GENERAL INFORMATION

Engine Overhaul Procedures

* PLEASE READ THIS FIRST *

NOTE: Examples used in this article are general in nature and do not necessarily relate to a specific engine or system. Illustrations and procedures have been chosen to guide mechanic through engine overhaul process. Descriptions of processes of cleaning, inspection, assembly and machine shop practice are included.

Always refer to appropriate engine overhaul article, if available, in the ENGINES section for complete overhaul procedures and specifications for the vehicle being repaired.

DESCRIPTION

Examples used in this article are general in nature and do not necessarily relate to a specific engine or system. Illustrations and procedures have been chosen to guide mechanic through engine overhaul process. Descriptions of cleaning, inspection, and assembly processes are included.

ENGINE IDENTIFICATION

Engine may be identified from Vehicle Identification Number (VIN) stamped on a metal tab. Metal tab may be located in different locations depending on manufacturer. Engine identification number or serial number is located on cylinder block. Location varies with each manufacturer.

INSPECTION PROCEDURES

*** PLEASE READ THIS FIRST ***

NOTE: Examples used in this article are general in nature and do not necessarily relate to a specific engine or system. Illustrations and procedures have been chosen to guide mechanic through engine overhaul process. Descriptions of processes of cleaning, inspection, assembly and

machine shop practice are included.

Always refer to appropriate engine overhaul article, if available, in the ENGINES section for complete overhaul procedures and specifications for the vehicle being repaired.

GENERAL

NOTE: Examples used in this article are general in nature and do not necessarily relate to a specific engine or system. Illustrations and procedures have been chosen to guide mechanic through engine overhaul process. Descriptions of processes of cleaning, inspection, assembly and machine shop practice are included.

Always refer to appropriate engine overhaul article, if available, in the ENGINES section for complete overhaul procedures and specifications for the vehicle being repaired.

Engine components must be inspected to meet manufacturer's specifications and tolerances during overhaul. Proper dimensions and tolerances must be met to obtain proper performance and maximum engine life.

Micrometers, depth gauges and dial indicator are used for checking tolerances during engine overhaul. Magnaflux, Magnaglo, dye-check, ultrasonic and x-ray inspection procedures are used for parts inspection.

MAGNETIC PARTICLE INSPECTION

NOTE: Examples used in this article are general in nature and do not necessarily relate to a specific engine or system. Illustrations and procedures have been chosen to guide mechanic through engine overhaul process. Descriptions of processes of cleaning, inspection, assembly and machine shop practice are included.

Always refer to appropriate engine overhaul article, if available, in the ENGINES section for complete overhaul

procedures and specifications for the vehicle being repaired.

Magnaflux & Magnaglo

Magnaflux is an inspection technique used to locate material flaws and stress cracks. Component is subjected to a strong magnetic field. Entire component or a localized area can be magnetized. Component is coated with either a wet or dry material that contains fine magnetic particles.

Cracks which are outlined by the particles cause an interruption of magnetic field. Dry powder method of Magnaflux can be used in normal lighting and crack appears as a bright line.

Fluorescent liquid is used along with a Black light in the Magnaglo Magnaflux system. Darkened room is required for this procedure. The crack will appear as a glowing line. Complete demagnetizing of component upon completion is required on both procedures. Magnetic particle inspection applies to ferrous materials only.

PENETRANT INSPECTION

NOTE: Examples used in this article are general in nature and do not necessarily relate to a specific engine or system. Illustrations and procedures have been chosen to guide mechanic through engine overhaul process. Descriptions of processes of cleaning, inspection, assembly and machine shop practice are included.

Always refer to appropriate engine overhaul article, if available, in the ENGINES section for complete overhaul procedures and specifications for the vehicle being repaired.

Zyglo

The Zyglo process coats material with a fluorescent dye penetrant. Component is often warmed to expand cracks that will be penetrated by the dye. Using darkened room and Black light, component is inspected for cracks. Crack will glow brightly.

Developing solution is often used to enhance results. Parts made of any material, such as aluminum cylinder heads or plastics, may be tested using this process.

Dye Check

Penetrating dye is sprayed on the previously cleaned component. Dye is left on component for 5-45 minutes, depending upon material density. Component is then wiped clean and sprayed with a developing solution. Surface cracks will show up as a bright line.

ULTRASONIC INSPECTION

NOTE: Examples used in this article are general in nature and do not necessarily relate to a specific engine or system. Illustrations and procedures have been chosen to guide mechanic through engine overhaul process. Descriptions of processes of cleaning, inspection, assembly and machine shop practice are included.

Always refer to appropriate engine overhaul article, if available, in the ENGINES section for complete overhaul procedures and specifications for the vehicle being repaired.

If an expensive part is suspected of internal cracking, ultrasonic testing is used. Sound waves are used for component inspection.

X-RAY INSPECTION

NOTE: Examples used in this article are general in nature and do not necessarily relate to a specific engine or system. Illustrations and procedures have been chosen to guide mechanic through engine overhaul process. Descriptions of processes of cleaning, inspection, assembly and machine shop practice are included.

Always refer to appropriate engine overhaul article, if available, in the ENGINES section for complete overhaul procedures and specifications for the vehicle being repaired.

This form of inspection is used on highly stressed components. X-ray inspection may be used to detect internal and external flaws in any material.

PRESSURE TESTING

NOTE: Examples used in this article are general in nature and do not necessarily relate to a specific engine or system. Illustrations and procedures have been chosen to guide mechanic through engine overhaul process. Descriptions of processes of cleaning, inspection, assembly and machine shop practice are included.

Always refer to appropriate engine overhaul article, if available, in the ENGINES section for complete overhaul procedures and specifications for the vehicle being repaired.

Cylinder heads can be tested for cracks using a pressure tester. Pressure testing is performed by plugging all but one of the holes of cylinder head and injecting air or water into the open passage.

Leaks are indicated by the appearance of wet or damp areas when using water. When air is used, it is necessary to spray the head surface with a soap solution. Bubbles will indicate a leak. Cylinder head may also be submerged in water heated to specified temperature to check for cracks created during heat expansion.

CLEANING PROCEDURES

*** PLEASE READ THIS FIRST ***

NOTE: Examples used in this article are general in nature and do not necessarily relate to a specific engine or system. Illustrations and procedures have been chosen to guide mechanic through engine overhaul process. Descriptions of processes of cleaning, inspection, assembly and machine shop practice are included.

Always refer to appropriate engine overhaul article, if available, in the ENGINES section for complete overhaul

procedures and specifications for the vehicle being repaired.

GENERAL

NOTE: Examples used in this article are general in nature and do not necessarily relate to a specific engine or system. Illustrations and procedures have been chosen to guide mechanic through engine overhaul process. Descriptions of processes of cleaning, inspection, assembly and machine shop practice are included.

Always refer to appropriate engine overhaul article, if available, in the ENGINES section for complete overhaul procedures and specifications for the vehicle being repaired.

All components of an engine do not have the same cleaning requirements. Physical methods include bead blasting and manual removal. Chemical methods include solvent blast, solvent tank, hot tank, cold tank and steam cleaning of components.

BEAD BLASTING

NOTE: Examples used in this article are general in nature and do not necessarily relate to a specific engine or system. Illustrations and procedures have been chosen to guide mechanic through engine overhaul process. Descriptions of processes of cleaning, inspection, assembly and machine shop practice are included.

Always refer to appropriate engine overhaul article, if available, in the ENGINES section for complete overhaul procedures and specifications for the vehicle being repaired.

Manual removal of deposits may be required prior to bead blasting, followed by some other cleaning method. Carbon, paint and rust may be removed using bead blasting method. Components must be free of oil and grease prior to bead blasting. Beads will stick to grease or oil soaked areas causing area not to be

cleaned.

Use air pressure to remove all trapped residual beads from component after cleaning. After cleaning internal engine parts made of aluminum, wash thoroughly with hot soapy water. Component must be thoroughly cleaned as glass beads will enter engine oil resulting in bearing damage.

CHEMICAL CLEANING

NOTE: Examples used in this article are general in nature and do not necessarily relate to a specific engine or system. Illustrations and procedures have been chosen to guide mechanic through engine overhaul process. Descriptions of processes of cleaning, inspection, assembly and machine shop practice are included.

Always refer to appropriate engine overhaul article, if available, in the ENGINES section for complete overhaul procedures and specifications for the vehicle being repaired.

Solvent tank is used for cleaning oily residue from components. Solvent blasting sprays solvent through a siphon gun using compressed air.

The hot tank, using heated caustic solvents, is used for cleaning ferrous materials only. DO NOT clean aluminum parts such as cylinder heads, bearings or other soft metals using the hot tank. After cleaning, flush parts with hot water.

A non-ferrous part will be ruined and caustic solution will be diluted if placed in the hot tank. Always use eye protection and gloves when using the hot tank.

Use of a cold tank is for cleaning aluminum cylinder heads, carburetors and other soft metals. A less caustic and unheated solution is used. Parts may be left in the tank for several hours without damage. After cleaning, flush parts with hot water.

Steam cleaning, with boiling hot water sprayed at high pressure, is recommended as the final cleaning process when using either hot or cold tank cleaning.

COMPONENT CLEANING

*** PLEASE READ THIS FIRST ***

NOTE: **Examples used in this article are general in nature and do not necessarily relate to a specific engine or system. Illustrations and procedures have been chosen to guide mechanic through engine overhaul process. Descriptions of processes of cleaning, inspection, assembly and machine shop practice are included.**

Always refer to appropriate engine overhaul article, if available, in the ENGINES section for complete overhaul procedures and specifications for the vehicle being repaired.

SHEET METAL PARTS

NOTE: **Examples used in this article are general in nature and do not necessarily relate to a specific engine or system. Illustrations and procedures have been chosen to guide mechanic through engine overhaul process. Descriptions of processes of cleaning, inspection, assembly and machine shop practice are included.**

Always refer to appropriate engine overhaul article, if available, in the ENGINES section for complete overhaul procedures and specifications for the vehicle being repaired.

Examples of sheet metal parts are rocker covers, front and side covers, oil pan and bellhousing dust cover. Glass bead blasting or hot tank may be used for cleaning.

Ensure all mating surfaces are flat. Deformed surfaces should be straightened. Check all sheet metal parts for cracks and dents.

INTAKE & EXHAUST MANIFOLDS

NOTE: **Examples used in this article are general in nature and do not necessarily relate to a specific engine or system. Illustrations and procedures have been chosen to guide mechanic through engine overhaul process. Descriptions of processes of cleaning, inspection, assembly and**

machine shop practice are included.

Always refer to appropriate engine overhaul article, if available, in the ENGINES section for complete overhaul procedures and specifications for the vehicle being repaired.

Using solvent cleaning or bead blasting, clean manifolds for inspection. If intake manifold has an exhaust crossover, all carbon deposits must be removed. Inspect manifolds for cracks, burned or eroded areas, corrosion and damage to fasteners.

Exhaust heat and products of combustion cause threads of fasteners to corrode. Replace studs and bolts as necessary. On "V" type intake manifolds, sheet metal oil shield must be removed for proper cleaning and inspection. Ensure all manifold parting surfaces are flat and free of burrs.

CYLINDER HEAD REPLACEMENT

*** PLEASE READ THIS FIRST ***

NOTE: Examples used in this article are general in nature and do not necessarily relate to a specific engine or system. Illustrations and procedures have been chosen to guide mechanic through engine overhaul process. Descriptions of processes of cleaning, inspection, assembly and machine shop practice are included.

Always refer to appropriate engine overhaul article, if available, in the ENGINES section for complete overhaul procedures and specifications for the vehicle being repaired.

REMOVAL

NOTE: Examples used in this article are general in nature and do not necessarily relate to a specific engine or system. Illustrations and procedures have been chosen to guide mechanic through engine overhaul process. Descriptions of processes of cleaning, inspection, assembly and machine shop practice are included.

Always refer to appropriate engine overhaul article, if available, in the ENGINES section for complete overhaul procedures and specifications for the vehicle being repaired.

Remove intake and exhaust manifolds and valve cover. Cylinder head and camshaft carrier bolts (if equipped) should be removed only when engine is cold. On many aluminum cylinder heads, removal while hot will cause cylinder head warpage. Mark rocker arm or overhead cam components for location.

Remove rocker arm components or overhead cam components. Components must be installed in original location. Individual design rocker arms may utilize shafts, ball-type pedestal mounts or no rocker arms. For all design types, wire components together and identify according to corresponding valve. Remove cylinder head bolts. Note length and location. Some applications require cylinder head bolts be removed in proper sequence to prevent cylinder head damage. See **Fig. 1**. Remove cylinder head.

INSTALLATION

NOTE: **Examples used in this article are general in nature and do not necessarily relate to a specific engine or system. Illustrations and procedures have been chosen to guide mechanic through engine overhaul process. Descriptions of processes of cleaning, inspection, assembly and machine shop practice are included.**

Always refer to appropriate engine overhaul article, if available, in the ENGINES section for complete overhaul procedures and specifications for the vehicle being repaired.

Ensure all surfaces and head bolts are clean. Check that head bolt holes of cylinder block are clean and dry to prevent block damage when bolts are tightened. Clean threads with tap to ensure accurate bolt torque.

Install head gasket on cylinder block. Some manufacturers may recommend sealant be applied to head gasket prior to installation. Note that all holes are aligned. Some gasket applications may be marked so that certain area faces

upward. Install cylinder head using care not to damage head gasket. Ensure cylinder head is fully seated on cylinder block.

Some applications require head bolts be coated with sealant prior to installation. This is done if head bolts are exposed to coolant passages. Some applications require head bolts be coated with light coat of engine oil.

Install head bolts. Head bolts should be tightened in proper steps and sequence to specification. See **Fig. 1**. Install remaining components. Tighten all bolts to specification. Adjust valves if required. See VALVE ADJUSTMENT.

NOTE: Some manufacturers require that head bolts be retightened after specified amount of operation. This must be done to prevent head gasket failure.

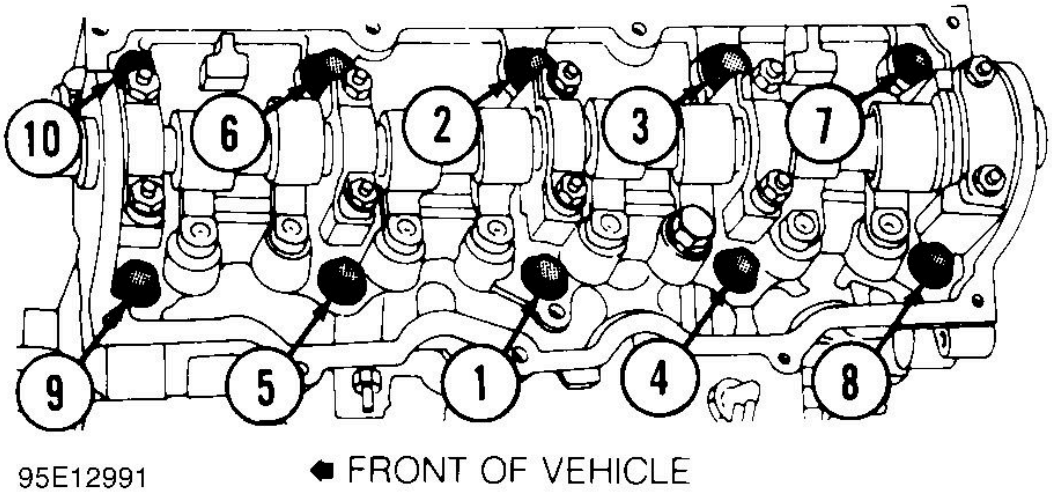

Fig. 1: Typical Cylinder Head Tightening or Loosening Sequence

VALVE ADJUSTMENT

NOTE: Examples used in this article are general in nature and do not necessarily relate to a specific engine or system. Illustrations and procedures have been chosen to guide mechanic through engine overhaul process. Descriptions of processes of cleaning, inspection, assembly and machine shop practice are included.

Always refer to appropriate engine overhaul article, if available, in the ENGINES section for complete overhaul procedures and specifications for the vehicle being repaired.

Engine specifications will indicate valve train clearance and temperature at which adjustment is to be made on most models. In most cases, adjustment will be made with a cold engine. In some cases, both a cold and a hot clearance will be given for maintenance convenience.

On some models, adjustment is not required. Rocker arms are tightened to specification and valve lash is automatically set. On some models with push rod actuated valve train, adjustment is made at push rod end of rocker arm while other models do not require adjustment.

Clearance will be checked between tip of rocker arm and tip of valve stem in proper sequence using a feeler gauge. Adjustment is made by rotating adjusting screw until proper clearance is obtained. Lock nut is then tightened. Engine will be rotated to obtain all valve adjustments to manufacturer's specifications.

Some models require hydraulic lifter to be bled down and clearance measured. Push rods of different length can be used to obtain proper clearance. Clearance will be checked between tip of rocker arm and tip of valve stem in proper sequence using a feeler gauge.

Overhead cam engines designed without rocker arms actuate valves directly on a cam follower. A hardened, removable disc is installed between the cam lobe and lifter. Clearance will be checked between cam heel and adjusting disc in proper sequence using a feeler gauge. Engine will be rotated to obtain all valve adjustments.

On overhead cam engines designed with rocker arms, adjustment is made at valve end of rocker arm. Ensure valve to be adjusted is riding on heel of cam on all engines. Clearance will be checked between tip of rocker arm and tip of valve stem in proper sequence using a feeler gauge. Adjustment is made by rotating adjusting screw until proper clearance is obtained. Lock nut is then tightened. Engine will be rotated to obtain all valve adjustments to manufacturer's specifications.

CYLINDER HEAD OVERHAUL

*** PLEASE READ THIS FIRST ***

NOTE: Examples used in this article are general in nature and do not necessarily relate to a specific engine or system. Illustrations and procedures have been chosen to guide mechanic through engine overhaul process. Descriptions of processes of cleaning, inspection, assembly and machine shop practice are included.

Always refer to appropriate engine overhaul article, if available, in the ENGINES section for complete overhaul procedures and specifications for the vehicle being repaired.

CYLINDER HEAD DISASSEMBLY

NOTE: Examples used in this article are general in nature and do not necessarily relate to a specific engine or system. Illustrations and procedures have been chosen to guide mechanic through engine overhaul process. Descriptions of processes of cleaning, inspection, assembly and machine shop practice are included.

Always refer to appropriate engine overhaul article, if available, in the ENGINES section for complete overhaul procedures and specifications for the vehicle being repaired.

Mark valves for location. Using valve spring compressor, compress valve springs. Remove valve locks. Carefully release spring compressor. Remove retainer or rotator, valve spring, spring seat and valve. See **Fig. 2**.

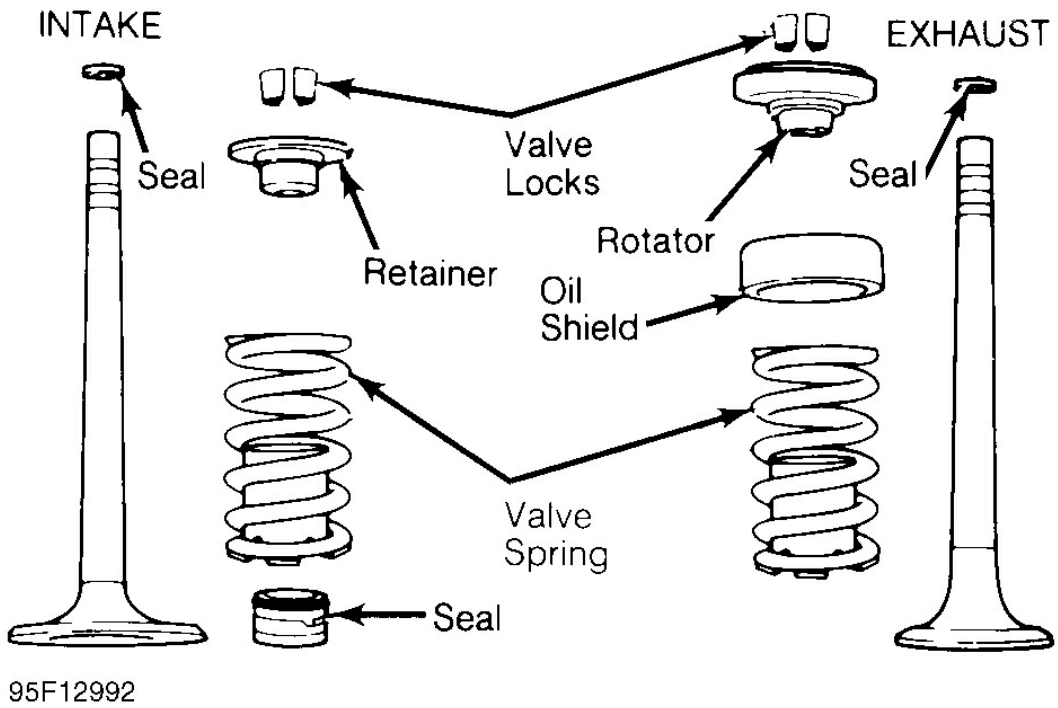

Fig. 2: Exploded View of Valve Assemblies

CYLINDER HEAD CLEANING & INSPECTION

NOTE: Examples used in this article are general in nature and do not necessarily relate to a specific engine or system. Illustrations and procedures have been chosen to guide mechanic through engine overhaul process. Descriptions of processes of cleaning, inspection, assembly and machine shop practice are included.

Always refer to appropriate engine overhaul article, if available, in the ENGINES section for complete overhaul procedures and specifications for the vehicle being repaired.

Clean cylinder head and valve components using approved cleaning methods. Inspect cylinder head for cracks, damage or warped gasket surface. Place straightedge across gasket surface. Determine clearance at center of straightedge. Measure across both diagonals, longitudinal center line and across cylinder head at several points. See **Fig. 3**.

On cast iron cylinder heads, if warpage exceeds .003" (.08 mm) in a 6" span, or .006" (.15 mm) over total length, cylinder head must be resurfaced. On most aluminum cylinder heads, if warpage exceeds .002" (.05 mm) in any area, cylinder head must be resurfaced. Warpage specification may vary by manufacturer. If warpage exceeds specification on some cylinder heads, cylinder head must be replaced.

Cylinder head thickness should be measured to determine amount of material which can be removed before replacement is required. Cylinder head thickness must not be less than the manufacturer's specification.

If cylinder head required resurfacing, it may not align properly with intake manifold. On "V" type engines, misalignment is corrected by machining intake manifold surface that contacts cylinder head. Cylinder head may be machined on surface that contacts intake manifold. Using oil stone, remove burrs or scratches from all sealing surfaces.

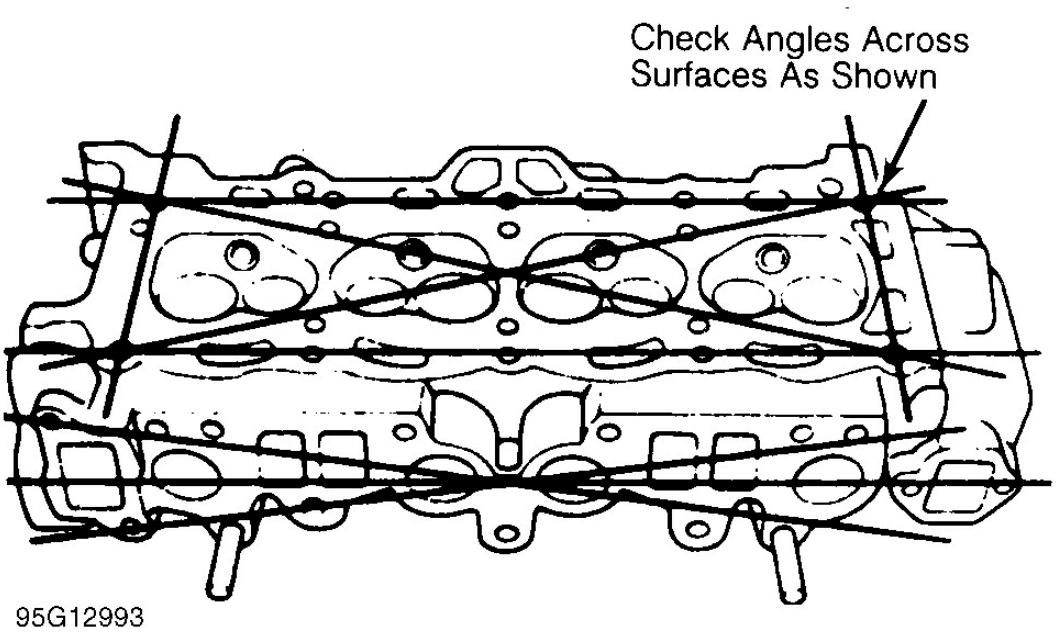

Fig. 3: Checking Cylinder Head for Warpage

VALVE SPRINGS

NOTE: Examples used in this article are general in nature and do not necessarily relate to a specific engine or system.

Illustrations and procedures have been chosen to guide mechanic through engine overhaul process. Descriptions of processes of cleaning, inspection, assembly and machine shop practice are included.

Always refer to appropriate engine overhaul article, if available, in the ENGINES section for complete overhaul procedures and specifications for the vehicle being repaired.

Inspect valve springs for corroded or pitted valve spring surfaces which may lead to breakage. Polished spring ends caused by a rotating spring indicate that spring surge has occurred. Replace springs showing evidence of these conditions.

Inspect valve springs for squareness using a 90-degree straightedge. See **Fig. 4**. Replace valve spring if out-of-square exceeds manufacturer's specification.

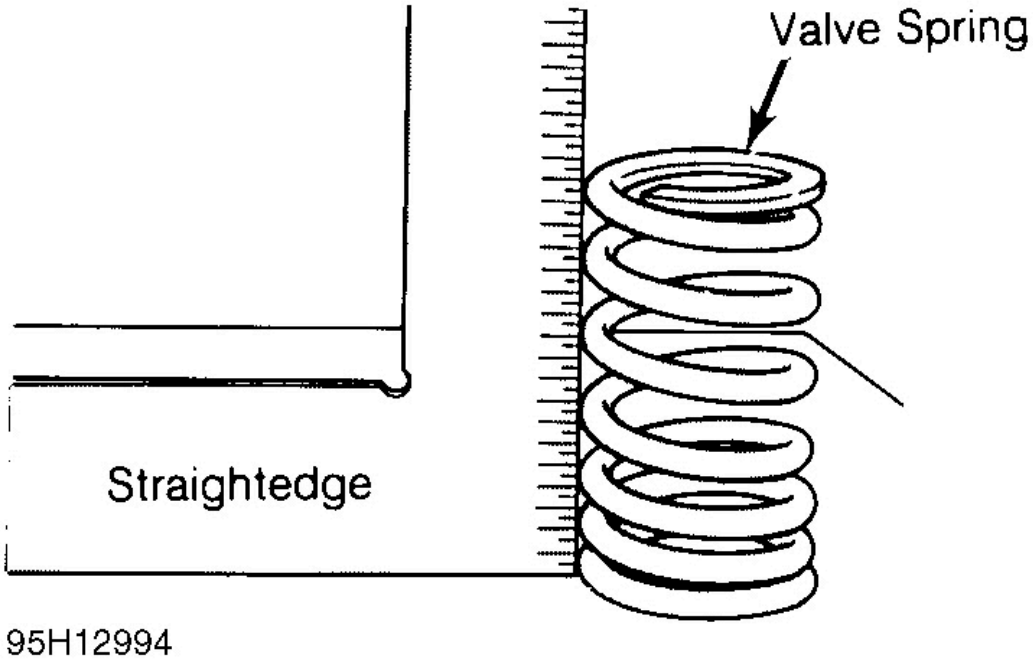

Fig. 4: Checking Valve Spring Squareness

Using vernier caliper, measure free length of all valve springs. Replace springs if not within specification. Using valve spring tester, test valve spring pressure at

installed and compressed heights. See **Fig. 5**.

Usually compressed height is installed height minus valve lift. Replace valve spring if not within specification. It is recommended to replace all valve springs when overhauling cylinder head. Valve springs may need to be installed with color coded end or small coils at specified area according to manufacturer.

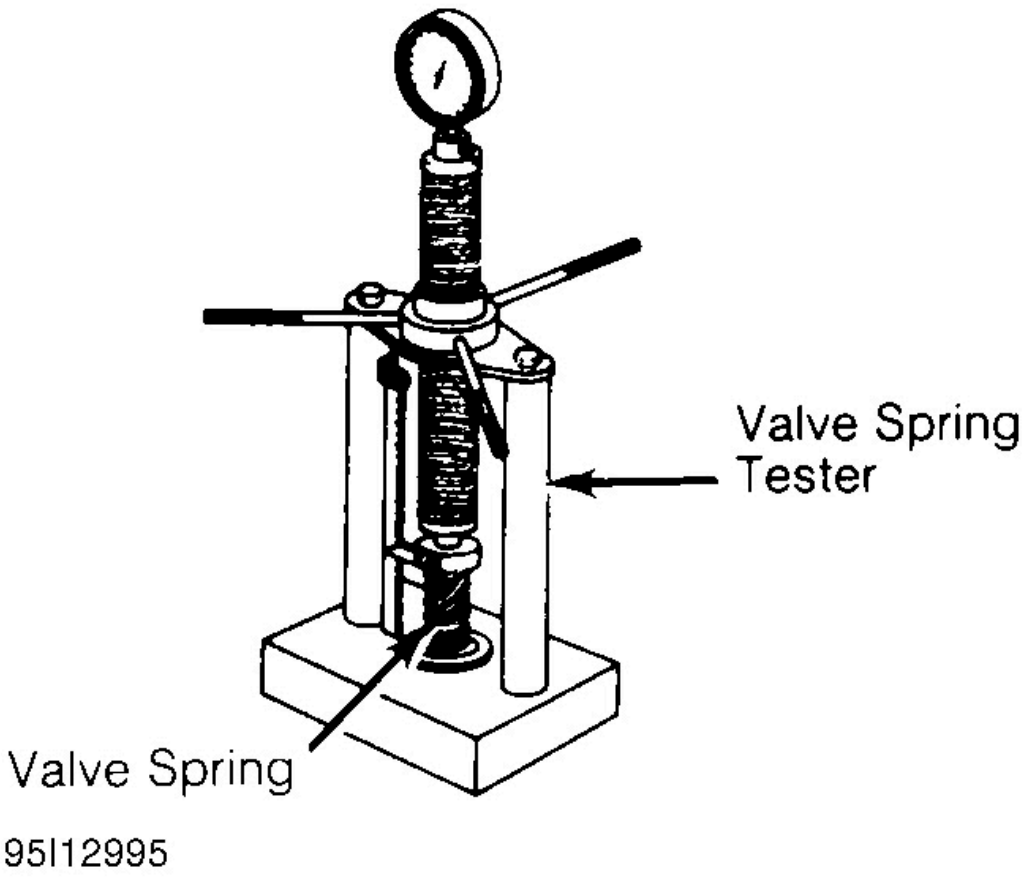

Fig. 5: Checking Valve Spring Pressure

VALVE GUIDE

NOTE: Examples used in this article are general in nature and do not necessarily relate to a specific engine or system. Illustrations and procedures have been chosen to guide mechanic through engine overhaul process. Descriptions of processes of cleaning, inspection, assembly and

machine shop practice are included.

Always refer to appropriate engine overhaul article, if available, in the ENGINES section for complete overhaul procedures and specifications for the vehicle being repaired.

Measuring Valve Guide Clearance

Check valve stem-to-guide clearance. Ensure valve stem diameter is within specification. Install valve in valve guide. Install dial indicator assembly on cylinder head with tip resting against valve stem just above valve guide. See **Fig. 6**.

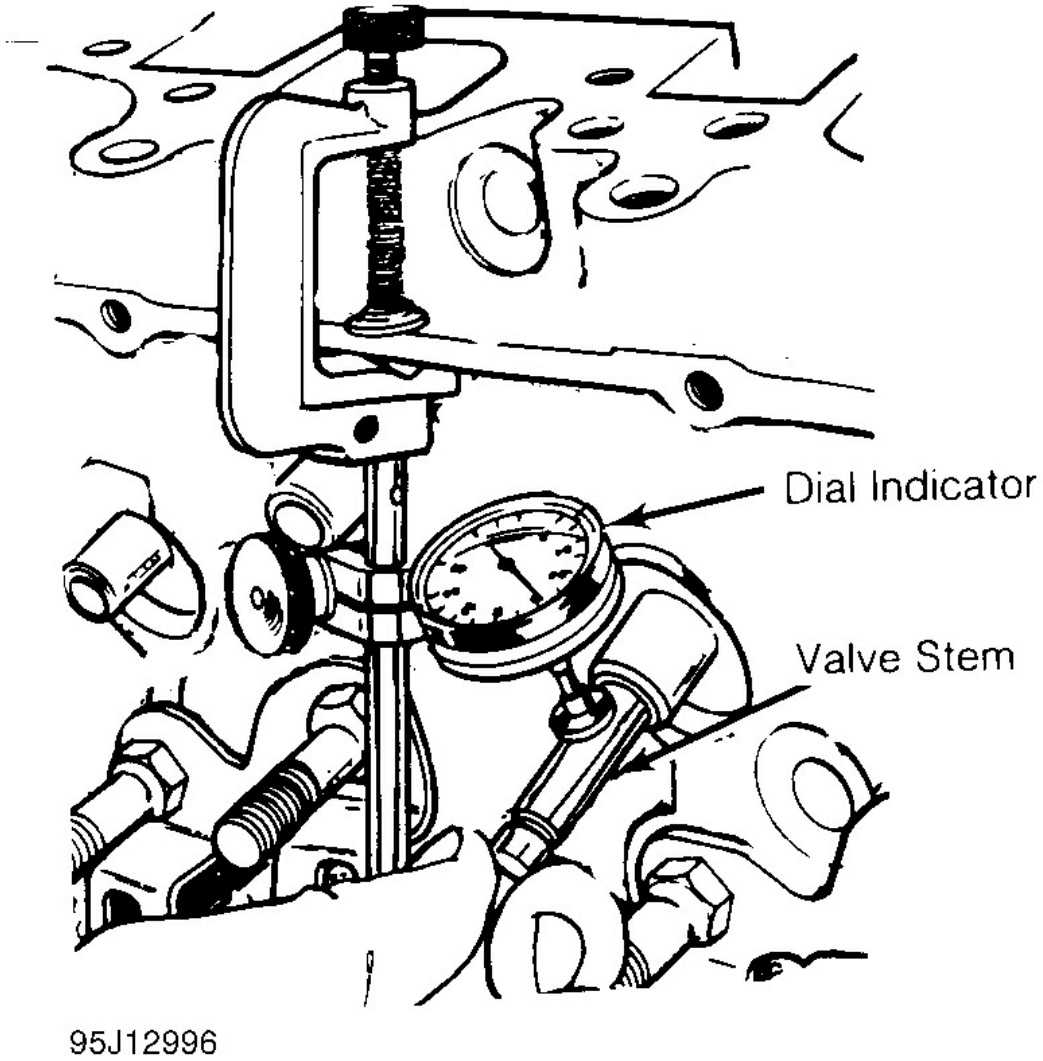

Fig. 6: Measuring Valve Stem-to-Guide Clearance

Lower valve approximately 1/16" below valve seat. Push valve stem against valve guide as far as possible. Adjust dial indicator to zero. Push valve stem in opposite direction and note reading. Clearance must be within specification.

If valve guide clearance exceeds specification, valves with oversize stems may be used and valve guides are reamed to larger size or valve guide must be replaced. On some applications, a false guide is installed, then reamed to proper specification. Valve guide reamer set is used to ream valve guide to obtain proper clearance for new valve.

Reaming Valve Guide

Select proper reamer for size of valve stem. Reamer must be of proper length to provide clean cut through entire length of valve guide. Install reamer in valve guide and rotate to cut valve guide. See **Fig. 7**.

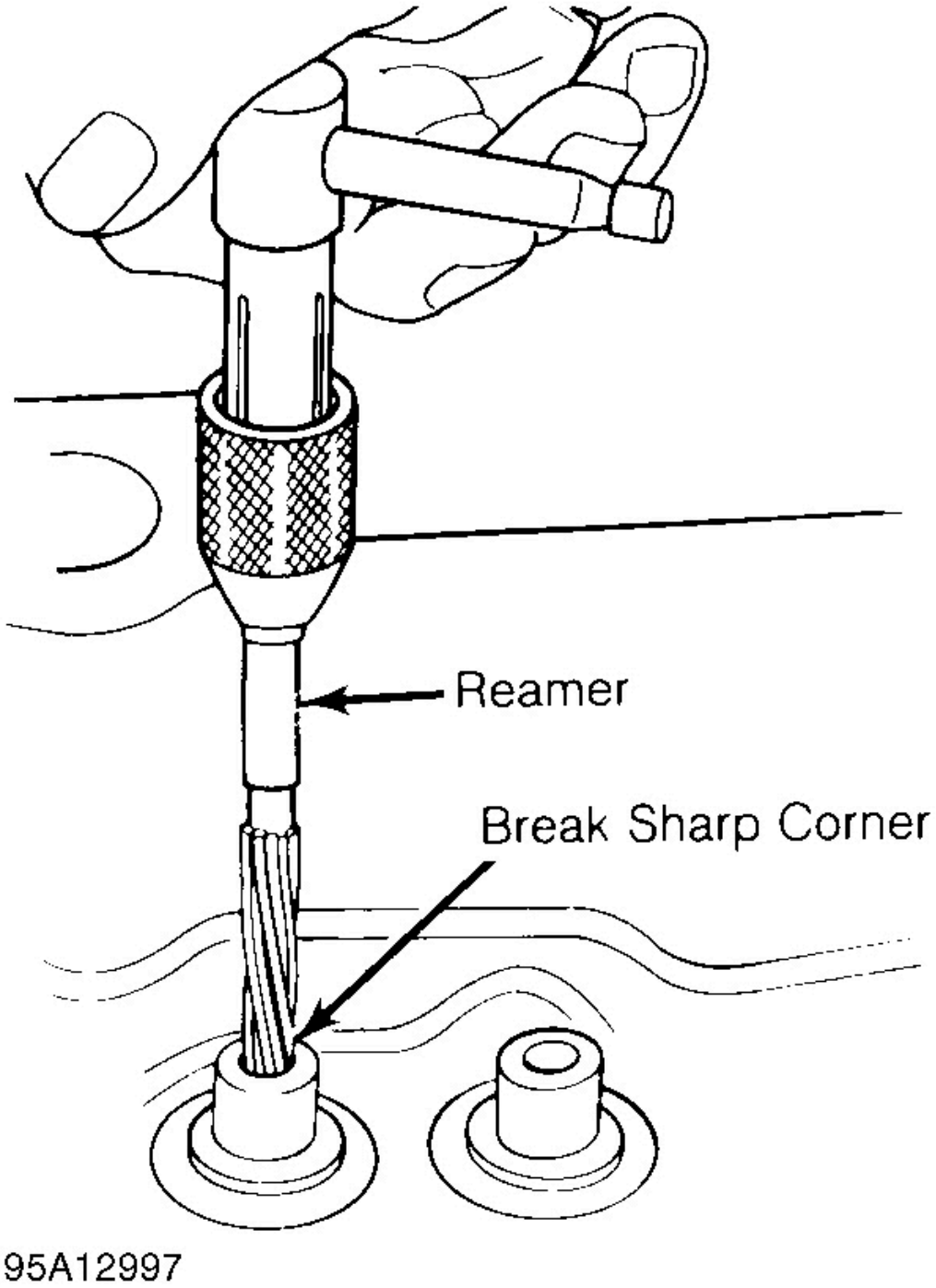

Fig. 7: Reaming Valve Guides

Replacing Valve Guide

Replace valve guide if clearance exceeds specification. Valve guides are either pressed, hammered or shrunk in place, depending upon cylinder head design and type of metal used.

Remove valve guide from cylinder head by pressing or tapping on a stepped drift. See **Fig. 8**. Once valve guide is installed, distance from cylinder head to top of valve guide must be checked. This distance must be within specification.

Aluminum heads are often heated before installing valve guide. Valve guide is sometimes cooled in dry ice prior to installation. Combination of a heated cylinder head and cooled valve guide ensures a tight guide fit upon assembly. The new guide must be reamed to specification.

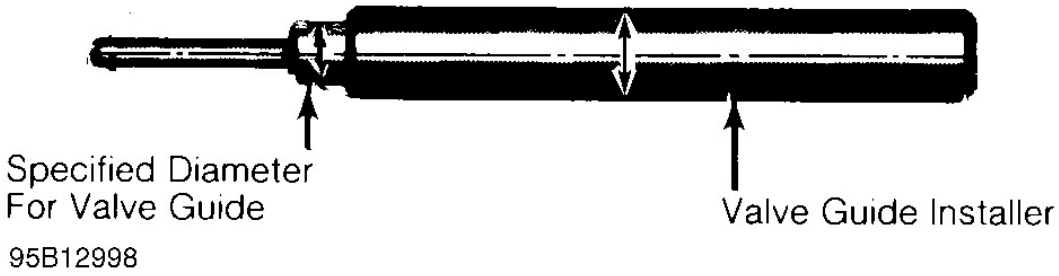

Fig. 8: Typical Valve Guide Remover & Installer

VALVES & VALVE SEATS

NOTE: Examples used in this article are general in nature and do not necessarily relate to a specific engine or system. Illustrations and procedures have been chosen to guide mechanic through engine overhaul process. Descriptions of processes of cleaning, inspection, assembly and machine shop practice are included.

Always refer to appropriate engine overhaul article, if available, in the ENGINES section for complete overhaul procedures and specifications for the vehicle being

repaired.

Valve Grinding

Valve stem O.D. should be measured in several areas to indicate amount of wear. Replace valve if not within specification. Valve margin area should be measured to ensure that valve can be ground. See **Fig. 9**.

If valve margin is less than specification, the valves will be burned. Valve must be replaced. Due to minimum margin dimensions during manufacture, some new type valves cannot be reground. Some manufacturers use stellite coated valves that must NOT be machined. Valves can only be lapped into valve seat.

CAUTION: Some valves are sodium filled. Extreme care must be used when disposing of damaged or worn sodium-filled valves.

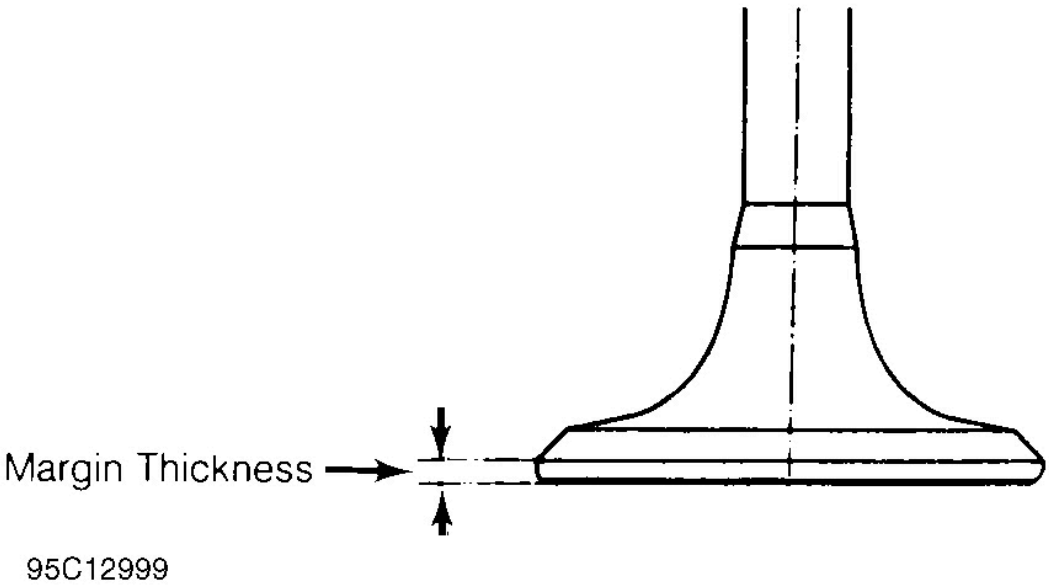

Fig. 9: Measuring Valve Head Margin

Resurface valve to proper angle specification using valve grinding machine. Follow manufacturer's instructions for valve grinding machine. Specifications may indicate a different valve face angle than seat angle. Measure valve margin after grinding. Replace valve if not within specification. Valve stem tip can be

refinished using valve grinding machine.

Valve Lapping

During valve lapping of recently designed valves, be sure to follow manufacturer's recommendations. Surface hardening and materials used with some valves do not permit lapping. Lapping process will remove excessive amounts of the hardened surface.

Valve lapping is done to ensure adequate sealing between valve face and seat. Use either a hand drill or lapping stick with suction cup attached.

Moisten and attach suction cup to valve. Lubricate valve stem and guide. Apply a thin coat of fine valve grinding compound between valve and seat. Rotate lapping tool between the palms or with hand drill.

Lift valve upward off the seat and change position often. This is done to prevent grooving of valve seat. Lap valve until a smooth polished seat is obtained. Thoroughly clean grinding compound from components. Valve-to-valve seat concentricity should be checked. See **VALVE SEAT CONCENTRICITY**.

CAUTION: Valve guides must be in good condition and free of carbon deposits prior to valve seat grinding. Some engines contain an induction hardened valve seat. Excessive material removal will damage valve seats.

Valve Seat Grinding

Select coarse stone of correct size and angle for seat to be ground. Ensure stone is true and has a smooth surface. Select correct size pilot for valve guide dimension. Install pilot in valve guide. Lightly lubricate pilot shaft. Install stone on pilot. Move stone off and on the seat approximately 2 times per second during grinding operation.

Select a fine stone to finish grinding operation. Various angle grinding stones are used to center and narrow the valve seat as required. See **Fig. 10**.

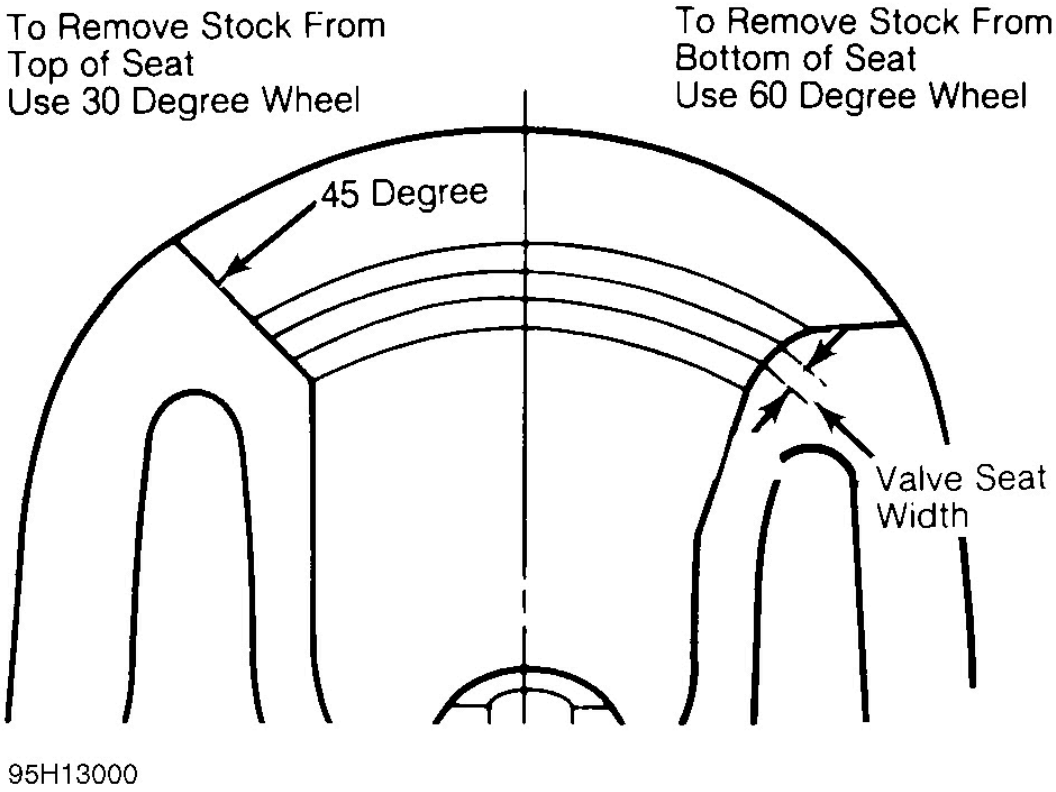

Fig. 10: Adjusting Valve Seat Width

Valve Seat Replacement

Replacement of valve seat inserts is done by cutting out the old insert and machining an oversize insert bore. Replacement oversize insert is usually cooled and the cylinder head is sometimes warmed. Valve seat is pressed into the head. This operation requires specialized machine shop equipment.

Valve Seat Concentricity

Using dial gauge, install gauge pilot in valve guide. Position gauge arm on the valve seat. Adjust dial indicator to zero. Rotate arm 360 degrees and note reading. Runout should not exceed specification.

To check valve-to-valve seat concentricity, coat valve face lightly with Prussian Blue dye. Install valve and rotate it on valve seat. If pattern is even and entire seat is coated at valve contact point, valve is concentric with the valve seat.

CYLINDER HEAD REASSEMBLY

NOTE: Examples used in this article are general in nature and do not necessarily relate to a specific engine or system. Illustrations and procedures have been chosen to guide mechanic through engine overhaul process. Descriptions of processes of cleaning, inspection, assembly and machine shop practice are included.

Always refer to appropriate engine overhaul article, if available, in the ENGINES section for complete overhaul procedures and specifications for the vehicle being repaired.

Valve Stem Installed Height

Valve stem installed height must be checked when new valves are installed or when valves or valve seats have been ground. Install valve in valve guide. Measure distance from tip of valve stem to spring seat. See **Fig. 11**. Distance must be within specification to allow sufficient clearance for valve operation.

Remove valve and grind valve stem tip if height exceeds specification. Valve tips are surface hardened. DO NOT remove more than .010" (.25 mm) from tip. Chamfer sharp edge of reground valve tip. Recheck valve stem installed height.

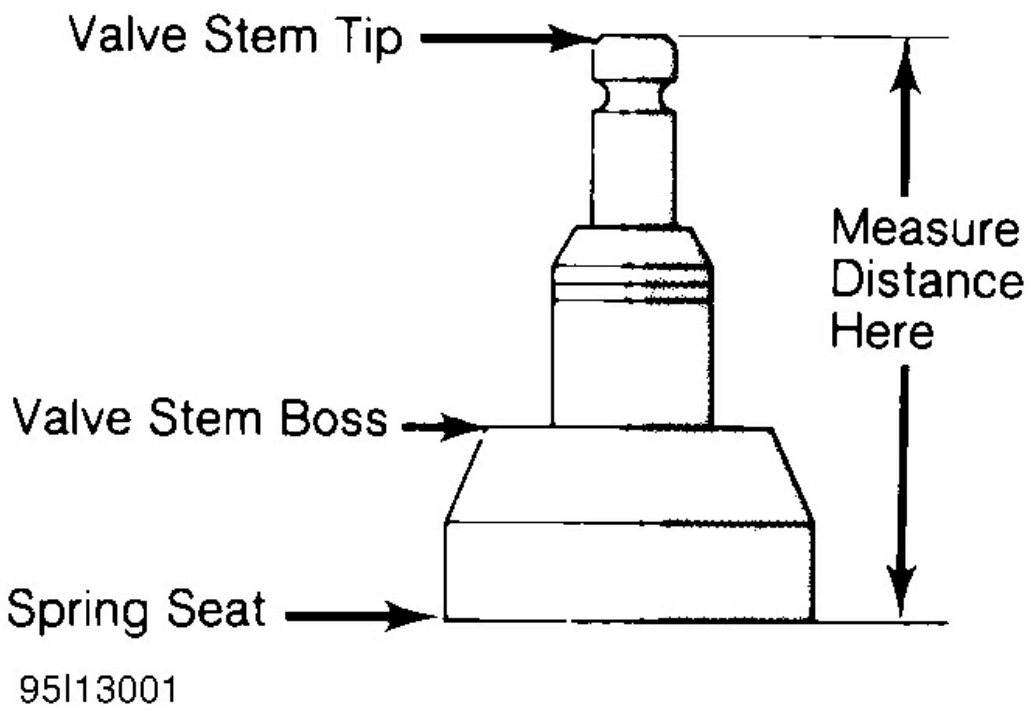

Fig. 11: Measuring Valve Stem Installed Height

VALVE STEM OIL SEALS

NOTE: Examples used in this article are general in nature and do not necessarily relate to a specific engine or system. Illustrations and procedures have been chosen to guide mechanic through engine overhaul process. Descriptions of processes of cleaning, inspection, assembly and machine shop practice are included.

Always refer to appropriate engine overhaul article, if available, in the ENGINES section for complete overhaul procedures and specifications for the vehicle being repaired.

Valve stem oil seals must be installed on valve stem. See **Fig. 2**. Seals are needed due to pressure differential at the ends of valve guides. Atmospheric pressure above intake guide, combined with manifold vacuum below guide, causes oil to

be drawn into the cylinder.

Exhaust guides also have pressure differential created by exhaust gas flowing past the guide, creating a low pressure area. This low pressure area draws oil into the exhaust system.

Some manufacturers require that special color code or specified height valve stem oil seal be installed in designated area.

Replacement (On-Vehicle)

Mark rocker arm or overhead cam components for location. Remove rocker arm components or overhead cam components. Components must be installed in original location. Remove spark plugs. Valve stem oil seals may be replaced by holding valves against seats using air pressure.

Air pressure must be installed in cylinder using an adapter for spark plug hole. An adapter can be constructed by welding air hose connection to spark plug body with porcelain removed.

Rotate engine until piston is at top of stroke. Install adapter in spark plug hole. Apply a minimum of 140 psi (9.8 kg/cm^2) line pressure to adapter. Air pressure should hold valve closed. If air pressure does not hold valve closed, check for damaged or bent valve. Cylinder head must be removed for service.

Using valve spring compressor, compress valve springs. Remove valve locks. Carefully release spring compressor. Remove retainer or rotator and valve spring. Remove valve stem oil seal.

If oversize valves have been installed, oversize oil seals must be used. Coat valve stem with engine oil. Install protective sleeve over end of valve stem. Install new oil seal over valve stem and seat on valve guide. Remove protective sleeve. Install spring seat, valve spring and retainer or rotator. Compress spring and install valve locks. Remove spring compressor. Ensure valve locks are fully seated.

Install rocker arms or overhead cam components. Tighten all bolts to specification. Adjust valves if required. Remove adapter. Install spark plugs, valve cover and gasket.

VALVE SPRING INSTALLED HEIGHT

NOTE: Examples used in this article are general in nature and do not necessarily relate to a specific engine or system. Illustrations and procedures have been chosen to guide mechanic through engine overhaul process. Descriptions of processes of cleaning, inspection, assembly and machine shop practice are included.

Always refer to appropriate engine overhaul article, if available, in the ENGINES section for complete overhaul procedures and specifications for the vehicle being repaired.

Valve spring installed height should be checked during reassembly. Measure height from lower edge of valve spring to the upper edge. DO NOT include valve spring seat or retainer. Distance must be within specification. If valves and/or seats have been ground, a valve spring shim may be required to correct spring height. See **Fig. 12**.

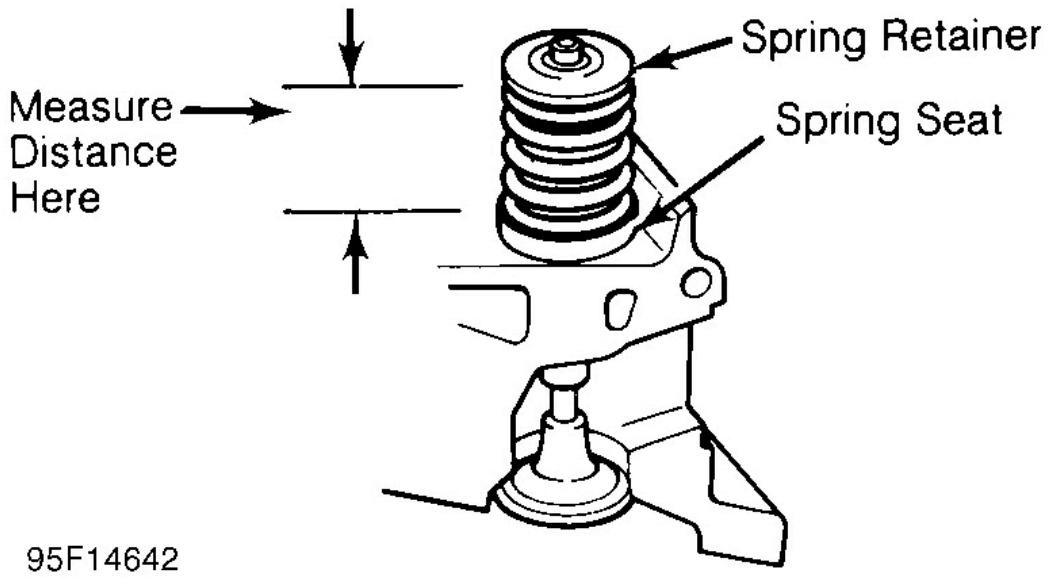

Fig. 12: Measuring Valve Spring Installed Height

ROCKER ARMS & ASSEMBLIES

NOTE: Examples used in this article are general in nature and do

not necessarily relate to a specific engine or system. Illustrations and procedures have been chosen to guide mechanic through engine overhaul process. Descriptions of processes of cleaning, inspection, assembly and machine shop practice are included.

Always refer to appropriate engine overhaul article, if available, in the ENGINES section for complete overhaul procedures and specifications for the vehicle being repaired.

Rocker Studs

Rocker studs are either threaded or pressed in place. Threaded studs are removed by locking 2 nuts on the stud. Unscrew the stud by turning the jam nut. Coat new stud threads with Loctite and install. Tighten to specification.

Pressed-in stud can be removed using a stud puller. Ream stud bore to proper specification and press in a new oversize stud. Pressed-in studs are often replaced by cutting threads in the stud bore to accept a threaded stud.

Rocker Arms & Shafts

Mark rocker arms for location. Remove rocker arm retaining bolts. Remove rocker arms. Inspect rocker arms, shafts, bushings and pivot balls (if equipped) for excessive wear. Inspect rocker arms for wear in valve stem contact area. Measure rocker arm bushing I.D. Replace bushings if excessively worn.

The rocker arm valve stem contact point may be reground, using special fixture for valve grinding machine. Remove minimum amount of material as possible. Ensure all oil passages are clear. Install rocker arm components in original location. Ensure rocker arm is properly seated in push rod. Tighten bolts to specification. Adjust valves if required. See **VALVE ADJUSTMENT**.

PUSH RODS

NOTE: **Examples used in this article are general in nature and do not necessarily relate to a specific engine or system. Illustrations and procedures have been chosen to guide mechanic through engine overhaul process. Descriptions of processes of cleaning, inspection, assembly and**

machine shop practice are included.

Always refer to appropriate engine overhaul article, if available, in the ENGINES section for complete overhaul procedures and specifications for the vehicle being repaired.

Remove rocker arms. Mark push rods for location. Remove push rods. Push rods can be steel or aluminum, solid or hollow. Hollow push rods must be internally cleaned to ensure oil passage to rocker arms is cleaned. Check push rods for damage, such as loose ends on steel tipped aluminum types.

Check push rod for straightness. Roll push rod on a flat surface. Using feeler gauge, check clearance at center. Replace push rod if bent. The push rod can also be supported at each end and rotated. A dial indicator is used to detect a bent area in the push rod.

Lubricate ends of push rod and install push rod in original location. Ensure push rod is properly seated in lifter. Install rocker arm. Tighten bolts to specification. Adjust valves if required. See **VALVE ADJUSTMENT**.

LIFTERS

NOTE: **Examples used in this article are general in nature and do not necessarily relate to a specific engine or system. Illustrations and procedures have been chosen to guide mechanic through engine overhaul process. Descriptions of processes of cleaning, inspection, assembly and machine shop practice are included.**

Always refer to appropriate engine overhaul article, if available, in the ENGINES section for complete overhaul procedures and specifications for the vehicle being repaired.

Hydraulic Lifters

Before replacing a hydraulic lifter for noisy operation, ensure noise is not caused by worn rocker arms or valve tips. Also ensure sufficient oil pressure exists. Hydraulic lifters must be installed in original location. Remove rocker arm

assembly and push rod. Mark components for location. Some applications require intake manifold, cylinder head or lifter cover removal. Remove lifter retainer plate (if used). To remove lifters, use a hydraulic lifter remover or magnet. Different type lifters are used. See **Fig. 13**.

On sticking lifters, disassemble and clean lifter. DO NOT mix lifter components or positions. Parts are select-fitted and are not interchangeable. Inspect all components for wear. Note amount of wear in lifter body-to-camshaft contact area. Surface must have smooth and convex contact face. If wear is apparent, carefully inspect cam lobe.

Inspect push rod contact area and lifter body for scoring or signs of wear. If body is scored, inspect lifter bore for damage and lack of lubrication. On roller type lifters, inspect roller for flaking, pitting, loss of needle bearings and roughness during rotation.

Measure lifter body O.D. in several areas. Measure lifter bore I.D. Ensure components or oil clearance is within specification. Some models offer oversize lifters. Replace lifter if damaged.

If lifter check valve is not operating, obstructions may be preventing it from closing or valve spring may be broken. Clean or replace components as necessary.

Check plunger operation. Plunger should drop to bottom of the body by its own weight when assembled dry. If plunger is not free, soak lifter in solvent to dissolve deposits.

Lifter leak-down test can be performed on lifter. Lifter must be filled with special test oil. New lifters contain special test oil. Using lifter leak-down tester, perform leak-down test following manufacturer's instructions. If leak-down time is not within specifications, replace lifter assembly.

Lifters should be soaked in clean engine oil several hours prior to installation. Coat lifter base, roller (if equipped) and lifter body with ample amount of Molykote or camshaft lubricant. See **Fig. 13**. Install lifter in original location. Install remaining components. Valve lash adjustment is not required on most hydraulic lifters. Preload of hydraulic lifter is automatic. Some models may require adjustment.

NOTE: Some manufacturers require that a crankcase conditioner be added to engine oil and engine operated for specified amount of time to aid in lifter break-in procedure if new lifters or camshaft are installed.

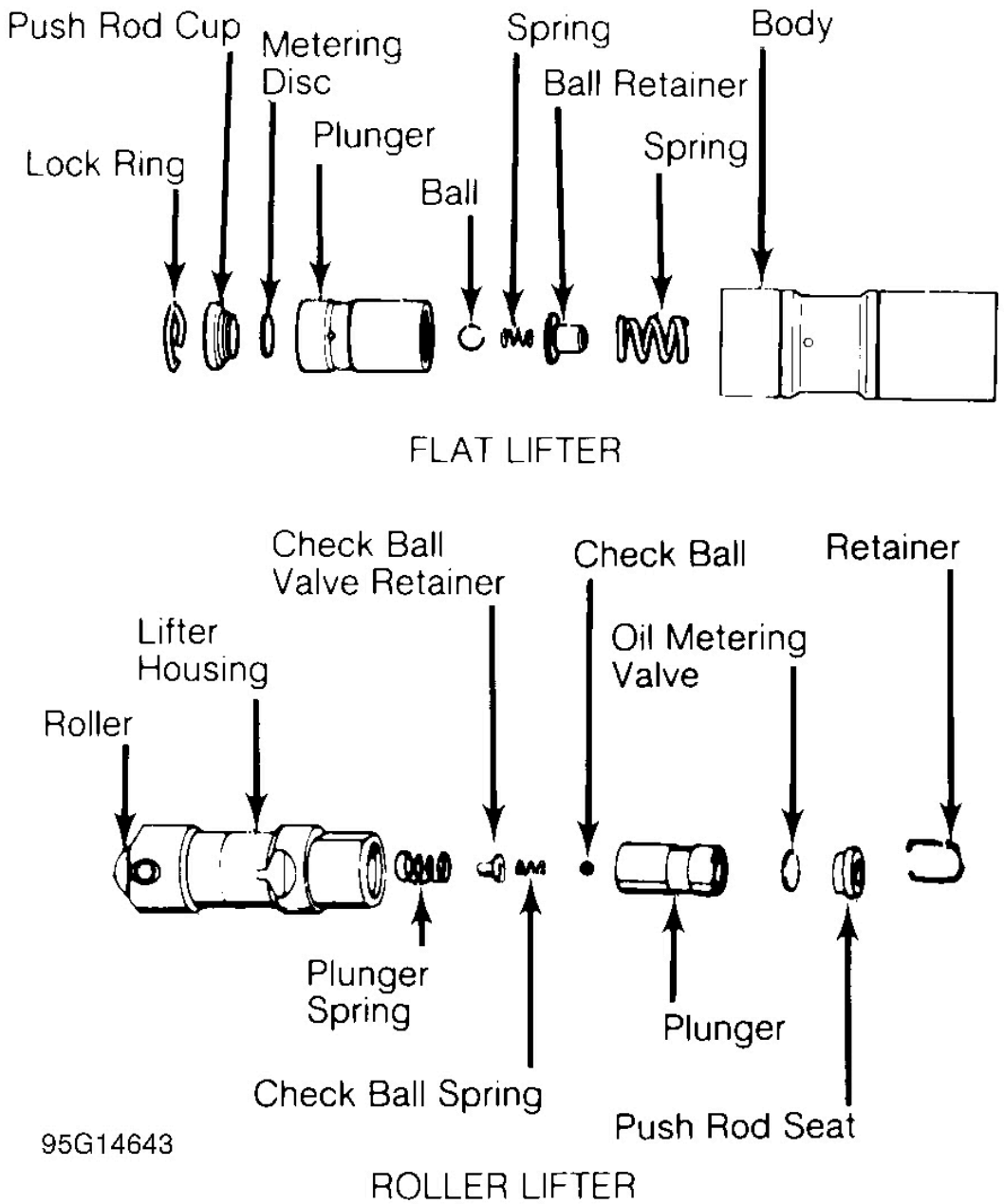

Fig. 13: Typical Hydraulic Valve Lifter Assemblies

Mechanical Lifters

Lifter assemblies must be installed in original locations. Remove rocker arm assembly and push rod. Mark components for location. Some applications require intake manifold or lifter cover removal. Remove lifter retainer plate (if used). To remove lifters, use lifter remover or magnet.

Inspect push rod contact area and lifter body for scoring or signs of wear. If body is scored, inspect lifter bore for damage and lack of lubrication. Note amount of wear in lifter body-to-camshaft contact area. Surface must have smooth and convex contact face. If wear is apparent, carefully inspect cam lobe.

Coat lifter base, roller (if equipped) and lifter body with ample amount of Molykote or camshaft lubricant. Install lifter in original location. Install remaining components. Tighten bolts to specification. Adjust valves. See **VALVE ADJUSTMENT**.

PISTONS, CONNECTING RODS & BEARINGS

*** PLEASE READ THIS FIRST ***

NOTE: Examples used in this article are general in nature and do not necessarily relate to a specific engine or system. Illustrations and procedures have been chosen to guide mechanic through engine overhaul process. Descriptions of processes of cleaning, inspection, assembly and machine shop practice are included.

Always refer to appropriate engine overhaul article, if available, in the ENGINES section for complete overhaul procedures and specifications for the vehicle being repaired.

RIDGE REMOVAL

NOTE: Examples used in this article are general in nature and do not necessarily relate to a specific engine or system. Illustrations and procedures have been chosen to guide mechanic through engine overhaul process. Descriptions of processes of cleaning, inspection, assembly and machine shop practice are included.

Always refer to appropriate engine overhaul article, if available, in the ENGINES section for complete overhaul procedures and specifications for the vehicle being repaired.

Ridge in cylinder wall must be removed prior to piston removal. Failure to remove ridge prior to removing pistons will cause piston damage in piston ring lands or grooves.

With piston at bottom dead center, place rag in bore to trap metal chips. Install ridge reamer in cylinder bore. Adjust ridge reamer using manufacturer's instructions. Remove ridge using ridge reamer. DO NOT remove an excessive amount of material. Ensure ridge is completely removed.

PISTON & CONNECTING ROD REMOVAL

NOTE: **Examples used in this article are general in nature and do not necessarily relate to a specific engine or system. Illustrations and procedures have been chosen to guide mechanic through engine overhaul process. Descriptions of processes of cleaning, inspection, assembly and machine shop practice are included.**

Always refer to appropriate engine overhaul article, if available, in the ENGINES section for complete overhaul procedures and specifications for the vehicle being repaired.

Note top of piston. Some pistons may contain a notch, arrow or be marked FRONT. Piston must be installed in proper direction to prevent damage with valve operation.

Check that connecting rod and cap are numbered for cylinder location and which side of cylinder block the number faces. Proper cap and connecting rod must be installed together. Connecting rod cap must be installed on connecting rod in proper direction to ensure bearing lock procedure. Mark connecting rod and cap if necessary. Pistons must be installed in original location.

Remove cap retaining nuts or bolts. Remove bearing cap. Install tubing protectors on connecting rod bolts. This protects cylinder walls from scoring

during removal. Ensure proper removal of ridge. Push piston and connecting rod from cylinder. Connecting rod boss can be tapped with a wooden dowel or hammer handle to aid in removal.

PISTON & CONNECTING ROD

NOTE: Examples used in this article are general in nature and do not necessarily relate to a specific engine or system. Illustrations and procedures have been chosen to guide mechanic through engine overhaul process. Descriptions of processes of cleaning, inspection, assembly and machine shop practice are included.

Always refer to appropriate engine overhaul article, if available, in the ENGINES section for complete overhaul procedures and specifications for the vehicle being repaired.

Disassembly

Using ring expander, remove piston rings. Remove piston pin retaining rings (if equipped). Note direction of piston installation on connecting rod. On pressed type piston pins, special fixtures and procedures according to manufacturer must be used to remove piston pins. Follow manufacturer's recommendations to avoid piston distortion or breakage.

Cleaning

Remove all carbon and varnish from piston. Pistons and connecting rods may be cleaned in cold type chemical tank. Using ring groove cleaner, clean all deposits from ring grooves. Ensure all deposits are cleaned from ring grooves to prevent ring breakage or sticking. DO NOT attempt to clean pistons with wire brush.

Inspection

Inspect pistons for nicks, scoring, cracks or damage in ring areas. Connecting rod should be checked for cracks using Magnaflux procedure. Piston diameter must be measured in manufacturer's specified area.

Using telescopic gauge and micrometer, measure piston pin bore of piston in 2 areas, 90 degrees apart. This is done to check diameter and out-of-round.

Install proper bearing cap on connecting rod. Ensure bearing cap is installed in proper location. Tighten bolts or nuts to specification. Using inside micrometer, measure inside diameter in 2 areas, 90 degrees apart.

Connecting rod I.D. and out-of-round must be within specification. Measure piston pin bore I.D. and piston pin O.D. All components must be within specification. Subtract piston pin diameter from piston pin bore in piston and connecting rod to determine proper fit.

Connecting rod length must be measured from center of crankshaft journal inside diameter to center of piston pin bushing using proper caliper. Connecting rods must be the same length. Connecting rods should be checked on an alignment fixture for bent or twisted condition. Replace all components which are damaged or not within specification.

PISTON & CYLINDER BORE FIT

NOTE: Examples used in this article are general in nature and do not necessarily relate to a specific engine or system. Illustrations and procedures have been chosen to guide mechanic through engine overhaul process. Descriptions of processes of cleaning, inspection, assembly and machine shop practice are included.

Always refer to appropriate engine overhaul article, if available, in the ENGINES section for complete overhaul procedures and specifications for the vehicle being repaired.

Ensure cylinder is checked for taper, out-of-round and properly honed prior to checking piston and cylinder bore fit. See **CYLINDER BLOCK**. Using dial bore gauge, measure cylinder bore.

Measure piston skirt diameter at 90 degree angle to piston pin at specified area by manufacturer. Subtract piston diameter from cylinder bore diameter to determine piston-to-cylinder clearance. Clearance must be within specification. Mark piston for proper cylinder location.

ASSEMBLING PISTON & CONNECTING ROD

NOTE: Examples used in this article are general in nature and do not necessarily relate to a specific engine or system. Illustrations and procedures have been chosen to guide mechanic through engine overhaul process. Descriptions of processes of cleaning, inspection, assembly and machine shop practice are included.

Always refer to appropriate engine overhaul article, if available, in the ENGINES section for complete overhaul procedures and specifications for the vehicle being repaired.

Install piston on connecting rod for corresponding cylinder. Ensure reference marking on top of piston corresponds with connecting rod and cap number. See **Fig. 14**.

Lubricate piston pin and install in connecting rod. Ensure piston pin retainers are fully seated (if equipped). On pressed type piston pins, follow manufacturer's recommended procedure to avoid distortion or breakage.

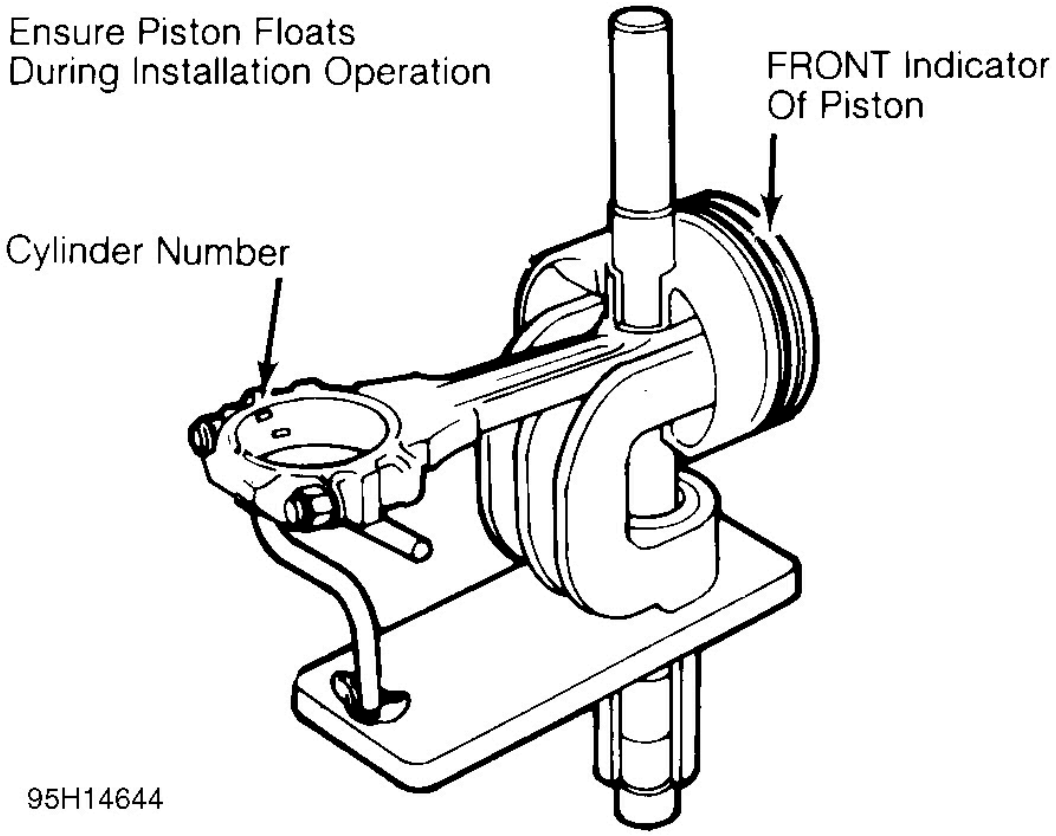

Fig. 14: Installing Typical Piston Pin

CHECKING PISTON RING CLEARANCES

NOTE: Examples used in this article are general in nature and do not necessarily relate to a specific engine or system. Illustrations and procedures have been chosen to guide mechanic through engine overhaul process. Descriptions of processes of cleaning, inspection, assembly and machine shop practice are included.

Always refer to appropriate engine overhaul article, if available, in the ENGINES section for complete overhaul procedures and specifications for the vehicle being repaired.

Piston rings must be checked for side clearance and end gap. To check end gap, install piston ring in cylinder in which it is to be installed. Using an inverted

piston, push ring to bottom of cylinder in smallest cylinder diameter.

Using feeler gauge, check ring end gap. See **Fig. 15**. Piston ring end gap must be within specification. Ring breakage will occur if insufficient ring end gap exists.

Some manufacturers permit correcting insufficient ring end gap by using a fine file while other manufacturers recommend using another ring set. Mark rings for proper cylinder installation after checking end gap.

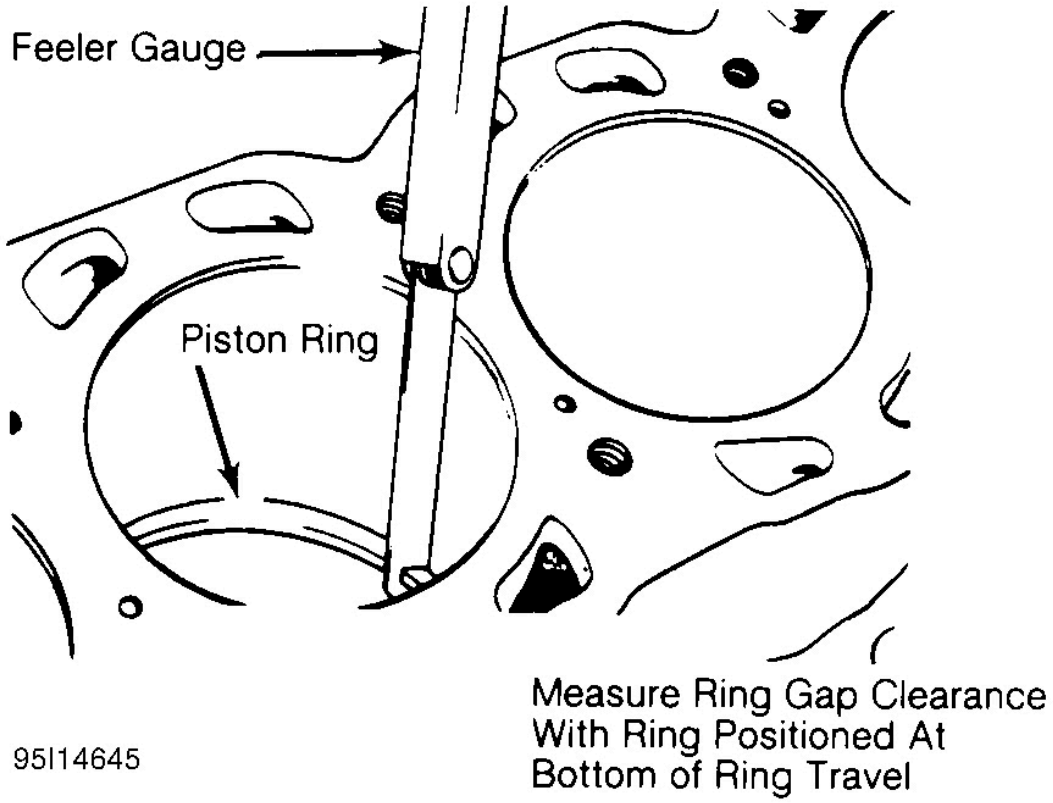

Fig. 15: Checking Piston Ring End Gap

For checking side clearance, install rings on piston. Using feeler gauge, measure clearance between piston ring and piston ring land. Check side clearance in several areas around piston. Side clearance must be within specification.

If side clearance is excessive, piston ring grooves can be machined to accept oversize piston rings (if available). Normal practice is to replace piston.

PISTON & CONNECTING ROD INSTALLATION

NOTE: Examples used in this article are general in nature and do not necessarily relate to a specific engine or system. Illustrations and procedures have been chosen to guide mechanic through engine overhaul process. Descriptions of processes of cleaning, inspection, assembly and machine shop practice are included.

Always refer to appropriate engine overhaul article, if available, in the ENGINES section for complete overhaul procedures and specifications for the vehicle being repaired.

Cylinders must be honed prior to piston installation. See **CYLINDER HONING** under CYLINDER BLOCK.

Install upper connecting rod bearings. Lubricate upper bearings with engine oil. Install lower bearings in rod caps. Ensure bearing tabs are properly seated. Position piston ring gaps according to manufacturer's recommendations. See **Fig. 16**. Lubricate pistons, rings and cylinder walls.

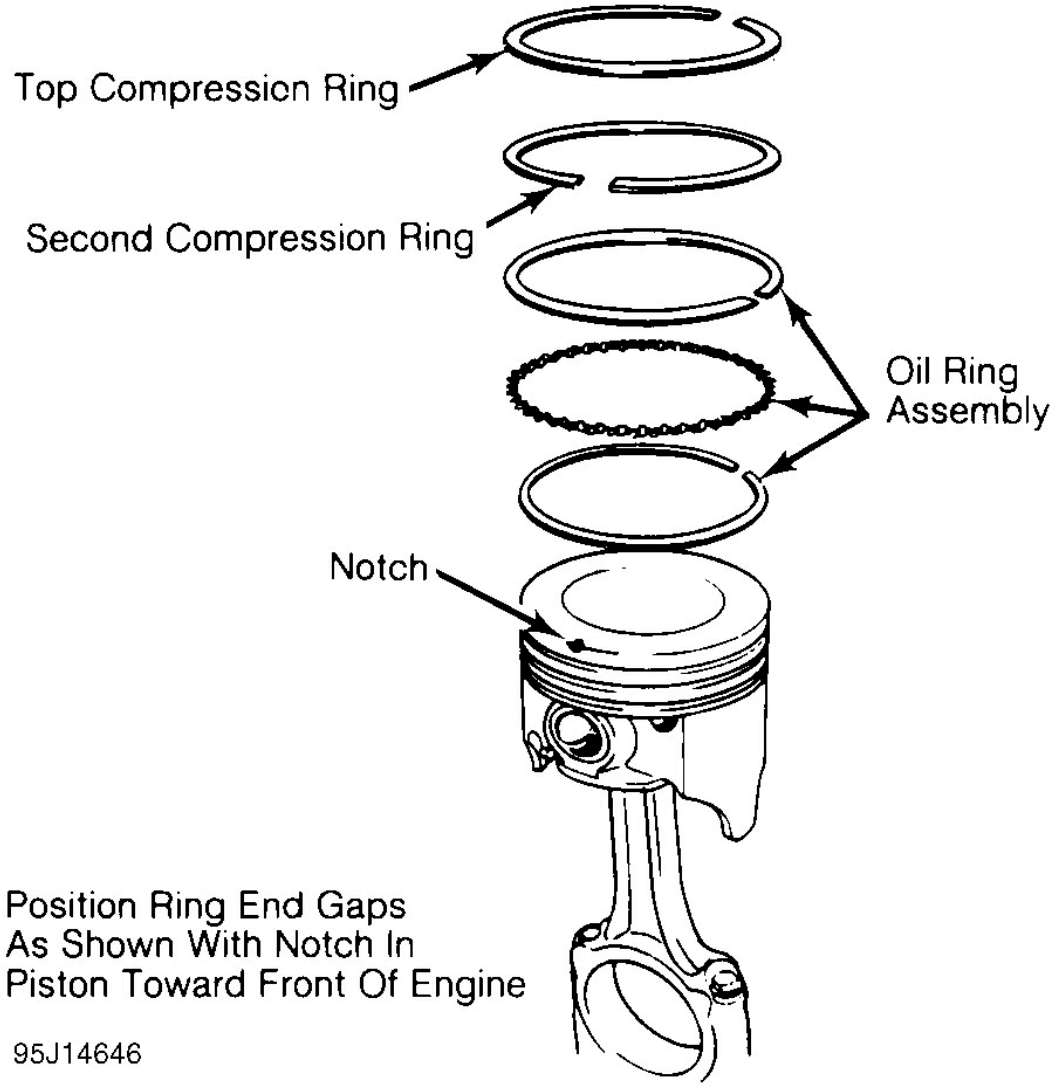

Fig. 16: Positioning Typical Piston Ring End Gap

Install ring compressor. Use care not to rotate piston rings. Compress rings with ring compressor. Install plastic tubing protectors over connecting rod bolts. Install piston and connecting rod assembly. Ensure piston notch, arrow or FRONT mark is toward front of engine. See **Fig. 17**.

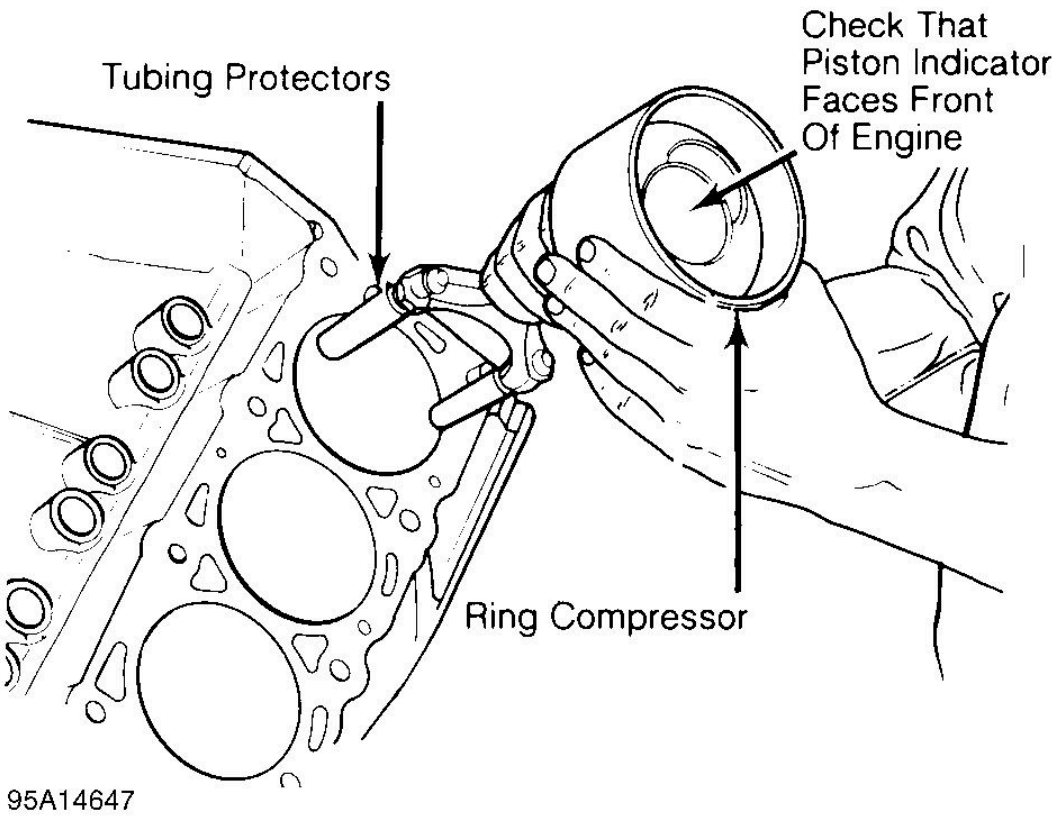

Fig. 17: Installing Piston & Connecting Rod Assembly

Carefully tap piston into cylinder until rod bearing is seated on crankshaft journal. Remove protectors. Install rod cap and bearing. Lightly tighten connecting rod bolts. Repeat procedure for remaining cylinders. Check bearing clearance. See **MAIN & CONNECTING ROD BEARING CLEARANCE**.

Once clearance is checked, lubricate journals and bearings. Install bearing caps. Ensure marks are aligned on connecting rod and cap. Tighten rod nuts or bolts to specification. Ensure rod moves freely on crankshaft. Check connecting rod side clearance. See **CONNECTING ROD SIDE CLEARANCE**.

CONNECTING ROD SIDE CLEARANCE

NOTE: Examples used in this article are general in nature and do not necessarily relate to a specific engine or system. Illustrations and procedures have been chosen to guide mechanic through engine overhaul process. Descriptions of processes of cleaning, inspection, assembly and

machine shop practice are included.

Always refer to appropriate engine overhaul article, if available, in the ENGINES section for complete overhaul procedures and specifications for the vehicle being repaired.

Position connecting rod toward one side of crankshaft as far as possible. Using feeler gauge, measure clearance between side of connecting rod and crankshaft. See **Fig. 18**. Clearance must be within specification.

Check for improper bearing installation, wrong bearing cap or insufficient bearing clearance if side clearance is insufficient. Connecting rod may require machining to obtain proper clearance. Excessive clearance usually indicates excessive wear at crankshaft. Crankshaft must be repaired or replaced.

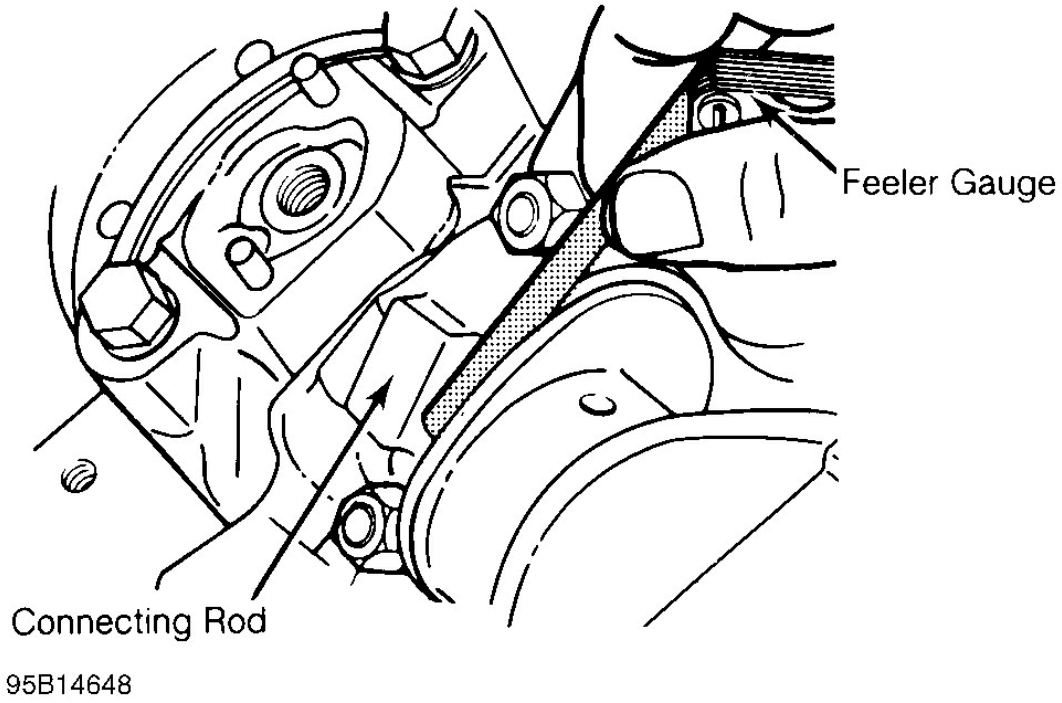

Fig. 18: Measuring Connecting Rod Side Clearance

MAIN & CONNECTING ROD BEARING CLEARANCE

NOTE: Examples used in this article are general in nature and do

not necessarily relate to a specific engine or system. Illustrations and procedures have been chosen to guide mechanic through engine overhaul process. Descriptions of processes of cleaning, inspection, assembly and machine shop practice are included.

Always refer to appropriate engine overhaul article, if available, in the ENGINES section for complete overhaul procedures and specifications for the vehicle being repaired.

Plastigage Method

Plastigage method may be used to determine bearing clearance. Plastigage can be used with an engine in service or during reassembly. Plastigage material is oil soluble.

Ensure journals and bearings are free of oil or solvent. Oil or solvent will dissolve material and false reading will be obtained. Install small piece of Plastigage along full length of bearing journal. Install bearing cap in original location. Tighten bolts to specification.

CAUTION: DO NOT rotate crankshaft while Plastigage is installed. Bearing clearance will not be obtained if crankshaft is rotated.

Remove bearing cap. Compare Plastigage width with scale on Plastigage container to determine bearing clearance. See **Fig. 19**. Rotate crankshaft 90 degrees. Repeat procedure. This is done to check journal eccentricity. This procedure can be used to check oil clearance on both connecting rod and main bearings.

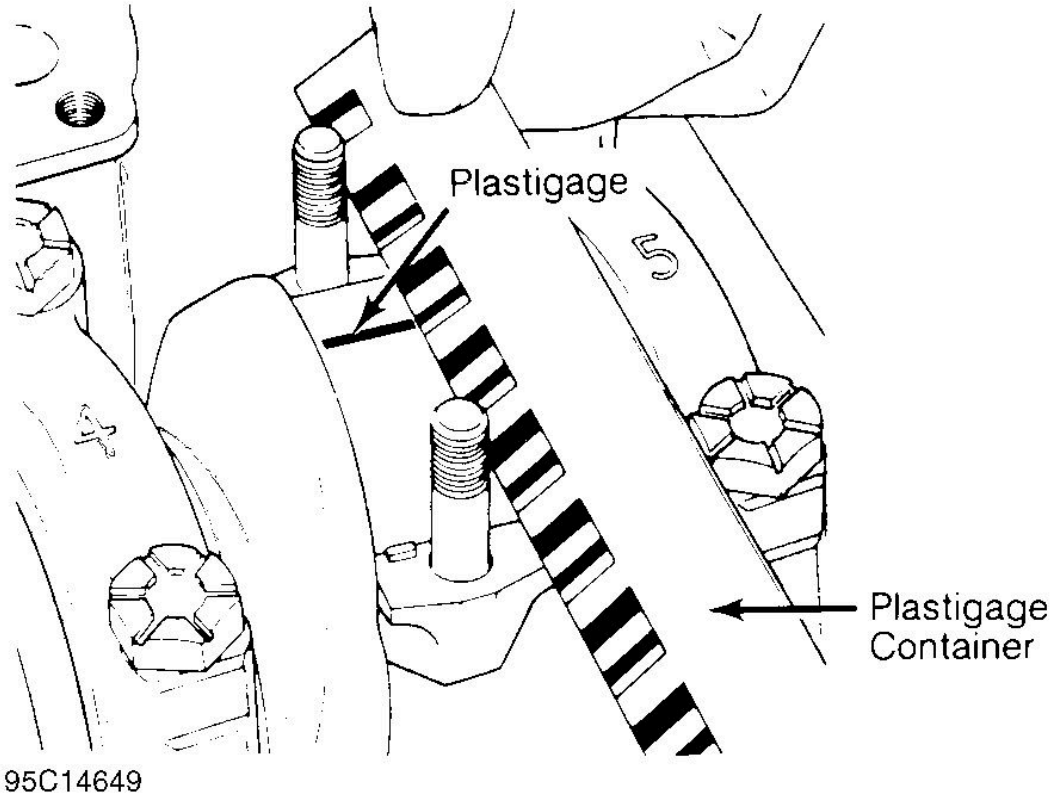

Fig. 19: Measuring Bearing Clearance

Micrometer & Telescopic Gauge Method

A micrometer is used to determine journal diameter, taper and out-of-round dimensions of the crankshaft. See **CLEANING & INSPECTION** under CRANKSHAFT & MAIN BEARINGS in this article.

With crankshaft removed, install bearings and caps in original location on cylinder block. Tighten bolts to specification. On connecting rods, install bearings and caps on connecting rods. Install proper connecting rod cap on corresponding rod. Ensure bearing cap is installed in original location. Tighten bolts to specification.

Using a telescopic gauge and micrometer or inside micrometer, measure inside diameter of connecting rod and main bearings bores. Subtract each crankshaft journal diameter from the corresponding inside bearing bore diameter. This is the bearing clearance.

CRANKSHAFT & MAIN BEARINGS

*** PLEASE READ THIS FIRST ***

NOTE: Examples used in this article are general in nature and do not necessarily relate to a specific engine or system. Illustrations and procedures have been chosen to guide mechanic through engine overhaul process. Descriptions of processes of cleaning, inspection, assembly and machine shop practice are included.

Always refer to appropriate engine overhaul article, if available, in the ENGINES section for complete overhaul procedures and specifications for the vehicle being repaired.

REMOVAL

NOTE: Examples used in this article are general in nature and do not necessarily relate to a specific engine or system. Illustrations and procedures have been chosen to guide mechanic through engine overhaul process. Descriptions of processes of cleaning, inspection, assembly and machine shop practice are included.

Always refer to appropriate engine overhaul article, if available, in the ENGINES section for complete overhaul procedures and specifications for the vehicle being repaired.

Ensure all main bearing caps are marked for location on cylinder block. Some main bearing caps have an arrow stamped on them. The arrow must face timing belt or timing chain end of engine. Remove main bearing cap bolts. Remove main bearing caps. Carefully remove crankshaft. Use care not to bind crankshaft in cylinder block during removal.

CLEANING & INSPECTION

NOTE: Examples used in this article are general in nature and do not necessarily relate to a specific engine or system.

Illustrations and procedures have been chosen to guide mechanic through engine overhaul process. Descriptions of processes of cleaning, inspection, assembly and machine shop practice are included.

Always refer to appropriate engine overhaul article, if available, in the ENGINES section for complete overhaul procedures and specifications for the vehicle being repaired.

Thoroughly clean crankshaft using solvent. Dry with compressed air. Ensure all oil passages are clear and free of sludge, rust, dirt and metal chips.

Inspect crankshaft for scoring and nicks. Inspect crankshaft for cracks using Magnaflux procedure. Inspect rear seal area for grooving or damage. Inspect bolt hole threads for damage. If pilot bearing or bushing is used, check pilot bearing or bushing fit in crankshaft. Inspect crankshaft gear for damaged or cracked teeth. Replace gear if damaged. Ensure oil passage plugs are tight (if equipped).

Using micrometer, measure all journals in 4 areas to determine journal taper, out-of-round and undersize. See **Fig. 20**. Some crankshafts can be reground to the next largest undersize, depending on the amount of wear or damage. Crankshafts with rolled fillet cannot be reground and must be replaced.

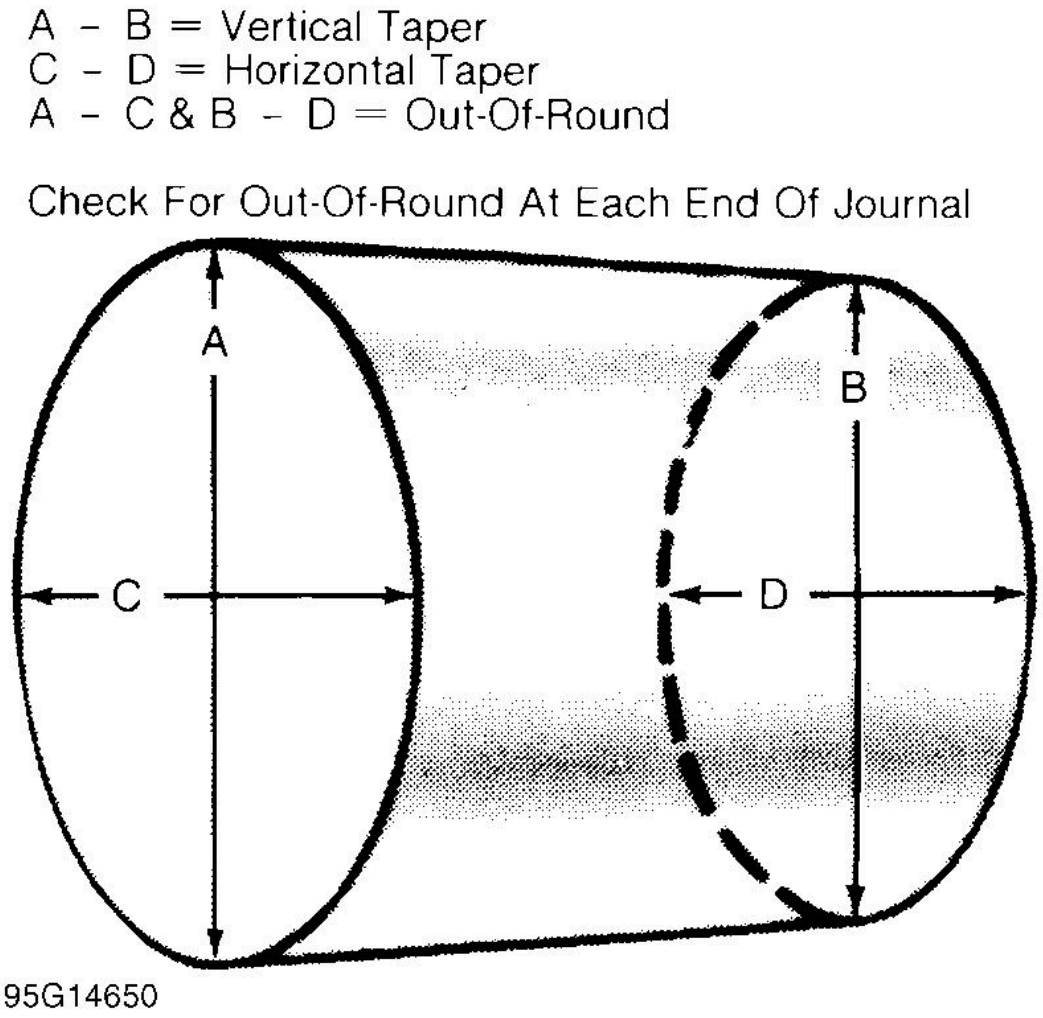

Fig. 20: Measuring Crankshaft Journals

Crankshaft journal runout should be checked. Install crankshaft in "V" blocks or bench center. Position dial indicator with tip resting on the main bearing journal area. See **Fig. 21**. Rotate crankshaft and note reading. Journal runout must not exceed specification. Repeat procedure on all main bearing journals. Crankshaft must be replaced if runout exceeds specification.

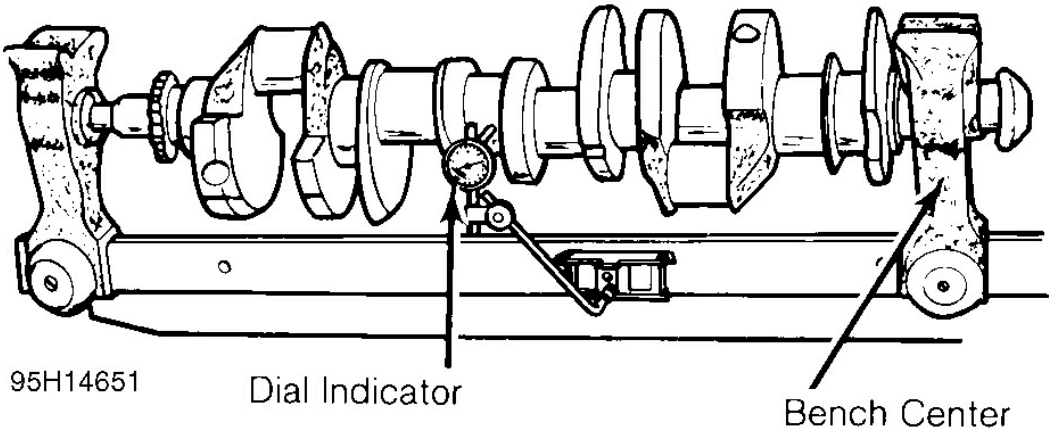

Fig. 21: Measuring Crankshaft Main Bearing Journal Runout

INSTALLATION

NOTE: Examples used in this article are general in nature and do not necessarily relate to a specific engine or system. Illustrations and procedures have been chosen to guide mechanic through engine overhaul process. Descriptions of processes of cleaning, inspection, assembly and machine shop practice are included.

Always refer to appropriate engine overhaul article, if available, in the ENGINES section for complete overhaul procedures and specifications for the vehicle being repaired.

Install upper main bearing in cylinder block. Ensure lock tab is properly located in cylinder block. Install bearings in main bearing caps. Ensure all oil passages are aligned. Install rear seal (if removed).

Ensure crankshaft journals are clean. Lubricate upper main bearings with clean engine oil. Carefully install crankshaft. Check each main bearing clearance using Plastigage method. See **MAIN & CONNECTING ROD BEARING CLEARANCE**.

Once clearance is checked, lubricate lower main bearing and journals. Install main bearing caps in original location. Install rear seal in rear main bearing cap

(if removed). Some rear main bearing caps require sealant to be applied in corners to prevent oil leakage.

Install and tighten all bolts except thrust bearing cap to specification. Tighten thrust bearing cap bolts finger tight only. Some models require that thrust bearing be aligned. On most applications, crankshaft must be moved rearward then forward. Procedure may vary with manufacturer. Thrust bearing cap is then tightened to specification. Ensure crankshaft rotates freely. Crankshaft end play should be checked. See **CRANKSHAFT END PLAY**.

CRANKSHAFT END PLAY

NOTE: Examples used in this article are general in nature and do not necessarily relate to a specific engine or system. Illustrations and procedures have been chosen to guide mechanic through engine overhaul process. Descriptions of processes of cleaning, inspection, assembly and machine shop practice are included.

Always refer to appropriate engine overhaul article, if available, in the ENGINES section for complete overhaul procedures and specifications for the vehicle being repaired.

Dial Indicator Method

Crankshaft end play can be checked using dial indicator. Mount dial indicator on rear of cylinder block. Position dial indicator tip against rear of crankshaft. Ensure tip is resting against flat surface.

Pry crankshaft rearward. Adjust dial indicator to zero. Pry crankshaft forward and note reading. Crankshaft end play must be within specification. If end play is not within specification, check for faulty thrust bearing installation or worn crankshaft. Some applications offer oversize thrust bearings.

Feeler Gauge Method

Crankshaft end play can be checked using feeler gauge. Pry crankshaft rearward. Pry crankshaft forward. Using feeler gauge, measure clearance between crankshaft and thrust bearing surface. See **Fig. 22**.

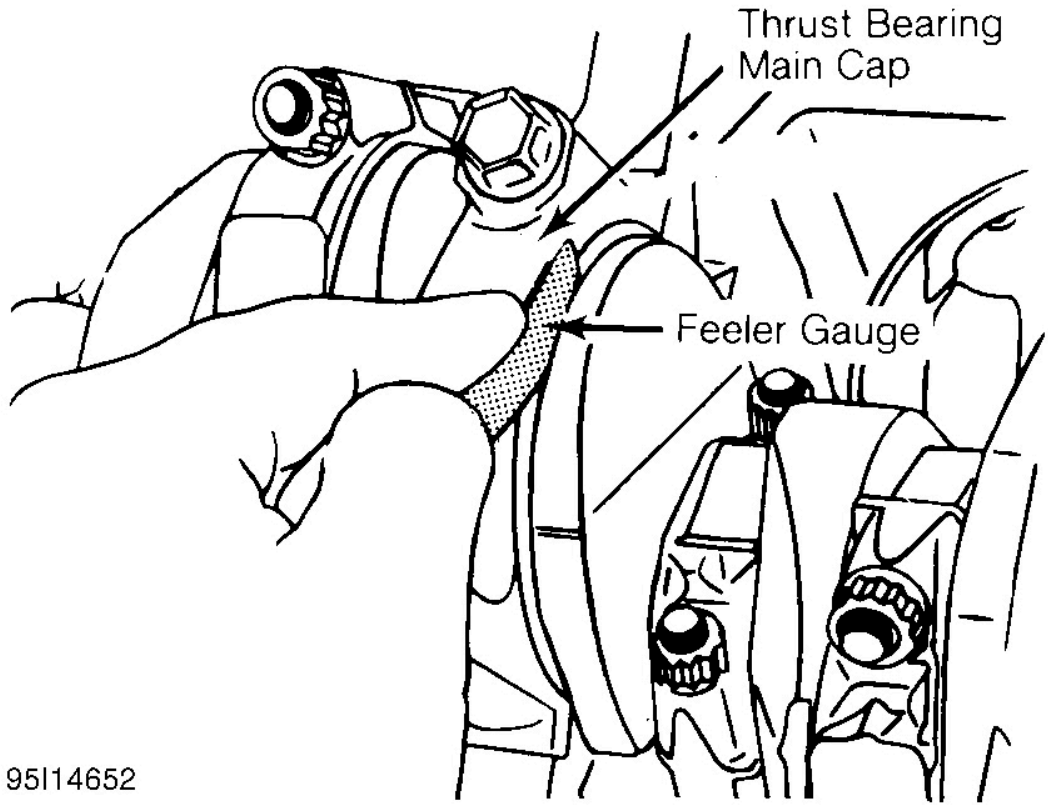

Fig. 22: Checking Crankshaft End Play

Crankshaft end play must be within specification. If end play is not within specification, check for faulty thrust bearing installation or worn crankshaft. Some applications offer oversize thrust bearings.

CYLINDER BLOCK

NOTE: Examples used in this article are general in nature and do not necessarily relate to a specific engine or system. Illustrations and procedures have been chosen to guide mechanic through engine overhaul process. Descriptions of processes of cleaning, inspection, assembly and machine shop practice are included.

Always refer to appropriate engine overhaul article, if available, in the ENGINES section for complete overhaul procedures and specifications for the vehicle being

repaired.

Block Cleaning

Only cast cylinder blocks should be hot tank cleaned. Aluminum cylinder blocks should be cleaned using cold tank method. Cylinder block is cleaned in order to remove carbon deposits, gasket residue and water jacket scale. Remove oil gallery plugs, freeze plugs and cam bearings before cleaning block.

Block Inspection

Visually inspect the block. Check suspected areas for cracks using the Dye Penetrant inspection method. Block may be checked for cracks using the Magnaflux method.

Cracks are most commonly found at the bottom of cylinders, main bearing saddles, near expansion plugs and between cylinders and water jackets. Inspect lifter bores for damage. Inspect all head bolt holes for damaged threads. Threads should be cleaned using tap to ensure proper head bolt torque. Consult machine shop concerning possible welding and machining (if required).

Cylinder Bore Inspection

Inspect bore for scoring or roughness. Cylinder bore is dimensionally checked for out-of-round and taper using dial bore gauge. For determining out-of-round, measure cylinder parallel and perpendicular to the block center line. Difference in the 2 readings is the bore out-of-round. Cylinder bore must be checked at top, middle and bottom of piston travel area.

Bore taper is obtained by measuring bore at the top and bottom. If wear has exceeded allowable limits, block must be honed or bored to next available oversize piston dimension.

Cylinder Honing

Cylinder must be properly honed to allow new piston rings to properly seat. Cross-hatching at correct angle and depth is critical to lubrication of cylinder walls and pistons.

A flexible drive hone and power drill are commonly used. Drive hone must be lubricated during operation. Mix equal parts of kerosene and SAE 20W engine oil for lubrication.

Apply lubrication to cylinder wall. Operate cylinder hone from top to bottom of cylinder using even strokes to produce 45 degree cross-hatch pattern on the cylinder wall. DO NOT allow cylinder hone to extend below cylinder during operation.

Recheck bore dimension after final honing. Wash cylinder wall with hot soapy water to remove abrasive particles. Blow dry with compressed air. Coat cleaned cylinder walls with lubricating oil.

Deck Warpage

Check deck for damage or warped gasket surface. Place a straightedge across gasket surface of the deck. Using feeler gauge, measure clearance at center of straightedge. Measure across width and length of cylinder block at several points.

If warpage exceeds specifications, deck must be resurfaced. If warpage exceeds manufacturer's maximum tolerance for material removal, replace block.

NOTE: Some manufacturers recommend that a total amount of material (cylinder head and cylinder block) can only be removed before components must be replaced.

Deck Height

Distance from crankshaft center line to block deck is called the deck height. Measure and record front and rear main journals of crankshaft. To compute this distance, install crankshaft and retain with center main bearing and cap only. Measure distance from crankshaft journal to block deck, parallel to cylinder center line.

Add one half of main bearing journal diameter to distance from crankshaft journal to block deck. This dimension should be checked at front and rear of cylinder block. Both readings should be the same.

If difference exceeds specification, cylinder block must be repaired or replaced. Deck height and warpage should be corrected at the same time.

Main Bearing Bore & Alignment

For checking main bearing bore, remove all bearings from cylinder block and main bearing caps. Install main bearing caps in original location. Tighten bolts to

specification. Using inside micrometer, measure main bearing bore in 2 areas 90 degrees apart. Determine bore size and out-of-round. If diameter is not within specification, block must be align-bored.

For checking alignment, place a straightedge along center line of main bearing saddles. Check for clearance between straightedge and main bearing saddles. Block must be align-bored if clearance exists.

Expansion Plug Removal

Drill hole in center of expansion plug. Remove with screwdriver or punch. Use care not to damage sealing surface.

Expansion Plug Installation

Ensure sealing surface is free of burrs. Coat expansion plug with sealer. Using wooden dowel or pipe of slightly smaller diameter, install expansion plug. Ensure expansion plug is evenly located.

Oil Gallery Plug Removal

Remove threaded oil gallery plugs using appropriate wrench. Soft press-in plugs are removed by drilling into plug and installing a sheet metal screw. Remove plug with slide hammer or pliers.

Oil Gallery Plug Installation

Ensure threads or sealing surface is clean. Coat threaded oil gallery plugs with sealer and install. Replacement soft press-in plugs are installed with a hammer and drift.

CAMSHAFT

*** PLEASE READ THIS FIRST ***

NOTE: Examples used in this article are general in nature and do not necessarily relate to a specific engine or system. Illustrations and procedures have been chosen to guide mechanic through engine overhaul process. Descriptions of processes of cleaning, inspection, assembly and machine shop practice are included.

Always refer to appropriate engine overhaul article, if available, in the ENGINES section for complete overhaul procedures and specifications for the vehicle being repaired.

CLEANING & INSPECTION

NOTE: Examples used in this article are general in nature and do not necessarily relate to a specific engine or system. Illustrations and procedures have been chosen to guide mechanic through engine overhaul process. Descriptions of processes of cleaning, inspection, assembly and machine shop practice are included.

Always refer to appropriate engine overhaul article, if available, in the ENGINES section for complete overhaul procedures and specifications for the vehicle being repaired.

Clean camshaft with solvent. Ensure all oil passages are clear. Inspect cam lobes and bearing journals for pitting, flaking or scoring. Using micrometer, measure bearing journal O.D.

Support camshaft at each end with "V" blocks. Position dial indicator with tip resting on center bearing journal. Rotate camshaft and note camshaft runout reading. If reading exceeds specification, replace camshaft.

Check cam lobe lift by measuring base circle of camshaft using micrometer. Measure again at 90-degree angle to tip of cam lobe. Cam lift can be determined by subtracting base circle diameter from tip of cam lobe measurement.

Different lift dimensions are given for intake and exhaust cam lobes. Reading must be within specification. Replace camshaft if cam lobes or bearing journals are not within specification.

Inspect camshaft gear for chipped, eroded or damaged teeth. Replace gear if damaged. On camshafts using thrust plate, measure distance between thrust plate and camshaft shoulder. Replace thrust plate if not within specification.

CAMSHAFT BEARINGS

NOTE: Examples used in this article are general in nature and do not necessarily relate to a specific engine or system. Illustrations and procedures have been chosen to guide mechanic through engine overhaul process. Descriptions of processes of cleaning, inspection, assembly and machine shop practice are included.

Always refer to appropriate engine overhaul article, if available, in the ENGINES section for complete overhaul procedures and specifications for the vehicle being repaired.

Removal & Installation

Remove camshaft rear plug. Camshaft bearing remover is assembled with shoulder resting against bearing to be removed according to manufacturer's instructions. Tighten puller nut until bearing is removed. Remove remaining bearings, leaving front and rear bearings until last. These bearings act as a guide for camshaft bearing remover.

To install new bearings, puller is rearranged to pull bearings toward the center of block. Ensure all lubrication passages of bearing are aligned with cylinder block. Coat new camshaft rear plug with sealant. Install camshaft rear plug. Ensure plug is even in cylinder block.

CAMSHAFT INSTALLATION

NOTE: Examples used in this article are general in nature and do not necessarily relate to a specific engine or system. Illustrations and procedures have been chosen to guide mechanic through engine overhaul process. Descriptions of processes of cleaning, inspection, assembly and machine shop practice are included.

Always refer to appropriate engine overhaul article, if available, in the ENGINES section for complete overhaul procedures and specifications for the vehicle being repaired.

Lubricate bearing surfaces and cam lobes with ample amount of Molykote or

camshaft lubricant. Carefully install camshaft. Use care not to damage bearing journals during installation. Install thrust plate retaining bolts (if equipped). Tighten bolts to specification. On overhead camshafts, install bearing caps in original location. Tighten bolts to specification. On all applications, check camshaft end play.

CAMSHAFT END PLAY

NOTE: Examples used in this article are general in nature and do not necessarily relate to a specific engine or system. Illustrations and procedures have been chosen to guide mechanic through engine overhaul process. Descriptions of processes of cleaning, inspection, assembly and machine shop practice are included.

Always refer to appropriate engine overhaul article, if available, in the ENGINES section for complete overhaul procedures and specifications for the vehicle being repaired.

Using dial indicator, check camshaft end play. Position dial indicator on front of engine block or cylinder head. Position indicator tip against camshaft. Push camshaft toward rear of cylinder head or engine and adjust indicator to zero.

Move camshaft forward and note reading. Camshaft end play must be within specification. End play may be adjusted by relocating gear, shimming thrust plate or replacing thrust plate depending on each manufacturer.

TIMING CHAINS & BELTS

*** PLEASE READ THIS FIRST ***

NOTE: Examples used in this article are general in nature and do not necessarily relate to a specific engine or system. Illustrations and procedures have been chosen to guide mechanic through engine overhaul process. Descriptions of processes of cleaning, inspection, assembly and machine shop practice are included.

Always refer to appropriate engine overhaul article, if

available, in the ENGINES section for complete overhaul procedures and specifications for the vehicle being repaired.

TIMING CHAINS

NOTE: Examples used in this article are general in nature and do not necessarily relate to a specific engine or system. Illustrations and procedures have been chosen to guide mechanic through engine overhaul process. Descriptions of processes of cleaning, inspection, assembly and machine shop practice are included.

Always refer to appropriate engine overhaul article, if available, in the ENGINES section for complete overhaul procedures and specifications for the vehicle being repaired.

Timing chains will stretch during operation. Limits are placed upon amount of stretch before replacement is required. Timing chain stretch will alter ignition timing and valve timing.

To check timing chain stretch, rotate crankshaft to eliminate slack from one side of timing chain. Mark reference point on cylinder block. Rotate crankshaft in opposite direction to eliminate slack from remaining side of timing chain. Force other side of chain outward and measure distance between reference point and timing chain. See **Fig. 23**. Replace timing chain and gears if not within specification.

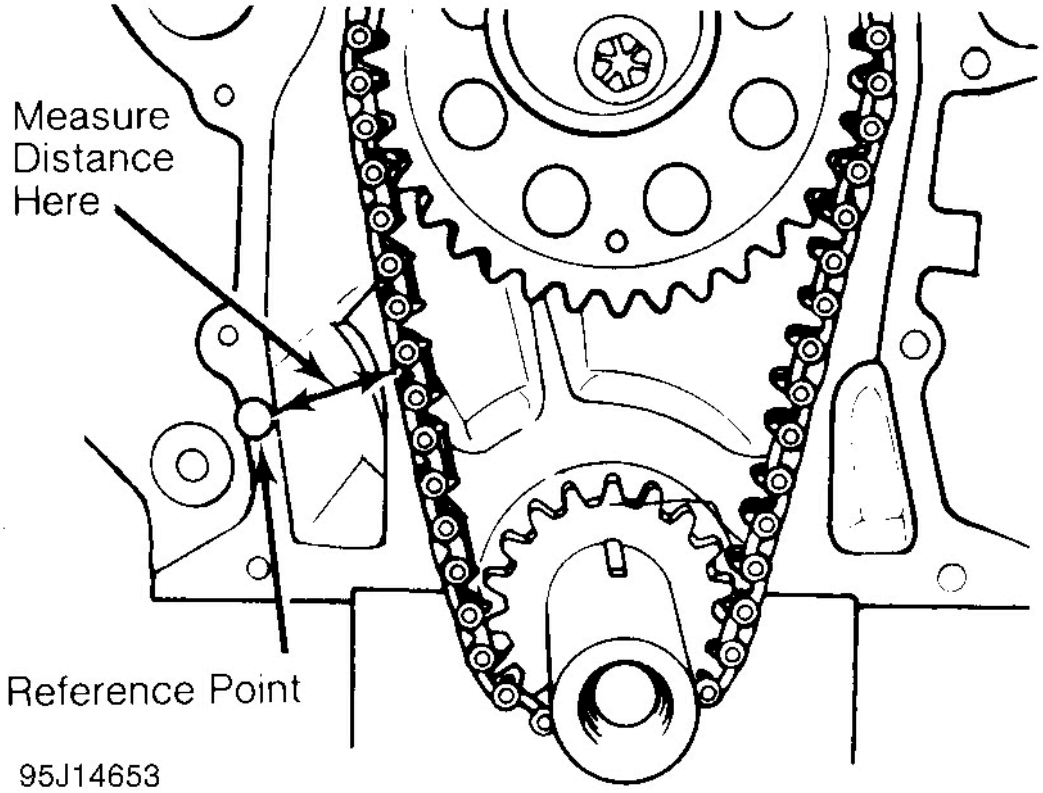

Fig. 23: Measuring Timing Chain Stretch

Timing chains must be installed so timing marks on camshaft gear and crankshaft gear are aligned according to manufacturer. See **Fig. 24**.

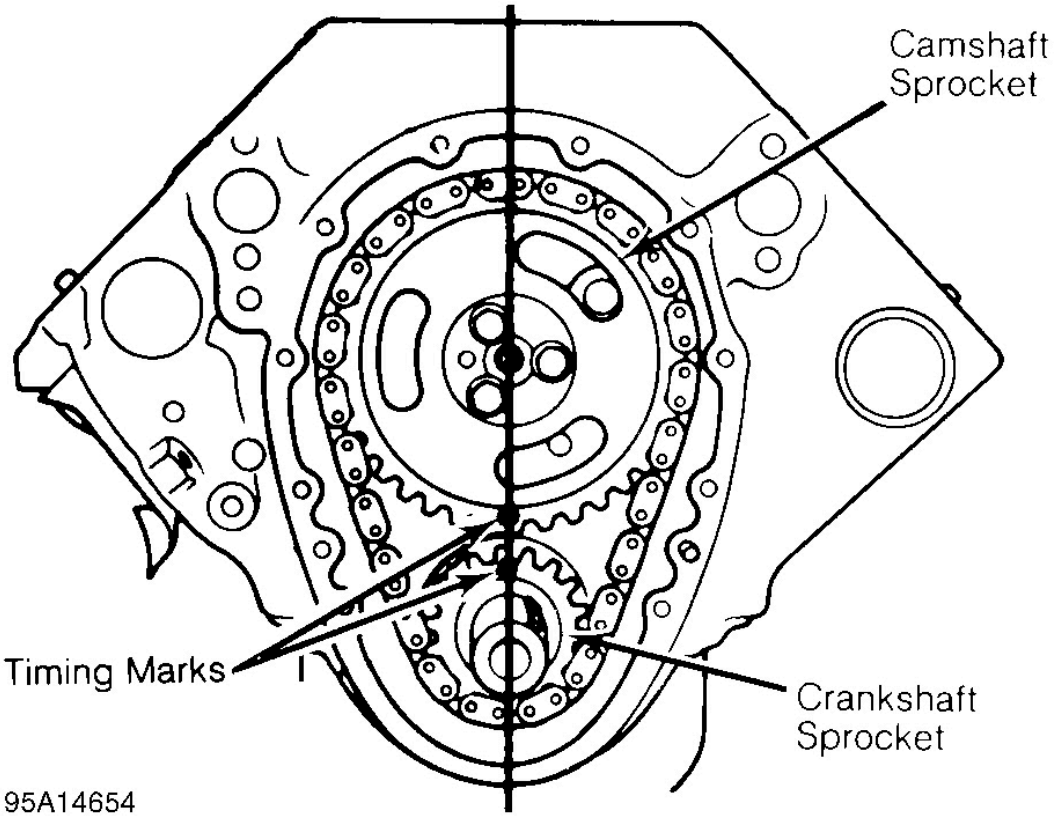

Fig. 24: Typical Gear Timing Mark Alignment

TIMING BELTS

NOTE: Examples used in this article are general in nature and do not necessarily relate to a specific engine or system. Illustrations and procedures have been chosen to guide mechanic through engine overhaul process. Descriptions of processes of cleaning, inspection, assembly and machine shop practice are included.

Always refer to appropriate engine overhaul article, if available, in the ENGINES section for complete overhaul procedures and specifications for the vehicle being repaired.

Cogged tooth belts are commonly used on overhead cam engines. Inspect belt teeth for rounded corners or cracking. Replace belt if it is cracked, damaged,

missing teeth or oil soaked.

Used timing belt must be installed in original direction of rotation. Inspect all sprocket teeth for wear. Replace all worn sprockets. Sprockets are marked for timing purposes. Engine is positioned so that crankshaft sprocket mark will be upward. Camshaft sprocket is aligned with reference mark on cylinder head or timing belt cover and then timing belt can be installed. See **Fig. 25**.

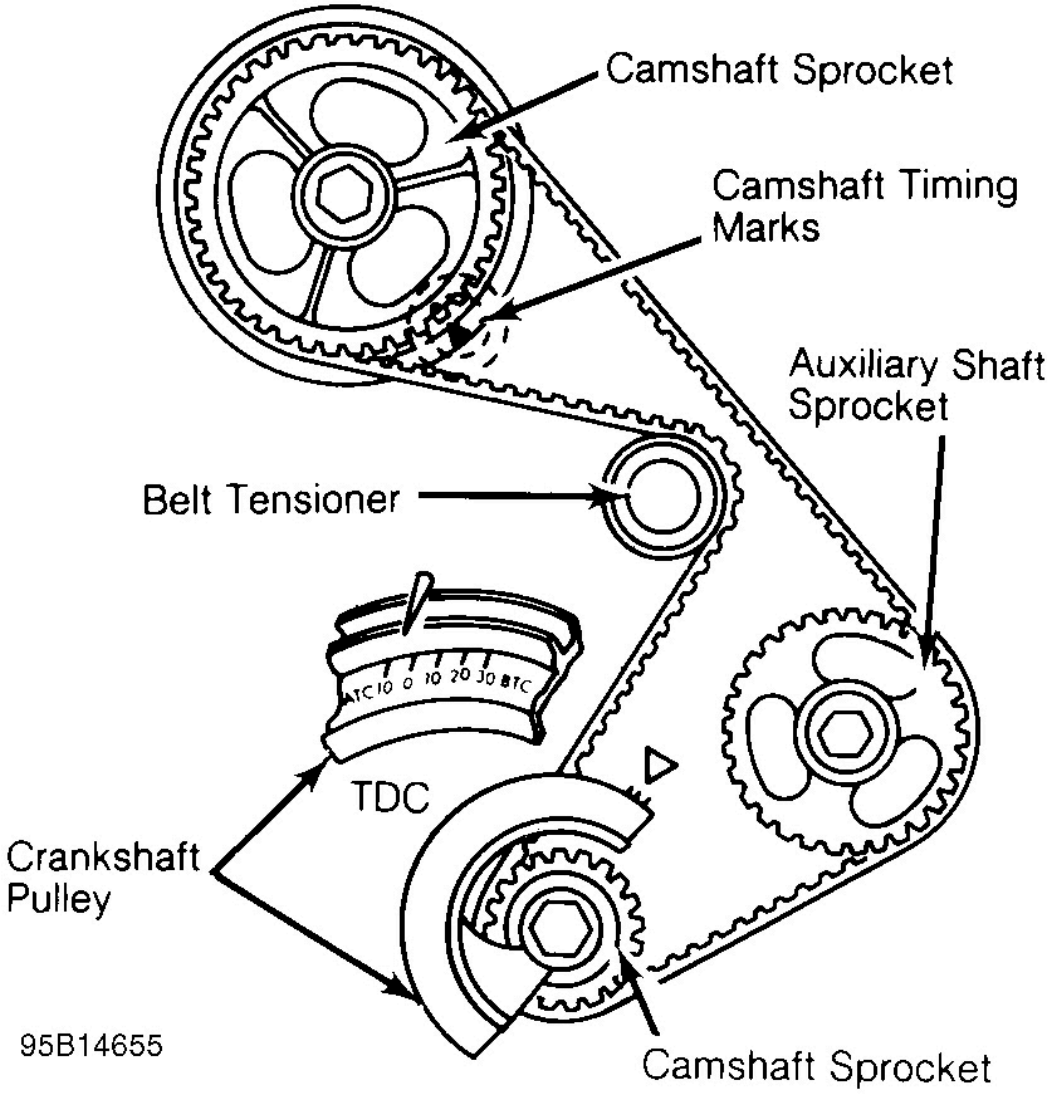

Fig. 25: Typical Camshaft Belt Sprocket Alignment

TENSION ADJUSTMENT

NOTE: Examples used in this article are general in nature and do not necessarily relate to a specific engine or system. Illustrations and procedures have been chosen to guide mechanic through engine overhaul process. Descriptions of processes of cleaning, inspection, assembly and machine shop practice are included.

Always refer to appropriate engine overhaul article, if available, in the ENGINES section for complete overhaul procedures and specifications for the vehicle being repaired.

If guide rails are used with spring loaded tensioners, ensure at least half of original rail thickness remains. Spring loaded tensioner should be inspected for damage.

Ensure all timing marks are aligned. Adjust belt tension using manufacturer's recommendations. Belt tension may require checking using tension gauge. See **Fig. 26**.

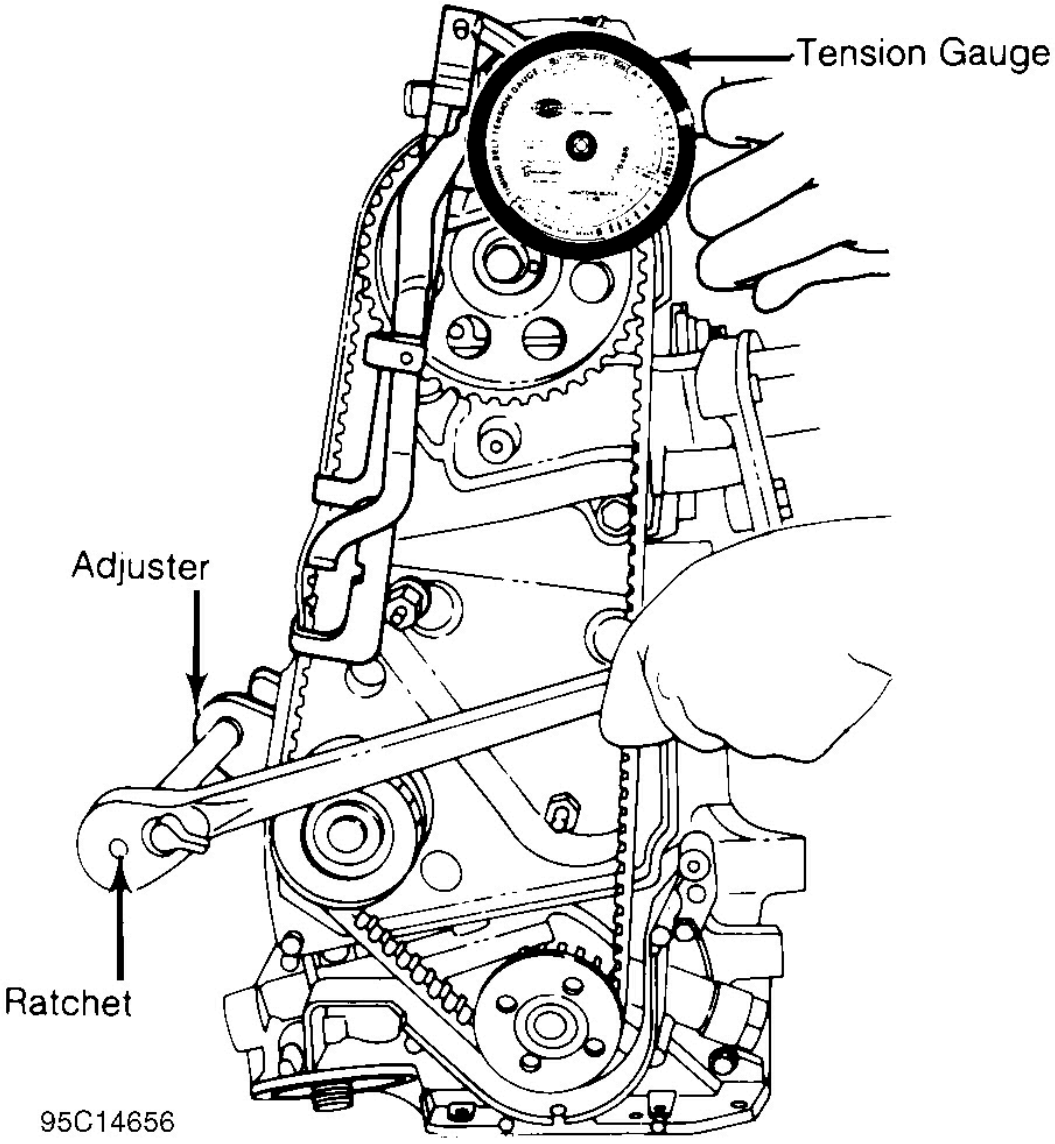

Fig. 26: Adjusting Typical Timing Belt Tension

TIMING GEARS

*** PLEASE READ THIS FIRST ***

NOTE: Examples used in this article are general in nature and do not necessarily relate to a specific engine or system. Illustrations and procedures have been chosen to guide mechanic through engine overhaul process. Descriptions of processes of cleaning, inspection, assembly and

machine shop practice are included.

Always refer to appropriate engine overhaul article, if available, in the ENGINES section for complete overhaul procedures and specifications for the vehicle being repaired.

TIMING GEAR BACKLASH & RUNOUT

NOTE: Examples used in this article are general in nature and do not necessarily relate to a specific engine or system. Illustrations and procedures have been chosen to guide mechanic through engine overhaul process. Descriptions of processes of cleaning, inspection, assembly and machine shop practice are included.

Always refer to appropriate engine overhaul article, if available, in the ENGINES section for complete overhaul procedures and specifications for the vehicle being repaired.

On engines where camshaft gear operates directly on crankshaft gear, gear backlash and runout must be checked. To check backlash, install dial indicator with tip resting on tooth of camshaft gear. Rotate camshaft gear as far as possible. Adjust indicator to zero. Rotate camshaft gear in opposite direction as far as possible and note reading.

To determine timing gear runout, mount dial indicator with tip resting on face edge of camshaft gear. Adjust indicator to zero. Rotate camshaft gear 360 degrees and note reading. If backlash or runout exceeds specification, replace camshaft and/or crankshaft gear.

REAR MAIN OIL SEAL INSTALLATION

NOTE: Examples used in this article are general in nature and do not necessarily relate to a specific engine or system. Illustrations and procedures have been chosen to guide mechanic through engine overhaul process. Descriptions of processes of cleaning, inspection, assembly and machine shop practice are included.

Always refer to appropriate engine overhaul article, if available, in the ENGINES section for complete overhaul procedures and specifications for the vehicle being repaired.

One-Piece Type Seal

For one-piece type oil seal installation, coat block contact surface of seal with sealer if seal is not factory coated. Ensure seal surface is free of burrs. Lubricate seal lip with engine oil and press seal into place using proper oil seal installer. See **Fig. 27**.

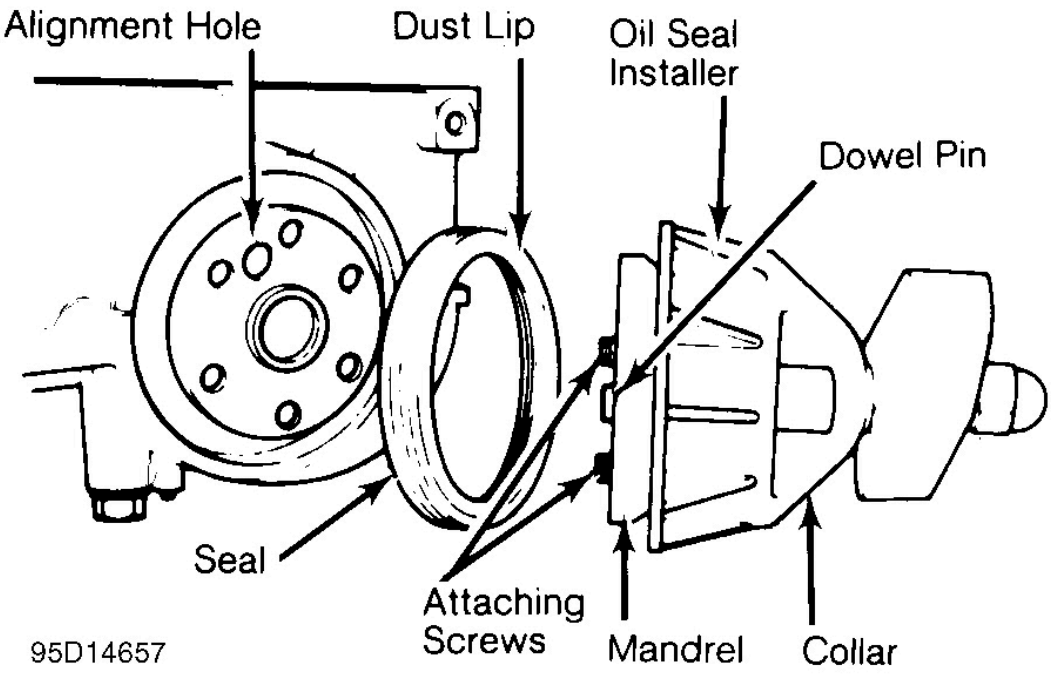

Fig. 27: Installing Typical One-Piece Oil Seal

Rope Type Seal

For rope type rear main oil seal installation, press seal lightly into seat area. Using seal installer, fully seat seal in bearing cap or cylinder block.

Trim seal ends even with cylinder block parting surface. Some applications require sealer to be applied on main bearing cap before installing. See **Fig. 28**.

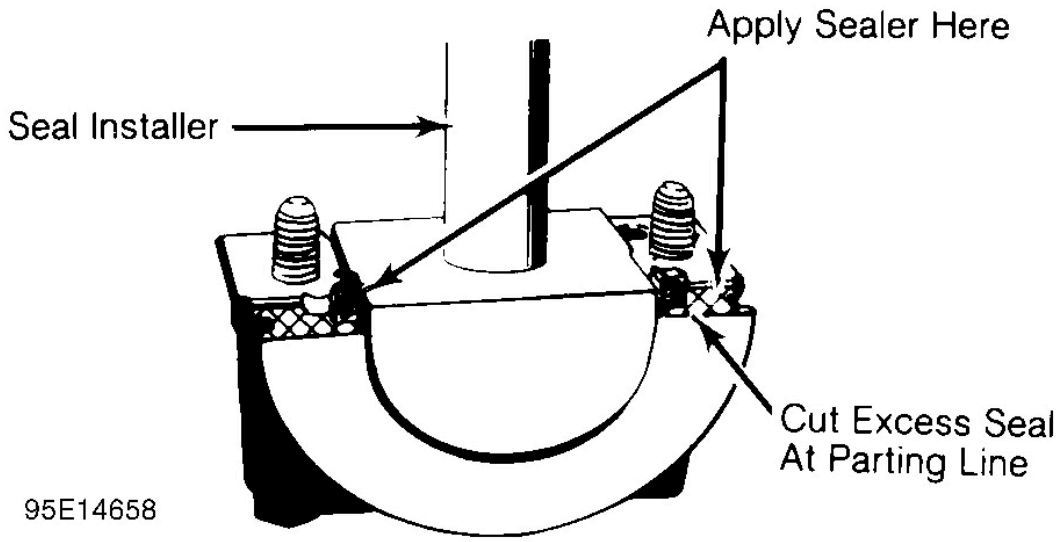

Fig. 28: Installing Typical Rope Seal

Split-Rubber Type Seal

Follow manufacturer's procedures when installing split-rubber type rear main oil seals. Installation procedures vary with manufacturer and engine type. See **Fig. 29**.

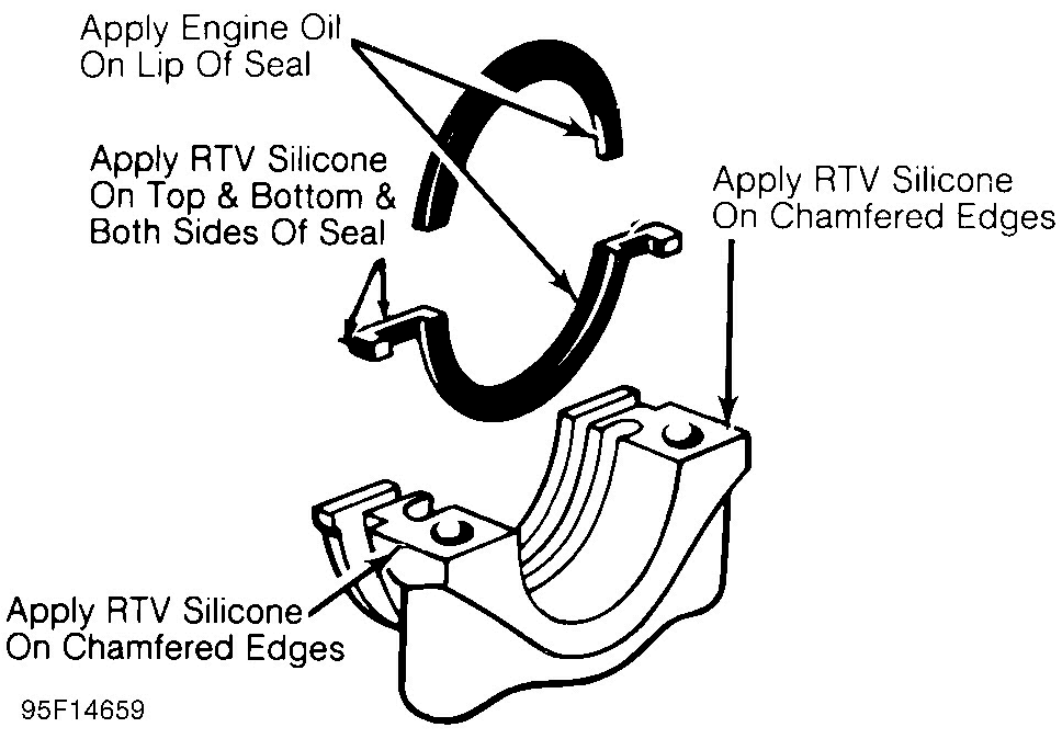

Fig. 29: Installing Typical Split-Rubber Seal

OIL PUMP

*** PLEASE READ THIS FIRST ***

NOTE: Examples used in this article are general in nature and do not necessarily relate to a specific engine or system. Illustrations and procedures have been chosen to guide mechanic through engine overhaul process. Descriptions of processes of cleaning, inspection, assembly and machine shop practice are included.

Always refer to appropriate engine overhaul article, if available, in the ENGINES section for complete overhaul procedures and specifications for the vehicle being repaired.

ROTOR TYPE

NOTE: Examples used in this article are general in nature and do

not necessarily relate to a specific engine or system. Illustrations and procedures have been chosen to guide mechanic through engine overhaul process. Descriptions of processes of cleaning, inspection, assembly and machine shop practice are included.

Always refer to appropriate engine overhaul article, if available, in the ENGINES section for complete overhaul procedures and specifications for the vehicle being repaired.

Mark oil pump rotor locations before removing. See **Fig. 30**. Remove outer rotor and measure thickness and diameter. Measure inner rotor thickness. Inspect shaft for scoring or wear. Inspect rotors for pitting or damage. Inspect cover for grooving or wear. Replace worn or damaged components.

Measure outer rotor-to-body clearance. Replace pump assembly if clearance exceeds specification. Measure clearance between rotors. See **Fig. 31**. Replace shaft and both rotors if clearance exceeds specification.

Install rotors in pump body. Position straightedge across pump body. Using feeler gauge, measure clearance between rotors and straightedge. Pump cover wear is measured using a straightedge and feeler gauge. Replace pump if clearance exceeds specification.

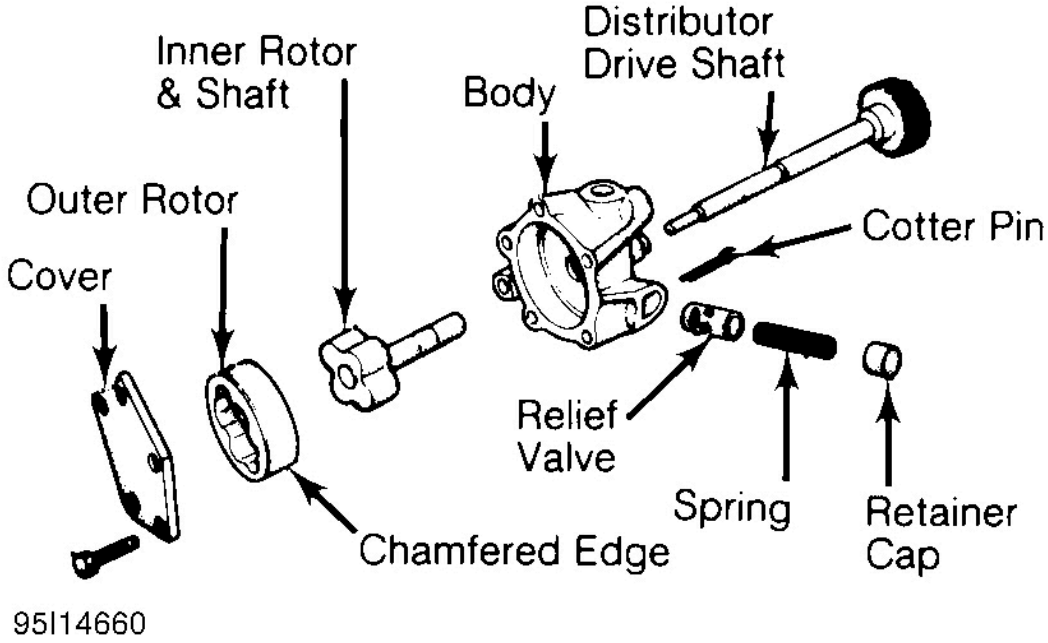

Fig. 30: Typical Rotor Type Oil Pump

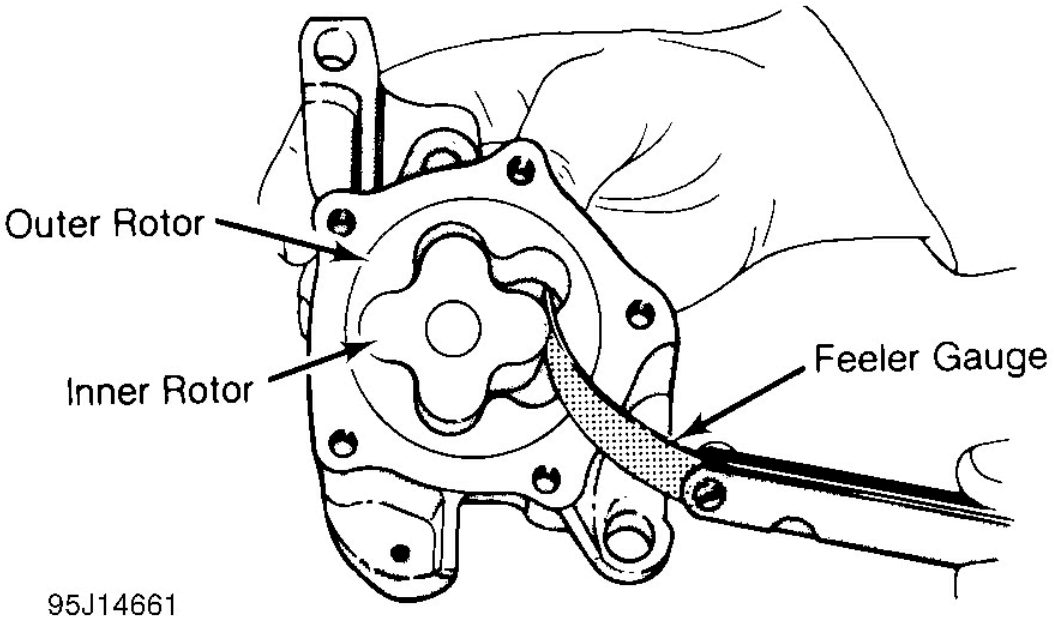

Fig. 31: Measuring Rotor Clearance

GEAR TYPE

NOTE: Examples used in this article are general in nature and do not necessarily relate to a specific engine or system. Illustrations and procedures have been chosen to guide mechanic through engine overhaul process. Descriptions of processes of cleaning, inspection, assembly and machine shop practice are included.

Always refer to appropriate engine overhaul article, if available, in the ENGINES section for complete overhaul procedures and specifications for the vehicle being repaired.

Mark oil pump gear location before removing. See **Fig. 32**. Remove gears from pump body. Inspect gears for pitting or damage. Inspect cover for grooving or wear. Measure gear diameter and length. Measure gear housing cavity depth and diameter. See **Fig. 33**. Replace worn or damaged components.

Pump cover wear is measured using a straightedge and feeler gauge. Replace pump or components if warpage or wear exceeds specification, or mating surface of pump cover is scratched or grooved.

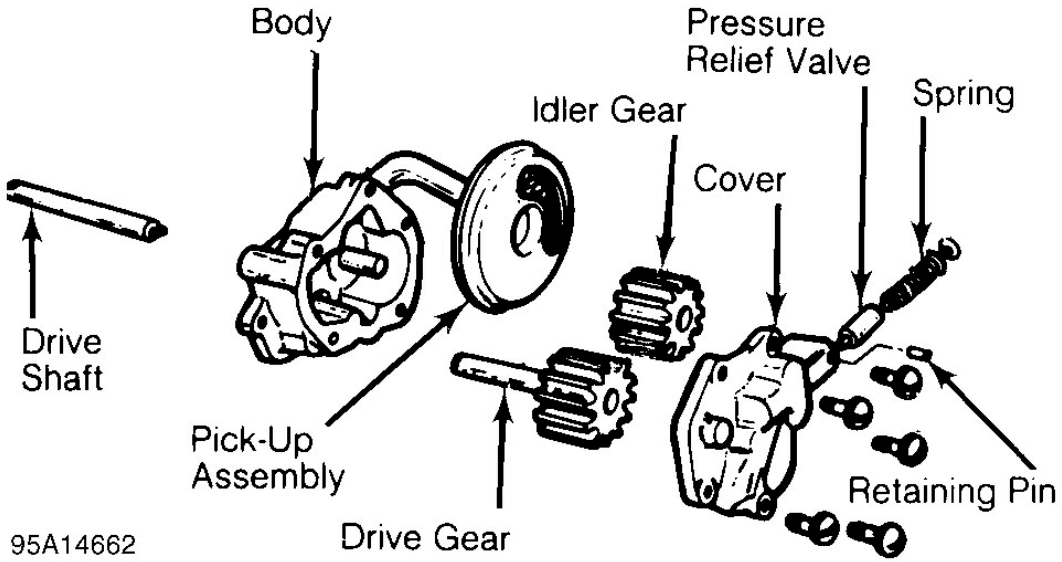

Fig. 32: Typical Gear Type Oil Pump

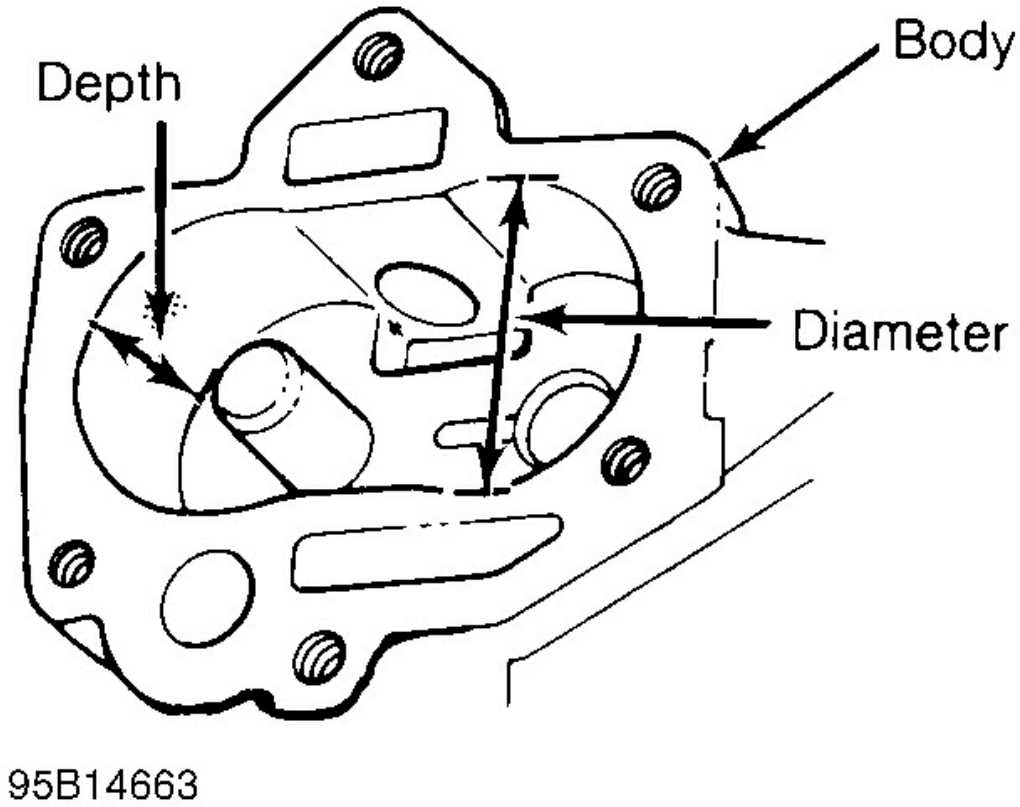

Fig. 33: Measuring Oil Pump Gear Cavity

BREAK-IN PROCEDURE

*** PLEASE READ THIS FIRST ***

NOTE: **Examples used in this article are general in nature and do not necessarily relate to a specific engine or system. Illustrations and procedures have been chosen to guide mechanic through engine overhaul process. Descriptions of processes of cleaning, inspection, assembly and machine shop practice are included.**

Always refer to appropriate engine overhaul article, if available, in the ENGINES section for complete overhaul procedures and specifications for the vehicle being repaired.

ENGINE PRE-OILING

NOTE: Examples used in this article are general in nature and do not necessarily relate to a specific engine or system. Illustrations and procedures have been chosen to guide mechanic through engine overhaul process. Descriptions of processes of cleaning, inspection, assembly and machine shop practice are included.

Always refer to appropriate engine overhaul article, if available, in the ENGINES section for complete overhaul procedures and specifications for the vehicle being repaired.

Pre-oil engine prior to operation to prevent engine damage. Lightly oiled oil pump will cavitate unless oil pump cavities are filled with engine oil or petroleum jelly.

Engine pre-oiling can be done using pressure oiler (if available). Connect pressure oiler to cylinder block oil passage such as oil pressure sending unit. Operate pressure oiler long enough to ensure correct amount of oil has filled crankcase. Check oil level while pre-oiling.

If pressure oiler is not available, disconnect ignition system. Remove oil pressure sending unit and replace with oil pressure test gauge. Using starter motor, rotate engine starter until gauge shows normal oil pressure for several seconds. DO NOT crank engine for more than 30 seconds to avoid starter motor damage. Ensure oil pressure has reached the most distant point from the oil pump.

NOTE: If new lifters or camshaft are installed, some manufacturers require that a crankcase conditioner be added to engine oil. The engine should be operated for specified amount of time to aid in lifter break-in procedure.

INITIAL START-UP

NOTE: Examples used in this article are general in nature and do not necessarily relate to a specific engine or system. Illustrations and procedures have been chosen to guide

mechanic through engine overhaul process. Descriptions of processes of cleaning, inspection, assembly and machine shop practice are included.

Always refer to appropriate engine overhaul article, if available, in the ENGINES section for complete overhaul procedures and specifications for the vehicle being repaired.

Start engine and operate engine at low speed while checking for coolant, fuel and oil leaks. Stop engine. Recheck coolant and oil level. Adjust if necessary.

CAMSHAFT

NOTE: Examples used in this article are general in nature and do not necessarily relate to a specific engine or system. Illustrations and procedures have been chosen to guide mechanic through engine overhaul process. Descriptions of processes of cleaning, inspection, assembly and machine shop practice are included.

Always refer to appropriate engine overhaul article, if available, in the ENGINES section for complete overhaul procedures and specifications for the vehicle being repaired.

Break-in procedure is required when new or reground camshaft has been installed. Operate and maintain engine speed between 1500-2500 RPM for approximately 30 minutes. Procedure may vary due to manufacturer's recommendations.

PISTON RINGS

NOTE: Examples used in this article are general in nature and do not necessarily relate to a specific engine or system. Illustrations and procedures have been chosen to guide mechanic through engine overhaul process. Descriptions of processes of cleaning, inspection, assembly and machine shop practice are included.

Always refer to appropriate engine overhaul article, if available, in the ENGINES section for complete overhaul procedures and specifications for the vehicle being repaired.

Piston rings require a break-in procedure to ensure seating of rings to cylinder walls. Serious damage may occur to rings if correct procedures are not followed.

Extremely high piston ring temperatures are obtained during break-in process. If rings are exposed to excessively high RPM or high cylinder pressures, ring damage can occur. Follow piston ring manufacturer's recommended break-in procedure.

FINAL ADJUSTMENTS

NOTE: Examples used in this article are general in nature and do not necessarily relate to a specific engine or system. Illustrations and procedures have been chosen to guide mechanic through engine overhaul process. Descriptions of processes of cleaning, inspection, assembly and machine shop practice are included.

Always refer to appropriate engine overhaul article, if available, in the ENGINES section for complete overhaul procedures and specifications for the vehicle being repaired.

Check or adjust ignition timing and dwell (if applicable). Adjust valves (if necessary). Adjust idle speed and mixture. Retighten cylinder heads (if required). If cylinder head or block is aluminum, retighten bolts when engine is cold. Follow the engine manufacturer's recommended break-in procedure and maintenance schedule for new engines.

NOTE: Some manufacturers require that head bolts be retightened after specified amount of operation. This must be done to prevent head gasket failure.

GENERAL INFORMATION

Symptom Check List Worksheets

* PLEASE READ THIS FIRST *

NOTE: This article is intended for general information purposes only. It does not apply specifically to one make or model.

PURPOSE

NOTE: This article is intended for general information purposes only. It does not apply specifically to one make or model.

WHY USE THE SYMPTOM CHECK LIST WORKSHEETS?

One of the most difficult and critical lines of communication is between the service customer and the technician. The clearer the technician understands the customer's concerns, the more likely the problem will be "fixed right the first time".

The Symptom Check List Worksheets in this article are designed to improve this communication. When used consistently, they can be helpful in reducing shop comebacks, increasing technician productivity, and producing satisfied customers. They also provide other benefits:

- Reduce "No Trouble Found" problems
- Increase customer involvement
- Customer perceive that "they really care and listen"
- Save time during peak write-up periods
- Reduce recontacting customers for additional information
- Improve night drop information
- Insure all the right questions are asked at write-up

MAKING THE WORKSHEETS A PART OF YOUR NORMAL ROUTINE

The following information contains ideas that may be helpful in forming habits that promote daily use of the Symptom Check Lists:

- HAVE THE SERVICE ADVISER FILL OUT THE FORM(S) WITH THE

CUSTOMER WHENEVER POSSIBLE.

- Place them in your night drop for the customer to fill out, along with an instruction sheet to help them understand what to do.
- Hand out the worksheets to customers while they wait in line during the peak morning rush and ask them to fill it out. It will save time for all concerned and improve the quality of information received from the customer.
- Make sure it is attached to the hard copy when it goes to the technician.
- Place a copy with the final repair papers and review it with the customer at delivery.
- Put a new worksheet in the glovebox of all departing customers.
- Require that you personally see a copy of all worksheets filled out for shop comebacks.
- Hold a shop meeting to get employee buy-in and their ideas on how to make it effective in your shop.

There are many other ways to utilize the concept, but as with every other idea, successful implementation depends on employee involvement and buy-in.

SYMPTOM CHECK LIST WORKSHEETS

CONDENSED VERSION - ALL ON ONE PAGE

NOTE: Have the service adviser fill out this form with the customer whenever possible.

DRIVEABILITY WORKSHEET

(To Be Filled Out By Vehicle Owner)

Name: _____ **Date:** _____ **Make:** _____

Model: _____ **Year:** _____ **Engine:** _____ **Mileage:** _____

FAULT CHARACTERISTICS – SYMPTOMS – DESCRIPTION OF PROBLEM	(Please Check All That Apply In All Categories)
Starting Problems	☐ Will Not Crank ☐ Cranks, But Won't Start ☐ Starts, But Takes A Long Time
Engine Quits/ Running Problems	**Quits:** ☐ Right After Starting ☐ When Put Into Gear ☐ Right After Vehicle Comes To A Stop ☐ During Steady Speed Driving ☐ While Idling ☐ During Acceleration ☐ When Parking
Poor Idling Conditions	**Idle Speed:** ☐ Is Too Slow At All Times ☐ Is Too Slow With A/C On ☐ Is Too Fast ☐ Is Rough Or Uneven ☐ Fluctuates Up and Down
Poor Running Conditions	☐ Runs Rough ☐ Lacks Power ☐ Hesitates Or Stumbles On Acceleration ☐ Bucks and Jerks ☐ Engine Knocks, Pings, Rattles ☐ Backfires ☐ Poor Fuel Economy ☐ Misfires or Cuts Out ☐ Surges and/or Chuggles ☐ Dieseling or Run-On ☐ Engine Light Always On ☐ Engine Light On Sometimes ☐ Fuel, Gas, or Sulfur Smell
Auto. Transmission Problems	☐ Improper Shifting (early/late) ☐ Changes Gear Randomly On Its Own ☐ Vehicle Does Not Move When In Gear
Poor Handling	☐ Pulls To One Side ☐ Hard Steering ☐ Vehicle Shakes and/or Vibrates While Moving
Noise Problems	**Explain:**
Odor Problems	**Explain:**
Problem Frequency	☐ Always ☐ Often ☐ Occasionally
Usually Occurs	☐ Morning ☐ Afternoon ☐ Anytime
Engine Temp.	☐ Cold ☐ Warm ☐ Hot
Vehicle Speed	☐ Low ☐ Cruising ☐ High
Driving Conditions During Occurrence	☐ Short – Less Than 2 Miles ☐ 2-10 Miles ☐ Long – More Than 10 Miles ☐ Stop & Go ☐ While Turning ☐ While Braking ☐ At Gear Engagement ☐ With A/C Operating ☐ With Headlights On ☐ During Acceleration ☐ During Deceleration ☐ Mostly Downhill ☐ Mostly Uphill ☐ Mostly Level ☐ Mostly Curvy ☐ Rough Road
Driving Habits	☐ Drive Hard Before Engine Is Warmed ☐ Allow Engine To Warm ☐ Mostly City Driving ☐ Highway ☐ Park Vehicle Inside ☐ Outside **Drive Per Day:** ☐ Less Than 10 Miles ☐ 10-50 ☐ More Than 50 **Fuel Octane:** ☐ 87 ☐ 89 ☐ 91 ☐ More Than 91 **Brand:** _____ ☐ Gasohol ☐ Propane Conversion
Outside Weather	☐ Cold ☐ Warm ☐ Hot ☐ Wet/Rainy ☐ Fog ☐ Snow/Hail ☐ Dust/Dirt ☐ Dry ☐ Humid

Fig. 1: Entire Vehicle - Symptom Check List For Customer

FULL VERSION - ALL ON FOUR PAGES

NOTE: Have the service adviser fill out these forms with the customer whenever possible.

Dear Valued Customer:
Our goal is to fix your problem correctly and get you back on the road as soon as possible in the unlikely event you experience a problem with your vehicle. Help us identify the exact nature of the concern by taking a few moments to complete the appropriate section of this diagnostic worksheet. Thank you.

CUSTOMER NAME: **PHONE NO.:** **REPAIR ORDER NO.:**

DIAGNOSTIC WORKSHEET

DRIVEABILITY - ENGINE - AUTOMATIC TRANSMISSION

SYMPTOM (CHECK ALL THAT APPLY)
ENGINE

- ☐ "Service Engine Soon"/"Malfunction Indicator Light" on
- ☐ Hard start/no start (cranks OK)
- ☐ Won't crank
- ☐ Engine stalls
- ☐ Engine miss
- ☐ Miss while driving
- ☐ Hesitates, stumbles or sags
- ☐ Rough idle
- ☐ Idle is too high ☐ Idle is too low
- ☐ Poor power/performance
- ☐ Surge or chuggle, buck - jerk - skip
- ☐ Poor gas mileage ☐ Highway ☐ City
- ☐ Pings, detonates
- ☐ Suphur, rotten egg odor
- ☐ Backfires (popping noise) - underhood/tailpipe
- ☐ Exhaust smoke ☐ Increased oil consumption
- ☐ Runs on after key is turned off
- ☐ Speed fluctuates without moving accelerator
- ☐ Engine noise (explain): _____

(whine, rattle, groan, clunk, etc)

- ☐ Other: _____

TRANSMISSION

- ☐ Does not shift properly ☐ Hard shift
- ☐ Will not shift ☐ Up ☐ Down
- ☐ Will not shift into overdrive
- ☐ Engine starts in other than "P" or "N"
- ☐ Noise (describe): _____

(whine, rattle, groan, clunk, buzz, etc.)

- ☐ Shifts into gear too early
- ☐ Overdrive doesn't work with speed control, but is otherwise OK
- ☐ Highway speed - shudder, surge, etc.
- ☐ Other: _____

EXPLAIN: _____

OPERATING CONDITIONS (CHECK ALL THAT APPLY)
HOW OFTEN DOES IT OCCUR? (Engine and/or Transmission)

- ☐ Always ☐ Few seconds ☐ Few minutes
- ☐ Few hours ☐ Few days ☐ Few weeks
- ☐ Few months ☐ Variable ☐ Only during event
- ☐ Every _____ to ____ miles ☐ Unknown
- ☐ Other (explain): _____
- ☐ Just started ☐ Getting better ☐ Getting worse
- ☐ Since new

WHEN DOES IT OCCUR? (Engine and/or Transmission)
When Engine Temperature is:

- ☐ Cold ☐ Warm ☐ Hot
- ☐ All the time ☐ Only during warmup

Weather Conditions:

- ☐ Very cold - below 0 degrees F ☐ Cold - 0 to 32 degrees F
- ☐ Cool - 32 to 60 degrees F ☐ Warm - 60 to 80 degrees F
- ☐ Hot - Above 80 degrees F ☐ Any environment
- ☐ Raining ☐ Dry ☐ Humid
- ☐ Snow/ice ☐ Wet roads ☐ Other (explain below)

Driving Conditions:

- ☐ Light throttle ☐ Medium throttle ☐ Hard throttle
- ☐ Starting ☐ At idle ☐ Decelerating
- ☐ Over bumps ☐ When shifting ☐ While turning
- ☐ Cruising steady at _____ MPH ☐ While braking
- ☐ Anytime ☐ Uphill ☐ Downhill
- ☐ Highway ☐ City/town ☐ Stop and go
- ☐ Between _____ MPH and _____ MPH
- ☐ Only with A/C or Defrost on

What Type of Fuel? **What Brand?** _____

- ☐ Regular UL ☐ Mid range UL ☐ Premium Unleaded
- ☐ Gasohol ☐ Ethanol ☐ Methanol
- ☐ Diesel #1 ☐ Diesel #2 ☐ Various brands

When Gear Selector is in:

- ☐ Park/Neutral ☐ Reverse ☐ Overdrive
- ☐ Drive/3 ☐ Drive/2 ☐ Drive/1

Between Gears:

- ☐ Park to R or D ☐ Rev/Drive ☐ First/Second
- ☐ Second/Third ☐ Third/Overdrive

50G15061

Fig. 2: Symptom Check List - Page 1

BRAKES - STEERING - SUSPENSION

SYMPTOM

- ☐ Vehicle pulls right - When _____
- ☐ Vehicle pulls left - When _____
- ☐ Steering wheel vibrates at ____ MPH
- ☐ Excessive play in steering
- ☐ Erratic steering when braking
- ☐ Poor steering wheel return after cornering
- ☐ Suspension bottoms out
- ☐ Leans or sways in corners
- ☐ Brake light on
- ☐ Traction control light on
- ☐ Uneven tire wear
- ☐ Sits uneven
- ☐ "Dog" tracks
- ☐ ABS light on
- ☐ Soft ride

Hard to steer

- ☐ Effort
- ☐ Wanders
- ☐ Steering wheel off center

Shimmy/vibration (check box below for location)

- ☐ Front
- ☐ Rear
- ☐ Don't know
- ☐ Seat
- ☐ Floor
- ☐ Other _____

Brake pedal

- ☐ Noise
- ☐ Pulses
- ☐ Squeaks
- ☐ Hard
- ☐ Mushy
- ☐ Excessive travel

WHEN DOES IT OCCUR?

- ☐ Cold days
- ☐ Hot days
- ☐ Wet/rain
- ☐ All the time
- ☐ Intermittent
- ☐ Parking manuevers
- ☐ At road speed
- ☐ Accelerating
- ☐ Decelerating

EXPLAIN: _____

SQUEAK - RATTLE - NOISE CONDITIONS

AREA OF NOISE

☐ Engine Compartment	☐ Left	☐ Right	☐ Center	☐ Don't know
☐ Front Suspension	☐ Left	☐ Right	☐ Center	☐ Don't know
☐ Rear Suspension	☐ Left	☐ Right	☐ Center	☐ Don't know
☐ Passenger Compartment	☐ Left	☐ Right	☐ Center	☐ Don't know
☐ Instrument Panel	☐ Left	☐ Right	☐ Center	☐ Don't know
☐ Doors	☐ Left	☐ Right	☐ Center	☐ Don't know
☐ Rear seat area	☐ Console	☐ Other _____		

NOISE SOUNDS LIKE

- ☐ Knocks
- ☐ Hard metal
- ☐ Light metal
- ☐ Roars
- ☐ Ticking
- ☐ Whine
- ☐ Squeaks
- ☐ Rattles
- ☐ Scraping
- ☐ Other _____

HOW OFTEN DOES IT OCCUR?

- ☐ Continuous
- ☐ Often
- ☐ Intermittent
- ☐ Just started
- ☐ Since new

WHEN DOES IT OCCUR?

- ☐ All the time
- ☐ Speed
- ☐ RPM
- ☐ Only moving
- ☐ On turns
- ☐ Braking
- ☐ Hard throttle
- ☐ Light throttle
- ☐ Decelerate
- ☐ Steady speed
- ☐ Idle in gear
- ☐ Idle out of gear
- ☐ Hot days
- ☐ Cold days
- ☐ Humid or rainy
- ☐ Temperature _____
- ☐ Heavy bumps
- ☐ Light bumps
- ☐ Smooth pavement

EXPLAIN: _____

CUSTOMER NAME: **PHONE NO.:** **REPAIR ORDER NO:**

SHOP USE ONLY:

VIN#: **MILES:** **TECHNICIAN:** **ADVISOR#:**

50H15062

Fig. 3: Symptom Check List - Page 2

AIR CONDITIONING - HEATER - VENTILATION

SYSTEM OR AREA AFFECTED

☐ Air conditioner ☐ Heater ☐ Defroster ☐ Vent ☐ Bi-Level ☐ Fan/blower
☐ Max A/C ☐ Automatic Temperature Control ☐ Mix/blend ☐ Economy ☐ All

SYMPTOM

☐ Does not work ☐ Blows wrong temperature air ☐ No air comes out of vents ☐ Rapid cycling
☐ Noisy (explain) ☐ Broken ☐ Odor ☐ Air comes from wrong outlets ☐ Blows fuse
☐ Leaks ☐ Insufficient heat or cool ☐ Other (explain below)

WHEN DOES IT OCCUR?

☐ All the time ☐ Hot ☐ Cold ☐ Intermittent ☐ Right after startup
☐ When change controls only ☐ Other (explain below) ☐ Fan blower speed High / Med / Low

EXPLAIN: _____

_____

ELECTRICAL - RADIO - TAPE/CD PLAYER

SYMPTOM - MUSIC SYSTEM

☐ Does not work ☐ Noisy ☐ Static ☐ Won't load ☐ Won't eject ☐ Poor reception
☐ Controls do not work ☐ Blows fuse ☐ Other (explain below)

SYSTEM AFFECTED

☐ Radio only ☐ AM ☐ FM ☐ FM stereo ☐ Graphic equalizer
☐ Tape player ☐ CD player ☐ Whole system ☐ Steering wheel buttons ☐ Phone
☐ Speakers ☐ Front ☐ Rear ☐ Left ☐ Right
☐ Antenna ☐ Clock ☐ Radio or player controls ☐ Rear seat controls

ALL OTHER ELECTRICAL ITEMS OR ACCESSORIES
Please list the complaint accessory or item and check any applicable symptom(s) from the list that follows:

_____ ☐ Inoperable ☐ Noisy ☐ No control ☐ Erratic
☐ Check light on or flashing ☐ Works improperly (explain below)
☐ Blows fuse ☐ Intermittent ☐ Related system affected (explain below)

_____ ☐ Inoperable ☐ Noisy ☐ No control ☐ Erratic
☐ Check light on or flashing ☐ Works improperly (explain below)
☐ Blows fuse ☐ Intermittent ☐ Related system affected (explain below)

_____ ☐ Inoperable ☐ Noisy ☐ No control ☐ Erratic
☐ Check light on or flashing ☐ Works improperly (explain below)
☐ Blows fuse ☐ Intermittent ☐ Related system affected (explain below)

WHEN DOES IT OCCUR?

☐ All the time ☐ Hot ☐ Cold ☐ Just after starting - malfunctions for a while
☐ Intermittent ☐ After runs for _____ minutes ☐ Rough roads or bumps only
☐ Other (explain below)

EXPLAIN: _____

_____

CUSTOMER NAME: **PHONE NO.:** **REPAIR ORDER NO:**

SHOP USE ONLY:
VIN#: **MILES:** **TECHNICIAN:** **ADVISOR#:**

50I15063

Fig. 4: Symptom Check List - Page 3

WATER LEAK - WINDNOISE

WATER LEAK
Leak Occurs When?

☐ Setting level ☐ Any time it rains ☐ While driving in the rain ☐ Car wash only
☐ Back lower than front (facing uphill) ☐ Front lower than back (facing downhill)

Location of Leak (where water appears):

☐ LF Door ☐ RF Door ☐ LR Door ☐ RR Door ☐ Windshield ☐ Rear window
☐ LF window ☐ RF window ☐ LR window ☐ RR window ☐ Side door ☐ Sunroof/T-Top
☐ Under instrument panel ☐ Rear door/rear hatch

WINDNOISE:
Location:

☐ LF Door ☐ RF Door ☐ LR Door ☐ RR Door ☐ Windshield ☐ Rear window
☐ LF window ☐ RF window ☐ LR window ☐ RR window ☐ Side door ☐ Sunroof/T-Top
☐ Under instrument panel ☐ Rear door/rear hatch

EXPLAIN: _____

MANUAL TRANSMISSION - CLUTCH

SYMPTOM - MANUAL GEAR SHIFT

☐ Hard to shift ☐ Doesn't shift
☐ Grinds going into_____ gear
☐ Noisy when in _____ gear or neutral _____
☐ Slips/pops out of gear
☐ Noise (describe): _____

☐ Upshift light stays on
☐ Upshift light doesn't light

WHEN DOES IT OCCUR?

☐ All the time ☐ Light load
☐ Heavy load

SYMPTOM - CLUTCH

☐ Hard to push ☐ Fail to release
☐ Noise when pressing pedal down (describe): _____

☐ Slips ☐ Chattering (grabbing)
☐ Odor present ☐ Pedal stays on the floor
☐ Squealing sound

WHEN DOES IT OCCUR?
When Engine Temperature is:

☐ Cold ☐ Hot
☐ Accelerating ☐ Decelerating

EXPLAIN: _____

COMMENTS:

CUSTOMER NAME: **PHONE NO.:** **REPAIR ORDER NO:**

SHOP USE ONLY:
VIN#: **MILES:** **TECHNICIAN:** **ADVISOR#:**

50J15064

Fig. 5: Symptom Check List - Page 4

INDIVIDUAL SYSTEM-BASED CHECK LISTS

NOTE: Have the service adviser fill out these forms with the customer whenever possible.

DRIVEABILITY - ENGINE - AUTOMATIC TRANSMISSION

SYMPTOM (CHECK ALL THAT APPLY)
ENGINE

- ☐ "Service Engine Soon"/Malfunction Indicator Light" on
- ☐ Hard start/no start (cranks OK)
- ☐ Won't crank
- ☐ Engine stalls
- ☐ Engine miss
- ☐ Miss while driving
- ☐ Hesitates, stumbles or sags
- ☐ Rough idle
- ☐ Idle is too high ☐ Idle is too low
- ☐ Poor power/performance
- ☐ Surge or chuggle, buck - jerk - skip
- ☐ Poor gas mileage ☐ Highway ☐ City
- ☐ Ping, detonates
- ☐ Sulphur/rotten egg odor
- ☐ Backfires (popping noise) - underhood/tailpipe
- ☐ Exhaust smoke ☐ Increased oil consumption
- ☐ Runs on after key is turned off
- ☐ Speed fluctuates without moving accelerator
- ☐ Engine noise (explain): _____

(whine, rattle, groan, clunk, etc.)

- ☐ Other: _____

TRANSMISSION

- ☐ Does not shift properly ☐ Hard shift
- ☐ Will not shift ☐ Up ☐ Down
- ☐ Will not shift into overdrive
- ☐ Engine starts in other than "P" or "N"
- ☐ Noise (describe): _____

(whine, rattle, groan, clunk, buzz, etc.)

- ☐ Shifts into next gear too early
- ☐ Overdrive doesn't work with speed control, but is otherwise OK
- ☐ Highway speed - shudder, surge, etc.
- ☐ Other: _____

EXPLAIN: _____

OPERATING CONDITIONS (CHECK ALL THAT APPLY)
HOW OFTEN DOES IT OCCUR? (Engine &/or Transmission)

- ☐ Always ☐ Few Seconds ☐ Few minutes
- ☐ Few hours ☐ Few days ☐ Few weeks
- ☐ Few months ☐ Variable ☐ Only during event
- ☐ Every _____ to _____ miles ☐ Unknown
- ☐ Other (explain): _____
- ☐ Just started ☐ Getting better ☐ Getting worse
- ☐ Since new

WHEN DOES IT OCCUR? (Engine and/or Transmission)
When Engine Temperature is:

- ☐ Cold ☐ Warm ☐ Hot
- ☐ All the time ☐ Only during warmup

Weather Conditions:

- ☐ Very cold - below 0°F ☐ Cold - 0 to 32°F
- ☐ Cool - 32 to 60°F ☐ Warm - 60 to 80°F
- ☐ Hot - above 80°F ☐ Any environment
- ☐ Raining ☐ Dry ☐ Humid
- ☐ Snow/Ice ☐ Wet roads
- ☐ Other (explain): _____

Driving Conditions:

- ☐ Light throttle ☐ Medium throttle ☐ Hard throttle
- ☐ Starting ☐ At idle ☐ Decelerating
- ☐ Over bumps ☐ When shifting ☐ While turning
- ☐ Cruising - steady at MPH ☐ While braking
- ☐ Anytime ☐ Uphill ☐ Downhill
- ☐ Highway ☐ City/town ☐ Stop and go
- ☐ Between ____ MPH and _____ MPH
- ☐ Only with A/C or Defrost on

What Type of Fuel? **What Brand?**

- ☐ Regular UL ☐ Midrange UL ☐ Premium UL
- ☐ Gasohol ☐ Ethanol ☐ Methanol
- ☐ Diesel #1 ☐ Diesel #2 ☐ Various brands

When Gear Selector is in:

- ☐ Park/Neutral ☐ Reverse ☐ Overdrive
- ☐ Drive/3 ☐ Drive/2 ☐ Drive/1

Between Gears:

- ☐ Park to R or D ☐ Reverse/Drive ☐ First/Second
- ☐ Second/Third ☐ Third/Overdrive

CUSTOMER NAME: **PHONE NO.:** **REPAIR ORDER NO:**

SHOP USE ONLY:
VIN#: **MILES:** **TECHNICIAN:** **ADVISOR#:**

50H15054

Fig. 6: Engine Driveability & Automatic Transmission

BRAKES - STEERING - SUSPENSION

SYMPTOM

- ☐ Vehicle pulls right - When _____
- ☐ Vehicle pulls left - When _____
- ☐ Steering wheel vibrates at ____ MPH
- ☐ Excessive play in steering
- ☐ Erratic steering when braking
- ☐ Poor steering wheel return after cornering
- ☐ Suspension bottoms out
- ☐ Leans or sways in corners
- ☐ Brake light on
- ☐ Traction control light on
- ☐ Uneven tire wear
- ☐ Sits uneven
- ☐ "Dog" tracks
- ☐ ABS light on
- ☐ Soft ride

Hard to steer

- ☐ Effort
- ☐ Wanders
- ☐ Steering wheel off center

Shimmy/vibration (check box below for location)

- ☐ Front
- ☐ Rear
- ☐ Don't know
- ☐ Seat
- ☐ Floor
- ☐ Other _____

Brake pedal

- ☐ Noise
- ☐ Pulses
- ☐ Squeaks
- ☐ Hard
- ☐ Mushy
- ☐ Excessive travel

WHEN DOES IT OCCUR?

- ☐ Cold days
- ☐ Hot days
- ☐ Wet/rain
- ☐ All the time
- ☐ Intermittent
- ☐ Parking manuevers
- ☐ At road speed
- ☐ Accelerating
- ☐ Decelerating

EXPLAIN: _____

CUSTOMER NAME: **PHONE NO.:** **REPAIR ORDER NO:**

SHOP USE ONLY:

VIN#: **MILES:** **TECHNICIAN:** **ADVISOR#:**

50C15059

Fig. 7: Brakes, Steering, & Suspension

AIR CONDITIONING - HEATER - VENTILATION

SYSTEM OR AREA AFFECTED

☐ Air conditioner ☐ Heater ☐ Defroster ☐ Vent ☐ Bi-Level ☐ Fan/blower
☐ Max A/C ☐ Automatic Temperature Control ☐ Mix/blend ☐ Economy ☐ All

SYMPTOM

☐ Does not work ☐ Blows wrong temperature air ☐ No air comes out of vents ☐ Rapid cycling
☐ Noisy (explain) ☐ Broken ☐ Odor ☐ Air comes from wrong outlets ☐ Blows fuse
☐ Leaks ☐ Insufficient heat or cool ☐ Other (explain below)

WHEN DOES IT OCCUR?

☐ All the time ☐ Hot ☐ Cold ☐ Intermittent ☐ Right after startup
☐ When change controls only ☐ Other (explain below) ☐ Fan blower speed High / Med / Low

EXPLAIN: _____

_____

_____

_____

CUSTOMER NAME: **PHONE NO.:** **REPAIR ORDER NO:**

SHOP USE ONLY:
VIN#: **MILES:** **TECHNICIAN:** **ADVISOR#:**

50A15057

Fig. 8: Air Conditioning, Heater & Ventilation

ELECTRICAL - RADIO - TAPE/CD PLAYER

SYMPTOM - MUSIC SYSTEM

☐ Does not work ☐ Noisy ☐ Static ☐ Won't load ☐ Won't eject ☐ Poor reception
☐ Controls do not work ☐ Blows fuse ☐ Other (explain below)

SYSTEM AFFECTED

☐ Radio only ☐ AM ☐ FM ☐ FM stereo ☐ Graphic equalizer
☐ Tape player ☐ CD player ☐ Whole system ☐ Steering wheel buttons ☐ Phone
☐ Speakers ☐ Front ☐ Rear ☐ Left ☐ Right
☐ Antenna ☐ Clock ☐ Radio or player controls ☐ Rear seat controls

ALL OTHER ELECTRICAL ITEMS OR ACCESSORIES
Please list the complaint accessory or item and check any applicable symptom(s) from the list that follows:

_____ ☐ Inoperable ☐ Noisy ☐ No control ☐ Erratic
☐ Check light on or flashing ☐ Works improperly (explain below)
☐ Blows fuse ☐ Intermittent ☐ Related system affected (explain below)

_____ ☐ Inoperable ☐ Noisy ☐ No control ☐ Erratic
☐ Check light on or flashing ☐ Works improperly (explain below)
☐ Blows fuse ☐ Intermittent ☐ Related system affected (explain below)

_____ ☐ Inoperable ☐ Noisy ☐ No control ☐ Erratic
☐ Check light on or flashing ☐ Works improperly (explain below)
☐ Blows fuse ☐ Intermittent ☐ Related system affected (explain below)

WHEN DOES IT OCCUR?

☐ All the time ☐ Hot ☐ Cold ☐ Just after starting - malfunctions for a while
☐ Intermittent ☐ After runs for _____ minutes ☐ Rough roads or bumps only
☐ Other (explain below)

EXPLAIN: _____

CUSTOMER NAME: **PHONE NO.:** **REPAIR ORDER NO:**

SHOP USE ONLY:
VIN#: **MILES:** **TECHNICIAN:** **ADVISOR#:**

50B15058

Fig. 9: Electrical, Radio & Tape/CD Player

MANUAL TRANSMISSION - CLUTCH

SYMPTOM - MANUAL GEAR SHIFT

☐ Hard to shift ☐ Doesn't shift
☐ Grinds going into_____ gear
☐ Noisy when in _____ gear or neutral _____
☐ Slips/pops out of gear
☐ Noise (describe): _____
_____
_____
☐ Upshift light stays on
☐ Upshift light doesn't light

WHEN DOES IT OCCUR?

☐ All the time ☐ Light load
☐ Heavy load

SYMPTOM - CLUTCH

☐ Hard to push ☐ Fail to release
☐ Noise when pressing pedal down (describe): _____
_____
_____
☐ Slips ☐ Chattering (grabbing)
☐ Odor present ☐ Pedal stays on the floor
☐ Squealing sound

WHEN DOES IT OCCUR?
When Engine Temperature is:

☐ Cold ☐ Hot
☐ Accelerating ☐ Decelerating

EXPLAIN: _____
_____
_____
_____
_____
_____

CUSTOMER NAME: **PHONE NO.:** **REPAIR ORDER NO:**

SHOP USE ONLY:
VIN#: **MILES:** **TECHNICIAN:** **ADVISOR#:**

50J15056

Fig. 10: Manual Transmission & Clutch

SQUEAK - RATTLE - NOISE CONDITIONS

AREA OF NOISE

☐ Engine Compartment	☐ Left	☐ Right	☐ Center	☐ Don't know
☐ Front Suspension	☐ Left	☐ Right	☐ Center	☐ Don't know
☐ Rear Suspension	☐ Left	☐ Right	☐ Center	☐ Don't know
☐ Passenger Compartment	☐ Left	☐ Right	☐ Center	☐ Don't know
☐ Instrument Panel	☐ Left	☐ Right	☐ Center	☐ Don't know
☐ Doors	☐ Left	☐ Right	☐ Center	☐ Don't know
☐ Rear seat area	☐ Console	☐ Other _____		

NOISE SOUNDS LIKE

☐ Knocks	☐ Hard metal	☐ Light metal	☐ Roars	☐ Ticking	☐ Whine
☐ Squeaks	☐ Rattles	☐ Scraping	☐ Other _____		

HOW OFTEN DOES IT OCCUR?

☐ Continuous ☐ Often ☐ Intermittent ☐ Just started ☐ Since new

WHEN DOES IT OCCUR?

☐ All the time	☐ Speed	☐ RPM	☐ Only moving	☐ On turns	☐ Braking
☐ Hard throttle	☐ Light throttle	☐ Decelerate	☐ Steady speed	☐ Idle in gear	☐ Idle out of gear
☐ Hot days	☐ Cold days	☐ Humid or rainy	☐ Temperature _____		
☐ Heavy bumps	☐ Light bumps	☐ Smooth pavement			

EXPLAIN: _____

CUSTOMER NAME: **PHONE NO.:** **REPAIR ORDER NO:**

SHOP USE ONLY:

VIN#: **MILES:** **TECHNICIAN:** **ADVISOR#:**

50F15060

Fig. 11: Squeak, Rattle, & Noise Conditions

WATER LEAK - WINDNOISE

WATER LEAK
Leak Occurs When?

☐ Setting level ☐ Any time it rains ☐ While driving in the rain ☐ Car wash only
☐ Back lower than front (facing uphill) ☐ Front lower than back (facing downhill)

Location of Leak (where water appears):

☐ LF Door ☐ RF Door ☐ LR Door ☐ RR Door ☐ Windshield ☐ Rear window
☐ LF window ☐ RF window ☐ LR window ☐ RR window ☐ Side door ☐ Sunroof/T-Top
☐ Under instrument panel ☐ Rear door/rear hatch

WINDNOISE:
Location:

☐ LF Door ☐ RF Door ☐ LR Door ☐ RR Door ☐ Windshield ☐ Rear window
☐ LF window ☐ RF window ☐ LR window ☐ RR window ☐ Side door ☐ Sunroof/T-Top
☐ Under instrument panel ☐ Rear door/rear hatch

EXPLAIN: _____

_____

_____

CUSTOMER NAME: **PHONE NO.:** **REPAIR ORDER NO:**

SHOP USE ONLY:
VIN#: **MILES:** **TECHNICIAN:** **ADVISOR#:**

50I15055

Fig. 12: Water Leak & Wind Noise

GENERAL INFORMATION

Trouble Shooting - Basic Procedures

*** PLEASE READ THIS FIRST ***

NOTE: This is GENERAL information. This article is not intended to be specific to any unique situation or individual vehicle configuration. The purpose of this Trouble Shooting information is to provide a list of common causes to problem symptoms. For model-specific Trouble Shooting, refer to SUBJECT, DIAGNOSTIC, or TESTING articles available in the section(s) you are accessing.

ACCESSORIES & ELECTRICAL

CHARGING SYSTEM TROUBLE SHOOTING

NOTE: This is GENERAL information. This article is not intended to be specific to any unique situation or individual vehicle configuration. The purpose of this Trouble Shooting information is to provide a list of common causes to problem symptoms. For model-specific Trouble Shooting, refer to SUBJECT, DIAGNOSTIC, or TESTING articles available in the section(s) you are accessing.

NOTE: This is GENERAL information. This article is not intended to be specific to any unique situation or individual vehicle configuration. The purpose of this Trouble Shooting information is to provide a list of common causes to problem symptoms. For model-specific Trouble Shooting, refer to SUBJECT, DIAGNOSTIC, or TESTING articles available in the section(s) you are accessing.

BASIC CHARGING SYSTEM TROUBLE SHOOTING CHART

CONDITION & POSSIBLE CAUSE	CORRECTION
Vehicle Will Not Start	
Dead battery	Check battery cells, alternator belt tension

	and alternator output
Loose or corroded battery connections	Check all charging system connections
Ignition circuit or switch malfunction	Check and replace as necessary
Alternator Light Stays On With Engine Running	
Loose or worn alternator drive belt	Check alternator drive tension and condition, See Belt Adjustment in TUNE-UP article in the TUNE-UP section
Loose alternator wiring connections	Check all charging system connections
Short in alternator light wiring	See Indicator Warning Lights in STANDARD INSTRUMENTS in the ACCESSORIES & EQUIPMENT section
Defective alternator stator or diodes	See Bench Tests in ALTERNATOR article
Defective regulator	See Regulator Check in ALTERNATOR article
Alternator Light Stays Off With Ignition Switch ON	
Blown fuse	See WIRING DIAGRAMS
Defective alternator	See Testing in ALTERNATOR article
Defective indicator light bulb or socket	See Indicator Warning Lights in STANDARD INSTRUMENTS in the ACCESSORIES & EQUIPMENT section
Alternator Light Stays OFF With Ignition Switch ON	
Short in alternator wiring	See On-Vehicle Tests in ALTERNATOR article

Defective rectifier bridge	See Bench Tests in ALTERNATOR article
Lights or Fuses Burn Out Frequently	
Defective alternator wiring	See On-Vehicle Tests in ALTERNATOR article
Defective regulator	See Regulator Check in ALTERNATOR article
Defective battery	Check and replace as necessary
Ammeter Gauge Shows Discharge	
Loose or worn drive belt	Check alternator drive belt tension and condition. See Belt Adjustment in TUNE-UP article in the TUNE-UP section
Defective wiring	Check all wires and wire connections
Defective alternator or regulator	See Bench Tests and On-Vehicle Tests in ALTERNATOR article
Defective ammeter, or improper ammeter wiring connection	See Testing in STANDARD INSTRUMENTS in the ACCESSORIES & EQUIPMENT section
Noisy Alternator	
Loose drive pulley	Tighten drive pulley attaching nut
Loose mounting bolts	Tighten all alternator mounting bolts
Worn or dirty bearings	See Bearing Replacement ALTERNATOR article
Defective diodes or stator	See Bench Test in

	ALTERNATOR article
Battery Does Stay Charged	
Loose or worn drive belt	Check alternator drive belt tension and condition. See Belt Adjustment in appropriate TUNE-UP article in the TUNE-UP section
Loose or corroded battery connections	Check all charging system connections
Loose alternator connections	Check all charging system connections
Defective alternator or battery	See On-Vehicle Tests and Bench Tests in ALTERNATOR article
Add-on electrical accessories exceeding alternator capacity	Install larger alternator
Battery Overcharged-Uses Too Much Water	
Defective battery	Check alternator output and repair as necessary
Defective alternator	See On-Vehicle Test and Bench Tests in ALTERNATOR article
Excessive alternator voltage	Check alternator output and repair as necessary

IGNITION SYSTEM TROUBLE SHOOTING

NOTE: This is GENERAL information. This article is not intended to be specific to any unique situation or individual vehicle configuration. The purpose of this Trouble Shooting information is to provide a list of common causes to problem symptoms. For model-specific Trouble Shooting, refer to SUBJECT, DIAGNOSTIC, or TESTING articles available in the section(s) you are accessing.

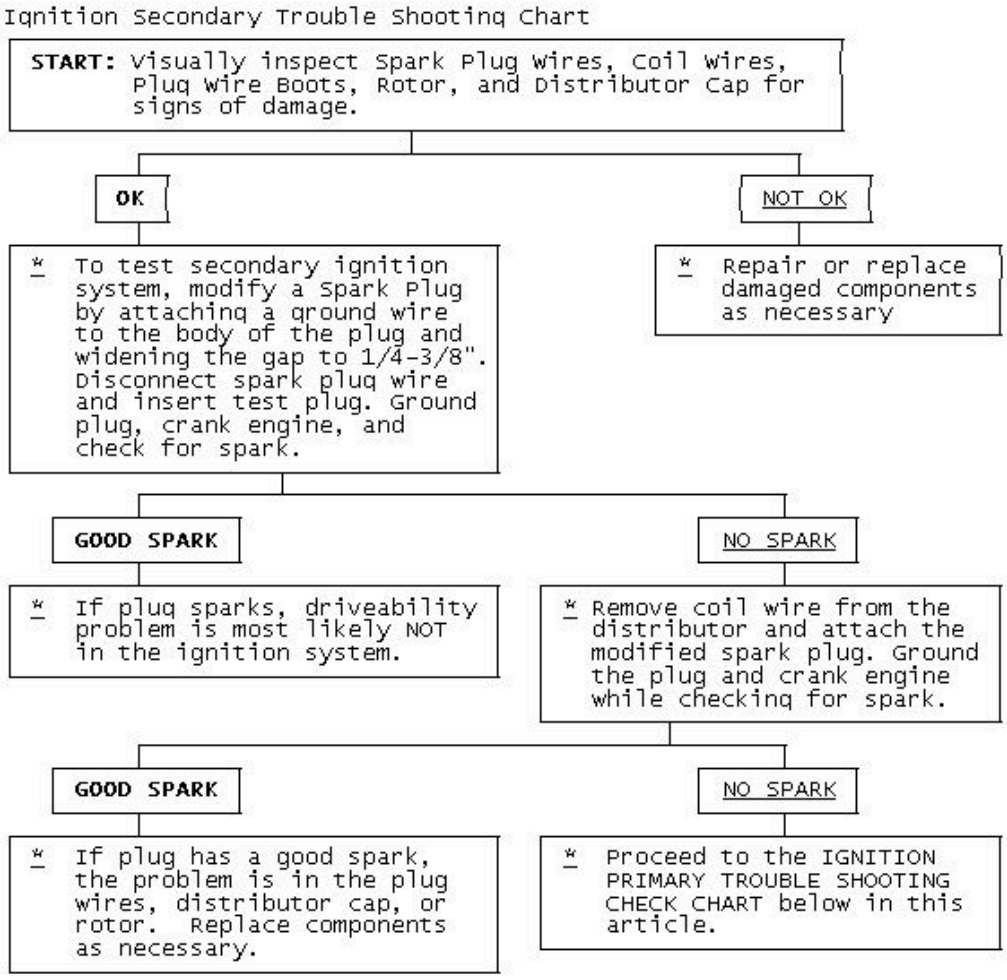

Fig. 1: Ignition Secondary Trouble Shooting Chart

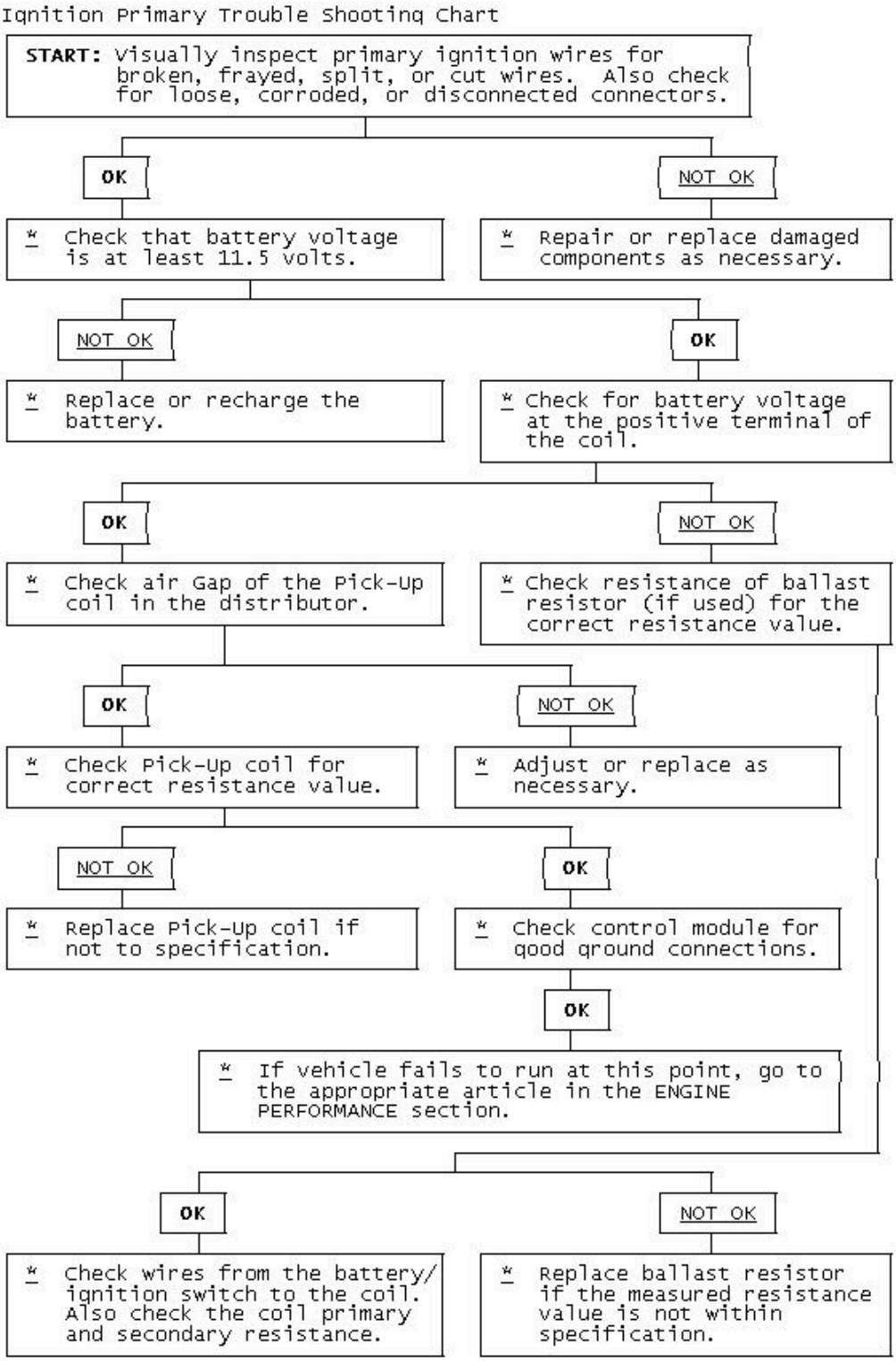

Fig. 2: Ignition Primary Trouble Shooting Chart

STARTER TROUBLE SHOOTING

NOTE: This is GENERAL information. This article is not intended to be specific to any unique situation or individual vehicle configuration. The purpose of this Trouble Shooting information is to provide a list of common causes to problem symptoms. For model-specific Trouble Shooting, refer to SUBJECT, DIAGNOSTIC, or TESTING articles available in the section(s) you are accessing.

BASIC STARTER TROUBLE SHOOTING CHART

CONDITION & POSSIBLE CAUSE	CORRECTION
Starter Fails to Operate	
Dead battery or bad connections between starter and battery	Check battery charge and all wires and connections to starter
Ignition switch faulty or misadjusted	Adjust or replace ignition switch
Open circuit between starter switch ignition terminal on starter relay	Check and repair wires and connections as necessary
Starter relay or starter defective	See Testing in STARTER article
Open solenoid pull-in wire	Testing in STARTER article
Starter Does Not Operate and Headlights Dim	
Weak battery or dead cell	Charge or replace battery as necessary
Loose or corroded battery connections	Check that battery connections are clean and tight
Internal ground in starter windings	See Testing in STARTER article
Grounded starter fields	See Testing in STARTERS
Armature rubbing on pole	See STARTER article shoes

Starter Turns but Engine Does Not Rotate	
Starter clutch slipping	See STARTER article
Broken clutch housing	See STARTER article
Pinion shaft rusted or dry	See STARTER article
Engine basic timing incorrect	See Ignition Timing in TUNE-UP article
Broken teeth on engine flywheel	Replace flywheel and check for starter pinion gear damage
Starter Will Not Crank Engine	
Faulty overrunning clutch	See STARTER article
Broken clutch housing	See STARTER article
Broken flywheel teeth	Replace flywheel and check for starter pinion gear damage
Armature shaft sheared or reduction gear teeth stripped	See STARTER article
Weak battery	Charge or replace battery as necessary
Faulty solenoid	See On-Vehicle Tests in STARTER article
Poor grounds	Check all ground connections for tight and clean connections
Ignition switch faulty or misadjusted	Adjust or replace ignition switch as necessary
Starter Cranks Engine Slowly	
Battery weak or defective	Charge or replace battery as necessary
Engine overheated	See ENGINE COOLING SYSTEM article
Engine oil too heavy	Check that proper viscosity oil is used
Poor battery-to-starter connections	Check that all between

	battery and starter are clean and tight
Current draw too low or too high	See Bench Tests in STARTER article
Bent armature, loose pole shoes screws or worn bearing	See STARTER article
Burned solenoid contacts	Replace solenoid
Faulty starter	Replace starter
Starter Engages Engine Only Momentarily	
Engine timing too far advanced	See Ignition Timing in TUNE-UP article
Overrunning clutch not engaging properly	Replace overrunning clutch. See STARTER article
Broken starter clutch	See STARTER article
Broken teeth on engine flywheel	Replace flywheel and check starter pinion gear for damage
Weak drive assembly thrust spring	See STARTER article
Weak hold-in coil	See Bench Tests in STARTER article
Starter Drive Will Not Engage	
Defective point assembly	See Testing in STARTER article
Poor point assembly ground	See Testing in STARTER article
Defective pull-in coil	Replace starter solenoid
Starter Relay Does Not Close	
Dead battery	Charge or replace battery as necessary
Faulty wiring	Check all wiring and connections leading to relay
Neutral safety switch faulty	Replace neutral safety switch

Starter relay faulty	Replace starter relay
Starter Drive Will Not Disengage	
Starter motor loose on mountings	Tighten starter attach bolts
Worn drive end bushing	See STARTER article
Damaged engine flywheel teeth	Replace flywheel and starter pinion gear for damage
Drive yolk return spring broken or missing	Replace return spring
Faulty ignition switch	Replace ignition switch
Insufficient clearance between winding leads to solenoid terminal and main contact in solenoid	Replace starter solenoid
Starter clutch not disengaging	Replace starter clutch
Ignition starter switch	Replace ignition switch contacts sticking
Starter Relay Operates but Solenoid Does Not	
Faulty solenoid switch, switch connections or relay	Check all wiring between relay and solenoid or replace relay or solenoid as necessary
Broken lead or loose soldered connections	Repair wire or wire connections as necessary
Solenoid Plunger Vibrates When Switch is Engaged	
Weak battery	Charge or replace battery as necessary
Solenoid contacts corroded	Clean contacts or replace solenoid
Faulty wiring	Check all wiring leading to solenoid
Broken connections inside switch cover	Repair connections or replace solenoid
Open hold-in wire	solenoid
Low Current Draw	
Worn brushes or weak brush springs	Replace brushes or

	brush springs as necessary
High Pitched Whine During Cranking Before Engine Fires but Engine Fires and Cranks Normally	
Distance too great between starter pinion and flywheel	Align starter or check that correct starter and flywheel are being used
High Pitched Whine After Engine Fires With Key released. Engine Fires and Cranks Normally	
Distance too small between starter pinion and flywheel	Flywheel runout contributes to the intermittent nature

AIR CONDITIONING & HEAT

AIR CONDITIONING TROUBLE SHOOTING

WARNING: This is GENERAL information. This article is not intended to be specific to any unique situation or individual vehicle configuration. The purpose of this Trouble Shooting information is to provide a list of common causes to problem symptoms. For model-specific Trouble Shooting, refer to SUBJECT, DIAGNOSTIC, or TESTING articles available in the section(s) you are accessing.

BASIC AIR CONDITIONING TROUBLE SHOOTING CHART

CONDITION	POSSIBLE CAUSE
Compressor Not Working	Compressor clutch circuit open.
.....	Compressor clutch coil inoperative.
.....	Poor clutch ground connection.
.....	Fan belts loose.
.....	Thermostatic switch inoperative.
.....	Thermostatic switch not adjusted.
.....	Ambient temperature switch open.

.....	Superheat fuse blown.
Excessive Noise or Vibration	Missing or loose mounting bolts.
.....	Bad idler pulley bearings.
.....	Fan belts not tightened correctly.
.....	Compressor clutch contacting body.
.....	Excessive system pressure.
.....	Compressor oil level low.
.....	Damaged clutch bearings.
.....	Damaged reed valves.
.....	Damaged compressor.
Insufficient or No Cooling; Compressor Working	Expansion valve inoperative.
.....	Heater control valve stuck open.
.....	Low system pressure.
.....	Blocked condenser fins.
.....	Blocked evaporator fins.
.....	Vacuum system leak.
.....	Vacuum motors inoperative.
.....	Control cables improperly adjusted.
.....	Restricted air inlet.
.....	Mode doors binding.
.....	Blower motor inoperative.
.....	Temperature above system capacity.

HEATER SYSTEM TROUBLE SHOOTING

NOTE: This is GENERAL information. This article is not intended to be specific to any unique situation or individual vehicle configuration. The purpose of this Trouble Shooting information is to provide a list of common causes to problem symptoms. For model-specific Trouble Shooting, refer to DIAGNOSTIC, or TESTING articles available in the section(s) you are accessing.

BASIC HEATER SYSTEM TROUBLE SHOOTING CHART

CONDITION	POSSIBLE CAUSE
Insufficient, Erratic, or No Heat	Low Coolant Level
.....	Incorrect thermostat.
.....	Restricted coolant flow through core.
.....	Heater hoses plugged.
.....	Misadjusted control cable.
.....	Sticking heater control valve.
.....	Vacuum hose leaking.
.....	Vacuum hose blocked.
.....	Vacuum motors inoperative.
.....	Blocked air inlet.
.....	Inoperative heater blower motor.
.....	Oil residue on heater core fins.
.....	Dirt on heater core fins.
Too Much Heat	Improperly adjusted cables.
.....	Sticking heater control valve.
.....	No vacuum to heater control valve.
.....	Temperature door stuck open.
Air Flow Changes During Acceleration	Vacuum system leak.
.....	Bad check valve or reservoir.
Air From Defroster At All Times	Vacuum system leak.
.....	Improperly adjusted control cables.
.....	Inoperative vacuum motor.
Blower Does Not Operate Correctly	Blown fuse.
.....	Blower motor windings open.
.....	Resistors burned out.
.....	Motor ground connection loose.
.....	Wiring harness connections loose.
.....	Blower motor switch inoperative.
.....	Blower relay inoperative.

.....	Fan binding or foreign object in housing.
.....	Fan blades broken or bent.

BRAKES

BRAKE SYSTEM TROUBLE SHOOTING

NOTE: This is GENERAL information. This article is not intended to be specific to any unique situation or individual vehicle configuration. The purpose of this Trouble Shooting information is to provide a list of common causes to problem symptoms. For model-specific Trouble Shooting, refer to SUBJECT, DIAGNOSTIC, or TESTING articles available in the section(s) you are accessing.

BRAKE SYSTEM TROUBLE SHOOTING CHART

CONDITION & POSSIBLE CAUSE	CORRECTION
Brakes Pull Left or Right	
Incorrect tire pressure	Inflate tires to proper pressure
Front end out of alignment	See WHEEL ALIGNMENT
Mismatched tires	Check tires sizes
Restricted brake lines or hoses	Check hose routing
Loose or malfunctioning caliper	See DISC BRAKES or BRAKE SYSTEM
Bent shoe or oily linings	See DRUM BRAKES or BRAKE SYSTEM
Malfunctioning rear brakes	See DRUM, DISC BRAKES or BRAKE SYSTEM
Loose suspension parts	See SUSPENSION
Noises Without Brakes Applied	
Front linings worn out	Replace linings
Dust or oil on drums or rotors	See DRUM, DISC BRAKES or BRAKE SYSTEM

Noises With Brakes Applied	
Insulator on outboard shoe damaged	See DISC BRAKES or BRAKE SYSTEM
Incorrect pads or linings	Replace pads or linings
Brake Rough, Chatters or Pulsates	
Excessive lateral runout	Check rotor runout
Parallelism not to specifications	Reface or replace rotor
Wheel bearings not adjusted	See SUSPENSION
Rear drums out-of-round	Reface or replace drums
Disc pad reversed, steel against rotor	Remove and reinstall pad
Excessive Pedal Effort	
Malfunctioning power unit	See POWER BRAKES or BRAKE SYSTEM
Partial system failure	Check fluid and pipes
Worn disc pad or lining	Replace pad or lining
Caliper piston stuck or sluggish	See DISC BRAKES or BRAKE SYSTEM
Master cylinder piston stuck	See MASTER CYLINDERS or BRAKE SYSTEM
Brake fade due to incorrect pads for linings	Replace pads or linings
Linings or pads glazed	Replace pads or linings
Worn drums	Reface or replace drums
Excessive Pedal Travel	
Partial brake system failure	Check fluid and pipes
Insufficient fluid in master cylinder	See MASTER CYLINDERS or BRAKE SYSTEM
Air trapped in system	See BRAKE

	BLEEDING or BRAKE SYSTEM
Rear brakes not adjusted	See Adjustments in DRUM BRAKES or BRAKE SYSTEM
Bent shoe or lining	See DRUM BRAKES or BRAKE SYSTEM
Plugged master cylinder cap	See MASTER CYLINDERS or BRAKE SYSTEM
Improper brake fluid	Replace brake fluid
Pedal Travel Decreasing	
Compensating port plugged	See MASTER CYLINDERS or BRAKE SYSTEM
Swollen cup in master cylinder	See MASTER CYLINDERS or BRAKE SYSTEM
Master cylinder piston not returning	See MASTER CYLINDERS or BRAKE SYSTEM
Weak shoe retracting springs	See DRUM BRAKES BRAKE SYSTEM
Wheel cylinder piston sticking	See DRUM BRAKES or BRAKE SYSTEM
Dragging Brakes	
Master cylinder pistons not returning	See MASTER CYLINDERS BRAKE SYSTEM
Restricted brake lines or hoses	Check line routing
Incorrect parking brake adjustment	See DRUM BRAKES BRAKE SYSTEM
Parking Brake cables frozen	See DRUM BRAKES BRAKE SYSTEM
Incorrect installation of inboard disc pad	Remove and replace correctly

Power booster output rod too long	See POWER BRAKE UNITS BRAKE SYSTEM
Brake pedal not returning freely	See DISC, DRUM BRAKES BRAKE SYSTEM
Brakes Grab or Uneven Braking Action	
Malfunction of combination valve	See CONTROL VALVE or BRAKE SYSTEM
Malfunction of power brake unit	See POWER BRAKE UNITS or BRAKE SYSTEM
Binding brake pedal	See DISC, DRUM BRAKES or BRAKE SYSTEM
Pulsation or Roughness	
Uneven pad wear caused by caliper	See DISC BRAKES or BRAKE SYSTEM
Uneven rotor wear	See DISC BRAKES or BRAKE SYSTEM
Drums out-of-round	Reface or replace drums

ENGINE MECHANICAL

COOLING SYSTEM TROUBLE SHOOTING

NOTE: This is GENERAL information. This article is not intended to be specific to any unique situation or individual vehicle configuration. The purpose of this Trouble Shooting information is to provide a list of common causes to problem symptoms. For model-specific Trouble Shooting, refer to SUBJECT, DIAGNOSTIC, or TESTING articles available in the section(s) you are accessing.

COOLING SYSTEM TROUBLE SHOOTING

CONDITION & POSSIBLE CAUSE	CORRECTION

Overheating	
Coolant Leak	Fill/Pressure Test System
A/C Condenser Fins Clogged	Remove/Clean Condenser
Radiator Fins Clogged	Remove/Clean Radiator
Thermostat Stuck Closed	Replace Thermostat
Clogged Cooling System Passages	Clean/Flush Cooling System
Water Pump Malfunction	Replace Water Pump
Fan Clutch Malfunction	Replace Fan Clutch
Retarded Ignition Timing	Reset Ignition Timing
Cooling Fan Malfunction	Test Cooling Fan/Circuit
Cooling Fan Motor Malfunction	Test Fan Motor
Cooling Fan Relay Malfunction	Test Fan Relay
Faulty Radiator Cap	Replace Radiator Cap
Broken/Slipping Fan Belt	Replace Fan Belt
Restricted Exhaust	Repair Exhaust System
Corrosion	
Impurities In Coolant	Clean/Flush System
Coolant Leakage	
Damaged hose	Replace Hose
Leaky Water Pump	Replace Water Pump
Damaged Radiator Seam	Replace/Repair Radiator
Leaky Thermostat Cover	Replace Thermostat Cover
Cylinder Head Problem	Check Head/Head Gasket
Leaky Freeze Plugs	Replace Freeze Plugs
Recovery System Inoperative	
Loose and/or Defective Radiator Cap	Replace Radiator Cap

Overflow Tube Clogged and/or Leaking	Repair Tube
Recovery Bottle Vent Restricted	Clean Vent
No Heater Core Flow	
Collapsed Heater Hose	Replace Heater Hose
Plugged Heater Core	Clean/Replace Heater Core
Faulty Heater Valve	Replace Heater Valve

GASOLINE ENGINE - MECHANICAL TROUBLE SHOOTING

NOTE: This is GENERAL information. This article is not intended to be specific to any unique situation or individual vehicle configuration. The purpose of this Trouble Shooting information is to provide a list of common causes to problem symptoms. For model-specific Trouble Shooting, refer to SUBJECT, DIAGNOSTIC, or TESTING articles available in the section(s) you are accessing.

BASIC GASOLINE ENGINE - MECHANICAL TROUBLE SHOOTING CHART

CONDITION & POSSIBLE CAUSE	CORRECTION
Engine Lopes At Idle	
Intake manifold-to-head leaks	Replace manifold gasket, See ENGINES
Blown head gasket	Replace head gasket, See ENGINES
Worn timing gears, chain or sprocket	Replace gears, chain or sprocket
Worn camshaft lobes	Replace camshaft, See ENGINES
Overheated engine	Check cooling system, See COOLING
Blocked crankcase vent valve	Remove restriction
Leaking EGR valve	Repair leak and/or replace valve
Faulty fuel pump	Replace fuel pump
Engine Has Low Power	

Leaking fuel pump	Repair leak and/or replace fuel pump
Excessive piston-to-bore clearance	Install larger pistons, See ENGINES
Sticking valves or weak valve springs	Check valve train components, See ENGINES
Incorrect valve timing	Reset valve timing, See ENGINES
Worn camshaft lobes	Replace camshaft, See ENGINES
Blown head gasket	Replace head gasket. See ENGINES.
Clutch slipping	Adjust pedal and/or replace components, See ENGINES
Engine overheating	Check cooling system, See COOLING
Auto. Trans. pressure regulator valve faulty	Replace pressure regulator valve
Auto. Trans. fluid level too low	Add fluid as necessary
Improper vacuum diverter valve operation	Replace vacuum diverter valve
Vacuum leaks	Inspect vacuum system and repair as required
Leaking piston rings	Replace piston rings, See ENGINES
Faulty High Speed Operation	
Low fuel pump volume	Replace fuel pump
Leaking valves or worn	Replace valves and/or springs, See ENGINES
Incorrect valve timing	Reset valve timing,See ENGINES
Intake manifold restricted	Remove restriction

Worn distributor shaft	Replace distributor
Faulty Acceleration	
Improper fuel pump stroke	Remove pump and reset pump stroke
Incorrect ignition timing	Reset ignition timing, See TUNE-UP
Leaking valves	Replace valves, See ENGINES
Worn fuel pump diaphragm or piston	Replace diaphragm or piston
Intake Backfire	
Improper ignition timing	Reset ignition timing, See TUNE-UP
Faulty accelerator pump discharge	Replace accelerator pump
Improper choke operation	Check choke and adjust as required
Defective EGR valve	Replace EGR valve
Fuel mixture too lean	Reset air/fuel mixture, See TUNE-UP
Choke valve initial clearance too large	Reset choke valve initial clearance
Exhaust Backfire	
Vacuum leak	Inspect and repair vacuum system
Faulty vacuum diverter valve	Replace vacuum diverter valve
Faulty choke operation	Check choke and adjust as required
Exhaust system leak	repair exhaust system leak
Engine Detonation	
Ignition timing too far advanced	Reset ignition timing, See TUNE-UP
Faulty ignition system	Check ignition timing, See TUNE-UP

Spark plugs loose or faulty	Retighten or replace plugs
Fuel delivery system clogged	Inspect lines, pump and filter for clog
EGR valve inoperative	Replace EGR valve
PCV system inoperative	Inspect and/or replace hoses or valve
Vacuum leaks	Check vacuum system and repair leaks
Excessive combustion chamber deposits	Remove built-up deposits
Leaking, sticking or broken valves	Inspect and/or replace valves
External Oil Leakage	
Fuel pump improperly seated or worn gasket	Remove pump, replace gasket and seat properly
Oil pan gasket broken or pan bent	Straighten pan and replace gasket
Timing chain cover gasket broken	Replace timing chain cover gasket
Rear main oil seal worn	Replace rear main oil seal
Oil pan drain plug not seated properly	Remove and reinstall drain plug
Camshaft bearing drain hole blocked	Remove restriction
Oil pressure sending switch leaking	Remove and reinstall sending switch
Excessive Oil Consumption	
Worn valve stems or guides	Replace stems or guides, See ENGINES
Valve "O" ring seals damaged	Replace "O" ring seals, See ENGINES
Plugged oil drain back holes	Remove restrictions
Improper PCV valve operation	Replace PCV valve
Engine oil level too high	Remove excess oil

Engine oil too thin	Replace thicker oil
Valve stem oil deflectors damaged	Replace oil deflectors
Incorrect piston rings	Replace piston rings, See ENGINES
Piston ring gaps not staggered	Reinstall piston rings, See ENGINES
Insufficient piston ring tension	Replace rings, See ENGINES
Piston ring grooves or oil return	slots clogged Replace piston rings, See ENGINES
Piston rings sticking in grooves	Replace piston rings, See ENGINES
Piston ring grooves excessively worn	Replace piston and rings, See ENGINES
Compression rings installed upside down	Replace compression rings correctly, See ENGINES
Worn or scored cylinder walls	Rebore cylinders or replace block
Mismatched oil ring expander and rail	Replace oil ring expander and rail, See ENGINES
Intake gasket dowels too long	Replace intake gasket dowels
Excessive main or connecting rod bearing clearance	Replace main or connecting rod bearings, See ENGINES
No Oil Pressure	
Low oil level	Add oil to proper level
Oil pressure sender or gauge broken	Replace sender or gauge
Oil pump malfunction	Remove and overhaul oil pump, See ENGINES

Oil pressure relief valve sticking	Remove and reinstall valve
Oil pump passages blocked	Overhaul oil pump, See ENGINES
Oil pickup screen or tube blocked	Remove restriction
Loose oil inlet tube	Tighten oil inlet tube
Loose camshaft bearings	Replace camshaft bearings, See ENGINES
Internal leakage at oil passages	Replace block or cylinder head
Low Oil Pressure	
Low engine oil level	Add oil to proper level
Engine oil too thin	Remove and replace with thicker oil
Excessive oil pump clearance	Reduce oil pump clearance, See ENGINES
Oil pickup tube or screen blocked	Remove restrictions
Main, rod or cam bearing clearance excessive	Replace bearing to reduce clearance, See ENGINES
High Oil Pressure	
Improper grade of oil	Replace with proper oil
Oil pressure relief valve stuck closed	Eliminate binding
Oil pressure sender or gauge faulty	Replace sender or gauge
Noisy Main Bearings	
Inadequate oil supply	Check oil delivery to main bearings
Excessive main bearing clearance	Replace main bearings, See ENGINES
Excessive crankshaft end play	Replace crankshaft, See ENGINES

Loose flywheel or torque converter	Tighten attaching bolts
Loose or damaged vibration damper	Tighten or replace vibration damper
Crankshaft journals out-of-round	Re-grind crankshaft journals
Excessive belt tension	Loosen belt tension
Noisy Connecting Rods	
Excessive bearing clearance or missing bearing	Replace bearing, See ENGINES
Crankshaft rod journal out-of-round	Re-grind crankshaft journal
Misaligned connecting rod or cap	Remove rod or cap and realign
Incorrectly tightened rod bolts	Remove and re-tighten rod bolts
Noisy Pistons and Rings	
Excessive piston-to-bore clearance	Install larger pistons, See ENGINES
Bore tapered or out-of-round	Rebore block
Piston ring broken	Replace piston rings, See ENGINES
Piston pin loose or seized	Replace piston pin, See ENGINES
Connecting rods misaligned	Realign connecting rods
Ring side clearance too loose or tight	Replace with larger or smaller rings
Carbon build-up on piston	Remove carbon
Noisy Valve Train	
Worn or bent push rods	Replace push rods, See ENGINES
Worn rocker arms or bridged pivots	Replace push rods, See ENGINES
Dirt or chips in valve lifters	Remove lifters and remove dirt/chips
Excessive valve lifter leak-down	Replace valve lifters,

	See ENGINES
Valve lifter face worn	Replace valve lifters, See ENGINES
Broken or cocked valve springs	Replace or reposition springs
Too much valve stem-to-guide clearance	Replace valve guides, See ENGINES
Valve bent	Replace valve, See ENGINES
Loose rocker arms	Retighten rocker arms, See ENGINES
Excessive valve seat run-out	Reface valve seats, See ENGINES
Missing valve lock	Install new valve lock
Excessively worn camshaft lobes	Replace camshaft, See ENGINES
Plugged valve lifter oil holes	Eliminate restriction or replace lifter
Faulty valve lifter check ball	Replace lifter check ball, See ENGINES
Rocker arm nut installed upside down	Remove and reinstall correctly
Valve lifter incorrect for engine	Remove and replace valve lifters
Faulty push rod seat or lifter plunger	Replace plunger or push rod
Noisy Valves	
Improper valve lash	Re-adjust valve lash, See ENGINES
Worn or dirty valve lifters	Clean and/or replace lifters
Worn valve guides	Replace valve guides, See ENGINES
Excessive valve seat or face run-out	Reface seats or valve face
Worn camshaft lobes	Replace camshaft, See

	ENGINES
Loose rocker arm studs	Re-tighten rocker arm studs, See ENGINES
Bent push rods	Replace push rods, See ENGINES
Broken valve springs	Replace valve springs, See ENGINES
Burned,Sticking or Broken Valves	
Weak valve springs or warped valves	Replace valves and/or springs, See ENGINES
Improper lifter clearance	Re-adjust clearance or replace lifters
Worn guides or improper guide clearance	Replace valve guides, See ENGINES
Out-of-round valve seats or improper seat width	Re-grind valve seats
Gum deposits on valve stems, seats or guide	Remove deposits
Improper spark timing	Re-adjust spark timing
Broken Pistons/Rings	
Undersize pistons	Replace with larger pistons, See ENGINES
Wrong piston rings	Replace with correct rings, See ENGINES
Out-of-round cylinder bore	Re-bore cylinder bore
Improper connecting rod alignment	Remove and realign connecting rods
Excessively worn ring grooves	Replace pistons, See ENGINES
Improperly assembled piston pins	Re-assemble pin-to-piston, See ENGINES
Insufficient ring gap clearance	Install new rings, See ENGINES
Engine overheating	Check cooling system
Incorrect ignition timing	Re-adjust ignition timing, See TUNE-UP

Excessive Exhaust Noise	
Leaks at manifold to head, or to pipe	Replace manifold or pipe gasket
Exhaust manifold cracked or broken	Replace exhaust manifold, See ENGINES

ENGINE PERFORMANCE

CARBURETOR TROUBLE SHOOTING:

NOTE: This is GENERAL information. This article is not intended to be specific to any unique situation or individual vehicle configuration. The purpose of this Trouble Shooting information is to provide a list of common causes to problem symptoms. For model-specific Trouble Shooting, refer to SUBJECT, DIAGNOSTIC, or TESTING articles available in the section(s) you are accessing.

BASIC COLD START SYMPTOMS TROUBLE SHOOTING CHART

CONDITION & POSSIBLE CAUSE	CORRECTION
Engine Won't Start	
Choke not closing	Check choke operation, see FUEL SYSTEMS
Choke linkage bent	Check linkage, see FUEL SYSTEM
Engine Starts, Then Dies	
Choke vacuum kick setting too wide	Check setting and adjust see, FUEL SYSTEMS
Fast idle RPM too low	Reset RPM to specification, see TUNE-UP
Fast idle cam index incorrect	Reset fast idle cam index, see FUEL SYSTEMS

Vacuum leak	Inspect vacuum system for leaks
Low fuel pump outlet	Repair or replace pump, see FUEL SYSTEMS
Low carburetor fuel level	Check float setting see FUEL SYSTEM
Engine Quits Under Load	
Choke vacuum kick setting incorrect	Reset vacuum kick setting,see FUEL SYSTEMS
Fast idle cam index incorrect	Reset fast idle cam index, see FUEL SYSTEM
Incorrect hot fast idle speed RPM	Reset fast idle RPM, see TUNE-UP
Engine Starts, Runs Up, Then Idles, Slowly With Black Smoke	
Choke vacuum kick set too narrow	Reset vacuum kick, see FUEL SYSTEMS
Fast idle cam index incorrect	Reset fast idle cam index, see FUEL SYSTEMS
Hot fast idle RPM too low	Reset fast idle RPM, see TUNE-UP

BASIC HOT START SYMPTOMS TROUBLE SHOOTING CHART

CONDITION & POSSIBLE CAUSE	CORRECTION
Engine Won't Start	
Engine flooded	Allow fuel to evaporate

BASIC COLD ENGINE DRIVEABILITY SYMPTOMS TROUBLE SHOOTING CHART

CONDITION & POSSIBLE CAUSE	CORRECTION
Engine Stalls in Gear	
Choke vacuum kick setting incorrect	Reset choke vacuum

	kick, see FUEL SYSTEMS
Fast idle RPM incorrect	Reset fast idle RPM, see TUNE-UP
Fast idle cam index incorrect	Reset fast idle cam see FUEL SYSTEMS
Acceleration Sag or Stall	
Defective choke control switch	Replace choke control switch
Choke vacuum kick setting incorrect	Reset choke vacuum kick see, FUEL SYSTEMS
Float level incorrect (too low)	Adjust float level, FUEL SYSTEMS
Accelerator pump defective	Repair or replace pump see FUEL SYSTEMS
Secondary throttles not closed	Inspect lockout adjustment, see FUEL SYSTEMS
Sag or Stall After Warmup	
Defective choke control switch	Replace choke control switch, see FUEL SYSTEMS
Defective accelerator pump	Replace pump, see FUEL SYSTEMS
Float level incorrect (too low)	Adjust float level, see FUEL SYSTEMS
Backfiring & Black Smoke	
Plugged heat crossover system	Remove restriction

BASIC WARM ENGINE DRIVEABILITY SYMPTOMS TROUBLE SHOOTING CHART

CONDITION & POSSIBLE CAUSE	CORRECTION
Hesitation With Small Amount of Gas Pedal Movement	
Vacuum leak	Inspect vacuum lines

Accelerator pump weak or inoperable	Replace pump, see FUEL SYSTEMS
Float level setting too low	Reset float level, see,FUEL SYSTEMS
Metering rods sticking or binding	Inspect and/or replace rods, see FUEL SYSTEMS
Carburetor idle or transfer system plugged	Inspect system and remove restriction
Frozen or binding heated air inlet	Inspect heated air door for binding
Hesitation With Heavy Gas Pedal Movement	
Defective accelerator pump	Replace pump, see FUEL SYSTEMS
Metering rod carrier sticking or binding	Remove restriction
Large vacuum leak	Inspect vacuum system and repair leak
Float level setting too low	Reset float level, see FUEL SYSTEMS
Defective fuel pump, lines or filter	Inspect pump, lines and filter
Air door setting incorrect	Adjust air door setting, see FUEL

DIESEL ENGINE TROUBLE SHOOTING

NOTE: This is GENERAL information. This article is not intended to be specific to any unique situation or individual vehicle configuration. The purpose of this Trouble Shooting information is to provide a list of common causes to problem symptoms. For model-specific Trouble Shooting, refer to SUBJECT, DIAGNOSTIC, or TESTING articles available in the section(s) you are accessing.

NOTE: Diesel engines mechanical diagnosis is the same as gasoline engines for items such as noisy valves, bearings, pistons, etc. The following trouble shooting

covers only items pertaining to diesel engines.

BASIC DIESEL ENGINE TROUBLE SHOOTING CHART

CONDITION & POSSIBLE CAUSE	CORRECTION
Engine Won't Crank	
Bad battery connections or dead batteries	Check connections and/or replace batteries
Bad starter connections or bad starter	Check connections and/or replace starter
Engine Cranks Slowly, Won't Start	
Bad battery connections or dead batteries	Check connections and/or replace batteries
Engine oil too heavy	Replace engine oil
Engine Cranks Normally, But Will Not Start	
Glow plugs not functioning	Check glow plug system, see FUEL SYSTEMS
Glow plug control not functioning	Check controller, see FUEL SYSTEMS
Fuel not injected into cylinders	Check fuel injectors, see FUEL SYSTEMS
No fuel to injection pump	Check fuel delivery system
Fuel filter blocked	Replace fuel filter
Fuel tank filter blocked	Replace fuel tank filter
Fuel pump not operating	Check pump operation and/or replace pump
Fuel return system blocked	Inspect system and remove restriction
No voltage to fuel solenoid	Check solenoid and connections
Incorrect or contaminated fuel	Replace fuel
Incorrect injection pump timing	Re-adjust pump timing, see FUEL SYSTEMS
Low compression	Check valves, pistons,

	rings, see ENGINES
Injection pump malfunction	Inspect and/or replace injection pump
Engine Starts, Won't Idle	
Incorrect slow idle adjustment	Reset idle adjustment, see TUNE-UP
Fast idle solenoid malfunctioning	Check solenoid and connections
Fuel return system blocked	Check system and remove restrictions
Glow plugs go off too soon	See glow plug diagnosis in FUEL SYSTEMS
Injection pump timing incorrect	Reset pump timing, see FUEL SYSTEMS
No fuel to injection pump	Check fuel delivery system
Incorrect or contaminated fuel	Replace fuel
Low compression	Check valves, piston, rings, see ENGINES
Injection pump malfunction	Replace injection pump, see FUEL SYSTEMS
Fuel solenoid closes in RUN position	Check solenoid and connections
Engines Starts/Idles Rough W/out Smoke or Noise	
Incorrect slow idle adjustment	Reset slow idle, see TUNE-UP
Injection line fuel leaks	Check lines and connections
Fuel return system blocked	Check lines and connections
Air in fuel system	Bleed air from system
Incorrect or contaminated fuel	Replace fuel
Injector nozzle malfunction	Check nozzles, see FUEL SYSTEMS

Engines Starts and Idles Rough W/out Smoke or Noise, But Clears After Warm-Up	
Injection pump timing incorrect	Reset pump timing, see FUEL SYSTEMS
Engine not fully broken in	Put more miles on engine
Air in system	Bleed air from system
Injector nozzle malfunction	Check nozzles, see FUEL SYSTEMS
Engine Idles Correctly, Misfires Above Idle	
Blocked fuel filter	Replace fuel filter
Injection pump timing incorrect	Reset pump timing, see FUEL SYSTEMS
Incorrect or contaminated fuel	Replace fuel
Engine Won't Return To Idle	
Fast idle adjustment incorrect	Reset fast idle, see TUNE-UP
Internal injection pump malfunction	Replace injection pump, see FUEL SYSTEMS
External linkage binding	Check linkage and remove binding
Fuel Leaks On Ground	
Loose or broken fuel line	Check lines and connections
Internal injection pump seal leak	Replace injection pump, see FUEL SYSTEMS
Cylinder Knocking Noise	
Injector nozzles sticking open	Test injectors, see FUEL SYSTEMS
Very low nozzle opening pressure	Test injectors and/or replace
Loss of Engine Power	
Restricted air intake	Remove restriction
EGR valve malfunction	Replace EGR valve

Blocked or damaged exhaust system	Remove restriction and/or replace components
Blocked fuel tank filter	Replace filter
Restricted fuel filter	Remove restriction and/or replace filter
Block vent in gas cap	Remove restriction and/or replace cap
Tank-to-injection pump fuel supply blocked	Check fuel lines and connections
Blocked fuel return system	Remove restriction
Incorrect or contaminated fuel	Replace fuel
Blocked injector nozzles	Check nozzle for blockage, see FUEL SYSTEMS
Low compression	Check valves, rings, pistons, see ENGINES
Loud Engine Noise With Black Smoke	
Basic timing incorrect	Reset timing, see FUEL SYSTEMS
EGR valve malfunction	Replace EGR valve
Internal injection pump malfunction	Replace injection pump, see FUEL SYSTEMS
Incorrect injector pump housing pressure	Check pressure, see FUEL SYSTEMS
Engine Overheating	
Cooling system leaks	Check cooling system and repair leaks
Belt slipping or damaged	Check tension and/or replace belt
Thermostat stuck closed	Remove and replace thermostat, see ENGINE COOLING
Head gasket leaking	Replace head gasket
Oil Light on at Idle	

Low oil pump pressure	Check oil pump operation, see ENGINES
Oil cooler or line restricted	Remove restriction and/or replace cooler
Engine Won't Shut Off	
Injector pump fuel solenoid does not return fuel valve to OFF position	Remove and check solenoid and replace if needed

VACUUM PUMP DIAGNOSIS

CONDITION & POSSIBLE CAUSE	CORRECTION
Excessive Noise	
Loose pump-to-drive assembly screws	Tighten screws
Loose tube on pump assembly	Tighten tube
Valves not functioning properly	Replace valves
Oil Leakage	
Loose end plug	Tighten end plug
Bad seal crimp	Remove and re-crimp seal

FUEL INJECTION TROUBLE SHOOTING

NOTE: This is GENERAL information. This article is not intended to be specific to any unique situation or individual vehicle configuration. The purpose of this Trouble Shooting information is to provide a list of common causes to problem symptoms. For model-specific Trouble Shooting, refer to SUBJECT, DIAGNOSTIC, or TESTING articles available in the section(s) you are accessing.

BASIC FUEL INJECTION TROUBLE SHOOTING CHART

CONDITION & POSSIBLE CAUSE	CORRECTION
Engine Won't Start (Cranks Normally)	
Cold start valve inoperative	Test valve and circuit
Poor connection;vacuum or wiring	Check vacuum and electrical connections

Contaminated fuel	Test fuel for water or alcohol
Defective fuel pump relay or circuit	Test relay and wiring
Battery too low	Charge and test battery
Low fuel pressure	Test pressure regulator and fuel pump, check for restricted lines and filters
No distributor reference pulses	Repair ignition system as necessary
Open coolant temperature sensor circuit	Test sensor and wiring
Shorted W.O.T. switch in T.P.S.	Disconnect W.O.T. switch, engine should start
Defective ECM	Replace ECM
Fuel tank residual pressure valve leaks	Test for fuel pressure drop after shut down
Hard Starting	
Disconnected hot air tube to air cleaner	Reconnect tube and test control valve
Defective Idle Air Control (IAC) valve	Test valve operation and circuit
Shorted, open or misadjusted T.P.S.	Test and adjust or replace T.P.S.
EGR valve open	Test EGR valve and control circuit
Poor Oxygen sensor signal	Test for shorted or circuit
Incorrect mixture from PCV system	Test PCV for flow, check sealing of oil filter cap
Poor High Speed Operation	
Low fuel pump volume	Faulty pump or restricted fuel lines or filters
Poor MAP sensor signal	Test MAP sensor,

	vacuum hose and wiring
Poor Oxygen sensor signal	Test for shorted or open sensor or circuit
Open coolant temperature sensor circuit	Test sensor and wiring
Faulty ignition operation	Check wires for cracks or poor con- nections, test secondary voltage with oscilloscope
Contaminated fuel	Test fuel for water or alcohol
Intermittent ECM ground	Test ECM ground connection for resistance
Restricted air cleaner	Replace air cleaner
Restricted exhaust system	Test for exhaust manifold back pressure
Poor MAF sensor signal	Check leakage between sensor and manifold
Poor VSS signal	If tester for ALCL hook-up is available check that VSS reading matches speedometer
Ping or Knock on Acceleration	
Poor Knock sensor signal	Test for shorted or open sensor or circuit
Poor Baro sensor signal	Test for shorted or open sensor or circuit
Improper ignition timing	See VEHICLE EMISSION CONTROL LABEL (where applicable)
Check for engine overheating problems	Low coolant, loose

	belts or electric cooling fan inoperative

NOTE: For additional electronic fuel injection trouble shooting information, see the appropriate article in the ENGINE PERFORMANCE section (not all vehicles have Computer Engine Control articles). Information is provided there for diagnosing fuel system problems on vehicles with electronic fuel injection.

IGNITION SYSTEM TROUBLE SHOOTING

NOTE: This is GENERAL information. This article is not intended to be specific to any unique situation or individual vehicle configuration. The purpose of this Trouble Shooting information is to provide a list of common causes to problem symptoms. For model-specific Trouble Shooting, refer to SUBJECT, DIAGNOSTIC, or TESTING articles available in the section(s) you are accessing.

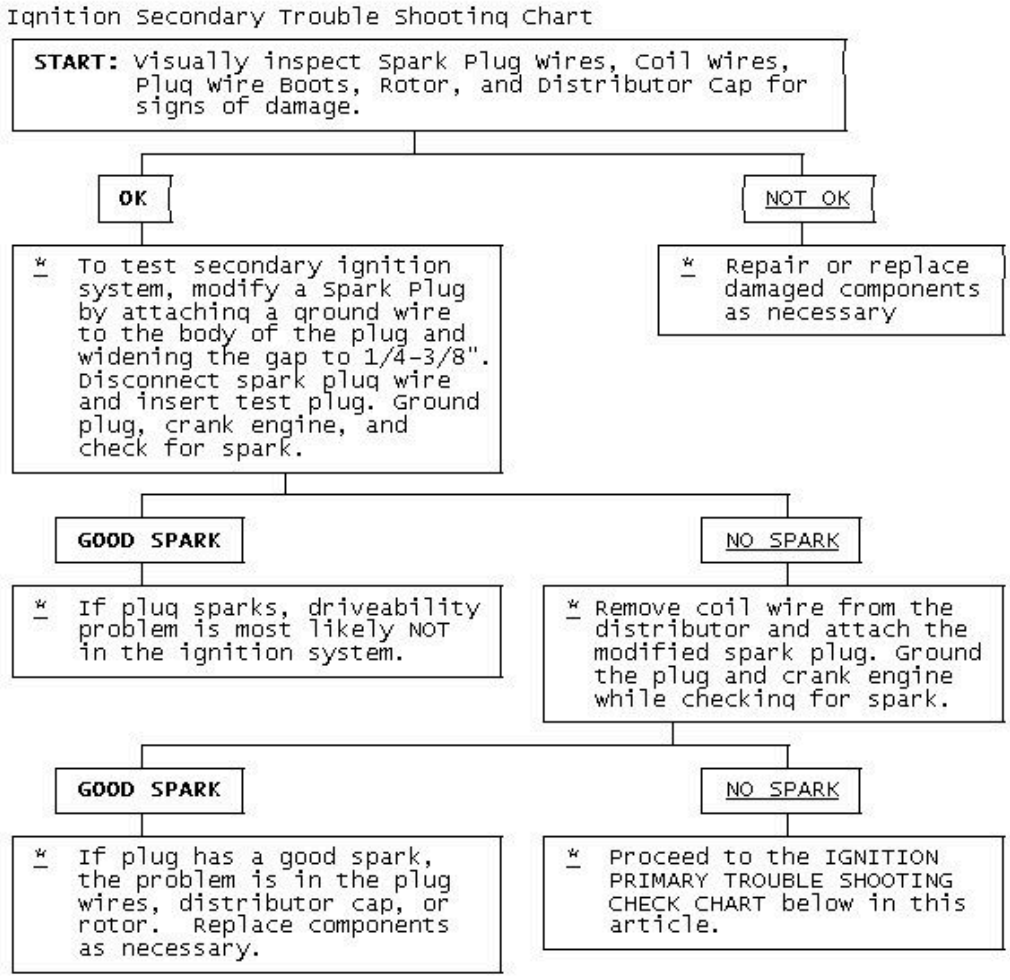

Fig. 3: Ignition Secondary Trouble Shooting Chart

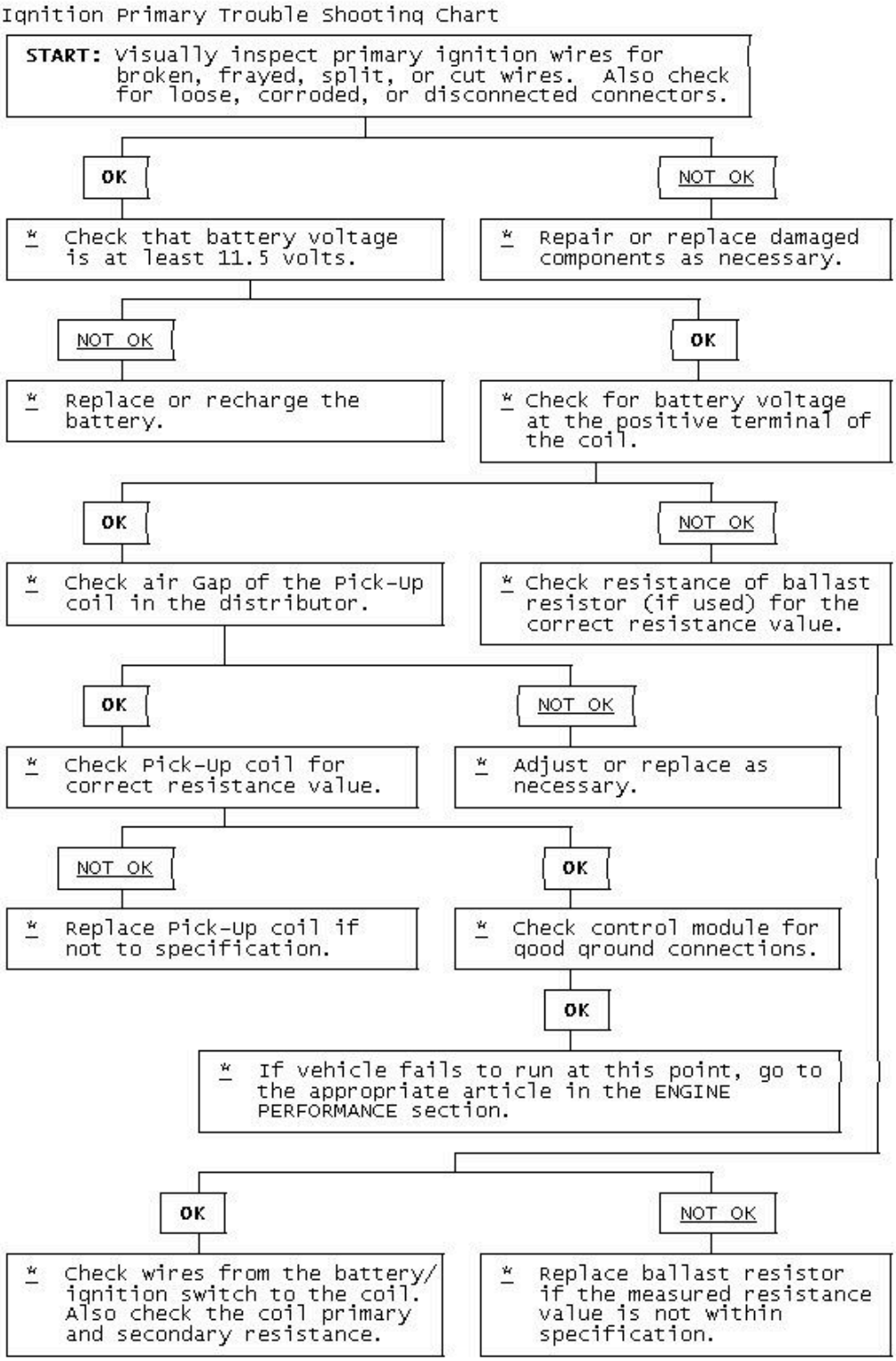

Fig. 4: Ignition Primary Trouble Shooting Chart

STARTER TROUBLE SHOOTING

NOTE: This is GENERAL information. This article is not intended to be specific to any unique situation or individual vehicle configuration. The purpose of this Trouble Shooting information is to provide a list of common causes to problem symptoms. For model-specific Trouble Shooting, refer to SUBJECT, DIAGNOSTIC, or TESTING articles available in the section(s) you are accessing.

BASIC STARTER TROUBLE SHOOTING CHART

CONDITION & POSSIBLE CAUSE	CORRECTION
Starter Fails to Operate	
Dead battery or bad connections between starter and battery	Check battery charge and all wires and connections to starter
Ignition switch faulty or misadjusted	Adjust or replace ignition switch
Open circuit between starter switch ignition terminal on starter relay	Check and repair wires and connections as necessary
Starter relay or starter defective	See Testing in STARTER article
Open solenoid pull-in wire	See Testing in STARTER article
Starter Does Not Operate and Headlights Dim	
Weak battery or dead cell	Charge or replace battery as necessary
Loose or corroded battery connections	Check that battery connections are clean and tight
Internal ground in starter windings	See Testing in STARTER article
Grounded starter fields	See Testing in STARTERS
Armature rubbing on pole shoes	See STARTER article
Starter Turns but Engine Does Not Rotate	

Starter clutch slipping	See STARTER article
Broken clutch housing	See STARTER article
Pinion shaft rusted or dry	See STARTER article
Engine basic timing incorrect	See Ignition Timing in TUNE-UP article
Broken teeth on engine flywheel	Replace flywheel and check for starter pinion gear damage
Starter Will Not Crank Engine	
Faulty overrunning clutch	See STARTER article
Broken clutch housing	See STARTER article
Broken flywheel teeth	Replace flywheel and check for starter pinion gear damage
Armature shaft sheared or reduction gear teeth stripped	See STARTER article
Weak battery	Charge or replace battery as necessary
Faulty solenoid	See On-Vehicle Tests in STARTER article
Poor grounds	Check all ground connections for tight and clean connections
Ignition switch faulty or misadjusted	Adjust or replace ignition switch as necessary
Starter Cranks Engine Slowly	
Battery weak or defective	Charge or replace battery as necessary
Engine overheated	See ENGINE COOLING SYSTEM article
Engine oil too heavy	Check that proper viscosity oil is used
Poor battery-to-starter connections	Check that all between battery and

	starter are clean and tight
Current draw too low or too high	See Bench Tests in STARTER article
Bent armature, loose pole shoes screws or worn bearings	See STARTER article
Burned solenoid contacts	Replace solenoid
Faulty starter	Replace starter
Starter Engages Engine Only Momentarily	
Engine timing too far advanced	See Ignition Timing in TUNE-UP article
Overrunning clutch not engaging properly	Replace overrunning clutch. See STARTER article
Broken starter clutch	See STARTER article
Broken teeth on engine flywheel	Replace flywheel and check starter pinion gear for damage
Weak drive assembly thrust spring	See STARTER article
Weak hold-in coil	See Bench Tests in STARTER article
Starter Drive Will Not Engage	
Defective point assembly	See Testing in STARTER article
Poor point assembly ground	See Testing in STARTER article
Defective pull-in coil	Replace starter solenoid
Starter Relay Does Not Close	
Dead battery	Charge or replace battery as necessary
Faulty wiring	Check all wiring and connections leading to relay
Neutral safety switch faulty	Replace neutral safety switch

Starter relay faulty	Replace starter relay
Starter Drive Will Not Disengage	
Starter motor loose on mountings	Tighten starter attach bolts
Worn drive end bushing	See STARTER article
Damaged engine flywheel teeth	Replace flywheel and starter pinion gear for damage
Drive yolk return spring broken or missing	Replace return spring
Faulty ignition switch	Replace ignition switch
Insufficient clearance between winding leads to solenoid terminal and main contact in solenoid	Replace starter solenoid
Starter clutch not disengaging	Replace starter clutch
Ignition starter switch contacts sticking	Replace ignition switch
Starter Relay Operates but Solenoid Does Not	
Faulty solenoid switch, switch connections or relay	Check all wiring between relay and solenoid or replace relay or solenoid as necessary
Broken lead or loose soldered connections	Repair wire or wire connections as necessary
Solenoid Plunger Vibrates When Switch is Engaged	
Weak battery	Charge or replace battery as necessary
Solenoid contacts corroded	Clean contacts or replace solenoid
Faulty wiring	Check all wiring leading to solenoid
Broken connections inside switch cover	Repair connections or replace solenoid
Open hold-in wire	Replace solenoid
Low Current Draw	

Worn brushes or weak	Replace brushes or brush springs as necessary
High Pitched Whine During Cranking Before Engine Fires but Engine Fires and Cranks Normally	
Distance too great between starter pinion and flywheel	Align starter or check that correct starter and flywheel are being used
High Pitched Whine After Engine Fires With Key released. Engine Fires and Cranks Normally	
Distance too small between starter pinion and flywheel	Flywheel runout contributes to the intermittent nature

TUNE-UP TROUBLE SHOOTING - GAS ENGINE VEHICLES

NOTE: This is GENERAL information. This article is not intended to be specific to any unique situation or individual vehicle configuration. The purpose of this Trouble Shooting information is to provide a list of common causes to problem symptoms. For model-specific Trouble Shooting, refer to SUBJECT, DIAGNOSTIC, or TESTING articles available in the section(s) you are accessing.

BASIC SPARK PLUG TROUBLE SHOOTING CHARTS

CONDITION & POSSIBLE CAUSE	CORRECTION
Normal Spark Plug Condition	
Light Tan or Gray deposits	No Action
Electrode not burned or fouled	No Action
Gap tolerance not changed	No Action
Cold Fouling or Carbon Deposits	
Overrich air/fuel mixture	Adjust air/fuel mixture, see ENGINE PERFORMANCE section
Faulty choke	Replace choke

	assembly, see ENGINE PERFORMANCE section
Clogged air filter	Clean and/or replace air filter
Incorrect idle speed or dirty carburetor	Reset idle speed and/ or clean carburetor
Faulty ignition wires	Replace ignition wiring
Prolonged operation at idle	Shut engine off during long idle
Sticking valves or worn valve guide seals	Check valve train
Wet Fouling or Oil Deposits	
Worn rings and pistons	Install new rings and pistons
Excessive cylinder wear	Rebore or replace block
Excessive valve guide clearance	Worn or loose bearing
Gap Bridged	
Deposits in combustion chamber becoming fused to electrode	Clean combustion chamber of deposits
Blistered Electrode	
Engine overheating	Check cooling system
Wrong type of fuel	Replace with correct fuel
Loose spark plugs	Retighten spark plugs
Over-advanced ignition timing	Reset ignition timing see ENGINE PERFORMANCE
Pre-Ignition or Melted Electrodes	
Incorrect type of fuel	Replace with correct fuel
Incorrect ignition timing	Reset ignition timing see ENGINE PERFORMANCE

Burned valves	Replace valves
Engine Overheating	Check cooling system
Wrong type of spark plug, too hot	Replace with correct spark plug, see ENGINE PERFORMANCE
Chipped Insulators	
Severe detonation	Check for over-advanced timing or combustion
Improper gapping procedure	Re-gap spark plugs
Rust Colored Deposits	
Additives in unleaded fuel	Try different fuel brand
Water In Combustion Chamber	
Blown head gasket or cracked head	Repair or replace head or head gasket

NOTE: Before diagnosing an electronic ignition system, ensure that all wiring is connected properly between distributor, wiring connector and spark plugs. Ignition problem will show up either as: Engine Will Not Start or Engine Runs Rough.

BASIC ELECTRONIC IGNITION TROUBLE SHOOTING CHARTS

CONDITION & POSSIBLE CAUSE	CORRECTION
Engine Won't Start	
Open circuit between distributor and bulkhead connector	Repair circuit
Open circuit between bulkhead connector and ignition switch	Repair circuit
Open circuit between ignition switch and starter solenoid	Repair circuit
Engine Runs Rough	
Fuel lines leaking or clogged	Tighten fitting, remove restriction

Initial timing incorrect	Reset ignition timing see ENGINE PERFORMANCE
Centrifugal advance malfunction	Repair distributor advance
Defective spark plugs or wiring	Replace plugs or plug wiring
Component Failure	
Spark arc-over on cap, rotor or coil	Replace cap, rotor or or coil
Defective pick-up coil	Replace pick-up coil
Defective ignition coil	Replace ignition coil
Defective vacuum unit	Replace vacuum unit
Defective control module	Replace control module

BASIC ELECTRONIC IGNITION TROUBLE SHOOTING CHARTS - USING OSCILLOSCOPE PATTERNS

CONDITION & POSSIBLE CAUSE	CORRECTION
Firing Voltage Lines are the Same, but Abnormally High	
Retarded ignition timing	Reset ignition timing, see ENGINE PERFORMANCE section
Fuel mixture too lean	Readjust carburetor, see ENGINE PERFORMANCE
High resistance in coil wire	Replace coil wire
Corrosion in coil tower terminal	Clean and/or replace coil
Corrosion in distributor coil terminal	Clean and/or replace distributor cap
Firing Voltage Lines are the Same but Abnormally Low	
Fuel mixture too rich	Readjust carburetor, see ENGINE PERFORMANCE

Breaks in coil wire causing arcing	Replace coil wire
Cracked coil tower causing arcing	Replace coil
Low coil output	Replace coil
Low engine compression	Determine cause and repair
One or More, But Not All Firing Voltage Lines are Higher Than Others	
Carburetor idle mixture not balanced	Readjust carburetor, see ENGINE PERFORMANCE
EGR valve stuck open	Clean and/or replace valve
High resistance in spark plug wires	Replace spark plug wires
Cracked or broken spark plug insulator	Replace spark plugs
Intake vacuum leak	Repair leak
Defective spark plugs	Replace spark plugs
Corroded spark plug terminals	Replace spark plugs
One or More, But Not All Firing Voltage Lines Are Lower Than Others	
Curb idle mixture not balanced	Readjust carburetor, see ENGINE PERFORMANCE
Breaks in plug wires	Replace plug wires causing arcing
Cracked coil tower causing arcing	Replace coil
Low compression	Determine cause and repair
Defective spark plugs	Replace spark plugs
Corroded spark plugs	Replace spark plugs
Cylinders Not Firing	
Cracked distributor cap terminals	Replace distributor cap
Shorted spark plug wire	Determine cause and repair
Mechanical problem in engine	Determine cause and repair
Defective spark plugs	Replace spark plugs

Spark plugs fouled	Replace spark plugs

BASIC DRIVEABILITY PROBLEMS TROUBLE SHOOTING

CONDITION & POSSIBLE CAUSE	CORRECTION
Hard Starting	
Binding carburetor linkage	Eliminate binding
Binding choke linkage	Eliminate binding
Binding choke piston	Eliminate binding
Restricted choke vacuum	Check vacuum lines for blockage
Worn or dirty needle valve and seat	Clean carburetor, see ENGINE PERFORMANCE
Float sticking	Readjust or replace float see the ENGINE PERFORMANCE section
Incorrect choke adjustment	Reset choke adjustment see ENGINE PERFORMANCE
Defective coil	Replace coil
Improper spark plug gap	Regap spark plugs
Incorrect ignition timing	Reset ignition timing see ENGINE PERFORMANCE
Detonation	
Over-advanced ignition timing	Reset ignition timing see ENGINE PERFORMANCE
Defective spark plugs	Replace spark plugs
Fuel lines clogged	Clean fuel lines
EGR system malfunction	Check and repair EGR system
PCV system malfunction	Repair PCV system
Vacuum leaks	Check and repair

	vacuum system
Loose fan belts	Tighten or replace fan belts, see ENGINE PERFORMANCE
Restricted airflow	Remove restriction
Vacuum advance malfunction	Check distributor operation
Dieseling	
Binding carburetor linkage	Eliminate binding
Binding throttle linkage	Eliminate blinding
Binding choke linkage or fast idle cam	Eliminate binding
Defective idle solenoid	Replace idle solenoid see ENGINE PERFORMANCE
Improper base idle speed	Reset idle speed, see see ENGINE PERFORMANCE
Incorrect ignition timing	Reset ignition timing see ENGINE PERFORMANCE
Incorrect idle mixture setting	Reset idle mixture, see ENGINE PERFORMANCE
Faulty Acceleration	
Incorrect ignition timing	Reset ignition timing see ENGINE PERFORMANCE
Engine cold and choke too lean	Adjust choke and allow engine to warm-up
Defective spark plugs	Replace spark plugs
Defective coil	Replace coil
Faulty Low Speed Operation	
Clogged idle transfer slots	Clean idle transfer slots, see FUEL
Restricted idle air bleeds and passages	Disassemble and clean

	carburetor, see FUEL
Clogged air cleaner	Replace air filter
Defective spark plugs	Replace spark plugs
Defective ignition wires	Replace ignition wire see ENGINE PERFORMANCE
Defective distributor cap	Replace distributor cap
Faulty High Speed Operation	
Incorrect ignition timing	Reset ignition timing see ENGINE PERFORMANCE
Defective distributor centrifugal advance	Replace advance mechanism
Defective distributor vacuum advance	Replace advance unit
Incorrect spark plugs or plug gap	Check gap and/or replace spark plugs
Faulty choke operation	Check choke and repair as required
Clogged vacuum passages	Remove restrictions
Improper size or clogged main jet	Check jet size and clean, see FUEL
Restricted air cleaner	Check filter and replace as necessary
Defective distributor cap, rotor or coil	Replace cap, rotor or coil
Misfire at All Speeds	
Defective spark plugs	Replace spark plugs
Defective spark plug wires	Replace spark plug wires
Defective distributor cap, rotor, or coil	Replace cap, rotor, or coil
Cracked or broken vacuum hoses	Replace vacuum hoses
Vacuum leaks	Repair vacuum leaks
Fuel lines clogged	Remove restriction
Hesitation	

Cracked or broken vacuum	Replace vacuum hoses hoses
Vacuum leaks	Repair Vacuum leaks
Binding carburetor linkage	Eliminate binding
Binding throttle linkage	Eliminate binding
Binding choke linkage or fast idle cam	Eliminate binding
Improper float setting	Readjust float setting, see FUEL
Cracked or broken ignition wires	Replace ignition wires
Rough Idle, Missing or Stalling	
Incorrect curb idle or fast idle speed	Reset idle speed, see see ENGINE PERFORMANCE
Incorrect basic timing	Reset ignition timing see ENGINE PERFORMANCE
Improper idle mixture adjustment	Reset idle mixture, see ENGINE PERFORMANCE
Improper feedback system operation	Check feedback system see ENGINE PERFORMANCE
Incorrect spark plug gap	Reset spark plug gap, see ENGINE PERFORMANCE
Moisture in ignition components	Dry components
Loose or broken ignition wires	Replace ignition wires
Damaged distributor cap or or rotor	Replace distributor cap or rotor
Faulty ignition coil	Replace ignition coil
Fuel filter clogged or worn	Replace fuel filter
Damaged idle mixture screw	Replace idle mixture screw, see FUEL
Improper fast idle cam adjustment	Reset fast idle cam adjustment, see TUNE- see ENGINE

	PERFORMANCE
Improper EGR valve operation	Replace EGR valve
Faulty PCV valve air flow	Replace PCV valve
Choke binding or improper choke setting	Reset choke or eliminate binding
Vacuum leak	Repair vacuum leak
Improper float bowl fuel level	Reset float adjustment, see FUEL
Clogged air bleed or idle passages	Clean carburetor passages, see FUEL
Clogged or worn air cleaner filter	Replace air filter
Faulty choke vacuum diaphragm	Replace diaphragm, see ENGINE PERFORMANCE
Exhaust manifold heat valve inoperative	Replace heat valve
Improper distributor spark advance	Check distributor operation
Leaking valves or valve components	Check and repair valvetrain
Improper carburetor mounting	Remove and remount carburetor
Excessive play in distributor shaft	Replace distributor
Loose or corroded wiring connections	Repair or replace as required
Engine Surges	
Improper PCV valve airflow	Replace PCV valve
Vacuum leaks	Repair vacuum leaks
Clogged air bleeds	Remove restriction
EGR valve malfunction	Replace EGR valve
Restricted air cleaner filter	Replace air filter
Cracked or broken vacuum hoses	Replace vacuum hoses
Cracked or broken ignition wires	Replace ignition wires
Vacuum advance malfunction	Check unit and replace as necessary
Defective or fouled spark plugs	Replace spark plugs

Ping or Spark Knock	
Incorrect ignition timing	Reset ignition timing see ENGINE PERFORMANCE
Distributor centrifugal or vacuum advance malfunction	Check operation and replace as necessary
Carburetor setting too lean	Readjust mixture setting, see ENGINE PERFORMANCE
Vacuum leak	Eliminate vacuum leak
EGR valve malfunction	Replace EGR valve
Poor Gasoline Mileage	
Cracked or broken vacuum	Replace vacuum hoses hoses
Vacuum leaks	Repair vacuum leaks
Defective ignition wires	Replace wires
Incorrect choke setting	Readjust setting, see ENGINE PERFORMANCE
Defective vacuum advance	Replace vacuum advance
Defective spark plugs	Replace spark plugs
Binding carburetor power piston	Eliminate binding
Dirt in carburetor jets	Clean and/or replace jets
Incorrect float adjustment	Readjust float setting, see FUEL
Defective power valve	Replace power valve, see ENGINE PERFORMANCE
Incorrect idle speed	Readjust idle speed
Engine Stalls	
Improper float level	Readjust float level
Leaking needle valve and seat	Replace needle valve and seat
Vacuum leaks	Eliminate vacuum

	leaks

VACUUM PUMP - DIESEL TROUBLE SHOOTING

NOTE: This is GENERAL information. This article is not intended to be specific to any unique situation or individual vehicle configuration. The purpose of this Trouble Shooting information is to provide a list of common causes to problem symptoms. For model-specific Trouble Shooting, refer to SUBJECT, DIAGNOSTIC, or TESTING articles available in the section(s) you are accessing.

NOTE: Diesel engines mechanical diagnosis is the same as gasoline engines for items such as noisy valves, bearings, pistons, etc. The following trouble shooting covers only items pertaining to diesel engines.

VACUUM PUMP (DIESEL) TROUBLE SHOOTING CHART

CONDITION & POSSIBLE CAUSE	CORRECTION
Excessive Noise	
Loose pump-to-drive assembly screws	Tighten screws
Loose tube on pump assembly	Tighten tube
Valves not functioning properly	Replace valves
Oil Leakage	
Loose end plug	Tighten end plug
Bad seal crimp	Remove and re-crimp seal

MANUAL TRANSMISSION

MANUAL TRANSMISSION TROUBLE SHOOTING

NOTE: This is GENERAL information. This article is not intended to be specific to any unique situation or individual vehicle configuration. The purpose of this Trouble Shooting information is to provide a list of common causes to problem symptoms. For model-specific Trouble Shooting, refer to SUBJECT, DIAGNOSTIC, or TESTING articles

available in the section(s) you are accessing.

MANUAL TRANSMISSION/TRANSAXLE TROUBLE SHOOTING

Condition	Possible Cause
Noisy In Forward Gears	Low gear oil level, Loose bell housing bolts, Worn bearings or gears
Clunk On Deceleration (FWD Only)	Loose engine mounts, Worn inboard CV joints, Worn differential pinion shaft, Side gear hub counterbore in case worn oversize
Gear Clash When Shifting Forward Gears	Clutch Out Of Adjustment, Shift linkage damaged or out of adjustment, Gears or synchronizers damaged, Low gear oil level
Transmission Noisy When Moving (RWD Only) Quiet In Neutral With Clutch Engaged	Worn rear outputshaft bearing
Gear Rattle	Worn bearings, Wrong gear oil, Low gear oil, Worn gears
Steady Ticking At Idle (Increases With RPM)	Broken tooth on gear
Gear Clash When Shifting Forward Gears	Worn or broken synchronizers
Loud Whine In Reverse	Normal condition (1)
Noise When Stepping On Clutch	Bad release bearing, Worn pilot bearing
Ticking Or Screeching As Clutch Is Engaged	Faulty release bearing, Uneven pressure plate fingers
Click Or Snap When Clutch Is Engaged	Worn clutch fork, Worn or broken front bearing retainer
Transmission Shifts Hard	Clutch not releasing, Shift mechanism binding, Clutch installed backwards
Will Not Shift Into One Gear, Shifts Into All Others	Bent shift fork, Worn detent balls
Locked Into Gear, Cannot Shift	Clutch adjustment, Worn detent balls
Transmission Jumps Out Of Gear	Pilot bearing worn, Bent shift fork,

	Worn gear teeth or face, Excessive gear train end play, Worn synchronizers, Missing detent ball spring, Shift mechanism worn or out of adjustment, Engine or transmission mount bolts loose or out of adjustment, Transmission not aligned
Shift Lever Rattle	Worn shift lever or detents, Worn shift forks, Worn synchronizers sleeve
Shift Lever Hops Under Acceleration	Worn engine or transmission mounts
(1) Most units use spur cut gears in reverse and are noisy	

POWERTRAIN

CLUTCH TROUBLE SHOOTING

NOTE: This is GENERAL information. This article is not intended to be specific to any unique situation or individual vehicle configuration. The purpose of this Trouble Shooting information is to provide a list of common causes to problem symptoms. For model-specific Trouble Shooting, refer to SUBJECT, DIAGNOSTIC, or TESTING articles available in the section(s) you are accessing.

BASIC CLUTCH TROUBLE SHOOTING CHART

CONDITION & POSSIBLE CAUSE	CORRECTION
Chattering or Grabbing	
Incorrect clutch adjustment	Adjust clutch
Oil, grease or glaze on facings	Disassemble and clean or replace
Loose "U" joint flange	See DRIVE AXLES article
Worn input shaft spline	Replace input shaft
Binding pressure plate	Replace pressure plate
Binding release lever	See CLUTCH article
Binding clutch disc hub	Replace clutch disc

Unequal pressure plate contact	Replace worn/misaligned components
Loose/bent clutch disc	Replace clutch disc
Incorrect transmission alignment	Realign transmission
Worn pressure plate, disc or flywheel	Replace damaged components
Broken or weak pressure springs	Replace pressure plate
Sticking clutch pedal	Lubricate clutch pedal & linkage
Incorrect clutch disc facing	Replace clutch disc
Engine loose in chassis	Tighten all mounting bolts
Failure to Release	
Oil or grease on clutch facings	Clean or replace clutch clutch disc
Incorrect release lever or pedal adjustment	See CLUTCH article
Worn or broken clutch facings	Replace clutch disc
Bent clutch disc or pressure plate	Replace damaged components
Clutch disc hub binding on input shaft	Clean or replace clutch disc and/or input shaft
Binding pilot bearing	Replace pilot bearing
Sticking release bearing sleeve	Replace release bearing and/or sleeve
Binding clutch cable	See CLUTCH article
Defective clutch master	Replace master cylinder
Defective clutch slave	Replace slave cylinder
Air in hydraulic system	Bleed hydraulic system
Rattling	
Weak or broken release lever spring	Replace spring and check alignment
Damaged pressure plate	Replace pressure plate
Broken clutch return spring	Replace return spring
Worn splines on clutch disc or input shaft	Replace clutch disc and/or input shaft

Worn clutch release bearing	Replace release bearing
Dry or worn pilot bearing	Lubricate or replace pilot bearing
Unequal release lever contact	Align or replace release lever
Incorrect pedal free play	Adjust free play
Warped or damaged clutch disc	Replace damaged components
Slipping	
Pressure springs worn or	Release pressure plate
Oily, greasy or worn facings	Clean or replace clutch disc
Incorrect clutch alignment	Realign clutch assembly
Warped clutch disc or pressure plate	Replace damaged components
Binding release levers or clutch pedal	Lubricate and/or replace release components
Squeaking	
Worn or damaged release	Replace release bearing
Dry or worn pilot or release bearing	Lubricate or replace assembly
Pilot bearing turning in crankshaft	Replace pilot bearing and/or crankshaft
Worn input shaft bearing	Replace bearing and seal
Incorrect transmission alignment	Realign transmission
Dry release fork between pivot	Lubricate release fork and pivot
Heavy and/or Stiff Pedal	
Sticking release bearing sleeve	Replace release bearing and/or sleeve
Dry or binding clutch pedal hub	Lubricate and align components
Floor mat interference with pedal	Lay mat flat in proper area
Dry or binding ball/fork pivots	Lubricate and align

	components
Faulty clutch cable	Replace clutch cable
Noisy Clutch Pedal	
Faulty interlock switch	Replace interlock switch
Self-adjuster ratchet noise	Lubricate or replace self-adjuster
Speed control interlock switch	Lubricate or replace interlock switch
Clutch Pedal Sticks Down	
Binding clutch cable	See CLUTCH article
Springs weak in pressure plate	Replace pressure plate
Binding in clutch linkage	Lubricate and free linkage
Noisy	
Dry release bearing	Lubricate or replace release bearing
Dry or worn pilot bearing	Lubricate or replace bearing
Worn input shaft bearing	Replace bearing
Transmission Click	
Weak springs in pressure	Replace pressure plate plate
Release fork loose on ball stud	Replace release fork and/or ball stud
Oil on clutch disc damper	Replace clutch disc
Broken spring in slave cylinder	Replace slave cylinder

DRIVE AXLE - NOISE DIAGNOSIS

Unrelated Noises

Some driveline trouble symptoms are also common to the engine, transmission, wheel bearings, tires, and other parts of the vehicle. Ensure cause of trouble actually is in the drive axle before adjusting, repairing, or replacing any of its parts.

Non-Drive Axle Noises

A few conditions can sound just like drive axle noise and have to be considered in pre-diagnosis. The 4 most common noises are exhaust, tires, CV/universal joints and wheel trim rings.

In certain conditions, the pitch of the exhaust gases may e gear whine. At other times, it may be mistaken for a wheel bearing rumble.

Tires, especially radial and snow, can have a high-pitched tread whine or roar, similar to gear noise. Also, some non-standard tires with an unusual tread construction may emit a roar or whine.

Defective CV/universal joints may cause clicking noises or excessive driveline play that can be improperly diagnosed as drive axle problems.

Trim and moldings also can cause a whistling or whining noise. Ensure none of these components are causing the noise before disassembling the drive axle.

Gear Noise

A "howling" or "whining" noise from the ring and pinion gear can be caused by an improper gear pattern, gear damage, or improper bearing preload. It can occur at various speeds and driving conditions, or it can be continuous.

Before disassembling axle to diagnose and correct gear ke sure that tires, exhaust, and vehicle trim have been checked as possible causes.

Chuckle

This is a particular rattling noise that sounds like a stick against the spokes of a spinning bicycle wheel. It occurs while decelerating from 40 MPH and usually can be heard until vehicle comes to a complete stop. The frequency varies with the speed of the vehicle.

A chuckle that occurs on the driving phase is usually caused ive clearance due to differential gear wear, or by a damaged tooth on the coast side of the pinion or ring gear. Even a very small tooth nick or a ridge on the edge of a gear tooth is enough the cause the noise.

This condition can be corrected simply by cleaning the gear tooth nick or ridge with a small grinding wheel. If either gear is damaged or scored badly, the gear set must be replaced. If metal has broken loose, the carrier and housing must be

cleaned to remove particles that could cause damage.

Knock

This is very similar to a chuckle, though it may be louder, and occur on acceleration or deceleration. Knock can be caused by a gear tooth that is damaged on the drive side of the ring and pinion gears. Ring gear bolts that are hitting the carrier casting can cause knock. Knock can also be due to excessive end play in the axle shafts.

Clunk

Clunk is a metallic noise heard when an automatic transmission is engaged in Reverse or Drive, or when throttle is applied or released. It is caused by backlash somewhere in the driveline, but not necessarily in the axle. To determine whether driveline clunk is caused by the axle, check the total axle backlash as follows:

1. Raise vehicle on a frame or twinpost hoist so that drive wheels are free. Clamp a bar between axle companion flange and a part of the frame or body so that flange cannot move.
2. On conventional drive axles, lock the left wheel to keep it from turning. On all models, turn the right wheel slowly until it is felt to be in Drive condition. Hold a chalk marker on side of tire about 12" from center of wheel. Turn wheel in the opposite direction until it is again felt to be in Drive condition.
3. Measure the length of the chalk mark, which is the total axle backlash. If backlash is one inch or less, drive axle is not the source of clunk noise.

Bearing Whine

Bearing whine is a high-pitched sound similar to a whistle. It is usually caused by malfunctioning pinion bearings. Pinion bearings operate at drive shaft speed. Roller wheel bearings may whine in a similar manner if they run completely dry of lubricant. Bearing noise will occur at all driving speeds. This distinguishes it from gear whine, which usually comes and goes as speed changes.

Bearing Rumble

Bearing rumble sounds like marbles being tumbled. It is usually caused by a malfunctioning wheel bearing. The lower pitch is because the wheel bearing turns at only about 1/3 of drive shaft speed.

Chatter On Turns

This is a condition where the entire front or rear of vehicle vibrates when vehicle is moving. The vibration is plainly felt as well as heard. Extra differential thrust washers installed during axle repair can cause a condition of partial lock-up that creates this chatter.

Axle Shaft Noise

Axle shaft noise is similar to gear noise and pinion bearing whine. Axle shaft bearing noise will normally distinguish itself from gear noise by occurring in all driving modes (Drive, cruise, coast and float), and will persist with transmission in Neutral while vehicle is moving at problem speed.

If vehicle displays this noise condition, remove suspect parts, replace wheel seals and install a new set of bearings. Re-evaluate vehicle for noise before removing any internal components.

Vibration

Vibration is a high-frequency trembling, shaking or grinding condition (felt or heard) that may be constant or variable in level and can occur during the total operating speed range of the vehicle.

The types of vibrations that can be felt in the vehicle can d into 3 main groups:

- Vibrations of various unbalanced rotating parts of the vehicle.
- Resonance vibrations of the body and frame structures caused by rotating of unbalanced parts.
- Tip-in moans of resonance vibrations from stressed engine or exhaust system mounts or driveline flexing modes.

DRIVE AXLE - RWD TROUBLE SHOOTING

NOTE: This is GENERAL information. This article is not intended to be specific to any unique situation or individual vehicle configuration. The purpose of this Trouble Shooting information is to provide a list of common causes to problem symptoms. For model-specific Trouble Shooting, refer to SUBJECT, DIAGNOSTIC, or TESTING articles available in the section(s) you are accessing. For

definitions of listed noises or sounds, see DRIVE AXLE - NOISE DIAGNOSIS under POWERTRAIN.

DRIVE AXLE (RWD) TROUBLE SHOOTING

CONDITION & POSSIBLE CAUSE	CORRECTION
Knocking or Clunking	
Differential Side Gear Clearance	Check Clearance
Worn Pinion Shaft	Replace Pinion Shaft
Axle Shaft End Play	Check End Play
Missing Gear Teeth	Check Differential/Replace Gear
Wrong Axle Backlash	Check Backlash
Misaligned Driveline	Realign Driveline
Clinking During Engagement	
Side Gear Clearance	Check Clearance
Ring and Pinion Backlash	Check Backlash
Worn/Loose Pinion Shaft	Replace Shaft/Bearing
Bad "U" Joint	Replace "U" Joint
Sticking Slip Yoke	Lube Slip Yoke
Broken Rear Axle Mount	Replace Mount
Loose Drive Shaft Flange	Check Flange
Click/Chatter On Turns	
Differential Side Gear Clearance	Check Clearance
Wrong Turn On Plates (1)	Replace Clutch Plates
Wrong Differential Lubricant (1)	Change Lubricant
Knock Or Click	
Flat Spot on Rear Wheel Bearing	Replace Wheel Bearing
Low Vibration At All Speeds	
Faulty Wheel Bearing	Replace Wheel Bearing

Faulty "U" Joint	Replace "U" Joint
Faulty Drive Shaft	Balance Drive Shaft
Faulty Companion Flange	Replace Flange
Faulty Slip Yoke Flange	Replace Flange
(1) Limited slip differential only.	

FWD AXLE SHAFTS & CV JOINTS TROUBLE SHOOTING

NOTE: This is GENERAL information. This article is not intended to be specific to any unique situation or individual vehicle configuration. The purpose of this Trouble Shooting information is to provide a list of common causes to problem symptoms. For model-specific Trouble Shooting, refer to SUBJECT, DIAGNOSTIC, or TESTING articles available in the section(s) you are accessing.

BASIC FWD AXLE SHAFTS & CV JOINTS TROUBLE SHOOTING CHART

CONDITION	POSSIBLE CAUSE
Grease Leaks	CV boot torn or cracked
Clicking Noise on Cornering	Damaged outer CV
Clunk Noise on Acceleration	Damaged inner CV
Vibration or Shudder on Acceleration	Sticking, damaged or worn CV Misalignment or spring height

STEERING & SUSPENSION

MANUAL STEERING GEAR TROUBLE SHOOTING

NOTE: This is GENERAL information. This article is not intended to be specific to any unique situation or individual vehicle configuration. The purpose of this Trouble Shooting information is to provide a list of common causes to problem symptoms. For model-specific Trouble Shooting, refer to SUBJECT, DIAGNOSTIC, or TESTING articles available in the section(s) you are accessing.

BASIC MANUAL STEERING GEAR TROUBLE SHOOTING CHART

CONDITION & POSSIBLE CAUSE	CORRECTION
Rattle or Chucking Noise in Rack and Pinion	
Rack and pinion mounting bracket loose	Tighten all mounting bolts
Lack of/or incorrect lubricant	Correct as necessary
Steering gear mounting bolts loose	Tighten all mounting bolts
Excessive Play	
Front wheel bearing improperly adjusted	See FRONT SUSPENSION article
Loose or worn steering linkage	See STEERING LINKAGE article
Loose or worn steering gear shift	See MANUAL STEERING GEAR article
Steering arm loose on gear shaft	See MANUAL STEERING GEAR article
Steering gear housing bolts loose	Tighten all mounting bolts
Steering gear adjustment too loose	See MANUAL STEERING GEAR article
Steering arms loose on knuckles	Tighten and check steering linkage
Rack and pinion mounting loose	Tighten all mounting bolts
Rack and pinion out of adjustment	See adjustment in STEERING article
Tie rod end loose	Tighten and check steering linkage
Excessive Pitman shaft-to-ball nut lash	Repair as necessary
Poor Returnability	
Lack of lubricant in ball joint or linkage	Lubricate and service systems
Binding in linkage or ball joints	See STEERING

	LINKAGE and SUSPENSION article
Improper front end alignment	See WHEEL ALIGNMENT article
Improper tire pressure	Inflate to proper pressure
Tie rod binding	Inflate to proper pressure
Shaft seal rubbing shaft	See STEERING COLUMN article
Excessive Vertical Motion	
Improper tire pressure	Inflate to proper pressure
Tires, wheels or rotors out of balance	Balance tires then check wheels and rotors
Worn or faulty shock absorbers	Check and replace if necessary
Loose tie rod ends or steering	Tighten or replace if necessary
Loose or worn wheel bearings	See SUSPENSION article
Steering Pulls to One Side	
Improper tire pressure	Inflate to proper pressure
Front tires are different sizes	Rotate or replace if necessary
Wheel bearings not adjusted properly	See FRONT SUSPENSION article
Bent or broken suspension components	See FRONT SUSPENSION article
Improper wheel alignment	See WHEEL ALIGNMENT article
Brakes dragging	See BRAKES article
Instability	
Low or uneven tire pressure	Inflate to proper

	pressure
Loose or worn wheel bearings	See FRONT SUSPENSION article
Loose or worn idler arm bushing	See FRONT SUSPENSION article
Loose or worn strut bushings	See FRONT SUSPENSION article
Incorrect front wheel alignment	See WHEEL ALIGNMENT article
Steering gear not centered	See MANUAL STEERING GEARS article
Springs or shock	Check and replace if necessary
Improper cross shaft	See MANUAL STEERING GEARS article

POWER STEERING TROUBLE SHOOTING

NOTE: This is GENERAL information. This article is not intended to be specific to any unique situation or individual vehicle configuration. The purpose of this Trouble Shooting information is to provide a list of common causes to problem symptoms. For model-specific Trouble Shooting, refer to SUBJECT, DIAGNOSTIC, or TESTING articles available in the section(s) you are accessing.

BASIC POWER STEERING TROUBLE SHOOTING CHART

CONDITION & POSSIBLE CAUSE	CORRECTION
Rattle or Chucking Noise	
Pressure hoses touching engine parts	Adjust to proper clearance
Loose Pitman shaft	Adjust or replace if necessary
Tie rods ends or Pitman arm loose	Tighten and check system

Rack and pinion mounts loose	Tighten all mounting bolts
Free play in worm gear	See POWER STEERING GEAR article
Loose sector shaft or thrust bearing adjustment	See POWER STEERING GEAR
Free play in pot coupling	See STEERING COLUMN article
Worn shaft serrations	See STEERING COLUMN article
Growl in Steering Pump	
Excessive pressure in hoses	Restricted hoses, see POWER STEERING GEAR article
Scored pressure plates	See POWER STEERING GEAR article
Scored thrust plates or rotor	See POWER STEERING GEAR article
Extreme wear of cam ring	See POWER STEERING GEAR article
Rattle in Steering Pump	
Vanes not installed	See POWER STEERING PUMP article
Vanes sticking in rotor	See POWER STEERING PUMP article
Swish noise in Pump	
Defective flow control valve	See POWER STEERING PUMP article
Groan in Steering Pump	

Air in fluid	See POWER STEERING PUMP article
Poor pressure hose connection	Tighten and check, replace if necessary
Squawk When Turning	
Damper "O" ring on valve spool cut	See POWER STEERING PUMP article
Moan or Whine in Pump	
Pump shaft bearing scored	Replace bearing and fluid
Air in fluid or fluid level low	See POWER STEERING PUMP article
Hose or column grounded	Check and replace if necessary
Cover "O" ring missing or damaged	See POWER STEERING PUMP article
Valve cover baffle missing or damaged	See POWER STEERING PUMP article
Interference of components in pump	See POWER STEERING PUMP article
Loose or poor bracket alignment	Correct or replace if necessary
Hissing When Parking	
Internal leakage in steering gear	Check valved assembly first
Chirp in Steering Pump	
Loose or worn power steering belt	Adjust or replace if necessary
Buzzing When Not Steering	
Noisy pump	See POWER

	STEERING PUMP article
Free play in steering shaft bearing	See STEERING COLUMN article
Bearing loose on shaft serrations	See STEERING COLUMN article
Clicking Noise in Pump	
Pump slippers too long	See POWER STEERING PUMP article
Broken slipper springs	See POWER STEERING PUMP article
Excessive wear or nicked rotors	See POWER STEERING PUMP article
Damaged cam contour	See POWER STEERING PUMP article
Poor Return of Wheel	
Wheel rubbing against turn signal	See STEERING COLUMN SWITCHES article
Flange rubbing steering gear adjuster	See STEERING COLUMN article
Tight or frozen steering shaft bearing	See STEERING COLUMN article
Steering gear out of adjustment	See POWER STEERING GEAR article
Sticking or plugged spool valve	See POWER STEERING PUMP article
Improper front end alignment	See WHEEL ALIGNMENT article
Wheel bearings worn or loose	See FRONT

	SUSPENSION article
Ties rods or ball joints binding	Check and replace if necessary
Intermediate shaft joints binding	See STEERING COLUMN article
Kinked pressure hoses	Correct or replace if necessary
Loose housing head spanner nut	See POWER STEERING GEAR article
Damaged valve lever	See POWER STEERING GEAR article
Sector shaft adjusted too tight	See ADJUSTMENTS in POWER STEERING GEAR article
Worm thrust bearing adjusted too tight	See ADJUSTMENTS in POWER STEERING GEAR article
Reaction ring sticking in cylinder	See POWER STEERING GEAR article
Reaction ring sticking in housing head	See POWER STEERING GEAR article
Steering pump internal leakage	See POWER STEERING PUMP article
Steering gear-to-column misalignment	See STEERING COLUMN article
Lack of lubrication in linkage	Service front suspension
Lack of lubrication in ball joints	Service front suspension

Increased Effort When Turning Wheel Fast Foaming, Milky Power Steering Fluid, Low Fluid Level or Low Pressure	
High internal pump leakage	See POWER STEERING PUMP article
Power steering pump belt slipping	Adjust or replace if necessary
Low fluid level	Check and fill to proper level
Engine idle speed to low	Adjust to correct setting
Air in pump fluid system	See POWER STEERING PUMP article
Pump output low	See POWER STEERING PUMP article
Steering gear malfunctioning	See POWER STEERING GEAR article
Wheel Surges or Jerks	
Low fluid level	Check and fill to proper level
Loose fan belt	Adjust or replace if necessary
Insufficient pump pressure	See POWER STEERING PUMP article
Sticky flow control valve	See POWER STEERING PUMP article
Linkage hitting oil pan at full turn	Replace bent components
Kick Back or Free Play	
Air in pump fluid system	See POWER STEERING PUMP

	article
Worn poppet valve in steering gear	See POWER STEERING PUMP article
Excessive over center lash	See POWER STEERING GEAR article
Thrust bearing out of adjustment	See POWER STEERING GEAR article
Free play in pot coupling	See POWER STEERING PUMP article
Steering gear coupling loose on shaft	See POWER STEERING PUMP article
Steering disc mounting bolts loose	Tighten or replace if necessary
Coupling loose on worm shaft	Tighten or replace if necessary
Improper sector shaft adjustment	See POWER STEERING GEAR article
Excessive worm piston side play	See POWER STEERING GEAR article
Damaged valve lever	See POWER STEERING GEAR article
Universal joint loose	Tighten or replace if necessary
Defective rotary valve	See POWER STEERING GEAR article
No Power When Parking	
Sticking flow control valve	See POWER

	STEERING PUMP article
Insufficient pump pressure output	See POWER STEERING PUMP article
Excessive internal pump leakage	See POWER STEERING PUMP article
Excessive internal gear leakage	See POWER STEERING PUMP article
Flange rubs against gear adjust plug	See STEERING COLUMN article
Loose pump belt	Adjust or replace if necessary
Low fluid level	Check and add proper amount of fluid
Engine idle too low	Adjust to correct setting
Steering gear-to-column misaligned	See STEERING COLUMN article
No Power, Left Turn	
Left turn reaction seal "O" ring worn	See POWER STEERING GEAR article
Left turn reaction seal damaged/missing	See POWER STEERING GEAR article
Cylinder head "O" ring damaged	See POWER STEERING PUMP article
No Power, Right Turns	
Column pot coupling bottomed	See STEERING COLUMN article
Right turn reaction seal "O" ring worn	See POWER STEERING GEAR

	article
Right turn reaction seal damaged	See POWER STEERING GEAR article
Internal leakage through piston end plug	See POWER STEERING GEAR article
Internal leakage through side plugs	See POWER STEERING GEAR article
Lack of Effort in Turning	
Left and/or right reaction seal sticking in cylinder head	Replace, see POWER STEERING GEAR article
Wanders to One Side	
Front end alignment incorrect	See WHEEL ALIGNMENT article
Unbalanced steering gear valve	See POWER STEERING GEAR article
Low Pressure Due to Steering Pump	
Flow control valve stuck or inoperative	See POWER STEERING PUMP article
Pressure plate not flat against cam ring	See POWER STEERING PUMP article
Extreme wear of cam ring	Replace and check adjustments
Scored plate, thrust plate or rotor	See POWER STEERING PUMP article
Vanes not installed properly	See POWER STEERING PUMP article
Vanes sticking in rotor slots	See POWER

	STEERING PUMP article
Cracked/broken thrust or pressure plate	See POWER STEERING PUMP article

STEERING COLUMN TROUBLE SHOOTING

NOTE: This is GENERAL information. This article is not intended to be specific to any unique situation or individual vehicle configuration. The purpose of this Trouble Shooting information is to provide a list of common causes to problem symptoms. For model-specific Trouble Shooting, refer to SUBJECT, DIAGNOSTIC, or TESTING articles available in the section(s) you are accessing.

BASIC STEERING COLUMN TROUBLE SHOOTING CHART

CONDITION & POSSIBLE CAUSE	CORRECTION
Noise in Steering	
Coupling pulled apart	See STEERING COLUMNS article
Column not correctly aligned	See STEERING COLUMNS article
Broken lower joint	Replace joint
Horn contact ring not	See STEERING COLUMN article
Bearing not lubricated	See STEERING COLUMN article
Shaft snap ring not properly seated	Reseat or replace snap ring
Plastic spherical joint not lubricated	See STEERING COLUMN article
Shroud or housing loose	Tighten holding screws
Lock plate retaining ring not seated	See STEERING COLUMN article
Loose sight shield	Tighten holding

	screws
High Steering Shaft Effort	
Column assembly misaligned	See STEERING COLUMN article
Improperly installed dust shield	Adjust or replace
Tight steering universal joint	See STEERING COLUMN article
High Shift Effort	
Column is out of alignment	See STEERING COLUMN article
Improperly installed dust shield	Adjust or replace
Seals or bearings not lubricated	See STEERING COLUMNS article
Mounting bracket screws too long	Replace with new shorter screws
Burrs on shift tube	Remove burrs or replace tube
Lower bowl bearing assembled wrong	See STEERING COLUMN article
Shift tube bent or broken	Replace as necessary
Improper adjustment of shift levers	See STEERING COLUMN article
Improper Trans. Shifting	
Sheared shift tube joint	Replace as necessary
Sheared lower shaft lever	Replace as necessary
Improper shift lever adjustment	See STEERING COLUMN article
Improper gate plate adjustment	See STEERING COLUMN article
Excess Play in Column	
Instrument panel bracket bolts loose	Tighten bolts and check bracket
Broken weld nut on jacket	See STEERING COLUMN article
Instrument bracket capsule sheared	See STEERING

	COLUMN article
Column bracket/jacket bolts loose	Tighten bolts and check bracket
Steering Locks in Gear	
Release lever mechanism	See STEERING COLUMN article

SUSPENSION TROUBLE SHOOTING

NOTE: This is GENERAL information. This article is not intended to be specific to any unique situation or individual vehicle configuration. The purpose of this Trouble Shooting information is to provide a list of common causes to problem symptoms. For model-specific Trouble Shooting, refer to SUBJECT, DIAGNOSTIC, or TESTING articles available in the section(s) you are accessing.

BASIC SUSPENSION TROUBLE SHOOTING CHART

CONDITION & POSSIBLE CAUSE	CORRECTION
Front End Noise	
Loose or worn wheel	See Wheel Bearing Adjustment in SUSPENSION
Worn shocks or shock mountings	Replace struts or strut mountings
Worn struts or strut mountings	Replace struts or strut mountings
Loose or worn lower control arm	See SUSPENSION
Loose steering gear-to-frame bolts	See STEERING
Worn control arm bushings	See SUSPENSION
Ball joints not lubricated	Lubricate ball joints & see Ball Joint Checking in SUSPENSION
Front Wheel Shake, Shimmy, or Vibration	
Tires or wheels out of balance	Check tire balance
Incorrect wheel alignment	See WHEEL

	ALIGNMENT
Drive shaft unbalanced	Check drive shaft balance
Loose or worn wheel bearings	See WHEEL ALIGNMENT
Loose or worn tie rod ends	See SUSPENSION
Worn upper ball joints	See Ball Joint Checking in SUSPENSION
Worn shock absorbers	Replace shock absorbers
Worn strut bushings	Replace strut bushings
Car Pulls to One Side	
Mismatched or uneven tires	Check tire condition
Broken or sagging springs	See SUSPENSION
Loose or worn strut bushings	See SUSPENSION
Improper wheel alignment	See WHEEL ALIGNMENT
Improper rear axle alignment	Check rear axle alignment
Power steering gear unbalanced	See STEERING
Front brakes dragging	See BRAKES
Abnormal Tire Wear	
Unbalanced tires	Check tire balance & rotation
Sagging or broken springs	See SUSPENSION
Incorrect front end alignment	See WHEEL ALIGNMENT
Faulty shock absorbers	Replace chock absorbers
Scuffed Tires	
Toe-In incorrect	See WHEEL ALIGNMENT
Suspension arm bent or twisted	See appropriate SUSPENSION article

Springs Bottom or Sag	
Bent or broken springs	See SUSPENSION
Leaking or worn shock absorbers	Replace shock absorbers
Frame misalignment	Check frame for damage
Spring Noises	
Loose "U" Bolts	See SUSPENSION
Loose or worn bushings	See SUSPENSION
Worn or missing interliners	See SUSPENSION
Shock Absorber Noise	
Loose shock mountings	Check & tighten mountings
Worn bushings	Replace bushings
Air in system	Bleed air from system
Undercoating on shocks	Remove undercoating
Car Leans or Sways on Corners	
Loose stabilizer bar	See SUSPENSION
Faulty shocks or mountings	Replace shocks or mountings
Broken or sagging springs	See SUSPENSION
Shock Absorbers Leaking	
Worn seals or reservoir tube crimped	See SUSPENSION
Broken Springs	
Loose "U" bolts	See SUSPENSION
Inoperative shock absorbers	Replace shock absorbers

WHEEL ALIGNMENT TROUBLE SHOOTING

NOTE: This is GENERAL information. This article is not intended to be specific to any unique situation or individual vehicle configuration. The purpose of this Trouble Shooting information is to provide a list of common causes to problem symptoms. For model-specific Trouble Shooting, refer to SUBJECT, DIAGNOSTIC, or TESTING articles

available in the section(s) you are accessing.

BASIC WHEEL ALIGNMENT TROUBLE SHOOTING CHART

CONDITION & POSSIBLE CAUSE	CORRECTION
Premature Tire Wear	
Improper tire inflation	Check tire pressure
Front alignment out of tolerance	See ALIGNMENT SPECS in WHEEL ALIGNMENT section
Suspension components worn	See SUSPENSION section
Steering system components worn	See STEERING section
Improper standing height	See WHEEL ALIGNMENT
Uneven or sagging springs	See SUSPENSION section
Bent wheel	See WHEEL ALIGNMENT
Improper torsion bar adjustment	See SUSPENSION section
Loose or worn wheel bearings	See WHEEL BEARING ADJ. in SUSPENSION section
Worn or defective shock	Replace shock absorbers
Tires out of balance	Check tire balance
Pulls to One Side	
Improper tire inflation	Check tire pressure
Brake dragging	See BRAKE section
Mismatched tires	See WHEEL ALIGNMENT
Broken or sagging spring	See SUSPENSION section
Broken torsion bar	See SUSPENSION section

Power steering valve not centered	See STEERING section
Front alignment out of tolerance	See WHEEL ALIGNMENT section
Defective wheel bearing	See WHEEL BEARINGS in SUSPENSION section
Uneven sway bar links	See SUSPENSION section
Frame bent	Check for frame damage
Steering system bushing worn	See STEERING section
Hard Steering	
Idler arm bushing too tight	See STEERING LINKAGE in STEERING section
Ball joint tight or seized	See SUSPENSION section
Steering linkage too tight	See STEERING LINKAGE in STEERING section
Power steering fluid low	Add proper amount of fluid
Power steering drive belt loose	See STEERING section
Power steering pump defective	See STEERING section
Steering gear out of adjustment	See STEERING section
Incorrect wheel alignment	See WHEEL ALIGNMENT
Damaged steering gear	See STEERING section
Damaged suspension	See SUSPENSION section

Bent steering knuckle or supports	See SUSPENSION section
Vehicle "Wanders"	
Strut rod or control arm bushing worn	See SUSPENSION section
Loose or worn wheel bearings	See WHEEL BEARINGS in SUSPENSION section
Improper tire inflation	Check tire pressure
Stabilizer bar missing or defective	See SUSPENSION section
Wheel alignment out of tolerance	See Adjustment in WHEEL ALIGNMENT section
Broken spring	See SUSPENSION section
Defective shock absorber	Replace shock absorbers
Worn steering & suspension components	See SUSPENSION section
Front End Shimmy	
Tire out of balance/round	Check tire balance
Excessive wheel runout	See WHEEL ALIGNMENT
Insufficient or improper caster	See WHEEL ALIGNMENT section
Worn suspension or steering components	See SUSPENSION section
Defective shock absorbers	Replace shock absorber
Wheel bearings worn or loose	See WHEEL BEARING ADJ. in SUSPENSION section
Power steering reaction Bracket loose	See STEERING section
Steering gear box (rack) mounting loose	See STEERING

	section
Steering gear adjustment loose	See STEERING section
Worn spherical joints	See SUSPENSION section
Toe-In Not Adjustable	
Lower control arm bent	See SUSPENSION section
Frame bent	Check frame for damage
Camber Not Adjustable	
Control arm bent	See SUSPENSION section
Frame bent	Check frame for damage
Hub & bearing not seated properly	See SUSPENSION section

GENERAL INFORMATION

Waveforms - Injector Pattern Tutorial

* PLEASE READ THIS FIRST *

NOTE: This is GENERAL information. This article is not intended to be specific to any unique situation or individual vehicle configuration. For model-specific information see appropriate articles where available.

PURPOSE OF THIS ARTICLE

NOTE: This is GENERAL information. This article is not intended to be specific to any unique situation or individual vehicle configuration. For model-specific information see appropriate articles where available.

Learning how to interpret injector drive patterns from a Lab Scope can be like learning ignition patterns all over again. This article exists to ease you into becoming a skilled injector pattern interpreter.

You will learn:

- How a DVOM and noid light fall short of a lab scope.
- The two types of injector driver circuits, voltage controlled & current controlled.
- The two ways injector circuits can be wired, constant ground/switched power & constant power/switched ground.
- The two different pattern types you can use to diagnose with, voltage & current.
- All the valuable details injector patterns can reveal.

SCOPE OF THIS ARTICLE

This is NOT a manufacturer specific article. All different types of systems are covered here, regardless of the specific year/make/model/engine.

The reason for such broad coverage is because there are only a few basic ways to operate a solenoid-type injector. By understanding the fundamental principles,

you will understand all the major points of injector patterns you encounter. Of course there are minor differences in each specific system, but that is where a waveform library helps out.

If this is confusing, consider a secondary ignition pattern. Even though there are many different implementations, each still has a primary voltage turn-on, firing line, spark line, etc.

If specific waveforms are available in On Demand for the engine and vehicle you are working on, you will find them in the Engine Performance section under the Engine Performance category.

IS A LAB SCOPE NECESSARY?

INTRODUCTION

You probably have several tools at your disposal to diagnose injector circuits. But you might have questioned "Is a lab scope necessary to do a thorough job, or will a set of noid lights and a multifunction DVOM do just as well?"

In the following text, we are going to look at what noid lights and DVOMs do best, do not do very well, and when they can mislead you. As you might suspect, the lab scope, with its ability to look inside an active circuit, comes to the rescue by answering for the deficiencies of these other tools.

OVERVIEW OF NOID LIGHT

The noid light is an excellent "quick and dirty" tool. It can usually be hooked to a fuel injector harness fast and the flashing light is easy to understand. It is a dependable way to identify a no-pulse situation.

However, a noid light can be very deceptive in two cases:

- If the wrong one is used for the circuit being tested. Beware: Just because a connector on a noid light fits the harness does not mean it is the right one.
- If an injector driver is weak or a minor voltage drop is present.

Use the Right Noid Light

In the following text we will look at what can happen if the wrong noid light is used, why there are different types of noid lights (besides differences with connectors), how to identify the types of noid lights, and how to know the right

type to use.

First, let's discuss what can happen if the incorrect type of noid light is used. You might see:

- A dimly flashing light when it should be normal.
- A normal flashing light when it should be dim.

A noid light will flash dim if used on a lower voltage circuit than it was designed for. A normally operating circuit would appear underpowered, which could be misinterpreted as the cause of a fuel starvation problem.

Here are the two circuit types that could cause this problem:

- Circuits with external injector resistors. Used predominately on some Asian & European systems, they are used to reduce the available voltage to an injector in order to limit the current flow. This lower voltage can cause a dim flash on a noid light designed for full voltage.
- Circuits with current controlled injector drivers (e.g. "Peak and Hold"). Basically, this type of driver allows a quick burst of voltage/current to flow and then throttles it back significantly for the remainder of the pulse width duration. If a noid light was designed for the other type of driver (voltage controlled, e.g. "Saturated"), it will appear dim because it is expecting full voltage/current to flow for the entire duration of the pulse width.

Let's move to the other situation where a noid light flashes normally when it should be dim. This could occur if a more sensitive noid light is used on a higher voltage/amperage circuit that was weakened enough to cause problems (but not outright broken). A circuit with an actual problem would thus appear normal.

Let's look at why. A noid light does not come close to consuming as much amperage as an injector solenoid. If there is a partial driver failure or a minor voltage drop in the injector circuit, there can be adequate amperage to fully operate the noid light BUT NOT ENOUGH TO OPERATE THE INJECTOR.

If this is not clear, picture a battery with a lot of corrosion on the terminals. Say there is enough corrosion that the starter motor will not operate; it only clicks. Now imagine turning on the headlights (with the ignition in the RUN position). You find they light normally and are fully bright. This is the same idea as noid light: There is a problem, but enough amp flow exists to operate the headlights

("noid light"), but not the starter motor ("injector").

How do you identify and avoid all these situations? By using the correct type of noid light. This requires that you understanding the types of injector circuits that your noid lights are designed for. There are three. They are:

- Systems with a voltage controlled injector driver. Another way to say it: The noid light is designed for a circuit with a "high" resistance injector (generally 12 ohms or above).
- Systems with a current controlled injector driver. Another way to say it: The noid light is designed for a circuit with a low resistance injector (generally less than 12 ohms) without an external injector resistor.
- Systems with a voltage controlled injector driver and an external injector resistor. Another way of saying it: The noid light is designed for a circuit with a low resistance injector (generally less than 12 ohms) and an external injector resistor.

NOTE: Some noid lights can meet both the second and third categories simultaneously.

If you are not sure which type of circuit your noid light is designed for, plug it into a known good car and check out the results. If it flashes normally during cranking, determine the circuit type by finding out injector resistance and if an external injector resistor is used. You now know enough to identify the type of injector circuit. Label the noid light appropriately.

Next time you need to use a noid light for diagnosis, determine what type of injector circuit you are dealing with and select the appropriate noid light.

Of course, if you suspect a no-pulse condition you could plug in any one whose connector fit without fear of misdiagnosis. This is because it is unimportant if the flashing light is dim or bright. It is only important that it flashes.

In any cases of doubt regarding the use of a noid light, a lab scope will overcome all inherent weaknesses.

OVERVIEW OF DVOM

A DVOM is typically used to check injector resistance and available voltage at the injector. Some techs also use it check injector on-time either with a built-in

feature or by using the dwell/duty function.

There are situations where the DVOM performs these checks dependably, and other situations where it can deceive you. It is important to be aware of these strengths and weaknesses. We will cover the topics above in the following text.

Checking Injector Resistance

If a short in an injector coil winding is constant, an ohmmeter will accurately identify the lower resistance. The same is true with an open winding. Unfortunately, an intermittent short is an exception. A faulty injector with an intermittent short will show "good" if the ohmmeter cannot force the short to occur during testing.

Alcohol in fuel typically causes an intermittent short, happening only when the injector coil is hot and loaded by a current high enough to jump the air gap between two bare windings or to break down any oxides that may have formed between them.

When you measure resistance with an ohmmeter, you are only applying a small current of a few milliamps. This is nowhere near enough to load the coil sufficiently to detect most problems. As a result, most resistance checks identify intermittently shorted injectors as being normal.

There are two methods to get around this limitation. The first is to purchase an tool that checks injector coil windings under full load. The Kent-Moore J-39021 is such a tool, though there are others. The Kent-Moore costs around $240 at the time of this writing and works on many different manufacturer's systems.

The second method is to use a lab scope. Remember, a lab scope allows you to see the regular operation of a circuit in real time. If an injector is having an short or intermittent short, the lab scope will show it.

Checking Available Voltage At the Injector

Verifying a fuel injector has the proper voltage to operate correctly is good diagnostic technique. Finding an open circuit on the feed circuit like a broken wire or connector is an accurate check with a DVOM. Unfortunately, finding an intermittent or excessive resistance problem with a DVOM is unreliable.

Let's explore this drawback. Remember that a voltage drop due to excessive

resistance will only occur when a circuit is operating? Since the injector circuit is only operating for a few milliseconds at a time, a DVOM will only see a potential fault for a few milliseconds. The remaining 90+% of the time the unloaded injector circuit will show normal battery voltage.

Since DVOMs update their display roughly two to five times a second, all measurements in between are averaged. Because a potential voltage drop is visible for such a small amount of time, it gets "averaged out", causing you to miss it.

Only a DVOM that has a "min-max" function that checks EVERY MILLISECOND will catch this fault consistently (if used in that mode). The Fluke 87 among others has this capability.

A "min-max" DVOM with a lower frequency of checking (100 millisecond) can miss the fault because it will probably check when the injector is not on. This is especially true with current controlled driver circuits. The Fluke 88, among others fall into this category.

Outside of using a Fluke 87 (or equivalent) in the 1 mS "min-max" mode, the only way to catch a voltage drop fault is with a lab scope. You will be able to see a voltage drop as it happens.

One final note. It is important to be aware that an injector circuit with a solenoid resistor will always show a voltage drop when the circuit is energized. This is somewhat obvious and normal; it is a designed-in voltage drop. What can be unexpected is what we already covered--a voltage drop disappears when the circuit is unloaded. The unloaded injector circuit will show normal battery voltage at the injector. Remember this and do not get confused.

Checking Injector On-Time With Built-In Function

Several DVOMs have a feature that allows them to measure injector on-time (mS pulse width). While they are accurate and fast to hookup, they have three limitations you should be aware of:

- They only work on voltage controlled injector drivers (e.g "Saturated Switch"), NOT on current controlled injector drivers (e.g. "Peak & Hold").
- A few unusual conditions can cause inaccurate readings.
- Varying engine speeds can result in inaccurate readings.

Regarding the first limitation, DVOMs need a well-defined injector pulse in order to determine when the injector turns ON and OFF. Voltage controlled drivers provide this because of their simple switch-like operation. They completely close the circuit for the entire duration of the pulse. This is easy for the DVOM to interpret.

The other type of driver, the current controlled type, start off well by completely closing the circuit (until the injector pintle opens), but then they throttle back the voltage/current for the duration of the pulse. The DVOM understands the beginning of the pulse but it cannot figure out the throttling action. In other words, it cannot distinguish the throttling from an open circuit (de-energized) condition.

Yet current controlled injectors will still yield a millisecond on-time reading on these DVOMs. You will find it is also always the same, regardless of the operating conditions. This is because it is only measuring the initial completely-closed circuit on-time, which always takes the same amount of time (to lift the injector pintle off its seat). So even though you get a reading, it is useless.

The second limitation is that a few erratic conditions can cause inaccurate readings. This is because of a DVOM's slow display rate; roughly two to five times a second. As we covered earlier, measurements in between display updates get averaged. So conditions like skipped injector pulses or intermittent long/short injector pulses tend to get "averaged out", which will cause you to miss important details.

The last limitation is that varying engine speeds can result in inaccurate readings. This is caused by the quickly shifting injector on-time as the engine load varies, or the RPM moves from a state of acceleration to stabilization, or similar situations. It too is caused by the averaging of all measurements in between DVOM display periods. You can avoid this by checking on-time when there are no RPM or load changes.

A lab scope allows you to overcome each one of these limitations.

Checking Injector On-Time With Dwell Or Duty

If no tool is available to directly measure injector millisecond on-time measurement, some techs use a simple DVOM dwell or duty cycle functions as a replacement.

While this is an approach of last resort, it does provide benefits. We will discuss the strengths and weaknesses in a moment, but first we will look at how a duty cycle meter and dwell meter work.

How A Duty Cycle Meter and Dwell Meter Work

All readings are obtained by comparing how long something has been OFF to how long it has been ON in a fixed time period. A dwell meter and duty cycle meter actually come up with the same answers using different scales. You can convert freely between them. See **RELATIONSHIP BETWEEN DWELL & DUTY CYCLE READINGS TABLE**.

The DVOM display updates roughly one time a second, although some DVOMs can be a little faster or slower. All measurements during this update period are tallied inside the DVOM as ON time or OFF time, and then the total ratio is displayed as either a percentage (duty cycle) or degrees (dwell meter).

For example, let's say a DVOM had an update rate of exactly 1 second (1000 milliseconds). Let's also say that it has been measuring/tallying an injector circuit that had been ON a total of 250 mS out of the 1000 mS. That is a ratio of one-quarter, which would be displayed as 25% duty cycle or 15° dwell (six-cylinder scale). Note that most duty cycle meters can reverse the readings by selecting the positive or negative slope to trigger on. If this reading were reversed, a duty cycle meter would display 75%.

Strengths of Dwell/Duty Meter

The obvious strength of a dwell/duty meter is that you can compare injector on-time against a known-good reading. This is the only practical way to use a dwell/duty meter, but requires you to have known-good values to compare against.

Another strength is that you can roughly convert injector mS on-time into dwell reading with some computations.

A final strength is that because the meter averages everything together it does not miss anything (though this is also a severe weakness that we will look at later). If an injector has a fault where it occasionally skips a pulse, the meter registers it and the reading changes accordingly.

Let's go back to figuring out dwell/duty readings by using injector on-time

specification. This is not generally practical, but we will cover it for completeness. You NEED to know three things:

- Injector mS on-time specification.
- Engine RPM when specification is valid.
- How many times the injectors fire per crankshaft revolution.

The first two are self-explanatory. The last one may require some research into whether it is a bank-fire type that injects every 360° of crankshaft rotation, a bank-fire that injects every 720°, or an SFI that injects every 720°. Many manufacturers do not release this data so you may have to figure it out yourself with a frequency meter.

Here are the four complete steps to convert millisecond on-time:

1. Determine the injector pulse width and RPM it was obtained at. Let's say the specification is for one millisecond of on-time at a hot idle of 600 RPM.
2. Determine injector firing method for the complete 4 stroke cycle. Let's say this is a 360° bank-fired, meaning an injector fires each and every crankshaft revolution.
3. Determine how many times the injector will fire at the specified engine speed (600 RPM) in a fixed time period. We will use 100 milliseconds because it is easy to use. Six hundred crankshaft Revolutions Per Minute (RPM) divided by 60 seconds equals 10 revolutions per second. Multiplying 10 times .100 yields one; the crankshaft turns one time in 100 milliseconds. With exactly one crankshaft rotation in 100 milliseconds, we know that the injector fires exactly one time.
4. Determine the ratio of injector on-time vs. off-time in the fixed time period, then figure duty cycle and/or dwell. The injector fires one time for a total of one millisecond in any given 100 millisecond period. One hundred minus one equals 99. We have a 99% duty cycle. If we wanted to know the dwell (on 6 cylinder scale), multiple 99% times .6; this equals 59.4° dwell.

Weaknesses of Dwell/Duty Meter

The weaknesses are significant. First, there is no one-to-one correspondence to actual mS on-time. No manufacturer releases dwell/duty data, and it is time-consuming to convert the mS on-time readings. Besides, there can be a large degree of error because the conversion forces you to assume that the injector(s)

are always firing at the same rate for the same period of time. This can be a dangerous assumption.

Second, all level of detail is lost in the averaging process. This is the primary weakness. You cannot see the details you need to make a confident diagnosis.

Here is one example. Imagine a vehicle that has a faulty injector driver that occasionally skips an injector pulse. Every skipped pulse means that that cylinder does not fire, thus unburned O2 gets pushed into the exhaust and passes the O2 sensor. The O2 sensor indicates lean, so the computer fattens up the mixture to compensate for the supposed "lean" condition.

A connected dwell/duty meter would see the fattened pulse width but would also see the skipped pulses. It would tally both and likely come back with a reading that indicated the "pulse width" was within specification because the rich mixture and missing pulses offset each other.

This situation is not a far-fetched scenario. Some early GM 3800 engines were suffering from exactly this. The point is that a lack of detail could cause misdiagnosis.

As you might have guessed, a lab scope would not miss this.

RELATIONSHIP BETWEEN DWELL & DUTY CYCLE READINGS

Dwell Meter (2)	**Duty Cycle Meter**
1°	1%
15°	25%
30°	50%
45°	75%
60°	100%

(1) These are just some examples for your understanding. It is okay to fill in the gaps.

(2) Dwell meter on the six-cylinder scale.

THE TWO TYPES OF INJECTOR DRIVERS

NOTE: This is GENERAL information. This article is not intended

to be specific to any unique situation or individual vehicle configuration. For model-specific information see appropriate articles where available.

OVERVIEW

There are two types of transistor driver circuits used to operate electric fuel injectors: voltage controlled and current controlled. The voltage controlled type is sometimes called a "saturated switch" driver, while the current controlled type is sometimes known as a "peak and hold" driver.

The basic difference between the two is the total resistance of the injector circuit. Roughly speaking, if a particular leg in an injector circuit has total resistance of 12 or more ohms, a voltage control driver is used. If less than 12 ohms, a current control driver is used.

It is a question of what is going to do the job of limiting the current flow in the injector circuit; the inherent "high" resistance in the injector circuit, or the transistor driver. Without some form of control, the current flow through the injector would cause the solenoid coil to overheat and result in a damaged injector.

VOLTAGE CONTROLLED CIRCUIT ("SATURATED SWITCH")

The voltage controlled driver inside the computer operates much like a simple switch because it does not need to worry about limiting current flow. Recall, this driver typically requires injector circuits with a total leg resistance of 12 or more ohms.

The driver is either ON, closing/completing the circuit (eliminating the voltage-drop), or OFF, opening the circuit (causing a total voltage drop).

Some manufacturers call it a "saturated switch" driver. This is because when switched ON, the driver allows the magnetic field in the injector to build to saturation. This is the same "saturation" property that you are familiar with for an ignition coil.

There are two ways "high" resistance can be built into an injector circuit to limit current flow. One method uses an external solenoid resistor and a low resistance injector, while the other uses a high resistance injector without the solenoid

resistor. See the left side of Fig. **Fig. 1**.

In terms of injection opening time, the external resistor voltage controlled circuit is somewhat faster than the voltage controlled high resistance injector circuit. The trend, however, seems to be moving toward use of this latter type of circuit due to its lower cost and reliability. The ECU can compensate for slower opening times by increasing injector pulse width accordingly.

NOTE: Never apply battery voltage directly across a low resistance injector. This will cause injector damage from solenoid coil overheating.

Fig. 1: Injector Driver Types - Current and Voltage

CURRENT CONTROLLED CIRCUIT ("PEAK & HOLD")

The current controlled driver inside the computer is more complex than a voltage controlled driver because as the name implies, it has to limit current flow in

addition to its ON-OFF switching function. Recall, this driver typically requires injector circuits with a total leg resistance of less than 12 ohms.

Once the driver is turned ON, it will not limit current flow until enough time has passed for the injector pintle to open. This period is preset by the particular manufacturer/system based on the amount of current flow needed to open their injector. This is typically between two and six amps. Some manufacturers refer to this as the "peak" time, referring to the fact that current flow is allowed to "peak" (to open the injector).

Once the injector pintle is open, the amp flow is considerably reduced for the rest of the pulse duration to protect the injector from overheating. This is okay because very little amperage is needed to hold the injector open, typically in the area of one amp or less. Some manufacturers refer to this as the "hold" time, meaning that just enough current is allowed through the circuit to "hold" the already-open injector open.

There are a couple methods of reducing the current. The most common trims back the available voltage for the circuit, similar to turning down a light at home with a dimmer.

The other method involves repeatedly cycling the circuit ON-OFF. It does this so fast that the magnetic field never collapses and the pintle stays open, but the current is still significantly reduced. See the right side of Fig. **Fig. 1** for an illustration.

The advantage to the current controlled driver circuit is the short time period from when the driver transistor goes ON to when the injector actually opens. This is a function of the speed with which current flow reaches its peak due to the low circuit resistance. Also, the injector closes faster when the driver turns OFF because of the lower holding current.

NOTE: Never apply battery voltage directly across a low resistance injector. This will cause injector damage from solenoid coil overheating.

THE TWO WAYS INJECTOR CIRCUITS ARE WIRED

NOTE: This is GENERAL information. This article is not intended to be specific to any unique situation or individual vehicle

configuration. For model-specific information see appropriate articles where available.

Like other circuits, injector circuits can be wired in one of two fundamental directions. The first method is to steadily power the injectors and have the computer driver switch the ground side of the circuit. Conversely, the injectors can be steadily grounded while the driver switches the power side of the circuit.

There is no performance benefit to either method. Voltage controlled and current controlled drivers have been successfully implemented both ways.

However, 95% percent of the systems are wired so the driver controls the ground side of the circuit. Only a handful of systems use the drivers on the power side of the circuit. Some examples of the latter are the 1970's Cadillac EFI system, early Jeep 4.0 EFI (Renix system), and Chrysler 1984-87 TBI.

INTERPRETING INJECTOR WAVEFORMS

NOTE: This is GENERAL information. This article is not intended to be specific to any unique situation or individual vehicle configuration. For model-specific information see appropriate articles where available.

INTERPRETING A VOLTAGE CONTROLLED PATTERN

NOTE: Voltage controlled drivers are also known as "Saturated Switch" drivers. They typically require injector circuits with a total leg resistance of 12 ohms or more.

NOTE: This example is based on a constant power/switched ground circuit.

- See **Fig. 2** for pattern that the following text describes.

Point "A" is where system voltage is supplied to the injector. A good hot run voltage is usually 13.5 or more volts. This point, commonly known as open circuit voltage, is critical because the injector will not get sufficient current saturation if there is a voltage shortfall. To obtain a good look at this precise point, you will need to shift your Lab Scope to five volts per division.

You will find that some systems have slight voltage fluctuations here. This can occur if the injector feed wire is also used to power up other cycling components, like the ignition coil(s). Slight voltage fluctuations are normal and are no reason for concern. Major voltage fluctuations are a different story, however. Major voltage shifts on the injector feed line will create injector performance problems. Look for excessive resistance problems in the feed circuit if you see big shifts and repair as necessary.

Note that circuits with external injector resistors will not be any different because the resistor does not affect open circuit voltage.

Point "B" is where the driver completes the circuit to ground. This point of the waveform should be a clean square point straight down with no rounded edges. It is during this period that current saturation of the injector windings is taking place and the driver is heavily stressed. Weak drivers will distort this vertical line.

Point "C" represents the voltage drop across the injector windings. Point "C" should come very close to the ground reference point, but not quite touch. This is because the driver has a small amount of inherent resistance. Any significant offset from ground is an indication of a resistance problem on the ground circuit that needs repaired. You might miss this fault if you do not use the negative battery post for your Lab Scope hook-up, so it is HIGHLY recommended that you use the battery as your hook-up.

The points between "B" and "D" represent the time in milliseconds that the injector is being energized or held open. This line at Point "C" should remain flat. Any distortion or upward bend indicates a ground problem, short problem, or a weak driver. Alert readers will catch that this is exactly opposite of the current controlled type drivers (explained in the next section), because they bend upwards at this point.

How come the difference? Because of the total circuit resistance. Voltage controlled driver circuits have a high resistance of 12+ ohms that slows the building of the magnetic field in the injector. Hence, no counter voltage is built up and the line remains flat.

On the other hand, the current controlled driver circuit has low resistance which allows for a rapid magnetic field build-up. This causes a slight inductive rise (created by the effects of counter voltage) and hence, the upward bend. You

should not see that here with voltage controlled circuits.

Point "D" represents the electrical condition of the injector windings. The height of this voltage spike (inductive kick) is proportional to the number of windings and the current flow through them. The more current flow and greater number of windings, the more potential for a greater inductive kick. The opposite is also true. The less current flow or fewer windings means less inductive kick. Typically you should see a minimum 35 volts at the top of Point "D".

If you do see approximately 35 volts, it is because a zener diode is used with the driver to clamp the voltage. Make sure the beginning top of the spike is squared off, indicating the zener dumped the remainder of the spike. If it is not squared, that indicates the spike is not strong enough to make the zener fully dump, meaning the injector has a weak winding.

If a zener diode is not used in the computer, the spike from a good injector will be 60 or more volts.

Point "E" brings us to a very interesting section. As you can see, the voltage dissipates back to supply value after the peak of the inductive kick. Notice the slight hump? This is actually the mechanical injector pintle closing. Recall that moving an iron core through a magnetic field will create a voltage surge. The pintle is the iron core here.

This pintle hump at Point "E" should occur near the end of the downward slope, and not afterwards. If it does occur after the slope has ended and the voltage has stabilized, it is because the pintle is slightly sticking because of a faulty injector

If you see more than one hump it is because of a distorted pintle or seat. This faulty condition is known as "pintle float".

It is important to realize that it takes a good digital storage oscilloscope or analog lab scope to see this pintle hump clearly. Unfortunately, it cannot always be seen.

Fig. 2: Identifying Voltage Controlled Type Injector Pattern

INTERPRETING A CURRENT CONTROLLED PATTERN

NOTE: Current controlled drivers are also known as "Peak and Hold" drivers. They typically require injector circuits with a total leg resistance with less than 12 ohm.

NOTE: This example is based on a constant power/switched ground circuit.

- See **Fig. 3** for pattern that the following text describes.

Point "A" is where system voltage is supplied to the injector. A good hot run voltage is usually 13.5 or more volts. This point, commonly known as open

circuit voltage, is critical because the injector will not get sufficient current saturation if there is a voltage shortfall. To obtain a good look at this precise point, you will need to shift your Lab Scope to five volts per division.

You will find that some systems have slight voltage fluctuations here. This could occur if the injector feed wire is also used to power up other cycling components, like the ignition coil(s). Slight voltage fluctuations are normal and are no reason for concern. Major voltage fluctuations are a different story, however. Major voltage shifts on the injector feed line will create injector performance problems. Look for excessive resistance problems in the feed circuit if you see big shifts and repair as necessary.

Point "B" is where the driver completes the circuit to ground. This point of the waveform should be a clean square point straight down with no rounded edges. It is during this period that current saturation of the injector windings is taking place and the driver is heavily stressed. Weak drivers will distort this vertical line.

Point "C" represents the voltage drop across the injector windings. Point "C" should come very close to the ground reference point, but not quite touch. This is because the driver has a small amount of inherent resistance. Any significant offset from ground is an indication of a resistance problem on the ground circuit that needs repaired. You might miss this fault if you do not use the negative battery post for your Lab Scope hook-up, so it is HIGHLY recommended that you use the battery as your hook-up.

Right after Point "C", something interesting happens. Notice the trace starts a normal upward bend. This slight inductive rise is created by the effects of counter voltage and is normal. This is because the low circuit resistance allowed a fast build-up of the magnetic field, which in turn created the counter voltage.

Point "D" is the start of the current limiting, also known as the "Hold" time. Before this point, the driver had allowed the current to free-flow ("Peak") just to get the injector pintle open. By the time point "D" occurs, the injector pintle has already opened and the computer has just significantly throttled the current back. It does this by only allowing a few volts through to maintain the minimum current required to keep the pintle open.

The height of the voltage spike seen at the top of Point "D" represents the electrical condition of the injector windings. The height of this voltage spike

(inductive kick) is proportional to the number of windings and the current flow through them. The more current flow and greater number of windings, the more potential for a greater inductive kick. The opposite is also true. The less current flow or fewer windings means less inductive kick. Typically you should see a minimum 35 volts.

If you see approximately 35 volts, it is because a zener diode is used with the driver to clamp the voltage. Make sure the beginning top of the spike is squared off, indicating the zener dumped the remainder of the spike. If it is not squared, that indicates the spike is not strong enough to make the zener fully dump, meaning there is a problem with a weak injector winding.

If a zener diode is not used in the computer, the spike from a good injector will be 60 or more volts.

At Point "E", notice that the trace is now just a few volts below system voltage and the injector is in the current limiting, or the "Hold" part of the pattern. This line will either remain flat and stable as shown here, or will cycle up and down rapidly. Both are normal methods to limit current flow. Any distortion may indicate shorted windings.

Point "F" is the actual turn-off point of the driver (and injector). To measure the millisecond on-time of the injector, measure between points "C" and "F". Note that we used cursors to do it for us; they are measuring a 2.56 mS on-time.

The top of Point "F" (second inductive kick) is created by the collapsing magnetic field caused by the final turn-off of the driver. This spike should be like the spike on top of point "D".

Point "G" shows a slight hump. This is actually the mechanical injector pintle closing. Recall that moving an iron core through a magnetic field will create a voltage surge. The pintle is the iron core here.

This pintle hump at Point "E" should occur near the end of the downward slope, and not afterwards. If it does occur after the slope has ended and the voltage has stabilized, it is because the pintle is slightly sticking. Some older Nissan TBI systems suffered from this.

If you see more than one hump it is because of a distorted pintle or seat. This faulty condition is known as "pintle float".

It is important to realize that it takes a good digital storage oscilloscope or analog lab scope to see this pintle hump clearly. Unfortunately, it cannot always be seen.

Fig. 3: Identifying Current Controlled Type Injector Pattern

CURRENT WAVEFORM SAMPLES

NOTE: This is GENERAL information. This article is not intended to be specific to any unique situation or individual vehicle configuration. For model-specific information see appropriate articles where available.

EXAMPLE #1 - VOLTAGE CONTROLLED DRIVER

The waveform pattern shown in Fig. **Fig. 4** indicate a normal current waveform

from a Ford 3.0L V6 VIN [U] engine. This voltage controlled type circuit pulses the injectors in groups of three injectors. Injectors No. 1, 3, and 5 are pulsed together and cylinders 2, 4, and 6 are pulsed together. The specification for an acceptable bank resistance is 4.4 ohms. Using Ohm's Law and assuming a hot run voltage of 14 volts, we determine that the bank would draw a current of 3.2 amps.

However this is not the case because as the injector windings become saturated, counter voltage is created which impedes the current flow. This, coupled with the inherent resistance of the driver's transistor, impedes the current flow even more. So, what is a known good value for a dynamic current draw on a voltage controlled bank of injectors? The waveform pattern shown below indicates a good parallel injector current flow of 2 amps. See **Fig. 4**.

Note that if just one injector has a resistance problem and partially shorts, the entire parallel bank that it belongs to will draw more current. This can damage the injector driver.

The waveform pattern in Fig. **Fig. 5** indicates this type of problem with too much current flow. This is on other bank of injectors of the same vehicle; the even side. Notice the Lab Scope is set on a one amp per division scale. As you can see, the current is at an unacceptable 2.5 amps.

It is easy to find out which individual injector is at fault. All you need to do is inductively clamp onto each individual injector and compare them. To obtain a known-good value to compare against, we used the good bank to capture the waveform in Fig. **Fig. 6**. Notice that it limits current flow to 750 milliamps.

The waveform shown in Fig. **Fig. 7** illustrates the problem injector we found. This waveform indicates an unacceptable current draw of just over one amp as compared to the 750 milliamp draw of the known-good injector. A subsequent check with a DVOM found 8.2 ohms, which is under the 12 ohm specification.

Fig. 4: Injector Bank w/Normal Current Flow - Current Pattern

Fig. 5: Injector Bank w/Excessive Current Flow - Current Pattern

Fig. 6: Single Injector w/Normal Current Flow - Current Pattern

Fig. 7: Single Injector w/Excessive Current Flow - Current Pattern

EXAMPLE #2 - VOLTAGE CONTROLLED DRIVER

This time we will look at a GM 3.1L V6 VIN [T]. Fig. **Fig. 8** shows the 1, 3, 5 (odd) injector bank with the current waveform indicating about a 2.6 amp draw at idle. This pattern, taken from a known good vehicle, correctly stays at or below the maximum 2.6 amps current range. Ideally, the current for each bank should be very close in comparison.

Notice the small dimple on the current flow's rising edge. This is the actual injector opening or what engineers refer to as the "set point." For good idle quality, the set point should be uniform between the banks.

When discussing Ohm's Law as it pertains to this parallel circuit, consider that each injector has specified resistance of 12.2 ohms. Since all three injectors are in parallel the total resistance of this parallel circuit drops to 4.1 ohms. Fourteen volts divided by four ohms would pull a maximum of 3.4 amps on this bank of injectors. However, as we discussed in **EXAMPLE #1** above, other factors knock this value down to roughly the 2.6 amp neighborhood.

Now we are going to take a look at the even bank of injectors; injectors 2, 4, and 6. See **Fig. 9**. Notice this bank peaked at 1.7 amps at idle as compared to the 2.6 amps peak of the odd bank (Fig. **Fig. 8**). Current flow between even and odd injectors banks is not uniform, yet it is not causing a driveability problem. That is because it is still under the maximum amperage we figured out earlier. But be aware this vehicle could develop a problem if the amperage flow increases any more.

Checking the resistance of this even injector group with a DVOM yielded 6.2 ohms, while the odd injector group in the previous example read 4.1 ohms.

Fig. 8: Injector Odd Bank w/Normal Current Flow - Current Pattern

Fig. 9: Injector Even Bank w/Normal Current Flow - Current Pattern

EXAMPLE #3 - VOLTAGE CONTROLLED DRIVER

Example #3 is of a Ford 5.0L V8 SEFI. Fig. **Fig. 10** shows a waveform of an individual injector at idle with the Lab Scope set on 200 milliamps per division. Notice the dimple in the rising edge. This dimple indicates the actual opening of the injector (set point) occurred at 400 milliamps and current peaked at 750 milliamps. This is a good specification for this engine.

The next waveform pattern in Fig. **Fig. 11** shows an abnormality with another injector. With the Lab Scope set on 500 milliamps per division, you can see that

the current waveform indicates a 1200 milliamp draw. This is a faulty injector.

Abnormally low resistance injectors create excessive current draw, causing rough idle, and possible computer driver damage.

Fig. 10: Single Injector w/Normal Current Flow - Current Pattern

Fig. 11: Single Injector w/Excessive Current Flow - Current Pattern

EXAMPLE #4 - CURRENT CONTROLLED DRIVER

Example #4 is of a Ford 4.6L SEFI VIN [W]. See **Fig. 12** for the known-good waveform pattern. This Ford system is different from the one above in **EXAMPLE #3** as it peaks at 900 milliamps and the actual opening of the injector (set point) is just below 600 milliamps.

This is offered as a comparison against the Ford pattern listed above, as they are both Ford SEFI injectors but with different operating ranges. The point is that you should not make any broad assumptions for any manufacturer.

Fig. 12: Single Injector w/Normal Current Flow - Current Pattern

EXAMPLE #5 - CURRENT CONTROLLED DRIVER

The known-good waveform in Fig. **Fig. 13** is from a Chrysler 3.0L V6 PFI VIN [3]. It is a perfect example of the peak and hold theory. The waveform shows a 1-amp per division current flow, ramping to 4 amps and then decreasing to 1-amp to hold the injector open.

Fig. 13: Injector Bank w/Normal Current Flow - Current Pattern

EXAMPLE #6 - CURRENT CONTROLLED DRIVER

This next known-good waveform is from a Ford 5.0L V8 CFI VIN [F]. See **Fig. 14**. The pattern, which is set on a 250 milliamps scale, indicates a 1.25 amp peak draw and a hold at 350 milliamps.

Fig. 14: Single Injector w/Normal Current Flow - Current Pattern

EXAMPLE #7 - CURRENT CONTROLLED DRIVER

The known-good current controlled type waveform in Fig. **Fig. 15** is from a GM 2.0L TBI VIN [1]. With the lab scope set at 2 amps per division, notice that this system peaks at 4 amps and holds at 1 amp.

The next waveform is from the same type of engine, except that it shows a faulty injector. See **Fig. 16**. Notice that the current went to almost 5 amps and stayed at 1 amp during the hold pattern. Excessive amounts of current flow from bad injectors are a common source of intermittent computer shutdown. Using a current waveform pattern is the most accurate method of pinpointing this problem.

C:\DOCUME~1\ADMINI~1\LOCALS~1\Temp\mric_tmp\~od57E.jpg (1999 x 1013) @ 564.48px

Fig. 15: Single Injector w/Normal Current Flow - Current Pattern

C:\DOCUME~1\ADMINI~1\LOCALS~1\Temp\mric_tmp\~od57F.jpg (1980 x 1017) @ 564.48px

Fig. 16: Single Injector w/Excessive Current Flow - Current Pattern

EXAMPLE #8 - CURRENT CONTROLLED DRIVER

This known-good CPI system waveform from a GM 4.3L V6 CPI VIN [W] peaks at 4 amps and holds at 1-amp. See **Fig. 17** for waveform.

C:\DOCUME~1\ADMINI~1\LOCALS~1\Temp\mric_tmp\~od580.jpg (1965 x 989) @ 564.48px

Fig. 17: Single Injector w/Normal Current Flow - Current Pattern

VOLTAGE WAVEFORM SAMPLES

NOTE: This is GENERAL information. This article is not intended to be specific to any unique situation or individual vehicle configuration. For model-specific information see appropriate articles where available.

EXAMPLE #1 - VOLTAGE CONTROLLED DRIVER

These two known-good waveform patterns are from a Ford 4.6L V8 VIN [W]. Fig. **Fig. 18** illustrates the 64 volt inductive kick on this engine, indicating no clamping is occurring. The second pattern, Fig. **Fig. 19**, was taken during hot idle, closed loop, and no load.

C:\DOCUME~1\ADMINI~1\LOCALS~1\Temp\mric_tmp\~od581.jpg (2113 x 1954) @ 564.48px

Fig. 18: Injector Bank - Known Good - Voltage Pattern

C:\DOCUME~1\ADMINI~1\LOCALS~1\Temp\mric_tmp\~od582.jpg (2131 x 1963) @ 564.48px

Fig. 19: Injector Bank - Known Good - Voltage Pattern

EXAMPLE #2 - VOLTAGE CONTROLLED DRIVER

The known-good waveform pattern in Fig. **Fig. 20** is from a GM 3.8L V6 PFI VIN [3]. It was taken during hot idle, closed loop and no load.

C:\DOCUME~1\ADMINI~1\LOCALS~1\Temp\mric_tmp\~od583.jpg (2180 x 1974) @ 564.48px

Fig. 20: Injector Bank - Known Good - Voltage Pattern

EXAMPLE #3 - VOLTAGE CONTROLLED DRIVER

This known-good waveform pattern, Fig. **Fig. 21**, is from a GM 5.0L V8 TPI VIN [F]. It was taken during hot idle, closed loop and no load.

C:\DOCUME~1\ADMINI~1\LOCALS~1\Temp\mric_tmp\~od584.jpg (2146 x 1945) @ 564.48px

Fig. 21: Injector Bank - Known Good - Voltage Pattern

EXAMPLE #4 - CURRENT CONTROLLED DRIVER

From 1984 to 1987, Chrysler used this type injector drive on their TBI-equipped engines. See **Fig. 22** for a known-good pattern. Instead of the ground side controlling the injector, Chrysler permanently grounds out the injector and switches the power feed side. Most systems do not work this way.

These injectors peak at 6 amps of current flow and hold at 1 amp.

C:\DOCUME~1\ADMINI~1\LOCALS~1\Temp\mric_tmp\~od585.jpg (1926 x 1967) @ 564.48px

Fig. 22: Single Injector - Known Good - Voltage Pattern

EXAMPLE #5 - CURRENT CONTROLLED DRIVER

These two known-good waveform patterns are from a Chrysler 3.0L V6 VIN [3]. The first waveform, Fig. **Fig. 23**, is a dual trace pattern that illustrates how Chrysler uses the rising edge of the engine speed signal to trigger the injectors. The second waveform, Fig. **Fig. 24**, was taken during hot idle, closed loop, and no load.

C:\DOCUME~1\ADMINI~1\LOCALS~1\Temp\mric_tmp\~od586.jpg (1836 x 2001) @ 564.48px

Fig. 23: Injector Bank - Known Good - Voltage Pattern

C:\DOCUME~1\ADMINI~1\LOCALS~1\Temp\mric_tmp\~od587.jpg (2128 x 1998) @ 564.48px

Fig. 24: Injector Bank - Known Good - Voltage Pattern

EXAMPLE #6 - CURRENT CONTROLLED DRIVER

This known-good pattern from a Ford 3.0L V6 PFI VIN [U] illustrates that a zener diode inside the computer is used to clamp the injector's inductive kick to 35-volts on this system. See **Fig. 25**.

C:\DOCUME~1\ADMINI~1\LOCALS~1\Temp\mric_tmp\~od588.jpg (2173 x 1984) @ 564.48px

Fig. 25: Injector Bank - Known Good - Voltage Pattern

EXAMPLE #7 - CURRENT CONTROLLED DRIVER

This known-good waveform from a Ford 5.0L V8 CFI VIN [F] was taken during hot idle, closed loop, and no load. See **Fig. 26**.

C:\DOCUME~1\ADMINI~1\LOCALS~1\Temp\mric_tmp\~od589.jpg (2131 x 1974) @ 564.48px

Fig. 26: Single Injector - Known Good - Voltage Pattern

EXAMPLE #8 - CURRENT CONTROLLED DRIVER

These two known-good waveform patterns are from a GM 2.0L In-Line 4 VIN [1]. Fig. **Fig. 27** illustrates the 78 volt inductive spike that indicates a zener diode is not used. The second waveform, Fig. **Fig. 28**, was taken during hot idle, closed loop, and no load.

C:\DOCUME~1\ADMINI~1\LOCALS~1\Temp\mric_tmp\~od58A.jpg (1842 x 1966) @ 564.48px

Fig. 27: Single Injector - Known Good - Voltage Pattern

C:\DOCUME~1\ADMINI~1\LOCALS~1\Temp\mric_tmp\~od58B.jpg (2102 x 2001) @ 564.48px

Fig. 28: Single Injector - Known Good - Voltage Pattern

GENERAL INFORMATION

Wheel Alignment Theory & Operation

* PLEASE READ THIS FIRST *

NOTE: This is GENERAL information. This article is not intended to be specific to any unique situation or individual vehicle configuration. For model-specific information see appropriate articles where available.

PRE-ALIGNMENT INSTRUCTIONS

NOTE: This is GENERAL information. This article is not intended to be specific to any unique situation or individual vehicle configuration. For model-specific information see appropriate articles where available.

GENERAL ALIGNMENT CHECKS

Before adjusting wheel alignment, check the following:

- Each axle uses tires of same construction and tread style, equal in tread wear and overall diameter. Verify that radial and axial runout is not excessive. Inflation should be at manufacturer's specifications.
- Steering linkage and suspension must not have excessive play. Check for wear in tie rod ends and ball joints. Springs must not be sagging. Control arm and strut rod bushings must not have excessive play. See **Fig. 1**.

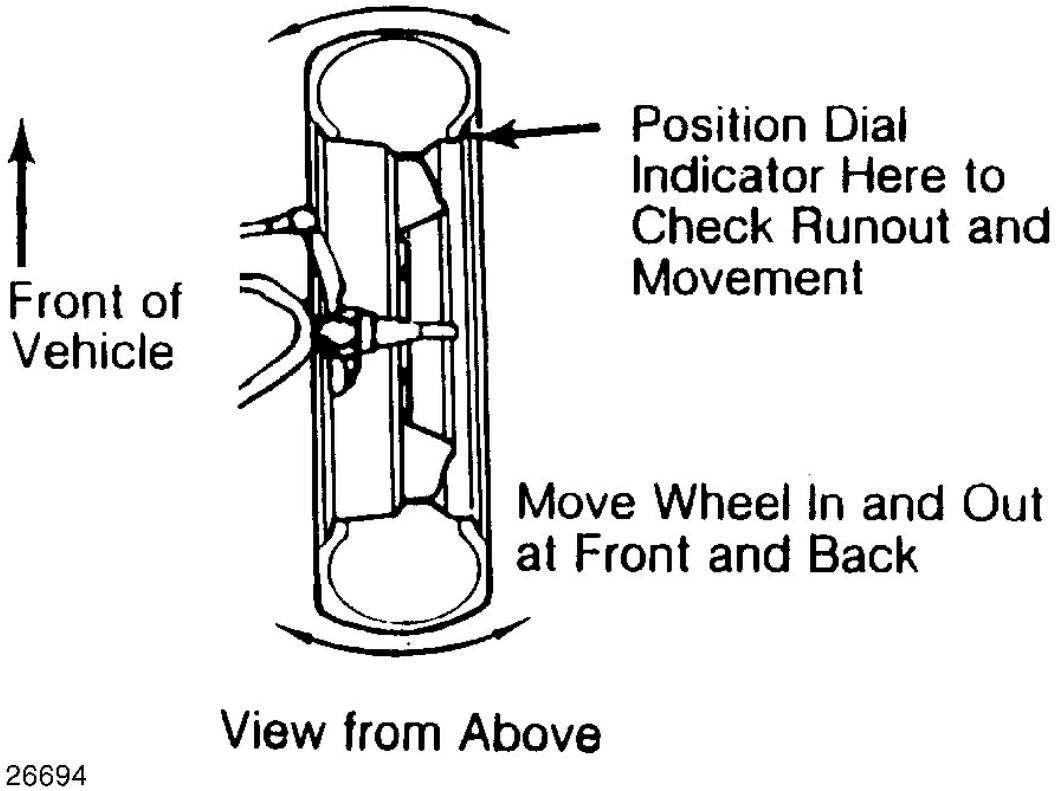

Fig. 1: Checking Steering Linkage

- Vehicle must be on level floor with full fuel tank, no passenger load, spare tire in place and no load in trunk. Bounce front and rear end of vehicle several times. Confirm vehicle is at normal riding height.
- Steering wheel must be centered with wheels in straight ahead position. If required, shorten one tie rod adjusting sleeve and lengthen opposite sleeve (equal amount of turns). See **Fig. 2**.
- Wheel bearings should have the correct preload and lug nuts must be tightened to manufacturer's specifications. Adjust camber, caster and toe-in using this sequence. Follow instructions of the alignment equipment manufacturer.

CAUTION: DO NOT attempt to correct alignment by straightening parts. Damaged parts MUST be replaced.

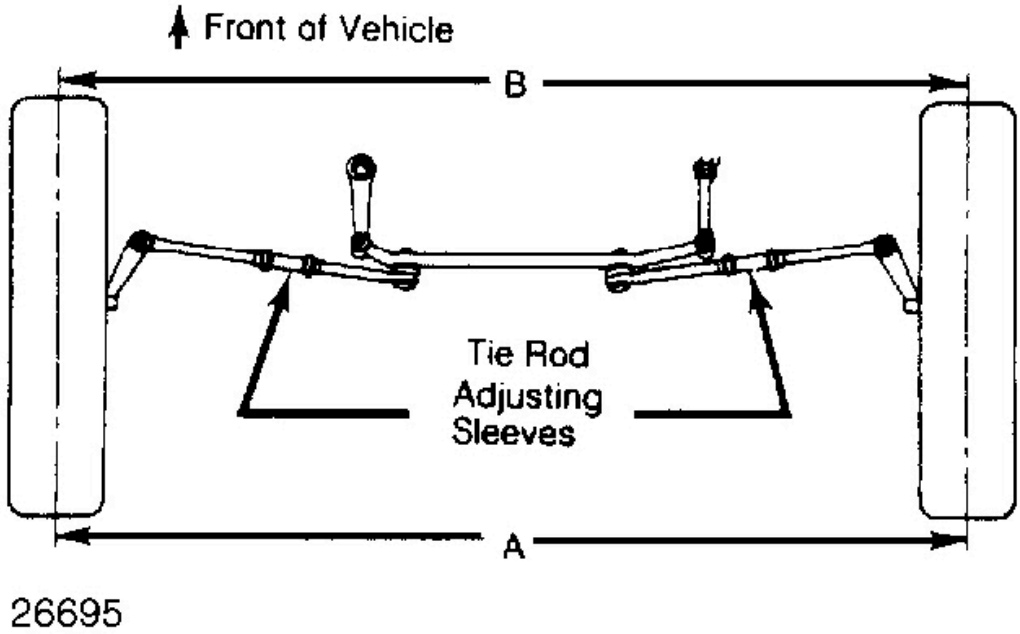

Fig. 2: Adjusting Tie Rod Sleeves (Top View)

ADJUSTMENTS

NOTE: This is GENERAL information. This article is not intended to be specific to any unique situation or individual vehicle configuration. For model-specific information see appropriate articles where available.

CAMBER

1. Camber is the tilting of the wheel, outward at either top or bottom, as viewed from front of vehicle. See **Fig. 3**.
2. When wheels tilts outward at the top (from centerline of vehicle), camber is positive. When wheels tilt inward at top, camber is negative. Amount of tilt is measured in degrees from vertical.

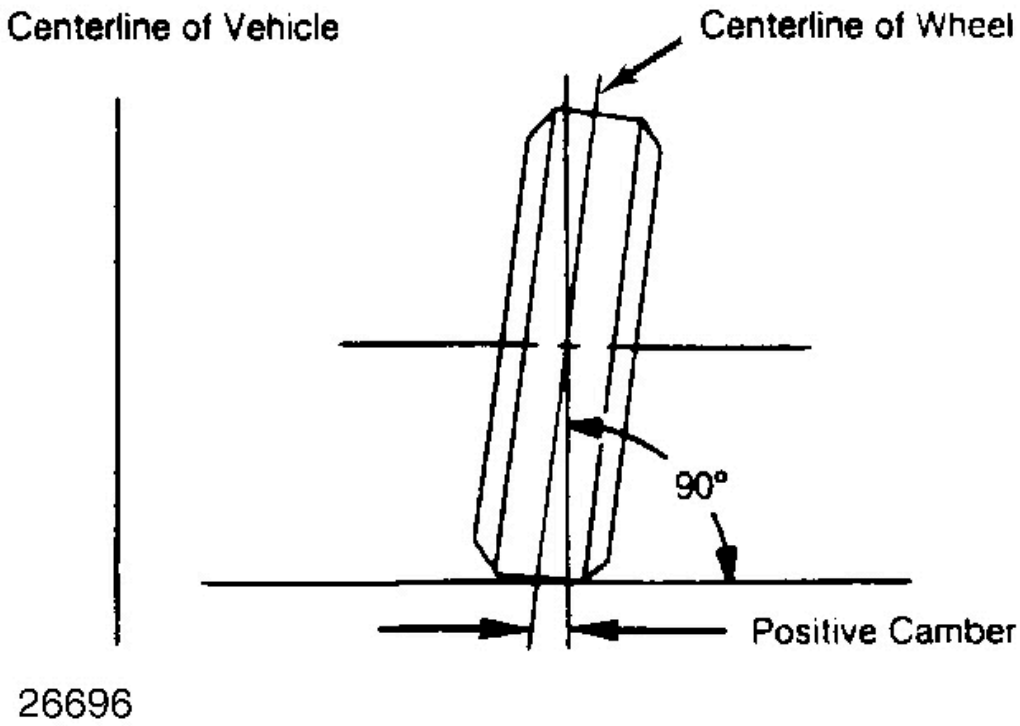

Fig. 3: Determining Camber Angle

CASTER

1. Caster is tilting of front steering axis either forward or backward from vertical, as viewed from side of vehicle. See **Fig. 4**.
2. When axis is tilted backward from vertical, caster is positive. This creates a trailing action on front wheels. When axis is tilted forward, caster is negative, causing a leading action on front wheels.

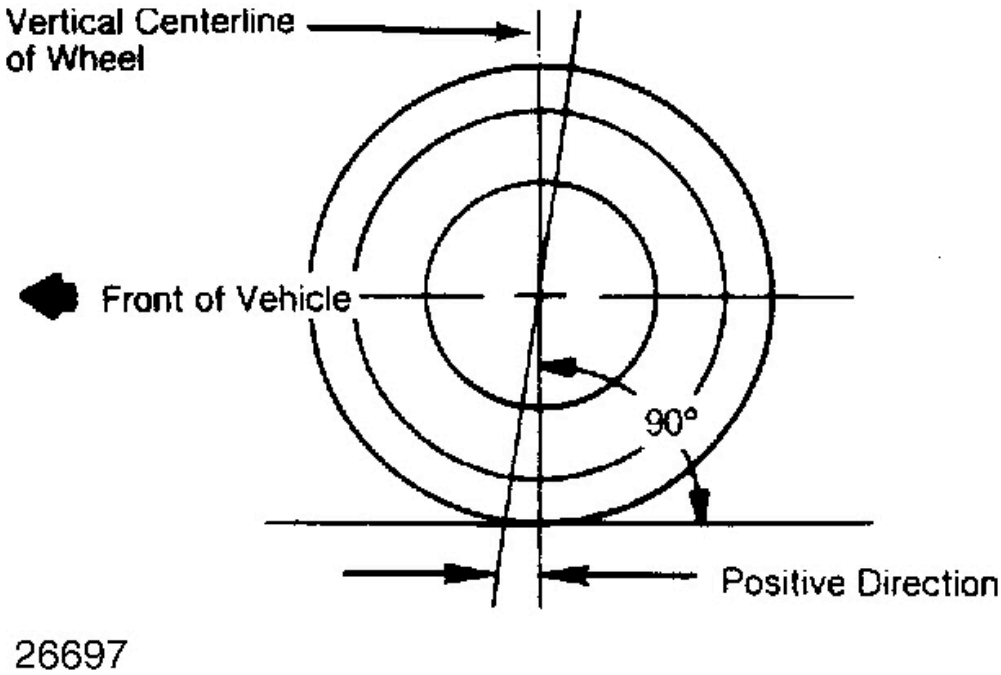

Fig. 4: Determining Caster Angle

TOE-IN ADJUSTMENT

Toe-in is the width measured at the rear of the tires subtracted by the width measured at the front of the tires at about spindle height. A positive figure would indicate toe-in and a negative figure would indicate toe-out. If the distance between the front and rear of the tires is the same, toe measurement would be zero. To adjust:

1) Measure toe-in with front wheels in straight ahead position and steering wheel centered. To adjust toe-in, loosen clamps and turn adjusting sleeve or adjustable end on right and left tie rods. See **Fig. 2** and **Fig. 5** .

2) Turn equally and in opposite directions to maintain steering wheel in centered position. Face of tie rod end must be parallel with machined surface of steering rod end to prevent binding.

3) When tightening clamps, make certain that clamp bolts are positioned so there will be no interference with other parts throughout the entire travel of linkage.

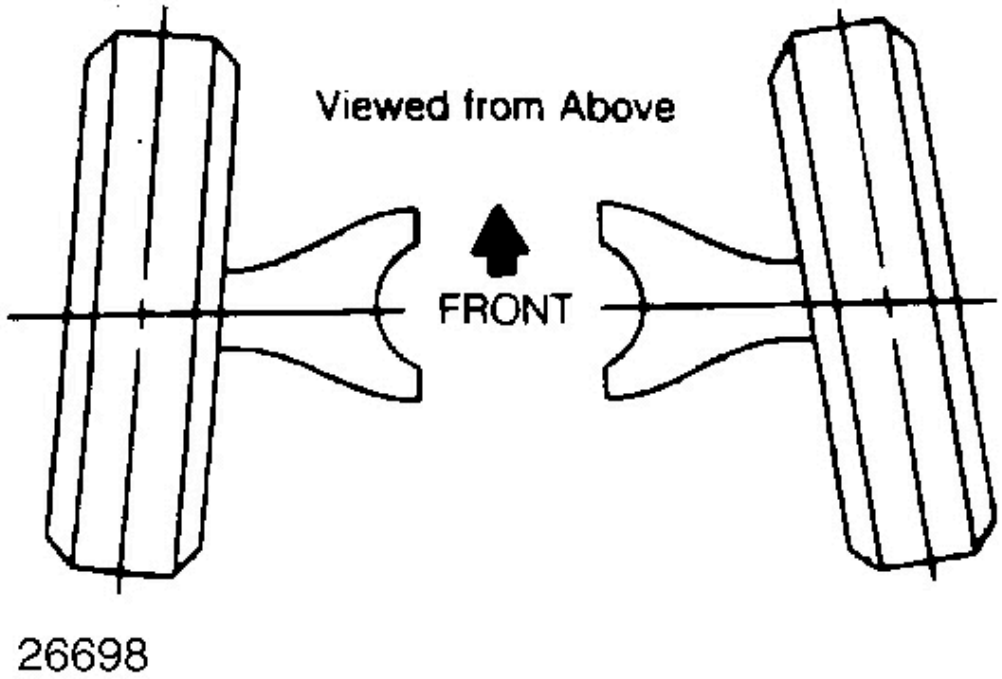

Fig. 5: Wheel Toe-In (Dimension A Less Dimension B)

TOE-OUT ON TURNS

1. Toe-out on turns (turning radius) is a check for bent or damaged parts, and not a service adjustment. With caster, camber, and toe-in properly adjusted, check toe-out with weight of vehicle on wheels.
2. Use a full floating turntable under each wheel, repeating test with each wheel positioned for right and left turns. Incorrect toe-out generally indicates a bent steering arm. Replace arm, if necessary, and recheck wheel alignment.

STEERING AXIS INCLINATION

1. Steering axis inclination is a check for bent or damaged parts, and not a service adjustment. Vehicle must be level and camber should be properly adjusted. See **Fig. 6**.
2. If camber cannot be brought within limits and steering axis inclination is correct, steering knuckle is bent. If camber and steering axis inclination are

both incorrect by approximately the same amount, the upper and lower control arms are bent.

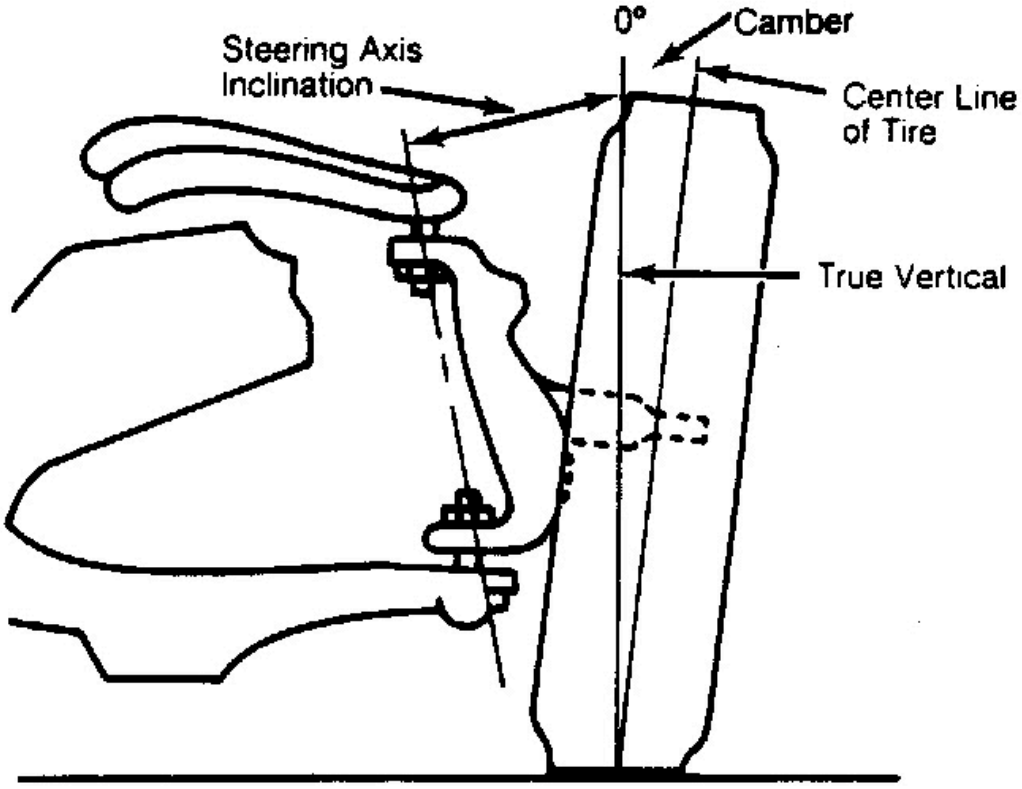

Fig. 6: Checking Steering Axis Inclination

REMINDER INDICATOR RESET PROCEDURES

Jeep - 1988-14

CHANGE OIL/OIL LIFE MONITOR

NOTE: To determine the appropriate reset procedure, refer to CHANGE OIL/OIL LIFE MONITOR RESET INDEX.

CHANGE OIL/OIL LIFE MONITOR RESET INDEX

Model & Year	Reset Procedure
Cherokee	
2014	Change Oil/Oil Life Monitor Reset - Procedure 1
Commander	
2008-10	Change Oil/Oil Life Monitor Reset - Procedure 1
Compass	
2008-14	Change Oil/Oil Life Monitor Reset - Procedure 1
Grand Cherokee	
2008-14	Change Oil/Oil Life Monitor Reset - Procedure 1
Liberty	
2008-12	Change Oil/Oil Life Monitor Reset - Procedure 1
Patriot	
2008-14	Change Oil/Oil Life Monitor Reset - Procedure 1
Wrangler	
2008-14	Change Oil/Oil Life Monitor Reset - Procedure 1

CHANGE OIL/OIL LIFE MONITOR RESET - PROCEDURE 1

1. Turn ignition on, with engine off.

NOTE: On vehicles with Keyless Enter-N-Go™, push the

ENGINE START/STOP button and cycle the ignition to the ON/ RUN position.

2. Fully depress the accelerator pedal, slowly, 3 times within 10 seconds.
3. Turn ignition switch to OFF/LOCK position.

NOTE: On vehicles with Keyless Enter-N-Go™, push the ENGINE START/STOP button once to return the ignition to the OFF/LOCK position.

4. If indicator message illuminates when engine is started, repeat the reset procedure.

EMISS MAINT INDICATOR LIGHT

NOTE: To determine the appropriate reset procedure, refer to EMISS MAINT INDICATOR LIGHT RESET INDEX.

EMISS MAINT INDICATOR LIGHT RESET INDEX

Model & Year	Reset Procedure
Cherokee	
1988-90	Emiss Maint Indicator Light Reset - Procedure 1
Comanche	
1988-90	Emiss Maint Indicator Light Reset - Procedure 1
Wagoneer	
1988-90	Emiss Maint Indicator Light Reset - Procedure 1
Wrangler	
1988-90	Emiss Maint Indicator Light Reset - Procedure 1

EMISS MAINT INDICATOR LIGHT RESET - PROCEDURE 1

1. Vehicles are equipped with a EMISS MAINT indicator light on the instrument cluster. This light will come on one time at 82,500 miles to alert driver that emission service is required. At this time, oxygen sensor and

PCV valve must be replaced and all other emission components should be inspected, and serviced or replaced as necessary.

2. The Service Reminder Indicator (SRI) timer is located under dash, near accelerator pedal or to right of steering column. Timer cannot be reset. To turn off light, timer must be replaced or disconnected. Since timer and sensor are interdependent, if timer should fail prematurely, oxygen sensor should be replaced at same time to preserve correct replacement interval.
3. To replace timer on Cherokee, Comanche and Wagoneer models, remove cruise control module (if equipped). Remove timer mounting screws. Disconnect electrical connector. On Wrangler models, remove timer mounting screws. Disconnect electrical connector. To install, reverse removal procedure.

MAINT REQD INDICATOR LIGHT

NOTE: To determine the appropriate reset procedure, refer to MAINT REQD INDICATOR LIGHT RESET INDEX.

MAINT REQD INDICATOR LIGHT RESET INDEX

Model & Year	Reset Procedure
Cherokee	
1991-92	**Maint Reqd Indicator Light Reset - Procedure 1**
Comanche	
1991-92	**Maint Reqd Indicator Light Reset - Procedure 1**
Grand Cherokee	
1993	**Maint Reqd Indicator Light Reset - Procedure 1**
Wrangler	
1991-92	**Maint Reqd Indicator Light Reset - Procedure 1**

MAINT REQD INDICATOR LIGHT RESET - PROCEDURE 1

Vehicles may be equipped with a MAINT REQD on the instrument cluster. This light will come on one time at 82,500 miles to alert driver that emission service is required. At this time, oxygen sensor must be replaced and all other emission

components should be inspected, and serviced or replaced as necessary. Chrysler's Diagnostic Readout Box (DRB-II) tester is required to reset the service reminder indicator system.

Using DRB-II tester, access SELECT SYSTEMS. Select appropriate engine. Select with or without A/C. Select FUEL & IGNITION. Select ADJUSTMENTS. Select RESET SRI LIGHT. Reset SRI light. When DRB-II is finished resetting light, DRB-II display will read SRI LIGHT IS RESET.

PERFORM SERVICE MESSAGE

NOTE: To determine the appropriate reset procedure, refer to PERFORM SERVICE MESSAGE RESET INDEX.

PERFORM SERVICE MESSAGE RESET INDEX

Model & Year	Reset Procedure
Grand Cherokee	
1994-98	Perform Service Message Reset - Procedure 1
1999-07	Perform Service Message Reset - Procedure 2
Liberty	
2003-07	Perform Service Message Reset - Procedure 2

PERFORM SERVICE MESSAGE RESET - PROCEDURE 1

This vehicle may be equipped with an optional Vehicle Information Center (VIC). A PERFORM SERVICE message is displayed when "miles/kms to service" is zero, indicating that regular service and maintenance is due. To reset counter, turn ignition on, then press SELECT button momentarily, then press and hold SET button for at least 2 seconds.

PERFORM SERVICE MESSAGE RESET - PROCEDURE 2

1. The Electronic Vehicle Information Center (EVIC) displays a PERFORM SERVICE message when distance to service interval has been reached, indicating that regular service and maintenance is due. After performing necessary services, reset service distance by selecting a distance to service

interval.

2. To program EVIC, turn ignition switch to ON position. Depress and release MENU push button until SERVICE INTV. = is displayed. Press and release STEP button to step through available options. The last selected distance option displayed becomes the service interval at which the PERFORM SERVICE message will be displayed.
3. If a new distance interval is selected, RESET SERVICE DISTANCE? with a yes or no option. When YES is selected, the accumulated distance since the last previous PERFORM SERVICE message will be reset to zero because the service interval has been changed. When NO is selected, the distance until the next PERFORM SERVICE message is reduced by the accumulated distance since the last pervious message.
4. EVIC exits programming mode and returns to its normal operation mode when the C/T button is depressed or when the end of the programmable feature menu list is reached, whichever occurs first.

TIRE PRESSURE MONITOR SYSTEM (TPMS)

NOTE: To determine the appropriate reset procedure, refer to TPMS RESET INDEX.

TPMS RESET INDEX

Model & Year	Reset Procedure
Cherokee	
2014	TPMS Reset - Procedure 1
Commander	
2006-10	TPMS Reset - Procedure 1
Compass	
2007-14	TPMS Reset - Procedure 1
Grand Cherokee	
2002-04	TPMS Reset - Procedure 2
2005-14	TPMS Reset - Procedure 1
Liberty	
2002-04	TPMS Reset - Procedure 2
2005-12	TPMS Reset - Procedure 1
Patriot	

2007-14	**TPMS Reset - Procedure 1**
Wrangler	
2007-14	**TPMS Reset - Procedure 1**

TPMS RESET - PROCEDURE 1

NOTE: There is no formal retraining procedure necessary. Each sensor transmits tire pressure data approximately once every minute. Each sensor's (transmitter) broadcast is uniquely coded so that the WCM can monitor the state of each of the sensors on the 4 rotating road wheels. The WCM automatically learns and stores the sensor's ID while driving after a sensor has been replaced.

Once the vehicle has remained stationary for more than 20 minutes, drive vehicle for a minimum of 10 minutes while maintaining a continuous speed above 15 mph (24 km/h). During this time, the system will learn the new sensor ID.

TPMS RESET - PROCEDURE 2

NOTE: Use the following procedure to retrain all 4 road wheel tire pressure sensors. No attempt should be made to retrain individual sensors.

1. Retrieve Relearn Magnet (8821).
2. Press MENU Button on EVIC until "RETRAIN TIRE SENSORS - NO" is displayed.
3. Press STEP button to select "YES".

NOTE: There is a 60-second timer for training the first sensor, and a 30-second timer between training the remaining sensors. If either of these timers expire, the EVIC will abort the training procedure.

NOTE: If at any time the EVIC display reads "TRAINING ABORTED", move the vehicle ahead at least one foot and repeat the entire retraining procedure.

4. Press MENU button to start retraining. Display will read "TRAIN LEFT

FRONT TIRE". The order for retraining all 5 sensors is:

- Left Front.
- Right Front.
- Right Rear.
- Left Rear.
- Spare (if so equipped).

5. Starting at left front tire, place relearn magnet over valve stem. See **Fig. 1**. Within approximately 5 seconds, vehicle horn will chirp indicating training complete at that particular sensor. Remove the magnet.
6. Repeat this step on remaining sensors as indicated by EVIC until all TPM sensors positions are trained.
7. Once EVIC displays "TRAINING COMPLETE", pressing either STEP, C/T, RESET or MENU button will exit training routine.

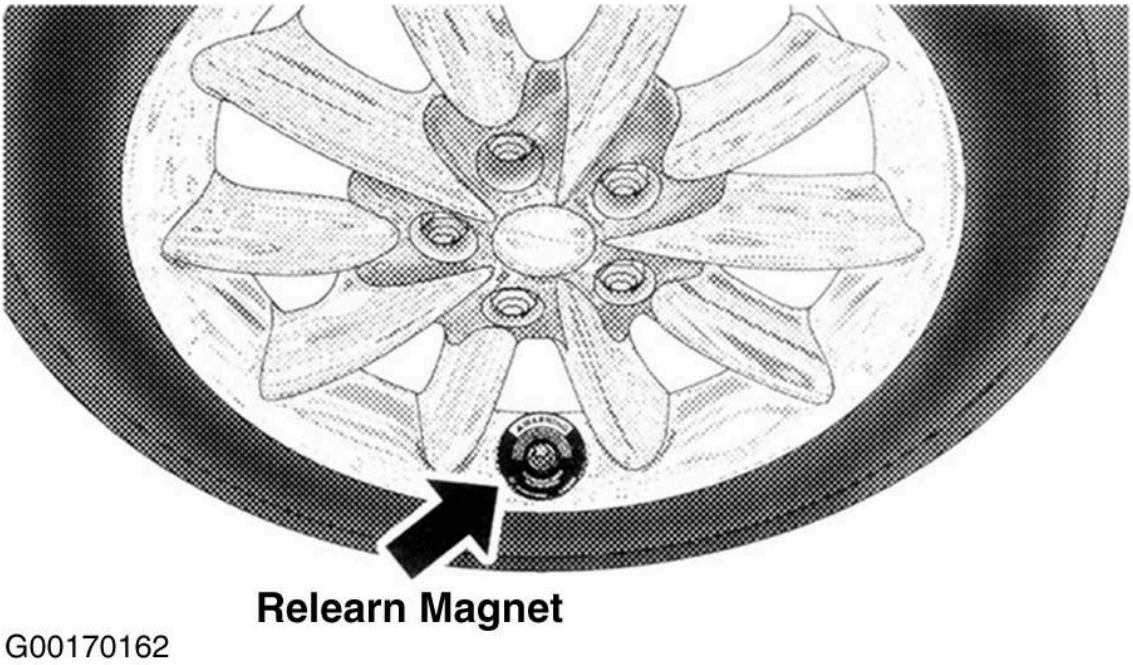

Fig. 1: Placing Training Magnet Around Valve Stem
Courtesy of DAIMLERCHRYSLER CORPORATION

UNIFORM INSPECTION & COMMUNICATION STANDARDS 2010 - 2011

Routine Inspection Reference Guide

ROUTINE INSPECTION REFERENCE GUIDE

These materials are confidential and are not to be disclosed to, or utilized by, any individual or entity other than participants of the Motorist Assurance Program (MAP).

The Automotive Maintenance and Repair Association (AMRA) and MAP do not warrant these materials or guarantee their accuracy, and AMRA and MAP assume no liability for errors.

MAP STANDARDS OF SERVICE

MAP developed standards of service for shops to follow in working with customers. Written from the point of view of customers, and for the use of maintenance and repair shops, the standards expand on the ideas and promises established in MAP's Pledge to Customer

I. Our recommendations are based upon the following definitions.

System Failure - Parts/system indicated are out of manufacturers' specifications, have failed or are unable to perform their normal function as intended or designed by the manufacturers. Service/replacement is required.

Preventive/Scheduled Maintenance - Parts/system are scheduled for service/ replacement per industry standards or are near the end of their useful life and repair/ replacement is recommended in advance of parts/system failure. Service/replacement is suggested.

Improved System Performance - Parts/ system indicated are recommended for repair/ replacement to enhance/improve the vehicle's ability to perform as intended or designed by the manufacturer, or as requested by the customer. Service/replacement is suggested.

II. Training/Criteria Our personnel have acquired auto repair expertise through formal education or work experience. Where appropriate, personnel are moving toward certification (e.g. vehicle manufacturer, ASE, etc.) for the services performed. Continuing education will be supported by all MAP participants.

III. Appropriate Company Approved Inspection

We will perform an appropriate inspection based on MAP Uniform Inspection & Communication Standards.

IV. Written Estimates

Written estimates based on our inspection, in compliance with state and local regulations, will include parts (dollar amount), labor (dollar amount), and the total estimate.

V. Work Authorization

No work will be performed without the customer's prior approval.

VI. Limited Warranty

A minimum limited warranty will be offered of 90 days or 4,000 miles, whichever comes first, covering parts and labor.

VII. Returned Parts

All customers will be entitled to the return of old parts, or if they choose, they may examine the parts prior to leaving the store. Where failed parts are required to be returned to the manufacturer in order to honor the warranty, the customer will be allowed to examine the parts.

VIII. Classification of Parts

Replaced parts will be identified as new, remanufactured, rebuilt or used. MAP participants will inform the customer and indicate on the estimate and invoice whether a part is new, remanufactured, rebuilt or used.

THE MAP PROCESS - OVERVIEW

Repair Association, Inc. (AMRA). Participation in the Motorist Assurance Program comes from retailers, suppliers, independent repair facilities, vehicle manufacturers and industry associations.

Our organization's mission is to strengthen the relationship between the consumer and the auto repair industry. We produce materials that give motorists

the information and encouragement to take greater responsibility for their vehicles-through proper, manufacturer / recommended maintenance. We encourage participating service and repair shops (including franchisees and dealers) to adopt (1) a Pledge of Assurance to their Customers and (2) the Motorist Assurance Program Standards of Service. All participating service providers have agreed to subscribe to this Pledge and to adhere to the promulgated Standards of Service demonstrating to their customers that they are serious about customer satisfaction.

These Standards of Service require that an inspection of the vehicle's (problem) system be made and the results communicated to the customer according to industry standards. Given that the industry did not have such standards, the Motorist Assurance Program successfully promulgated industry inspection communication standards in 1994-95 for the following systems: Exhaust, Brakes, ABS, Steering and Suspension, Engine Maintenance and Performance, HVAC, Electrical Systems, and Drive Train and Transmissions. Further, revisions to all of these inspection communication standards are continually re-published. Participating shops utilize these Uniform Inspection & Communication Standards as part of the inspection process and for communicating their findings to their customers.

The Motorist Assurance Program continues to work cooperatively and proactively with government agencies and consumer groups toward solutions that both benefit the customer and are mutually acceptable to both regulators and industry. We maintain the belief that industry must retain control over how we conduct our business, and we must be viewed as part of the solution and not part of the problem. Meetings with state and other government officials (and their representatives), concerned with auto repair and/or consumer protection, are conducted. Feedback from these sessions is brought back to the association, and the program adjusted as needed.

We welcome you to join us as we continue our outreach... with your support, both the automotive repair industry and your customers will reap the benefits. Please visit MAP at our Internet site www.motorist.org or contact us at:

201 Park Washington Court

Falls Church, Virginia 22046

Tel: (703) 532-2027 * Fax: (202) 318-0378

THE MAP PROCESS - OVERVIEW OF SERVICE REQUIREMENTS AND SUGGESTIONS

It is MAP policy that all exhaust, brake, steering, suspension, wheel alignment, drive-train, engine performance and maintenance, and heating, ventilation and air conditioning, and electrical services be offered and performed under the standards and procedures specified in these sections.

Before any service is performed on a vehicle, an inspection of the appropriate system must be performed. The results of this inspection must be explained to the customer and documented on an inspection form. The condition of the vehicle and its components will indicate what services/part replacements may be "Required" or "Suggested". In addition, suggestions may be made to satisfy the requests expressed by the customer.

When a component is suggested or required to be repaired or replaced, the decision to repair or replace must be made in the customer's best interest, and at his or her choice given the options available.

This section lists the various parts and conditions that indicate a required or suggested service or part replacement. Although this list is extensive, it is not fully inclusive. In addition to this list, a technician may make a suggestion. However, any suggestions must be based on substantial and informed experience or the vehicle manufacturer's recommended service interval and must be documented. However, any suggestions must be documented and must be based on substantial and informed experience or the vehicle manufacturer's recommended service interval. NOTE: Vehicle manufacturer service intervals are often categorized as either Normal or Severe. Frequently, motorists are unaware that their driving patterns and habits meet the criteria for following Severe Service schedules. Severe Service is generally defined as, but not limited to one or more of the following conditions: Driving in stop-and-go traffic; frequent short trips; high-speed driving; extreme temperatures; towing or hauling.

Some conditions indicate that service or part replacement is required because the part in question is no longer providing the function for which it is intended, does not meet a vehicle manufacturer's design specification or is missing.

- **Example:** An exhaust pipe has corroded severely and has a hole in it through which exhaust gases are leaking. Replacement of the exhaust pipe in this case is required due to functional failure.

- **Example:** A brake rotor has been worn to the point where it measures less than the vehicle manufacturer's discard specifications. Replacement of the rotor is required because it does not meet design specifications.

Some conditions indicate that a service or part replacement is suggested because the part is close to the end of its useful life or addresses a customer's need, convenience or request. If a customer's vehicle has one of these conditions, the procedure may be only to suggest service.

- **Example:** An exhaust pipe is rusted, corroded or weak, but no leaks are present. In this case, the exhaust pipe has not failed. However, there is evidence that the pipe may need replacement in the near future. Replacement of the pipe may be suggested for the customer's convenience in avoiding a future problem.
- **Example:** The customer desires improved ride and/or handling, but the vehicle's shocks or struts have not failed. In this case, replacement may be suggested to satisfy the customer's wishes. In this case, replacement of the shocks or struts may not be sold as a requirement.

A customer, of course, has the choice of whether or not a shop will service his or her vehicle. He or she may decide not to follow some of your suggestions. When a repair is required, a MAP shop must refuse partial service on that system if, in the judgment of the service provider, proceeding with the work could create or continue an unsafe condition. When a procedure states that required or suggested repair or replacement is recommended, the customer must be informed of the generally acceptable repair/replacement options whether or not performed by the shop.

The following reasons may be used for required and suggested services. These codes are shown in the "Code" column of the MAP Uniform Inspection & Communications Standards that follow:

Reasons to Require Repair or Replacement	Reasons to Suggest Repair or Replacement
A. Part no longer performs intended purpose B. Part does not meet a design specification (regardless of	1. Part is close to the end of its useful life B - Part does not meet a design specification (regardless of performance) (just above

performance) C. Part is missing	discard specifications, or weak; failure likely to occur soon, etc.) 2. To address a customer need, convenience, or request (to stiffen ride, enhance performance, eliminate noise, etc.) 3. To comply with maintenance recommended by the vehicle's Original Equipment Manufacturer (OEM) 4. Technician's recommendation based on substantial and informed experience 5. To comply with maintenance recommended by AMRA / MAP
NOTE: **When a repair is required, the shop must refuse partial service to the system in question, if the repair creates or continues an unsafe condition.**	**NOTE:** **Suggested services are *always* optional. When presenting suggested repairs to the customer, you must present the facts, allowing the customer to draw their own conclusions and make an informed decision about how to proceed.**

MAINTENANCE OVERVIEW

ANTIFREEZE/COOLANT

The main function of the Engine Cooling System is to carry heat away from the engine and maintain the desired operating temperature. This is accomplished by circulating antifreeze/coolant through the engine, where heat is generated, and carrying it to the radiator to be cooled.

Over the past decade internal combustion engines have become more fuel efficient; however, most of the energy in the gasoline (perhaps 70%) is converted into heat, and the cooling system keeps the engine from overheating by transferring this heat to the air. But the cooling system also has several other functions.

An automobile engine runs best at a fairly high temperature. When the engine is cold, components wear out faster, and the engine is less efficient and releases

more pollutants into the atmosphere. The cooling system is designed to allow the engine to heat up as quickly as possible, and then to keep the engine at a constant temperature.

Modern automobiles operate in a wide variety of ambient temperatures, from well below freezing to well over 100 F. The fluid used to cool the engine must have a very low freezing point, a high boiling point, and it must have the ability to transfer a lot of heat.

An adequate amount of an antifreeze/coolant and water mixture is necessary to reduce the possibility of engine overheating and freezing, and to prevent rust and corrosion in the cooling system.

Water is one of the most effective fluids for holding heat, but water freezes at too high a temperature to be used in car engines. The fluid that most cars use is a mixture of water and ethylene glycol, also known as antifreeze. By adding ethylene glycol to water, the boiling and freezing points are improved significantly.

The temperature of the coolant can sometimes reach 250 to 275 F (121 to 135 C). Even with ethylene glycol added, these temperatures would boil the coolant. The cooling system is pressurized, which further raises the boiling point of the coolant. Most automobiles have around 14 to 15 pounds per square inch (psi), which raises the boiling point approximately 45 F so the coolant can endure the high temperatures produced in the engine.

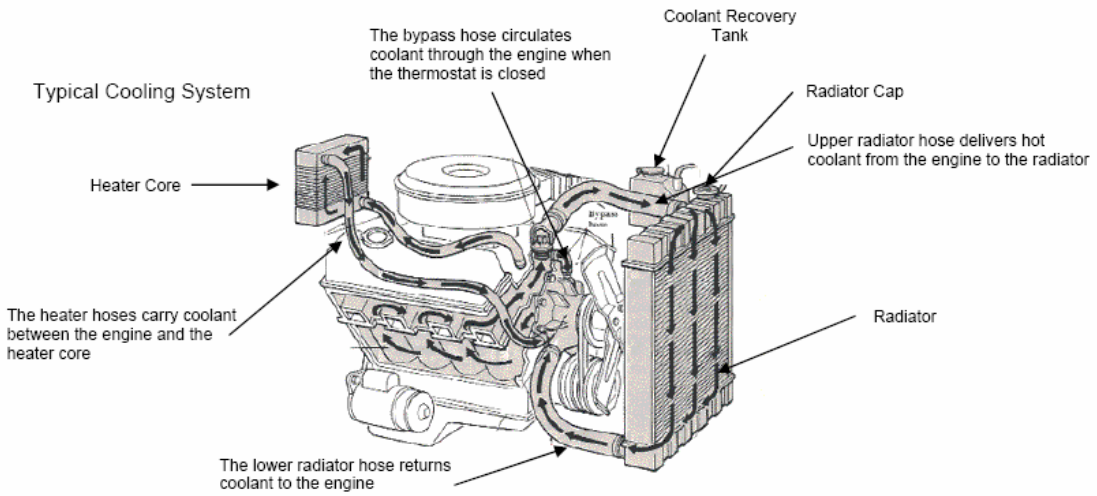

Fig. 1: Typical Cooling System

Hoses showing obvious signs of wear such as cracks, cuts, stiffness, bulges, excessive softness or abrasions should be replaced.

The National Automotive Radiator Service Association (NARSA) recommends a seven (7)-point preventative cooling system maintenance check at least once every two years. The program is designed to identify any areas that need attention, and consists of:

- a visual inspection of all cooling system components, including belts and hoses
- a radiator cap test to check for the recommended system pressure level
- a thermostat check for proper opening and closing
- a pressure test to identify any external leaks to the cooling system parts; including the radiator, water pump, engine coolant passages, radiator and heater hoses and heater core
- an internal leak test to check for combustion gas leakage into the cooling system
- an engine fan test for proper operation h a system power flush and refill with car manufacturer's recommended concentration of coolant

VISUAL INSPECTION

What you are looking for is the condition of the belts and hoses. The radiator hoses and heater hoses are easily inspected just by opening the hood and looking. You want to be sure that the hoses have no cracking or splitting and that there is no bulging or swelling at the ends. If there is any sign of problems, the hose should be replaced with the correct part number for the year, make and model of the vehicle. Never use a universal hose unless it is an emergency and a proper molded hose is not available.

Heater hoses are usually straight runs and are not molded, so a universal hose is fine to use and often is all that is available. Make sure that you use the proper inside diameter for the hose being replaced. For either the radiator hoses or the heater hoses, make sure that you route the replacement hose in the same way that the original hose was running. Position the hose away from any obstruction that can possibly damage it and always use new hose clamps. After you refill the cooling system with coolant, do a pressure test to make sure that there are no leaks.

RADIATOR CAP TEST

A radiator cap is designed to maintain pressure in the cooling system at a certain maximum pressure. If the cooling system exceeds that pressure, a valve in the cap opens to bleed the excessive pressure into the reserve tank. Once the engine has cooled off, a negative pressure begins to develop in the cooling system. When this happens, a second valve in the cap allows the coolant to be siphoned back into the radiator from the coolant reservoir. If the cap should fail, the engine can easily overheat. A pressure test of the radiator cap is a quick way to tell if the cap is doing its job. It should be able to hold its rated pressure for two minutes.

ENGINE FAN

The radiator cooling fan is an important part of the cooling system operation. While a fan is not really needed while a vehicle is traveling down the highway, it is extremely important when driving slowly or stopped with the engine running. In the past, the fan was attached to the engine and was driven by the fan belt. The speed of the fan was directly proportional to the speed of the engine; a viscous fan drive was developed in order to disengage the fan when it was not needed.

With computer controls, the engine-driven fans gave way to electric fans mounted directly on the radiator. A temperature sensor determined when the engine was beginning to run too hot and turned on the fan to draw air through the radiator to cool the engine. On many cars, there were two fans mounted side by side to make sure that the radiator had a uniform air flow for the width of the unit.

When the car is in motion, the speed of the air entering the grill is usually sufficient to keep the coolant at the proper temperature and the fans shut off. When the vehicle is stopped, there is no air flow and the fan is turned on when the engine reaches a designated temperature.

When the A/C is turned on the fan circuit would power the fans regardless of engine temperature. The air conditioning system always requires a good air flow through the condenser mounted in front of the radiator. If the air flow stopped, the air-conditioned air coming through the dash outlets would immediately start warming up.

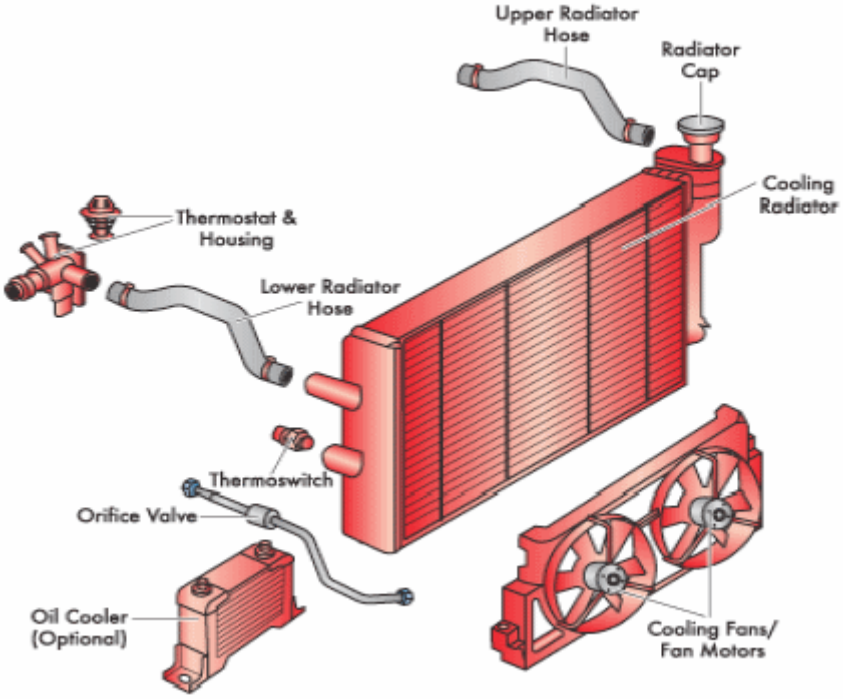

Fig. 2: Typical Cooling Fan

COOLING SYSTEM POWER FLUSH AND REFILL

Old coolant can be replaced by draining it out and replacing it with fresh coolant; however, power flushing will remove all the old coolant and pull out any sediment and scale along with it. Power flushing requires special equipment and generally requires the thermostat to be removed, the lower radiator hose disconnected, and the flush machine connected in line. Water and, sometimes, a cleaning agent are pumped through the cooling system in a reverse path from the normal coolant flow. When completed, the hose is reconnected and a new thermostat is installed. The cooling system is refilled with the appropriate amount of antifreeze to bring the coolant to the proper mixture of antifreeze and water. For most vehicles and most climates, the mixture is 50 / 50. In colder climates, more antifreeze is used, but must never exceed 75 percent antifreeze. Follow the vehicle manufacturers' procedures and recommendations.

BELTS (EXCEPT TIMING BELTS)

On most older vehicles, the water pump is driven by a V belt or serpentine belt on the front of the engine that is also responsible for driving the alternator, power steering pump and air conditioner compressor. These types of belts are easy to inspect and replace if they are worn. You are looking for dry cracking on the inside surface of the belt.

On later vehicles, the water pump is often driven by the timing belt. This belt usually has a specific life expectancy at which time it must be replaced to insure that it does not fail. Since the timing belt is inside the engine and will require partial engine disassembly to inspect, it is very important to replace it at the correct interval.

Low belt tension, contamination and belt vibration are common sources of belt noise. A screeching or squealing noise that occurs when pulling away from a stop normally indicates a lack of tension; check belt tension and automatic tensioners.

A grinding noise can result from damaged bearings, which must be replaced, aligned and lubricated to eliminate the noise and further damage. Vibration and noise can develop over time as drive components such as pulleys and spring tensioners wear, bearings and brackets loosen, or belts wear and stretch.

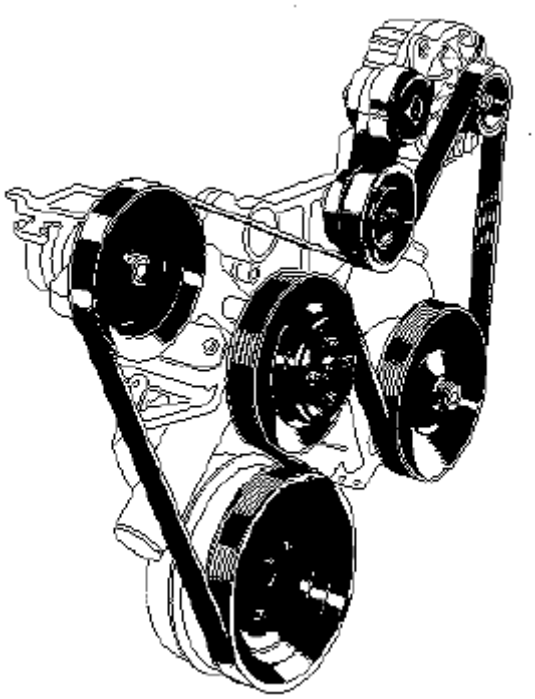

Fig. 3: Typical Accessory Drive Belt

The angle between belt span and pulley is the critical factor responsible for causing the "chirp" associated with misalignment noise. The presence of high humidity (or a damp belt) often increases the likelihood for misalignment noise to occur. Misalignment angle can result from many different combinations of pulley positions - parallel and angular are two typical examples.

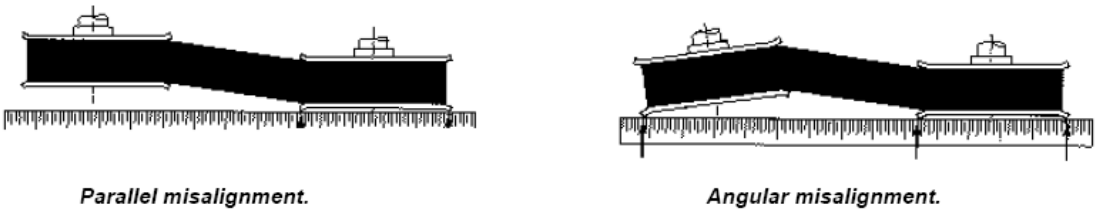

Fig. 4: Accessory Drive Belt Misalignment

Whenever a vehicle owner complains of belt noise, determine the type of noise and under what circumstances it occurs. The correction for a noise problem caused by belt misalignment is not likely to resolve a slip noise problem that may be caused by insufficient tension or other problem. The highest occurrence of belt noise due to misalignment comes from short belt spans entering large diameter pulleys. In the case of severe misalignment, repositioning of drive components may be required. Pulley alignment and tension must be correct for the drive to operate properly.

BELT TENSIONER

Belt tensioners are used to maintain constant tension on the belt, extending both belt and accessory drive bearing life.

NOTE: A tensioner cannot be rebuilt since internal parts are not available. Never try to disassemble a tensioner unit. Injury may result.

Fig. 5: Typical Accessory Dive Belt Tensioner

AUTOMATIC TRANSMISSION FLUID

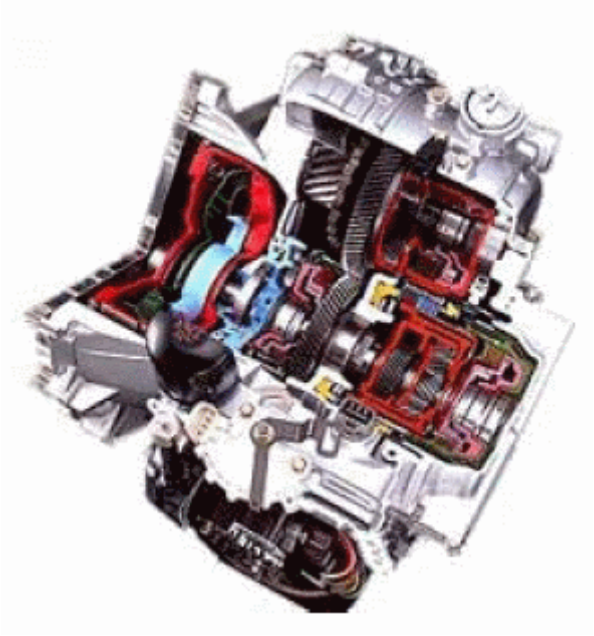

Fig. 6: Crosssection Of Automatic Transmission - Typical

Automatic transmission fluid (ATF) is the fluid used in vehicles with a self-shifting or automatic transmission. It is typically colored red or green to distinguish it from motor oil and other fluids in the vehicle. The fluid is a highly refined mineral oil optimized for the special requirements of an automatic transmission, such as valve operation, clutch and band operation, torque converter and gear lubrication. ATF is also used as a hydraulic medium in some power-assisted steering systems and as a lubricant in some 4WD transfer cases.

ATF usually contains an additive package with anti-foam additives, detergents and dispersants, anti-oxidation compounds, surfactants and petroleum dye. There are many specifications for ATF, such as the DEXRON and MERCON series, and the vehicle manufacturer will identify the ATF specification appropriate for each vehicle. The vehicle's owner's manual will typically list the ATF specification(s) that are recommended by the manufacturer. Some manufacturers will recommend different ATF products for different kinds of vehicle use, such as frequent trailer towing or vehicles that are used for longer periods between routine maintenance.

Overused ATF often has reduced lubrication properties and abrasive friction materials (from clutches and bands) suspended in it; failure to replace such fluid will accelerate transmission wear and could eventually ruin a transmission. Color is not an indication of the service life of an ATF as most ATF products will darken with use. The manufacturer's recommended service interval is a more

reliable measure of ATF life.

AUTOMATIC TRANSMISSION FLUID EXCHANGE & FILTER REPLACEMENT

Automatic transmission fluid lubricates, cools and cleans internal components of the transmission. It also helps to maintain the hydraulic pressure necessary for the transmission to function. The additives in the transmission fluid can be depleted over time and should be replaced following the manufacturer's recommended service interval.

ENGINE OIL

The temperature range the oil is exposed to in most vehicles can be wide, ranging from cold ambient temperatures in the winter before the vehicle is started up to hot operating temperatures when the vehicle is fully warmed up in hot summer weather. A "specific" oil will have high viscosity when cold and a low viscosity at the engine's operating temperature. The difference in viscosities for any single-grade oil is too large between the extremes of temperature. To bring the difference in viscosities closer together, additives called viscosity index improvers are added to the oil. This creates "multi-grade" oil which has the viscosity of the first number when cold and the viscosity of the second number when hot. This allows one type of oil to be generally used all year.

In engines, there is inevitably some exposure of the oil to products of internal combustion, and microscopic particles from black soot accumulate in the oil during operation. Also the rubbing of metal engine parts inevitably produces some microscopic metallic particles from the wearing of the surfaces. Such particles could circulate in the oil and grind against the part surfaces causing wear. The oil filter removes many of the particles and sludge, but eventually the oil filter can become clogged, if used for extremely long periods. The motor oil and especially the additives also undergo thermal and mechanical degradation. For these reasons, the oil and the oil filter need to be periodically replaced.

Most vehicle manufacturers utilize a time/mileage-based schedule. Time-based intervals account for both the short trip driver who does fewer miles, but builds up more contaminates, as well as the long highway trips that are much easier on the oil. Many vehicle manufacturers list somewhat higher intervals for changing of oil and filter, with "severe" service requiring more frequent changes. This generally applies to vehicles that are mostly used in "Stopand- Go" driving conditions; experience extended periods of idling; or used for short trips of under

10 miles, where the oil does not get to full operating temperature and other adverse conditions.

Some vehicle manufacturers have installed engine Oil Life Monitors using computer calculations to estimate the oil's condition based on the factors which degrade it. Conditions such as RPMs, temperatures, and trip length are factored in to the equation; and one system adds an optical sensor for determining the clarity of the oil in the engine.

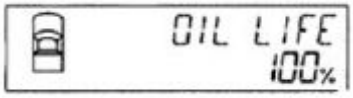

Fig. 7: Engine Oil Life Monitor Display Example

AIR FILTERS

The engine air filter prevents dirt from entering the engine's cylinders, where it would cause mechanical wear and oil contamination. Most fuel injected vehicles use a pleated paper filter element in the form of a flat panel. This filter is usually placed inside a plastic box connected to the throttle body with an intake tube. Older vehicles that use carburetors or throttle body fuel injection typically use a cylindrical air filter, usually a few inches high and between 6 and 16 inches in diameter, positioned above the carburetor or throttle body and may incorporate ducting to provide cool and/or warm inlet air, and secured with a metal or plastic lid.

A Pleated paper filter element is used for most automobile engine air cleaners, because they are efficient, easy to service, and cost-effective. The pleated-paper filter is sized appropriately for the airflow volumes encountered in a particular application and present only minor restriction to air flow until the filter has become clogged with dirt.

CABIN AIR FILTER

The cabin air filter is typically a pleated-paper filter that is placed in the outside-air intake for the vehicle's passenger compartment. Some of these filters are rectangular and similar in shape to the combustion air filter. Others are uniquely shaped to fit the available space of particular vehicles' outside-air intakes. Clogged or dirty cabin air filters can significantly reduce airflow from the cabin vents, as well as introduce allergens into the cabin air stream.

BRAKE FLUID

The purpose of brake fluid is to:

1. Utilize hydraulic pressure to apply force on brake components that use a friction material to slow the vehicle
2. Protect the brake system from corrosion

Motor vehicle brake fluids are hygroscopic and absorb moisture when exposed to the atmosphere and in service. Water contamination from any source, including mechanical or accidental additions of free water, will appreciably lower the original boiling point of the brake fluid and increase its viscosity at low ambient temperatures. Water contamination may cause corrosion of brake cylinder bores and pistons, and may seriously affect the braking efficiency and safety of the brake actuating system. While moisture is definitely an issue with brake fluids, no consistent and accurate measurement identifying the percentage of moisture that is detrimental to brake fluid performance has been found in the literature. In addition, no specification exists for an in-use brake fluid boiling point that can be identified by a testing procedure and therefore no recommendation for replacement based on moisture content can be made with confidence.

It has been demonstrated that corrosion inhibitors in brake fluid deplete over time and can be severely depleted by 36 months. The depletion of corrosion inhibitors results in corrosion. Copper is not found in new brake fluid and is used as a brazing alloy in the brake lines, which represent a high surface area for brake fluid contact. Copper is the first metal to corrode in a brake system, and is a principle contaminate in brake fluid. Copper levels increase slowly and stably over time. The slow and steady increase in copper levels provides a means to predict the age of brake fluid under normal conditions. The age of the brake fluid can help determine when brake fluid should be serviced according to OEM recommendations when applicable. Copper can also directly affect ABS components as it can plate to the valve and valve seats.

Iron levels begin to sharply increase when the copper levels reach 150-250 ppm indicating corrosion of iron components. This also allows copper levels to be used to predict when iron levels will increase or the start of component corrosion and the depletion of corrosion inhibitors. Once iron corrosion begins copper acts as a catalyst to speed corrosion. At this point (iron corrosion) it is evident that the brake fluid no longer performs the intended purpose of protecting the system from corrosion.

A copper content of 200 ppm or greater indicates a depletion of corrosion inhibitors in the brake fluid and Brake Fluid Replacement is Required.

BATTERY

The automotive battery is an electrochemical device that produces voltage and delivers current. In an automotive battery the electrochemical action can be reversed, recharging the battery, providing many years of service. Batteries emit hydrogen gas while charging and the battery case cannot be completely sealed. Batteries (maintenance free) have small vents on the side forcing the gases to go through baffles to escape. This process allows the liquid to condense and flow back to the bottom of the battery.

The purpose of the battery is to supply current to the starter motor, provide current to the ignition system while cranking, to supply additional current when the demand is higher than the alternator can supply and to act as an electrical reservoir. Batteries are rated in cold cranking amps. This represents the current the battery can produce for 30 seconds at 0 degrees before the battery voltage drops below 7.2 volts.

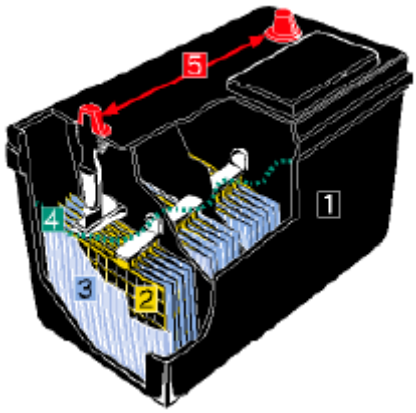

Fig. 8: Typical Battery Components

BATTERY CABLES

Battery cables are large diameter, multi-stranded wire which conveys the high current (250+ amps) necessary to operate the starter motor. Some battery cables will have a smaller wire, soldered to the terminal, which is used to either operate a smaller device or to provide an additional ground. When the smaller cable burns it indicates a high resistance in the heavy cable.

Even maintenance free batteries need periodic inspection and cleaning to insure

they stay in good working order. Inspect the battery to see that it is clean and that it is held securely in its carrier. Some corrosion naturally collects around the battery. Electrolyte condensation contains corrosive sulfuric acid, which eats away the metal of battery terminals, cable ends and battery hold-down parts.

POWER STEERING

Power steering is a system for reducing the steering effort on cars by using an external power source to assist in turning the wheels. Most vehicles have power steering and the trend to front wheel drive, greater vehicle mass and wider tires means that modern vehicles would be extremely difficult to maneuver at low speeds (e.g. when parking) without assistance.

POWER STEERING FLUID

Power Steering Fluid is the hydraulic component in power steering systems and is charged with pressure transfer and component protection. It fails when it stops performing one of its tasks. When a fluid becomes oxidized, its resistance to flow is greater and it decreases its ability to protect components and transfer pressure. The more common failure mode of PSF is internal and external contamination, and excess particles in fluid promote component wear and can lead to component failures, including seals, shafts and gears.

Most power steering systems work by using a belt driven pump to provide hydraulic pressure to the system. This hydraulic pressure is generated by a rotary-vane pump which is driven by the vehicle's engine. As the speed of the engine increases, the pressure in the hydraulic fluid also increases, hence a relief valve is incorporated into the system to allow excess pressure to be bled away. Some of the hydraulic systems also include an electronic pressure valve which can reduce the hydraulic pressure of the power steering lines as the vehicle's speed increases (Variable assist power steering).

Electric Power Steering uses sensors to detect the motion and torque of the steering column and a computer module applies electric motor to provide power assist. This allows variable assist power steering to be applied depending on driving conditions. In the event of component failure, a mechanical linkage such as a rack and pinion serves as a back-up in a manner similar to that of hydraulic systems. Electric power steering is usually limited to smaller vehicles rather than trucks and SUVs. Electric systems have a significant advantage in fuel efficiency because there is no hydraulic pump constantly running, whether assistance is

required or not.

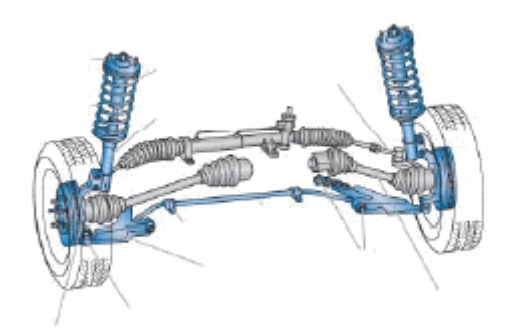

Fig. 9: Typical Front Suspension & Steering Components

WIPER BLADES

Worn wiper blades are dangerous. Ozone, airborne contaminants, oil, sunlight and dirt all act to weaken and reduce your wiper blades' ability to keep your view unobstructed. And exposure to sunlight and ozone cause the wiper blades to age, even if they're not used much. Weather also plays a critical role in your windshield wiper blades' deterioration. Freezing temperatures make the rubber in your wiper blades hard and brittle, which increases their tendency to crack or tear. Hot weather warps the rubber and prevents the blade from wiping your windshield cleanly.

Heavy use is hard on the wipers because dust, abrasives, road grime and bug juice wear away the cutting edge the blade needs to wipe cleanly. Even road dirt acts like an abrasive to wear away the flat surface necessary for a good squeegee effect. Rubber also deteriorates over time. As blades age, they lose their flexibility and are less able to wipe cleanly. They may develop a permanent set or curvature, which prevents full contact with your windshield.

A wiper blades ability to clean the glass depends on:

The slope and area of the windshield: Windshields are sloped for improved aerodynamics and a "cab-forward" windshield with a lot of surface area directs more wind against the wipers, and can force the blades away from the windshield at high speeds unless the wiper system is designed to resist lift.

The amount of spring tension on the wiper arm: This is important to keep the wiper blade in tight contact with the windshield and provide a squeegee effect.

The number of pressure points or claws holding the blade: The more claws a blade has, the broader the area over which the pressure of the wiper arm is spread. More claws also provide increased flexibility so the blade can more easily follow the curvature of a large, sloping windshield for full side-to-side contact.

ROUTINE INSPECTION CHECKSHEET

MOTORIST ASSURANCE PROGRAM
STANDARDS FOR AUTOMOTIVE REPAIR

ROUTINE INSPECTION CHECKSHEET

Date: _____

Name: _____

Address: _____

City: _____ State: _____ Zip Code: _____

Year: _____ Make: _____ Model: _____

Mileage: _____ License: _____ VIN: _____ Eng Code: _____

Customer Interview:

_____

_____

_____

_____

_____

Reason Code Explanation

Code	Reason
	Required
A	*Part No Longer Performs Intended Purpose*
B	*Part Does Not Meet A Design Specification (Regardless Of Performance)*
C	*Part Is Missing*
	Suggested/Optional
1	*Part Is Close To The End Of Its Useful Life*
2	*To Address A Customer Need, Convenience Or Request*
3	*To Comply With Maintenance Recommended By The Vehicle's Original Equipment Manufacturer*
4	*Technician's Recommendation Based On Substantial And Informed Experience*
5	*To Comply With Maintenance Recommended By AMRA/MAP*

Your vehicle has been inspected following the Uniform Inspection and Communication Standards developed by the Motorist Assurance Program. MAP produces materials that give motorists the information and encouragement to take greater responsibility for their vehicles—through proper maintenance. We encourage participating service and repair shops to adopt the MAP Pledge of Assurance to their Customers and the Motorist Assurance Program Standards of Service. All participating service providers have agreed to subscribe to this Pledge and to adhere to the promulgated Standards of Service demonstrating to their customers that they are serious about customer satisfaction. For more information visit: www.motorist.org

DISCLAIMER: This document may be used as a guide when performing vehicle inspection. This form is not to be used as an estimate form and may not comply with Local or State Laws. The Motorist Assurance Program is not responsible for the performance and accuracy of the motor vehicle inspection performed using this document.

Fig. 10: Routine Inspection Checksheet (1 Of 2)

State Inspection Due___/___ **ROUTINE INSPECTION CHECKSHEET**

UNDERHOOD				
Component	OK	S	R	Condition
Coolant				
Coolant Hoses				
Belts (Except Timing Belt)				
Tensioner				
Transmission Fluid				
Engine Oil				
Engine Air Filter				
Cabin Air Filter				
Brake Fluid				
Clutch Fluid (M/T)				
Washer Fluid				
Battery				
Battery Hold Down				
Battery Box				
Battery Cables / Ends				
Power Steering Fluid				
Wiper Blades				
UNDER VEHICLE				
Shocks / Struts				
Exhaust				

Notes: _____

1. Coolant
2. Belts
3. Transmission Fluid
4. Engine Oil
5. Air Filter
6. Brake Fluid
7. Washer Fluid
8. Battery
9. Power Steering Fluid

Lights/Lamps	OK	S	R	Location
Headlights				
Parking				
Turn Signal				
Brake				
License Plate				

10. Wiper Blades
11. Lights
12. Tire Pressure
13. Shocks / Struts
14. Exhaust

CHECK TIRES

Tire Size (Placard) _____ Actual _____ TPMS Warning On ___ Off ___ n/a___

Tire Pressure			Wear Pattern / Damage			
Front Spec: _____	Before	After	OK	S	R	Wear Type
Left Front						
Right Front						
Rear Spec: _____						
Left Rear						
Right Rear						
Spare Tire						

Wear Type
1.) Edge wear
2.) Cupped
3.) Cut
4.) Irregular wear
5.) Other _____

Tread Depth	Left Front	Right Front	Left Rear	Right Rear

OK	Suggested 1, 2, 3, 4, 5	Required A, B, C

Automotive Maintenance & Repair Assn © 2009

Fig. 11: Routine Inspection Checksheet (2 Of 2)

ROUTINE INSPECTION - UICS

BRAKE SYSTEMS

NOTE: Some states may have specifications that differ from OEM. Check your local/state regulations. Where state or local laws are stricter, they take precedence over these guidelines.

BRAKE FLUID

NOTE: Most manufacturers prohibit the use of DOT 5 brake fluid in a system equipped with ABS. DOT 3, DOT 4, and DOT 5.1 brake fluids are clear or light amber in color. DOT 5 brake fluid is violet in color. Correct fluid type is normally stamped on the master cylinder cover.

NOTE: Fluid Flush - a process using a sufficient volume of fluid to help remove contaminants and replacing the contaminated fluid with new fluid of the same type and specification. At times a chemical may be used to enhance removal.

NOTE: Fluid Exchange/Replace - draining (evacuating) old fluid and replacing it with new fluid of the correct type and specification.

Condition	Code	Procedure
At or beyond OEM service interval	3	Suggest fluid exchange/replacement
Brake fluid type incorrect	B	Require flushing and refilling
NOTE: For example, DOT fluid lower than specified for the vehicle or silicone brake fluid (DOT 5) in an ABS system		
Contaminated, for example, fluid other than brake fluid present	A	Require service
NOTE: If a fluid other than brake fluid is present in the brake system which DOES affect the rubber parts, the required service is to: 1) remove all components having rubber parts from the system, 2) flush lines, 3) repair or replace all components having rubber parts, and 4) fill with correct brake fluid.		
Contaminated, for	B	Require service

example, fluid other than brake fluid present		
NOTE: **If a fluid other than brake fluid is present in the brake system which DOES NOT affect the rubber parts, the required service is to flush and fill with the correct brake fluid.**		
Corrosion inhibitors depleted	B	Require fluid exchange/replacement
NOTE: **A copper content of 200 ppm or greater indicates a depletion of corrosion inhibitors in the brake fluid.**		
Fluid discolored	No Service Suggested or Required	
NOTE: **Further testing necessary to determine condition of fluid.**		
Hydraulic component overhaul or replacement	3	Suggest flushing and refilling
Rubber master cylinder cover gasket distorted and gummy	A	Require replacement of gasket
NOTE: **This condition may indicate contaminated brake fluid. Further inspection required.**		

BULBS AND LEDS

NOTE: Does not include soldered-in components.

Condition	Code	Procedure
Application incorrect	B	Require replacement
NOTE: **Application incorrect includes wrong bulb coating or color.**		
Base burned, affecting performance	A	Require repair or replacement
NOTE: **Determine cause and correct prior to repair or replacement of part.**		
Base burned, not affecting performance	2	Suggest repair or replacement
NOTE: **Determine cause and correct prior to repair or replacement of part.**		
Base corroded, affecting performance	A	Require repair or replacement

Base corroded, not affecting performance	2	Suggest repair or replacement
Base loose, affecting performance	B	Require repair or replacement
Base loose, not affecting performance	1	Suggest repair or replacement
Burned out	A	Require replacement
Intermittent	A	Require replacement
Missing	C	Require replacement
Seized in socket	A	Require repair or replacement
Terminal broken	A	Require repair or replacement
Terminal burned, affecting performance	A	Require repair or replacement
NOTE: **Determine cause and correct prior to repair or replacement of part.**		
Terminal burned, not affecting performance	2	Suggest repair or replacement
NOTE: **Determine cause and correct prior to repair or replacement of part.**		
Terminal corroded, affecting performance	A	Require repair or replacement
Terminal corroded, not affecting performance	2	Suggest repair or replacement
Terminal loose, affecting performance	B	Require repair or replacement
Terminal loose, not affecting performance	1	Suggest repair or replacement

HOSES

Condition	Code	Procedure
Attaching hardware broken	A	Require repair or replacement of hardware
Attaching hardware missing	C	Require replacement of hardware

Attaching hardware not functioning	A	Require repair or replacement of hardware
Blistered	B	Require replacement
Expansion affecting performance	A	Require Replacement
Fitting threads damaged	A	Require repair or replacement
Fitting threads stripped (threads missing)	A	Require replacement
Incorrectly secured	B	Require repair
Inner fabric (webbing) cut	B	Require replacement
Leaking	A	Require replacement
Missing	C	Require replacement
Outer covering is cracked to the extent that inner fabric of hose is visible	B	Require replacement
Restricted	A	Require replacement
Routed incorrectly	B	Require repair

LENSES

Condition	Code	Procedure
Application incorrect	A	Require replacement
Attaching hardware broken	A	Require repair or replacement of hardware
Attaching hardware missing	C	Require replacement of hardware
Attaching hardware not functioning	A	Require repair or replacement of hardware
Broken, affecting performance	A	Require replacement
Broken, not affecting performance	No Service Suggested or Required	
Cracked	B	Require replacement

Discolored	A	Require replacement
Leaking	B	Require repair or replacement
Melted, affecting performance	A	Require replacement
Melted, not affecting performance	2	Suggest replacement
Missing	C	Require replacement

LUG NUT

Condition	Code	Procedure
Lug nut flats rounded	A	Require replacement of nut
Lug nut installed backward	B	Require repair
Lug nut mating surface dished	A	Require replacement of nut
Lug nut mating type incorrect	B	Require replacement of nut
Lug nut seized	A	Require replacement of nut and/or stud
Stud incorrect	B	Require replacement of stud
Threads damaged	A	Require repair or replacement of component with damaged threads
Threads stripped (threads missing)	A	Require replacement of component with stripped threads

MASTER CYLINDER COVER GASKET

Condition	Code	Procedure
Rubber master cylinder cover gasket distorted and gummy	A	Require replacement of the gasket

NOTE:
This condition may indicate contaminated brake fluid. See Brake Fluid.

PARKING BRAKE CABLE

Condition	Code	Procedure
Cable improperly adjusted	B	Require cable adjustment
Cable or individual wires in the cable are broken	A	Require replacement of cable assembly
Cable sticking	A	Require cable lubrication
Cable stuck inside conduit and cannot be lubricated so that parking brake functions properly	A	Require replacement of cable assembly

VACUUM HOSES

Condition	Code	Procedure
Attaching hardware broken	A	Require repair or replacement of hardware
Attaching hardware missing	C	Require replacement of hardware
Attaching hardware not functioning	A	Require repair or replacement of hardware
Blistered	B	Require replacement
Fitting threads damaged	A	Require repair or replacement
Fitting threads stripped (threads missing)	A	Require replacement
Incorrectly secured	B	Require repair
Inner fabric (webbing) cut	B	Require replacement
Leaking	A	Require replacement
Missing	C	Require replacement
Outer covering is cracked to the extent that	B	Require replacement

inner fabric of hose is visible		
Restricted	A	Require replacement
Routed incorrectly	B	Require repair

WHEEL ATTACHMENT HARDWARE

NOTE: For conditions noted below, also check condition of wheel stud holes. Proper lug nut torque is essential. Follow manufacturer's torque specifications and tightening sequence. DO NOT lubricate threads unless specified by the vehicle manufacturer.

Condition	Code	Procedure
Bent	A	Require replacement
Broken	A	Require replacement
NOTE: **Some manufacturers require replacement of all studs on any wheel if two or more studs or nuts on the same wheel are broken or missing.**		
Loose	A	Require repair or replacement of affected component
Lug nut flats rounded	A	Require replacement of nut
Lug nut installed backward	B	Require repair
Lug nut mating surface dished	A	Require replacement of nut
Lug nut mating type incorrect	B	Require replacement of nut
Lug nut seized	A	Require replacement of nut and/or stud
Stud incorrect	B	Require replacement of stud
Threads damaged	A	Require repair or replacement of component with damaged threads

Threads stripped (threads missing)	A	Require replacement of component with stripped threads

WHEEL BEARINGS, RACES AND SEALS

NOTE: When replacing or repacking wheel bearings, grease seal replacement is required. You are not required to replace these components in axle sets. Determine the need to replace based upon the individual component conditions.

Condition	Code	Procedure
Axle seal on drive axle leaking	A	Require replacement of seal and inspection of axle, bearing, housing, and vent tube
Bearing end-play exceeds specifications	B	Require adjustment of bearing, if possible If proper adjustment cannot be obtained, require replacement of bearing and race assembly
Bearing rollers, balls or races are worn, pitted, or feel rough when rotated as an assembly or other damage affecting performance.	B	Require replacement of bearing and race assembly
Seal leaking	A	Require replacement of seal and inspection of bearings
NOTE: **Require inspection of mating and sealing surface and repair or replace as necessary. Check vent. A plugged vent may force fluid past the seal.**		
Seal missing	C	Require replacement

DRIVETRAIN AND TRANSMISSION

NOTE: When a procedure states that a required or suggested repair or replacement is recommended, the basis for the recommendation MUST be explained to the customer. If the customer asks whether there are alternatives to the recommendation, generally acceptable repair/replacement options must be explained, whether performed or not by the shop.

NOTE: Whenever transmission or drive-train service is performed that affects the suspension alignment, for example, removing the engine cradle, it is required that the alignment be checked and corrected if necessary.

NOTE: The conditions listed for the components included in this section assume that the problem has been isolated to the specific component through proper testing.

AUTOMATIC TRANSMISSION FLUID

Condition	Code	Procedure
Additive depletion	A	Require replacement of fluid
Application incorrect	B	Require replacement
NOTE: Determine and correct cause.		
Burned	Further inspection required	
NOTE: Fluid that is burned indicates a serious problem. Determine and correct the cause.		
Contaminated, for example, fluid other than the specified fluid present	A	Require service
NOTE: If an incorrect fluid is present in the hydraulic system which DOES affect the rubber parts, the required service is to: 1) remove all components having rubber parts from the system, 2) flush lines, 3) repair or replace all components having rubber parts, and 4) fill with correct fluid.		
Contaminated, for example, fluid other than the specified fluid	B	Require service

present		
NOTE: **If a fluid other than the specified fluid is present in the hydraulic system which DOES NOT affect the rubber parts, the required service is to flush and fill following OEM specified procedure with the correct hydraulic fluid.**		
Fluid at or beyond service interval	3	Suggest replacement
Fluid discolored	No Service Suggested or Required	
NOTE: **Further testing necessary to determine condition of fluid.**		
Fluid incorrect	B	Require service
NOTE: **If a fluid other than the correctly specified fluid is present in the hydraulic system, the required service is to flush and fill with the correct fluid.**		
Level incorrect	B	Require correction of fluid level
Oxidized	A	Require replacement of fluid
Varnish deposits present on system components affecting performance	Further inspection required	

CLUTCH MASTER CYLINDERS

Condition	Code	Procedure
Cover gasket distorted	A	Require replacement of cover gasket
Cover gasket gummy	A	Require replacement of cover gasket
NOTE: **This condition may indicate contaminated fluid. Further inspection required.**		
Cylinder leaking fluid from rear of bore	A	Require repair or replacement
Cylinder leaking fluid internally	A	Require replacement
Dust boot missing	C	Require replacement of dust boot
Dust boot punctured	A	Require replacement of dust boot

Dust boot torn	A	Require replacement of dust boot
Fluid level incorrect	B	Require fluid level adjustment
Housing damaged, affecting performance	A	Require repair or replacement
Master cylinder has residue in reservoir	2	Further inspection required
NOTE: **Do not replace master cylinder unless it exhibits conditions listed for replacement.**		
Pushrod out of adjustment	B	Require Repair or Replacement
Threads damaged	A	Require repair or replacement
Threads stripped (threads missing)	A	Require replacement

COOLER LINES

Condition	Code	Procedure
Abrasion damage, affecting structural integrity	A	Require repair or replacement
Abrasion damage, not affecting structural integrity	No Service Suggested or Required	
Application incorrect	B	Require replacement
Attaching hardware broken	A	Require repair or replacement of hardware
Attaching hardware missing	C	Require replacement of hardware
Attaching hardware not functioning	A	Require repair or replacement of hardware
Clamp corroded, not reusable	1	Suggest replacement
NOTE: **If clamp removed, require replacement.**		

Connected incorrectly	A	Require repair
Corroded, affecting structural integrity	A	Require replacement
Corroded, not affecting structural integrity	No Service Suggested or Required	
Cracked	B	Require repair or replacement
Fitting type incorrect (such as compression fitting)	B	Require replacement
Flange leaking	A	Require repair or replacement
Insufficient clamping force, allowing hose to leak	A	Require repair or replacement
Leaking	A	Require repair or replacement
Melted	1	Suggest repair or replacement
Missing	C	Require replacement
Outer covering damaged to the extent that the inner fabric is visible	A	Require replacement
Protective sleeves damaged	2	Suggest replacement of sleeves
Protective sleeves missing	C	Require replacement of sleeves
Restricted, affecting performance	A	Require repair or replacement
Routed incorrectly	B	Require repair
Swollen	1	Suggest replacement
Threads damaged	A	Require repair or replacement
Threads stripped (threads missing)	A	Require replacement
Type incorrect	2	Suggest repair or

		replacement

COOLERS

Condition	Code	Procedure
Air flow obstruction	A	Require repair
Attaching hardware broken	A	Require repair or replacement of hardware
Attaching hardware missing	C	Require replacement of hardware
Attaching hardware not functioning	A	Require repair or replacement of hardware
Connection leaking	A	Require repair or replacement
Contaminated	A	Require repair or replacement
Corroded	1	Suggest repair or replacement
Fins damaged, affecting performance	A	Require repair or replacement
Fins damaged, not affecting performance	No Service Suggested or Required	
Internal restrictions	B	Require repair or replacement
Leaking	A	Require repair or replacement
Threads damaged	A	Require repair or replacement
Threads stripped (threads missing)	A	Require repair or replacement
Tubes damaged, affecting performance	A	Require repair or replacement
Tubes damaged, not affecting performance	No Service Suggested or Required	

DIFFERENTIAL FLUID

Condition	Code	Procedure
Additive depletion	A	Require replacement of fluid
Application incorrect	B	Require replacement
NOTE: **Determine and correct cause.**		
Burned	Further inspection required	
NOTE: **Fluid that is burned indicates a serious problem. Determine and correct the cause.**		
Contaminated, for example, fluid other than the specified fluid present	B	Require service
NOTE: **If a fluid other than the specified fluid is present in the hydraulic system which DOES NOT affect the rubber parts, the required service is to flush and fill following OEM specified procedure with the correct hydraulic fluid.**		
Contaminated, for example, fluid other than the specified fluid present	A	Require service
NOTE: **If an incorrect fluid is present in the hydraulic system which DOES affect the rubber parts, the required service is to: 1) remove all components having rubber parts from the system, 2) flush lines, 3) repair or replace all components having rubber parts, and 4) fill with correct fluid.**		
Fluid at or beyond service interval	3	Suggest replacement
Fluid discolored	No Service Suggested or Required	
NOTE: **Further testing necessary to determine condition of fluid.**		
fluid incorrect	B	Require service
NOTE: **If a fluid other than the correctly specified fluid is present in the hydraulic system, the required service is to flush and fill with the correct hydraulic fluid.**		
Level incorrect	B	Require correction of fluid level
Oxidized	A	Require replacement of fluid
Rubber master/ clutch	A	Require service

cylinder cover gasket distorted or gummy		
NOTE: **If an incorrect fluid is present in the hydraulic system which DOES affect the rubber parts, the required service is to: 1) remove all components having rubber parts from the system, 2) flush lines, 3) repair or replace all components having rubber parts, and 4) fill with correct fluid.**		
Varnish deposits present on system components affecting performance	Further inspection required	

DRAIN PLUGS AND GASKETS

Condition	Code	Procedure
Leaking	A	Require repair or replacement
NOTE: **Require inspection of mating and sealing surface and repair or replace as necessary.**		
Missing	C	Require replacement
Threads Damaged	A	Require repair or replacement

FILTERS AND SCREENS

Condition	Code	Procedure
At service interval	3	Suggest replacement
Bent, affecting performance	A	Require repair or replacement
Exceeding service interval	3	Suggest replacement
Missing	C	Require replacement
Near service interval	3	Suggest replacement
Restricted	A	Require repair or replacement
NOTE: **Further inspection may be required to determine the source of restriction or contamination.**		
Torn	A	Require replacement
Worn, affecting performance (metal or nylon screen type)	A	Require repair or replacement

FLUIDS AND LUBRICANTS

Condition	Code	Procedure
Additive depletion	A	Require replacement of fluid
Application incorrect	B	Require replacement
NOTE: **Determine and correct cause.**		
Burned	Further inspection required	
NOTE: **Fluid that is burned indicates a serious problem. Determine and correct the cause.**		
Contaminated, for example, fluid other than the specified fluid present	A	Require service
NOTE: **If an incorrect fluid is present in the hydraulic system which DOES affect the rubber parts, the required service is to: 1) remove all components having rubber parts from the system, 2) flush lines, 3) repair or replace all components having rubber parts, and 4) fill with correct brake fluid.**		
Contaminated, for example, fluid other than the specified fluid present	B	Require service
NOTE: **If a fluid other than the specified fluid is present in the hydraulic system which DOES NOT affect the rubber parts, the required service is to flush and fill following OEM specified procedure with the correct hydraulic fluid.**		
Fluid at or beyond service interval	3	Suggest replacement
Fluid discolored	No Service Suggested or Required	
NOTE: **Further testing necessary to determine condition of fluid.**		
Fluid incorrect	B	Require service
NOTE: **If a fluid other than the correctly specified fluid is present in the hydraulic system, the required service is to flush and fill with the correct hydraulic fluid.**		
Level incorrect	B	Require correction of fluid level
Oxidized	A	Require replacement of fluid

Rubber master/ clutch cylinder cover gasket distorted or gummy	A	Require service
NOTE: **If an incorrect fluid is present in the hydraulic system which DOES affect the rubber parts, the required service is to: 1) remove all components having rubber parts from the system, 2) flush lines, 3) repair or replace all components having rubber parts, and 4) fill with correct fluid.**		
Varnish deposits present on system components affecting performance	Further inspection required	

HOSES, LINES, AND TUBES

Condition	Code	Procedure
Application incorrect	B	Require replacement
At or beyond service interval	3	Suggest replacement
Connected incorrectly	A	Require repair
Corroded, not reusable	1	Suggest replacement
Cracked line or tube	A	Require replacement
Hard hose	1	Suggest replacement
Inner fabric (webbing) damaged	A	Require replacement
Insufficient clamping force, allowing hose to leak	A	Require repair or replacement
Leaking	A	Require repair or replacement
Melted	1	Suggest repair or replacement
Missing	C	Require replacement
Outer covering damaged	1	Suggest replacement
Outer covering damaged to the extent that the inner fabric is visible	A	Require replacement
Protective sleeves damaged	2	Suggest replacement of sleeves
Protective sleeves	2	Suggest replacement of

missing		sleeves
Restricted, affecting performance	A	Require repair or replacement
Restricted, not affecting performance	2	Suggest repair or replacement
Routed incorrectly	2	Suggest replacement
Safety clip missing	C	Require replacement
Spongy	1	Suggest repair or replacement
Stripped	A	Require replacement
Surface cracked (weather-checked)	1	Suggest repair or replacement
Swollen	B	Require replacement
Threads damaged	A	Require repair or replacement
Threads stripped (threads missing)	A	Require replacement
Type incorrect	1	Suggest repair or replacement

HYDRAULIC FLUID

Condition	Code	Procedure
Additive depletion	A	Require replacement of fluid
Application incorrect	B	Require replacement
NOTE: **Determine and correct cause.**		
Burned	Further inspection required	
NOTE: **Fluid that is burned indicates a serious problem. Determine and correct the cause.**		
Contaminated, for example, fluid other than the specified fluid present	A	Require service
NOTE: **If an incorrect fluid is present in the hydraulic system which DOES affect the rubber parts, the required service is to: 1) remove all components having rubber parts from the system, 2) flush**		

lines, 3) repair or replace all components having rubber parts, and 4) fill with correct brake fluid.		
Contaminated, for example, fluid other than the specified fluid present	B	Require service
NOTE: **If a fluid other than the specified fluid is present in the hydraulic system which DOES NOT affect the rubber parts, the required service is to flush and fill following OEM specified procedure with the correct hydraulic fluid.**		
Fluid at or beyond service interval	3	Suggest replacement
Fluid discolored	No Service Suggested or Required	
Fluid incorrect	B	Require service
NOTE: **If a fluid other than the correctly specified fluid is present in the hydraulic system, the required service is to flush and fill with the correct hydraulic fluid.**		
Level incorrect	B	Require correction of fluid level
Oxidized	A	Require replacement of fluid
Rubber master/ clutch cylinder cover gasket distorted or gummy	A	Require service
NOTE: **If an incorrect fluid is present in the hydraulic system which DOES affect the rubber parts, the required service is to: 1) remove all components having rubber parts from the system, 2) flush lines, 3) repair or replace all components having rubber parts, and 4) fill with correct fluid.**		
Varnish deposits present on system components affecting performance	Further inspection required	

LUBRICANTS

Condition	Code	Procedure
Additive Depletion	A	Require replacement of fluid
Application incorrect	B	Require replacement
NOTE: **Determine and correct cause.**		
At service interval	3	Suggest replacement

Beyond service interval	3	Suggest replacement
Burned	Further inspection required	
NOTE: **Fluid that is burned indicates a serious problem. Determine and correct the cause.**		
Contaminated, for example, fluid other than the specified fluid present	B	Require service
NOTE: **If a fluid other than the correctly specified fluid is present in the hydraulic system which DOES NOT affect the rubber parts, the required service is to flush and fill following OEM specified procedure with the correctly specified hydraulic fluid.**		
Fluid incorrect	B	Require service
NOTE: **If a fluid other than the correctly specified fluid is present in the hydraulic system, the required service is to flush and fill with the correct hydraulic fluid.**		
Level incorrect	B	Require correction of fluid level
Near service interval	3	Suggest replacement
Oxidized	A	Require replacement of fluid
Rubber master cylinder cover gasket distorted and gummy	A	Require service
NOTE: **If a fluid other than brake fluid is present in the system which DOES affect the rubber parts, the required service is to: 1) remove all components having rubber parts from the system, 2) flush lines, 3) repair or replace all components having rubber parts, and 4) fill with correct brake fluid.**		

MANUAL TRANSMISSION FLUID

Condition	Code	Procedure
Additive depletion	A	Require replacement of fluid
Application incorrect	B	Require replacement
NOTE: **Determine and correct cause.**		
Burned	Further inspection required	
NOTE: **Fluid that is burned indicates a serious problem. Determine and correct the cause.**		

Contaminated, for example, fluid other than the specified fluid present	A	Require service
NOTE: **If an incorrect fluid is present in the hydraulic system which DOES affect the rubber parts, the required service is to: 1) remove all components having rubber parts from the system, 2) flush lines, 3) repair or replace all components having rubber parts, and 4) fill with correct brake fluid.**		
Contaminated, for example, fluid other than the specified fluid present	B	Require service
NOTE: **If a fluid other than the specified fluid is present in the hydraulic system which DOES NOT affect the rubber parts, the required service is to flush and fill following OEM specified procedure with the correct hydraulic fluid.**		
Fluid at or beyond service interval	3	Suggest replacement
Fluid discolored	No Service Suggested or Required	
NOTE: **Further testing necessary to determine condition of fluid.**		
Fluid discolored	No Service Suggested or Required	
NOTE: **Further testing necessary to determine condition of fluid.**		
Fluid incorrect	B	Require service
NOTE: **If a fluid other than the correctly specified fluid is present in the hydraulic system, the required service is to flush and fill with the correct hydraulic fluid.**		
Level incorrect	B	Require correction of fluid level
Oxidized	A	Require replacement of fluid
Rubber master/ clutch cylinder cover gasket distorted or gummy	A	Require service
NOTE: **If an incorrect fluid is present in the hydraulic system which DOES affect the rubber parts, the required service is to: 1) remove all components having rubber parts from the system, 2) flush lines, 3) repair or replace all components having rubber parts, and 4) fill with correct fluid.**		
Varnish deposits present	Further inspection required	

on system components affecting performance	

MOUNTS (ENGINE, TRANSAXLE AND TRANSMISSION)

Condition	Code	Procedure
Attaching hardware broken	A	Require repair or replacement of hardware
Attaching hardware missing	C	Require replacement of hardware
Attaching hardware not functioning	A	Require repair or replacement of hardware
Broken	A	Require replacement
Leaking (hydraulic mount)	A	Require replacement
Mounting hole worn, affecting performance	A	Require replacement
Mounting hole worn, not affecting performance	No Service Suggested or Required	
Rubber deteriorated, affecting performance	A	Require replacement
Rubber deteriorated, not affecting performance	No Service Suggested or Required	
Threads damaged	A	Require repair or replacement
Threads stripped (threads missing)	A	Require replacement

TRANSFER CASE FLUID

Condition	Code	Procedure
Additive depletion	A	Require replacement of fluid
Application incorrect	B	Require replacement
NOTE: **Determine and correct cause.**		
Burned	Further inspection required	
NOTE:		

Fluid that is burned indicates a serious problem. Determine and correct the cause.		
Contaminated, for example, fluid other than the specified fluid present	A	Require service
NOTE: **If an incorrect fluid is present in the hydraulic system which DOES affect the rubber parts, the required service is to: 1) remove all components having rubber parts from the system, 2) flush lines, 3) repair or replace all components having rubber parts, and 4) fill with correct brake fluid.**		
Contaminated, for example, fluid other than the specified fluid present	B	Require service
NOTE: **If a fluid other than the specified fluid is present in the hydraulic system which DOES NOT affect the rubber parts, the required service is to flush and fill following OEM specified procedure with the correct hydraulic fluid.**		
Fluid at or beyond service interval	3	Suggest replacement
Fluid discolored	No Service Suggested or Required	
NOTE: **Further testing necessary to determine condition of fluid.**		
Fluid incorrect	B	Require service
NOTE: **If a fluid other than the correctly specified fluid is present in the hydraulic system, the required service is to flush and fill with the correct hydraulic fluid.**		
Level incorrect	B	Require correction of fluid level
Oxidized	A	Require replacement of fluid
Rubber master/ clutch cylinder cover gasket distorted or gummy	A	Require service
NOTE: **If an incorrect fluid is present in the hydraulic system which DOES affect the rubber parts, the required service is to: 1) remove all components having rubber parts from the system, 2) flush lines, 3) repair or replace all components having rubber parts, and 4) fill with correct fluid.**		
Varnish deposits present on system components affecting performance	Further inspection required	

VACUUM HOSES

Condition	Code	Procedure
Application incorrect	B	Require replacement
At or beyond service interval	3	Suggest replacement
Connected incorrectly	A	Require repair
Corroded, not reusable	1	Suggest replacement
Cracked line or tube	A	Require replacement
Hard hose	1	Suggest replacement
Inner fabric (webbing) damaged	A	Require replacement
Insufficient clamping force, allowing hose to leak	A	Require repair or replacement
Leaking	A	Require repair or replacement
Melted, affecting performance	B	Require repair or replacement
Missing	C	Require replacement
Outer covering damaged	1	Suggest replacement
Outer covering damaged to the extent that the inner fabric is visible	A	Require replacement
Protective sleeves damaged	2	Suggest replacement of sleeves
Protective sleeves missing	C	Suggest replacement of sleeves
Restricted, affecting performance	A	Require repair or replacement
Restricted, not affecting performance	2	Suggest repair or replacement
Routed incorrectly	B	Suggest replacement
Safety clip missing	C	Require replacement
Spongy	1	Suggest repair or replacement

Stripped	A	Require replacement
Surface cracked (weather-checked)	1	Suggest repair or replacement
Swollen	B	Require replacement
Threads damaged	A	Require repair or replacement
Threads stripped (threads missing)	A	Require replacement
Type incorrect	2	Suggest repair or replacement

ELECTRICAL SYSTEMS

BATTERIES

NOTE: Proper operation of any electrical system or component can be affected by battery condition. The battery(ies) must meet or exceed minimum specification for vehicle as equipped and test to that specific battery's CCA.

Definition of Terms

Battery Performance Testing - Testing that determines whether or not a battery meets both vehicle OEM and battery manufacturer's specifications.

Cold Cranking Amp (CCA) Rating - The number of amperes a new, fully charged battery at 0° F (-17.8° C) can deliver for 30 seconds and maintain at least a voltage of 1.2 volts per cell (7.2 volts for a 12-volt battery).

Cranking Amps (CA) - The number of amperes a new, fully charged battery, typically at 32° F (0° C) can deliver for 30 seconds and maintain at least a voltage of 1.2 volts per cell (7.2 volts for a 12volt battery).

OEM Cranking Amps - The minimum CCA required by the original vehicle manufacturer for a specific vehicle.

Condition	Code	Procedure
Battery frozen	Further inspection required	
NOTE: **Do not attempt to charge a frozen battery. Allow battery to warm thoroughly and then performance-test. If battery fails performance test, require replacement.**		
Battery tests near the ""end of its useful life"" utilizing a tester or on-board monitor able to accurately determine this condition	1	Suggest Replacement
Case leaking	A	Require replacement
Casing swollen	A	Further inspection required
NOTE: **No service suggested or required unless the battery fails performance test, in which case, require replacement.**		
Circuit open internally	A	Require replacement
Electrolyte contamination	A	Further inspection required
NOTE: **No service suggested or required unless the battery fails performance test, in which case, require replacement.**		
Electrolyte discoloration	A	Further inspection required
NOTE: **No service suggested or required unless the battery fails performance test, in which case, require replacement.**		
Fails to accept and hold charge	A	Require replacement
NOTE: **This phrase refers to a battery that fails to either accept and/or retain a charge using appropriate times listed in the Battery Charging Guide of the BCI Service Manual, battery charger operating manual, or battery manufacturer's specifications.**		
Fluid level low	B	Further inspection required
NOTE: **Determine cause of low fluid level. Refill to proper level(s) with water (distilled water preferred). Recharge battery and performance-test. If battery does not meet specifications, require replacement. If battery is sealed type (non-removable filler caps), require replacement.**		

Out of performance specification for battery	B	Require replacement
NOTE: **The battery may meet vehicle's OEM specifications for that vehicle but test below the minimum specifications defined by the battery manufacturer.**		
Out of specification for application	B	Require replacement
NOTE: **The battery may meet battery manufacturer's specifications but test below the minimum specification defined by the vehicle's OEM for that vehicle.**		
Post (top or side) burned, affecting performance	A	Require repair or replacement
NOTE: **Determine cause and correct prior to repair or replacement of part.**		
Post (top or side) burned, not affecting performance	2	Suggest repair or replacement
NOTE: **Determine cause and correct prior to repair or replacement of part.**		
Post (top or side) corroded, affecting performance	A	Require repair
Post (top or side) corroded, not affecting performance	2	Suggest repair
Post (top or side) loose	A	Require replacement
Post (top or side) melted, affecting performance	A	Require repair or replacement
NOTE: **Determine cause and correct prior to repair or replacement of part.**		
Post (top or side) melted, not affecting performance	2	Suggest repair or replacement
NOTE: **Determine cause and correct prior to repair or replacement of part.**		
Specific gravity low	B	Further inspection required
NOTE: **Recharge and test to manufacturer's specifications. If battery fails performance test, require**		

replacement.		
State of charge low	A	Further inspection required
NOTE: **Recharge and test to manufacturer's specifications. If battery fails performance test, require replacement.**		
Top dirty	2	Suggest cleaning battery
Top wet	A	Require cleaning battery Further inspection required
NOTE: **Check fluid level and adjust to manufacturer's specification. Suggest checking charging system for proper operation.**		
Vent cap loose	A	Require repair or replacement of vent cap
Vent cap missing	C	Require replacement of vent cap

BATTERY CABLES

Condition	Code	Procedure
Application incorrect	B	Require repair or replacement
Attaching hardware broken	A	Require repair or replacement of hardware
Attaching hardware missing	C	Require replacement of hardware
Attaching hardware not functioning	A	Require repair or replacement of hardware
Connector broken	A	Require repair or replacement
Connector melted	A	Require repair or replacement
NOTE: **Determine cause and correct prior to repair or replacement of part.**		
Connector missing	C	Require replacement
Insulation damaged, conductors exposed	A	Require repair or replacement

NOTE: **Exposed conductor at replacement (aftermarket) terminal end does not require repair or replacement.**		
Insulation damaged, conductors not exposed	1	Suggest replacement
Open	A	Require repair or replacement
Protective shield (conduit) melted	2	Suggest repair or replacement
NOTE: **Determine cause and correct prior to repair or replacement of part.**		
Protective shield (conduit) missing	C	Suggest repair or replacement
Resistance (voltage drop) out of specification	A	Require repair or replacement
Routed incorrectly	B	Require repair
Secured incorrectly	B	Require repair
Shorted	A	Require repair or replacement
Terminal broken	A	Require repair or replacement
Terminal burned, affecting performance	A	Require repair or replacement
NOTE: **Determine cause and correct prior to repair or replacement of part.**		
Terminal burned, not affecting performance	2	Suggest repair or replacement
Terminal corroded, affecting performance	A	Require repair or replacement
Terminal corroded, not affecting performance	2	Suggest repair or replacement
Terminal loose, affecting performance	B	Require repair or replacement
Terminal loose, not affecting performance	1	Suggest repair or replacement
Voltage drop out of specification	A	Require repair or replacement

BATTERY TRAYS AND HOLD DOWN HARDWARE

Condition	Code	Procedure
Battery improperly secured	2	Suggest repair
Bent, affecting performance	A	Require repair or replacement
Bent, not affecting performance	No Service Suggested or Required	
Broken, affecting performance	A	Require repair or replacement
Broken, not affecting performance	No Service Suggested or Required	
Corroded, affecting performance	A	Require repair or replacement
Corroded, not affecting performance	2	Suggest repair or replacement
Cracked, affecting performance	A	Require repair or replacement
Cracked, not affecting performance	1	Suggest repair or replacement
Missing	C	Require replacement
Threads damaged	A	Require repair or replacement
Water drain clogged	A	Require repair

BULBS, SEALED BEAMS AND LEDS

NOTE: Does not include soldered-in components.

Condition	Code	Procedure
Adjustment out of specification	B	Require repair or replacement
Application incorrect	B	Require replacement
NOTE: **Application incorrect includes wrong bulb coating or color.**		
Attaching hardware	A	Require repair or

broken		replacement of hardware
Attaching hardware missing	C	Require replacement of hardware
Attaching hardware not functioning	A	Require repair or replacement of hardware
Base burned, affecting performance	A	Require repair or replacement
NOTE: **Determine cause and correct prior to repair or replacement of part.**		
Base burned, not affecting performance	2	Suggest repair or replacement
NOTE: **Determine cause and correct prior to repair or replacement of part.**		
Base corroded, affecting performance	A	Require repair or replacement
Base corroded, not affecting performance	2	Suggest repair or replacement
Base leaking	A	Require repair or replacement
Base loose, affecting performance	B	Require repair or replacement
Base loose, not affecting performance	1	Suggest repair or replacement
Base melted	A	Require replacement
NOTE: **Determine cause and correct prior to replacement of part.**		
Bracket bent, affecting performance	A	Require repair or replacement
Bracket bent, not affecting performance	No Service Suggested or Required	
Bracket broken, affecting performance	A	Require replacement
Bracket broken, not affecting performance	No Service Suggested or Required	
Bracket corroded, affecting performance	A	Require repair or replacement
Bracket corroded, not	2	Suggest repair or

affecting performance		replacement
Bracket cracked, affecting performance	A	Require repair or replacement
Bracket cracked, not affecting performance	1	Suggest repair or replacement
Bracket loose, affecting performance	A	Require repair or replacement
Bracket loose, not affecting performance	1	Suggest repair or replacement
Bracket missing	C	Require replacement
Burned out	A	Require replacement
Connector (Weatherpack type) leaking	A	Require repair or replacement
Connector broken	A	Require repair or replacement
Connector melted	A	Require repair or replacement
NOTE: **Determine cause and correct prior to repair or replacement of part.**		
Connector missing	C	Require replacement
Corroded, affecting performance	A	Require repair or replacement
Corroded, not affecting performance	2	Suggest repair or replacement
Cracked	B	Require replacement
Intermittent	A	Require replacement
Lamp base melted	A	Require replacement
NOTE: **Determine cause and correct prior to replacement of part.**		
Leaking	B	Require repair or replacement
Missing	C	Require replacement
Seized in socket	A	Require repair or replacement
Terminal broken	A	Require repair or replacement

Terminal burned, affecting performance	A	Require repair or replacement
NOTE: **Determine cause and correct prior to repair or replacement of part.**		
Terminal burned, not affecting performance	2	Suggest repair or replacement
NOTE: **Determine cause and correct prior to repair or replacement of part.**		
Terminal corroded, affecting performance	A	Require repair or replacement
Terminal corroded, not affecting performance	2	Suggest repair or replacement
Terminal loose, affecting performance	B	Require repair or replacement
Terminal loose, not affecting performance	1	Suggest repair or replacement
Threads damaged	A	Require repair or replacement
Threads stripped (threads missing)	A	Require replacement

FUSES, FUSIBLE LINKS AND CIRCUIT BREAKERS

Condition	Code	Procedure
Application incorrect	B	Require replacement
Blown	A	Require replacement
NOTE: **Determine cause and correct prior to replacement of part.**		
Corroded, affecting performance	A	Require repair or replacement
Corroded, not affecting performance	2	Suggest repair or replacement
Cracked, affecting performance	A	Require repair or replacement
Cracked, not affecting performance	1	Suggest repair or replacement
Inoperative	A	Require replacement

NOTE: **Determine cause and correct prior to replacement of part.**		
Insulation damaged, conductors exposed	A	Require repair or replacement
Insulation damaged, conductors not exposed	1	Suggest replacement
Missing	C	Require replacement
Routed incorrectly	B	Require repair
Secured incorrectly	B	Require repair
Terminal broken	A	Require repair or replacement
Terminal burned, affecting performance	A	Require repair or replacement
NOTE: **Inoperative includes intermittent operation.**		
Terminal burned, not affecting performance	2	Suggest repair or replacement
Terminal corroded, affecting performance	A	Require repair or replacement
Terminal corroded, not affecting performance	2	Suggest repair or replacement
Terminal loose, affecting performance	B	Require repair or replacement

GROUND CABLES AND STRAPS

Condition	Code	Procedure
Attaching hardware broken	A	Require repair or replacement of hardware
Attaching hardware missing	C	Require replacement of hardware
Attaching hardware not functioning	A	Require repair or replacement of hardware
Corroded, affecting performance	A	Require repair or replacement
Corroded, not affecting performance	2	Suggest repair or replacement

Insulation damaged, exposing conductors	2	Suggest replacement
Loose	A	Require repair
Missing	C	Require replacement
Open	A	Require repair or replacement
Resistance high	A	Require repair or replacement
Terminal resistance (voltage drop) is out of specification	B	Require repair or replacement
Voltage drop out of specification	B	Require repair or replacement

GROUND STRAPS

Condition	Code	Procedure
Attaching hardware broken	A	Require repair or replacement of hardware
Attaching hardware missing	C	Require replacement of hardware
Attaching hardware not functioning	A	Require repair or replacement of hardware
Corroded, affecting performance	A	Require repair or replacement
Corroded, not affecting performance	2	Suggest repair or replacement
Insulation damaged, exposing conductors	2	Suggest replacement
Loose	A	Require repair
Missing	C	Require replacement
Open	A	Require repair or replacement
Resistance high	A	Require repair or replacement
Terminal resistance (voltage drop) is out of	B	Require repair or replacement

specification		
Voltage drop out of specification	B	Require repair or replacement

LENSES

Condition	Code	Procedure
Adjustment out of specification	B	Require repair
Application incorrect	A	Require replacement
Attaching hardware broken	A	Require repair or replacement of hardware
Attaching hardware missing	C	Require replacement of hardware
Attaching hardware not functioning	A	Require repair or replacement of hardware
Broken, affecting performance	A	Require replacement
Broken, not affecting performance	No Service Suggested or Required	
Cracked	B	Require replacement
Discolored	A	Require replacement
Leaking	B	Require repair or replacement
Melted, affecting performance	A	Require replacement
Melted, not affecting performance	2	Suggest replacement
Missing	C	Require replacement

SEALED BEAMS

NOTE: Does not include soldered-in components.

Condition	Code	Procedure
Adjustment out of specification	B	Require repair or replacement

Application incorrect	B	Require replacement
Attaching hardware broken	A	Require repair or replacement of hardware
Attaching hardware missing	C	Require replacement of hardware
Attaching hardware not functioning	A	Require repair or replacement of hardware
Base burned, affecting performance	A	Require repair or replacement
NOTE: **Determine cause and correct prior to repair or replacement of part.**		
Base burned, not affecting performance	2	Suggest repair or replacement
NOTE: **Determine cause and correct prior to repair or replacement of part.**		
Base corroded, affecting performance	A	Require repair or replacement
Base corroded, not affecting performance	2	Suggest repair or replacement
Base leaking	A	Require repair or replacement
Base loose, affecting performance	B	Require repair or replacement
Base loose, not affecting performance	1	Suggest repair or replacement
Base melted	A	Require replacement
NOTE: **Determine cause and correct prior to replacement of part.**		
Bracket bent, affecting performance	A	Require repair or replacement
Bracket bent, not affecting performance	No Service Suggested or Required	
Bracket broken, affecting performance	A	Require replacement
Bracket broken, not affecting performance	No Service Suggested or Required	
Bracket corroded,	A	Require repair or

affecting performance		replacement
Bracket corroded, not affecting performance	2	Suggest repair or replacement
Bracket cracked, affecting performance	A	Require repair or replacement
Bracket cracked, not affecting performance	1	Suggest repair or replacement
Bracket loose, affecting performance	A	Require repair or replacement
Bracket loose, not affecting performance	1	Suggest repair or replacement
Bracket missing	C	Require replacement
Burned out	A	Require replacement
Connector (Weatherpack type) leaking	A	Require repair or replacement
Connector broken	A	Require repair or replacement
Connector melted	A	Require repair or replacement
NOTE: **Determine cause and correct prior to repair or replacement of part.**		
Connector missing	C	Require replacement
Corroded, affecting performance	A	Require repair or replacement
Corroded, not affecting performance	2	Suggest repair or replacement
Cracked	B	Require replacement
Intermittent	A	Require replacement
Lamp base melted	A	Require replacement
NOTE: **Determine cause and correct prior to replacement of part.**		
Leaking	B	Require repair or replacement
Missing	C	Require replacement
Seized in socket	A	Require repair or replacement

Terminal broken	A	Require repair or replacement
Terminal burned, affecting performance	A	Require repair or replacement
NOTE: **Determine cause and correct prior to repair or replacement of part.**		
Terminal burned, not affecting performance	2	Suggest repair or replacement
NOTE: **Determine cause and correct prior to repair or replacement of part.**		
Terminal corroded, affecting performance	A	Require repair or replacement
Terminal corroded, not affecting performance	2	Suggest repair or replacement
Terminal loose, affecting performance	B	Require repair or replacement
Terminal loose, not affecting performance	1	Suggest repair or replacement
Threads damaged	A	Require repair or replacement
Threads stripped (threads missing)	A	Require replacement

WASHER PUMPS

Condition	Code	Procedure
Attaching hardware broken	A	Require repair or replacement of hardware
Attaching hardware missing	C	Require replacement of hardware
Attaching hardware not functioning	A	Require repair or replacement of hardware
Connector broken	A	Require repair or replacement
Connector melted	A	Require repair or replacement
NOTE:		

Determine cause and correct prior to repair or replacement of part.		
Connector missing	C	Require replacement
Inoperative	A	Require repair or replacement
NOTE: **Inoperative includes intermittent operation.**		
Leaking externally	A	Require repair or replacement
Leaking internally	A	Require repair or replacement
Noisy	2	Suggest repair or replacement
Resistance out of specification	B	Require repair or replacement
Terminal broken	A	Require repair or replacement
Terminal burned, affecting performance	A	Require repair or replacement
NOTE: **Determine cause and correct prior to repair or replacement of part.**		
Terminal burned, not affecting performance	2	Suggest repair or replacement
Terminal corroded, affecting performance	A	Require repair or replacement
Terminal corroded, not affecting performance	2	Suggest repair or replacement
Terminal loose, affecting performance	B	Require repair or replacement
Terminal loose, not affecting performance	1	Suggest repair or replacement
Threads damaged	A	Require repair or replacement
Threads stripped (threads missing)	A	Require replacement
Wire lead conductors exposed	B	Require repair or replacement

Wire lead corroded	A	Require repair or replacement
Wire lead open	A	Require repair or replacement
Wire lead shorted	A	Require repair or replacement

WIPER ARMS AND BLADES

NOTE: Windshield coatings or waxes can cause blades to not function as intended. Clean surface before making final judgment about blade replacement.

Condition	Code	Procedure
Attaching hardware broken	A	Require repair or replacement of hardware
Attaching hardware missing	C	Require replacement of hardware
Attaching hardware not functioning	A	Require repair or replacement of hardware
Attaching socket stripped	A	Require replacement
Bent	A	Require repair or replacement
Loose	2	Suggest repair or replacement
Missing	C	Require replacement
Noisy	2	Suggest repair or replacement
Size incorrect	2	Suggest replacement
Tension insufficient	B	Require repair or replacement
Torn	A	Require replacement
Worn, affecting performance	A	Require replacement
Worn, not affecting performance	1	Suggest replacement

WIPER HOSES AND NOZZLES

Condition	Code	Procedure
Attaching hardware broken	A	Require repair or replacement of hardware
Attaching hardware missing	C	Require replacement of hardware
Attaching hardware not functioning	A	Require repair or replacement of hardware
Blocked	A	Require repair or replacement
Leaking	A	Require repair or replacement
Missing	C	Require replacement
Oil-soaked (spongy)	1	Suggest replacement
Spray pattern incorrect	2	Suggest repair or replacement
Surface cracks (dry-rotted)	1	Suggest replacement

WIPER PUMP RESERVOIRS

Condition	Code	Procedure
Attaching hardware broken	A	Require repair or replacement of hardware
Attaching hardware missing	C	Require replacement of hardware
Attaching hardware not functioning	A	Require repair or replacement of hardware
Cap missing	C	Require replacement
Leaking	A	Require repair or replacement
Missing	C	Require replacement

ENGINE PERFORMANCE AND MAINTENANCE

NOTE: CHEMICAL ENGINE DECARBONIZATION is a process utilizing chemicals to remove soft and semi-hardened

gum, varnish, resin and carbon deposits from the air/fuel delivery systems and combustion chambers of gasoline internal combustion engines, providing benefits that include improved fuel economy, performance and driveability and reduced emissions. This process is performed to remove deposits preferably prior to deposit accumulation and hardening which may require costly mechanical deposit removal or component replacement.

NOTE: SUGGEST Chemical Engine Decarbonization service every 15,000 miles or 12 months.

NOTE: CONTAMINATED OIL SYSTEM SERVICE is an event based process (beyond that of a normal oil and filter change) performed to remove coolant, water or fuel contamination. Contamination increases oil's oxidation rate and has been shown to result in increased engine wear and reduced oil flow. CAUTION: Some OEM's (including GM and Honda) have issued Technical Service Bulletins advising that Chemical Crankcase Flushing may damage some engine components and that such damage will not be covered by the manufacturer's new car warranty.

ACCESSORY BELTS

Condition	Code	Procedure
Alignment incorrect	B	Further inspection required
NOTE: Determine cause of incorrect alignment and require repair.		
Cracked	1	Suggest replacement
Frayed	1	Suggest replacement
Missing	C	Require replacement
Noisy	2	Further inspection required
NOTE: Determine cause of noise and suggest repair.		

Plies separated	A	Require replacement
Tension out of specification	B	Require adjustment or replacement
Worn beyond adjustment range	B	Require replacement
Worn so it contacts bottom of pulley	A	Require replacement

AIR FILTER ELEMENTS

Condition	Code	Procedure
At or beyond service interval	3	Suggest replacement to comply with vehicle's OEM recommended service intervals
Leaking	A	Require replacement
Melted	A	Required replacement
Missing	C	Require replacement
Paper filter element oil-soaked	A	Require replacement
NOTE: **Further inspection required to determine cause.**		
Restricted, affecting performance	A	Require replacement
Water-contaminated	A	Require replacement
NOTE: **Further inspection required to determine cause.**		

AIR FILTER GASKETS

Condition	Code	Procedure
Attaching hardware broken	A	Require repair or replacement of hardware
Attaching hardware missing	C	Require replacement of hardware
Attaching hardware not functioning	A	Require repair or replacement of hardware
Leaking	A	Require repair or

		replacement
Missing	C	Require replacement

AIR FILTER HOUSINGS AND GASKETS

Condition	Code	Procedure
Attaching hardware broken	A	Require repair or replacement of hardware
Attaching hardware missing	C	Require replacement of hardware
Attaching hardware not functioning	A	Require repair or replacement of hardware
Leaking	A	Require repair or replacement
Missing	C	Require replacement

AIR PUMP BELTS

Condition	Code	Procedure
Alignment incorrect	B	Further inspection required
NOTE: **Determine cause of incorrect alignment and require repair.**		
At or beyond service interval	3	Suggest replacement to comply with vehicle OEM recommended service intervals
Cracked	1	Suggest replacement
Frayed	1	Suggest replacement
Missing	C	Require replacement
Noisy	2	Further inspection required
NOTE: **Determine cause of noise and suggest repair.**		
Plies separated	A	Require replacement
Tension out of specification	B	Require adjustment or replacement
Worn beyond adjustment	B	Require replacement

range		
Worn so it contacts bottom of pulley	A	Require replacement

BATTERIES

NOTE: Proper operation of any electrical system or component can be affected by battery condition. The battery(ies) must meet or exceed minimum specification for vehicle as equipped and test to that specific battery's CCA.

Definition of Terms

Battery Performance Testing - Testing that determines whether or not a battery meets both vehicle OEM and battery manufacturer's specifications.

Cold Cranking Amp (CCA) Rating - The number of amperes a new, fully charged battery at 0° F (-17.8° C) can deliver for 30 seconds and maintain at least a voltage of 1.2 volts per cell (7.2 volts for a 12-volt battery).

Cranking Amps (CA) - The number of amperes a new, fully charged battery, typically at 32° F (0° C) can deliver for 30 seconds and maintain at least a voltage of 1.2 volts per cell (7.2 volts for a 12volt battery).

OEM Cranking Amps - The minimum CCA required by the original vehicle manufacturer for a specific vehicle.

Condition	Code	Procedure
Battery frozen	Further inspection required	
NOTE: **Do not attempt to charge a frozen battery. Allow battery to warm thoroughly and then performance-test. If battery fails performance test, require replacement.**		
Battery tests near the ""end of its useful life"" utilizing a tester or on-board monitor able to accurately determine this	1	Suggest Replacement

condition		
Case leaking	A	Require replacement
Casing swollen	A	Further inspection required
NOTE: **No service suggested or required unless the battery fails performance test, in which case, require replacement.**		
Circuit open internally	A	Require replacement
Electrolyte contamination	A	Further inspection required
NOTE: **No service suggested or required unless the battery fails performance test, in which case, require replacement.**		
Electrolyte discoloration	A	Further inspection required
NOTE: **No service suggested or required unless the battery fails performance test, in which case, require replacement.**		
Fails to accept and hold charge	A	Require replacement
NOTE: **This phrase refers to a battery that fails to either accept and/or retain a charge using appropriate times listed in the Battery Charging Guide of the BCI Service Manual, battery charger operating manual, or battery manufacturer's specifications.**		
Fluid level low	B	Further inspection required
NOTE: **Determine cause of low fluid level. Refill to proper level(s) with water (distilled water preferred). Recharge battery and performance-test. If battery does not meet specifications, require replacement. If battery is sealed type (non-removable filler caps), require replacement.**		
Out of performance specification for battery	B	Require replacement
NOTE: **The battery may meet vehicle's OEM specifications for that vehicle but test below the minimum specifications defined by the battery manufacturer.**		
Out of specification for application	B	Require replacement
NOTE: **The battery may meet battery manufacturer's specifications but test below the minimum specification defined by the vehicle's OEM for that vehicle.**		
Post (top or side) burned,	A	Require repair or

affecting performance		replacement
NOTE: **Determine cause and correct prior to repair or replacement of part.**		
Post (top or side) burned, not affecting performance	2	Suggest repair or replacement
NOTE: **Determine cause and correct prior to repair or replacement of part.**		
Post (top or side) corroded, affecting performance	A	Require repair
Post (top or side) corroded, not affecting performance	2	Suggest repair
Post (top or side) loose	A	Require replacement
Post (top or side) melted, affecting performance	A	Require repair or replacement
NOTE: **Determine cause and correct prior to repair or replacement of part.**		
Post (top or side) melted, not affecting performance	2	Suggest repair or replacement
NOTE: **Determine cause and correct prior to repair or replacement of part.**		
Specific gravity low	B	Further inspection required
NOTE: **Recharge and test to manufacturer's specifications. If battery fails performance test, require replacement.**		
State of charge low	A	Further inspection required
NOTE: **Recharge and test to manufacturer's specifications. If battery fails performance test, require replacement.**		
Top dirty	2	Suggest cleaning battery
Top wet	A	Require cleaning battery Further inspection required

NOTE: **Check fluid level and adjust to manufacturer's specification. Suggest checking charging system for proper operation.**		
Vent cap loose	A	Require repair or replacement of vent cap
Vent cap missing	C	Require replacement of vent cap

BATTERY CONNECTORS

Condition	Code	Procedure
Application incorrect	B	Require repair or replacement
Attaching hardware broken	A	Require repair or replacement of hardware
Attaching hardware missing	C	Require replacement of hardware
Attaching hardware not functioning	A	Require repair or replacement of hardware
Connector broken	A	Require repair or replacement
Connector melted	A	Require repair or replacement
NOTE: **Determine cause and correct prior to repair or replacement of part.**		
Connector missing	C	Require replacement
Insulation damaged, conductors exposed	A	Require repair or replacement
Insulation damaged, conductors not exposed	1	Suggest replacement
NOTE: **Exposed conductor at replacement (aftermarket) terminal end does not require repair or replacement.**		
Open	A	Require repair or replacement
Protective shield (conduit) melted	2	Suggest repair or replacement
NOTE:		

Determine cause and correct prior to repair or replacement of part.		
Protective shield (conduit) missing	C	Suggest repair or replacement
Resistance (voltage drop) out of specification	A	Require repair or replacement
Routed incorrectly	B	Require repair
Secured incorrectly	B	Require repair
Shorted	A	Require repair or replacement
Terminal broken	A	Require repair or replacement
Terminal burned, affecting performance	A	Require repair or replacement
NOTE: **Determine cause and correct prior to repair or replacement of part.**		
Terminal burned, not affecting performance	2	Suggest repair or replacement
Terminal corroded, affecting performance	A	Require repair or replacement
Terminal corroded, not affecting performance	2	Suggest repair or replacement
Terminal loose, affecting performance	B	Require repair or replacement
Terminal loose, not affecting performance	1	Suggest repair or replacement
Voltage drop out of specification	A	Require repair or replacement

BELT IDLER ASSEMBLIES (ACCESSORY AND CAM BELTS)

Condition	Code	Procedure
Alignment incorrect	B	Require repair or replacement
Attaching hardware broken	A	Require repair or replacement of hardware
Attaching hardware missing	C	Require replacement of hardware

Attaching hardware not functioning	A	Require repair or replacement of hardware
Bearings worn	1	Suggest replacement
Cracked	2	Suggest replacement
Missing	C	Require replacement
Noisy	2	Suggest replacement
Seized	A	Require repair or replacement

BELT TENSIONERS (ACCESSORY AND CAM BELT)

Condition	Code	Procedure
Alignment incorrect	B	Require repair or replacement
Attaching hardware broken	A	Require repair or replacement of hardware
Attaching hardware missing	C	Require replacement of hardware
Attaching hardware not functioning	A	Require repair or replacement of hardware
Bearings worn	1	Suggest replacement
Belt tension incorrect	B	Require adjustment or repair
Cracked	B	Suggest replacement
Missing	C	Require replacement
Noisy	2	Suggest replacement
Pulley damaged, affecting belt life	A	Require replacement
Seized	A	Require repair or replacement

CHEMICAL ENGINE DECARBONIZATION

NOTE: Chemical engine decarbonization is a process utilizing chemicals to remove soft and semi-hardened gum, varnish, resin and carbon deposits from the air/fuel delivery systems and combustion chambers of gasoline

internal combustion engines, providing benefits that include improved fuel economy, performance and driveability and reduced emissions. This process is performed to remove deposits preferably prior to deposit accumulation and hardening which may require costly mechanical deposit removal or component replacement.

NOTE: SUGGEST Chemical Engine Decarbonization service every 15,000 miles or 12 months.

COMBUSTION CHAMBER CLEANING

NOTE: See CHEMICAL ENGINE DECARBONIZATION.

COOLANT RECOVERY TANKS

Condition	Code	Procedure
Attaching hardware broken	A	Require repair or replacement of hardware
Attaching hardware missing	C	Require replacement of hardware
Attaching hardware not functioning	A	Require repair or replacement of hardware
Leaking	A	Require repair or replacement
Missing (if original equipment)	C	Require replacement

COOLANT

Condition	Code	Procedure
Acidity (pH) incorrect	1	Suggest correction or replacement
At or beyond service interval	3	Suggest replacement
NOTE: **The system should be drained and/ or flushed and refilled with correct coolant according to OEM recommended service interval and procedures.**		
Contaminated	B	Require replacement or

		recycling Further inspection required
NOTE: **Determine source of contamination and require correction prior to coolant replacement.**		
Fluid discolored	No Service Suggested or Required	
NOTE: **Further testing necessary to determine condition of fluid.**		
Level incorrect	B	Require correction of fluid level
NOTE: **Determine source of incorrect level and suggest repair.**		
Mixture incorrect	B	Require correction or replacement
Type incorrect	B	Require replacement

DISTRIBUTOR CAPS

Condition	Code	Procedure
Application incorrect	B	Require replacement
Arcing	A	Require replacement
Attaching hardware broken	A	Require repair or replacement of hardware
Attaching hardware missing	C	Require replacement of hardware
Attaching hardware not functioning	A	Require repair or replacement of hardware
Burned	A	Require replacement
Carbon button missing	A	Require replacement
Carbon button worn, affecting performance	A	Require replacement
Carbon button worn, not affecting performance	1	Suggest replacement
Carbon-tracked	A	Require replacement
Cracked	B	Require replacement
Loose	B	Suggest repair or replacement
Terminal broken	A	Require repair or

		replacement
Terminal burned, affecting performance	A	Require repair or replacement
NOTE: **Determine cause and correct prior to repair or replacement of part.**		
Terminal burned, not affecting performance	2	Suggest repair or replacement
Terminal corroded, affecting performance	A	Require repair or replacement
Terminal corroded, not affecting performance	2	Suggest repair or replacement
Terminal eroded, affecting performance	A	Require repair or replacement
Terminal eroded, not affecting performance	No Service Suggested or Required	
Terminal loose, affecting performance	B	Require repair or replacement
Terminal loose, not affecting performance	1	Suggest repair or replacement

DISTRIBUTOR ROTORS

Condition	Code	Procedure
Application incorrect	B	Require replacement
Attaching hardware broken	A	Require repair or replacement of hardware
Attaching hardware missing	C	Require replacement of hardware
Carbon-tracked	A	Require replacement
Contact burned	A	Require replacement
Corroded	1	Suggest replacement
Eroded	1	Suggest replacement
Loose	B	Require repair or replacement
Out of specification	B	Require replacement

ENGINE COOLING SYSTEMS

NOTE: Overheating, poor engine performance, and insufficient cabin heat can be affected by, but are not limited to, all of the components in the engine cooling system.

ENGINE DECARBONIZATION

NOTE: See CHEMICAL ENGINE DECARBONIZATION.

ENGINE OIL DRAIN PLUGS AND GASKETS

Condition	Code	Procedure
Leaking	A	Require repair or replacement
Missing	C	Require replacement
Threads damaged	A	Require repair or replacement
NOTE: Some OEMs require replacement of drain plug gasket when removing drain plug. Inspect threads in oil pan for damage.		

ENGINE OIL FILTERS AND CANISTERS

Condition	Code	Procedure
At or beyond service interval	3	Suggest replacement to comply with vehicle's OEM recommended service intervals
Bulged	A	Require replacement. Further inspection required
NOTE: Inspect pressure relief valve.		
Canister attaching hardware broken	A	Require repair or replacement of hardware
Canister attaching hardware loose	A	Require repair
Canister attaching hardware missing	C	Require replacement
Canister attaching	A	Require repair or

hardware not functioning		replacement of hardware
Center tube collapsed	A	Require replacement. Further inspection required
NOTE: **Inspect bypass.**		
Dented	2	Suggest replacement. Further inspection required
NOTE: **Determine cause, such as broken motor mount.**		
Leaking	B	Require repair or replacement

ENGINE OIL

Condition	Code	Procedure
Additive Depletion	A	Require replacement of fluid
At or beyond service interval	3	Suggest replacement to comply with vehicle's OEM recommended service intervals
Contaminated	A	Require replacement of oil and filter; Further Inspection Required
NOTE: **Determine source of contamination, such as engine coolant, fuel, metal particles, or water when changing oil.**		
Fluid discolored	No Service Suggested or Required	
NOTE: **Further testing necessary to determine condition of fluid.**		
Fluid incorrect	B	Require service
Level Incorrect	B	Adjust to correct level. Further Inspection Required.
NOTE: **Determine cause of incorrect level such as leaking gaskets or contamination by engine coolant, fuel or water.**		

Oxidized	A	Require replacement of fluid

FUEL FILTERS

Condition	Code	Procedure
At or beyond service interval	3	Suggest replacement to comply with OEM recommended service interval
Attaching hardware broken	A	Require repair or replacement of hardware
Attaching hardware missing	C	Require replacement of hardware
Attaching hardware not functioning	A	Require repair or replacement of hardware
Leaking	B	Require repair or replacement
Missing	C	Require replacement
Restricted, affecting performance	A	Require replacement
Restricted, not affecting performance	1	Suggest replacement
Water-contaminated	2	Suggest replacement

FUEL INJECTOR CLEANING

NOTE: See CHEMICAL ENGINE DECARBONIZATION.

FUEL INJECTORS

Condition	Code	Procedure
15,000 miles or 12 months beyond most recent Chemical Engine Decarbonization	5	Suggest chemical engine decarbonization
Attaching hardware missing	C	Require replacement of hardware

Attaching hardware threads damaged	A	Require repair or replacement of hardware
Attaching hardware threads stripped (threads missing)	A	Require repair or replacement of hardware
Connector (Weatherpack type) leaking	A	Require repair or replacement
Connector broken	A	Require repair or replacement
Connector melted	A	Require repair or replacement
NOTE: **Determine cause and correct prior to repair or replacement of part.**		
Connector missing	C	Require replacement
Contaminated	A	Require repair or replacement
NOTE: **Determine source of contamination, such as engine coolant, fuel, metal particles, or water. Require repair or replacement.**		
Inoperative	A	Require repair or replacement
NOTE: **Inoperative includes intermittent operation. Some components may be serviceable; check for accepted cleaning procedure.**		
Leaking	A	Require repair or replacement
Missing	C	Require replacement
Resistance out of specification	B	Require repair or replacement
Restricted, affecting performance	A	Require repair or replacement
Restricted, not affecting performance	2	Suggest repair or replacement
Terminal broken	A	Require repair or replacement
Terminal burned, affecting performance	A	Require repair or replacement

NOTE: Determine cause and correct prior to repair or replacement of part.		
Terminal burned, not affecting performance	2	Suggest repair or replacement
Terminal corroded, affecting performance	A	Require repair or replacement
Terminal corroded, not affecting performance	2	Suggest repair or replacement
Terminal loose, affecting performance	B	Require repair or replacement
Terminal loose, not affecting performance	1	Suggest repair or replacement
Threads damaged	A	Require repair or replacement
Threads stripped (threads missing)	A	Require replacement
Wire lead conductors exposed	B	Require repair or replacement
Wire lead corroded	A	Require repair or replacement
Wire lead open	A	Require repair or replacement
Wire lead shorted	A	Require repair or replacement

FUEL SYSTEM CLEANING SERVICE

NOTE: See CHEMICAL ENGINE DECARBONIZATION.

HOSE CLAMPS

Condition	Code	Procedure
Application incorrect	B	Require replacement
Connected incorrectly	A	Require repair
Corroded, not reusable	1	Suggest replacement
Cracked	A	Require replacement
Insufficient clamping	A	Require repair or

force, allowing hose to leak		replacement
Missing	C	Require replacement
Safety clip missing (not leaking)	C	Require replacement of safety clip
Stripped	A	Require replacement

HOSE CONNECTORS

Condition	Code	Procedure
Application incorrect	B	Require replacement
Connected incorrectly	A	Require repair
Corroded, not reusable	1	Suggest replacement
Cracked	A	Require replacement
Insufficient clamping force, allowing hose to leak	A	Require repair or replacement
Leaking	A	Require repair or replacement
Missing	C	Require replacement
Safety clip missing (not leaking)	C	Require replacement of safety clip
Stripped	A	Require replacement

HOSE COUPLERS

Condition	Code	Procedure
Application incorrect	B	Require replacement
Connected incorrectly	A	Require repair
Corroded, not reusable	1	Suggest replacement
Cracked	B	Require replacement
Insufficient clamping force, allowing hose to leak	A	Require repair or replacement
Leaking	A	Require repair or replacement
Missing	C	Require replacement

Safety clip missing (not leaking)	C	Require replacement of safety clip
Stripped	A	Require replacement

HOSES AND TUBES (FUEL LINES, RADIATOR, VACUUM, BY-PASS, HEATER, RECOVERY TANK AND OIL COOLERS)

Condition	Code	Procedure
Application incorrect	B	Require replacement
At or beyond service interval	3	Suggest replacement
Connected incorrectly	A	Require repair
Corroded, not reusable	1	Suggest replacement
Cracked	B	Require replacement
Dry-rotted	1	Suggest repair or replacement
Hard	1	Suggest repair or replacement
Inner fabric (webbing) damaged	A	Require replacement
Insufficient clamping force, allowing hose to leak	A	Require repair or replacement
Leaking	A	Require repair or replacement
Melted	1	Suggest repair or replacement
Missing	C	Require replacement
Outer covering damaged	1	Suggest replacement
Outer covering damaged to the extent that the inner fabric is visible	A	Require replacement
Protective sleeves damaged	2	Suggest replacement of sleeves
Protective sleeves missing	C	Require replacement of sleeves
Restricted, affecting	A	Require repair or

performance		replacement
Restricted, not affecting performance	2	Suggest repair or replacement
Routed incorrectly (where failure is likely to occur)	B	Require repair or replacement
Safety clip missing	C	Require replacement
Spongy	1	Suggest repair or replacement
Stripped	A	Require replacement
Swollen	B	Require replacement
Threads damaged	A	Require repair or replacement
Threads stripped (threads missing)	A	Require replacement
Type incorrect	2	Suggest repair or replacement

IGNITION WIRES (SECONDARY)

Condition	Code	Procedure
Application incorrect	B	Require replacement
Attaching hardware broken	A	Require repair or replacement of hardware
Attaching hardware missing	C	Require replacement of hardware
Attaching hardware not functioning	A	Require repair or replacement of hardware
Carbon-tracked	A	Require replacement
Corroded	1	Suggest repair or replacement
Insulation leaking (shorted)	A	Require repair or replacement
Metal heat shield bent	2	Suggest repair or replacement
Missing	C	Require replacement

Oil-soaked (spongy)	1	Suggest replacement
Resistance incorrect	B	Require replacement
Routed incorrectly	B	Suggest repair
NOTE: **If improper routing affects the performance of other systems, require repair. Proper routing, hardware, heatshields, etc., are intended to prevent premature failure of secondary ignition components.**		
Terminal broken	A	Require repair or replacement
Terminal burned, affecting performance	A	Require repair or replacement
NOTE: **Determine cause and correct prior to repair or replacement of part.**		
Terminal burned, not affecting performance	2	Suggest repair or replacement
Terminal corroded, affecting performance	A	Require repair or replacement
Terminal corroded, not affecting performance	2	Suggest repair or replacement
Terminal loose, affecting performance	B	Require repair or replacement
Terminal loose, not affecting performance	1	Suggest repair or replacement

INTAKE CLEANING

NOTE: See CHEMICAL ENGINE DECARBONIZATION.

O2 SENSORS

Condition	Code	Procedure
At or beyond service interval	3	Suggest replacement to comply with vehicle's OEM recommended service intervals
Attaching hardware missing	C	Require replacement of hardware
Attaching hardware threads damaged	A	Require repair or replacement of hardware

Attaching hardware threads stripped (threads missing)	A	Require repair or replacement of hardware
Connector (Weatherpack type) leaking	A	Require repair or replacement
Connector broken	A	Require repair or replacement
Connector melted	A	Require repair or replacement
NOTE: **Determine cause and correct prior to repair or replacement of part.**		
Connector missing	C	Require replacement
Contaminated	A	Require repair or replacement
NOTE: **Determine source of contamination, such as engine coolant, fuel, metal particles, or water. Require repair or replacement.**		
Inoperative	A	Require repair or replacement. Further inspection required
NOTE: **Inoperative includes intermittent operation. Some components may be serviceable; check for accepted cleaning procedure.**		
Leaking	A	Require repair or replacement
Missing	C	Require replacement
Resistance out of specification	B	Require repair or replacement
Restricted, affecting performance	A	Require repair or replacement
Terminal broken	A	Require repair or replacement
Terminal burned, affecting performance	A	Require repair or replacement
NOTE: **Determine cause and correct prior to repair or replacement of part.**		
Terminal burned, not affecting performance	2	Suggest repair or replacement

Terminal corroded, affecting performance	A	Require repair or replacement
Terminal corroded, not affecting performance	2	Suggest repair or replacement
Terminal loose, affecting performance	B	Require repair or replacement
Terminal loose, not affecting performance	1	Suggest repair or replacement
Threads damaged	A	Require repair or replacement
Threads stripped (threads missing)	A	Require replacement
Wire lead conductors exposed	B	Require repair or replacement
Wire lead corroded	A	Require repair or replacement
Wire lead open	A	Require repair or replacement
Wire lead shorted	A	Require repair or replacement

PCV BREATHER ELEMENTS

Condition	Code	Procedure
At or beyond service interval	3	Suggest replacement to comply with vehicle's OEM recommended service intervals
Attaching hardware broken	A	Require repair or replacement of hardware
Attaching hardware missing	C	Require replacement of hardware
Attaching hardware not functioning	A	Require repair or replacement of hardware
Leaking	A	Require replacement
Melted	A	Required replacement
Missing	C	Require replacement

Restricted, affecting performance	A	Require replacement
Restricted, not affecting performance	1	Suggest replacement
Water-contaminated	A	Require replacement

PCV VALVES

Condition	Code	Procedure
Application incorrect	B	Require replacement
At or beyond service interval	3	Suggest replacement to comply with vehicle's OEM recommended service intervals
Attaching hardware broken	A	Require repair or replacement of hardware
Attaching hardware missing	C	Require replacement of hardware
Attaching hardware not functioning	A	Require repair or replacement of hardware
Grommet broken	A	Require repair or replacement of grommet
Grommet missing	C	Require replacement of grommet
Grommet not functioning	A	Require repair or replacement of grommet
Inoperative	A	Require replacement
NOTE: **Inoperative includes intermittent operation.**		
Leaking	A	Require replacement
Missing	C	Require replacement
Restricted	A	Require replacement

RADIATOR CAPS AND PRESSURIZED EXPANSION TANK CAPS

Condition	Code	Procedure
Application incorrect	B	Require replacement

Coolant recovery check valve inoperative	A	Require replacement
NOTE: **Inoperative includes intermittent operation.**		
Fails to maintain proper pressure	B	Require replacement
Gasket missing	C	Require replacement of gasket
Missing	C	Require replacement
Seal missing	C	Require replacement of seal

SPARK PLUGS

NOTE: You are not required to replace spark plugs in sets. However, you may suggest replacement of the other plugs for preventive maintenance.

Condition	Code	Procedure
Application incorrect	B	Require replacement
At or beyond service interval	3	Suggest replacement
Electrode eroded	1	Suggest replacement
Fouled	A	Require repair or replacement
NOTE: **Determine cause of fouling and suggest repair.**		
Gap incorrect	B	Require repair or replacement
Improperly Indexed	Remove and Reinstall following manufacturers installation requirements	
Insulation broken	A	Require replacement
Insulator cracked	A	Require replacement
Leaking compression	A	Require repair or replacement
Threads damaged	A	Require repair or replacement

Threads stripped (threads missing)	A	Require replacement

THERMOSTATS AND HOUSINGS

Condition	Code	Procedure
Application incorrect	B	Require replacement
Attaching hardware broken	A	Require repair or replacement of hardware
Attaching hardware corroded	A	Require repair or replacement of hardware
Attaching hardware missing	C	Require replacement of hardware
Attaching hardware not functioning	A	Require repair or replacement of hardware
Housing corroded	1	Suggest replacement of housing
Inoperative	A	Require replacement
NOTE: **Inoperative includes intermittent operation.**		
Installation incorrect	B	Require repair or replacement
Leaking	A	Require repair or replacement
Thermostat missing	C	Require replacement of thermostat
Threads damaged	A	Require repair or replacement
Threads stripped (threads missing)	A	Require repair or replacement

THROTTLE BODY CLEANING

NOTE: See CHEMICAL ENGINE DECARBONIZATION.

TIMING BELTS

Condition	Code	Procedure

Adjustment incorrect	B	Suggest adjustment
NOTE: **Inspect belt tensioners, pulleys, and cover.**		
Alignment incorrect	B	Further inspection required
NOTE: **Determine cause of incorrect alignment and require repair.**		
At or beyond service interval	3	Suggest replacement to comply with vehicle OEM recommended service intervals
Broken	A	Require replacement
Cam timing out of specification	B	Require repair
Cracked	1	Suggest replacement
Fluid-soaked	1	Suggest replacement. Further inspection required
Frayed	1	Suggest replacement
Missing	C	Require replacement
NOTE: **Internal engine damage may result from timing belt damage/failure.**		
Noisy	2	Further inspection required
NOTE: **Determine cause of noise and suggest repair.**		
Plies separated	A	Require replacement
Teeth missing	A	Require replacement
Tension out of specification	B	Require adjustment or replacement

VACUUM HOSES, TUBES AND CONNECTIONS (NON-METALLIC)

Condition	Code	Procedure
Leaking	A	Require repair or replacement
Melted	A	Require replacement

Missing	C	Require replacement
Oil-soaked (spongy)	1	Suggest replacement
Restricted	A	Require repair or replacement
Surface cracks (dry-rotted)	1	Suggest replacement

EXHAUST SYSTEMS

WARNING: Federal EPA rules prohibit altering an exhaust system in any way that defeats the emission reduction components of a vehicle. Be sure to review and adhere to EPA policy on removing and replacing catalytic converters. Where state or local laws are stricter, they take precedence over these guidelines.

NOTE: Some exhaust systems are of a welded design. It is not required that the entire system be replaced. Determine the need to replace individual components based on conditions of component.

EXHAUST AND TAIL PIPES

Condition	Code	Procedure
Broken bracket	A	Require repair or replacement
Pipe Bent Out Of Position	B	Require repair or replacement
Pipe Broken	A	Require repair or replacement
Pipe Cracked	B	Require repair or replacement
Pipe Leaking	A	Require replacement
Pipe Missing	C	Require replacement
Pipe Plugged	A	Require replacement
Pipe Weak Due To Corrosion, But No Leaks	1	Suggest replacement

Present		
Weld Broken	A	Require repair or replacement

HEATING, VENTILATION AND AIR CONDITIONING SYSTEMS

NOTE: AIR CONDITIONING SYSTEM FLUSHING utilizes chemicals or refrigerant to remove oil, debris and contaminants from the evaporator, condenser, hoses or metal lines.

NOTE: An INLINE FILTER, both high and low side, protects a/c components from residual debris in the system. An inline filter or suction screen is suggested when a condenser, evaporator, compressor, expansion valve, accumulator/drier, hoses or metal lines is replaced, or if debris is found in the system during an a/c repair. An inline filter is suggested to help prevent future component damage and increase system longevity.

BELTS

Condition	Code	Procedure
Alignment incorrect	B	Further inspection required
NOTE: Determine cause of incorrect alignment and require repair.		
Cracked	1	Suggest replacement
Frayed	1	Suggest replacement
Missing	C	Require replacement
Noisy	2	Further inspection required
NOTE: Determine cause of noise and suggest repair.		
Plies separated	A	Require replacement
Serpentine belt routed incorrectly	B	Require repair
Tension out of	B	Require adjustment or

specification		replacement
Worn beyond adjustment range	B	Require replacement
Worn so it contacts bottom of pulley	A	Require replacement

CABIN AIR FILTERS

Condition	Code	Procedure
Air flow obstruction	A	Require cleaning or replacement
At or beyond service interval	3	Suggest replacement
Microbial growth causing odor	A	Require replacement of filter
Missing	C	Require replacement

COOLANT

Condition	Code	Procedure
Acidity (pH) incorrect	1	Suggest correction or replacement
At or beyond service interval	3	Suggest replacement
Contaminated	B	Require replacement or recycling. Further inspection required
NOTE: **Determine source of contamination and require correction prior to coolant replacement.**		
Fluid discolored	No Service Suggested or Required	
NOTE: **Further testing necessary to determine condition of fluid.**		
Level incorrect	B	Require filling to proper level
NOTE: **Determine source of incorrect level and suggest repair.**		
Mixture incorrect	B	Require correction or replacement

Type incorrect	B	Require replacement

EVAPORATOR DRAIN TUBES

Condition	Code	Procedure
Disconnected	A	Require repair
Leaking	A	Require replacement
Missing	C	Require replacement
Restricted	A	Require repair or replacement
Routed incorrectly	B	Require repair

EVAPORATOR FILTERS

Condition	Code	Procedure
Air flow obstruction	A	Require cleaning or replacement
At or beyond service interval	3	Suggest replacement
Microbial growth causing odor	A	Require replacement of filter
Missing	C	Require replacement

IN-LINE FILTERS

Condition	Code	Procedure
Connection leaking	A	Require repair or replacement
Leaking	B	Require repair or replacement
Restricted	A	Require replacement
Threads damaged	A	Require repair or replacement
Threads stripped (threads missing)	A	Require replacement

VACUUM HOSES AND TUBES

Condition	Code	Procedure

Disconnected	A	Require repair
Leaking	A	Require repair or replacement
Leaking	A	Require repair or replacement
Melted	A	Require repair or replacement
Missing	C	Require replacement
Oil-soaked (spongy)	1	Suggest replacement
Restricted	A	Require repair or replacement
Routing incorrect	B	Require repair
Surface cracks (dry-rotted)	1	Suggest replacement

STEERING AND SUSPENSION, WHEEL ALIGNMENT, WHEELS AND TIRES

NOTE: Steering and Suspension are complex systems made up of a variety of interdependent components and controls. For proper vehicle handling, ride, and tire wear, a thorough inspection is required whenever suspension work is being performed.

NOTE: Listed repair conditions assume that the problem has been isolated to the specific component by proper testing procedures. When replacing steering and/or suspension components which may affect an alignment angle, you are required to check and adjust alignment as needed. Refer to the OEM specifications for both ride height and alignment angle tolerances.

NOTE: Improper alignment geometry, and/or improper tire/wheel fitment may affect other systems such as Adaptive Cruise Control, Electronic Stability Control, Electronic Traction Control and Variable Ratio Steering. These systems may require attention after an alignment or suspension service is performed. Care must be taken to identify these

vehicles/systems before any repair procedures are performed. Failure to follow OEM guidelines when servicing interrelated systems could result in an unsafe condition.

CAUTION: Do not use ride height altering or load compensating components, such as variable rate springs or coil over shocks on vehicles with height sensing or load sensing proportioning- valve equipped braking systems, unless these components are supplied as original equipment.

HYDRAULIC HOSES

Condition	Code	Procedure
Attaching hardware broken	A	Require repair or replacement of hardware
Attaching hardware missing	C	Require replacement of hardware
Attaching hardware not functioning	A	Require repair or replacement of hardware
Attaching hardware threads damaged	A	Require repair or replacement of hardware
Attaching hardware threads stripped (threads missing)	A	Require replacement of hardware
Blistered	B	Require replacement
Fitting threads damaged	A	Require repair or replacement
Fitting threads stripped (threads missing)	A	Require replacement
Inner fabric (webbing) cut	B	Require replacement
Leaking	A	Require replacement
Missing	C	Require replacement
Outer covering is cracked to the extent that	B	Require replacement

inner fabric of hose is visible		
Restricted	A	Require replacement
Routed incorrectly (where failure is likely to occur)	B	Require repair or replacement
Secured incorrectly	B	Require repair

POWER STEERING BELTS

Condition	Code	Procedure
Alignment incorrect	B	Further inspection required
NOTE: **Determine cause of incorrect alignment and require repair.**		
Cracked	1	Suggest replacement
Frayed	1	Suggest replacement
Missing	C	Require replacement
Noisy	2	Further inspection required
NOTE: **Determine cause of noise and suggest repair.**		
Plies separated	A	Require replacement
Serpentine belt routed incorrectly	B	Require repair
Tension out of specification	B	Require adjustment or replacement
Worn beyond adjustment range	B	Require replacement
Worn so it contacts bottom of pulley	A	Require replacement

POWER STEERING FLUID

Condition	Code	Procedure
50,000 miles or greater on OE fluid (in absence of published	5	Suggest Replacement

manufacturer interval)		
NOTE: **One time only fluid exchange**		
Additive Depletion	A	Require replacement of fluid
Fluid at or beyond service interval	3	Suggest fluid replacement
Fluid contaminated (i.e. fluid other than power steering fluid present)	B	Require flushing and refilling of the system
NOTE: **Determine and correct source of contamination. OEM specifications must be followed for fluid type.**		
Fluid discolored	No Service Suggested or Required	
NOTE: **Further testing necessary to determine condition of fluid.**		
Fluid level incorrect	B	Require adjustment of fluid level
Fluid type incorrect	B	Require flushing and refilling with correct fluid
Oxidized	A	Require replacement of fluid

POWER STEERING HOSES

Condition	Code	Procedure
Attaching hardware broken	A	Require repair or replacement of hardware
Attaching hardware missing	C	Require replacement of hardware
Attaching hardware not functioning	A	Require repair or replacement of hardware
Attaching hardware threads damaged	A	Require repair or replacement of hardware
Attaching hardware threads stripped (threads missing)	A	Require replacement of hardware

Blistered	B	Require replacement
Fitting threads damaged	A	Require repair or replacement
Fitting threads stripped (threads missing)	A	Require replacement
Inner fabric (webbing) cut	B	Require replacement
Leaking	A	Require replacement
Missing	C	Require replacement
Outer covering is cracked to the extent that inner fabric of hose is visible	B	Require replacement
Restricted	A	Require replacement
Routed incorrectly (where failure is likely to occur)	B	Require repair or replacement
Secured incorrectly	B	Require repair

SHOCK ABSORBERS, STRUT CARTRIDGES AND STRUT ASSEMBLIES

NOTE: You are not required to replace shocks or struts in axle sets. However, when replacing a shock or strut due to the conditions that follow, you may suggest replacement of the other shock or strut on the same axle for one or more of the following: improved performance or preventive maintenance; part is close to the end of its useful life; to extend tire life; to balance ride and handling; or to improve stopping distance. When replacing steering and/or suspension components which may affect an alignment angle, you are required to check and adjust alignment as needed. Refer to the OEM specifications. Under no circumstances should a technician bend struts or strut housings. A vehicle's load-carrying and handling abilities are limited by its suspension, tires, brakes, and driveline. Installing coil over shocks or any other load assist device does not increase the vehicle's load

capacity. See the vehicle owner's manual for more details. If vehicle is equipped with OEM coil over shocks, apply the conditions for coil springs from the Springs: Coil, Leaf, and Torsion Bar section of the Steering and Suspension guidelines. If the vehicle is equipped with add-on coil over shocks, you may suggest replacement with standard shocks for a spring-related condition.

Condition	Code	Procedure
50,000 miles or greater on OEM Shocks or Struts	1	Suggest Replacement
NOTE: **Applies only to OEM hydraulic fluid and/or gas charged shocks and struts, NOT electronically controlled units.**		
Attaching hardware broken	A	Require repair or replacement of hardware
Attaching hardware corroded, affecting structural integrity	A	Require replacement of hardware
Attaching hardware missing	C	Require replacement of hardware
Attaching hardware not functioning	A	Require repair or replacement of hardware
Attaching hardware threads damaged	A	Require repair or replacement of hardware
Attaching hardware threads stripped (threads missing)	A	Require replacement of hardware
Binding	A	Require replacement
Body dented	A	Further inspection required
NOTE: **Require replacement of units where dents restrict shock or strut piston rod movement. If dents don't restrict movement, no service is suggested or required. Especially critical on mono-tube shocks.**		
Body punctured	A	Require replacement
Brake hose bracket bent	B	Require repair or

		replacement
Brake hose bracket missing	C	Require replacement
Brake hose bracket threads damaged	A	Require repair or replacement
Brake hose bracket threads stripped (threads missing)	C	Require replacement
Compression bumper missing	C	Require replacement of compression bumper
Compression bumper split	1	Suggest replacement of compression bumper
Damping (none)	A	Require replacement
Dust boot (bellows) missing	C	Require replacement of boot
NOTE: **If boot is not available as a separate component, suggest replacement of shock or strut (reason code 2). This condition can lead to damage of the piston rod, which causes piston rod seal wear.**		
Dust boot (bellows) split	A	Require replacement of boot
NOTE: **If boot is not available as a separate component, suggest replacement of shock or strut (reason code 2). This condition can lead to damage of the piston rod, which, in turn, causes premature piston rod seal wear.**		
Dust boot (bellows) torn	A	Require replacement of boot
NOTE: **If boot is not available as a separate component, suggest replacement of shock or strut (reason code 2). This condition can lead to damage of the piston rod, which, in turn, causes premature piston rod seal wear.**		
Dust shield broken	2	Suggest replacement
NOTE: **This condition can lead to damage of the piston rod, which, in turn, causes premature piston rod seal wear.**		
Dust shield missing	2	Suggest replacement
NOTE: **This condition can lead to damage of the piston rod, which, in turn, causes premature piston rod seal wear.**		
Gland nut (strut housing cap) is not removable	A	Require replacement of nut and/or housing

using appropriate tool		
NOTE: **Only required if replacing cartridge.**		
Gland nut (strut housing cap) threads damaged	A	Require repair or replacement of nut
Housing dented	A	Further inspection required
NOTE: **Require replacement of units where dents restrict shock or strut piston rod movement. If dents don't restrict movement, no service is suggested or required. Especially critical on mono-tube shocks.**		
Housing punctured	A	Require replacement
Jounce bumper missing	C	Require replacement of jounce bumper
Jounce bumper split	1	Suggest replacement of jounce bumper
Leaking oil, enough for fluid to be running down the body	A	Require replacement
NOTE: **If the strut cartridge has been replaced previously, the oil on the strut housing may be filler oil. The technician must identify the source of the oil.**		
Noisy	2	Further inspection required
NOTE: **If noise is isolated to shock or strut, suggest replacement.**		
Piston rod bent	A	Require replacement
Piston rod broken	A	Require replacement
Piston rod has surface defect	2	Suggest replacement
Piston rod threads damaged	A	Require repair or replacement
Piston rod threads stripped (threads missing)	A	Require replacement
Seized	A	Require replacement
Shock missing	C	Require replacement
Strut housing bent	A	Require replacement

Strut housing cap (gland nut) is not removable using appropriate tool	A	Require replacement of nut and/or housing
NOTE: **Only required if replacing cartridge.**		
Strut housing cap (gland nut) threads damaged	A	Require repair or replacement of nut
Strut housing cap (gland nut) threads stripped (threads missing)	A	Require replacement of nut
Strut housing severely corroded, affecting structural integrity	A	Require replacement
Strut housing threads damaged	A	Require repair or replacement
Strut housing threads stripped (threads missing)	A	Require replacement
Tire cupping	A	Further inspection required
NOTE: **Although shocks or struts may have contributed to tire cupping, an inspection is needed of the entire suspension system. If the shock or strut is found to be contributing to the tire cupping, require replacement.**		

STRUT RODS

Condition	Code	Procedure
Adjusting nut seized	A	Require repair or replacement of hardware
NOTE: **Only required if an alignment is being performed and adjustment of the strut in question is required.**		
Attaching (mating) hole oversized	A	Require repair or replacement of bracket or frame
Attaching hardware broken	A	Require repair or replacement of hardware
Attaching hardware	C	Require replacement of

missing		hardware
Attaching hardware not functioning	A	Require repair or replacement of hardware
Attaching hardware threads damaged	A	Require repair or replacement of hardware
Attaching hardware threads stripped (threads missing)	A	Require replacement of hardware
Attaching point on bracket or frame corroded, affecting structural integrity	A	Require repair of bracket or frame
Bent, affecting performance	A	Require replacement
Mating (attaching) hole oversized	A	Require repair or replacement of bracket or frame
Threads damaged	A	Require repair or replacement
Threads stripped (threads missing)	A	Require replacement

TIRE PRESSURE MONITORING SYSTEM

NOTE: A Tire Pressure Monitoring System (TPMS) is designed to detect and alert the driver should the air pressure level in one or more of the vehicle's tires, up to all four tires, fall below the manufacturer's recommended inflation pressure or another pre-set level.

NOTE: NHTSA does not consider installation of an aftermarket or replacement tire or rim that is not compatible with the TPMS to be a "make inoperative" situation under 49 U.S.C. 30122, provided that the entity does not disable the TPMS malfunction indicator.

TIRE PRESSURE SENSORS

Condition	Code	Procedure
Attaching hardware broken	A	Require repair or replacement of hardware
Attaching hardware missing	C	Require replacement of hardware
Attaching hardware not functioning	A	Require repair or replacement of hardware
Inoperative	A	Require repair or replacement
NOTE: **Inoperative includes intermittent failure.**		
Loose	B	Require repair or replacement
Missing (Non-OE Wheel and/or Tire Applications)	2	Suggest replacement if appropriate sensor is available
Missing (OE Wheel and Tire Applications)	C	Replacement Reqiuired
Not Responding	Further inspection required	
NOTE: **If sensor does not Wake Up, follow manufacturers recommended diagnostic procedure to determine cause**		

TIRES

NOTE: These guidelines do not apply to split rims. Some vehicle manufacturers restrict replacement of tires to specific brands, types, or sizes. High pressure temporary compact spare tires should not be used with any other rims or wheels, nor should standard tires, snow tires, wheel covers, or trim rings be used with high pressure compact spare rims or wheels. Attempting to mount a tire of one diameter on a wheel of a different diameter or flange type may result in serious injury or death. Only specially trained persons should de-mount or mount tires. Explosions of tire and wheel assembly can result from improper mounting, possibly causing serious injury or death. Consult the vehicle owner's manual or vehicle

placard for correct size, speed rating, designation, and cold inflation pressure of the original tires. Do not exceed the maximum load or inflation capacity of the tire specified by the Tire and Rim Association When replacing tires, it is suggested that the replacement tires match or exceed the OEM speed rating designation. If tires of different speed rating designations are mixed on the same vehicle, the tires may vary in handling characteristics. Do not mix different speed rating designations on the same axle. Do not mix radials with non-radial tires on the same axle, as this may affect vehicle handling and stability. If radial tires and bias or bias-belted ply tires are mixed on the same vehicle, the radials must be on the rear. High-pressure temporary compact spare tires are exempt from this rule. Do not mix size or type (Run Flat, all season, performance, mud and snow) of tires on the same axle. If any flammable emergency tire inflation product has been used on a tire, consult inflation product, manufacturer's product information label for tire deflation procedures to avoid possible serious injury or death. In some vehicles, changing the tire diameter from factory-equipped size can affect drive ability, as well as the performance of ABS and other vehicle systems. Consult the vehicle manufacturer's specifications.

Condition	Code	Procedure
Air pressure incorrect	B	Require repair
Bead broken	A	Require replacement
Bead leaking, caused by tire	A	Require repair or replacement
Bead wire/cord exposed	A	Require replacement
Cord or belt material exposed	A	Require replacement
Cord ply separations	A	Require replacement
Directional/asymmetrical tires mounted incorrectly	B	Require remounting and/or repositioning

Irregular tread wear, affecting performance	2	Suggest replacement
NOTE: **Determine and correct cause of irregular tire wear.**		
Load ratings less than OEM specifications	B	Require replacement
Mixed tread types (all season, performance, mud and snow) on same axle	A	Require replacement
Number of punctures exceeds manufacturer's limit	B	Require replacement
Out of balance	B	Require rebalance of tire/wheel assembly
Ply separation	A	Require replacement
Pull or lead, caused by tire	A	Require repair or replacement
Radial and bias or bias-belted ply tires on same axle	B	Require repair or replacement
Radials are on the front and not on the rear	B	Require repair or replacement
NOTE: **If radials and bias or bias-belted ply tires are on the same vehicle, the radials must be on the rear axle, except for high-pressure temporary spares.**		
Run flat damage	A	Require replacement
Shoulder cut	A	Require replacement
Shoulder puncture	A	Require replacement
Shoulder with plug	A	Require replacement
Sidewall bulge	A	Require replacement
Sidewall cut	A	Require replacement
Sidewall indentation	No service required or suggested	
Sidewall puncture	A	Require replacement
Sidewall with plug	A	Require replacement
Speed rating designations different on same axle	2	Suggest rotation or replacement
Tire and wheel assembly has excessive run-out	B	Require repair or replacement of

		appropriate part
NOTE: **Excessive is defined as enough to contribute to performance problems. Match mounting may correct run-out. If not, require replacement of appropriate part. Refer to manufacturer's specifications.**		
Tires with excessive diameter difference on an all-wheel drive vehicle or four-wheel drive vehicle	B	Require replacement
NOTE: **Excessive diameter difference is defined as exceeding manufacturer's specifications or, if no manufacturer's specifications exist, with more than 1/4"" diameter difference.**		
Tires with excessive diameter difference on the same side of a dual-wheel application	B	Require replacement
NOTE: **Excessive diameter difference is defined as exceeding manufacturer's specifications or, if no manufacturer's specifications exist, with more than 1/4"" diameter difference.**		
Tread area puncture larger in diameter than manufacturer's specifications	B	Require replacement
Tread missing pieces (chunking), exposing cord	A	Require replacement
Tread missing pieces (chunking), not exposing cord	1	Suggest replacement
Tread separations	A	Require replacement
Tube in tubeless tire	3	Suggest removal of tube
NOTE: **Most manufacturers do not recommend tubes in tubeless tires. Inspect tire and wheel . Assembly to determine the reason for a tube in tubeless tire. Recommendation for repair or replacement should be based upon condition of tires and! Or wheel listed in these guidelines.**		
Weather-checking	No service required or suggested	
Worn to tread wear indicators	B	Require replacement

VALVE STEMS

NOTE: Most tire manufacturers suggest replacement of non-TPMS valve stems any time a new tire is installed. For TPMS valve stems, the manufacturer may require replacement of the valve stem, o-ring seals, washers, gaskets, valve cores, compression washers and/or locking nut.

Condition	Code	Procedure
Bent	2	Suggest replacement
Broken	A	Require replacement
Cap seized	A	Require repair or replacement
Cut, but not leaking	1	Suggest replacement
Deteriorated (cracking, dry rot)	1	Suggest replacement
Leaking	A	Require repair or replacement
Missing	C	Require replacement
O-Ring leaking	A	Require replacement of O-Ring
Threads damaged	A	Require repair or replacement
Threads stripped	A	Require replacement
Valve cap missing	C	Require replacement of cap

WHEEL ATTACHMENT HARDWARE

NOTE: For conditions noted below, also check condition of wheel stud holes. Proper lug nut torque is essential. Follow recommended torque specifications and tightening sequence. DO NOT lubricate threads unless specified by the vehicle manufacturer.

Condition	Code	Procedure
Bent	A	Require replacement
Broken	A	Require replacement

NOTE: **Some manufacturers require replacement of all studs on that wheel if two or more studs or nuts on the same wheel are broken or missing.**		
Locking lug nut locking groove damaged	A	Require replacement
Loose	A	Require repair or replacement of affected component
Lug nut installed backward	B	Require repair or replacement
Lug nut mating surface distorted	A	Require replacement of nut
Lug nut mating type incorrect	B	Require replacement of nut
Lug nut missing	C	Require replacement
Lug nut rounded	A	Require replacement of nut
NOTE: **Only required if removing wheel.**		
Lug nut seized	A	Require replacement of nut
NOTE: **Only required if removing wheel.**		
Stud incorrect	B	Require replacement of stud
Stud missing	C	Require replacement
Threads damaged	A	Require repair or replacement of component with damaged threads
Threads stripped	A	Require replacement of component with stripped threads

WHEEL BEARINGS, RACES AND SEALS

NOTE: When replacing or repacking wheel bearings, grease seal replacement is required. You are not required to replace

these components in axle sets. Determine the need to replace based upon the individual component conditions that follow.

Condition	Code	Procedure
Axle seal on drive axle leaking	A	Require replacement of seal and inspection of axle, bearing, housing, and vent tube
Bearing end-play exceeds specifications	B	Require adjustment of bearing, if possible If proper adjustment cannot be obtained, require replacement of bearing and race assembly
Bearing rollers, balls or races are worn, pitted, or feel rough when rotated as an assembly or other damage affecting performance.	B	Require replacement of bearing and race assembly
Seal leaking	A	Require replacement of seal and inspection of bearings
NOTE: **Require inspection of mating and sealing surface and repair or replace as necessary. Check vent. A plugged vent may force fluid past the seal.**		
Seal missing	C	Require replacement

WHEEL & TIRE SUPPLEMENT

Steering and suspension are complex systems made up of a variety of interdependent components. For proper vehicle handling, ride, and tire wear, a thorough inspection is required whenever suspension work is being performed. Conditions listed assume that the problem has been isolated to the specific component by proper testing procedures.

NOTE: When replacing steering and/or suspension components that may affect an alignment angle, you are required to check and adjust alignment as needed. Refer to the OEM specifications.

CAUTION: Do not use ride height altering or load compensating components, such as variable rate springs and coil over shocks, on vehicles with height or load sensing proportioning valve-equipped braking systems, unless these components are original equipment.

NOTE: Depending on the air suspension design, there are some aftermarket products available to eliminate the air ride suspension on certain vehicles. If the system has been eliminated with one of these products, then no service is suggested or required.

WARNING: These guidelines do not apply to split rims.

TIRES

When replacing tires, it is suggested that the replacement tires match or exceed the OEM speed rating designation. If tires of different speed rating designations are mixed on the same vehicle, the tires may vary in handling characteristics. Do not mix different speed rating designations on the same axle.

Consult the vehicle owner's manual or vehicle placard for correct tire size, service description, load index, speed rating and cold inflation pressure of the original tires. Do not exceed the maximum load or inflation capacity of the tire specified by the Tire and Rim Association (www.us-tra.org)

When replacing fewer than ALL tires on a vehicle, follow the vehicle manufacturer's recommendations as to the placement of the new tires. If it is not possible to follow the vehicle manufacturer's tire replacement recommendations, remember to replace tires on the same axle with the same size, construction, speed rating, and, if possible, similar tread pattern.

Do not mix radials with non-radial tires on the same axle, as this may affect vehicle handling and stability. If radial tires and non-radial tires are mixed on the same vehicle, the radials must be on the rear. If radial and non-radial tires are used on a vehicle equipped with dual rear tires, radial tires may be used on either axle. High-pressure temporary compact spare tires are exempt from this rule.

Do not mix size or type (all season, performance, mud and snow) of tires on the same axle. When replacing only two tires on front or rear drive vehicles, follow the vehicle manufacturer's recommendations concerning placement. If it is not possible to follow OE recommendations, it is preferable to place the two new tires on the rear for greater stability, greater adhesion affecting steering -- on other than dry pavement -- and overall safety, regardless of whether the vehicle is front or rear wheel drive.

It is particularly important to match all tire sizes and constructions on 4-wheel (4x4) and all-wheel (AWD) drive vehicles unless otherwise specified by vehicle manufacturer. Ideally, all four tires should be replaced at the same time. Some vehicle manufacturers restrict replacement of tires to specific brands, types, or sizes.

MOUNTING TIRES

Only specially trained persons should de-mount or mount tires. Explosions of tire and wheel assembly can result from improper mounting, possibly causing serious injury or death. High pressure temporary compact spare tires should not be used with any other rims or wheels, nor should standard tires, snow tires, wheel covers, or trim rings be used with high pressure compact spare rims or wheels.

Mount tires only on same or approved rim widths.

Attempting to mount a tire of one diameter on a wheel of a different diameter , bead taper or flange type may result in serious injury or death.

If any flammable emergency tire inflation product has been used in a tire, consult inflation product manufacturer's product information label for tire deflation procedures to avoid possible serious injury or death.

VEHICLE TIRE PLACARD

Since 1968, cars and light trucks sold in the United States have been required to have a tire information sticker, called a vehicle tire placard. The vehicle tire

placard indicates the size of the original equipment tires (including the spare), cold inflation pressure for the tires on both axles as well as the spare, and load index or range. Depending on the vehicle, the vehicle tire placard will either be located on the edge of any door, the doorpost, glove box, fuel door or inside trunk lid. If the tire placard is missing, consult the owner's manual, vehicle manufacturer, or tire manufacturer regarding applicable tire information.

Always refer to the vehicle manufacturer's recommendations before replacing tires. Tires should always be replaced with the same size designation, or approved options, as recommended. Never choose a smaller size with less load carrying capacity than the size on the tire placard. (Some vehicle manufacturers require different-sized tires for either the front or rear axles.)

NOTE: It is not always possible to select a replacement tire with exactly the same size as shown on the placard. Consult with a vehicle or tire manufacturer for replacement recommendations.

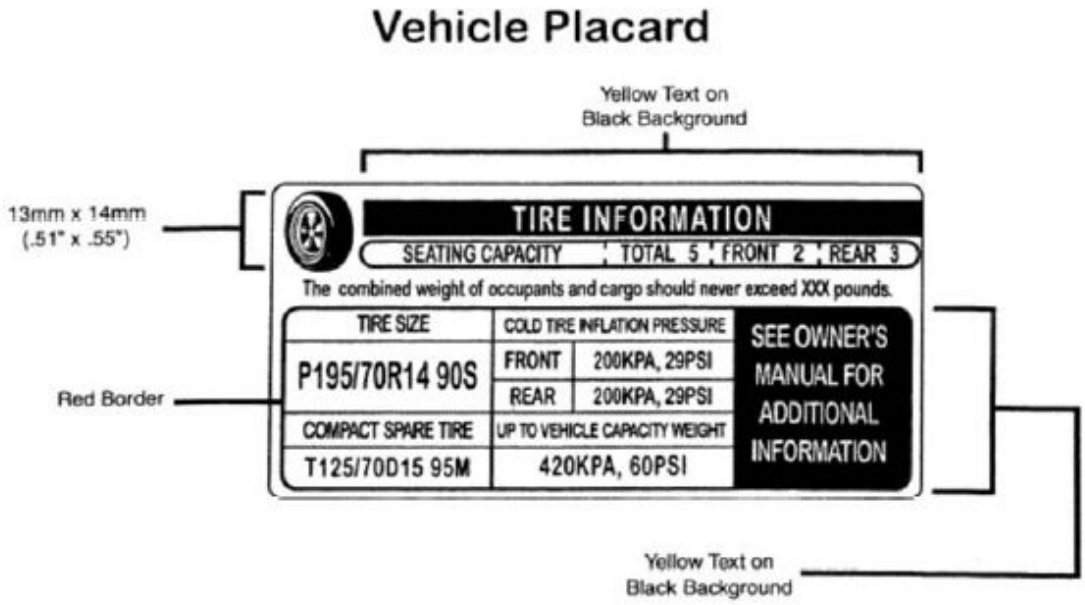

Fig. 12: Vehicle Tire Placard - Typical

TIRE ROTATION

The front tires on most vehicles tend to wear out faster than the rear tires. This is due to the effects of steering the vehicle and the weight transfer that occurs during braking. To ensure that all four tires wear evenly, it is important to rotate

them on a regular basis. Tire rotation helps maintain balanced handling because it allows all four tires to wear at the same rate. Keep in mind, as tire wear reduces tread depth, it increases the tires' response to driver inputs. Consequently, by equalizing tire wear at all four corners, dry road performance is actually enhanced. Another advantage of regular rotation is that it allows the tires to be replaced in complete sets rather than in pairs. This maintains handling continuity. It also enables drivers to take advantage of the latest in tire technology, instead of trying to match a pair of older tires.

Most manufacturers list rotation intervals in the scheduled maintenance section of the vehicle service manual and/or the owner's manual. Tire rotation patterns can also be found in these books. If this information is unavailable for a particular vehicle, rotate the tires every 5-7,000 miles following the appropriate rotation sequence shown in the illustrations. After completing a tire rotation, be sure to reset inflation pressures to the manufacturer's recommended specifications indicated on the vehicle tire placard.

To ensure that the proper amount of clamping force is applied to each fastener, follow these guidelines:

- Make sure the area around the lug holes, as well as the wheel and hub mating surfaces are clean and dry. A wire brush can be used to remove corrosion and other debris. Wipe the areas clean using a shop rag.
- Inspect the bolt holes for damage. Do not use a wheel if the bolt holes are deformed.
- Inspect the wheel studs and lug nuts or lug bolts and bolt holes (depending on the vehicle) for damage. Replace or repair any damaged or worn components.
- Always follow a star pattern when tightening lugs.

WHEEL LUG NUT TORQUE & CLAMPING FORCE

Although proper wheel lug nut torque is important, it does not guarantee that the required clamping force will be achieved. For example, excessive corrosion on the wheel and hub mating surfaces will result in improper clamping force, even when the lugs are tightened with a calibrated torque wrench. Low clamping force can also occur if the threads are dirty. This is because dirt causes interference between the mating threads. As a result, the torque wrench will register the correct reading but the clamping force will be inadequate. To improve the

chances of achieving the precise clamping force between the wheel and hub, proper torque must be applied to clean components in good condition. Specifications for wheel lug nut torque can be found in the `Tire and Wheel' section of most vehicle service manuals. When specifications are indicated as a range, adjust the torque wrench to the middle of the range to compensate for normal variations in tool calibration.

POPULAR TIRE ROTATION PATTERNS

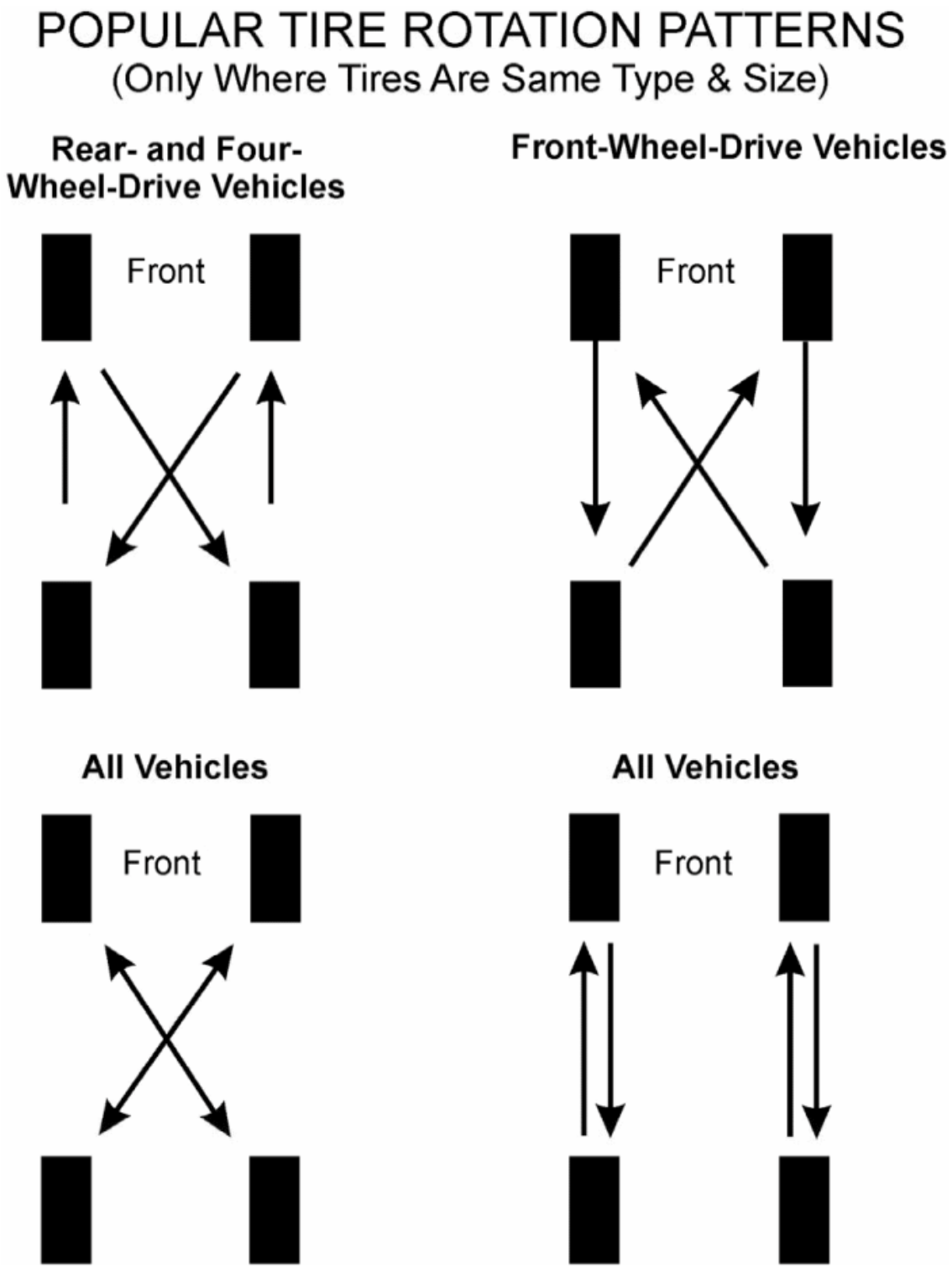

Fig. 13: Popular Tire Rotation Patterns - Without Dual Rear Wheels

Never rotate directional tires from side-to-side since this will reverse their direction of rotation. Directional tires can only be rotated from front to rear or vice versa. Directional tires are typically used on high-performance cars and can be identified by the arrows imprinted on the sidewall.

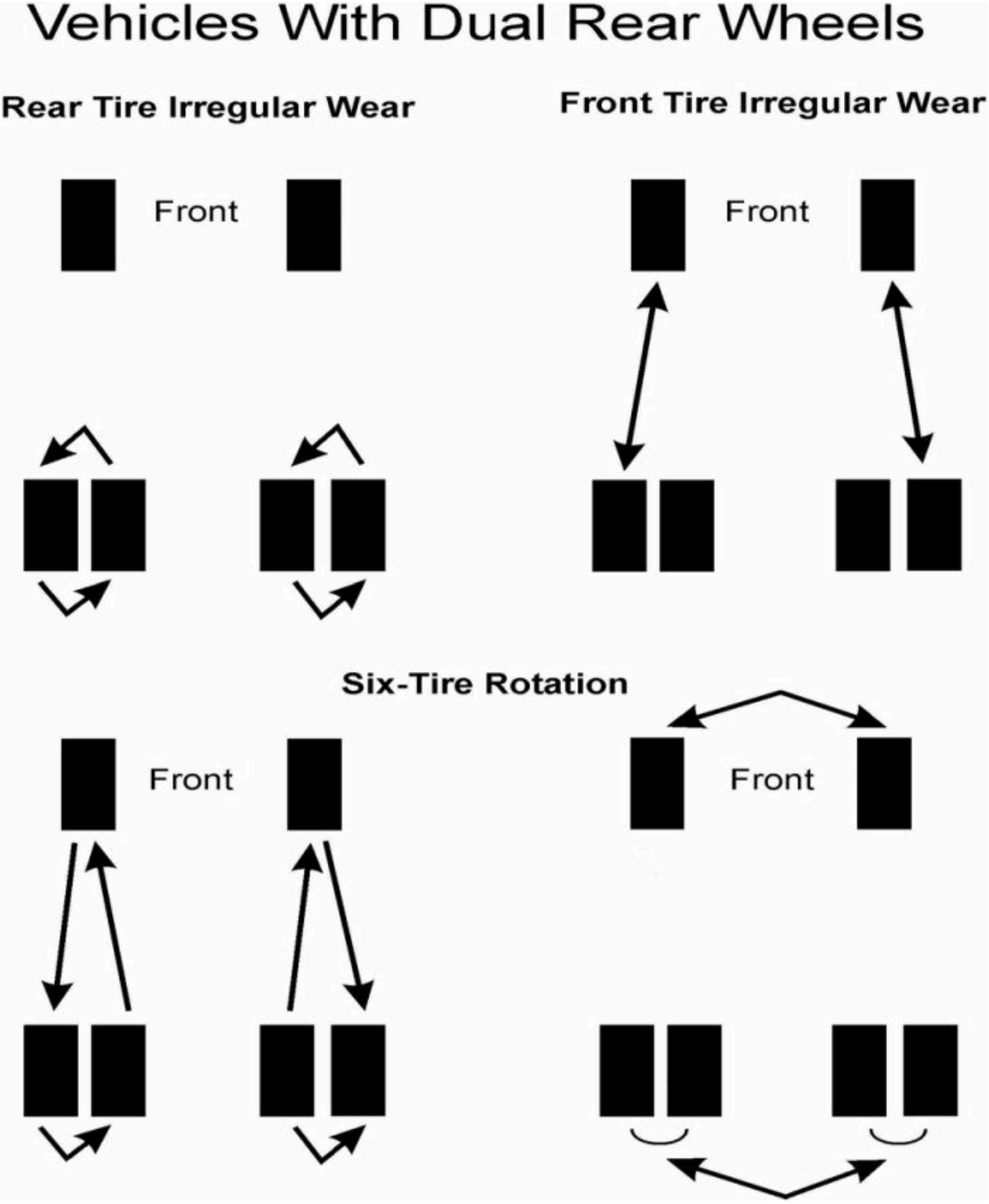

Fig. 14: Popular Tire Rotation Patterns - With Dual Rear Wheels

Some tires cannot be rotated in the manners described. Such tires include uni-directional tires and tires with asymmetric tread designs. Also, some vehicles may have different-sized tires mounted on the front and rear axles, and these different-sized tires also have rotation restrictions. Check your owner's manual or with a tire manufacturer or a tire dealer for proper recommendations for these specific cases.

WHEELS AND RIMS

The wheels on today's vehicles are made of steel, aluminum, or aluminum alloy (a combination of two or more metals). Steel wheels are the least expensive to produce, which is why they come as original equipment on many passenger cars and light trucks. The center section includes the bolt circle, or mounting holes, and is used to attach the wheel to the vehicle. The flange is the outermost lip of the rim, and is the area typically used for attaching wheel (balancing) weights. The rim is formed by rolling a strip of metal and then welding the two ends together. The interior section of the rim has a smaller diameter section called a drop center. This area provides the means for removing and installing a tire, since the bead is not designed to stretch. During removal or installation, most of the tire bead is pushed into the drop center so that the exposed portion can be pulled over the rim. The edges of the rim are flared to form the bead seats, which hold the tire and provide the airtight seal. Many rims include safety humps. These are small elevations on the inside of the bead seats. Safety humps help prevent the tire from falling into the drop center during a blowout. This allows the driver to maintain better directional control of a vehicle running on one or more deflated tires.

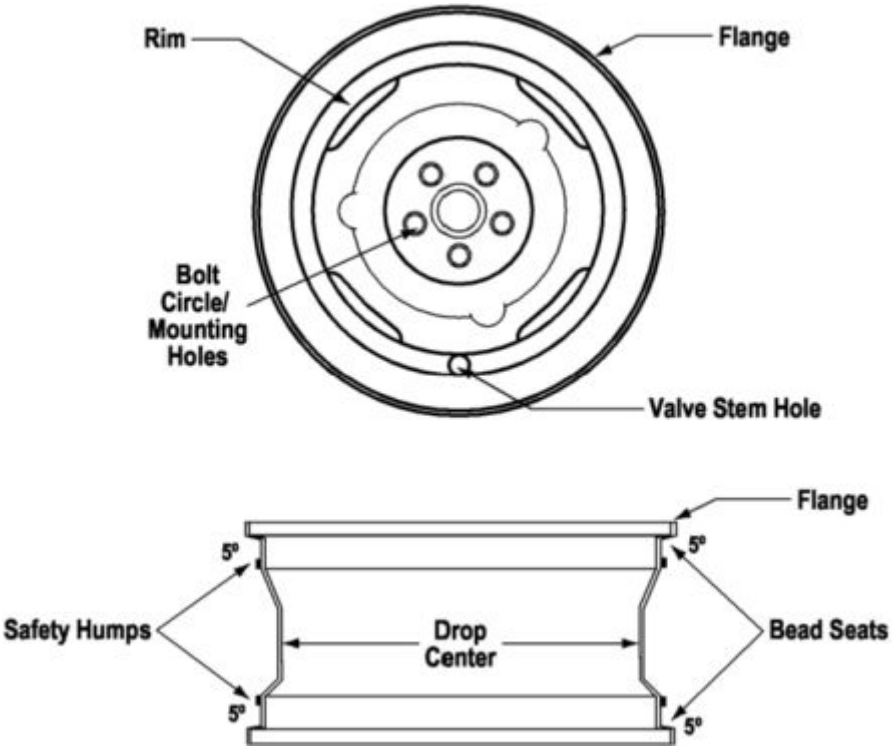

Fig. 15: Steel Wheel

WARNING: Mounting a regular tire on a high-pressure compact spare wheel is not permitted. Attempting to mount a tire of one diameter on a wheel of a

different diameter or flange type may result in serious injury or death. Mount tires only on approved rim widths. If the wheel identification stamp is not legible, or cannot be found, do not use the wheel until the size and type have been properly identified. Load, cold inflation pressure, and tire construction forces imposed on the rim/wheel must not exceed the rim/wheel manufacturer's recommendations, even if the tire is approved for a higher load or inflation. Wheels of different diameter, offset, or width cannot be mixed on the same axle. Bead seat tapers cannot be interchanged.

TIRE PRESSURE MONITORING SYSTEMS

To avoid damaging sensors when mounting and demounting tires, it is beneficial to know where the sensors are located. Sensor assemblies are commonly attached to the valve stem, with the valve stem acting as an antenna to assist with transmitting RF signals. They may also be strapped to the drop center of the wheel. If this is the case, the sensor assembly should be located in-line with the valve stem.

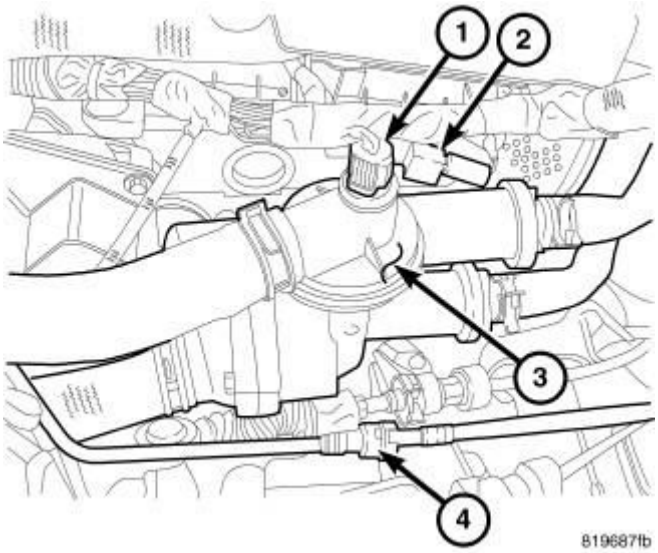

Fig. 16: Valve Stem Mounted Sensor

To avoid damaging sensors when demounting tires, do not break the bead within 45 of either side of sensor assembly locations. Be careful not to damage sensors

when mounting tires as well. Sensors are not repairable and require replacement if damaged or when their battery is completely drained. It is recommended that the sensor be carefully "dropped into the tire" prior to demounting to avoid damage.

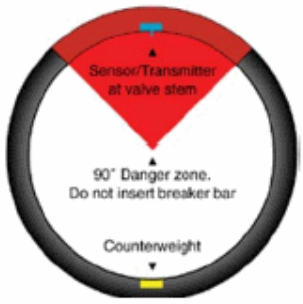

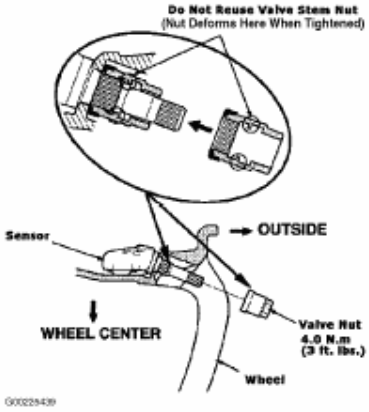

Fig. 17: Mounting Sensor

When reinstalling the sensor, it is suggested that the locknut, gasket and valve stem be replaced and torgued to the proper specification. It is also necessary to use the proper valve cap as it is also an integral part of the system.

It may be necessary to reprogram the TPMS when the tires are rotated, when a new sensor is installed, or after the vehicle loses power. This usually requires a scan tool and may involve the use of a special magnet. Refer to the vehicle service manual to properly reprogram the TPMS.

WHEELS & TIRES CHECKSHEET

MOTORIST ASSURANCE PROGRAM
STANDARDS FOR AUTOMOTIVE REPAIR

WHEELS & TIRES CHECKSHEET

Date: _____

Name: _____

Address: _____

City: _____ State: _____ Zip Code: _____

Year: _____ Make: _____ Model: _____

Mileage: _____ License: _____ VIN: _____ Eng Code: _____

Customer Interview:

_____

_____

_____

_____

_____

Reason Code Explanation

Code	Reason
	Required
A	*Part No Longer Performs Intended Purpose*
B	*Part Does Not Meet A Design Specification (Regardless Of Performance)*
C	*Part Is Missing*
	Suggested/Optional
1	*Part Is Close To The End Of Its Useful Life*
2	*To Address A Customer Need, Convenience Or Request*
3	*To Comply With Maintenance Recommended By The Vehicle's Original Equipment Manufacturer*
4	*Technician's Recommendation Based On Substantial And Informed Experience*
5	*To Comply With Maintenance Recommended By AMRA/MAP*

Your vehicle has been inspected following the Uniform Inspection and Communication Standards developed by the Motorist Assurance Program. MAP produces materials that give motorists the information and encouragement to take greater responsibility for their vehicles—through proper maintenance. We encourage participating service and repair shops to adopt the MAP Pledge of Assurance to their Customers and the Motorist Assurance Program Standards of Service. All participating service providers have agreed to subscribe to this Pledge and to adhere to the promulgated Standards of Service demonstrating to their customers that they are serious about customer satisfaction. For more information visit: www.motorist.org

DISCLAIMER: This document may be used as a guide when performing vehicle inspection. This form is not to be used as an estimate form and may not comply with Local or State Laws. The Motorist Assurance Program is not responsible for the performance and accuracy of the motor vehicle inspection performed using this document.

Fig. 18: Wheels & Tires Checksheet (1 Of 2)

WHEELS & TIRES CHECKSHEET

LEFT FRONT

Component	OK	S	R	Condition
Lugs/Studs				
Tire Size Speed Rating _____				Spec_____ Actual_____
Run Flat				Y ____ N ____
Tread Depth				_____/32nds
Tire Pressure Placard _____				Before _____ After _____
TPMS Sensor Nut Valve core / Cap Sensor				
Valve Stem				
Wheel (Condition) Wheel Size				Spec_____ Actual_____

☐Edge wear ☐Cupped ☐Cut ☐Irregular wear

RIGHT FRONT

Component	OK	S	R	Condition
Lugs/Studs				
Tire Size Speed Rating _____				Spec_____ Actual_____
Run Flat				Y ____ N ____
Tread Depth				_____/32nds
Tire Pressure Placard _____				Before _____ After _____
TPMS Sensor Nut Valve core / Cap Sensor				
Valve Stem				
Wheel (Condition) Wheel Size				Spec_____ Actual_____

☐Edge wear ☐Cupped ☐Cut ☐Irregular wear

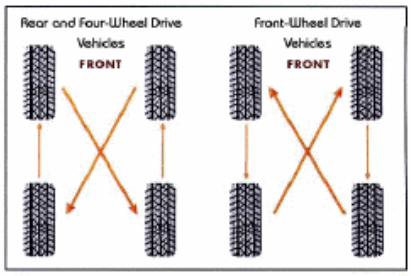

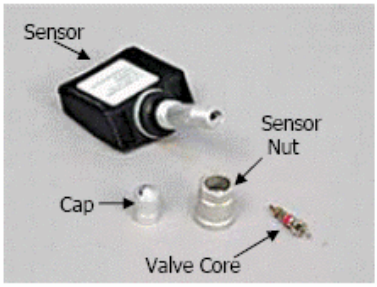

LEFT REAR

Component	OK	S	R	Condition
Lugs/Studs				
Tire Size Speed Rating _____				Spec_____ Actual_____
Run Flat				Y ____ N ____
Tread Depth				_____/32nds
Tire Pressure Placard _____				Before _____ After _____
TPMS Sensor Nut Valve core / Cap Sensor				
Valve Stem				
Wheel (Condition) Wheel Size				Spec_____ Actual_____

☐Edge wear ☐Cupped ☐Cut ☐Irregular wear

RIGHT REAR

Component	OK	S	R	Condition
Lugs/Studs				
Tire Size Speed Rating _____				Spec_____ Actual_____
Run Flat				Y ____ N ____
Tread Depth				_____/32nds
Tire Pressure Placard _____				Before _____ After _____
TPMS Sensor Nut Valve core / Cap Sensor				
Valve Stem				
Wheel (Condition) Wheel Size				Spec_____ Actual_____

☐Edge wear ☐Cupped ☐Cut ☐Irregular wear

OK	Suggested 1, 2, 3, 4, 5	Required A, B, C

Automotive Maintenance & Repair Assn © 2009

Fig. 19: Wheels & Tires Checksheet (2 Of 2)

WHEEL & TIRE - UICS

TIRE PRESSURE MONITORING SYSTEM

NOTE: A Tire Pressure Monitoring System (TPMS) is designed to

detect and alert the driver should the air pressure level in one or more of the vehicle's tires, up to all four tires, fall below the manufacturer's recommended inflation pressure or another pre-set level.

NOTE: NHTSA does not consider installation of an aftermarket or replacement tire or rim that is not compatible with the TPMS to be a "make inoperative" situation under 49 U.S.C. 30122, provided that the entity does not disable the TPMS malfunction indicator.

TIRE PRESSURE SENSORS

Condition	Code	Procedure
Attaching hardware broken	A	Require repair or replacement of hardware
Attaching hardware missing	C	Require replacement of hardware
Attaching hardware not functioning	A	Require repair or replacement of hardware
Inoperative	A	Require repair or replacement
NOTE: **Inoperative includes intermittent failure.**		
Loose	B	Require repair or replacement
Missing (Non-OE Wheel and/or Tire Applications)	2	Suggest replacement if appropriate sensor is available
Missing (OE Wheel and Tire Applications)	C	Replacement Reqiuired
Not Responding		Further inspection required
NOTE: **If sensor does not Wake Up, follow manufacturers recommended diagnostic procedure to determine cause**		

TIRES

NOTE: These guidelines do not apply to split rims. Some vehicle

manufacturers restrict replacement of tires to specific brands, types, or sizes. High pressure temporary compact spare tires should not be used with any other rims or wheels, nor should standard tires, snow tires, wheel covers, or trim rings be used with high pressure compact spare rims or wheels. Attempting to mount a tire of one diameter on a wheel of a different diameter or flange type may result in serious injury or death. Only specially trained persons should de-mount or mount tires. Explosions of tire and wheel assembly can result from improper mounting, possibly causing serious injury or death. Consult the vehicle owner's manual or vehicle placard for correct size, speed rating, designation, and cold inflation pressure of the original tires. Do not exceed the maximum load or inflation capacity of the tire specified by the Tire and Rim Association When replacing tires, it is suggested that the replacement tires match or exceed the OEM speed rating designation. If tires of different speed rating designations are mixed on the same vehicle, the tires may vary in handling characteristics. Do not mix different speed rating designations on the same axle. Do not mix radials with non-radial tires on the same axle, as this may affect vehicle handling and stability. If radial tires and bias or bias-belted ply tires are mixed on the same vehicle, the radials must be on the rear. High-pressure temporary compact spare tires are exempt from this rule. Do not mix size or type (Run Flat, all season, performance, mud and snow) of tires on the same axle. If any flammable emergency tire inflation product has been used on a tire, consult inflation product, manufacturer's product information label for tire deflation procedures to avoid possible serious injury or death. In some vehicles, changing the tire diameter from factory-equipped size can affect drive ability, as well as the performance of ABS and other vehicle systems. Consult the vehicle manufacturer's specifications.

Condition	Code	Procedure
Air pressure incorrect	B	Require repair
Bead broken	A	Require replacement
Bead leaking, caused by tire	A	Require repair or replacement
Bead wire/cord exposed	A	Require replacement
Cord or belt material exposed	A	Require replacement
Cord ply separations	A	Require replacement
Directional/asymmetrical tires mounted incorrectly	B	Require remounting and/or repositioning
Irregular tread wear, affecting performance	2	Suggest replacement
NOTE: **Determine and correct cause of irregular tire wear.**		
Load ratings less than OEM specifications	B	Require replacement
Mixed tread types (all season, performance, mud and snow) on same axle	A	Require replacement
Number of punctures exceeds manufacturer's limit	B	Require replacement
Out of balance	B	Require rebalance of tire/wheel assembly
Ply separation	A	Require replacement
Pull or lead, caused by tire	A	Require repair or replacement
Radial and bias or bias-belted ply tires on same axle	B	Require repair or replacement
Radials are on the front and not on the rear	B	Require repair or replacement
NOTE: **If radials and bias or bias-belted ply tires are on the same vehicle, the radials must be on the rear axle, except for high-pressure temporary spares.**		
Run flat damage	A	Require replacement
Shoulder cut	A	Require replacement
Shoulder puncture	A	Require replacement

Shoulder with plug	A	Require replacement
Sidewall bulge	A	Require replacement
Sidewall cut	A	Require replacement
Sidewall indentation		No service required or suggested
Sidewall puncture	A	Require replacement
Sidewall with plug	A	Require replacement
Speed rating designations different on same axle	2	Suggest rotation or replacement
Tire and wheel assembly has excessive run-out	B	Require repair or replacement of appropriate part
NOTE: **Excessive is defined as enough to contribute to performance problems. Match mounting may correct run-out. If not, require replacement of appropriate part. Refer to manufacturer's specifications.**		
Tires with excessive diameter difference on an all-wheel drive vehicle or four-wheel drive vehicle	B	Require replacement
NOTE: **Excessive diameter difference is defined as exceeding manufacturer's specifications or, if no manufacturer's specifications exist, with more than 1/4"" diameter difference.**		
Tires with excessive diameter difference on the same side of a dual-wheel application	B	Require replacement
NOTE: **Excessive diameter difference is defined as exceeding manufacturer's specifications or, if no manufacturer's specifications exist, with more than 1/4"" diameter difference.**		
Tread area puncture larger in diameter than manufacturer's specifications	B	Require replacement
Tread missing pieces (chunking), exposing cord	A	Require replacement
Tread missing pieces (chunking), not exposing cord	1	Suggest replacement
Tread separations	A	Require replacement
Tube in tubeless tire	3	Suggest removal of tube
NOTE: **Most manufacturers do not recommend tubes in tubeless tires. Inspect tire and wheel . Assembly to determine the reason for a tube in tubeless tire. Recommendation for repair or replacement**		

should be based upon condition of tires and! Or wheel listed in these guidelines.		
Weather-checking		No service required or suggested
Worn to tread wear indicators	B	Require replacement

WHEEL ALIGNMENT

NOTE: Wheel alignment is defined as the measurement, analysis, and adjustment of steering and suspension angles to conform to manufacturer specifications. These angles usually include, but are not limited to: caster, camber, toe, and thrust angle. Where these angles are not adjustable and not in specification, component replacement or correction kits may be required. Errors in set-back and steering axis inclination (SAI) are often attributable to failed or damaged components and must be corrected prior to performing an alignment. Failure to replace or correct suggested parts or service may prevent a proper alignment. Before performing an alignment check, inspect and verify the following: Tire pressure and size . Vehicle loading . Ride height . Steering and suspension parts only if the inspection reveals that all the above are within published specifications, a wheel alignment check and a proper wheel alignment, if needed, may be performed. Under no circumstances should a technician bend or heat any steering or suspension component, unless specified by the vehicle manufacturer. All measurements and specifications must be noted on the inspection report.

Condition	Code	Procedure
Beyond manufacturer's service interval	3	Suggest alignment check
Dog tracking, shown to be caused by faulty alignment	2	Suggest repair
Drift, shown to be caused by faulty alignment	A	Require alignment
Lead, shown to be caused by faulty alignment	A	Require alignment

Outside manufacturer's specifications	B	Require repair
Part has been changed, affecting alignment	A	Require alignment check
Pull, shown to be caused by faulty alignment	A	Require alignment
Steering wheel off-center	2	Suggest alignment
Tire wear, shown to be caused by faulty alignment	A	Require alignment
Wander, shown to be caused by faulty alignment	A	Require alignment

WHEEL ATTACHMENT HARDWARE

NOTE: For conditions noted below, also check condition of wheel stud holes. Proper lug nut torque is essential. Follow recommended torque specifications and tightening sequence. DO NOT lubricate threads unless specified by the vehicle manufacturer.

Condition	Code	Procedure
Bent	A	Require replacement
Broken	A	Require replacement
NOTE: **Some manufacturers require replacement of all studs on that wheel if two or more studs or nuts on the same wheel are broken or missing.**		
Locking lug nut locking groove damaged	A	Require replacement
Loose	A	Require repair or replacement of affected component
Lug nut installed backward	B	Require repair or replacement
Lug nut mating surface distorted	A	Require replacement of nut
Lug nut mating type incorrect	B	Require replacement of nut
Lug nut missing	C	Require replacement
Lug nut rounded	A	Require replacement of nut
NOTE:		

Only required if removing wheel.		
Lug nut seized	A	Require replacement of nut
NOTE: **Only required if removing wheel.**		
Stud incorrect	B	Require replacement of stud
Stud missing	C	Require replacement
Threads damaged	A	Require repair or replacement of component with damaged threads
Threads stripped	A	Require replacement of component with stripped threads

WHEELS (RIMS)

NOTE: Mounting a regular tire on a high-pressure compact spare wheel is not permitted. Attempting to mount a tire of one diameter on a wheel of a different diameter or flange type may result in serious injury or death. If the wheel identification stamp is not legible, or cannot be found, do not use the wheel until the size and type have been properly identified. Wheels of different diameter, offset, or width cannot be mixed on the same axle. Bead seat tapers cannot be interchanged.

Condition	Code	Procedure
Bead leaking, caused by wheel	A	Require repair or replacement
NOTE: **Do not attempt to correct a bent rim.**		
Bent hub mounting surface	A	Require replacement
Bent rim, causing vibration	2	Suggest replacement
NOTE: **Do not attempt to correct a bent rim.**		
Broken	A	Require replacement
Cast wheel porous, causing a leak	A	Require repair or replacement
Clip-on balance weight is incorrect type	2	Suggest replacement of

for rim flange		weight
Corrosion affecting structural integrity	A	Require replacement
Corrosion build-up on wheel mounting surface	A	Require repair
Cracked	B	Require replacement
Directional/asymmetrical wheels mounted incorrectly	B	Require remounting and/or repositioning
Load capacity less than OEM specifications	B	Require replacement
Mating surface distorted	A	Require replacement
Offset mismatched on same axle	B	Require replacement
Rivets leaking	A	Require replacement
Run-out beyond OEM specs	B	Require replacement
NOTE: **Some wire-spoke wheels may be repaired.**		
Stud holes elongated	A	Require replacement
NOTE: **Inspect wheel attaching hardware for damage.**		
Welded or brazed repair	2	Suggest replacement
Welds leaking	A	Require replacement
Wheel centering (pilot) hole incorrect	B	Require replacement

REASON CODE EXPLANATION

Code	Reason
Required	
A	Part No Longer Performs Intended Purpose
B	Part Does Not Meet A Design Specification (Regardless Of Performance)
C	Part Is Missing
Suggested/Optional	
1	Part Is Close To The End Of Its Useful Life
2	To Address A Customer Need, Convenience Or Request
3	To Comply With Maintenance Recommended By The Vehicle's Original

	Equipment Manufacturer
4	Technician's Recommendation Based On Substantial And Informed Experience
5	To Comply With Maintenance Recommended By AMRA/MAP

AUTOMOTIVE TERMINOLOGY & DEFINITIONS

ABRASIVE CLEANING

removing contaminants using a cleaning agent containing abrasive material. Cleaning that requires physical abrasion (e.g., glass bead blasting, wire brushing).

ADDITIVE

in automotive terminology, a substance added to a liquid, such as engine oil, transmission fluid, gear oil or coolant to enhance its properties.

AEROSOL

a cloud consisting of particles dispersed in a gas or gases

AFTERMARKET

broad term that applies to any change after the original purchase, such as adding equipment. When applied to AFVs, it refers to conversion devices or kits for conventional fuel vehicles.

ALIGNMENT

an adjustment to bring parts or components into a line or proper coordination.

ALTERNATOR

a belt driven device that provides electrical current for the vehicle's charging system.

ANTIFREEZE

a material such as ethylene glycol which is added to water to lower its freezing point; used in an automobile's cooling system.

AQUAPLANING

the loss of traction that results when a tire loses sufficient grip on a wet roadway, the tire actually loses contact with the road surface and rides on a thin film of water.

AUTOMATIC TRANSMISSION FLUID (ATF)

the oil that is used in an automatic transmission.

BATTERY ACID

the sulfuric acid solution used as the electrolyte in a battery.

BATTERY CELL

the part of a battery made from two dissimilar metals and an acid solution. A cell stores chemical energy to be used later as electrical energy.

BATTERY SAVER

the battery saver system is an effective way to prevent complete battery discharge when the engine is shut down. Based on the preset time-limit, the system automatically disconnects the battery load when the battery is not being charged. Depressing the reset push button will enable the battery to be reconnected for additional periods of time. Critical systems can be set up to have battery power maintained.

BATTERY

batteries are the principal energy storage devices for hybrid electric vehicles (HEVs). Desirable attributes of high-power batteries for HEV applications are high-peak and pulse- specific power, high specific energy at pulse power, a high charge acceptance to maximize regenerative braking utilization, and long calendar and cycle life. Developing methods/designs to balance the packs electrically and thermally, developing accurate techniques to determine a battery's state of charge, and developing abuse-tolerant batteries, and recyclability are additional technical challenges.

BEARING RACE

the machined surface of a bearing assembly against which the needles, balls or rollers ride. The outer race is also called a cup.

BEARING

part that supports and reduces friction between a stationary and moving part or two moving parts.

BLEEDER VALVE

a valve located on disc brake calipers, wheel cylinders and some master cylinders that allows air and fluid to be removed from the brake system.

BOILING POINT

the temperature at which a liquid turns to vapor.

BRAKE DRAG

a condition that occurs when brake pads or shoes are in continuous contact with the disc brake rotors or brake drums.

BRAKE FLUSHING

a procedure to clean the brake hydraulic system with fresh, clean fluid that should be performed whenever new parts are installed, if there is any doubt as to the grade of fluid in the system, if a glycol fluid has been mixed with a silicone-based fluid, or if the fluid has been contaminated with petroleum or mineral based fluids.

BRAKE HOSE

flexible hoses that connect the brake lines on the chassis with the calipers or wheel cylinders, or the junction block on a solid axle.

BRAKE LINE

metal tubing that carries the brake fluid from the master cylinder to other brake system components.

CHARGE

the electrical current that passes through the battery to restore it to full power; to fill, or bring up to the specific level, an A/C system with refrigerant; the required amount of refrigerant for an A/C system.

CHARGING SYSTEM

the system that supplies electrical power for vehicle operation and recharges the battery.

CHEMICAL CLEANING

relies primarily on chemical action to remove dirt, grease, scale, paint or rust.

COLD CRANKING AMPS

the amount of cranking amperes that a battery can deliver in 30 seconds at O°F (- 18°C).

COLD START

difficulty of starting an internal combustion engine in cold weather because of gasoline, which evaporates more slowly when it is cold; oil, which gets thicker in cold weather; and the chemical reactions inside the battery, which progress more slowly in cold weather.

CONDENSER

a device, similar to a radiator, in which the refrigerant loses heat and changes state from a high-pressure gas to a high pressure liquid as it dissipates heat to the surrounding air.

COOLANT

the mixture of water and antifreeze used in an engine's cooling system to maintain the engine's temperature throughout Its operating range.

COOLING FAN

a mechanically or electrically driven propeller that draws air through the radiator.

COOLING SYSTEM

the system used to remove excess heat from an engine and transfer it to the atmosphere. Includes the radiator, cooling fan, hoses, water pump, thermostat and engine coolant passages.

CORE PLUGS

plugs that fill holes in a block or head left from the casting process. Also called freeze, welsh or expansion plugs.

CORE

in automotive terminology, the main part of a heat exchanger, such as a radiator, evaporator or heater. Usually made of tubes, surrounded by cooling fins, used to transfer heat from the coolant to the air.

CORROSION INHIBITORS

additives used to inhibit corrosion (e.g., rust) in the fuel system.

CROSSFLOW RADIATOR

a radiator in which coolant enters on one side, travels through tubes, and collects on the opposite side (see downflow radiator).

DIFFERENTIAL

gear assembly that transmits power from the driveshaft to the wheels; allows the outside wheel to turn faster than the inside when cornering.

DIGITAL VOLT/OHMMETER (DVOM)

an instrument that measures volts, ohms and amps and displays the results numerically.

DIRECTIONAL TIRE

tire with a tread pattern that is designed to give maximum traction by

removing water from under the tread in such a way as to minimize the risk of aquaplaning. Directional tires must be installed to turn in a specific direction.

DOWNFLOW RADIATOR

a radiator in which coolant enters the top of the radiator and is drawn downward by gravity (see crossflow radiator).

DRIVETRAIN

all of the components that generate power and transfer it to the vehicle's wheels.

DUAL MASTER CYLINDER

a master cylinder that has one cylinder bore, but two pistons and two fluid reservoirs. Each piston applies hydraulic pressure to two wheels only. In the event one of the hydraulic circuits fails, the other provides enough braking power to stop the vehicle.

DUO-SERVO DRUM BRAKES

a drum brake design that provides increased stopping power due to the servo or self- energizing action of the brake shoes.

EGR VALVE

see 'exhaust gas recirculation (EGR) valve',

ELECTROLYTE

a material whose atoms become ionized (electrically charged) in solution. In automobiles, the battery electrolyte is a mixture of sulfuric acid and water.

ELECTRONIC AIR SUSPENSION

electronic air suspension provides the comfort of riding on air with adjustable spring rates and capability to change ride height and load-carrying ability. Under normal driving conditions, an electronic air suspension vehicle rides at the same height as a traditionally sprung vehicle.

With a heavy load, ride height is increased automatically. On current vehicles, the suspension lowers the ride height by 20 mm at highway speeds for improved aerodynamics, with about 2 percent better fuel economy. Lower ride height also can improve on-center feel of steering due to the change in suspension geometry and increased caster angle.

ENGINE COOLANT TEMPERATURE (ECT) SENSOR

a sensor which works by a negative coefficient thermistor that loses resistance as its temperature goes up (just like the intake air temperature sensor). When the computer applies its 5-volt reference signal to the sensor, this voltage is reduced through a ground circuit by an amount corresponding to the temperature of the engine coolant.

EVAPORATOR

a heat exchanger, in which low-pressure refrigerant flows and changes state, absorbing heat from the surrounding air.

EXHAUST GAS RECIRCULATION (EGR)

component in the EGR system, used to meter a controlled amount of exhaust gas into the intake air stream.

EXHAUST GAS RECIRCULATION (EGR) VALVE

an emissions control technique that reuses engine exhaust gases as part of the intake air supply to help reduce harmful emissions (especially Nox).

FAHRENHEIT

a scale of temperature measurement with the boiling point of water at 212°F. In the metric system, water's boiling point is 100°Celsius.

FAN CLUTCH

a device attached to a mechanically driven cooling fan that allows the fan to freewheel when the engine is cold or the vehicle is driven at speed.

FAN SHROUD

an enclosure that routes air through the radiator cooling fins.

FAN

a mechanically or electrically driven propeller that draws or pushes air through the radiator, condenser, heater core or evaporator core.

FILTER

a screen or filter element that can be made to filter specified sizes of particles from air or liquid.

FLOODING

a condition in which unvaporized fuel in the intake manifold and/or combustion area, prevents the engine from starting.

FOOT POUND

a unit of measurement for torque. One foot pound is the torque obtained by a force of one pound applied to a wrench handle that is 12-in. long; a unit of energy required to raise a weight of one pound, a distance of one foot.

FOUR STROKE CYCLE ENGINE

an engine, either gasoline or diesel that uses four strokes: intake, compression, power and exhaust. A firing impulse occurs every two turns of the crankshaft. When this engine is a gasoline engine it is also called an Otto cycle engine after its inventor. A diesel engine is called a Diesel cycle engine for the same reason.

FREEZE PLUG

another name for core plug.

FRONT WHEEL DRIVE

the entire drivetrain is located at the front of and drives the front wheels of the vehicle.

FUSE

a metal circuit protection device that melts when there is a circuit overload or short.

FUSIBLE LINK

a smaller gauge wire that is included in an electrical circuit to provide circuit protection. The smaller gauge wire will melt when the circuit is overloaded.

GASKET

a material such as artificial rubber, cork, or steel used to seal between parts that would otherwise leak fuel, coolant, lubricants or combustion gases.

GENERATOR

a device that converts mechanical energy into electrical energy; SAE J1930 nomenclature for an alternator; a generating device that uses diode rectifiers to convert ac to dc.

HALFSHAFT

transfers power from the transaxle to the front wheels on a front-wheel drive vehicle. Also used on some vehicles with rear-wheel drive and independent rear suspension to transfer power from the differential to the rear wheels. Consists of a stub shaft that is splined into the differential side gear, another stub shaft that is splined into the wheel hub, an interconnecting shaft, and two CV-joints, which connect the interconnecting shaft to the stub shafts.

HEATER CORE

a radiator-like device used to heat the inside of a vehicle. Hot coolant is pumped through it by the water pump, and heat from the coolant moves from the heater core to the passenger compartment as the blower fan forces air through it.

HUB

mounting point for the wheelan an axle or spindle; the part of the synchronizer assembly that is splined to the transmission shaft; the center part of a wheel, gear, etc., that rides on a shaft.

HYDRAULIC PRESSURE

pressure exerted through a liquid.

HYDROMETER

an instrument used to measure the specific gravity of a solution.

IMPEDANCE

the total resistance of an electrical device measured in ohms.

INCH POUND

one twelfth of a foot pound.

INDEPENDENT SUSPENSION

a suspension in which each wheel can travel up and down without directly affecting the position of the opposite wheel.

INNER BEARING RACE

inner part of a ball or roller bearing that provides a surface for the balls or rollers to rotate.

INTEGRATED CIRCUIT

an electrical circuit containing many interconnected amplifying devices and circuit elements formed on a single body or chip of semiconductor material; diodes, transistors and other electronic components mounted on semiconductor material and able to perform numerous functions.

INTERCOOLER

a component on some turbocharged engines used to cool the compressed intake air.

INTERNAL COMBUSTION ENGINE (ICE)

engine that converts the energy contained in the fuel inside the engine into motion. Combustion engines use the pressure created by the expansion of

the gases to do mechanical work.

JAM NUT

a locknut.

KEEP-ALIVE MEMORY

a series of vehicle battery-powered memory locations in the microcomputer that store information on input failure, identified in normal operations for use in diagnostic routines; adapts some calibration parameters to compensate for changes in the vehicle system.

LEAF SPRING

a suspension spring consisting of a single flat plate made of steel or composite material or several steel plates bundled together.

LIGHT-DUTY VEHICLE

passenger cars and trucks with a gross vehicle weight rating of 8,500 or less.

LIMITED SLIP DIFFERENTIAL

a type of differential that uses clutches to supply a major portion of the drive torque to the wheel that has better traction when one wheel is slipping,

LITER (L)

a metric measurement used to calculate the volume displacement of an engine. One liter is equal to 1,000 cubic centimeters or 61 cubic inches.

LUBRICATION

the process of introducing a friction reducing substance between moving parts to reduce wear.

MACPHERSON STRUT

the principal device in the suspension of the same name, in which the spring, shock absorber and sometimes the steering knuckle are combined in a single unit.

MALFUNCTION INDICATOR LIGHT (MIL)

also known as the CHECK ENGINE or SERVICE ENGINE SOON light on many vehicles. The MIL comes on when the ignition is first turned on (to check the bulb) and then goes out once the engine is started, unless a trouble code is stored in the computer. If the MIL is on when the vehicle is running, there has been a malfunction on one of the sensor or actuator circuits monitored by the computer, and a diagnosis will have to be made by retrieving the code.

MASTER CYLINDER

the primary fluid pressurizing device in some hydraulic systems. In automotive use, it is found in the brake and hydraulic clutch systems and is pedal-activated, either directly or through a vacuum assist unit.

MILLIMETER

the base of metric size measurement. One millimeter equals 0.039370-in. One inch is equal to 25.4 m m.

MULTIVISCOSITY OIL

chemically-modified oil that has been tested for viscosity at cold and hot temperatures.

OFF-ROAD

any non-stationary device, powered by an internal combustion engine or motor, used primarily off the highways to propel, move, or draw persons or property, and used in any of the following applications: marine vessels, construction/farm equipment, locomotives, utility and lawn and garden equipment, off-road motorcycles, and off-highway vehicles.

OHM

a unit of electrical resistance of a circuit in which an electromotive force of one volt maintains a current of one ampere, named after German physicist Georg Ohm.

OHMMETER

an instrument that measures electrical resistance in ohms.

OHM'S LAW

a basic law of electricity expressing the relationship between current, resistance and voltage in any electrical circuit. Ohm's law states that the voltage in a circuit is equal to the current multiplied by the resistance.

OIL COOLER

device used to remove heat from the engine or transmission oil. There are oil-to-air coolers and oil coolers that are incorporated into the vehicle's cooling system.

OIL PAN

the part that encloses the crankcase at the lower end of the block.

OIL PRESSURE

the pressure that results from resistance to flow from the oil pump. As the pump turns faster, it produces more flow. A relief valve limits the amount of pressure it can produce.

ON-CAR BALANCING

the practice of spinning a wheel on the car to balance the wheel and all other rotational components together.

ORIGINAL EQUIPMENT MANUFACTURER (OEM)

the original manufacturer of a vehicle or engine.

OSCILLOSCOPE

an instrument that displays electrical activity in the form of line patterns on a screen.

OUTER BEARING RACE

outer part of a bailor roller bearing that provides a surface for the balls or rollers to rotate. Can be integral with the bearing or a separate part.

OXIDATION

the process of combining with oxygen, resulting in rusting or burning. Rust is slow oxidation; fire is rapid oxidation.

PAG

polyalkyline glycol oil (lubricant) used with A/C systems containing R-134a refrigerant.

PARALLEL CIRCUIT

a circuit with more than one path for the current to follow.

PARKING BRAKE

a system that applies the brakes mechanically through a series of linkages and cables. Depending on the vehicle, the parking brake system will either be actuated using a foot pedal or a hand-operated lever.

PASCAL'S LAW

the law of physics stating that liquids are noncompressible, and that a force applied to the top of a liquid in a closed container is exerted equally in all directions.

PCV SYSTEM

see 'positive crankcase ventilation system'.

PCV VALVE

a part of the positive crankcase ventilation system. Meters crankcase vapors into the intake manifold.

PLAY

the relative movement between or among parts.

POLARITY

the condition of being positive or negative relative to a reference point or

object; the particular state (positive or negative) with reference to the two magnetic poles.

POSITIVE CRANKCASE VENTILATION (PCV) SYSTEM

a system that controls crankcase emissions by using a valve to meter crankcase vapors nto the intake manifold.

POWER BRAKES

a system that uses vacuum or hydraulic pressure to assist the driver with brake application.

PSI

measurement of pressure in pounds per square inch.

RADIAL RUNOUT

the out-of-roundness ot a wheel or tire.

RADIATOR CAP

a device that seals the radiator and maintains a set pressure in the cooling system.

RADIATOR

the part of the cooling system that acts as a heat exchanger, transferring heat to atmosphere. It consists of a core and holding tanks connected to the cooling system by hoses.

REAR WHEEL DRIVE

system where the driveline drives the rear wheels of the vehicle. Most often the engine is located in the front of the vehicle and a transmission and drive shaff connect to a drive axle, however there are also systems where the entire drive line is located toward the rear of the vehicle.

REAR WHEEL STEERING

a system used on a some vehicles to change the toe of the rear wheels to

either steepen a sharp turn or enhance cornering on a shallower, faster one.

RESISTOR

an electrical device installed in a circuit to lower voltage and current flow.

RIDE HEIGHT

the dimension between a fixed point on the vehicle and the pavement. The fixed point varies according to vehicle and manufacturer. Also called vehicle height.

RUNOUT

wobble or deflection beyond a rotating part's normal plane of movement.

SCAN TOOL

microprocessor designed to communicate with a vehicle's on-board computer system to perform diagnostic and troubleshooting functions.

SEMICONDUCTOR

a material that is neither a good conductor of electricity nor a good insulator.

SENDING UNIT

a mechanical, electrical, hydraulic or electromechanical device which transmits information to a gauge or other receiving unit.

SERIES CIRCUIT

a circuit that has only one path for current to follow.

SERIES-PARALLEL CIRCUIT

a circuit that combines series and parallel circuits.

SERVO

a device, such as an electric motor or hydraulic piston, that is controlled by an amplified signal from a low power command device.

SHOCK ABSORBER

a device used to dampen the oscillation of the suspension caused by irregularities in the road surface.

SHORT CIRCUIT

a condition that occurs in an electrical circuit when the current bypasses the intended load and takes a path with little or no resistance, such as another circuit or ground.

SPECIFIC GRAVITY

the ratio of the weight or mass of the given volume of a substance to that of an equal volume of another substance, e.g. - water for liquids and solids; air or hydrogen for gases, are used as standards.

SPONGINESS

the feel of a soft or mushy brake pedal usually caused by trapped air in the hydraulic system.

SPRUNG WEIGHT

the weight of all the vehicle components that are supported by the springs; see 'unsprung weight'.

STABILIZER BAR

a torsion-bar spring connecting the suspension on either side of the vehicle. When a vehicle rolls to the side in a turn, the suspension at the outside wheel compresses and the suspension at the inside wheel extends. The stabilizer bar that connects them twists to apply a counteracting force to hold the vehicle closer to level. Also called an anti-roll bar or sway bar.

STARTER

the electric motor that is used to start an engine.

STUD

a fastener that has screw threads at both ends.

TECHNICAL SERVICE BULLETIN (TSB)

information published by vehicle manufacturers that describe updated service procedures and service procedures that should be used to handle vehicle defects.

TENSIONER

a device used with a timing chain or belt to maintain its tension.

THERMOSTAT

a device installed in the cooling system that allows the engine to come to operating temperature quickly and then maintain a minimum operating temperature.

TIMING BELT

a toothed reinforced belt used to drive the camshaft from a sprocket on the crankshaft.

TOLERANCE

the difference between the allowable maximum and minimum dimensions of a mechanical part; the basis for determining the accuracy of a fitting.

TORQUE SEQUENCE

a specified order in which a component's mounting bolts should be tightened

TORQUE WRENCH

a breaker bar or ratchet wrench with an indicator that measure the twisting effort applied to a fastener during tightening.

TORQUE

twisting effort on a shaft or bolt.

TWIN I-BEAM SUSPENSION

a type of independent front suspension and used on light trucks and vans. It consists of two I-beams supported by coil springs, and the steering knuckles/spindles, which are connected by king pins or ball joints. The inner end of the axle connects to the vehicle frame through a rubber bushing. A radius arm also connects to the frame through rubber bushings to control wheelbase and caster.

UNIVERSAL JOINT (U-JOINT)

a joint that allows the drives haft to transmit torque at different angles as the suspension moves up and down.

UNSPRUNG WEIGHT

the components of a vehicle that rest directly on the road surface without being supported by the suspension springs.

VACUUM

a pressure lower than atmospheric.

VOLT

unit of electromotive force. One volt of electromotive force applied steadily to a conductor of one-ohm resistance produces a current of one ampere.

VOLTAGE DROP

voltage lost by the passage of electrical current through resistance.

VOLTMETER

an instrument used to measure voltage in a circuit.

WATER PUMP

a device used to circulate coolant through the engine.

WHEEL ALIGNMENT

the adjustment of suspension and steering components to optimize steering control and minimize tire wear.

WHEEL BALANCE

the condition in which a wheel/tire assembly has equal weight around its center, preventing vibration at high speeds. Wheel balance can be static, such as on a bubble balancer, or dynamic, such as with a spin balancer.

WHEEL WEIGHTS

small weights, usually made of lead, attached either mechanically or by adhesive to a wheel/tire assembly to correct its balance.

UNIFORM INSPECTION & COMMUNICATION STANDARDS 2010 - 2011

Steering & Suspension Systems

STEERING & SUSPENSION SYSTEMS

These materials are confidential and are not to be disclosed to, or utilized by, any individual or entity other than participants of the Motorist Assurance Program (MAP).

The Automotive Maintenance and Repair Association (AMRA) and MAP do not warrant these materials or guarantee their accuracy, and AMRA and MAP assume no liability for errors.

MAP STANDARDS OF SERVICE

MAP developed standards of service for shops to follow in working with customers. Written from the point of view of customers, and for the use of maintenance and repair shops, the standards expand on the ideas and promises established in MAP's Pledge to Customer

I. Our recommendations are based upon the following definitions.

System Failure - Parts/system indicated are out of manufacturers' specifications, have failed or are unable to perform their normal function as intended or designed by the manufacturers. Service/replacement is required.

Preventive/Scheduled Maintenance - Parts/system are scheduled for service/ replacement per industry standards or are near the end of their useful life and repair/ replacement is recommended in advance of parts/system failure. Service/replacement is suggested.

Improved System Performance - Parts/ system indicated are recommended for repair/ replacement to enhance/improve the vehicle's ability to perform as intended or designed by the manufacturer, or as requested by the customer. Service/replacement is suggested.

II. Training/Criteria Our personnel have acquired auto repair expertise through formal education or work experience. Where appropriate, personnel are moving toward certification (e.g. vehicle manufacturer, ASE, etc.) for the services performed. Continuing education will be supported by all MAP participants.

III. Appropriate Company Approved Inspection

We will perform an appropriate inspection based on MAP Uniform Inspection & Communication Standards.

IV. Written Estimates

Written estimates based on our inspection, in compliance with state and local regulations, will include parts (dollar amount), labor (dollar amount), and the total estimate.

V. Work Authorization

No work will be performed without the customer's prior approval.

VI. Limited Warranty

A minimum limited warranty will be offered of 90 days or 4,000 miles, whichever comes first, covering parts and labor.

VII. Returned Parts

All customers will be entitled to the return of old parts, or if they choose, they may examine the parts prior to leaving the store. Where failed parts are required to be returned to the manufacturer in order to honor the warranty, the customer will be allowed to examine the parts.

VIII. Classification of Parts

Replaced parts will be identified as new, remanufactured, rebuilt or used. MAP participants will inform the customer and indicate on the estimate and invoice whether a part is new, remanufactured, rebuilt or used.

THE MAP PROCESS - OVERVIEW

Repair Association, Inc. (AMRA). Participation in the Motorist Assurance Program comes from retailers, suppliers, independent repair facilities, vehicle manufacturers and industry associations.

Our organization's mission is to strengthen the relationship between the consumer and the auto repair industry. We produce materials that give motorists

the information and encouragement to take greater responsibility for their vehicles-through proper, manufacturer / recommended maintenance. We encourage participating service and repair shops (including franchisees and dealers) to adopt (1) a Pledge of Assurance to their Customers and (2) the Motorist Assurance Program Standards of Service. All participating service providers have agreed to subscribe to this Pledge and to adhere to the promulgated Standards of Service demonstrating to their customers that they are serious about customer satisfaction.

These Standards of Service require that an inspection of the vehicle's (problem) system be made and the results communicated to the customer according to industry standards. Given that the industry did not have such standards, the Motorist Assurance Program successfully promulgated industry inspection communication standards in 1994-95 for the following systems: Exhaust, Brakes, ABS, Steering and Suspension, Engine Maintenance and Performance, HVAC, Electrical Systems, and Drive Train and Transmissions. Further, revisions to all of these inspection communication standards are continually re-published. Participating shops utilize these Uniform Inspection & Communication Standards as part of the inspection process and for communicating their findings to their customers.

The Motorist Assurance Program continues to work cooperatively and proactively with government agencies and consumer groups toward solutions that both benefit the customer and are mutually acceptable to both regulators and industry. We maintain the belief that industry must retain control over how we conduct our business, and we must be viewed as part of the solution and not part of the problem. Meetings with state and other government officials (and their representatives), concerned with auto repair and/or consumer protection, are conducted. Feedback from these sessions is brought back to the association, and the program adjusted as needed.

We welcome you to join us as we continue our outreach... with your support, both the automotive repair industry and your customers will reap the benefits. Please visit MAP at our Internet site www.motorist.org or contact us at:

201 Park Washington Court

Falls Church, Virginia 22046

Tel: (703) 532-2027 * Fax: (202) 318-0378

THE MAP PROCESS - OVERVIEW OF SERVICE REQUIREMENTS AND SUGGESTIONS

It is MAP policy that all exhaust, brake, steering, suspension, wheel alignment, drive-train, engine performance and maintenance, and heating, ventilation and air conditioning, and electrical services be offered and performed under the standards and procedures specified in these sections.

Before any service is performed on a vehicle, an inspection of the appropriate system must be performed. The results of this inspection must be explained to the customer and documented on an inspection form. The condition of the vehicle and its components will indicate what services/part replacements may be "Required" or "Suggested". In addition, suggestions may be made to satisfy the requests expressed by the customer.

When a component is suggested or required to be repaired or replaced, the decision to repair or replace must be made in the customer's best interest, and at his or her choice given the options available.

This section lists the various parts and conditions that indicate a required or suggested service or part replacement. Although this list is extensive, it is not fully inclusive. In addition to this list, a technician may make a suggestion. However, any suggestions must be based on substantial and informed experience or the vehicle manufacturer's recommended service interval and must be documented. However, any suggestions must be documented and must be based on substantial and informed experience or the vehicle manufacturer's recommended service interval. NOTE: Vehicle manufacturer service intervals are often categorized as either Normal or Severe. Frequently, motorists are unaware that their driving patterns and habits meet the criteria for following Severe Service schedules. Severe Service is generally defined as, but not limited to one or more of the following conditions: Driving in stop-and-go traffic; frequent short trips; high-speed driving; extreme temperatures; towing or hauling.

Some conditions indicate that service or part replacement is required because the part in question is no longer providing the function for which it is intended, does not meet a vehicle manufacturer's design specification or is missing.

- **Example:** An exhaust pipe has corroded severely and has a hole in it through which exhaust gases are leaking. Replacement of the exhaust pipe in this case is required due to functional failure.

- **Example:** A brake rotor has been worn to the point where it measures less than the vehicle manufacturer's discard specifications. Replacement of the rotor is required because it does not meet design specifications.

Some conditions indicate that a service or part replacement is suggested because the part is close to the end of its useful life or addresses a customer's need, convenience or request. If a customer's vehicle has one of these conditions, the procedure may be only to suggest service.

- **Example:** An exhaust pipe is rusted, corroded or weak, but no leaks are present. In this case, the exhaust pipe has not failed. However, there is evidence that the pipe may need replacement in the near future. Replacement of the pipe may be suggested for the customer's convenience in avoiding a future problem.
- **Example:** The customer desires improved ride and/or handling, but the vehicle's shocks or struts have not failed. In this case, replacement may be suggested to satisfy the customer's wishes. In this case, replacement of the shocks or struts may not be sold as a requirement.

A customer, of course, has the choice of whether or not a shop will service his or her vehicle. He or she may decide not to follow some of your suggestions. When a repair is required, a MAP shop must refuse partial service on that system if, in the judgment of the service provider, proceeding with the work could create or continue an unsafe condition. When a procedure states that required or suggested repair or replacement is recommended, the customer must be informed of the generally acceptable repair/replacement options whether or not performed by the shop.

The following reasons may be used for required and suggested services. These codes are shown in the "Code" column of the MAP Uniform Inspection & Communications Standards that follow:

Reasons to Require Repair or Replacement	Reasons to Suggest Repair or Replacement
A. Part no longer performs intended purpose B. Part does not meet a design specification (regardless of	1. Part is close to the end of its useful life B - Part does not meet a design specification (regardless of performance) (just above

performance) C. Part is missing	discard specifications, or weak; failure likely to occur soon, etc.) 2. To address a customer need, convenience, or request (to stiffen ride, enhance performance, eliminate noise, etc.) 3. To comply with maintenance recommended by the vehicle's Original Equipment Manufacturer (OEM) 4. Technician's recommendation based on substantial and informed experience 5. To comply with maintenance recommended by AMRA / MAP
NOTE: **When a repair is required, the shop must refuse partial service to the system in question, if the repair creates or continues an unsafe condition.**	**NOTE:** **Suggested services are *always* optional. When presenting suggested repairs to the customer, you must present the facts, allowing the customer to draw their own conclusions and make an informed decision about how to proceed.**

WHEEL AND TIRE

Steering and suspension are complex systems made up of a variety of interdependent components. For proper vehicle handling, ride, and tire wear, a thorough inspection is required whenever suspension work is being performed. Conditions listed assume that the problem has been isolated to the specific component by proper testing procedures.

NOTE: When replacing steering and/or suspension components that may affect an alignment angle, you are required to check and adjust alignment as needed. Refer to the OEM specifications.

CAUTION: Do not use ride height altering or load compensating components, such as variable rate

springs and coil over shocks, on vehicles with height or load sensing proportioning valve-equipped braking systems, unless these components are original equipment.

NOTE: Depending on the air suspension design, there are some aftermarket products available to eliminate the air ride suspension on certain vehicles. If the system has been eliminated with one of these products, then no service is suggested or required.

WARNING: These guidelines do not apply to split rims.

TIRES

When replacing tires, it is suggested that the replacement tires match or exceed the OEM speed rating designation. If tires of different speed rating designations are mixed on the same vehicle, the tires may vary in handling characteristics. Do not mix different speed rating designations on the same axle.

Consult the vehicle owner's manual or vehicle placard for correct tire size, service description, load index, speed rating and cold inflation pressure of the original tires. Do not exceed the maximum load or inflation capacity of the tire specified by the Tire and Rim Association (www.us-tra.org)

When replacing fewer than ALL tires on a vehicle, follow the vehicle manufacturer's recommendations as to the placement of the new tires. If it is not possible to follow the vehicle manufacturer's tire replacement recommendations, remember to replace tires on the same axle with the same size, construction, speed rating, and, if possible, similar tread pattern.

Do not mix radials with non-radial tires on the same axle, as this may affect vehicle handling and stability. If radial tires and non-radial tires are mixed on the same vehicle, the radials must be on the rear. If radial and non-radial tires are used on a vehicle equipped with dual rear tires, radial tires may be used on either axle. High-pressure temporary compact spare tires are exempt from this rule.

Do not mix size or type (all season, performance, mud and snow) of tires on the same axle. When replacing only two tires on front or rear drive vehicles, follow

the vehicle manufacturer's recommendations concerning placement. If it is not possible to follow OE recommendations, it is preferable to place the two new tires on the rear for greater stability, greater adhesion affecting steering -- on other than dry pavement -- and overall safety, regardless of whether the vehicle is front or rear wheel drive.

It is particularly important to match all tire sizes and constructions on 4-wheel (4x4) and all-wheel (AWD) drive vehicles unless otherwise specified by vehicle manufacturer. Ideally, all four tires should be replaced at the same time. Some vehicle manufacturers restrict replacement of tires to specific brands, types, or sizes.

MOUNTING TIRES

Only specially trained persons should de-mount or mount tires. Explosions of tire and wheel assembly can result from improper mounting, possibly causing serious injury or death. High pressure temporary compact spare tires should not be used with any other rims or wheels, nor should standard tires, snow tires, wheel covers, or trim rings be used with high pressure compact spare rims or wheels.

Mount tires only on same or approved rim widths.

Attempting to mount a tire of one diameter on a wheel of a different diameter , bead taper or flange type may result in serious injury or death.

If any flammable emergency tire inflation product has been used in a tire, consult inflation product manufacturer's product information label for tire deflation procedures to avoid possible serious injury or death.

VEHICLE TIRE PLACARD

Since 1968, cars and light trucks sold in the United States have been required to have a tire information sticker, called a vehicle tire placard. The vehicle tire placard indicates the size of the original equipment tires (including the spare), cold inflation pressure for the tires on both axles as well as the spare, and load index or range. Depending on the vehicle, the vehicle tire placard will either be located on the edge of any door, the doorpost, glove box, fuel door or inside trunk lid. If the tire placard is missing, consult the owner's manual, vehicle manufacturer, or tire manufacturer regarding applicable tire information.

Always refer to the vehicle manufacturer's recommendations before replacing

tires. Tires should always be replaced with the same size designation, or approved options, as recommended. Never choose a smaller size with less load carrying capacity than the size on the tire placard. (Some vehicle manufacturers require different-sized tires for either the front or rear axles.)

NOTE: It is not always possible to select a replacement tire with exactly the same size as shown on the placard. Consult with a vehicle or tire manufacturer for replacement recommendations.

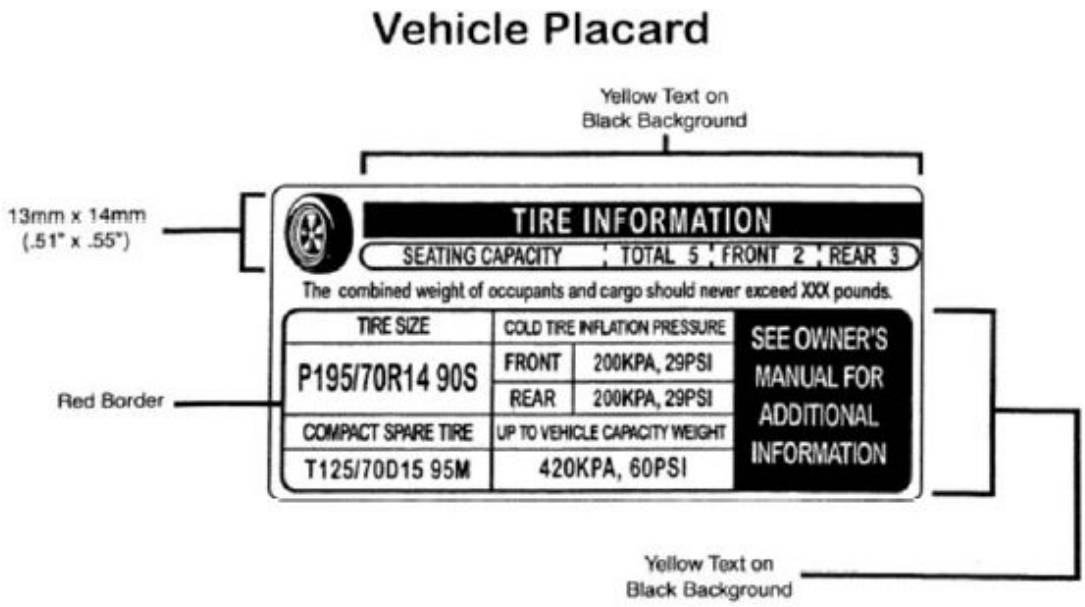

Fig. 1: Vehicle Tire Placard - Typical

TIRE ROTATION

The front tires on most vehicles tend to wear out faster than the rear tires. This is due to the effects of steering the vehicle and the weight transfer that occurs during braking. To ensure that all four tires wear evenly, it is important to rotate them on a regular basis. Tire rotation helps maintain balanced handling because it allows all four tires to wear at the same rate. Keep in mind, as tire wear reduces tread depth, it increases the tires' response to driver inputs. Consequently, by equalizing tire wear at all four corners, dry road performance is actually enhanced. Another advantage of regular rotation is that it allows the tires to be replaced in complete sets rather than in pairs. This maintains handling continuity. It also enables drivers to take advantage of the latest in tire technology, instead of trying to match a pair of older tires.

Most manufacturers list rotation intervals in the scheduled maintenance section of the vehicle service manual and/or the owner's manual. Tire rotation patterns can also be found in these books. If this information is unavailable for a particular vehicle, rotate the tires every 5-7,000 miles following the appropriate rotation sequence shown in the illustrations. After completing a tire rotation, be sure to reset inflation pressures to the manufacturer's recommended specifications indicated on the vehicle tire placard.

To ensure that the proper amount of clamping force is applied to each fastener, follow these guidelines:

- Make sure the area around the lug holes, as well as the wheel and hub mating surfaces are clean and dry. A wire brush can be used to remove corrosion and other debris. Wipe the areas clean using a shop rag.
- Inspect the bolt holes for damage. Do not use a wheel if the bolt holes are deformed.
- Inspect the wheel studs and lug nuts or lug bolts and bolt holes (depending on the vehicle) for damage. Replace or repair any damaged or worn components.
- Always follow a star pattern when tightening lugs.

WHEEL LUG NUT TORQUE & CLAMPING FORCE

Although proper wheel lug nut torque is important, it does not guarantee that the required clamping force will be achieved. For example, excessive corrosion on the wheel and hub mating surfaces will result in improper clamping force, even when the lugs are tightened with a calibrated torque wrench. Low clamping force can also occur if the threads are dirty. This is because dirt causes interference between the mating threads. As a result, the torque wrench will register the correct reading but the clamping force will be inadequate. To improve the chances of achieving the precise clamping force between the wheel and hub, proper torque must be applied to clean components in good condition. Specifications for wheel lug nut torque can be found in the `Tire and Wheel' section of most vehicle service manuals. When specifications are indicated as a range, adjust the torque wrench to the middle of the range to compensate for normal variations in tool calibration.

POPULAR TIRE ROTATION PATTERNS

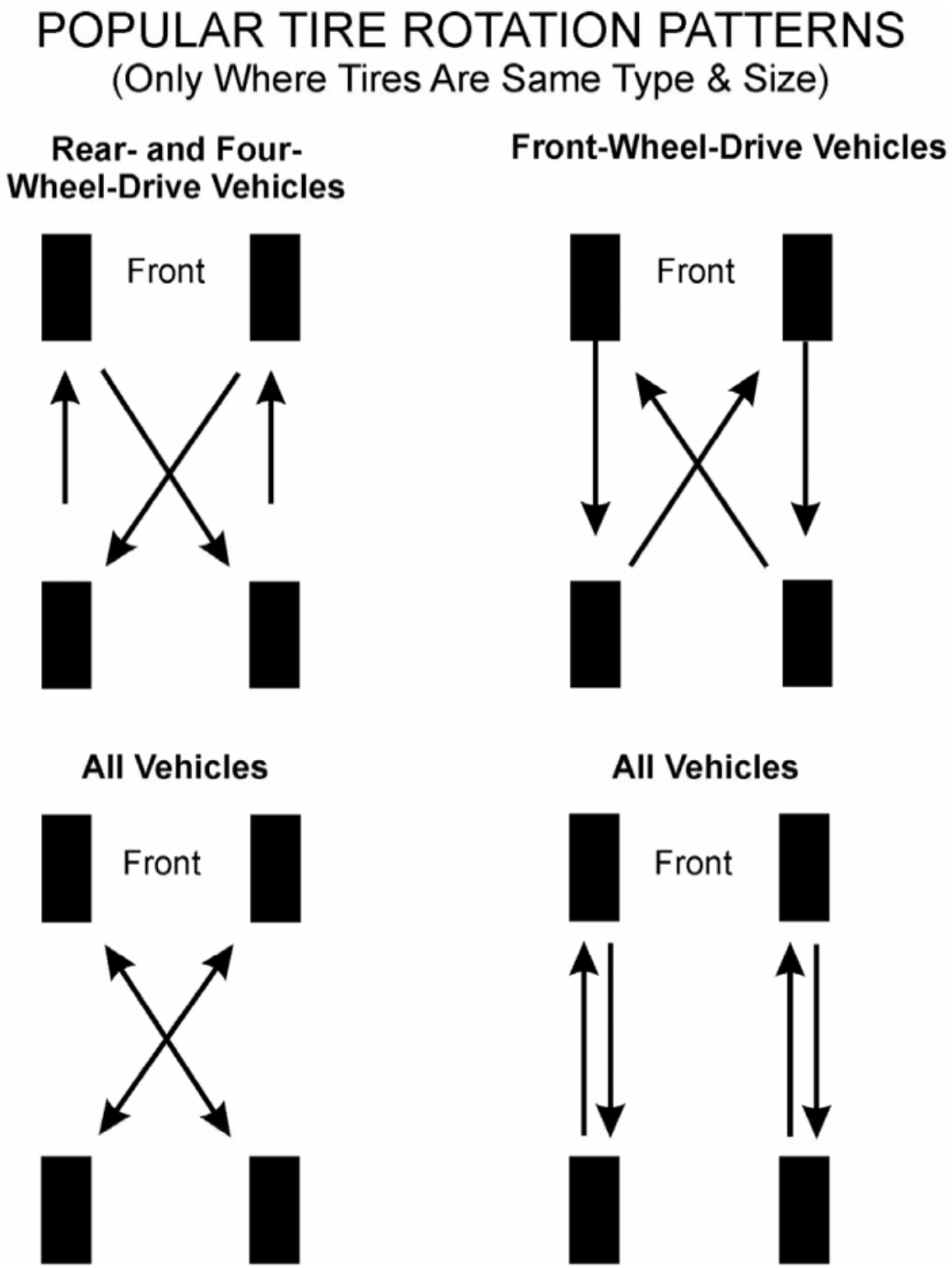

Fig. 2: Popular Tire Rotation Patterns - Without Dual Rear Wheels

Never rotate directional tires from side-to-side since this will reverse their direction of rotation. Directional tires can only be rotated from front to rear or vice versa. Directional tires are typically used on high-performance cars and can be identified by the arrows imprinted on the sidewall.

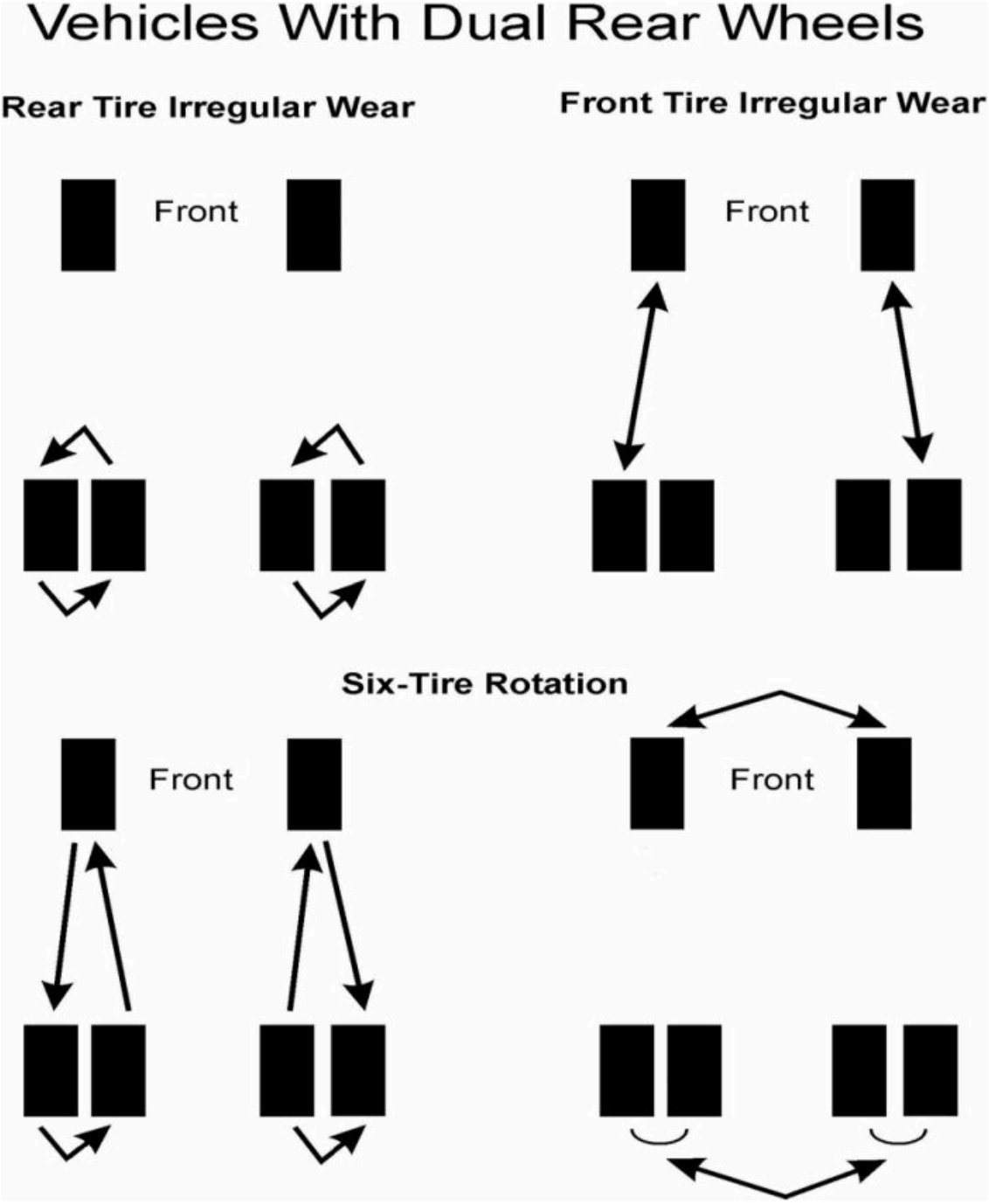

Fig. 3: Popular Tire Rotation Patterns - With Dual Rear Wheels

Some tires cannot be rotated in the manners described. Such tires include uni-directional tires and tires with asymmetric tread designs. Also, some vehicles may have different-sized tires mounted on the front and rear axles, and these different-sized tires also have rotation restrictions. Check your owner's manual or with a tire manufacturer or a tire dealer for proper recommendations for these specific cases.

WHEELS AND RIMS

The wheels on today's vehicles are made of steel, aluminum, or aluminum alloy (a combination of two or more metals). Steel wheels are the least expensive to produce, which is why they come as original equipment on many passenger cars and light trucks. The center section includes the bolt circle, or mounting holes, and is used to attach the wheel to the vehicle. The flange is the outermost lip of the rim, and is the area typically used for attaching wheel (balancing) weights. The rim is formed by rolling a strip of metal and then welding the two ends together. The interior section of the rim has a smaller diameter section called a drop center. This area provides the means for removing and installing a tire, since the bead is not designed to stretch. During removal or installation, most of the tire bead is pushed into the drop center so that the exposed portion can be pulled over the rim. The edges of the rim are flared to form the bead seats, which hold the tire and provide the airtight seal. Many rims include safety humps. These are small elevations on the inside of the bead seats. Safety humps help prevent the tire from falling into the drop center during a blowout. This allows the driver to maintain better directional control of a vehicle running on one or more deflated tires.

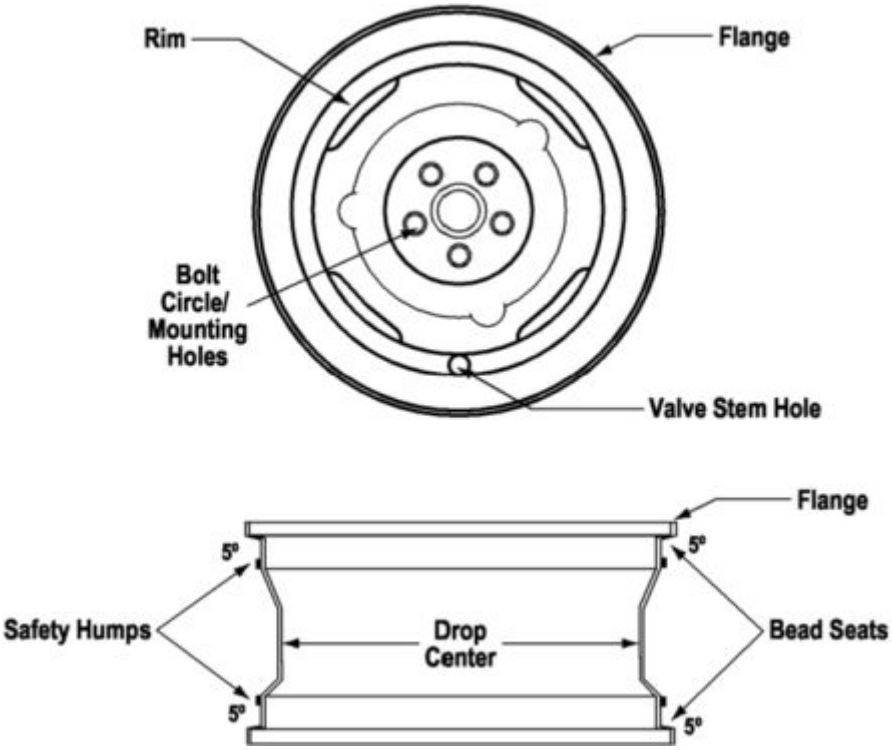

Fig. 4: Steel Wheel

WARNING: Mounting a regular tire on a high-pressure compact spare wheel is not permitted. Attempting to mount a tire of one diameter on a wheel of a

different diameter or flange type may result in serious injury or death. Mount tires only on approved rim widths. If the wheel identification stamp is not legible, or cannot be found, do not use the wheel until the size and type have been properly identified. Load, cold inflation pressure, and tire construction forces imposed on the rim/wheel must not exceed the rim/wheel manufacturer's recommendations, even if the tire is approved for a higher load or inflation. Wheels of different diameter, offset, or width cannot be mixed on the same axle. Bead seat tapers cannot be interchanged.

TIRE PRESSURE MONITORING SYSTEMS

To avoid damaging sensors when mounting and demounting tires, it is beneficial to know where the sensors are located. Sensor assemblies are commonly attached to the valve stem, with the valve stem acting as an antenna to assist with transmitting RF signals. They may also be strapped to the drop center of the wheel. If this is the case, the sensor assembly should be located in-line with the valve stem.

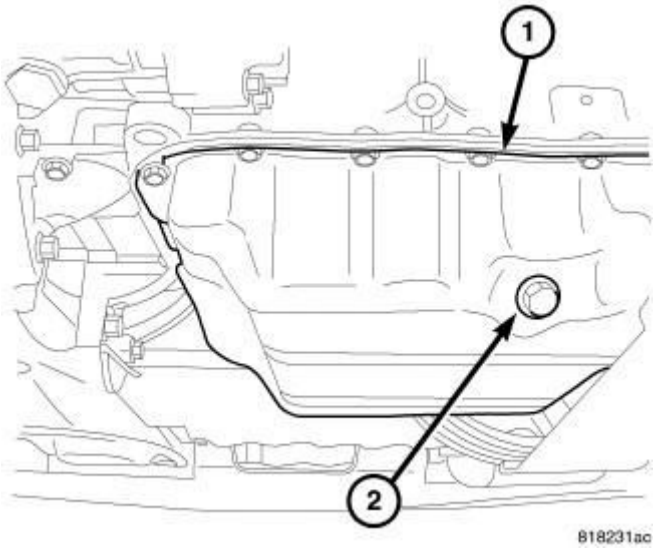

Fig. 5: Valve Stem Mounted Sensor

To avoid damaging sensors when demounting tires, do not break the bead within 45 of either side of sensor assembly locations. Be careful not to damage sensors

when mounting tires as well. Sensors are not repairable and require replacement if damaged or when their battery is completely drained. It is recommended that the sensor be carefully "dropped into the tire" prior to demounting to avoid damage.

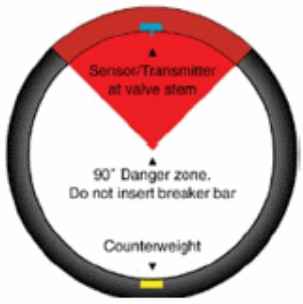

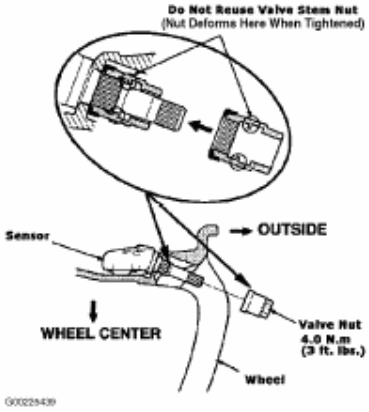

Fig. 6: Mounting Sensor

When reinstalling the sensor, it is suggested that the locknut, gasket and valve stem be replaced and torgued to the proper specification. It is also necessary to use the proper valve cap as it is also an integral part of the system.

It may be necessary to reprogram the TPMS when the tires are rotated, when a new sensor is installed, or after the vehicle loses power. This usually requires a scan tool and may involve the use of a special magnet. Refer to the vehicle service manual to properly reprogram the TPMS.

STEERING & SUSPENSION CHECKSHEET

MOTORIST ASSURANCE PROGRAM

STANDARDS FOR AUTOMOTIVE REPAIR

STEERING & SUSPENSION CHECKSHEET

Date: _____

Name: _____

Address: _____

City: _____ State: _____ Zip Code: _____

Year: _____ Make: _____ Model: _____

Mileage: _____ License: _____ VIN: _____ Eng Code: _____

Customer Interview:

_____

_____

_____

_____

_____

Reason Code Explanation

Code	Reason
	Required
A	*Part No Longer Performs Intended Purpose*
B	*Part Does Not Meet A Design Specification (Regardless Of Performance)*
C	*Part Is Missing*
	Suggested/Optional
1	*Part Is Close To The End Of Its Useful Life*
2	*To Address A Customer Need, Convenience Or Request*
3	*To Comply With Maintenance Recommended By The Vehicle's Original Equipment Manufacturer*
4	*Technician's Recommendation Based On Substantial And Informed Experience*
5	*To Comply With Maintenance Recommended By AMRA/MAP*

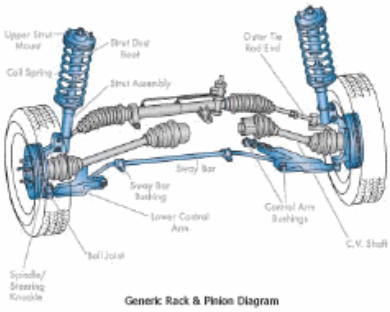

Generic Rack & Pinion Diagram

Your vehicle has been inspected following the Uniform Inspection and Communication Standards developed by the Motorist Assurance Program. MAP produces materials that give motorists the information and encouragement to take greater responsibility for their vehicles—through proper maintenance. We encourage participating service and repair shops to adopt the MAP Pledge of Assurance to their Customers and the Motorist Assurance Program Standards of Service. All participating service providers have agreed to subscribe to this Pledge and to adhere to the promulgated Standards of Service demonstrating to their customers that they are serious about customer satisfaction. For more information visit: www.motorist.org

DISCLAIMER: This document may be used as a guide when performing vehicle inspection. This form is not to be used as an estimate form and may not comply with Local or State Laws. The Motorist Assurance Program is not responsible for the performance and accuracy of the motor vehicle inspection performed using this document.

Fig. 7: Steering & Suspension Checksheet (1 Of 2)

STEERING & SUSPENSION CHECKSHEET

UNDERHOOD/UNDER VEHICLE

Component	OK	S	R	Condition
Rack & Pinion Assy				
P/S Pump				
P/S Hoses				
P/S Fluid				
P/S Cooler				

Component	OK	S	R	Condition
Center / Drag Link				
Steering Gear				
Sway Bar/Bushings				
Idler Arm				
Pitman Arm				

LEFT FRONT

Component	OK	S	R	Condition
Link Pin / Bushings				
CV Joints				Inner Outer _____
CV Boots				Inner _____ Outer _____
Shock / Strut				_____
Spring / Mount				
Ball Joint Upper				Spec_____
Lower				Actual_____
Control Arm / Shaft				
Bushings				
Tie Rod End				Inner _____ Outer _____
Bearing / Spindle				

RIGHT FRONT

Component	OK	S	R	Condition
Link Pin / Bushings				
CV Joints				Inner Outer _____
CV Boots				Inner _____ Outer _____
Shock / Strut				_____
Spring / Mount				
Ball Joint Upper				Spec_____
Lower				Actual_____
Control Arm / Shaft				
Bushings				
Tie Rod End				Inner _____ Outer _____
Bearing / Spindle				

LEFT REAR

Component	OK	S	R	Condition
Link Pin / Bushings				
CV Joints				Inner _____ Outer _____
CV Boots				Inner _____ Outer _____
Shock / Strut				
Spring / Mount				
Ball Joint Upper				Spec_____
Lower				Actual_____
Control Arm / Shaft				
Bushings				
Tie Rod End				Inner _____ Outer _____
Bearing / Spindle				

RIGHT REAR

Component	OK	S	R	Condition
Link Pin / Bushings				
CV Joints				Inner _____ Outer _____
CV Boots				Inner _____ Outer _____
Shock / Strut				
Spring / Mount				
Ball Joint Upper				Spec_____
Lower				Actual_____
Control Arm / Shaft				
Bushings				
Tie Rod End				Inner _____ Outer _____
Bearing / Spindle				

OK	Suggested 1, 2, 3, 4, 5	Required A, B, C

Automotive Maintenance & Repair Assn © 2009

Fig. 8: Steering & Suspension Checksheet (2 Of 2)

WHEELS & TIRES CHECKSHEET

MOTORIST ASSURANCE PROGRAM
STANDARDS FOR AUTOMOTIVE REPAIR

MOTORIST ASSURANCE PROGRAM
STANDARDS FOR AUTOMOTIVE REPAIR

PARTICIPATING FACILITY

WHEELS & TIRES CHECKSHEET

Date: _____

Name: _____

Address: _____

City: _____ State: _____ Zip Code: _____

Year: _____ Make: _____ Model: _____

Mileage: _____ License: _____ VIN: _____ Eng Code: _____

Customer Interview:

_____

_____

_____

_____

_____

Reason Code Explanation

Code	*Reason*
	Required
A	*Part No Longer Performs Intended Purpose*
B	*Part Does Not Meet A Design Specification (Regardless Of Performance)*
C	*Part Is Missing*
	Suggested/Optional
1	*Part Is Close To The End Of Its Useful Life*
2	*To Address A Customer Need, Convenience Or Request*
3	*To Comply With Maintenance Recommended By The Vehicle's Original Equipment Manufacturer*
4	*Technician's Recommendation Based On Substantial And Informed Experience*
5	*To Comply With Maintenance Recommended By AMRA/MAP*

Your vehicle has been inspected following the Uniform Inspection and Communication Standards developed by the Motorist Assurance Program. MAP produces materials that give motorists the information and encouragement to take greater responsibility for their vehicles—through proper maintenance. We encourage participating service and repair shops to adopt the MAP Pledge of Assurance to their Customers and the Motorist Assurance Program Standards of Service. All participating service providers have agreed to subscribe to this Pledge and to adhere to the promulgated Standards of Service demonstrating to their customers that they are serious about customer satisfaction. For more information visit: www.motorist.org

DISCLAIMER: This document may be used as a guide when performing vehicle inspection. This form is not to be used as an estimate form and may not comply with Local or State Laws. The Motorist Assurance Program is not responsible for the performance and accuracy of the motor vehicle inspection performed using this document.

Fig. 9: Wheels & Tires Checksheet (1 Of 2)

WHEELS & TIRES CHECKSHEET

LEFT FRONT

Component	OK	S	R	Condition
Lugs/Studs				
Tire Size Speed Rating _____				Spec_____ Actual_____
Run Flat				Y ____ N ____
Tread Depth				_____/32nds
Tire Pressure Placard _____				Before _____ After _____
TPMS Sensor Nut Valve core / Cap Sensor				
Valve Stem				
Wheel (Condition) Wheel Size				Spec_____ Actual_____

☐Edge wear ☐Cupped ☐Cut ☐Irregular wear

RIGHT FRONT

Component	OK	S	R	Condition
Lugs/Studs				
Tire Size Speed Rating _____				Spec_____ Actual_____
Run Flat				Y ____ N ____
Tread Depth				_____/32nds
Tire Pressure Placard _____				Before _____ After _____
TPMS Sensor Nut Valve core / Cap Sensor				
Valve Stem				
Wheel (Condition) Wheel Size				Spec_____ Actual_____

☐Edge wear ☐Cupped ☐Cut ☐Irregular wear

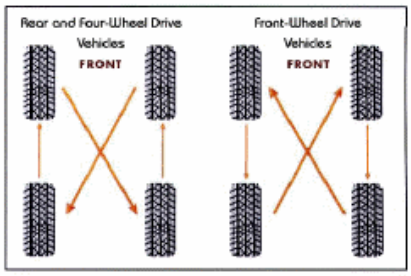

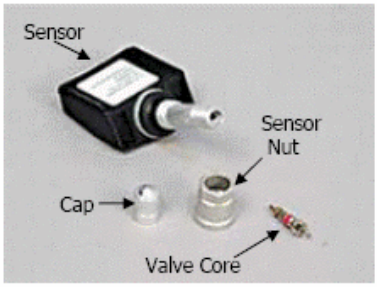

LEFT REAR

Component	OK	S	R	Condition
Lugs/Studs				
Tire Size Speed Rating _____				Spec_____ Actual_____
Run Flat				Y ____ N ____
Tread Depth				_____/32nds
Tire Pressure Placard _____				Before _____ After _____
TPMS Sensor Nut Valve core / Cap Sensor				
Valve Stem				
Wheel (Condition) Wheel Size				Spec_____ Actual_____

☐Edge wear ☐Cupped ☐Cut ☐Irregular wear

RIGHT REAR

Component	OK	S	R	Condition
Lugs/Studs				
Tire Size Speed Rating _____				Spec_____ Actual_____
Run Flat				Y ____ N ____
Tread Depth				_____/32nds
Tire Pressure Placard _____				Before _____ After _____
TPMS Sensor Nut Valve core / Cap Sensor				
Valve Stem				
Wheel (Condition) Wheel Size				Spec_____ Actual_____

☐Edge wear ☐Cupped ☐Cut ☐Irregular wear

OK	Suggested 1, 2, 3, 4, 5	Required A, B, C

Automotive Maintenance & Repair Assn © 2009

Fig. 10: Wheels & Tires Checksheet (2 Of 2)

STEERING AND SUSPENSION, WHEEL ALIGNMENT, WHEELS AND TIRES

NOTE: Steering and Suspension are complex systems made up

of a variety of interdependent components and controls. For proper vehicle handling, ride, and tire wear, a thorough inspection is required whenever suspension work is being performed.

NOTE: Listed repair conditions assume that the problem has been isolated to the specific component by proper testing procedures. When replacing steering and/or suspension components which may affect an alignment angle, you are required to check and adjust alignment as needed. Refer to the OEM specifications for both ride height and alignment angle tolerances.

NOTE: Improper alignment geometry, and/or improper tire/wheel fitment may affect other systems such as Adaptive Cruise Control, Electronic Stability Control, Electronic Traction Control and Variable Ratio Steering. These systems may require attention after an alignment or suspension service is performed. Care must be taken to identify these vehicles/systems before any repair procedures are performed. Failure to follow OEM guidelines when servicing interrelated systems could result in an unsafe condition.

CAUTION: Do not use ride height altering or load compensating components, such as variable rate springs or coil over shocks on vehicles with height sensing or load sensing proportioning- valve equipped braking systems, unless these components are supplied as original equipment.

ACTIVE HANDLING

NOTE: An evolution of ABS and Traction Control. It uses the ABS hardware and two additional sensors: a steering-wheel angle sensor, which measures the position and rate of steering wheel input, and a yaw sensor, which measures the rate at which the vehicle is actually turning.

By comparing rates, computer determines if the vehicle is oversteering or understeering.

NOTE: On slippery surfaces or during aggressive maneuvers, if the vehicle understeers severely, the computer will actuate the brakes on the inside rear wheel, just hard enough and just long enough to correct the steering behavior. When the vehicle oversteers severely, the system will brake the outside front wheel instead.

NOTE: When servicing this system, OEM may require steering angle sensor be calibrated to the vehicle thrustline.

ACTIVE SUSPENSION CONTROL MODULES

Condition	Code	Procedure
Application incorrect	B	Require replacement
Attaching hardware broken	A	Require repair or replacement of hardware
Attaching hardware missing	C	Require replacement of hardware
Attaching hardware not functioning	A	Require repair or replacement of hardware
Attaching hardware threads damaged	A	Require repair or replacement of hardware
Attaching hardware threads stripped (threads missing)	A	Require replacement of hardware
Connector broken	A	Require repair or replacement
Connector melted	A	Require repair or replacement
NOTE: **Determine cause and correct prior to repair or replacement of part.**		
Connector missing	C	Require repair
Contaminated	A	Require repair or replacement
NOTE:		

Determine source of contamination, such as engine coolant, fuel, metal particles, or water. Require repair or replacement.		
Inoperative	B	Require repair or replacement
NOTE: **Inoperative includes intermittent operation. Some components may be serviceable; check for accepted cleaning procedure.**		
Leaking	B	Require repair or replacement
Malfunctioning	A	Require replacement
NOTE: **Includes inoperative, intermittent operation, failure to perform all functions, out of OEM specifications, or out of range.**		
Missing	C	Require replacement
Terminal broken	A	Require repair or replacement
Terminal burned, affecting performance	A	Require repair or replacement
NOTE: **Determine cause and correct prior to repair or replacement of part.**		
Terminal burned, not affecting performance	2	Suggest repair or replacement
Terminal corroded, affecting performance	A	Require repair or replacement
Terminal corroded, not affecting performance	2	Suggest repair or replacement
Terminal loose, affecting performance	B	Require repair or replacement
Terminal loose, not affecting performance	1	Suggest repair or replacement
Threads damaged	A	Require repair or replacement
Threads stripped (threads missing)	A	Require replacement
Wire lead conductors exposed	B	Require repair or replacement
Wire lead corroded	A	Require repair or replacement
Wire lead open	A	Require repair or

		replacement
Wire lead shorted	A	Require repair or replacement

ACTIVE VARIABLE RATIO STEERING

NOTE: Besides electronically providing variable steering ratios, the computer is linked with the Vehicle Stability Control system to aid in directional stability. As the vehicle travels down the highway, road surfaces and wind gusts can affect the vehicle's directional stability. The vehicle may wander or dart to one side, (as many who have met a tractor-trailer unit on a windy day have experienced). Sensors on the vehicle detect this sudden, unintentional movement and the computer will stabilize the vehicle by moving the Active Steering electric motor and steering gear, all without the driver turning the steering wheel.

NOTE: Additionally, if the driver experiences a skid or slide because of poor road conditions, the Active Steering will react to information from the yaw rate and steering angle sensors to modify the steering angle of the front wheels and stabilize the vehicle. This occurs much faster than the driver can react. If the Active Steering correction is not adequate to control the skid or slide, then the Stability Control system is also activated.

Condition	Code	Procedure
Improper Operation		
NOTE: **Refer to manufacturers' service information.**		

ACTIVE YAW CONTROL

NOTE: An evolution of ABS and Traction Control. It uses the ABS hardware and two additional sensors: a steering-wheel angle sensor, which measures the position and rate of steering wheel input, and a yaw sensor, which measures the rate at which the vehicle is actually turning.

By comparing rates, computer determines if the vehicle is oversteering or understeering.

NOTE: On slippery surfaces or during aggressive maneuvers, if the vehicle understeers severely, the computer will actuate the brakes on the inside rear wheel, just hard enough and just long enough to correct the steering behavior. When the vehicle oversteers severely, the system will brake the outside front wheel instead.

NOTE: When servicing this system, OEM may require steering angle sensor be calibrated to the vehicle thrustline.

ADAPTIVE CRUISE CONTROL

NOTE: Similar to conventional cruise control. It maintains the vehicle's pre-set speed. However, beyond conventional cruise control, this system automatically adjusts speed to maintain proper distance between vehicles in the same lane. This is achieved through use of a radar or laser headway sensor, a digital signal processor and a longitudinal controller. If the lead vehicle slows down, or another object is detected, the system sends a signal to the engine and/or braking system to decelerate. Then, when the lane is clear, the system will re-accelerate the vehicle back to the set speed. Some OEM's require that the radar or laser headway sensor be calibrated to the thrustline of the vehicle.

ADVANCE TRAC

NOTE: An evolution of ABS and Traction Control. It uses the ABS hardware and two additional sensors: a steering-wheel angle sensor, which measures the position and rate of steering wheel input, and a yaw sensor, which measures the rate at which the vehicle is actually turning. By comparing rates, computer determines if the vehicle is oversteering or understeering.

NOTE: On slippery surfaces or during aggressive maneuvers, if the vehicle understeers severely, the computer will actuate the brakes on the inside rear wheel, just hard enough and just long enough to correct the steering behavior. When the vehicle oversteers severely, the system will brake the outside front wheel instead.

NOTE: When servicing this system, OEM may require steering angle sensor be calibrated to the vehicle thrustline.

AIR BAGS

Condition	Code	Procedure
Attaching hardware missing	C	Require replacement of hardware
Attaching hardware not functioning	A	Require repair or replacement of hardware
Attaching hardware threads damaged	A	Require repair or replacement of hardware
Attaching hardware threads stripped (threads missing)	A	Require replacement of hardware
Collar cracked	A	Require replacement
End cap cracked	A	Require replacement
Inner fabric of bag damaged	A	Require replacement
Leaking	A	Require repair or replacement
Outer covering of air bag is cracked to the extent that inner fabric of air bag is visible	1	Suggest replacement
Piston cracked	A	Require replacement

AIR RIDE CONTROL MODULES

Condition	Code	Procedure
Application incorrect	B	Require replacement
Attaching hardware broken	A	Require repair or replacement of hardware

Attaching hardware missing	C	Require replacement of hardware
Attaching hardware not functioning	A	Require repair or replacement of hardware
Attaching hardware threads damaged	A	Require repair or replacement of hardware
Attaching hardware threads stripped (threads missing)	A	Require replacement of hardware
Connector broken	A	Require repair or replacement
Connector melted	A	Require repair or replacement
NOTE: **Determine cause and correct prior to repair or replacement of part.**		
Connector missing	C	Require repair
Contaminated	A	Require repair or replacement
NOTE: **Determine source of contamination, such as engine coolant, fuel, metal particles, or water. Require repair or replacement.**		
Inoperative	A	Require repair or replacement
NOTE: **Inoperative includes intermittent operation. Some components may be serviceable; check for accepted cleaning procedure.**		
Leaking	B	Require repair or replacement
Malfunctioning	A	Require replacement
NOTE: **Includes inoperative, intermittent operation, failure to perform all functions, out of OEM specifications, or out of range.**		
Missing	C	Require replacement
Terminal broken	A	Require repair or replacement
Terminal burned, affecting performance	A	Require repair or replacement
NOTE: **Determine cause and correct prior to repair or replacement of part.**		

Terminal burned, not affecting performance	2	Suggest repair or replacement
Terminal corroded, affecting performance	A	Require repair or replacement
Terminal corroded, not affecting performance	2	Suggest repair or replacement
Terminal loose, affecting performance	B	Require repair or replacement
Terminal loose, not affecting performance	1	Suggest repair or replacement
Threads damaged	A	Require repair or replacement
Threads stripped (threads missing)	A	Require replacement
Wire lead conductors exposed	B	Require repair or replacement
Wire lead corroded	A	Require repair or replacement
Wire lead open	A	Require repair or replacement
Wire lead shorted	A	Require repair or replacement

AIR RIDE SUSPENSION TORSION SPRINGS (COUNTER BALANCING)

Condition	Code	Procedure
Attaching hardware broken	A	Require repair or replacement of hardware
Attaching hardware missing	C	Require replacement of hardware
Attaching hardware not functioning	A	Require repair or replacement of hardware
Attaching hardware threads damaged	A	Require repair or replacement of hardware
Attaching hardware threads stripped (threads missing)	A	Require replacement of hardware
Broken	A	Require replacement

Missing	C	Require replacement

AIR RIDE SUSPENSION

NOTE: Depending on the air suspension design, there are some aftermarket products available to eliminate the air ride suspension on certain vehicles. If the system has been eliminated with one of these products, then no service is suggested or required.

AIR RIDE TUBES

Condition	Code	Procedure
Application incorrect	B	Require replacement
Attaching hardware broken	A	Require repair or replacement of hardware
Attaching hardware missing	C	Require replacement of hardware
Attaching hardware not functioning	A	Require repair or replacement of hardware
Attaching hardware threads damaged	A	Require repair or replacement of hardware
Attaching hardware threads stripped (threads missing)	A	Require replacement of hardware
Connected incorrectly	A	Require repair
Insufficient clamping force, allowing hose to leak	A	Require repair or replacement
Leaking	A	Require repair or replacement
Melted	1	Suggest repair or replacement
Missing	C	Require replacement
Protective sleeves damaged	2	Suggest replacement of sleeves
Protective sleeves missing	C	Require replacement of sleeves
Restricted, affecting performance	A	Require repair or

		replacement
Restricted, not affecting performance	2	Suggest repair or replacement
Routed incorrectly (where failure is likely to occur)	B	Require repair or replacement
Safety clip missing	C	Require replacement
Threads damaged	A	Require repair or replacement
Threads stripped (threads missing)	A	Require replacement
Type incorrect	2	Suggest repair or replacement

AIR SHOCKS AND AIR STRUTS

NOTE: This section covers the air spring portion of the air shock or strut. For damping portion of shock or strut conditions and procedures, refer to the Shock Absorbers, Strut Cartridges, and Strut Assemblies section.

Condition	Code	Procedure
Inner fabric of air bag damaged	A	Require replacement
Leaking	A	Require repair or replacement
Outer covering of air bag is cracked to the extent that inner fabric of air bag is visible	1	Suggest replacement

AIR SPRING VALVES

Condition	Code	Procedure
Attaching hardware broken	A	Require repair or replacement of hardware
Attaching hardware missing	C	Require replacement of hardware
Attaching hardware not functioning	A	Require repair or replacement of hardware
Attaching hardware threads damaged	A	Require repair or

		replacement of hardware
Attaching hardware threads stripped (threads missing)	A	Require replacement of hardware
Blocked	A	Require repair or replacement
Connector bent	A	Require repair or replacement
Connector broken	A	Require replacement
Connector loose	A	Require repair or replacement
Inoperative	A	Require repair or replacement
Leaking	B	Require repair or replacement
Restricted	A	Require repair or replacement

AIR SPRINGS

Condition	Code	Procedure
Attaching hardware broken	A	Require repair or replacement of hardware
Attaching hardware missing	C	Require replacement of hardware
Attaching hardware not functioning	A	Require repair or replacement of hardware
Attaching hardware threads damaged	A	Require repair or replacement of hardware
Attaching hardware threads stripped (threads missing)	A	Require replacement of hardware
Collar cracked	A	Require replacement
End cap cracked	A	Require replacement
Inner fabric of bag damaged	A	Require replacement
Leaking	A	Require repair or replacement
Outer covering of air bag is cracked to	1	Suggest replacement

the extent that inner fabric of air bag is visible		
Piston cracked	A	Require replacement

AIR SUSPENSION CONTROL VALVES

Condition	Code	Procedure
Attaching hardware broken	A	Require repair or replacement of hardware
Attaching hardware missing	C	Require replacement of hardware
Attaching hardware not functioning	A	Require repair or replacement of hardware
Attaching hardware threads damaged	A	Require repair or replacement of hardware
Attaching hardware threads stripped (threads missing)	A	Require replacement of hardware
Connector (Weatherpack type) leaking	A	Require repair or replacement
Connector broken	A	Require repair or replacement
Connector melted	A	Require replacement
NOTE: **Determine cause and correct prior to repair or replacement of part.**		
Connector missing	C	Require replacement
Leaking	B	Require repair or replacement
Output incorrect	B	Require replacement
Terminal burned, affecting performance	A	Require repair or replacement
NOTE: **Determine cause and correct prior to repair or replacement of part.**		
Terminal burned, not affecting performance	2	Suggest repair or replacement
Terminal corroded, affecting performance	A	Require repair or replacement
Terminal corroded, not affecting	2	Suggest repair or

performance		replacement
Terminal loose, affecting performance	B	Require repair or replacement
Terminal loose, not affecting performance	1	Suggest repair or replacement
Threads damaged	A	Require repair or replacement
Threads stripped (threads missing)	A	Require replacement
Wire lead burned	A	Require repair or replacement
Wire lead conductors exposed	B	Require repair or replacement
Wire lead open	A	Require repair or replacement
Wire lead shorted	A	Require repair or replacement

AIR SUSPENSION DRIERS

Condition	Code	Procedure
Attaching hardware broken	A	Require repair or replacement of hardware
Attaching hardware missing	C	Require replacement of hardware
Attaching hardware not functioning	A	Require repair or replacement of hardware
Attaching hardware threads damaged	A	Require repair or replacement of hardware
Attaching hardware threads stripped (threads missing)	A	Require replacement of hardware
Contaminated, affecting performance	A	Require replacement
Desiccant bag deteriorated	A	Require replacement
NOTE: **Inspect system to determine effects of desiccant bag deterioration.**		
Leaking	B	Require replacement
Restricted	A	Require repair or replacement

Threads damaged	A	Require repair or replacement
Threads stripped (threads missing)	A	Require replacement
Tubing connection leaking	A	Require repair or replacement

AXLE ACCELERATION SENSOR

NOTE: When servicing this system, OEM may require steering angle sensor be calibrated to the vehicle thrustline.

Condition	Code	Procedure
Attaching hardware broken	A	Require repair or replacement of hardware
Attaching hardware corroded, affecting structural integrity	A	Require replacement of hardware
Attaching hardware missing	C	Require replacement of hardware
Attaching hardware not functioning	A	Require repair or replacement of hardware
Attaching hardware threads damaged	A	Require repair or replacement of hardware
Attaching hardware threads stripped (threads missing)	A	Require replacement of hardware
Connector (Weatherpack type) leaking	A	Require repair or replacement
Connector broken	A	Require repair or replacement
Connector melted	A	Require replacement
Connector missing	C	Require replacement
NOTE: **Determine cause and correct prior to replacement of part.**		
Dust boot missing	C	Require replacement of boot
Dust boot split	A	Require replacement of boot
NOTE: **If boot is not available separately, suggest replacement of sensor (reason code 2). This condition can lead to damage of the sliding magnet, which, in turn, causes premature sensor failure**		

Dust boot torn	A	Require replacement of boot
NOTE: **If boot is not available separately, suggest replacement of sensor (reason code 2). This condition can lead to damage of the sliding magnet, which, in turn, causes premature sensor failure.**		
Housing cracked	B	Require replacement
NOTE: **If boot is not available separately, suggest replacement of sensor (reason code 2). This condition can lead to damage of the sliding magnet, which, in turn, causes premature sensor failure.**		
Lead routing incorrect	B	Require rerouting according to vehicle manufacturer's specifications
Loose	B	Require adjustment to vehicle manufacturer's specifications
Missing	C	Require replacement
Output signal incorrect	B	Require repair or replacement
Terminal burned, affecting performance	A	Require repair or replacement
NOTE: **Determine cause and correct prior to repair or replacement of part.**		
Terminal burned, not affecting performance	2	Suggest repair or replacement
Terminal corroded, affecting performance	A	Require repair or replacement
Terminal corroded, not affecting performance	2	Suggest repair or replacement
Terminal loose, affecting performance	B	Require repair or replacement
Terminal loose, not affecting performance	1	Suggest repair or replacement
Wire lead burned	A	Require repair or replacement
Wire lead conductors exposed	B	Require repair or replacement
Wire lead open	A	Require repair or replacement

Wire lead shorted	A	Require repair or replacement

BALL JOINTS

NOTE: Before requiring or suggesting ball joint replacement, the approved OEM procedure must be used to measure ball joint wear. The measurement(s) obtained, along with the vehicle manufacturer's specifications, must be noted on the inspection report. Some states require that these measurements also appear on the invoice. The term ""perceptible movement,"" defined as any visible movement in any direction, has been the industry standard for determining the need for replacement of follower (non-load carrying) ball joints. Some vehicle manufacturers are now publishing specifications for follower ball joints that were previously diagnosed by the ""perceptible movement"" standard. Before requiring or suggesting any parts be replaced based on ""perceptible movement,"" consult your repair manual to determine if OEM specifications exist. You are not required to replace ball joints in axle sets. However, when replacing a ball joint due to wear exceeding manufacturer's specification, you may suggest replacement of the other ball joint if its measurement shows it is close to the end of its useful life, for preventive maintenance.

Condition	Code	Procedure
Attaching hardware broken	A	Require repair or replacement of hardware
Attaching hardware corroded, affecting structural integrity	A	Require replacement of hardware
Attaching hardware missing	C	Require replacement of hardware
Attaching hardware not functioning	A	Require repair or replacement of hardware
Attaching hardware threads damaged	A	Require repair or replacement of hardware

Attaching hardware threads stripped (threads missing)	A	Require replacement of hardware
Binding	A	Further inspection required
NOTE: **If greaseable, grease ball joint. If problem persists or joint is non-greaseable, require replacement.**		
Grease boot cracked	2	Suggest replacement
NOTE: **Cracked grease boot will allow contaminants to enter the ball joint and will accelerate wear.**		
Grease boot missing	C	Require replacement
NOTE: **Lack of grease boot will allow contaminants to enter the ball joint and will accelerate wear.**		
Grease boot torn	A	Require replacement
NOTE: **Torn grease boot will allow contaminants to enter the ball joint and will accelerate wear.**		
Grease fitting broken	A	Require replacement of grease fitting
NOTE: **Some vehicles come from the factory with broken fittings. No service is suggested or required on these vehicles.**		
Grease fitting missing	C	Require replacement of grease fitting
Grease fitting won't seal	A	Require replacement of grease fitting
Greaseable ball joint will not take grease	2	Suggest replacement of grease fitting
NOTE: **If the greaseable ball joint still will not take grease after replacing the grease fitting, suggest replacement of ball joint.**		
Nut on ball joint loose	A	Require repair or replacement
NOTE: **Check for bent stud or damaged taper hole.**		
Pre-load adjustment incorrect	B	Require repair or replacement
Seized	A	Require replacement
Stud bent	B	Require replacement
NOTE: **Check for damaged taper hole.**		

Stud broken	A	Require replacement
NOTE: **Check for damaged taper hole.**		
Threads damaged	A	Require repair or replacement
Threads stripped (threads missing)	A	Require replacement
NOTE: **Check for damaged taper hole.**		
Wear exceeds manufacturer's specifications	B	Require replacement

BODY ACCELERATION SENSOR

NOTE: When servicing this system, OEM may require steering angle sensor be calibrated to the vehicle thrustline.

Condition	Code	Procedure
Attaching hardware broken	A	Require repair or replacement of hardware
Attaching hardware corroded, affecting structural integrity	A	Require replacement of hardware
Attaching hardware missing	C	Require replacement of hardware
Attaching hardware not functioning	A	Require repair or replacement of hardware
Attaching hardware threads damaged	A	Require repair or replacement of hardware
Attaching hardware threads stripped (threads missing)	A	Require replacement of hardware
Connector (Weatherpack type) leaking	A	Require repair or replacement
Connector broken	A	Require repair or replacement
Connector melted	A	Require replacement
Connector missing	C	Require replacement
NOTE: **Determine cause and correct prior to replacement of part.**		

Dust boot missing	C	Require replacement of boot
Dust boot split	A	Require replacement of boot
NOTE: **If boot is not available separately, suggest replacement of sensor (reason code 2). This condition can lead to damage of the sliding magnet, which, in turn, causes premature sensor failure**		
Dust boot torn	A	Require replacement of boot
NOTE: **If boot is not available separately, suggest replacement of sensor (reason code 2). This condition can lead to damage of the sliding magnet, which, in turn, causes premature sensor failure.**		
Housing cracked	B	Require replacement
NOTE: **If boot is not available separately, suggest replacement of sensor (reason code 2). This condition can lead to damage of the sliding magnet, which, in turn, causes premature sensor failure.**		
Lead routing incorrect	B	Require rerouting according to vehicle manufacturer's specifications
Loose	B	Require adjustment to vehicle manufacturer's specifications
Missing	C	Require replacement
Output signal incorrect	B	Require repair or replacement
Terminal burned, affecting performance	A	Require repair or replacement
NOTE: **Determine cause and correct prior to repair or replacement of part.**		
Terminal burned, not affecting performance	2	Suggest repair or replacement
Terminal corroded, affecting performance	A	Require repair or replacement
Terminal corroded, not affecting performance	2	Suggest repair or replacement
Terminal loose, affecting performance	B	Require repair or replacement
Terminal loose, not affecting performance	1	Suggest repair or replacement
Wire lead burned	A	Require repair or replacement

Wire lead conductors exposed	B	Require repair or replacement
Wire lead open	A	Require repair or replacement
Wire lead shorted	A	Require repair or replacement

BUSHINGS

Condition	Code	Procedure
Attaching hardware broken	A	Require repair or replacement of hardware
Attaching hardware missing	C	Require replacement of hardware
Attaching hardware not functioning	A	Require repair or replacement of hardware
Attaching hardware threads damaged	A	Require repair or replacement of hardware
Attaching hardware threads stripped (threads missing)	A	Require replacement of hardware
Binding	A	Require repair or replacement
Deteriorated, affecting performance	A	Require repair or replacement
NOTE: **If condition is caused by oil-soaking, further inspection is required to determine source of oil.**		
Distorted, affecting performance	A	Require repair or replacement
Leaking (fluid-filled type)	A	Require replacement
Missing	C	Require replacement
Noisy	2	Further inspection required
NOTE: **If noise isolated to bushing, suggest repair or replacement. Use only approved lubricant on rubber bushings. Petroleum-based lubricants may damage rubber bushings.**		
Oil-soaked, affecting performance	A	Require replacement
NOTE: **Further inspection required to determine source of oil.**		

Rubber separating from internal metal sleeve on bonded bushing	A	Require replacement
Seized	A	Require replacement
Shifted (out of position)	B	Require repair or replacement
Split	A	Require replacement
Surface cracking (weather-checked)		No service suggested or required

CENTER LINKS

Condition	Code	Procedure
Attaching hardware broken	A	Require repair or replacement of hardware
Attaching hardware missing	C	Require replacement of hardware
Attaching hardware not functioning	A	Require repair or replacement of hardware
Attaching hardware threads damaged	A	Require repair or replacement of hardware
Attaching hardware threads stripped (threads missing)	A	Require replacement of hardware
Bent, affecting performance	B	Require replacement
Binding	A	Further inspection required
NOTE: **If greaseable, grease joint. If problem persists or joint is non-greaseable, require replacement.**		
Grease boot cracked	2	Require replacement of boot
NOTE: **If boot is not available as a separate component, suggest replacement of center link (reason code 2). Cracked grease boot will allow contaminants to enter the joint and will accelerate wear.**		
Grease boot missing	C	Require replacement of boot
NOTE: **If boot is not available as a separate component, suggest replacement of center link (reason code 2). Lack of grease boot will allow contaminants to enter the joint and will accelerate wear**		
Grease boot torn	A	Require replacement of boot
NOTE: **If boot is not available as a separate component, suggest replacement of center link (reason code 2). Torn grease boot will allow contaminants to enter the joint and will accelerate wear .**		

Grease fitting broken	A	Require replacement of grease fitting
Grease fitting missing	C	Require replacement of grease fitting
Grease fitting won't seal	A	Require replacement of grease fitting
Grease seal missing	C	Require replacement
NOTE: **If seal is not available as a separate component, suggest replacement of center link (reason code 2). Lack of grease seal will allow contaminants to enter the joint and will accelerate wear.**		
Grease seal torn	A	Require replacement
NOTE: **If seal is not available as a separate component, suggest replacement of center link (reason code 2). Torn grease seal will allow contaminants to enter the joint and will accelerate wear.**		
Greaseable center link will not take grease	2	Suggest replacement of grease fitting
NOTE: **If greaseable center link still will not take grease after replacing the grease fitting, suggest replacement of center link.**		
Looseness (perceptible horizontal movement)	1	Suggest replacement
NOTE: **If manufacturer's procedures for inspection exist, use those procedures; otherwise, use an approved inspection method such as the dry park check. Do not use pliers or pry bar to check ball and socket movement. Use only moderate hand pressure.**		
Looseness that is excessive	B	Require replacement
NOTE: **Excessive looseness is defined as being significant enough to affect vehicle handling or structural integrity. If manufacturer's procedures for inspection exist, use those procedures; otherwise, use an approved inspection method such as the dry park check.**		
CAUTION: **Do not use pliers or pry bar to check ball and socket movement. Use only moderate hand pressure.**		
Seized	A	Require replacement
Stud bent	B	Require replacement
NOTE: **Check for damaged taper hole.**		
Stud broken	A	Require replacement
NOTE: **Check for damaged taper hole.**		
Stud loose in taper hole	A	Require repair or

		replacement
NOTE: **Check for damaged taper hole.**		
Taper hole elongated	A	Require replacement
NOTE: **Check for damaged stud.**		
Threads damaged	A	Require repair or replacement
Threads stripped (threads missing)	A	Require replacement
NOTE: **Check for damaged taper hole.**		
Wear exceeds manufacturer's specifications	B	Require replacement

COMPRESSORS

Condition	Code	Procedure
Attaching hardware broken	A	Require repair or replacement of hardware
Attaching hardware missing	C	Require replacement of hardware
Attaching hardware not functioning	A	Require repair or replacement of hardware
Attaching hardware threads damaged	A	Require repair or replacement of hardware
Attaching hardware threads stripped (threads missing)	A	Require replacement of hardware
Connector bent	A	Require repair or replacement
Connector broken	A	Require replacement
Connector loose	A	Require repair or replacement
Does not build pressure	A	Require replacement
Excessive run time	B	Require replacement
Inoperative	A	Require replacement
NOTE: **Inoperative includes intermittent operation.**		

Leaking	B	Require repair or replacement
Missing	C	Require replacement
Noisy (abnormal)	2	Suggest replacement
Terminal burned, affecting performance	A	Require repair or replacement
NOTE: **Determine cause and correct prior to repair or replacement of part.**		
Terminal burned, not affecting performance	2	Suggest repair or replacement
Terminal corroded, affecting performance	A	Require repair or replacement
Terminal corroded, not affecting performance	2	Suggest repair or replacement
Terminal loose, affecting performance	B	Require repair or replacement
Terminal loose, not affecting performance	1	Suggest repair or replacement
Wire lead burned	A	Require repair or replacement
Wire lead conductors exposed	B	Require repair or replacement
Wire lead open	A	Require repair or replacement
Wire lead shorted	A	Require repair or replacement

CONTINUOUS DAMPING CONTROL

NOTE: A semi-active suspension system which continuously adjusts damping levels according to road conditions and vehicle dynamics, (such as speed, turning and cornering, as well as driver inputs). An ECU processes driver inputs and data from sensors. The sensors include accelerometers mounted on the vehicle body and suspension position sensors, which feed steering wheel angle, vehicle speed, brake pressure and other chassis

control data to the ECU. The ECU processes sensor data and sends signals which adjust the damping level of each shock.

CONTROL ARM SHAFTS

Condition	Code	Procedure
Attaching hardware broken	A	Require repair or replacement of hardware
Attaching hardware missing	C	Require replacement of hardware
Attaching hardware not functioning	A	Require repair or replacement of hardware
Attaching hardware threads damaged	A	Require repair or replacement of hardware
Attaching hardware threads stripped (threads missing)	A	Require replacement of hardware
Bent, affecting performance	B	Require replacement
Shaft bushing surface undersized (worn)	B	Require replacement
Threads damaged	A	Require repair or replacement
Threads stripped (threads missing)	A	Require replacement

CONTROL ARMS

Condition	Code	Procedure
Attaching hardware broken	A	Require repair or replacement of hardware
Attaching hardware corroded, affecting structural integrity	A	Require replacement of hardware
Attaching hardware missing	C	Require replacement of hardware
Attaching hardware not functioning	A	Require repair or replacement of hardware
Attaching hardware threads damaged	A	Require repair or replacement of hardware

Attaching hardware threads stripped (threads missing)	A	Require replacement of hardware
Ball joint hole oversized (loose interference or press fit)	B	Further inspection required
NOTE: **If oversized ball joint is available, require replacement orb all joint. If oversized ball joint is not available, require replacement of control arm.**		
Bent, affecting performance	B	Require replacement
Bushing hole oversized	B	Require replacement
Corroded, affecting structural integrity	A	Require replacement
Holes distorted	A	Require replacement
Threads damaged	A	Require repair or replacement
Threads stripped (threads missing)	A	Require replacement

CONTROL MODULES

Condition	Code	Procedure
Application incorrect	B	Require replacement
Attaching hardware broken	A	Require repair or replacement of hardware
Attaching hardware missing	C	Require replacement of hardware
Attaching hardware not functioning	A	Require repair or replacement of hardware
Attaching hardware threads damaged	A	Require repair or replacement of hardware
Attaching hardware threads stripped (threads missing)	A	Require replacement of hardware
Connector broken	A	Require repair or replacement
Connector melted	A	Require repair or replacement
NOTE: **Determine cause and correct prior to repair or replacement of part.**		
Connector missing	C	Require repair
Contaminated	A	Require repair or

		replacement
NOTE: **Determine source of contamination, such as engine coolant, fuel, metal particles, or water. Require repair or replacement.**		
Inoperative	A	Require repair or replacement
NOTE: **Inoperative includes intermittent operation. Some components may be serviceable; check for accepted cleaning procedure.**		
Leaking	B	Require repair or replacement
Malfunctioning	A	Require replacement
NOTE: **Includes inoperative, intermittent operation, failure to perform all functions, out of OEM specifications, or out of range.**		
Missing	C	Require replacement
Terminal broken	A	Require repair or replacement
Terminal burned, affecting performance	A	Require repair or replacement
NOTE: **Determine cause and correct prior to repair or replacement of part.**		
Terminal burned, not affecting performance	2	Suggest repair or replacement
Terminal corroded, affecting performance	A	Require repair or replacement
Terminal corroded, not affecting performance	2	Suggest repair or replacement
Terminal loose, affecting performance	B	Require repair or replacement
Terminal loose, not affecting performance	1	Suggest repair or replacement
Threads damaged	A	Require repair or replacement
Threads stripped (threads missing)	A	Require replacement
Wire lead conductors exposed	B	Require repair or replacement
Wire lead corroded	A	Require repair or

		replacement
Wire lead open	A	Require repair or replacement
Wire lead shorted	A	Require repair or replacement

DISTANCE REGULATION CONTROL MODULE

Condition	Code	Procedure
Attaching hardware broken	A	Require repair or replacement of hardware
Attaching hardware corroded, affecting structural integrity	A	Require replacement of hardware
Attaching hardware missing	C	Require replacement of hardware
Attaching hardware not functioning	A	Require repair or replacement of hardware
Attaching hardware threads damaged	A	Require repair or replacement of hardware
Attaching hardware threads stripped (threads missing)	A	Require replacement of hardware
Connector (Weatherpack type) leaking	A	Require repair or replacement
Connector broken	A	Require repair or replacement
Connector melted	A	Require replacement
NOTE: **Determine cause and correct prior to replacement of part.**		
Connector melted	A	Require repair or replacement
NOTE: **Determine cause and correct prior to repair or replacement of part.**		
Connector missing	C	Require replacement
Contaminated	A	Require repair or replacement
NOTE: **Determine source of contamination, such as engine coolant, fuel, metal particles, or water. Require repair or replacement.**		

Dust boot missing	C	Require replacement of boot
NOTE: **If boot is not available separately, suggest replacement of sensor (reason code 2). This condition can lead to damage of the sliding magnet, which, in turn, causes premature sensor failure**		
Dust boot split	A	Require replacement of boot
NOTE: **If boot is not available separately, suggest replacement of sensor (reason code 2). This condition can lead to damage of the sliding magnet, which, in turn, causes premature sensor failure.**		
Dust boot torn	A	Require replacement of boot
NOTE: **If boot is not available separately, suggest replacement of sensor (reason code 2). This condition can lead to damage of the sliding magnet, which, in turn, causes premature sensor failure.**		
Housing cracked	B	Require replacement
Inoperative	A	Require repair or replacement
NOTE: **Inoperative includes intermittent operation. Some components may be serviceable; check for accepted cleaning procedure.**		
Lead routing incorrect	B	Require rerouting according to vehicle manufacturer's specifications
Loose	B	Require adjustment to vehicle manufacturer's specifications
Malfunctioning	A	Require replacement
NOTE: **includes inoperative, intermittent operation, failure to perform all functions, out of OEM specifications, or out of range.**		
Missing	C	Require replacement
Output signal incorrect	B	Require repair or replacement
Terminal burned, affecting performance	A	Require repair or replacement
NOTE: **Determine cause and correct prior to repair or replacement of part.**		
Terminal burned, affecting performance	A	Require repair or replacement
NOTE: **Determine cause and correct prior to repair or replacement of part.**		

Terminal burned, not affecting performance	2	Suggest repair or replacement
Terminal corroded, affecting performance	A	Require repair or replacement
Terminal corroded, not affecting performance	2	Suggest repair or replacement
Terminal loose, affecting performance	B	Require repair or replacement
Terminal loose, not affecting performance	1	Suggest repair or replacement
Wire lead burned	A	Require repair or replacement
Wire lead conductors exposed	B	Require repair or replacement
Wire lead open	A	Require repair or replacement
Wire lead shorted	A	Require repair or replacement

DISTANCE REGULATION SENSOR

NOTE: OEM may require this sensor be calibrated to the vehicle thrustline.

Condition	Code	Procedure
Attaching hardware broken	A	Require repair or replacement of hardware
Attaching hardware corroded, affecting structural integrity	A	Require replacement of hardware
Attaching hardware missing	C	Require replacement of hardware
Attaching hardware not functioning	A	Require repair or replacement of hardware
Attaching hardware threads damaged	A	Require repair or replacement of hardware
Attaching hardware threads stripped (threads missing)	A	Require replacement of hardware

Connector (Weatherpack type) leaking	A	Require repair or replacement
Connector broken	A	Require repair or replacement
Connector melted	A	Require replacement
Connector missing	C	Require replacement
NOTE: **Determine cause and correct prior to replacement of part.**		
Dust boot missing	C	Require replacement of boot
Dust boot split	A	Require replacement of boot
NOTE: **If boot is not available separately, suggest replacement of sensor (reason code 2). This condition can lead to damage of the sliding magnet, which, in turn, causes premature sensor failure**		
Dust boot torn	A	Require replacement of boot
NOTE: **If boot is not available separately, suggest replacement of sensor (reason code 2). This condition can lead to damage of the sliding magnet, which, in turn, causes premature sensor failure.**		
Housing cracked	B	Require replacement
NOTE: **If boot is not available separately, suggest replacement of sensor (reason code 2). This condition can lead to damage of the sliding magnet, which, in turn, causes premature sensor failure.**		
Lead routing incorrect	B	Require rerouting according to vehicle manufacturer's specifications
Loose	B	Require adjustment to vehicle manufacturer's specifications
Missing	C	Require replacement
Output signal incorrect	B	Require repair or replacement
Terminal burned, affecting performance	A	Require repair or replacement
NOTE: **Determine cause and correct prior to repair or replacement of part.**		
Terminal burned, not affecting performance	2	Suggest repair or replacement
Terminal corroded, affecting performance	A	Require repair or replacement

Terminal corroded, not affecting performance	2	Suggest repair or replacement
Terminal loose, affecting performance	B	Require repair or replacement
Terminal loose, not affecting performance	1	Suggest repair or replacement
Wire lead burned	A	Require repair or replacement
Wire lead conductors exposed	B	Require repair or replacement
Wire lead open	A	Require repair or replacement
Wire lead shorted	A	Require repair or replacement

DRAG LINKS

Condition	Code	Procedure
Attaching hardware broken	A	Require repair or replacement of hardware
Attaching hardware missing	C	Require replacement of hardware
Attaching hardware not functioning	A	Require repair or replacement of hardware
Attaching hardware threads damaged	A	Require repair or replacement of hardware
Attaching hardware threads stripped (threads missing)	A	Require replacement of hardware
Bent, affecting performance	B	Require replacement
Binding	A	Further inspection required
NOTE: **If greaseable, grease joint. If problem persists or joint is non-greaseable, require replacement.**		
Grease boot cracked	2	Require replacement of boot
NOTE: **If boot is not available as a separate component, suggest replacement of drag link (reason code 2). Cracked grease boot will allow contaminants to enter the joint and will accelerate wear.**		
Grease boot missing	C	Require replacement of boot

NOTE: **If boot is not available as a separate component, suggest replacement of drag link (reason code 2). Lack of grease boot will allow contaminants to enter the joint and will accelerate wear.**		
Grease boot torn	A	Require replacement of boot
NOTE: **If boot is not available as a separate component, suggest replacement of drag link (reason code 2). Torn grease boot will allow contaminants to enter the joint and will accelerate wear.**		
Grease fitting broken	A	Require replacement of grease fitting
Grease fitting missing	C	Require replacement of grease fitting
Grease fitting won't seal	A	Require replacement of grease fitting
Grease seal missing	C	Require replacement
NOTE: **If seal is not available as a separate component, suggest replacement of drag link (reason code 2). Lack of grease seal will allow contaminants to enter the joint and will accelerate wear.**		
Grease seal torn	A	Require replacement
NOTE: **If seal is not available as a separate component, suggest replacement of drag link (reason code 2). Torn grease seal will allow contaminants to enter the joint and will accelerate wear.**		
Greaseable drag link will not take grease	2	Suggest replacement of grease fitting
NOTE: **If greaseable center link still will not take grease after replacing the grease fitting, suggest replacement of drag link.**		
Looseness (perceptible horizontal movement)	1	Suggest replacement
NOTE: **If manufacturer's procedures for inspection exist, use those procedures; otherwise, use an approved inspection method such as the dry park check. Do not use pliers or pry bar to check ball and socket movement. Use only moderate hand pressure.**		
Looseness that is excessive	B	Require replacement
NOTE: **Excessive looseness is defined as being significant enough to affect vehicle handling or structural integrity. If manufacturer's procedures for inspection exist, use those procedures; otherwise, use an approved inspection method such as the dry park check.**		
CAUTION: **Do not use pliers or pry bar to check ball and socket movement. Use only moderate hand pressure.**		
Seized	A	Require replacement

Stud bent	B	Require replacement
NOTE: **Check for damaged taper hole.**		
Stud broken	A	Require replacement
NOTE: **Check for damaged taper hole.**		
Stud loose in taper hole	A	Require repair or replacement
NOTE: **Check for damaged taper hole.**		
Taper hole elongated	A	Require replacement
NOTE: **Check for damaged stud.**		
Threads damaged	A	Require repair or replacement
Threads stripped (threads missing)	A	Require replacement
NOTE: **Check for damaged taper hole.**		
Wear exceeds manufacturer's specifications	B	Require replacement

DYNAMIC STABILITY CONTROL

NOTE: An evolution of ABS and Traction Control. It uses the ABS hardware and two additional sensors: a steering-wheel angle sensor, which measures the position and rate of steering wheel input, and a yaw sensor, which measures the rate at which the vehicle is actually turning. By comparing rates, computer determines if the vehicle is oversteering or understeering.

Condition	Code	Procedure
NOTE: **On slippery surfaces or during aggressive maneuvers, if the vehicle understeers severely, the computer will actuate the brakes on the inside rear wheel, just hard enough and just long enough to correct the steering behavior. When the vehicle oversteers severely, the system will brake the outside front wheel instead.**		
NOTE: **When servicing this system, OEM may require steering angle sensor be calibrated to the vehicle thrustline.**		

DYNAMIC STABILITY TRACTION CONTROL

NOTE: An evolution of ABS and Traction Control. It uses the ABS hardware and two additional sensors: a steering-wheel angle sensor, which measures the position and rate of steering wheel input, and a yaw sensor, which measures the rate at which the vehicle is actually turning. By comparing rates, computer determines if the vehicle is oversteering or understeering.

NOTE: On slippery surfaces or during aggressive maneuvers, if the vehicle understeers severely, the computer will actuate the brakes on the inside rear wheel, just hard enough and just long enough to correct the steering behavior. When the vehicle oversteers severely, the system will brake the outside front wheel instead.

NOTE: When servicing this system, OEM may require steering angle sensor be calibrated to the vehicle thrustline.

ELECTRONIC RIDE CONTROL SHOCKS AND STRUTS

NOTE: This section covers the electronic damping control portion of the electronic shock or strut. For damping portion of shock or strut conditions and procedures, refer to the Shock Absorbers, Strut Cartridges, and Strut Assemblies section.

Condition	Code	Procedure
Attaching hardware broken	A	Require repair or replacement of hardware
Attaching hardware missing	C	Require replacement of hardware
Attaching hardware not functioning	A	Require repair or replacement of hardware
Attaching hardware threads damaged	A	Require repair or replacement of hardware
Attaching hardware threads stripped	A	Require replacement of

(threads missing)		hardware
Connector bent	A	Require repair or replacement
Connector broken	A	Require repair or replacement
Connector loose	A	Require repair or replacement
Electronic valve control inoperative	A	Require replacement
NOTE: **It is acceptable to replace with a non-electronically controlled unit, where available.**		
Terminal bent	A	Require repair or replacement
Terminal broken	A	Require repair or replacement
Terminal corroded	A	Require repair or replacement
Terminal loose	A	Require repair or replacement

ELECTRONIC STABILITY CONTROL

NOTE: An evolution of ABS and Traction Control. It uses the ABS hardware and two additional sensors: a steering-wheel angle sensor, which measures the position and rate of steering wheel input, and a yaw sensor, which measures the rate at which the vehicle is actually turning. By comparing rates, computer determines if the vehicle is oversteering or understeering.

NOTE: On slippery surfaces or during aggressive maneuvers, if the vehicle understeers severely, the computer will actuate the brakes on the inside rear wheel, just hard enough and just long enough to correct the steering behavior. When the vehicle oversteers severely, the system will brake the outside front wheel instead.

ELECTRONIC SUSPENSION SYSTEM

NOTE: (Typical) A semi-active suspension system which continuously adjusts damping levels according to road conditions and vehicle dynamics, (such as speed, turning and cornering, as well as driver inputs). An ECU processes driver inputs and data from sensors. The sensors include accelerometers mounted on the vehicle body and suspension position sensors, which feed steering wheel angle, vehicle speed, brake pressure and other chassis control data to the ECU. The ECU processes sensor data and sends signals which adjust the damping level of each shock.

FLEX COUPLERS

Condition	Code	Procedure
Attaching hardware broken	A	Require repair or replacement of hardware
Attaching hardware missing	C	Require replacement of hardware
Attaching hardware not functioning	A	Require repair or replacement of hardware
Attaching hardware threads damaged	A	Require repair or replacement of hardware
Attaching hardware threads stripped (threads missing)	A	Require replacement of hardware
Flex coupler binding	A	Require repair or replacement of coupler
Flex coupler loose	A	Require repair or replacement of coupler
Flex coupler missing parts	A	Require repair or replacement of coupler
Flex coupler soft/ spongy	A	Require replacement of coupler
Flex coupler tom	A	Require replacement of coupler
Steering coupler shield cracked	2	Suggest replacement
Steering coupler shield missing	C	Require replacement

Steering coupler shield torn	2	Suggest replacement
U-joint binding	A	Require repair or replacement of joint
U-joint loose	A	Require repair or replacement of joint

GASKETS

Condition	Code	Procedure
Leaking	A	Require repair or replacement
NOTE: **Require inspection of mating and sealing surface and repair or replace as necessary.**		

HEIGHT SENSORS

Condition	Code	Procedure
Attaching hardware broken	A	Require repair or replacement of hardware
Attaching hardware corroded, affecting structural integrity	A	Require replacement of hardware
Attaching hardware missing	C	Require replacement of hardware
Attaching hardware not functioning	A	Require repair or replacement of hardware
Attaching hardware threads damaged	A	Require repair or replacement of hardware
Attaching hardware threads stripped (threads missing)	A	Require replacement of hardware
Connector (Weatherpack type) leaking	A	Require repair or replacement
Connector broken	A	Require repair or replacement
Connector melted	A	Require replacement
NOTE: **Determine cause and correct prior to replacement of part.**		
Connector missing	C	Require replacement

Dust boot missing	C	Require replacement of boot
NOTE: **If boot is not available separately, suggest replacement of sensor (reason code 2). This condition can lead to damage of the sliding magnet, which, in turn, causes premature sensor failure**		
Dust boot split	A	Require replacement of boot
NOTE: **If boot is not available separately, suggest replacement of sensor (reason code 2). This condition can lead to damage of the sliding magnet, which, in turn, causes premature sensor failure.**		
Dust boot torn	A	Require replacement of boot
NOTE: **If boot is not available separately, suggest replacement of sensor (reason code 2). This condition can lead to damage of the sliding magnet, which, in turn, causes premature sensor failure.**		
Housing cracked	B	Require replacement
Lead routing incorrect	B	Require rerouting according to vehicle manufacturer's specifications
Loose	B	Require adjustment to vehicle manufacturer's specifications
Missing	C	Require replacement
Output signal incorrect	B	Require repair or replacement
Terminal burned, affecting performance	A	Require repair or replacement
NOTE: **Determine cause and correct prior to repair or replacement of part.**		
Terminal burned, not affecting performance	2	Suggest repair or replacement
Terminal corroded, affecting performance	A	Require repair or replacement
Terminal corroded, not affecting performance	2	Suggest repair or replacement
Terminal loose, affecting performance	B	Require repair or replacement
Terminal loose, not affecting performance	1	Suggest repair or replacement
Wire lead burned	A	Require repair or replacement

Wire lead conductors exposed	B	Require repair or replacement
Wire lead open	A	Require repair or replacement
Wire lead shorted	A	Require repair or replacement

HYDRAULIC HOSES

Condition	Code	Procedure
Attaching hardware broken	A	Require repair or replacement of hardware
Attaching hardware missing	C	Require replacement of hardware
Attaching hardware not functioning	A	Require repair or replacement of hardware
Attaching hardware threads damaged	A	Require repair or replacement of hardware
Attaching hardware threads stripped (threads missing)	A	Require replacement of hardware
Blistered	B	Require replacement
Fitting threads damaged	A	Require repair or replacement
Fitting threads stripped (threads missing)	A	Require replacement
Inner fabric (webbing) cut	B	Require replacement
Leaking	A	Require replacement
Missing	C	Require replacement
Outer covering is cracked to the extent that inner fabric of hose is visible	B	Require replacement
Restricted	A	Require replacement
Routed incorrectly (where failure is likely to occur)	B	Require repair or replacement
Secured incorrectly	B	Require repair

HYDRAULIC POWER STEERING PUMPS

Condition	Code	Procedure
Attaching hardware broken	A	Require repair or replacement of hardware
Attaching hardware missing	C	Require replacement of hardware
Attaching hardware not functioning	A	Require repair or replacement of hardware
Attaching hardware threads damaged	A	Require repair or replacement of hardware
Attaching hardware threads stripped (threads missing)	A	Require replacement of hardware
Binding	A	Require repair or replacement
Connector (Weatherpack type) leaking	A	Require repair or replacement
Connector broken	A	Require repair or replacement
Connector melted	A	Require replacement
NOTE: **Determine cause and correct prior to replacement of part.**		
Connector missing	C	Require replacement
Leaking	B	Require repair or replacement
Noisy	2	Suggest repair or replacement
Pulley bent	A	Require repair or replacement of pulley
Pulley missing	C	Require replacement of pulley
Pump output out of manufacturer's specifications	A	Require repair or replacement
Remote reservoir leaking	A	Require replacement of reservoir
Reservoir cap broken	A	Require replacement of cap
Reservoir cap missing	C	Require replacement of cap
Seized	A	Require replacement

Terminal burned, affecting performance	A	Require repair or replacement
NOTE: **Determine cause and correct prior to repair or replacement of part.**		
Terminal burned, not affecting performance	2	Suggest repair or replacement
Terminal corroded, affecting performance	A	Require repair or replacement
Terminal corroded, not affecting performance	2	Suggest repair or replacement
Terminal loose, affecting performance	B	Require repair or replacement
Terminal loose, not affecting performance	1	Suggest repair or replacement
Threads damaged	A	Require repair or replacement
Threads stripped (threads missing)	A	Require replacement
Wire lead burned	A	Require repair or replacement
Wire lead conductors exposed	B	Require repair or replacement
Wire lead open	A	Require repair or replacement
Wire lead shorted	A	Require repair or replacement

HYDRAULIC SUSPENSION HOSES

Condition	Code	Procedure
Attaching hardware broken	A	Require repair or replacement of hardware
Attaching hardware missing	C	Require replacement of hardware
Attaching hardware not functioning	A	Require repair or replacement of hardware
Attaching hardware threads damaged	A	Require repair or replacement of hardware

Attaching hardware threads stripped (threads missing)	A	Require replacement of hardware
Blistered	B	Require replacement
Fitting threads damaged	A	Require repair or replacement
Fitting threads stripped (threads missing)	A	Require replacement
Inner fabric (webbing) cut	B	Require replacement
Leaking	A	Require replacement
Missing	C	Require replacement
Outer covering is cracked to the extent that inner fabric of hose is visible	B	Require replacement
Restricted	A	Require replacement
Routed incorrectly (where failure is likely to occur)	B	Require repair or replacement
Secured incorrectly	B	Require repair

HYDRAULIC SUSPENSION PUMPS

Condition	Code	Procedure
Attaching hardware broken	A	Require repair or replacement of hardware
Attaching hardware missing	C	Require replacement of hardware
Attaching hardware not functioning	A	Require repair or replacement of hardware
Attaching hardware threads damaged	A	Require repair or replacement of hardware
Attaching hardware threads stripped (threads missing)	A	Require replacement of hardware
Binding	A	Require repair or replacement
Fluid at or beyond service interval	3	Suggest fluid change
Fluid contaminated	B	Require flushing and refilling of the system
NOTE:		

Determine and correct source of contamination. OEM specifications must be followed for fluid type.		
Fluid contaminated	B	Require flushing and refilling of the system
NOTE: **Determine and correct source of contamination. OEM specifications must be followed for fluid type.**		
Fluid level incorrect	B	Require adjustment of fluid level
Leaking	B	Require repair or replacement
Noisy	2	Suggest repair or replacement
Pulley bent	A	Require repair or replacement of pulley
Pulley missing	C	Require replacement of pulley
Pump output out of manufacturer's specifications	A	Require repair or replacement
Remote reservoir leaking	A	Require replacement of reservoir
Reservoir cap broken	A	Require replacement of cap
Reservoir cap missing	C	Require replacement of cap
Seized	A	Require replacement
Threads damaged	A	Require repair or replacement
Threads stripped (threads missing)	A	Require replacement

IDLER ARMS

Condition	Code	Procedure
Attaching hardware broken	A	Require repair or replacement of hardware
Attaching hardware missing	C	Require replacement of hardware
Attaching hardware not functioning	A	Require repair or replacement of hardware

Attaching hardware threads damaged	A	Require repair or replacement of hardware
Attaching hardware threads stripped (threads missing)	A	Require replacement of hardware
Binding	A	Further inspection required
NOTE: **If greaseable, grease joint. If problem persists or joint is non-greaseable, require replacement.**		
Grease boot cracked	B	Require replacement of boot
NOTE: **If boot is not available as a separate component, suggest replacement of idler arm (reason code 2). Cracked grease boot will allow contaminants to enter joint and will accelerate wear.**		
Grease boot missing	C	Require replacement of boot
NOTE: **If boot is not available as a separate component, suggest replacement of idler arm (reason code 2). Lack of grease boot will allow contaminants to enter joint and will accelerate wear.**		
Grease boot torn	A	Require replacement of boot
NOTE: **If boot is not available as a separate component, suggest replacement of idler arm (reason code 2). Torn grease boot will allow contaminants to enter joint and will accelerate wear.**		
Grease fitting broken	A	Require replacement of grease fitting
Grease fitting missing	C	Require replacement of grease fitting
Grease fitting won't seal	A	Require replacement of grease fitting
Grease seal missing	C	Require replacement of seal
NOTE: **If seal is not available as a separate component, suggest replacement of idler arm (reason code 2). Missing grease seal will allow contaminants to enter joint and will accelerate wear.**		
Grease seal torn	A	Require replacement of seal
NOTE: **If seal is not available as a separate component, suggest replacement of idler arm (reason code 2). Torn grease seal will allow contaminants to enter joint and will accelerate wear.**		
Greaseable joint will not take grease	2	Suggest replacement of grease fitting
NOTE: **If greaseable joint will not take grease after replacing the grease fitting, suggest replacement of idler arm.**		
Looseness at frame bracket end	B	Require repair or replacement

NOTE: **If manufacturer's procedures and specifications exist, use those procedures and specifications; otherwise, use an approved inspection method such as the dry park check.**		
NOTE: **Looseness is defined as movement that creates excessive toe change.**		
Looseness at link end (perceptible horizontal movement)	1	Suggest replacement
NOTE: **If manufacturer's procedures for inspection exist, use those procedures; otherwise, use an approved inspection method such as the dry park check. Do not use pliers or pry bar to check ball and socket movement. Use only moderate hand pressure.**		
Looseness at link end that is excessive	B	Require replacement
NOTE: **Excessive looseness is defined as significant enough to affect vehicle handling or structural integrity. If manufacturer's procedures for inspection exist, use those procedures; otherwise, use an approved inspection method such as the dry park check.**		
CAUTION: **Do not use pliers or pry bar to check ball and socket movement. Use only moderate hand pressure.**		
Mounted out of position (center link not parallel)	B	Require repositioning
Nut on stud loose	A	Require repair or replacement
NOTE: **Check for bent stud or damaged taper hole.**		
Seized	A	Require replacement
Stud bent	B	Require replacement
NOTE: **Check for damaged taper hole.**		
Stud broken	A	Require replacement
NOTE: **Check for damaged taper hole.**		
Taper hole elongated	A	Require replacement
NOTE: **Check for damaged stud.**		
Threads damaged	A	Require repair or replacement
Threads stripped (threads missing)	A	Require replacement
NOTE: **Check for damaged taper hole.**		

Wear exceeds manufacturer's specifications	B	Require replacement

INTERMEDIATE SHAFT U-JOINTS

Condition	Code	Procedure
Attaching hardware broken	A	Require repair or replacement of hardware
Attaching hardware missing	C	Require replacement of hardware
Attaching hardware not functioning	A	Require repair or replacement of hardware
Attaching hardware threads damaged	A	Require repair or replacement of hardware
Attaching hardware threads stripped (threads missing)	A	Require replacement of hardware
Flex coupler binding	A	Require repair or replacement of coupler
Flex coupler loose	A	Require repair or replacement of coupler
Flex coupler missing parts	A	Require repair or replacement of coupler
Flex coupler soft/ spongy	A	Require replacement of coupler
Flex coupler tom	A	Require replacement of coupler
Steering coupler shield cracked	2	Suggest replacement
Steering coupler shield missing	C	Require replacement
Steering coupler shield torn	2	Suggest replacement
U-joint binding	A	Require repair or replacement of joint
U-joint loose	A	Require repair or replacement of joint

KING PINS

NOTE: You are not required to replace king pins in axle sets.

However, when replacing a king pin due to wear exceeding manufacturer's specifications, you may suggest replacement of the other king pin on the axle if its measurement shows it is close to the end of its useful life.

Condition	Code	Procedure
Bearing balls pitted	A	Require replacement
Bearing balls worn	A	Require replacement
Bearing races pitted	A	Require replacement
Bearing races worn	A	Require replacement
Bearing rollers pitted	A	Require replacement
Bearing rollers worn	A	Require replacement
Bearing seal bent	2	Suggest replacement of seal or bearing
Bearing seal missing	C	Require replacement of seal if available separately or bearing and seal together
Bearing seal torn	A	Require replacement of seal if available separately or bearing and seal together
Binding	A	Require repair or replacement of affected parts
End caps missing	C	Require replacement of missing part, if available; otherwise, replace king pin
End play exceeds specifications	B	Require repair
Grease fitting broken	A	Require replacement of grease fitting
Grease fitting missing	C	Require replacement of grease fitting
Grease fitting will not seal	A	Require replacement of grease fitting
Locating pins missing	C	Require replacement of missing part, if available; otherwise, replace king pin

Looseness exceeds manufacturer's specifications	B	Require replacement of worn parts
Seized	A	Require replacement
Threads damaged	A	Require repair or replacement
Threads stripped (threads missing)	A	Require replacement
Will not take grease	2	Suggest replacement of grease fitting
NOTE: **If king pin will not take grease after replacement of grease fitting, suggest replacement of king pin.**		

MODULES

Condition	Code	Procedure
Application incorrect	B	Require replacement
Attaching hardware broken	A	Require repair or replacement of hardware
Attaching hardware missing	C	Require replacement of hardware
Attaching hardware not functioning	A	Require repair or replacement of hardware
Attaching hardware threads damaged	A	Require repair or replacement of hardware
Attaching hardware threads stripped (threads missing)	A	Require replacement of hardware
Connector broken	A	Require repair or replacement
Connector melted	A	Require repair or replacement
NOTE: **Determine cause and correct prior to repair or replacement of part.**		
Connector missing	C	Require repair
Contaminated	A	Require repair or replacement
NOTE: **Determine source of contamination, such as engine coolant, fuel, metal particles, or water. Require repair or replacement.**		

Inoperative	A	Require repair or replacement
NOTE: **Inoperative includes intermittent operation. Some components may be serviceable; check for accepted cleaning procedure.**		
Leaking	B	Require repair or replacement
Malfunctioning	A	Require replacement
NOTE: **Includes inoperative, intermittent operation, failure to perform all functions, out of OEM specifications, or out of range.**		
Missing	C	Require replacement
Terminal broken	A	Require repair or replacement
Terminal burned, affecting performance	A	Require repair or replacement
NOTE: **Determine cause and correct prior to repair or replacement of part.**		
Terminal burned, not affecting performance	2	Suggest repair or replacement
Terminal corroded, affecting performance	A	Require repair or replacement
Terminal corroded, not affecting performance	2	Suggest repair or replacement
Terminal loose, affecting performance	B	Require repair or replacement
Terminal loose, not affecting performance	1	Suggest repair or replacement
Threads damaged	A	Require repair or replacement
Threads stripped (threads missing)	A	Require replacement
Wire lead conductors exposed	B	Require repair or replacement
Wire lead corroded	A	Require repair or replacement
Wire lead open	A	Require repair or replacement

Wire lead shorted	A	Require repair or replacement

PITMAN ARMS

Condition	Code	Procedure
Attaching hardware broken	A	Require repair or replacement of hardware
Attaching hardware missing	C	Require replacement of hardware
Attaching hardware not functioning	A	Require repair or replacement of hardware
Attaching hardware threads damaged	A	Require repair or replacement of hardware
Attaching hardware threads stripped (threads missing)	A	Require replacement of hardware
Bent, affecting performance	B	Require replacement
Binding	A	Further inspection required
NOTE: **If greaseable, grease joint. If problem persists or joint is non-greaseable, require replacement.**		
Grease boot cracked	2	Require replacement of boot
NOTE: **If boot is not available as a separate component, suggest replacement of pitman arm (reason code 2). Cracked grease boot will allow contaminants to enter joint and will accelerate wear.**		
Grease boot missing	C	Require replacement of boot
NOTE: **If boot is not available as a separate component, suggest replacement of pitman arm (reason code 2). Lack of grease boot will allow contaminants to enter joint and will accelerate wear.**		
Grease boot torn	A	Require replacement of boot
NOTE: **If boot is not available as a separate component, suggest replacement of pitman arm (reason code 2). Tom grease boot will allow contaminants to enter joint and will accelerate wear.**		
Grease fitting broken	A	Require replacement grease fitting
Grease fitting missing	C	Require replacement of grease fitting
Grease fitting won't seal	A	Require replacement of grease fitting

Grease seal missing	C	Require replacement of seal
NOTE: **If seal is not available as a separate component, suggest replacement of pitman arm (reason code 2). Lack of grease seal will allow contaminants to enter joint and will accelerate wear.**		
Grease seal torn	A	Require replacement of seal
NOTE: **If seal is not available as a separate component, suggest replacement of pitman arm (reason code 2). Tom grease seal will allow contaminants to enter joint and will accelerate wear.**		
Looseness (perceptible horizontal movement)	1	Suggest replacement
NOTE: **If manufacturer's procedures for inspection exist, use those procedures; otherwise, use an approved inspection method such as the dry park check. Do not use pliers or pry bar to check ball and socket movement. Use only moderate hand pressure.**		
Looseness that is excessive	B	Require replacement
NOTE: **Excessive looseness is defined as being significant enough to affect vehicle handling or structural integrity. If manufacturer's procedures for inspection exist, use those procedures; otherwise, use an approved inspection method such as the dry park check.**		
CAUTION: **Do not use pliers or pry bar to check ball and socket movement. Use only moderate hand pressure.**		
Nut on stud loose	A	Require repair or replacement
NOTE: **Check for bent stud or damaged taper hole.**		
Seized	A	Require replacement
Splines damaged	A	Require repair or replacement
Splines stripped (splines missing)	A	Require replacement
Stud bent	B	Require replacement
NOTE: **Check for damaged taper hole.**		
Stud broken	A	Require replacement
NOTE: **Check for damaged taper hole.**		
Stud loose in taper hole	A	Require repair or replacement
NOTE: **Check for damaged taper hole.**		

Taper hole elongated	A	Require replacement
NOTE: **Check for damaged stud.**		
Threads damaged	A	Require repair or replacement
Threads stripped (threads missing)	A	Require replacement
NOTE: **Check for damaged taper hole.**		

POWER STEERING BELTS

Condition	Code	Procedure
Alignment incorrect	B	Further inspection required
NOTE: **Determine cause of incorrect alignment and require repair.**		
Cracked	1	Suggest replacement
Frayed	1	Suggest replacement
Missing	C	Require replacement
Noisy	2	Further inspection required
NOTE: **Determine cause of noise and suggest repair.**		
Plies separated	A	Require replacement
Serpentine belt routed incorrectly	B	Require repair
Tension out of specification	B	Require adjustment or replacement
Worn beyond adjustment range	B	Require replacement
Worn so it contacts bottom of pulley	A	Require replacement

POWER STEERING COOLERS

Condition	Code	Procedure
Air flow obstruction	A	Require repair
Attaching hardware broken	A	Require repair or replacement of hardware
Attaching hardware missing	C	Require replacement of hardware
Attaching hardware not functioning	A	Require repair or

		replacement of hardware
Attaching hardware threads damaged	A	Require repair or replacement of hardware
Attaching hardware threads stripped (threads missing)	A	Require replacement of hardware
Connection leaking	A	Require repair or replacement
Contaminated	A	Require repair or replacement
Corroded	1	Suggest repair or replacement
Fins damaged, affecting performance	A	Require repair or replacement
Fins damaged, not affecting performance		No service suggested or required
Internal restrictions	B	Require repair or replacement
Leaking	B	Require repair or replacement
Threads damaged	A	Require repair or replacement
Threads stripped (threads missing)	A	Require repair or replacement
Tubes damaged, affecting performance	A	Require repair or replacement
Tubes damaged, not affecting performance		No service suggested or required

POWER STEERING FLUID

Condition	Code	Procedure
50,000 miles or greater on OE fluid (in absence of published manufacturer interval)	5	Suggest Replacement
NOTE: **One time only fluid exchange**		
Additive Depletion	A	Require replacement of fluid

Fluid at or beyond service interval	3	Suggest fluid replacement
Fluid contaminated (i.e. fluid other than power steering fluid present)	B	Require flushing and refilling of the system
NOTE: **Determine and correct source of contamination. OEM specifications must be followed for fluid type.**		
Fluid discolored		No Service Suggested or Required
NOTE: **Further testing necessary to determine condition of fluid.**		
Fluid level incorrect	B	Require adjustment of fluid level
Fluid type incorrect	B	Require flushing and refilling with correct fluid
Oxidized	A	Require replacement of fluid

POWER STEERING HOSES

Condition	Code	Procedure
Attaching hardware broken	A	Require repair or replacement of hardware
Attaching hardware missing	C	Require replacement of hardware
Attaching hardware not functioning	A	Require repair or replacement of hardware
Attaching hardware threads damaged	A	Require repair or replacement of hardware
Attaching hardware threads stripped (threads missing)	A	Require replacement of hardware
Blistered	B	Require replacement
Fitting threads damaged	A	Require repair or replacement
Fitting threads stripped (threads missing)	A	Require replacement
Inner fabric (webbing) cut	B	Require replacement
Leaking	A	Require replacement
Missing	C	Require replacement

Outer covering is cracked to the extent that inner fabric of hose is visible	B	Require replacement
Restricted	A	Require replacement
Routed incorrectly (where failure is likely to occur)	B	Require repair or replacement
Secured incorrectly	B	Require repair

POWER STEERING LINES (STEEL)

NOTE: When replacing steel power steering lines, be sure to use a replacement product that meets or exceeds OEM specifications.

Condition	Code	Procedure
Attaching hardware broken	A	Require repair or replacement of hardware
Attaching hardware missing	C	Require replacement of hardware
Attaching hardware not functioning	A	Require repair or replacement of hardware
Attaching hardware threads damaged	A	Require repair or replacement of hardware
Attaching hardware threads stripped (threads missing)	A	Require replacement of hardware
Corroded, affecting structural integrity	A	Require replacement
Fitting incorrect (for example, compression fitting)	B	Require replacement
Flare type incorrect	B	Require repair or replacement
Leaking	A	Require repair or replacement
Line material incorrect (copper, etc.)	B	Require replacement
Restricted	A	Require replacement
Routed incorrectly (where failure is likely to occur)	B	Require repair or replacement
Rust-pitted, not affecting structural	1	Suggest replacement

integrity		
Threads damaged	A	Require repair or replacement
Threads stripped (threads missing)	A	Require replacement

POWER STEERING PUMPS - ELECTRIC

Condition	Code	Procedure
Attaching hardware broken	A	Require repair or replacement of hardware
Attaching hardware missing	C	Require replacement of hardware
Attaching hardware not functioning	A	Require repair or replacement of hardware
Attaching hardware threads damaged	A	Require repair or replacement of hardware
Attaching hardware threads stripped (threads missing)	A	Require replacement of hardware
Binding	A	Require repair or replacement
Connector (Weatherpack type) leaking	A	Require repair or replacement
Connector broken	A	Require repair or replacement
Connector melted	A	Require replacement
NOTE: **Determine cause and correct prior to replacement of part.**		
Connector missing	C	Require replacement
Leaking	B	Require repair or replacement
Noisy	2	Suggest repair or replacement
Pulley bent	A	Require repair or replacement of pulley
Pulley missing	C	Require replacement of pulley
Pump output out of manufacturer's	A	Require repair or

specifications		replacement
Remote reservoir leaking	A	Require replacement of reservoir
Reservoir cap broken	A	Require replacement of cap
Reservoir cap missing	C	Require replacement of cap
Seized	A	Require replacement
Terminal burned, affecting performance	A	Require repair or replacement
NOTE: **Determine cause and correct prior to repair or replacement of part.**		
Terminal burned, not affecting performance	2	Suggest repair or replacement
Terminal corroded, affecting performance	A	Require repair or replacement
Terminal corroded, not affecting performance	2	Suggest repair or replacement
Terminal loose, affecting performance	B	Require repair or replacement
Terminal loose, not affecting performance	1	Suggest repair or replacement
Threads damaged	A	Require repair or replacement
Threads stripped (threads missing)	A	Require replacement
Wire lead burned	A	Require repair or replacement
Wire lead conductors exposed	B	Require repair or replacement
Wire lead open	A	Require repair or replacement
Wire lead shorted	A	Require repair or replacement

POWER STEERING PUMPS

Condition	Code	Procedure
Attaching hardware broken	A	Require repair or replacement of hardware

Attaching hardware broken	A	Require repair or replacement of hardware
Attaching hardware missing	C	Require replacement of hardware
Attaching hardware missing	C	Require replacement of hardware
Attaching hardware not functioning	A	Require repair or replacement of hardware
Attaching hardware not functioning	A	Require repair or replacement of hardware
Attaching hardware threads damaged	A	Require repair or replacement of hardware
Attaching hardware threads damaged	A	Require repair or replacement of hardware
Attaching hardware threads stripped (threads missing)	A	Require replacement of hardware
Attaching hardware threads stripped (threads missing)	A	Require replacement of hardware
Binding	A	Require repair or replacement
Binding	A	Require repair or replacement
Connector (Weatherpack type) leaking	A	Require repair or replacement
Connector broken	A	Require repair or replacement
Connector melted	A	Require replacement
NOTE: **Determine cause and correct prior to replacement of part.**		
Connector missing	C	Require replacement
Fluid at or beyond service interval	3	Suggest fluid change
Fluid contaminated	B	Require flushing and refilling of the system
Fluid level incorrect	B	Require adjustment of fluid level
Leaking	B	Require repair or

		replacement
Leaking	A	Require repair or replacement
Noisy	2	Suggest repair or replacement
Noisy	2	Suggest repair or replacement
Pulley bent	A	Require repair or replacement of pulley
Pulley bent	A	Require repair or replacement of pulley
Pulley missing	C	Require replacement of pulley
Pulley missing	C	Require replacement of pulley
Pump output out of manufacturer's specifications	A	Require repair or replacement
Pump output out of manufacturer's specifications	A	Require repair or replacement
Remote reservoir leaking	A	Require replacement of reservoir
Remote reservoir leaking	A	Require replacement of reservoir
Reservoir cap broken	A	Require replacement of cap
Reservoir cap broken	A	Require replacement of cap
Reservoir cap missing	C	Require replacement of cap
Reservoir cap missing	C	Require replacement of cap
Seized	A	Require replacement
Seized	A	Require replacement
Terminal burned, affecting performance	A	Require repair or replacement
NOTE: **Determine cause and correct prior to repair or replacement of part.**		
Terminal burned, not affecting performance	2	Suggest repair or replacement
Terminal corroded, affecting	A	Require repair or

performance		replacement
Terminal corroded, not affecting performance	2	Suggest repair or replacement
Terminal loose, affecting performance	B	Require repair or replacement
Terminal loose, not affecting performance	1	Suggest repair or replacement
Threads damaged	A	Require repair or replacement
Threads damaged	A	Require repair or replacement
Threads stripped (threads missing)	A	Require replacement
Wire lead burned	A	Require repair or replacement
Wire lead conductors exposed	B	Require repair or replacement
Wire lead open	A	Require repair or replacement
Wire lead shorted	A	Require repair or replacement

RADAR SENSOR

NOTE: OEM may require this sensor be calibrated to the vehicle thrustline.

Condition	Code	Procedure
Attaching hardware broken	A	Require repair or replacement of hardware
Attaching hardware corroded, affecting structural integrity	A	Require replacement of hardware
Attaching hardware missing	C	Require replacement of hardware
Attaching hardware not functioning	A	Require repair or replacement of hardware
Attaching hardware threads damaged	A	Require repair or replacement of hardware

Attaching hardware threads stripped (threads missing)	A	Require replacement of hardware
Connector (Weatherpack type) leaking	A	Require repair or replacement
Connector broken	A	Require repair or replacement
Connector melted	A	Require replacement
Connector missing	C	Require replacement
NOTE: **Determine cause and correct prior to replacement of part.**		
Dust boot missing	C	Require replacement of boot
Dust boot split	A	Require replacement of boot
NOTE: **If boot is not available separately, suggest replacement of sensor (reason code 2). This condition can lead to damage of the sliding magnet, which, in turn, causes premature sensor failure**		
Dust boot torn	A	Require replacement of boot
NOTE: **If boot is not available separately, suggest replacement of sensor (reason code 2). This condition can lead to damage of the sliding magnet, which, in turn, causes premature sensor failure.**		
Housing cracked	B	Require replacement
NOTE: **If boot is not available separately, suggest replacement of sensor (reason code 2). This condition can lead to damage of the sliding magnet, which, in turn, causes premature sensor failure.**		
Lead routing incorrect	B	Require rerouting according to vehicle manufacturer's specifications
Loose	B	Require adjustment to vehicle manufacturer's specifications
Missing	C	Require replacement
Output signal incorrect	B	Require repair or replacement
Terminal burned, affecting performance	A	Require repair or replacement
NOTE: **Determine cause and correct prior to repair or replacement of part.**		
Terminal burned, not affecting performance	2	Suggest repair or replacement

Terminal corroded, affecting performance	A	Require repair or replacement
Terminal corroded, not affecting performance	2	Suggest repair or replacement
Terminal loose, affecting performance	B	Require repair or replacement
Terminal loose, not affecting performance	1	Suggest repair or replacement
Wire lead burned	A	Require repair or replacement
Wire lead conductors exposed	B	Require repair or replacement
Wire lead open	A	Require repair or replacement
Wire lead shorted	A	Require repair or replacement

RADIUS ARMS

Condition	Code	Procedure
Attaching hardware broken	A	Require repair or replacement of hardware
Attaching hardware missing	C	Require replacement of hardware
Attaching hardware not functioning	A	Require repair or replacement of hardware
Attaching hardware threads damaged	A	Require repair or replacement of hardware
Attaching hardware threads stripped (threads missing)	A	Require replacement of hardware
Bent, affecting performance	B	Require replacement
Corroded, affecting structural integrity	a	Require replacement
Holes distorted	A	Require replacement
Threads damaged	A	Require repair or replacement
Threads stripped (threads missing)	A	Require replacement

RELAY RODS

Condition	Code	Procedure
Attaching hardware broken	A	Require repair or replacement of hardware
Attaching hardware missing	C	Require replacement of hardware
Attaching hardware not functioning	A	Require repair or replacement of hardware
Attaching hardware threads damaged	A	Require repair or replacement of hardware
Attaching hardware threads stripped (threads missing)	A	Require replacement of hardware
Bent, affecting performance	B	Require replacement
Binding	A	Further inspection required
NOTE: **If greaseable, grease joint. If problem persists or joint is non-greaseable, require replacement.**		
Grease boot cracked	B	Require replacement of boot
NOTE: **If boot is not available as a separate component, suggest replacement of relay rod (reason code 2). Cracked grease boot will allow contaminants to enter the joint and will accelerate wear.**		
Grease boot missing	C	Require replacement of boot
NOTE: **If boot is not available as a separate component, suggest replacement of relay rod (reason code 2). Lack of grease boot will allow contaminants to enter the joint and will accelerate wear.**		
Grease boot torn	A	Require replacement of boot
NOTE: **If boot is not available as a separate component, suggest replacement of center link (reason code 2). Torn grease boot will allow contaminants to enter the joint and will accelerate wear.**		
Grease fitting broken	A	Require replacement of grease fitting
Grease fitting missing	C	Require replacement of grease fitting
Grease fitting won't seal	A	Require replacement of grease fitting
Grease seal missing	C	Require replacement of seal
NOTE: **If seal is not available as a separate component, suggest replacement of relay rod (reason code 2). Lack of grease seal will allow contaminants to enter the joint and will accelerate wear.**		

Grease seal torn	A	Require replacement of seal
NOTE: **If seal is not available as a separate component, suggest replacement of relay rod (reason code 2). Torn grease seal will allow contaminants to enter the joint and will accelerate wear.**		
Greaseable relay rod will not take grease	2	Suggest replacement of grease fitting
NOTE: **If greaseable relay rod still will not take grease after replacing the grease fitting, suggest replacement of relay rod.**		
Looseness (perceptible horizontal movement)	1	Suggest replacement
NOTE: **If manufacturer's procedures for inspection exist, use those procedures; otherwise, use an approved inspection method such as the dry park check. Do not use pliers or pry bar to check ball and socket movement. Use only moderate hand pressure.**		
Looseness that is excessive	B	Require replacement
NOTE: **Excessive looseness is defined as being significant enough to affect vehicle handling or structural integrity. If manufacturer's procedures for inspection exist, use those procedures; otherwise, use an approved inspection method such as the dry park check.**		
CAUTION: **Do not use pliers or pry bar to check ball and socket movement. Use only moderate hand pressure.**		
Seized	A	Require replacement
Stud bent	B	Require replacement
NOTE: **Check for damaged taper hole.**		
Stud broken	A	Require replacement
NOTE: **Check for damaged taper hole.**		
Stud loose in taper hole	A	Require repair or replacement
NOTE: **Check for damaged taper hole.**		
Taper hole elongated	A	Require replacement
NOTE: **Check for damaged stud.**		
Threads damaged	A	Require repair or replacement
Threads stripped (threads missing)	A	Require replacement

NOTE: **Check for damaged taper hole.**		
Wear exceeds manufacturer's specifications	B	Require replacement

RELAYS

Condition	Code	Procedure
Attaching hardware broken	A	Require repair or replacement of hardware
Attaching hardware missing	C	Require replacement of hardware
Attaching hardware not functioning	A	Require repair or replacement of hardware
Attaching hardware threads damaged	A	Require repair or replacement of hardware
Attaching hardware threads stripped (threads missing)	A	Require replacement of hardware
Housing broken	A	Require replacement
Housing cracked	2	Suggest replacement
Inoperative	A	Require replacement
NOTE: **Inoperative includes intermittent operation.**		
Missing	C	Require replacement
Terminal broken	A	Require repair or replacement
Terminal burned, affecting performance	A	Require repair or replacement
NOTE: **Determine cause and correct prior to repair or replacement of part.**		
Terminal burned, not affecting performance	2	Suggest repair or replacement
Terminal corroded, affecting performance	A	Require repair or replacement
Terminal corroded, not affecting performance	2	Suggest repair or replacement
Terminal loose, affecting performance	B	Require repair or

		replacement
Terminal loose, not affecting performance	1	Suggest repair or replacement

SENSORS

Condition	Code	Procedure
Attaching hardware broken	A	Require repair or replacement of hardware
Attaching hardware missing	C	Require replacement of hardware
Attaching hardware not functioning	A	Require repair or replacement of hardware
Attaching hardware threads damaged	A	Require repair or replacement of hardware
Attaching hardware threads stripped (threads missing)	A	Require replacement of hardware
Connector (Weatherpack type) leaking	A	Require repair or replacement
Connector broken	A	Require repair or replacement
Connector melted	A	Require repair or replacement
NOTE: **Determine cause and correct prior to repair or replacement of part.**		
Connector missing	C	Require replacement
Inoperative	A	Require repair or replacement
NOTE: **Inoperative includes intermittent operation or out of specification.**		
Leaking (vacuum/fluid/air)	A	Require replacement
Out of adjustment	B	Further inspection required
NOTE: **Follow OEM recommended adjustment procedures. Repair or replace if out of specification.**		
Terminal broken	A	Require repair or replacement
Terminal burned, affecting performance	A	Require repair or

		replacement
NOTE: **Determine cause and correct prior to repair or replacement of part.**		
Terminal burned, not affecting performance	2	Suggest repair or replacement
Terminal corroded, affecting performance	A	Require repair or replacement
Terminal corroded, not affecting performance	2	Suggest repair or replacement
Terminal loose, affecting performance	B	Require repair or replacement
Terminal loose, not affecting performance	1	Suggest repair or replacement
Threads damaged	A	Require repair or replacement
Threads stripped (threads missing)	A	Require replacement
Wire lead burned	A	Require repair or replacement
Wire lead conductors exposed	B	Require repair or replacement
Wire lead open	A	Require repair or replacement
Wire lead shorted	A	Require repair or replacement

SHOCK ABSORBERS, STRUT CARTRIDGES AND STRUT ASSEMBLIES

NOTE: You are not required to replace shocks or struts in axle sets. However, when replacing a shock or strut due to the conditions that follow, you may suggest replacement of the other shock or strut on the same axle for one or more of the following: improved performance or preventive maintenance; part is close to the end of its useful life; to extend tire life; to balance ride and handling; or to improve stopping distance. When replacing steering and/or suspension components which may affect an alignment angle, you are required to check and adjust

alignment as needed. Refer to the OEM specifications. Under no circumstances should a technician bend struts or strut housings. A vehicle's load-carrying and handling abilities are limited by its suspension, tires, brakes, and driveline. Installing coil over shocks or any other load assist device does not increase the vehicle's load capacity. See the vehicle owner's manual for more details. If vehicle is equipped with OEM coil over shocks, apply the conditions for coil springs from the Springs: Coil, Leaf, and Torsion Bar section of the Steering and Suspension guidelines. If the vehicle is equipped with add-on coil over shocks, you may suggest replacement with standard shocks for a spring-related condition.

Condition	Code	Procedure
50,000 miles or greater on OEM Shocks or Struts	1	Suggest Replacement
NOTE: **Applies only to OEM hydraulic fluid and/or gas charged shocks and struts, NOT electronically controlled units.**		
Attaching hardware broken	A	Require repair or replacement of hardware
Attaching hardware corroded, affecting structural integrity	A	Require replacement of hardware
Attaching hardware missing	C	Require replacement of hardware
Attaching hardware not functioning	A	Require repair or replacement of hardware
Attaching hardware threads damaged	A	Require repair or replacement of hardware
Attaching hardware threads stripped (threads missing)	A	Require replacement of hardware
Binding	A	Require replacement
Body dented	A	Further inspection required
NOTE: **Require replacement of units where dents restrict shock or strut piston rod movement. If dents don't restrict movement, no service is suggested or required. Especially critical on mono-tube shocks.**		

Body punctured	A	Require replacement
Brake hose bracket bent	B	Require repair or replacement
Brake hose bracket missing	C	Require replacement
Brake hose bracket threads damaged	A	Require repair or replacement
Brake hose bracket threads stripped (threads missing)	C	Require replacement
Compression bumper missing	C	Require replacement of compression bumper
Compression bumper split	1	Suggest replacement of compression bumper
Damping (none)	A	Require replacement
Dust boot (bellows) missing	C	Require replacement of boot
NOTE: **If boot is not available as a separate component, suggest replacement of shock or strut (reason code 2). This condition can lead to damage of the piston rod, which causes piston rod seal wear.**		
Dust boot (bellows) split	A	Require replacement of boot
NOTE: **If boot is not available as a separate component, suggest replacement of shock or strut (reason code 2). This condition can lead to damage of the piston rod, which, in turn, causes premature piston rod seal wear.**		
Dust boot (bellows) torn	A	Require replacement of boot
NOTE: **If boot is not available as a separate component, suggest replacement of shock or strut (reason code 2). This condition can lead to damage of the piston rod, which, in turn, causes premature piston rod seal wear.**		
Dust shield broken	2	Suggest replacement
NOTE: **This condition can lead to damage of the piston rod, which, in turn, causes premature piston rod seal wear.**		
Dust shield missing	2	Suggest replacement
NOTE: **This condition can lead to damage of the piston rod, which, in turn, causes premature piston rod seal wear.**		
Gland nut (strut housing cap) is not removable using appropriate tool	A	Require replacement of nut and/or housing
NOTE: **Only required if replacing cartridge.**		
Gland nut (strut housing cap) threads	A	Require repair or

damaged		replacement of nut
Housing dented	A	Further inspection required
NOTE: **Require replacement of units where dents restrict shock or strut piston rod movement. If dents don't restrict movement, no service is suggested or required. Especially critical on mono-tube shocks.**		
Housing punctured	A	Require replacement
Jounce bumper missing	C	Require replacement of jounce bumper
Jounce bumper split	1	Suggest replacement of jounce bumper
Leaking oil, enough for fluid to be running down the body	A	Require replacement
NOTE: **If the strut cartridge has been replaced previously, the oil on the strut housing may be filler oil. The technician must identify the source of the oil.**		
Noisy	2	Further inspection required
NOTE: **If noise is isolated to shock or strut, suggest replacement.**		
Piston rod bent	A	Require replacement
Piston rod broken	A	Require replacement
Piston rod has surface defect	2	Suggest replacement
Piston rod threads damaged	A	Require repair or replacement
Piston rod threads stripped (threads missing)	A	Require replacement
Seized	A	Require replacement
Shock missing	C	Require replacement
Strut housing bent	A	Require replacement
Strut housing cap (gland nut) is not removable using appropriate tool	A	Require replacement of nut and/or housing
NOTE: **Only required if replacing cartridge.**		
Strut housing cap (gland nut) threads damaged	A	Require repair or replacement of nut
Strut housing cap (gland nut) threads stripped (threads missing)	A	Require replacement of nut

Strut housing severely corroded, affecting structural integrity	A	Require replacement
Strut housing threads damaged	A	Require repair or replacement
Strut housing threads stripped (threads missing)	A	Require replacement
Tire cupping	A	Further inspection required
NOTE: **Although shocks or struts may have contributed to tire cupping, an inspection is needed of the entire suspension system. If the shock or strut is found to be contributing to the tire cupping, require replacement.**		

SPINDLES

Condition	Code	Procedure
Attaching hardware broken	A	Require repair or replacement of hardware
Attaching hardware missing	C	Require replacement of hardware
Attaching hardware not functioning	A	Require repair or replacement of hardware
Attaching hardware threads damaged	A	Require repair or replacement of hardware
Attaching hardware threads stripped (threads missing)	A	Require replacement of hardware
Bent	B	Require replacement
Broken	A	Require replacement
Pinch bolt bent	B	Require replacement
Pinch bolt incorrect	B	Require replacement with bolt that meets OEM design
Pinch bolt loose	B	Require repair
Pinch bolt missing	C	Require replacement
Pinch bolt tabs deformed (gap closer together than allowed by OEM specification, typically minimum .032"" gap before clamping)	B	Require replacement
NOTE: **Steering knuckle deformation can cause pinch bolt breakage.**		

Race seat area undersized	B	Require replacement
Scored	A	Require repair or replacement
Taper hole elongated	A	Require replacement
NOTE: **Check for damaged stud.**		
Threads damaged	A	Require repair or replacement
Threads stripped (threads missing)	A	Require replacement

SPRINGS, COIL, LEAF AND TORSION BARS

NOTE: When springs are replaced, it is suggested, but not required, that both springs on an axle be replaced to maintain equal height from side to side and to provide a balanced ride and proper handling. When variable rate springs are installed in place of conventional coil springs, they must be installed in axle sets to ensure proper handling, uniform ride, and proper chassis height. Erroneous height measurements may result from: improper tire inflation, non-standard tire or wheel size, and heavy load in vehicle or trunk.

Condition	Code	Procedure
Attaching hardware broken	A	Require repair or replacement of hardware
Attaching hardware corroded, affecting structural integrity	A	Require replacement of hardware
Attaching hardware missing	C	Require replacement of hardware
Attaching hardware not functioning	A	Require repair or replacement of hardware
Attaching hardware threads damaged	A	Require repair or replacement of hardware
Attaching hardware threads stripped (threads missing)	A	Require replacement of hardware
Broken (all springs except secondary	A	Require replacement

leave(s) on multi-leaf springs)		
Coil clash		Further inspection required
NOTE: **Require ride height check and inspection of strike out Jounce) bumper. If vehicle is within manufacturer's height specifications, no service is suggested or required.**		
Coil spring insulator deteriorated	2	Suggest replacement of insulator
Coil spring insulator missing	C	Require replacement of insulator
Coil spring insulator split	2	Suggest replacement of insulator
Coil spring plastic coating deteriorated - rust present	A	Refer to manufacturer's service requirements
NOTE: **Some manufacturers require replacement under these conditions.**		
Composite spring damaged		Further inspection required
NOTE: **Check vehicle ride height. If ride height is OK, no service is suggested or required.**		
Cracked (all springs except composite leaf and secondary leave(s) on multileaf springs)	A	Require replacement
Installed incorrectly	B	Require repair
Leaf spring insulators missing	C	Require replacement of insulators
Secondary leaf on multi-leaf spring broken	1	Suggest repair or replacement
Secondary leaf on multi-leaf spring cracked	1	Suggest repair or replacement
Torsion bar adjuster bent	A	Require repair or replacement of adjuster
NOTE: **Only required if ride height needs to be adjusted.**		
Torsion bar adjuster seized	A	Require repair or replacement of adjuster
NOTE: **Only required if ride height needs to be adjusted.**		
Torsion bar adjuster threads damaged	A	Require repair or

		replacement of part with damaged threads
NOTE: **Only required if ride height needs to be adjusted.**		
Torsion bar adjuster threads stripped (threads missing)	A	Require replacement of part with stripped threads
Vehicle suspension height not within OEM specifications	A	Require adjustment or replacement

STABILITRAC

NOTE: An evolution of ABS and Traction Control. It uses the ABS hardware and two additional sensors: a steering-wheel angle sensor, which measures the position and rate of steering wheel input, and a yaw sensor, which measures the rate at which the vehicle is actually turning. By comparing rates, computer determines if the vehicle is oversteering or understeering.

NOTE: On slippery surfaces or during aggressive maneuvers, if the vehicle understeers severely, the computer will actuate the brakes on the inside rear wheel, just hard enough and just long enough to correct the steering behavior. When the vehicle oversteers severely, the system will brake the outside front wheel instead.

NOTE: When servicing this system, OEM may require steering angle sensor be calibrated to the vehicle thrustline.

STABILITY MANAGEMENT SYSTEM

NOTE: An evolution of ABS and Traction Control. It uses the ABS hardware and two additional sensors: a steering-wheel angle sensor, which measures the position and rate of steering wheel input, and a yaw sensor, which measures the rate at which the vehicle is actually turning. By comparing rates, computer determines if the vehicle is oversteering or understeering.

NOTE: On slippery surfaces or during aggressive maneuvers, if the vehicle understeers severely, the computer will actuate the brakes on the inside rear wheel, just hard enough and just long enough to correct the steering behavior. When the vehicle oversteers severely, the system will brake the outside front wheel instead.

NOTE: When servicing this system, OEM may require steering angle sensor be calibrated to the vehicle thrustline.

STEERING ANGLE SENSOR

NOTE: OEM may require this sensor be calibrated to the vehicle thrustline. Sensor must be reset when replacing / servicing steering rack assembly.

Condition	Code	Procedure
Attaching hardware broken	A	Require repair or replacement of hardware
Attaching hardware corroded, affecting structural integrity	A	Require replacement of hardware
Attaching hardware missing	C	Require replacement of hardware
Attaching hardware not functioning	A	Require repair or replacement of hardware
Attaching hardware threads damaged	A	Require repair or replacement of hardware
Attaching hardware threads stripped (threads missing)	A	Require replacement of hardware
Connector (Weatherpack type) leaking	A	Require repair or replacement
Connector broken	A	Require repair or replacement
Connector melted	A	Require replacement
Connector missing	C	Require replacement
NOTE: **Determine cause and correct prior to replacement of part.**		

Dust boot missing	C	Require replacement of boot
Dust boot split	A	Require replacement of boot
NOTE: **If boot is not available separately, suggest replacement of sensor (reason code 2). This condition can lead to damage of the sliding magnet, which, in turn, causes premature sensor failure**		
Dust boot torn	A	Require replacement of boot
NOTE: **If boot is not available separately, suggest replacement of sensor (reason code 2). This condition can lead to damage of the sliding magnet, which, in turn, causes premature sensor failure.**		
Housing cracked	B	Require replacement
NOTE: **If boot is not available separately, suggest replacement of sensor (reason code 2). This condition can lead to damage of the sliding magnet, which, in turn, causes premature sensor failure.**		
Lead routing incorrect	B	Require rerouting according to vehicle manufacturer's specifications
Loose	B	Require adjustment to vehicle manufacturer's specifications
Missing	C	Require replacement
Output signal incorrect	B	Require repair or replacement
Terminal burned, affecting performance	A	Require repair or replacement
NOTE: **Determine cause and correct prior to repair or replacement of part.**		
Terminal burned, not affecting performance	2	Suggest repair or replacement
Terminal corroded, affecting performance	A	Require repair or replacement
Terminal corroded, not affecting performance	2	Suggest repair or replacement
Terminal loose, affecting performance	B	Require repair or replacement
Terminal loose, not affecting performance	1	Suggest repair or replacement
Wire lead burned	A	Require repair or replacement

Wire lead conductors exposed	B	Require repair or replacement
Wire lead open	A	Require repair or replacement
Wire lead shorted	A	Require repair or replacement

STEERING ARMS

Condition	Code	Procedure
Attaching hardware broken	A	Require repair or replacement of hardware
Attaching hardware missing	C	Require replacement of hardware
Attaching hardware not functioning	A	Require repair or replacement of hardware
Attaching hardware threads damaged	A	Require repair or replacement of hardware
Attaching hardware threads stripped (threads missing)	A	Require replacement of hardware
Bent	B	Require replacement
Broken	A	Require replacement
Pinch bolt bent	B	Require replacement
Pinch bolt incorrect	B	Require replacement with bolt that meets OEM design
Pinch bolt loose	B	Require repair
Pinch bolt missing	C	Require replacement
Pinch bolt tabs deformed (gap closer together than allowed by OEM specification, typically minimum .032"" gap before clamping)	B	Require replacement
NOTE: **Steering knuckle deformation can cause pinch bolt breakage.**		
Race seat area undersized	B	Require replacement
Scored	A	Require repair or replacement
Taper hole elongated	A	Require replacement

NOTE: **Check for damaged stud.**		
Threads damaged	A	Require repair or replacement
Threads stripped (threads missing)	A	Require replacement

STEERING COUPLERS

Condition	Code	Procedure
Attaching hardware broken	A	Require repair or replacement of hardware
Attaching hardware missing	C	Require replacement of hardware
Attaching hardware not functioning	A	Require repair or replacement of hardware
Attaching hardware threads damaged	A	Require repair or replacement of hardware
Attaching hardware threads stripped (threads missing)	A	Require replacement of hardware
Flex coupler binding	A	Require repair or replacement of coupler
Flex coupler loose	A	Require repair or replacement of coupler
Flex coupler missing parts	A	Require repair or replacement of coupler
Flex coupler soft/ spongy	A	Require replacement of coupler
Flex coupler tom	A	Require replacement of coupler
Steering coupler shield cracked	2	Suggest replacement
Steering coupler shield missing	C	Require replacement
Steering coupler shield torn	2	Suggest replacement
U-joint binding	A	Require repair or replacement of joint
U-joint loose	A	Require repair or replacement of joint

STEERING DAMPERS

NOTE: The following procedures are only required if the vehicle was originally equipped from the factory with a steering damper. If the steering damper is an add-on unit, then the unit may be removed (and not replaced), based on customer's informed decision.

Condition	Code	Procedure
Attaching hardware broken	A	Require repair or replacement of hardware
Attaching hardware corroded, affecting structural integrity	A	Require replacement of hardware
Attaching hardware missing	C	Require replacement of hardware
Attaching hardware not functioning	A	Require repair or replacement of hardware
Attaching hardware threads damaged	A	Require repair or replacement of hardware
Attaching hardware threads stripped (threads missing)	A	Require replacement of hardware
Binding	A	Require replacement
Damper body dented	A	Further inspection required
NOTE: **Require replacement of units where dents restrict damper piston rod movement. If dents don't restrict movement, no service is suggested or required. Especially critical on mono-tube dampers.**		
Damper body punctured	A	Require replacement
Damping (none)	A	Require replacement
Dust boot (bellows) missing	C	Require replacement of boot
NOTE: **If boot is not available separately, suggest replacement of steering damper (reason code 2). This condition can lead to damage of the piston rod, which, in turn, causes premature piston rod seal wear.**		
Dust boot (bellows) split	A	Require replacement of boot
NOTE: **If boot is not available separately, suggest replacement of steering damper (reason code 2). This condition can lead to damage of the piston rod, which, in turn, causes premature piston rod seal wear.**		

Dust shield broken	2	Suggest replacement
NOTE: **This condition can lead to damage of the piston rod, which, in turn, causes premature piston rod seal wear.**		
Dust shield missing	2	Suggest replacement
NOTE: **This condition can lead to damage of the piston rod, which, in turn, causes premature piston rod seal wear.**		
Leaking oil, enough for fluid to be running down the body	A	Require replacement
Loose	A	Require repair or replacement
Missing	C	Require replacement
Noise	2	Further inspection required
NOTE: **If noise is isolated to damper, suggest replacement.**		
Piston rod bent	A	Require replacement
Piston rod broken	A	Require replacement
Piston rod has surface defect	2	Suggest replacement
Piston rod threads damaged	A	Require repair or replacement
Piston rod threads stripped (threads missing), affecting performance	A	Require replacement
NOTE: **Only required if condition affects structural integrity or if unit needs to be serviced.**		
Seized	A	Require replacement

STEERING GEARS (EXCEPT RACK AND PINION)

Condition	Code	Procedure
Attaching hardware broken	A	Require repair or replacement of hardware
Attaching hardware missing	C	Require replacement of hardware
Attaching hardware not functioning	A	Require repair or replacement of hardware
Attaching hardware threads damaged	A	Require repair or replacement of hardware

Attaching hardware threads stripped (threads missing)	A	Require replacement of hardware
Binding	A	Require repair or replacement
Connector (Weatherpack type) leaking	A	Require repair or replacement
Connector broken	A	Require repair or replacement
Connector melted	A	Require replacement
NOTE: **Determine cause and correct prior to replacement of part.**		
Fluid contaminated	B	Require flushing and refilling of the system
NOTE: **Determine and correct source of contamination. OEM specifications must be followed for fluid type.**		
Gasket leaking	A	Require repair or replacement of gasket
Housing leaking	A	Require replacement
Hydraulic fittings leaking	A	Require repair or replacement of fittings
Inadequate power assist	A	Further inspection required
NOTE: **If steering gear is source of inadequate assist, require repair or replacement.**		
Lash exceeds manufacturer's specifications	B	Require repair or replacement
Malfunctioning	A	Require repair or replacement
NOTE: **Includes inoperative, intermittent operation, failure to perform all functions, out of OEM specification, or out of range.**		
Seal leaking	A	Require repair or replacement of seal and / or mating part
Splines damaged	A	Require repair or replacement of splines
Splines stripped	A	Require replacement of splines

Steering coupler shield cracked	2	Suggest replacement
Steering coupler shield missing	C	Require replacement
Terminal burned, affecting performance	A	Require repair or replacement
NOTE: **Determine cause and correct prior to repair or replacement of part.**		
Terminal burned, not affecting performance	2	Suggest repair or replacement
Terminal corroded, affecting performance	A	Require repair or replacement
Terminal corroded, not affecting performance	2	Suggest repair or replacement
Terminal loose, affecting performance	B	Require repair or replacement
Terminal loose, not affecting performance	1	Suggest repair or replacement
Threads damaged	A	Require repair or replacement of part with damaged threads
Threads stripped (threads missing)	A	Require replacement of part with stripped threads
Unequal power assist	A	Require repair or replacement
Wire lead burned	A	Require repair or replacement
Wire lead conductors exposed	B	Require repair or replacement
Wire lead open	A	Require repair or replacement
Wire lead shorted	A	Require repair or replacement

STEERING GEARS, RACK AND PINION

Condition	Code	Procedure
Attaching hardware broken	A	Require repair or replacement of hardware

Attaching hardware missing	C	Require replacement of hardware
Attaching hardware not functioning	A	Require repair or replacement of hardware
Attaching hardware threads damaged	A	Require repair or replacement of hardware
Attaching hardware threads stripped (threads missing)	A	Require replacement of hardware
Balance tube blocked	A	Require repair or replacement of balance tube
Balance tube missing	C	Require replacement of balance tube
Balance tube restricted	A	Require repair or replacement of balance tube
Bellows boot clamp missing	C	Require replacement of clamp
Bellows boot cracked (not through)	2	Suggest replacement of bellows boot
Bellows boot missing	C	Require replacement of bellows boot
Bellows boot not sealing	A	Require repair or replacement of bellows boot
Bellows boot torn	A	Require replacement of bellows boot
Bellows boot twisted (from toe adjustment)	B	Require repair
Connector (Weatherpack type) leaking	A	Require repair or replacement
Connector broken	A	Require repair or replacement
Connector melted	A	Require replacement
NOTE: **Determine cause and correct prior to replacement of part.**		
Connector missing	C	Require replacement
Fitting leaking	A	Require repair or replacement

Fitting missing	A	Require replacement of fitting
Fitting threads damaged	A	Require repair or replacement of part with damaged threads
Fitting threads stripped (threads missing)	A	Require replacement of part with stripped threads
Fluid contaminated	B	Require flushing and refilling of the system
NOTE: **Determine and correct source of contamination. OEM specifications must be followed for fluid type.**		
Gasket leaking	A	Require repair or replacement
Housing cracked, affecting structural integrity	B	Require replacement
Housing leaking	A	Require replacement
Inadequate power assist	A	Further inspection required
NOTE: **If steering gear is source of inadequate assist, require repair or replacement.**		
Lash exceeds manufacturer's specifications	B	Require repair or replacement
Malfunctioning	A	Require repair or replacement
NOTE: **Includes inoperative, intermittent operation, failure to perform all functions, out of OEM specification, or out of range.**		
Seal leaking	A	Require repair or replacement
Splines damaged	A	Require repair or replacement
Splines stripped (splines missing)	A	Require replacement
Steel line blocked	A	Require repair or replacement of line
Steel line leaking	A	Require repair or replacement of line
Steel line missing	C	Require replacement of line

Steel line restricted	A	Require repair or replacement of line
Terminal burned, affecting performance	A	Require repair or replacement
NOTE: **Determine cause and correct prior to repair or replacement of part.**		
Terminal burned, not affecting performance	2	Suggest repair or replacement
Terminal corroded, affecting performance	A	Require repair or replacement
Terminal corroded, not affecting performance	2	Suggest repair or replacement
Terminal loose, affecting performance	B	Require repair or replacement
Terminal loose, not affecting performance	1	Suggest repair or replacement
Threads damaged	A	Require repair or replacement of part with damaged threads
Threads stripped (threads missing)	A	Require replacement of part with stripped threads
Unequal power assist	A	Require repair or replacement
Wire lead burned	A	Require repair or replacement
Wire lead conductors exposed	B	Require repair or replacement
Wire lead open	A	Require repair or replacement
Wire lead shorted	A	Require repair or replacement

STEERING KNUCKLES

Condition	Code	Procedure
Attaching hardware broken	A	Require repair or replacement of hardware

Attaching hardware missing	C	Require replacement of hardware
Attaching hardware not functioning	A	Require repair or replacement of hardware
Attaching hardware threads damaged	A	Require repair or replacement of hardware
Attaching hardware threads stripped (threads missing)	A	Require replacement of hardware
Bent	B	Require replacement
Broken	A	Require replacement
Pinch bolt bent	B	Require replacement
Pinch bolt incorrect	B	Require replacement with bolt that meets OEM design
Pinch bolt loose	B	Require repair
Pinch bolt missing	C	Require replacement
Pinch bolt tabs deformed (gap closer together than allowed by OEM specification, typically minimum .032"" gap before clamping)	B	Require replacement
NOTE: **Steering knuckle deformation can cause pinch bolt breakage.**		
Race seat area undersized	B	Require replacement
Scored	A	Require repair or replacement
Taper hole elongated	A	Require replacement
NOTE: **Check for damaged stud.**		
Threads damaged	A	Require repair or replacement
Threads stripped (threads missing)	A	Require replacement

STRIKE OUT BUMPERS

Condition	Code	Procedure
Attaching hardware broken	A	Require repair or replacement of hardware
Attaching hardware corroded, affecting	A	Require replacement of

structural integrity		hardware
Attaching hardware missing	C	Require replacement of hardware
Attaching hardware not functioning	A	Require repair or replacement of hardware
Attaching hardware threads damaged	A	Require repair or replacement of hardware
Attaching hardware threads stripped (threads missing)	A	Require replacement of hardware
Missing	C	Require replacement
Split	A	Suggest replacement

STRUT BEARING PLATE ASSEMBLIES

NOTE: When the following guidelines indicate replacement of bearing, only the bearing should be replaced if it is available separately; otherwise, replace the bearing plate assembly.

Condition	Code	Procedure
Attaching hardware broken	A	Require repair or replacement of hardware
Attaching hardware missing	C	Require replacement of hardware
Attaching hardware not functioning	A	Require repair or replacement of hardware
Attaching hardware threads damaged	A	Require repair or replacement of hardware
Attaching hardware threads stripped (threads missing)	A	Require replacement of hardware
Axial or radial movement exceeds vehicle manufacturer's specifications	B	Require replacement
Bearing binding	A	Require replacement of bearing
Bearing missing	C	Require replacement of bearing
Bearing seized	A	Require replacement of

		bearing
Bent, affecting performance	B	Require replacement
Corroded, affecting structural integrity	A	Require replacement
Holes distorted	A	Require replacement
Missing	C	Require replacement
Threads damaged	A	Require repair or replacement
Threads stripped (threads missing)	A	Require replacement

STRUT RODS

Condition	Code	Procedure
Adjusting nut seized	A	Require repair or replacement of hardware
NOTE: **Only required if an alignment is being performed and adjustment of the strut in question is required.**		
Attaching (mating) hole oversized	A	Require repair or replacement of bracket or frame
Attaching hardware broken	A	Require repair or replacement of hardware
Attaching hardware missing	C	Require replacement of hardware
Attaching hardware not functioning	A	Require repair or replacement of hardware
Attaching hardware threads damaged	A	Require repair or replacement of hardware
Attaching hardware threads stripped (threads missing)	A	Require replacement of hardware
Attaching point on bracket or frame corroded, affecting structural integrity	A	Require repair of bracket or frame
Bent, affecting performance	A	Require replacement
Mating (attaching) hole oversized	A	Require repair or replacement of bracket or frame
Threads damaged	A	Require repair or

		replacement
Threads stripped (threads missing)	A	Require replacement

SUSPENSION PUMPS (HYDRAULIC)

Condition	Code	Procedure
Attaching hardware broken	A	Require repair or replacement of hardware
Attaching hardware missing	C	Require replacement of hardware
Attaching hardware not functioning	A	Require repair or replacement of hardware
Attaching hardware threads damaged	A	Require repair or replacement of hardware
Attaching hardware threads stripped (threads missing)	A	Require replacement of hardware
Binding	A	Require repair or replacement
Fluid at or beyond service interval	3	Suggest fluid change
Fluid contaminated	B	Require flushing and refilling of the system
NOTE: **Determine and correct source of contamination. OEM specifications must be followed for fluid type.**		
Fluid level incorrect	B	Require adjustment of fluid level
Leaking	B	Require repair or replacement
Noisy	2	Suggest repair or replacement
Pulley bent	A	Require repair or replacement of pulley
Pulley missing	C	Require replacement of pulley
Pump output out of manufacturer's specifications	A	Require repair or replacement
Remote reservoir leaking	A	Require replacement of

		reservoir
Reservoir cap broken	A	Require replacement of cap
Reservoir cap missing	C	Require replacement of cap
Seized	A	Require replacement
Threads damaged	A	Require repair or replacement
Threads stripped (threads missing)	A	Require replacement

SWAY BAR LINKS

Condition	Code	Procedure
Attaching (mating) hole distorted	A	Require repair or replacement of bracket or control arm
Attaching hardware broken	A	Require repair or replacement of hardware
Attaching hardware missing	C	Require replacement of hardware
Attaching hardware not functioning	A	Require repair or replacement of hardware
Attaching hardware threads damaged	A	Require repair or replacement of hardware
Attaching hardware threads stripped (threads missing)	A	Require replacement of hardware
Ball and socket has looseness (perceptible vertical movement)	1	Suggest replacement
NOTE: **If manufacturer's procedures for inspection exist, use those procedures; otherwise, use an approved inspection method. Do not use pliers or pry bar to check ball and socket movement. Use only moderate hand pressure.**		
Ball and socket has looseness that is excessive	B	Require replacement
NOTE: **Excessive looseness is defined as being significant enough to affect vehicle handling or structural integrity. If manufacturer's procedures for inspection exist, use those procedures; otherwise, use an approved inspection method.**		
CAUTION: **Do not use pliers or pry bar to check ball and socket movement. Use only moderate hand**		

pressure.		
Bent	B	Require replacement
Broken	A	Require replacement
Bushing cracked	A	Require replacement
Bushing deteriorated, affecting performance	A	Require repair or replacement
NOTE: **If condition is caused by oil-soaking, further inspection is required to determine source of oil.**		
Bushing distorted, affecting performance	A	Require repair or replacement
Bushing missing	C	Require replacement
Bushing oil-soaked, affecting performance	A	Require replacement
NOTE: **Further inspection required to determine source of oil.**		
Bushing shows surface cracking (weather-checked)		No service suggested or required
Bushing split	A	Require replacement
Corroded, affecting structural integrity	A	Require replacement
Grease boot cracked	2	Suggest replacement
NOTE: **Cracked grease boot will allow contaminants to enter the joint and will accelerate wear .**		
Grease boot missing	C	Require replacement of boot
NOTE: **If boot is not available separately, suggest replacement of sway bar link (reason code 2). Lack of grease boot will allow contaminants to enter the joint and will accelerate wear.**		
Grease boot torn	A	Require replacement of boot
NOTE: **If boot is not available separately, suggest replacement of sway bar link (reason code 2). Lack of grease boot will allow contaminants to enter the joint and will accelerate wear.**		
Mating (attaching) hole distorted	A	Require repair or replacement of bracket or control arm
Missing	C	Require replacement
Nut on stud loose	A	Require repair
NOTE:		

Check for bent stud or damaged mating hole.		
Stud bent	B	Require replacement
NOTE: **Check for damaged mating hole.**		
Stud broken	A	Require replacement
NOTE: **Check for damaged mating hole.**		
Threads damaged	A	Require repair or replacement
Threads stripped (threads missing)	A	Require replacement
NOTE: **Check for damaged mating hole.**		

SWAY BAR MOUNTING BUSHINGS

Condition	Code	Procedure
Attaching hardware broken	A	Require repair or replacement of hardware
Attaching hardware missing	C	Require replacement of hardware
Attaching hardware not functioning	A	Require repair or replacement of hardware
Attaching hardware threads damaged	A	Require repair or replacement of hardware
Attaching hardware threads stripped (threads missing)	A	Require replacement of hardware
Binding	A	Require repair or replacement
Deteriorated, affecting performance	A	Require repair or replacement
NOTE: **If condition is caused by oil-soaking, further inspection is required to determine source of oil.**		
Distorted, affecting performance	A	Require repair or replacement
Leaking (fluid-filled type)	A	Require replacement
Missing	C	Require replacement
Noisy	2	Further inspection required

NOTE: **If noise isolated to bushing, suggest repair or replacement. Use only approved lubricant on rubber bushings. Petroleum-based lubricants may damage rubber bushings.**		
Oil-soaked, affecting performance	A	Require replacement
NOTE: **Further inspection required to determine source of oil.**		
Rubber separating from internal metal sleeve on bonded bushing	A	Require replacement
Seized	A	Require replacement
Shifted (out of position)	B	Require repair or replacement
Split	A	Require replacement
Surface cracking (weather-checked)		No service suggested or required

SWAY BARS

Condition	Code	Procedure
Attaching hardware broken	A	Require repair or replacement of hardware
Attaching hardware corroded, affecting structural integrity	A	Require replacement of hardware
Attaching hardware missing	C	Require replacement of hardware
Attaching hardware not functioning	A	Require repair or replacement of hardware
Attaching hardware threads damaged	A	Require repair or replacement of hardware
Attaching hardware threads stripped (threads missing)	A	Require replacement of hardware
Bent	B	Require replacement
Broken	A	Require replacement
Sway bar corroded at point of attachment to frame bushing	A	Require repair or replacement
Threads damaged	A	Require repair or replacement
Threads stripped (threads missing)	A	Require replacement

SWITCHES

Condition	Code	Procedure
Attaching hardware broken	A	Require repair or replacement of hardware
Attaching hardware missing	C	Require replacement of hardware
Attaching hardware not functioning	A	Require repair or replacement of hardware
Binding, affecting performance	A	Require repair or replacement
Binding, not affecting performance	2	Suggest repair or replacement
Broken	A	Require repair or replacement
Burned, affecting performance	2	Suggest repair or replacement
NOTE: **Determine cause and correct prior to repair or replacement of part.**		
Burned, not affecting performance	1	Determine cause and correct prior to repair or replacement of part
Cracked, affecting performance	A	Require repair or replacement
Cracked, not affecting performance	1	Suggest repair or replacement
Leaking	B	Require repair or replacement
Malfunctioning	A	Require repair or replacement
NOTE: **Includes inoperative, intermittent operation, or failure to perform all functions.**		
Melted, affecting performance	A	Require repair or replacement
NOTE: **Determine cause and correct prior to repair or replacement of part.**		
Melted, not affecting performance	2	Determine cause and correct

		prior to repair or replacement of part
Missing	C	Require replacement
Out of adjustment	B	Require repair or replacement
Terminal broken	A	Require repair or replacement
Terminal burned, affecting performance	A	Require repair or replacement
Terminal burned, not affecting performance	2	Suggest repair or replacement
Terminal corroded, affecting performance	A	Require repair or replacement
Terminal corroded, not affecting performance	2	Suggest repair or replacement
Terminal loose, affecting performance	B	Require repair or replacement
Terminal loose, not affecting performance	1	Suggest repair or replacement
Won't return	A	Require repair or replacement
Worn	1	Suggest replacement

TIE ROD ENDS (INNER AND OUTER)

Condition	Code	Procedure
Adjusting sleeve bent	B	Require replacement of sleeve
Adjusting sleeve clamps out of position	B	Require repair
Adjusting sleeve corroded, affecting structural integrity	A	Require replacement of sleeve
Adjusting sleeve missing	C	Require replacement of sleeve
Adjusting sleeve seized	A	Require repair or replacement
NOTE: **Only required if toe needs to be adjusted.**		

Adjusting sleeve threads damaged	A	Require repair or replacement of sleeve
Adjusting sleeve threads stripped (threads missing)	A	Require replacement of sleeve
Attaching hardware broken	A	Require repair or replacement of hardware
Attaching hardware missing	C	Require replacement of hardware
Attaching hardware not functioning	A	Require repair or replacement of hardware
Attaching hardware threads damaged	A	Require repair or replacement of hardware
Attaching hardware threads stripped (threads missing)	A	Require replacement of hardware
Bent	A	Require replacement
Binding	A	Further inspection required
NOTE: **If greaseable, grease joint. If problem persists or joint is non-greaseable, require replacement.**		
Grease boot cracked	2	Suggest replacement of boot
NOTE: **If boot is not available separately, suggest replacement of tie rod end (reason code 2). Cracked grease boot will allow contaminants to enter joint and will accelerate wear.**		
Grease boot missing	C	Require replacement of boot
NOTE: **If boot is not available separately, suggest replacement of tie rod end (reason code 2). Lack of grease boot will allow contaminants to enter joint and will accelerate wear.**		
Grease boot torn	A	Require replacement of boot
NOTE: **If boot is not available separately, suggest replacement of tie rod end (reason code 2). Torn grease boot will allow contaminants to enter joint and will accelerate wear.**		
Grease fitting broken	A	Require replacement of grease fitting
Grease fitting missing	C	Require replacement of grease fitting
Grease fitting won't seal	A	Require replacement of grease fitting
Grease seal missing	C	Require replacement of seal
NOTE:		

If seal is not available separately, suggest replacement of tie rod end (reason code 2). Lack of grease seal will allow contaminants to enter joint and will accelerate wear.		
Grease seal torn	A	Require replacement of seal
NOTE: **If seal is not available separately, suggest replacement of tie rod end (reason code 2), wear. Torn grease seal will allow contaminants to enter joint and will accelerate wear.**		
Greaseable tie rod end won't take grease	2	Suggest replacement of grease fitting
NOTE: **If greaseable tie rod end will not take grease after replacing the grease fitting, suggest replacement of tie rod end.**		
Looseness (perceptible horizontal movement)	1	Suggest replacement
NOTE: **If manufacturer's procedures for inspection exist, use those procedures; otherwise, use an approved inspection method such as the dry park check. Do not use pliers or pry bar to check ball and socket movement. Use only moderate hand pressure.**		
Looseness exceeds manufacturer's specifications	B	Require replacement
Looseness that is excessive	B	Require replacement
NOTE: **Excessive looseness is defined as being significant enough to affect vehicle handling or structural integrity. If manufacturer's procedures for inspection exist, use those procedures; otherwise, use an approved inspection method such as the dry park check.**		
CAUTION: **Do not use pliers or pry bar to check ball and socket movement. Use only moderate hand pressure.**		
Noisy	2	Further inspection required
NOTE: **If greaseable, grease joint. If problem persists or joint is non-greaseable, suggest replacement.**		
Nut on stud loose	A	Require repair or replacement
NOTE: **Check for bent stud or damaged taper hole.**		
Seized	A	Require replacement
Stud bent	B	Require replacement
NOTE: **Check for damaged taper hole.**		
Stud broken	A	Require replacement
NOTE: **Check for damaged taper hole.**		

Threads damaged	A	Require repair or replacement
Threads stripped (threads missing)	A	Require replacement
NOTE: **Check for damaged taper hole.**		

TIRE PRESSURE MONITORING SYSTEM

NOTE: A Tire Pressure Monitoring System (TPMS) is designed to detect and alert the driver should the air pressure level in one or more of the vehicle's tires, up to all four tires, fall below the manufacturer's recommended inflation pressure or another pre-set level.

NOTE: NHTSA does not consider installation of an aftermarket or replacement tire or rim that is not compatible with the TPMS to be a "make inoperative" situation under 49 U.S.C. 30122, provided that the entity does not disable the TPMS malfunction indicator.

TIRE PRESSURE SENSORS

Condition	Code	Procedure
Attaching hardware broken	A	Require repair or replacement of hardware
Attaching hardware missing	C	Require replacement of hardware
Attaching hardware not functioning	A	Require repair or replacement of hardware
Inoperative	A	Require repair or replacement
NOTE: **Inoperative includes intermittent failure.**		
Loose	B	Require repair or replacement
Missing (Non-OE Wheel and/or Tire Applications)	2	Suggest replacement if appropriate sensor is available

Missing (OE Wheel and Tire Applications)	C	Replacement Reqiuired
Not Responding		Further inspection required
NOTE: **If sensor does not Wake Up, follow manufacturers recommended diagnostic procedure to determine cause**		

TIRES

NOTE: These guidelines do not apply to split rims. Some vehicle manufacturers restrict replacement of tires to specific brands, types, or sizes. High pressure temporary compact spare tires should not be used with any other rims or wheels, nor should standard tires, snow tires, wheel covers, or trim rings be used with high pressure compact spare rims or wheels. Attempting to mount a tire of one diameter on a wheel of a different diameter or flange type may result in serious injury or death. Only specially trained persons should de-mount or mount tires. Explosions of tire and wheel assembly can result from improper mounting, possibly causing serious injury or death. Consult the vehicle owner's manual or vehicle placard for correct size, speed rating, designation, and cold inflation pressure of the original tires. Do not exceed the maximum load or inflation capacity of the tire specified by the Tire and Rim Association When replacing tires, it is suggested that the replacement tires match or exceed the OEM speed rating designation. If tires of different speed rating designations are mixed on the same vehicle, the tires may vary in handling characteristics. Do not mix different speed rating designations on the same axle. Do not mix radials with non-radial tires on the same axle, as this may affect vehicle handling and stability. If radial tires and bias or bias-belted ply tires are mixed on the same vehicle, the radials must be on the rear. High-pressure temporary compact spare tires are exempt from this rule. Do not mix size or type (Run Flat, all season, performance, mud and snow) of tires on the same axle. If any flammable

emergency tire inflation product has been used on a tire, consult inflation product, manufacturer's product information label for tire deflation procedures to avoid possible serious injury or death. In some vehicles, changing the tire diameter from factory-equipped size can affect drive ability, as well as the performance of ABS and other vehicle systems. Consult the vehicle manufacturer's specifications.

Condition	Code	Procedure
Air pressure incorrect	B	Require repair
Bead broken	A	Require replacement
Bead leaking, caused by tire	A	Require repair or replacement
Bead wire/cord exposed	A	Require replacement
Cord or belt material exposed	A	Require replacement
Cord ply separations	A	Require replacement
Directional/asymmetrical tires mounted incorrectly	B	Require remounting and/or repositioning
Irregular tread wear, affecting performance	2	Suggest replacement
NOTE: **Determine and correct cause of irregular tire wear.**		
Load ratings less than OEM specifications	B	Require replacement
Mixed tread types (all season, performance, mud and snow) on same axle	A	Require replacement
Number of punctures exceeds manufacturer's limit	B	Require replacement
Out of balance	B	Require rebalance of tire/wheel assembly
Ply separation	A	Require replacement
Pull or lead, caused by tire	A	Require repair or replacement
Radial and bias or bias-belted ply tires	B	Require repair or

on same axle		replacement
Radials are on the front and not on the rear	B	Require repair or replacement
NOTE: **If radials and bias or bias-belted ply tires are on the same vehicle, the radials must be on the rear axle, except for high-pressure temporary spares.**		
Run flat damage	A	Require replacement
Shoulder cut	A	Require replacement
Shoulder puncture	A	Require replacement
Shoulder with plug	A	Require replacement
Sidewall bulge	A	Require replacement
Sidewall cut	A	Require replacement
Sidewall indentation		No service required or suggested
Sidewall puncture	A	Require replacement
Sidewall with plug	A	Require replacement
Speed rating designations different on same axle	2	Suggest rotation or replacement
Tire and wheel assembly has excessive run-out	B	Require repair or replacement of appropriate part
NOTE: **Excessive is defined as enough to contribute to performance problems. Match mounting may correct run-out. If not, require replacement of appropriate part. Refer to manufacturer's specifications.**		
Tires with excessive diameter difference on an all-wheel drive vehicle or four-wheel drive vehicle	B	Require replacement
NOTE: **Excessive diameter difference is defined as exceeding manufacturer's specifications or, if no manufacturer's specifications exist, with more than 1/4"" diameter difference.**		
Tires with excessive diameter difference on the same side of a dual-wheel application	B	Require replacement
NOTE: **Excessive diameter difference is defined as exceeding manufacturer's specifications or, if no manufacturer's specifications exist, with more than 1/4"" diameter difference.**		
Tread area puncture larger in diameter than manufacturer's specifications	B	Require replacement

Tread missing pieces (chunking), exposing cord	A	Require replacement
Tread missing pieces (chunking), not exposing cord	1	Suggest replacement
Tread separations	A	Require replacement
Tube in tubeless tire	3	Suggest removal of tube
NOTE: **Most manufacturers do not recommend tubes in tubeless tires. Inspect tire and wheel . Assembly to determine the reason for a tube in tubeless tire. Recommendation for repair or replacement should be based upon condition of tires and! Or wheel listed in these guidelines.**		
Weather-checking		No service required or suggested
Worn to tread wear indicators	B	Require replacement

TORQUE SENSOR

Condition	Code	Procedure
Attaching hardware broken	A	Require repair or replacement of hardware
Attaching hardware missing	C	Require replacement of hardware
Attaching hardware not functioning	A	Require repair or replacement of hardware
Attaching hardware threads damaged	A	Require repair or replacement of hardware
Attaching hardware threads stripped (threads missing)	A	Require replacement of hardware
Connector (Weatherpack type) leaking	A	Require repair or replacement
Connector broken	A	Require repair or replacement
Connector melted	A	Require repair or replacement
Connector missing	C	Require replacement
Inoperative	A	Require repair or replacement
Leaking (vacuum/fluid/air)	A	Require replacement

Out of adjustment	B	Further inspection required
Terminal broken	A	Require repair or replacement
Terminal burned, affecting performance	A	Require repair or replacement
Terminal burned, not affecting performance	2	Suggest repair or replacement
Terminal corroded, affecting performance	A	Require repair or replacement
Terminal corroded, not affecting performance	2	Suggest repair or replacement
Terminal loose, affecting performance	B	Require repair or replacement
Terminal loose, not affecting performance	1	Suggest repair or replacement
Threads damaged	A	Require repair or replacement
Threads stripped (threads missing)	A	Require replacement
Wire lead burned	A	Require repair or replacement
Wire lead conductors exposed	B	Require repair or replacement
Wire lead open	A	Require repair or replacement
Wire lead shorted	A	Require repair or replacement

TORSION SPRINGS

Condition	Code	Procedure
Attaching hardware broken	A	Require repair or replacement of hardware
Attaching hardware missing	C	Require replacement of hardware
Attaching hardware not functioning	A	Require repair or replacement of hardware

Attaching hardware threads damaged	A	Require repair or replacement of hardware
Attaching hardware threads stripped (threads missing)	A	Require replacement of hardware
Broken	A	Require replacement
Missing	C	Require replacement

TRACK BAR BUSHINGS

Condition	Code	Procedure
Attaching hardware broken	A	Require repair or replacement of hardware
Attaching hardware missing	C	Require replacement of hardware
Attaching hardware not functioning	A	Require repair or replacement of hardware
Attaching hardware threads damaged	A	Require repair or replacement of hardware
Attaching hardware threads stripped (threads missing)	A	Require replacement of hardware
Binding	A	Require repair or replacement
Deteriorated, affecting performance	A	Require repair or replacement
NOTE: **If condition is caused by oil-soaking, further inspection is required to determine source of oil.**		
Distorted, affecting performance	A	Require repair or replacement
Leaking (fluid-filled type)	A	Require replacement
Missing	C	Require replacement
Noisy	2	Further inspection required
NOTE: **If noise isolated to bushing, suggest repair or replacement. Use only approved lubricant on rubber bushings. Petroleum-based lubricants may damage rubber bushings.**		
Oil-soaked, affecting performance	A	Require replacement
NOTE: **Further inspection required to determine source of oil.**		

Rubber separating from internal metal sleeve on bonded bushing	A	Require replacement
Seized	A	Require replacement
Shifted (out of position)	B	Require repair or replacement
Split	A	Require replacement
Surface cracking (weather-checked)		No service suggested or required

TRACK BARS

Condition	Code	Procedure
Attaching (mating) hole distorted	A	Require repair or replacement of bracket or frame
Attaching hardware broken	A	Require repair or replacement of hardware
Attaching hardware missing	C	Require replacement of hardware
Attaching hardware not functioning	A	Require repair or replacement of hardware
Attaching hardware threads damaged	A	Require repair or replacement of hardware
Attaching hardware threads stripped (threads missing)	A	Require replacement of hardware
Bent, affecting performance	B	Require replacement
Corroded, affecting structural integrity	A	Require replacement
Grease boot cracked	2	Suggest replacement of boot
NOTE: **If boot is not available separately, suggest replacement of tie rod end (reason code 2). Cracked grease boot will allow contaminants to enter joint and will accelerate wear .**		
Grease boot missing	C	Require replacement of boot
NOTE: **If boot is not available separately, suggest replacement of track bar (reason code 2). Lack of grease boot will allow contaminants to enter joint and will accelerate wear.**		
Grease boot torn	A	Require replacement of boot
NOTE: **If boot is not available separately, suggest replacement of track bar (reason code 2). Torn grease**		

boot will allow contaminants to enter joint and will accelerate wear.		
Holes distorted	A	Require replacement
Looseness (perceptible horizontal movement)	1	Suggest replacement
NOTE: **If manufacturer's procedures for inspection exist, use those procedures; otherwise, use an approved inspection method such as the dry park check. Do not use pliers or pry bar to check ball and socket movement. Use only moderate hand pressure.**		
Looseness that is excessive	B	Require replacement
NOTE: **Excessive looseness is defined as being significant enough to affect vehicle handling or structural integrity. If manufacturer's procedures 'for inspection exist, use those procedures; otherwise, use an approved inspection method such as the dry park check.**		
CAUTION: **Do not use pliers or pry bar to check ball and socket movement. Use only moderate hand pressure.**		
Mating (attaching) hole distorted	A	Require repair or replacement of bracket or frame
Nut on stud loose	A	Require repair or replacement of nut
NOTE: **Check for bent stud or damaged mating hole.**		
Seized	A	Require replacement
Stud bent	B	Require replacement
NOTE: **Check for damaged mating hole.**		
Stud broken	A	Require replacement
NOTE: **Check for damaged mating hole.**		
Threads damaged	A	Require repair or replacement
Threads stripped (threads missing)	A	Require replacement
NOTE: **Check for damaged mating hole.**		
Wear exceeds manufacturer's specifications	B	Require replacement

TRAILING ARM BUSHINGS

Condition	Code	Procedure
Attaching hardware broken	A	Require repair or replacement of hardware
Attaching hardware missing	C	Require replacement of hardware
Attaching hardware not functioning	A	Require repair or replacement of hardware
Attaching hardware threads damaged	A	Require repair or replacement of hardware
Attaching hardware threads stripped (threads missing)	A	Require replacement of hardware
Binding	A	Require repair or replacement
Deteriorated, affecting performance	A	Require repair or replacement
NOTE: **If condition is caused by oil-soaking, further inspection is required to determine source of oil.**		
Distorted, affecting performance	A	Require repair or replacement
Leaking (fluid-filled type)	A	Require replacement
Missing	C	Require replacement
Noisy	2	Further inspection required
NOTE: **If noise isolated to bushing, suggest repair or replacement. Use only approved lubricant on rubber bushings. Petroleum-based lubricants may damage rubber bushings.**		
Oil-soaked, affecting performance	A	Require replacement
NOTE: **Further inspection required to determine source of oil.**		
Rubber separating from internal metal sleeve on bonded bushing	A	Require replacement
Seized	A	Require replacement
Shifted (out of position)	B	Require repair or replacement
Split	A	Require replacement
Surface cracking (weather-checked)		No service suggested or required

TRAILING ARMS

Condition	Code	Procedure
Attaching hardware broken	A	Require repair or replacement of hardware
Attaching hardware corroded, affecting structural integrity	A	Require replacement of hardware
Attaching hardware missing	C	Require replacement of hardware
Attaching hardware not functioning	A	Require repair or replacement of hardware
Attaching hardware threads damaged	A	Require repair or replacement of hardware
Attaching hardware threads stripped (threads missing)	A	Require replacement of hardware
Ball joint hole oversized (loose interference or press fit)	B	Further inspection required
NOTE: **If oversized ball joint is available, require replacement of ball joint. If oversized ball joint is not available, require replacement of control arm.**		
Bent, affecting performance	B	Require replacement
Bushing hole oversized	B	Require replacement
Corroded, affecting structural integrity	A	Require replacement
Holes distorted	A	Require replacement
Threads damaged	A	Require repair or replacement
Threads stripped (threads missing)	A	Require replacement

VALVE STEMS

NOTE: Most tire manufacturers suggest replacement of non-TPMS valve stems any time a new tire is installed. For TPMS valve stems, the manufacturer may require replacement of the valve stem, o-ring seals, washers, gaskets, valve cores, compression washers and/or locking nut.

Condition	Code	Procedure

Bent	2	Suggest replacement
Broken	A	Require replacement
Cap seized	A	Require repair or replacement
Cut, but not leaking	1	Suggest replacement
Deteriorated (cracking, dry rot)	1	Suggest replacement
Leaking	A	Require repair or replacement
Missing	C	Require replacement
O-Ring leaking	A	Require replacement of O-Ring
Threads damaged	A	Require repair or replacement
Threads stripped	A	Require replacement
Valve cap missing	C	Require replacement of cap

VEHICLE DYNAMICS CONTROL

NOTE: An evolution of ABS and Traction Control. It uses the ABS hardware and two additional sensors: a steering-wheel angle sensor, which measures the position and rate of steering wheel input, and a yaw sensor, which measures the rate at which the vehicle is actually turning. By comparing rates, computer determines if the vehicle is oversteering or understeering.

NOTE: On slippery surfaces or during aggressive maneuvers, if the vehicle understeers severely, the computer will actuate the brakes on the inside rear wheel, just hard enough and just long enough to correct the steering behavior. When the vehicle oversteers severely, the system will brake the outside front wheel instead.

NOTE: When servicing this system, OEM may require steering angle sensor be calibrated to the vehicle thrustline.

VEHICLE SPEED SENSOR

Condition	Code	Procedure
Attaching hardware broken	A	Require repair or replacement of hardware
Attaching hardware corroded, affecting structural integrity	A	Require replacement of hardware
Attaching hardware missing	C	Require replacement of hardware
Attaching hardware not functioning	A	Require repair or replacement of hardware
Attaching hardware threads damaged	A	Require repair or replacement of hardware
Attaching hardware threads stripped (threads missing)	A	Require replacement of hardware
Connector (Weatherpack type) leaking	A	Require repair or replacement
Connector broken	A	Require repair or replacement
Connector melted	A	Require replacement
Connector missing	C	Require replacement
NOTE: **Determine cause and correct prior to replacement of part.**		
Dust boot missing	C	Require replacement of boot
Dust boot split	A	Require replacement of boot
NOTE: **If boot is not available separately, suggest replacement of sensor (reason code 2). This condition can lead to damage of the sliding magnet, which, in turn, causes premature sensor failure**		
Dust boot torn	A	Require replacement of boot
NOTE: **If boot is not available separately, suggest replacement of sensor (reason code 2). This condition can lead to damage of the sliding magnet, which, in turn, causes premature sensor failure.**		
Housing cracked	B	Require replacement
NOTE: **If boot is not available separately, suggest replacement of sensor (reason code 2). This condition can lead to damage of the sliding magnet, which, in turn, causes premature sensor failure.**		
Lead routing incorrect	B	Require rerouting according to vehicle manufacturer's specifications
Loose	B	Require adjustment to

		vehicle manufacturer's specifications
Missing	C	Require replacement
Output signal incorrect	B	Require repair or replacement
Terminal burned, affecting performance	A	Require repair or replacement
NOTE: **Determine cause and correct prior to repair or replacement of part.**		
Terminal burned, not affecting performance	2	Suggest repair or replacement
Terminal corroded, affecting performance	A	Require repair or replacement
Terminal corroded, not affecting performance	2	Suggest repair or replacement
Terminal loose, affecting performance	B	Require repair or replacement
Terminal loose, not affecting performance	1	Suggest repair or replacement
Wire lead burned	A	Require repair or replacement
Wire lead conductors exposed	B	Require repair or replacement
Wire lead open	A	Require repair or replacement
Wire lead shorted	A	Require repair or replacement

VEHICLE STABILITY ASSIST

NOTE: An evolution of ABS and Traction Control. It uses the ABS hardware and two additional sensors: a steering-wheel angle sensor, which measures the position and rate of steering wheel input, and a yaw sensor, which measures the rate at which the vehicle is actually turning. By comparing rates, computer determines if the vehicle is oversteering or understeering.

NOTE: On slippery surfaces or during aggressive maneuvers, if the vehicle understeers severely, the computer will actuate the brakes on the inside rear wheel, just hard enough and just long enough to correct the steering behavior. When the vehicle oversteers severely, the system will brake the outside front wheel instead.

NOTE: When servicing this system, OEM may require steering angle sensor be calibrated to the vehicle thrustline.

VEHICLE STABILITY/SKID CONTROL

NOTE: An evolution of ABS and Traction Control. It uses the ABS hardware and two additional sensors: a steering-wheel angle sensor, which measures the position and rate of steering wheel input, and a yaw sensor, which measures the rate at which the vehicle is actually turning. By comparing rates, computer determines if the vehicle is oversteering or understeering.

NOTE: On slippery surfaces or during aggressive maneuvers, if the vehicle understeers severely, the computer will actuate the brakes on the inside rear wheel, just hard enough and just long enough to correct the steering behavior. When the vehicle oversteers severely, the system will brake the outside front wheel instead.

NOTE: When servicing this system, OEM may require steering angle sensor be calibrated to the vehicle thrustline.

WARNING LAMPS

Condition	Code	Procedure
Bulb burned out	A	Require replacement
Warning light does not come on during bulb check		Further inspection required to determine cause
Warning light flashes		Further inspection required to determine cause

Warning light is intermittent		Further inspection required to determine cause
Warning light stays on after initial bulb check		Further inspection required to determine cause

WHEEL ALIGNMENT

NOTE: Wheel alignment is defined as the measurement, analysis, and adjustment of steering and suspension angles to conform to manufacturer specifications. These angles usually include, but are not limited to: caster, camber, toe, and thrust angle. Where these angles are not adjustable and not in specification, component replacement or correction kits may be required. Errors in set-back and steering axis inclination (SAI) are often attributable to failed or damaged components and must be corrected prior to performing an alignment. Failure to replace or correct suggested parts or service may prevent a proper alignment. Before performing an alignment check, inspect and verify the following: Tire pressure and size . Vehicle loading . Ride height . Steering and suspension parts only if the inspection reveals that all the above are within published specifications, a wheel alignment check and a proper wheel alignment, if needed, may be performed. Under no circumstances should a technician bend or heat any steering or suspension component, unless specified by the vehicle manufacturer. All measurements and specifications must be noted on the inspection report.

Condition	Code	Procedure
Beyond manufacturer's service interval	3	Suggest alignment check
Dog tracking, shown to be caused by faulty alignment	2	Suggest repair
Drift, shown to be caused by faulty alignment	A	Require alignment
Lead, shown to be caused by faulty alignment	A	Require alignment

Outside manufacturer's specifications	B	Require repair
Part has been changed, affecting alignment	A	Require alignment check
Pull, shown to be caused by faulty alignment	A	Require alignment
Steering wheel off-center	2	Suggest alignment
Tire wear, shown to be caused by faulty alignment	A	Require alignment
Wander, shown to be caused by faulty alignment	A	Require alignment

WHEEL ATTACHMENT HARDWARE

NOTE: For conditions noted below, also check condition of wheel stud holes. Proper lug nut torque is essential. Follow recommended torque specifications and tightening sequence. DO NOT lubricate threads unless specified by the vehicle manufacturer.

Condition	Code	Procedure
Bent	A	Require replacement
Broken	A	Require replacement
NOTE: **Some manufacturers require replacement of all studs on that wheel if two or more studs or nuts on the same wheel are broken or missing.**		
Locking lug nut locking groove damaged	A	Require replacement
Loose	A	Require repair or replacement of affected component
Lug nut installed backward	B	Require repair or replacement
Lug nut mating surface distorted	A	Require replacement of nut
Lug nut mating type incorrect	B	Require replacement of nut
Lug nut missing	C	Require replacement
Lug nut rounded	A	Require replacement of nut
NOTE:		

Only required if removing wheel.		
Lug nut seized	A	Require replacement of nut
NOTE: **Only required if removing wheel.**		
Stud incorrect	B	Require replacement of stud
Stud missing	C	Require replacement
Threads damaged	A	Require repair or replacement of component with damaged threads
Threads stripped	A	Require replacement of component with stripped threads

WHEEL BEARINGS, RACES AND SEALS

NOTE: When replacing or repacking wheel bearings, grease seal replacement is required. You are not required to replace these components in axle sets. Determine the need to replace based upon the individual component conditions that follow.

Condition	Code	Procedure
Axle seal on drive axle leaking	A	Require replacement of seal and inspection of axle, bearing, housing, and vent tube
Bearing end-play exceeds specifications	B	Require adjustment of bearing, if possible If proper adjustment cannot be obtained, require replacement of bearing and race assembly
Bearing rollers, balls or races are worn, pitted, or feel rough when rotated as an assembly or other damage affecting performance.	B	Require replacement of bearing and race assembly
Seal leaking	A	Require replacement of seal and inspection of bearings

NOTE: **Require inspection of mating and sealing surface and repair or replace as necessary. Check vent. A plugged vent may force fluid past the seal.**		
Seal missing	C	Require replacement

WHEELS (RIMS)

NOTE: Mounting a regular tire on a high-pressure compact spare wheel is not permitted. Attempting to mount a tire of one diameter on a wheel of a different diameter or flange type may result in serious injury or death. If the wheel identification stamp is not legible, or cannot be found, do not use the wheel until the size and type have been properly identified. Wheels of different diameter, offset, or width cannot be mixed on the same axle. Bead seat tapers cannot be interchanged.

Condition	Code	Procedure
Bead leaking, caused by wheel	A	Require repair or replacement
NOTE: **Do not attempt to correct a bent rim.**		
Bent hub mounting surface	A	Require replacement
Bent rim, causing vibration	2	Suggest replacement
NOTE: **Do not attempt to correct a bent rim.**		
Broken	A	Require replacement
Cast wheel porous, causing a leak	A	Require repair or replacement
Clip-on balance weight is incorrect type for rim flange	2	Suggest replacement of weight
Corrosion affecting structural integrity	A	Require replacement
Corrosion build-up on wheel mounting surface	A	Require repair
Cracked	B	Require replacement
Directional/asymmetrical wheels mounted incorrectly	B	Require remounting and/or repositioning
Load capacity less than OEM	B	Require replacement

specifications		
Mating surface distorted	A	Require replacement
Offset mismatched on same axle	B	Require replacement
Rivets leaking	A	Require replacement
Run-out beyond OEM specs	B	Require replacement
NOTE: **Some wire-spoke wheels may be repaired.**		
Stud holes elongated	A	Require replacement
NOTE: **Inspect wheel attaching hardware for damage.**		
Welded or brazed repair	2	Suggest replacement
Welds leaking	A	Require replacement
Wheel centering (pilot) hole incorrect	B	Require replacement

WIRING HARNESSES AND CONNECTORS

Condition	Code	Procedure
Application incorrect	B	Require repair or replacement
Attaching hardware broken	A	Require repair or replacement of hardware
Attaching hardware missing	C	Require replacement of hardware
Attaching hardware not functioning	A	Require repair or replacement of hardware
Attaching hardware threads damaged	A	Require repair or replacement of hardware
Attaching hardware threads stripped (threads missing)	A	Require replacement of hardware
Connector (Weatherpack type) leaking	A	Require repair or replacement
Connector broken	A	Require repair or replacement
Connector melted	A	Require repair or replacement
NOTE: **Determine cause and correct prior to repair or replacement of part.**		

Connector missing	C	Require replacement
Insulation damaged, conductors exposed	A	Require repair or replacement
Insulation damaged, conductors not exposed	1	Suggest repair or replacement
Open	A	Require repair or replacement
Protective shield (conduit) melted	2	Suggest repair or replacement
NOTE: **Determine cause and correct prior to repair or replacement of part.**		
Protective shield (conduit) missing	C	Require repair or replacement
Resistance (voltage drop) out of specification	A	Require repair or replacement
Routed incorrectly	B	Require repair
Secured incorrectly	B	Require repair
Shorted	A	Require repair or replacement
Terminal broken	A	Require repair or replacement
Terminal burned, affecting performance	A	Require repair or replacement
NOTE: **Determine cause and correct prior to repair or replacement of part.**		
Terminal burned, not affecting performance	2	Suggest repair or replacement
Terminal corroded, affecting performance	A	Require repair or replacement
Terminal corroded, not affecting performance	2	Suggest repair or replacement
Terminal loose, affecting performance	B	Require repair or replacement
Terminal loose, not affecting performance	1	Suggest repair or replacement
Voltage drop out of specification	A	Require repair or

		replacement

REASON CODE EXPLANATION

Code	Reason
Required	
A	Part No Longer Performs Intended Purpose
B	Part Does Not Meet A Design Specification (Regardless Of Performance)
C	Part Is Missing
Suggested/Optional	
1	Part Is Close To The End Of Its Useful Life
2	To Address A Customer Need, Convenience Or Request
3	To Comply With Maintenance Recommended By The Vehicle's Original Equipment Manufacturer
4	Technician's Recommendation Based On Substantial And Informed Experience
5	To Comply With Maintenance Recommended By AMRA/MAP

AUTOMOTIVE TERMINOLOGY & DEFINITIONS

ACTIVE SUSPENSION SYSTEM

active suspension systems move each wheel up and down to control body motion in response to road abnormalities. The system responds to inputs from the road and the driver. With an active suspension, a vehicle can simultaneously provide the smooth ride of a soft suspension along with the superior handling associated with a firm suspension.

ACTIVE TILT CONTROL

active tilt control winds up the stabilizer bars in the front and rear suspension to resist body lean while cornering. Because active control is used only as needed, vehicle spring rates and stabilizer bar stiffness can be reduced, improving normal ride characteristics. In addition, this system has

potential to increase low-speed, off-road traction on 4WD vehicles.

ACTIVE VARIABLE RATIO STEERING

electronically provides variable steering ratios. A computer is linked with the vehicle stability control system to aid in directional stability of the vehicle. As the vehicle travels down the highway, road surfaces and wind gusts can affect the vehicle directional stability. The car may wander a little or dart to one side, as many who have met a tractor-trailer unit on a windy day have experienced. Sensors on the car detect this sudden unintentional movement and the computer will stabilize the car by moving the Active Steering electric motor and steering gear. The driver doesn't turn the steering wheel at all.

AIR SPRING

a suspension device made up of a flexible bladder containing compressed air. The air spring takes the place of a :onvent;onal coil or leaf spring. Air is supplied by an on-board ;ompressor, usually with auxiliary equipment to sense vehicle leight and modify the pressure in the air spring as needed.

AIR SUSPENSION

instead of steel coil or leaf springs, some vehicles have a bellows-like unit at each corner that contains pressurized air. As a rule, air suspensions can produce a softer ride.

ALIGNMENT

an adjustment to bring parts or components into a line or proper coordination.

ALL-WHEEL DRIVE

the method of providing traction to any of the wheels of a vehicle, as conditions require. Depending on the system, it may be full-time or part-time.

ANTI-ROLL BAR

see 'stabilizer bar'.

ASPECT RATIO

the relationship between the height of a tire from bead to tread, and the tread width, usually expressed as a percentage of the tread width.

AUTOMATIC RIDE CONTROL

automatic ride control adjusts vehicle shock absorber resistance (damping) in response to driver inputs such as steering and braking and for changes in road surface. During maneuvers such as hard braking or quick lane changes, the system increases suspension damping to improve dynamic stability. Damping is automatically decreased during steady driving, so that bumps and potholes are absorbed rather than being transmitted to the occupants. Some systems also allow the driver to select suspension settings: soft, normal or firm (sport).

AXIAL LOAD

a type of load placed on a bearing that is parallel to the axis of the rotating shaft.

AXIAL PLAY

movement of a component parallel to the axis of rotation.

AXIAL

round, on or along an axis; having the same direction or being parallel to the axis of rotation.

AXIS

a real or imaginary straight line on which or around which an object rotates.

BALANCE

a condition of equal weight distribution within a component or among components; the act of equalizing the weight distribution, such as balancing a tire or an engine's reciprocating assembly.

BALL JOINT

a suspension component that provides a pivot point, allowing the steering knuckle to move up and down as well as turn. In response to steering input. The ball fits into a socket housing that is attached to the control arm and the stud on the other end of the ball is attached to the steering knuckle. A dust cover is installed over the ball and socket assembly to keep dirt out and lubricant in.

BEAD

the steel reinforced inner edge of a tire, which fits inside and seals against the wheel rim.

BOOT

protective rubber cover with accordion pleats used to contain lubricants and exclude contaminating dirt, water and grime, located at each end of the rack-and- pinion assembly and FWD CV-joints.

BUMP STEER

a steering problem in which a vehicle tends to the left or the right after a bump, without steering wheel input from the driver. This is usually caused by some steering misalignment or damage that permits change of toe when the suspension works up and down.

BUSHING

a liner, usually removable, for a bearing; an anti-friction liner used in place of a bearing; a type of bearing that is used to support rotating shafts.

CAMBER

the attitude of a wheel/tire assembly in which, when viewed from the front, the distance between the tops and bottoms of the tires are different. If the distance between the tops is greater than between the bottoms, positive camber is present. If the distance between the tops is less than between the bottoms, negative camber is present.

CASTER

angle formed between the kingpin axis and a vertical axis as viewed from

the side of the vehicle. Caster is considered positive when the top of the kingpin axis is behind the vertical axis, that is, tilted toward the rear of the vehicle.

CENTER LINK

a steering linkage component which attaches the Pitman arm to the idler arm, tie-rod or crosslink.

COIL SPRING

spring steel rod wound into a coil that supports the vehicle's weight while allowing suspension movement.

COLLAPSIBLE STEERING COLUMN

a steering column that is designed to collapse, to prevent the column from heavily impacting the driver during an accident.

CONSTANT VELOCITY (CV) JOINT

a flexible coupling between two shafts that allows each shaft to maintain the same speed regardless of operating angle.

CONTROL ARM

a suspension component that connects the vehicle frame to the steering knuckle or axle housing and allows the up and down movement of the wheels.

COTTER PIN.

a safety component made from soft steel, used to keep a nut from loosening on a bolt or stud. The cotter pin is inserted through a hole in the bolt or stud and through slots in the nut (see 'castellated nut'), then the ends of the cotter pin are spread to lock it in position.

CROSSMEMBER

part of the vehicle frame structure, arranged transversely and attached to the frame rails at each side of the vehicle. Can be removable or welded in place.

DAMPEN

to slow or reduce oscillations or movement.

DEAD AXLE

a load-supporting axle that does not transmit power; an axle that does not rotate, but merely forms a base on which to attach the wheels.

DIRECTIONAL STABILITY

the ability of a car to travel in a straight line on a flat surface with a minimum of driver control.

DIRECTIONAL TIRE

tire with a tread pattern that is designed to give maximum traction by removing water from under the tread in such a way as to minimize the risk of aquaplaning. Directional tires must be installed to turn in a specific direction.

DOWNFORCE

negative aerodynamic lift.

DRAG COEFFICIENT

drag divided by the product of dynamic pressure and projected area. A factor representing the drag acting on a body (as an automobile or airfoil).

DRAG LINK

a steering linkage component that connects the pitman arm and the steering arm.

DRAG

horizontal aerodynamic retarding force on a vehicle parallel to the relative wind direction.

DYNAMIC BALANCING

balancing a part while it is in motion.

ELECTRICALLY POWERED STEERING

electrically powered steering uses an electric motor to drive either the power steering hydraulic pump or the steering linkage directly. The power steering function is therefore independent of engine speed, resulting in significant energy savings.

ELECTRONIC AIR SUSPENSION

electronic air suspension provides the comfort of riding on air with adjustable spring rates and capability to change ride height and load-carrying ability. Under normal driving conditions, an electronic air suspension vehicle rides at the same height as a traditionally sprung vehicle. With a heavy load, ride height is increased automatically. On current vehicles, the suspension lowers the ride height by 20 mm at highway speeds for improved aerodynamics, with about 2 percent better fuel economy. Lower ride height also can improve on-center feel of steering due to the change in suspension geometry and increased caster angle.

ELECTRONIC LEVEL CONTROL.

a suspension system that uses air springs to maintain vehicle ride height. Height sensors are used to signal a control unit when the vehicle is riding low or high. In response to this signal, compressed air is either sent to or vented from the air springs.

HALFSHAFT

transfers power from the transaxle to the front wheels on a front-wheel drive vehicle. Also used on some vehicles with rear-wheel drive and independent rear suspension to transfer power from the differential to the rear wheels. Consists of a stub shaft that is splined into the differential side gear, another stub shaft that is splined into the wheel hub, an interconnecting shaft, and two CV-joints, which connect the interconnecting shaft to the stub shafts.

HARMONIC VIBRATION

periodic motion or vibration along a straight line. The severity depends on

the frequency or amplitude.

HEIGHT SENSOR

a component used in an air suspension system to signal a control unit when the vehicle is riding low or high. In response to this signal, compressed air is either sent to or vented from the air springs.

HUB

mounting point for the wheelan an axle or spindle; the part of the synchronizer assembly that is splined to the transmission shaft; the center part of a wheel, gear, etc., that rides on a shaft.

IDLER ARM

a conventional steering system component consisting of an arm that swivels in a bushing on a shaft, which is attached to the frame. The idler arm is mounted on the right side of the vehicle and is the same length and set at the same angle as the Pitman arm. Its function is to hold the right end of the center link level with the left end, which is moved by the pitman arm, and transfer the steering motion to the right side tie-rod.

INCLUDED ANGLE

the sum of the angle of camber and steering axis inclination; the sum of two intersecting angles.

INDEPENDENT SUSPENSION

a suspension in which each wheel can travel up and down without directly affecting the position of the opposite wheel.

INTEGRAL POWER STEERING

a power steering system in which the power cylinder and control valve are contained in one housing.

INTELLIGENT VEHICLE HIGHWAY SYSTEM (IVHS)

the Intelligent Vehicle Highway System (IVHS) provides a variety of

information to the vehicle and driver through cooperation of automotive electronics, communications, controls and systems engineering technologies. IVHS has two areas of interest to car and truck makers: (1) telematics and (2)active safety warning and control systems. Several features are: Telematics: Navigation systems Traffic messaging Emergency messaging and security tracking (e.g. RESCU - Remote Emergency Satellite Cellular Unit) Short range communications/ automatic toll collection Active Safety Warning and Control Systems Collision warning/avoidance - Backup and parking aids - Side vision aid - Vision enhancement - (all weather/night vision) - Adaptive cruise control - Lane departure control

INTERACTIVE VEHICLE DYNAMICS (IVD)

interactive Vehicle Dynamics is designed to minimize loss of vehicle control due to loss of traction. The IVD system could be activated when a vehicle is taking a turn too quickly or when encountering an icy patch.

JAM NUT

a locknut.

KINGPIN

the pivot shaft for the steering knuckle on most early axles and some modern heavy-duty axles.

KNUCKLE

the suspension component that connects the upper and lower control arms or the strut and lower control arm. On rear wheel drive vehicles, it usually incorporates the front wheel spindle and on front wheel drive vehicles it has an opening where the halfshaft passes through. A steering arm is attached to the knuckle, where the tie-rod end is connected. Also called a steering knuckle.

LANE-DEPARTURE WARNING SYSTEM

Issues a warning when the vehicle edges off course and reaches the highway lane markers. Introduced on the 2005 Infiniti FX and available on the 2006 Infiniti M45, the system developed by Iteris can detect lane dividers even in

rainy weather. It delivers a noticeable sound when the vehicle starts to move into an adjacent lane, whether due to inattention, drowsiness or distraction.

LATERAL RUNOUT

side-to-side movement or wobble in a wheel or tire.

LEAF SPRING

a suspension spring consisting of a single flat plate made of steel or composite material or several steel plates bundled together.

LOW TIRE PRESSURE WARNING

a low tire pressure warning system alerts the driver if the air pressure in a tire becomes too low. Typically, a light on the instrument panel will be illuminated to warn of the low-pressure condition.

MACPHERSON STRUT

the principal device in the suspension of the same name, in which the spring, shock absorber and sometimes the steering knuckle are combined in a single unit.

MEMORY STEER

a steering condition where the steering wheel and wheels want to return to a position other than center. This can be caused by tightening rubber bonded socket tie-rod ends when the steering wheel is not centered, binding in the upper strut mounts, or binding in a steering component or ball joint.

ON-CAR BALANCING

the practice of spinning a wheel on the car to balance the wheel and all other rotational components together.

PARALLELOGRAM STEERING LINKAGE

a type of conventional steering linkage consisting of a pitman arm, center link, idler arm and tierod assemblies to connect to the steering knuckles. The pitman arm, center link and idler arm form three sides of a parallelogram.

PITMAN ARM

a steering system component mounted on the steering box shaft and transfers the gearbox motion to the steering linkage.

PLUNGER JOINT

the inboard CV-joint on a halfshaft, so called because the joint moves in and out in response to the suspension's up and down movement, which causes the distance between the transaxle and the wheel to change. The movement takes place within the joint, with the tripod rollers or double offset ball bearings moving in and out on elongated grooves in the yoke or outer race.

PRESS FIT

when a part is slightly larger than a hole it must be forced together with a press.

PULL

a steering condition where the vehicle driver has to maintain constant pressure on the steering wheel to keep the vehicle moving straight.

RACK-AND-PINION STEERING

a type of steering mechanism that replaces the pitman arm, center link and idler arm on gearbox steering. The steering column ends in a pinion gear that moves the driven rack to the left and right. The rack ends contain ball studs connected to the outer tie-rod ends and steering knuckles.

RADIAL LOAD

load applied at 90 degrees to an axis of rotation.

RADIAL RUNOUT

the out-of-roundness ot a wheel or tire.

RADIAL

branching out in all directions from a common center; perpendicular to the

shaft or bearing bore.

RADIUS ARM

a suspension component that is connected to a twin I-beam or solid axle at one end and to the vehicle frame through bushings at the other. The radius arm braces the I-beam or axle and keeps it at a right angle to the vehicle frame.

REAR WHEEL STEERING

a system used on a some vehicles to change the toe of the rear wheels to either steepen a sharp turn or enhance cornering on a shallower, faster one.

RIDE HEIGHT

the dimension between a fixed point on the vehicle and the pavement. The fixed point varies according to vehicle and manufacturer. Also called vehicle height.

ROLLING RESISTANCE

retarding force, parallel to the direction of travel, caused by tire resistance along the ground.

RUNOUT

wobble or deflection beyond a rotating part's normal plane of movement.

SAI

see 'steering axis inclination',

SCRUB RADIUS

the distance between the point at which the tire's vertical centerpoint intersects the road, and the steering axis inclination (SAI) intersects the road.

SHACKLE

the attachment to the frame for one end of a leaf spring. The shackle allows

the spring to change in length as the vehicle encounters uneven road surfaces.

SHIM

thin sheets of material, usually metal, used as spacers to control the distance between parts.

SHOCK ABSORBER

a device used to dampen the oscillation of the suspension caused by irregularities in the road surface.

SHORT AND LONG ARM SUSPENSION

a suspension system in which the upper control arm is shorter than the lower control arm, allowing the wheel to deflect in a vertical direction with minimal change in camber.

SPINDLE

a shaft used to attach the wheel assembly on non-drive axles.

SPRING

a suspension system component that supports the vehicle and absorbs shock caused by uneven road surfaces; a device that returns to its original form after being forced out of shape.

SPROCKET

a toothed wheel used to engage a chain or ribbed belt.

SPRUNG WEIGHT

the weight of all the vehicle components that are supported by the springs; see 'unsprung weight'.

STABILIZER BAR

a torsion-bar spring connecting the suspension on either side of the vehicle. When a vehicle rolls to the side in a turn, the suspension at the outside wheel

compresses and the suspension at the inside wheel extends. The stabilizer bar that connects them twists to apply a counteracting force to hold the vehicle closer to level. Also called an anti-roll bar or sway bar.

STATIC BALANCE

balance at rest; still balance; the equal distribution of weight of the wheel and tire around the axis of rotation such that the wheel assembly has no tendency to rotate by itself regardless of its position.

STEERING ARM

the steering system component that links the steering knuckle to the tie-rod assembly.

STEERING AXIS INCLINATION

the angle between true vertical and an imaginary line running through the rotational center of the ball joint(s).

STEERING COLUMN

the housing, steering shaft, bearings and related components between the steering wheel and the steering gear.

STEERING GEAR

the assembly located at the end of the steering column, which contains the gears and other components that multiply the driver turning force.

STEERING KNUCKLE

the suspension component that connects the upper and lower control arms or the strut and lower control arm. On rear wheel drive vehicles, it usually incorporates the front wheel spindle and on front wheel drive vehicles it has an opening where the halfshaft passes through. A steering arm is attached to the steering knuckle, where the tie-rod end is connected.

STEERING LINKAGE

all of the components that connect the steering gear to the front wheels.

STRUT ROD

on vehicles where the lower control arm is attached to the frame at one pivot point, a strut rod is used to brace the control arm against the vehicle frame.

STUD

a fastener that has screw threads at both ends.

SWAY BAR

see 'stabilizer bar',

THRUST ANGLE

the difference between the thrust line and the geometric centerline of the vehicle.

THRUST LINE ALIGNMENT

aligning the front wheels to the thrust line during a wheel alignment, when rear wheel toe cannot be adjusted to specification.

THRUST LINE

an imaginary line that divides the total toe angle of the rear wheels.

THRUST LOAD

load placed on a part that is parallel to the center of the axis.

TIE-ROD END

a ball and socket joint that connects the tie-rod to the steering knuckle arm and to the center link or steering rack.

TIE-ROD

steering linkage member which connects the steering knuckle arm with the centerlink or the steering rack.

TIRE ROTATION

the practice of moving a set of tires to different positions on the vehicle to equalize wear and extend the life of the tires.

TIRE SLIP

see 'wheel slip'.

TOE

the direction in which a wheel tends to roll, a major factor in tire wear.

TOE-IN

a condition that exists if the tire's line of forward direction intersects the extended centerline of the vehicle.

TOE-OUT ON TURNS

the designed angle of the steering arm on the steering knuckle, which causes the inside front wheel to turn at a sharper angle than the outside front wheel during a turn. The specification is checked using the turntables on wheel alignment machine. Toe-out on turns is not an adjustable angle, and if it is incorrect it is most likely due to a bent steering arm.

TOE-OUT

a condition that exists if the tire's line of forward direction and the vehicle centerline are angled apart.

TRACK

the distance between the centers of the treads of parallel wheels.

TRACKING

travel of the rear wheels in a parallel path with the front wheels.

TWIN I-BEAM SUSPENSION

a type of independent front suspension and used on light trucks and vans. It consists of two I-beams supported by coil springs, and the steering knuckles/spindles, which are connected by king pins or ball joints. The inner

end of the axle connects to the vehicle frame through a rubber bushing. A radius arm also connects to the frame through rubber bushings to control wheelbase and caster.

UNSPRUNG WEIGHT

the components of a vehicle that rest directly on the road surface without being supported by the suspension springs.

VARIABLE ASSIST POWER STEERING

a power steering system that uses valves and speed sensors to vary the amount of steering assist according to engine or road speed. At slow speeds more steering assist is delivered and steering the wheels is easier; necessary for parking, etc.. At higher speeds, steering assist is reduced and more steering effort is required to steer the car, giving the driver greater feel of the road. Also known as Speed-sensitive power steering.

VEHICLE HEIGHT

see 'ride height'.

WHEEL ALIGNMENT

the adjustment of suspension and steering components to optimize steering control and minimize tire wear.

WHEEL BALANCE

the condition in which a wheel/tire assembly has equal weight around its center, preventing vibration at high speeds. Wheel balance can be static, such as on a bubble balancer, or dynamic, such as with a spin balancer.

WHEEL OFFSET

the dimensional difference between a wheel's centerline and the plane of the axle flange mounting surface.

WHEEL SLIP

a measurement (in percentage) of the friction between the tire and road

surface; at zero slip the tire rotates freely, while at 100% slip the tire is locked up and is pushed along the road surface by the moving vehicle. Also called tire slip.

WHEEL SPEED SENSOR

a permanent magnetic sensor that sends information to the computer in an ABS system regarding wheel speed.

WHEEL WEIGHTS

small weights, usually made of lead, attached either mechanically or by adhesive to a wheel/tire assembly to correct its balance.

WORM GEAR

a gear into which teeth are cut, resembling the threads of a screw.

2014 ACCESSORIES AND EQUIPMENT

Amplifier (AMP) - Electrical Diagnostics - Base - Compass & Patriot

DIAGNOSTIC CODE INDEX

DIAGNOSTIC CODE INDEX

DTC	Description
B1460	CHANNEL 1 AUDIO SPEAKER OUTPUT CIRCUIT PERFORMANCE
B1461	CHANNEL 1 AUDIO SPEAKER OUTPUT CIRCUIT LOW
B1462	CHANNEL 1 AUDIO SPEAKER OUTPUT CIRCUIT HIGH
B1463	CHANNEL 1 AUDIO SPEAKER OUTPUT CIRCUIT OPEN
B1464	CHANNEL 1 AUDIO SPEAKER OUTPUT CIRCUIT SHORTED TOGETHER
B1465	CHANNEL 2 AUDIO SPEAKER OUTPUT CIRCUIT PERFORMANCE
B1466	CHANNEL 2 AUDIO SPEAKER OUTPUT CIRCUIT LOW
B1467	CHANNEL 2 AUDIO SPEAKER OUTPUT CIRCUIT HIGH
B1468	CHANNEL 2 AUDIO SPEAKER OUTPUT CIRCUIT OPEN
B1469	CHANNEL 2 AUDIO SPEAKER OUTPUT CIRCUIT SHORTED TOGETHER
B146A	CHANNEL 3 AUDIO SPEAKER OUTPUT CIRCUIT PERFORMANCE
B146B	CHANNEL 3 AUDIO SPEAKER OUTPUT CIRCUIT LOW
B146C	CHANNEL 3 AUDIO SPEAKER OUTPUT CIRCUIT HIGH
B146D	CHANNEL 3 AUDIO SPEAKER OUTPUT CIRCUIT OPEN
B146E	CHANNEL 3 AUDIO SPEAKER OUTPUT CIRCUIT

	SHORTED TOGETHER
B146F	CHANNEL 4 AUDIO SPEAKER OUTPUT CIRCUIT PERFORMANCE
B1470	CHANNEL 4 AUDIO SPEAKER OUTPUT CIRCUIT LOW
B1471	CHANNEL 4 AUDIO SPEAKER OUTPUT CIRCUIT HIGH
B1472	CHANNEL 4 AUDIO SPEAKER OUTPUT CIRCUIT OPEN
B1473	CHANNEL 4 AUDIO SPEAKER OUTPUT CIRCUIT SHORTED TOGETHER
B1474	CHANNEL 5 AUDIO SPEAKER OUTPUT CIRCUIT PERFORMANCE
B1475	CHANNEL 5 AUDIO SPEAKER OUTPUT CIRCUIT LOW
B1476	CHANNEL 5 AUDIO SPEAKER OUTPUT CIRCUIT HIGH
B1477	CHANNEL 5 AUDIO SPEAKER OUTPUT CIRCUIT OPEN
B1478	CHANNEL 5 AUDIO SPEAKER OUTPUT CIRCUIT SHORTED TOGETHER
B1479	CHANNEL 6 AUDIO SPEAKER OUTPUT CIRCUIT PERFORMANCE
B147A	CHANNEL 6 AUDIO SPEAKER OUTPUT CIRCUIT LOW
B147B	CHANNEL 6 AUDIO SPEAKER OUTPUT CIRCUIT HIGH
B147C	CHANNEL 6 AUDIO SPEAKER OUTPUT CIRCUIT OPEN
B147D	CHANNEL 6 AUDIO SPEAKER OUTPUT CIRCUIT SHORTED TOGETHER
B147E	CHANNEL 7 AUDIO SPEAKER OUTPUT CIRCUIT PERFORMANCE
B147F	CHANNEL 7 AUDIO SPEAKER OUTPUT CIRCUIT LOW
B1480	CHANNEL 7 AUDIO SPEAKER OUTPUT CIRCUIT

	HIGH
B1481	CHANNEL 7 AUDIO SPEAKER OUTPUT CIRCUIT OPEN
B1482	CHANNEL 7 AUDIO SPEAKER OUTPUT CIRCUIT SHORTED TOGETHER
B1483	CHANNEL 8 AUDIO SPEAKER OUTPUT CIRCUIT PERFORMANCE
B1484	CHANNEL 8 AUDIO SPEAKER OUTPUT CIRCUIT LOW
B1485	CHANNEL 8 AUDIO SPEAKER OUTPUT CIRCUIT HIGH
B1486	CHANNEL 8 AUDIO SPEAKER OUTPUT CIRCUIT OPEN
B1487	CHANNEL 8 AUDIO SPEAKER OUTPUT CIRCUIT SHORTED TOGETHER
U0019	CAN B BUS
U0141	LOST COMMUNICATION WITH IPM (FCM/TIPM)
U0184	LOST COMMUNICATION WITH RADIO

DIAGNOSIS AND TESTING

B1460-CHANNEL 1 AUDIO SPEAKER OUTPUT CIRCUIT PERFORMANCE

For a complete wiring diagram, **refer to appropriate SYSTEM WIRING DIAGRAMS article** .

WHEN MONITORED

With the ignition on.

SET CONDITION

This Diagnostic Trouble Code (DTC) sets if a Direct Current (DC) offset occurs on the output channel, the Amplifier shall set a DTC after a maturity rate of four to six seconds.

POSSIBLE CAUSES

Possible Causes
AMPLIFIER

DIAGNOSTIC TEST

CHECK FOR AN INTERMITTENT CONDITION

1. Turn the ignition on and open one of the front doors.

   NOTE: A front door must remain open whenever checking or erasing Amplifier DTCs.

2. Using the scan tool, record and erase the Amplifier DTCs.
3. Cycle the ignition switch from on to off, wait five seconds and then back to on.
4. Turn the Radio on and set the volume to 25.
5. Adjust the speakers to the front and center.
6. Using the scan tool, read the active Amplifier DTCs.

   Does the scan tool display active: B1460-CHANNEL 1 AUDIO SPEAKER OUTPUT CIRCUIT PERFORMANCE?

   Yes

   - Replace the Amplifier in accordance with the Service Information.
   - Perform the BODY VERIFICATION TEST. Refer to **STANDARD PROCEDURE** .

   No

   - Test complete, the condition or conditions that originally set this DTC are not present at this time. Using the wiring diagrams as a guide, check all related splices and connectors for signs of water intrusion, corrosion, pushed out or bent terminals and correct pin tension.
   - Perform the BODY VERIFICATION TEST. Refer to **STANDARD PROCEDURE** .

B1461-CHANNEL 1 AUDIO SPEAKER OUTPUT CIRCUIT LOW

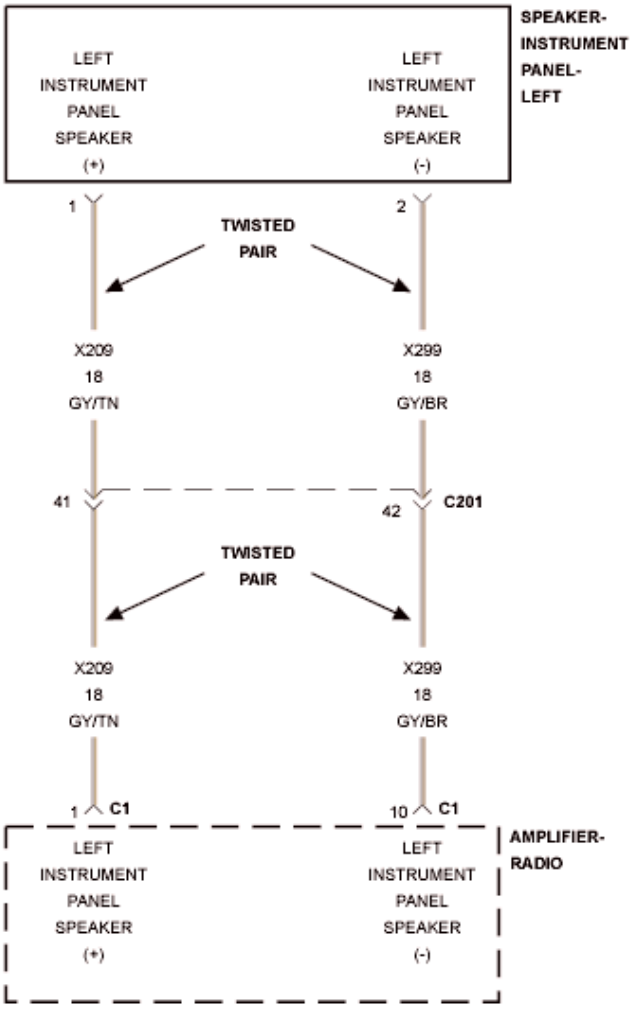

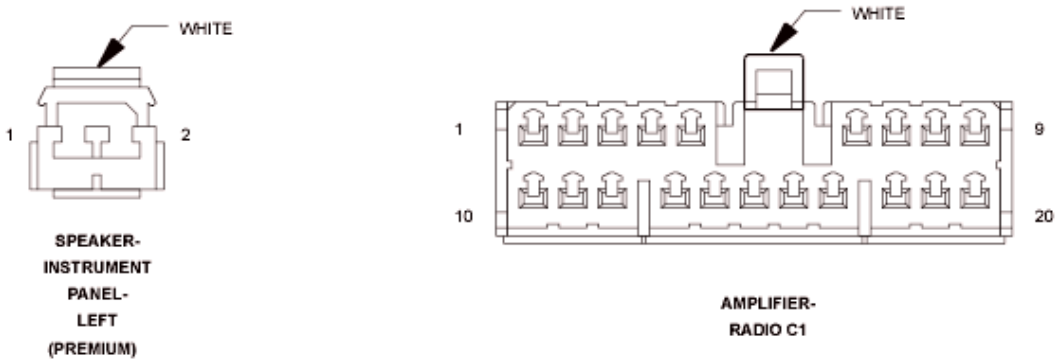

Fig. 1: Left Instrument Panel Speaker Circuit Schematic
Courtesy of CHRYSLER GROUP, LLC

For a complete wiring diagram, **refer to appropriate SYSTEM WIRING DIAGRAMS article** .

WHEN MONITORED

With the ignition on.

SET CONDITION

The Amplifier detects a shorted to ground condition on the speaker output circuit.

POSSIBLE CAUSES

Possible Causes
(X209) LEFT INSTRUMENT PANEL SPEAKER (+) CIRCUIT SHORTED TO GROUND
(X299) LEFT INSTRUMENT PANEL SPEAKER (-) CIRCUIT SHORTED TO GROUND
LEFT INSTRUMENT PANEL SPEAKER
AMPLIFIER

DIAGNOSTIC TEST

1. **CHECK FOR AN INTERMITTENT CONDITION**
    1. Turn the ignition on and open one of the front doors.

       NOTE: A front door must remain open whenever checking or erasing Amplifier DTCs.

    2. Using the scan tool, record and erase the Amplifier DTCs.
    3. Cycle the ignition switch from on to off, wait five seconds and then back to on.
    4. Turn the Radio on and set the volume to 25.
    5. Adjust the speakers to the front and center.
    6. Using the scan tool, read the active Amplifier DTCs.

       Does the scan tool display active: B1461-CHANNEL 1 AUDIO SPEAKER OUTPUT CIRCUIT LOW?

Yes

- Go To2

No

- Test complete, the condition or conditions that originally set this DTC are not present at this time. Using the wiring diagrams as a guide, check all related splices and connectors for signs of water intrusion, corrosion, pushed out or bent terminals and correct pin tension.
- Perform the BODY VERIFICATION TEST. Refer to **STANDARD PROCEDURE** .

2. **LEFT INSTRUMENT PANEL (I/P) SPEAKER**

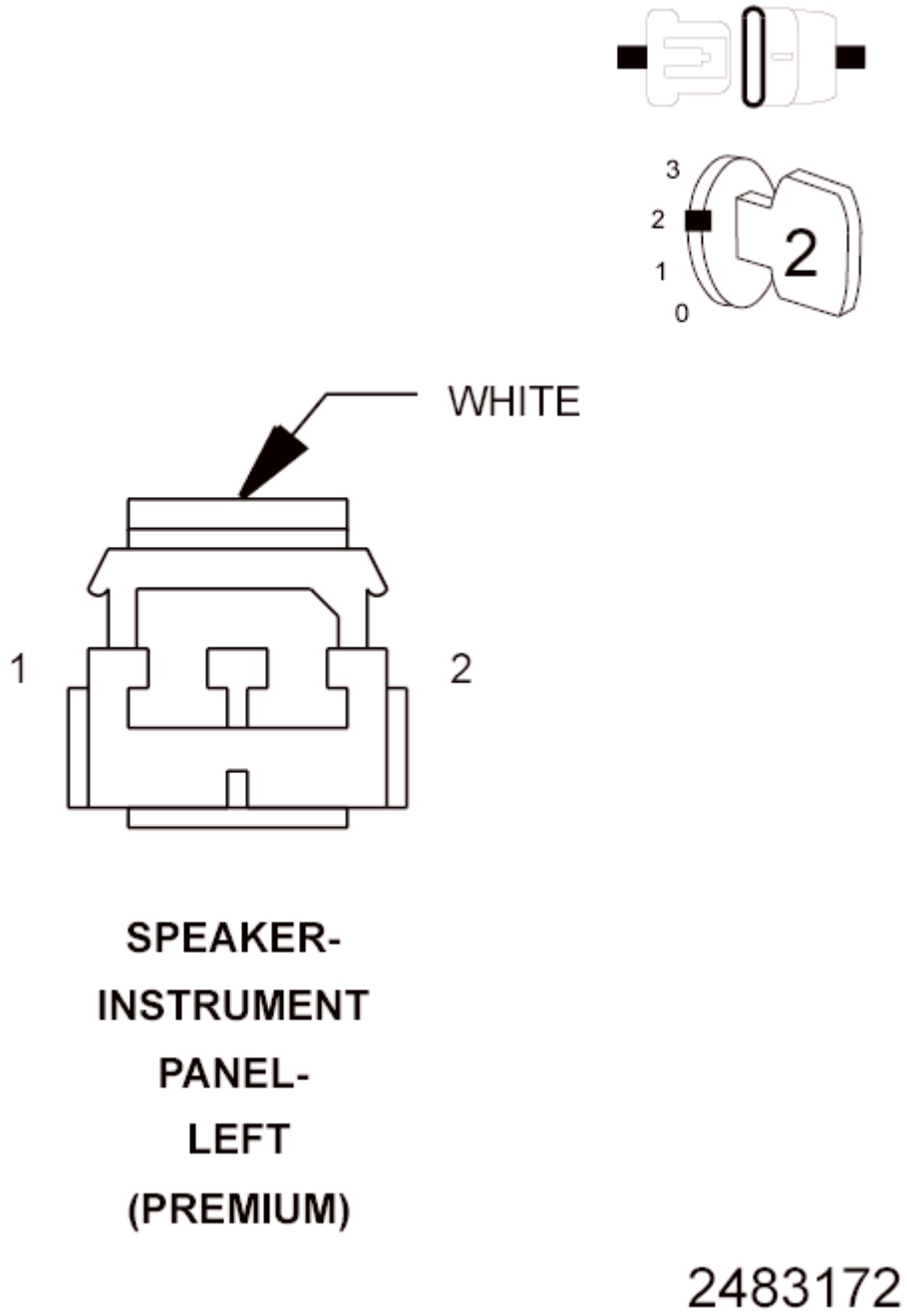

Fig. 2: Left Instrument Panel Speaker Harness Connector End View
Courtesy of CHRYSLER GROUP, LLC

1. With the scan tool, erase the DTCs.
2. Turn the ignition off.
3. Disconnect the Left Instrument Panel Speaker harness connector.
4. Turn the ignition on.
5. Turn the radio on and set the volume to 25.
6. Adjust the speakers to the front and center.

7. With the scan tool, read the active Amplifier DTCs.

   Does the scan tool display active: B1461-CHANNEL 1 AUDIO SPEAKER OUTPUT CIRCUIT LOW?

   Yes

   - Go To 3

   No

   - Replace the Left Instrument Panel Speaker in accordance with the Service Information.
   - Perform the BODY VERIFICATION TEST. Refer to **STANDARD PROCEDURE** .

3. **CHECK THE (X209) LEFT I/P SPEAKER (+) CIRCUIT FOR A SHORT TO GROUND**

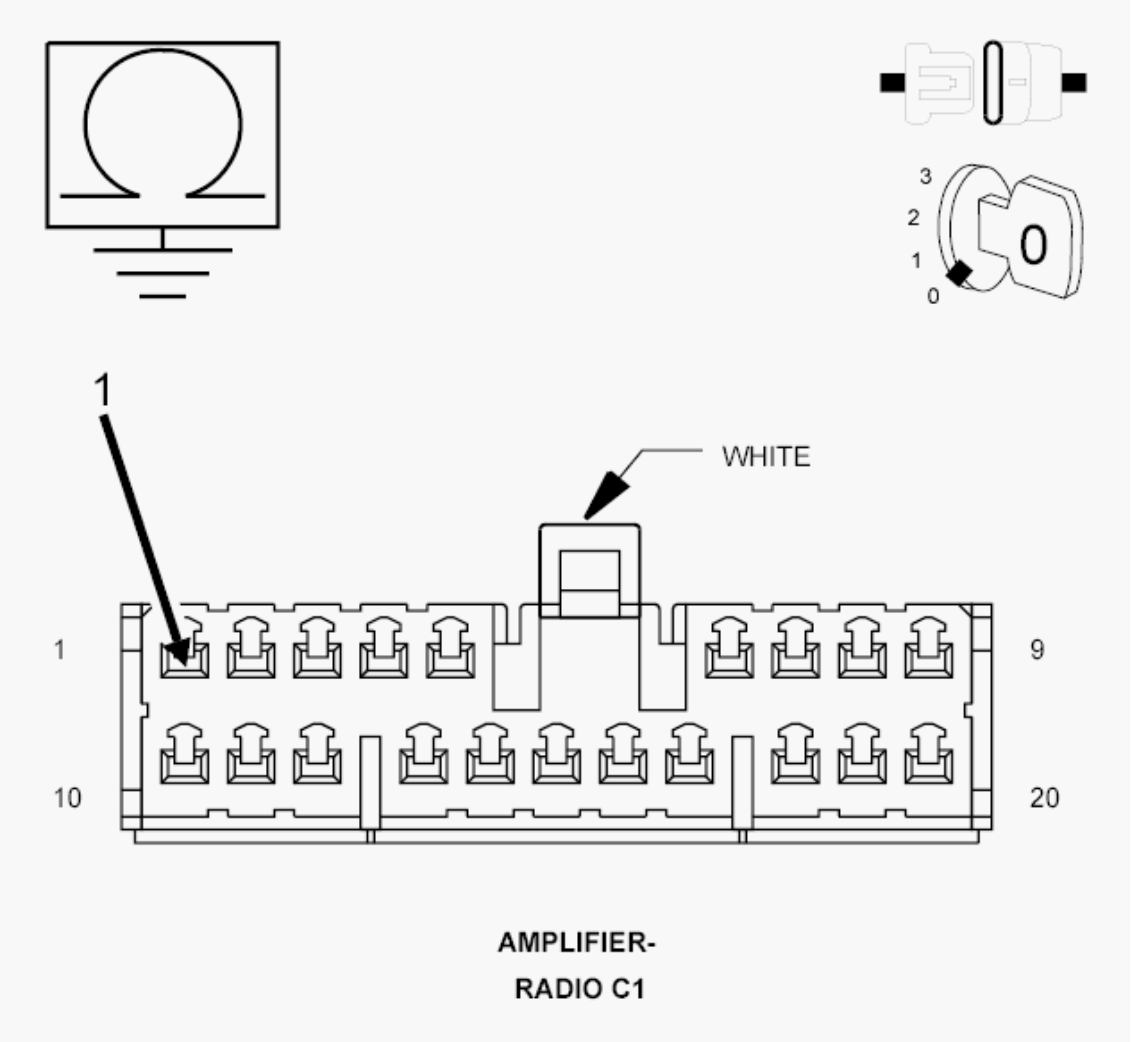

Fig. 3: Measuring Resistance Between Ground & Left I/P Speaker (+) Circuit
Courtesy of CHRYSLER GROUP, LLC

1. Turn the ignition off.
2. Disconnect the Amplifier C1 harness connector.
3. Measure the resistance between ground and the (X209) Left I/P Speaker (+) circuit in the Amplifier C1 connector.

   Is the resistance below 10K Ohms?

   Yes

   - Repair the (X209) Left I/P Speaker (+) circuit for a short to ground.
   - Perform the BODY VERIFICATION TEST. Refer to

STANDARD PROCEDURE .

No

- Go To 4

4. **CHECK THE (X299) LEFT I/P SPEAKER (-) CIRCUIT FOR A SHORT TO GROUND**

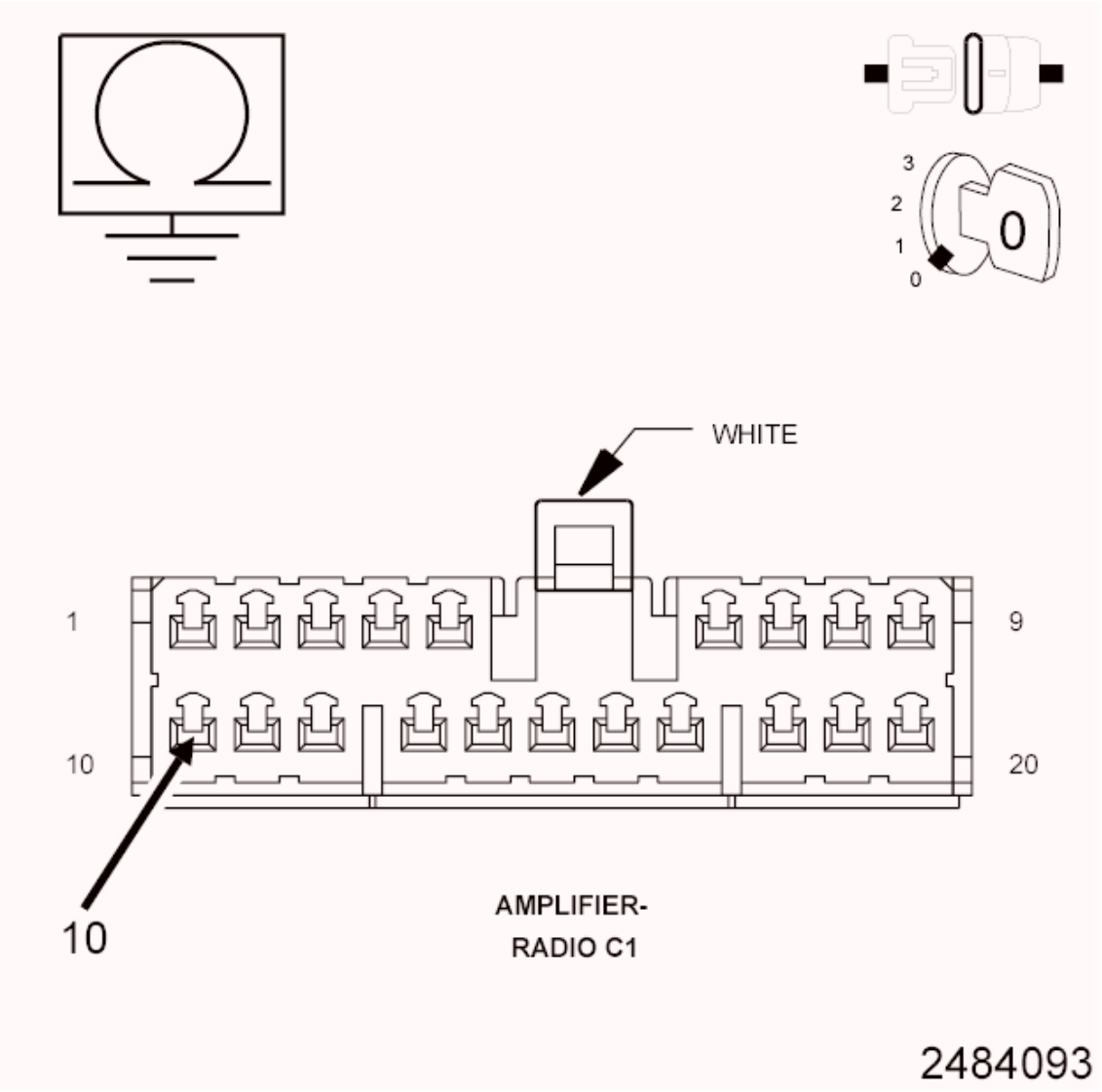

Fig. 4: Checking Amplified Left I/P Speaker (-) Circuit For Short To Ground
Courtesy of CHRYSLER GROUP, LLC

1. Measure the resistance between ground and the (X299) Left I/P Speaker (-) circuit in the Amplifier C1 connector.

Is the resistance below 10K Ohms?

Yes

- Repair the (X299) Left I/P Speaker (-) circuit for a short to ground.
- Perform the BODY VERIFICATION TEST. Refer to **STANDARD PROCEDURE** .

No

- Replace the Amplifier in accordance with the Service Information.
- Perform the BODY VERIFICATION TEST. Refer to **STANDARD PROCEDURE** .

B1462-CHANNEL 1 AUDIO SPEAKER OUTPUT CIRCUIT HIGH

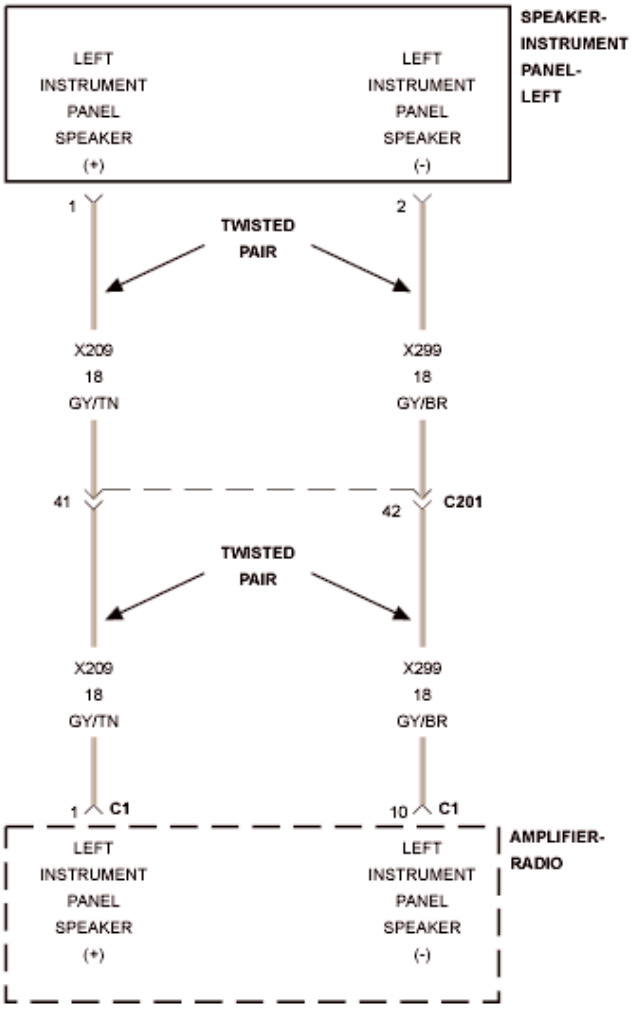

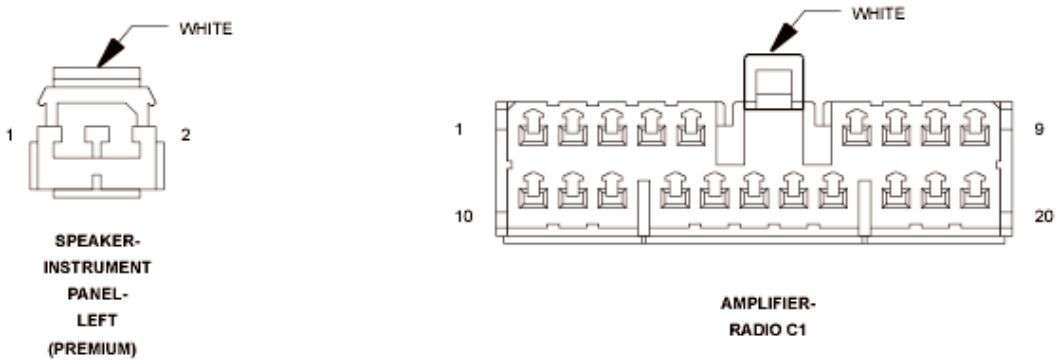

Fig. 5: Left Instrument Panel Speaker Circuit Schematic
Courtesy of CHRYSLER GROUP, LLC

For a complete wiring diagram, **refer to appropriate SYSTEM WIRING DIAGRAMS article** .

WHEN MONITORED

With the ignition on.

SET CONDITION

The Amplifier detects a short to battery condition on the speaker output circuit.

POSSIBLE CAUSES

Possible Causes
(X209) LEFT INSTRUMENT PANEL (I/P) SPEAKER (+) CIRCUIT SHORTED TO VOLTAGE (X299) LEFT INSTRUMENT PANEL (I/P) SPEAKER (-) CIRCUIT SHORTED TO VOLTAGE AMPLIFIER

DIAGNOSTIC TEST

1. **CHECK FOR AN INTERMITTENT CONDITION**
   1. Turn the ignition on and open one of the front doors.

      NOTE: A front door must remain open whenever checking or erasing Amplifier DTCs.

   2. Using the scan tool, record and erase the Amplifier DTCs.
   3. Cycle the ignition switch from on to off, wait five seconds and then back to on.
   4. Turn the Radio on and set the volume to 25.
   5. Adjust the speakers to the front and center.
   6. Using the scan tool, read the active Amplifier DTCs.

      Does the scan tool display active: B1462-CHANNEL 1 AUDIO SPEAKER OUTPUT CIRCUIT HIGH?

      Yes

      - Go To 2

No

- Test complete, the condition or conditions that originally set this DTC are not present at this time. Using the wiring diagrams as a guide, check all related splices and connectors for signs of water intrusion, corrosion, pushed out or bent terminals and correct pin tension.
- Perform the BODY VERIFICATION TEST. Refer to **STANDARD PROCEDURE** .

2. **CHECK FOR VOLTAGE ON THE (X209) LEFT INSTRUMENT PANEL (I/P) SPEAKER (+) CIRCUIT**

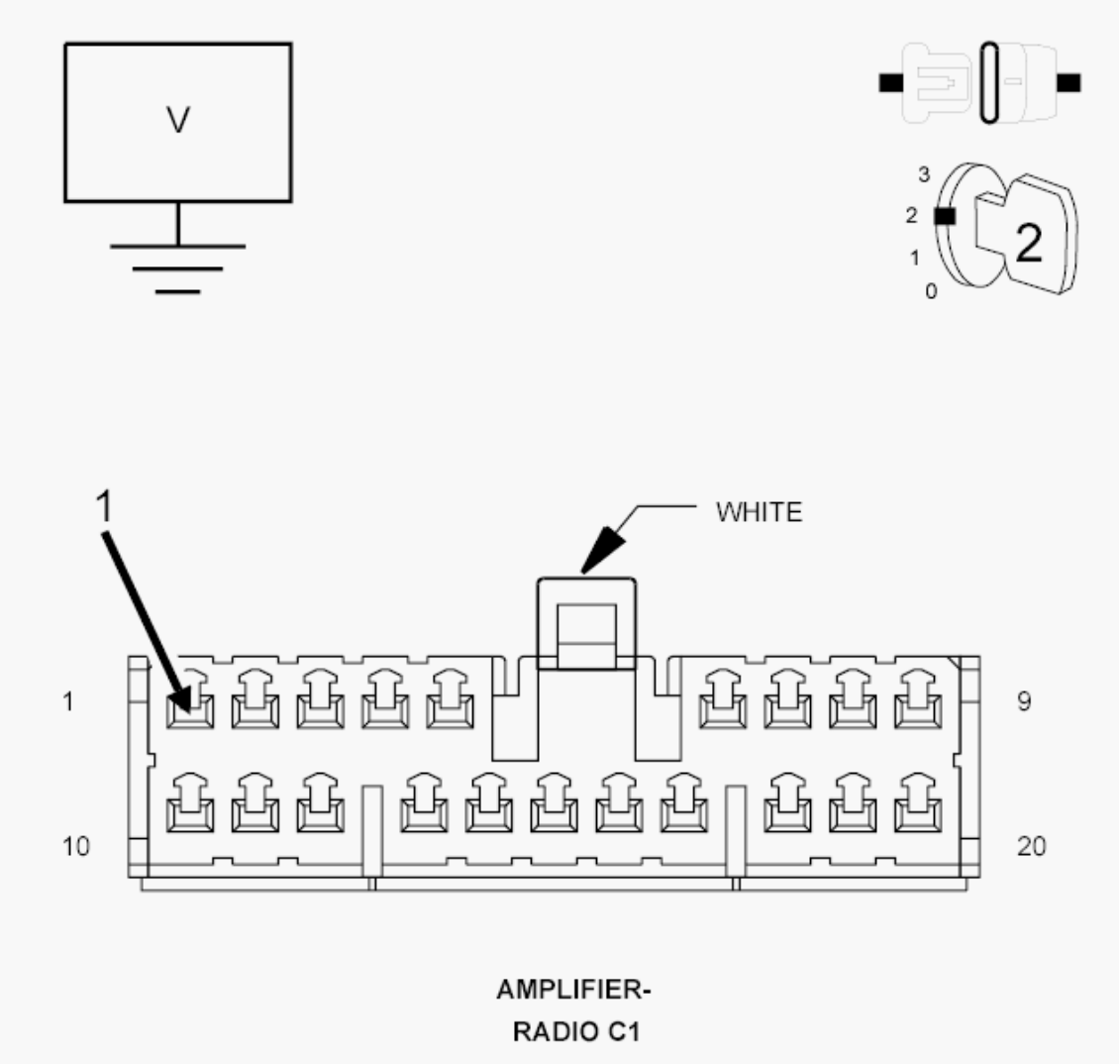

Fig. 6: Measuring Voltage Between Left I/P Speaker (+) Circuit & Ground
Courtesy of CHRYSLER GROUP, LLC

1. Turn the ignition off.
2. Disconnect the Amplifier C1 harness connector.
3. Turn the ignition on.
4. Measure the voltage between the (X209) Left I/P Speaker (+) circuit and ground.

   Is there any voltage present?

   Yes

   - Repair the (X209) Left I/P Speaker (+) circuit for a short to voltage.
   - Perform the BODY VERIFICATION TEST. Refer to **STANDARD PROCEDURE** .

   No

   - Go To 3

3. **CHECK FOR VOLTAGE ON THE (X299) LEFT I/P SPEAKER (-) CIRCUIT**

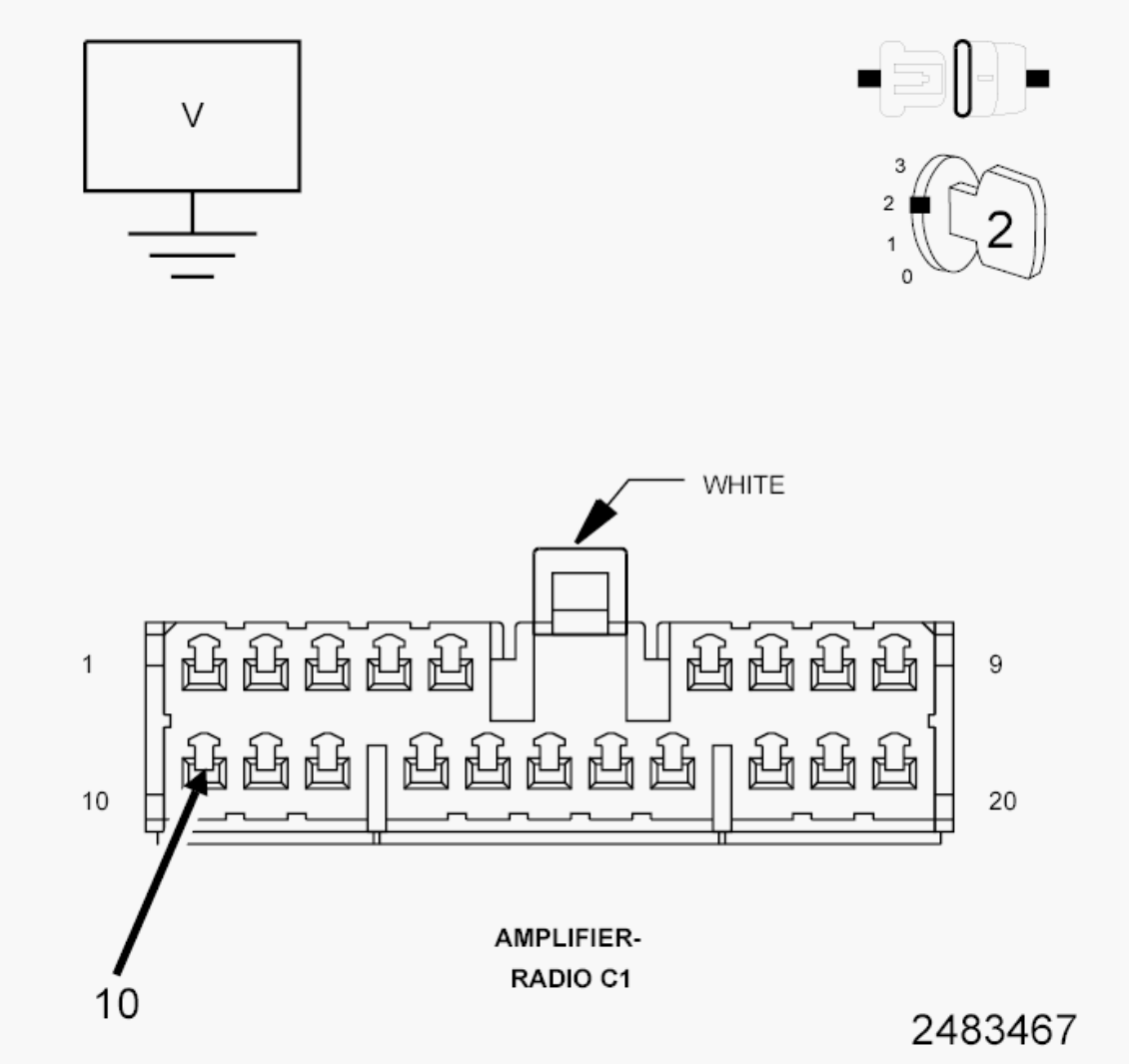

Fig. 7: Measuring Voltage Between Left I/P Speaker (-) Circuit & Ground
Courtesy of CHRYSLER GROUP, LLC

1. Measure the voltage between the (X299) Left I/P Speaker (-) circuit and ground.

   Is there any voltage present?

   Yes

   - Repair the (X299) Left I/P Speaker (-) circuit for a short to voltage.
   - Perform the BODY VERIFICATION TEST. Refer to **STANDARD PROCEDURE** .

   No

- Replace the Amplifier in accordance with the Service Information.
- Perform the BODY VERIFICATION TEST. Refer to **STANDARD PROCEDURE** .

B1463-CHANNEL 1 AUDIO SPEAKER OUTPUT CIRCUIT OPEN

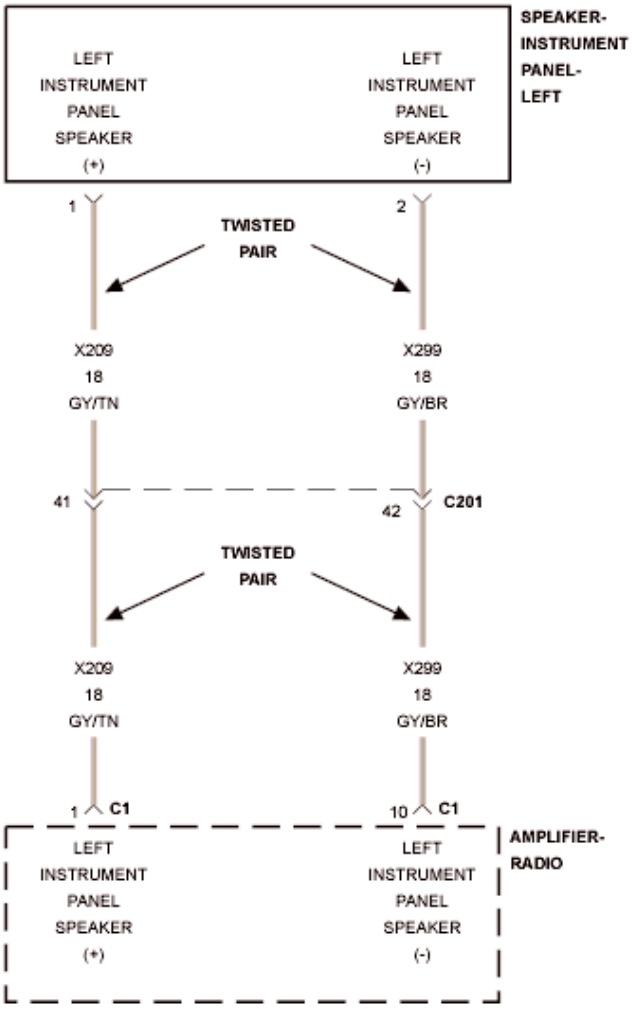

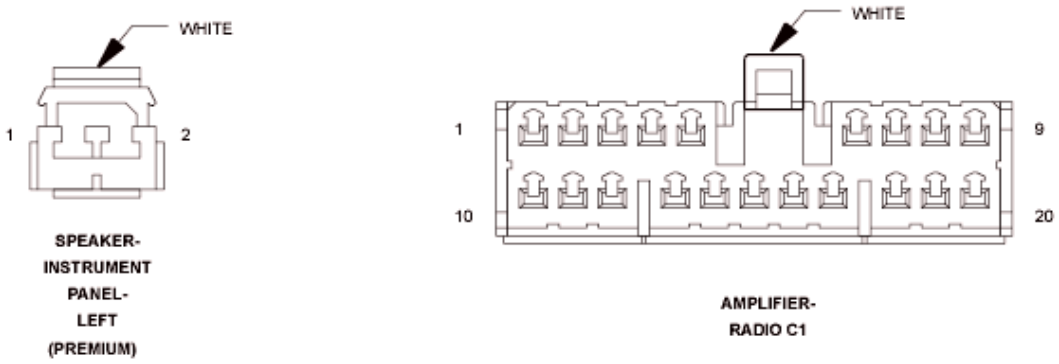

Fig. 8: Left Instrument Panel Speaker Circuit Schematic
Courtesy of CHRYSLER GROUP, LLC

For a complete wiring diagram, **refer to appropriate SYSTEM WIRING DIAGRAMS article** .

WHEN MONITORED

Amplifier bus wake-up.

Amplifier reset with scan tool.

SET CONDITION

The Amplifier detects an open condition on the speaker output circuit.

POSSIBLE CAUSES

Possible Causes
(X209) LEFT INSTRUMENT PANEL (I/P) SPEAKER (+) CIRCUIT OPEN
(X299) LEFT INSTRUMENT PANEL (I/P) SPEAKER (-) CIRCUIT OPEN
LEFT INSTRUMENT PANEL (I/P) SPEAKER
AMPLIFIER

DIAGNOSTIC TEST

1. **CHECK FOR AN INTERMITTENT CONDITION**
   1. Turn the ignition on and open one of the front doors.

      NOTE: A front door must remain open whenever checking or erasing Amplifier DTCs.

   2. Using the scan tool, record and erase the Amplifier DTCs.
   3. Cycle the ignition switch from on to off, wait five seconds and then back to on.
   4. Turn the Radio on and set the volume to 25.
   5. Adjust the speakers to the front and center.
   6. Using the scan tool, read the active Amplifier DTCs.

      Does the scan tool display active: B1463-CHANNEL 1 AUDIO SPEAKER OUTPUT CIRCUIT OPEN?

Yes

- Go To 2

No

- Test complete, the condition or conditions that originally set this DTC are not present at this time. Using the wiring diagrams as a guide, check all related splices and connectors for signs of water intrusion, corrosion, pushed out or bent terminals and correct pin tension.
- Perform the BODY VERIFICATION TEST. Refer to **STANDARD PROCEDURE** .

2. **CHECK THE OPERATION OF THE LEFT I/P SPEAKER**

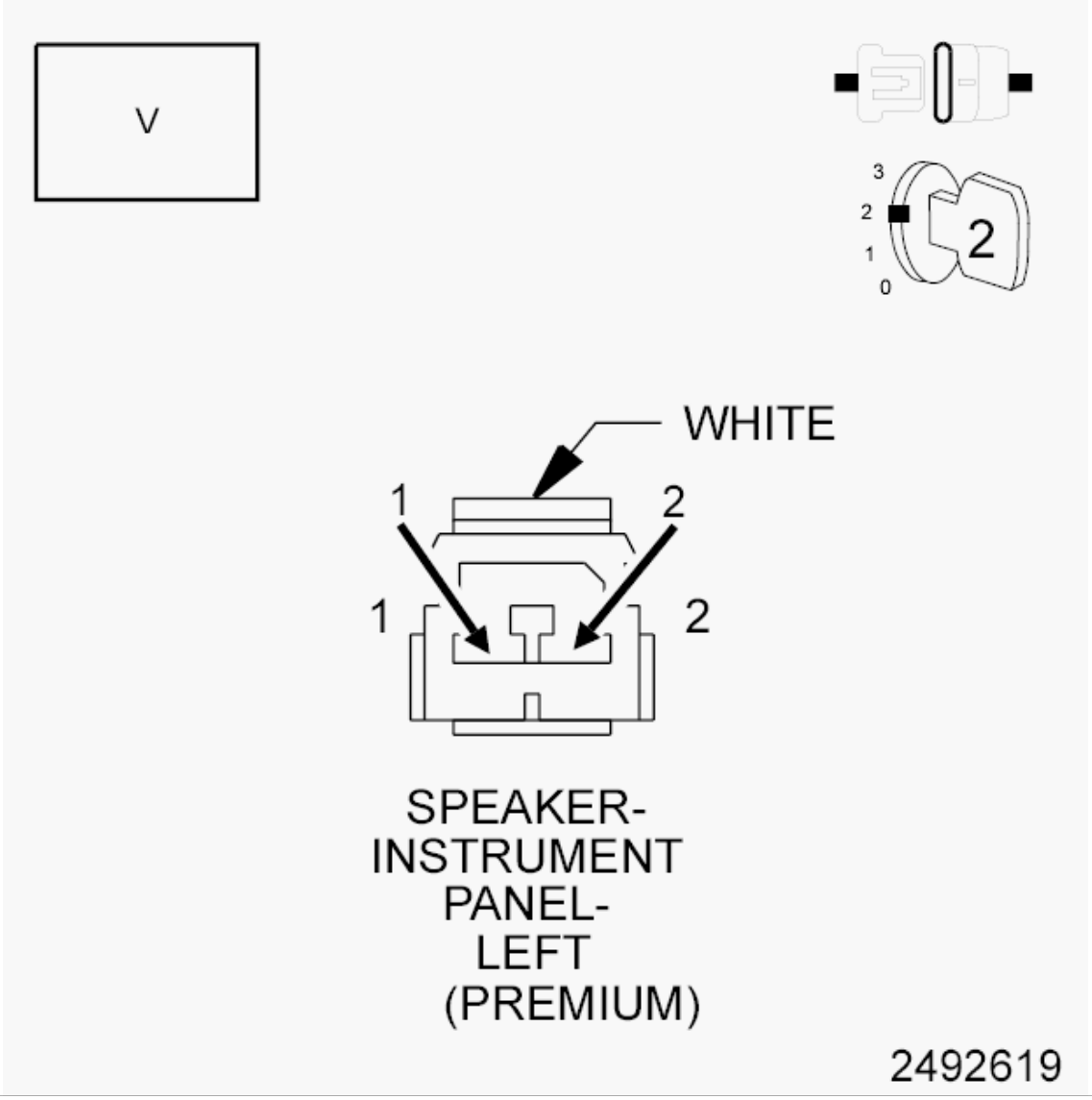

Fig. 9: Checking Operation Of Left I/P Speaker
Courtesy of CHRYSLER GROUP, LLC

1. Turn the ignition off.
2. Disconnect the Left I/P Speaker harness connector.
3. Turn the ignition on.
4. Turn the Radio on and turn the volume to mid level.
5. Adjust the speakers to the front and center.
6. With a voltmeter set to read in A/C voltage, measure the voltage of the Left I/P Speaker circuits in the Left Front I/P Speaker harness connector.

   Is the voltage present greater than 1 volt?

   Yes

   - Replace the Left I/P Speaker in accordance with the Service Information.
   - Perform the BODY VERIFICATION TEST. Refer to **STANDARD PROCEDURE** .

   No

   - Go To 3

3. **CHECK THE (X209) LEFT I/P SPEAKER (+) CIRCUIT FOR AN OPEN**

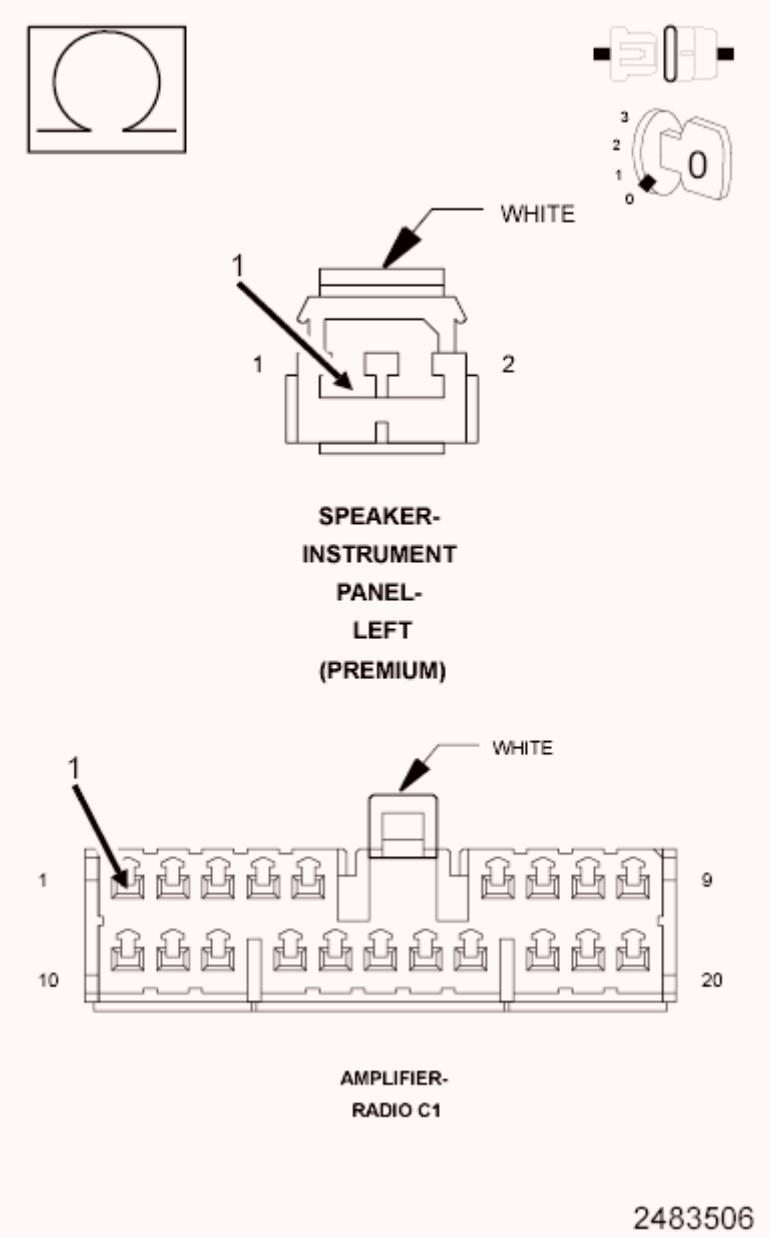

Fig. 10: Measuring Resistance Of Left I/P Speaker (+) Circuit
Courtesy of CHRYSLER GROUP, LLC

1. Turn the ignition off.
2. Disconnect the Amplifier C1 harness connector.
3. Measure the resistance of the (X209) Left I/P Speaker (+) circuit between the Amplifier C1 harness connector and the Left I/P Speaker harness connector.

   Is the resistance below 2.0 Ohms?

   Yes

- Go To 4

No

- Repair the (X209) Left I/P Speaker (+) circuit for an open.
- Perform the BODY VERIFICATION TEST. Refer to **STANDARD PROCEDURE** .

4. **CHECK THE (X299) LEFT I/P SPEAKER (-) CIRCUIT FOR AN OPEN**

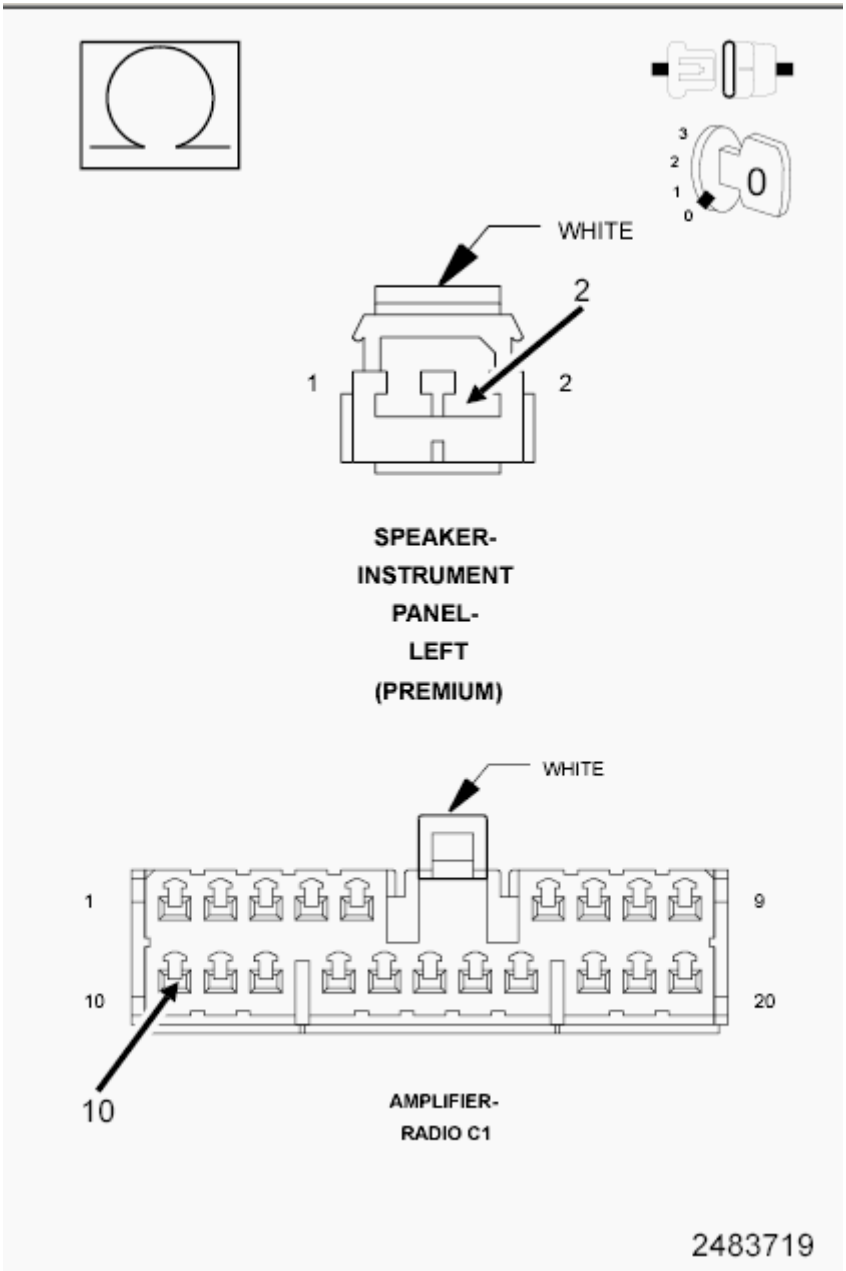

Fig. 11: Measuring Resistance Of Left I/P Speaker (-) Circuit

Courtesy of CHRYSLER GROUP, LLC

1. Measure the resistance of the (X299) Left I/P Speaker (-) circuit between the Amplifier C1 harness connector and the Left I/P Speaker harness connector.

   Is the resistance below 2.0 Ohms?

   Yes

   - Replace the Amplifier in accordance with the Service Information.
   - Perform the BODY VERIFICATION TEST. Refer to **STANDARD PROCEDURE** .

   No

   - Repair the (X299) Left I/P Speaker (-) circuit for an open.
   - Perform the BODY VERIFICATION TEST. Refer to **STANDARD PROCEDURE** .

B1464-CHANNEL 1 AUDIO SPEAKER OUTPUT CIRCUIT SHORTED TOGETHER

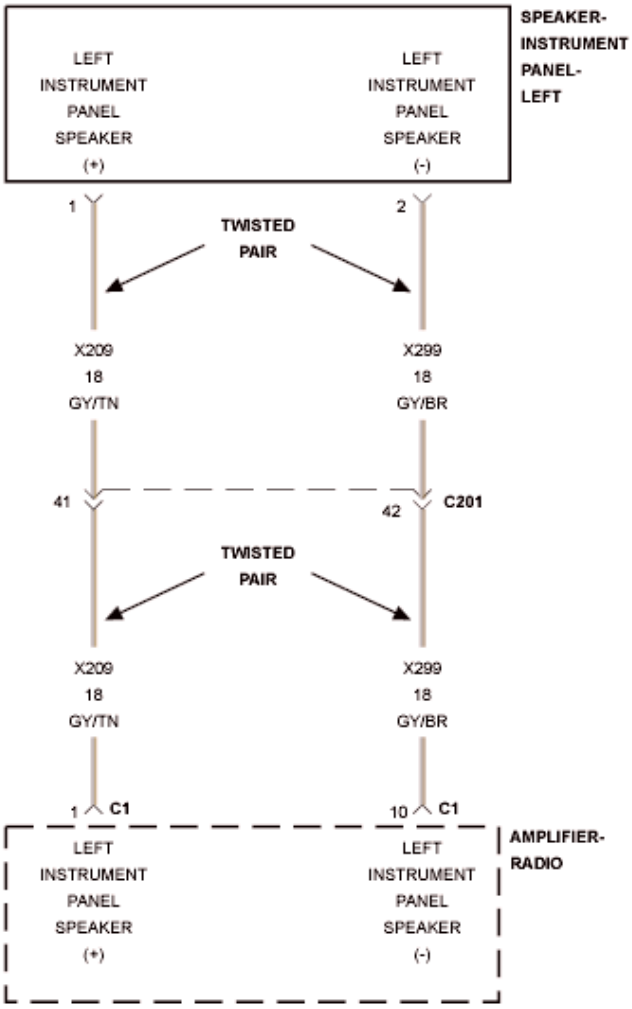

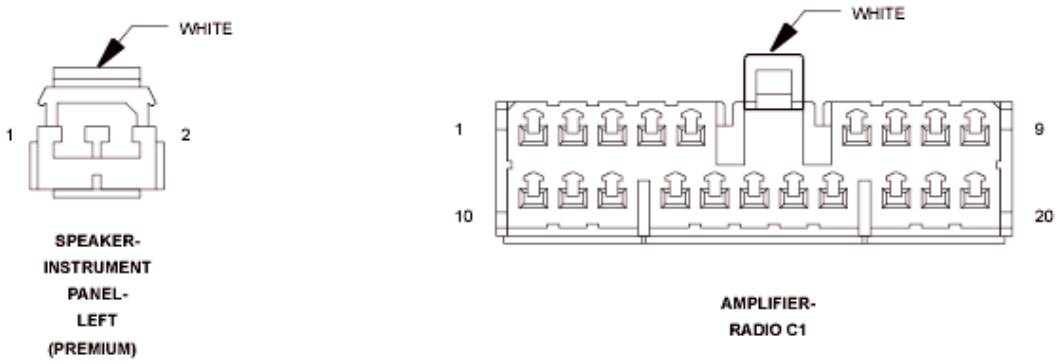

Fig. 12: Left Instrument Panel Speaker Circuit Schematic
Courtesy of CHRYSLER GROUP, LLC

For a complete wiring diagram, **refer to appropriate SYSTEM WIRING DIAGRAMS article** .

WHEN MONITORED

With the ignition on.

Radio volume at 25 or higher.

SET CONDITION

The Amplifier detects that the output circuits are shorted together.

POSSIBLE CAUSES

Possible Causes
(X209) LEFT INSTRUMENT PANEL (I/P) (+) CIRCUIT SHORTED TO THE (X299) LEFT INSTRUMENT PANEL (I/P) (-) CIRCUIT LEFT INSTRUMENT PANEL (I/P) SPEAKER AMPLIFIER

DIAGNOSTIC TEST

1. **CHECK FOR AN INTERMITTENT CONDITION**
   1. Turn the ignition on and open one of the front doors.

      NOTE: A front door must remain open whenever checking or erasing Amplifier DTCs.

   2. Using the scan tool, record and erase the Amplifier DTCs.
   3. Cycle the ignition switch from on to off, wait five seconds and then back to on.
   4. Turn the Radio on and set the volume to 25.
   5. Adjust the speakers to the front and center.
   6. Using the scan tool, read the active Amplifier DTCs.

      Does the scan tool display active: B1464-CHANNEL 1 AUDIO SPEAKER OUTPUT CIRCUIT SHORTED TOGETHER?

      Yes

- Go To 2

No

- Test complete, the condition or conditions that originally set this DTC are not present at this time. Using the wiring diagrams as a guide, check all related splices and connectors for signs of water intrusion, corrosion, pushed out or bent terminals and correct pin tension.
- Perform the BODY VERIFICATION TEST. Refer to **STANDARD PROCEDURE** .

2. **CHECK THE OPERATION OF THE AMPLIFIED LEFT I/P SPEAKER**

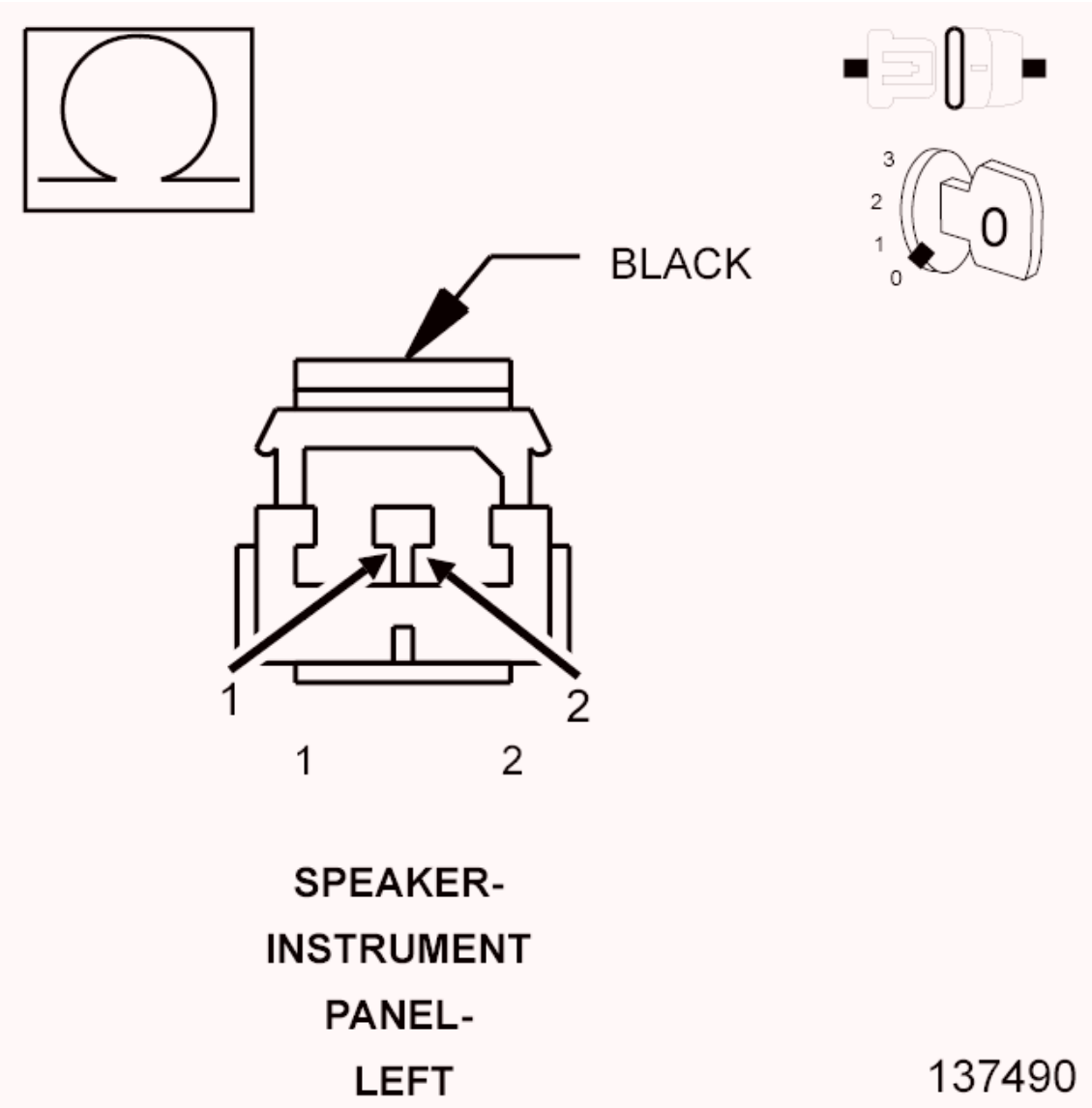

Fig. 13: Measuring Resistance Of Speaker Between Two Terminals
Courtesy of CHRYSLER GROUP, LLC

1. Turn the ignition off.
2. Disconnect the Left I/P Speaker harness connector.
3. Measure the resistance of the speaker between the two terminals.

NOTE: The graphic shows the connector for reference only. Measure at the speaker terminals.

Is the resistance of the speaker less than 1 Ohm?

Yes

- Replace the Left I/P Speaker in accordance with the Service Information.
- Perform the BODY VERIFICATION TEST. Refer to **STANDARD PROCEDURE** .

No

- Go To 3

3. **CHECK THE (X209) AMPLIFIED LEFT I/P SPEAKER (+) CIRCUIT, AND THE (X299) AMPLIFIED LEFT I/P SPEAKER (-) CIRCUITS FOR A SHORT TOGETHER**

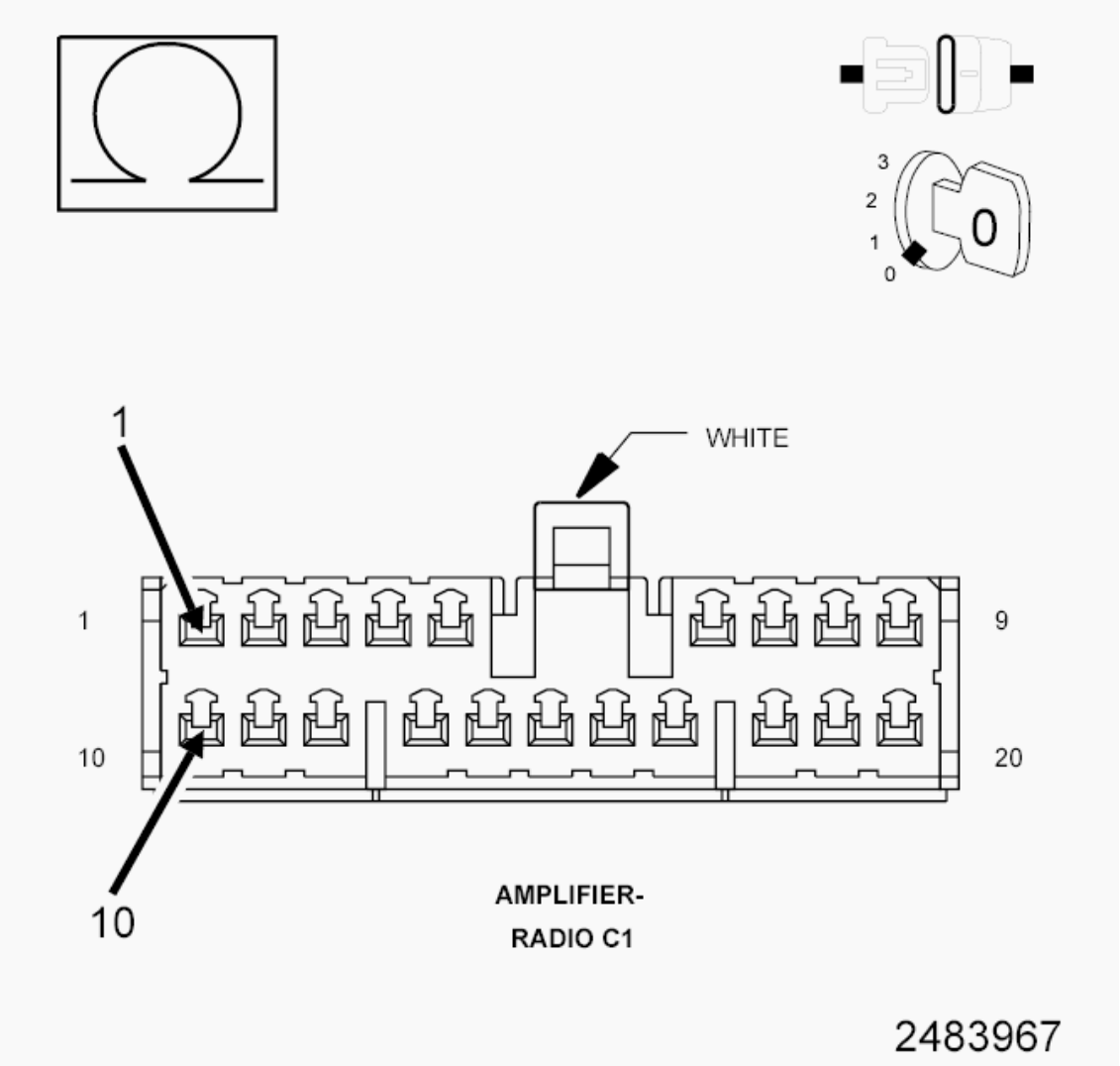

Fig. 14: Measuring Resistance Between Left I/P Speaker (+) Circuit & Left I/P Speaker (-) Circuit
Courtesy of CHRYSLER GROUP, LLC

1. Disconnect the Amplifier C1 harness connector.
2. Measure the resistance between the (X209) Left I/P Speaker (+) circuit and the (X299) Left I/P Speaker (-) circuit.

   Is the resistance below 10k Ohms?

   Yes

   - Repair the (X209) Left I/P Speaker (+) circuit for a short to the (X299) Left I/P Speaker (-) circuit.
   - Perform the BODY VERIFICATION TEST. Refer to **STANDARD PROCEDURE** .

No

- Replace the Amplifier in accordance with the Service Information.
- Perform the BODY VERIFICATION TEST. Refer to **STANDARD PROCEDURE** .

B1465-CHANNEL 2 AUDIO SPEAKER OUTPUT CIRCUIT PERFORMANCE

For a complete wiring diagram, **refer to appropriate SYSTEM WIRING DIAGRAMS article** .

WHEN MONITORED

With the ignition on.

SET CONDITION

This Diagnostic Trouble Code (DTC) sets if a Direct Current (DC) offset occurs on the output channel, the Amplifier shall set a DTC after a maturity rate of four to six seconds.

POSSIBLE CAUSES

Possible Causes
AMPLIFIER

DIAGNOSTIC TEST

CHECK FOR AN INTERMITTENT CONDITION

1. Turn the ignition on and open one of the front doors.

NOTE: A front door must remain open whenever checking or erasing Amplifier DTCs.

2. Using the scan tool, record and erase the Amplifier DTCs.
3. Cycle the ignition switch from on to off, wait five seconds and then back to on.
4. Turn the Radio on and set the volume to 25.
5. Adjust the speakers to the front and center.
6. Using the scan tool, read the active Amplifier DTCs.

Does the scan tool display active: B1465-CHANNEL 2 AUDIO SPEAKER OUTPUT CIRCUIT PERFORMANCE?

Yes

- Replace the Amplifier in accordance with the Service Information.
- Perform the BODY VERIFICATION TEST. Refer to **STANDARD PROCEDURE** .

No

- Test complete, the condition or conditions that originally set this DTC are not present at this time. Using the wiring diagrams as a guide, check all related splices and connectors for signs of water intrusion, corrosion, pushed out or bent terminals, and correct pin tension.
- Perform the BODY VERIFICATION TEST. Refer to **STANDARD PROCEDURE** .

B1466-CHANNEL 2 AUDIO SPEAKER OUTPUT CIRCUIT LOW

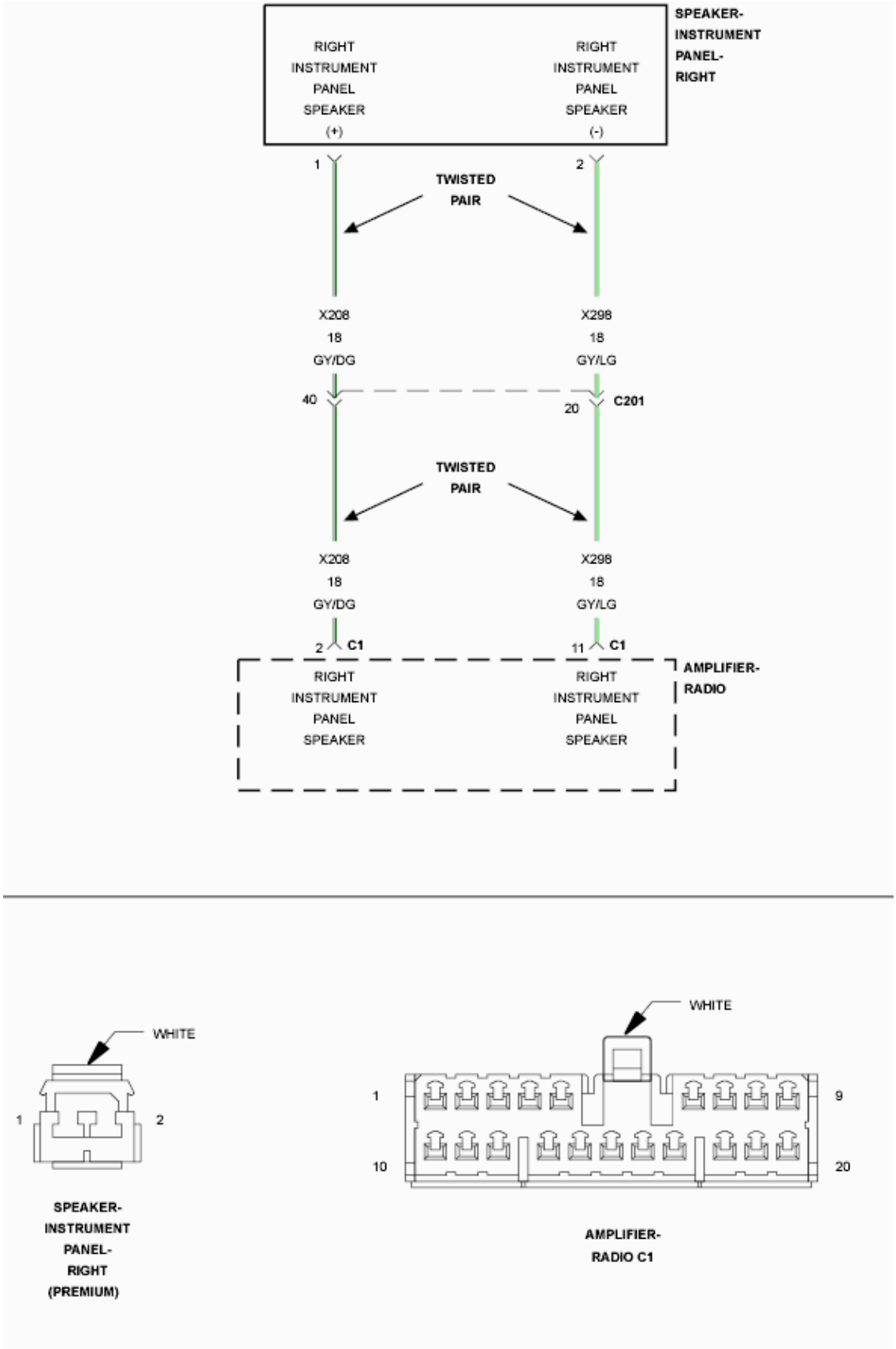

Fig. 15: Right Instrument Panel Speaker Circuit Schematic
Courtesy of CHRYSLER GROUP, LLC

For a complete wiring diagram, **refer to appropriate SYSTEM WIRING DIAGRAMS article** .

WHEN MONITORED

With the ignition on.

SET CONDITION

The Amplifier detects a shorted to ground condition on the speaker output circuit.

POSSIBLE CAUSES

Possible Causes
(X208) RIGHT INSTRUMENT PANEL (I/P) SPEAKER (+) CIRCUIT SHORTED TO GROUND
(X298) RIGHT INSTRUMENT PANEL (I/P) SPEAKER (-) CIRCUIT SHORTED TO GROUND
RIGHT INSTRUMENT PANEL (I/P) SPEAKER
AMPLIFIER

DIAGNOSTIC TEST

1. **CHECK FOR AN INTERMITTENT CONDITION**
    1. Turn the ignition on and open one of the front doors.

       NOTE: A front door must remain open whenever checking or erasing Amplifier DTCs.

    2. Using the scan tool, record and erase the Amplifier DTCs.
    3. Cycle the ignition switch from on to off, wait five seconds and then back to on.
    4. Turn the Radio on and set the volume to 25.
    5. Adjust the speakers to the front and center.
    6. Using the scan tool, read the active Amplifier DTCs.

       Does the scan tool display active: B1466-CHANNEL 2 AUDIO SPEAKER OUTPUT CIRCUIT LOW?

Yes

- Go To 2

No

- Test complete, the condition or conditions that originally set this DTC are not present at this time. Using the wiring diagrams as a guide, check all related splices and connectors for signs of water intrusion, corrosion, pushed out or bent terminals and correct pin tension.
- Perform the BODY VERIFICATION TEST. Refer to **STANDARD PROCEDURE** .

2. **RIGHT INSTRUMENT PANEL (I/P) SPEAKER**

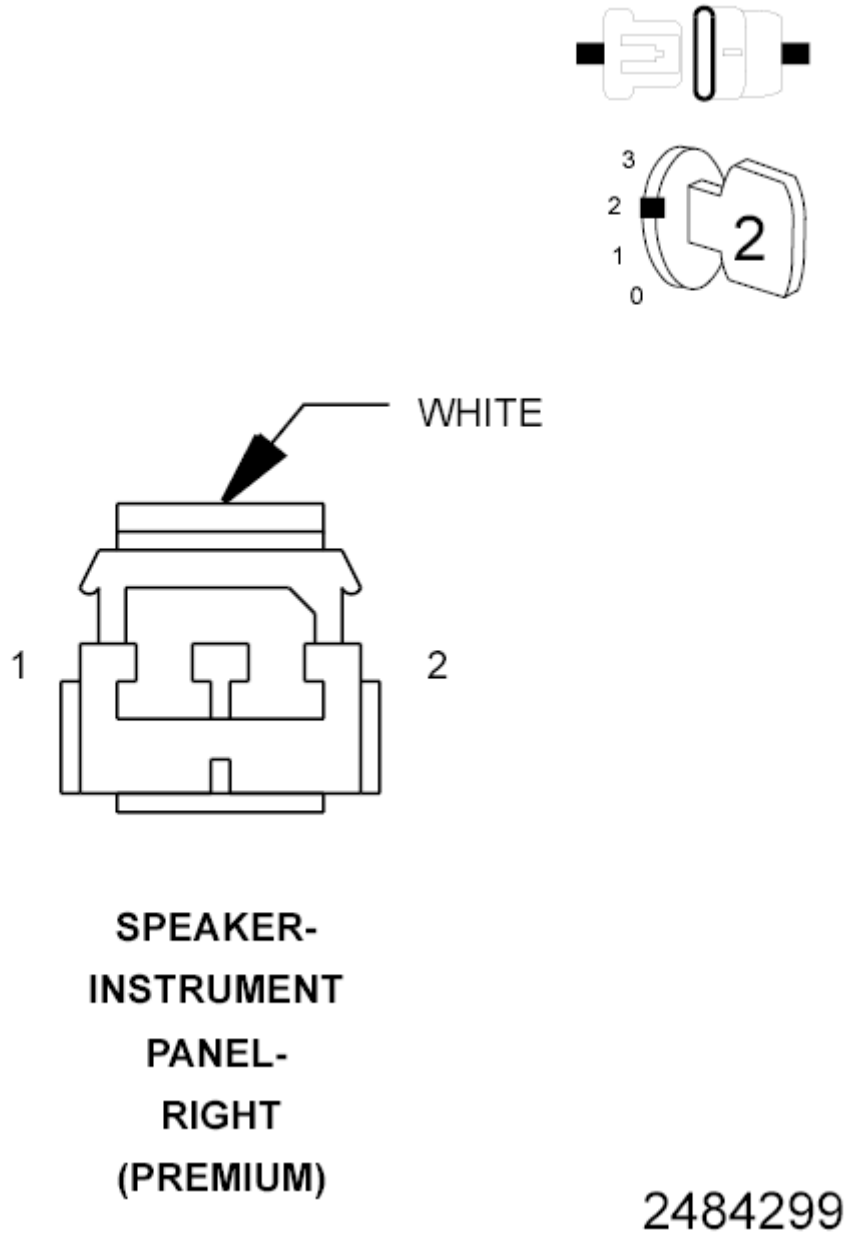

Fig. 16: Checking Right Instrument Panel (I/P) Speaker
Courtesy of CHRYSLER GROUP, LLC

1. With the scan tool, erase the Amplifier DTCs.
2. Turn the ignition off.
3. Disconnect the Right Instrument Panel Speaker harness connector.
4. Turn the ignition on.
5. Turn the radio on and set the column to 25.
6. Adjust the speakers to the front and center.
7. With the scan tool, read the active Amplifier DTCs.

Does the scan tool display active: B1466-CHANNEL 2 AUDIO SPEAKER OUTPUT CIRCUIT LOW?

Yes

- Go To 3

No

- Replace the Right Instrument Panel Speaker in accordance with the Service Information.
- Perform the BODY VERIFICATION TEST. Refer to **STANDARD PROCEDURE** .

3. **CHECK THE (X208) RIGHT FRONT I/P SPEAKER (+) CIRCUIT FOR A SHORT TO GROUND**

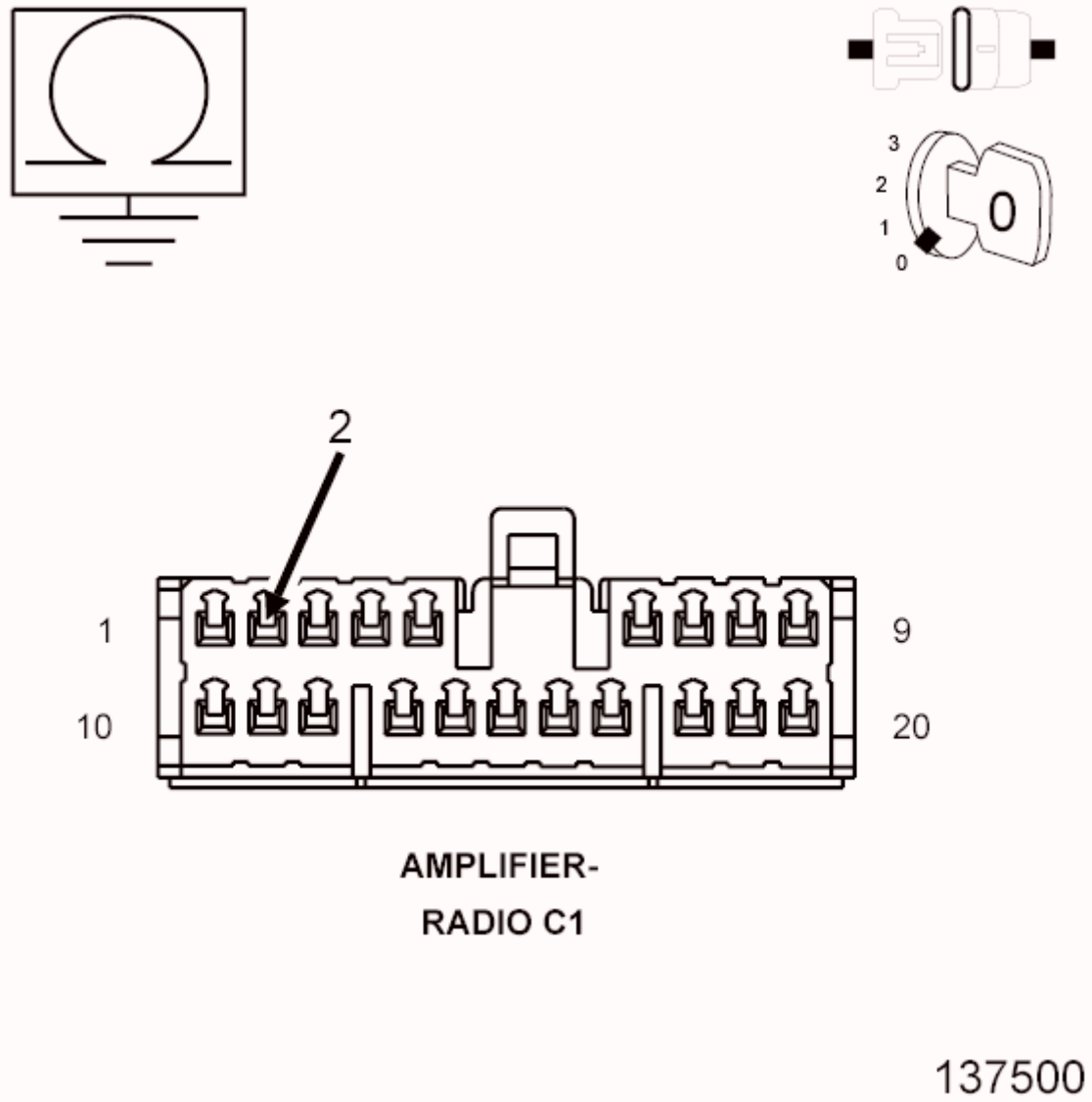

Fig. 17: Measuring Resistance Between Ground & Right I/P Speaker (+) Circuit
Courtesy of CHRYSLER GROUP, LLC

1. Turn the ignition off.
2. Disconnect the Amplifier C1 harness connector.
3. Measure the resistance between ground and the (X208) Right I/P Speaker (+) circuit.

   Is the resistance below 10K Ohms?

   Yes

   - Repair the (X208) Amplified Right Front I/P Speaker (+) circuit for a short to ground.

- Perform the BODY VERIFICATION TEST. Refer to **STANDARD PROCEDURE** .

No

- Go To 4

4. **CHECK THE (X298) RIGHT I/P SPEAKER (-) CIRCUIT FOR A SHORT TO GROUND**

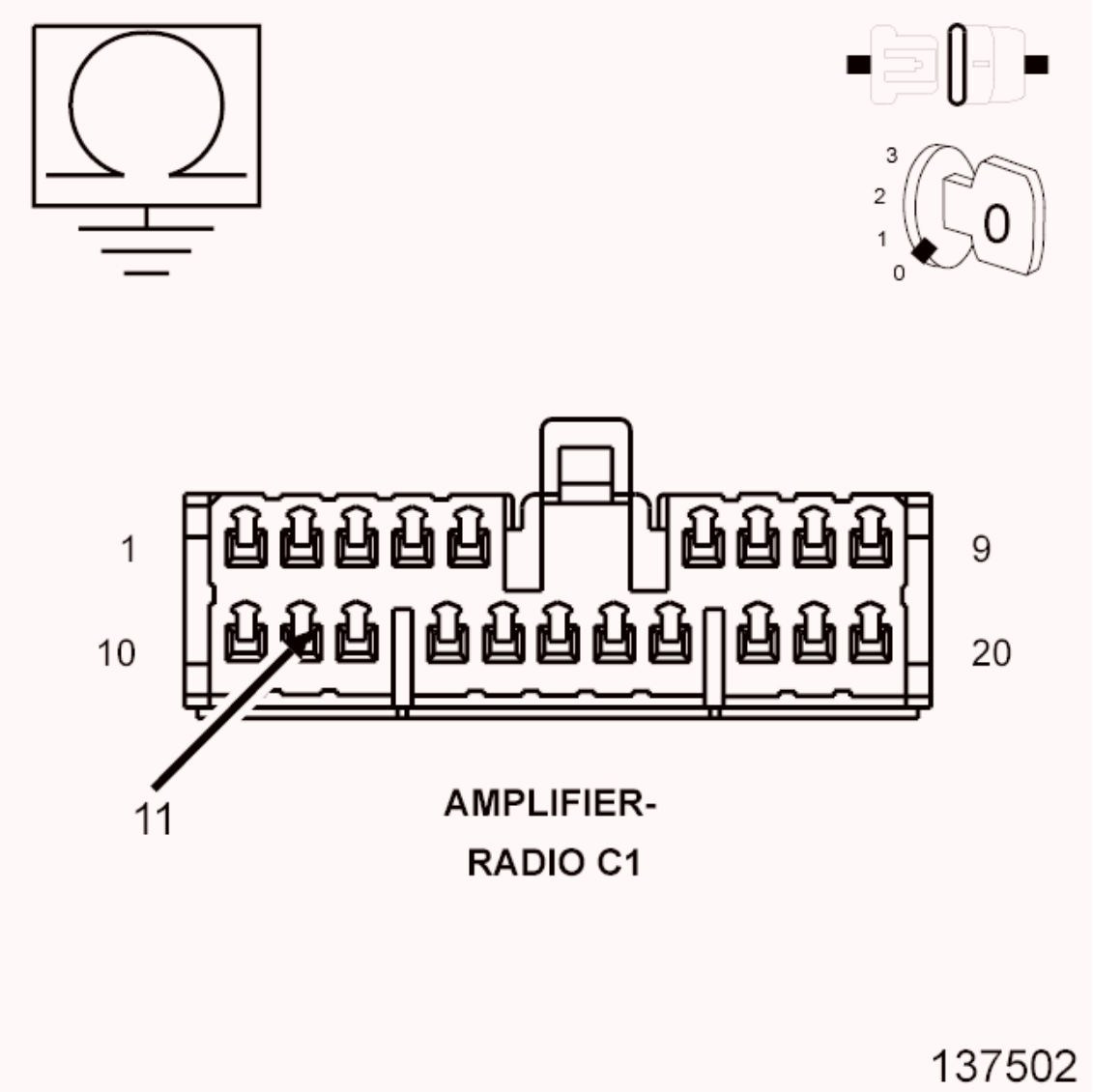

Fig. 18: Measuring Resistance Between Ground & Right Front I/P Speaker (-) Circuit
Courtesy of CHRYSLER GROUP, LLC

1. Measure the resistance between ground and the (X298) Right Front I/P Speaker (-) circuit.

Is the resistance below 10K Ohms?

Yes

- Repair the (X298) Right I/P Speaker (-) for a short to ground.
- Perform the BODY VERIFICATION TEST. Refer to **STANDARD PROCEDURE** .

No

- Replace the Amplifier in accordance with the Service Information.
- Perform the BODY VERIFICATION TEST. Refer to **STANDARD PROCEDURE** .

B1467-CHANNEL 2 AUDIO SPEAKER OUTPUT CIRCUIT HIGH

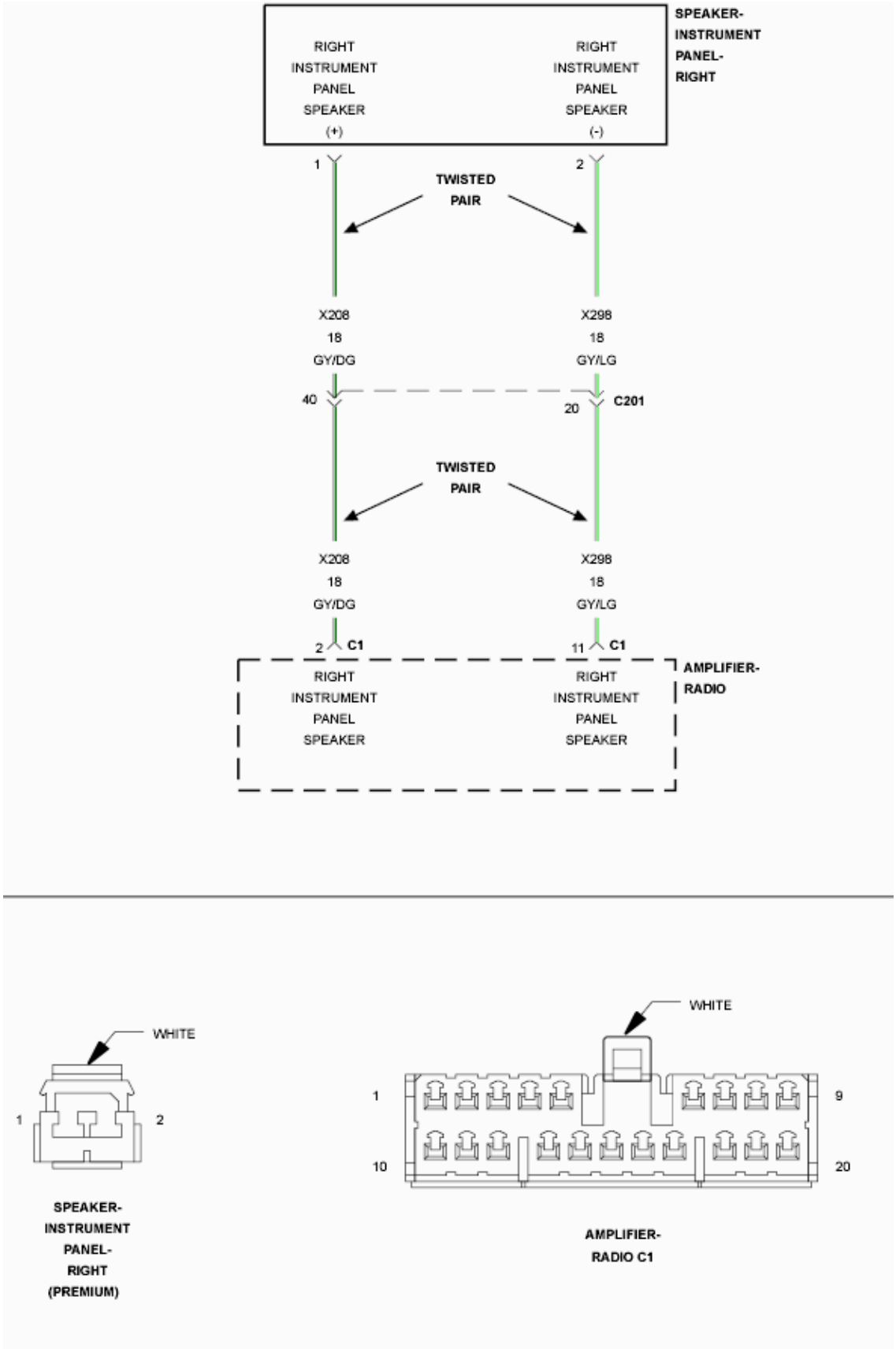

Fig. 19: Right Instrument Panel Speaker Circuit Schematic
Courtesy of CHRYSLER GROUP, LLC

For a complete wiring diagram, **refer to appropriate SYSTEM WIRING DIAGRAMS article** .

WHEN MONITORED

With the ignition on.

SET CONDITION

The Amplifier detects a short to battery condition on the output circuit.

POSSIBLE CAUSES

Possible Causes
(X208) RIGHT INSTRUMENT PANEL (I/P) SPEAKER (+) CIRCUIT SHORTED TO VOLTAGE (X298) RIGHT INSTRUMENT PANEL (I/P) SPEAKER (-) CIRCUIT SHORTED TO VOLTAGE AMPLIFIER

DIAGNOSTIC TEST

1. **CHECK FOR AN INTERMITTENT CONDITION**
   1. Turn the ignition on and open one of the front doors.

      NOTE: A front door must remain open whenever checking or erasing Amplifier DTCs.

   2. Using the scan tool, record and erase the Amplifier DTCs.
   3. Cycle the ignition switch from on to off, wait five seconds and then back to on.
   4. Turn the Radio on and set the volume to 25.
   5. Adjust the speakers to the front and center.
   6. Using the scan tool, read the active Amplifier DTCs.

      Does the scan tool display active: B1467-CHANNEL 2 AUDIO SPEAKER OUTPUT CIRCUIT HIGH?

      Yes

      - Go To 2

No

- Test complete, the condition or conditions that originally set this DTC are not present at this time. Using the wiring diagrams as a guide, check all related splices and connectors for signs of water intrusion, corrosion, pushed out or bent terminals and correct pin tension.
- Perform the BODY VERIFICATION TEST. Refer to **STANDARD PROCEDURE** .

2. **CHECK FOR VOLTAGE ON THE (X208) RIGHT I/P SPEAKER (+) CIRCUIT**

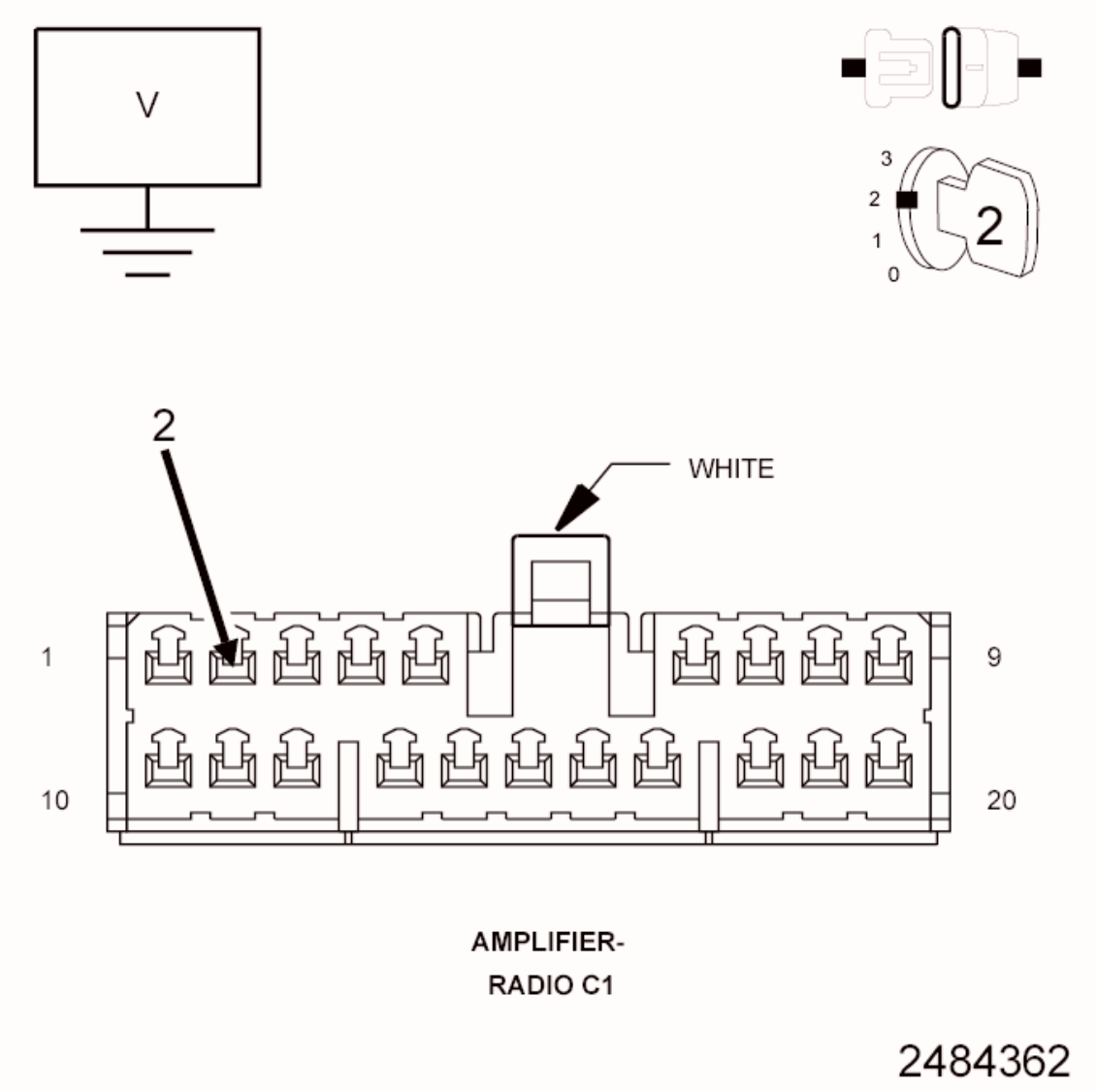

Fig. 20: Measuring Voltage On Right I/P Speaker (+) Circuit
Courtesy of CHRYSLER GROUP, LLC

1. Turn the ignition off.
2. Disconnect the Amplifier C1 harness connector.
3. Disconnect the Right I/P Speaker harness connector.
4. Turn the ignition on.
5. Measure for voltage on the (X208) Right I/P Speaker (+) circuit.

   Is there any voltage present?

   Yes

   - Repair the (X208) Right I/P Speaker (+) circuit for a short to voltage.
   - Perform the BODY VERIFICATION TEST. Refer to **STANDARD PROCEDURE** .

   No

   - Go To 3

3. **CHECK FOR VOLTAGE ON THE (X298) RIGHT I/P SPEAKER (-) CIRCUIT**

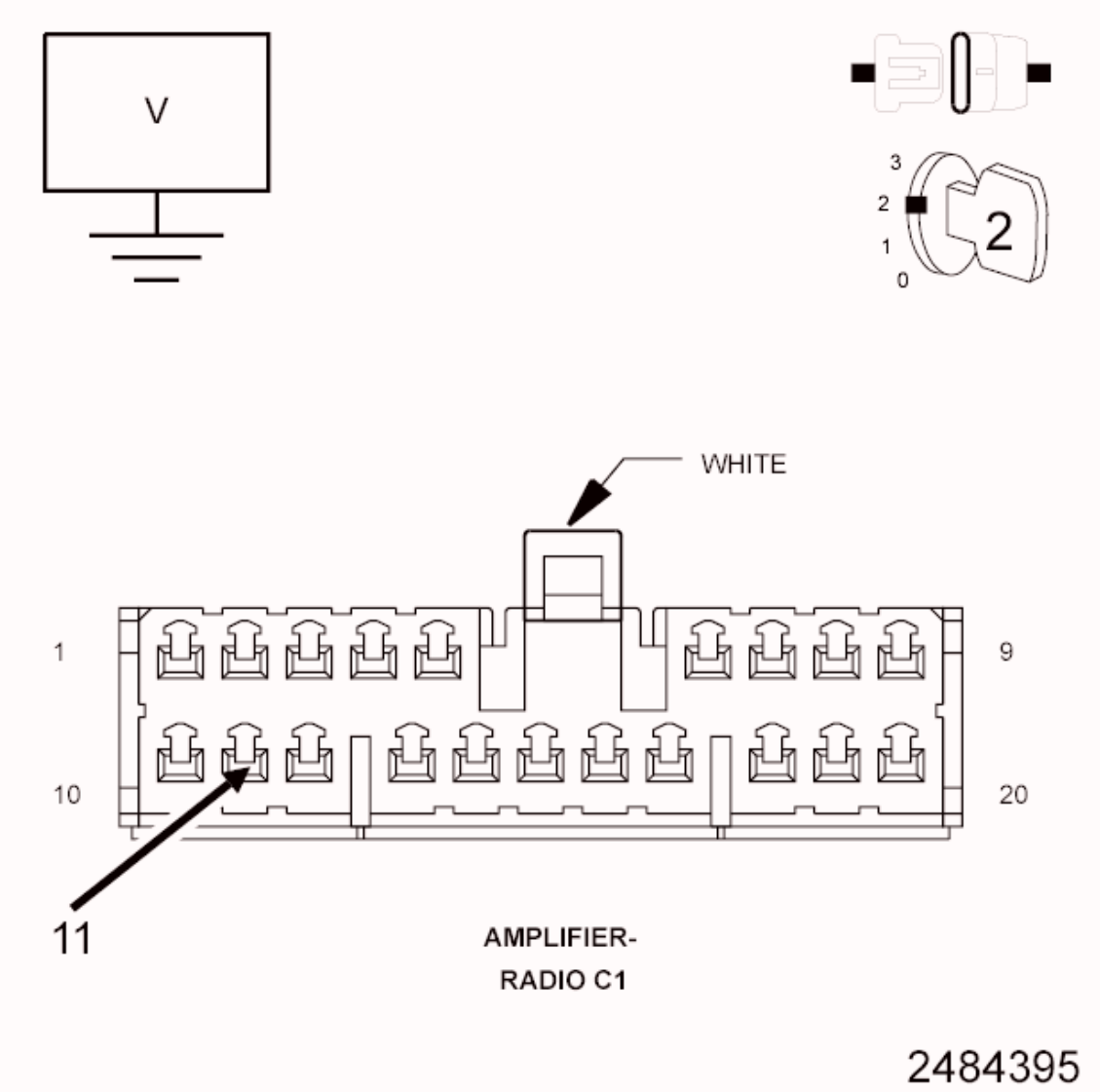

Fig. 21: Measuring Voltage On Right I/P Speaker (-) Circuit
Courtesy of CHRYSLER GROUP, LLC

1. Measure for voltage on the (X298) Right I/P Speaker (-) circuit.

   Is there any voltage present?

   Yes

   - Repair the (X298) Right I/P Speaker (-) circuit for a short to voltage.
   - Perform the BODY VERIFICATION TEST. Refer to **STANDARD PROCEDURE** .

   No

- Replace the Amplifier in accordance with the Service Information.
- Perform the BODY VERIFICATION TEST. Refer to **STANDARD PROCEDURE** .

B1468-CHANNEL 2 AUDIO SPEAKER OUTPUT CIRCUIT OPEN

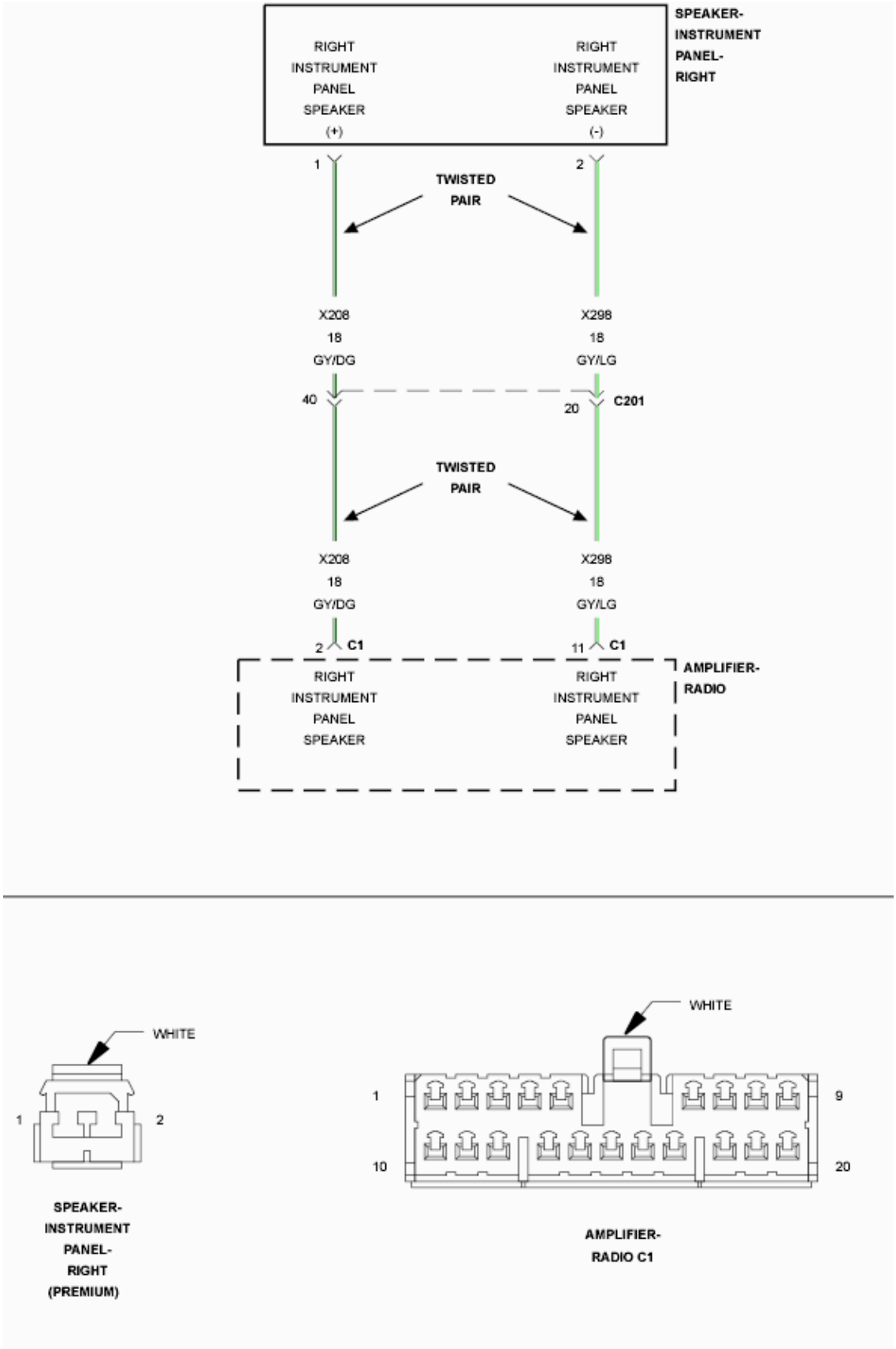

Fig. 22: Right Instrument Panel Speaker Circuit Schematic
Courtesy of CHRYSLER GROUP, LLC

For a complete wiring diagram, **refer to appropriate SYSTEM WIRING DIAGRAMS article** .

WHEN MONITORED

Amplifier BUS wake-up. Amplifier reset with scan tool.

SET CONDITION

The Amplifier detects an open condition on the speaker output circuit.

POSSIBLE CAUSES

Possible Causes
(X208) RIGHT INSTRUMENT PANEL (I/P) SPEAKER (+) CIRCUIT OPEN
(X298) RIGHT INSTRUMENT PANEL (I/P) SPEAKER (-) CIRCUIT OPEN
RIGHT INSTRUMENT PANEL (I/P) SPEAKER
AMPLIFIER

DIAGNOSTIC TEST

1. **CHECK FOR AN INTERMITTENT CONDITION**
   1. Turn the ignition on and open one of the front doors.

      NOTE: A front door must remain open whenever checking or erasing Amplifier DTCs.

   2. Using the scan tool, record and erase the Amplifier DTCs.
   3. Cycle the ignition switch from on to off, wait five seconds and then back to on.
   4. Turn the Radio on and set the volume to 25.
   5. Adjust the speakers to the front and center.
   6. Using the scan tool, read the active Amplifier DTCs.

      Does the scan tool display active: B1468-CHANNEL 2 AUDIO SPEAKER OUTPUT CIRCUIT OPEN?

      Yes

- Go To 2

No

- Test complete, the condition or conditions that originally set this DTC are not present at this time. Using the wiring diagrams as a guide, check all related splices and connectors for signs of water intrusion, corrosion, pushed out or bent terminals and correct pin tension.
- Perform the BODY VERIFICATION TEST. Refer to **STANDARD PROCEDURE** .

2. **CHECK THE OPERATION OF THE RIGHT FRONT I/P SPEAKER**

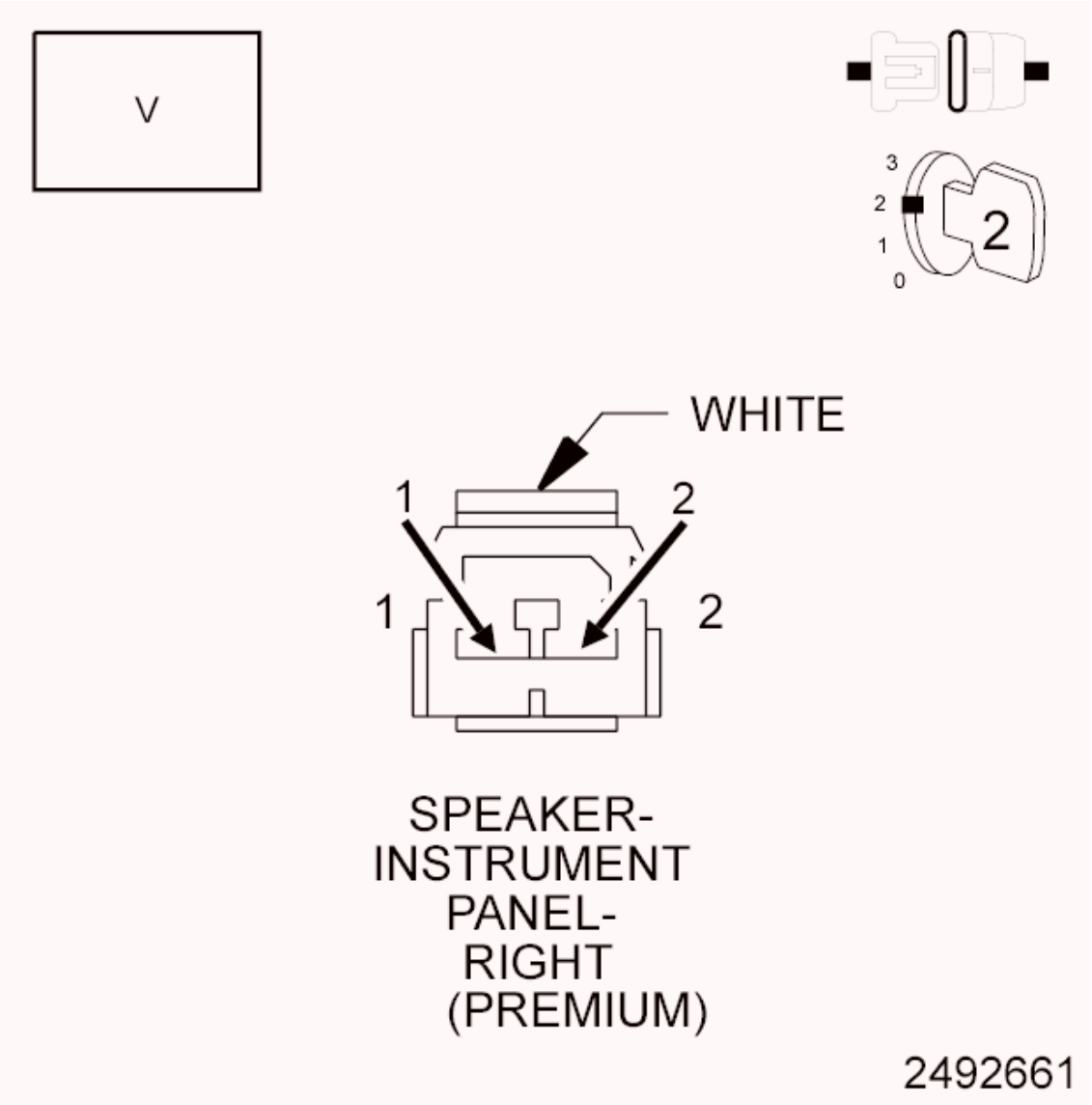

Fig. 23: Measuring Voltage Of Amplified Right I/P Speaker Circuits In

Right I/P Speaker Harness Connector
Courtesy of CHRYSLER GROUP, LLC

1. Turn the ignition off.
2. Disconnect the Right I/P Speaker harness connector.
3. Turn the ignition on.
4. Turn the radio on and turn the volume to mid level.
5. With a voltmeter set to read in A/C voltage, measure the voltage of the Amplified Right I/P Speaker circuits in the Amplified Right I/P Speaker harness connector.

   Is the voltage present greater than 1 volt?

   Yes

   - Replace the Amplified Right I/P Speaker in accordance with the Service Information.
   - Perform the BODY VERIFICATION TEST. Refer to **STANDARD PROCEDURE** .

   No

   - Go To 3

3. **CHECK THE (X208) RIGHT I/P SPEAKER (+) CIRCUIT FOR AN OPEN**

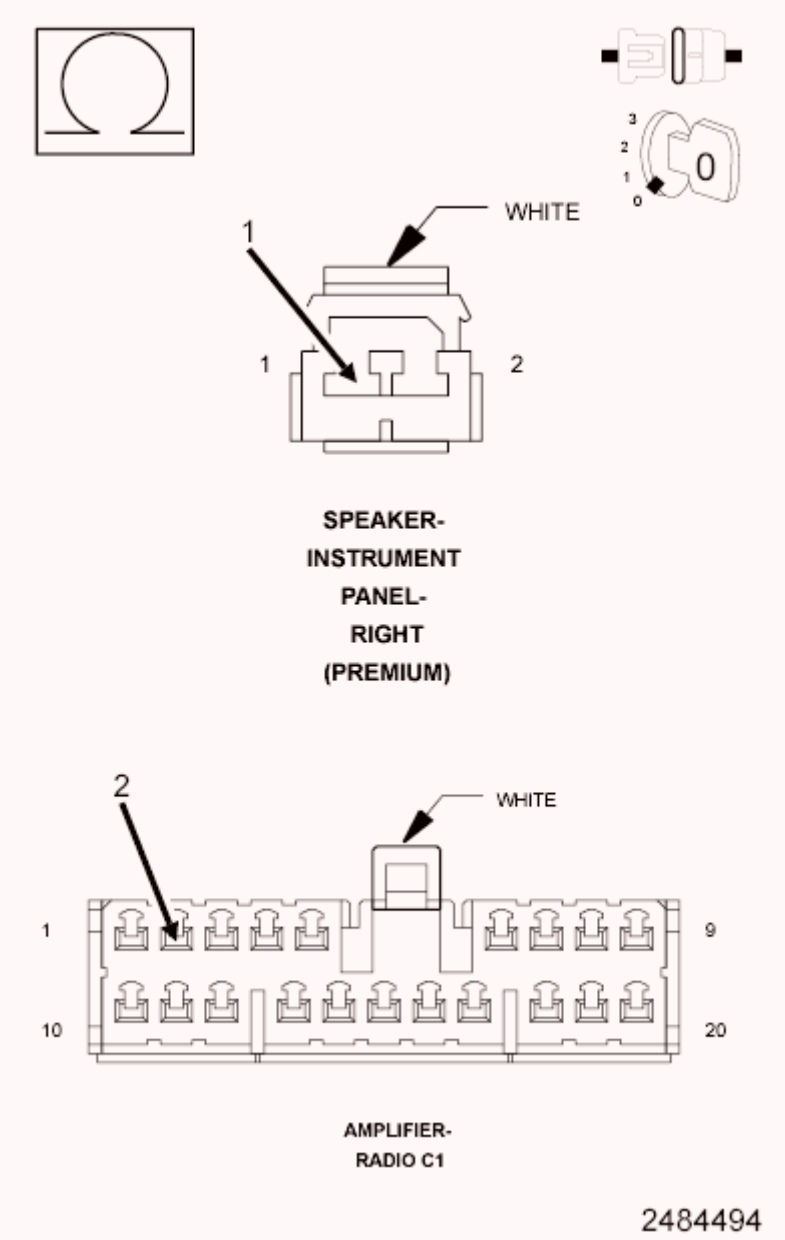

Fig. 24: Checking Right I/P Speaker (+) Circuit
Courtesy of CHRYSLER GROUP, LLC

1. Turn the ignition off.
2. Disconnect the Amplifier C1 harness connector.
3. Measure the resistance of the (X208) Amplified Right I/P Speaker (+) circuit between the Amplifier C1 harness connector and the Amplified Right I/P Speaker harness connector.

   Is the resistance below 2.0 Ohms?

   Yes

- Go To 4

No

- Repair the (X208) Right I/P Speaker (+) circuit for an open.
- Perform the BODY VERIFICATION TEST. Refer to **STANDARD PROCEDURE** .

4. **CHECK THE (X298) RIGHT I/P SPEAKER (-) CIRCUIT FOR AN OPEN**

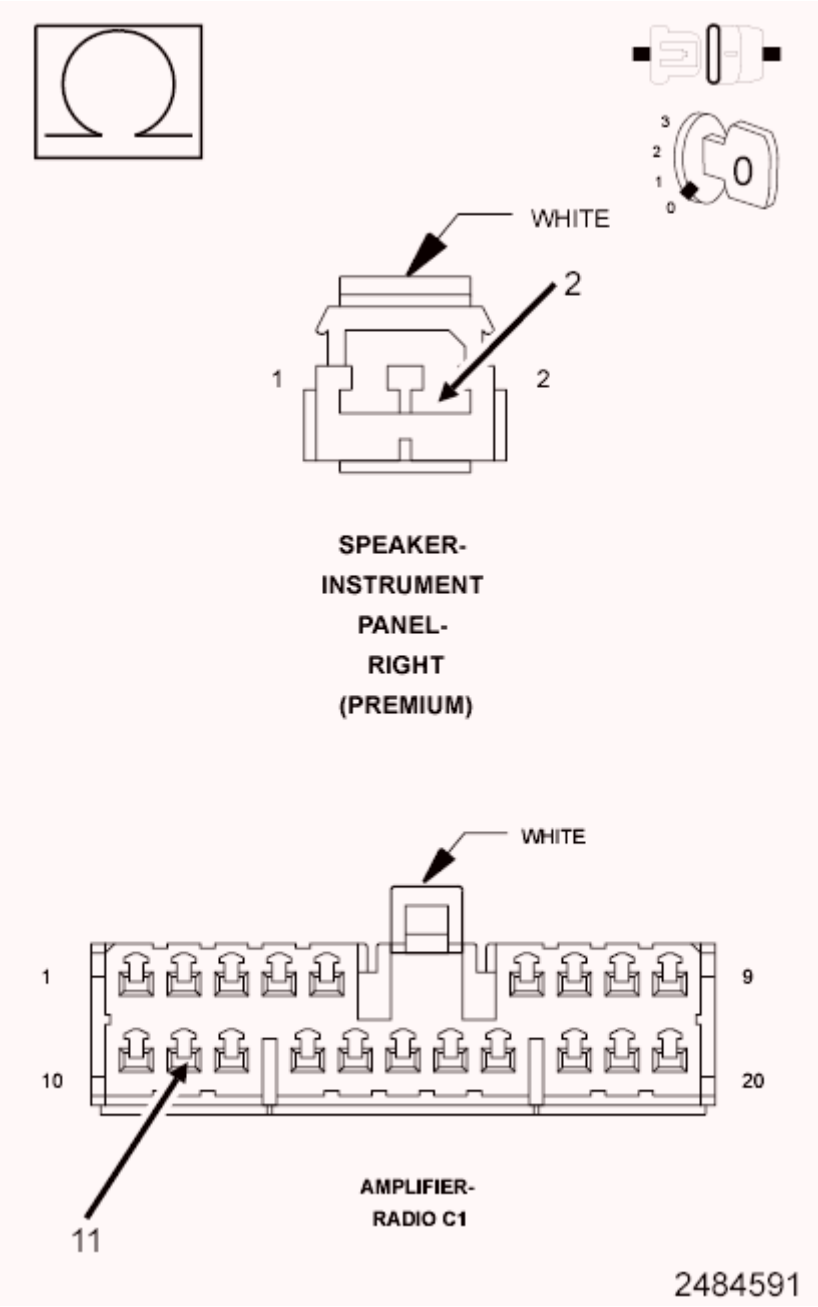

Fig. 25: Measuring Resistance Of Right I/P Speaker (-) Circuit

Courtesy of CHRYSLER GROUP, LLC

1. Measure the resistance of the (X298) Right I/P Speaker (-) circuit between the Amplifier C1 harness connector and the Right I/P Speaker harness connector.

   Is the resistance below 2.0 Ohms?

   Yes

   - Replace the Amplifier in accordance with the Service Information.
   - Perform the BODY VERIFICATION TEST. Refer to **STANDARD PROCEDURE** .

   No

   - Repair the (X298) Amplified Right I/P Speaker (-) circuit for an open.
   - Perform the BODY VERIFICATION TEST. Refer to **STANDARD PROCEDURE** .

B1469-CHANNEL 2 AUDIO SPEAKER OUTPUT CIRCUIT SHORTED TOGETHER

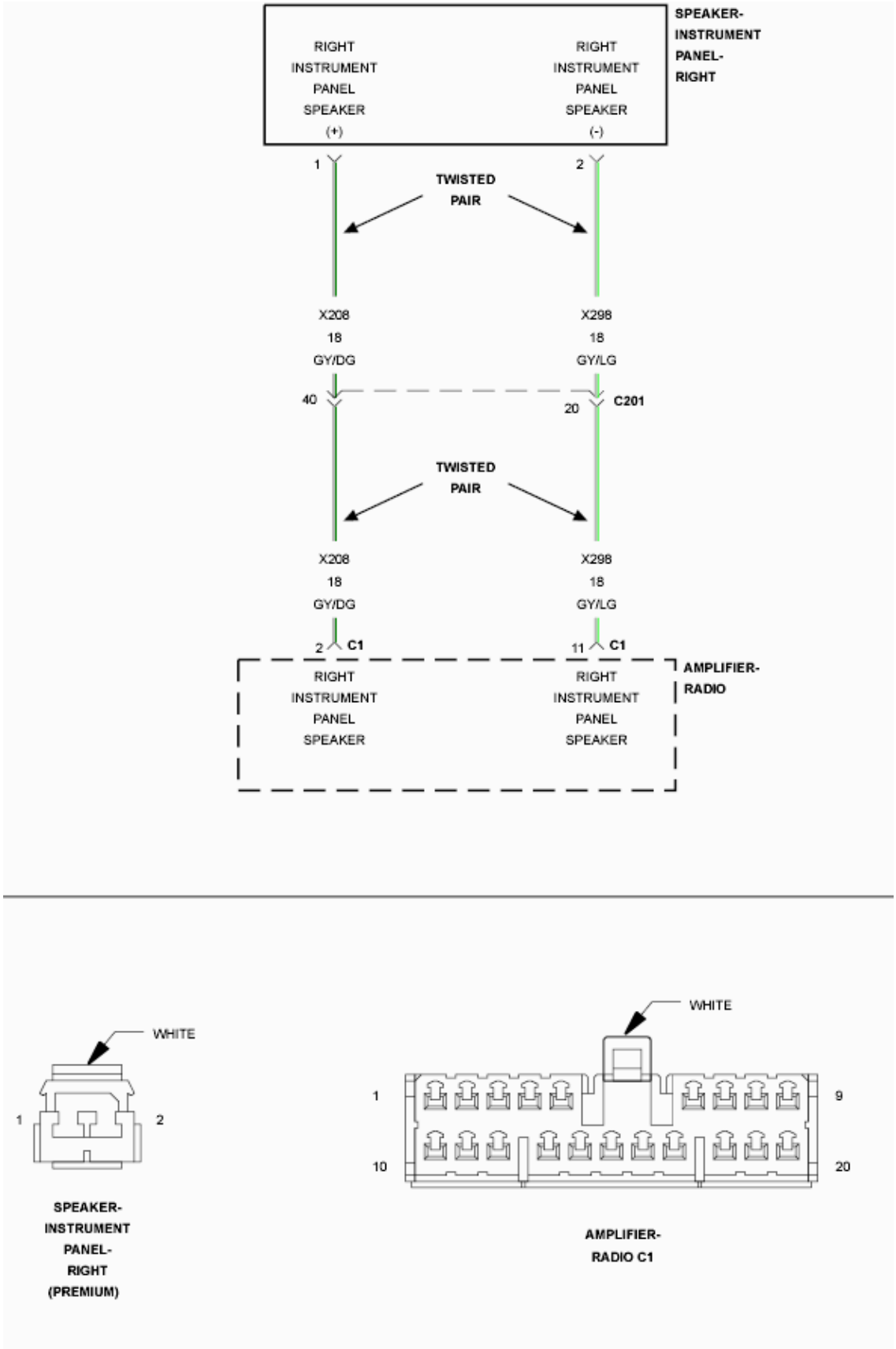

Fig. 26: Right Instrument Panel Speaker Circuit Schematic
Courtesy of CHRYSLER GROUP, LLC

For a complete wiring diagram, **refer to appropriate SYSTEM WIRING DIAGRAMS article** .

WHEN MONITORED

With the ignition on. Radio volume at 25 or higher.

SET CONDITION

The Amplifier detects that the output circuits are shorted together.

POSSIBLE CAUSES

Possible Causes
(X208) RIGHT INSTRUMENT PANEL (I/P) SPEAKER (+) CIRCUIT SHORTED TO THE (X298) RIGHT INSTRUMENT PANEL (I/P) SPEAKER (-) CIRCUIT
RIGHT INSTRUMENT PANEL (I/P) SPEAKER
AMPLIFIER

DIAGNOSTIC TEST

1. **CHECK FOR AN INTERMITTENT CONDITION**
   1. Turn the ignition on and open one of the front doors.

      NOTE: A front door must remain open whenever checking or erasing Amplifier DTCs.

   2. Using the scan tool, record and erase the Amplifier DTCs.
   3. Cycle the ignition switch from on to off, wait five seconds and then back to on.
   4. Turn the Radio on and set the volume to 25.
   5. Adjust the speakers to the front and center.
   6. Using the scan tool, read the active Amplifier DTCs.

      Does the scan tool display active: B1469-CHANNEL 2 AUDIO SPEAKER OUTPUT CIRCUIT SHORTED TOGETHER?

      Yes

      - Go To 2

No

- Test complete, the condition or conditions that originally set this DTC are not present at this time. Using the wiring diagrams as a guide, check all related splices and connectors for signs of water intrusion, corrosion, pushed out or bent terminals and correct pin tension.
- Perform the BODY VERIFICATION TEST. Refer to **STANDARD PROCEDURE** .

2. **CHECK THE OPERATION OF THE AMPLIFIED RIGHT I/P SPEAKER**

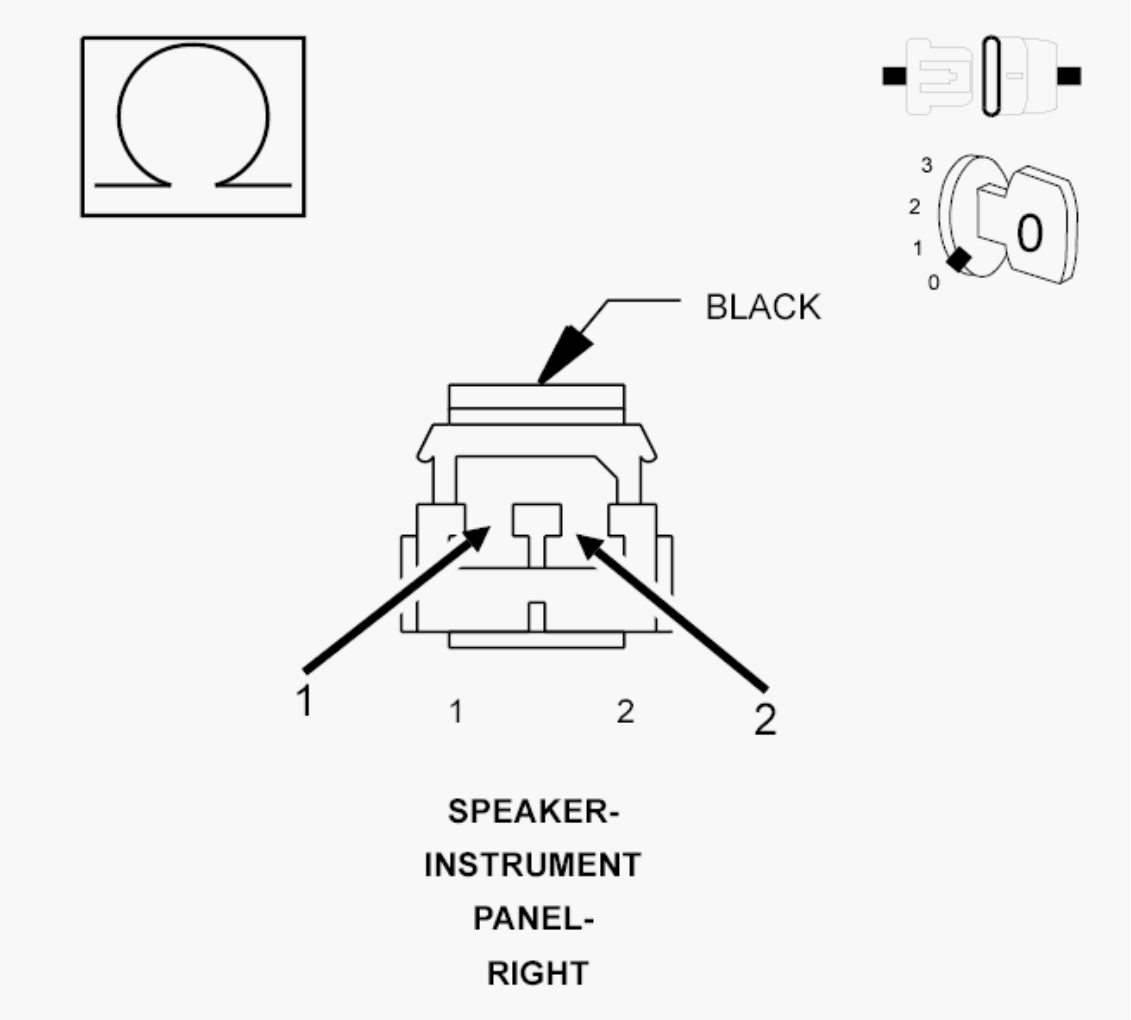

Fig. 27: Measuring Resistance Of Speaker Between Two Terminals
Courtesy of CHRYSLER GROUP, LLC

1. Turn the ignition off.
2. Disconnect the Right I/P Speaker harness connector.

3. Measure the resistance of the speaker between the two terminals.

NOTE: The graphic shows the connector for reference only. Measure the speaker terminals.

Is the resistance of the speaker less than 1 Ohm?

Yes

- Replace the Right I/P Speaker in accordance with the Service Information.
- Perform the BODY VERIFICATION TEST. Refer to **STANDARD PROCEDURE** .

No

- Go To 3

3. **CHECK THE (X208) RIGHT I/P SPEAKER (+) CIRCUIT, AND THE (X298) RIGHT I/P SPEAKER (-) CIRCUITS FOR A SHORT TOGETHER**

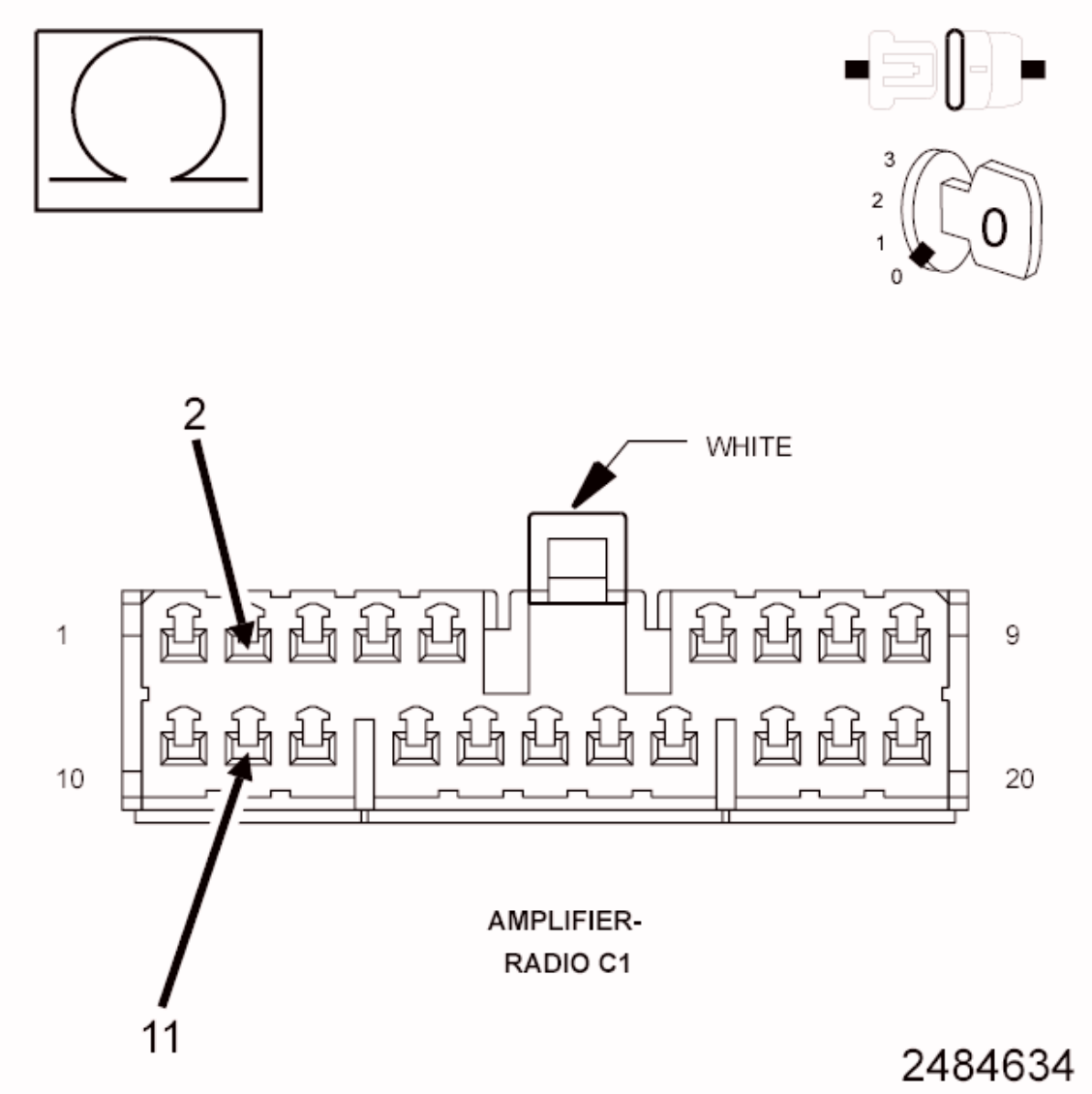

Fig. 28: Measuring Resistance Between Right I/P Speaker (+) Circuit & Right I/P Speaker (-) Circuit
Courtesy of CHRYSLER GROUP, LLC

1. Disconnect the Amplifier C1 harness connector.
2. Measure the resistance between the (X208) Right I/P Speaker (+) circuit, and the (X298) Right I/P Speaker (-) circuit.

   Is the resistance below 10K Ohms?

   Yes

   - Repair the (X208) Right I/P Speaker (+) circuit for a short to the (X298) Right I/P Speaker (-) circuit.
   - Perform the BODY VERIFICATION TEST. Refer to

STANDARD PROCEDURE .

No

- Replace the Amplifier in accordance with the Service Information.
- Perform the BODY VERIFICATION TEST. Refer to **STANDARD PROCEDURE** .

B146A-CHANNEL 3 AUDIO SPEAKER OUTPUT CIRCUIT PERFORMANCE

For a complete wiring diagram, **refer to appropriate SYSTEM WIRING DIAGRAMS article** .

WHEN MONITORED

With the ignition on.

SET CONDITION

This Diagnostic Trouble Code (DTC) sets if a Direct Current (DC) offset occurs on the output channel, the Amplifier shall set a DTC after a maturity rate of four to six seconds.

POSSIBLE CAUSES

Possible Causes
AMPLIFIER

DIAGNOSTIC TEST

CHECK FOR AN INTERMITTENT CONDITION

1. Turn the ignition on and open one of the front doors.

NOTE: A front door must remain open whenever checking or erasing Amplifier DTCs.

2. Using the scan tool, record and erase the Amplifier DTCs.
3. Cycle the ignition switch from on to off, wait five seconds and then back to on.
4. Turn the Radio on and set the volume to 25.
5. Adjust the speakers to the front and center.

6. Using the scan tool, read the active Amplifier DTCs.

   Does the scan tool display active: B146A-CHANNEL 3 AUDIO SPEAKER OUTPUT CIRCUIT PERFORMANCE?

   Yes

   - Replace the Amplifier in accordance with the Service Information.
   - Perform the BODY VERIFICATION TEST. Refer to **STANDARD PROCEDURE** .

   No

   - Test complete, the condition or conditions that originally set this DTC are not present at this time. Using the wiring diagrams as a guide, check all related splices and connectors for signs of water intrusion, corrosion, pushed out or bent terminals and correct pin tension.
   - Perform BODY VERIFICATION TEST. Refer to **STANDARD PROCEDURE** .

B146B-CHANNEL 3 AUDIO SPEAKER OUTPUT CIRCUIT LOW

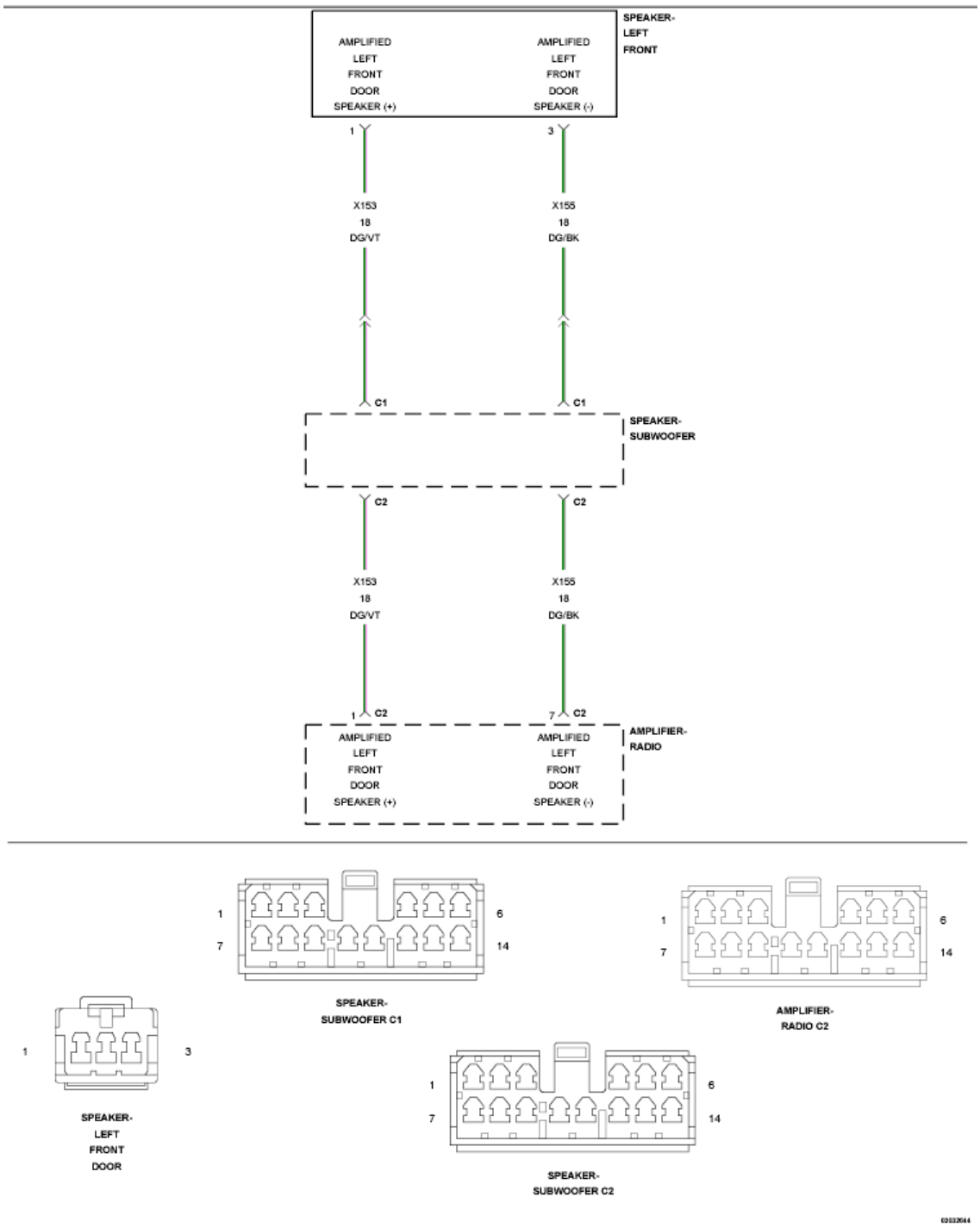

Fig. 29: Left Front Door Speaker Circuit Diagram
Courtesy of CHRYSLER GROUP, LLC

For a complete wiring diagram, **refer to appropriate SYSTEM WIRING DIAGRAMS article** .

WHEN MONITORED

With the ignition on.

SET CONDITION

The Amplifier detects a shorted to ground condition on the speaker output circuit.

POSSIBLE CAUSES

Possible Causes
(X153) AMPLIFIED LEFT FRONT DOOR SPEAKER (+) CIRCUIT SHORTED TO GROUND
(X155) AMPLIFIED LEFT FRONT DOOR SPEAKER (-) CIRCUIT SHORTED TO GROUND
LEFT FRONT DOOR SPEAKER
AMPLIFIER

DIAGNOSTIC TEST

1. **CHECK FOR AN INTERMITTENT CONDITION**
   1. Turn the ignition on and open one of the front doors.

      NOTE: A front door must remain open whenever checking or erasing Amplifier DTCs.

   2. Using the scan tool, record and erase the Amplifier DTCs.
   3. Cycle the ignition switch from on to off, wait five seconds and then back to on.
   4. Turn the Radio on and set the volume to 25.
   5. Adjust the speakers to the front and center.
   6. Using the scan tool, read the active Amplifier DTCs.

      Does the scan tool display active: B146B-CHANNEL 3 AUDIO SPEAKER OUTPUT CIRCUIT LOW?

      Yes

      - Go To 2

      No

      - Test complete, the condition or conditions that originally set this

DTC are not present at this time. Using the wiring diagrams as a guide, check all related splices and connectors for signs of water intrusion, corrosion, pushed out or bent terminals and correct pin tension.

- Perform the BODY VERIFICATION TEST. Refer to **STANDARD PROCEDURE** .

2. **LEFT FRONT DOOR SPEAKER**

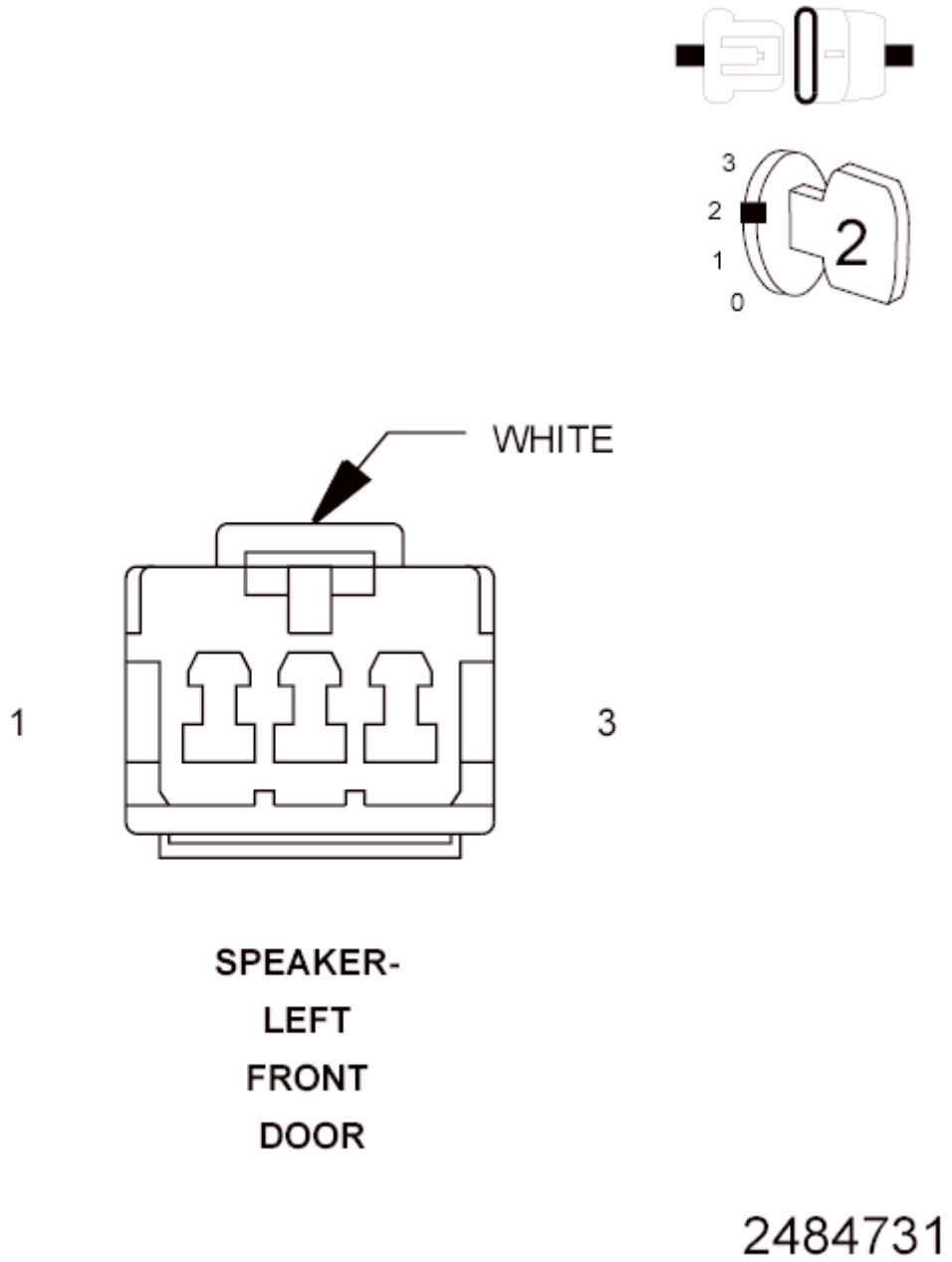

Fig. 30: Left Front Door Speaker
Courtesy of CHRYSLER GROUP, LLC

1. With the scan tool, erase the DTCs.
2. Turn the ignition off.
3. Disconnect the Left Front Door Speaker harness connector.
4. Turn the ignition on.
5. Turn the radio on and set the column to 25.
6. Adjust the speakers to the front and center.
7. With the scan tool, read the active Amplifier DTCs.

   Does the scan tool display active: B146B-CHANNEL 3 AUDIO SPEAKER OUTPUT CIRCUIT LOW?

   Yes

   - Go To 3

   No

   - Replace the Amplified Left Front Door Speaker in accordance with the Service Information.
   - Perform the BODY VERIFICATION TEST. Refer to **STANDARD PROCEDURE** .

3. **CHECK THE (X153) AMPLIFIED LEFT FRONT DOOR SPEAKER (+) CIRCUIT FOR A SHORT TO GROUND**

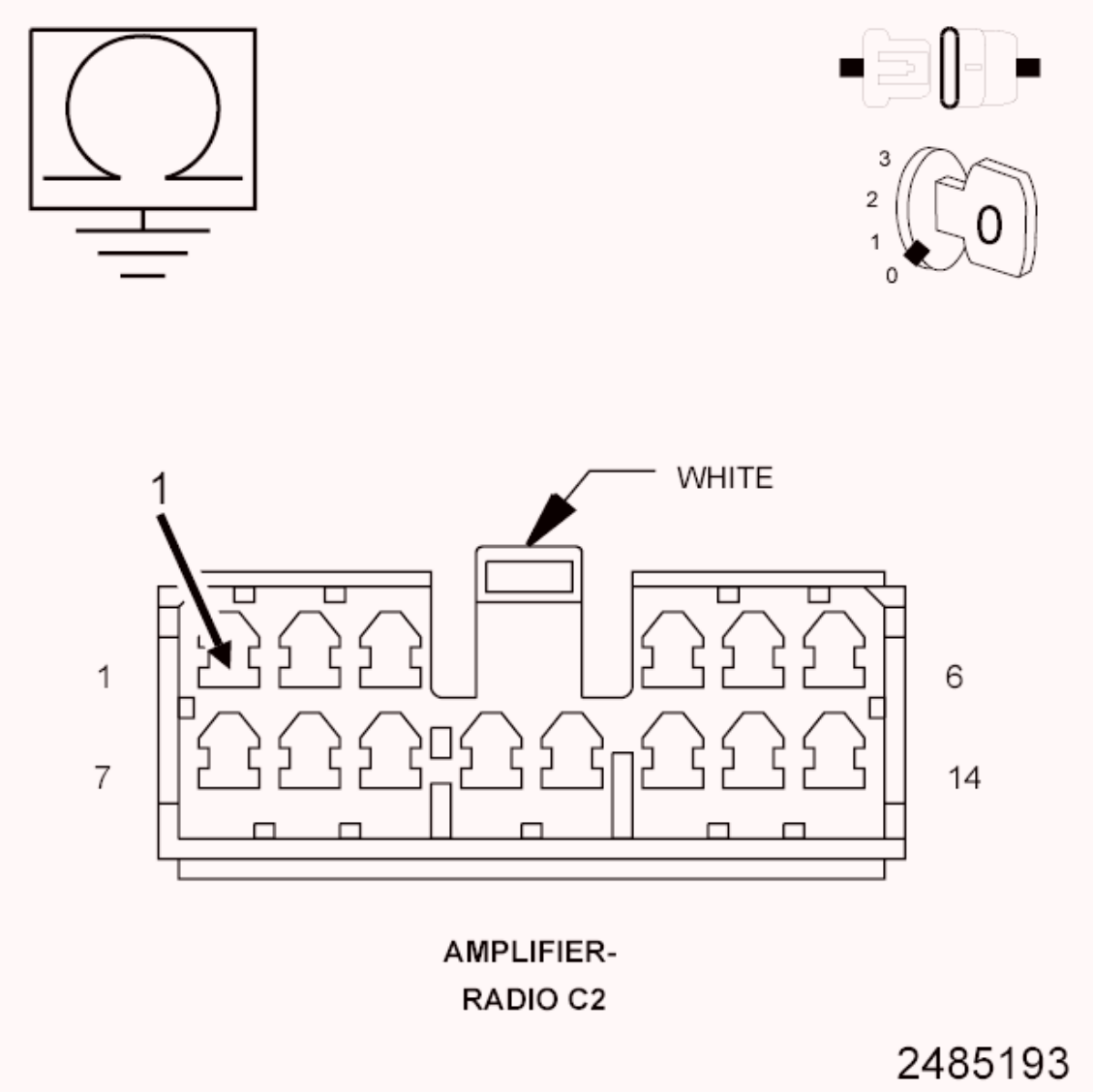

Fig. 31: Measuring Resistance Between Ground & Amplified Left Front Door Speaker (+) Circuit
Courtesy of CHRYSLER GROUP, LLC

1. Turn the ignition off.
2. Disconnect the Amplifier C2 harness connector.
3. Measure the resistance between ground and the (X153) Amplified Left Front Door Speaker (+) circuit.

   Is the resistance below 10K Ohms?

   Yes

   - Repair the (X153) Amplified Left Front Door Speaker (+) circuit for a short to ground.

- Perform the BODY VERIFICATION TEST. Refer to **STANDARD PROCEDURE** .

No

- Go To 4

4. **CHECK THE (X155) AMPLIFIED LEFT FRONT DOOR SPEAKER (-) CIRCUIT FOR A SHORT TO GROUND**

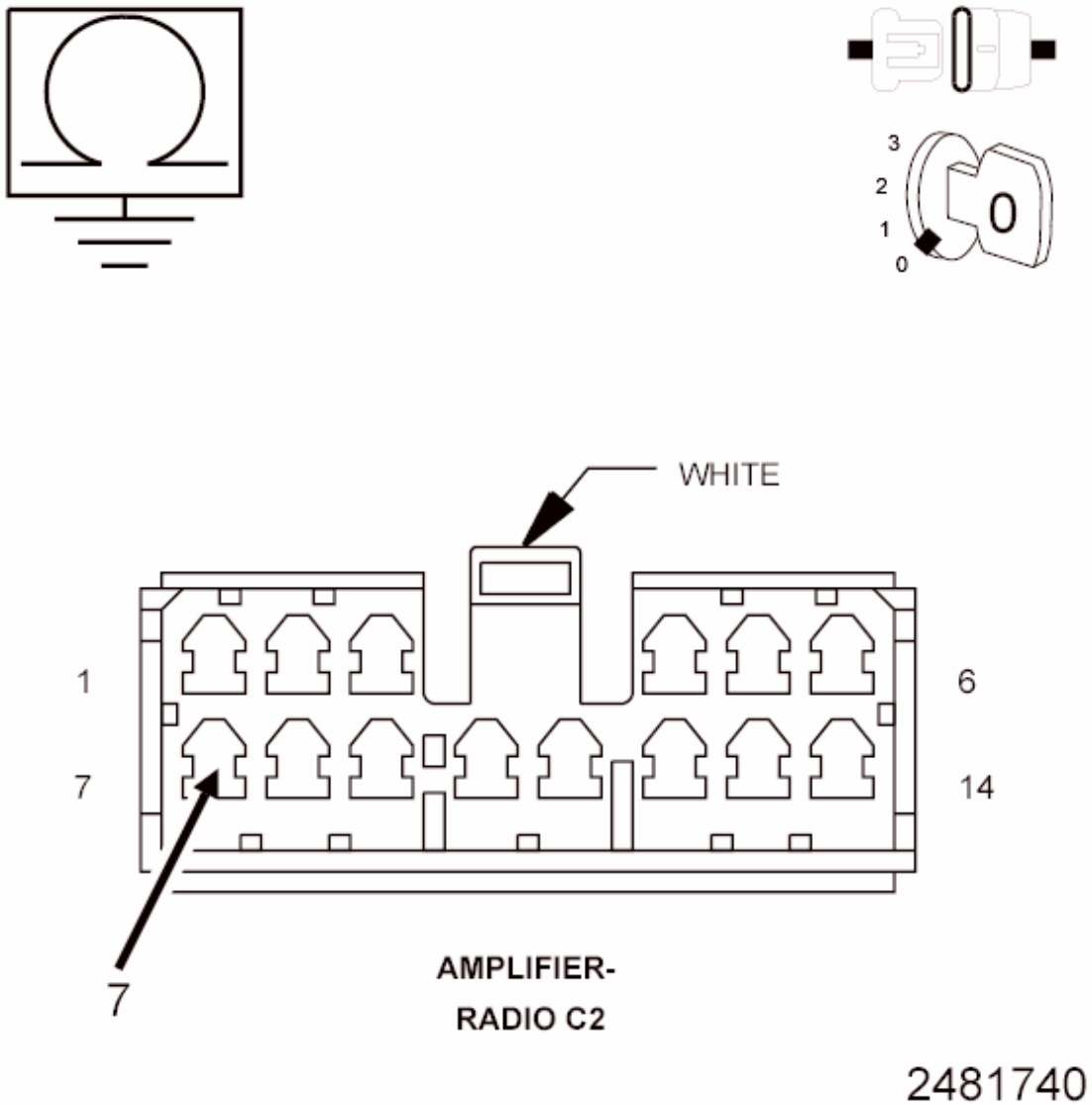

Fig. 32: Measuring Resistance Between Ground & Amplified Left Front Door Speaker (-) Circuit
Courtesy of CHRYSLER GROUP, LLC

1. Measure the resistance between ground and the (X155) Amplified Left Front Door Speaker (-) circuit.

Is the resistance below 10K Ohms?

Yes

- Repair the (X155) Amplified Left Front Door Speaker (-) for a short to ground.
- Perform the BODY VERIFICATION TEST. Refer to **STANDARD PROCEDURE** .

No

- Replace the Amplifier in accordance with the Service Information.
- Perform the BODY VERIFICATION TEST. Refer to **STANDARD PROCEDURE** .

B146C-CHANNEL 3 AUDIO SPEAKER OUTPUT CIRCUIT HIGH

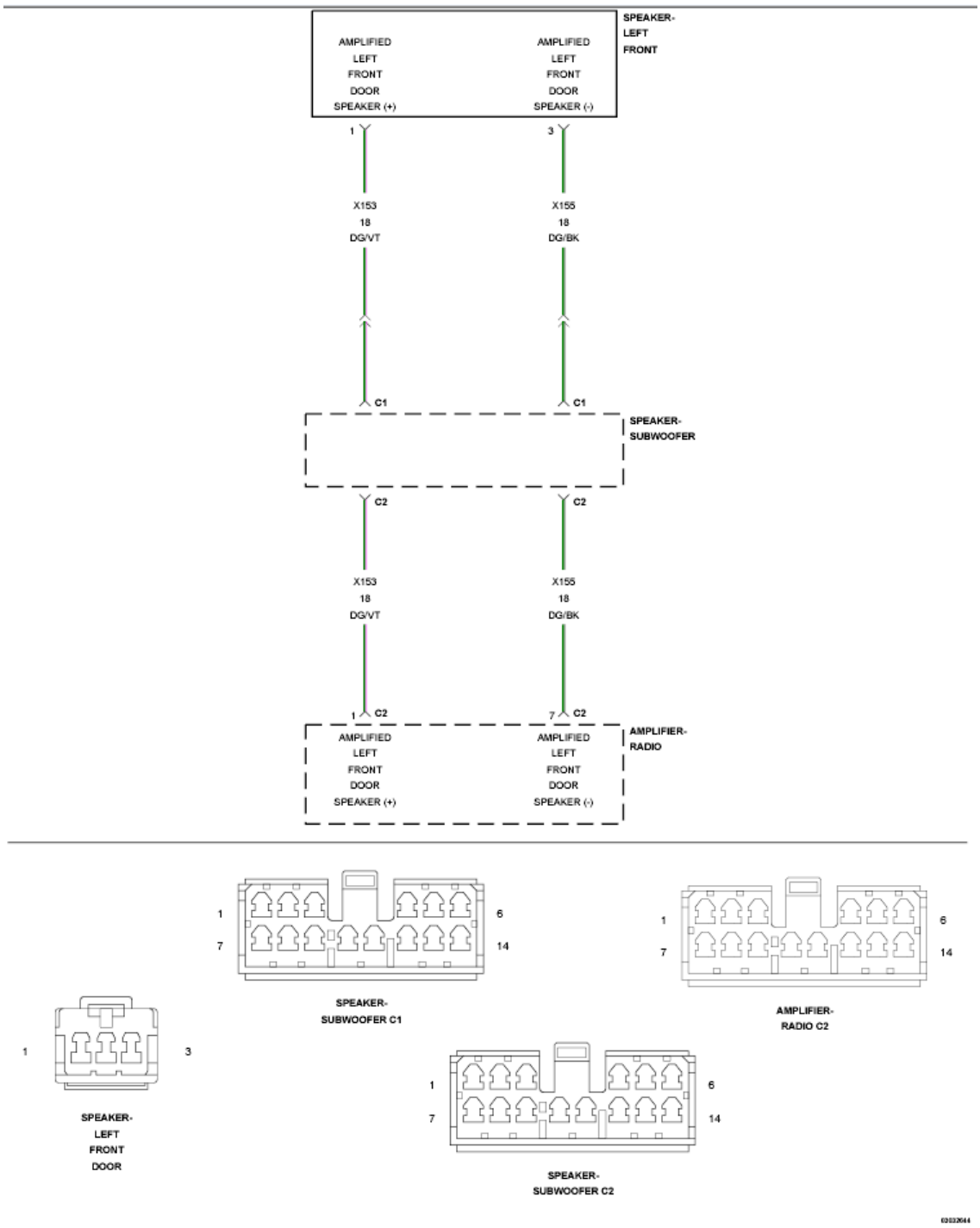

Fig. 33: Left Front Door Speaker Circuit Diagram
Courtesy of CHRYSLER GROUP, LLC

For a complete wiring diagram, **refer to appropriate SYSTEM WIRING DIAGRAMS article** .

WHEN MONITORED

With the ignition on.

SET CONDITION

The Amplifier detects a short to battery condition on the output circuit.

POSSIBLE CAUSES

Possible Causes
(X153) AMPLIFIED LEFT FRONT DOOR SPEAKER (+) CIRCUIT SHORTED TO VOLTAGE (X155) AMPLIFIED LEFT FRONT DOOR SPEAKER (-) CIRCUIT SHORTED TO VOLTAGE AMPLIFIER

DIAGNOSTIC TEST

1. **CHECK FOR AN INTERMITTENT CONDITION**
   1. Turn the ignition on and open one of the front doors.

      NOTE: A front door must remain open whenever checking or erasing Amplifier DTCs.

   2. Using the scan tool, record and erase the Amplifier DTCs.
   3. Cycle the ignition switch from on to off, wait five seconds and then back to on.
   4. Turn the Radio on and set the volume to 25.
   5. Adjust the speakers to the front and center.
   6. Using the scan tool, read the active Amplifier DTCs.

      Does the scan tool display active: B146C-CHANNEL 3 AUDIO SPEAKER OUTPUT CIRCUIT HIGH?

      Yes

      - Go To 2

      No

      - Test complete, the condition or conditions that originally set this DTC are not present at this time. Using the wiring diagrams as a guide, check all related splices and connectors for signs of water

intrusion, corrosion, pushed out or bent terminals and correct pin tension.

- Perform the BODY VERIFICATION TEST. Refer to **STANDARD PROCEDURE** .

2. **CHECK FOR VOLTAGE ON THE (X153) AMPLIFIED LEFT FRONT DOOR SPEAKER (+) CIRCUIT**

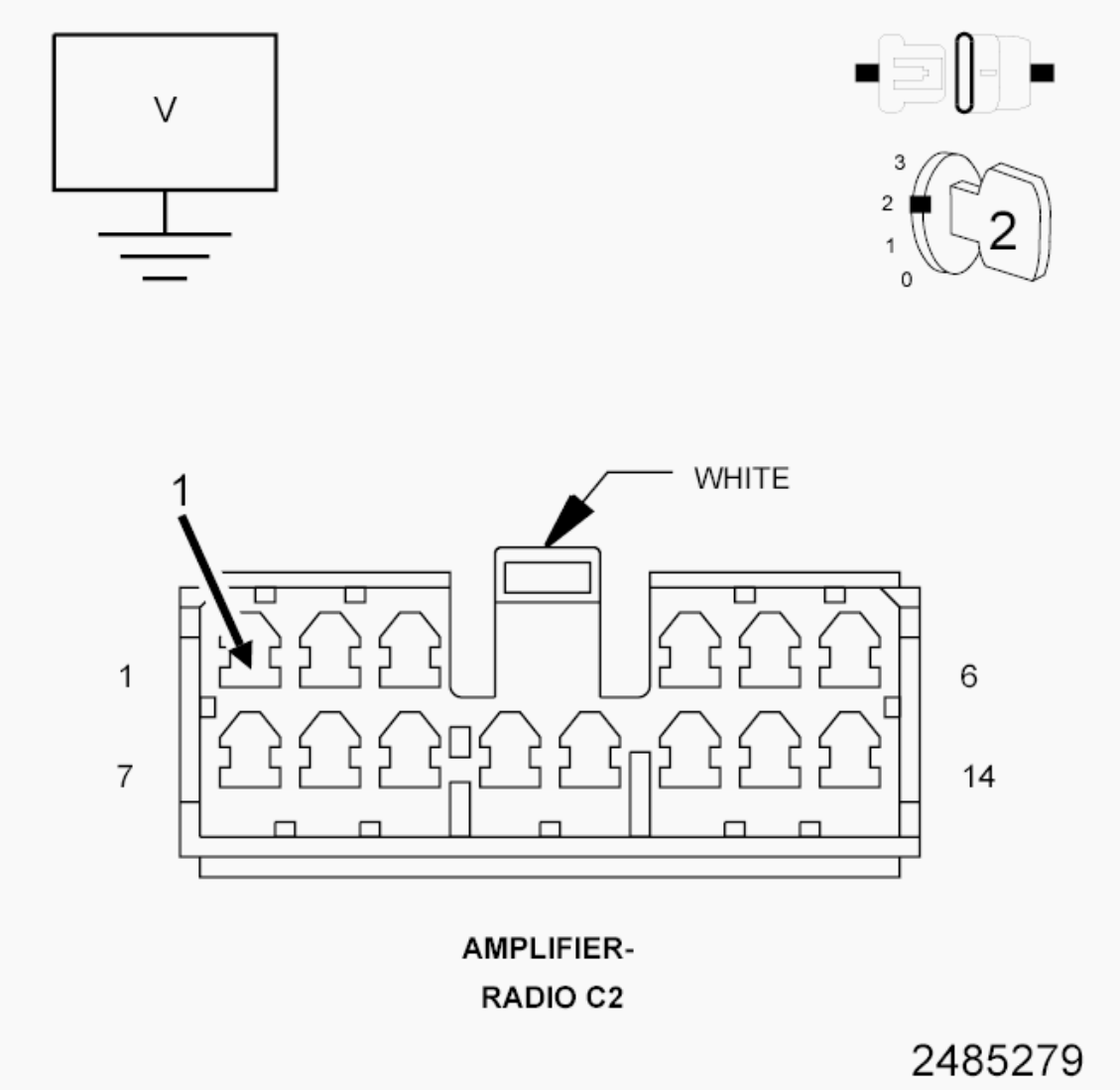

Fig. 34: Measuring Voltage Between Ground & Amplified Left Front Door Speaker (+) Circuit
Courtesy of CHRYSLER GROUP, LLC

1. Turn the ignition off.
2. Disconnect the Amplifier C2 harness connector.
3. Disconnect the Left Front Door Speaker harness connector.

4. Turn the ignition on.
5. Measure for voltage between ground and the (X153) Amplified Left Front Door Speaker (+) circuit.

   Is there any voltage present?

   Yes

   - Repair the (X153) Amplified Left Front Door Speaker (+) circuit for a short to voltage.
   - Perform the BODY VERIFICATION TEST. Refer to **STANDARD PROCEDURE** .

   No

   - Go To 3

3. **CHECK FOR VOLTAGE ON THE (X155) AMPLIFIED LEFT FRONT SPEAKER (-) CIRCUIT**

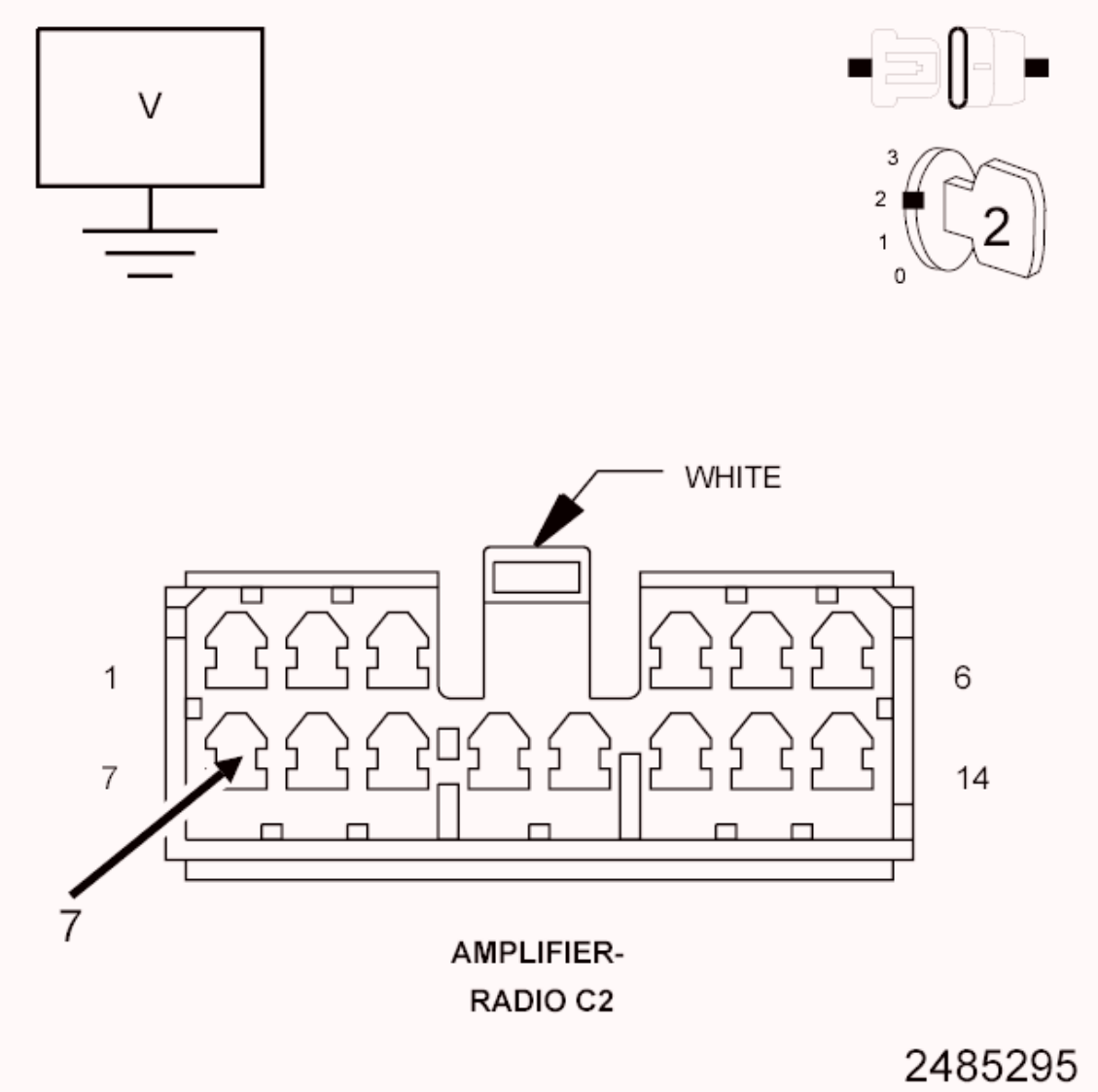

Fig. 35: Measuring Voltage Between Ground & Amplified Left Front Door Speaker (-) Circuit
Courtesy of CHRYSLER GROUP, LLC

1. Measure the voltage between ground and the (X155) Amplified Left Front Door Speaker (-) circuit.

   Is there any voltage present?

   Yes

   - Repair the (X155) Amplified Left Front Door Speaker (-) circuit for a short to voltage.
   - Perform the BODY VERIFICATION TEST. Refer to **STANDARD PROCEDURE** .

No

- Replace the Amplifier in accordance with the Service Information.
- Perform the BODY VERIFICATION TEST. Refer to **STANDARD PROCEDURE** .

B146D-CHANNEL 3 AUDIO SPEAKER OUTPUT CIRCUIT OPEN

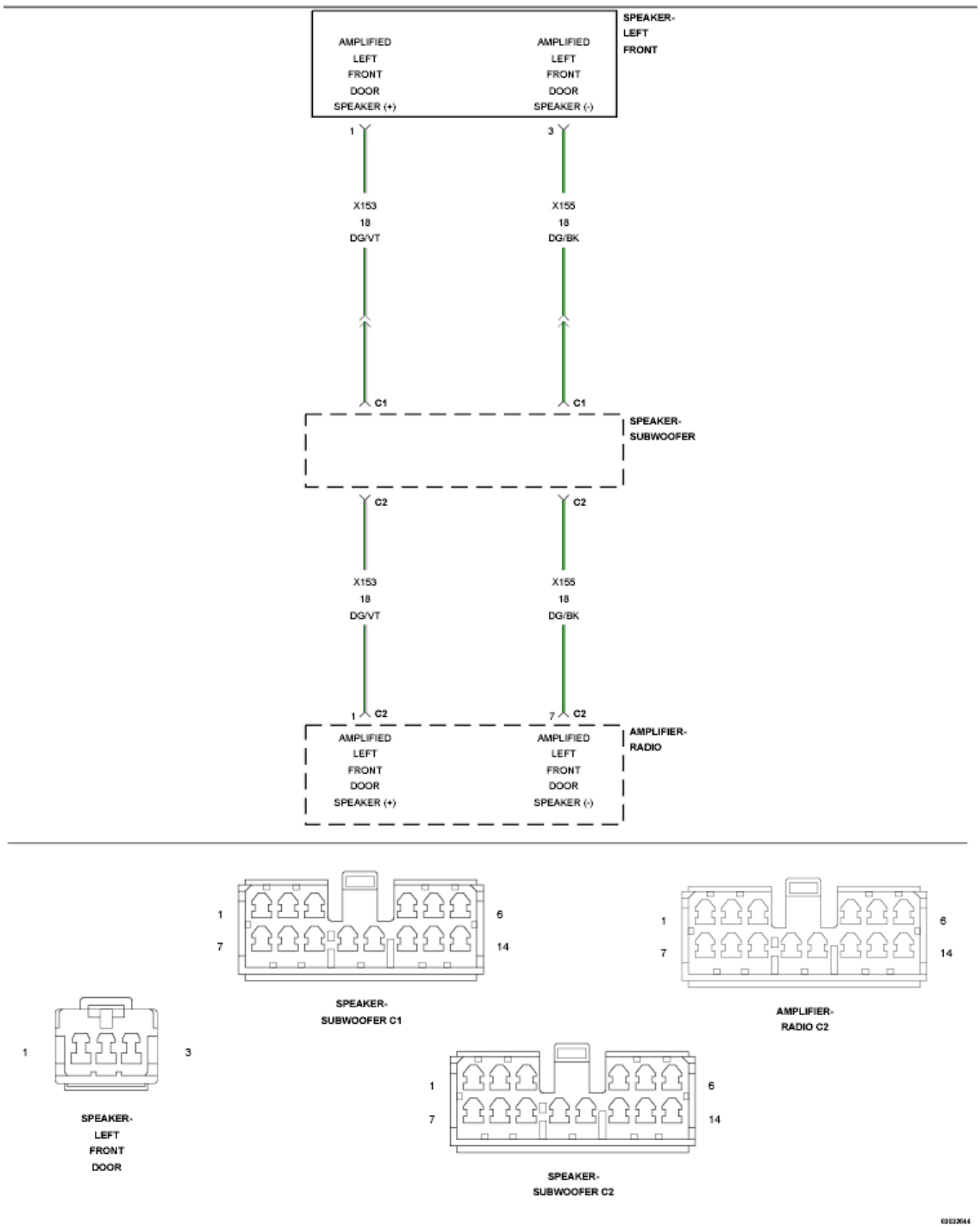

Fig. 36: Left Front Door Speaker Circuit Diagram

Courtesy of CHRYSLER GROUP, LLC

For a complete wiring diagram, **refer to appropriate SYSTEM WIRING DIAGRAMS article** .

WHEN MONITORED

Amplifier BUS wake-up. Amplifier reset with scan tool.

SET CONDITION

The Amplifier detects an open condition on the speaker output circuit.

POSSIBLE CAUSES

Possible Causes
(X153) AMPLIFIED LEFT FRONT DOOR SPEAKER (+) CIRCUIT OPEN
(X155) AMPLIFIED LEFT FRONT DOOR SPEAKER (-) CIRCUIT OPEN
AMPLIFIED LEFT FRONT DOOR SPEAKER
AMPLIFIER

DIAGNOSTIC TEST

1. **CHECK FOR AN INTERMITTENT CONDITION**
   1. Turn the ignition on and open one of the front doors.

      NOTE: A front door must remain open whenever checking or erasing Amplifier DTCs.

   2. Using the scan tool, record and erase the Amplifier DTCs.
   3. Cycle the ignition switch from on to off, wait five seconds and then back to on.
   4. Turn the Radio on and set the volume to 25.
   5. Adjust the speakers to the front and center.
   6. Using the scan tool, read the active Amplifier DTCs.

      Does the scan tool display active: B146D-CHANNEL 3 AUDIO SPEAKER OUTPUT CIRCUIT OPEN?

Yes

- Go To 2

No

- Test complete, the condition or conditions that originally set this DTC are not present at this time. Using the wiring diagrams as a guide, check all related splices and connectors for signs of water intrusion, corrosion, pushed out or bent terminals and correct pin tension.
- Perform the BODY VERIFICATION TEST. Refer to **STANDARD PROCEDURE** .

2. **CHECK THE OPERATION OF THE AMPLIFIED LEFT FRONT DOOR SPEAKER**

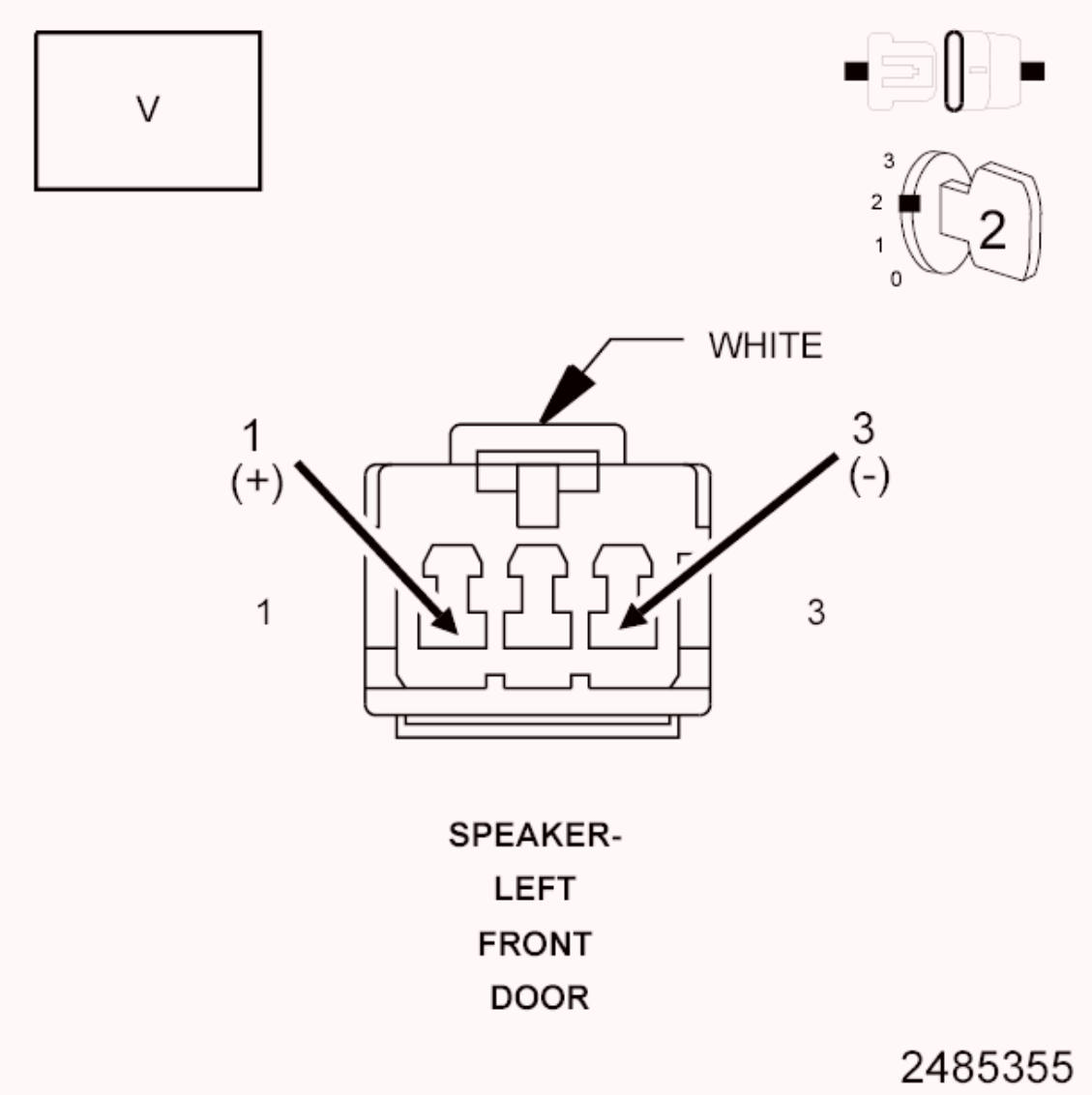

Fig. 37: Checking Operation Of Amplified Left Front Door Speaker
Courtesy of CHRYSLER GROUP, LLC

1. Turn the ignition off.
2. Disconnect the Left Front Door Speaker harness connector.
3. Turn the ignition on.
4. Turn the radio on and turn the volume to 25.
5. Adjust the speakers to the front and center.
6. With a voltmeter set to read in A/C voltage, measure the voltage between the Amplified Left Front Door Speaker (+) and (-) circuits in the Left Front Door Speaker harness connector.

   Is the voltage present greater than 1 volt?

Yes

- Replace the Amplified Left Front Door Speaker in accordance with the Service Information.
- Perform the BODY VERIFICATION TEST. Refer to **STANDARD PROCEDURE** .

No

- Go To 3

3. **CHECK THE (X153) AMPLIFIED LEFT FRONT DOOR SPEAKER (+) CIRCUIT FOR AN OPEN**

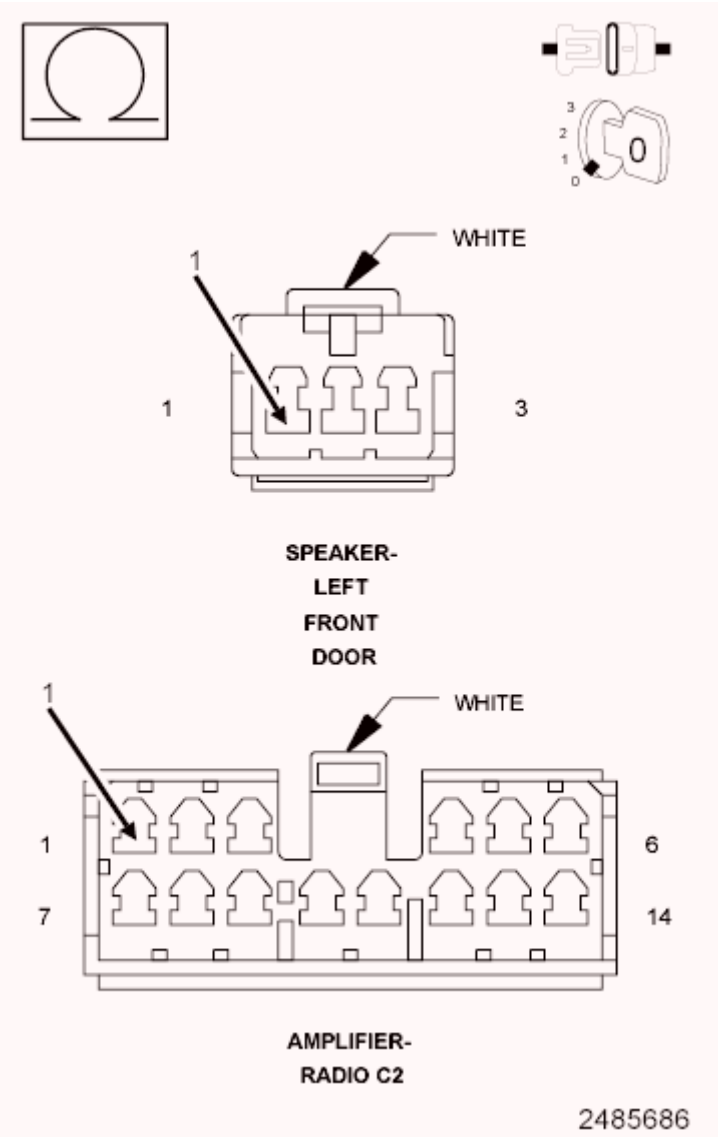

Fig. 38: Measuring Resistance Of Amplified Left Front Door Speaker (+) Circuit

Courtesy of CHRYSLER GROUP, LLC

1. Turn the ignition off.
2. Disconnect the Amplifier C2 harness connector.
3. Measure the resistance of the (X153) Amplified Left Front Door Speaker (+) circuit between the Amplifier C2 harness connector and the Left Front Door Speaker harness connector.

   Is the resistance below 2.0 Ohms?

   Yes

   - Go To 4

   No

   - Repair the (X153) Amplified Left Front Speaker (+) circuit for an open.
   - Perform the BODY VERIFICATION TEST. Refer to **STANDARD PROCEDURE** .

4. **CHECK THE (X155) AMPLIFIED LEFT FRONT SPEAKER (-) CIRCUIT FOR AN OPEN**

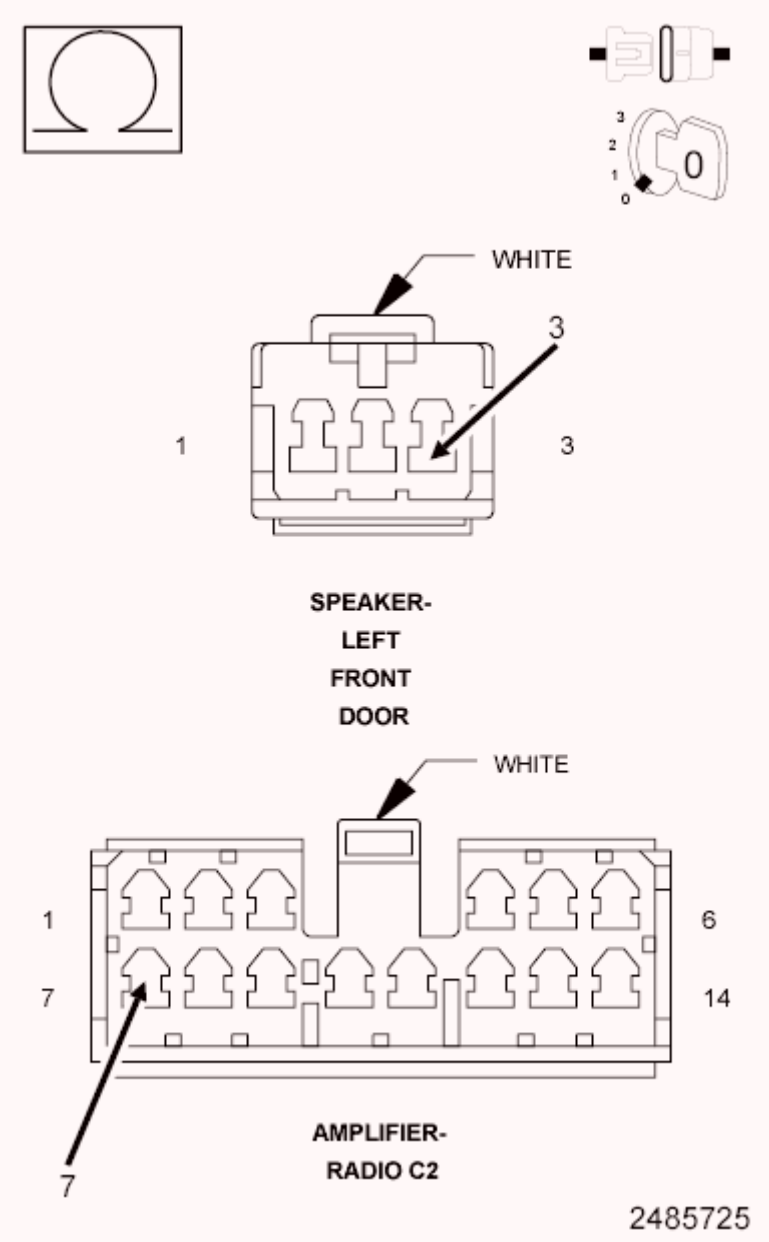

Fig. 39: Measuring Resistance Of Amplified Left Front Door Speaker (-) Circuit
Courtesy of CHRYSLER GROUP, LLC

1. Measure the resistance of the (X155) Amplified Left Front Door Speaker (-) circuit between the Amplifier C2 harness connector and the Left Front Door Speaker harness connector.

   Is the resistance below 2.0 Ohms?

   Yes

   - Replace the Amplifier in accordance with the Service Information.

- Perform the BODY VERIFICATION TEST. Refer to **STANDARD PROCEDURE** .

No

- Repair the (X155) Amplified Left Front Door Speaker (-) circuit for an open.
- Perform the BODY VERIFICATION TEST. Refer to **STANDARD PROCEDURE** .

B146E-CHANNEL 3 AUDIO SPEAKER OUTPUT CIRCUIT SHORTED TOGETHER

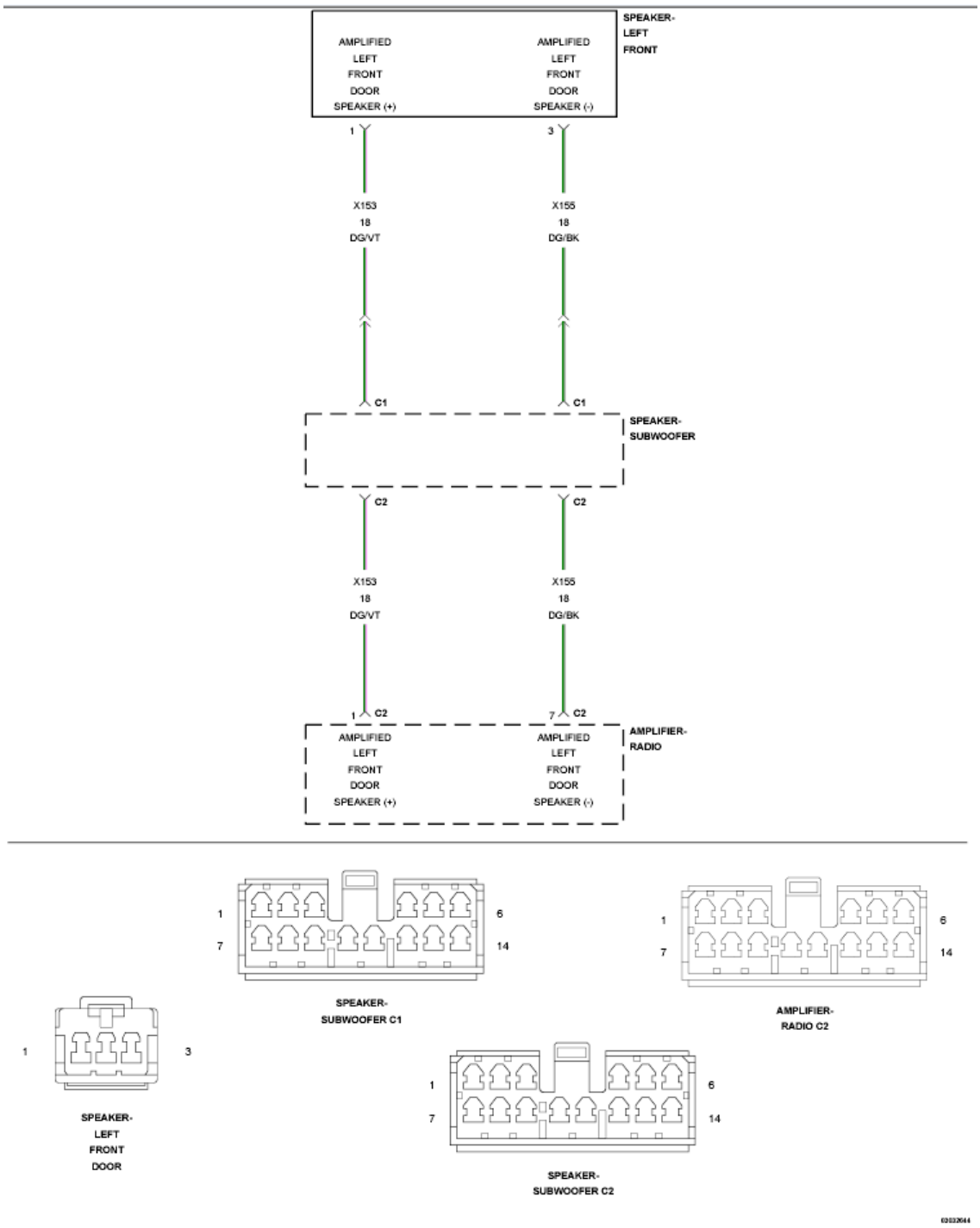

Fig. 40: Left Front Door Speaker Circuit Diagram
Courtesy of CHRYSLER GROUP, LLC

For a complete wiring diagram, **refer to appropriate SYSTEM WIRING DIAGRAMS article** .

WHEN MONITORED

With the ignition on. Radio volume at 25 or higher.

SET CONDITION

The Amplifier detects that the output circuits are shorted together.

POSSIBLE CAUSES

Possible Causes
(X153) AMPLIFIED LEFT FRONT DOOR SPEAKER (+) CIRCUIT SHORTED TO THE (X155) AMPLIFIED LEFT FRONT DOOR SPEAKER (-) CIRCUIT AMPLIFIED LEFT FRONT DOOR SPEAKER AMPLIFIER

DIAGNOSTIC TEST

1. **CHECK FOR AN INTERMITTENT CONDITION**
   1. Turn the ignition on and open one of the front doors.

      NOTE: A front door must remain open whenever checking or erasing Amplifier DTCs.

   2. Using the scan tool, record and erase the Amplifier DTCs.
   3. Cycle the ignition switch from on to off, wait five seconds and then back to on.
   4. Turn the Radio on and set the volume to 25.
   5. Adjust the speakers to the front and center.
   6. Using the scan tool, read the active Amplifier DTCs.

      Does the scan tool display active: B146E-CHANNEL 3 AUDIO SPEAKER OUTPUT CIRCUIT SHORTED TOGETHER?

      Yes

      - Go To 2

      No

      - Test complete, the condition or conditions that originally set this DTC are not present at this time. Using the wiring diagrams as a guide, check all related splices and connectors for signs of water

intrusion, corrosion, pushed out or bent terminals and correct pin tension.

- Perform the BODY VERIFICATION TEST. Refer to **STANDARD PROCEDURE** .

2. **CHECK THE OPERATION OF THE AMPLIFIED LEFT FRONT DOOR SPEAKER**

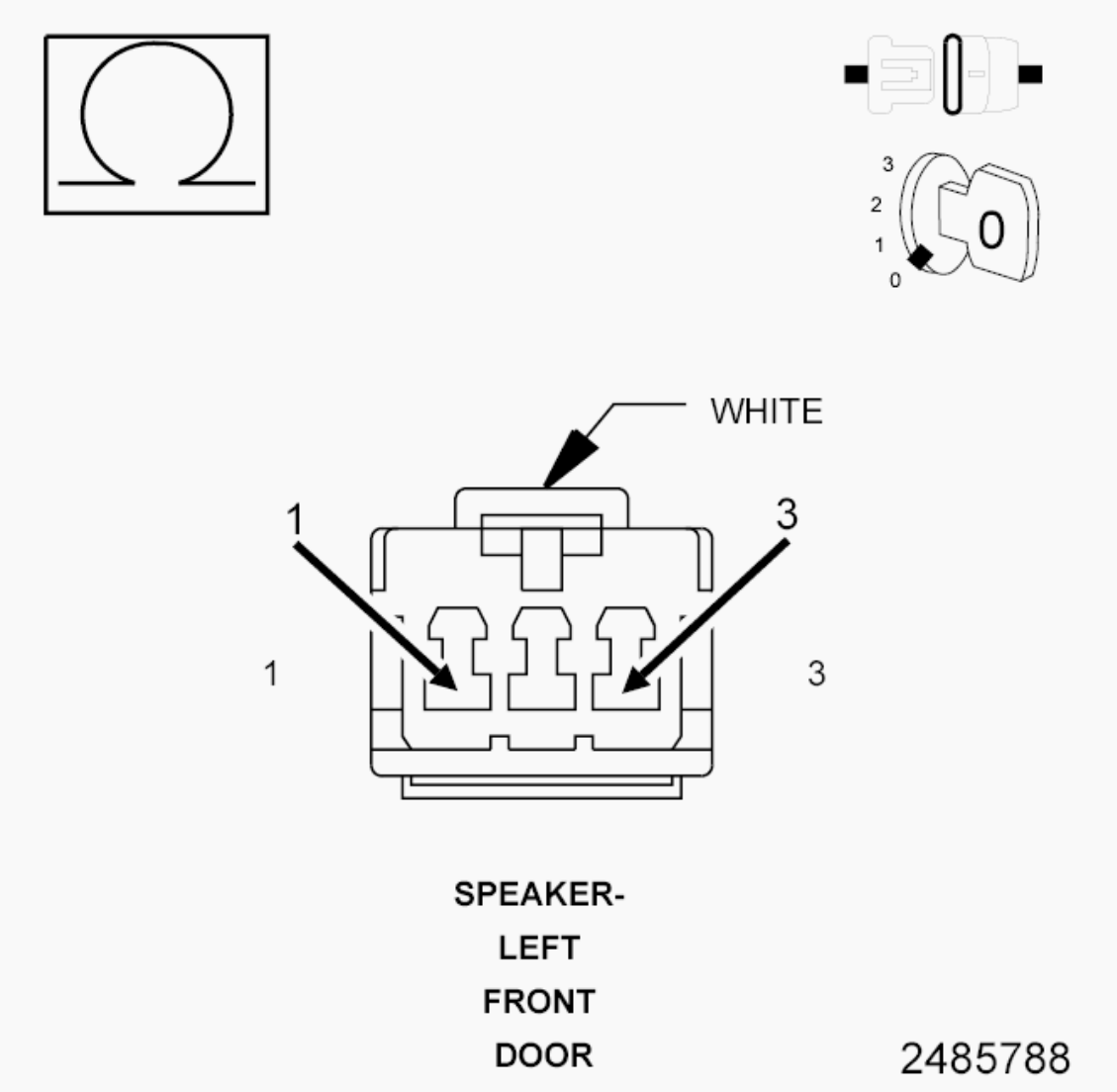

Fig. 41: Measuring Resistance Of Speaker Between Two Terminals
Courtesy of CHRYSLER GROUP, LLC

1. Turn the ignition off.
2. Disconnect the Left Front Door Speaker harness connector.
3. Measure the resistance of the speaker between the two terminals.

NOTE: The graphic shows the connector for reference only. Measure between the speaker terminals.

Is the resistance of the speaker less than 1 Ohm?

Yes

- Replace the Amplified Left Front Door Speaker in accordance with the Service Information.
- Perform the BODY VERIFICATION TEST. Refer to **STANDARD PROCEDURE** .

No

- Go To 3

3. **CHECK THE (X153) AMPLIFIED LEFT FRONT DOOR SPEAKER (+) CIRCUIT, AND THE (X155) AMPLIFIED LEFT FRONT DOOR SPEAKER (-) CIRCUITS FOR A SHORT TOGETHER**

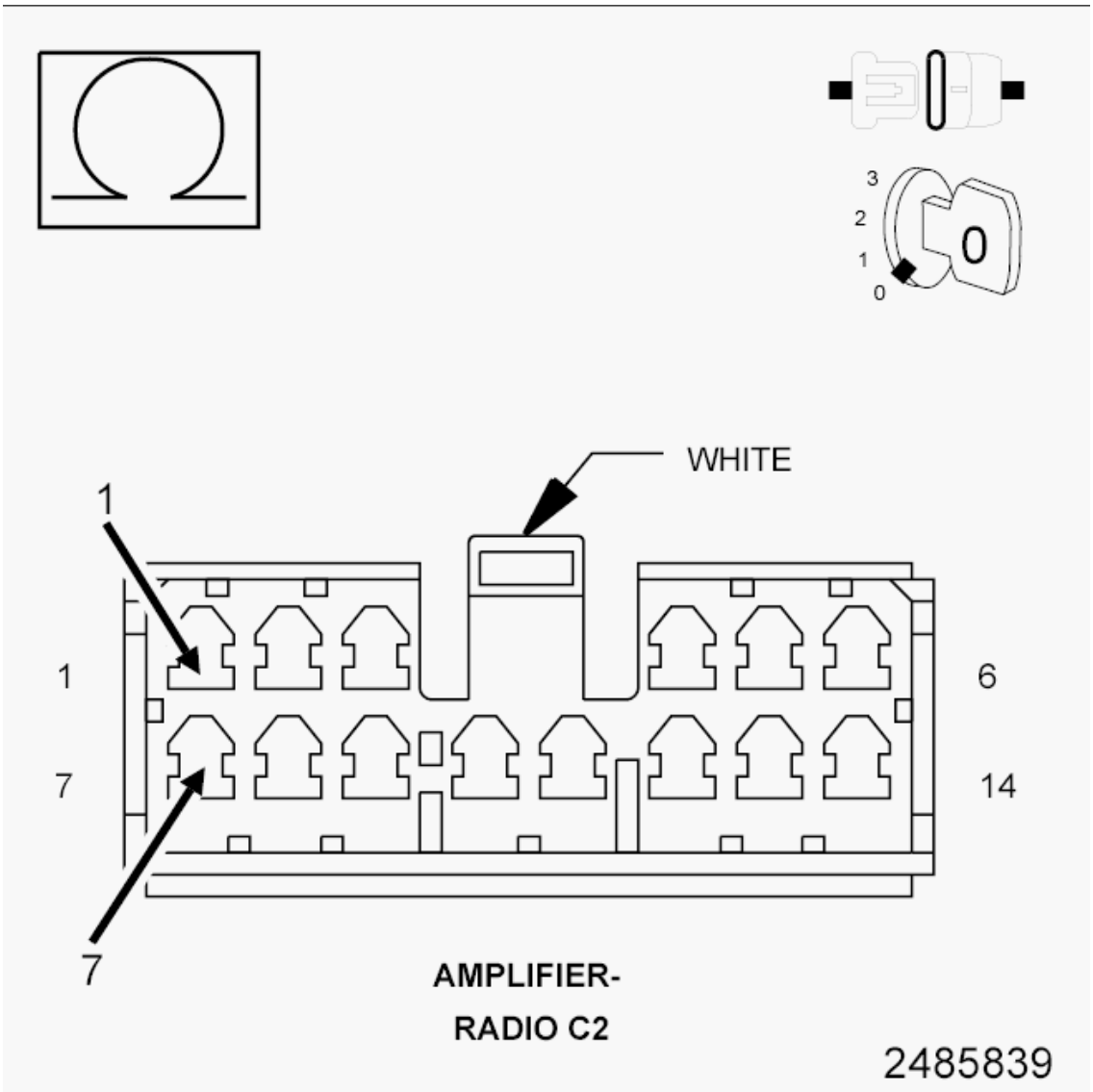

Fig. 42: Measuring Resistance Between Amplified Left Front Door Speaker (+) Circuit & Amplified Left Front Door Speaker (-) Circuit
Courtesy of CHRYSLER GROUP, LLC

1. Disconnect the Amplifier C2 harness connector.
2. Measure the resistance between the (X153) Amplified Left Front Door Speaker (+) circuit, and the (X155) Amplified Left Front Door Speaker (-) circuit.

   Is the resistance below 10K Ohms?

   Yes

   - Repair the (X153) Amplified Left Front Door Speaker (+) circuit for a short to the (X155) Amplified Left Front Door Speaker (-)

circuit.

- Perform the BODY VERIFICATION TEST. Refer to **STANDARD PROCEDURE** .

No

- Replace the Amplifier in accordance with the Service Information.
- Perform the BODY VERIFICATION TEST. Refer to **STANDARD PROCEDURE** .

B146F-CHANNEL 4 AUDIO SPEAKER OUTPUT CIRCUIT PERFORMANCE

For a complete wiring diagram, **refer to appropriate SYSTEM WIRING DIAGRAMS article** .

WHEN MONITORED

With the ignition on.

SET CONDITION

This Diagnostic Trouble Code (DTC) sets if a Direct Current (DC) offset occurs on the output channel, the Amplifier shall set a DTC after a maturity rate of four to six seconds.

POSSIBLE CAUSES

Possible Causes
AMPLIFIER

DIAGNOSTIC TEST

CHECK FOR AN INTERMITTENT CONDITION

1. Turn the ignition on and open one of the front doors.

NOTE: A front door must remain open whenever checking or erasing Amplifier DTCs.

2. Using the scan tool, record and erase the Amplifier DTCs.
3. Cycle the ignition switch from on to off, wait five seconds and then back to on.

4. Turn the Radio on and set the volume to 25.
5. Adjust the speakers to the front and center.
6. Using the scan tool, read the active Amplifier DTCs.

   Does the scan tool display active: B146F-CHANNEL 4 AUDIO SPEAKER OUTPUT CIRCUIT PERFORMANCE?

   Yes

   - Replace the Amplifier in accordance with the Service Information.
   - Perform the BODY VERIFICATION TEST. Refer to **STANDARD PROCEDURE** .

   No

   - Test complete, the condition or conditions that originally set this DTC are not present at this time. Using the wiring diagrams as a guide, check all related splices and connectors for signs of water intrusion, corrosion, pushed out or bent terminals and correct pin tension.
   - Perform the BODY VERIFICATION TEST. Refer to **STANDARD PROCEDURE** .

B1470-CHANNEL 4 AUDIO SPEAKER OUTPUT CIRCUIT LOW

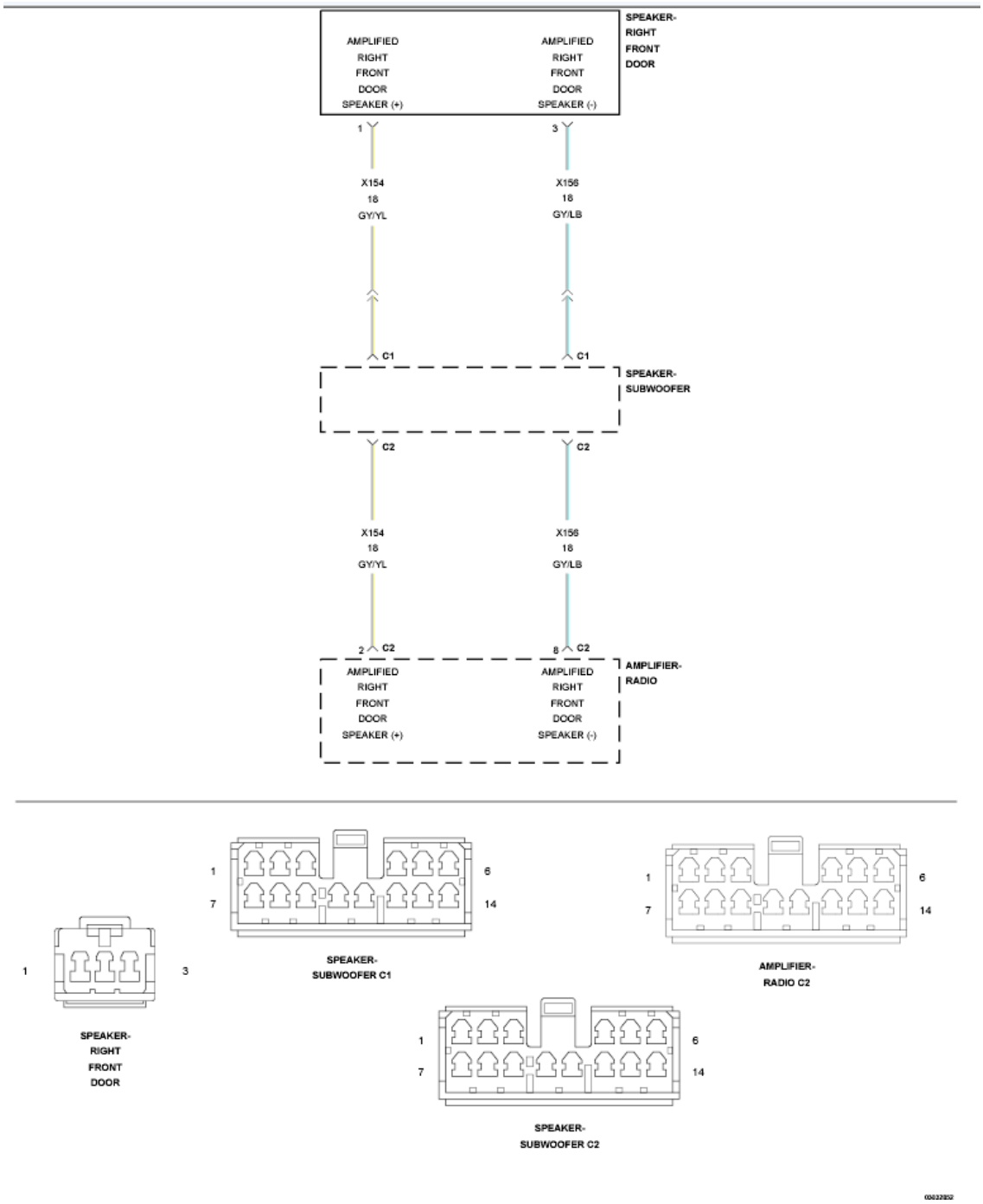

Fig. 43: Right Front Door Speaker Circuit Diagram
Courtesy of CHRYSLER GROUP, LLC

For a complete wiring diagram, **refer to appropriate SYSTEM WIRING DIAGRAMS article** .

WHEN MONITORED

With the ignition on.

SET CONDITION

The Amplifier detects a shorted to ground condition on the speaker output circuit.

POSSIBLE CAUSES

Possible Causes
(X154) AMPLIFIED RIGHT FRONT DOOR SPEAKER (+) CIRCUIT SHORTED TO GROUND
(X156) AMPLIFIED RIGHT FRONT DOOR SPEAKER (-) CIRCUIT SHORTED TO GROUND
RIGHT FRONT DOOR SPEAKER
AMPLIFIER

DIAGNOSTIC TEST

1. **CHECK FOR AN INTERMITTENT CONDITION**
   1. Turn the ignition on and open one of the front doors.

      NOTE: A front door must remain open whenever checking or erasing Amplifier DTCs.

   2. Using the scan tool, record and erase the Amplifier DTCs.
   3. Cycle the ignition switch from on to off, wait five seconds and then back to on.
   4. Turn the Radio on and set the volume to 25.
   5. Adjust the speakers to the front and center.
   6. Using the scan tool, read the active Amplifier DTCs.

      Does the scan tool display active: B1470-CHANNEL 4 AUDIO SPEAKER OUTPUT CIRCUIT LOW?

      Yes

      - Go To 2

      No

      - Test complete, the condition or conditions that originally set this

DTC are not present at this time. Using the wiring diagrams as a guide, check all related splices and connectors for signs of water intrusion, corrosion, pushed out or bent terminals and correct pin tension.

- Perform the BODY VERIFICATION TEST. Refer to **STANDARD PROCEDURE** .

2. **RIGHT FRONT DOOR SPEAKER**

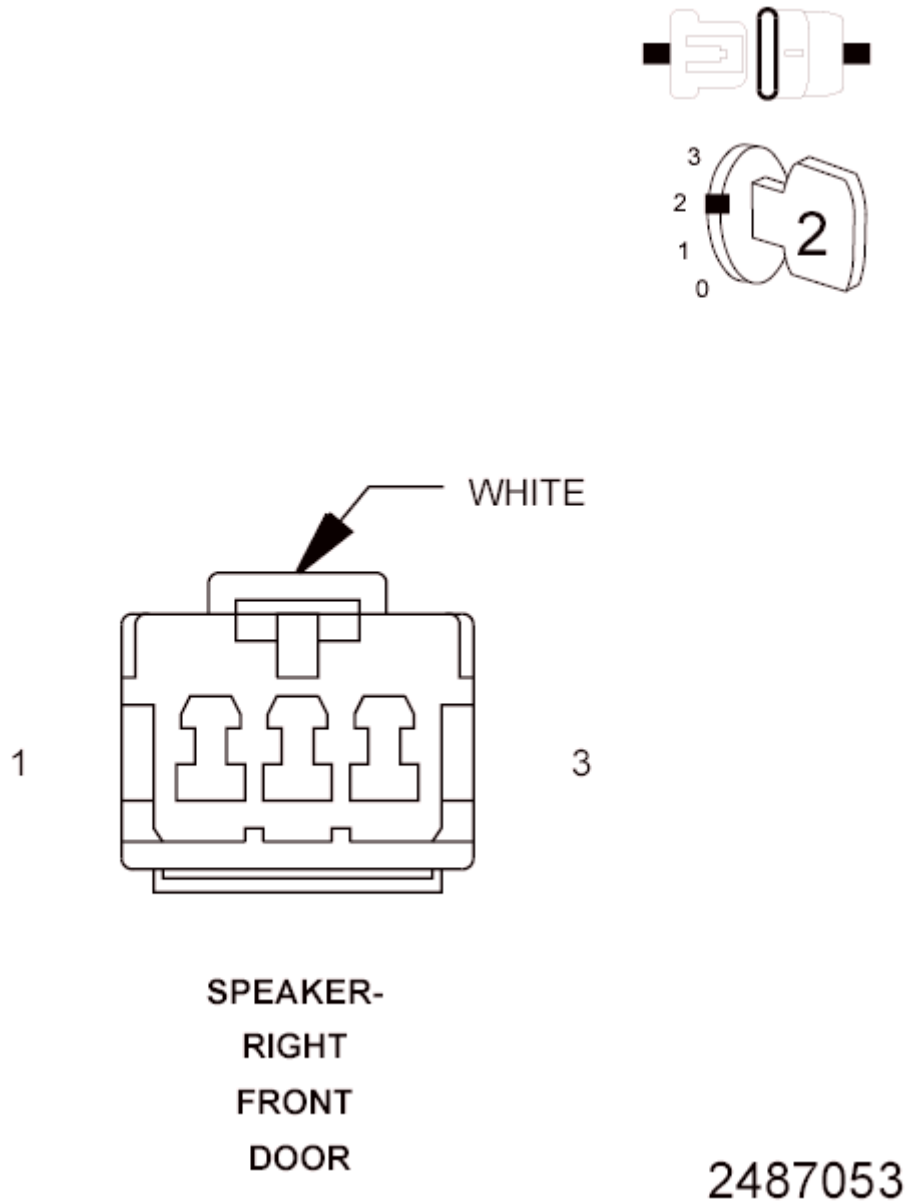

Fig. 44: Checking Right Front Door Speaker
Courtesy of CHRYSLER GROUP, LLC

1. With the scan tool, erase the DTCs.

2. Turn the ignition off.
3. Disconnect the Right Front Door Speaker harness connector.
4. Turn the ignition on
5. Turn the radio on and set the column to 25.
6. Adjust the speakers to the front and center.
7. With the scan tool, read the active Amplifier DTCs.

   Does the scan tool display active: B1470-CHANNEL 4 AUDIO SPEAKER OUTPUT CIRCUIT LOW?

   Yes

   - Go To 3

   No

   - Replace the Right Front Door Speaker in accordance with the Service Information.
   - Perform the BODY VERIFICATION TEST. Refer to **STANDARD PROCEDURE** .

3. **CHECK THE (X154) AMPLIFIED RIGHT FRONT DOOR SPEAKER (+) CIRCUIT FOR A SHORT TO GROUND**

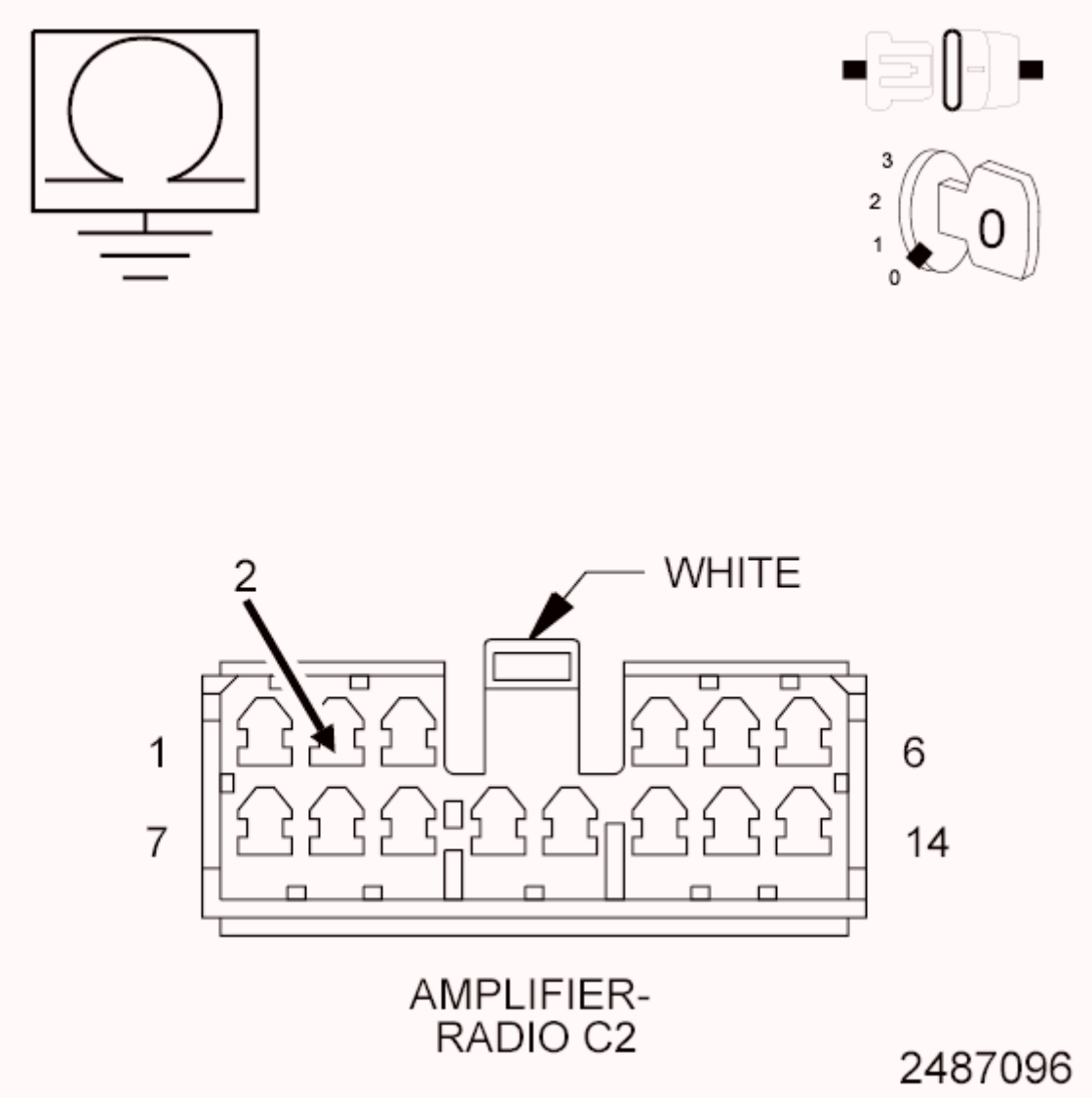

Fig. 45: Measuring Resistance Between Ground & Amplified Right Front Door Speaker (+) Circuit
Courtesy of CHRYSLER GROUP, LLC

1. Turn the ignition off.
2. Disconnect the Amplifier C2 harness connector.
3. Measure the resistance between ground and the (X154) Amplified Right Front Door Speaker (+) circuit.

   Is the resistance below 10K Ohms?

   Yes

   - Repair the (X154) Amplified Right Front Door Speaker (+) circuit for a short to ground.

- Perform the BODY VERIFICATION TEST. Refer to **STANDARD PROCEDURE** .

No

- Go To 4

4. **CHECK THE (X156) AMPLIFIED RIGHT FRONT DOOR SPEAKER (-) CIRCUIT FOR A SHORT TO GROUND**

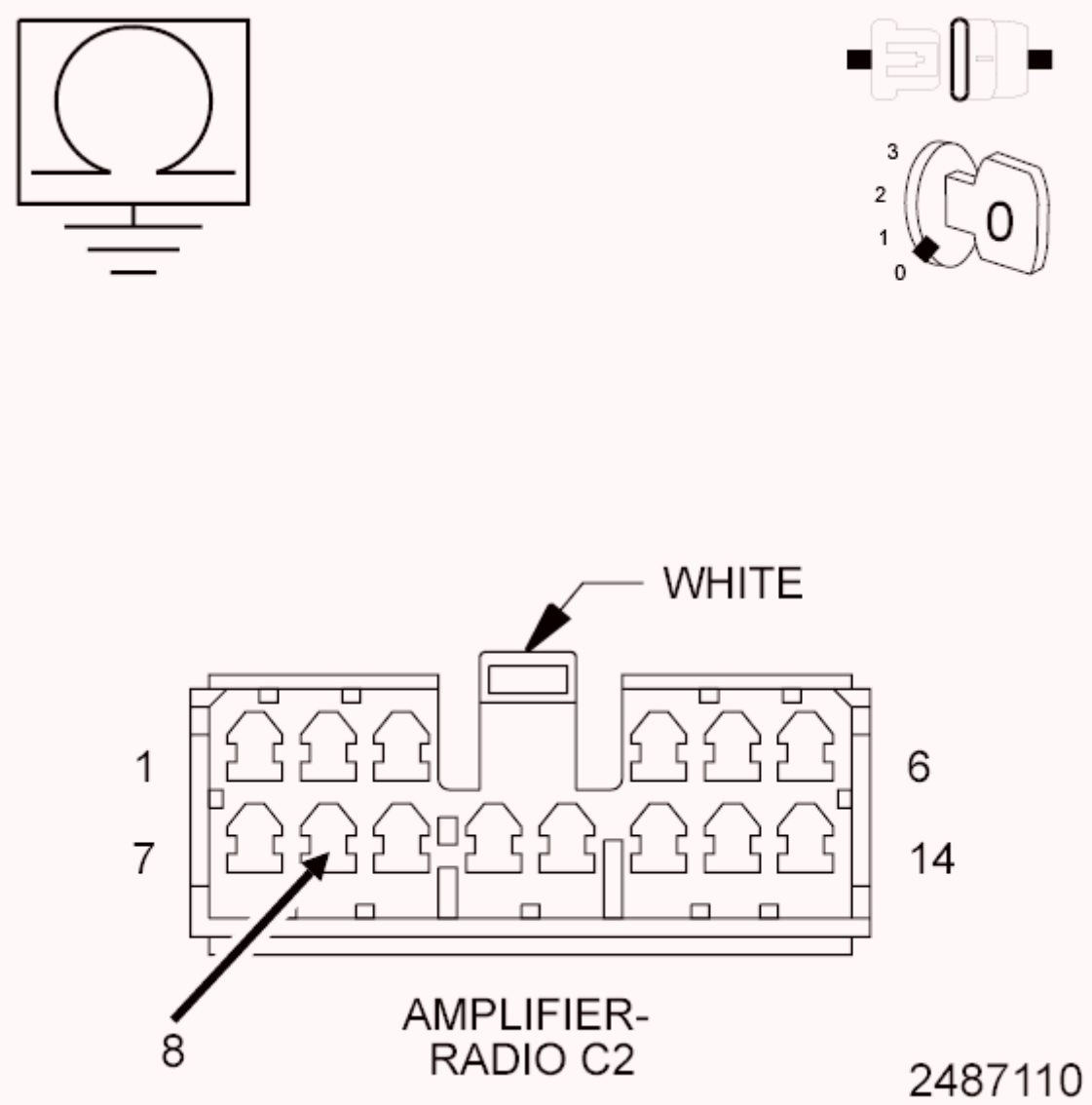

Fig. 46: Measuring Resistance Between Ground & Amplified Right Front Door Speaker (-) Circuit
Courtesy of CHRYSLER GROUP, LLC

1. Measure the resistance between ground and the (X156) Amplified Right Front Door Speaker (-) circuit.

Is the resistance below 10K Ohms?

Yes

- Repair the (X156) Amplified Right Front Door Speaker (-) for a short to ground.
- Perform the BODY VERIFICATION TEST. Refer to **STANDARD PROCEDURE** .

No

- Replace the Amplifier in accordance with the Service Information.
- Perform the BODY VERIFICATION TEST. Refer to **STANDARD PROCEDURE** .

B1471-CHANNEL 4 AUDIO SPEAKER OUTPUT CIRCUIT HIGH

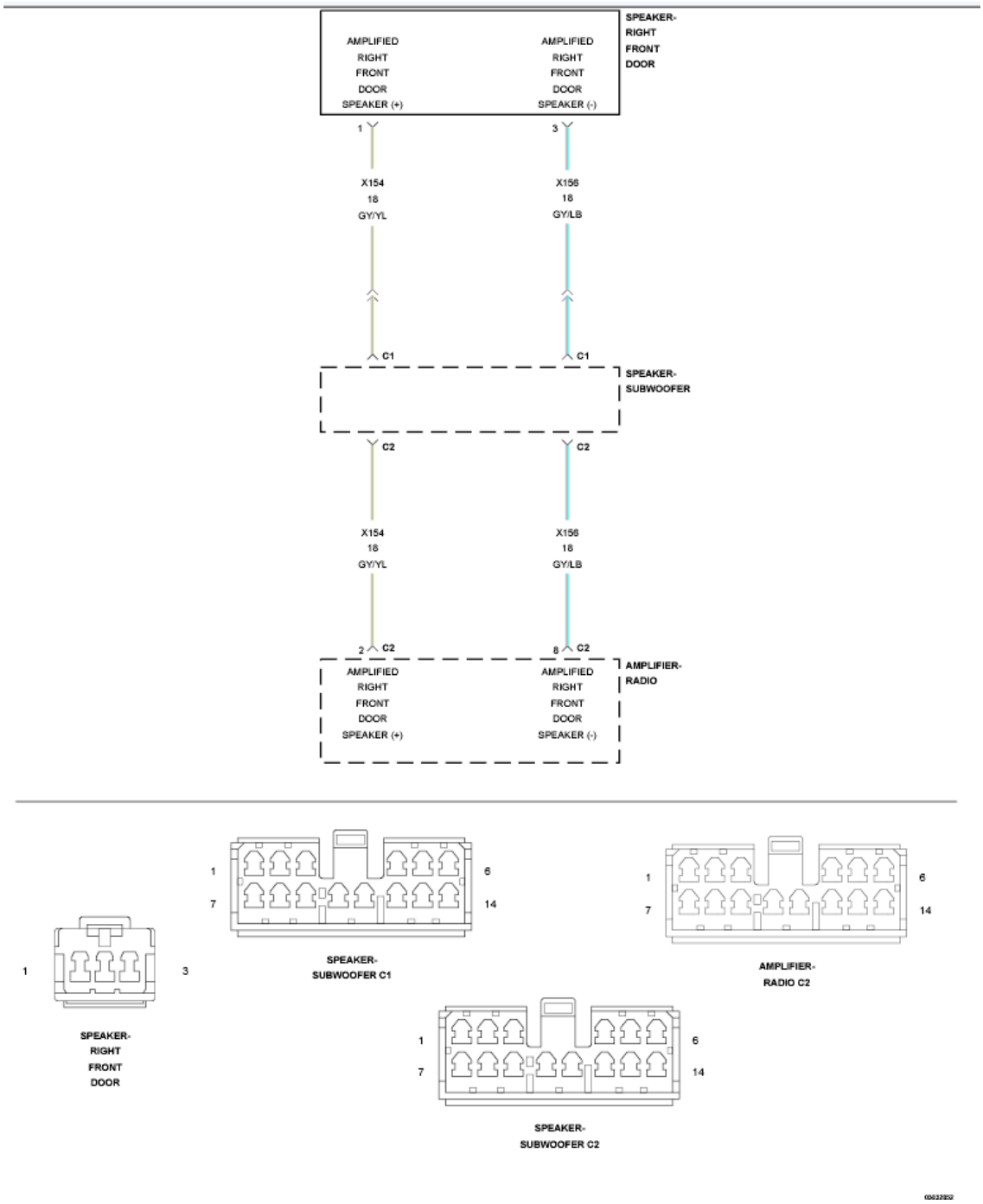

Fig. 47: Right Front Door Speaker Circuit Diagram
Courtesy of CHRYSLER GROUP, LLC

For a complete wiring diagram, **refer to appropriate SYSTEM WIRING DIAGRAMS article** .

WHEN MONITORED

With the ignition on.

SET CONDITION

The Amplifier detects a short to battery condition on the output circuit.

POSSIBLE CAUSES

Possible Causes
(X154) AMPLIFIED RIGHT FRONT DOOR SPEAKER (+) CIRCUIT SHORTED TO VOLTAGE (X156) AMPLIFIED RIGHT FRONT DOOR SPEAKER (-) CIRCUIT SHORTED TO VOLTAGE AMPLIFIER

DIAGNOSTIC TEST

1. **CHECK FOR AN INTERMITTENT CONDITION**
   1. Turn the ignition on and open one of the front doors.

      NOTE: A front door must remain open whenever checking or erasing Amplifier DTCs.

   2. Using the scan tool, record and erase the Amplifier DTCs.
   3. Cycle the ignition switch from on to off, wait five seconds and then back to on.
   4. Turn the Radio on and set the volume to 25.
   5. Adjust the speakers to the front and center.
   6. Using the scan tool, read the active Amplifier DTCs.

      Does the scan tool display active: B1471-CHANNEL 4 AUDIO SPEAKER OUTPUT CIRCUIT HIGH?

      Yes

      - Go To 2

      No

      - Test complete, the condition or conditions that originally set this DTC are not present at this time. Using the wiring diagrams as a guide, check all related splices and connectors for signs of water

intrusion, corrosion, pushed out or bent terminals and correct pin tension.

- Perform the BODY VERIFICATION TEST. Refer to **STANDARD PROCEDURE** .

2. **CHECK FOR VOLTAGE ON THE (X154) AMPLIFIED RIGHT FRONT DOOR SPEAKER (+) CIRCUIT**

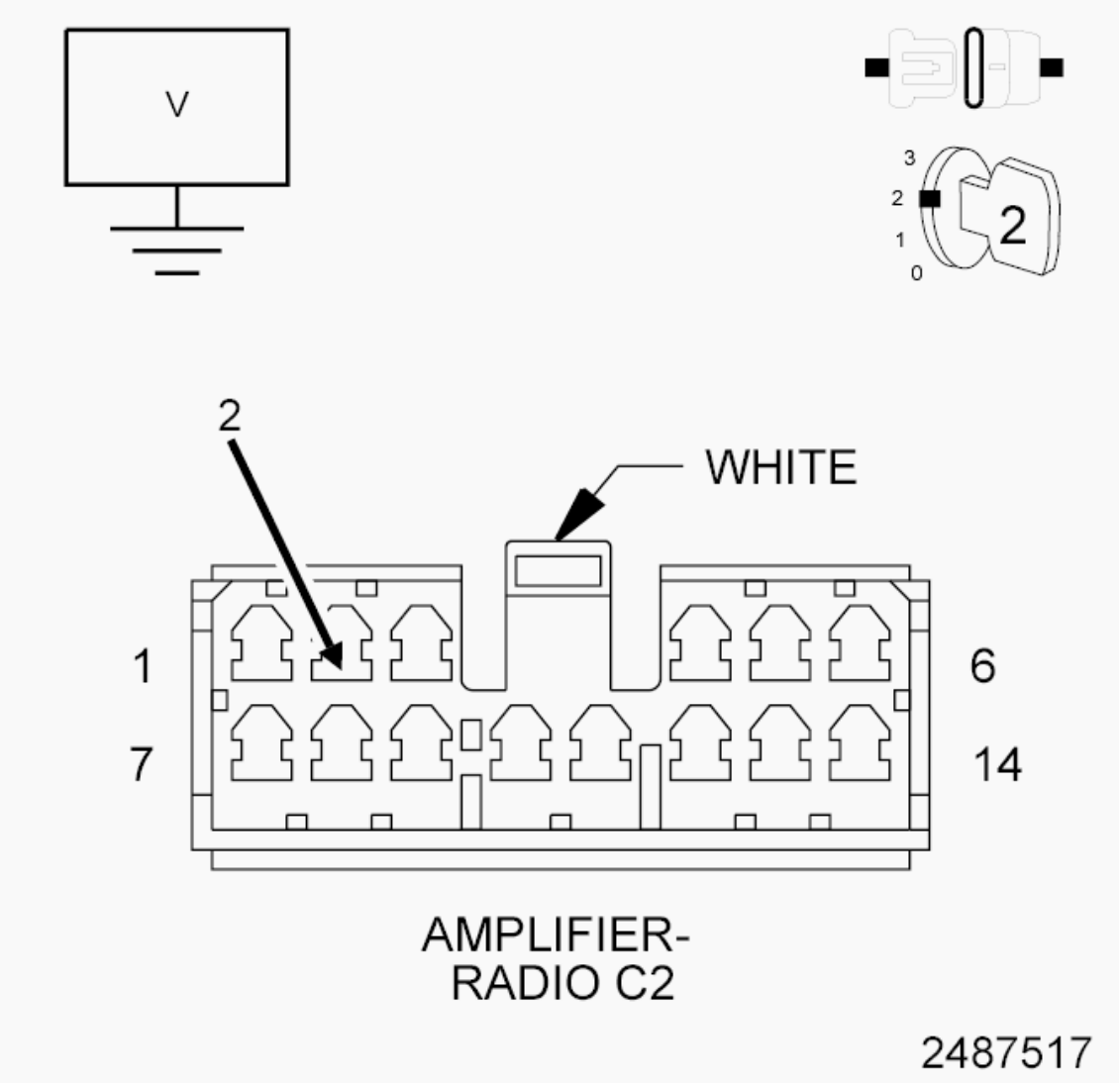

Fig. 48: Checking For Voltage On Amplified Right Front Door Speaker (+) Circuit
Courtesy of CHRYSLER GROUP, LLC

1. Turn the ignition off.
2. Disconnect the Amplifier C2 harness connector.
3. Disconnect the Amplified Right Front Door Speaker harness connector.
4. Turn the ignition on.

5. Measure the voltage between the (X154) Amplified Right Front Door Speaker (+) circuit and ground.

   Is there any voltage present?

   Yes

   - Repair the (X154) Amplified Right Front Door Speaker (+) circuit for a short to voltage.
   - Perform the BODY VERIFICATION TEST. Refer to **STANDARD PROCEDURE** .

   No

   - Go To 3

3. **CHECK FOR VOLTAGE ON THE (X156) AMPLIFIED RIGHT FRONT DOOR SPEAKER (-) CIRCUIT**

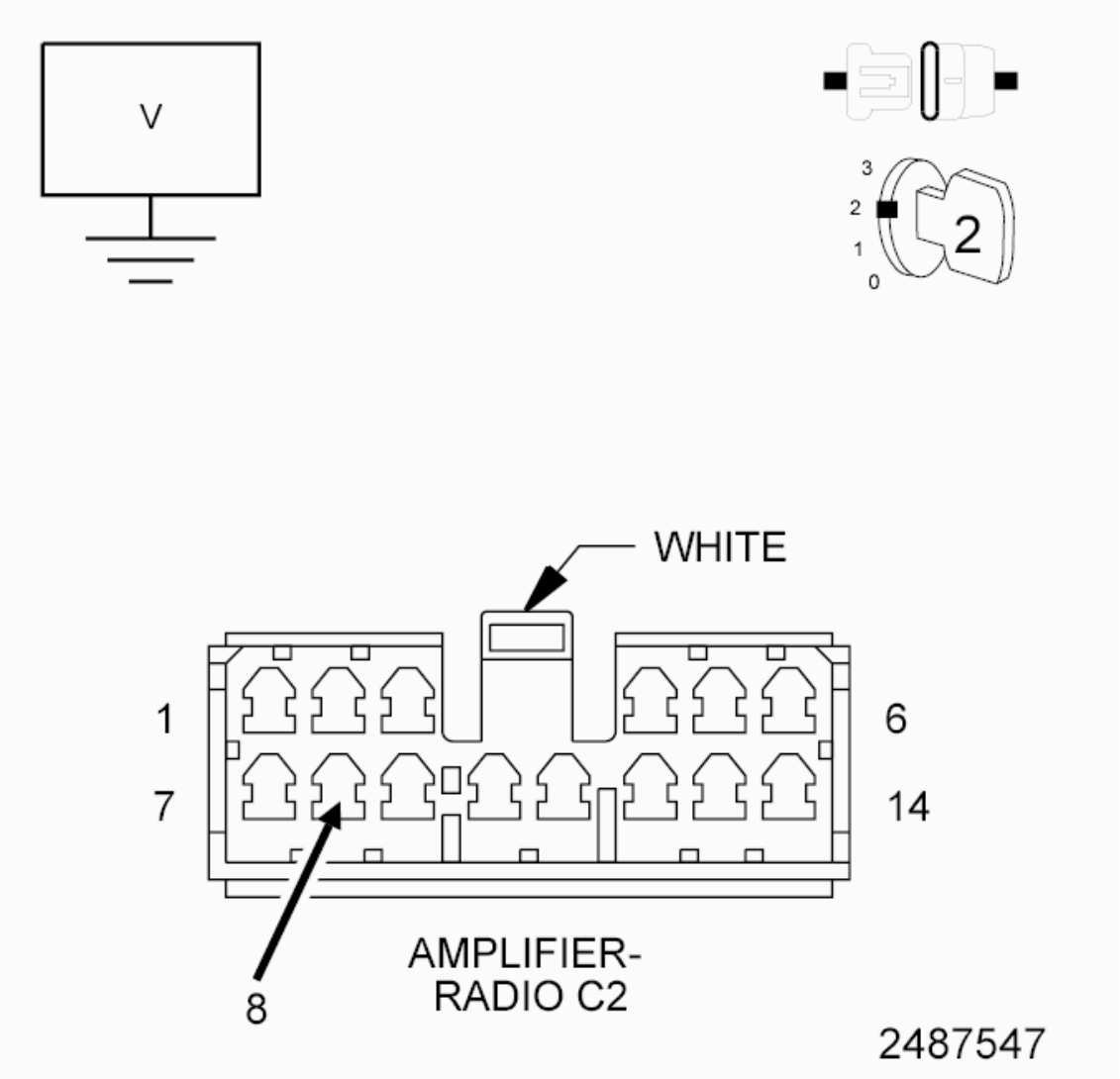

Fig. 49: Measuring Voltage Between Ground & Amplified R-Front Door Speaker (-) Circuit
Courtesy of CHRYSLER GROUP, LLC

1. Measure the voltage between the (X156) Amplified Right Front Door Speaker (-) circuit and ground.

   Is there any voltage present?

   Yes

   - Repair the (X156) Amplified Right Front Door Speaker (-) circuit for a short to voltage.
   - Perform the BODY VERIFICATION TEST. Refer to **STANDARD PROCEDURE** .

No

- Replace the Amplifier in accordance with the Service Information.
- Perform the BODY VERIFICATION TEST. Refer to **STANDARD PROCEDURE** .

B1472-CHANNEL 4 AUDIO SPEAKER OUTPUT CIRCUIT OPEN

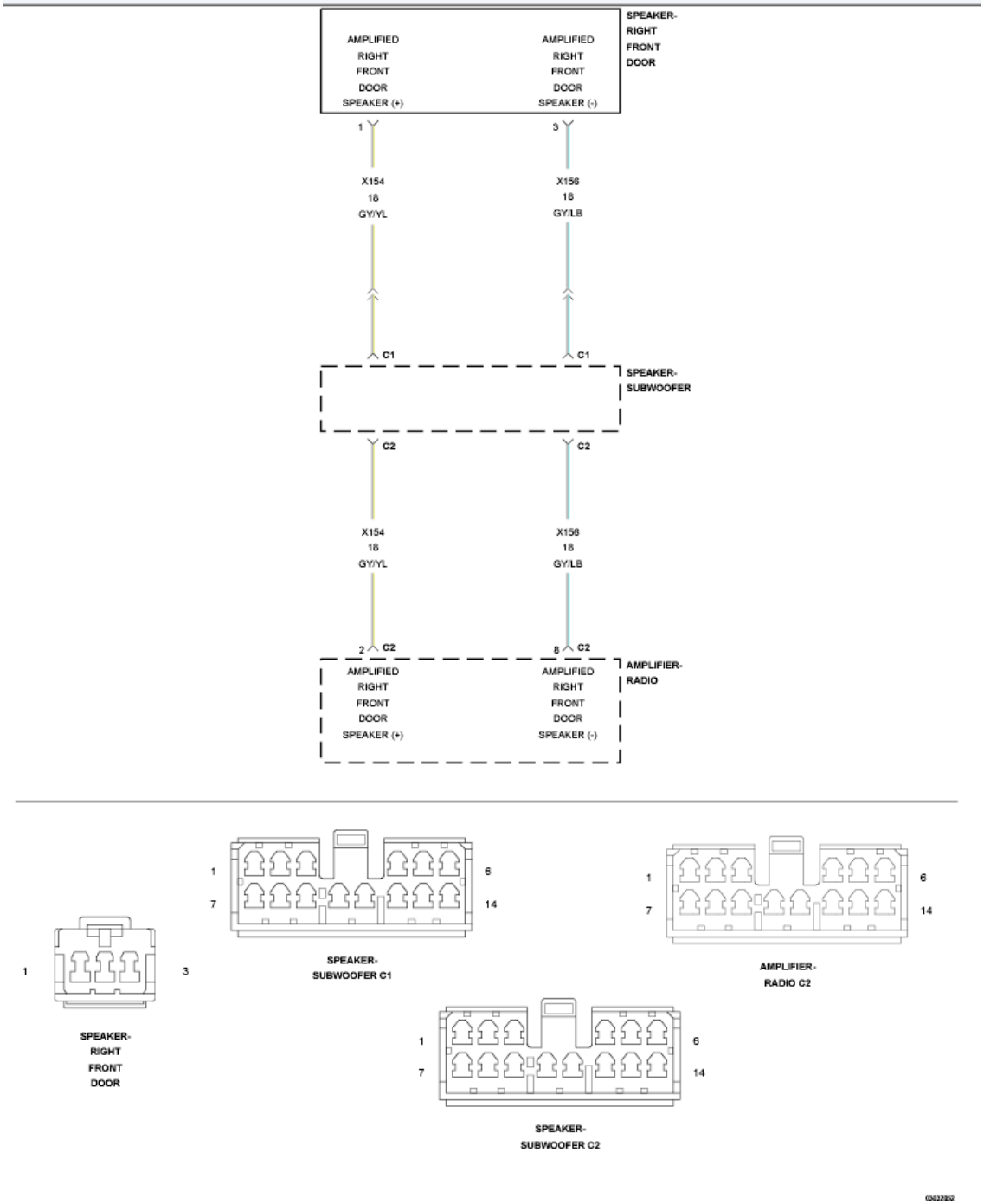

Fig. 50: Right Front Door Speaker Circuit Diagram
Courtesy of CHRYSLER GROUP, LLC

For a complete wiring diagram, **refer to appropriate SYSTEM WIRING DIAGRAMS article** .

WHEN MONITORED

Amplifier BUS wake-up. Amplifier reset with scan tool.

SET CONDITION

The Amplifier detects an open condition on the speaker output circuit.

POSSIBLE CAUSES

Possible Causes
(X154) AMPLIFIED RIGHT FRONT DOOR SPEAKER (+) CIRCUIT OPEN (X156) AMPLIFIED RIGHT FRONT DOOR SPEAKER (-) CIRCUIT OPEN AMPLIFIED RIGHT FRONT DOOR SPEAKER AMPLIFIER

DIAGNOSTIC TEST

1. **CHECK FOR AN INTERMITTENT CONDITION**
   1. Turn the ignition on and open one of the front doors.

      NOTE: A front door must remain open whenever checking or erasing Amplifier DTCs.

   2. Using the scan tool, record and erase the Amplifier DTCs.
   3. Cycle the ignition switch from on to off, wait five seconds and then back to on.
   4. Turn the Radio on and set the volume to 25.
   5. Adjust the speakers to the front and center.
   6. Using the scan tool, read the active Amplifier DTCs.

      Does the scan tool display active: B1472-CHANNEL 4 AUDIO SPEAKER OUTPUT CIRCUIT OPEN?

      Yes

- Go To 2

No

- Test complete, the condition or conditions that originally set this DTC are not present at this time. Using the wiring diagrams as a guide, check all related splices and connectors for signs of water intrusion, corrosion, pushed out or bent terminals and correct pin tension.
- Perform the BODY VERIFICATION TEST. Refer to **STANDARD PROCEDURE** .

2. **CHECK THE OPERATION OF THE AMPLIFIED RIGHT FRONT SPEAKER**

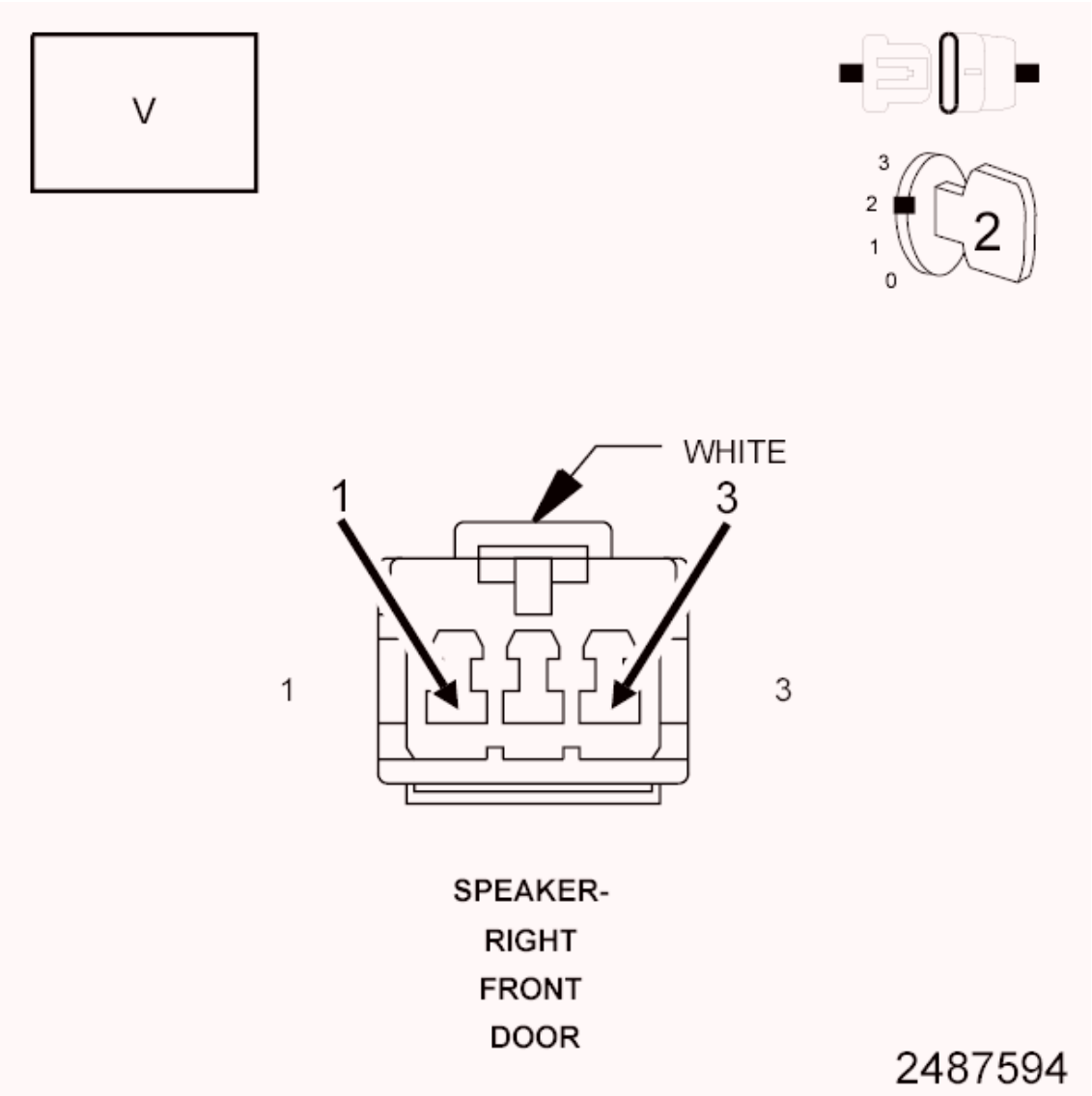

Fig. 51: Checking Operation Of Right Front Door Speaker
Courtesy of CHRYSLER GROUP, LLC

1. Turn the ignition off.
2. Disconnect the Amplified Right Front Speaker harness connector.
3. Turn the ignition on.
4. Turn the radio on and turn the volume to mid level.
5. Adjust the speakers to the front and center.
6. With a voltmeter set to read in A/C voltage, measure the voltage of the Amplified Right Front Door Speaker circuits in the Amplified Right Front Door Speaker harness connector.

   Is the voltage above 1 volt?

   Yes

   - Replace the Amplified Right Front Door Speaker in accordance with the Service Information.
   - Perform the BODY VERIFICATION TEST. Refer to **STANDARD PROCEDURE** .

   No

   - Go To 3

3. **CHECK THE (X154) AMPLIFIED RIGHT FRONT DOOR SPEAKER (+) CIRCUIT FOR AN OPEN**

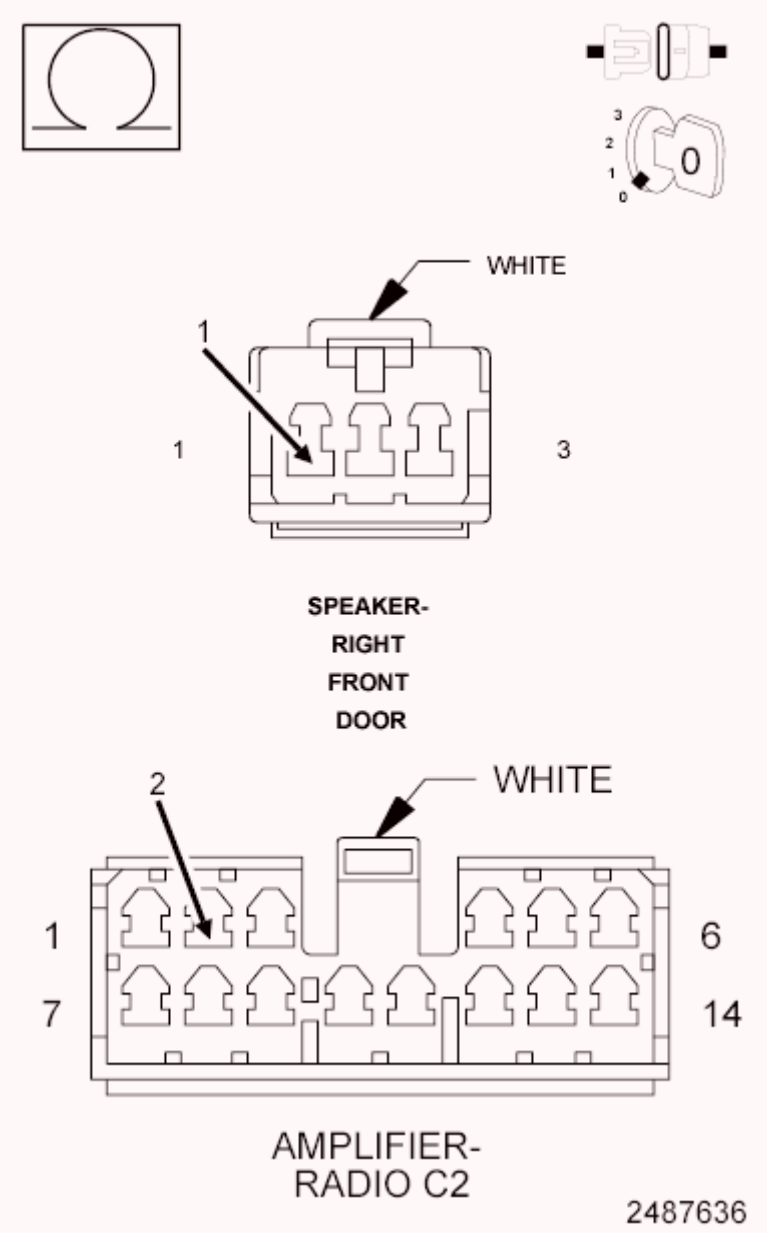

Fig. 52: Measuring Resistance Of Amplified Right Front Door Speaker (+) Circuit
Courtesy of CHRYSLER GROUP, LLC

1. Turn the ignition off.
2. Disconnect the Amplifier C2 harness connector.
3. Measure the resistance of the (X154) Amplified Right Front Door Speaker (+) circuit between the Amplifier C2 harness connector and the Amplified Right Front Door Speaker harness connector.

   Is the resistance below 2.0 Ohms?

Yes

- Go To 4

No

- Repair the (X154) Amplified Right Front Door Speaker (+) circuit for an open.
- Perform the BODY VERIFICATION TEST. Refer to **STANDARD PROCEDURE** .

4. **CHECK THE (X156) AMPLIFIED RIGHT FRONT DOOR SPEAKER (-) CIRCUIT FOR AN OPEN**

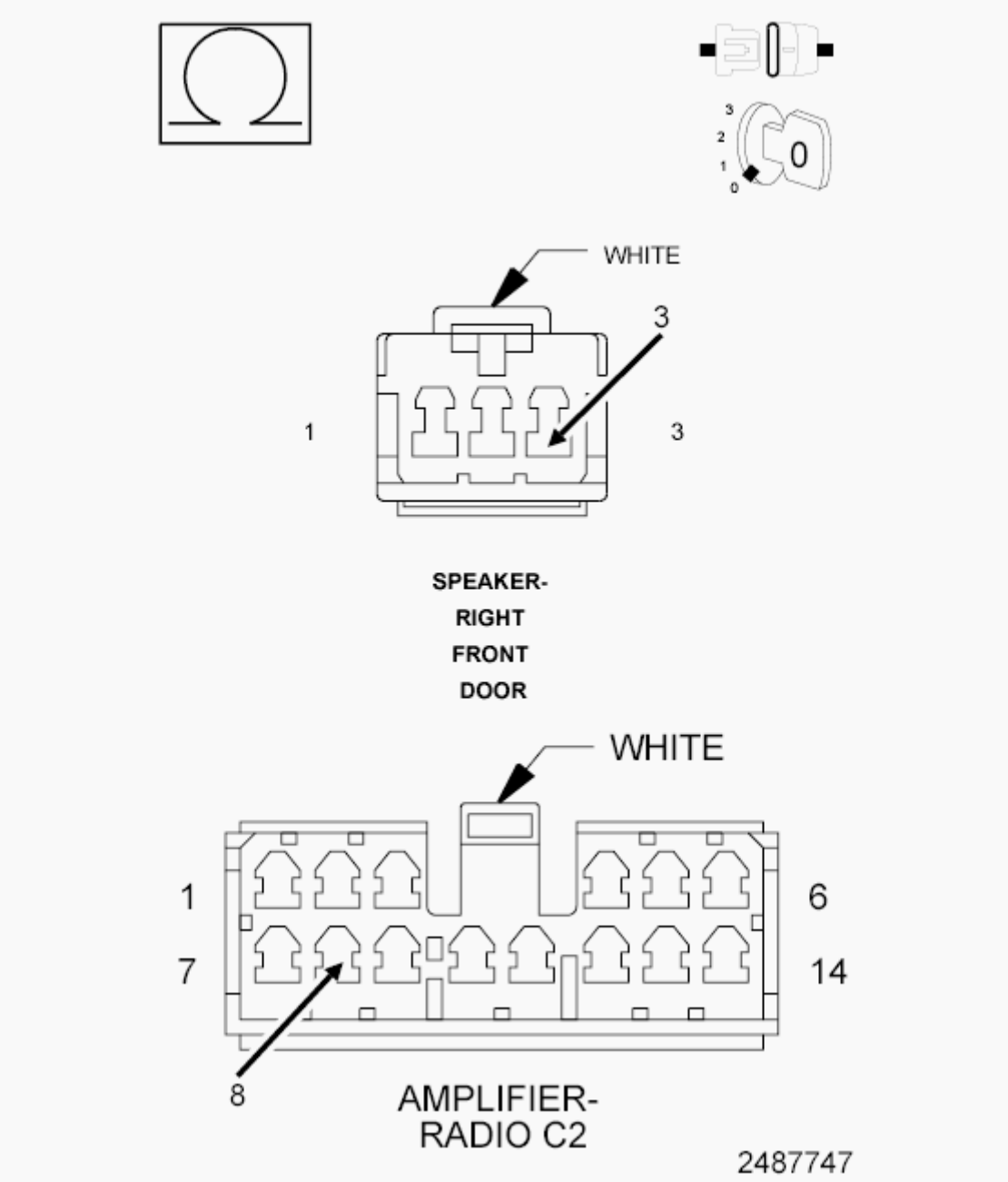

Fig. 53: Measuring Resistance Of Amplified Right Front Door Speaker (-) Circuit
Courtesy of CHRYSLER GROUP, LLC

1. Measure the resistance of the (X156) Amplified Right Front Door Speaker (-) circuit between the Amplifier C2 harness connector and the Amplified Right Front Door Speaker harness connector.

   Is the resistance below 2.0 Ohms?

   Yes

- Replace the Amplifier in accordance with the Service Information.
- Perform the BODY VERIFICATION TEST. Refer to **STANDARD PROCEDURE** .

No

- Repair the (X156) Amplified Right Front Door Speaker (-) circuit for an open.
- Perform the BODY VERIFICATION TEST. Refer to **STANDARD PROCEDURE** .

B1473-CHANNEL 4 AUDIO SPEAKER OUTPUT CIRCUIT SHORTED TOGETHER

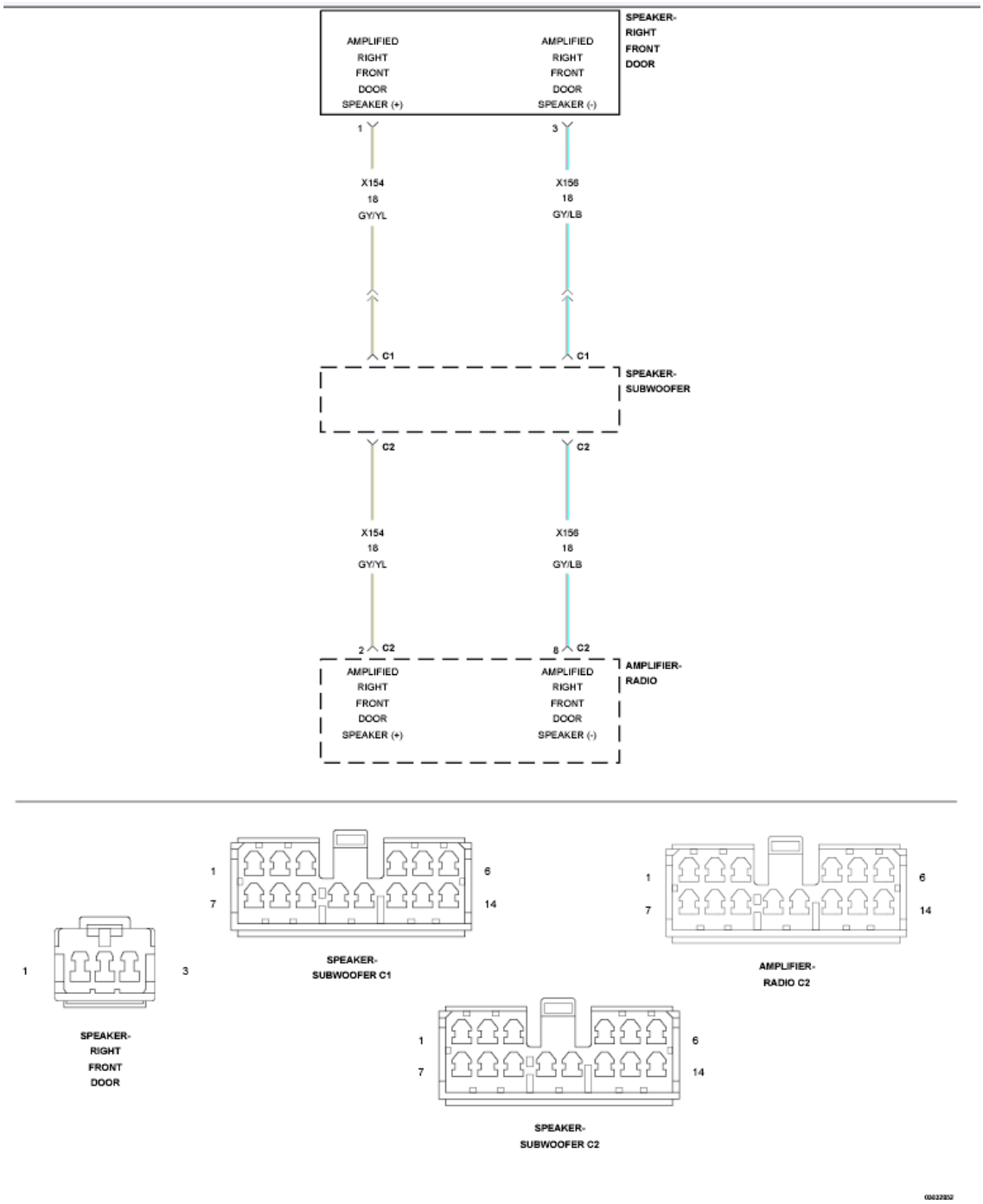

Fig. 54: Right Front Door Speaker Circuit Diagram
Courtesy of CHRYSLER GROUP, LLC

For a complete wiring diagram, **refer to appropriate SYSTEM WIRING DIAGRAMS article** .

WHEN MONITORED

With the ignition on. Radio volume at 25 or higher.

SET CONDITION

The Amplifier detects that the output circuits are shorted together.

POSSIBLE CAUSES

Possible Causes
(X154) AMPLIFIED RIGHT FRONT DOOR SPEAKER (+) CIRCUIT SHORTED TO THE (X156) AMPLIFIED RIGHT FRONT DOOR SPEAKER (-) CIRCUIT AMPLIFIED RIGHT FRONT DOOR SPEAKER AMPLIFIER

DIAGNOSTIC TEST

1. **CHECK FOR AN INTERMITTENT CONDITION**
   1. Turn the ignition on and open one of the front doors.

      NOTE: A front door must remain open whenever checking or erasing Amplifier DTCs.

   2. Using the scan tool, record and erase the Amplifier DTCs.
   3. Cycle the ignition switch from on to off, wait five seconds and then back to on.
   4. Turn the Radio on and set the volume to 25.
   5. Adjust the speakers to the front and center.
   6. Using the scan tool, read the active Amplifier DTCs.

      Does the scan tool display active: B1473-CHANNEL 4 AUDIO SPEAKER OUTPUT CIRCUIT SHORTED TOGETHER?

      Yes

      - Go To 2

      No

      - Test complete, the condition or conditions that originally set this DTC are not present at this time. Using the wiring diagrams as a guide, check all related splices and connectors for signs of water

intrusion, corrosion, pushed out or bent terminals and correct pin tension.

- Perform the BODY VERIFICATION TEST. Refer to **STANDARD PROCEDURE** .

2. **CHECK THE OPERATION OF THE AMPLIFIED RIGHT FRONT DOOR SPEAKER**

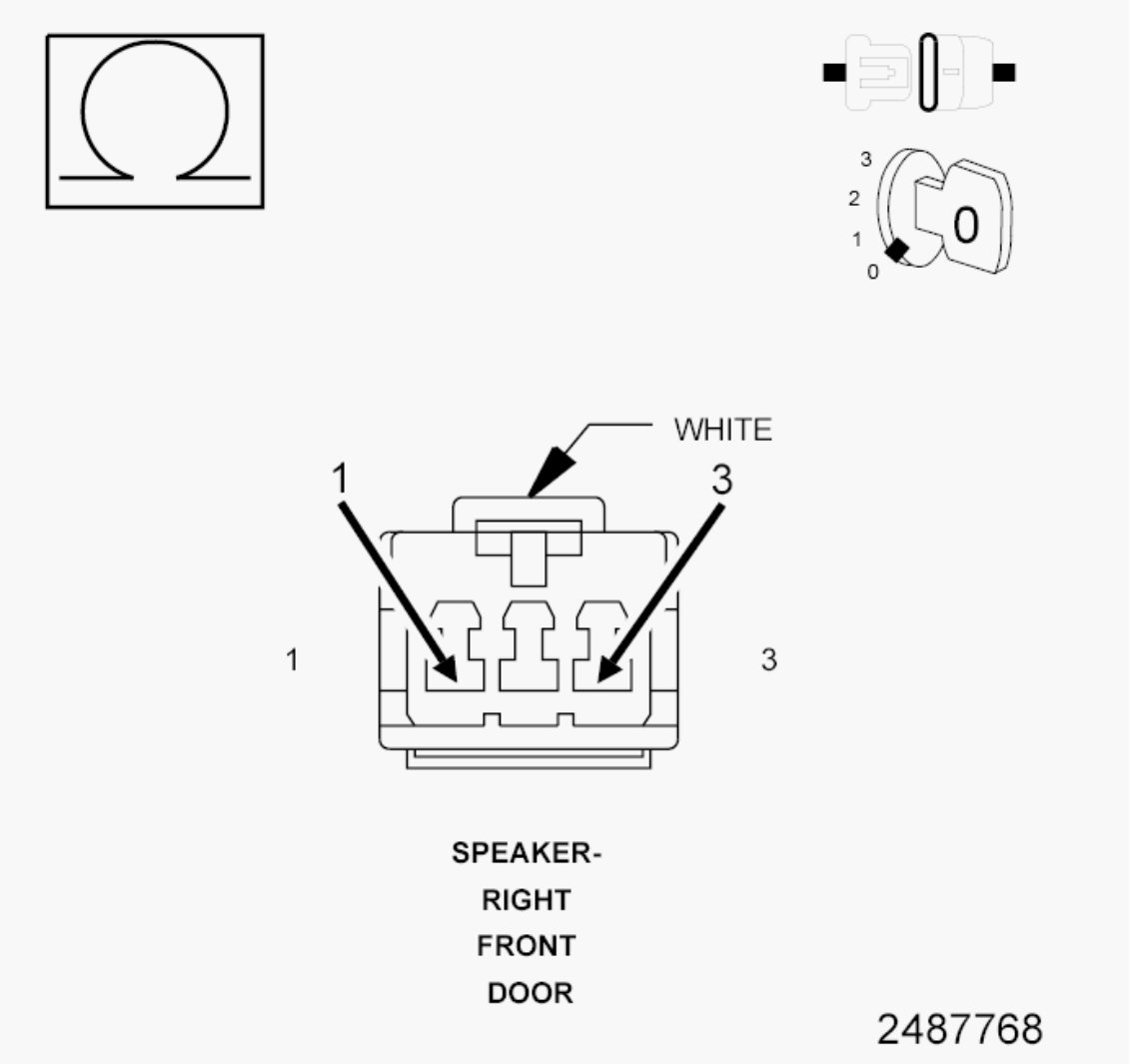

Fig. 55: Checking The Operation Of The Right Front Door Speaker
Courtesy of CHRYSLER GROUP, LLC

1. Turn the ignition off.
2. Disconnect the Amplified Right Front Door Speaker harness connector.
3. Measure the resistance of the speaker between the two terminals.

NOTE: The graphic shows the connector for reference

only. Measure between the speaker terminals

Is the resistance of the speaker less than 1 Ohm?

Yes

- Replace the Amplified Right Front Door Speaker in accordance with the Service Information.
- Perform the BODY VERIFICATION TEST. Refer to **STANDARD PROCEDURE** .

No

- Go To 3

3. **CHECK THE (X154) AMPLIFIED RIGHT FRONT DOOR SPEAKER (+) CIRCUIT, AND THE (X156) AMPLIFIED RIGHT FRONT DOOR SPEAKER (-) CIRCUITS FOR A SHORT TOGETHER**

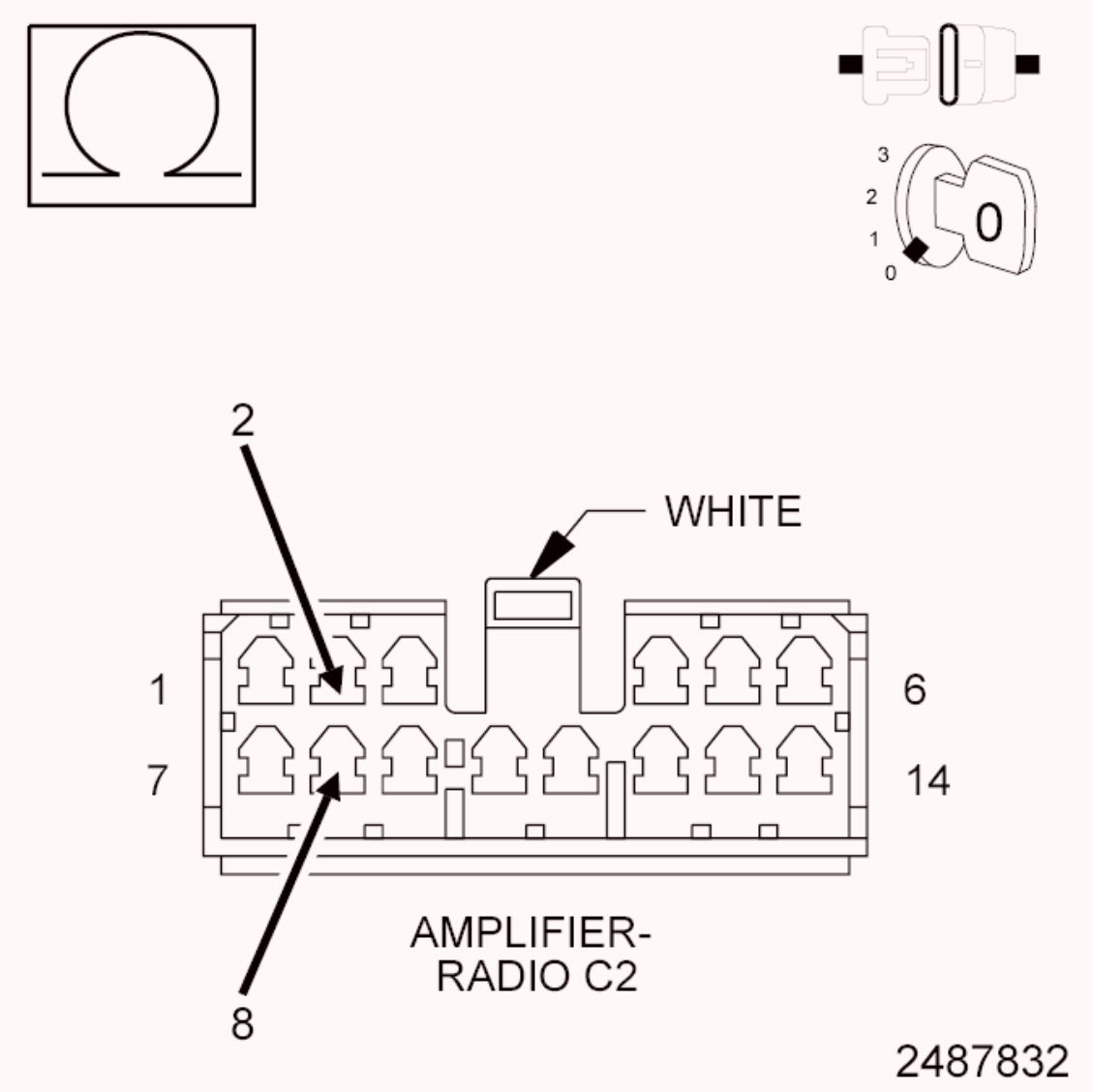

Fig. 56: Measuring Resistance Between Amplified Right Front Door Speaker (+) Circuit & Amplified Right Front Door Speaker (-) Circuit
Courtesy of CHRYSLER GROUP, LLC

1. Disconnect the Amplifier C2 harness connector.
2. Measure the resistance between the (X154) Amplified Right Front Door Speaker (+) circuit, and the (X156) Amplified Right Front Door Speaker (-) circuit.

   Is the resistance below 10K Ohms?

   Yes

   - Repair the (X154) Amplified Right Front Door Speaker (+) circuit for a short to the (X156) Amplified Right Front Door Speaker (-)

circuit.

- Perform the BODY VERIFICATION TEST. Refer to **STANDARD PROCEDURE** .

No

- Replace the Amplifier in accordance with the Service Information.
- Perform the BODY VERIFICATION TEST. Refer to **STANDARD PROCEDURE** .

B1474-CHANNEL 5 AUDIO SPEAKER OUTPUT CIRCUIT PERFORMANCE

For a complete wiring diagram, **refer to appropriate SYSTEM WIRING DIAGRAMS article** .

WHEN MONITORED

With the ignition on.

SET CONDITION

This Diagnostic Trouble Code (DTC) sets if a Direct Current (DC) offset occurs on the output channel, the Amplifier shall set a DTC after a maturity rate of four to six seconds.

POSSIBLE CAUSES

Possible Causes
AMPLIFIER

DIAGNOSTIC TEST

CHECK FOR AN INTERMITTENT CONDITION

1. Turn the ignition on and open one of the front doors.

NOTE: A front door must remain open whenever checking or erasing Amplifier DTCs.

2. Using the scan tool, record and erase the Amplifier DTCs.
3. Cycle the ignition switch from on to off, wait five seconds and then back to on.

4. Turn the Radio on and set the volume to 25.
5. Adjust the speakers to the rear and center.
6. Using the scan tool, read the active Amplifier DTCs.

   Does the scan tool display active: B1474-CHANNEL 5 AUDIO SPEAKER OUTPUT CIRCUIT PERFORMANCE?

   Yes

   - Replace the Amplifier in accordance with the Service Information.
   - Perform the BODY VERIFICATION TEST. Refer to **STANDARD PROCEDURE** .

   No

   - Test complete, the condition or conditions that originally set this DTC are not present at this time. Using the wiring diagrams as a guide, check all related splices and connectors for signs of water intrusion, corrosion, pushed out or bent terminals and correct pin tension.
   - Perform the BODY VERIFICATION TEST. Refer to **STANDARD PROCEDURE** .

B1475-CHANNEL 5 AUDIO SPEAKER OUTPUT CIRCUIT LOW

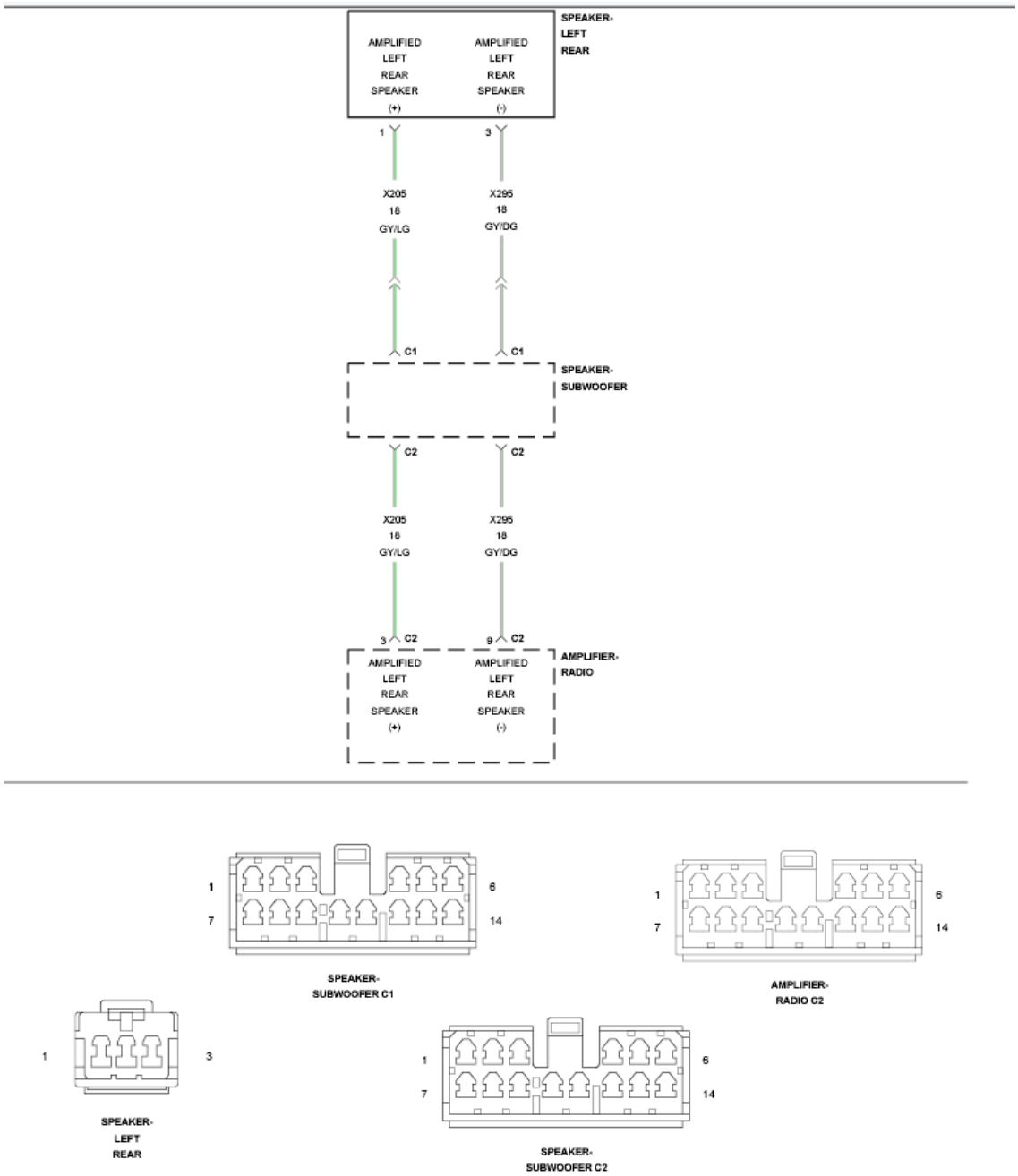

Fig. 57: Left Rear Speaker Circuit Diagram
Courtesy of CHRYSLER GROUP, LLC

For a complete wiring diagram, **refer to appropriate SYSTEM WIRING DIAGRAMS article** .

WHEN MONITORED

With the ignition on.

SET CONDITION

The Amplifier detects a shorted to ground condition on the speaker output circuit.

POSSIBLE CAUSES

Possible Causes
(X205) AMPLIFIED LEFT REAR SPEAKER (+) CIRCUIT SHORTED TO GROUND
(X295) AMPLIFIED LEFT REAR SPEAKER (-) CIRCUIT SHORTED TO GROUND
AMPLIFIED LEFT REAR SPEAKER
AMPLIFIER

DIAGNOSTIC TEST

1. **CHECK FOR AN INTERMITTENT CONDITION**
   1. Turn the ignition on and open one of the front doors.

      NOTE: A front door must remain open whenever checking or erasing Amplifier DTCs.

   2. Using the scan tool, record and erase the Amplifier DTCs.
   3. Cycle the ignition switch from on to off, wait five seconds and then back to on.
   4. Turn the Radio on and set the volume to 25.
   5. Adjust the speakers to the rear and center.
   6. Using the scan tool, read the active Amplifier DTCs.

      Does the scan tool display active: B1475-CHANNEL 5 AUDIO SPEAKER OUTPUT CIRCUIT LOW?

      Yes

      - Go To 3

      No

      - Test complete, the condition or conditions that originally set this DTC are not present at this time. Using the wiring diagrams as a

guide, check all related splices and connectors for signs of water intrusion, corrosion, pushed out or bent terminals and correct pin tension.

- Perform the BODY VERIFICATION TEST. Refer to **STANDARD PROCEDURE** .

2. **LEFT REAR SPEAKER**

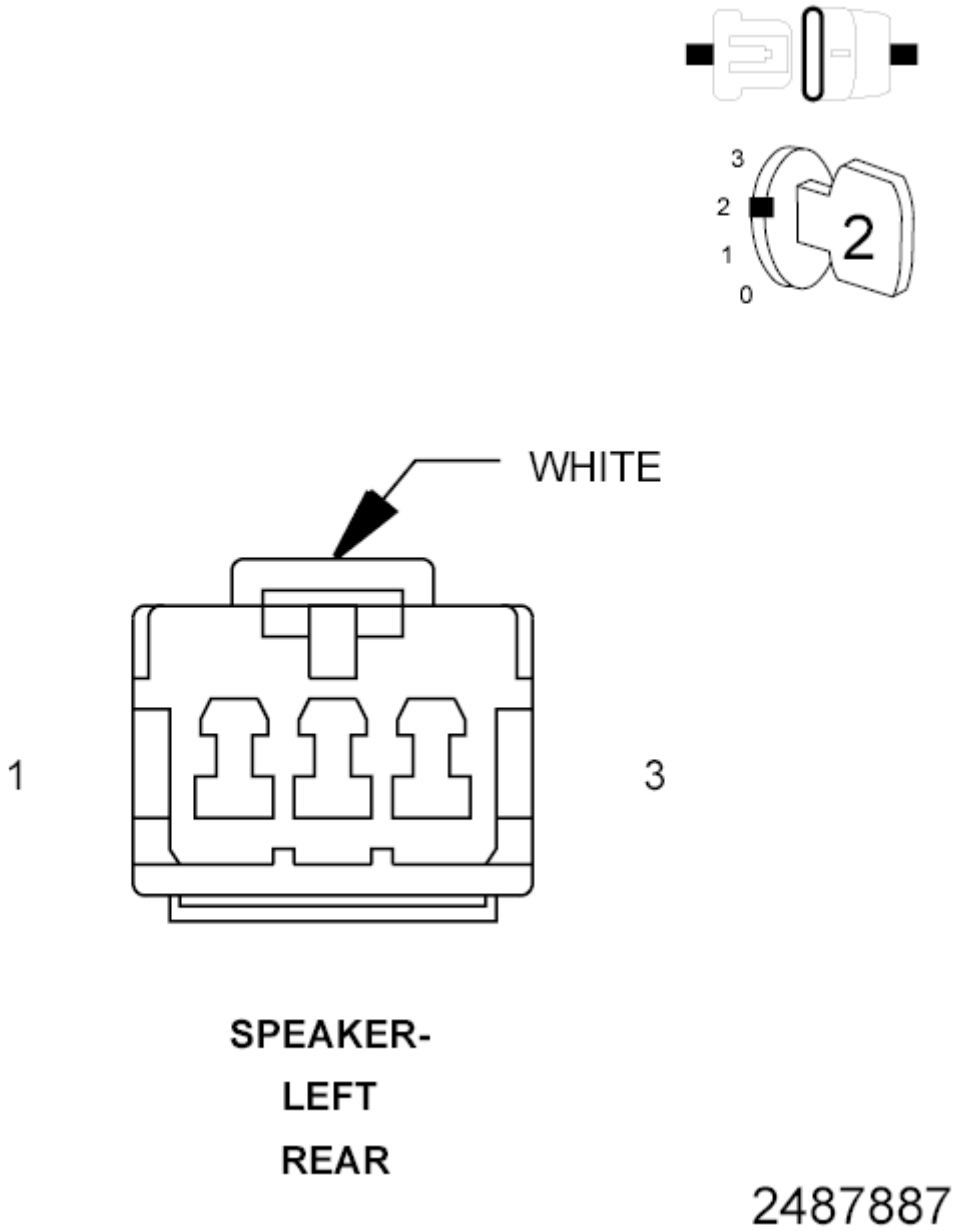

Fig. 58: Checking Left Rear Speaker
Courtesy of CHRYSLER GROUP, LLC

1. With the scan tool, erase the DTCs.

2. Turn the ignition off.
3. Disconnect the Left Rear Speaker harness connector.
4. Turn the ignition on.
5. Turn the radio on and set the volume to 25.
6. Adjust the speakers to the rear and center.
7. With the scan tool, read the active Amplifier DTCs.

   Does the scan tool display active: B1475-CHANNEL 5 AUDIO SPEAKER OUTPUT CIRCUIT LOW?

   Yes

   - Go To 3

   No

   - Replace the Amplified Left Rear Speaker in accordance with the Service Information.
   - Perform the BODY VERIFICATION TEST. Refer to **STANDARD PROCEDURE** .

3. **CHECK THE (X205) AMPLIFIED LEFT REAR SPEAKER (+) CIRCUIT FOR A SHORT TO GROUND**

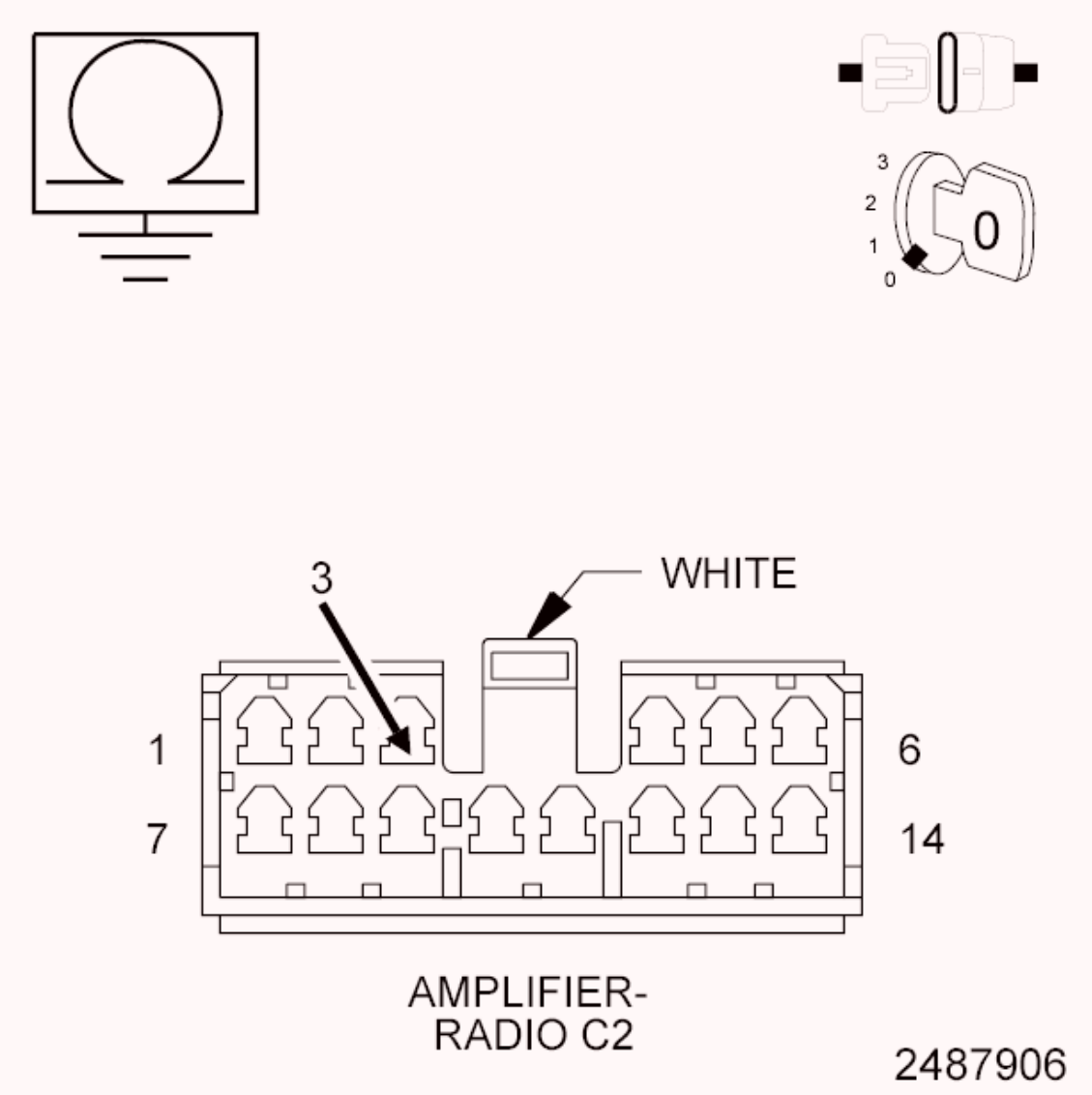

Fig. 59: Measuring Resistance Between Ground & Amplified Left Rear Speaker (+) Circuit
Courtesy of CHRYSLER GROUP, LLC

1. Turn the ignition off.
2. Disconnect the Amplifier C2 harness connector.
3. Measure the resistance between ground and the (X205) Amplified Left Rear Speaker (+) circuit.

   Is the resistance below 10K Ohms?

   Yes

   - Repair the (X205) Amplified Left Rear Speaker (+) circuit for a short to ground.

- Perform the BODY VERIFICATION TEST. Refer to **STANDARD PROCEDURE** .

No

- Go To 4

4. **CHECK THE (X295) AMPLIFIED LEFT REAR SPEAKER (-) CIRCUIT FOR A SHORT TO GROUND**

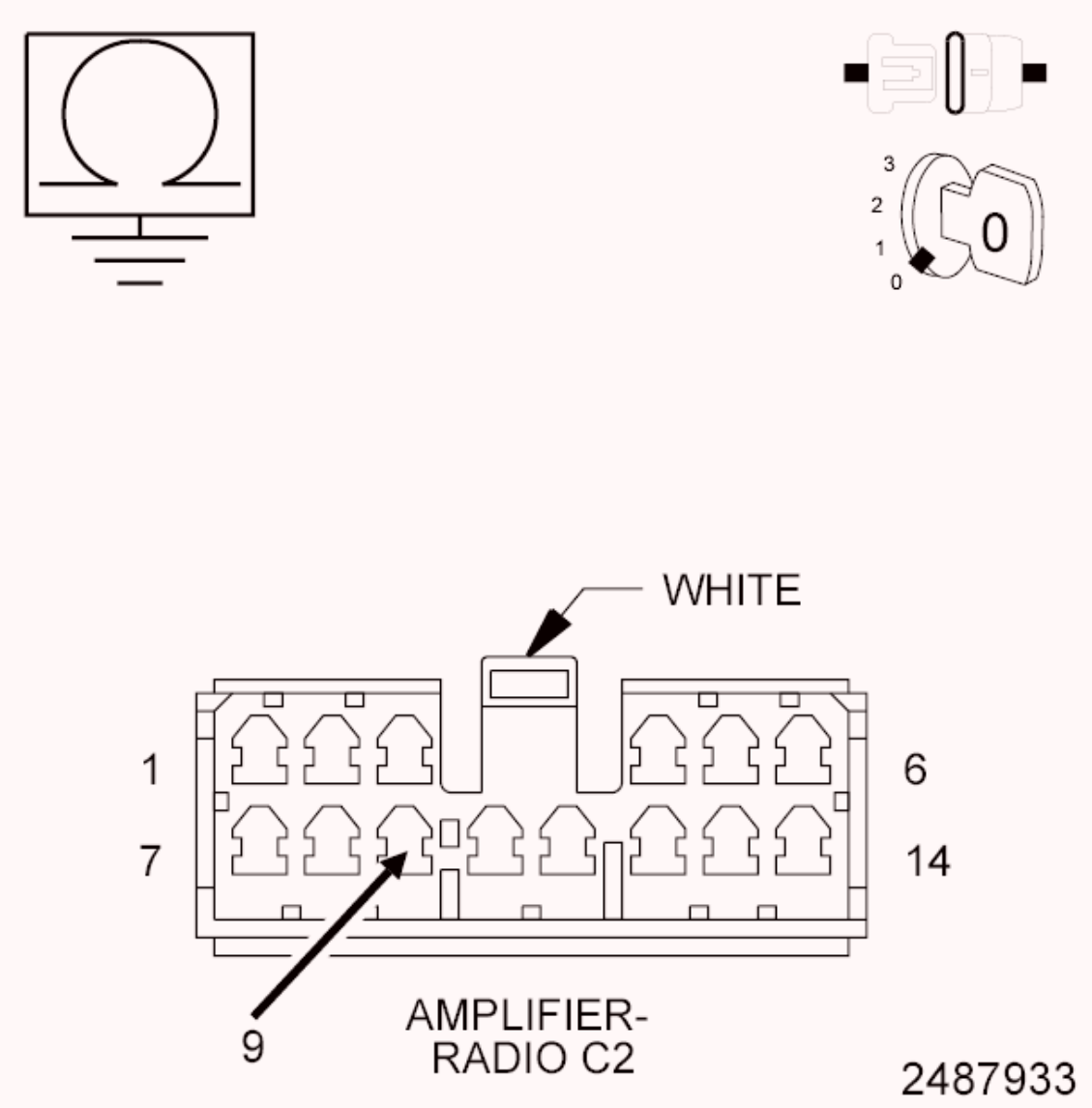

Fig. 60: Measuring Resistance Between Ground & Amplified Left Rear Speaker (-) Circuit
Courtesy of CHRYSLER GROUP, LLC

1. Measure the resistance between ground and the (X295) Amplified Left

Rear Speaker (-) circuit.

Is the resistance below 10K Ohms?

Yes

- Repair the (X295) Amplified Left Rear Speaker (-) for a short to ground.
- Perform the BODY VERIFICATION TEST. Refer to **STANDARD PROCEDURE** .

No

- Replace the Amplifier in accordance with the Service Information.
- Perform the BODY VERIFICATION TEST. Refer to **STANDARD PROCEDURE** .

B1476-CHANNEL 5 AUDIO SPEAKER OUTPUT CIRCUIT HIGH

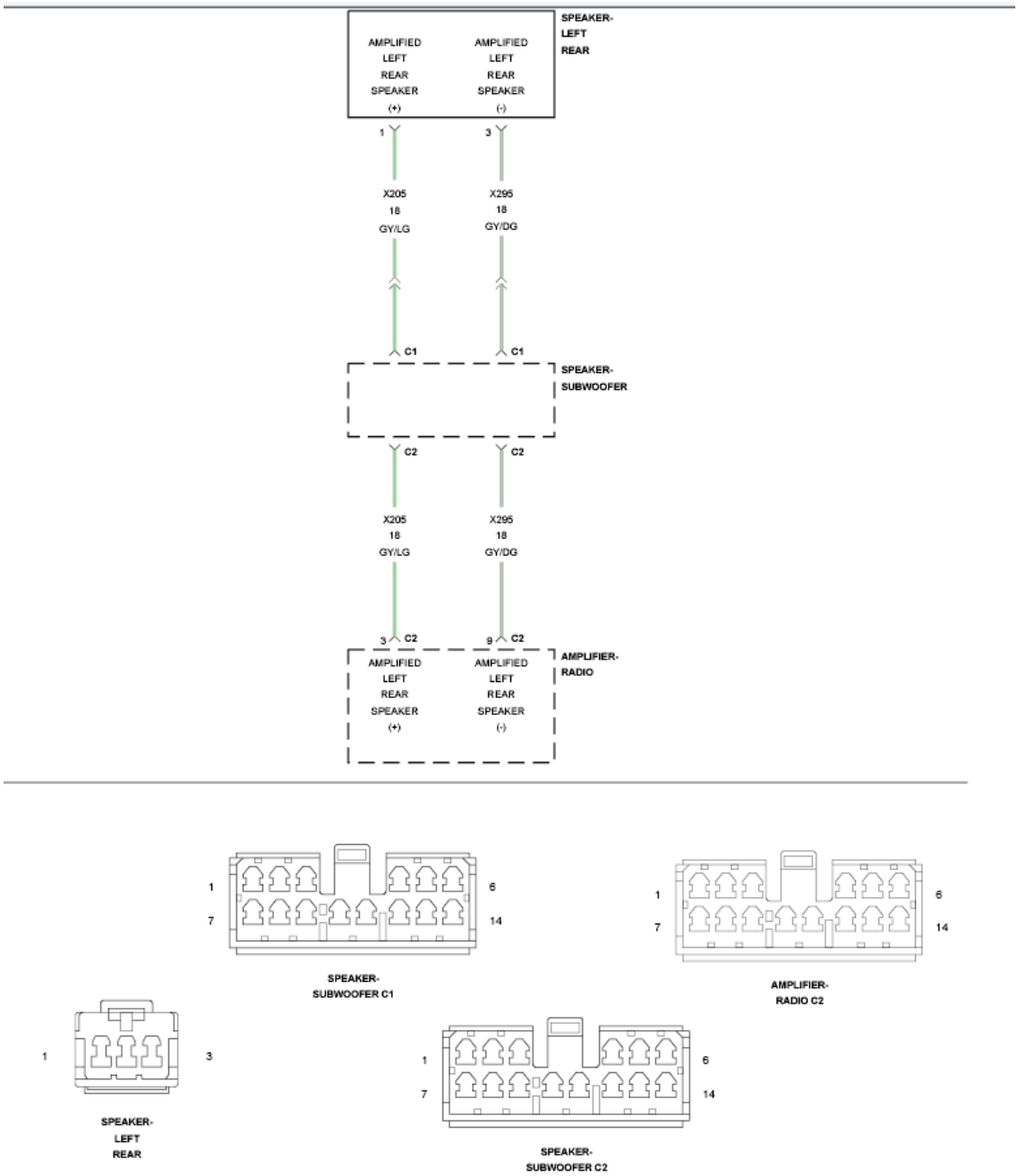

Fig. 61: Left Rear Speaker Circuit Diagram
Courtesy of CHRYSLER GROUP, LLC

For a complete wiring diagram, **refer to appropriate SYSTEM WIRING DIAGRAMS article** .

WHEN MONITORED

With the ignition on.

SET CONDITION

The Amplifier detects a short to battery condition on the output circuit.

POSSIBLE CAUSES

Possible Causes
(X205) AMPLIFIED LEFT REAR SPEAKER (+) CIRCUIT SHORTED TO VOLTAGE (X295) AMPLIFIED LEFT REAR SPEAKER (-) CIRCUIT SHORTED TO VOLTAGE AMPLIFIER

DIAGNOSTIC TEST

1. **CHECK FOR AN INTERMITTENT CONDITION**
   1. Turn the ignition on and open one of the front doors.

      NOTE: A front door must remain open whenever checking or erasing Amplifier DTCs.

   2. Using the scan tool, record and erase the Amplifier DTCs.
   3. Cycle the ignition switch from on to off, wait five seconds and then back to on.
   4. Turn the Radio on and set the volume to 25.
   5. Adjust the speakers to the rear and center.
   6. Using the scan tool, read the active Amplifier DTCs.

      Does the scan tool display active: B1476-CHANNEL 5 AUDIO SPEAKER OUTPUT CIRCUIT HIGH?

      Yes

      - Go To 2

      No

      - Test complete, the condition or conditions that originally set this DTC are not present at this time. Using the wiring diagrams as a guide, check all related splices and connectors for signs of water intrusion, corrosion, pushed out or bent terminals and correct pin

tension.

- Perform the BODY VERIFICATION TEST. Refer to **STANDARD PROCEDURE** .

2. **CHECK FOR VOLTAGE ON THE (X205) AMPLIFIED LEFT REAR SPEAKER (+) CIRCUIT**

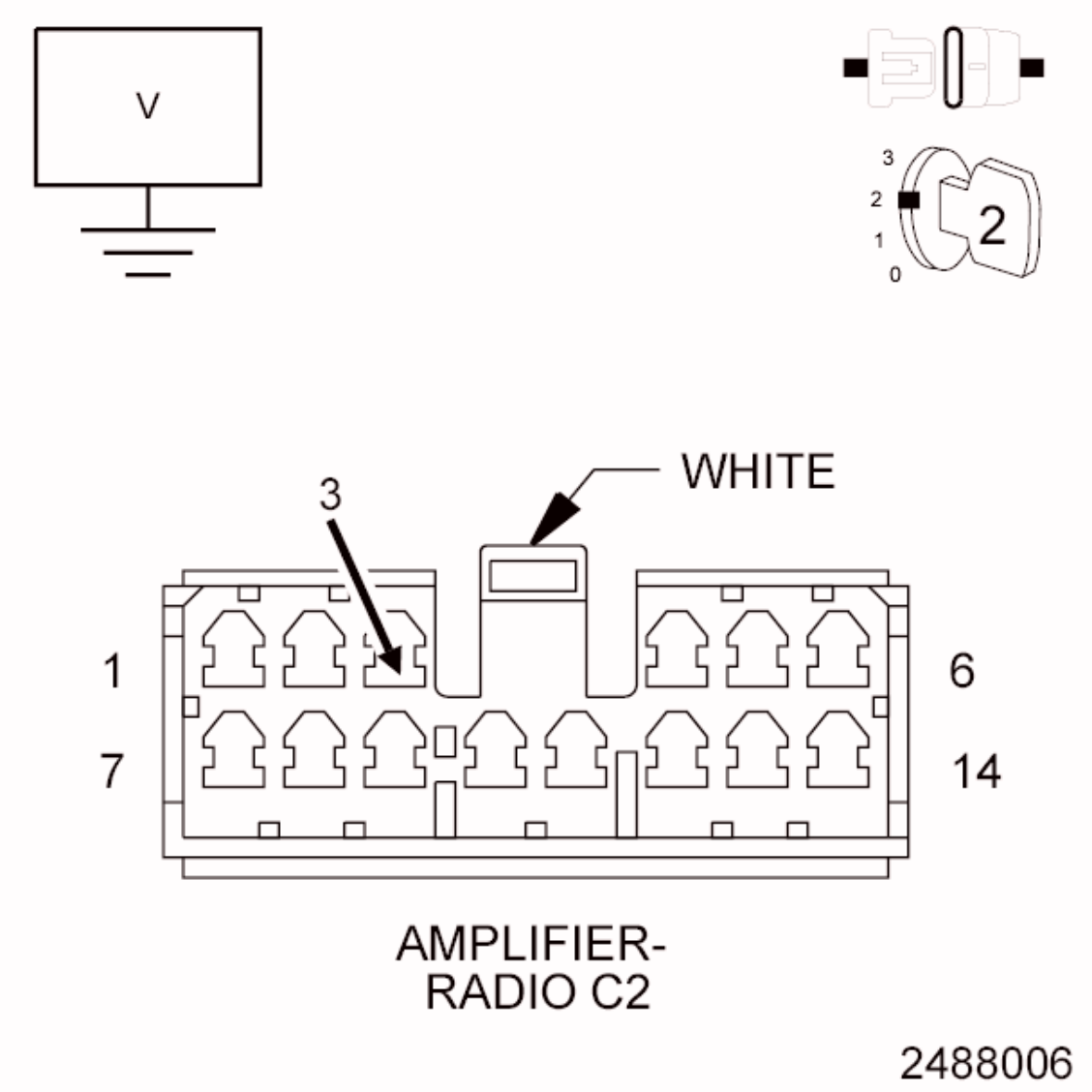

Fig. 62: Measuring Voltage Between Amplified Left Rear Speaker (+) Circuit & Ground
Courtesy of CHRYSLER GROUP, LLC

1. Turn the ignition off.
2. Disconnect the Amplifier C2 harness connector.
3. Turn the ignition on.
4. Measure the voltage between the (X205) Amplified Left Rear Speaker

(+) circuit and ground.

Is there any voltage present?

Yes

- Repair the (X205) Amplified Left Rear Speaker (+) circuit for a short to voltage.
- Perform the BODY VERIFICATION TEST. Refer to **STANDARD PROCEDURE** .

No

- Go To 3

3. **CHECK FOR VOLTAGE ON THE (X295) AMPLIFIED LEFT REAR SPEAKER (-) CIRCUIT**

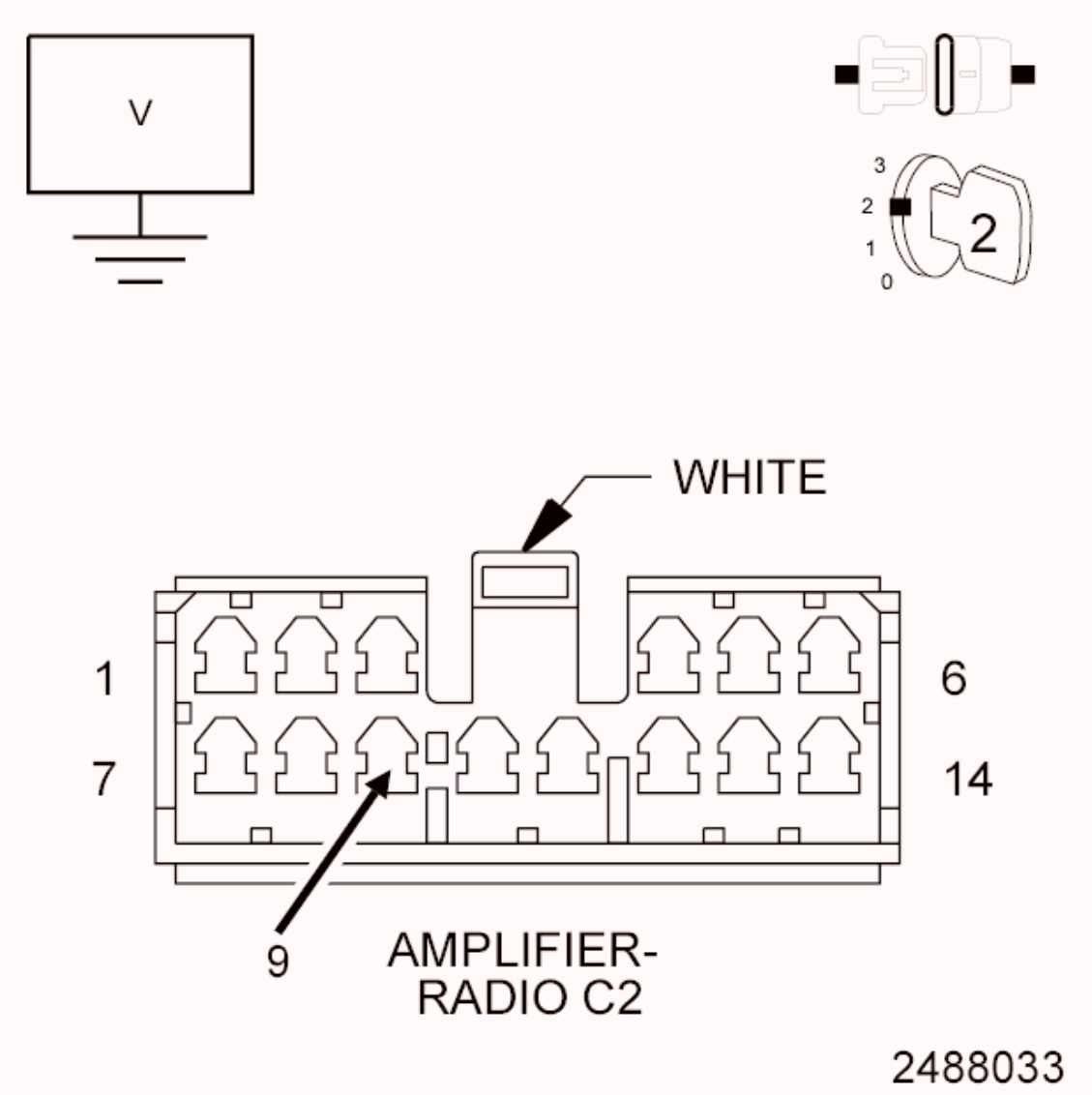

Fig. 63: Measuring Voltage Between Amplified Left Rear Speaker (-) Circuit & Ground
Courtesy of CHRYSLER GROUP, LLC

1. Measure the voltage between the (X295) Amplified Left Rear Speaker (-) circuit and ground.

   Is there any voltage present?

   Yes

   - Repair the (X295) Amplified Left Rear Speaker (-) circuit for a short to voltage.
   - Perform the BODY VERIFICATION TEST. Refer to **STANDARD PROCEDURE** .

No

- Replace the Amplifier in accordance with the Service Information.
- Perform the BODY VERIFICATION TEST. Refer to **STANDARD PROCEDURE** .

B1477-CHANNEL 5 AUDIO SPEAKER OUTPUT CIRCUIT OPEN

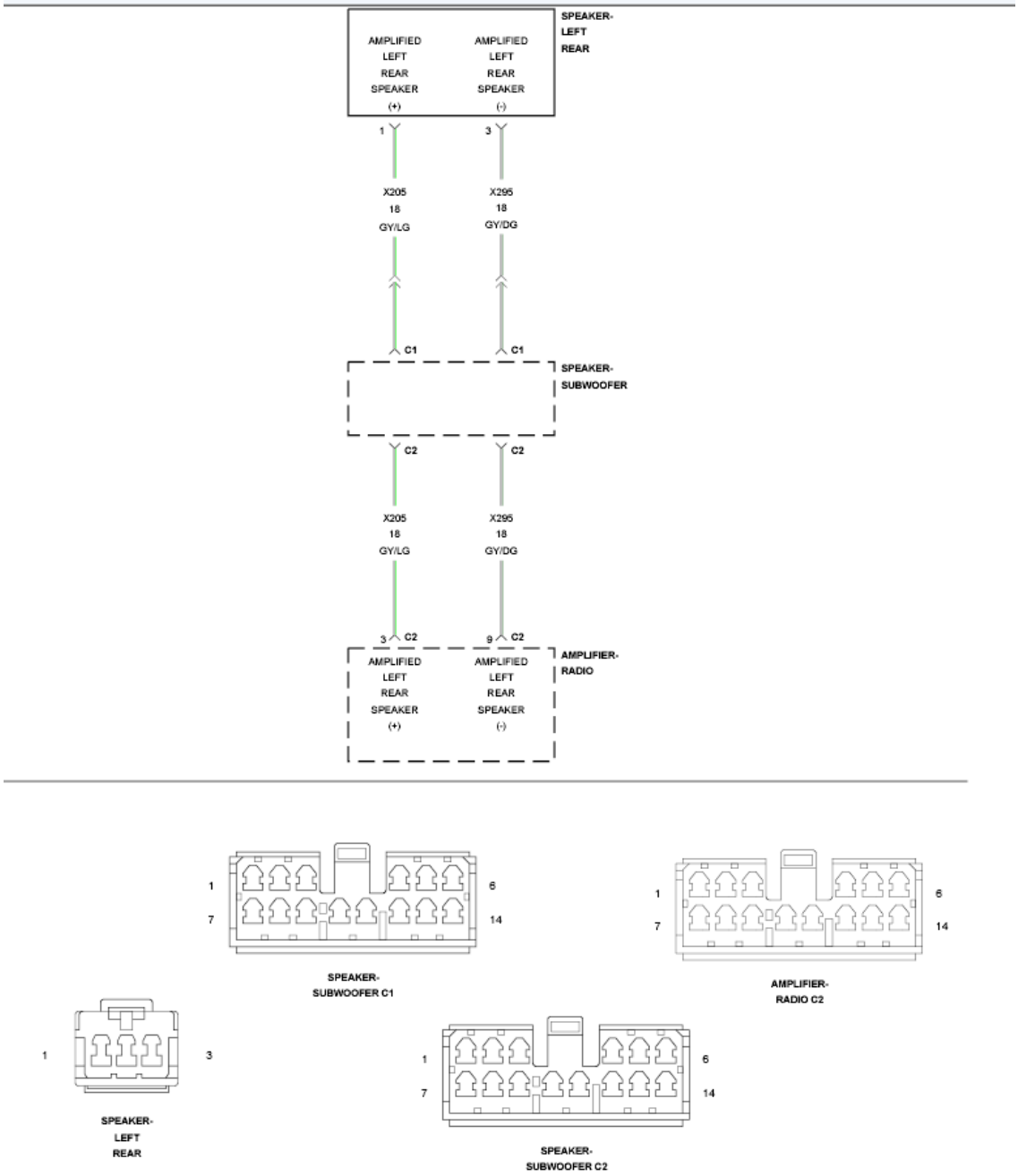

Fig. 64: Left Rear Speaker Circuit Diagram
Courtesy of CHRYSLER GROUP, LLC

For a complete wiring diagram, **refer to appropriate SYSTEM WIRING DIAGRAMS article** .

WHEN MONITORED

Amplifier BUS wake-up. Amplifier reset with scan tool.

SET CONDITION

The Amplifier detects an open condition on the speaker output circuit.

POSSIBLE CAUSES

Possible Causes
(X205) AMPLIFIED LEFT REAR SPEAKER (+) CIRCUIT OPEN (X295) AMPLIFIED LEFT REAR SPEAKER (-) CIRCUIT OPEN AMPLIFIED LEFT REAR SPEAKER AMPLIFIER

DIAGNOSTIC TEST

1. **CHECK FOR AN INTERMITTENT CONDITION**
   1. Turn the ignition on and open one of the front doors.

      NOTE: A front door must remain open whenever checking or erasing Amplifier DTCs.

   2. Using the scan tool, record and erase the Amplifier DTCs.
   3. Cycle the ignition switch from on to off, wait five seconds and then back to on.
   4. Turn the Radio on and set the volume to 25.
   5. Adjust the speakers to the rear and center.
   6. Using the scan tool, read the active Amplifier DTCs.

      Does the scan tool display active: B1477-CHANNEL 5 AUDIO SPEAKER OUTPUT CIRCUIT OPEN?

      Yes

      - Go To 2

No

- Test complete, the condition or conditions that originally set this DTC are not present at this time. Using the wiring diagrams as a guide, check all related splices and connectors for signs of water intrusion, corrosion, pushed out or bent terminals and correct pin tension.
- Perform the BODY VERIFICATION TEST. Refer to **STANDARD PROCEDURE** .

2. **CHECK THE OPERATION OF THE AMPLIFIED LEFT REAR SPEAKER**

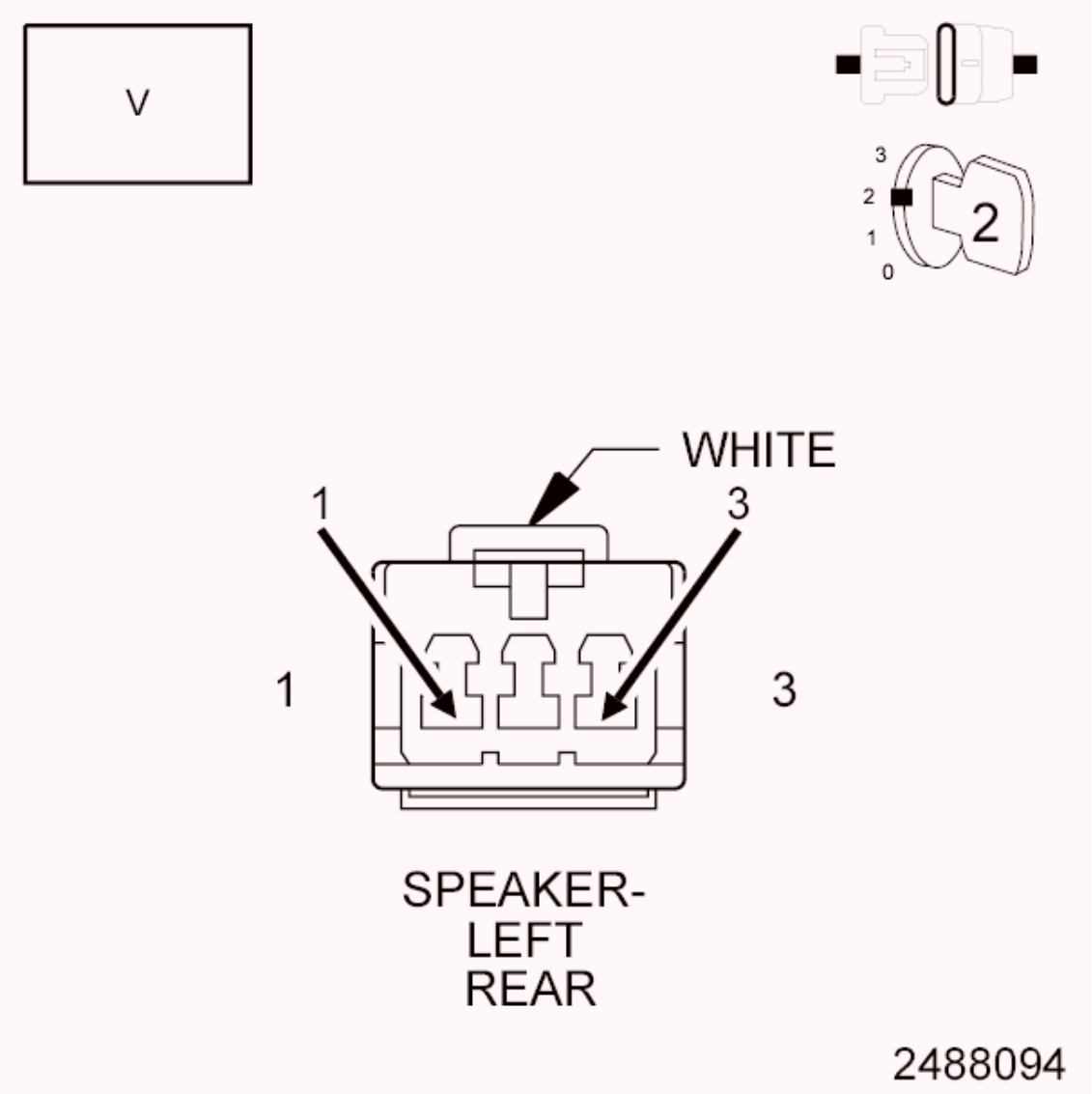

Fig. 65: Measuring Voltage Of Amplified L-Rear Speaker Circuits In Amplified Left Rear Speaker Harness Connector

Courtesy of CHRYSLER GROUP, LLC

1. Turn the ignition off.
2. Disconnect the Amplified Left Rear Speaker harness connector.
3. Turn the ignition on.
4. Turn the radio on and turn the volume to mid level.
5. Adjust the speakers to the rear and center.
6. With a voltmeter set to read in A/C voltage, measure the voltage of the Amplified Left Rear Speaker circuits in the Amplified Left Rear Speaker harness connector.

   Is the voltage present greater than 1 volt?

   Yes

   - Replace the Amplified Left Rear Speaker in accordance with the Service Information.
   - Perform the BODY VERIFICATION TEST. Refer to **STANDARD PROCEDURE** .

   No

   - Go To 3

3. **CHECK THE (X205) AMPLIFIED LEFT REAR SPEAKER (+) CIRCUIT FOR AN OPEN**

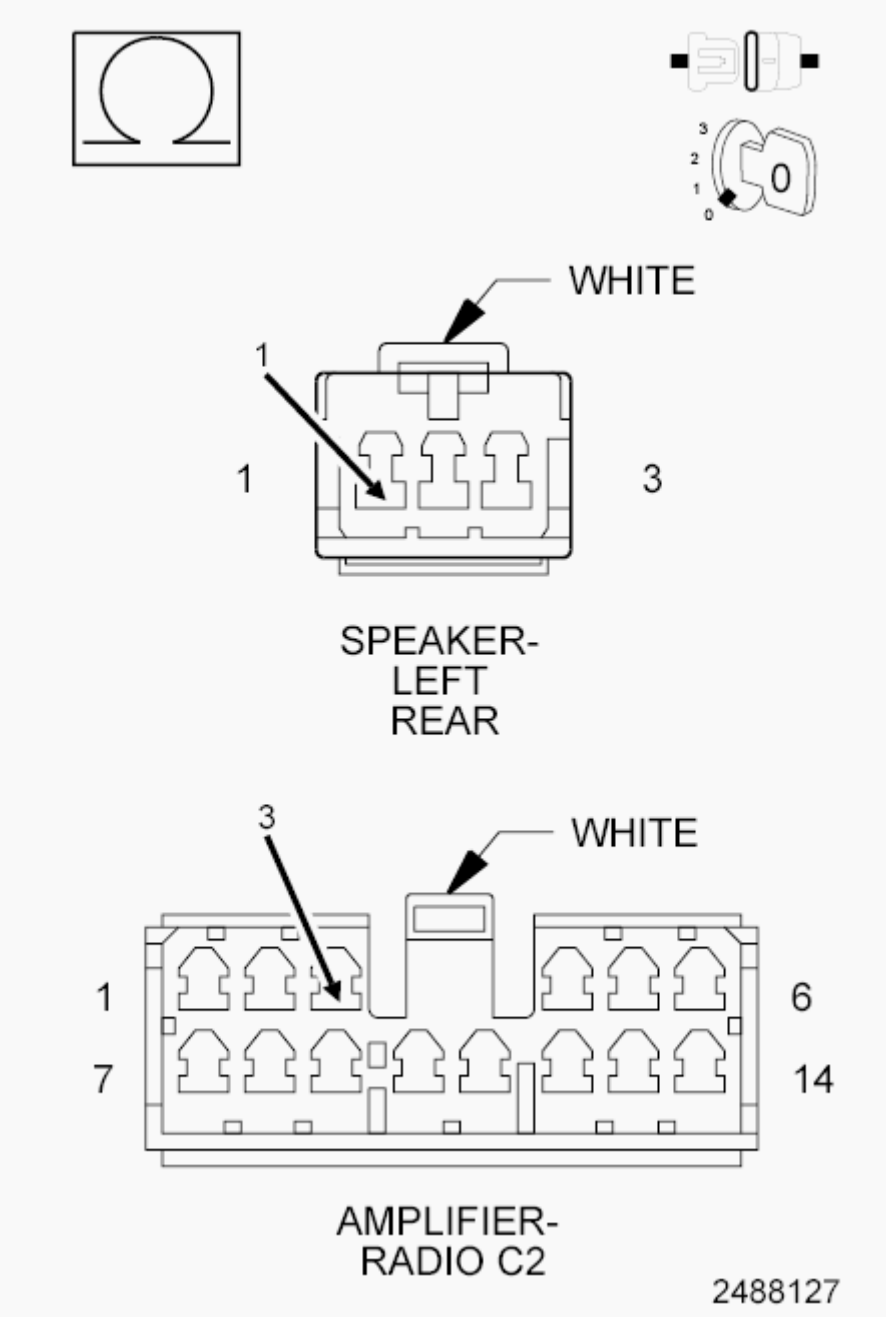

Fig. 66: Measuring Resistance Of Amplified Left Rear Speaker (+) Circuit
Courtesy of CHRYSLER GROUP, LLC

1. Turn the ignition off.
2. Disconnect the Amplifier C2 harness connector.
3. Measure the resistance of the (X205) Amplified Left Rear Speaker (+) circuit between the Amplifier C2 harness connector and the Amplified Left Rear Speaker harness connector.

Is the resistance below 2.0 Ohms?

Yes

- Go To 4

No

- Repair the (X205) Amplified Left Rear Speaker (+) circuit for an open.
- Perform the BODY VERIFICATION TEST. Refer to **STANDARD PROCEDURE** .

4. **CHECK THE (X295) AMPLIFIED LEFT REAR SPEAKER (-) CIRCUIT FOR AN OPEN**

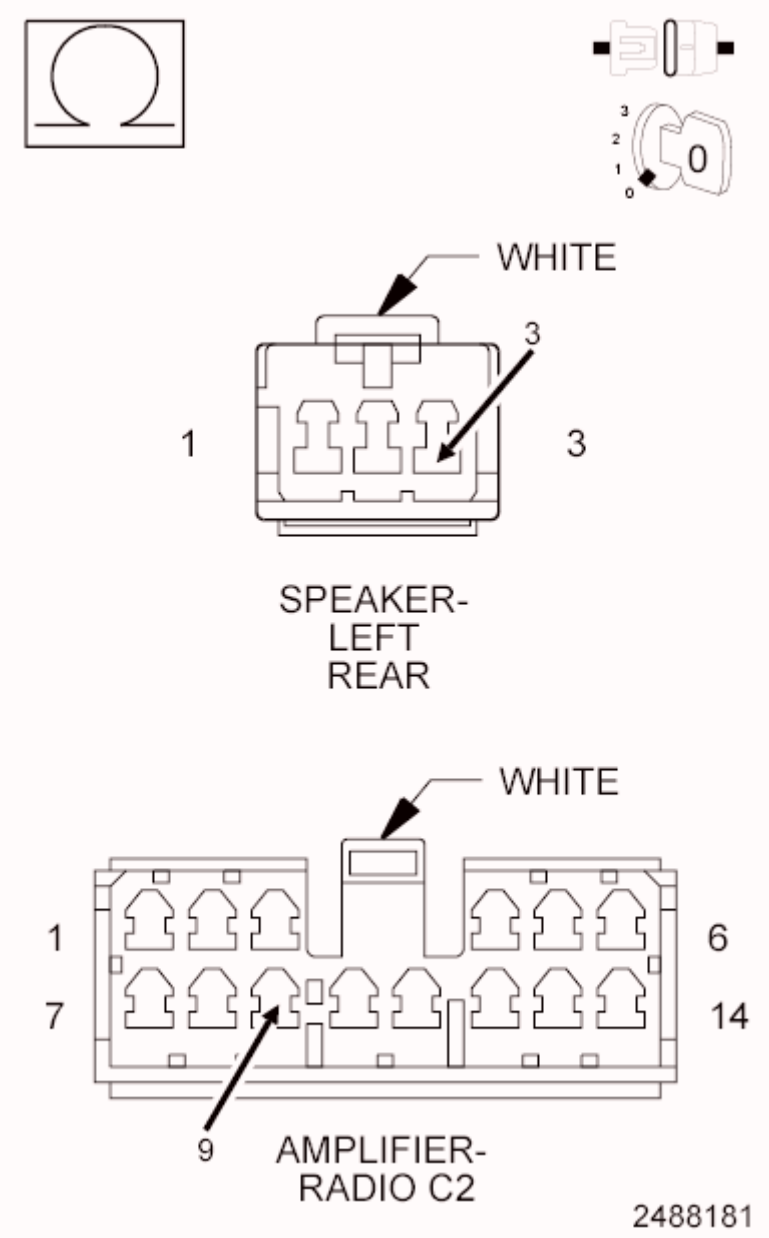

Fig. 67: Measuring Resistance Of Amplified Left Rear Speaker (-) Circuit
Courtesy of CHRYSLER GROUP, LLC

1. Measure the resistance of the (X295) Amplified Left Rear Speaker (-) circuit between the Amplifier C2 harness connector and the Amplified Left Rear Speaker harness connector.

   Is the resistance below 2.0 Ohms?

   Yes

   - Replace the Amplifier in accordance with the Service Information.

- Perform the BODY VERIFICATION TEST. Refer to **STANDARD PROCEDURE** .

No

- Repair the (X295) Amplified Left Rear Speaker (-) circuit for an open.
- Perform the BODY VERIFICATION TEST. Refer to **STANDARD PROCEDURE** .

B1478-CHANNEL 5 AUDIO SPEAKER OUTPUT CIRCUIT SHORTED TOGETHER

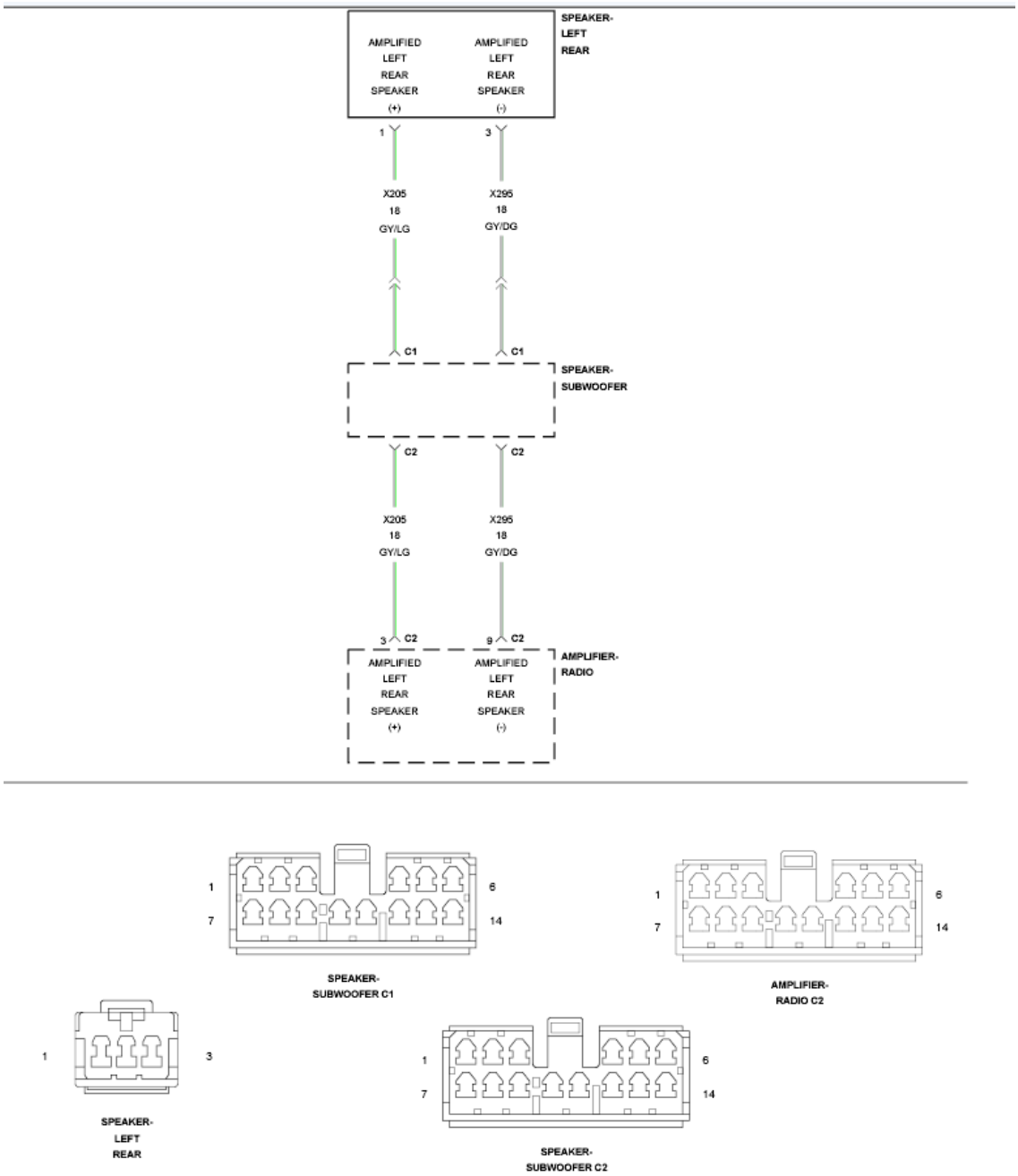

Fig. 68: Left Rear Speaker Circuit Diagram
Courtesy of CHRYSLER GROUP, LLC

For a complete wiring diagram, **refer to appropriate SYSTEM WIRING DIAGRAMS article** .

WHEN MONITORED

With the ignition on. Radio volume at 25 or higher.

SET CONDITION

The Amplifier detects that the output circuits are shorted together.

POSSIBLE CAUSES

Possible Causes
(X205) AMPLIFIED LEFT REAR SPEAKER (+) CIRCUIT SHORTED TO THE (X295) AMPLIFIED LEFT REAR SPEAKER (-) CIRCUIT AMPLIFIED LEFT REAR SPEAKER AMPLIFIER

DIAGNOSTIC TEST

1. **CHECK FOR AN INTERMITTENT CONDITION**
   1. Turn the ignition on and open one of the front doors.

      NOTE: A front door must remain open whenever checking or erasing Amplifier DTCs.

   2. Using the scan tool, record and erase the Amplifier DTCs.
   3. Cycle the ignition switch from on to off, wait five seconds and then back to on.
   4. Turn the Radio on and set the volume to 25.
   5. Adjust the speakers to the rear and center.
   6. Using the scan tool, read the active Amplifier DTCs.

      Does the scan tool display active: B1478-CHANNEL 5 AUDIO SPEAKER OUTPUT CIRCUIT SHORTED TOGETHER?

      Yes

      - Go To 2

      No

      - Test complete, the condition or conditions that originally set this DTC are not present at this time. Using the wiring diagrams as a guide, check all related splices and connectors for signs of water intrusion, corrosion, pushed out or bent terminals and correct pin tension.

- Perform the BODY VERIFICATION TEST. Refer to **STANDARD PROCEDURE** .

2. **CHECK THE OPERATION OF THE LEFT REAR SPEAKER**

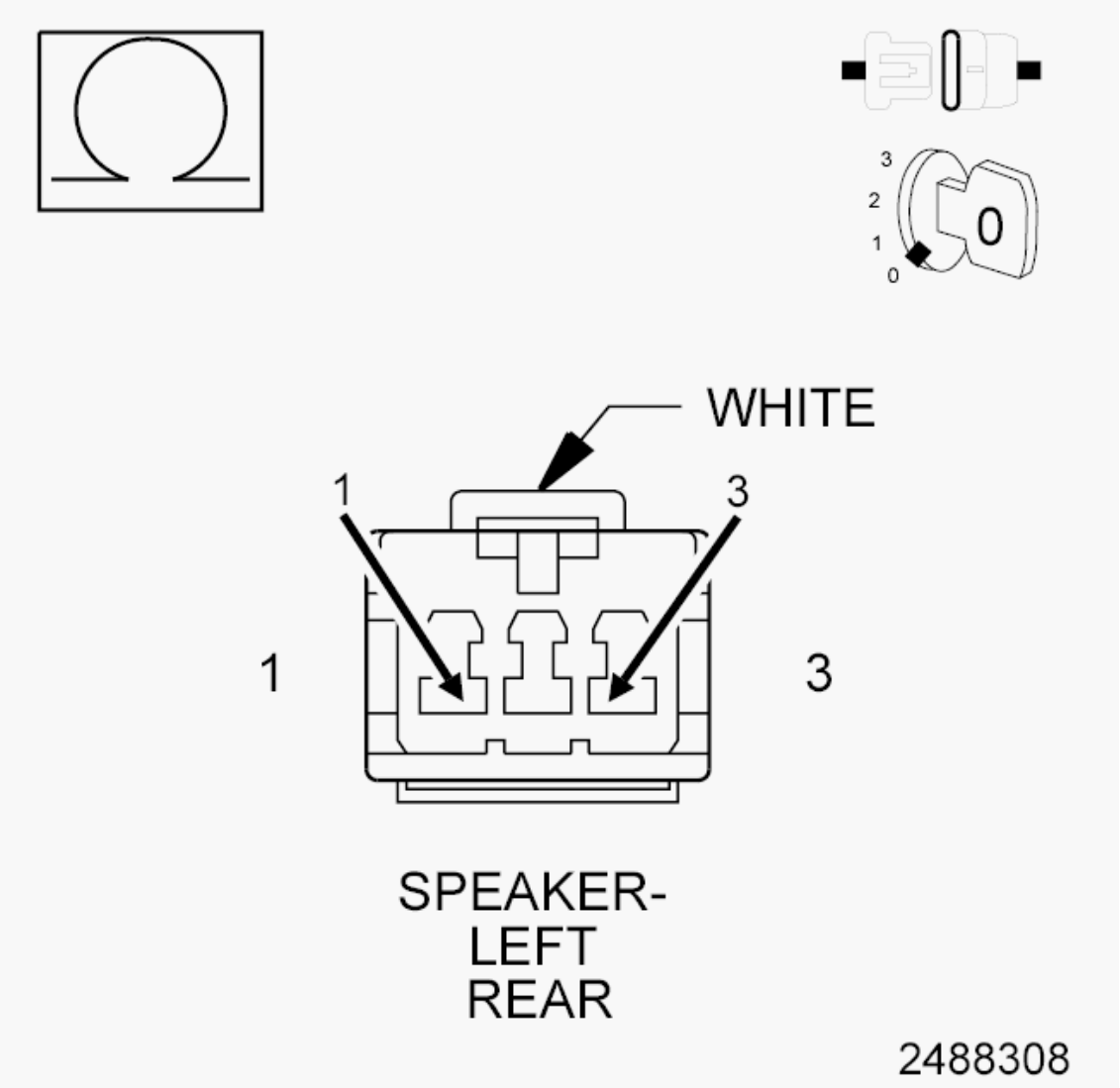

Fig. 69: Measuring Resistance Of Speaker Between Both Terminals
Courtesy of CHRYSLER GROUP, LLC

1. Turn the ignition off.
2. Disconnect the Left Rear Speaker.
3. Measure the resistance of the speaker between the two terminals.

NOTE: The graphic shows the connector for reference only. Measure between the speaker terminals

Is the resistance of the speaker less than 1 Ohm?

Yes

- Replace the Amplified Left Rear Speaker in accordance with the Service Information.
- Perform the BODY VERIFICATION TEST. Refer to **STANDARD PROCEDURE** .

No

- Go To 3

3. **CHECK THE (X205) AMPLIFIED LEFT REAR SPEAKER (+) CIRCUIT, AND THE (X295) AMPLIFIED LEFT REAR SPEAKER (-) CIRCUITS FOR A SHORT TOGETHER**

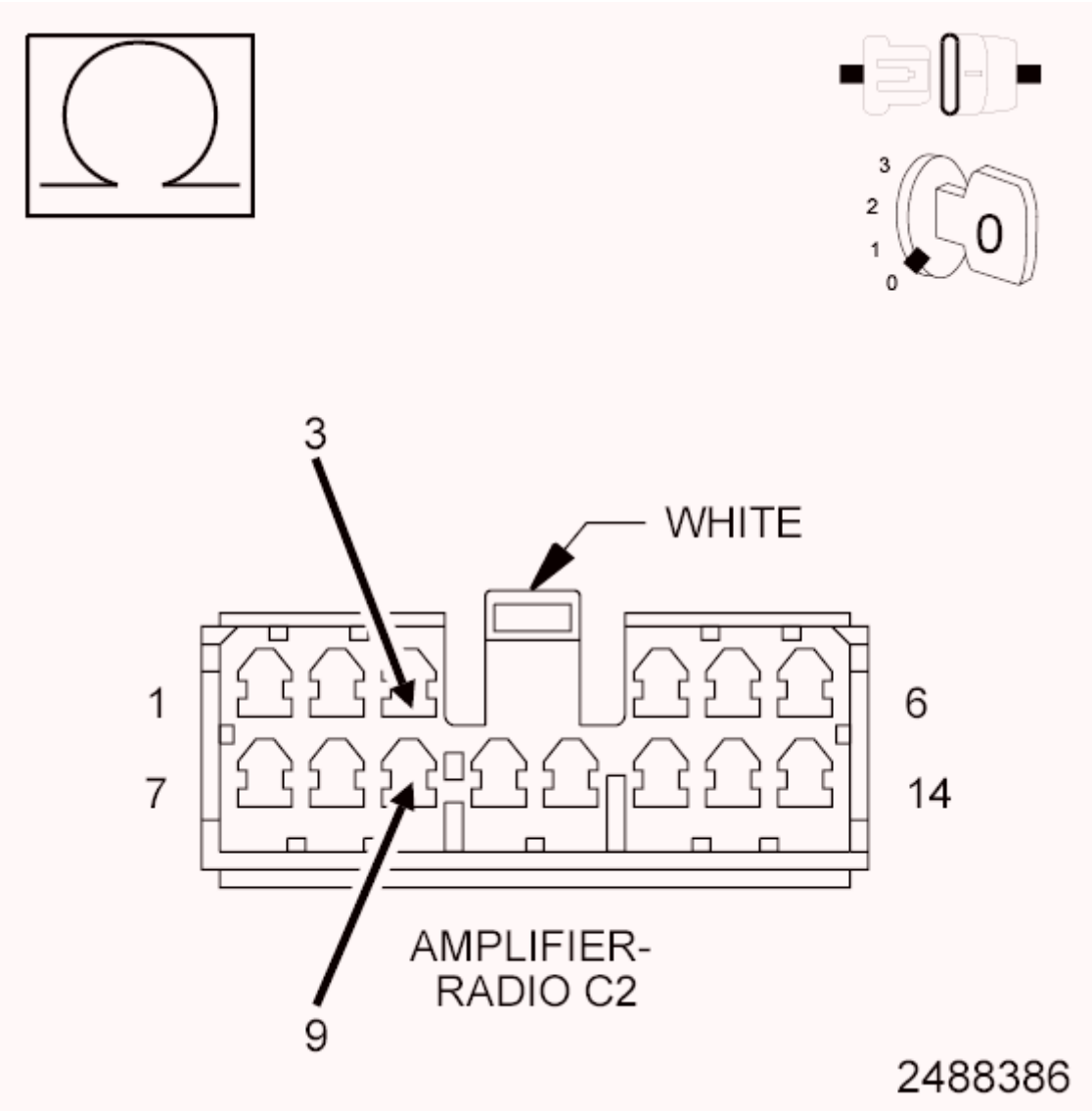

Fig. 70: Measuring Resistance Between Amplified Left Rear Speaker

(+) Circuit & Amplified Left Rear Speaker (-) Circuit
Courtesy of CHRYSLER GROUP, LLC

1. Disconnect the Amplifier C2 harness connector.
2. Measure the resistance between the (X205) Amplified Left Rear Speaker (+) circuit, and the (X295) Amplified Left Rear Speaker (-) circuit.

   Is the resistance below 10K Ohms?

   Yes

   - Repair the (X205) Amplified Left Rear Speaker (+) circuit for a short to the (X295) Amplified Left Rear Speaker (-) circuit.
   - Perform the BODY VERIFICATION TEST. Refer to **STANDARD PROCEDURE** .

   No

   - Replace the Amplifier in accordance with the Service Information.
   - Perform the BODY VERIFICATION TEST. Refer to **STANDARD PROCEDURE** .

B1479-CHANNEL 6 AUDIO SPEAKER OUTPUT CIRCUIT PERFORMANCE

For a complete wiring diagram, **refer to appropriate SYSTEM WIRING DIAGRAMS article** .

WHEN MONITORED

With the ignition on.

SET CONDITION

This Diagnostic Trouble Code (DTC) sets if a Direct Current (DC) offset occurs on the output channel, the Amplifier shall set a DTC after a maturity rate of four to six seconds.

POSSIBLE CAUSES

Possible Causes

AMPLIFIER

DIAGNOSTIC TEST

CHECK FOR AN INTERMITTENT CONDITION

1. Turn the ignition on and open one of the front doors.

   NOTE: A front door must remain open whenever checking or erasing Amplifier DTCs.

2. Using the scan tool, record and erase the Amplifier DTCs.
3. Cycle the ignition switch from on to off, wait five seconds and then back to on.
4. Turn the Radio on and set the volume to 25.
5. Adjust the speakers to the rear and center.
6. Using the scan tool, read the active Amplifier DTCs.

   Does the scan tool display active: B1479-CHANNEL 6 AUDIO SPEAKER OUTPUT CIRCUIT PERFORMANCE?

   Yes

   - Replace the Amplifier in accordance with the service Information.
   - Perform the BODY VERIFICATION TEST. Refer to **STANDARD PROCEDURE** .

   No

   - Test complete, the condition or conditions that originally set this DTC are not present at this time. Using the wiring diagrams as a guide, check all related splices and connectors for signs of water intrusion, corrosion, pushed out or bent terminals and correct pin tension.
   - Perform the BODY VERIFICATION TEST. Refer to **STANDARD PROCEDURE** .

B147A-CHANNEL 6 AUDIO SPEAKER OUTPUT CIRCUIT LOW

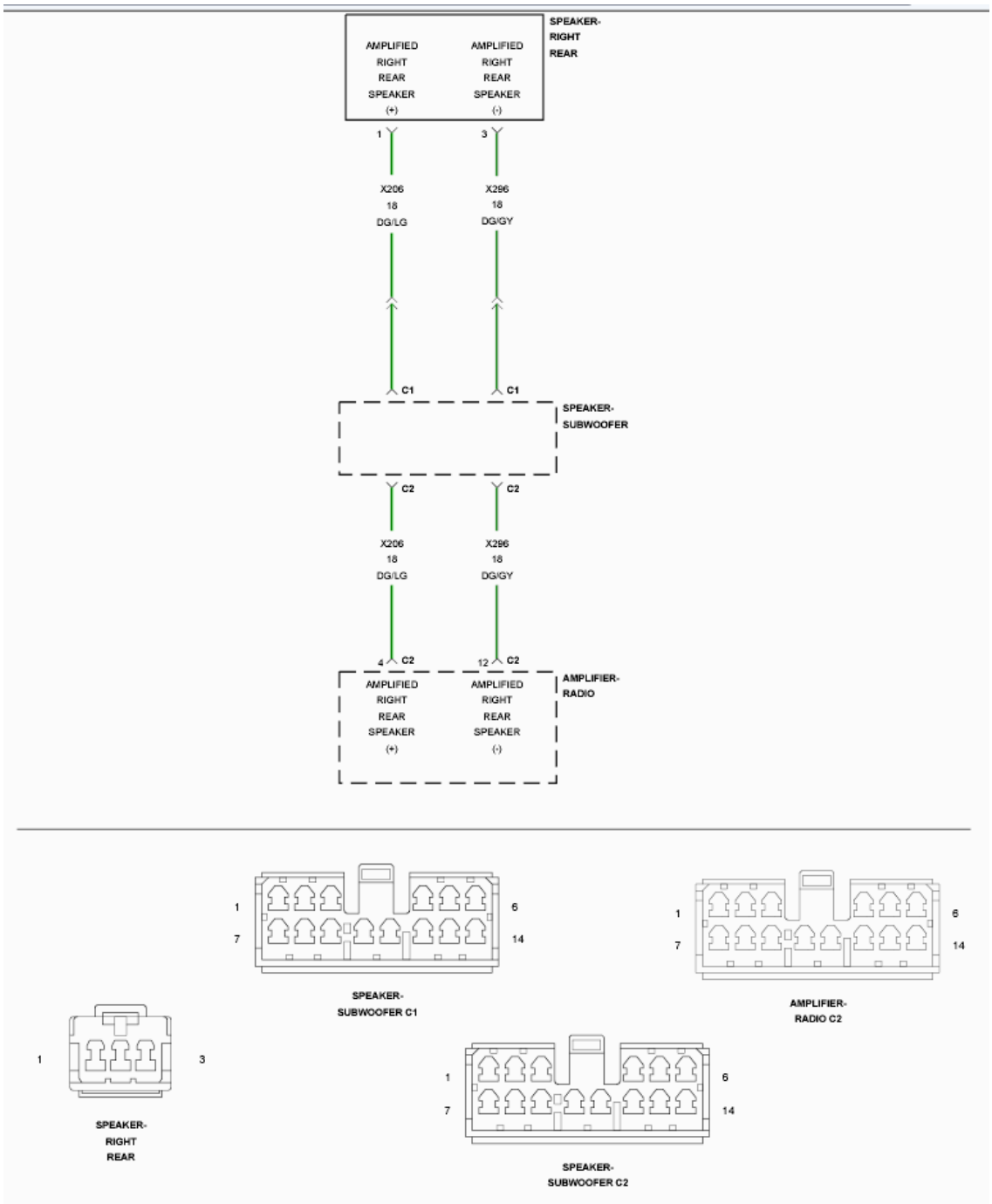

Fig. 71: Right Rear Speaker Circuit Diagram
Courtesy of CHRYSLER GROUP, LLC

For a complete wiring diagram, **refer to appropriate SYSTEM WIRING DIAGRAMS article** .

WHEN MONITORED

With the ignition on.

SET CONDITION

The Amplifier detects a shorted to ground condition on the speaker output circuit.

POSSIBLE CAUSES

Possible Causes
(X206) AMPLIFIED RIGHT REAR SPEAKER (+) CIRCUIT SHORTED TO GROUND
(X296) AMPLIFIED RIGHT REAR SPEAKER (-) CIRCUIT SHORTED TO GROUND
AMPLIFIED RIGHT REAR SPEAKER
AMPLIFIER

DIAGNOSTIC TEST

1. **CHECK FOR AN INTERMITTENT CONDITION**
   1. Turn the ignition on and open one of the front doors.

      NOTE: A front door must remain open whenever checking or erasing Amplifier DTCs.

   2. Using the scan tool, record and erase the Amplifier DTCs.
   3. Cycle the ignition switch from on to off, wait five seconds and then back to on.
   4. Turn the Radio on and set the volume to 25.
   5. Adjust the speakers to the rear and center.
   6. Using the scan tool, read the active Amplifier DTCs.

      Does the scan tool display active: B147A-CHANNEL 6 AUDIO SPEAKER OUTPUT CIRCUIT LOW?

      Yes

      - Go To 3

      No

      - Test complete, the condition or conditions that originally set this DTC are not present at this time. Using the wiring diagrams as a

guide, check all related splices and connectors for signs of water intrusion, corrosion, pushed out or bent terminals and correct pin tension.

- Perform the BODY VERIFICATION TEST. Refer to **STANDARD PROCEDURE** .

2. **RIGHT REAR SPEAKER**

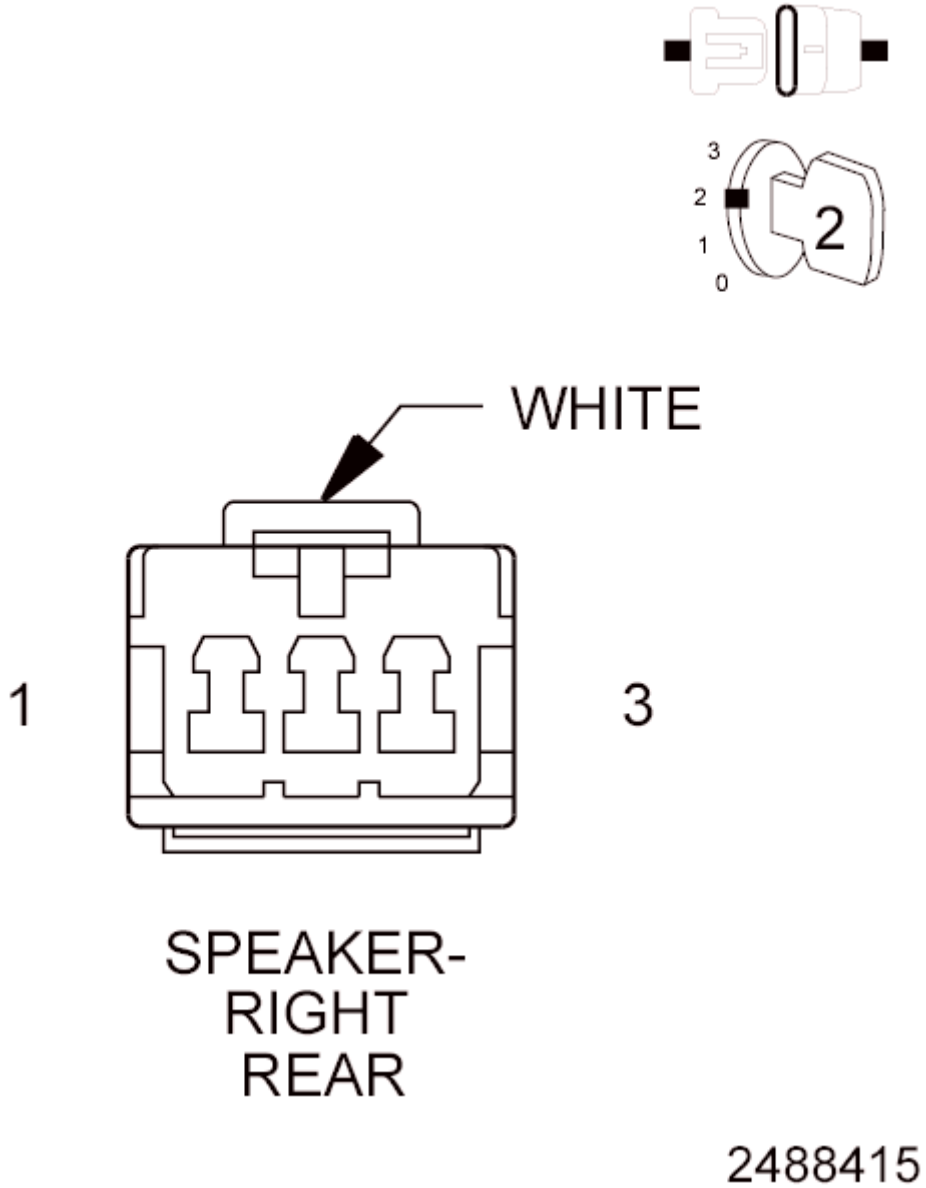

Fig. 72: Checking Right Rear Speaker
Courtesy of CHRYSLER GROUP, LLC

1. With the scan tool, erase the DTCs.
2. Turn the ignition off.

3. Disconnect the Right Rear Speaker harness connector.
4. Turn the ignition on
5. Turn the radio on and set the volume to 25.
6. Adjust the speakers to the rear and center.
7. With the scan tool, read the active Amplifier DTCs.

   Does the scan tool display active: B147A-CHANNEL 6 AUDIO SPEAKER OUTPUT CIRCUIT LOW?

   Yes

   - Go To 3

   No

   - Replace the Amplified Right Rear Speaker in accordance with the Service Information.
   - Perform the BODY VERIFICATION TEST. Refer to **STANDARD PROCEDURE** .

3. **CHECK THE (X206) AMPLIFIED RIGHT REAR SPEAKER (+) CIRCUIT FOR A SHORT TO GROUND**

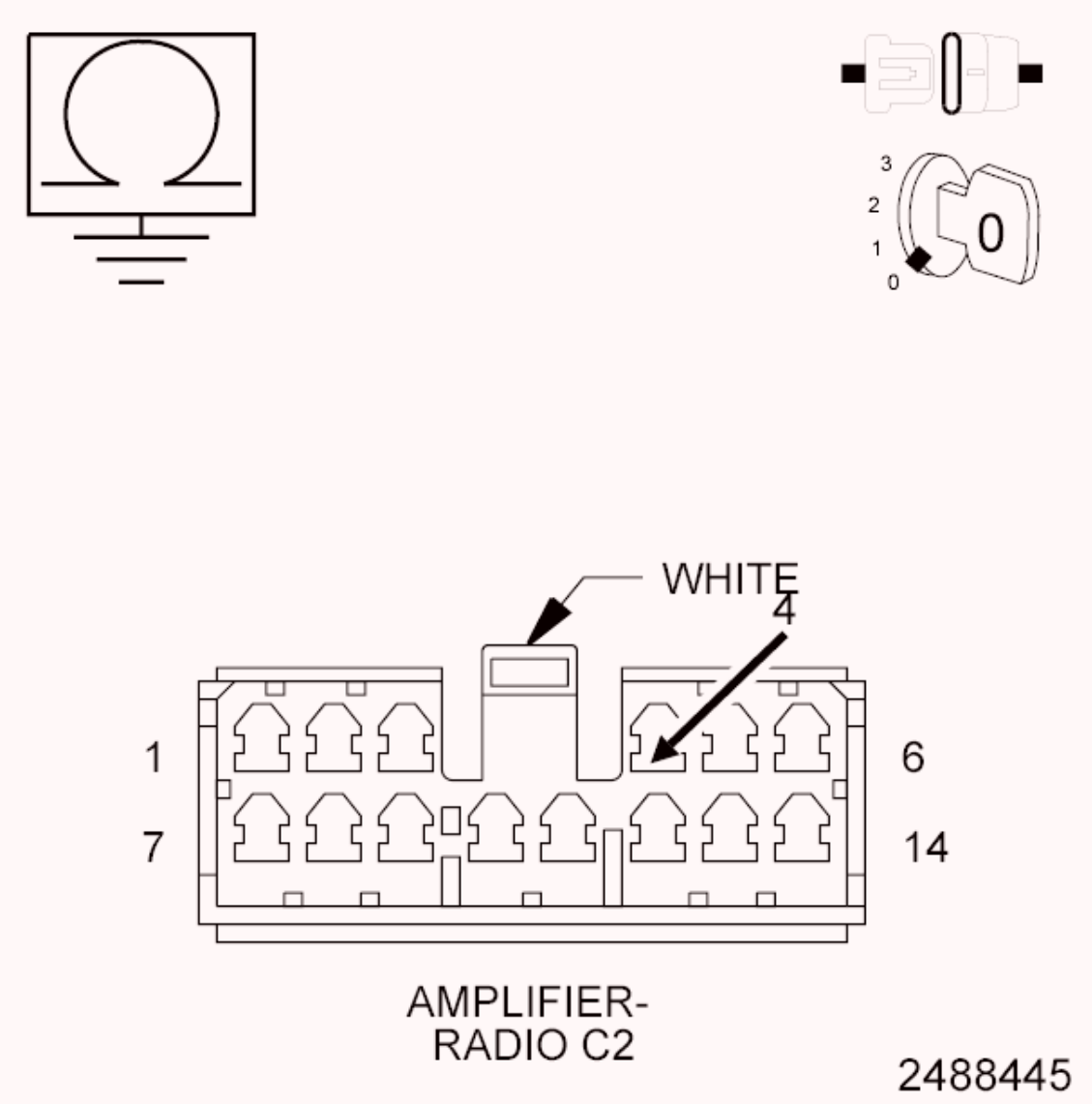

Fig. 73: Measuring Resistance Between Ground & Amplified Right Rear Speaker (+) Circuit
Courtesy of CHRYSLER GROUP, LLC

1. Turn the ignition off.
2. Disconnect the Amplifier C2 harness connector.
3. Measure the resistance between ground and the (X206) Amplified Right Rear Speaker (+) circuit.

   Is the resistance below 10K Ohms?

   Yes

   - Repair the (X206) Amplified Right Rear Speaker (+) circuit for a short to ground.

- Perform the BODY VERIFICATION TEST. Refer to **STANDARD PROCEDURE** .

No

- Go To 4

4. **CHECK THE (X296) AMPLIFIED RIGHT REAR SPEAKER (-) CIRCUIT FOR A SHORT TO GROUND**

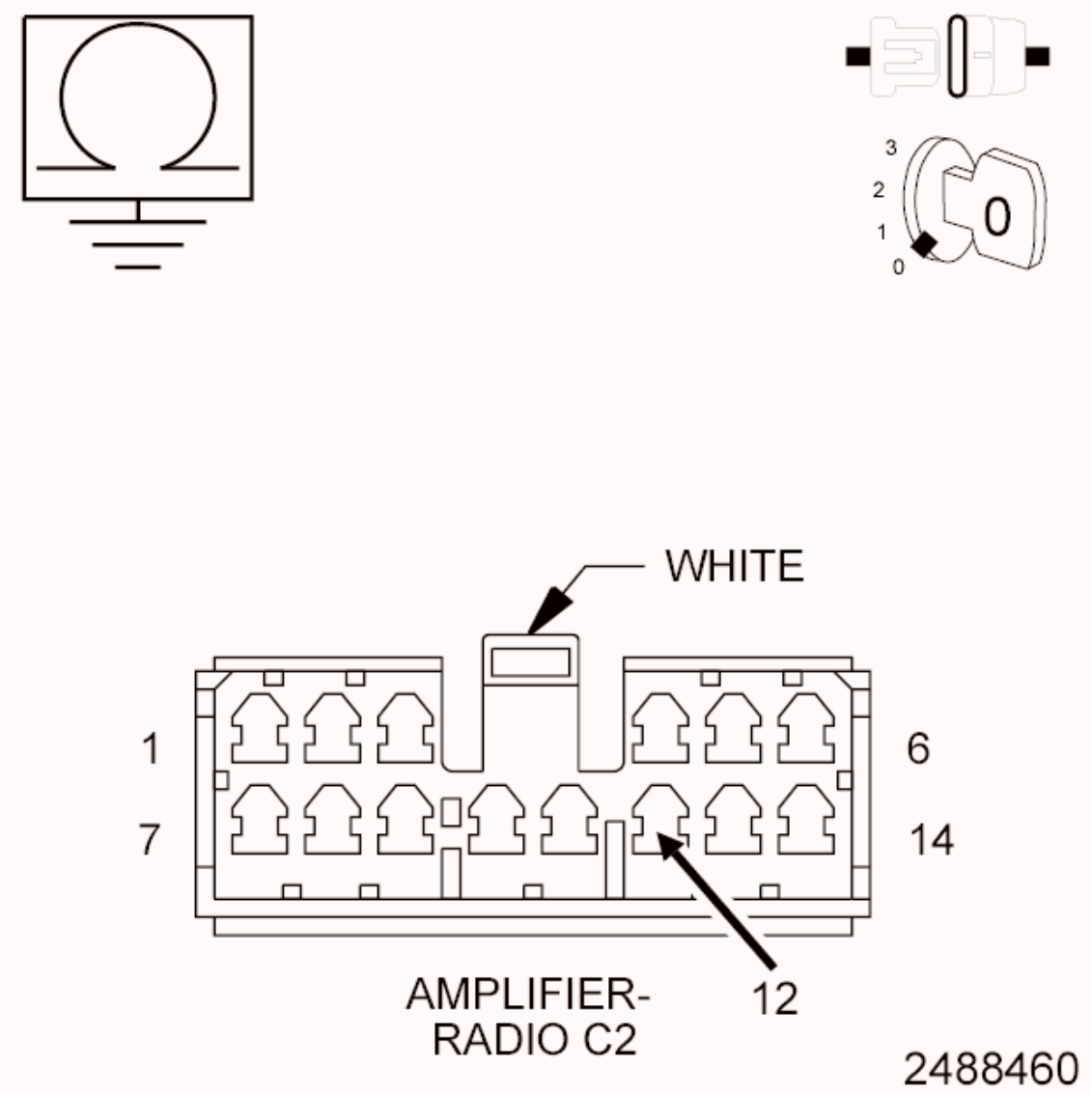

Fig. 74: Measuring Resistance Between Ground & Amplified Right Rear Speaker (-) Circuit
Courtesy of CHRYSLER GROUP, LLC

1. Measure the resistance between ground and the (X296) Amplified Right Rear Speaker (-) circuit.

Is the resistance below 10K Ohms?

Yes

- Repair the (X296) Amplified Right Rear Speaker (-) for a short to ground.
- Perform the BODY VERIFICATION TEST. Refer to **STANDARD PROCEDURE** .

No

- Replace the Amplifier in accordance with the Service Information.
- Perform the BODY VERIFICATION TEST. Refer to **STANDARD PROCEDURE** .

B147B-CHANNEL 6 AUDIO SPEAKER OUTPUT CIRCUIT HIGH

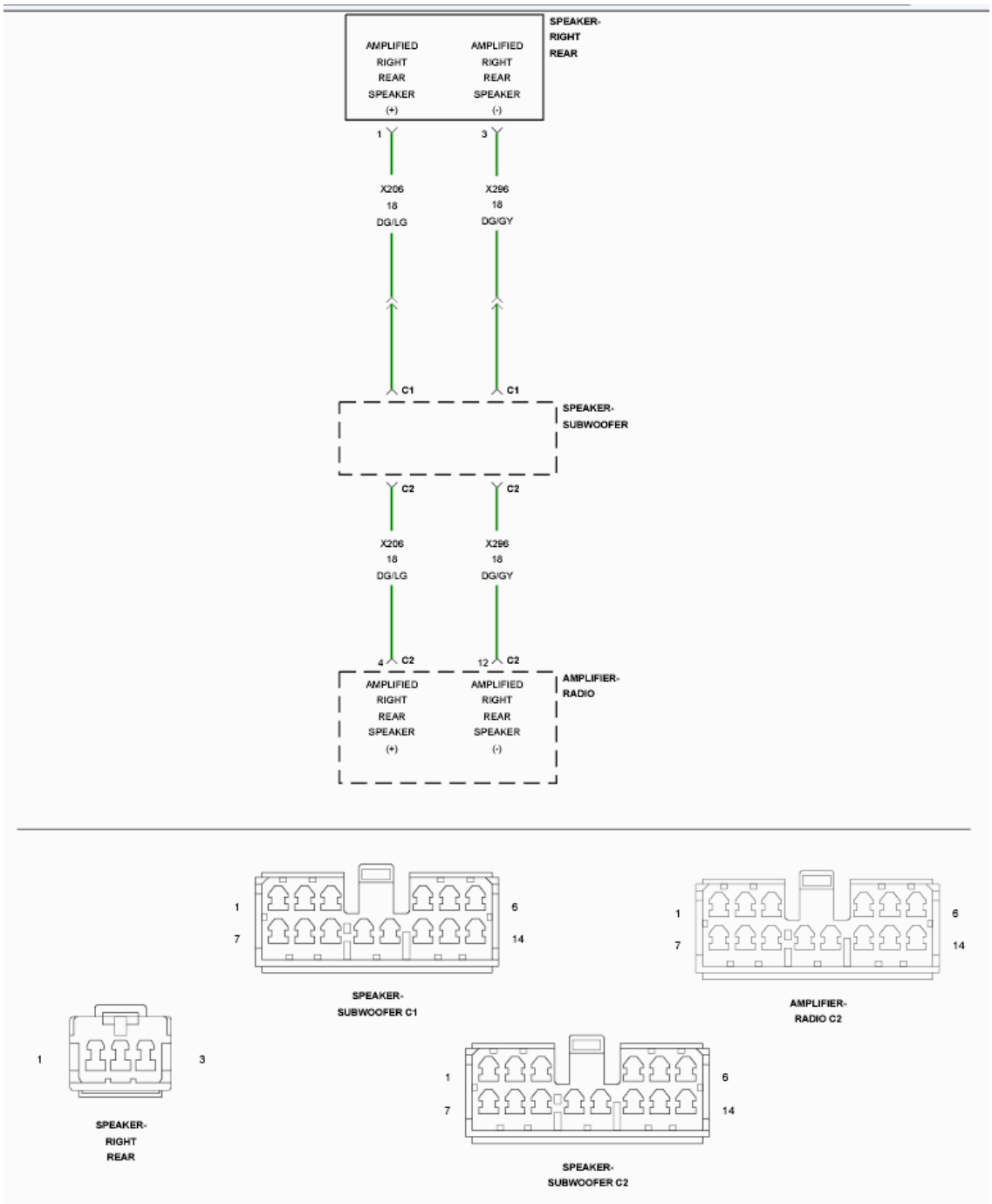

Fig. 75: Right Rear Speaker Circuit Diagram
Courtesy of CHRYSLER GROUP, LLC

For a complete wiring diagram, **refer to appropriate SYSTEM WIRING DIAGRAMS article** .

WHEN MONITORED

With the ignition on.

SET CONDITION

The Amplifier detects a short to battery condition on the output circuit.

POSSIBLE CAUSES

Possible Causes
(X206) AMPLIFIED RIGHT REAR SPEAKER (+) CIRCUIT SHORTED TO VOLTAGE (X296) AMPLIFIED RIGHT REAR SPEAKER (-) CIRCUIT SHORTED TO VOLTAGE AMPLIFIER

DIAGNOSTIC TEST

1. **CHECK FOR AN INTERMITTENT CONDITION**
   1. Turn the ignition on and open one of the front doors.

      NOTE: A front door must remain open whenever checking or erasing Amplifier DTCs.

   2. Using the scan tool, record and erase the Amplifier DTCs.
   3. Cycle the ignition switch from on to off, wait five seconds and then back to on.
   4. Turn the Radio on and set the volume to 25.
   5. Adjust the speakers to the rear and center.
   6. Using the scan tool, read the active Amplifier DTCs.

      Does the scan tool display active: B147B-CHANNEL 6 AUDIO SPEAKER OUTPUT CIRCUIT HIGH?

      Yes

      - Go To 2

      No

      - Test complete, the condition or conditions that originally set this DTC are not present at this time. Using the wiring diagrams as a guide, check all related splices and connectors for signs of water intrusion, corrosion, pushed out or bent terminals and correct pin

tension.

- Perform the BODY VERIFICATION TEST. Refer to **STANDARD PROCEDURE** .

2. **CHECK FOR VOLTAGE ON THE (X206) AMPLIFIED RIGHT REAR SPEAKER (+) CIRCUIT**

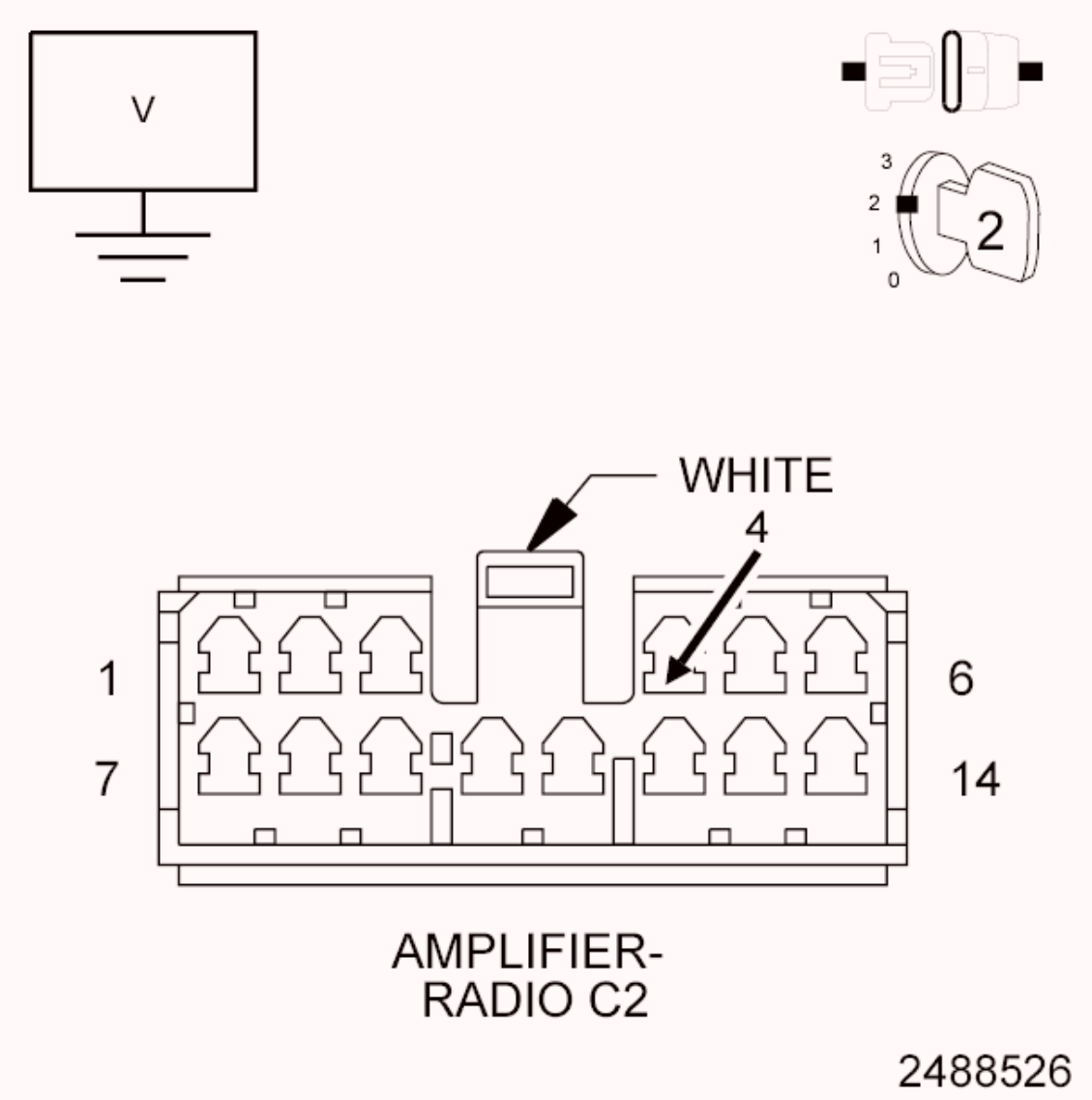

Fig. 76: Measuring Voltage Between Amplified Right Rear Speaker (+) Circuit & Ground
Courtesy of CHRYSLER GROUP, LLC

1. Turn the ignition off.
2. Disconnect the Amplifier C2 harness connector.
3. Turn the ignition on.
4. Measure the voltage between the (X206) Amplified Right Rear Speaker

(+) circuit and ground.

Is there any voltage present?

Yes

- Repair the (X206) Amplified Right Rear Speaker (+) circuit for a short to voltage.
- Perform the BODY VERIFICATION TEST. Refer to **STANDARD PROCEDURE** .

No

- Go To 3

3. **CHECK FOR VOLTAGE ON THE (X296) AMPLIFIED RIGHT REAR SPEAKER (-) CIRCUIT**

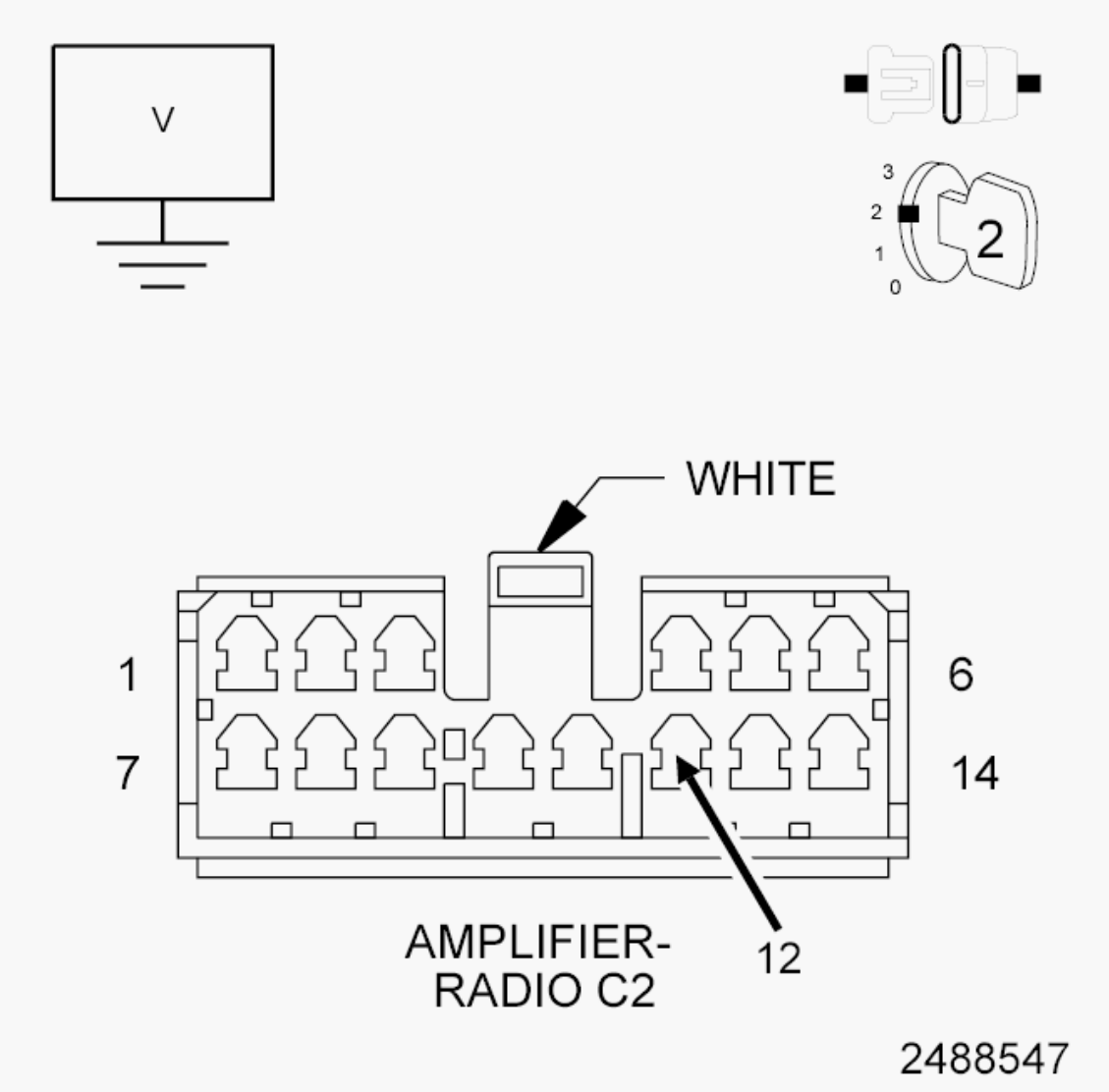

Fig. 77: Measuring Voltage Between Amplified Right Rear Speaker (-) Circuit & Ground
Courtesy of CHRYSLER GROUP, LLC

1. Measure the voltage between the (X296) Amplified Right Rear Speaker (-) circuit and ground.

   Is there any voltage present?

   Yes

   - Repair the (X296) Amplified Right Rear Speaker (-) circuit for a short to voltage.
   - Perform the BODY VERIFICATION TEST. Refer to **STANDARD PROCEDURE** .

No

- Replace the Amplifier in accordance with the Service Information.
- Perform the BODY VERIFICATION TEST. Refer to **STANDARD PROCEDURE** .

B147C-CHANNEL 6 AUDIO SPEAKER OUTPUT CIRCUIT OPEN

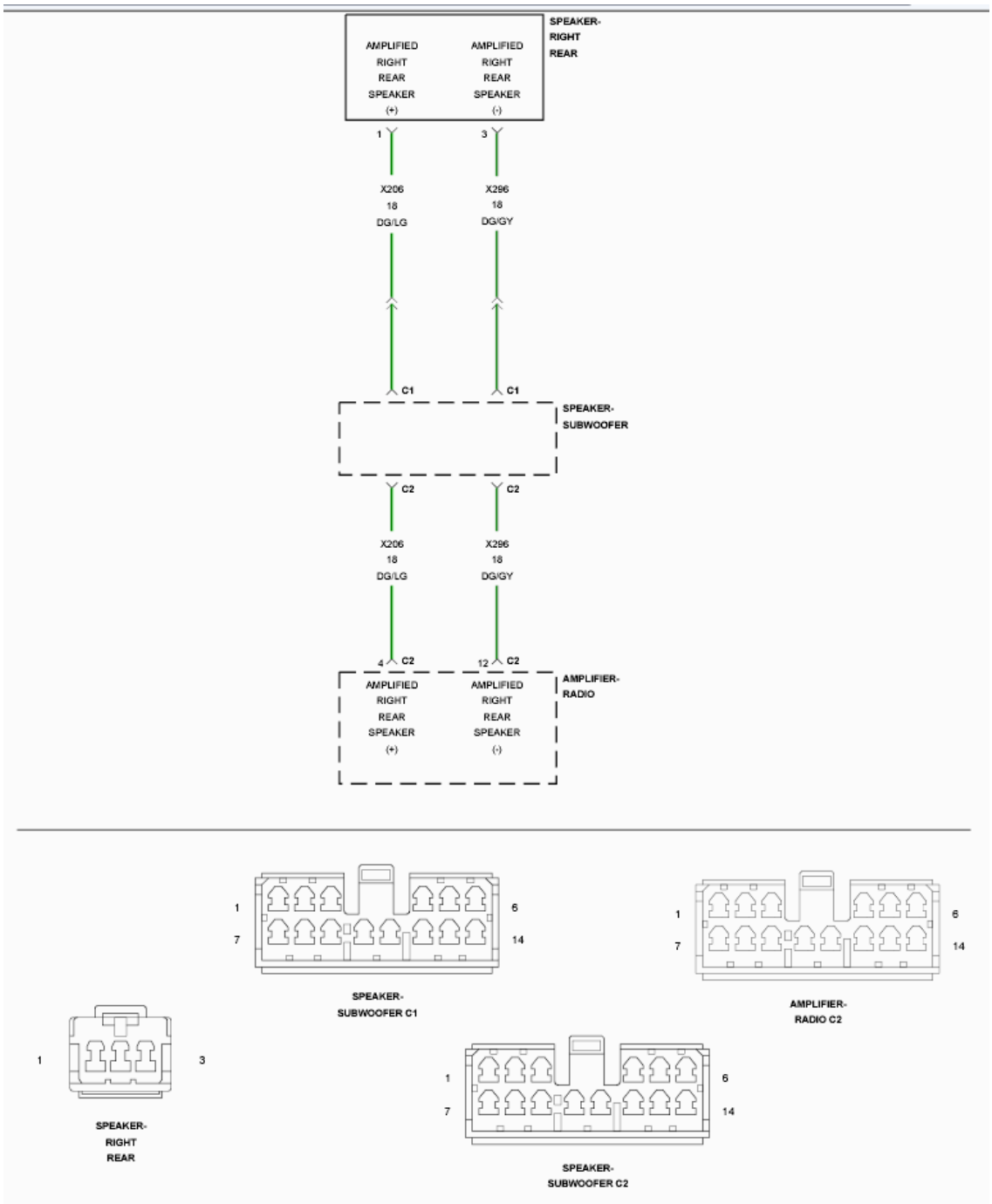

Fig. 78: Right Rear Speaker Circuit Diagram
Courtesy of CHRYSLER GROUP, LLC

For a complete wiring diagram, **refer to appropriate SYSTEM WIRING DIAGRAMS article** .

WHEN MONITORED

Amplifier BUS wake-up. Amplifier reset with scan tool.

SET CONDITION

The Amplifier detects an open condition on the speaker output circuit.

POSSIBLE CAUSES

Possible Causes
(X206) AMPLIFIED RIGHT REAR SPEAKER (+) CIRCUIT OPEN (X296) AMPLIFIED RIGHT REAR SPEAKER (-) CIRCUIT OPEN AMPLIFIED RIGHT REAR SPEAKER AMPLIFIER

DIAGNOSTIC TEST

1. **CHECK FOR AN INTERMITTENT CONDITION**
   1. Turn the ignition on and open one of the front doors.

      NOTE: A front door must remain open whenever checking or erasing Amplifier DTCs.

   2. Using the scan tool, record and erase the Amplifier DTCs.
   3. Cycle the ignition switch from on to off, wait five seconds and then back to on.
   4. Turn the Radio on and set the volume to 25.
   5. Adjust the speakers to the rear and center.
   6. Using the scan tool, read the active Amplifier DTCs.

      Does the scan tool display active: B147C-CHANNEL 6 AUDIO SPEAKER OUTPUT CIRCUIT OPEN?

      Yes

      - Go To 2

No

- Test complete, the condition or conditions that originally set this DTC are not present at this time. Using the wiring diagrams as a guide, check all related splices and connectors for signs of water intrusion, corrosion, pushed out or bent terminals and correct pin tension.
- Perform the BODY VERIFICATION TEST. Refer to **STANDARD PROCEDURE** .

2. **CHECK THE OPERATION OF THE RIGHT REAR SPEAKER**

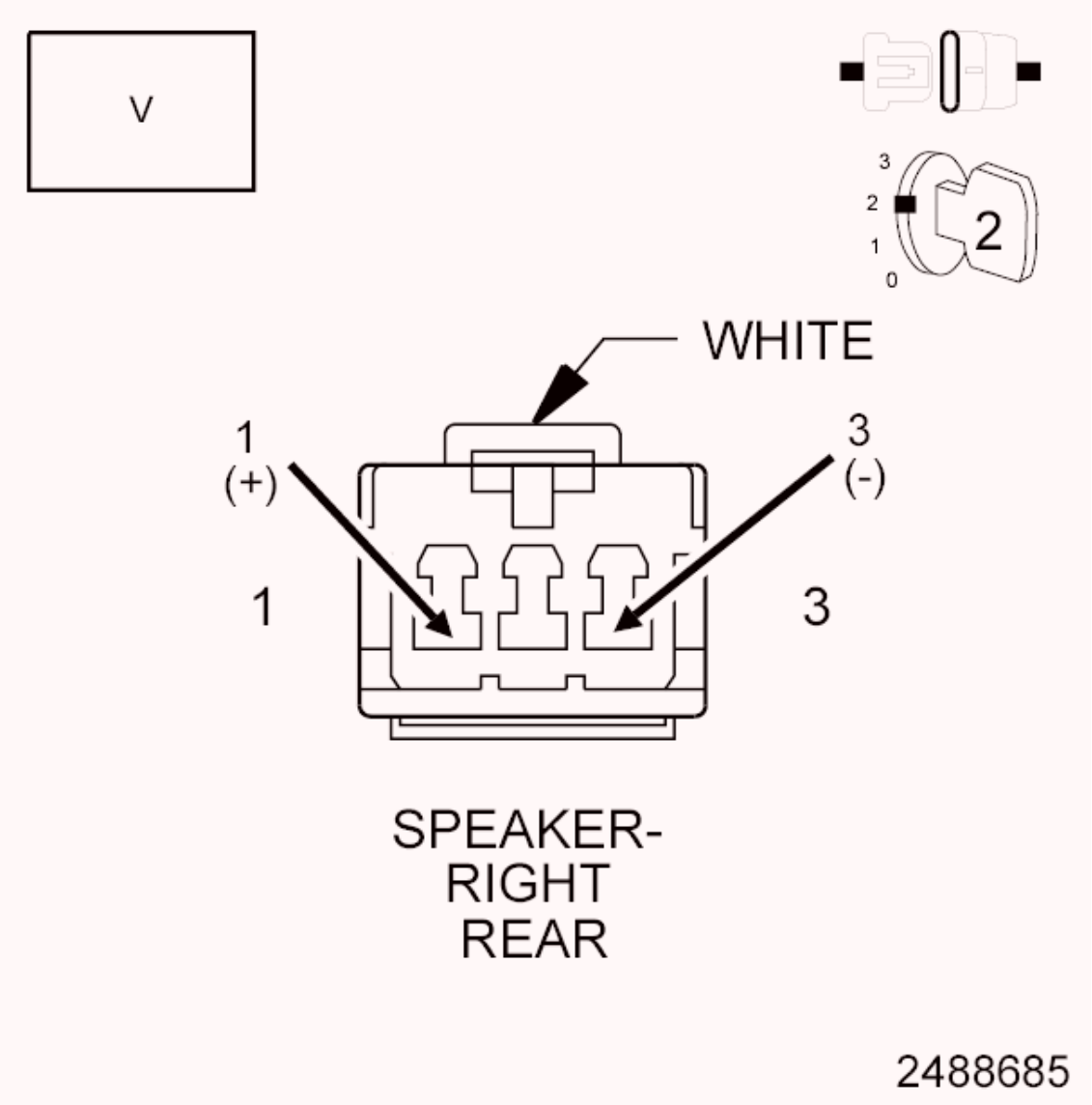

Fig. 79: Measuring Voltage Of Amplified Right Rear Speaker Circuits
Courtesy of CHRYSLER GROUP, LLC

1. Turn the ignition off.
2. Disconnect the Right Rear Speaker harness connector.
3. Turn the ignition on.
4. Turn the radio on and turn the volume to mid level.
5. Adjust the speakers to the rear and center.
6. With a voltmeter set to read in A/C voltage, measure the voltage of the Amplified Right Rear Speaker circuits in the Amplified Right Rear Speaker harness connector.

   Is the voltage above 1 volt?

   Yes

   - Replace the Amplified Right Rear Speaker in accordance with the Service Information.
   - Perform the BODY VERIFICATION TEST. Refer to **STANDARD PROCEDURE** .

   No

   - Go To 3

3. **CHECK THE (X206) AMPLIFIED RIGHT REAR SPEAKER (+) CIRCUIT FOR AN OPEN**

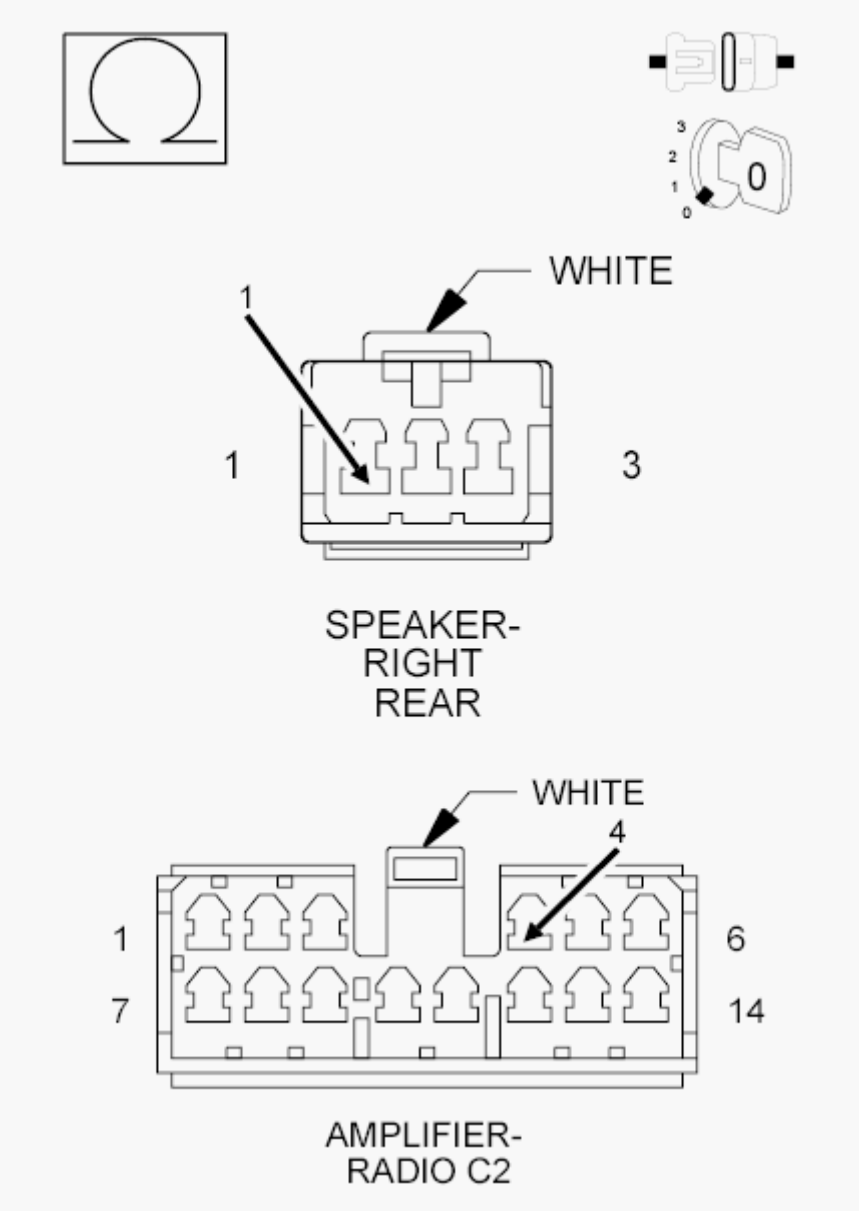

Fig. 80: Measuring Resistance Of Amplified Right Rear Speaker (+) Circuit
Courtesy of CHRYSLER GROUP, LLC

1. Turn the ignition off.
2. Disconnect the Amplifier C2 harness connector.
3. Measure the resistance of the (X206) Amplified Right Rear Speaker (+) circuit between the Amplifier C2 harness connector and the Amplified Right Rear Speaker harness connector.

   Is the resistance below 2.0 Ohms?

   Yes

- Go To 4

No

- Repair the (X206) Amplified Right Rear Speaker (+) circuit for an open.
- Perform the BODY VERIFICATION TEST. Refer to **STANDARD PROCEDURE** .

4. **CHECK THE (X296) AMPLIFIED RIGHT REAR SPEAKER (-) CIRCUIT FOR AN OPEN**

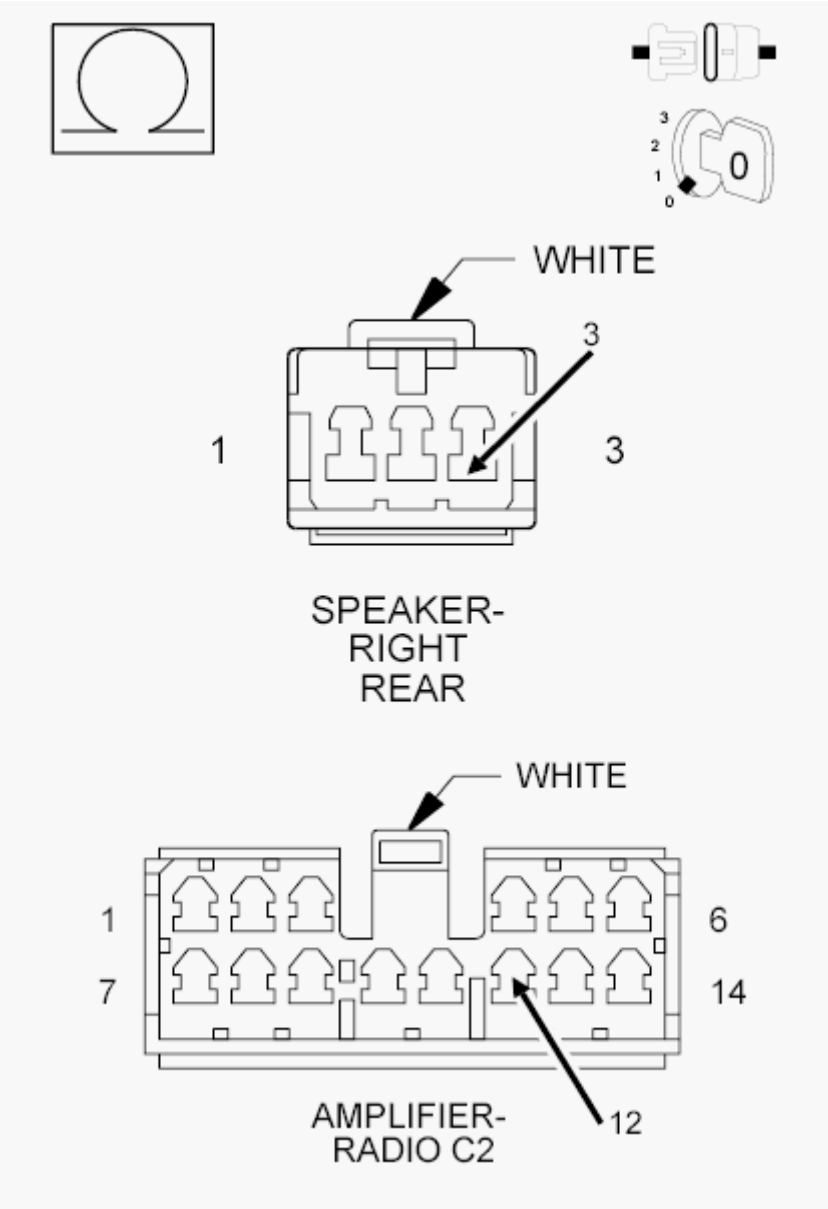

Fig. 81: Measuring Resistance Of Amplified Right Rear Speaker (-) Circuit

Courtesy of CHRYSLER GROUP, LLC

1. Measure the resistance of the (X296) Amplified Right Rear Speaker (-) circuit between the Amplifier C2 harness connector and the Amplified Right Rear Speaker harness connector.

   Is the resistance below 2.0 Ohms?

   Yes

   - Replace the Amplifier in accordance with the Service Information.
   - Perform the BODY VERIFICATION TEST. Refer to **STANDARD PROCEDURE** .

   No

   - Repair the (X296) Amplified Right Rear Speaker (-) circuit for an open.
   - Perform the BODY VERIFICATION TEST. Refer to **STANDARD PROCEDURE** .

B147D-CHANNEL 6 AUDIO SPEAKER OUTPUT CIRCUIT SHORTED TOGETHER

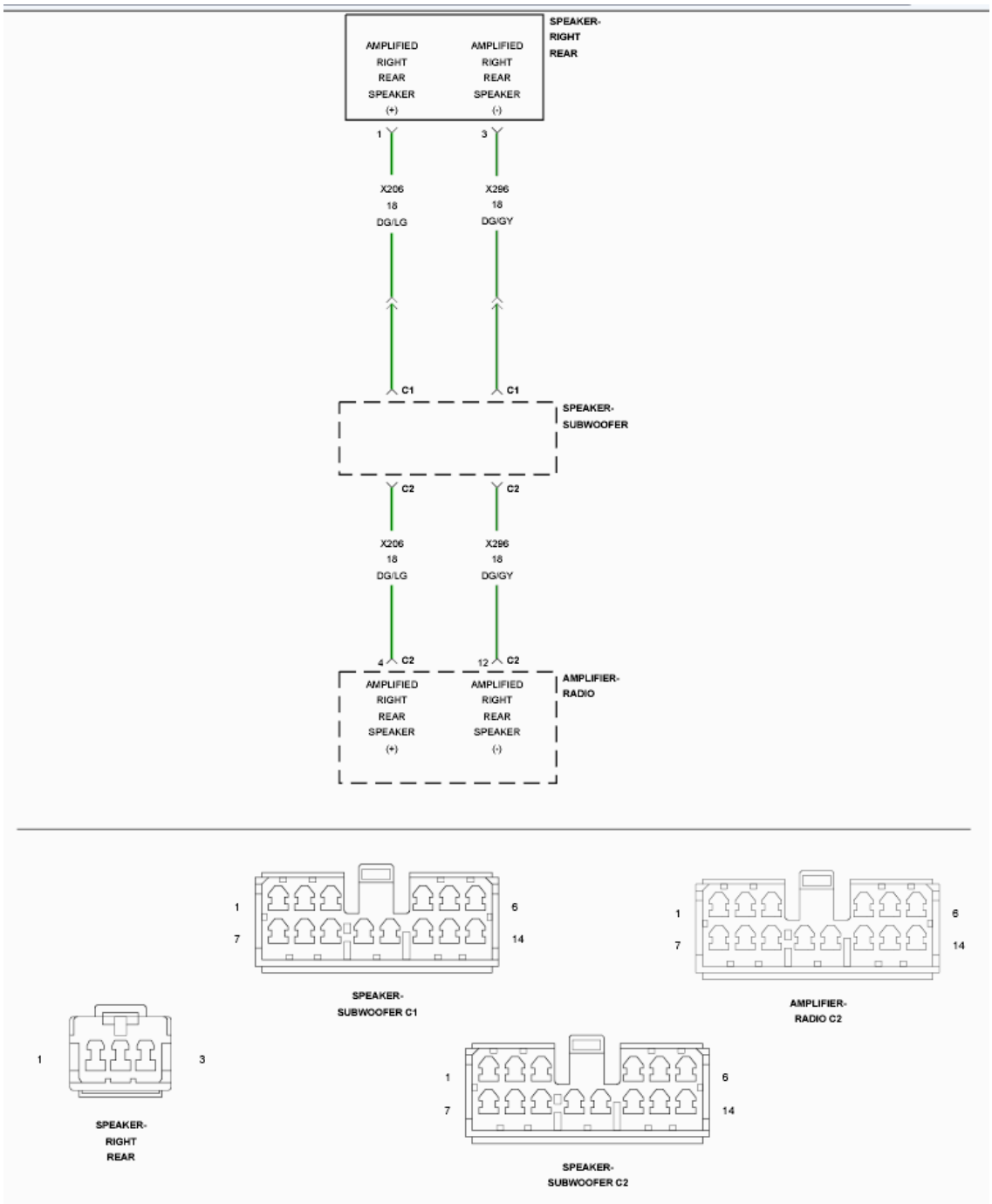

Fig. 82: Right Rear Speaker Circuit Diagram
Courtesy of CHRYSLER GROUP, LLC

For a complete wiring diagram, **refer to appropriate SYSTEM WIRING DIAGRAMS article** .

WHEN MONITORED

With the ignition on. Radio volume at 25 or higher.

SET CONDITION

The Amplifier detects that the output circuits are shorted together.

POSSIBLE CAUSES

Possible Causes
(X206) AMPLIFIED RIGHT REAR SPEAKER (+) CIRCUIT SHORTED TO THE (X296) AMPLIFIED RIGHT REAR SPEAKER (-) CIRCUIT AMPLIFIED RIGHT REAR SPEAKER AMPLIFIER

DIAGNOSTIC TEST

1. **CHECK FOR AN INTERMITTENT CONDITION**
   1. Turn the ignition on and open one of the front doors.

      NOTE: A front door must remain open whenever checking or erasing Amplifier DTCs.

   2. Using the scan tool, record and erase the Amplifier DTCs.
   3. Cycle the ignition switch from on to off, wait five seconds and then back to on.
   4. Turn the Radio on and set the volume to 25.
   5. Adjust the speakers to the rear and center.
   6. Using the scan tool, read the active Amplifier DTCs.

      Does the scan tool display active: B147D-CHANNEL 6 AUDIO SPEAKER OUTPUT CIRCUIT SHORTED TOGETHER?

      Yes

      - Go To 2

      No

      - Test complete, the condition or conditions that originally set this DTC are not present at this time. Using the wiring diagrams as a guide, check all related splices and connectors for signs of water intrusion, corrosion, pushed out or bent terminals and correct pin tension.

- Perform the BODY VERIFICATION TEST. Refer to **STANDARD PROCEDURE** .

2. **CHECK THE OPERATION OF THE AMPLIFIED RIGHT REAR SPEAKER**

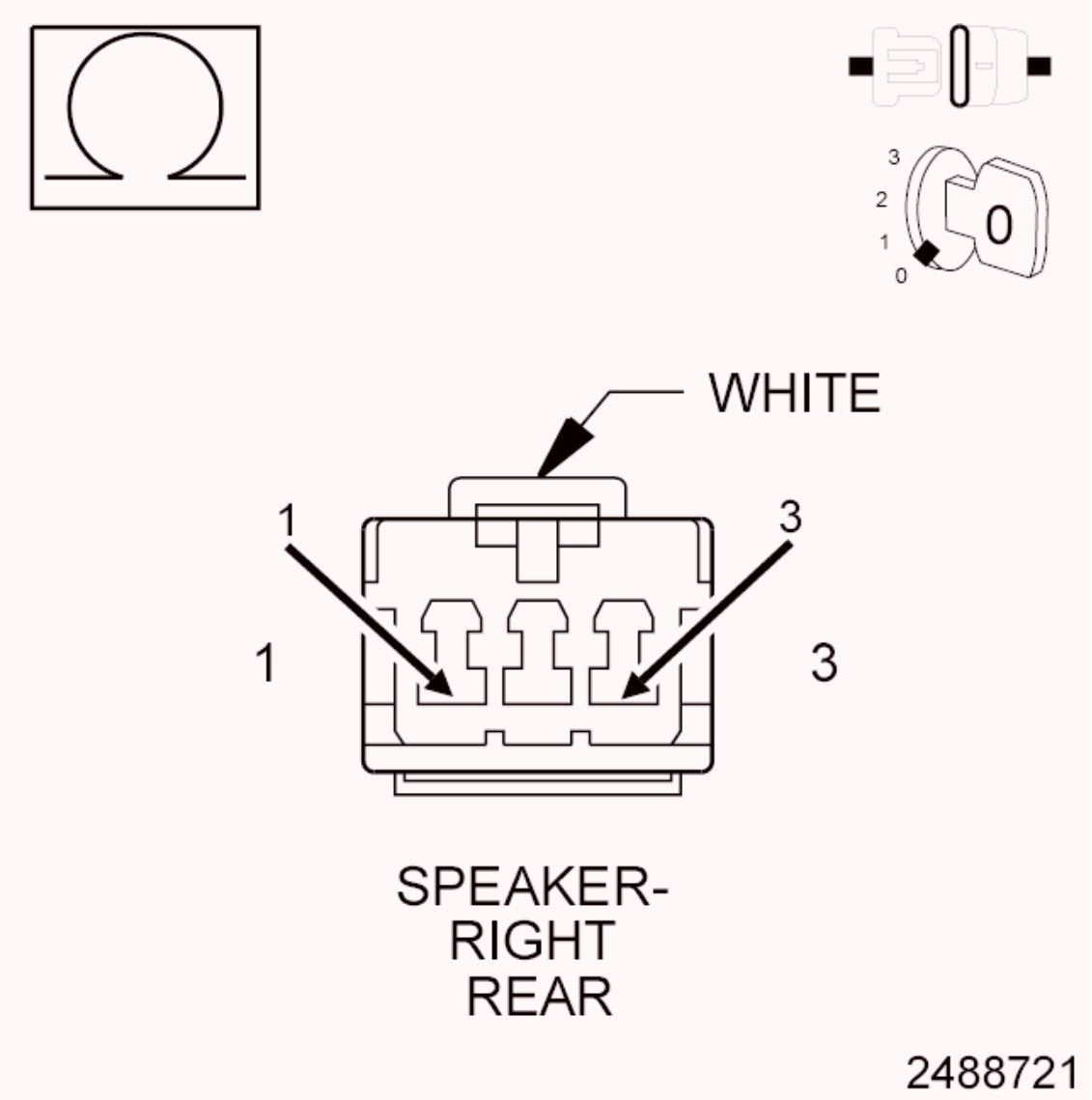

Fig. 83: Measuring Resistance Between Speaker Terminals
Courtesy of CHRYSLER GROUP, LLC

1. Turn the ignition off.
2. Disconnect the Amplified Right Rear Speaker.
3. Measure the resistance of the speaker between the two terminals.

NOTE: The graphic shows the connector for reference only. Measure between the speaker terminals.

Is the resistance of the speaker less than 1 Ohm?

Yes

- Replace the Amplified Right Rear Speaker in accordance with the Service Information.
- Perform the BODY VERIFICATION TEST. Refer to **STANDARD PROCEDURE** .

No

- Go To 3

3. **CHECK THE (X206) AMPLIFIED RIGHT REAR SPEAKER (+) CIRCUIT, AND THE (X296) AMPLIFIED RIGHT REAR SPEAKER (-) CIRCUITS FOR A SHORT TOGETHER**

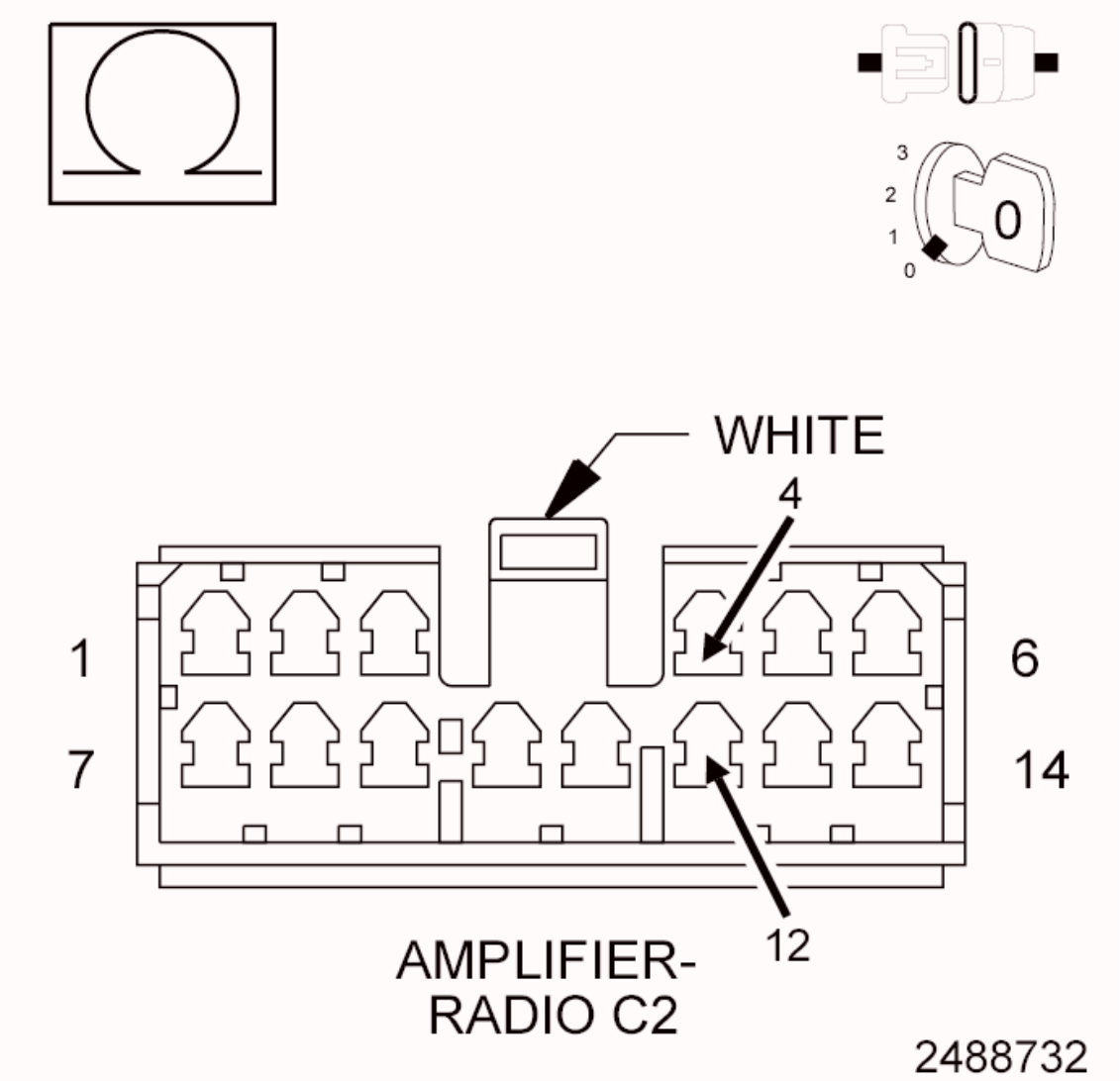

Fig. 84: Measuring Resistance Between Amplified Right Rear Speaker (+) Circuit & Amplified Right Rear Speaker (-) Circuit
Courtesy of CHRYSLER GROUP, LLC

1. Disconnect the Amplifier C2 harness connector.
2. Measure the resistance between the (X206) Amplified Right Rear Speaker (+) circuit, and the (X296) Amplified Right Rear Speaker (-) circuit.

   Is the resistance below 10K Ohms?

   Yes

   - Repair the (X206) Amplified Right Rear Speaker (+) circuit for a short to the (X296) Amplified Right Rear Speaker (-) circuit.
   - Perform the BODY VERIFICATION TEST. Refer to **STANDARD PROCEDURE** .

   No

   - Replace the Amplifier in accordance with the Service Information.
   - Perform the BODY VERIFICATION TEST. Refer to **STANDARD PROCEDURE** .

B147E-CHANNEL 7 AUDIO SPEAKER OUTPUT CIRCUIT PERFORMANCE

For a complete wiring diagram, **refer to appropriate SYSTEM WIRING DIAGRAMS article** .

WHEN MONITORED

With the ignition on.

SET CONDITION

This Diagnostic Trouble Code (DTC) sets if a Direct Current (DC) offset occurs on the output channel, the Amplifier shall set a DTC after a maturity rate of four to six seconds.

POSSIBLE CAUSES

Possible Causes

AMPLIFIER

DIAGNOSTIC TEST

CHECK FOR AN INTERMITTENT CONDITION

1. Turn the ignition on and open one of the front doors.

   NOTE: A front door must remain open whenever checking or erasing Amplifier DTCs.

2. Using the scan tool, record and erase the Amplifier DTCs.
3. Cycle the ignition switch from on to off, wait five seconds and then back to on.
4. Turn the Radio on and set the volume to 25.
5. Adjust the speakers to the rear and center.
6. Using the scan tool, read the active Amplifier DTCs.

   Does the scan tool display: B147E-CHANNEL 7 AUDIO SPEAKER OUTPUT CIRCUIT PERFORMANCE?

   Yes

   - Replace the Amplifier in accordance with the Service Information.
   - Perform the BODY VERIFICATION TEST. Refer to **STANDARD PROCEDURE** .

   No

   - Test complete, the condition or conditions that originally set this DTC are not present at this time. Using the wiring diagrams as a guide, check all related splices and connectors for signs of water intrusion, corrosion, pushed out or bent terminals and correct pin tension.
   - Perform the BODY VERIFICATION TEST. Refer to **STANDARD PROCEDURE** .

B147F-CHANNEL 7 AUDIO SPEAKER OUTPUT CIRCUIT LOW

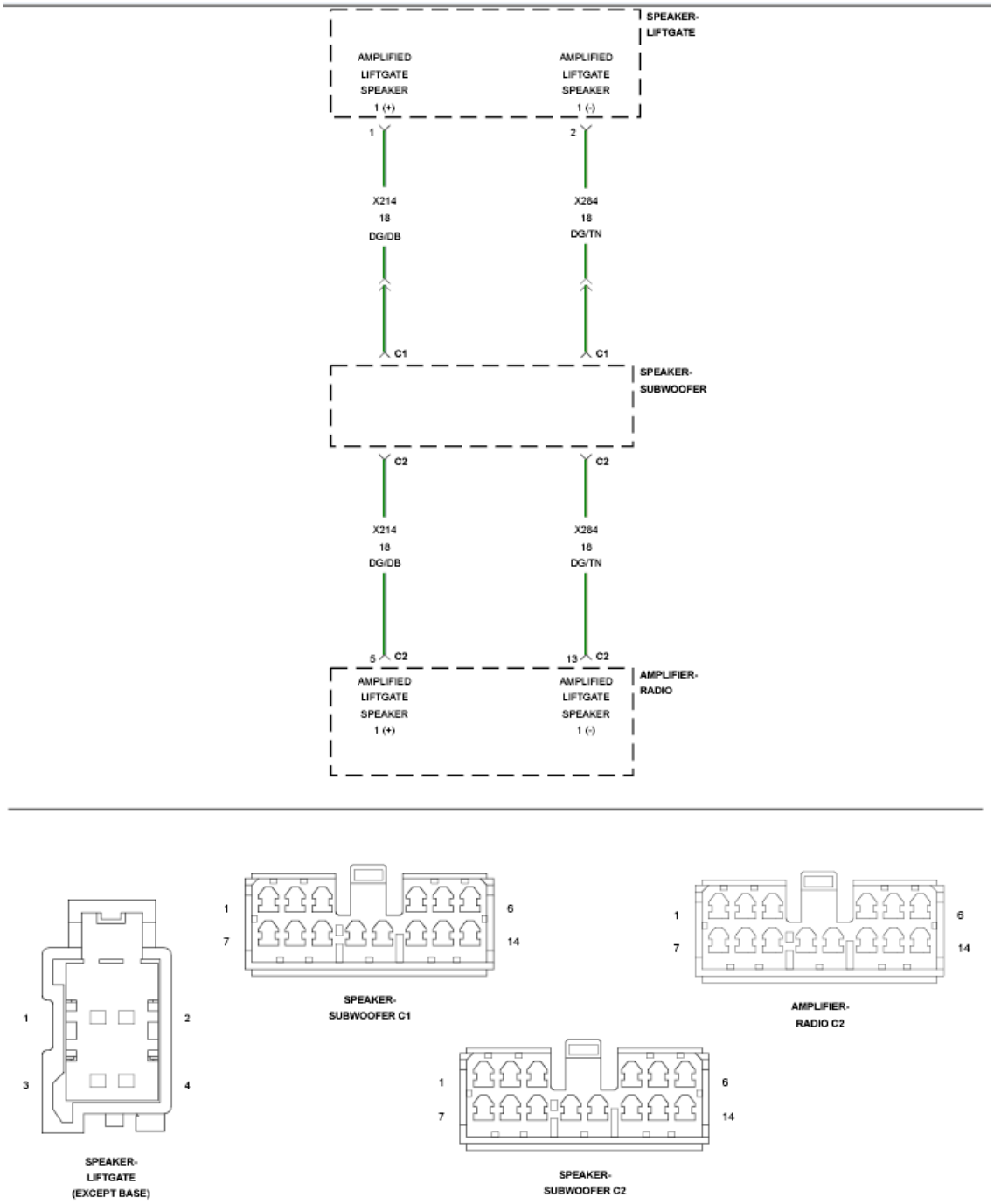

Fig. 85: Liftgate Speaker Circuit Diagram
Courtesy of CHRYSLER GROUP, LLC

For a complete wiring diagram, **refer to appropriate SYSTEM WIRING DIAGRAMS article** .

WHEN MONITORED

With the ignition on.

SET CONDITION

The Amplifier detects a shorted to ground condition on the speaker output circuit.

POSSIBLE CAUSES

Possible Causes
(X214) AMPLIFIED LIFTGATE SPEAKER 1 (+) CIRCUIT SHORTED TO GROUND
(X284) AMPLIFIED LIFTGATE SPEAKER 1 (-) CIRCUIT SHORTED TO GROUND
AMPLIFIED LIFTGATE SPEAKER
AMPLIFIER

DIAGNOSTIC TEST

1. **CHECK FOR AN INTERMITTENT CONDITION**
   1. Turn the ignition on and open one of the front doors.

      NOTE: A front door must remain open whenever checking or erasing Amplifier DTCs.

   2. Using the scan tool, record and erase the Amplifier DTCs.
   3. Cycle the ignition switch from on to off, wait five seconds and then back to on.
   4. Turn the Radio on and set the volume to 25.
   5. Adjust the speakers to the rear and center.
   6. Using the scan tool, read the active Amplifier DTCs.

      Does the scan tool display active: B147F-CHANNEL 7 AUDIO SPEAKER OUTPUT CIRCUIT LOW?

      Yes

      - Go To 2

      No

      - Test complete, the condition or conditions that originally set this

DTC are not present at this time. Using the wiring diagrams as a guide, check all related splices and connectors for signs of water intrusion, corrosion, pushed out or bent terminals and correct pin tension.

- Perform the BODY VERIFICATION TEST. Refer to **STANDARD PROCEDURE** .

2. **CHECK THE AMPLIFIED LIFTGATE SPEAKER FOR A SHORT TO GROUND**

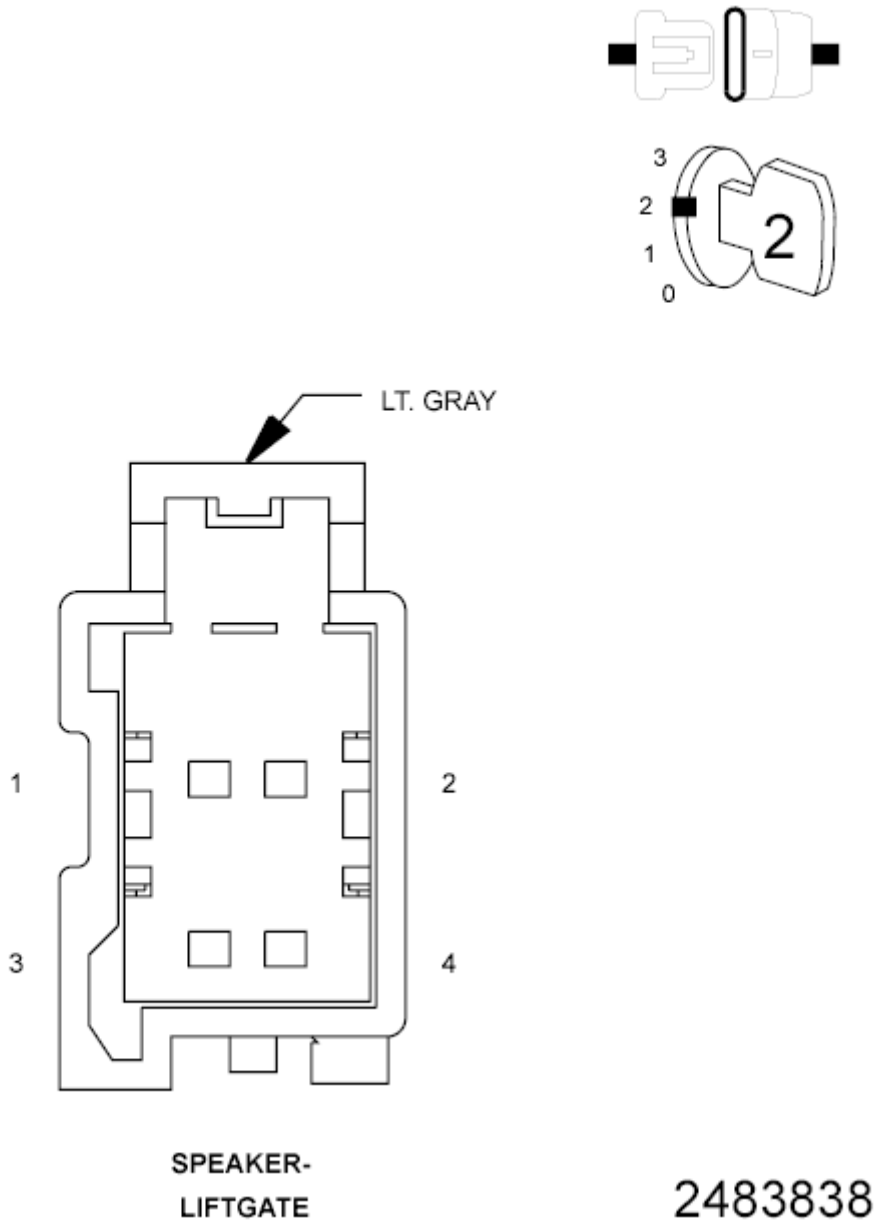

Fig. 86: Checking Amplified Liftgate Speaker For A Short To Ground
Courtesy of CHRYSLER GROUP, LLC

1. Turn the ignition off.
2. Disconnect the Amplified Liftgate Speaker harness connector.
3. Turn the ignition on, engine not running.
4. With the scan tool, read the active DTCs.

   Does the scan tool display: B147F-CHANNEL 7 AUDIO SPEAKER OUTPUT CIRCUIT LOW?

   Yes

   - Go To 3

   No

   - Replace the Amplified Liftgate Speaker in accordance with the Service Information.
   - Perform the BODY VERIFICATION TEST. Refer to **STANDARD PROCEDURE** .

3. **CHECK THE (X214) AMPLIFIED LIFTGATE SPEAKER 1 (+) CIRCUIT FOR A SHORT TO GROUND**

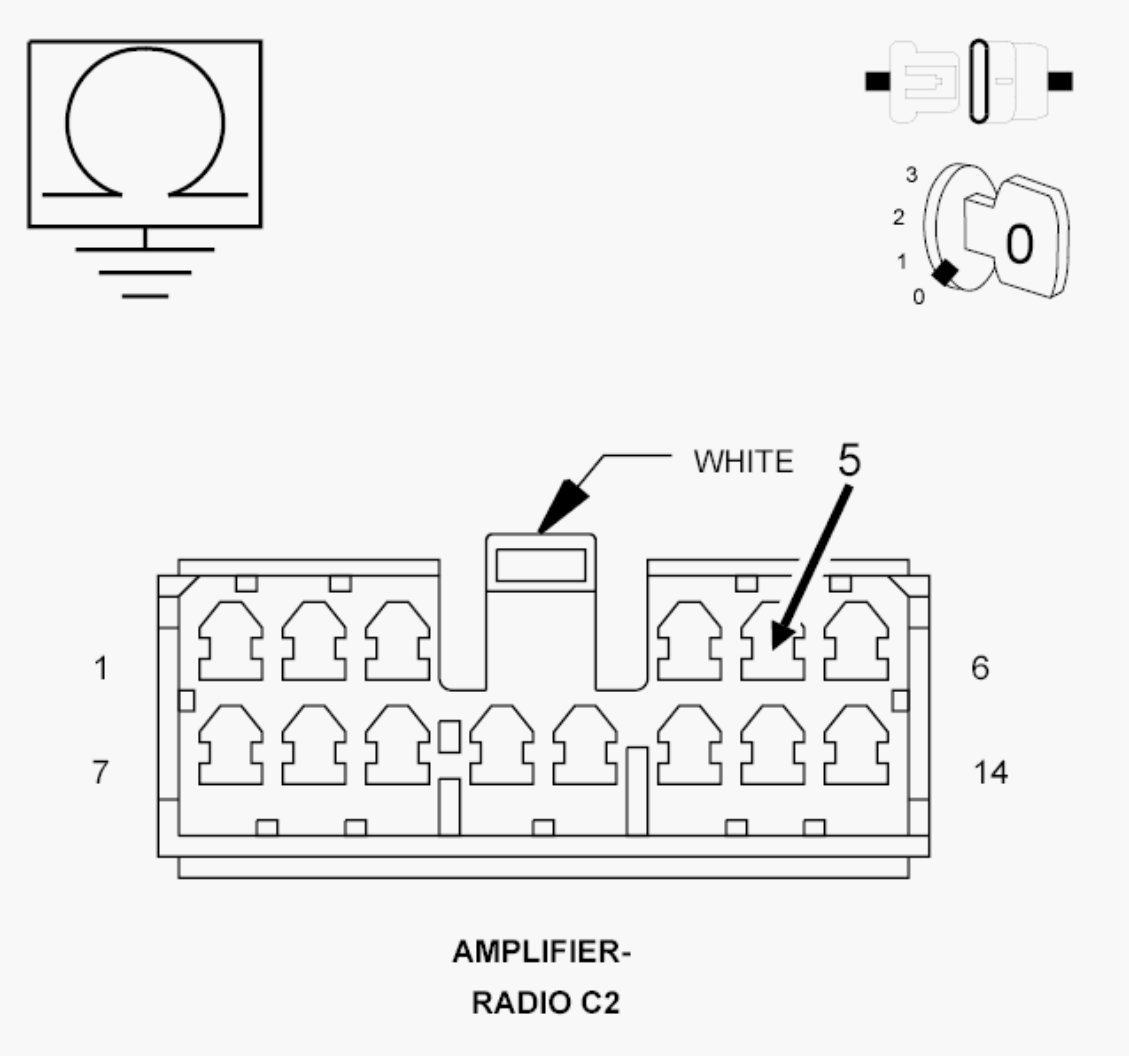

Fig. 87: Measuring Resistance Between Ground & Amplified Liftgate Speaker 1 (+) Circuit
Courtesy of CHRYSLER GROUP, LLC

1. Turn the ignition off.
2. Disconnect the Amplifier C2 harness connector.
3. Measure the resistance between ground and the (X214) Amplified Liftgate Speaker 1 (+) circuit.

   Is the resistance below 10K Ohms?

   Yes

   - Repair the (X214) Amplified Liftgate Speaker 1 (+) circuit for a short to ground.
   - Perform the BODY VERIFICATION TEST. Refer to

STANDARD PROCEDURE .

No

- Go To 4

4. **CHECK THE (X284) AMPLIFIED LIFTGATE SPEAKER 1 (-) CIRCUIT FOR A SHORT TO GROUND**

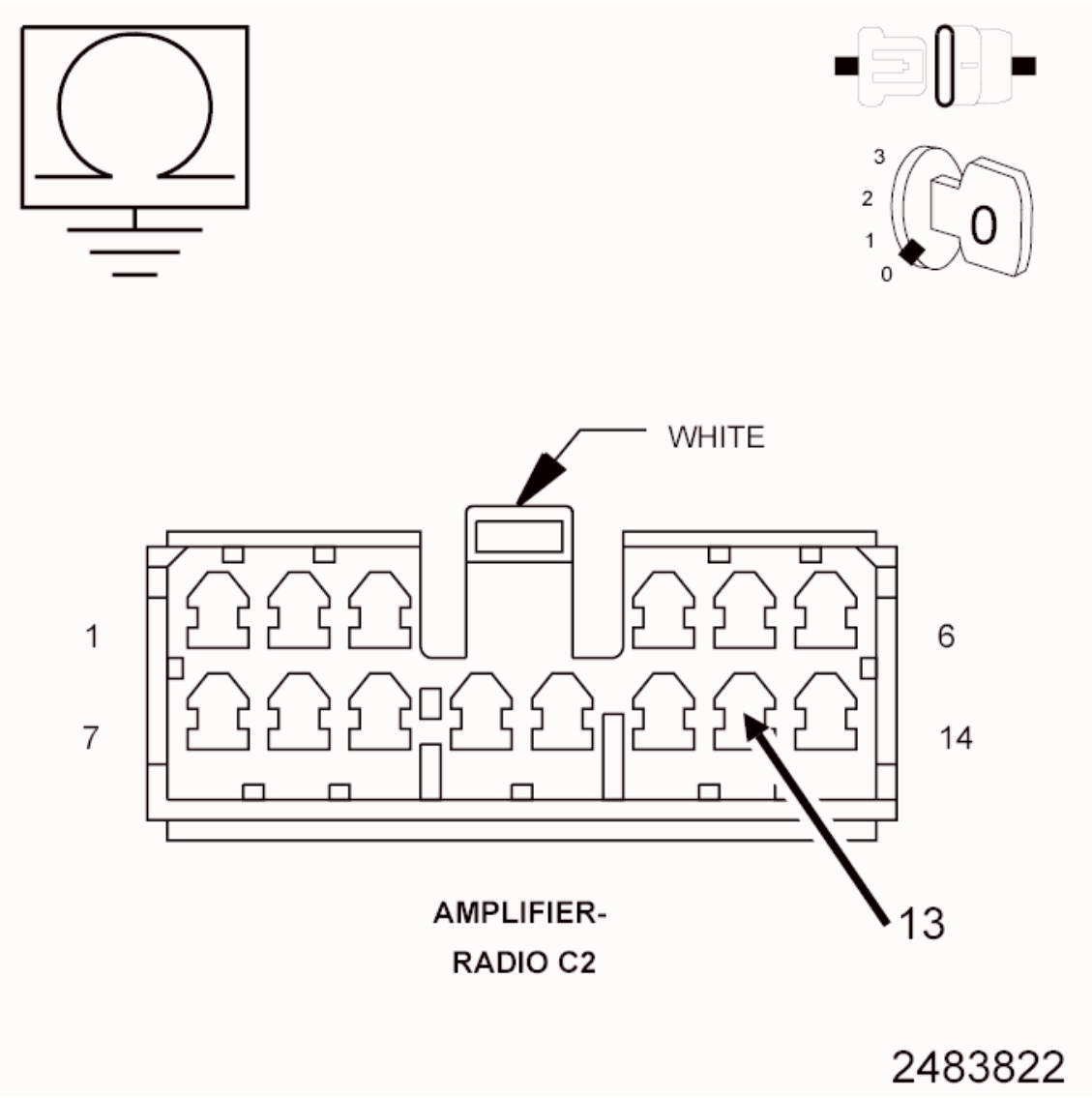

Fig. 88: Measuring Resistance Between Ground & Amplified Liftgate Speaker 1 (-) Circuit
Courtesy of CHRYSLER GROUP, LLC

1. Measure the resistance between ground and the (X284) Amplified Liftgate Speaker 1 (-) circuit.

Is the resistance below 10K Ohms?

Yes

- Repair the (X284) Amplified Liftgate Speaker 1 (-) circuit for a short to ground.
- Perform the BODY VERIFICATION TEST. Refer to **STANDARD PROCEDURE** .

No

- Replace the Amplifier in accordance with the Service Information.
- Perform the BODY VERIFICATION TEST. Refer to **STANDARD PROCEDURE** .

B1480-CHANNEL 7 AUDIO SPEAKER OUTPUT CIRCUIT HIGH

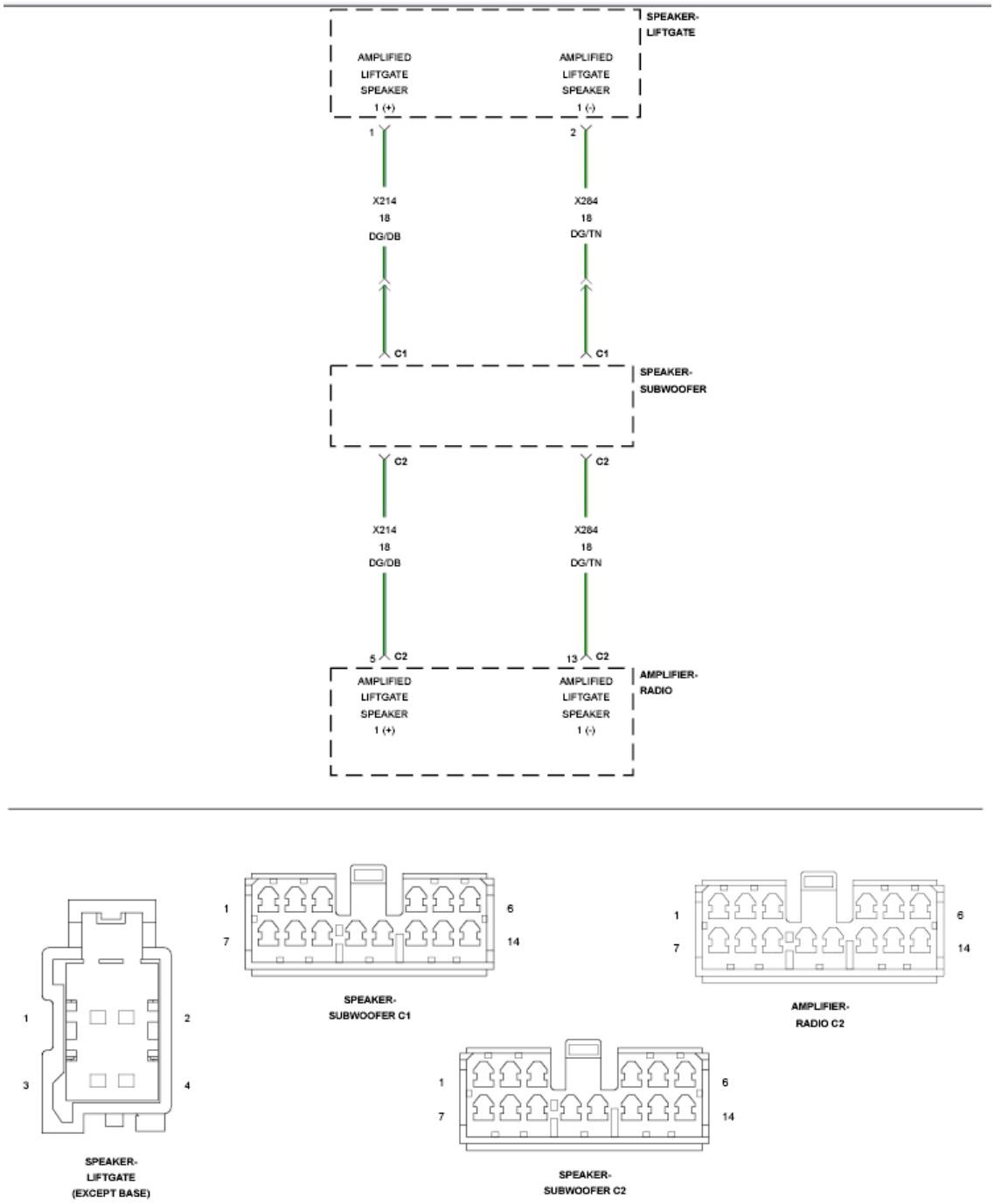

Fig. 89: Liftgate Speaker Circuit Diagram
Courtesy of CHRYSLER GROUP, LLC

For a complete wiring diagram, **refer to appropriate SYSTEM WIRING DIAGRAMS article** .

WHEN MONITORED

With the ignition on.

SET CONDITION

The Amplifier detects a short to battery condition on the output circuit.

POSSIBLE CAUSES

Possible Causes
(X214) AMPLIFIED LIFTGATE SPEAKER 1 (+) CIRCUIT SHORT TO VOLTAGE (X284) AMPLIFIED LIFTGATE SPEAKER 1 (-) CIRCUIT SHORTED TO VOLTAGE AMPLIFIER

DIAGNOSTIC TEST

1. **CHECK FOR AN INTERMITTENT CONDITION**
   1. Turn the ignition on and open one of the front doors.

      NOTE: A front door must remain open whenever checking or erasing Amplifier DTCs.

   2. Using the scan tool, record and erase the Amplifier DTCs.
   3. Cycle the ignition switch from on to off, wait five seconds and then back to on.
   4. Turn the Radio on and set the volume to 25.
   5. Adjust the speakers to the rear and center.
   6. Using the scan tool, read the active Amplifier DTCs.

      Does the scan tool display: B1480-CHANNEL 7 AUDIO SPEAKER OUTPUT CIRCUIT HIGH?

      Yes

      - Go To 2

      No

      - Test complete, the condition or conditions that originally set this DTC are not present at this time. Using the wiring diagrams as a guide, check all related splices and connectors for signs of water

intrusion, corrosion, pushed out or bent terminals and correct pin tension.

- Perform the BODY VERIFICATION TEST. Refer to **STANDARD PROCEDURE** .

2. **CHECK FOR VOLTAGE ON THE (X214) AMPLIFIED LIFTGATE SPEAKER 1 (+) CIRCUIT**

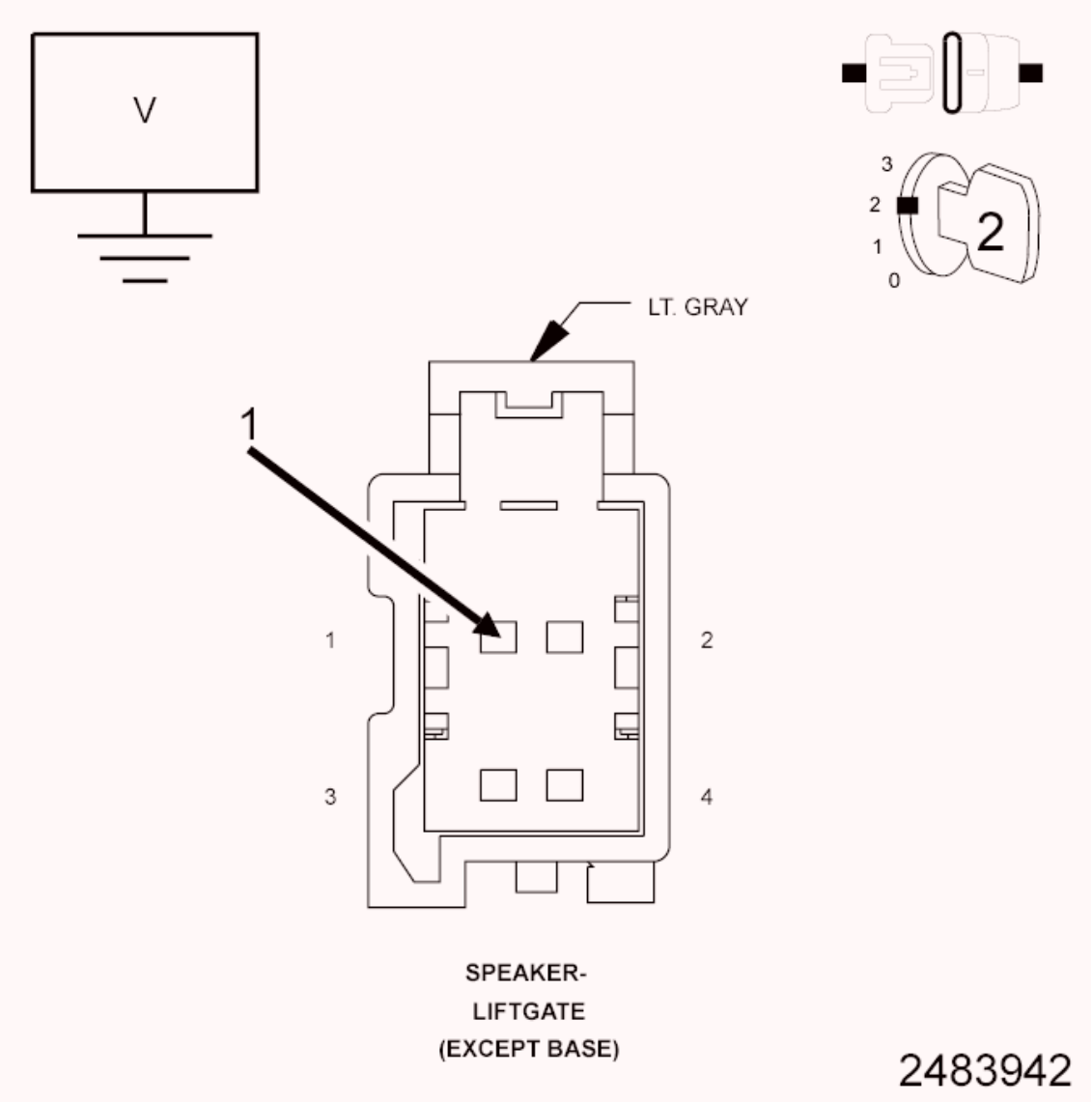

Fig. 90: Measuring Voltage Between Amplified Liftgate Speaker 1 (+) Circuit & Ground
Courtesy of CHRYSLER GROUP, LLC

1. Turn the ignition off.
2. Disconnect the Amplifier C2 harness connector.
3. Disconnect the Amplified Liftgate Speaker harness connector.

4. Turn the ignition on.
5. Measure the voltage between the (X214) Amplified Liftgate Speaker 1 (+) circuit and ground.

   Is there any voltage present?

   Yes

   - Repair the (X214) Amplified Liftgate Speaker 1 (+) circuit for a short to voltage.
   - Perform the BODY VERIFICATION TEST. Refer to **STANDARD PROCEDURE** .

   No

   - Go To 3

3. **CHECK FOR VOLTAGE ON THE (X284) AMPLIFIED LIFTGATE SPEAKER 1 (-) CIRCUIT**

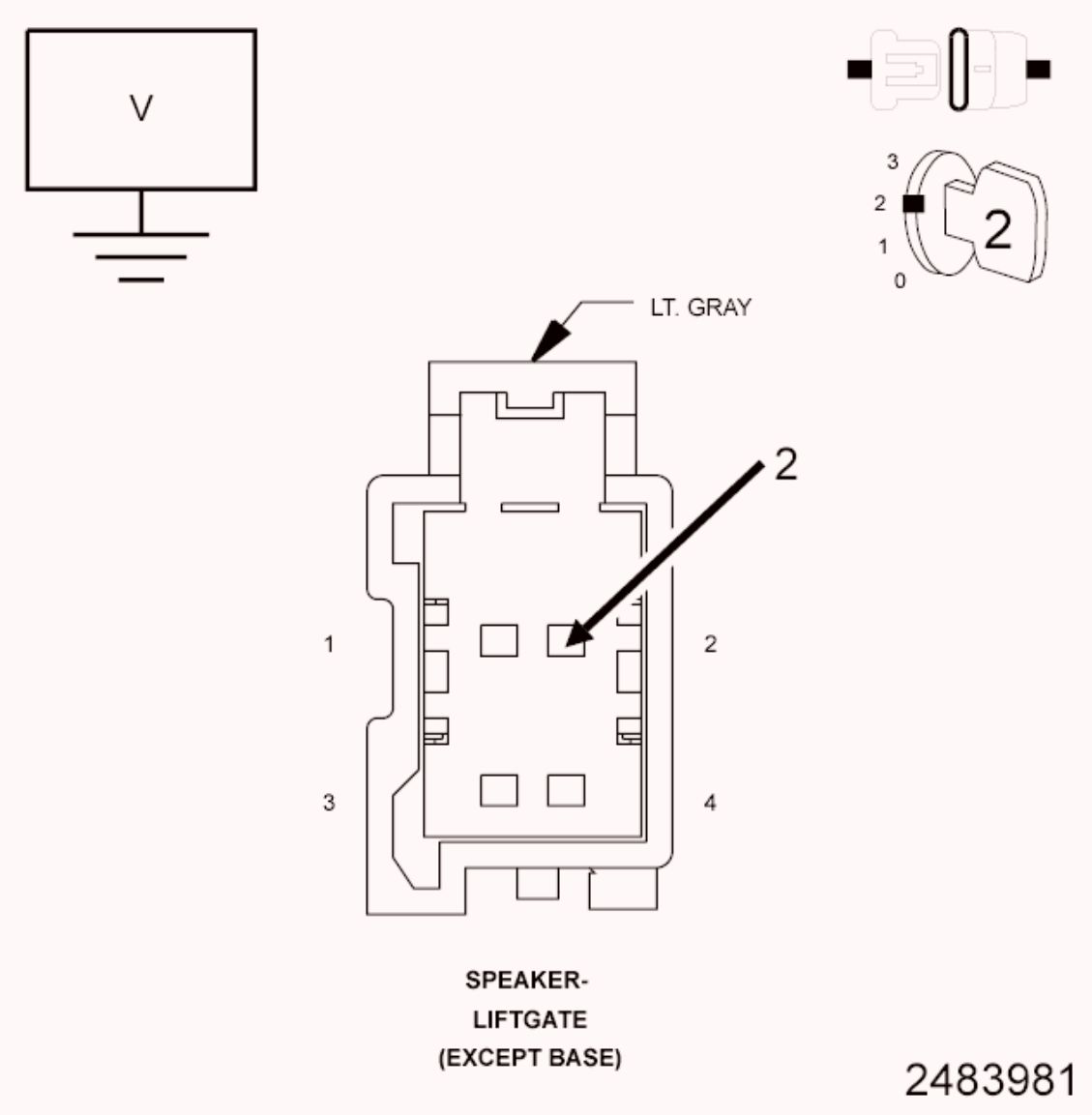

Fig. 91: Measuring Voltage Between Amplified Liftgate Speaker 1 (-) Circuit & Ground
Courtesy of CHRYSLER GROUP, LLC

1. Measure the voltage between the (X284) Amplified Liftgate Speaker 1 (-) circuit and ground.

   Is there any voltage present?

   Yes

   - Repair the (X284) Amplified Liftgate Speaker 1 (-) circuit for a short to voltage.
   - Perform the BODY VERIFICATION TEST. Refer to

STANDARD PROCEDURE .

No

- Replace the Amplifier in accordance with the Service Information.
- Perform the BODY VERIFICATION TEST. Refer to **STANDARD PROCEDURE** .

B1481-CHANNEL 7 AUDIO SPEAKER OUTPUT CIRCUIT OPEN

For a complete wiring diagram, **refer to appropriate SYSTEM WIRING DIAGRAMS article** .

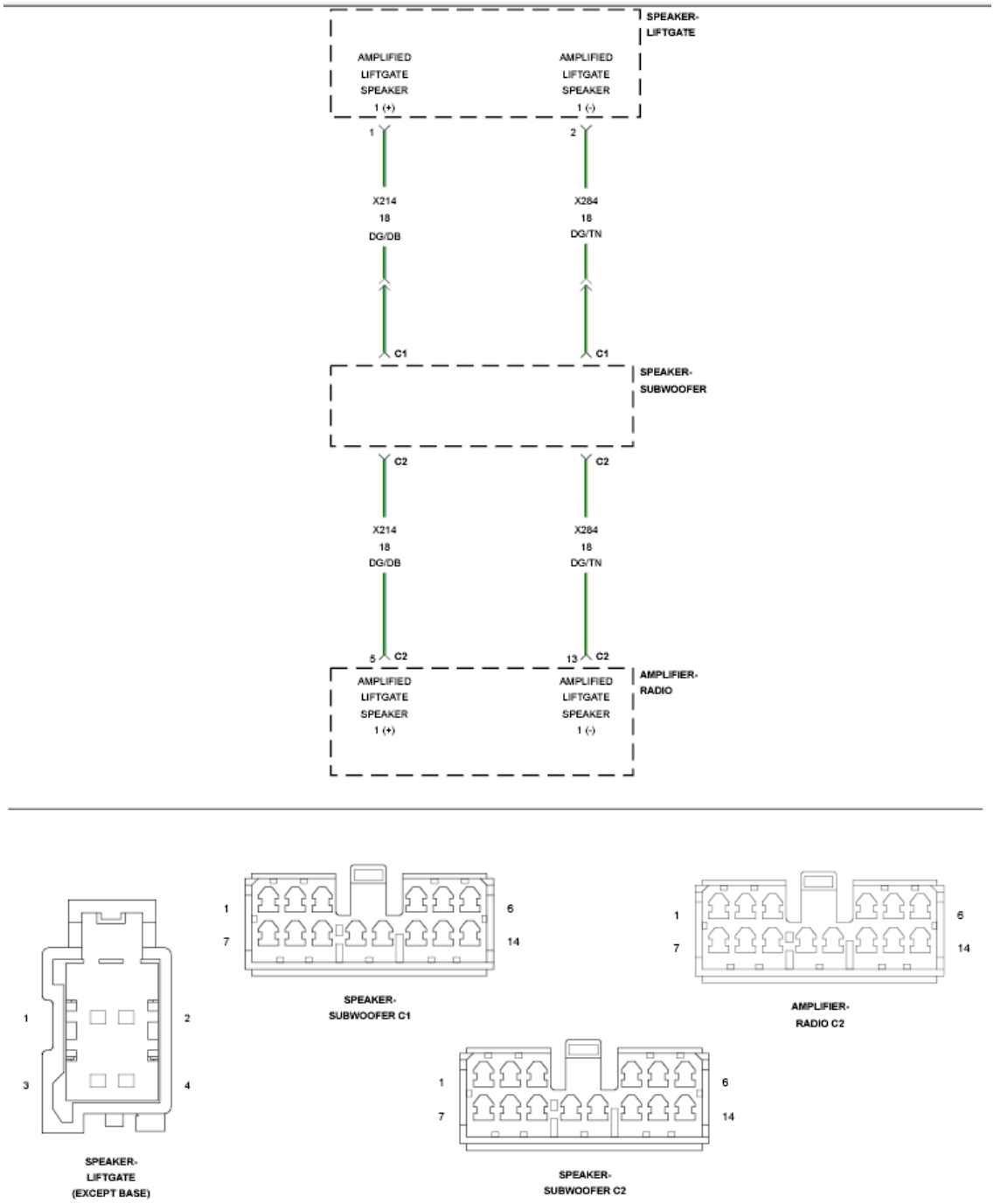

Fig. 92: Liftgate Speaker Circuit Diagram
Courtesy of CHRYSLER GROUP, LLC

WHEN MONITORED

Amplifier BUS wake-up. Amplifier reset with scan tool.

SET CONDITION

The Amplifier detects an open condition on the speaker output circuit.

POSSIBLE CAUSES

Possible Causes
(X214) AMPLIFIED LIFTGATE SPEAKER 1 (+) CIRCUIT OPEN (X284) AMPLIFIED LIFTGATE SPEAKER 1 (-) CIRCUIT OPEN AMPLIFIED LIFTGATE SPEAKER AMPLIFIER

DIAGNOSTIC TEST

1. **CHECK FOR AN INTERMITTENT CONDITION**
   1. Turn the ignition on and open one of the front doors.

      NOTE: A front door must remain open whenever checking or erasing Amplifier DTCs.

   2. Using the scan tool, record and erase the Amplifier DTCs.
   3. Cycle the ignition switch from on to off, wait five seconds and then back to on.
   4. Turn the Radio on and set the volume to 25.
   5. Adjust the speakers to the rear and center.
   6. Using the scan tool, read the active Amplifier DTCs.

      Does the scan tool display: B1481-CHANNEL 7 AUDIO SPEAKER OUTPUT CIRCUIT OPEN?

      Yes

      - Go To 2

      No

      - Test complete, the condition or conditions that originally set this DTC are not present at this time. Using the wiring diagrams as a guide, check all related splices and connectors for signs of water intrusion, corrosion, pushed out or bent terminals and correct pin tension.
      - Perform the BODY VERIFICATION TEST. Refer to **STANDARD PROCEDURE** .

2. CHECK THE OPERATION OF THE AMPLIFIED LIFTGATE SPEAKER

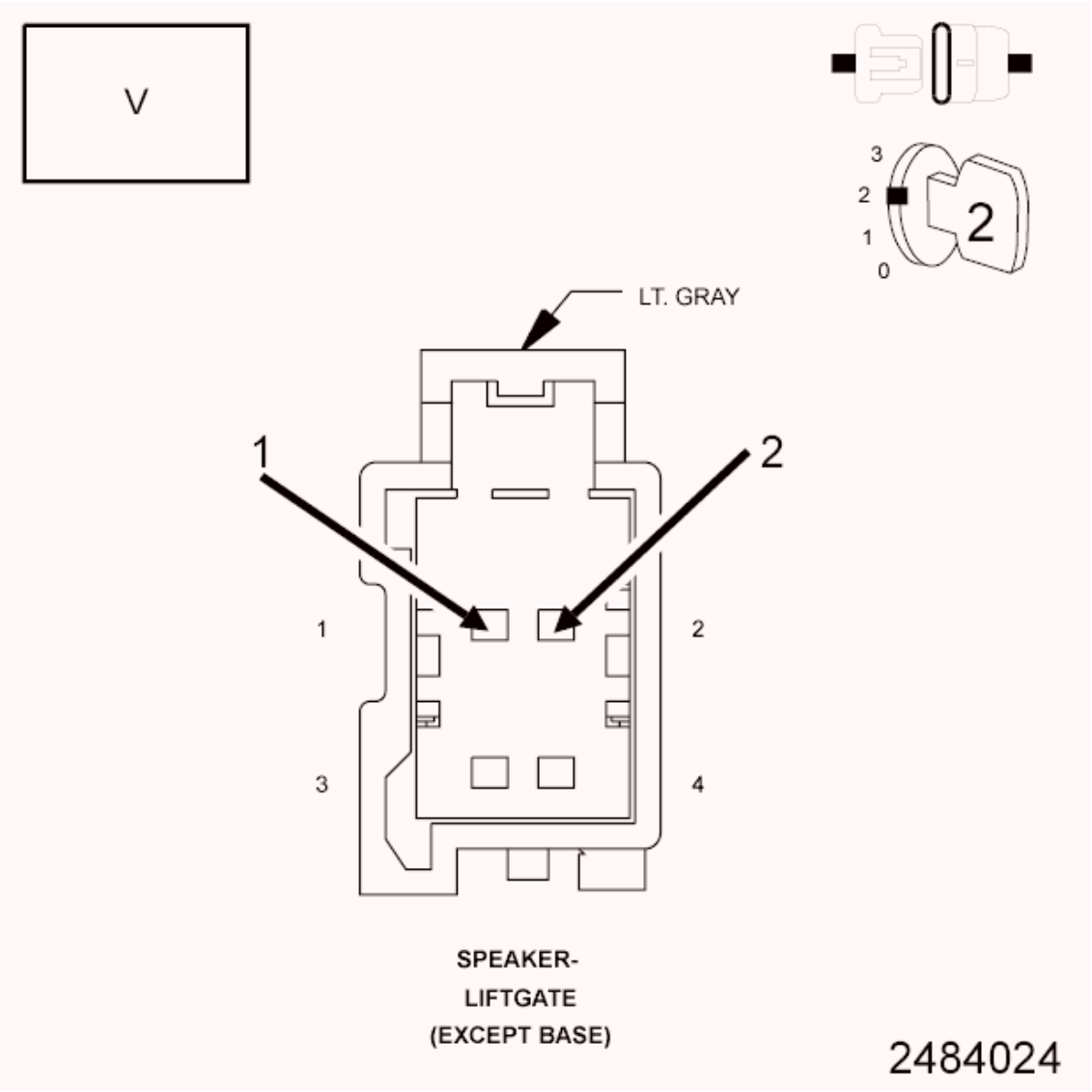

Fig. 93: Measuring Voltage Of Amplified Liftgate Speaker 1 Circuits In Amplified Liftgate Speaker Harness Connector
Courtesy of CHRYSLER GROUP, LLC

1. Turn the ignition off.
2. Disconnect the Amplified Liftgate Speaker harness connector.
3. Turn the ignition on.
4. Turn the radio on and turn the volume to mid level.
5. With a voltmeter set to read in A/C voltage, measure the voltage of the Amplified Liftgate Speaker 1 circuits in the Amplified Liftgate Speaker harness connector.

Is the voltage above 1 volt?

Yes

- Replace the Amplified Liftgate Speaker in accordance with the Service Information.
- Perform the BODY VERIFICATION TEST. Refer to **STANDARD PROCEDURE** .

No

- Go To 3

3. **CHECK THE (X214) AMPLIFIED LIFTGATE SPEAKER 1 (+) CIRCUIT FOR AN OPEN**

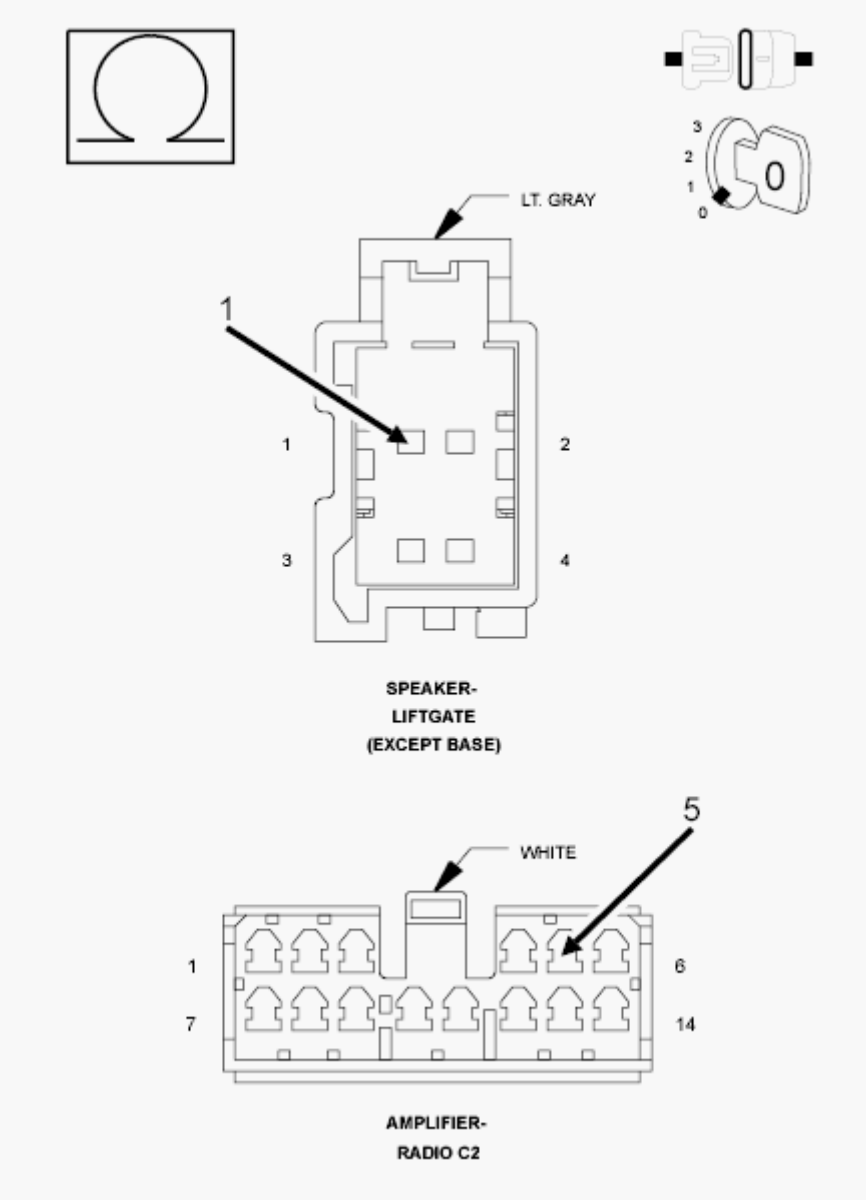

Fig. 94: Measuring Resistance Of Amplified Liftgate Speaker 1 (+) Circuit Between Amplifier C2 Harness Connector & Amplified Liftgate Speaker Harness Connector
Courtesy of CHRYSLER GROUP, LLC

1. Turn the ignition off.
2. Disconnect the Amplifier C2 harness connector.
3. Measure the resistance of the (X214) Amplified Liftgate Speaker 1 (+) circuit between the Amplifier C2 harness connector and the Amplified Liftgate Speaker harness connector.

   Is the resistance below 5.0 Ohms?

Yes

- Go To 4

No

- Repair the (X214) Amplified Liftgate Speaker 1 (+) circuit for an open.
- Perform the BODY VERIFICATION TEST. Refer to **STANDARD PROCEDURE** .

4. **CHECK THE (X284) AMPLIFIED LIFTGATE SPEAKER 1 (-) CIRCUIT FOR AN OPEN**

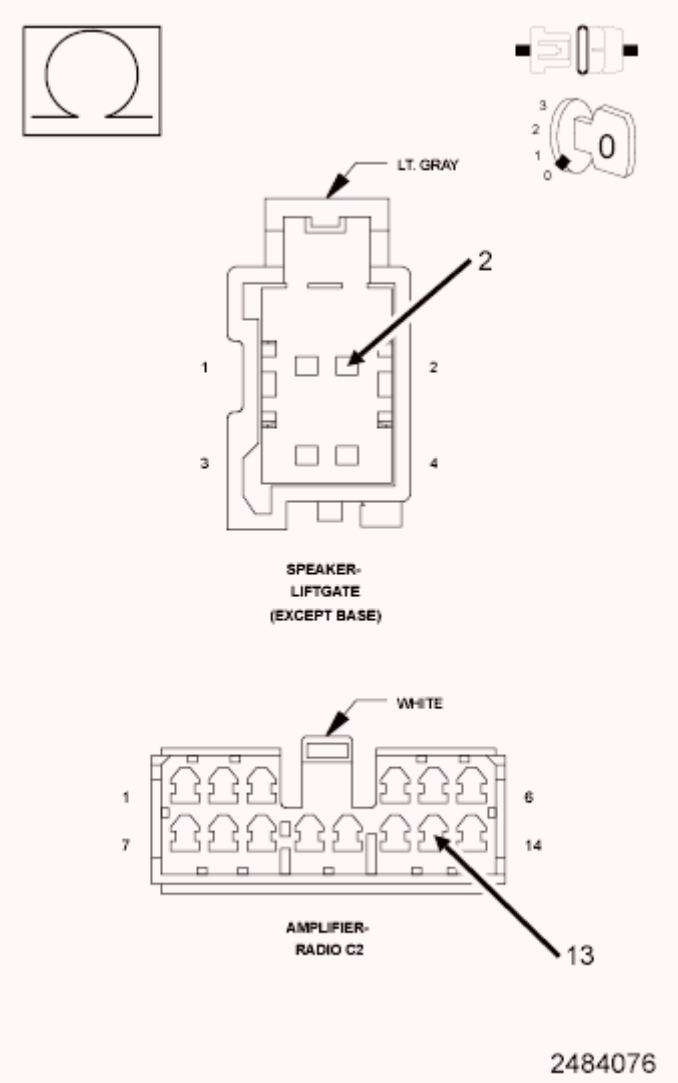

Fig. 95: Measuring Resistance Of Amplified Liftgate Speaker 1 (-) Circuit Between Amplifier C2 harness connector & Amplified Liftgate Speaker Harness Connector

Courtesy of CHRYSLER GROUP, LLC

1. Measure the resistance of the (X284) Amplified Liftgate Speaker 1 (-) circuit between the Amplifier C2 harness connector and the Amplified Liftgate Speaker harness connector.

   Is the resistance below 5.0 Ohms?

   Yes

   - Replace the Amplifier in accordance with the Service Information.
   - Perform the BODY VERIFICATION TEST. Refer to **STANDARD PROCEDURE** .

   No

   - Repair the (X284) Amplified Liftgate Speaker 1 (-) circuit for an open.
   - Perform the BODY VERIFICATION TEST. Refer to **STANDARD PROCEDURE** .

B1482-CHANNEL 7 AUDIO SPEAKER OUTPUT CIRCUIT SHORTED TOGETHER

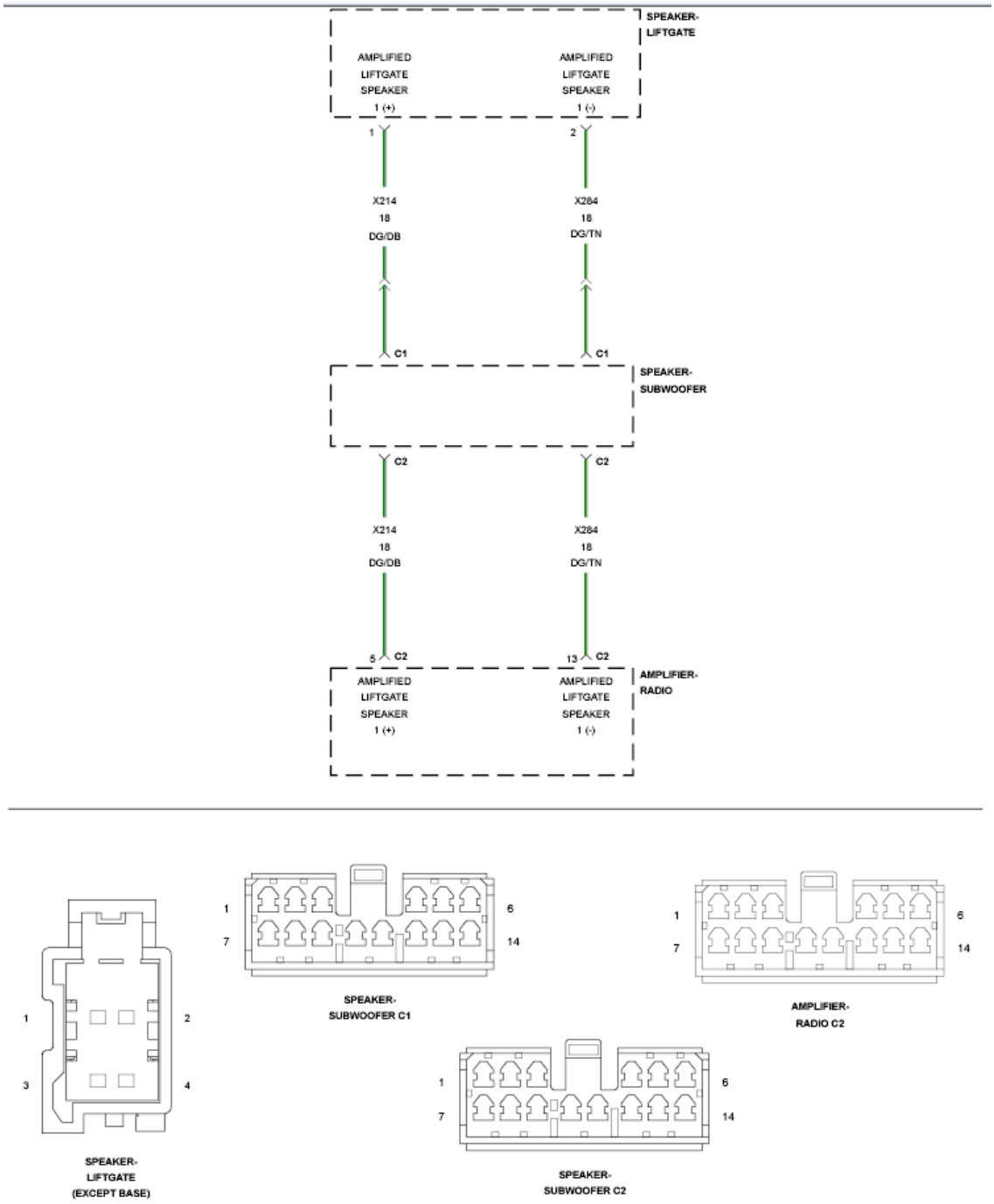

Fig. 96: Liftgate Speaker Circuit Diagram
Courtesy of CHRYSLER GROUP, LLC

For a complete wiring diagram, **refer to appropriate SYSTEM WIRING DIAGRAMS article** .

WHEN MONITORED

With the ignition on. Radio volume at 25 or higher.

SET CONDITION

The Amplifier detects that the output circuits are shorted together.

POSSIBLE CAUSES

Possible Causes
(X214) AMPLIFIED LIFTGATE SPEAKER 1 (+) CIRCUIT SHORTED TO THE (X284) AMPLIFIED LIFTGATE SPEAKER 1 (-) CIRCUIT AMPLIFIED LIFTGATE SPEAKER AMPLIFIER

DIAGNOSTIC TEST

1. **CHECK FOR AN INTERMITTENT CONDITION**
   1. Turn the ignition on and open one of the front doors.

      NOTE: A front door must remain open whenever checking or erasing Amplifier DTCs.

   2. Using the scan tool, record and erase the Amplifier DTCs.
   3. Cycle the ignition switch from on to off, wait five seconds and then back to on.
   4. Turn the Radio on and set the volume to 25.
   5. Adjust the speakers to the rear and center.
   6. Using the scan tool, read the active Amplifier DTCs.

   Does the scan tool: B1482-CHANNEL 7 AUDIO SPEAKER OUTPUT CIRCUIT SHORTED TOGETHER?

   Yes

   - Go To 2

   No

   - Test complete, the condition or conditions that originally set this DTC are not present at this time. Using the wiring diagrams as a guide, check all related splices and connectors for signs of water intrusion, corrosion, pushed out or bent terminals and correct pin

tension.

- Perform the BODY VERIFICATION TEST. Refer to **STANDARD PROCEDURE** .

2. **CHECK THE OPERATION OF THE AMPLIFIED LIFTGATE SPEAKER**

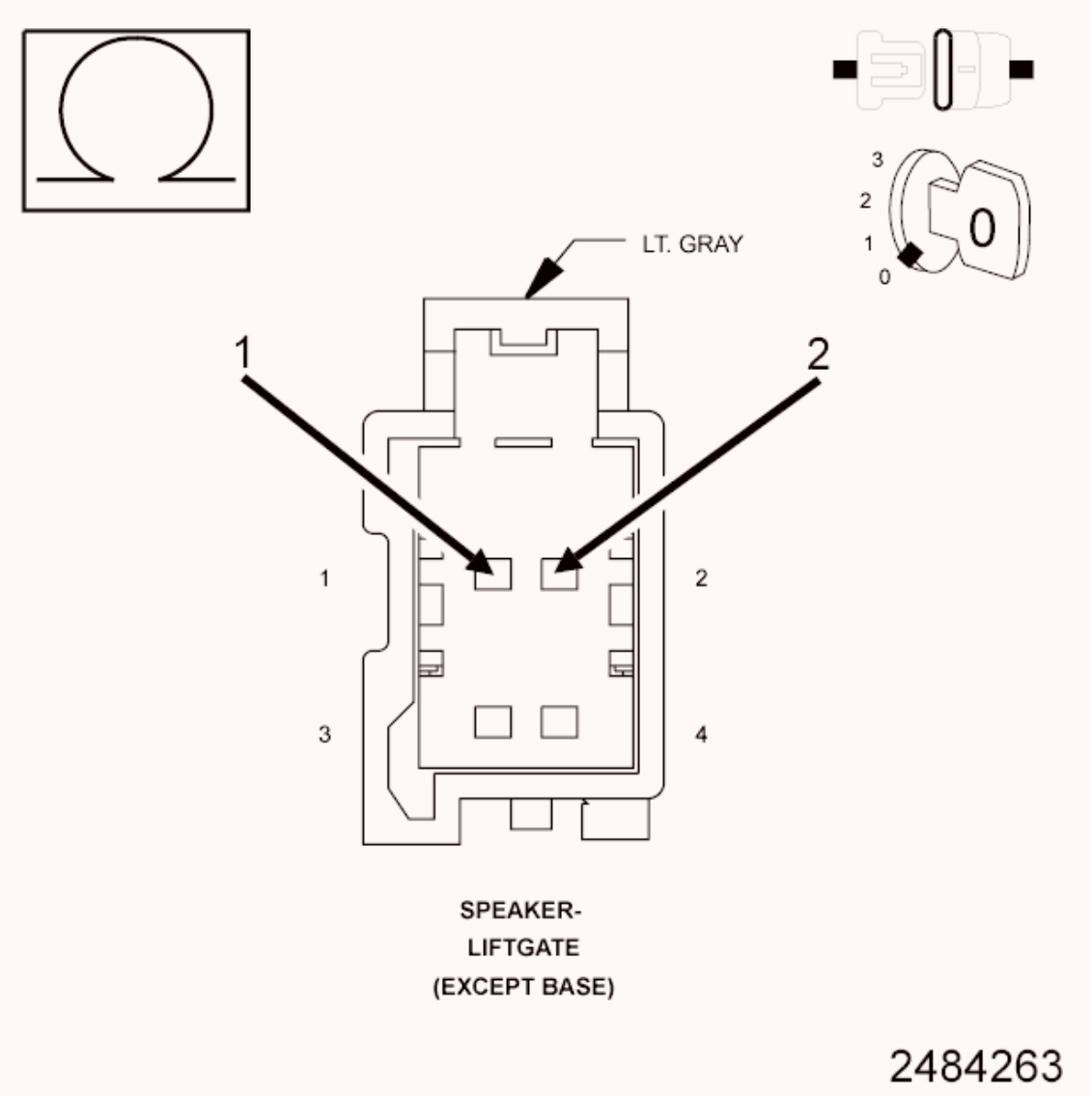

Fig. 97: Measuring Resistance Of Amplified Liftgate Speaker Between Component Terminals
Courtesy of CHRYSLER GROUP, LLC

1. Turn the ignition off.
2. Disconnect the Amplified Liftgate Speaker.
3. Measure the resistance of the Amplified Liftgate Speaker between the component terminals.

NOTE: The graphic shows the connector for reference only. Measure the speaker terminals.

Is the resistance of the speaker below 1 Ohm?

Yes

- Replace the Amplified Liftgate Speaker in accordance with the Service Information.
- Perform the BODY VERIFICATION TEST. Refer to **STANDARD PROCEDURE** .

No

- Go To 3

3. **CHECK THE (X214) AMPLIFIED LIFTGATE SPEAKER 1 (+) CIRCUIT, AND THE (X284) AMPLIFIED LIFTGATE SPEAKER 1 (-) CIRCUITS FOR A SHORT TOGETHER**

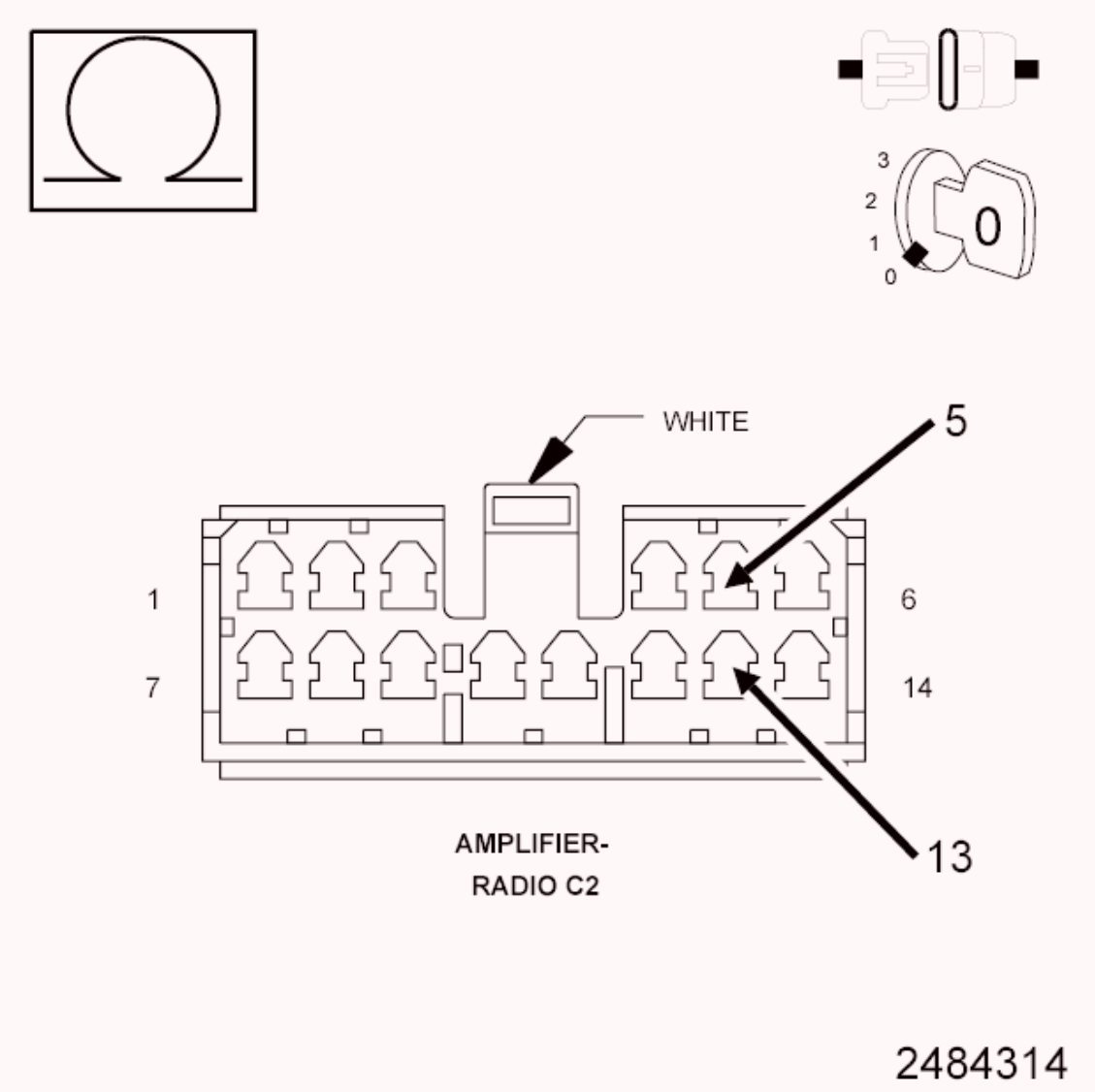

Fig. 98: Checking Amplified Liftgate Speaker 1 (+) Circuit & Amplified Liftgate Speaker 1 (-) Circuits For A Short Together
Courtesy of CHRYSLER GROUP, LLC

1. Disconnect the Amplifier C2 harness connector.
2. Measure the resistance between the (X214) Amplified Liftgate Speaker 1 (+) circuit, and the (X284) Amplified Liftgate Speaker 1 (-) circuit.

   Is the resistance below 10K Ohms?

   Yes

   - Repair the (X214) Amplified Liftgate Speaker 1 (+) circuit, and the (X284) Amplified Liftgate Speaker 1 (-) circuit for a short together.

- Perform the BODY VERIFICATION TEST. Refer to **STANDARD PROCEDURE** .

No

- Replace the Amplifier in accordance with the Service Information.
- Perform the BODY VERIFICATION TEST. Refer to **STANDARD PROCEDURE** .

B1483-CHANNEL 8 AUDIO SPEAKER OUTPUT CIRCUIT PERFORMANCE

For a complete wiring diagram, **refer to appropriate SYSTEM WIRING DIAGRAMS article** .

WHEN MONITORED

With the ignition on.

SET CONDITION

This Diagnostic Trouble Code (DTC) sets if a Direct Current (DC) offset occurs on the output channel, the Amplifier shall set a DTC after a maturity rate of four to six seconds.

POSSIBLE CAUSES

Possible Causes
AMPLIFIER

DIAGNOSTIC TEST

CHECK FOR AN INTERMITTENT CONDITION

1. Turn the ignition on and open one of the front doors.

NOTE: A front door must remain open whenever checking or erasing Amplifier DTCs.

2. Using the scan tool, record and erase the Amplifier DTCs.
3. Cycle the ignition switch from on to off, wait five seconds and then back to on.
4. Turn the Radio on and set the volume to 25.

5. Adjust the speakers to the rear and center.
6. Using the scan tool, read the active Amplifier DTCs.

   Does the scan tool display: B1483-CHANNEL 8 AUDIO SPEAKER OUTPUT CIRCUIT PERFORMANCE?

   Yes

   - Replace the Amplifier in accordance with the service Information.
   - Perform BODY VERIFICATION TEST. Refer to **STANDARD PROCEDURE** .

   No

   - Test complete, the condition or conditions that originally set this DTC are not present at this time. Using the wiring diagrams as a guide, check all related splices and connectors for signs of water intrusion, corrosion, pushed out or bent terminals and correct pin tension.
   - Perform BODY VERIFICATION TEST. Refer to **STANDARD PROCEDURE** .

B1484-CHANNEL 8 AUDIO SPEAKER OUTPUT CIRCUIT LOW

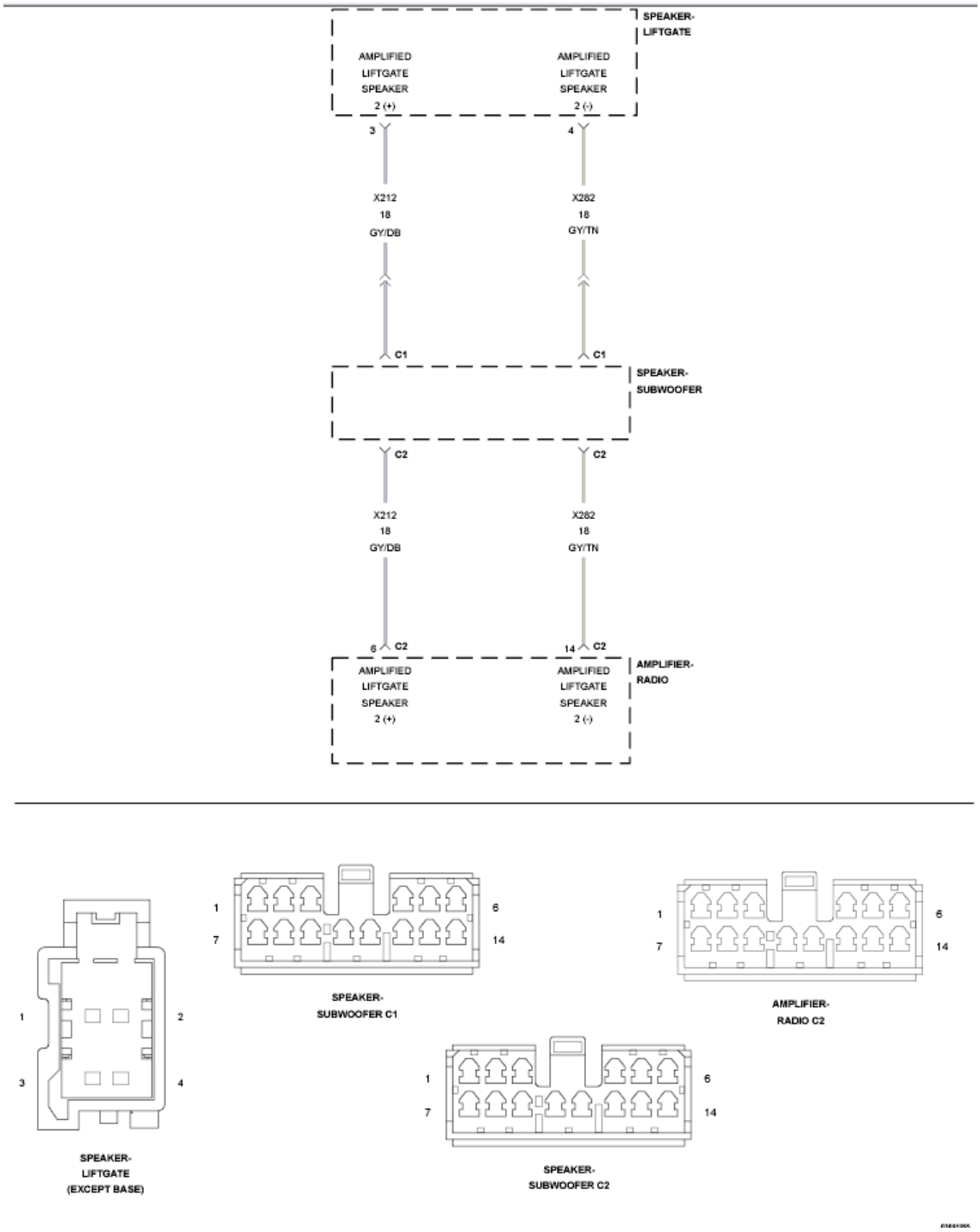

Fig. 99: Amplified Liftgate Speaker 2 Circuit Diagram
Courtesy of CHRYSLER GROUP, LLC

For a complete wiring diagram, **refer to appropriate SYSTEM WIRING DIAGRAMS article** .

WHEN MONITORED

With the ignition on.

SET CONDITION

The Amplifier detects a shorted to ground condition on the speaker output circuit.

POSSIBLE CAUSES

Possible Causes
(X212) AMPLIFIED LIFTGATE SPEAKER 2 (+) CIRCUIT SHORTED TO GROUND
(X282) AMPLIFIED LIFTGATE SPEAKER 2 (-) CIRCUIT SHORTED TO GROUND
AMPLIFIED LIFTGATE SPEAKER
AMPLIFIER

DIAGNOSTIC TEST

1. **CHECK FOR AN INTERMITTENT CONDITION**
   1. Turn the ignition on and open one of the front doors.

      NOTE: A front door must remain open whenever checking or erasing Amplifier DTCs.

   2. Using the scan tool, record and erase the Amplifier DTCs.
   3. Cycle the ignition switch from on to off, wait five seconds and then back to on.
   4. Turn the Radio on and set the volume to 25.
   5. Adjust the speakers to the rear and center.
   6. Using the scan tool, read the active Amplifier DTCs.

      Does the scan tool display: B1484-CHANNEL 8 AUDIO SPEAKER OUTPUT CIRCUIT LOW?

      Yes

      - Go To 2

      No

      - Test complete, the condition or conditions that originally set this

DTC are not present at this time. Using the wiring diagrams as a guide, check all related splices and connectors for signs of water intrusion, corrosion, pushed out or bent terminals and correct pin tension.

- Perform the BODY VERIFICATION TEST. Refer to **STANDARD PROCEDURE** .

2. **CHECK THE AMPLIFIED LIFTGATE SPEAKER FOR A SHORT TO GROUND**

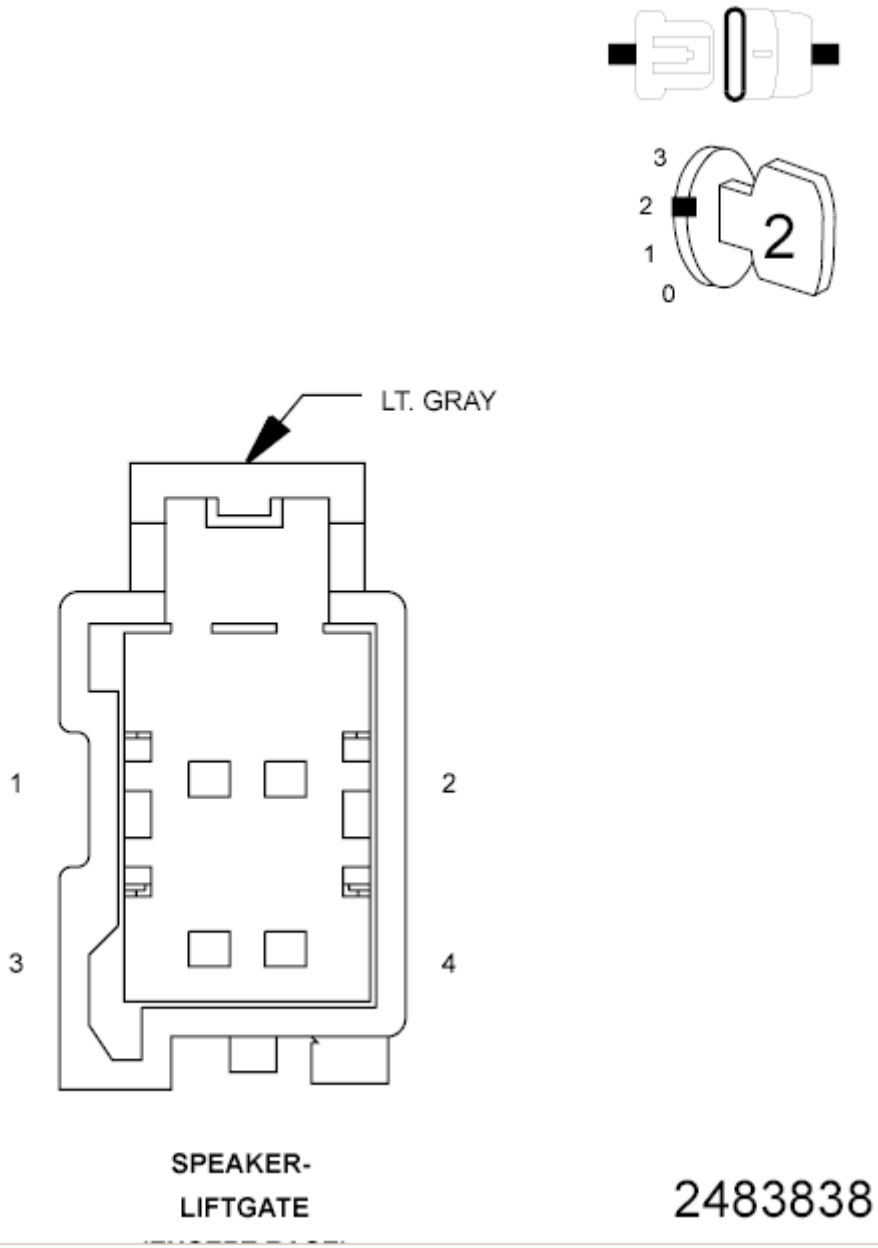

Fig. 100: Checking Amplified Liftgate Speaker For A Short To Ground
Courtesy of CHRYSLER GROUP, LLC

1. Turn the ignition off.
2. Disconnect the Amplified Liftgate Speaker harness connector.
3. Turn the ignition on.
4. With the scan tool, read the active DTCs.

   Does the scan tool display: B1484-CHANNEL 8 AUDIO SPEAKER OUTPUT CIRCUIT LOW?

   Yes

   - Go To 3

   No

   - Replace the Amplified Liftgate Speaker in accordance with the Service Information.
   - Perform the BODY VERIFICATION TEST. Refer to **STANDARD PROCEDURE** .

3. **CHECK THE (X212) AMPLIFIED LIFTGATE SPEAKER 2 (+) CIRCUIT FOR A SHORT TO GROUND**

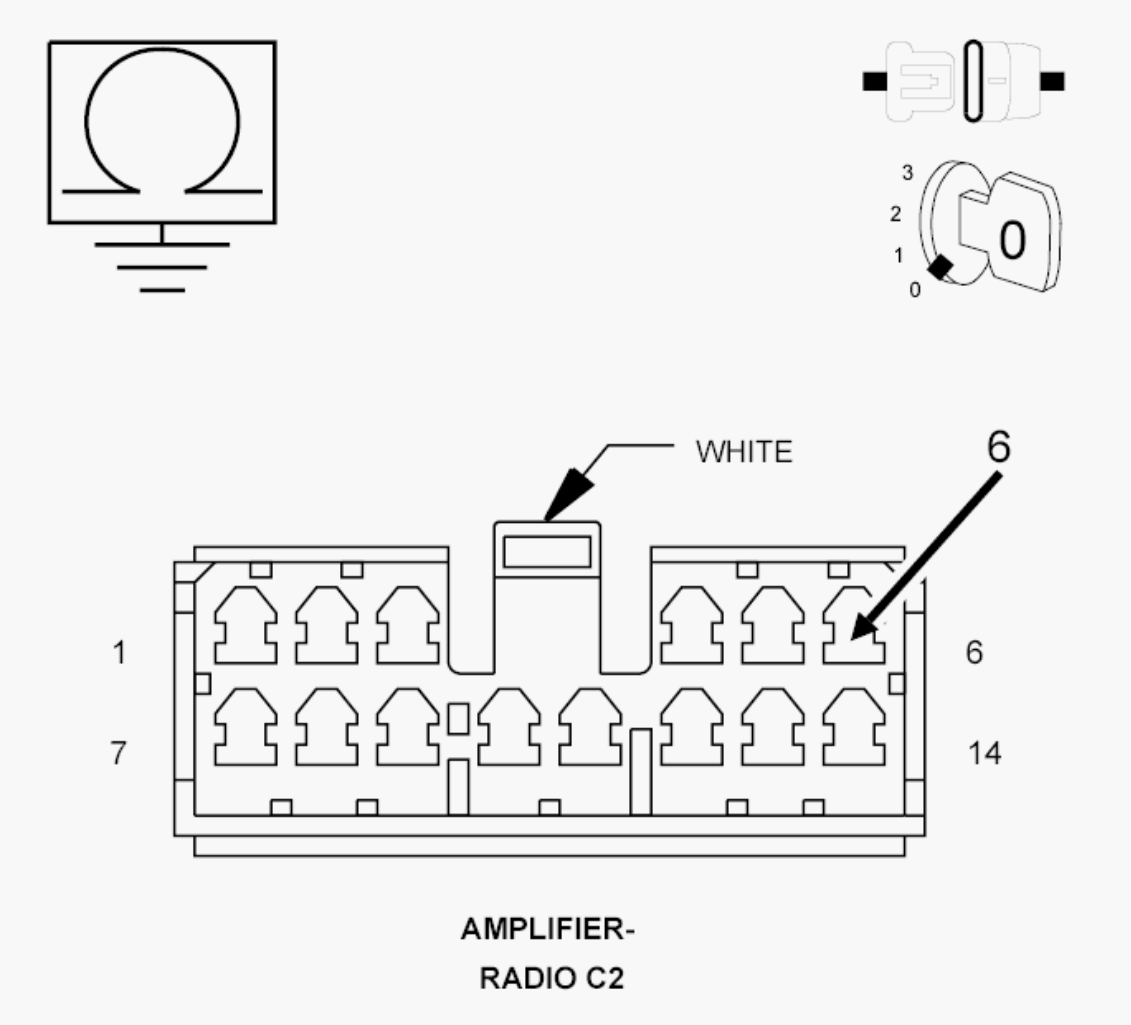

Fig. 101: Measuring Resistance Between Ground & Amplified Liftgate Speaker 2 (+) Circuit & Ground
Courtesy of CHRYSLER GROUP, LLC

1. Turn the ignition off.
2. Disconnect the Amplifier C2 harness connector.
3. Measure the resistance between ground and the (X212) Amplified Liftgate Speaker 2 (+) circuit and ground.

   Is the resistance below 10K Ohms?

   Yes

   - Repair the (X212) Amplified Liftgate Speaker 2 (+) circuit for a short to ground.
   - Perform the BODY VERIFICATION TEST. Refer to **STANDARD PROCEDURE** .

No

- Go To 4

4. **CHECK THE (X282) AMPLIFIED LIFTGATE SPEAKER 2 (-) CIRCUIT FOR A SHORT TO GROUND**

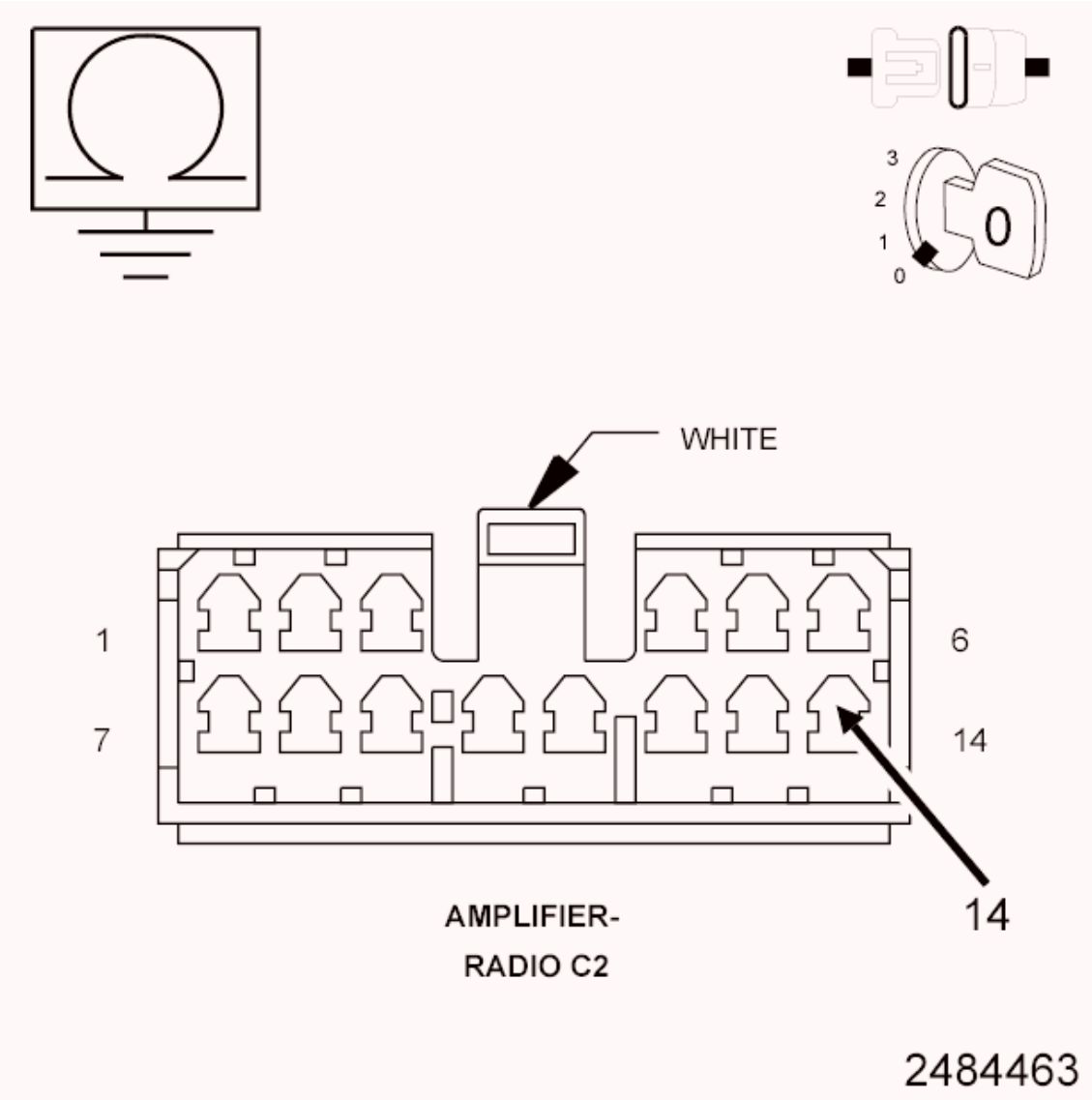

Fig. 102: Measuring Resistance Between Ground & Amplified Liftgate Speaker 2 (-) Circuit & Ground
Courtesy of CHRYSLER GROUP, LLC

1. Measure the resistance between ground and the (X282) Amplified Liftgate Speaker 2 (-) circuit and ground.

   Is the resistance below 10K Ohms?

Yes

- Repair the (X282) Amplified Liftgate Speaker 2 (-) for a short to ground.
- Perform the BODY VERIFICATION TEST. Refer to **STANDARD PROCEDURE** .

No

- Replace the Amplifier in accordance with the Service Information.
- Perform the BODY VERIFICATION TEST. Refer to **STANDARD PROCEDURE** .

B1485-CHANNEL 8 AUDIO SPEAKER OUTPUT CIRCUIT HIGH

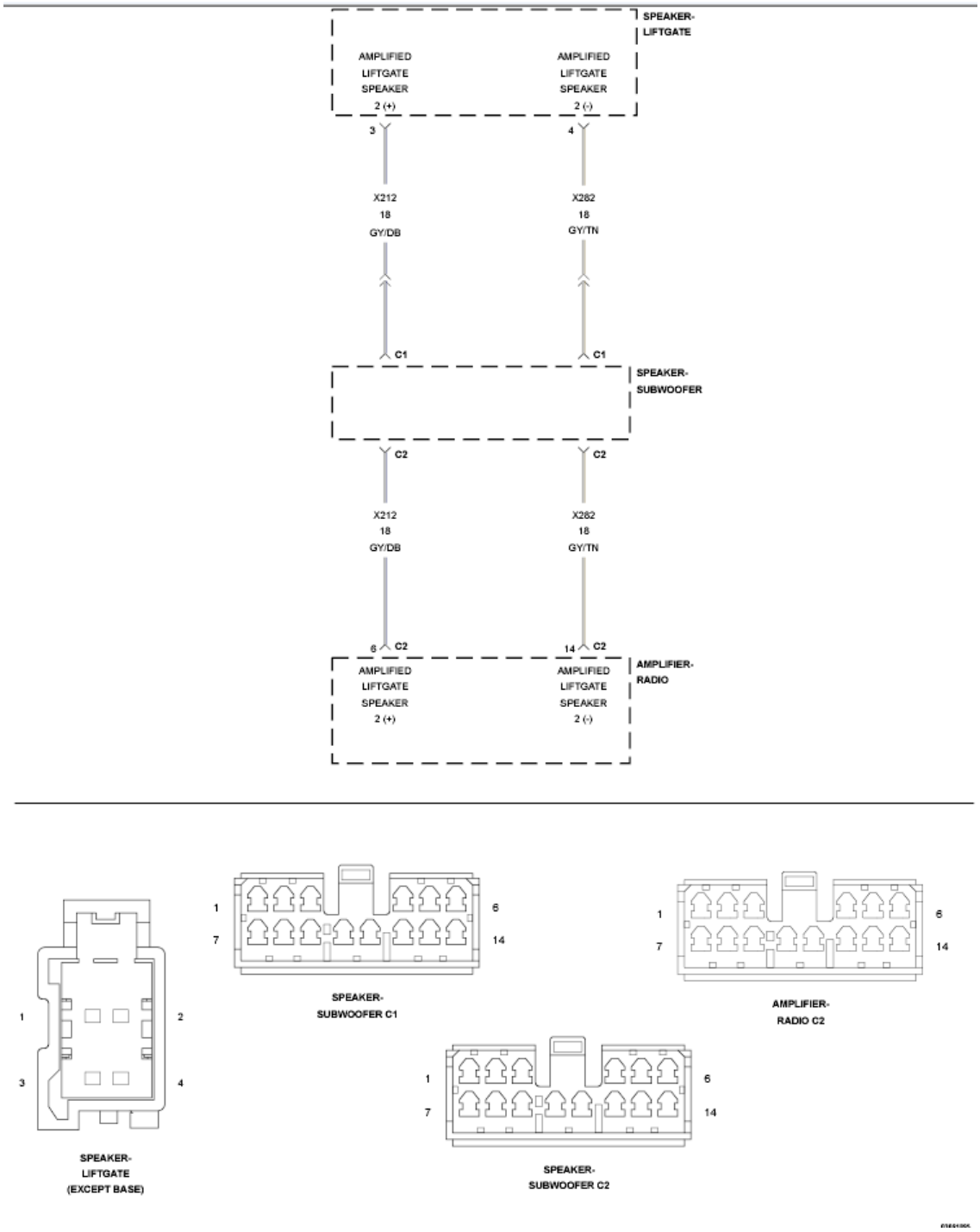

Fig. 103: Channel 8 Audio Speaker Output Wiring Diagram
Courtesy of CHRYSLER GROUP, LLC

For a complete wiring diagram, **refer to appropriate SYSTEM WIRING DIAGRAMS article** .

WHEN MONITORED

With the ignition on.

SET CONDITION

The Amplifier detects a short to battery condition on the output circuit.

POSSIBLE CAUSES

Possible Causes
(X212) AMPLIFIED LIFTGATE SPEAKER 2 (+) CIRCUIT SHORTED TO VOLTAGE (X282) AMPLIFIED LIFTGATE SPEAKER 2 (-) CIRCUIT SHORTED TO VOLTAGE AMPLIFIER

DIAGNOSTIC TEST

1. **CHECK FOR AN INTERMITTENT CONDITION**
   1. Turn the ignition on and open one of the front doors.

      NOTE: A front door must remain open whenever checking or erasing Amplifier DTCs.

   2. Using the scan tool, record and erase the Amplifier DTCs.
   3. Cycle the ignition switch from on to off, wait five seconds and then back to on.
   4. Turn the Radio on and set the volume to 25.
   5. Adjust the speakers to the rear and center.
   6. Using the scan tool, read the active Amplifier DTCs.

      Does the scan tool display: B1485-CHANNEL 8 AUDIO SPEAKER OUTPUT CIRCUIT HIGH?

      Yes

      - Go To 2

      No

      - Test complete, the condition or conditions that originally set this DTC are not present at this time. Using the wiring diagrams as a guide, check all related splices and connectors for signs of water

intrusion, corrosion, pushed out or bent terminals and correct pin tension.

- Perform the BODY VERIFICATION TEST. Refer to **STANDARD PROCEDURE** .

2. **CHECK FOR VOLTAGE ON THE (X212) AMPLIFIED LIFTGATE SPEAKER 2 (+) CIRCUIT**

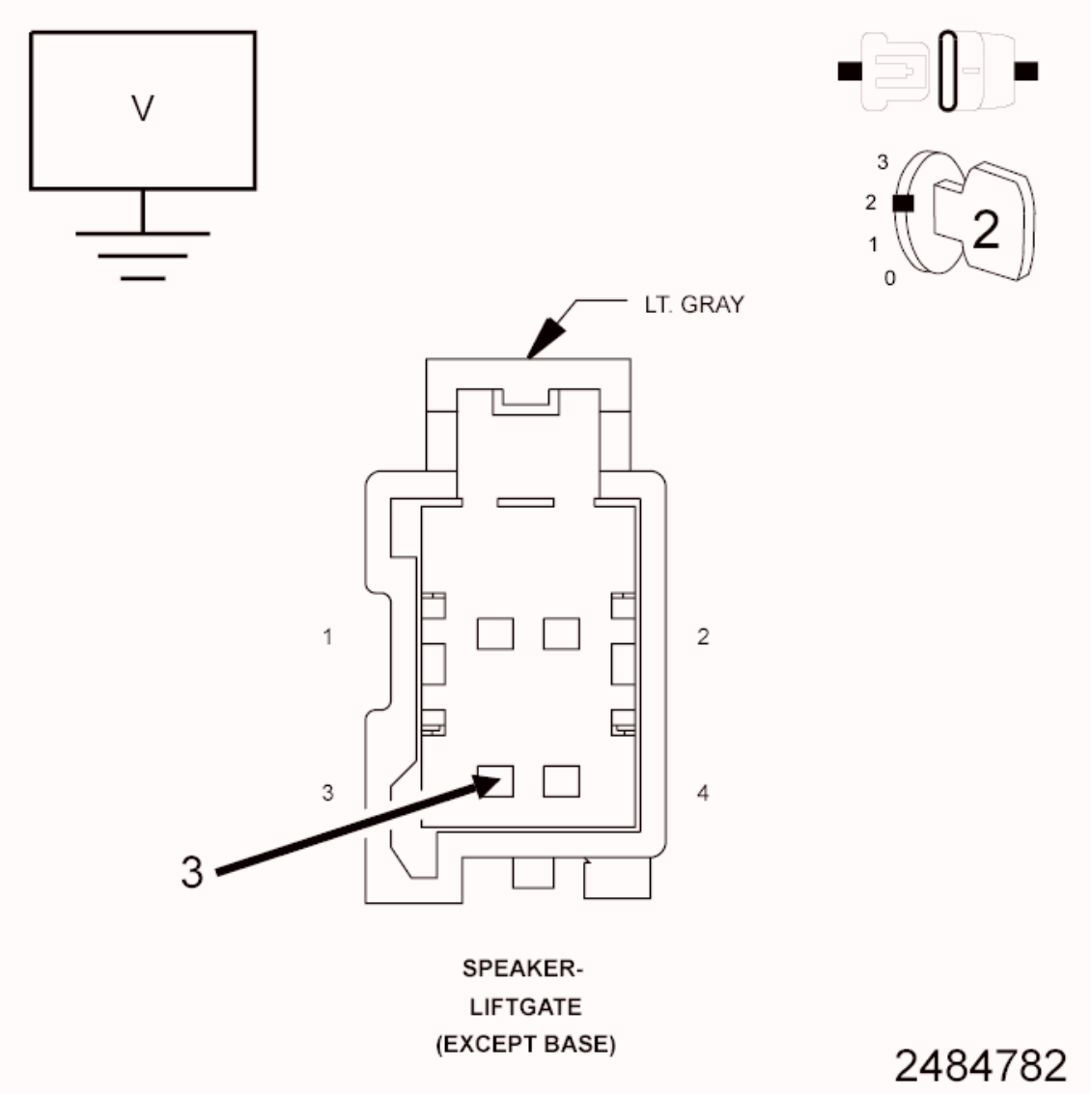

Fig. 104: Measuring Voltage Between Amplified Liftgate Speaker 2 (+) Circuit & Ground
Courtesy of CHRYSLER GROUP, LLC

1. Turn the ignition off.
2. Disconnect the Amplifier C2 harness connector.
3. Disconnect the Amplified Liftgate Speaker harness connector.

4. Turn the ignition on.
5. Measure the voltage between the (X212) Amplified Liftgate Speaker 2 (+) circuit and ground.

   Is there any voltage present?

   Yes

   - Repair the (X212) Amplified Liftgate Speaker 2 (+) circuit for a short to voltage.
   - Perform the BODY VERIFICATION TEST. Refer to **STANDARD PROCEDURE** .

   No

   - Go To 3

3. **CHECK FOR VOLTAGE ON THE (X282) AMPLIFIED LIFTGATE SPEAKER 2 (-) CIRCUIT**

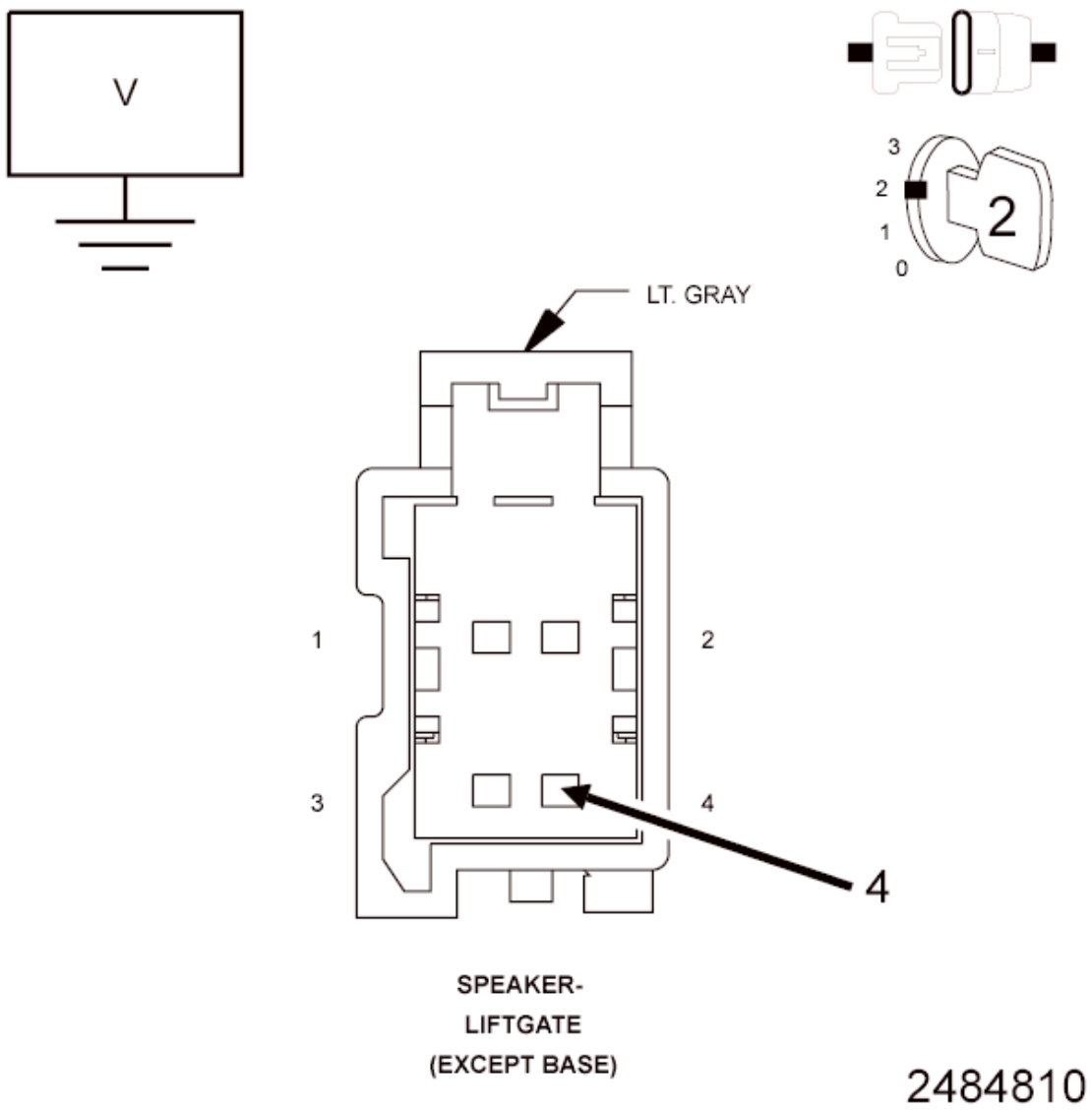

Fig. 105: Measuring Voltage Between Amplified Liftgate Speaker 2 (-) Circuit & Ground
Courtesy of CHRYSLER GROUP, LLC

1. Measure the voltage between the (X282) Amplified Liftgate Speaker 2 (-) circuit and ground.

   Is there any voltage present?

   Yes

   - Repair the (X282) Amplified Liftgate Speaker 2 (-) circuit for a short to voltage.
   - Perform the BODY VERIFICATION TEST. Refer to **STANDARD PROCEDURE** .

No

- Replace the Amplifier in accordance with the Service Information.
- Perform the BODY VERIFICATION TEST. Refer to **STANDARD PROCEDURE** .

B1486-CHANNEL 8 AUDIO SPEAKER OUTPUT CIRCUIT OPEN

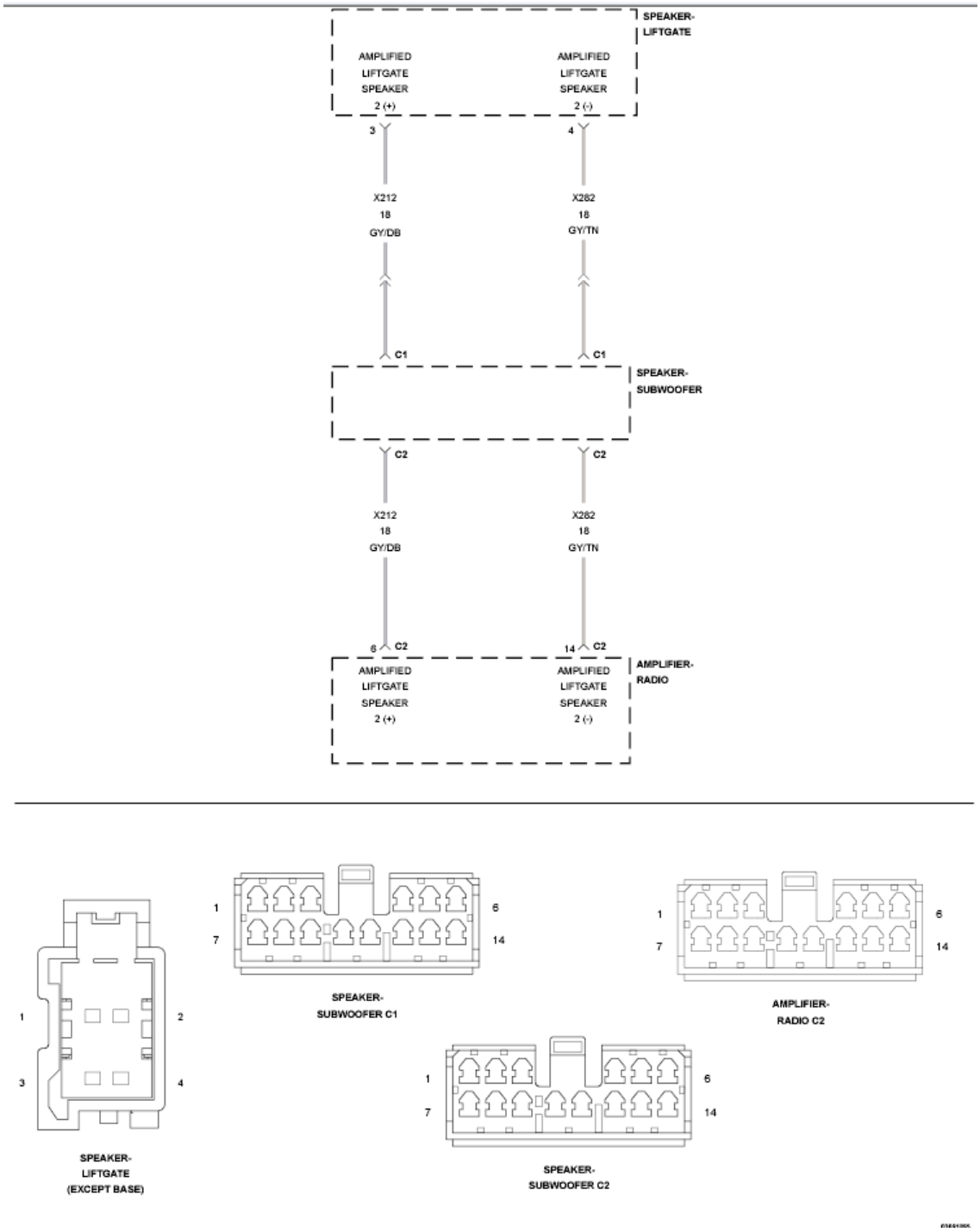

Fig. 106: Amplified Liftgate Speaker 2 Circuit Diagram

Courtesy of CHRYSLER GROUP, LLC

For a complete wiring diagram, **refer to appropriate SYSTEM WIRING DIAGRAMS article** .

WHEN MONITORED

Amplifier BUS wake-up. Amplifier reset with scan tool.

SET CONDITION

The Amplifier detects an open condition on the speaker output circuit.

POSSIBLE CAUSES

Possible Causes
(X212) AMPLIFIED LIFTGATE SPEAKER 2 (+) CIRCUIT OPEN
(X282) AMPLIFIED LIFTGATE SPEAKER 2 (-) CIRCUIT OPEN
AMPLIFIED LIFTGATE SPEAKER
AMPLIFIER

DIAGNOSTIC TEST

1. **CHECK FOR AN INTERMITTENT CONDITION**
   1. Turn the ignition on and open one of the front doors.

      NOTE: A front door must remain open whenever checking or erasing Amplifier DTCs.

   2. Using the scan tool, record and erase the Amplifier DTCs.
   3. Cycle the ignition switch from on to off, wait five seconds and then back to on.
   4. Turn the Radio on and set the volume to 25.
   5. Adjust the speakers to the rear and center.
   6. Using the scan tool, read the active Amplifier DTCs.

      Does the scan tool display: B1486-CHANNEL 8 AUDIO SPEAKER OUTPUT CIRCUIT OPEN?

      Yes

- Go To 2

No

- The condition that caused this symptom is currently not present. Check for an intermittent condition by inspecting the related wiring harness for chafed, pierced, pinched, and partially broken wires. Also, inspect the related connectors for broken, bent, pushed out, spread, corroded, or contaminated terminals. Repair as necessary.
- Perform the BODY VERIFICATION TEST. Refer to **STANDARD PROCEDURE** .

2. **CHECK THE OPERATION OF THE AMPLIFIED LIFTGATE SPEAKER**

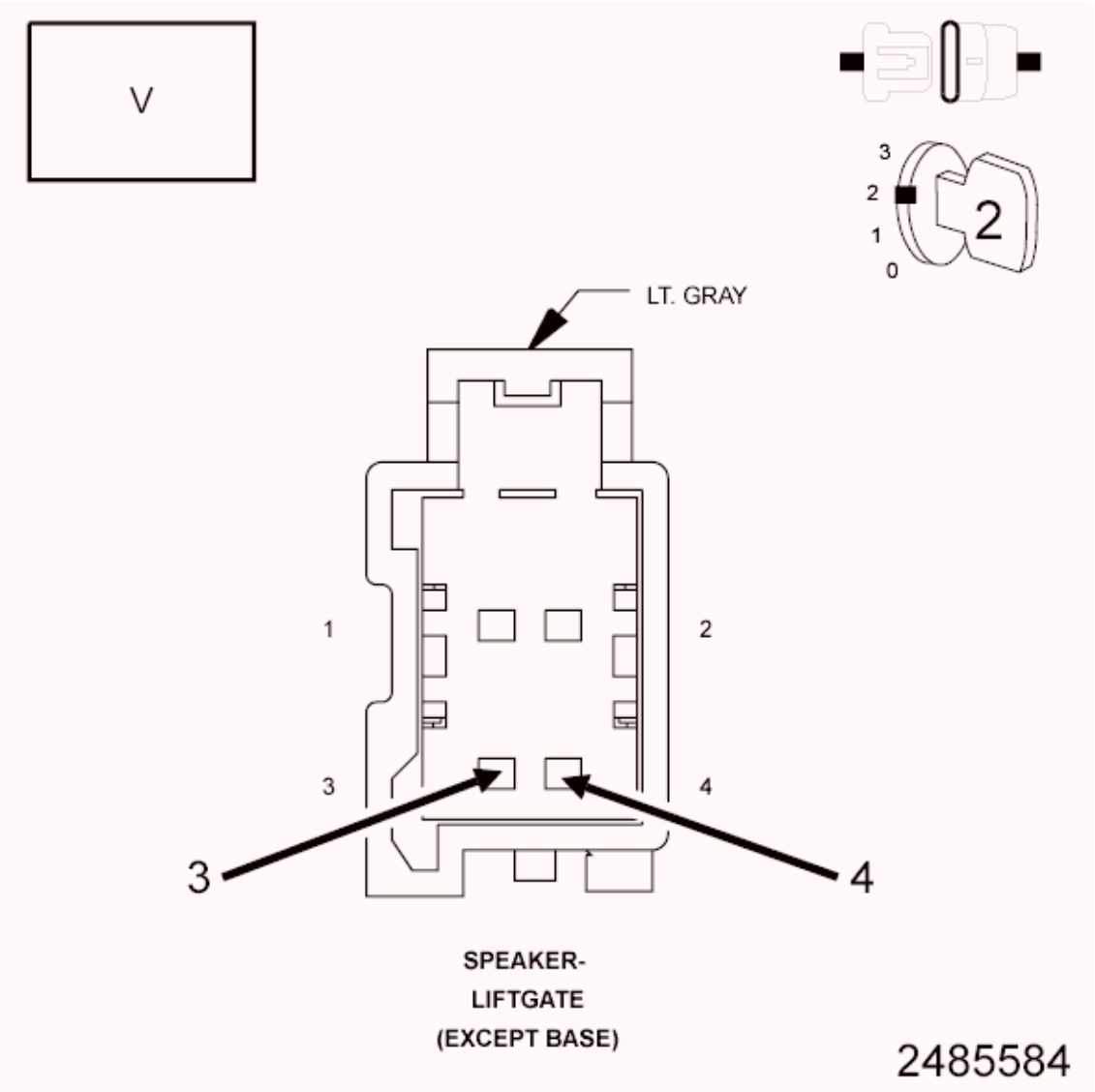

Fig. 107: Measuring Voltage Of Amplified Liftgate Speaker 2 Circuits In Amplified Liftgate Speaker Harness Connector
Courtesy of CHRYSLER GROUP, LLC

1. Turn the ignition off.
2. Disconnect the Amplified Liftgate Speaker harness connector.
3. Turn the ignition on.
4. Turn the radio on and turn the volume to mid level.
5. With a voltmeter set to read in A/C voltage, measure the voltage of the Amplified Liftgate Speaker 2 circuits in the Amplified Liftgate Speaker harness connector.

   Is the voltage above 1 volt?

   Yes

   - Replace the Amplified Liftgate Speaker in accordance with the Service Information.
   - Perform the BODY VERIFICATION TEST. Refer to **STANDARD PROCEDURE** .

   No

   - Go To 3

3. **CHECK THE (X212) AMPLIFIED LIFTGATE SPEAKER 2 (+) CIRCUIT FOR AN OPEN**

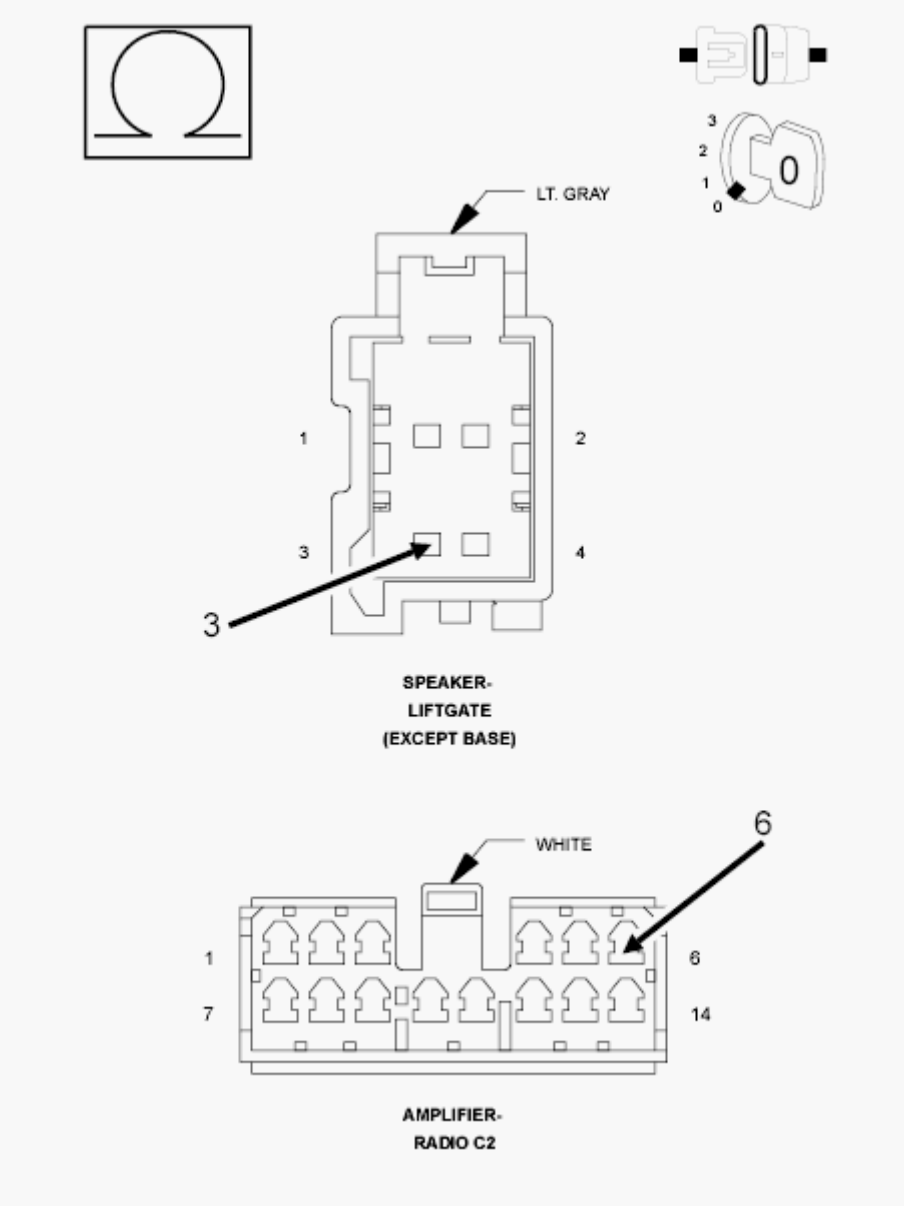

Fig. 108: Measuring Resistance Of Amplified Liftgate 2 (+) Circuit Between Amplifier C2 Harness Connector & Amplified Liftgate Speaker Harness Connector
Courtesy of CHRYSLER GROUP, LLC

1. Turn the ignition off.
2. Disconnect the Amplifier C2 harness connector.
3. Measure the resistance of the (X212) Amplified Liftgate 2 (+) circuit between the Amplifier C2 harness connector and the Amplified Liftgate Speaker harness connector.

   Is the resistance below 5.0 Ohms?

Yes

- Go To 4

No

- Repair the (X212) Amplified Liftgate 2 (+) circuit for an open.
- Perform the BODY VERIFICATION TEST. Refer to **STANDARD PROCEDURE** .

4. **CHECK THE (X282) AMPLIFIED LIFTGATE 2 (-) CIRCUIT FOR AN OPEN**

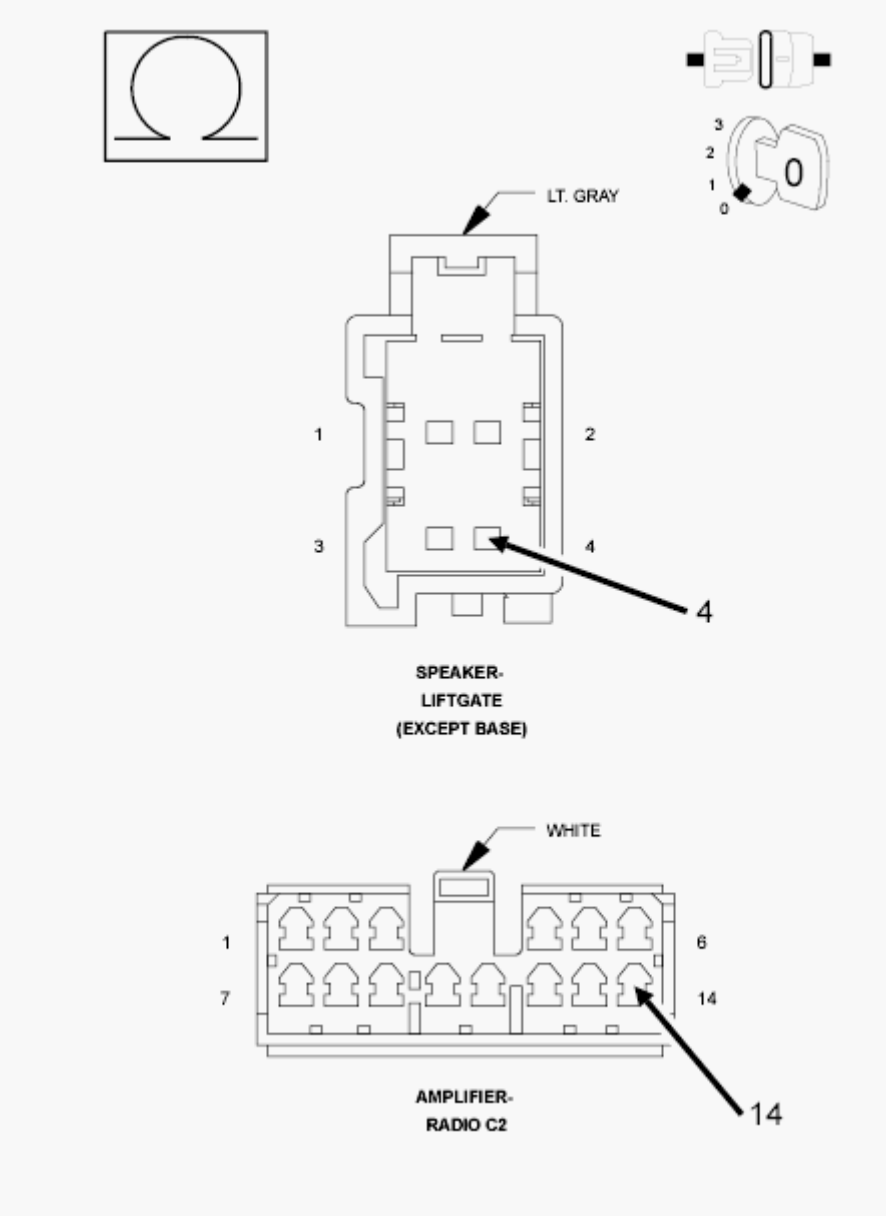

Fig. 109: Measuring Resistance Of Amplified Liftgate 2 (-) Circuit

Between Amplifier C2 Harness Connector & Amplified Liftgate Speaker Harness Connector
Courtesy of CHRYSLER GROUP, LLC

1. Measure the resistance of the (X282) Amplified Liftgate 2 (-) circuit between the Amplifier C2 harness connector and the (X282) Amplified Liftgate Speaker harness connector.

   Is the resistance below 5.0 Ohms?

   Yes

   - Replace the Amplifier in accordance with the Service Information.
   - Perform the BODY VERIFICATION TEST. Refer to **STANDARD PROCEDURE** .

   No

   - Repair the (X282) Amplified Liftgate 2 (-) circuit for an open.
   - Perform the BODY VERIFICATION TEST. Refer to **STANDARD PROCEDURE** .

B1487-CHANNEL 8 AUDIO SPEAKER OUTPUT CIRCUIT SHORTED TOGETHER

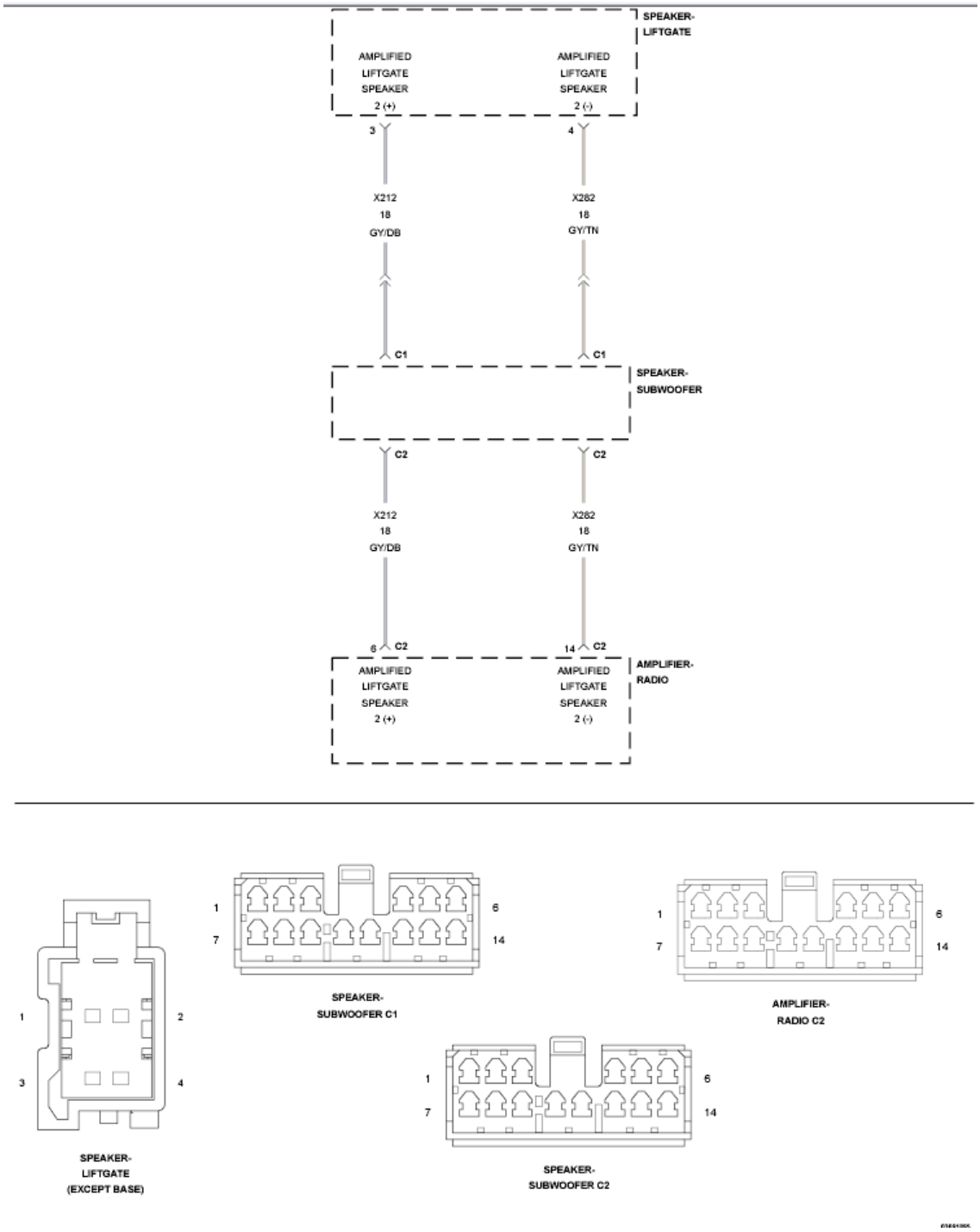

Fig. 110: Amplified Liftgate Speaker 2 Circuit Diagram
Courtesy of CHRYSLER GROUP, LLC

For a complete wiring diagram, **refer to appropriate SYSTEM WIRING DIAGRAMS article** .

WHEN MONITORED

With the ignition on. Radio volume at 25 or higher.

SET CONDITION

The Amplifier detects that the output circuits are shorted together.

POSSIBLE CAUSES

Possible Causes
(X212) AMPLIFIED LIFTGATE SPEAKER 2 (+) CIRCUIT SHORTED TO THE (X282) AMPLIFIED LIFTGATE SPEAKER 2 (-) CIRCUIT AMPLIFIED LIFTGATE SPEAKER AMPLIFIER

DIAGNOSTIC TEST

1. **CHECK FOR AN INTERMITTENT CONDITION**
   1. Turn the ignition on and open one of the front doors.

      NOTE: A front door must remain open whenever checking or erasing Amplifier DTCs.

   2. Using the scan tool, record and erase the Amplifier DTCs.
   3. Cycle the ignition switch from on to off, wait five seconds and then back to on.
   4. Turn the Radio on and set the volume to 25.
   5. Adjust the speakers to the rear and center.
   6. Using the scan tool, read the active Amplifier DTCs.

      Does the scan tool display: B1487-CHANNEL 8 AUDIO SPEAKER OUTPUT CIRCUIT SHORTED TOGETHER?

      Yes

      - Go To 2

      No

      - Test complete, the condition or conditions that originally set this DTC are not present at this time. Using the wiring diagrams as a guide, check all related splices and connectors for signs of water intrusion, corrosion, pushed out or bent terminals and correct pin

tension.

- Perform the BODY VERIFICATION TEST. Refer to **STANDARD PROCEDURE** .

2. **CHECK THE OPERATION OF THE AMPLIFIED LIFTGATE SPEAKER**

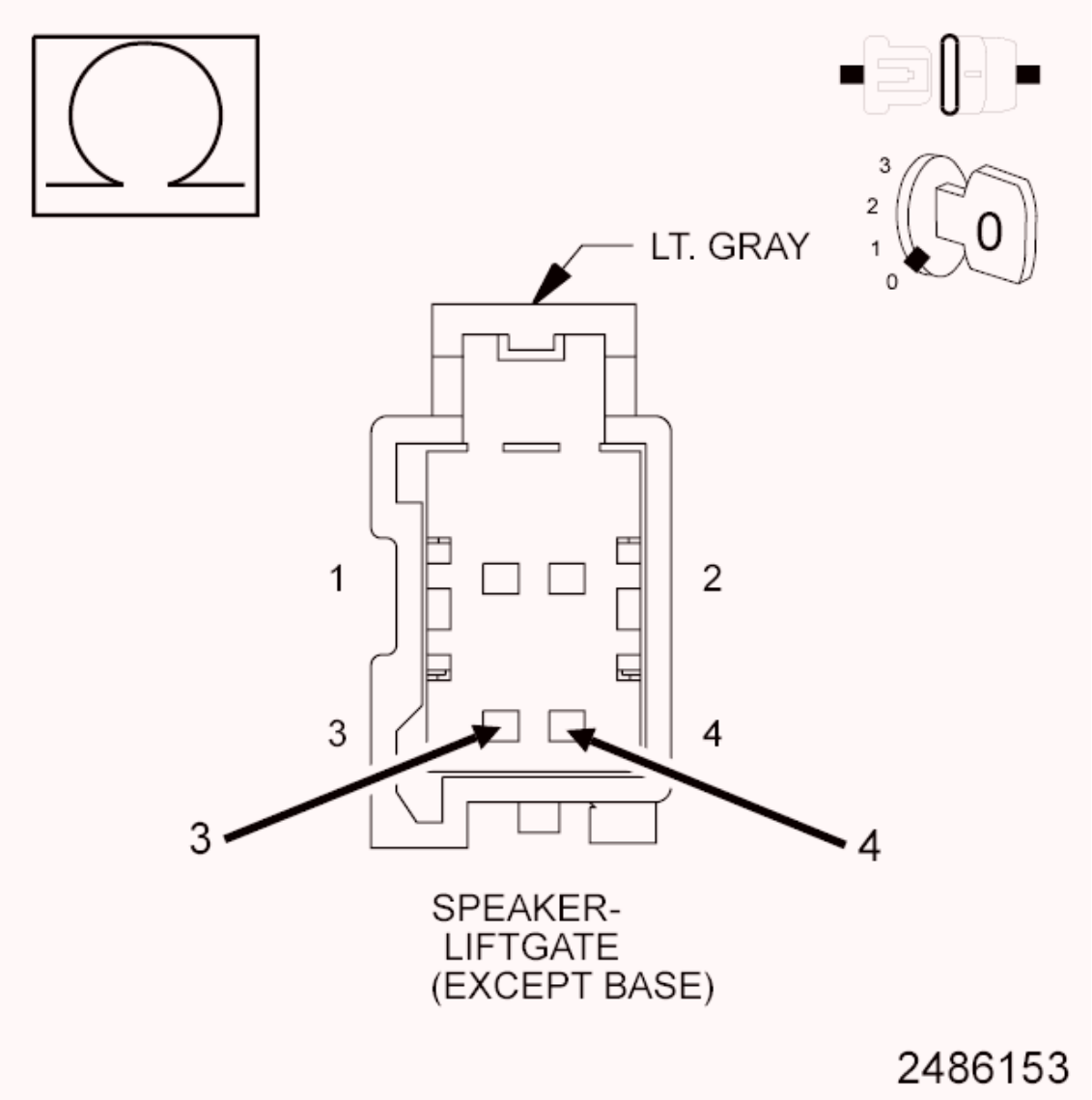

Fig. 111: Measuring Resistance Between Amplified Liftgate Speaker Component Terminals
Courtesy of CHRYSLER GROUP, LLC

1. Turn the ignition off.
2. Disconnect the Amplified Liftgate Speaker.
3. Measure the resistance between the Amplified Liftgate Speaker component terminals.

NOTE: The graphic shows the connector for reference only. Measure the speaker terminals.

Is the resistance of the speaker below 1 Ohm?

Yes

- Replace the Amplified Liftgate Speaker in accordance with the Service Information.
- Perform the BODY VERIFICATION TEST. Refer to **STANDARD PROCEDURE** .

No

- Go To 3

3. **CHECK THE (X212) AMPLIFIED LIFTGATE SPEAKER 2 (+) CIRCUIT, AND THE (X282) AMPLIFIED LIFTGATE SPEAKER 2 (-) CIRCUITS FOR A SHORT TOGETHER**

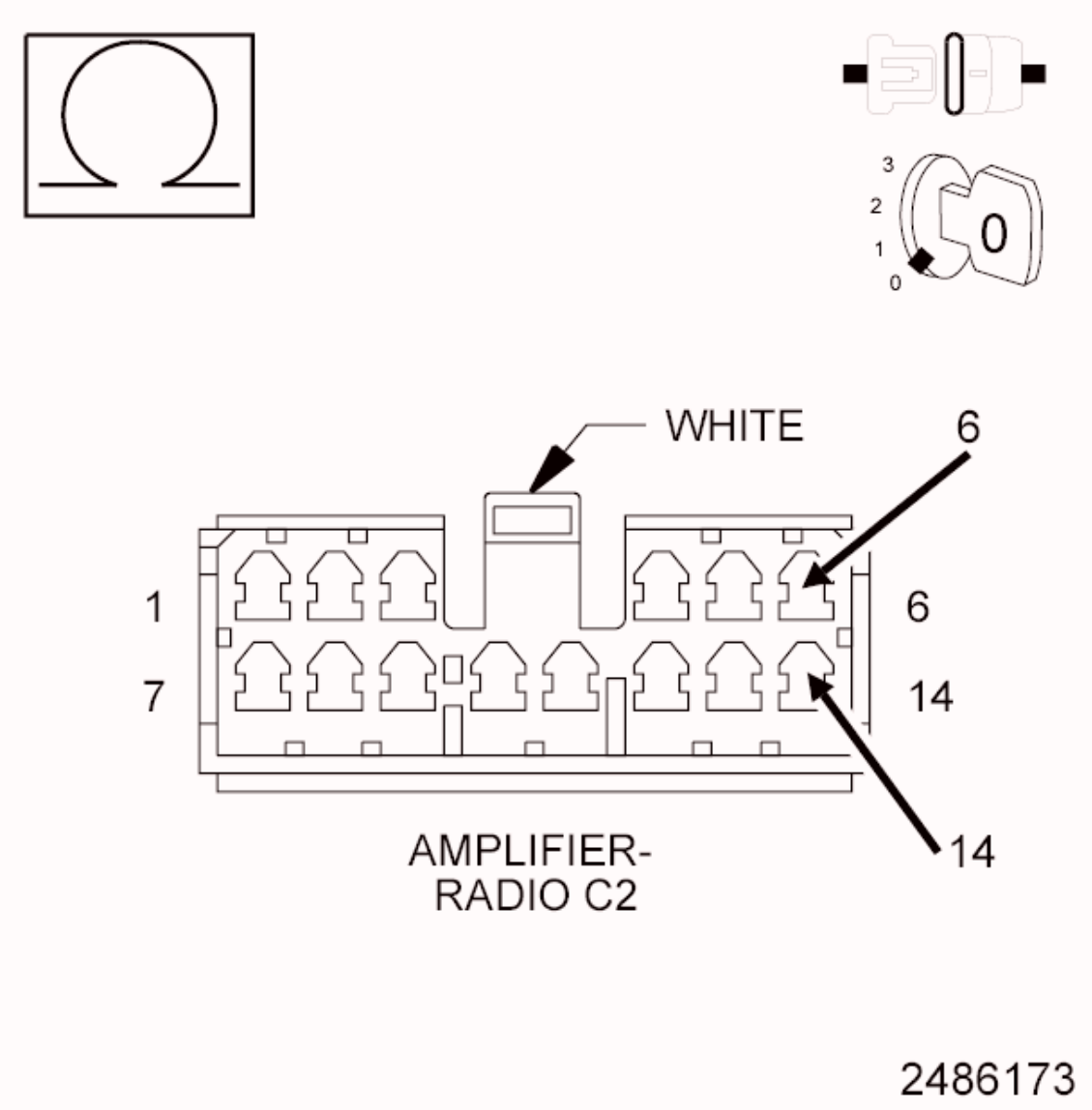

Fig. 112: Measuring Resistance Between Amplified Liftgate Speaker 2 (+) Circuit & Amplified Liftgate Speaker 2 (-) Circuit
Courtesy of CHRYSLER GROUP, LLC

1. Disconnect the Amplifier C2 harness connector.
2. Measure the resistance between the (X212) Amplified Liftgate Speaker 2 (+) circuit, and the (X282) Amplified Liftgate Speaker 2 (-) circuit.

   Is the resistance below 10K Ohms?

   Yes

   - Repair the (X212) Amplified Liftgate Speaker 2 (+) circuit, and the (X282) Amplified Liftgate Speaker 2 (-) circuit for a short together.

- Perform the BODY VERIFICATION TEST. Refer to **STANDARD PROCEDURE** .

No

- Replace the Amplifier in accordance with the Service Information.
- Perform the BODY VERIFICATION TEST. Refer to **STANDARD PROCEDURE** .

U0019-CAN B BUS

For a complete wiring diagram, **refer to appropriate SYSTEM WIRING DIAGRAMS article** .

WHEN MONITORED

Continuously.

SET CONDITION

Whenever the CAN B BUS (+) or B BUS (-) circuit is open, shorted to voltage or shorted to ground, this code will set.

POSSIBLE CAUSES

Possible Causes
CAN B BUS DTCs IN THE TOTALLY INTEGRATED POWER MODULE (D54) CAN B BUS (-) CIRCUIT OPEN (D55) CAN B BUS (+) CIRCUIT OPEN AMPLIFIER

DIAGNOSTIC TEST

1. **TEST FOR INTERMITTENT CONDITION**
    1. Turn the ignition on.
    2. With the scan tool, record and erase DTCs.
    3. Cycle the ignition from on to off 3 times.
    4. Turn the ignition on.
    5. With the scan tool, read DTCs.

Does the scan tool display: U0019-CAN B BUS CIRCUIT?

Yes

- Go To 2

No

- The conditions that caused this code to set are not present at this time. Using the wiring diagram/schematic as a guide, inspect the wiring and connectors.
- Perform the BODY VERIFICATION TEST. Refer to **STANDARD PROCEDURE** .

2. **CHECK TOTALLY INTEGRATED POWER MODULE DTCs**
   1. With the scan tool, read Totally Integrated Power Module DTCs

   Does the scan tool display any CAN B BUS DTCs - ACTIVE?

   Yes

   - Perform the appropriate diagnostic procedure. Refer to **TOTALLY INTEGRATED POWER MODULE (TIPM) - DIAGNOSTIC CODE INDEX** .

   No

   - Go To 3
3. **CAN B BUS (+) CIRCUIT OPEN**

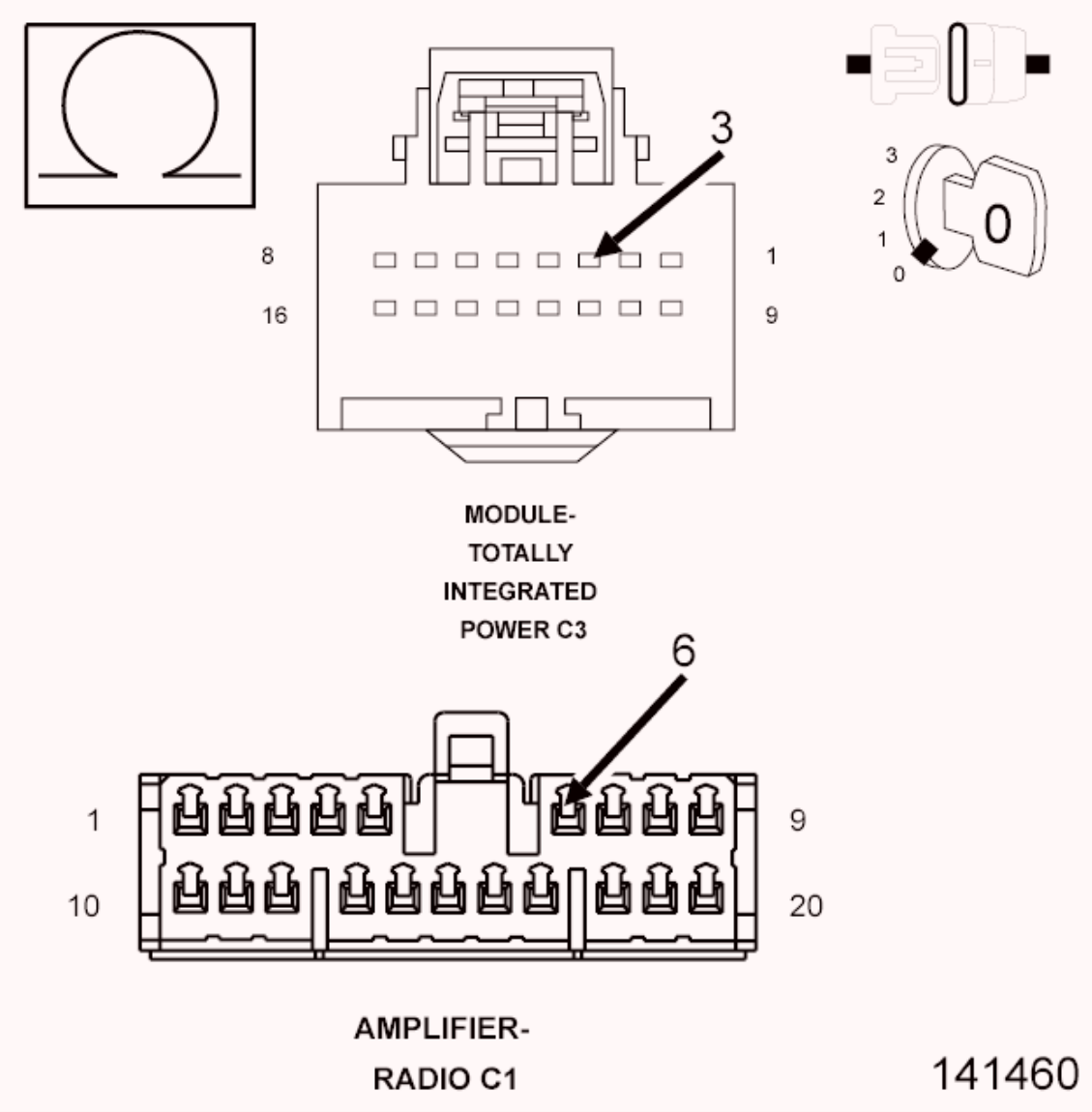

Fig. 113: Checking CAN B Bus (+) Circuit For An Open
Courtesy of CHRYSLER GROUP, LLC

1. Turn the ignition off.
2. Disconnect the Amplifier C1 harness connector.
3. Disconnect the Totally Integrated Power Module C3 harness connector.
4. Measure the resistance of the (D55) CAN B BUS (+) circuit between the Totally Integrated Power Module C3 harness connector and the Amplifier C1 harness connector.

   Is the resistance below 2.0 Ohms?

   Yes

- Go To 4

No

- Repair the CAN B BUS (+) circuit for an open.
- Perform the BODY VERIFICATION TEST. Refer to **STANDARD PROCEDURE** .

4. **CAN B BUS (-) CIRCUIT OPEN**

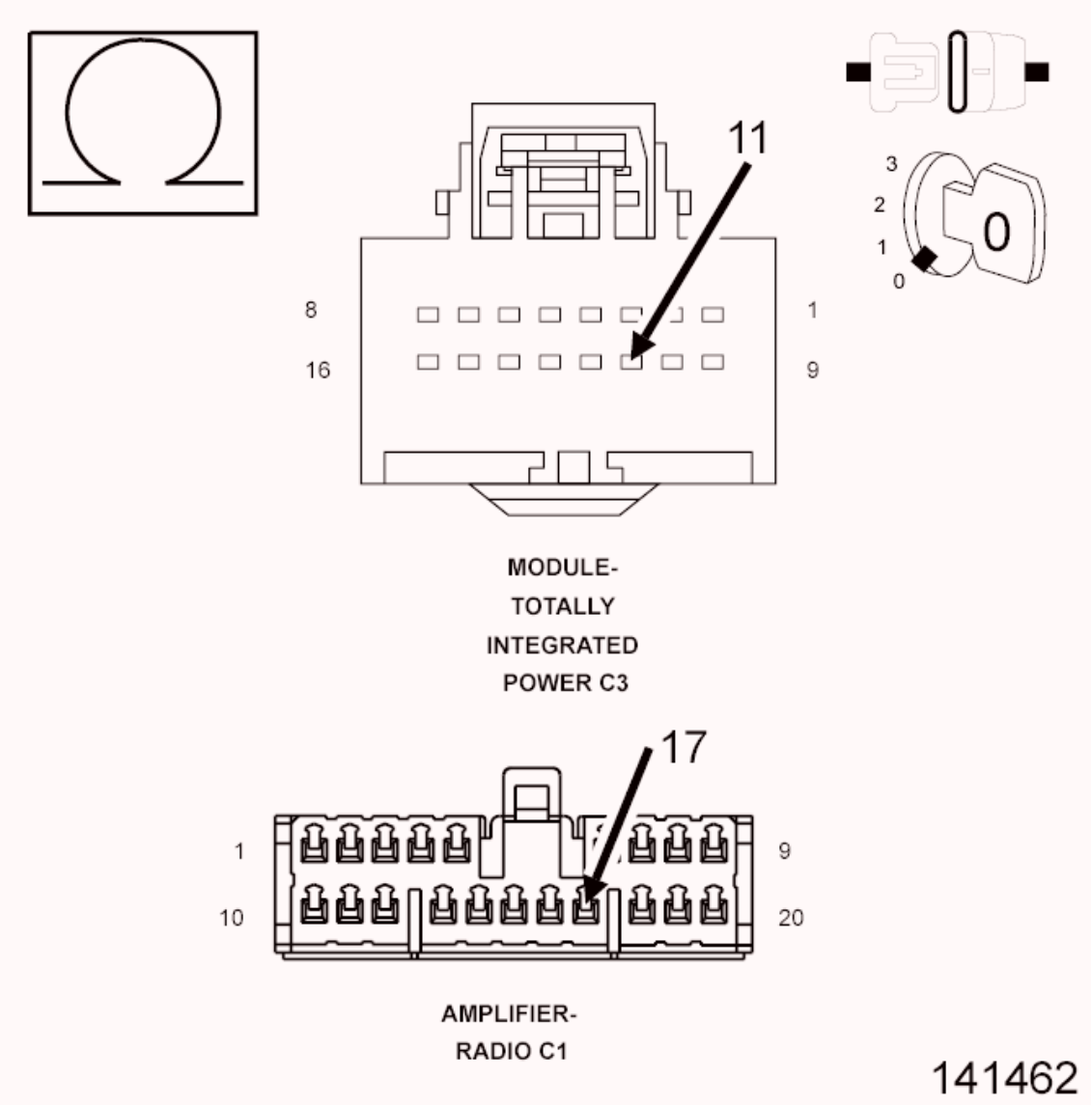

Fig. 114: Checking CAN B Bus (-) Circuit For An Open
Courtesy of CHRYSLER GROUP, LLC

1. Measure the resistance of the (D54) CAN B BUS (-) circuit between the Totally Integrated Power Module C3 harness connector and the

Amplifier C1 harness connector.

Is the resistance below 2.0 Ohms?

Yes

- Replace the Amplifier in accordance with the Service Information.
- Perform the BODY VERIFICATION TEST. Refer to **STANDARD PROCEDURE** .

No

- Repair the CAN B BUS (-) circuit for an open.
- Perform the BODY VERIFICATION TEST. Refer to **STANDARD PROCEDURE** .

U0141-LOST COMMUNICATION WITH IPM (FCM/TIPM)

For a complete wiring diagram, **refer to appropriate SYSTEM WIRING DIAGRAMS article** .

WHEN MONITORED

Continuously when the ignition is on.

The battery voltage between 10.0 and 16.0 Volts.

Ignition Off Draw (IOD) fuse installed.

Totally Integrated Power Module (TIPM) is configured correctly.

SET CONDITION

Bus messages not received from the Totally Integrated Power Module (TIPM) for approximately two to five seconds.

POSSIBLE CAUSES

Possible Causes
CAN BUS CIRCUITS OPEN OR SHORTED DTCS RELATED TO BATTERY VOLTAGE, IGNITION, OR VIN MESSAGES

TOTALLY INTEGRATED POWER MODULE POWER AND GROUND
TIPM NOT CONFIGURED CORRECTLY
TOTALLY INTEGRATED POWER MODULE (TIPM)
MODULE THAT SET THIS DTC

DIAGNOSTIC TEST

VERIFY DTC IS ACTIVE

NOTE: Make sure the IOD fuse is installed and the battery is fully charged before proceeding.

1. Turn the ignition on.
2. With the scan tool, read active DTCs.

   Is this DTC active?

   Yes

   - Refer to **DIAGNOSIS AND TESTING** and perform the U0141-LOST COMMUNICATION WITH IPM (FCM/TIPM) diagnostic procedure.

   No

   - Refer to **DIAGNOSIS AND TESTING** and perform the STORED LOST COMMUNICATION DTCs diagnostic procedure.

U0184-LOST COMMUNICATION WITH RADIO

For a complete wiring diagram, **refer to appropriate SYSTEM WIRING DIAGRAMS article** .

WHEN MONITORED

Continuously when the ignition is on.

Battery voltage between 10 and 16 volts.

Ignition Off Draw (IOD) fused installed.

Totally Integrated Power Module (TIPM) is configured correctly.

SET CONDITION

Bus messages not received from the Radio for approximately two to five seconds.

POSSIBLE CAUSES

Possible Causes
CAN BUS CIRCUITS OPEN OR SHORTED DTCS RELATED TO BATTERY VOLTAGE, IGNITION, OR VIN MESSAGES RADIO POWER AND GROUND TIPM NOT CONFIGURED CORRECTLY RADIO MODULE THAT SET THIS DTC

DIAGNOSTIC TEST

VERIFY THE DIAGNOSTIC TROUBLE CODE (DTC) IS ACTIVE

NOTE: Make sure the IOD fuse is installed and the battery is fully charged before proceeding.

1. Turn the ignition on.
2. With the scan tool, read the active DTCs.

   Is this DTC active?

   Yes

   - Refer to **DIAGNOSIS AND TESTING** and perform the U0184-87-LOST COMMUNICATION WITH RADIO - MISSING MESSAGE diagnostic procedure.

   No

   - Refer to **DIAGNOSIS AND TESTING** and perform the STORED LOST COMMUNICATION DTCs diagnostic procedure.

2014 ACCESSORIES AND EQUIPMENT

Audio (Radio) - Electrical Diagnostics - Compass & Patriot

DIAGNOSTIC CODE INDEX

DIAGNOSTIC CODE INDEX

DTC	Description
B1401	FRONT LEFT AUDIO SPEAKER OUTPUT CIRCUIT LOW
B1402	FRONT LEFT AUDIO SPEAKER OUTPUT CIRCUIT HIGH
B1403	FRONT LEFT AUDIO SPEAKER OUTPUT CIRCUIT OPEN
B1405	FRONT RIGHT AUDIO SPEAKER OUTPUT CIRCUIT LOW
B1406	FRONT RIGHT AUDIO SPEAKER OUTPUT CIRCUIT HIGH
B1407	FRONT RIGHT AUDIO SPEAKER OUTPUT CIRCUIT OPEN
B1409	REAR LEFT AUDIO SPEAKER OUTPUT CIRCUIT LOW - BASE
B1409	REAR LEFT AUDIO SPEAKER OUTPUT CIRCUIT LOW - PREMIUM
B140A	REAR LEFT AUDIO SPEAKER OUTPUT CIRCUIT HIGH - BASE
B140A	REAR LEFT AUDIO SPEAKER OUTPUT CIRCUIT HIGH - PREMIUM
B140B	REAR LEFT AUDIO SPEAKER OUTPUT CIRCUIT OPEN - BASE
B140B	REAR LEFT AUDIO SPEAKER OUTPUT CIRCUIT OPEN - PREMIUM
B140D	REAR RIGHT AUDIO SPEAKER OUTPUT CIRCUIT LOW - BASE
B140D	REAR RIGHT AUDIO SPEAKER OUTPUT CIRCUIT LOW - PREMIUM
B140E	REAR RIGHT AUDIO SPEAKER OUTPUT CIRCUIT

	HIGH - BASE
B140E	REAR RIGHT AUDIO SPEAKER OUTPUT CIRCUIT HIGH - PREMIUM
B140F	REAR RIGHT AUDIO SPEAKER OUTPUT CIRCUIT OPEN - BASE
B140F	REAR RIGHT AUDIO SPEAKER OUTPUT CIRCUIT OPEN - PREMIUM
B1420	AUDIO CASSETTE ERROR/INOPERABLE CASSETTE
B1421	AUDIO CD READ ERROR/INOPERABLE DISC
B1422	AUDIO DVD READ ERROR/INOPERABLE DISC
B1424	IMPROPER DVD-WRONG REGION
B1429	RADIO DISPLAY HIGH TEMPERATURE
B142A	RADIO UNIT HIGH TEMPERATURE
B142D	AUDIO ANTENNA NOT CONNECTED
B142E	GPS ANTENNA NOT CONNECTED
B142F	SATELLITE RADIO ANTENNA NOT CONNECTED
B1430	2.5)-SATELLITE RADIO ANTENNA INTERNAL PERFORMANCE
B1430	(4.0)-SATELLITE RADIO ANTENNA INTERNAL PERFORMANCE
B143A	MICROPHONE 1 CIRCUIT PERFORMANCE
B143B	MICROPHONE 1 CIRCUIT LOW
B143C	MICROPHONE 1 CIRCUIT HIGH
B143D	MICROPHONE 2 CIRCUIT PERFORMANCE
B143E	MICROPHONE 2 CIRCUIT LOW
B143F	MICROPHONE 2 CIRCUIT HIGH
B156B	SATELLITE RADIO ANTENNA CIRCUIT
B1570	USB COMMUNICATION PERFORMANCE
B157B	SATELLITE REGION MISMATCH - US/CANADA
B157C	SATELLITE REGION MISMATCH - REST OF WORLD
U0019	CAN B BUS
U0151	LOST COMMUNICATION WITH OCCUPANT RESTRAINT CONTROLLER (ORC)
U0186	LOST COMMUNICATION WITH AUDIO AMPLIFIER
U0197	LOST COMMUNICATION WITH HANDS FREE PHONE

	MODULE

DIAGNOSIS AND TESTING

B1401-FRONT LEFT AUDIO SPEAKER OUTPUT CIRCUIT LOW

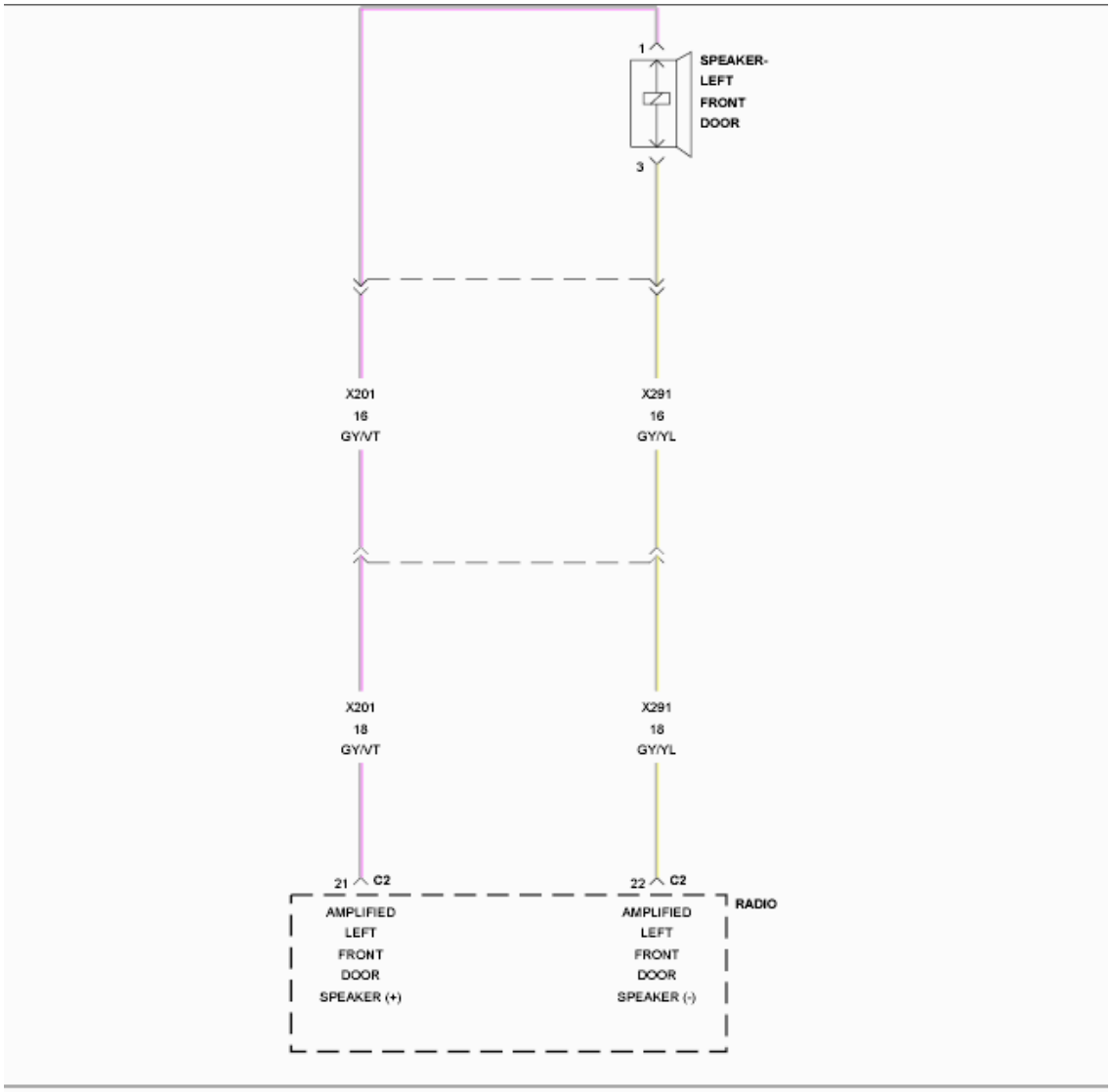

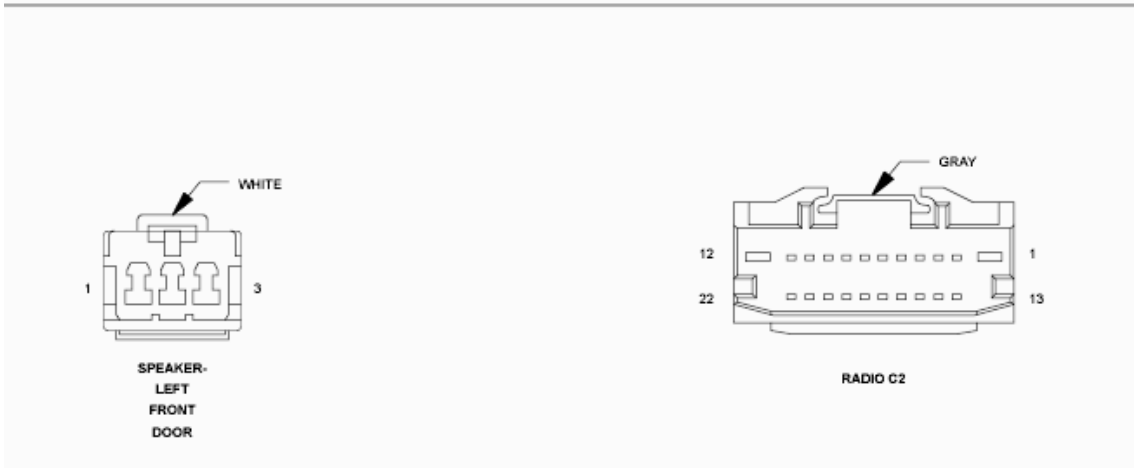

Fig. 1: Left Front Speaker Circuit Diagram
Courtesy of CHRYSLER GROUP, LLC

For a complete wiring diagram, **refer to appropriate SYSTEM WIRING DIAGRAMS article** .

THEORY OF OPERATION

The (X201) Left Front Speaker (+) circuit and the (X291) Left Front Speaker (-) circuit are outputs of the Radio. The Radio controls and monitors these circuits for a concern.

WHEN MONITORED

With the Radio on.

SET CONDITION

The Radio detects a short to ground condition on the speaker output circuit.

POSSIBLE CAUSES

Possible Causes
(X201) LEFT FRONT SPEAKER (+) CIRCUIT SHORTED TO GROUND (X291) LEFT FRONT SPEAKER (-) CIRCUIT SHORTED TO GROUND LEFT FRONT SPEAKER RADIO

DIAGNOSTIC TEST

1. **CHECK FOR AN INTERMITTENT CONDITION**
    1. Turn the ignition on and open one of the front doors.

        NOTE: A front door must remain open whenever checking or erasing Radio DTCs.

    2. Using the scan tool, record and erase the Radio DTCs.
    3. Turn the Radio on.
    4. Adjust the speakers to the front and center.
    5. Using the scan tool, read the active Radio DTCs.

Does the scan tool read: B1401-FRONT LEFT AUDIO SPEAKER OUTPUT CIRCUIT LOW?

Yes

- Go To 2

No

- Test complete, the condition or conditions that originally set this DTC are not present at this time. Using the wiring diagrams as a guide, check all related splices and connectors for signs of water intrusion, corrosion, pushed out or bent terminals and correct pin tension.
- Perform the BODY VERIFICATION TEST. Refer to **STANDARD PROCEDURE** .

2. **CHECK THE LEFT FRONT SPEAKER**

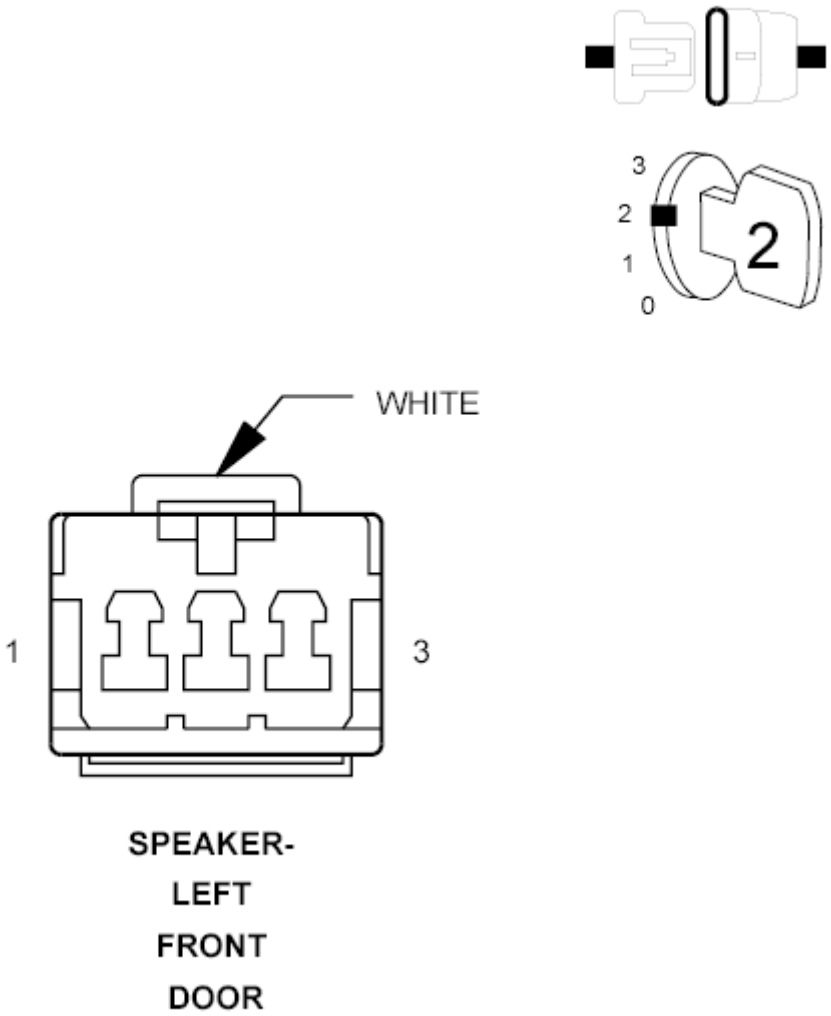

Fig. 2: Left Front Speaker Harness Connector End View
Courtesy of CHRYSLER GROUP, LLC

1. Make sure one of the front doors is still open.
2. Using the scan tool, erase the DTCs.
3. Turn the ignition off.
4. Disconnect the Left Front Speaker harness connector to the Left Front Speaker.
5. Turn the ignition on.
6. Turn the radio on.
7. Using the scan tool, read the active Radio DTCs.

   Does the scan tool read: B1401-FRONT LEFT AUDIO SPEAKER OUTPUT CIRCUIT LOW?

Yes

- Go To 3

No

- Replace the Left Front Speaker in accordance with the Service Information.
- Perform the BODY VERIFICATION TEST. Refer to **STANDARD PROCEDURE** .

3. **CHECK THE (X201) LEFT FRONT SPEAKER (+) CIRCUIT FOR A SHORT TO GROUND**

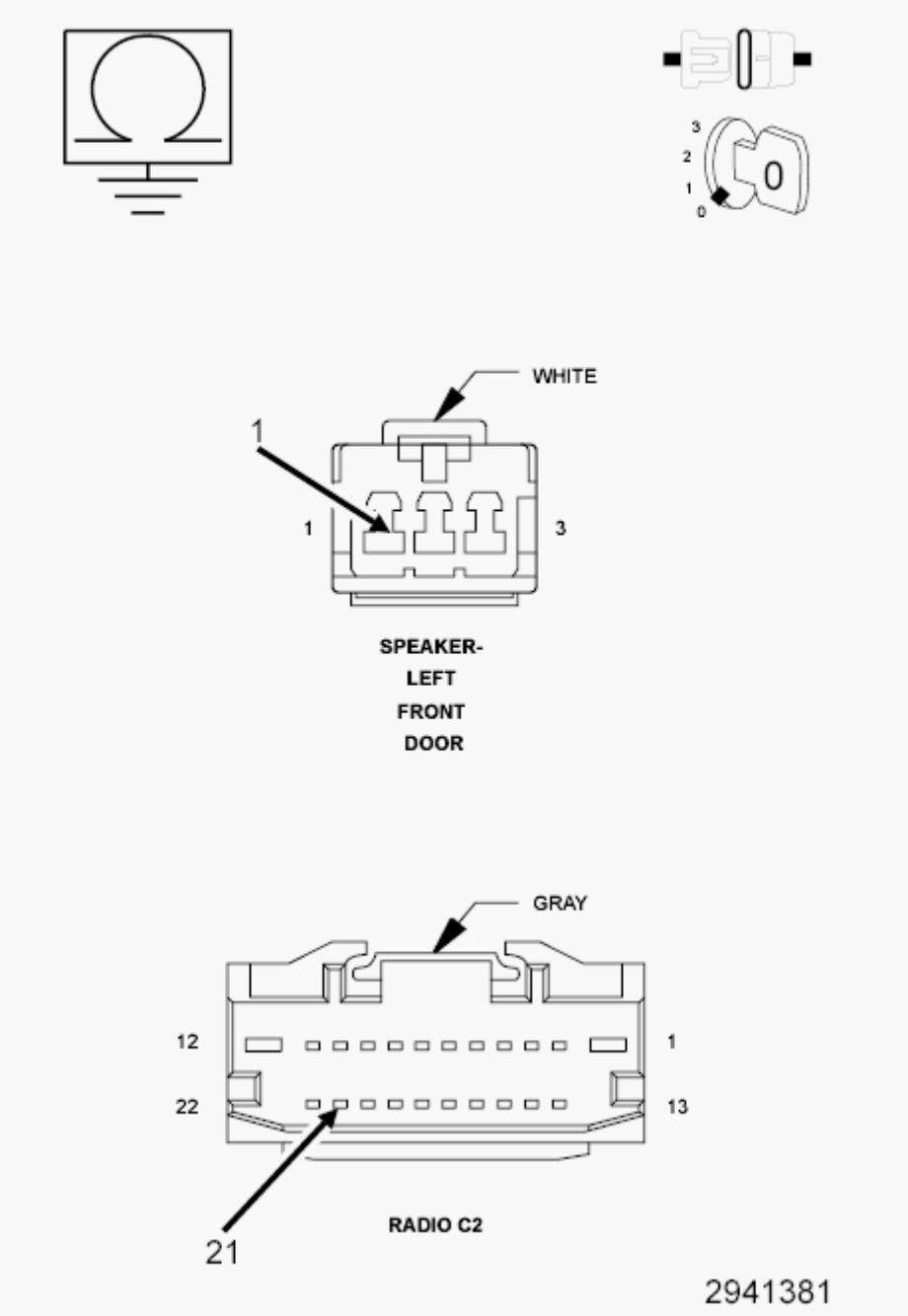

Fig. 3: Checking Left Front Speaker (+) Circuit For A Short To Ground
Courtesy of CHRYSLER GROUP, LLC

1. Turn the ignition off.
2. Disconnect the Radio C2 harness connector.
3. Measure the resistance between ground and the (X201) Left Front Speaker (+) circuit.

   Is the resistance below 5.0 Ohms?

Yes

- Repair the (X201) Left Front Speaker (+) circuit for a short to ground.
- Perform the BODY VERIFICATION TEST. Refer to **STANDARD PROCEDURE** .

No

- Go To 4

4. **CHECK THE (X291) LEFT FRONT SPEAKER (-) CIRCUIT FOR A SHORT TO GROUND**

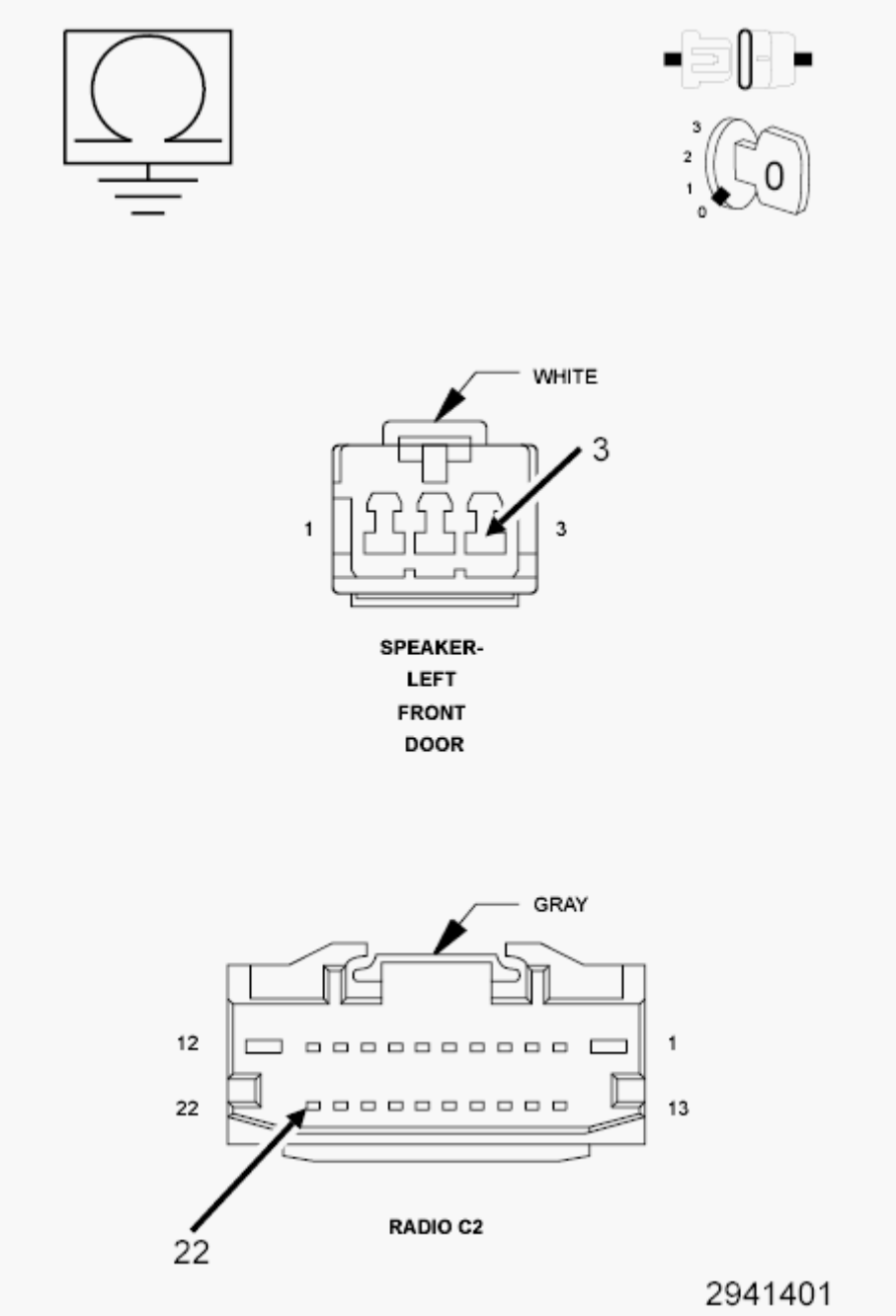

Fig. 4: Checking Left Front Speaker (-) Circuit For A Short To Ground
Courtesy of CHRYSLER GROUP, LLC

1. Measure the resistance between ground and the (X291) Left Rear Speaker (-) circuit.

   Is the resistance below 5.0 Ohms?

   Yes

   - Repair the (X291) Left Rear Speaker (-) for a short to ground.

- Perform the BODY VERIFICATION TEST. Refer to **STANDARD PROCEDURE** .

No

- Replace the Radio in accordance with the Service Information.
- Perform the BODY VERIFICATION TEST. Refer to **STANDARD PROCEDURE** .

B1402-FRONT LEFT AUDIO SPEAKER OUTPUT CIRCUIT HIGH

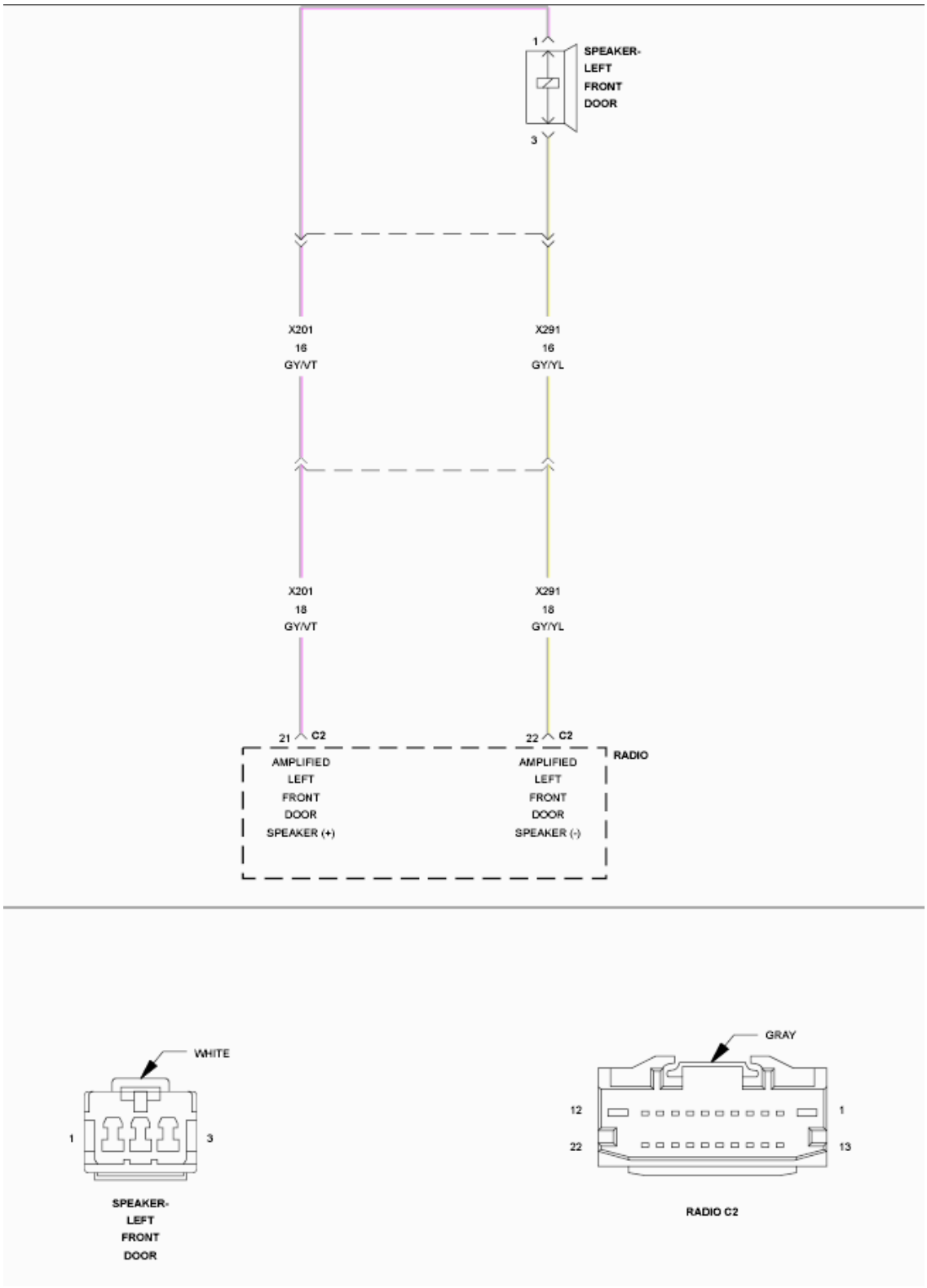

Fig. 5: Left Front Speaker Circuit Diagram
Courtesy of CHRYSLER GROUP, LLC

For a complete wiring diagram, **refer to appropriate SYSTEM WIRING DIAGRAMS article** .

THEORY OF OPERATION

The (X201) Left Front Speaker (+) circuit and the (X291) Left Front Speaker (-) circuit are outputs of the Radio. The Radio controls and monitors these circuits for a concern.

WHEN MONITORED

With the ignition on.

SET CONDITION

The Radio detects a short to battery condition on the speaker output circuit.

POSSIBLE CAUSES

Possible Causes
(X201) LEFT FRONT SPEAKER (+) CIRCUIT (X291) LEFT FRONT SPEAKER (-) CIRCUIT RADIO

DIAGNOSTIC TEST

1. **CHECK FOR AN INTERMITTENT CONDITION**
   1. Turn the ignition on and open one of the front doors.

      NOTE: A front door must remain open whenever checking or erasing Radio DTCs.

   2. Using the scan tool, record and erase the Radio DTCs.
   3. Turn the Radio on.
   4. Adjust the speakers to the front and center.
   5. Using the scan tool, read the active Radio DTCs.

      Does the scan tool display active: B1402-FRONT LEFT AUDIO SPEAKER OUTPUT CIRCUIT HIGH?

      Yes

      - Go To 2

No

- Test complete, the condition or conditions that originally set this DTC are not present at this time. Using the wiring diagrams as a guide, check all related splices and connectors for signs of water intrusion, corrosion, pushed out or bent terminals and correct pin tension.
- Perform the BODY VERIFICATION TEST. Refer to **STANDARD PROCEDURE** .

2. **CHECK FOR VOLTAGE ON THE (X201) LEFT FRONT SPEAKER (+) CIRCUIT**

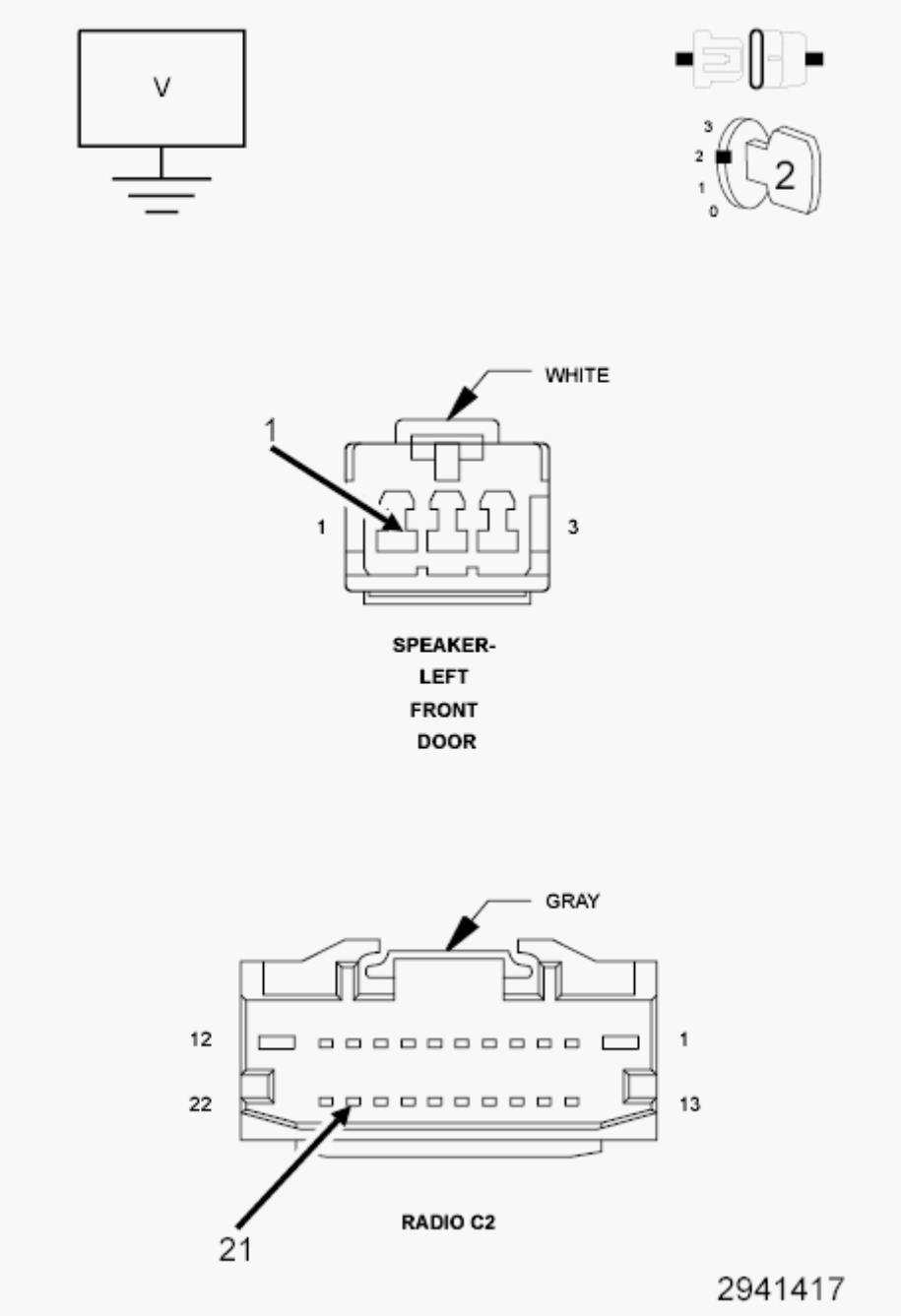

Fig. 6: Checking Voltage On Left Front Speaker (+) Circuit
Courtesy of CHRYSLER GROUP, LLC

1. Turn the ignition off.
2. Disconnect the Radio C2 harness connector.
3. Disconnect the Left Front Speaker harness connector.
4. Turn the ignition on.
5. Measure the voltage between ground and the (X201) Left Front Speaker (+) circuit.

Is there any voltage present?

Yes

- Repair the (X201) Left Front Door Speaker (+) circuit for a short to voltage.
- Perform the BODY VERIFICATION TEST. Refer to **STANDARD PROCEDURE** .

No

- Go To 3

3. **CHECK FOR VOLTAGE ON THE (X291) LEFT FRONT SPEAKER (-) CIRCUIT**

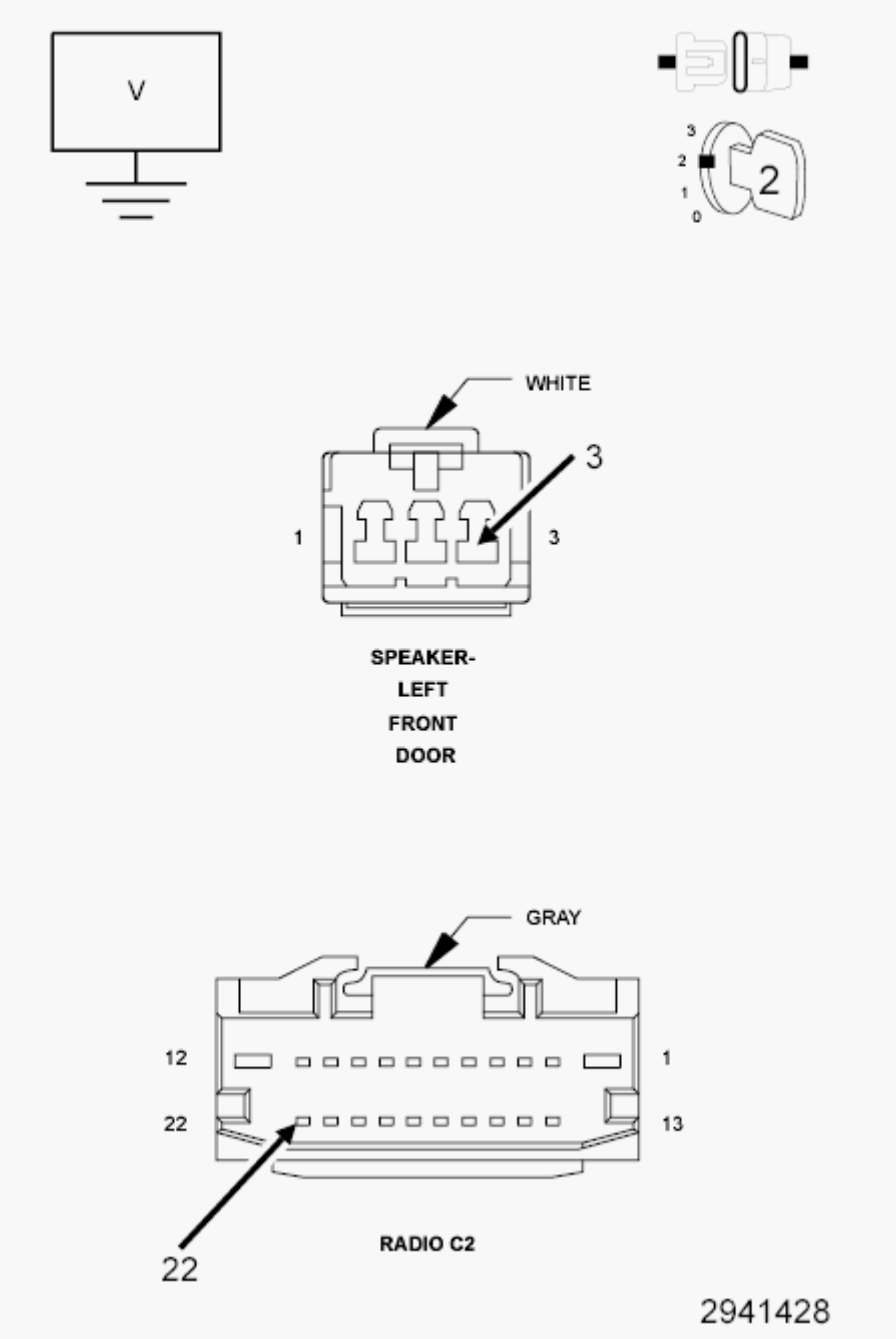

Fig. 7: Checking Voltage On Left Front Speaker (-) Circuit
Courtesy of CHRYSLER GROUP, LLC

1. Measure the voltage between ground and the (X291) Left Front Speaker (-) circuit.

   Is there any voltage present?

   Yes

   - Repair the (X291) Left Front Speaker (-) circuit for a short to

voltage.

- Perform the BODY VERIFICATION TEST. Refer to **STANDARD PROCEDURE** .

No

- Replace the Radio in accordance with the Service Information.
- Perform the BODY VERIFICATION TEST. Refer to **STANDARD PROCEDURE** .

B1403-FRONT LEFT AUDIO SPEAKER OUTPUT CIRCUIT OPEN

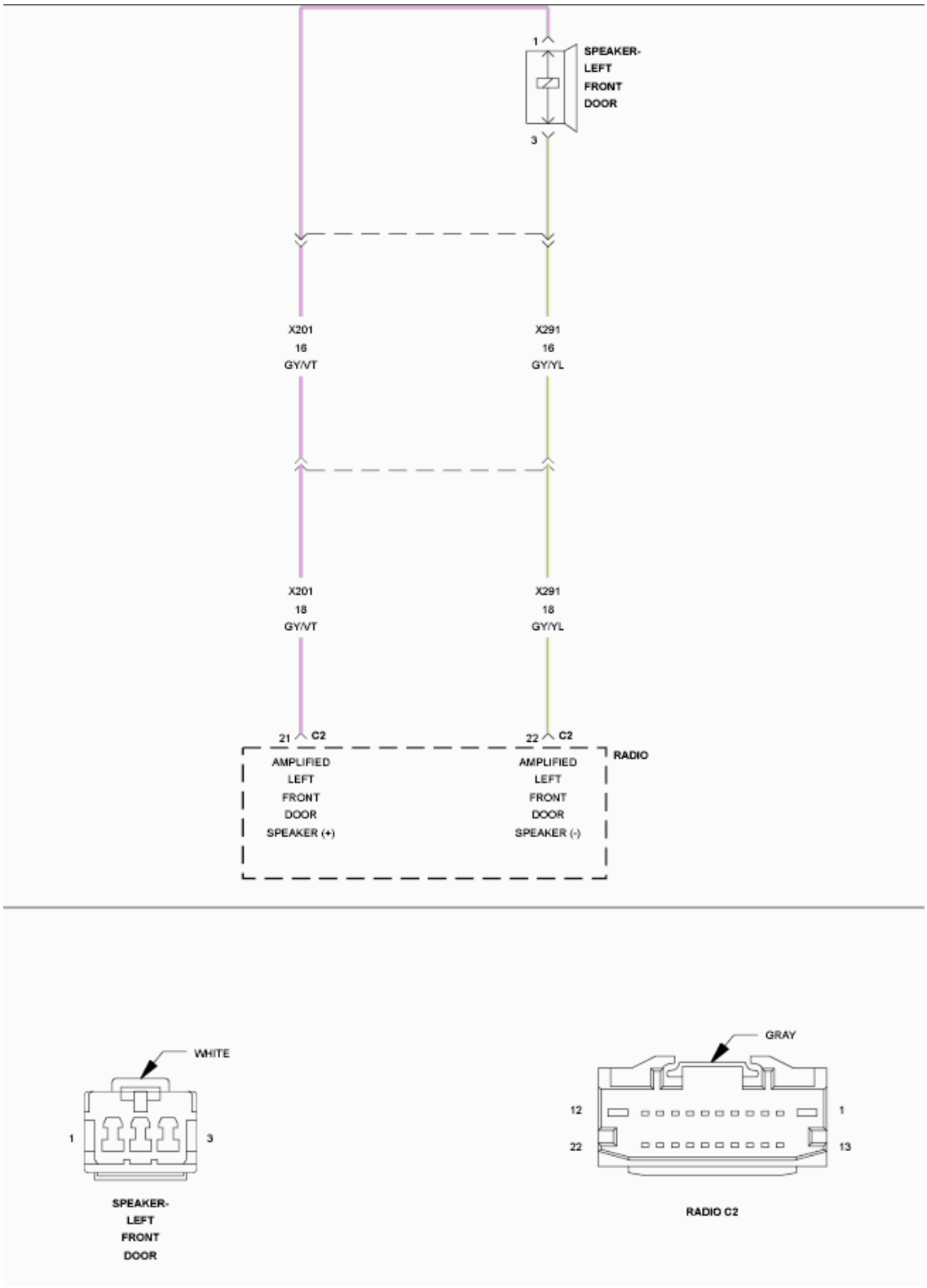

Fig. 8: Left Front Speaker Circuit Diagram
Courtesy of CHRYSLER GROUP, LLC

For a complete wiring diagram, **refer to appropriate SYSTEM WIRING DIAGRAMS article** .

THEORY OF OPERATION

The (X201) Left Front Speaker (+) circuit and the (X291) Left Front Speaker (-) circuit are outputs of the Radio. The Radio controls and monitors these circuits for a concern.

WHEN MONITORED

With the Radio on.

SET CONDITION

The Radio detects an open condition on the speaker output circuit.

POSSIBLE CAUSES

Possible Causes
(X201) LEFT FRONT SPEAKER (+) CIRCUIT OPEN
(X291) LEFT FRONT SPEAKER (-) CIRCUIT OPEN
LEFT FRONT SPEAKER
RADIO

DIAGNOSTIC TEST

1. **CHECK FOR AN INTERMITTENT CONDITION**
    1. Turn the ignition on and open one of the front doors.

       NOTE: A front door must remain open whenever checking or erasing Radio DTCs.

    2. Using the scan tool, record and erase the Radio DTCs.
    3. Turn the Radio on.
    4. Adjust the speakers to the front and center.
    5. Using the scan tool, read the active Radio DTCs.

       Does the scan tool read: B1403-FRONT LEFT AUDIO SPEAKER OUTPUT CIRCUIT OPEN?

       Yes

       - Go To 2

No

- Test complete, the condition or conditions that originally set this DTC are not present at this time. Using the wiring diagrams as a guide, check all related splices and connectors for signs of water intrusion, corrosion, pushed out or bent terminals and correct pin tension.
- Perform the BODY VERIFICATION TEST. Refer to **STANDARD PROCEDURE** .

2. **CHECK THE LEFT FRONT SPEAKER**

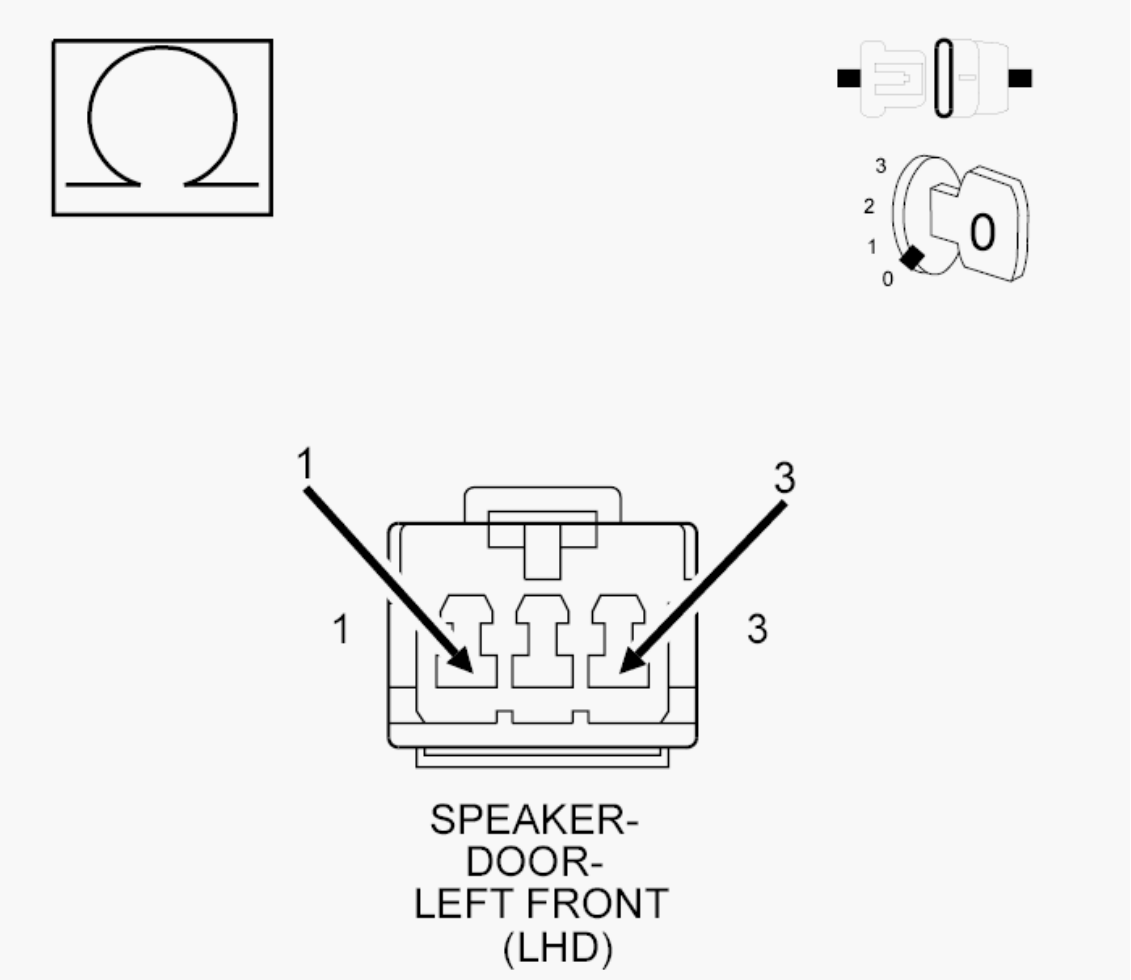

Fig. 9: Checking Left Front Speaker
Courtesy of CHRYSLER GROUP, LLC

1. Turn the ignition off.
2. Disconnect the Left Front Speaker.
3. Measure the resistance of the speaker between the two terminals.

NOTE: The graphic shows the connector for reference only. Measure between the speaker terminals.

Is the resistance above 5.0 Ohms?

Yes

- Replace the Left Front Speaker in accordance with the Service Information. An open Tweeter will not set this code.
- Perform the BODY VERIFICATION TEST. Refer to **STANDARD PROCEDURE** .

No

- Go To 3

3. **CHECK THE (X201) LEFT FRONT SPEAKER (+) CIRCUIT FOR AN OPEN**

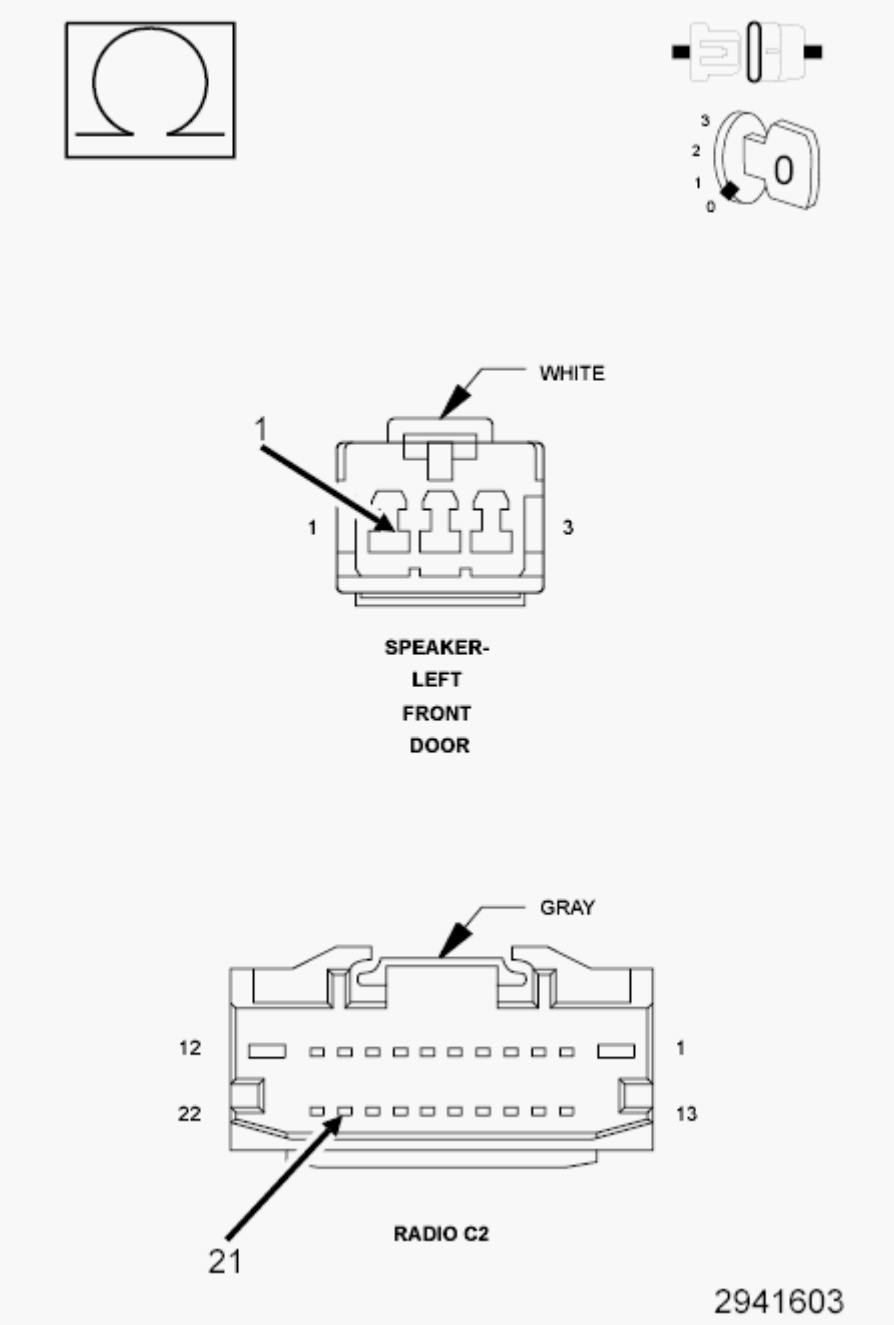

Fig. 10: Checking Left Front Speaker (+) Circuit For An Open
Courtesy of CHRYSLER GROUP, LLC

1. Disconnect the Radio C2 harness connector.
2. Measure the resistance of the (X201) Left Front Speaker (+) circuit between the Radio C2 connector, and the Left Front Speaker harness connector.

   Is the resistance below 5.0 Ohms?

   Yes

- Go To 4

No

- Repair an open in the (X201) Left Front Speaker (+) circuit.
- Perform the BODY VERIFICATION TEST. Refer to **STANDARD PROCEDURE** .

4. **CHECK THE (X291) LEFT FRONT SPEAKER (-) CIRCUIT FOR AN OPEN**

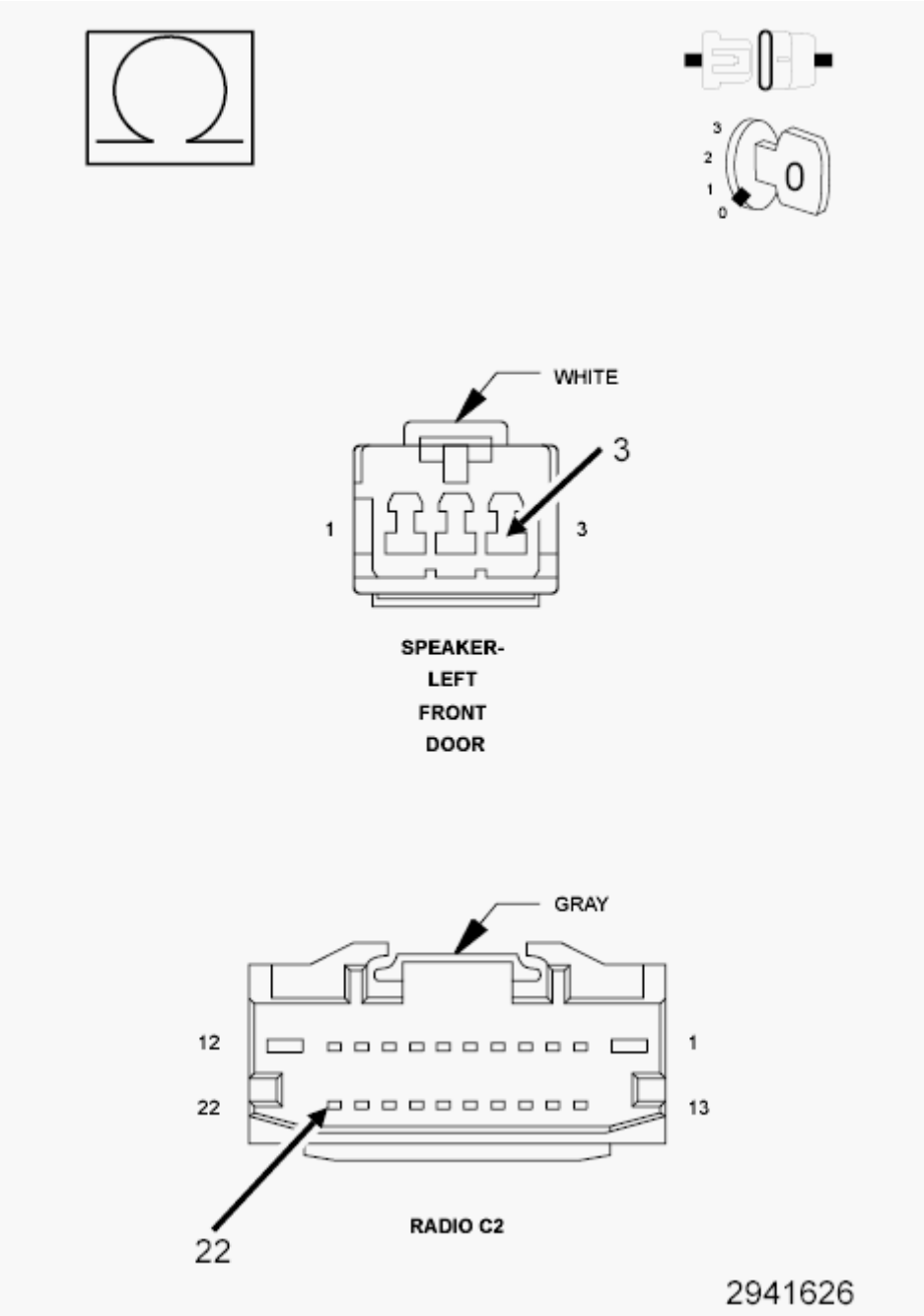

Fig. 11: Checking Left Front Speaker (-) Circuit For An Open
Courtesy of CHRYSLER GROUP, LLC

1. Measure the resistance of the (X291) Left Front Speaker (-) circuit between the Radio C2 connector, and the Left Front Speaker harness connector.

   Is the resistance below 5.0 Ohms?

   Yes

   - Replace the Radio in accordance with the Service Information.
   - Perform the BODY VERIFICATION TEST. Refer to **STANDARD PROCEDURE** .

   No

   - Repair an open in the (X291) Left Front Speaker (-) circuit.
   - Perform the BODY VERIFICATION TEST. Refer to **STANDARD PROCEDURE** .

B1405-FRONT RIGHT AUDIO SPEAKER OUTPUT CIRCUIT LOW

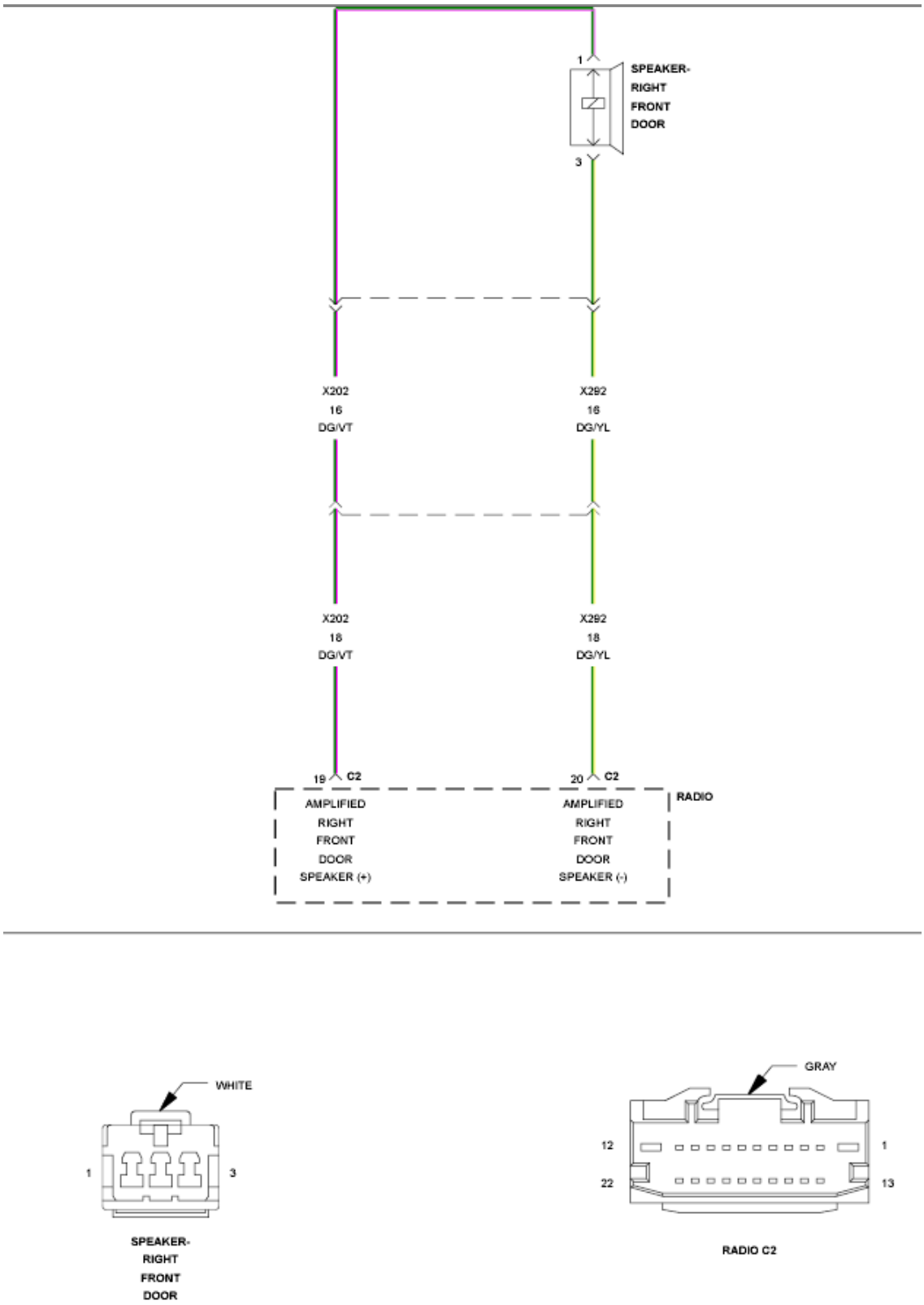

Fig. 12: Right Front Speaker Circuit Diagram
Courtesy of CHRYSLER GROUP, LLC

For a complete wiring diagram, **refer to appropriate SYSTEM WIRING DIAGRAMS article** .

THEORY OF OPERATION

The (X202) Right Front Speaker (+) circuit and the (X292) Right Front Speaker (-) circuit are outputs of the Radio. The Radio controls and monitors these circuits for a concern.

WHEN MONITORED

With the Radio on.

SET CONDITION

The Radio detects a short to ground condition on the speaker output circuit.

POSSIBLE CAUSES

Possible Causes
(X202) RIGHT FRONT SPEAKER (+) CIRCUIT SHORTED TO GROUND
(X292) RIGHT FRONT SPEAKER (-) CIRCUIT SHORTED TO GROUND
RIGHT FRONT SPEAKER
RADIO

DIAGNOSTIC TEST

1. **CHECK FOR AN INTERMITTENT CONDITION**
    1. Turn the ignition on and open one of the front doors.

       NOTE: A front door must remain open whenever checking or erasing Radio DTCs.

    2. Using the scan tool, record and erase the Radio DTCs.
    3. Turn the Radio on.
    4. Adjust the speakers to the front and center.
    5. Using the scan tool, read the active Radio DTCs.

       Does the scan tool read: B1405-FRONT RIGHT AUDIO SPEAKER

OUTPUT CIRCUIT LOW?

Yes

- Go To 2

No

- Test complete, the condition or conditions that originally set this DTC are not present at this time. Using the wiring diagrams as a guide, check all related splices and connectors for signs of water intrusion, corrosion, pushed out or bent terminals and correct pin tension.
- Perform the BODY VERIFICATION TEST. Refer to **STANDARD PROCEDURE** .

2. **CHECK THE RIGHT FRONT SPEAKER**

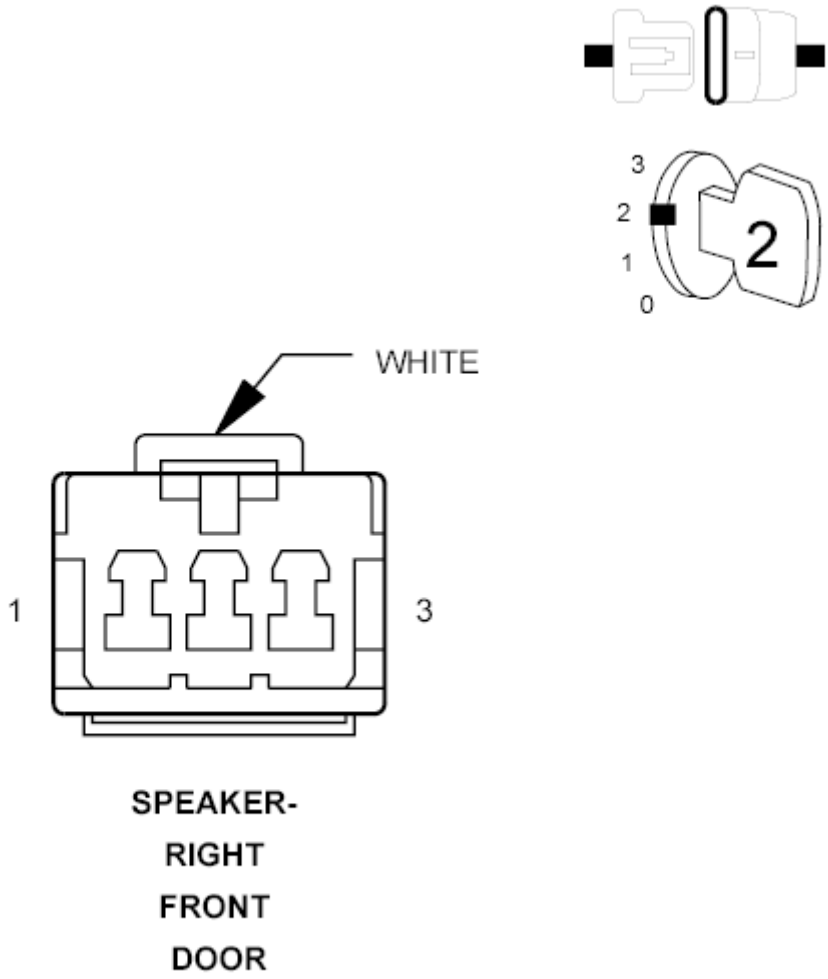

Fig. 13: Checking Right Front Speaker
Courtesy of CHRYSLER GROUP, LLC

1. Make sure one of the front doors is still open.
2. Using the scan tool, erase the DTCs.
3. Turn the ignition off.
4. Disconnect the Right Front Speaker harness connector to the Right Front Speaker.
5. Turn the ignition on.
6. Turn the radio on.
7. Using the scan tool, read the active Radio DTCs.

   Does the scan tool read: B1405-FRONT RIGHT AUDIO SPEAKER OUTPUT CIRCUIT LOW?

Yes

- Go To 3

No

- Replace the Right Front Speaker in accordance with the Service Information.
- Perform the BODY VERIFICATION TEST. Refer to **STANDARD PROCEDURE** .

3. **CHECK THE (X202) RIGHT FRONT SPEAKER (+) CIRCUIT FOR A SHORT TO GROUND**

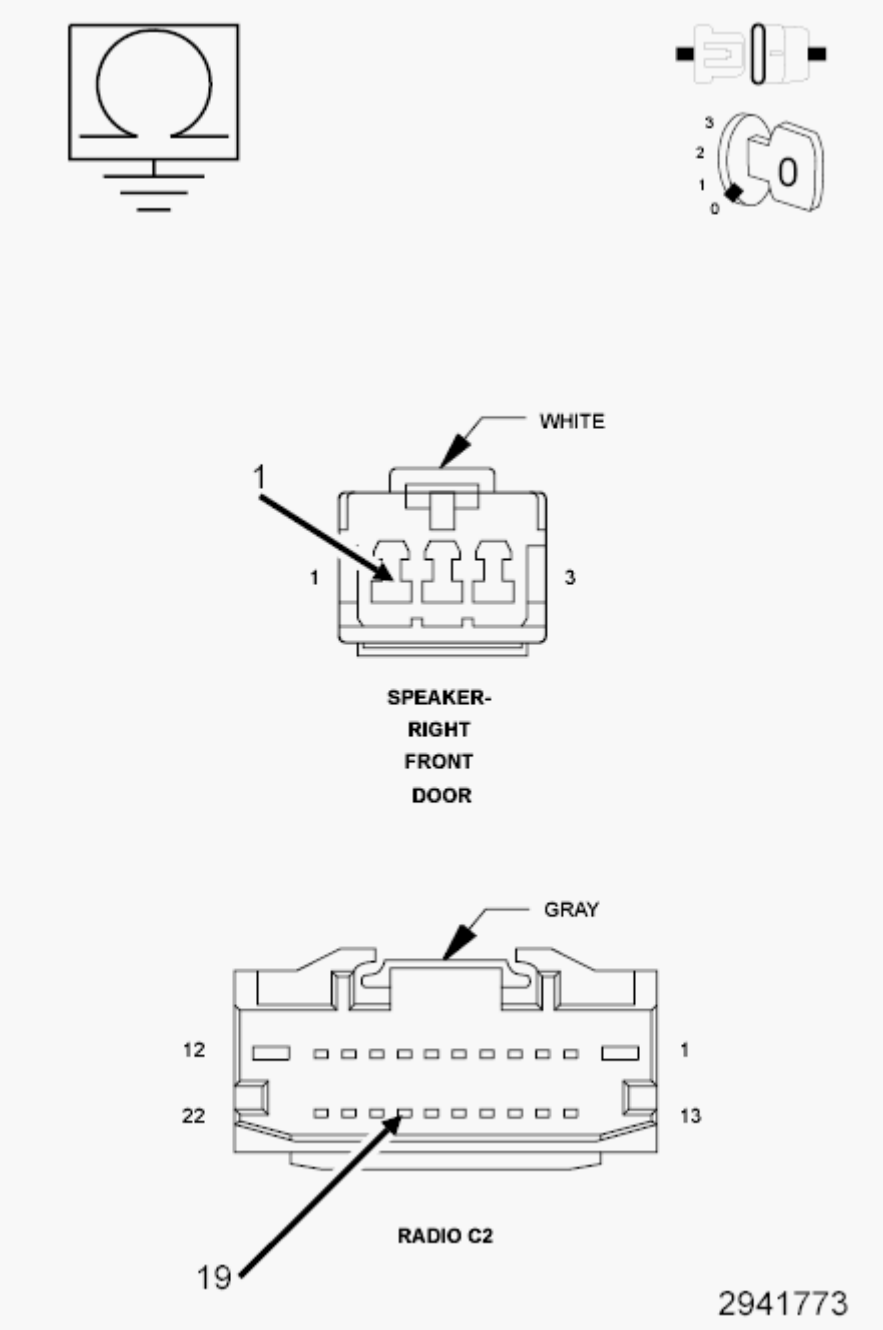

Fig. 14: Checking Right Front Speaker (+) Circuit For A Short To Ground
Courtesy of CHRYSLER GROUP, LLC

1. Turn the ignition off.
2. Disconnect the Radio C2 harness connector.
3. Measure the resistance between ground and the (X202) Right Front Speaker (+) circuit.

   Is the resistance below 5.0 Ohms?

Yes

- Repair the (X202) Right Front Speaker (+) circuit for a short to ground.
- Perform the BODY VERIFICATION TEST. Refer to **STANDARD PROCEDURE** .

No

- Go To 4

4. **CHECK THE (X292) RIGHT FRONT SPEAKER (-) CIRCUIT FOR A SHORT TO GROUND**

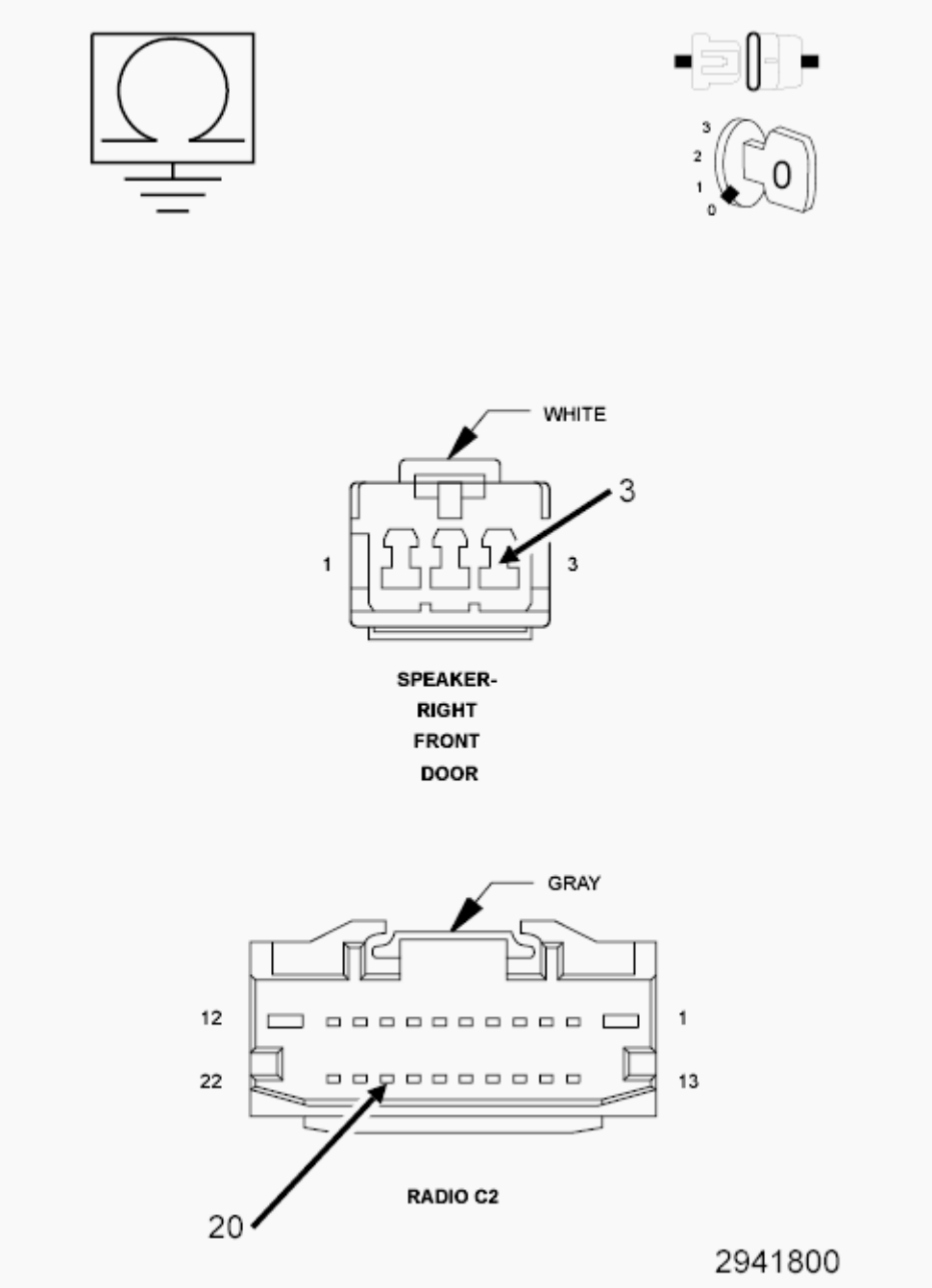

Fig. 15: Checking Right Front Speaker (-) Circuit For A Short To Ground
Courtesy of CHRYSLER GROUP, LLC

1. Measure the resistance between ground and the (X292) Right Rear Speaker (-) circuit.

   Is the resistance below 5.0 Ohms?

   Yes

- Repair the (X292) Right Rear Speaker (-) for a short to ground.
- Perform the BODY VERIFICATION TEST. Refer to **STANDARD PROCEDURE** .

No

- Replace the Radio in accordance with the Service Information.
- Perform the BODY VERIFICATION TEST. Refer to **STANDARD PROCEDURE** .

B1406-FRONT RIGHT AUDIO SPEAKER OUTPUT CIRCUIT HIGH

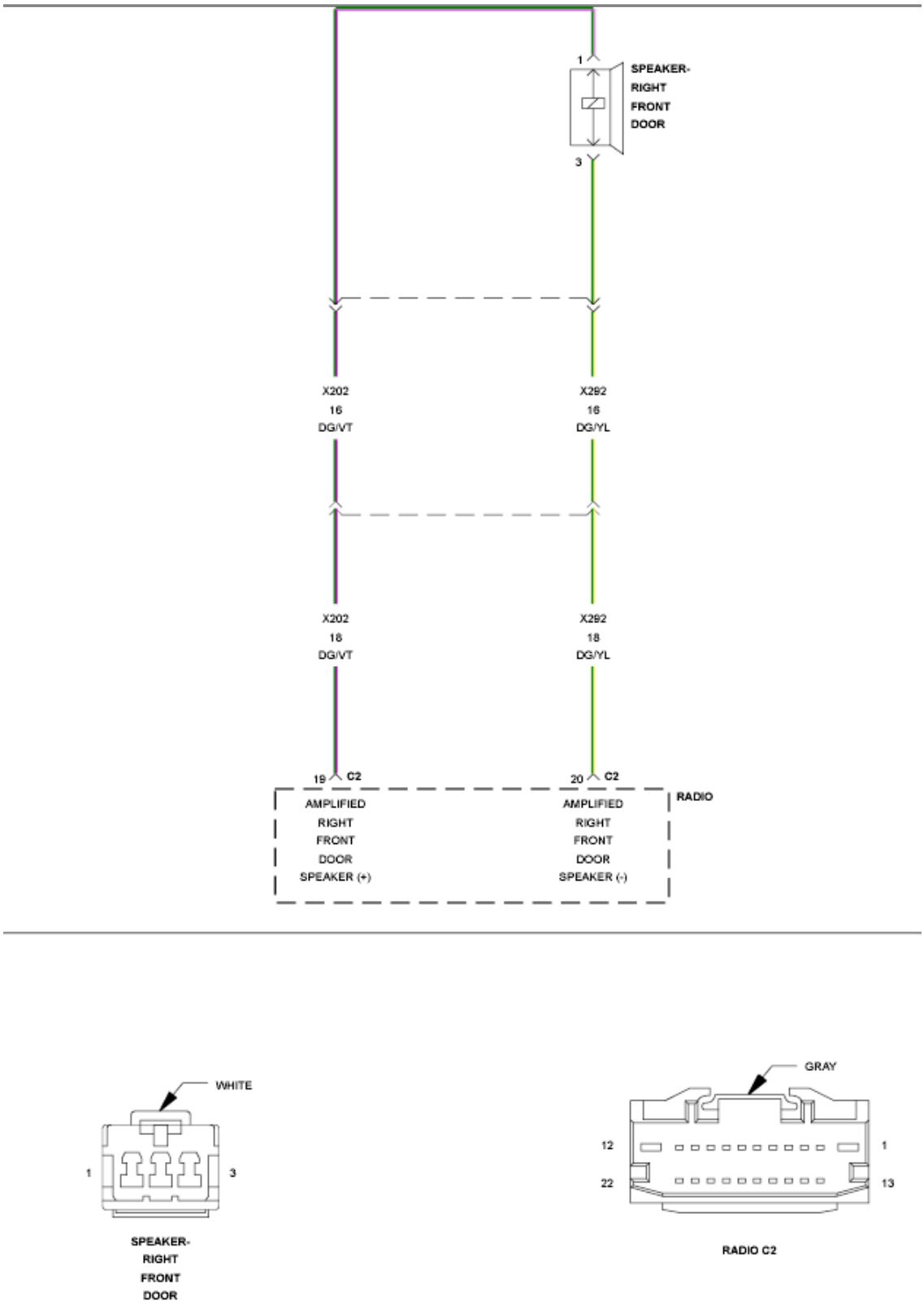

Fig. 16: Right Front Speaker Circuit Diagram
Courtesy of CHRYSLER GROUP, LLC

For a complete wiring diagram, **refer to appropriate SYSTEM WIRING DIAGRAMS article** .

THEORY OF OPERATION

The (X202) Right Front Speaker (+) circuit and the (X292) Right Front Speaker (-) circuit are outputs of the Radio. The Radio controls and monitors these circuits for a concern.

Possible Causes
(X202) RIGHT FRONT SPEAKER (+) CIRCUIT SHORTED TO VOLTAGE (X292) RIGHT FRONT SPEAKER (-) CIRCUIT SHORTED TO VOLTAGE RADIO

DIAGNOSTIC TEST

1. **CHECK FOR AN INTERMITTENT CONDITION**
    1. Turn the ignition on and open one of the front doors.

       NOTE: A front door must remain open whenever checking or erasing Radio DTCs.

    2. Using the scan tool, record and erase the Radio DTCs.
    3. Turn the Radio on.
    4. Adjust the speakers to the front and center.
    5. Using the scan tool, read the active Radio DTCs.

       Does the scan tool display active: B1406-FRONT RIGHT AUDIO SPEAKER OUTPUT CIRCUIT HIGH?

       Yes

       - Go To 2

       No

       - Test complete, the condition or conditions that originally set this DTC are not present at this time. Using the wiring diagrams as a

guide, check all related splices and connectors for signs of water intrusion, corrosion, pushed out or bent terminals and correct pin tension.

- Perform the BODY VERIFICATION TEST. Refer to **STANDARD PROCEDURE** .

2. **CHECK FOR VOLTAGE ON THE (X202) RIGHT FRONT SPEAKER (+) CIRCUIT**

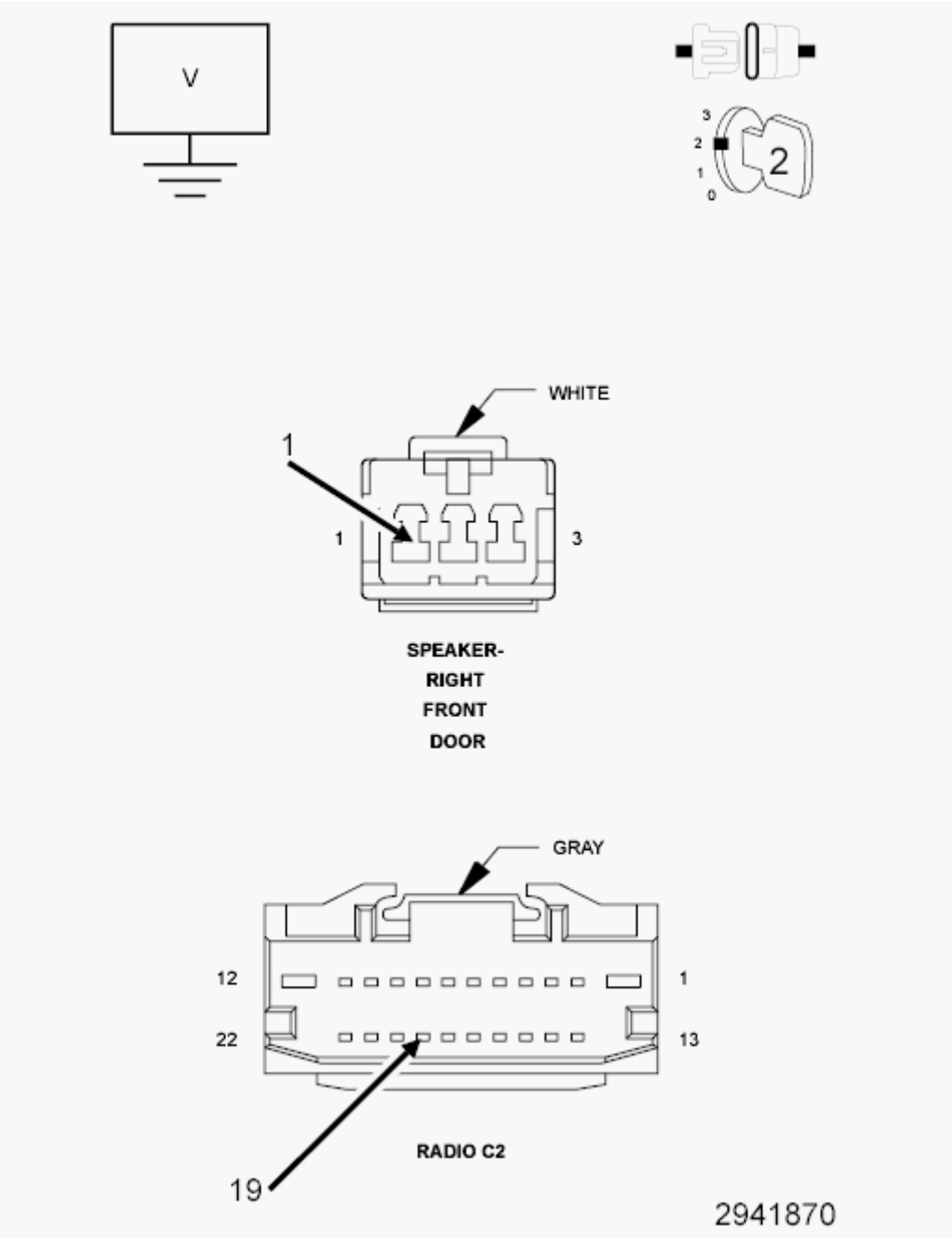

Fig. 17: Checking Voltage On Right Front Speaker (+) Circuit
Courtesy of CHRYSLER GROUP, LLC

1. Turn the ignition off.
2. Disconnect the Radio C2 harness connector.
3. Disconnect the Right Front Speaker harness connector.
4. Turn the ignition on.
5. Measure the voltage between ground and the (X202) Right Front Speaker (+) circuit.

   Is there any voltage present?

   Yes

   - Repair the (X202) Right Front Door Speaker (+) circuit for a short to voltage.
   - Perform the BODY VERIFICATION TEST. Refer to **STANDARD PROCEDURE** .

   No

   - Go To 3

3. **CHECK FOR VOLTAGE ON THE (X292) RIGHT FRONT SPEAKER (-) CIRCUIT**

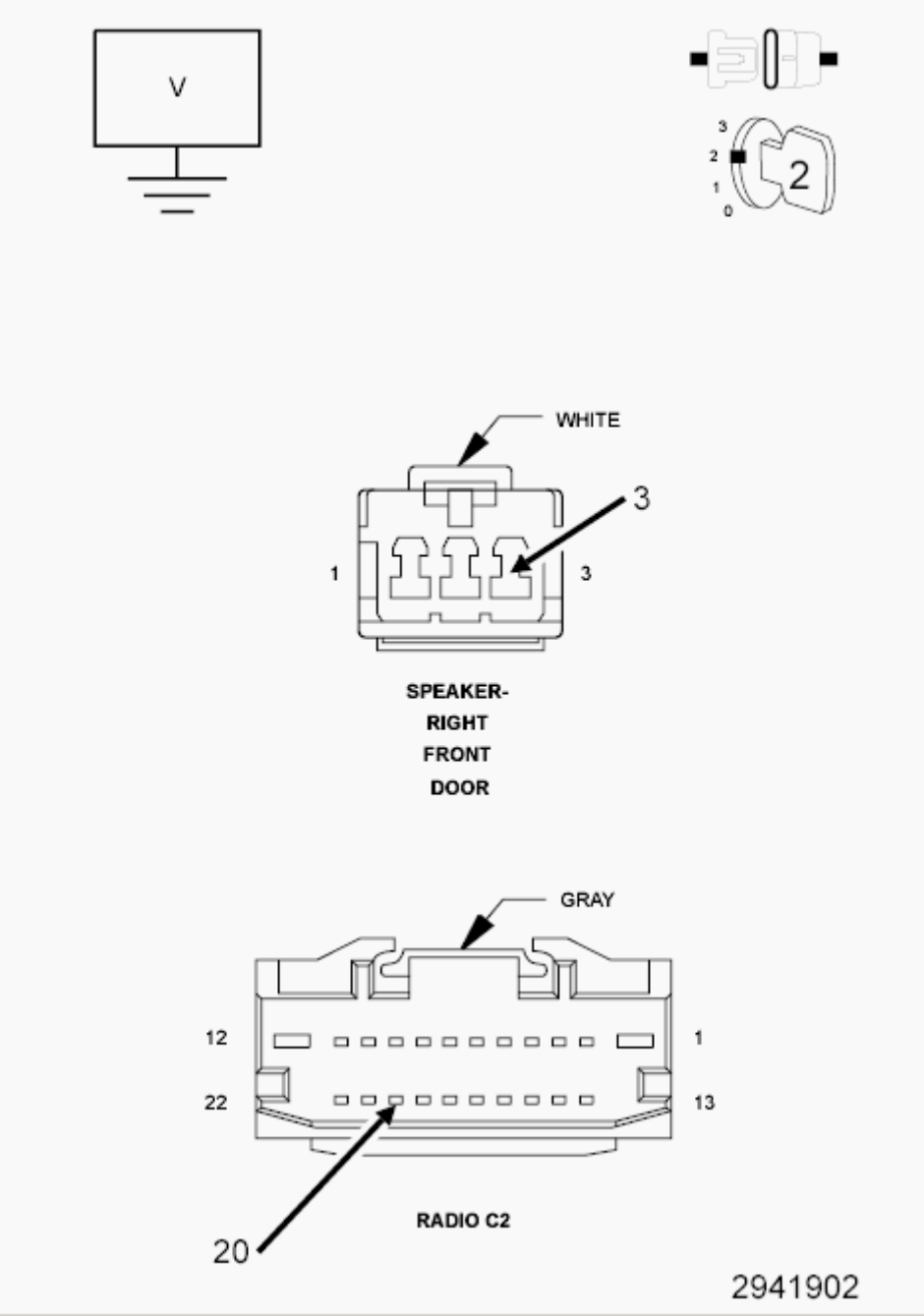

Fig. 18: Checking Voltage On Right Front Speaker (-) Circuit
Courtesy of CHRYSLER GROUP, LLC

1. Measure the voltage between ground and the (X292) Right Front Speaker (-) circuit.

   Is there any voltage present?

   Yes

   - Repair the (X292) Right Front Door Speaker (-) circuit for a short

to voltage.

- Perform the BODY VERIFICATION TEST. Refer to **STANDARD PROCEDURE** .

No

- Replace the Radio in accordance with the Service Information.
- Perform the BODY VERIFICATION TEST. Refer to **STANDARD PROCEDURE** .

B1407-FRONT RIGHT AUDIO SPEAKER OUTPUT CIRCUIT OPEN

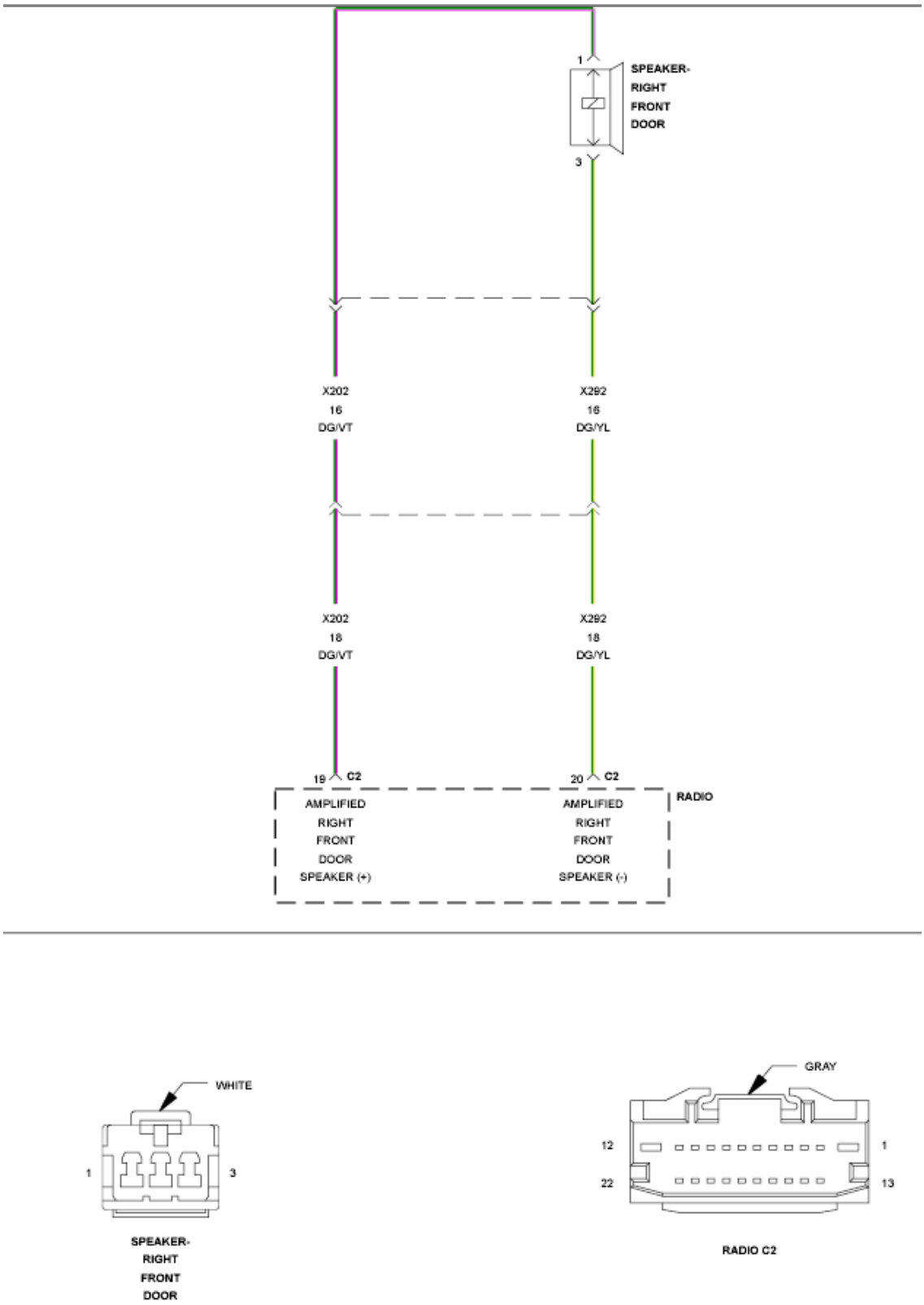

Fig. 19: Right Front Speaker Circuit Diagram
Courtesy of CHRYSLER GROUP, LLC

For a complete wiring diagram, **refer to appropriate SYSTEM WIRING DIAGRAMS article** .

THEORY OF OPERATION

The (X202) Right Front Speaker (+) circuit and the (X292) Right Front Speaker (-) circuit are outputs of the Radio. The Radio controls and monitors these circuits for a concern.

WHEN MONITORED

With the Radio on.

SET CONDITION

The Radio detects an open condition on the speaker output circuit.

POSSIBLE CAUSES

Possible Causes
(X202) RIGHT FRONT SPEAKER (+) CIRCUIT OPEN
(X292) RIGHT FRONT SPEAKER (-) CIRCUIT OPEN
RIGHT FRONT SPEAKER
RADIO

DIAGNOSTIC TEST

1. **CHECK FOR AN INTERMITTENT CONDITION**
    1. Turn the ignition on and open one of the front doors.

       NOTE: A front door must remain open whenever checking or erasing Radio DTCs.

    2. Using the scan tool, record and erase the Radio DTCs.
    3. Turn the Radio on.
    4. Adjust the speakers to the front and center.
    5. Using the scan tool, read the active Radio DTCs.

       Does the scan tool read: B1407-FRONT RIGHT AUDIO SPEAKER OUTPUT CIRCUIT OPEN?

Yes

- Go To 2

No

- Test complete, the condition or conditions that originally set this DTC are not present at this time. Using the wiring diagrams as a guide, check all related splices and connectors for signs of water intrusion, corrosion, pushed out or bent terminals and correct pin tension.
- Perform the BODY VERIFICATION TEST. Refer to **STANDARD PROCEDURE** .

2. **CHECK THE RIGHT FRONT SPEAKER**

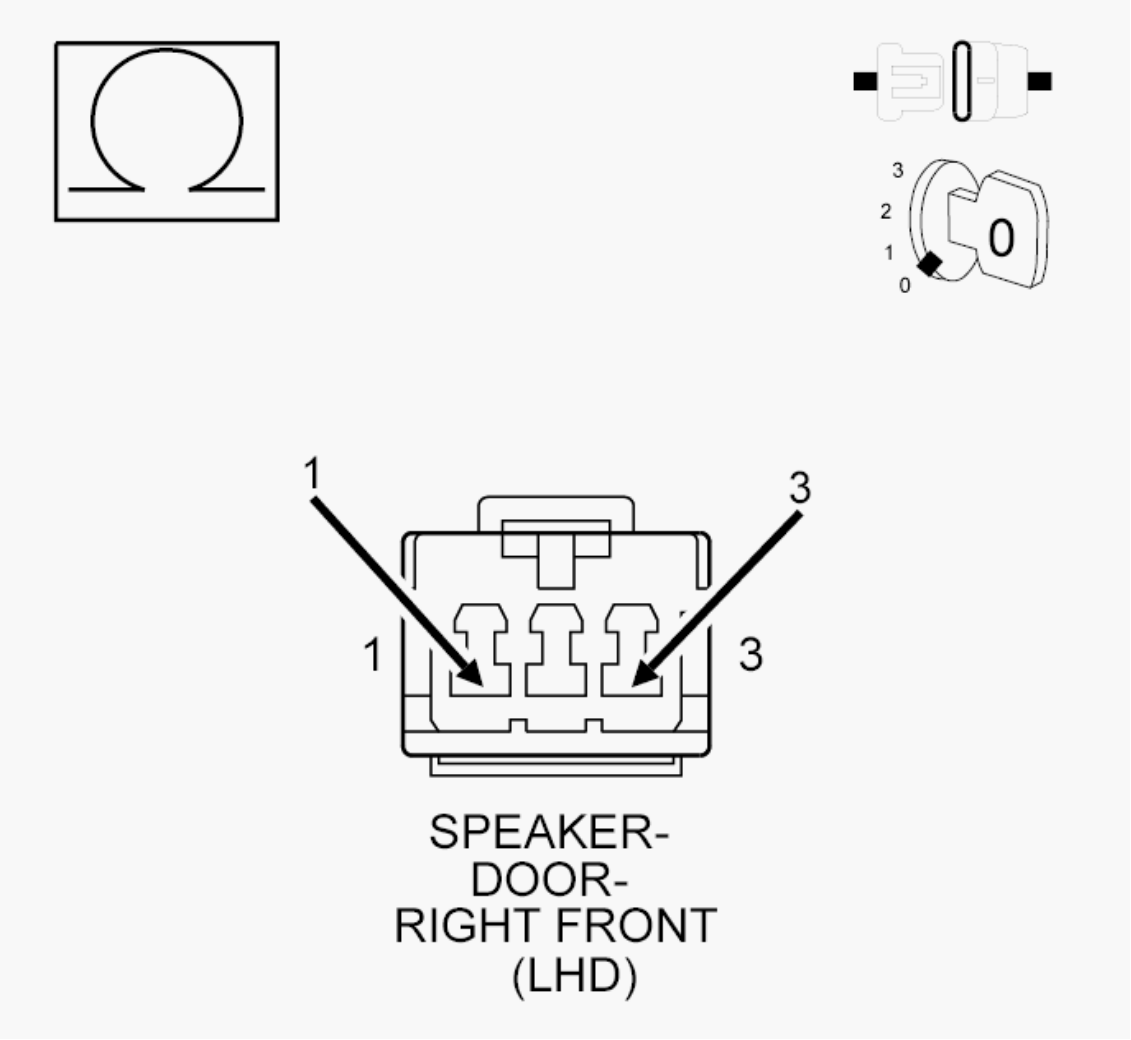

Fig. 20: Checking Right Front Speaker
Courtesy of CHRYSLER GROUP, LLC

1. Turn the ignition off.
2. Disconnect the Right Front Speaker.
3. Measure the resistance of the speaker between the two terminals.

NOTE: The graphic shows the connector for reference only. Measure between the speaker terminals.

Is the resistance above 5.0 Ohms?

Yes

- Replace the Right Front Speaker in accordance with the Service Information.
- Perform the BODY VERIFICATION TEST. Refer to **STANDARD PROCEDURE** .

No

- Go To 3

3. **CHECK THE (X202) RIGHT FRONT SPEAKER (+) CIRCUIT FOR AN OPEN**

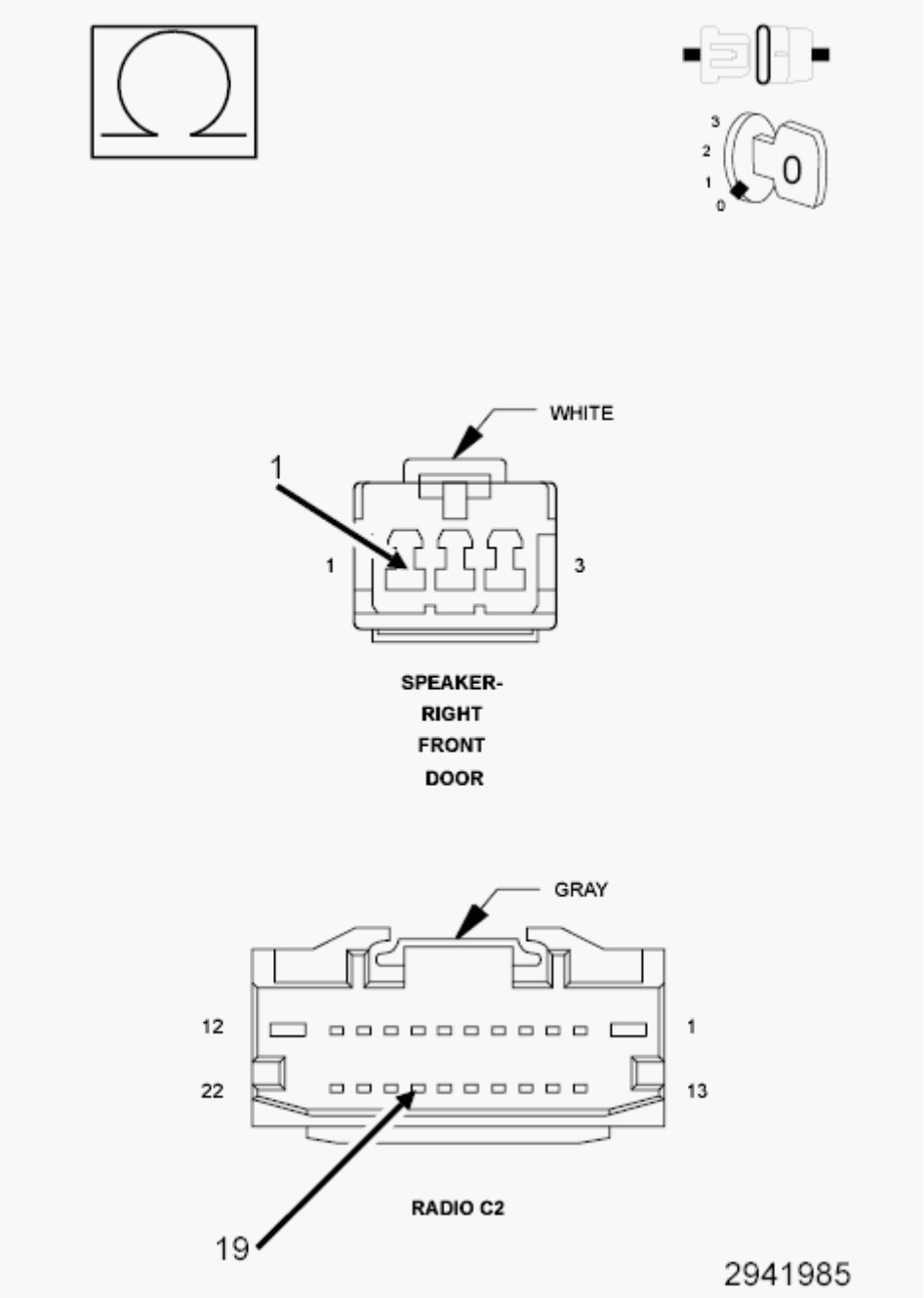

Fig. 21: Checking Right Front Speaker (+) Circuit For An Open
Courtesy of CHRYSLER GROUP, LLC

1. Disconnect the Radio C2 harness connector.
2. Measure the resistance of the (X202) Right Front Speaker (+) circuit between the Radio C2 connector, and the Right Front Speaker harness connector.

   Is the resistance below 5.0 Ohms?

   Yes

- Go To 4

No

- Repair an open in the (X202) Right Front Speaker (+) circuit.
- Perform the BODY VERIFICATION TEST. Refer to **STANDARD PROCEDURE** .

4. **CHECK THE (X292) RIGHT FRONT SPEAKER (-) CIRCUIT FOR AN OPEN**

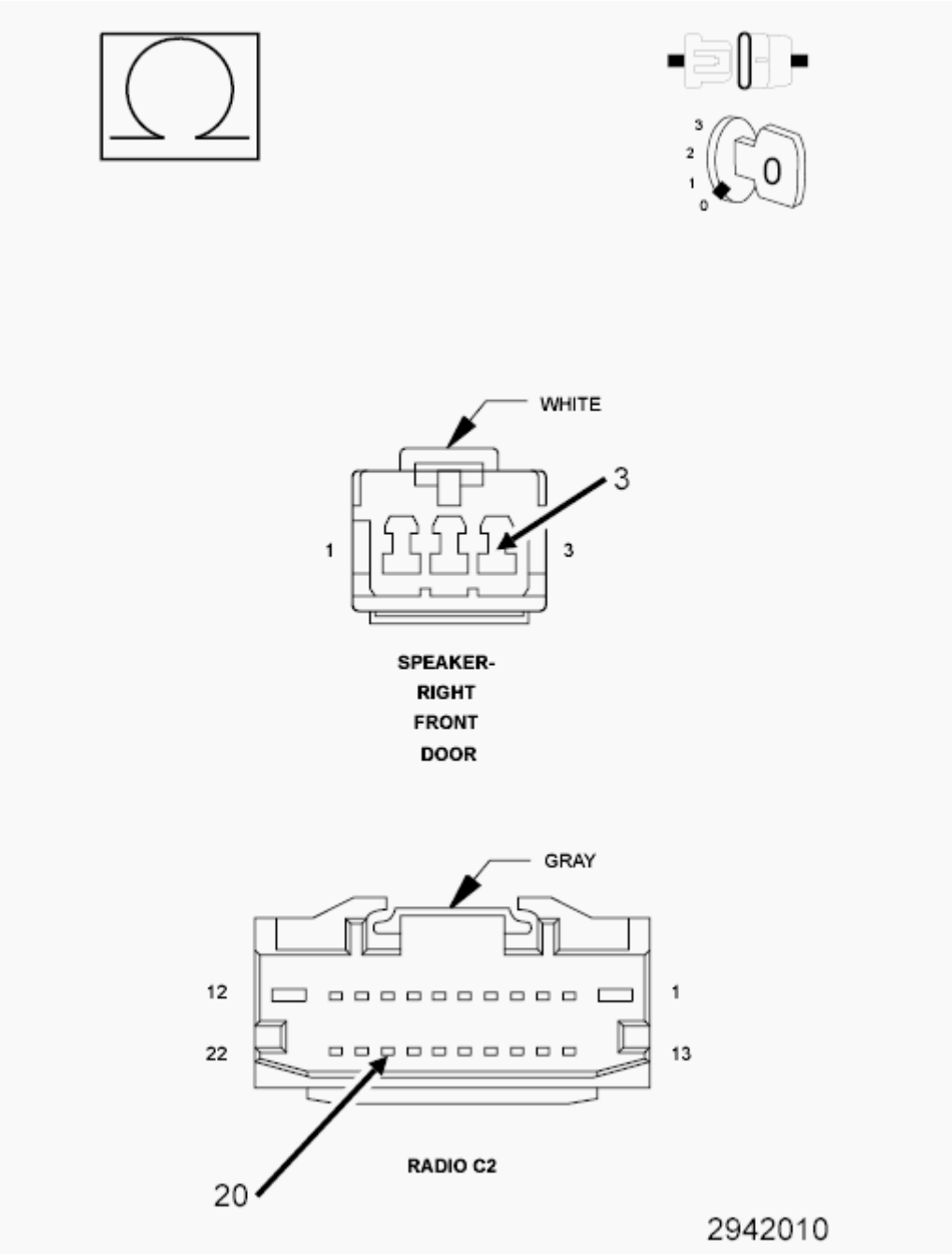

Fig. 22: Checking Right Front Speaker (-) Circuit For An Open
Courtesy of CHRYSLER GROUP, LLC

1. Measure the resistance of the (X292) Right Front Speaker (-) circuit between the Radio C2 connector, and the Right Front Speaker harness connector.

   Is the resistance below 5.0 Ohms?

   Yes

   - Replace the Radio in accordance with the Service Information.
   - Perform the BODY VERIFICATION TEST. Refer to **STANDARD PROCEDURE** .

   No

   - Repair an open in the (X292) Right Front Speaker (-) circuit.
   - Perform the BODY VERIFICATION TEST. Refer to **STANDARD PROCEDURE** .

B1409-REAR LEFT AUDIO SPEAKER OUTPUT CIRCUIT LOW - BASE

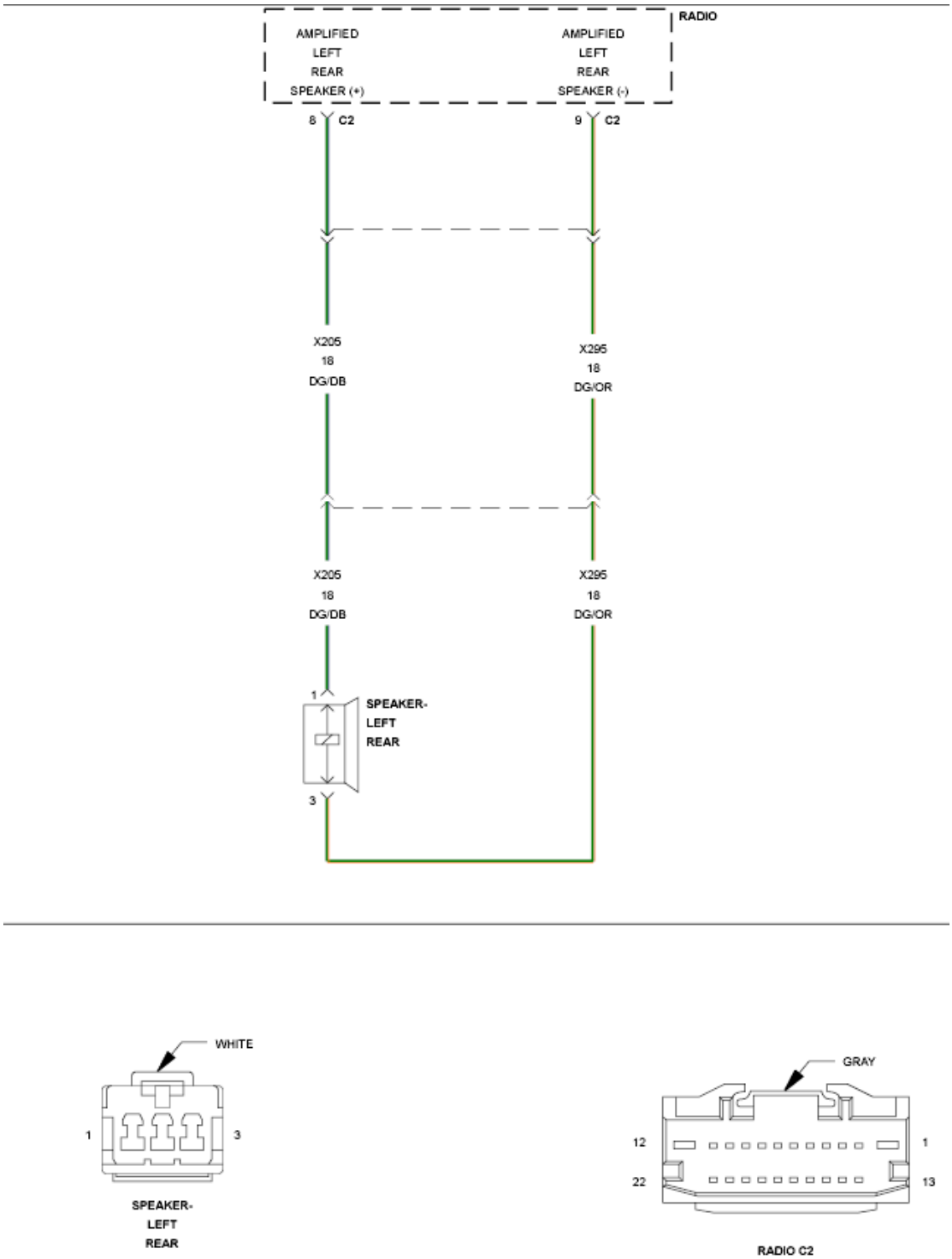

Fig. 23: Left Rear Speaker Circuit Diagram - Base
Courtesy of CHRYSLER GROUP, LLC

For a complete wiring diagram, **refer to appropriate SYSTEM WIRING DIAGRAMS article** .

NOTE: There are two versions of the B1409 DTC test. In order to select the proper test you must know if the vehicle is equipped with an Amplifier. If the vehicle is equipped with an Amplifier use the B1409-PREMIUM test. If the vehicle is not equipped with an Amplifier use the B1409-BASE test.

THEORY OF OPERATION

The (X205) Left Rear Speaker (+) circuit and the (X295) Left Rear Speaker (-) circuit are outputs of the Radio. The Radio controls and monitors these circuits for a concern.

WHEN MONITORED

With the Radio on.

SET CONDITION

The Radio detects a short to ground condition on the speaker output circuit.

POSSIBLE CAUSES

Possible Causes
(X205) LEFT REAR SPEAKER (+) CIRCUIT SHORTED TO GROUND
(X295) LEFT REAR SPEAKER (-) CIRCUIT SHORTED TO GROUND
LEFT REAR SPEAKER
RADIO

DIAGNOSTIC TEST

1. **CHECK FOR AN INTERMITTENT CONDITION**
    1. Turn the ignition on and open one of the front doors.

    NOTE: A front door must remain open whenever checking or erasing Radio DTCs.

    2. Using the scan tool, record and erase the Radio DTCs.
    3. Turn the Radio on.
    4. Adjust the speakers to the rear and center.

5. Using the scan tool, read the active Radio DTCs.

   Does the scan tool read: B1409-REAR LEFT AUDIO SPEAKER OUTPUT CIRCUIT LOW?

   Yes

   - Go To 2

   No

   - Test complete, the condition or conditions that originally set this DTC are not present at this time. Using the wiring diagrams as a guide, check all related splices and connectors for signs of water intrusion, corrosion, pushed out or bent terminals and correct pin tension.
   - Perform the BODY VERIFICATION TEST. Refer to **STANDARD PROCEDURE** .

2. **CHECK THE LEFT REAR SPEAKER**

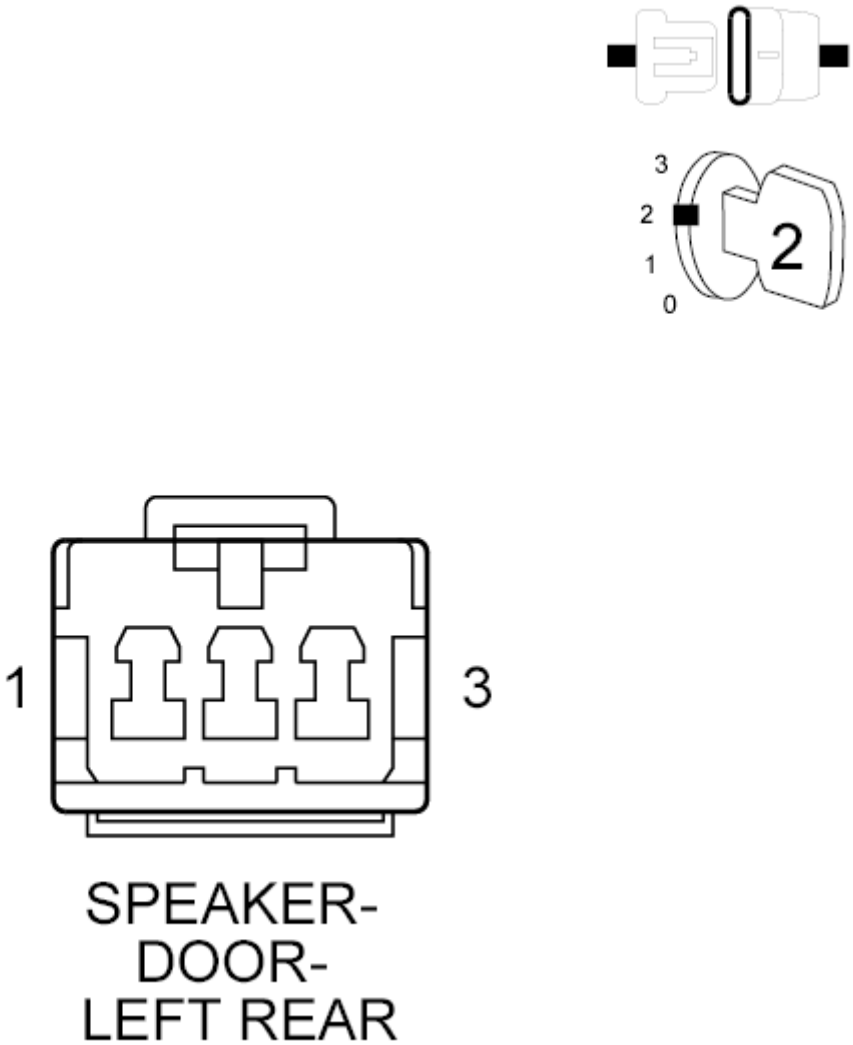

Fig. 24: Checking Left Rear Speaker
Courtesy of CHRYSLER GROUP, LLC

1. Make sure one of the front doors is still open.
2. Using the scan tool, erase the DTCs.
3. Turn the ignition off.
4. Disconnect the Left Rear Speaker harness connector from the Left Rear Speaker.
5. Turn the ignition on.
6. Turn the radio on.
7. Using the scan tool, read the active Radio DTCs.

   Does the scan tool read: B1401-FRONT LEFT AUDIO SPEAKER

OUTPUT CIRCUIT LOW?

Yes

- Go To 3

No

- Replace the Left Rear Speaker in accordance with the Service Information.
- Perform the BODY VERIFICATION TEST. Refer to **STANDARD PROCEDURE** .

3. **CHECK THE (X205) LEFT REAR SPEAKER (+) CIRCUIT FOR A SHORT TO GROUND**

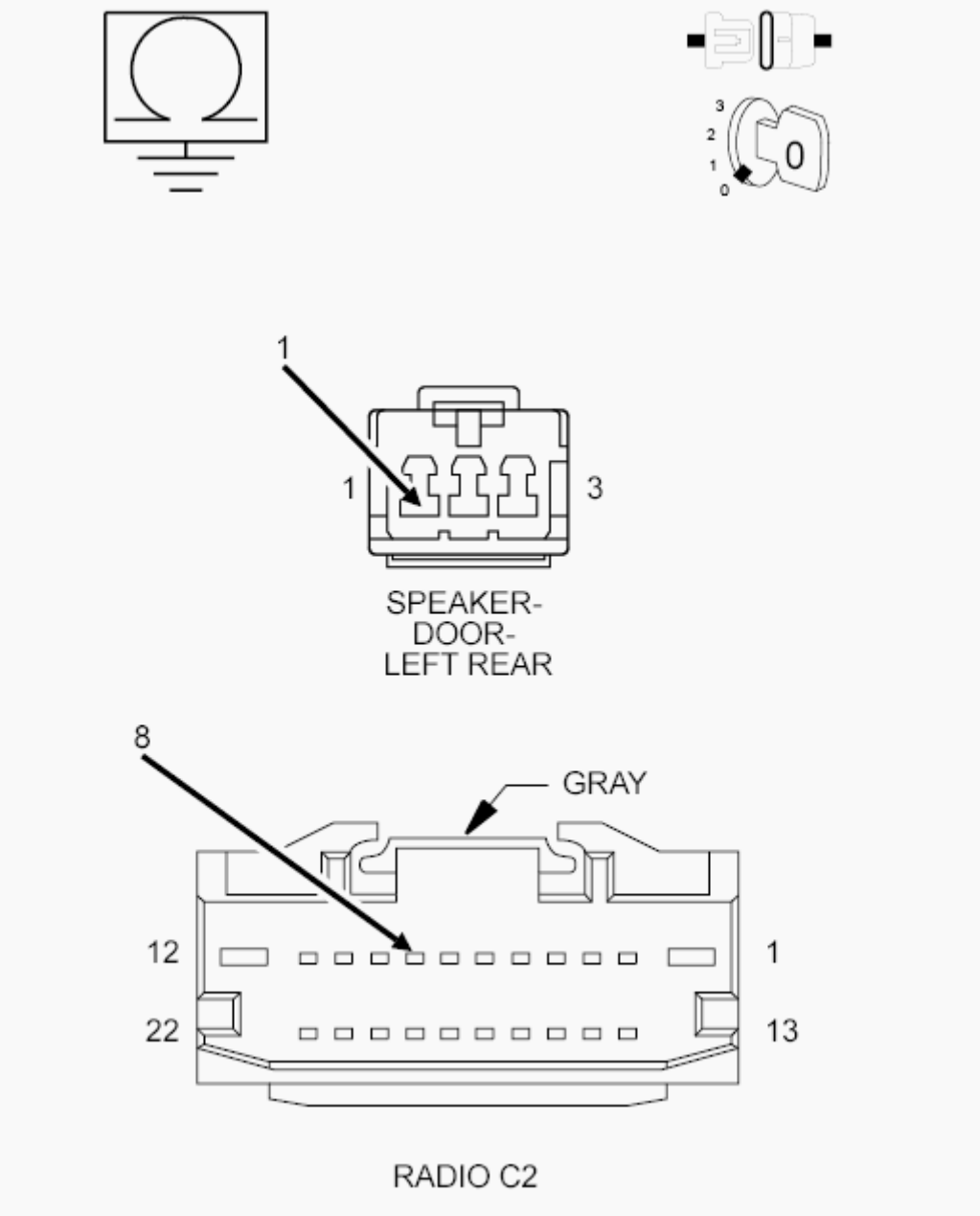

Fig. 25: Checking Left Rear Speaker (+) Circuit For A Short To Ground
Courtesy of CHRYSLER GROUP, LLC

1. Turn the ignition off.
2. Disconnect the Radio C2 harness connector.
3. Measure the resistance between ground and the (X205) Left Rear Speaker (+) circuit.

   Is the resistance below 5.0 Ohms?

   Yes

- Repair the (X205) Left Rear Speaker (+) circuit for a short to ground.
- Perform the BODY VERIFICATION TEST. Refer to **STANDARD PROCEDURE** .

No

- Go To 4

4. **CHECK THE (X295) LEFT REAR SPEAKER (-) CIRCUIT FOR A SHORT TO GROUND**

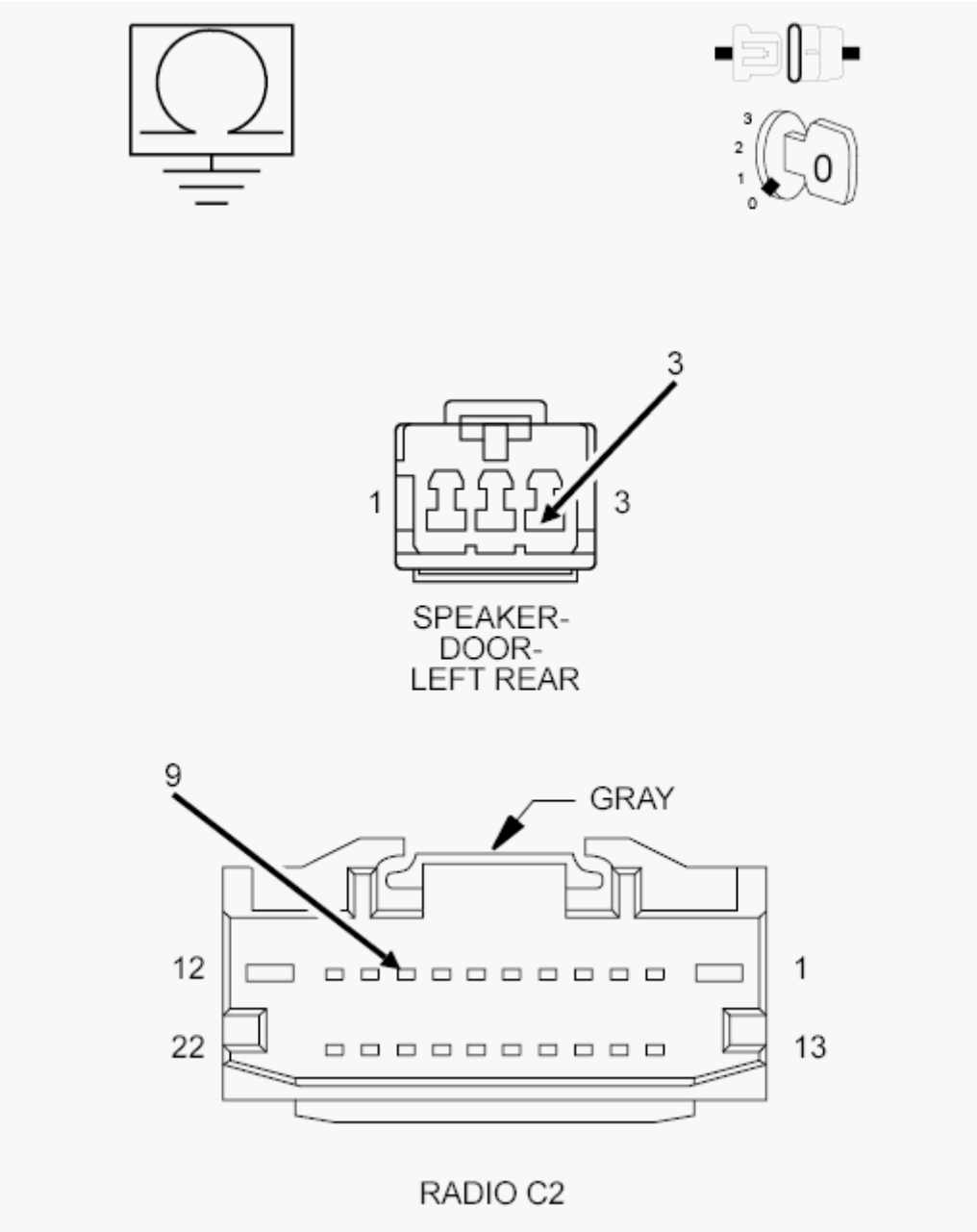

Fig. 26: Checking Left Rear Speaker (-) Circuit For A Short To Ground
Courtesy of CHRYSLER GROUP, LLC

1. Measure the resistance between ground and the (X295) Left Rear Speaker (-) circuit.

   Is the resistance below 5.0 Ohms?

   Yes

   - Repair the (X295) Left Rear Speaker (-) circuit for a short to ground.
   - Perform the BODY VERIFICATION TEST. Refer to **STANDARD PROCEDURE** .

   No

   - Replace the Radio in accordance with the Service Information.
   - Perform the BODY VERIFICATION TEST. Refer to **STANDARD PROCEDURE** .

B1409-REAR LEFT AUDIO SPEAKER OUTPUT CIRCUIT LOW - PREMIUM

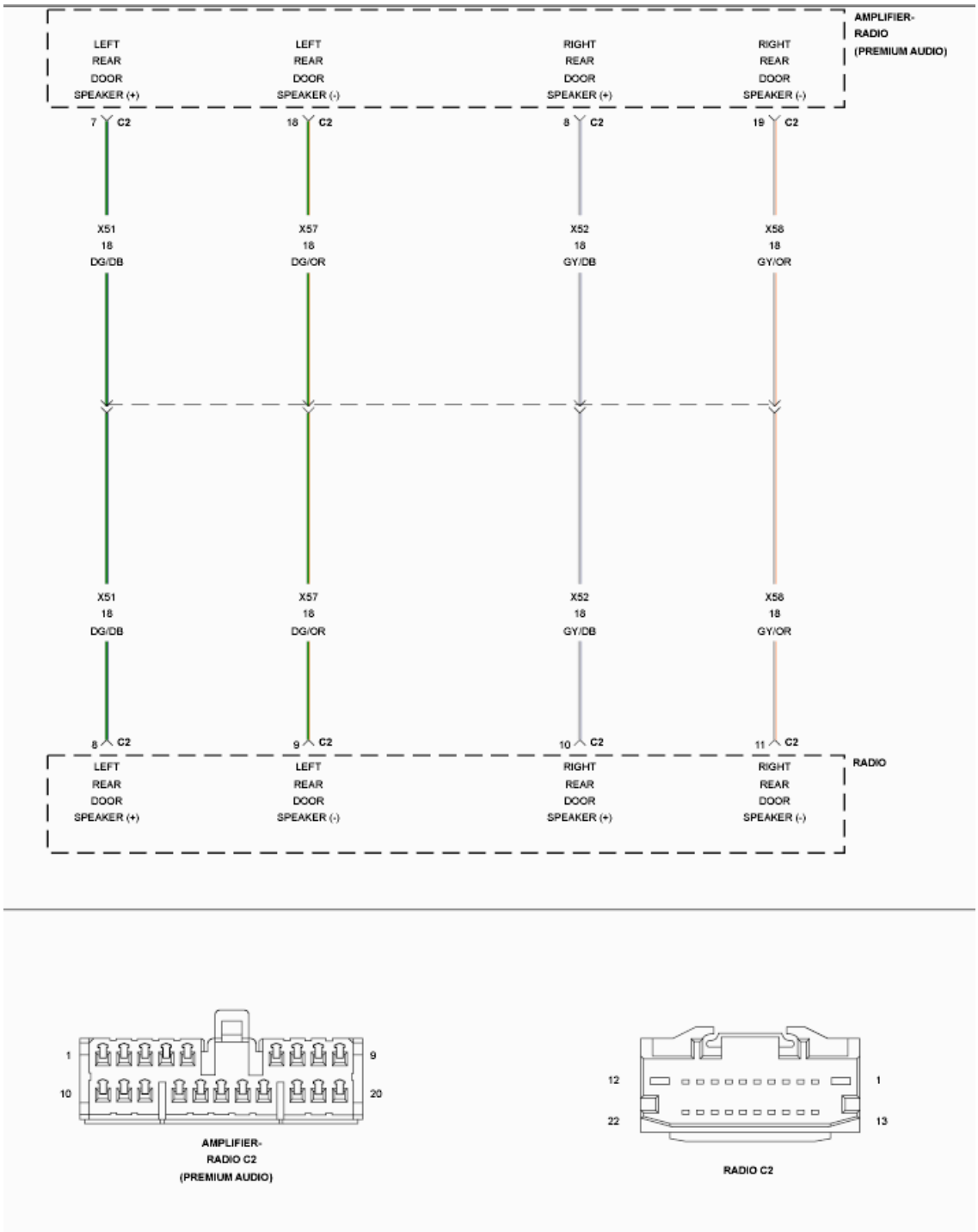

Fig. 27: Rear Audio Speaker Circuit Diagram - Premium
Courtesy of CHRYSLER GROUP, LLC

For a complete wiring diagram, **refer to appropriate SYSTEM WIRING DIAGRAMS article** .

NOTE: There are two versions of the B1409 DC test. In order to select the proper test you must know if the vehicle is

equipped with an Amplifier. If the vehicle is equipped with an Amplifier use the B1409-PREMIUM test. If the vehicle is not equipped with an Amplifier use the B1409-BASE test.

THEORY OF OPERATION

The (X51) Left Rear Audio (+) circuit and the (X57) Left Rear Audio (-) circuit are outputs of the Radio. The Radio controls and monitors these circuits for a concern.

WHEN MONITORED

With the Radio on.

SET CONDITION

The Radio detects a short to ground condition on the audio output circuit.

POSSIBLE CAUSES

Possible Causes
(X51) LEFT REAR AUDIO (+) CIRCUIT SHORTED TO GROUND
(X57) LEFT REAR AUDIO (-) CIRCUIT SHORTED TO GROUND
AMPLIFIER
RADIO

DIAGNOSTIC TEST

1. **CHECK FOR AN INTERMITTENT CONDITION**
   1. Turn the ignition on and open one of the front doors.

      NOTE: A front door must remain open whenever checking or erasing Radio DTCs.

   2. Using the scan tool, record and erase the Radio DTCs.
   3. Turn the Radio on.
   4. Adjust the speakers to the rear and center.
   5. Using the scan tool, read the active Radio DTCs.

      Does the scan tool read: B1409-REAR LEFT AUDIO SPEAKER

OUTPUT CIRCUIT LOW?

Yes

- Go To 2

No

- Test complete, the condition or conditions that originally set this DTC are not present at this time. Using the wiring diagrams as a guide, check all related splices and connectors for signs of water intrusion, corrosion, pushed out or bent terminals and correct pin tension.
- Perform the BODY VERIFICATION TEST. Refer to **STANDARD PROCEDURE** .

2. **CHECK THE AMPLIFIER**

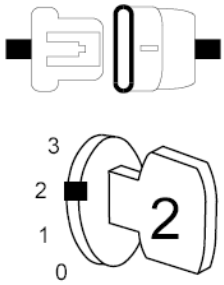

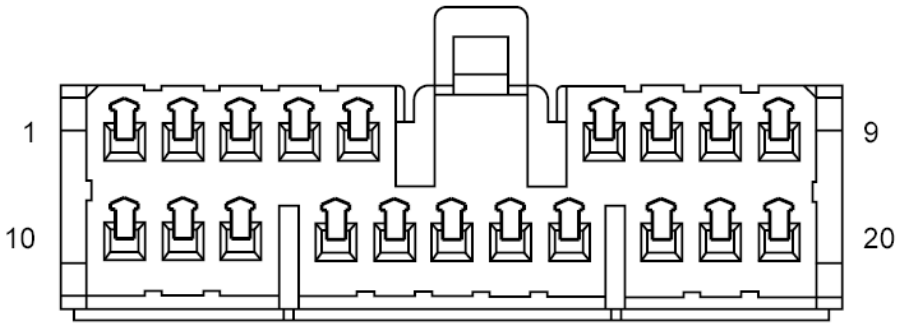

AMPLIFIER-
RADIO C2
(PREMIUM AUDIO)

Fig. 28: Checking Amplifier
Courtesy of CHRYSLER GROUP, LLC

1. Make sure one of the front doors is still open.
2. Using the scan tool, erase the DTCs.
3. Turn the ignition off.
4. Disconnect the Amplifier C1 harness connector from the Amplifier.
5. Turn the ignition on.
6. Turn the radio on.
7. Using the scan tool, read the active Radio DTCs.

   Does the scan tool read: B1409-REAR LEFT AUDIO SPEAKER OUTPUT CIRCUIT LOW?

   Yes

   - Go To 3

   No

   - Replace the Amplifier in accordance with the Service Information.
   - Perform the BODY VERIFICATION TEST. Refer to **STANDARD PROCEDURE** .

3. **CHECK THE (X51) LEFT REAR AUDIO (+) CIRCUIT FOR A SHORT TO GROUND**

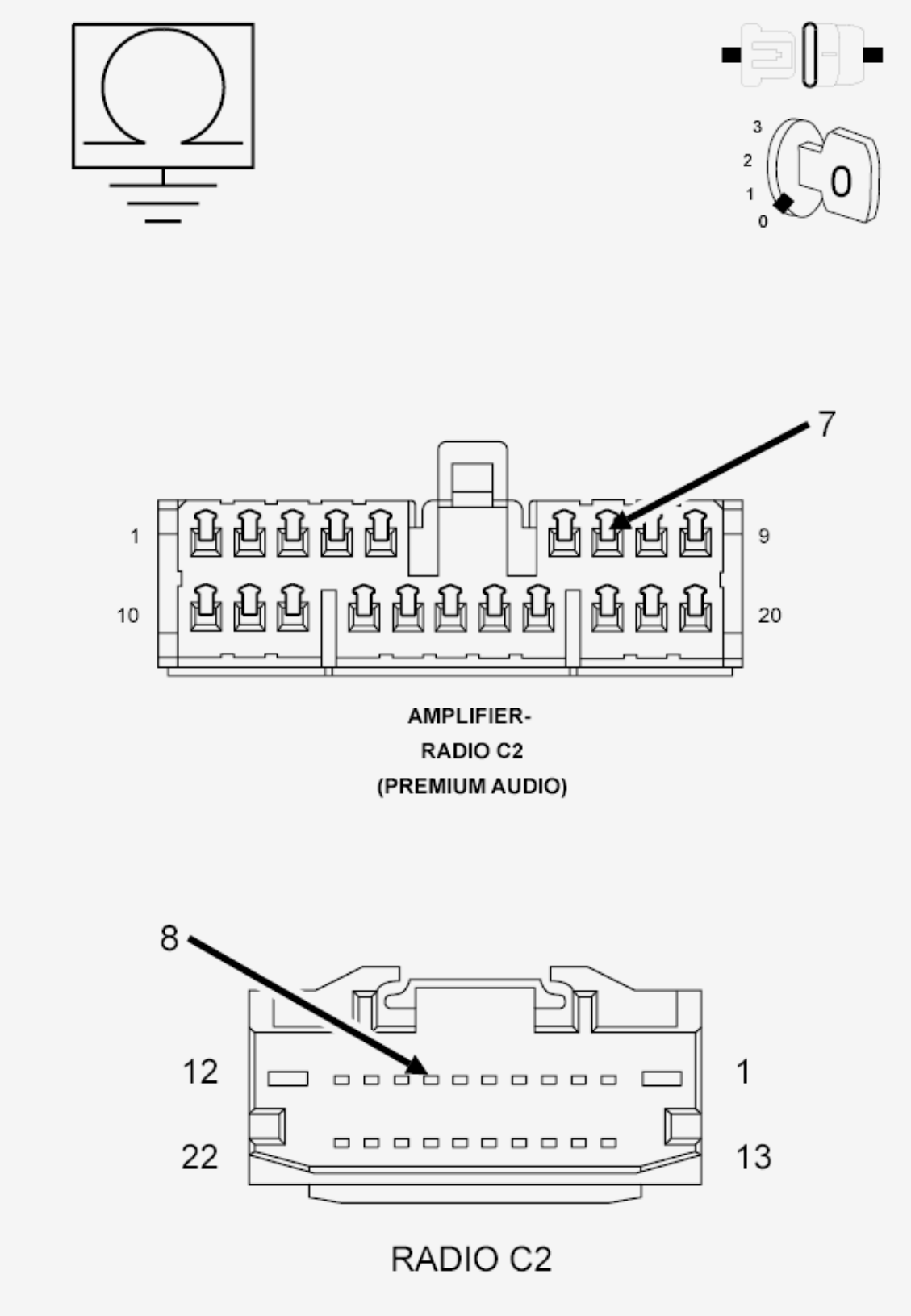

Fig. 29: Checking Left Rear Audio (+) Circuit For Short To Ground
Courtesy of CHRYSLER GROUP, LLC

1. Turn the ignition off.

2. Disconnect the Radio C2 harness connector.
3. Measure the resistance between ground and the (X51) Left Rear Audio (+) circuit.

   Is the resistance below 5.0 Ohms?

   Yes

   - Repair the (X51) Left Rear Audio (+) circuit for a short to ground.
   - Perform the BODY VERIFICATION TEST. Refer to **STANDARD PROCEDURE** .

   No

   - Go To 4

4. **CHECK THE (X57) LEFT REAR AUDIO (-) CIRCUIT FOR A SHORT TO GROUND**

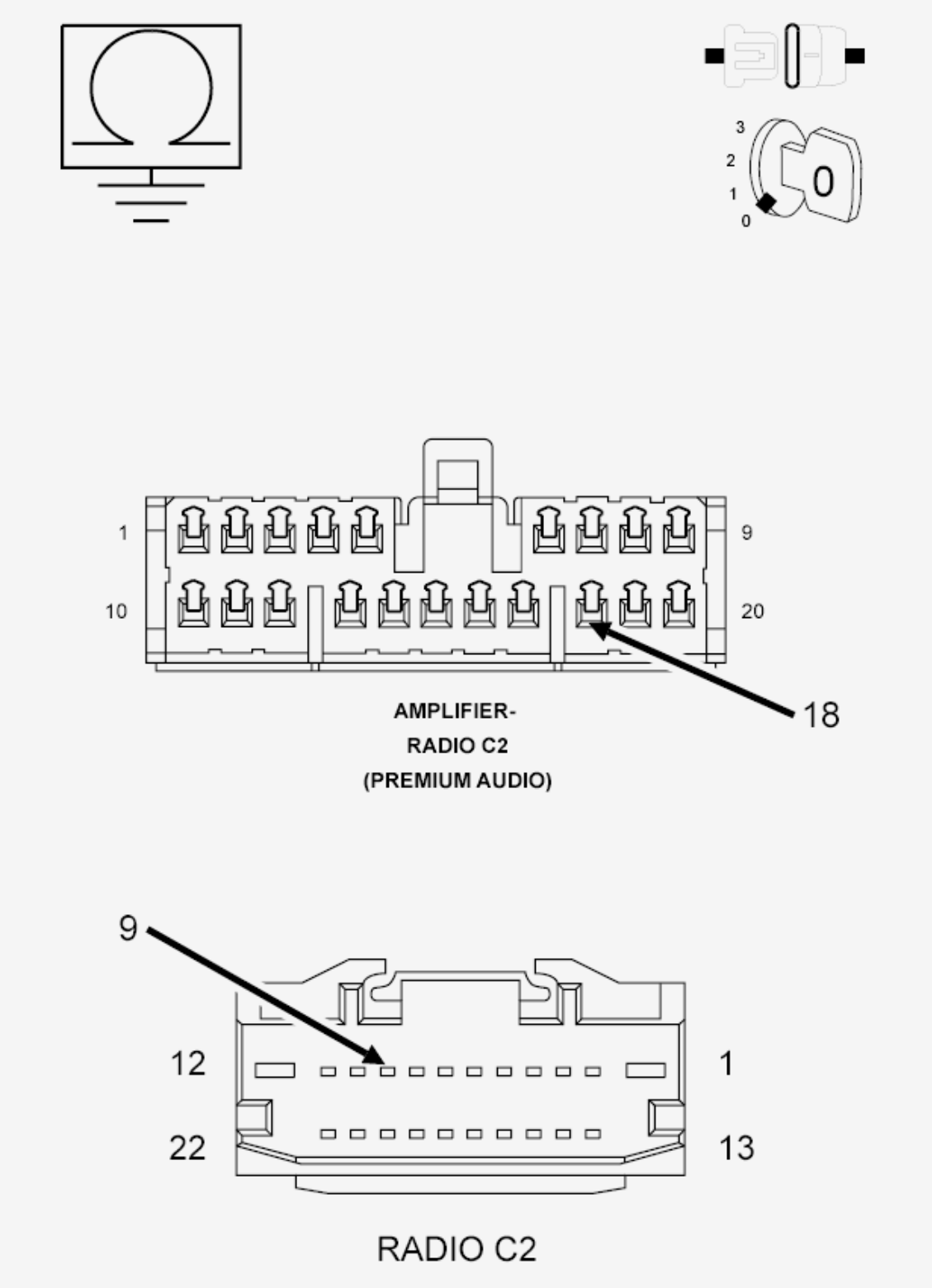

Fig. 30: Checking Left Rear Audio (-) Circuit For Short To Ground
Courtesy of CHRYSLER GROUP, LLC

1. Measure the resistance between ground and the (X57) Left Rear Audio (-) circuit.

Is the resistance below 5.0 Ohms?

Yes

- Repair the (X57) Left Rear Audio (-) circuit for a short to ground.
- Perform the BODY VERIFICATION TEST. Refer to **STANDARD PROCEDURE** .

No

- Replace the Radio in accordance with the Service Information.
- Perform the BODY VERIFICATION TEST. Refer to **STANDARD PROCEDURE** .

B140A-REAR LEFT AUDIO SPEAKER OUTPUT CIRCUIT HIGH - BASE

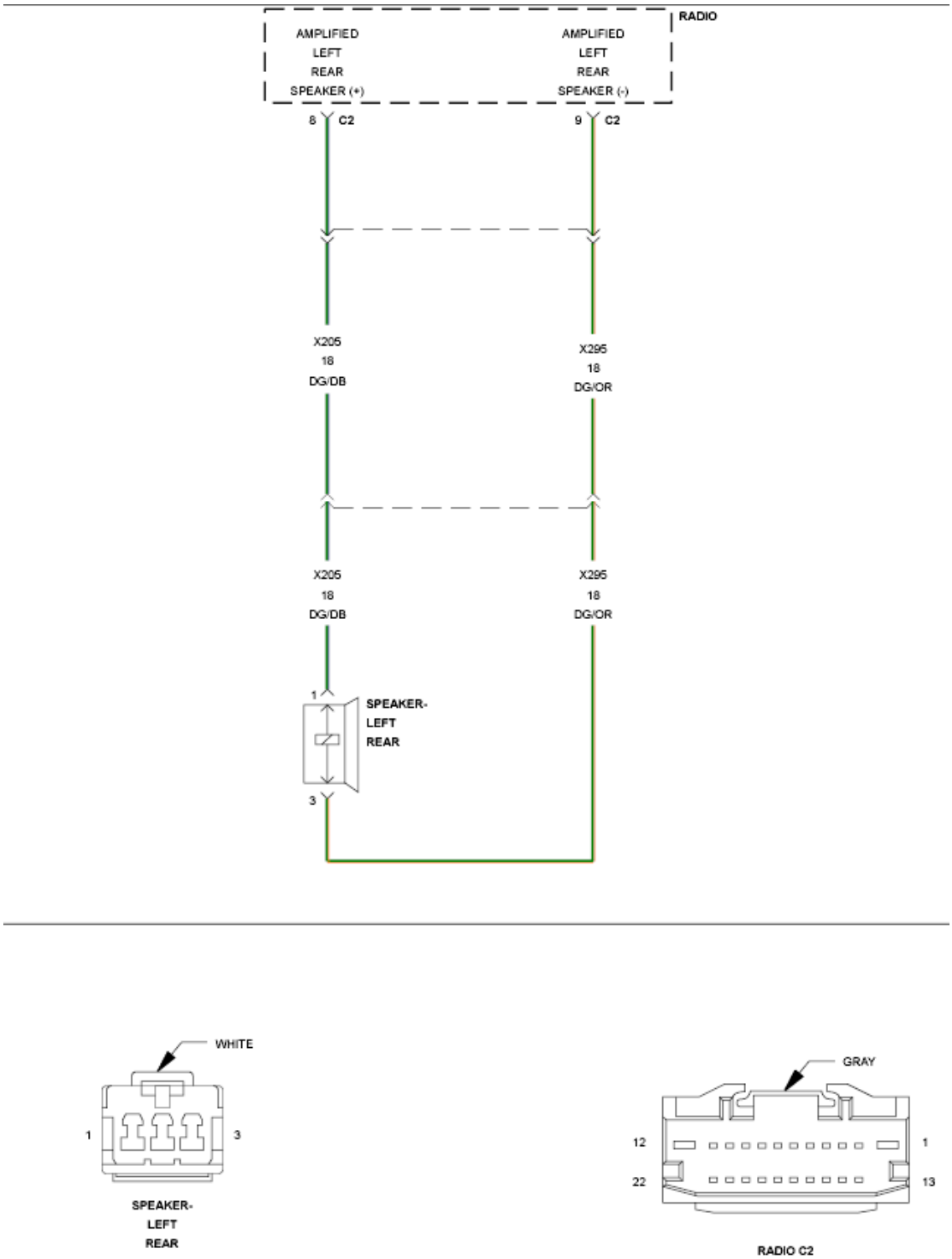

Fig. 31: Left Rear Speaker Circuit Diagram - Base
Courtesy of CHRYSLER GROUP, LLC

For a complete wiring diagram, **refer to appropriate SYSTEM WIRING DIAGRAMS article** .

NOTE: There are two versions of the B140A DTC test. In order to select the proper test you must know if the vehicle is equipped with an Amplifier. If the vehicle is equipped with an Amplifier use the B140A-PREMIUM test. If the vehicle is not equipped with an Amplifier use the B140A-BASE test.

THEORY OF OPERATION

The (X205) Left Rear Speaker (+) circuit and the (X295) Left Rear Speaker (-) circuit are outputs of the Radio. The Radio controls and monitors these circuits for a concern.

WHEN MONITORED

With the Radio on.

SET CONDITION

The Radio detects a short to battery condition on the speaker output circuit.

POSSIBLE CAUSES

Possible Causes
(X205) LEFT REAR SPEAKER (+) CIRCUIT SHORTED TO VOLTAGE (X295) LEFT REAR SPEAKER (-) CIRCUIT SHORTED TO VOLTAGE RADIO

DIAGNOSTIC TEST

1. **CHECK FOR AN INTERMITTENT CONDITION**
    1. Turn the ignition on and open one of the front doors.

    NOTE: A front door must remain open whenever checking or erasing Radio DTCs.

    2. Using the scan tool, record and erase the Radio DTCs.
    3. Turn the Radio on.
    4. Adjust the speakers to the rear and center.
    5. Using the scan tool, read the active Radio DTCs.

Does the scan tool read: B140A-REAR LEFT AUDIO SPEAKER OUTPUT CIRCUIT HIGH?

Yes

- Go To 2

No

- Test complete, the condition or conditions that originally set this DTC are not present at this time. Using the wiring diagrams as a guide, check all related splices and connectors for signs of water intrusion, corrosion, pushed out or bent terminals and correct pin tension.
- Perform the BODY VERIFICATION TEST. Refer to **STANDARD PROCEDURE** .

2. **CHECK FOR VOLTAGE ON THE (X205) LEFT REAR SPEAKER (+) CIRCUIT**

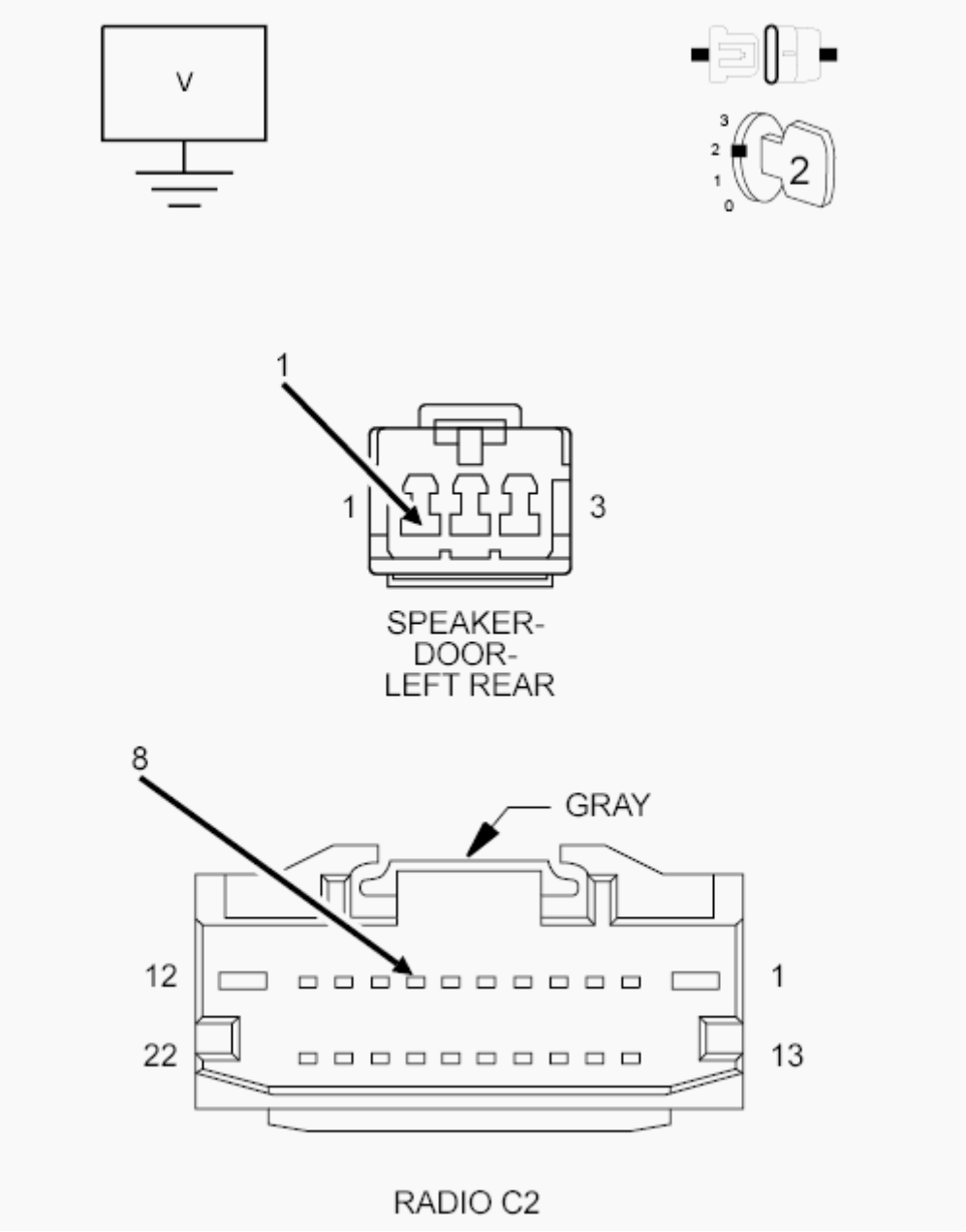

Fig. 32: Check Voltage On Left Rear Speaker (+) Circuit
Courtesy of CHRYSLER GROUP, LLC

1. Turn the ignition off.
2. Disconnect the Radio C2 harness connector.
3. Turn the ignition on.
4. Measure the voltage between ground and the (X205) Left Rear Speaker (+) circuit.

   Is there any voltage present?

Yes

- Repair the (X205) Left Rear Speaker (+) circuit for a short to voltage.
- Perform the BODY VERIFICATION TEST. Refer to **STANDARD PROCEDURE** .

No

- Go To 3

3. **CHECK FOR VOLTAGE ON THE (X295) LEFT REAR SPEAKER (-) CIRCUIT**

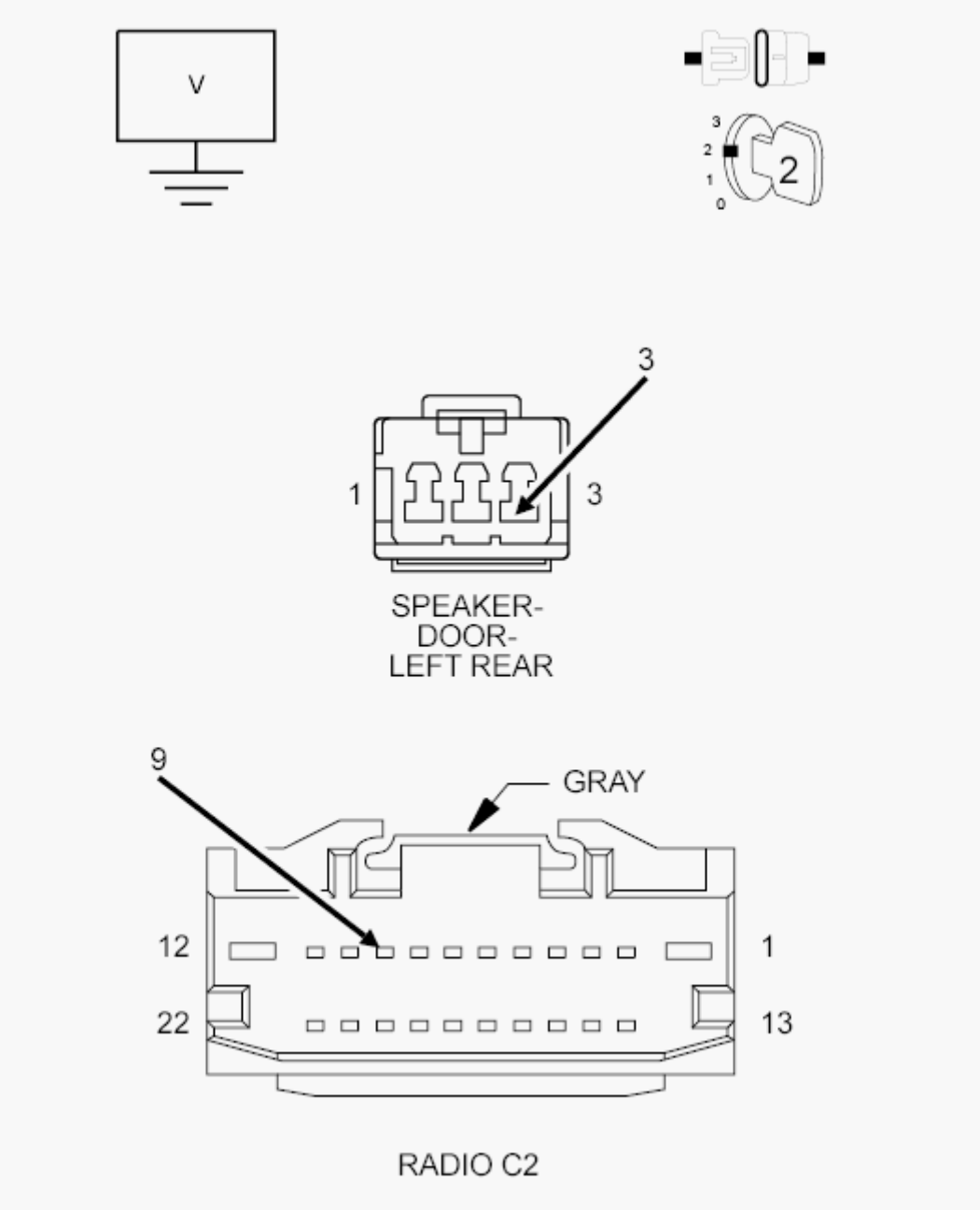

Fig. 33: Checking Voltage On Left Rear Speaker (-) Circuit
Courtesy of CHRYSLER GROUP, LLC

1. Measure the voltage between ground and the (X295) Left Rear Speaker (-) circuit.

   Is there any voltage present?

   Yes

   - Repair the (X295) Left Rear Speaker (-) circuit for a short to voltage.

- Perform the BODY VERIFICATION TEST. Refer to **STANDARD PROCEDURE** .

No

- Replace the Radio in accordance with the Service Information.
- Perform the BODY VERIFICATION TEST. Refer to **STANDARD PROCEDURE** .

B140A-REAR LEFT AUDIO SPEAKER OUTPUT CIRCUIT HIGH - PREMIUM

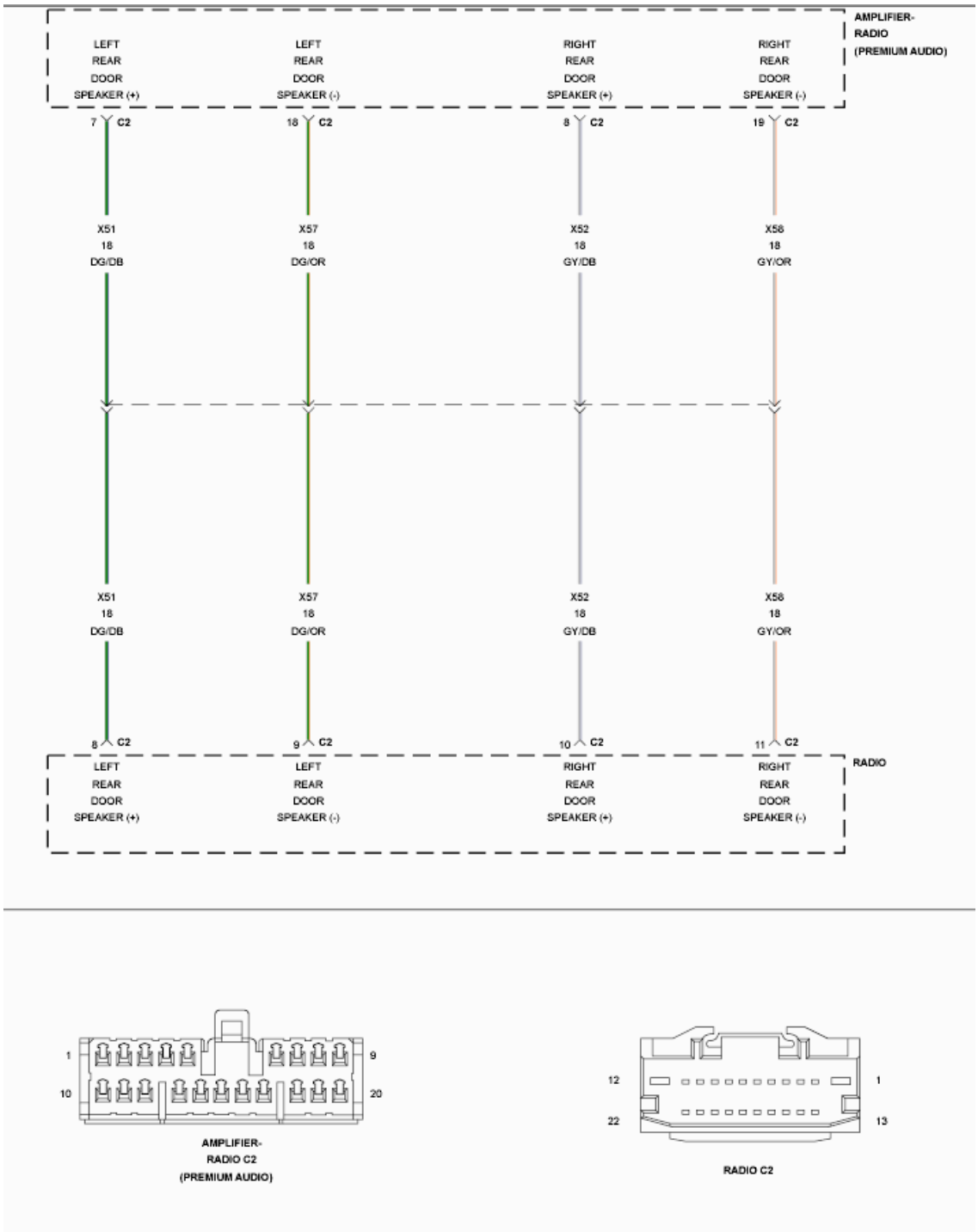

Fig. 34: Rear Audio Speaker Circuit Diagram - Premium
Courtesy of CHRYSLER GROUP, LLC

For a complete wiring diagram, **refer to appropriate SYSTEM WIRING DIAGRAMS article** .

NOTE: There are two versions of the B140A DTC test. In order to select the proper test you must know if the vehicle is

equipped with an Amplifier. If the vehicle is equipped with an Amplifier use the B140A-PREMIUM test. If the vehicle is not equipped with an Amplifier use the B140A-BASE test.

THEORY OF OPERATION

The (X51) Left Rear Audio (+) circuit and the (X57) Left Rear Audio (-) circuit are outputs of the Radio. The Radio controls and monitors these circuits for a concern.

WHEN MONITORED

With the Radio on.

SET CONDITION

The Radio detects a short to battery condition on the audio output circuit.

POSSIBLE CAUSES

Possible Causes
(X51) LEFT REAR AUDIO (+) CIRCUIT SHORTED TO VOLTAGE (X57) LEFT REAR AUDIO (-) CIRCUIT SHORTED TO VOLTAGE RADIO

DIAGNOSTIC TEST

1. **CHECK FOR AN INTERMITTENT CONDITION**
   1. Turn the ignition on and open one of the front doors.

      NOTE: A front door must remain open whenever checking or erasing Radio DTCs.

   2. Using the scan tool, record and erase the Radio DTCs.
   3. Turn the Radio on.
   4. Adjust the speakers to the rear and center.
   5. Using the scan tool, read the active Radio DTCs.

      Does the scan tool read: B140A-REAR LEFT AUDIO SPEAKER OUTPUT CIRCUIT HIGH?

Yes

- Go To 2

No

- Test complete, the condition or conditions that originally set this DTC are not present at this time. Using the wiring diagrams as a guide, check all related splices and connectors for signs of water intrusion, corrosion, pushed out or bent terminals and correct pin tension.
- Perform the BODY VERIFICATION TEST. Refer to **STANDARD PROCEDURE** .

2. **CHECK THE AMPLIFIER**

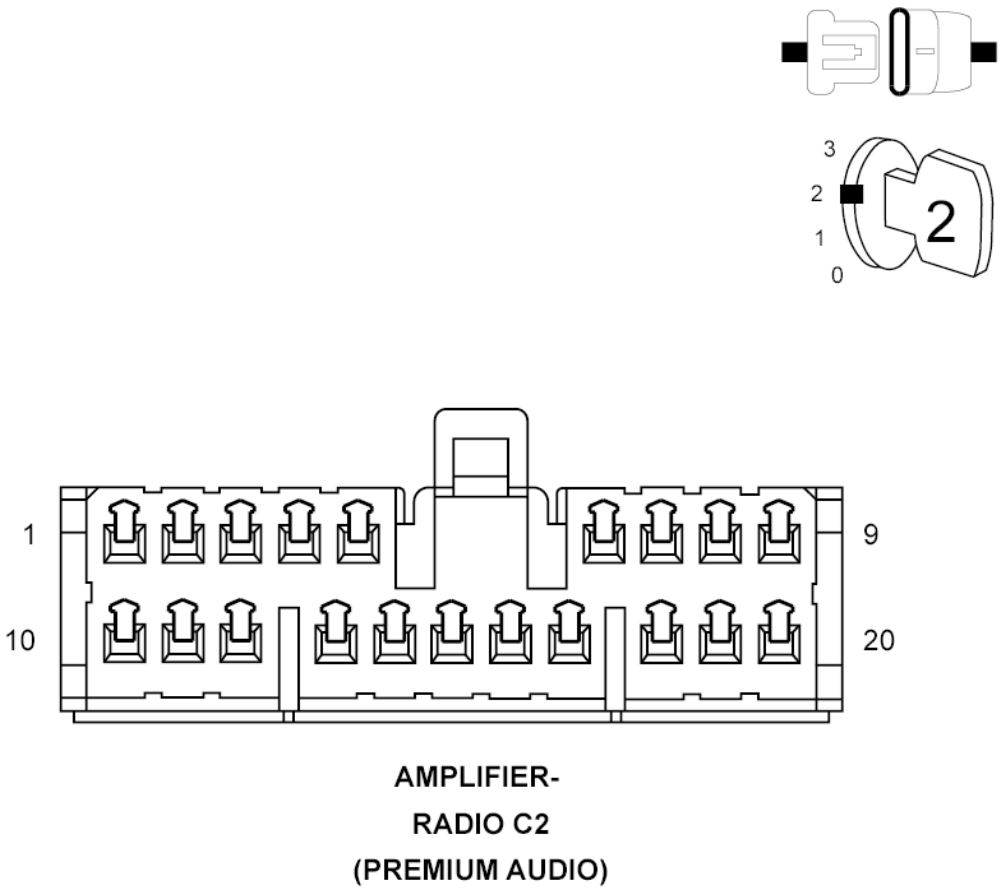

Fig. 35: Checking Amplifier
Courtesy of CHRYSLER GROUP, LLC

1. Make sure one of the front doors is still open.
2. Using the scan tool, erase the DTCs.
3. Turn the ignition off.
4. Disconnect the Amplifier C1 harness connector from the Amplifier.
5. Turn the ignition on.
6. Turn the radio on.
7. Using the scan tool, read the active Radio DTCs.

   Does the scan tool read: B140A-REAR LEFT AUDIO SPEAKER OUTPUT CIRCUIT HIGH?

   Yes

   - Go To 3

   No

   - Replace the Amplifier in accordance with the Service Information.
   - Perform the BODY VERIFICATION TEST. Refer to **STANDARD PROCEDURE** .

3. **CHECK FOR VOLTAGE ON THE (X51) LEFT REAR AUDIO (+) CIRCUIT**

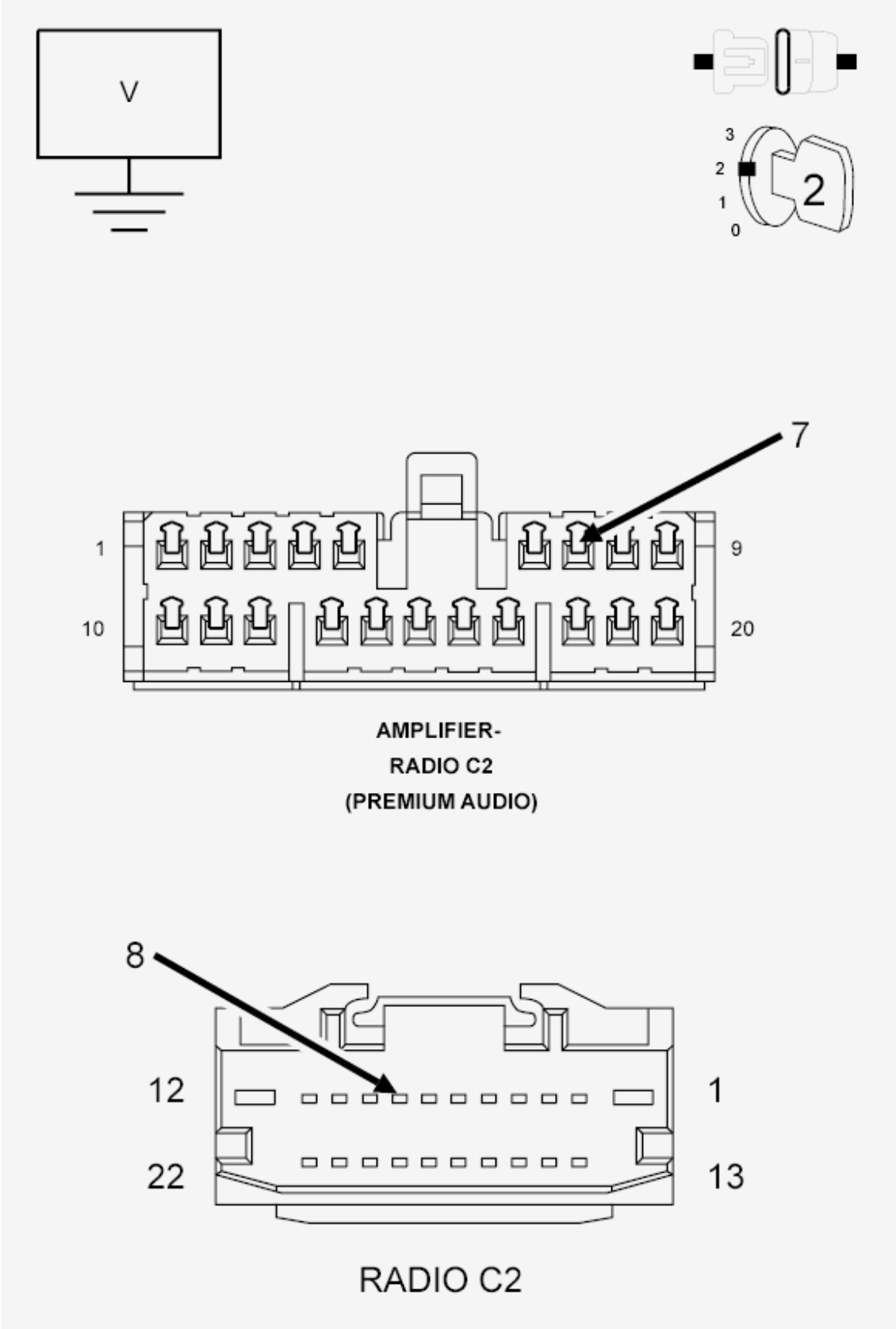

Fig. 36: Checking For Voltage On Left Rear Audio (+) Circuit
Courtesy of CHRYSLER GROUP, LLC

1. Turn the ignition off.
2. Disconnect the Radio C2 harness connector.
3. Turn the ignition on.
4. Measure the voltage between ground and the (X51) Left Rear Audio (+) circuit.

   Is there any voltage present?

   Yes

   - Repair the (X51) Left Rear Audio (+) circuit for a short to voltage.
   - Perform the BODY VERIFICATION TEST. Refer to **STANDARD PROCEDURE** .

   No

   - Go To 4

4. **CHECK FOR VOLTAGE ON THE (X57) LEFT REAR AUDIO (-) CIRCUIT**

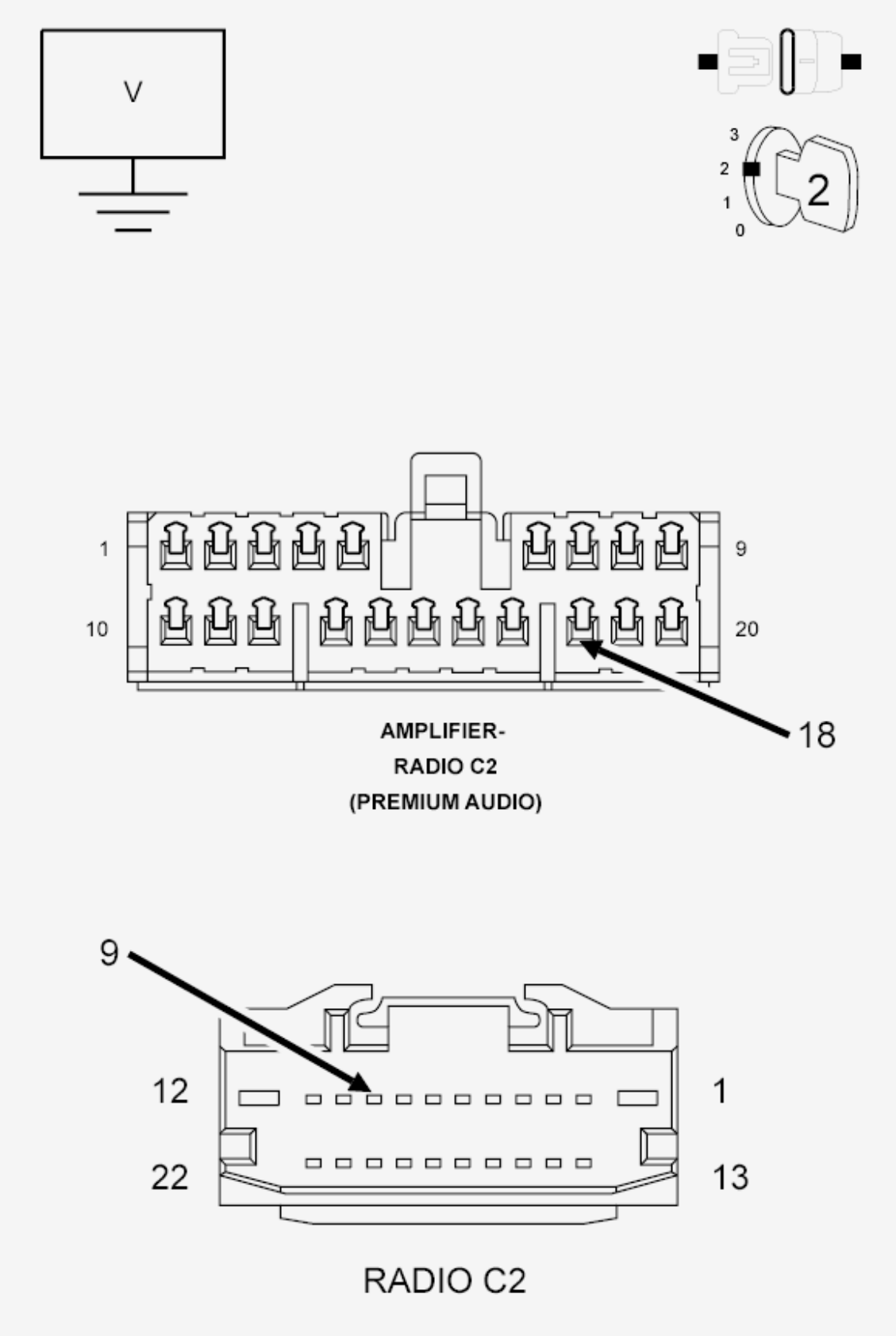

Fig. 37: Checking For Voltage On Left Rear Audio (-) Circuit
Courtesy of CHRYSLER GROUP, LLC

1. Measure the voltage between ground and the (X57) Left Rear Audio (-) circuit.

   Is there any voltage present?

   Yes

   - Repair the (X57) Left Rear Audio (-) circuit for a short to voltage.
   - Perform the BODY VERIFICATION TEST. Refer to **STANDARD PROCEDURE** .

   No

   - Replace the Radio in accordance with the Service Information.
   - Perform the BODY VERIFICATION TEST. Refer to **STANDARD PROCEDURE** .

B140B-REAR LEFT AUDIO SPEAKER OUTPUT CIRCUIT OPEN - BASE

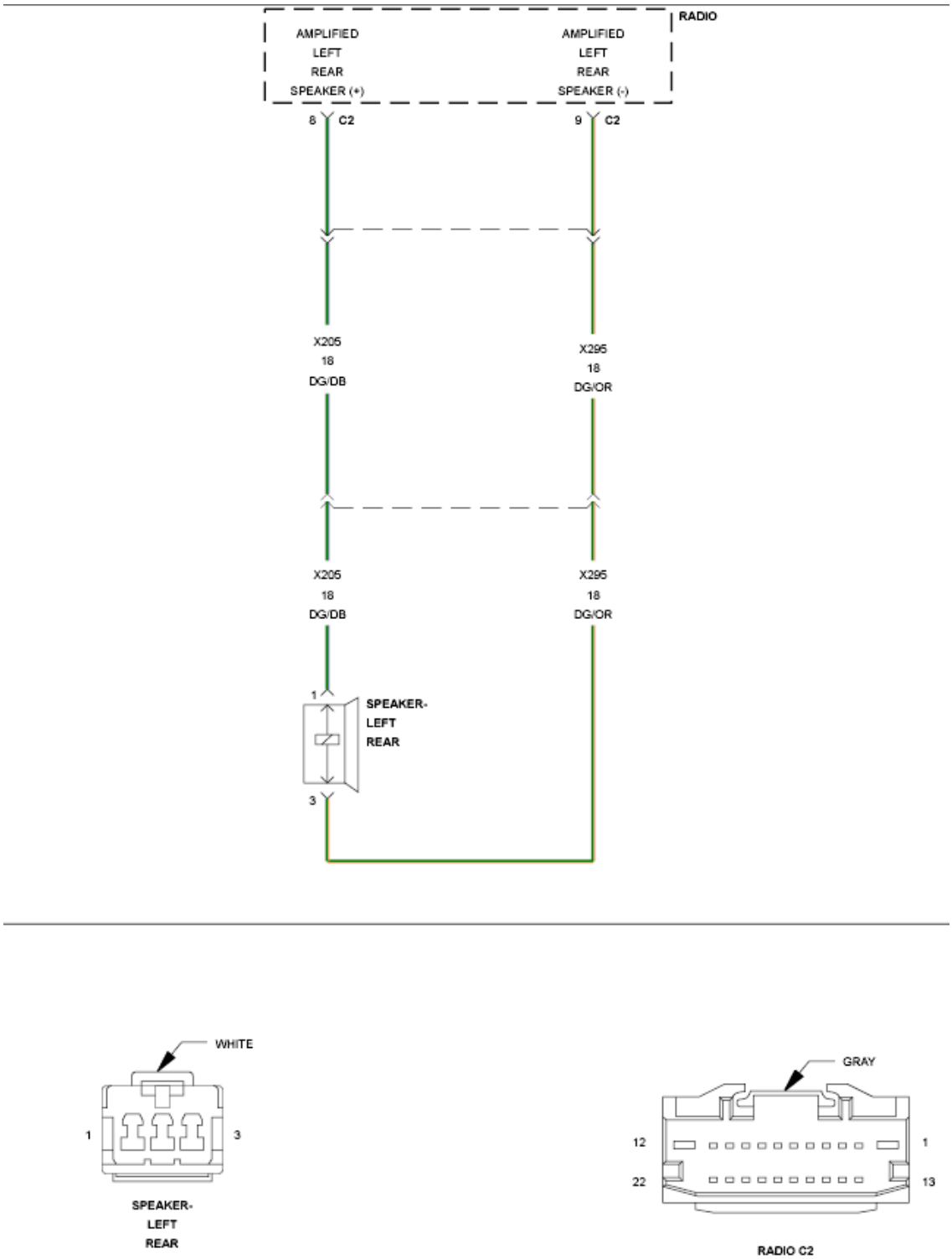

Fig. 38: Left Rear Speaker Circuit Diagram - Base
Courtesy of CHRYSLER GROUP, LLC

For a complete wiring diagram, **refer to appropriate SYSTEM WIRING DIAGRAMS article** .

NOTE: There are two versions of the B140B DTC test. In order to select the proper test you must know if the vehicle is equipped with an Amplifier. If the vehicle is equipped with an Amplifier use the B140B-PREMIUM test. If the vehicle is not equipped with an Amplifier use the B140B-BASE test.

THEORY OF OPERATION

The (X205) Left Rear Speaker (+) circuit and the (X295) Left Rear Speaker (-) circuit are outputs of the Radio. The Radio controls and monitors these circuits for a concern.

WHEN MONITORED

With the Radio on.

SET CONDITION

The Radio detects an open condition on the speaker output circuit.

POSSIBLE CAUSES

Possible Causes
(X205) LEFT REAR SPEAKER (+) CIRCUIT OPEN
(X295) LEFT REAR SPEAKER (-) CIRCUIT OPEN
LEFT REAR SPEAKER
RADIO

DIAGNOSTIC TEST

1. **CHECK FOR AN INTERMITTENT CONDITION**
    1. Turn the ignition on and open one of the front doors.

    NOTE: A front door must remain open whenever checking or erasing Radio DTCs.

    2. Using the scan tool, record and erase the Radio DTCs.
    3. Turn the Radio on.
    4. Adjust the speakers to the rear and center.

5. Using the scan tool, read the active Radio DTCs.

   Does the scan tool read: B140B-REAR LEFT AUDIO SPEAKER OUTPUT CIRCUIT OPEN?

   Yes

   - Go To 2

   No

   - Test complete, the condition or conditions that originally set this DTC are not present at this time. Using the wiring diagrams as a guide, check all related splices and connectors for signs of water intrusion, corrosion, pushed out or bent terminals and correct pin tension.
   - Perform the BODY VERIFICATION TEST. Refer to **STANDARD PROCEDURE** .

2. **CHECK THE LEFT REAR SPEAKER**

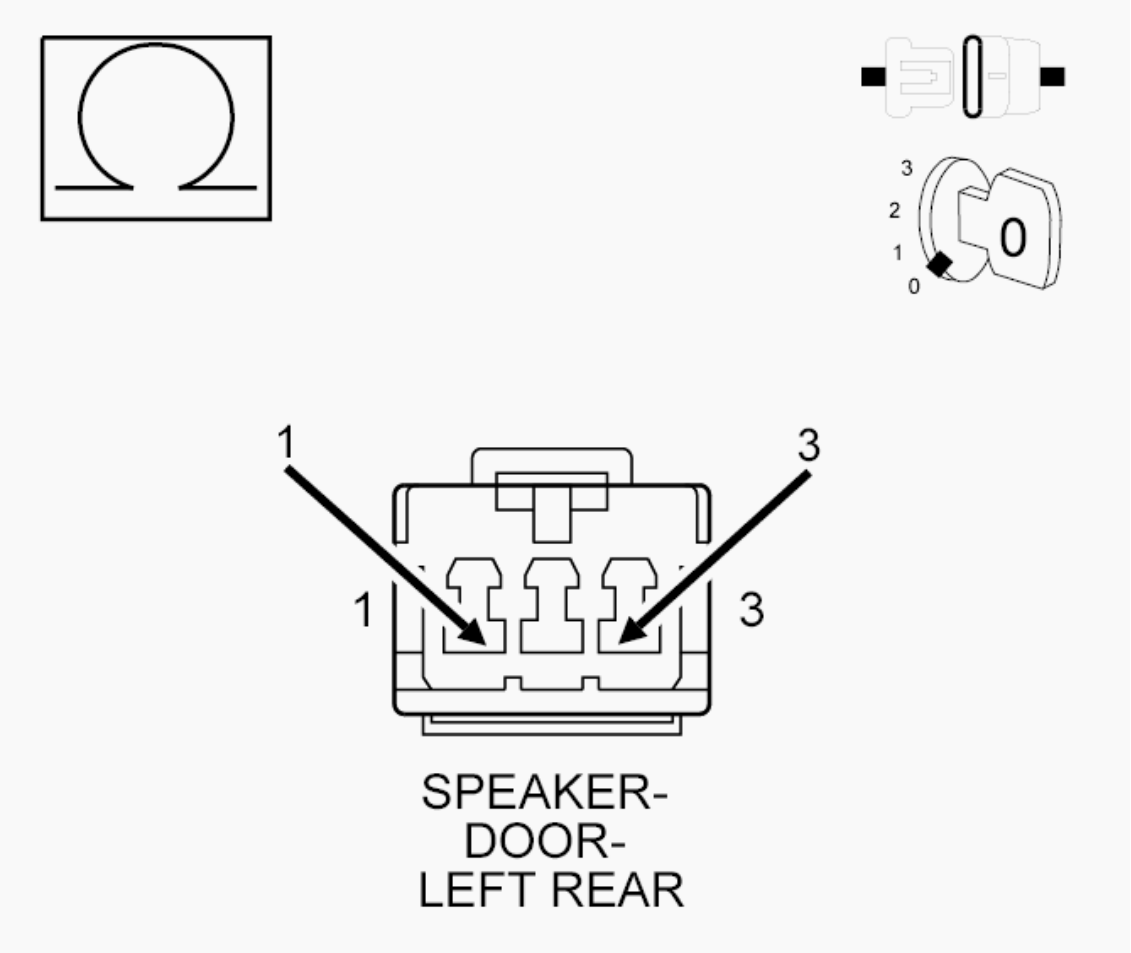

Fig. 39: Checking Left Rear Speaker
Courtesy of CHRYSLER GROUP, LLC

1. Turn the ignition off.
2. Disconnect the Left Rear Speaker.
3. Measure the resistance of the speaker between the two terminals.

NOTE: The graphic shows the connector for reference only. Measure between the speaker terminals.

Is the resistance above 5.0 Ohms?

Yes

- Replace the Left Rear Speaker in accordance with the Service Information.
- Perform the BODY VERIFICATION TEST. Refer to **STANDARD PROCEDURE** .

No

- Go To 3

3. **CHECK THE (X205) LEFT REAR SPEAKER (+) CIRCUIT FOR AN OPEN**

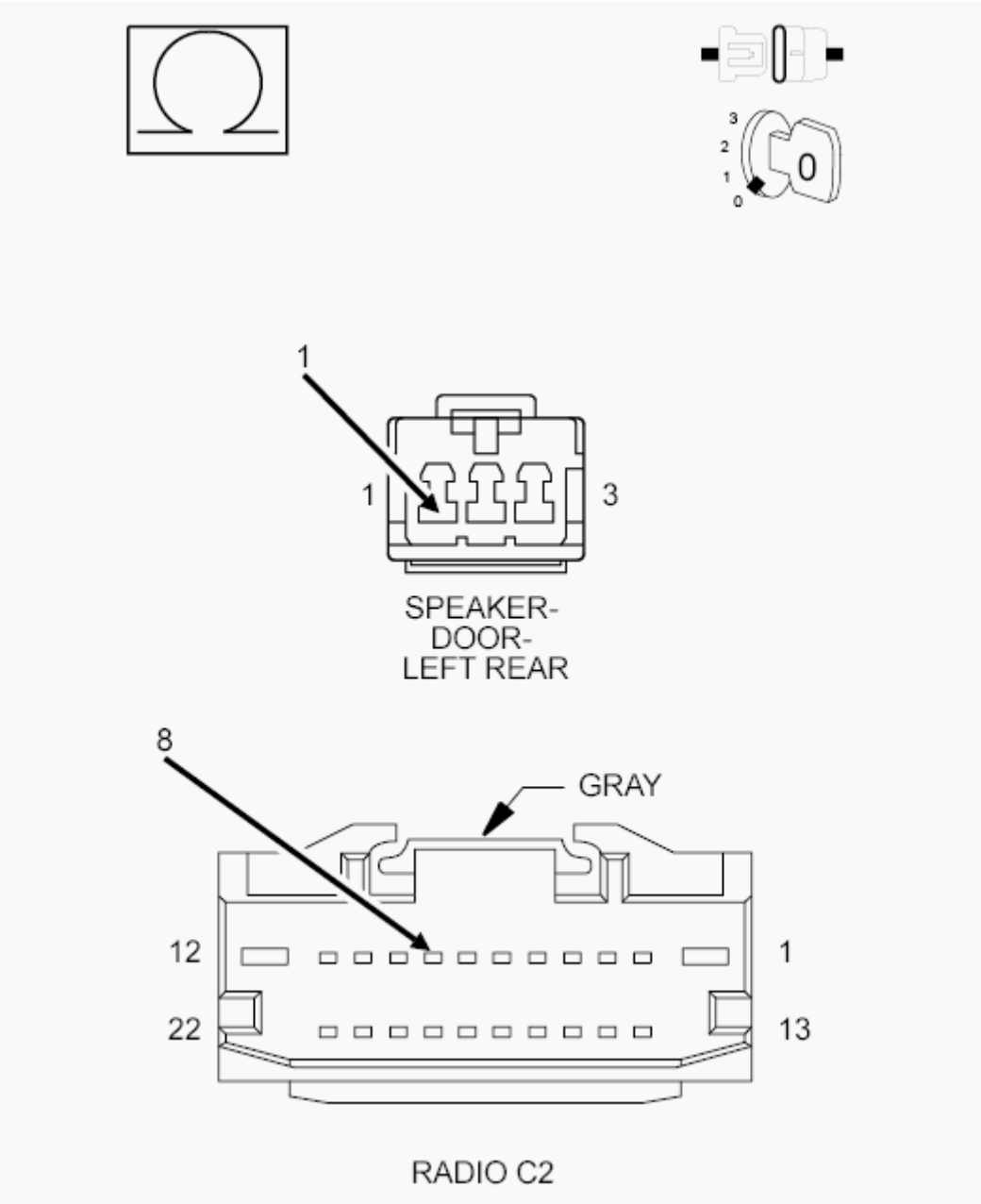

Fig. 40: Checking Left Rear Speaker (+) Circuit For An Open
Courtesy of CHRYSLER GROUP, LLC

1. Turn the ignition off.
2. Disconnect the Radio C2 harness connector.

3. Measure the resistance of (X205) Left Rear Speaker (+) circuit between the Radio C2 connector, and the Left Rear Speaker harness connector.

   Is the resistance below 5.0 Ohms?

   Yes

   - Go To 4

   No

   - Repair open in the (X205) Left Rear Speaker (+) circuit.
   - Perform the BODY VERIFICATION TEST. Refer to **STANDARD PROCEDURE** .

4. **CHECK THE (X295) LEFT REAR SPEAKER (-) CIRCUIT FOR AN OPEN**

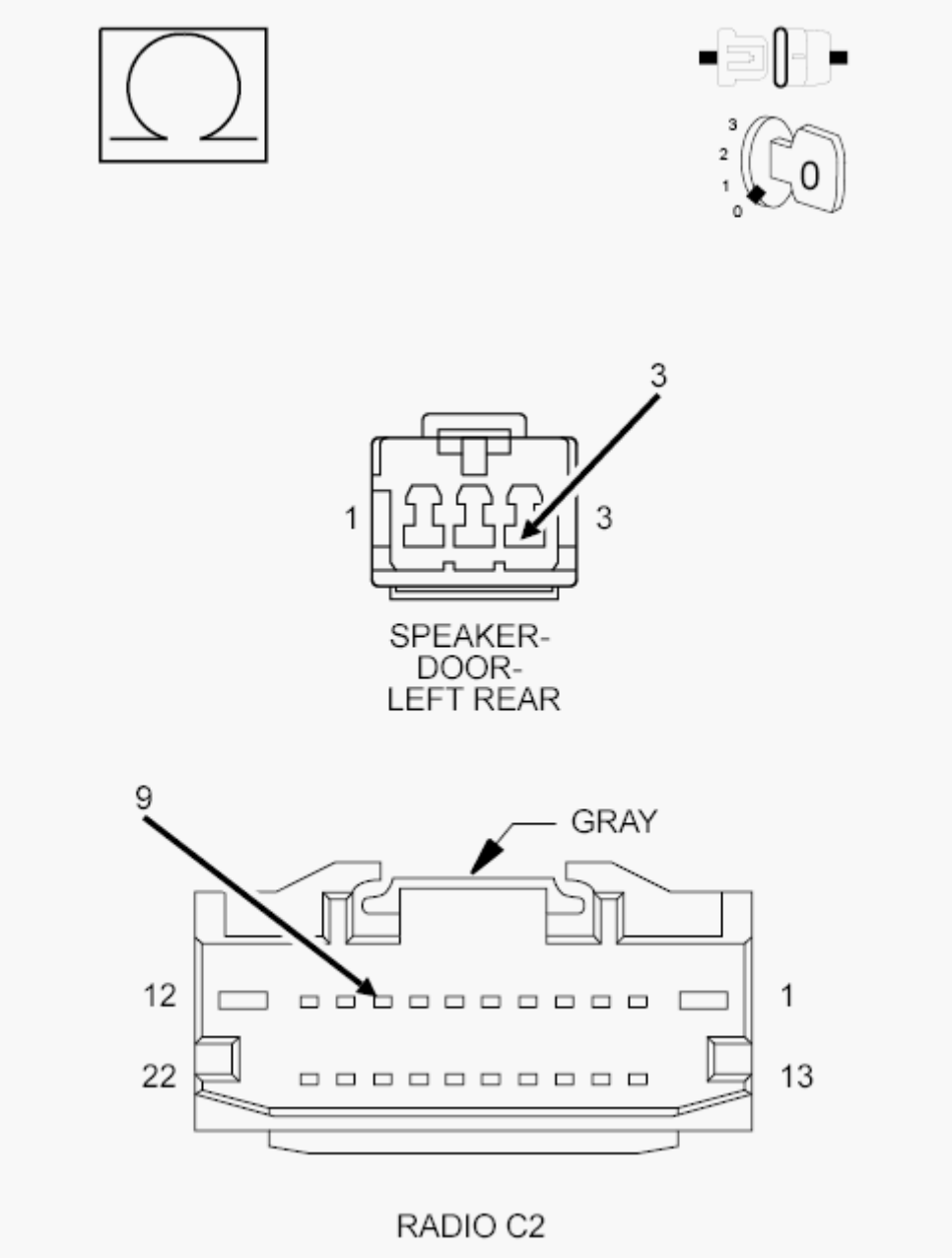

Fig. 41: Checking Left Rear Speaker (-) Circuit For An Open
Courtesy of CHRYSLER GROUP, LLC

1. Measure the resistance of (X295) Left Rear Speaker (-) circuit between the Radio C2 connector, and the Left Rear Speaker harness connector.

   Is the resistance below 5.0 Ohms?

   Yes

   - Replace the Radio in accordance with the Service Information.
   - Perform the BODY VERIFICATION TEST. Refer to

STANDARD PROCEDURE .

No

- Repair open in the (X295) Left Rear Speaker (-) circuit.
- Perform the BODY VERIFICATION TEST. Refer to **STANDARD PROCEDURE** .

B140B-REAR LEFT AUDIO SPEAKER OUTPUT CIRCUIT OPEN - PREMIUM

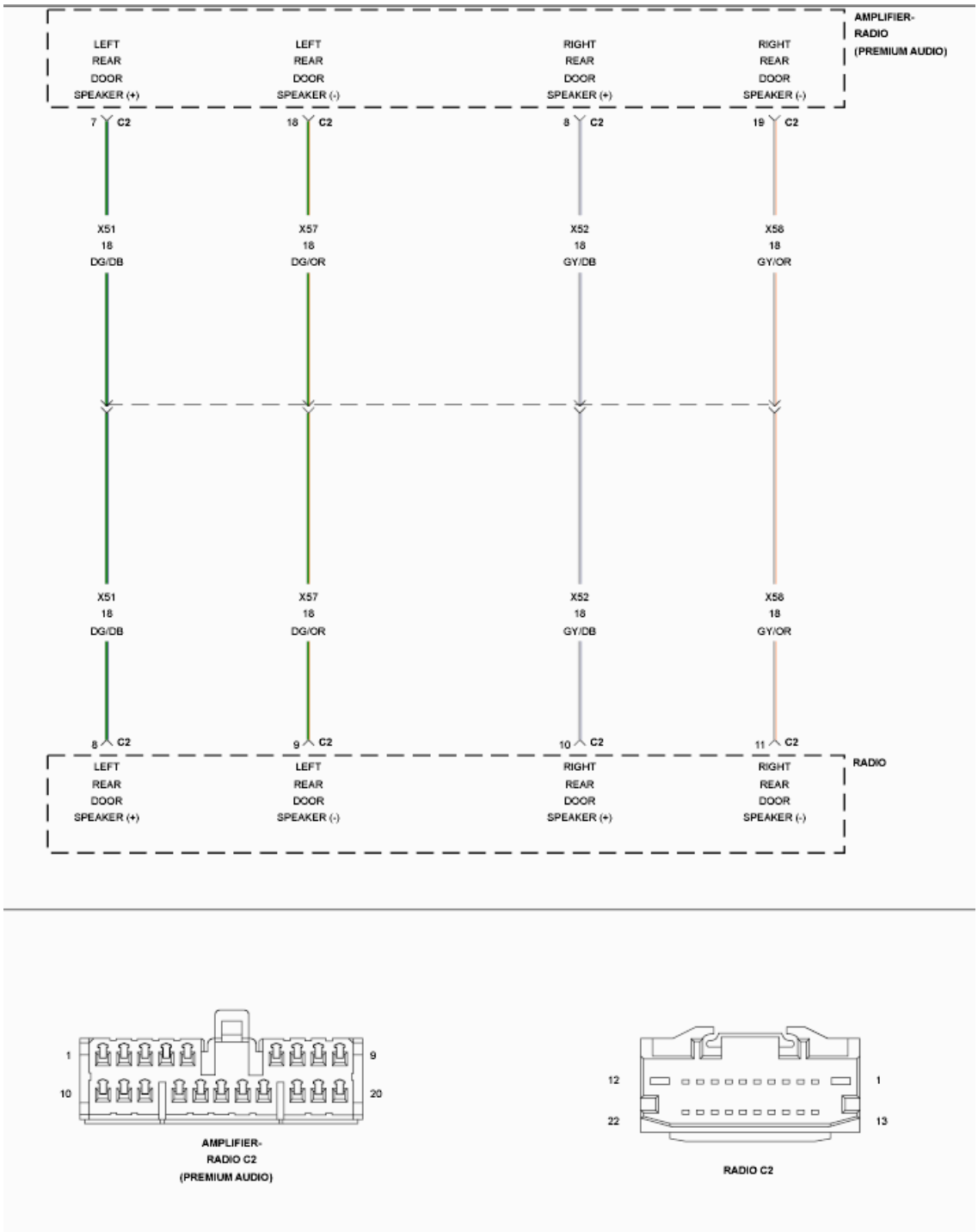

Fig. 42: Rear Audio Speaker Circuit Diagram - Premium
Courtesy of CHRYSLER GROUP, LLC

For a complete wiring diagram, **refer to appropriate SYSTEM WIRING DIAGRAMS article** .

NOTE: There are two versions of the B140B DTC test. In order to select the proper test you must know if the vehicle is

equipped with an Amplifier. If the vehicle is equipped with an Amplifier use the B140B-PREMIUM test. If the vehicle is not equipped with an Amplifier use the B140B-BASE test.

THEORY OF OPERATION

The (X51) Left Rear Audio (+) circuit and the (X57) Left Rear Audio (-) circuit are outputs of the Radio. The Radio controls and monitors these circuits for a concern.

WHEN MONITORED

With the Radio on.

SET CONDITION

The Radio detects an open condition on the audio output circuit.

POSSIBLE CAUSES

Possible Causes
(X51) LEFT REAR AUDIO (+) CIRCUIT OPEN
(X57) LEFT REAR AUDIO (-) CIRCUIT OPEN
AMPLIFIER
RADIO

DIAGNOSTIC TEST

1. **CHECK FOR AN INTERMITTENT CONDITION**
   1. Turn the ignition on and open one of the front doors.

      NOTE: A front door must remain open whenever checking or erasing Radio DTCs.

   2. Using the scan tool, record and erase the Radio DTCs.
   3. Turn the Radio on.
   4. Adjust the speakers to the rear and center.
   5. Using the scan tool, read the active Radio DTCs.

      Does the scan tool read: B140B-REAR LEFT AUDIO SPEAKER

OUTPUT CIRCUIT OPEN?

Yes

- Go To 2

No

- Test complete, the condition or conditions that originally set this DTC are not present at this time. Using the wiring diagrams as a guide, check all related splices and connectors for signs of water intrusion, corrosion, pushed out or bent terminals and correct pin tension.
- Perform the BODY VERIFICATION TEST. Refer to **STANDARD PROCEDURE** .

2. **CHECK THE AMPLIFIER**

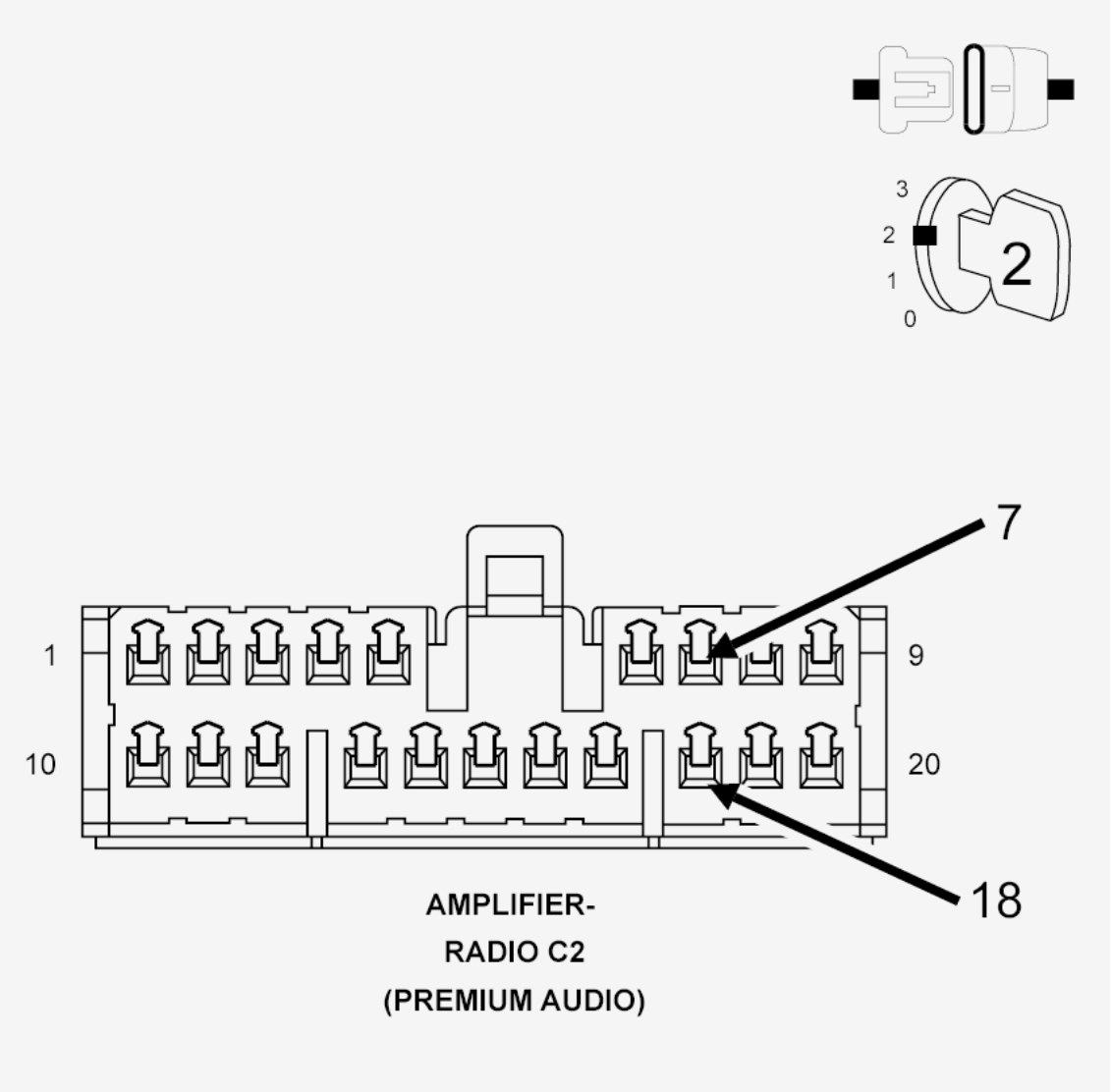

Fig. 43: Checking Amplifier Circuit
Courtesy of CHRYSLER GROUP, LLC

1. Turn the ignition off.
2. Disconnect the Amplifier C1 harness connector.
3. Connect a jumper wire between the (X51) Left Rear Audio (+) circuit and the (X57) Left Rear Audio (-) circuits.
4. Turn the ignition on.
5. Turn the Radio on.
6. Adjust the speakers to the rear and center.
7. Using the scan tool, read the active Radio DTCs.

   Does the scan tool read: B140B-REAR LEFT AUDIO SPEAKER OUTPUT CIRCUIT OPEN?

Yes

- Go To 3

No

- Replace the Amplifier in accordance with the Service Information.
- Perform the BODY VERIFICATION TEST. Refer to **STANDARD PROCEDURE** .

3. **CHECK THE (X51) LEFT REAR AUDIO (+) CIRCUIT FOR AN OPEN**

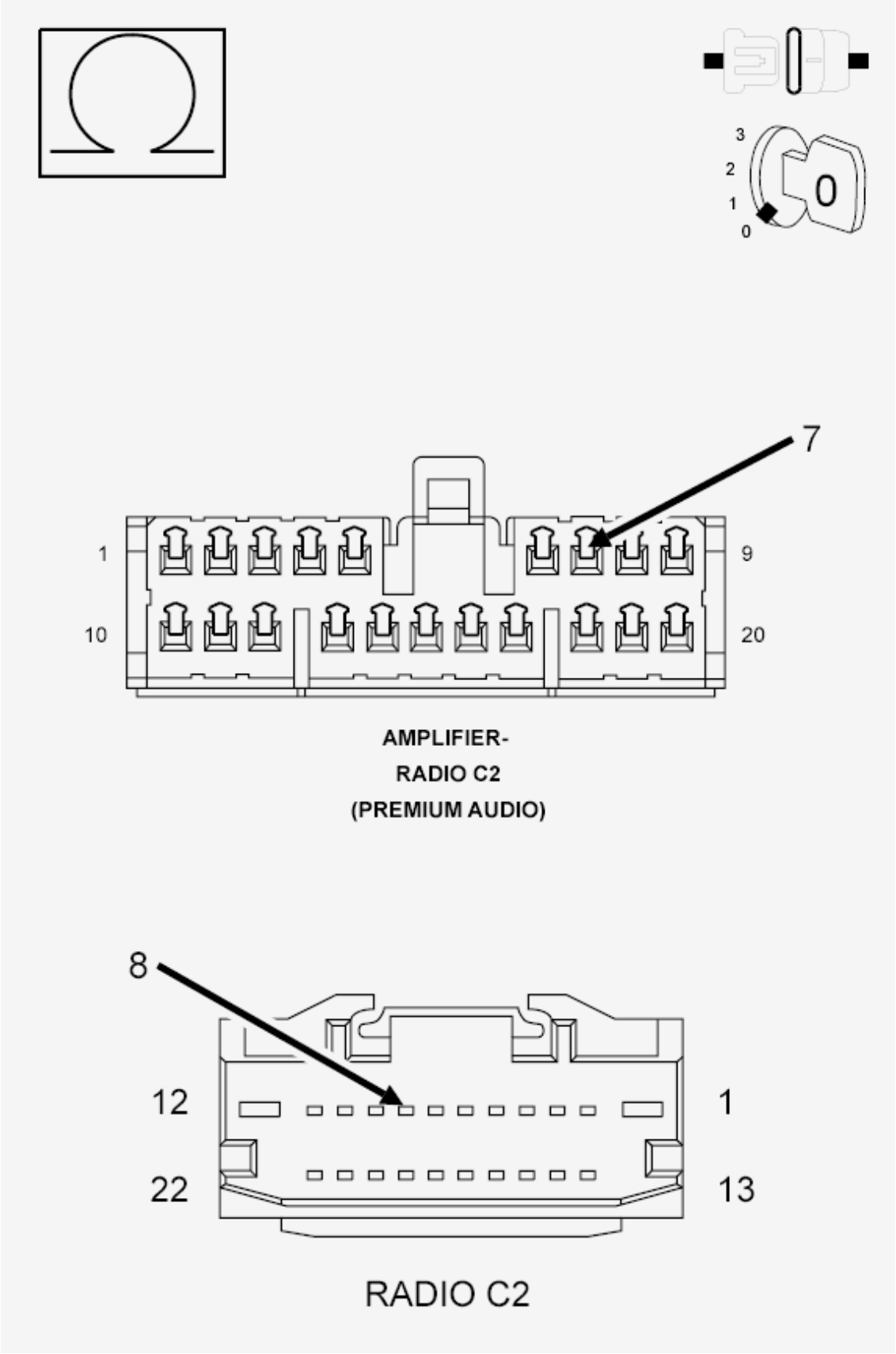

Fig. 44: Checking Left Rear Audio (+) Circuit For Open
Courtesy of CHRYSLER GROUP, LLC

1. Turn the ignition off.
2. Disconnect the Radio C2 harness connector.
3. Measure the resistance of (X51) Left Rear Audio (+) circuit between the Radio C2 connector and the Amplifier C1 harness connector.

   Is the resistance below 5.0 Ohms?

   Yes

   - Go To 4

   No

   - Repair open in the (X51) Left Rear Audio (+) circuit.
   - Perform the BODY VERIFICATION TEST. Refer to **STANDARD PROCEDURE** .

4. **CHECK THE (X57) LEFT REAR AUDIO (-) CIRCUIT FOR AN OPEN**

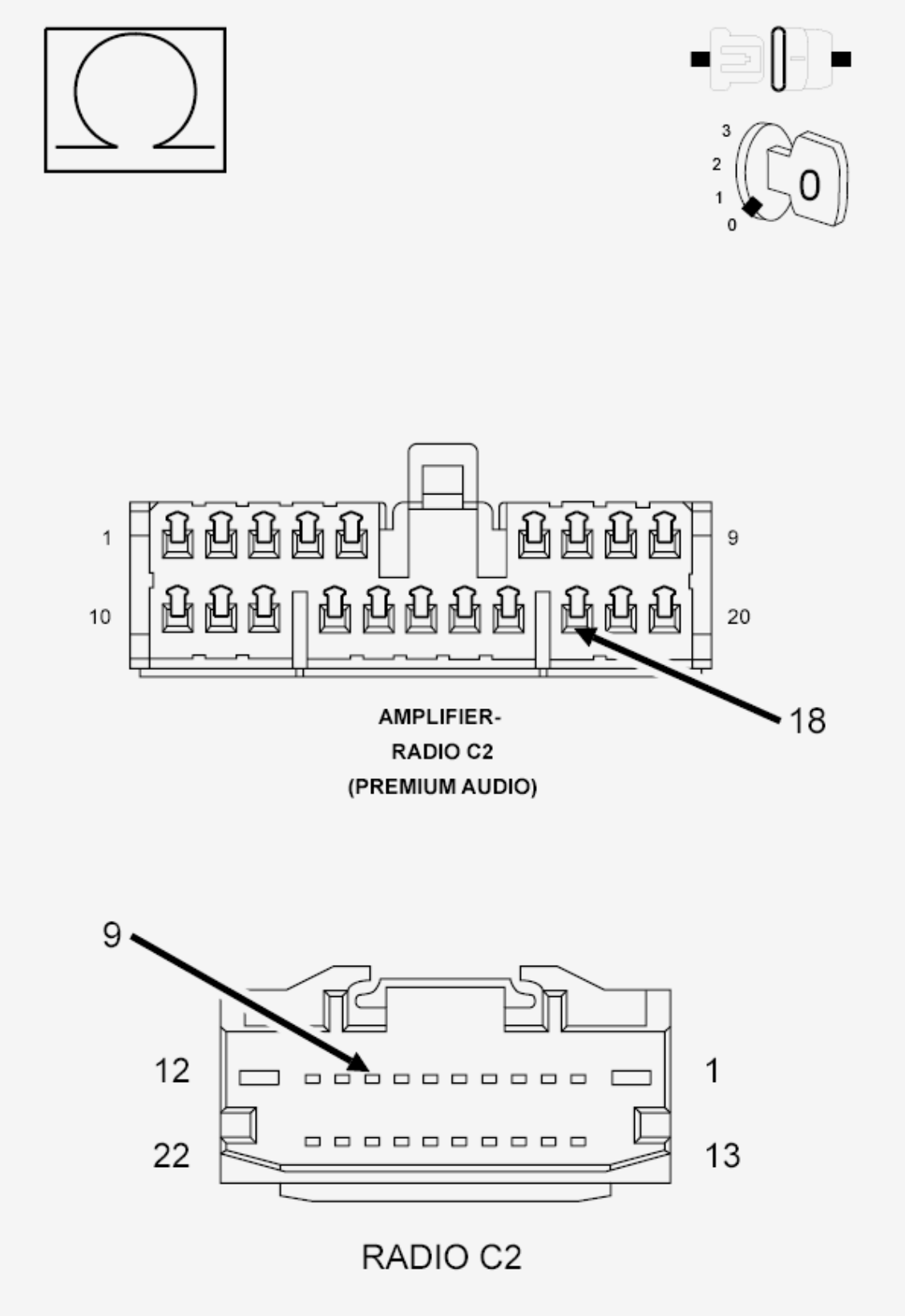

Fig. 45: Checking Left Rear Audio (-) Circuit For Open
Courtesy of CHRYSLER GROUP, LLC

1. Measure the resistance of (X57) Left Rear Audio (-) circuit between the

Radio C2 connector, and the Amplifier C1 harness connector.

Is the resistance below 5.0 Ohms?

Yes

- Replace the Radio in accordance with the Service Information.
- Perform the BODY VERIFICATION TEST. Refer to **STANDARD PROCEDURE** .

No

- Repair open in the (X57) Left Rear Audio (-) circuit.
- Perform the BODY VERIFICATION TEST. Refer to **STANDARD PROCEDURE** .

B140D-REAR RIGHT AUDIO SPEAKER OUTPUT CIRCUIT LOW - BASE

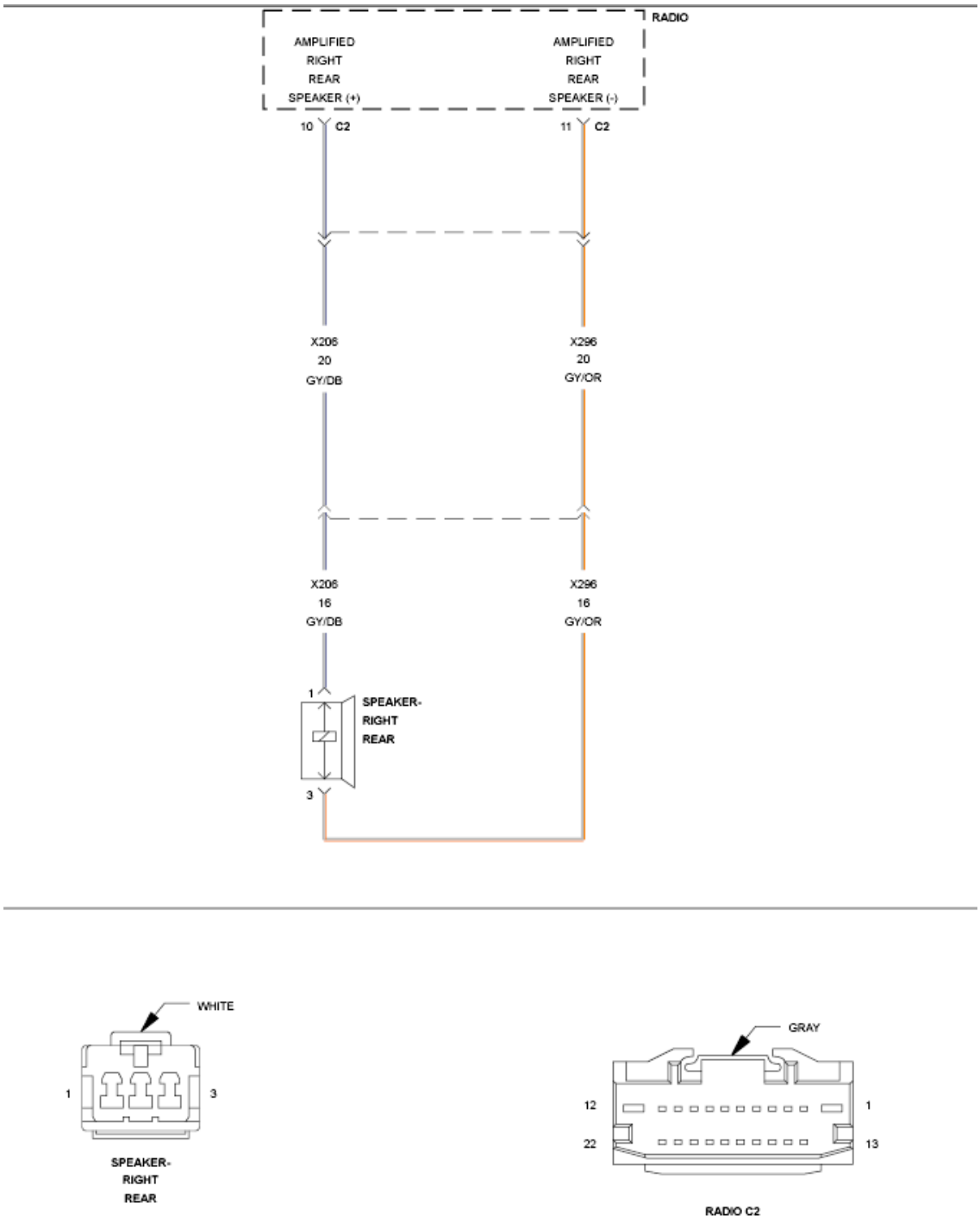

Fig. 46: Right Rear Speaker Circuit Diagram - Base
Courtesy of CHRYSLER GROUP, LLC

For a complete wiring diagram, **refer to appropriate SYSTEM WIRING DIAGRAMS article** .

NOTE: There are two versions of the B140D DTC test. In order to

select the proper test you must know if the vehicle is equipped with an Amplifier. If the vehicle is equipped with an Amplifier use the B140D-PREMIUM test. If the vehicle is not equipped with an Amplifier use the B140D-BASE test.

THEORY OF OPERATION

The (X206) Right Rear Speaker (+) circuit and the (X296) Right Rear Speaker (-) circuit are outputs of the Radio. The Radio controls and monitors these circuits for a concern.

WHEN MONITORED

With the Radio on.

SET CONDITION

The Radio detects a short to ground condition on the speaker output circuit.

POSSIBLE CAUSES

Possible Causes
(X206) RIGHT REAR SPEAKER (+) CIRCUIT SHORTED TO GROUND
(X296) RIGHT REAR SPEAKER (-) CIRCUIT SHORTED TO GROUND
RIGHT REAR SPEAKER
RADIO

DIAGNOSTIC TEST

1. **CHECK FOR AN INTERMITTENT CONDITION**
   1. Turn the ignition on and open one of the front doors.

      NOTE: A front door must remain open whenever checking or erasing Radio DTCs.

   2. Using the scan tool, record and erase the Radio DTCs.
   3. Turn the Radio on.
   4. Adjust the speakers to the rear and center.
   5. Using the scan tool, read the active Radio DTCs.

Does the scan tool read: B140D-REAR RIGHT AUDIO SPEAKER OUTPUT CIRCUIT LOW?

Yes

- Go To 2

No

- Test complete, the condition or conditions that originally set this DTC are not present at this time. Using the wiring diagrams as a guide, check all related splices and connectors for signs of water intrusion, corrosion, pushed out or bent terminals and correct pin tension.
- Perform the BODY VERIFICATION TEST. Refer to **STANDARD PROCEDURE** .

2. **CHECK RIGHT REAR SPEAKER**

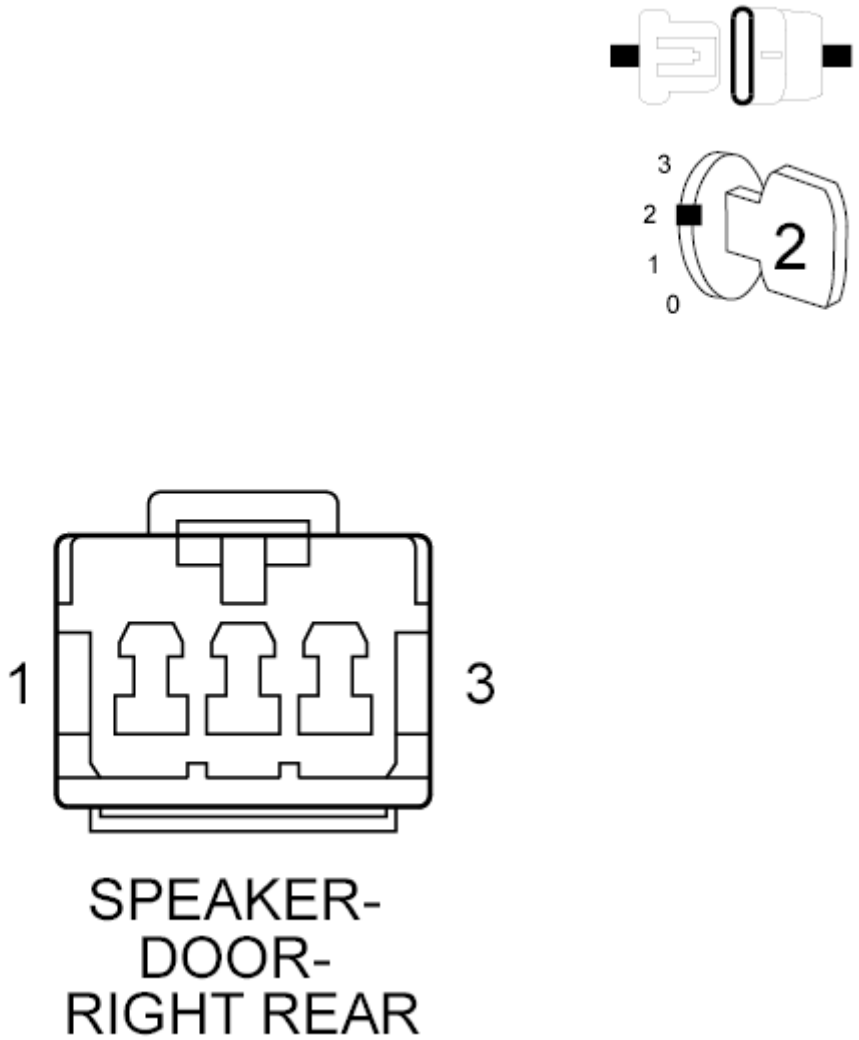

Fig. 47: Right Rear Speaker Harness Connector End View
Courtesy of CHRYSLER GROUP, LLC

1. Make sure one of the front doors is still open.
2. Using the scan tool, erase the DTCs.
3. Turn the ignition off.
4. Disconnect the Right Rear Speaker harness connector from the Right Rear Speaker.
5. Turn the ignition on.
6. Turn the radio on.
7. Using the scan tool, read the active Radio DTCs.

   Does the scan tool read: B140D-FRONT RIGHT AUDIO SPEAKER

OUTPUT CIRCUIT LOW?

Yes

- Go To 3

No

- Replace the Right Rear Speaker in accordance with the Service Information.
- Perform the BODY VERIFICATION TEST. Refer to **STANDARD PROCEDURE** .

3. **CHECK THE (X206) RIGHT REAR SPEAKER (+) CIRCUIT FOR A SHORT TO GROUND**

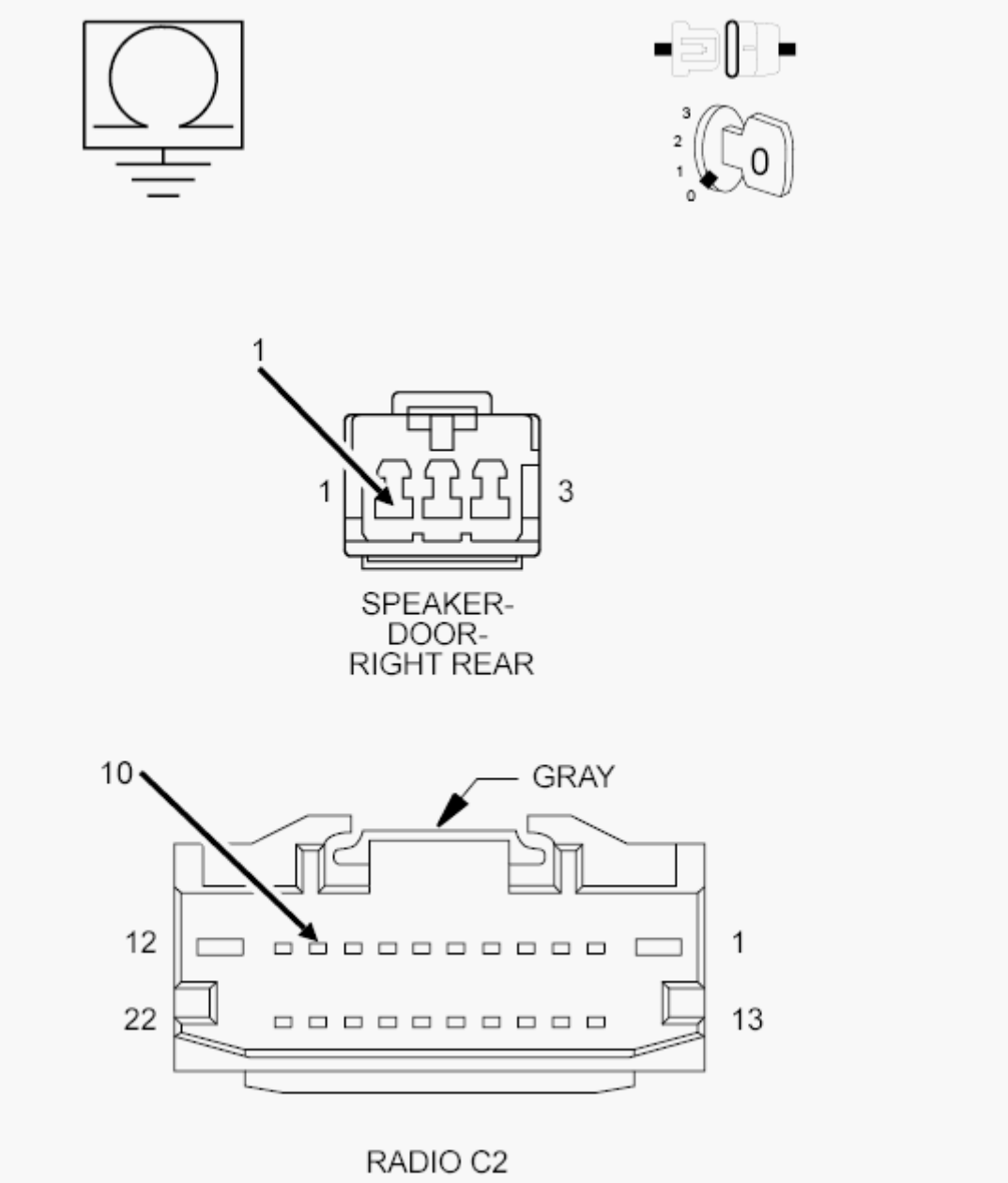

Fig. 48: Checking Right Rear Speaker (+) Circuit For A Short To Ground
Courtesy of CHRYSLER GROUP, LLC

1. Turn the ignition off.
2. Disconnect the Radio C2 harness connector.
3. Disconnect the Right Rear Speaker harness connector.
4. Measure the resistance between ground and the (X206) Right Rear Speaker (+) circuit.

   Is the resistance below 5.0 Ohms?

Yes

- Repair the (X206) Right Rear Speaker (+) circuit for a short to ground.
- Perform the BODY VERIFICATION TEST. Refer to **STANDARD PROCEDURE** .

No

- Go To 4

4. **CHECK THE (X296) RIGHT REAR SPEAKER (-) CIRCUIT FOR A SHORT TO GROUND**

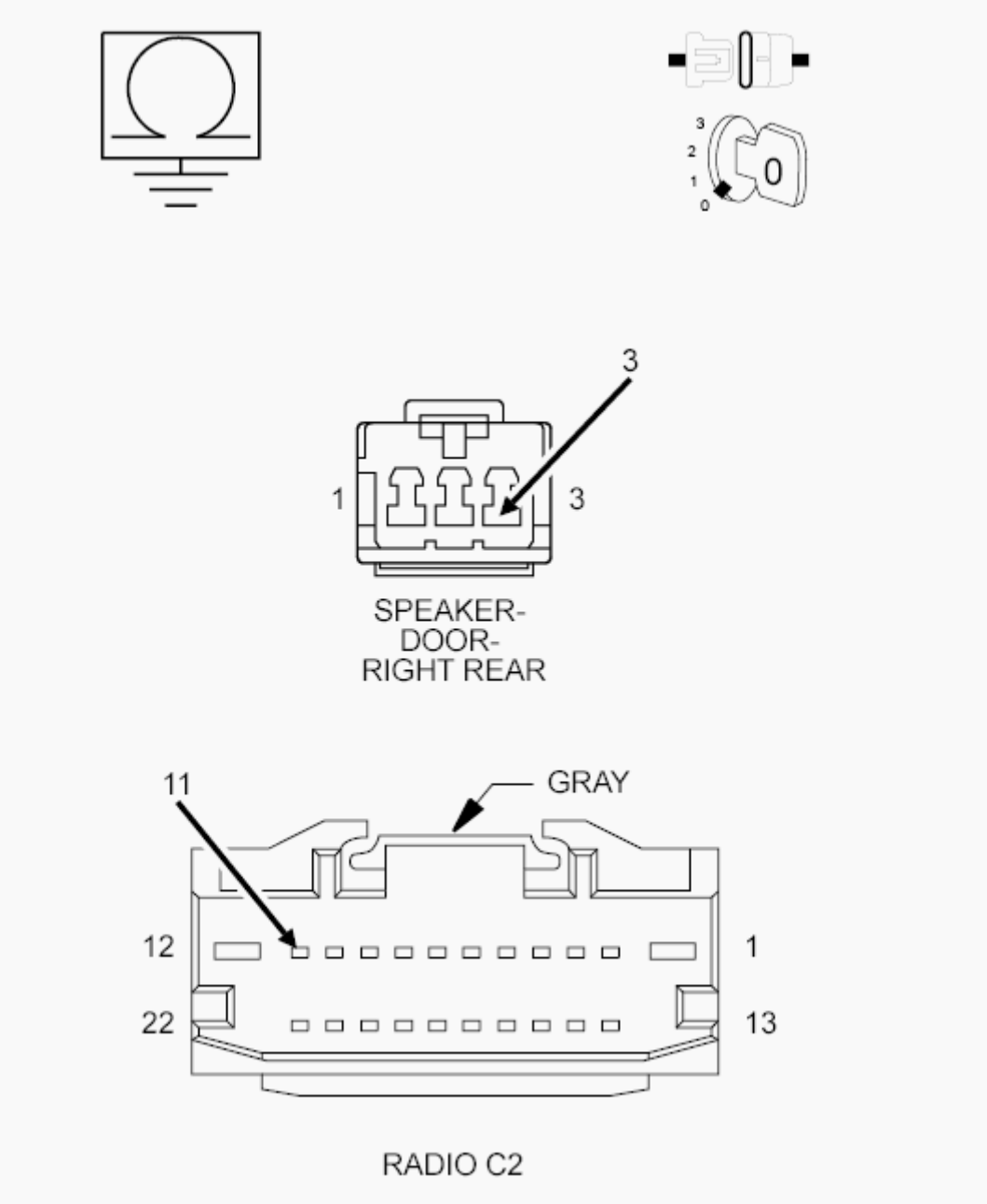

Fig. 49: Checking Right Rear Speaker (-) Circuit For A Short To Ground
Courtesy of CHRYSLER GROUP, LLC

1. Measure the resistance between ground and the (X296) Right Rear Speaker (-) circuit.

   Is the resistance below 5.0 Ohms?

   Yes

   - Repair the (X296) Right Rear Speaker (-) circuit for a short to

ground.

- Perform the BODY VERIFICATION TEST. Refer to **STANDARD PROCEDURE** .

No

- Replace the Radio in accordance with the Service Information.
- Perform the BODY VERIFICATION TEST. Refer to **STANDARD PROCEDURE** .

B140D-REAR RIGHT AUDIO SPEAKER OUTPUT CIRCUIT LOW - PREMIUM

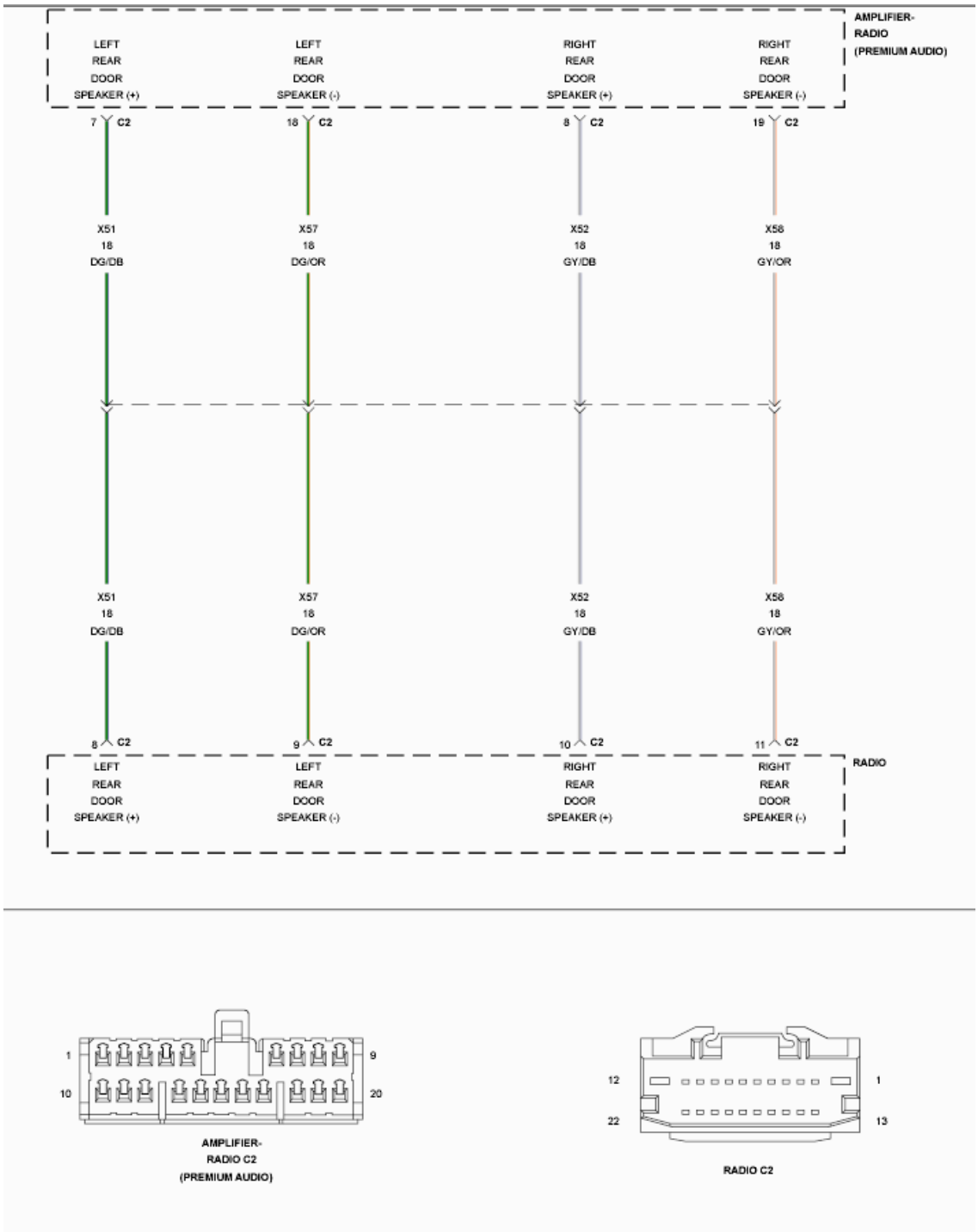

Fig. 50: Rear Audio Speaker Circuit Diagram - Premium
Courtesy of CHRYSLER GROUP, LLC

For a complete wiring diagram, **refer to appropriate SYSTEM WIRING DIAGRAMS article** .

NOTE: There are two versions of the B140D DTC test. In order to select the proper test you must know if the vehicle is

equipped with an Amplifier. If the vehicle is equipped with an Amplifier use the B140D-PREMIUM test. If the vehicle is not equipped with an Amplifier use the B140D-BASE test.

THEORY OF OPERATION

The (X52) Right Rear Audio (+) circuit and the (X58) Right Rear Audio (-) circuit are outputs of the Radio. The Radio controls and monitors these circuits for a concern.

WHEN MONITORED

With the Radio on.

SET CONDITION

The Radio detects a short to ground condition on the audio output circuit.

POSSIBLE CAUSES

Possible Causes
(X52) RIGHT REAR AUDIO (+) CIRCUIT SHORTED TO GROUND
(X58) RIGHT REAR AUDIO (-) CIRCUIT SHORTED TO GROUND
AMPLIFIER
RADIO

DIAGNOSTIC TEST

1. **CHECK FOR AN INTERMITTENT CONDITION**
   1. Turn the ignition on and open one of the front doors.

      NOTE: A front door must remain open whenever checking or erasing Radio DTCs.

   2. Using the scan tool, record and erase the Radio DTCs.
   3. Turn the Radio on.
   4. Adjust the speakers to the rear and center.
   5. Using the scan tool, read the active Radio DTCs.

      Does the scan tool read: B140D-REAR RIGHT AUDIO SPEAKER

OUTPUT CIRCUIT LOW?

Yes

- Go To 2

No

- Test complete, the condition or conditions that originally set this DTC are not present at this time. Using the wiring diagrams as a guide, check all related splices and connectors for signs of water intrusion, corrosion, pushed out or bent terminals and correct pin tension.
- Perform the BODY VERIFICATION TEST. Refer to **STANDARD PROCEDURE** .

2. **CHECK THE AMPLIFIER**

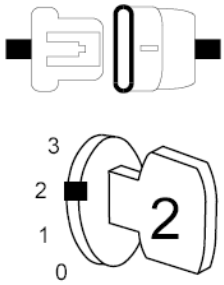

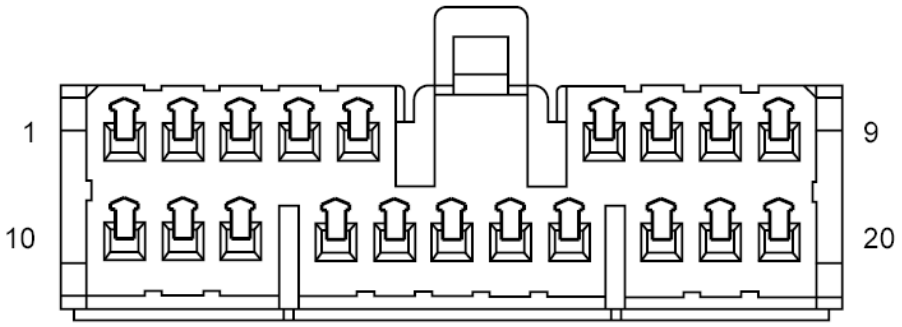

AMPLIFIER-
RADIO C2
(PREMIUM AUDIO)

Fig. 51: Checking Amplifier
Courtesy of CHRYSLER GROUP, LLC

1. Make sure one of the front doors is still open.
2. Using the scan tool, erase the DTCs.
3. Turn the ignition off.
4. Disconnect the Amplifier C1harness connector from the Amplifier.
5. Turn the ignition on.
6. Turn the radio on.
7. Using the scan tool, read the active Radio DTCs.

   Does the scan tool read: B140D-FRONT RIGHT AUDIO SPEAKER OUTPUT CIRCUIT LOW?

   Yes

   - Go To 3

   No

   - Replace the Amplifier in accordance with the Service Information.
   - Perform the BODY VERIFICATION TEST. Refer to **STANDARD PROCEDURE** .

3. **CHECK THE (X52) RIGHT REAR AUDIO (+) CIRCUIT FOR A SHORT TO GROUND**

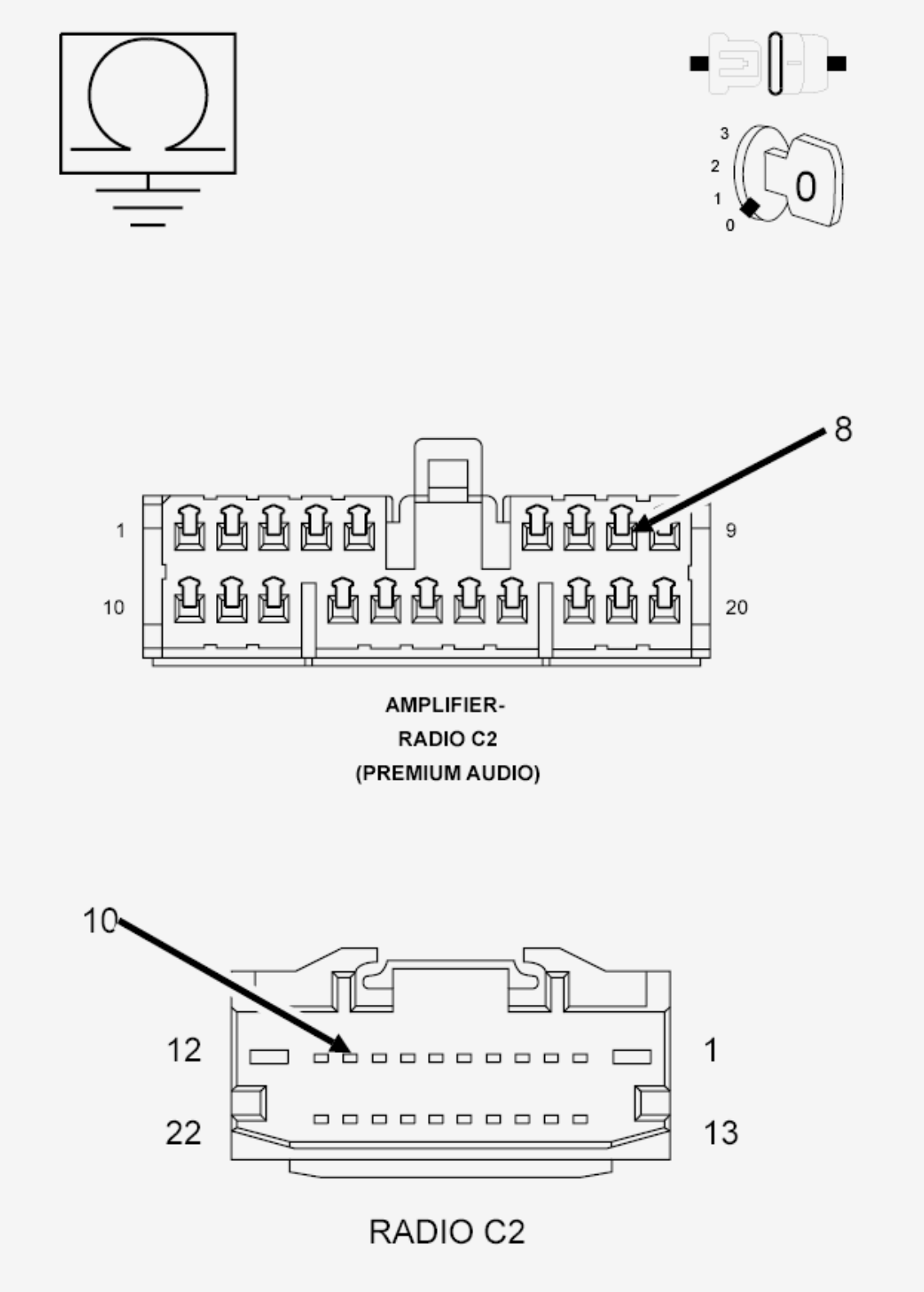

Fig. 52: Checking Right Rear Audio (+) Circuit For Short To Ground
Courtesy of CHRYSLER GROUP, LLC

1. Turn the ignition off.
2. Disconnect the Radio C2 harness connector.

3. Disconnect the Right Rear Speaker harness connector.
4. Measure the resistance between ground and the (X52) Right Rear Speaker (+) circuit.

   Is the resistance below 5.0 Ohms?

   Yes

   - Repair the (X52) Right Rear Audio (+) circuit for a short to ground.
   - Perform the BODY VERIFICATION TEST. Refer to **STANDARD PROCEDURE** .

   No

   - Go To 4

4. **CHECK THE (X58) RIGHT REAR AUDIO (-) CIRCUIT FOR A SHORT TO GROUND**

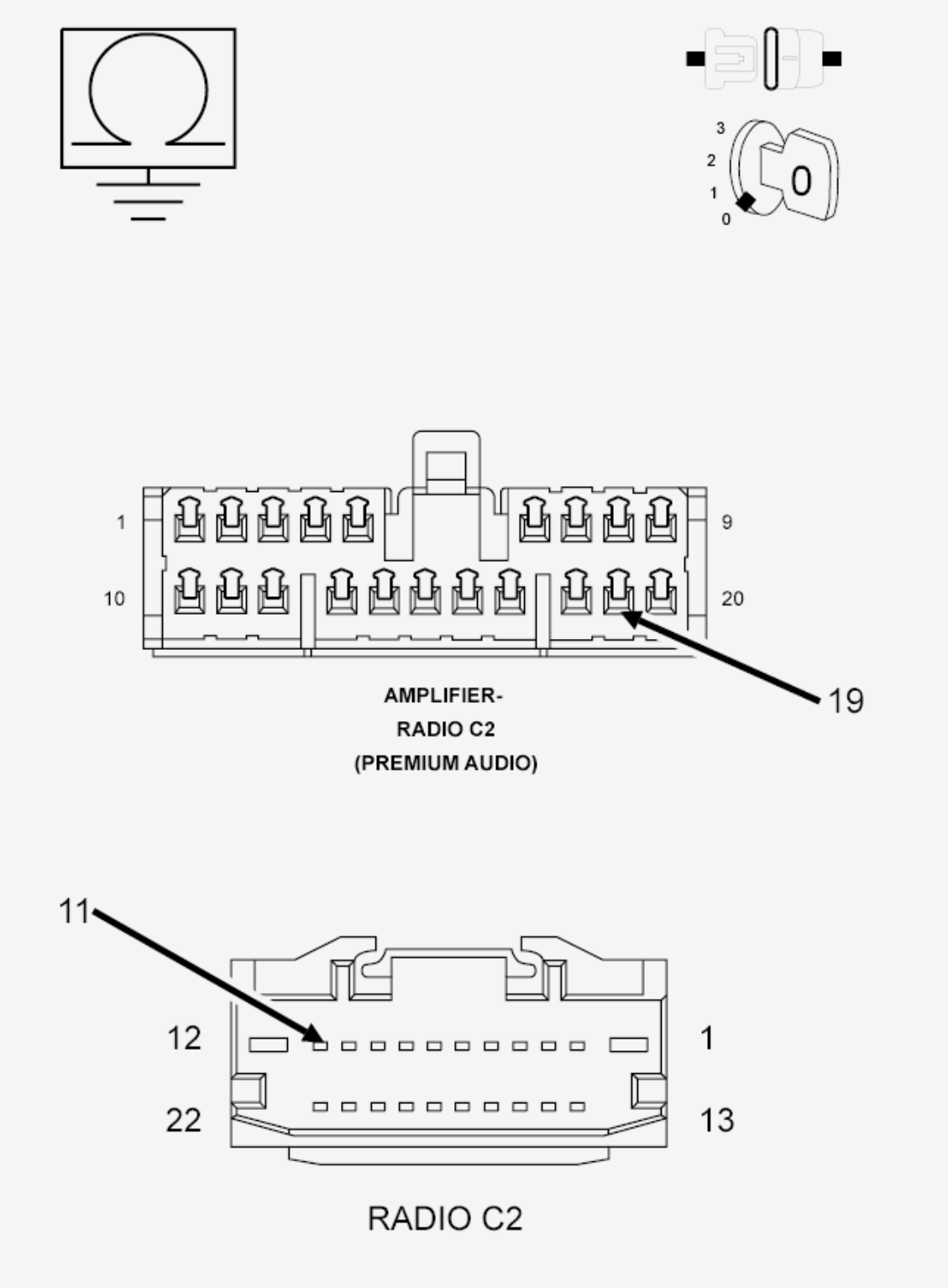

Fig. 53: Checking Right Rear Audio (-) Circuit For Short To Ground
Courtesy of CHRYSLER GROUP, LLC

1. Measure the resistance between ground and the (X58) Right Rear Audio (-) circuit.

Is the resistance below 5.0 Ohms?

Yes

- Repair the (X58) Right Rear Audio (-) circuit for a short to ground.
- Perform the BODY VERIFICATION TEST. Refer to **STANDARD PROCEDURE** .

No

- Replace the Radio in accordance with the Service Information.
- Perform the BODY VERIFICATION TEST. Refer to **STANDARD PROCEDURE** .

B140E-REAR RIGHT AUDIO SPEAKER OUTPUT CIRCUIT HIGH - BASE

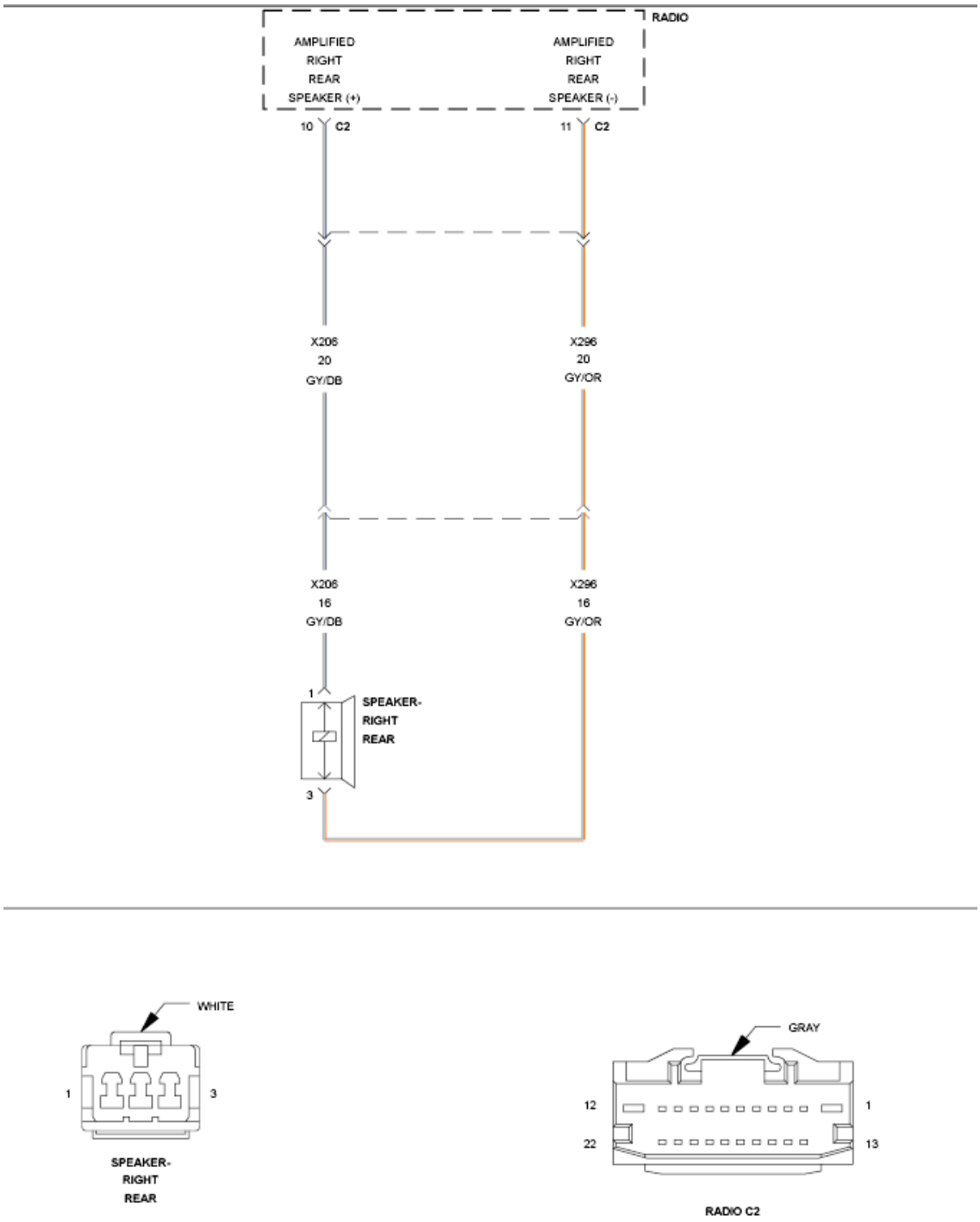

Fig. 54: Right Rear Speaker Circuit Diagram - Base
Courtesy of CHRYSLER GROUP, LLC

For a complete wiring diagram, **refer to appropriate SYSTEM WIRING DIAGRAMS article** .

NOTE: There are two versions of the B140E DTC test. In order to

select the proper test you must know if the vehicle is equipped with an Amplifier. If the vehicle is equipped with an Amplifier use the B140E-PREMIUM test. If the vehicle is not equipped with an Amplifier use the B140E-BASE test.

THEORY OF OPERATION

The (X206) Right Rear Speaker (+) circuit and the (X296) Right Rear Speaker (-) circuit are outputs of the Radio. The Radio controls and monitors these circuits for a concern.

WHEN MONITORED

With the Radio on.

SET CONDITION

The Radio detects a short to battery condition on the speaker output circuit.

POSSIBLE CAUSES

Possible Causes
(X206) RIGHT REAR SPEAKER (+) CIRCUIT SHORTED TO VOLTAGE (X296) RIGHT REAR SPEAKER (-) CIRCUIT SHORTED TO VOLTAGE RADIO

DIAGNOSTIC TEST

1. **CHECK FOR AN INTERMITTENT CONDITION**
   1. Turn the ignition on and open one of the front doors.

      NOTE: A front door must remain open whenever checking or erasing Radio DTCs.

   2. Using the scan tool, record and erase the Radio DTCs.
   3. Turn the Radio on.
   4. Adjust the speakers to the rear and center.
   5. Using the scan tool, read the active Radio DTCs.

Does the scan tool read: B140E-REAR RIGHT AUDIO SPEAKER OUTPUT CIRCUIT HIGH?

Yes

- Go To 2

No

- Test complete, the condition or conditions that originally set this DTC are not present at this time. Using the wiring diagrams as a guide, check all related splices and connectors for signs of water intrusion, corrosion, pushed out or bent terminals and correct pin tension.
- Perform the BODY VERIFICATION TEST. Refer to **STANDARD PROCEDURE** .

2. **CHECK FOR VOLTAGE ON THE (X206) RIGHT REAR SPEAKER (+) CIRCUIT**

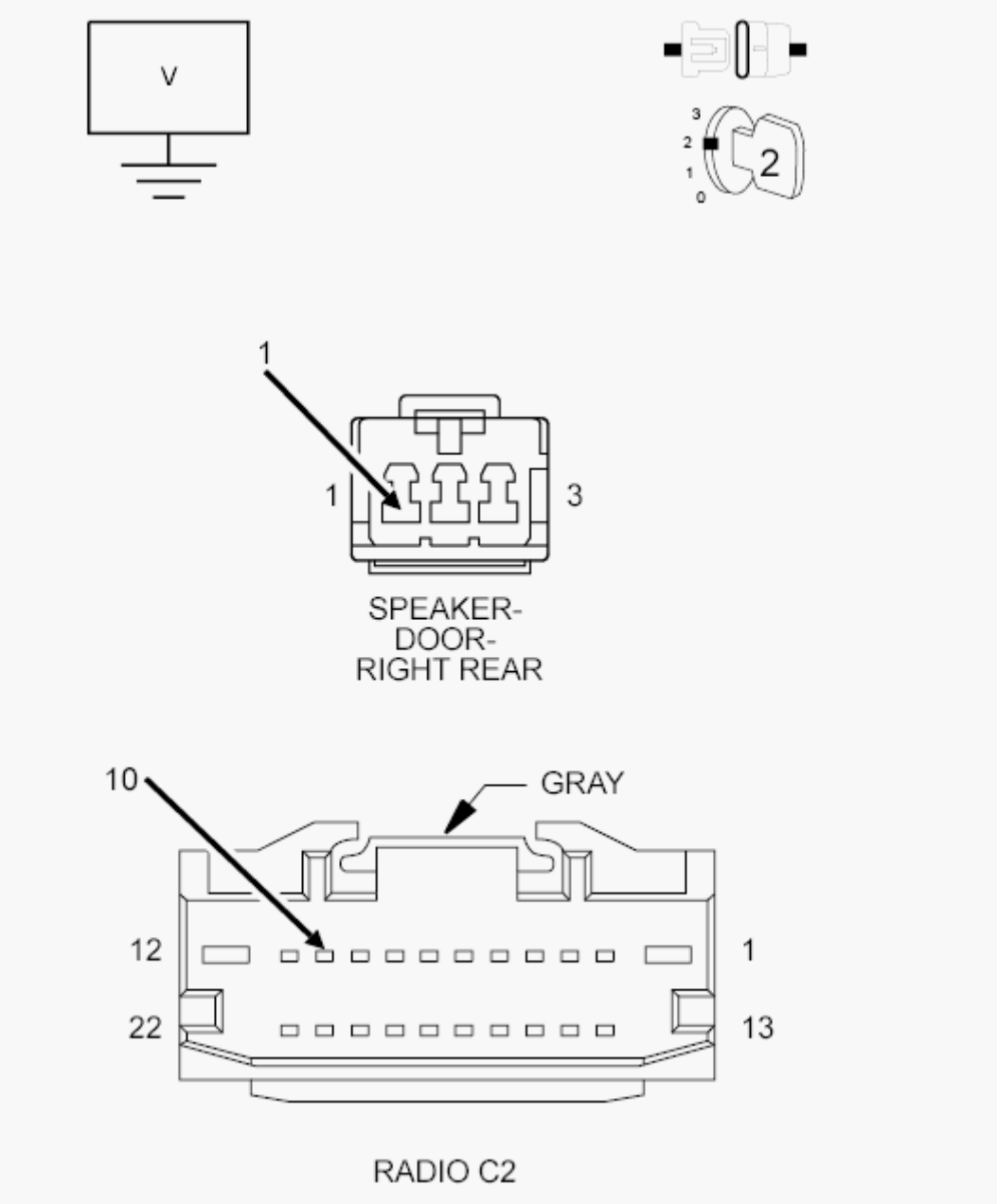

Fig. 55: Checking Voltage On Right Rear Speaker (+) Circuit
Courtesy of CHRYSLER GROUP, LLC

1. Turn the ignition off.
2. Disconnect the Radio C2 harness connector.
3. Turn the ignition on.
4. Measure the voltage between ground and the (X206) Right Rear Speaker (+) circuit.

   Is there any voltage present?

Yes

- Repair the (X206) Right Rear Speaker (+) circuit for a short to voltage.
- Perform the BODY VERIFICATION TEST. Refer to **STANDARD PROCEDURE** .

No

- Go To 3

3. **CHECK FOR VOLTAGE ON THE (X296) RIGHT REAR SPEAKER (-) CIRCUIT**

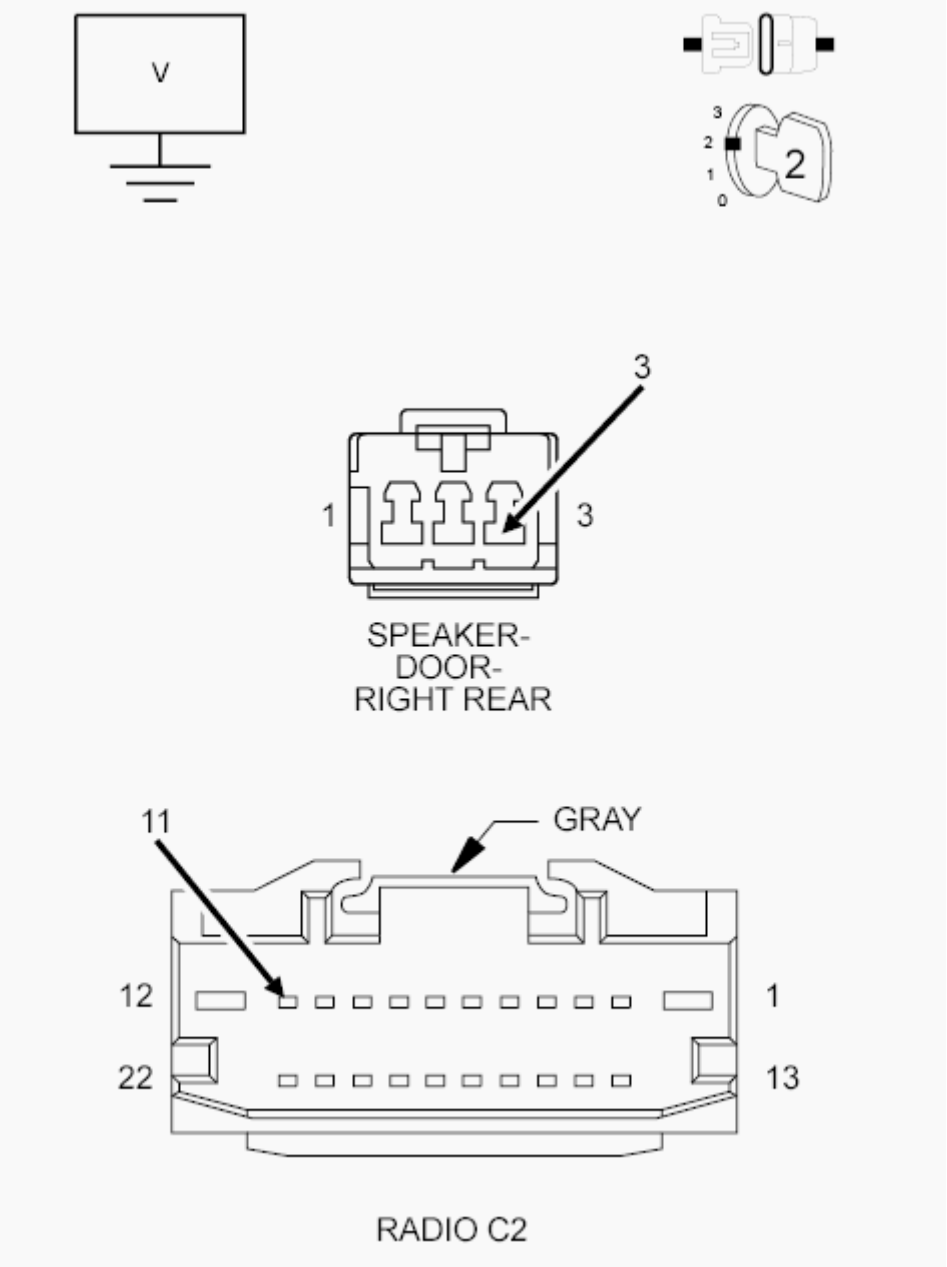

Fig. 56: Checking Voltage On Right Rear Speaker (-) Circuit
Courtesy of CHRYSLER GROUP, LLC

1. Measure the voltage between ground and the (X296) Right Rear Speaker (-) circuit.

   Is there any voltage present?

   Yes

   - Repair the (X296) Right Rear Speaker (-) circuit for a short to voltage.

- Perform the BODY VERIFICATION TEST. Refer to **STANDARD PROCEDURE** .

No

- Replace the Radio in accordance with the Service Information.
- Perform the BODY VERIFICATION TEST. Refer to **STANDARD PROCEDURE** .

B140E-REAR RIGHT AUDIO SPEAKER OUTPUT CIRCUIT HIGH - PREMIUM

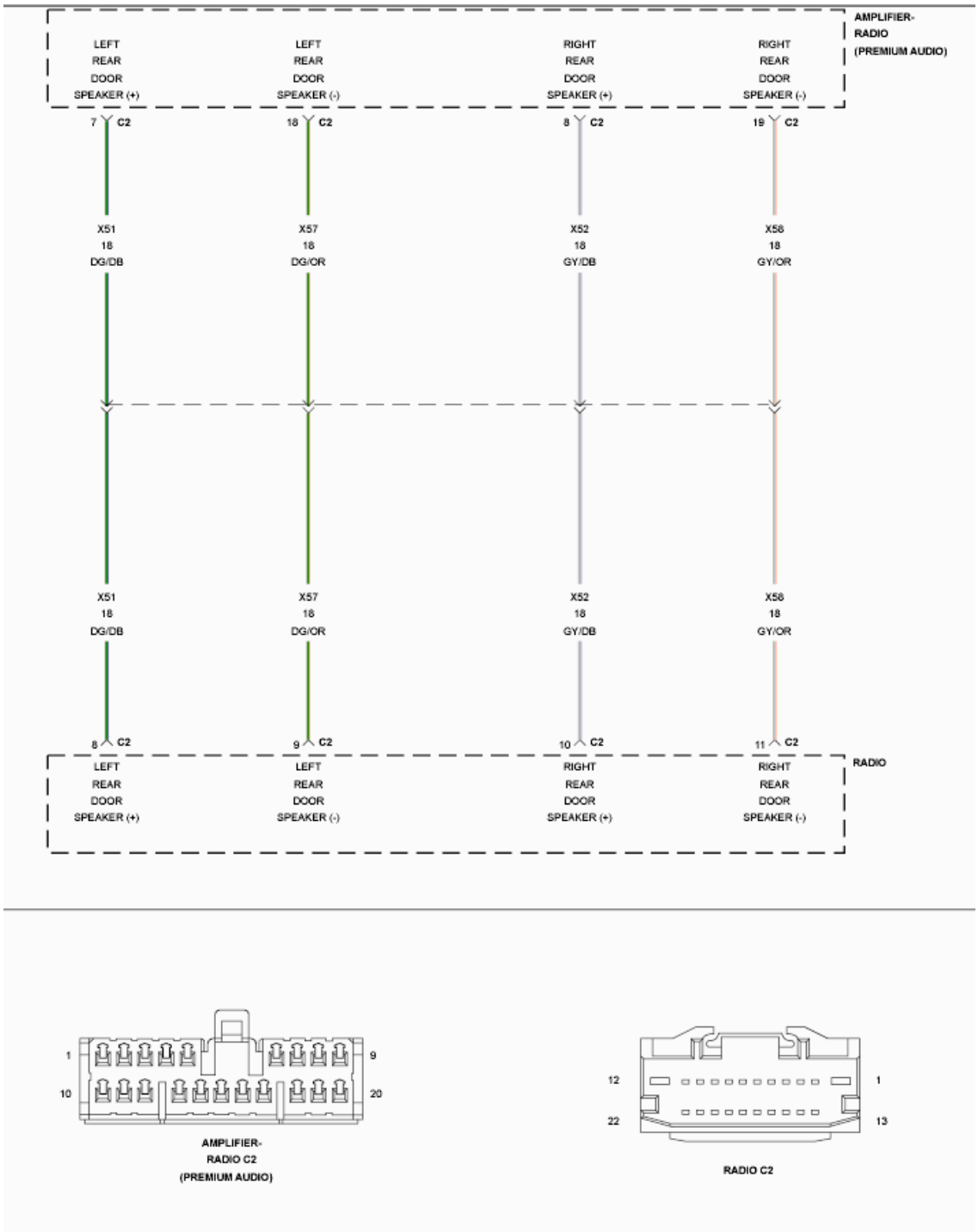

Fig. 57: Rear Audio Speaker Circuit Diagram - Premium
Courtesy of CHRYSLER GROUP, LLC

For a complete wiring diagram, **refer to appropriate SYSTEM WIRING DIAGRAMS article** .

NOTE: There are two versions of the B140E DTC test. In order to select the proper test you must know if the vehicle is

equipped with an Amplifier. If the vehicle is equipped with an Amplifier use the B140E-PREMIUM test. If the vehicle is not equipped with an Amplifier use the B140E-BASE test.

THEORY OF OPERATION

The (X52) Right Rear Audio (+) circuit and the (X58) Right Rear Audio (-) circuit are outputs of the Radio. The Radio controls and monitors these circuits for a concern.

WHEN MONITORED

With the Radio on.

SET CONDITION

The Radio detects a short to battery condition on the Audio output circuit.

POSSIBLE CAUSES

Possible Causes
(X52) RIGHT REAR AUDIO (+) CIRCUIT SHORTED TO VOLTAGE (X58) RIGHT REAR AUDIO (-) CIRCUIT SHORTED TO VOLTAGE RADIO

DIAGNOSTIC TEST

1. **CHECK FOR AN INTERMITTENT CONDITION**
   1. Turn the ignition on and open one of the front doors.

      NOTE: A front door must remain open whenever checking or erasing Radio DTCs.

   2. Using the scan tool, record and erase the Radio DTCs.
   3. Turn the Radio on.
   4. Adjust the speakers to the rear and center.
   5. Using the scan tool, read the active Radio DTCs.

      Does the scan tool read: B140E-REAR RIGHT AUDIO SPEAKER OUTPUT CIRCUIT HIGH?

Yes

- Go To 3

No

- Test complete, the condition or conditions that originally set this DTC are not present at this time. Using the wiring diagrams as a guide, check all related splices and connectors for signs of water intrusion, corrosion, pushed out or bent terminals and correct pin tension.
- Perform the BODY VERIFICATION TEST. Refer to **STANDARD PROCEDURE** .

2. **CHECK THE AMPLIFIER**

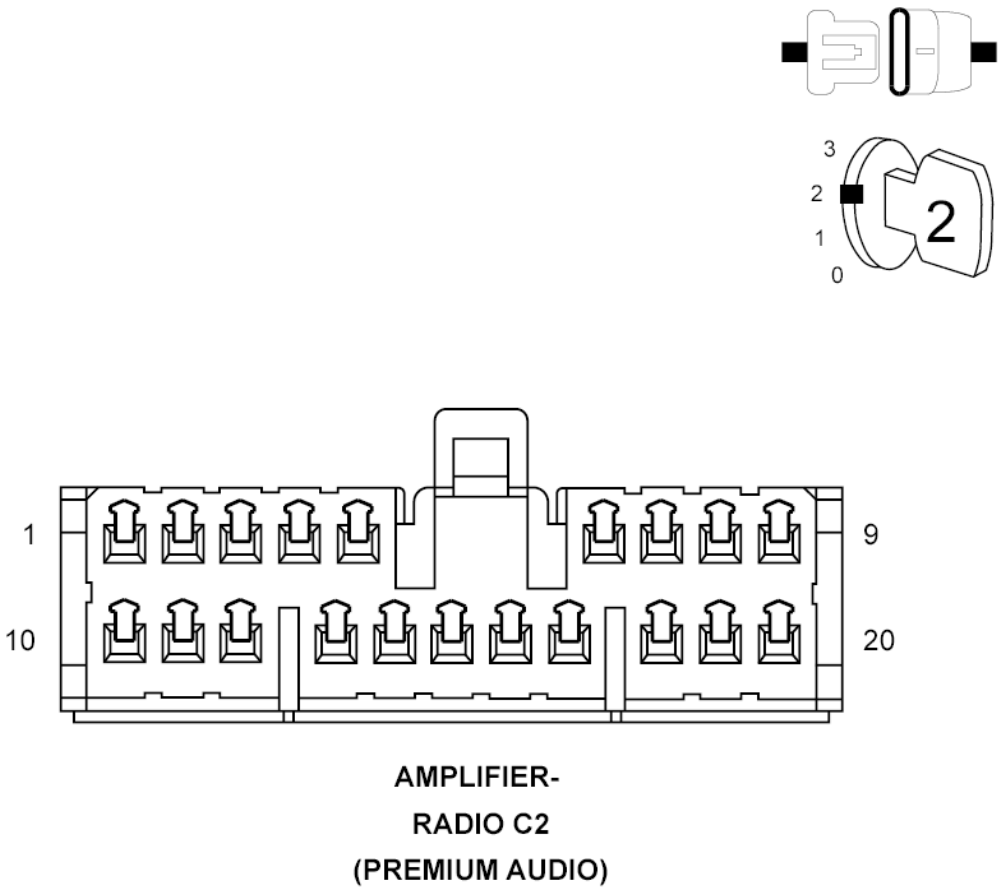

Fig. 58: Checking Amplifier
Courtesy of CHRYSLER GROUP, LLC

1. Make sure one of the front doors is still open.
2. Using the scan tool, erase the DTCs.
3. Turn the ignition off.
4. Disconnect the Amplifier C1 harness connector from the Amplifier.
5. Turn the ignition on.
6. Turn the radio on.
7. Using the scan tool, read the active Radio DTCs.

   Does the scan tool read: B140E-REAR RIGHT AUDIO SPEAKER OUTPUT CIRCUIT HIGH?

   Yes

   - Go To 3

   No

   - Replace the Amplifier in accordance with the Service Information.
   - Perform the BODY VERIFICATION TEST. Refer to **STANDARD PROCEDURE** .

3. **CHECK FOR VOLTAGE ON THE (X52) RIGHT REAR AUDIO (+) CIRCUIT**

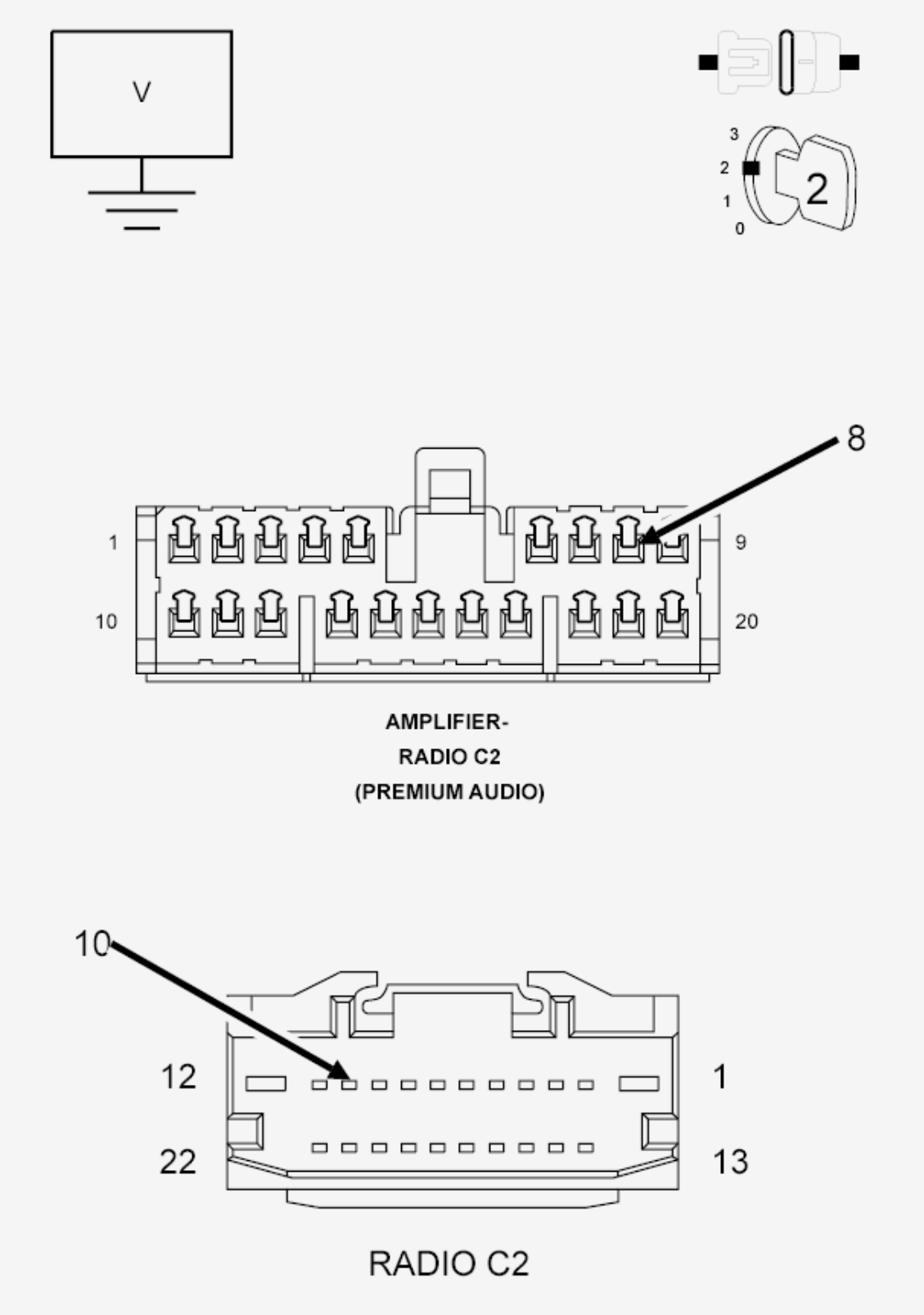

Fig. 59: Checking For Voltage On Right Rear Audio (+) Circuit
Courtesy of CHRYSLER GROUP, LLC

1. Turn the ignition off.

2. Disconnect the Radio C2 harness connector.
3. Turn the ignition on.
4. Measure the voltage between ground and the (X52) Right Rear Audio (+) circuit.

   Is there any voltage present?

   Yes

   - Repair the (X52) Right Rear Audio (+) circuit for a short to voltage.
   - Perform the BODY VERIFICATION TEST. Refer to **STANDARD PROCEDURE** .

   No

   - Go To 4

4. **CHECK FOR VOLTAGE ON THE (X58) RIGHT REAR AUDIO (-) CIRCUIT**

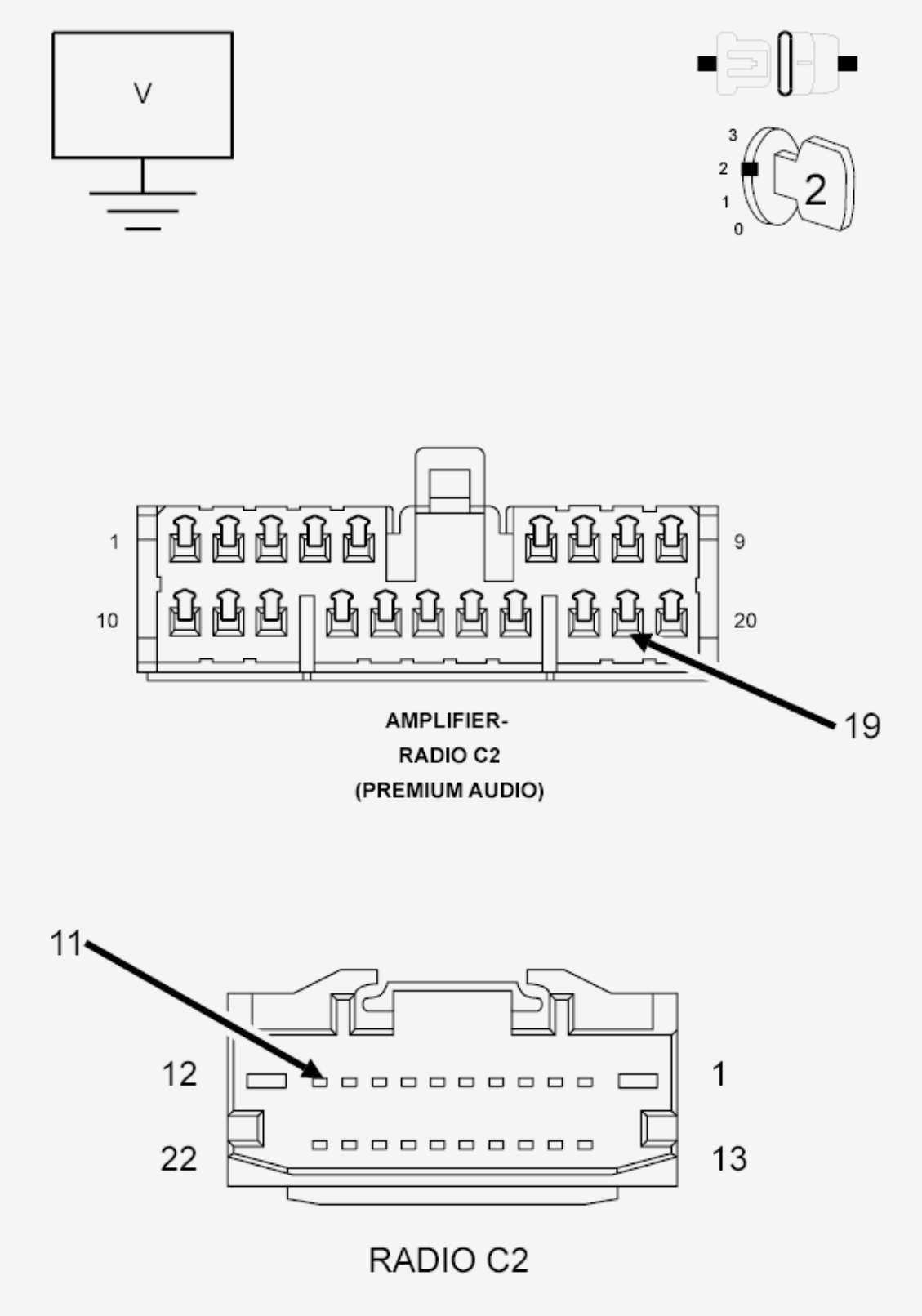

Fig. 60: Checking For Voltage On Right Rear Audio (-) Circuit
Courtesy of CHRYSLER GROUP, LLC

1. Measure the voltage between ground and the (X58) Right Rear Audio (-

) circuit.

Is there any voltage present?

Yes

- Repair the (X58) Right Rear Audio (-) circuit for a short to voltage.
- Perform the BODY VERIFICATION TEST. Refer to **STANDARD PROCEDURE** .

No

- Replace the Radio in accordance with the Service Information.
- Perform the BODY VERIFICATION TEST. Refer to **STANDARD PROCEDURE** .

B140F-REAR RIGHT AUDIO SPEAKER OUTPUT CIRCUIT OPEN - BASE

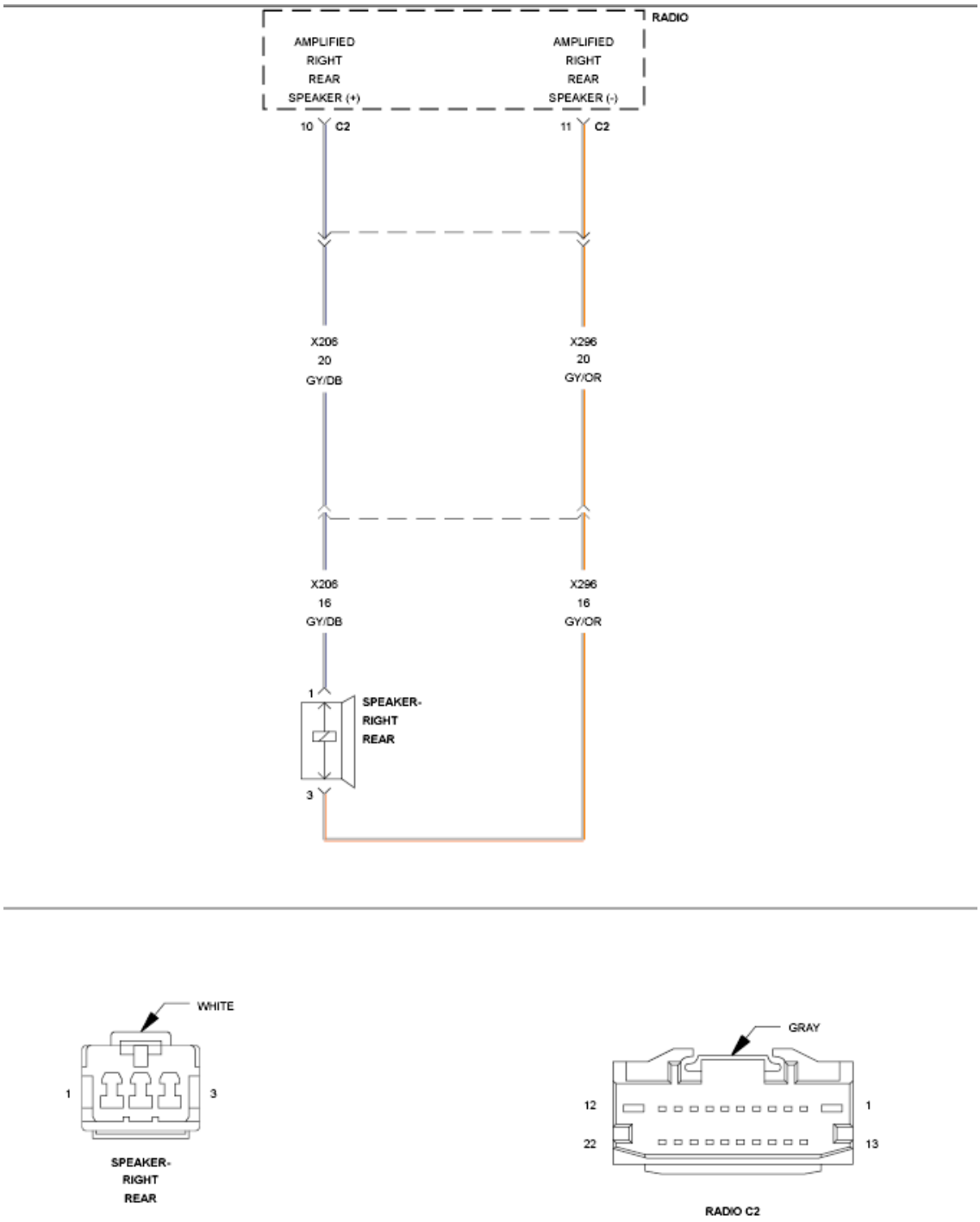

Fig. 61: Right Rear Speaker Circuit Diagram - Base
Courtesy of CHRYSLER GROUP, LLC

For a complete wiring diagram, **refer to appropriate SYSTEM WIRING DIAGRAMS article** .

NOTE: There are two versions of the B140F DTC test. In order to

select the proper test you must know if the vehicle is equipped with an Amplifier. If the vehicle is equipped with an Amplifier use the B140F-PREMIUM test. If the vehicle is not equipped with an Amplifier use the B140F-BASE test.

THEORY OF OPERATION

The (X206) Right Rear Speaker (+) circuit and the (X296) Right Rear Speaker (-) circuit are outputs of the Radio. The Radio controls and monitors these circuits for a concern.

WHEN MONITORED

With the Radio on.

SET CONDITION

The Radio detects an open condition on the speaker output circuit.

POSSIBLE CAUSES

Possible Causes
(X206) RIGHT REAR SPEAKER (+) CIRCUIT OPEN (X296) RIGHT REAR SPEAKER (-) CIRCUIT OPEN RIGHT REAR SPEAKER

DIAGNOSTIC TEST

1. **CHECK FOR AN INTERMITTENT CONDITION**
   1. Turn the ignition on and open one of the front doors.

      NOTE: A front door must remain open whenever checking or erasing Radio DTCs.

   2. Using the scan tool, record and erase the Radio DTCs.
   3. Turn the Radio on.
   4. Adjust the speakers to the rear and center.
   5. Using the scan tool, read the active Radio DTCs.

   Does the scan tool read: B140F-REAR RIGHT AUDIO SPEAKER

OUTPUT CIRCUIT LOW?

Yes

- Go To 2

No

- Test complete, the condition or conditions that originally set this DTC are not present at this time. Using the wiring diagrams as a guide, check all related splices and connectors for signs of water intrusion, corrosion, pushed out or bent terminals and correct pin tension.
- Perform the BODY VERIFICATION TEST. Refer to **STANDARD PROCEDURE** .

2. **CHECK THE RIGHT REAR SPEAKER**

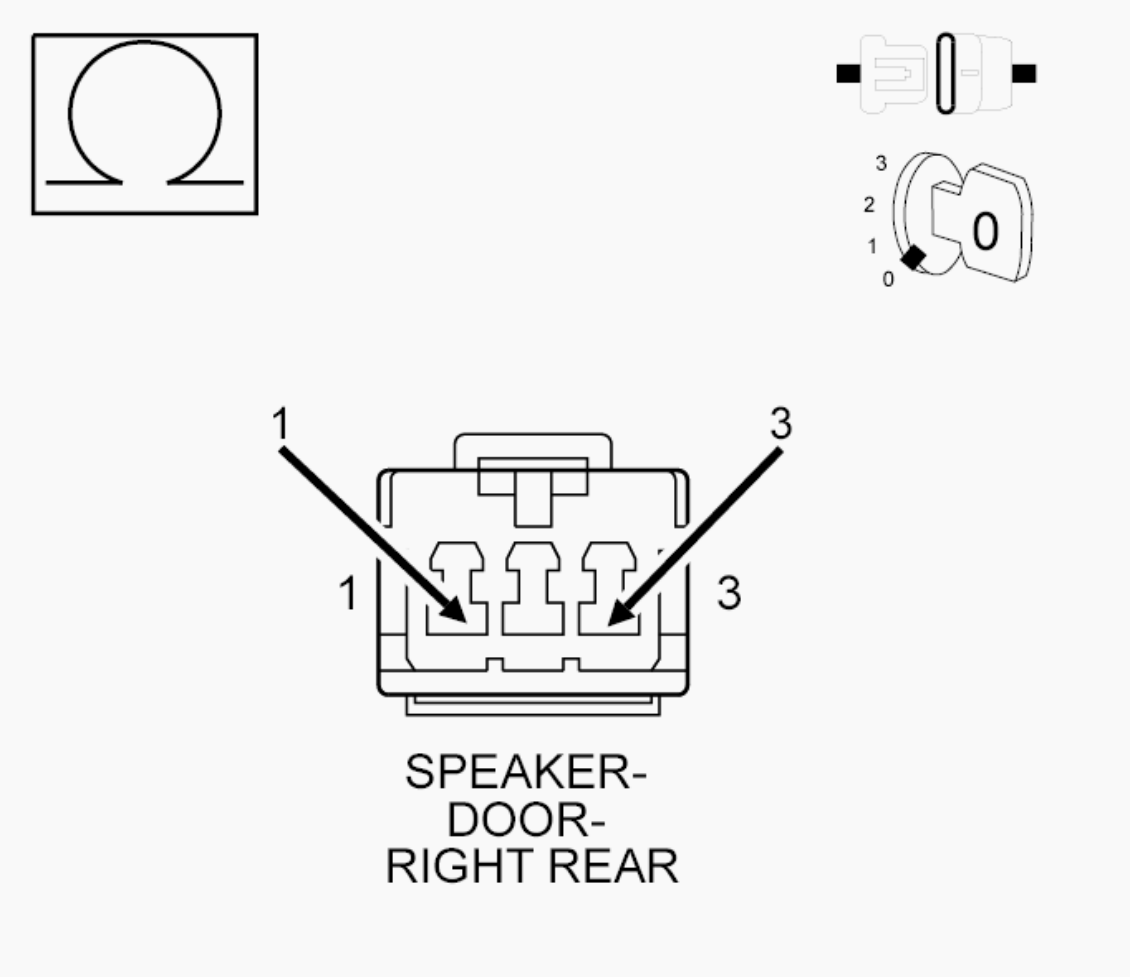

Fig. 62: Checking Right Rear Speaker

Courtesy of CHRYSLER GROUP, LLC

1. Turn the ignition off.
2. Disconnect the Right Rear Speaker.
3. Measure the resistance of the speaker between the two terminals.

NOTE: The graphic shows the connector for reference only. Measure between the speaker terminals.

Is the resistance above 5.0 Ohms?

Yes

- Replace the Right Rear Speaker in accordance with the Service Information.
- Perform the BODY VERIFICATION TEST. Refer to **STANDARD PROCEDURE** .

No

- Go To 3

3. **CHECK THE (X206) RIGHT REAR SPEAKER (+) CIRCUIT FOR AN OPEN**

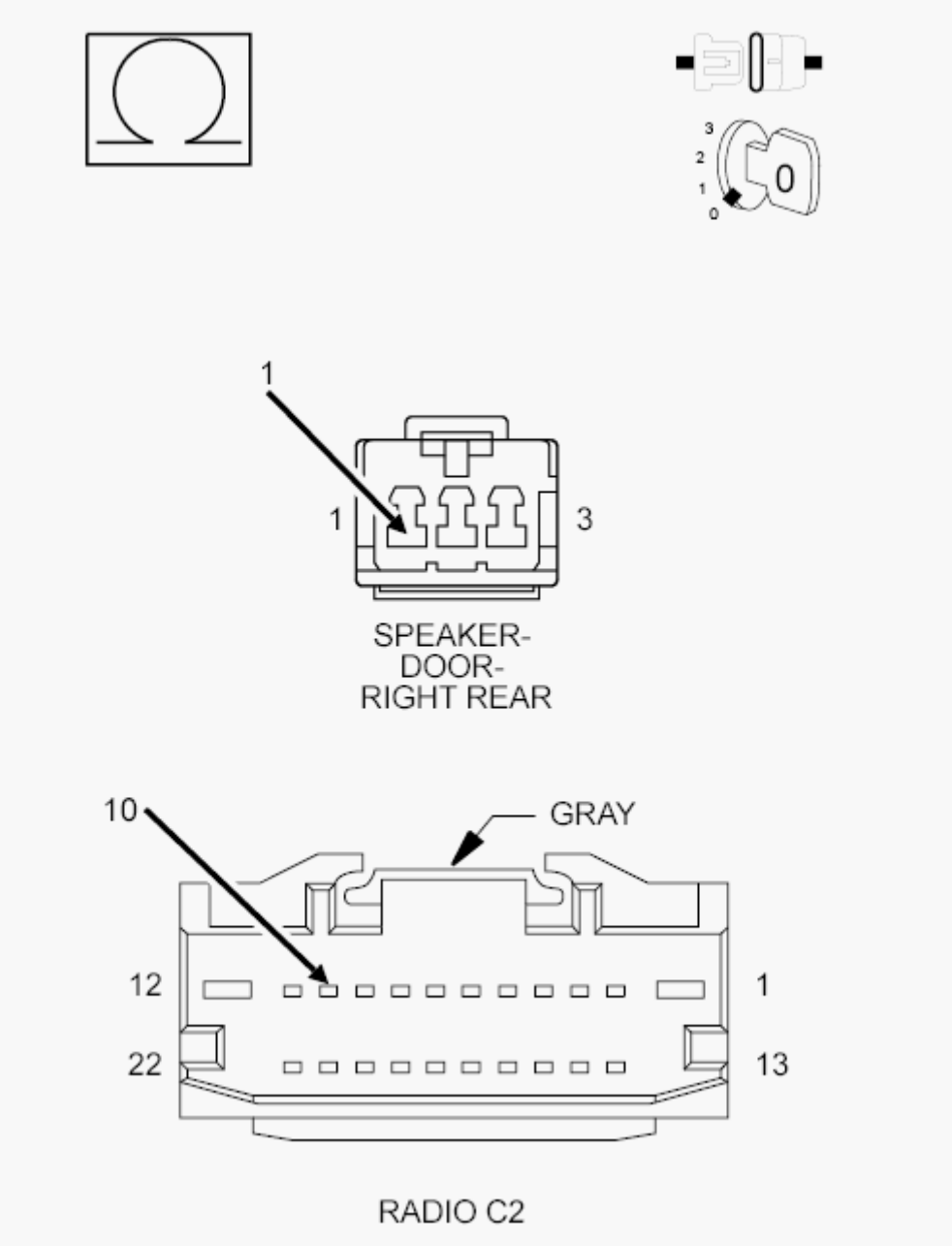

Fig. 63: Checking Right Rear Speaker (+) Circuit For An Open
Courtesy of CHRYSLER GROUP, LLC

1. Disconnect the Radio C2 harness connector.
2. Measure the resistance of the (X206) Right Rear Speaker (+) circuit between the Radio C2 connector and the Right Rear Speaker harness connector.

   Is the resistance below 5.0 Ohms?

   Yes

- Go To 4

No

- Repair an open in the (X206) Right Rear Speaker (+) circuit.
- Perform the BODY VERIFICATION TEST. Refer to **STANDARD PROCEDURE** .

4. **CHECK THE (X296) RIGHT REAR SPEAKER (-) CIRCUIT FOR AN OPEN**

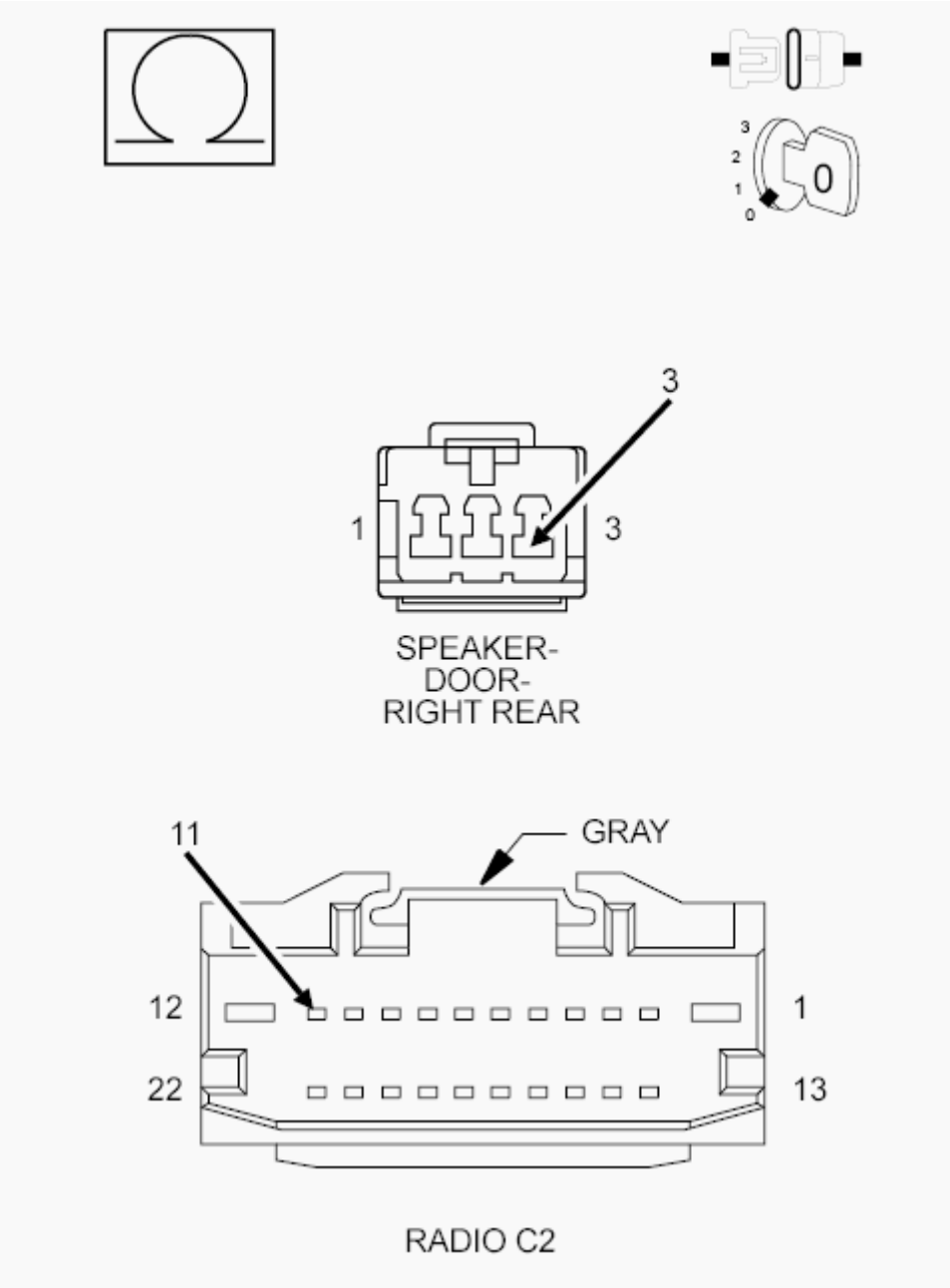

Fig. 64: Checking Right Rear Speaker (-) Circuit For An Open

Courtesy of CHRYSLER GROUP, LLC

1. Measure the resistance of the (X296) Right Rear Speaker (-) circuit between the Radio C2 connector, and the Right Rear Speaker harness connector.

   Is the resistance below 5.0 Ohms?

   Yes

   - Replace the Radio in accordance with the Service Information.
   - Perform the BODY VERIFICATION TEST. Refer to **STANDARD PROCEDURE** .

   No

   - Repair an open in the (X296) Right Rear Speaker (-) circuit.
   - Perform the BODY VERIFICATION TEST. Refer to **STANDARD PROCEDURE** .

B140F-REAR RIGHT AUDIO SPEAKER OUTPUT CIRCUIT OPEN - PREMIUM

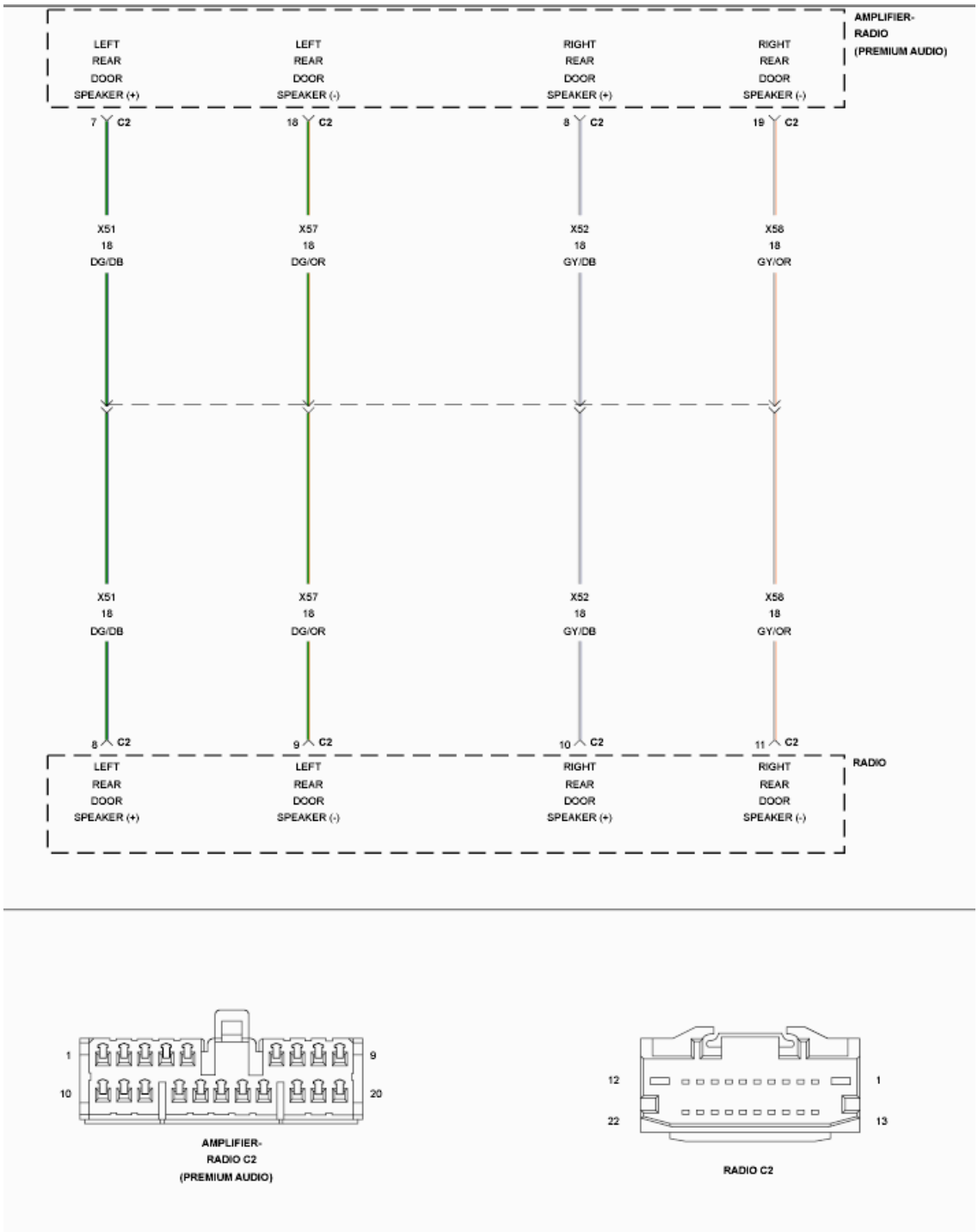

Fig. 65: Rear Audio Speaker Circuit Diagram - Premium
Courtesy of CHRYSLER GROUP, LLC

For a complete wiring diagram, **refer to appropriate SYSTEM WIRING DIAGRAMS article** .

NOTE: There are two versions of the B140F DTC test. In order to select the proper test you must know if the vehicle is

equipped with an Amplifier. If the vehicle is equipped an Amplifier use the B140F-PREMIUM test. If the vehicle is not equipped with an Amplifier use the B140F-BASE test.

THEORY OF OPERATION

The (X52) Right Rear Audio (+) circuit and the (X58) Right Rear Audio (-) circuit are outputs of the Radio. The Radio controls and monitors these circuits for a concern.

WHEN MONITORED

With the Radio on.

SET CONDITION

The Radio detects an open condition on the Audio output circuit.

POSSIBLE CAUSES

Possible Causes
(X52) RIGHT REAR AUDIO (+) CIRCUIT OPEN
(X58) RIGHT REAR AUDIO (-) CIRCUIT OPEN
AMPLIFIER
RADIO

DIAGNOSTIC TEST

1. **CHECK FOR AN INTERMITTENT CONDITION**
   1. Turn the ignition on and open one of the front doors.

      NOTE: A front door must remain open whenever checking or erasing Radio DTCs.

   2. Using the scan tool, record and erase the Radio DTCs.
   3. Turn the Radio on.
   4. Adjust the speakers to the rear and center.
   5. Using the scan tool, read the active Radio DTCs.

      Does the scan tool read: B140F-REAR RIGHT AUDIO SPEAKER OUTPUT CIRCUIT LOW?

Yes

- Go To 2

No

- Test complete, the condition or conditions that originally set this DTC are not present at this time. Using the wiring diagrams as a guide, check all related splices and connectors for signs of water intrusion, corrosion, pushed out or bent terminals and correct pin tension.
- Perform the BODY VERIFICATION TEST. Refer to **STANDARD PROCEDURE** .

2. **CHECK THE AMPLIFIER**

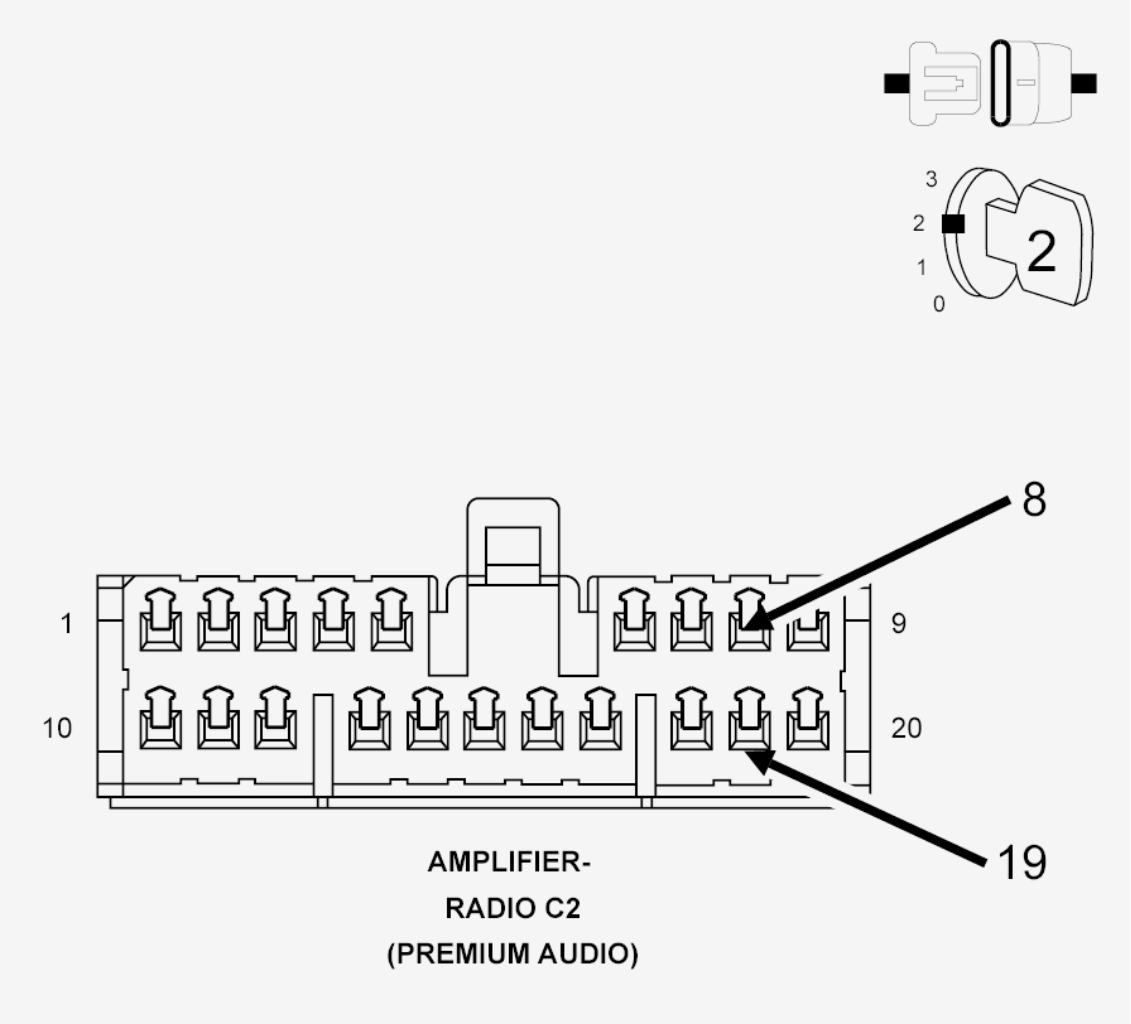

Fig. 66: Checking Amplifier Circuit
Courtesy of CHRYSLER GROUP, LLC

1. Turn the ignition off.
2. Disconnect the Amplifier C1 harness connector.
3. Connect a jumper wire between the (X52) Left Rear Audio (+) circuit and the (X58) Left Rear Audio (-) circuits.
4. Turn the ignition on.
5. Turn the Radio on.
6. Adjust the speakers to the rear and center.
7. Using the scan tool, read the active Radio DTCs.

   Does the scan tool read: B140F-REAR RIGHT AUDIO SPEAKER OUTPUT CIRCUIT OPEN?

   Yes

   - Go To 3

   No

   - Replace the Amplifier in accordance with the Service Information.
   - Perform the BODY VERIFICATION TEST. Refer to **STANDARD PROCEDURE** .

3. **CHECK THE (X52) RIGHT REAR AUDIO (+) CIRCUIT FOR AN OPEN**

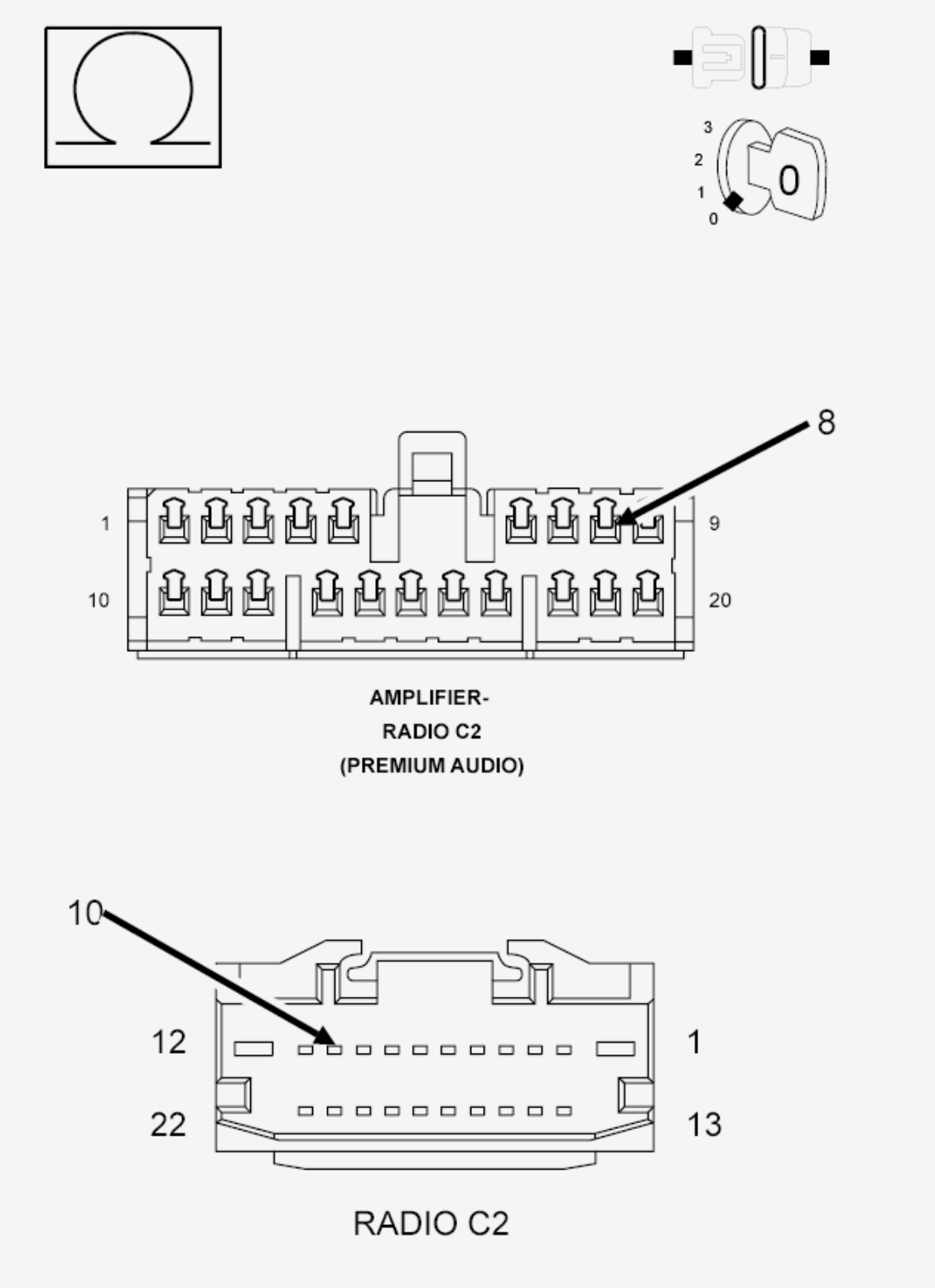

Fig. 67: Checking Right Rear Audio (+) Circuit For Open
Courtesy of CHRYSLER GROUP, LLC

1. Turn the ignition off.
2. Disconnect the Radio C2 harness connector.

3. Measure the resistance of the (X52) Right Rear Audio (+) circuit between the Radio C2 connector and the Amplifier C1 harness connector.

   Is the resistance below 5.0 Ohms?

   Yes

   - Go To 4

   No

   - Repair an open in the (X52) Right Rear Audio (+) circuit.
   - Perform the BODY VERIFICATION TEST. Refer to **STANDARD PROCEDURE** .

4. **CHECK THE (X58) RIGHT REAR AUDIO (-) CIRCUIT FOR AN OPEN**

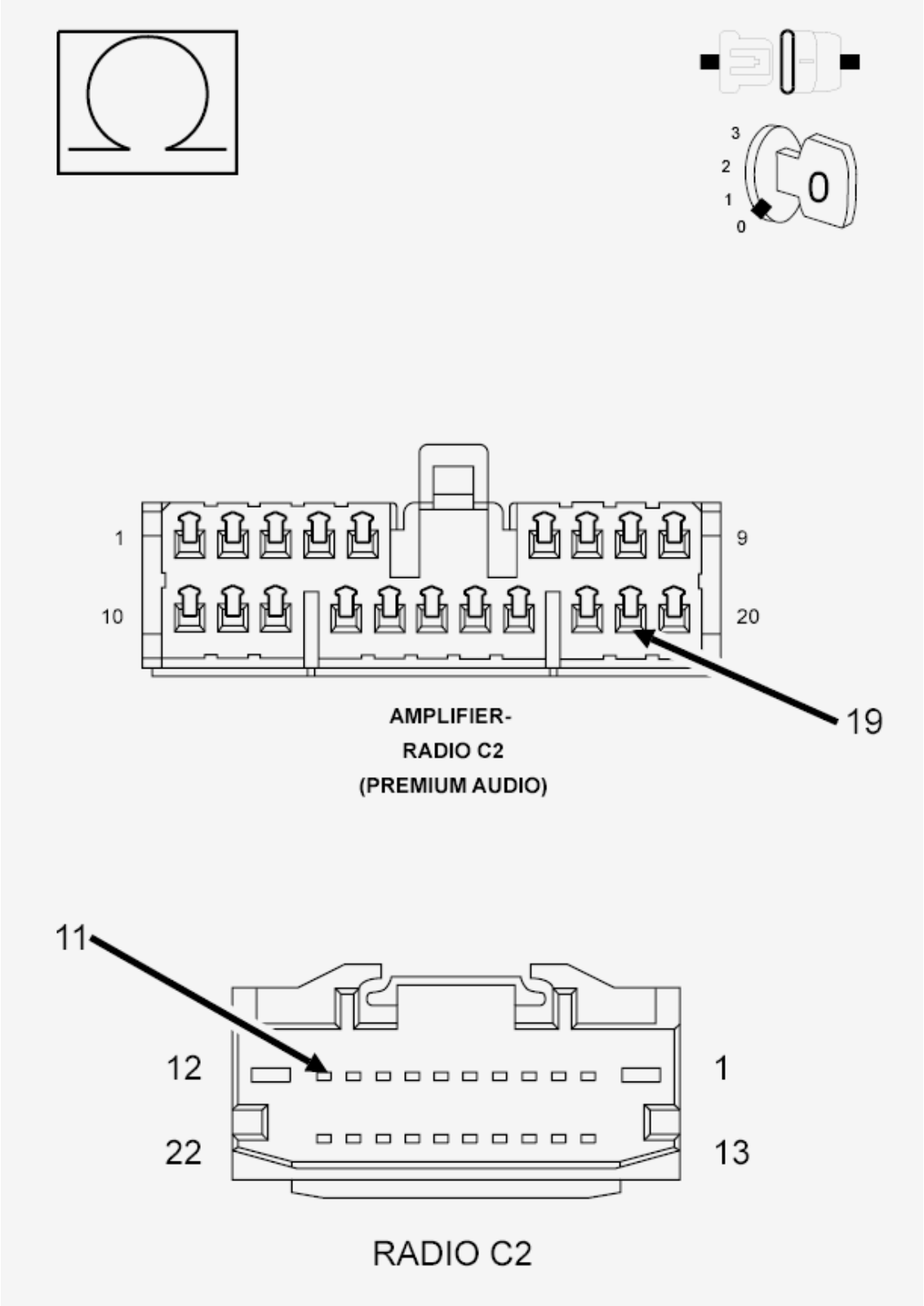

Fig. 68: Checking Right Rear Audio (-) Circuit For Open
Courtesy of CHRYSLER GROUP, LLC

1. Measure the resistance of the (X58) Right Rear Audio (-) circuit between the Radio C2 connector, and the Amplifier C1 harness

connector.

Is the resistance below 5.0 Ohms?

Yes

- Replace the Radio in accordance with the Service Information.
- Perform the BODY VERIFICATION TEST. Refer to **STANDARD PROCEDURE** .

No

- Repair an open in the (X58) Right Rear Audio (-) circuit.
- Perform the BODY VERIFICATION TEST. Refer to **STANDARD PROCEDURE** .

B1420-AUDIO CASSETTE ERROR/INOPERABLE CASSETTE

For a complete wiring diagram, **refer to appropriate SYSTEM WIRING DIAGRAMS article** .

WHEN MONITORED

Continuously with the ignition on and the Radio Cassette player turned on.

SET CONDITION

The code will set when a damaged Cassette is placed in the Cassette Player.

POSSIBLE CAUSES

Possible Causes
CASSETTE READ FAILURE

DIAGNOSTIC TEST

RADIO

1. Replace the problem Cassette with a good, clean, undamaged, cassette.
2. Turn the Radio cassette player on.
3. With the scan tool, read DTCs.

Does the scan tool display active: B1420-AUDIO CASSETTE ERROR/INOPERABLE CASSETTE?

Yes

- Eject the inoperative cassette and replace the Radio/Cassette Player in accordance with the Service Information.
- Perform the BODY VERIFICATION TEST. Refer to **STANDARD PROCEDURE** .

No

- Test Complete.

B1421-AUDIO CD READ ERROR/INOPERABLE DISC

For a complete wiring diagram, **refer to appropriate SYSTEM WIRING DIAGRAMS article** .

WHEN MONITORED

Continuously with the ignition on and the Radio CD player turned on.

SET CONDITION

The code will set if a CD is scratched, damaged, or contains corrupt data.

POSSIBLE CAUSES

Possible Causes
CD READ FAILURE

DIAGNOSTIC TEST

RADIO

1. Replace the problem CD with a good, clean, unscratched, music CD.
2. Turn the Radio CD player on.
3. With the scan tool, read DTCs.

   Does the scan tool display: B1421 AUDIO CD READ ERROR/INOPERABLE DISC?

Yes

- Eject the inoperative CD and replace the Radio in accordance with the Service Information.
- Perform the BODY VERIFICATION TEST. Refer to **STANDARD PROCEDURE** .

No

- Test Complete.
- Perform the BODY VERIFICATION TEST. Refer to **STANDARD PROCEDURE** .

B1422-AUDIO DVD READ ERROR/INOPERABLE DISC

For a complete wiring diagram, **refer to appropriate SYSTEM WIRING DIAGRAMS article** .

WHEN MONITORED

Continuously with the ignition on and the Radio/DVD player turned on.

SET CONDITION

The code will set if a DVD is scratched, damaged, or contains corrupt data.

POSSIBLE CAUSES

Possible Causes
DVD READ FAILURE

DIAGNOSTIC TEST

RADIO/DVD PLAYER

1. Replace the problem DVD with a good, clean, unscratched DVD.
2. Turn the Radio/DVD player on.
3. With the scan tool, read DTCs.

   Does the scan tool display active: B1422-AUDIO DVD READ ERROR/INOPERABLE DISC?

Yes

- Eject the inoperative DVD and replace the Radio/DVD player in accordance with the Service Information.
- Perform the BODY VERIFICATION TEST. Refer to **STANDARD PROCEDURE** .

No

- Test Complete.

B1424-IMPROPER DVD-WRONG REGION

For a complete wiring diagram, **refer to appropriate SYSTEM WIRING DIAGRAMS article** .

WHEN MONITORED

Continuously with the ignition on and the Radio/DVD player turned on.

SET CONDITION

The code will set if a DVD is not formatted for the proper region or the Radio/DVD player is programmed for the incorrect region.

POSSIBLE CAUSES

Possible Causes
DVD READ FAILURE

DIAGNOSTIC TEST

1. **CHECK THE DVD**
    1. Replace the problem DVD with a DVD formatted for the proper region.
    2. Turn the Radio/DVD player on.
    3. With the scan tool, read DTCs.

    Does the scan tool display active: B1424-IMPROPER DVD-WRONG REGION?

    Yes

- Go To 2

No

- Test Complete.

2. **RADIO/DVD PLAYER**
   1. With the scan tool, verify the Radio/DVD player is programmed for the proper region.
   2. With the scan tool, read DTCs.

      Does the scan tool display active: B1424-IMPROPER DVD-WRONG REGION?

      Yes

      - Eject the inoperative DVD and replace the Radio/DVD player in accordance with the Service Information.
      - Perform the BODY VERIFICATION TEST. Refer to **STANDARD PROCEDURE** .

      No

      - Test Complete.

B1429-RADIO DISPLAY HIGH TEMPERATURE

For a complete wiring diagram, **refer to appropriate SYSTEM WIRING DIAGRAMS article** .

WHEN MONITORED

Continuously with the ignition and Radio on.

SET CONDITION

The code will set if the temperature inside the Radio is above +65°C (+145°F)

POSSIBLE CAUSES

Possible Causes
HIGH TEMPERATURE FAILURE

DIAGNOSTIC TEST

VERIFY THAT DTC B1429-RADIO DISPLAY HIGH TEMPERATURE IS ACTIVE.

1. With the scan tool, clear all DTC's.
2. Start the engine and allow the engine to reach normal operating temperature.
3. If the vehicle has been in the hot sunlight or extreme cold, move the vehicle indoors and open the doors to allow the inside temperature to stabilize.
4. The Radio should operate between -23°C and +65°C (-10°F and +145°F).
5. With the scan tool, read DTC's.

   Does the scan tool display active: B1429-RADIO DISPLAY HIGH TEMPERATURE?

   Yes

   - Replace the Radio in accordance with the Service Information.
   - Perform the BODY VERIFICATION TEST. Refer to **STANDARD PROCEDURE** .

   No

   - Test Complete.

B142A-RADIO UNIT HIGH TEMPERATURE

For a complete wiring diagram, **refer to appropriate SYSTEM WIRING DIAGRAMS article** .

WHEN MONITORED

Continuously with the ignition and Radio on.

SET CONDITION

The code will set if the temperature inside the Radio is above +65°C (+145°F)

POSSIBLE CAUSES

Possible Causes
HIGH TEMPERATURE FAILURE

DIAGNOSTIC TEST

VERIFY THAT DTC B142A-RADIO UNIT HIGH TEMPERATURE IS ACTIVE.

1. With the scan tool, erase the DTC's.
2. Start the engine and allow the engine to reach normal operating temperature.
3. If the vehicle has been in the hot sunlight or extreme cold, move the vehicle indoors and open the doors to allow the inside temperature to stabilize.
4. The Radio should operate between -23°C and +65°C (-10°F and +145°F).
5. With the scan tool, read DTC's.

   Does the scan tool display active: B142A-RADIO UNIT HIGH TEMPERATURE?

   Yes

   - Replace the Radio in accordance with the Service Information.
   - Perform the BODY VERIFICATION TEST. Refer to **STANDARD PROCEDURE** .

   No

   - Test Complete.

B142D-AUDIO ANTENNA NOT CONNECTED

For a complete wiring diagram, **refer to appropriate SYSTEM WIRING DIAGRAMS article** .

WHEN MONITORED

With the ignition on and the Radio in seek mode.

SET CONDITION

With the Radio in seek mode for two loops around the band. The Radio does not detect an Antenna connection or does not receive a Radio station signal.

POSSIBLE CAUSES

Possible Causes

BAD ANTENNA CONNECTION
OPEN ANTENNA CABLE
RADIO

DIAGNOSTIC TEST

1. **CHECK THE ANTENNA CONNECTIONS**
   1. Turn the ignition off.
   2. Disconnect the Radio Antenna connector.
   3. Inspect the Radio Antenna connection.

      Was the Antenna connection clean and secure?

      Yes

      - Go To 2

      No

      - Repair the Antenna connection as needed.
      - Perform the BODY VERIFICATION TEST. Refer to **STANDARD PROCEDURE** .
2. **CHECK THE ANTENNA AND CABLE**
   1. Connect the Radio Diagnostic Tool (special tool #9977-6-FM, Antenna) to the antenna connection on the back of the Radio.
   2. Make sure one of the front doors is still open.
   3. Using the scan tool, erase the DTCs.
   4. Turn the ignition on.
   5. Turn the Radio on.
   6. Using the scan tool, read the active Radio DTCs.

      Does the scan tool read: B142D- AUDIO ANTENNA NOT CONNECTED as active?

      Yes

      - Go To 3

No

- Repair or replace the Radio in accordance with the Service Information.
- Perform the BODY VERIFICATION TEST. Refer to **STANDARD PROCEDURE** .

3. **TEST THE ANTENNA CABLE**
   1. Turn the ignition off.
   2. Disconnect the Antenna cable at the base.
   3. Connect the appropriate Radio Diagnostic Tool (special tool #9977-6-1, Adapter) or (special tool #9977-6-3, Adapter) to the Antenna cable at the back of the Radio.
   4. Connect the appropriate Radio Diagnostic Tool (special tool #9977-6-4, Jumper) or (special tool #9977-6-2, Jumper) to the Antenna cable at the Antenna base.
   5. Measure the Resistance across the tool terminals.

   Is the resistance above 52.5 Ohms?

   Yes

   - Use the Radio Diagnostic Tool (special tool #9977-6, Kit, Radio Antenna Diagnostic) to locate the open circuit, repair or replace the Antenna cable as necessary.
   - Perform the BODY VERIFICATION TEST. Refer to **STANDARD PROCEDURE** .

   No

   - Replace the Antenna base in accordance with the Service Information.
   - Perform the BODY VERIFICATION TEST. Refer to **STANDARD PROCEDURE** .

B142E-GPS ANTENNA NOT CONNECTED

For a complete wiring diagram, **refer to appropriate SYSTEM WIRING DIAGRAMS article** .

WHEN MONITORED

With the ignition on and the Radio in Navigation mode.

SET CONDITION

With the Radio in Navigation mode. The Radio does not detect an Antenna connection or does not receive a Navigation (GPS) signal.

POSSIBLE CAUSES

Possible Causes
BAD ANTENNA CONNECTION RADIO ANTENNA

DIAGNOSTIC TEST

1. **CHECK THE ANTENNA CONNECTION**
    1. Turn the ignition off.
    2. Disconnect the Antenna connector at the back of the Radio.
    3. Inspect the Antenna connections.

    Are the Antenna connections clean and secure?

    Yes

    - Go To 2

    No

    - Repair the Antenna connection as needed.
    - Perform the BODY VERIFICATION TEST. Refer to **STANDARD PROCEDURE** .
2. **CHECK THE ANTENNA AND CABLE**
    1. Connect the 9977-6-GPS test antenna (special tool #9977-6-GPS, Adapter, GPS Antenna Diagnostic) to the antenna connection on the back of the Radio.
    2. Make sure one of the front doors is still open.
    3. Using the scan tool, erase the DTCs.

4. Turn the ignition on.
5. Turn the Radio on.
6. Using the scan tool, read the active Radio DTCs.

NOTE: While using the 9977-6-GPS test antenna the Satellite radio reception will not be available and Satellite radio faults may occur. The 9977-6-GPS test tool will only enable GPS reception to work. For Satellite Radio reception concerns use test antenna 9977-6-SAT.

Does the scan tool read: B142E-GPS ANTENNA NOT CONNECTED as active?

Yes

- Replace the Radio in accordance with the Service Information. Refer to **RADIO, REMOVAL** .
- Perform the BODY VERIFICATION TEST. Refer to **STANDARD PROCEDURE** .

No

- Go To 3

3. **TEST THE ANTENNA CABLE**
   1. Disconnect the Antenna cable at the base.
   2. Connect the appropriate (special tool #9977-6-1, Adapter) or (special tool #9977-6-3, Adapter) to the Antenna cable at the back of the Radio.
   3. Connect the appropriate (special tool #9977-6-4, Jumper) or (special tool #9977-6-2, Jumper) to the Antenna cable at the Antenna base.
   4. Measure the Resistance across the tool terminals.

   Is the resistance above 52.5 Ohms?

   Yes

   - Use the (special tool #9977-6, Kit, Radio Antenna Diagnostic) to locate the open circuit, repair or replace the Antenna cable as

necessary.

- Perform the BODY VERIFICATION TEST. Refer to **STANDARD PROCEDURE** .

No

- Replace the Antenna base in accordance with the Service Information.
- Perform the BODY VERIFICATION TEST. Refer to **STANDARD PROCEDURE** .

B142F-SATELLITE RADIO ANTENNA NOT CONNECTED

For a complete wiring diagram, **refer to appropriate SYSTEM WIRING DIAGRAMS article** .

WHEN MONITORED

With the ignition on and the Radio in satellite mode.

SET CONDITION

This DTC sets when the Radio does not detect a Satellite Antenna connection.

POSSIBLE CAUSES

Possible Causes
BAD ANTENNA CONNECTION
OPEN SATELLITE RADIO ANTENNA CABLE
OPEN SATELLITE RADIO ANTENNA
SATELLITE RADIO RECEIVER

DIAGNOSTIC TEST

1. **CHECK THE ANTENNA CONNECTION**
    1. Turn the ignition off.
    2. Disconnect the Satellite Radio Antenna connector at the rear of the Radio.
    3. Inspect the Satellite Radio Antenna connection.

    Was the Antenna connection clean and secure?

Yes

- Go To 2

No

- Clean and secure the Antenna connection as necessary.
- Perform the BODY VERIFICATION TEST. Refer to **STANDARD PROCEDURE** .

2. **CHECK THE ANTENNA AND CABLE**
   1. Connect the Radio Diagnostic Tool (special tool #9977-6-SAT, Antenna) to the Satellite Antenna connection on the back of the Satellite Radio Receiver.
   2. Make sure one of the front doors is still open.
   3. Using the scan tool, erase the DTCs.
   4. Turn the ignition on.
   5. Turn the Radio on.
   6. Using the scan tool, read the active Satellite Radio Receiver DTCs.

   Does the scan tool display: B142F Satellite Radio Antenna Not Connected as Active?

   Yes

   - Replace the Satellite Radio in accordance with the Service Information.
   - Perform the BODY VERIFICATION TEST. Refer to **STANDARD PROCEDURE** .

   No

   - Go To 3

3. **TEST THE SATELLITE ANTENNA CABLE**
   1. Turn the ignition off.
   2. Disconnect the Satellite Antenna cable at the Satellite Antenna.
   3. Connect the appropriate Radio Diagnostic Tool (special tool #9977-6-1, Adapter) or (special tool #9977-6-3, Adapter) to the Satellite Antenna

cable at the back of the Radio.

4. Connect the appropriate Radio Diagnostic Tool (special tool #9977-6-4, Jumper) or (special tool #9977-6-2, Jumper) to the Satellite Antenna cable at the Satellite Antenna.
5. Measure the Resistance across the terminals on the tool.

Is the resistance above 52.5 Ohms?

Yes

- Use the Radio Diagnostic Tool (special tool #9977-6, Kit, Radio Antenna Diagnostic) to locate the open circuit, repair or replace the Satellite Antenna cable as necessary.
- Perform the BODY VERIFICATION TEST. Refer to **STANDARD PROCEDURE** .

No

- Replace the Satellite Antenna in accordance with the Service Information.
- Perform the BODY VERIFICATION TEST. Refer to **STANDARD PROCEDURE** .

B1430 (2.5)-SATELLITE RADIO ANTENNA INTERNAL PERFORMANCE

For a complete wiring diagram, **refer to appropriate SYSTEM WIRING DIAGRAMS article** .

NOTE: There are two versions of the B1430 DTC tests. In order to select the proper test you must know the Sales (model) Code of the radio. The Sales Code is on the face of the radio or if necessary use the scan tool and select Radio, More options and ECU Details.

NOTE: This version of the B1430 test is only applicable for the GEN 2.5 radios (2007/2008 RES, REQ, and 2007 and later RER, REU and REN). For the GEN 4.0 radios (2009 and later RES, REQ and RBZ) see the other version of the B1430 test. Refer to B1430(4.0)-SATELLITE RADIO

ANTENNA INTERNAL PERFORMANCE

WHEN MONITORED

With the ignition on and the radio in Satellite mode.

SET CONDITION

When the Satellite Radio does not detect a proper antenna signal, this code will set

POSSIBLE CAUSES

Possible Causes
SHORTED ANTENNA CABLE SHORTED ANTENNA SATELLITE RADIO RECEIVER

DIAGNOSTIC TEST

1. **TEST ANTENNA**
    1. With the scan tool, record the DTCs.
    2. Erase the DTCs.
    3. Turn the ignition off.
    4. Disconnect the Satellite Radio Antenna connector at the back of the Radio.
    5. Turn the ignition on and the radio in Satellite mode.
    6. With the scan tool, erase the DTCs again.
    7. Put the satellite radio in seek up mode for two loops around the band cycle.
    8. With the scan tool, read the active DTCs.

    What Active DTC(s) are displayed?

    B142F-Satellite Radio Antenna Not Connected and B1430-Satellite Radio Antenna Internal Performance.

    - Replace the Satellite Radio in accordance with the Service Information.

- Perform the BODY VERIFICATION TEST. Refer to **STANDARD PROCEDURE** .

B142F-Satellite Radio Antenna Not Connected only.

- Go To 2

B1430-Satellite Radio Antenna Internal Performance only.

- Replace the Satellite Radio in accordance with the Service Information.
- Perform the BODY VERIFICATION TEST. Refer to **STANDARD PROCEDURE** .

2. **CHECK CONNECTOR**
   1. Turn the ignition off.
   2. Inspect the Satellite Radio Antenna connection at the Radio.

   Was the antenna connection clean and secure?

   Yes

   - Go To 3

   No

   - Clean and secure the antenna connection as necessary.
   - Perform the BODY VERIFICATION TEST. Refer to **STANDARD PROCEDURE** .

3. **SATELLITE RADIO**
   1. Re-connect the antenna cable to the Radio.
   2. Disconnect the Satellite Radio Antenna connector at the Antenna.
   3. Turn the ignition on.
   4. With the scan tool, record, then erase the radio DTCs.
   5. Turn the radio on and put the Satellite Radio in Satellite Mode.
   6. Put the satellite radio in seek up mode for two loops around the band cycle.
   7. With the scan tool, read the active DTCs.

What Active DTC(s) are displayed?

B142F-Satellite Radio Antenna Not Connected

- Replace the Satellite Radio Antenna in accordance with the Service Information.
- Perform the BODY VERIFICATION TEST. Refer to **STANDARD PROCEDURE** .

B1430-Satellite Radio Antenna Internal Performance

- Go To 4

4. **SATELLITE RADIO ANTENNA CABLE**
   1. Turn the ignition off.
   2. Locate the intermediate Satellite Radio Antenna connector.
   3. Disconnect and inspect the intermediate Satellite Radio Antenna connector.

   Was the connector clean and secure?

   No

   - Clean and secure the Satellite Radio Antenna intermediate connector.
   - Perform the BODY VERIFICATION TEST. Refer to **STANDARD PROCEDURE** .

   Yes

   - Replace the Satellite Radio Antenna Cable as necessary.
   - Perform the BODY VERIFICATION TEST. Refer to **STANDARD PROCEDURE** .

B1430(4.0)-SATELLITE RADIO ANTENNA INTERNAL PERFORMANCE

For a complete wiring diagram, **refer to appropriate SYSTEM WIRING DIAGRAMS article** .

NOTE: There are two versions of the B1430 DTC tests. In order

to select the proper test you must know the Sales (model) Code of the radio. The Sales Code is on the face of the radio or if necessary use the scan tool and select Radio, More options and ECU Details.

NOTE: This version of the B1430 test is only applicable for the GEN 4.0 radios (2009 and later RES, REQ and RBZ). For the GEN 2.5 radios (2007/2008 RES, REQ, and 2007 and later RER, REU and REN) see the other version of the B1430 test. Refer to B1430 (2.5)-SATELLITE RADIO ANTENNA INTERNAL PERFORMANCE.

WHEN MONITORED

With the ignition on and the radio in Satellite mode.

SET CONDITION

When the Satellite Radio does not detect a proper antenna signal, this code will set

POSSIBLE CAUSES

Possible Causes
SATELLITE RADIO RECEIVER

DIAGNOSTIC TEST

TEST RADIO

1. With the scan tool, record the DTCs.
2. Erase the DTCs.
3. Turn the ignition off.
4. Turn the ignition on and the radio in Satellite mode.
5. With the scan tool, erase the DTCs again.
6. Put the satellite radio in seek up mode for two loops around the band cycle.
7. With the scan tool, read the active DTCs.

   Does the scan display: B1430-Satellite Radio Antenna Internal Performance as Active?

Yes

- Replace the Satellite Radio in accordance with the Service Information.
- Perform the BODY VERIFICATION TEST. Refer to **STANDARD PROCEDURE** .

No

- Test complete, the condition or conditions that originally set this DTC are not present at this time. Using the wiring diagrams as a guide check all related splices and connectors for signs of water intrusion, corrosion, pushed out or bent terminals and poor fit.
- Perform the BODY VERIFICATION TEST. Refer to **STANDARD PROCEDURE** .

B143A-MICROPHONE 1 CIRCUIT PERFORMANCE

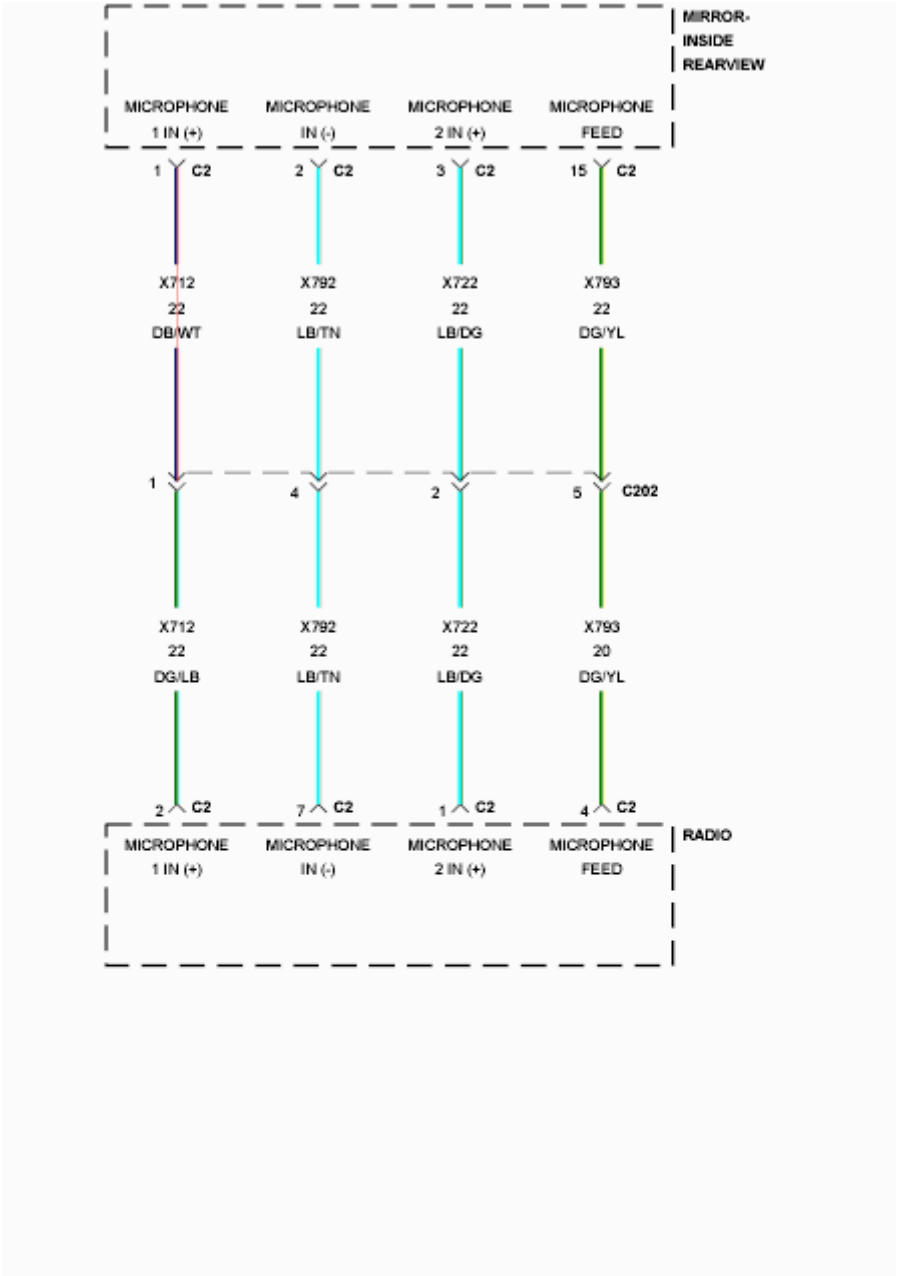
MIRROR-
INSIDE
REARVIEW
MICROPHONE
1 IN (+)
MICROPHONE
IN (-)
MICROPHONE
2 IN (+)
MICROPHONE
FEED
1 C2
2 C2
3 C2
15 C2
X712
22
DB/WT
X792
22
LB/TN
X722
22
LB/DG
X793
22
DG/YL
1
4
2
5 C202
X712
22
DG/LB
X792
22
LB/TN
X722
22
LB/DG
X793
20
DG/YL
2 C2
7 C2
1 C2
4 C2
MICROPHONE
1 IN (+)
MICROPHONE
IN (-)
MICROPHONE
2 IN (+)
MICROPHONE
FEED
RADIO

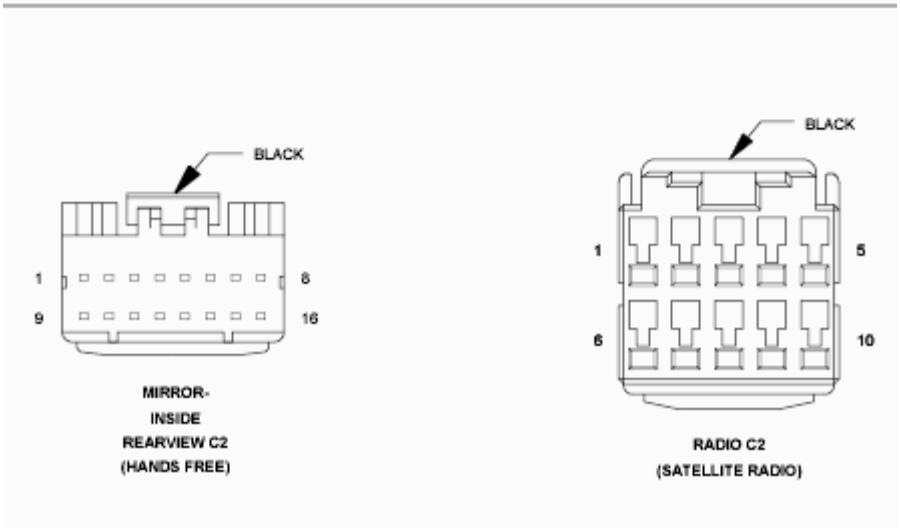
BLACK
1
8
9
16
MIRROR-
INSIDE
REARVIEW C2
(HANDS FREE)
BLACK
1
5
6
10
RADIO C2
(SATELLITE RADIO)

Fig. 69: Microphone Circuit Diagram
Courtesy of CHRYSLER GROUP, LLC

For a complete wiring diagram, **refer to appropriate SYSTEM WIRING DIAGRAMS article** .

WHEN MONITORED

With the ignition on.

SET CONDITION

The Radio detects a fault in any of the microphone circuits.

POSSIBLE CAUSES

Possible Causes
(X712) MICROPHONE 1 IN (+) CIRCUIT SHORTED TO GROUND
(X712) MICROPHONE 1 IN (+) CIRCUIT SHORTED TO VOLTAGE
(X712) MICROPHONE 1 IN (+) CIRCUIT OPEN
INSIDE REARVIEW MIRROR
RADIO

DIAGNOSTIC TEST

1. **CHECK FOR ACTIVE DTC**
    1. Turn the ignition on.
    2. With the scan tool, read the active DTCs.

    Does the scan tool display this DTC as active?

    Yes

    - Go To 2

    No

    - Test complete, the condition or conditions that originally set this DTC are not present at this time. Using the wiring diagrams as a guide, check all related splices and connectors for signs of water intrusion, corrosion, pushed out or bent terminals and correct pin

tension.

2. **INSIDE REARVIEW MIRROR**
   1. Turn the ignition off.
   2. Disconnect the Inside Rearview Mirror C2 harness connector.
   3. Turn the ignition on.
   4. With the scan tool, read the DTCs.

   Does the scan tool display this DTC as active?

   Yes

   - Go To 3

   No

   - Replace the Inside Rearview Mirror in accordance with the service information.
   - Perform the BODY VERIFICATION TEST. Refer to **STANDARD PROCEDURE** .

3. **(X712) MICROPHONE 1 IN (+) CIRCUIT SHORTED TO GROUND**
   1. Turn the ignition off.
   2. Disconnect the Radio C2 harness connector.
   3. Measure the resistance between ground and the (X712) Microphone 1 circuit.

   Is the resistance below 10K Ohms?

   Yes

   - Repair the (X712) Microphone 1 circuit for short to ground.
   - Perform the BODY VERIFICATION TEST. Refer to **STANDARD PROCEDURE** .

   No

   - Go To 4

4. **(X712) MICROPHONE 1 IN (+) CIRCUIT SHORTED TO VOLTAGE**
   1. Turn the ignition on.

2. Measure the voltage of the (X712) Microphone 1 IN (+) circuit.

   Is voltage present?

   Yes

   - Repair the (X712) Microphone 1 IN (+) circuit for a short to voltage.
   - Perform the BODY VERIFICATION TEST. Refer to **STANDARD PROCEDURE** .

   No

   - Go To 5

5. **(X712) MICROPHONE 1 IN (+) CIRCUIT OPEN**
   1. Measure the resistance of the (X712) Microphone 1 IN (+) circuit between the Radio C2 connector and the Inside Rearview Mirror C2 harness connector.

      Is the resistance below 5.0 Ohms?

      Yes

      - Replace the Radio in accordance with the service information.
      - Perform the BODY VERIFICATION TEST. Refer to **STANDARD PROCEDURE** .

      No

      - Repair the (X712) Microphone 1 IN (+) circuit for an open.
      - Perform the BODY VERIFICATION TEST. Refer to **STANDARD PROCEDURE** .

B143B-MICROPHONE 1 CIRCUIT LOW

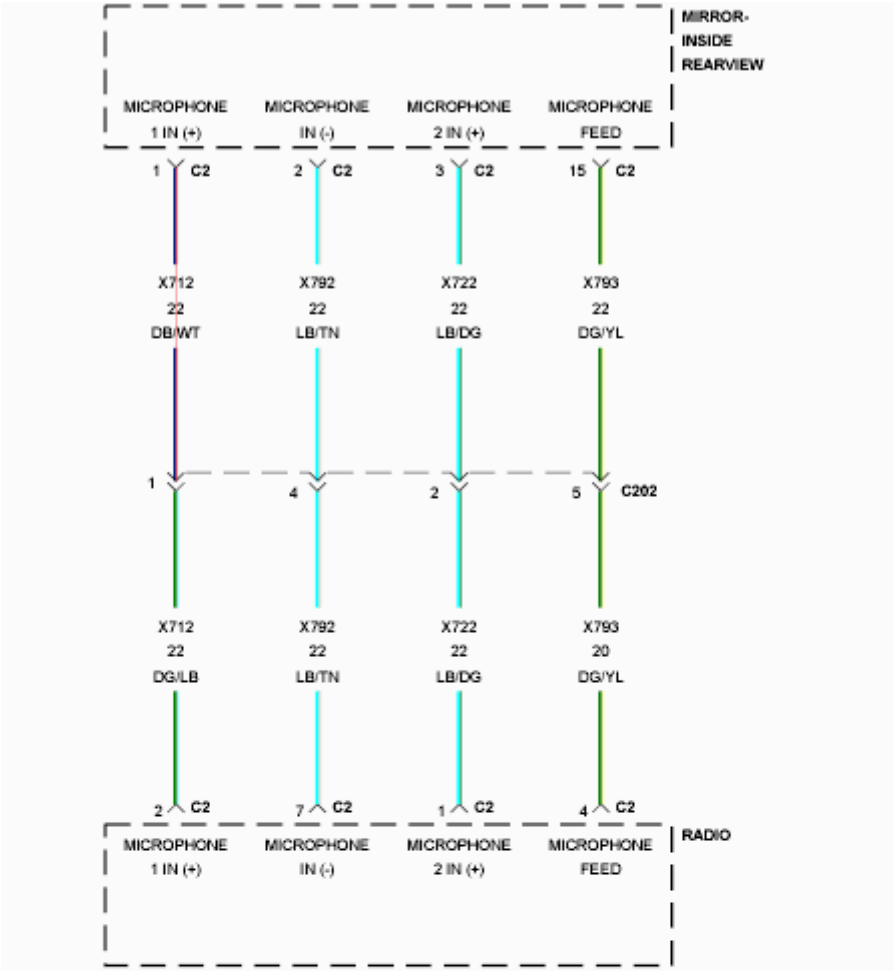
MIRROR-
INSIDE
REARVIEW
MICROPHONE
1 IN (+)
MICROPHONE
IN (-)
MICROPHONE
2 IN (+)
MICROPHONE
FEED
1 C2
2 C2
3 C2
15 C2
X712
22
DB/WT
X792
22
LB/TN
X722
22
LB/DG
X793
22
DG/YL
1
4
2
5 C202
X712
22
DG/LB
X792
22
LB/TN
X722
22
LB/DG
X793
20
DG/YL
2 C2
7 C2
1 C2
4 C2
RADIO
MICROPHONE
1 IN (+)
MICROPHONE
IN (-)
MICROPHONE
2 IN (+)
MICROPHONE
FEED

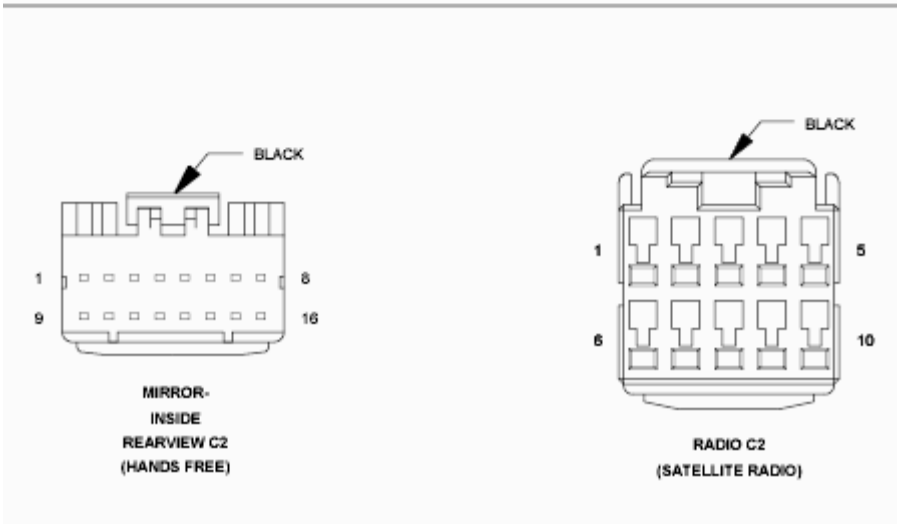
BLACK
1
8
9
16
MIRROR-
INSIDE
REARVIEW C2
(HANDS FREE)
BLACK
1
5
6
10
RADIO C2
(SATELLITE RADIO)

Fig. 70: Microphone Circuit Diagram
Courtesy of CHRYSLER GROUP, LLC

For a complete wiring diagram, **refer to appropriate SYSTEM WIRING DIAGRAMS article** .

WHEN MONITORED

With the ignition on.

SET CONDITION

The Radio detects a short to ground or open on the (X712) Microphone 1 IN (+) circuit.

POSSIBLE CAUSES

Possible Causes
(X712) MICROPHONE 1 IN (+) CIRCUIT OPEN
(X712) MICROPHONE 1 IN (+) CIRCUIT SHORTED TO GROUND
(X793) MICROPHONE FEED CIRCUIT OPEN
INSIDE REARVIEW MIRROR
RADIO

DIAGNOSTIC TEST

1. **CHECK FOR ACTIVE DTC**

NOTE: Verify the connection of the Inside Rearview Mirror harness connector.

1. Turn the ignition on.
2. With the scan tool, read the active DTCs.

   Does the scan tool display B143B-MICROPHONE 1 CIRCUIT LOW as active?

   Yes

   - Go To 2

   No

- Test complete, the condition or conditions that originally set this DTC are not present at this time. Using the wiring diagrams as a guide, check all related splices and connectors for signs of water intrusion, corrosion, pushed out or bent terminals and correct pin tension.

2. **CHECK FOR ACTIVE DTC B143E**
   1. With the scan tool, read the active DTCs.

      Does the scan tool display B143E-MICROPHONE 2 CIRCUIT LOW also as active?

      Yes

      - Go To 3

      No

      - Go To 6

3. **CHECK FOR VOLTAGE AT THE INSIDE REARVIEW MIRROR**

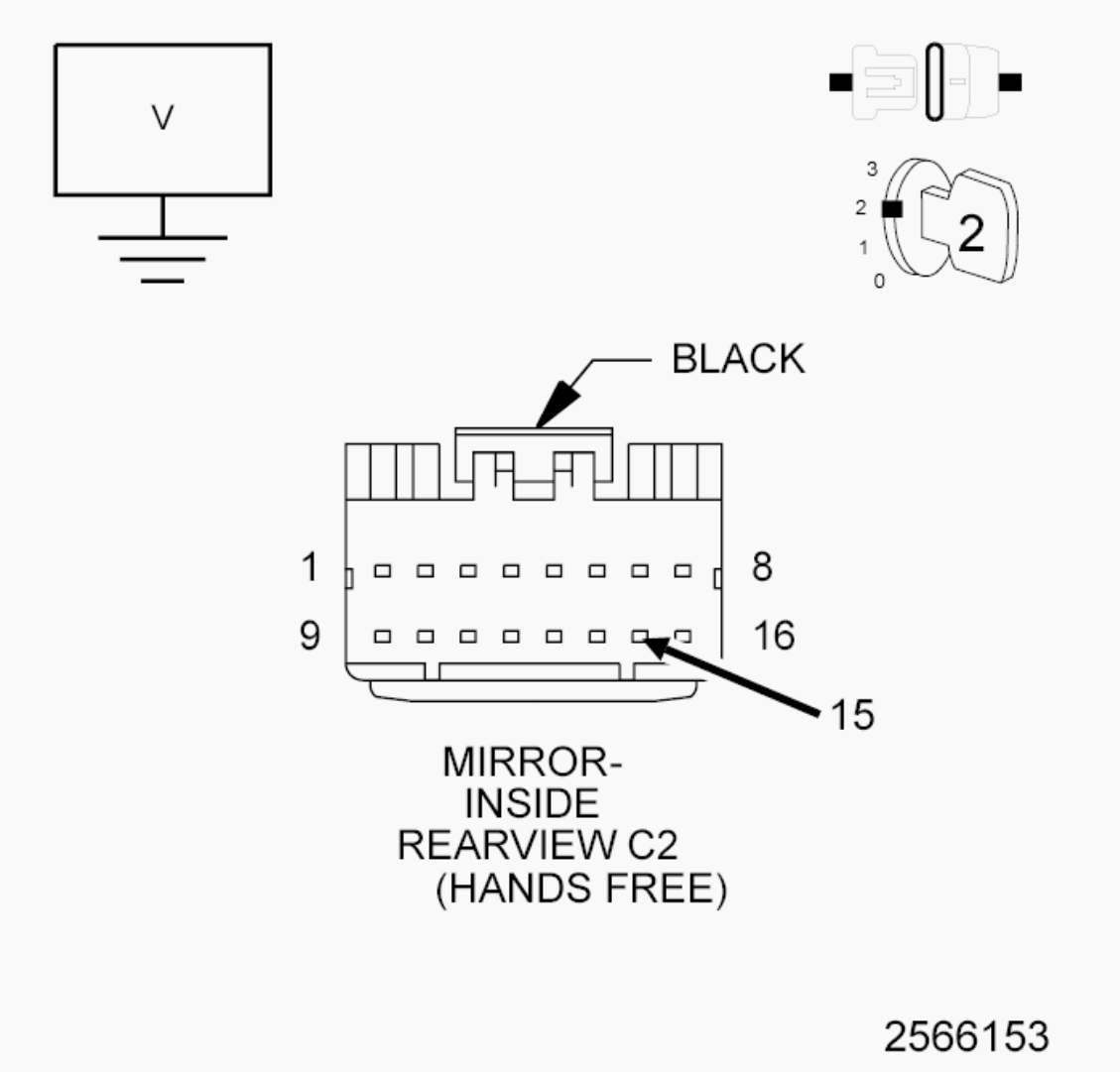

Fig. 71: Checking For Voltage At Inside Rearview Mirror
Courtesy of CHRYSLER GROUP, LLC

1. Turn the ignition off.
2. Disconnect the Inside Rearview Mirror C2 harness connector.
3. Turn the ignition on.
4. Measure the voltage between the (X793) Microphone Feed circuit and ground.

   Is the voltage above 10.0 volts?

   Yes

   - Go To 6

   No

- Go To 4

4. **CHECK FOR VOLTAGE AT THE RADIO**

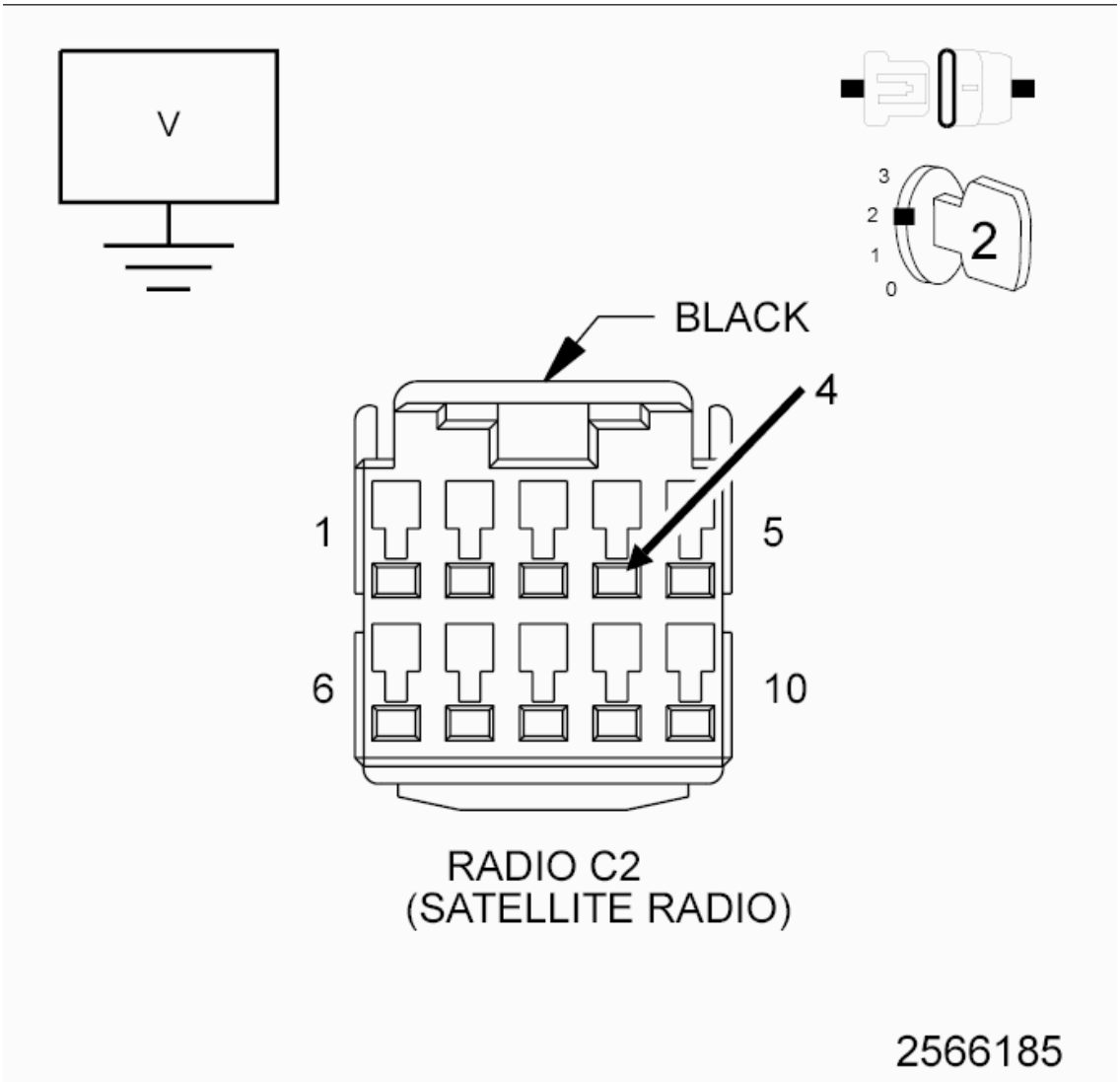

Fig. 72: Checking For Voltage At Radio
Courtesy of CHRYSLER GROUP, LLC

1. While back probing, measure the voltage between the (X793) Microphone Feed circuit and ground at the Radio C2 harness connector.

   NOTE: The graphic shows the connector for reference only. Back probe the harness connector.

   Is the voltage above 10.0 volts?

   Yes

- Repair the (X793) Microphone Feed circuit for an open.
- Perform the BODY VERIFICATION TEST. Refer to **STANDARD PROCEDURE** .

No

- Go To 5

5. **RESTORE THE VEHICLE CONFIGURATION**
   1. With the scan tool, restore the vehicle configuration.
   2. Turn the ignition off, then back on.
   3. With the scan tool, read the active DTCs.

   Does the scan tool display B143B-MICROPHONE 1 CIRCUIT LOW as active?

   Yes

   - Replace the Radio in accordance with the Service Information.
   - Perform the BODY VERIFICATION TEST. Refer to **STANDARD PROCEDURE** .

   No

   - Test complete, the condition or conditions that originally set this DTC are not present at this time. Using the wiring diagrams as a guide, check all related splices and connectors for signs of water intrusion, corrosion, pushed out or bent terminals and correct pin tension.
   - Perform the BODY VERIFICATION TEST. Refer to **STANDARD PROCEDURE** .
6. **CHECK THE INSIDE REARVIEW MIRROR**

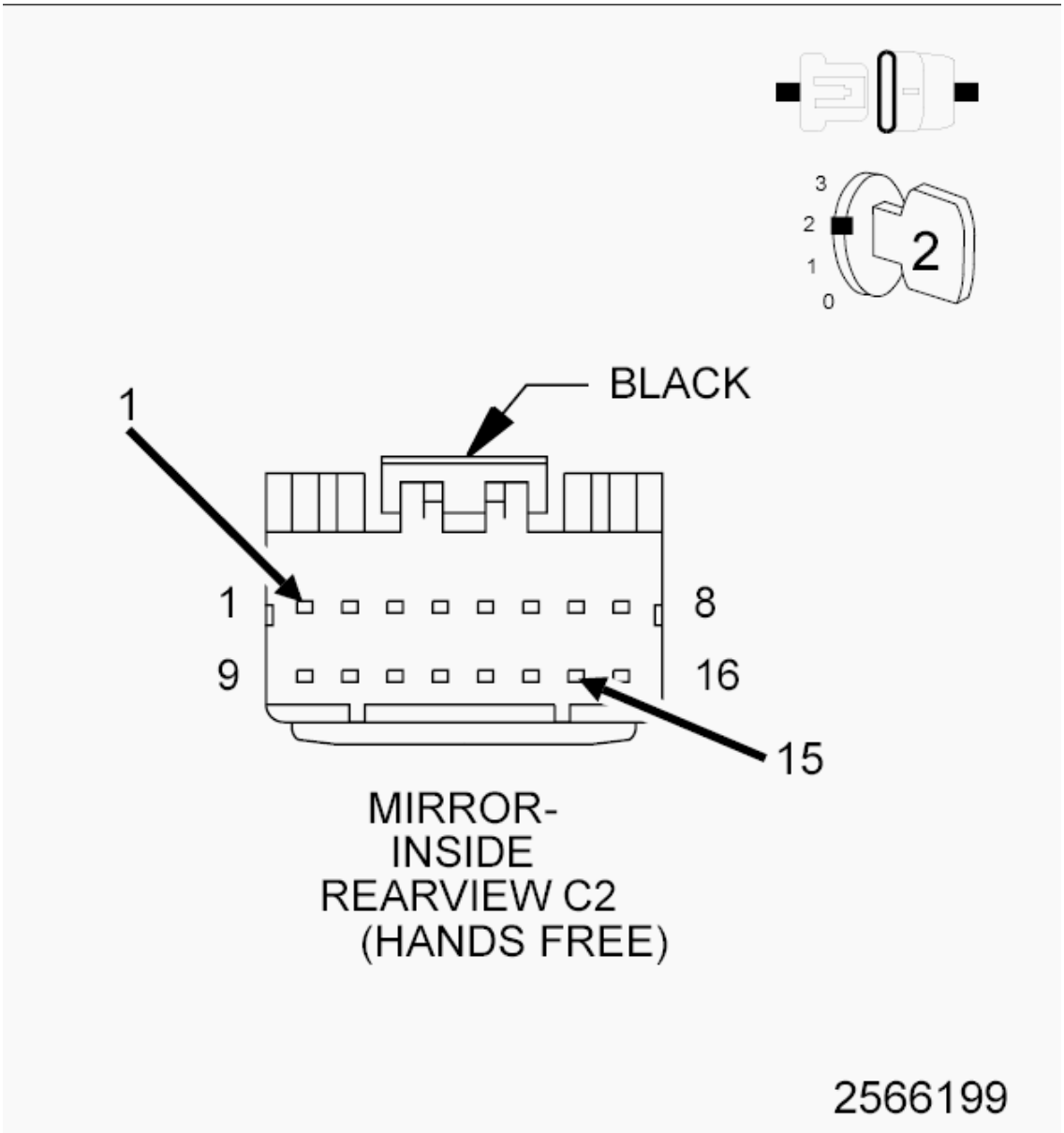

Fig. 73: Checking Inside Rearview Mirror
Courtesy of CHRYSLER GROUP, LLC

1. Turn the ignition off.
2. Disconnect the Inside Rearview Mirror C2 harness connector.
3. Connect a jumper wire between the (X793) Microphone Feed and the (X712) Microphone 1 IN (+) circuits.
4. Turn the ignition on.
5. With the scan tool, read the DTCs.

NOTE: DTC B143C-MICROPHONE 1 CIRCUIT HIGH should display as active as a result of this test.

Does the scan tool display B143B-MICROPHONE 1 CIRCUIT LOW as active?

Yes

- Go To 7

No

- Replace the Inside Rearview Mirror in accordance with the Service Information.
- Perform the BODY VERIFICATION TEST. Refer to **STANDARD PROCEDURE** .

7. **CHECK FOR THE (X712) MICROPHONE 1 IN (+) CIRCUIT OPEN**

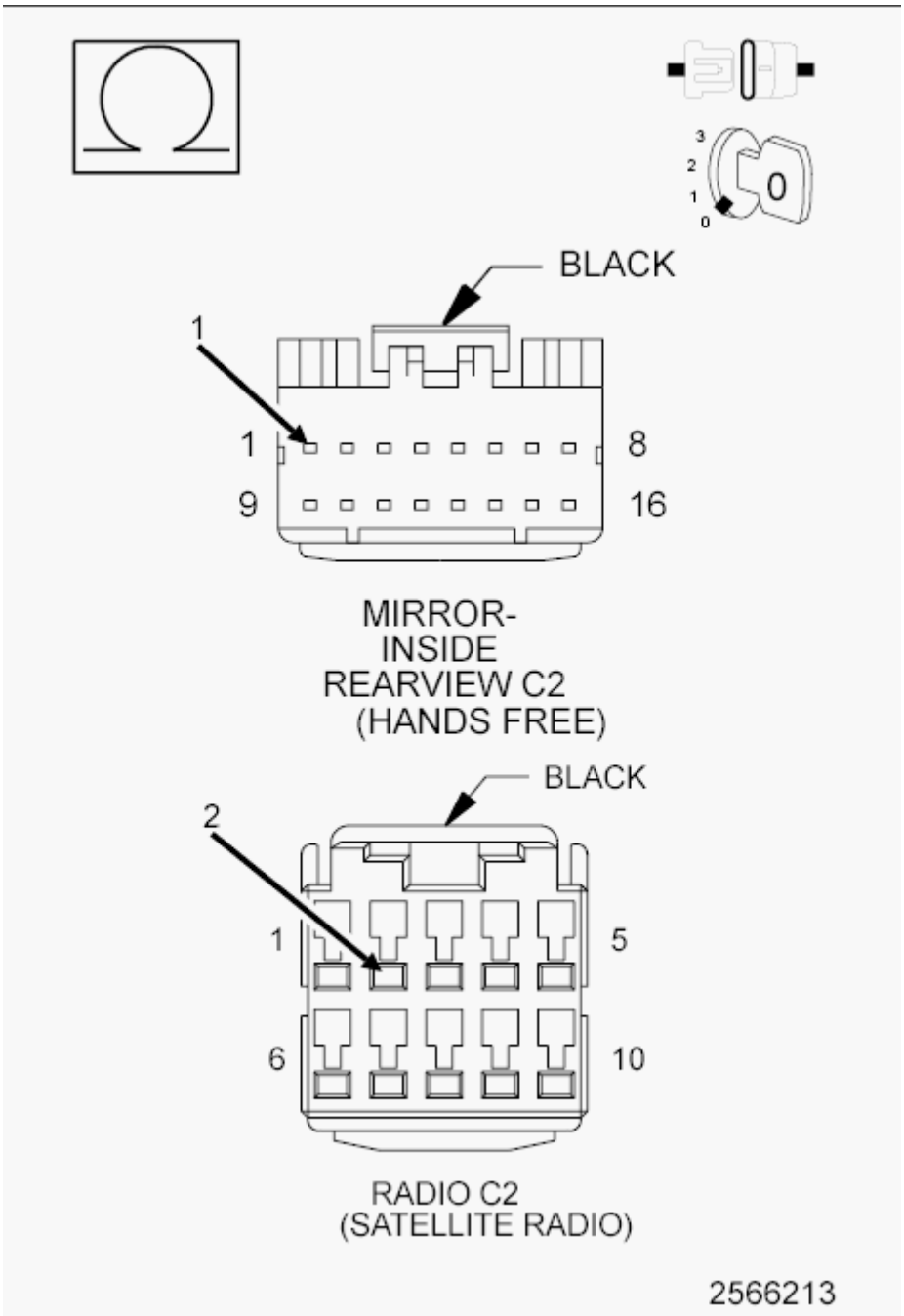

Fig. 74: Measuring Resistance Of Microphone 1 IN (+) Circuit Between Inside Rearview Mirror C2 & Radio C2 Harness Connectors
Courtesy of CHRYSLER GROUP, LLC

1. Turn the ignition off.
2. Disconnect the Radio C2 harness connector.
3. Measure the resistance of the (X712) Microphone 1 IN (+) circuit between the Inside Rearview Mirror C2 and Radio C2 harness connectors.

Is the resistance above 10K Ohms?

Yes

- Repair the (X712) Microphone 1 IN (+) circuit for an open.
- Perform the BODY VERIFICATION TEST. Refer to **STANDARD PROCEDURE** .

No

- Go To 8

8. **CHECK FOR THE (X712) MICROPHONE 1 IN (+) CIRCUIT SHORTED TO GROUND**

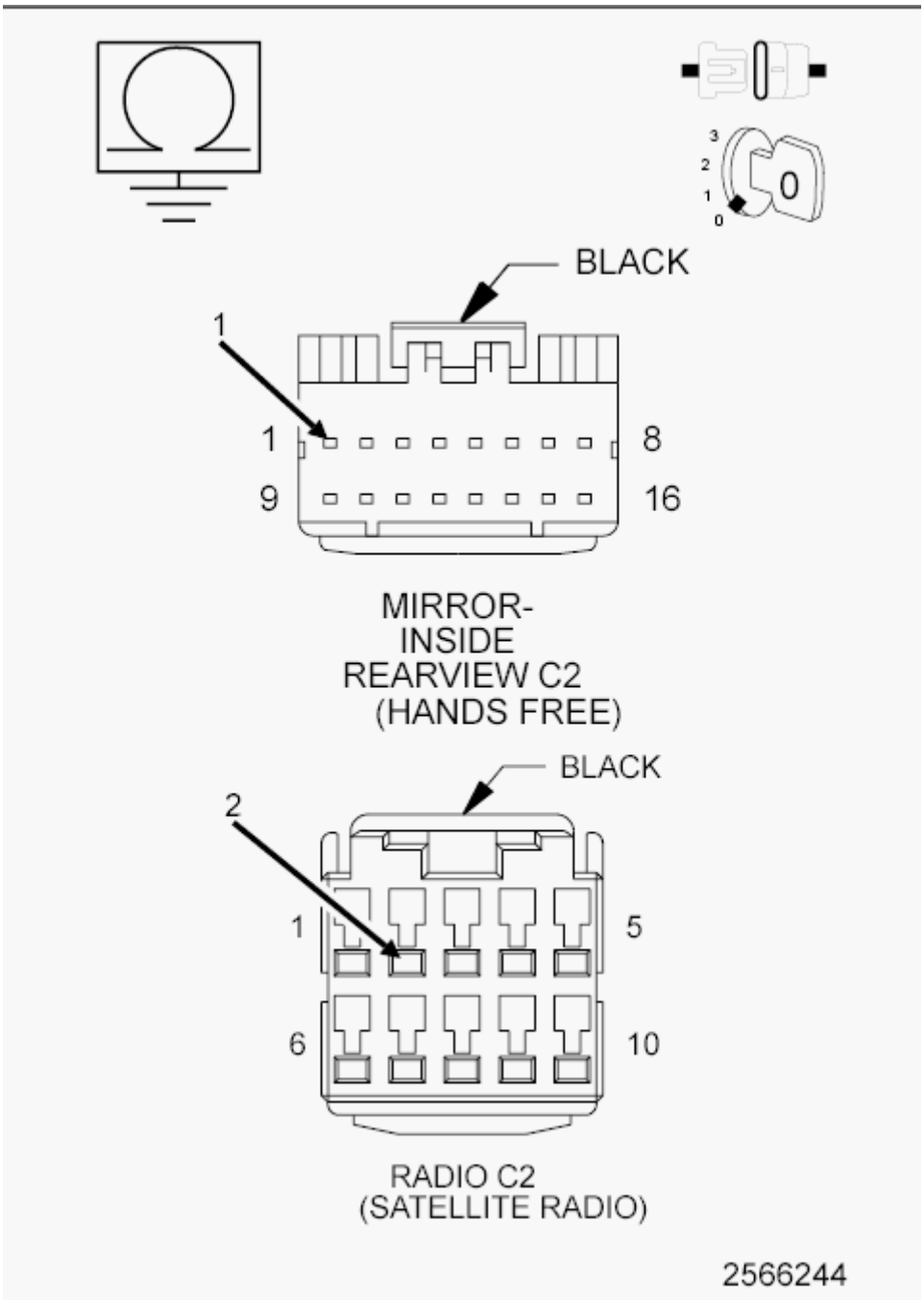

Fig. 75: Measuring Resistance Between Ground & Microphone 1 IN (+) Circuit
Courtesy of CHRYSLER GROUP, LLC

1. Measure the resistance between ground and the (X712) Microphone 1 IN (+) circuit.

   Is the resistance below 10K Ohms?

   Yes

- Repair the (X712) Microphone 1 IN (+) circuit for short to ground.
- Perform the BODY VERIFICATION TEST. Refer to **STANDARD PROCEDURE** .

No

- Replace the Radio in accordance with the Service Information.
- Perform the BODY VERIFICATION TEST. Refer to **STANDARD PROCEDURE** .

B143C-MICROPHONE 1 CIRCUIT HIGH

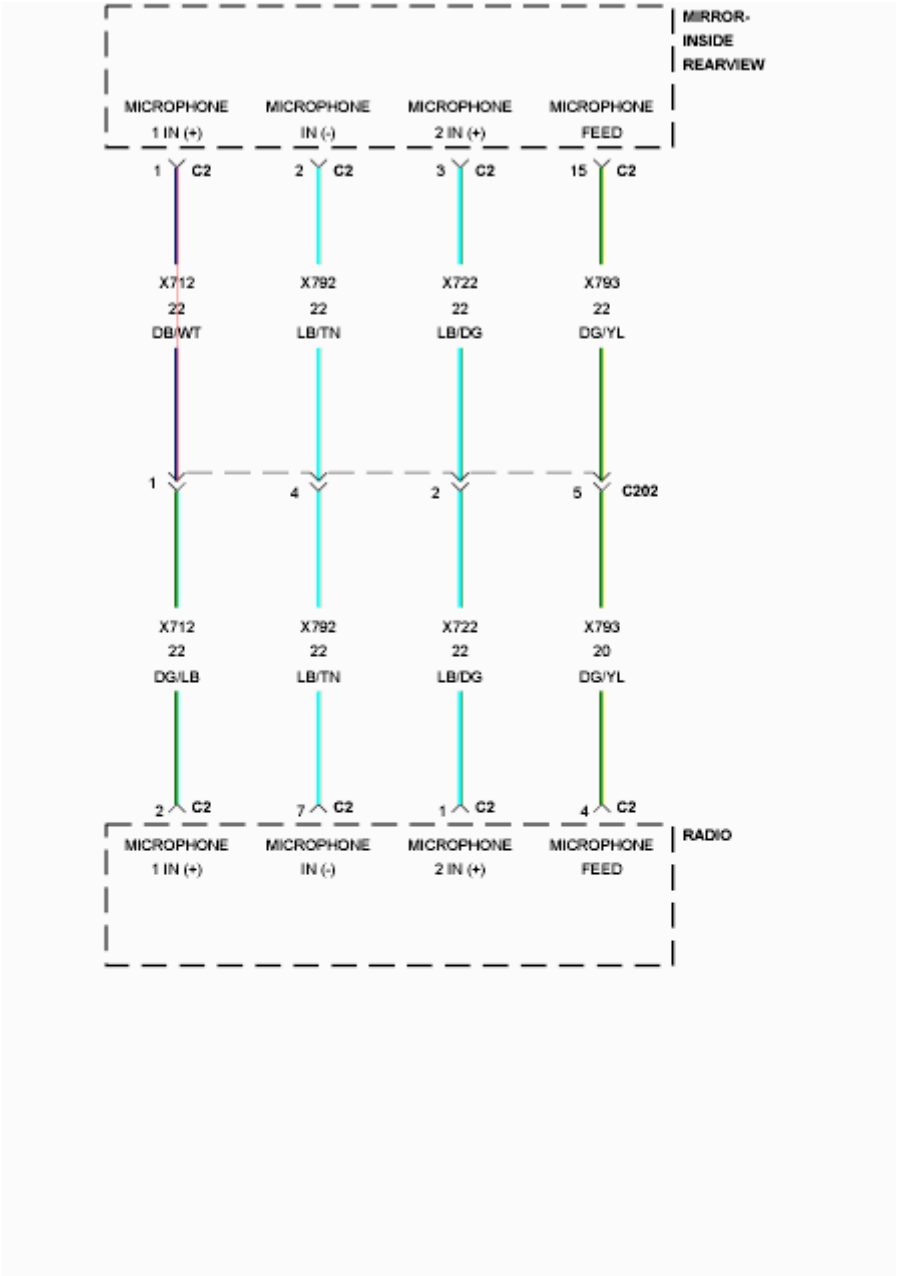
MIRROR-
INSIDE
REARVIEW
MICROPHONE
1 IN (+)
MICROPHONE
IN (-)
MICROPHONE
2 IN (+)
MICROPHONE
FEED
1 C2
2 C2
3 C2
15 C2
X712
22
DB/WT
X792
22
LB/TN
X722
22
LB/DG
X793
22
DG/YL
1
4
2
5 C202
X712
22
DG/LB
X792
22
LB/TN
X722
22
LB/DG
X793
20
DG/YL
2 C2
7 C2
1 C2
4 C2
MICROPHONE
1 IN (+)
MICROPHONE
IN (-)
MICROPHONE
2 IN (+)
MICROPHONE
FEED
RADIO

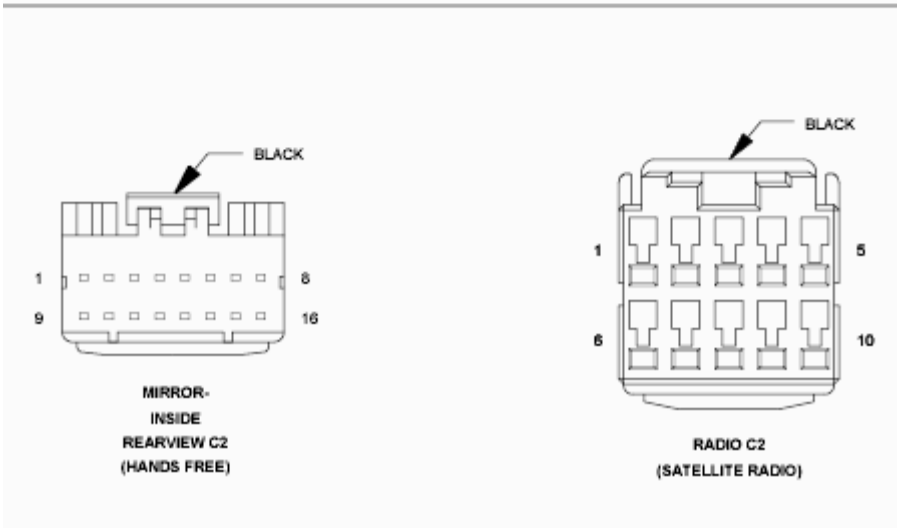
BLACK
1
8
9
16
MIRROR-
INSIDE
REARVIEW C2
(HANDS FREE)
BLACK
1
5
6
10
RADIO C2
(SATELLITE RADIO)

Fig. 76: Microphone Circuit Diagram
Courtesy of CHRYSLER GROUP, LLC

For a complete wiring diagram, **refer to appropriate SYSTEM WIRING DIAGRAMS article** .

WHEN MONITORED

With the ignition on.

SET CONDITION

The Radio detects a fault in any of the microphone circuits.

POSSIBLE CAUSES

Possible Causes
(X712) MICROPHONE 1 IN (+) CIRCUIT OPEN (X712) MICROPHONE 1 IN (+) CIRCUITS SHORTED TO VOLTAGE INSIDE REARVIEW MIRROR RADIO

DIAGNOSTIC TEST

1. **CHECK FOR ACTIVE DTC**
    1. Turn the ignition on.
    2. With the scan tool, read the active DTCs.

    Does the scan tool display this DTC as active?

    Yes

    - Go To 2

    No

    - If the DTC is stored, check for an intermittent condition. Visually inspect the related wiring harness connectors. Look for broken, bent, pushed out, or corroded terminals.
2. **INSIDE REARVIEW MIRROR**
    1. Turn the ignition off.

2. Disconnect the Inside Rearview Mirror C2 harness connector.
3. Turn the ignition on.
4. With the scan tool, read the active DTCs.

   Does the scan tool display this DTC as active?

   Yes

   - Go To 3

   No

   - Replace the Rearview Mirror in accordance with the service information.
   - Perform the BODY VERIFICATION TEST. Refer to **STANDARD PROCEDURE** .

3. **(X712) MICROPHONE 1 IN (+) CIRCUIT SHORTED TO VOLTAGE**
   1. Turn the ignition off.
   2. Disconnect the Radio C2 harness connector.
   3. Turn the ignition on.
   4. Measure the voltage of the (X712) Microphone 1 IN (+) circuit.

      Is voltage present?

      Yes

      - Repair the (X712) Microphone 1 IN (+) circuit for a short to voltage.
      - Perform the BODY VERIFICATION TEST. Refer to **STANDARD PROCEDURE** .

      No

      - Go To 4

4. **(X712) MICROPHONE 1 IN (+) CIRCUIT OPEN**
   1. Turn the ignition off.
   2. Measure the resistance of the (X712) Microphone 1 IN (+) circuit between the Radio C2 connector and the inside Rearview Mirror

connector.

Is the resistance below 5.0 ohms?

Yes

- Replace the Radio in accordance with the service information.
- Perform the BODY VERIFICATION TEST. Refer to **STANDARD PROCEDURE** .

No

- Repair the (X712) Microphone 1 IN (+) circuit for an open.
- Perform the BODY VERIFICATION TEST. Refer to **STANDARD PROCEDURE** .

B143D-MICROPHONE 2 CIRCUIT PERFORMANCE

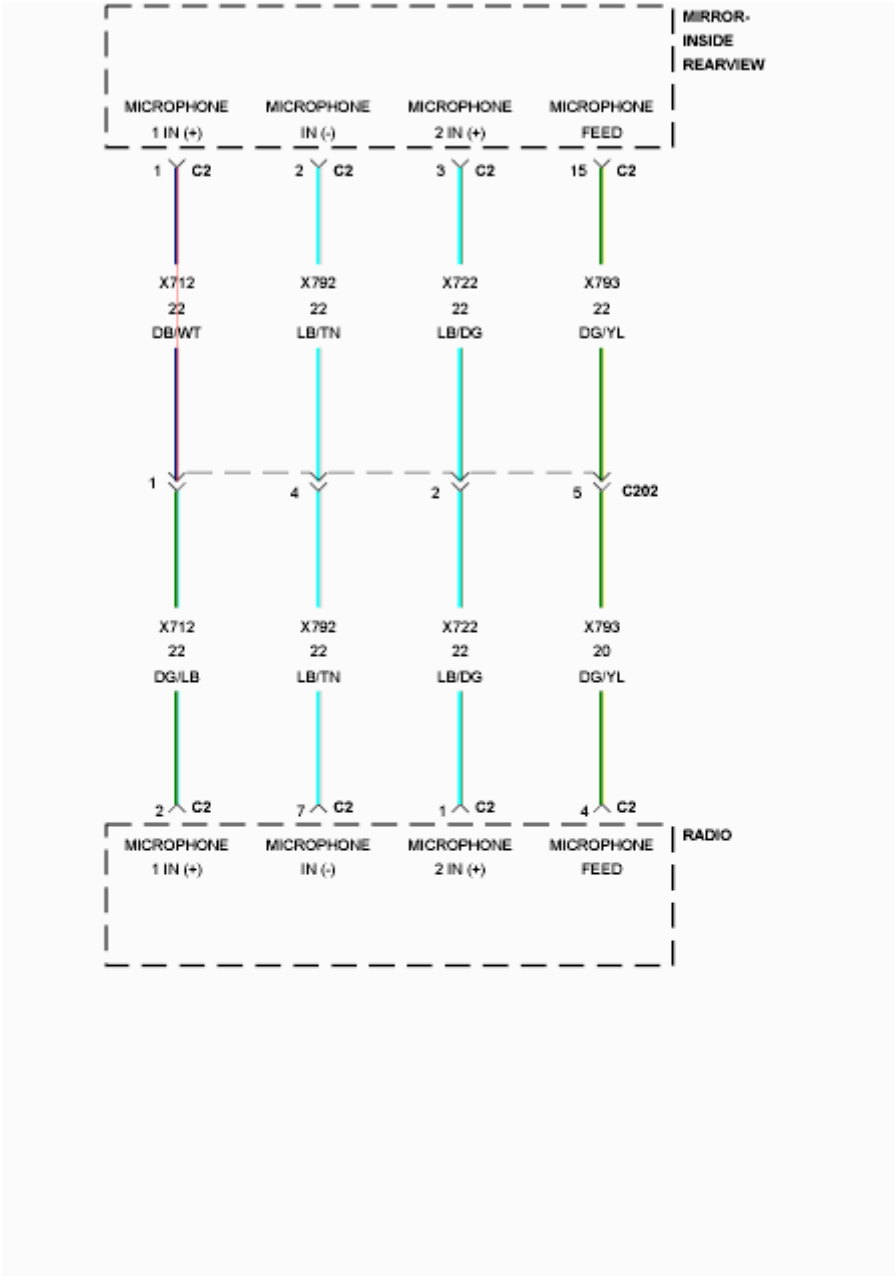
MIRROR-
INSIDE
REARVIEW
MICROPHONE
1 IN (+)
MICROPHONE
IN (-)
MICROPHONE
2 IN (+)
MICROPHONE
FEED
1 C2
2 C2
3 C2
15 C2
X712
22
DB/WT
X792
22
LB/TN
X722
22
LB/DG
X793
22
DG/YL
1
4
2
5 C202
X712
22
DG/LB
X792
22
LB/TN
X722
22
LB/DG
X793
20
DG/YL
2 C2
7 C2
1 C2
4 C2
MICROPHONE
1 IN (+)
MICROPHONE
IN (-)
MICROPHONE
2 IN (+)
MICROPHONE
FEED
RADIO

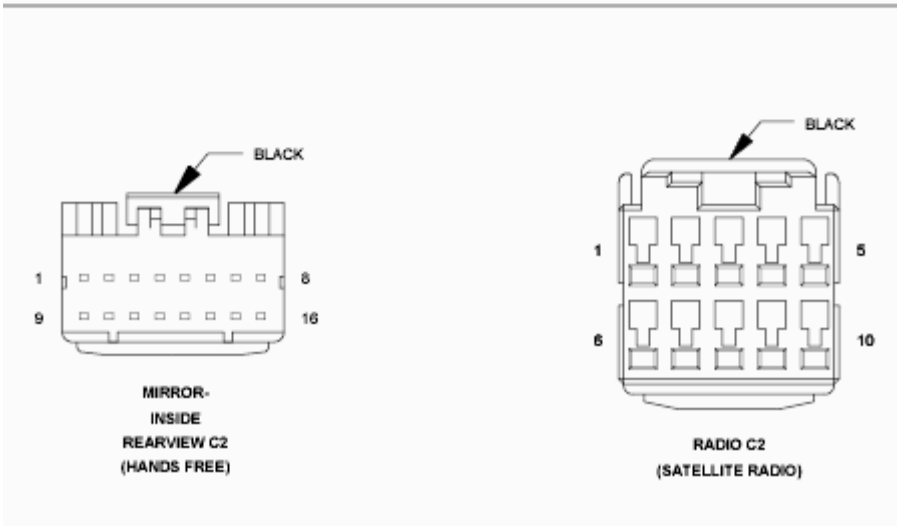
BLACK
1
8
9
16
MIRROR-
INSIDE
REARVIEW C2
(HANDS FREE)
BLACK
1
5
6
10
RADIO C2
(SATELLITE RADIO)

Fig. 77: Microphone Circuit Diagram
Courtesy of CHRYSLER GROUP, LLC

For a complete wiring diagram, **refer to appropriate SYSTEM WIRING DIAGRAMS article** .

WHEN MONITORED

With the ignition on.

SET CONDITION

The Radio detects a fault in any of the microphone circuits.

POSSIBLE CAUSES

Possible Causes
(X722) MICROPHONE 2 IN (+) CIRCUIT SHORTED TO GROUND
(X722) MICROPHONE 2 IN (+) CIRCUIT SHORTED TO VOLTAGE
(X722) MICROPHONE 2 IN (+) CIRCUIT OPEN
INSIDE REARVIEW MIRROR
RADIO

DIAGNOSTIC TEST

1. **CHECK FOR ACTIVE DTC**
    1. Turn the ignition on.
    2. With the scan tool, read the active DTCs.

    Does the scan tool display this DTC as active?

    Yes

    - Go To 2

    No

    - Test complete, the condition or conditions that originally set this DTC are not present at this time. Using the wiring diagrams as a guide, check all related splices and connectors for signs of water intrusion, corrosion, pushed out or bent terminals and correct pin

tension.

2. **INSIDE REARVIEW MIRROR**

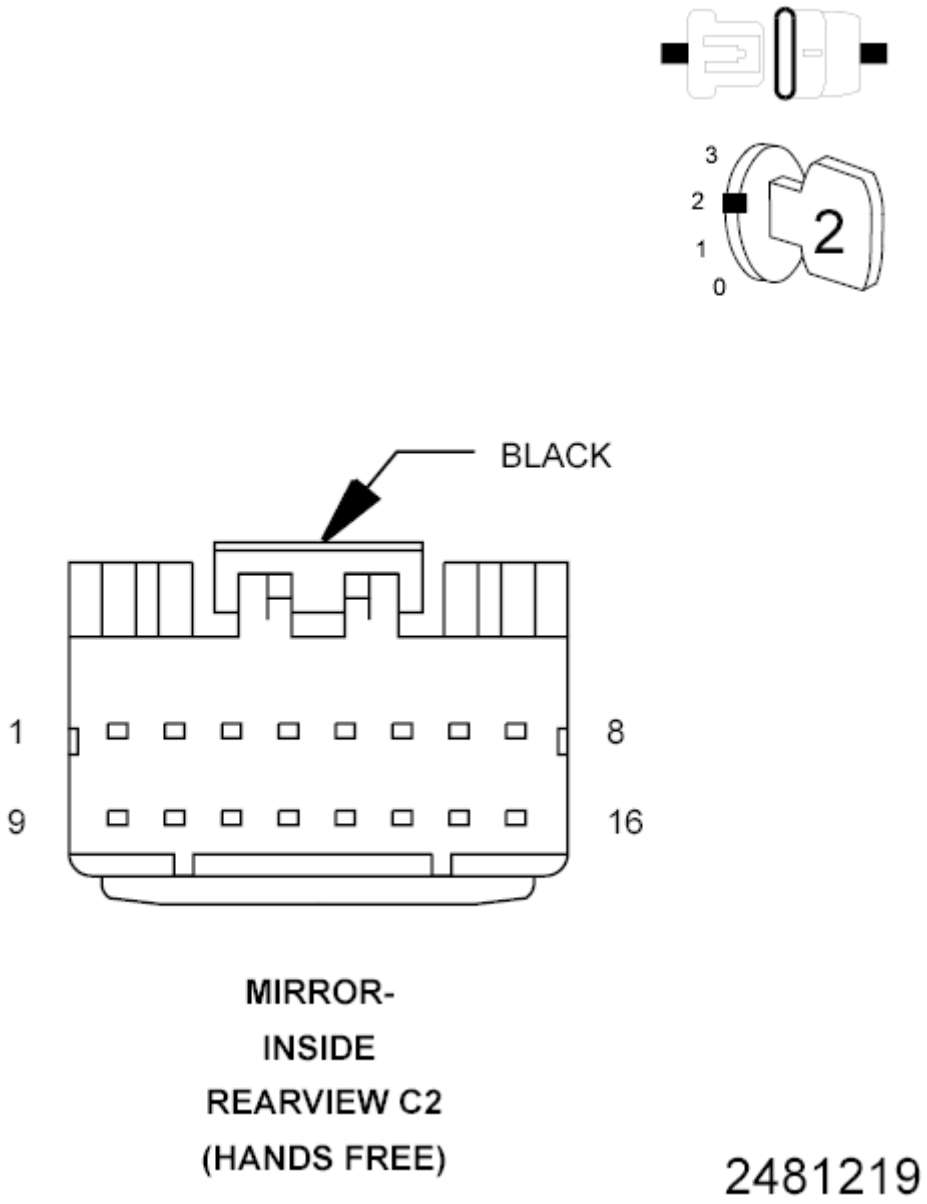

Fig. 78: Inside Rearview Mirror Harness Connector End View
Courtesy of CHRYSLER GROUP, LLC

1. Turn the ignition off.
2. Disconnect the Inside Rearview Mirror C2 harness connector.
3. Turn the ignition on.
4. With the scan tool, read the DTCs.

Does the scan tool display this DTC as active?

Yes

- Go To 3

No

- Replace the Inside Rearview Mirror in accordance with the Service Information.
- Perform the BODY VERIFICATION TEST. Refer to **STANDARD PROCEDURE** .

3. **(X722) MICROPHONE 2 IN (+) CIRCUIT SHORTED TO GROUND**

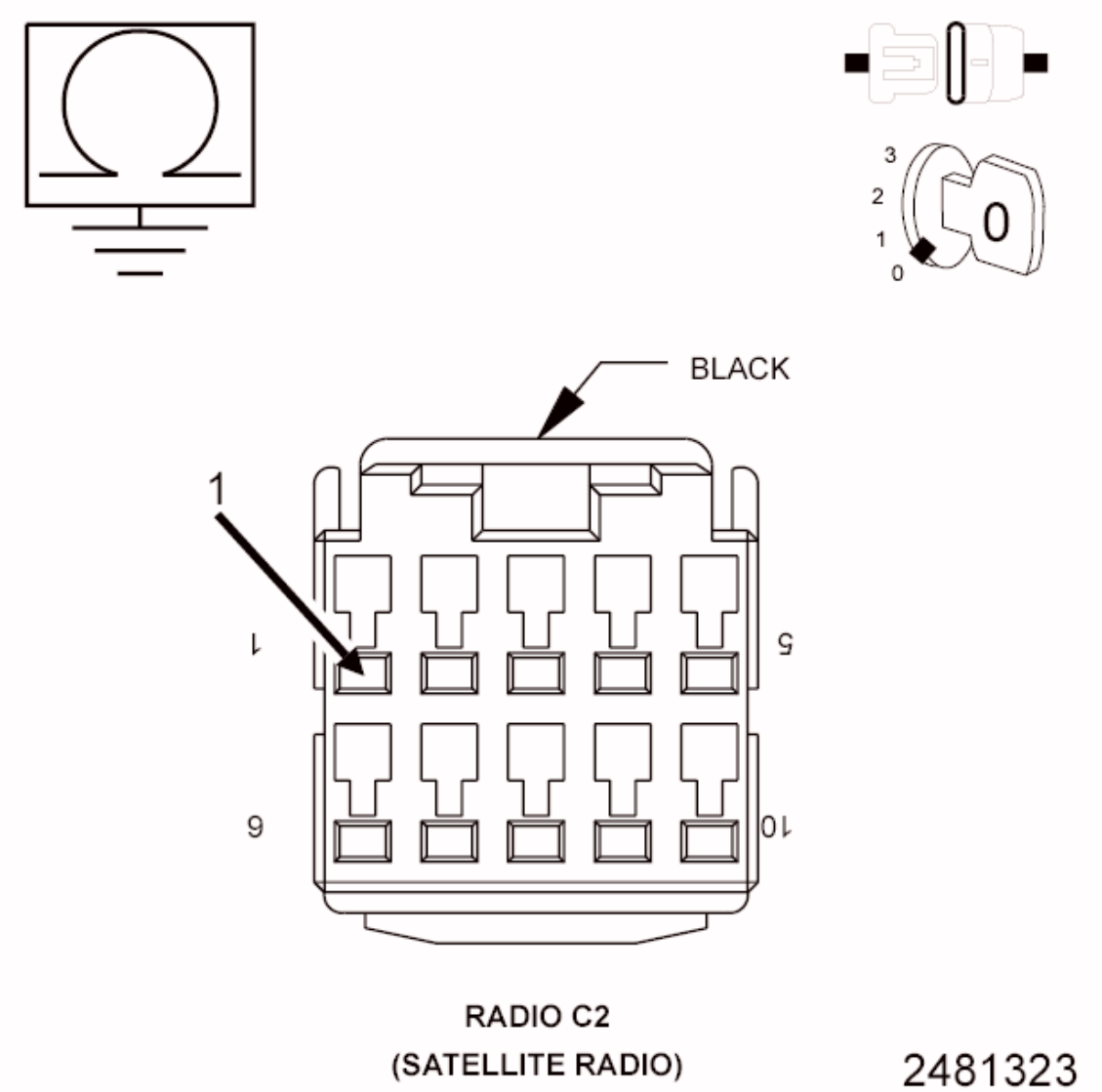

Fig. 79: Measuring Resistance Between Ground & Microphone 2 IN (+) Circuit
Courtesy of CHRYSLER GROUP, LLC

1. Turn the ignition off.
2. Disconnect the Radio C2 harness connector.
3. Measure the resistance between ground and the (X722) Microphone 2 IN (+) circuit.

   Is the resistance below 10K ohms?

   Yes

   - Repair the (X722) Microphone 2 IN (+) circuit for a short to ground.
   - Perform the BODY VERIFICATION TEST. Refer to **STANDARD PROCEDURE** .

   No

   - Go To 4

4. **(X722) MICROPHONE 2 IN (+) CIRCUIT SHORTED TO VOLTAGE**

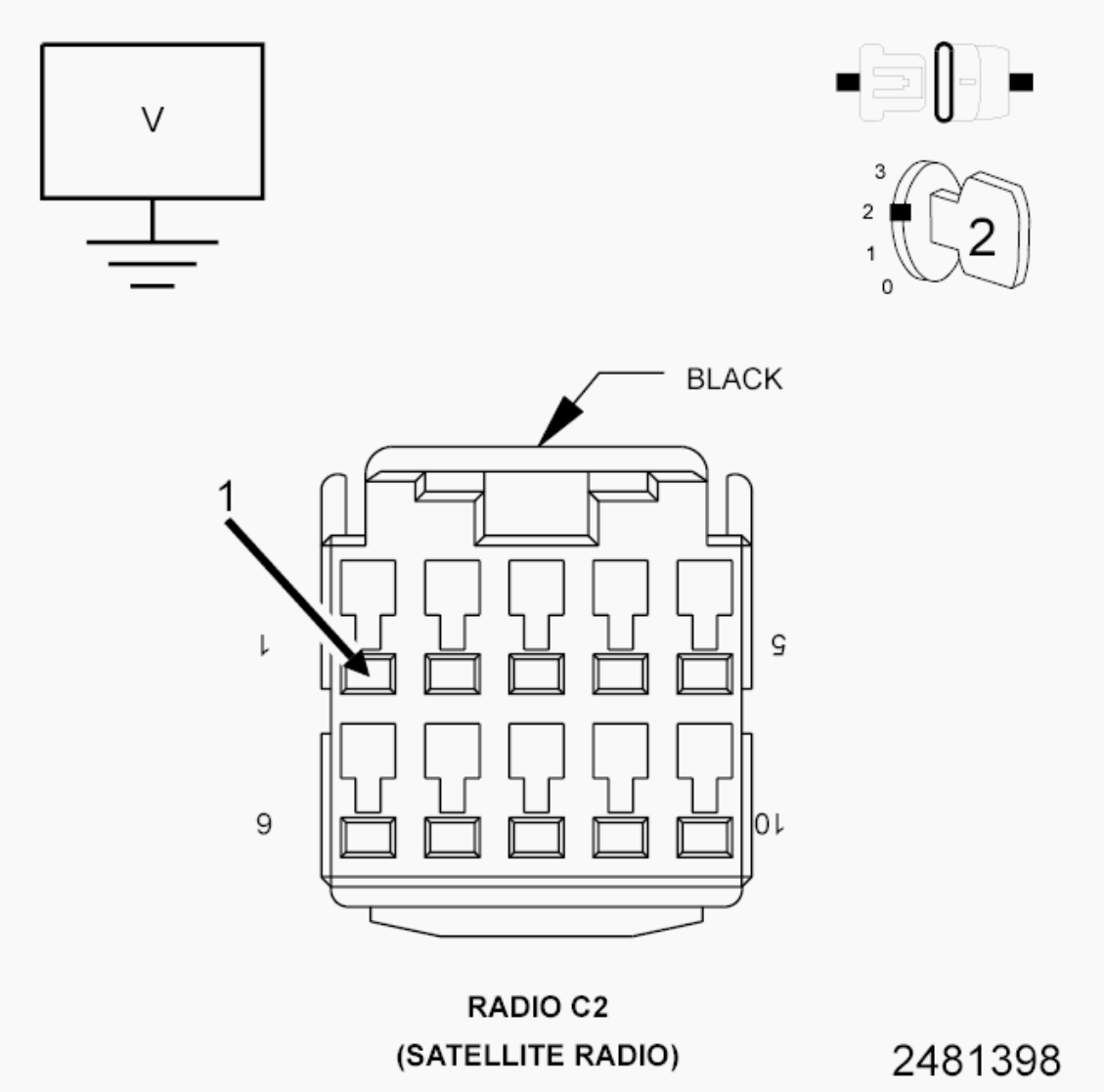

Fig. 80: Measuring Voltage Between Microphone 2 IN (+) Circuit & Ground
Courtesy of CHRYSLER GROUP, LLC

1. Turn the ignition on.
2. Measure the voltage between the (X722) Microphone 2 IN (+) circuit and ground.

   Is the voltage above 1.0 volt?

   Yes

   - Repair the short to voltage in the (X722) Microphone 2 IN (+) circuit.
   - Perform the BODY VERIFICATION TEST. Refer to

STANDARD PROCEDURE .

No

- Go To 5

5. **(X722) MICROPHONE 2 IN (+) CIRCUIT OPEN**

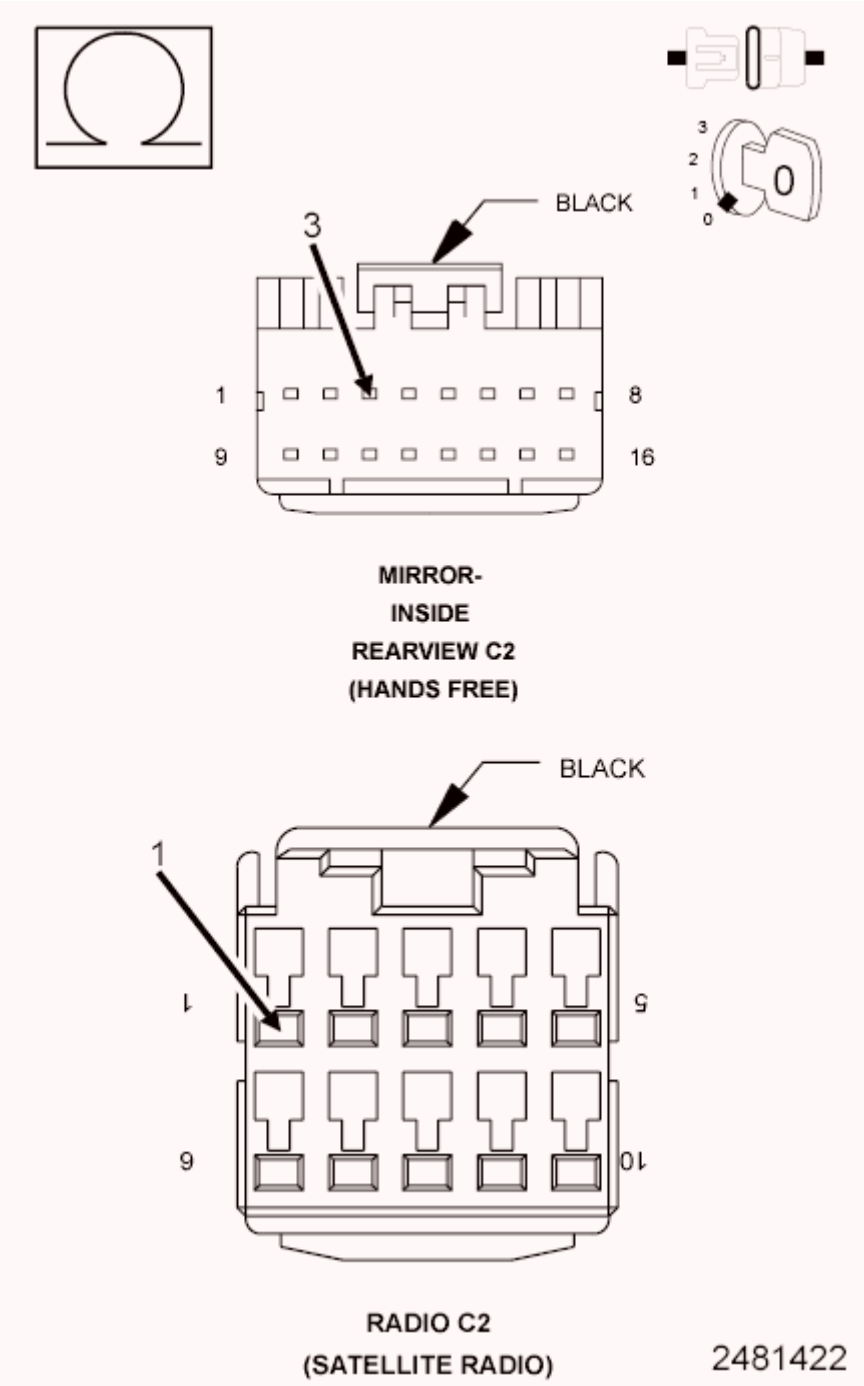

Fig. 81: Measuring Resistance Of Microphone 2 IN (+) Circuit Between Radio C2 Connector & Inside Rearview Mirror Connector

Courtesy of CHRYSLER GROUP, LLC

1. Turn the ignition off.
2. Measure the resistance of the (X722) Microphone 2 IN (+) circuit between the Radio C2 connector and the Inside Rearview Mirror connector.

   Is the resistance below 5.0 ohms?

   Yes

   - Replace the Radio in accordance with the Service Information.
   - Perform the BODY VERIFICATION TEST. Refer to **STANDARD PROCEDURE** .

   No

   - Repair the (X722) Microphone 2 IN (+) circuit for an open.
   - Perform the BODY VERIFICATION TEST. Refer to **STANDARD PROCEDURE** .

B143E-MICROPHONE 2 CIRCUIT LOW

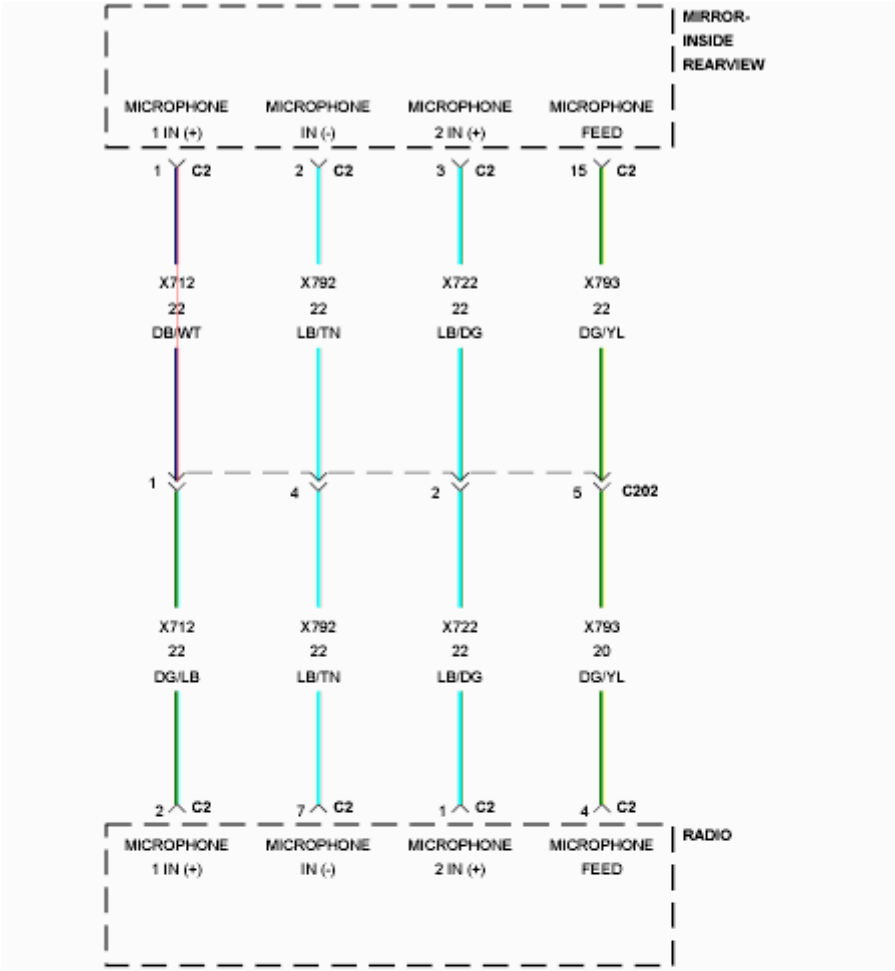
MIRROR-
INSIDE
REARVIEW
MICROPHONE
1 IN (+)
MICROPHONE
IN (-)
MICROPHONE
2 IN (+)
MICROPHONE
FEED
1 C2
2 C2
3 C2
15 C2
X712
22
DB/WT
X792
22
LB/TN
X722
22
LB/DG
X793
22
DG/YL
1
4
2
5 C202
X712
22
DG/LB
X792
22
LB/TN
X722
22
LB/DG
X793
20
DG/YL
2 C2
7 C2
1 C2
4 C2
RADIO
MICROPHONE
1 IN (+)
MICROPHONE
IN (-)
MICROPHONE
2 IN (+)
MICROPHONE
FEED

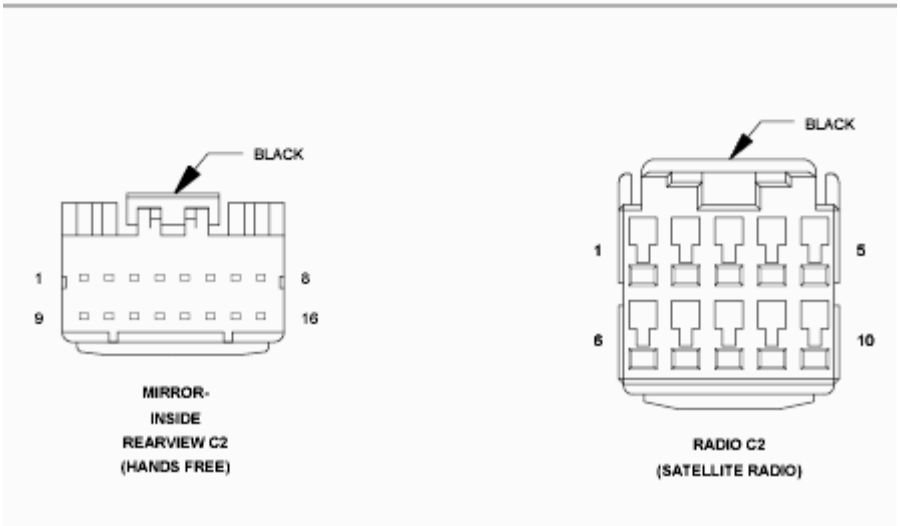
BLACK
1
8
9
16
MIRROR-
INSIDE
REARVIEW C2
(HANDS FREE)
BLACK
1
5
6
10
RADIO C2
(SATELLITE RADIO)

Fig. 82: Microphone Circuit Diagram
Courtesy of CHRYSLER GROUP, LLC

For a complete wiring diagram, **refer to appropriate SYSTEM WIRING DIAGRAMS article** .

WHEN MONITORED

With the ignition on.

SET CONDITION

The Radio detects a short to ground or an open on the (X722) Microphone 2 IN (+) circuit.

POSSIBLE CAUSES

Possible Causes
(X722) MICROPHONE 2 IN (+) CIRCUIT OPEN
(X722) MICROPHONE 2 IN (+) CIRCUIT SHORTED TO GROUND
(X793) MICROPHONE FEED CIRCUIT OPEN
INSIDE REARVIEW MIRROR
RADIO

DIAGNOSTIC TEST

1. **CHECK FOR ACTIVE DTC**

NOTE: Verify the connection of the Inside Rearview Mirror harness connector.

1. Turn the ignition on.
2. With the scan tool, read the active DTCs.

   Does the scan tool display B143E-MICROPHONE 2 CIRCUIT LOW as active?

   Yes

   - Go To 2

   No

- Test complete, the condition or conditions that originally set this DTC are not present at this time. Using the wiring diagrams as a guide, check all related splices and connectors for signs of water intrusion, corrosion, pushed out or bent terminals and correct pin tension.

2. **CHECK FOR ACTIVE DTC B143B**
   1. With the scan tool, read the active DTCs.

      Does the scan tool display B143B-MICROPHONE 1 CIRCUIT LOW also as active?

      Yes

      - Go To 3

      No

      - Go To 6

3. **CHECK FOR VOLTAGE AT THE INSIDE REARVIEW MIRROR**

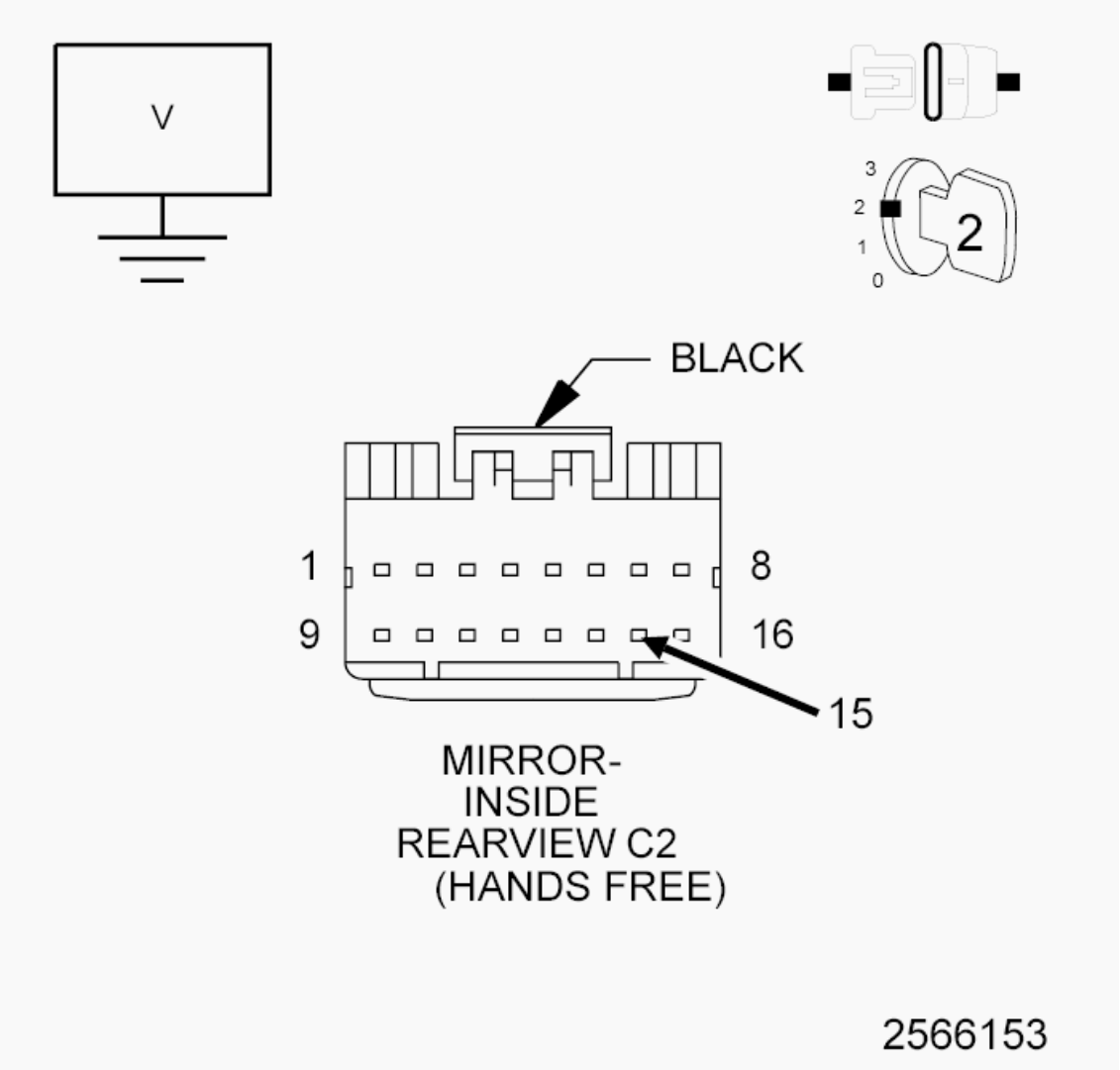

Fig. 83: Measuring Voltage Between Microphone Feed Circuit & Ground
Courtesy of CHRYSLER GROUP, LLC

1. Turn the ignition off.
2. Disconnect the Inside Rearview Mirror C2 harness connector.
3. Turn the ignition on.
4. Measure the voltage between the (X793) Microphone Feed circuit and ground.

   Is the voltage above 10.0 volts?

   Yes

   - Go To 6

No

- Go To 4

4. **CHECK FOR VOLTAGE AT THE RADIO**

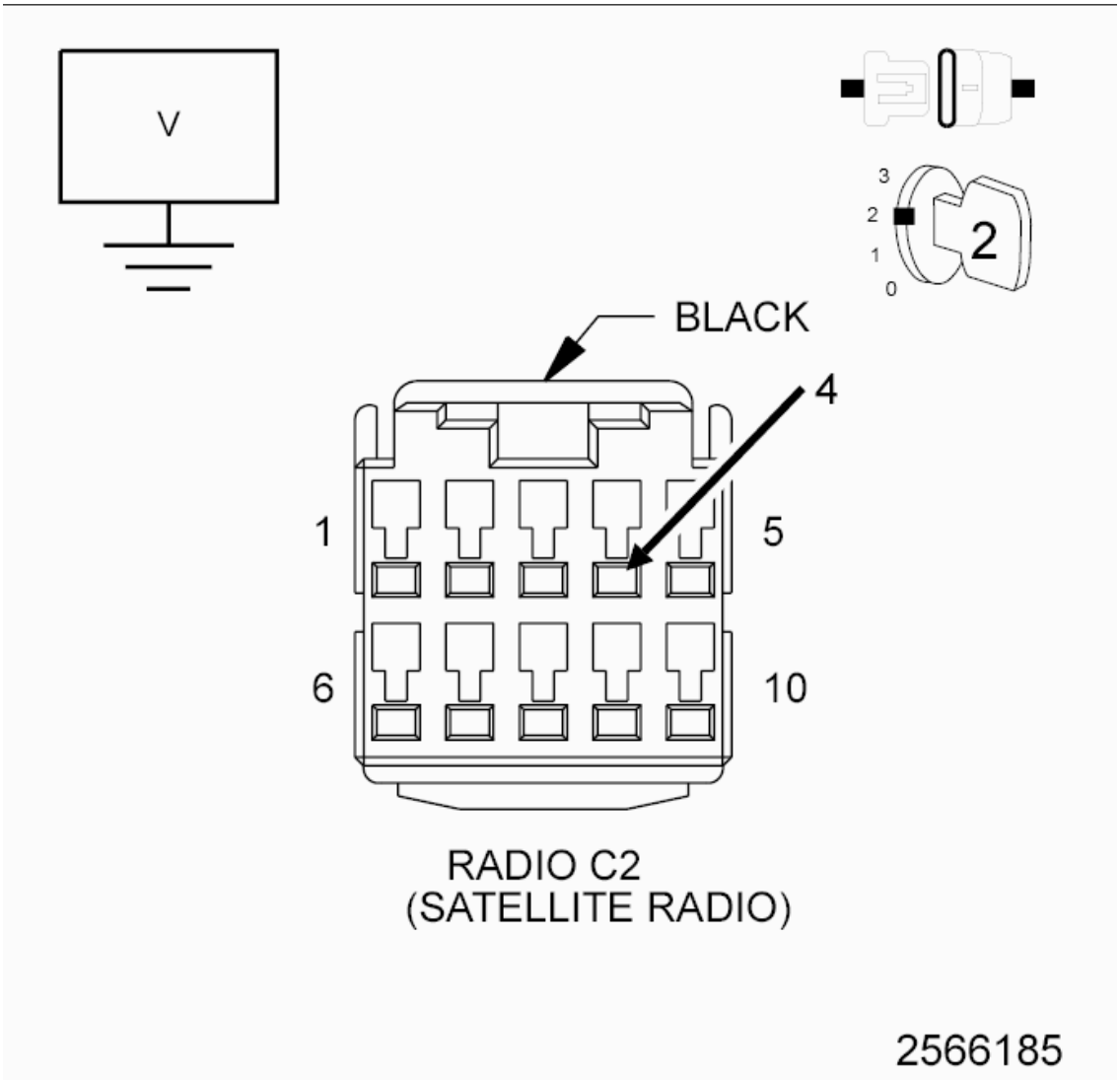

Fig. 84: Checking For Voltage At Radio
Courtesy of CHRYSLER GROUP, LLC

1. While back probing, measure the voltage between the (X793) Microphone Feed circuit and ground at the Radio C2 harness connector.

NOTE: The graphic shows the connector for reference only. Back probe the harness connector.

Is the voltage above 10.0 volts?

Yes

- Repair the (X793) Microphone Feed circuit for an open.
- Perform the BODY VERIFICATION TEST. Refer to **STANDARD PROCEDURE** .

No

- Go To 5

5. **RESTORE THE VEHICLE CONFIGURATION**
   1. With the scan tool, restore the vehicle configuration.
   2. Turn the ignition off, then back on.
   3. With the scan tool, read the active DTCs.

   Does the scan tool display B143E-MICROPHONE 2 CIRCUIT LOW as active?

   Yes

   - Replace the Radio in accordance with the Service Information.
   - Perform the BODY VERIFICATION TEST. Refer to **STANDARD PROCEDURE** .

   No

   - Test complete, the condition or conditions that originally set this DTC are not present at this time. Using the wiring diagrams as a guide, check all related splices and connectors for signs of water intrusion, corrosion, pushed out or bent terminals and correct pin tension.
   - Perform the BODY VERIFICATION TEST. Refer to **STANDARD PROCEDURE** .
6. **CHECK THE INSIDE REARVIEW MIRROR**

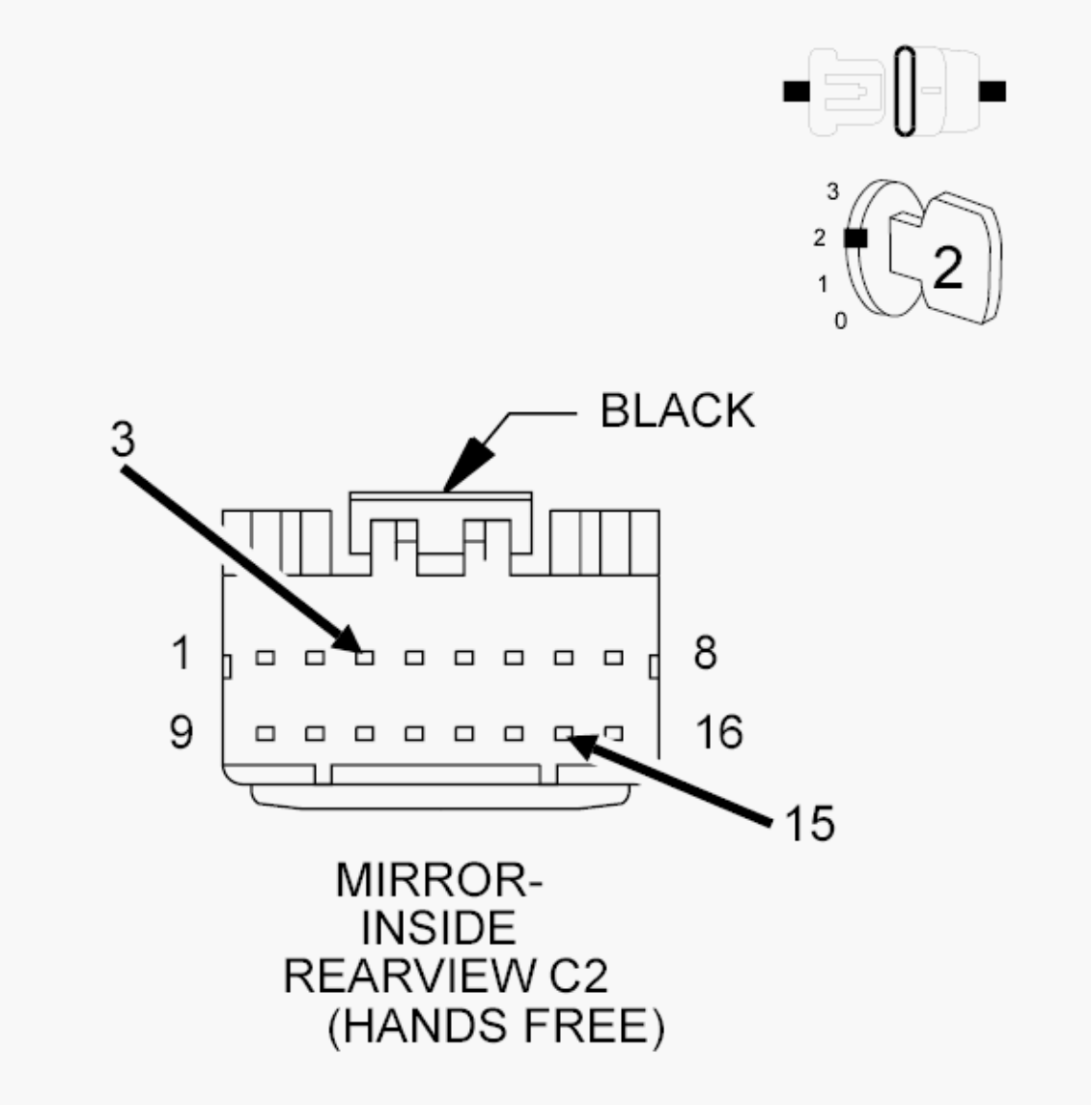

Fig. 85: Checking Inside Rearview Mirror
Courtesy of CHRYSLER GROUP, LLC

1. Turn the ignition off.
2. Disconnect the Inside Rearview Mirror C2 harness connector.
3. Connect a jumper wire between the (X793) Microphone Feed and the (X722) Microphone 2 IN (+) circuits.
4. Turn the ignition on.
5. With the scan tool, read the DTCs.

NOTE: DTC B143F-MICROPHONE 2 CIRCUIT HIGH should display as active as a result of this test.

Does the scan tool display B143E-MICROPHONE 2 CIRCUIT LOW

as active?

Yes

- Go To 7

No

- Replace the Inside Rearview Mirror in accordance with the Service Information.
- Perform the BODY VERIFICATION TEST. Refer to **STANDARD PROCEDURE** .

7. **CHECK FOR THE (X722) MICROPHONE 2 IN (+) CIRCUIT OPEN**

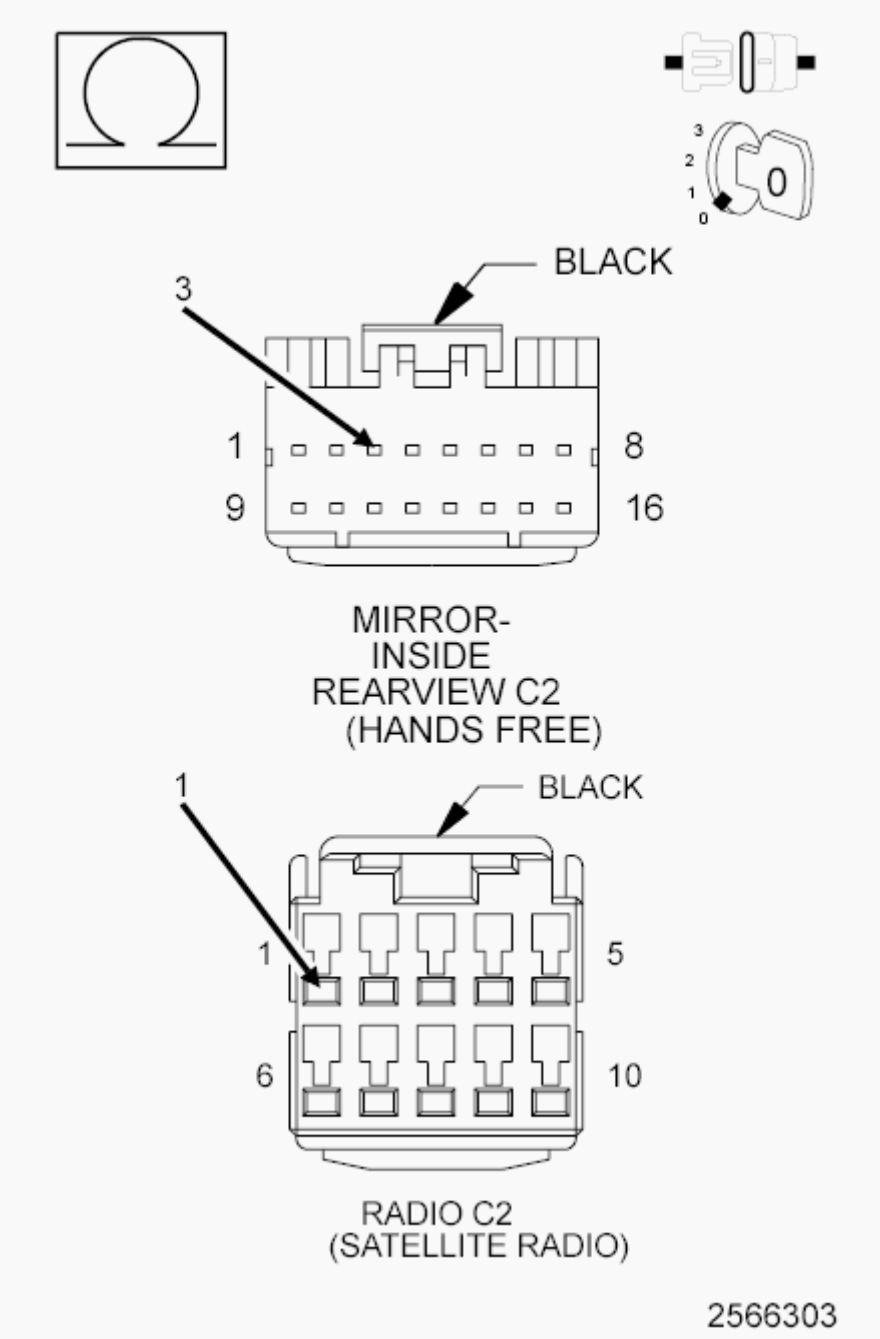

Fig. 86: Measuring Resistance Of Microphone 2 IN (+) Circuit Between Inside Rearview Mirror C2 & Radio C2 Harness Connectors
Courtesy of CHRYSLER GROUP, LLC

1. Turn the ignition off.
2. Disconnect the Radio C2 harness connector.
3. Measure the resistance of the (X722) Microphone 2 IN (+) circuit between the Inside Rearview Mirror C2 and Radio C2 harness connectors.

Is the resistance above 10K Ohms?

Yes

- Repair the (X722) Microphone 2 IN (+) circuit for an open.
- Perform the BODY VERIFICATION TEST. Refer to **STANDARD PROCEDURE** .

No

- Go To 8

8. **CHECK FOR THE (X722) MICROPHONE 2 IN (+) CIRCUIT SHORTED TO GROUND**

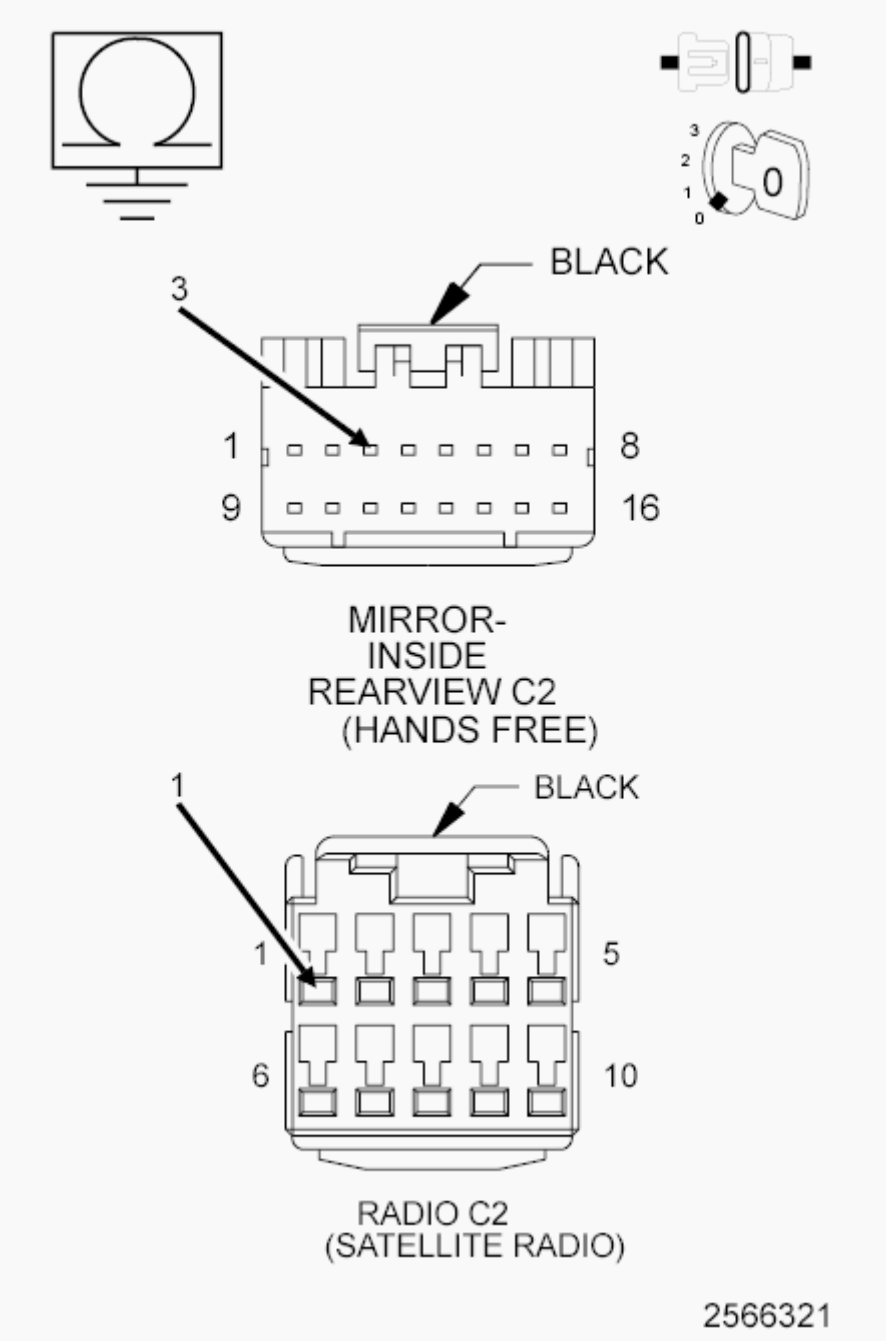

Fig. 87: Measuring Resistance Between Ground & Microphone 2 IN (+) Circuit
Courtesy of CHRYSLER GROUP, LLC

1. Measure the resistance between ground and the (X722) Microphone 2 IN (+) circuit.

   Is the resistance below 10K Ohms?

   Yes

- Repair the (X722) Microphone 2 IN (+) circuit for short to ground.
- Perform the BODY VERIFICATION TEST. Refer to **STANDARD PROCEDURE** .

No

- Replace the Radio in accordance with the Service Information.
- Perform the BODY VERIFICATION TEST. Refer to **STANDARD PROCEDURE** .

B143F-MICROPHONE 2 CIRCUIT HIGH

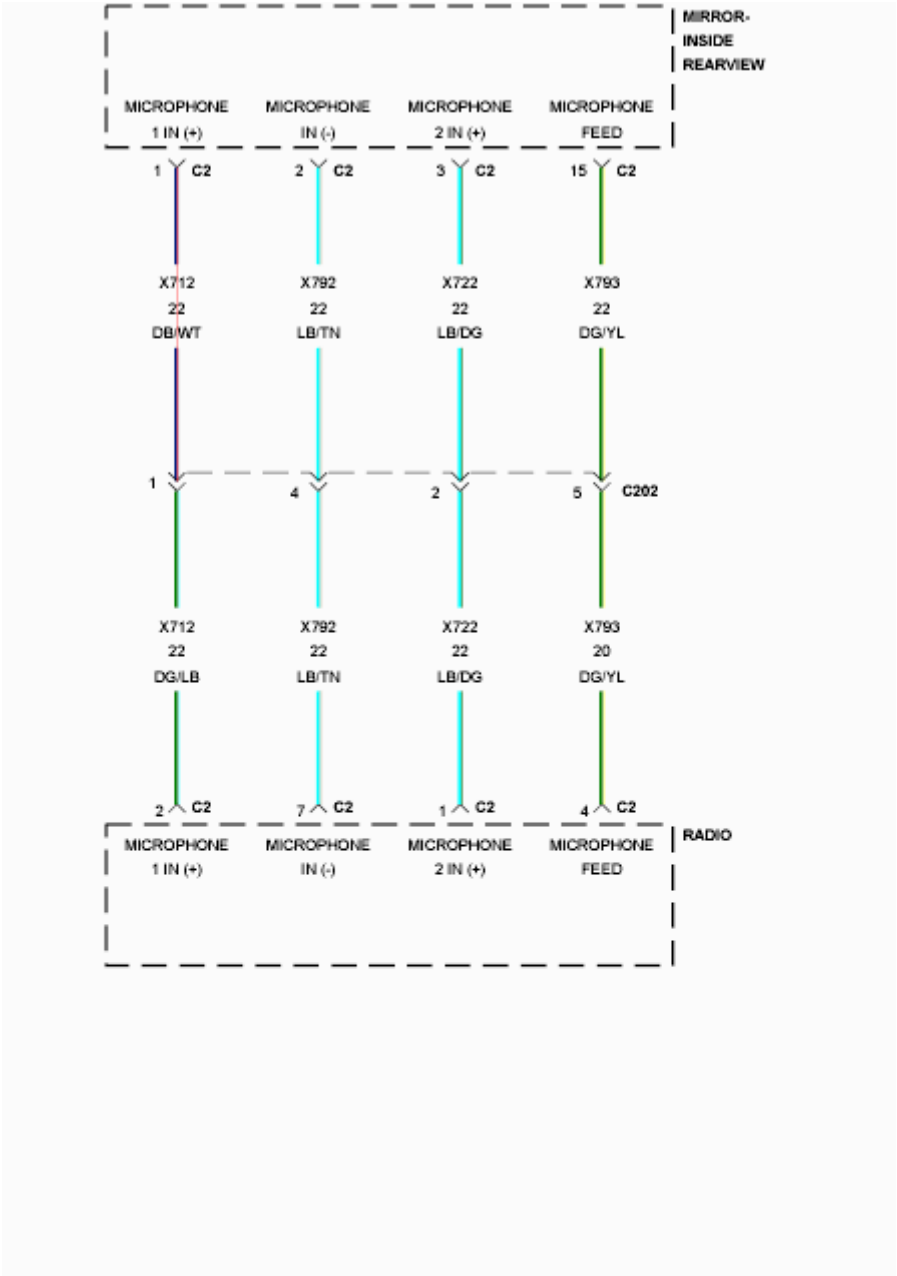
MIRROR-
INSIDE
REARVIEW
MICROPHONE
1 IN (+)
MICROPHONE
IN (-)
MICROPHONE
2 IN (+)
MICROPHONE
FEED
1 C2
2 C2
3 C2
15 C2
X712
22
DB/WT
X792
22
LB/TN
X722
22
LB/DG
X793
22
DG/YL
1
4
2
5
C202
X712
22
DG/LB
X792
22
LB/TN
X722
22
LB/DG
X793
20
DG/YL
2 C2
7 C2
1 C2
4 C2
MICROPHONE
1 IN (+)
MICROPHONE
IN (-)
MICROPHONE
2 IN (+)
MICROPHONE
FEED
RADIO

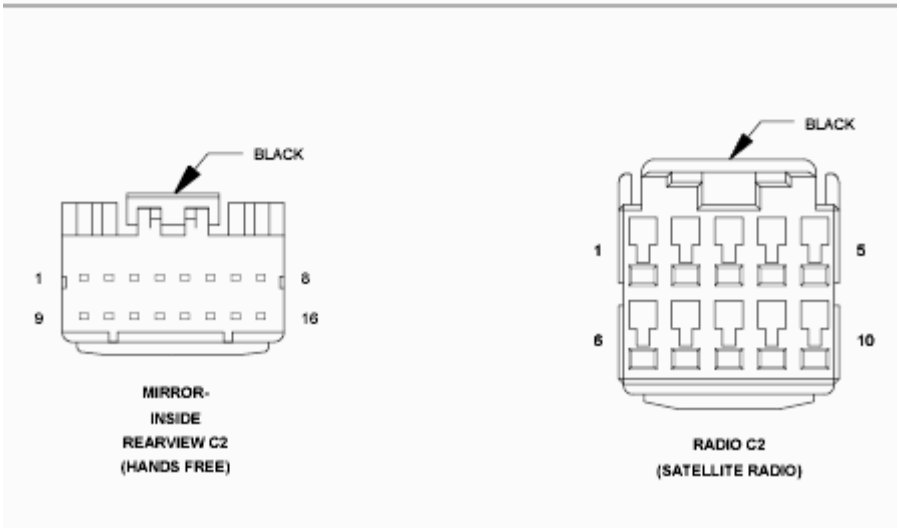
BLACK
1
8
9
16
MIRROR-
INSIDE
REARVIEW C2
(HANDS FREE)
BLACK
1
5
6
10
RADIO C2
(SATELLITE RADIO)

Fig. 88: Microphone Circuit Diagram
Courtesy of CHRYSLER GROUP, LLC

For a complete wiring diagram, **refer to appropriate SYSTEM WIRING DIAGRAMS article** .

WHEN MONITORED

With the ignition on.

SET CONDITION

The Radio detects a fault in any of the microphone circuits.

POSSIBLE CAUSES

Possible Causes
(X722) MICROPHONE 2 IN (+) CIRCUIT OPEN (X722) MICROPHONE 2 IN (+) CIRCUITS SHORTED TO VOLTAGE INSIDE REARVIEW MIRROR RADIO

DIAGNOSTIC TEST

1. **CHECK FOR ACTIVE DTC**
    1. Turn the ignition on.
    2. With the scan tool, read the active DTCs.

    Does the scan tool display this DTC as active?

    Yes

    - Go To 2

    No

    - If the DTC is stored, check for an intermittent condition. Visually inspect the related wiring harness connectors. Look for broken, bent, pushed out, or corroded terminals.
2. **INSIDE REARVIEW MIRROR**
    1. Turn the ignition off.

2. Disconnect the Inside Rearview Mirror C2 harness connector.
3. Turn the ignition on.
4. With the scan tool, read the active DTCs.

   Does the scan tool display this DTC as active?

   Yes

   - Go To 3

   No

   - Replace the Rearview Mirror in accordance with the service information.
   - Perform the BODY VERIFICATION TEST. Refer to **STANDARD PROCEDURE** .

3. **(X722) MICROPHONE 2 IN (+) CIRCUIT SHORTED TO VOLTAGE**
   1. Turn the ignition off.
   2. Disconnect the Radio C2 harness connector.
   3. Turn the ignition on.
   4. Measure the voltage of the (X722) Microphone 2 IN (+) circuit.

      Is the voltage above 1.0 volt?

      Yes

      - Repair the (X722) Microphone 2 IN (+) circuit for a short to voltage.
      - Perform the BODY VERIFICATION TEST. Refer to **STANDARD PROCEDURE** .

      No

      - Go To 4

4. **(X722) MICROPHONE 2 IN (+) CIRCUIT OPEN**
   1. Turn the ignition off.
   2. Measure the resistance of the (X722) Microphone 2 IN (+) circuit between the Radio C2 connector and the inside rearview mirror

connector.

Is the resistance below 5.0 ohms?

Yes

- Replace the Radio in accordance with the service information.
- Perform the BODY VERIFICATION TEST. Refer to **STANDARD PROCEDURE** .

No

- Repair the (X722) Microphone 2 IN (+) circuit for an open.
- Perform the BODY VERIFICATION TEST. Refer to **STANDARD PROCEDURE** .

B156B-SATELLITE RADIO ANTENNA CIRCUIT

For a complete wiring diagram, **refer to appropriate SYSTEM WIRING DIAGRAMS article** .

WHEN MONITORED

With the ignition on and the Satellite Radio in seek mode.

SET CONDITION

This DTC sets when the radio is in satellite mode and detects a shorted or open antenna circuit for more than five milliseconds.

POSSIBLE CAUSES

Possible Causes
SHORTED OR OPEN ANTENNA CABLE SHORTED OR OPEN ANTENNA SATELLITE RADIO RECEIVER

DIAGNOSTIC TEST

1. **TEST FOR INTERMITTENT CONDITION**
    1. Turn the ignition on.
    2. With the scan tool, erase all Satellite Radio DTCs.

3. Turn the ignition and radio on.
4. Put the satellite radio in seek up mode for two loops around the band cycle.
5. With the scan tool, read the DTCs.

   Does the scan tool display active: B156B-Satellite Radio Antenna Circuit?

   Yes

   - Go To 2

   No

   - Test complete, the condition or conditions that originally set this DTC are not present at this time. Using the wiring diagrams as a guide, check all related splices and connectors for signs of water intrusion, corrosion, pushed out or bent terminals and correct pin tension. Repair as necessary.
   - Perform the BODY VERIFICATION TEST. Refer to **STANDARD PROCEDURE** .

2. **CHECK THE ANTENNA AND CABLE**
   1. Disconnect the Satellite Radio Antenna connector at the rear of the Radio.
   2. Connect the Radio Diagnostic Tool (special tool #9977-6-SAT, Antenna) to the Satellite Antenna connection on the back of the Radio.
   3. Make sure one of the front doors is still open.
   4. Using the scan tool, erase the DTCs.
   5. Turn the ignition on.
   6. Turn the Radio on.
   7. Using the scan tool, read the active Radio DTCs.

      Does the scan tool display active: B156B-Satellite Radio Antenna Circuit?

      Yes

      - Replace the Satellite Radio in accordance with the Service

Information.

- Perform the BODY VERIFICATION TEST. Refer to **STANDARD PROCEDURE** .

No

- Go To 3

3. **TEST THE SATELLITE ANTENNA CABLE**
   1. Disconnect the Satellite Antenna cable at the Satellite Antenna.
   2. Connect the appropriate Radio Diagnostic Tool (special tool #9977-6-1, Adapter) or (special tool #9977-6-3, Adapter) to the Satellite Antenna cable at the back of the Radio.
   3. Connect the appropriate Radio Diagnostic Tool (special tool #9977-6-4, Jumper) or (special tool #9977-6-2, Jumper) to the Satellite Antenna cable at the Satellite Antenna.
   4. Measure the Resistance across the terminals on the tool.

   Is the resistance above 52.5 Ohms or below 47.5 Ohms?

   No

   - Use the Radio Diagnostic Tool (special tool #9977-6, Kit, Radio Antenna Diagnostic) to locate the open or short circuit, repair or replace the Satellite Antenna cable as necessary.
   - Perform the BODY VERIFICATION TEST. Refer to **STANDARD PROCEDURE** .

   Yes

   - Replace the Satellite Antenna in accordance with the Service Information.
   - Perform the BODY VERIFICATION TEST. Refer to **STANDARD PROCEDURE** .

B1570-USB COMMUNICATION PERFORMANCE

For a complete wiring diagram, **refer to appropriate SYSTEM WIRING DIAGRAMS article** .

WHEN MONITORED

With the ignition on.

SET CONDITION

This DTC will set by connecting an unsupported USB device into the USB port.

POSSIBLE CAUSES

Possible Causes
UNSUPPORTED USB DEVICE RADIO

DIAGNOSTIC TEST

1. **CHECK FOR AN INTERMITTENT CONDITION**

   NOTE: Use a known good USB device to perform the following tests.

   1. Using the scan tool, record and erase the radio DTCs.
   2. Cycle the ignition switch from on to off, wait five seconds and then back to on.
   3. Connect a known good USB device into the USB port.
   4. Using the scan tool, read the active radio DTCs.

      Does the scan tool display active: B1570-USB COMMUNICATION PERFORMANCE?

      Yes

      - Go To 2

      No

      - Test complete.
      - Perform the BODY VERIFICATION TEST. Refer to **STANDARD PROCEDURE** .
2. **CHECK THE CONNECTORS AND HARNESS**
   1. Turn the ignition off.

2. Disconnect the USB harness connector at the back of the radio.
3. Inspect the connectors and harness between the USB port and the radio.

   Are there any issues with the harness or connectors?

   Yes

   - Repair or replace as needed.
   - Perform the BODY VERIFICATION TEST. Refer to **STANDARD PROCEDURE** .

   No

   - Replace the radio in accordance with the Service Information. Refer to **RADIO, REMOVAL** .
   - Perform the BODY VERIFICATION TEST. Refer to **STANDARD PROCEDURE** .

B157B-SATELLITE REGION MISMATCH - US/CANADA

For a complete wiring diagram, **refer to appropriate SYSTEM WIRING DIAGRAMS article** .

WHEN MONITORED

Continuously with the ignition on and the radio turned on and set to satellite mode.

SET CONDITION

This DTC will set if the radio country code is set to US or Canada and the satellite module contains no US or Canadian tier vectors.

POSSIBLE CAUSES

Possible Causes
INCORRECT VEHICLE CONFIGURATION INCORRECT RADIO

DIAGNOSTIC TEST

1. **CHECK FOR AN ACTIVE DTC**

1. Turn the radio on and place it in satellite mode.
2. With the scan tool, read the radio DTCs.

   Does the scan tool display active: B157B-SATELLITE REGION MISMATCH - US/CANADA?

   Yes

   - Go To 2

   No

   - Test Complete.

2. **CHECK THE RADIO**
   1. With the scan tool, verify the radio is programmed for the proper country code.

      Does the scan tool display a country code of US or Canada?

      Yes

      - Replace the radio in accordance with the Service Information. Refer to **RADIO, REMOVAL** .
      - Perform the BODY VERIFICATION TEST. Refer to **STANDARD PROCEDURE** .

      No

      - Verify the vehicle configuration.
      - Perform the BODY VERIFICATION TEST. Refer to **STANDARD PROCEDURE** .

B157C-SATELLITE REGION MISMATCH - REST OF WORLD

For a complete wiring diagram, **refer to appropriate SYSTEM WIRING DIAGRAMS article** .

WHEN MONITORED

Continuously with the ignition on and the radio turned on and set to satellite mode.

SET CONDITION

This DTC will set if the radio country code is not set to US or Canada and the satellite module is present.

POSSIBLE CAUSES

Possible Causes
INCORRECT VEHICLE CONFIGURATION INCORRECT RADIO

DIAGNOSTIC TEST

1. **CHECK FOR AN ACTIVE DTC**
    1. Turn the radio on and place it in satellite mode.
    2. With the scan tool, read the radio DTCs.

    Does the scan tool display active: B157C-SATELLITE REGION MISMATCH - REST OF WORLD?

    Yes

    - Go To 2

    No

    - Test Complete.
2. **CHECK THE RADIO**
    1. With the scan tool, verify the radio is programmed for the proper country code.

    Does the scan tool display a country code of other than US or Canada?

    Yes

    - Replace the radio in accordance with the Service Information. Refer to **RADIO, REMOVAL** .
    - Perform the BODY VERIFICATION TEST. Refer to **STANDARD PROCEDURE** .

    No

- Verify the vehicle configuration.
- Perform the BODY VERIFICATION TEST. Refer to **STANDARD PROCEDURE** .

U0019-CAN B BUS

For a complete wiring diagram, **refer to appropriate SYSTEM WIRING DIAGRAMS article** .

WHEN MONITORED

Continuously.

SET CONDITION

Whenever the CAN B BUS (+) or B BUS (-) circuit is open, shorted to voltage or shorted to ground, this code will set.

POSSIBLE CAUSES

Possible Causes
CAN B BUS DTCs IN THE TOTALLY INTEGRATED POWER MODULE (D54) CAN B BUS (-) CIRCUIT OPEN (D55) CAN B BUS (+) CIRCUIT OPEN RADIO

DIAGNOSTIC TEST

1. **TEST FOR INTERMITTENT CONDITION**
    1. Turn the ignition on.
    2. With the scan tool, record and erase DTCs.
    3. Cycle the ignition from on to off three times.
    4. Turn the ignition on.
    5. With the scan tool, read DTCs.

    Does the scan tool display: U0019-CAN B BUS CIRCUIT?

    Yes

    - Go To 2

No

- The conditions that caused this code to set are not present at this time. Using the wiring diagram/schematic as a guide, inspect the wiring and connectors.
- Perform the BODY VERIFICATION TEST. Refer to **STANDARD PROCEDURE** .

2. **CHECK TOTALLY INTEGRATED POWER MODULE DTCs**
   1. With the scan tool, read Totally Integrated Power Module DTCs

      Does the scan tool display any CAN B BUS DTCs - ACTIVE?

      Yes

      - Perform the appropriate diagnostic procedure. Refer to **DIAGNOSTIC CODE INDEX** .

      No

      - Go To 3

3. **CAN B BUS (+) CIRCUIT OPEN**
   1. Turn the ignition off.
   2. Disconnect the Radio C2 harness connector.
   3. Disconnect the Totally Integrated Power Module C3 harness connector.
   4. Measure the resistance of the (D55) CAN B BUS (+) circuit between the Totally Integrated Power Module C3 harness connector and the Radio C2 harness connector.

      Is the resistance below 2.0 Ohms?

      Yes

      - Go To 4

      No

      - Repair the CAN B BUS (+) circuit for an open.
      - Perform the BODY VERIFICATION TEST. Refer to **STANDARD PROCEDURE** .

4. **CAN B BUS (-) CIRCUIT OPEN**
   1. Measure the resistance of the (D54) CAN B BUS (-) circuit between the Totally Integrated Power Module C3 harness connector and the Radio C2 harness connector.

      Is the resistance below 2.0 Ohms?

      Yes

      - Replace the Radio in accordance with the Service Information.
      - Perform the BODY VERIFICATION TEST. Refer to **STANDARD PROCEDURE** .

      No

      - Repair the CAN B BUS (-) circuit for an open.
      - Perform the BODY VERIFICATION TEST. Refer to **STANDARD PROCEDURE** .

U0151-LOST COMMUNICATION WITH OCCUPANT RESTRAINT CONTROLLER (ORC)

For a complete wiring diagram, **refer to appropriate SYSTEM WIRING DIAGRAMS article** .

WHEN MONITORED

Continuously when the ignition is on.

Battery voltage between 10 and 16 volts.

Ignition Off Draw (IOD) fuse installed.

Totally Integrated Power Module (TIPM) is configured correctly.

SET CONDITION

Bus messages not received from the Occupant Restraint Controller (ORC) for approximately two to five seconds.

POSSIBLE CAUSES

Possible Causes

CAN BUS CIRCUITS OPEN OR SHORTED
DTCS RELATED TO BATTERY VOLTAGE, IGNITION, OR VIN MESSAGES
OCCUPANT RESTRAINT CONTROLLERS POWER AND GROUND
TIPM NOT CONFIGURED CORRECTLY
OCCUPANT RESTRAINT CONTROLLER
MODULE THAT SET THIS DTC

DIAGNOSTIC TEST

VERIFY THE DIAGNOSTIC TROUBLE CODE (DTC) IS ACTIVE

NOTE: Make sure the IOD fuse is installed and the battery is fully charged before proceeding.

1. Turn the ignition on.
2. With the scan tool, read active DTCs.

   Is this DTC active?

   Yes

   - Refer to **DIAGNOSIS AND TESTING** and perform the U0151-LOST COMMUNICATION WITH OCCUPANT RESTRAINT CONTROLLER (ORC) diagnostic procedure.

   No

   - Refer to **DIAGNOSIS AND TESTING** and perform the STORED LOST COMMUNICATION DTCs diagnostic procedure.

U0186-LOST COMMUNICATION WITH AUDIO AMPLIFIER

For a complete wiring diagram, **refer to appropriate SYSTEM WIRING DIAGRAMS article** .

WHEN MONITORED

Continuously when the ignition is on.

The battery voltage is between 10 and 16 volts.

Ignition Off Draw (IOD) fused installed.

Totally Integrated Power Module (TIPM) is configured correctly.

SET CONDITION

Bus messages not received from the Audio Amplifier for approximately two to five seconds.

POSSIBLE CAUSES

Possible Causes
CAN BUS CIRCUITS OPEN OR SHORTED
DTCS RELATED TO BATTERY VOLTAGE, IGNITION, OR VIN MESSAGES
AMPLIFIER POWER AND GROUND
TIPM NOT CONFIGURED CORRECTLY
AMPLIFIER
MODULE THAT SET THIS DTC

DIAGNOSTIC TEST

VERIFY THE DIAGNOSTIC TROUBLE CODE (DTC) IS ACTIVE

NOTE: Make sure the IOD fuse is installed and the battery is fully charged before proceeding.

1. Turn the ignition on.
2. With the scan tool, read the active DTCs.

   Is this DTC active?

   Yes

   - Refer to **DIAGNOSIS AND TESTING** and perform the U0186-LOST COMMUNICATION WITH AUDIO AMPLIFIER diagnostic procedure.

   No

   - Refer to **DIAGNOSIS AND TESTING** and perform the STORED

LOST COMMUNICATION DTCs diagnostic procedure.

U0197-LOST COMMUNICATION WITH HANDS FREE PHONE MODULE

For a complete wiring diagram, **refer to appropriate SYSTEM WIRING DIAGRAMS article** .

WHEN MONITORED

Continuously when the ignition is on.

The battery voltage is between 10 and 16 volts.

Ignition Off Draw (IOD) fused installed.

Totally Integrated Power Module (TIPM) is configured correctly.

SET CONDITION

Bus messages not received from the Hands Free Module (HFM) for approximately two to five seconds.

POSSIBLE CAUSES

Possible Causes
CAN BUS CIRCUITS OPEN OR SHORTED DTCS RELATED TO BATTERY VOLTAGE, IGNITION, OR VIN MESSAGES HANDS FREE MODULE POWER AND GROUND TIPM NOT CONFIGURED CORRECTLY HANDS FREE MODULE MODULE THAT SET THIS DTC

DIAGNOSTIC TEST

VERIFY THE DIAGNOSTIC TROUBLE CODE (DTC) IS ACTIVE

NOTE: Make sure the IOD fuse is installed and the battery is fully charged before proceeding.

1. Turn the ignition on.
2. With the scan tool, read the active DTCs.

Is this DTC active?

Yes

- Refer to **DIAGNOSIS AND TESTING** and perform the U0197-LOST COMMUNICATION WITH HANDS FREE PHONE MODULE diagnostic procedure.

No

- Refer to **DIAGNOSIS AND TESTING** and perform the STORED LOST COMMUNICATION DTCs diagnostic procedure.

2014 ACCESSORIES AND EQUIPMENT

Audio/Video/Entertainment/Connectivity - Service Information - Compass & Patriot

DESCRIPTION

DESCRIPTION

Several combinations of radio receivers are offered. The audio system uses an ignition switched source of battery current so that the system will only operate when the ignition switch is in the RUN or ACCESSORY positions.

An optional navigation radio is available on this vehicle. With this system, the operator has the option of choosing a street address, point of interest, trip itinerary and other features outlined in the operator's manual.

The audio system includes the following components:

- Amplifier (if equipped)
- Antenna
- Antenna - satellite radio and navigation (if equipped)
- Radio noise suppression components
- Radio receiver
- Satellite receiver module (if equipped)
- Speakers

Certain functions and features of the audio system rely upon resources shared with other electronic modules in the vehicle over the Cabin Compartment Node (CCN) bus network. The data bus network allows the sharing of sensor information. For diagnosis of these electronic modules or of the data bus network, the use of a scan tool and the proper Diagnostic Procedures Service Information are recommended.

OPERATION

OPERATION

The audio system components are designed to provide audio entertainment and information through the reception, tuning and amplification of locally broadcast radio signals in both the Amplitude Modulating (AM) and Frequency Modulating

(FM) commercial frequency ranges.

The available satellite radio system is a subscription based service. Information sent by satellite is transmitted to the roof mounted antenna, then to the satellite receiver module. The operator then has the choice of multiple music/information channels.

The available navigation radio system receives GPS signals from up to eight satellites to display the position and direction of the vehicle. Map information is supplied through a DVD-ROM. An electronic gyro-sensor and the vehicle's speed sensor enable the system to display the present vehicle position even in locations where GPS signals may be blocked, however system performance will be degraded.

When a destination is selected, the navigation system uses information from the map to quickly calculate a route. As the vehicle is driven along the chosen route, the operator is guided with pictorial displays and voice prompts. The navigation system will also reroute the user if a turn is missed. For complete operating instructions, refer to the owner's manual included with the vehicle.

The audio system components operate on battery current received through a fuse in the Junction Block (JB) on a fused ignition switch output (RUN-ACC) circuit so that the system will only operate when the ignition switch is in the ON or ACCESSORY positions.

DIAGNOSIS AND TESTING

AUDIO

AUDIO SYSTEM

Any diagnosis of the Audio system should begin with the use of scan tool. For information on the use of the scan tool, refer to the appropriate Diagnostic information.

Refer to the appropriate wiring information.

WARNING: **Disable the airbag system before attempting any steering wheel, steering column, seat belt tensioner, side airbag or instrument panel component diagnosis or service. Disconnect and**

isolate the negative battery (ground) cable. Wait two minutes for the airbag system capacitor to discharge before performing further diagnosis or service. This is the only sure way to disable the airbag system. Failure to follow these instructions may result in accidental airbag deployment and possible serious or fatal injury.

AUDIO SYSTEM DIAGNOSIS TABLE

CONDITION	POSSIBLE CAUSES	CORRECTION
NO AUDIO	1. Fuse faulty.	1. Check radio fuse and Ignition-Off Draw (IOD) fuse in Totally Integrated Power Module (TIPM). Replace fuses, if required.
	2. Radio connector faulty.	2. Check for loose or corroded radio connector. Repair, if required.
	3. Wiring faulty.	3. Check for shorted or open wires. Repair wiring, if required.
	4. Radio ground faulty.	4. Check for continuity between radio chassis and a known good ground. There should be continuity. Repair ground, if required.
	5. Speakers faulty.	5. Replace speaker as necessary.
	6. Radio faulty.	6. Refer to appropriate Diagnostic Service Information .
NO RADIO DISPLAY	1. Fuse faulty.	1. Check radio fuse and Ignition-Off Draw (IOD) fuse in Junction Block (JB). Replace fuses, if required.
	2. Radio connector	2. Check for loose or corroded

	faulty.	radio connector. Repair, if required.
	3. Wiring faulty.	3. Check for battery voltage at radio connector. Repair wiring, if required.
	4. Radio ground faulty.	4. Check for continuity between radio chassis and a known good ground. There should be continuity. Repair ground, if required.
POOR RADIO RECEPTION	5. Radio faulty.	5. Refer to appropriate Diagnostic Service Information .
	1. Antenna faulty.	1. Refer to **BODY AND CABLE, ANTENNA, DIAGNOSIS AND TESTING**.
	2. Radio ground faulty.	2. Check for continuity between radio chassis and a known good ground. There should be continuity. Repair ground, if required.
	3. Radio noise suppression faulty.	3. Repair or replace ground strap as necessary.
	4. Radio faulty.	4. Refer to appropriate Diagnostic Service Information .
	5. Faulty rear window defogger.	5. Verify that the rear defogger grid is functioning properly, repair as necessary. Refer to **DIAGNOSIS AND TESTING** .
SOUND DISTORTION (VIBRATION FROM SPEAKER AREA, BUZZING -	1. Door trim panel loose or missing fasteners.	1. Inspect door trim panel and correct as necessary. Replace any missing fasteners.

HUMMING)		
	2. Water shield loose or misaligned.	2. Inspect water shield and adjust as required.
	3. Items placed in door trim panel map pockets vibrating or moving from side to side.	3. Remove items from door trim panel. Ensure that vibration is no longer present.
NO COMPACT DISC/DVD OPERATION	1. Faulty CD/DVD.	1. Insert known good CD/DVD and test operation.
	2. Foreign material on CD/DVD.	2. Clean CD/DVD and test operation.
	3. Condensation on CD/DVD or optics.	3. Allow temperature of vehicle interior to stabilize and test operation.
	4. Faulty radio.	4. Refer to appropriate Diagnostic Service Information .

STANDARD PROCEDURE

STANDARD PROCEDURE - RADIO BACKUP AND RESTORE

The radio's internal hard disk drive (HDD) can be backed up and restored using a USB memory stick to save customer data in the event that a radio replacement is required. **This procedure can only be performed with radios equipped with a hard disk drive (RER, REN, RHR, RHB, RBZ, REU, RHP, RHW & RB2).**

1. Turn the ignition to RUN, engine OFF.
2. Connect the scan tool to the vehicle connector and perform the following steps:
    1. Go to the "Vehicle View"
    2. Click on the "Radio" icon button from the topology view
    3. Select the "System Tests" folder
    4. Click on the "Radio Hard-drive Back-up" option, and then click "Continue"
    5. When prompted to "Please connect portable Back-up Hard-drive to the

radio before continuing" insert a blank USB memory stick with sufficient space into the radio USB port and click "Continue".

6. On the radio screen, select the "HDD Backup" option and follow the instructions on the radio screen. Once complete, remove the USB memory stick, select the back arrow on the radio screen and then select "Exit".

NOTE: Hard drive back up times can vary based on radio hard drive used space. Ensure that the vehicle has the proper battery voltage to complete the entire download.

7. On the scan tool, click "Complete" and disconnect from the vehicle.

3. With the ignition in the RUN position, engine OFF and the scan tool connected to the vehicle, perform the following steps to restore the data:
   1. Go to "Vehicle View".
   2. Click on the "Radio" icon button.
   3. Select the "System Tests" folder.
   4. Click on the "Radio Hard-drive Back-up" option, and then click "Continue".
   5. When prompted to "Please connect portable Backup hard-drive to the radio before continuing" plug in the USB memory stick that was used in the Back Up procedure, into the USB radio port, and click "Continue".
   6. On the radio screen, select the "HDD Restore" option and follow the instructions on the radio screen. Once complete, select the back arrow and then select "Exit".
   7. On the scan tool, click "Complete" and disconnect it from the vehicle.
   8. Remove the USB memory stick from the radio and turn the ignition to the OFF position.
   9. Open the driver door and the close all doors. Wait for a minimum of two minutes to allow the vehicle communication bus to go to sleep.
   10. Turn the ignition on, and turn on the radio. If you do not see the personal files on the hard drive, repeat step **"h"** above and wait a minute longer.

SPECIFICATIONS

SPECIFICATIONS

SPECIFICATIONS

DESCRIPTION	N.m	Ft. Lbs.	In. Lbs.
Engine Ground Strap - Strut Tower	12	-	106
Engine Ground Strap - Cylinder Head	28	21	-
Hood Hinge Ground Strap	28	21	-
Muffler Ground Strap	8	-	71

AMPLIFIER

DESCRIPTION

DESCRIPTION

The optional premium speaker system includes a separate audio power amplifier. The amplifier is located on the floor behind the spare tire in the trunk.

OPERATION

OPERATION

The power amplifier electronically increases the frequency response of the normal audio signal output from the radio amplifier in order to improve the acoustic performance of the speakers. On vehicles equipped with an amplifier, the amplifier section of the radio becomes a pre-amplifier.

The amplifier receives audio signal inputs for speaker channels from the radio, then sends amplified audio outputs with dedicated feed and return circuits to the individual speakers.

REMOVAL

REMOVAL

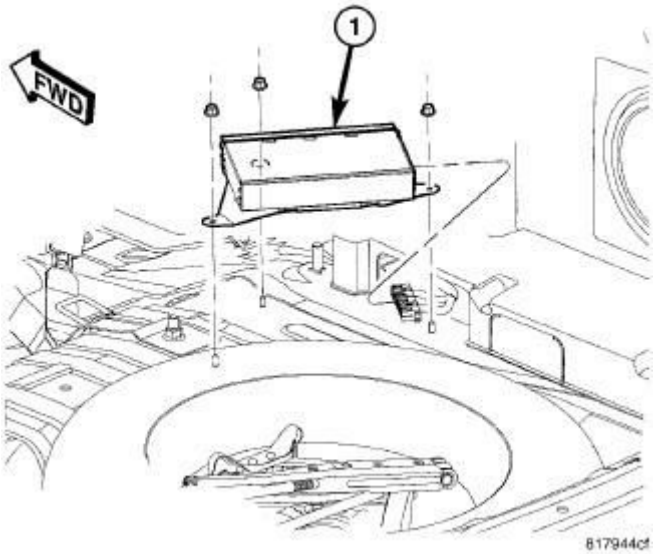

Fig. 1: Removing/Installing Amplifier
Courtesy of CHRYSLER GROUP, LLC

1. Disconnect and isolate the battery negative cable.
2. Remove the retaining fasteners.
3. Disconnect the wire harness connector.
4. Remove the amplifier (1).

INSTALLATION

INSTALLATION

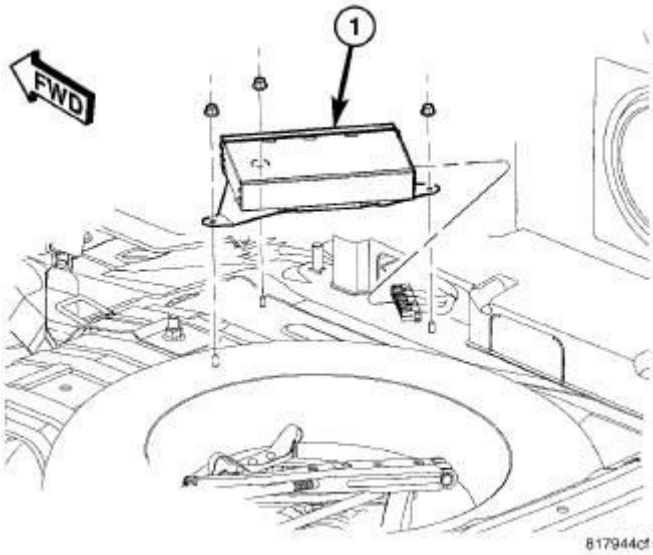

Fig. 2: Removing/Installing Amplifier
Courtesy of CHRYSLER GROUP, LLC

1. Install amplifier (1).
2. Install the mounting fasteners.
3. Connect wire harness connector to amplifier.
4. Connect battery negative cable.

ANTENNA, SATELLITE

DESCRIPTION

DESCRIPTION

The satellite radio antenna is secured by adhesive foam and retainers which protrude through a hole in the roof panel. Two wires from the antenna are connected to the body harness above the headliner.

OPERATION

OPERATION

The satellite radio antenna receives signals from orbiting satellites and sends these signals to the satellite receiver module. The satellite radio antenna must have open space in which to operate. Items carried on the roof, parking inside etc. can have an effect on the antenna's ability to receive signals.

REMOVAL

REMOVAL

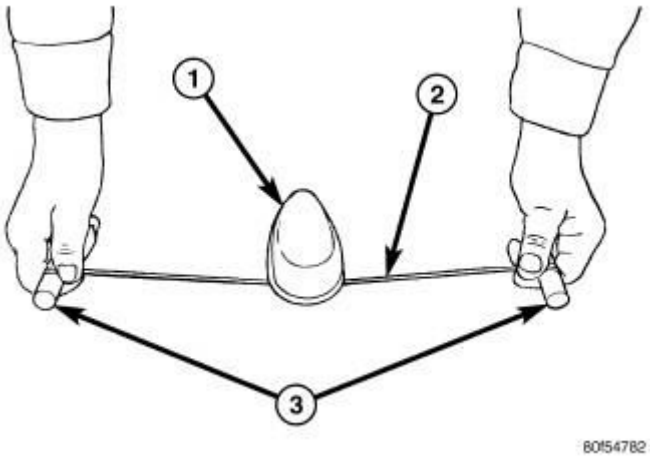

Fig. 3: Removing Satellite Radio Antenna
Courtesy of CHRYSLER GROUP, LLC

1. Disconnect and isolate the battery negative cable.
2. Lower the rear portion of the headliner as necessary to access underside of antenna (1). Refer to **HEADLINER, REMOVAL** .
3. An adhesive removal tool can be created by using an 18 to 24 inch piece of nylon cord (2) wrapped around two handles (3). Using the removal tool, guide the nylon cord under the dust seal on the forward side of the antenna. Grab the handles and work the cord through the adhesive. Continue this for 360° around the antenna.
4. Disconnect the wire harness connectors from the antenna.
5. From inside the vehicle, and using a flat bladed tool, depress one of the retaining tabs on the antenna. Push up the one side of the antenna connector through the roof panel. Depress the other side of the connector and remove the antenna.
6. Remove any remaining adhesive from roof panel with isopropyl alcohol and a lint free cloth. If original antenna is being reinstalled, remove adhesive from antenna mounting surface.

INSTALLATION

INSTALLATION

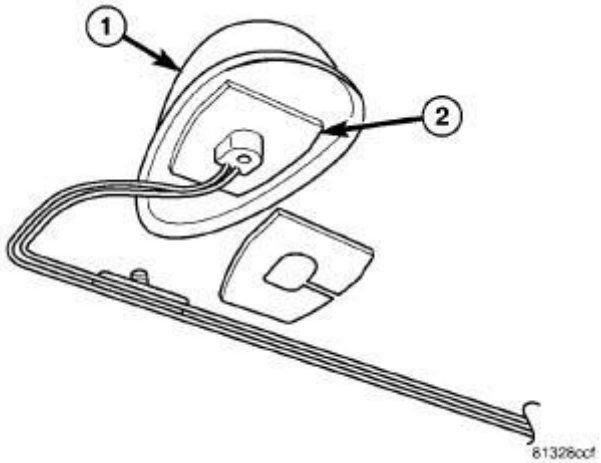

Fig. 4: Patch Adhesive On Antenna Base
Courtesy of CHRYSLER GROUP, LLC

1. If original antenna is being reinstalled, remove backing from patch adhesive (2) and apply to antenna base (1).
2. Remove backing from the adhesive on the antenna.

3. Insert wire harness through hole in roof panel. Press antenna into position until both retainers snap into place.
4. Connect wire harness connectors to antenna.
5. Install headliner. Refer to **HEADLINER, INSTALLATION** .
6. Connect battery negative cable.

BODY AND CABLE, ANTENNA

DESCRIPTION

DESCRIPTION

FIXED MAST ANTENNA

The antenna body and cable are secured below the fender panel by the antenna cap nut through a mounting hole in the side of the right front fender. The primary coaxial antenna cable is then routed beneath the fender sheet metal and through an entry hole in the right cowl side panel into the interior of the vehicle. Inside the vehicle, the primary coaxial cable is connected to a secondary instrument panel antenna coaxial cable with an in-line connector that is located behind the right end of the instrument panel. The secondary coaxial cable is then routed behind the instrument panel to the back of the radio.

ROOF MOUNTED ANTENNA

The roof mounted antenna is a combination antenna that is used for the reception of Amplitude Modulation (AM) frequencies, Frequency Modulated (FM) frequencies and Satellite signals for the Digital Satellite Radio. The primary coaxial antenna cable is then routed through an entry hole in the roof panel into the interior of the vehicle. Inside the vehicle, the primary coaxial cable is connected to a secondary instrument panel antenna coaxial cable with an in-line connector that is located behind the right end of the instrument panel. The secondary coaxial cable is then routed behind the instrument panel to the back of the radio.

OPERATION

OPERATION

The antenna body and cable connects the antenna mast to the radio. The radio antenna is an electromagnetic circuit component used to capture radio frequency signals that are broadcast by local commercial radio stations in both the

Amplitude Modulating (AM) and Frequency Modulating (FM) frequency ranges. These electromagnetic radio frequency signals induce small electrical modulations into the antenna as they move past the mast. The antenna body transfers the weak electromagnetic radio waves induced into the rigid antenna mast into the center conductor of the flexible primary antenna coaxial cable. The braided outer shield of the antenna coaxial cable is grounded through both the antenna body and the radio chassis, effectively shielding the radio waves as they are conducted to the radio. The radio then tunes and amplifies the weak radio signals into stronger electrical signals in order to operate the audio system speakers. For more information on the satellite radio operation of the roof mounted antenna, Refer to **ANTENNA, SATELLITE, OPERATION**.

DIAGNOSIS AND TESTING

DIAGNOSIS AND TESTING - ANTENNA BODY AND CABLE

The following four tests are used to diagnose the antenna with an ohmmeter:

- **TEST 1** - Mast to ground test
- **TEST 2** - Tip-of-mast to tip-of-conductor test
- **TEST 3** - Body ground to battery ground test
- **TEST 4** - Body ground to antenna coaxial cable shield test.

WARNING: Disable the airbag system before attempting any steering wheel, steering column, seat belt tensioner, side airbag or instrument panel component diagnosis or service. Disconnect and isolate the negative battery (ground) cable. Wait two minutes for the airbag system capacitor to discharge before performing further diagnosis or service. This is the only sure way to disable the airbag system. Failure to follow these instructions may result in accidental airbag deployment and possible serious or fatal injury.

The ohmmeter test lead connections for each test are shown in the illustration.

NOTE: This model has a two-piece antenna coaxial cable. Tests 2 and 4 must be conducted in two steps to isolate an

antenna cable problem. First, test the primary antenna cable (integral to the antenna body and cable) from the coaxial cable connector under the right end of the instrument panel near the right cowl side inner panel to the antenna body. Then, test the secondary antenna cable (instrument panel antenna cable) from the coaxial cable connector under the right end of the instrument panel near the right cowl side inner panel to the coaxial cable connector at the radio.

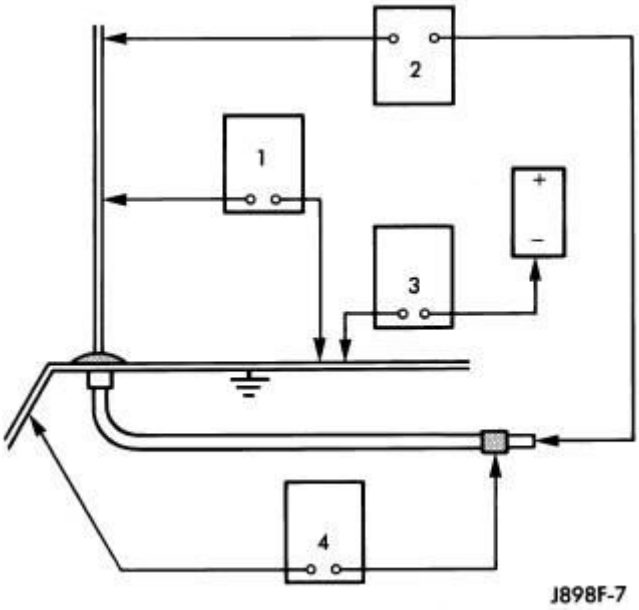

Fig. 5: Ohmmeter Test Lead Connections
Courtesy of CHRYSLER GROUP, LLC

TEST 1

Test 1 determines if the antenna mast is insulated from ground. Proceed as follows:

1. Disconnect and isolate the antenna coaxial cable connector under the right end of the instrument panel near the right cowl side inner panel.
2. Touch one ohmmeter test lead to the tip of the antenna mast (below tip if ball tip is plastic). Touch the other test lead to the antenna cap nut. Check the ohmmeter reading for continuity.
3. There should be no continuity. If OK, go to Test 2. If not OK, replace the faulty antenna body and cable.

TEST 2

Test 2 checks the antenna conductor components for an open circuit. This test should be performed first on the entire antenna circuit, from the antenna mast to the center conductor of the coaxial cable connector at the radio. If an open circuit is detected, each of the three antenna conductor components (antenna mast, antenna body and primary cable unit, instrument panel antenna secondary cable) should be isolated and tested individually to locate the exact component that is the source of the open circuit. To begin this test, proceed as follows:

1. Disconnect the instrument panel (secondary) antenna cable coaxial connector from the back of the radio.
2. Touch one ohmmeter test lead to the tip of the antenna mast. Touch the other test lead to the center conductor pin of the instrument panel antenna cable coaxial connector for the radio. Check the ohmmeter reading for continuity.
3. There should be continuity. The ohmmeter should register only a fraction of an ohm resistance. High or infinite resistance indicates a damaged or open antenna conductor. If OK, go to Test 3. If not OK, isolate and test each of the individual antenna conductor components. Replace only the faulty antenna conductor component.

TEST 3

Test 3 checks the condition of the vehicle body ground connection. To begin this test, proceed as follows:

1. This test must be performed with the battery positive cable disconnected from the battery. Disconnect and isolate both battery cables, negative cable first.
2. Reconnect the battery negative cable.
3. Touch one ohmmeter test lead to a good clean ground point on the vehicle fender. Touch the other test lead to the battery negative terminal post. Check the ohmmeter reading for continuity.
4. There should be continuity. The ohmmeter should register less than one ohm resistance. High or infinite resistance indicates a loose, corroded, or damaged connection between the battery negative terminal and the vehicle body. If OK, go to Test 4. If not OK, check the battery negative cable connection to the vehicle body and the radio noise suppression ground strap

connections to the engine and the vehicle body for being loose or corroded. Clean or tighten these connections as required.

TEST 4

Test 4 checks the condition of the connection between the antenna coaxial cable shield and the vehicle body ground as follows:

1. Disconnect and isolate the antenna coaxial cable connector under the right end of the instrument panel near the right cowl side inner panel.
2. Touch one ohmmeter test lead to a good clean ground point on the vehicle fender. Touch the other test lead to the outer crimp on the antenna coaxial cable connector under the right end of the instrument panel near the right cowl side inner panel. Check the ohmmeter reading for continuity.
3. There should be continuity. The ohmmeter should register less than one ohm resistance. High or infinite resistance indicates a loose, corroded, or damaged connection between the antenna body and the vehicle body or between the antenna body and the antenna coaxial cable shield. If not OK, clean the antenna body to fender mating surfaces and tighten the antenna cap nut to specifications.
4. Check the resistance again with an ohmmeter. If the resistance is still more then one ohm, replace the faulty antenna body and cable.

REMOVAL

REMOVAL

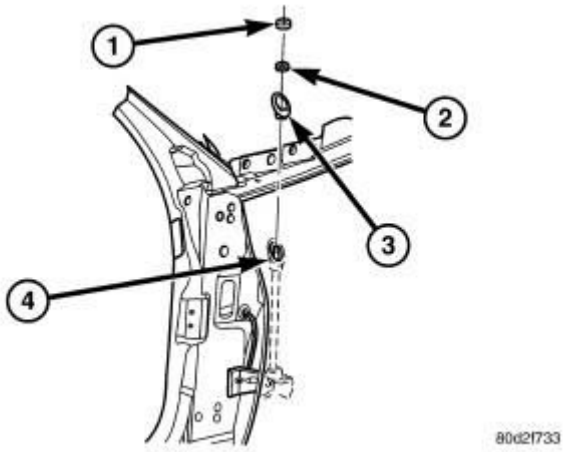

Fig. 6: Antenna Body & Cable
Courtesy of CHRYSLER GROUP, LLC

1. Disconnect and isolate the battery negative cable.
2. Remove antenna mast by unscrewing mast from antenna body. On vehicles equipped with manual retractable antenna, lower antenna fully.
3. Remove shroud (1), if equipped.
4. Remove antenna nut (2) and adapter (3)

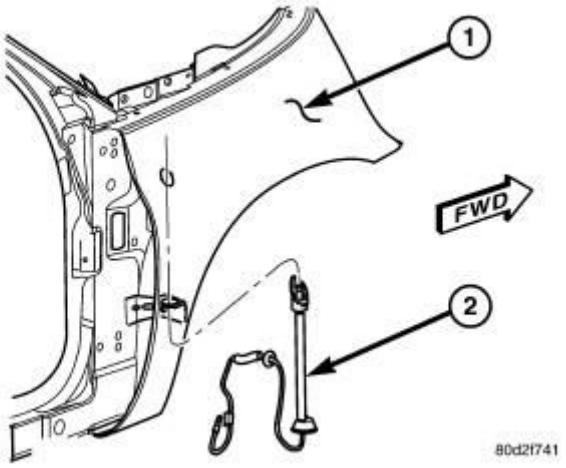

Fig. 7: Antenna Mounting
Courtesy of CHRYSLER GROUP, LLC

5. Disconnect antenna body cable from instrument panel antenna cable.
6. Remove inner fender shield as necessary to gain access to mounting fasteners.
7. Remove antenna body and cable (2) assembly from fender (1)

INSTALLATION

INSTALLATION

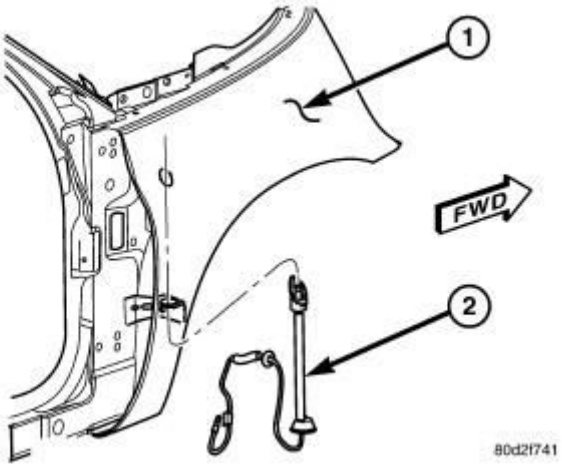

Fig. 8: Antenna Mounting
Courtesy of CHRYSLER GROUP, LLC

1. Position antenna body and cable assembly (2) into fender (1).
2. Insert antenna cable through the opening in fender.

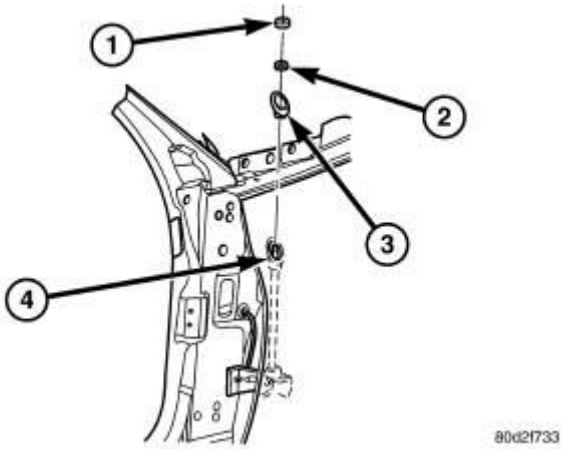

Fig. 9: Antenna Body & Cable
Courtesy of CHRYSLER GROUP, LLC

3. Seat the grommet in the side panel and connect the cable to the instrument panel harness connector.
4. Install antenna nut (2) and adapter (3).
5. Install shroud (1), if equipped.
6. Install the inner fender shield.
7. Install antenna mast. Tighten to 5 N.m (46 in. lbs.). **Ensure that the antenna mast is fully seated on antenna base and that there is no gap between the mast and base.**

8. Connect the antenna cable to the instrument panel antenna cable.
9. Install the right side cowl trim panel.
10. Connect the battery negative cable.

BODY AND CABLE, ANTENNA, SATELLITE RADIO

DESCRIPTION

DESCRIPTION

The satellite radio antenna cable connects the roof mounted antenna to the satellite receiver module. It has two connectors at each end and is routed above the headliner, then behind the left quarter panel trim.

REMOVAL

REMOVAL

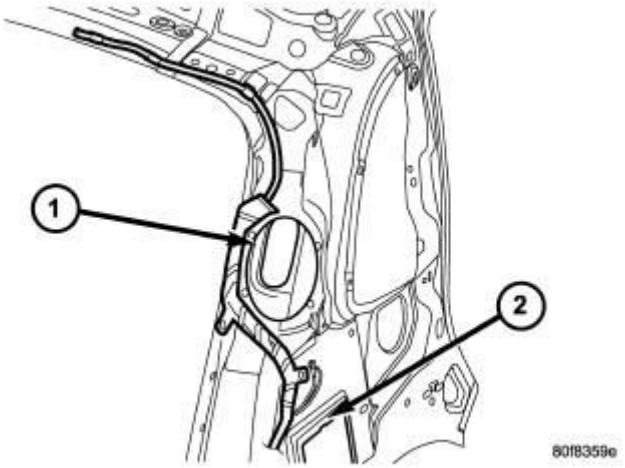

Fig. 10: Antenna Cable - Satellite Radio
Courtesy of CHRYSLER GROUP, LLC

1. Disconnect and isolate the battery negative cable.
2. Remove the rear quarter trim panel. Refer to **PANEL, QUARTER TRIM, REMOVAL** .
3. Lower the rear portion of the headliner as necessary to access the underside of the satellite antenna. Refer to **HEADLINER, REMOVAL** .
4. Detach the antenna cable (1) from the body harness. Disconnect wire harness connectors at each end of the cable.

INSTALLATION

INSTALLATION

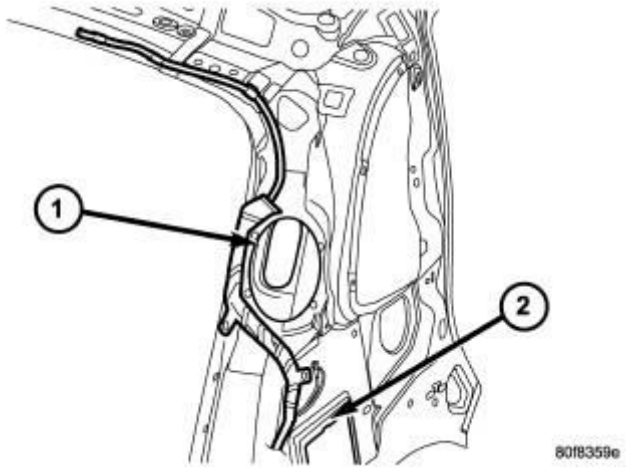

Fig. 11: Antenna Cable - Satellite Radio
Courtesy of CHRYSLER GROUP, LLC

1. Secure the antenna cable (1) to the body harness. Connect the wire harness connectors at each end of the antenna.
2. Install the headliner. Refer to **HEADLINER, INSTALLATION** .
3. Install the rear quarter trim panel. Refer to **PANEL, QUARTER TRIM, INSTALLATION** .
4. Connect the battery negative cable.

COMPONENTS, RADIO NOISE SUPPRESSION

DESCRIPTION

DESCRIPTION

Radio noise suppression devices are factory-installed standard equipment on this vehicle. Radio Frequency Interference (RFI) and ElectroMagnetic Interference (EMI) can be produced by any on-board or external source of electromagnetic energy. These electromagnetic energy sources can radiate electromagnetic signals through the air, or conduct them through the vehicle electrical system.

When the audio system converts RFI or EMI to an audible acoustic wave form, it is referred to as radio noise. This undesirable radio noise is generally manifested in the form of "buzzing," "hissing," "popping," "clicking," "crackling," and/or "whirring" sounds. In most cases, RFI and EMI radio noise can be suppressed using a combination of vehicle and component grounding, filtering and shielding

techniques. This vehicle is equipped with factory-installed radio noise suppression devices that were designed to minimize exposure to typical sources of RFI and EMI; thereby, minimizing radio noise complaints.

Radio noise suppression is accomplished primarily through circuitry or devices that are integral to the radios, audio power amplifiers and other on-board electrical components such as generators, wiper motors, blower motors, and fuel pumps that have been found to be potential sources of RFI or EMI. External radio noise suppression devices that are used on this vehicle to control RFI or EMI, and can be serviced, include the following:

- **Ground straps** - This length of braided ground strap has an eyelet terminal connector crimped to each end. They are located in various locations on the vehicle.
- **Radio Noise Suppression Capacitor** - This component is attached near the exhaust manifold.
- **Resistor-type spark plugs** - This type of spark plug has an internal resistor connected in series between the spark plug terminal and the center electrode to help reduce the production of electromagnetic radiation that can result in radio noise.

OPERATION

OPERATION

There are two common strategies that can be used to suppress Radio Frequency Interference (RFI) and ElectroMagnetic Interference (EMI) radio noise. The first suppression strategy involves preventing the production of RFI and EMI electromagnetic signals at their sources. The second suppression strategy involves preventing the reception of RFI and EMI electromagnetic signals by the audio system components.

The use of braided ground straps in key locations is part of the RFI and EMI prevention strategy. These ground straps ensure adequate ground paths, particularly for high current components such as many of those found in the starting, charging, ignition, engine control and transmission control systems. An insufficient ground path for any of these high current components may result in radio noise caused by induced voltages created as the high current seeks alternative ground paths through components or circuits intended for use by, or in close proximity to the audio system components or circuits.

Preventing the reception of RFI and EMI is accomplished by ensuring that the audio system components are correctly installed in the vehicle. Loose, corroded or improperly soldered wire harness connections, improperly routed wiring and inadequate audio system component grounding can all contribute to the reception of RFI and EMI. A properly grounded antenna body and radio chassis, as well as a shielded antenna coaxial cable with clean and tight connections will each help reduce the potential for reception of RFI and EMI.

REMOVAL

REMOVAL

COMPONENT	LOCATION
ENGINE GROUND STRAP	Refer to **ENGINE GROUND STRAP**.
HOOD HINGE GROUND STRAP	Refer to **HOOD HINGE GROUND STRAP**.
MUFFLER GROUND STRAP	Refer to **MUFFLER GROUND STRAP**.
RADIO NOISE SUPPRESSION CAPACITOR	Refer to **RADIO NOISE SUPPRESSION CAPACITOR**.
STRUT BRACKET TO BODY GROUND STRAP	Refer to **STRUT BRACKET TO BODY GROUND STRAP**.

ENGINE GROUND STRAP

1. Disconnect and isolate the battery negative cable.

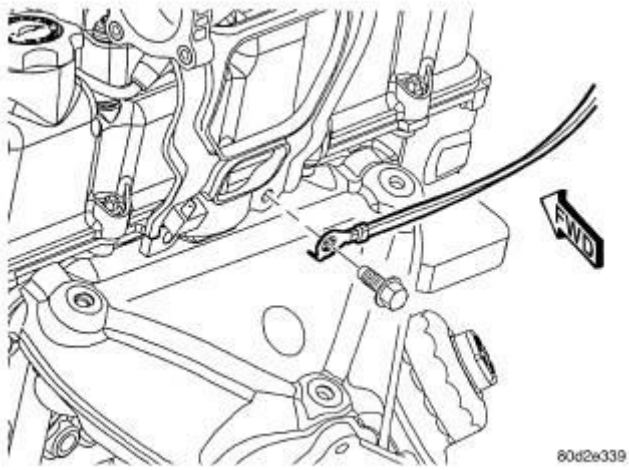

Fig. 12: Ground Strap To Engine (1.6L)

Courtesy of CHRYSLER GROUP, LLC

2. For the 1.6L Engine, remove bolt from engine cylinder head.

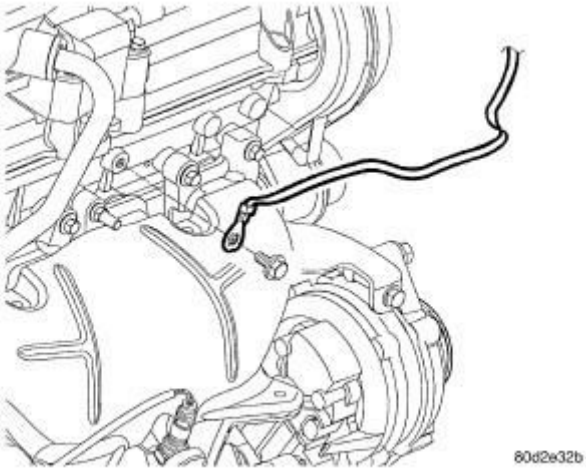

Fig. 13: Ground Strap To Engine (2.0L/2.4L)
Courtesy of CHRYSLER GROUP, LLC

3. For the 2.0/2.4L Engine, remove bolt from engine cylinder head.

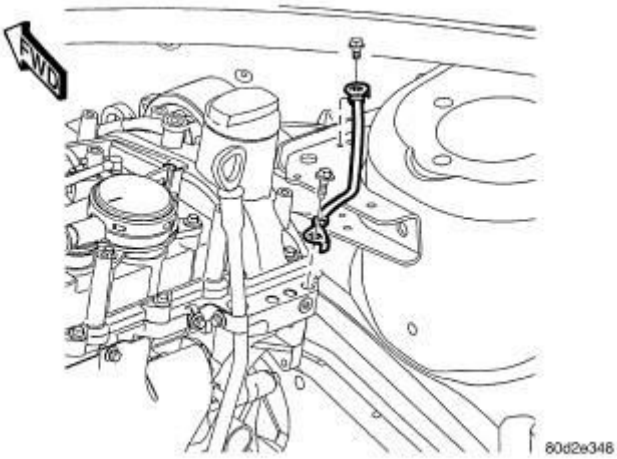

Fig. 14: Ground Strap To Engine (2.2L)
Courtesy of CHRYSLER GROUP, LLC

4. For the 2.2L Engine, remove bolt from engine cylinder head.

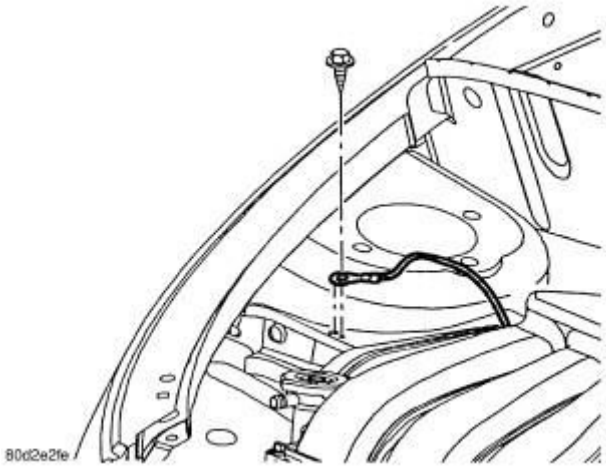

Fig. 15: Ground Strap To Strut Tower
Courtesy of CHRYSLER GROUP, LLC

5. Remove bolt from strut tower and remove strap.

HOOD HINGE GROUND STRAP

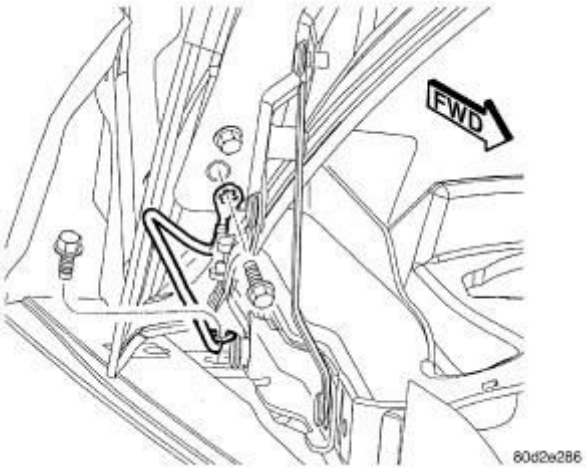

Fig. 16: Hood Hinge Ground Strap
Courtesy of CHRYSLER GROUP, LLC

1. Disconnect and isolate the battery negative cable.
2. Remove bolt from fender.
3. Remove bolt from hood and remove strap.

MUFFLER GROUND STRAP

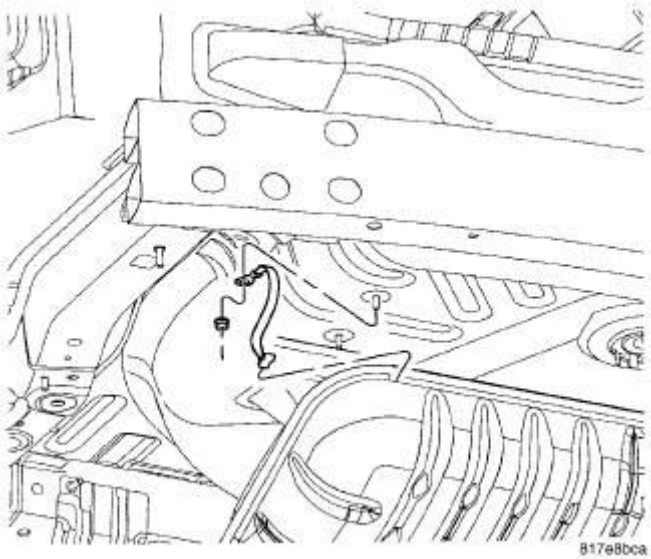

Fig. 17: Rear Floor Pan Bolt
Courtesy of CHRYSLER GROUP, LLC

1. Disconnect and isolate the battery negative cable.
2. Remove bolt from rear floor pan.
3. Remove bolt from muffler and remove strap.

RADIO NOISE SUPPRESSION CAPACITOR

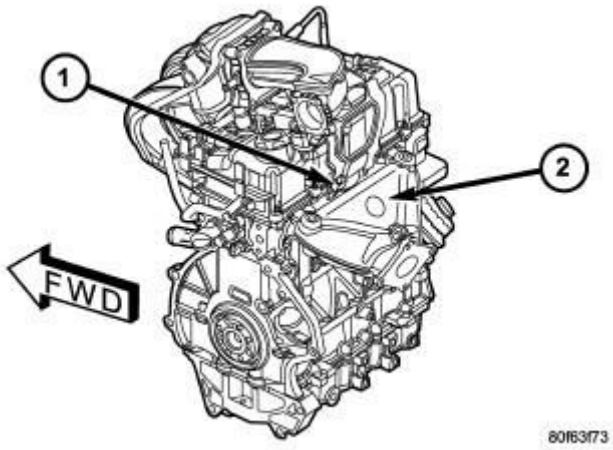

Fig. 18: Radio Noise Capacitor - Typical
Courtesy of CHRYSLER GROUP, LLC

1. Disconnect and isolate the battery negative cable.
2. Disconnect electrical harness connector from capacitor (1).
3. Remove bolt from capacitor and remove capacitor.

STRUT BRACKET TO BODY GROUND STRAP

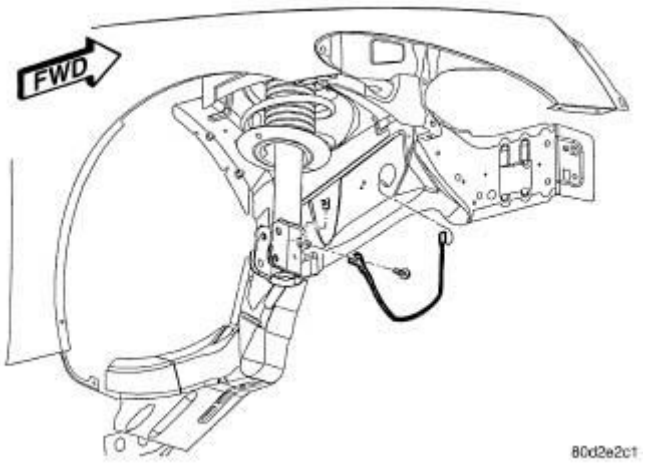

Fig. 19: Strut Bracket To Body Ground Strap
Courtesy of CHRYSLER GROUP, LLC

1. Disconnect and isolate the battery negative cable.
2. Remove bolt from strut.
3. Remove strap from frame rail.

INSTALLATION

INSTALLATION

COMPONENT	LOCATION
ENGINE GROUND STRAP	Refer to **ENGINE GROUND STRAP**.
HOOD HINGE GROUND STRAP	Refer to **HOOD HINGE GROUND STRAP**.
MUFFLER GROUND STRAP	Refer to **MUFFLER GROUND STRAP**.
RADIO NOISE SUPPRESSION CAPACITOR	Refer to **RADIO NOISE SUPPRESSION CAPACITOR**.
STRUT BRACKET TO BODY GROUND STRAP	Refer to **STRUT BRACKET TO BODY GROUND STRAP**.

ENGINE GROUND STRAP

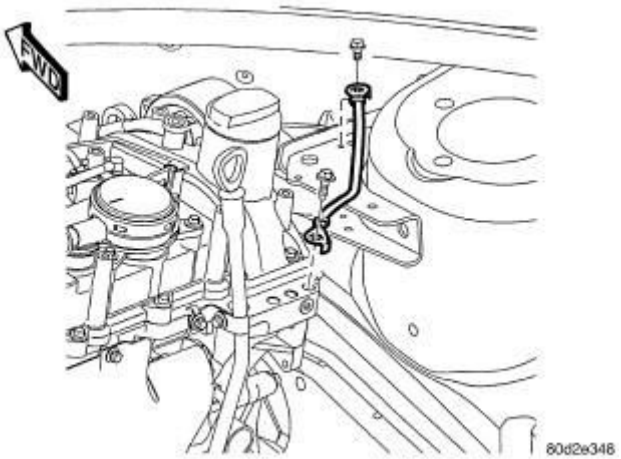

Fig. 20: Ground Strap To Engine (2.2L)
Courtesy of CHRYSLER GROUP, LLC

1. Install strap and bolt to strut tower. Tighten bolt to 12 N.m (106 in. lbs.).
2. Install strap and bolt to engine cylinder head. Tighten bolt to 28 N.m (21 ft. lbs.).
3. Connect battery negative cable.

HOOD HINGE GROUND STRAP

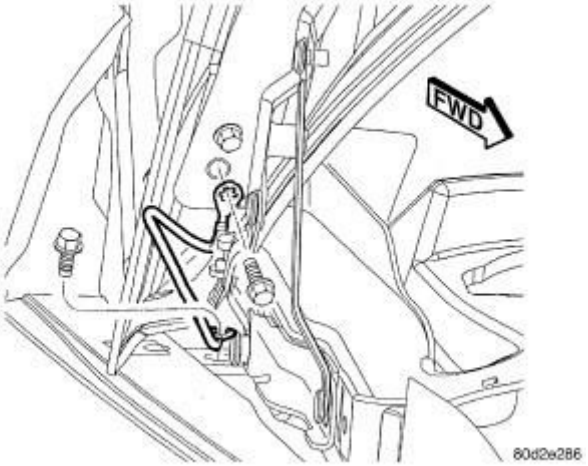

Fig. 21: Hood Hinge Ground Strap
Courtesy of CHRYSLER GROUP, LLC

1. Install strap and bolt to fender. Tighten bolt to 4 N.m (35 in. lbs.).
2. Install strap and bolt to hood. Tighten bolt to 4 N.m (35 in. lbs.).
3. Connect battery negative cable.

MUFFLER GROUND STRAP

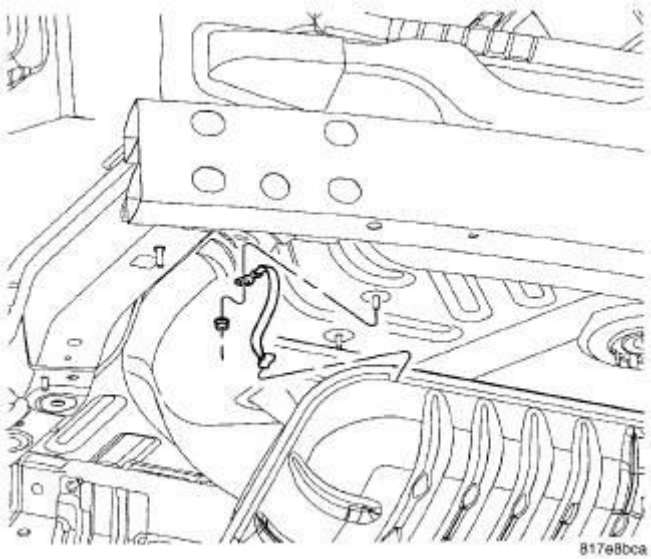

Fig. 22: Rear Floor Pan Bolt
Courtesy of CHRYSLER GROUP, LLC

1. Install strap and bolt to rear floor pan. Tighten bolt to 8 N.m (71 in. lbs.).
2. Install strap and bolt to muffler. Tighten bolt to 8 N.m (71 in. lbs.).
3. Connect battery negative cable.

RADIO NOISE SUPPRESSION CAPACITOR

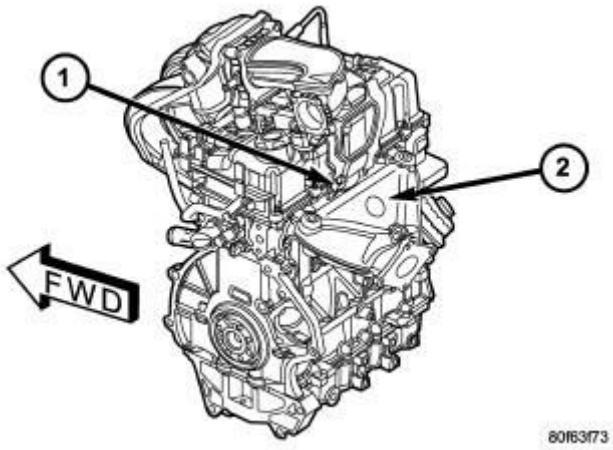

Fig. 23: Radio Noise Capacitor - Typical
Courtesy of CHRYSLER GROUP, LLC

1. Install capacitor and bolt.
2. Connect electrical harness connector to capacitor.
3. Connect battery negative cable.

STRUT BRACKET TO BODY GROUND STRAP

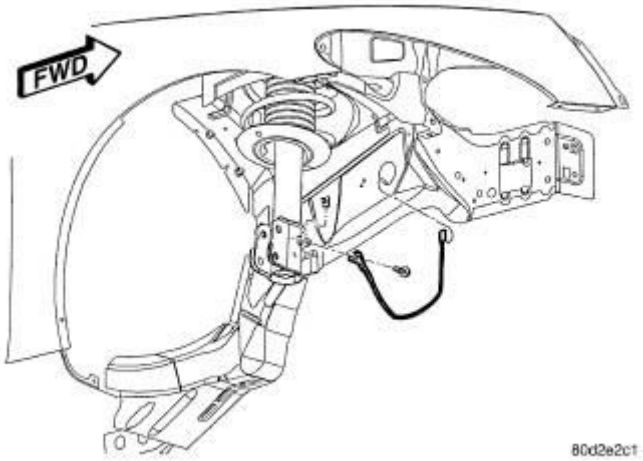

Fig. 24: Strut Bracket To Body Ground Strap
Courtesy of CHRYSLER GROUP, LLC

1. Install strap to frame rail.

CAUTION: Ensure that ground strap does not come in contact with brake hose. Damage to brake hose can result.

2. Install strap and bolt to strut. Tighten bolt to 12 N.m (106 in. lbs.).
3. Connect battery negative cable.

MAST, ANTENNA, EXPORT

REMOVAL

REMOVAL

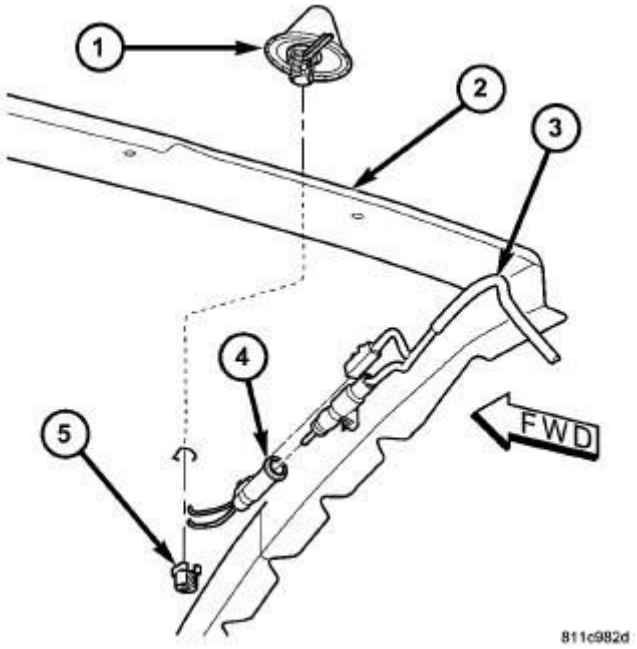

Fig. 25: Antenna - Export
Courtesy of CHRYSLER GROUP, LLC

1. Disconnect and isolate the battery negative cable.
2. Lower the headliner as necessary to access antenna mounting fastener. Refer to **HEADLINER, REMOVAL** .
3. Disconnect antenna cable and electrical harness connector (4).
4. Remove the mounting fastener.
5. Remove antenna from roof panel.

INSTALLATION

INSTALLATION

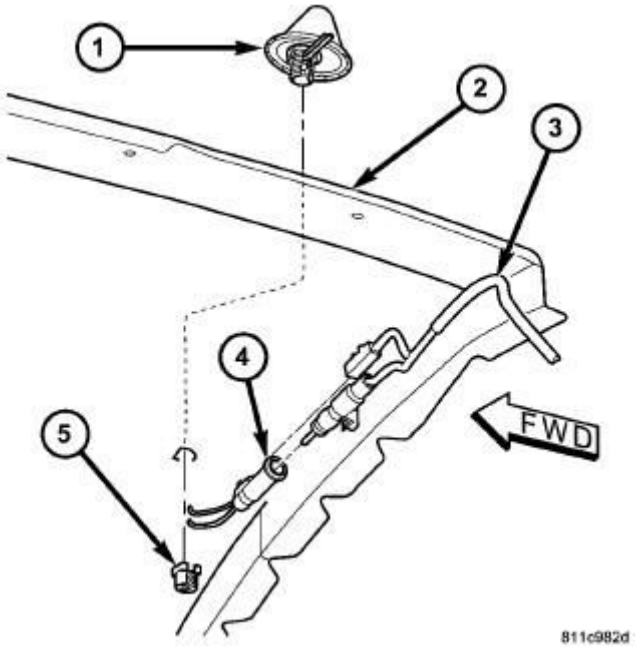

Fig. 26: Antenna - Export
Courtesy of CHRYSLER GROUP, LLC

1. Position antenna to roof panel.
2. Install and tighten mounting fastener.
3. Connect antenna cable and electrical harness connector.
4. Raise headliner. Refer to **HEADLINER, INSTALLATION** .
5. Connect battery negative cable.

RADIO

DESCRIPTION

DESCRIPTION

Interaction with the radio features is done through the ISC screen module and switch bank located in the center stack of the instrument panel.

RADIO ANTI-THEFT CODE PROCEDURE The following is for vehicles that are equipped with power net or NTG4 radios. If the TGW or the radio have been removed or replaced, a four digit security code is required in order for the radio to function:

1. The key must be in the "RUN" position.

2. Press the "ON/VOL" control button.
3. The word "CODE" or " Please enter Anti-Theft Code" will appear on the display.
4. Enter the 4-digit code by pressing the corresponding preset buttons in sequence.

NOTE: If three consecutive attempts are made to enter an invalid anti-theft code the radio will enter a 'WAIT' state. While in this state the radio display will read 'WAIT'. To exit the 'WAIT' state the radio must remain powered with the ignition in the run position for a continuous 30 minutes (the vehicle may be driven during this time). After exiting the 'WAIT' state the radio will again display 'CODE' and a valid anti-theft code may be entered.

OPERATION

OPERATION

The radio receiver operates on ignition switched battery current that is available only when the ignition switch is in the ON or ACCESSORY positions. The electronic digital clock function of the radio operates on fused battery current supplied through the IOD fuse, regardless of the ignition switch position.

REMOVAL

REMOVAL

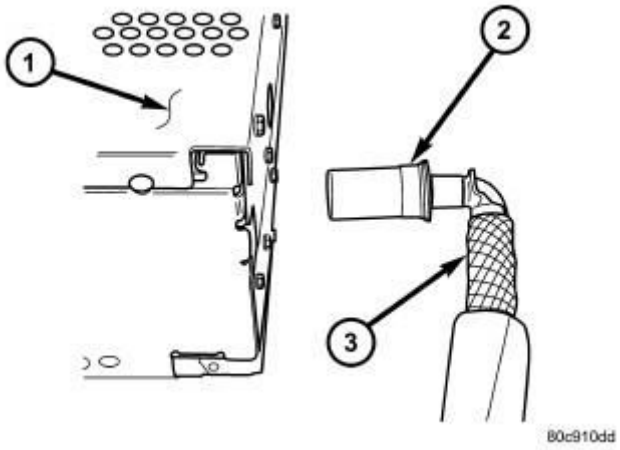

Fig. 27: Locating Antenna AT Radio

Courtesy of CHRYSLER GROUP, LLC

1. If radio is equipped with an internal hard disk drive (HDD), perform a complete backup of user data. Refer to **STANDARD PROCEDURE**.
2. Disconnect and isolate the battery negative cable.
3. Remove instrument panel center bezel. Refer to **BEZEL, INSTRUMENT PANEL, CENTER, REMOVAL** .
4. Remove mounting fasteners and remove radio from instrument panel.
5. Disconnect wire harness connectors from radio.

CAUTION: Pulling the antenna cable straight out of the radio without pulling on the locking antenna connector could damage the cable or radio.

6. Disconnect the antenna cable (3) by pulling the locking antenna connector (2) away from the radio (1).

INSTALLATION

INSTALLATION

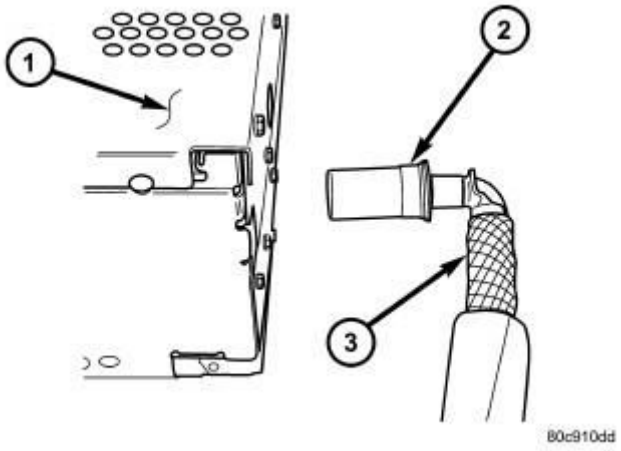

Fig. 28: Locating Antenna AT Radio
Courtesy of CHRYSLER GROUP, LLC

1. Connect the wire harness connectors and antenna cable to radio.
2. Insert radio into instrument panel.
3. Install mounting fasteners. Tighten to 2 N.m (20 in. lbs.).
4. Install instrument panel center bezel. Refer to **BEZEL, INSTRUMENT**

PANEL, CENTER, INSTALLATION .

5. Connect battery negative cable.
6. If radio is equipped with an internal hard disk drive (HDD), restore user data from backup. Refer to **STANDARD PROCEDURE**.

RECEIVER, SATELLITE

DESCRIPTION

DESCRIPTION

The satellite receiver module is located behind the spare tire. It is mounted to a bracket which is fastened to the trunk floor sheet metal.

OPERATION

OPERATION

The satellite receiver module receives signals from the roof mounted antenna and processes this information before it is sent to the radio. The module operates on both battery and accessory feed circuits and will operate with the ignition key in the RUN or ACCESSORY position only.

REMOVAL

REMOVAL

NOTE: If the owner's satellite service was active before the satellite receiver module was replaced the new satellite receiver module will have to be activated. The existing satellite receiver module will have to be deactivated before the replacement satellite receiver module can be activated.

To activate Sirius satellite radio service, call Sirius at their toll-free number. Please have the following information available when activating a system:

- **Electronic Serial Number / Sirius Identification Number (ESN/SID) of the unit to be replaced**
- **ESN/SID of the replacement receiver**

- **Vehicle Owner's name and address**
- **VIN**

The ESN/SID number can be obtained through the radio display by following the steps in the satellite radio owners manual.

The vehicle must be outside with the audio system powered on, in the satellite radio mode, to receive the activation signal.

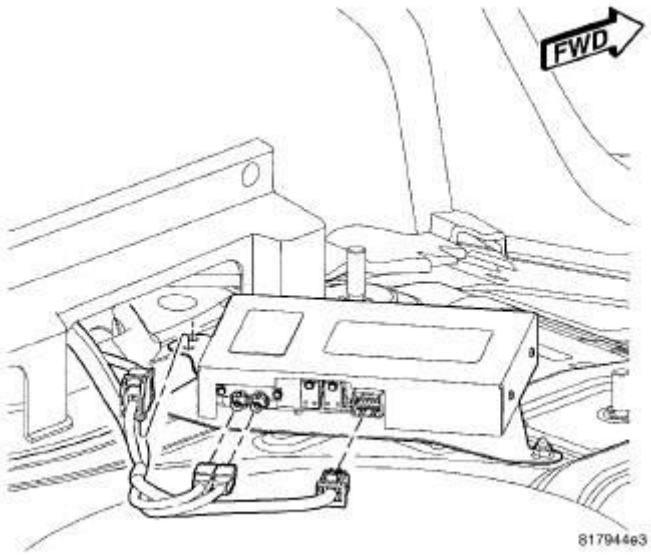

Fig. 29: Wire Harness Connectors
Courtesy of CHRYSLER GROUP, LLC

1. Disconnect and isolate the battery negative cable.
2. Remove the left rear quarter trim panel. Refer to **PANEL, QUARTER TRIM, REMOVAL** .
3. Remove the mounting bracket fasteners.
4. Disconnect the wire harness connectors.
5. Remove the module from the mounting bracket.

INSTALLATION

INSTALLATION

NOTE: If the owner's satellite service was active before the

satellite receiver module was replaced the new satellite receiver module will have to be activated. The existing satellite receiver module will have to be deactivated before the replacement satellite receiver module can be activated.

To activate Sirius satellite radio service, call Sirius at their toll-free number. Please have the following information available when activating a system:

- **Electronic Serial Number / Sirius Identification Number (ESN/SID) of the unit to be replaced**
- **ESN/SID of the replacement receiver**
- **Vehicle Owner's name and address**
- **VIN**

The ESN/SID number can be obtained through the radio display by following the steps in the satellite radio owners manual.

The vehicle must be outside with the audio system powered on, in the satellite radio mode, to receive the activation signal.

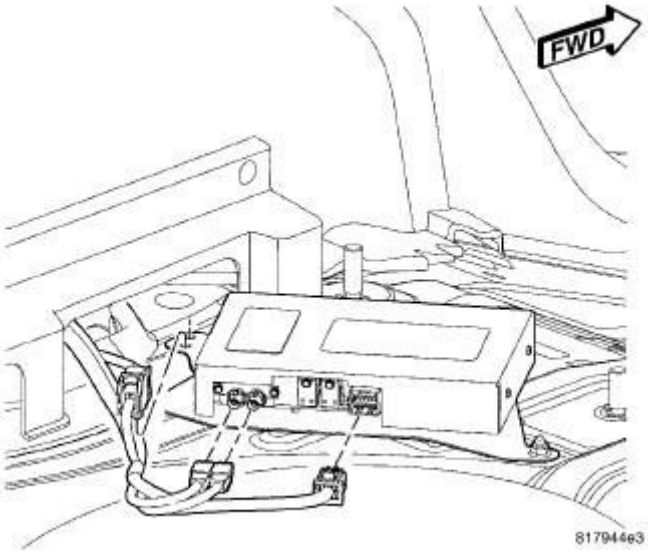

Fig. 30: Wire Harness Connectors
Courtesy of CHRYSLER GROUP, LLC

1. Position the module to the mounting bracket.
2. Connect wire harness connectors.
3. Install mounting bracket and fasteners.
4. Install the left rear quarter trim panel. Refer to **PANEL, QUARTER TRIM, INSTALLATION** .
5. Connect the battery negative cable.

SPEAKER

REMOVAL

REMOVAL

Door Speakers	Refer to **DOOR SPEAKERS**.
Instrument Panel Speaker	Refer to **INSTRUMENT PANEL SPEAKER**.
Rear Speaker - Liftgate	Refer to **REAR SPEAKER - LIFTGATE**.
Rear Subwoofer	Refer to **REAR SUBWOOFER**.

DOOR SPEAKERS

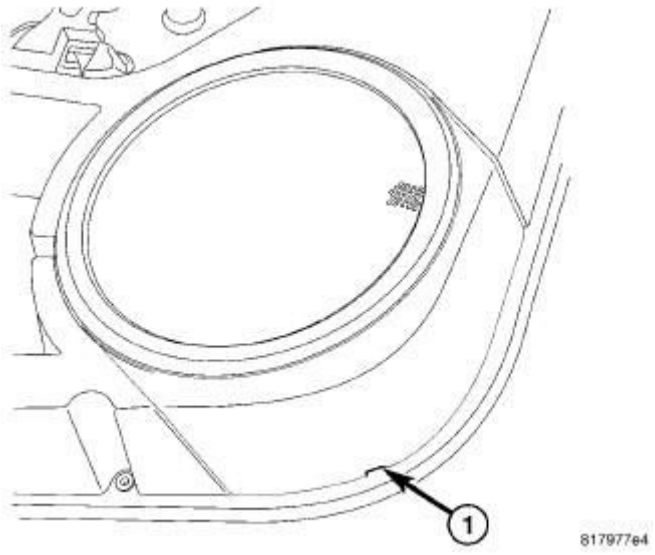

Fig. 31: Service Notch
Courtesy of CHRYSLER GROUP, LLC

1. Using an approved flat blade tool find the service notch located at the

bottom of speaker grille and pry up speaker grille.

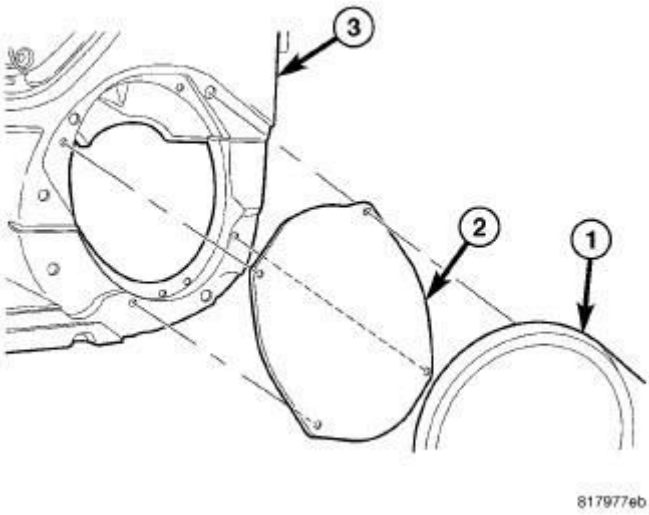

Fig. 32: Door Module
Courtesy of CHRYSLER GROUP, LLC

2. Remove the four screws attaching the speaker (2) to door panel (3).
3. Disconnect the electrical connector and remove the speaker.

INSTRUMENT PANEL SPEAKER

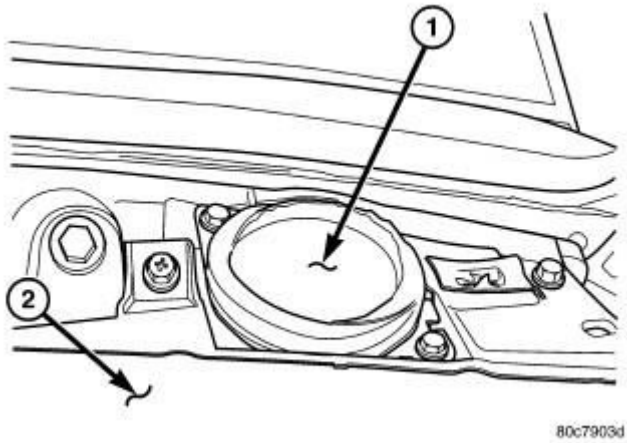

Fig. 33: Instrument Panel Top Cover
Courtesy of CHRYSLER GROUP, LLC

1. Disconnect and isolate the battery negative cable.
2. Remove instrument panel (2) top cover. Refer to **COVER, INSTRUMENT PANEL, REMOVAL** .

3. Remove speaker retaining screws.
4. Remove speaker (1) and disconnect wire harness connector.

REAR SPEAKER - LIFTGATE

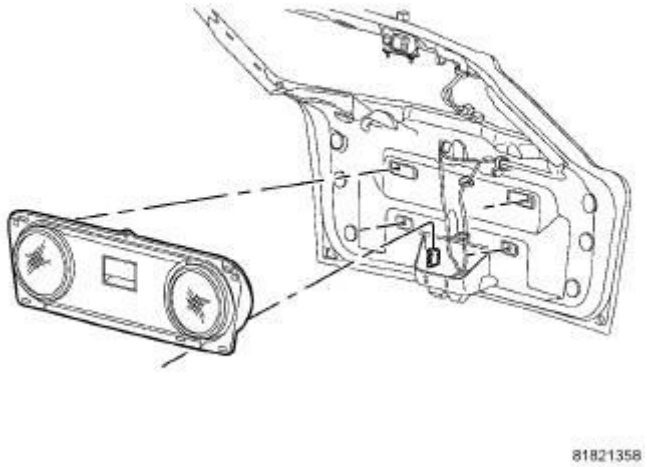

Fig. 34: Rear Speaker - Liftgate
Courtesy of CHRYSLER GROUP, LLC

1. Disconnect and isolate the battery negative cable.
2. Remove the speaker enclosure fasteners.
3. Remove speaker and disconnect the electrical harness connector.

REAR SUBWOOFER

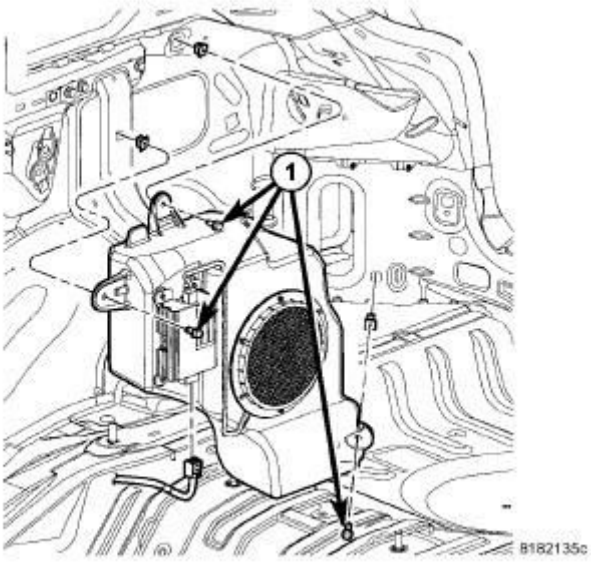

Fig. 35: Rear Subwoofer
Courtesy of CHRYSLER GROUP, LLC

1. Disconnect and isolate the battery negative cable.
2. Remove the right quarter trim panel. Refer to **PANEL, QUARTER TRIM, REMOVAL** .
3. Remove the subwoofer mounting fasteners.
4. Disconnect the electrical harness connector.
5. Remove the speaker.

INSTALLATION

INSTALLATION

Door Speakers	Refer to **DOOR SPEAKERS**.
Instrument Panel Speaker	Refer to **INSTRUMENT PANEL SPEAKER**.
Rear Speaker - Tailgate	Refer to **REAR SPEAKER - TAILGATE**.
Rear Subwoofer	Refer to **REAR SUBWOOFER**.

DOOR SPEAKERS

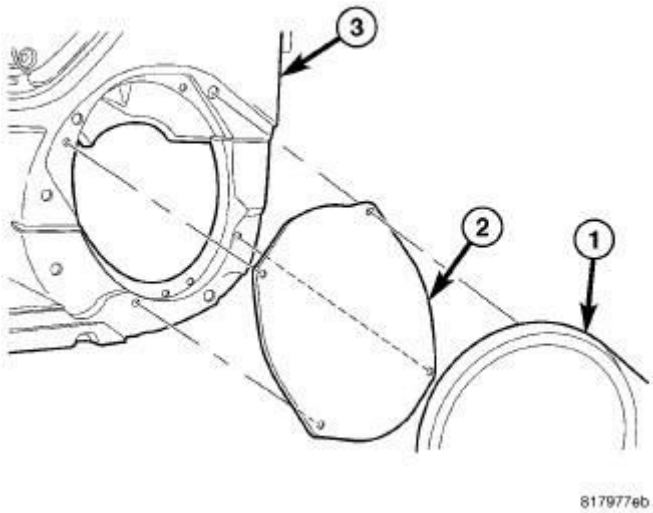

Fig. 36: Door Module
Courtesy of CHRYSLER GROUP, LLC

1. Connect wire connector.

2. Install speaker (2) into the door panel (3) opening and install the four screws into door panel.
3. Install speaker grille (1) onto trim panel.

INSTRUMENT PANEL SPEAKER

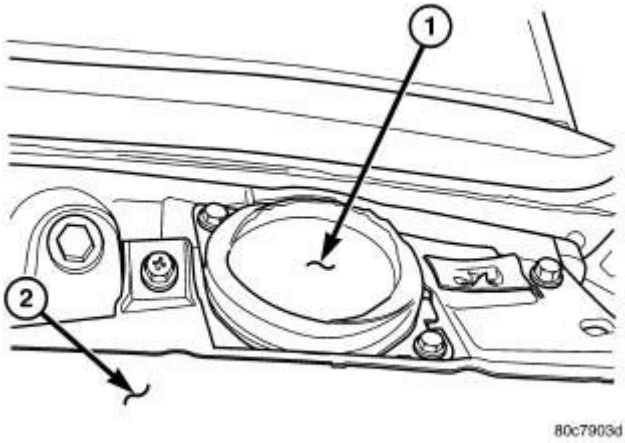

Fig. 37: Instrument Panel Speaker
Courtesy of CHRYSLER GROUP, LLC

1. Connect wire harness connector to speaker (1).
2. Install speaker screws.
3. Install instrument panel (2) top cover. Refer to **COVER, INSTRUMENT PANEL, INSTALLATION** .
4. Connect the battery negative cable.

REAR SPEAKER - TAILGATE

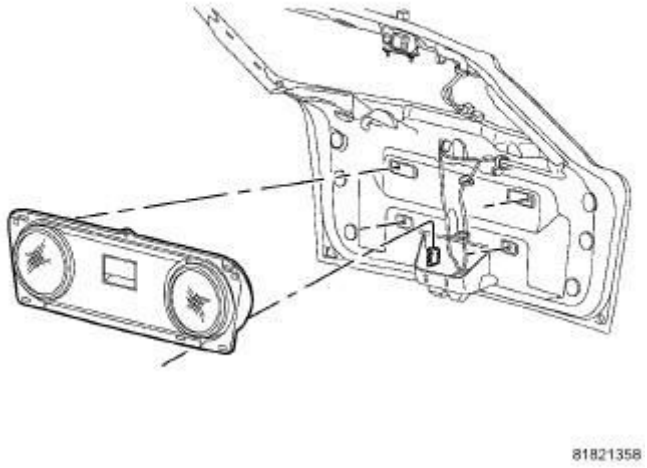

Fig. 38: Rear Speaker - Liftgate
Courtesy of CHRYSLER GROUP, LLC

1. Connect electrical harness connector and position speaker.
2. Install and tighten mounting fasteners.
3. Connect battery negative cable.

REAR SUBWOOFER

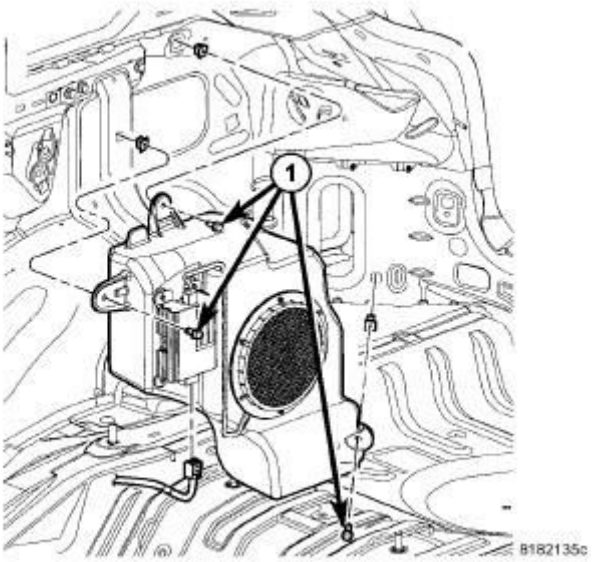

Fig. 39: Rear Subwoofer
Courtesy of CHRYSLER GROUP, LLC

1. Position the speaker and connect the electrical harness connector.

2. Install the subwoofer mounting fasteners.
3. Install the right rear quarter trim panel. Refer to **PANEL, QUARTER TRIM, INSTALLATION** .
4. Connect the battery negative cable.

SWITCH, REMOTE RADIO

DESCRIPTION

DESCRIPTION

Two rocker-type switches (if equipped) are mounted on the back (instrument panel side) of the steering wheel spokes. The switch on the left spoke is the seek switch and has seek up, seek down, and preset station advance functions. The switch on the right spoke is the volume control switch and has volume up, and volume down functions. The switch on the right spoke also includes a "mode" control that allows the driver to sequentially select AM radio, FM radio, cassette player, CD player or CD changer (if equipped).

OPERATION

OPERATION

These switches are resistor multiplexed units that are hard-wired to the Cab Compartment Node (CCN) through the clockspring. The CCN sends the proper messages on the Controller Area Network (CAN) data bus network to the radio receiver. For diagnosis of the CCN or the CAN data bus, the use of a scan tool and the proper Diagnostic Procedures Service Information are recommended. For more information on the operation of the remote radio switch controls, refer to the owner's manual in the vehicle glove box.

DIAGNOSIS AND TESTING

DIAGNOSIS AND TESTING - REMOTE SWITCHES

WARNING: **On vehicles equipped with airbags, refer to electrical, restraints before attempting any steering wheel, steering column, or instrument panel component diagnosis or service. Failure to take the proper precautions could result in accidental airbag deployment and possible**

personal injury.

Any diagnosis of the Audio system should begin with the use of the scan tool. For information on the use of the scan tool, refer to the appropriate Diagnostic Service Information .

For complete circuit diagrams, refer to the appropriate wiring information.

1. Disconnect and isolate the battery negative cable.
2. Remove the remote radio switch(es) from the steering wheel. Refer to **SWITCH, REMOTE RADIO, REMOVAL**.
3. Use an ohmmeter to check the switch resistance as shown in the Remote Radio Switch Test table

REMOTE RADIO SWITCH TEST

Switch	Switch Position	Resistance
Right (White)	Volume Up	1.210 Kilohms
Right (White)	Volume Down	3.010 Kilohms
Right (White)	Mode Advance	0.0511 Kilohms
Left (Black)	Seek Up	0.261 Kilohms
Left (Black)	Seek Down	0.681 Kilohms
Left (Black)	Pre-Set Station Advance	0.162 Kilohms

NOTE: The right remote radio switch back is white in color. The left switch back is black in color. The right/left remote radio switch orientation is with the steering wheel installed, and driver in driver's seat.

4. If the switch resistance checks OK, go to 5. If not OK, replace the faulty switch.
5. Check for continuity between the ground circuit cavity of the switch wire harness connector and a good ground. There should be continuity. If OK, go to 6. If not OK, repair the open circuit as required.
6. Unplug the connector from the Cab Compartment Node (CCN). Check for continuity between the radio control circuit cavity of the remote radio switch wire harness connector and a good ground. There should be no continuity. If OK, go to 7. If not OK, repair the short circuit as required.

7. Check for continuity between the radio control circuit cavities of the remote radio switch wire harness connector and the CCN wire harness connector. There should be continuity. If OK, refer to the proper Diagnostic Procedures Information to test the CCN and the CAN data bus. If not OK, repair the open circuit as required.

REMOVAL

REMOVAL

WARNING: On vehicles equipped with airbags, refer to electrical, restraints before attempting any steering wheel, steering column, or instrument panel component diagnosis or service. Failure to take the proper precautions could result in accidental airbag deployment and possible personal injury.

1. Disconnect and isolate the battery negative cable.
2. Remove the driver side airbag. Refer to **AIR BAG, DRIVER, REMOVAL** .
3. Remove the steering wheel. Refer to **WHEEL, STEERING, REMOVAL** .
4. Unplug the wire harness connector from the remote radio switch.
5. Remove steering wheel rear cover.
6. Remove the remote radio switch from the steering wheel by depressing tabs on each side of each switch.

NOTE: The right remote radio switch back is white in color. The left switch back is black in color. The right/left remote radio switch orientation is with the steering wheel installed, and driver in driver's seat.

INSTALLATION

INSTALLATION

WARNING: On vehicles equipped with airbags, refer to electrical, restraints before attempting any steering wheel, steering column, or instrument

panel component diagnosis or service. Failure to take the proper precautions could result in accidental airbag deployment and possible personal injury.

1. Install remote radio switch to the steering wheel.
2. Install steering wheel rear cover.
3. Connect the wire harness to the remote radio switch.
4. Install the steering wheel. Refer to **WHEEL, STEERING, INSTALLATION** .
5. Install the driver side airbag. Refer to **AIR BAG, DRIVER, INSTALLATION** .
6. Connect the battery negative cable.

2014 ACCESSORIES AND EQUIPMENT

Body - Interior & Exterior - Compass & Patriot

WARNING

USE OF HEAT DURING REPAIR

WARNING: Chrysler Group LLC engineering's position on the use of heat during collision repair is as follows:

- **Any body panel or frame component damaged which is to be repaired and reused, must be repaired using the "cold straightening" method. No heat may be used during the straightening process.**
- **During rough straightening prior to panel replacement, damaged panels or frame components may be heated to assist in body/frame realignment. The application of heat must be constrained to the parts which will be replaced and not allowed to affect any other components.**

This "no heat" recommendation is due to the extensive use of high strength and advanced high strength steels in Chrysler Group LLC products. High-strength materials can be substantially and negatively affected from heat input which will not be obviously known to the repairer or consumer.

Ignoring these recommendations may lead to serious compromises in the ability to protect occupants in a future collision event, reduce the engineered qualities and attributes, or decrease the durability and reliability of the vehicle.

This statement supersedes any previously released information by the Chrysler Group LLC.

Failure to follow these instructions may result in serious or fatal injury.

WARNINGS

WARNING: Use an Occupational Safety and Health Administration (OSHA) approved breathing filter, when spraying paint or solvents in a confined area. Failure to follow these instructions may result in possible serious or fatal injury.

- **avoid prolonged skin contact with petroleum or alcohol based cleaning solvents.**
- **do not stand under a hoisted vehicle that is not properly supported on safety stands. Failure to follow these instructions may result in possible serious or fatal injury.**

CAUTION: When holes are drilled or punched in an inner body panel, verify the depth of space to the outer body panel, electrical wiring or other components. Damage to the vehicle can result.

- **do not weld exterior panels unless combustible material on the interior of vehicle is removed from the repair area. Fire or hazardous conditions, can result.**
- **always have a fire extinguisher ready for use when welding.**
- **disconnect the negative (-) cable clamp from the battery when servicing electrical components that are live when the ignition is off. Damage to electrical system can result.**
- **do not use abrasive chemicals or compounds on painted surfaces. Damage to finish can result.**
- **do not use harsh alkaline based cleaning solvents on painted or upholstered surfaces.**

Damage to finish or color can result.

- **do not hammer or pound on plastic trim panel when servicing interior trim. Plastic panels can break.**

RESTRAINT WARNINGS

WARNING: **To avoid potential physical injury, or damage to sensitive electronic circuits and systems, always disconnect and isolate the battery negative (ground) cable and the positive cable, then ground the positive cable to discharge the ORC capacitor before performing any welding operations on the vehicle. Failure to take the proper precautions could result in accidental airbag deployment, possible damage to the Supplemental Restraint System (SRS) circuits and components, and possible damage to other electronic circuits and components. Whenever a welding process is being performed within 30 cm (12 in) of an electronic module/harness, then that module/harness should be relocated out of the way, or disconnected. Always protect against component or vehicle damage from weld spatter by using weld blankets and screens. Failure to follow these instructions may result in serious or fatal injury.**

WARNING: **To avoid serious or fatal injury on vehicles equipped with the Supplemental Restraint System (SRS), never attempt to repair the electrically conductive circuits or wiring components related to the SRS for which there is no MOPAR wiring repair kit. It is important to use ONLY the recommended splicing kit and procedure. For applicable and available MOPAR wiring repair kits, please visit the MOPAR Connector Web Site at the following address on the Internet:**

(http://dto.vftis.com/mopar/disclaimer.asp). Inappropriate repairs can compromise the conductivity and current carrying capacity of those critical electrical circuits, which may cause SRS components not to deploy when required, or to deploy when not required. Only minor cuts or abrasions of wire and terminal insulation where the conductive material has not been damaged, or connector insulators where the integrity of the latching and locking mechanisms have not been compromised may be repaired using appropriate methods.

WARNING: **To avoid serious or fatal injury during and following any seat belt or child restraint anchor service, carefully inspect all seat belts, buckles, mounting hardware, retractors, tether straps, and anchors for proper installation, operation, or damage. Replace any belt that is cut, frayed, or torn. Straighten any belt that is twisted. Tighten any loose fasteners. Replace any belt that has a damaged or ineffective buckle or retractor. Replace any belt that has a bent or damaged latch plate or anchor plate. Replace any child restraint anchor or the unit to which the anchor is integral that has been bent or damaged. Never attempt to repair a seat belt or child restraint component. Always replace damaged or ineffective seat belt and child restraint components with the correct, new and unused replacement parts listed in the Chrysler Mopar® Parts Catalog. Failure to follow these instructions may result in possible serious or fatal injury.**

WARNING: **To avoid serious or fatal injury on vehicles equipped with airbags, disable the Supplemental Restraint System (SRS) before attempting any steering wheel, steering column, airbag, Occupant**

Classification System (OCS), seat belt tensioner, impact sensor or instrument panel component diagnosis or service. Disconnect and isolate the battery negative (ground) cable, then wait two minutes for the system capacitor to discharge before performing further diagnosis or service. This is the only sure way to disable the SRS. Failure to follow these instructions may result in accidental airbag deployment.

WARNING: **To avoid potential physical injury or damage to sensitive electronic circuits and systems, always disconnect and isolate the battery negative (ground) cable and the positive cable, then ground the positive cable to discharge the Occupant Restraint Controller (ORC) capacitor before performing any welding operations on the vehicle. Failure to take the proper precautions could result in accidental airbag deployment, possible damage to the Supplemental Restraint System (SRS) circuits and components, and possible damage to other electronic circuits and components. Whenever a welding process is being performed within 12 inches (30 centimeters) of an electronic module or wiring harness, then that module or harness should be relocated out of the way, or disconnected. Always protect against component or vehicle damage from weld spatter by using weld blankets and screens.**

WARNING: **To avoid serious or fatal injury, do not attempt to dismantle an airbag unit or tamper with its inflator. Do not puncture, incinerate or bring into contact with electricity. Do not store at temperatures exceeding 93° C (200° F). An airbag inflator unit may contain sodium azide and potassium nitrate. These materials are poisonous and extremely flammable. Contact with acid, water, or heavy**

metals may produce harmful and irritating gases (sodium hydroxide is formed in the presence of moisture) or combustible compounds. An airbag inflator unit may also contain a gas canister pressurized to over 17.24 kPa (2500 psi). Failure to follow these instructions may result in possible serious or fatal injury.

WARNING: To avoid serious or fatal injury when handling a seat belt tensioner retractor. Exercise proper care to keep fingers out from under the retractor cover and away from the seat belt webbing where it exits from the retractor cover. Failure to follow these instructions may result in possible serious or fatal injury.

WARNING: To avoid serious or fatal injury, replace all Supplemental Restraint System (SRS) components only with parts specified in the Chrysler Mopar® Parts Catalog. Substitute parts may appear interchangeable, but internal differences may result in inferior occupant protection.

WARNING: To avoid serious or fatal injury, the fasteners, screws, and bolts originally used for the Supplemental Restraint System (SRS) components must never be replaced with any substitutes. These fasteners have special coatings and are specifically designed for the SRS. Anytime a new fastener is needed, replace it with the correct fasteners provided in the service package or specified in the Chrysler Mopar® Parts Catalog.

WARNING: To avoid serious or fatal injury when a steering column has an airbag unit attached, never place the column on the floor or any other surface with

the steering wheel or airbag unit face down. Failure to follow these instructions may result in possible serious or fatal injury.

DESCRIPTION

DESCRIPTION

Throughout this Service Information , references to the Chrysler LLC vehicle family identification code are used when describing a procedure that is unique to that vehicle. Refer to **VEHICLE DATA** of this Service Information for detailed information on vehicle identification. If a procedure is common to all vehicles covered in this Service Information , no reference will be made to a vehicle family code.

DIAGNOSIS AND TESTING

GENERAL WATER LEAKS

Water leaks can be caused by poor sealing, improper body component alignment, body seam porosity, missing plugs, or blocked drain holes. Centrifugal and gravitational force can cause water to drip from a location away from the actual leak point, making leak detection difficult. All body sealing points should be water tight in normal wet-driving conditions. Water flowing downward from the front of the vehicle should not enter the passenger or luggage compartment. Moving sealing surfaces will not always seal water tight under all conditions. At times, side glass or door seals will allow water to enter the passenger compartment during high pressure washing or hard driving rain (severe) conditions. Overcompensating on door or glass adjustments to stop a water leak that occurs under severe conditions can cause premature seal wear and excessive closing or latching effort. After completing a repair, water test vehicle to verify leak has stopped before returning vehicle to use.

VISUAL INSPECTION BEFORE WATER LEAK TESTS

Verify that floor and body plugs are in place, body drains are clear, and body components are properly aligned and sealed. If component alignment or sealing is necessary, refer to the appropriate Service Information for proper procedures.

WATER LEAK TESTS

WARNING: Do not use electric shop lights or tools in water test area. Personal injury can result.

When the conditions causing a water leak have been determined, simulate the conditions as closely as possible.

- If a leak occurs with the vehicle parked in a steady light rain, flood the leak area with an open-ended garden hose.
- If a leak occurs while driving at highway speeds in a steady rain, test the leak area with a reasonable velocity stream or fan spray of water. Direct the spray in a direction comparable to actual conditions.
- If a leak occurs when the vehicle is parked on an incline, hoist the end or side of the vehicle to simulate this condition. This method can be used when the leak occurs when the vehicle accelerates, stops or turns. If the leak occurs on acceleration, hoist the front of the vehicle. If the leak occurs when braking, hoist the back of the vehicle. If the leak occurs on left turns, hoist the left side of the vehicle. If the leak occurs on right turns, hoist the right side of the vehicle. For hoisting recommendations, refer to **HOISTING, STANDARD PROCEDURE** .

WATER LEAK DETECTION

To detect a water leak point-of-entry, do a water test and watch for water tracks or droplets forming on the inside of the vehicle. If necessary, remove interior trim covers or panels to gain visual access to the leak area. If the hose cannot be positioned without being held, have someone help do the water test.

Some water leaks must be tested for a considerable length of time to become apparent. When a leak appears, find the highest point of the water track or drop. The highest point usually will show the point of entry. After leak point has been found, repair the leak and water test to verify that the leak has stopped.

Locating the entry point of water that is leaking into a cavity between panels can be difficult. The trapped water may splash or run from the cavity, often at a distance from the entry point. Most water leaks of this type become apparent after accelerating, stopping, turning, or when on an incline.

MIRROR INSPECTION METHOD

When a leak point area is visually obstructed, use a suitable mirror to gain visual

access. A mirror can also be used to deflect light to a limited-access area to assist in locating a leak point.

BRIGHT LIGHT LEAK TEST METHOD

Some water leaks in the luggage compartment can be detected without water testing. Position the vehicle in a brightly lit area. From inside the darkened luggage compartment inspect around seals and body seams. If necessary, have a helper direct a drop light over the suspected leak areas around the luggage compartment. If light is visible through a normally sealed location, water could enter through the opening.

PRESSURIZED LEAK TEST METHOD

When a water leak into the passenger compartment cannot be detected by water testing, pressurize the passenger compartment and soap test exterior of the vehicle. To pressurize the passenger compartment, close all doors and windows, start engine, and set heater control to high blower in HEAT position. If engine can not be started, connect a charger to the battery to ensure adequate voltage to the blower. With interior pressurized, apply dish detergent solution to suspected leak area on the exterior of the vehicle. Apply detergent solution with spray device or soft bristle brush. If soap bubbles occur at a body seam, joint, seal or gasket, the leak entry point could be at that location.

WIND NOISE

Wind noise is the result of most air leaks. Air leaks can be caused by poor sealing, improper body component alignment, body seam porosity, or missing plugs in the engine compartment or door hinge pillar areas. All body sealing points should be airtight in normal driving conditions. Moving sealing surfaces will not always seal airtight under all conditions. At times, side glass or door seals will allow wind noise to be noticed in the passenger compartment during high cross winds. Over compensating door or glass adjustments to stop wind noise that occurs under severe conditions can cause premature seal wear and excessive closing or latching effort. After a repair procedure has been performed, test vehicle to verify noise has stopped before returning vehicle to use.

VISUAL INSPECTION BEFORE TESTS

Verify that floor and body plugs are in place and body components are aligned and sealed. If component alignment or sealing is necessary, refer to the

appropriate Service Information for proper procedures.

ROAD TESTING WIND NOISE

1. Drive the vehicle to verify the general location of the wind noise.
2. Apply 50 mm (2 in.) masking tape in 150 mm (6 in.) lengths along weatherstrips, weld seams or moldings. After each length is applied, drive the vehicle. If noise goes away after a piece of tape is applied, remove tape, locate, and repair defect.

POSSIBLE CAUSE OF WIND NOISE

- Moldings standing away from body surface can catch wind and whistle.
- Gaps in sealed areas behind overhanging body flanges can cause wind-rushing sounds.
- Misaligned movable components.
- Missing or improperly installed plugs in pillars.
- Weld burn through holes.

STANDARD PROCEDURE

BUZZ, SQUEAKS AND RATTLES

Buzz, Squeaks and Rattles (BSR's) may be caused by any one or more of the following and may be corrected as indicated:

- Loose fasteners should be tightened to specifications.
- Damaged or missing clips should be replaced.
- Damaged trim panels should be replaced.
- Incorrectly installed trim panels should be reinstalled properly.

Many BSR complaints such as loose trim, can be serviced using various tapes or lubricants. Tapes including foam, flock and anti-squeak, can be used to eliminate noises caused by metal, plastic and vinyl components. Long life lubricants and greases can also be used on a variety of components. Refer to **BUZZ, SQUEAKS AND RATTLES** for materials and usage.

BUZZ, SQUEAKS AND RATTLES

ITEM	FEATURES	APPLICATIONS	SERVICE TEMP

ITCH AND SQUEAK TAPE	An abrasion resistant material thin enough to conform to most irregular surfaces. Stops most itches and squeaks.	Between metal and metal, metal and plastic, metal and vinyl, vinyl and plastic. Interior. Examples: Trim panels and bezels.	-40° to 107° C (-40° to 225° F)
BLACK NYLON FLOCK	Nylon Flock with an aggressive acrylic adhesive. Provides for cushioning and compression fit, also isolates components. Water-resistant.	Between metal and metal, metal and plastic, vinyl and plastic. Examples: Pull cups, bezels, clips, ducts, top cover to glass, cowl panel.	-40° to 82° C (-40° to 180° F)
HIGH DENSITY URETHANE FOAM	Tear resistant, highly resilient and durable.	Between metal and metal, metal and plastic. Water-resistant. Examples: I/P, heavy metal rattles, isolating brackets.	-40° to 82° C (-40° to 180° F)
OPEN CELL FOAM TAPE	Soft foam conforms to irregular surfaces.	Wire harness and connector wrap. Examples: Seals, gasket, wiring, heat ducts.	-40° to 82° C (-40° to 180° F)
CLOSED CELL LOW DENSITY FOAM TAPE	Soft, conformable. Water-resistant.	Wherever bulk is needed. Prevents closing flutters and rattles when applied to door watershield. Examples: Door, I/P.	-40° to 82° C (-40° to 180° F)
NYE® GREASE 880	Long life.	Suspensions. Examples: Strut bushings, sway bars.	-40° to 200° C (-40° to 390° F)
KRYTOX®	Long life. Will not	When access is not	-34° to 205° C

OIL	dry out or harm plastics or rubber.	possible, oil will migrate to condition. Vinyl, rubber, plastic, metal. Examples: Convertible top bushings, pull cups trim panel inserts.	(-30° to 400° F)
KRYTOX® GREASE	Long life. Will not dry out or harm plastics or rubber.	Vinyl, rubber, plastic, metal, glass. Examples: Weather-strips, backlite and windshield moldings.	-34° to 205° C (-30° to 400° F)

HEAT STAKING

1. Remove trim panel.
2. Bend or move the trim panel components at the heat staked joints. Observe the heat staked locations and/or component seams for looseness.
3. Heat stake the components.
   a. If the heat staked or component seam location is loose, hold the two components tightly together and using a soldering gun with a flat tip, melt the material securing the components together. Do not over heat the affected area, damage to the exterior of the trim panel may occur.
   b. If the heat staked material is broken or missing, use a hot glue gun to apply new material to the area to be repaired. The panels that are being heat staked must be held together while the applying the glue. Once the new material is in place, it may be necessary to use a soldering gun to melt the newly applied material. Do not over heat the affected area, damage to the exterior of the trim panel may occur.
4. Allow the repaired area to cool and verify the repair.
5. Install trim panel.

PLASTIC BODY PANEL REPAIR

There are many different types of plastics used in today's automotive environment. We group plastics in three different categories: Rigid, Semi-Rigid, and Flexible. Any of these plastics may require the use of an adhesion promoter for repair. These types of plastic are used extensively on Chrysler LLC vehicles.

Always follow repair material manufacturer's plastic identification and repair procedures.

RIGID PLASTICS:

Examples of rigid plastic use: Fascias, Hoods, Doors, and other Body Panels, which include SMC, ABS, and Polycarbonates.

SEMI-RIGID PLASTICS:

Examples of semi-rigid plastic use: Interior Panels, Under Hood Panels, and other Body Trim Panels.

FLEXIBLE PLASTICS:

Examples of flexible plastic use: Fascias, Body Moldings, and upper and lower Fascia Covers.

REPAIR PROCEDURE:

The repair procedure for all three categories of plastics is basically the same. The one difference is the material used for the repair. The materials must be specific for each substrate, rigid repair material for rigid plastic repair, semi-rigid repair material for semi-rigid plastic repair and flexible repair material for flexible plastic repair.

ADHESION PROMOTER/SURFACE MODIFIER:

Adhesion Promoters/Surface Modifiers are required for certain plastics. All three categories may have plastics that require the use of adhesion promoter/surface modifiers. Always follow repair material manufacturer's plastic identification and repair procedures.

SAFETY PRECAUTION AND WARNINGS

WARNING:

- **Eye protection should be used when servicing components. Personal injury can result.**
- **Use an OSHA approved breathing mask when mixing epoxy, grinding, and spraying paint or solvents in a confined area. Personal injury can result.**
- **Avoid prolonged skin contact with resin,**

petroleum, or alcohol based solvents. Personal injury can result.

- **Do not venture under a hoisted vehicle that is not properly supported on safety stands. Personal injury can result.**

WARNING: Failure to follow these instructions may result in serious or fatal injury.

NOTE:

- **When holes must be drilled or cut in body panels, verify locations of internal body components and electrical wiring. Damage to vehicle can result.**
- **Do not use abrasive chemicals or compounds on undamaged painted surfaces around repair areas. Damage to finish can result.**

RIGID, SEMI-RIGID, AND FLEXIBLE PLASTIC PARTS TYPES

CODE	FAMILY NAME	COMMON TRADE NAME	TYPICAL APPLICATIO
ASA	ACRYLONITRILE STYRENE ACRYLITE	LURAN S	CONSOLES, GRILLES
ABS	ACRYLONITRILE BUTADIENE STYRENE	TERLURAN	"A" PILLARS, CONSOLES, GRILLES
ABS/PC	ABS/PC ALLOY	PULSE, PROLOY, BAYBLEND	DOORS, INSTRUMENT PANELS
ABS/PVC	ABS/PV ALLOY	PROLOY, PULSE, LUSTRAN, CYCLOVIN	DOOR PANELS, GRILLES, TRIM
BMC	BULK MOLDING COMPOUND	BMC	FENDER EXTENSIONS
EMA	EHTYLENE METHYL ACRYLATE/IONOMER	SURLYN, EMA,	BUMPER GUARDS,

		IONOMER	PADS
METTON	METTON	METTON	GRILLES, KICK PANELS RUNNING BOARDS
MPPO	MODIFIED POLYPHENYLENE OXIDE	MPPO	SPOILER ASSEMBLY
PA	POLYAMID	ZYTEL, VYDYNE, PA, MINLON	FENDERS, QUARTER PANELS
PET	THERMOPLASTIC POLYESTER	RYNITE	TRIM
PBT/PPO	PBT/PPO ALLOY	GERMAX	CLADDINGS
PBTP	POLYBUTYLENE THEREPTHALATE	PBT, PBTP, POCAN, VALOX	WHEEL COVERS, FENDERS, GRILLES
PBTP/EEBC	POLYBUTYLENE THEREPTHALATE/EEBC ALLOY	BEXLOY, "M", PBTP/EEBC	FASCIAS, ROCKER PANEL, MOLDINGS
PC	POLYCARBONATE	LEXAN, MERLON, CALIBRE, MAKROLON PC	TAIL LIGHT LENSES, IP TRIM, VALANCE PANELS
PC/ABS	PC/ABS ALLOY	GERMAX, BAY BLENDS, PULSE	DOORS, INSTRUMENT PANELS
PPO	POLYPHENYLENE OXIDE	AZDEL, HOSTALEN, MARLEX, PRFAX, NORYL, GTX, PPO	INTERIOR TRIM, DOOR PANELS, SPLASH SHIELDS, STEERING COLUMN SHROUD

PPO/PA	POLYPHENYLENE/POLYAMID	PPO/PA, GTX 910	FENDERS, QUARTER PANELS
PR/FV	FIBERGLASS REINFORCED PLASTIC	FIBERGLASS, FV, PR/FV	BODY PANEL
PS	POLYSTYRENE	LUSTREX, STYRON, PS	DOOR PANELS, DAS PANELS
RTM	RESIN TRANSFER MOLDING COMPOUND	RTM	BODY PANEL
SMC	SHEET MOLDED COMPOUND	SMC	BODY PANEL
TMC	TRANSFER MOLDING COMPOUND	TMC	GRILLES
UP	UNSATURATED POLYESTER (THERMOSETTING)	SMC, BMC, TMC, ZMC, IMC, XSMC, UP	GRILLE OPENING PANEL, LIFTGATES, FLARESIDE FENDERS, FENDER EXTENSIONS
EEBC	ETHER/ESTER BLOCKED CO-POLYMER	EEBC	BUMPERS
EEBC/PBTP	EEBC/POLYBUTYLENE TEREPTHALATE	EEBC, PBTP, BEXLOY	BUMPER, ROCKER PANELS
EMPP	ETHYLENE MODIFIED POLYPROPYLENE	EMPP	BUMPER COVERS
EPDM	ETHYLENE/PROPROPYLENE DIENE MONOMER	EPDM, NORDEL, VISTALON	BUMPERS
EPM	ETHYLENE/PROPROPYLENE CO-POLYMER	EPM	FENDERS
MPU	FOAM POLYURETHANE	MPU	SPOILERS
PE	POLYETHYLENE	ALATHON, DYLAN, LUPOLEN,	"?

		MARLEX	
PP	POLYPROPYLENE (BLENDS)	NORYL, AZDEL, MARLOX, DYLON, PRAVEX	INNER FENDER, SPOILERS, KICK PANELS
PP/EPDM	PP/EPDM ALLOY	PP/EPDM	SPOILERS, GRILLES
PUR	POLYURETHANE	COLONELS, PUR, PU	FASCIAS, BUMPERS
PUR/PC	PUR/PC ALLOY	TEXIN	BUMPERS
PVC	POLYVINYL CHLORIDE	APEX, GEON, VINYLITE	BODY MOLDINGS, WIRE INSULATION STEERING WHEELS
RIM	REACTION INJECTED MOLDED POLYURETHANE	RIM, BAYFLEX	FRONT FASCIAS, MODULAR WINDOWS
RRIM	REINFORCED REACTION INJECTED MOLDED	PUR, RRIM	FASCIAS, BODY PANELS, BODY TRIMS
TPE	THERMO POLYETHYLENE	TPE, HYTREL, BEXLOY-V	FASCIAS, BUMPERS, CLADDINGS
TPO	THERMOPOLYOLEFIN	POLYTROPE, RENFLEX, SANTOPRENE, VISAFLEX, ETA, APEX, TPO, SHIELDS, CLADDINGS	BUMPERS, END CAPS, TELCAR, RUBBER, STRIPS, SIGH INTERIOR B POST
TPP	THERMO-POLYPROPYLENE	TPP	BUMPERS
TPU	THERMOPOLYURETHANE,	TPU, HYTREL,	BUMPERS,

	POLYESTER	TEXIN, ESTANE	BODY SIDE, MOLDINGS, FENDERS, FASCIAS

PANEL SECTIONING

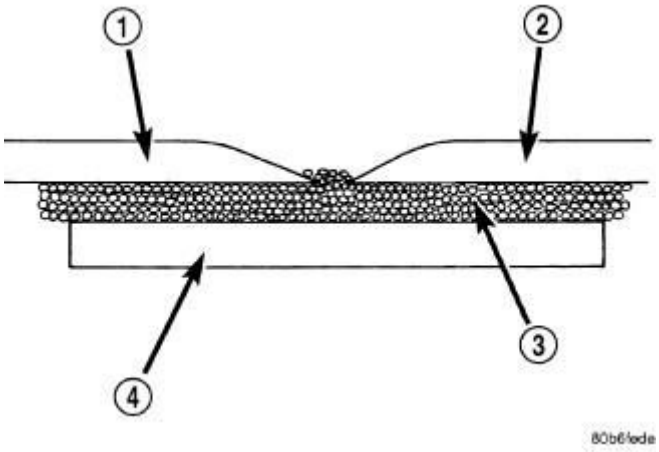

Fig. 1: Identifying Panel Sectioning
Courtesy of CHRYSLER GROUP, LLC

1 - EXISTING PANEL
2 - NEW PANEL
3 - PANEL ADHESIVE
4 - BONDING STRIP

If it is required to section a large panel for a plastic repair, it will be necessary to reinforce the panel. To bond two plastic panels together, a reinforcement must overlap both panels. The panels must be "V'd" at a 20 degree angle. The area to be reinforced should be washed, then sanded. Be sure to wipe off any excess soap and water when finished. Lightly sand or abrade the plastic with an abrasive pad or sandpaper. Blow off any dust with compressed air or wipe with a clean dry rag.

When bonding plastic panels, follow repair material manufacturers recommendations. Be sure that enough adhesive has been applied to allow squeeze out and to fill the full bond line. Once the pieces have been brought together, do not move them until the adhesive is cured. The assembly can be held together with clamps, rivets, etc. A faster cure can be obtained by heating with a heat lamp or heat gun. After the parts have been bonded and have had time to

cure, rough sand the seam and apply the final adhesive filler to the area being repaired. Smooth the filler with a spreader, wooden tongue depressor, or squeegee. For fine texturing, a small amount of water can be applied to the filler surface while smoothing. The cured filler can be sanded as necessary and, as a final step, cleanup can be done with soapy water. Wipe the surface clean with a dry cloth allowing time for the panel to dry before moving on with the repair.

PANEL REINFORCEMENT

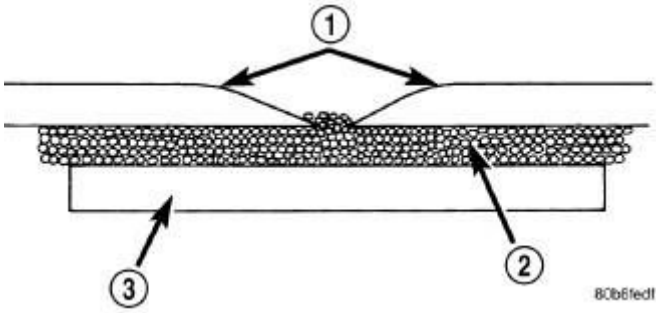

Fig. 2: Identifying Panel Reinforcement
Courtesy of CHRYSLER GROUP, LLC

1 - SOFTENED EDGES
2 - PANEL ADHESIVE
3 - BONDING STRIP

Structural repair procedures for rigid panels with large cracks and holes will require a reinforcement backing. Reinforcements can be made with several applications of glass cloth saturated with structural adhesive. Semi-rigid or flexible repair materials should be used for semi-rigid or flexible backing reinforcement and open meshed fiberglass dry wall tape can be used to form a reinforcement. The dry wall tape allows the resin to penetrate through and make a good bond between the panel and the adhesive. Structurally, the more dry wall tape used, the stronger the repair.

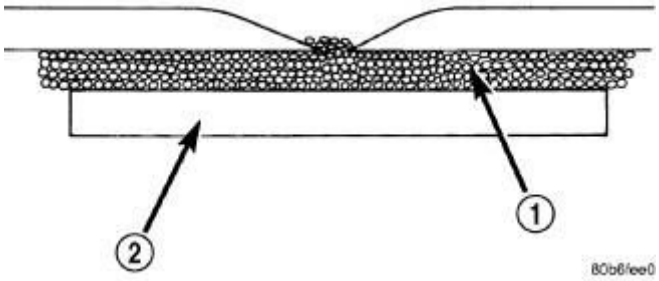

Fig. 3: Identifying Panel Reinforcement

Courtesy of CHRYSLER GROUP, LLC

1 - PANEL ADHESIVE 2 - REINFORCEMENT

Another kind of repair that can be done to repair large cracks and holes is to use a scrap piece of similar plastic and bond with structural adhesive. The reinforcement should cover the entire break and should have a generous amount of overlap on either side of the cracked or broken area.

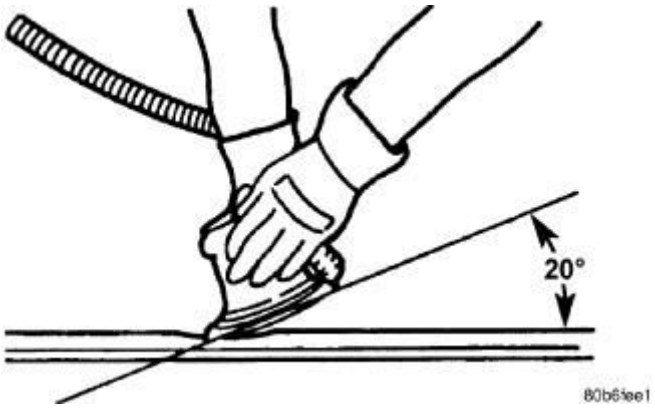

Fig. 4: Beveling Area Around Crack AT 20 Degree Angle
Courtesy of CHRYSLER GROUP, LLC

When repairing plastic, the damaged area is first "V'd" out, or beveled. Large bonding areas are desirable when repairing plastic because small repairs are less likely to hold permanently. Beveling the area around a crack at a 20° angle will increase the bonding surface for a repair. It is recommended that sharp edges be avoided because the joint may show through after the panel is refinished.

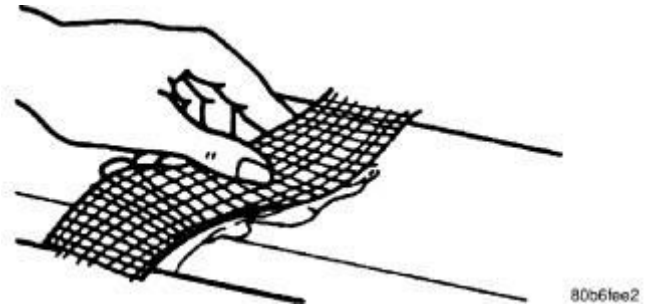

Fig. 5: Identifying Bonding Surface Repair Area
Courtesy of CHRYSLER GROUP, LLC

- Panel repair for both flexible and rigid panels are basically the same. The primary difference between flexible panel repair and rigid panel repair is in

the adhesive materials used.

- The technician should first decide what needs to be done when working on any type of body panel. One should determine if it is possible to return the damage part to its original strength and appearance without exceeding the value of the replacement part.
- When plastic repairs are required, it is recommended that the part be left on the vehicle when ever possible. That will save time, and the panel will remain stationary during the repair. Misalignment can cause stress in the repair areas and can result in future failure.

VISUAL INSPECTION

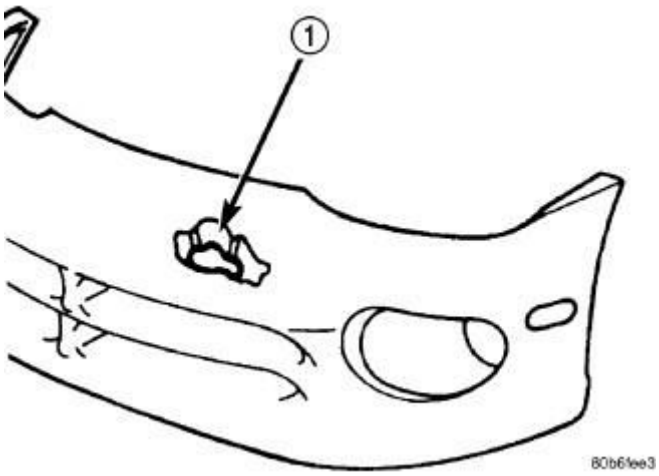

Fig. 6: Identifying Damage Components
Courtesy of CHRYSLER GROUP, LLC

1 - PUNCTURE

Composite materials can mask the severity of an accident. Adhesive bond lines, interior structure of the doors, and steel structures need to be inspected carefully to get a true damage assessment. Close inspection may require partial removal of interior trim or inner panels.

Identify the type of repair: Puncture (1) or Crack - Damage that has penetrated completely through the panel. Damage is confined to one general area; a panel section is not required. However, a backer panel, open fiberglass tape, or matted material must be bonded from behind.

PANEL SURFACE PREPARATION

If a body panel has been punctured, cracked, or crushed, the damaged area must be removed from the panel to achieve a successful repair. All spider web cracks leading away from a damaged area must be stopped or removed. To stop a running crack in a panel, drill a 6 mm (0.250 in.) hole at the end of the crack farthest away from the damage. If spider web cracks can not be stopped, the panel would require replacement. The surfaces around the damaged area should be stripped of paint and freed from wax and oil. Sand surfaces around repair area with 80 -120 grit sandpaper, or equivalent, to assure adhesion of repair materials.

PATCHING PANELS

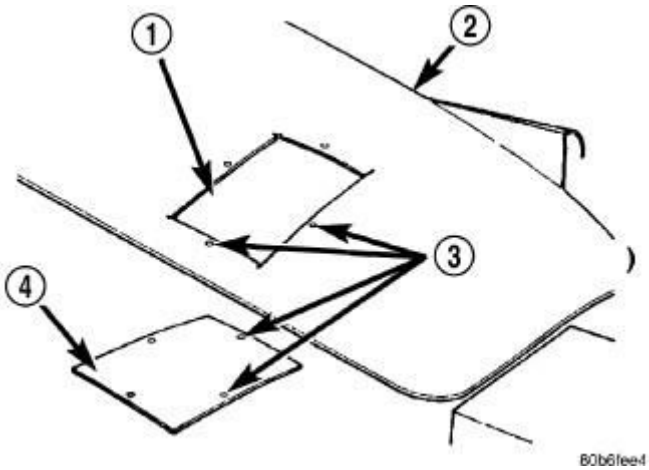

Fig. 7: Identifying Damaged Panel Cutout And Patch
Courtesy of CHRYSLER GROUP, LLC

1 - CUTOUT
2 - DAMAGED BODY PANEL
3 - 4 MM (0.160 IN.) HOLES
4 - PATCH CUT TO SIZE

A panel that has extensive puncture type damage can be repaired by cutting out the damaged material. Use a suitable reciprocating saw or cut off wheel to remove the section of the panel that is damaged. The piece cut out can be used as a template to shape the new patch. It is not necessary to have access to the back of the panel to install a patch. Bevel edges of cutout at 20° to expose a larger bonding area on the outer side. This will allow for an increased reinforcement areas.

PANEL PATCH FABRICATIONS

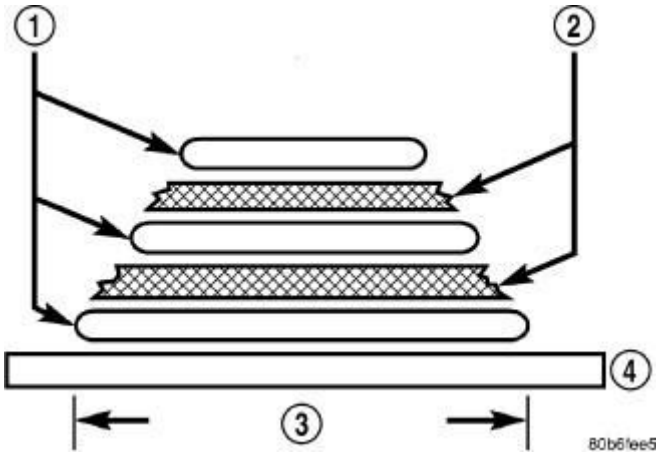

Fig. 8: Identifying Fabricated Panel
Courtesy of CHRYSLER GROUP, LLC

1 - STRUCTURAL ADHESIVE
2 - FIBERGLASS CLOTH OR FIBERGLASS MESH TAPE
3 - WIDTH OF V-GROOVE
4 - WAXED PAPER

A patch can be fabricated from any rigid fiberglass panel that has comparable contour with the repair area. Lift gates and fenders can be used to supply patch material. If existing material is not available or compatible, a patch can be constructed with adhesive and reinforcement mesh (dry wall tape). Perform the following operation if required:

1. Cover waxed paper or plastic with adhesive backed nylon mesh (dry wall tape) larger than the patch required.
2. Tape waxed paper or plastic sheet with mesh to a surface that has a compatible contour to the repair area.
3. Apply a liberal coat of adhesive over the reinforcement mesh. If necessary apply a second or third coat of adhesive and mesh after first coat has cured. The thickness of the patch should be the same as the repair area.
4. After patch has cured, peel waxed paper or plastic from the back of the patch.
5. If desired, a thin film coat of adhesive can be applied to the back of the patch to cover mesh for added strength.

PANEL PATCH INSTALLATION

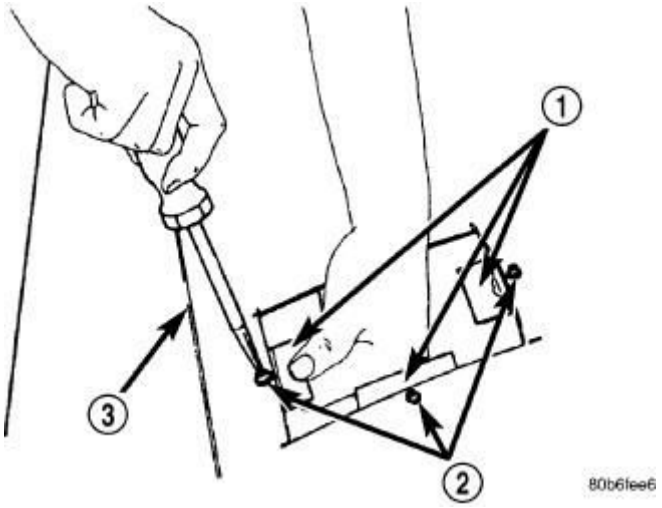

Fig. 9: Securing Support Squares To Body Panel
Courtesy of CHRYSLER GROUP, LLC

1 - SUPPORT SQUARES
2 - SCREWS
3 - DAMAGED BODY PANEL

1. Make a paper or cardboard pattern the size and shape of the cutout hole in the panel.
2. Trim 3 mm (0.125 in.) from edges of pattern so patch will have a gap between connecting surfaces.
3. Using the pattern as a guide, cut the patch to size.
4. Cut scrap pieces of patch material into 50 mm (2 in.) squares to use as patch supports to sustain the patch in the cutout.
5. Drill 4 mm (0.160 in.) holes 13 mm (0.5 in.) in from edge of cutout hole.
6. Drill 4 mm (0.160 in.) holes 13 mm (0.5 in.) away from edge of patch across from holes drilled around cutout.
7. Drill 3 mm (0.125 in.) holes in the support squares 13 mm (0.5 in.) from the edge in the center of one side.
8. Scuff the backside of the body panel around the cutout hole with a scuff pad or sandpaper.
9. Mix enough adhesive to cover one side of all support squares.
10. Apply adhesive to cover one side of all support squares.
11. Using number 8 sheet metal screws, secure support squares to back side of body panel with adhesive sandwiched between the panel and squares.

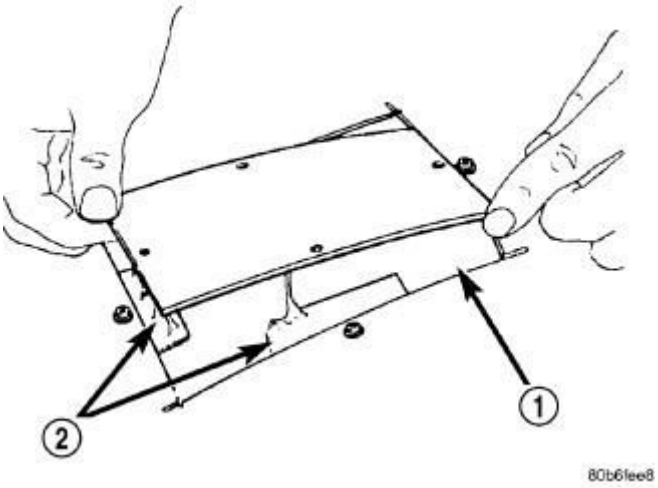

Fig. 10: Identifying Cutout And Support Squares
Courtesy of CHRYSLER GROUP, LLC

1 - CUTOUT 2 - SUPPORT SQUARES

12. Position patch in cutout (1) against support squares (2) and adjust patch until the gap is equal along all sides.
13. Drill 3 mm (0.125 in.) holes in the support squares through the pre-drilled holes in the patch.

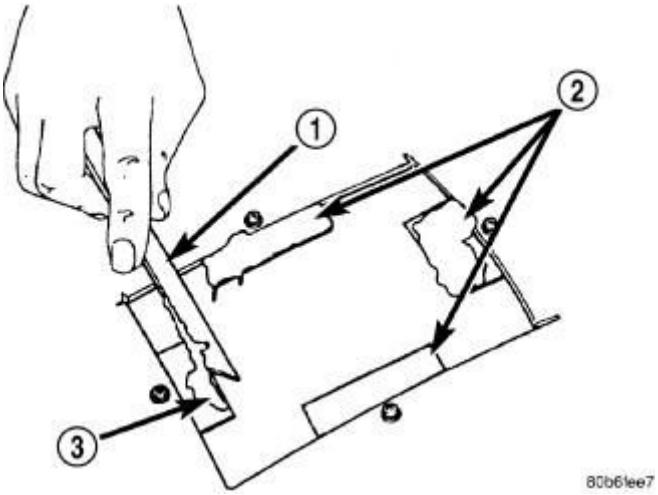

Fig. 11: Applying Adhesive
Courtesy of CHRYSLER GROUP, LLC

1 - APPLICATOR 2 - SUPPORT SQUARES 3 - ADHESIVE

14. Apply a coat of adhesive (3) to the exposed ends of the support squares (2).

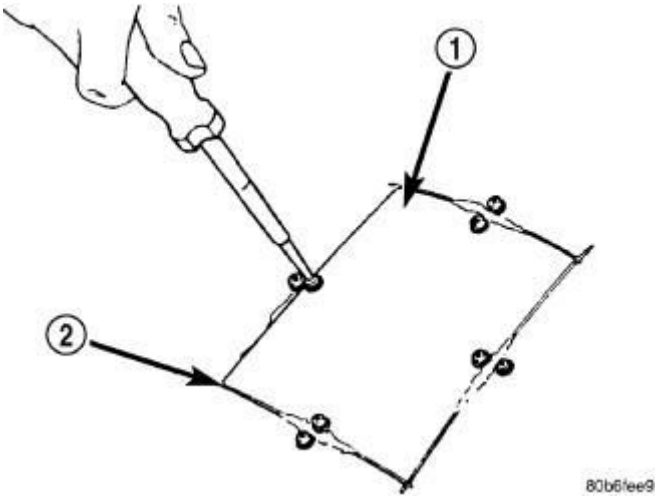

Fig. 12: Applying Coat Of Adhesive To Exposed Ends Of Support Squares
Courtesy of CHRYSLER GROUP, LLC

1 - PATCH 2 - GAP

15. Install screws to hold the patch (1) to support squares. Tighten screws until patch surface is flush with panel surface.
16. Allow adhesive to cure, and remove all screws.

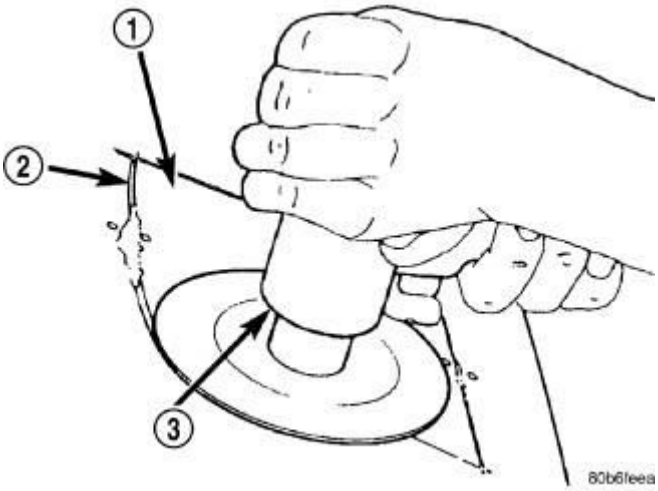

Fig. 13: Grinding Surface
Courtesy of CHRYSLER GROUP, LLC

1 - PATCH

2 - GAP
3 - DISC GRINDER

17. Using a 125 mm (5 in.) 24 grit disc grinder (3), grind a 50 mm (2 in.) to 75 mm (3 in.) wide and 75% -80% deep (original material thickness) path across the gaps (2) around the patch (1). With compressed air, blow dust from around patch.

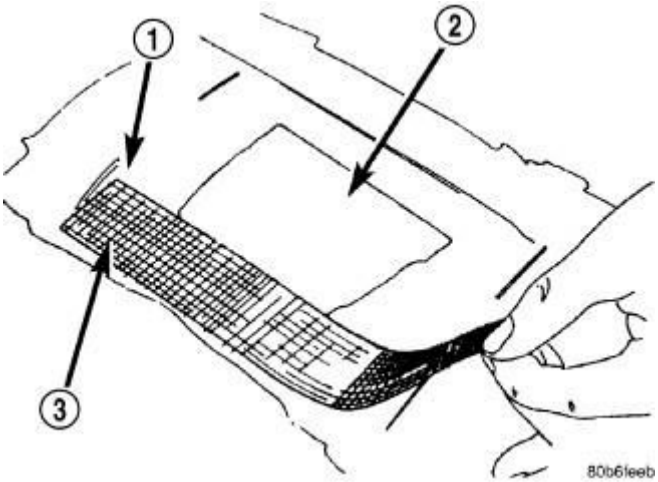

Fig. 14: Covering Gaps With Mesh
Courtesy of CHRYSLER GROUP, LLC

1 - GROUND DOWN AREA
2 - PATCH
3 - MESH

18. Apply adhesive backed nylon mesh (dry wall tape) over gaps around patch.
19. Mix enough adhesive to cover the entire patch area.

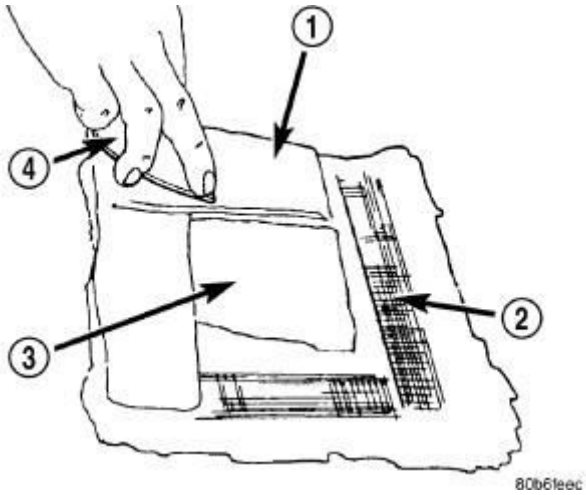

Fig. 15: Applying Adhesive Over Mesh Around Patch
Courtesy of CHRYSLER GROUP, LLC

1 - ADHESIVE 2 - MESH 3 - PATCH 4 - SPREADER

20. Apply adhesive over the mesh around patch, and smooth epoxy with a wide spreader to reduce finish grinding. Use two to three layers of mesh and adhesive to create a stronger repair.

PATCHED PANEL SURFACING

After patch panel is installed, the patch area can be finished using the same methods as finishing other types of body panels. If mesh material is exposed in the patched area, grind surface down, and apply a coat of high quality rigid plastic body filler. Prime, block sand, and paint as required.

SPECIFICATIONS

BODY LUBRICATION

LUBRICATION REQUIREMENTS

Body mechanisms and linkages should be inspected, cleaned, and lubricated, as required, to maintain ease of operation and to provide protection against rust and wear. When performing other under hood services, the hood latch release mechanism and safety catch should be inspected, cleaned, and lubricated. During the winter season, external door lock cylinders should be lubricated to assure proper operation when exposed to water and ice.

Prior to the application of any lubricant, the parts concerned should be wiped clean to remove dust and grit. If necessary, a suitable solvent can be used to clean the item to be lubricated. After lubricating a component, any excess oil or grease should be removed.

LUBRICANT APPLICATION

DOOR LOCK CYLINDERS

1. Apply a small amount of lubricant directly into the lock cylinder.

2. Apply a small amount of lubricant to the key.
3. Insert key into lock cylinder and cycle the mechanism from the locked to the unlocked position.

NOTE: Do not add more lubricant.

4. Cycle the lock cylinder mechanism several times to allow the lubricant to flow throughout the cylinder.
5. Wipe all lubricant from exterior of lock cylinder and key.

ALL OTHER BODY MECHANISMS

1. Clean component as described above.
2. Apply specified lubricant to all pivoting and sliding contact areas of component.

LUBRICANT USAGE

ENGINE OIL

- Door Hinges - Hinge Pin and Pivot Contact Areas
- Hood Hinges - Pivot Points
- Liftgate Hinges

MOPAR® SPRAY WHITE LUBE OR EQUIVALENT

- Door Check Straps
- Liftgate Latches
- Liftgate Prop Pivots
- Ash Receiver
- Fuel Filler Door Remote Control Latch Mechanism
- Parking Brake Mechanism
- Sliding Seat Tracks
- Liftgate Latch

MOPAR® MULTIPURPOSE GREASE OR EQUIVALENT

- All Other Hood Mechanisms

MOPAR® LOCK CYLINDER LUBRICANT OR EQUIVALENT

- Door Lock Cylinders
- Liftgate Lock Cylinder

TORQUE

TORQUE SPECIFICATIONS

Description	N.m	Ft. Lbs.	In. Lbs.
Door latch adjustment screw	3	-	27
Exterior mirror nuts	5	-	44
Fender fasteners	14	10	-
Front door exterior handle screws	8	-	71
Front door hinge to pillar fasteners	22	16	-
Front door latch screws	7	-	62
Front door lower regulator/trim screws	6	-	53
Front door striker fasteners	26	19	-
Front door to hinge fasteners	13	9.5	-
Front door trim screws (front corner)	6	-	53
Front door upper regulator rail screws	8	-	71
Front seat air bag nuts	10	-	90
Front seat back bolts	40	30	-
Front seat belt anchor bolt	51	37.5	-
Front seat belt buckle bolts	45	33	-
Front seat belt turning loop bolt	40	30	-
Front seat cushion strap bolts	11	8	-
Front seat to floor bolts	51	37.5	-
Hood hinge to body bolts	20	15	-
Hood latch bolts	13.5	10	-
Hood to hinge nuts	20	15	-
I/P center support bolts	21	15.5	-
I/P fence line bolts	21	15.5	-
I/P side support bolts	21	15.5	-
Liftgate handle nuts	8.5	-	75
Liftgate latch screws	8	-	71

Liftgate latch striker screws	23	17	-
Liftgate spoiler nuts	8.5	-	75
Liftgate striker fasteners	23	17	-
Liftgate to body fasteners	15	11	-
Liftgate to hinge fasteners	15	11	-
Luggage rack screws	4	-	35
Rear door exterior handle nuts	4	-	35
Rear door glass run screw	8	-	71
Rear door hinge to pillar fasteners	22	16	-
Rear door latch screws	7	-	62
Rear door lower regulator/trim screw	6	-	53
Rear door striker fasteners	26	19	-
Rear door to hinge fasteners	13	9.5	-
Rear door upper regulator rail screws	6	-	53
Rear seat back inboard pivot bolts	45	33	-
Rear seat back mounting bracket fasteners	80	59	-
Rear seat back outboard pivot bolts	32	23.5	-
Rear seat back pivot bracket bolts	7	-	62
Rear seat back pulley assembly bolt	7	-	62
Rear seat back recliner bolt	45	33	-
Rear seat belt buckle bolts	66	49	-
Rear seat cushion mounting bolts	80	59	-
Rear seat latch bolts	28	21	-
Rear view mirror screw	2	-	18
Roof rack rail screws	4	-	35
Spoiler nuts	8.5	-	75
Sunroof frame assembly screws	9	-	80
Sunroof glass screws	3	-	27
Sunroof motor screws	3	-	27
Upper radiator crossmember bolts - inner	8	-	71
Upper radiator crossmember bolts - outer	22.5	16.5	-
Visor screws	2	-	18
Visor support screws	2	-	18

SPECIAL TOOLS

SPECIAL TOOLS

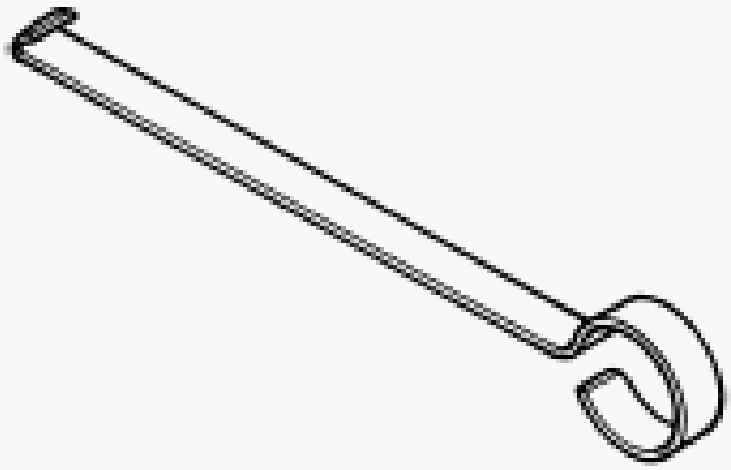	9093 - Remover, Belt Moldings (Originally Shipped In Kit Number(s) 9076, 9090, 9090CC, 9098, 9098CC.)
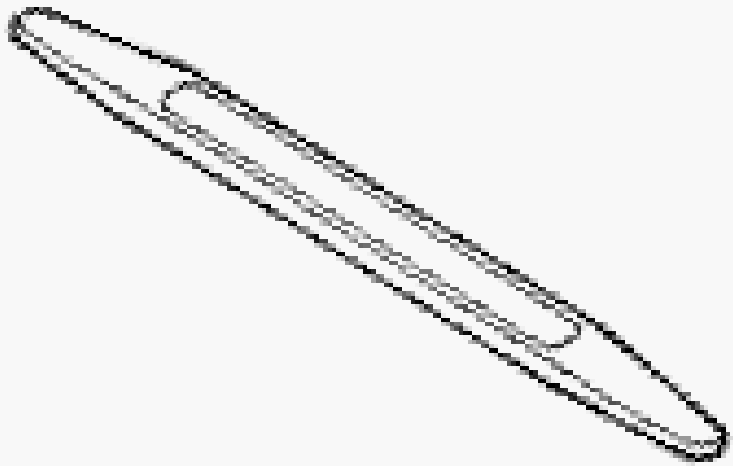	C-4755 - Trim Stick (Originally Shipped In Kit Number(s) 9299, 9299CC, 9299CC, 9300A-CAN.)

DOOR - FRONT

DOOR

ADJUSTMENTS

ADJUSTMENTS

NOTE: For four door vehicles, it is recommended that you adjust the rear door before adjusting the front door. Refer to DOOR, REAR, ADJUSTMENTS.

- **Door adjustment measurements should be taken from stationary or welded body panels like the roof, rocker or quarter panels.**
- **During adjustment procedures, it is recommended that all the hinge fasteners be loosened except for the upper most fasteners. Adjustments can be made using the upper bolts to hold the door with final torque of the fasteners occurring after correct door positioning is achieved.**
- **A suitable body sealant should be used when removing or moving the hinges.**

FORE/AFT

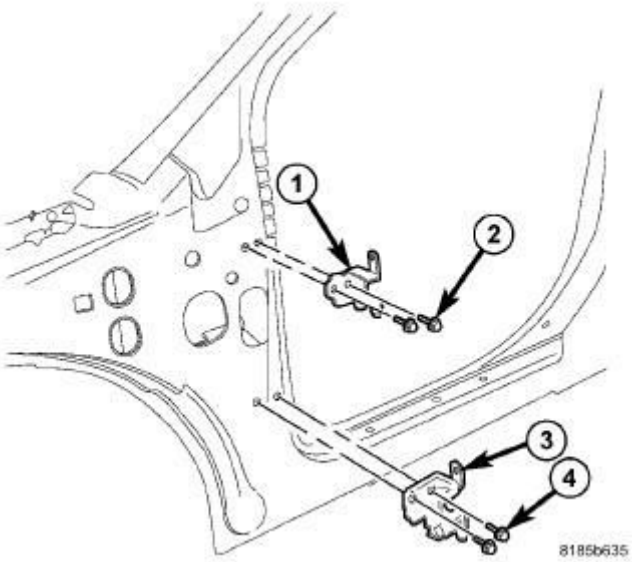

Fig. 16: Hinges
Courtesy of CHRYSLER GROUP, LLC

NOTE: Fore/aft (lateral) door adjustment is done by loosening the hinge to the hinge pillar fasteners one hinge at a time and moving the door to the correct position.

1. Support the door with a suitable lifting device.
2. Loosen the upper (2) and lower (4) hinge to hinge pillar fasteners. Refer to **HINGE, DOOR, REMOVAL**.
3. Adjust the door to the correct position. Refer to **GAP AND FLUSH,**

SPECIFICATIONS.

4. Tighten the upper most hinge bolt (1) to hinge pillar to 22 N.m (16 ft. lbs.).
5. Tighten the lower most hinge bolt (4) to hinge pillar to 22 N.m (16 ft. lbs.).
6. Tighten the remaining hinge to hinge pillar bolts to 22 N.m (16 ft. lbs.).

UP/DOWN

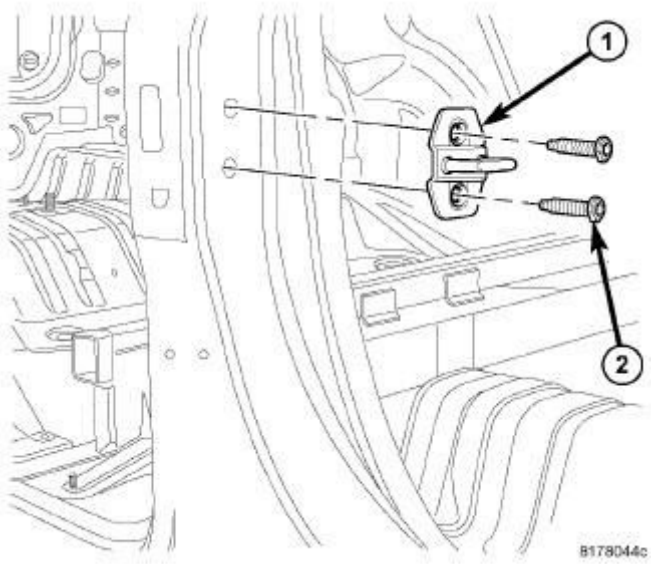

Fig. 17: Front Door Striker
Courtesy of CHRYSLER GROUP, LLC

NOTE: Up/down door adjustment is done by loosening either the hinge to the hinge pillar fasteners or the hinge to door fasteners and moving the door to the correct position.

1. Support the door with a suitable lifting device.
2. Loosen the latch striker bolts (2). Refer to **STRIKER, DOOR LATCH, REMOVAL**.

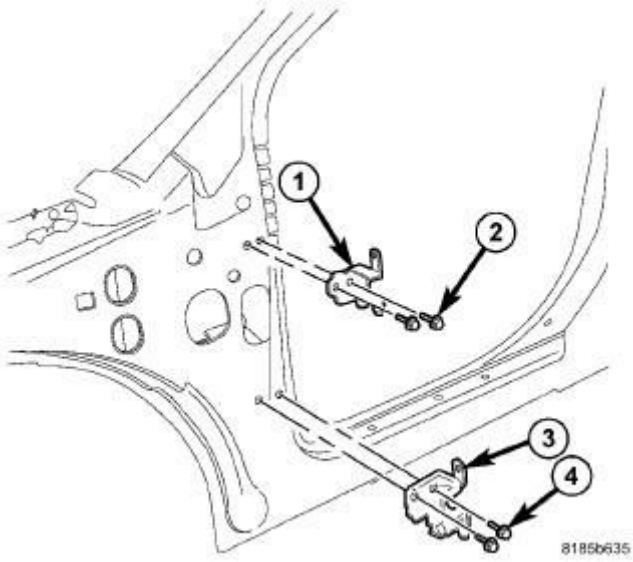

Fig. 18: Hinges
Courtesy of CHRYSLER GROUP, LLC

3. If necessary, loosen the hinge to hinge pillar fasteners (2) and (4). Refer to **HINGE, DOOR, REMOVAL**.

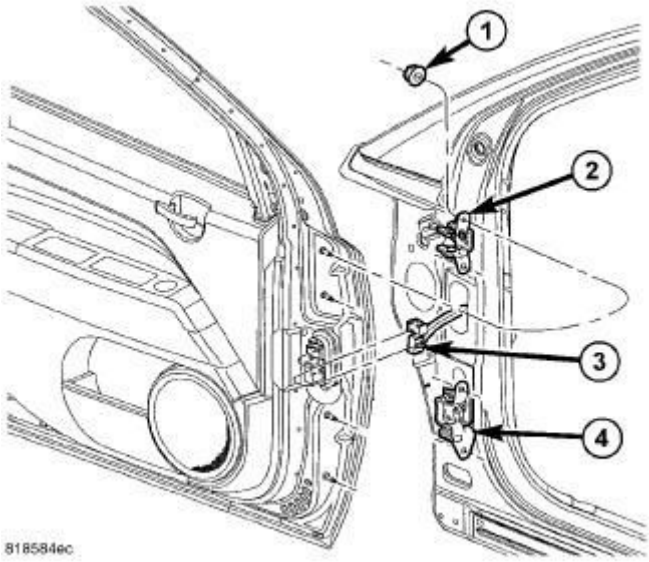

Fig. 19: Door
Courtesy of CHRYSLER GROUP, LLC

4. If necessary, Loosen the hinge to door fasteners (1). Refer to **DOOR, REMOVAL**.
5. Adjust the door to the correct position. Refer to **GAP AND FLUSH, SPECIFICATIONS**.

6. Tighten the door to hinges fasteners to 13 N.m (9.5 ft. lbs.).

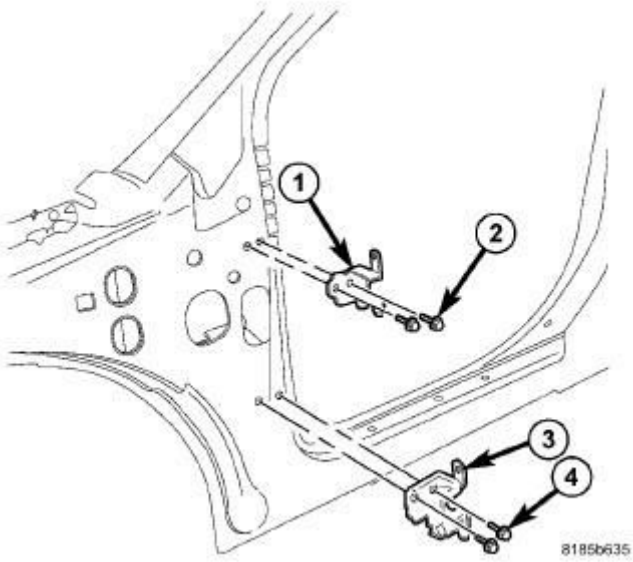

Fig. 20: Hinges
Courtesy of CHRYSLER GROUP, LLC

7. Tighten the upper most hinge bolt (1) to hinge pillar to 22 N.m (16 ft. lbs.).
8. Tighten the lower most hinge bolt (4) to hinge pillar to 22 N.m (16 ft. lbs.).
9. Tighten the remaining hinge to hinge pillar bolts to 22 N.m (16 ft. lbs.).

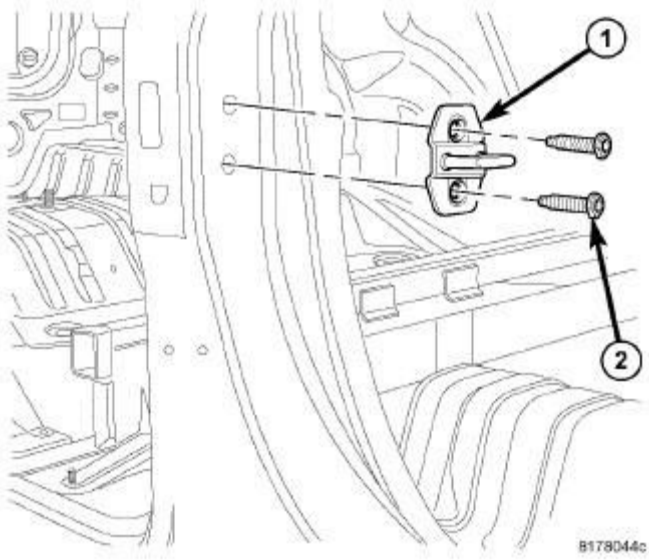

Fig. 21: Front Door Striker
Courtesy of CHRYSLER GROUP, LLC

10. Tighten the latch striker bolts (2) 26 N.m (19 ft. lbs.). Refer to **STRIKER,**

DOOR LATCH, INSTALLATION.

IN/OUT

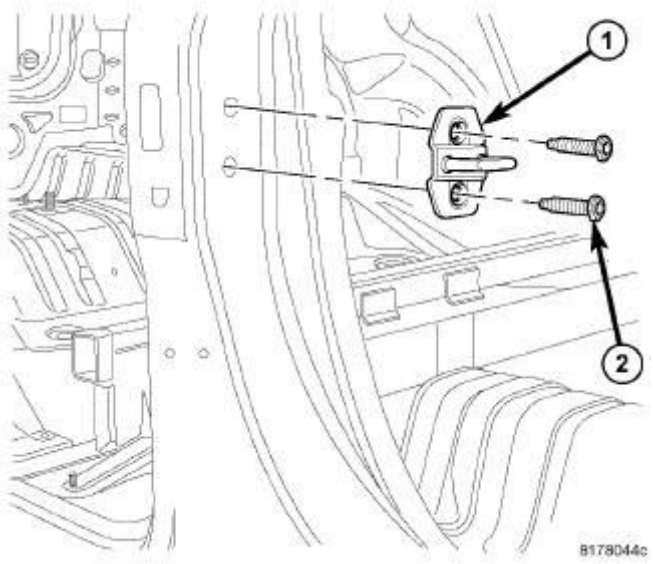

Fig. 22: Front Door Striker
Courtesy of CHRYSLER GROUP, LLC

NOTE: In/out door adjustment is done by loosening the hinge to door fasteners one hinge at a time and moving the door to the correct position.

1. Support the door with a suitable lifting device.
2. Loosen the latch striker bolts (2). Refer to **STRIKER, DOOR LATCH, REMOVAL**.

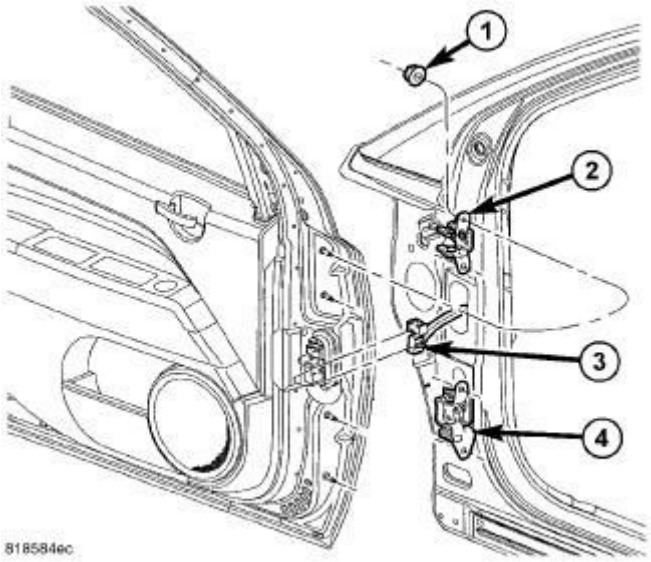

Fig. 23: Door
Courtesy of CHRYSLER GROUP, LLC

3. Loosen the hinge to door fasteners (1). Refer to **DOOR, REMOVAL**.
4. Adjust the door to the correct position. Refer to **GAP AND FLUSH, SPECIFICATIONS**.
5. Tighten the door to hinges fasteners to 13 N.m (9.5 ft. lbs.).

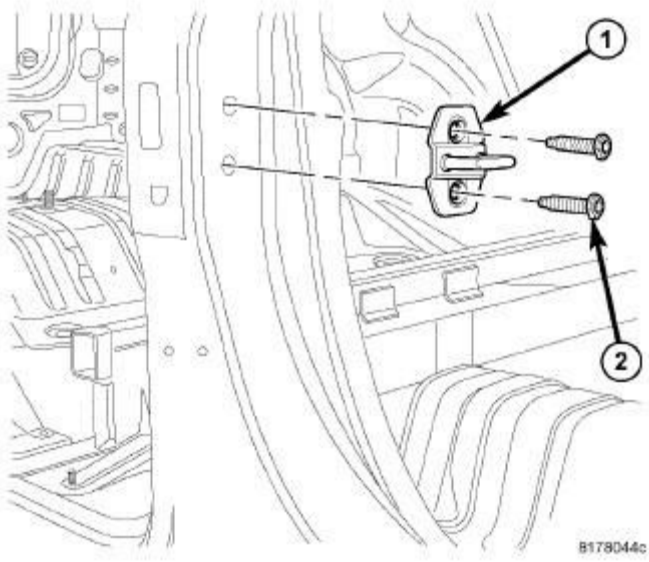

Fig. 24: Front Door Striker
Courtesy of CHRYSLER GROUP, LLC

6. Tighten the latch striker bolts (2) to 26 N.m (19 ft. lbs.). Refer to **STRIKER, DOOR LATCH, INSTALLATION**.

REMOVAL

REMOVAL

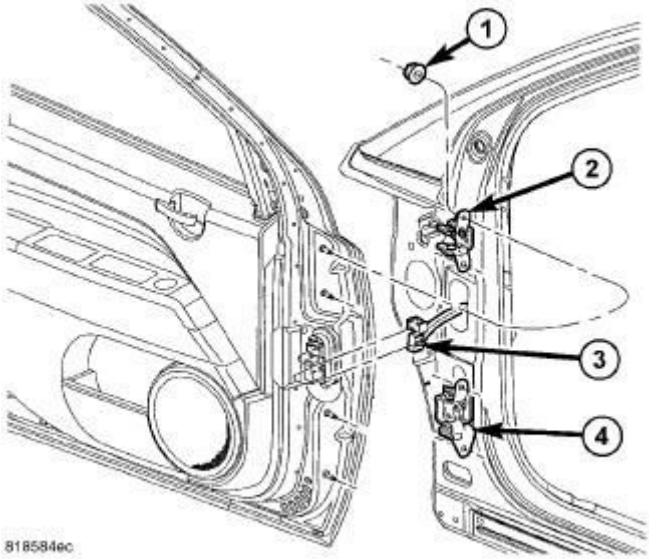

Fig. 25: Door
Courtesy of CHRYSLER GROUP, LLC

1. Disconnect and isolate the negative battery cable.
2. Disconnect the electrical connectors (3).
3. Using a grease pencil or equivalent, mark the location of the door hinges (2 and 4) on the door.
4. Support the door with a suitable lifting device and remove the nuts (1) that secure the door to the hinges.
5. Carefully remove the door from the hinges.
6. If necessary, remove the front door hinges from the A-pillar. Refer to **HINGE, DOOR, REMOVAL**.

INSTALLATION

INSTALLATION

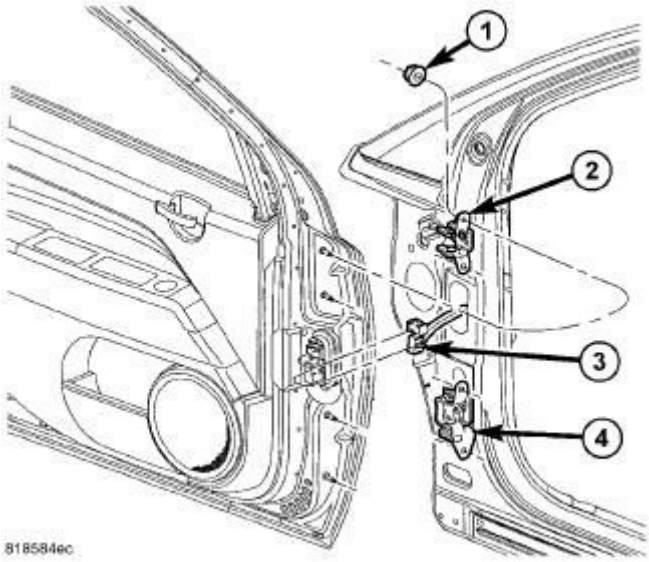

Fig. 26: Door
Courtesy of CHRYSLER GROUP, LLC

1. Carefully position the door onto the hinges (2 and 4) and support the door with a suitable lifting device.
2. Loosely install the four nuts (1) that secure the door to the hinges.
3. Align the door to the hinges using the reference marks made during the removal procedure and tighten the nuts and bolts to 13 N.m (9.5 ft. lbs.).
4. Connect the electrical connectors (3).
5. Reconnect the negative battery cable.
6. If necessary, adjust the door. Refer to **DOOR, ADJUSTMENTS**.

GLASS, DOOR

REMOVAL

REMOVAL

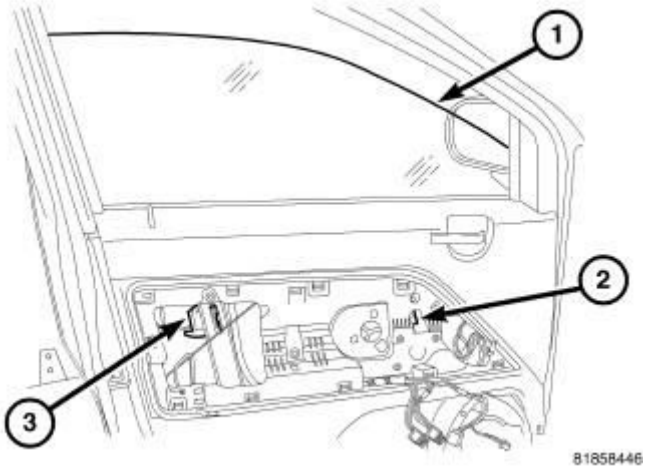

Fig. 27: Glass Location
Courtesy of CHRYSLER GROUP, LLC

1. Place the glass (1) in the position shown to gain access to the glass connections (2) and (3) from behind the bolster.
2. Disconnect and isolate battery negative cable.

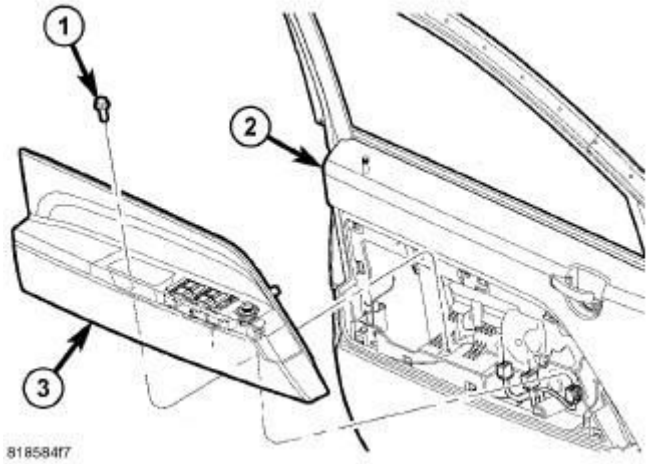

Fig. 28: Bolster
Courtesy of CHRYSLER GROUP, LLC

3. Separate the bolster (3) and allow it to hang by the tethers. Refer to **PANEL, DOOR TRIM, BOLSTER, REMOVAL**.

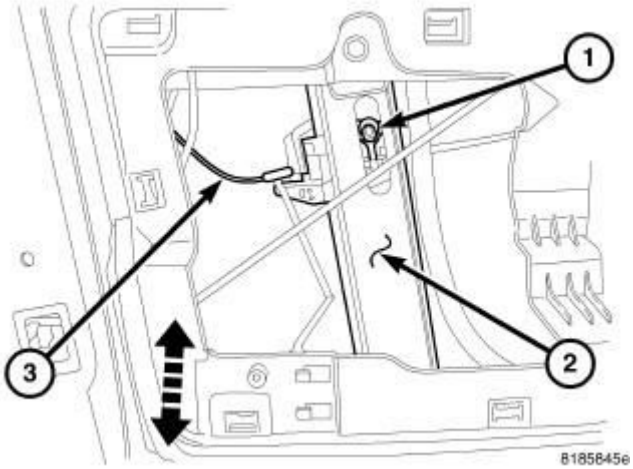

Fig. 29: Glass Disconnect
Courtesy of CHRYSLER GROUP, LLC

4. Depress the lock tabs (1) and release the glass (3) from the regulator (2) lift plates.

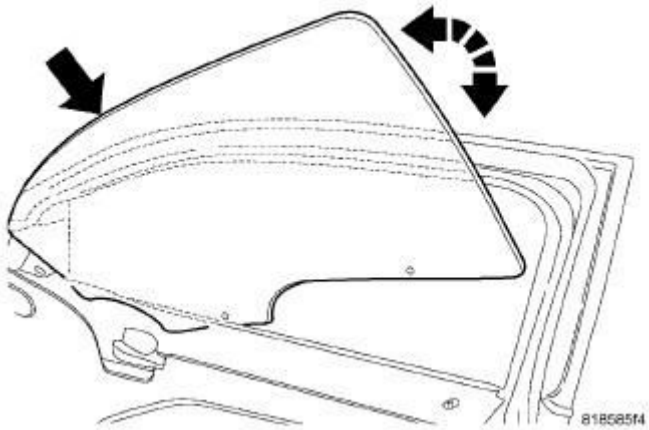

Fig. 30: Glass Removal
Courtesy of CHRYSLER GROUP, LLC

5. Remove the glass from the door.

INSTALLATION

INSTALLATION

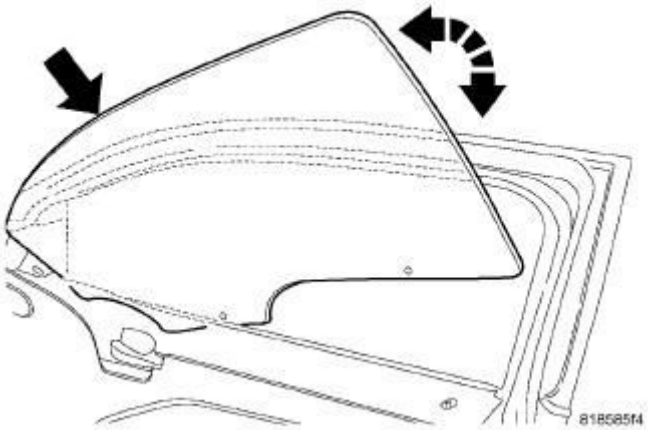

Fig. 31: Glass Removal
Courtesy of CHRYSLER GROUP, LLC

1. Position the glass into the door frame.

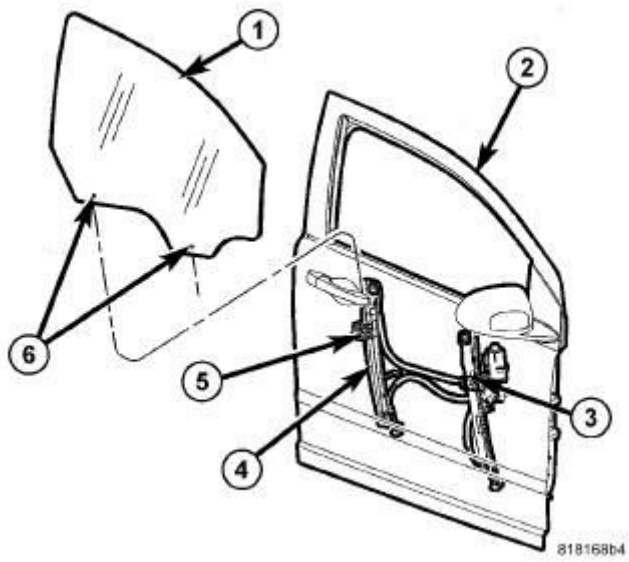

Fig. 32: Window Alignment
Courtesy of CHRYSLER GROUP, LLC

2. Slide glass (1) down into the door (2) and connect the mounting holes (6) to the regulator lift plates (3) and (5).

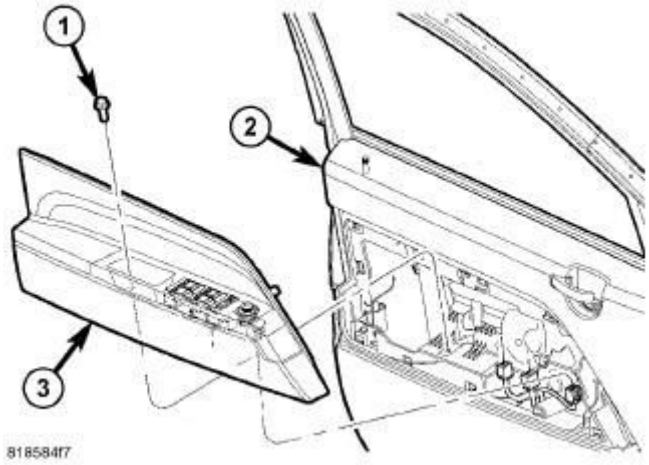

Fig. 33: Bolster
Courtesy of CHRYSLER GROUP, LLC

3. Install the bolster (3). Refer to **PANEL, DOOR TRIM, BOLSTER, INSTALLATION**.

HANDLE, EXTERIOR

REMOVAL

REMOVAL

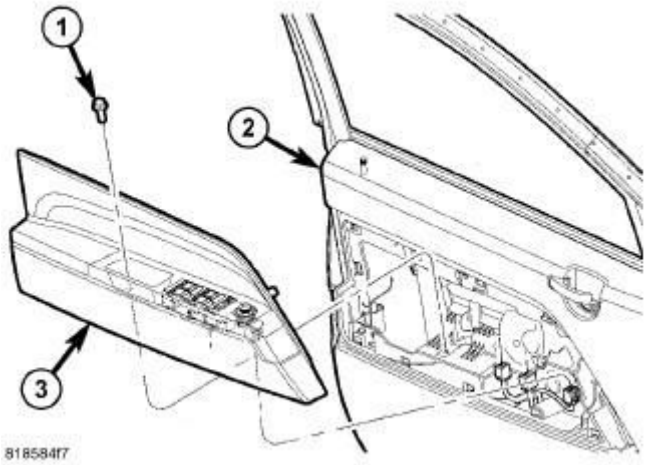

Fig. 34: Bolster
Courtesy of CHRYSLER GROUP, LLC

1. Separate the bolster (3) and allow it to hang by the tethers. Refer to **PANEL, DOOR TRIM, BOLSTER, REMOVAL**.

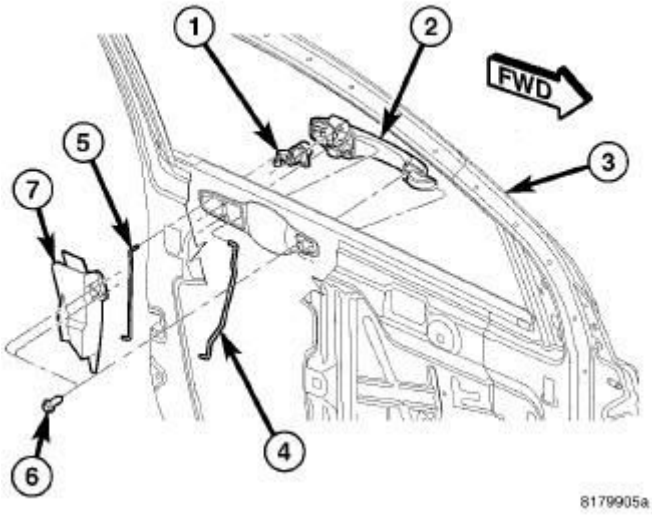

Fig. 35: Front Door Outside Handle Assembly
Courtesy of CHRYSLER GROUP, LLC

2. Disconnect the linkages (4) and (5), if equipped.
3. Remove the screws (6) and remove the exterior handle (2).
4. Remove the lock cylinder (1), if equipped.

INSTALLATION

INSTALLATION

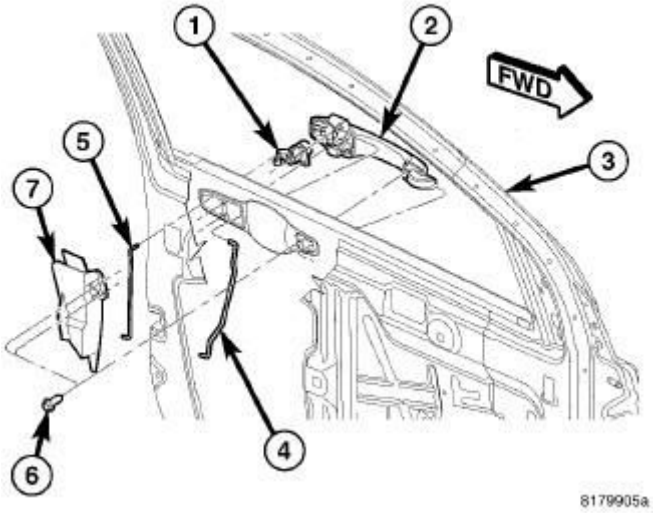

Fig. 36: Front Door Outside Handle Assembly
Courtesy of CHRYSLER GROUP, LLC

1. Install the lock cylinder (1), if equipped.
2. Install the handle (2) and install the screws (6).
3. Tighten screws (6) to 8 N.m (6 ft. lbs.)
4. Connect lock cylinder link rod (5) on to lock cylinder (1).
5. Connect handle link rod (4) on to door handle (2).

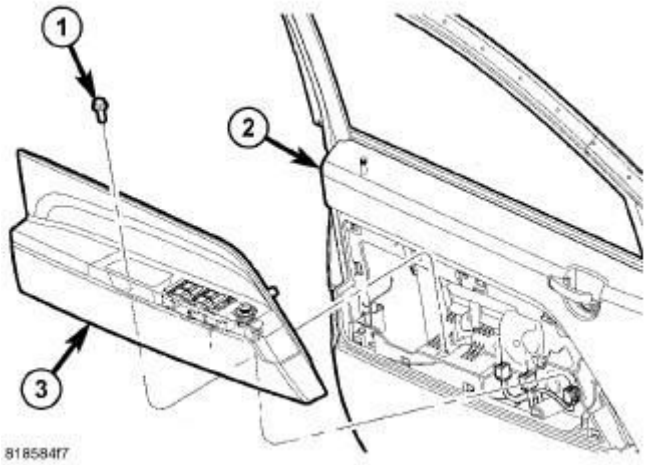

Fig. 37: Bolster
Courtesy of CHRYSLER GROUP, LLC

6. Install the bolster (3). Refer to **PANEL, DOOR TRIM, BOLSTER, INSTALLATION**.

HANDLE, INTERIOR

REMOVAL

REMOVAL

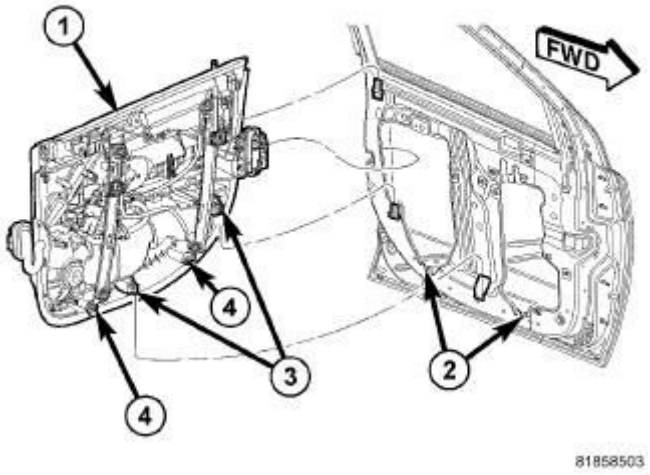

Fig. 38: Door Trim Module
Courtesy of CHRYSLER GROUP, LLC

1. Remove the door trim module (1). Refer to **PLATE, CARRIER, REMOVAL**.

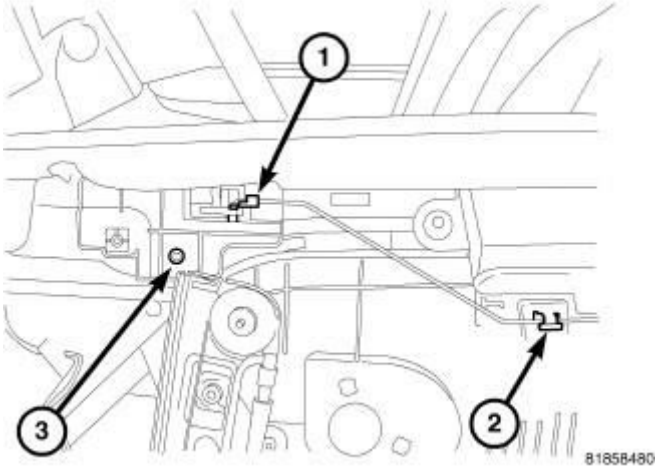

Fig. 39: Inside Handle
Courtesy of CHRYSLER GROUP, LLC

2. Disconnect the handle linkage (1).
3. Remove the screw (3) and remove the inside handle.

INSTALLATION

INSTALLATION

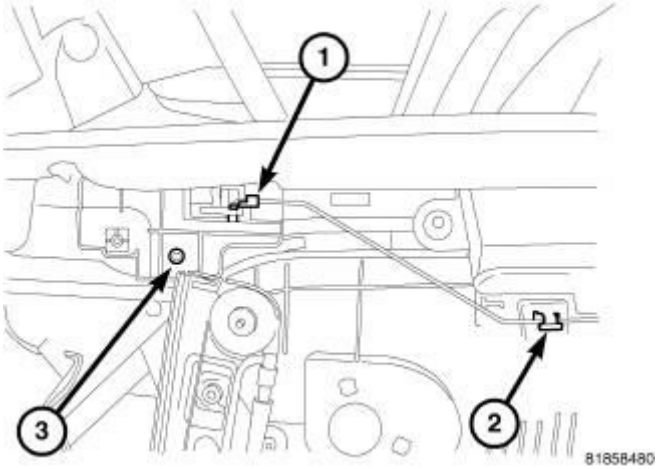

Fig. 40: Inside Handle
Courtesy of CHRYSLER GROUP, LLC

1. Install the handle onto the door trim panel and install the screw (3).
2. Connect the inside handle linkage (1) and (2).

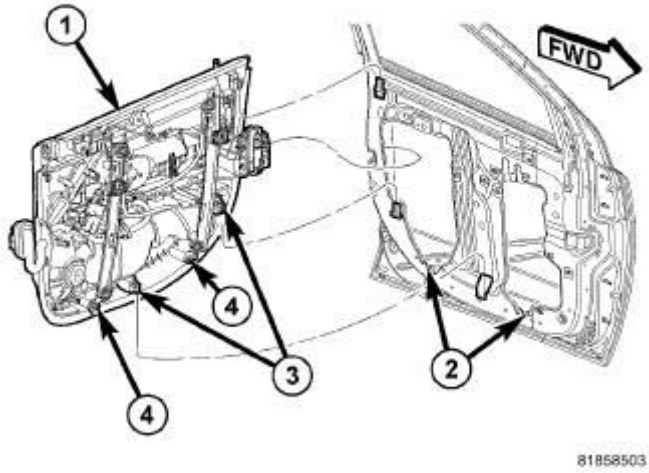

Fig. 41: Door Trim Module
Courtesy of CHRYSLER GROUP, LLC

3. Install the door trim module (1). Refer to **PLATE, CARRIER, INSTALLATION**.

HINGE, DOOR

REMOVAL

REMOVAL

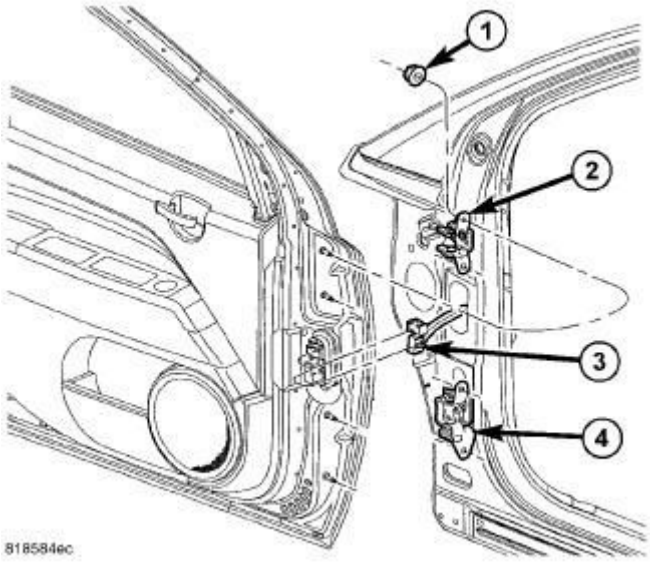

Fig. 42: Door
Courtesy of CHRYSLER GROUP, LLC

1. Remove the door. Refer to **DOOR, REMOVAL**.

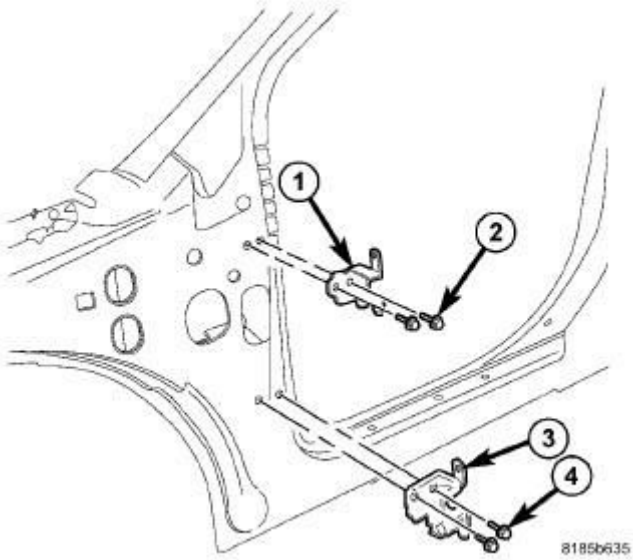

Fig. 43: Hinges
Courtesy of CHRYSLER GROUP, LLC

2. Using a grease pencil or equivalent, mark the hinge location and remove the bolts (2) and (4).

INSTALLATION

INSTALLATION

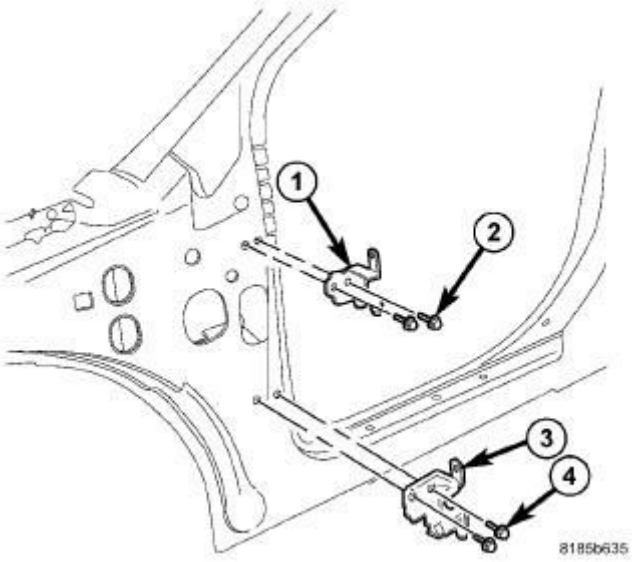

Fig. 44: Hinges
Courtesy of CHRYSLER GROUP, LLC

NOTE: A suitable body sealant should be used when removing or moving the hinges.

1. Install the hinges (1 and 3) and bolts (2 and 4).
2. Tighten the upper most hinge bolt (1) to hinge pillar to 22 N.m (16 ft. lbs.).
3. Tighten the lower most hinge bolt (4) to hinge pillar to 22 N.m (16 ft. lbs.).
4. Tighten the remaining hinge to hinge pillar bolts to 22 N.m (16 ft. lbs.).

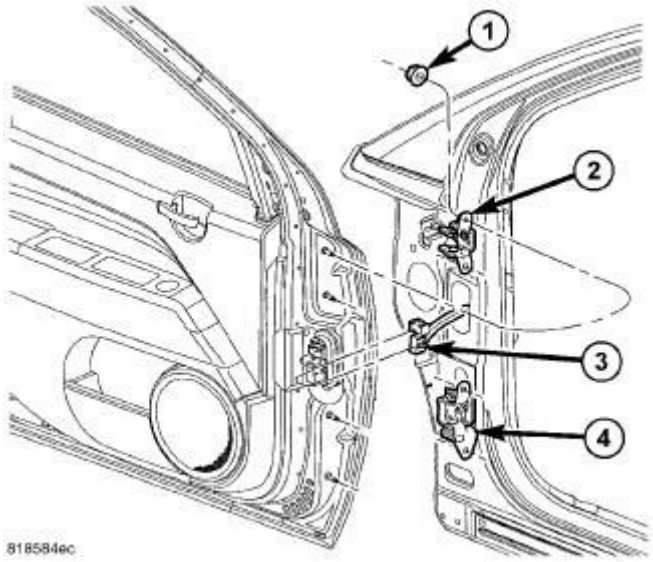

Fig. 45: Door
Courtesy of CHRYSLER GROUP, LLC

5. Install the door. Refer to **DOOR, INSTALLATION**.

LATCH, DOOR

ADJUSTMENTS

ADJUSTMENTS

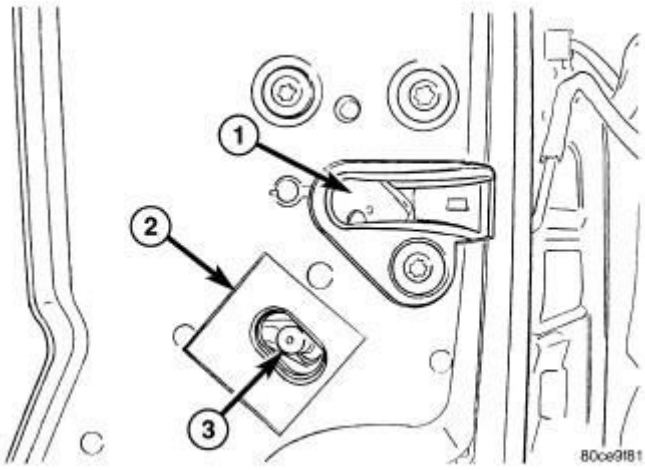

Fig. 46: Adjusting Front Latch
Courtesy of CHRYSLER GROUP, LLC

1. Locate the access hole in the door to adjust the door latch (1) and remove the mylar tape (2).
2. Loosen latch adjusting screw (3) threw access slot in door shut face (1/2 to 1 full turn).
3. Operate the door handles several times to reduce any possible linkage binding and tighten the adjustment screw to 3 N.m (30 in. lbs.).
4. Operate the door handles again to verify proper operation and reinstall the mylar tape.

REMOVAL

REMOVAL

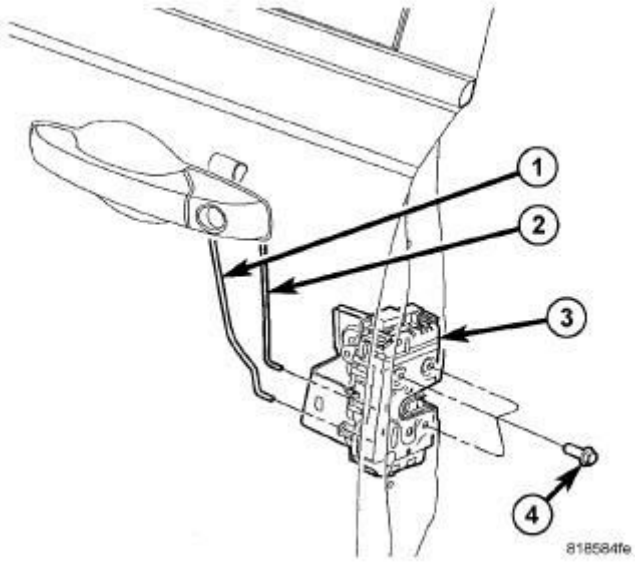

Fig. 47: Latch Fasteners
Courtesy of CHRYSLER GROUP, LLC

1. Remove the carrier plate. Refer to **PLATE, CARRIER, REMOVAL**.

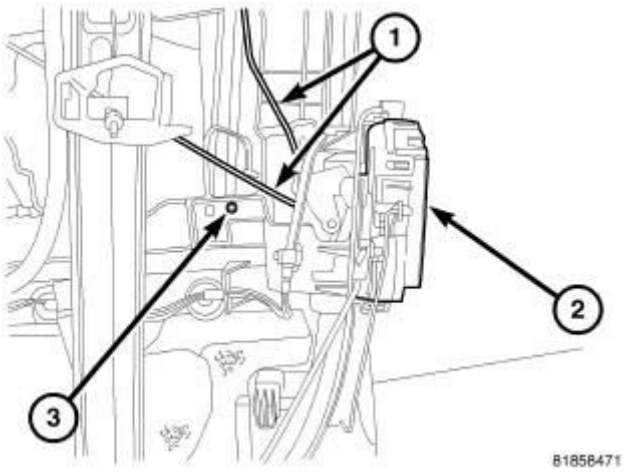

Fig. 48: Latch
Courtesy of CHRYSLER GROUP, LLC

2. Remove the bracket screw (3).
3. Remove the latch (2) and disconnect the electrical connector.

INSTALLATION

INSTALLATION

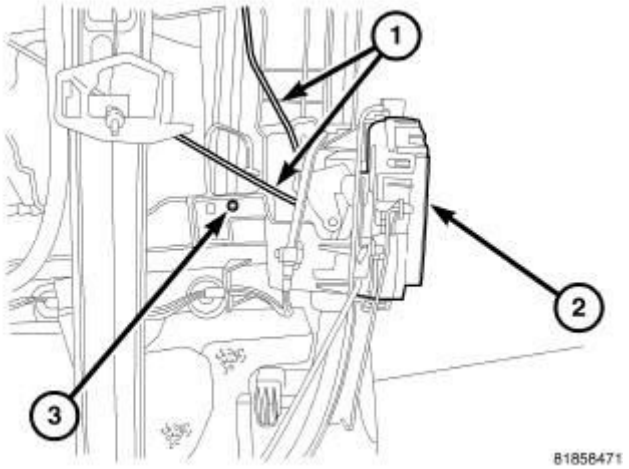

Fig. 49: Latch
Courtesy of CHRYSLER GROUP, LLC

1. Position the latch (2) to the carrier plate.
2. Install the support bracket screw (3).
3. Connect the electrical connector.

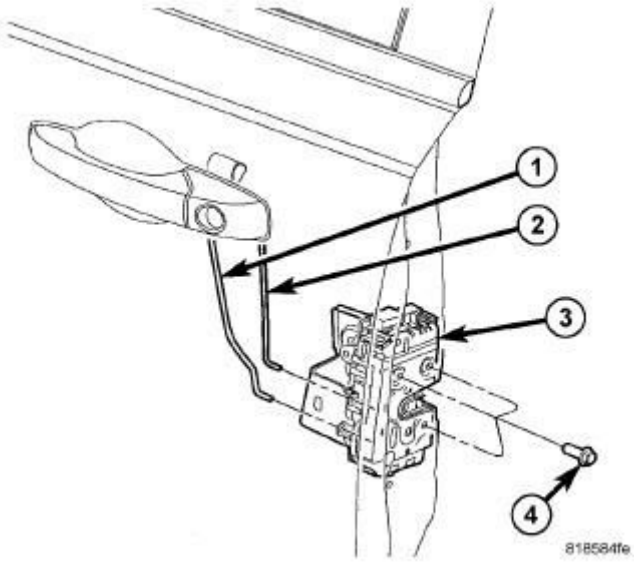

Fig. 50: Latch Fasteners
Courtesy of CHRYSLER GROUP, LLC

4. Install the carrier plate. Refer to **PLATE, CARRIER, INSTALLATION**.

PANEL, DOOR TRIM, BOLSTER

REMOVAL

REMOVAL

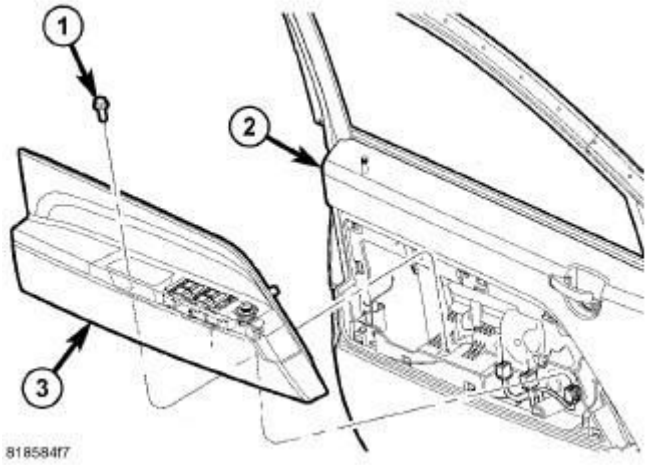

Fig. 51: Bolster
Courtesy of CHRYSLER GROUP, LLC

1. Disconnect and isolate battery negative cable.
2. Remove the screw (1) from the pull handle.
3. Using a trim stick (special tool #C-4755, Trim Stick) or equivalent, separate the bolster (3) from the door module (2).

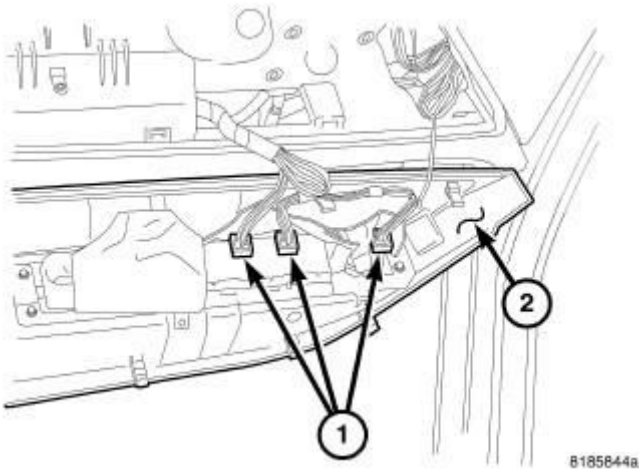

Fig. 52: Window Switch Electrical
Courtesy of CHRYSLER GROUP, LLC

4. Disconnect the electrical connectors (1), if equipped.

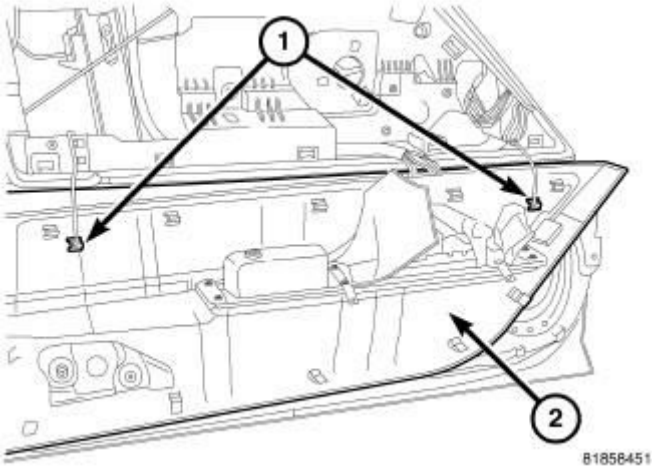

Fig. 53: Bolster Tethers
Courtesy of CHRYSLER GROUP, LLC

5. Disconnect the tethers (1) and remove the bolster (2).

INSTALLATION

INSTALLATION

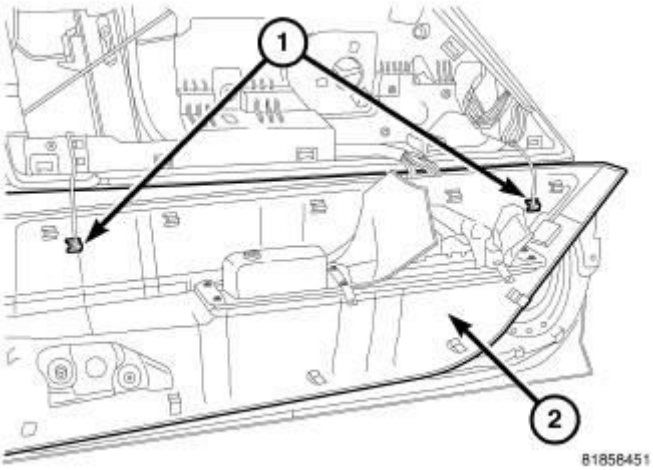

Fig. 54: Bolster Tethers
Courtesy of CHRYSLER GROUP, LLC

1. Connect the bolster tethers (1).

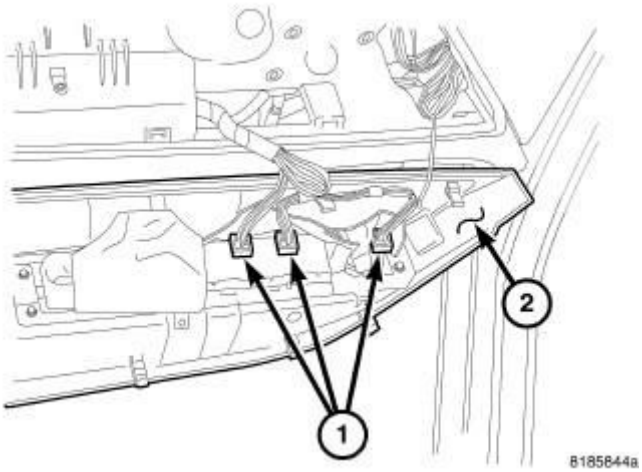

Fig. 55: Window Switch Electrical
Courtesy of CHRYSLER GROUP, LLC

2. Connect the electrical connectors (1), if equipped.

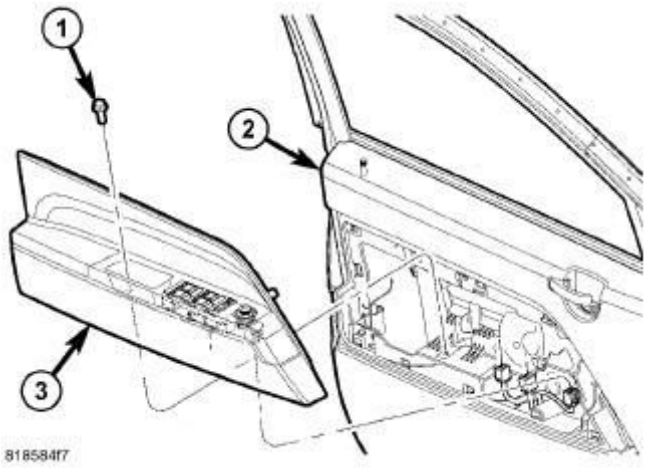

Fig. 56: Bolster
Courtesy of CHRYSLER GROUP, LLC

3. Position the bolster (3) onto the door module (2) and seat the clips fully.
4. Install the screw (1).

PLATE, CARRIER

DESCRIPTION

DESCRIPTION

Door trim modules include the hardware, window regulators, latch, remote handle and links, speakers and wiring harness. In addition to providing

manufacturing efficiencies, the door modules benefit the customer too. Having all the parts assembled into a module improves build accuracy and fit and finish between the components and trim as a result of greater communication between the release engineers and suppliers.

Lower door trim (from the beltline down) is molded polypropylene. The door trim is two-tone with a darker color matching the instrument panel in the upper third and a lighter shade for the lower two-thirds, including the bolster and substrate.

ITEMS SERVICEABLE WITHOUT REMOVING MODULE OR OPENING BOLSTER:

- Speaker grille
- Speaker
- I/s handle screw cover
- Front door mirror flag cover
- Fasteners accessible :
    a. Substrate and lower window regulator screws
    b. Speaker screws (after grille removal)
    c. Pull cup screw
    d. I/s handle screw (after cover removal)

ITEMS SERVICEABLE WITHOUT REMOVING MODULE BUT WITH OPENING OF BOLSTER:

- Electric window switch
- Electric mirror switch (front driver door only)
- Bolster trim assembly
- Bolster seal
- Sock seals on switches
- Outside handle link
- Front door lock and rod assembly
- Front door latch
- Fasteners accessible :
    a. Pull cup clip
    b. Upper window regulator screws
    c. Pull cup screw

ITEMS SERVICEABLE BY REMOVING ENTIRE MODULE:

- Rear door latch
- Window regulator
- Inside remote handle
- Inside handle links
- Periphery seal (around edge of trim)
- Wire harness

REMOVAL

REMOVAL

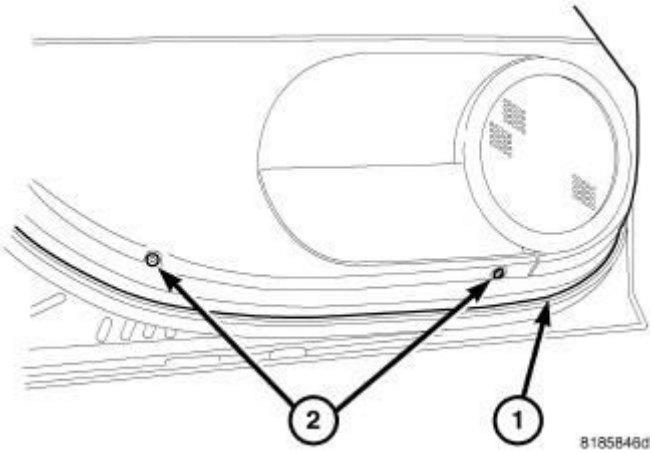

Fig. 57: Lower Trim Screws
Courtesy of CHRYSLER GROUP, LLC

1. Loosen lower screws (2).

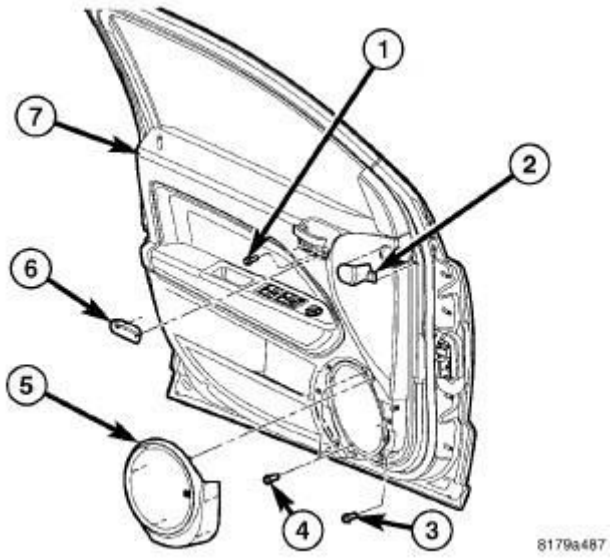

Fig. 58: Door Plugs
Courtesy of CHRYSLER GROUP, LLC

2. Remove speaker (5). Refer to **SPEAKER, REMOVAL** .
3. Remove the trim screws (4) from the speaker opening.
4. Remove the trim cap (6) and the screw (1) at the inside handle.
5. Using a trim stick (special tool #C-4755, Trim Stick) or equivalent, remove the outside mirror trim (2).

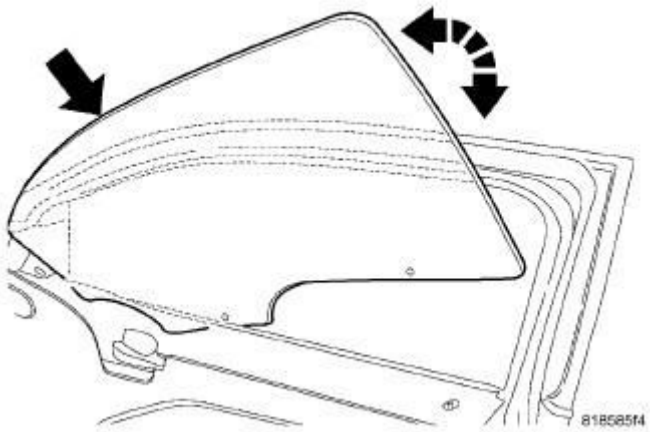

Fig. 59: Glass Removal
Courtesy of CHRYSLER GROUP, LLC

6. Remove the door glass. Refer to **GLASS, DOOR, REMOVAL**.

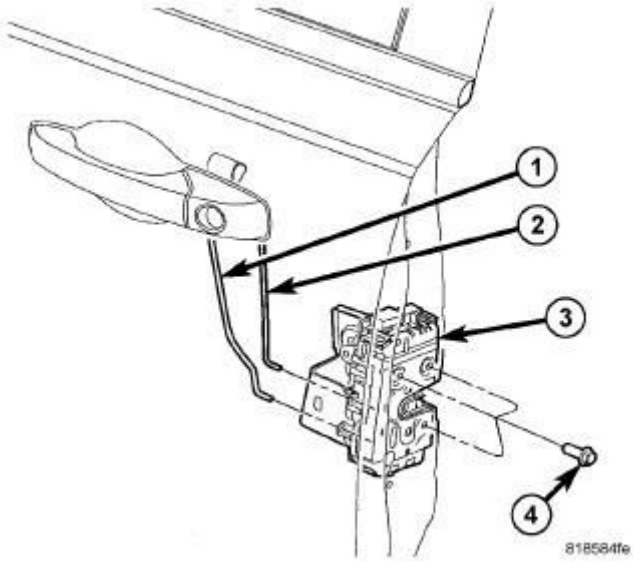

Fig. 60: Latch Fasteners
Courtesy of CHRYSLER GROUP, LLC

7. Disconnect the latch linkages (1 and 2).
8. Remove the latch screws (4).

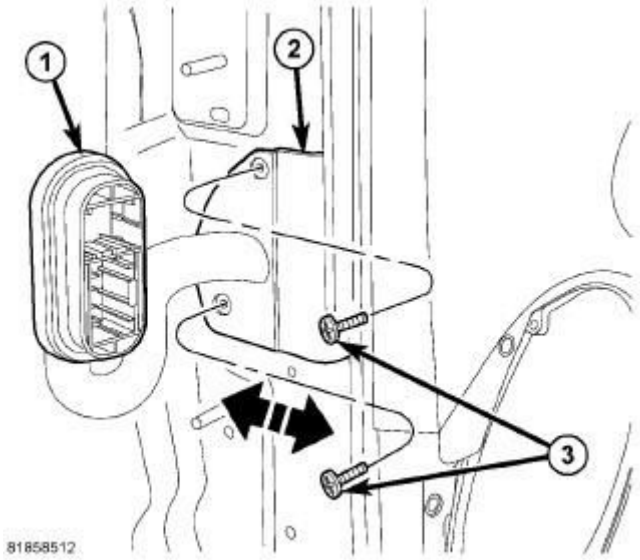

Fig. 61: Harness Fasteners
Courtesy of CHRYSLER GROUP, LLC

9. Disconnect main harness connector.
10. Remove screws and separate harness from door frame.

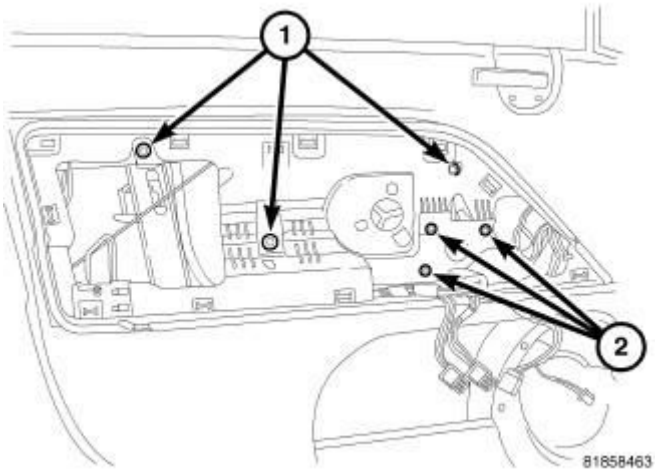

Fig. 62: Upper Regulator Fasteners
Courtesy of CHRYSLER GROUP, LLC

11. Remove three upper bolts (1).

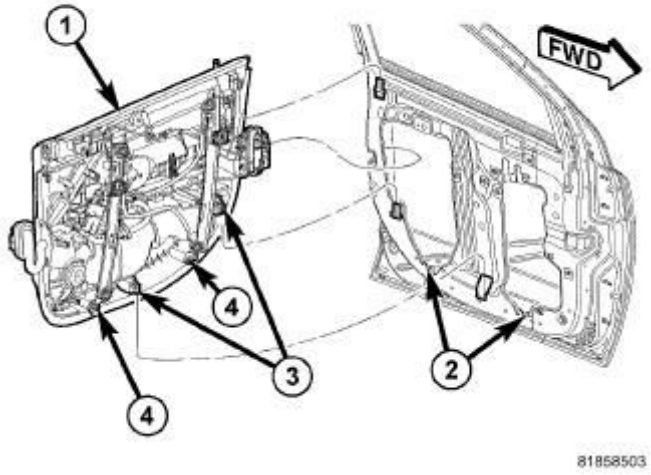

Fig. 63: Door Trim Module
Courtesy of CHRYSLER GROUP, LLC

12. Lift the module (1) up off of the four trim hooks (3) and the lower regulator screws (4).
13. Pull the front of the trim module (1) out from the door and forward to remove the latch.

INSTALLATION

INSTALLATION

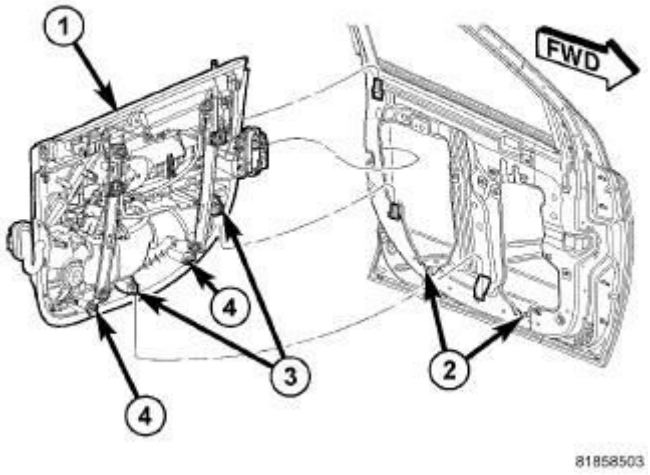

Fig. 64: Door Trim Module
Courtesy of CHRYSLER GROUP, LLC

1. Position the latch into the door and set the trim module (1) in place.
2. Position the four trim hooks (3) and the lower regulator screws (4) into the corresponding slots (2) in the door and seat trim module fully.

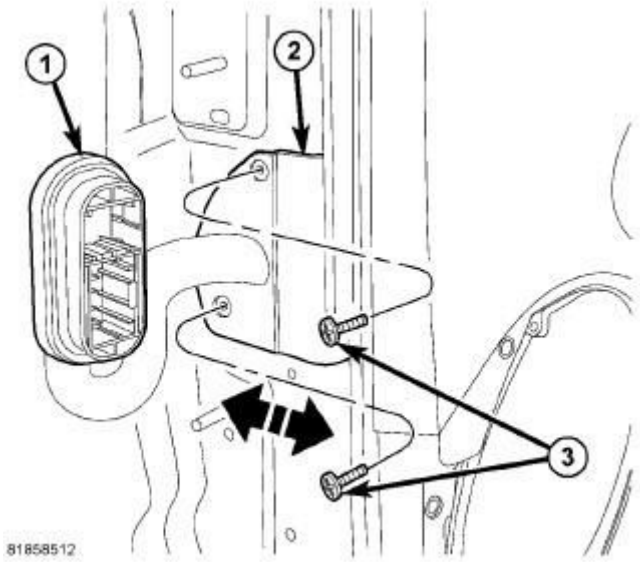

Fig. 65: Harness Fasteners
Courtesy of CHRYSLER GROUP, LLC

3. Position the wire harness door bracket (2) into the door and install the screws (3).

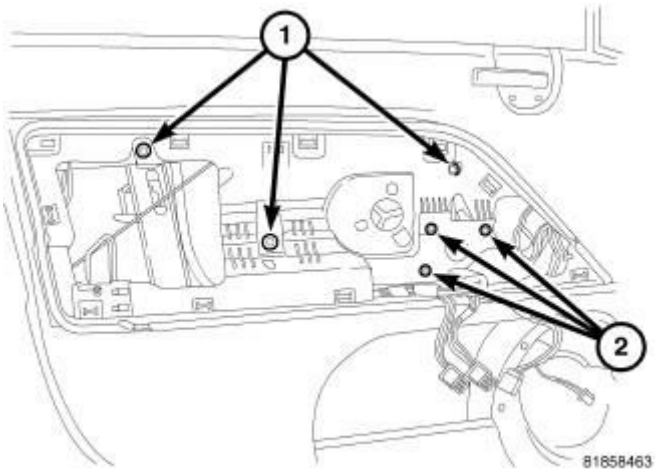

Fig. 66: Upper Regulator Fasteners
Courtesy of CHRYSLER GROUP, LLC

4. Install the upper regulator screws (1) and tighten to 8 N.m (71 in. lbs.)

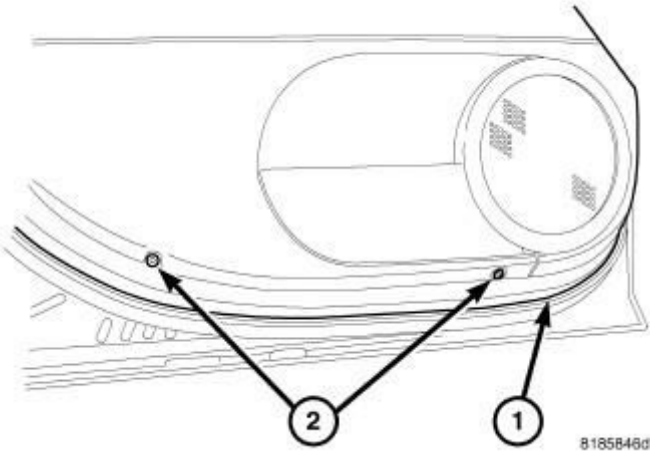

Fig. 67: Lower Trim Screws
Courtesy of CHRYSLER GROUP, LLC

5. Tighten the lower trim screws (2) to 6 N.m (53 in. lbs.).

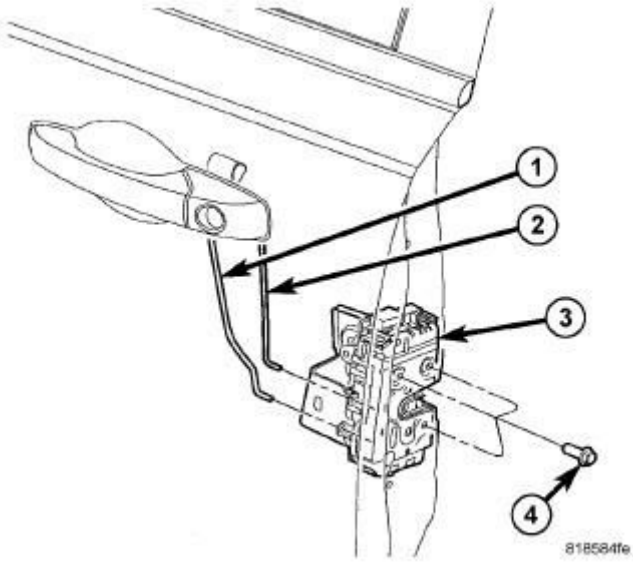

Fig. 68: Latch Fasteners
Courtesy of CHRYSLER GROUP, LLC

6. Install the latch screws (4).
7. Tighten the screws to 7 N.m (62 in. lbs.).
8. Attach the exterior handle rod (1) and lock rod (2).

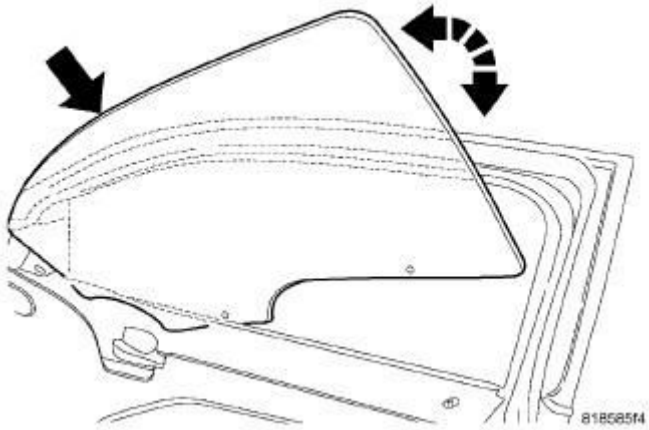

Fig. 69: Glass Removal
Courtesy of CHRYSLER GROUP, LLC

9. Install the door glass. Refer to **GLASS, DOOR, INSTALLATION**.

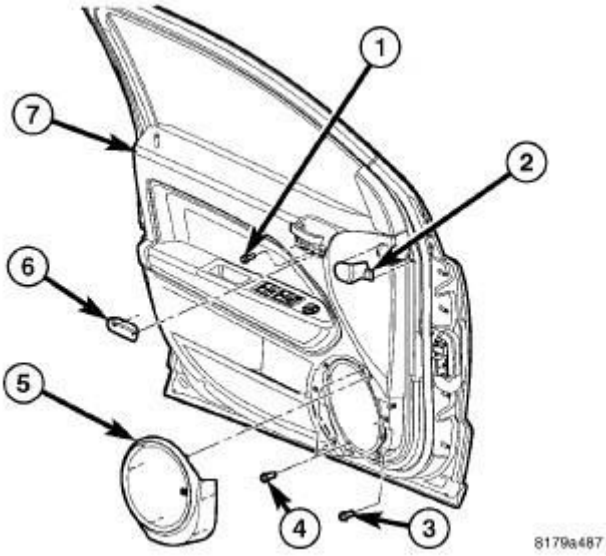

Fig. 70: Door Plugs
Courtesy of CHRYSLER GROUP, LLC

10. Install the mirror trim (2).
11. Install the screws (3, 4) in the front corner and tighten to 6 N.m (53 in. lbs.).
12. Install the screw (1) at the inside handle and seat the trim (6) fully.
13. Install the speaker (5). Refer to **SPEAKER, INSTALLATION** .

REGULATOR, WINDOW

REMOVAL

REMOVAL

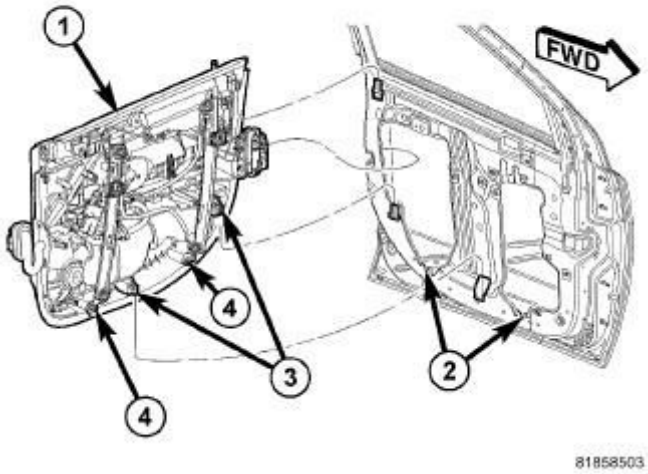

Fig. 71: Door Trim Module
Courtesy of CHRYSLER GROUP, LLC

1. Remove the door trim module (1). Refer to **PLATE, CARRIER, REMOVAL**.

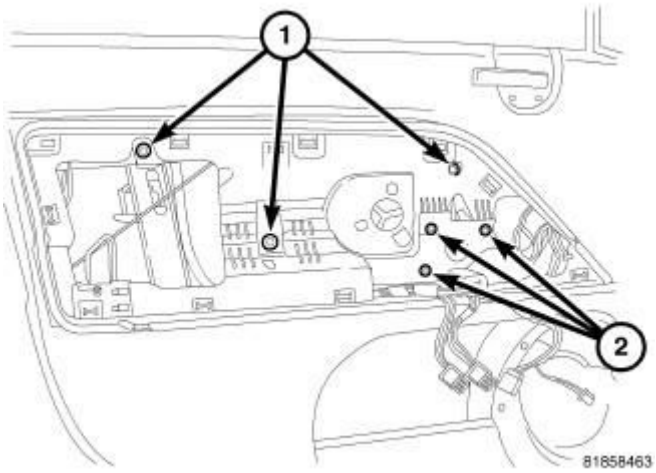

Fig. 72: Upper Regulator Fasteners
Courtesy of CHRYSLER GROUP, LLC

2. Remove the motor or manual lift mechanism screws (2).

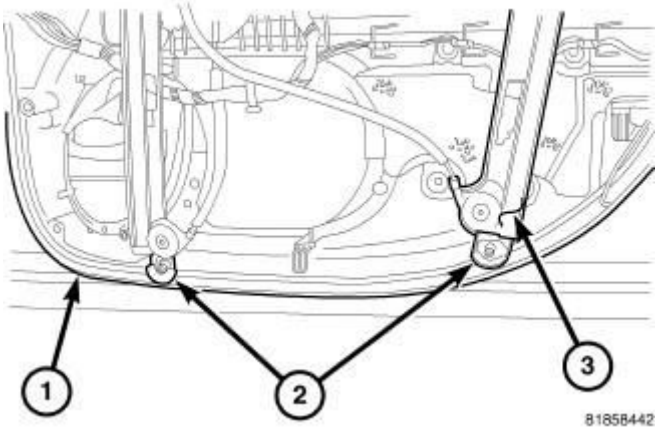

Fig. 73: Lower Regulator Fasteners
Courtesy of CHRYSLER GROUP, LLC

3. Remove the lower regulator screws (2).

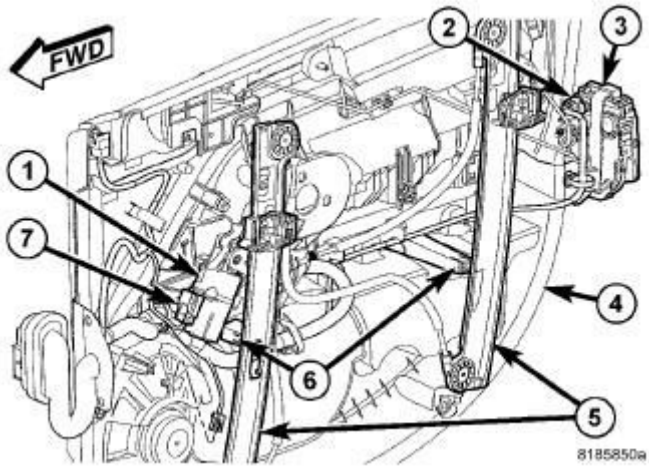

Fig. 74: Regulator
Courtesy of CHRYSLER GROUP, LLC

4. Disconnect the regulator motor (1) electrical connector (7), if equipped.
5. Separate the regulator runners (5) from the support brackets (6) and remove the regulator assembly.

INSTALLATION

INSTALLATION

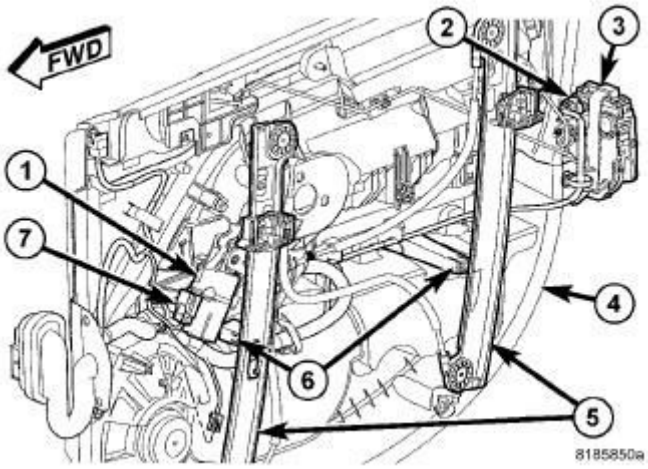

Fig. 75: Regulator
Courtesy of CHRYSLER GROUP, LLC

1. Position the regulator assembly onto the door trim panel and seat the runner support clips (6) fully.
2. Connect the regulator motor (1) electrical connector (7).

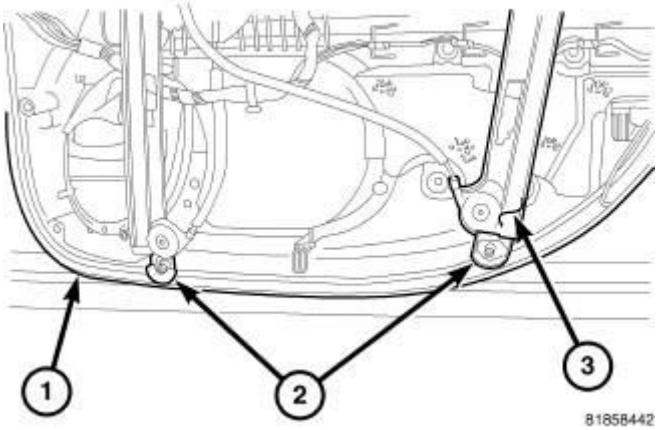

Fig. 76: Lower Regulator Fasteners
Courtesy of CHRYSLER GROUP, LLC

3. Install the lower regulator screws (2) but do not tighten them at this time.

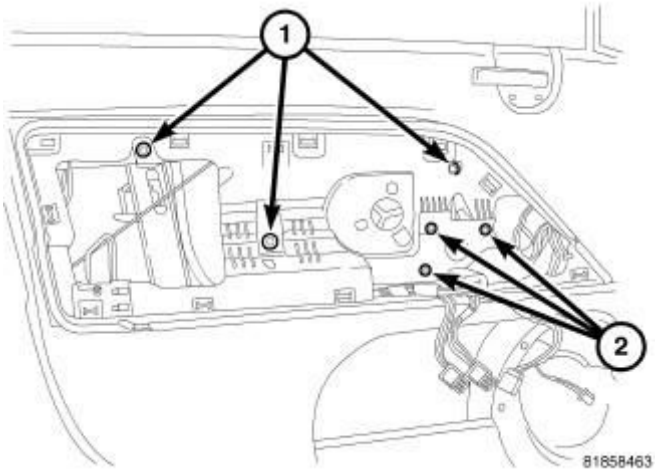

Fig. 77: Upper Regulator Fasteners
Courtesy of CHRYSLER GROUP, LLC

4. Install the motor or manual lift mechanism screws (2).

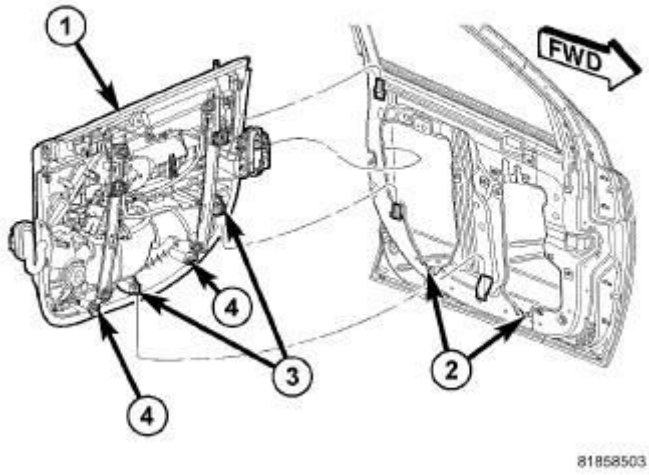

Fig. 78: Door Trim Module
Courtesy of CHRYSLER GROUP, LLC

5. Install the door trim module (1). Refer to **PLATE, CARRIER, INSTALLATION**.

STRIKER, DOOR LATCH

ADJUSTMENTS

ADJUSTMENTS

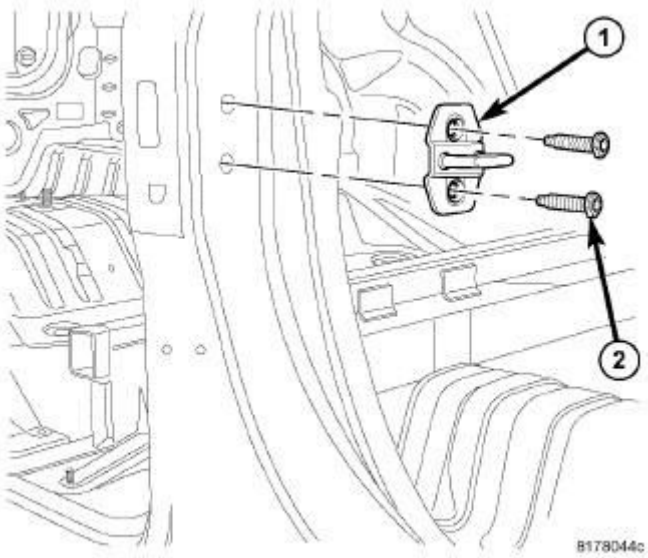

Fig. 79: Front Door Striker
Courtesy of CHRYSLER GROUP, LLC

1. Using a grease pencil or equivalent, mark the location of the door latch striker (1) on the B-pillar to aid in adjustment.
2. Loosen the two screws (2) that secure the door latch striker to the B-pillar.
3. To adjust the rear gap and flush measurement, change the position of the door latch striker and then tighten the two bolts to 26 N.m (19 ft. lbs.). Refer to **GAP AND FLUSH, SPECIFICATIONS**.
4. Verify correct door and latch position.

REMOVAL

REMOVAL

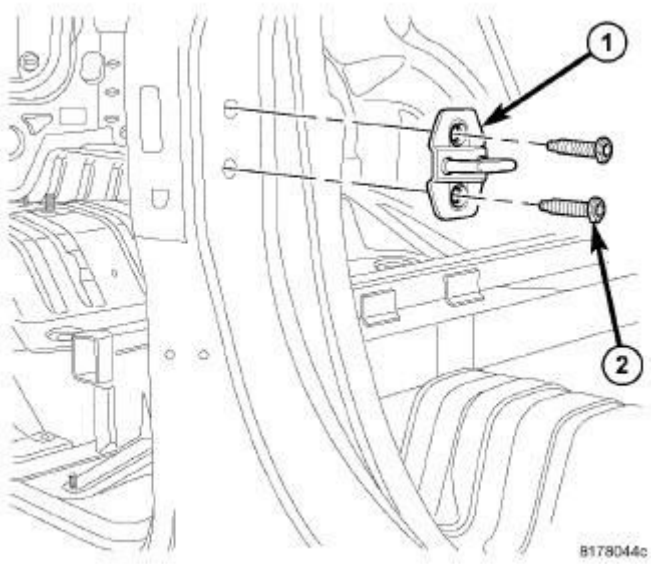

Fig. 80: Front Door Striker
Courtesy of CHRYSLER GROUP, LLC

1. Using a grease pencil or equivalent, mark the location of the door latch striker (1) on the B-pillar.
2. Remove the two bolts (2) that secure the door latch striker to the B-pillar and remove the striker.

INSTALLATION

INSTALLATION

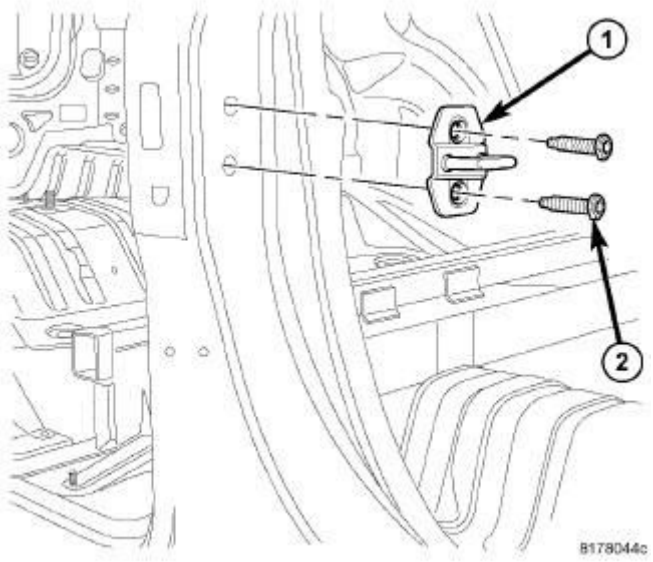

Fig. 81: Front Door Striker
Courtesy of CHRYSLER GROUP, LLC

1. Position the door latch striker (1) onto the B-pillar and loosely install the two bolts (2).
2. Align the door latch striker to the B-pillar using the reference marks made during the removal procedure and tighten the bolts to 26 N.m (19 ft. lbs.).
3. If necessary, adjust the door latch striker. Refer to **STRIKER, DOOR LATCH, ADJUSTMENTS**.

DOORS - REAR

DOOR, REAR

ADJUSTMENTS

ADJUSTMENTS

NOTE: For four door vehicles, it is recommended that you adjust the rear door before adjusting the front door.

- **Door adjustment measurements should be taken from stationary or welded body panels like the roof, rocker or quarter panels.**
- **During adjustment procedures, it is recommended that all the hinge fasteners be loosened except for the upper most fasteners. Adjustments can be made**

using the upper fasteners to hold the door with final torque of the fasteners occurring after correct door positioning is achieved.

FORE/AFT

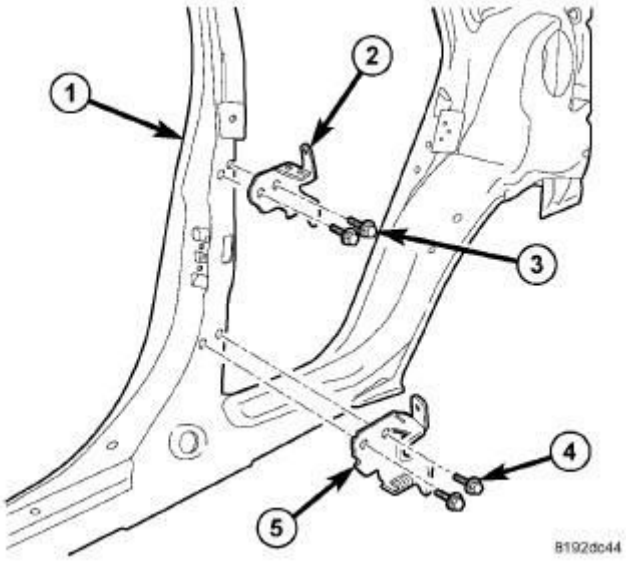

Fig. 82: Hinges
Courtesy of CHRYSLER GROUP, LLC

NOTE: Fore/aft (lateral) door adjustment is done by loosening the hinge to the hinge pillar fasteners one hinge at a time and moving the door to the correct position.

1. Support the door with a suitable lifting device.
2. Loosen the hinge to hinge pillar fasteners (3) and (4). Refer to **HINGE, DOOR, REMOVAL**.
3. Adjust the door to the correct position. Refer to **GAP AND FLUSH, SPECIFICATIONS**.
4. Tighten the upper most hinge bolt (1) to hinge pillar to 22 N.m (16 ft. lbs.).
5. Tighten the lower most hinge bolt (4) to hinge pillar to 22 N.m (16 ft. lbs.).
6. Tighten the remaining hinge pillar fasteners to 22 N.m (16 ft. lbs.). Refer to **HINGE, DOOR, INSTALLATION**.

NOTE: Use a suitable body sealer on the hinge to body mating surfaces.

UP/DOWN

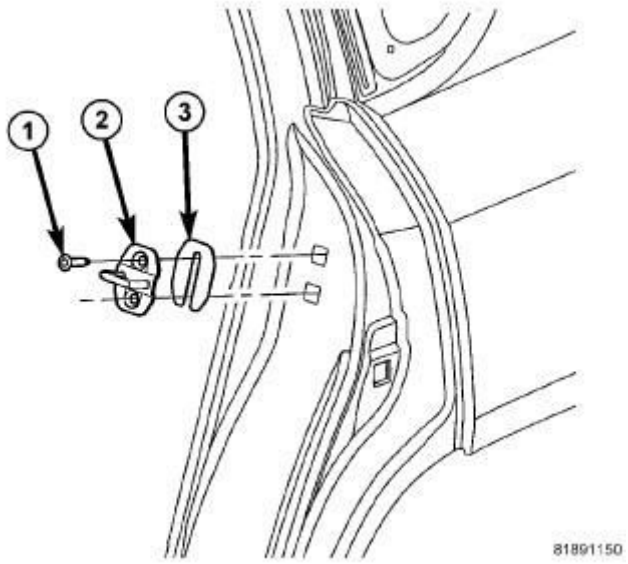

Fig. 83: Striker
Courtesy of CHRYSLER GROUP, LLC

NOTE: Up/down door adjustment is done by loosening either the hinge to the hinge pillar fasteners or the hinge to door fasteners and moving the door to the correct position.

1. Support the door with a suitable lifting device.
2. Remove the latch striker (2). Refer to **STRIKER, DOOR LATCH, REMOVAL**.

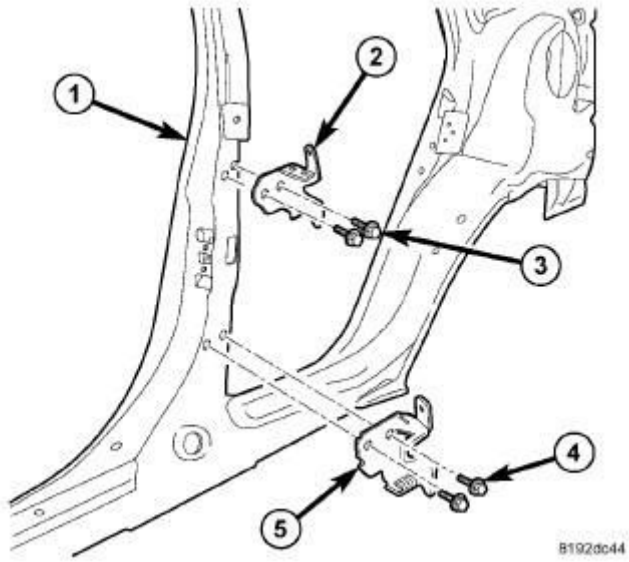

Fig. 84: Hinges

Courtesy of CHRYSLER GROUP, LLC

3. If necessary, loosen the hinge to hinge pillar fasteners (3) and (4). Refer to **HINGE, DOOR, REMOVAL**.

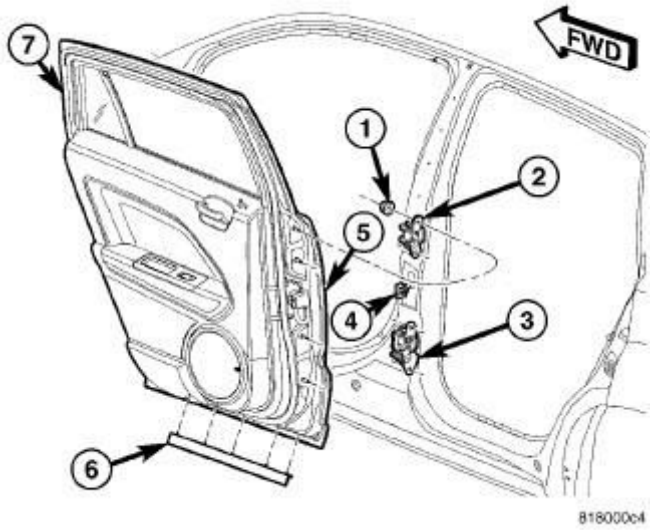

Fig. 85: Rear Door Hinge
Courtesy of CHRYSLER GROUP, LLC

4. If necessary, loosen the hinge to door fasteners (1). Refer to **DOOR, REAR, REMOVAL**.
5. Adjust the door to the correct position. Refer to **GAP AND FLUSH, SPECIFICATIONS**.

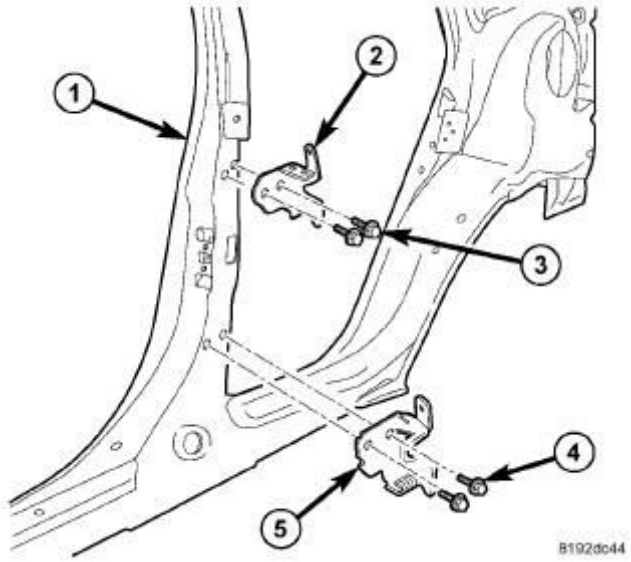

Fig. 86: Hinges
Courtesy of CHRYSLER GROUP, LLC

6. If necessary, tighten the hinge to pillar bolts.
   a. Tighten the upper most hinge bolt (3) to hinge pillar to 22 N.m (16 ft. lbs.).
   b. Tighten the lower most hinge bolt (4) to hinge pillar to 22 N.m (16 ft. lbs.).
   c. Tighten the remaining hinge pillar fasteners to 22 N.m (16 ft. lbs.). Refer to **HINGE, DOOR, INSTALLATION**.

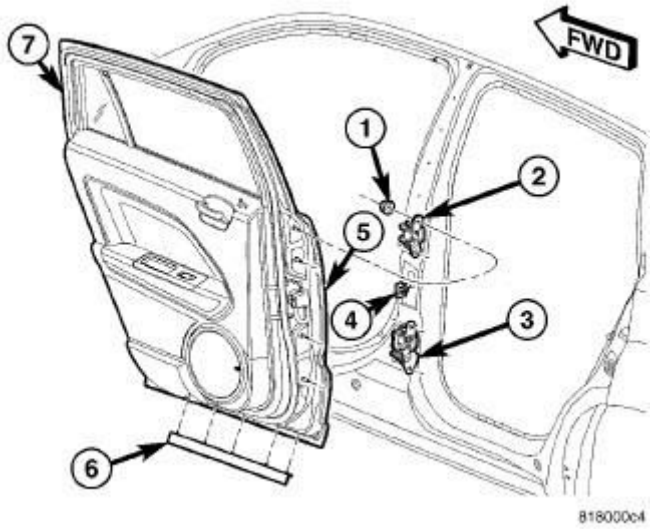

Fig. 87: Rear Door Hinge
Courtesy of CHRYSLER GROUP, LLC

7. Tighten the door to hinge fasteners (1) to 13 N.m (9.5 ft. lbs.). Refer to **HINGE, DOOR, INSTALLATION**.

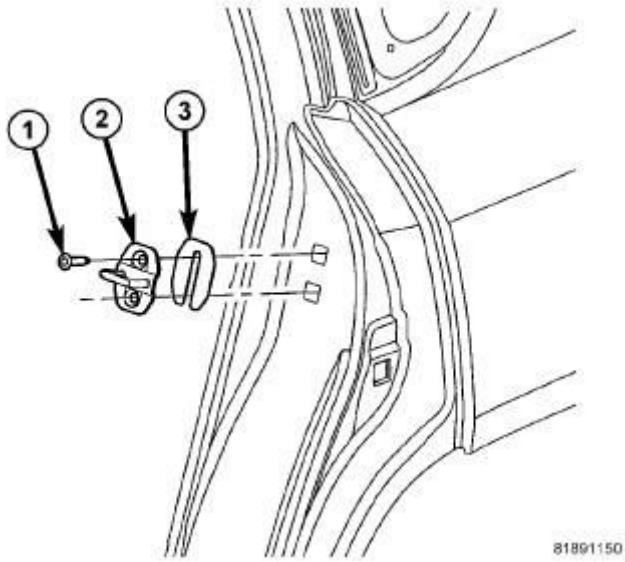

Fig. 88: Striker
Courtesy of CHRYSLER GROUP, LLC

8. Install the latch striker. Refer to **STRIKER, DOOR LATCH, INSTALLATION**.

IN/OUT

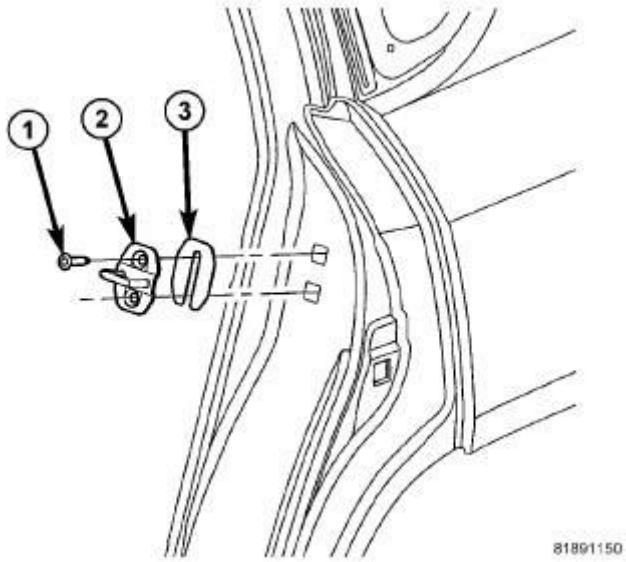

Fig. 89: Striker
Courtesy of CHRYSLER GROUP, LLC

NOTE: In/out door adjustment is done by loosening the hinge to door fasteners one hinge at a time and moving the door to the correct position.

1. Support the door with a suitable lifting device.
2. Remove the latch striker. Refer to **STRIKER, DOOR LATCH, REMOVAL**.

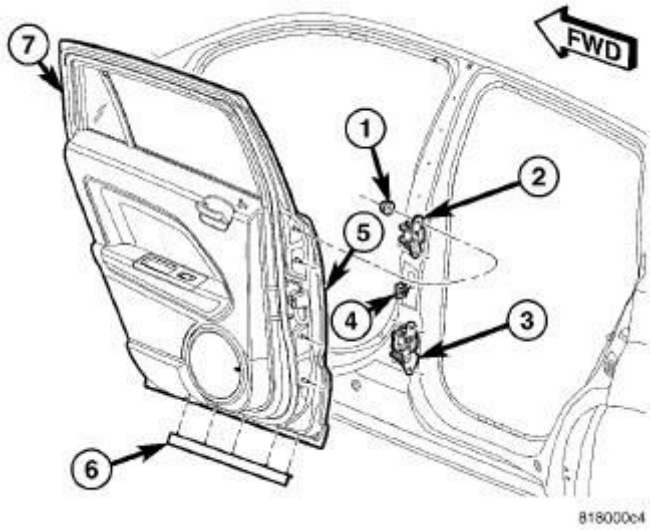

Fig. 90: Rear Door Hinge
Courtesy of CHRYSLER GROUP, LLC

3. Loosen the hinge to door fasteners (1). Refer to **DOOR, REAR, REMOVAL**.
4. Adjust the front of the door to the correct position. Refer to **GAP AND FLUSH, SPECIFICATIONS**.
5. Tighten the door to hinges fasteners to 13 N.m (9.5 ft. lbs.).

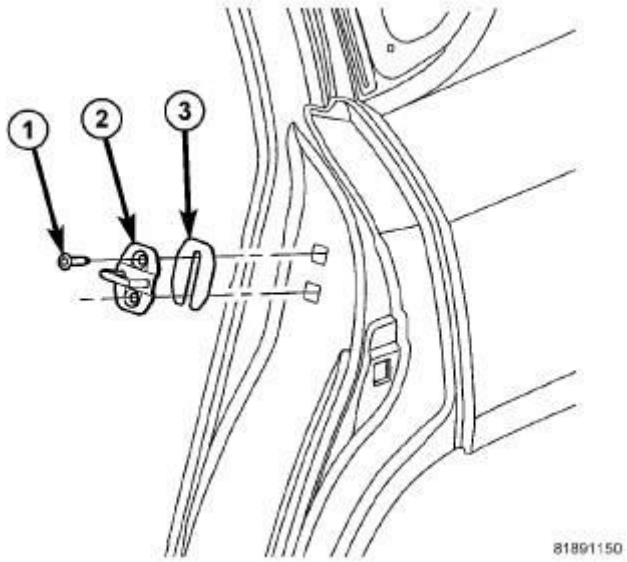

Fig. 91: Striker
Courtesy of CHRYSLER GROUP, LLC

6. Install the latch striker (2). Refer to **STRIKER, DOOR LATCH, INSTALLATION**.

REMOVAL

REMOVAL

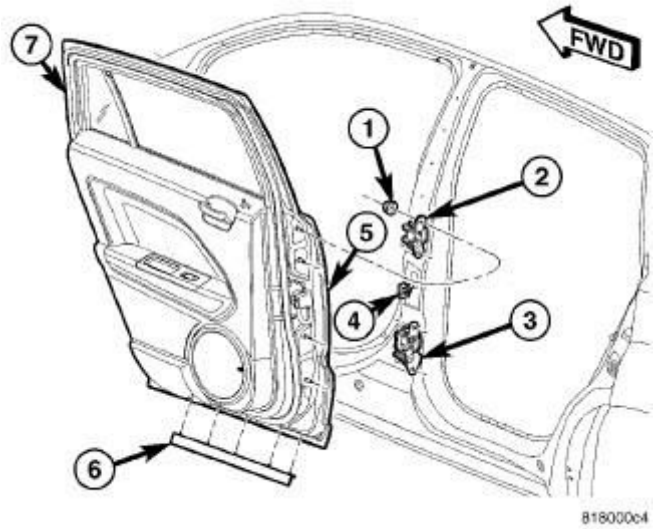

Fig. 92: Rear Door Hinge
Courtesy of CHRYSLER GROUP, LLC

1. Disconnect and isolate the negative battery cable.
2. Disconnect the door wire harness connector (4) from the body wire harness.
3. Using a grease pencil or equivalent, mark the location of the door hinges (2 and 3) on the door.
4. Support the door with a suitable lifting device and remove the nuts (1) that secure the door to the hinges.
5. Carefully remove the door from the hinges.
6. If necessary, remove the rear door hinges from the B-pillar.

INSTALLATION

INSTALLATION

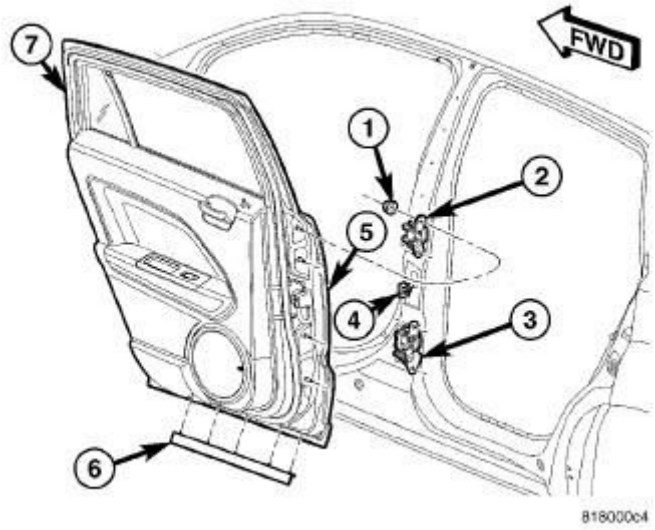

Fig. 93: Rear Door Hinge
Courtesy of CHRYSLER GROUP, LLC

1. Carefully position the door onto the hinges (2 and 3) and support the door with a suitable lifting device.
2. Loosely install the four nuts (1) that secure the door to the hinges.
3. Align the door to the hinges using the reference marks made during the removal procedure and tighten the nuts and bolts to 13 N.m (9.5 ft. lbs.).
4. Connect the door wire harness (4) to the body wire harness.
5. Reconnect the negative battery cable.
6. If necessary, adjust the door. Refer to **DOOR, REAR, ADJUSTMENTS**.

GLASS, DOOR

REMOVAL

REMOVAL

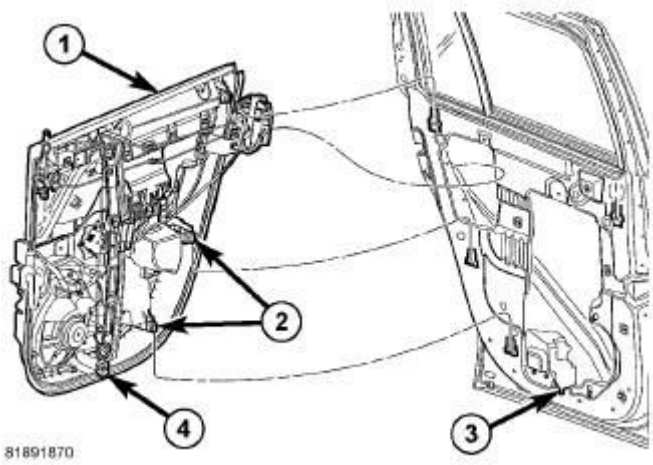

Fig. 94: Door Trim Module
Courtesy of CHRYSLER GROUP, LLC

1. Remove the door trim module (1). Refer to **PLATE, CARRIER, REMOVAL**.

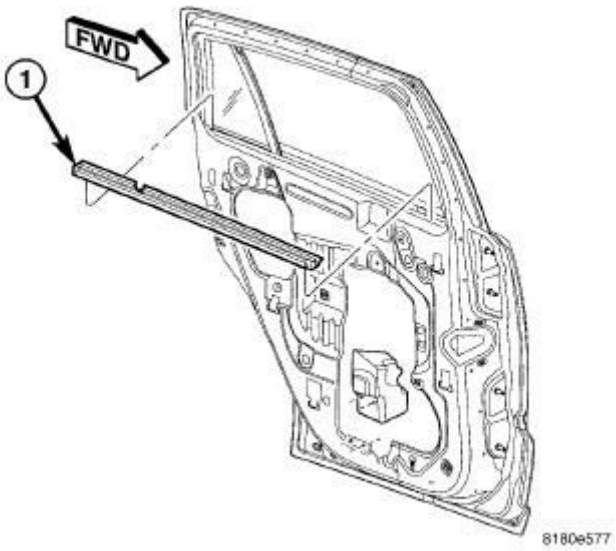

Fig. 95: Rear Door Inner Belt Molding
Courtesy of CHRYSLER GROUP, LLC

2. Remove the two screws and remove the foam block.
3. Remove the inner belt weatherstrip (1) from the door using the Remover, Outer Door Belt Molding (special tool #9093, Remover, Belt Moldings) special tool, if necessary.

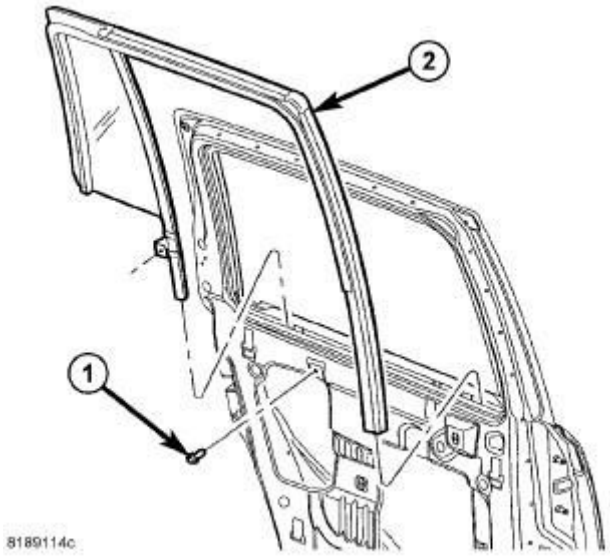

Fig. 96: Glass Run
Courtesy of CHRYSLER GROUP, LLC

4. Remove the rear door glass foam blocker and slide the glass down and out of the glass track (2).
5. Remove the screws (1) and remove the glass run assembly (2) from the door.

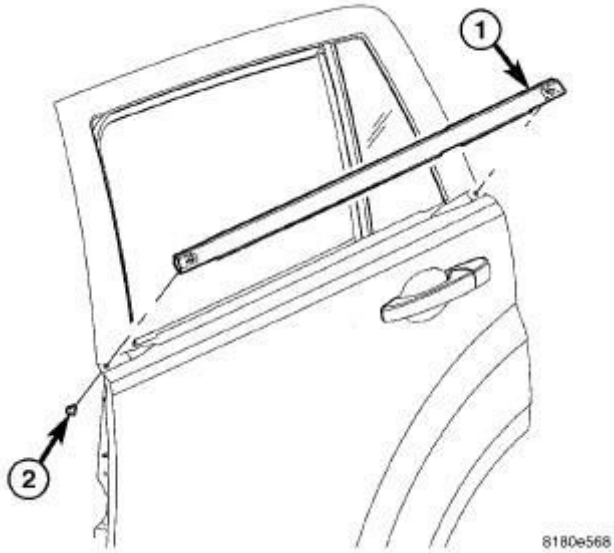

Fig. 97: Rear Door Outer Weatherstrip
Courtesy of CHRYSLER GROUP, LLC

6. Remove the screws (2) and using the Remover, Outer Door Belt Molding (special tool #9093, Remover, Belt Moldings) special tool, if necessary,

remove the outer belt weatherstrip (1).

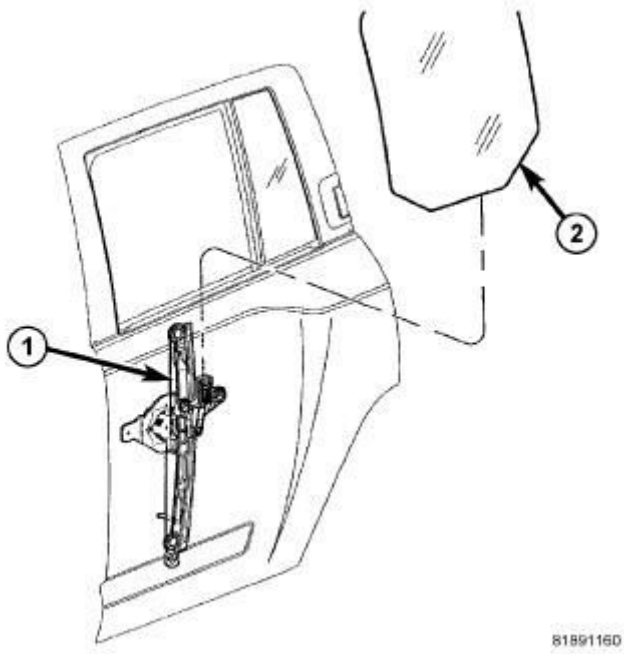

Fig. 98: Door Glass & Regulator
Courtesy of CHRYSLER GROUP, LLC

7. Remove the glass (2) from the door.

INSTALLATION

INSTALLATION

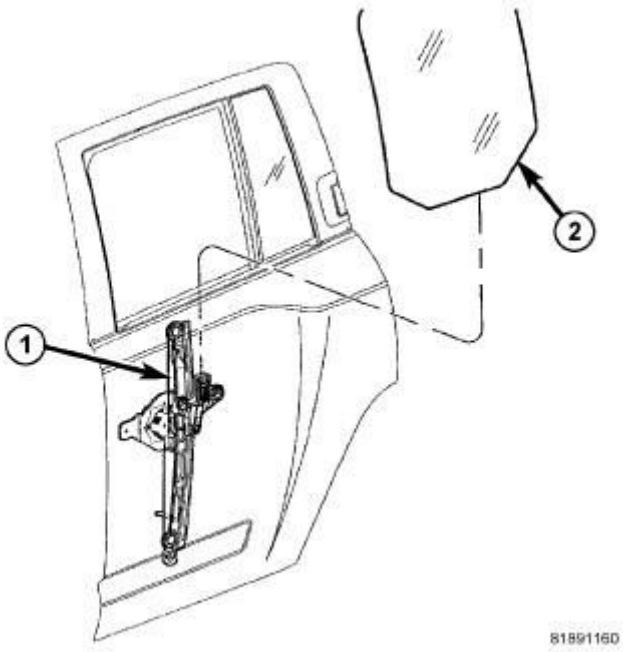

Fig. 99: Door Glass & Regulator
Courtesy of CHRYSLER GROUP, LLC

1. Install the glass (2) into the door.

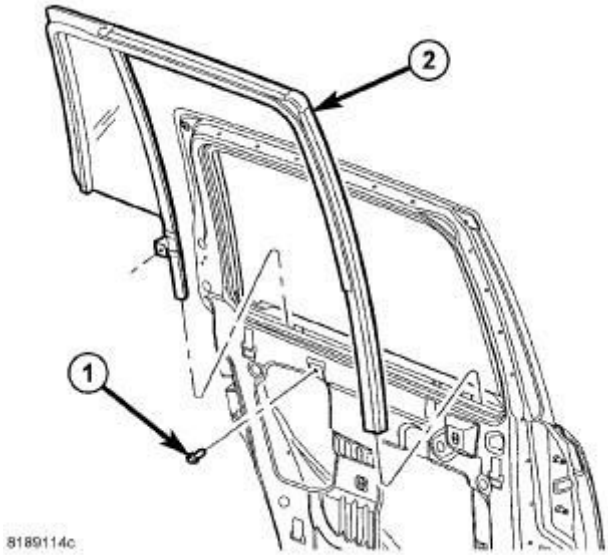

Fig. 100: Glass Run
Courtesy of CHRYSLER GROUP, LLC

2. Install the glass run (2) assembly into the door and seat fully.
3. Install the screw (1) and tighten to 8 N.m (71 in. lbs.).

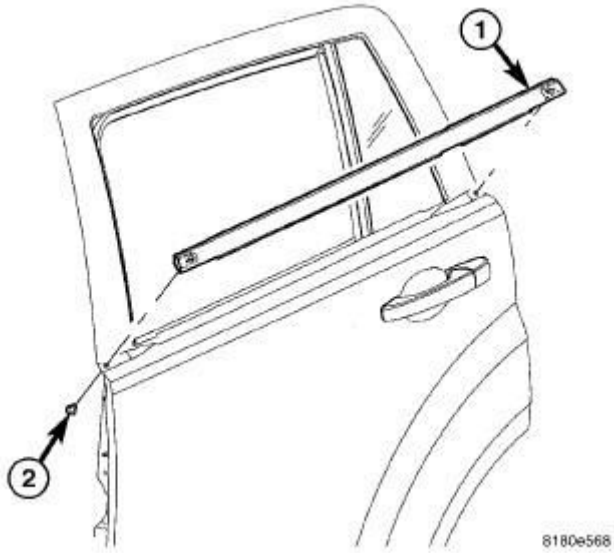

Fig. 101: Rear Door Outer Weatherstrip
Courtesy of CHRYSLER GROUP, LLC

4. Install the outer belt molding (1) and install the screws (2).

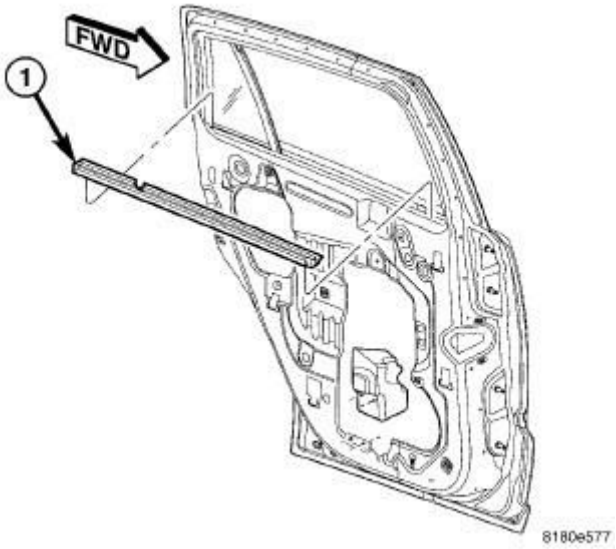

Fig. 102: Rear Door Inner Belt Molding
Courtesy of CHRYSLER GROUP, LLC

5. Install the inner belt molding (1).
6. Install the foam block and install the two screws.

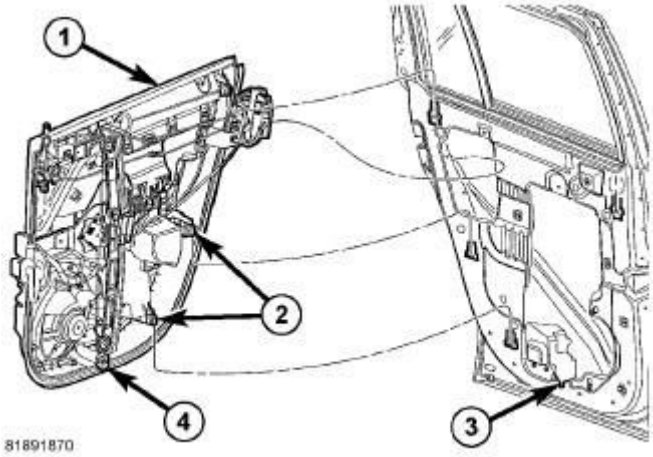

Fig. 103: Door Trim Module
Courtesy of CHRYSLER GROUP, LLC

7. Position the glass into the full up position and tape into place.
8. Install the door trim module (1). Refer to **PLATE, CARRIER, INSTALLATION**.

HANDLE, EXTERIOR

REMOVAL

REMOVAL

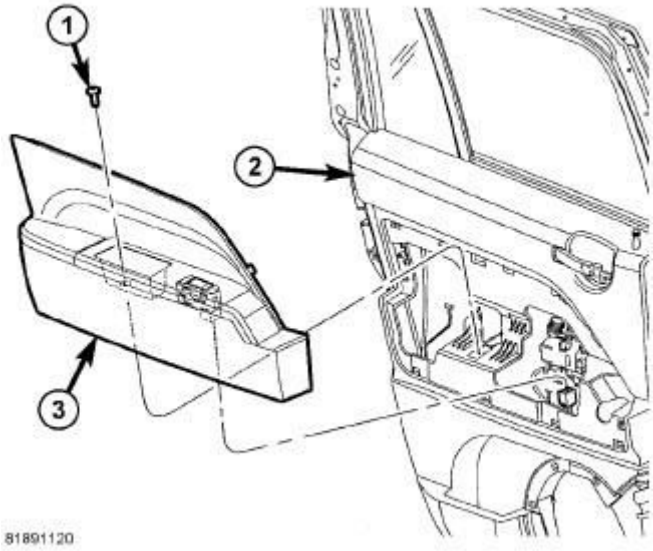

Fig. 104: Bolster Removal & Installation
Courtesy of CHRYSLER GROUP, LLC

1. Separate the bolster (3) and allow it to hang by the tethers. Refer to **PANEL, REAR DOOR TRIM, BOLSTER, REMOVAL**.

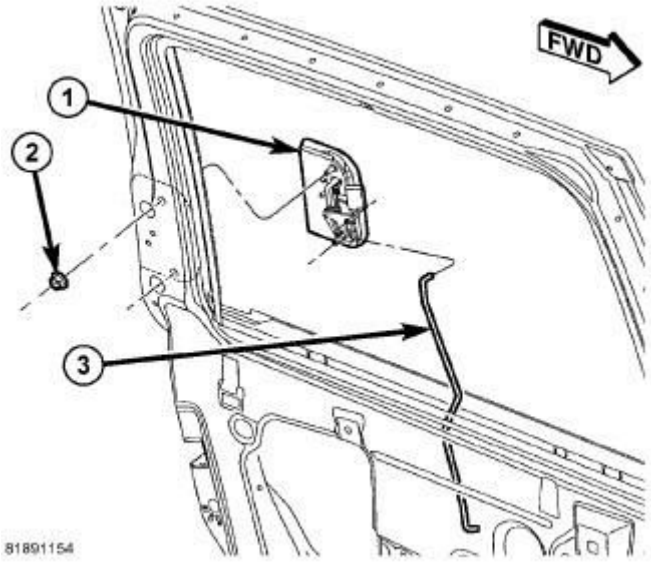

Fig. 105: Exterior Handle
Courtesy of CHRYSLER GROUP, LLC

2. Disconnect the latch rod (3).
3. Position the weatherstrip aside to gain access to the handle fasteners.
4. Remove the two handle nuts (2) and remove the handle (1).

INSTALLATION

INSTALLATION

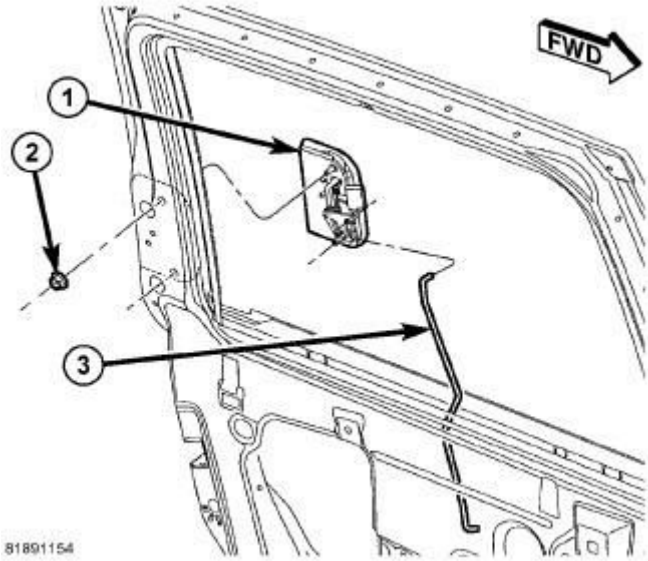

Fig. 106: Exterior Handle
Courtesy of CHRYSLER GROUP, LLC

1. Install the handle (1) and install the nuts (2).
2. Tighten the nuts to 4 N.m (35.5 in. lbs.).
3. Position the weather strip back, if necessary.

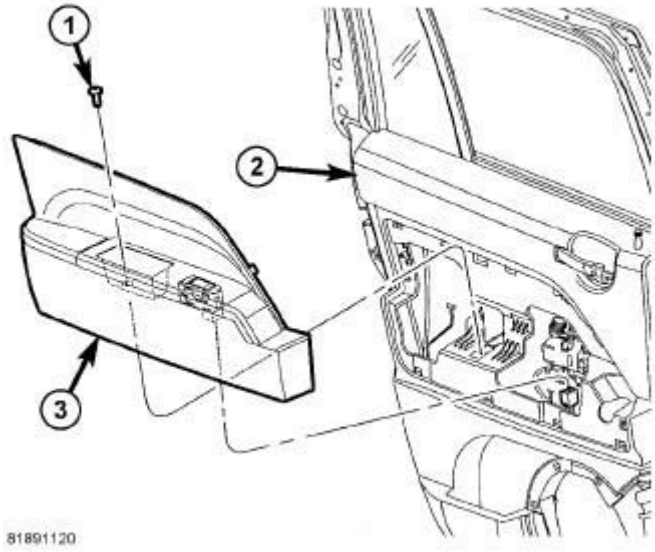

Fig. 107: Bolster Removal & Installation
Courtesy of CHRYSLER GROUP, LLC

4. Install the bolster (3). Refer to **PANEL, REAR DOOR TRIM, BOLSTER, INSTALLATION**.

HANDLE, INTERIOR

REMOVAL

REMOVAL

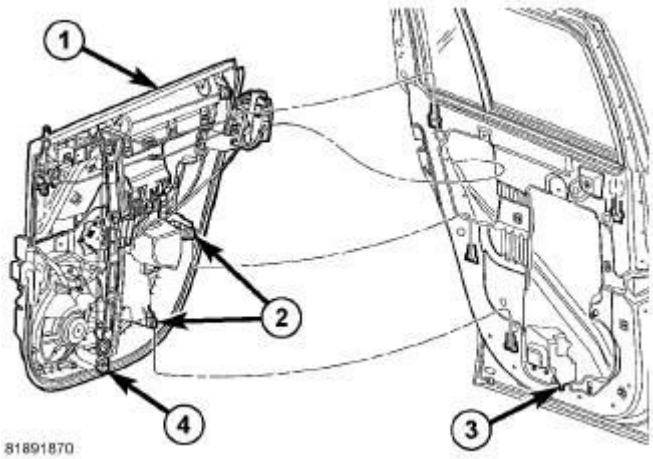

Fig. 108: Door Trim Module
Courtesy of CHRYSLER GROUP, LLC

1. Remove the door trim module (1). Refer to **PLATE, CARRIER, REMOVAL**.

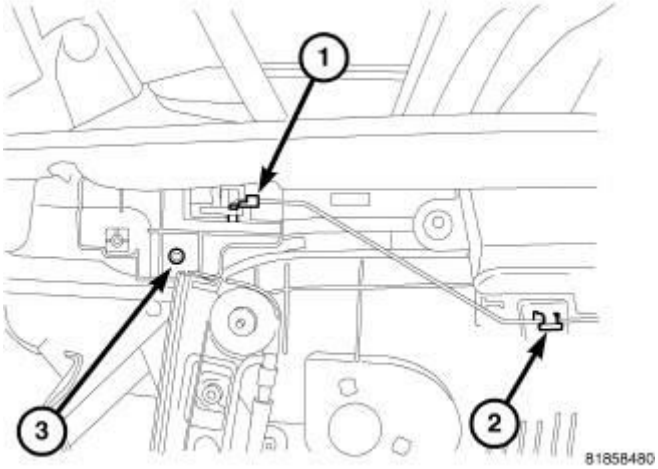

Fig. 109: Inside Handle
Courtesy of CHRYSLER GROUP, LLC

2. Disconnect the handle linkage (1).
3. Remove the screw (3) and remove the inside handle.

INSTALLATION

INSTALLATION

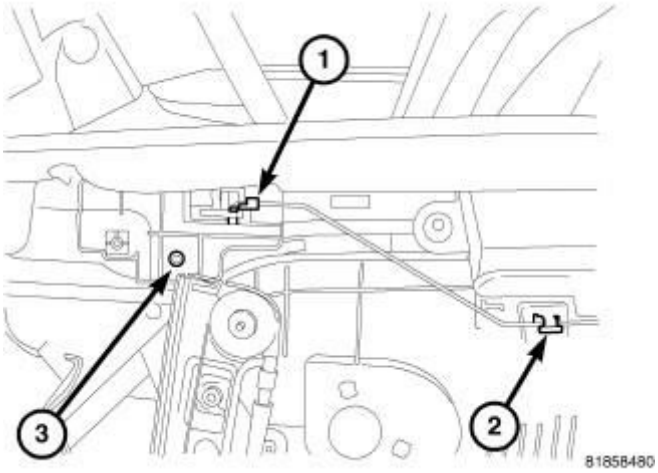

Fig. 110: Inside Handle
Courtesy of CHRYSLER GROUP, LLC

1. Install the handle onto the door trim panel and install the screw (3).
2. Connect the inside handle linkage (1) and (2).

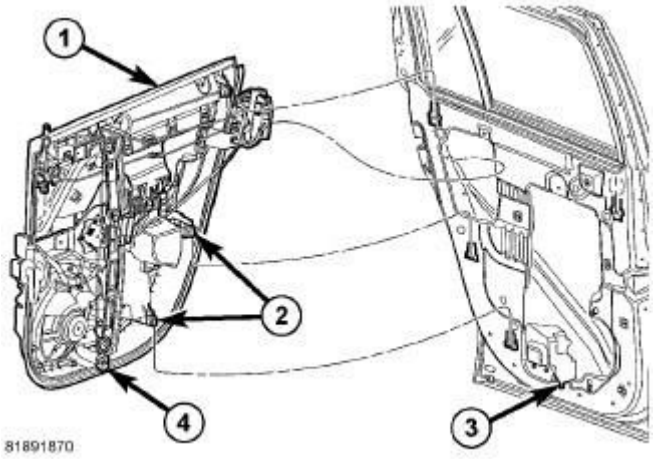

Fig. 111: Door Trim Module
Courtesy of CHRYSLER GROUP, LLC

3. Install the door trim module (1). Refer to **PLATE, CARRIER, INSTALLATION**.

HINGE, DOOR

REMOVAL

REMOVAL

NOTE: It is not necessary to remove the door to replace the hinges if they are replaced one at a time.

NOTE: A suitable body sealant should be used when removing or moving the hinges.

1. Open the front door.

UPPER HINGE

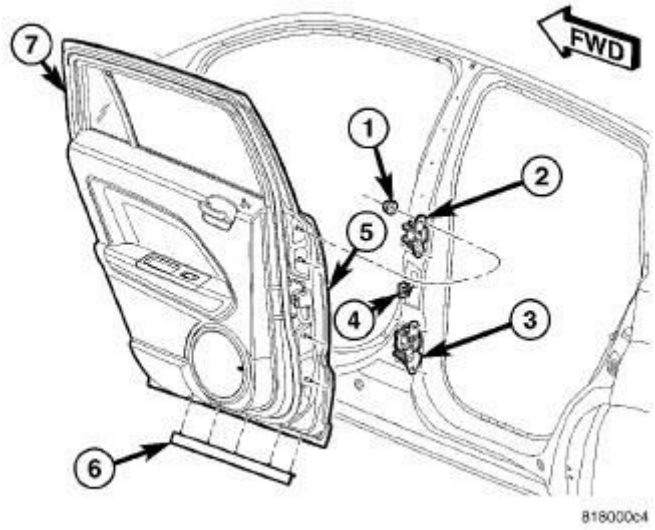

Fig. 112: Rear Door Hinge
Courtesy of CHRYSLER GROUP, LLC

1. Using a grease pencil or equivalent, mark the position of the hinge on the door and B-pillar.
2. Remove the nuts (1) attaching the hinge to the door (7).

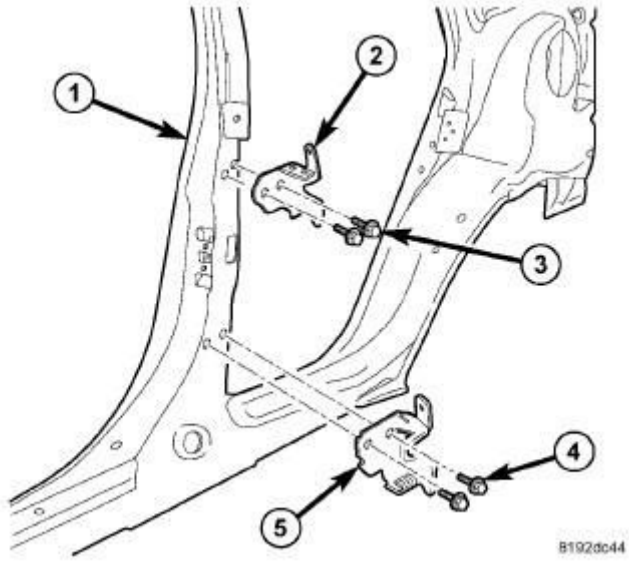

Fig. 113: Hinges
Courtesy of CHRYSLER GROUP, LLC

3. Remove the bolts (3) attaching the hinge (2) to the B-pillar (1) and remove the hinge.

LOWER HINGE

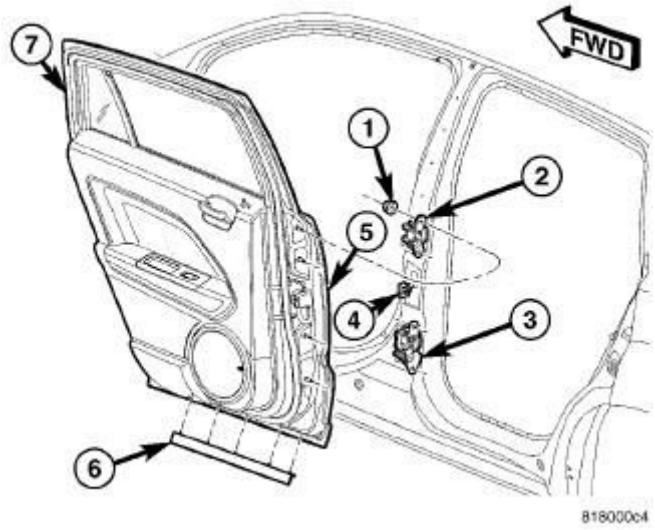

Fig. 114: Rear Door Hinge
Courtesy of CHRYSLER GROUP, LLC

1. Using a grease pencil or equivalent, mark the position of the hinge (3) on the door and B-pillar.
2. Remove the nuts (1) attaching the hinge to the door (7).

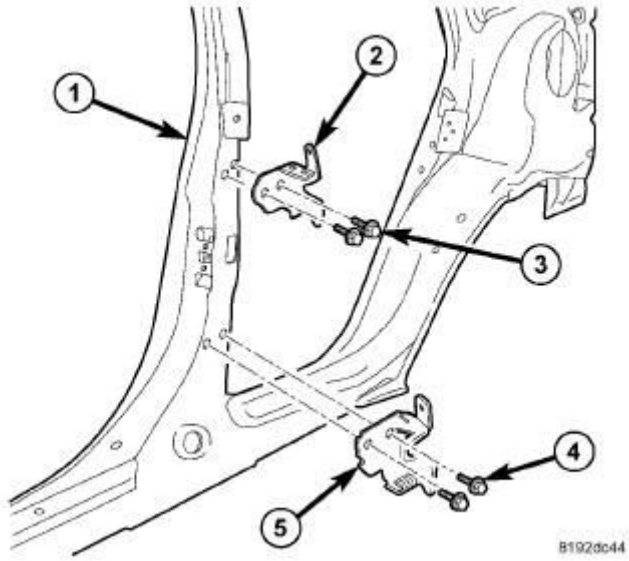

Fig. 115: Hinges
Courtesy of CHRYSLER GROUP, LLC

3. Remove the two bolts (4) attaching the hinge (5) to the B-pillar (1).

INSTALLATION

INSTALLATION

UPPER HINGE

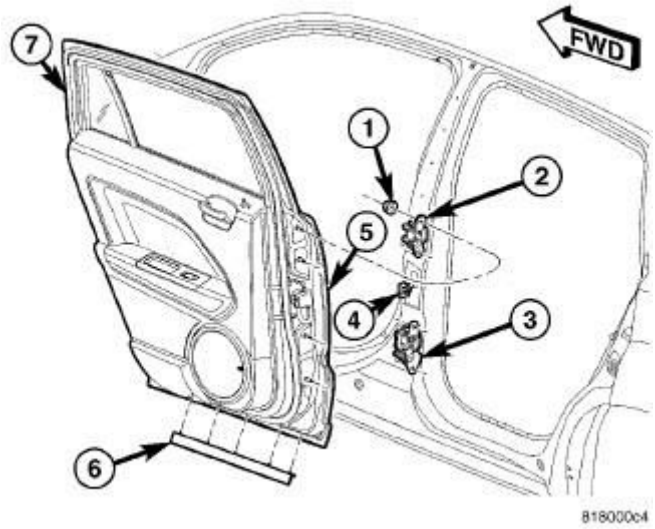

Fig. 116: Rear Door Hinge
Courtesy of CHRYSLER GROUP, LLC

NOTE: A suitable body sealant should be used when removing or moving the hinges.

1. Install the nuts (2) and tighten to 13 N.m (9.5 ft. lbs.).

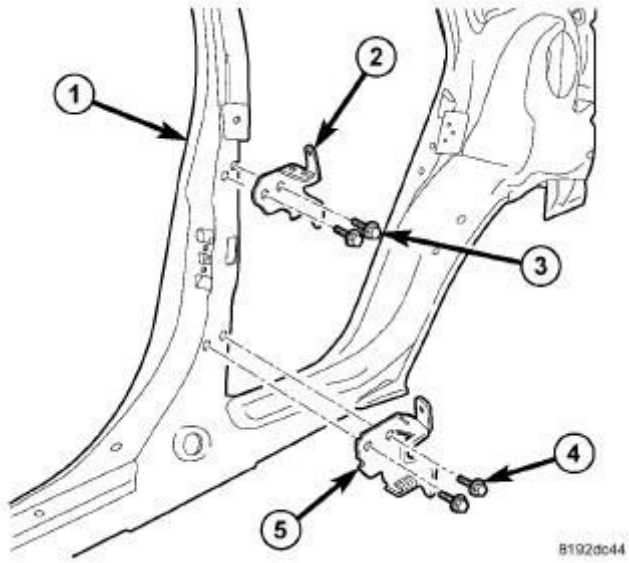

Fig. 117: Hinges
Courtesy of CHRYSLER GROUP, LLC

2. Install the two hinge to B-pillar bolts (3).
3. Tighten the bolts to 22 N.m (16 ft. lbs.).
4. Adjust the door if needed. Refer to **DOOR, REAR, ADJUSTMENTS**.

LOWER HINGE

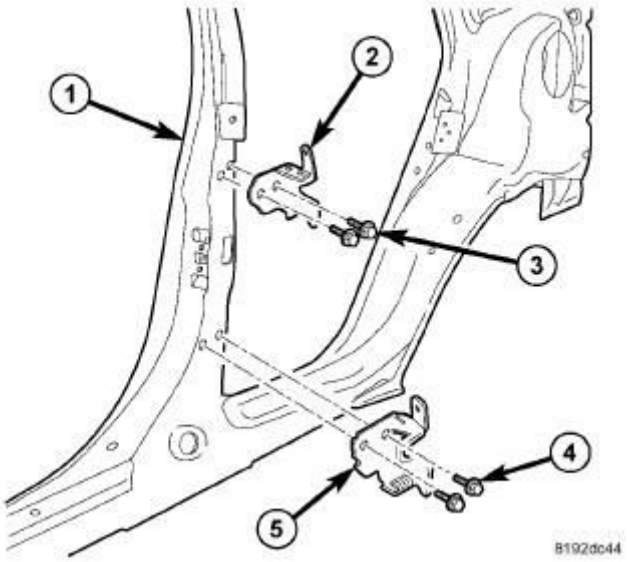

Fig. 118: Hinges
Courtesy of CHRYSLER GROUP, LLC

NOTE: A suitable body sealant should be used when removing or moving the hinges.

1. Install the hinge (5) and install the B-pillar bolts (4).
2. Tighten the bolts to 22 N.m (16 ft. lbs.).

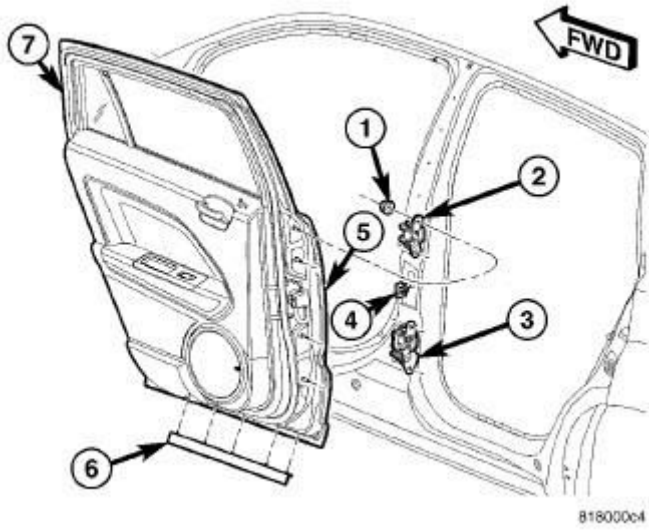

Fig. 119: Rear Door Hinge
Courtesy of CHRYSLER GROUP, LLC

3. Install the hinge to door nuts (1) and tighten to 13 N.m (9.5 ft. lbs.).
4. Adjust the door if needed. Refer to **DOOR, REAR, ADJUSTMENTS**.

LATCH, DOOR

ADJUSTMENTS

ADJUSTMENTS

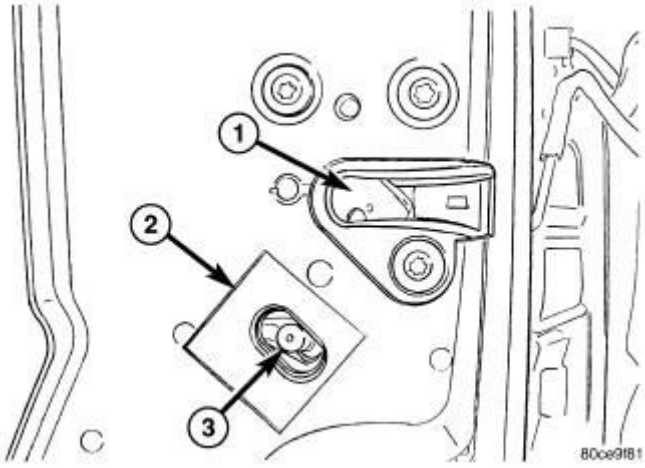

Fig. 120: Adjusting Front Latch
Courtesy of CHRYSLER GROUP, LLC

1. Locate the access hole in the door to adjust the door latch (1) and remove the mylar tape (2).

2. Loosen latch adjusting screw (3) threw access slot in door shut face (1/2 to 1 full turn).
3. Operate the door handles several times to reduce any possible linkage binding and tighten the adjustment screw to 3 N.m (30 in. lbs.).
4. Operate the door handles again to verify proper operation and reinstall the mylar tape.

REMOVAL

REMOVAL

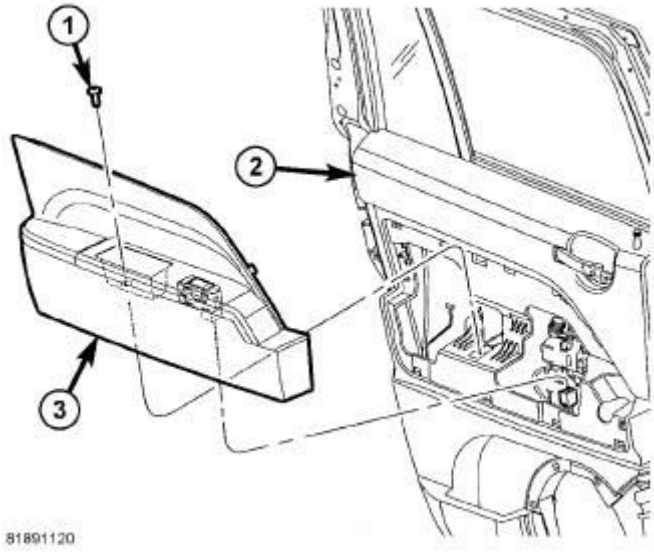

Fig. 121: Bolster Removal & Installation
Courtesy of CHRYSLER GROUP, LLC

1. Separate the bolster (3) and allow it to hang by the tethers. Refer to **PANEL, REAR DOOR TRIM, BOLSTER, REMOVAL**.

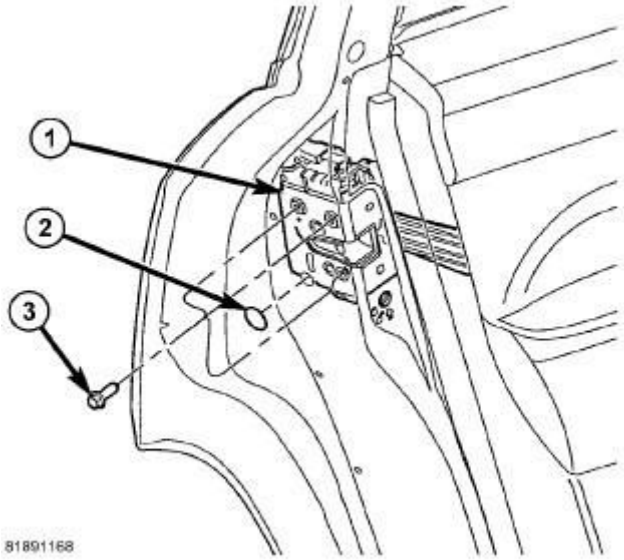

Fig. 122: Latch Fasteners
Courtesy of CHRYSLER GROUP, LLC

2. Remove the latch screws (3).

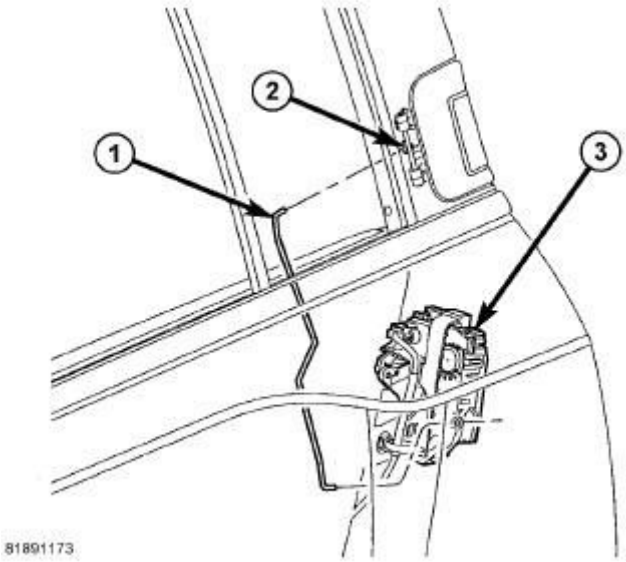

Fig. 123: Exterior Handle Rod
Courtesy of CHRYSLER GROUP, LLC

3. Disconnect the exterior handle rod (1).

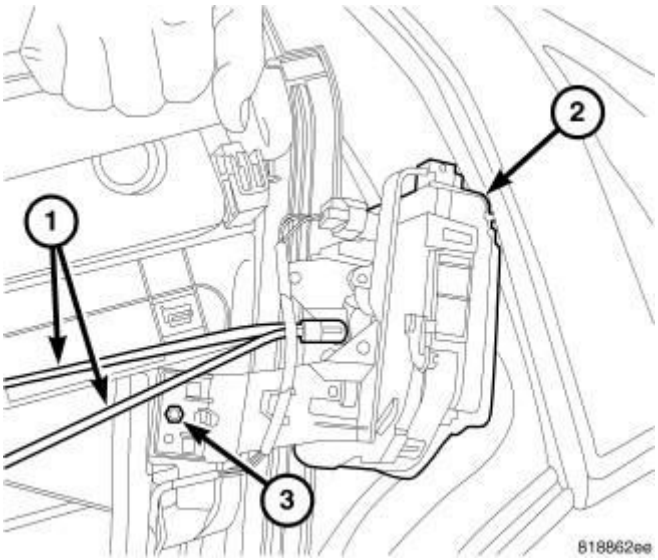

Fig. 124: Latch
Courtesy of CHRYSLER GROUP, LLC

4. Disconnect the latch linkages (1).
5. Remove the bracket screw (3).
6. Remove the latch (2) and disconnect the electrical connector.

INSTALLATION

INSTALLATION

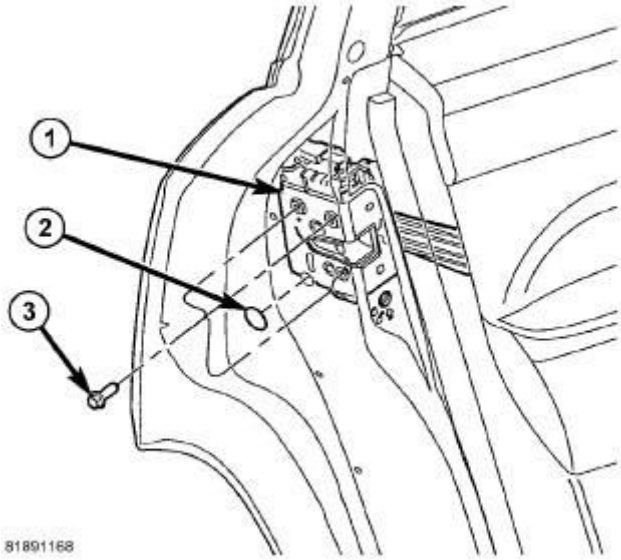

Fig. 125: Latch Fasteners
Courtesy of CHRYSLER GROUP, LLC

1. Connect the electrical connector.

2. Install the latch (1) and install the screws (3).
3. Tighten the screws to 7 N.m (62 in. lbs.).

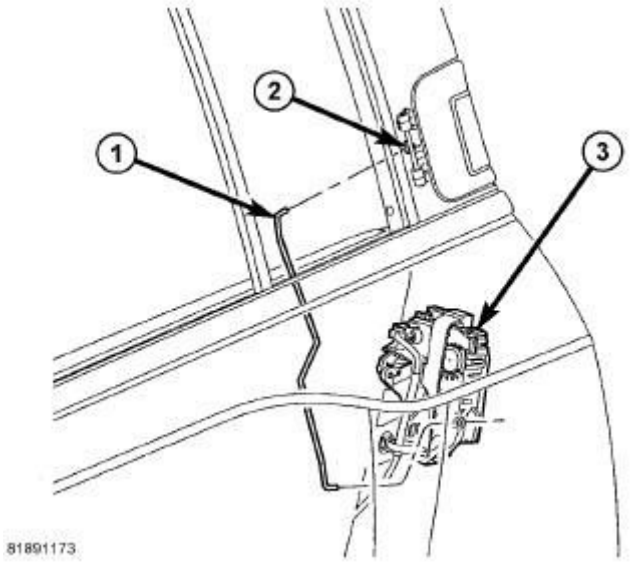

Fig. 126: Exterior Handle Rod
Courtesy of CHRYSLER GROUP, LLC

4. Connect the exterior handle rod (1) to the latch (3).

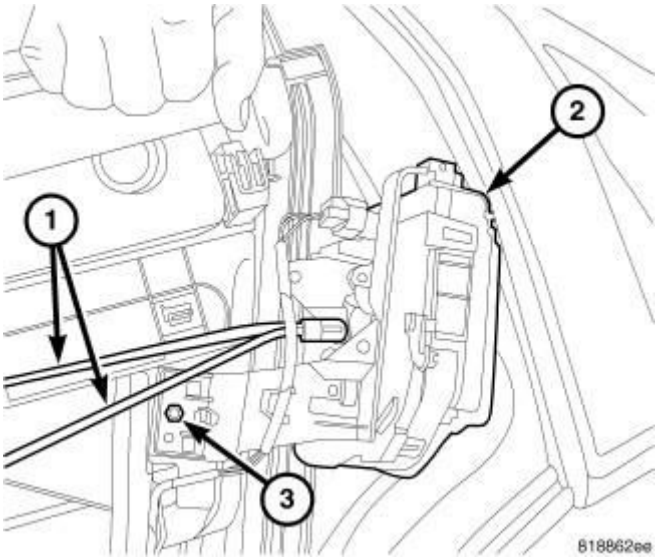

Fig. 127: Latch
Courtesy of CHRYSLER GROUP, LLC

5. Install the mounting bracket screw (3).
6. Connect the linkage rods (1) to the latch (2).

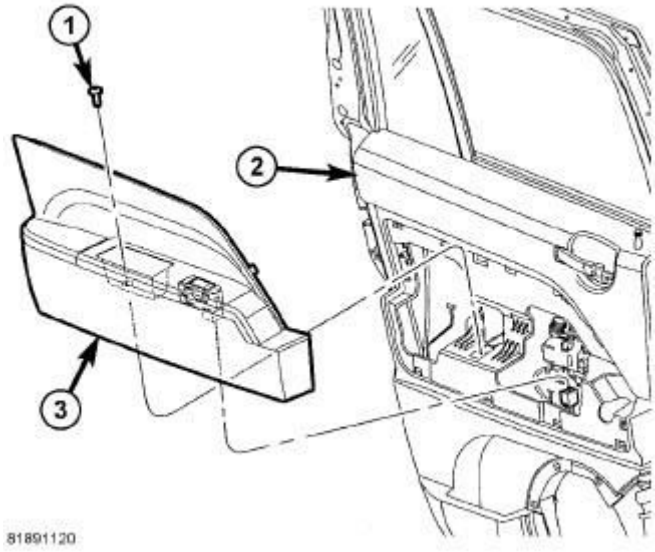

Fig. 128: Bolster Removal & Installation
Courtesy of CHRYSLER GROUP, LLC

7. Install the bolster (3). Refer to **PANEL, REAR DOOR TRIM, BOLSTER, INSTALLATION**.

PANEL, REAR DOOR TRIM, BOLSTER

REMOVAL

REMOVAL

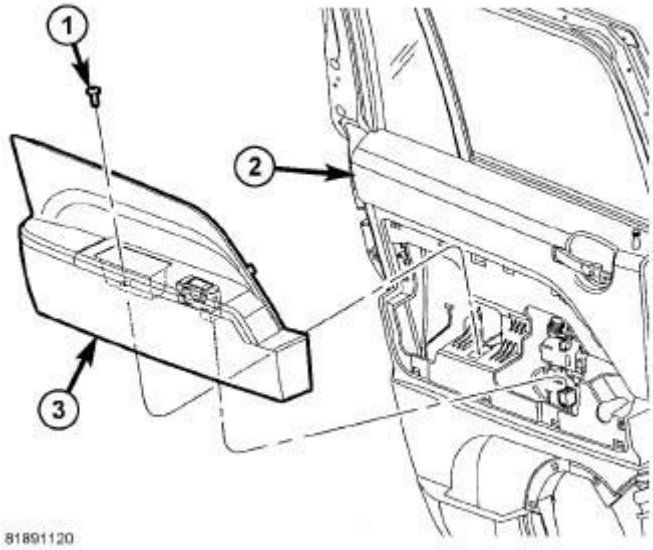

Fig. 129: Bolster Removal & Installation
Courtesy of CHRYSLER GROUP, LLC

1. Disconnect and isolate battery negative cable.
2. Remove the screw (1) from the pull handle.
3. Using a trim stick (special tool #C-4755, Trim Stick) or equivalent, separate the bolster (3) from the door module (2).

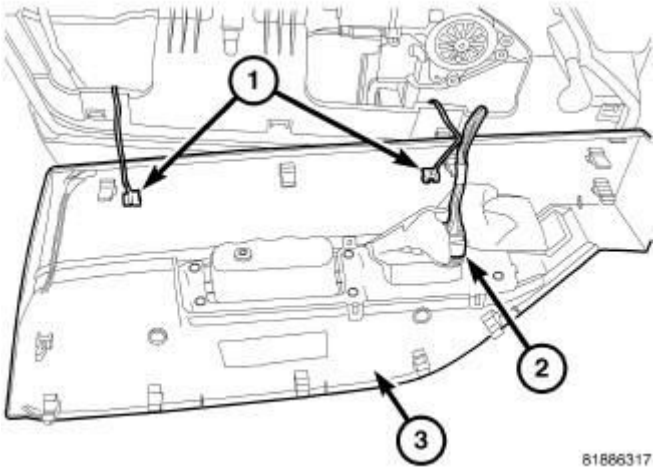

Fig. 130: Bolster
Courtesy of CHRYSLER GROUP, LLC

4. Disconnect the electrical connectors (2), if equipped.
5. Disconnect the tethers (1) and remove the bolster (3).

INSTALLATION

INSTALLATION

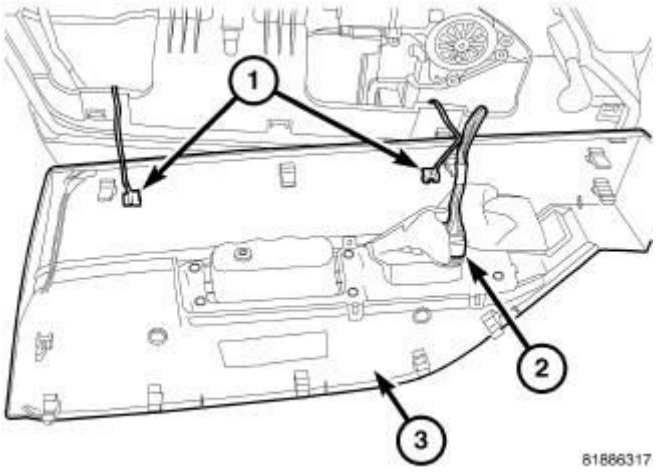

Fig. 131: Bolster
Courtesy of CHRYSLER GROUP, LLC

1. Connect the bolster tethers (1).
2. Connect the electrical connectors (2), if equipped.

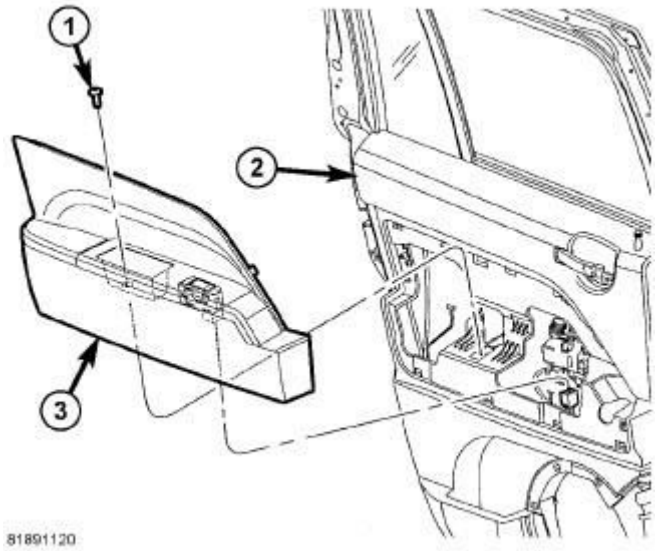

Fig. 132: Bolster Removal & Installation
Courtesy of CHRYSLER GROUP, LLC

3. Position the bolster (3) onto the door module (2) and seat the clips fully.
4. Install the screw (1).

PLATE, CARRIER

DESCRIPTION

DESCRIPTION

Door trim modules include the hardware, window regulators, latch, remote handle and links, speakers and wiring harness. In addition to providing manufacturing efficiencies, the door modules benefit the customer too. Having all the parts assembled into a module improves build accuracy and fit and finish between the components and trim as a result of greater communication between the release engineers and suppliers.

Lower door trim (from the beltline down) is molded polypropylene. The door trim is two-tone with a darker color matching the instrument panel in the upper third and a lighter shade for the lower two-thirds, including the bolster and substrate.

ITEMS SERVICEABLE WITHOUT REMOVING MODULE OR OPENING BOLSTER:

- Speaker grille
- Speaker
- I/s handle screw cover
- Front door mirror flag cover
- Fasteners accessible :
  a. Substrate and lower window regulator screws
  b. Speaker screws (after grille removal)
  c. Pull cup screw
  d. I/s handle screw (after cover removal)

ITEMS SERVICEABLE WITHOUT REMOVING MODULE BUT WITH OPENING OF BOLSTER:

- Electric window switch
- Electric mirror switch (front driver door only)
- Bolster trim assembly
- Bolster seal
- Sock seals on switches
- Outside handle link
- Front door lock and rod assembly
- Fasteners accessible :
  a. Pull cup clip
  b. Upper window regulator screws
  c. Pull cup screw

ITEMS SERVICEABLE BY REMOVING ENTIRE MODULE:

- Door latch
- Window regulator
- Window Glass Run
- Window Glass
- Inside remote handle
- Inside handle links
- Periphery seal (around edge of trim)
- Wire harness

REMOVAL

REMOVAL

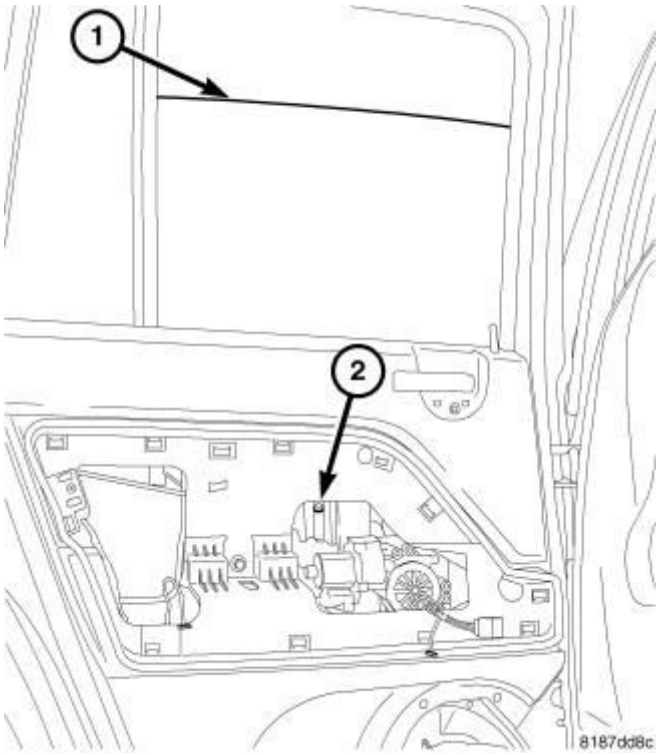

Fig. 133: Glass Location
Courtesy of CHRYSLER GROUP, LLC

NOTE: It may be necessary to have an assistant help with these steps.

1. Raise the window (1) into the position shown to gain access to the window tabs.
2. Remove the door trim bolster panel. Refer to **PANEL, REAR DOOR TRIM, BOLSTER, REMOVAL**.
3. With a punch or equivalent, press the regulator tabs holding the window (1) in the regulator (2).
4. Disconnect the window (1) from the regulator (2).
5. Tape the window (1) into the full up position.

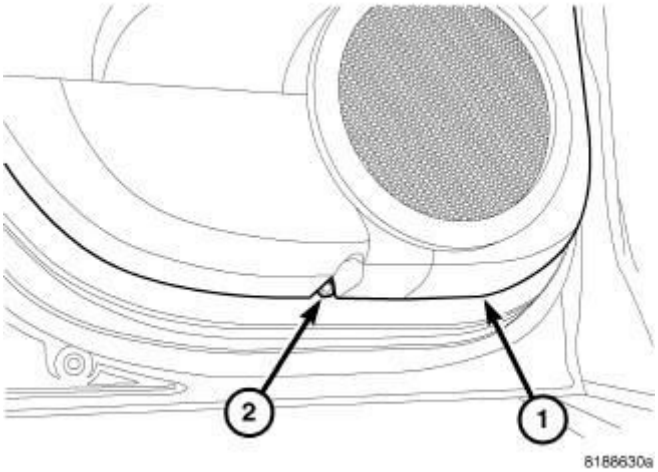

Fig. 134: Lower Trim Fastener
Courtesy of CHRYSLER GROUP, LLC

6. Loosen the lower screw (2).

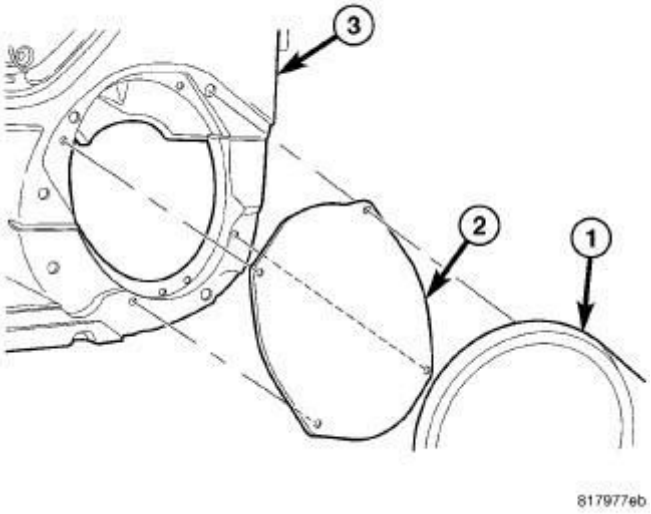

Fig. 135: Door Module
Courtesy of CHRYSLER GROUP, LLC

7. Remove the speaker (2). Refer to **SPEAKER, REMOVAL** .

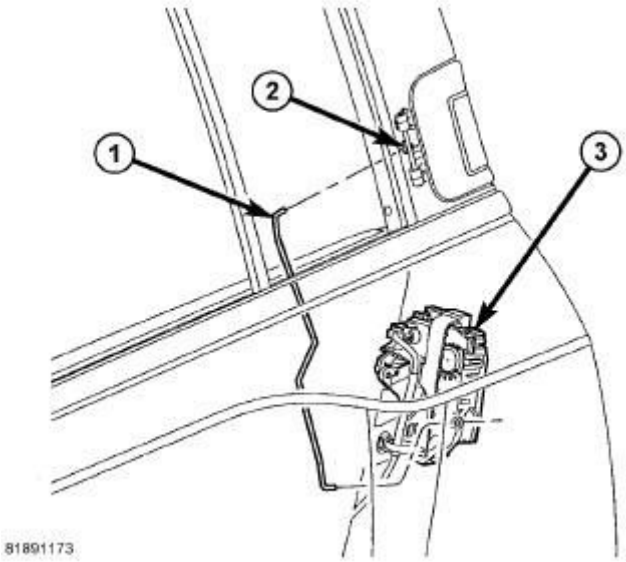

Fig. 136: Exterior Handle Rod
Courtesy of CHRYSLER GROUP, LLC

8. Disconnect the exterior handle rod (1) from the latch (3).

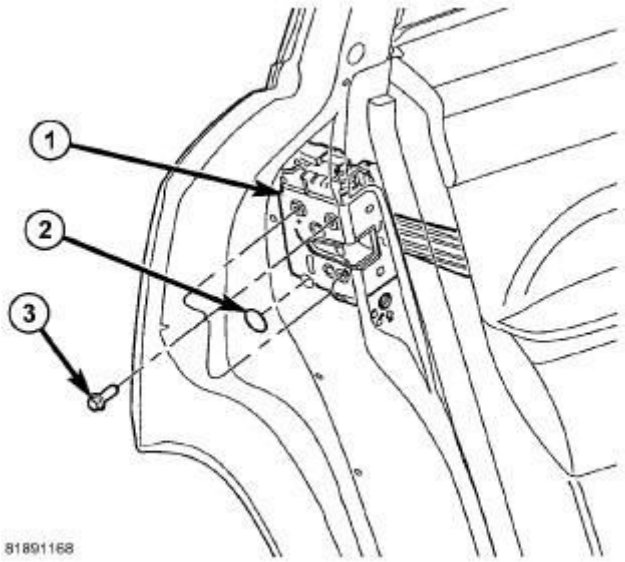

Fig. 137: Latch Fasteners
Courtesy of CHRYSLER GROUP, LLC

9. Remove the latch screws (3).

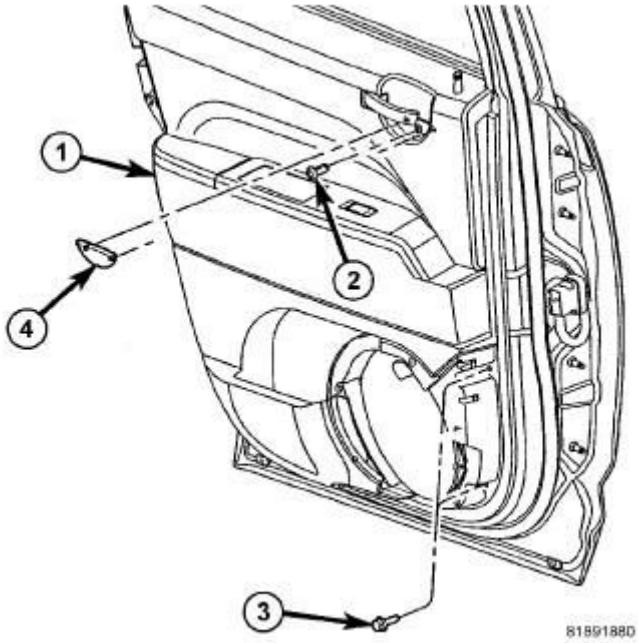

Fig. 138: Door Trim Fasteners
Courtesy of CHRYSLER GROUP, LLC

10. Remove the trim screws (3) from the speaker opening.
11. Remove the trim cap (4) and the screw (2) at the inside handle.

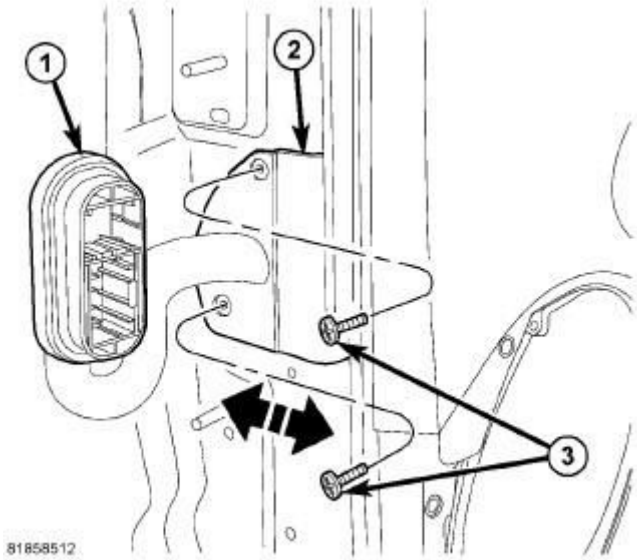

Fig. 139: Harness Fasteners
Courtesy of CHRYSLER GROUP, LLC

12. Disconnect the main harness connector (1).
13. Remove the screws (3) from the door frame.

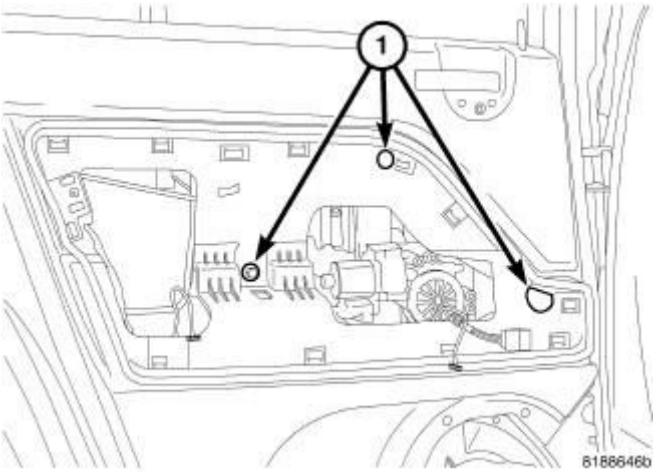

Fig. 140: Upper Regulator Fastener
Courtesy of CHRYSLER GROUP, LLC

14. Remove the three upper fasteners (1).

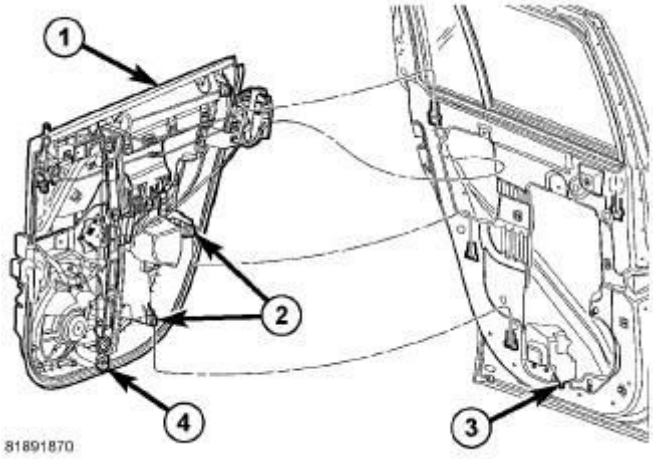

Fig. 141: Door Trim Module
Courtesy of CHRYSLER GROUP, LLC

15. Lift the module (1) up off of the four trim hooks (2) and lower regulator screw (4).
16. Pull the front of the trim module (1) out from the door and forward to remove the latch.

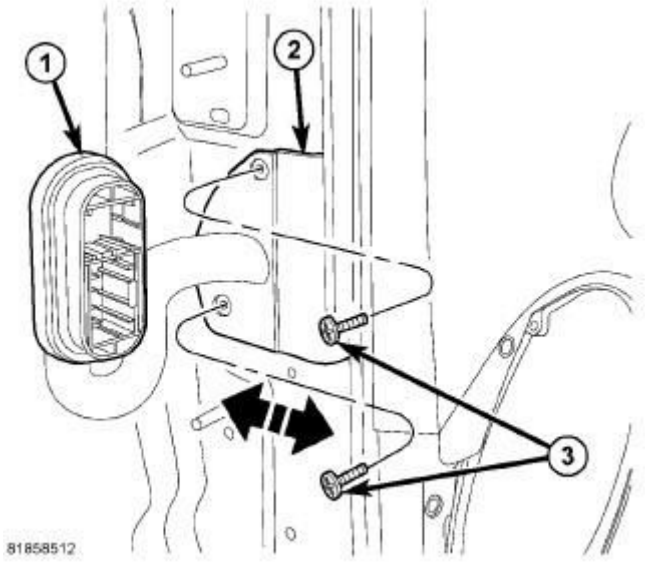

Fig. 142: Harness Fasteners
Courtesy of CHRYSLER GROUP, LLC

17. Separate the harness (2) from the door.

INSTALLATION

INSTALLATION

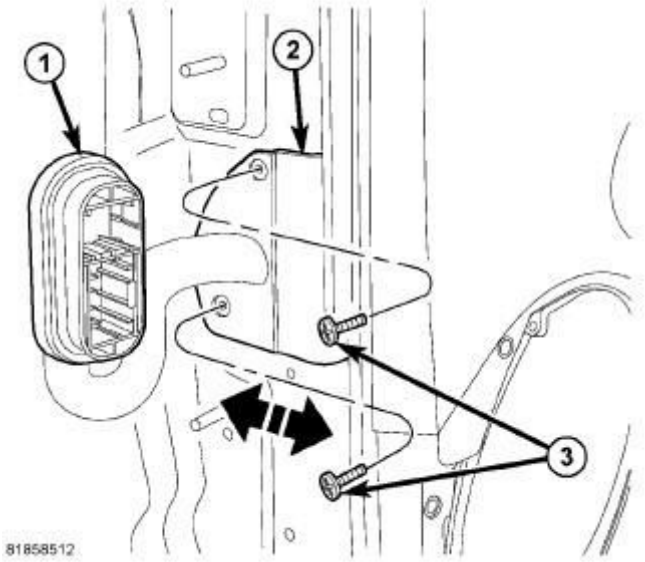

Fig. 143: Harness Fasteners
Courtesy of CHRYSLER GROUP, LLC

1. Position the wire harness door bracket (2) into the door and install the screws (3).

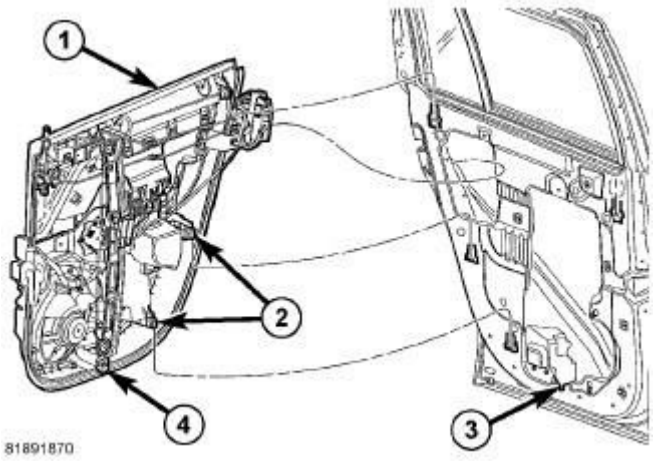

Fig. 144: Door Trim Module
Courtesy of CHRYSLER GROUP, LLC

2. Position the latch into the door and set the trim module (1) into place.
3. Position the four trim hooks (2) and lower the regulator screw (4) into the corresponding slot (3) in the door and seat the trim module fully.

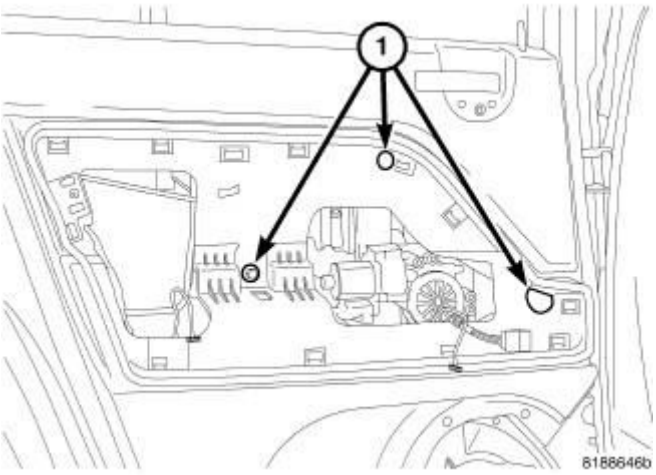

Fig. 145: Upper Regulator Fastener
Courtesy of CHRYSLER GROUP, LLC

4. Install the upper regulator screws (1) and tighten to 6 N.m (53 in. lbs.).

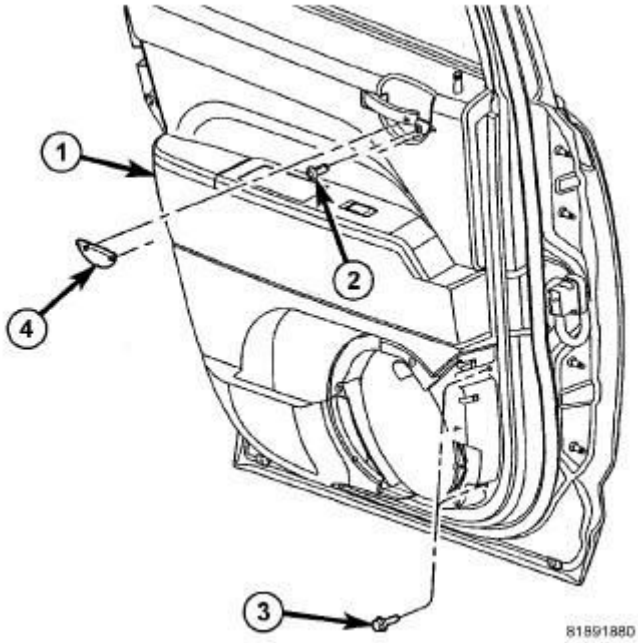

Fig. 146: Door Trim Fasteners
Courtesy of CHRYSLER GROUP, LLC

5. Install the screws (3) in the front corner and tighten to 6 N.m (53 in. lbs.).
6. Install the screw (2) at the inside handle and seat the trim (4) fully.

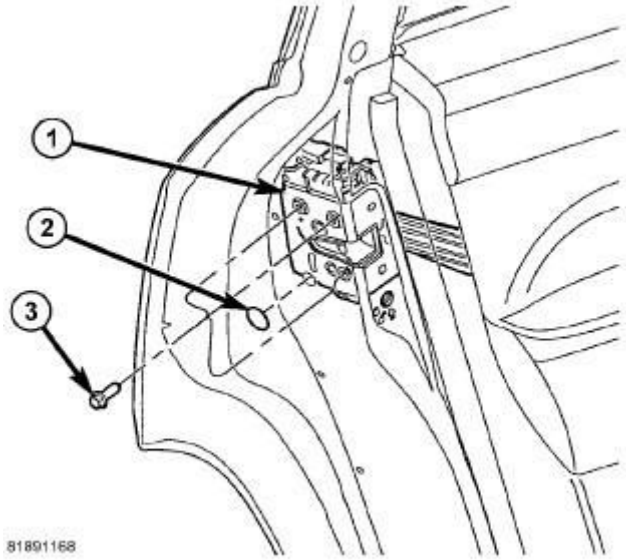

Fig. 147: Latch Fasteners
Courtesy of CHRYSLER GROUP, LLC

7. Install the latch screws (3) and tighten to 7 N.m (62 in. lbs.).

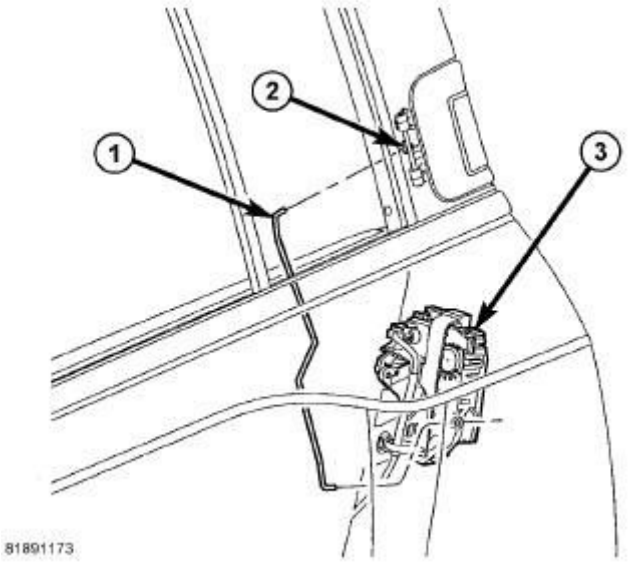

Fig. 148: Exterior Handle Rod
Courtesy of CHRYSLER GROUP, LLC

8. Connect the exterior handle rod (1) to the latch (3).

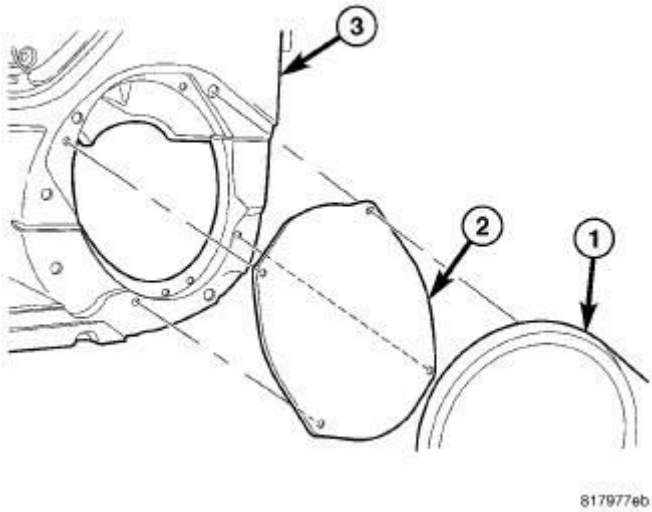

Fig. 149: Door Module
Courtesy of CHRYSLER GROUP, LLC

9. Install the speaker (2). Refer to **SPEAKER, INSTALLATION** .

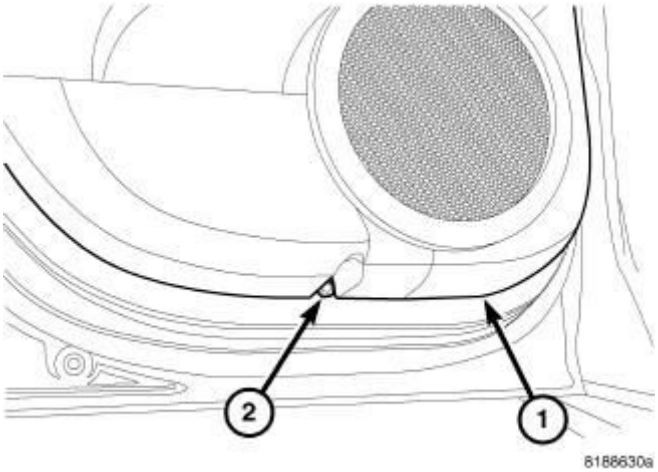

Fig. 150: Lower Trim Fastener
Courtesy of CHRYSLER GROUP, LLC

10. Tighten the lower trim screw (2) to 6 N.m (53 in. lbs.).

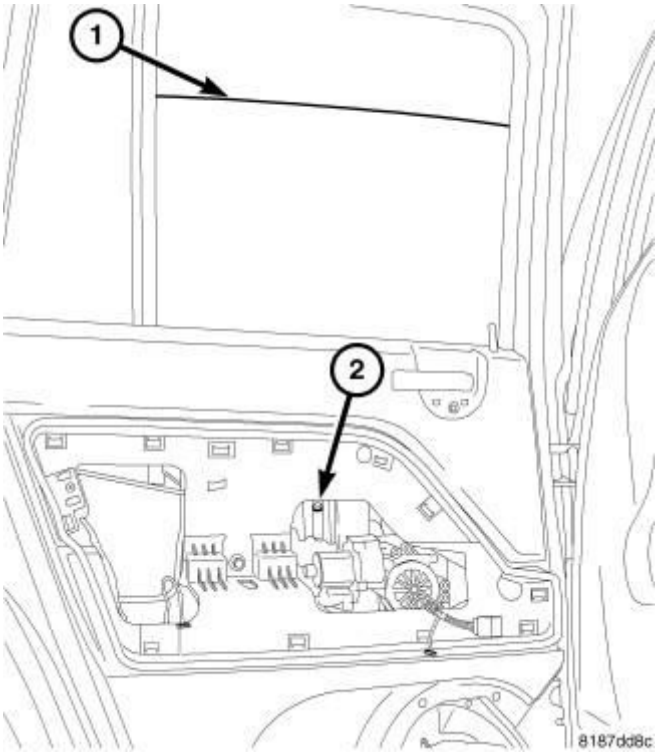

Fig. 151: Glass Location
Courtesy of CHRYSLER GROUP, LLC

11. Release the glass (1) from the tape, connect the glass to the regulator lift plate (2). Ensure that the glass is properly seated.
12. Install the rear door trim bolster panel. Refer to **PANEL, REAR DOOR TRIM, BOLSTER, INSTALLATION**.

REGULATOR, WINDOW

REMOVAL

REMOVAL

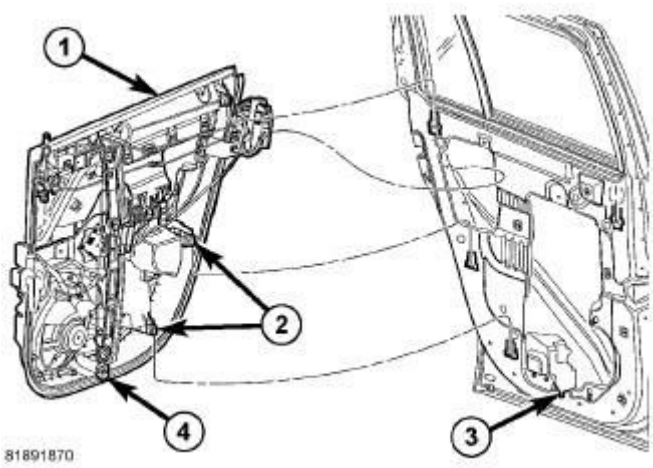

Fig. 152: Door Trim Module
Courtesy of CHRYSLER GROUP, LLC

1. Remove the door trim module (1). Refer to **PLATE, CARRIER, REMOVAL**.

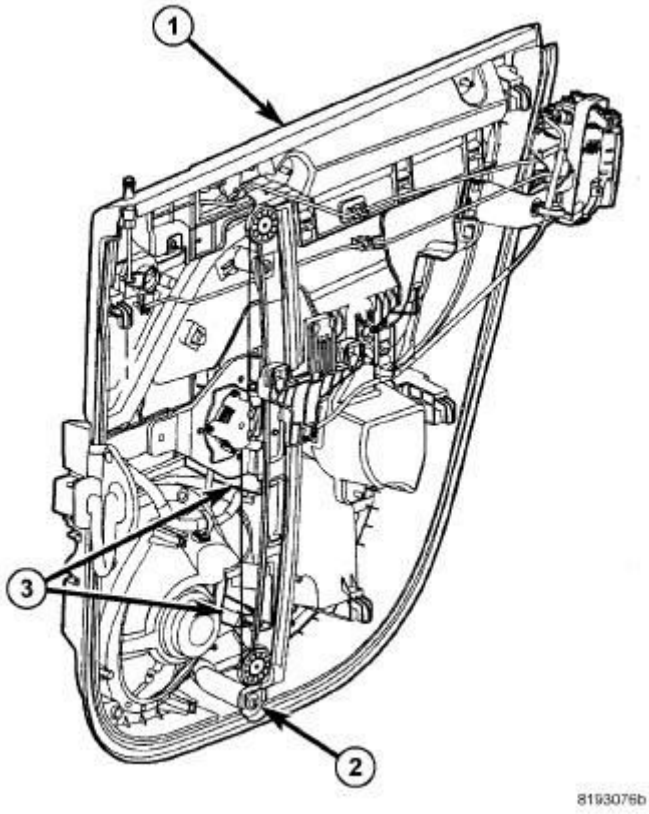

Fig. 153: Regulator
Courtesy of CHRYSLER GROUP, LLC

2. Remove the lower regulator screw (2).
3. Disconnect the regulator motor electrical connector, if equipped.
4. Separate the regulator runner from the support brackets (3) and remove the regulator assembly.

INSTALLATION

INSTALLATION

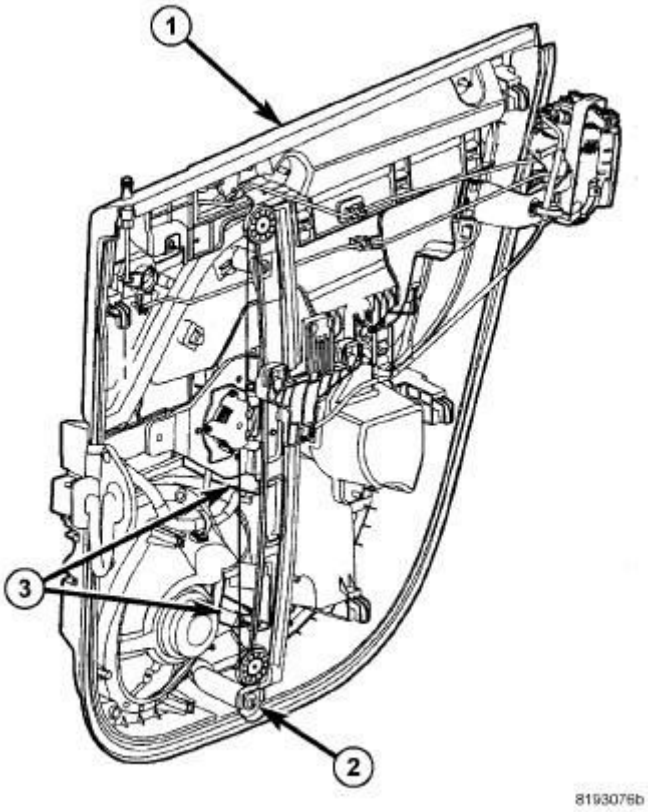

Fig. 154: Regulator
Courtesy of CHRYSLER GROUP, LLC

1. Position the regulator assembly onto the door trim panel (1) and seat the runner support clips (3) fully.
2. Connect the regulator motor electrical connector, if equipped.
3. Install the lower regulator screw (2) but do not tighten them at this time.

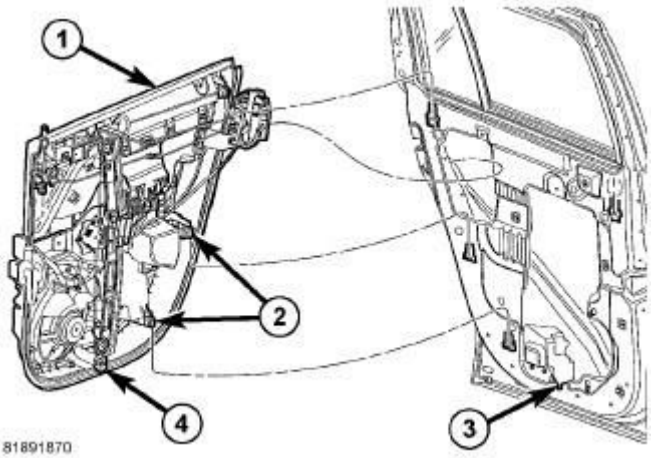

Fig. 155: Door Trim Module

Courtesy of CHRYSLER GROUP, LLC

4. Install the door trim module (1). Refer to **PLATE, CARRIER, INSTALLATION**.

STRIKER, DOOR LATCH

ADJUSTMENTS

ADJUSTMENTS

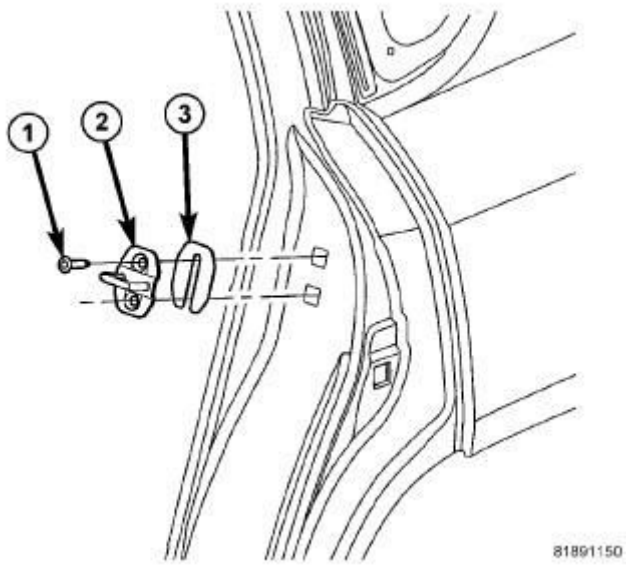

Fig. 156: Striker
Courtesy of CHRYSLER GROUP, LLC

1. Using a grease pencil or equivalent, mark the location of the door latch striker (2) on the C-pillar to aid in adjustment.
2. Loosen the two bolts (1) that secure the door latch striker to the C-pillar.
3. To adjust the rear gap and flush measurement, change the position of the door latch striker and then tighten the two bolts to 26 N.m (19 ft. lbs.). Refer to **GAP AND FLUSH, SPECIFICATIONS**.
4. Verify correct door and latch position.

REMOVAL

REMOVAL

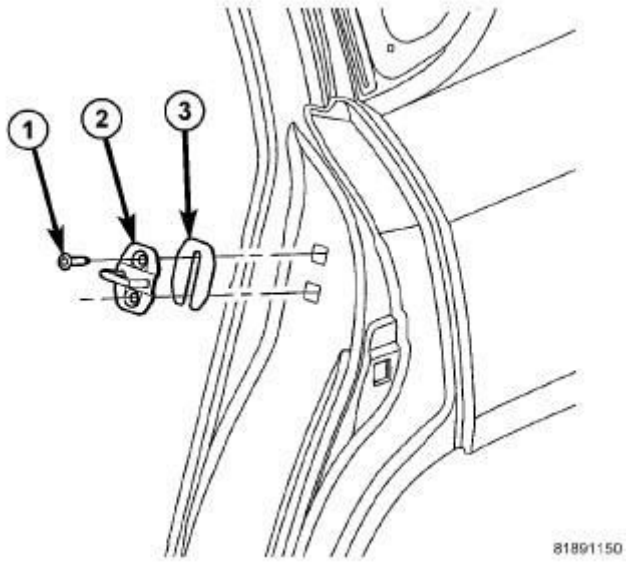

Fig. 157: Striker
Courtesy of CHRYSLER GROUP, LLC

1. Using a grease pencil or equivalent, mark the location of the door latch striker (2) on the C-pillar.
2. Remove the two bolts (1) that secure the door latch striker to the C-pillar and remove the striker.

INSTALLATION

INSTALLATION

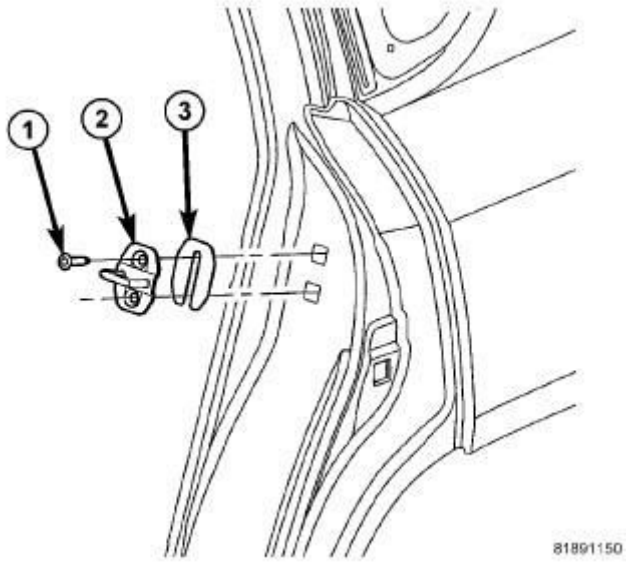

Fig. 158: Striker
Courtesy of CHRYSLER GROUP, LLC

1. Position the door latch striker (2) and shim (3) onto the C-pillar and loosely install the two bolts (1).
2. Align the door latch striker to the C-pillar using the reference marks made during the removal procedure and tighten the bolts to 26 N.m (19 ft. lbs.).
3. If necessary, adjust the door latch striker (2). Refer to **STRIKER, DOOR LATCH, ADJUSTMENTS**.

EXTERIOR

CLADDING, BODY

REMOVAL

REMOVAL

NOTE: Compass shown, SRT-4 and Caliber similar.

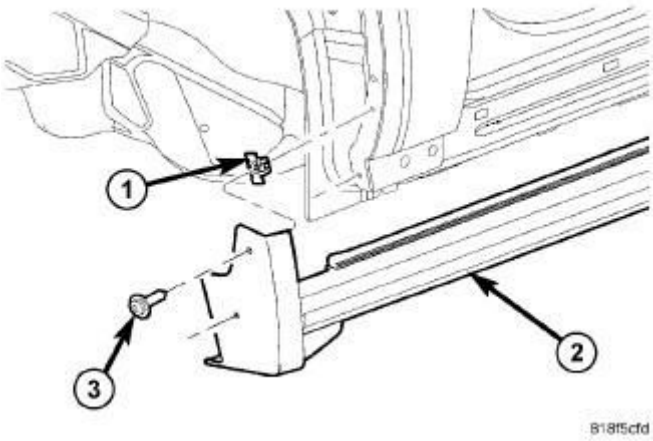

Fig. 159: Cladding & End Screw
Courtesy of CHRYSLER GROUP, LLC

1. Remove the end screws from the cladding (2).

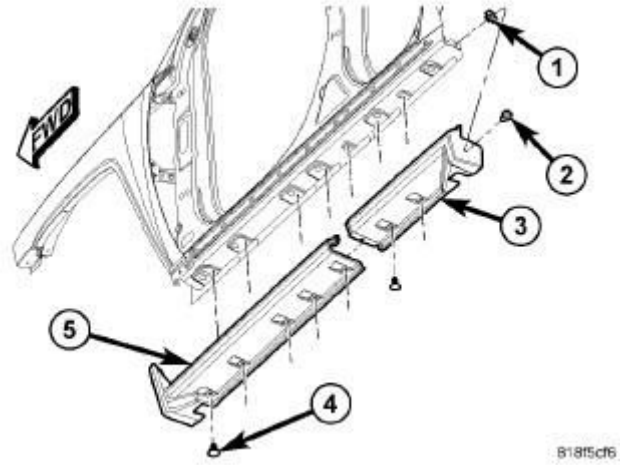

Fig. 160: Cladding & Push Pin Fasteners
Courtesy of CHRYSLER GROUP, LLC

2. Remove the push pin fasteners (4) and remove the cladding (3 and 5).

INSTALLATION

INSTALLATION

NOTE: Compass shown, SRT-4 and Caliber similar.

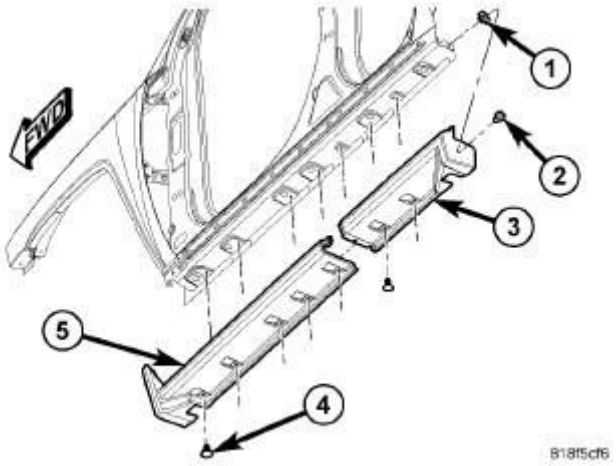

Fig. 161: Cladding & Push Pin Fasteners
Courtesy of CHRYSLER GROUP, LLC

1. Position the rear cladding (3) onto the vehicle and install the pushpin fasteners (4).
2. Position the front cladding (5) onto the vehicle and install the pushpin fasteners (4).

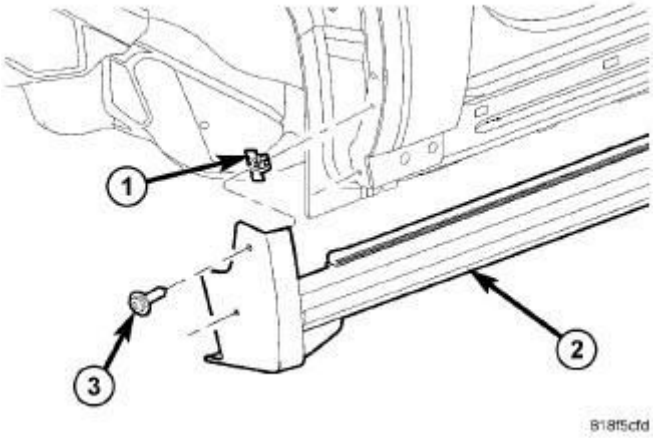

Fig. 162: Cladding & End Screw
Courtesy of CHRYSLER GROUP, LLC

3. Install the end screws (3).

COVER, COWL PANEL

REMOVAL

REMOVAL

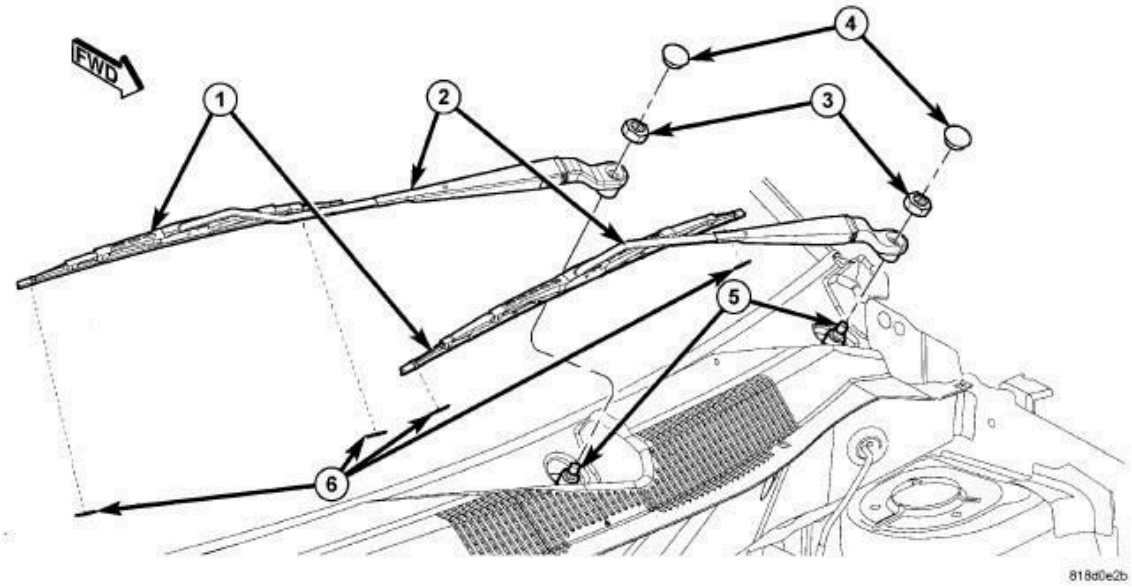

Fig. 163: Front Wiper Arm Replacement
Courtesy of CHRYSLER GROUP, LLC

1. Remove the wiper arms (2). Refer to **ARM, WIPER, REMOVAL** .

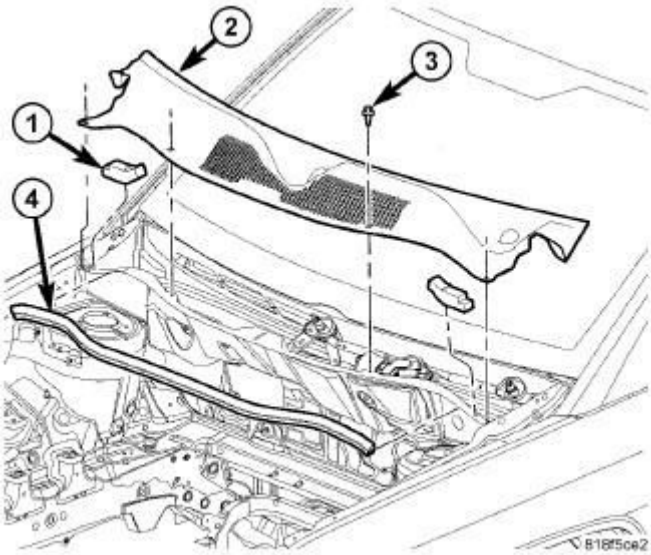

Fig. 164: Cowl Top Panel
Courtesy of CHRYSLER GROUP, LLC

2. Remove the hood seal (4).
3. Remove the screws (3) and remove the panel (2).

INSTALLATION

INSTALLATION

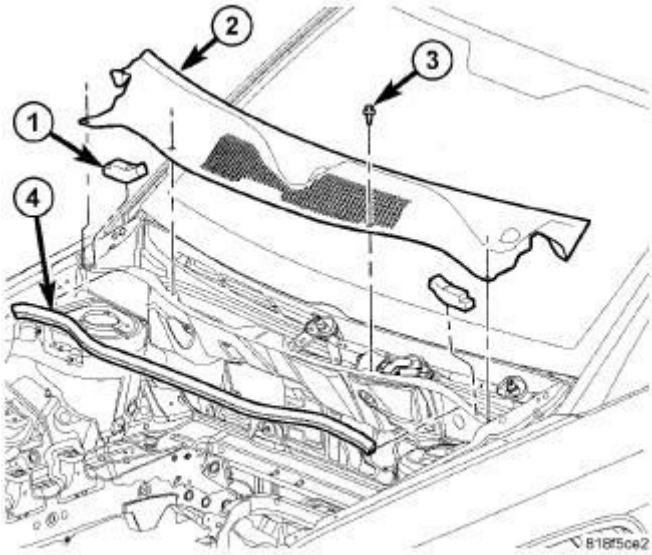

Fig. 165: Cowl Top Panel
Courtesy of CHRYSLER GROUP, LLC

1. Position the end seals (1) into place.

2. Install the panel (2) and install the screws (3).
3. Install the hood seal (4).
4. Install the wiper arms (2). Refer to **ARM, WIPER, INSTALLATION** .

CROSSMEMBER, RADIATOR

REMOVAL

REMOVAL

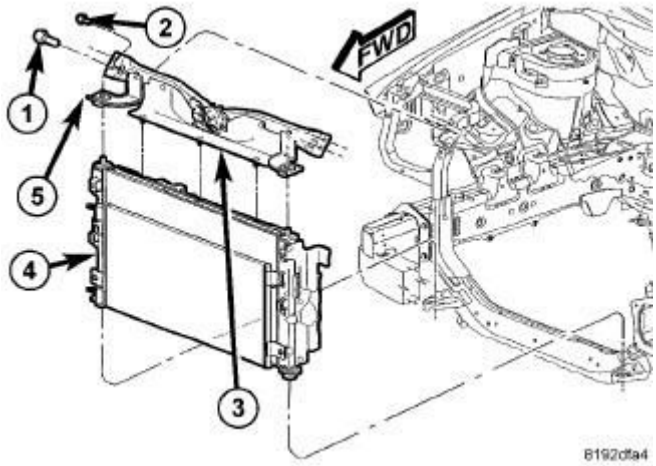

Fig. 166: Crossmember - Radiator
Courtesy of CHRYSLER GROUP, LLC

1. Separate the close out panel push pins (3).
2. Remove the bolts (1 and 2) and remove the crossmember (5).

INSTALLATION

INSTALLATION

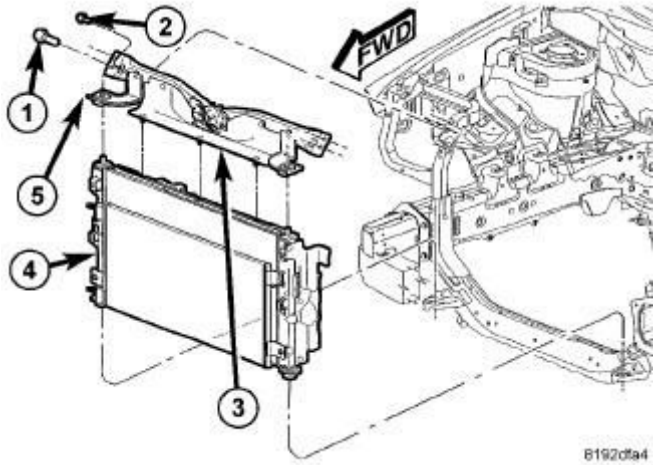

Fig. 167: Crossmember - Radiator
Courtesy of CHRYSLER GROUP, LLC

1. Install the crossmember (5) over the radiator (4) isolator posts.
2. Install the inner bolts (2) and tighten the left bolt first followed by the right bolt to 8 N.m (71 in. lbs.).
3. Install the outer bolts (1) and tighten to 22.5 Nm (16.5 ft. lbs.).
4. Position the close out panel (3) back into place and install the push pin fasteners.

FENDER, FRONT

REMOVAL

REMOVAL

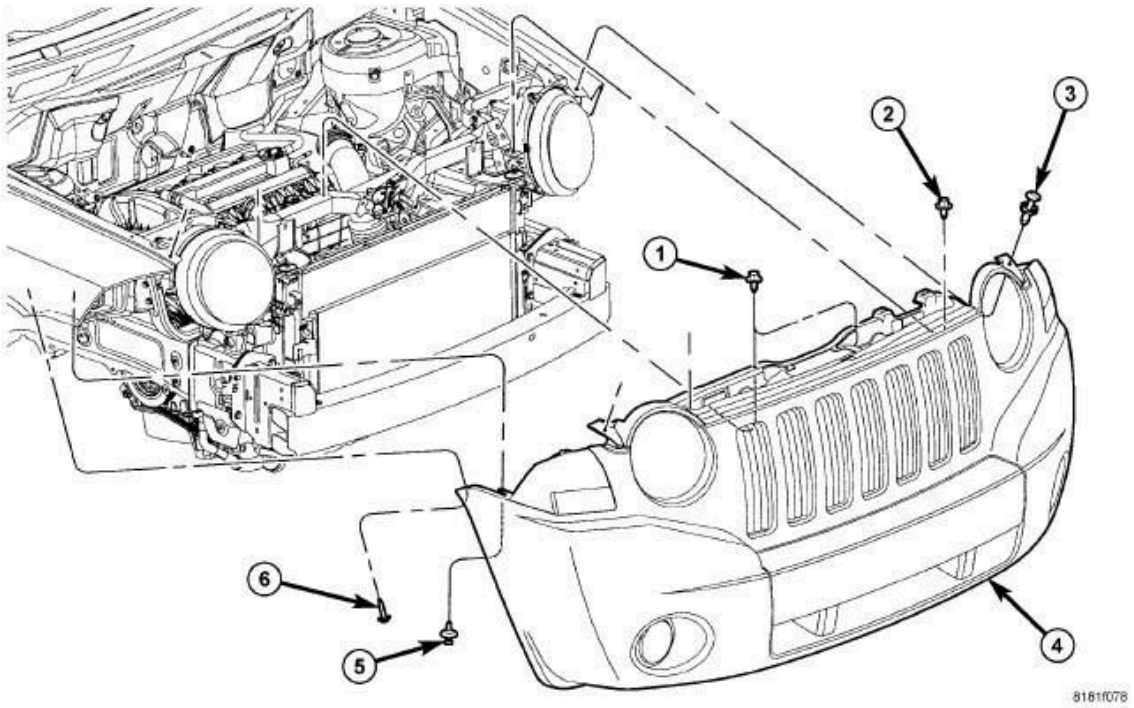

Fig. 168: Front Fascia Components (Compass)
Courtesy of CHRYSLER GROUP, LLC

NOTE: Compass shown, Patriot similar.

1. Remove the radiator closure panel. Refer to **PANEL, CLOSURE, UPPER, REMOVAL**.
2. Remove the wheelhouse splash shield. Refer to **SHIELD, SPLASH, FRONT WHEELHOUSE, REMOVAL** .

3. Remove the radio antenna, if equipped. Refer to **BODY AND CABLE, ANTENNA, REMOVAL** and **BODY AND CABLE, ANTENNA, SATELLITE RADIO, REMOVAL** .
4. Remove the fender to fascia fasteners (5 and 6).

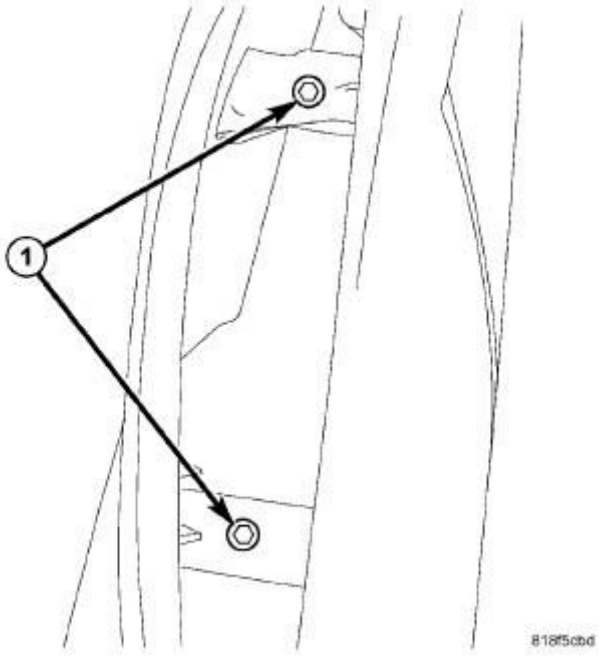

Fig. 169: Inner Bolts At Rear Of Wheel Well
Courtesy of CHRYSLER GROUP, LLC

5. Remove the two inner bolts (1) at the rear of the wheel well.

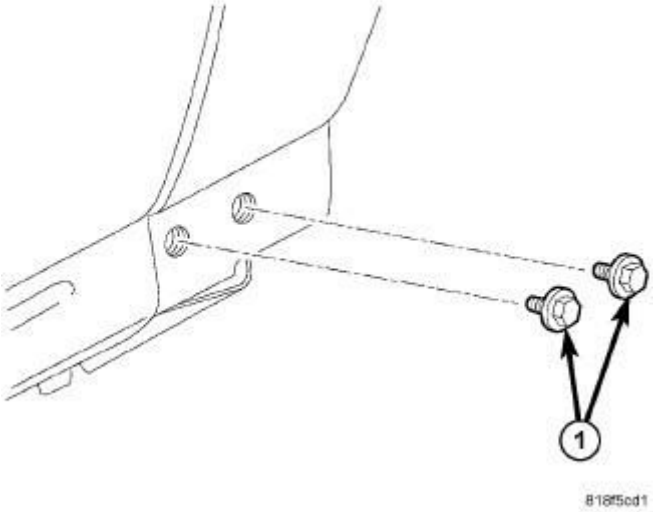

Fig. 170: Lower Bolts Next To Door Sill

Courtesy of CHRYSLER GROUP, LLC

6. Remove the two lower bolts (1) next to the door sill.

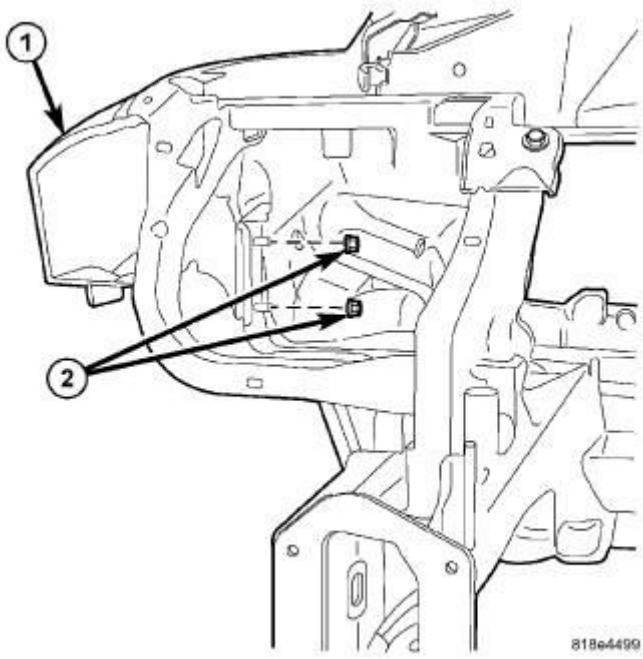

Fig. 171: Inner Nuts
Courtesy of CHRYSLER GROUP, LLC

7. Remove the two inner nuts (2).

COMPASS

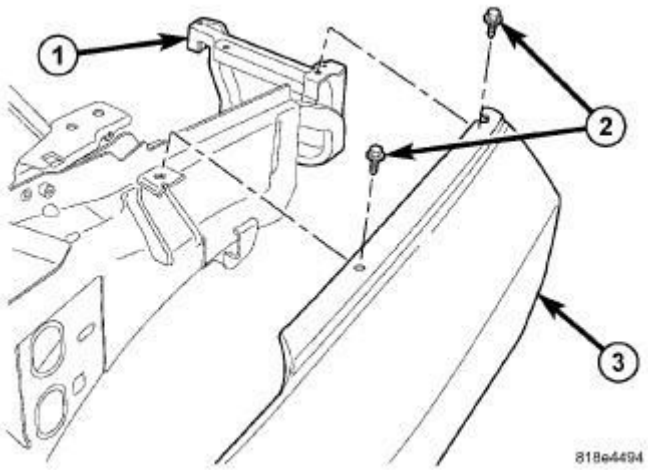

Fig. 172: Fender & Upper Fender Bolts (Compass)
Courtesy of CHRYSLER GROUP, LLC

1. Remove the two upper bolts (2) and remove the fender (3).

PATRIOT

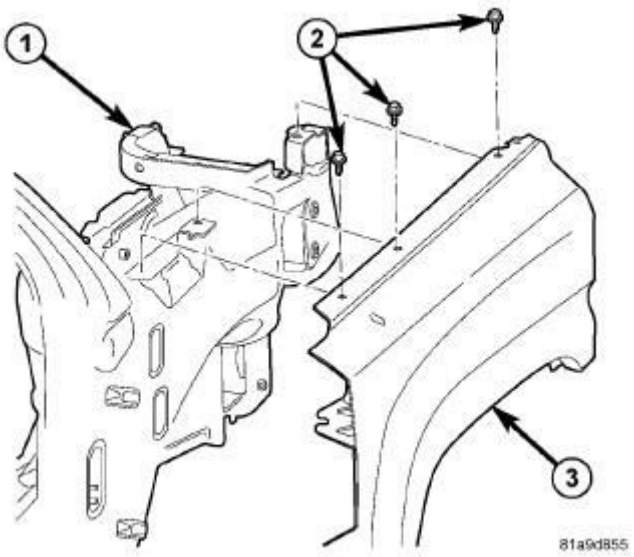

Fig. 173: Fender & Upper Fender Bolts (Patriot)
Courtesy of CHRYSLER GROUP, LLC

1. Remove the three upper bolts (2) and remove the fender (3).

INSTALLATION

INSTALLATION

COMPASS

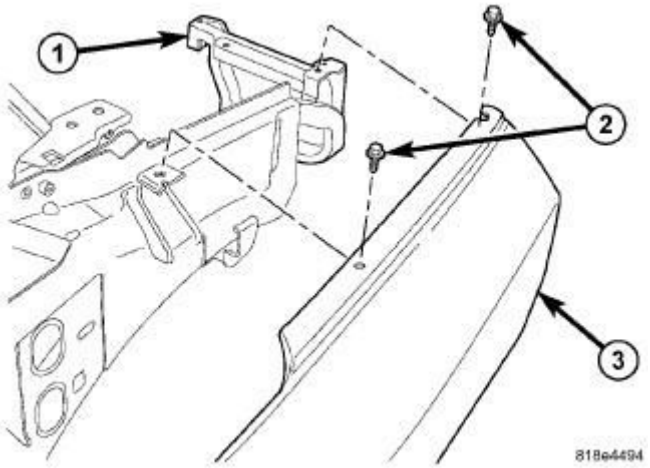

Fig. 174: Fender & Upper Fender Bolts (Compass)
Courtesy of CHRYSLER GROUP, LLC

NOTE: Tighten the fender fasteners only after all fasteners are installed loosely and the fender is adjusted for gap and flush. Refer to GAP AND FLUSH, SPECIFICATIONS.

1. Loosely install the two upper bolts (2).

PATRIOT

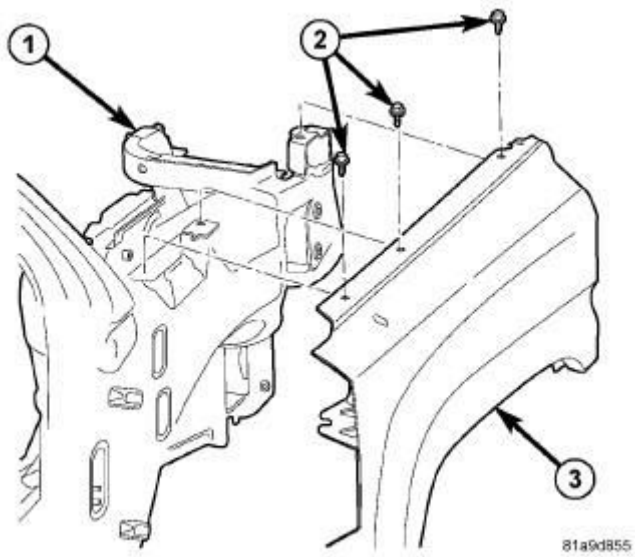

Fig. 175: Fender & Upper Fender Bolts (Patriot)
Courtesy of CHRYSLER GROUP, LLC

NOTE: Tighten the fender fasteners only after all fasteners are installed loosely and the fender is adjusted for gap and flush. Refer to GAP AND FLUSH, SPECIFICATIONS.

1. Loosely install the three upper bolts (2).

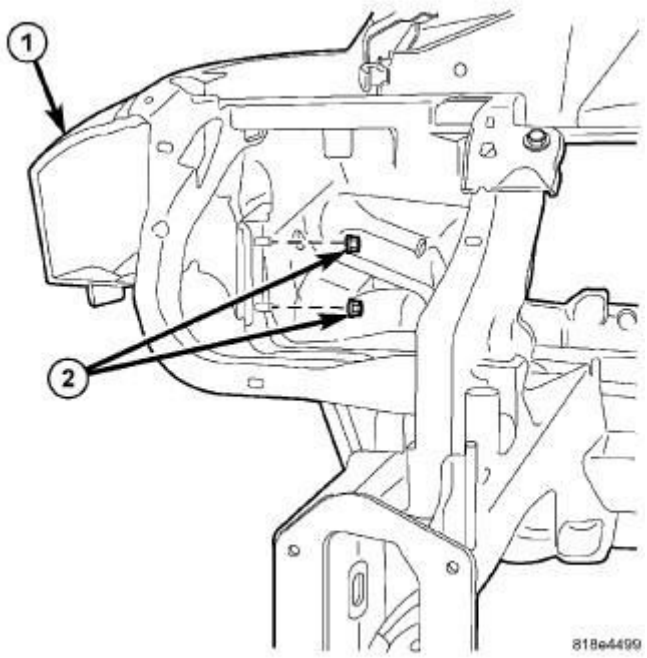

Fig. 176: Inner Nuts
Courtesy of CHRYSLER GROUP, LLC

1. Install the two inner nuts (2) loosely.

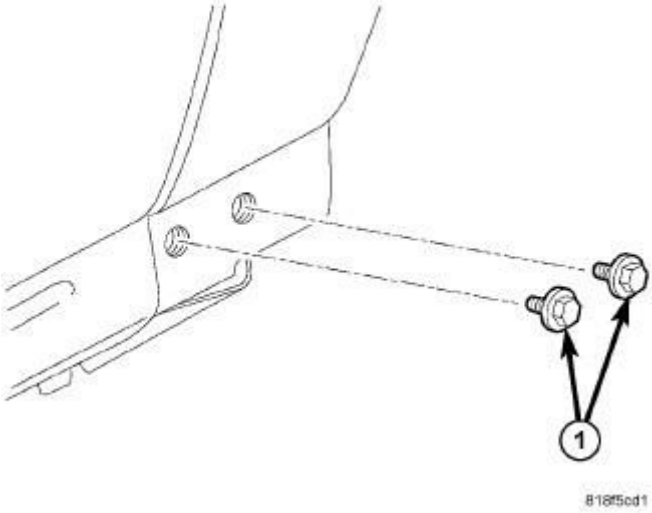

Fig. 177: Lower Bolts Next To Door Sill
Courtesy of CHRYSLER GROUP, LLC

2. Install the two lower bolts (1) next to the door, loosely.

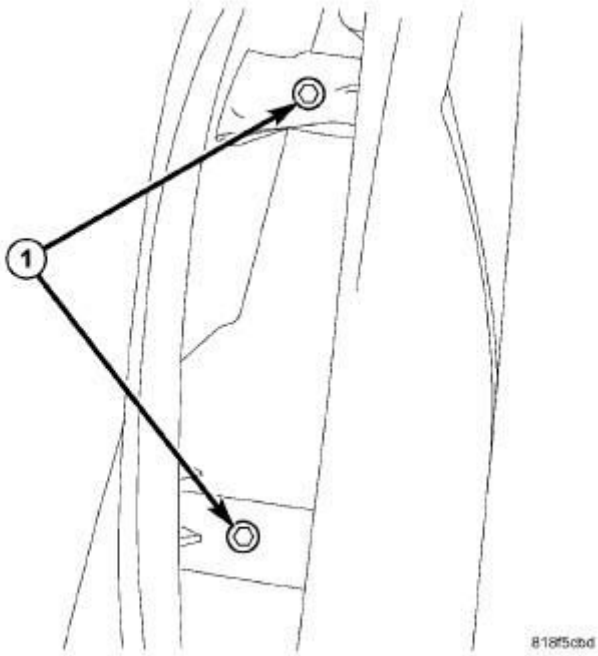

Fig. 178: Inner Bolts At Rear Of Wheel Well
Courtesy of CHRYSLER GROUP, LLC

3. Loosely install the two inner bolts (1) at the rear of the wheel well and adjust the fender to the correct gap and flush dimensions. Refer to **GAP AND FLUSH, SPECIFICATIONS**.
4. After correct fender gap and flush specifications are met, tighten all the fender fasteners to 14 N.m (10.5 ft. lbs.).

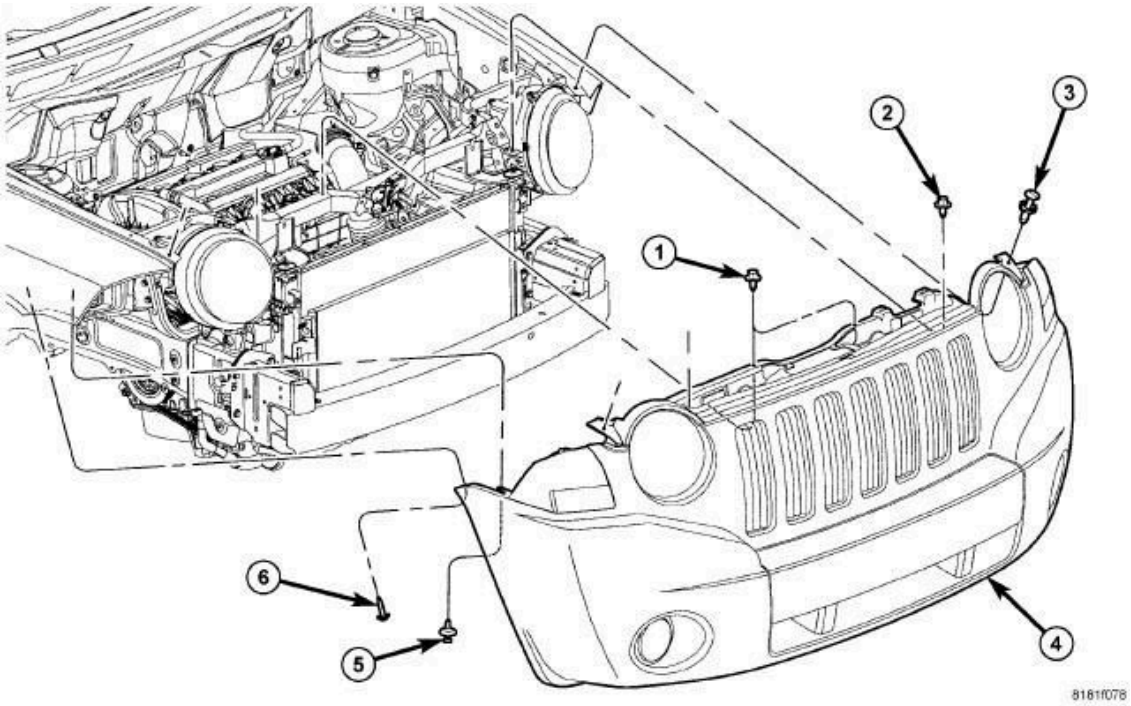

Fig. 179: Front Fascia Components (Compass)
Courtesy of CHRYSLER GROUP, LLC

NOTE: Compass shown, Patriot similar.

5. Install the fender to fascia fasteners (5 and 6).
6. Install the radio antenna, if equipped. Refer to **BODY AND CABLE, ANTENNA, INSTALLATION** and **BODY AND CABLE, ANTENNA, SATELLITE RADIO, INSTALLATION** .
7. Install the wheelhouse splash shield. Refer to **SHIELD, SPLASH, FRONT WHEELHOUSE, INSTALLATION** .
8. Install the radiator closure panel. Refer to **PANEL, CLOSURE, UPPER, INSTALLATION**.

MIRROR, OUTSIDE REARVIEW

REMOVAL

REMOVAL

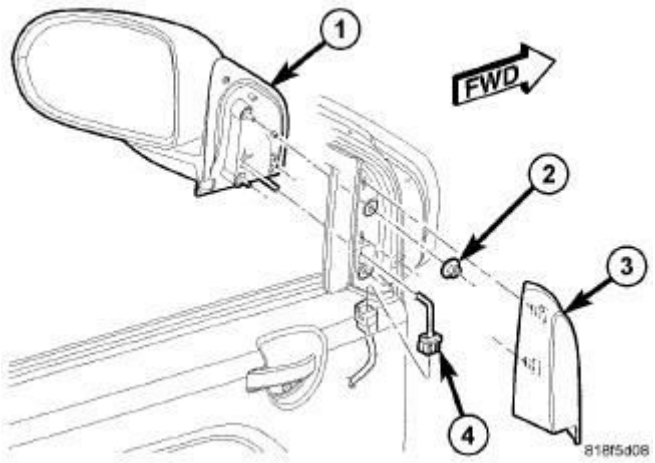

Fig. 180: Side View Mirror
Courtesy of CHRYSLER GROUP, LLC

1. Using a trim stick (special tool #C-4755, Trim Stick) or equivalent, remove the mirror flag trim (3).
2. Remove the nuts (2) and disconnect the electrical connectors (4).
3. Remove the mirror (1).

INSTALLATION

INSTALLATION

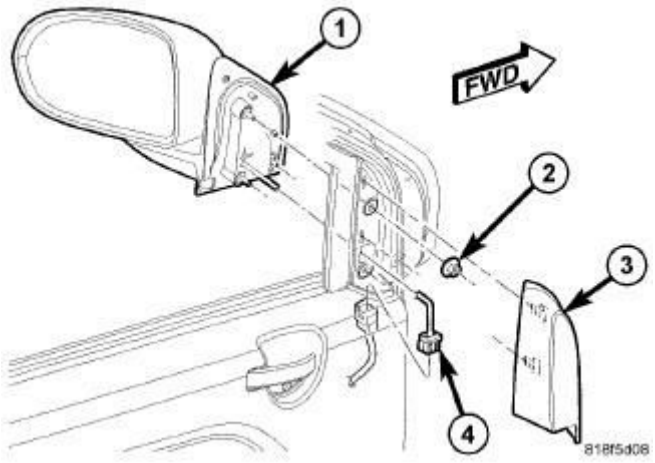

Fig. 181: Side View Mirror
Courtesy of CHRYSLER GROUP, LLC

1. Install the mirror (1).
2. Install the nuts (2) and tighten to 5 N.m (44 in. lbs.).
3. Connect the electrical connector (4).
4. Position the mirror trim flag (3) and seat the clips fully.

MOLDING, A-PILLAR

REMOVAL

REMOVAL

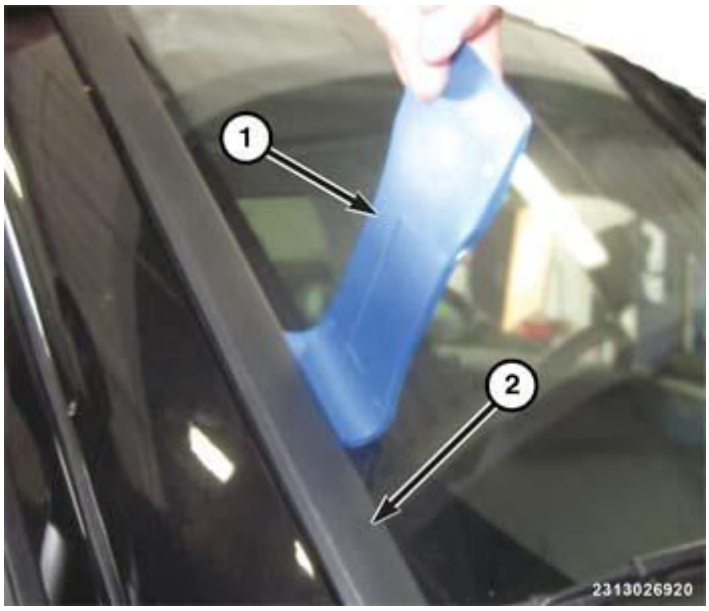

Fig. 182: Removing A-Pillar Molding

Courtesy of CHRYSLER GROUP, LLC

1. Using a trim stick (1) or equivalent, start at the bottom of the windshield A-pillar molding (2) and pry up to remove.

INSTALLATION

INSTALLATION

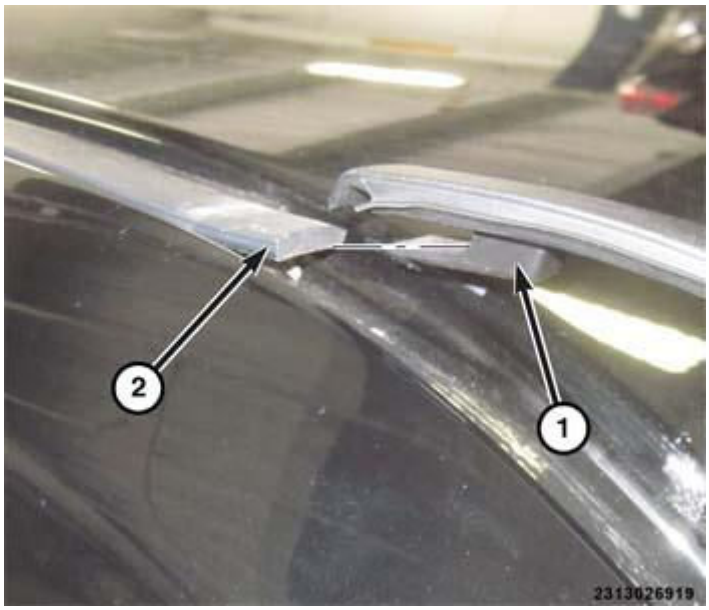

Fig. 183: Installing A-Pillar Molding
Courtesy of CHRYSLER GROUP, LLC

1. Starting at the top, engage the roof molding (2) into the windshield A-pillar molding (1) then snap the windshield A-pillar molding into clips.

MOLDING, BODY SIDE

REMOVAL

REMOVAL

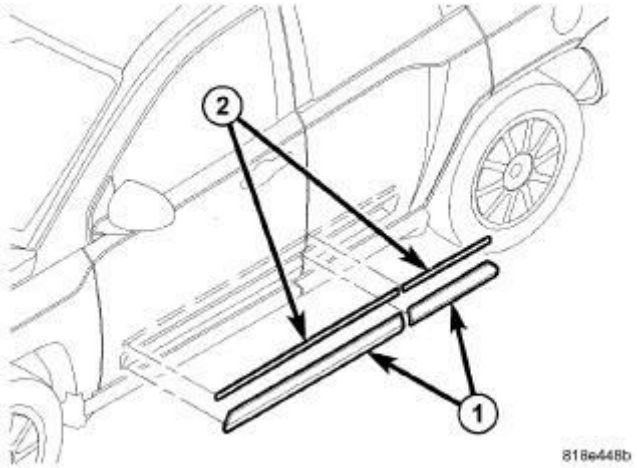

Fig. 184: Moldings
Courtesy of CHRYSLER GROUP, LLC

1. Apply a length of masking tape on the body, parallel to the top edge of the molding to use as a guide, if necessary.
2. Warm the affected adhesive type molding and body metal to approximately 38°C (100°F) using a suitable heat lamp or heat gun.
3. Pull stick-on molding (1) from painted surface.

INSTALLATION

INSTALLATION

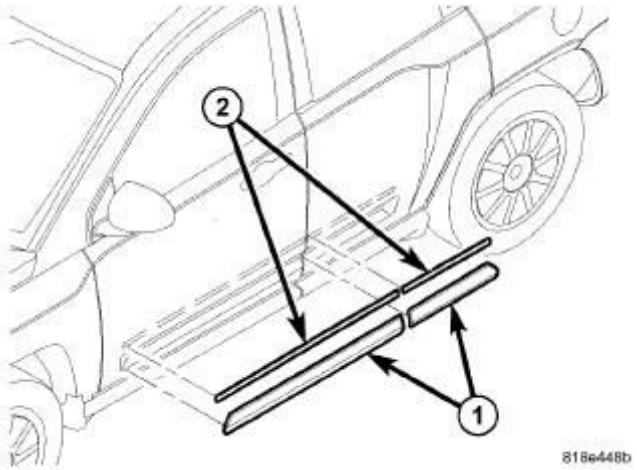

Fig. 185: Moldings
Courtesy of CHRYSLER GROUP, LLC

1. Clean body surface with MOPAR® Super Kleen solvent or equivalent. Wipe surface dry with lint free cloth.

2. Remove protective cover from tape on back of molding (2). Apply molding to body below the masking tape guide.
3. Remove masking tape guide and firmly press molding to body surface to assure adhesion.

NAMEPLATE

REMOVAL

REMOVAL

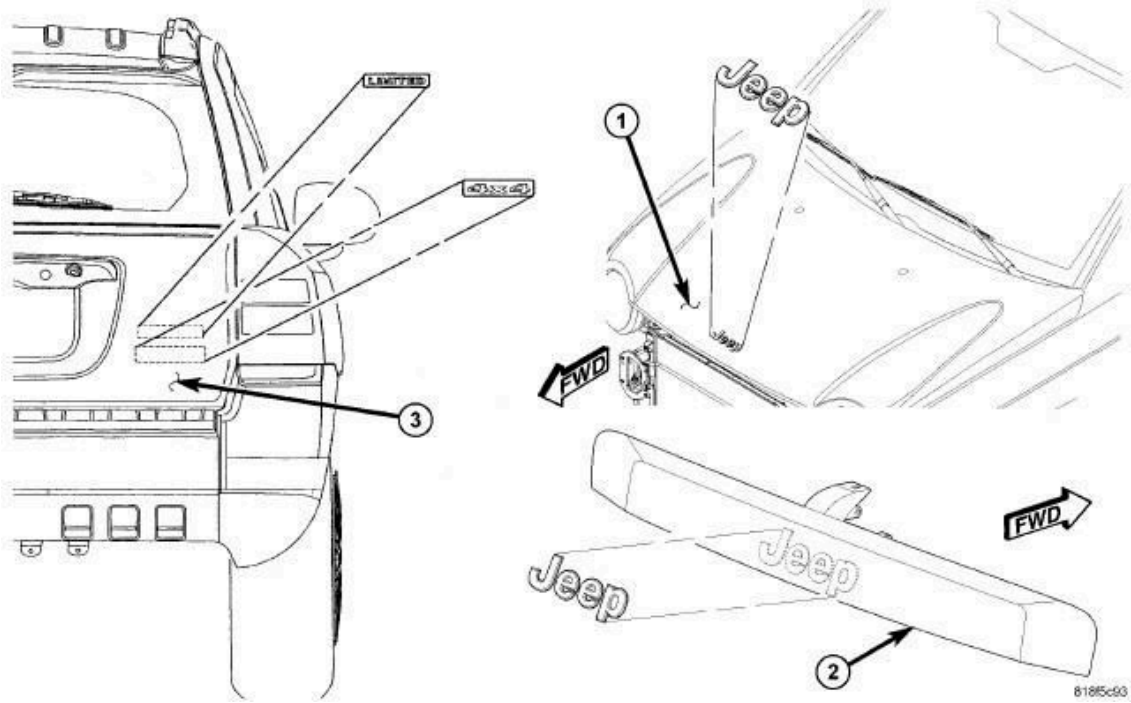

Fig. 186: Name Plates
Courtesy of CHRYSLER GROUP, LLC

1 - HOOD
2 - LIFTGATE HANDLE
3 - LIFTGATE

NOTE: Exterior nameplates are attached to body panels with adhesive tape.

1. Apply a length of masking tape on the body, parallel to the top edge of the nameplate to use as a guide, if necessary.
2. If temperature is below 21°C (70°F) warm emblem with a heat lamp or gun.

Do not exceed 52°C (120°F) when heating emblem.

3. Using a trim stick (special tool #C-4755, Trim Stick) or equivalent, from behind the emblem to separate the adhesive backing from the body.
4. Clean adhesive residue from body with MOPAR® Super Kleen solvent or equivalent.

INSTALLATION

INSTALLATION

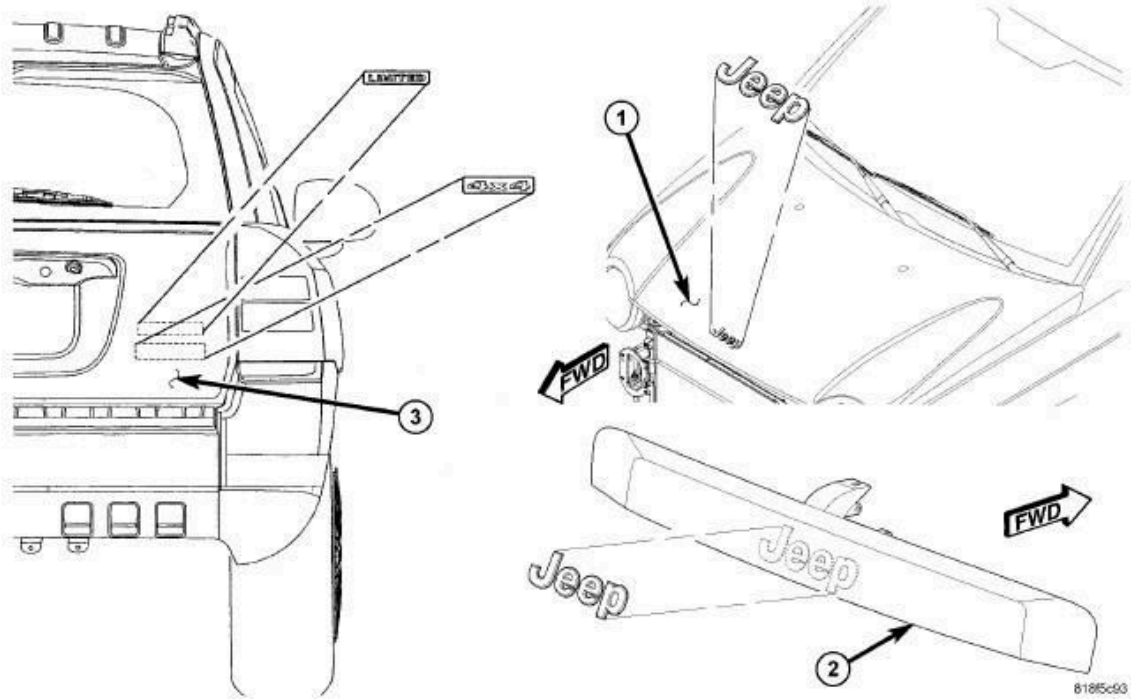

Fig. 187: Name Plates
Courtesy of CHRYSLER GROUP, LLC

1 - HOOD
2 - LIFTGATE HANDLE
3 - LIFTGATE

1. Remove carrier from adhesive tape on back of emblem.
2. Position emblem properly on body.
3. Press emblem firmly to body with palm of hand.
4. If temperature is below 21°C (70°F) warm emblem with a heat lamp or gun to assure adhesion. Do not exceed 52°C (120°F) when heating emblem.

PANEL, CLOSURE, UPPER

REMOVAL

REMOVAL

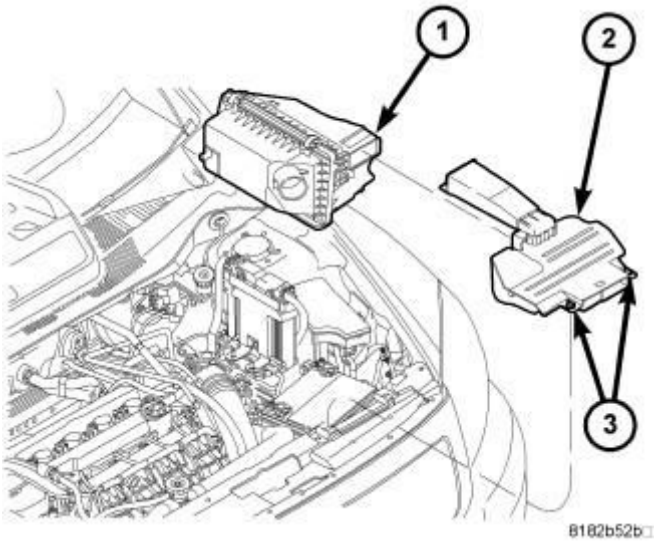

Fig. 188: Air Cleaner Box And Snorkel
Courtesy of CHRYSLER GROUP, LLC

1. Rotate the two retaining clips (3) and remove the air cleaner snorkel (2) from air cleaner box (1).

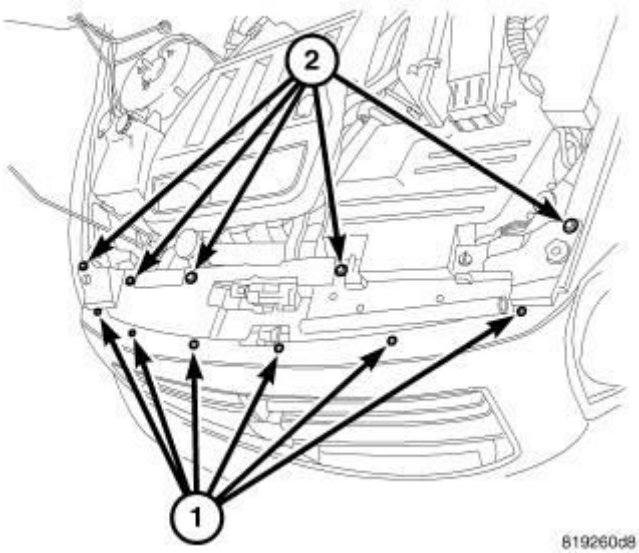

Fig. 189: Fasteners- Upper Fascia
Courtesy of CHRYSLER GROUP, LLC

2. Remove fascia fasteners (1).
3. Remove closure panel fasteners (2).
4. Remove closure panel from vehicle.

INSTALLATION

INSTALLATION

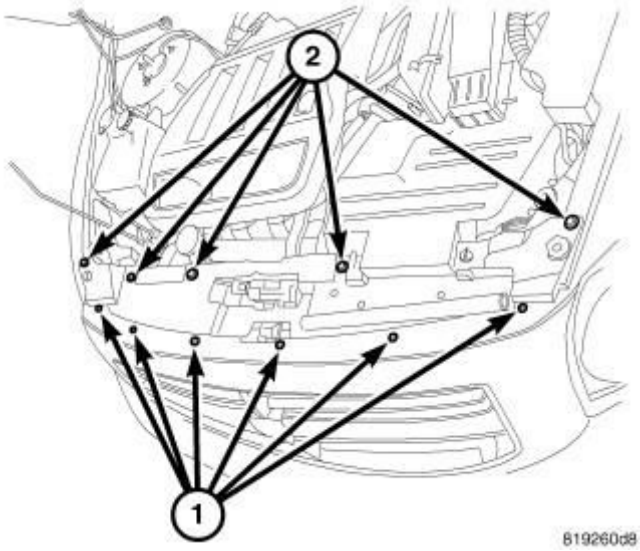

Fig. 190: Fasteners- Upper Fascia
Courtesy of CHRYSLER GROUP, LLC

1. Slide closure panel under fascia aligning holes.
2. Tighten fascia fasteners (1).
3. Insert closure panel fasteners (2) and tighten.

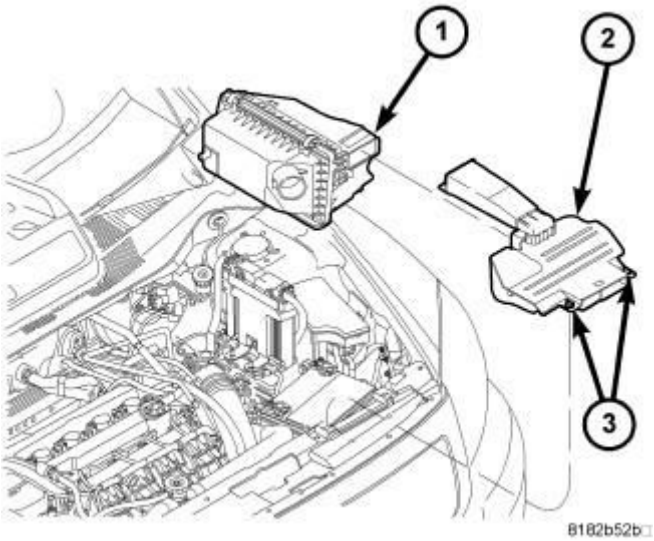

Fig. 191: Air Cleaner Box And Snorkel
Courtesy of CHRYSLER GROUP, LLC

4. Insert air cleaner snorkel into airbox opening. Rotate the two retaining clips (3) and fasten into closure panel ensuring fit.

RACK, LUGGAGE

REMOVAL

REMOVAL

COMPASS

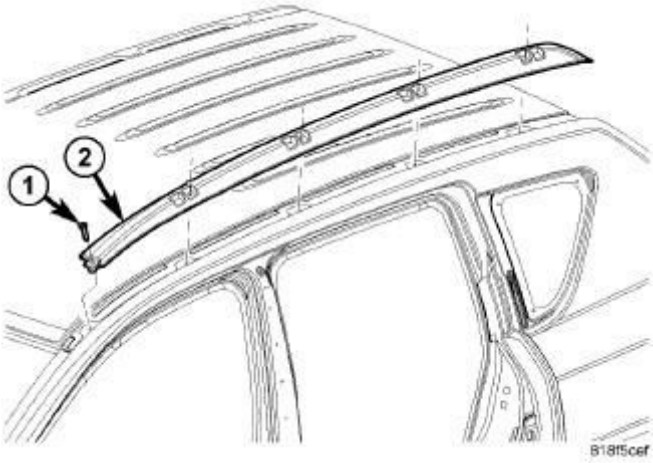

Fig. 192: Luggage Rack
Courtesy of CHRYSLER GROUP, LLC

1. Remove the screws (1) and remove the luggage rack rails (2).

PATRIOT

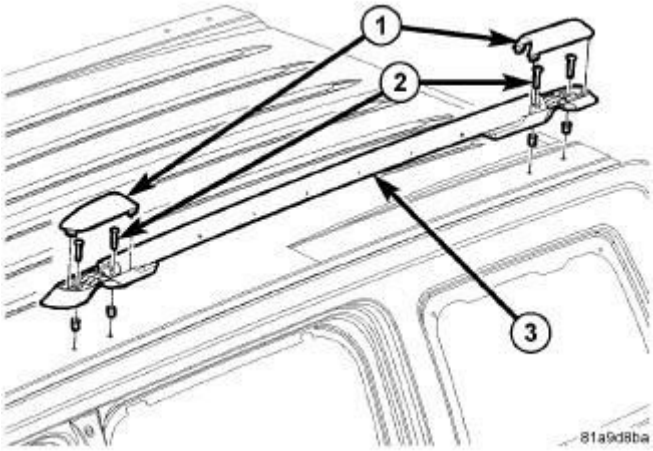

Fig. 193: Luggage Rack Rails & End Caps
Courtesy of CHRYSLER GROUP, LLC

1. Using a trim stick (special tool #C-4755, Trim Stick) or equivalent, remove the two end caps (1).

2. Remove the screws (2) and remove the luggage rack rails (3).

INSTALLATION

INSTALLATION

COMPASS

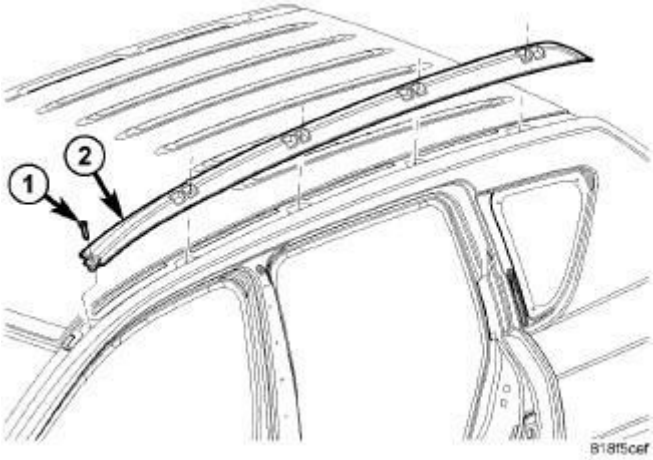

Fig. 194: Luggage Rack
Courtesy of CHRYSLER GROUP, LLC

1. Install the roof rack rails (2) and install the screws (1).
2. Tighten the screws to 4 N.m (35 in. lbs.).

PATRIOT

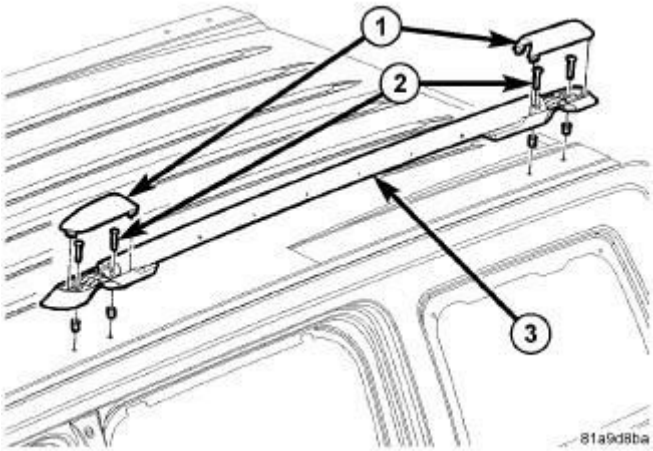

Fig. 195: Luggage Rack Rails & End Caps
Courtesy of CHRYSLER GROUP, LLC

1. Install the roof rack rails (3) and install the screws (2).

2. Tighten the screws to 4 N.m (35 in. lbs.).
3. Position the end caps (1) back into place and seat fully.

SHIELD, SPLASH, FRONT WHEELHOUSE

REMOVAL

REMOVAL

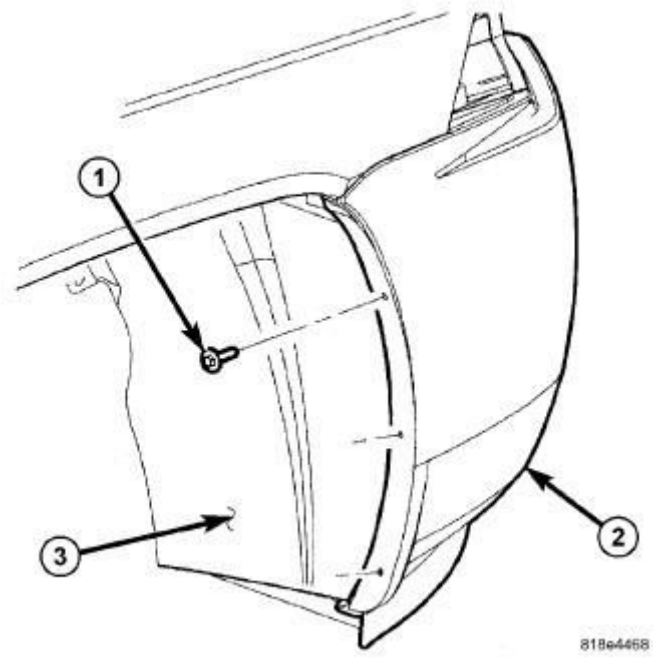

Fig. 196: Front Fascia Components
Courtesy of CHRYSLER GROUP, LLC

1. Remove the front fasteners (1).

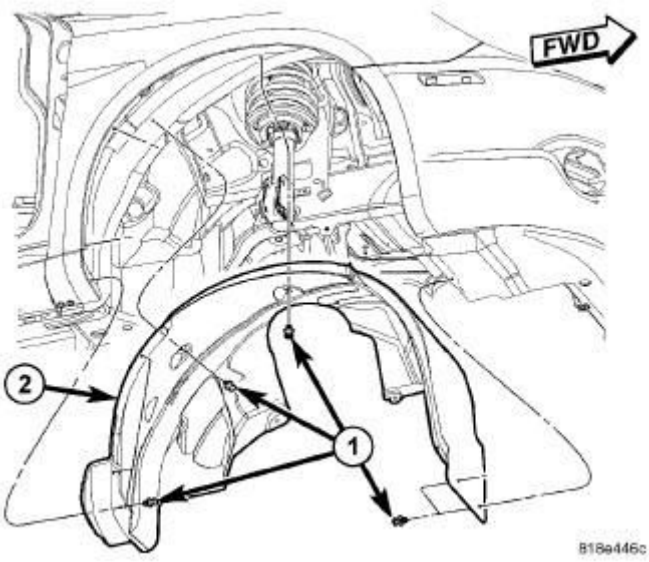

Fig. 197: Splash Shield
Courtesy of CHRYSLER GROUP, LLC

2. Remove the remaining fasteners (3 - 5) and remove the splash shield (6).

INSTALLATION

INSTALLATION

NOTE: Left hand side has 2 additional push pins as it has additional material to cover the fuel filler tube.

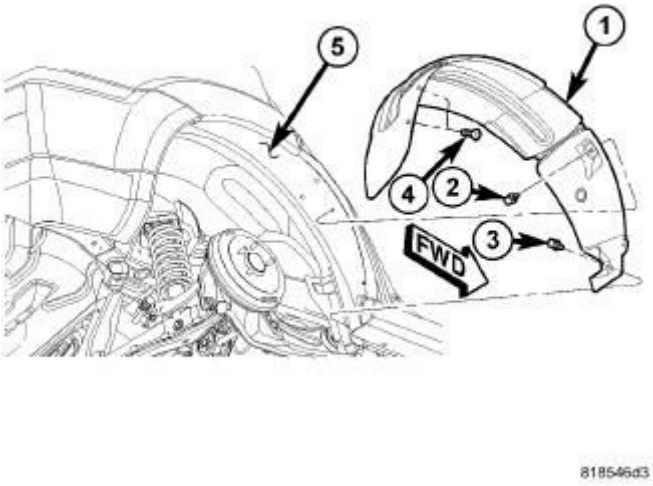

Fig. 198: Rear Splash Shield
Courtesy of CHRYSLER GROUP, LLC

1. Place splash shield (1) up to wheel house (5) and align splash shield holes with fender.
2. Install fasteners (4).
3. Install push pins (2) and (3).
4. Install the rear wheels. Refer to **INSTALLATION** .

SHIELD, SPLASH, REAR WHEELHOUSE

REMOVAL

REMOVAL

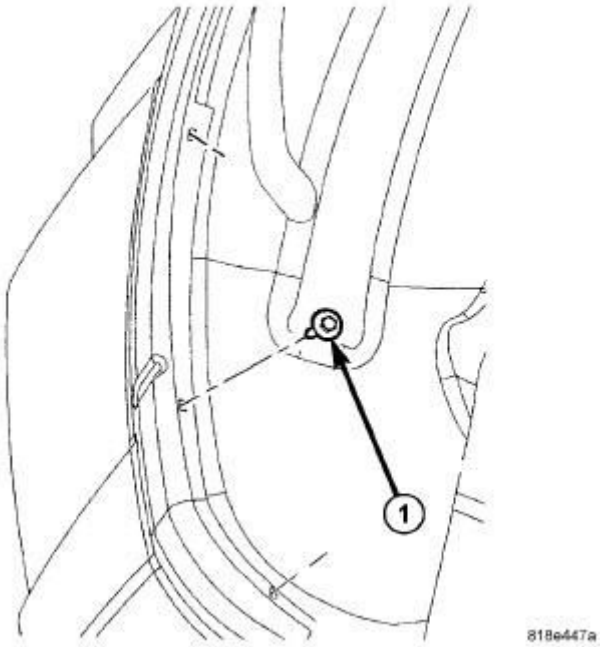

Fig. 199: Rear Fascia Splash Shield Fasteners
Courtesy of CHRYSLER GROUP, LLC

1. Remove the fasteners (1) along the outer edge of the splash shield.

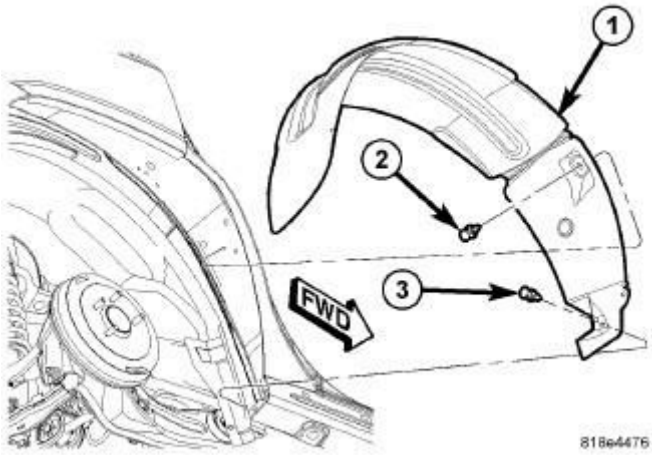

Fig. 200: Front Push Pin Fasteners
Courtesy of CHRYSLER GROUP, LLC

2. Remove the front push pin fasteners (2 - 3).

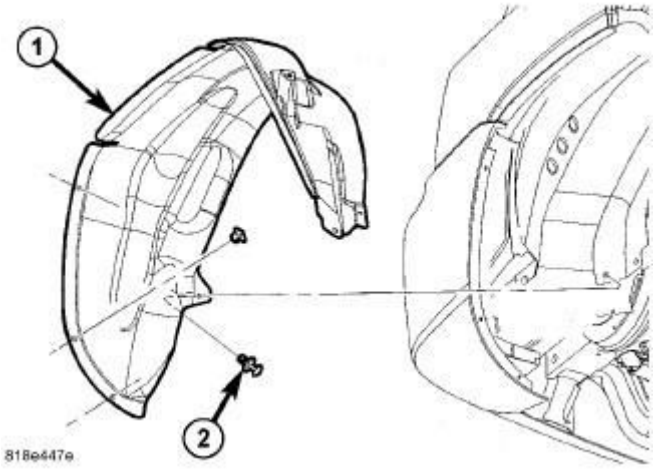

Fig. 201: Rear Push Pin Fasteners
Courtesy of CHRYSLER GROUP, LLC

3. Remove the rear push pin fasteners (2).

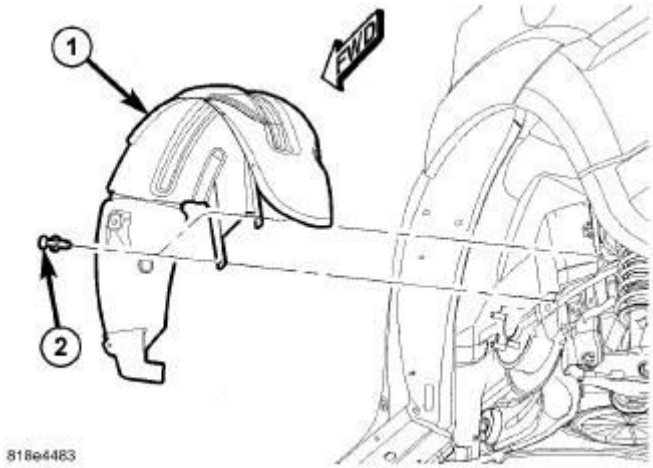

Fig. 202: Splash Shield & Inner Push Pin Fasteners
Courtesy of CHRYSLER GROUP, LLC

4. Remove the inner push pin fasteners and remove the splash shields (1).

INSTALLATION

INSTALLATION

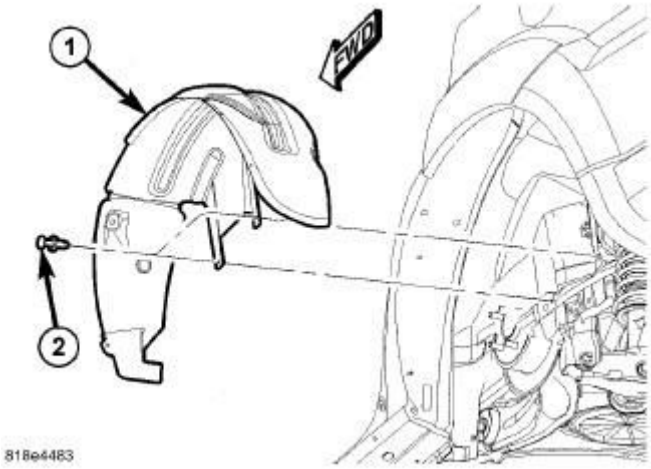

Fig. 203: Splash Shield & Inner Push Pin Fasteners
Courtesy of CHRYSLER GROUP, LLC

1. Install the splash shield (1) and install the inner push pin fasteners.

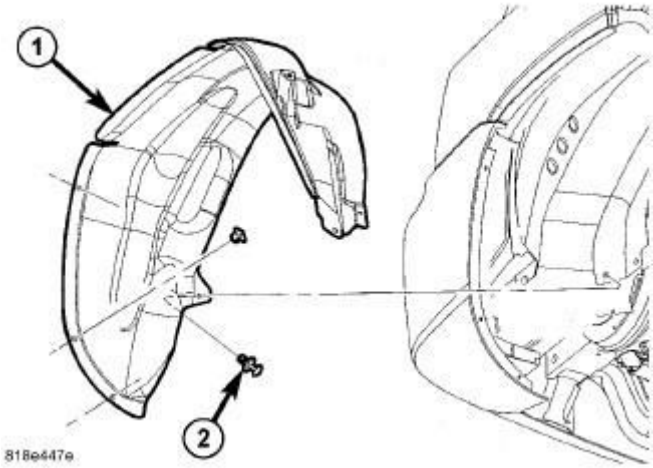

Fig. 204: Rear Push Pin Fasteners
Courtesy of CHRYSLER GROUP, LLC

2. Install the rear fastener (2).

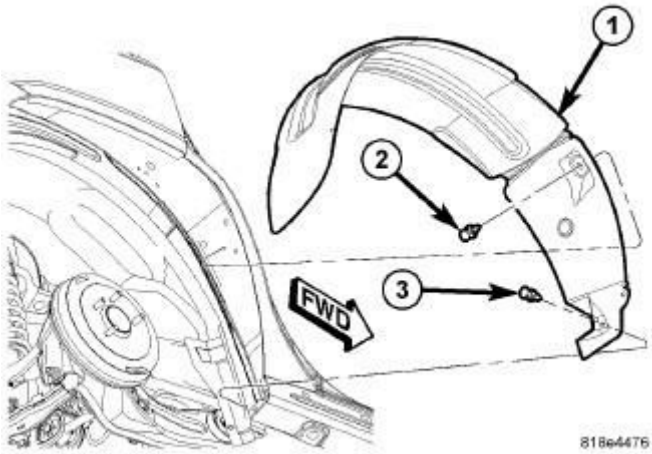

Fig. 205: Front Push Pin Fasteners
Courtesy of CHRYSLER GROUP, LLC

3. Install the front push pin fasteners (2 - 3).

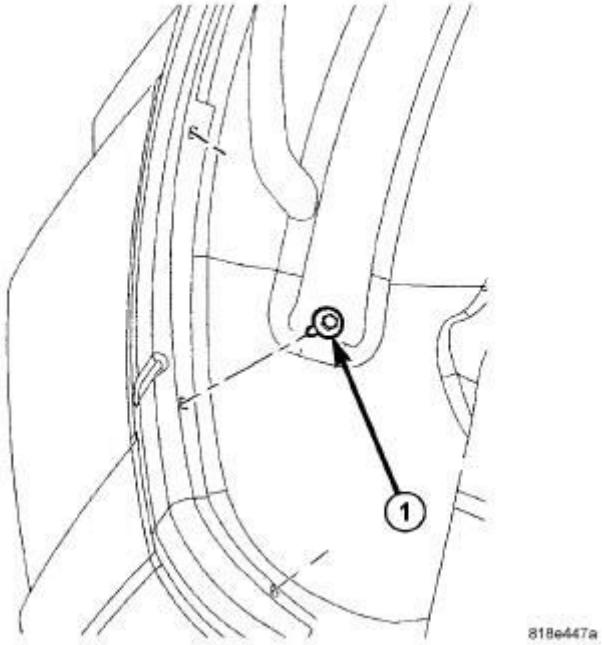

Fig. 206: Rear Fascia Splash Shield Fasteners
Courtesy of CHRYSLER GROUP, LLC

4. Install the fasteners (1) along the outer edge of the splash shield.

SPOILER, LIFTGATE

REMOVAL

REMOVAL

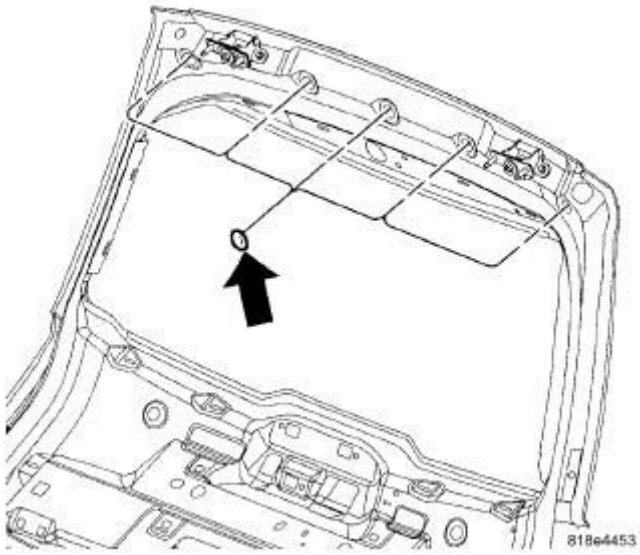

Fig. 207: Trim Plugs
Courtesy of CHRYSLER GROUP, LLC

1. Remove the liftgate trim plugs.

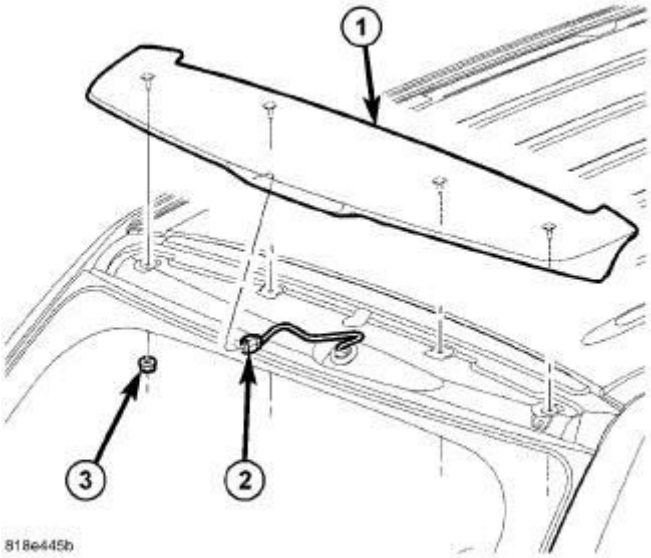

Fig. 208: Spoiler
Courtesy of CHRYSLER GROUP, LLC

2. Remove the nuts (3).
3. Remove the spoiler (1) and disconnect the electrical connector.

INSTALLATION

INSTALLATION

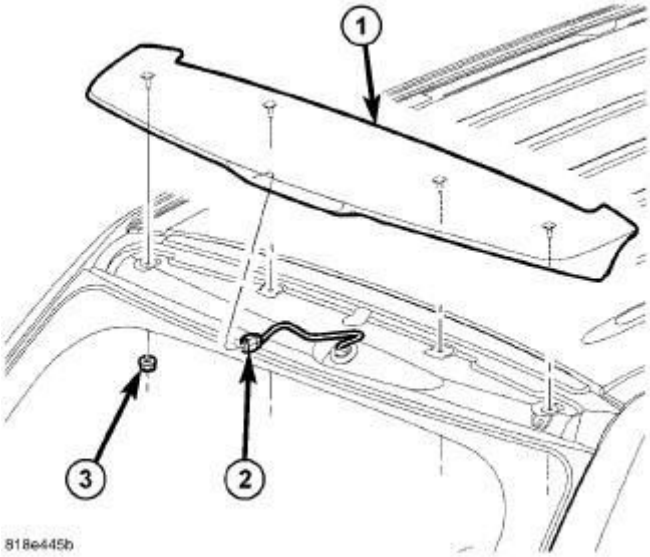

Fig. 209: Spoiler
Courtesy of CHRYSLER GROUP, LLC

1. Connect the electrical connector (2) and install the spoiler (1).
2. Install the nuts (3) and tighten to 8.5 N.m (75 in. lbs.)

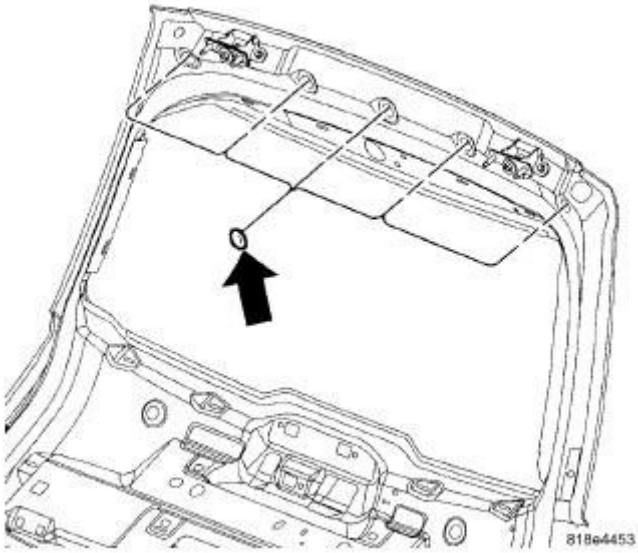

Fig. 210: Trim Plugs
Courtesy of CHRYSLER GROUP, LLC

3. Install the trim plugs.

HOOD

REMOVAL

REMOVAL

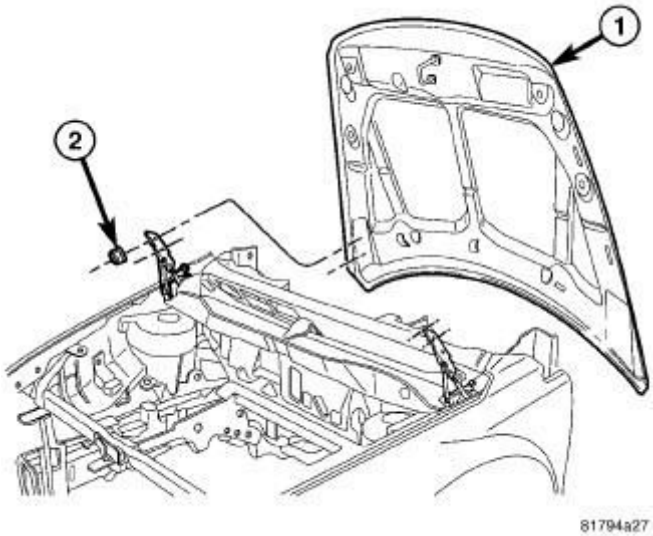

Fig. 211: Hood
Courtesy of CHRYSLER GROUP, LLC

1. Raise hood.
2. Using a grease pencil or equivalent, mark location of hood hinges on hood for installation alignment.
3. Remove bolts (2) attaching hinges to hood.
4. With the aid of a helper, remove hood (1) from vehicle.

INSTALLATION

INSTALLATION

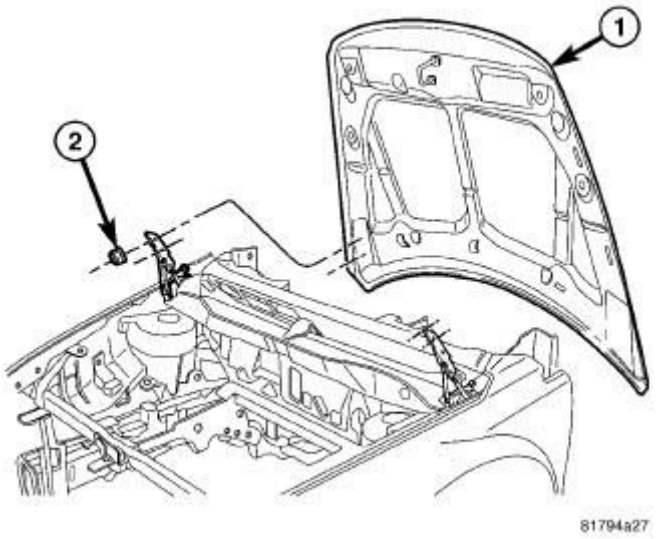

Fig. 212: Hood
Courtesy of CHRYSLER GROUP, LLC

NOTE: The Vehicle Emission Control Information (VECI) label(s) must be in place for the life of the vehicle. When replacing the component in which the VECI label is adhered, a new VECI label must also be adhered to the new component.

1. Position hood (1) on hinges.
2. Install bolts (2) finger-tight.
3. Align hinges with installation reference marks made previously and tighten bolts to 20 N.m (15 ft. lbs.).

4. If required, adjust the hood to the correct position. Refer to **GAP AND FLUSH, SPECIFICATIONS**.

CABLE, HOOD RELEASE

REMOVAL

REMOVAL

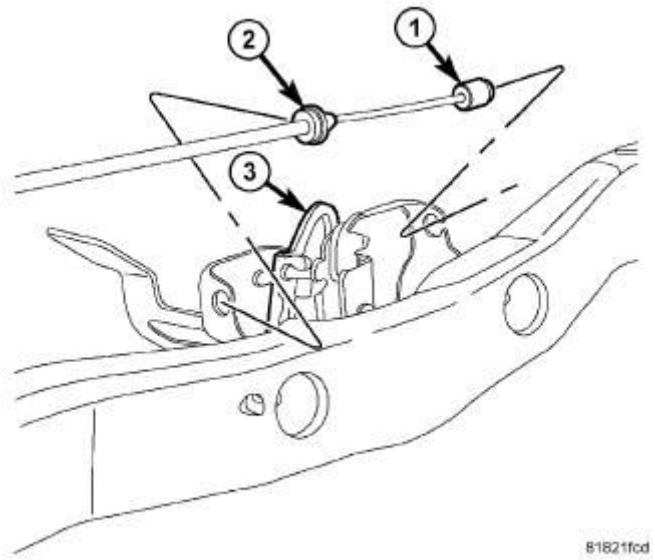

Fig. 213: Latch Cable
Courtesy of CHRYSLER GROUP, LLC

1. Disconnect the latch cable (1) from the latch (3).
2. Separate the cable (2) from the latch (3).

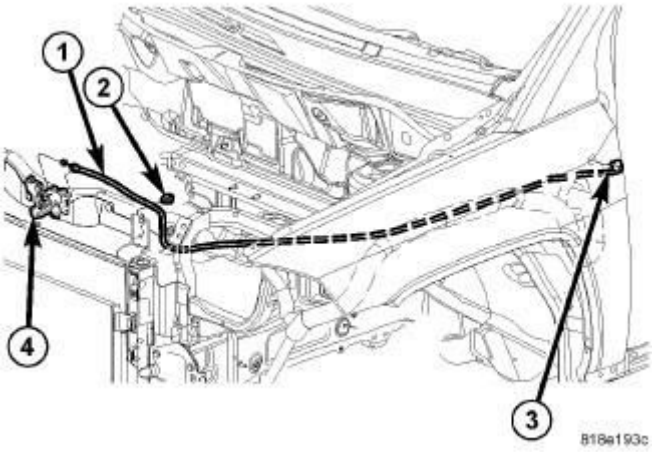

Fig. 214: Release Cable
Courtesy of CHRYSLER GROUP, LLC

3. Release the push pin fasteners (2).

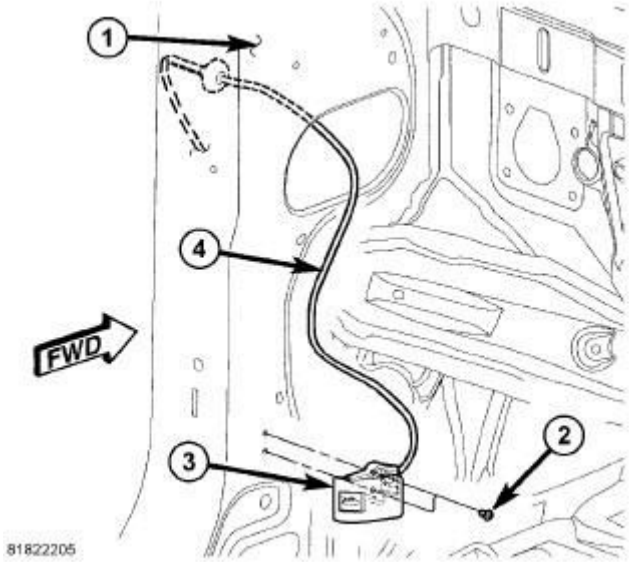

Fig. 215: Hood Release Lever
Courtesy of CHRYSLER GROUP, LLC

4. Remove the cowl trim panel. Refer to **PANEL, COWL TRIM, SIDE, REMOVAL**.
5. Remove the screws (2) and separate the handle (3) from the cowl.
6. Remove the cable from the cowl panel from the inside of the car.

INSTALLATION

INSTALLATION

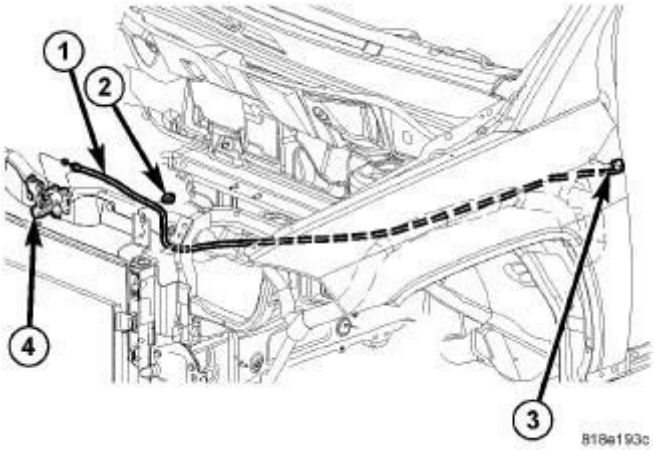

Fig. 216: Release Cable
Courtesy of CHRYSLER GROUP, LLC

1. Install the cable (1) and route through the cowl panel (3).
2. Install the push pin fastener (2).

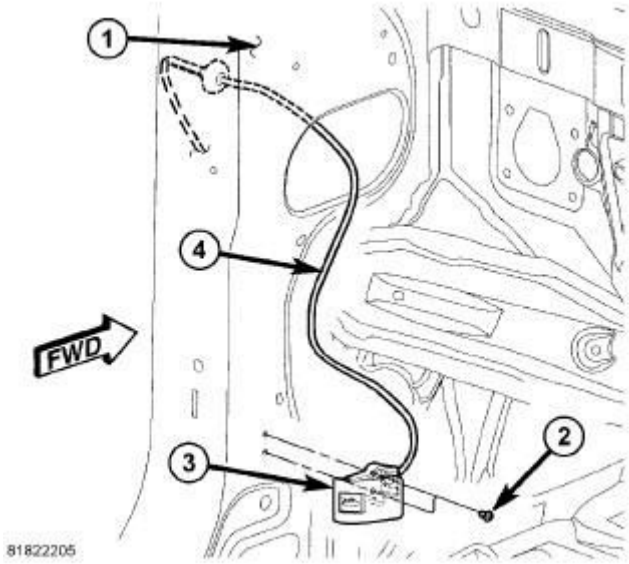

Fig. 217: Hood Release Lever
Courtesy of CHRYSLER GROUP, LLC

3. Install the handle (3) and install the screws (2).
4. Install the cowl trim panel. Refer to **PANEL, COWL TRIM, SIDE, REMOVAL**.

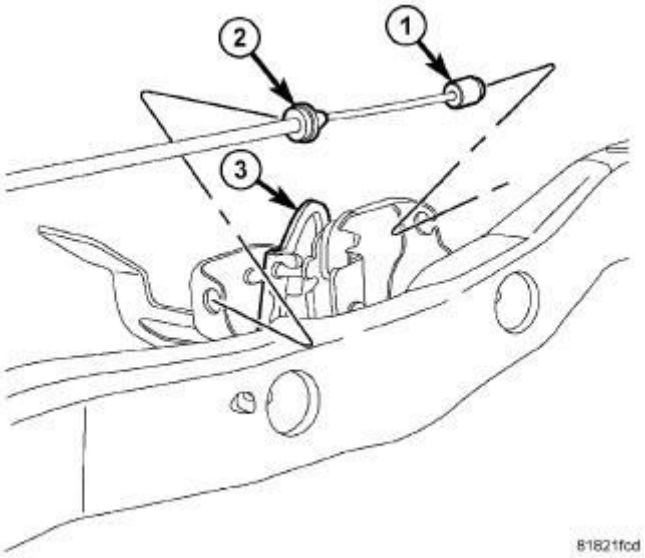

Fig. 218: Latch Cable
Courtesy of CHRYSLER GROUP, LLC

5. Connect the hood latch cable (1 and 2) to the hood latch (3).

HINGE, HOOD

REMOVAL

REMOVAL

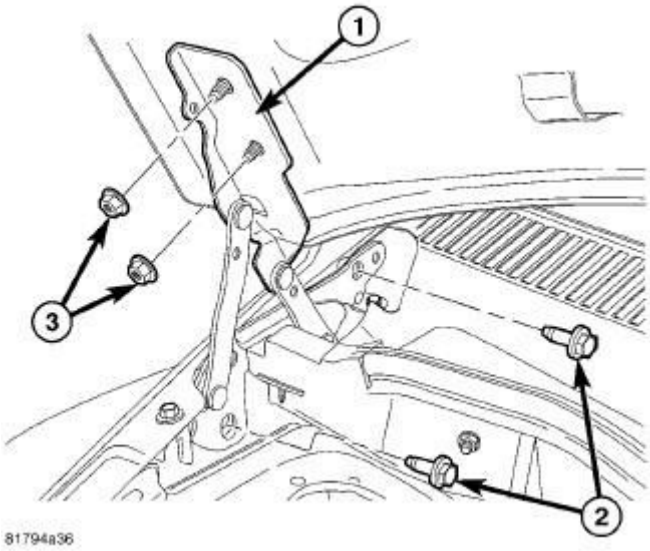

Fig. 219: Hood Hinge
Courtesy of CHRYSLER GROUP, LLC

NOTE: It is not necessary to remove the hood to replace the hood hinges. Hood hinges can be replaced one at a time.

1. Using a grease pencil or equivalent, mark the position of the hood hinge (1) on the hood for the hinge being serviced.
2. Support the hood and remove the bolts (2) that secures the hood hinge (1) to the front fender.
3. Remove the nuts (3) that secure the hood hinge (1) to the hood.

INSTALLATION

INSTALLATION

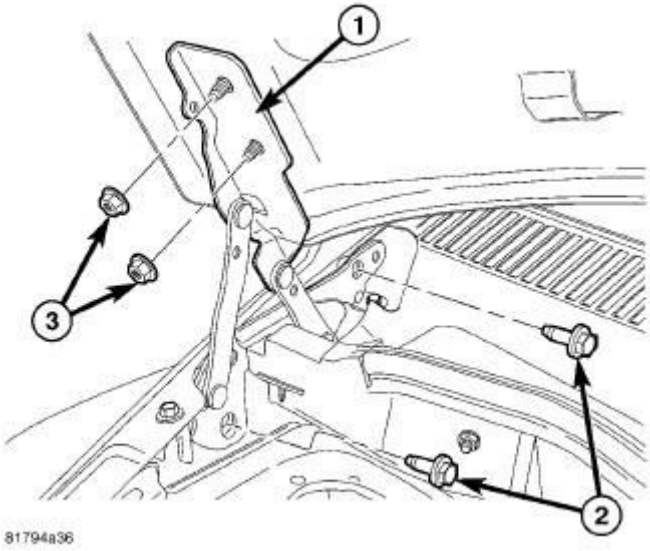

Fig. 220: Hood Hinge
Courtesy of CHRYSLER GROUP, LLC

NOTE: It is not necessary to remove the hood to replace the hood hinges. Hood hinges can be replaced one at a time.

1. Position the hood hinge (1) onto the hood.
2. Align the hood to the hood hinge using the reference marks made during the removal procedure and Install the nuts (3) that secure the hood hinge (1) to the hood. Tighten the bolts to 20 N.m (15 ft. lbs.).
3. Install the bolts (2) that secures the hood hinge (1) to the fender rail.
4. Align the hood hinge to the hood and the fender rail using the reference marks made during the removal procedure and tighten the bolts to 20 N.m (15 ft. lbs.).
5. If required, adjust the hood to the correct position. Refer to **GAP AND FLUSH, SPECIFICATIONS**.

LATCH, HOOD

REMOVAL

REMOVAL

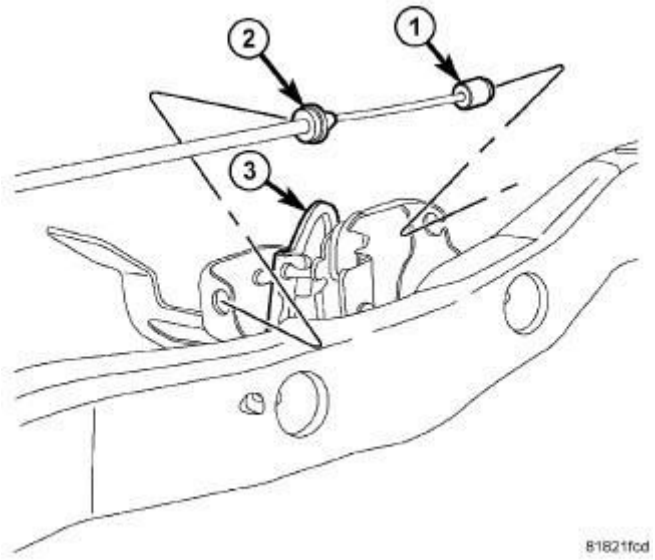

Fig. 221: Latch Cable
Courtesy of CHRYSLER GROUP, LLC

1. Using a grease pencil or equivalent, mark the position of the hood latch (3) on the upper radiator crossmember.
2. Disconnect the latch cable (1) from the latch (3).
3. Separate the cable (2) from the latch (3).

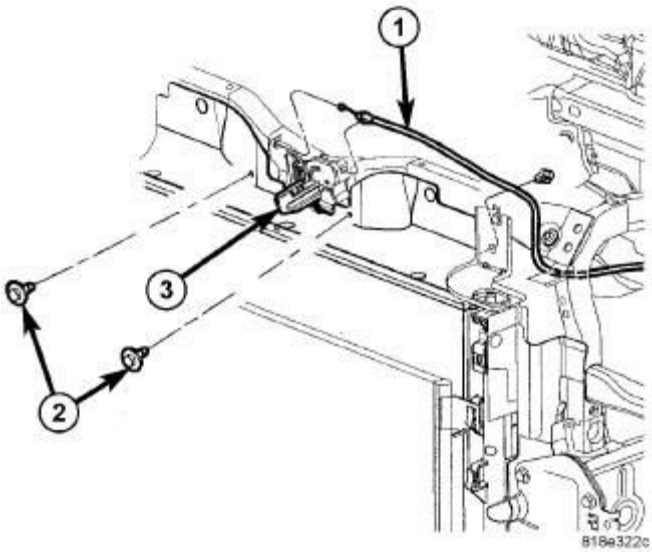

Fig. 222: Latch
Courtesy of CHRYSLER GROUP, LLC

4. Remove the bolts (2) and remove the latch (3).

INSTALLATION

INSTALLATION

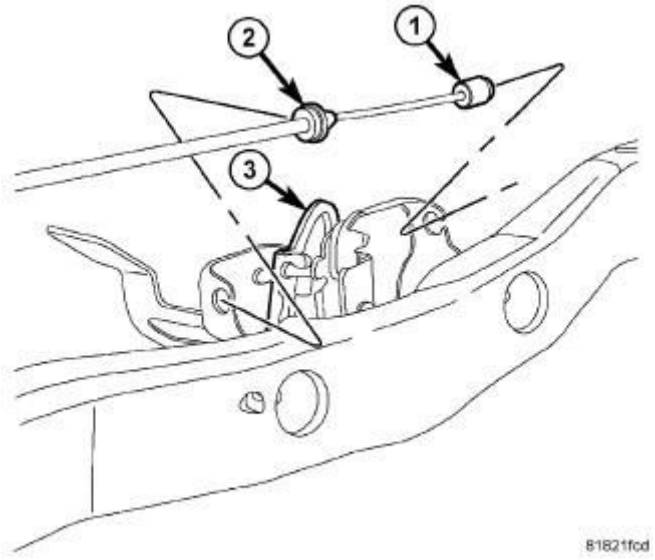

Fig. 223: Latch Cable
Courtesy of CHRYSLER GROUP, LLC

1. Connect the hood latch cable (1 and 2) to the hood latch (3).

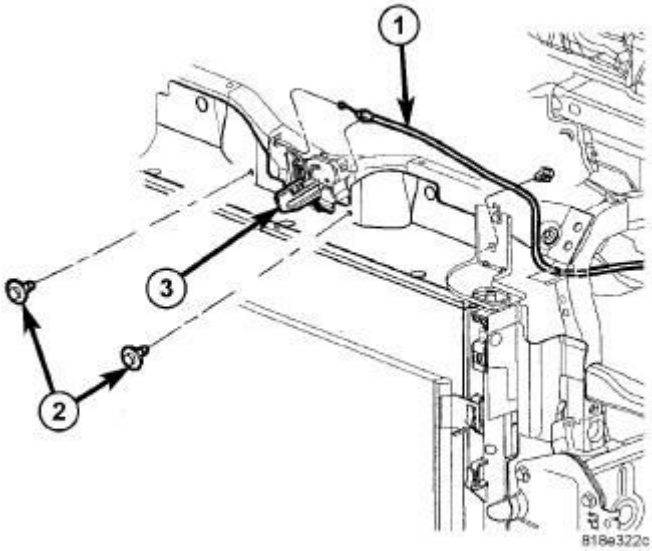

Fig. 224: Latch
Courtesy of CHRYSLER GROUP, LLC

2. Position the hood latch (3) to the upper radiator crossmember and loosely install the two bolts (2) that secure the latch to the crossmember.
3. Align the hood latch (3) to the upper radiator crossmember using the reference marks made during the removal procedure and tighten the bolts to

13.5 N.m (10 ft. lbs.).

4. If required, adjust the hood to the correct position. Refer to **GAP AND FLUSH, SPECIFICATIONS**.

INSTRUMENT PANEL

WARNING

WARNING

FRONT AIRBAG SYSTEM

This system contains a sensitive, complex electronic unit. Disconnect and isolate the battery negative remote cable before beginning airbag system component removal or installation procedures. This will disable the airbag system. Failure to disconnect the battery could result in accidental airbag deployment, personal injury, or death.

Allow system capacitor to discharge for two minutes before removing airbag components.

Do not place an intact undeployed airbag face down on a solid surface, the airbag will propel into the air if accidentally deployed and could result in personal injury or death. When carrying or handling an undeployed airbag, the trim side of the airbag should be pointing toward the body to minimize possibility of injury or death if accidental deployment occurs.

Replace airbag system components with Mopar® replacement parts only. Substitute parts may appear interchangeable, but internal differences may result in inferior occupant protection, personal injury or death.

Wear safety glasses, rubber gloves, and long sleeved clothing when cleaning powder residue from the vehicle after an airbag deployment. A powder residue emitted from a deployed airbag can cause skin irritation. Flush affected area with cool water if irritation is experienced. If nasal or throat irritation is experienced, exit the vehicle for fresh air until the irritation ceases. If irritation continues, see a physician.

Do not use a replacement airbag that is not in the original packaging, improper deployment, personal injury or death may result.

The factory installed fasteners, screws and bolts used to fasten airbag components are specifically designed for the airbag system. Do not use substitute fasteners, use only original equipment fasteners listed in the parts catalog when fastener replacement is required.

Airbags should be stored in a cool, dry place, away from excessive heat and static electrical activity with the fabric airbag facing up. If not, a premature deployment can result in personal injury or death.

Please refer to the Hazardous Substance Control System for proper disposal. Dispose of deployed air bags in a manner consistent with state, provincial, local, and federal regulations.

SIDE IMPACT AIRBAG SYSTEM

The side impact airbag system contains sensitive, complex electronic units. Before attempting to diagnose or service any side impact airbag system components, you must first disconnect and isolate the battery negative remote cable. This is the only sure way to disable the side impact airbag system. Failure to do this could result in accidental side impact airbag module deployment and possible personal injury or death.

Allow system capacitor to discharge for two minutes before removing airbag components.

Do not place a non-deployed side airbag face down on a hard surface, the airbag will propel into the air if accidentally deployed, and could result in personal injury or death.

Do not attempt to dismantle a side impact airbag or tamper with its inflator. Do not puncture, incinerate, or bring into contact with electricity. Do not store at temperatures exceeding 93° C (200° F).

Replace side impact airbag system components only with parts specified in the Mopar® parts catalog. Substitute parts may appear interchangeable, but internal differences may result in inferior occupant protection.

The fasteners, screws, and bolts originally used for the side impact airbag system components are specifically designed for the side impact airbag system. They must never be replaced with any substitutes. Any time a new fastener is needed, replace it with the correct fasteners provided in the

service package or specified in the Mopar® parts catalog.

Deployed and non-deployed airbags may or may not have live pyrotechnic material within the airbag inflator. Do not dispose of driver, passenger, or side airbags unless you are sure of complete deployment. Please refer to the Hazardous Substance Control System for proper disposal. Dispose of deployed airbags in a manner consistent with state, provincial, local, and federal regulations.

LOWER ANCHOR AND TETHER FOR CHILDREN

During, and following, any child restraint anchor service, due to an impact event or vehicle repair, carefully inspect all mounting hardware, tether straps, and anchors for proper installation, operation, or damage. If a child restraint anchor is found damaged in any way, the anchor must be replaced.

BEZEL, INSTRUMENT CLUSTER

REMOVAL

REMOVAL

NOTE: The cluster bezel is integral to the instrument panel top cover. The top cover must be removed in order to service the cluster. Refer to COVER, INSTRUMENT PANEL, REMOVAL.

BEZEL, INSTRUMENT PANEL, CENTER

REMOVAL

REMOVAL

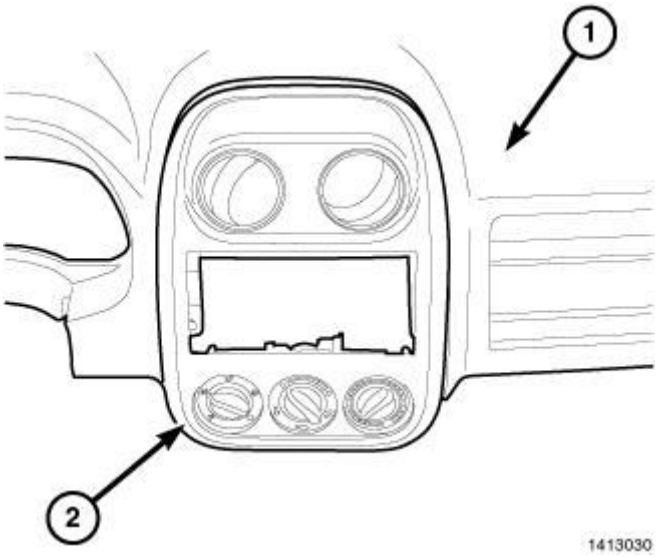

Fig. 225: Identifying Center Bezel
Courtesy of CHRYSLER GROUP, LLC

1. Disconnect the negative battery cable.

CAUTION: Use caution when pulling out the center bezel, damage may occur to the plastic clips or gear posts.

2. Using trim stick (special tool #C-4755, Trim Stick) or equivalent, carefully pry the center bezel (2) away from the instrument panel (1).

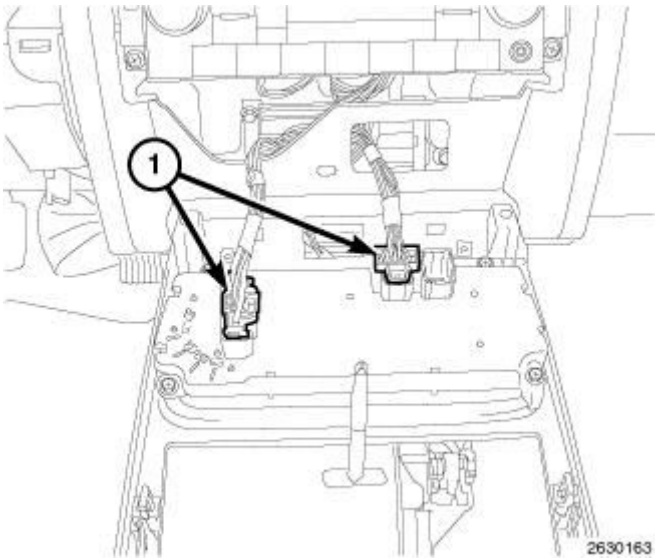

Fig. 226: Identifying Electrical Connectors
Courtesy of CHRYSLER GROUP, LLC

3. Disconnect the HVAC controller electrical connectors (1). Refer to **CONTROL, A/C AND HEATER, REMOVAL** .

INSTALLATION

INSTALLATION

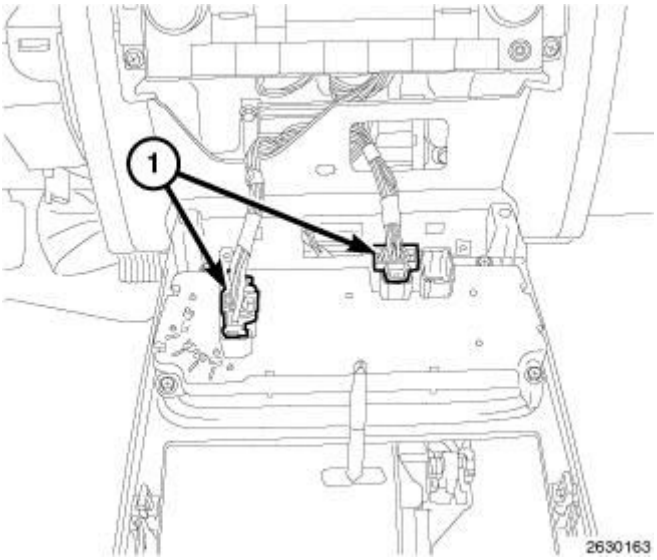

Fig. 227: Identifying Electrical Connectors
Courtesy of CHRYSLER GROUP, LLC

1. Connect the HVAC electrical connectors (1). Refer to **CONTROL, A/C AND HEATER, INSTALLATION** .

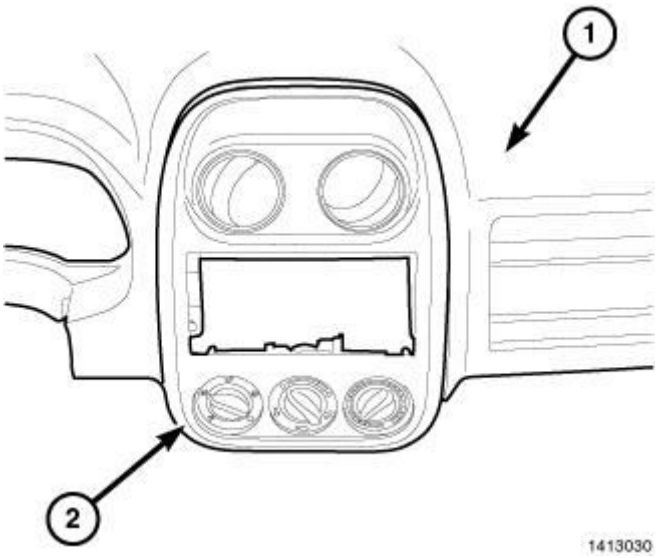

Fig. 228: Identifying Center Bezel
Courtesy of CHRYSLER GROUP, LLC

2. Align and position the center bezel (2) onto the I/P (1) and hand tap to seat the retaining clips fully.
3. Reconnect the negative battery cable.

COVER, INSTRUMENT PANEL

REMOVAL

COVER-UPPER INSTRUMENT PANEL

WARNING: Disable the airbag system before attempting any steering wheel, steering column, or instrument panel component diagnosis or service. Disconnect and isolate the negative battery (ground) cable, then wait two minutes for the airbag system capacitor to discharge before performing further diagnosis or service. This is the only sure way to disable the airbag system. Failure to take the proper precautions could result in an accidental airbag deployment and possible personal injury or death.

NOTE: Before proceeding with the following repair procedure, review all warnings and cautions. Refer to INSTRUMENT PANEL, WARNING.

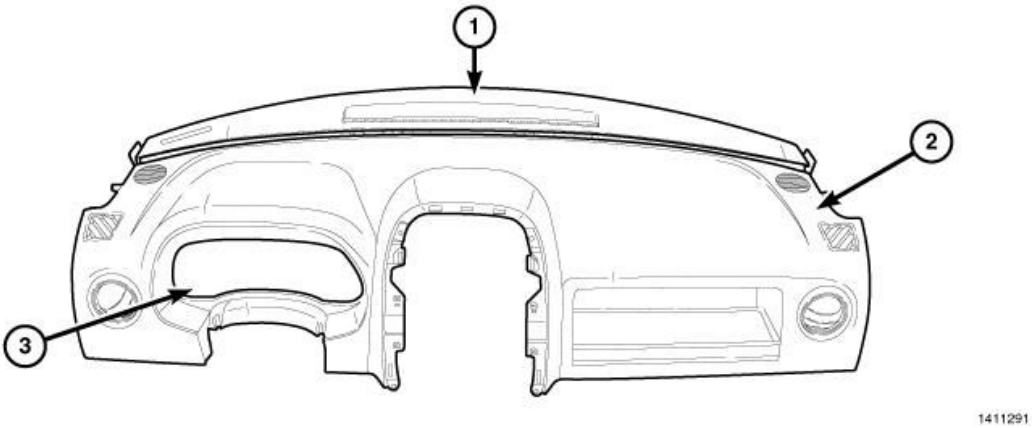

Fig. 229: Upper Instrument Panel Cover
Courtesy of CHRYSLER GROUP, LLC

1. Disconnect and isolate the battery negative cable.

2. Remove the driver and passenger A-pillars from the vehicle. Using trim stick (special tool #C-4755, Trim Stick) or equivalent, release the clips and separate the A-pillar trim panel from the A-pillar.
3. Using a trim stick or equivalent, carefully pry up on the defroster grille to disengage the clip retainers from the instrument panel.
4. Remove the defroster grille (1) from the vehicle.

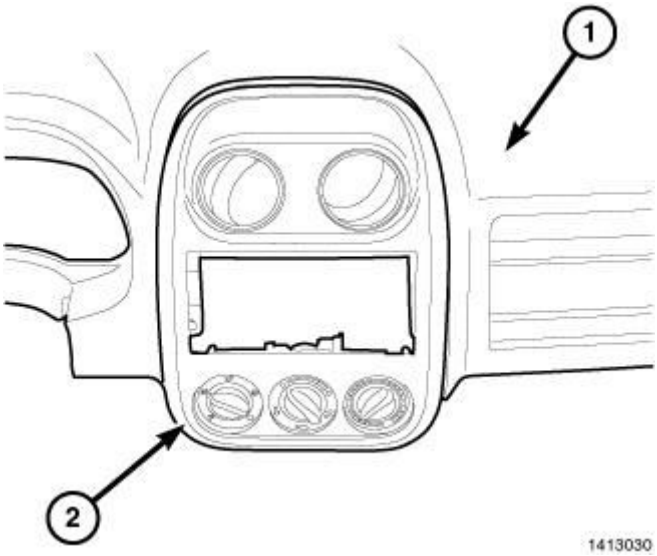

Fig. 230: Identifying Center Bezel
Courtesy of CHRYSLER GROUP, LLC

5. Using trim stick (special tool #C-4755, Trim Stick) or equivalent, carefully pry the instrument panel center bezel (2) away from the instrument panel (1).
6. Disconnect the electrical connectors and the mechanical connections to the HVAC.
7. Remove the center bezel (2) from the IP (1).
8. Remove the radio mounting fasteners.
9. Pull out the radio and disconnect the electrical connectors.
10. Remove the radio from the IP.

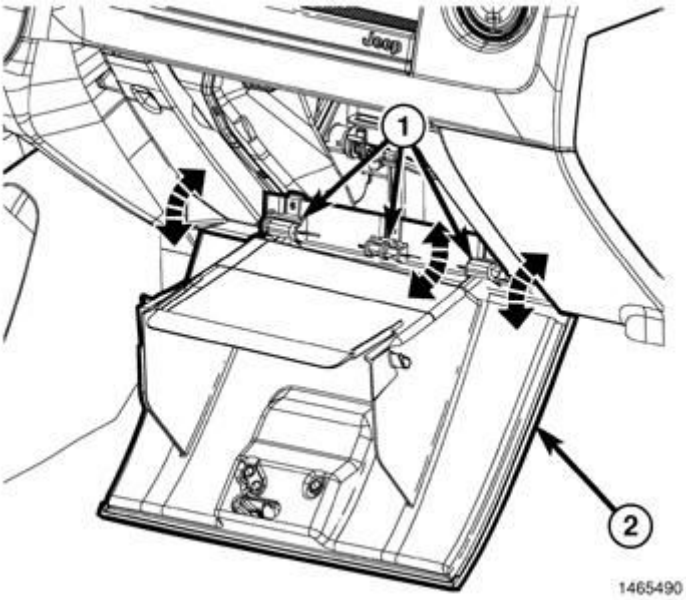

Fig. 231: Glove Box Release Hinges
Courtesy of CHRYSLER GROUP, LLC

11. Remove the driver and passenger side end caps.
12. Open the glove box and squeeze the stop tabs inward.
13. Lower the glove box and release the hinges (1) using a twisting motion and remove the glove box.

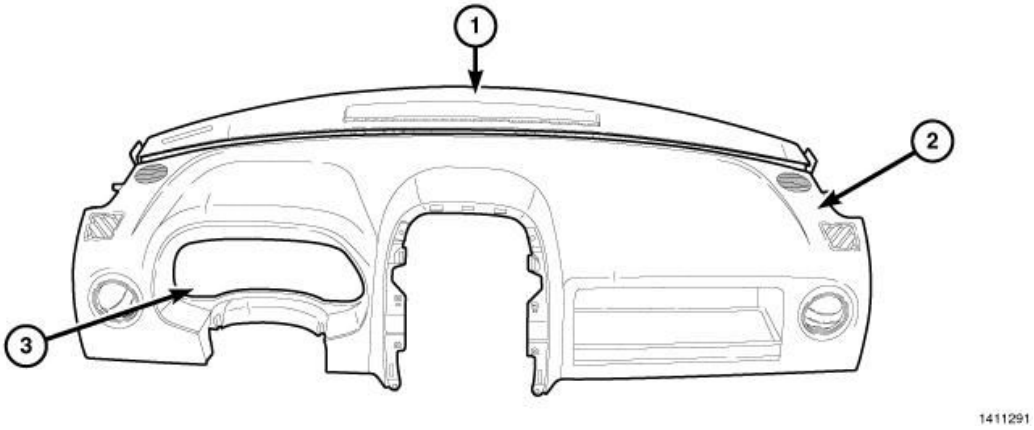

Fig. 232: Upper Instrument Panel Cover
Courtesy of CHRYSLER GROUP, LLC

14. Remove the passenger airbag mounting fasteners. Refer to **AIR BAG, PASSENGER, REMOVAL** .
15. Disconnect the passenger airbag electrical connectors.
16. Remove the screws securing the upper IP cover (2) to the instrument panel (IP).

17. While pulling up on the rear of the upper IP cover, rock the cover forward, then up and out away from the IP structure.

COVER-LOWER INSTRUMENT PANEL

WARNING: Disable the airbag system before attempting any steering wheel, steering column, or instrument panel component diagnosis or service. Disconnect and isolate the negative battery (ground) cable, then wait two minutes for the airbag system capacitor to discharge before performing further diagnosis or service. This is the only sure way to disable the airbag system. Failure to take the proper precautions could result in an accidental airbag deployment and possible personal injury or death.

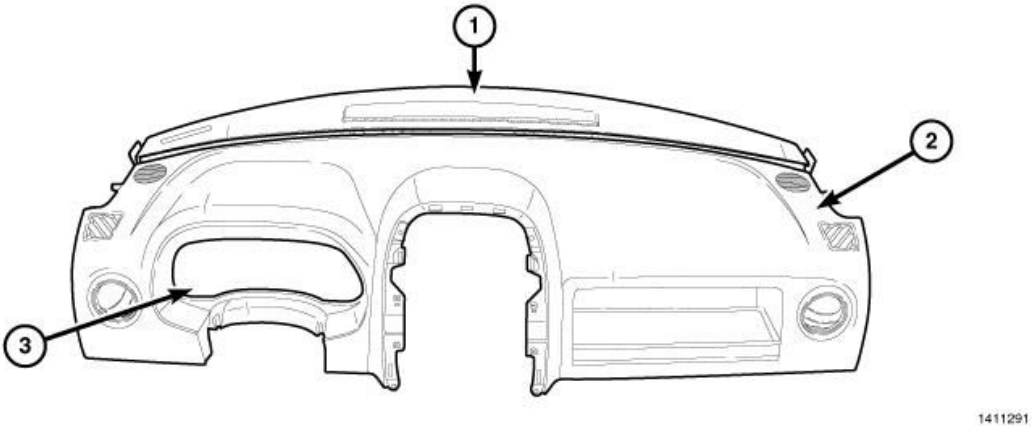

Fig. 233: Upper Instrument Panel Cover
Courtesy of CHRYSLER GROUP, LLC

1. Disconnect and isolate the battery negative cable.
2. Remove the upper IP top cover. Refer to **COVER, INSTRUMENT PANEL, REMOVAL**.
3. Remove the center floor console. Refer to **CONSOLE, FLOOR, REMOVAL**.
4. Remove the shifter assembly. Refer to **SHIFTER, TRANSMISSION, REMOVAL** .

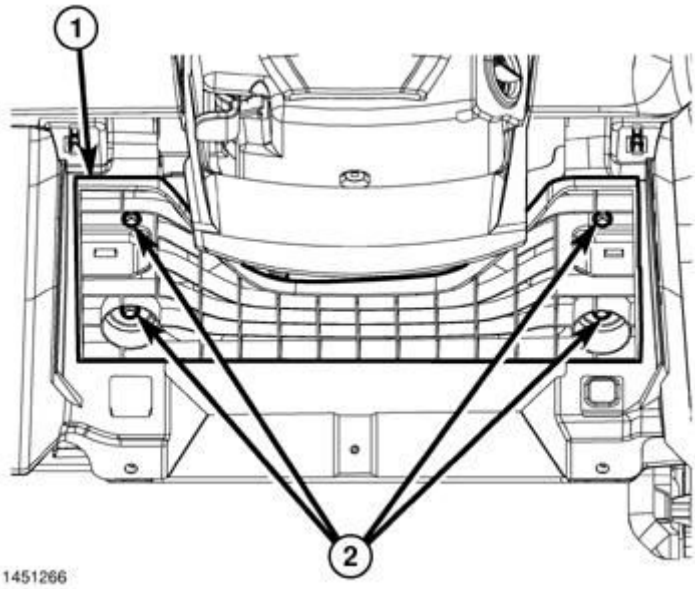

Fig. 234: Steering Column Reinforcement
Courtesy of CHRYSLER GROUP, LLC

5. Remove the instrument cluster fasteners.
6. Disconnect the electrical connectors to the cluster and remove from the vehicle.
7. Remove the cowl trim panels. Refer to **PANEL, COWL TRIM, SIDE, REMOVAL**.
8. Remove the screws securing the steering column opening cover to the IP.
9. Using trim stick (special tool #C-4755, Trim Stick) or equivalent, separate the snap clips and remove the steering column opening cover.
10. Remove the screws (2) and remove the steering column reinforcement (1).

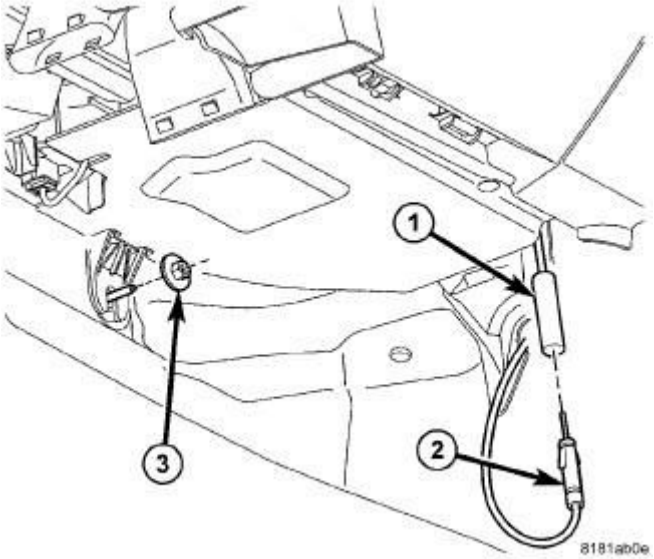

Fig. 235: RT Side Underdash
Courtesy of CHRYSLER GROUP, LLC

11. Remove the driver and passenger side end caps.
12. Remove the passenger side silencer pad.
13. Remove the steering column from the vehicle. Refer to **COLUMN, REMOVAL** .
14. Disconnect the electrical connector to the remote compass module and remote start antenna, if equipped.
15. If equipped, remove the navigation antenna.

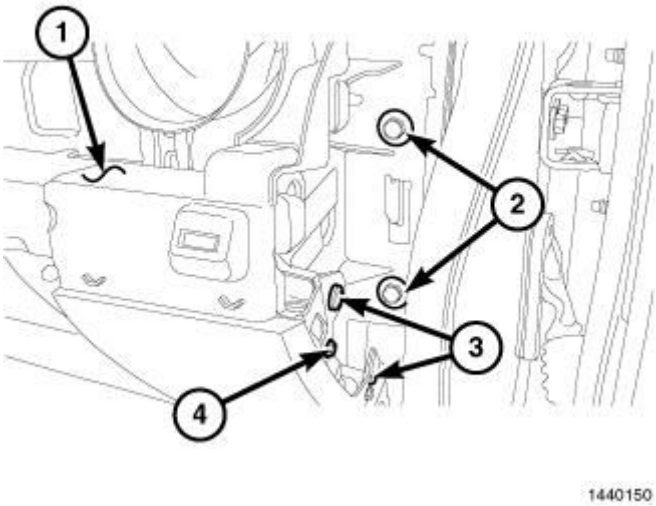

Fig. 236: Passenger Side Support Bolts
Courtesy of CHRYSLER GROUP, LLC

16. Remove the lower shifter cable bracket from under the center stack of the IP.
17. Remove the 28 screws (4) securing the lower IP cover (1) to the instrument panel structure.
18. Carefully pull the sides of the lower cover outwards away from the tabs (3) holding the cover to the IP structure.
19. Remove the lower cover from the IP structure.

INSTALLATION

COVER-UPPER INSTRUMENT PANEL

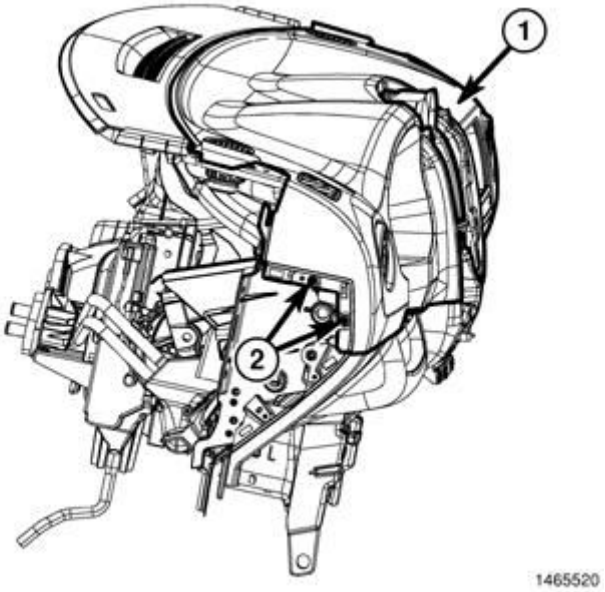

Fig. 237: Upper IP Cover & Passenger Airbag Mounting Fasteners
Courtesy of CHRYSLER GROUP, LLC

1. Carefully place the upper instrument panel cover into position to the IP structure. Ensure the passenger airbag mounting studs are aligned.
2. Install the screws securing the upper IP cover (2) to the instrument panel (IP).
3. Install the passenger airbag mounting fasteners. Refer to **AIR BAG, PASSENGER, INSTALLATION** .
4. Connect the passenger airbag electrical connectors.

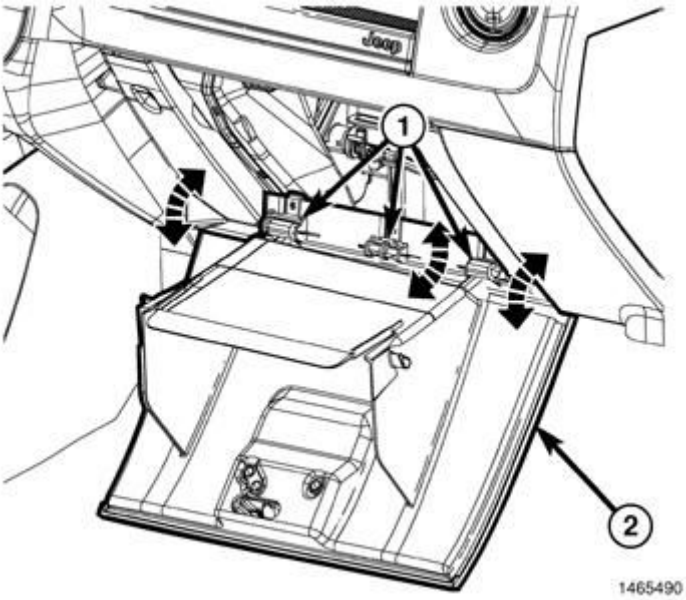

Fig. 238: Glove Box Release Hinges
Courtesy of CHRYSLER GROUP, LLC

5. Install the glove box (2) to the hinges (1) using a twisting motion.

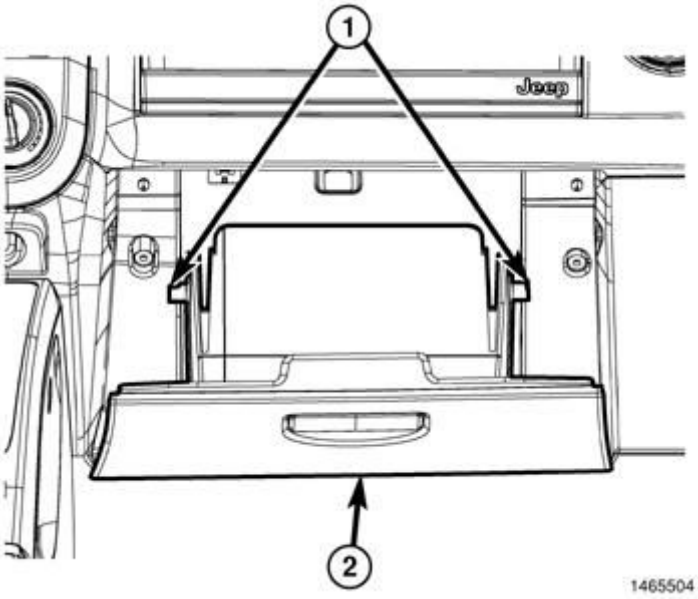

Fig. 239: Glove Box & Stop Tabs
Courtesy of CHRYSLER GROUP, LLC

6. Raise the glove box (2) while squeezing the stop tabs (1) inward.
7. Install the driver and passenger side end caps.

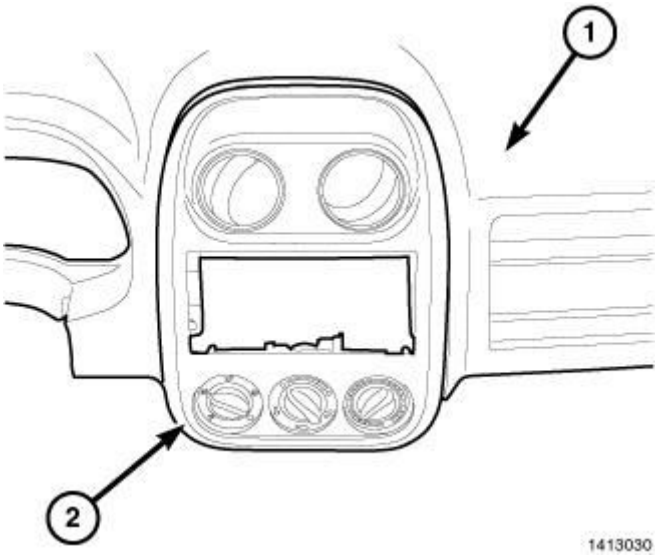

Fig. 240: Identifying Center Bezel
Courtesy of CHRYSLER GROUP, LLC

8. Place the radio into position and connect the electrical connectors.
9. Install the radio mounting fasteners.
10. Place the center bezel (2) into position to the IP (1).
11. Connect the electrical connectors and the mechanical connections to the HVAC.
12. Fully seat the center bezel to the instrument panel (1).

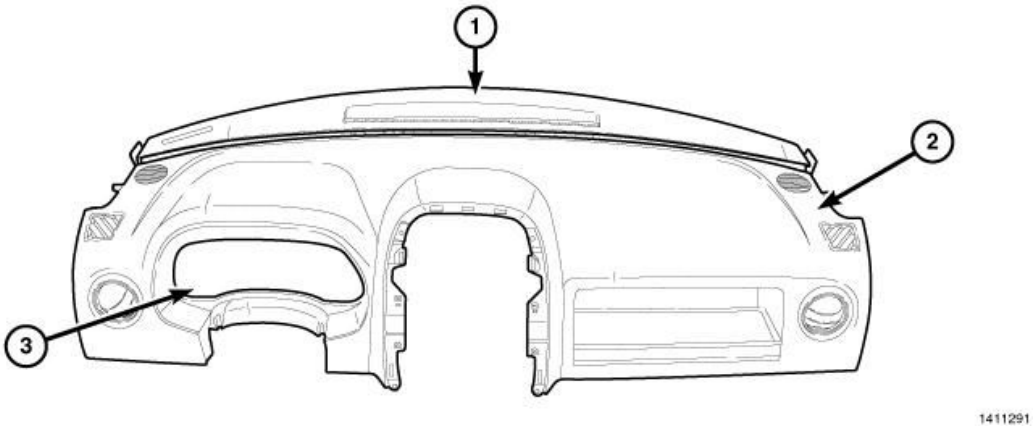

Fig. 241: Upper Instrument Panel Cover
Courtesy of CHRYSLER GROUP, LLC

13. Install the defroster grille (1) to the vehicle and seat fully.
14. Install the driver and passenger A-pillars from the vehicle.
15. Connect the battery negative cable.

COVER-LOWER INSTRUMENT PANEL

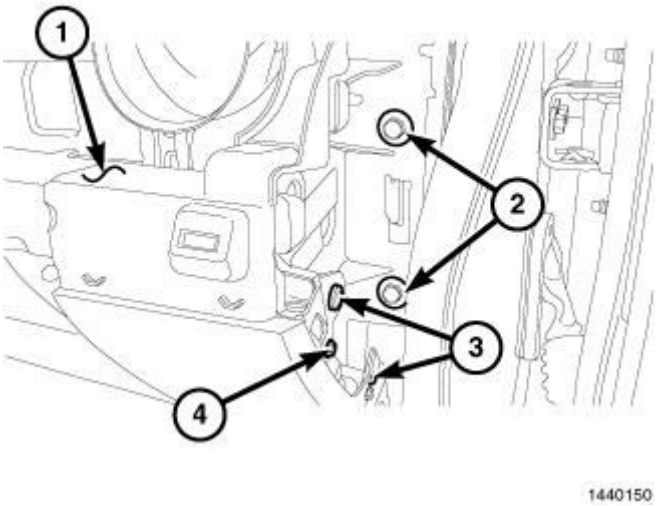

Fig. 242: Passenger Side Support Bolts
Courtesy of CHRYSLER GROUP, LLC

1. Install the lower cover to the IP structure.
2. Carefully pull the sides of the lower cover outwards and engage to the tabs (3) that hold the cover to the IP structure.
3. Install the 28 screws (4) securing the lower IP cover (1) to the instrument panel structure.
4. Install the lower shifter cable bracket under the center stack of the IP.

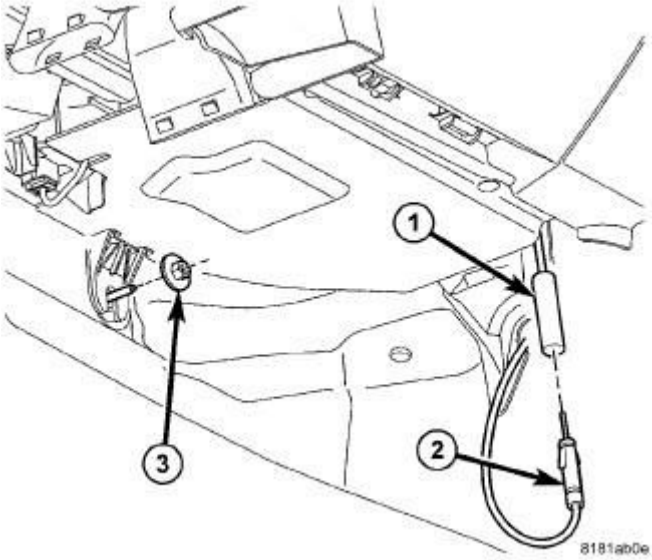

Fig. 243: RT Side Underdash
Courtesy of CHRYSLER GROUP, LLC

5. If equipped, install the navigation antenna.
6. Connect the electrical connector to the remote compass module and remote start antenna, if equipped.
7. Install the steering column from the vehicle. Refer to **COLUMN, INSTALLATION** .
8. Install the passenger side silencer pad.
9. Install the driver and passenger side end caps.

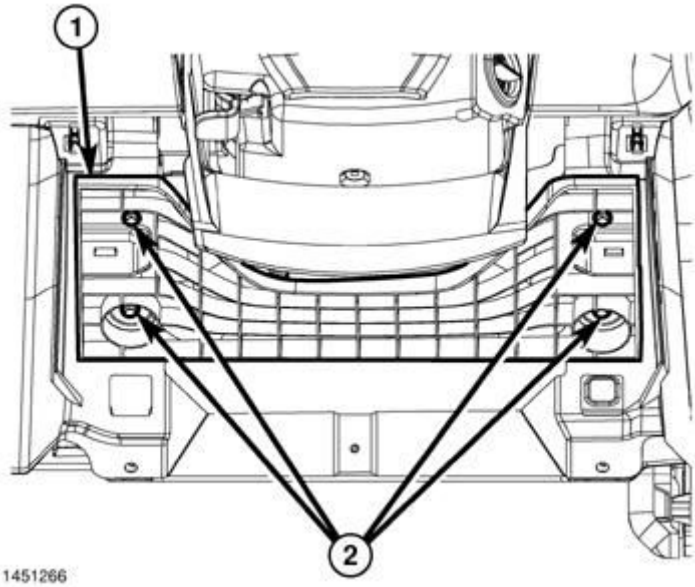

Fig. 244: Steering Column Reinforcement
Courtesy of CHRYSLER GROUP, LLC

10. Remove the instrument cluster fasteners.
11. Connect the electrical connectors to the cluster and install to the vehicle.
12. Install the cowl trim panels.
13. Install the steering column reinforcement (1) and install the fasteners (2).
14. Install the steering column opening cover and screws.

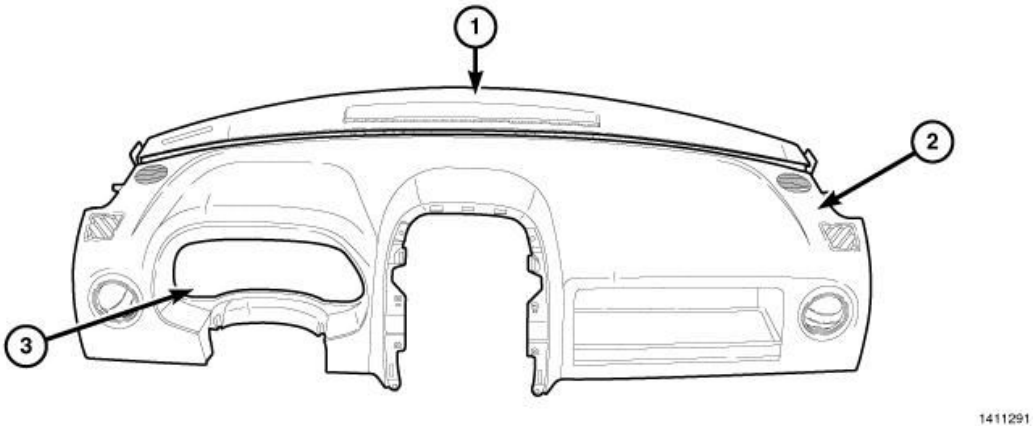

Fig. 245: Upper Instrument Panel Cover
Courtesy of CHRYSLER GROUP, LLC

15. Install the shifter assembly. Refer to **SHIFTER, TRANSMISSION, INSTALLATION** .
16. Install the center floor console. Refer to **CONSOLE, FLOOR, INSTALLATION**.
17. Install the upper IP top cover. Refer to **COVER, INSTRUMENT PANEL, INSTALLATION**.
18. Connect the battery negative cable.

COVER, STEERING COLUMN OPENING

REMOVAL

REMOVAL

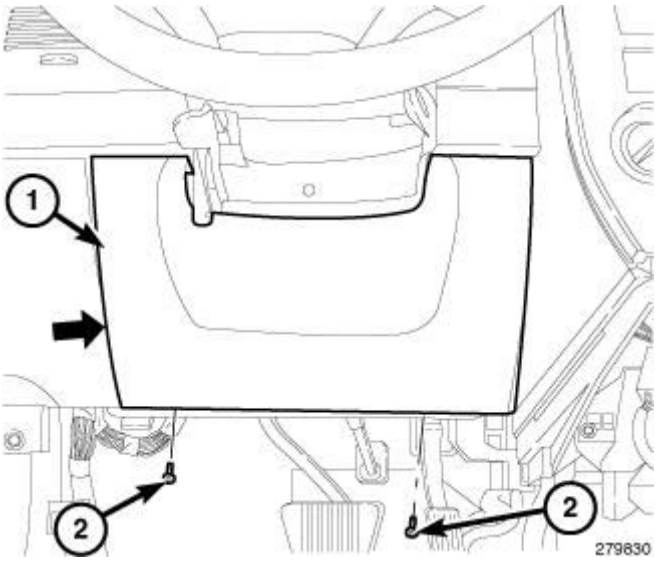

Fig. 246: Steering Column Opening Cover

Courtesy of CHRYSLER GROUP, LLC

1. Remove the screws from the bottom of the cover.
2. Using trim stick (special tool #C-4755, Trim Stick) or equivalent, separate the steering column opening cover and remove.

INSTALLATION

INSTALLATION

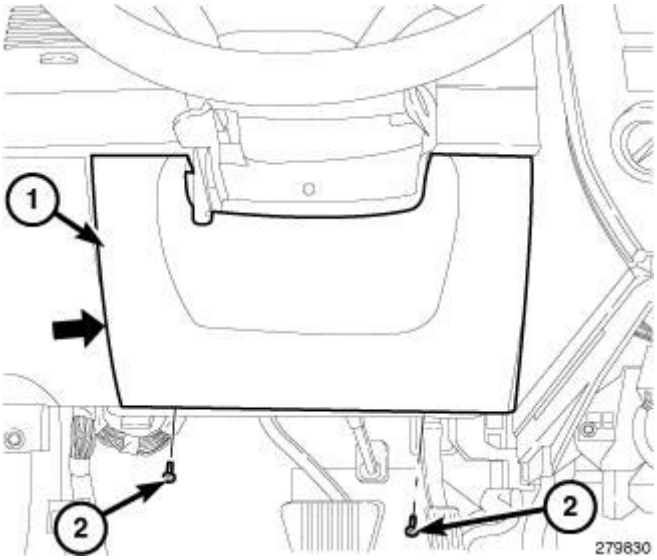

Fig. 247: Steering Column Opening Cover
Courtesy of CHRYSLER GROUP, LLC

1. Position the steering column opening cover onto the I/P and seat the retaining clips fully.
2. Install the screws to the bottom of the cover.

GLOVE BOX, INSTRUMENT PANEL

REMOVAL

REMOVAL

NOTE: ND vehicle line shown, MK vehicle line similar.

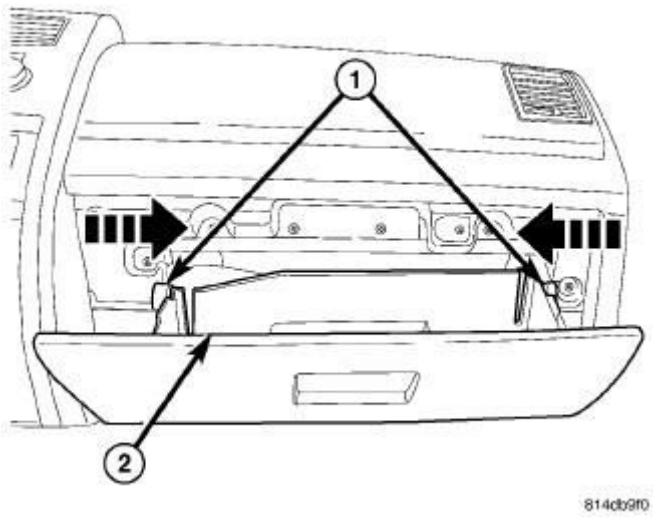

Fig. 248: Identifying Glove Box Stop Tabs
Courtesy of CHRYSLER GROUP, LLC

1. Open the glove box and squeeze the stop tabs inward.

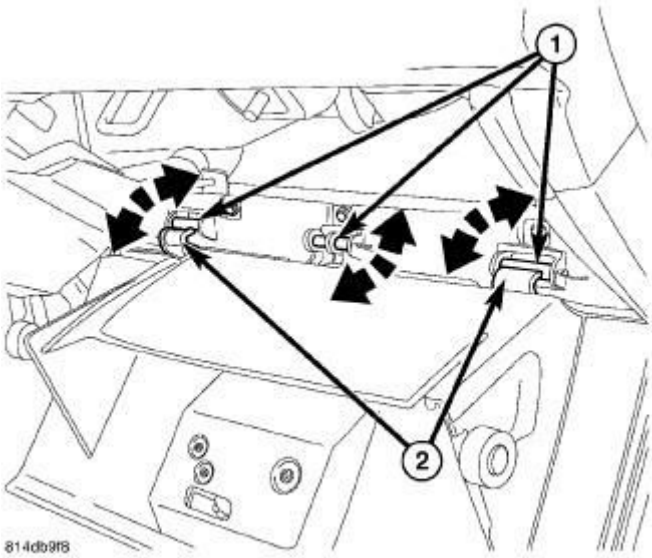

Fig. 249: Identifying Glove Box Assembly
Courtesy of CHRYSLER GROUP, LLC

2. Lower the glove box and release the hinges (1) using a twisting motion and remove the glove box.

INSTALLATION

INSTALLATION

NOTE: ND vehicle line shown, MK vehicle line similar.

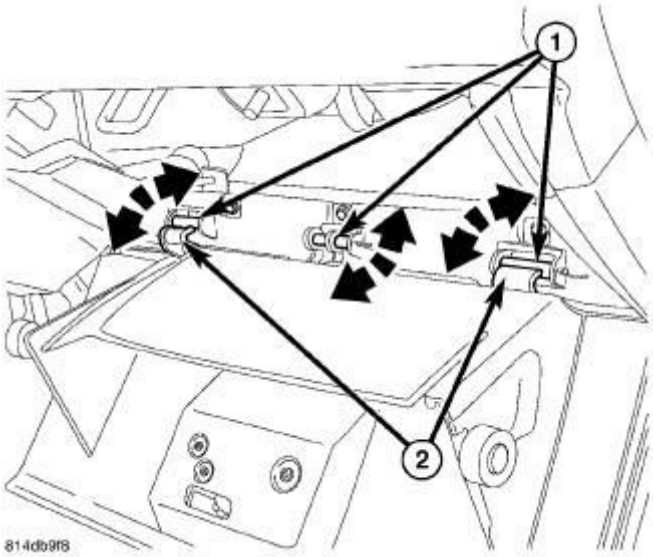

Fig. 250: Identifying Glove Box Assembly
Courtesy of CHRYSLER GROUP, LLC

1. Position the glove box and twist the box tabs (2) onto the hinges (1) using a twisting motion as indicated.

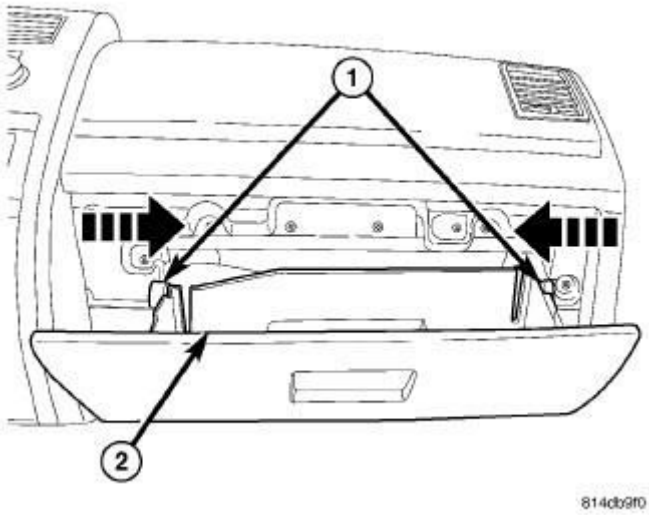

Fig. 251: Identifying Glove Box Stop Tabs
Courtesy of CHRYSLER GROUP, LLC

2. Close the box and squeeze the stop tabs inward and engage into the instrument panel.

GRILLE, DEFROSTER

REMOVAL

REMOVAL

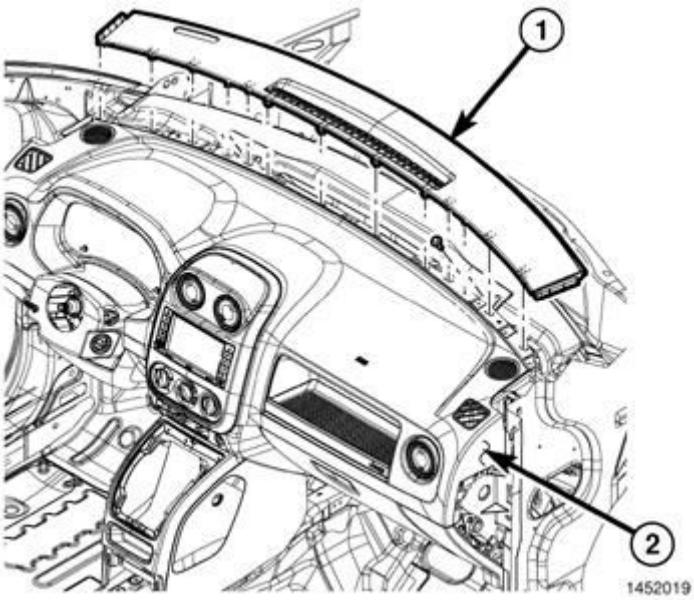

Fig. 252: Defroster Grille
Courtesy of CHRYSLER GROUP, LLC

1. Disconnect and isolate the battery negative cable.
2. Remove the driver and passenger A-pillars from the vehicle. Using trim stick (special tool #C-4755, Trim Stick) or equivalent, release the clips and separate the A-pillar trim panel from the A-pillar.
3. Using a trim stick or equivalent, carefully pry up on the defroster grille to disengage the clip retainers from the instrument panel.
4. Remove the defroster grille from the vehicle.

INSTALLATION

INSTALLATION

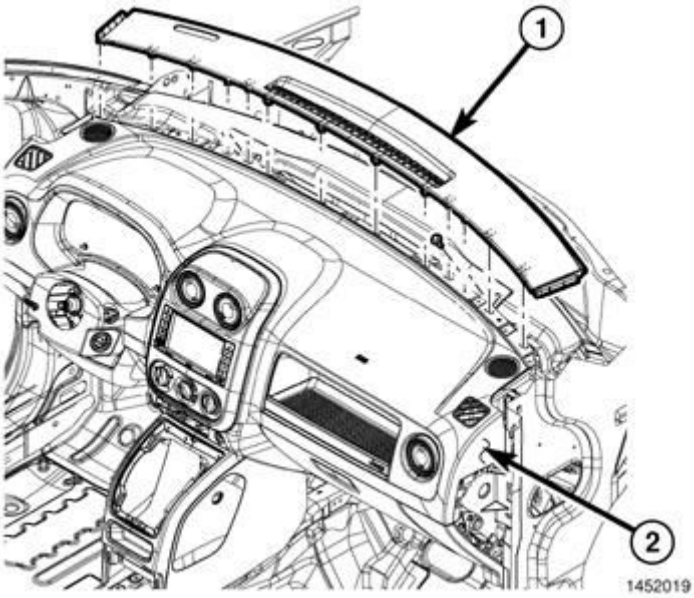

Fig. 253: Defroster Grille
Courtesy of CHRYSLER GROUP, LLC

1. Place the defroster grille into position on the instrument panel (IP).
2. Firmly seat the defroster grille, engaging the clip retainers to the IP.
3. Install both A-pillar trim panels to the vehicle and seat firmly to engage the retainers.
4. Connect the battery negative cable.

KNEEBLOCKER

REMOVAL

REMOVAL

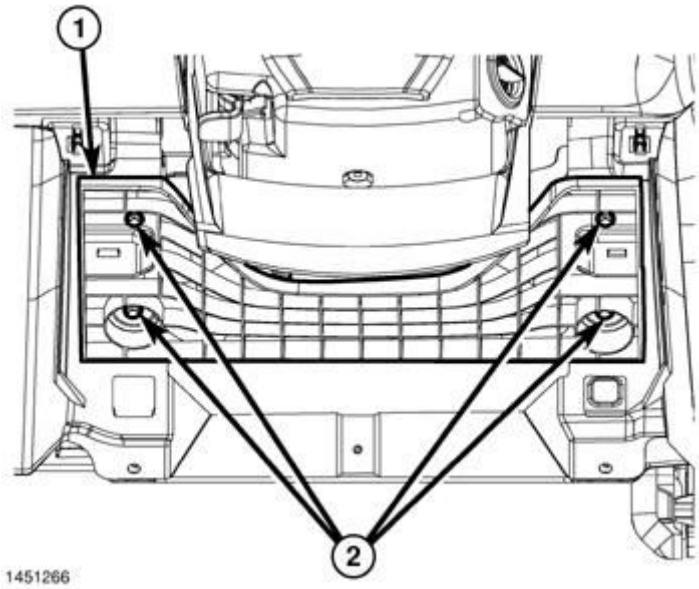

Fig. 254: Steering Column Reinforcement
Courtesy of CHRYSLER GROUP, LLC

1. Remove the screws from the bottom of the steering column opening cover.
2. Using trim stick (special tool #C-4755, Trim Stick) or equivalent, separate the snap clips and remove the cover.
3. Remove the mounting fasteners (2) and remove the knee blocker (1).

INSTALLATION

INSTALLATION

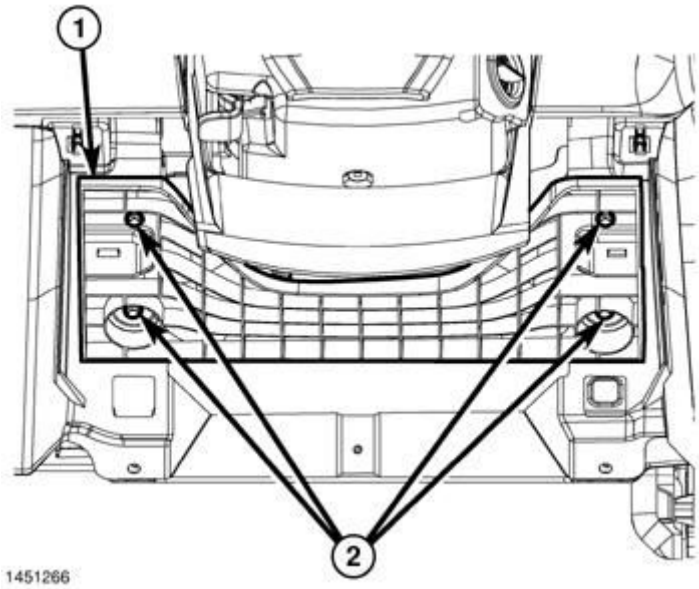

Fig. 255: Steering Column Reinforcement
Courtesy of CHRYSLER GROUP, LLC

1. Place the knee blocker (1) into position and install the mounting fasteners (2).
2. Install the steering column opening cover and seat fully.
3. Install the screws to the bottom of the cover.

PANEL, INSTRUMENT

REMOVAL

REMOVAL

WARNING: Before servicing the steering column the airbag system must be disarmed. Failure to do so may result in accidental deployment of the airbag and possible personal injury.

NOTE: Before proceeding with the following repair procedure, review all warnings and cautions. Refer to INSTRUMENT PANEL, WARNING.

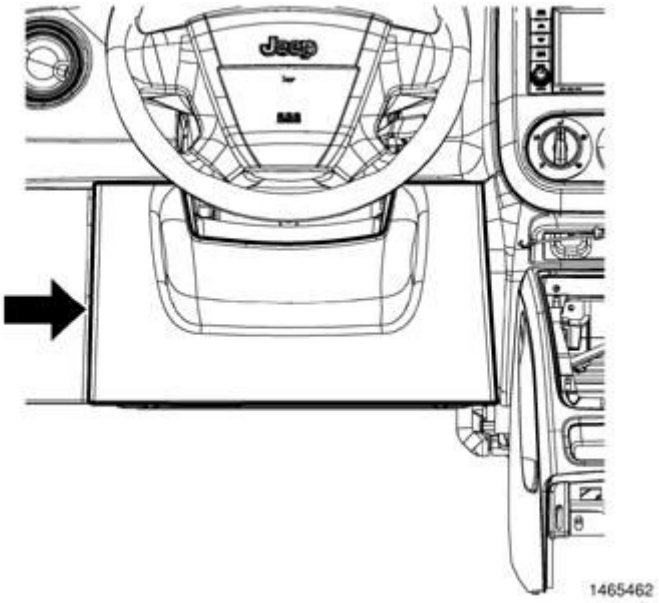

Fig. 256: Steering Column Opening Cover
Courtesy of CHRYSLER GROUP, LLC

1. Disconnect and isolate the battery negative cable.
2. Remove the center floor console. Refer to **CONSOLE, FLOOR, REMOVAL**.

3. Remove the shifter assembly. Refer to **SHIFTER, TRANSMISSION, REMOVAL** .
4. Remove the cowl trim panels. Refer to **PANEL, COWL TRIM, SIDE, REMOVAL**.
5. Using trim stick (special tool #C-4755, Trim Stick) or equivalent, separate the snap clips and remove the steering column opening cover.

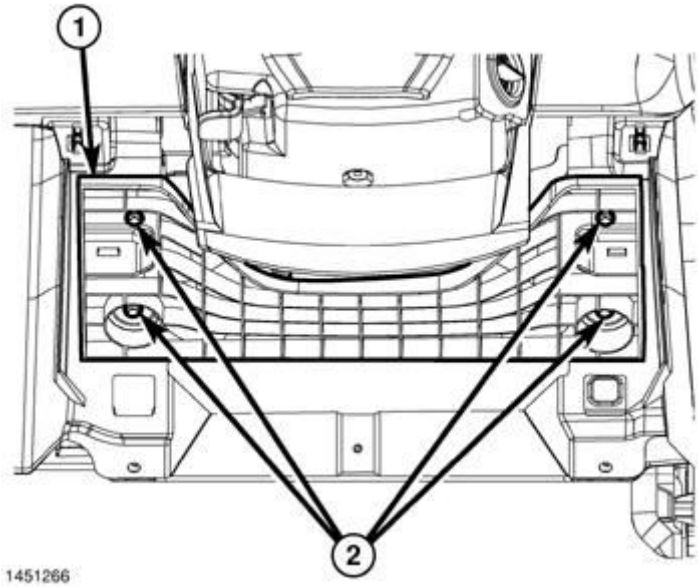

Fig. 257: Steering Column Reinforcement
Courtesy of CHRYSLER GROUP, LLC

6. Remove the screws (2) and remove the steering column reinforcement (1).

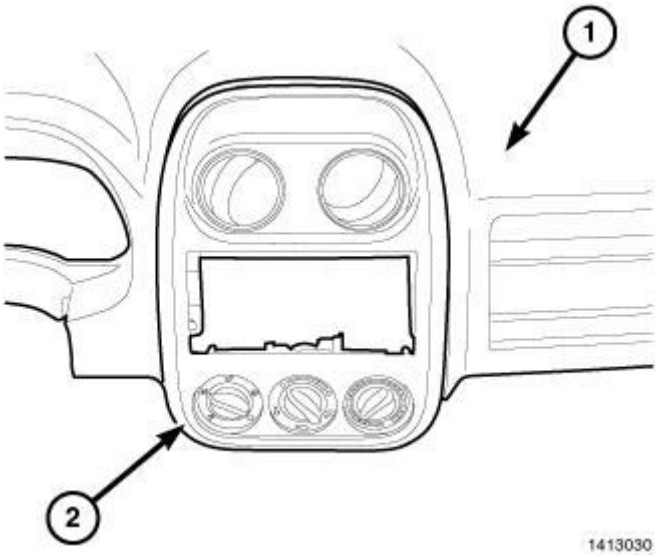

Fig. 258: Identifying Center Bezel
Courtesy of CHRYSLER GROUP, LLC

7. Using trim stick (special tool #C-4755, Trim Stick) or equivalent, carefully pry the instrument panel center bezel (2) away from the instrument panel (1).
8. Disconnect the electrical connectors and the mechanical connections to the HVAC.
9. Remove the center bezel from the IP.
10. Remove the defrost grille from the IP. Refer to **GRILLE, DEFROSTER, REMOVAL**.

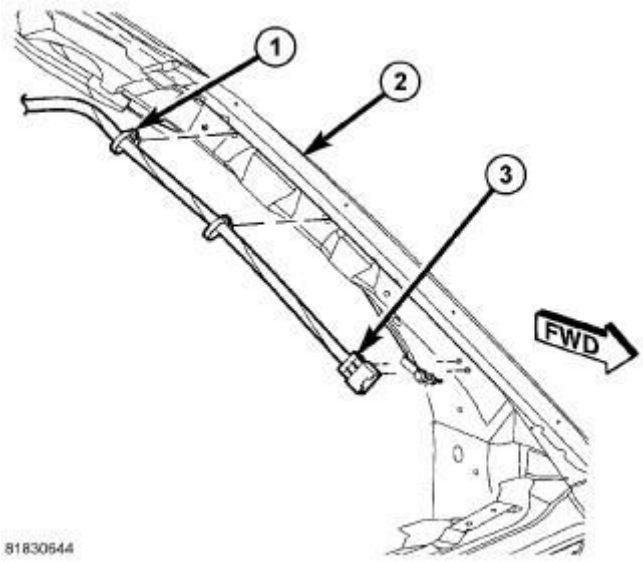

Fig. 259: A-Pillar Wire Harness
Courtesy of CHRYSLER GROUP, LLC

11. Disconnect the electrical connectors at the A-pillars.

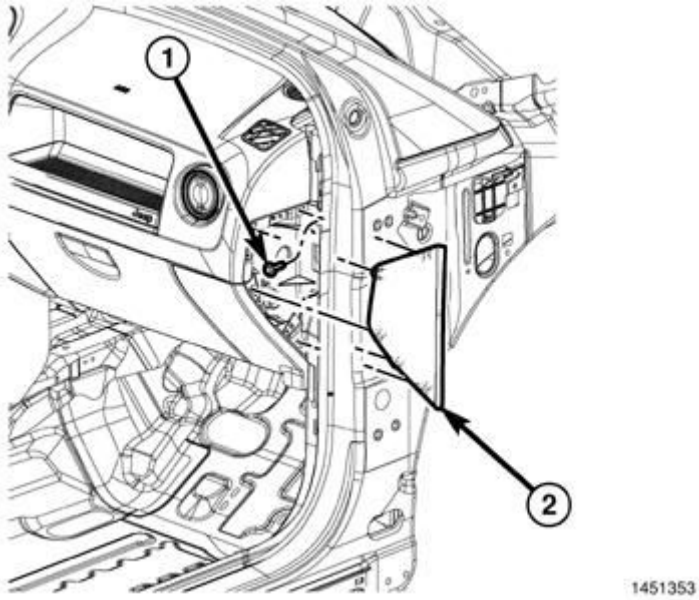

Fig. 260: Side End Caps
Courtesy of CHRYSLER GROUP, LLC

12. Remove the driver and passenger side end caps.

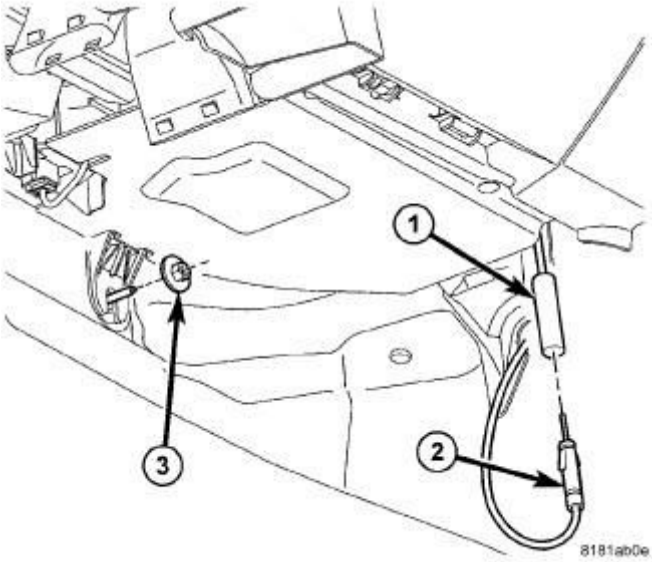

Fig. 261: RT Side Underdash
Courtesy of CHRYSLER GROUP, LLC

13. Remove the passenger side silencer pad.
14. Disconnect the radio antenna (1).

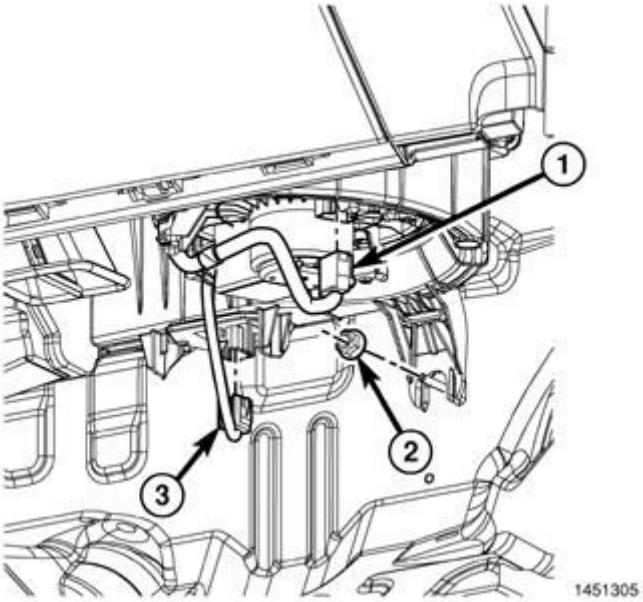

Fig. 262: HVAC Wire Harness Connectors
Courtesy of CHRYSLER GROUP, LLC

15. Disconnect the HVAC wire harness connectors (1 and 2).

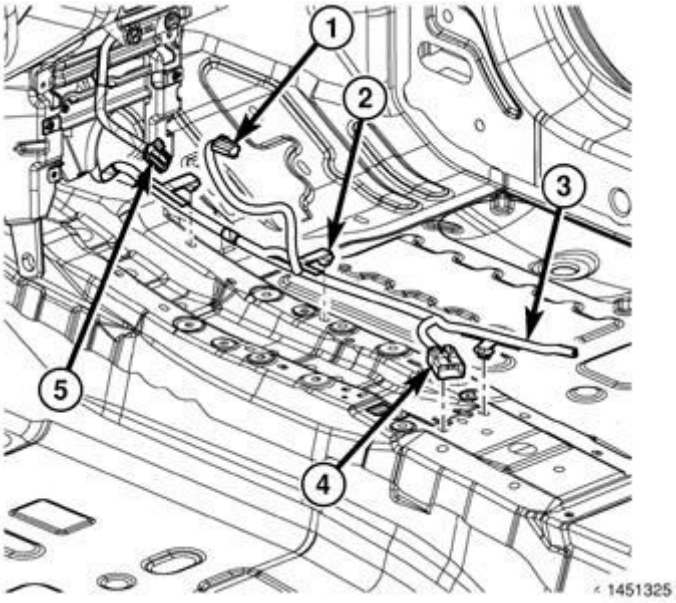

Fig. 263: Center Wire Harness
Courtesy of CHRYSLER GROUP, LLC

16. Separate the center wire harness (3).

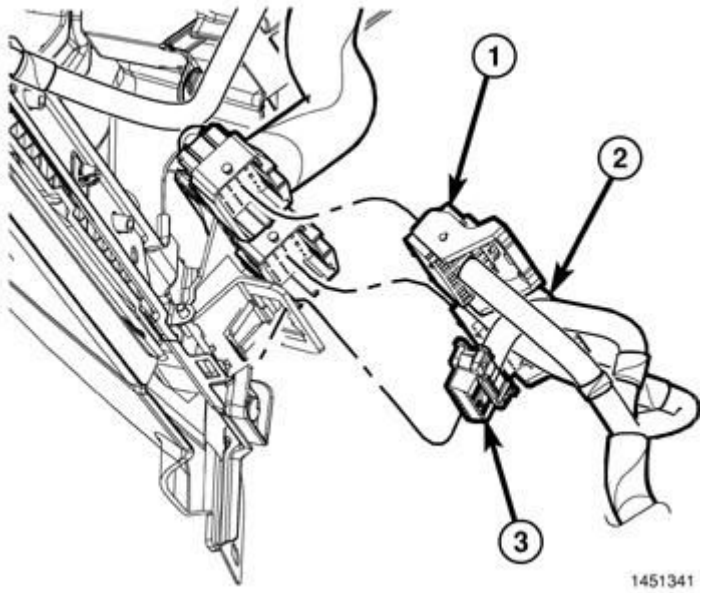

Fig. 264: Main Wire Harness Connectors
Courtesy of CHRYSLER GROUP, LLC

17. Remove the steering column from the vehicle. Refer to **COLUMN, REMOVAL** .
18. Disconnect the main wire harness connectors at the driver's side cowl.

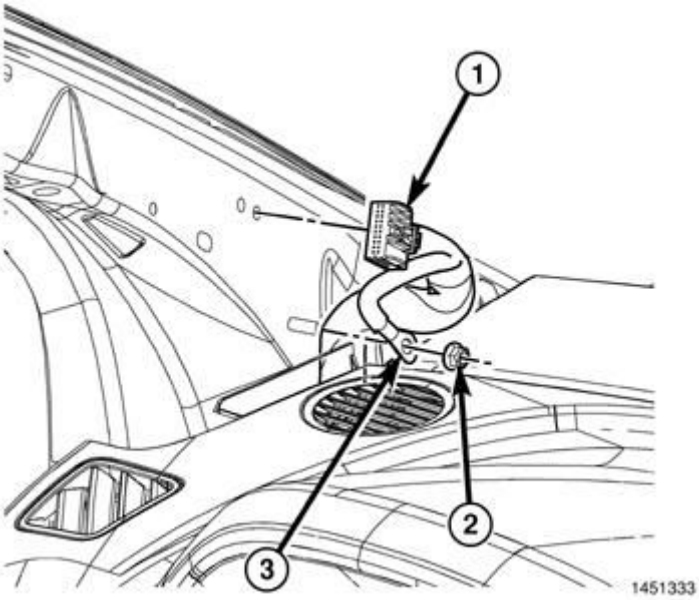

Fig. 265: Harness Connectors
Courtesy of CHRYSLER GROUP, LLC

19. Disconnect the wire harness connectors at the driver's side A-pillar.

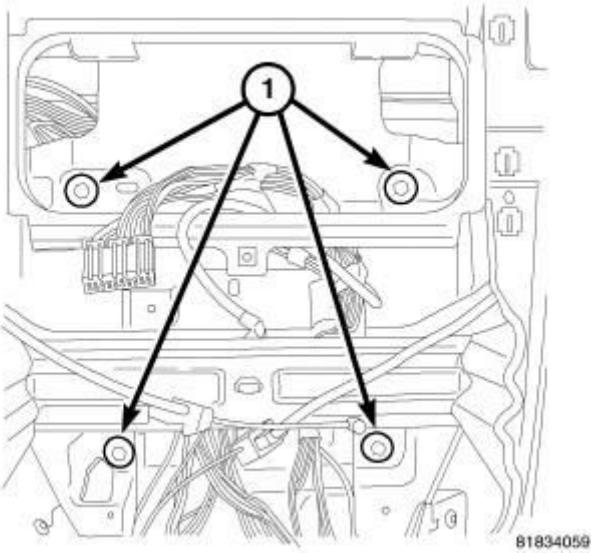

Fig. 266: Center Bezel Fastener Locations
Courtesy of CHRYSLER GROUP, LLC

20. Remove the HVAC to I/P screws (1).

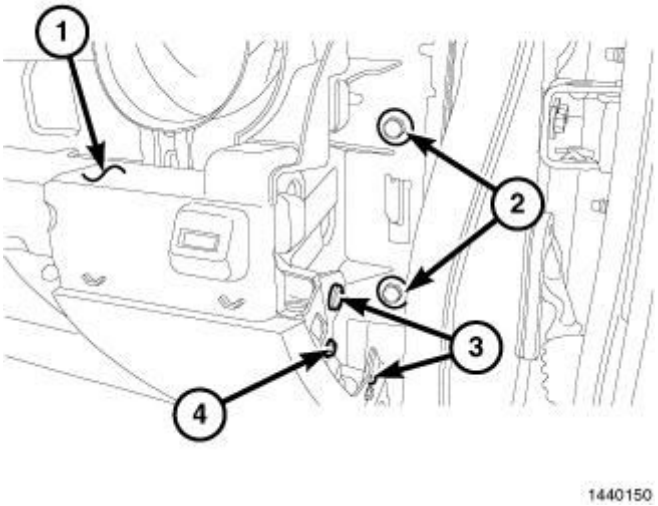

Fig. 267: Passenger Side Support Bolts
Courtesy of CHRYSLER GROUP, LLC

21. Remove the passenger side support bolts (2).

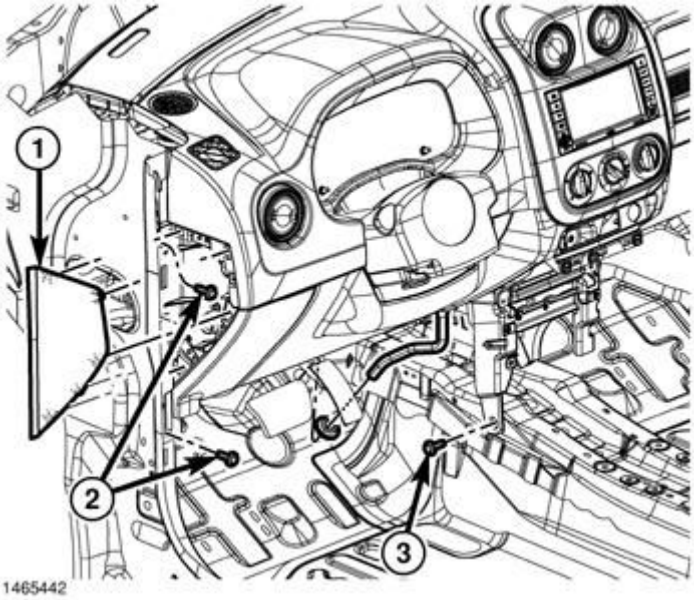

Fig. 268: Driver Side Support Bolts
Courtesy of CHRYSLER GROUP, LLC

22. Remove the center support bolts.
23. Remove the driver's side support bolts (1).
24. Remove the fence line bolts.

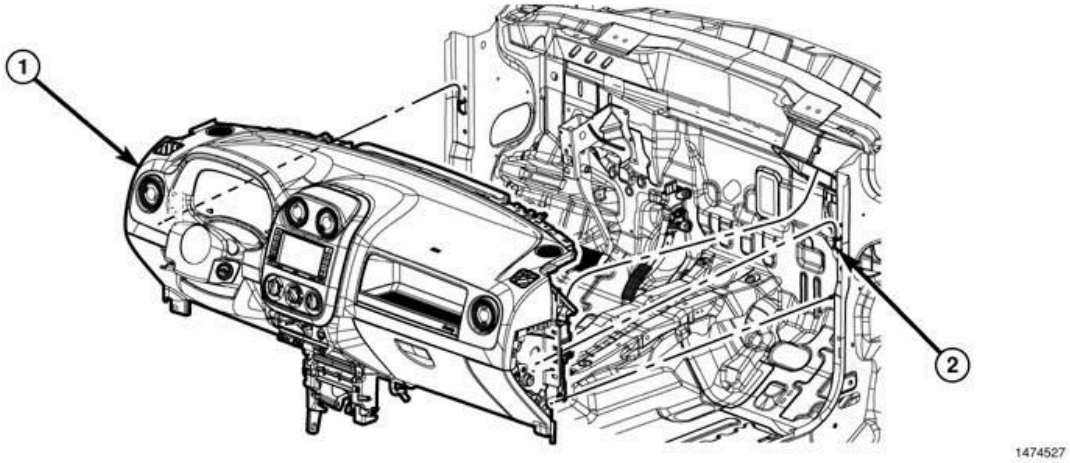

Fig. 269: Instrument Panel Assembly
Courtesy of CHRYSLER GROUP, LLC

25. Remove the instrument panel (1) from the vehicle.

INSTALLATION

INSTALLATION

1. Before proceeding with the following repair procedure, review all warnings

and cautions. Refer to **INSTRUMENT PANEL, WARNING**.

WARNING: Before servicing the steering column the airbag system must be disarmed. Failure to do so may result in accidental deployment of the airbag and possible personal injury.

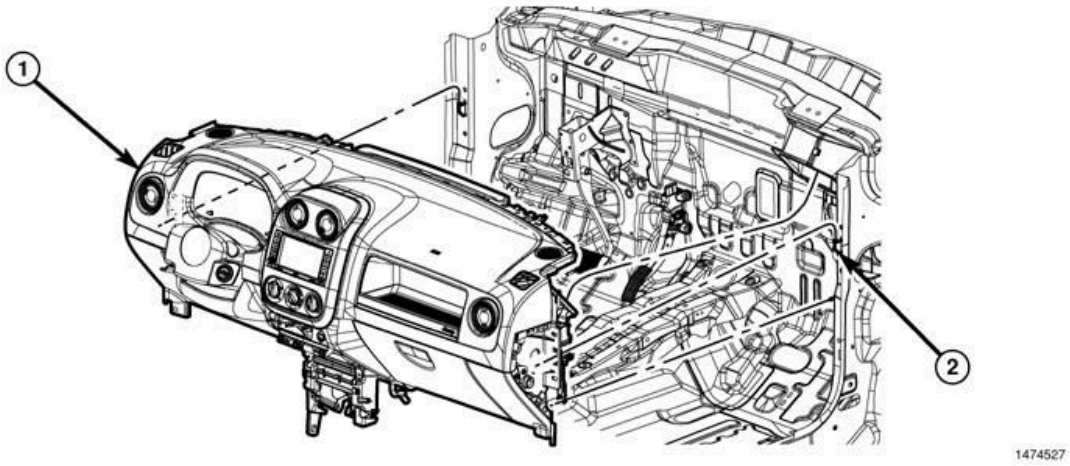

Fig. 270: Instrument Panel Assembly
Courtesy of CHRYSLER GROUP, LLC

2. Install the I/P assembly (1) into the vehicle and position onto the support hooks (4) and alignment pins (5).

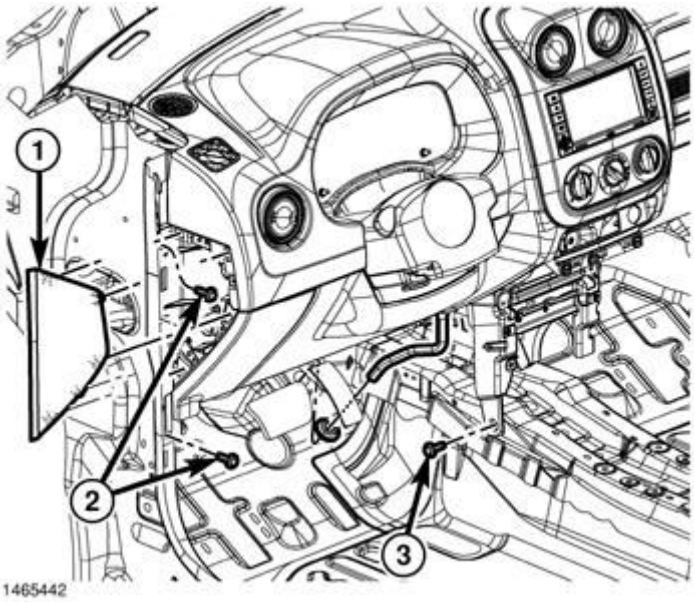

Fig. 271: Driver Side Support Bolts
Courtesy of CHRYSLER GROUP, LLC

3. Install the left side support bolts (4) and tighten to 21 N.m (15.5 ft. lbs.).
4. Install the center support bolt (3) and tighten to 21 N.m (15.5 ft. lbs.).

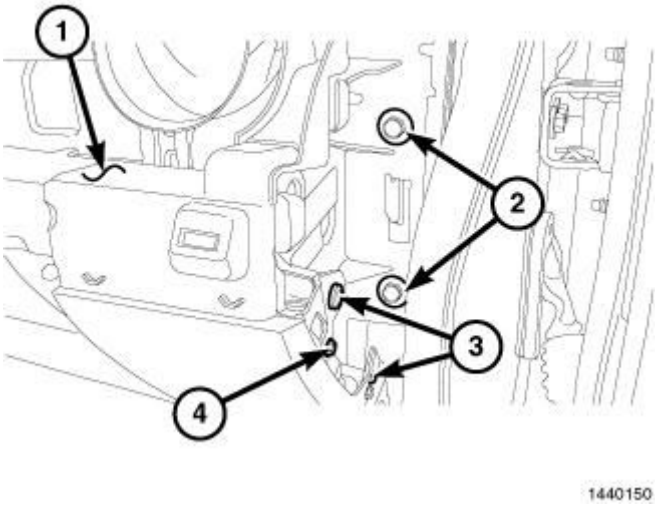

Fig. 272: Passenger Side Support Bolts
Courtesy of CHRYSLER GROUP, LLC

5. Install the passenger side support bolts (2) and tighten to 21 N.m (15.5 ft. lbs.).
6. Install the fence line bolts and tighten to 21 N.m (15.5 ft. lbs.).

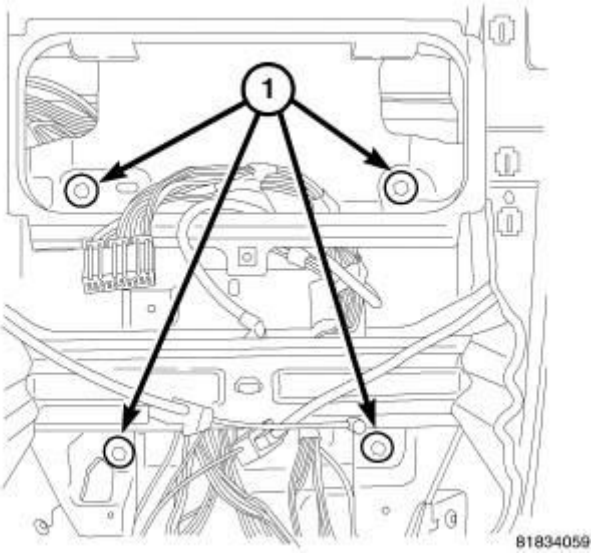

Fig. 273: Center Bezel Fastener Locations
Courtesy of CHRYSLER GROUP, LLC

7. Install the center I/P to HVAC screws (1).

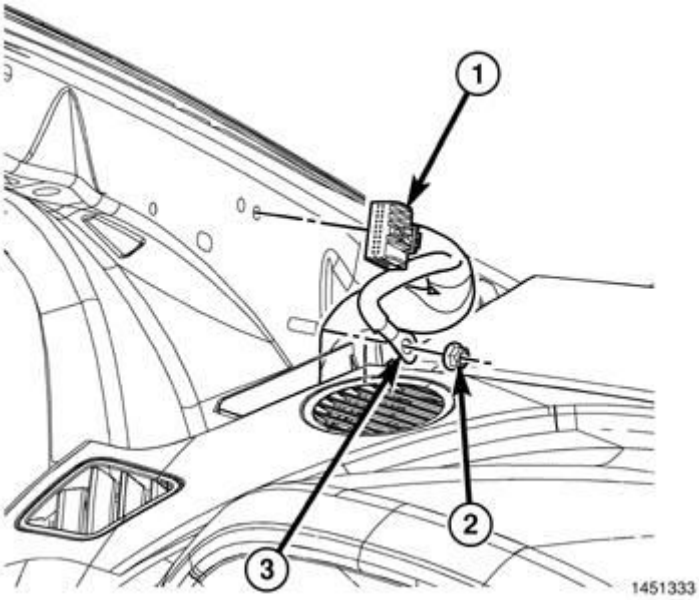

Fig. 274: Harness Connectors
Courtesy of CHRYSLER GROUP, LLC

8. Connect the wire harness (1) and ground (2) at the A-pillar.

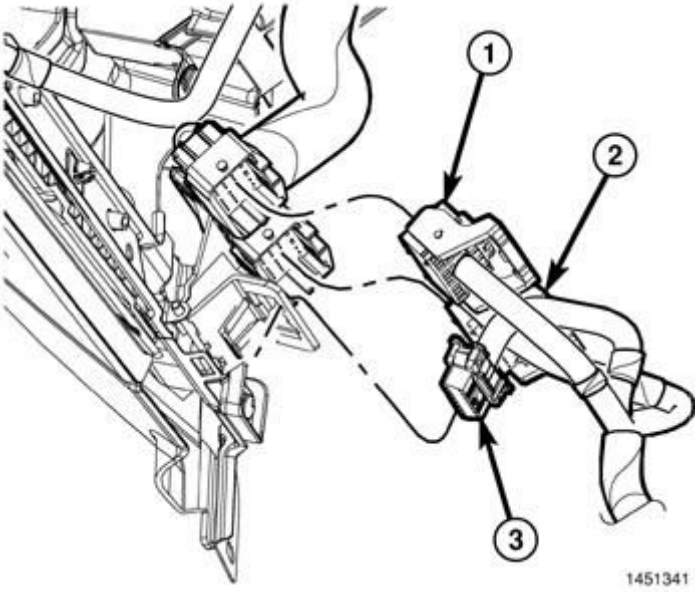

Fig. 275: Main Wire Harness Connectors
Courtesy of CHRYSLER GROUP, LLC

9. Connect the main wire harness connectors at the driver's side cowl (1 - 3).
10. Install the steering column. Refer to **COLUMN, INSTALLATION** .

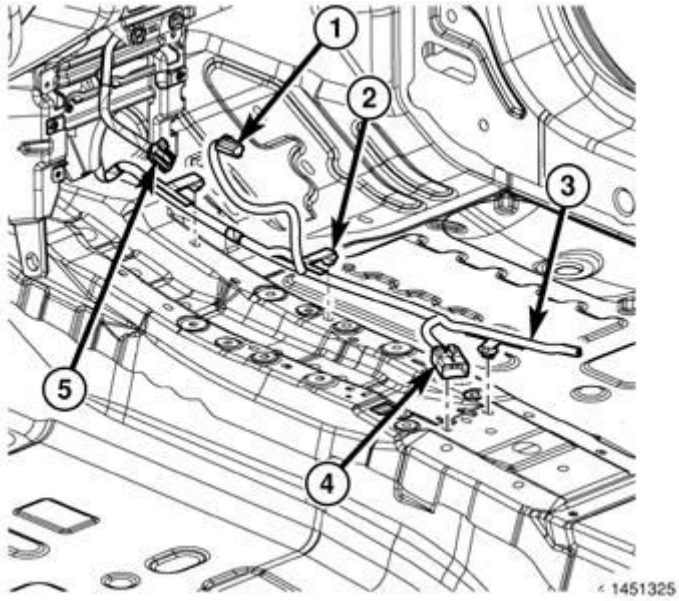

Fig. 276: Center Wire Harness
Courtesy of CHRYSLER GROUP, LLC

11. Position the center wire harness (3) and seat the push pin fasteners (2) fully.

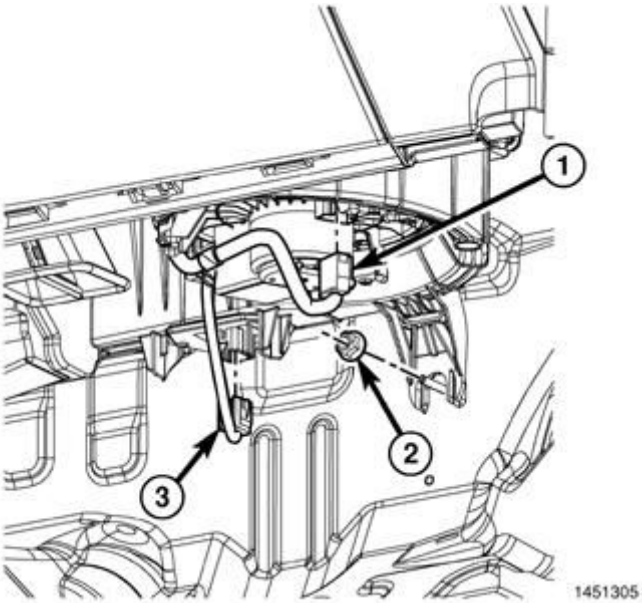

Fig. 277: HVAC Wire Harness Connectors
Courtesy of CHRYSLER GROUP, LLC

12. Connect the HVAC wire harness connectors (1 - 3).

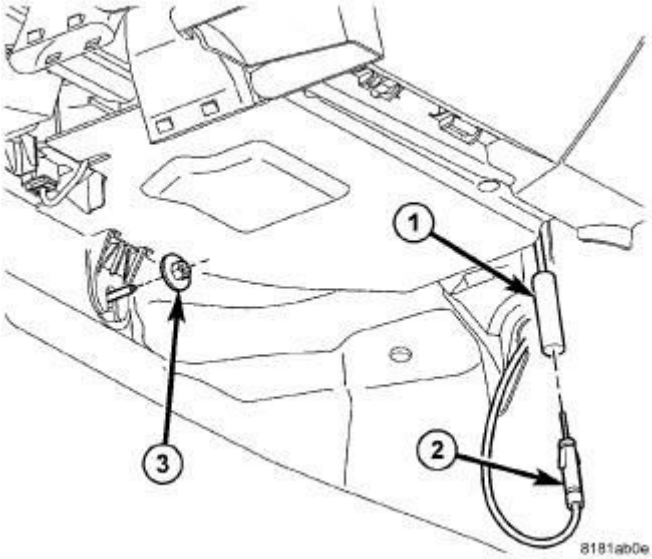

Fig. 278: RT Side Underdash
Courtesy of CHRYSLER GROUP, LLC

13. Connect the radio antenna (2).
14. Install the passenger side silencer pad.
15. Install the driver and passenger side end caps and seat fully.

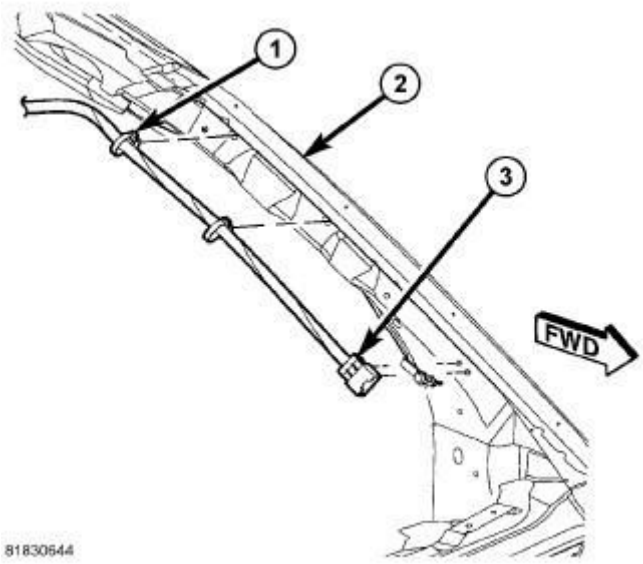

Fig. 279: A-Pillar Wire Harness
Courtesy of CHRYSLER GROUP, LLC

16. Connect the A-pillar wire harness electrical connector (3).

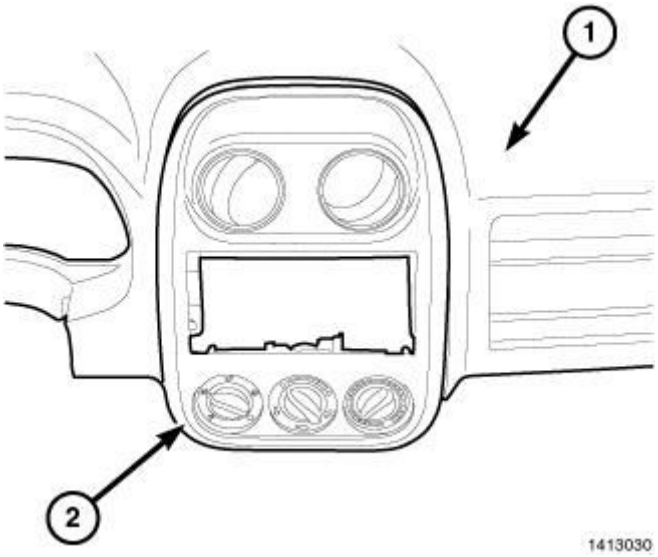

Fig. 280: Identifying Center Bezel
Courtesy of CHRYSLER GROUP, LLC

17. Place the center bezel (2) into position and connect the electrical connectors.
18. Connect the mechanical connections and seat the center bezel fully to the IP (1).
19. Install the defroster grille and A-pillar trim panels. Refer to **GRILLE, DEFROSTER, INSTALLATION**.

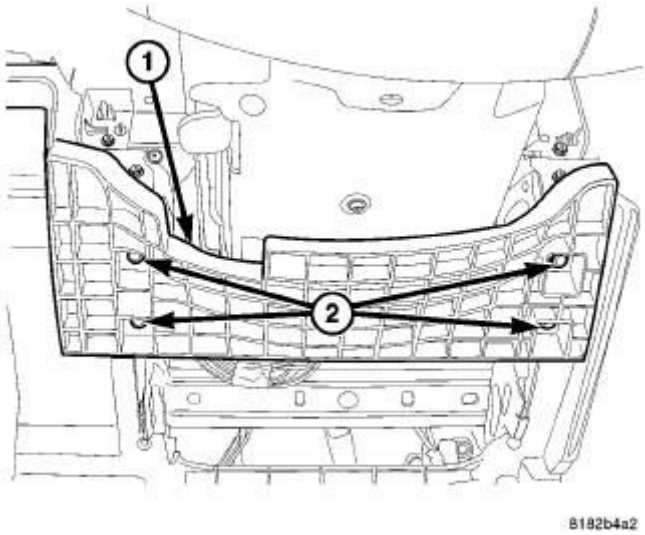

Fig. 281: Reinforcement
Courtesy of CHRYSLER GROUP, LLC

20. Install the steering column reinforcement (1) and install the screws (2).
21. Position the steering column opening cover over the opening and seat the

clips fully.

22. Install the cowl trim panels. Refer to **PANEL, COWL TRIM, SIDE, INSTALLATION**.
23. Install the shifter assembly. Refer to **SHIFTER, TRANSMISSION, INSTALLATION** .
24. Install the center floor console. Refer to **CONSOLE, FLOOR, INSTALLATION**.

PANEL, SILENCER

REMOVAL

REMOVAL

1. Remove the two plastic fasteners from under the glove box and remove the closeout panel.

INSTALLATION

INSTALLATION

1. Install the closeout panel and install the two plastic fasteners under the glove box.

INTERIOR

CAUTION

CAUTION

CAUTION: Do not attempt to remove interior trim panels or moldings without first removing the necessary adjacent trim panels or moldings. To avoid damaging the trim panels, ensure that all the fasteners are removed or disengaged before attempting to remove interior trim panels or moldings. Trim panels are somewhat flexible but can be damaged if handled improperly.

BEZEL, SHIFTER

REMOVAL

REMOVAL

AUTOMATIC

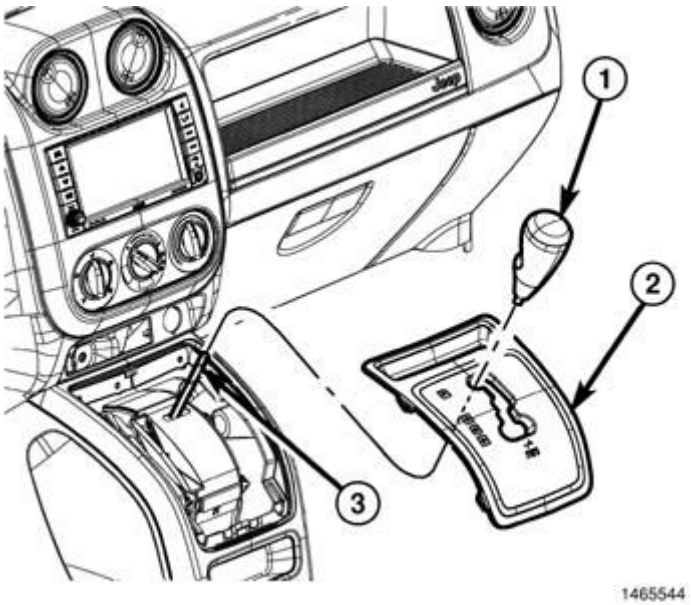

Fig. 282: Shifter Knob & Shifter Console Bezel
Courtesy of CHRYSLER GROUP, LLC

1. Pull up on shifter knob (1) and remove from the shifter shaft (3).
2. Using trim stick (special tool #C-4755, Trim Stick) or equivalent, separate the bezel (2) from the shifter console.

MANUAL

1. Pull up on shifter knob and remove from the shifter shaft.
2. Using trim stick (special tool #C-4755, Trim Stick) or equivalent, pry up on the shifter boot and separate from the bezel.
3. Using trim stick (special tool #C-4755, Trim Stick) or equivalent, separate the bezel from the shifter housing.

INSTALLATION

INSTALLATION

AUTOMATIC

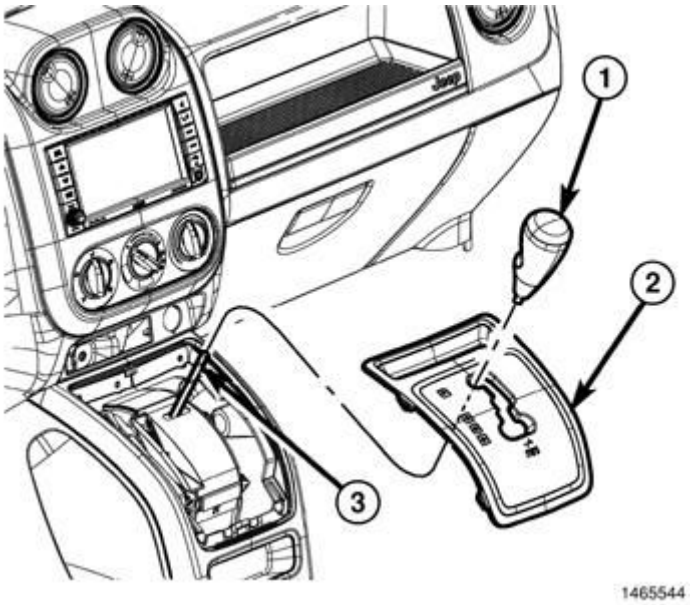

Fig. 283: Shifter Knob & Shifter Console Bezel
Courtesy of CHRYSLER GROUP, LLC

1. Install the shifter bezel (2) onto the shifter console and seat fully.
2. Install the shift knob (1) onto the shifter (3) and seat fully.

MANUAL

1. Install the shifter bezel onto the shifter console and seat fully.
2. Install the shift boot and seat fully.
3. Install the shift knob onto the shifter and seat fully.

CARPET, PASSENGER

REMOVAL

REMOVAL

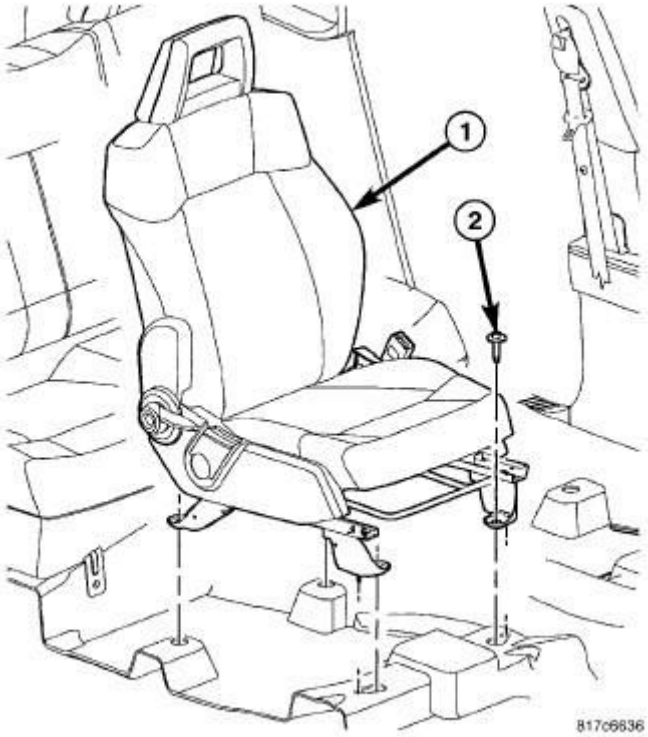

Fig. 284: Front Passenger Seat
Courtesy of CHRYSLER GROUP, LLC

1. Disconnect and isolate battery negative cable.
2. Remove the front seats (1). Refer to **SEAT, FRONT, REMOVAL**.

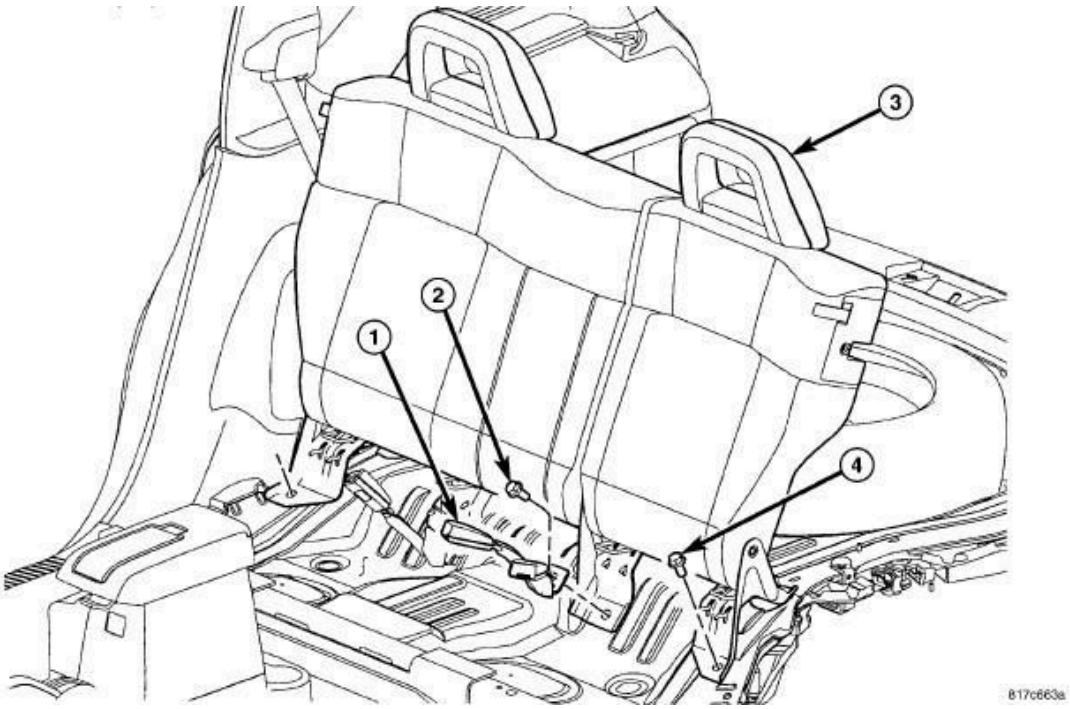

Fig. 285: Buckle, Belt Buckle Bolt & Recliner Bolts

Courtesy of CHRYSLER GROUP, LLC

3. Remove the rear seat backs (3). Refer to **SEAT BACK, REAR, REMOVAL**.

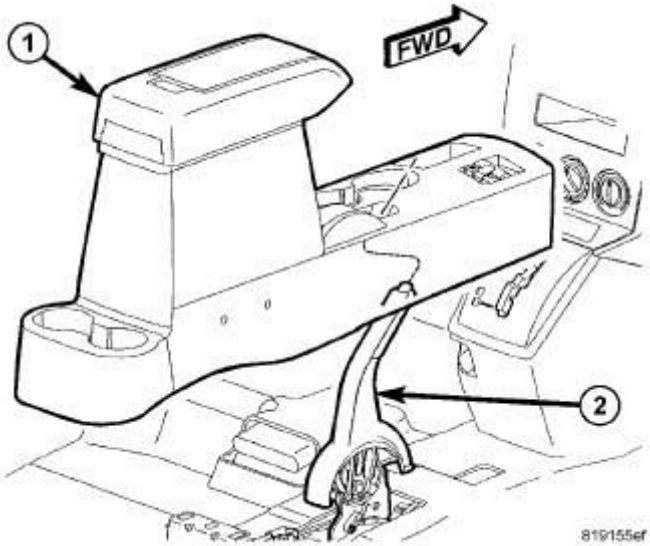

Fig. 286: Floor Console
Courtesy of CHRYSLER GROUP, LLC

4. Remove the floor console (1). Refer to **CONSOLE, FLOOR, REMOVAL**.

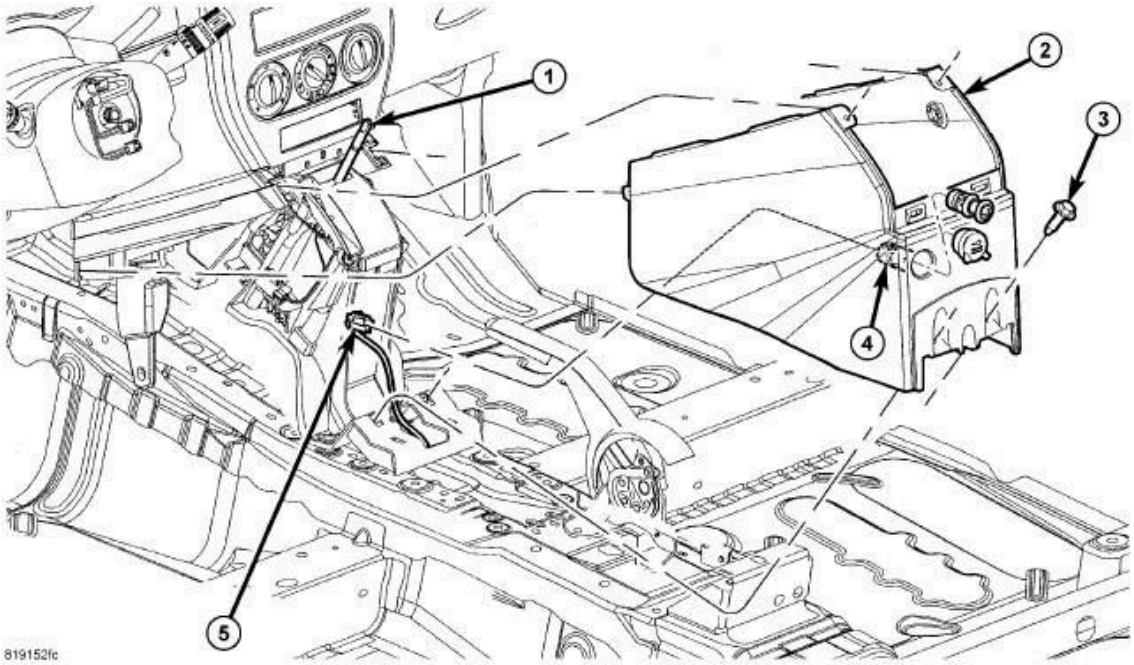

Fig. 287: Shifter Console
Courtesy of CHRYSLER GROUP, LLC

5. Remove the shifter housing (2). Refer to **CONSOLE, FLOOR, REMOVAL**.

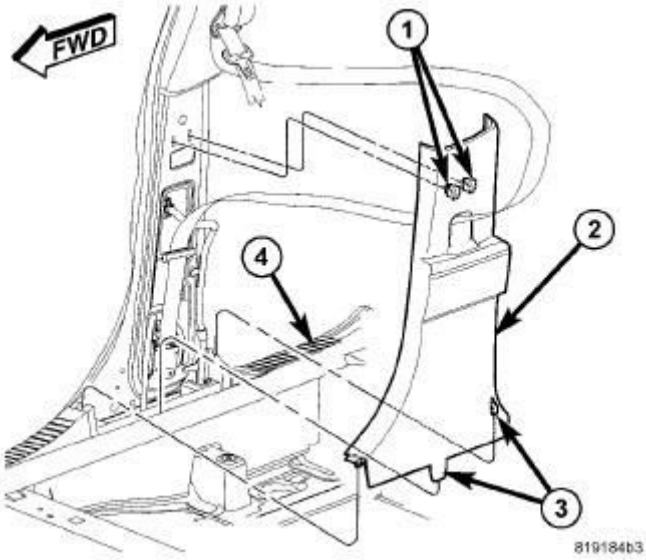

Fig. 288: B-Pillar Lower
Courtesy of CHRYSLER GROUP, LLC

6. Remove the lower B-pillar trim (2). Refer to **PANEL, B-PILLAR TRIM, LOWER, REMOVAL** .

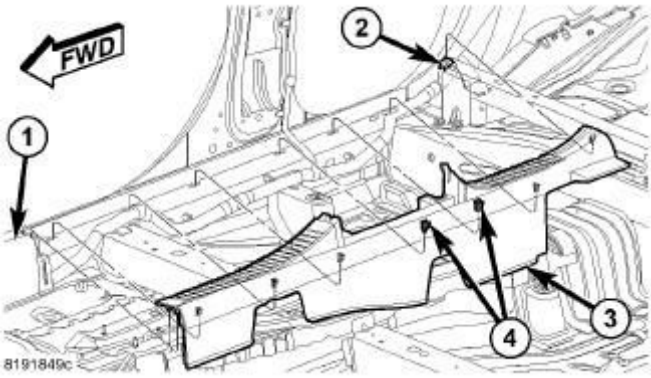

Fig. 289: Door Scuff
Courtesy of CHRYSLER GROUP, LLC

7. Remove the door scuff plates (3). Refer to **CONSOLE, FLOOR, REMOVAL**.

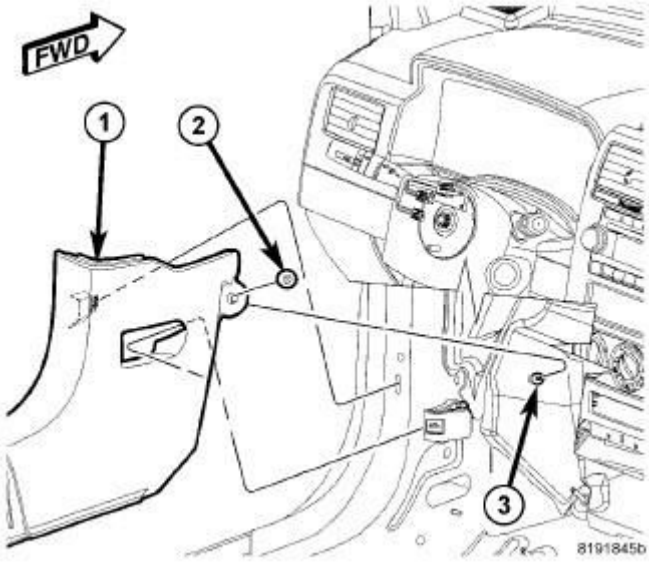

Fig. 290: Cowl Trim Panel
Courtesy of CHRYSLER GROUP, LLC

8. Remove the cowl side trim panels (1). Refer to **PANEL, COWL TRIM, SIDE, REMOVAL**.

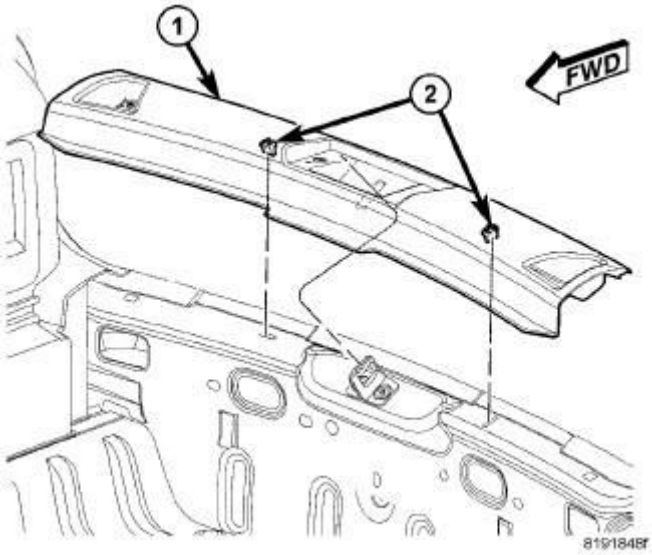

Fig. 291: Liftgate Scuff
Courtesy of CHRYSLER GROUP, LLC

9. Remove the liftgate scuff plate (1). Refer to **PLATE, SCUFF, LIFTGATE, REMOVAL**.

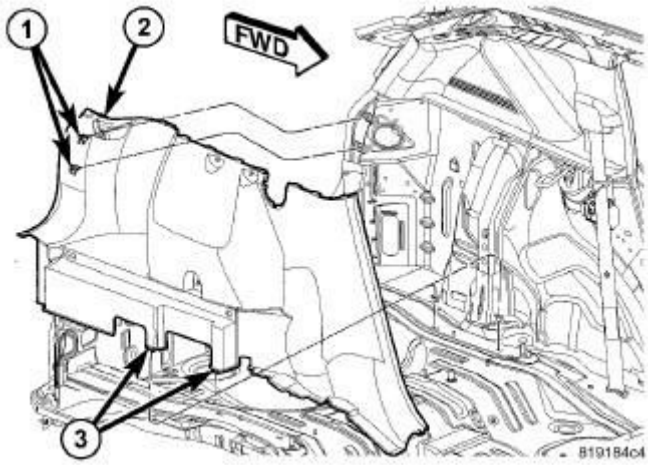

Fig. 292: Quarter Trim Panel
Courtesy of CHRYSLER GROUP, LLC

10. Remove the quarter trim panels (2). Refer to **PANEL, QUARTER TRIM, REMOVAL**.

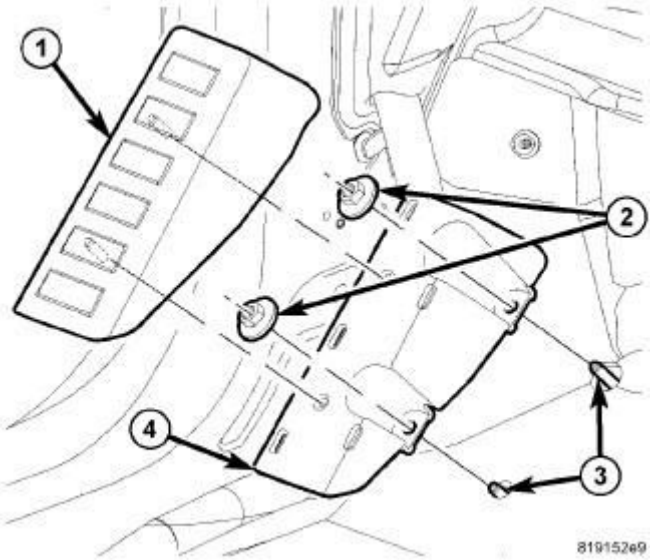

Fig. 293: Foot Rest
Courtesy of CHRYSLER GROUP, LLC

11. Remove the foot rest cover (1).
12. Remove the nuts (2) and the footrest (4), if equipped.

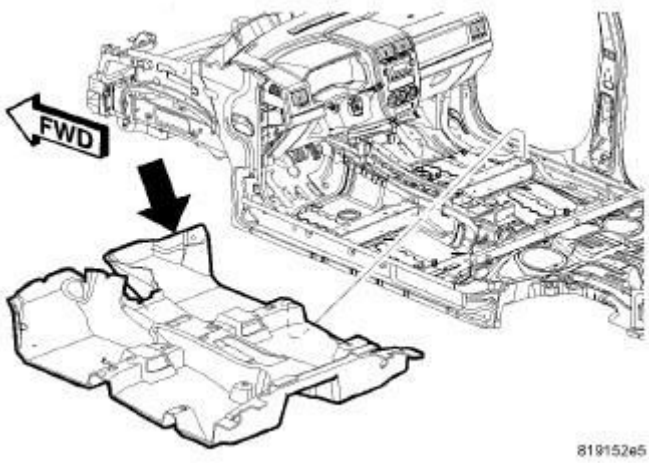

Fig. 294: Carpet
Courtesy of CHRYSLER GROUP, LLC

13. Remove the carpet.

INSTALLATION

INSTALLATION

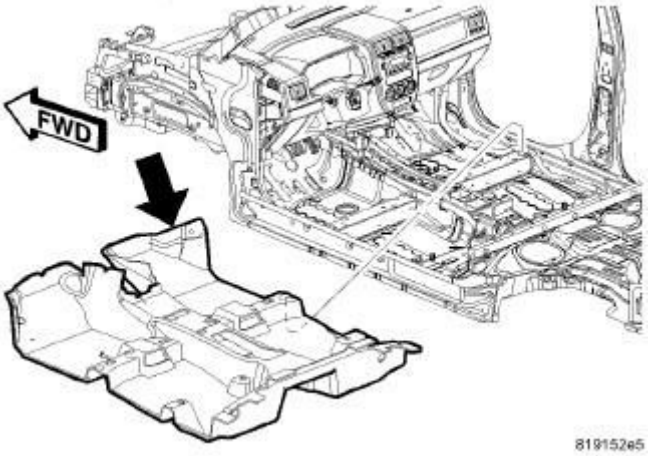

Fig. 295: Carpet
Courtesy of CHRYSLER GROUP, LLC

1. Install the carpet,

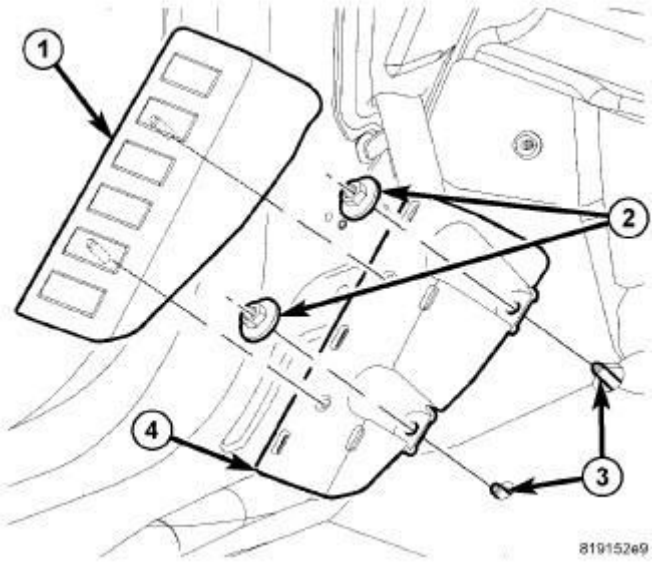

Fig. 296: Foot Rest
Courtesy of CHRYSLER GROUP, LLC

2. Install the footrest (4), the nuts (2), and the cover (1).

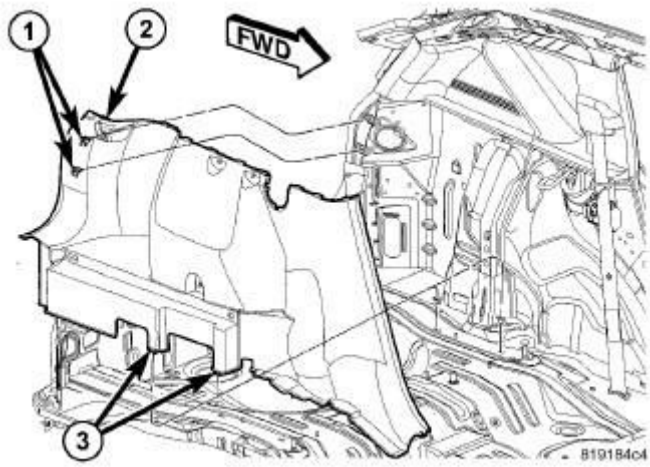

Fig. 297: Quarter Trim Panel
Courtesy of CHRYSLER GROUP, LLC

3. Install the quarter trim panels (2). Refer to **PANEL, QUARTER TRIM, INSTALLATION**.

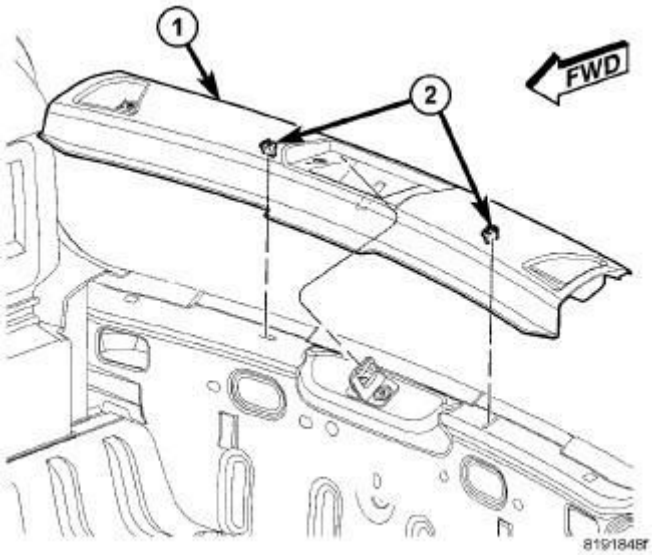

Fig. 298: Liftgate Scuff
Courtesy of CHRYSLER GROUP, LLC

4. Install the liftgate scuff plate (1). Refer to **PLATE, SCUFF, LIFTGATE, INSTALLATION**.

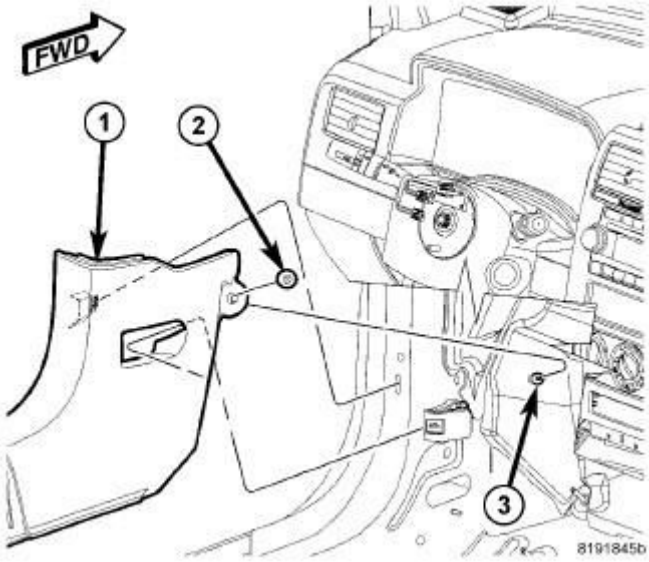

Fig. 299: Cowl Trim Panel
Courtesy of CHRYSLER GROUP, LLC

5. Install the cowl side trim panels (1). Refer to **PANEL, COWL TRIM, SIDE, INSTALLATION**.

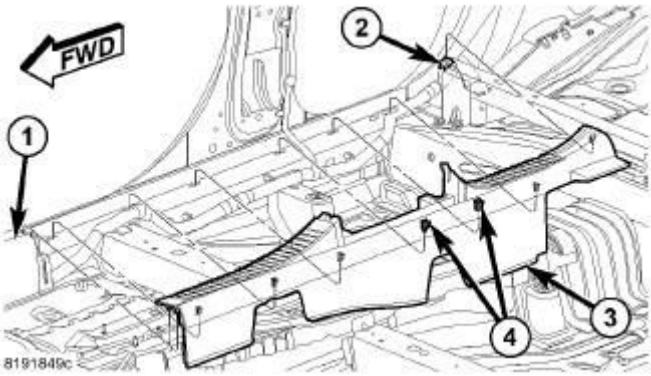

Fig. 300: Door Scuff
Courtesy of CHRYSLER GROUP, LLC

6. Install the door scuff plates (3). Refer to **CONSOLE, FLOOR, INSTALLATION**.

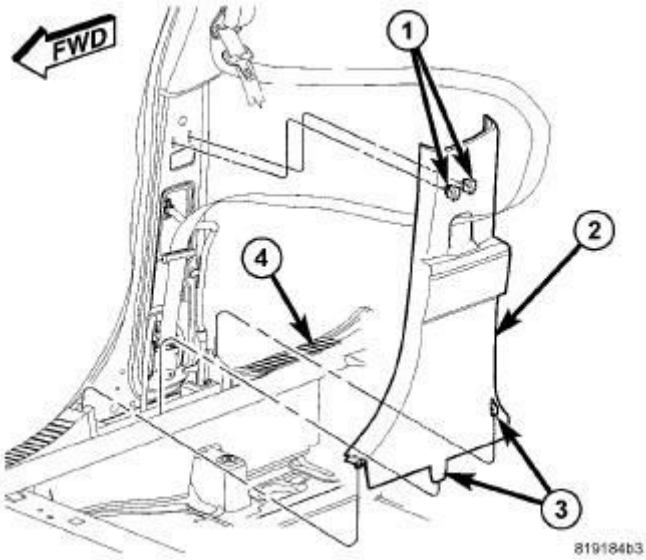

Fig. 301: B-Pillar Lower
Courtesy of CHRYSLER GROUP, LLC

7. Install the lower B-pillar trim (2), Refer to **PANEL, B-PILLAR TRIM, LOWER, INSTALLATION** .

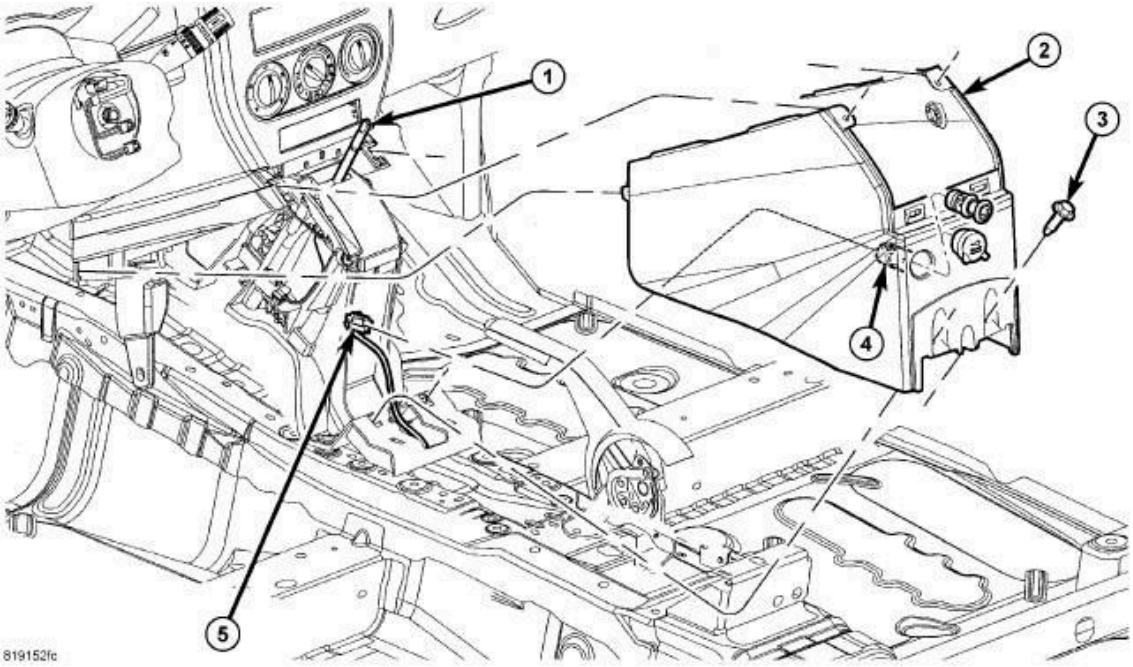

Fig. 302: Shifter Console
Courtesy of CHRYSLER GROUP, LLC

8. Install the shifter housing (2). Refer to **CONSOLE, FLOOR, INSTALLATION**.

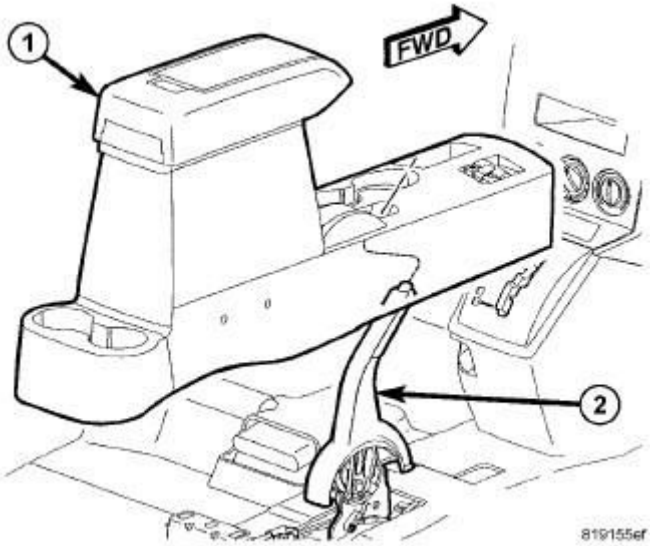

Fig. 303: Floor Console
Courtesy of CHRYSLER GROUP, LLC

9. Install the floor console (1). Refer to **CONSOLE, FLOOR, INSTALLATION**.

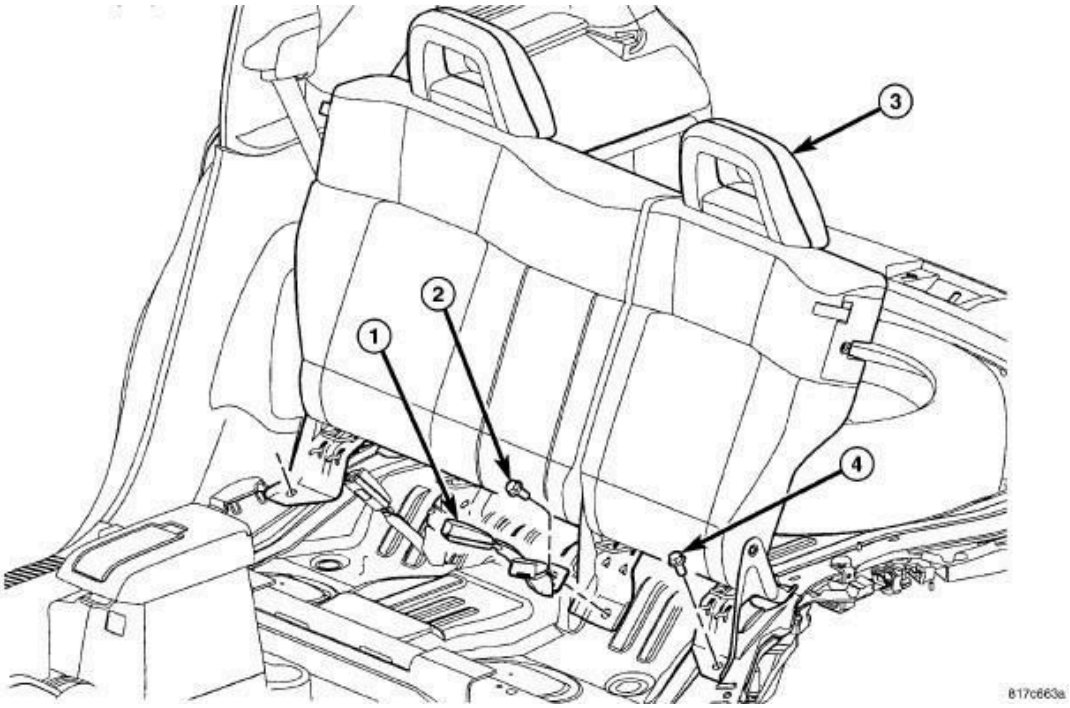

Fig. 304: Buckle, Belt Buckle Bolt & Recliner Bolts
Courtesy of CHRYSLER GROUP, LLC

10. Install the rear seat backs (3). Refer to **SEAT BACK, REAR, INSTALLATION**.

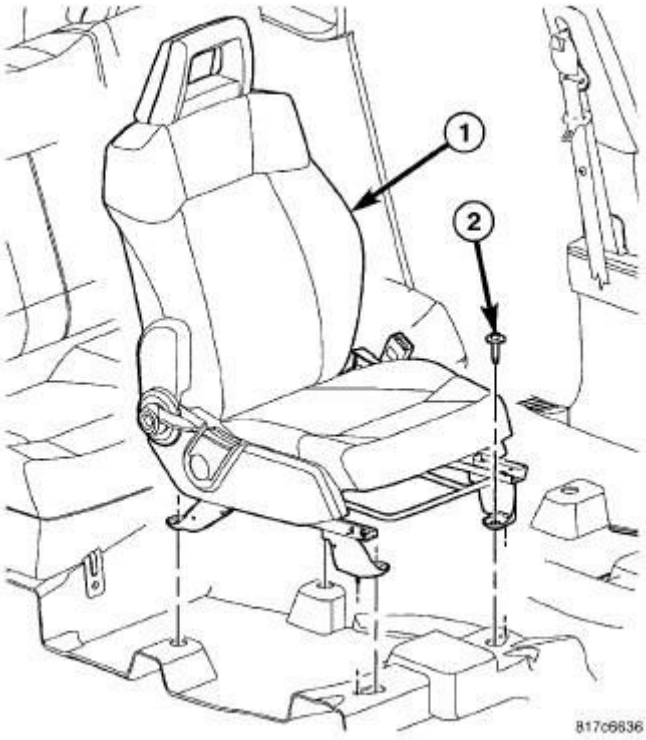

Fig. 305: Front Passenger Seat

Courtesy of CHRYSLER GROUP, LLC

11. Install the front seats (1). Refer to **SEAT, FRONT, INSTALLATION**.
12. Connect battery negative cable.

CONSOLE, FLOOR

REMOVAL

REMOVAL

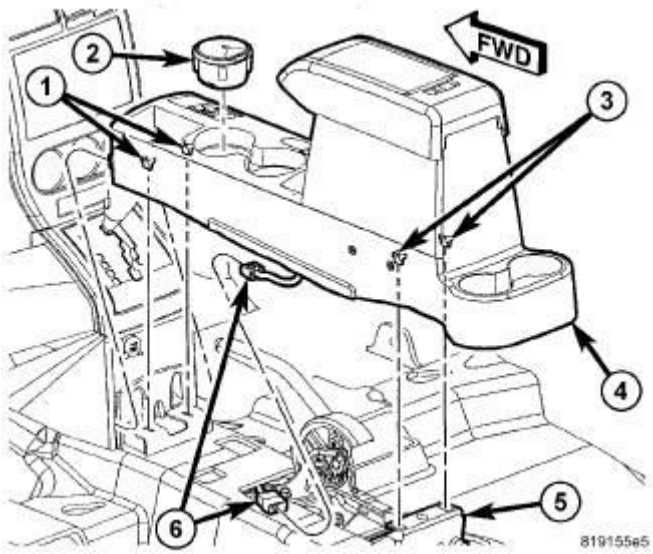

Fig. 306: Floor Console
Courtesy of CHRYSLER GROUP, LLC

1. Set the parking brake lever in the up position.
2. Remove the two screws from the console bin.
3. Lift the console (4) up at the front from underneath right hand and left hand sides of console base at the same time and release the console clips (1).
4. Lift console from rear and release the rear clips (3).
5. Disconnect the electrical connector (6).

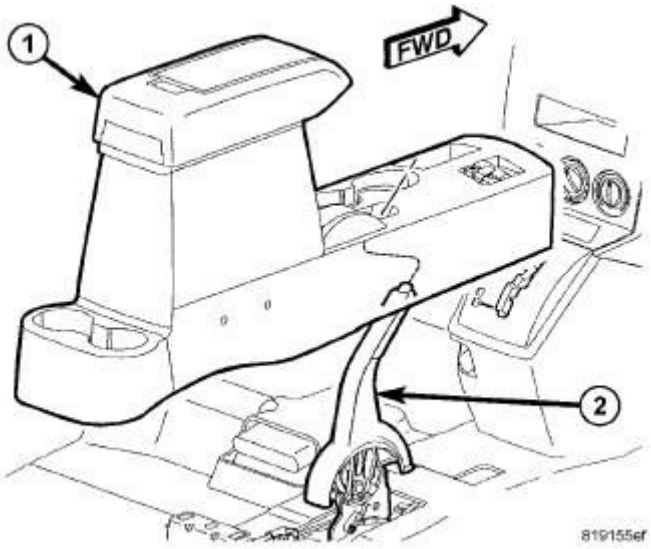

Fig. 307: Floor Console
Courtesy of CHRYSLER GROUP, LLC

6. Lift the console (1) up and over the park break lever (2) and remove.

INSTALLATION

INSTALLATION

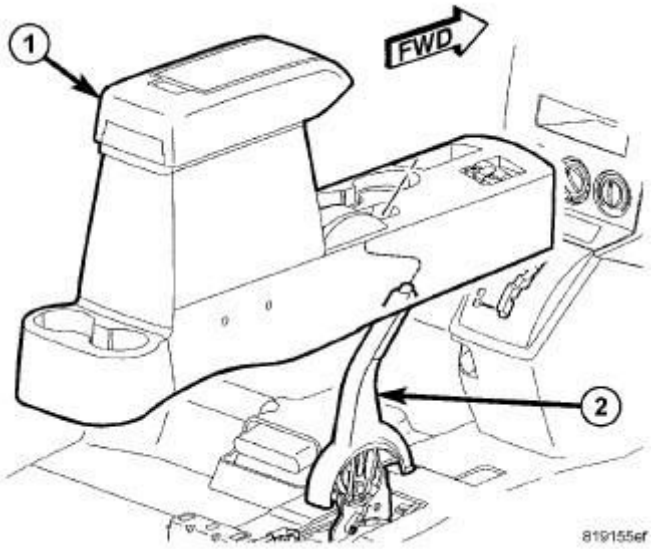

Fig. 308: Floor Console
Courtesy of CHRYSLER GROUP, LLC

1. Position the console (1) into the vehicle and down over the park break lever (2).

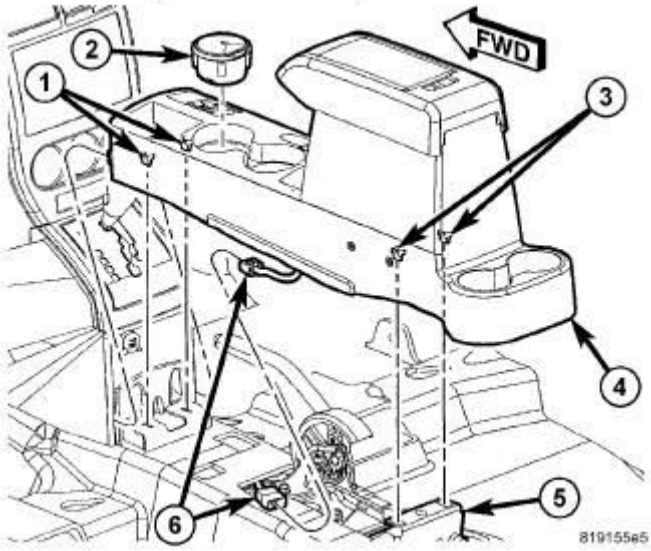

Fig. 309: Floor Console
Courtesy of CHRYSLER GROUP, LLC

2. Connect the electrical connector (6).
3. Position the front of the console (4) up into the shifter console and position the front clips (1).
4. Position the rear of the console down and seat the clips (1 and 3) fully.

COVER, REAR CARGO FLOOR

REMOVAL

REMOVAL

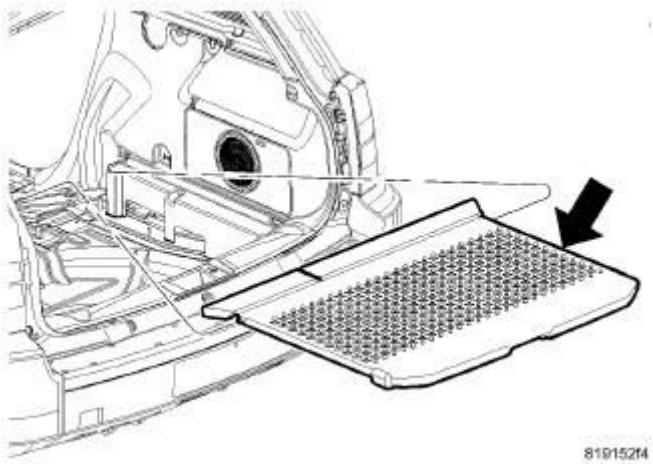

Fig. 310: Cargo Floor
Courtesy of CHRYSLER GROUP, LLC

1. Lift the cargo floor up and disengage from the rear pivots.

INSTALLATION

INSTALLATION

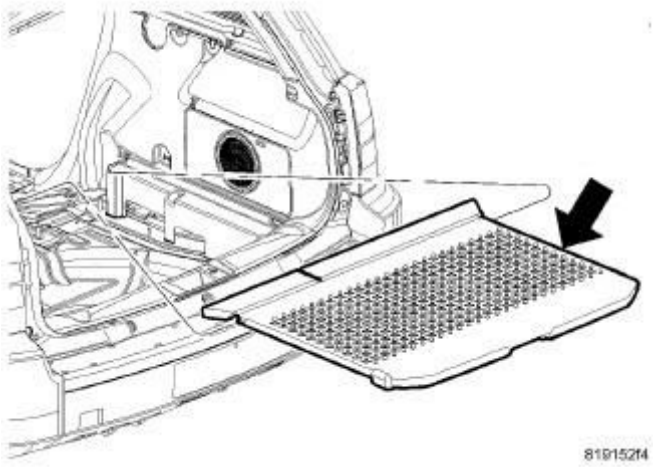

Fig. 311: Cargo Floor
Courtesy of CHRYSLER GROUP, LLC

1. Position the cargo floor into the vehicle and engage the rear pivots.
2. Seat the floor cover fully.

HANDLE, GRAB

REMOVAL

REMOVAL

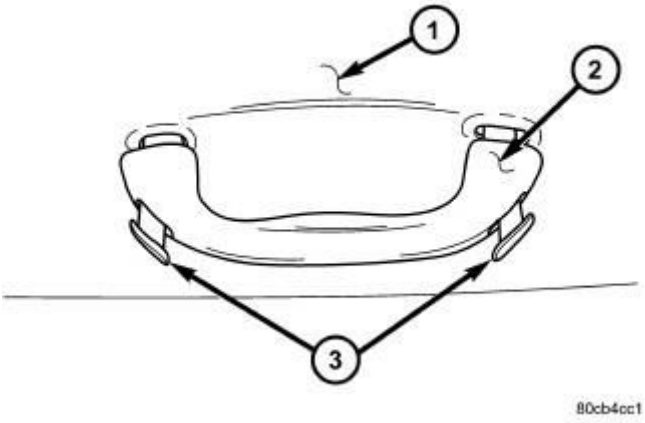

Fig. 312: Assist Handle
Courtesy of CHRYSLER GROUP, LLC

1 - HEADLINER 2 - ASSIST HANDLE 3 - RETAINING CLIPS

1. Using a small pry tool or equivalent, release the assist handle by prying out the clips (3) at either end.

INSTALLATION

INSTALLATION

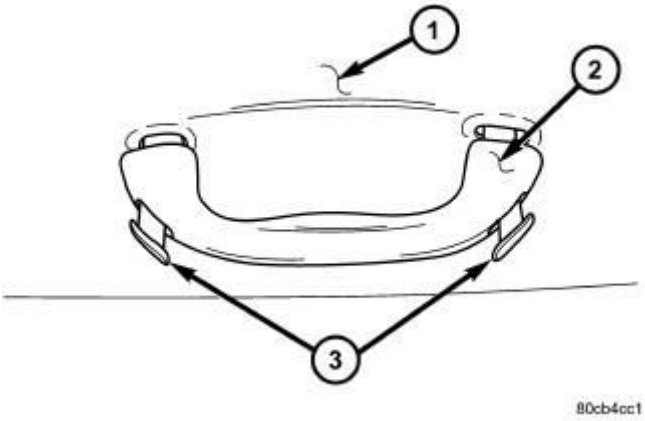

Fig. 313: Assist Handle
Courtesy of CHRYSLER GROUP, LLC

1 - HEADLINER 2 - ASSIST HANDLE 3 - RETAINING CLIPS

1. Position the assist handle and seat the retaining clips (3).

HEADLINER

REMOVAL

REMOVAL

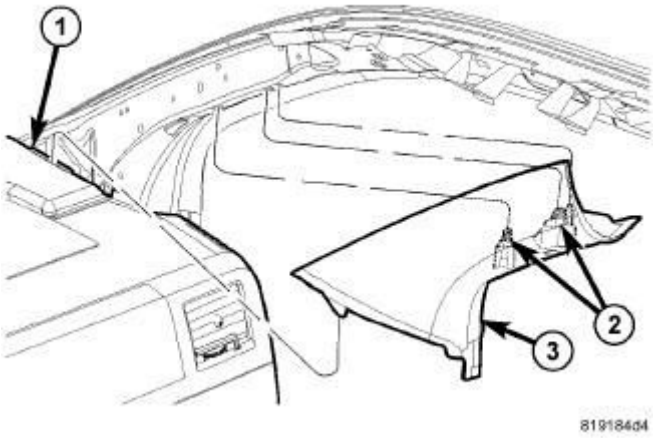

Fig. 314: A-Pillar Trim
Courtesy of CHRYSLER GROUP, LLC

NOTE: In the event the headliner is damaged or creased during removal, it will need to be replaced with a new headliner.

1. Disconnect and isolate battery negative cable.
2. Using (special tool #C-4755, Trim Stick) or equivalent, release the clips (2) and separate the A-pillar trim from the A-pillar.

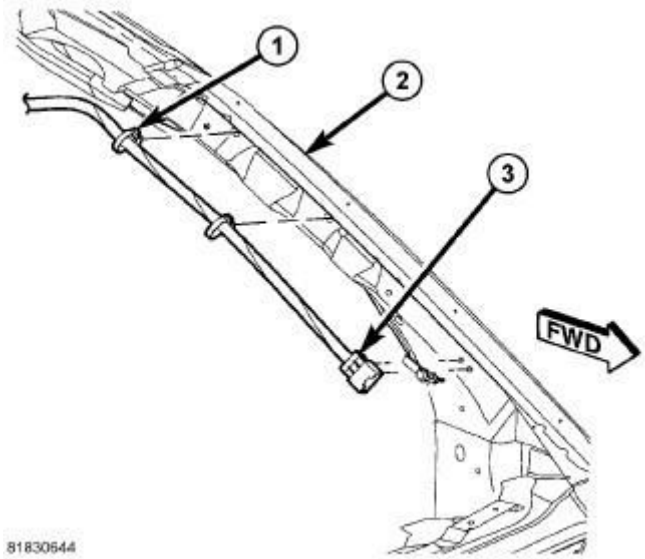

Fig. 315: A-Pillar Wire Harness
Courtesy of CHRYSLER GROUP, LLC

3. Disconnect the electrical connector (3) and release the wire harness support clips (1).

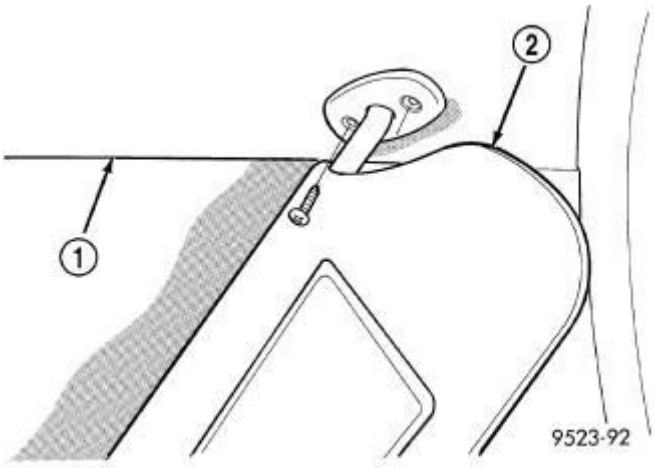

Fig. 316: Disengaging Sun Visor From Sun Visor Support
Courtesy of CHRYSLER GROUP, LLC

4. Remove the two screws that secure the sun visor to the roof panel and remove the sun visor from the headliner.
5. If equipped, disconnect the illuminated vanity mirror wire harness connector.

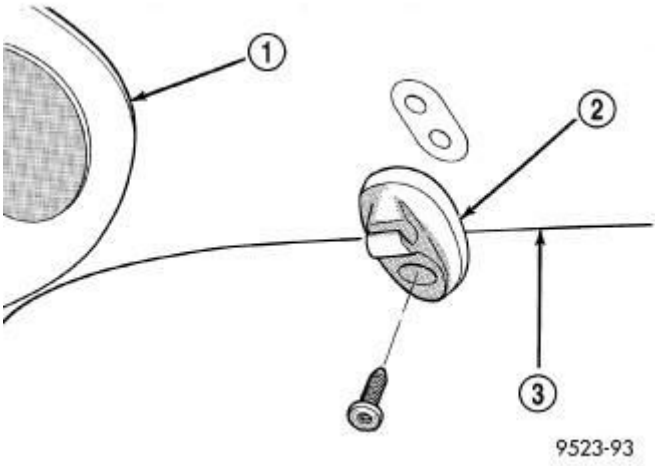

Fig. 317: Disengaging Sun Visor From Sun Visor Support
Courtesy of CHRYSLER GROUP, LLC

6. Remove the screw that secures the sun visor support to the roof panel and remove the support from the headliner.

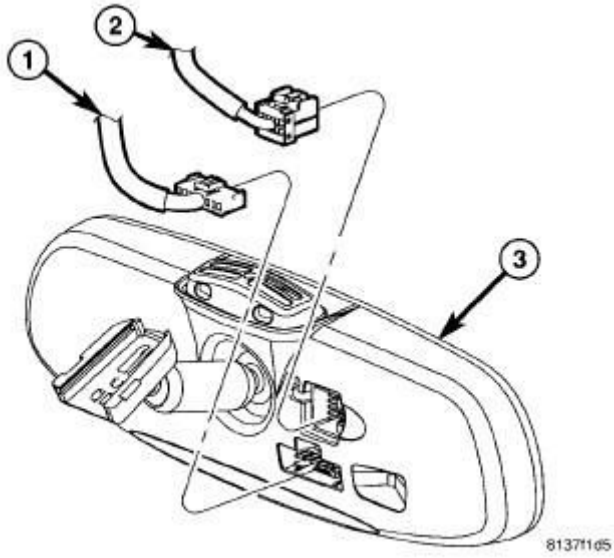

Fig. 318: Inside Rearview Mirror
Courtesy of CHRYSLER GROUP, LLC

7. Disconnect the rear view mirror (3) electrical connectors (1 and 2).

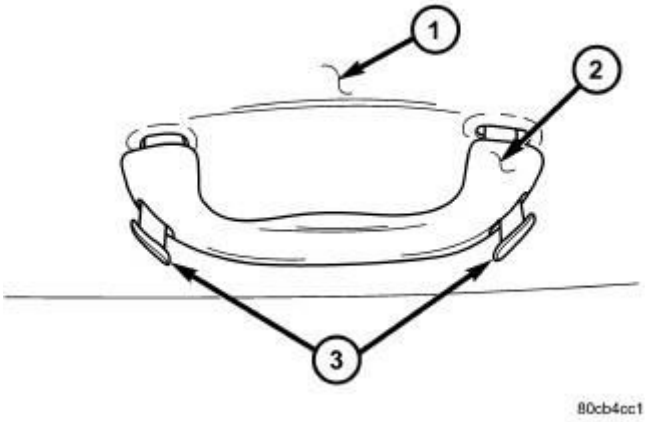

Fig. 319: Assist Handle
Courtesy of CHRYSLER GROUP, LLC

8. Remove the assist handles by using a small pry tool or equivalent, release the assist handle (2) by prying out the clips (3) at either end.

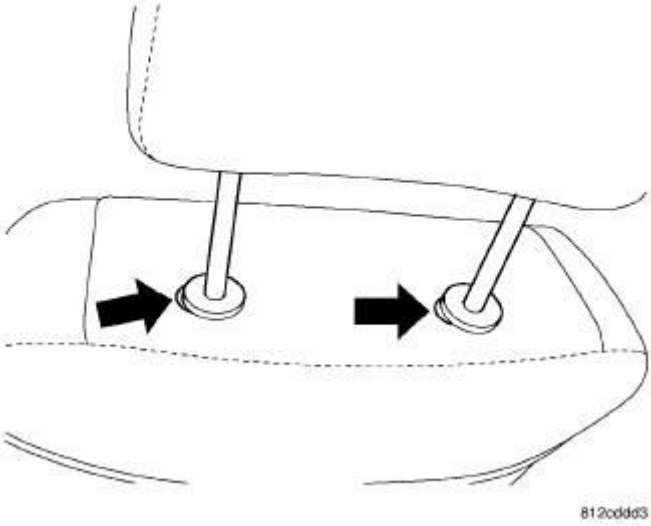

Fig. 320: Headrest
Courtesy of CHRYSLER GROUP, LLC

9. Fold the rear seats into the down position.
10. Press the release buttons and remove the headrests.
11. Place the front seats into the recline position.

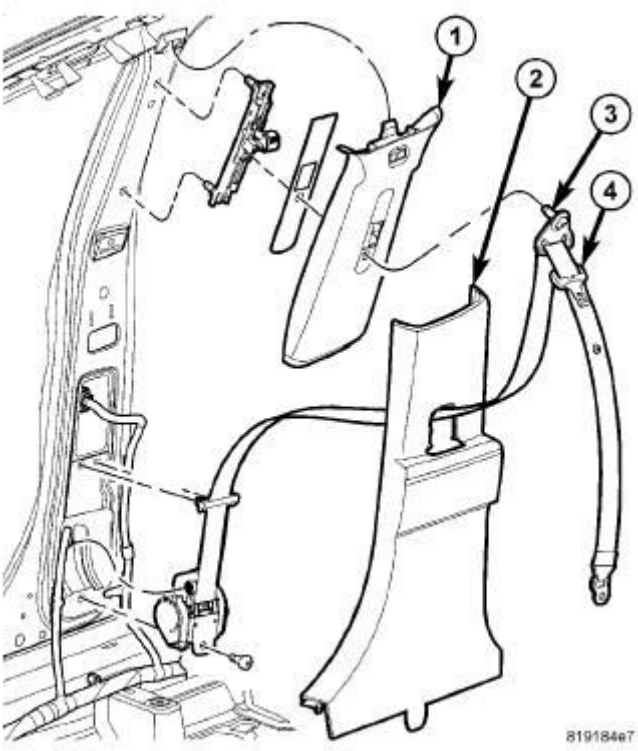

Fig. 321: B-Pillar Trim Upper
Courtesy of CHRYSLER GROUP, LLC

12. From one side of the vehicle, position aside the upper B-pillar trim (1) as necessary. Refer to **PANEL, B-PILLAR TRIM, UPPER, REMOVAL**.

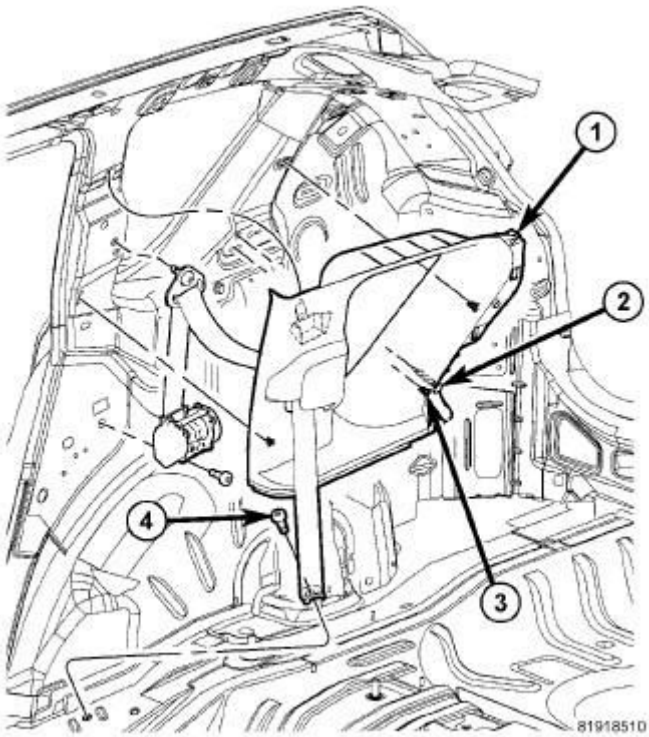

Fig. 322: C-Pillar Trim
Courtesy of CHRYSLER GROUP, LLC

13. From one side of the vehicle, position aside the C-pillar (1) trim as necessary. Refer to **PANEL, C-PILLAR TRIM, REMOVAL**.

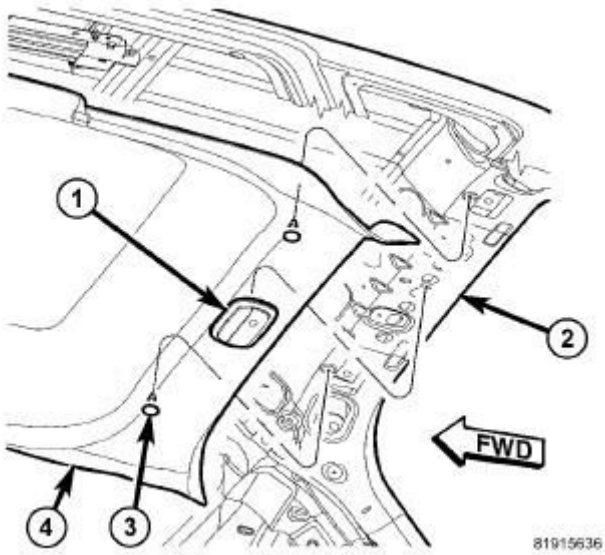

Fig. 323: Headliner, Push Pins & Dome Light
Courtesy of CHRYSLER GROUP, LLC

14. Remove the push pin fasteners (3) and lower the rear of the head liner.
15. Disconnect the dome light (1) electrical connector.
16. Disconnect the washer hose, if equipped.

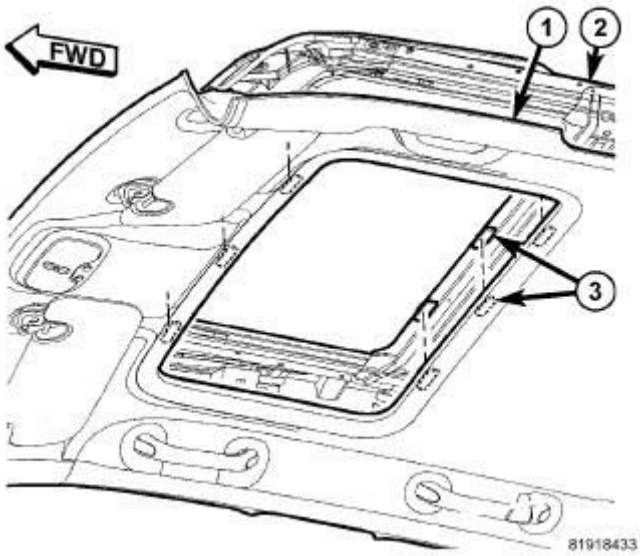

Fig. 324: Headliner & Fasteners
Courtesy of CHRYSLER GROUP, LLC

17. If equipped with a sunroof, separate the fasteners (3) and lower the headliner (1).

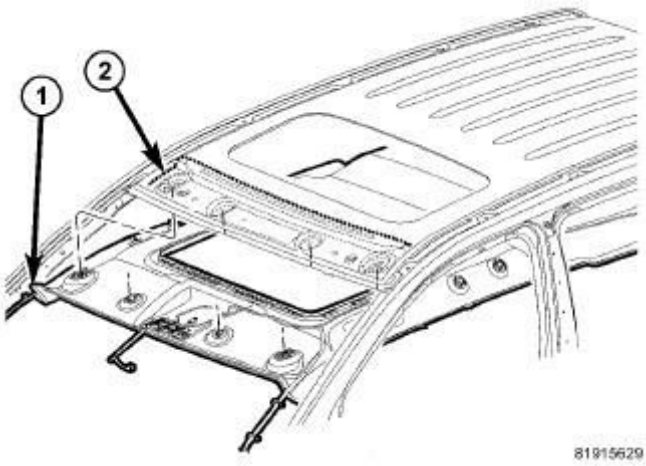

Fig. 325: Headliner
Courtesy of CHRYSLER GROUP, LLC

18. Disconnect the washer hose, if equipped, and remove the headliner (1) through the rear of the vehicle.

INSTALLATION

INSTALLATION

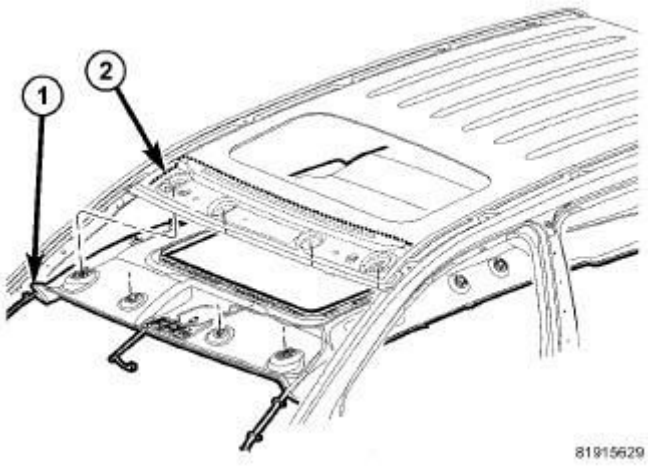

Fig. 326: Headliner
Courtesy of CHRYSLER GROUP, LLC

NOTE: In the event the headliner is damaged or creased during removal, it will need to be replaced with a new headliner.

1. Position the headliner into the vehicle and connect the washer hose at the front (1).

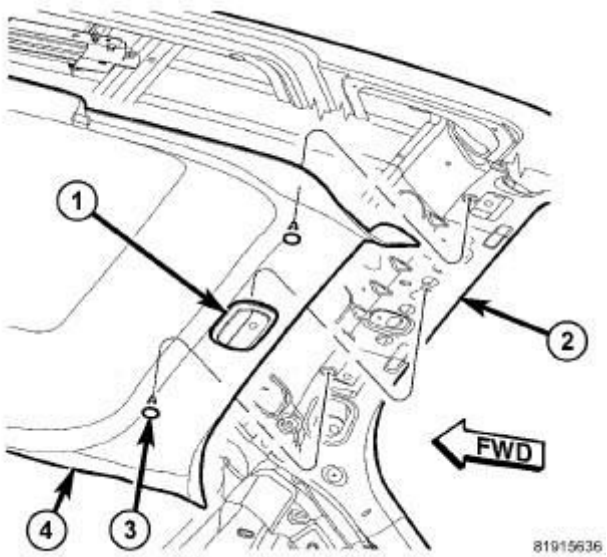

Fig. 327: Headliner, Push Pins & Dome Light
Courtesy of CHRYSLER GROUP, LLC

2. Tuck the headliner up over the remaining interior trim and connect the rear washer hose, if equipped.
3. Connect the dome light (1) electrical connector and position the headliner (4) up onto the rear header (2).
4. Install the push pin fasteners (3).

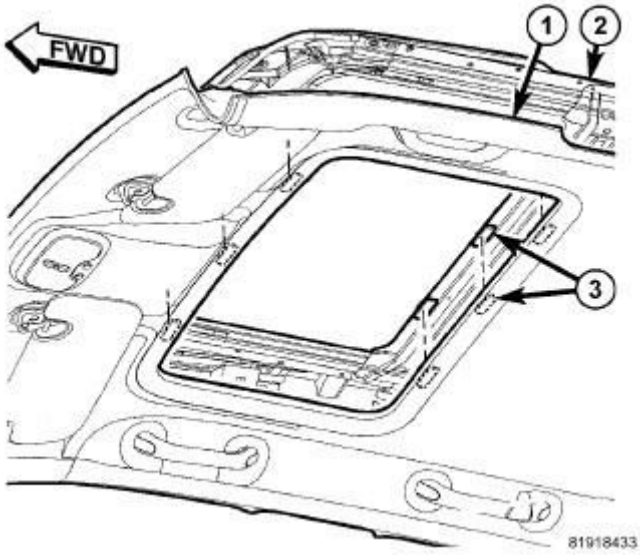

Fig. 328: Headliner & Fasteners
Courtesy of CHRYSLER GROUP, LLC

5. If equipped with a sunroof seat the trim ring fasteners (3) fully.

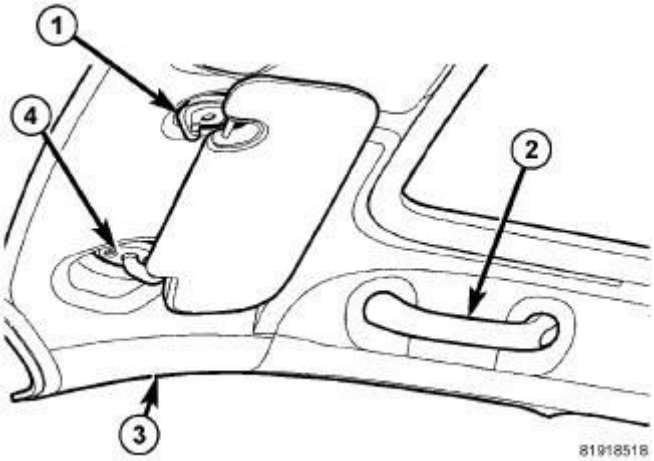

Fig. 329: Support, Assist Handle & Visor

Courtesy of CHRYSLER GROUP, LLC

6. Install the assist handles (2) and seat the retaining clips fully.
7. Install the visors (4) and supports (1) and install the screws.

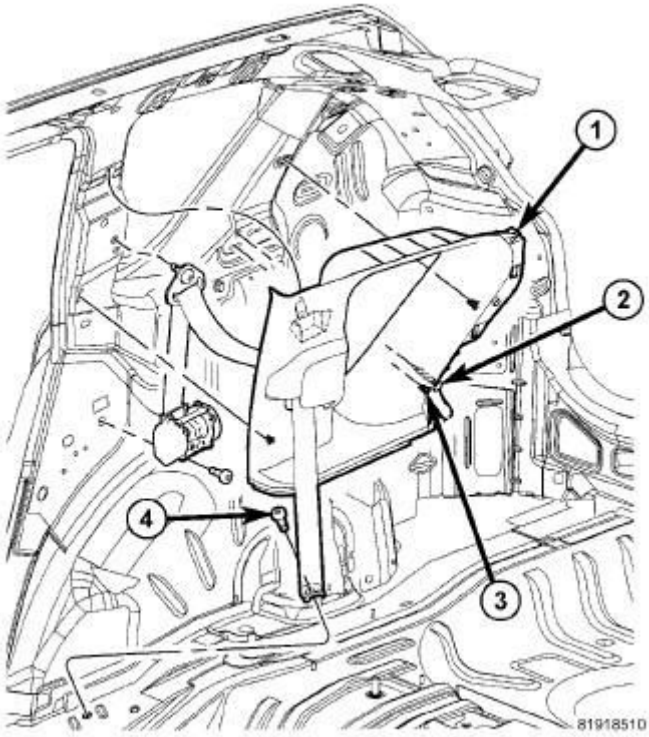

Fig. 330: C-Pillar Trim
Courtesy of CHRYSLER GROUP, LLC

8. Install the C-pillar trim (1). Refer to **PANEL, C-PILLAR TRIM, INSTALLATION**.

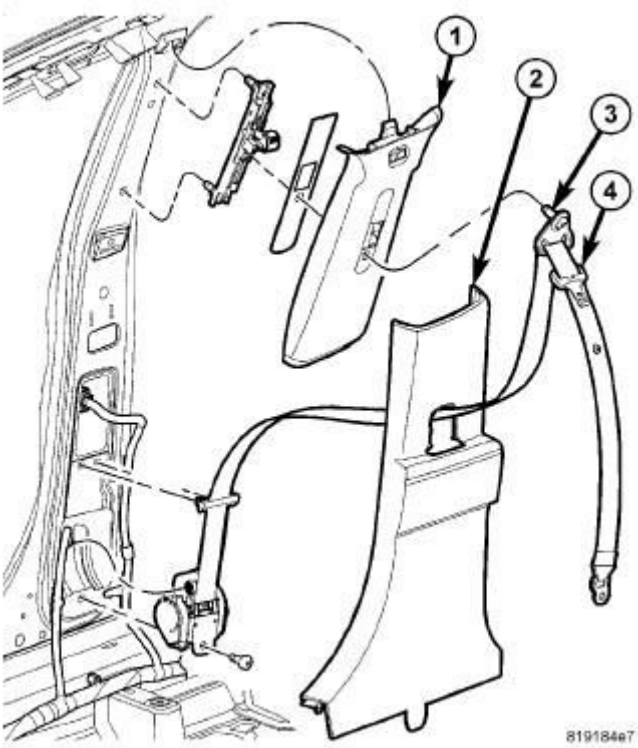

Fig. 331: B-Pillar Trim Upper
Courtesy of CHRYSLER GROUP, LLC

9. Install the upper B-pillar trim (1). Refer to **PANEL, B-PILLAR TRIM, UPPER, INSTALLATION**.

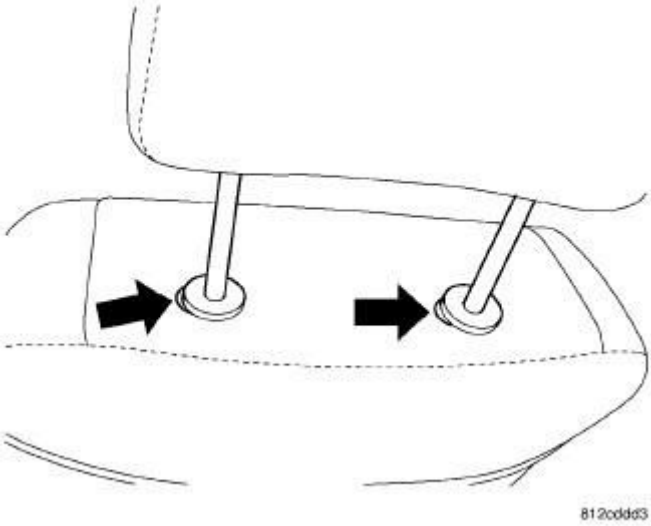

Fig. 332: Headrest
Courtesy of CHRYSLER GROUP, LLC

10. Return the seats into the upright positions.
11. Press the headrest sleeve release buttons and install the headrest.

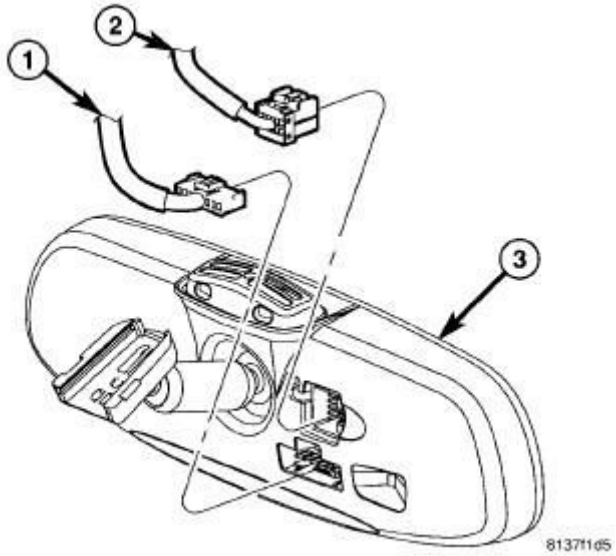

Fig. 333: Inside Rearview Mirror
Courtesy of CHRYSLER GROUP, LLC

12. Connect the rear view mirror (3) electrical connectors (1 and 2).

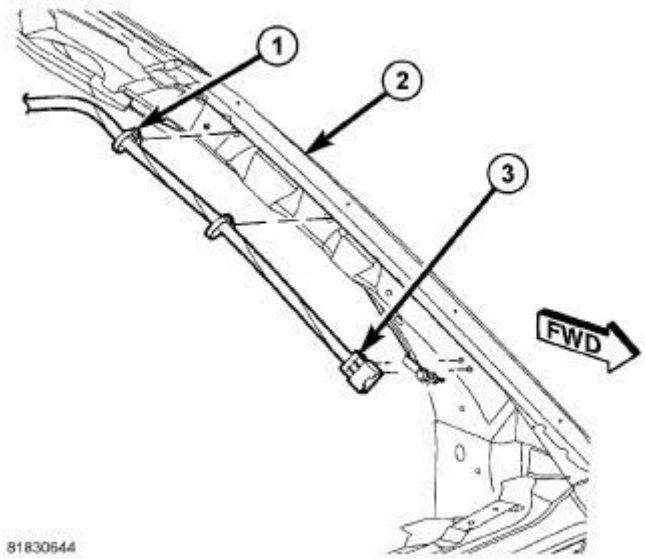

Fig. 334: A-Pillar Wire Harness
Courtesy of CHRYSLER GROUP, LLC

13. Position the wire harness onto the A-pillar (2) and seat the push pin retainers (1) fully.

14. Connect the electrical connector (3).

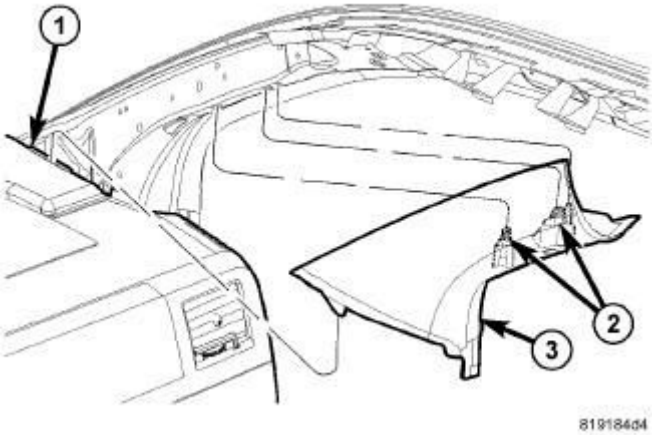

Fig. 335: A-Pillar Trim
Courtesy of CHRYSLER GROUP, LLC

15. Position the bottom A-pillar tab into the top cover (1) and seat the retaining clips (2) fully.

HOUSING, SHIFTER

REMOVAL

REMOVAL

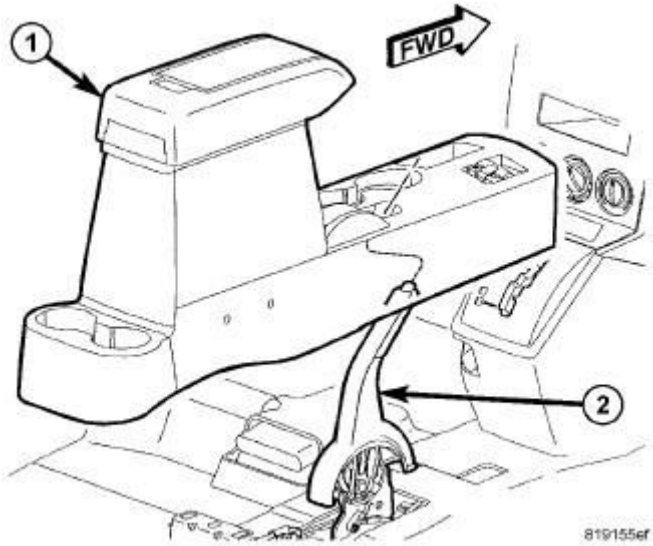

Fig. 336: Floor Console
Courtesy of CHRYSLER GROUP, LLC

1. Remove the floor console (1). Refer to **CONSOLE, FLOOR, REMOVAL**.

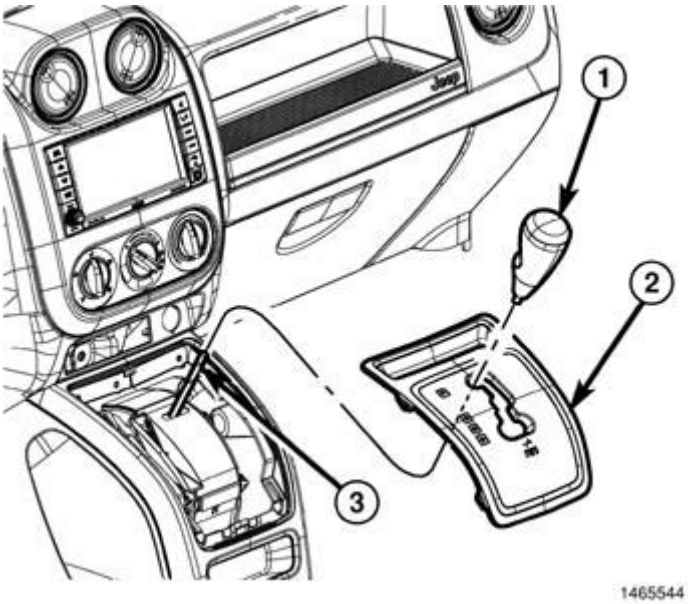

Fig. 337: Shifter Knob & Shifter Console Bezel
Courtesy of CHRYSLER GROUP, LLC

2. Remove the shift bezels (2). Refer to **BEZEL, SHIFTER, REMOVAL**.

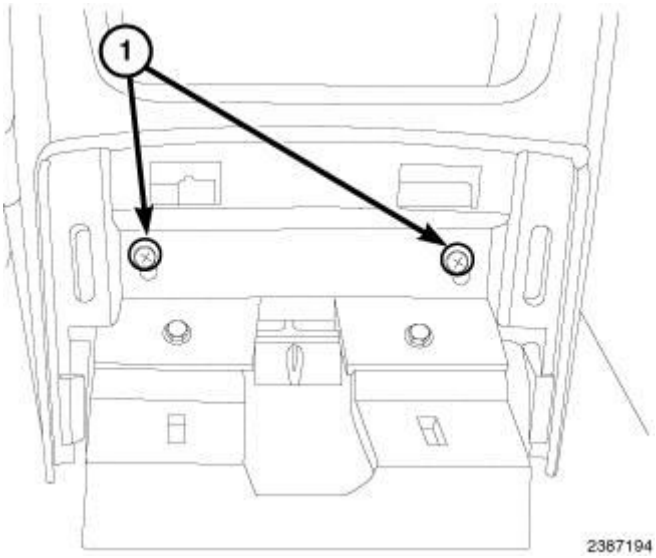

Fig. 338: Shifter Housing Lower Screws
Courtesy of CHRYSLER GROUP, LLC

3. Remove the shifter housing lower screws (1).

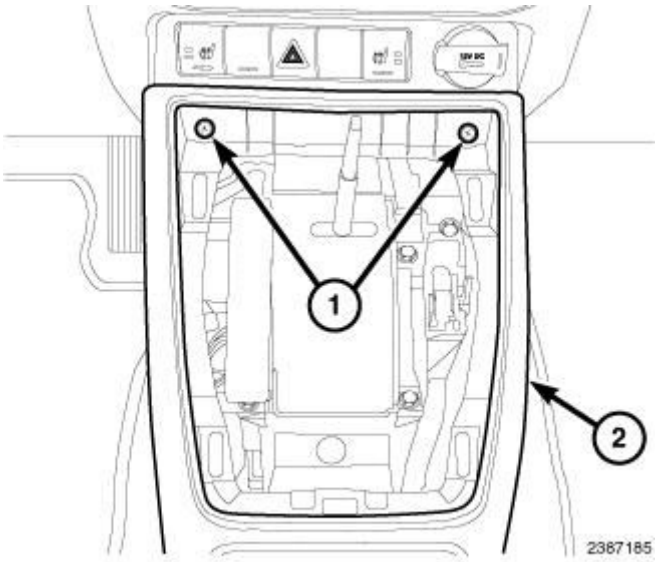

Fig. 339: Shifter Housing Upper Screws & Shifter Housing
Courtesy of CHRYSLER GROUP, LLC

4. Remove the shifter housing upper screws (1) and remove the shifter housing (2).

INSTALLATION

INSTALLATION

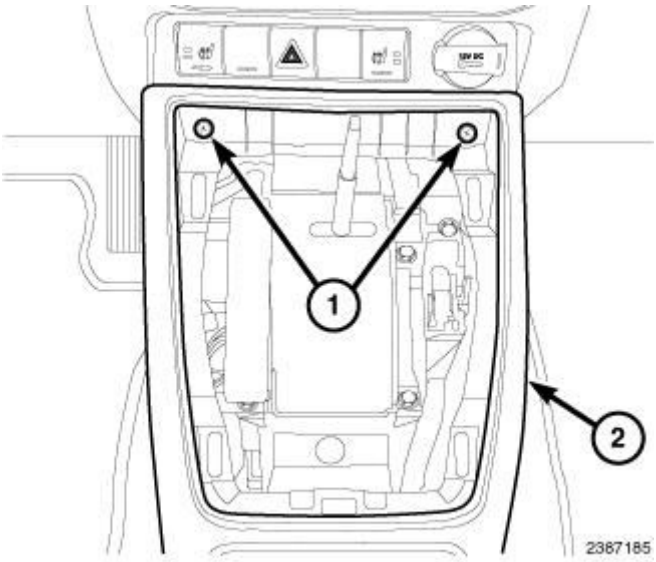

Fig. 340: Shifter Housing Upper Screws & Shifter Housing
Courtesy of CHRYSLER GROUP, LLC

1. Position the shifter housing (2) in the vehicle and install the upper screws

(1).

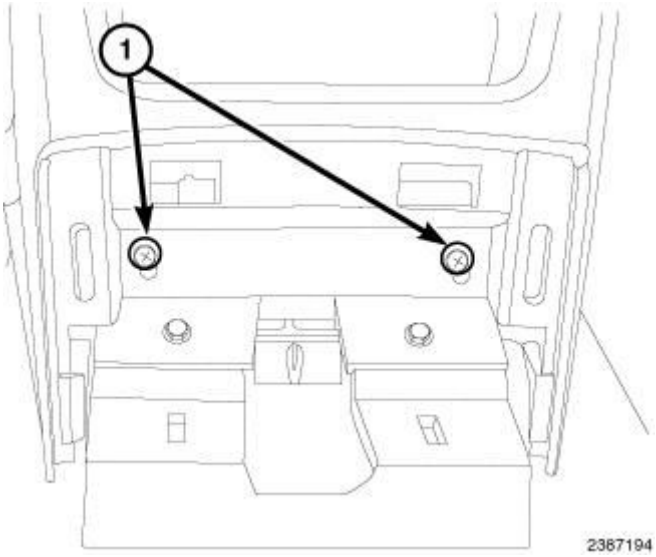

Fig. 341: Shifter Housing Lower Screws
Courtesy of CHRYSLER GROUP, LLC

2. Install the shifter housing lower screws (1).

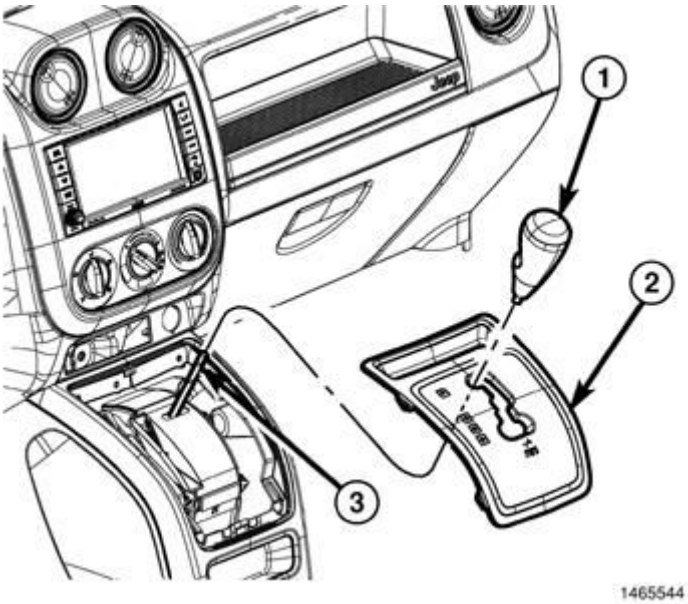

Fig. 342: Shifter Knob & Shifter Console Bezel
Courtesy of CHRYSLER GROUP, LLC

3. Install the shift bezels (2). Refer to **BEZEL, SHIFTER, INSTALLATION**.

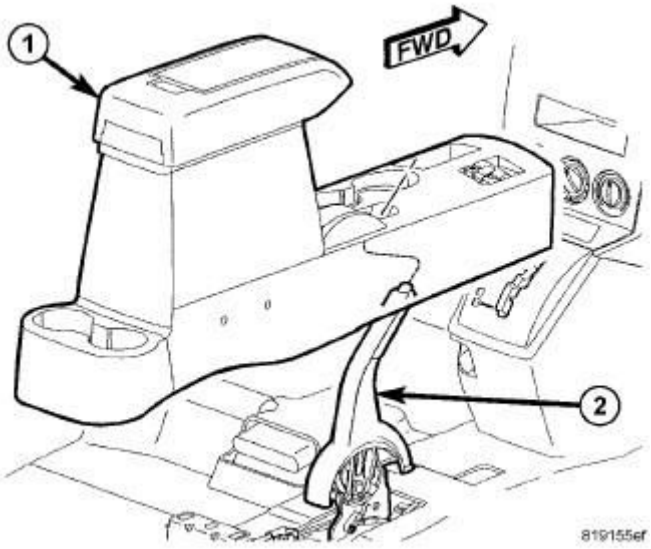

Fig. 343: Floor Console
Courtesy of CHRYSLER GROUP, LLC

4. Install the floor console (1). Refer to **CONSOLE, FLOOR, INSTALLATION**.

MIRROR, REARVIEW

REMOVAL

REMOVAL

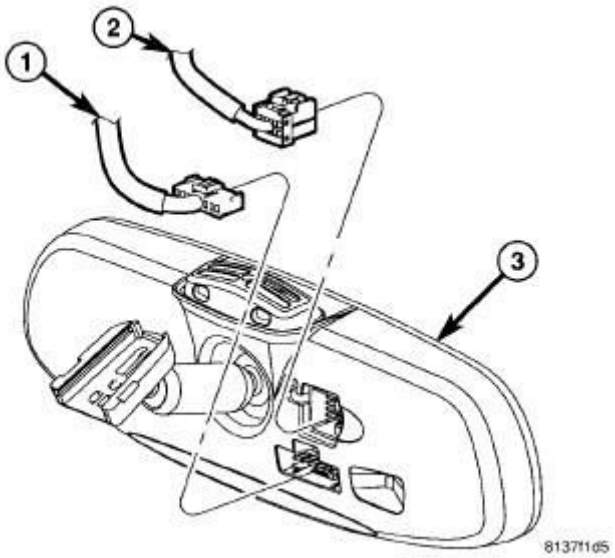

Fig. 344: Inside Rearview Mirror
Courtesy of CHRYSLER GROUP, LLC

1. If the vehicle is equipped with either the electrochromic (automatic dimming) or the telematic (hands-free phone) mirror option, disconnect and isolate the battery negative cable.
2. If the vehicle is so equipped, disconnect the electrochromic mirror takeout and connector (1) and/or the telematic mirror takeout and connector (2) of the headliner wire harness from the connector receptacle on the back (windshield side) of the mirror housing (3).

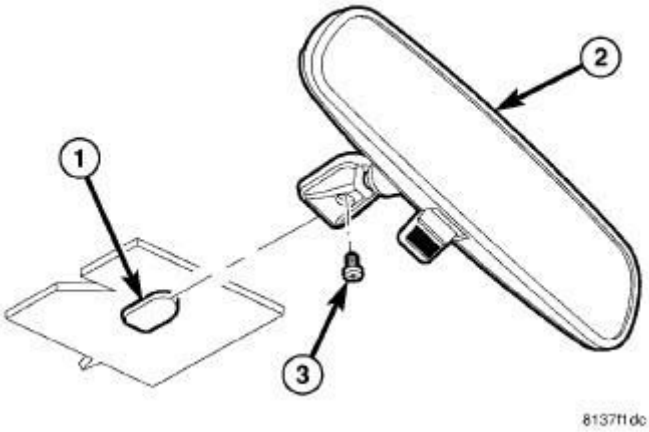

Fig. 345: Removing/Installing Inside Rearview Mirror
Courtesy of CHRYSLER GROUP, LLC

3. Remove the set screw (3) that secures the rear view mirror (2) to the support bracket/button (1) on the inside of the windshield glass.
4. Slide the rear view mirror upward far enough to disengage it from the support bracket/button.

INSTALLATION

MIRROR

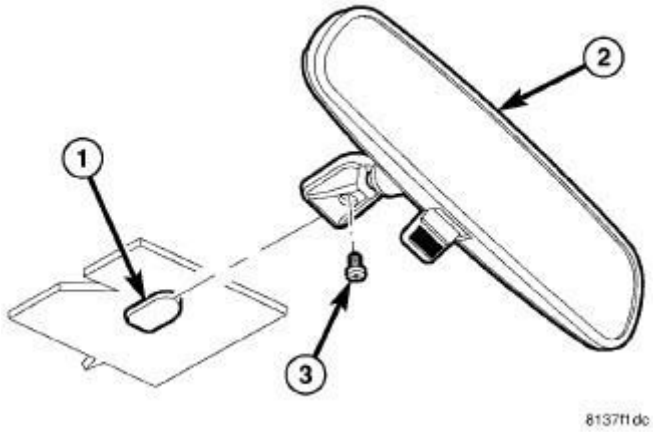

Fig. 346: Removing/Installing Inside Rearview Mirror
Courtesy of CHRYSLER GROUP, LLC

1. Position and slide the rear view mirror (2) downward over the support bracket/button (1) on the inside of the windshield glass.
2. Install and tighten the set screw (3) that secures the rear view mirror to the support bracket/button. Tighten the screw to 2 N.m (17 in. lbs.).

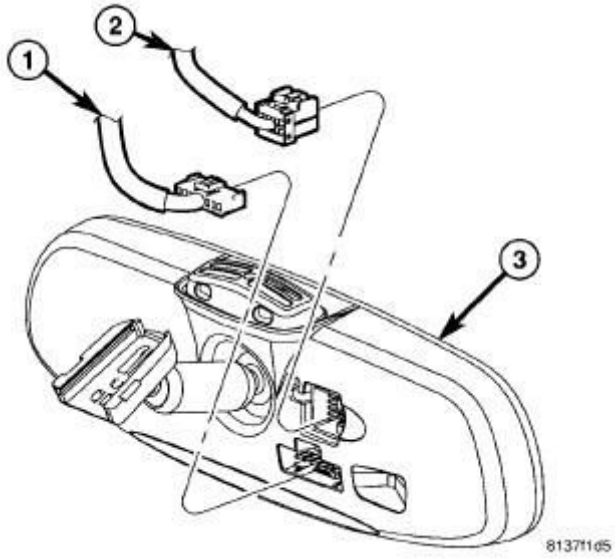

Fig. 347: Inside Rearview Mirror
Courtesy of CHRYSLER GROUP, LLC

3. If the vehicle is so equipped, route the electrochromic (automatic dimming) mirror takeout and connector (1) and/or the telematic (hands-free phone) mirror takeout and connector (2) of the headliner wire harness to the left of the mirror support bracket and reconnect it to the connector receptacle on

the back (windshield side) of the mirror housing (3).

4. If the vehicle is equipped with either the electrochromic or the telematic mirror option, reconnect the battery negative cable.

SUPPORT BRACKET

NOTE: The rear view mirror support bracket (or button) is permanently bonded to the inside of the windshield glass. If the bracket should become separated from the glass, it may be re-bonded using the following procedure. This procedure requires the use of a Rear View Mirror Adhesive kit that is available through Mopar® in single application packages that include a two-part adhesive and an accelerant with applicator.

1. Mark the proper position for the mirror bracket on the outside of the windshield glass with a wax pencil. The residual adhesive on the inside of the glass from the prior mirror bracket installation can be used as a guide.
2. Clean the bracket contact area on the inside of the glass. Use a mild powdered cleanser on a cloth saturated with isopropyl (rubbing) alcohol. Finally, clean the glass with a paper towel dampened with alcohol.
3. Sand the bonding surface (the smaller side) of the support bracket with fine grit-sandpaper. Wipe the bracket surface clean with a paper towel.
4. Apply accelerant to the bonding surface of the bracket according to the following instructions:
   - Crush the accelerant vial to saturate the felt applicator.
   - Remove the paper sleeve.
   - Apply accelerant to the bonding surface of the bracket.
   - Allow the accelerant to dry for five minutes.
   - Do not touch the bracket bonding surface after the accelerant has been applied.
5. Apply adhesive accelerant to the bracket contact area on the inside of the windshield glass. Allow the accelerant to dry for one minute. Do not touch the bracket contact area of the glass after the accelerant has been applied.
6. Install the bracket according to the following instructions:
   - Apply one drop of adhesive at the center of the bracket contact area on the inside of the windshield glass.

- Apply an even coat of adhesive to the bonding surface of the bracket.
- Align the bracket with the marked position on the windshield glass.
- Press and hold the bracket in place for at least one minute.

NOTE: Verify that the mirror support bracket is correctly aligned, because the adhesive will cure rapidly.

7. Allow the adhesive to cure for 8-10 minutes. Remove any excess adhesive with an alcohol-dampened cloth.
8. Allow the adhesive to cure for an additional 8-10 minutes before reinstalling the mirror.

PANEL, A-PILLAR TRIM

REMOVAL

REMOVAL

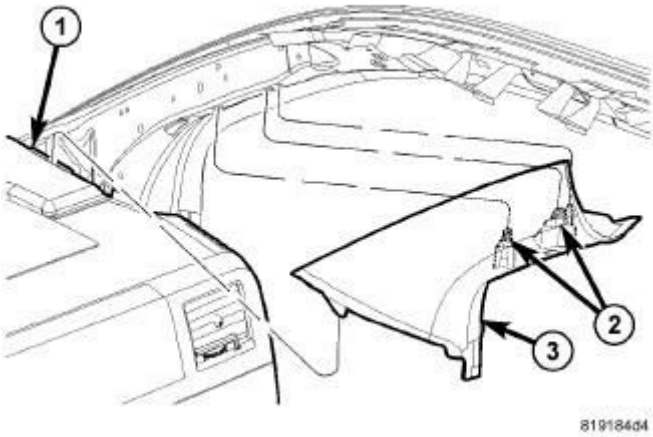

Fig. 348: A-Pillar Trim
Courtesy of CHRYSLER GROUP, LLC

1. Using a trim stick (special tool #C-4755, Trim Stick) or equivalent, release the clips (2) and separate the A-pillar trim from the A-pillar.

INSTALLATION

INSTALLATION

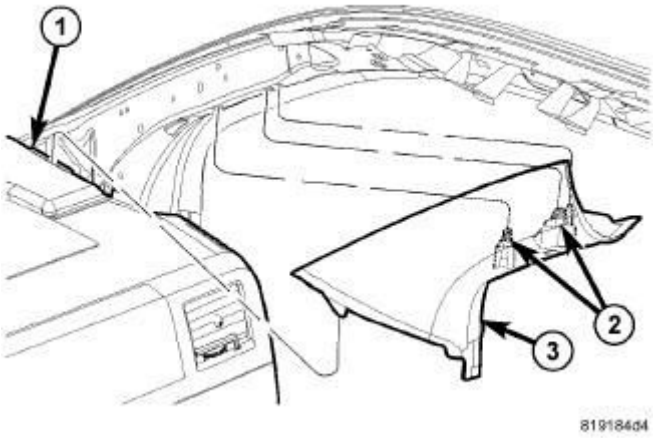

Fig. 349: A-Pillar Trim
Courtesy of CHRYSLER GROUP, LLC

1. Position the bottom A-pillar tab into the top cover (1) and seat the retaining clips (2) fully.

PANEL, B-PILLAR TRIM, LOWER

REMOVAL

REMOVAL

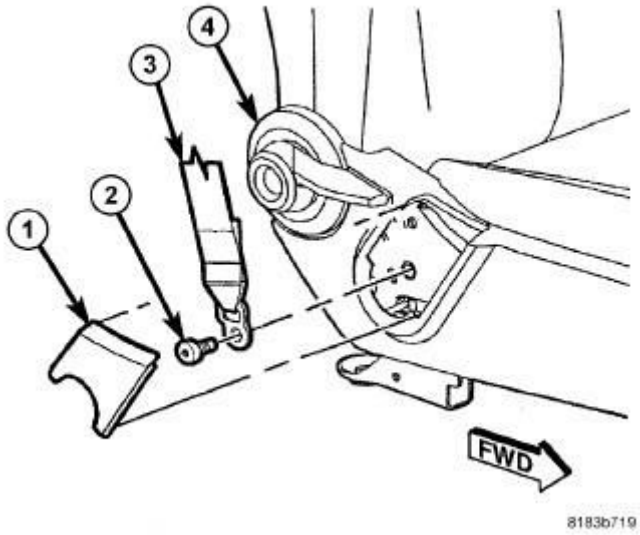

Fig. 350: Replacing Front Seat Belt
Courtesy of CHRYSLER GROUP, LLC

1. Adjust the front seat to its most forward position for easiest access to the front seat belt lower anchor cover (1) and the B-pillar trim.

2. Grasp the upper edge of the lower anchor cover and pull upward to unsnap it from the front seat cushion outboard side shield (4).
3. Remove the screw (2) that secures the seat belt (3) lower anchor to the outboard side of the front seat cushion frame.

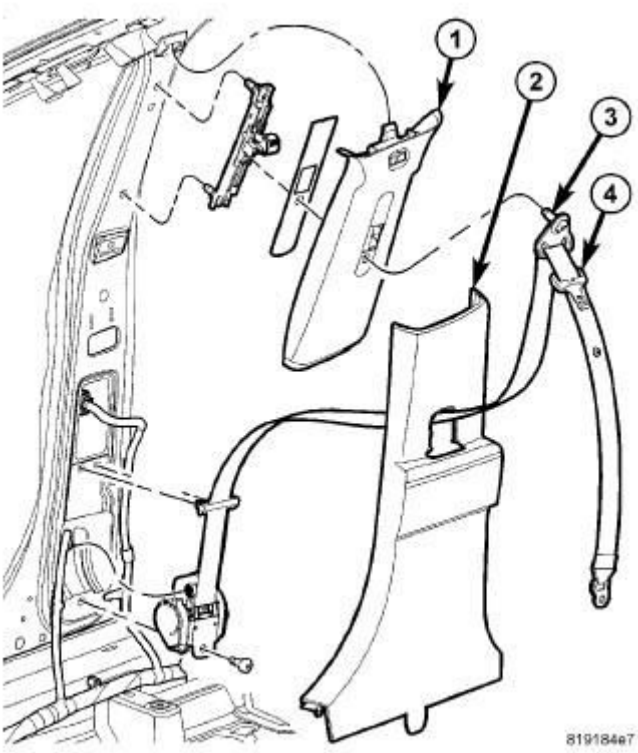

Fig. 351: B-Pillar Trim Upper
Courtesy of CHRYSLER GROUP, LLC

4. Remove the screw (3) that secures the seat belt turning loop to the height adjuster on the upper B-pillar.
5. Remove the seat belt turning loop from the height adjuster.
6. Release the upper retaining clips and separate the lower B-pillar trim (2) from the pillar, pull seat belt (4) through the hole and remove.

INSTALLATION

INSTALLATION

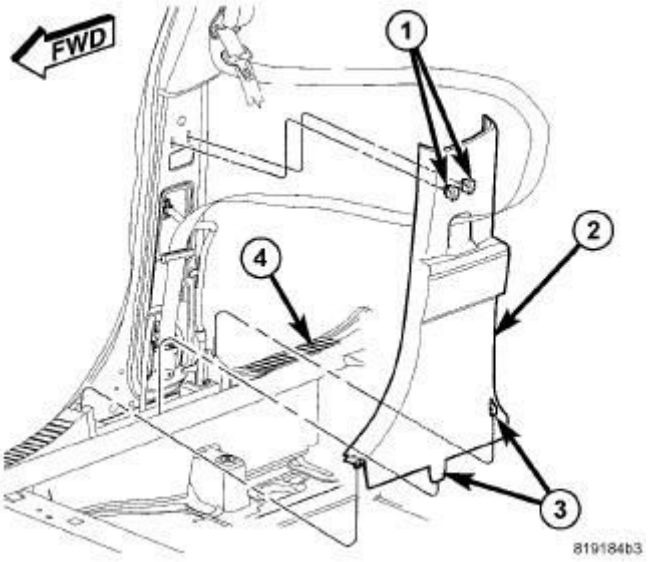

Fig. 352: B-Pillar Lower
Courtesy of CHRYSLER GROUP, LLC

1. Position the seat belt through the hole in the lower B-pillar trim.
2. Position the lower tabs (3) into the scuff plate (4) and seat the upper retaining clips (1) fully.

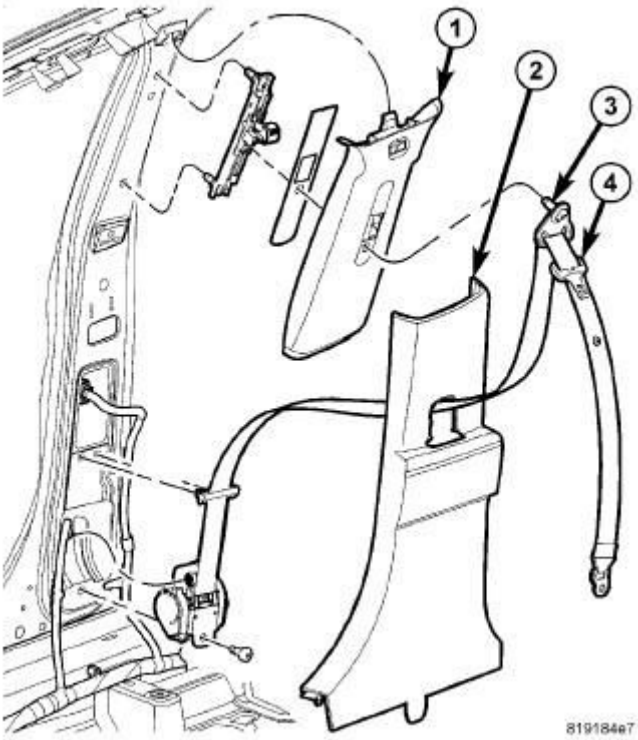

Fig. 353: B-Pillar Trim Upper
Courtesy of CHRYSLER GROUP, LLC

3. Install and tighten the screw (3) that secures the turning loop to the height adjuster. Tighten the screw to 40 N.m (30 ft. lbs.).

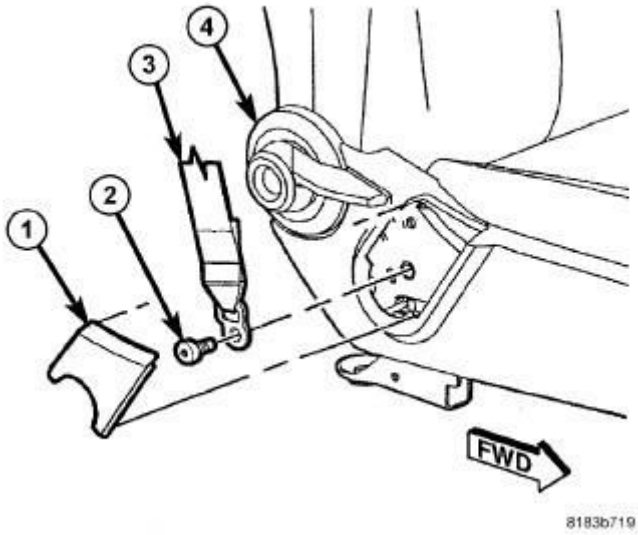

Fig. 354: Replacing Front Seat Belt
Courtesy of CHRYSLER GROUP, LLC

4. Position the seat belt (3) lower anchor to the mounting hole on the outboard side of the front seat cushion frame. Be certain that the seat belt webbing between the turning loop and the lower anchor is not twisted.
5. Install and tighten the screw (2) that secures the lower anchor to the seat. Tighten the screw to 51 N.m (37.5 ft. lbs.).
6. Install the lower anchor cover (1) onto the front seat cushion outboard side shield (4).

PANEL, B-PILLAR TRIM, UPPER

REMOVAL

REMOVAL

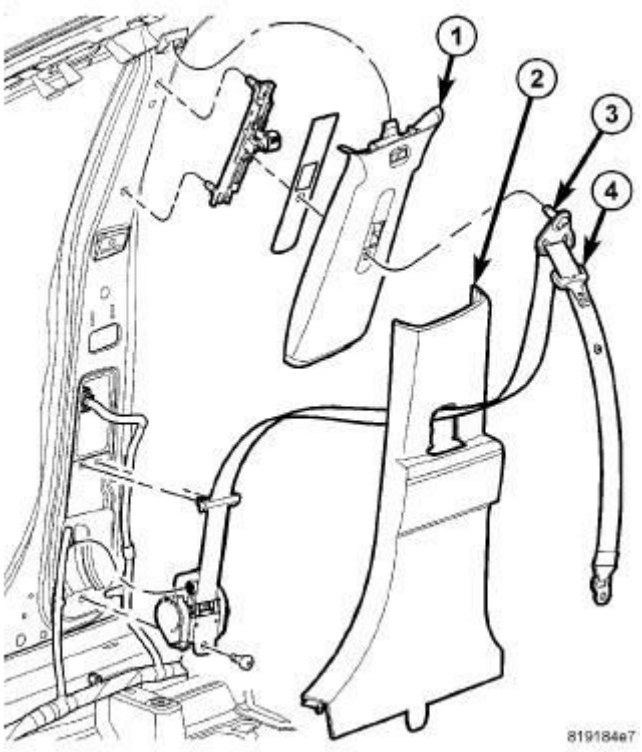

Fig. 355: B-Pillar Trim Upper
Courtesy of CHRYSLER GROUP, LLC

1. Remove the screw (3) that secures the seat belt turning loop to the height adjuster on the upper B-pillar.
2. Remove the seat belt turning loop from the height adjuster.
3. Separate the lower B-pillar trim (2) from the pillar and position aside.
4. Remove the upper B-pillar trim (1).

INSTALLATION

INSTALLATION

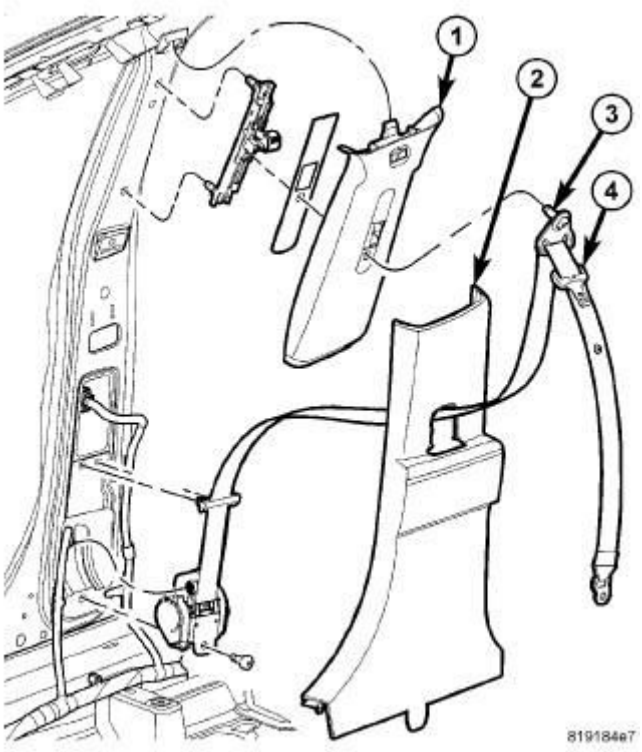

Fig. 356: B-Pillar Trim Upper
Courtesy of CHRYSLER GROUP, LLC

1. Align the upper tab and position the upper B-pillar trim (1) into place and seat the trim fully.
2. Install and tighten the screw (3) that secures the turning loop to the height adjuster. Tighten the screw to 40 N.m (30 ft. lbs.).
3. Position the lower B-pillar trim (2) into place and seat fully.

PANEL, C-PILLAR TRIM

REMOVAL

REMOVAL

COMPASS AND PATRIOT

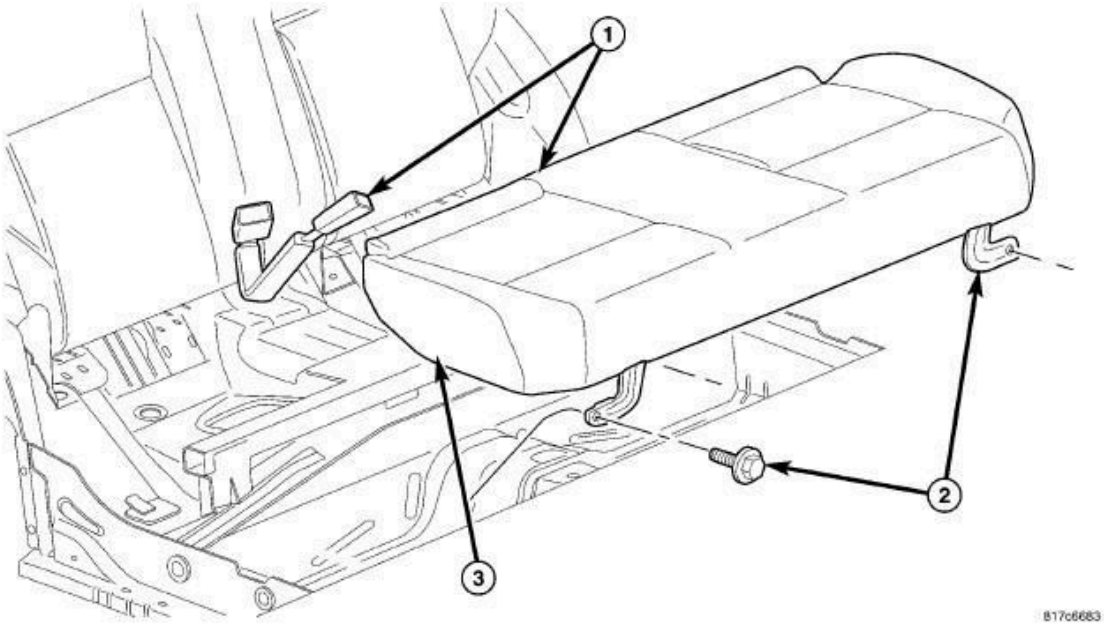

Fig. 357: Rear Cushion
Courtesy of CHRYSLER GROUP, LLC

1. Remove the bolts (2) and remove the rear seat cushion (3). Refer to **COVER, SEAT CUSHION, REAR, REMOVAL**.

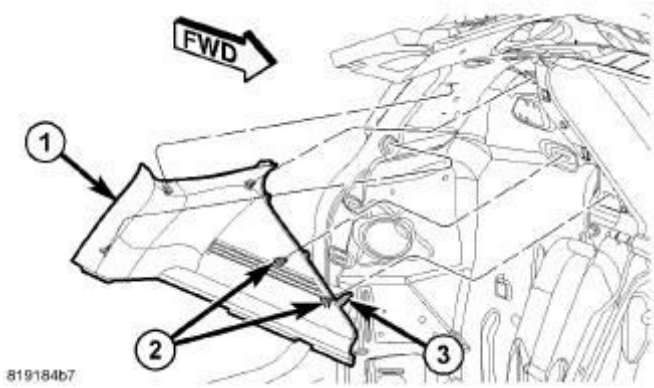

Fig. 358: D-Pillar Trim
Courtesy of CHRYSLER GROUP, LLC

2. Remove the D-pillar trim (1). Refer to **PANEL, D-PILLAR TRIM, REMOVAL**.

COMPASS

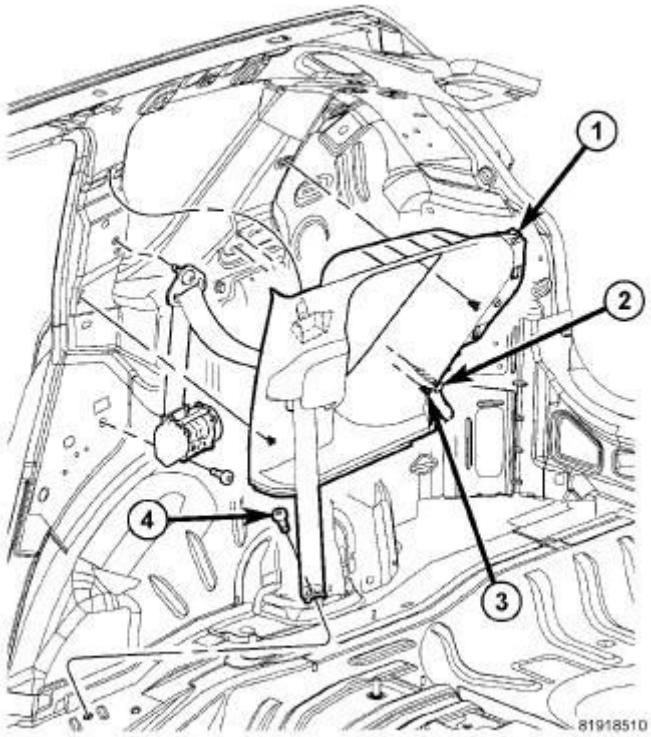

Fig. 359: C-Pillar Trim
Courtesy of CHRYSLER GROUP, LLC

1. Remove the seat belt anchor bolt (4).
2. Using a trim stick (special tool #C-4755, Trim Stick) or equivalent, separate the retaining clips (3) and remove the C-pillar trim (1).
3. Pull the seat belt through the hole in the trim.

PATRIOT

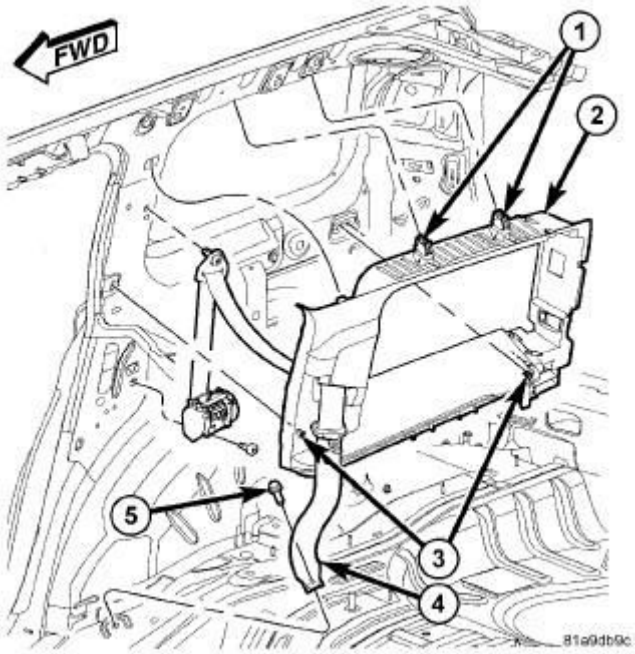

Fig. 360: C-Pillar Trim (Patriot)
Courtesy of CHRYSLER GROUP, LLC

1. Remove the seat belt anchor bolt (5).
2. Using a trim stick (special tool #C-4755, Trim Stick) or equivalent, separate the retaining clips (3) and remove the C-pillar trim (2).
3. Pull the seat belt (4) through the hole in the trim.

INSTALLATION

INSTALLATION

COMPASS

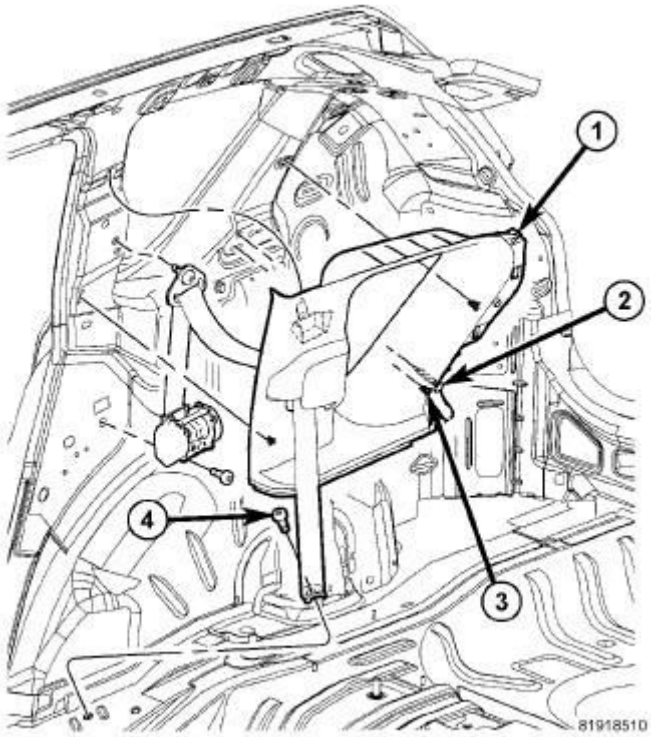

Fig. 361: C-Pillar Trim
Courtesy of CHRYSLER GROUP, LLC

1. Pull the seat belt through the hole in the trim.
2. Position the trim tabs (2) into the body and seat the trim retaining clips (3) fully.
3. Install and tighten the screw (4) that secures the lower anchor to the rear floor panel. Tighten the screw to 40 N.m (30 ft. lbs.).

PATRIOT

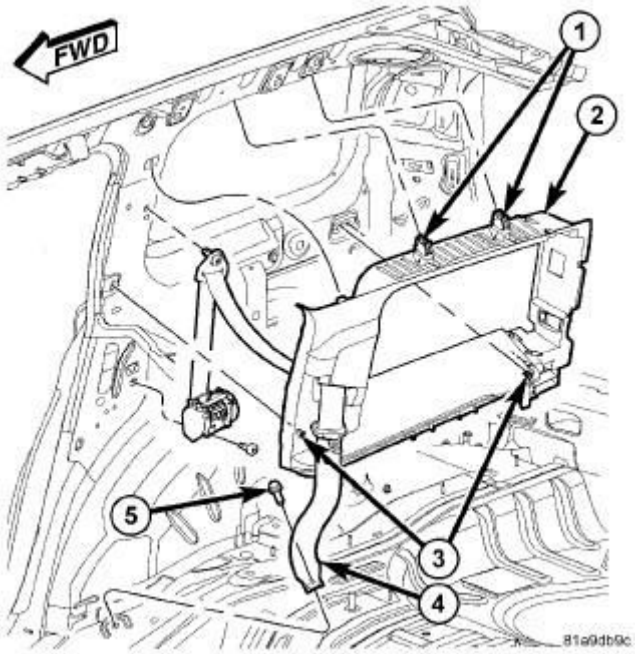

Fig. 362: C-Pillar Trim (Patriot)
Courtesy of CHRYSLER GROUP, LLC

1. Pull the seat belt (4) through the hole in the trim.
2. Position the trim tabs (1) into the body and seat the trim retaining clips (3) fully.
3. Install and tighten the screw (5) that secures the lower anchor to the rear floor panel. Tighten the screw to 40 N.m (30 ft. lbs.).

COMPASS AND PATRIOT

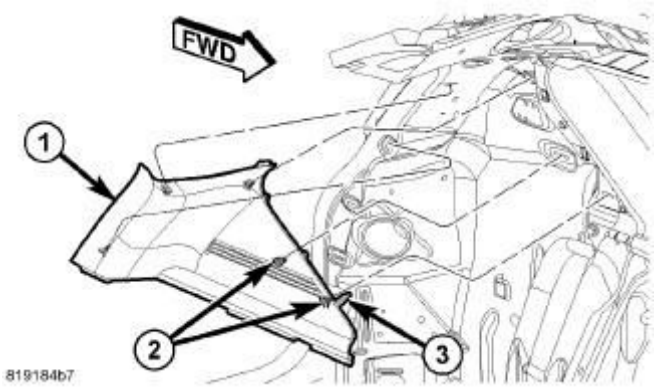

Fig. 363: D-Pillar Trim
Courtesy of CHRYSLER GROUP, LLC

1. Install the D-pillar trim (1). Refer to **PANEL, D-PILLAR TRIM, INSTALLATION**.

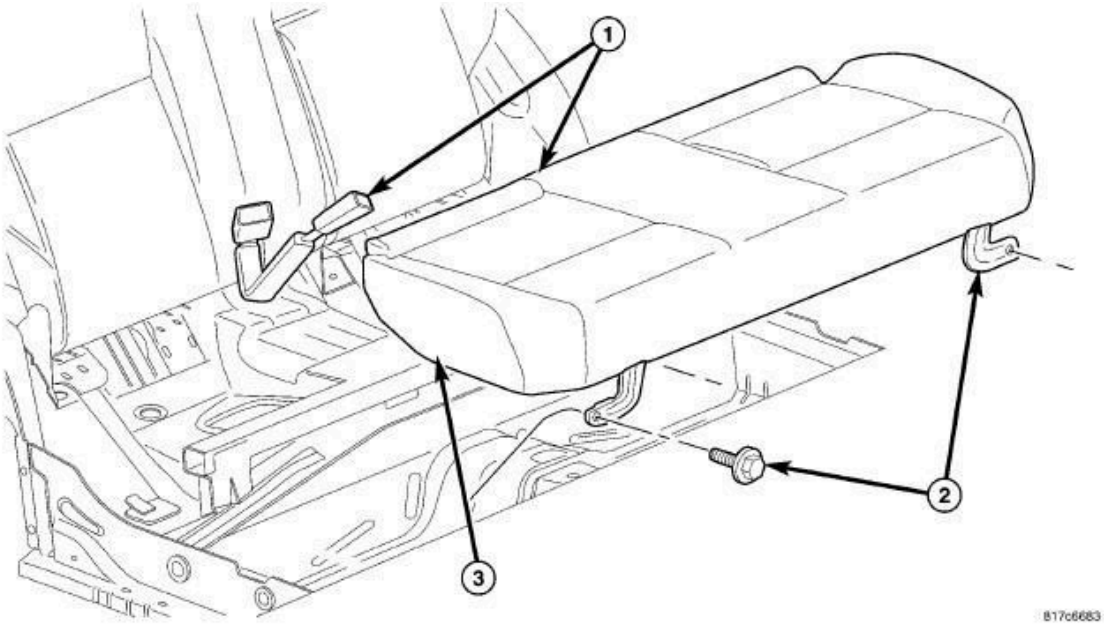

Fig. 364: Rear Cushion
Courtesy of CHRYSLER GROUP, LLC

2. Install the rear seat cushion (3). Refer to **COVER, SEAT CUSHION, REAR, INSTALLATION**.

PANEL, COWL TRIM, SIDE

REMOVAL

REMOVAL

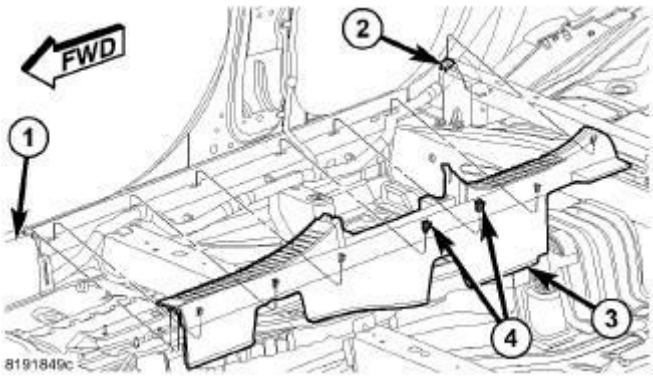

Fig. 365: Door Scuff
Courtesy of CHRYSLER GROUP, LLC

1. Release the front retaining clips (4) and position the front of the door scuff aside to access the cowl trim (1).

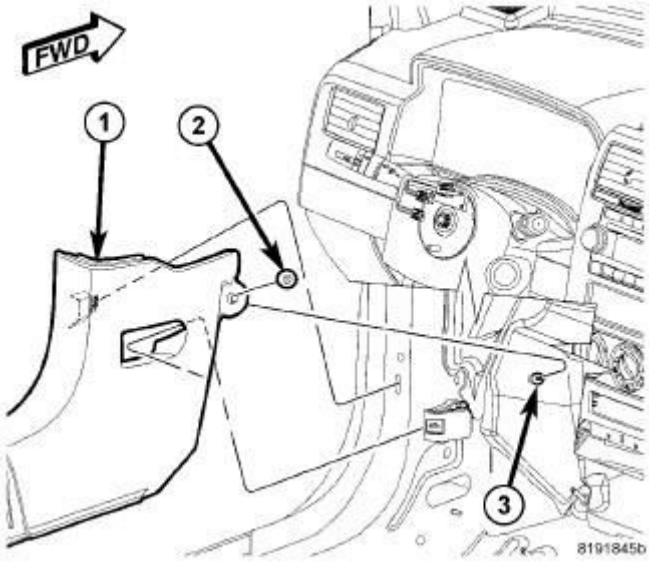

Fig. 366: Cowl Trim Panel
Courtesy of CHRYSLER GROUP, LLC

2. Remove the fastener (2) and release the retaining clip.
3. Guide the trim off the hood release, if required, and remove.

INSTALLATION

INSTALLATION

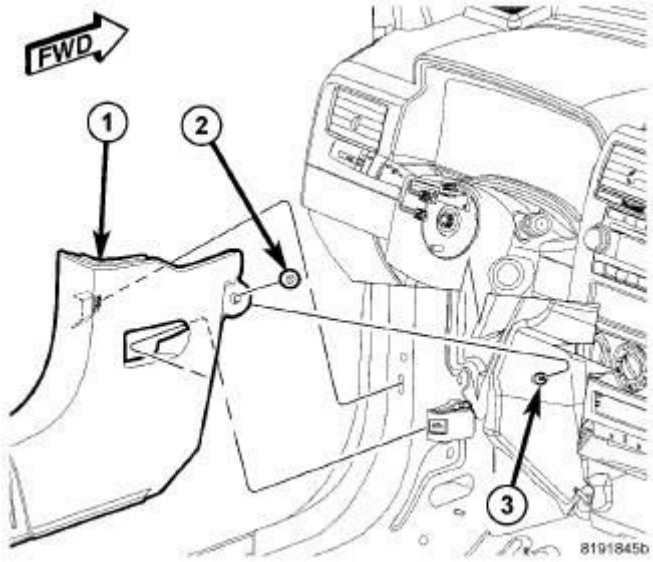

Fig. 367: Cowl Trim Panel
Courtesy of CHRYSLER GROUP, LLC

1. Position the trim (1) over the hood release, if required, and seat the retaining

clip fully.

2. Install the fastener (2).

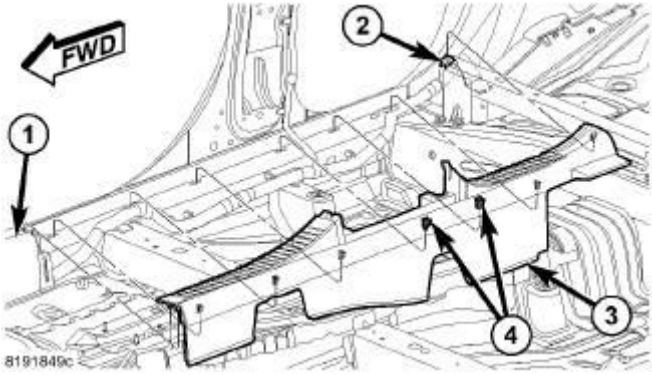

Fig. 368: Door Scuff
Courtesy of CHRYSLER GROUP, LLC

3. Position the door scuff (3) into back into place over the scuff (1) and seat the retaining clips fully.

PANEL, D-PILLAR TRIM

REMOVAL

REMOVAL

COMPASS AND PATRIOT

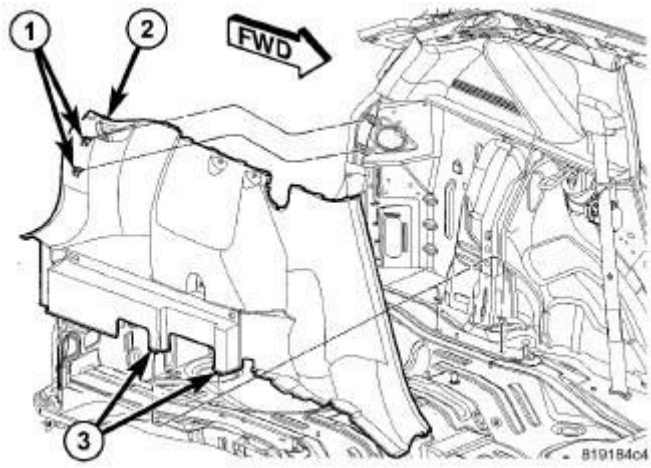

Fig. 369: Quarter Trim Panel
Courtesy of CHRYSLER GROUP, LLC

NOTE: Compass shown, Patriot similar.

NOTE: Left side shown, right side similar.

1. Remove the quarter trim panel (2). Refer to **PANEL, QUARTER TRIM, REMOVAL**.

LEFT SIDE

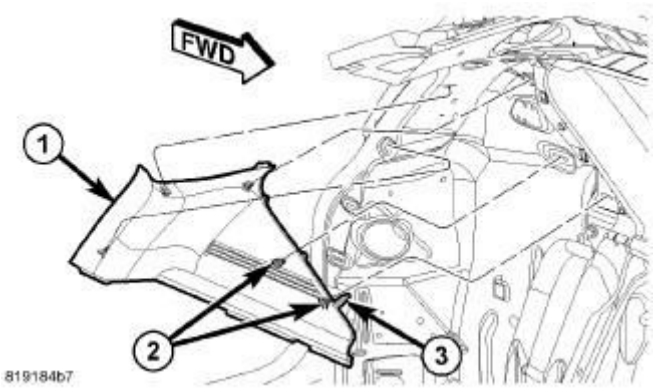

Fig. 370: D-Pillar Trim
Courtesy of CHRYSLER GROUP, LLC

1. Using a trim stick (special tool #C-4755, Trim Stick) or equivalent, separate the retaining clips (2) and remove the left D-pillar trim panel, if required.

RIGHT SIDE

Fig. 371: Seat Belt Lower Anchor And Anchor Buckle
Courtesy of CHRYSLER GROUP, LLC

1. If the second row center seat belt lower anchor (1) is connected, access and unbuckle the lower anchor latch plate from the unique, keyed lower anchor buckle (2). Use an ignition key or a small screwdriver to depress the small latch release button on the anchor buckle.

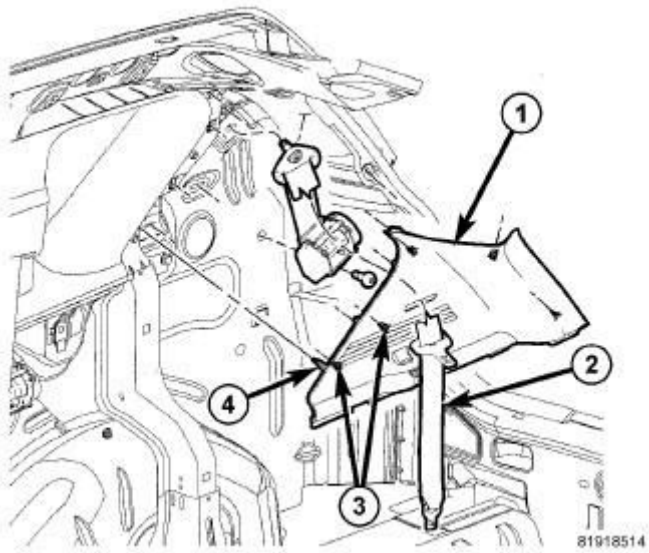

Fig. 372: D-Pillar Trim Right
Courtesy of CHRYSLER GROUP, LLC

2. Separate the D-pillar trim retaining clips (3), using a trim stick (special tool #C-4755, Trim Stick) or equivalent.
3. Pull the seat belt (2) through the hole in the D-pillar trim (1) and remove.

LEFT SIDE

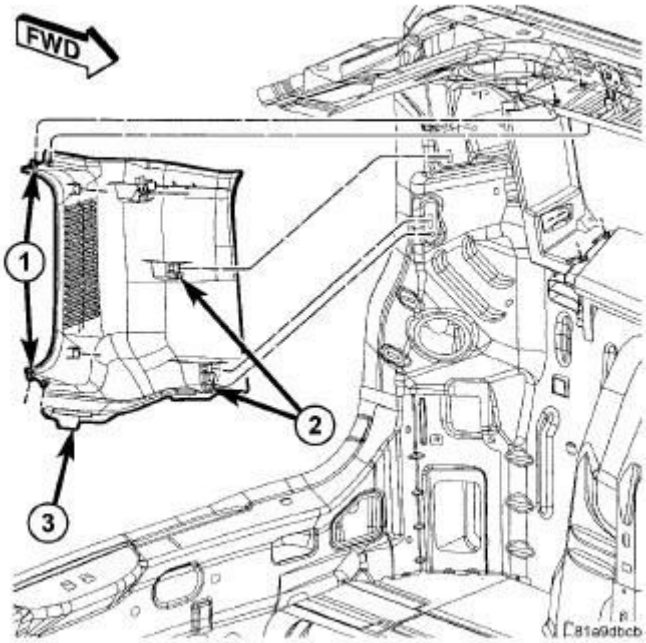

Fig. 373: Left D-Pillar Trim Panel
Courtesy of CHRYSLER GROUP, LLC

1. Using a trim stick (special tool #C-4755, Trim Stick) or equivalent, separate the retaining clips (2) and remove the left D-pillar trim panel, if required.

RIGHT SIDE

Fig. 374: Seat Belt Lower Anchor And Anchor Buckle
Courtesy of CHRYSLER GROUP, LLC

NOTE: Compass shown, Patriot similar.

1. If the second row center seat belt lower anchor (1) is connected, access and unbuckle the lower anchor latch plate from the unique, keyed lower anchor buckle (2). Use an ignition key or a small screwdriver to depress the small latch release button on the anchor buckle.

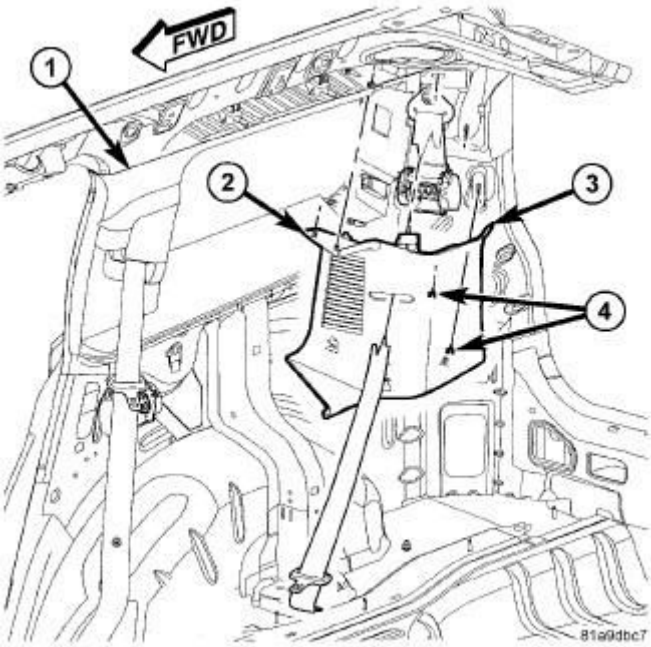

Fig. 375: Right D-Pillar Trim Panel
Courtesy of CHRYSLER GROUP, LLC

2. Separate the D-pillar trim retaining clips (4), using a trim stick (special tool #C-4755, Trim Stick) or equivalent.
3. Pull the seat belt through the hole in the D-pillar trim (3) and remove.

INSTALLATION

INSTALLATION

RIGHT SIDE

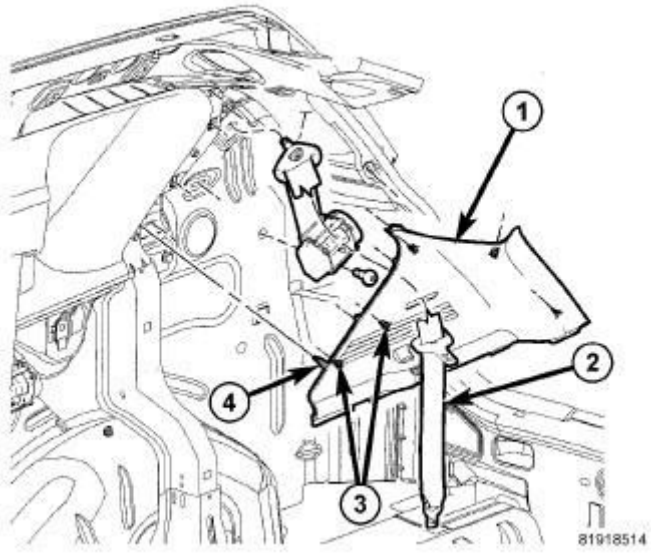

Fig. 376: D-Pillar Trim Right
Courtesy of CHRYSLER GROUP, LLC

1. Pull the seat belt through the hole in the trim (1) and position the trim onto the body while inserting the alignment pin (4) into the C-pillar trim.
2. Seat the retaining clips (3) fully.

Fig. 377: Seat Belt Lower Anchor And Anchor Buckle
Courtesy of CHRYSLER GROUP, LLC

3. Access and buckle the second row center seat belt lower anchor latch plate

(1) to the unique, keyed lower anchor buckle (2).

LEFT SIDE

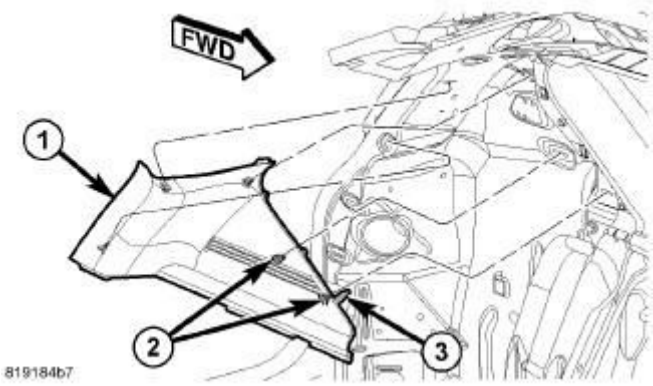

Fig. 378: D-Pillar Trim
Courtesy of CHRYSLER GROUP, LLC

1. position the trim (1) onto the body while inserting the alignment pin (3) into the C-pillar trim.
2. Seat the retaining clips (2) fully.

RIGHT SIDE

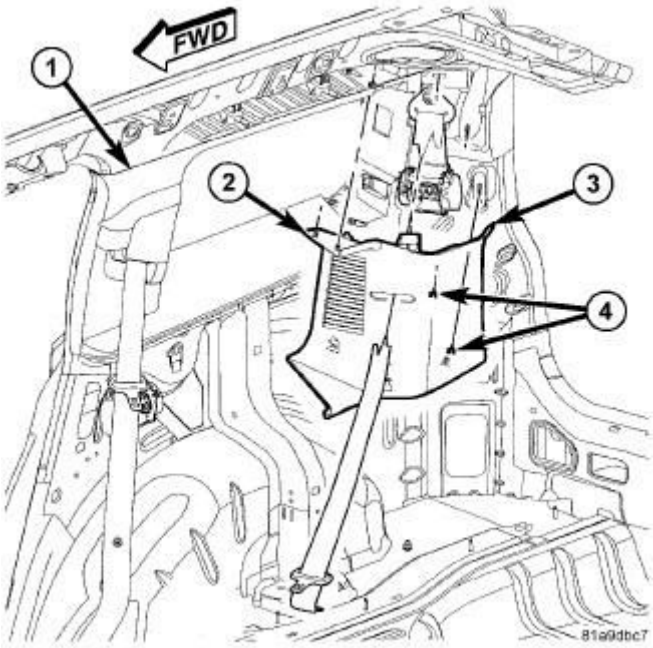

Fig. 379: Right D-Pillar Trim Panel
Courtesy of CHRYSLER GROUP, LLC

1. Pull the seat belt through the hole in the trim and position the trim onto the

body while inserting the alignment pin (2) into the C-pillar trim (1).

2. Seat the retaining clips (4) fully.

Fig. 380: Seat Belt Lower Anchor And Anchor Buckle
Courtesy of CHRYSLER GROUP, LLC

3. Access and buckle the second row center seat belt lower anchor latch plate (1) to the unique, keyed lower anchor buckle (2).

LEFT SIDE

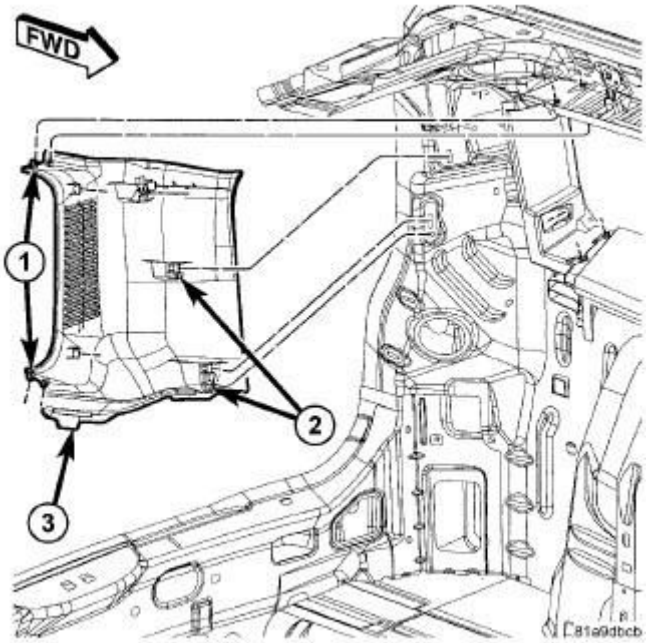

Fig. 381: Left D-Pillar Trim Panel
Courtesy of CHRYSLER GROUP, LLC

1. position the trim (3) onto the body while inserting the alignment pin (1) into the C-pillar trim.
2. Seat the retaining clips (2) fully.

COMPASS AND PATRIOT

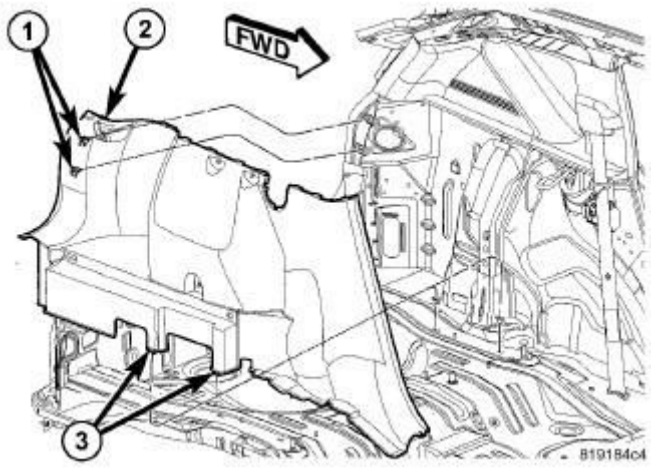

Fig. 382: Quarter Trim Panel
Courtesy of CHRYSLER GROUP, LLC

1. Install the quarter trim panel (2). Refer to **PANEL, QUARTER TRIM, INSTALLATION**.

PANEL, QUARTER TRIM

REMOVAL

REMOVAL

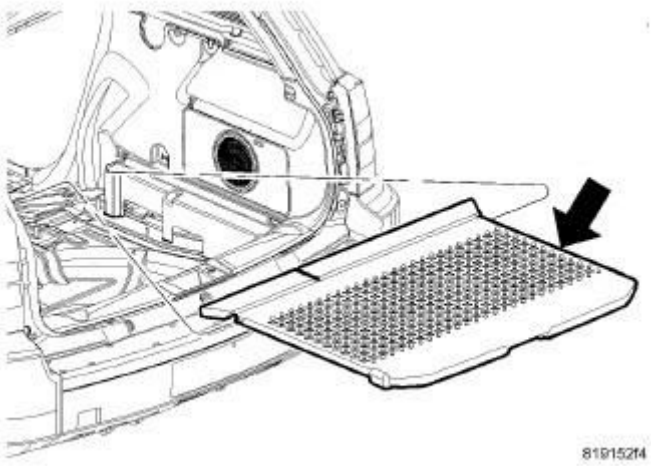

Fig. 383: Cargo Floor
Courtesy of CHRYSLER GROUP, LLC

1. Lift the cargo floor up and disengage from the rear pivots.

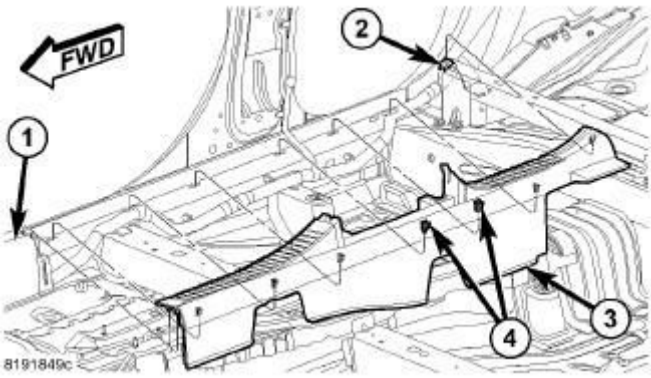

Fig. 384: Door Scuff
Courtesy of CHRYSLER GROUP, LLC

2. Remove the door scuff plate (3). Refer to **PLATE, SCUFF, DOOR, REMOVAL** .

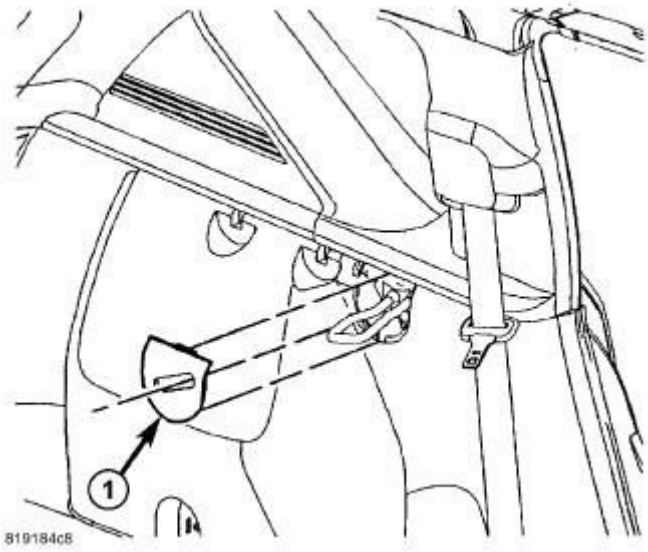

Fig. 385: Latch Trim
Courtesy of CHRYSLER GROUP, LLC

3. Fold the rear seat back into the down position.
4. Using a trim stick (special tool #C-4755, Trim Stick) or equivalent, remove the latch trim bezel (1).

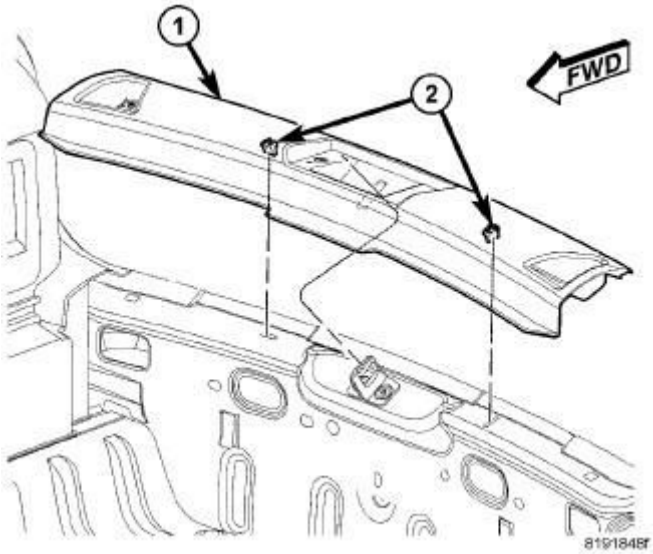

Fig. 386: Liftgate Scuff
Courtesy of CHRYSLER GROUP, LLC

5. Using a trim stick (special tool #C-4755, Trim Stick) or equivalent, release the retaining clips (2) and remove the liftgate scuff plate (1).

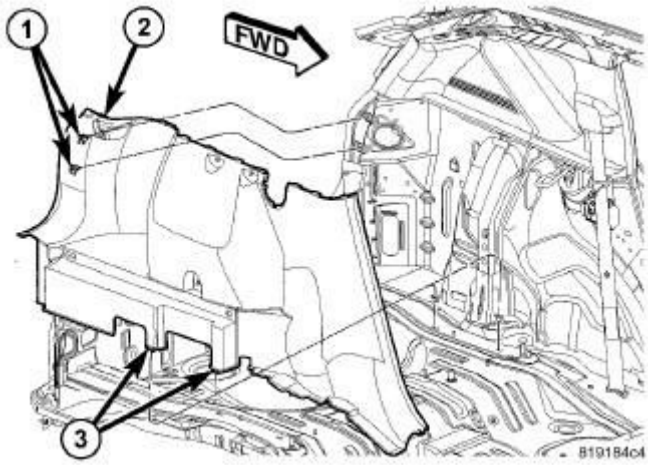

Fig. 387: Quarter Trim Panel
Courtesy of CHRYSLER GROUP, LLC

6. Remove the cargo hook and retainer, if equipped.
7. Separate the quarter trim panel (2) from the body and remove.

INSTALLATION

INSTALLATION

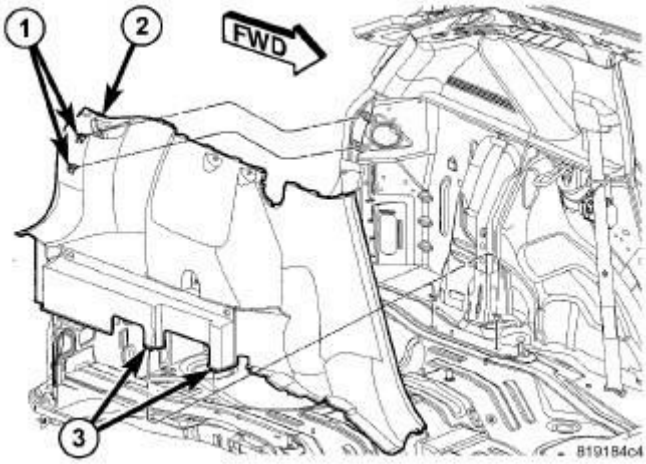

Fig. 388: Quarter Trim Panel
Courtesy of CHRYSLER GROUP, LLC

1. Position the quarter trim tabs (3) into the appropriate slots in the body and seat the trim (2) fully.
2. Install the cargo hook and retainer if necessary.

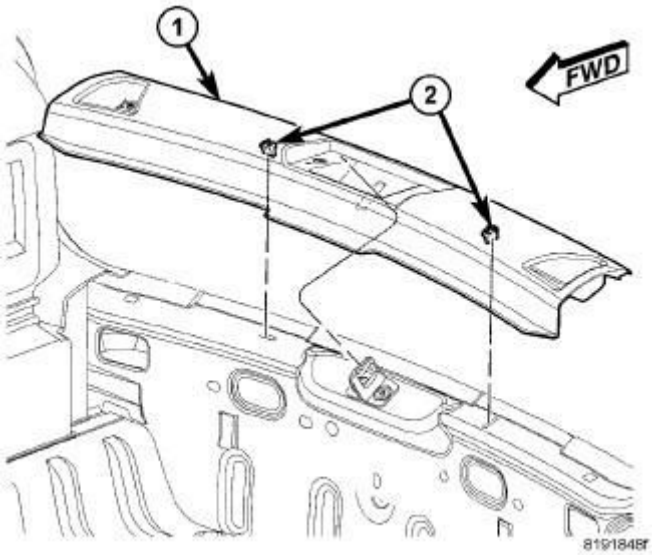

Fig. 389: Liftgate Scuff
Courtesy of CHRYSLER GROUP, LLC

3. Position the liftgate scuff plate (1) onto the liftgate sill and seat the retaining clips (2) fully.

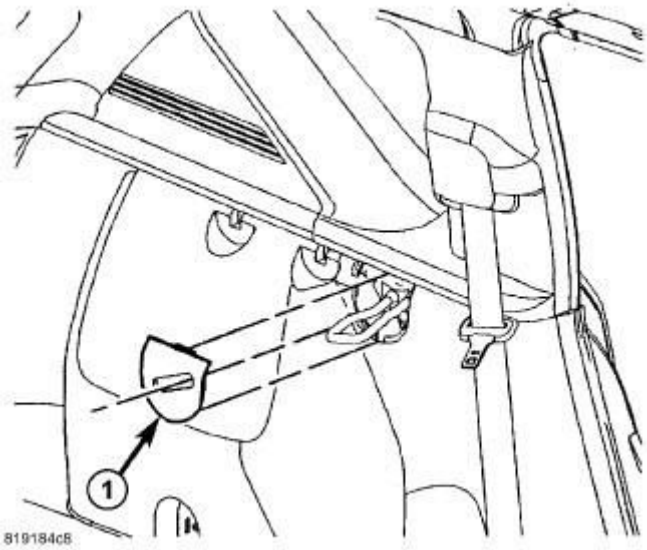

Fig. 390: Latch Trim
Courtesy of CHRYSLER GROUP, LLC

4. Position the seat latch striker trim (1) back into place and seat fully.

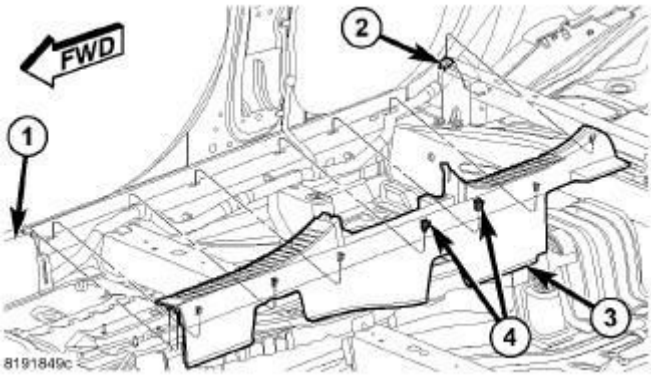

Fig. 391: Door Scuff
Courtesy of CHRYSLER GROUP, LLC

5. Fold the seat back up and install the door sill scuff plate (3). Refer to **PLATE, SCUFF, DOOR, INSTALLATION** .

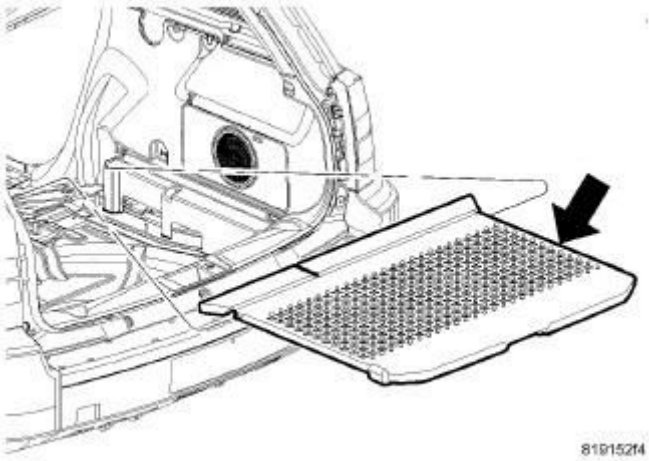

Fig. 392: Cargo Floor
Courtesy of CHRYSLER GROUP, LLC

6. Position the cargo floor into the vehicle and engage the rear pivots.
7. Seat the floor cover fully.

PLATE, SCUFF, DOOR

REMOVAL

REMOVAL

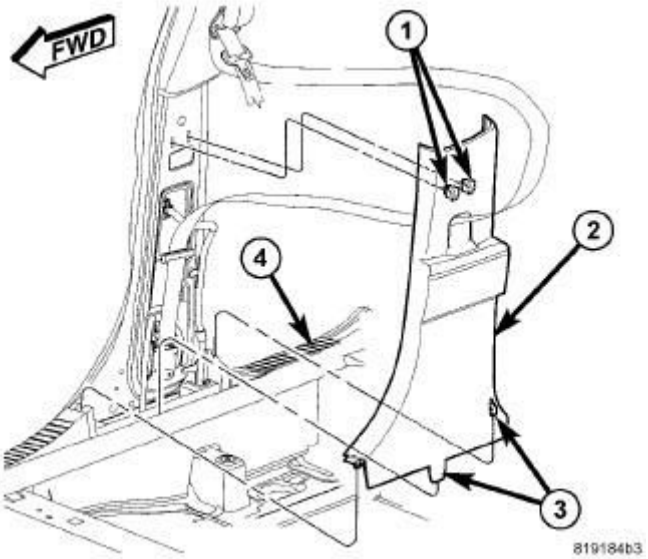

Fig. 393: B-Pillar Lower
Courtesy of CHRYSLER GROUP, LLC

1. Separate the lower B-pillar trim (2) from the pillar and position aside.

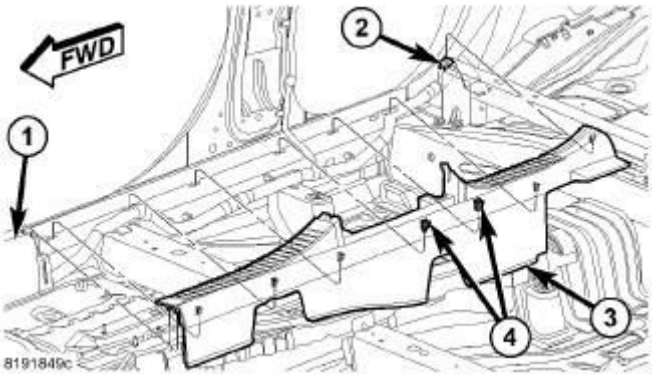

Fig. 394: Door Scuff
Courtesy of CHRYSLER GROUP, LLC

2. Using a trim stick (special tool #C-4755, Trim Stick) or equivalent, release the retaining clips (4) and remove the door scuff (3).

INSTALLATION

INSTALLATION

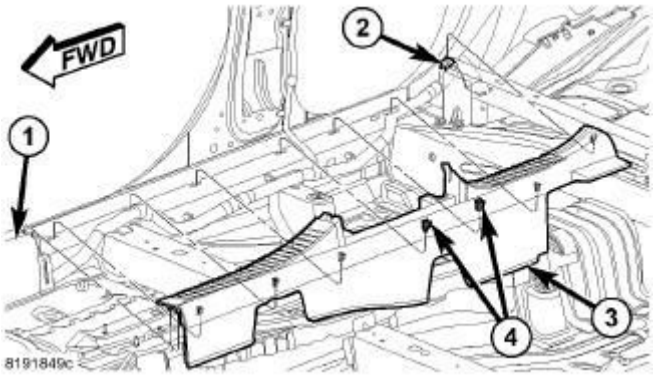

Fig. 395: Door Scuff
Courtesy of CHRYSLER GROUP, LLC

1. Position the door scuff plate (3) onto the door sill and insert the clips (4) into the sill and interior trim panels (1 and 2).
2. Seat the clips (4) fully.

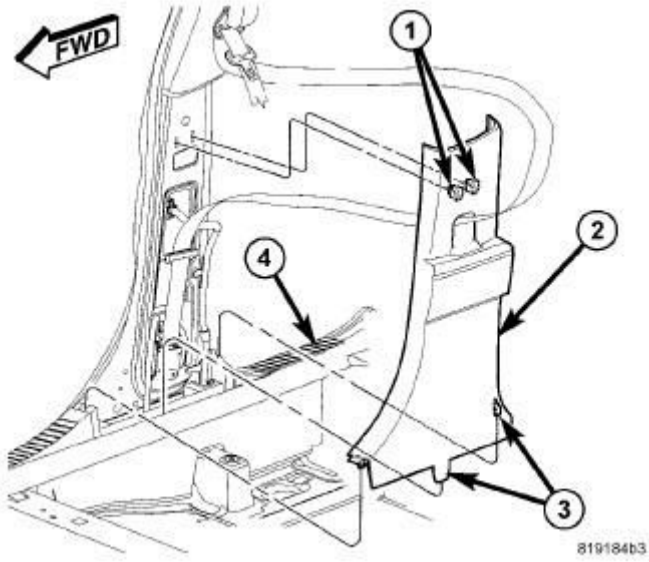

Fig. 396: B-Pillar Lower
Courtesy of CHRYSLER GROUP, LLC

3. Position the lower tabs (3) into the scuff plate (4) and seat the upper retaining clips (1) fully.

PLATE, SCUFF, LIFTGATE

REMOVAL

REMOVAL

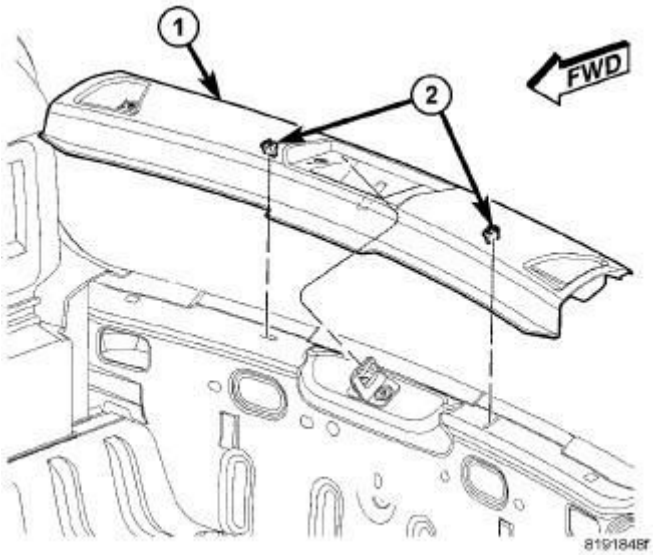

Fig. 397: Liftgate Scuff
Courtesy of CHRYSLER GROUP, LLC

1. Remove the two screws and the cargo hooks, if equipped.
2. Using a trim stick (special tool #C-4755, Trim Stick) or equivalent, release the retaining clips (2) and remove the liftgate scuff plate (1).

INSTALLATION

INSTALLATION

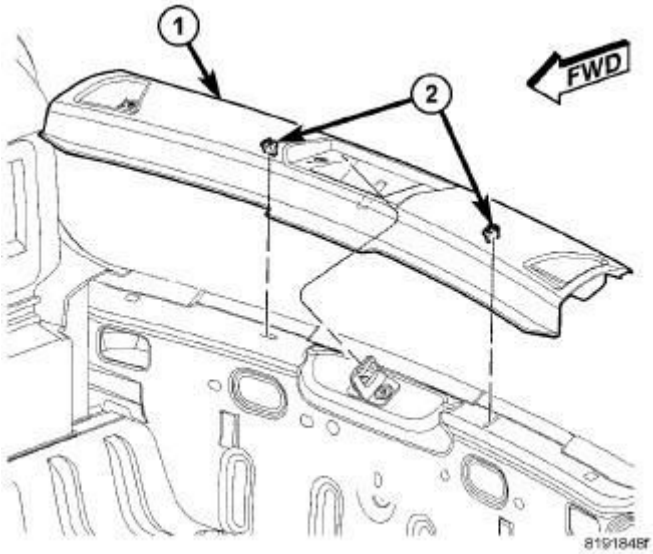

Fig. 398: Liftgate Scuff
Courtesy of CHRYSLER GROUP, LLC

1. Position the liftgate scuff plate (1) onto the liftgate sill and seat the retaining clips (2) fully.
2. Install the two cargo rings and screws, if equipped.

SUPPORT, VISOR

REMOVAL

REMOVAL

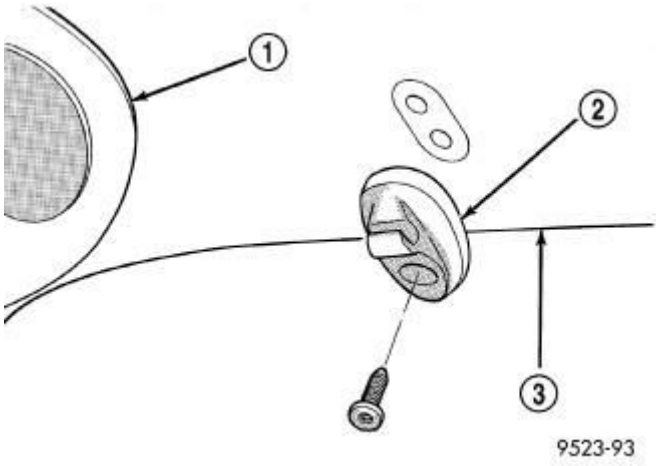

Fig. 399: Disengaging Sun Visor From Sun Visor Support
Courtesy of CHRYSLER GROUP, LLC

1. Remove the screw that secures the sun visor support to the roof panel and remove the support from the headliner.

INSTALLATION

INSTALLATION

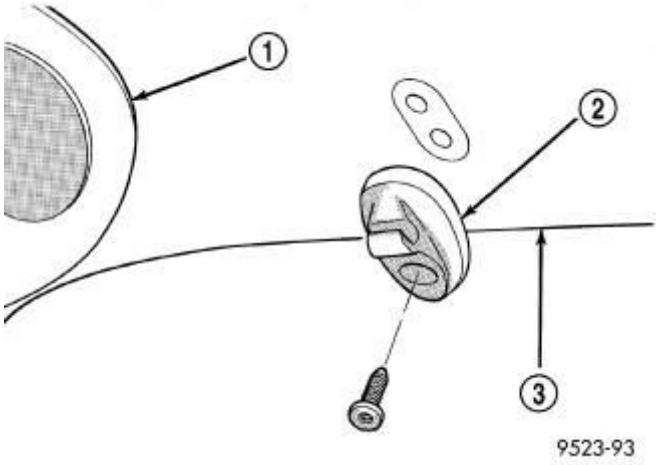

Fig. 400: Disengaging Sun Visor From Sun Visor Support
Courtesy of CHRYSLER GROUP, LLC

1. Position the sun visor support on the headliner and install the screw that secures the support to the roof panel. Tighten the screw to 2.2 N.m (20 in. lbs.).

VISOR

REMOVAL

REMOVAL

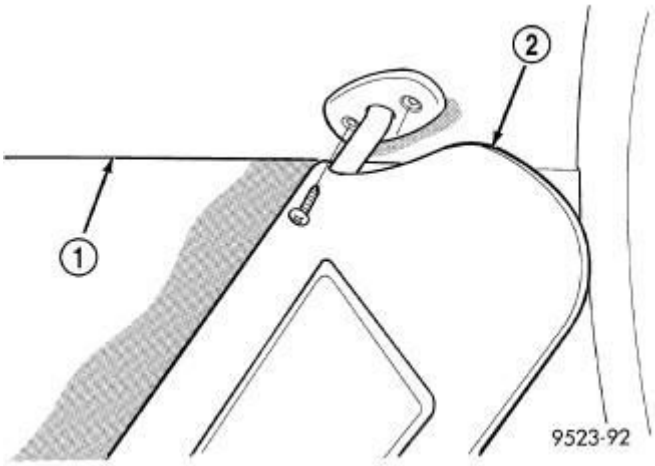

Fig. 401: Disengaging Sun Visor From Sun Visor Support
Courtesy of CHRYSLER GROUP, LLC

1. Remove the two screws that secure the sun visor to the roof panel and remove the sun visor from the headliner.
2. If equipped, disconnect the illuminated vanity mirror wire harness connector.

INSTALLATION

INSTALLATION

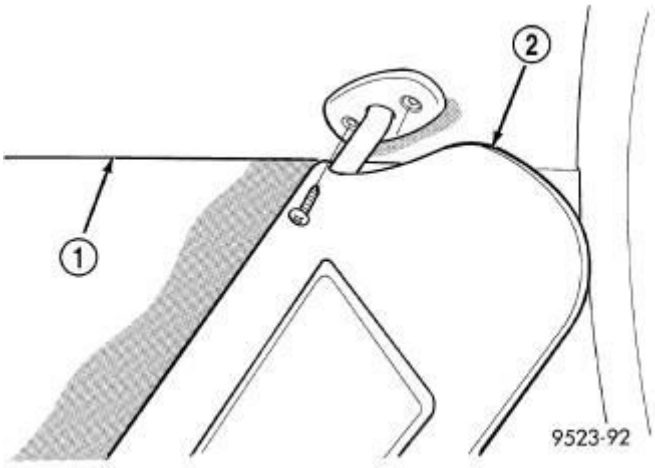

Fig. 402: Disengaging Sun Visor From Sun Visor Support
Courtesy of CHRYSLER GROUP, LLC

1. If equipped, connect the illuminated vanity mirror wire harness connector.
2. Position the sun visor on the headliner and install the two screws that secure the sun visor to the roof panel. Tighten the screws to 2 N.m (20 in. lbs.).

DECKLID/HATCH/LIFTGATE/TAILGATE

CYLINDER, LOCK

REMOVAL

REMOVAL

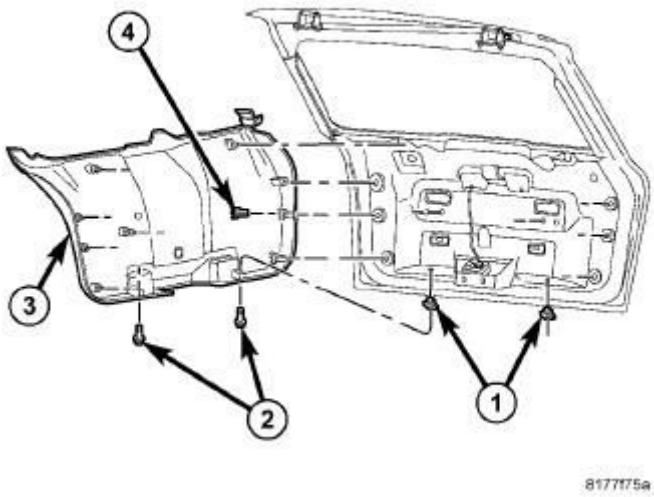

Fig. 403: Lower Liftgate Trim
Courtesy of CHRYSLER GROUP, LLC

NOTE: Compass shown, Patriot similar.

1. Remove the lower liftgate trim panel (3). Refer to **PANEL, TRIM, REMOVAL**.

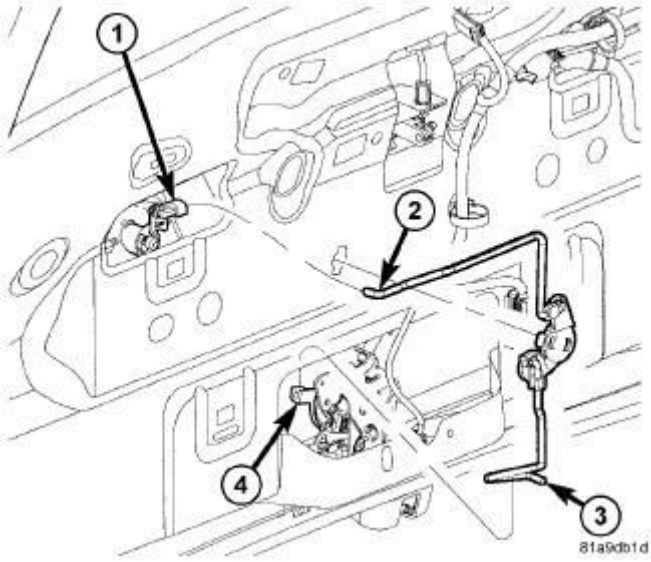

Fig. 404: Lock Rod & Clip
Courtesy of CHRYSLER GROUP, LLC

2. Release the clip (1) and separate the lock rod (2).

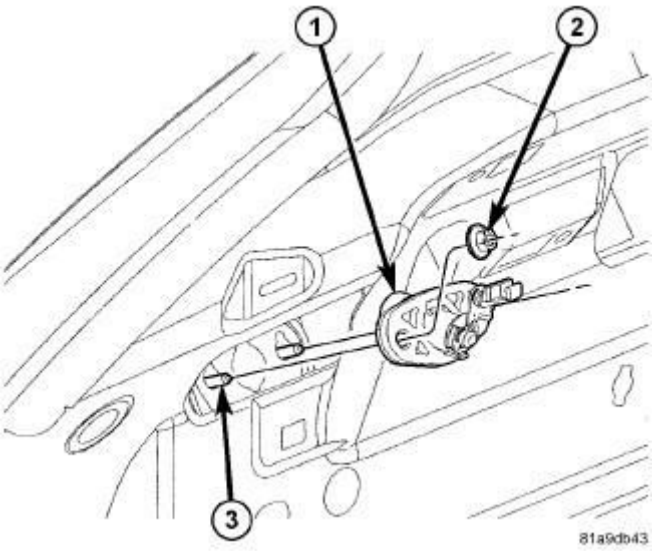

Fig. 405: Two Nuts & Lock Cylinder
Courtesy of CHRYSLER GROUP, LLC

3. Remove the two nuts (2) and remove the lock cylinder (1).

INSTALLATION

INSTALLATION

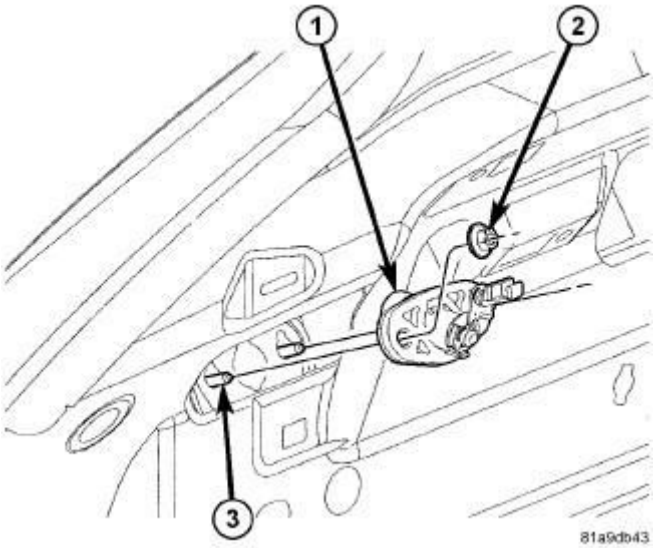

Fig. 406: Two Nuts & Lock Cylinder
Courtesy of CHRYSLER GROUP, LLC

NOTE: Compass shown, Patriot similar.

1. Install the lock cylinder (1) and install the two nuts (2).
2. Tighten the nuts (2) to 8.5 N.m (75 in. lbs.)

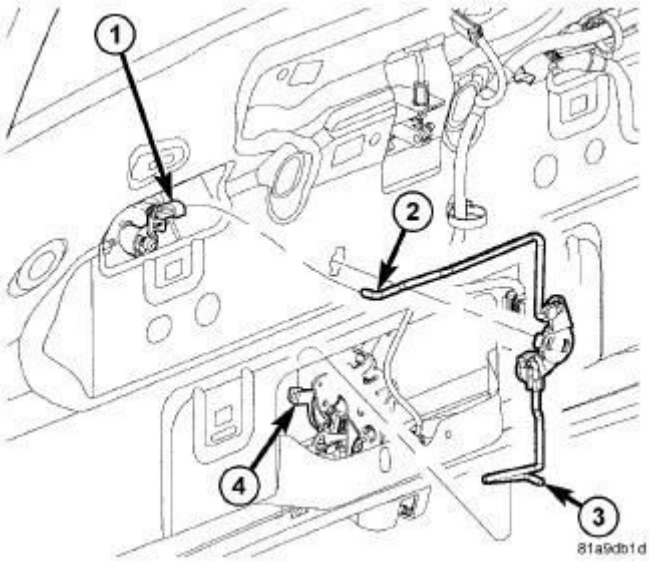

Fig. 407: Lock Rod & Clip
Courtesy of CHRYSLER GROUP, LLC

3. Connect the lock cylinder rod (2) and secure the clip (1).

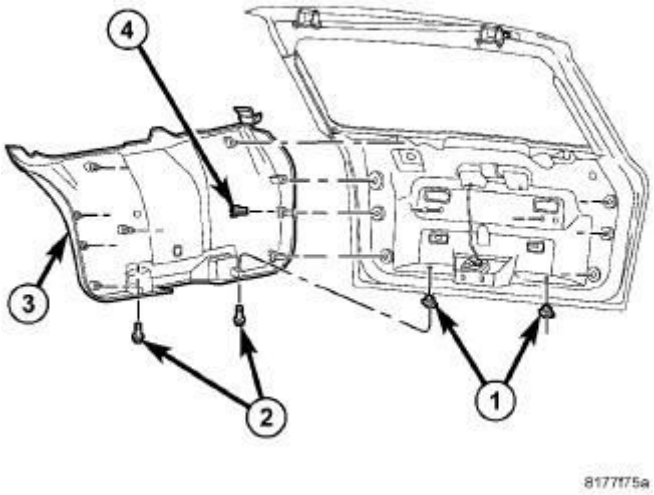

Fig. 408: Lower Liftgate Trim
Courtesy of CHRYSLER GROUP, LLC

NOTE: Compass shown, Patriot similar.

4. Install the lower liftgate trim (3). Refer to **PANEL, TRIM, INSTALLATION**.

HANDLE, EXTERIOR

REMOVAL

REMOVAL

1. Remove the lower liftgate trim panel. Refer to **PANEL, TRIM, REMOVAL**.

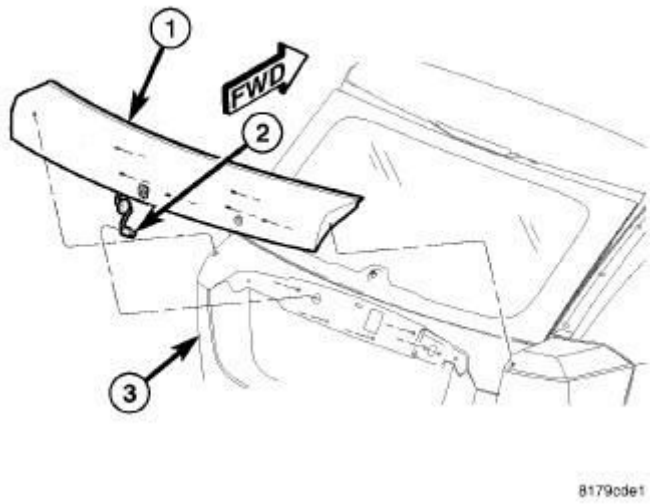

Fig. 409: Light Bar
Courtesy of CHRYSLER GROUP, LLC

2. Remove nuts from handle studs.
3. Disconnect wire connector.
4. Disconnect cable from handle.

INSTALLATION

INSTALLATION

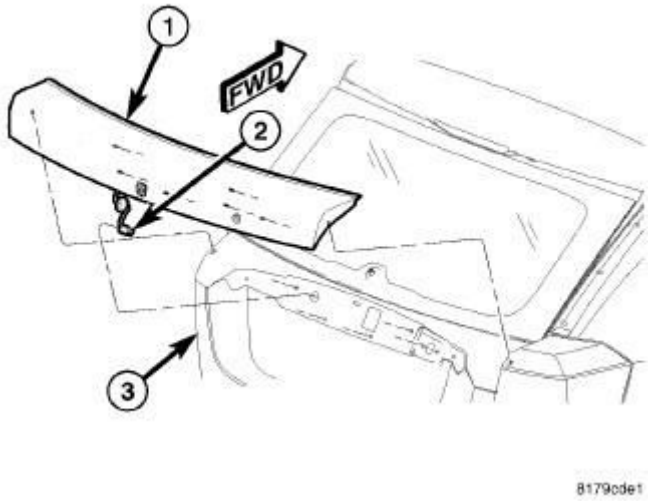

Fig. 410: Light Bar
Courtesy of CHRYSLER GROUP, LLC

1. Connect the electrical connector (2).
2. Connect release cable to the handle.
3. Align handle studs to the holes in the liftgate and install handle (1).
4. Install six nuts to handle studs and tighten to 8.5 N.m (75 in. lbs.).

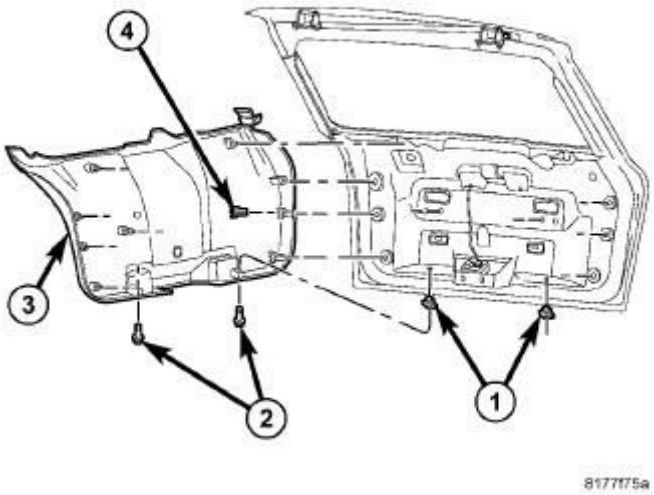

Fig. 411: Lower Liftgate Trim
Courtesy of CHRYSLER GROUP, LLC

5. Install the lower liftgate trim (3). Refer to **PANEL, TRIM, INSTALLATION**.

HINGE

REMOVAL

REMOVAL

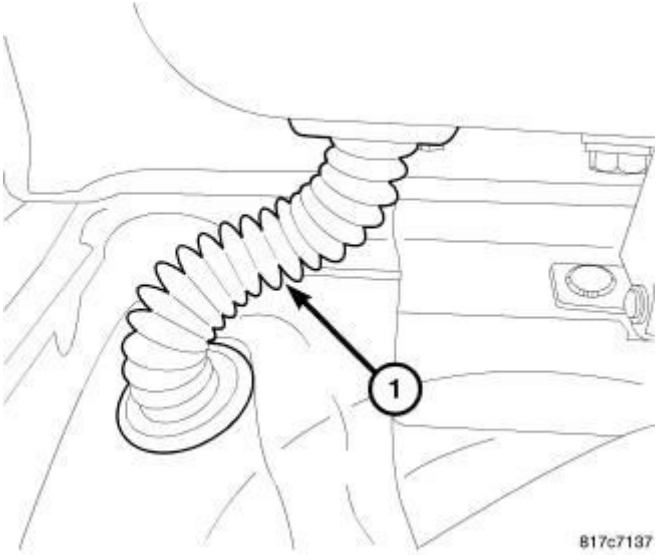

Fig. 412: Liftgate Harness
Courtesy of CHRYSLER GROUP, LLC

NOTE: It is not necessary to remove the liftgate to replace one or both hinges. The hinges can be replaced one at a time.

NOTE: A suitable body sealant should be used when removing or moving the hinges.

1. Support liftgate on a suitable lifting device.
2. Disconnect liftgate harness and washer hose.

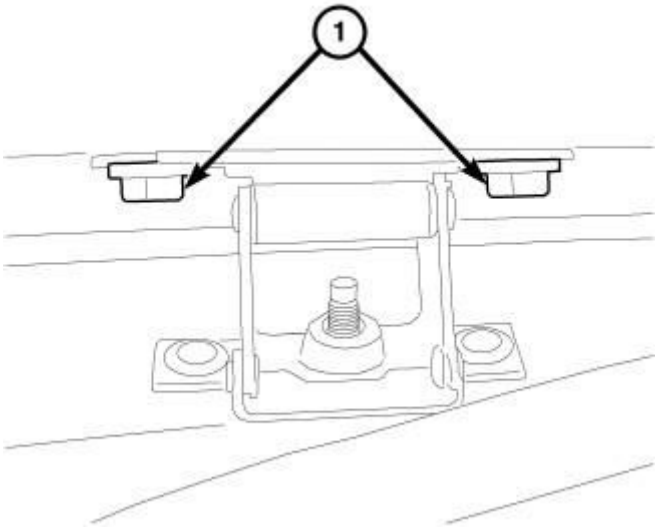

Fig. 413: Hinge
Courtesy of CHRYSLER GROUP, LLC

3. Using a grease pencil or equivalent, mark the location of the hinge to aid installation.
4. Remove the two bolts that secure the liftgate hinge (1) to the liftgate.

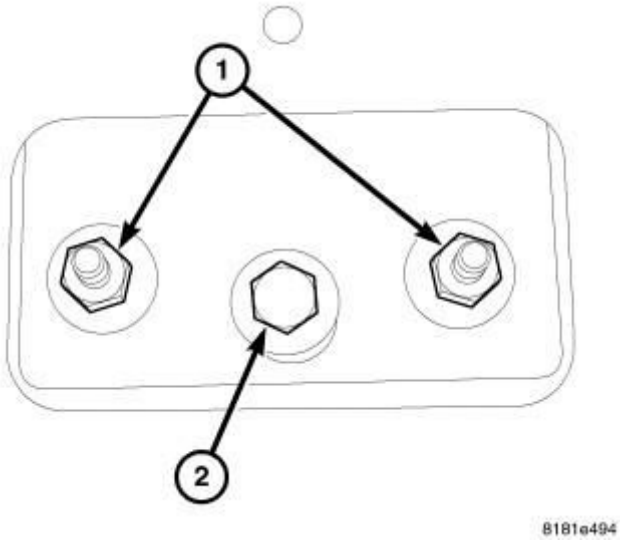

Fig. 414: Liftgate Hinge Nuts And Fastener
Courtesy of CHRYSLER GROUP, LLC

5. Carefully, move down headliner and remove two nuts and one fastener. Remove hinge from vehicle.

INSTALLATION

INSTALLATION

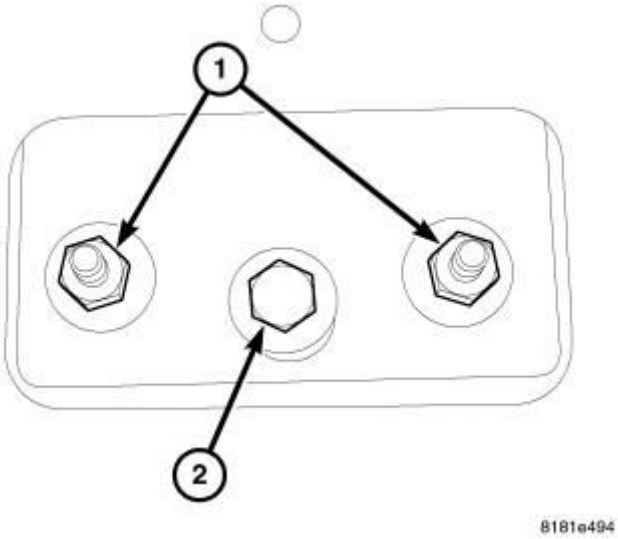

Fig. 415: Liftgate Hinge Nuts And Fastener
Courtesy of CHRYSLER GROUP, LLC

NOTE: A suitable body sealant should be used when removing or moving the hinges.

1. If necessary, paint replacement hinge before installation.
2. Carefully, pry down headliner and install the nuts (1) and bolt (2).
3. Tighten fasteners to 15 N.m (11 ft. lbs.).

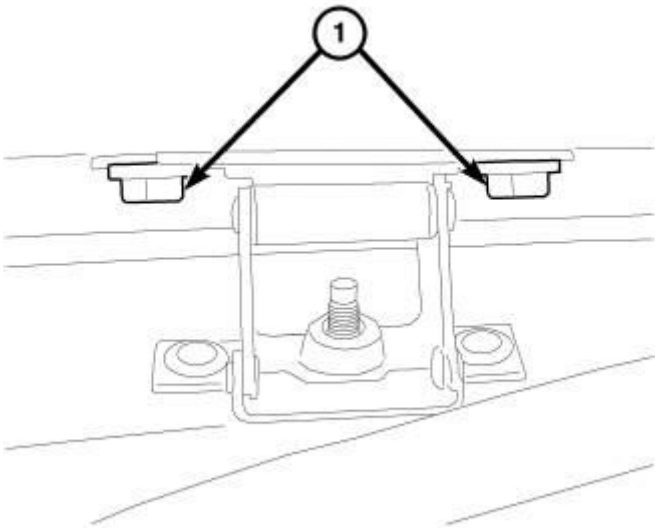

Fig. 416: Hinge
Courtesy of CHRYSLER GROUP, LLC

4. Install the liftgate bolts (1) and tighten to 15 N.m (11 ft. lbs.).

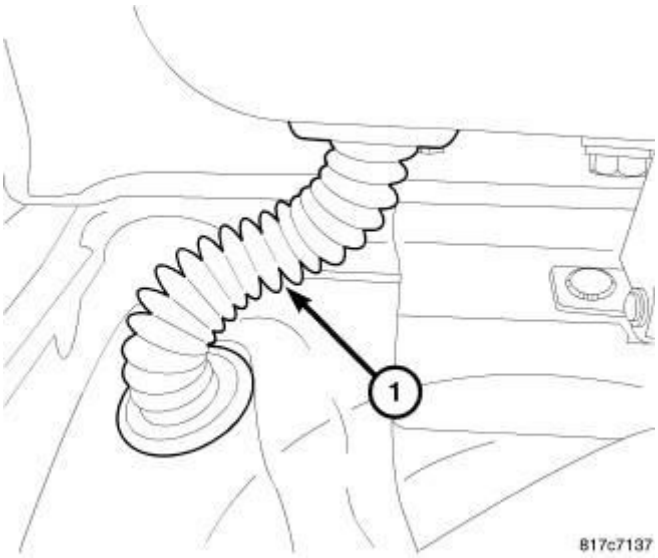

Fig. 417: Liftgate Harness
Courtesy of CHRYSLER GROUP, LLC

5. Connect liftgate harness (1) and washer hose.
6. Adjust liftgate if necessary,
7. Position the upper rear headliner back into place and seat the two push pin fasteners fully.

LATCH

REMOVAL

REMOVAL

COMPASS AND PATRIOT

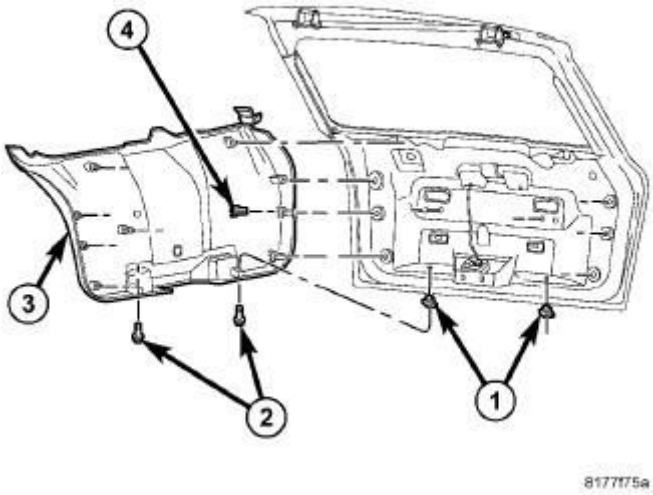

Fig. 418: Lower Liftgate Trim
Courtesy of CHRYSLER GROUP, LLC

NOTE: Compass shown, Patriot similar.

1. Remove the lower liftgate trim panel (3). Refer to **PANEL, TRIM, REMOVAL**.

COMPASS

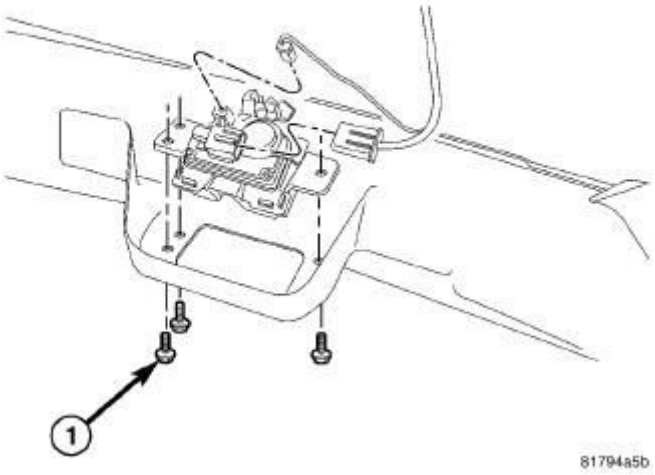

Fig. 419: Liftgate Latch
Courtesy of CHRYSLER GROUP, LLC

1. Remove three fasteners (1).
2. Disconnect the electrical connectors.
3. Disconnect the release cable.

PATRIOT

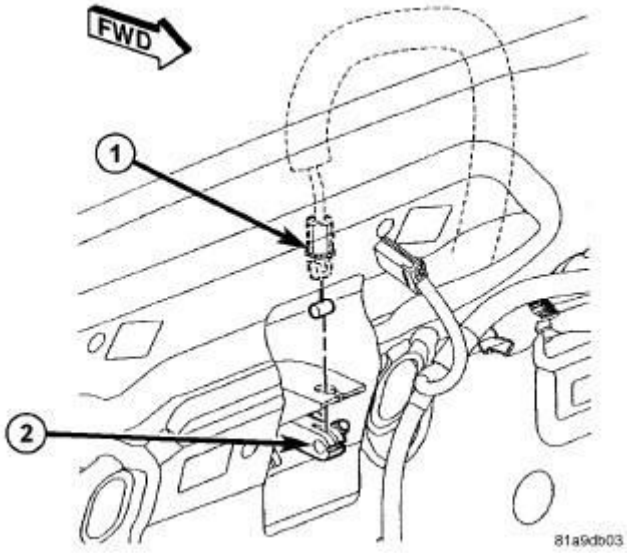

Fig. 420: Latch Cable & Exterior Handle
Courtesy of CHRYSLER GROUP, LLC

1. Disconnect the latch cable (1) from the exterior handle (2).

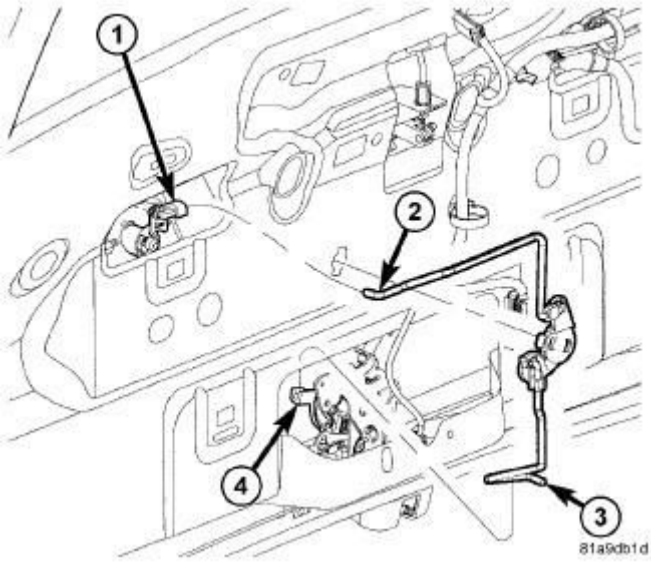

Fig. 421: Lock Rod & Clip
Courtesy of CHRYSLER GROUP, LLC

2. Separate the clip (4) and disconnect the lock rod (3).

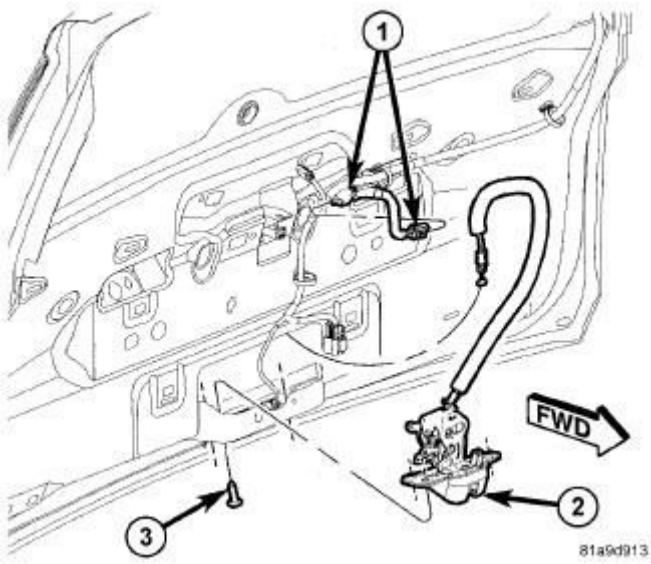

Fig. 422: Fasteners, Electrical Connector & Latch Assembly
Courtesy of CHRYSLER GROUP, LLC

3. Remove the fasteners (3) and disconnect the electrical connector (1).
4. Remove the latch assembly (2).

INSTALLATION

INSTALLATION

COMPASS

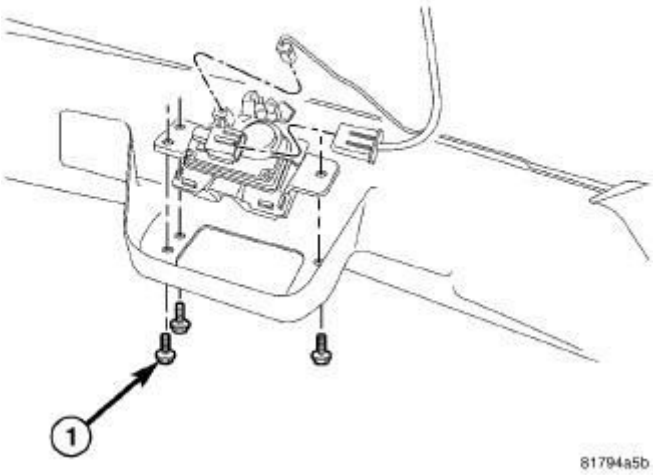

Fig. 423: Liftgate Latch
Courtesy of CHRYSLER GROUP, LLC

1. Connect the electrical connectors.
2. Install latch assembly into liftgate pocket.
3. Install three fasteners (1) and tighten to 8 N.m (6 ft. lbs.).
4. Install cable fastener to liftgate inner while working the cable upward.
5. Guide cable upward through opening and tuck into the outer handle hole.

PATRIOT

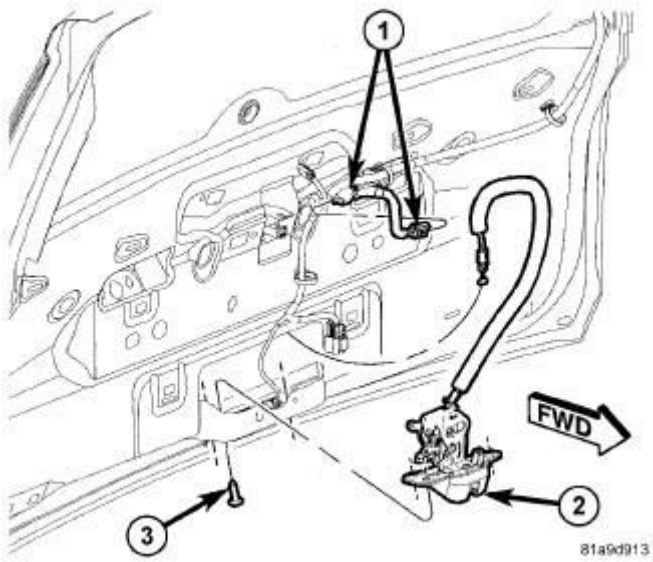

Fig. 424: Fasteners, Electrical Connector & Latch Assembly

Courtesy of CHRYSLER GROUP, LLC

1. Connect the electrical connector (1) and install the latch (2).
2. Install the fasteners (3) and tighten to 8 N.m (6 ft. lbs.).

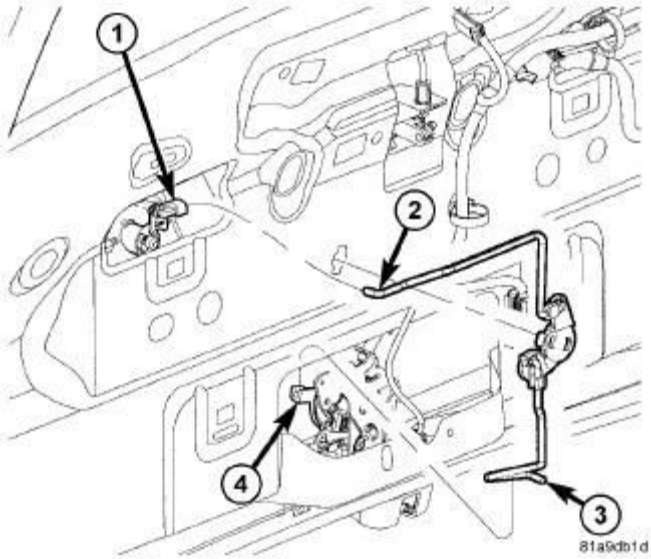

Fig. 425: Lock Rod & Clip
Courtesy of CHRYSLER GROUP, LLC

3. Connect the lock rod (3) and secure the clip (4).

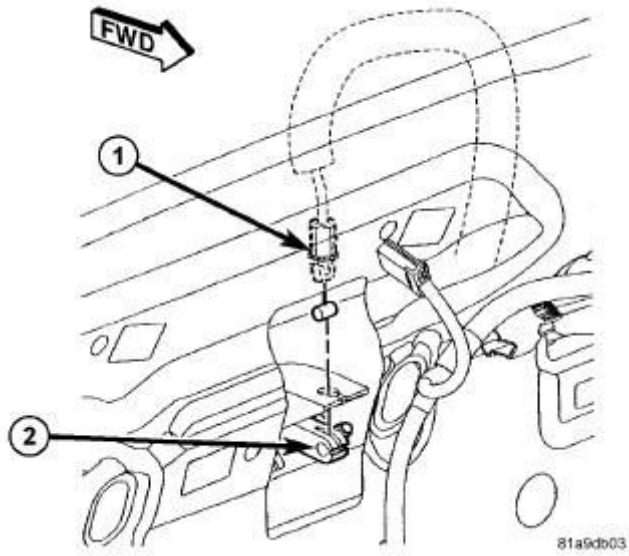

Fig. 426: Latch Cable & Exterior Handle
Courtesy of CHRYSLER GROUP, LLC

4. Connect the exterior handle cable (1) to the handle (2).

COMPASS AND PATRIOT

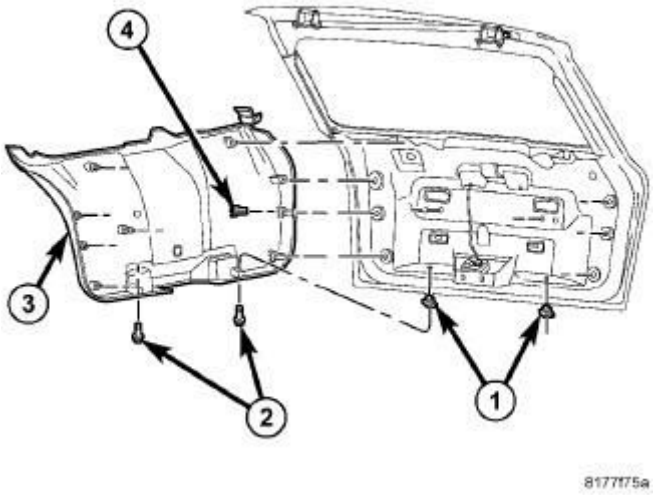

Fig. 427: Lower Liftgate Trim
Courtesy of CHRYSLER GROUP, LLC

NOTE: Compass shown, Patriot similar.

1. Install the lower liftgate trim (3). Refer to **PANEL, TRIM, INSTALLATION**.

LIFTGATE

ADJUSTMENTS

ADJUSTMENTS

NOTE: The position of the liftgate can be adjusted upward or downward by the use of slots in the hinge. An inward or outward adjustment is achieved by use of slots in the body. If an inward or outward adjustment is needed, use a body sealer on the hinge to body mating surface.

IN/OUT

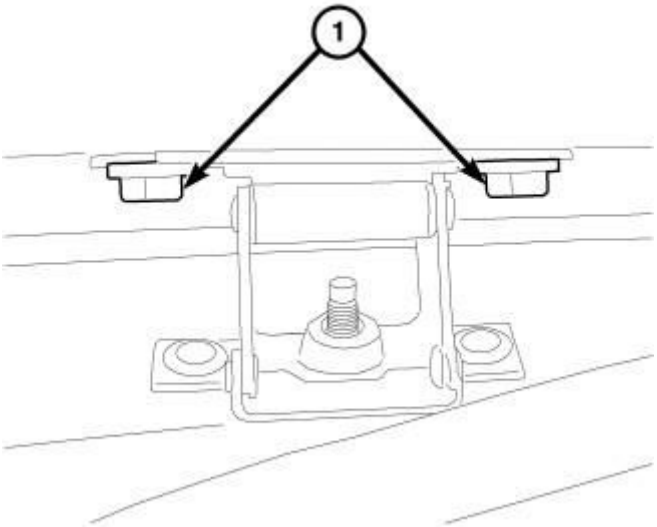

Fig. 428: Hinge
Courtesy of CHRYSLER GROUP, LLC

1. Using a trim stick (special tool #C-4755, Trim Stick) or equivalent, remove the upper rear headliner trim.
2. For the upper lift gate in/out adjustments, loosen the two hinge to header bolts and four nuts and adjust to specifications. Refer to **GAP AND FLUSH, SPECIFICATIONS**.
3. Tighten the hinge bolts to 15 N.m (11 ft. lbs.).
4. Position the headliner back into place and seat the push pin fasteners fully.

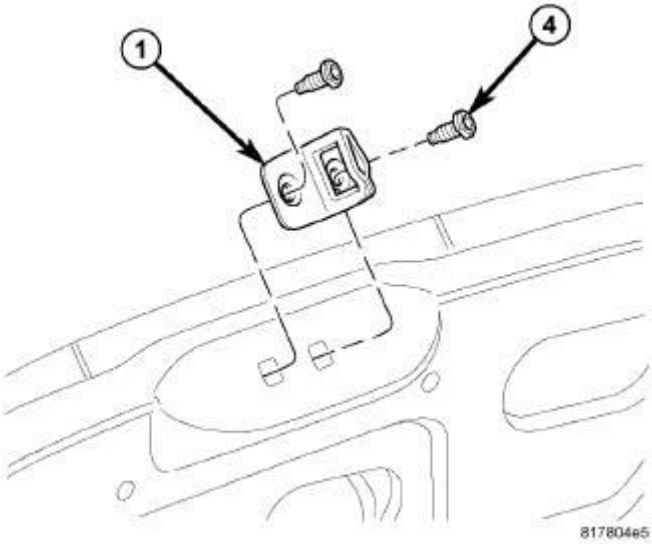

Fig. 429: Liftgate Striker Assembly
Courtesy of CHRYSLER GROUP, LLC

5. Remove the liftgate scuff plate. Refer to **PLATE, SCUFF, LIFTGATE, REMOVAL**.
6. For the lower lift gate adjustments, loosen the striker screws (4) and adjust to specifications Refer to **GAP AND FLUSH, SPECIFICATIONS**.
7. Tighten the striker screws to 23 N.m (17 ft. lbs.).
8. Install the liftgate scuff plate. Refer to **PLATE, SCUFF, LIFTGATE, INSTALLATION**.
9. Position the upper rear headliner trim and seat fully.

UP/DOWN AND LEFT/RIGHT

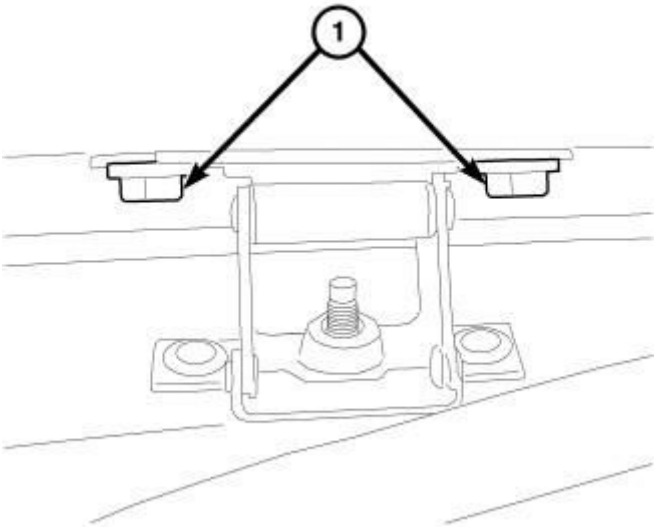

Fig. 430: Hinge
Courtesy of CHRYSLER GROUP, LLC

1. Loosen the hinge to liftgate bolts (1).

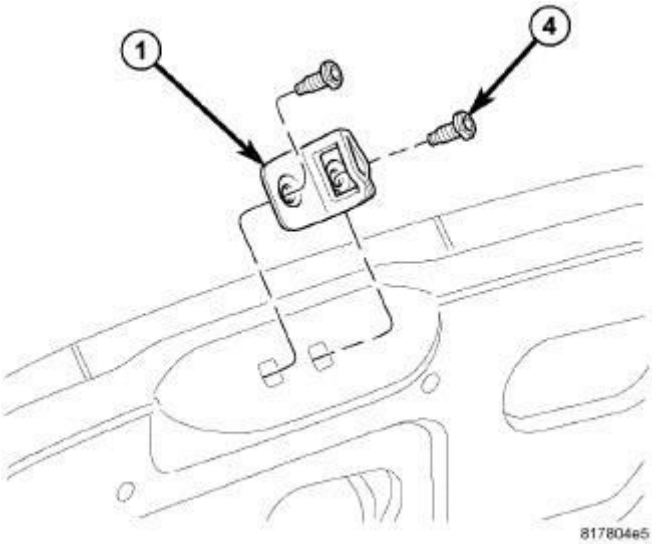

Fig. 431: Liftgate Striker Assembly
Courtesy of CHRYSLER GROUP, LLC

2. Remove the liftgate scuff plate. Refer to **PLATE, SCUFF, LIFTGATE, REMOVAL**.
3. Loosen the striker screws (4).
4. Adjust the liftgate up/down position and tighten the hinge bolts to 15 N.m (11 ft. lbs.). Refer to **GAP AND FLUSH, SPECIFICATIONS**.
5. Confirm the lower liftgate in/out position and tighten the striker screws to 23 N.m (17 ft. lbs.).
6. Install the liftgate scuff plate. Refer to **PLATE, SCUFF, LIFTGATE, INSTALLATION**.

REMOVAL

REMOVAL

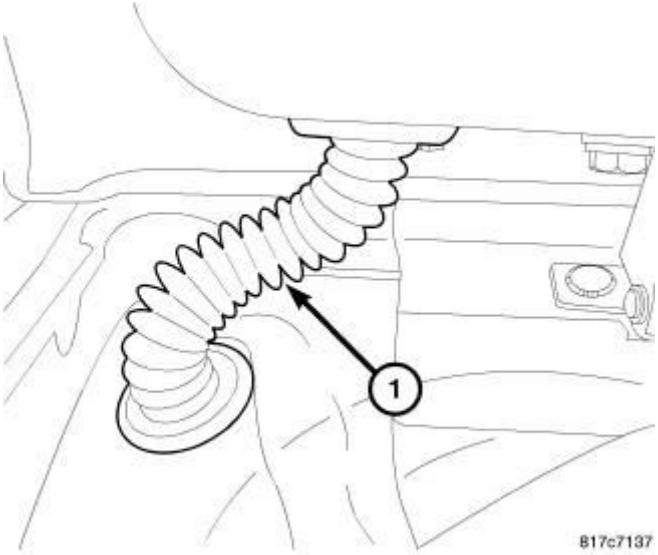

Fig. 432: Liftgate Harness
Courtesy of CHRYSLER GROUP, LLC

1. Open liftgate.
2. Disconnect washer hose.
3. Disconnect liftgate harness (1).
4. Disconnect cable from handle.
5. Support the liftgate and disconnect the liftgate prop cylinders. Refer to **PROP, GAS, REMOVAL**.

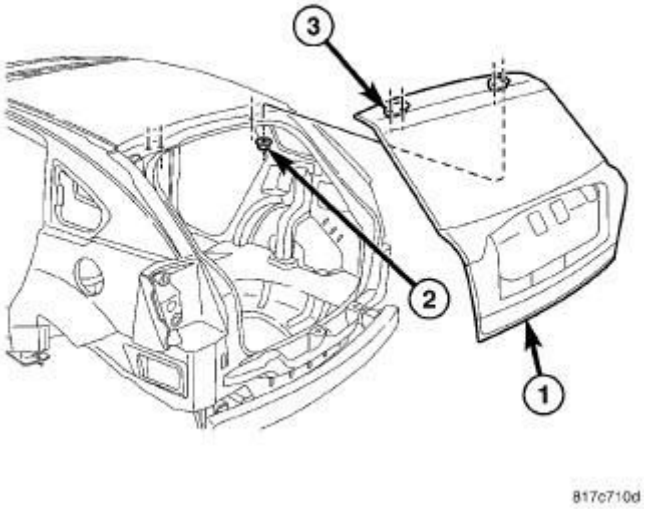

Fig. 433: Liftgate Hinge
Courtesy of CHRYSLER GROUP, LLC

6. Remove fasteners (2) attaching liftgate (1) to liftgate hinge (3).

INSTALLATION

INSTALLATION

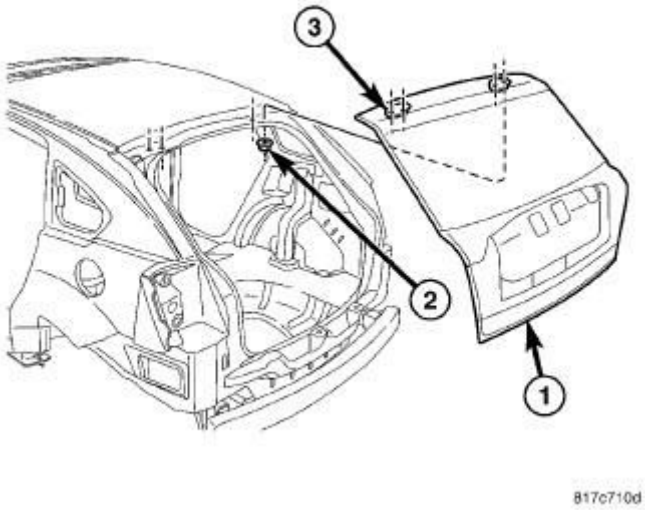

Fig. 434: Liftgate Hinge
Courtesy of CHRYSLER GROUP, LLC

1. With the help of an assistant, place liftgate (1) onto liftgate hinges (3).
2. Torque nuts (2) to 15 N.m (11 ft. lbs.).
3. Install the liftgate prop cylinders. Refer to **PROP, GAS, INSTALLATION**.

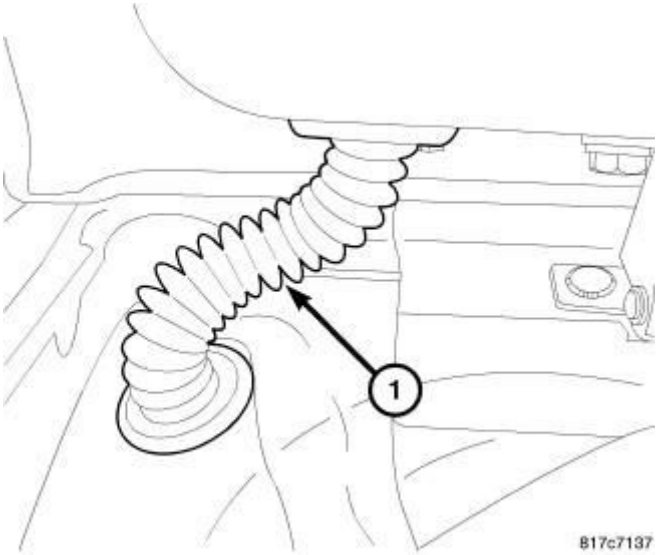

Fig. 435: Liftgate Harness
Courtesy of CHRYSLER GROUP, LLC

4. Install liftgate harness (1).

5. Install washer hose.
6. Adjust liftgate. Refer to **LIFTGATE, ADJUSTMENTS**.

PANEL, TRIM

REMOVAL

REMOVAL

LIFTGATE HEADER PANEL

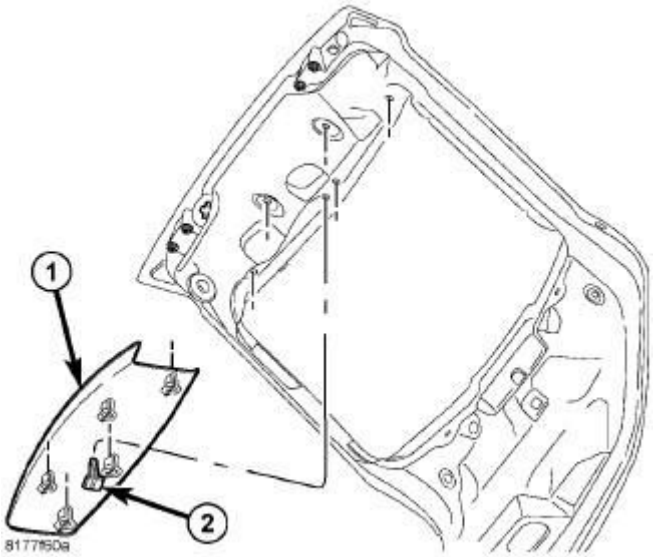

Fig. 436: Center Liftgate Upper Trim
Courtesy of CHRYSLER GROUP, LLC

NOTE: Caliber shown, Compass and Patriot similar.

1. Using a trim stick (special tool #C-4755, Trim Stick) or equivalent, separate the clip fasteners (2) and remove the upper trim (1).

PATRIOT

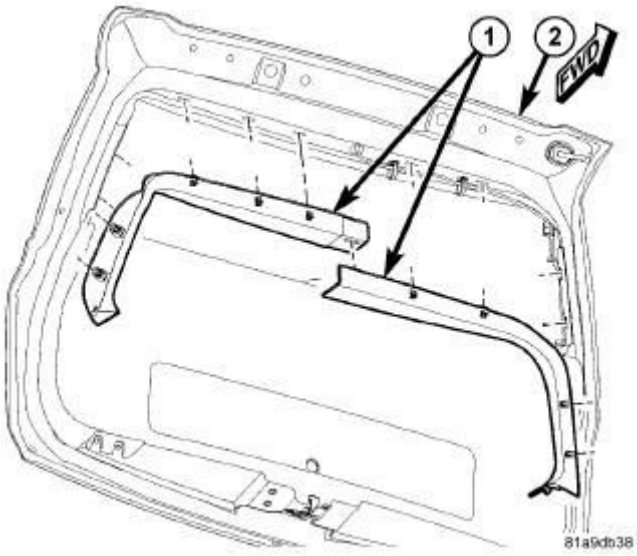

Fig. 437: Side Trim Panels
Courtesy of CHRYSLER GROUP, LLC

1. Using a trim stick (special tool #C-4755, Trim Stick) or equivalent, separate the clip fasteners and remove the side trim panels (1).

LIFTGATE PANEL

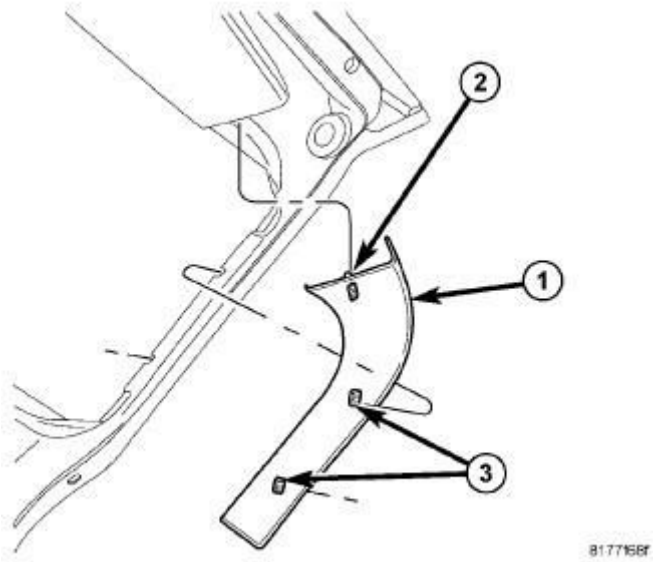

Fig. 438: Liftgate Upper Side Trim
Courtesy of CHRYSLER GROUP, LLC

NOTE: Caliber shown, Compass similar.

1. Using a trim stick (special tool #C-4755, Trim Stick) or equivalent, separate

the clip fasteners (2 and 3) and remove the side trim panels (1).

LIFTGATE TRIM PANEL

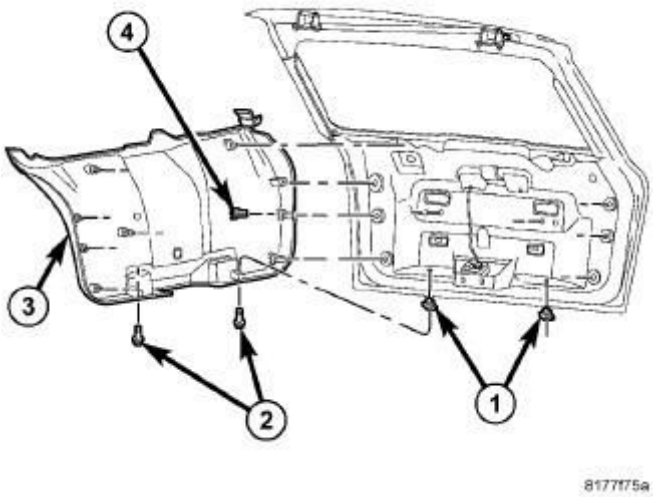

Fig. 439: Lower Liftgate Trim
Courtesy of CHRYSLER GROUP, LLC

NOTE: Caliber shown, Compass and Patriot similar.

1. Remove the screws (2).
2. Using a trim stick (special tool #C-4755, Trim Stick) or equivalent, separate the clip fasteners (4) and remove the trim panel (3).

LIFTGATE TRIM AND SPEAKER PANEL

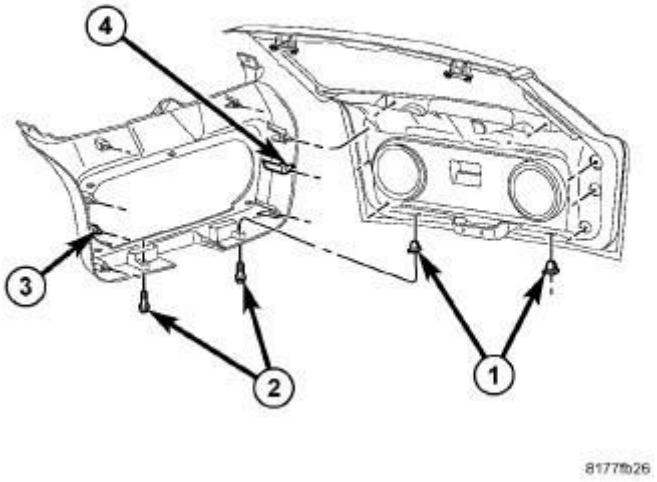

Fig. 440: Trim Panel
Courtesy of CHRYSLER GROUP, LLC

NOTE: Caliber shown, Compass and Patriot similar.

1. Remove the screws (2).
2. Using a trim stick (special tool #C-4755, Trim Stick) or equivalent, separate the clip fasteners (4) and remove the trim panel (3).

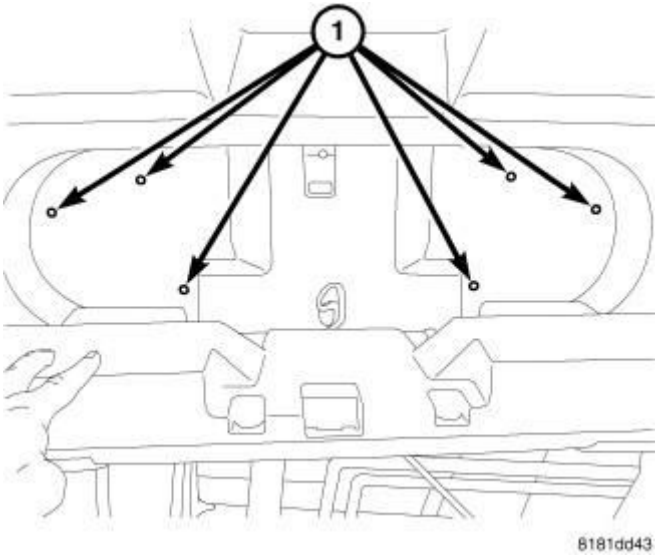

Fig. 441: Speaker Fasteners
Courtesy of CHRYSLER GROUP, LLC

3. Open the speaker panel assembly and remove the screws (1).

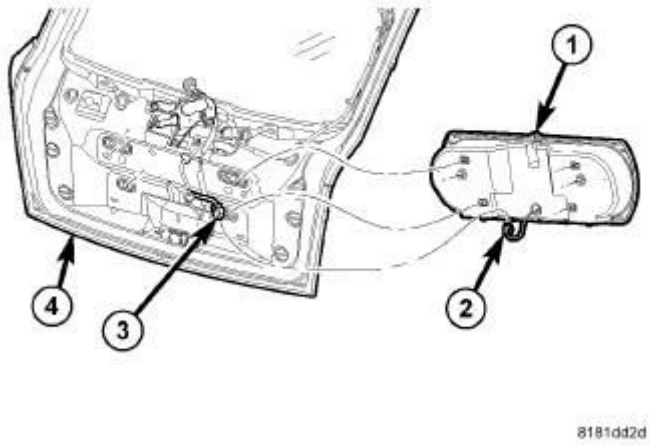

Fig. 442: Speaker Connection
Courtesy of CHRYSLER GROUP, LLC

4. Disconnect the electrical connectors (2 and 3) and remove the speaker panel assembly (1).

INSTALLATION

INSTALLATION

LIFTGATE TRIM AND SPEAKER PANEL

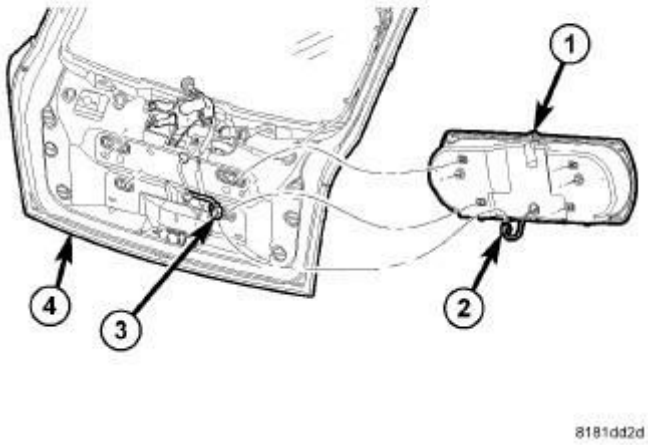

Fig. 443: Speaker Connection
Courtesy of CHRYSLER GROUP, LLC

NOTE: Caliber shown, Compass and Patriot similar.

1. Connect the electrical connectors (2 and 3) and position the speaker panel assembly (1) into place.

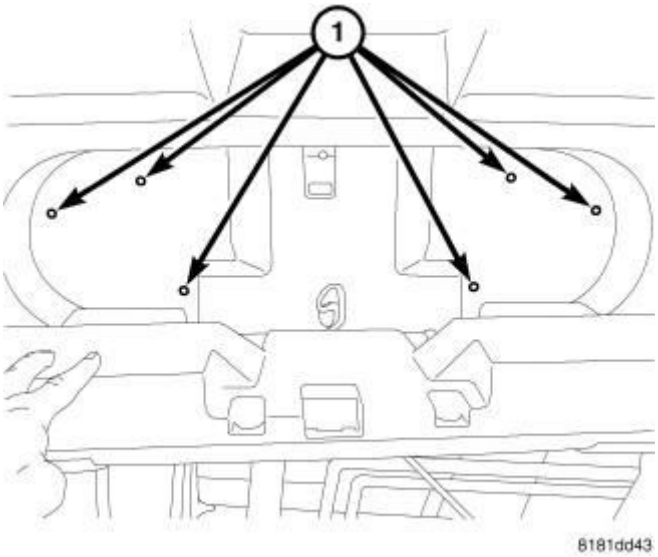

Fig. 444: Speaker Fasteners
Courtesy of CHRYSLER GROUP, LLC

2. Install the mounting screws (1) and close the speaker panel.

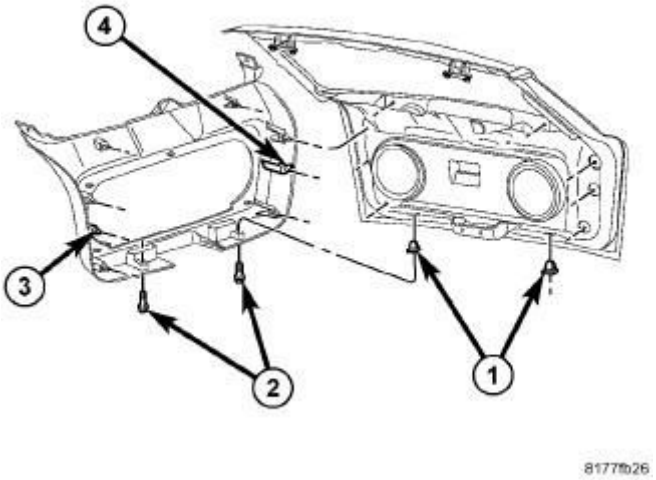

Fig. 445: Trim Panel
Courtesy of CHRYSLER GROUP, LLC

3. Position the trim panel (3) back into place and seat the fastener clips (4) fully.

4. Install the two lower screws (2).

LIFTGATE TRIM PANEL

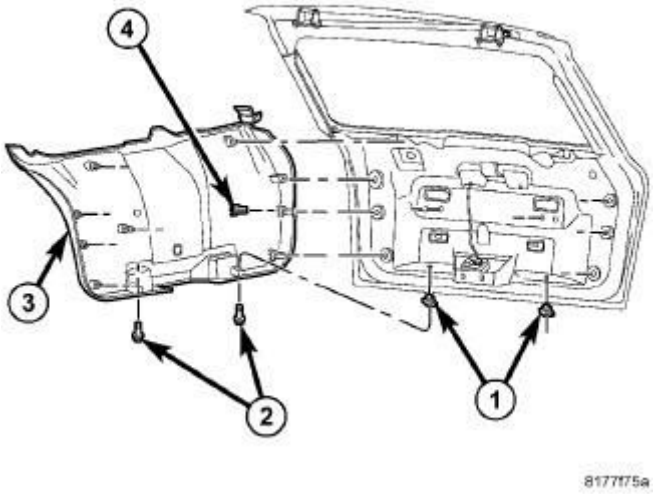

Fig. 446: Lower Liftgate Trim
Courtesy of CHRYSLER GROUP, LLC

NOTE: Caliber shown, Compass and Patriot similar.

1. Position the trim panel (3) back into place and seat the fastener clips (4) fully.
2. Install the two lower screws (2).

PATRIOT

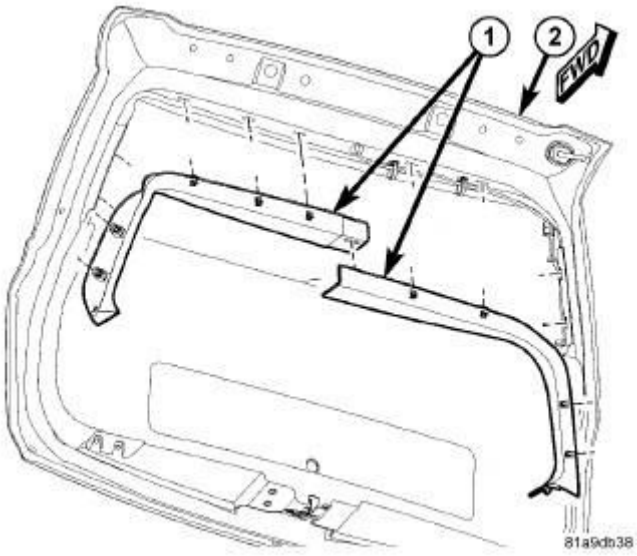

Fig. 447: Side Trim Panels
Courtesy of CHRYSLER GROUP, LLC

1. Position the side panels (1) into place and seat the fastener clips fully.

LIFTGATE PANEL

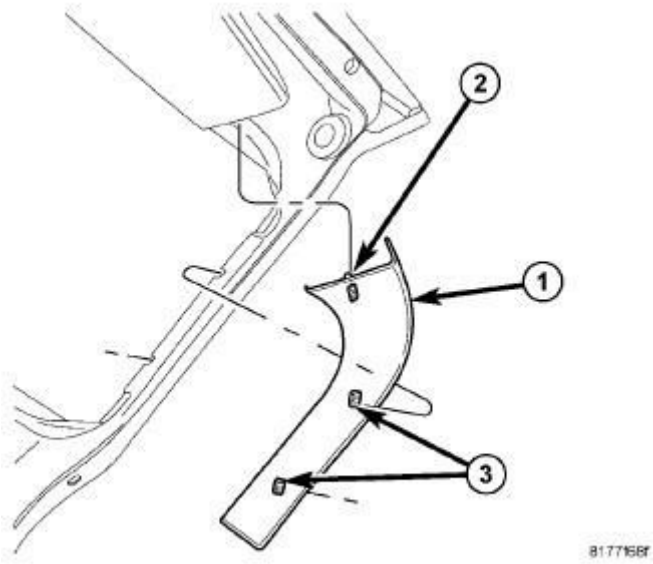

Fig. 448: Liftgate Upper Side Trim
Courtesy of CHRYSLER GROUP, LLC

NOTE: Caliber shown, Compass similar.

1. Position the side panels (1) into place and seat the fastener clips (2 and 3) fully.

LIFTGATE HEADER PANEL

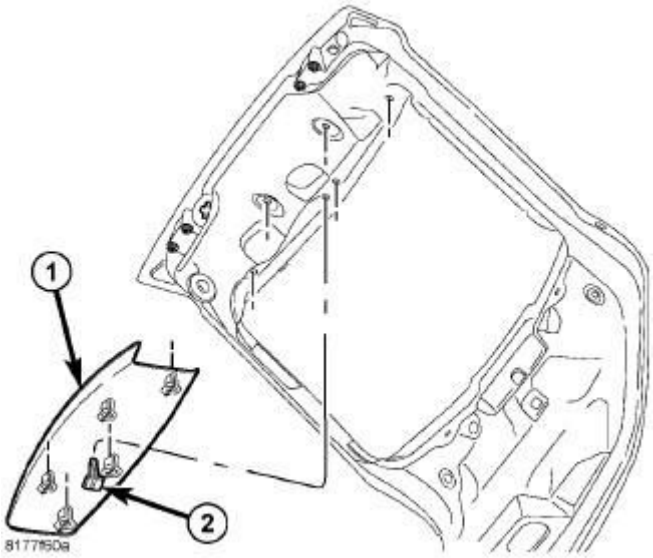

Fig. 449: Center Liftgate Upper Trim
Courtesy of CHRYSLER GROUP, LLC

NOTE: Caliber shown, Compass and Patriot similar.

1. Position the upper trim panel (1) into place and seat the fastener clips (2) fully.

PROP, GAS

REMOVAL

REMOVAL

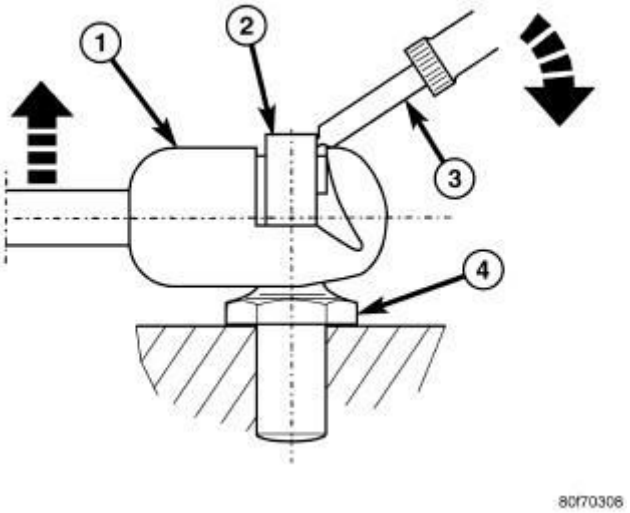

Fig. 450: Support Cylinder Removal
Courtesy of CHRYSLER GROUP, LLC

1 - BALL SOCKET
2 - RETAINING CLIP
3 - FLAT BLADED TOOL
4 - BALL STUD

WARNING: **Do not remove the liftgate support cylinders with the liftgate closed. The support cylinder pistons are operated by high pressure gas and could cause personal injury and/or vehicle damage if they are removed with the pistons compressed (liftgate closed). Once removed, do not attempt to disassemble or repair the support cylinders.**

1. Open the liftgate and support.
2. Using a small flat bladed tool (3), or equivalent, release the retaining clips (2) while pulling the ball socket (1) away from the ball stud (4).

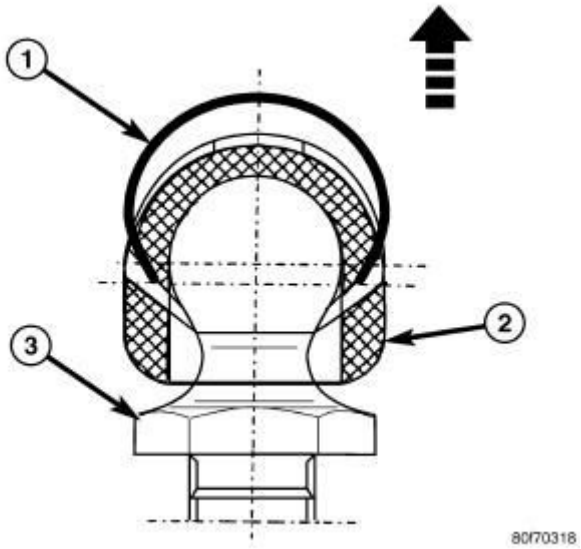

Fig. 451: Support Cylinder Retaining Clip
Courtesy of CHRYSLER GROUP, LLC

1 - RETAINING CLIP
2 - BALL SOCKET
3 - BALL STUD

NOTE: Lift the clips (1) only enough to release the ball studs (3).

3. Remove the support cylinder from the upper and lower ball studs.

INSTALLATION

INSTALLATION

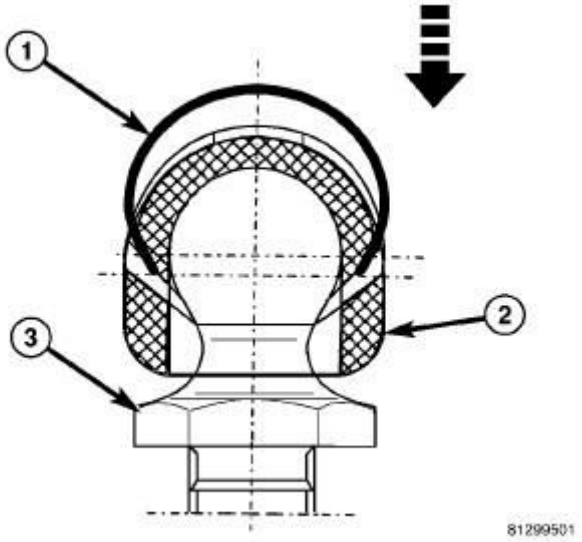

Fig. 452: Removing/Installing Support Cylinder Retaining Clip
Courtesy of CHRYSLER GROUP, LLC

1 - RETAINING CLIP
2 - BALL SOCKET
3 - BALL STUD

WARNING: Do not remove the liftgate support cylinders with the liftgate closed. The support cylinder pistons are operated by high pressure gas and could cause personal injury and/or vehicle damage if they are removed with the pistons compressed (liftgate closed). Once removed, do not attempt to disassemble or repair the support cylinders.

1. Make sure the retaining clips (1) are seated into the ball socket (2) fully.
2. Install the support cylinder (2) over the ball studs (3) with the thin end connected to the body and the retaining clips snapping into place.

STRIKER

ADJUSTMENTS

ADJUSTMENTS

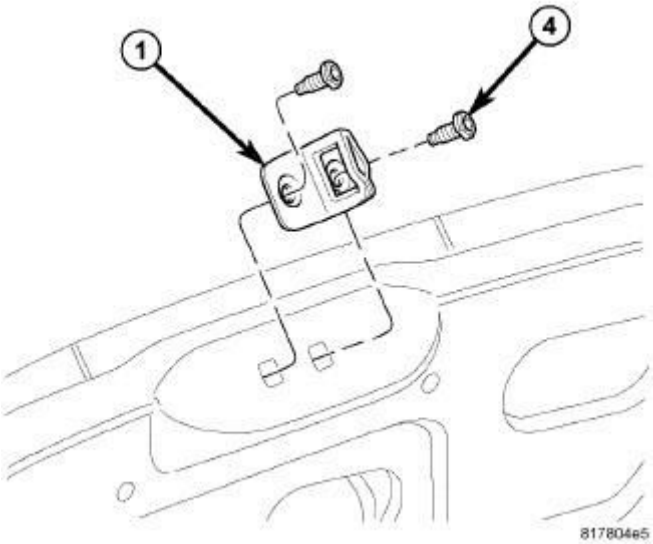

Fig. 453: Liftgate Striker Assembly
Courtesy of CHRYSLER GROUP, LLC

1. Using a grease pencil or equivalent, mark the position of the striker (1) to aid in adjustment.
2. Loosen the striker bolts (4).
3. Change the striker position to adjust the lower liftgate gap and flush measurement. Refer to **GAP AND FLUSH, SPECIFICATIONS**.
4. Tighten the bolts to 23 N.m (17 ft. lbs.).

REMOVAL

REMOVAL

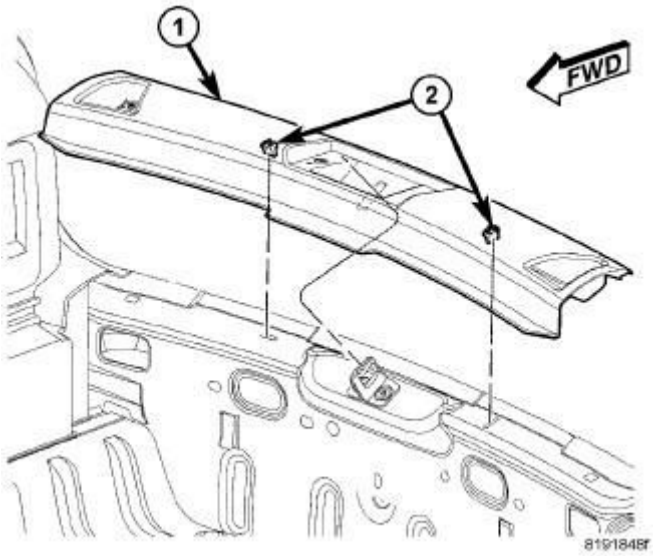

Fig. 454: Liftgate Scuff
Courtesy of CHRYSLER GROUP, LLC

1. Using a trim stick (special tool #C-4755, Trim Stick) or equivalent, release the retaining clips (2) and remove the liftgate scuff plate (1).

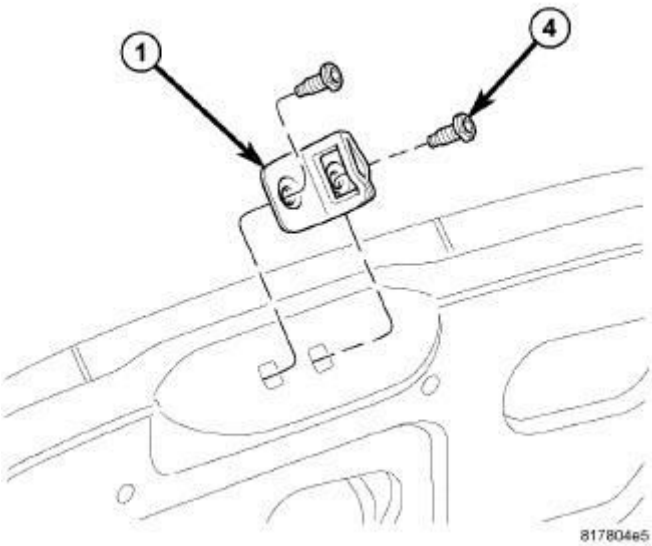

Fig. 455: Liftgate Striker Assembly
Courtesy of CHRYSLER GROUP, LLC

NOTE: Place a reference mark along the outer edge of the striker to ensure it is reinstalled to its original position.

2. Using a grease pencil or equivalent, mark the position of the striker (1) on the liftgate opening lower panel to aid installation.
3. Remove the two screws (4) that secure the striker to the lower panel and remove the striker.

INSTALLATION

INSTALLATION

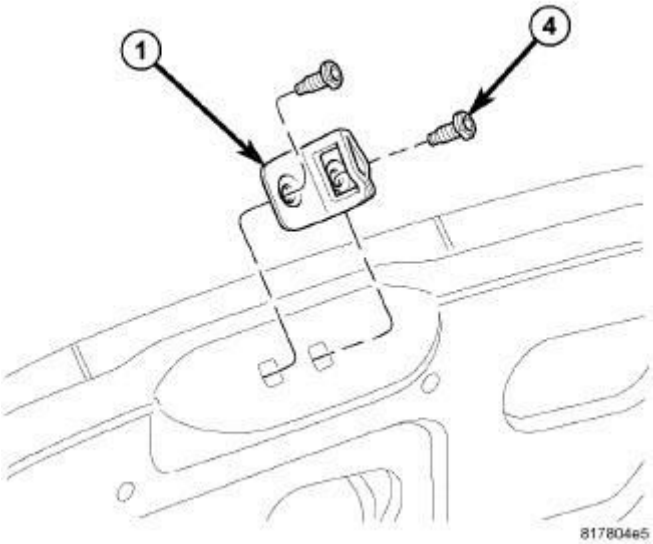

Fig. 456: Liftgate Striker Assembly
Courtesy of CHRYSLER GROUP, LLC

1. Position the liftgate striker (1) onto the liftgate opening lower panel and align the striker to the previously marked location.
2. Install the two bolts (4) that secure the striker to the lower panel. Tighten the bolts to 23 N.m (17 ft. lbs.).
3. Check and adjust the striker if necessary. Refer to **STRIKER, ADJUSTMENTS**.

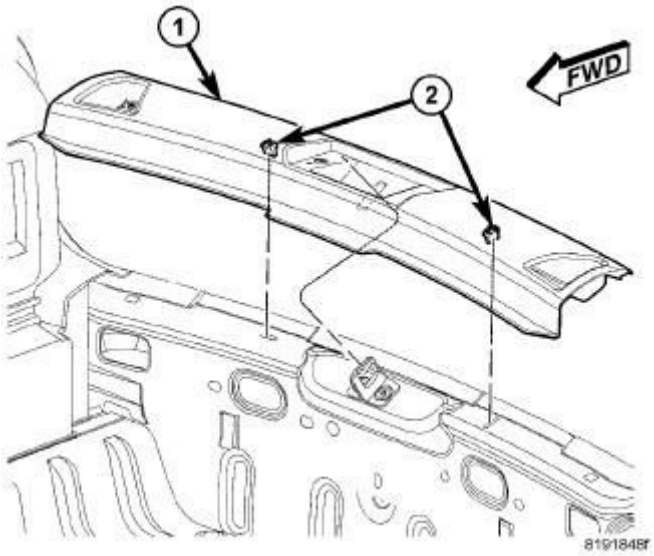

Fig. 457: Liftgate Scuff
Courtesy of CHRYSLER GROUP, LLC

4. Position the liftgate scuff plate (1) onto the liftgate sill and seat the retaining clips (2) fully.

PAINT

SPECIFICATIONS

SPECIFICATIONS

EXTERIOR COLORS

EXTERIOR COLOR	CHRYSLER CODE
Deep Cherry Red Crystal Pearl Coat	JRP
Rugged Brown Pearl Coat	GTW
Maximum Steel Metallic Clear Coat	KAR
True Blue Pearl Coat	KBU
Winter Chill Pearl Coat	JBA
Mineral Grey Metallic Clear Coat	CDM
Granite Crystal Metallic Clear Coat	LAU
Bright Silver Metallic Clear Coat	WS2
Billet Silver Metallic Clear Coat	JSC
Black Clear Coat	DX8
Bright White Clear Coat	GW7

INTERIOR COLORS

INTERIOR COLOR	CHRYSLER CODE
Dark Slate Gray	DV
Dark Pebble Beige/Pastel Pebble Beige	DK
Dark Slate Gray/Saddle	VT

BASECOAT/CLEARCOAT FINISH

DESCRIPTION

DESCRIPTION

On most vehicles a two-part paint application (basecoat/clearcoat) is used. Color paint that is applied to primer is called basecoat. The clearcoat protects the basecoat from ultraviolet light and provides a durable high-gloss finish.

CAUTION: Do not use abrasive chemicals or compounds on painted surfaces. Damage to finish can result.

Do not use harsh alkaline based cleaning solvents on painted surfaces. Damage to finish or color can result.

FINESSE SANDING, BUFFING, AND POLISHING

DESCRIPTION

DESCRIPTION

Minor acid etching, orange peel, or smudging in clearcoat or single-stage finishes can be reduced with light finesse sanding, hand buffing, and polishing.**If the finish has been finesse sanded in the past, it cannot be repeated. Finesse sanding operation should be performed by a trained automotive paint technician.**

CAUTION: Do not remove clearcoat finish, if equipped. Basecoat paint must retain clearcoat for durability.

PAINT CODE

DESCRIPTION

DESCRIPTION

Exterior vehicle body colors are identified on the Vehicle Safety Certification Label which is located on the drivers door shut face. The first digit of the paint code listed on the vehicle indicates the sequence of application, i.e.: P = primary coat, Q = secondary coat. The codes listed in the Color Code Chart, are used for manufacturing purposes. Refer to **PAINT, SPECIFICATIONS**.

PAINT TOUCH-UP

DESCRIPTION

DESCRIPTION

When a painted metal surface has been scratched or chipped, it should be touched up as soon as possible to avoid corrosion. For best results, use Mopar® Scratch Filler/Primer, Touch Up Paints and Clear Top Coat. For a description of the paint codes, refer to **PAINT, SPECIFICATIONS**.

WARNING: Use an OSHA approved respirator and safety glasses when spraying paint or solvents in a confined area. Personal injury can result.

TOUCH UP PROCEDURE

1. Scrape loose paint and corrosion from inside scratch or chip.
2. Clean affected area with Mopar® Tar/Road Oil Remover, and allow to dry.
3. Fill the inside of the scratch or chip with a coat of filler/primer. Do not overlap primer onto good surface finish. The applicator brush should be wet enough to puddle-fill the scratch or chip without running. Do not stroke brush applicator on body surface. Allow the filler/primer to dry hard.
4. Cover the filler/primer with color touch up paint. Do not overlap touch up color onto the original color coat around the scratch or chip. Butt the new color to the original color, if possible. Do not stroke applicator brush on body surface. Allow touch up paint to dry hard.
5. On vehicles without clearcoat, the touch up color can be lightly finesse sanded (1500 grit) and polished with rubbing compound.
6. On vehicles with clearcoat, apply clear top coat to touch up paint with the same technique as described in step 4. Allow clear top coat to dry hard. If desired, can be performed on clear top coat. Go to 5.

WARNING: Avoid prolonged skin contact with petroleum or alcohol - based cleaning solvents. Personal injury can result.

SEATS

WARNING

WARNING

WARNING: During and following any seat belt or child restraint anchor service, carefully inspect all seat belts, buckles, mounting hardware, retractors, tether straps, and anchors for proper installation, operation, or damage. Replace any belt that is cut, frayed, or torn. Straighten any belt that is twisted. Tighten any loose fasteners. Replace any belt that

has a damaged or inoperative buckle or retractor. Replace any belt that has a bent or damaged latch plate or anchor plate. Replace any child restraint anchor or the unit to which the anchor is integral that has been bent or damaged. Never attempt to repair a seat belt or child restraint component. Always replace damaged or faulty seat belt and child restraint components with the correct, new and unused replacement parts listed in the Chrysler Mopar® parts catalog. Failure to follow these instructions may result in personal injury or death.

WARNING: **On vehicles equipped with airbags, disable the supplemental restraint system before attempting any steering wheel, steering column, driver airbag, passenger airbag, side impact sensor, or instrument panel component diagnosis or service. Disconnect and isolate the battery negative (ground) cable, then wait two minutes for the system capacitor to discharge before performing further diagnosis or service. This is the only sure way to disable the supplemental restraint system. Failure to take the proper precautions could result in accidental airbag deployment and possible personal injury.**

WARNING: **Replace all restraint system components only with parts specified in the Chrysler Mopar® parts catalog. Substitute parts may appear interchangeable, but internal differences may result in inferior occupant protection. Failure to follow these instructions may result in personal injury or death.**

WARNING: **The fasteners, screws, and bolts originally used for the restraint system components must never be replaced with any substitutes. These fasteners**

have special coatings and are specifically designed for the restraint system. Any time a new fastener is needed, replace it with the correct fasteners provided in the service package or specified in the Chrysler Mopar® parts catalog. Failure to follow these instructions may result in personal injury or death.

ADJUSTER, SEAT

REMOVAL

REMOVAL

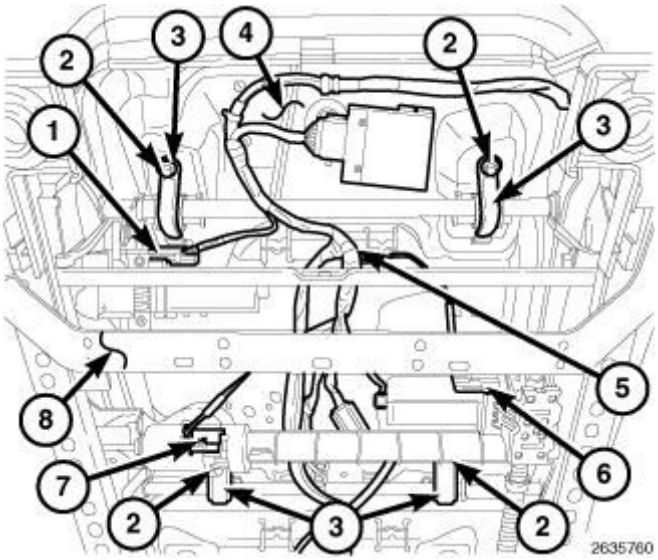

Fig. 458: Identifying Harness Connectors, Bolts, Seat Cushion Pan Brackets, Seat Cushion Pan, Wire Harness & Power Seat Adjuster Assembly
Courtesy of CHRYSLER GROUP, LLC

NOTE: Take the proper precautions to protect the seat from cosmetic damage while performing this procedure.

NOTE: Power seat shown, manual seat fastening locations similar.

1. Disconnect and isolate the negative battery cable.
2. Remove the front seat and place it on a workbench. Refer to **SEAT, FRONT, REMOVAL**.
3. Disconnect the wire harness connectors (1, 6 and 7) from the three power

seat motors.

4. Remove the wire harness (5) from the power seat adjuster assembly (8).
5. Remove the four bolts (2) that secure the four seat cushion pan brackets (3) to the seat cushion pan (4) and remove the brackets.
6. Remove the seat cushion and pan from the power seat adjuster assembly.
7. Remove the seat cushion side shields and the seat back. Refer to **SEAT BACK, FRONT, REMOVAL** and **SEAT BACK, REAR, REMOVAL**.

NOTE: If replacing the power or manual seat adjuster, remove the track stops from the front of both tracks. These stops need to be removed to snap into the same track locations on the new seat adjuster. If a stop is damaged, a new one should be ordered and installed.

INSTALLATION

INSTALLATION

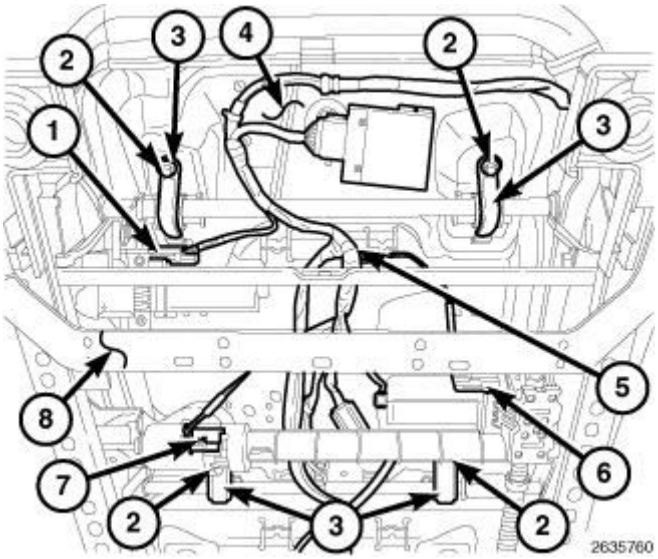

Fig. 459: Identifying Harness Connectors, Bolts, Seat Cushion Pan Brackets, Seat Cushion Pan, Wire Harness & Power Seat Adjuster Assembly
Courtesy of CHRYSLER GROUP, LLC

NOTE: If replacing the power or manual seat adjuster, remove the track stops from the front of both tracks. These stops need to be removed to snap into the same track locations on the new seat adjuster. If a stop is damaged, a new one should be ordered and installed.

NOTE: Take the proper precautions to protect the seat from cosmetic damage while performing this procedure.

NOTE: Power seat shown, manual seat fastening locations similar.

1. Transfer any parts onto power seat adjuster assembly (8) as necessary.
2. Install the seat back and seat cushion side shields. Refer to **SEAT BACK, FRONT, INSTALLATION** and **SEAT BACK, REAR, INSTALLATION**.
3. Position the seat cushion and pan (4) onto the power seat adjuster assembly.
4. Install the four seat cushion pan brackets (3) and bolts (2). Tighten the bolts securely.
5. Install the wire harness (5). Make sure all harness retainers are fully engaged to the adjuster assembly and seat cushion pan.
6. Connect the wire harness connectors (1, 6 and 7) to the three power seat motors.
7. Install the front seat. Refer to **SEAT, FRONT, INSTALLATION**.
8. Reconnect the negative battery cable.
9. Verify seat operation.

COVER, SEAT CUSHION, FRONT

REMOVAL

REMOVAL

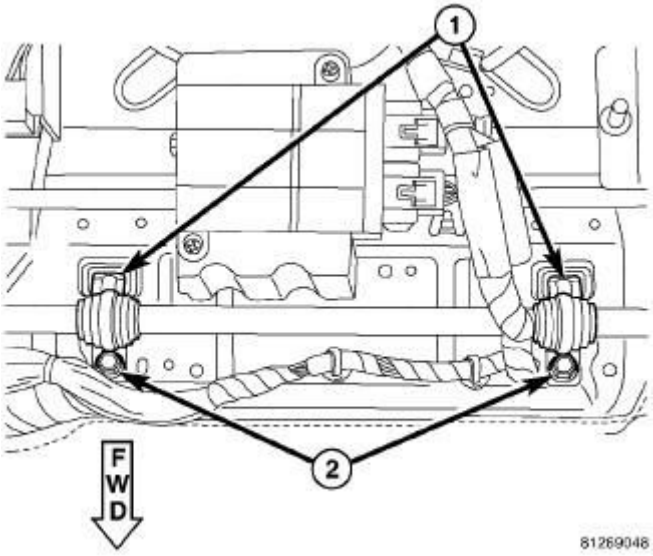

Fig. 460: Cushion Nuts
Courtesy of CHRYSLER GROUP, LLC

1. Before proceeding with the following repair procedure, review all warnings and cautions. Refer to **SEATS, WARNING**.
2. Move the seat to the forward position and disconnect and isolate the negative battery cable.
3. Remove the bolts (2) and the straps (1).
4. Disconnect the electrical connector, if equipped.

Fig. 461: Seat Cushion Removal
Courtesy of CHRYSLER GROUP, LLC

5. Lift the front of the seat cushion (2) up and slide out from under the seat back cushion (1).

DISASSEMBLY

DISASSEMBLY

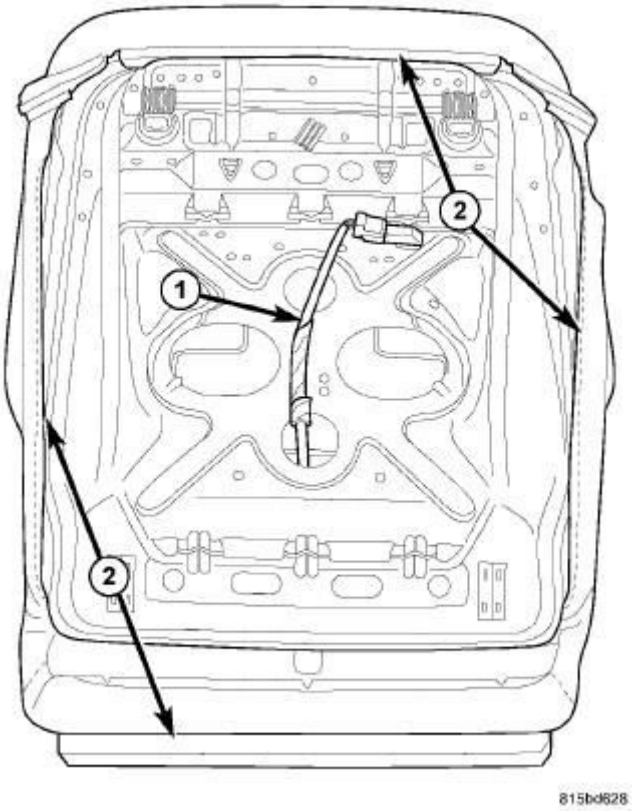

Fig. 462: Seat Cushion Cover J-Straps
Courtesy of CHRYSLER GROUP, LLC

1. Before proceeding with the following repair procedure, review all warnings and cautions. Refer to **SEATS, WARNING**.
2. Remove the seat cushion. Refer to **SEAT, FRONT, REMOVAL**.
3. Release the seat cushion cover J-straps (2) from the seat pan and remove the cushion from the pan.

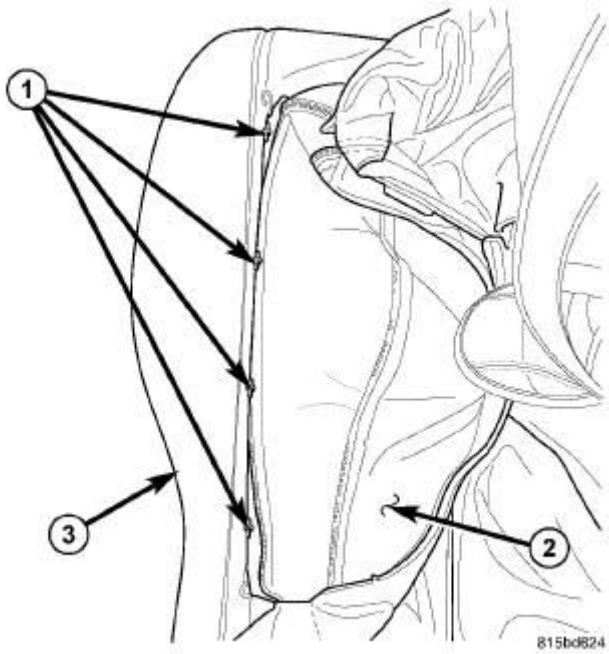

Fig. 463: Seat Cushion Hog Rings
Courtesy of CHRYSLER GROUP, LLC

4. Remove the hog rings (1) and separate the seat cushion cover (2) from the seat cushion foam (3).

ASSEMBLY

ASSEMBLY

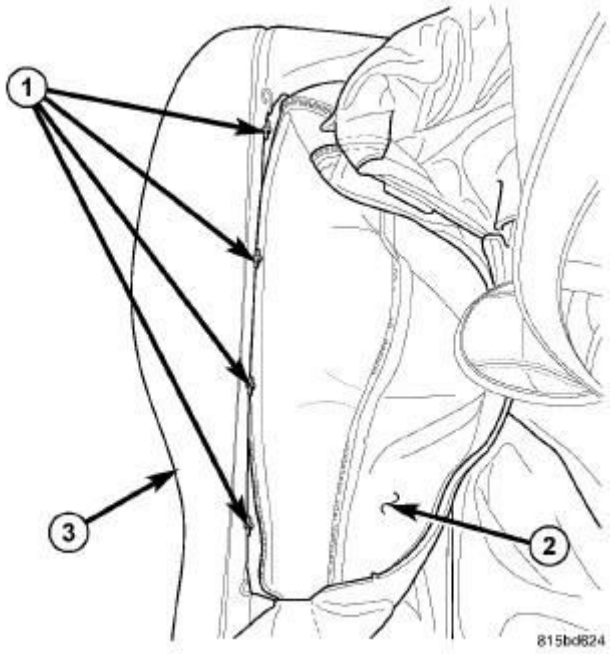

Fig. 464: Seat Cushion Hog Rings
Courtesy of CHRYSLER GROUP, LLC

1. Before proceeding with the following repair procedure, review all warnings and cautions. Refer to **SEATS, WARNING**.
2. Position the seat cushion cover (2) over the seat cushion foam (3) and attach new hog rings (1).

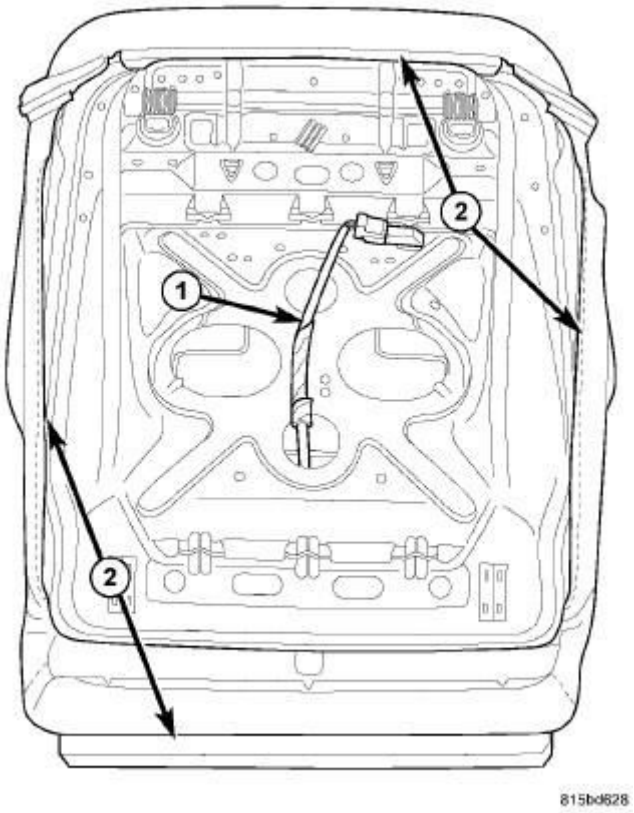

Fig. 465: Seat Cushion Cover J-Straps
Courtesy of CHRYSLER GROUP, LLC

3. Connect the seat cushion cover J-straps (2) to the seat pan.

INSTALLATION

INSTALLATION

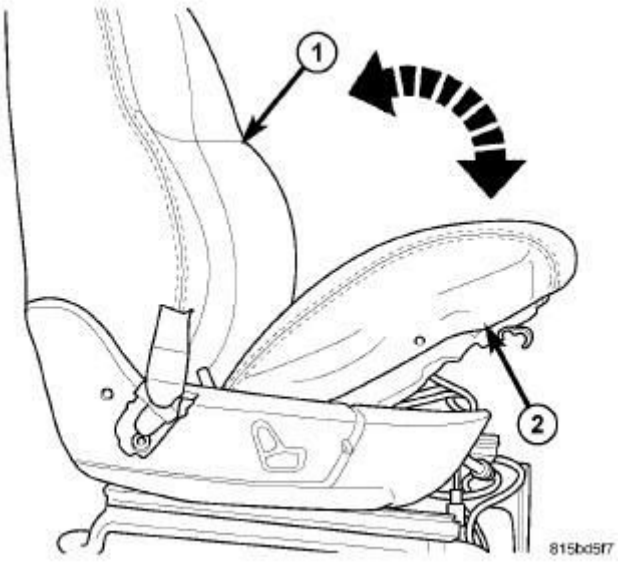

Fig. 466: Seat Cushion Removal
Courtesy of CHRYSLER GROUP, LLC

1. Before proceeding with the following repair procedure, review all warnings and cautions. Refer to **SEATS, WARNING**.
2. Position the rear of the seat cushion assembly (2) back under the seat back (1) and position the front of the cushion down over the seat adjuster frame.

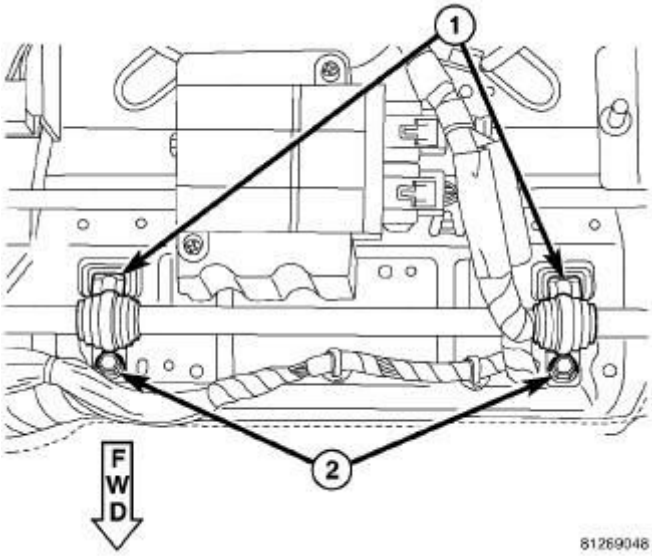

Fig. 467: Cushion Nuts
Courtesy of CHRYSLER GROUP, LLC

3. Install the seat cushion bushings and straps (1) and install the bolts (2).
4. Tighten the bolts to 11 N.m (8 ft. lbs.).

COVER, SEAT CUSHION, REAR

REMOVAL

REMOVAL

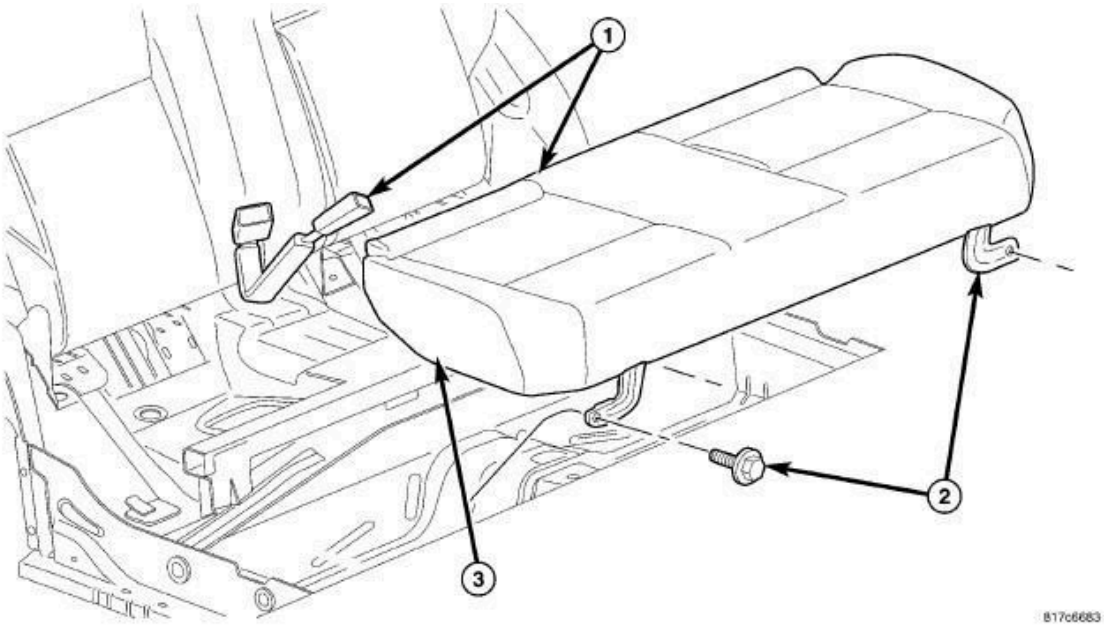

Fig. 468: Rear Cushion
Courtesy of CHRYSLER GROUP, LLC

1. Remove the bolts (2).
2. Lift the front of the cushion (3) up and remove the cushion from under the seat back.

DISASSEMBLY

DISASSEMBLY

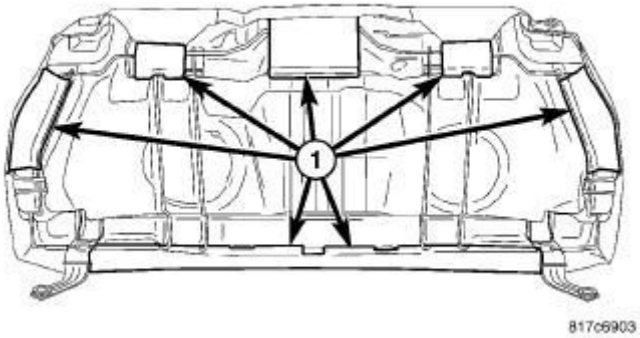

Fig. 469: Cushion Assembly
Courtesy of CHRYSLER GROUP, LLC

1. Remove the seat cushion. Refer to **SEAT, FRONT, REMOVAL**.
2. Separate the J-straps (1) from the seat frame.

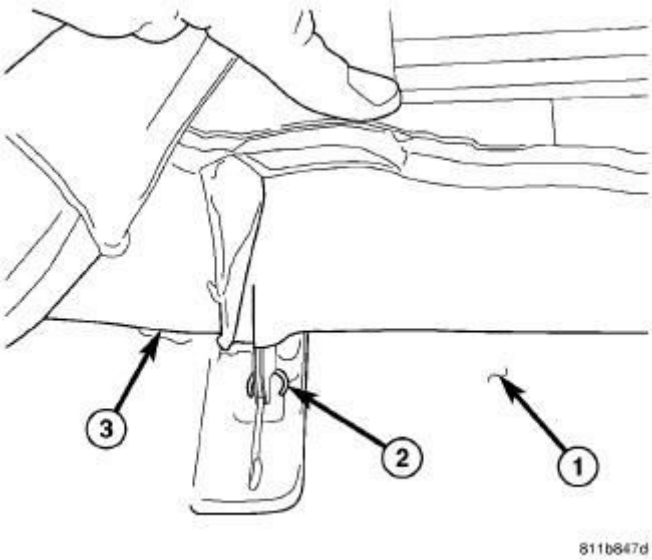

Fig. 470: Cushion Cover - Hog Rings
Courtesy of CHRYSLER GROUP, LLC

1 - SEAT FOAM CUSHION
2 - HOG RINGS
3 - SEAT CUSHION COVER

3. Remove the hog rings (2) connecting the seat cover (3) to the seat cushion foam (1) and separate from the seat cushion frame.

ASSEMBLY

ASSEMBLY

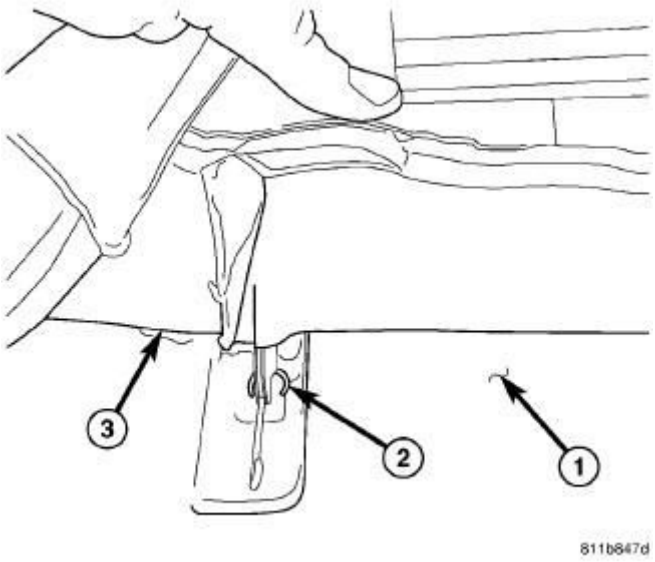

Fig. 471: Cushion Cover - Hog Rings
Courtesy of CHRYSLER GROUP, LLC

1 - SEAT FOAM CUSHION
2 - HOG RINGS
3 - SEAT CUSHION COVER

1. Place the cushion cover (3) onto the cushion foam (1) and install new hog rings (2).

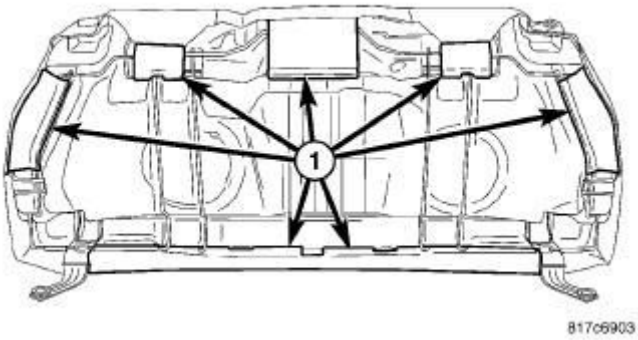

Fig. 472: Cushion Assembly
Courtesy of CHRYSLER GROUP, LLC

2. Connect the J-straps (1) to the seat cushion frame.
3. Install the seat cushion. Refer to **SEAT, FRONT, INSTALLATION**.

INSTALLATION

INSTALLATION

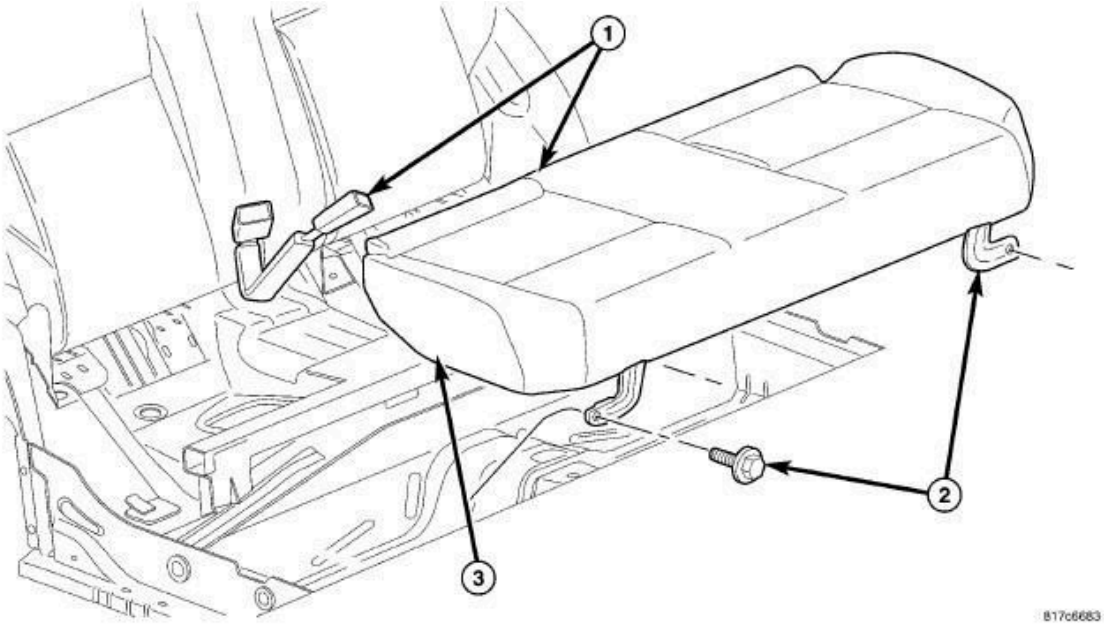

Fig. 473: Rear Cushion
Courtesy of CHRYSLER GROUP, LLC

1. Place the seat cushion into the vehicle and tuck the rear of the cushion (1) up under the seat belt buckles and rear seat back.
2. Lower the front of the cushion (3) down and install the bolts (2).
3. Tighten the bolts to 80 N.m (60 ft. lbs.).

HEADREST

REMOVAL

ACTIVE HEAD RESTRAINT (AHR)

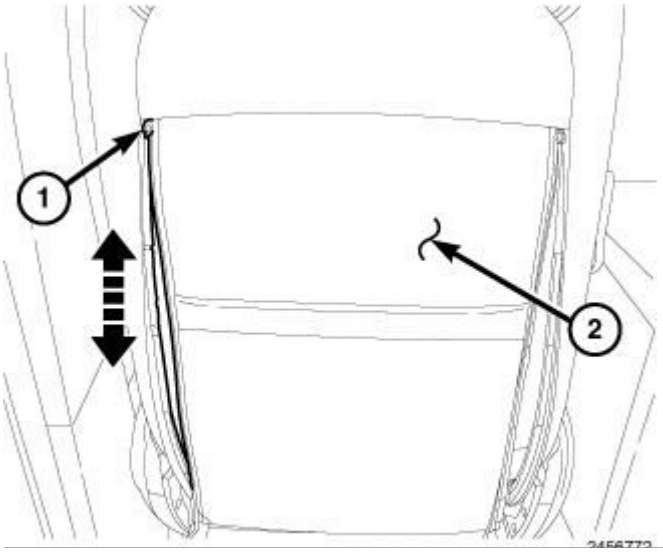

Fig. 474: Unzip/Zipping Soft Back Cover Side Zippers
Courtesy of CHRYSLER GROUP, LLC

WARNING: Disable the airbag system before attempting any component diagnosis or service of the front seats, when equipped with front seat air bags. Disconnect and isolate the negative battery (ground) cable, then wait two minutes for the airbag system capacitor to discharge before performing further diagnosis or service. This is the only sure way to disable the airbag system. Failure to take the proper precautions may result in accidental airbag deployment and possible serious or fatal injury.

WARNING: Improper installation of the headrests may result in reduced protection of the occupants. If, after installation, the headrest can be removed, without simultaneously pressing the buttons on the master and slave guide sleeves, then the head restraint is installed incorrectly. Failure to follow these instructions may result in possible serious or fatal injury.

NOTE: For reset procedures, refer to RESTRAINT, ACTIVE HEAD, STANDARD PROCEDURE .

1. Disconnect and isolate battery negative cable.
2. For seats equipped with a soft back cover (2), unzip one of the side zippers (1) to gain access to the AHR electrical connector.

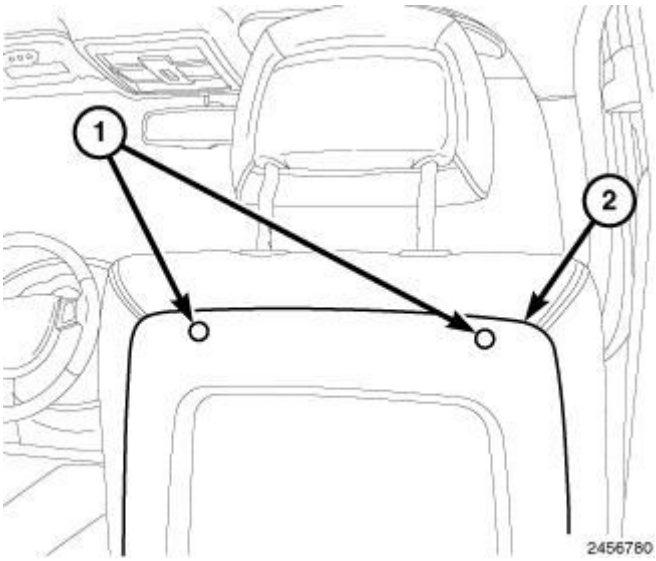

Fig. 475: Top Clips & Hard Back Seat Cover
Courtesy of CHRYSLER GROUP, LLC

3. For seats equipped with a hard back seat cover (2), using trim stick (special tool #C-4755, Trim Stick) or equivalent, release the top clips (1).

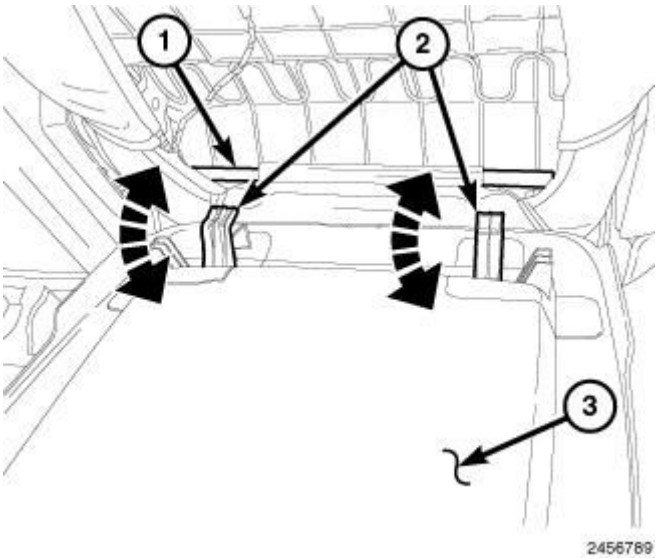

Fig. 476: Separating/Positioning Lower Retaining Hooks And Removing/Installing Seat Back Cover
Courtesy of CHRYSLER GROUP, LLC

4. Separate the lower retaining hooks (2) and remove the seat back cover (3).

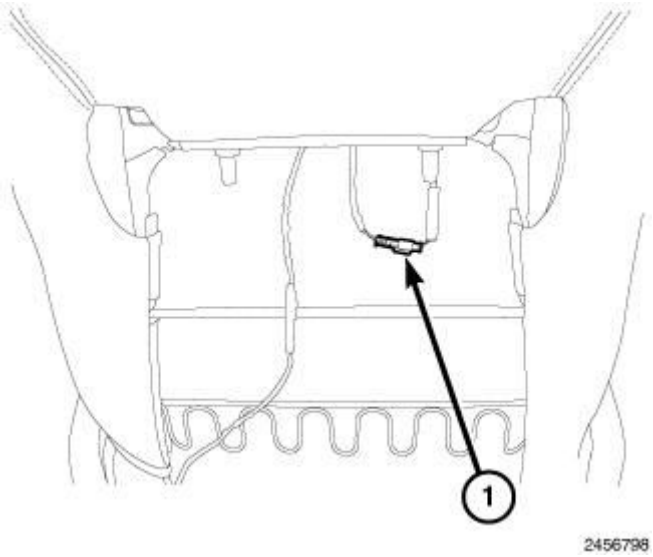

Fig. 477: Identifying Electrical Connector
Courtesy of CHRYSLER GROUP, LLC

5. Disconnect the electrical connector (1).

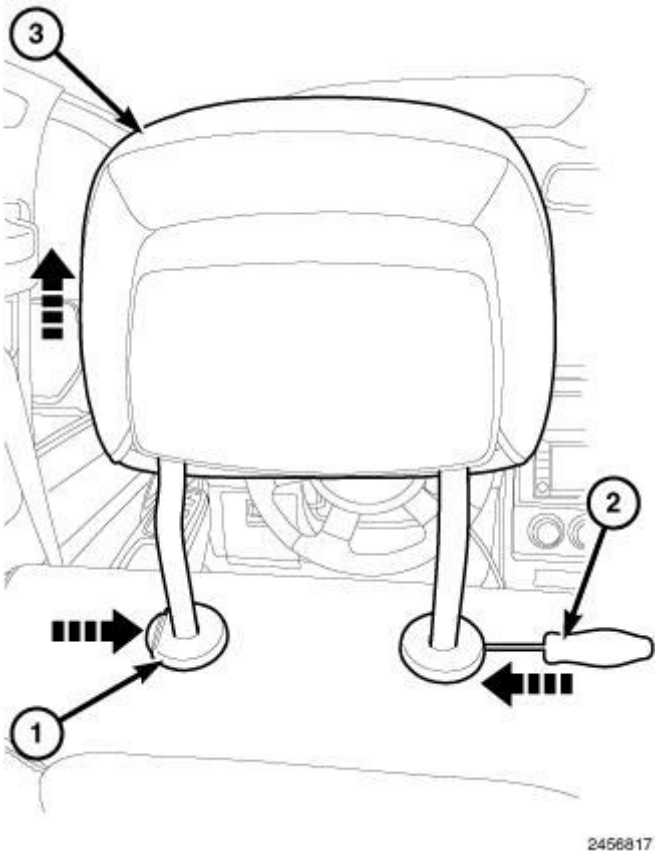

Fig. 478: Release Button, Thin Wire Type Tool & AHR
Courtesy of CHRYSLER GROUP, LLC

6. Recline the seat to gain enough room to remove the AHR (3).

7. Press the release button (1) on the left side headrest master sleeve.
8. Using a thin wire type tool (2), press the hidden release button on the right side headrest slave sleeve.

CAUTION: Special care should be taken not to damage to the AHR connector.

9. Slowly lift the AHR (3) up while pressing the buttons simultaneously.
10. Watch the connector as it reaches the bottom of the tube and guide the connector through.
11. Remove the AHR (3) fully.

INSTALLATION

ACTIVE HEAD RESTRAINT (AHR)

WARNING: Disable the airbag system before attempting any component diagnosis or service of the front seats, when equipped with front seat air bags. Disconnect and isolate the negative battery (ground) cable, then wait two minutes for the airbag system capacitor to discharge before performing further diagnosis or service. This is the only sure way to disable the airbag system. Failure to take the proper precautions may result in accidental airbag deployment and possible serious or fatal injury.

WARNING: Improper installation of the headrests may result in reduced protection of the occupants. If, after installation, the headrest can be removed, without simultaneously pressing the buttons on the master and slave guide sleeves, then the head restraint is installed incorrectly. Failure to follow these instructions may result in possible serious or fatal injury.

NOTE: For reset procedures, refer to RESTRAINT, ACTIVE HEAD, STANDARD PROCEDURE .

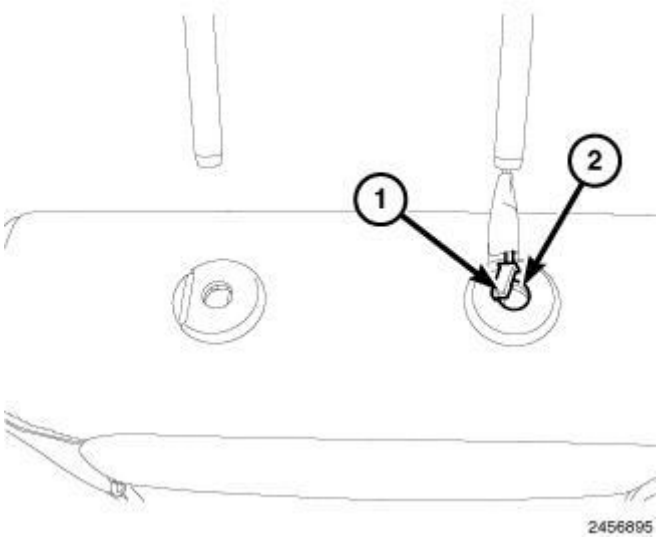

Fig. 479: Identifying AHR Electrical Connector & Slave Headrest Sleeve
Courtesy of CHRYSLER GROUP, LLC

CAUTION: Special care should be taken not to damage to the AHR connector.

1. Position the AHR electrical connector (1) into the slave headrest sleeve (2).

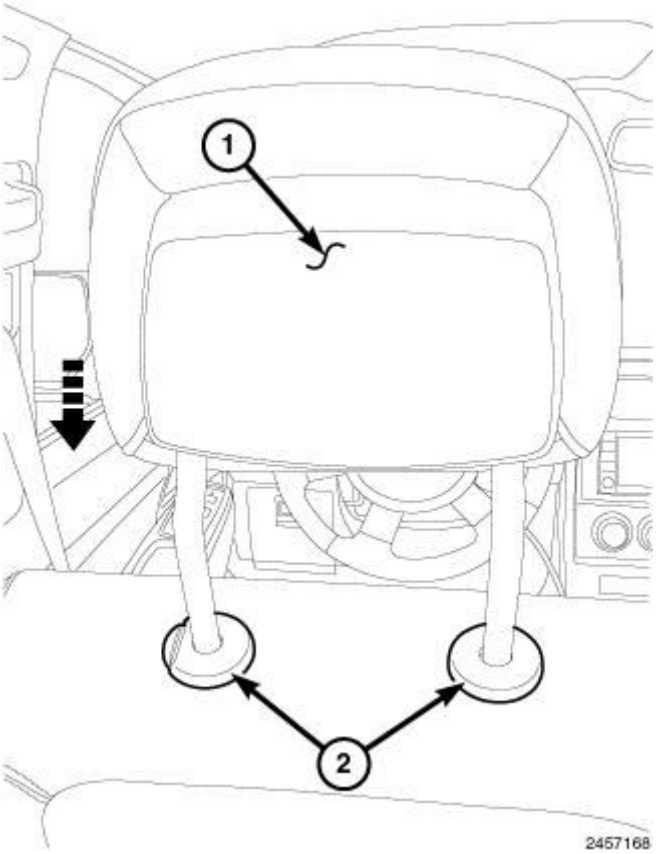

Fig. 480: Inserting AHR Rods Into Sleeves And Seat Into Lowest

Notches
Courtesy of CHRYSLER GROUP, LLC

2. Insert the AHR (1) rods into the sleeves (2) and seat into the lowest notches fully.

NOTE: At the full down position, there will be a gap between the AHR trim and the seat back trim. (The AHR trim doesn't have a touch condition with the seat back trim.)

3. Push the adjust button and seat the AHR (1) down fully and then verify that the adjustment functions properly.

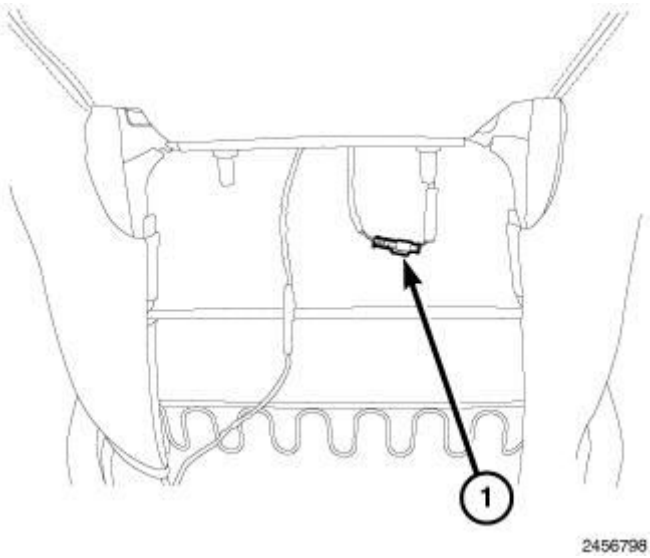

Fig. 481: Identifying Electrical Connector
Courtesy of CHRYSLER GROUP, LLC

4. Connect the AHR electrical connector (1).

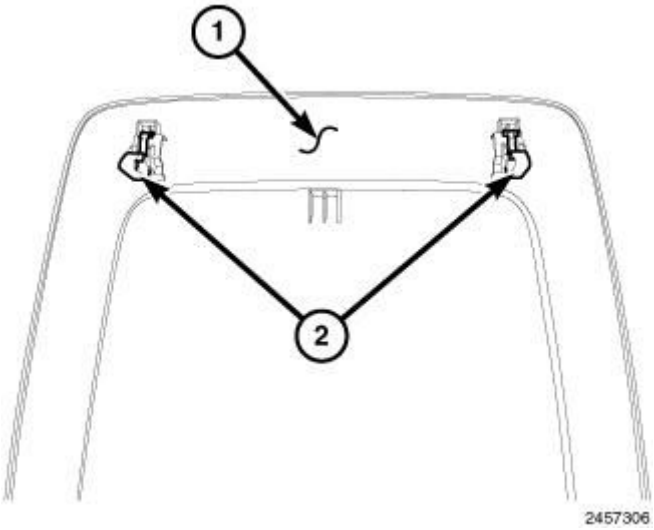

Fig. 482: Identifying Hard Back Panel & Retaining Clips
Courtesy of CHRYSLER GROUP, LLC

5. For seats with a hard back panel (1) verify that the retaining clips (2) are installed onto the panel (1).

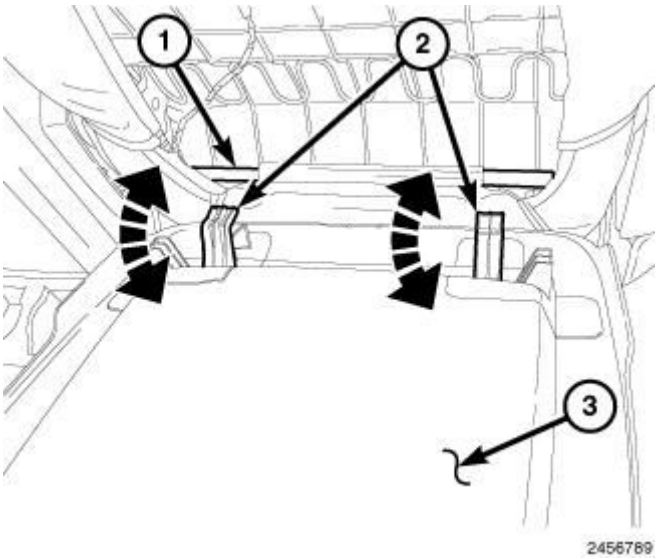

Fig. 483: Separating/Positioning Lower Retaining Hooks And Removing/Installing Seat Back Cover
Courtesy of CHRYSLER GROUP, LLC

6. Position the lower seat back panel (3) support hooks (2) onto the seat back frame (1).

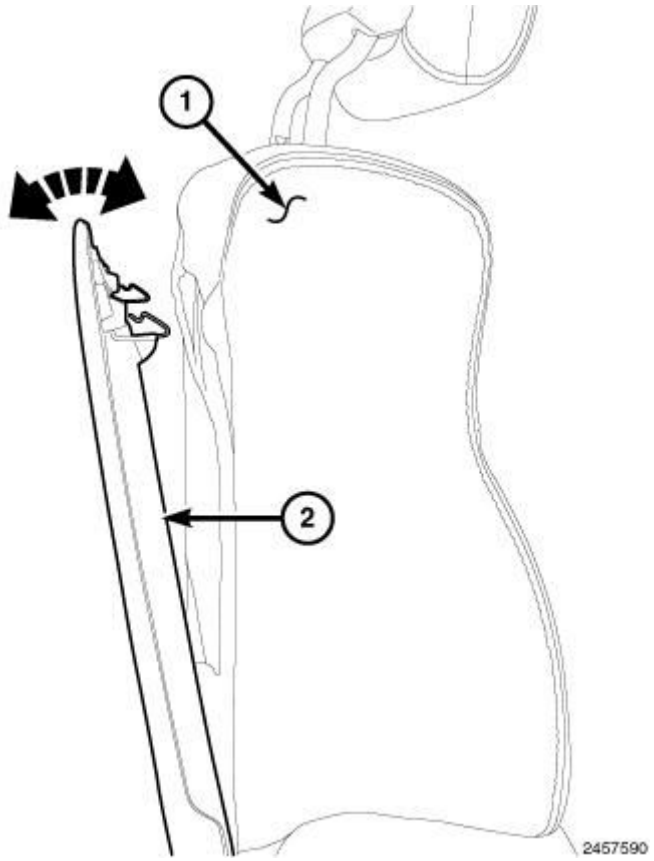

Fig. 484: Seat Back Frame & Seat Back Panel
Courtesy of CHRYSLER GROUP, LLC

7. Rotate the seat back panel (2) up and position the retaining clips into the holes in the seat back frame (1).

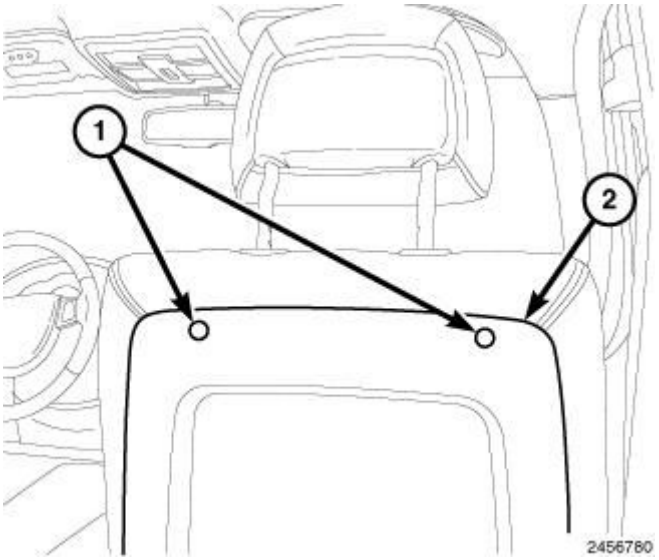

Fig. 485: Top Clips & Hard Back Seat Cover
Courtesy of CHRYSLER GROUP, LLC

8. Seat the retaining clips (1) fully.

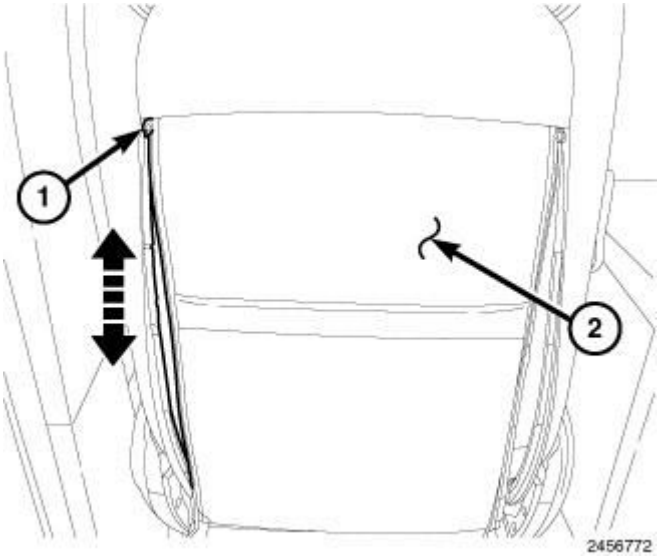

Fig. 486: Unzip/Zipping Soft Back Cover Side Zippers
Courtesy of CHRYSLER GROUP, LLC

9. For seats with a soft back cover (2), close the zipper and tuck up into the seat back.
10. Using a scan tool, check for electrical continuity and clear any diagnostic trouble codes.

SEAT BACK, FRONT

REMOVAL

REMOVAL

DRIVER SEAT

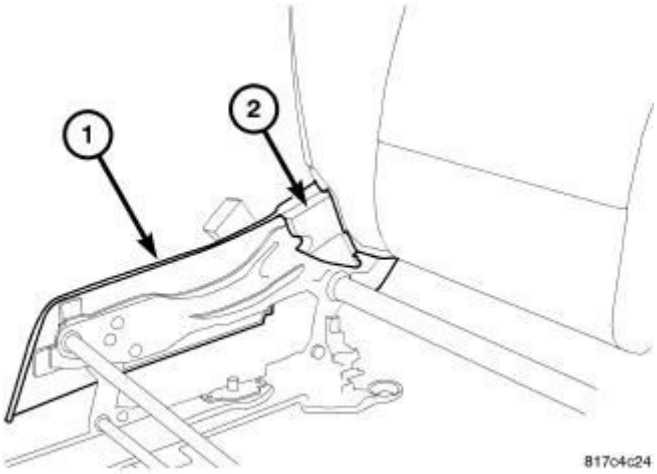

Fig. 487: Drivers Inner Shield
Courtesy of CHRYSLER GROUP, LLC

1. Before proceeding with the following repair procedure, review all warnings and cautions. Refer to **SEATS, WARNING**.
2. Remove the seat cushion. Refer to **COVER, SEAT CUSHION, FRONT, REMOVAL** .
3. Remove both of the inner side shields (2).

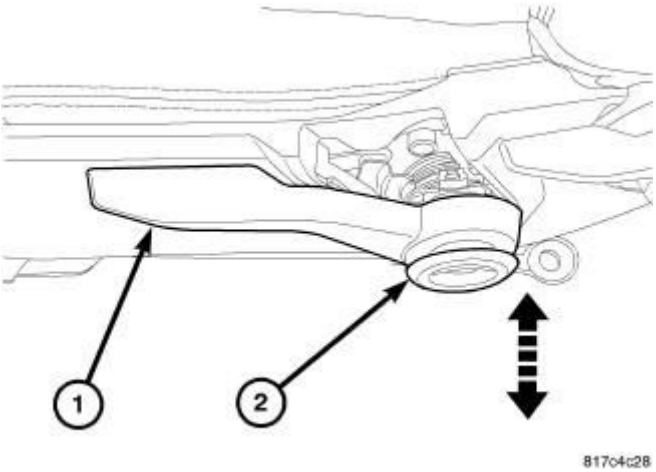

Fig. 488: Height Adjuster Cover
Courtesy of CHRYSLER GROUP, LLC

4. Remove the lift lever trim cap (2).

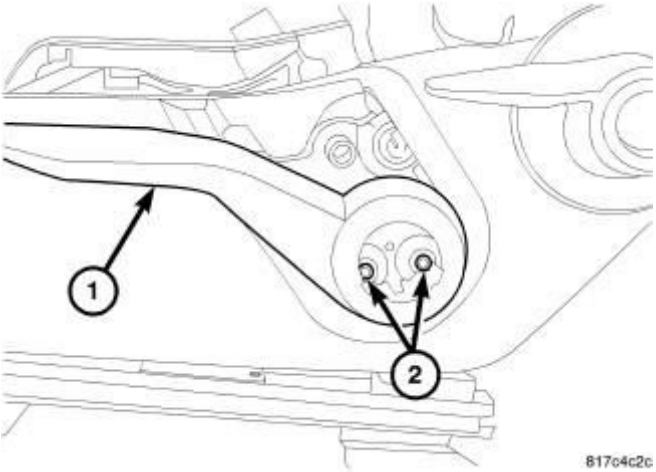

Fig. 489: Height Adjuster Lever
Courtesy of CHRYSLER GROUP, LLC

5. Remove the screws (2) and remove the lift lever (1).

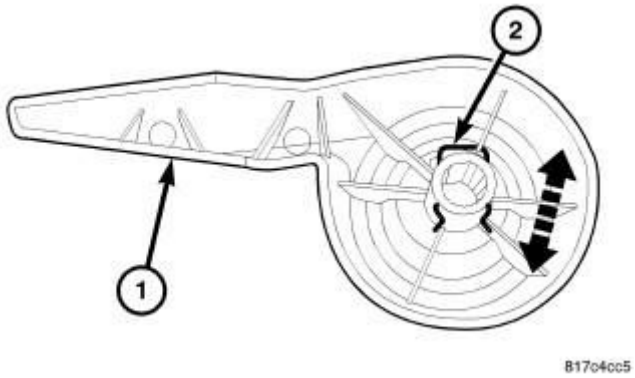

Fig. 490: Recliner Handle Clip
Courtesy of CHRYSLER GROUP, LLC

6. Separate the clip (2).

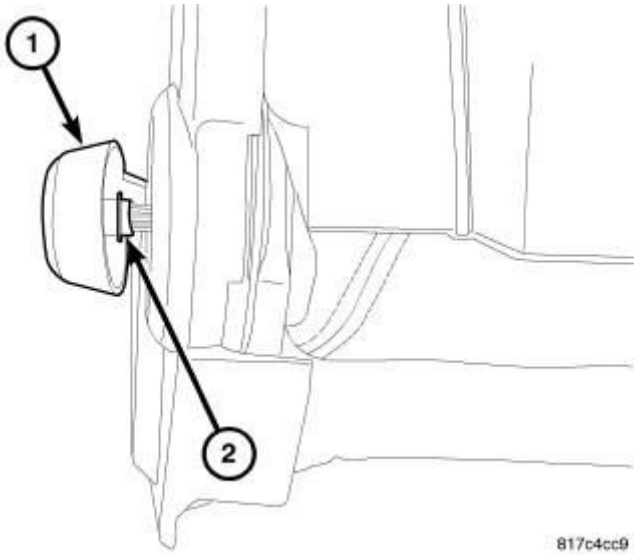

Fig. 491: Recliner Handle
Courtesy of CHRYSLER GROUP, LLC

7. Remove the recliner handle (1).

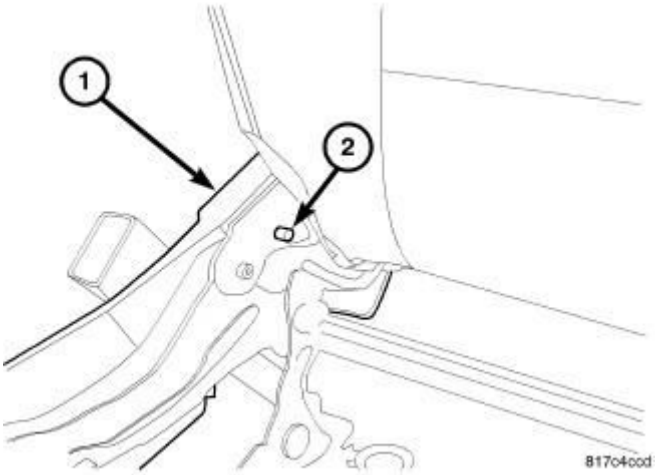

Fig. 492: Outer Shield Screw
Courtesy of CHRYSLER GROUP, LLC

8. Remove the screws (2) attaching the inboard and outboard side shields (1) to the seat frame.

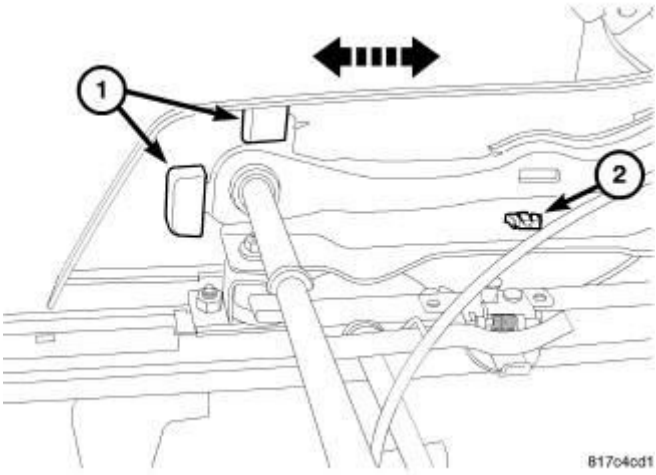

Fig. 493: Outer Shield Tabs
Courtesy of CHRYSLER GROUP, LLC

9. Separate the clip fasteners (2) and remove the side shields from the seat cushion frame tabs (1).

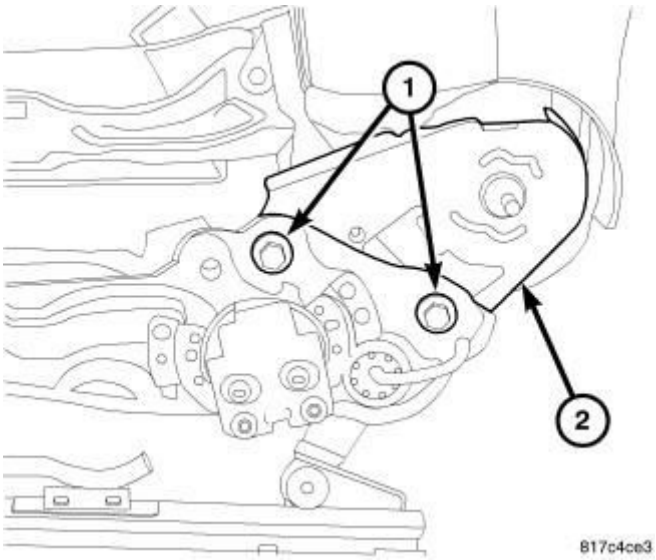

Fig. 494: Driver Seat Back Bolts
Courtesy of CHRYSLER GROUP, LLC

WARNING: Discard and replace the seat back bolts (1) with new bolts when servicing. Installing used bolts may result in the loosening of the seat back bolts after repair. Failure to follow these instructions may result in serious or fatal injury.

10. Remove and discard the bolts (1) and remove the seat back assembly (2).

PASSENGER SEAT

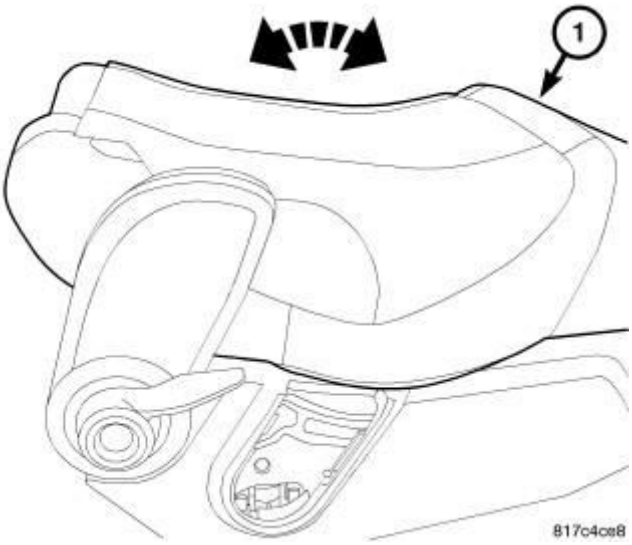

Fig. 495: PASS Seat Back Position
Courtesy of CHRYSLER GROUP, LLC

1. Before proceeding with the following repair procedure, review all warnings and cautions. Refer to **SEATS, WARNING**.
2. Remove the seat cushion. Refer to **COVER, SEAT CUSHION, FRONT, REMOVAL** .
3. Fold the seat back (1) into the down position.

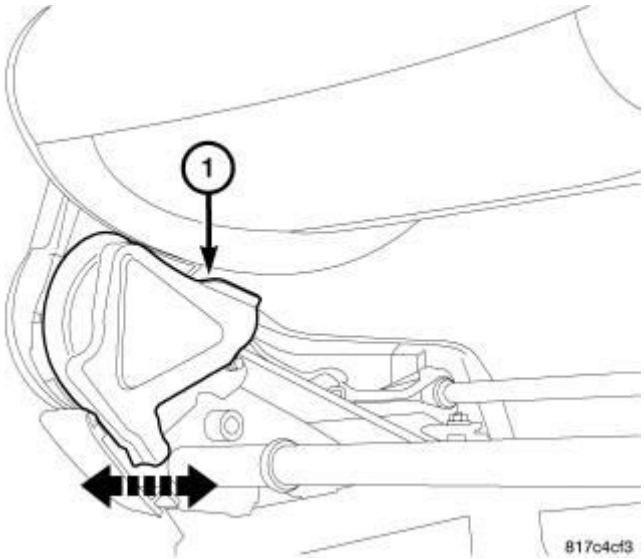

Fig. 496: PASS Inner Shield
Courtesy of CHRYSLER GROUP, LLC

4. Remove both of the inner side shields (1).

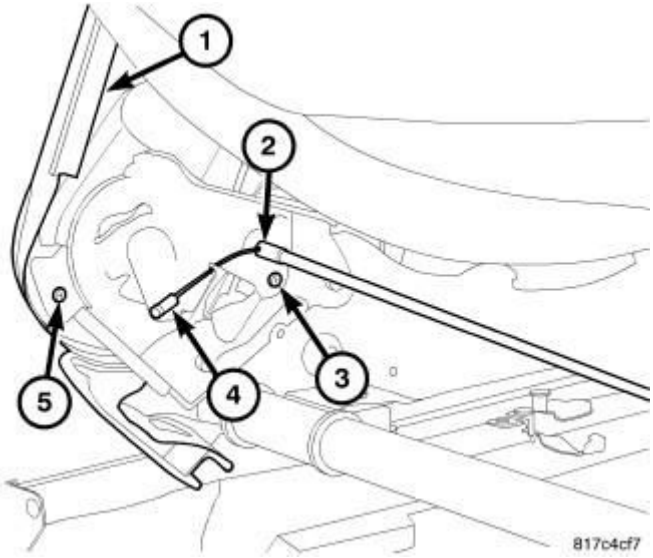

Fig. 497: PASS Recliner Shield & Cable
Courtesy of CHRYSLER GROUP, LLC

5. Release the cable housing (2) from the seat back frame and disconnect the

recliner cable ends (4).

6. Remove the screw (5) and remove the recliner shields (1).
7. Remove the screw (3) attaching the inboard and outboard side shields to the seat frame.

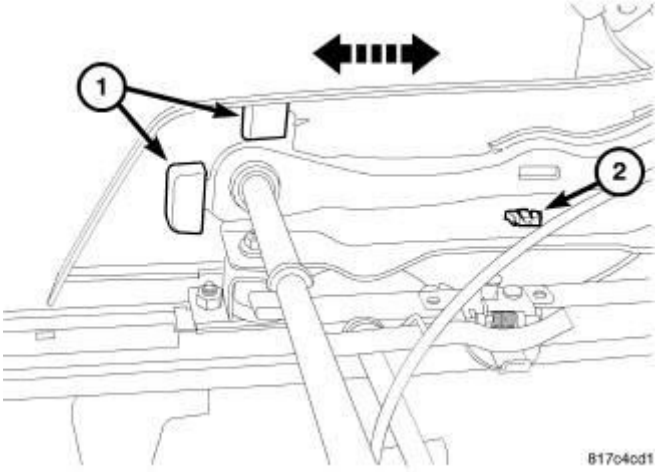

Fig. 498: Outer Shield Tabs
Courtesy of CHRYSLER GROUP, LLC

8. Separate the clip fasteners (2) and remove the side shields from the seat cushion frame tabs (1).

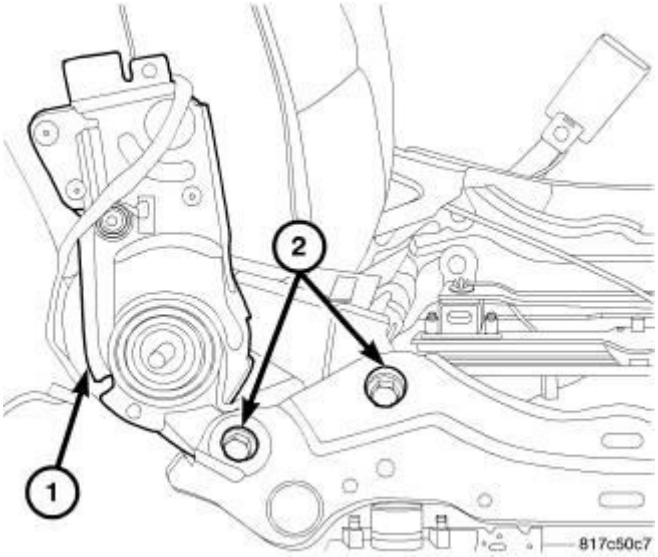

Fig. 499: PASS Seat Back Bolts
Courtesy of CHRYSLER GROUP, LLC

WARNING: Discard and replace the seat back bolts (2) with new bolts when servicing. Installing used

bolts may result in the loosening of the seat back bolts after repair. Failure to follow these instructions may result in serious or fatal injury.

9. Remove and discard the bolts (2) and remove the seat back assembly (1).

DISASSEMBLY

DISASSEMBLY

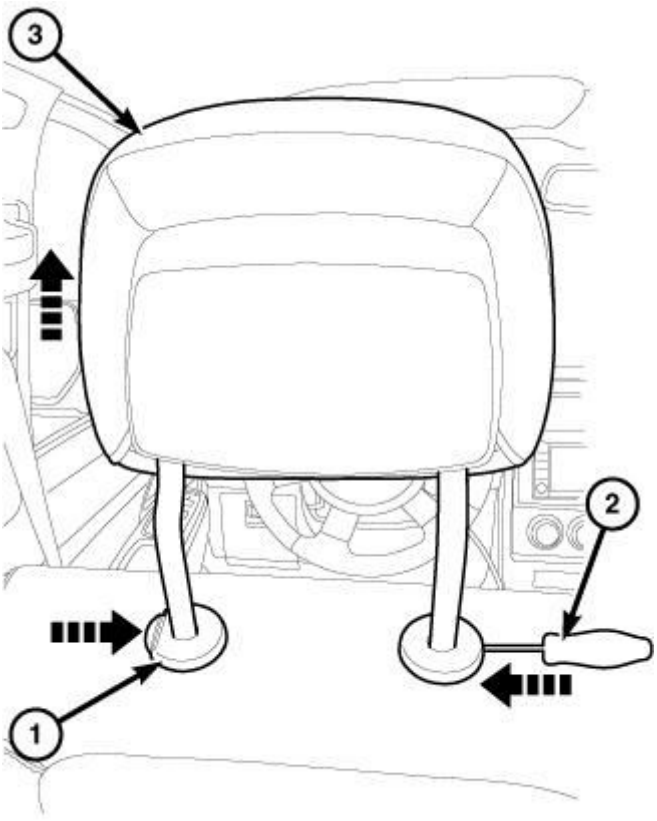

Fig. 500: Release Button, Thin Wire Type Tool & AHR
Courtesy of CHRYSLER GROUP, LLC

NOTE: Seat mechanical part description and specifications are found in seat description. Refer to SEAT, FRONT, DESCRIPTION.

1. Before proceeding with the following repair procedure, review all warnings and cautions. Refer to **SEATS, WARNING**.
2. Remove the seat back. Refer to **SEAT BACK, FRONT, REMOVAL** .

3. Remove the active head restraint headrest (3). Refer to **HEADREST, REMOVAL**.

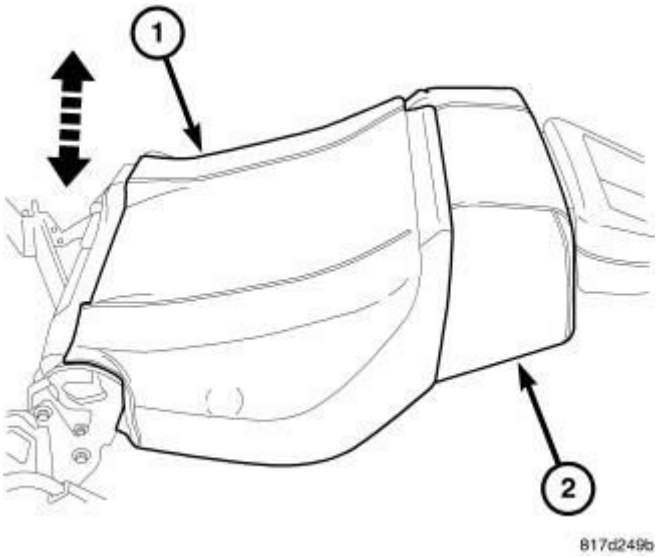

Fig. 501: Back Panel
Courtesy of CHRYSLER GROUP, LLC

4. Remove the lumbar handle, if equipped.
5. Remove the back panel (1).

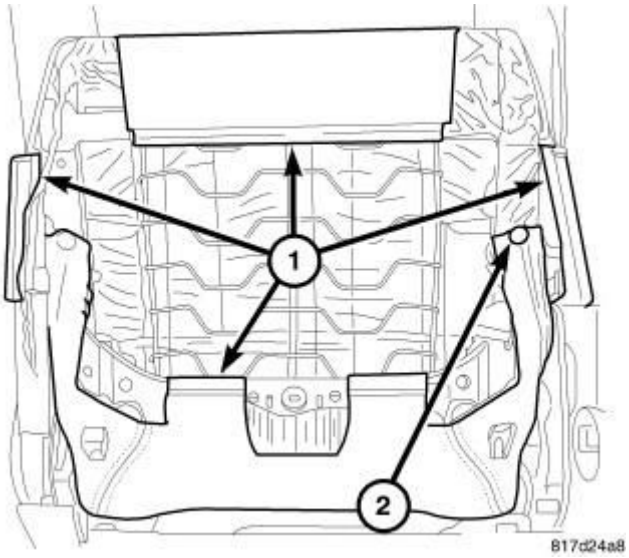

Fig. 502: J-Straps
Courtesy of CHRYSLER GROUP, LLC

6. Separate the J-straps (1) and the push-pin fasteners (2).

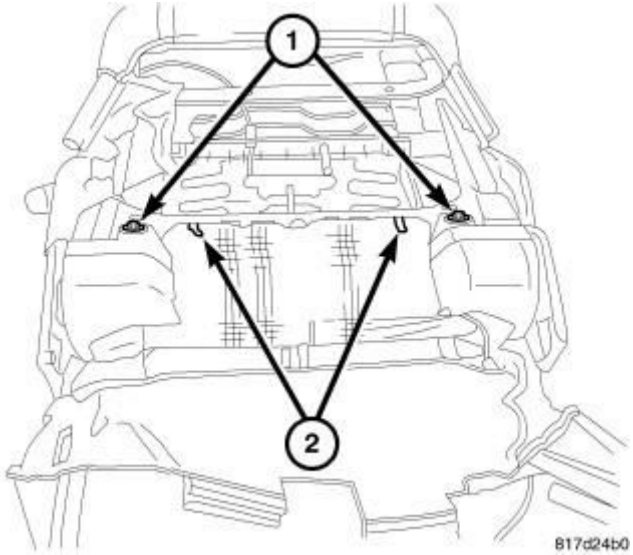

Fig. 503: Seat Cover Push-Pin Fasteners & Hooks
Courtesy of CHRYSLER GROUP, LLC

7. Release the push-pin fasteners (1) and release the cover from the hooks (2).

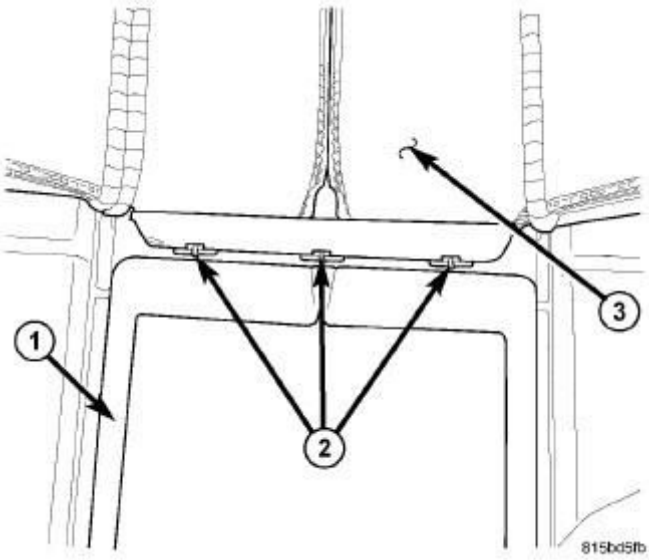

Fig. 504: Seat Back Hog Rings
Courtesy of CHRYSLER GROUP, LLC

8. Separate the seat cover (3) from the foam cushion (1) and cut off all hog rings (2) attaching cover to the foam.

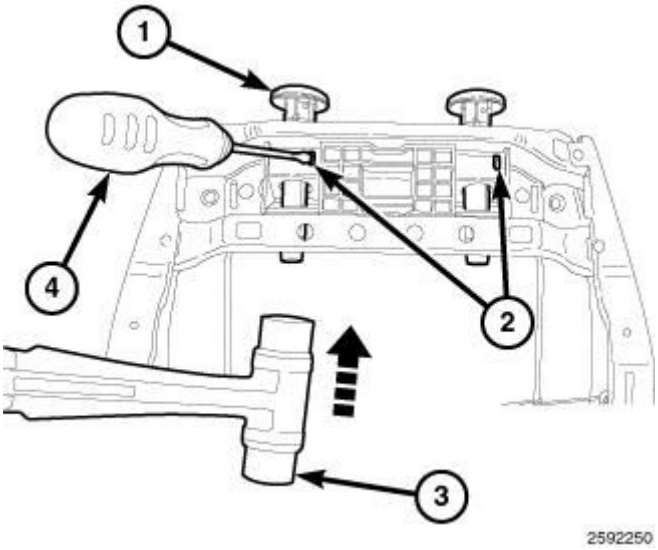

Fig. 505: Removing Headrest Sleeves
Courtesy of CHRYSLER GROUP, LLC

9. Using a small flat bladed tool (4) or equivalent, release the headrest sleeve retaining tabs through the openings (2) in the sleeve support piece.
10. Using a soft hammer (3) or equivalent, remove the headrest sleeves (1).
11. Remove the seat back cover and cushion.

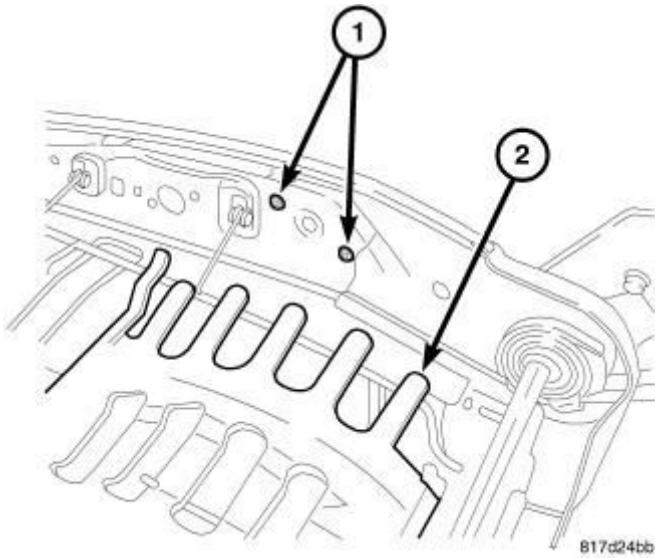

Fig. 506: Lumbar Screws
Courtesy of CHRYSLER GROUP, LLC

12. Remove the lumbar adjuster screws (1).

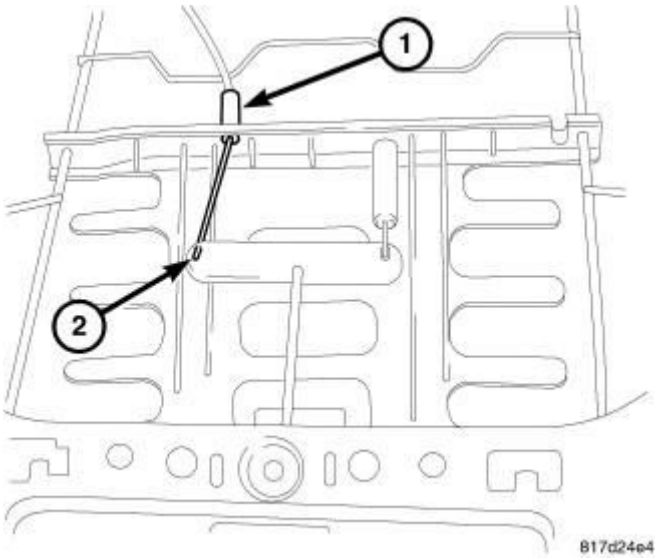

Fig. 507: Lumbar Cable
Courtesy of CHRYSLER GROUP, LLC

13. Disconnect the lumbar cable (2) and separate the cable housing (1).

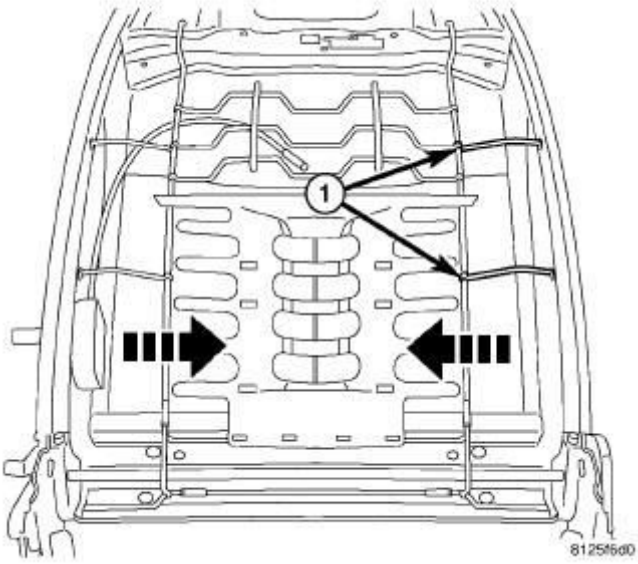

Fig. 508: Identifying Lumbar Mat Side Wires
Courtesy of CHRYSLER GROUP, LLC

14. Release the lumbar mat side wires (1) by pulling out on the wire supports and then pulling them in.

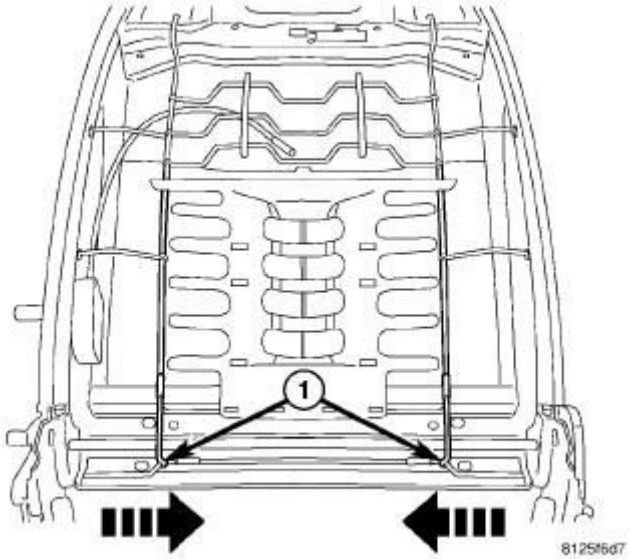

Fig. 509: Lower Support Wires
Courtesy of CHRYSLER GROUP, LLC

15. Squeeze the lower support wires (1) in and release the lower wires.

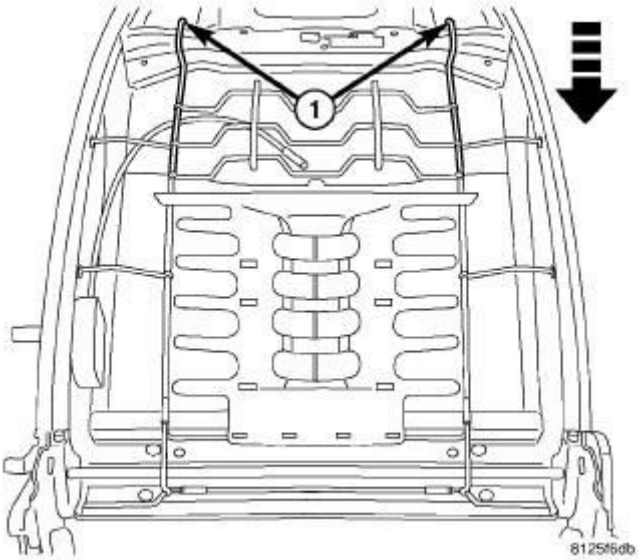

Fig. 510: Upper Support Wires
Courtesy of CHRYSLER GROUP, LLC

16. Pull the upper support wires (1) down and release the lumbar mat from the seat back frame.

ASSEMBLY

ASSEMBLY

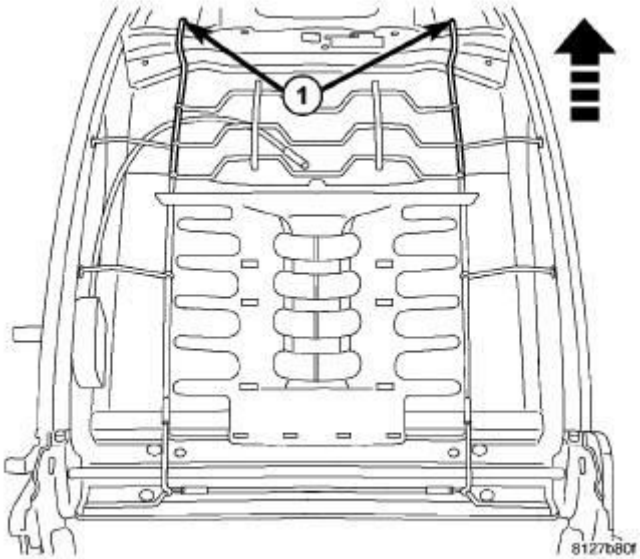

Fig. 511: Upper Support Wires
Courtesy of CHRYSLER GROUP, LLC

NOTE: Seat mechanical part description and specifications are found in seat description. Refer to SEAT, FRONT, DESCRIPTION.

1. Place lumbar mat onto seat back frame and insert the upper support wires (1) into the frame.

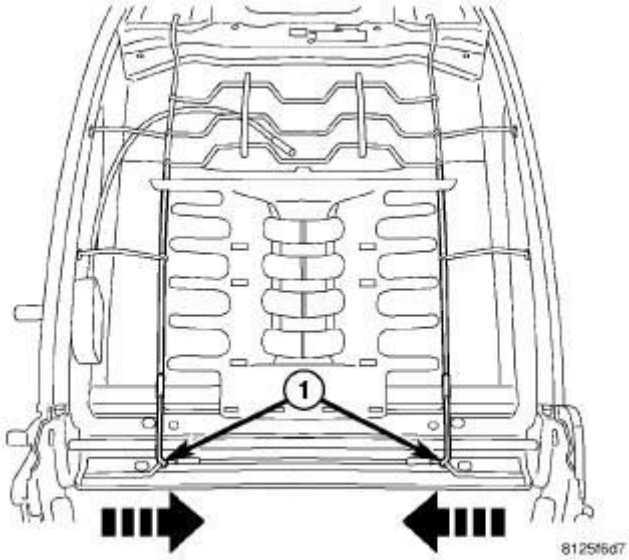

Fig. 512: Lower Support Wires
Courtesy of CHRYSLER GROUP, LLC

2. Squeeze the lower support wires (1) together and insert into the lower frame.

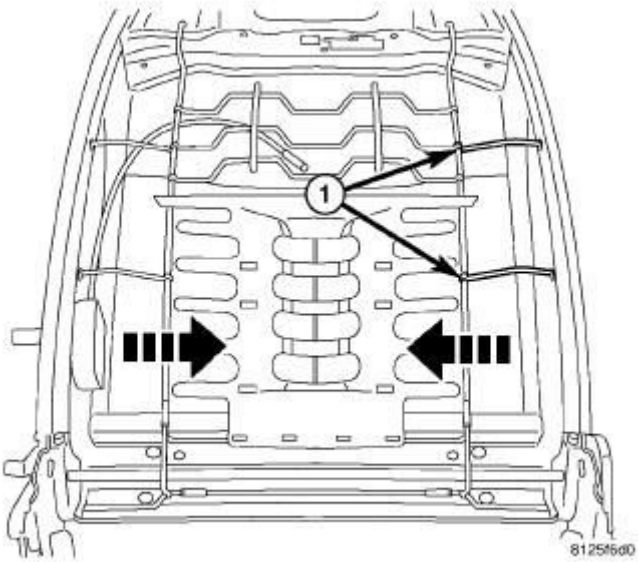

Fig. 513: Side Support Wires
Courtesy of CHRYSLER GROUP, LLC

3. Squeeze the side support wires together and insert them into the sides of the seat back frame.

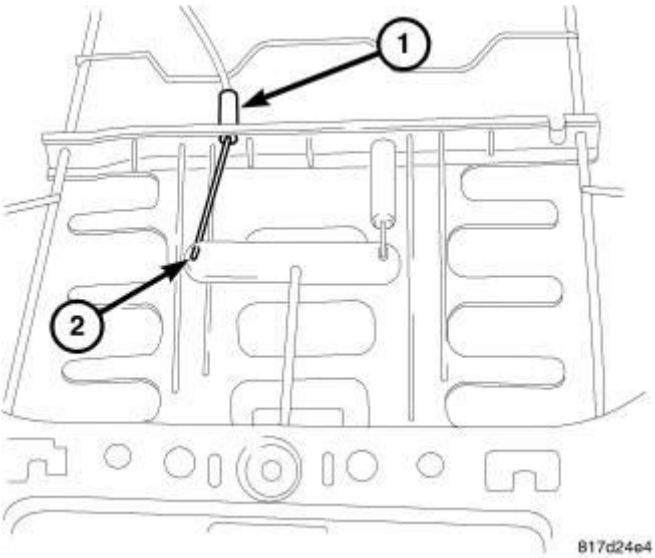

Fig. 514: Lumbar Cable
Courtesy of CHRYSLER GROUP, LLC

4. Connect the lumbar cable housing (1) and connect the cable end (2) to the anchor.

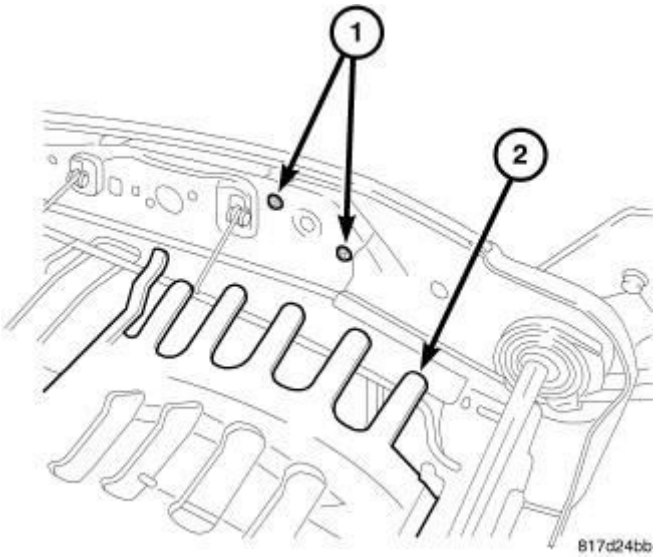

Fig. 515: Lumbar Screws
Courtesy of CHRYSLER GROUP, LLC

5. Install the lumbar adjuster and install the adjuster screws (1).

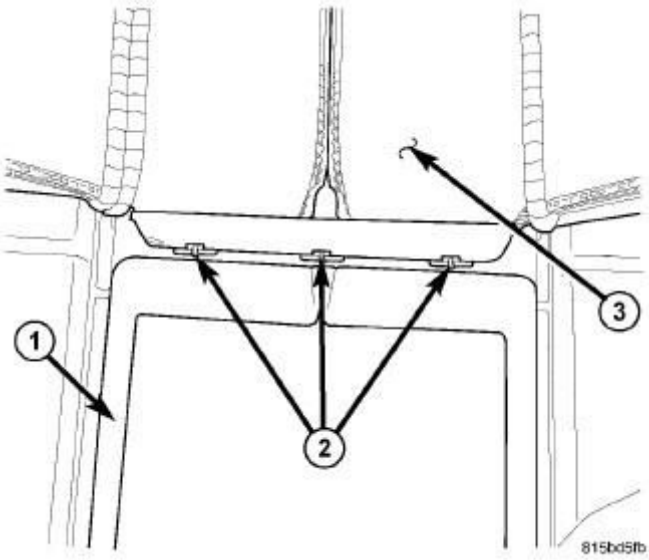

Fig. 516: Seat Back Hog Rings
Courtesy of CHRYSLER GROUP, LLC

6. Position the seat back cushion on the frame and position the cover over the cushion.
7. Attach the seat cover (3) to the seat back cushion (1) and install new hog rings (2) as required.

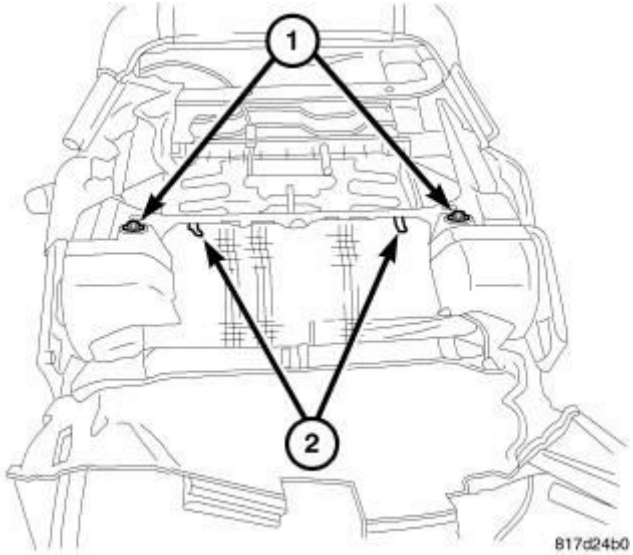

Fig. 517: Seat Cover Push-Pin Fasteners & Hooks
Courtesy of CHRYSLER GROUP, LLC

8. Install the push pins (1) and connect the inner cover to the hooks (2).

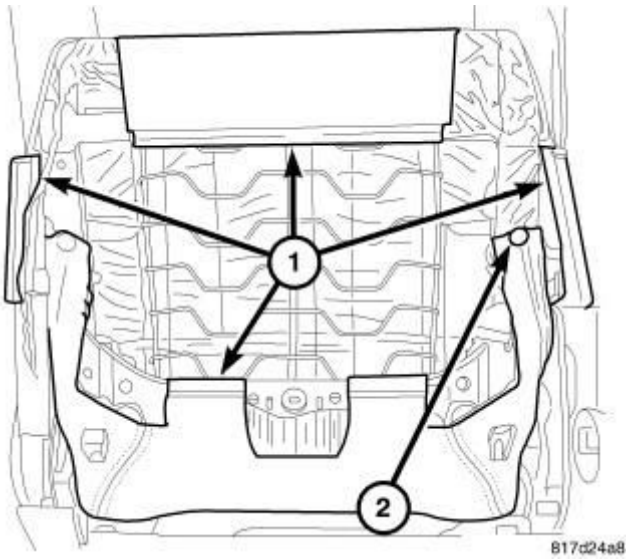

Fig. 518: J-Straps
Courtesy of CHRYSLER GROUP, LLC

9. Install the push-pin fasteners (2) and connect the J-straps (1).

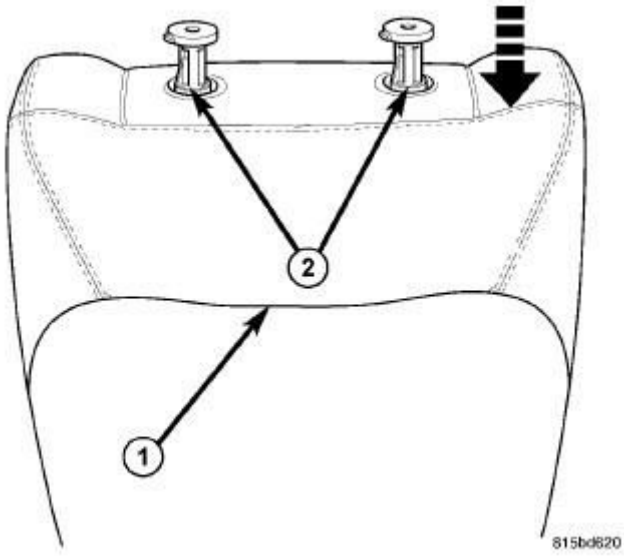

Fig. 519: Headrest Sleeve Install
Courtesy of CHRYSLER GROUP, LLC

10. Install the headrest sleeves (2).

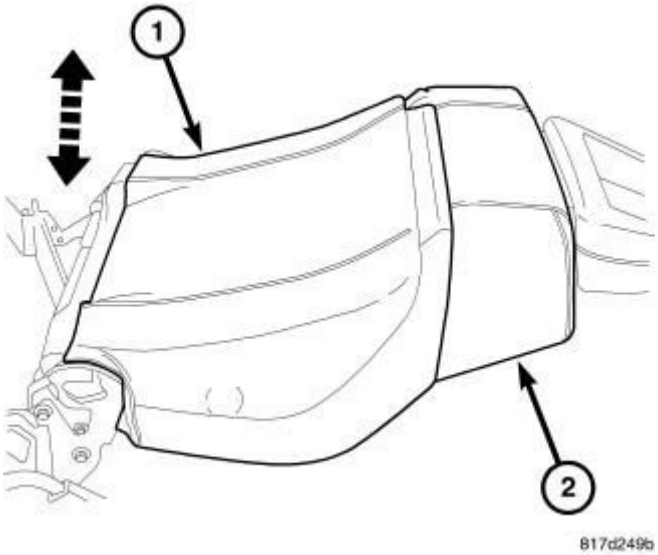

Fig. 520: Back Panel
Courtesy of CHRYSLER GROUP, LLC

11. Position the seat back panel (1) onto the seat back (2) and seat fully.

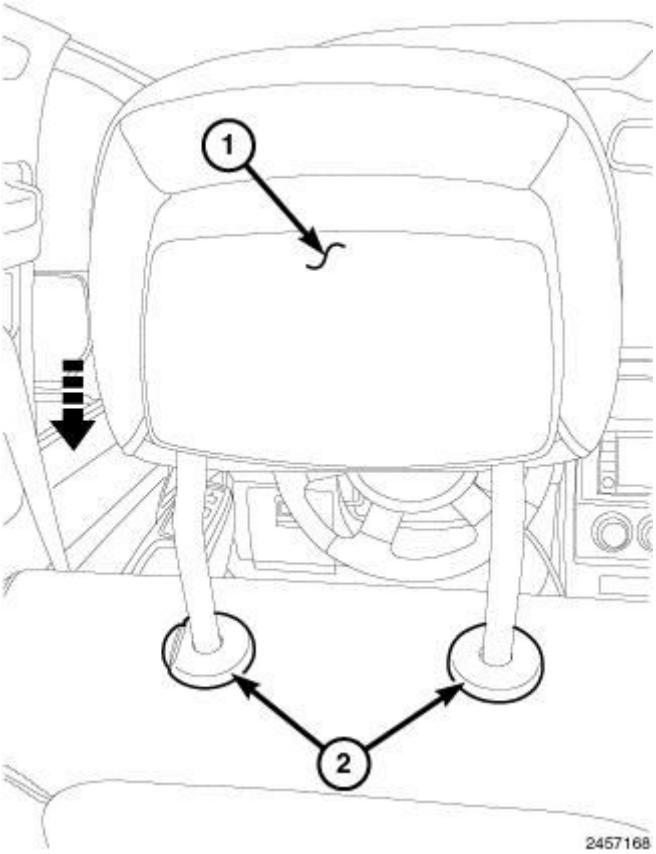

Fig. 521: Inserting AHR Rods Into Sleeves And Seat Into Lowest Notches
Courtesy of CHRYSLER GROUP, LLC

12. Install the active head restraint headrest (1). Refer to **HEADREST, INSTALLATION**.
13. Install the seat back. Refer to **SEAT BACK, FRONT, INSTALLATION** .

INSTALLATION

INSTALLATION

DRIVER SEAT

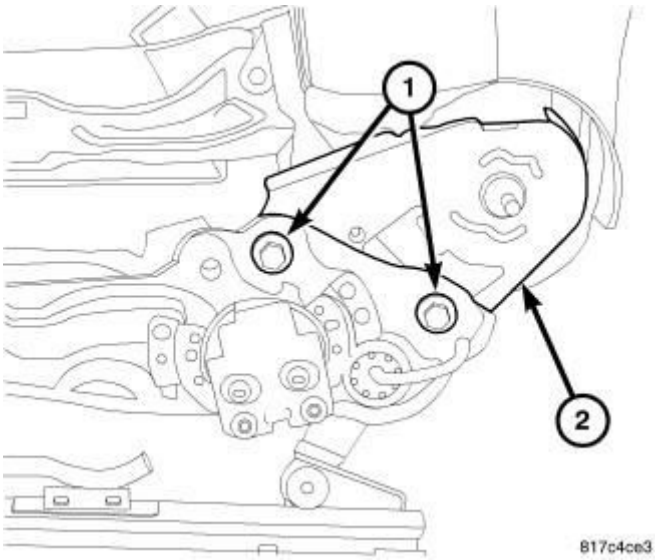

Fig. 522: Driver Seat Back Bolts
Courtesy of CHRYSLER GROUP, LLC

1. Before proceeding with the following repair procedure, review all warnings and cautions. Refer to **SEATS, WARNING**.

   WARNING: **Discard and replace the seat back bolts (1) with new bolts when servicing. Installing used bolts may result in the loosening of the seat back bolts after repair. Failure to follow these instructions may result in serious or fatal injury.**

2. Install the seat back assembly (2) and install the new bolts (1).
3. Tighten the bolts to 40 N.m (30 ft. lbs.).

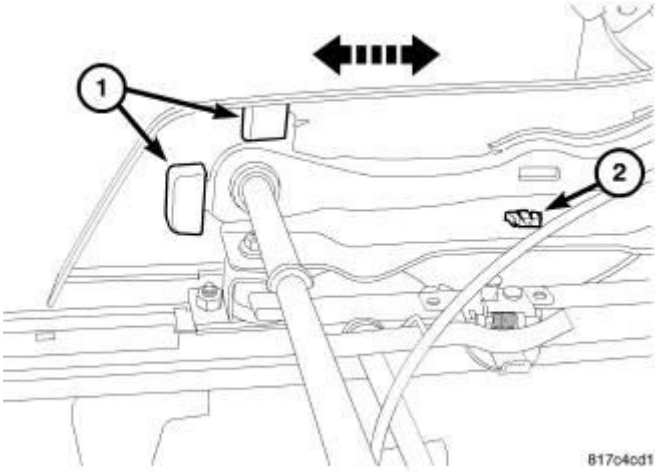

Fig. 523: Outer Shield Tabs
Courtesy of CHRYSLER GROUP, LLC

4. Position the side shields onto the seat adjuster tabs (1) and seat the clip (2) fully.

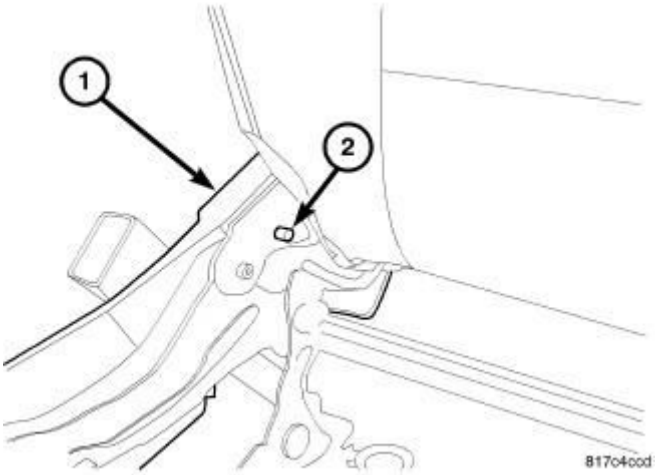

Fig. 524: Outer Shield Screw
Courtesy of CHRYSLER GROUP, LLC

5. Install the outer side shield screw (2).

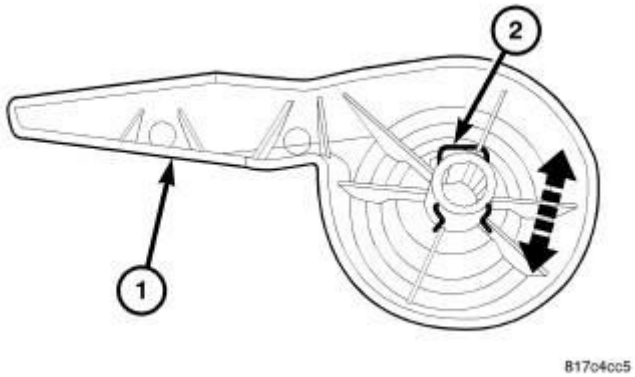

Fig. 525: Recliner Handle Clip
Courtesy of CHRYSLER GROUP, LLC

6. Install the clip (2) onto the recliner handle, if necessary.

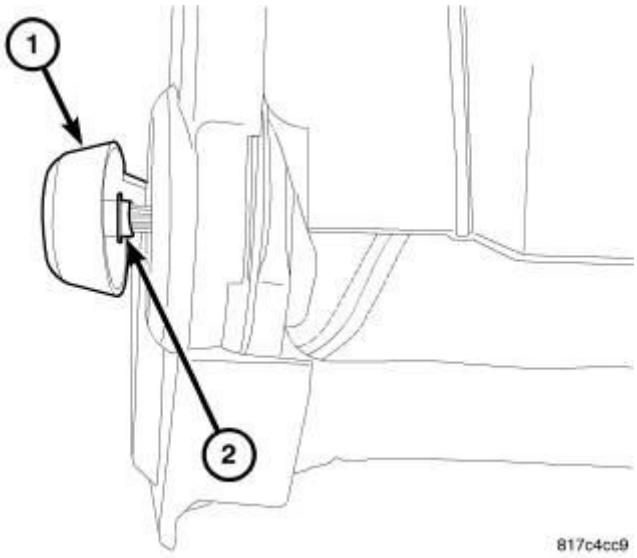

Fig. 526: Recliner Handle
Courtesy of CHRYSLER GROUP, LLC

7. Position the recliner handle (1) onto the spined shaft (2) and seat fully.

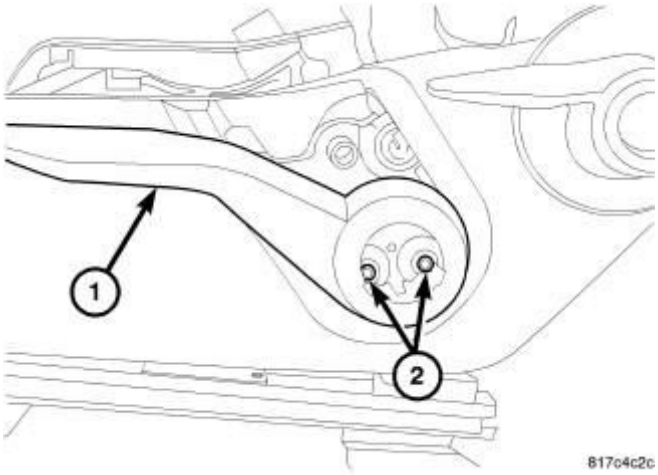

Fig. 527: Height Adjuster Lever
Courtesy of CHRYSLER GROUP, LLC

8. Install the height adjuster handle (1) and install the screws (2), if equipped.

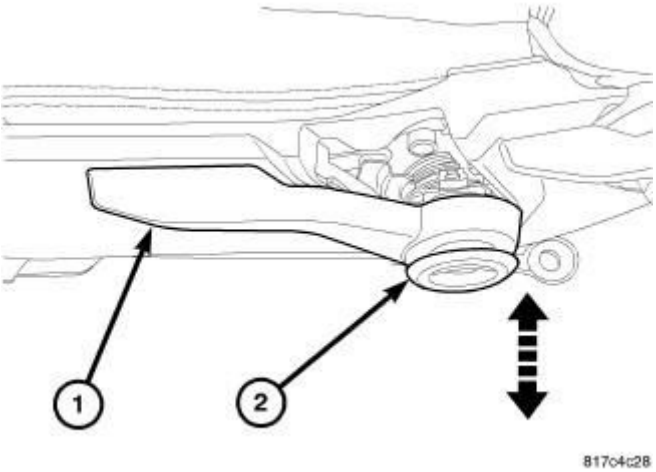

Fig. 528: Height Adjuster Cover
Courtesy of CHRYSLER GROUP, LLC

9. Position the lift lever trim cap (2) and seat fully.

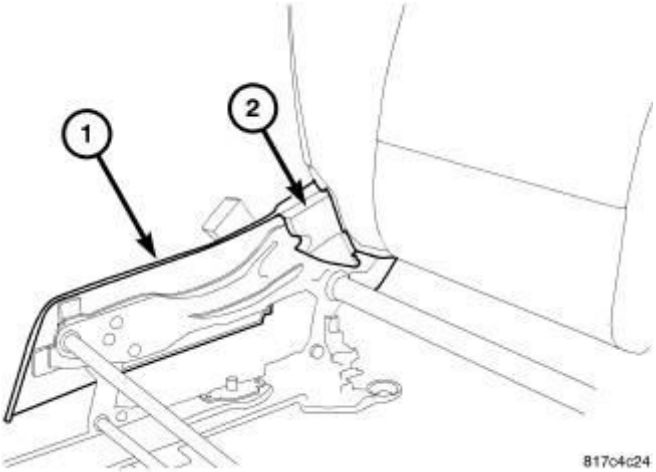

Fig. 529: Drivers Inner Shield
Courtesy of CHRYSLER GROUP, LLC

10. Position the inner side shields (2) and seat fully.
11. Install the seat cushion. Refer to **COVER, SEAT CUSHION, FRONT, INSTALLATION** .

PASSENGER SEAT

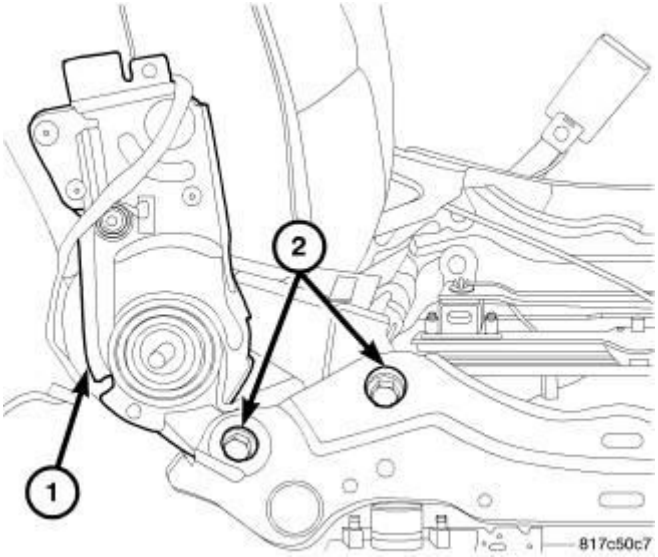

Fig. 530: PASS Seat Back Bolts
Courtesy of CHRYSLER GROUP, LLC

WARNING: Discard and replace the seat back bolts (2) with new bolts when servicing. Installing used bolts may result in the loosening of the seat back bolts after repair. Failure to follow these instructions may result in serious or fatal injury.

1. Install the seat back assembly (1) and install the new bolts (2).
2. Tighten the bolts to 40 N.m (30 ft. lbs.).

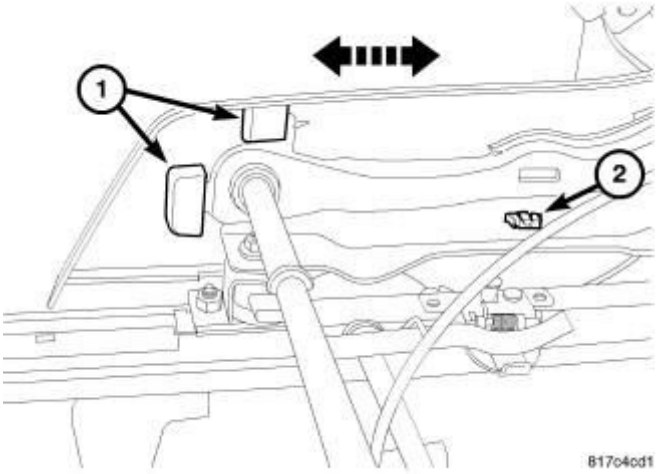

Fig. 531: Outer Shield Tabs
Courtesy of CHRYSLER GROUP, LLC

3. Position the side shields onto the seat adjuster tabs (1) and seat the clip (2)

fully.

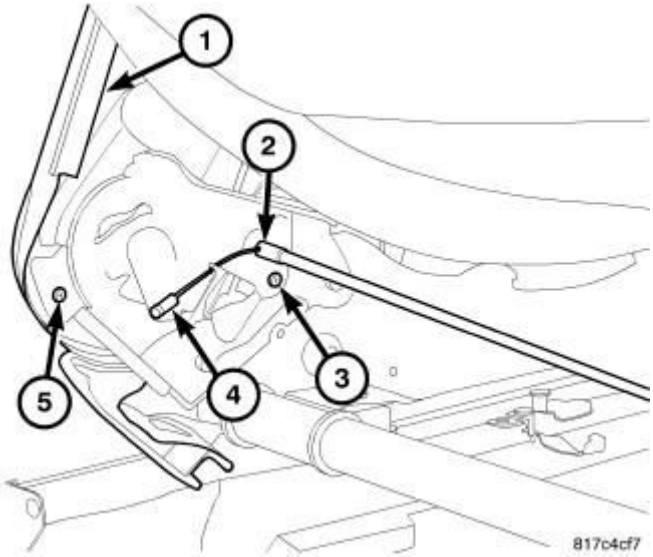

Fig. 532: PASS Recliner Shield & Cable
Courtesy of CHRYSLER GROUP, LLC

4. Install the screws (3) attaching the inboard and outboard side shields to the seat frame.
5. Install the recliner shields (1) and install the screws (5).
6. Connect the recliner cable ends (4) and fasten the cable housing (2) to the seat back frame.

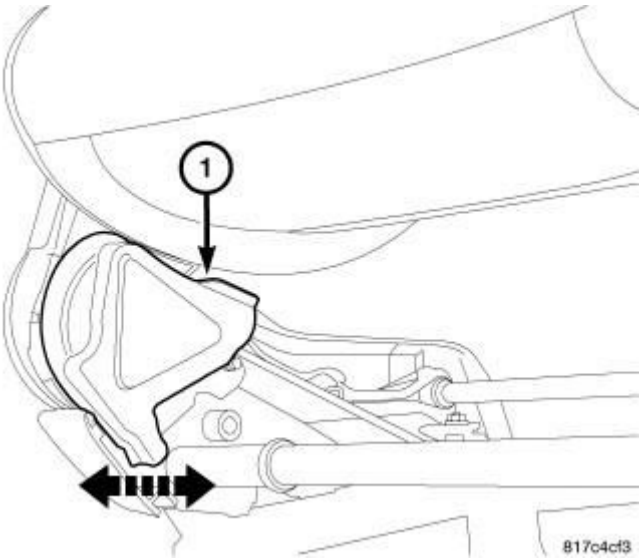

Fig. 533: PASS Inner Shield
Courtesy of CHRYSLER GROUP, LLC

7. Install both of the inner side shields (1).

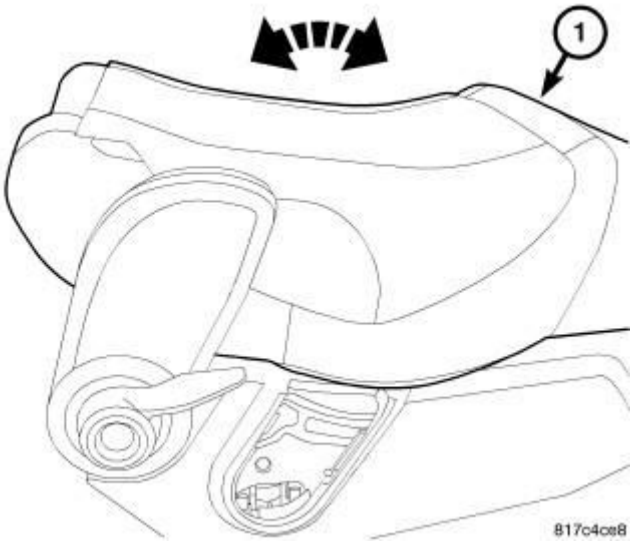

Fig. 534: PASS Seat Back Position
Courtesy of CHRYSLER GROUP, LLC

8. Position the seat back (1) into the upright position.
9. Install the seat cushion. Refer to **COVER, SEAT CUSHION, FRONT, INSTALLATION** .

SEAT BACK, REAR

DESCRIPTION

DESCRIPTION

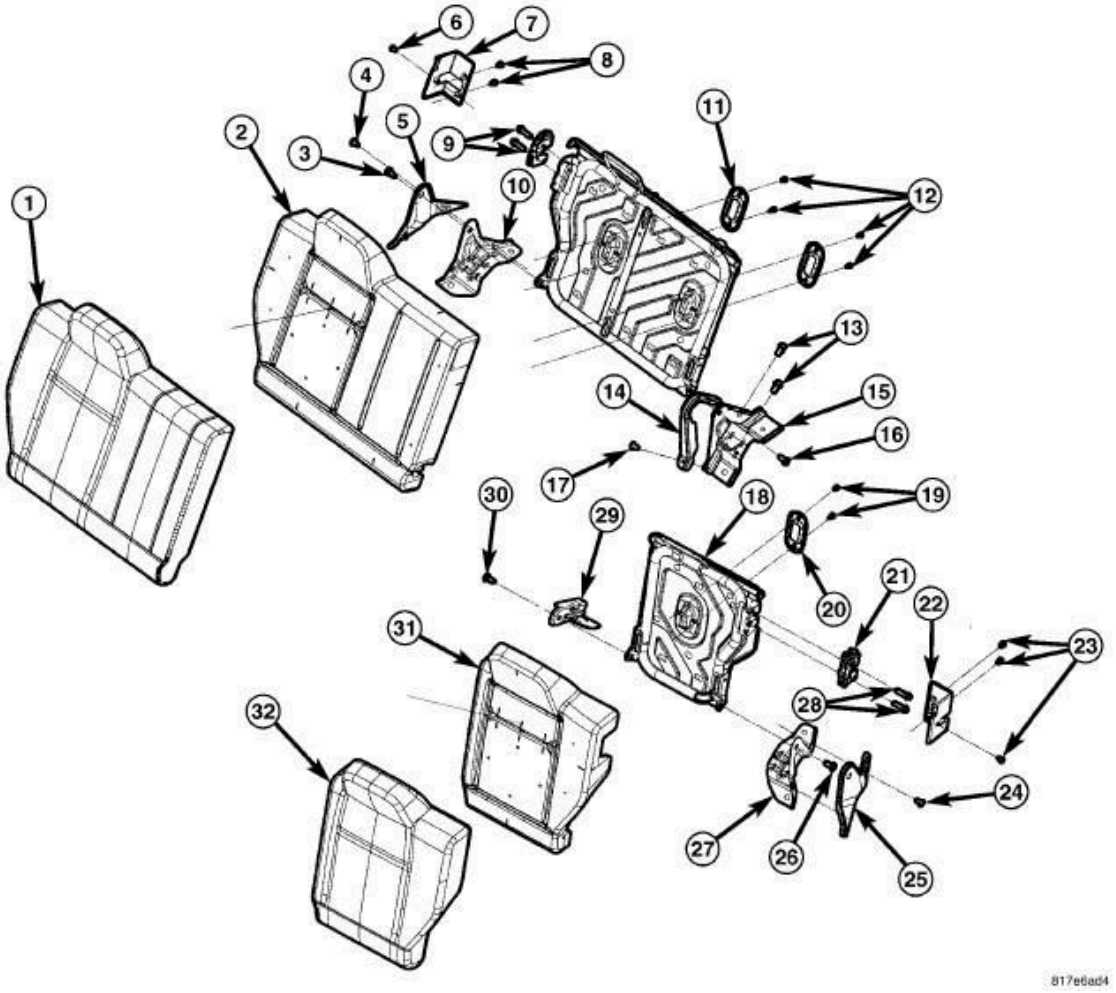

Fig. 535: Rear Seat Back - W/O Recliner Option
Courtesy of CHRYSLER GROUP, LLC

1 - 60% SEAT BACK COVER	17 - PUSH PIN FASTENER
2 - 60% SEAT BACK FOAM CUSHION	18 - SEAT BACK FRAME ASSEMBLY 40%
3 - PIVOT BOLT 32 N.m (24 ft. lbs.)	19 - CHILD TETHER BEZEL SCREWS
4 - PIN	20 - CHILD TETHER BEZEL
5 - FLOOR BRACKET	21 - LATCHES (2)
6 - LATCH BEZEL SCREW	22 - LATCH BEZEL
7 - LATCH BEZEL	23 - LATCH BEZEL SCREWS
8 - LATCH BEZEL SCREWS	24 - PUSH PIN FASTENER
9 - LATCH BOLTS 28 N.m (21 ft. lbs.)	25 - SHIELD
10 - FLOOR BRACKET	26 - PIVOT BOLT 32 N.m (24 ft.

	lbs.)
11 - CHILD TETHER BEZELS	27 - FLOOR BRACKET
12 - CHILD TETHER BEZEL SCREWS	28 - LATCH BOLTS 28 N.m (21 ft. lbs.)
13 - BOLTS 7 N.m (5 ft. lbs.)	29 - FLOOR BRACKET
14 - CENTER SHIELD	30 - PIVOT BOLT 32 N.m (24 ft. lbs.)
15 - FLOOR BRACKET	31 - SEAT BACK FOAM CUSHION 40%
16 - PIVOT BOLT 45 N.m (33 ft. lbs.)	32 - SEAT BACK CUSHION COVER 40%

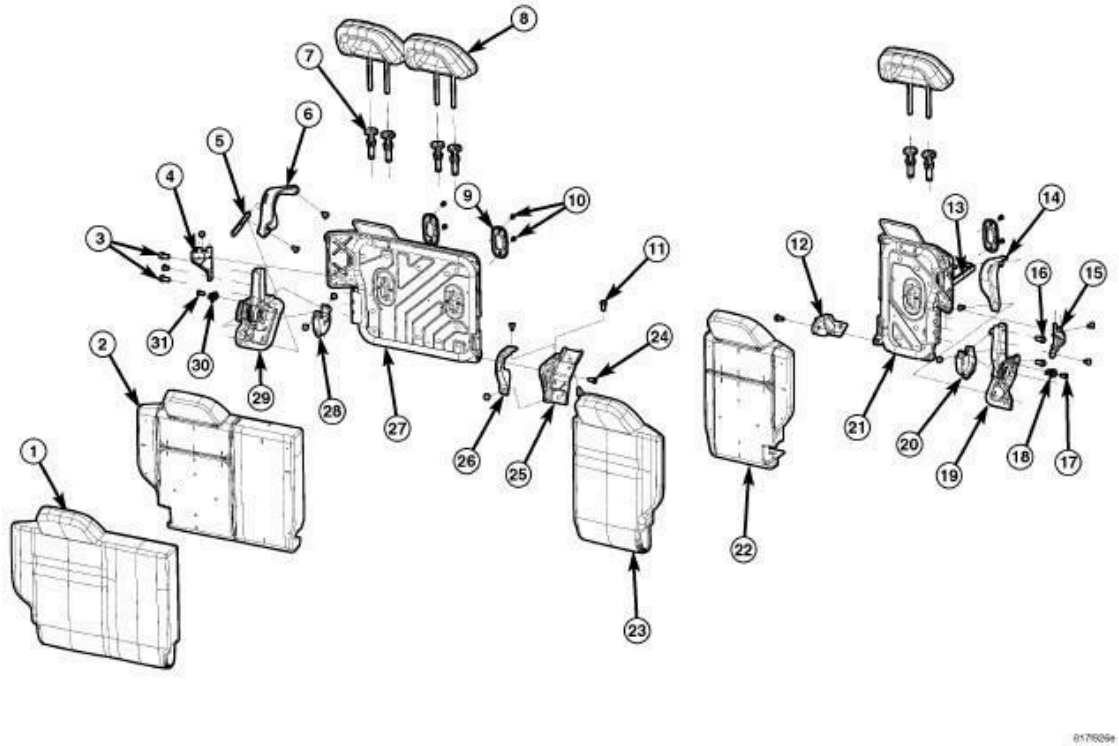

Fig. 536: Rear Seat Back - Recliner
Courtesy of CHRYSLER GROUP, LLC

1 - 60% SEAT BACK COVER	17 - PUSH PIN
2 - 60% SEAT BACK FOAM CUSHION	18 - PULLEY ASSEMBLY BOLT 7 N.m (5 ft. lbs.)
3 - RECLINER BOLT 45 N.m (33 ft. lbs.)	19 - RECLINER ASSEMBLY
4 - UPPER INNER SHIELD	20 - LOWER INNER SHIELD

5 - PULL STRAP	21 - SEAT BACK FRAME ASSEMBLY 40%
6 - RECLINER SHIELD	22 - SEAT BACK FOAM CUSHION 40%
7 - HEADREST SLEEVES (REST OF WORLD)	23 - SEAT BACK CUSHION COVER 40%
8 - HEADRESTS (3) (REST OF WORLD)	24 - PIVOT BOLT 32 N.m (24 ft. lbs.)
9 - CHILD TETHER BEZELS	25 - FLOOR BRACKET
10 - CHILD TETHER BEZEL SCREWS	26 - CENTER SHIELD
11 - SCREWS (2) 7 N.m (5 ft. lbs.)	27 - SEAT BACK FRAME ASSEMBLY 60%
12 - FLOOR BRACKET	28 - LOWER INNER SHIELD
13 - PULL STRAP	29 - RECLINER ASSEMBLY
14 - RECLINER SHIELD	30 - PULLEY ASSEMBLY BOLT 7 N.m (5 ft. lbs.)
15 - UPPER INNER SHIELD	31- PUSH PIN
16 - RECLINER BOLT (2) 45 N.m (33 ft. lbs.)	

REMOVAL

REMOVAL

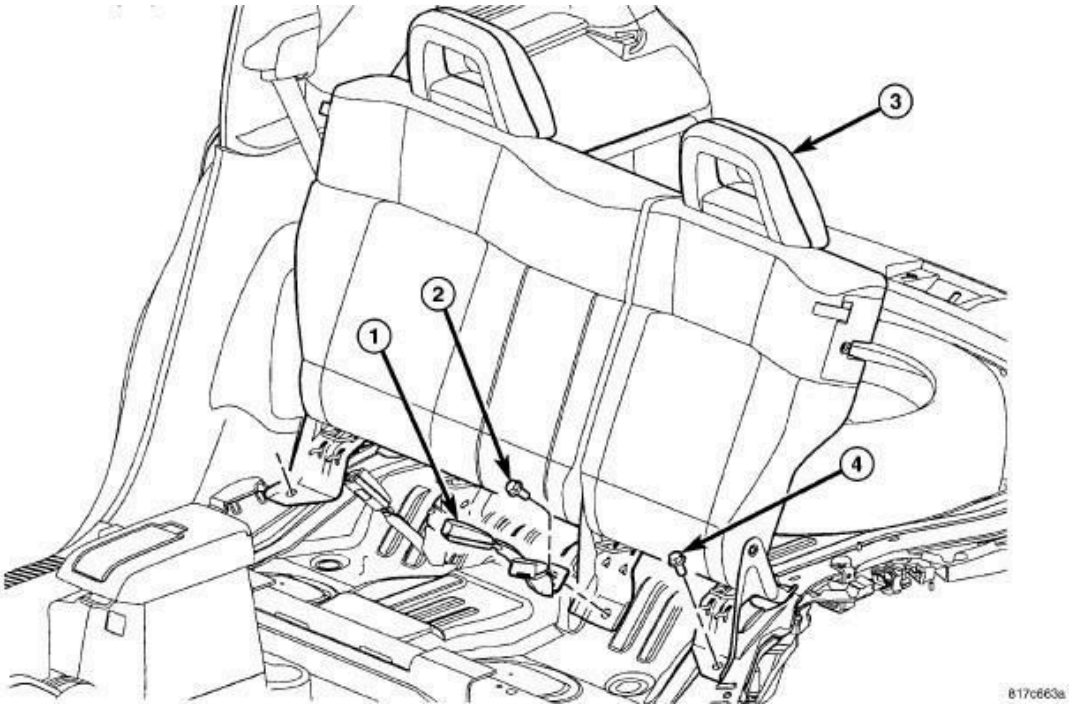

Fig. 537: Buckle, Belt Buckle Bolt & Recliner Bolts
Courtesy of CHRYSLER GROUP, LLC

1. Remove the seat cushion. Refer to **COVER, SEAT CUSHION, REAR, REMOVAL**.
2. Remove the belt buckle bolt (2) and the buckle (1).
3. Remove the floor bracket or recliner bolts (4).

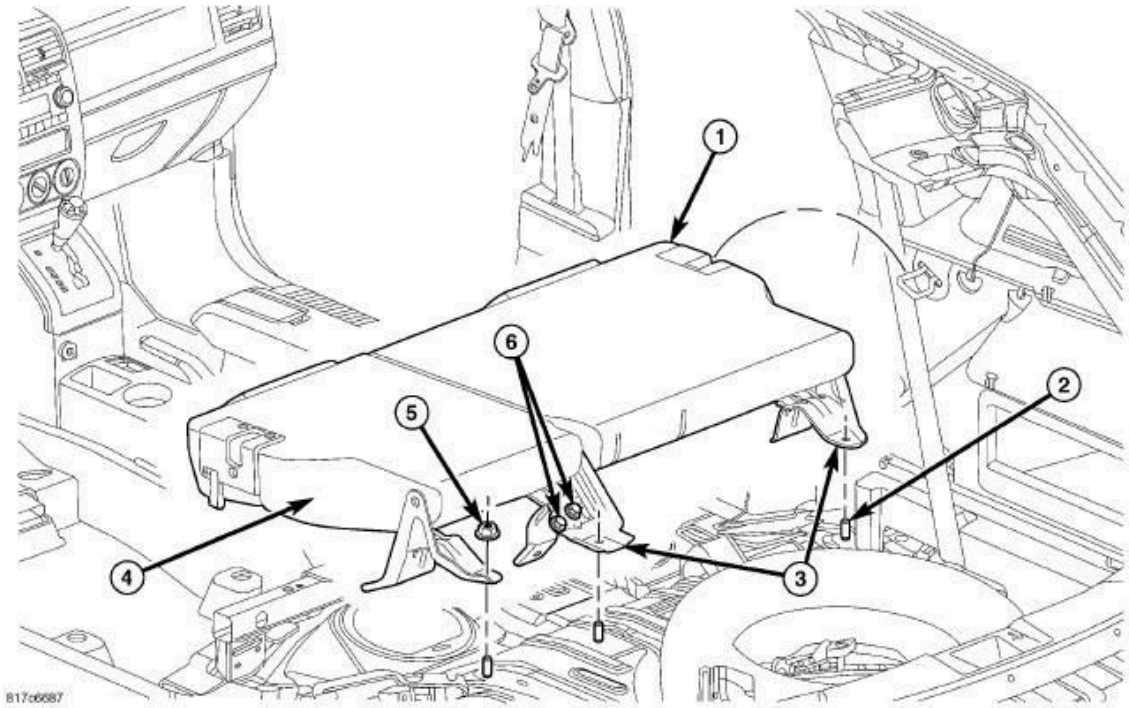

Fig. 538: 60/40 Rear Seat Back, Bolts, Nuts & Studs
Courtesy of CHRYSLER GROUP, LLC

4. Fold the seats forward.
5. Remove the nut (5) and bolts (6) and remove the 40% seat back (4).
6. Remove the nuts from the studs (2) and remove the 60% seat back.

DISASSEMBLY

DISASSEMBLY

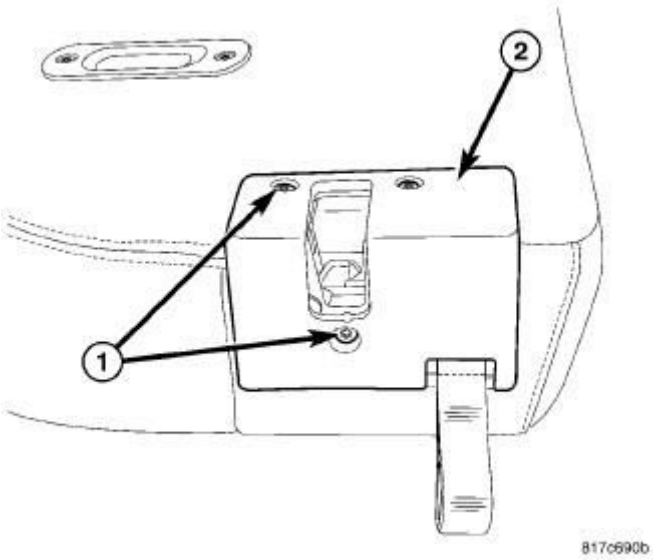

Fig. 539: Latch Bezel
Courtesy of CHRYSLER GROUP, LLC

1. Remove the screws (1) and remove the latch bezel (2).

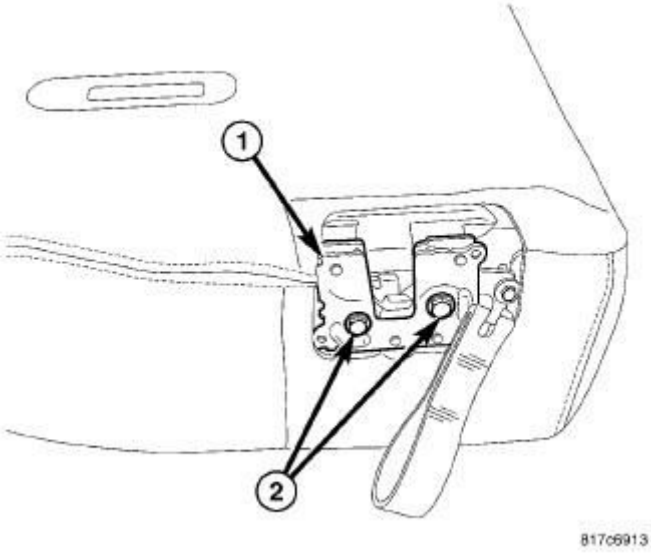

Fig. 540: Latch
Courtesy of CHRYSLER GROUP, LLC

2. Remove the bolts (2) and remove the latch (1).

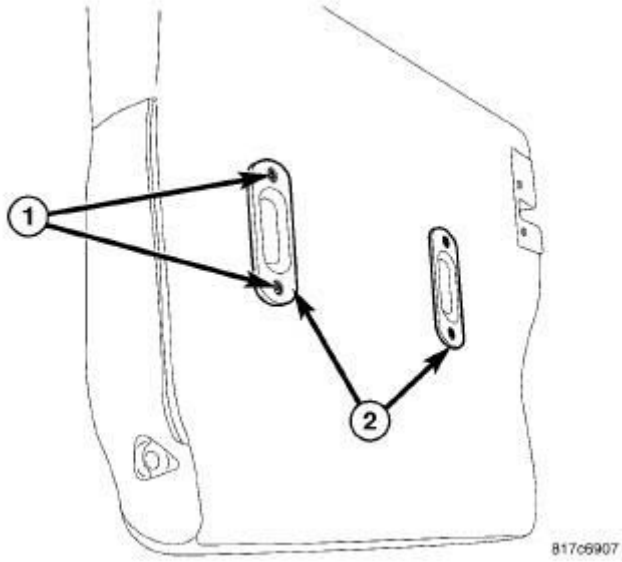

Fig. 541: Child Tether Bezels
Courtesy of CHRYSLER GROUP, LLC

3. Remove the screws (1) and remove the tether trim bezels (2).

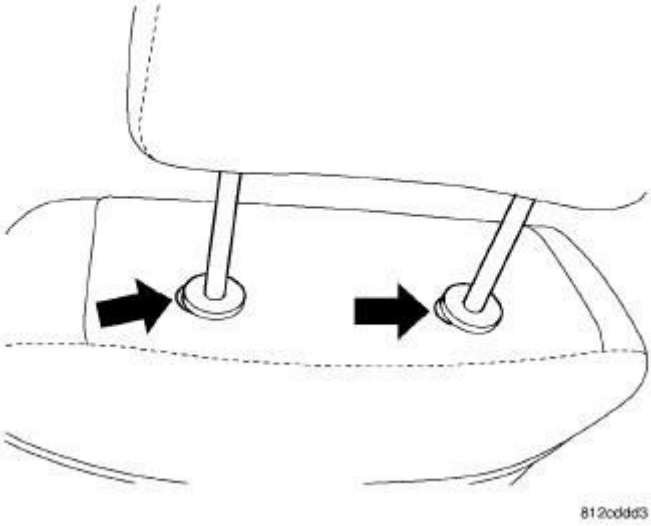

Fig. 542: Headrest
Courtesy of CHRYSLER GROUP, LLC

4. Remove the headrest.

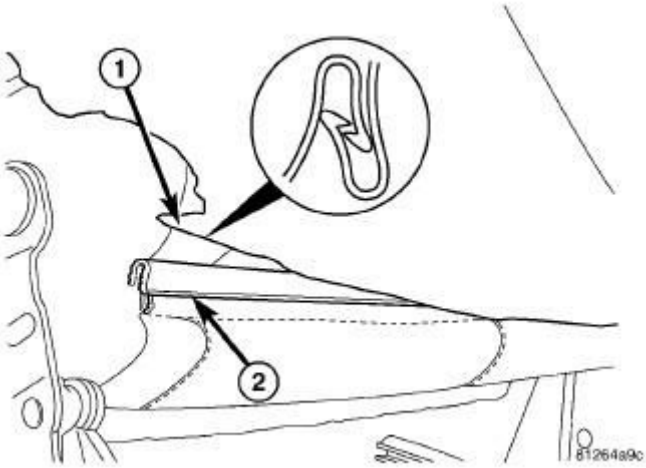

Fig. 543: J-Straps
Courtesy of CHRYSLER GROUP, LLC

5. Separate the zip strips (1 and 2).

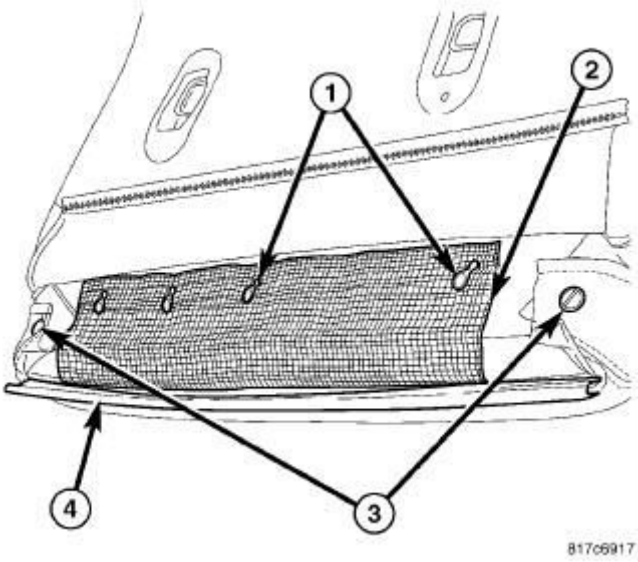

Fig. 544: Cover
Courtesy of CHRYSLER GROUP, LLC

6. Remove the push pin fasteners (3).
7. Separate the inner cover (2) from the hooks (1).

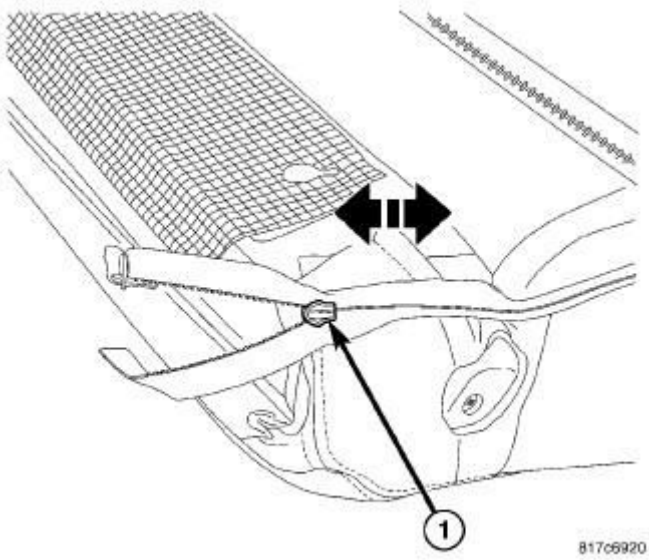

Fig. 545: Cover Zipper
Courtesy of CHRYSLER GROUP, LLC

8. Unzip the cover (1).

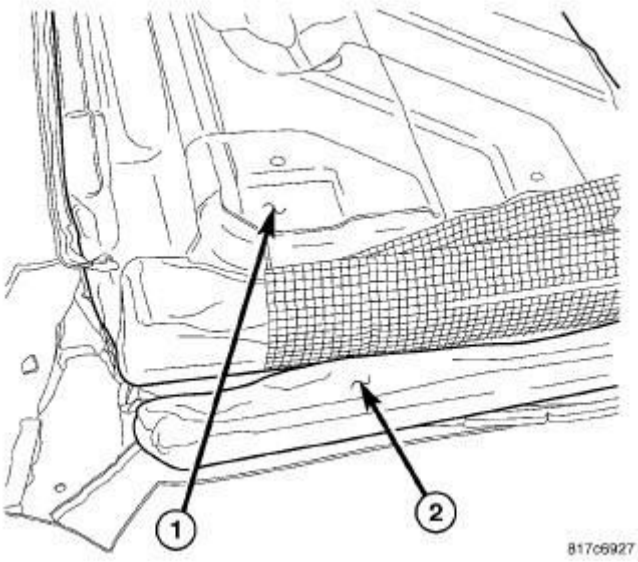

Fig. 546: Foam Insert
Courtesy of CHRYSLER GROUP, LLC

9. Remove the foam insert (2) from the seat back assembly (1).

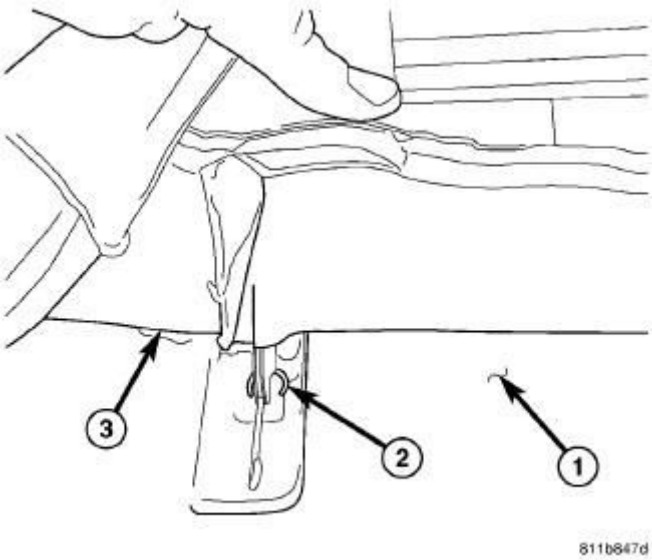

Fig. 547: Cushion Cover - Hog Rings
Courtesy of CHRYSLER GROUP, LLC

1 - SEAT FOAM CUSHION
2 - HOG RINGS
3 - SEAT CUSHION COVER

10. Separate the seat cover (3) from the foam cushion (1) and cut off all hog

rings (2) attaching the cover to the foam.

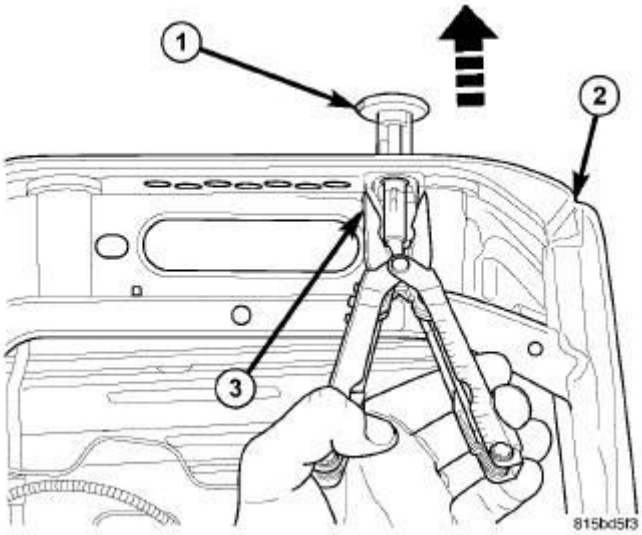

Fig. 548: Headrest Sleeve Removal
Courtesy of CHRYSLER GROUP, LLC

11. Squeeze the locking tab (3) and remove the headrest sleeves (1).
12. Remove the seat back cover and cushion.

ASSEMBLY

ASSEMBLY

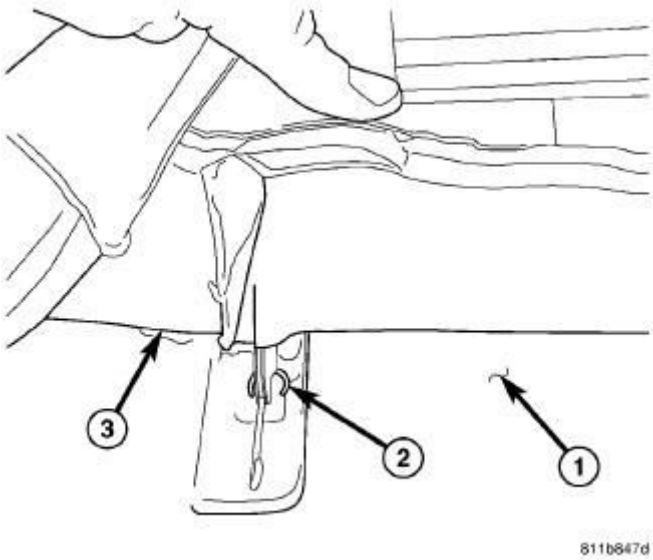

Fig. 549: Cushion Cover - Hog Rings
Courtesy of CHRYSLER GROUP, LLC

1 - SEAT FOAM CUSHION
2 - HOG RINGS
3 - SEAT CUSHION COVER

1. Position the seat back cushion on the frame and position the cover over the cushion.
2. Attach the seat cover (3) to the seat back cushion (1) and install new hog rings (2) as required.

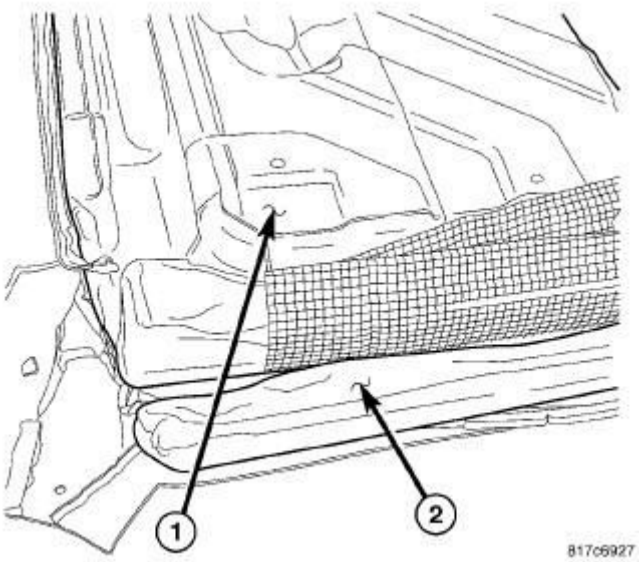

Fig. 550: Foam Insert
Courtesy of CHRYSLER GROUP, LLC

3. Position the foam insert (2) back at the base of the seat back assembly (1).

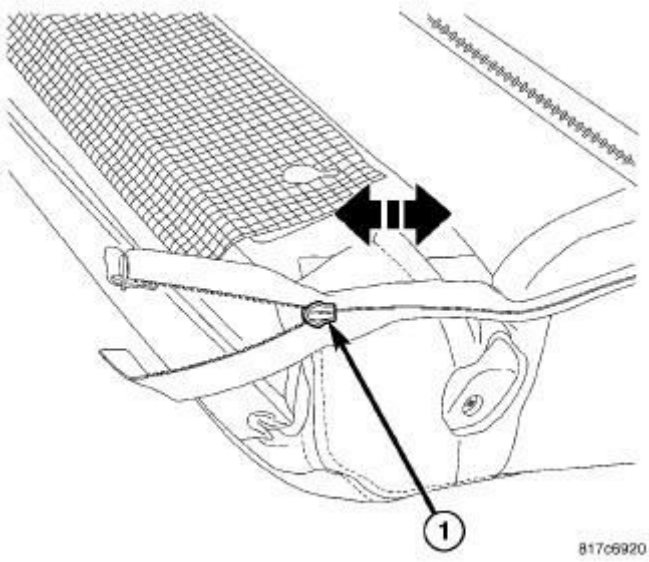

Fig. 551: Cover Zipper
Courtesy of CHRYSLER GROUP, LLC

4. Zip the cover back over the frame.

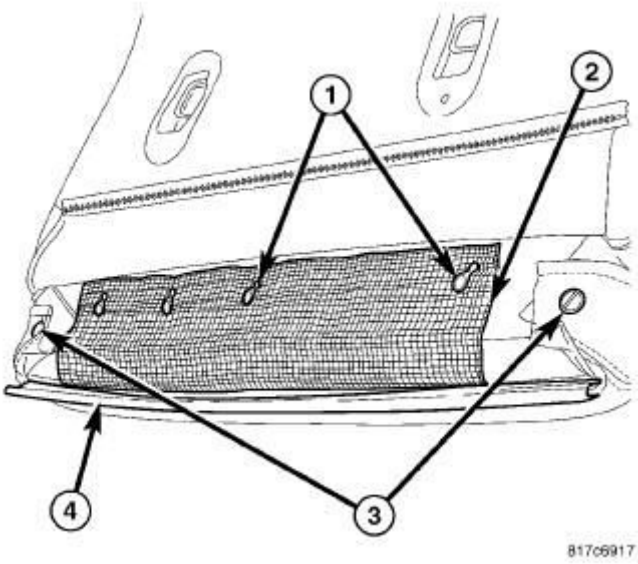

Fig. 552: Cover
Courtesy of CHRYSLER GROUP, LLC

5. Install the push pin fasteners (3).
6. Position the inner cover (2) over the frame hooks (1).

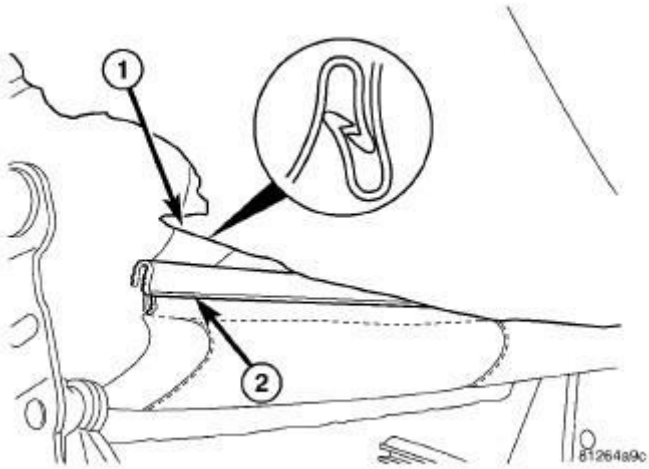

Fig. 553: J-Straps
Courtesy of CHRYSLER GROUP, LLC

7. Fasten the upper (1) and lower (2) zip strips at the bottom of the seat back.

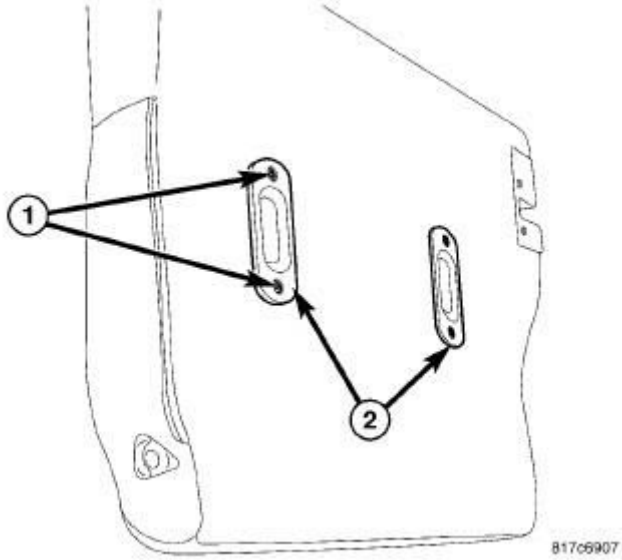

Fig. 554: Child Tether Bezels
Courtesy of CHRYSLER GROUP, LLC

8. Install the child tether bezels (2) and install the screws (1).

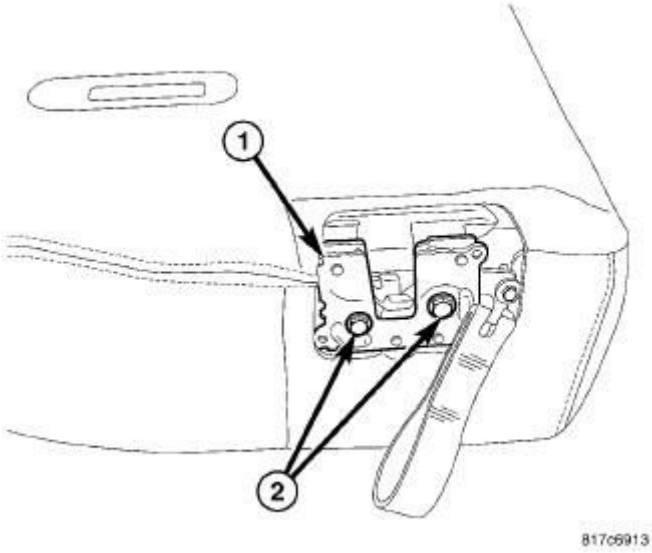

Fig. 555: Latch
Courtesy of CHRYSLER GROUP, LLC

9. Install the latch (1) and install the bolts (2).
10. Tighten the bolts to 28 N.m (21 ft. lbs.).

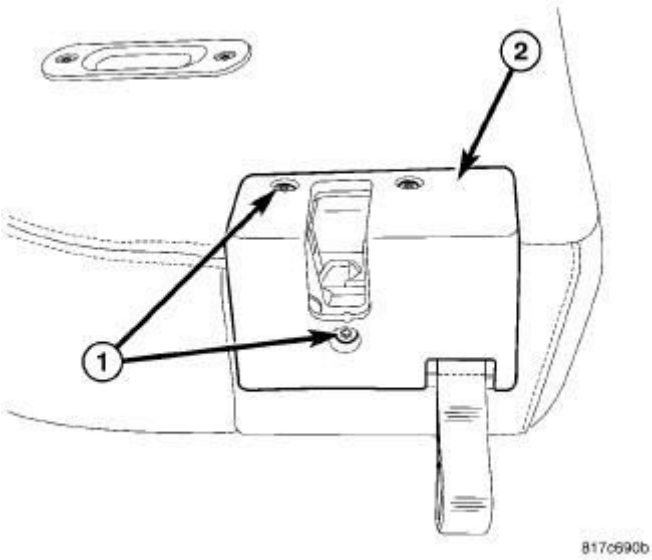

Fig. 556: Latch Bezel
Courtesy of CHRYSLER GROUP, LLC

11. Install the latch bezel (2) and install the screws (1).

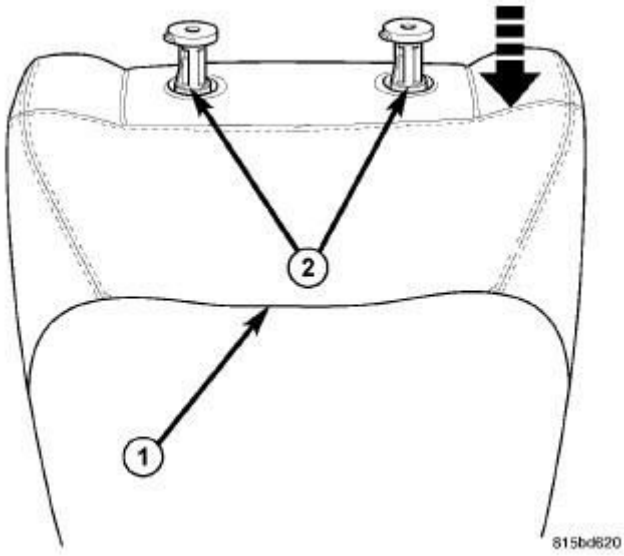

Fig. 557: Headrest Sleeve Install
Courtesy of CHRYSLER GROUP, LLC

12. Install the headrest sleeves (2), if equipped.

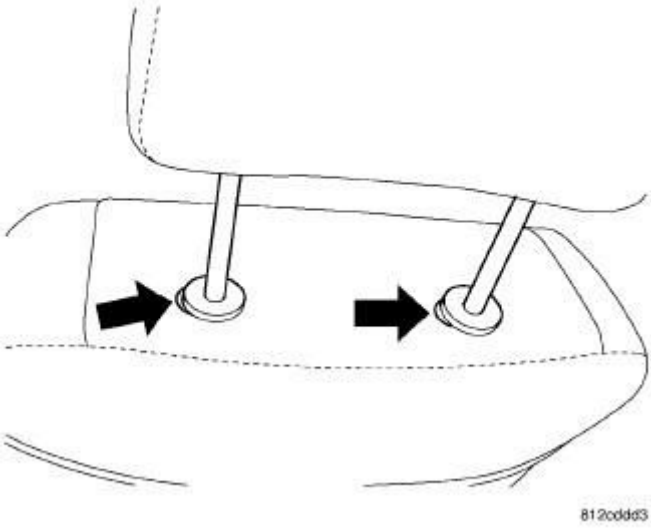

Fig. 558: Headrest
Courtesy of CHRYSLER GROUP, LLC

13. Press the headrest sleeve release buttons and install the headrest, if equipped.
14. Install the seat back. Refer to **SEAT BACK, REAR, INSTALLATION**.

INSTALLATION

INSTALLATION

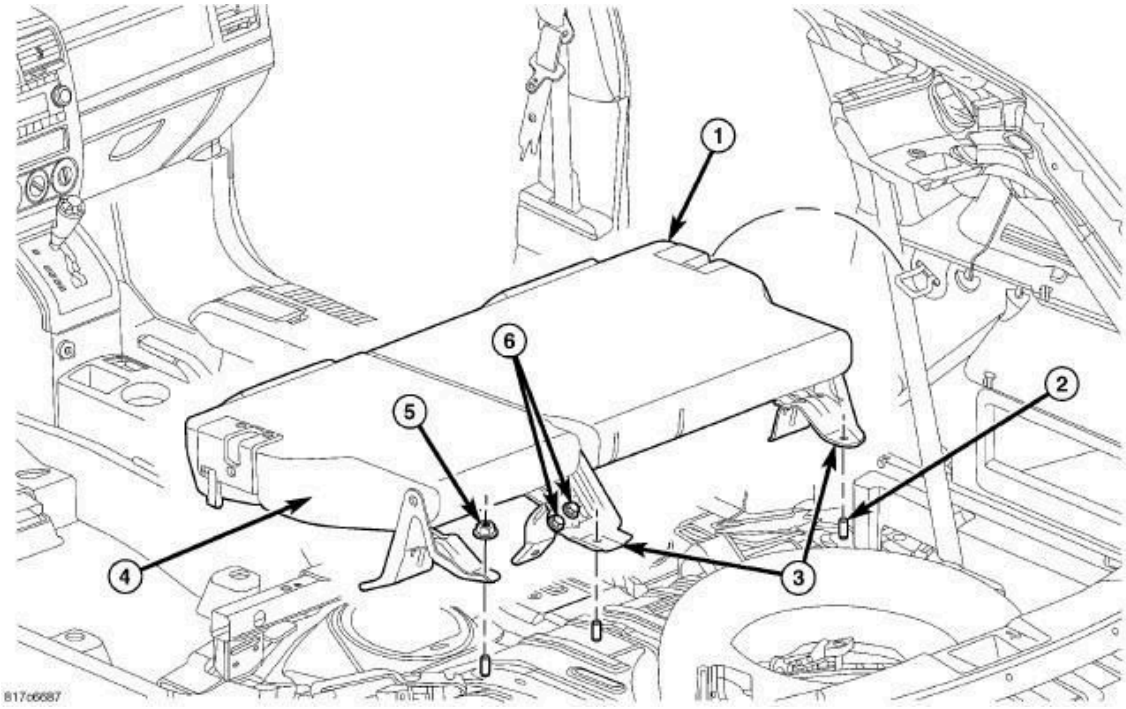

Fig. 559: 60/40 Rear Seat Back, Bolts, Nuts & Studs
Courtesy of CHRYSLER GROUP, LLC

1. Install the 60% seat section (1) over the studs (2) and install the nuts (3).
2. Install the 40% seat section (4) over the stud and seat bracket and install the seat bracket bolts (6).
3. Tighten the seat bracket bolts (6) to 46 N.m (34 ft. lbs.).
4. Install the nut (5).
5. Tighten the nuts (5 and 3) to 80 N.m (60 ft. lbs.).

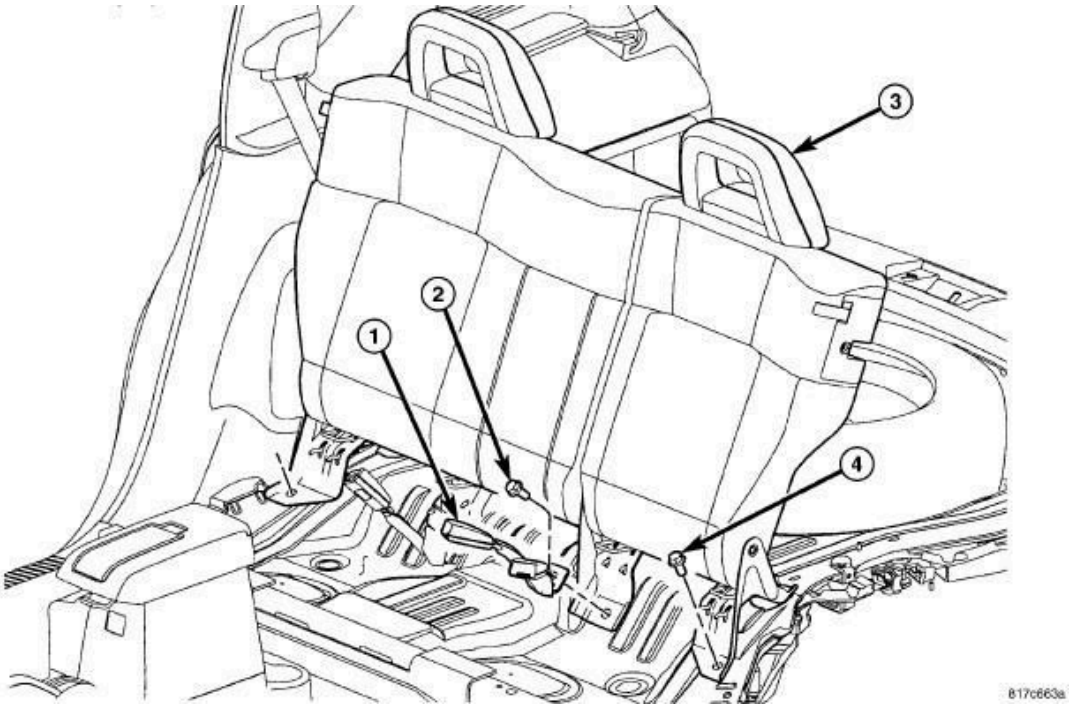

Fig. 560: Buckle, Belt Buckle Bolt & Recliner Bolts
Courtesy of CHRYSLER GROUP, LLC

6. Position the seat backs (3) up and latch.
7. Install the belt buckles (1) and install the bolt (2).
8. Tighten the buckle bolt to 66 N.m (49 ft. lbs.)
9. Install the bolts (4) and tighten to 80 N.m (59 ft. lbs.)
10. Install the seat cushion. Refer to **COVER, SEAT CUSHION, REAR, INSTALLATION**.

SEAT, FRONT

DESCRIPTION

DESCRIPTION

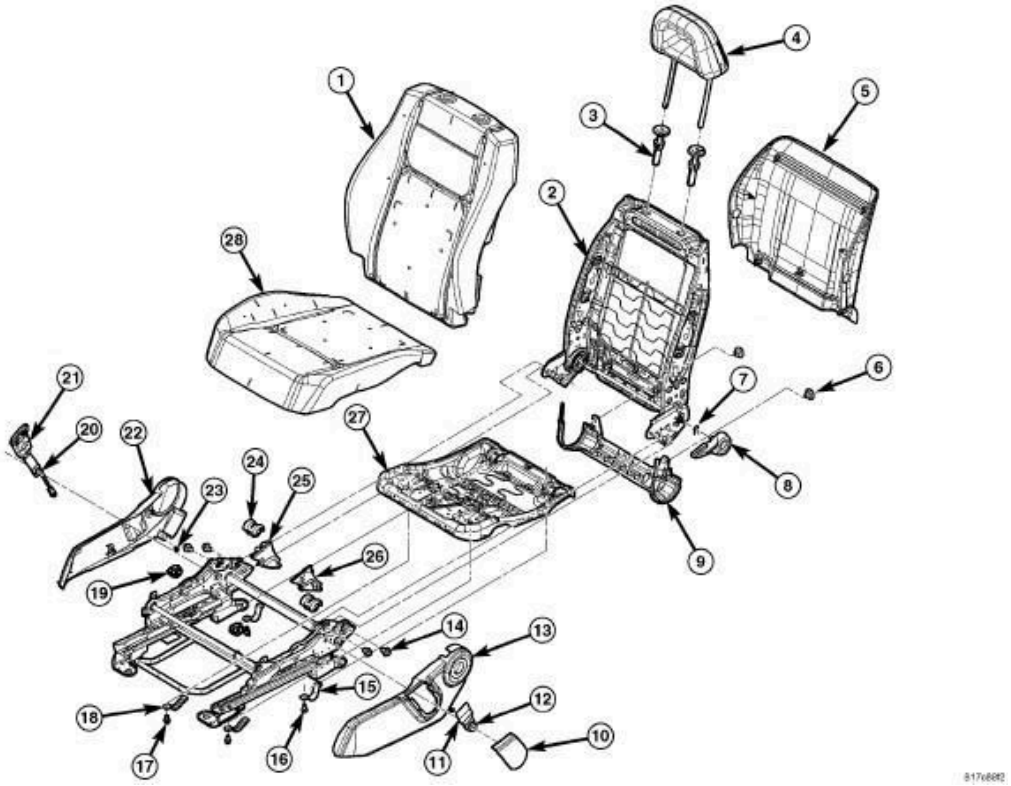

Fig. 561: 2-Way Driver Seat
Courtesy of CHRYSLER GROUP, LLC

1 - SEAT BACK CUSHION/COVER	15 - SEAT CUSHION STRAPS - REAR (2)
2 - SEAT BACK FRAME	16 - SEAT CUSHION STRAP BOLTS - REAR (2) 11 N.m (8 ft. lbs.)
3 - HEADREST SLEEVES	17 - SEAT CUSHION STRAP BOLTS - FRONT (2) 11 N.m (8 ft. lbs.)
4 - HEADREST - ACTIVE HEAD RESTRAINT	18 - SEAT CUSHION STRAPS - FRONT (2)
5 - SEAT BACK TRIM PANEL	19 - SEAT CUSHION STRAP BUSHINGS - FRONT (2)
6 - PUSH PIN FASTENERS (2)	20 - SEAT BELT BUCKLE BOLT 45 N.m (33 ft. lbs.)
7 - RECLINER HANDLE RETAINER CLIP	21 - SEAT BELT BUCKLE
8 - RECLINER HANDLE	22 - INBOARD SIDE SHIELD - OUTER

9 - SUB PANEL BASE TRIM

23 - SIDE SHIELD SCREWS (one per side)

11 - SEAT BELT ANCHOR

12 - SEAT BELT ANCHOR BOLT 32 N.m (23.5 ft. lbs.)

13 - OUTBOARD SIDE SHIELD - OUTER

14 - BACK ASSEMBLY BOLTS (4) 40 N.m (30 ft. lbs.)

10 - SEAT BELT ANCHOR TRIM

24 - SEAT CUSHION STRAP BUSHINGS - REAR (2)

25 - INBOARD SIDE SHIELD - INNER

26 - OUTBOARD SIDE SHIELD - INNER

27 - SEAT CUSHION PAN

28 - SEAT CUSHION/COVER

WARNING:

Discard and replace the seat back bolts (14) with new bolts when servicing. Installing used bolts may result in the loosening of the seat back bolts after repair. Failure to follow these instructions may result in serious or fatal injury.

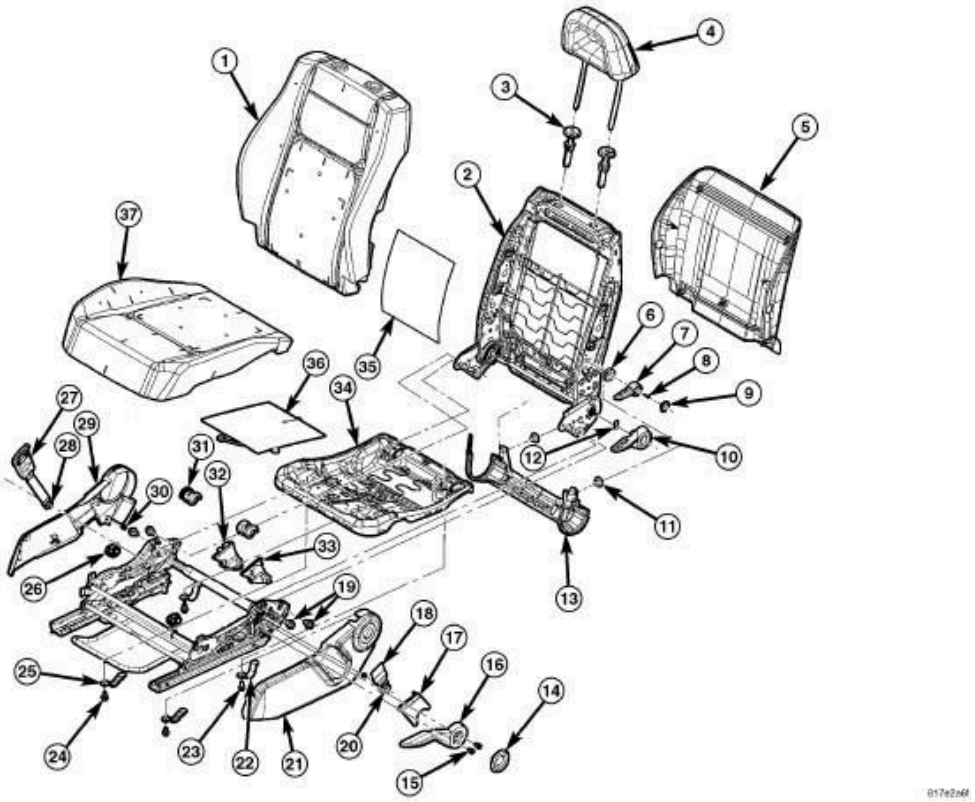

Fig. 562: 4-Way Driver Seat
Courtesy of CHRYSLER GROUP, LLC

1 - SEAT BACK CUSHION/COVER

20 - SEAT BELT ANCHOR BOLT 32 N.m (23.5 ft. lbs.)

21 - OUTBOARD SIDE SHIELD -

2 - SEAT BACK FRAME
3 - HEADREST SLEEVES
4 - HEADREST - ACTIVE HEAD RESTRAINT
5 - SEAT BACK TRIM PANEL
6 - LUMBAR HANDLE GROMMET
7 - LUMBAR HANDLE
8 - LUMBAR HANDLE SCREW
9 - LUMBAR HANDLE CAP
10 - RECLINER HANDLE
11 - PUSH PIN FASTENERS (2)
12 - RECLINER HANDLE RETAINER CLIP
13 - SUB PANEL BASE TRIM
14 - LIFT HANDLE CAP
15 - LIFT HANDLE SCREWS (2)
16 - LIFT HANDLE
17 - SEAT BELT ANCHOR TRIM
18 - SEAT BELT ANCHOR
19 - BACK ASSEMBLY BOLTS (4) 40 N.m (30 ft. lbs.)
OUTER
22 - SEAT CUSHION STRAPS - REAR (2)
23 - SEAT CUSHION STRAP BOLTS - REAR (2) 11 N.m (8 ft. lbs.)
24 - SEAT CUSHION STRAP BOLTS - FRONT (2) 11 N.m (8 ft. lbs.)
25 - SEAT CUSHION STRAPS - FRONT (2)
26 - SEAT CUSHION STRAP BUSHINGS - FRONT (2)
27 - SEAT BELT BUCKLE
28 - SEAT BELT BUCKLE BOLT 45 N.m (33 ft. lbs.)
29 - INBOARD SIDE SHIELD - OUTER
30 - SIDE SHIELD SCREWS (one per side)
31 - SEAT CUSHION STRAP BUSHINGS - REAR (2)
32 - INBOARD SIDE SHIELD - INNER
33 - OUTBOARD SIDE SHIELD - INNER
34 - SEAT CUSHION PAN
35 - HEATING ELEMENT - SEAT BACK
36 - HEATING ELEMENT - SEAT CUSHION
37 - SEAT CUSHION/COVER

WARNING:

Discard and replace the seat back bolts (19) with new bolts when servicing. Installing used bolts may result in the loosening of the seat back bolts after repair. Failure to follow these instructions may result in serious or fatal injury.

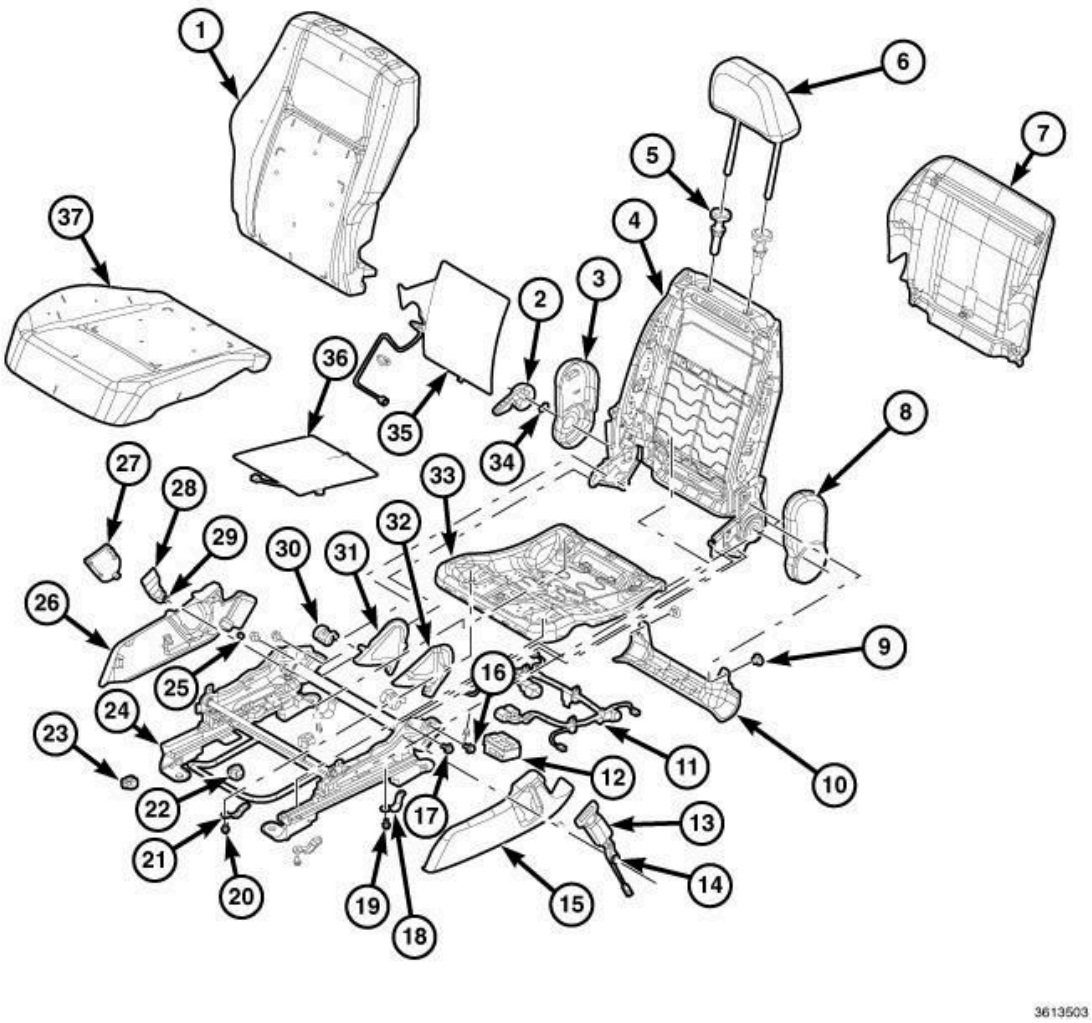

Fig. 563: Exploded View Of Passenger Fold Flat Seat
Courtesy of CHRYSLER GROUP, LLC

1 - SEAT BACK CUSHION/COVER	20 - SEAT CUSHION STRAP BOLTS - FRONT (2) 11 N.m (8 ft. lbs.)
2 - RECLINER HANDLE	21 - SEAT CUSHION STRAPS - FRONT (2)
3 - OUTBOARD RECLINER SHIELD	22 - SEAT CUSHION STRAP BUSHINGS - FRONT (2)
4 - SEAT BACK FRAME	23 - TRACK POSITION SENSOR
5 - HEADREST SLEEVES	24 - SEAT ADJUSTER ASSEMBLY
6 - HEADREST - ACTIVE HEAD RESTRAINT	25 - SIDE SHIELD SCREWS (one per side)
7 - SEAT BACK TRIM PANEL	26 - OUTBOARD SIDE SHIELD - OUTER

8 - INBOARD RECLINER SHIELD	27 - SEAT BELT ANCHOR TRIM
9 - PUSH PIN FASTENERS (2)	28 - SEAT BELT ANCHOR
10 - SUB PANEL BASE TRIM	29- SEAT BELT ANCHOR BOLT 32 N.m (23.5 ft. lbs.)
11 - WIRE HARNESS	30 - SEAT CUSHION STRAP BUSHINGS - REAR (2)
12 - HEATED SEAT MODULE	31 - OUTBOARD SIDE SHIELD - INNER
13 - SEAT BELT BUCKLE	32 - INBOARD SIDE SHIELD - INNER
14 - SEAT BELT BUCKLE BOLT 45 N.m (33 ft. lbs.)	33 - SEAT CUSHION PAN
15 - INBOARD SIDE SHIELD - OUTER	34 - RECLINER HANDLE RETAINER CLIP
16 - BACK ASSEMBLY BOLT (4) 40 N.m (30 ft. lbs.)	35 - HEATING ELEMENT - SEAT BACK
WARNING: **Discard and replace the seat back bolts (17) with new bolts when servicing. Installing used bolts may result in the loosening of the seat back bolts after repair. Failure to follow these instructions may result in serious or fatal injury.**	
17 - BACK ASSEMBLY BOLT (4) 40 N.m (30 ft. lbs.)	36 - HEATING ELEMENT - SEAT CUSHION
18 - SEAT CUSHION STRAPS - REAR (2)	37 - SEAT CUSHION/COVER
19 - SEAT CUSHION STRAP BOLTS - REAR (2) 11 N.m (8 ft. lbs.)	

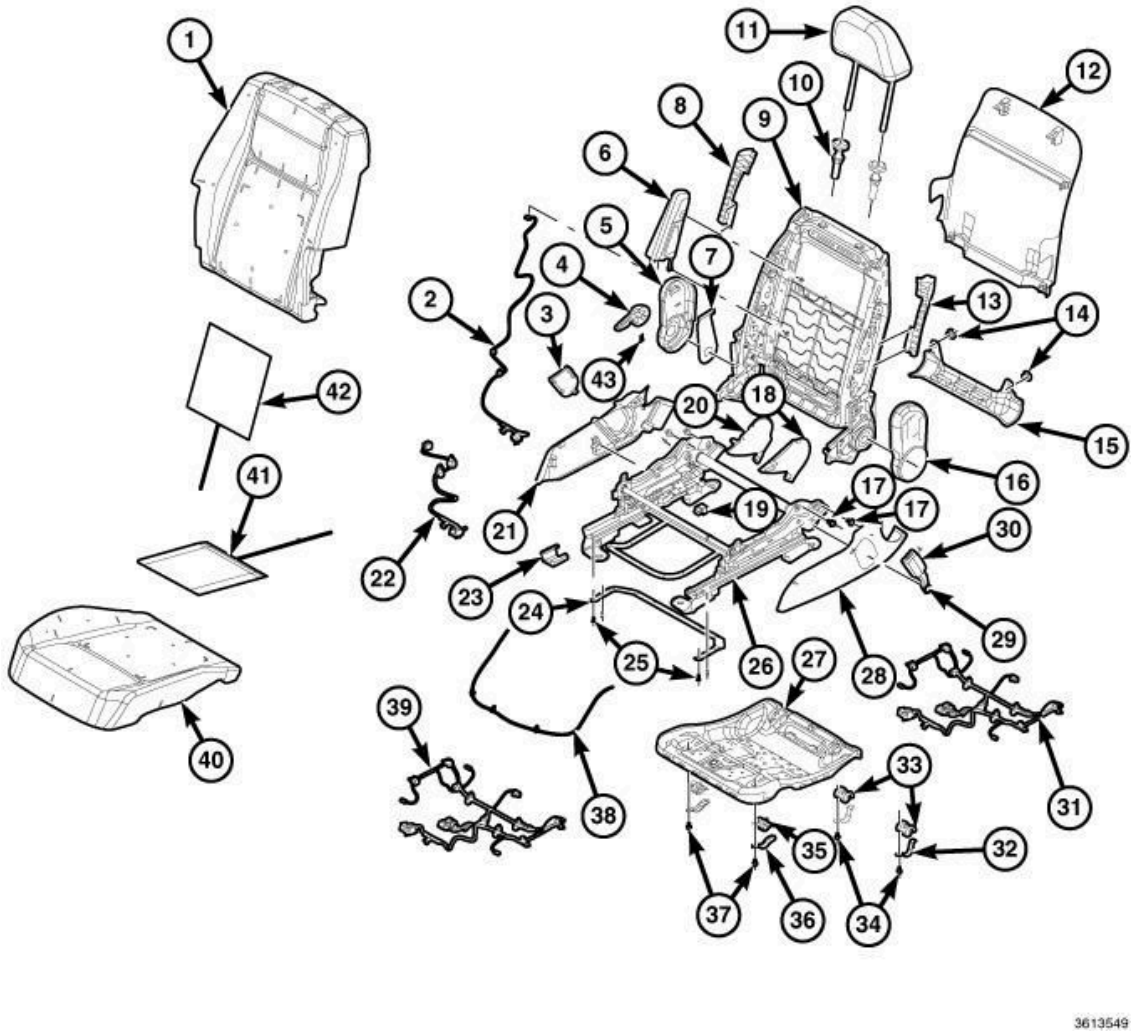

Fig. 564: Exploded View Of Passenger Fold Flat W/Air Bag
Courtesy of CHRYSLER GROUP, LLC

1 - SEAT BACK CUSHION/COVER	23 - TRACK RAIL COVER (2)
2 - SEAT AIR BAG WIRE HARNESS	24 - CROSS BRACE TRACK BRACKET
3 - SEAT BELT ANCHOR TRIM	25 - CROSS BRACE TRACK BRACKET SCREWS (4)
4 - RECLINER HANDLE	26 - SEAT ADJUSTER ASSEMBLY

5 - OUTBOARD RECLINER SHIELD

6 - SEAT AIR BAG 10 N.m (90 in. lbs.)

7 - WIRE ROUTING SHIELD

8 - SEAT AIR BAG BEZEL

9 - SEAT BACK FRAME

10 - HEADREST SLEEVES

11 - HEADREST - ACTIVE HEAD RESTRAINT

12 - SEAT BACK TRIM PANEL

13 - SEAT AIR BAG BEZEL

14 - PUSH PIN FASTENERS (2)

15 - SUB PANEL BASE TRIM

27 - SEAT CUSHION PAN

28 - OUTBOARD SIDE SHIELD - OUTER

29 - SEAT BELT BUCKLE BOLT 45 N.m (33 ft. lbs.)

30 - SEAT BELT BUCKLE

31 - WIRE HARNESS

32 - SEAT CUSHION STRAPS - REAR (2)

33 - SEAT CUSHION STRAP BUSHINGS - REAR (2)

34 - SEAT CUSHION STRAP BOLTS - REAR (2) 11 N.m (8 ft. lbs.)

35 - SEAT CUSHION STRAP BUSHINGS - FRONT (2)

36 - SEAT CUSHION STRAPS - FRONT (2)

37 - SEAT CUSHION STRAP BOLTS - FRONT (2) 11 N.m (8 ft. lbs.)

16 - INBOARD RECLINER SHIELD

WARNING:

Discard and replace the seat back bolts (17) with new bolts when servicing. Installing used bolts may result in the loosening of the seat back bolts after repair. Failure to follow these instructions may result in serious or fatal injury.

17 - BACK ASSEMBLY BOLTS (4) 40 N.m (30 ft. lbs.)

18 - INBOARD SIDE SHIELD - INNER

19 - TRACK POSITION SENSOR

20 - OUTBOARD SIDE SHIELD - INNER

21 - OUTBOARD SIDE SHIELD - OUTER

22 - WIRE HARNESS

38 - RECLINER CABLE

39 - WIRE HARNESS

40 - SEAT CUSHION/COVER

41 - SEAT CUSHION HEAT ELEMENT

42- SEAT BACK HEAT ELEMENT

43- RECLINER HANDLE RETAINER CLIP

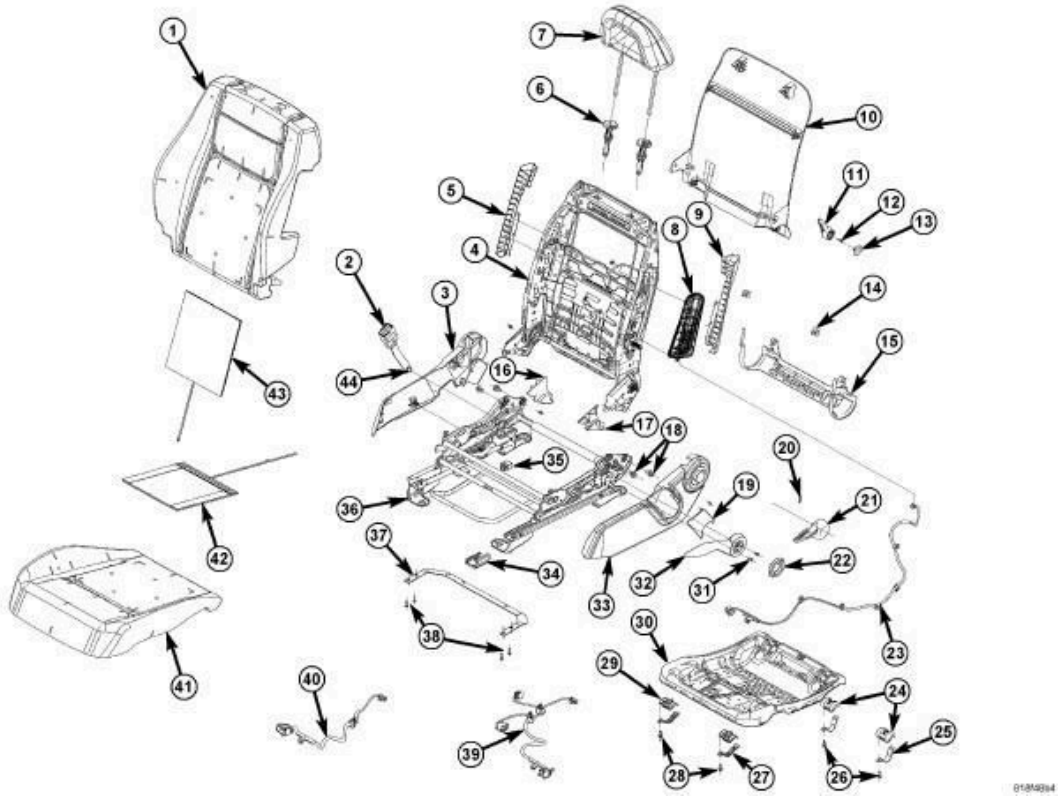

Fig. 565: 4-Way Driver W/Air Bag
Courtesy of CHRYSLER GROUP, LLC

1 - SEAT BACK CUSHION/COVER	23 - SEAT AIR BAG HARNESS
2 - SEAT BELT BUCKLE	24 - SEAT CUSHION STRAP BUSHINGS - REAR (2)
3 - INBOARD SIDE SHIELD - OUTER	25 - SEAT CUSHION STRAPS - REAR (2)
4 - SEAT BACK FRAME	26 - SEAT CUSHION STRAP BOLTS - REAR (2) 11 N.m (8 ft. lbs.)
5 - SEAT AIR BAG BEZEL	27 - SEAT CUSHION STRAPS - FRONT (2)
6 - HEADREST SLEEVES	28 - SEAT CUSHION STRAP BOLTS - FRONT (2) 11 N.m (8 ft. lbs.)
7 - HEADREST - ACTIVE HEAD RESTRAINT	29 - SEAT CUSHION STRAP BUSHINGS - FRONT (2)
8 - SEAT AIR BAG 10 N.m (90 in. lbs.)	30 - SEAT CUSHION PAN
9 - SIDE IMPACT AIR BAG (SIAB) BEZEL	31 - LIFT HANDLE SCREWS (2)
10 - SEAT BACK TRIM PANEL	32 - LIFT HANDLE
11 - LUMBAR HANDLE	33 - OUTBOARD SIDE SHIELD - OUTER
12 - LUMBAR HANDLE SCREW	34 - TRACK RAIL COVER (2)
13 - LUMBAR HANDLE CAP	35 - TRACK POSITION SENSOR
14 - PUSH PIN FASTENERS (2)	36 - SEAT ADJUSTER ASSEMBLY
15 - SUB PANEL BASE TRIM	37 - CROSS BRACE TRACK BRACKET
16 - INBOARD SIDE SHIELD - INNER	38 - CROSS BRACE TRACK BRACKET SCREWS (4)

17 - OUTBOARD SIDE SHIELD - INNER	39 - WIRE HARNESS
18 - BACK ASSEMBLY BOLTS (4) 40 N.m (30 ft. lbs.)	40 - WIRE HARNESS
WARNING: **Discard and replace the seat back bolts (18) with new bolts when servicing. Installing used bolts may result in the loosening of the seat back bolts after repair. Failure to follow these instructions may result in serious or fatal injury.**	
19 - SEAT BELT ANCHOR TRIM	41 - SEAT CUSHION/COVER
20 - RECLINER HANDLE RETAINER CLIP	42 - SEAT CUSHION HEAT ELEMENT
21 - RECLINER HANDLE	43 - SEAT BACK HEAT ELEMENT
22 - LIFT HANDLE CAP	44 - SEAT BELT BUCKLE BOLT 45 N.m (33 ft. lbs.)

REMOVAL

REMOVAL

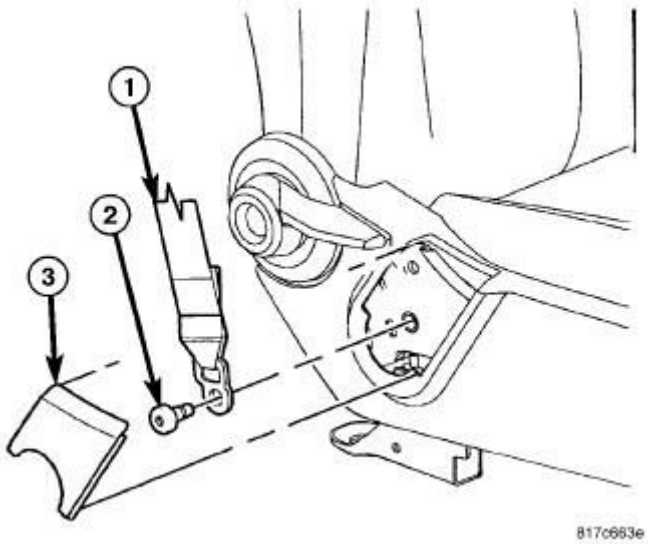

Fig. 566: Front Belt Anchor
Courtesy of CHRYSLER GROUP, LLC

1. Before proceeding with the following repair procedure, review all warnings and cautions. Refer to **SEATS, WARNING**.

   WARNING: **The Seat Weight Sensor is a sensitive, calibrated unit and must be handled carefully. Do not drop or handle roughly. If dropped or damaged, replace with another sensor. Failure to follow these instructions may result in personal injury or death.**

   WARNING: **The front passenger seat must be handled carefully as well. When removing the seat, be careful when setting on floor not to drop. If dropped, the sensor may be inoperative. Failure to follow these instructions may result in personal injury or death.**

   WARNING: **When the seat is on the floor, no one should sit in the front passenger seat. This uneven force may damage the sensing ability of the seat weight sensors. If sat on and damaged, the sensor may be inoperative. Failure to follow these instructions may result in personal injury or death.**

2. Using a trim stick (special tool #C-4755, Trim Stick) or equivalent, remove the seat belt anchor trim (3).
3. Remove the bolt (2) and separate the seat belt anchor (1).

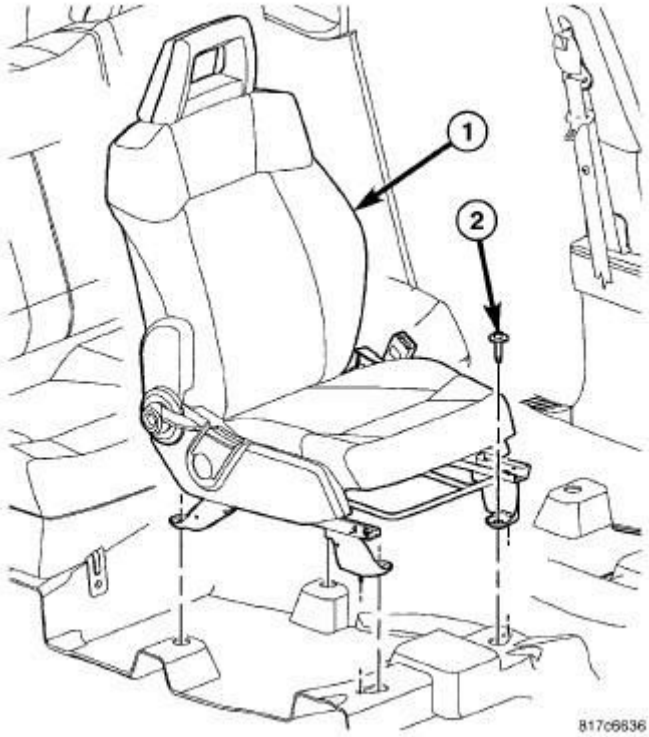

Fig. 567: Front Passenger Seat
Courtesy of CHRYSLER GROUP, LLC

4. Remove the bolts (2).

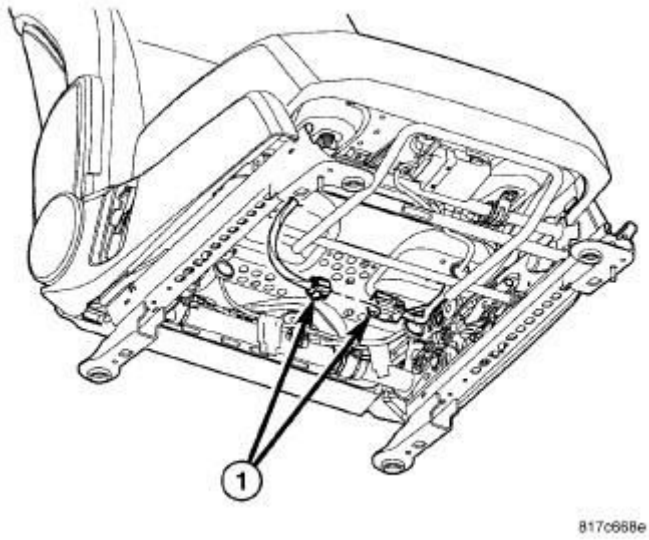

Fig. 568: Electrical Connector
Courtesy of CHRYSLER GROUP, LLC

5. Tip the seat back and disconnect the electrical connectors (1).

6. Remove the seat.

INSTALLATION

INSTALLATION

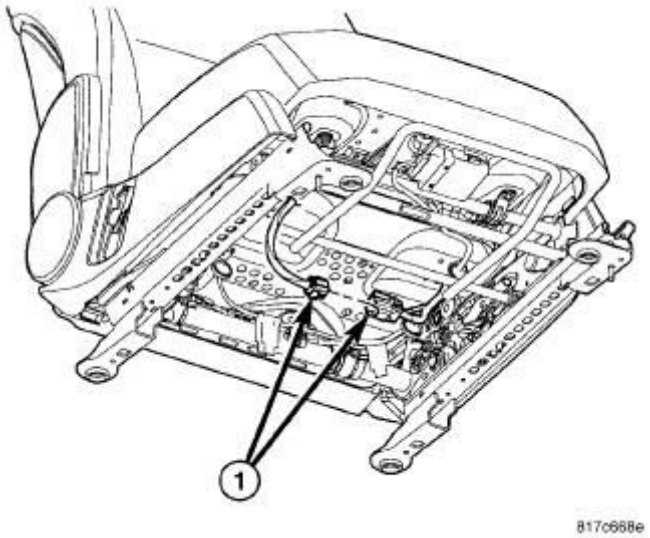

Fig. 569: Electrical Connector
Courtesy of CHRYSLER GROUP, LLC

1. Before proceeding with the following repair procedure, review all warnings and cautions. Refer to **SEATS, WARNING**.

WARNING: **The Seat Weight Sensor is a sensitive, calibrated unit and must be handled carefully. Do not drop or handle roughly. If dropped or damaged, replace with another sensor. Failure to follow these instructions may result in personal injury or death.**

WARNING: **The front passenger seat must be handled carefully as well. When removing the seat, be careful when setting on floor not to drop. If dropped, the sensor may be inoperative. Failure to follow these instructions may result in personal injury or death.**

WARNING: **When the seat is on the floor, no one should**

sit in the front passenger seat. This uneven force may damage the sensing ability of the seat weight sensors. If sat on and damaged, the sensor may be inoperative. Failure to follow these instructions may result in personal injury or death.

2. Position the seat into the vehicle and connect the electrical connectors (1), if equipped.

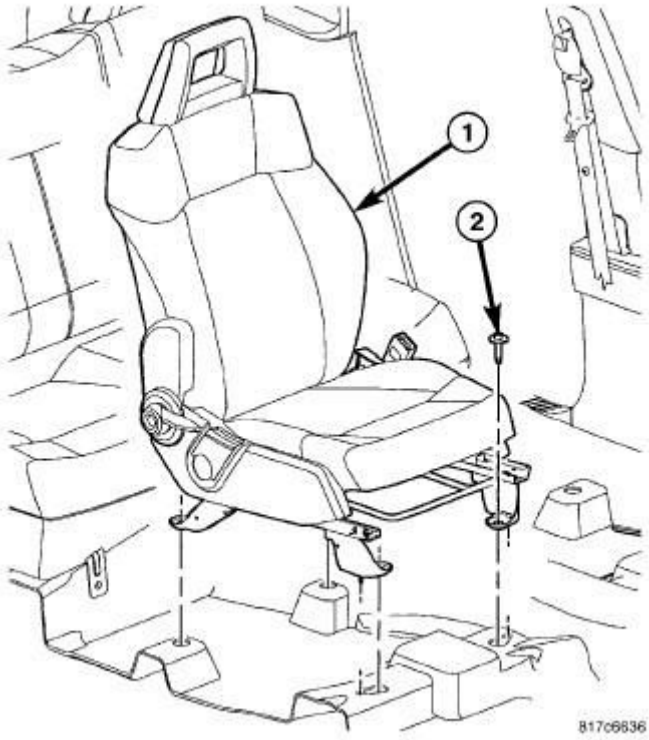

Fig. 570: Front Passenger Seat
Courtesy of CHRYSLER GROUP, LLC

3. Install the bolts (2).
   a. Adjust the seat forward.
   b. Tighten the rear outboard bolt to 51 N.m (38 ft. lbs.).
   c. Tighten the rear inboard bolt to 51 N.m (38 ft. lbs.).
   d. Adjust the seat rearward.
   e. Tighten the front outboard bolt to 51 N.m (38 ft. lbs.).
   f. Tighten the front inboard bolt to 51 N.m (38 ft. lbs.).

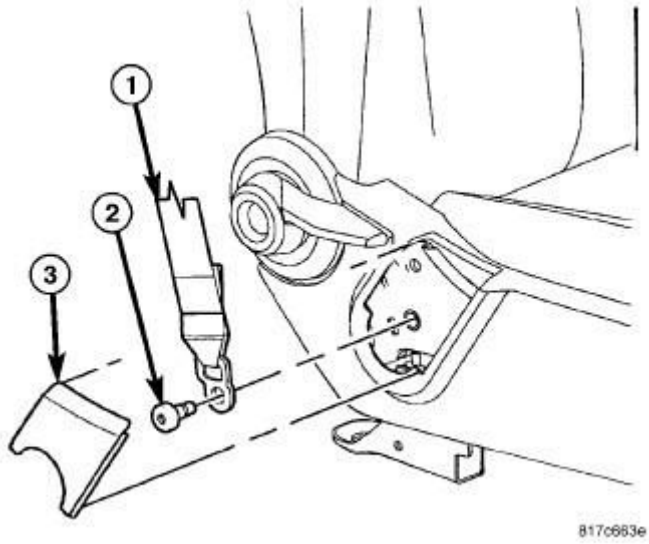

Fig. 571: Front Belt Anchor
Courtesy of CHRYSLER GROUP, LLC

4. Install the lower seat belt anchor (1) and install the bolt (2).
5. Tighten the bolt (2) to 32 N.m (23.5 ft. lbs.) and install the trim cover (3).
6. Do not reconnect the battery negative cable at this time. The occupant classification module system verification test procedure should be performed following service of any supplemental restraint system component. Refer to **DIAGNOSIS AND TESTING** .

STATIONARY GLASS

WARNING

WARNING

WARNING: Do not operate the vehicle within 24 hours of windshield installation. It takes at least 24 hours for urethane adhesive to cure. If it is not cured, the windshield may not perform properly in an accident.

- **Urethane adhesives are applied as a system. Use glass cleaner, glass prep solvent, glass primer, PVC (vinyl) primer and pinch weld (fence) primer provided by the adhesive manufacturer. If not, structural integrity could**

be compromised.

- Chrysler does not recommend glass adhesive by brand. Technicians should review product labels and technical data sheets, and use only adhesives that their manufactures warrant will restore a vehicle to the requirements of FMVSS 212. Technicians should also insure that primers and cleaners are compatible with the particular adhesive used.
- Be sure to refer to the urethane manufacturer's directions for curing time specifications, and do not use adhesive after its expiration date.
- Vapors that are emitted from the urethane adhesive or primer could cause personal injury. Use them in a well-ventilated area.
- Skin contact with urethane adhesive should be avoided. Personal injury may result.
- Always wear eye and hand protection when working with glass.

Failure to follow these instructions may result in possible serious or fatal injury.

CAUTION: Protect all painted and trimmed surfaces from coming in contact with urethane or primers.

Be careful not to damage painted surfaces when removing moldings or cutting urethane around windshield.

BACKLITE, LIFTGATE

REMOVAL

REMOVAL

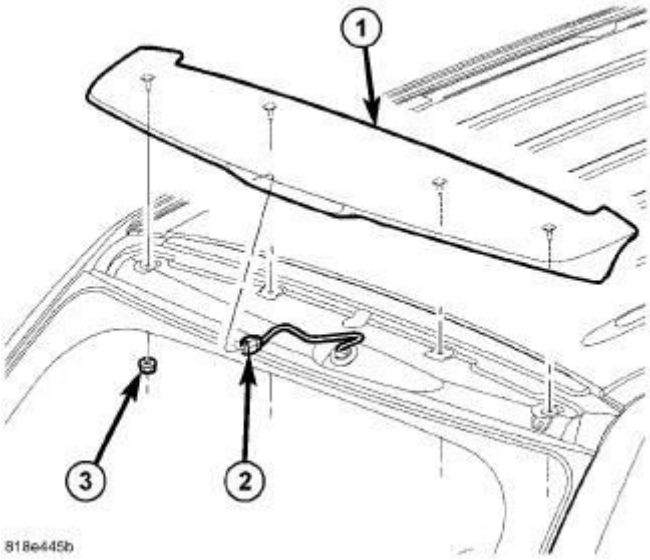

Fig. 572: Spoiler
Courtesy of CHRYSLER GROUP, LLC

1. Before proceeding with the following repair procedure, review all warnings and cautions. Refer to **STATIONARY GLASS, WARNING**.
2. Remove the spoiler (1). Refer to **SPOILER, LIFTGATE, REMOVAL**.

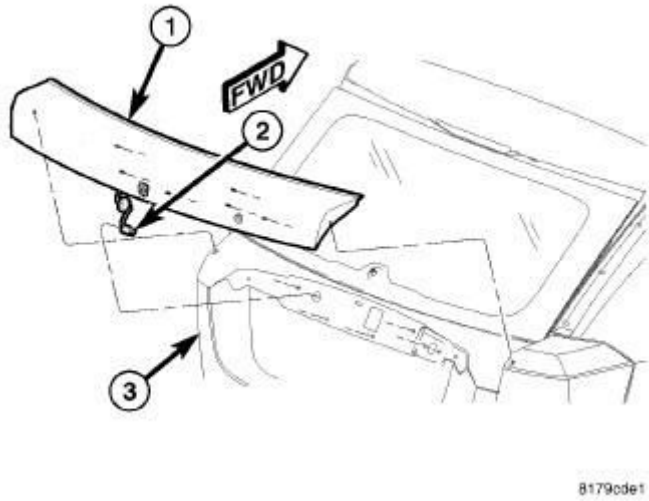

Fig. 573: Light Bar
Courtesy of CHRYSLER GROUP, LLC

3. Remove the liftgate handle (1). Refer to **HANDLE, EXTERIOR, REMOVAL**.

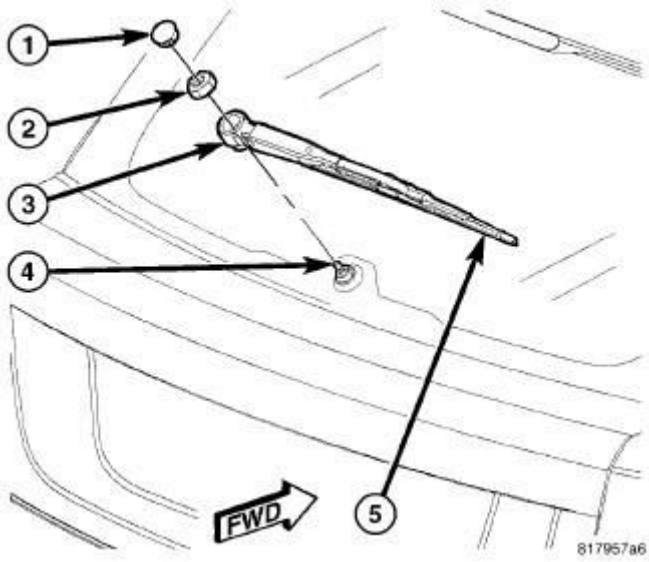

Fig. 574: Rear Wiper Arm Remove/Install
Courtesy of CHRYSLER GROUP, LLC

4. Remove the rear wiper arm (3). Refer to **ARM, WIPER, REMOVAL** .

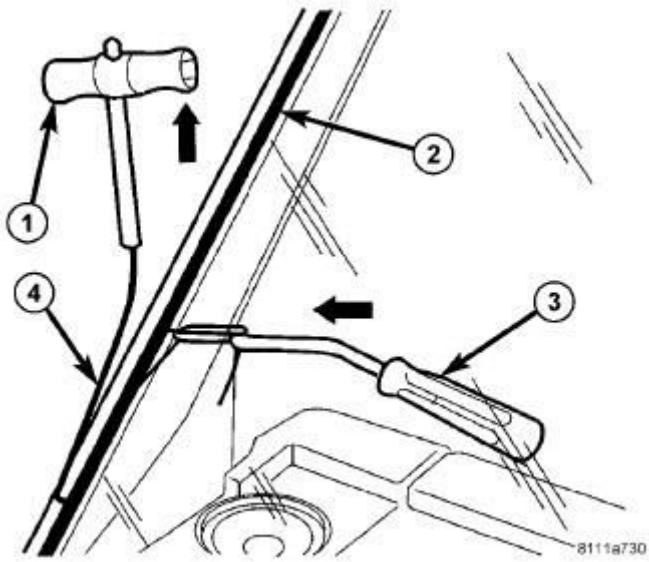

Fig. 575: Adhesive Separation
Courtesy of CHRYSLER GROUP, LLC

1 - T-HANDLE
2 - WINDSHIELD ADHESIVE
3 - COUNTER SUPPORT
4 - CUTTING WIRE

NOTE: Windshield removal shown, liftgate glass similar.

5. Disconnect the heated liftgate glass electrical connectors, if equipped.
6. Using a windshield cut-out wire (4) or other suitable tool, separate the adhesive (2).
7. Carefully remove liftgate glass.

INSTALLATION

INSTALLATION

WARNING: Allow the urethane at least 24 hours to cure before returning the vehicle to use.

CAUTION: Roll down the left and right front door glass and open the rear glass slider (if available) before installing liftgate glass to avoid pressurizing the passenger compartment if a door is slammed before urethane is cured. Water leaks can result.

NOTE: The liftgate glass fence should be cleaned of most of its old urethane bonding material. A small amount of old urethane, approximately 1-2 mm in height, should remain on the fence. Do not grind off or completely remove all old urethane from the fence, the paint finish and bonding strength will be adversely affected. Support spacers should be replaced with new parts. Replace any missing or damaged spacers around the perimeter of the liftgate opening.

GLASS PREPARATION - INSTALLING A PREVIOUSLY INSTALLED LIFTGATE GLASS

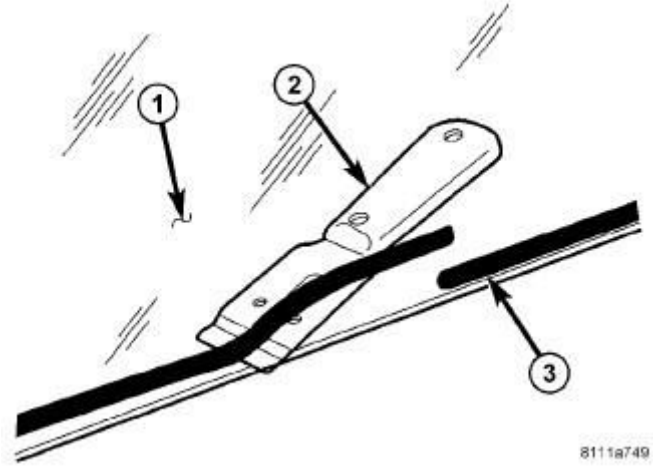

Fig. 576: Windshield Adhesive Preparation
Courtesy of CHRYSLER GROUP, LLC

1 - WINDSHIELD
2 - SCRAPER
3 - OLD ADHESIVE

1. Before proceeding with the following repair procedure, review all warnings and cautions. Refer to **STATIONARY GLASS, WARNING**.
2. Level old bead of liftgate glass adhesive (3) to a thickness of approximately 1 mm (0.04 in.) and remove loose adhesive.

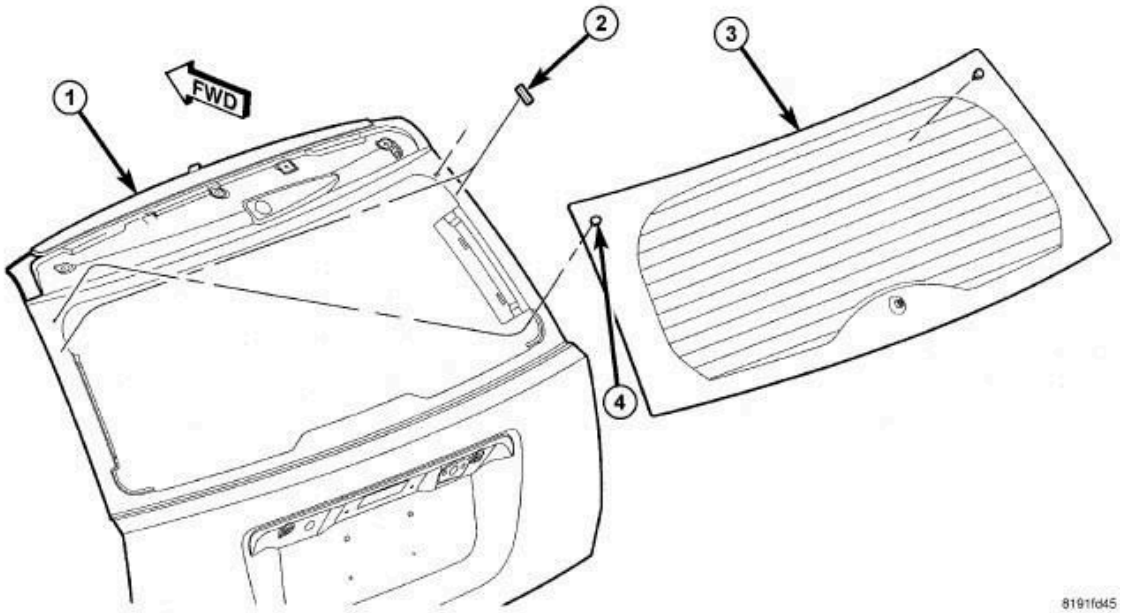

Fig. 577: Liftgate Glass
Courtesy of CHRYSLER GROUP, LLC

3. Apply two new spacers (2) to the liftgate frame.
4. Install the lower spacers to the liftgate horizontal flange.

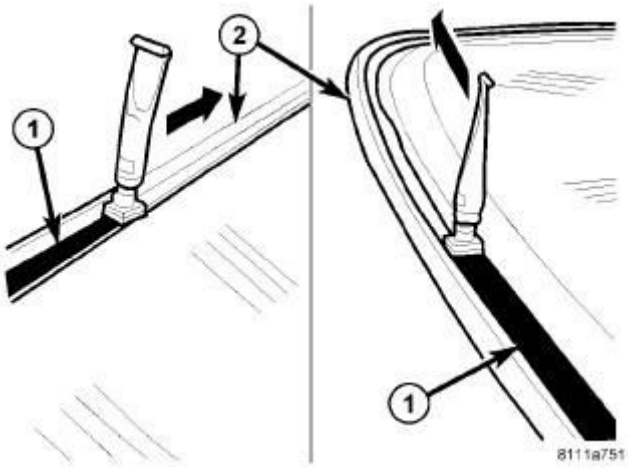

Fig. 578: Windshield Primer
Courtesy of CHRYSLER GROUP, LLC

1 - PRIMER
2 - WINDSHIELD SEAL

NOTE: Typical primer installation shown.

5. Clean and dry area of glass (2) to be re-glued with a suitable glass preparation solvent and rag.
6. Using a flash light, verify that glass primer is without damage.
7. Re-prime any damaged area. If old adhesive has been exposed for more than 12 hours, entire adhesive area needs to be re-primed.

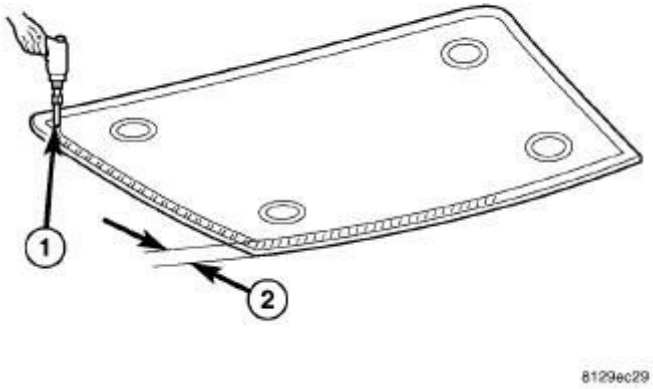

Fig. 579: Applying Primer
Courtesy of CHRYSLER GROUP, LLC

8. Apply primer (1) around the perimeter of the glass to a width of 15 mm (0.5 in.) (2).
9. Allow primer to air dry for at least 10 minutes.
10. Using a flash light, verify that glass primer is without damage.

GLASS PREPARATION - INSTALLING A NEW LIFTGATE GLASS

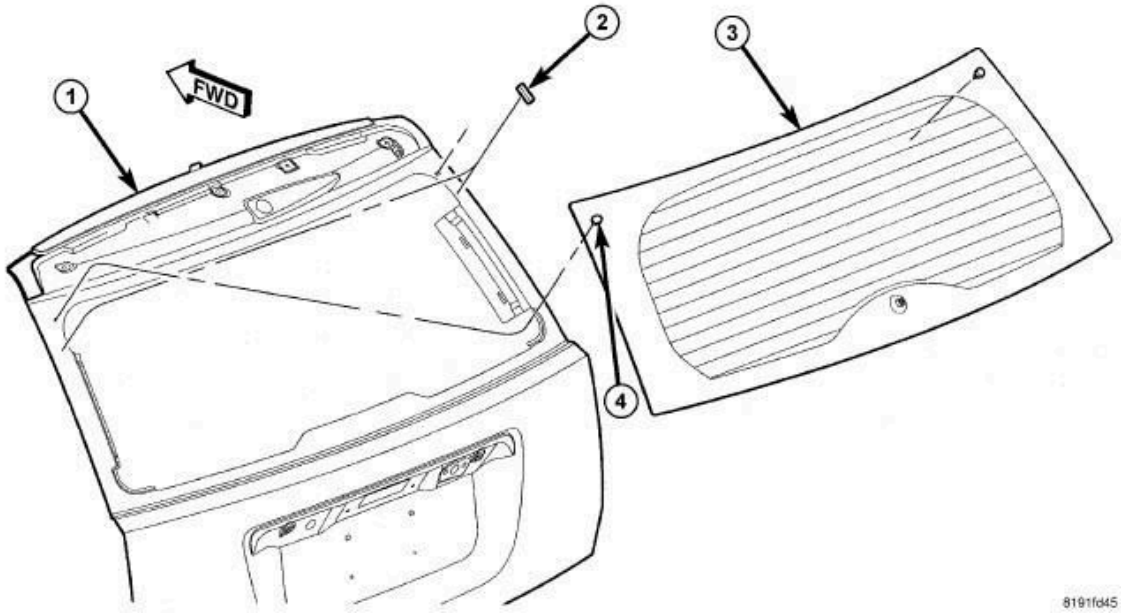

Fig. 580: Liftgate Glass
Courtesy of CHRYSLER GROUP, LLC

1. Apply two new spacers (2) to the liftgate frame.
2. Install the lower spacers to the liftgate horizontal flange.

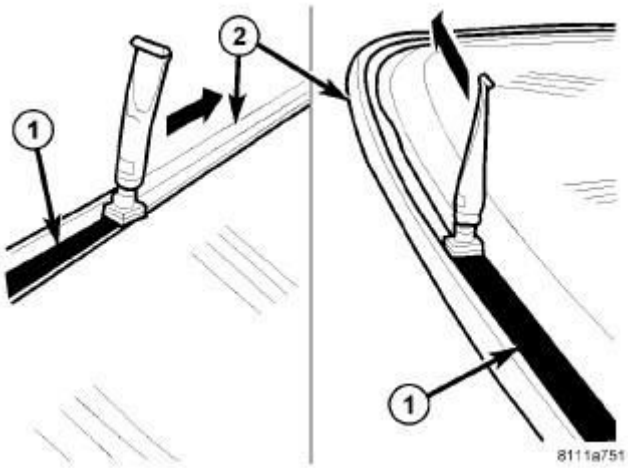

Fig. 581: Windshield Primer
Courtesy of CHRYSLER GROUP, LLC

1 - PRIMER 2 - WINDSHIELD SEAL

NOTE: Typical primer installation shown.

3. Clean and dry area of glass (2) to be re-glued with a suitable glass preparation solvent and rag.
4. Apply primer to gluing surface at liftgate glass seal.

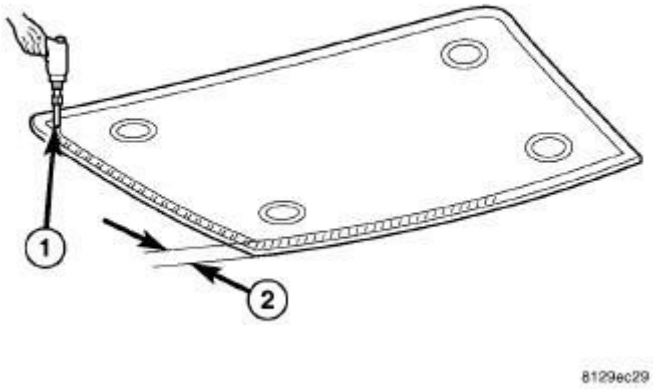

Fig. 582: Applying Primer
Courtesy of CHRYSLER GROUP, LLC

5. Apply primer (1) around the perimeter of the glass to a width of 15 mm (0.5 in.) (2).

6. Allow primer to air dry for at least 10 minutes.
7. Using a flash light, verify that glass primer is without damage.

LIFTGATE OPENING PREPARATION

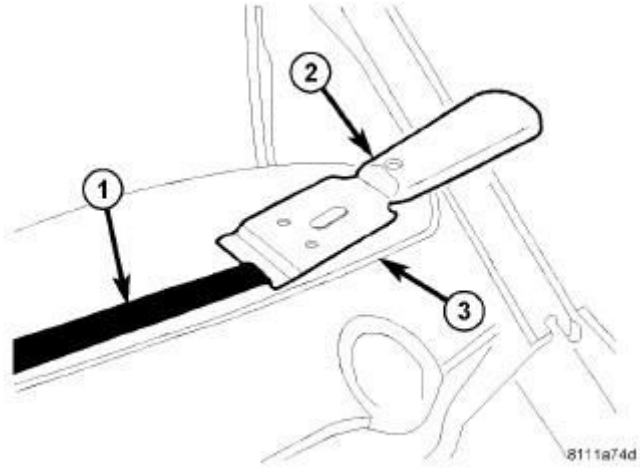

Fig. 583: Smoothing Windshield Adhesive
Courtesy of CHRYSLER GROUP, LLC

1 - OLD ADHESIVE
2 - SCRAPER
3 - WINDSHIELD OPENING

NOTE: Windshield opening shown, liftgate opening similar.

1. Clean and vacuum liftgate opening.
2. Level old bead of liftgate opening adhesive (1) to a thickness of approximately 1 mm (0.04 in.) and remove loose adhesive.

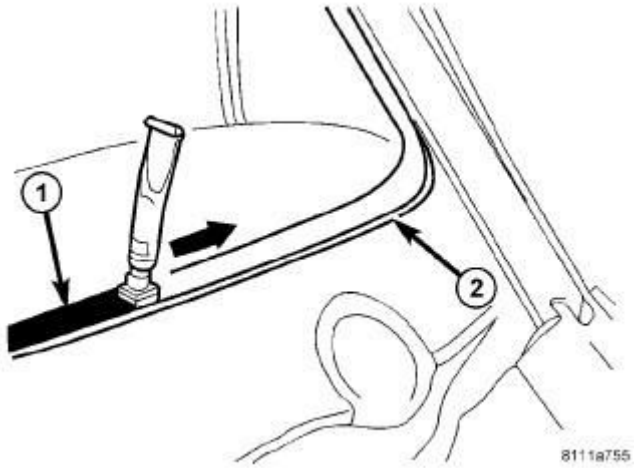

Fig. 584: Windshield Opening Primer
Courtesy of CHRYSLER GROUP, LLC

1 - PRIMER
2 - WINDSHIELD OPENING

NOTE: Windshield opening shown, liftgate opening similar.

3. Clean and dry area of liftgate opening to be re-glued with a suitable glass preparation solvent and rag.
4. Re-prime any damaged area. If old adhesive has been exposed for more than 12 hours, entire adhesive area needs to be re-primed.
5. Allow primer to air dry for at least 10 minutes.

LIFTGATE GLASS INSTALLATION

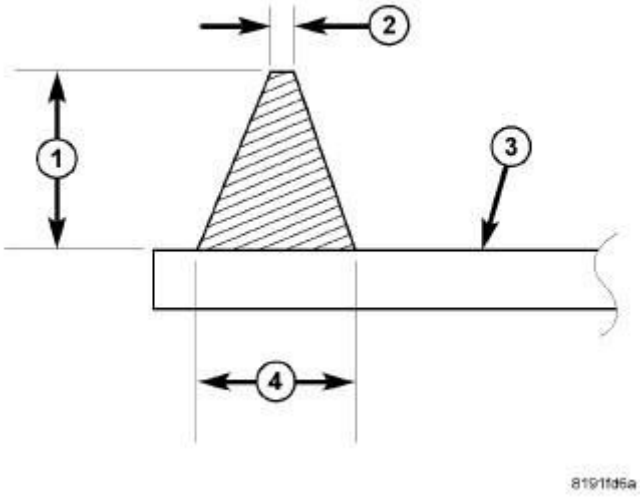

Fig. 585: Bead Dimensions
Courtesy of CHRYSLER GROUP, LLC

1 - ADHESIVE HEIGHT 12.7 mm (0.50 in)
2 - ADHESIVE TIP WIDTH 3 mm (0.120 in)
3 - INNER WINDSHIELD SURFACE
4 - ADHESIVE WIDTH 9.5 mm (0.375 in)

1. Bead dimensions should be approximately 9.5 mm (0.375 in) wide (4) by 12.7 mm (0.50 in) in height (1).

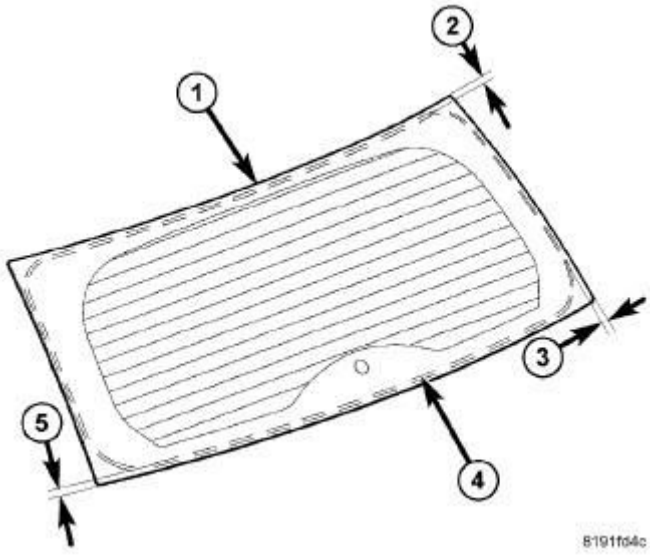

Fig. 586: Liftgate Glass
Courtesy of CHRYSLER GROUP, LLC

1 - LIFTGATE GLASS
2 - TOP LOCATION 18.0 mm (0.70 in.)
3 - SIDE LOCATION 11.5 mm (0.45 in.)
4 - ADHESIVE BEAD
5 - BOTTOM LOCATION 11.5 mm (0.45 in.)

NOTE: Adhesive locations are measured from the center of the bead to the edge of the glass.

2. Apply bead (4) of adhesive with a triangular nozzle directly to the liftgate glass (1) starting at bottom in center of the liftgate glass.
3. Locate the bead (4) of adhesive onto the primed glass surface (2) as indicated.

CAUTION: Always apply bead of adhesive to the liftgate glass. Always install the liftgate glass within 5 minutes after applying adhesive.

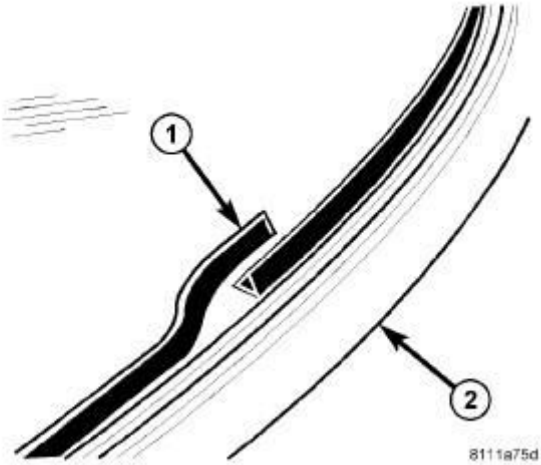

Fig. 587: Windshield Adhesive Overlap
Courtesy of CHRYSLER GROUP, LLC

1 - ADHESIVE BEAD
2 - WINDSHIELD SEAL

4. Allow end of adhesive bead (1) to run out parallel to the start of the bead and smooth ends flush.

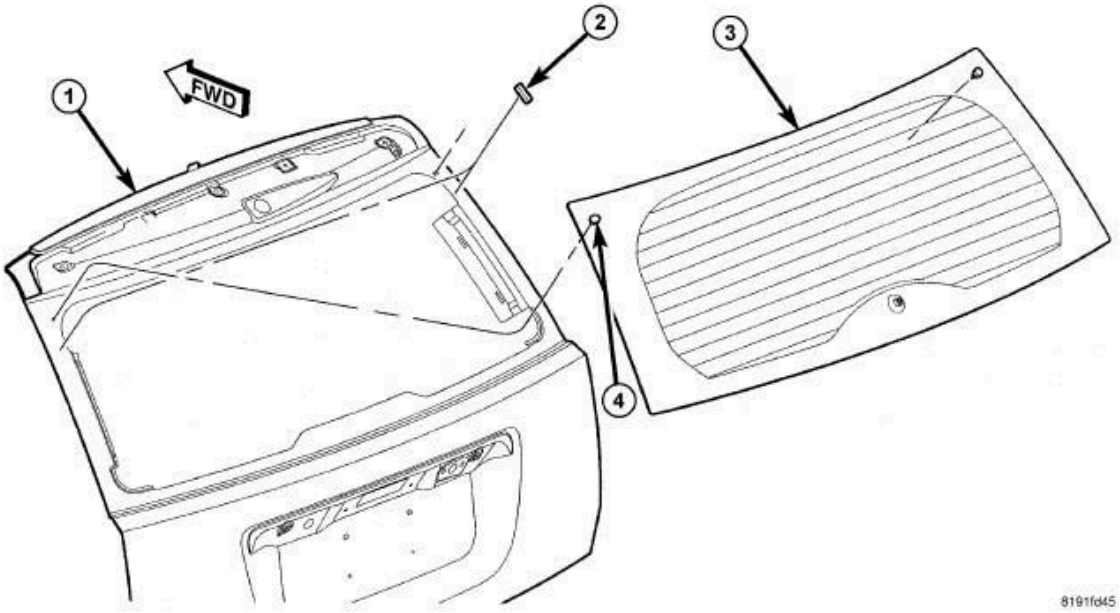

Fig. 588: Liftgate Glass
Courtesy of CHRYSLER GROUP, LLC

5. Lift liftgate glass into place in the center of the liftgate opening and line up the guide pins (4) to the holes in the liftgate glass frame.
6. Carefully lay down the liftgate glass and press on.

CAUTION: It is no longer possible to move the liftgate glass after installation. The liftgate glass should never be pressed into place by more than one person, because the liftgate glass can break if pressed simultaneously on both sides.

CAUTION: Roll down the left and right front door glass and open the rear glass slider (if available) before installing liftgate glass to avoid pressurizing the passenger compartment if a door is slammed before urethane is cured. Water leaks can result.

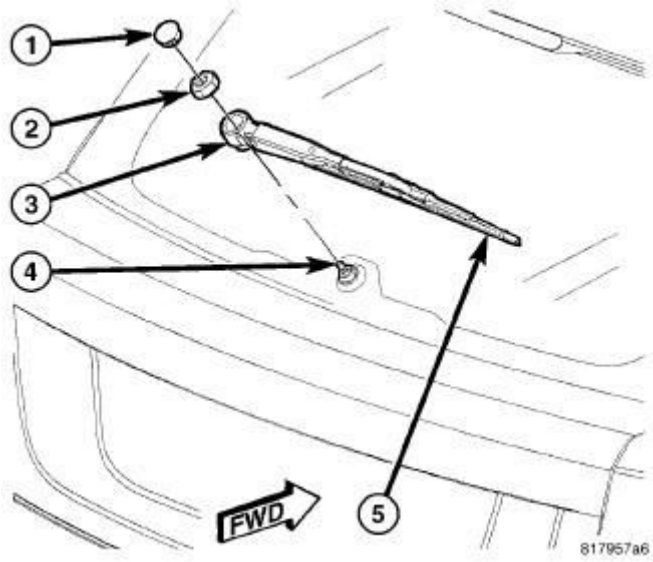

Fig. 589: Rear Wiper Arm Remove/Install
Courtesy of CHRYSLER GROUP, LLC

1. Install the rear wiper arm, if equipped. Refer to **ARM, WIPER, INSTALLATION** .

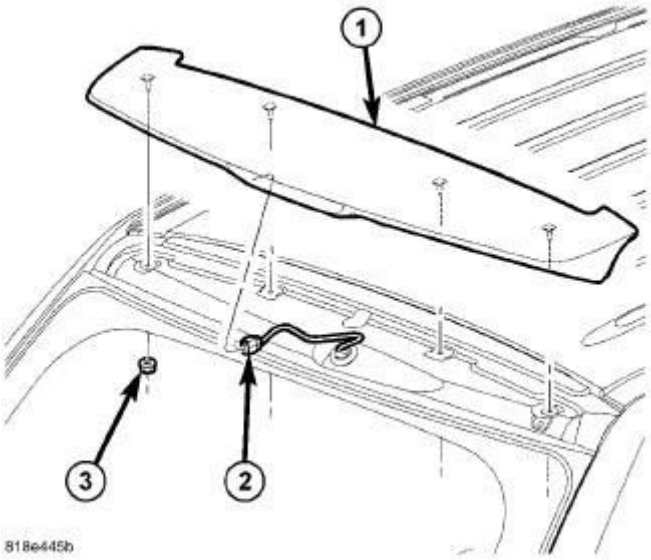

Fig. 590: Spoiler
Courtesy of CHRYSLER GROUP, LLC

2. Install the liftgate spoiler (1). Refer to **SPOILER, LIFTGATE, INSTALLATION**.

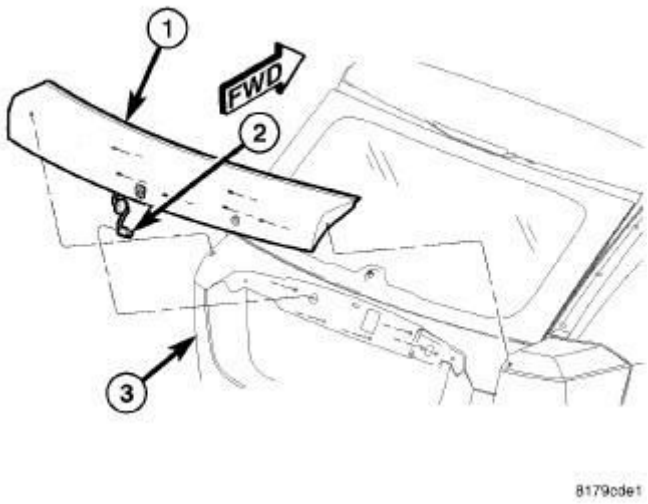

Fig. 591: Light Bar
Courtesy of CHRYSLER GROUP, LLC

3. Install the liftgate handle (1). Refer to **HANDLE, EXTERIOR, INSTALLATION**.

GLASS, QUARTER

REMOVAL

REMOVAL

COMPASS AND PATRIOT

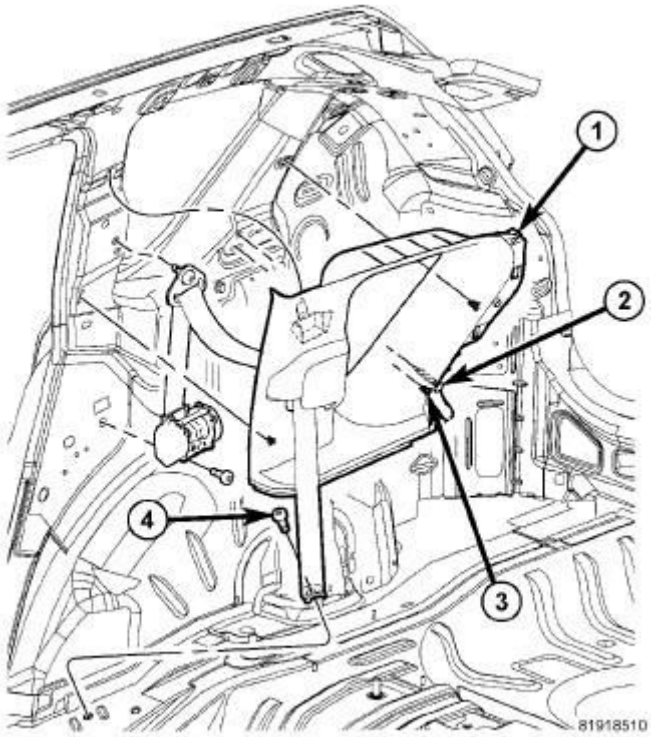

Fig. 592: C-Pillar Trim
Courtesy of CHRYSLER GROUP, LLC

NOTE: Compass shown, Patriot similar.

1. Before proceeding with the following repair procedure, review all warnings and cautions. Refer to **STATIONARY GLASS, WARNING**.
2. Remove the C-pillar trim (1). Refer to **PANEL, C-PILLAR TRIM, REMOVAL**.

COMPASS

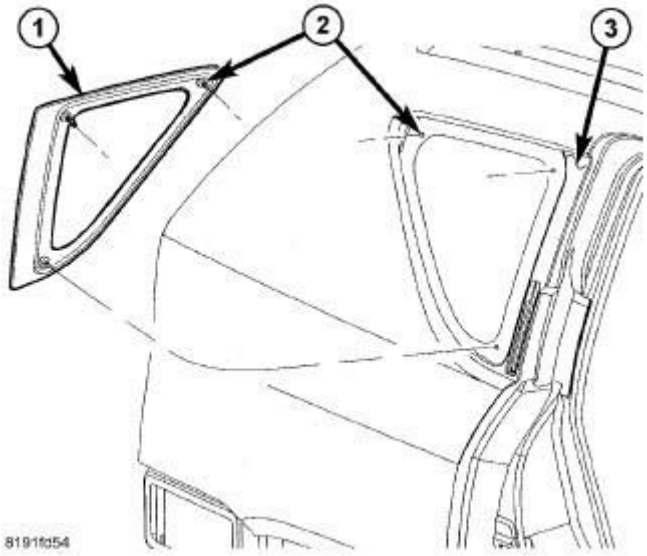

Fig. 593: Quarter Glass
Courtesy of CHRYSLER GROUP, LLC

1. Using a windshield removal tool with a cable pull handle, or equivalent separate the glass adhesive from the inside of the vehicle and remove the glass (1).

PATRIOT

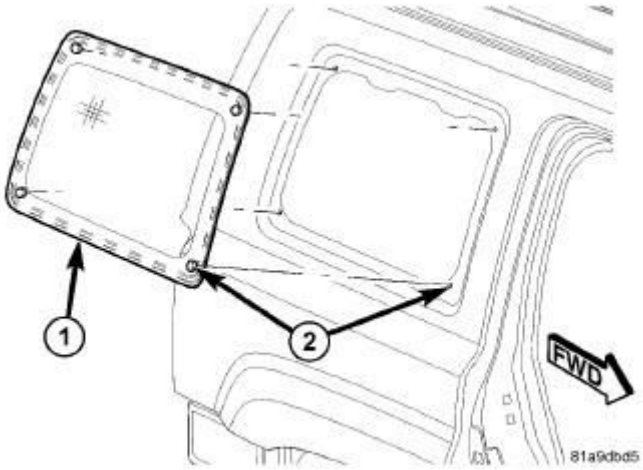

Fig. 594: Quarter Glass
Courtesy of CHRYSLER GROUP, LLC

1. Using a windshield removal tool with a cable pull handle, or equivalent separate the glass adhesive from the inside of the vehicle and remove the glass (1).

INSTALLATION

INSTALLATION

WARNING: Allow the urethane at least 24 hours to cure before returning the vehicle to use.

CAUTION: Roll down the left and right front door glass and open the rear glass slider (if available) before installing quarter glass to avoid pressurizing the passenger compartment if a door is slammed before urethane is cured. Water leaks can result.

NOTE: The quarter glass fence should be cleaned of most of its old urethane bonding material. A small amount of old urethane, approximately 1-2 mm in height, should remain on the fence. Do not grind off or completely remove all old urethane from the fence, the paint finish and bonding strength will be adversely affected.

GLASS PREPARATION - INSTALLING A PREVIOUSLY INSTALLED QUARTER GLASS

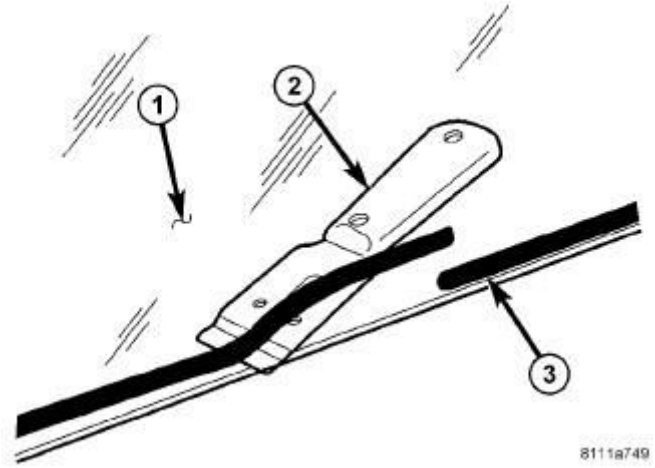

Fig. 595: Windshield Adhesive Preparation
Courtesy of CHRYSLER GROUP, LLC

1 - WINDSHIELD
2 - SCRAPER
3 - OLD ADHESIVE

1. Before proceeding with the following repair procedure, review all warnings and cautions. Refer to **STATIONARY GLASS, WARNING**.

2. Level old bead of quarter glass adhesive (3) to a thickness of approximately 1 mm (0.04 in.) and remove loose adhesive.

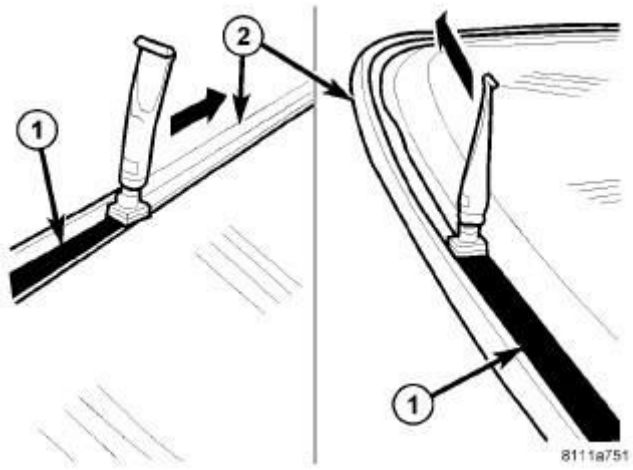

Fig. 596: Windshield Primer
Courtesy of CHRYSLER GROUP, LLC

1 - PRIMER
2 - WINDSHIELD SEAL

NOTE: Typical primer installation shown.

3. Clean and dry area of glass (2) to be re-glued with a suitable glass preparation solvent and rag.
4. Using a flash light, verify that glass primer is without damage.
5. Re-prime any damaged area. If old adhesive has been exposed for more than 12 hours, entire adhesive area needs to be re-primed.
6. Apply primer (1) around the perimeter of the glass to a width of 15 mm (0.5 in.).
7. Allow primer to air dry for at least 10 minutes.
8. Using a flash light, verify that glass primer is without damage.

GLASS PREPARATION - INSTALLING A NEW QUARTER GLASS

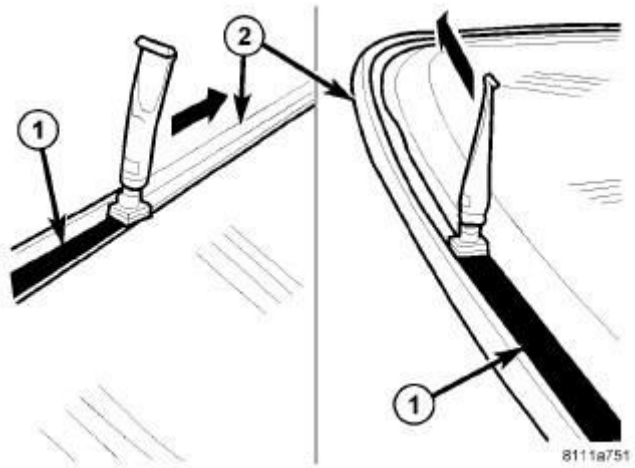

Fig. 597: Windshield Primer
Courtesy of CHRYSLER GROUP, LLC

1 - PRIMER
2 - WINDSHIELD SEAL

NOTE: Typical primer installation shown.

1. Clean and dry area of glass (2) to be re-glued with a suitable glass preparation solvent and rag.
2. Apply primer to gluing surface at quarter glass seal.
3. Apply primer (1) around the perimeter of the glass to a width of 15 mm (0.5 in.).
4. Allow primer to air dry for at least 10 minutes.
5. Using a flash light, verify that glass primer is without damage.

QUARTER GLASS OPENING PREPARATION

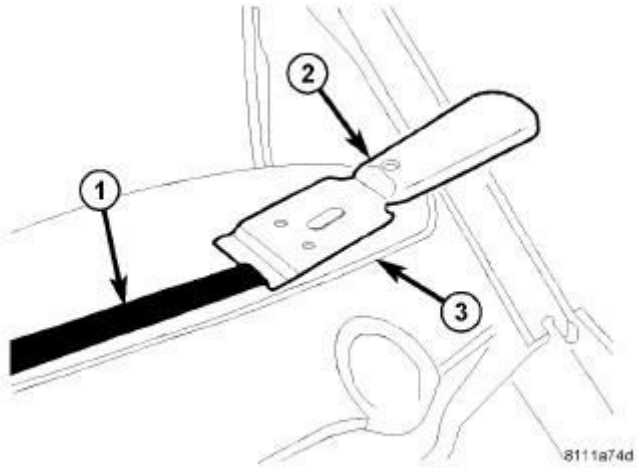

Fig. 598: Windshield Opening Preparation
Courtesy of CHRYSLER GROUP, LLC

1 - OLD ADHESIVE
2 - SCRAPER
3 - WINDSHIELD OPENING

NOTE: Windshield opening shown, quarter glass opening similar.

1. Clean and vacuum quarter glass opening.
2. Level old bead of quarter glass opening adhesive (1) to a thickness of approximately 1 mm (0.04 in.) and remove loose adhesive.

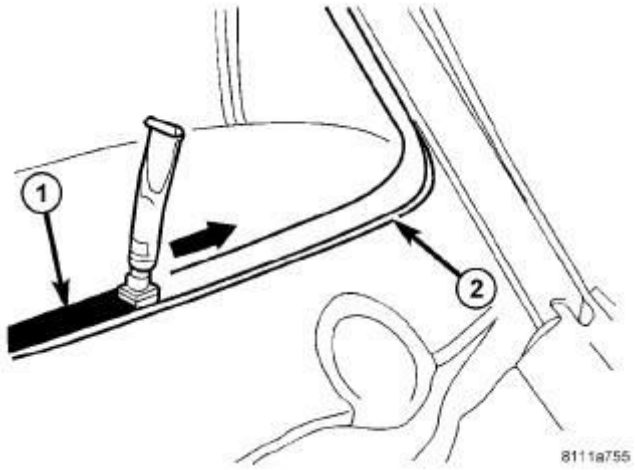

Fig. 599: Applying Windshield Primer
Courtesy of CHRYSLER GROUP, LLC

1 - PRIMER
2 - WINDSHIELD OPENING

NOTE: Windshield opening shown, quarter glass opening similar.

3. Clean and dry area of quarter glass opening to be re-glued with a suitable glass preparation solvent and rag.
4. Re-prime any damaged area. If old adhesive has been exposed for more than 12 hours, entire adhesive area needs to be re-primed.
5. Allow primer to air dry for at least 10 minutes.

QUARTER GLASS INSTALLATION

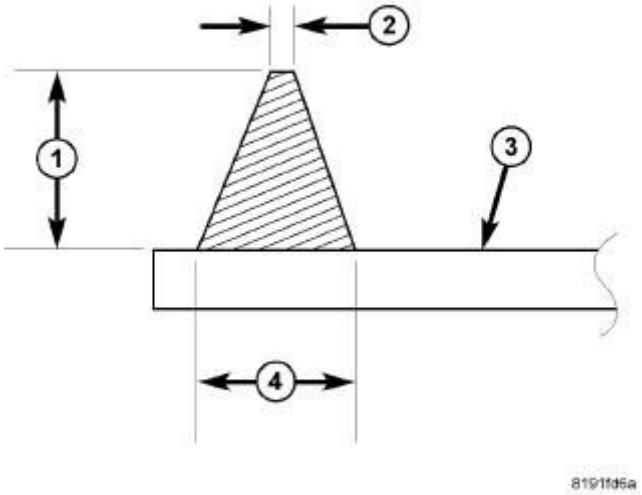

Fig. 600: Bead Dimensions
Courtesy of CHRYSLER GROUP, LLC

1 - ADHESIVE HEIGHT 12.7 mm (0.50 in)
2 - ADHESIVE TIP WIDTH 3 mm (0.120 in)
3 - INNER WINDSHIELD SURFACE
4 - ADHESIVE WIDTH 9.5 mm (0.375 in)

1. Bead dimensions should be approximately 9.5 mm (0.375 in) wide (4) by 12.7 mm (0.50 in) in height (1).

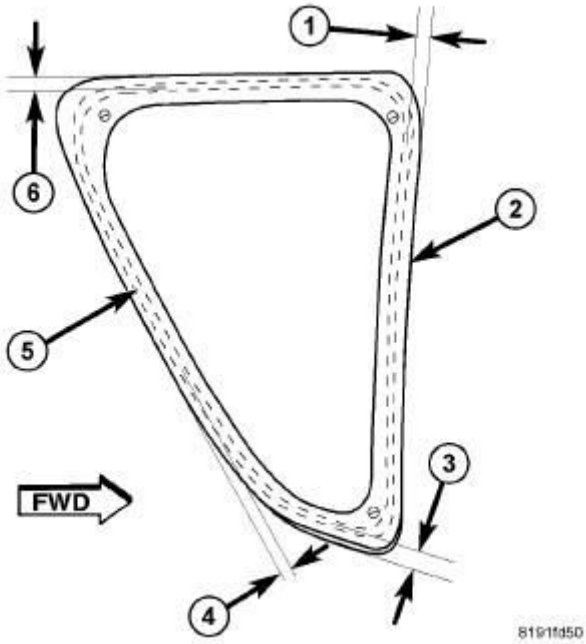

Fig. 601: Quarter Glass
Courtesy of CHRYSLER GROUP, LLC

1 - AFT LOCATION 14.0 mm (0.55 in.)
2 - QUARTER GLASS
3 - BOTTOM LOCATION 7.0 mm (0.25 in.)
4 - FORWARD LOCATION 36.0 mm (1.40 in.)
5 - ADHESIVE BEAD
6 - TOP LOCATION 14.0 mm (0.55 in.)

NOTE: Compass shown, Patriot similar.

NOTE: Adhesive locations are measured from the center of the bead to the edge of the glass.

2. Apply bead (5) of adhesive with a triangular nozzle directly to the quarter glass seal starting at bottom in center of the quarter glass.
3. Locate the bead (5) of adhesive onto the primed glass surface (2) as indicated.

CAUTION: Always apply bead of adhesive to the quarter glass. Always install the quarter glass within 5 minutes after applying adhesive.

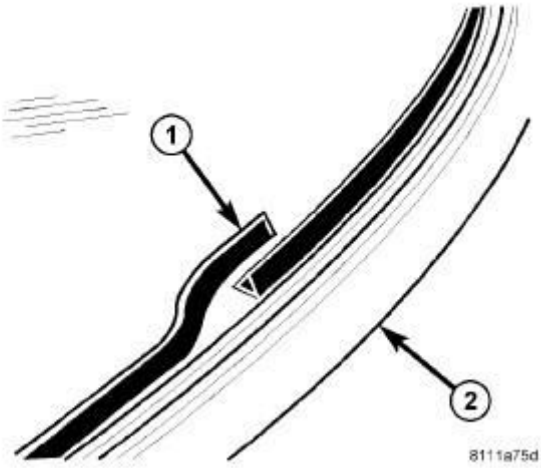

Fig. 602: Identifying Windshield Adhesive Overlap
Courtesy of CHRYSLER GROUP, LLC

1 - ADHESIVE BEAD 2 - WINDSHIELD SEAL

4. Allow end of adhesive bead (1) to run out parallel to the start of the bead and smooth ends flush.

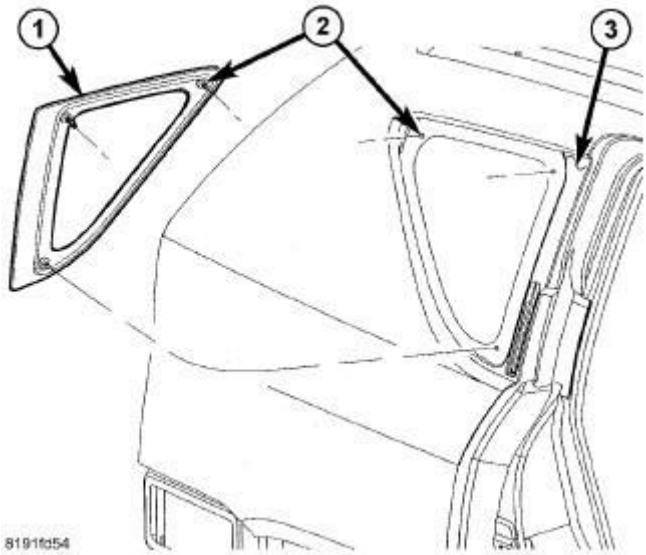

Fig. 603: Quarter Glass
Courtesy of CHRYSLER GROUP, LLC

5. Lift quarter glass into place in the center of the quarter glass opening and install over the alignment tabs and pin (2).
6. Carefully lay down the quarter glass and press on.

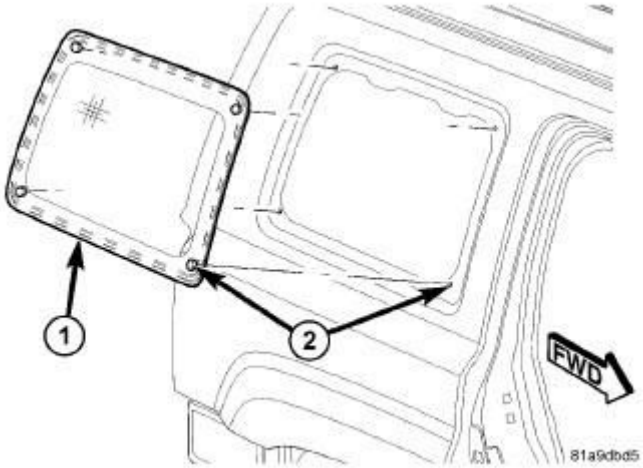

Fig. 604: Quarter Glass
Courtesy of CHRYSLER GROUP, LLC

NOTE: Patriot installation similar to the Compass installation above.

CAUTION: It is no longer possible to move the quarter glass after installation. The quarter glass should never be pressed into place by more than one person, because the quarter glass can break if pressed simultaneously on both sides.

CAUTION: Roll down the left and right front door glass and open the rear glass slider (if available) before installing quarter glass to avoid pressurizing the passenger compartment if a door is slammed before urethane is cured. Water leaks can result.

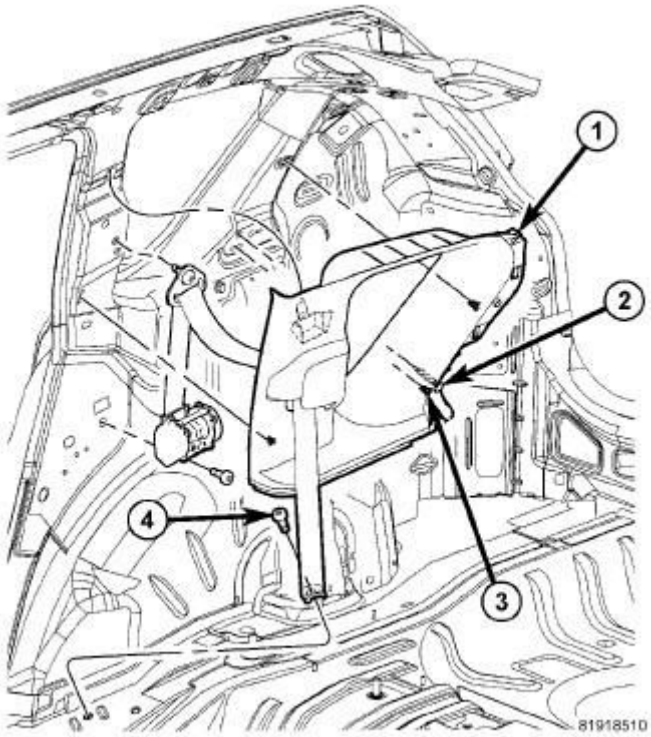

Fig. 605: C-Pillar Trim
Courtesy of CHRYSLER GROUP, LLC

NOTE: Compass shown, Patriot similar.

1. Install the C-pillar trim (1). Refer to **PANEL, C-PILLAR TRIM, INSTALLATION**.

WINDSHIELD

REMOVAL

REMOVAL

1. Before proceeding with the following repair procedure, review all warnings and cautions. Refer to **STATIONARY GLASS, WARNING**.
2. Remove rear view mirror. Refer to **MIRROR, REARVIEW, REMOVAL**.
3. Remove the windshield A-pillar molding, Refer to **MOLDING, A-PILLAR, REMOVAL**.
4. Remove the cowl grille. Refer to **COVER, COWL PANEL, REMOVAL**.

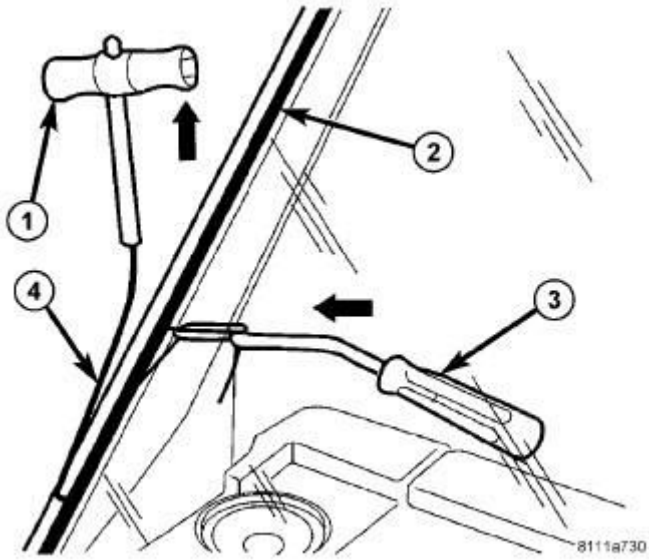

Fig. 606: Adhesive Separation
Courtesy of CHRYSLER GROUP, LLC

1 - T-HANDLE
2 - WINDSHIELD ADHESIVE
3 - COUNTER SUPPORT
4 - CUTTING WIRE

5. Using a windshield cut-out wire separate the adhesive.
6. Carefully remove windshield.

INSTALLATION

INSTALLATION

WARNING: Allow the urethane at least 24 hours to cure before returning the vehicle to use.

CAUTION: Roll down the left and right front door glass and open the rear glass slider (if available) before installing windshield to avoid pressurizing the passenger compartment if a door is slammed before urethane is cured. Water leaks can result.

NOTE: The windshield fence should be cleaned of most of its old urethane bonding material. A small amount of old

urethane, approximately 1-2 mm in height, should remain on the fence. Do not grind off or completely remove all old urethane from the fence, the paint finish and bonding strength will be adversely affected. Support spacers located on the cowl at the bottom of the windshield opening should be replaced with new parts. Replace any missing or damaged spacers around the perimeter of the windshield opening.

WINDSHIELD PREPARATION - INSTALLING A PREVIOUSLY INSTALLED WINDSHIELD

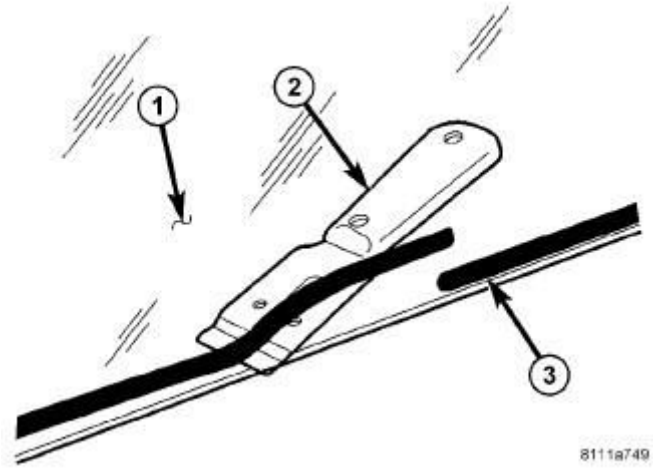

Fig. 607: Glass Adhesive Preparation
Courtesy of CHRYSLER GROUP, LLC

1 - WINDSHIELD
2 - SCRAPER
3 - OLD ADHESIVE

1. Before proceeding with the following repair procedure, review all warnings and cautions. Refer to **STATIONARY GLASS, WARNING**.
2. Level old bead of windshield adhesive (3) to a thickness of approximately 1 mm (0.04 in.) and remove loose adhesive.

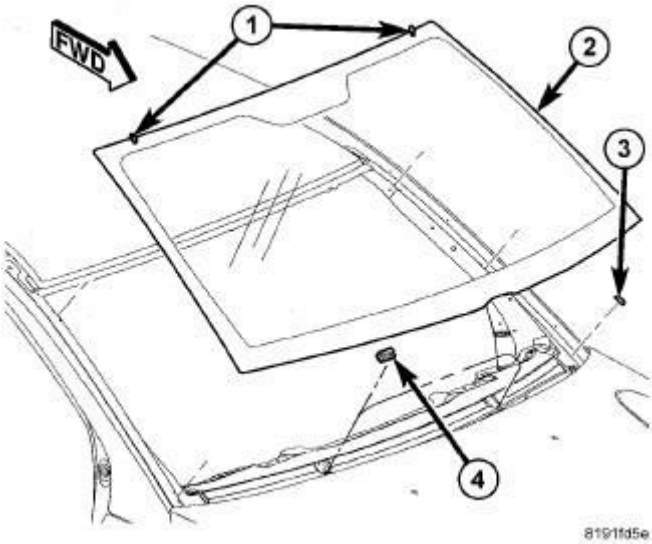

Fig. 608: Windshield
Courtesy of CHRYSLER GROUP, LLC

3. Apply new spacers (1) to the top of the glass (2) as shown.
4. Install the lower spacer assemblies (4) into the slotted holes and verify proper installation by pulling to make sure they are locked on.

NOTE: Lower spacers must be facing with the flat side upwards when installing into the slotted holes.

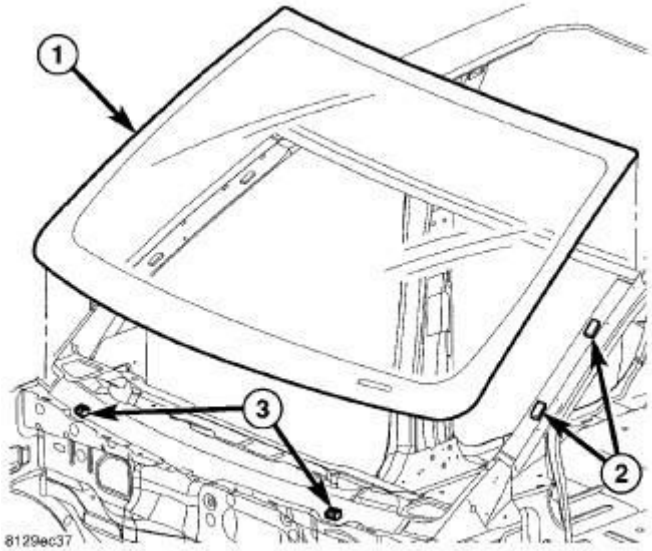

Fig. 609: Windshield
Courtesy of CHRYSLER GROUP, LLC

5. Position windshield (1) in center of windshield opening and resting on the side and lower spacers (2 AND 3).
6. Adjust the lower spacers (3) as required, to obtain the specified roof gap tolerance by pushing on the side of the wedge and raising or lowering the glass as necessary. For roof gap specifications, refer to **ROOF GAP TOLERANCES** .

ROOF GAP TOLERANCES

Roof Gap	Roof Flush
4.0 mm ± 1.5 mm Parallel within 2.0 mm	Underflush 2.0 mm ± 1.5 mm
(0.16 in ± 0.060 in) Parallel within (0.080 in)	(0.080 in ± 0.060 in)

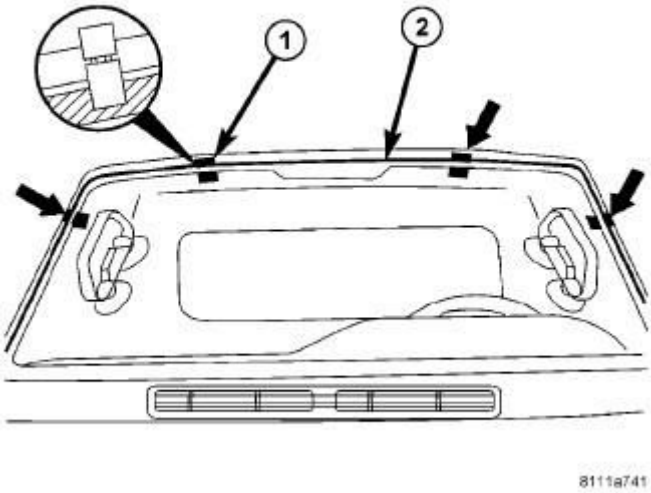

Fig. 610: Applying Adhesive Tape To Windshield
Courtesy of CHRYSLER GROUP, LLC

1 - TAPE 2 - WINDSHIELD FRAME

7. Apply adhesive tape (1) to the locations shown to aid with final installation.
8. Verify windshield gap is parallel to with windshield.
9. Cut tape with a sharp knife and remove windshield.

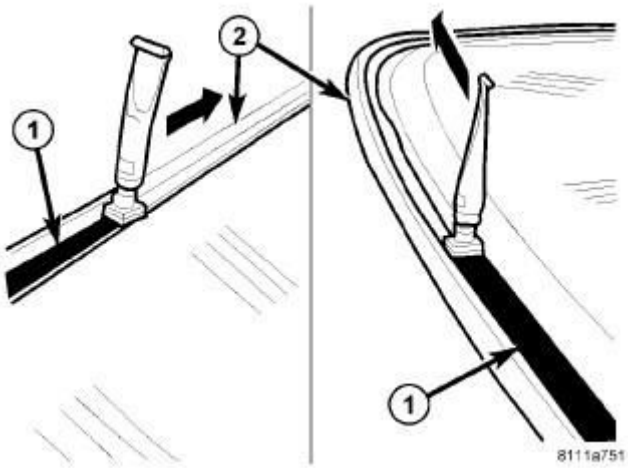

Fig. 611: Windshield Primer
Courtesy of CHRYSLER GROUP, LLC

1 - PRIMER 2 - WINDSHIELD SEAL

NOTE: Typical primer installation shown.

10. Clean and dry area of glass (2) to be re-glued with a suitable glass preparation solvent and rag.
11. Using a flash light, verify that glass primer is without damage.
12. Re-prime any damaged area. If old adhesive has been exposed for more than 12 hours, entire adhesive area needs to be re-primed.

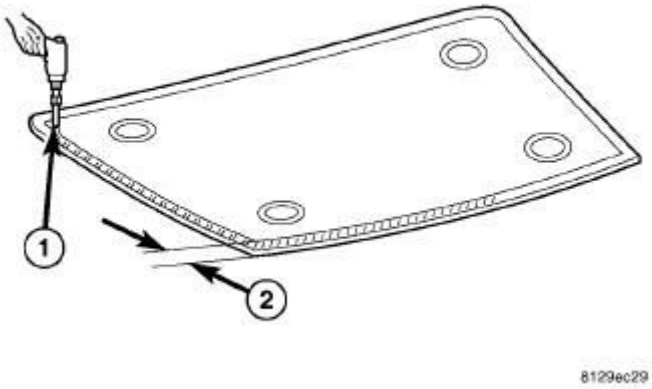

Fig. 612: Applying Primer
Courtesy of CHRYSLER GROUP, LLC

13. Apply primer (1) around the perimeter of the glass to a width of 15 mm (0.5 in.) (2).
14. Allow primer to air dry for at least 10 minutes.
15. Using a flash light, verify that glass primer is without damage.

WINDSHIELD PREPARATION - INSTALLING A NEW WINDSHIELD

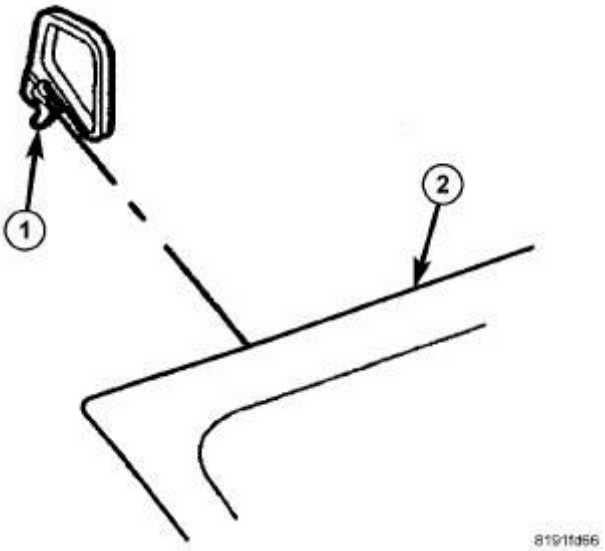

Fig. 613: Upper Spacers
Courtesy of CHRYSLER GROUP, LLC

1. Install the upper spacers (1) onto the upper edge of the glass (2).

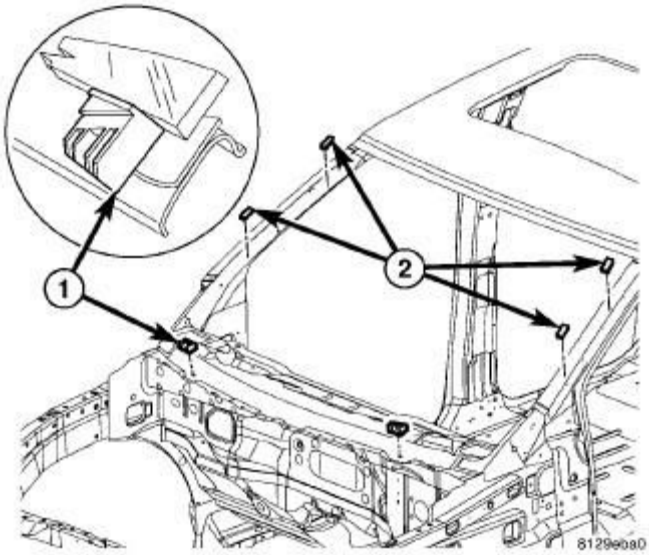

Fig. 614: Installing Spacer

Courtesy of CHRYSLER GROUP, LLC

2. Apply four new spacers (2) to the A-pillars and place them evenly apart at the top and bottom.
3. Install the lower spacer assemblies (1) into the slotted holes and verify proper installation by pulling to make sure they are locked on.

NOTE: Lower spacers must be facing with the flat side upwards when installing into the slotted holes.

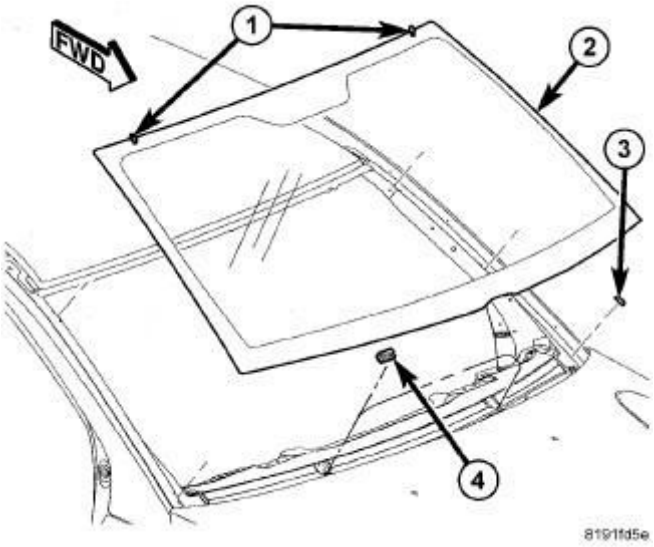

Fig. 615: Windshield
Courtesy of CHRYSLER GROUP, LLC

4. Position windshield (2) in center of windshield opening and resting on the side and lower spacers (2 AND 3).
5. Adjust the lower spacers (3) as required, to obtain the specified roof gap tolerance by pushing on the side of the wedge and raising or lowering the glass as necessary. For roof gap specifications, refer to **ROOF GAP TOLERANCES** .

ROOF GAP TOLERANCES

Roof Gap	Roof Flush
4.0 mm ± 1.5 mm Parallel within 2.0 mm	Underflush 2.0 mm ± 1.5 mm
(0.16 in ± 0.060 in)	(0.080 in ± 0.060 in)

Parallel within (0.080 in)	

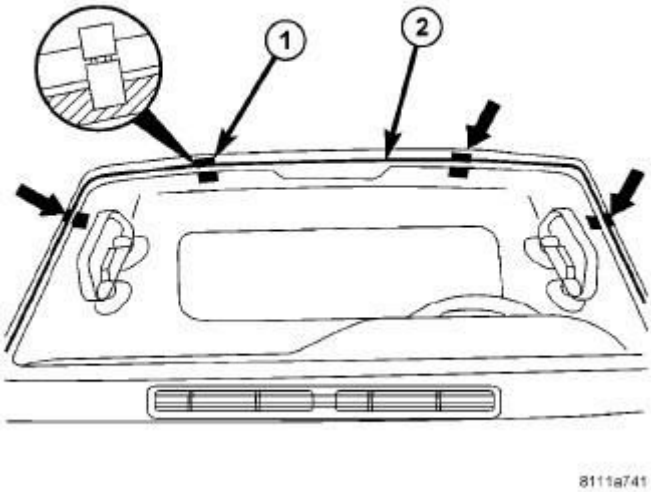

Fig. 616: Applying Adhesive Tape To Windshield
Courtesy of CHRYSLER GROUP, LLC

1 - TAPE 2 - WINDSHIELD FRAME

6. Clean and check windshield for damage.
7. Position windshield in center of windshield opening.
8. Apply adhesive tape to the locations shown to aid with final installation.
9. Verify windshield gap is parallel to with windshield.
10. Cut tape with a sharp knife and remove windshield.

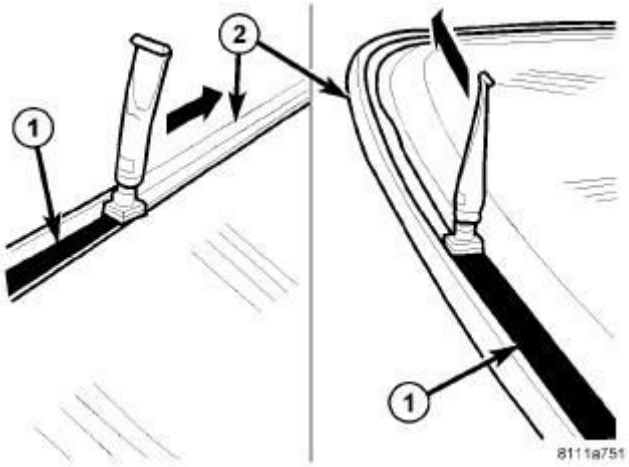

Fig. 617: Windshield Primer
Courtesy of CHRYSLER GROUP, LLC

1 - PRIMER
2 - WINDSHIELD SEAL

11. Clean and dry area of glass to be glued with a suitable glass preparation solvent and rag.
12. Apply primer to gluing surface at windshield seal.

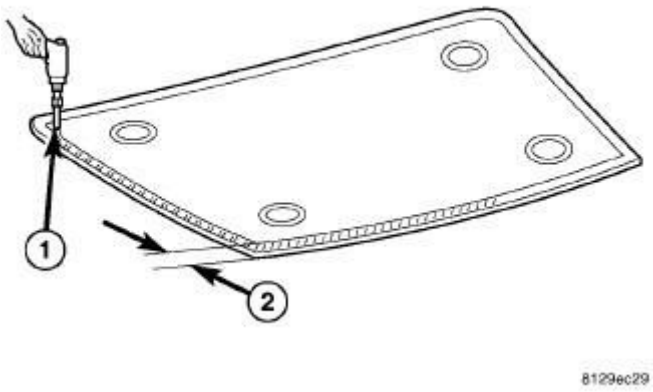

Fig. 618: Applying Primer
Courtesy of CHRYSLER GROUP, LLC

13. Apply primer (1) around the perimeter of the glass to a width of 15 mm (0.5 in.) (2).
14. Allow primer to air dry for at least 10 minutes.
15. Using a flash light, verify that glass primer is without damage.

WINDSHIELD OPENING PREPARATION

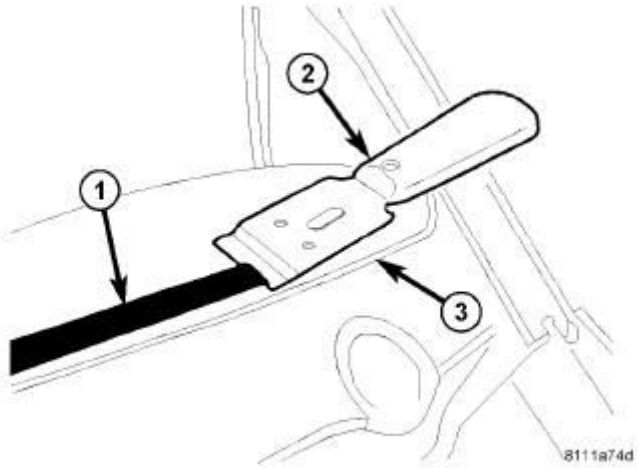

Fig. 619: Smoothing Windshield Adhesive
Courtesy of CHRYSLER GROUP, LLC

1 - OLD ADHESIVE
2 - SCRAPER
3 - WINDSHIELD OPENING

1. Clean and vacuum windshield opening.
2. Level old bead of windshield opening adhesive (1) to a thickness of approximately 1 mm (0.04 in.) and remove loose adhesive.

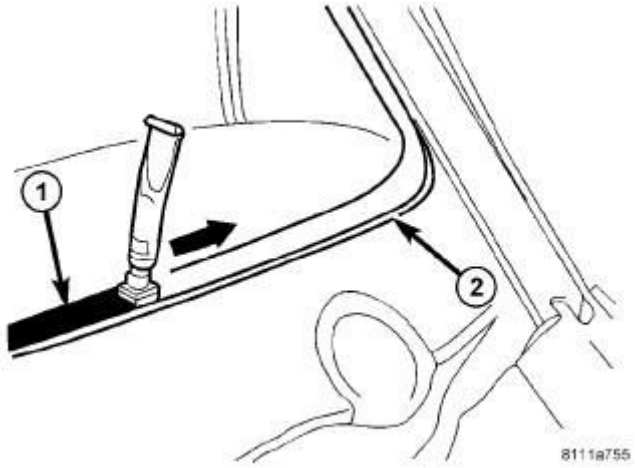

Fig. 620: Applying Windshield Primer
Courtesy of CHRYSLER GROUP, LLC

1 - PRIMER
2 - WINDSHIELD OPENING

3. Clean and dry area of windshield opening to be re-glued with a suitable glass preparation solvent and rag.
4. Re-prime any damaged area. If old adhesive has been exposed for more than 12 hours, entire adhesive area needs to be re-primed.
5. Allow primer to air dry for at least 10 minutes.

WINDSHIELD INSTALLATION

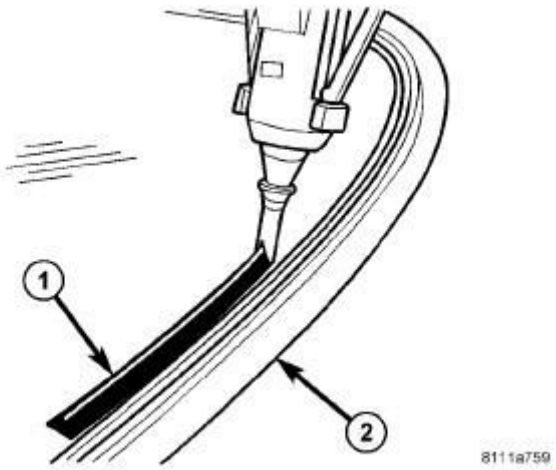

Fig. 621: Applying Windshield Adhesive
Courtesy of CHRYSLER GROUP, LLC

1 - ADHESIVE BEAD
2 - WINDSHIELD SEAL

1. Apply bead of adhesive (1) with a triangular nozzle directly to the windshield seal starting at bottom in center of windshield.

CAUTION: Always apply bead of adhesive to the windshield. Always install the windshield within 5 minutes after applying adhesive.

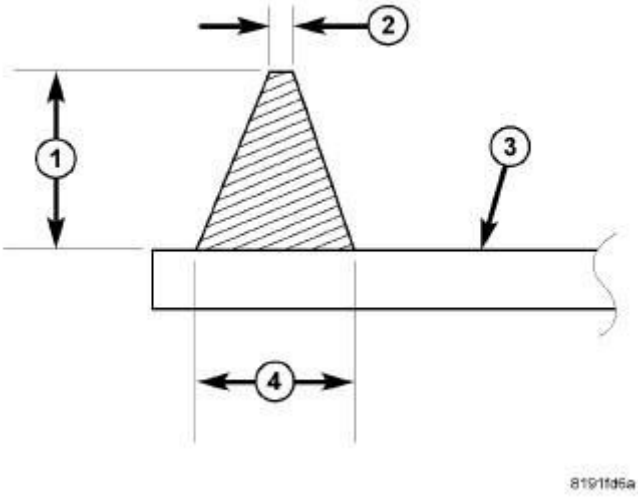

Fig. 622: Bead Dimensions
Courtesy of CHRYSLER GROUP, LLC

1 - ADHESIVE HEIGHT 12.7 mm (0.50 in)
2 - ADHESIVE TIP WIDTH 3 mm (0.120 in)
3 - INNER WINDSHIELD SURFACE
4 - ADHESIVE WIDTH 9.5 mm (0.375 in)

2. Bead dimensions should be approximately 9.5 mm wide (4) by 12.7 mm in height (1).

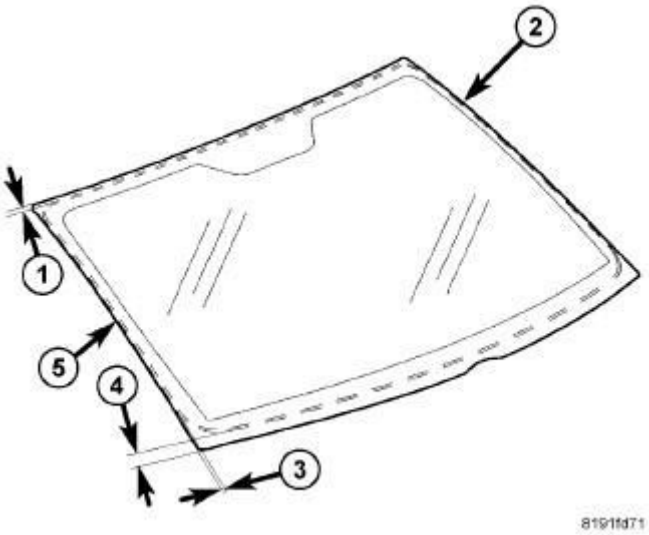

Fig. 623: Windshield
Courtesy of CHRYSLER GROUP, LLC

1 - TOP LOCATION 11.5 mm 2 - WINDSHIELD PRIMER AREA 3 - SIDE LOCATION 7.0 mm 4 - BOTTOM LOCATION 16.0 mm 5 - WINDSHIELD

NOTE: Adhesive locations are measured from the center of the bead to the edge of the glass.

3. Locate the bead of adhesive onto the primed windshield surface (2) as indicated.

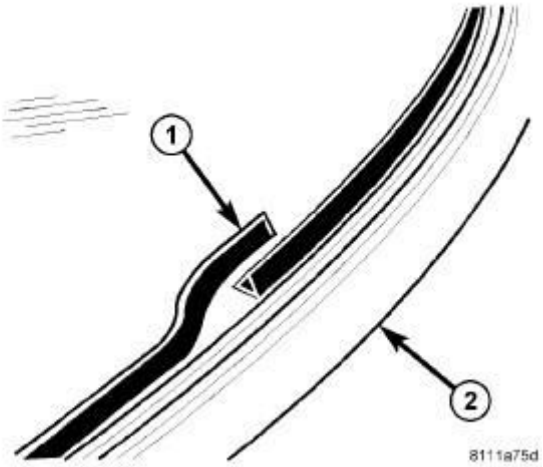

Fig. 624: Identifying Windshield Adhesive Overlap
Courtesy of CHRYSLER GROUP, LLC

1 - ADHESIVE BEAD 2 - WINDSHIELD SEAL

4. Allow end of adhesive bead to run out parallel to the start of the bead and smooth ends flush.

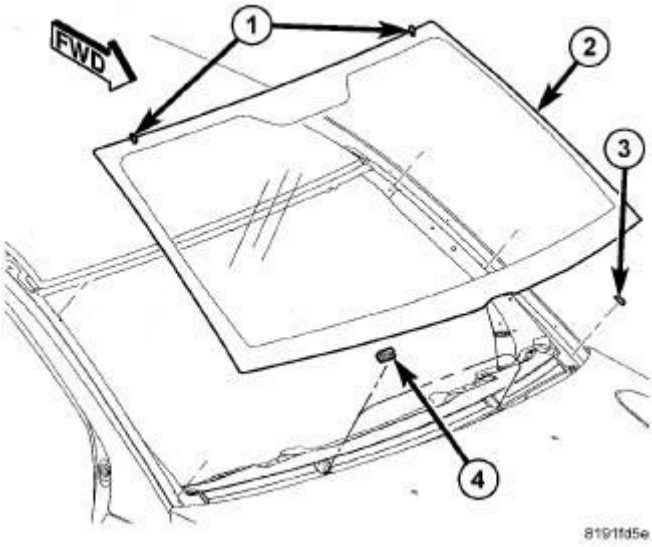

Fig. 625: Windshield
Courtesy of CHRYSLER GROUP, LLC

5. Lift windshield (2) into place in the center of the windshield opening and use the tape as a guide to aid installation of the windshield into the center of the cutout.
6. Carefully lay down windshield and press on.

CAUTION: It is no longer possible to move the windshield after installation. The windshield should never be pressed into place by more than one person, because the windshield can break if pressed simultaneously on both sides.

CAUTION: Roll down the left and right front door glass and open the rear glass slider (if available) before installing windshield to avoid pressurizing the passenger compartment if a door is slammed before urethane is cured. Water leaks can result.

7. Install cowl panel. Refer to **COVER, COWL PANEL, INSTALLATION**.
8. Install windshield A-pillar molding. Refer to **MOLDING, A-PILLAR, INSTALLATION**.
9. Install rear view mirror. Refer to **MIRROR, REARVIEW,**

INSTALLATION.

SUNROOF

DESCRIPTION

DESCRIPTION

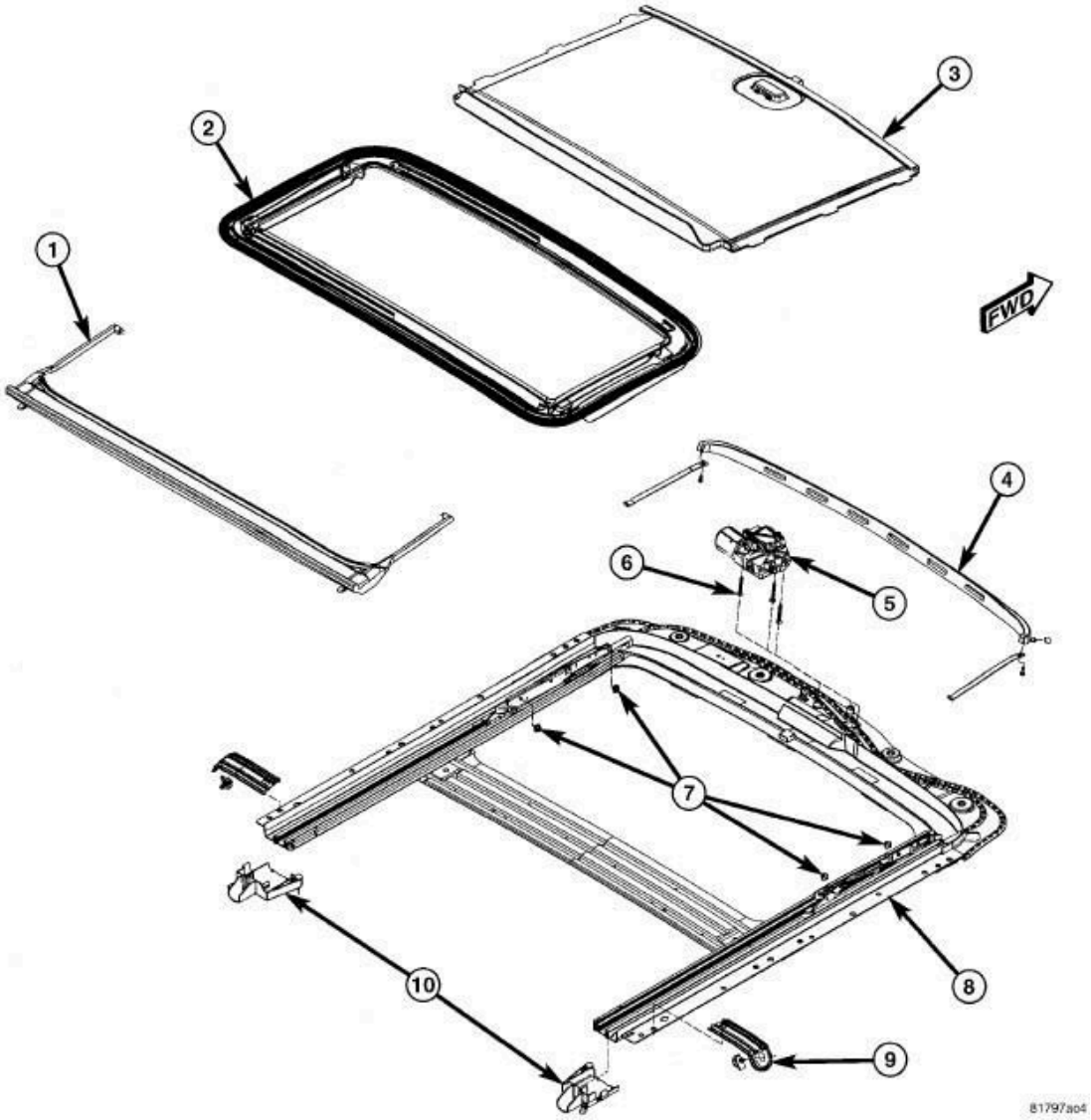

Fig. 626: Exploded View
Courtesy of CHRYSLER GROUP, LLC

1 - DRAIN TROUGH
2 - GLASS ASSEMBLY
3 - SUN SHADE
4 - WIND DEFLECTOR
5 - MOTOR

6 - MOTOR SCREWS (3) 3 N.m (26 in. lbs.)
7 - GLASS ASSEMBLY SCREWS (4) 3.5 N.m (31 in. lbs.)
8 - FRAME ASSEMBLY
9 - BRACKETS
10 - END CAPS

WARNING: Keep fingers and other body parts away from sunroof and sunroof opening at all times. Failure to follow these instruction may result in serious or fatal injury.

The sunroof features a power sliding glass panel and a sunshade which can be manually positioned anywhere along its travel, rearward of glass panel front edge.

The sunroof is electrically operated from two switches located on the windshield header, between the map lamp. To operate the sunroof the ignition switch must be in either the Accessory or On/Run position. One switch (vent) is a push button type and opens the sunroof to the vent position only. The other switch (open/close) is a rocker type for opening and closing the sunroof. Pressing and releasing the open button once, the sunroof will express open and the wind deflector will raise. If the button is pressed a second time the sunroof will stop in that position. Pressing and holding the close button will close the sunroof. If the close button is released the sunroof will stop in that position. Also, by pressing the close button the sunroof will close automatically.

SUNROOF OPERATION INSTRUCTIONS

SWITCH INPUTS			
	OPEN	CLOSE	VENT
FULL VENT	1. Push and hold switch until glass stops in flush closed position glass will then express open 2. Press switch for less than 0.65	1. Push and hold switch until glass stops in flush closed position. 2. Press switch for less than 0.65	No action

	seconds for express to full open.	seconds for express to flush closed.	
VENT RANGE	1. Push and hold switch until glass passes through flush closed position. Glass will then open 2. Press switch for less than 0.65 seconds for express to full open.	1. Push and hold switch until glass stops in flush closed position. 2. Press switch for less than 0.65 seconds for express to flush closed.	1. Push and hold switch until glass stops in full vent position. 2. Press switch for less than 0.65 seconds for express to full vent.
FLUSH	1. Press switch for less than 0.65 seconds for express to full open. 2. Press switch for more than 0.65 seconds and glass will stop when switch is released	No action	1. Press and hold switch. Glass will travel through flush closed to full vent. Glass will stop when switch is released or when fully vented. 2. Press switch for less than 0.65 seconds for express to full vent.
FULL OPEN	No action	1. Press and hold switch until glass stops in flush closed position or anywhere in between. 2. Press switch for less than 0.65 seconds for express	1. Press and hold switch. Glass will travel through flush closed to full vent. Glass will stop when switch is released. 2. Press switch for less than 0.65 seconds for express to full

		to flush closed.	vent.

DIAGNOSIS AND TESTING

WATER DRAINAGE AND WIND NOISE DIAGNOSIS

The sliding glass panel is designed to seal water entry with a snug fit between the roof and the seal. The fit can be checked by inserting a piece of paper between the roof and the seal. The piece of paper should have some resistance when pulled out when the glass panel is in the closed position. The sunroof housing will drain off a minimum amount of water. Excessive wind noise could result if the gap clearances are exceeded. The sunroof glass panel may need to be adjusted. Refer to Sunroof Glass Panel Adjustment for proper procedures.

Adequate drainage is provided by a drain trough in the sunroof housing which encircles the sliding glass panel and leads to drain hoses. If a wet headliner or other water leak complaints are encountered, before performing any adjustments, first ensure that the drainage system is not plugged or disconnected. Use a pint container to pour water into the sunroof housing drain trough. If water flow is restricted, use compressed air to blow out any material plugging the drain system. Retest system again.

To further check for a disconnected drain hose:

1. Remove A-pillar trim, sun visors, and map lamps/mini console.
2. Lower headliner as necessary to gain access to sunroof housing drain tubes. Refer to **HEADLINER, REMOVAL**.
3. Repair as necessary.
4. Install headliner. Refer to **HEADLINER, INSTALLATION**.

DIAGNOSTIC PROCEDURES

Before beginning sunroof diagnostics verify that all other power accessories are in proper operating condition. Refer to Sunroof Diagnostic Chart for possible causes. If not, a common electrical problem may exist. Refer to **SYSTEM WIRING DIAGRAMS** , in this Service Information for circuit, splice and component descriptions. Check the condition of the circuit protection (20 amp circuit breaker in cavity 19 of the Junction Block). Inspect all wiring connector pins for proper engagement and continuity. Check for battery voltage at the power sunroof drive motor, refer to **SYSTEM WIRING DIAGRAMS** , for

circuit information. If battery voltage of more than 9 volts is detected at the drive motor, proceed with the following tests (the drive motor will not operate at less than 9 volts).

Before beginning diagnosis for wind noise or water leaks, verify that the problem was not caused by releasing the control switch before the sunroof was fully closed. The sunroof module has a water-management system. If however, the sunroof glass is in a partial closed position, high pressure water may be forced beyond the water management system boundaries and onto the headlining.

SUNROOF DIAGNOSIS CHART

SYMPTOM	POSSIBLE CAUSE
Sunroof motor inoperative.	Faulty control switch. Faulty circuit ground between sunroof drive motor, control switch, and body harness. Faulty power circuit between sunroof drive motor, control switch, and body harness. Faulty drive motor. Faulty drive motor electrical connector.
Audible whine when switch is depressed, sunroof does not operate.	Faulty drive motor. Binding cable.
Audible clicking or ratcheting when switch is pressed, sunroof does not operate.	Broken or worn drive cable. Worn drive motor gear. Mechanisms not synchronized.
Sunroof vents and opens, but does not close.	Binding cable. Faulty circuit. Faulty control switch. Faulty drive motor. Broken trough guide
Sunroof vents, but does not open.	Binding cable or mechanism. Faulty circuit. Faulty switch. Faulty drive motor.
Sunroof does not vent.	Binding cable or mechanism.

	Faulty circuit. Faulty control switch. Faulty drive motor.
Sunroof water leak.	Drain tubes clogged or kinked or disconnected from the sunroof. Glass panel improperly adjusted. Faulty glass panel seal.
Gurgling sound from sunroof.	Low spot in drain hose routing, allowing water to stand.
Wind noise from sunroof.	Front of glass panel to high or rear to low. Wind deflector not deploying. Glass not centered in opening. Faulty glass panel seal.
Rattles from open sunroof while driving.	Loose or broken attaching hardware. Worn or broken mechanism.
Sunroof does not stop in the fully closed position.	Drive motor has lost position of glass, teach procedure required to reprogram drive motor. Refer to **STANDARD PROCEDURE** .

DEFLECTOR, WIND

REMOVAL

REMOVAL

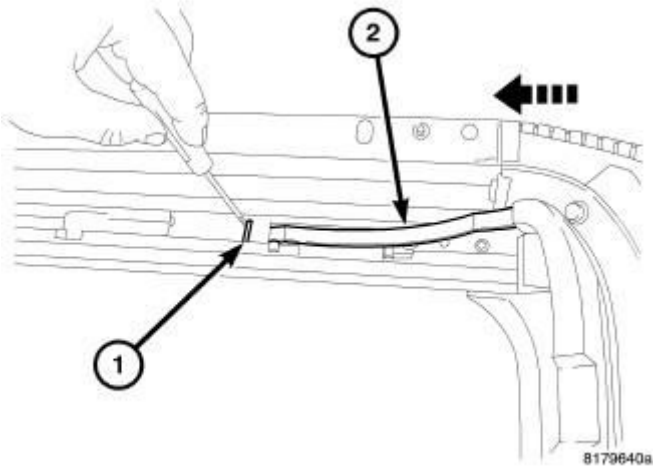

Fig. 627: Spring Lock & Wind Deflector
Courtesy of CHRYSLER GROUP, LLC

1. Open the sunroof glass to the full open position.
2. Press the spring lock (1) with a small flat bladed tool and push the wind deflector (2) reward to release from the car top opening.
3. Repeat the previous step on the opposite side.

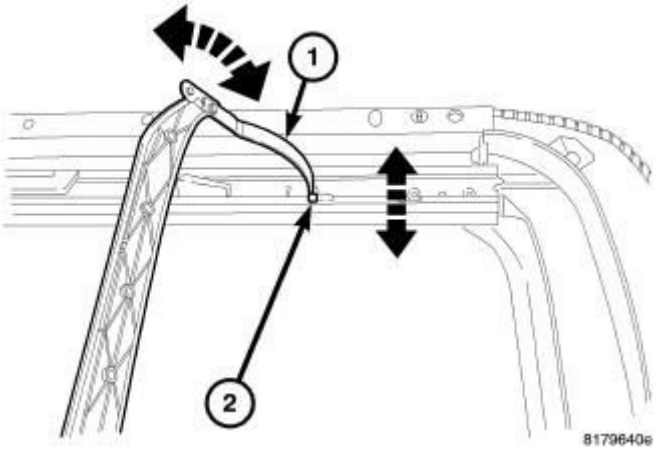

Fig. 628: Wind Deflector & Mounting Hole
Courtesy of CHRYSLER GROUP, LLC

4. Rotate the wind deflector (1) up and release from the mounting hole (2) in the sunroof frame.

INSTALLATION

INSTALLATION

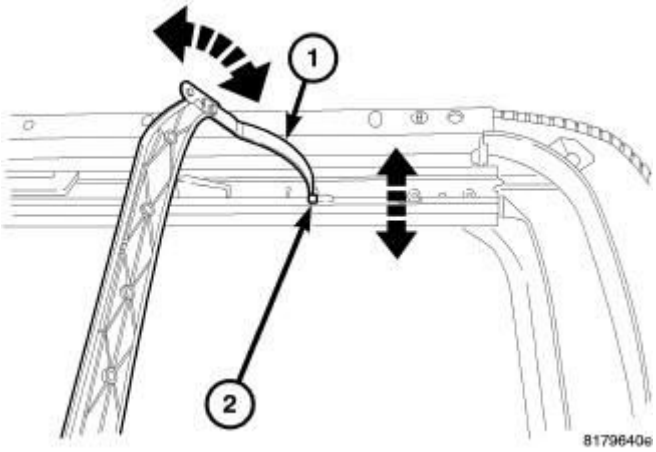

Fig. 629: Wind Deflector & Mounting Hole
Courtesy of CHRYSLER GROUP, LLC

1. Position the wind deflector springs (1) into the mounting holes (2) in the sunroof frame.
2. Rotate forward and down into position.

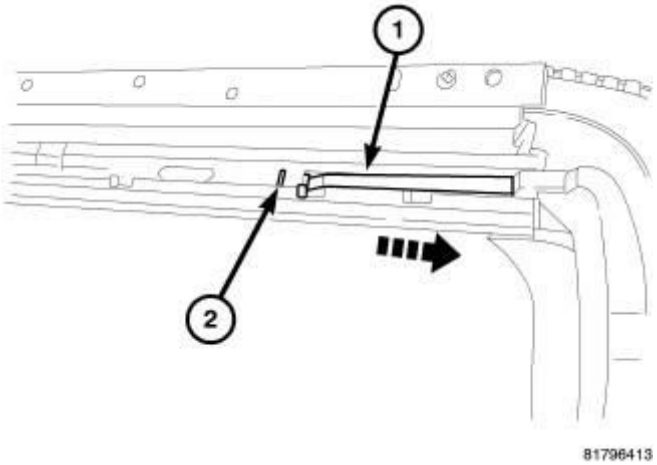

Fig. 630: Sliding Wind Deflector & Spring Forward
Courtesy of CHRYSLER GROUP, LLC

3. Slide the wind deflector and spring (1) forward under the car top lip and make sure the spring lock snaps into place (2) fully.

GLASS, SUNROOF

ADJUSTMENTS

ADJUSTMENTS

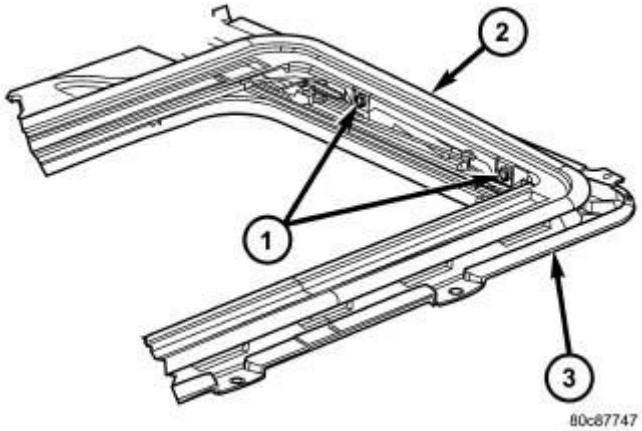

Fig. 631: Identifying Sunroof Glass Panel
Courtesy of CHRYSLER GROUP, LLC

1 - SCREWS
2 - GLASS PANEL
3 - MODULE ASSEMBLY

1. Move the sunshade rearward to the open position.
2. Move the sunroof glass panel to the fully closed position.
3. Adjust the glass one corner at a time.
   a. Loosen four glass screws (1).
   b. Lift glass assembly and align the top of the glass panel to the top of the roof panel.
   c. Tighten screw to 3 N.m (26 in. lbs.).
   d. Repeat steps a. and b. for each corner of the glass panel.
   e. When properly adjusted, the front of the glass panel is 1.0 mm (0.04 in.) to 2.0 mm (0.08 in.) lower than the roof surface and the rear edge of the glass panel is 1.0 mm (0.04 in.) to 2.0 mm (0.08 in.) higher than the roof surface.

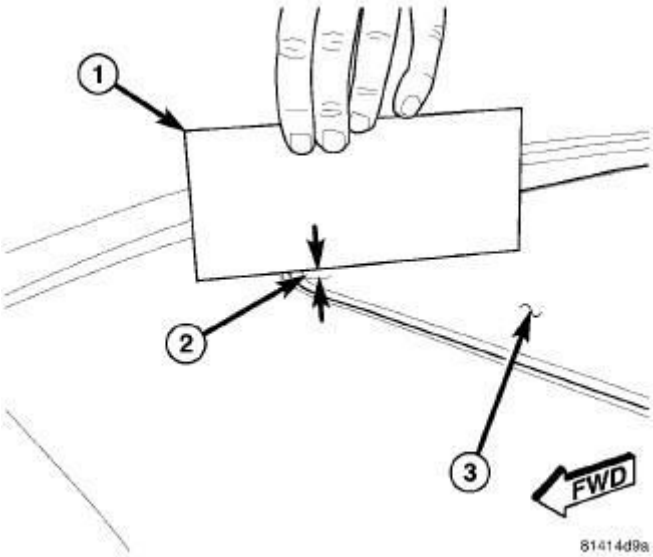

Fig. 632: Checking Sunroof Front Height
Courtesy of CHRYSLER GROUP, LLC

NOTE: When properly adjusted, the front of the glass panel (3) is 1.0 mm (0.04 in.) to 2.0 mm (0.08 in.) lower than the roof surface (2).

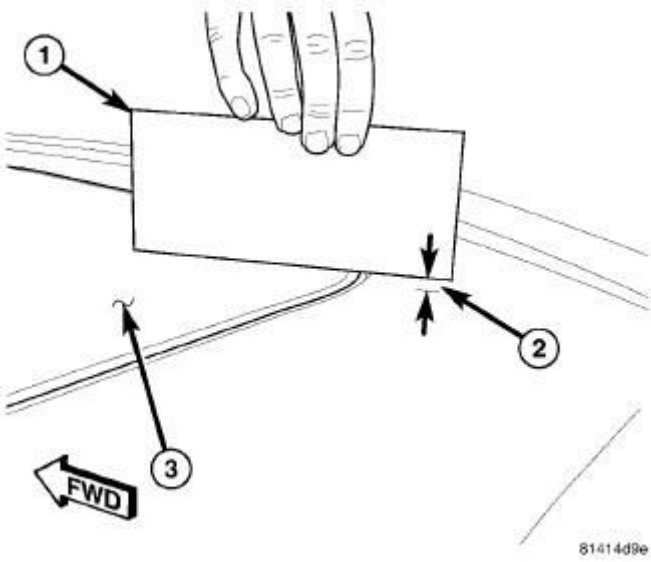

Fig. 633: Checking Sunroof Rear Height
Courtesy of CHRYSLER GROUP, LLC

NOTE: When properly adjusted, the rear edge of the glass panel (3) is 1.0 mm (0.04 in.) to 2.0 mm (0.08 in.) higher than the roof surface (2).

4. Verify sunroof operation and alignment. Check fit and re-adjust as necessary.

REMOVAL

REMOVAL

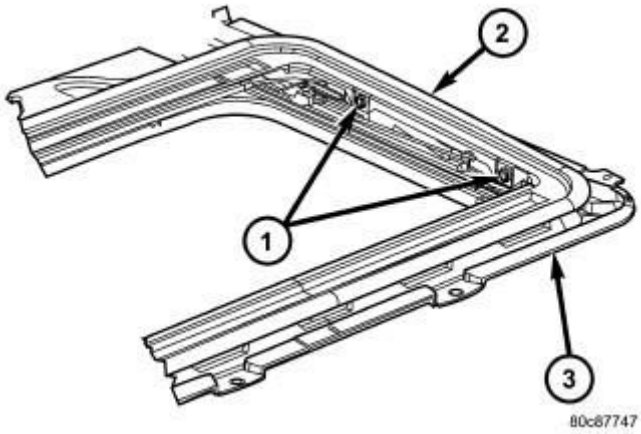

Fig. 634: Identifying Sunroof Glass Panel
Courtesy of CHRYSLER GROUP, LLC

1 - SCREWS
2 - GLASS PANEL
3 - MODULE ASSEMBLY

1. Slide sunshade rearward to the open position.
2. Move the glass panel to the closed position.
3. Remove the four glass panel screws (1).
4. Lift off glass panel and remove from vehicle.

INSTALLATION

INSTALLATION

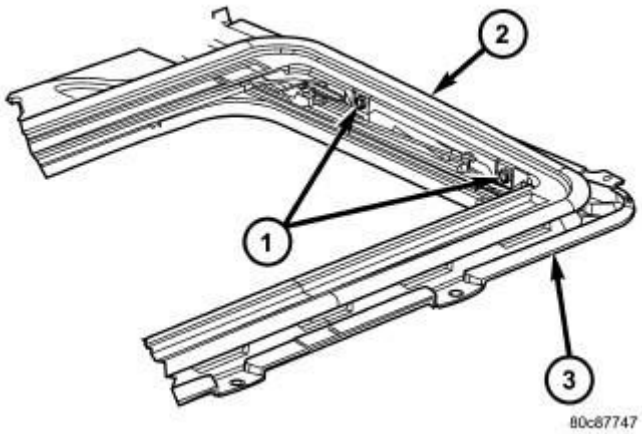

Fig. 635: Identifying Sunroof Glass Panel
Courtesy of CHRYSLER GROUP, LLC

1 - SCREWS
2 - GLASS PANEL
3 - MODULE ASSEMBLY

1. Position glass panel (2) on to mechanism lift arm.
2. Start the four attaching screws (1).
3. Center glass in opening by running a business card around the glass.
4. Adjust glass panel. Refer to **GLASS, SUNROOF, ADJUSTMENTS**.

SEAL, SUNROOF GLASS

REMOVAL

REMOVAL

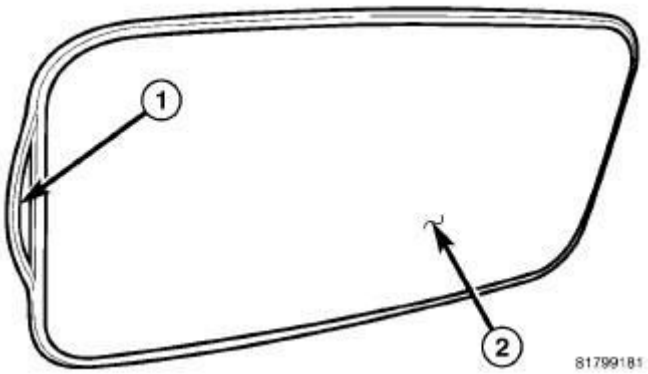

Fig. 636: Glass Seal
Courtesy of CHRYSLER GROUP, LLC

1. Remove sunroof glass panel. Refer to **GLASS, SUNROOF, REMOVAL**.
2. Place glass panel on clean work area with the top side up. Support the glass assembly from underside to avoid bending or otherwise damaging the mounting tabs.
3. Grasp the seal (1) and pull seal away from the glass panel (2). The seal is a one piece seal.

INSTALLATION

INSTALLATION

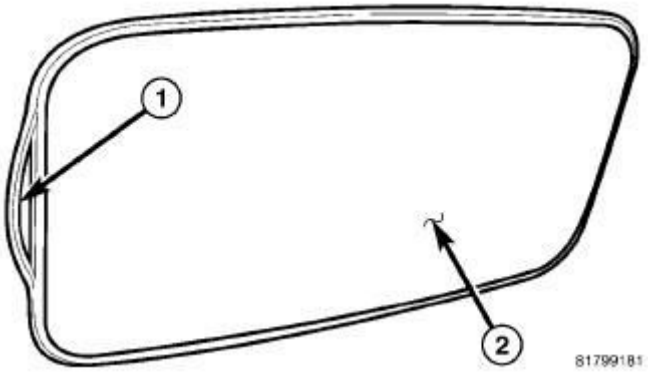

Fig. 637: Glass Seal
Courtesy of CHRYSLER GROUP, LLC

NOTE: Always position seal seam on center of the passenger side of glass panel.

1. Place seal (1) into position.

2. Seat the seal into the glass channel fully. Using care working the seal around the glass (2), being careful not to over stretch the seal while installing.
3. Install the glass panel. Refer to **GLASS, SUNROOF, INSTALLATION**.

SUNROOF

REMOVAL

REMOVAL

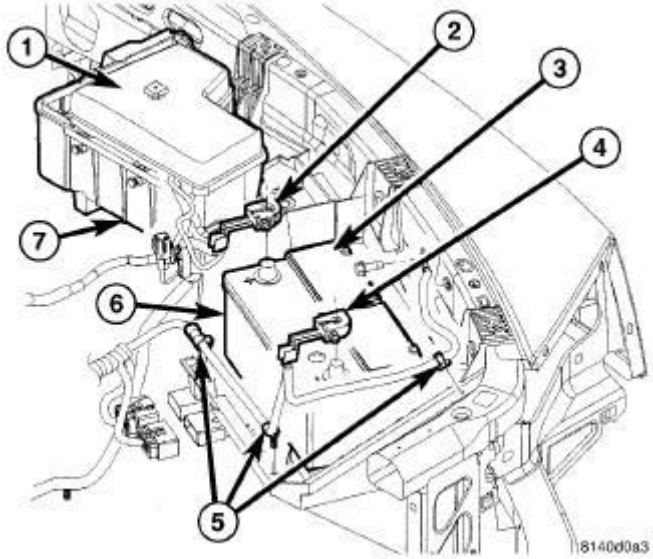

Fig. 638: Locating Battery System Components
Courtesy of CHRYSLER GROUP, LLC

1. Move glass panel to fully closed position.
2. Disconnect and isolate negative battery cable (4).
3. Remove control switch. Refer to **SWITCH, SUNROOF, REMOVAL** .
4. Remove headliner. Refer to **HEADLINER, REMOVAL**.

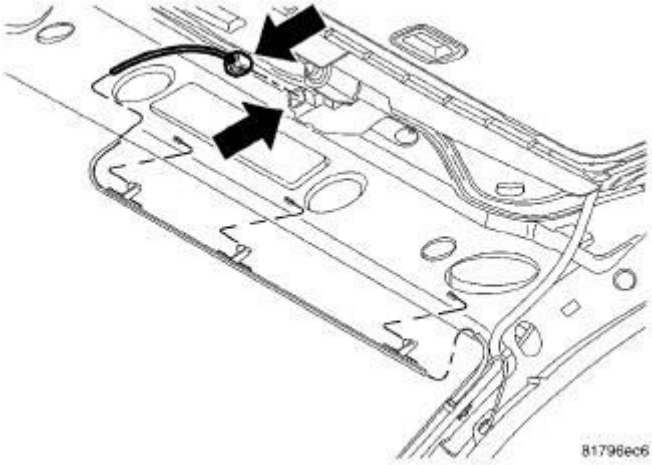

Fig. 639: Electrical Connector
Courtesy of CHRYSLER GROUP, LLC

5. Disconnect the electrical connector.

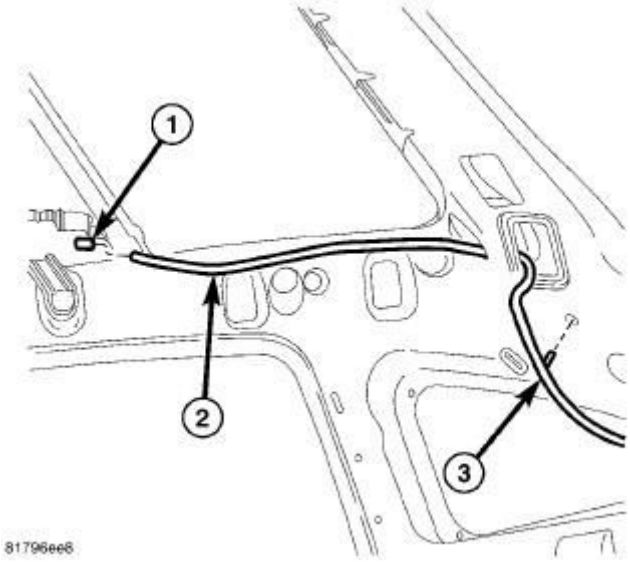

Fig. 640: Rear Hose, Sunroof Assembly & Clips
Courtesy of CHRYSLER GROUP, LLC

6. Disconnect drain tubes (2) from sunroof housing (1).

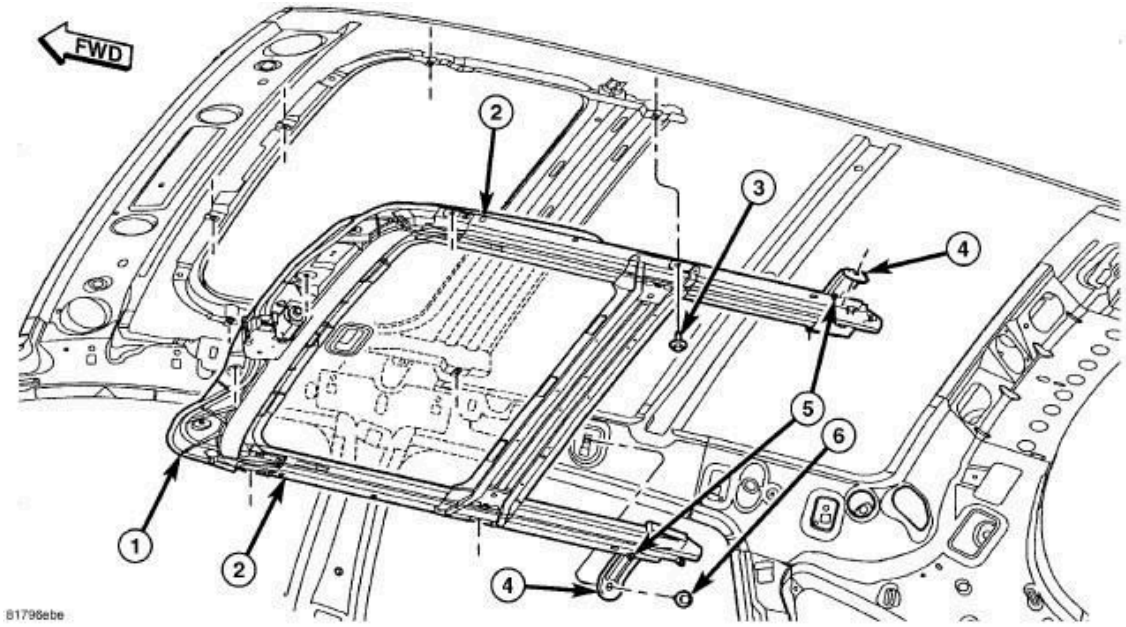

Fig. 641: Sunroof Module Assembly
Courtesy of CHRYSLER GROUP, LLC

7. Remove two module side bracket (4) bolts (6) and loosen the six remaining fasteners (3).
8. Remove the six (3) fasteners attaching sunroof module assembly (1) to roof panel.
9. Remove the glass panel. Refer to **GLASS, SUNROOF, REMOVAL**.
10. Remove the sunshade. Refer to **SUNSHADE, SUNROOF, REMOVAL**.
11. Remove the drive motor. Refer to **MOTOR, SUNROOF, REMOVAL** .
12. Remove the wire harness.
13. Remove the trough guides. Refer to **TUBE, SUNROOF DRAIN, REMOVAL**.

INSTALLATION

INSTALLATION

1. Install the trough guides. Refer to **TUBE, SUNROOF DRAIN, INSTALLATION**.
2. Install the drive motor. Refer to **MOTOR, SUNROOF, INSTALLATION** .
3. Install the sunshade. Refer to **SUNSHADE, SUNROOF, INSTALLATION**.
4. Install the glass panel. Refer to **GLASS, SUNROOF, INSTALLATION**.

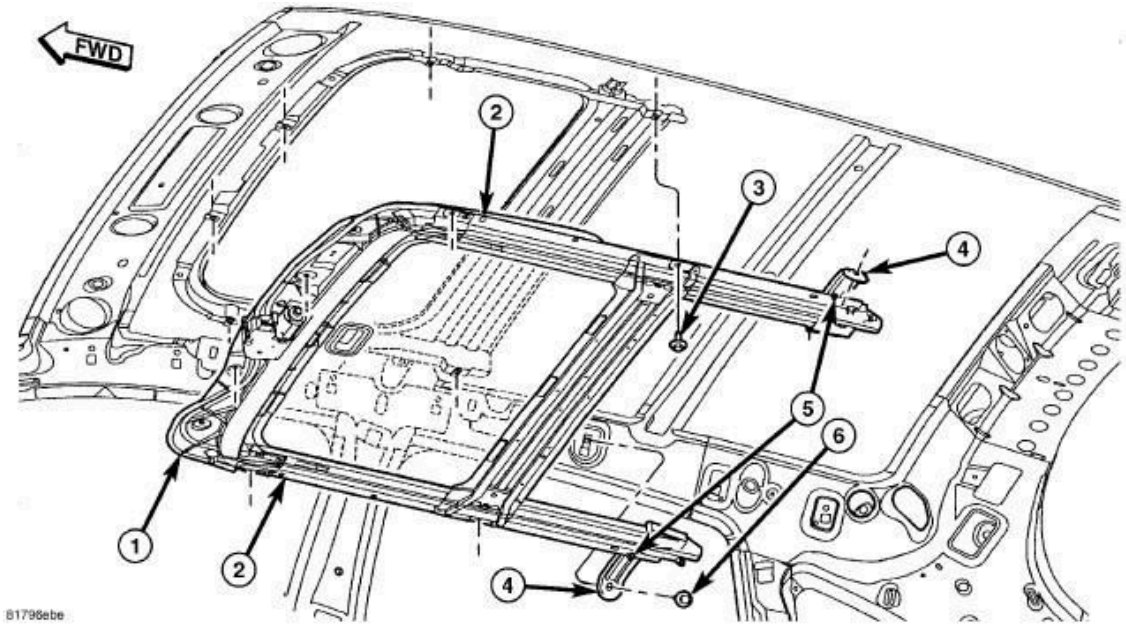

Fig. 642: Sunroof Module Assembly
Courtesy of CHRYSLER GROUP, LLC

5. Raise rear end of sunroof module assembly (1) and guide into position and start the six fasteners (3).
6. Visually line up the alignment guide holes (2) with the guide holes in the roof of the vehicle.
7. Tighten the six fasteners (3) to 9 N.m (80 in. lbs.).
8. Tighten the two side bracket fasteners (6) to 9 N.m (80 in. lbs.).

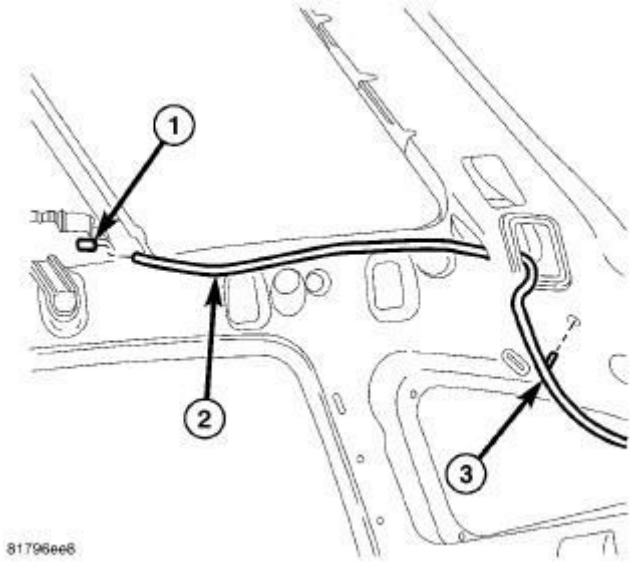

Fig. 643: Rear Hose, Sunroof Assembly & Clips
Courtesy of CHRYSLER GROUP, LLC

9. Connect the drain tubes (2) to the assembly (1).

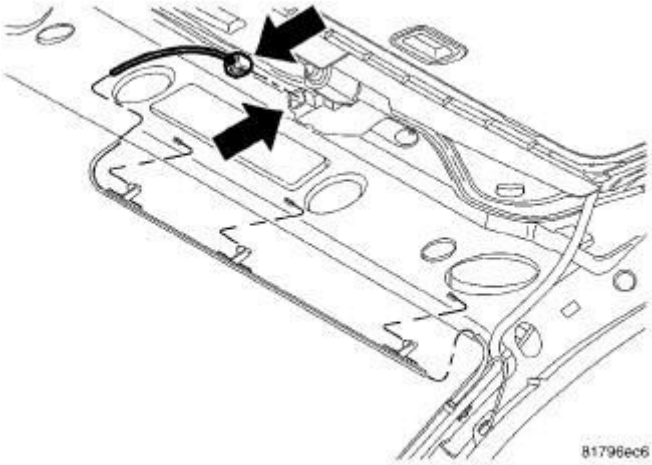

Fig. 644: Electrical Connector
Courtesy of CHRYSLER GROUP, LLC

10. Connect the electrical connector.

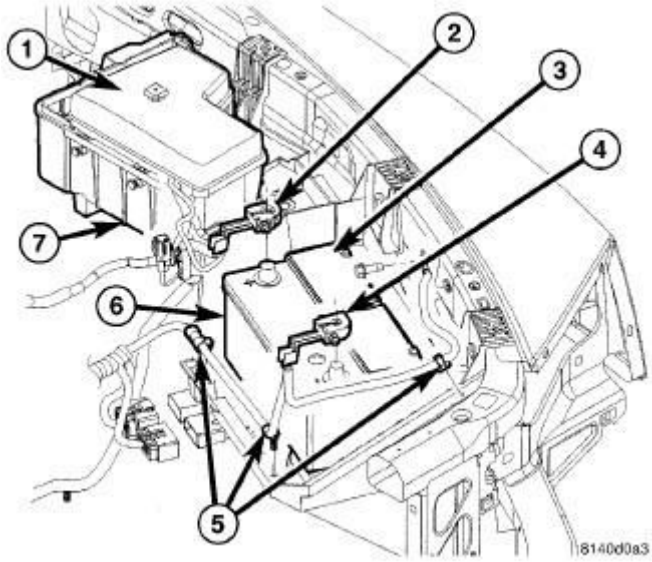

Fig. 645: Locating Battery System Components
Courtesy of CHRYSLER GROUP, LLC

11. Connect battery negative cable (4).
12. Test sunroof operation, adjust glass as necessary. Refer to **GLASS, SUNROOF, ADJUSTMENTS**.
13. Partially install the headliner and connect the sunroof wiring electrical connectors. Refer to **HEADLINER, INSTALLATION**.

14. Temporarily install sunroof switch and perform the sunroof motor teach procedure. Refer to **MOTOR, SUNROOF, STANDARD PROCEDURE** .
15. Complete headliner installation. Refer to **HEADLINER, INSTALLATION**.
16. Verify correct sunroof operation.

SUNSHADE, SUNROOF

REMOVAL

REMOVAL

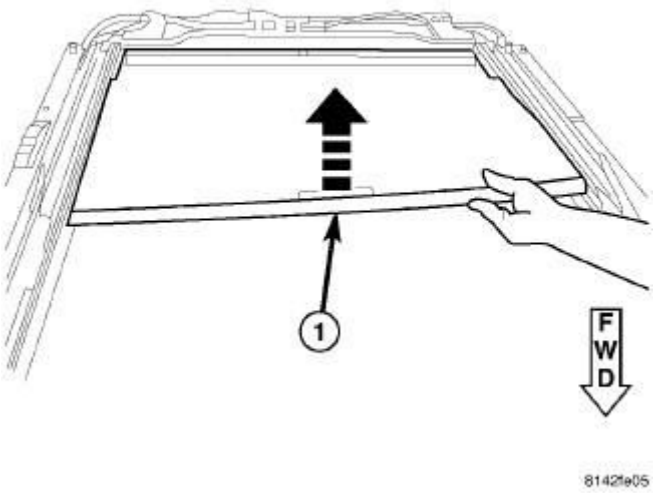

Fig. 646: Removing/Installing Drain Channel
Courtesy of CHRYSLER GROUP, LLC

1. Remove the drain channel. Refer to **TUBE, SUNROOF DRAIN, REMOVAL**.
2. Push up the front center of the sunshade (1) to pop out the front two feet.

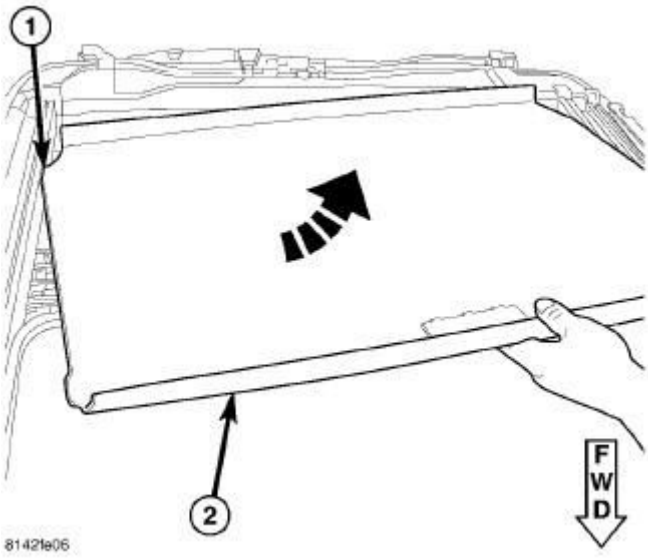

Fig. 647: Removing/Installing Sunshade
Courtesy of CHRYSLER GROUP, LLC

3. Rotate the sunshade (2) so that the other feet (1) are removed from the guide track.

INSTALLATION

INSTALLATION

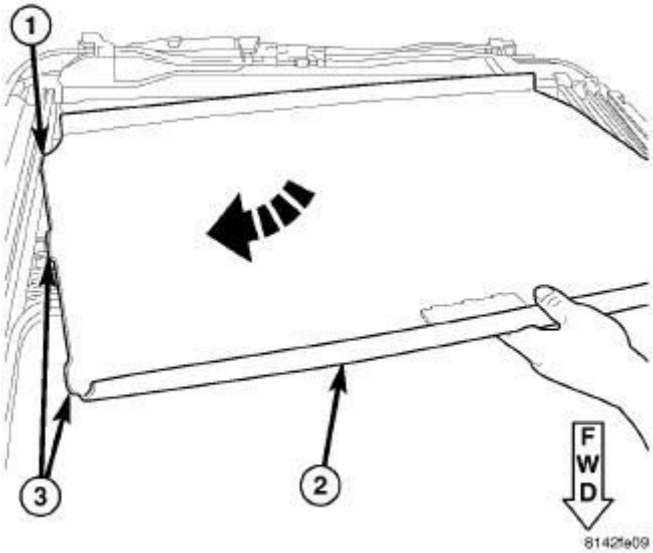

Fig. 648: Removing/Installing Sunshade
Courtesy of CHRYSLER GROUP, LLC

1. Verify the sunshade track is free of obstructions like the trim lace/ring.

2. Start with sunshade (2) at an angle with one foot (1) in the track.
3. Rotate the sunshade so the other rear foot is in the track as well as the 2 other feet (3) on the same side as the first foot.

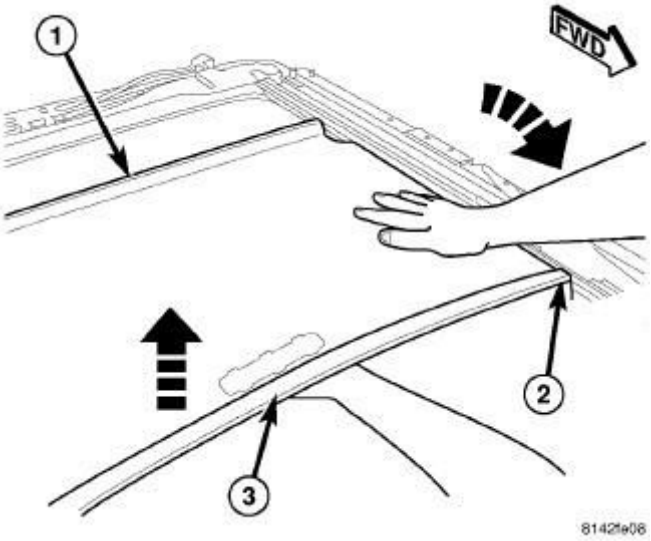

Fig. 649: Removing/Installing Drain Channel
Courtesy of CHRYSLER GROUP, LLC

4. To insert the remaining two feet (2) apply force to the middle front of sunshade (3) and guide them into the track.
5. Check that all the feet are in the right track and verify sunshade operation.
6. Install the drain trough. Refer to **TUBE, SUNROOF DRAIN, INSTALLATION**.

SWITCH, SUNROOF

DESCRIPTION

DESCRIPTION

For service information, refer to **DESCRIPTION** .

TROUGH, SUNROOF

REMOVAL

REMOVAL

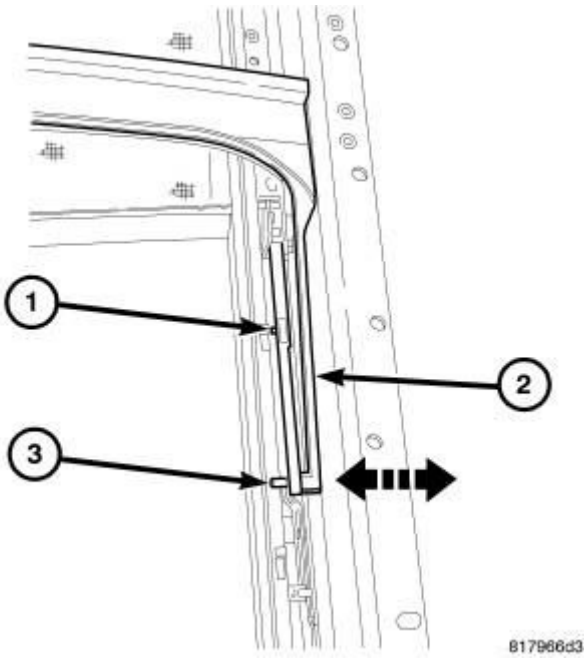

Fig. 650: Trough Pins & Glass Lift Mechanisms
Courtesy of CHRYSLER GROUP, LLC

1. Remove the glass. Refer to **GLASS, SUNROOF, REMOVAL**.
2. Separate the trough pins (3) from the glass lift mechanisms (1).

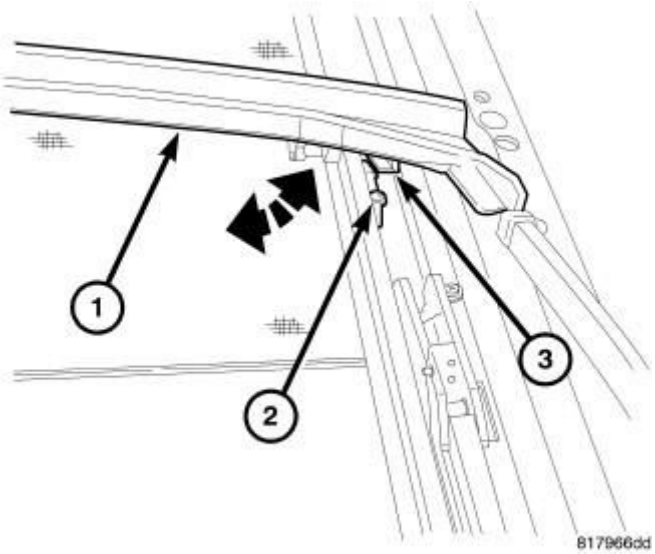

Fig. 651: Trough, Shoe Tab & Track
Courtesy of CHRYSLER GROUP, LLC

3. Slide trough (1) to one side and push down on the center of the trough until the guide shoe tab (3) releases from the track (2).
4. Slide the trough in the opposite direction to release the other shoe and lift the trough out of the sunroof opening.

INSTALLATION

INSTALLATION

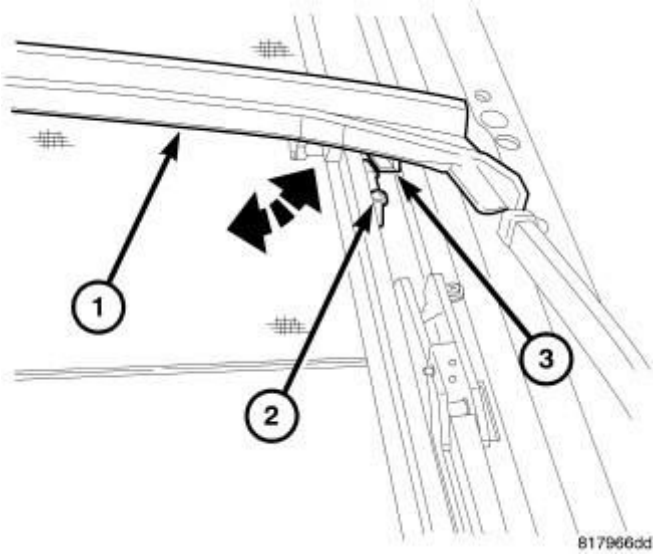

Fig. 652: Trough, Shoe Tab & Track
Courtesy of CHRYSLER GROUP, LLC

1. Insert one of the trough guides (3) and guide shoe (2) into the track.
2. Push down on the center of the trough (1) to flatten it out and install the remaining trough guide (3) and guide shoe (2) into the track.

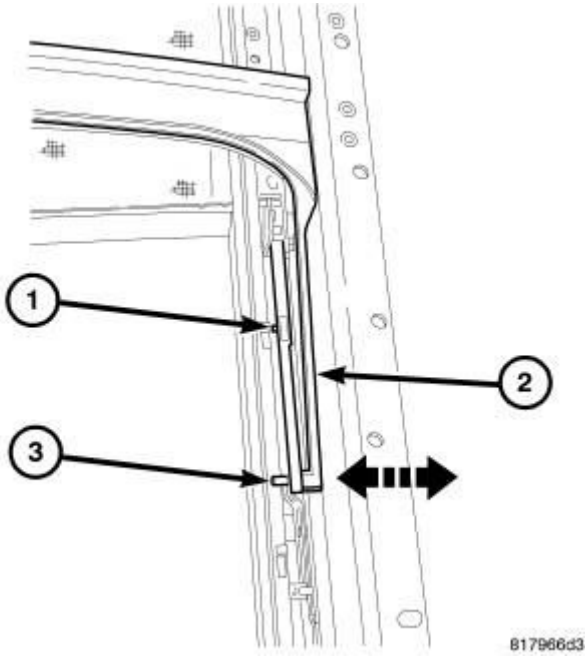

Fig. 653: Trough Pins & Glass Lift Mechanisms
Courtesy of CHRYSLER GROUP, LLC

3. Install the trough guide pins into the glass lift mechanism (3) and seat fully.
4. Install the glass. Refer to **GLASS, SUNROOF, INSTALLATION**.

TUBE, SUNROOF DRAIN

REMOVAL

REMOVAL

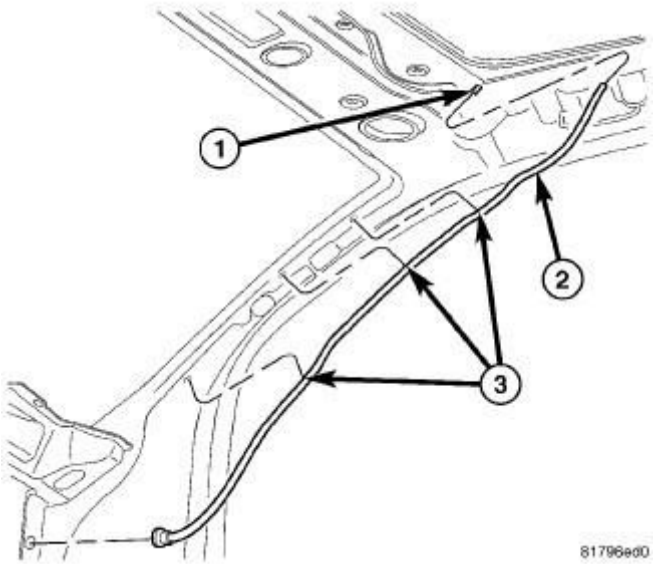

Fig. 654: Front Hose, Sunroof Assembly & Clips
Courtesy of CHRYSLER GROUP, LLC

NOTE: Compass shown, Patriot similar.

1. Drop down the headliner as necessary to gain access to the drain hoses. Refer to **HEADLINER, REMOVAL**.
2. Disconnect the front hoses (2) from the sunroof assembly (1).
3. Release the support clips (3) and disconnect the lower grommet and remove the hose.

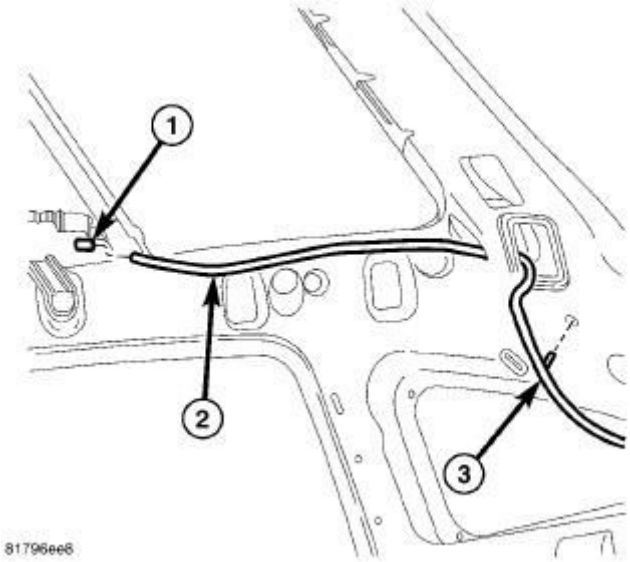

Fig. 655: Rear Hose, Sunroof Assembly & Clips
Courtesy of CHRYSLER GROUP, LLC

4. Disconnect the rear hoses (2) from the sunroof assembly (1) and release the support clips (3).

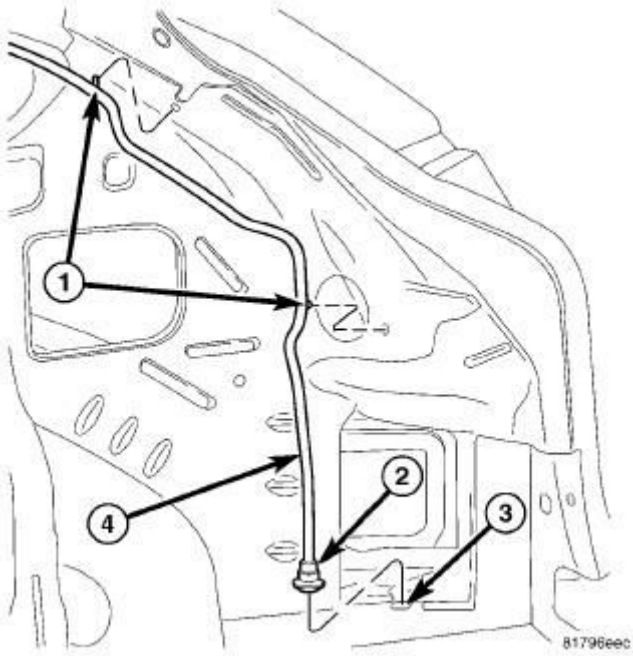

Fig. 656: Rear Hose, Grommets & Body
Courtesy of CHRYSLER GROUP, LLC

5. Separate the remaining support clips (1).
6. Disconnect the grommet (2) from the body (3) and remove the rear hoses as

necessary.

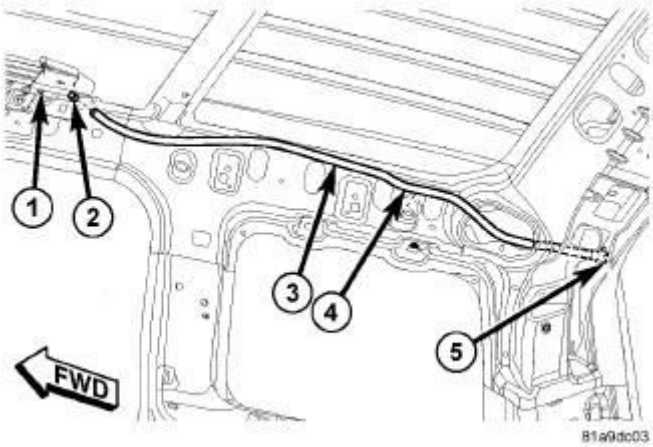

Fig. 657: Sunroof Right Drain Hose & Support Clips
Courtesy of CHRYSLER GROUP, LLC

7. For the Patriot right rear drain hose, separate the support clips (4) and disconnect the hose ends from the sunroof (2) and the rear header (5).

INSTALLATION

INSTALLATION

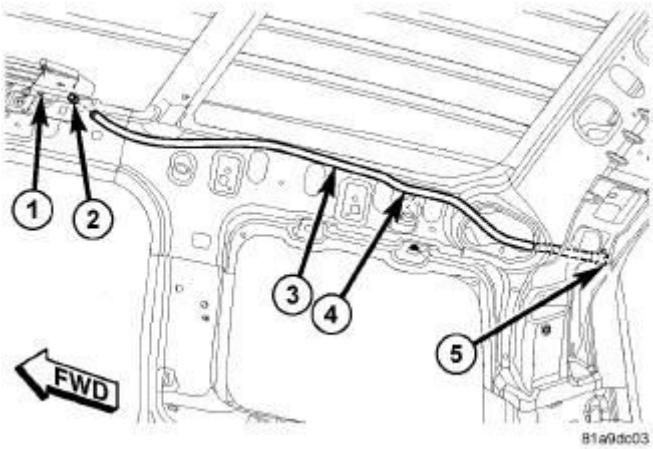

Fig. 658: Sunroof Right Drain Hose & Support Clips
Courtesy of CHRYSLER GROUP, LLC

1. For the right rear hose on Patriot vehicles connect the hose to the header (5) and to the sunroof (2).
2. Secure the support clips (4) fully.

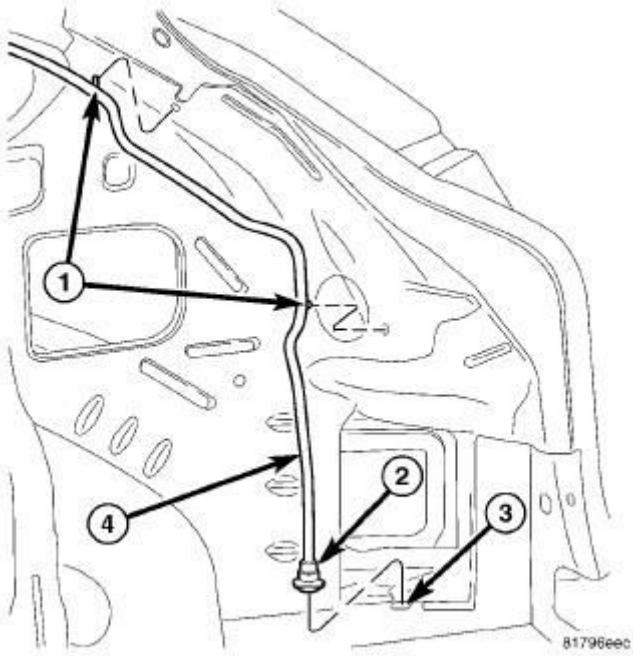

Fig. 659: Rear Hose, Grommets & Body
Courtesy of CHRYSLER GROUP, LLC

NOTE: Compass shown, Patriot similar.

3. Install the rear hoses (4) and connect the grommets (2) to the body (3).
4. Connect the support clips (1).

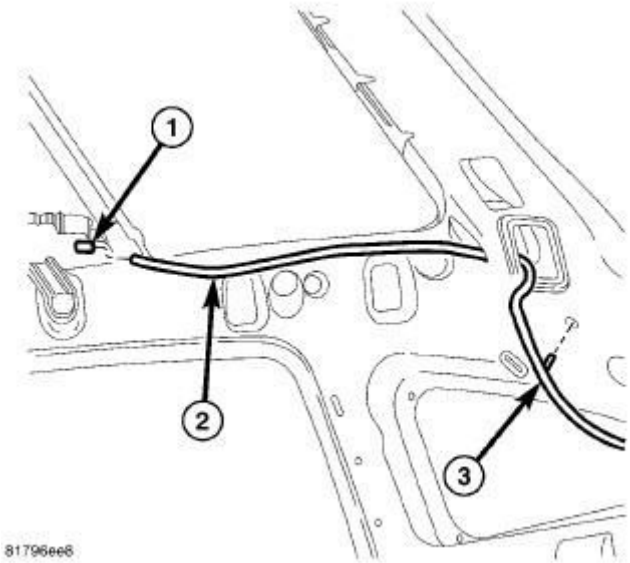

Fig. 660: Rear Hose, Sunroof Assembly & Clips
Courtesy of CHRYSLER GROUP, LLC

5. Route the hose as required and connect the remaining support clips (3).
6. Connect the hoses (2) to the sunroof assembly (1).

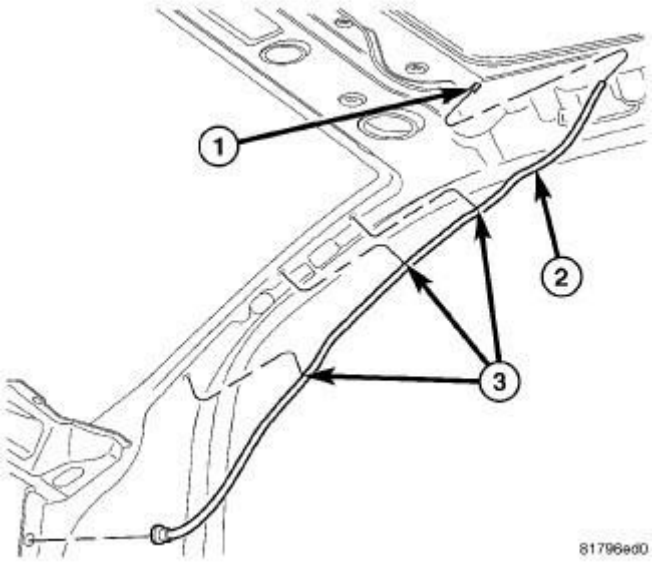

Fig. 661: Front Hose, Sunroof Assembly & Clips
Courtesy of CHRYSLER GROUP, LLC

7. Connect the front hose lower grommet to the body.
8. Connect the front hose (2) to the sunroof assembly (1) and connect the support clips (3).

BODY STRUCTURE

GAP AND FLUSH

SPECIFICATIONS

SPECIFICATIONS

INDEX

DESCRIPTION	FIGURE
BODY GAP AND FLUSH	Refer to **COMPASS**.
BODY GAP AND FLUSH	Refer to **PATRIOT**.

COMPASS

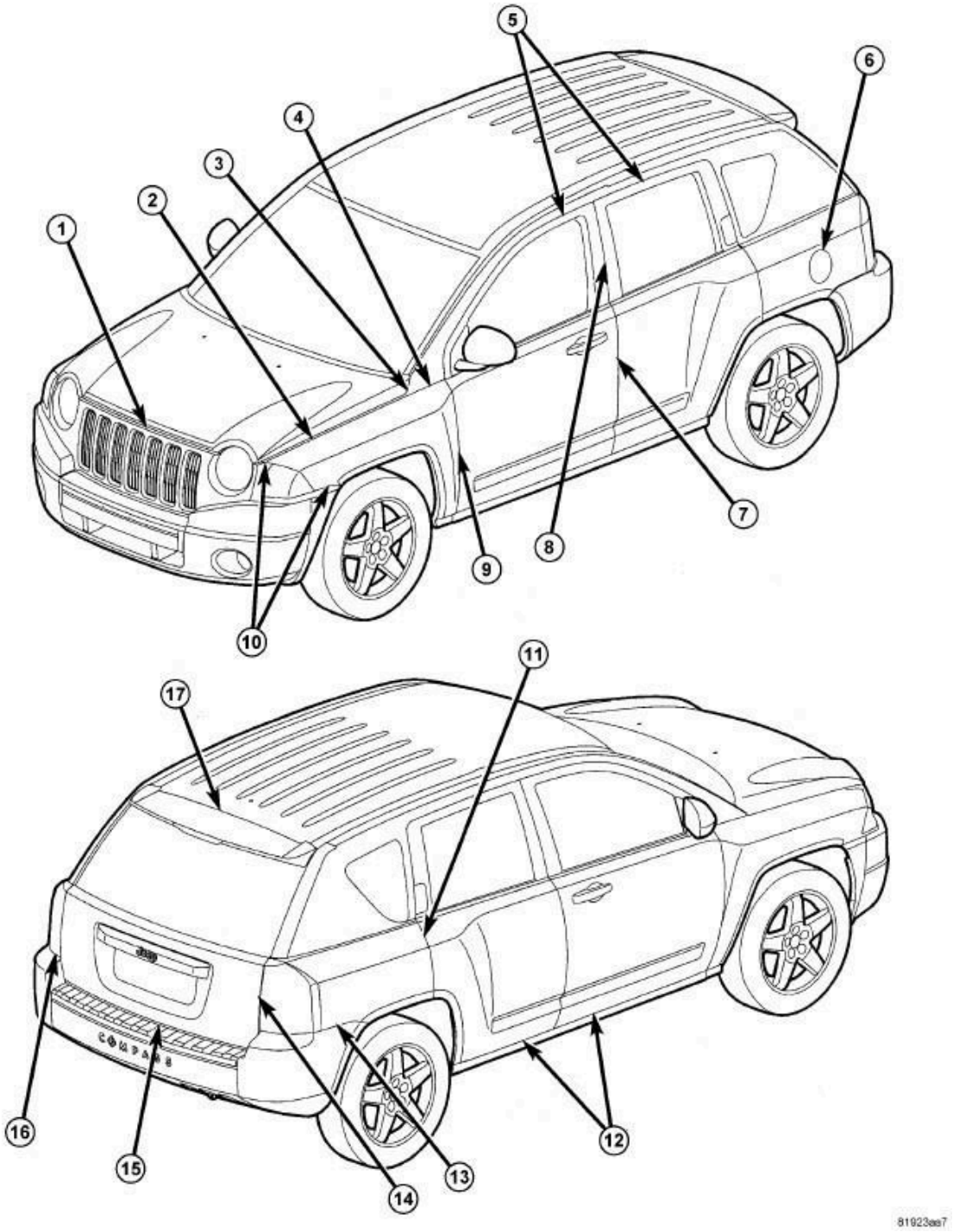

Fig. 662: Gap & Flush Fit (Compass)
Courtesy of CHRYSLER GROUP, LLC

NOTE: All dimensions are in millimeters.

- **O/F = Over Flush**
- **U/F = Under Flush**
- **U/D = Up/Down**

- **F/A = Fore/Aft**

GAP AND FLUSH MEASUREMENTS

Dimension	Description	Gap	Flush
1	Fascia to hood	8.0 +/- 1.5 Parallel within 2.0	Fascia u/f 1.0 +/- 1.5 Consistent within 2.0
2	Fender to hood	6.0 +/- 1.5 Parallel within 1.5	--
3	Hood to body side aperture (a-pillar)	6.7 +/- 1.5 Parallel within 1.5	--
4	Body side aperture (a-pillar) to fender	6.0 +/- 1.5 Parallel within 1.5	--
5	Door header to body side aperture	4.5 +/- 1.2 Parallel within 1.2	Header u/f 1.5 +/- 1.2 Consistent within 1.5
6	Fuel filler door to body side	3.0 +/- 0.8 Parallel within 0.75	Fuel door u/f 0.5 +/- 1.0 Consistent within 1.0
7	Front door to rear door (below belt)	4.5 +/- 1.2 Parallel within 1.5	Front door o/f 1.0 +/- 1.0 Consistent within 2.0
8	Front door to rear door (above belt)	4.5 +/- 1.2 Parallel within 1.2	Header u/f 1.5 +/- 1.2 Consistent within 1.5
9	Fender to front door	4.5 +/- 1.0 Parallel within 1.5	Fender o/f 1.0 +/- 1.0 Consistent within 1.0
		Between side marker and wheelhouse net to	Fascia u/f 1.0 +/-

10	Fascia to fender	1.0 between headlamp and side marker 2.0 +/- 2.0	1.0 Consistent within 1.5
11	Rear door to body side aperture	4.5 +/- 1.2 Parallel within 1.2	+/- 1.0 Consistent within 1.5
12	Body side aperture to front and rear doors	6.0 +/- 2.0	--
13	Fascia to body side aperture	Net to 1.0	Fascia u/f 1.0 +/- 1.0 Consistent within 1.5
14	Tail lamp to liftgate	4.0 +/- 2.0 Parallel within 2.0 Symmetrical within 2.0 lh to rh	Lamp o/f 1.0 +/- 2.0
15	Fascia to liftgate	Cross/car 4.0 +/- 2.0	--
16	Tail lamp to fascia	1.5 +2.0/-1.5 Parallel within 2.0 Symmetrical within 2.0 rh to lh	0.0 +/- 2.0
17	Liftgate to roof	6.0 +/- 1.5 Parallel within 2.0	Liftgate u/f 1.0 +/- 1.2 Consistent within 2.0

PATRIOT

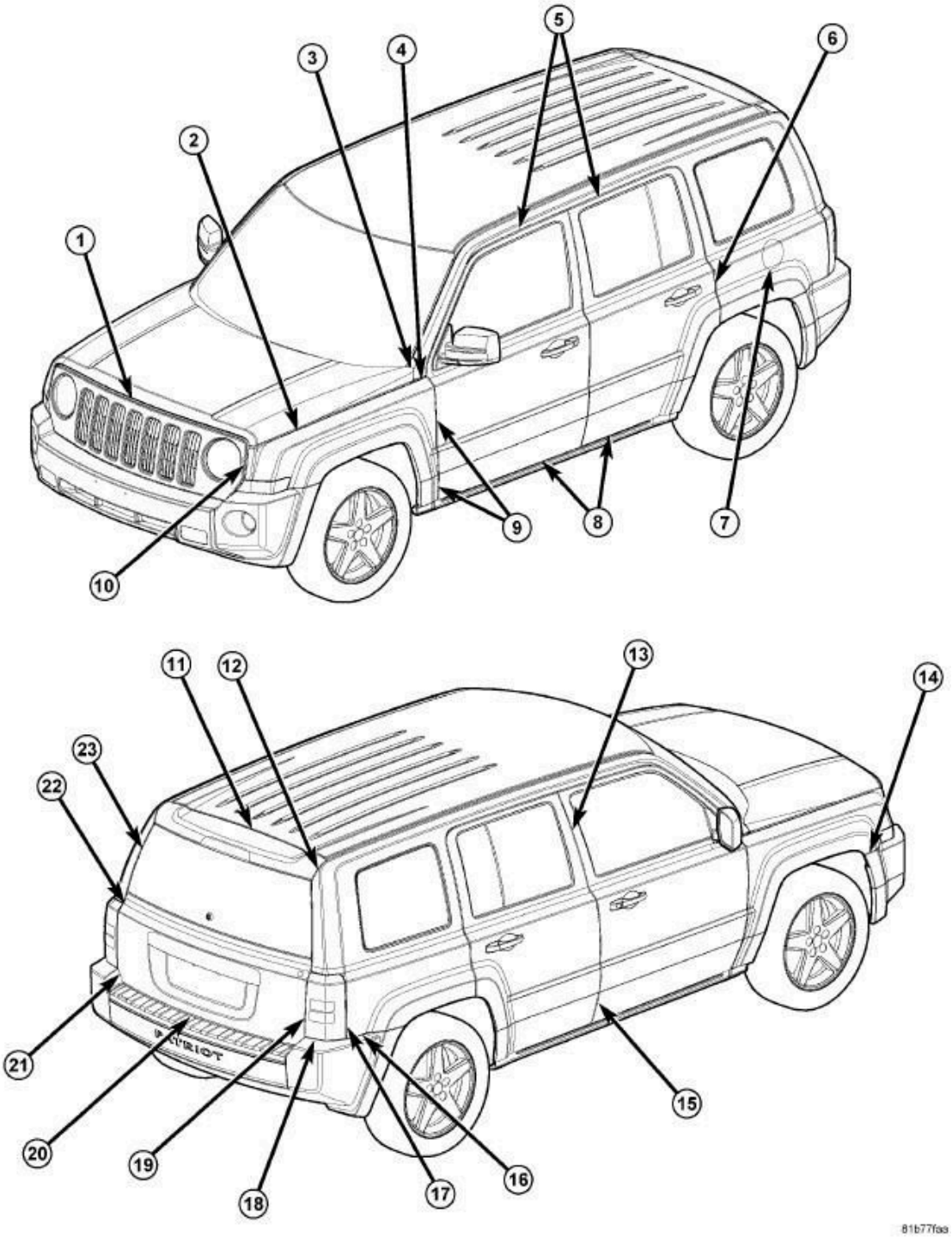

Fig. 663: Gap & Flush Fit (Patriot)
Courtesy of CHRYSLER GROUP, LLC

NOTE: All dimensions are in millimeters.

- **O/F = Over Flush**
- **U/F = Under Flush**
- **U/D = Up/Down**

- **F/A = Fore/Aft**

GAP AND FLUSH MEASUREMENTS

DIMENSION	DESCRIPTION	GAP	FLUSH
1	Hood to Fascia	9.3 +/- 1.5 Parallel within 2.0	Hood U/F 2.9/3.9 +/- 1.5 Consistent within 2.0
2	Hood to Fender	6.5 +/- 1.5 Parallel within 1.5	-
3	Hood to Body Side Aperture (A-Pillar)	4.0 +/- 1.5 Parallel within 1.5	-
4	Fender to Body Side Aperture (A-Pillar)	6.4 +/- 1.5 Parallel within 1.5	-
5	Front and Rear Door Header	4.5 +/- 1.2	Header 1.5 U/F
	To Body Side Aperture	Parallel within 1.2	Transitioning to 0.5 U/F @ Rear +/- 1.2 Consistent within 1.5
6	Rear Door to Body Side Aperture	4.5 +/- 1.2 Parallel within 1.2	Rear Door 1.0 O/F1.0+/-1.0 Consistent within 1.5
7	Fuel Filler Door to Body Side Aperture	3.0 +/- 0.8 Parallel within 0.75	Fuel Door 0.5 U/F +/- 1.0 Consistent within 1.0
8	Front and Rear Doors to	6.0 +/- 2.0	-

	Sill	Parallel within 1.5	
9	Fender to Front Door	4.5 +/- 1.0 Parallel within 1.0	Above Belt: 0.0 +/- 1.0 Consistent within 1.0 Below Belt: Fender 1.0 O/F +/- 1.0 Consistent within 1.0
10	Fascia to Fender (Front)	4.0 +/- 1.5 Parallel within 2.0	0.0 @ Z = 600 Fascia 1.0 O/F @ Z = 485 +/- 1.5 Consistent within 2.0
11	Liftgate to Roof	7.0 +/- 1.5 Parallel within 2.0	Liftgate 1.0 U/F +/- 1.2 Consistent within 2.0
12	Body Side Aperture to Liftgate	5.0 @ X = 3080 4.0 @ Z = 1225 +/- 1.5	Body Side Aperture 1.0 O/F +/- 1.5
13	Front Door to Rear Door (Above Belt)	4.5 +/- 1.2 Parallel within 1.5	0.0 +/- 1.0 Consistent within 1.5
14	Fender to Fascia	Net to 1.0	0.0 +/- 1.0 Consistent within 1.5
15	Front Door to Rear Door (Below Belt)	4.5 +/- 1.2 Parallel within	Front Door 1.0 O/F +/- 1.0 Consistent within

		1.5	1.5
16	Fascia to Body Side Aperture	Net to 1.0	0.0 +/- 1.0 Consistent within 1.5
17	Tail Lamp to Body Side Aperture	1.5 +/- 1.5 Parallel within 1.5	Tail Lamp 1.0 U/F +/- 2.0 Consistent within 2.0
18	Tail Lamp to Fascia	1.5 +/- 1.5 Parallel within 2.0	-
19	Tail Lamp to Liftgate	4.0 +/- 2.0 Parallel within 2.0	Liftgate 1.0 U/F +/- 2.0
20	Liftgate to Fascia (Step Pad)	U/D 6.0 +/- 2.0	-
21	Fascia to Liftgate	Cross/Car 4.5 +/- 2.0	-
22	Body Side Aperture to Liftgate	4.0 +/- 2.0 Parallel within 2.0	Liftgate 1.0 U/F +/- 1.0
23	Body Side Aperture to Liftgate Glass	4.0 +/- 1.5	Body Side Aperture 2.0 O/F +/- 1.5

OPENING DIMENSIONS

SPECIFICATIONS

SPECIFICATIONS

INDEX

DESCRIPTION	FIGURE
COMPASS AND PATRIOT	
ENGINE BOX	Refer to **Fig. 664**.
COMPASS ONLY	
WINDSHIELD OPENING	Refer to **Fig. 665**.

FRONT DOOR OPENING	Refer to **Fig. 666**.
REAR DOOR OPENING	Refer to **Fig. 667**.
QUARTER WINDOW OPENING	Refer to **Fig. 668**.
LIFTGATE OPENING	Refer to **Fig. 669**.
LIFTGATE WINDOW OPENING	Refer to **Fig. 670**.
PATRIOT ONLY	
WINDSHIELD OPENING	Refer to **Fig. 671**.
FRONT DOOR OPENING	Refer to **Fig. 672**.
REAR DOOR OPENING	Refer to **Fig. 673**.
REAR QUARTER WINDOW OPENING	Refer to **Fig. 674**.
LIFTGATE OPENING	Refer to **Fig. 675**.
LIFTGATE WINDOW OPENING	Refer to **Fig. 676**.

COMPASS AND PATRIOT

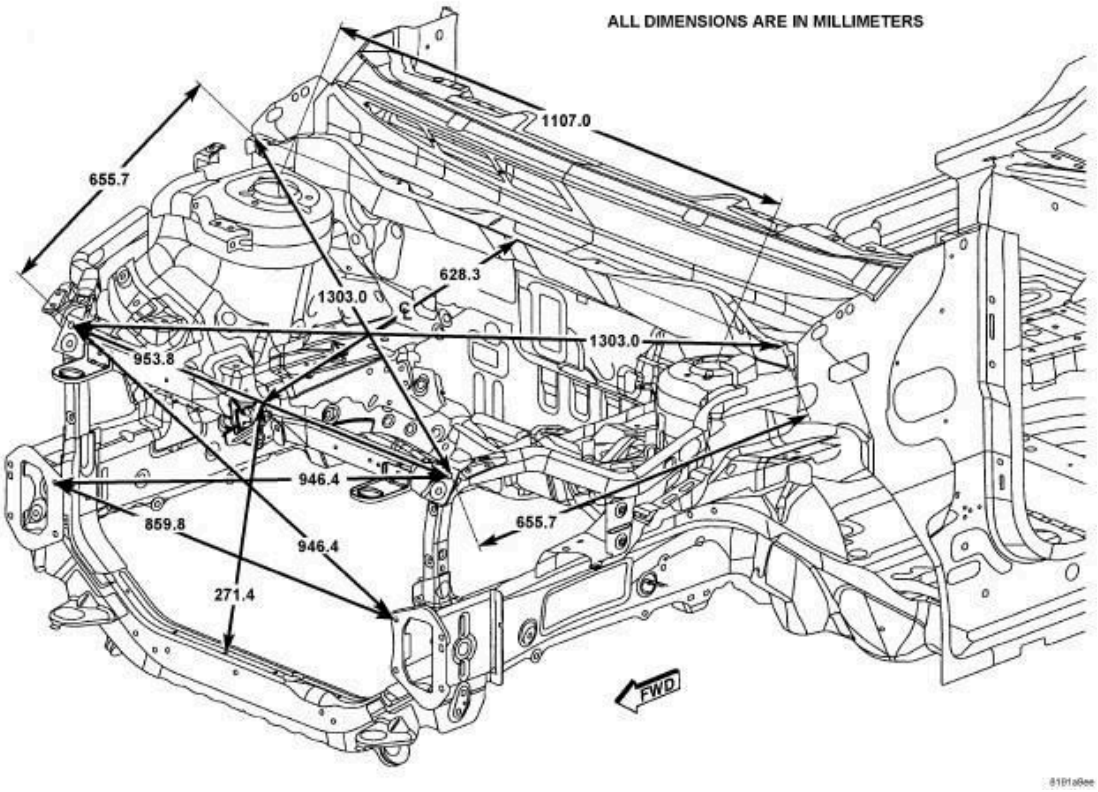

Fig. 664: Engine Box
Courtesy of CHRYSLER GROUP, LLC

COMPASS ONLY

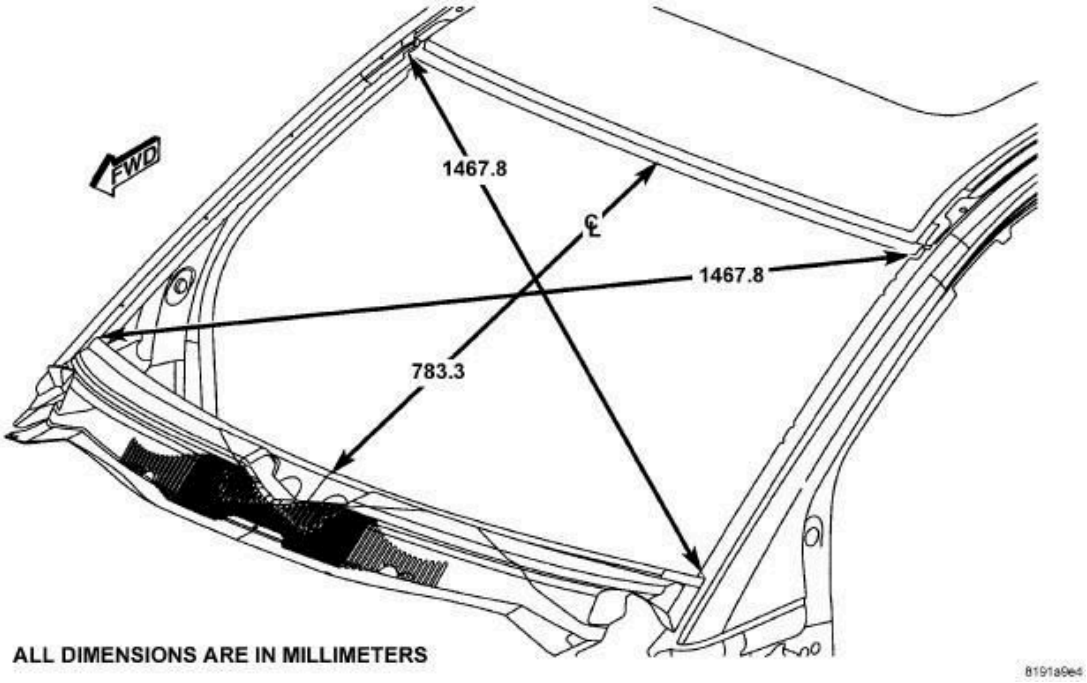

Fig. 665: Windshield Opening
Courtesy of CHRYSLER GROUP, LLC

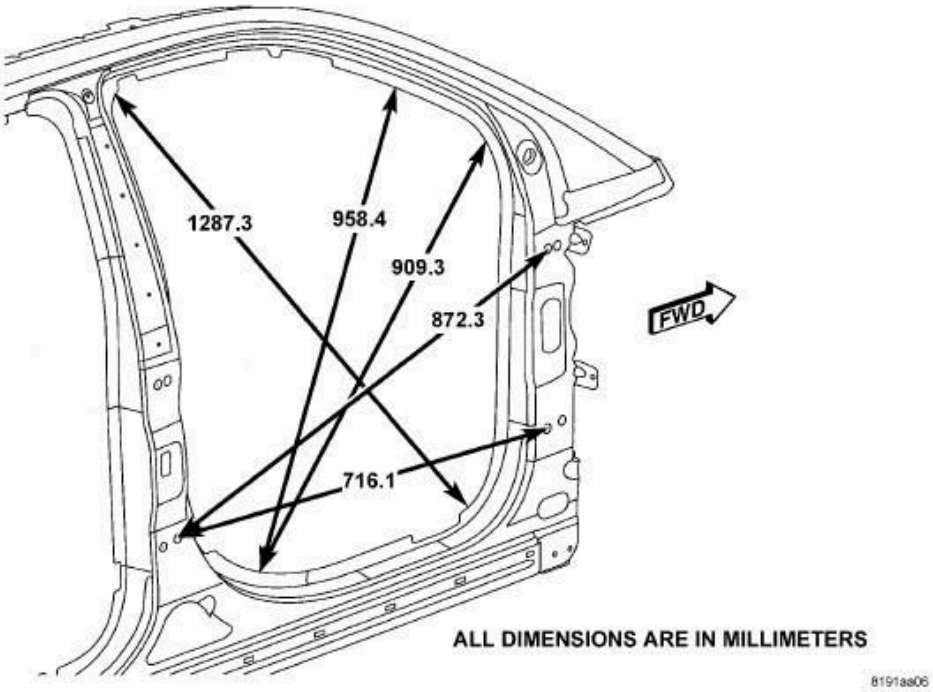

Fig. 666: Front Door Opening
Courtesy of CHRYSLER GROUP, LLC

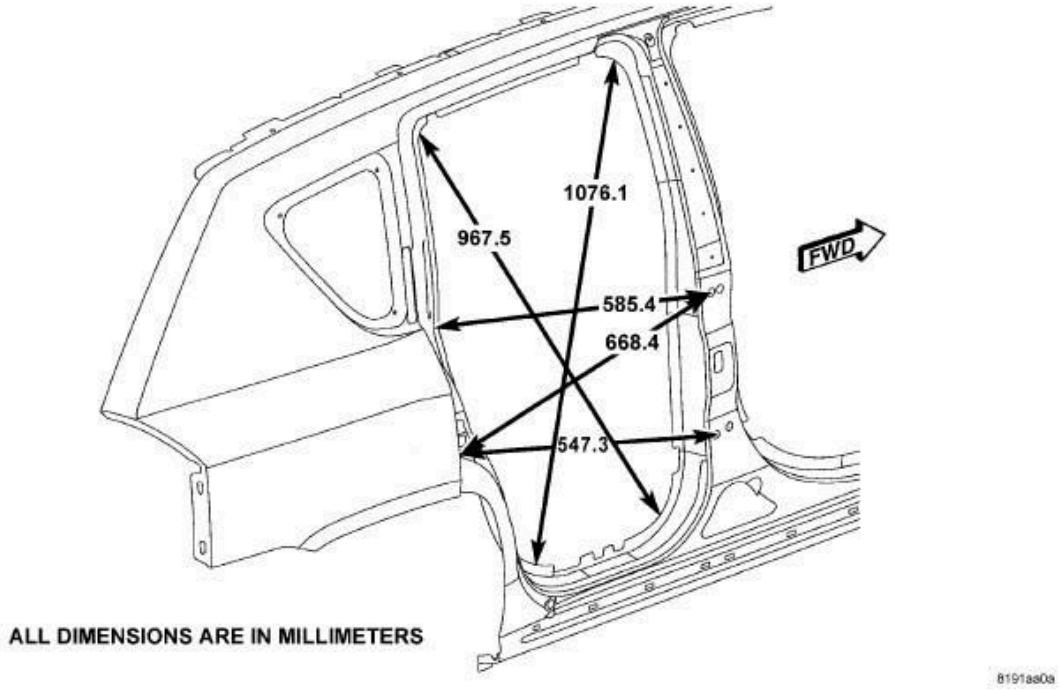

Fig. 667: Rear Door Opening
Courtesy of CHRYSLER GROUP, LLC

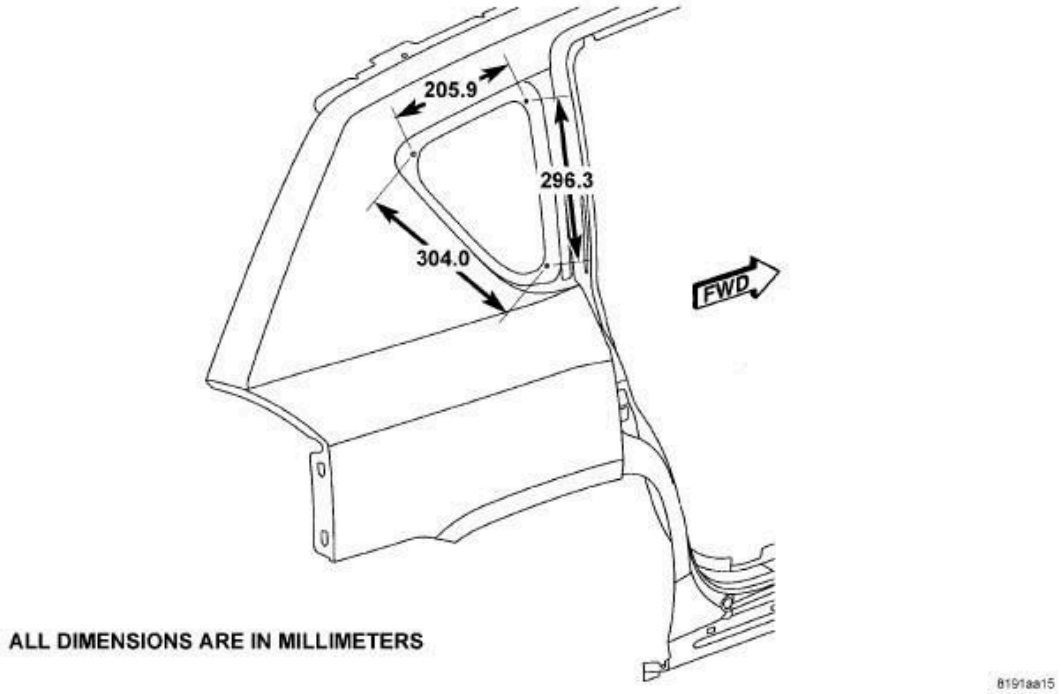

Fig. 668: Quarter Window Opening
Courtesy of CHRYSLER GROUP, LLC

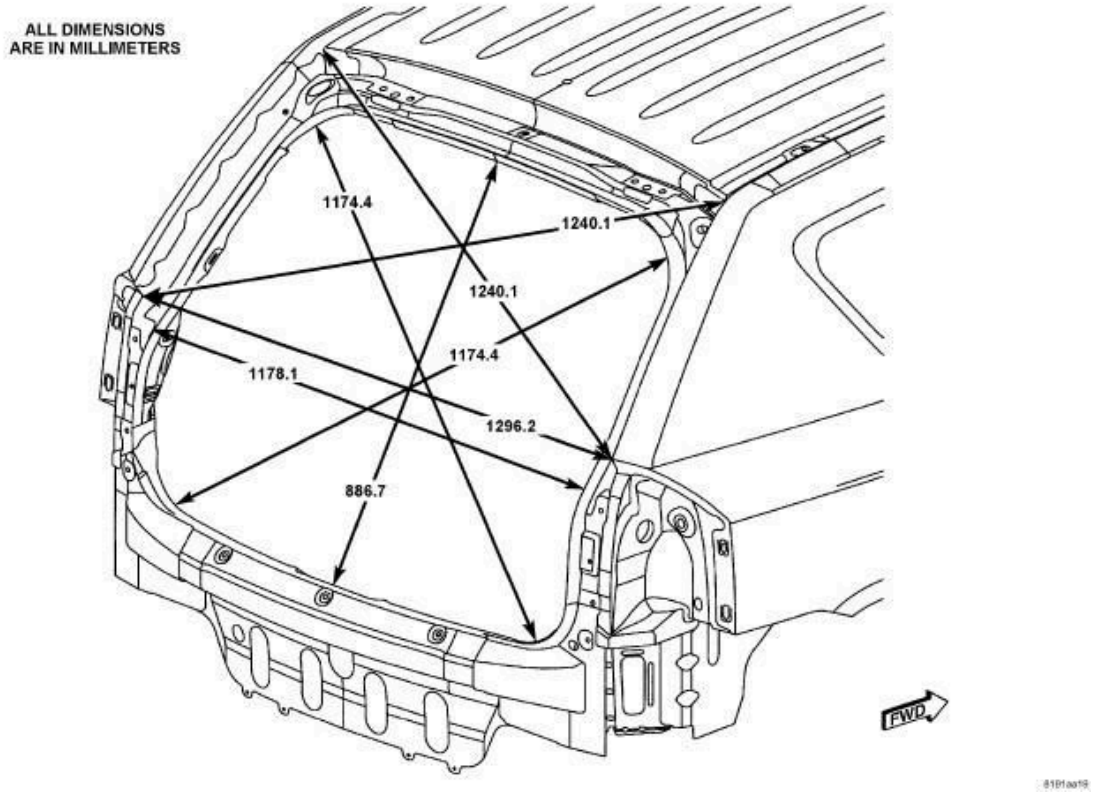

Fig. 669: Liftgate Opening
Courtesy of CHRYSLER GROUP, LLC

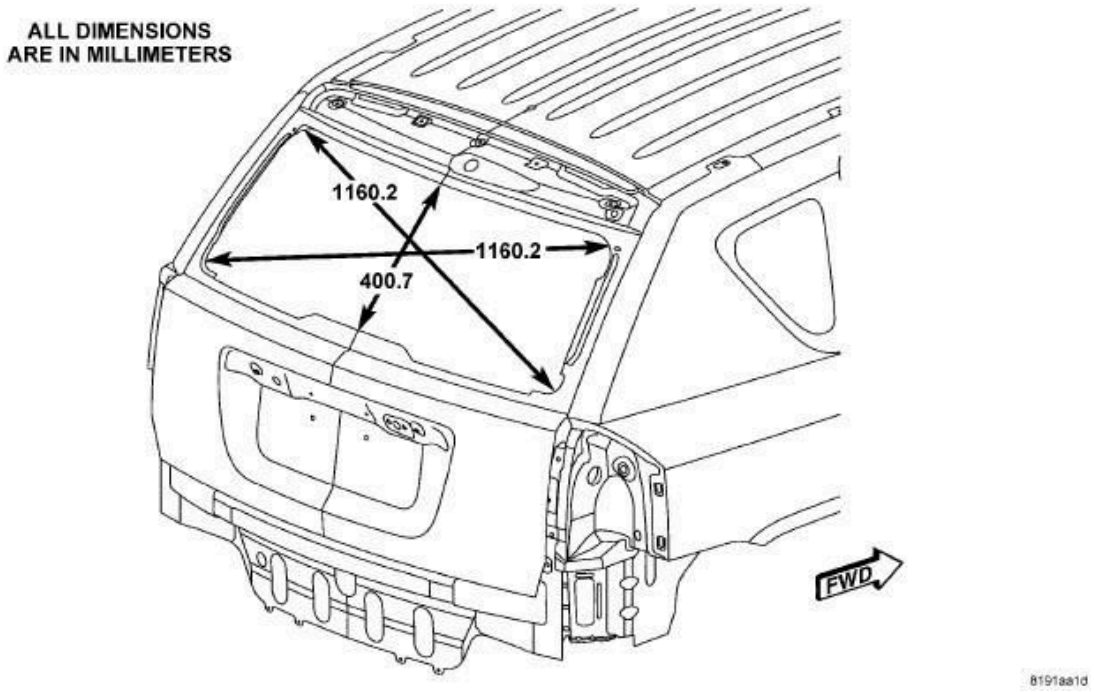

Fig. 670: Liftgate Window Opening
Courtesy of CHRYSLER GROUP, LLC

PATRIOT ONLY

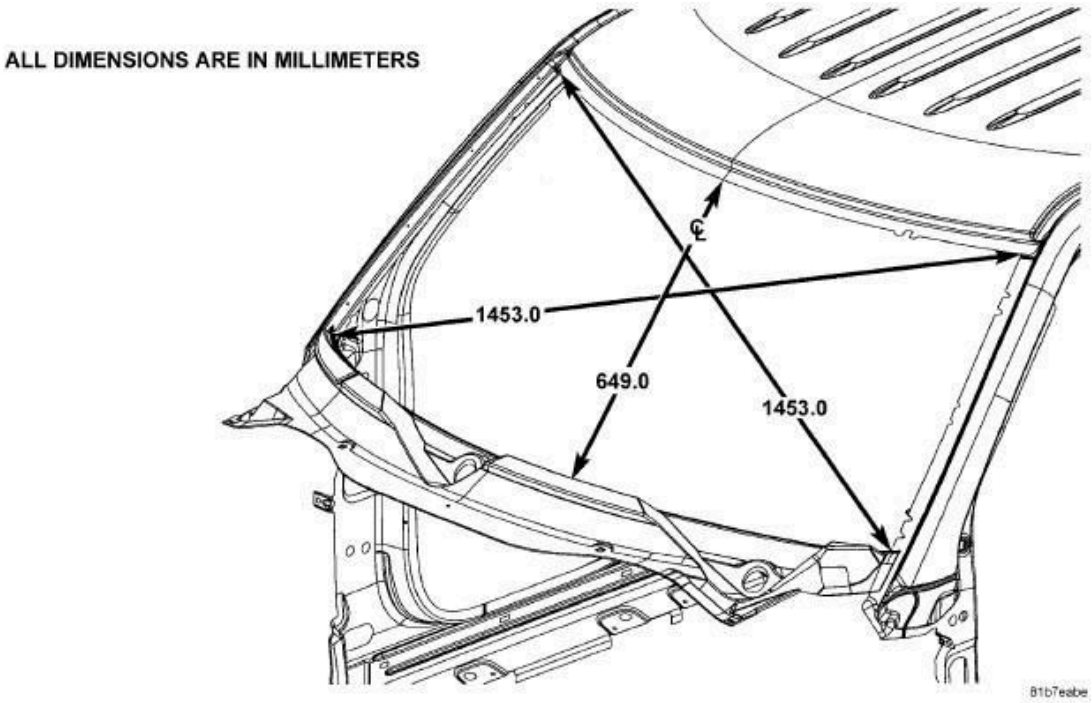

Fig. 671: Windshield Opening
Courtesy of CHRYSLER GROUP, LLC

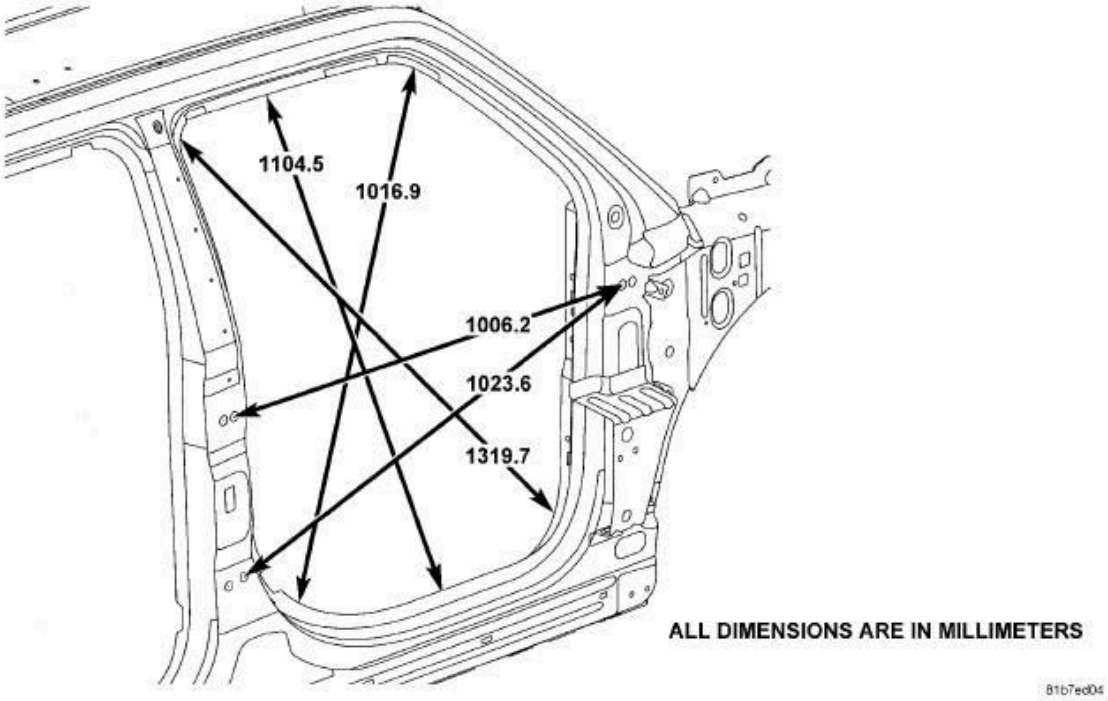

Fig. 672: Front Door Opening
Courtesy of CHRYSLER GROUP, LLC

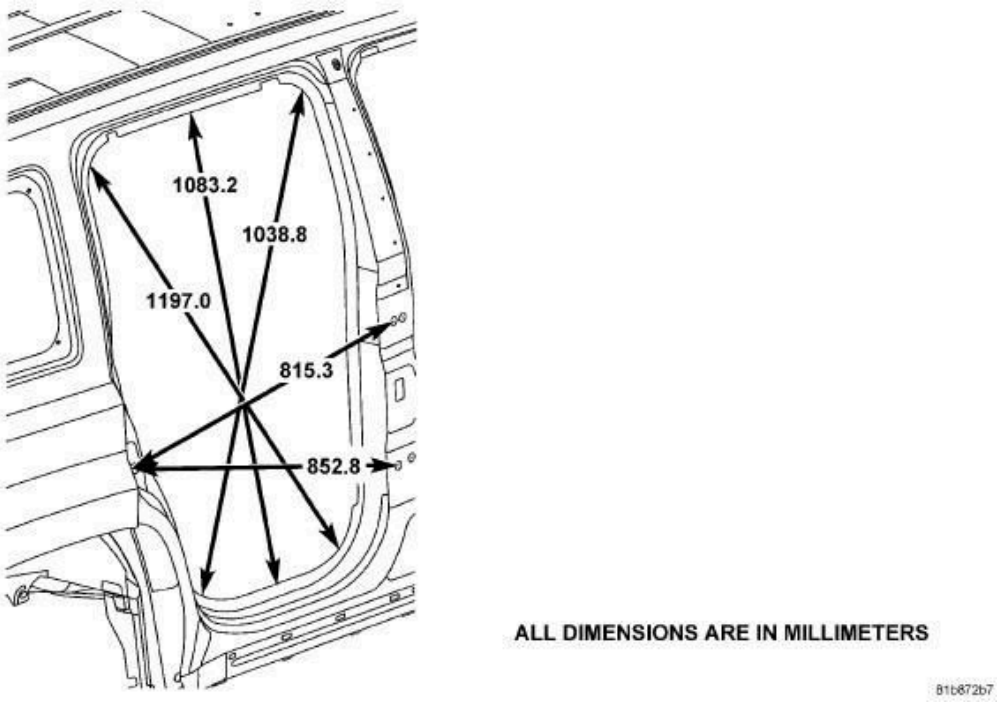

Fig. 673: Rear Door Opening
Courtesy of CHRYSLER GROUP, LLC

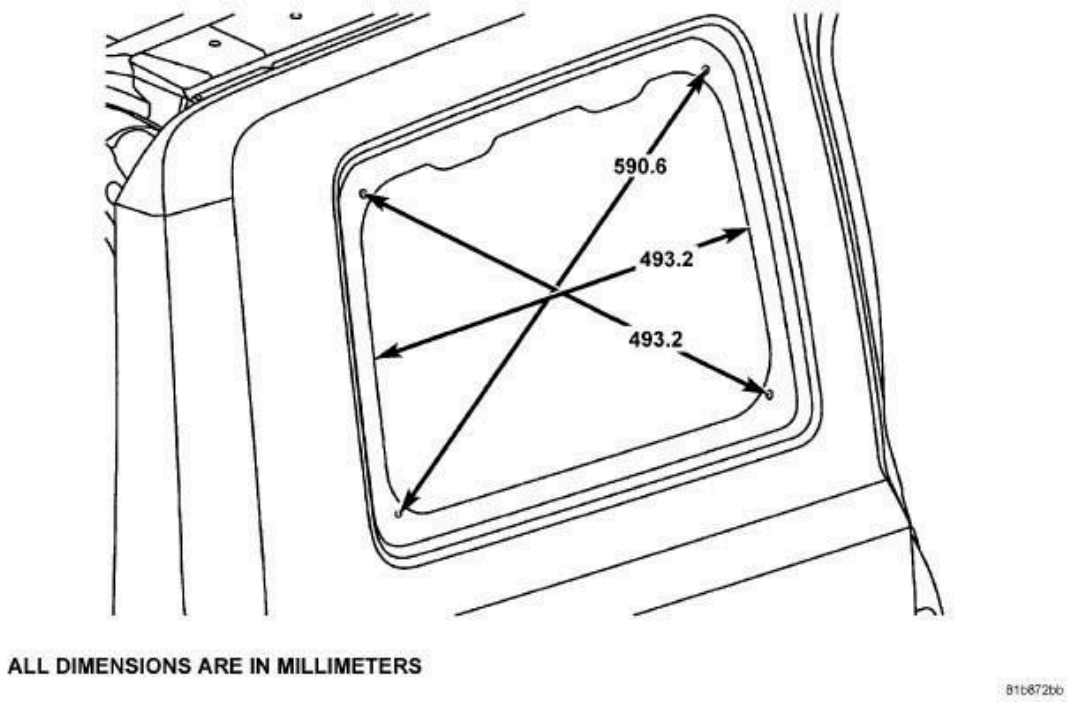

Fig. 674: Rear Quarter Window Opening
Courtesy of CHRYSLER GROUP, LLC

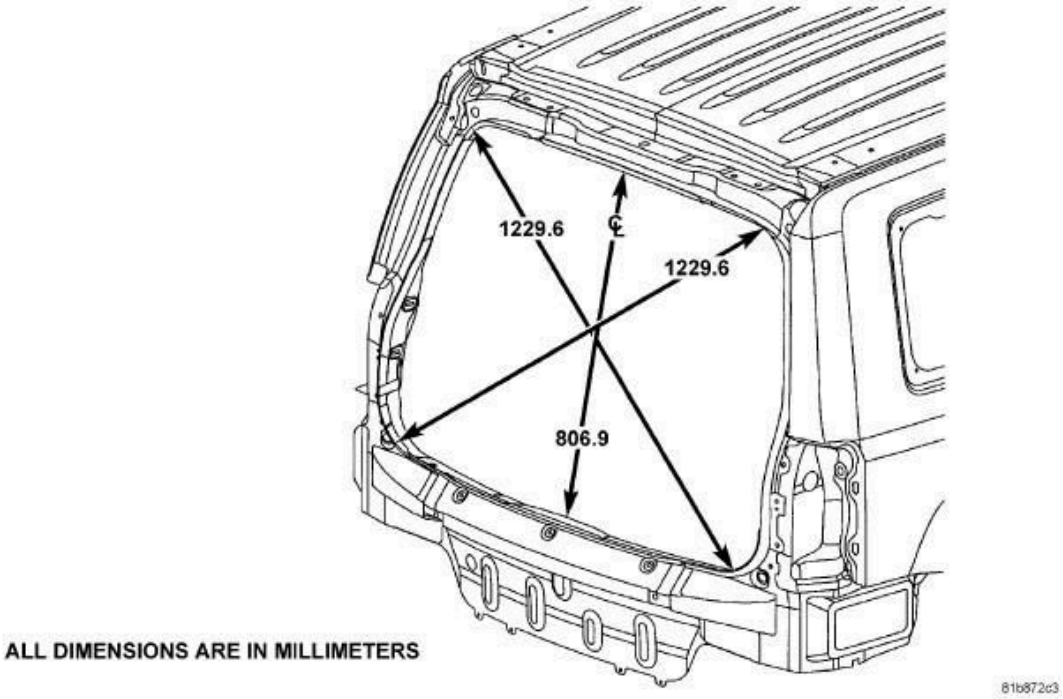

Fig. 675: Liftgate Opening
Courtesy of CHRYSLER GROUP, LLC

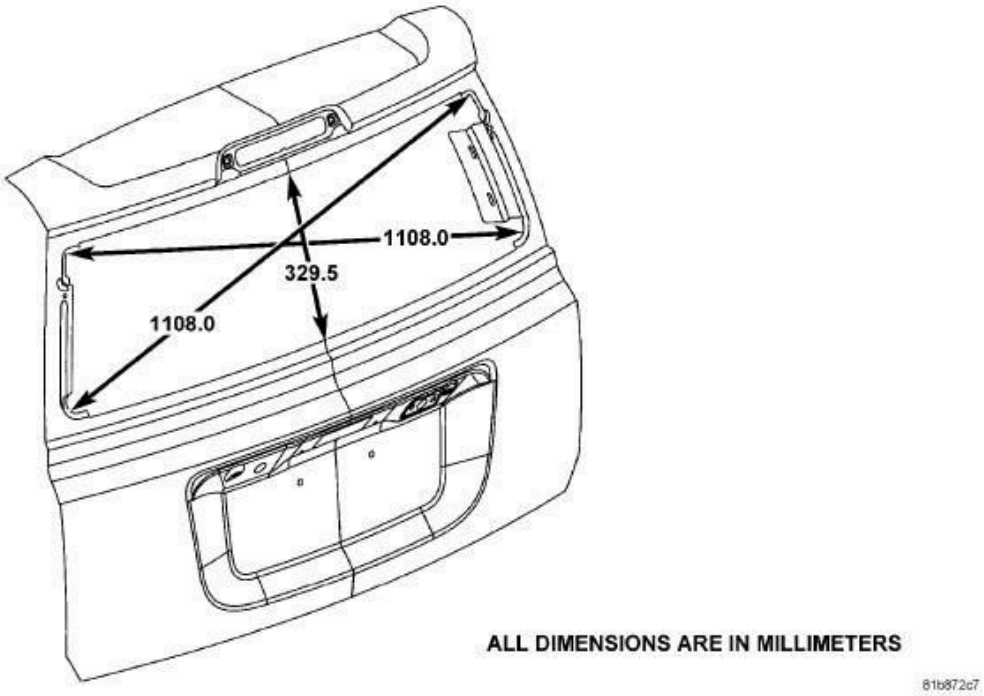

Fig. 676: Liftgate Window Opening
Courtesy of CHRYSLER GROUP, LLC

SEALER LOCATIONS

SPECIFICATIONS

SPECIFICATIONS

INDEX

DESCRIPTION	FIGURE
APPLICATION METHODS	Refer to **Fig. 677**.
FRONT ROOF CORNER/APERTURE PANEL	Refer to **Fig. 678**.
UPPER COWL TOP/COWL SIDE	Refer to **Fig. 679**.
FRONT WHEELHOUSE/SHOCK TOWER	Refer to **Fig. 680**.
DASH/PLENUM/COWL SIDE PANEL	Refer to **Fig. 681**.
DASH/STEERING SHAFT BRACKET	Refer to **Fig. 682**.
DASH/FRONT FLOOR PAN	Refer to **Fig. 683**.
REAR WHEELHOUSES	Refer to **Fig. 684**.
RIGHT REAR INNER QUARTER PANEL	Refer to **Fig. 685**.
LEFT REAR INNER QUARTER PANEL	Refer to **Fig. 686**.
UNDERBODY	Refer to **Fig. 687**.
REAR FLOOR PAN	Refer to **Fig. 688**.
ROOF/BODY SIDE APERTURE	Refer to **Fig. 689**.
ROOF/ROOF REAR UPPER HEADER	Refer to **Fig. 690**.
BODY SIDE APERTURE/LIFTGATE DRAIN TROUGH	Refer to **Fig. 691**.
TAIL LAMP PANEL	Refer to **Fig. 692**.
LOWER LIFTGATE CLOSEOUT PANEL	Refer to **Fig. 693**.
BODY SIDE APERTURE/INNER BODY SIDE REINFORCEMENT	Refer to **Fig. 694**.
REAR WHEELHOUSE	Refer to **Fig. 695**.
REAR WHEELHOUSE/REAR QUARTER PANEL EXTENSION	Refer to **Fig. 696**.
PATRIOT ONLY	
FRONT ROOF PANEL/APERTURE PANEL	Refer to **Fig. 697**.
A-PILLAR/WINDSHIELD BRACKET	Refer to **Fig. 698**.
ROOF/BODY SIDE APERTURE	Refer to **Fig. 699**.
LIFTGATE OPENING	Refer to **Fig. 700**.
LOWER LIFTGATE CLOSEOUT PANEL	Refer to **Fig. 701**.
BODY SIDE APERTURE/LIFTGATE DRAIN TROUGH	Refer to **Fig. 702**.

TAIL LAMP PANEL	Refer to **Fig. 703**.

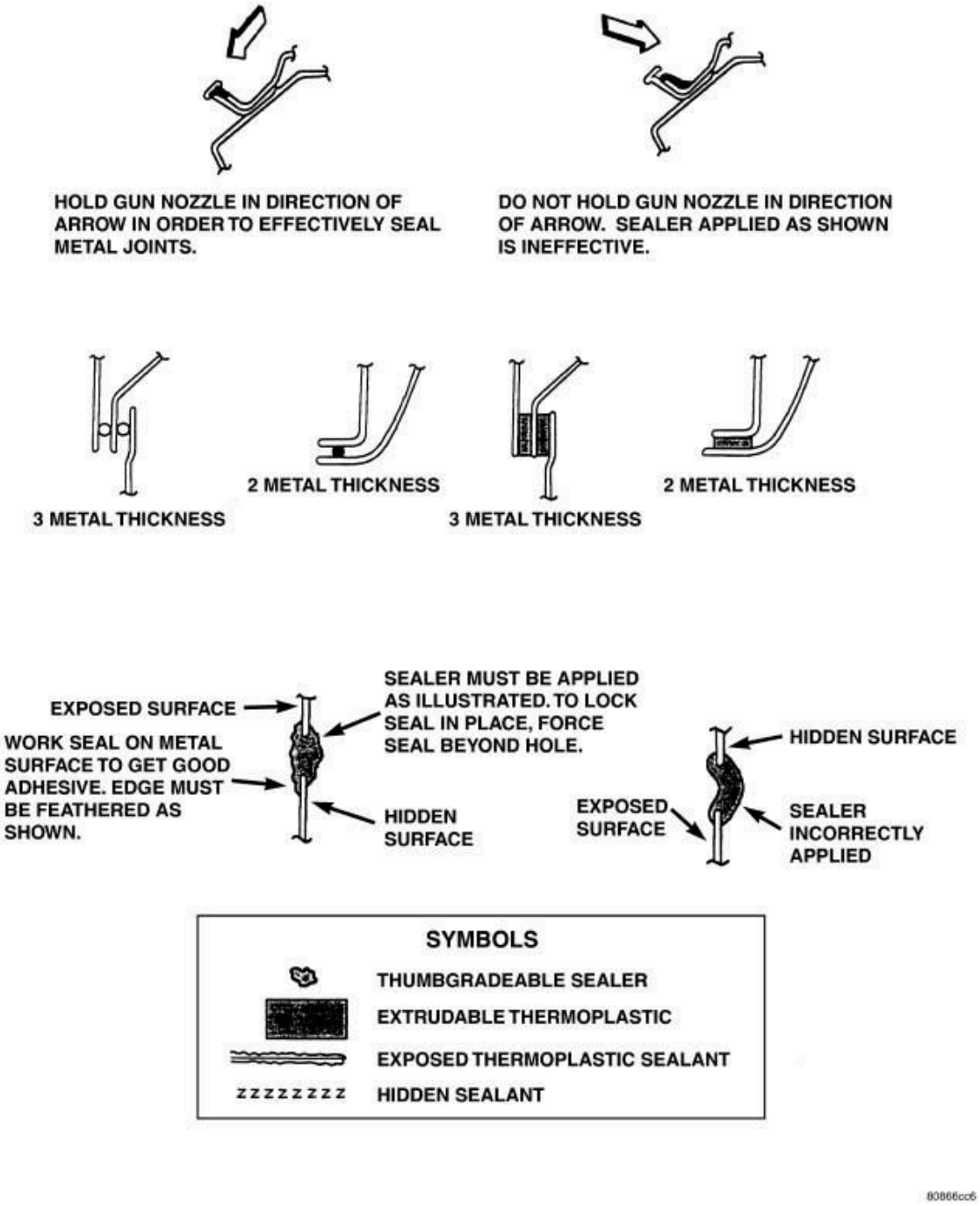

Fig. 677: Methods Of Applying Body Sealant
Courtesy of CHRYSLER GROUP, LLC

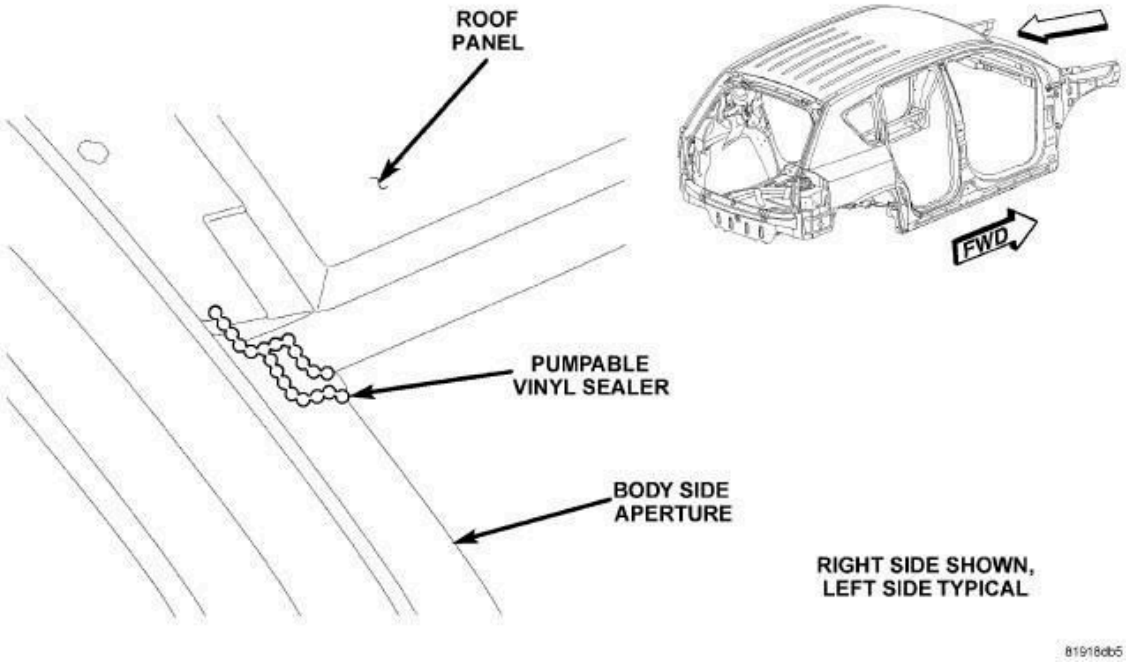

Fig. 678: Front Roof Corner/Aperture Panel
Courtesy of CHRYSLER GROUP, LLC

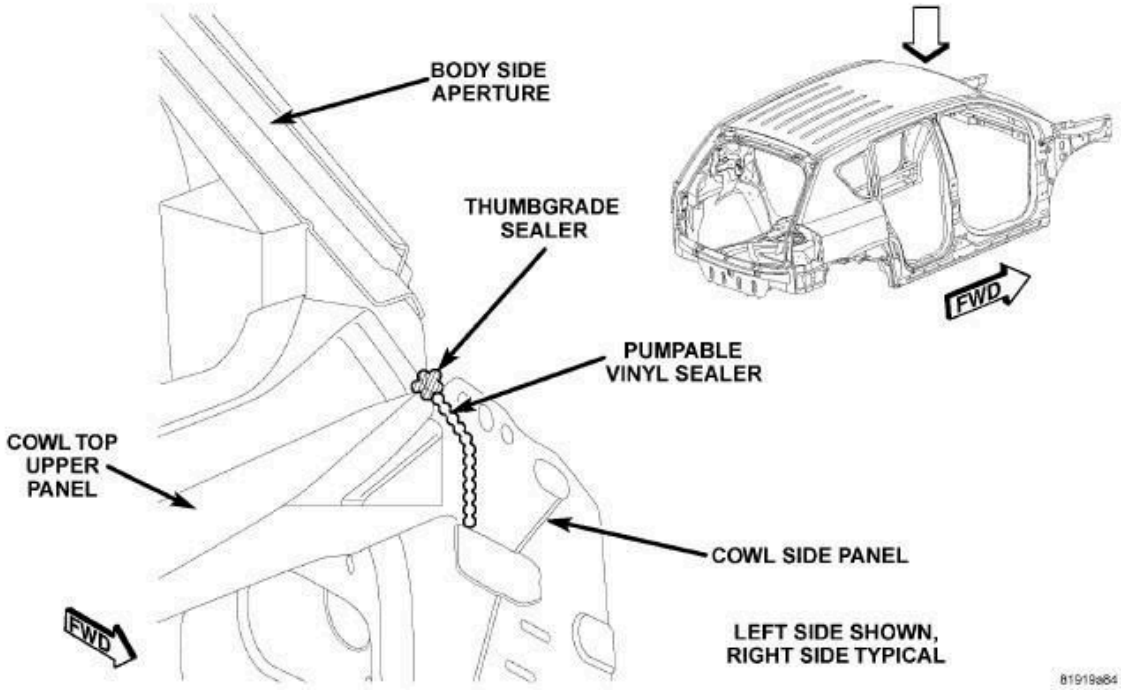

Fig. 679: Upper Cowl Top/Cowl Side
Courtesy of CHRYSLER GROUP, LLC

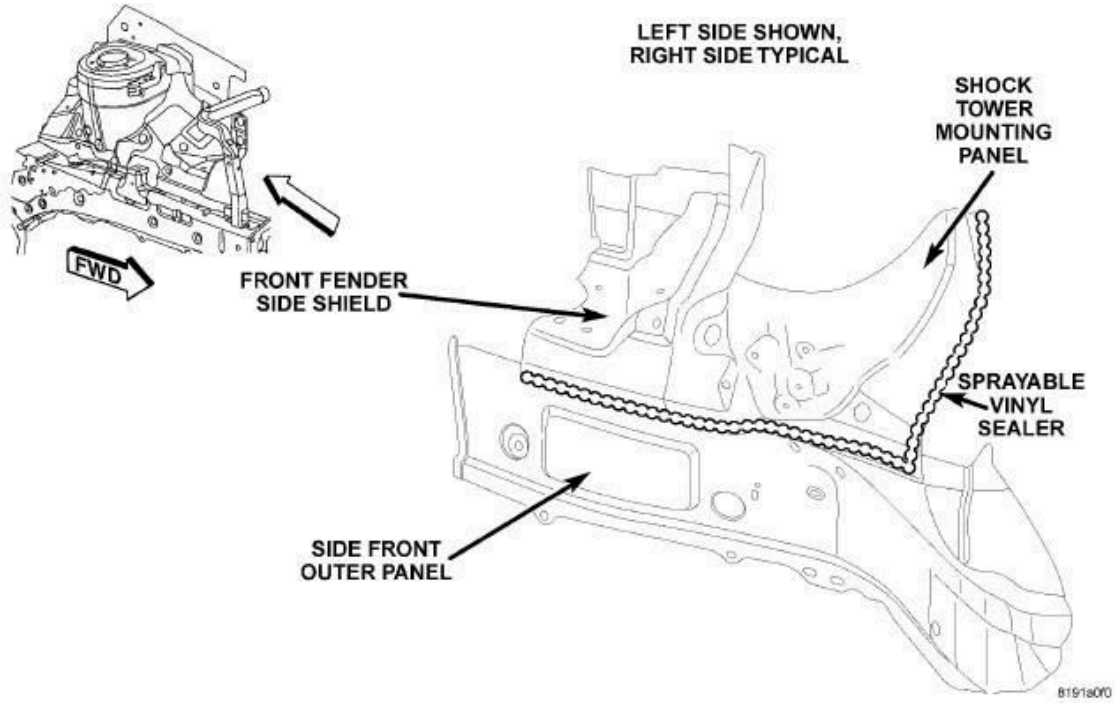

Fig. 680: Front Wheelhouse/Shock Tower
Courtesy of CHRYSLER GROUP, LLC

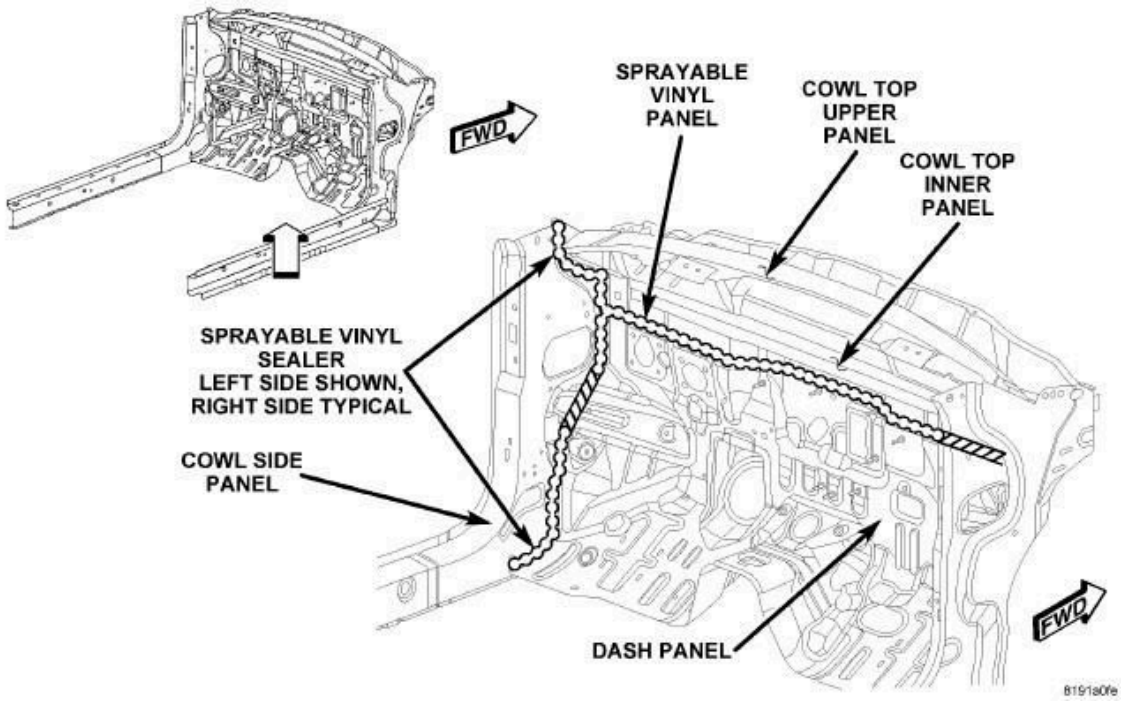

Fig. 681: Dash/Plenum/Cowl Side Panel
Courtesy of CHRYSLER GROUP, LLC

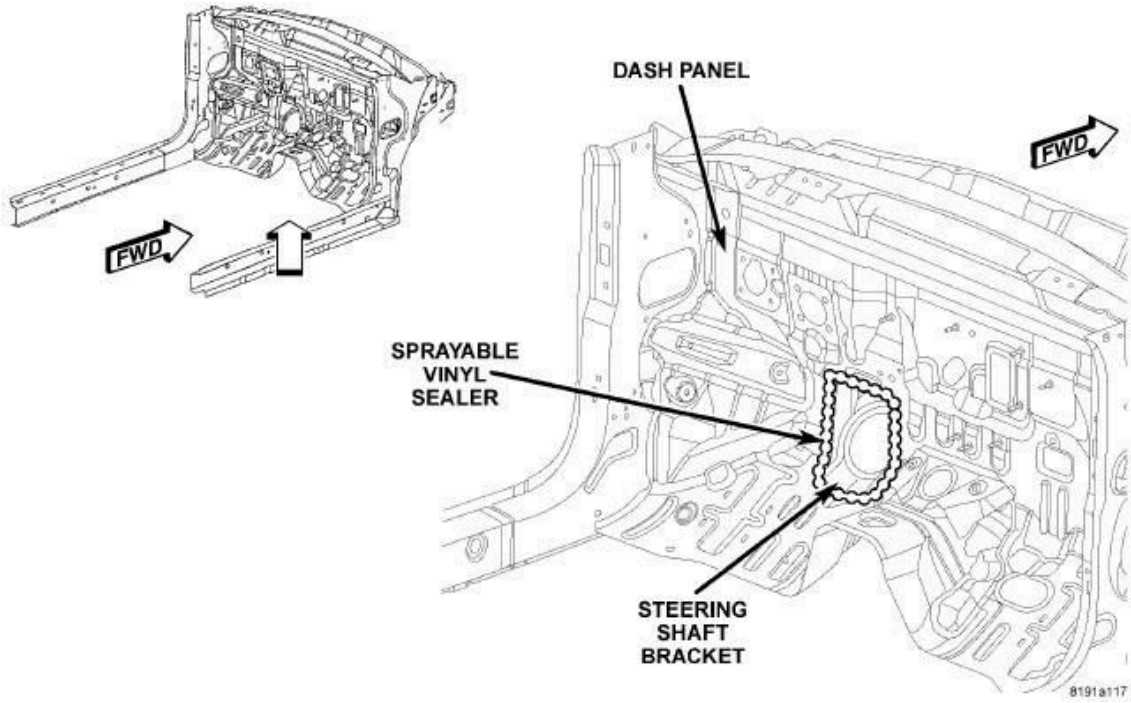

Fig. 682: Dash/Steering Shaft Bracket
Courtesy of CHRYSLER GROUP, LLC

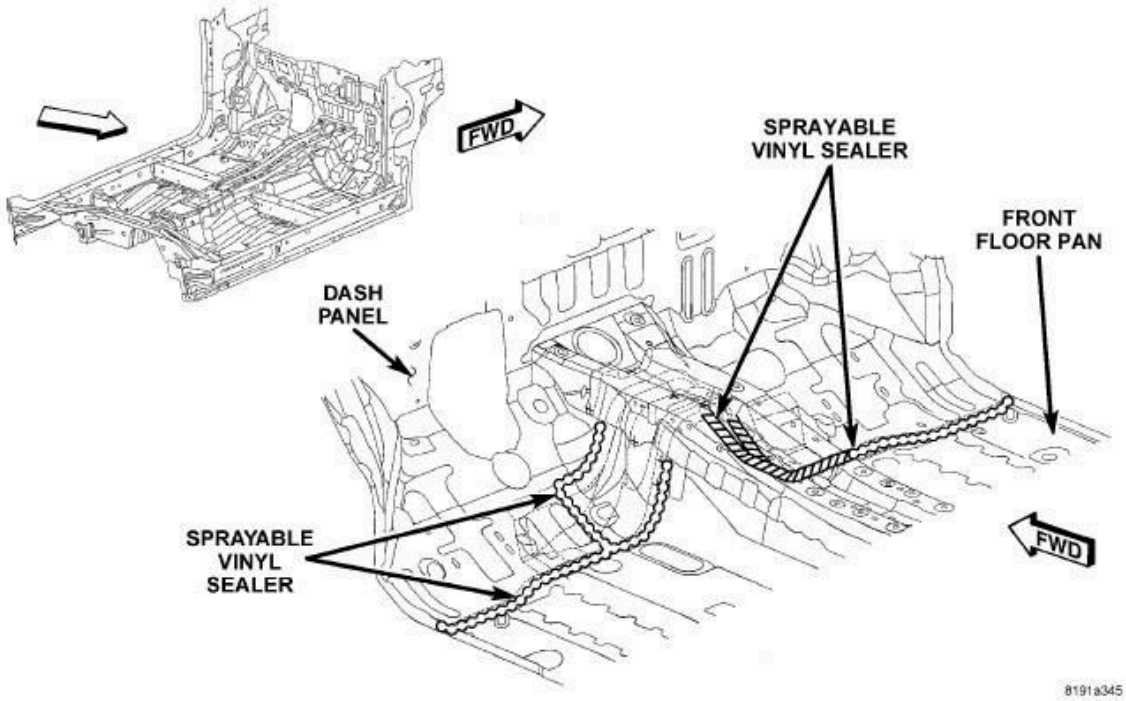

Fig. 683: Dash/Front Floor Pan
Courtesy of CHRYSLER GROUP, LLC

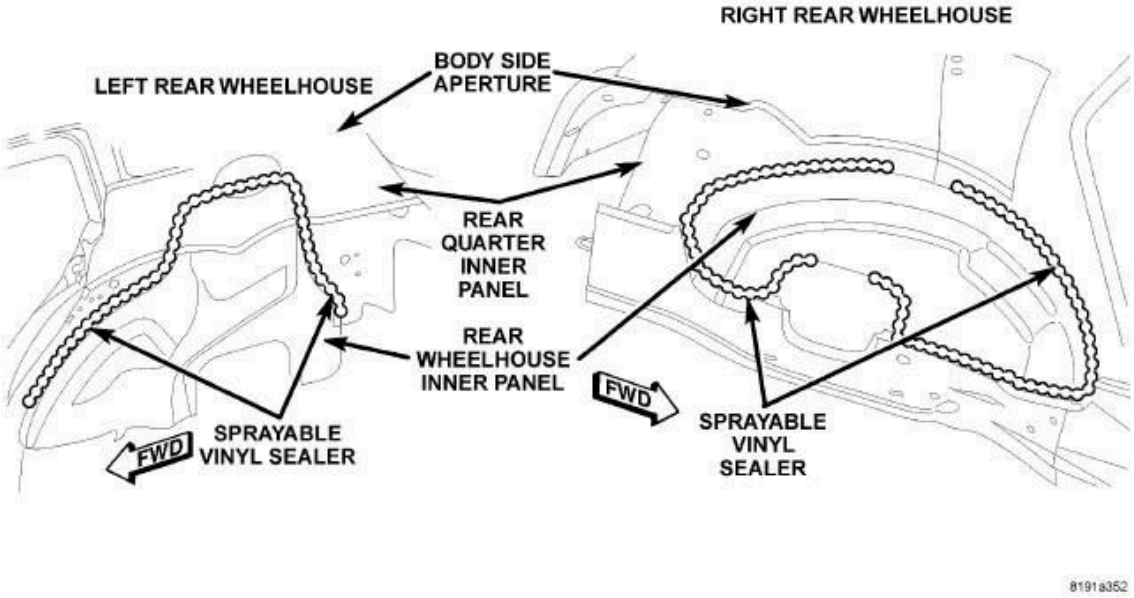

Fig. 684: Rear Wheelhouses
Courtesy of CHRYSLER GROUP, LLC

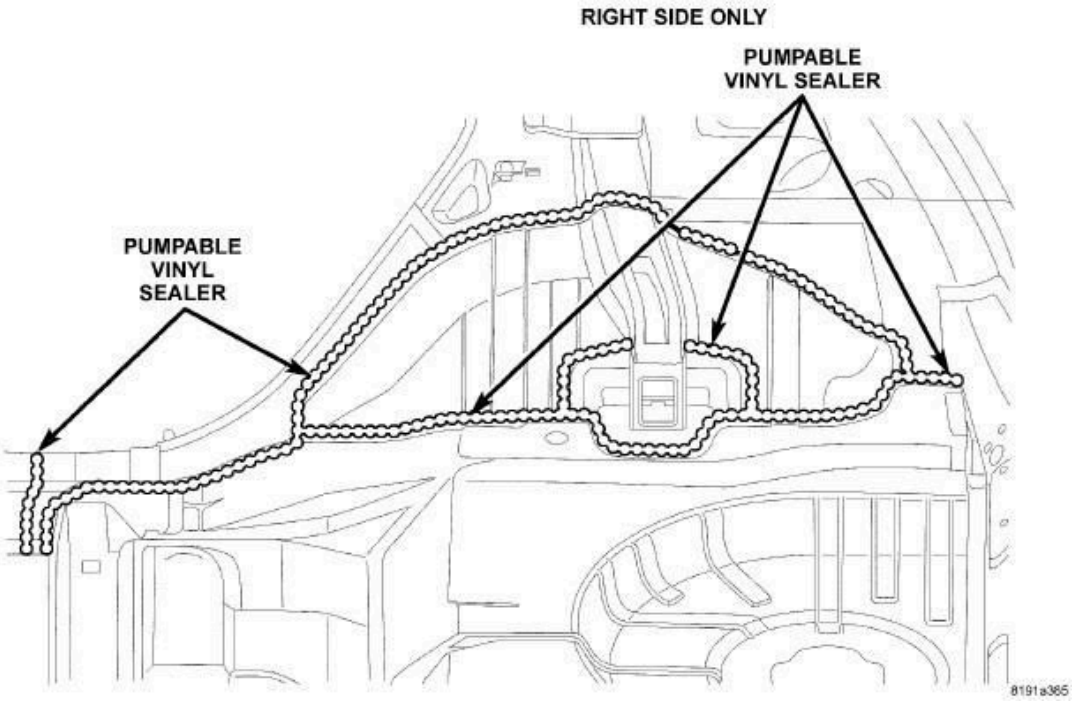

Fig. 685: Right Rear Inner Quarter Panel
Courtesy of CHRYSLER GROUP, LLC

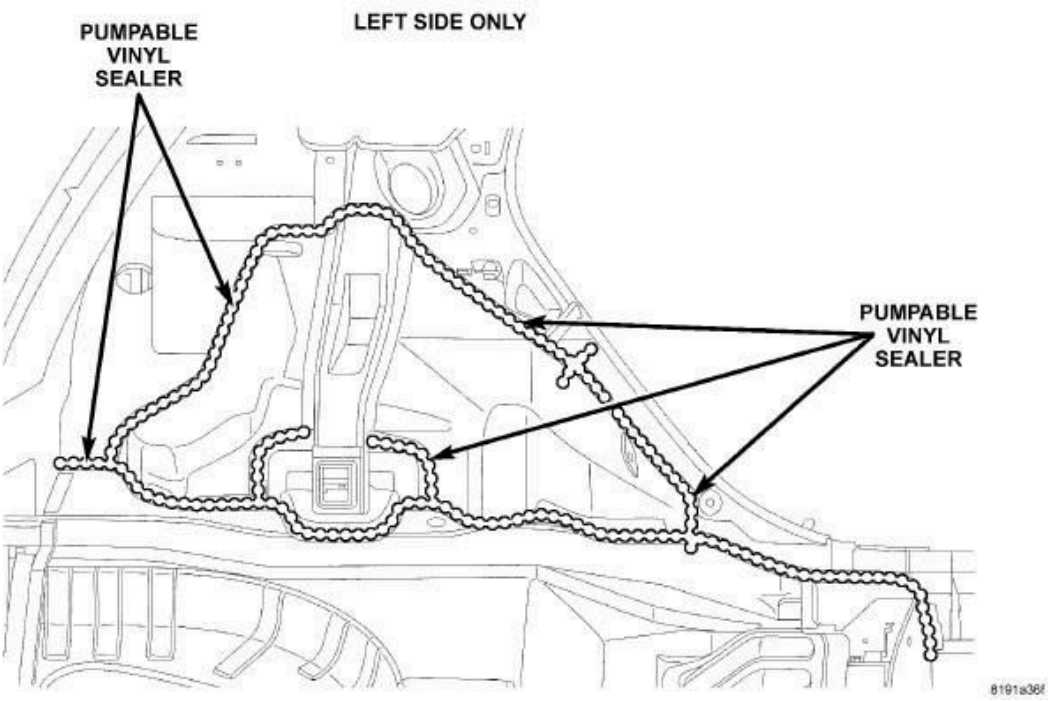

Fig. 686: Left Rear Inner Quarter Panel
Courtesy of CHRYSLER GROUP, LLC

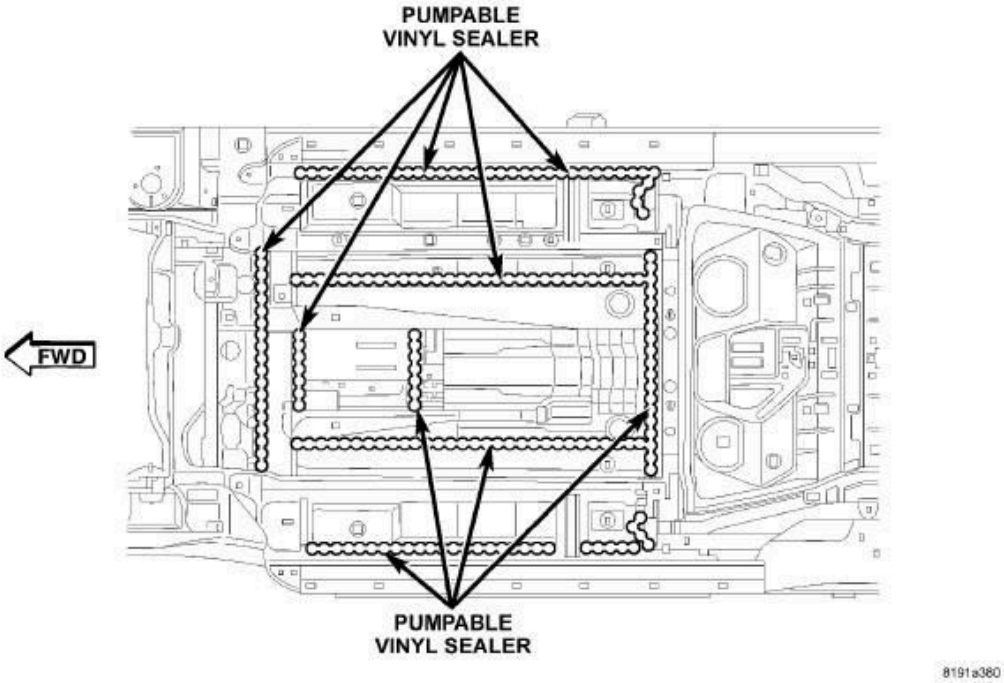

Fig. 687: Underbody
Courtesy of CHRYSLER GROUP, LLC

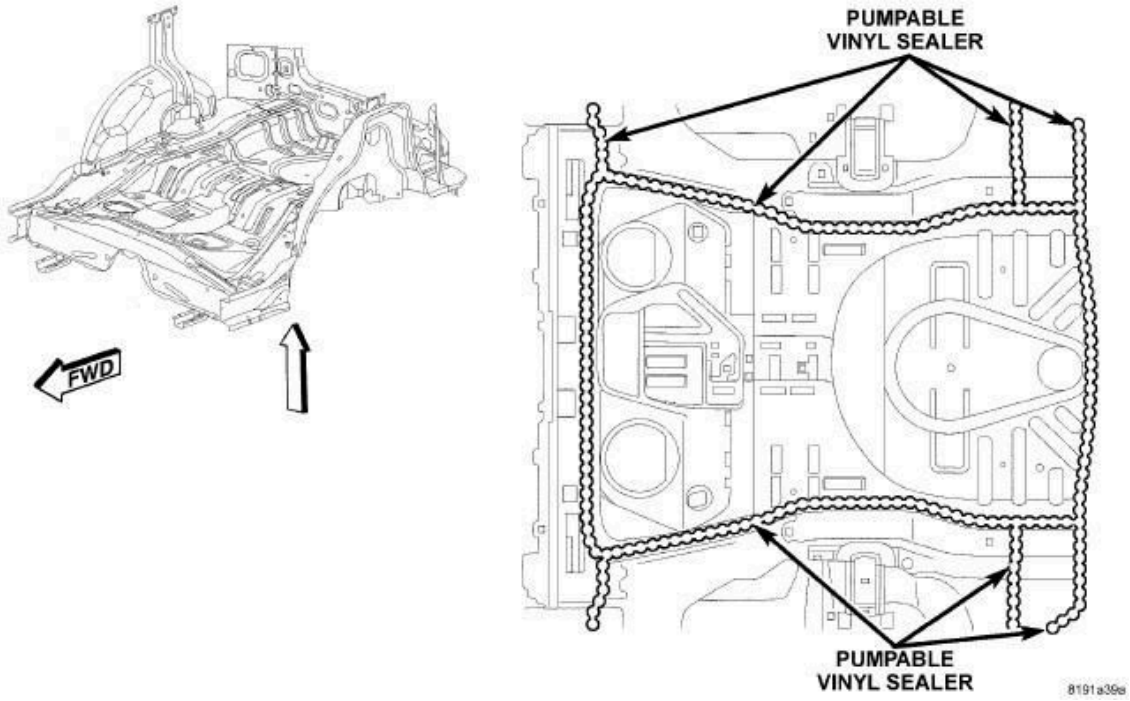

Fig. 688: Rear Floor Pan
Courtesy of CHRYSLER GROUP, LLC

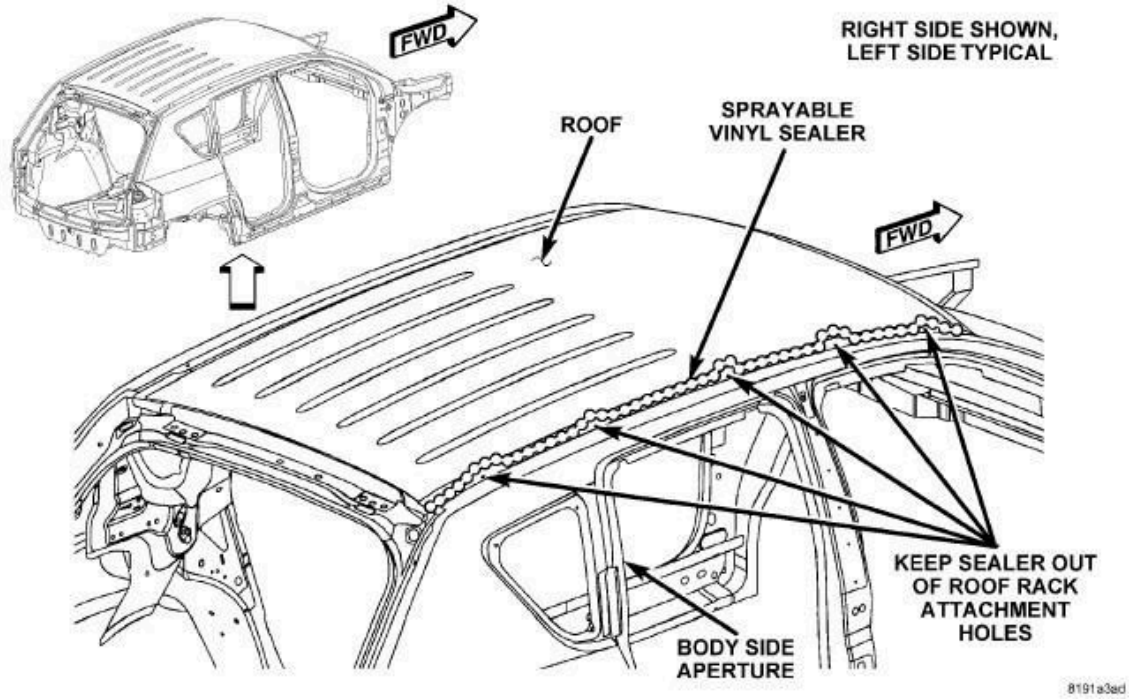

Fig. 689: Roof/Body Side Aperture
Courtesy of CHRYSLER GROUP, LLC

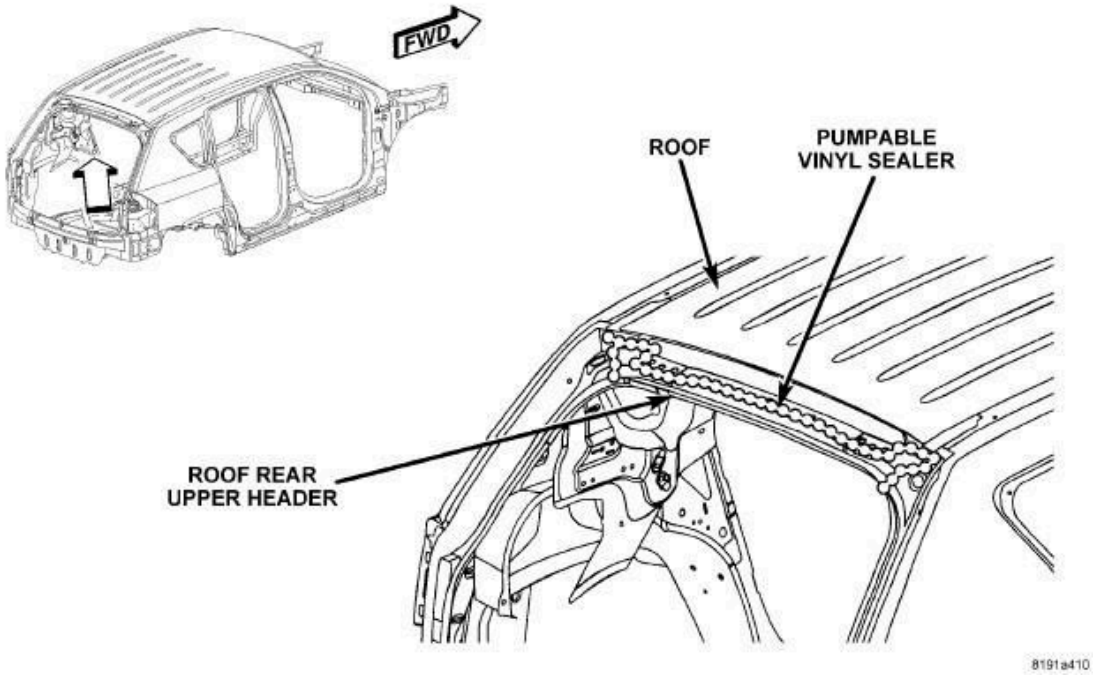

Fig. 690: Roof/Roof Rear Upper Header
Courtesy of CHRYSLER GROUP, LLC

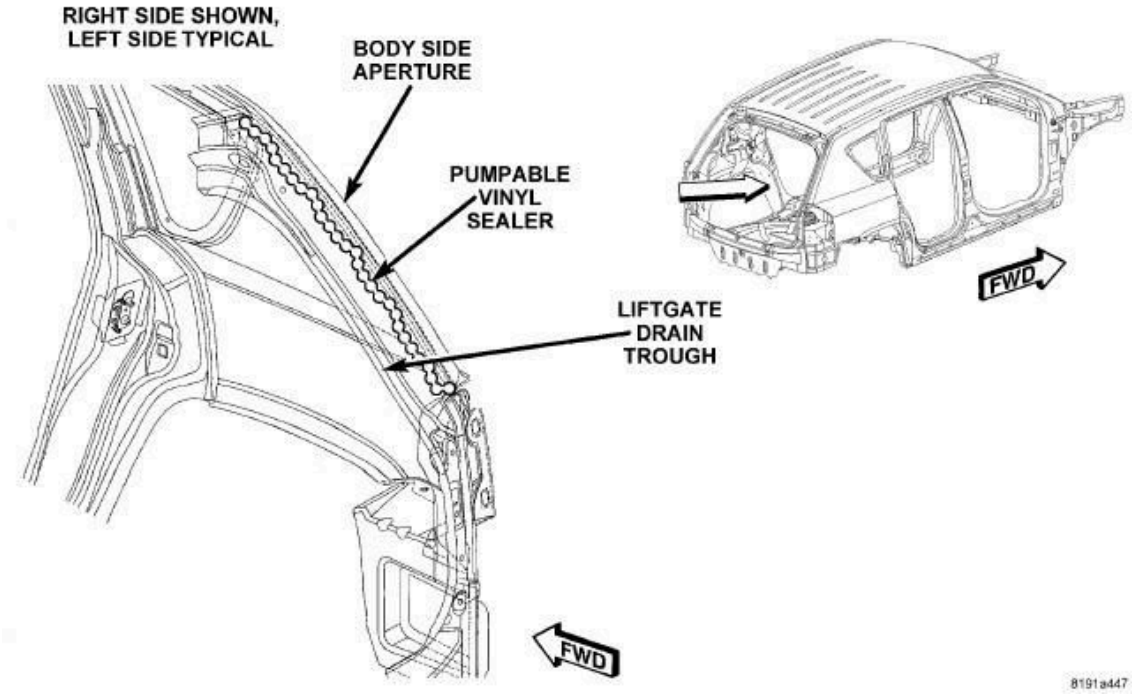

Fig. 691: Body Side Aperture/Liftgate Drain Trough
Courtesy of CHRYSLER GROUP, LLC

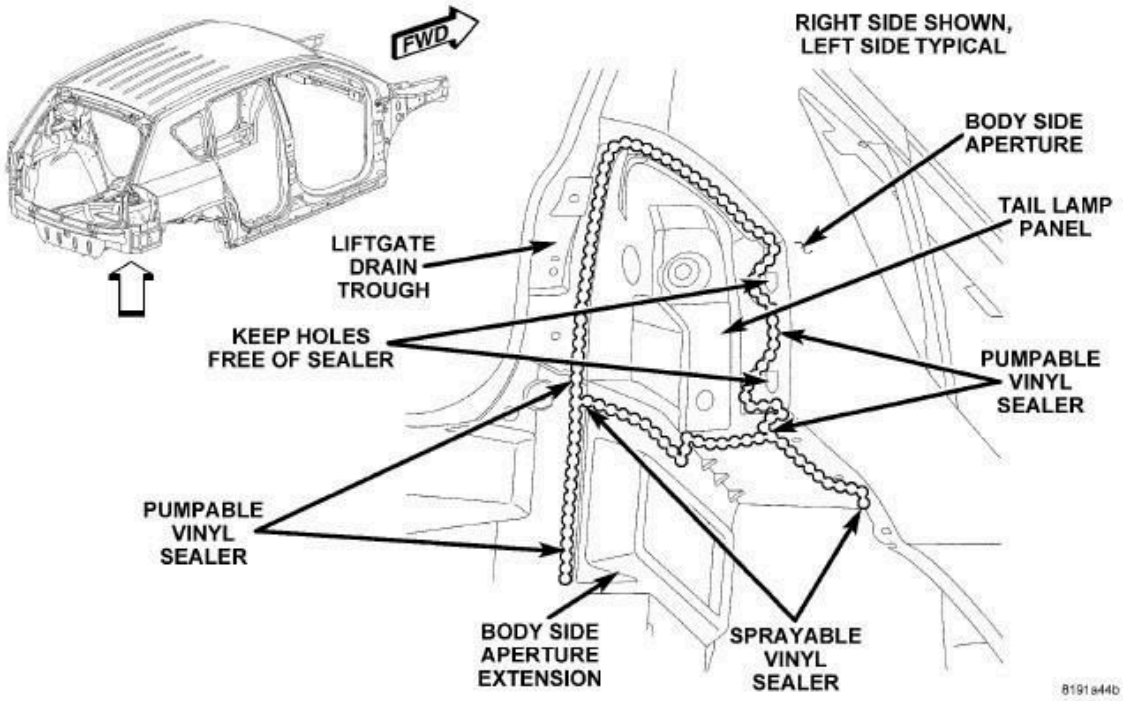

Fig. 692: Tail Lamp Panel
Courtesy of CHRYSLER GROUP, LLC

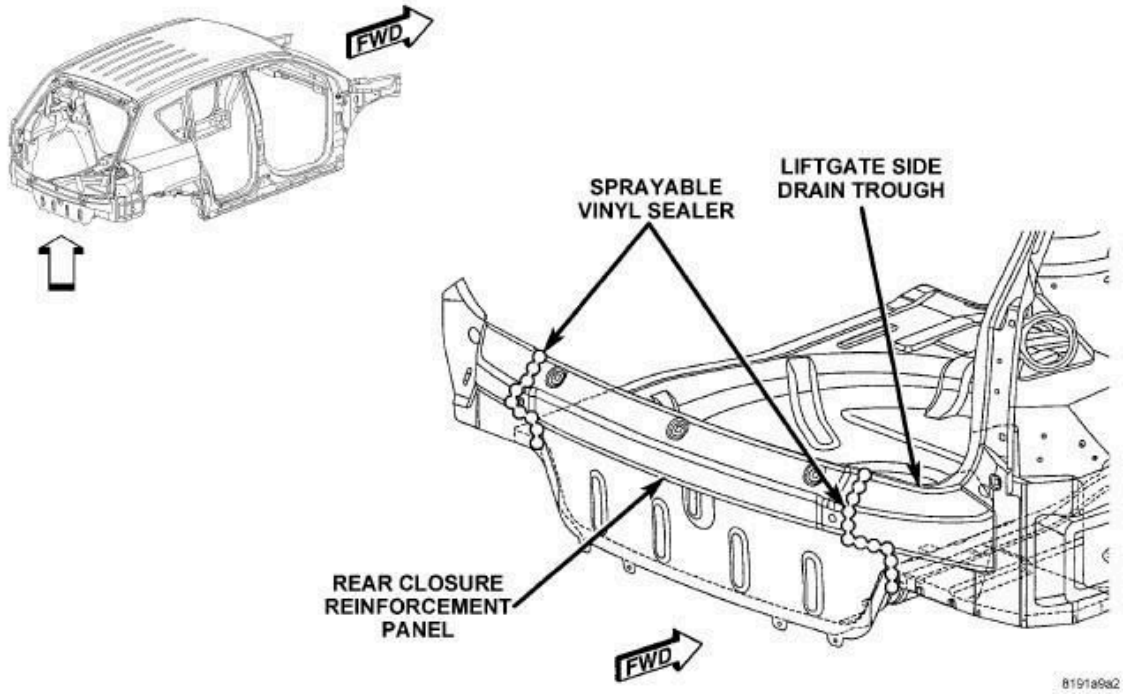

Fig. 693: Lower Liftgate Closeout Panel
Courtesy of CHRYSLER GROUP, LLC

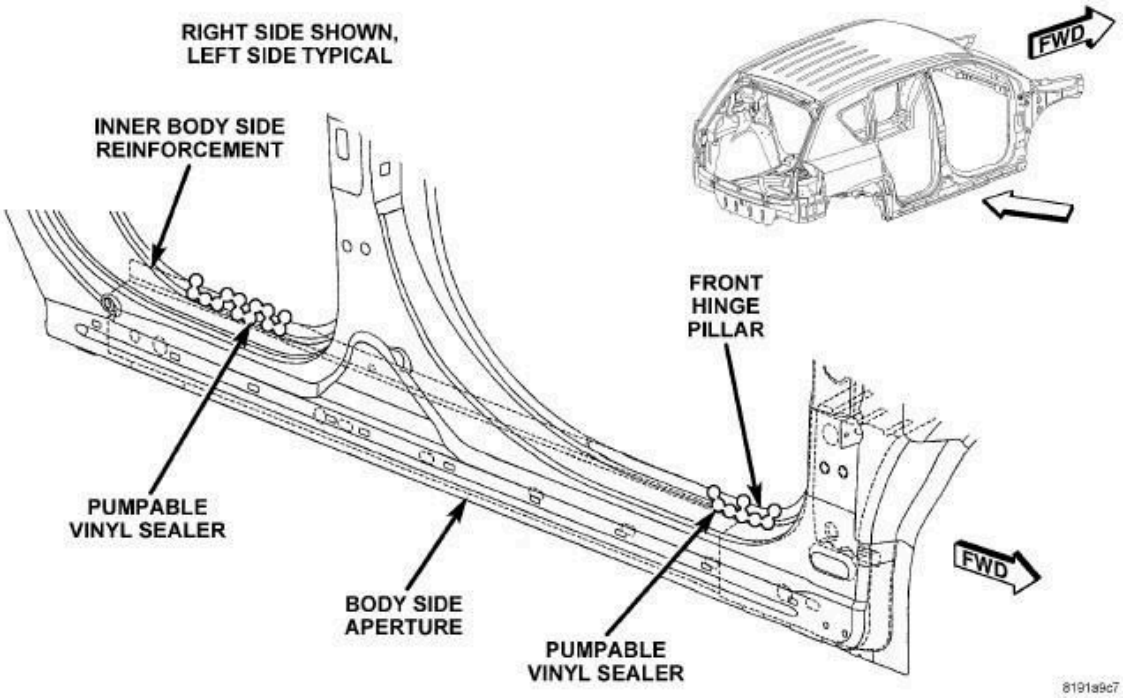

Fig. 694: Body Side Aperture/Inner Body Side Reinforcement
Courtesy of CHRYSLER GROUP, LLC

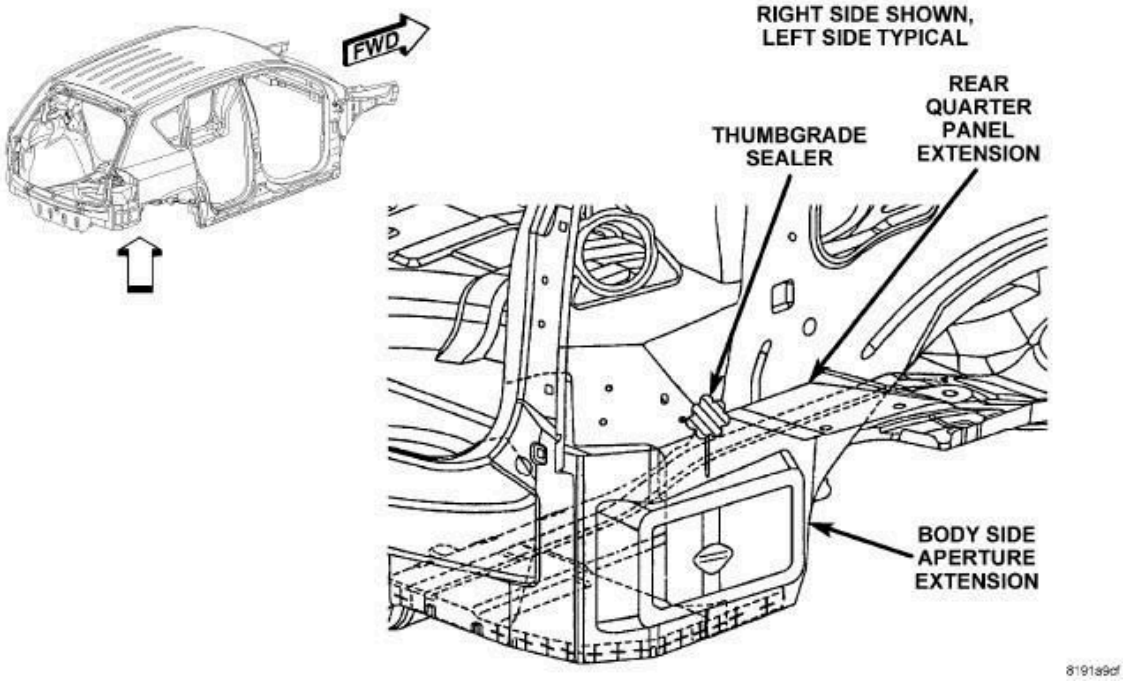

Fig. 695: Rear Wheelhouse
Courtesy of CHRYSLER GROUP, LLC

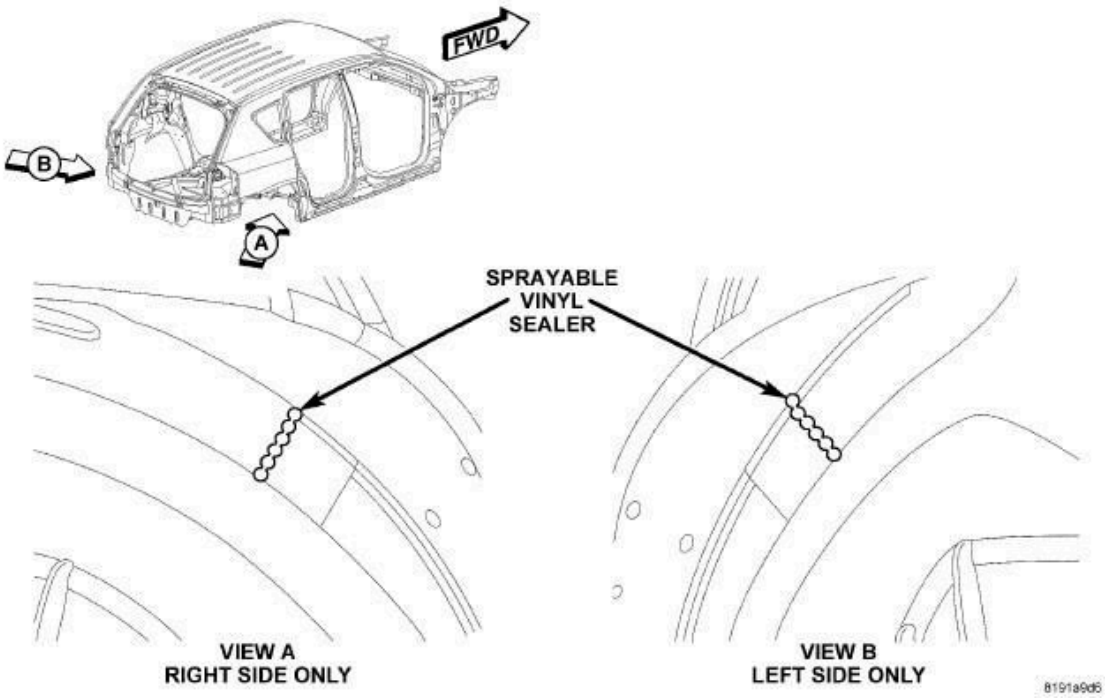

Fig. 696: Rear Wheelhouse/Rear Quarter Panel Extension
Courtesy of CHRYSLER GROUP, LLC

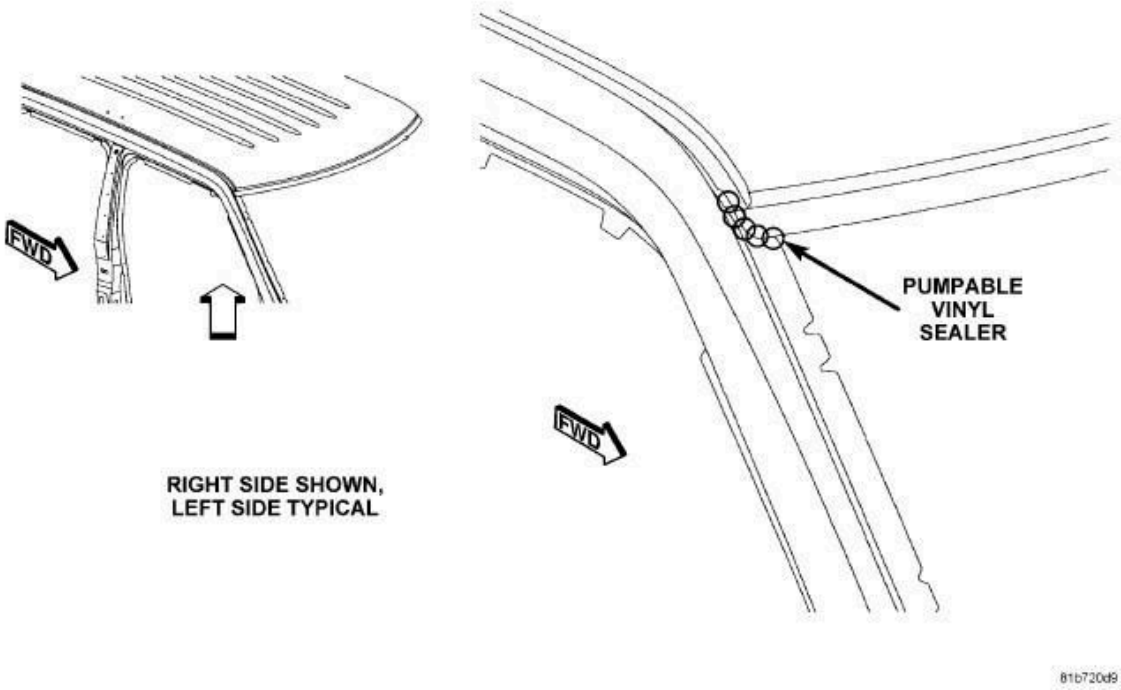

Fig. 697: Front Roof Panel/Aperture Panel
Courtesy of CHRYSLER GROUP, LLC

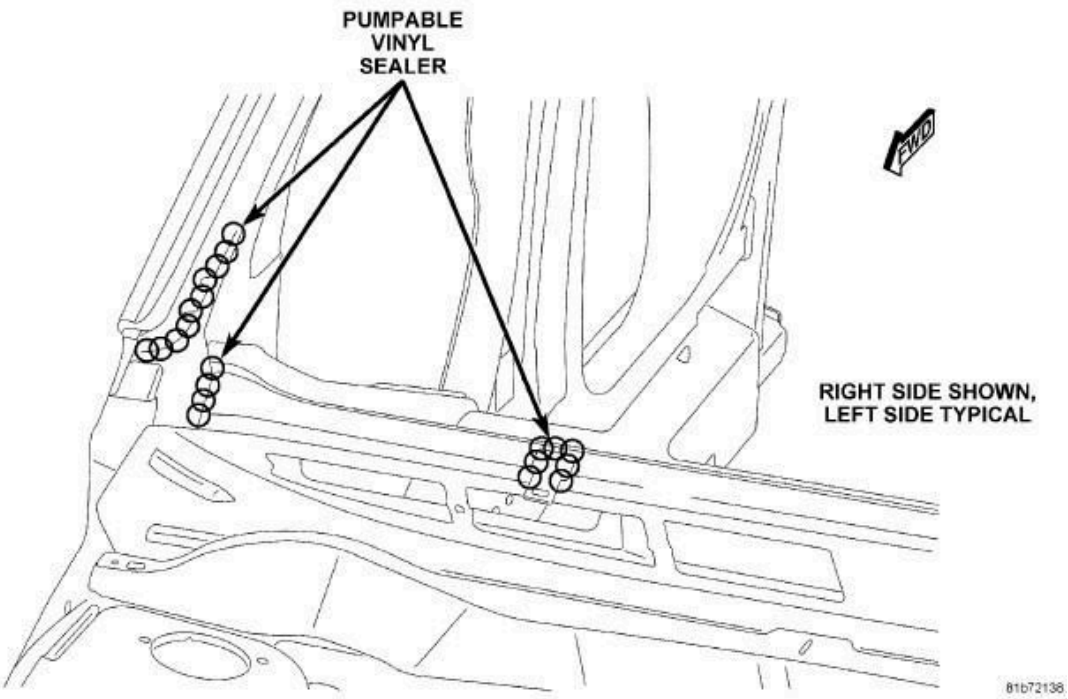

Fig. 698: A-Pillar/Windshield Bracket
Courtesy of CHRYSLER GROUP, LLC

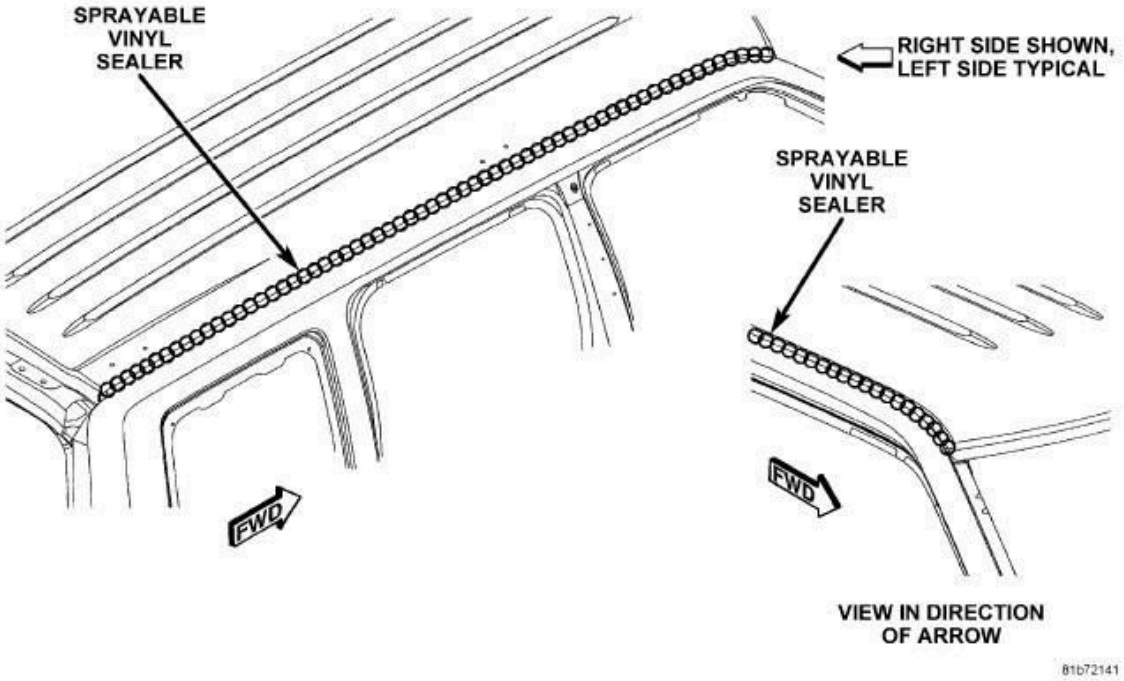

Fig. 699: Roof/Body Side Aperture
Courtesy of CHRYSLER GROUP, LLC

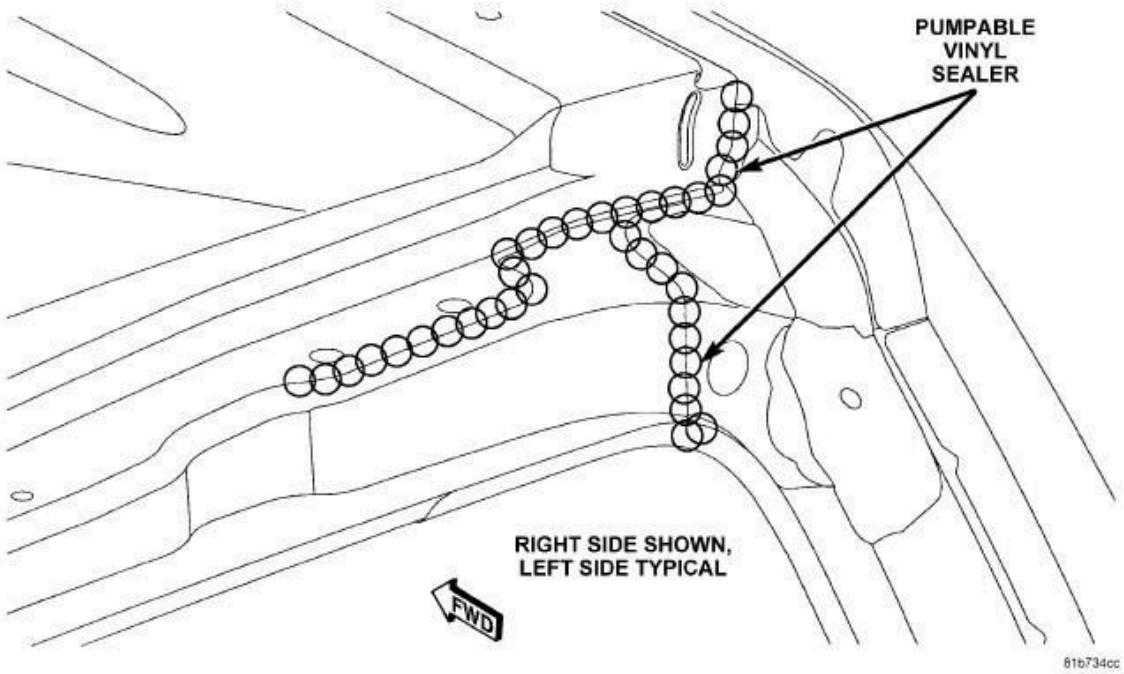

Fig. 700: Liftgate Opening
Courtesy of CHRYSLER GROUP, LLC

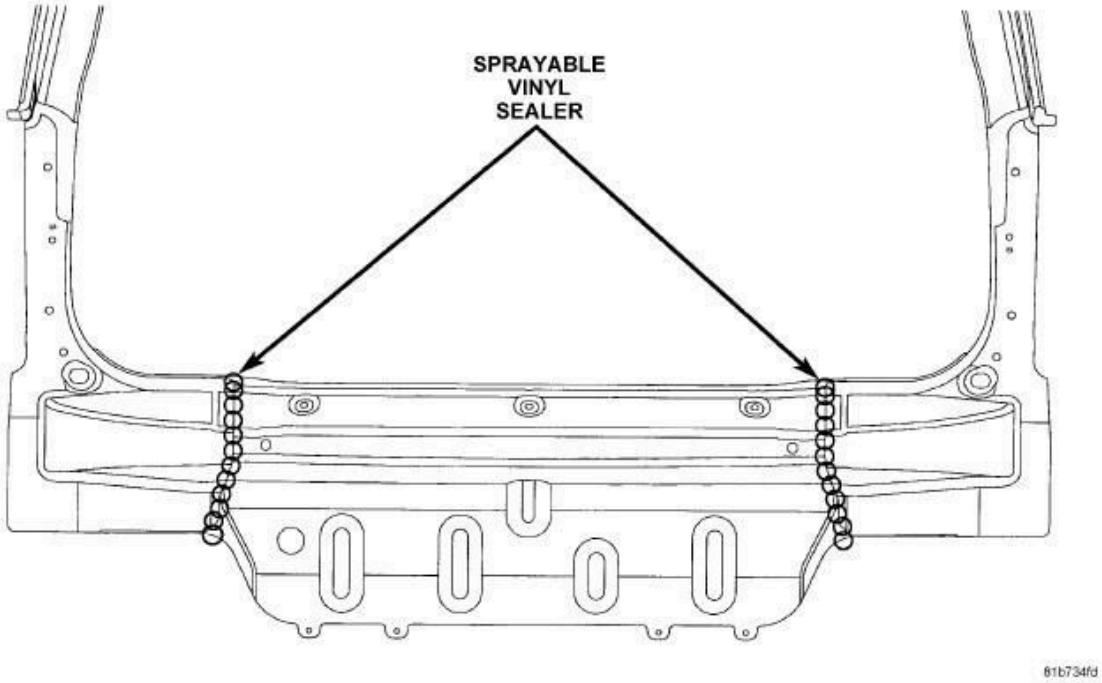

Fig. 701: Lower Liftgate Closeout Panel
Courtesy of CHRYSLER GROUP, LLC

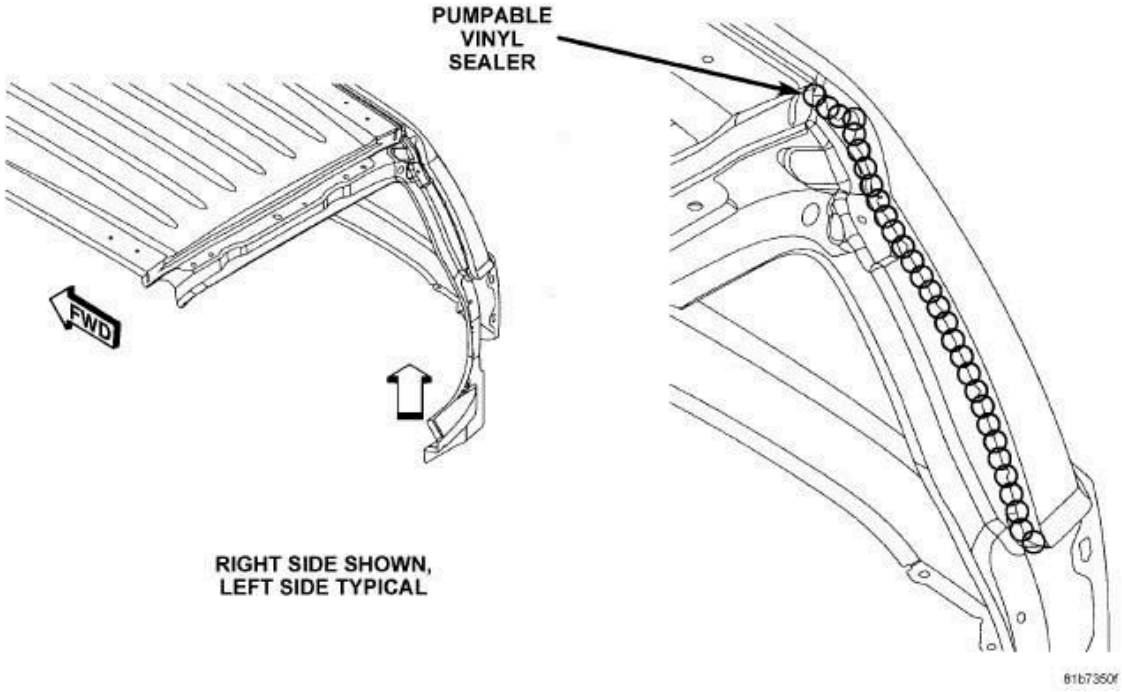

Fig. 702: Body Side Aperture/Liftgate Drain Trough
Courtesy of CHRYSLER GROUP, LLC

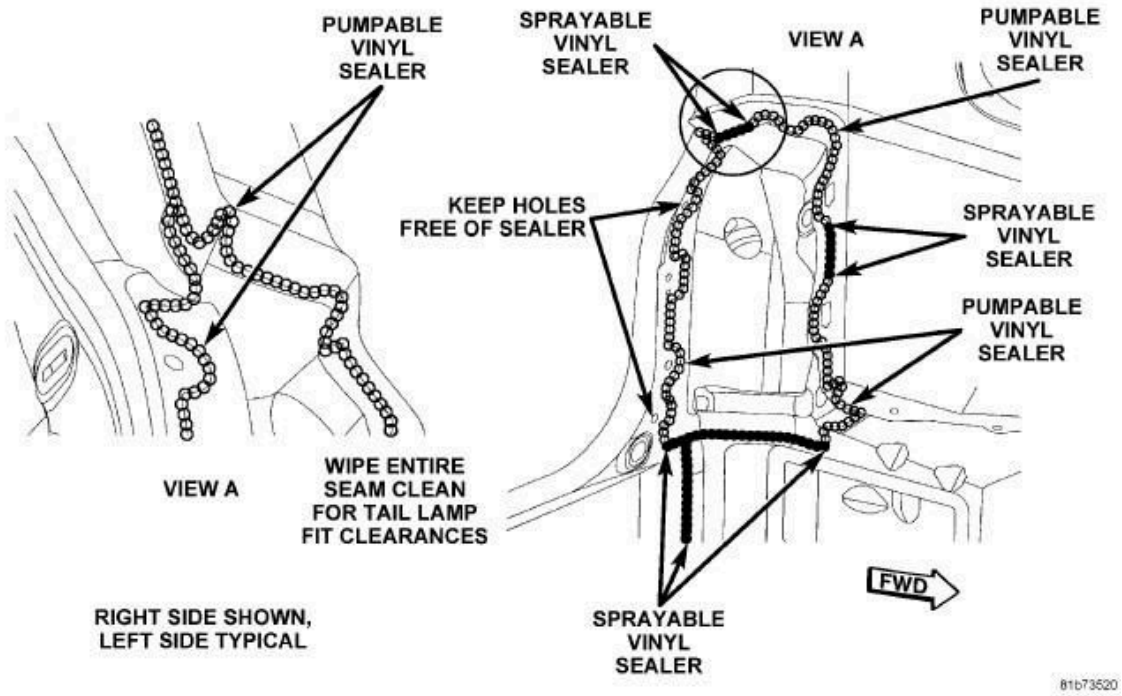

Fig. 703: Tail Lamp Panel
Courtesy of CHRYSLER GROUP, LLC

STRUCTURAL ADHESIVE LOCATIONS

SPECIFICATIONS

SPECIFICATIONS

INDEX

DESCRIPTION	FIGURE
COMPASS AND PATRIOT	
PLENUM ASSEMBLY	Refer to **Fig. 704**.
FRONT FLOOR	Refer to **Fig. 705**.
SIDEMEMBER ASSEMBLY (1 OF 3)	Refer to **Fig. 706**.
SIDEMEMBER ASSEMBLY (2 OF 3)	Refer to **Fig. 707**.
SIDEMEMBER ASSEMBLY (3 OF 3)	Refer to **Fig. 708**.
COMPASS ONLY	
BODY SIDE APERTURE INNER ASSEMBLY	Refer to **Fig. 709**.
BODY SIDE APERTURE COMPLETE	Refer to **Fig. 710**.
ROOF WITHOUT SUNROOF	Refer to **Fig. 711**.
ROOF WITH SUNROOF	Refer to **Fig. 712**.
BODY IN WHITE COMPLETE (1 OF 2)	Refer to **Fig. 713**.
BODY IN WHITE COMPLETE (2 OF 2)	Refer to **Fig. 714**.
PATRIOT ONLY	
PLENUM ASSEMBLY	Refer to **Fig. 715**.
SUNROOF FRAME	Refer to **Fig. 716**.
INNER BODY SIDE APERTURE	Refer to **Fig. 717**.
BODY SIDE APERTURE COMPLETE	Refer to **Fig. 718**.
ROOF WITHOUT SUNROOF	Refer to **Fig. 719**.
ROOF WITH SUNROOF	Refer to **Fig. 720**.
BODY IN WHITE COMPLETE (1 OF 2)	Refer to **Fig. 721**.
BODY IN WHITE COMPLETE (2 OF 2)	Refer to **Fig. 722**.

COMPASS AND PATRIOT

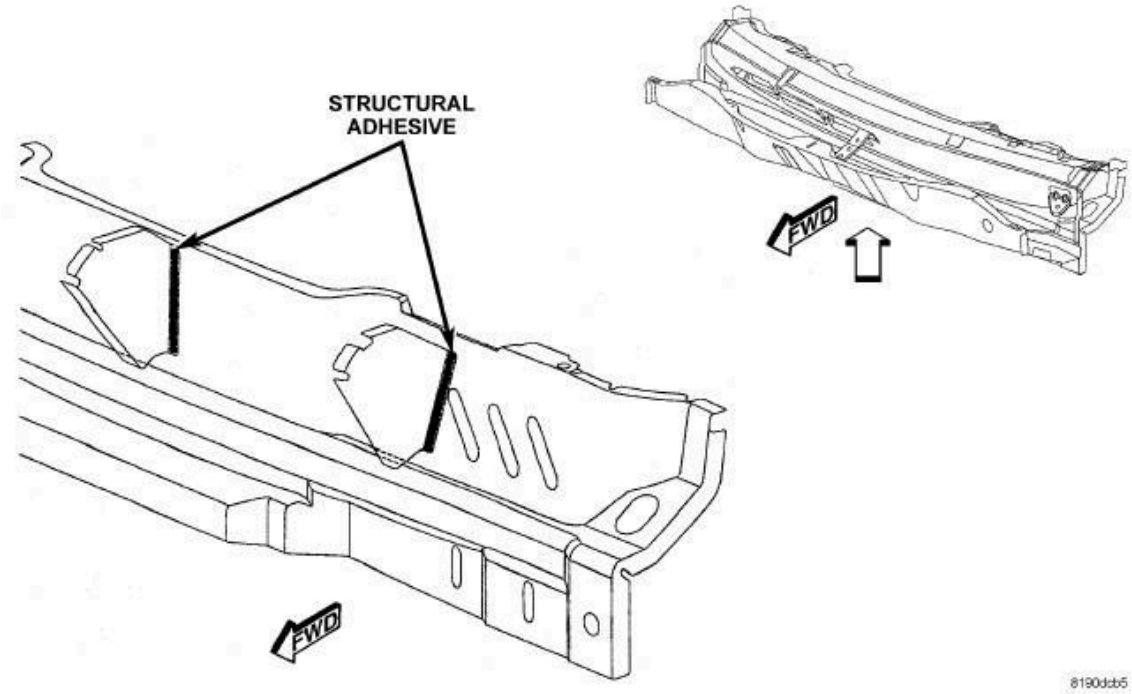

Fig. 704: Plenum Assembly
Courtesy of CHRYSLER GROUP, LLC

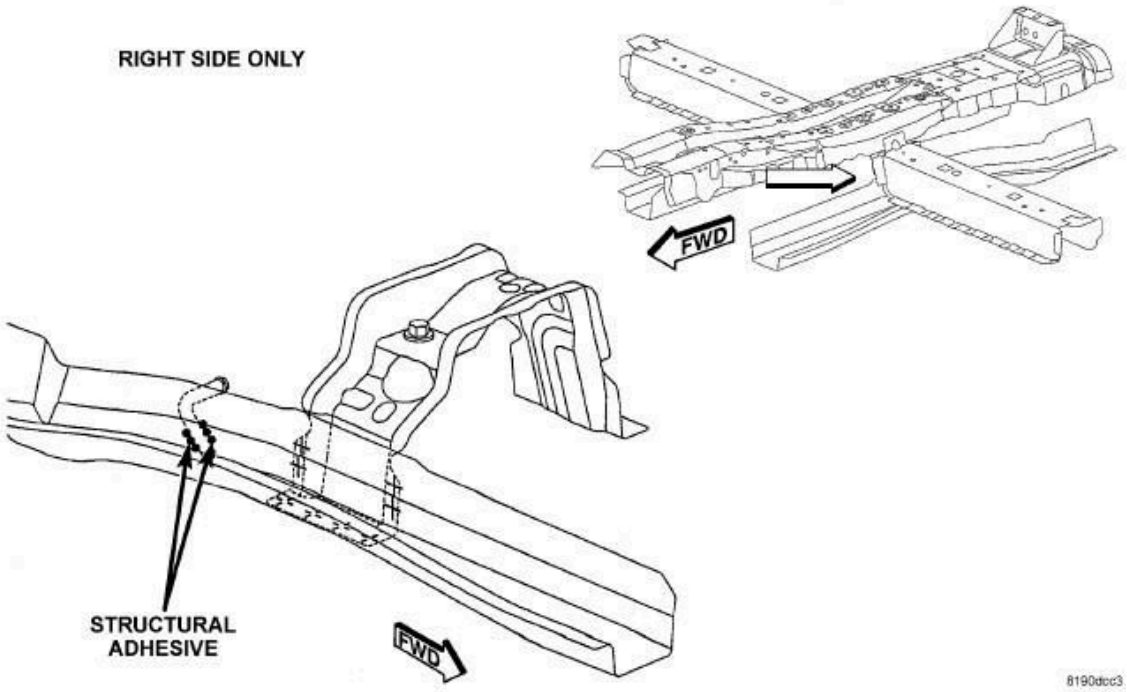

Fig. 705: Front Floor
Courtesy of CHRYSLER GROUP, LLC

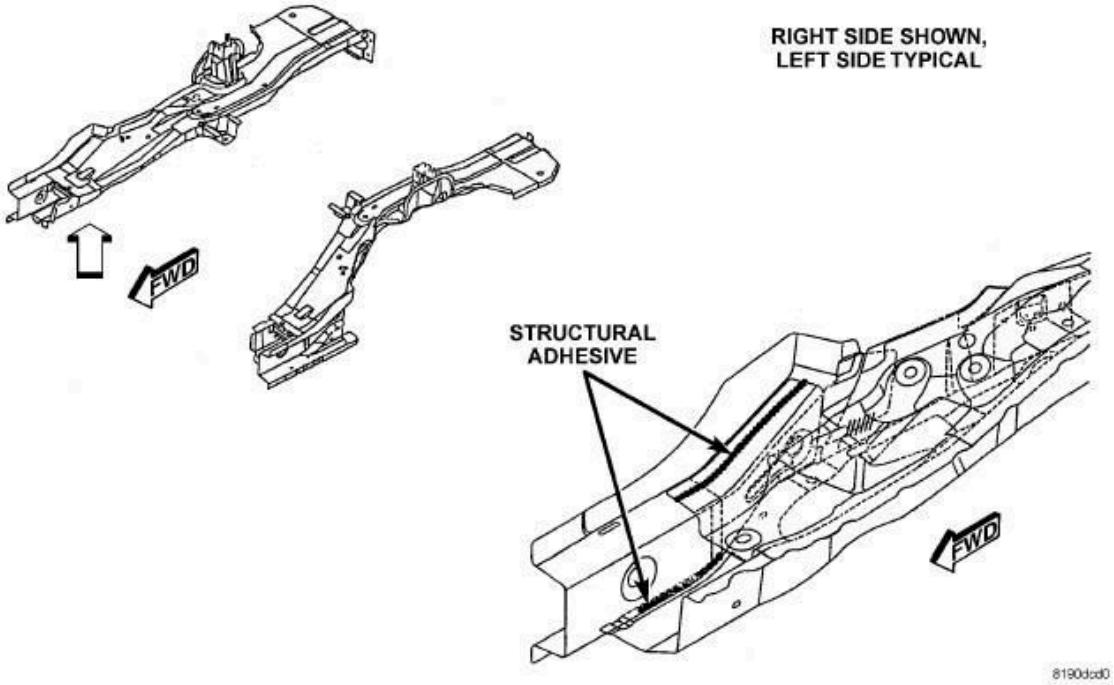

Fig. 706: Sidemember Assembly (1 Of 3)
Courtesy of CHRYSLER GROUP, LLC

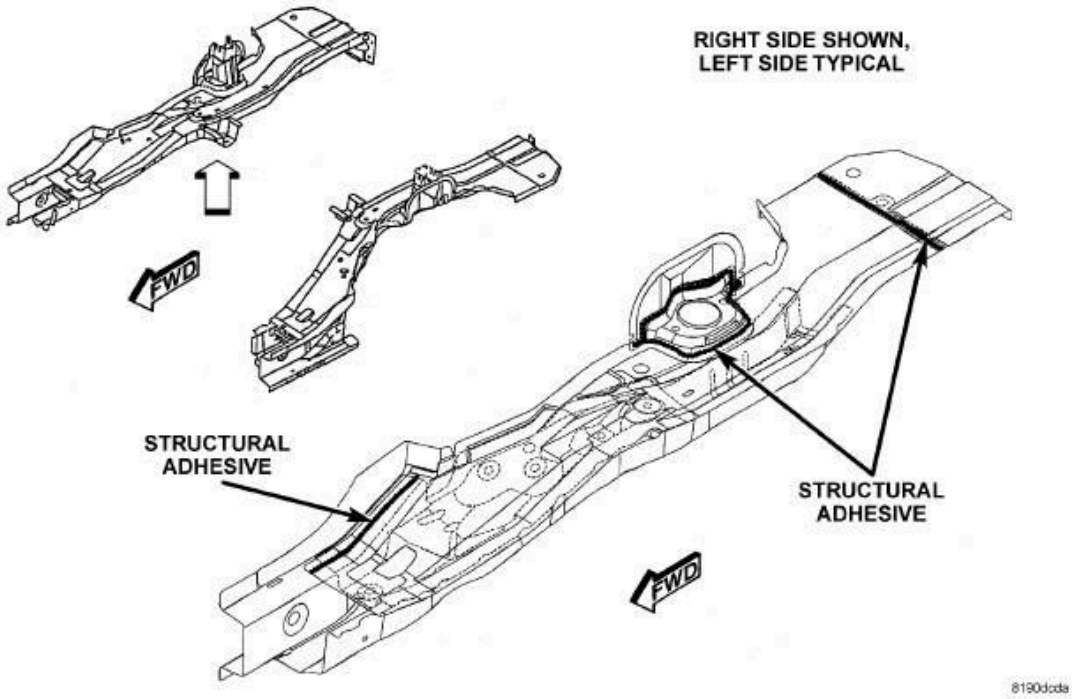

Fig. 707: Sidemember Assembly (2 Of 3)
Courtesy of CHRYSLER GROUP, LLC

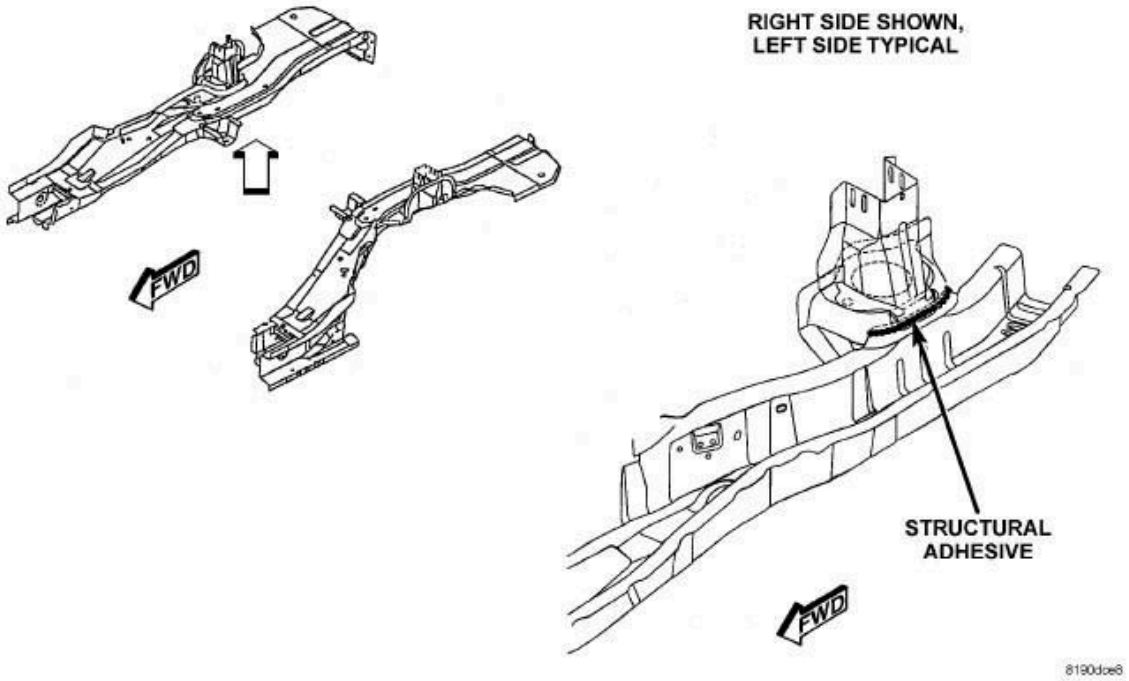

Fig. 708: Sidemember Assembly (3 Of 3)
Courtesy of CHRYSLER GROUP, LLC

COMPASS ONLY

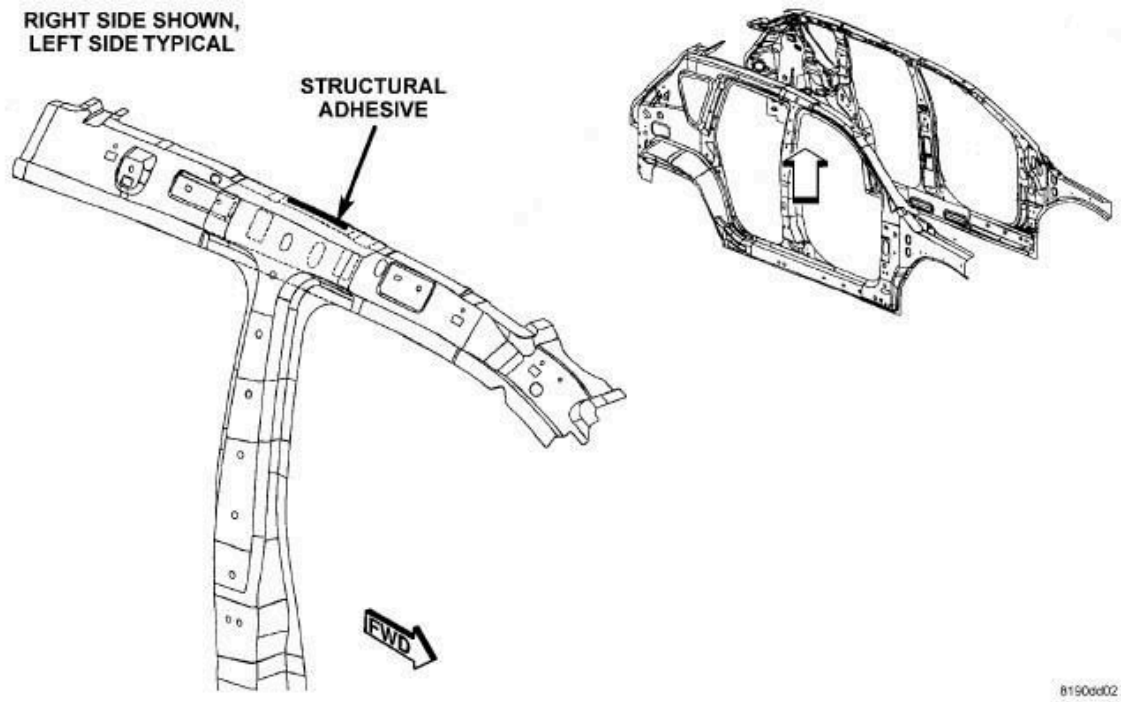

Fig. 709: Body Side Aperture Inner Assembly
Courtesy of CHRYSLER GROUP, LLC

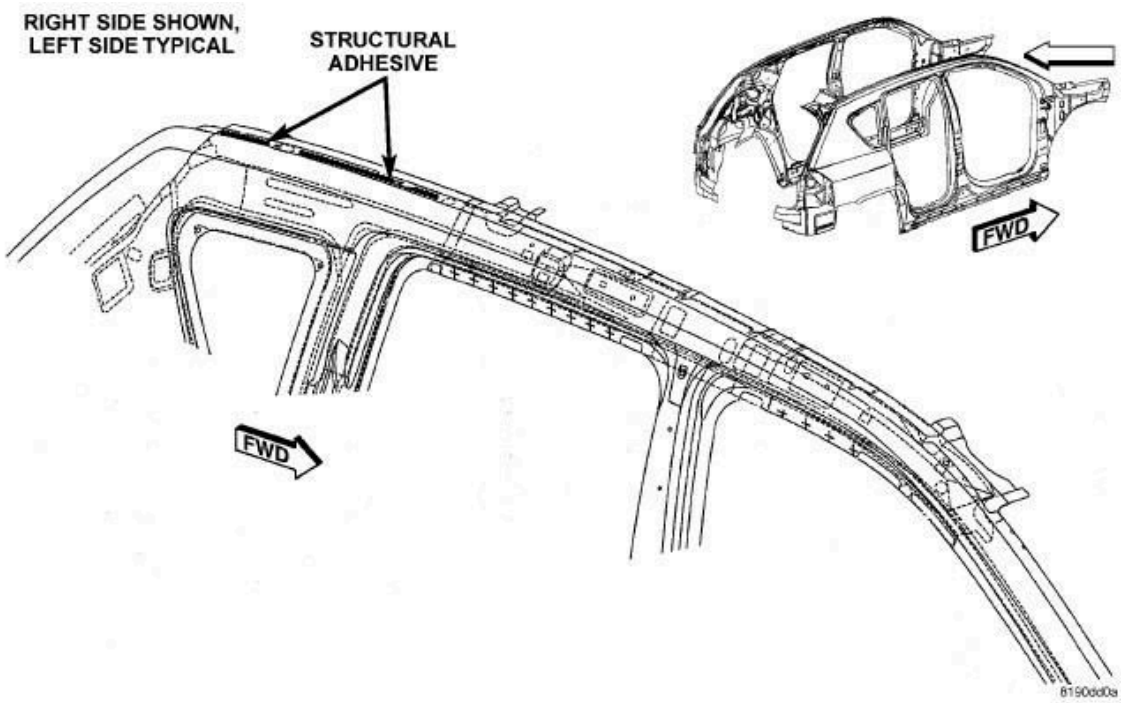

Fig. 710: Body Side Aperture Complete
Courtesy of CHRYSLER GROUP, LLC

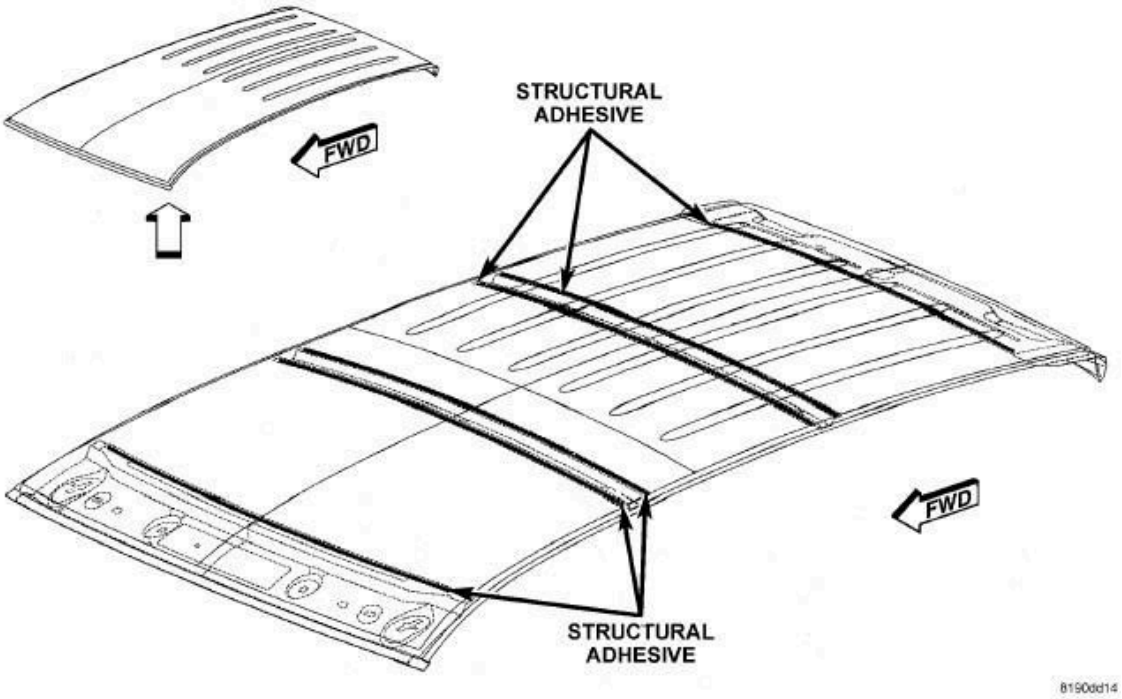

Fig. 711: Roof Without Sunroof
Courtesy of CHRYSLER GROUP, LLC

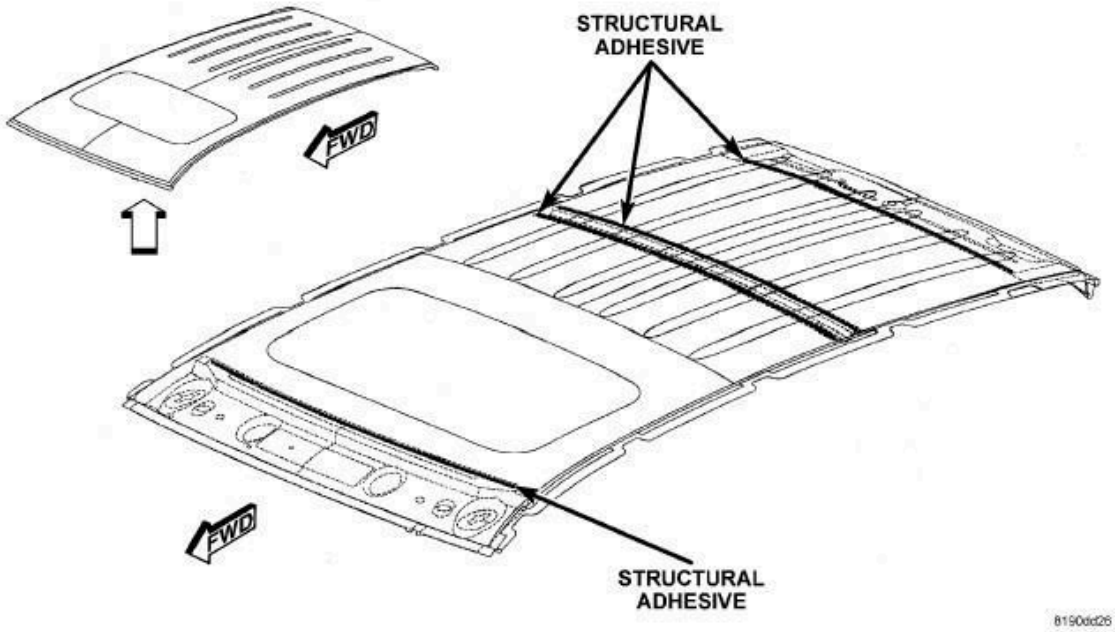

Fig. 712: Roof With Sunroof
Courtesy of CHRYSLER GROUP, LLC

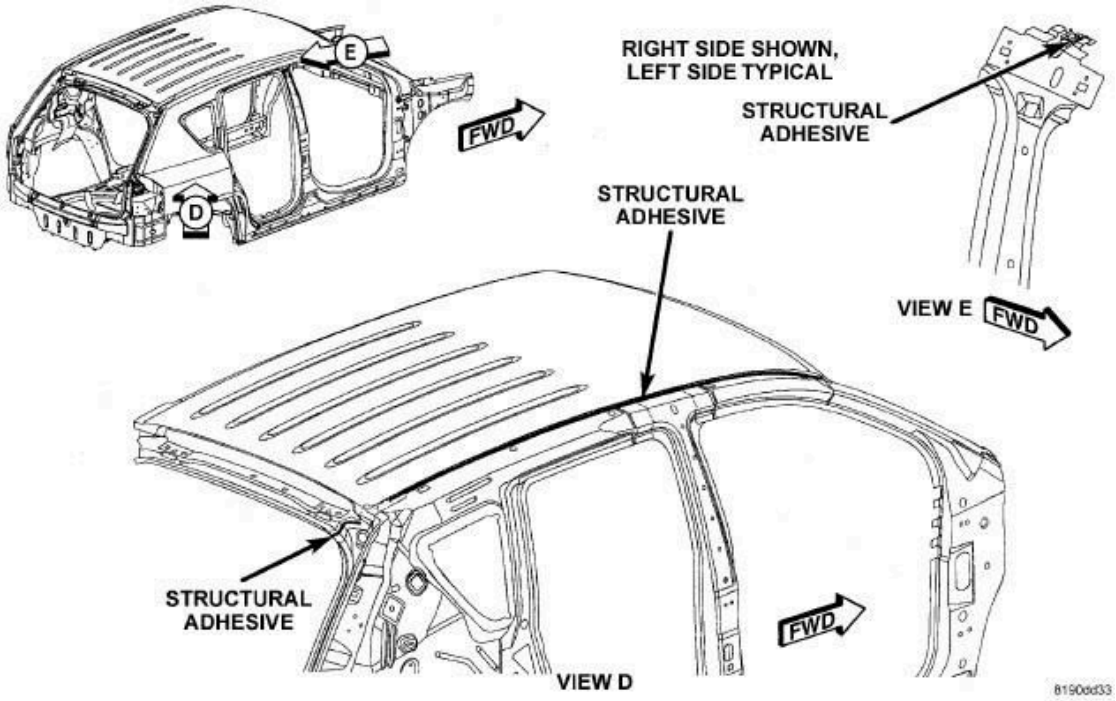

Fig. 713: Body In White Complete (1 Of 2)
Courtesy of CHRYSLER GROUP, LLC

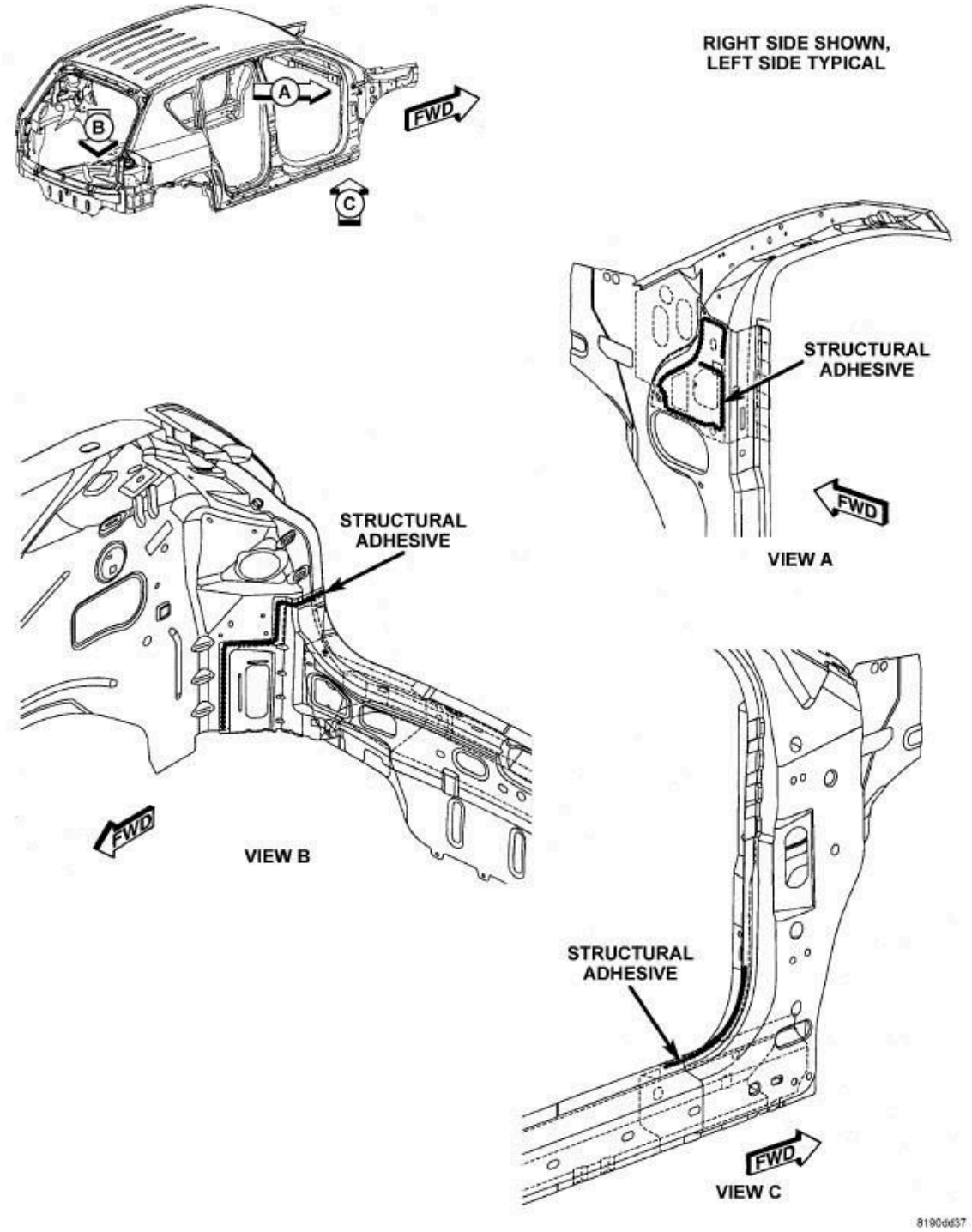

Fig. 714: Body In White Complete (2 Of 2)
Courtesy of CHRYSLER GROUP, LLC

PATRIOT ONLY

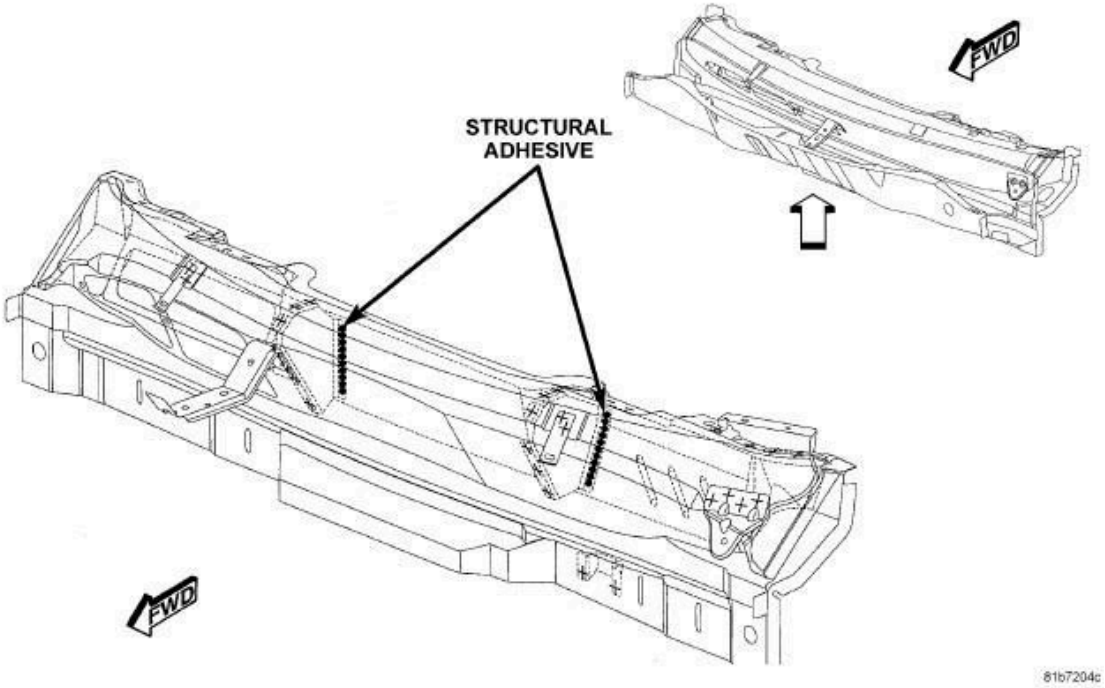

Fig. 715: Plenum Assembly
Courtesy of CHRYSLER GROUP, LLC

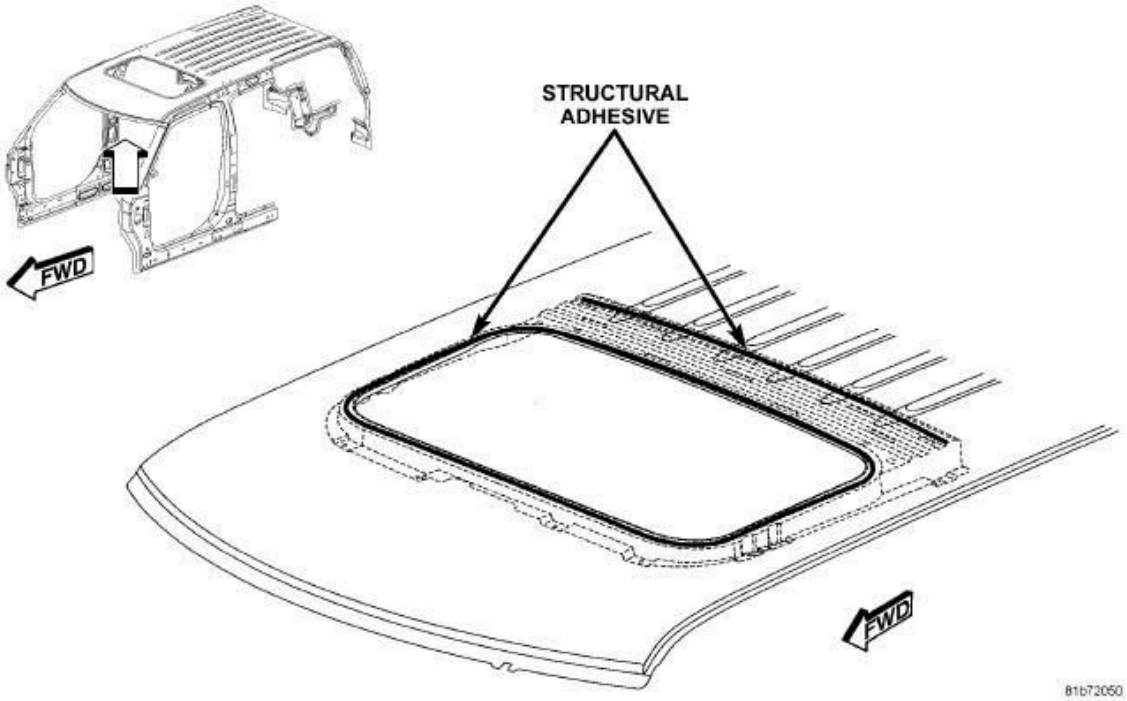

Fig. 716: Sunroof Frame
Courtesy of CHRYSLER GROUP, LLC

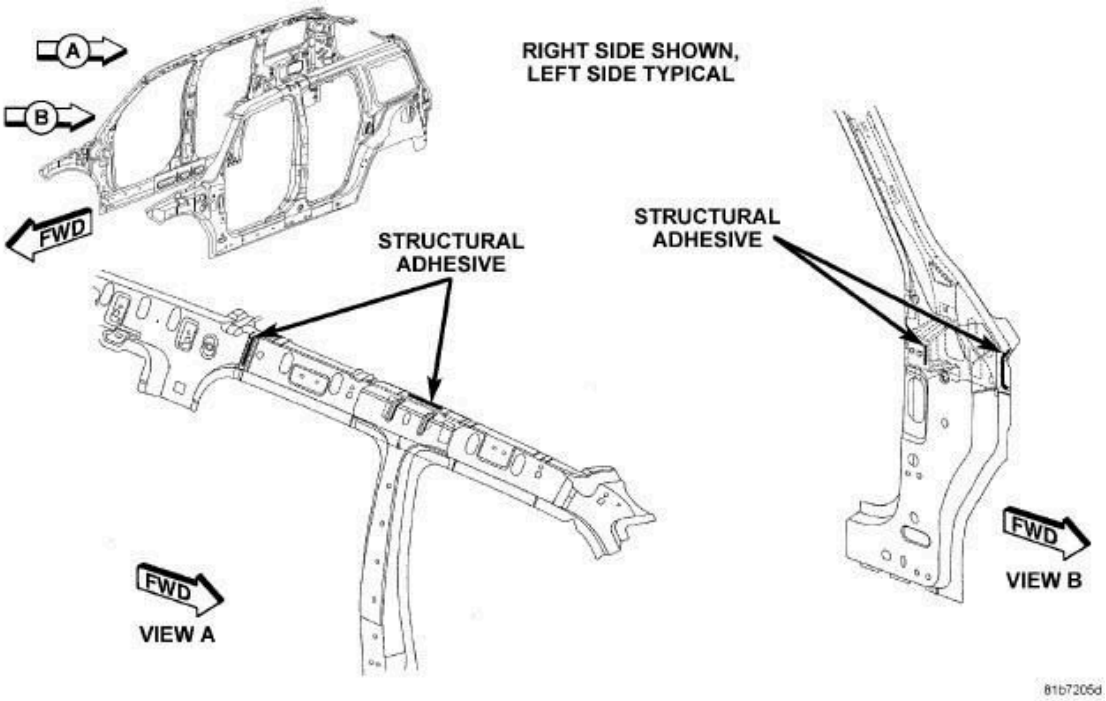

Fig. 717: Inner Body Side Aperture
Courtesy of CHRYSLER GROUP, LLC

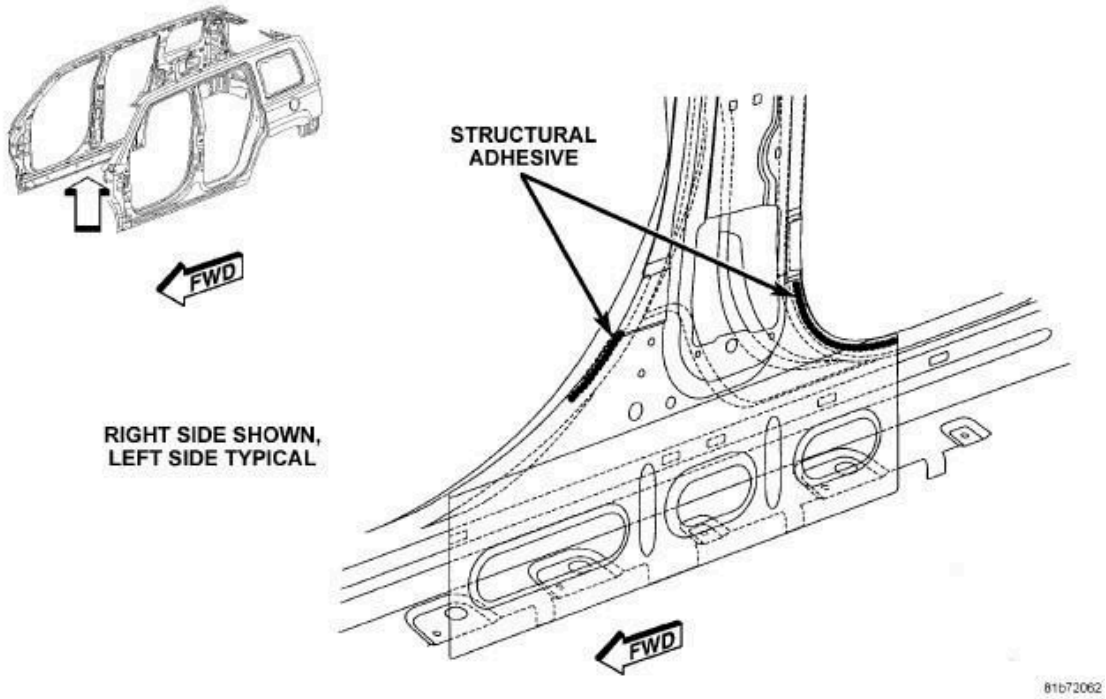

Fig. 718: Body Side Aperture Complete
Courtesy of CHRYSLER GROUP, LLC

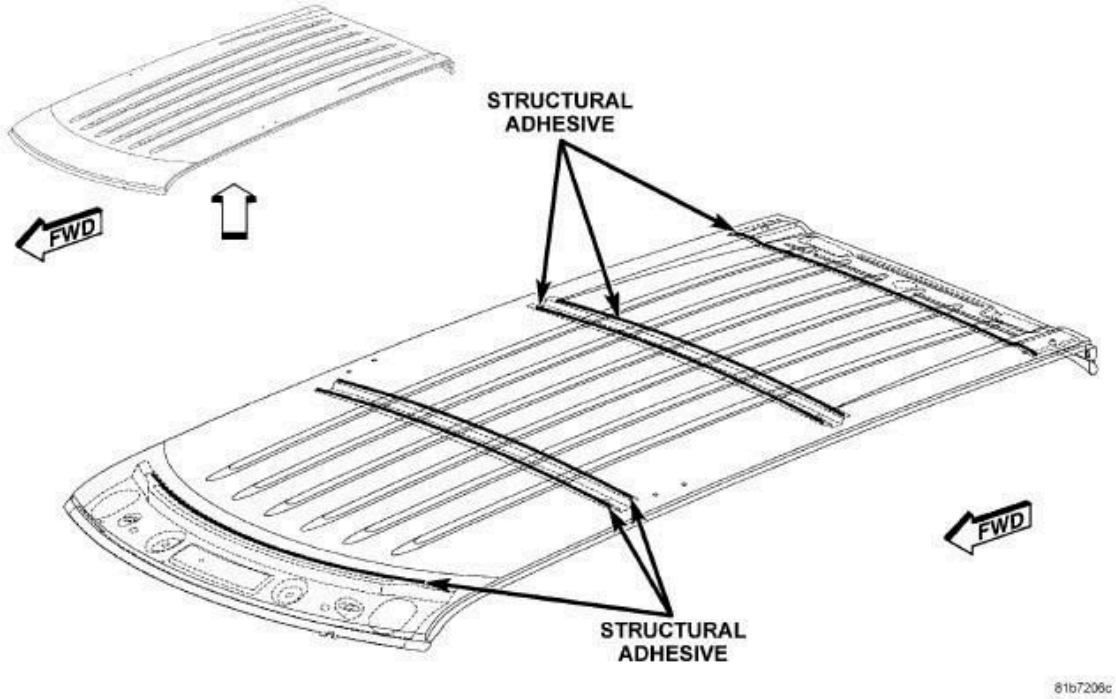

Fig. 719: Roof Without Sunroof
Courtesy of CHRYSLER GROUP, LLC

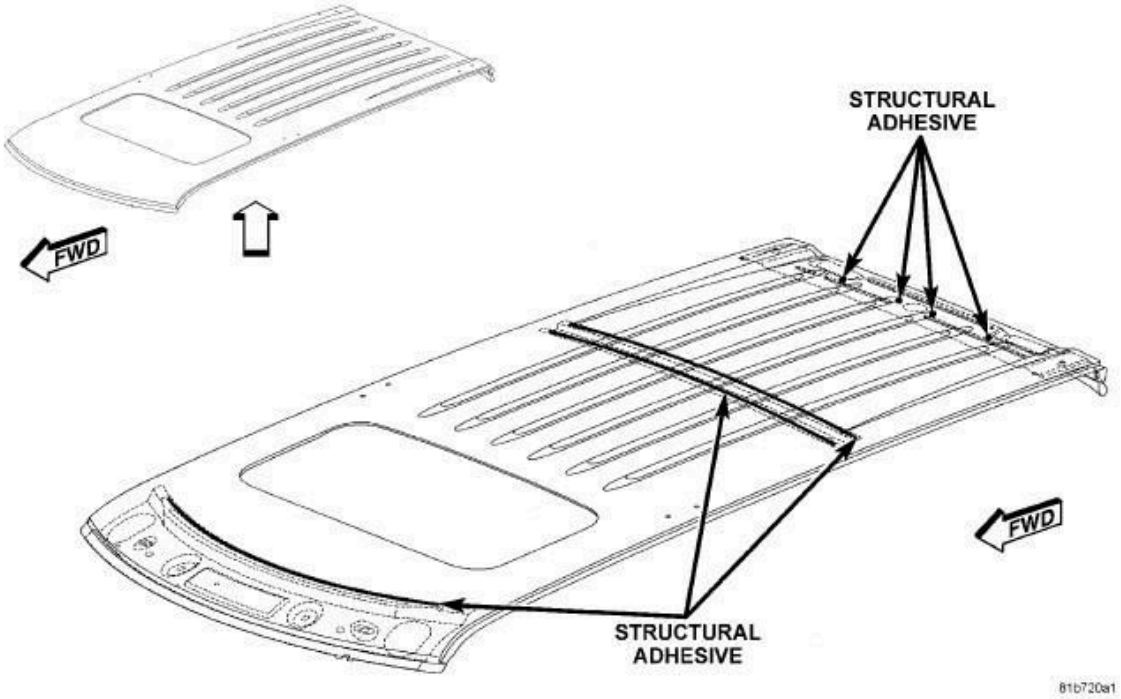

Fig. 720: Roof With Sunroof
Courtesy of CHRYSLER GROUP, LLC

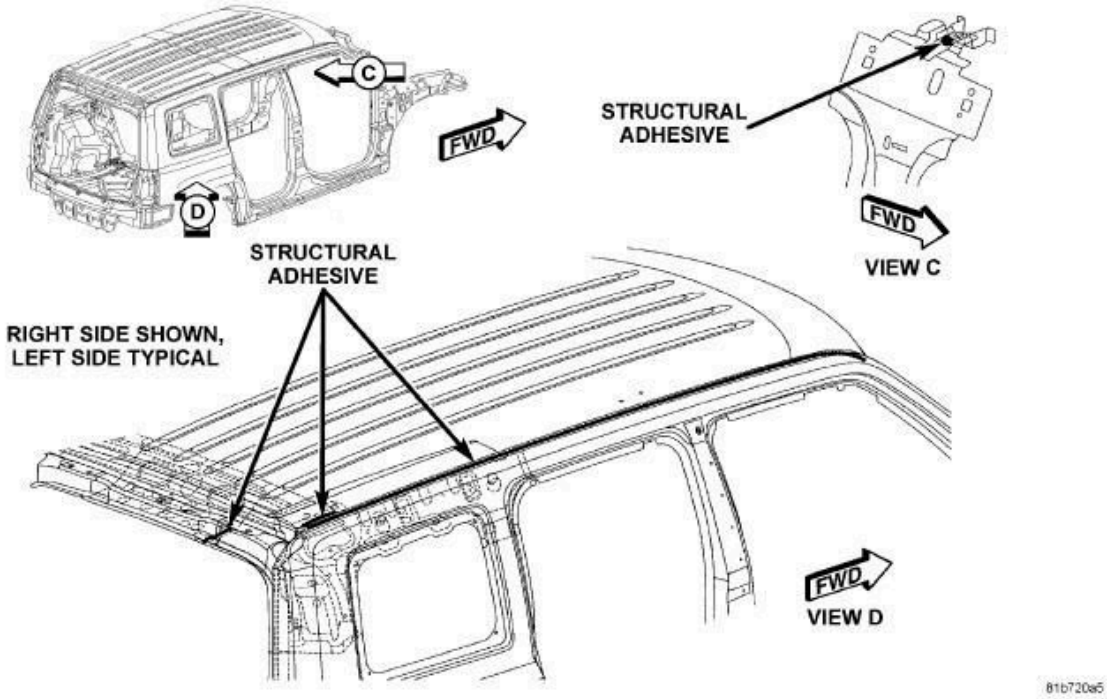

Fig. 721: Body In White Complete (1 Of 2)
Courtesy of CHRYSLER GROUP, LLC

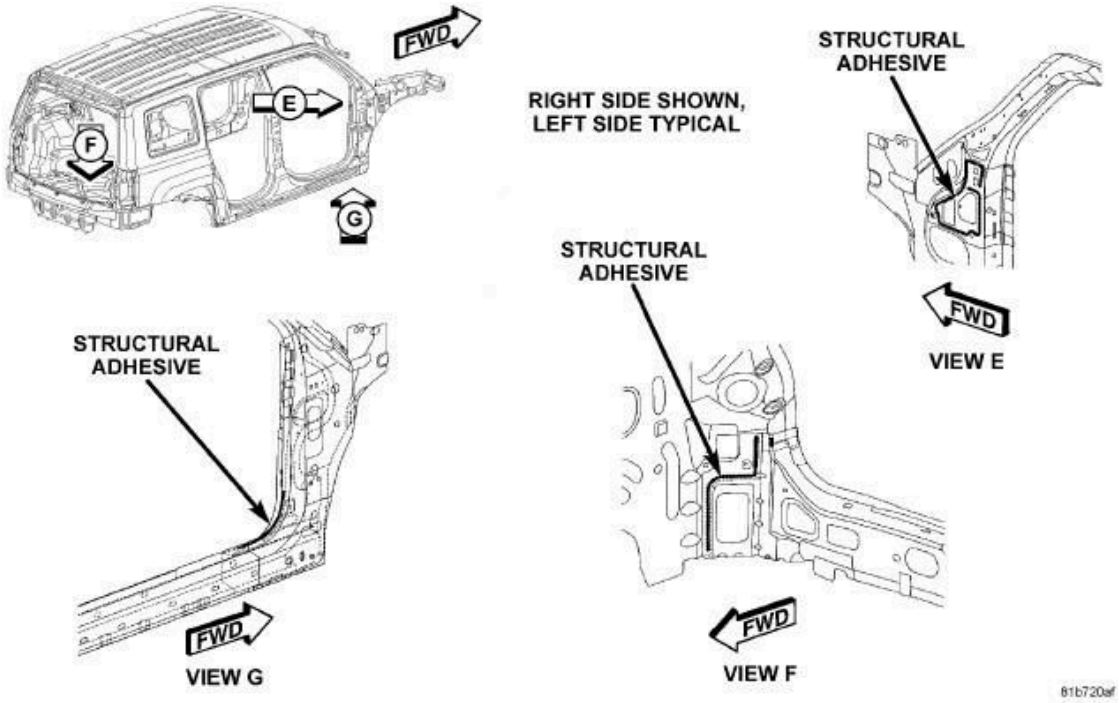

Fig. 722: Body In White Complete (2 Of 2)
Courtesy of CHRYSLER GROUP, LLC

2014 ACCESSORIES AND EQUIPMENT

Cabin Compartment Node (CCN) - Electrical Diagnostics - Compass & Patriot

DIAGNOSTIC CODE INDEX

DIAGNOSTIC CODE INDEX

DTC	Description
B1092	FRONT LEFT SEAT HEATER CONTROL CIRCUIT LOW
B1094	FRONT LEFT SEAT HEATER CONTROL CIRCUIT OPEN
B1096	FRONT RIGHT SEAT HEATER CONTROL CIRCUIT LOW
B1098	FRONT RIGHT SEAT HEATER CONTROL CIRCUIT OPEN
B10BB	LEFT HEATED SEAT SWITCH INPUT CIRCUIT STUCK
B10BC	RIGHT HEATED SEAT SWITCH INPUT CIRCUIT STUCK
B123F	MENU SWITCH STUCK
B1263	COMPASS MAGNETIC FIELD PERFORMANCE
B1265	TRIP/TOGGLE SWITCH STUCK
B1286	COMPASS/TEMP BUTTON PERFORMANCE
B1427	REMOTE RADIO SWITCH INPUT CIRCUIT HIGH
B1428	REMOTE RADIO SWITCH INPUT CIRCUIT STUCK
B1504	LEFT STEERING WHEEL CONTROL SWITCH CIRCUIT
B161A	COURTESY/DOME LAMP CONTROL CIRCUIT
B161E	READING LAMP CONTROL CIRCUIT
B168F	FRONT FOG LAMP SWITCH CIRCUIT
B1782	HEADLAMP LEVELING SWITCH STUCK
B178E	HEADLAMP SWITCH INPUT CIRCUIT
B178F	TURN SWITCH INPUT CIRCUIT
B1800	DRIVER DOOR LOCK/UNLOCK SWITCH CIRCUIT PERFORMANCE
B1801	DRIVER DOOR LOCK/UNLOCK SWITCH CIRCUIT

	LOW
B1806	PASSENGER DOOR LOCK/UNLOCK SWITCH CIRCUIT LOW
B1934	DRIVER DOOR LOCK/UNLOCK SWITCH CIRCUIT STUCK
B1935	PASSENGER DOOR LOCK/UNLOCK SWITCH CIRCUIT STUCK
B2181	HEATED SEAT MODULE POWER SUPPLY LOW
B2182	HEATED SEAT MODULE POWER SUPPLY HIGH
B225C	COMPASS MODULE INTERNAL
B2300	WIPER MODE SWITCH INPUT CIRCUIT PERFORMANCE
B2339	HORN SWITCH STUCK
B2372	HIGH BEAM SWITCH CIRCUIT
B2374	WASHER SWITCH INPUT CIRCUIT
B2375	MIST SWITCH INPUT CIRCUIT
B2376	REAR WIPER SWITCH INPUT CIRCUIT
B2377	REAR WASHER SWITCH INPUT CIRCUIT
B2378	FLASH TO PASS SWITCH CIRCUIT
C2312	TRAC/ESP OFF SWITCH STUCK
P0462	FUEL LEVEL SENSOR 1 CIRCUIT LOW
P0463	FUEL LEVEL SENSOR 1 CIRCUIT HIGH
P2067	FUEL LEVEL SENSOR 2 CIRCUIT LOW
P2068	FUEL LEVEL SENSOR 2 CIRCUIT HIGH
U0141	LOST COMMUNICATION WITH IPM (FCM/TIPM)
U0151	LOST COMMUNICATION WITH OCCUPANT RESTRAINT CONTROLLER (ORC)
U0161	LOST COMMUNICATION WITH COMPASS MODULE
U0164	LOST COMMUNICATION WITH HVAC CONTROL MODULE
U0167	LOST COMMUNICATION WITH INTRUSION TRANSCEIVER CONTROL MODULE
U0168	LOST COMMUNICATION WITH VEHICLE SECURITY CONTROL MODULE (SKREEM/WCM)
U0184	LOST COMMUNICATION WITH RADIO

U0195	LOST COMMUNICATION WITH SDARS
U0197	LOST COMMUNICATION WITH HANDS FREE PHONE MODULE
U0208	LOST COMMUNICATION WITH HEATED SEAT CONTROL MODULE
U1008	LIN 1 BUS
U1109	LOST COMMUNICATION WITH LIN STEERING WHEEL CONTROLS
U113B	LOST COMMUNICATION WITH SWITCH BANK MODULE
U1149	LOST COMMUNICATION WITH MULTI-FUNCTION SWITCH

DIAGNOSIS AND TESTING

B1092-FRONT LEFT SEAT HEATER CONTROL CIRCUIT LOW

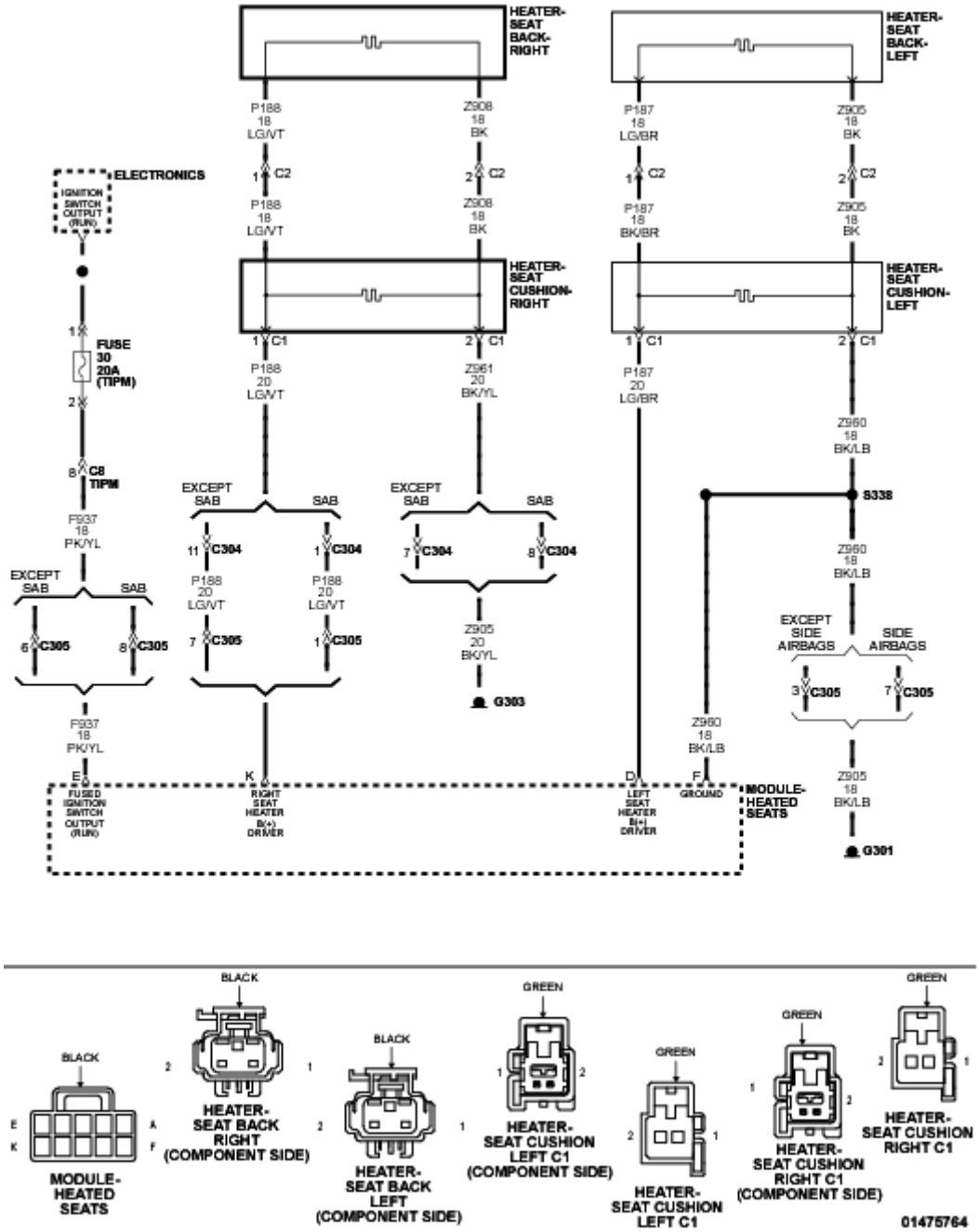

Fig. 1: Seat Heater Control Circuit Diagram
Courtesy of CHRYSLER GROUP, LLC

For a complete wiring diagram, **refer to appropriate SYSTEM WIRING DIAGRAMS article** .

WHEN MONITORED

With the ignition on, during the heated seat operation.

SET CONDITION

When the Heated Seat Module (HSM) detects that the Left Seat Heater B(+) Driver circuit is shorted to ground.

POSSIBLE CAUSES

Possible Causes
LEFT SEAT HEATER B(+) DRIVER CIRCUIT SHORTED TO GROUND
SEAT CUSHION HEATER ELEMENT SHORTED
SEAT BACK HEATER ELEMENT SHORTED
HEATED SEAT MODULE (HSM)

DIAGNOSTIC TEST

1. **CHECK IF THE DTC IS ACTIVE**
   1. Turn the ignition on.
   2. With the scan tool, record and erase Diagnostic Trouble Codes (DTCs).
   3. Operate the Heated Seat Switch in both positions several times.
   4. With the scan tool, read DTCs.

   Does the scan tool display this DTC as active?

   Yes

   - Go To 2

   No

   - The condition or conditions that originally set this DTC are not present at this time. Using the wiring diagrams as a guide, check all related splices and connectors for signs of water intrusion, corrosion, pushed out or bent terminals, and correct pin tension. Attempt to reproduce condition by adjusting the seat.
   - Perform the BODY VERIFICATION TEST. Refer to **STANDARD PROCEDURE** .
2. **CHECK THE (P187) LEFT SEAT HEATER B(+) DRIVER CIRCUIT IN BODY HARNESS FOR A SHORT TO GROUND**

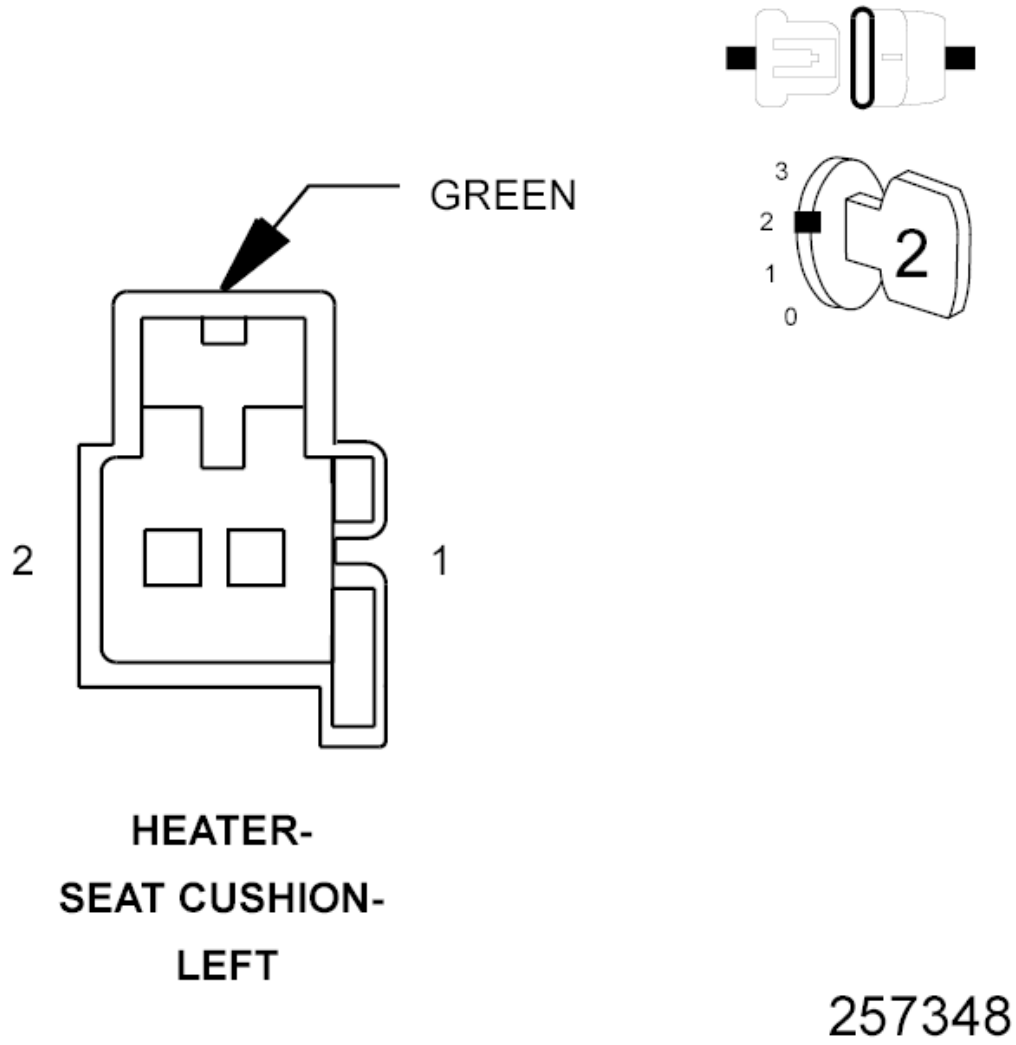

Fig. 2: Checking Left Seat Heater B(+) Driver Circuit
Courtesy of CHRYSLER GROUP, LLC

1. Turn the ignition off.
2. Disconnect the Left Seat Cushion Heater harness connector.
3. Turn the ignition on.
4. With the scan tool, erase DTCs.
5. Operate the Heated Seat Switch in both positions several times.
6. With the scan tool, read DTCs.

   Does the scan tool display this DTC as active?

   Yes

   - Go To 3

No

- Go To 4

3. **CHECK THE (P187) LEFT SEAT HEATER B(+) DRIVER CIRCUIT FOR A SHORT TO GROUND**

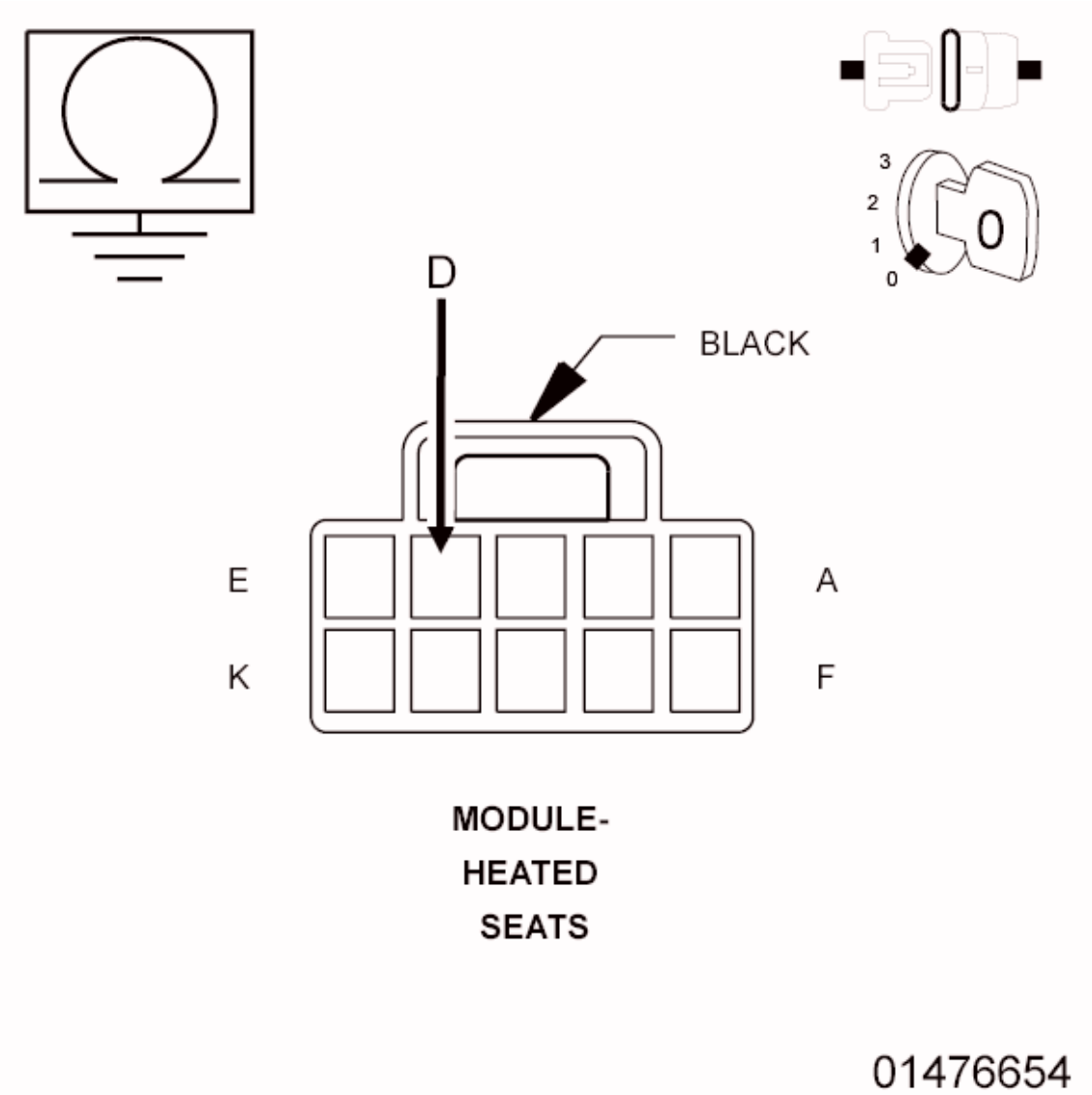

Fig. 3: Measuring Resistance Of Left Seat Heater B (+) Driver Circuit Between Ground & HSM Connector
Courtesy of CHRYSLER GROUP, LLC

1. Turn the ignition off.
2. Disconnect the HSM harness connector.
3. Measure the resistance of the (P187) Left Seat Heater B(+) Driver circuit between ground and the HSM harness connector.

Is the resistance below 10K Ohms?

Yes

- Repair the (P187) Left Seat Heater B(+) Driver circuit for a short to ground.
- Perform the BODY VERIFICATION TEST. Refer to **STANDARD PROCEDURE** .

No

- Go To 4

4. **CHECK LEFT SEAT CUSHION HEATER FOR A SHORT TO GROUND**

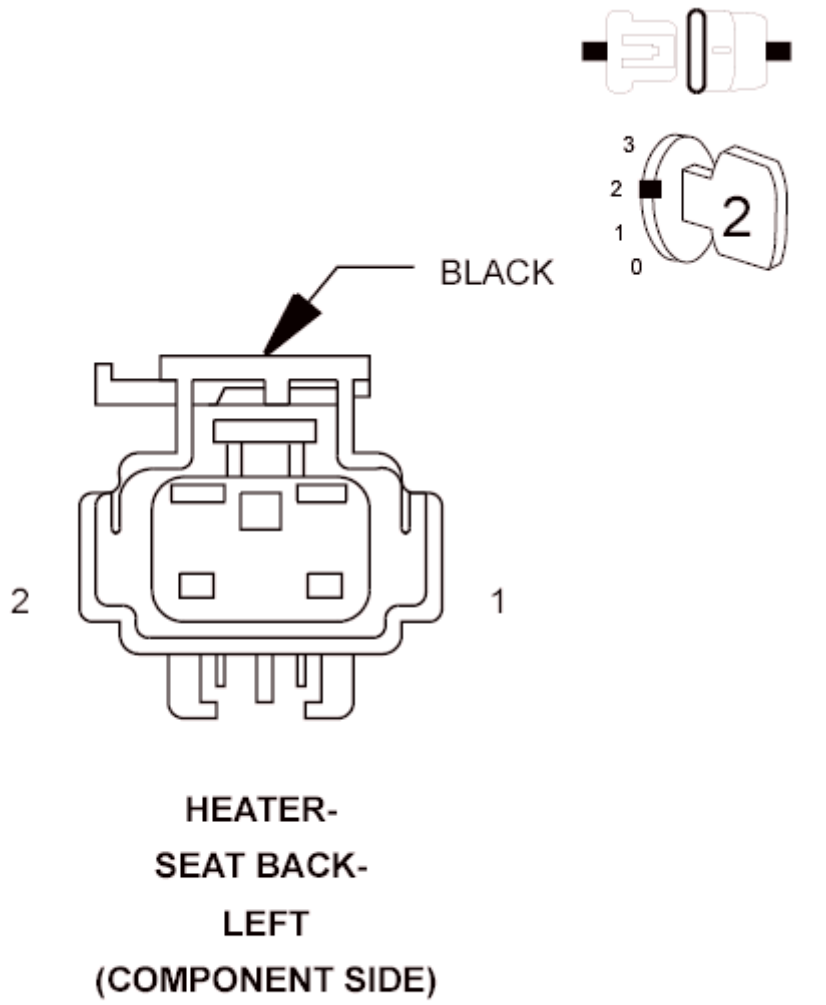

01476756

Fig. 4: Left Seat Cushion Heater Connector End View
Courtesy of CHRYSLER GROUP, LLC

1. Turn the ignition off.
2. Reconnect the Left Seat Cushion Heater harness connector.
3. Disconnect the Left Seat Back Heater harness connector.
4. Turn the ignition on.
5. With the scan tool, erase DTCs.
6. Operate the Heated Seat Switch in both positions several times.
7. With the scan tool, read DTCs.

   Does the scan tool display this DTC as active?

   Yes

   - Replace the Left Seat Cushion Heater Element in accordance with the Service Information.
   - Perform the BODY VERIFICATION TEST. Refer to **STANDARD PROCEDURE** .

   No

   - Replace the Left Seat Back Heater Element in accordance with the Service Information.
   - Perform the BODY VERIFICATION TEST. Refer to **STANDARD PROCEDURE** .

B1094-FRONT LEFT SEAT HEATER CONTROL CIRCUIT OPEN

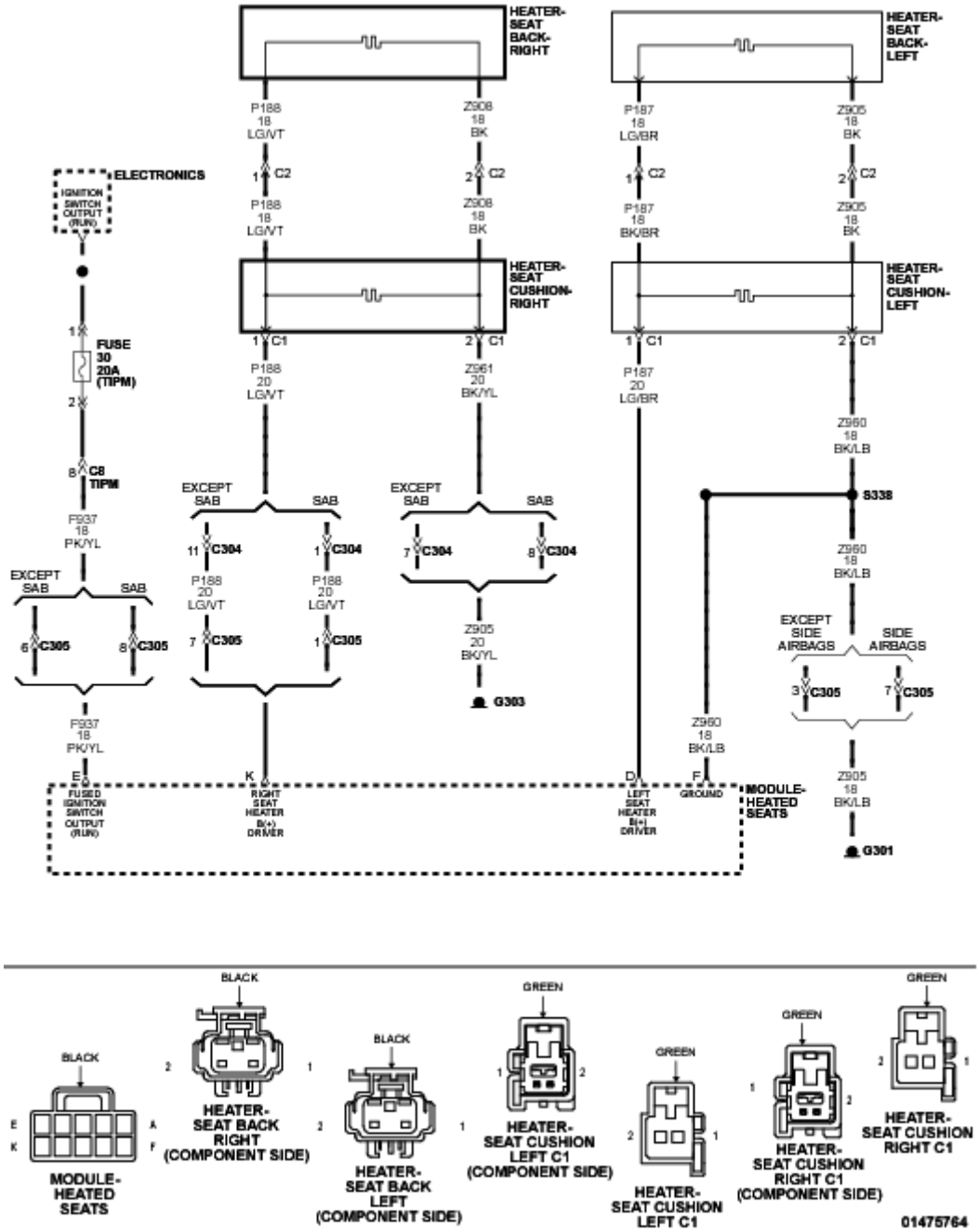

Fig. 5: Seat Heater Control Circuit Diagram
Courtesy of CHRYSLER GROUP, LLC

For a complete wiring diagram, **refer to appropriate SYSTEM WIRING DIAGRAMS article** .

WHEN MONITORED

With the ignition on, during the heated seat operation.

SET CONDITION

When the Heated Seat Module (HSM) detects that the Left Seat Heater B(+) Driver circuit is open.

POSSIBLE CAUSES

Possible Causes
LEFT SEAT HEATER B(+) DRIVER CIRCUIT OPEN
GROUND CIRCUIT OPEN
SEAT CUSHION HEATER ELEMENT OPEN
SEAT BACK HEATER ELEMENT OPEN
HEATED SEAT MODULE (HSM)

DIAGNOSTIC TEST

1. **CHECK IF THE DTC IS ACTIVE**
    1. Turn the ignition on.
    2. With the scan tool, record and erase Diagnostic Trouble Codes (DTCs).
    3. Operate the Heated Seat Switch in both positions several times.
    4. With the scan tool, read DTCs.

    Does the scan tool display this DTC as active?

    Yes

    - Go To 2

    No

    - The condition or conditions that originally set this DTC are not present at this time. Using the wiring diagrams as a guide, check all related splices and connectors for signs of water intrusion, corrosion, pushed out or bent terminals, and correct pin tension. Attempt to reproduce condition by adjusting the seat.
    - Perform the BODY VERIFICATION TEST. Refer to **STANDARD PROCEDURE** .
2. **CHECK FOR AN OPEN SEAT HEATER ELEMENTS**

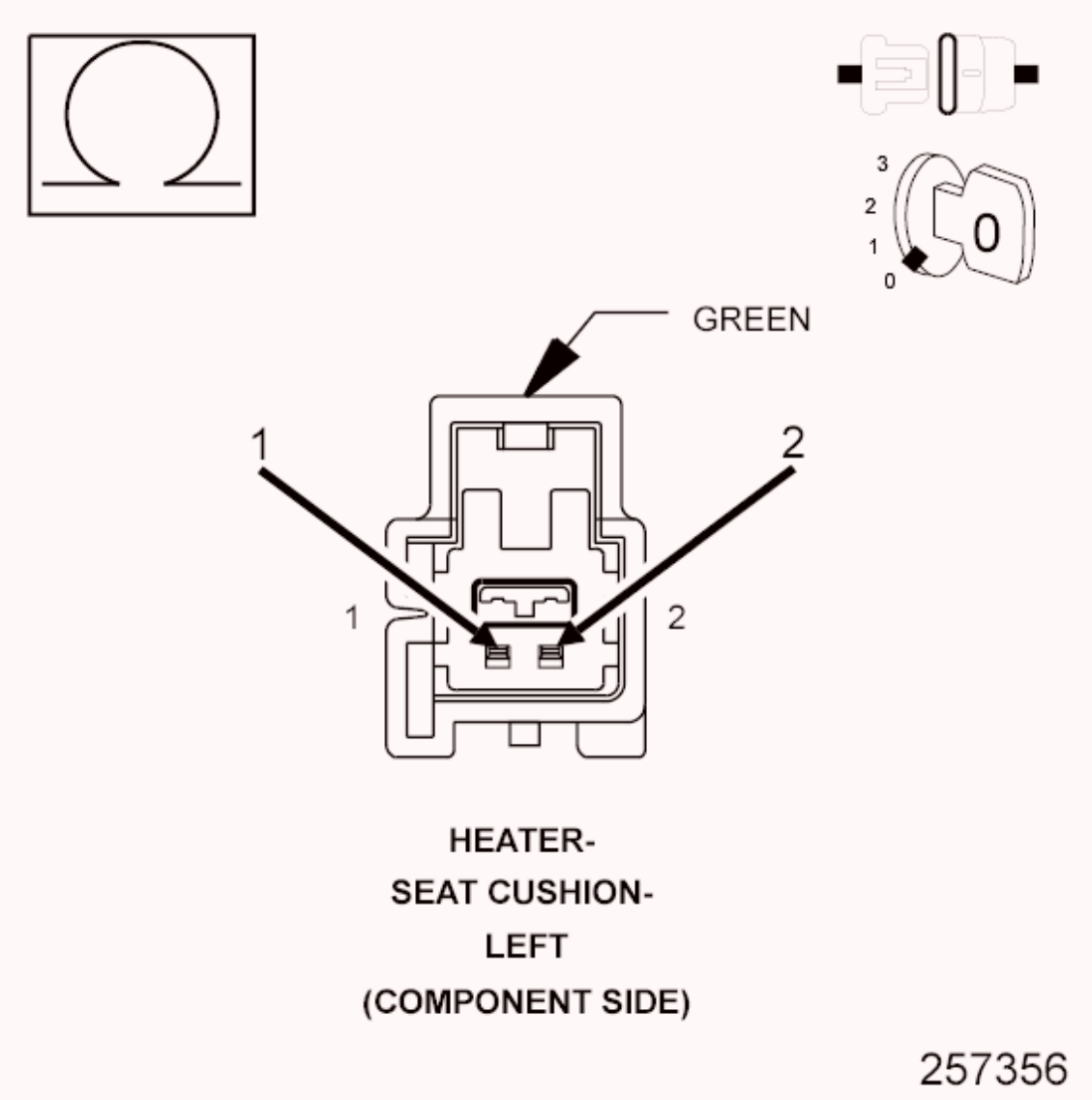

Fig. 6: Checking For Open Seat Heater Elements
Courtesy of CHRYSLER GROUP, LLC

1. Turn the ignition off.
2. Disconnect the Left Seat Cushion Heater harness connector.
3. Measure the total resistance of the Cushion and Seat Back Heater Elements between the (P187) Left Seat Heater B(+) Driver circuit and the (Z905) Ground circuit at the Left Seat Cushion Heater connector (component side).

   Is the total resistance 2.5 to 3.5 Ohms (±0.5 Ohm)?

   Yes

   - Go To 3

No

- Go To 5

3. **CHECK THE (Z903) GROUND CIRCUIT FOR AN OPEN**

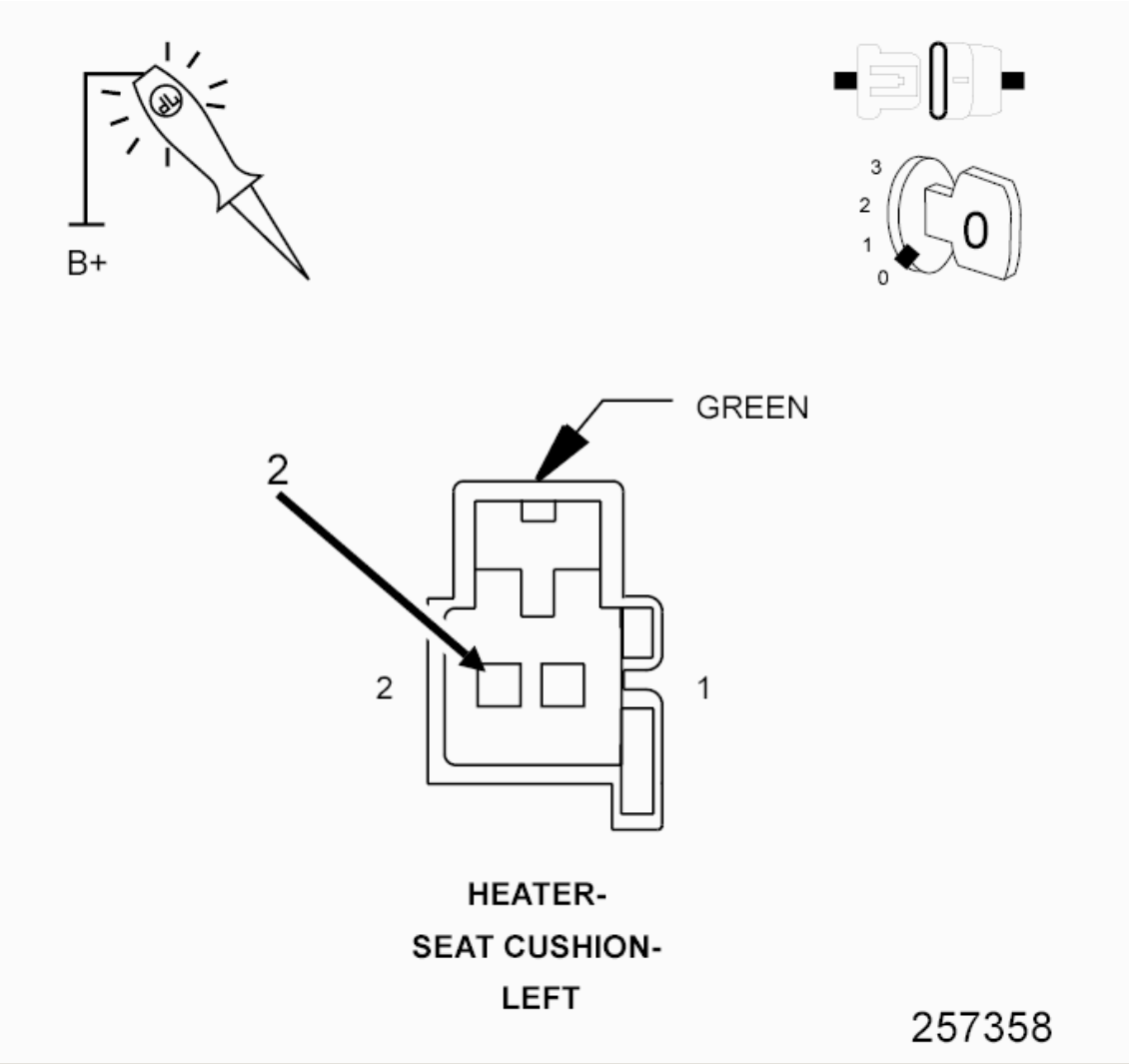

Fig. 7: Checking Ground Circuit For An Open
Courtesy of CHRYSLER GROUP, LLC

1. Using a 12-volt test light connected to 12-volts, check the (Z903) Ground circuit at the Left Seat Cushion Heater harness connector (harness side).

NOTE: The test light should be illuminated and bright. Compare the brightness to that of a direct connection to the battery.

Does the test light illuminate brightly?

Yes

- Go To 4

No

- Repair the (Z903) Ground circuit for an open.
- Perform the BODY VERIFICATION TEST. Refer to **STANDARD PROCEDURE** .

4. **CHECK THE (P187) LEFT SEAT HEATER B(+) DRIVER CIRCUIT FOR AN OPEN IN BODY HARNESS**

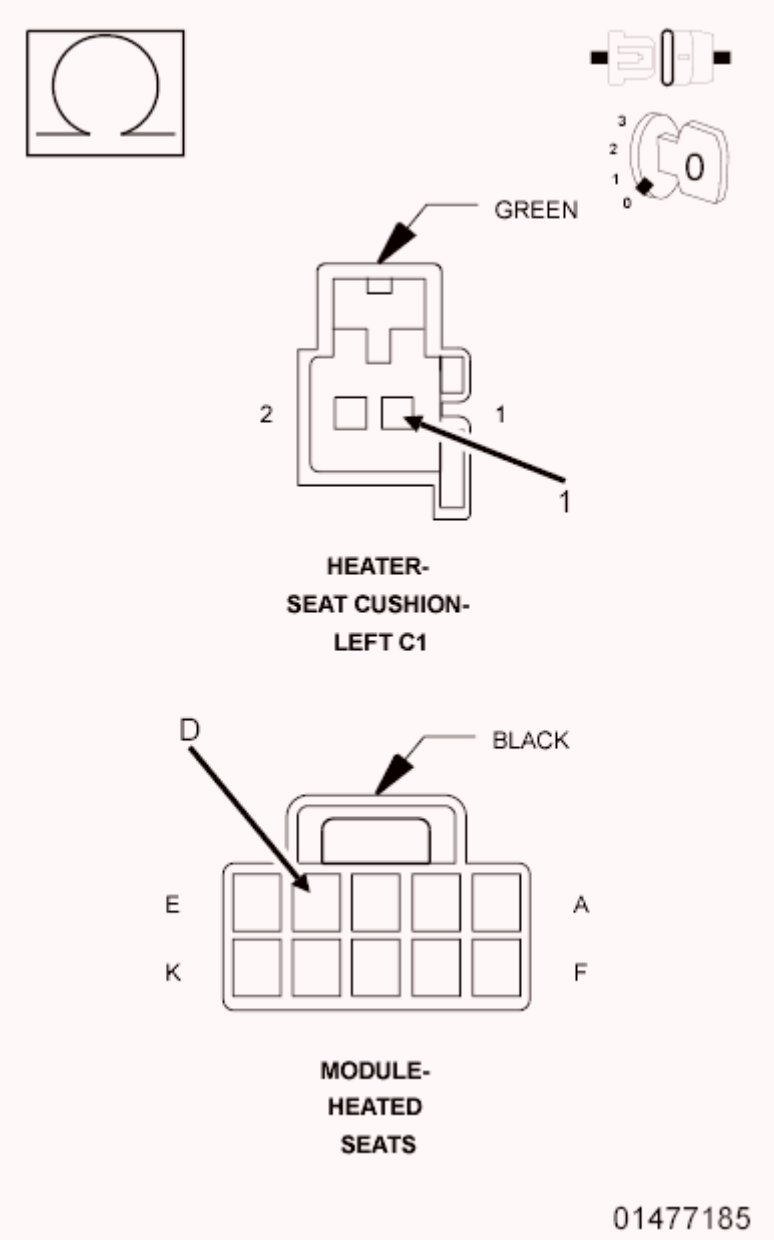

Fig. 8: Measuring Resistance Of Left Seat Heater B (+) Driver Circuit
Courtesy of CHRYSLER GROUP, LLC

1. Disconnect the HSM harness connector.
2. Measure the resistance of the (P187) Left Seat Heater B(+) Driver circuit between the HSM harness connector and the Left Seat Cushion Heater harness connector (harness side).

   Is the resistance below 5.0 Ohms?

   Yes

   - Replace the Heated Seat Module (HSM) in accordance with the

Service Information.

- Perform the BODY VERIFICATION TEST. Refer to **STANDARD PROCEDURE** .

No

- Repair the (P187) Left Seat Heater B(+) Driver circuit for an open.
- Perform the BODY VERIFICATION TEST. Refer to **STANDARD PROCEDURE** .

5. **CHECK THE LEFT SEAT BACK HEATER ELEMENT FOR AN OPEN**

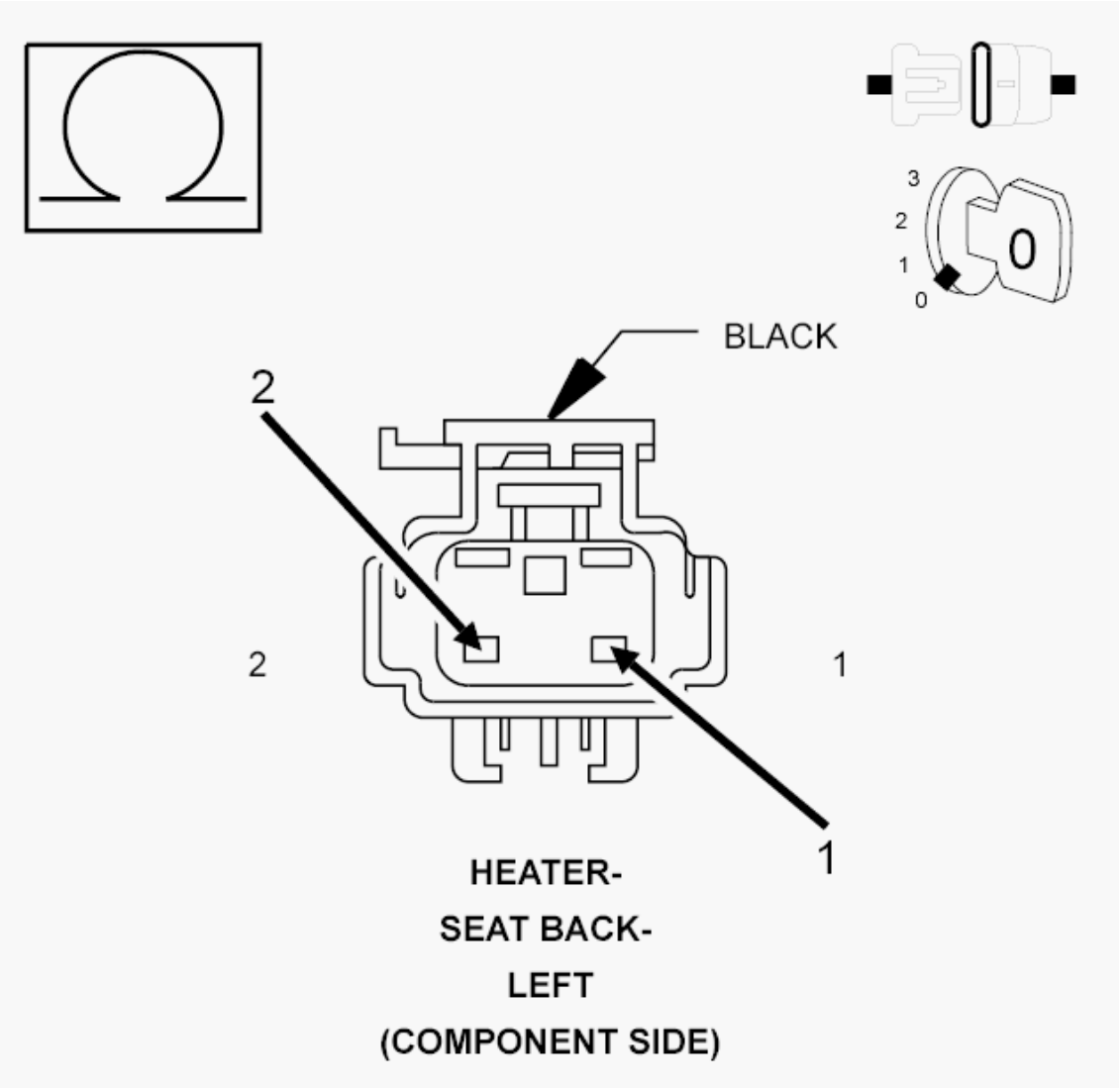

Fig. 9: Measuring Resistance Of Left Seat Back Heater Element
Courtesy of CHRYSLER GROUP, LLC

1. Disconnect the Left Seat Back Heater harness connector.
2. Measure the resistance of the Left Seat Back Heater Element between the (P187) Left Seat Heater B(+) Driver and the (Z905) Ground circuit at the Left Seat Back Heater connector (component side).

   Is the resistance above 6.0 Ohms?

   Yes

   - Replace the Seat Back Heater Element in accordance with the Service Information.
   - Perform the BODY VERIFICATION TEST. Refer to **STANDARD PROCEDURE** .

   No

   - Replace the Seat Cushion Heater Element in accordance with the Service Information.
   - Perform the BODY VERIFICATION TEST. Refer to **STANDARD PROCEDURE** .

B1096-FRONT RIGHT SEAT HEATER CONTROL CIRCUIT LOW

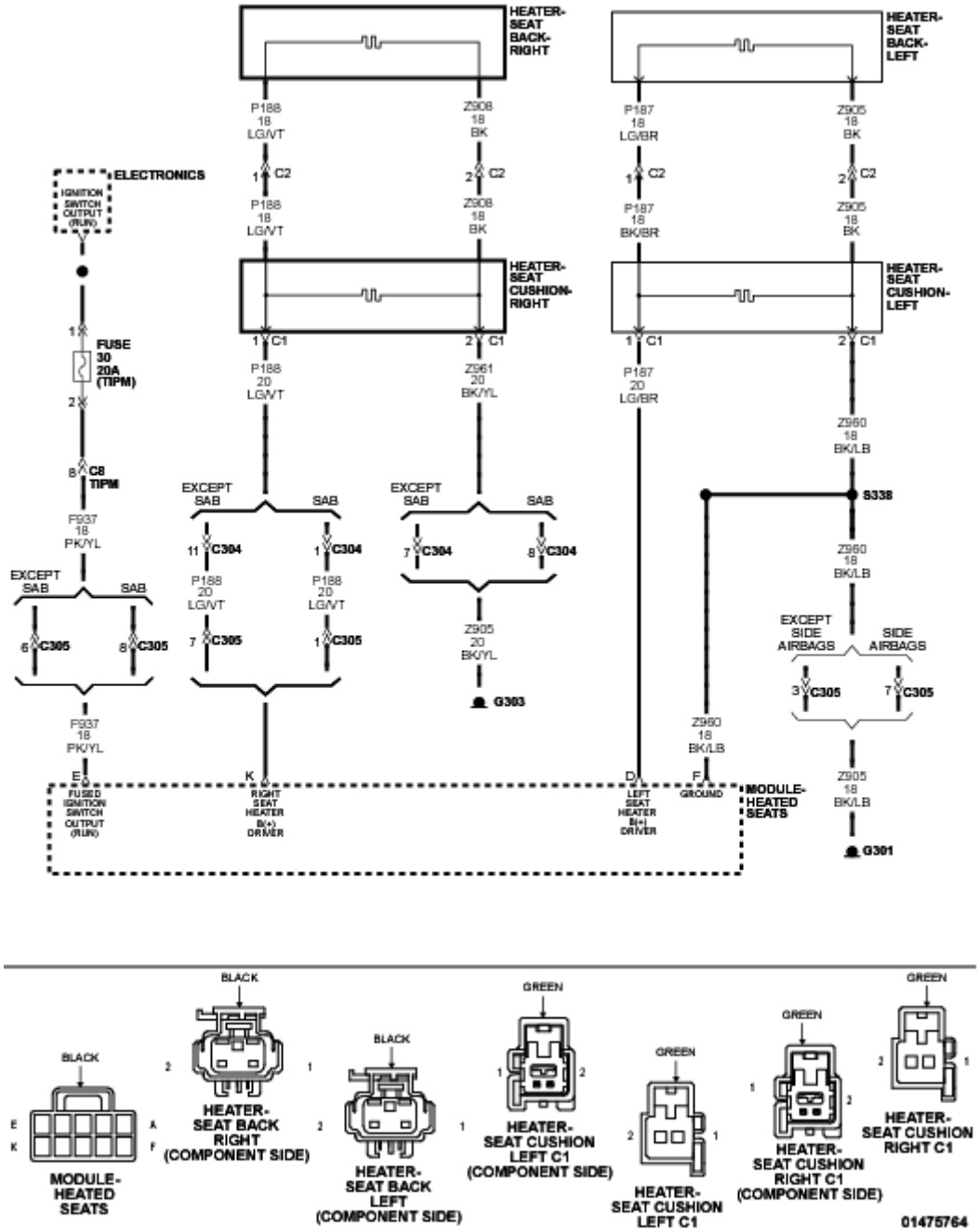

Fig. 10: Seat Heater Control Circuit Diagram
Courtesy of CHRYSLER GROUP, LLC

For a complete wiring diagram, **refer to appropriate SYSTEM WIRING DIAGRAMS article** .

WHEN MONITORED

With the ignition on, during the heated seat operation.

SET CONDITION

When the Heated Seat Module (HSM) detects that the Right Seat Heater B(+) Driver circuit is shorted to ground.

POSSIBLE CAUSES

Possible Causes
RIGHT SEAT HEATER B(+) DRIVER CIRCUIT SHORTED TO GROUND
SEAT CUSHION HEATER ELEMENT SHORTED
SEAT BACK HEATER ELEMENT SHORTED
HEATED SEAT MODULE (HSM)

DIAGNOSTIC TEST

1. **CHECK IF THE DTC IS ACTIVE**
   1. Turn the ignition on.
   2. With the scan tool, record and erase Diagnostic Trouble Codes (DTCs).
   3. Operate the Heated Seat Switch in both positions several times.
   4. With the scan tool, read DTCs.

   Does the scan tool display this DTC as active?

   Yes

   - Go To 2

   No

   - The condition or conditions that originally set this DTC are not present at this time. Using the wiring diagrams as a guide, check all related splices and connectors for signs of water intrusion, corrosion, pushed out or bent terminals, and correct pin tension. Attempt to reproduce condition by adjusting the seat.
   - Perform the BODY VERIFICATION TEST. Refer to **STANDARD PROCEDURE** .
2. **CHECK THE (P188) RIGHT SEAT HEATER B(+) DRIVER CIRCUIT IN BODY HARNESS FOR A SHORT TO GROUND**

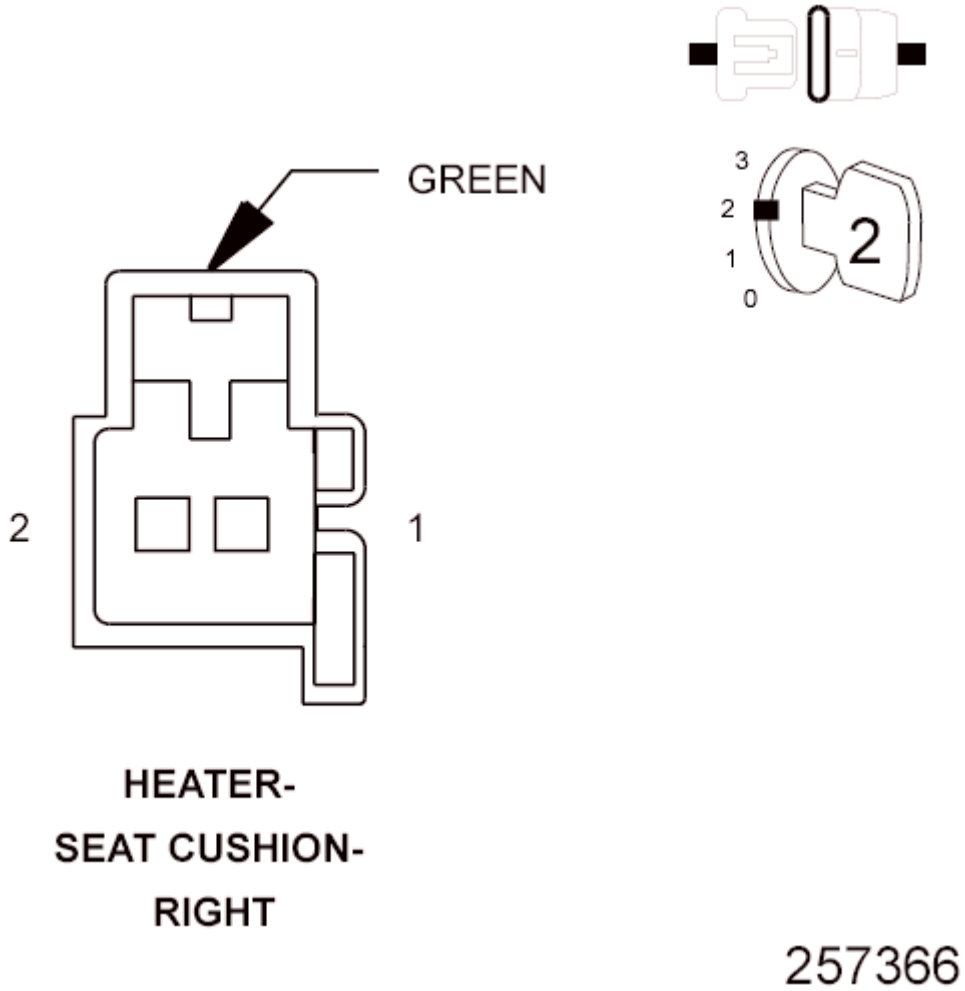

Fig. 11: Checking Right Seat Heater B(+) Driver Circuit
Courtesy of CHRYSLER GROUP, LLC

1. Turn the ignition off.
2. Disconnect the Right Seat Cushion Heater harness connector.
3. Turn the ignition on.
4. With the scan tool, erase DTCs.
5. Operate the Heated Seat Switch in both positions several times.
6. With the scan tool, read DTCs.

Is this active?

Yes

- Go To 3

No

- Go To 4

3. **CHECK THE (P188) RIGHT SEAT HEATER B(+) DRIVER CIRCUIT FOR A SHORT TO GROUND**

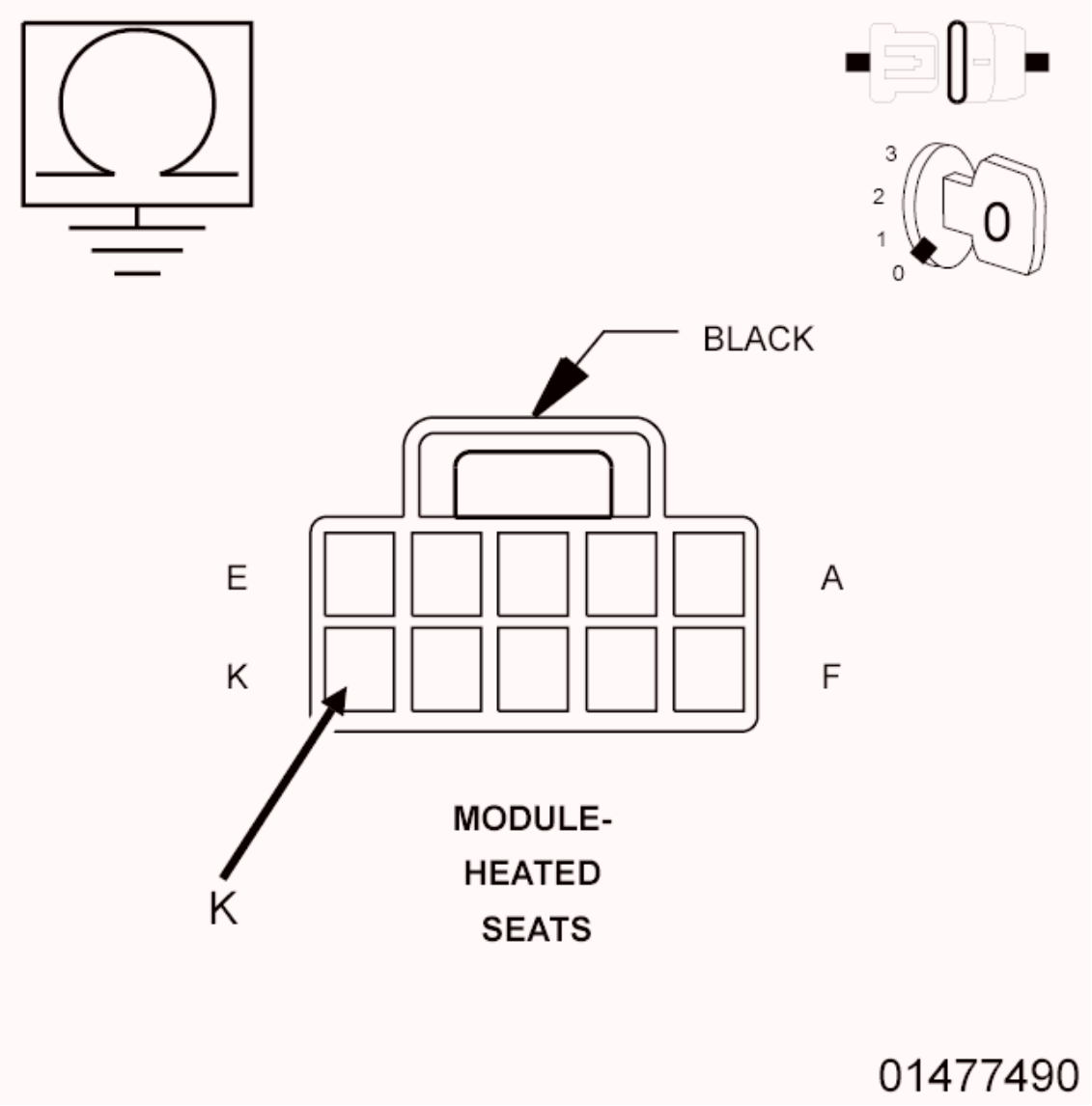

Fig. 12: Measuring Resistance Of Right Seat Heater B (+) Driver Circuit Between Ground & HSM Connector
Courtesy of CHRYSLER GROUP, LLC

1. Turn the ignition off.
2. Disconnect the HSM harness connector.
3. Measure the resistance of the (P188) Right Seat Heater B(+) Driver circuit between ground and the HSM harness connector.

   Is the resistance below 10K Ohms?

Yes

- Repair the (P188) Right Seat Heater B(+) Driver circuit for a short to ground.
- Perform the BODY VERIFICATION TEST. Refer to **STANDARD PROCEDURE** .

No

- Go To 4

4. **CHECK THE RIGHT SEAT CUSHION HEATER FOR A SHORT TO GROUND**

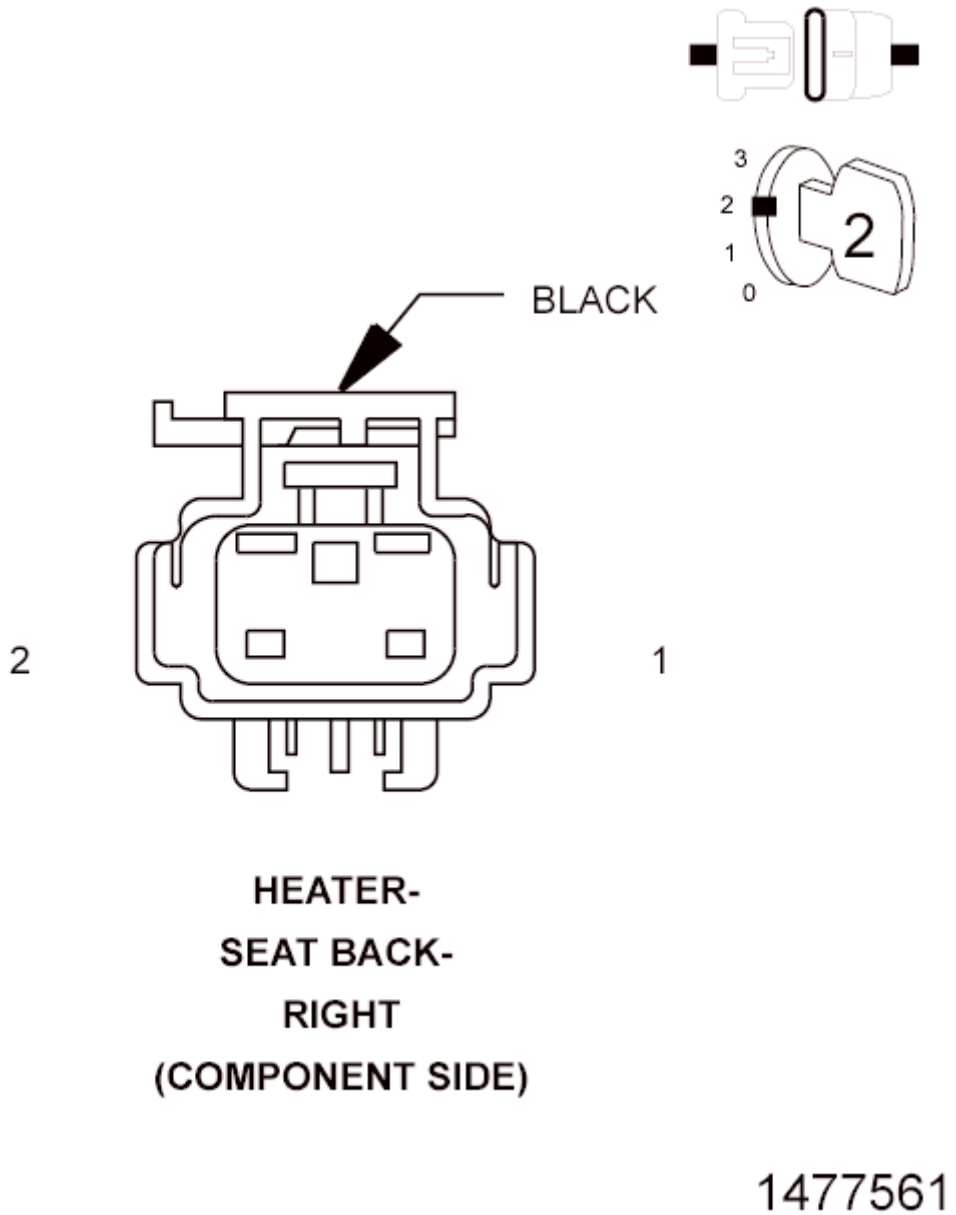

Fig. 13: Checking Right Seat Cushion Heater For A Short To Ground
Courtesy of CHRYSLER GROUP, LLC

1. Turn the ignition off.
2. Reconnect the Right Seat Cushion Heater harness connector.
3. Disconnect the Right Seat Back Heater harness connector.
4. Turn the ignition on.
5. With the scan tool, erase DTCs.
6. Operate the Heated Seat Switch in both positions several times.
7. With the scan tool, read DTCs.

Is this DTC active?

Yes

- Replace the Right Seat Cushion Heater Element in accordance with the Service Information.
- Perform the BODY VERIFICATION TEST. Refer to **STANDARD PROCEDURE** .

No

- Replace the Right Seat Back Heater Element in accordance with the Service Information.
- Perform the BODY VERIFICATION TEST. Refer to **STANDARD PROCEDURE** .

B1098-FRONT RIGHT SEAT HEATER CONTROL CIRCUIT OPEN

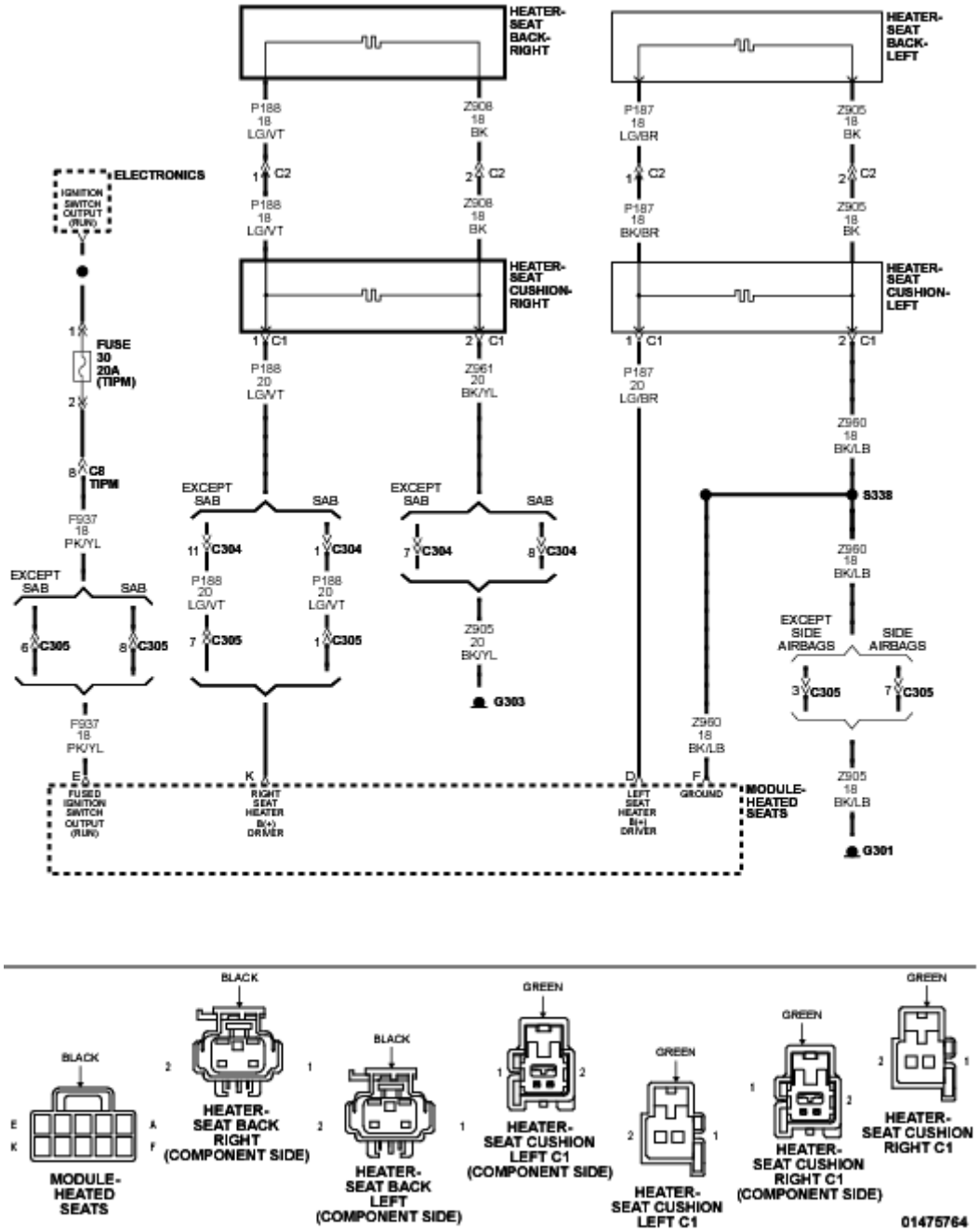

Fig. 14: Seat Heater Control Circuit Diagram
Courtesy of CHRYSLER GROUP, LLC

For a complete wiring diagram, **refer to appropriate SYSTEM WIRING DIAGRAMS article** .

WHEN MONITORED

With the ignition on, during the heated seat operation.

SET CONDITION

When the Heated Seat Module (HSM) detects that the Right Seat Heater B(+) Driver circuit is open.

POSSIBLE CAUSES

Possible Causes
RIGHT SEAT HEATER B(+) DRIVER CIRCUIT OPEN
GROUND CIRCUIT OPEN
SEAT CUSHION HEATER ELEMENT OPEN
SEAT BACK HEATER ELEMENT OPEN
HEATED SEAT MODULE (HSM)

DIAGNOSTIC TEST

1. **CHECK IF THE DTC IS ACTIVE**
    1. Turn the ignition on.
    2. With the scan tool, record and erase Diagnostic Trouble Codes (DTCs).
    3. Operate the Heated Seat Switch in both positions several times.
    4. With the scan tool, read DTCs.

    Does the scan tool display this DTC as active?

    Yes

    - Go To 2

    No

    - The condition or conditions that originally set this DTC are not present at this time. Using the wiring diagrams as a guide, check all related splices and connectors for signs of water intrusion, corrosion, pushed out or bent terminals, and correct pin tension. Attempt to reproduce condition by adjusting the seat.
    - Perform the BODY VERIFICATION TEST. Refer to **STANDARD PROCEDURE** .
2. **CHECK FOR OPEN SEAT HEATER ELEMENTS**

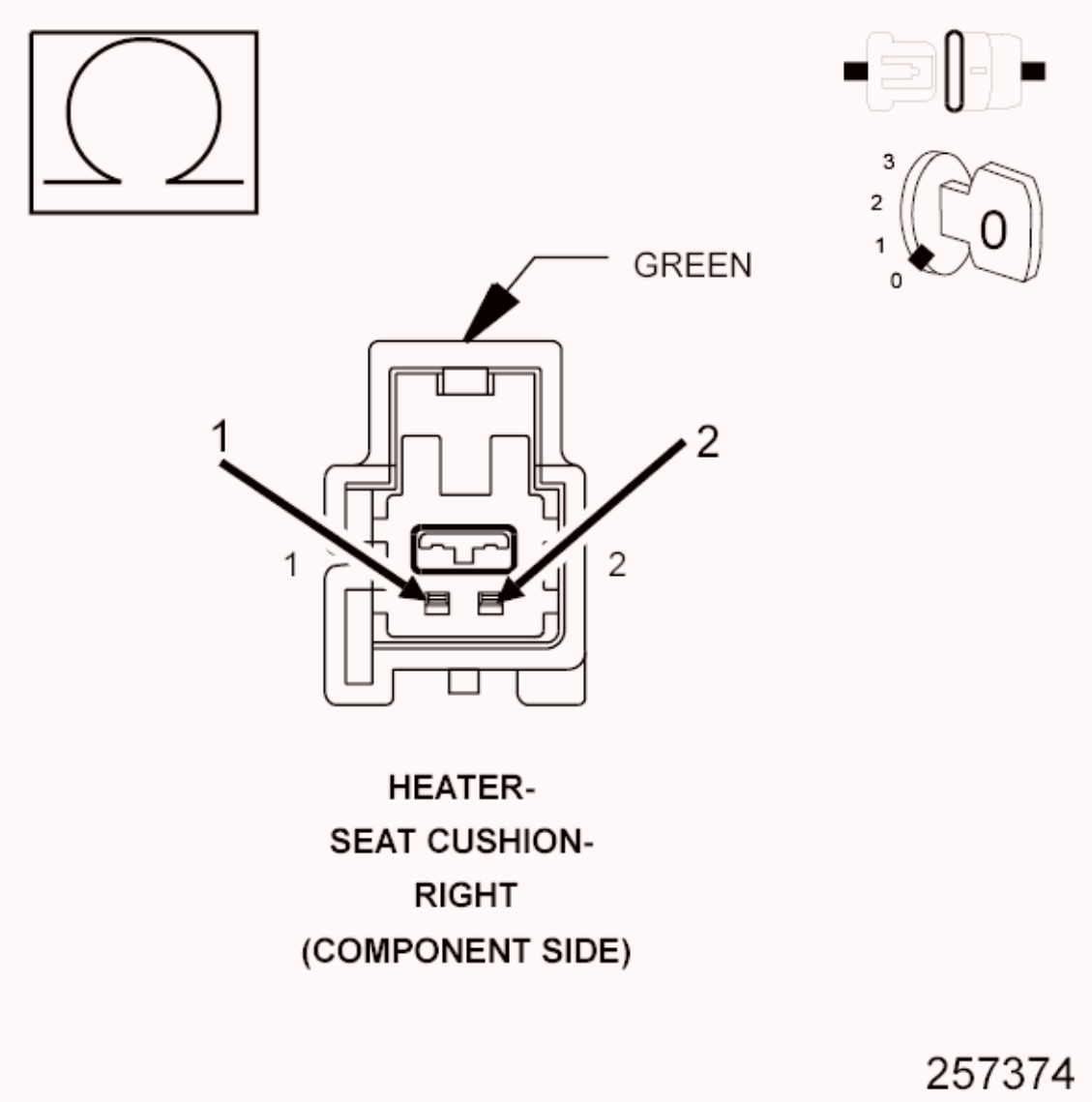

Fig. 15: Checking For Open Seat Heater Elements
Courtesy of CHRYSLER GROUP, LLC

1. Turn the ignition off.
2. Disconnect the Right Seat Cushion Heater harness connector.
3. Measure the total resistance of the Cushion and Seat Back Heater Elements between (P188) Right Seat Heater B(+) Driver circuit and the (Z908) Ground circuit at the Right Seat Cushion Heater connector (component side).

   Is the total resistance 2.5 to 3.5 Ohms (± 0.5 Ohm)?

   Yes

   - Go To 3

No

- Go To 5

3. **CHECK THE (Z908) GROUND CIRCUIT FOR AN OPEN**

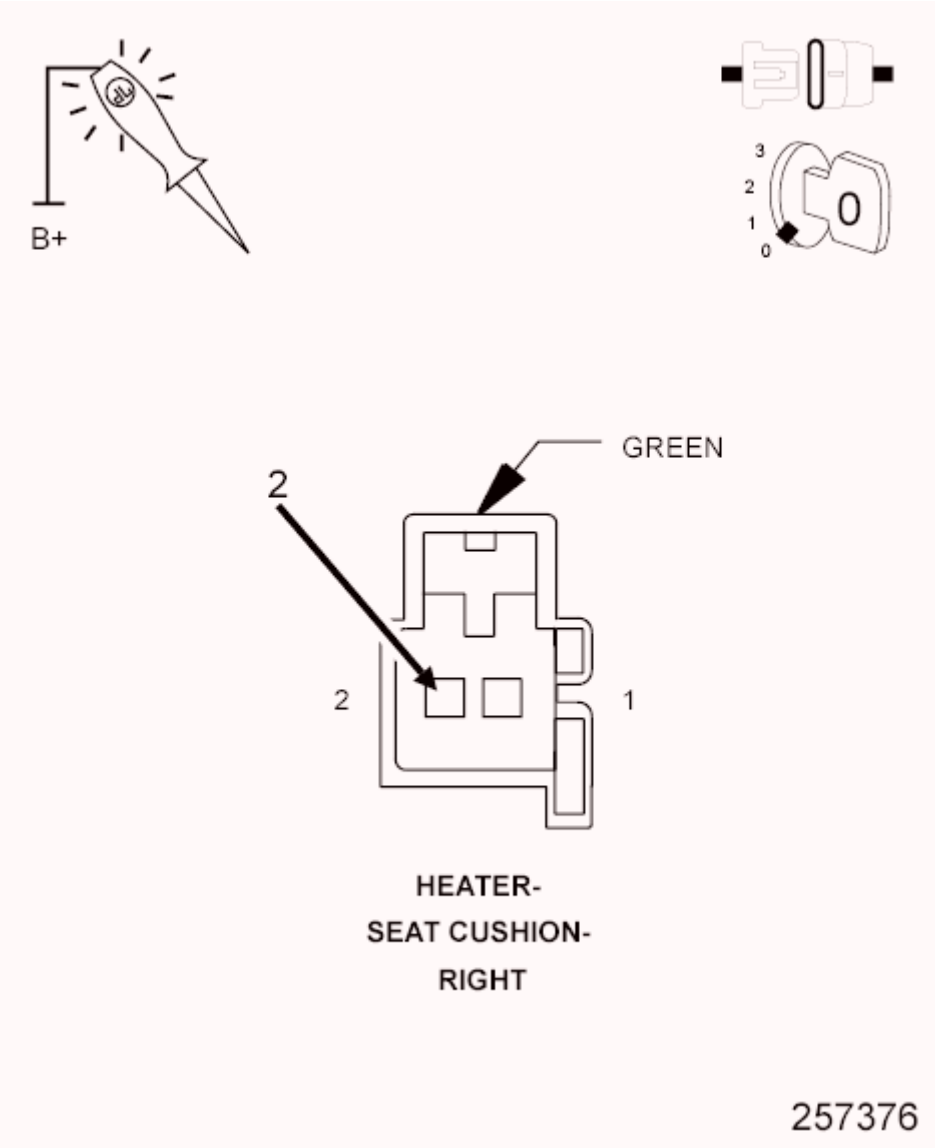

Fig. 16: Checking Ground Circuit For An Open
Courtesy of CHRYSLER GROUP, LLC

1. Using a 12-volt test light connected to 12-volts, check the (Z908) Ground circuit at the Right Seat Cushion Heater harness connector (harness side).

NOTE: The test light should be illuminated and bright. Compare the brightness to that of a direct

connection to the battery.

Does the test light illuminate brightly?

Yes

- Go To 4

No

- Repair the (Z908) Ground circuit for an open.
- Perform the BODY VERIFICATION TEST. Refer to **STANDARD PROCEDURE** .

4. **CHECK THE (P188) RIGHT SEAT HEATER B(+) DRIVER CIRCUIT FOR AN OPEN IN BODY HARNESS**

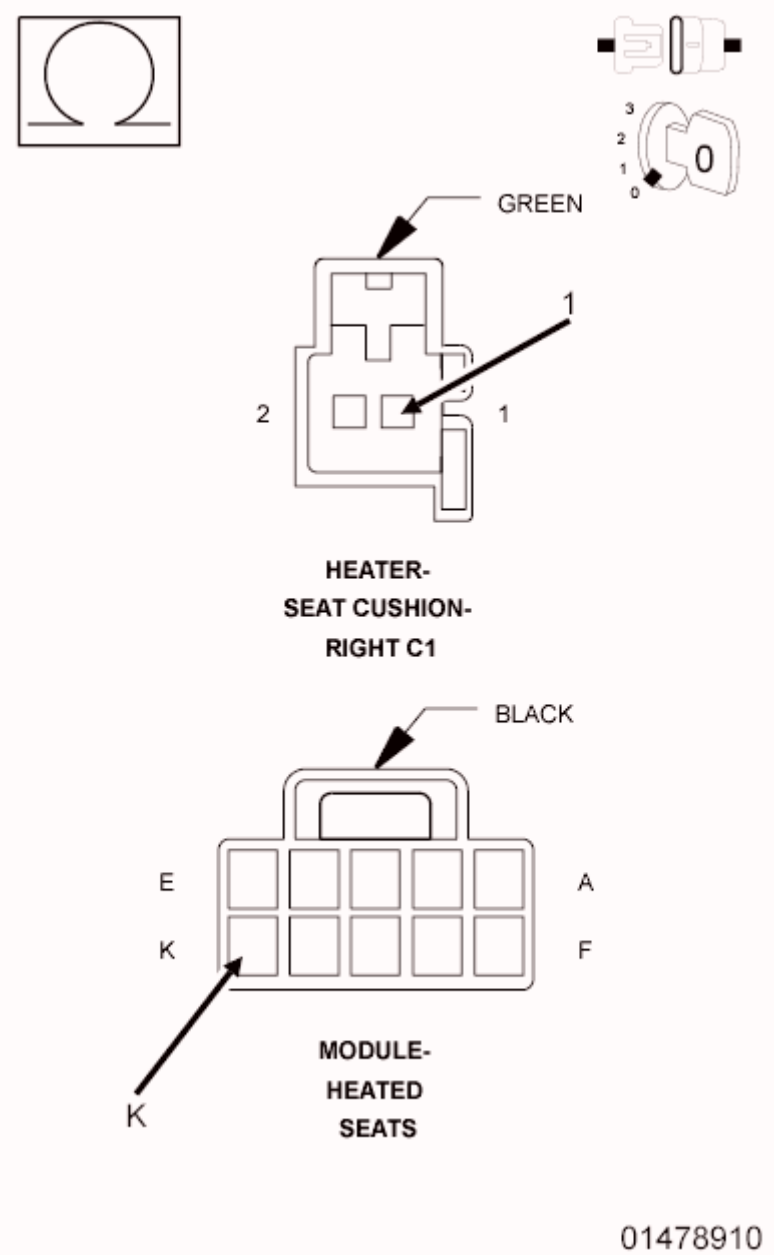

Fig. 17: Measuring Resistance Of Right Seat Heater B (+) Driver Circuit
Courtesy of CHRYSLER GROUP, LLC

1. Disconnect the HSM harness connector.
2. Measure the resistance of the (P188) Right Seat Heater B(+) Driver circuit between the HSM harness connector and the Right Seat Cushion Heater harness connector (harness side).

   Is the resistance below 5.0 Ohms?

   Yes

- Replace the Heated Seat Module (HSM) in accordance with the Service Information.
- Perform the BODY VERIFICATION TEST. Refer to **STANDARD PROCEDURE** .

No

- Repair the (P188) Right Seat Heater B(+) Driver circuit for an open.
- Perform the BODY VERIFICATION TEST. Refer to **STANDARD PROCEDURE** .

5. **CHECK THE RIGHT SEAT BACK HEATER ELEMENT FOR AN OPEN**

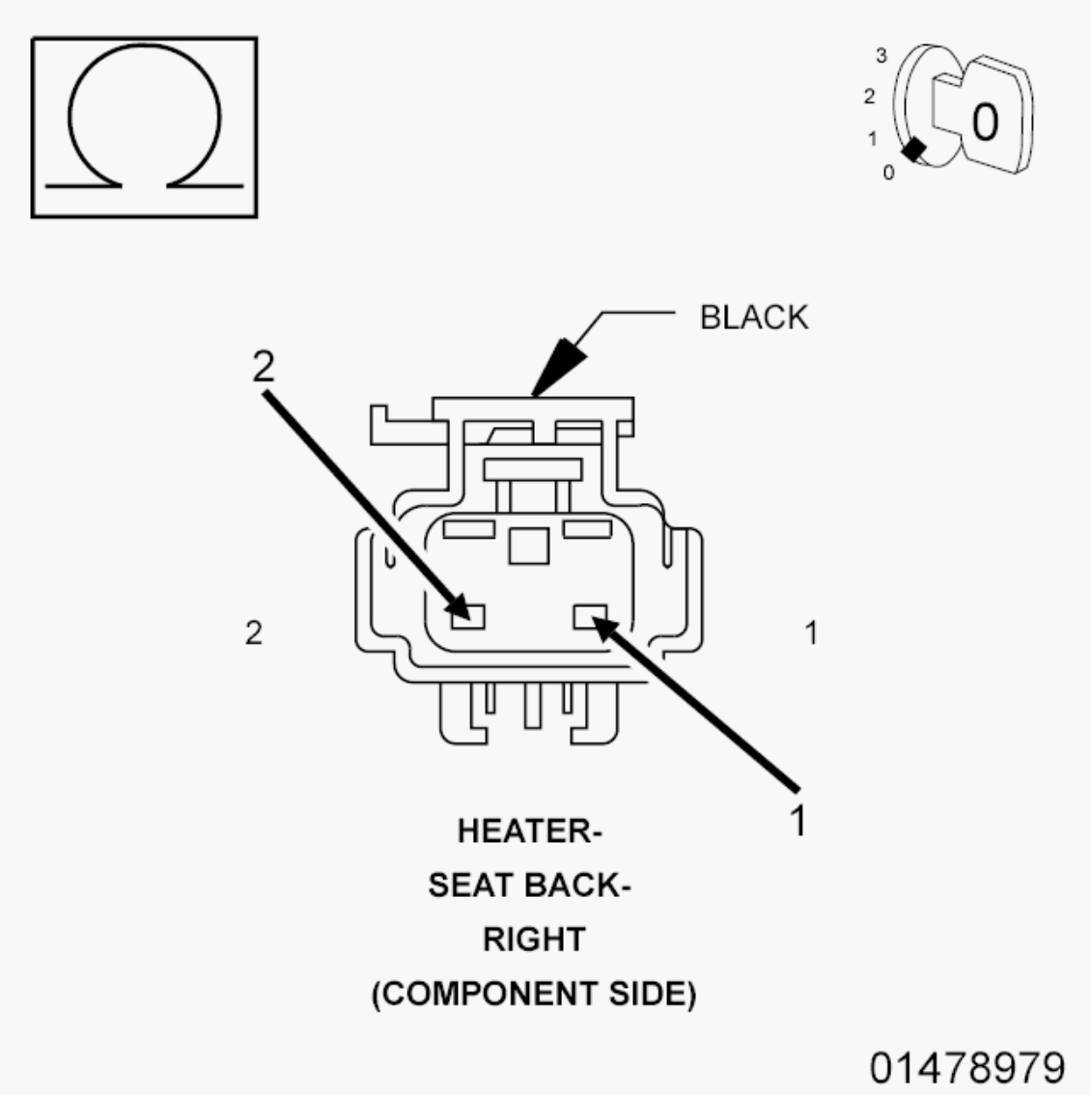

Fig. 18: Measuring Resistance Of Right Seat Back Heater Element
Courtesy of CHRYSLER GROUP, LLC

1. Disconnect the Right Seat Back Heater harness connector.
2. Measure the resistance of the Right Seat Back Heater Element between the (P188) Right Seat Heater B(+) Driver and the (Z908) Ground circuit at the Right Seat Back Heater connector (component side).

   Is the resistance above 6.0 Ohms?

   Yes

   - Replace the Seat Back Heater Element in accordance with the Service Information.
   - Perform the BODY VERIFICATION TEST. Refer to **STANDARD PROCEDURE** .

   No

   - Replace the Seat Cushion Heater Element in accordance with the Service Information.
   - Perform the BODY VERIFICATION TEST. Refer to **STANDARD PROCEDURE** .

B10BB-LEFT HEATED SEAT SWITCH INPUT CIRCUIT STUCK

For a complete wiring diagram, **refer to appropriate SYSTEM WIRING DIAGRAMS article** .

WHEN MONITORED

With the ignition on.

SET CONDITION

If the Cluster (CCN) senses the Left Heated Seat switch input for more than 10 seconds.

POSSIBLE CAUSES

Possible Causes
OBJECT HOLDING LEFT HEATED SEAT SWITCH IN A PUSHED

POSITION
SUBSTANCE CAUSING LEFT HEATED SEAT SWITCH TO GET STUCK IN A PUSHED POSITION
SWITCH BANK

DIAGNOSTIC TEST

1. **INSPECT THE SWITCH BANK FOR DAMAGE**

   NOTE: Diagnose and repair all LIN Bus related DTCs before performing this test procedure.

   1. Turn the ignition off.
   2. Inspect the Switch Bank for damage.

      Is the Switch Bank damaged?

      Yes

      - Replace the Switch Bank in accordance with the Service Information.
      - Perform the BODY VERIFICATION TEST. Refer to **STANDARD PROCEDURE** .

      No

      - Go To 2

2. **INSPECT FOR OBJECT OR SUBSTANCE CAUSING LEFT HEATED SEAT SWITCH TO STAY OR STICK IN A PUSHED POSITION**

   1. Inspect the Left Heated Seat switch for anything that would cause it to stay or stick in a pushed position.

      Is anything present that would cause the Left Heated Seat switch to stay or stick in a pushed position?

      Yes

      - Repair as necessary.

- Perform the BODY VERIFICATION TEST. Refer to **STANDARD PROCEDURE** .

No

- Go To 3

3. **TEST FOR INTERMITTENT CONDITION**
   1. Turn the ignition on.
   2. With the scan tool, record and erase DTCs.
   3. Press and release the Left Heated Seat switch several times and then wait 10 seconds.
   4. With the scan tool, read DTCs.

   Does the scan tool display this DTC as active?

   Yes

   - Replace the Switch Bank in accordance with the Service Information.
   - Perform the BODY VERIFICATION TEST. Refer to **STANDARD PROCEDURE** .

   No

   - The conditions that caused this code to set are not present at this time.
   - Perform the BODY VERIFICATION TEST. Refer to **STANDARD PROCEDURE** .

B10BC-RIGHT HEATED SEAT SWITCH INPUT CIRCUIT STUCK

For a complete wiring diagram, **refer to appropriate SYSTEM WIRING DIAGRAMS article** .

WHEN MONITORED

With the ignition on.

SET CONDITION

If the Cluster (CCN) senses the Right Heated Seat switch input for more than 10 seconds.

POSSIBLE CAUSES

Possible Causes
OBJECT HOLDING RIGHT HEATED SEAT SWITCH IN A PUSHED POSITION
SUBSTANCE CAUSING RIGHT HEATED SEAT SWITCH TO GET STUCK IN A PUSHED POSITION
SWITCH BANK

DIAGNOSTIC TEST

1. **INSPECT SWITCH BANK FOR DAMAGE**

   NOTE: Diagnose and repair all LIN Bus related DTCs before performing this test procedure.

   1. Turn the ignition off.
   2. Inspect the Switch Bank for damage.

      Is the Switch Bank damaged?

      Yes

      - Replace the Switch Bank in accordance with the Service Information.
      - Perform the BODY VERIFICATION TEST. Refer to **STANDARD PROCEDURE** .

      No

      - Go To 2

2. **INSPECT FOR OBJECT OR SUBSTANCE CAUSING RIGHT HEATED SEAT SWITCH TO STAY OR STICK IN A PUSHED POSITION**
   1. Inspect the Right Heated Seat switch for anything that would cause it to stay or stick in a pushed position.

Is anything present that would cause the Right Heated Seat switch to stay or stick in a pushed position?

Yes

- Repair as necessary.
- Perform the BODY VERIFICATION TEST. Refer to **STANDARD PROCEDURE** .

No

- Go To 3

3. **TEST FOR INTERMITTENT CONDITION**
   1. Turn the ignition on.
   2. With the scan tool, record and erase DTCs.
   3. Press and release the Right Heated Seat switch several times and then wait 10 seconds.
   4. With the scan tool, read DTCs.

   Does the scan tool display this DTC as active?

   Yes

   - Replace the Switch Bank in accordance with the Service Information.
   - Perform the BODY VERIFICATION TEST. Refer to **STANDARD PROCEDURE** .

   No

   - The conditions that caused this DTC to set are not present at this time.
   - Perform the BODY VERIFICATION TEST. Refer to **STANDARD PROCEDURE** .

B123F-MENU SWITCH STUCK

For a complete wiring diagram, **refer to appropriate SYSTEM WIRING DIAGRAMS article** .

WHEN MONITORED

With the ignition on.

SET CONDITION

The Cluster detects the Menu Switch active for greater than 20 seconds.

POSSIBLE CAUSES

Possible Causes
LEFT STEERING WHEEL SWITCH

DIAGNOSTIC TEST

CHECK FOR AN ACTIVE DTC

1. Turn the ignition on.
2. With the scan tool, record and erase DTCs.
3. Press the MENU switch three times.
4. With the scan tool, read DTCs.

   Does the scan tool display this DTC as active?

   Yes

   - Replace the Left Steering Wheel Switch in accordance with the Service Information.
   - Perform the BODY VERIFICATION TEST. Refer to **STANDARD PROCEDURE** .

   No

   - Test complete, the condition or conditions that originally set this DTC are not present at this time. Using the wiring diagrams as a guide, check all related splices and connectors for signs of water intrusion, corrosion, pushed out or bent terminals, and correct pin tension.

B1263-COMPASS MAGNETIC FIELD PERFORMANCE

For a complete wiring diagram, **refer to appropriate SYSTEM WIRING DIAGRAMS article** .

WHEN MONITORED

With the ignition on.

SET CONDITION

Internal Compass Module failure detected.

POSSIBLE CAUSES

Possible Causes
COMPASS MODULE

DIAGNOSTIC TEST

CHECK FOR AN ACTIVE DTC

1. Turn the ignition on.
2. With the scan tool, read DTCs.

   Does the scan tool display this DTC as active?

   Yes

   - Replace the Compass Module in accordance with the Service Information.
   - Perform the BODY VERIFICATION TEST. Refer to **STANDARD PROCEDURE** .

   No

   - Test complete, the condition or conditions that originally set this DTC are not present at this time. Using the wiring diagrams as a guide, check all related splices and connectors for signs of water intrusion, corrosion, pushed out or bent terminals, and correct pin tension.
   - Perform the BODY VERIFICATION TEST. Refer to **STANDARD PROCEDURE** .

B1265-TRIP/TOGGLE SWITCH STUCK

For a complete wiring diagram **refer to appropriate SYSTEM WIRING DIAGRAMS article** .

WHEN MONITORED

With the ignition on.

SET CONDITION

The Cluster detects the TRIP/TOGGLE Switch active for greater than 20 seconds.

POSSIBLE CAUSES

Possible Causes
CLUSTER

DIAGNOSTIC TEST

CHECK FOR AN ACTIVE DTC

1. Turn the ignition on.
2. With the scan tool, record and erase DTCs.
3. Press the TRIP/TOGGLE switch three times.
4. With the scan tool, read DTCs.

   Does the scan tool display: B1265-Trip/Toggle Switch Stuck?

   Yes

   - Replace the Cluster in accordance with the Service Information.
   - Perform the BODY VERIFICATION TEST Refer to **STANDARD PROCEDURE** .

   No

   - Test complete.

B1286-COMPASS/TEMP BUTTON PERFORMANCE

For a complete wiring diagram, **refer to appropriate SYSTEM WIRING DIAGRAMS article** .

WHEN MONITORED

With the ignition on.

SET CONDITION

The Cluster detects the Compass / Temp Button active for greater than 20 seconds.

POSSIBLE CAUSES

Possible Causes
LEFT STEERING WHEEL SWITCH

DIAGNOSTIC TEST

CHECK FOR AN ACTIVE DTC

NOTE: Before proceeding with this diagnostic procedure, verify the Left and Right Steering Wheel Switch and Clockspring harness connectors are properly seated and verify proper pin terminal tension. A loose connection at any of these connectors may cause this DTC to set.

1. Turn the ignition on.
2. With the scan tool, read DTCs.

   Does the scan tool display this DTC as active?

   Yes

   - Replace the Left Steering Wheel Switch in accordance with the Service Information.
   - Perform the BODY VERIFICATION TEST. Refer to **STANDARD PROCEDURE** .

   No

   - The condition or conditions that originally set this DTC are not present at this time. Using the wiring diagrams as a guide, check all related splices and connectors for signs of water intrusion, corrosion, pushed out or bent terminals, and correct pin tension.

B1427-REMOTE RADIO SWITCH INPUT CIRCUIT HIGH

For a complete wiring diagram, **refer to appropriate SYSTEM WIRING DIAGRAMS article** .

WHEN MONITORED

Continuously with the ignition on.

SET CONDITION

The Cluster senses that the Remote Radio Switch Input circuit is open.

POSSIBLE CAUSES

Possible Causes
REMOTE RADIO SWITCH INPUT CIRCUIT OPEN (FAULTY STEERING WHEEL WIRING HARNESS / CONNECTOR)
RIGHT STEERING WHEEL CONTROL SWITCH (SPEED CONTROL SWITCH)

DIAGNOSTIC TEST

CHECK FOR AN ACTIVE DTC

NOTE: Before proceeding with the diagnostic procedure, verify that the connections are proper made, properly seated and verify proper pin terminal tension. A loose connection at any of the related connectors may cause the DTC to set.

1. Turn the ignition on.
2. Press each Remote Radio Switch twice.
3. With the scan tool, read DTCs

   Does the scan tool display this DTC as active?

   Yes

   WARNING: Turn the ignition off disconnect the 12-volt battery and wait two minutes before proceeding. Failure to follow these instructions may result in possible serious or

fatal injury.

WARNING: Do not place an intact non-deployed airbag face down on a hard surface, the airbag propels into the air if accidentally deployed. Failure to follow these instructions may result in possible serious or fatal injury.

NOTE: Visually and physically inspect the wiring harness between the Remote Radio Switch harness connectors and the Right Steering Wheel Switch (Speed Control Switch) harness connector. Repair any damaged wires, connectors, and open/spread terminals. If harness is OK, proceed with test.

- Replace the Right Steering Wheel Control Switch (Speed Control Switch) in accordance with the Service Information.
- Perform the BODY VERIFICATION TEST. Refer to **STANDARD PROCEDURE** .

No

- The condition or conditions that originally set this DTC are not present at this time. Using the wiring diagrams as a guide, check all related splices and connectors for signs of water intrusion, corrosion, pushed out or bent terminals, and correct pin tension.
- Perform the BODY VERIFICATION TEST. Refer to **STANDARD PROCEDURE** .

B1428-REMOTE RADIO SWITCH INPUT CIRCUIT STUCK

For a complete wiring diagram, **refer to appropriate SYSTEM WIRING DIAGRAMS article** .

WHEN MONITORED

Continuously with the ignition on.

SET CONDITION

The Cluster senses that the Remote Radio Switch Input circuit is stuck for greater than 600 seconds.

POSSIBLE CAUSES

Possible Causes
STUCK REMOTE RADIO SWITCH

DIAGNOSTIC TEST

1. **CHECK FOR AN ACTIVE DTC**

NOTE: Before proceeding with the diagnostic procedure, verify that the connections are properly seated and verify correct pin terminal tension. A loose connection at any of the related connectors may cause the DTC to set.

1. Turn the ignition on.
2. Press each Remote Radio Switch twice.
3. With the scan tool, read DTCs

Does the scan tool display this DTC as active?

Yes

- Go To 2

No

- The condition or conditions that originally set this DTC are not present at this time. Using the wiring diagrams as a guide, check all related splices and connectors for signs of water intrusion, corrosion, pushed out or bent terminals, and correct pin tension.
- Perform the BODY VERIFICATION TEST. Refer to **STANDARD PROCEDURE** .

2. **LEFT OR RIGHT REMOTE RADIO SWITCH**

NOTE: Check for a stuck Remote Radio Switch. Repair as necessary.

1. With the scan tool, view the switch status. Status can be viewed in the Cluster data display.

   NOTE: With the switches pressed, the value for the remote switches should change state on the scan tool.

2. **Left Remote Radio Switch**
   - Seek Up
   - Preset
   - Seek Down
3. **Right Remote Radio Switch**
   - Volume Up
   - Audio Mode
   - Volume Down

   Does the scan tool display the correct status of the switches in the data display?

   Yes

   - The condition or conditions that originally set this DTC are not present at this time. Using the wiring diagrams as a guide, check all related splices and connectors for signs of water intrusion, corrosion, pushed out or bent terminals, and correct pin tension.

   No

   WARNING: Turn the ignition off disconnect the 12-volt battery and wait two minutes before proceeding. Failure to follow these instructions may result in possible serious or fatal injury.

   WARNING: Do not place an intact non-deployed airbag face down on a hard surface, the airbag propels into the air if accidentally

deployed. Failure to follow these instructions may result in possible serious or fatal injury.

NOTE: Visually and physically inspect the wiring harness between the Remote Radio Switch harness connectors and the Right Steering Wheel Switch (Speed Control Switch) harness connector. Repair any damaged wires, connectors, and open/spread terminals. If harness is OK, proceed with test.

- Replace the Remote Radio Switch that does not display the correct value in the data display.
- Perform the BODY VERIFICATION TEST. Refer to **STANDARD PROCEDURE** .

B1504-LEFT STEERING WHEEL CONTROL SWITCH CIRCUIT

For a complete wiring diagram, **refer to appropriate SYSTEM WIRING DIAGRAMS article** .

WHEN MONITORED

Continuously with the ignition on.

SET CONDITION

The Cluster senses that the Left Steering Wheel Control Switch is in the Set position for greater than 20 seconds. Phone related switches have a set time of 600 seconds.

POSSIBLE CAUSES

Possible Causes
LEFT STEERING WHEEL CONTROL SWITCH RIGHT STEERING WHEEL CONTROL SWITCH (SPEED CONTROL SWITCH)

DIAGNOSTIC TEST

CHECK FOR AN ACTIVE DTC

1. Turn the ignition on.
2. Press each switch on the Left Steering Wheel Switch assembly twice.
3. With the scan tool, read DTCs.

Does the scan tool display this DTC as active?

Yes

WARNING: Turn the ignition off disconnect the 12-volt battery and wait two minutes before proceeding. Failure to follow these instructions may result in possible serious or fatal injury.

WARNING: Do not place an intact non-deployed airbag face down on a hard surface, the airbag propels into the air if accidentally deployed. Failure to follow these instructions may result in possible serious or fatal injury.

NOTE: Check for a stuck Left Steering Wheel Control Switch.

NOTE: Visually and physically inspect the wiring harness between the Left Steering Wheel Control Switch harness connector and the Right Steering Wheel Control Switch (Speed Control Switch) harness connector. Repair any damaged wires, connectors, and open/spread terminals. If harness is OK, proceed with test.

- Replace the Left Steering Wheel Control Switch in accordance with the Service Information. Once switch has been replaced, press it twice to initialize it. If problem persists, replace the Right Steering Wheel Switch (Speed Control Switch) in accordance with the Service Information.
- Perform the BODY VERIFICATION TEST. Refer to **STANDARD**

PROCEDURE .

No

- The condition or conditions that originally set this DTC are not present at this time. Using the wiring diagrams as a guide, check all related splices and connectors for signs of water intrusion, corrosion, pushed out or bent terminals, and correct pin tension.
- Perform the BODY VERIFICATION TEST. Refer to **STANDARD PROCEDURE** .

B161A-COURTESY/DOME LAMP CONTROL CIRCUIT

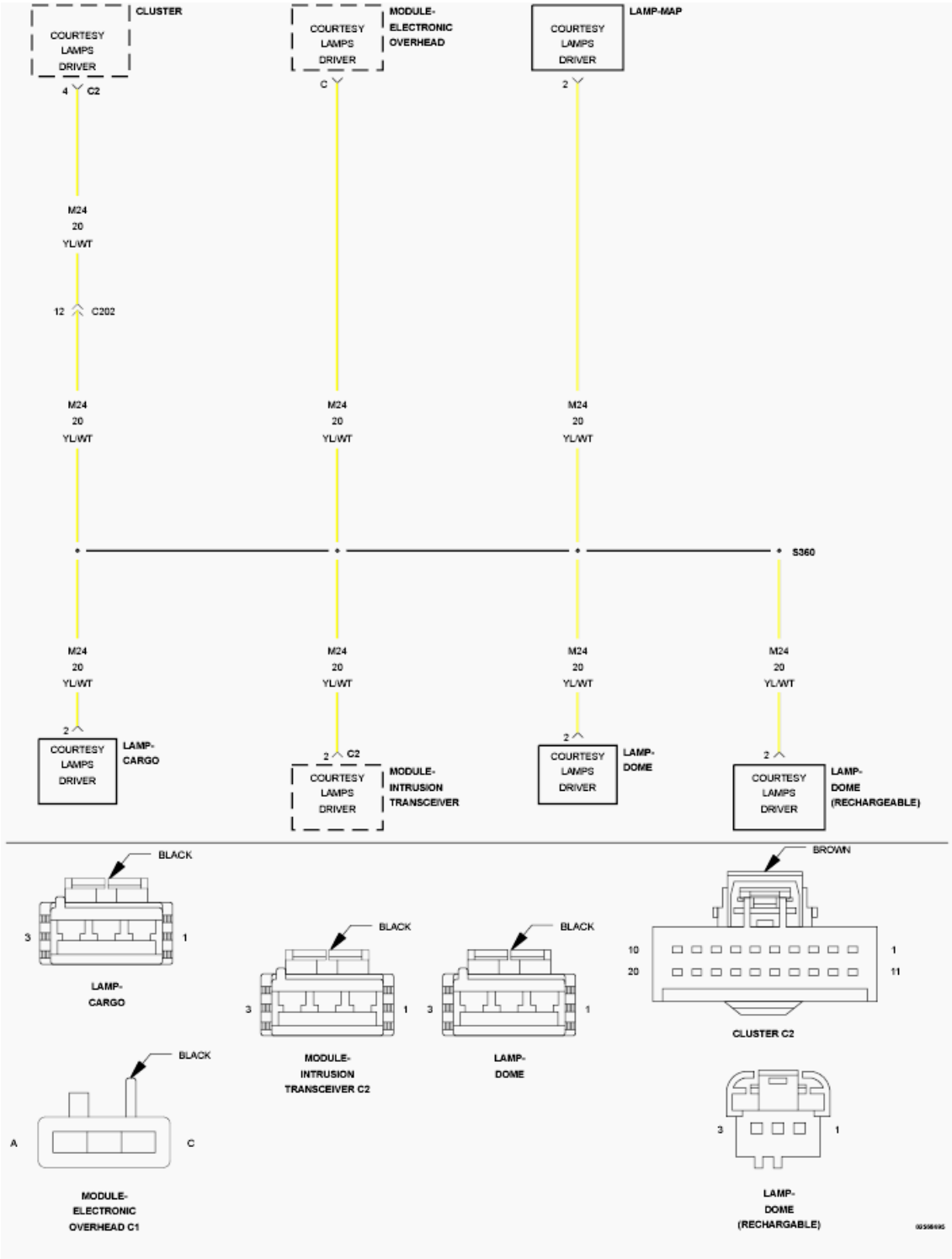

Fig. 19: Courtesy/Dome Lamp Control Circuit Diagram
Courtesy of CHRYSLER GROUP, LLC

For a complete wiring diagram, **refer to appropriate SYSTEM WIRING DIAGRAMS article** .

WHEN MONITORED

Continuously

SET CONDITION

When the Cluster detects a short to battery on the Control circuit.

POSSIBLE CAUSES

Possible Causes
(M24) COURTESY LAMPS DRIVER CIRCUIT SHORTED TO GROUND (M24) COURTESY LAMPS DRIVER CIRCUIT OPEN CLUSTER

DIAGNOSTIC TEST

1. **CHECK FOR AN ACTIVE DTC**
    1. Turn the ignition on.
    2. With the scan tool, read DTCs.

    Does the scan tool read: B161A-COURTESY/DOME LAMP CONTROL CIRCUIT?

    Yes

    - Go To 2

    No

    - Test complete, the condition or conditions that originally set this DTC are not present at this time. Using the wiring diagrams as a guide, check all related splices and connectors for signs of water intrusion, corrosion, pushed out or bent terminals, and correct pin tension.
2. **CHECK THE (M24) COURTESY LAMPS DRIVER CIRCUIT FOR A SHORT TO GROUND**

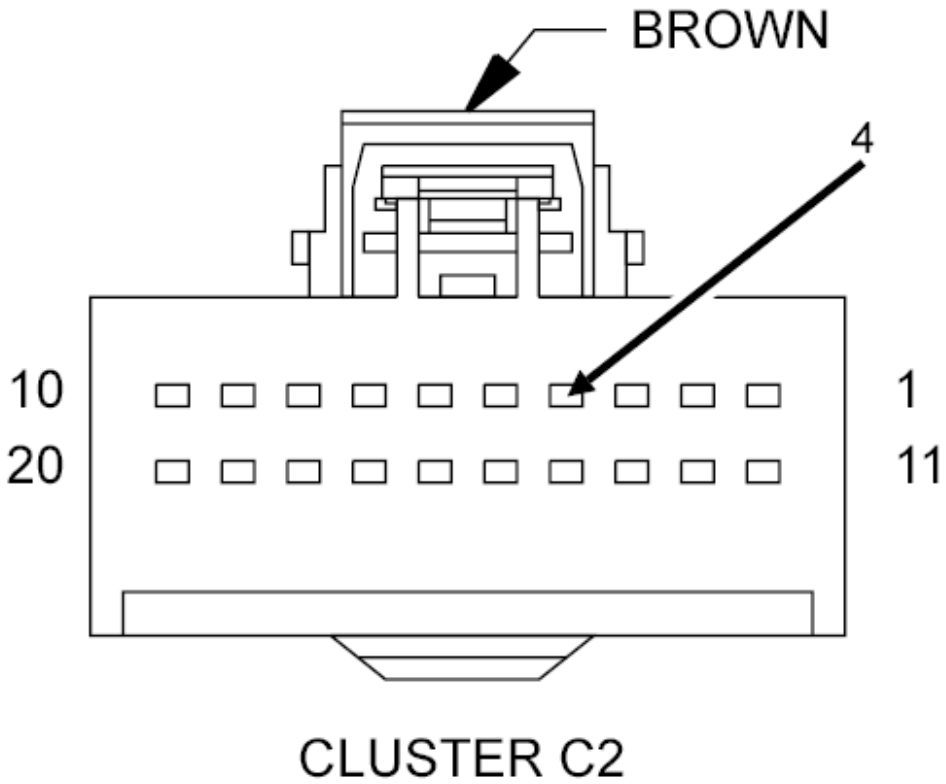

Fig. 20: Measuring Resistance Between (M24) Courtesy Lamp Driver Circuit & Ground
Courtesy of CHRYSLER GROUP, LLC

1. Turn the ignition off.
2. Disconnect the Cluster C2 harness connector.
3. Measure the resistance between the (M24) Courtesy Lamp Driver circuit and ground.

   Is the resistance below 5.0 Ohms?

   Yes

- Repair the short to ground in the (M24) Courtesy Lamp Driver circuit.
- Perform the BODY VERIFICATION TEST. Refer to **STANDARD PROCEDURE** .

No

- Go To 3

3. **CHECK THE (M24) COURTESY LAMPS DRIVER CIRCUIT FOR AN OPEN**

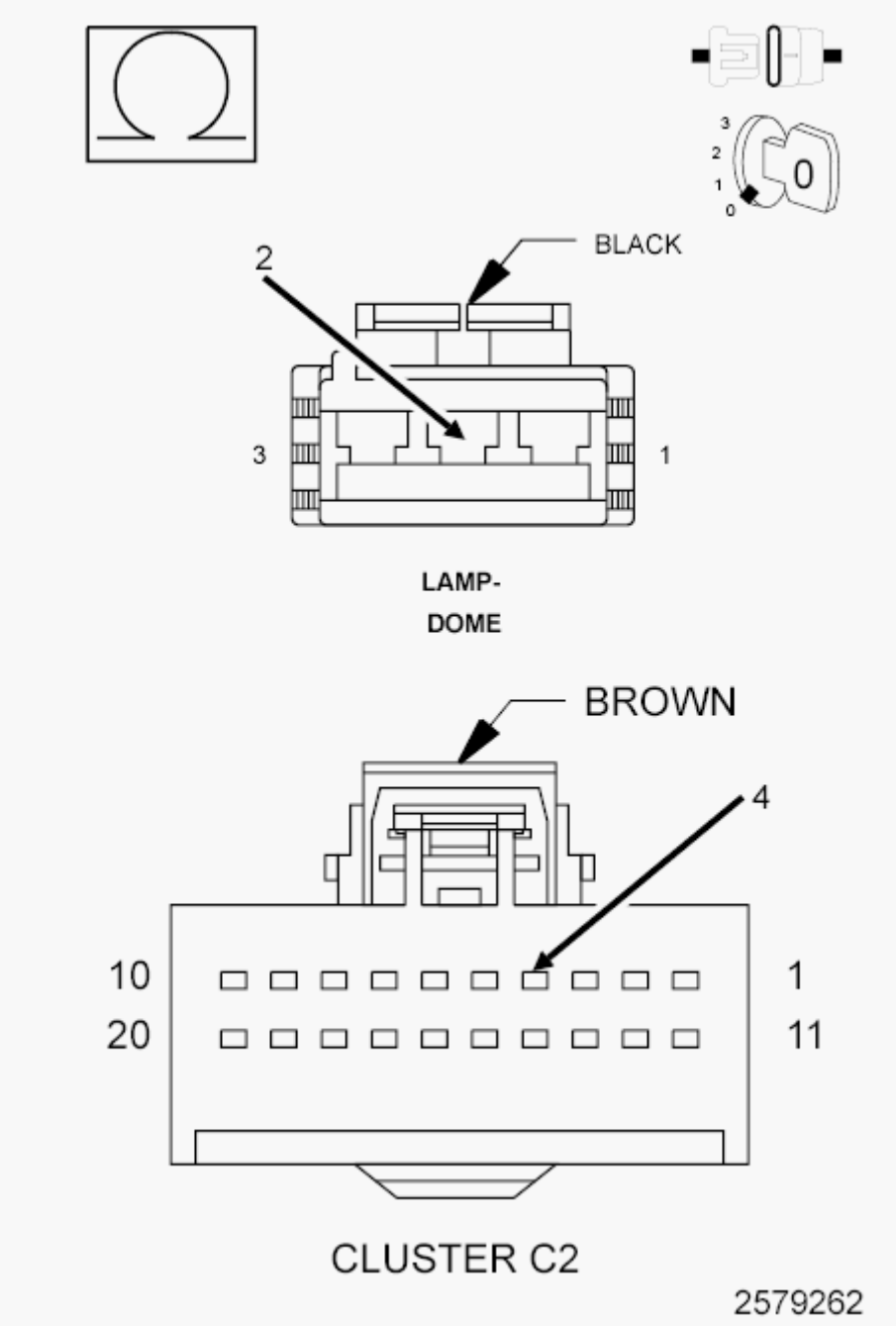

Fig. 21: Measuring Resistance Of Courtesy Lamp Driver Circuit Between Cluster C2 & Dome Lamp Harness Connectors
Courtesy of CHRYSLER GROUP, LLC

1. Turn the ignition off.
2. Disconnect the Dome Lamp harness connector.
3. Measure the resistance of the (M24) Courtesy Lamp Driver circuit between the Cluster C2 and Dome Lamp harness connectors.

   Is the resistance above 5.0 Ohms?

Yes

- Repair the open in the (M24) Courtesy Lamp Driver circuit.
- Perform the BODY VERIFICATION TEST. Refer to **STANDARD PROCEDURE** .

No

- Replace the Cluster in accordance with the Service Information.
- Perform the BODY VERIFICATION TEST. Refer to **STANDARD PROCEDURE** .

B161E-READING LAMP CONTROL CIRCUIT

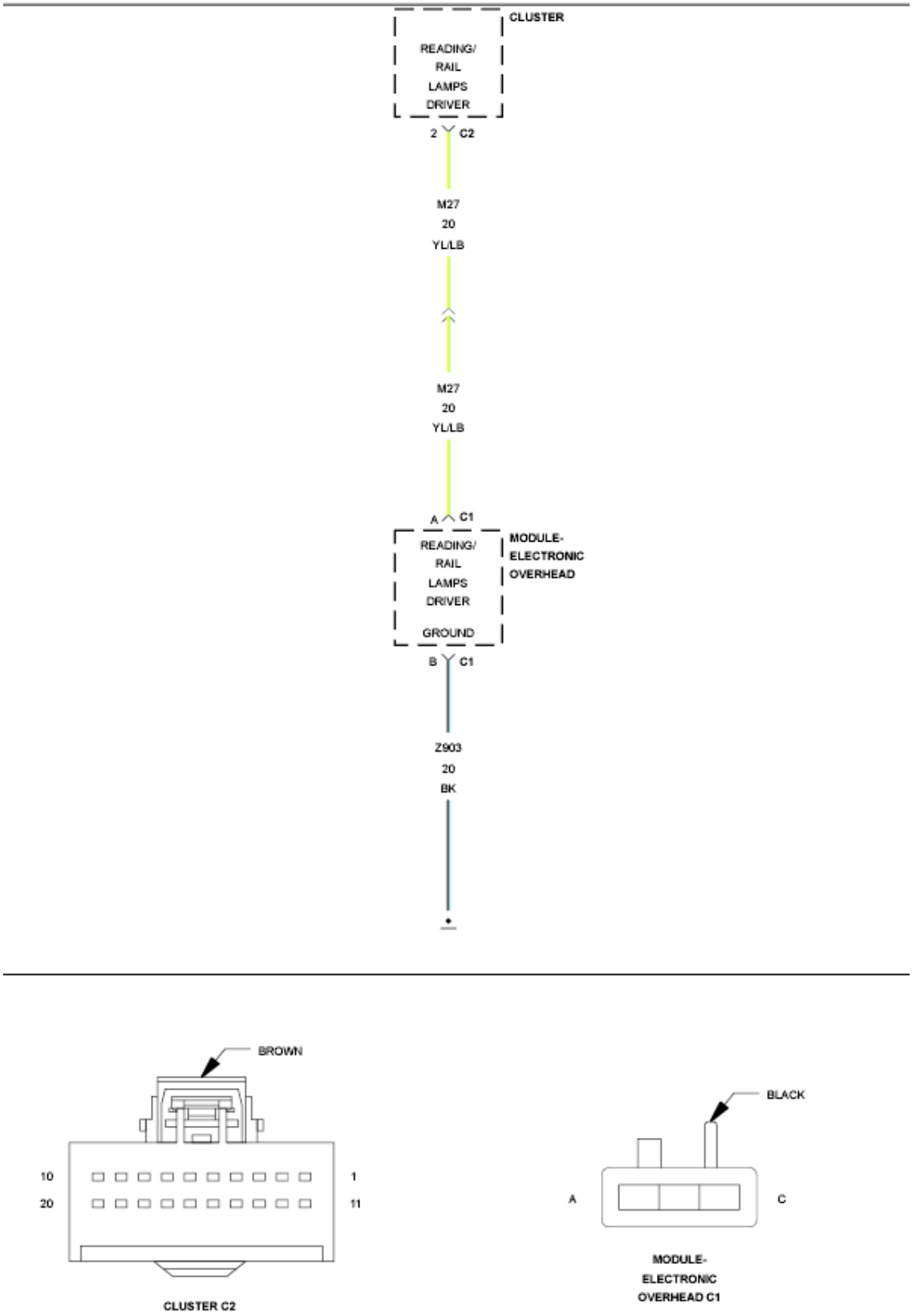

Fig. 22: Reading Lamp Control Circuit Diagram
Courtesy of CHRYSLER GROUP, LLC

For a complete wiring diagram, **refer to appropriate SYSTEM WIRING DIAGRAMS article** .

WHEN MONITORED

With the ignition on.

SET CONDITION

When the Cluster detects an open or a short to ground driver circuit.

POSSIBLE CAUSES

Possible Causes
(M27) READING/RAIL LAMPS DRIVER CIRCUIT SHORTED TO GROUND (M27) READING/RAIL LAMPS DRIVER CIRCUIT OPEN (Z903) GROUND CIRCUIT OPEN ELECTRONIC OVERHEAD MODULE (EOM) CLUSTER

DIAGNOSTIC TEST

1. **CHECK FOR AN ACTIVE DTC**
    1. Turn the ignition on.
    2. With the scan tool, read DTCs.

    Does the scan tool display this DTC as active?

    Yes

    - Go To 4

    No

    - Test complete, the condition or conditions that originally set this DTC are not present at this time. Using the wiring diagrams as a guide, check all related splices and connectors for signs of water intrusion, corrosion, pushed out or bent terminals, and correct pin tension.
2. **CHECK THE VOLTAGE OF THE (M27) READING/RAIL LAMPS**

DRIVER CIRCUIT

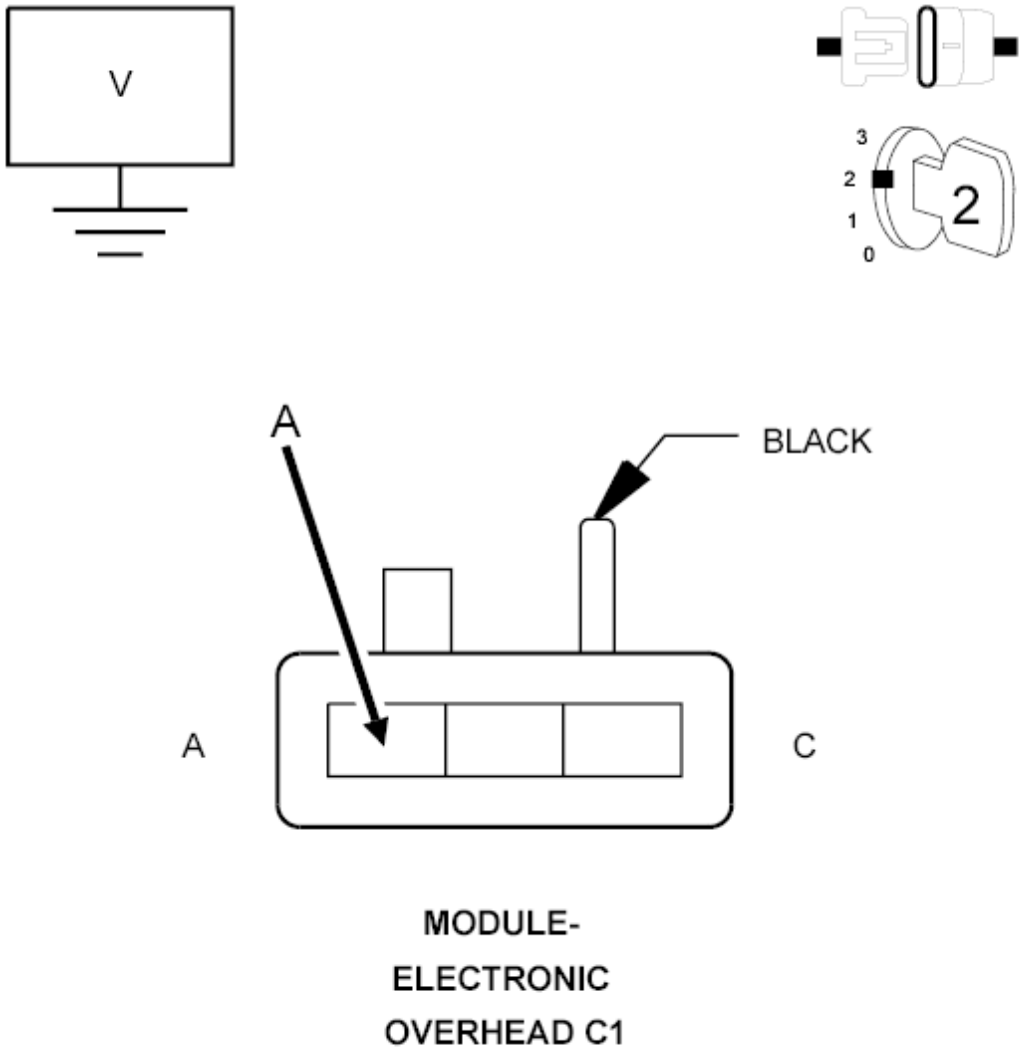

Fig. 23: Measuring Voltage Of Reading/Rail Lamps Driver circuit
Courtesy of CHRYSLER GROUP, LLC

1. Turn the ignition off.
2. Disconnect the Electronic Overhead Module C1 harness connector.
3. Turn the ignition on.
4. Measure the voltage of the (M27) Reading/Rail Lamps Driver circuit.

   Is the voltage above 10.0 volts?

   Yes

   - Go To 3

No

- Go To 4

3. **CHECK THE (Z903) GROUND CIRCUIT**

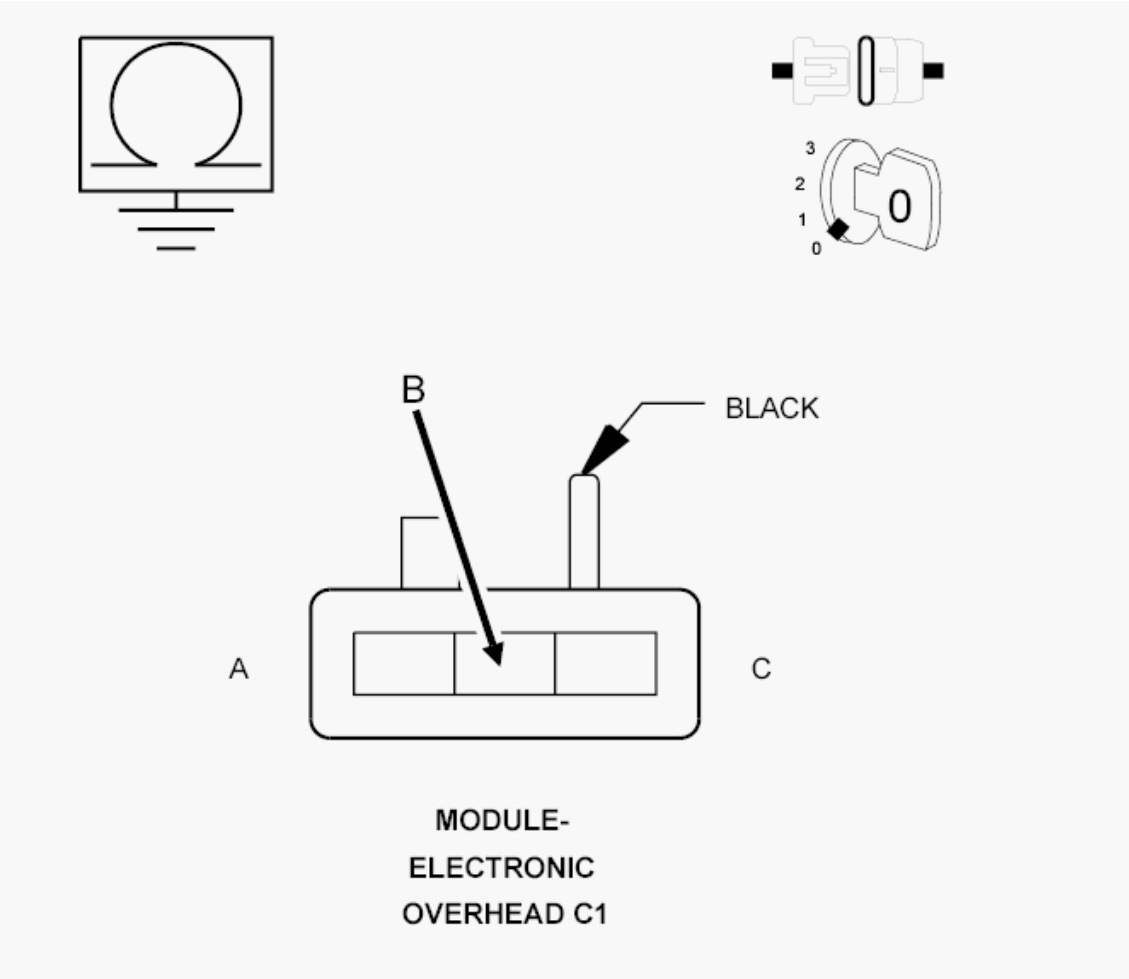

Fig. 24: Measuring Resistance Between Ground & Ground Circuit
Courtesy of CHRYSLER GROUP, LLC

1. Measure the resistance between ground and the (Z903) Ground circuit.

   Is the resistance below 10K Ohms?

   Yes

   - Replace the Electronic Overhead Module in accordance with the Service Information.
   - Perform the BODY VERIFICATION TEST. Refer to **STANDARD PROCEDURE** .

No

- Repair the open in the (Z903) Ground Circuit.
- Perform the BODY VERIFICATION TEST. Refer to **STANDARD PROCEDURE** .

4. **CHECK THE (M27) READING/RAIL LAMPS DRIVER CIRCUIT FOR A SHORT TO GROUND**

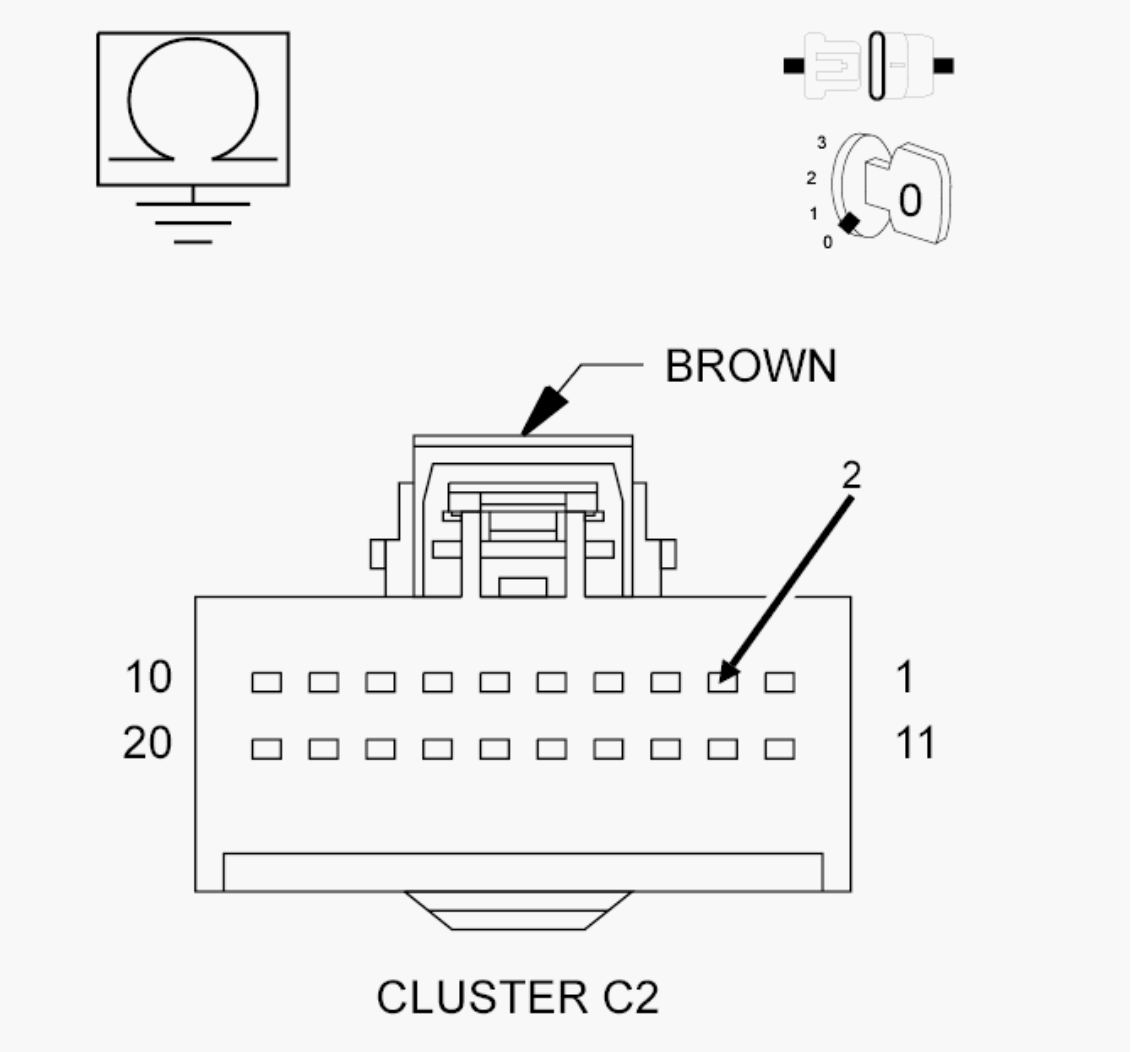

Fig. 25: Measuring Resistance Between Ground & Reading/Rail Lamps Driver circuit
Courtesy of CHRYSLER GROUP, LLC

1. Disconnect the Cluster C2 harness connector.
2. Measure the resistance between ground and the (M27) Reading/Rail Lamps Driver circuit.

Is the resistance below 10K Ohms?

Yes

- Repair the short to ground in the (M27) Reading/Rail Lamps Driver circuit.
- Perform the BODY VERIFICATION TEST. Refer to **STANDARD PROCEDURE** .

No

- Go To 5

5. **CHECK THE (M27) READING/RAIL LAMPS DRIVER CIRCUIT FOR AN OPEN**

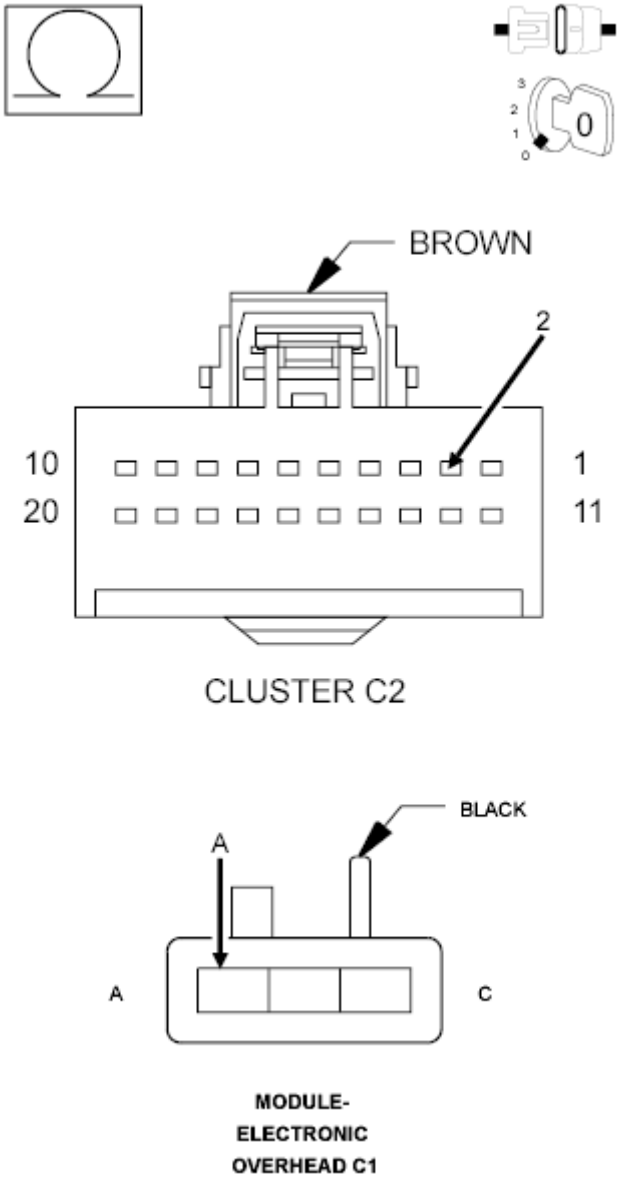

Fig. 26: Measuring Resistance Of Reading/Rail Lamps Driver Circuit
Courtesy of CHRYSLER GROUP, LLC

1. Measure the resistance of the (M27) Reading/Rail Lamps Driver circuit.

   Is the resistance above 5.0 Ohms?

   Yes

   - Repair the open in the (M27) Reading/Rail Lamps Driver circuit.
   - Perform the BODY VERIFICATION TEST. Refer to **STANDARD PROCEDURE** .

No

- Replace the Cluster in accordance with the Service Information.
- Perform the BODY VERIFICATION TEST. Refer to **STANDARD PROCEDURE** .

B168F-FRONT FOG LAMP SWITCH CIRCUIT

For a complete wiring diagram, **refer to appropriate SYSTEM WIRING DIAGRAMS article** .

WHEN MONITORED

With the ignition on.

SET CONDITION

The Cluster detects the Front Fog Lamp Switch Input Circuit voltage is less than the expected value.

POSSIBLE CAUSES

Possible Causes
LEFT MULTIFUNCTION SWITCH

DIAGNOSTIC TEST

CHECK FOR AN ACTIVE DTC

NOTE: Before proceeding with this diagnostic procedure, verify the Left and Right Multifunction Switch and Clockspring harness connectors are properly seated and verify proper pin terminal tension. A loose connection at any of these connectors may cause this DTC to set.

1. Turn the ignition on.
2. Turn the Fog Lamps on and off three times.
3. With the scan tool, read DTCs.

Does the scan tool display this DTC as active?

Yes

- Replace the Left Multifunction Switch in accordance with the Service Information.
- Perform the BODY VERIFICATION TEST. Refer to **STANDARD PROCEDURE** .

No

- Test complete, the condition or conditions that originally set this DTC are not present at this time. Using the wiring diagrams as a guide, check all related splices and connectors for signs of water intrusion, corrosion, pushed out or bent terminals, and correct pin tension.

B1782-HEADLAMP LEVELING SWITCH STUCK

For a complete wiring diagram, **refer to appropriate SYSTEM WIRING DIAGRAMS article** .

WHEN MONITORED

With the ignition on.

SET CONDITION

The Cluster detects the Headlamp Leveling Switch is active for greater than 20 seconds.

POSSIBLE CAUSES

Possible Causes
SWITCH BANK

DIAGNOSTIC TEST

CHECK FOR AN ACTIVE DTC

1. Turn the ignition on.
2. With the scan tool, record and erase DTCs.
3. Actuate the Headlamp Leveling Switch three times.
4. With the scan tool, read DTCs.

   Does the scan tool display this DTC as active?

Yes

- Replace the Switch Bank in accordance with the Service Information.
- Perform the BODY VERIFICATION TEST. Refer to **STANDARD PROCEDURE** .

No

- Test complete, the condition or conditions that originally set this DTC are not present at this time. Using the wiring diagrams as a guide, check all related splices and connectors for signs of water intrusion, corrosion, pushed out or bent terminals, and correct pin tension.

B178E-HEADLAMP SWITCH INPUT CIRCUIT

For a complete wiring diagram, **refer to appropriate SYSTEM WIRING DIAGRAMS article** .

WHEN MONITORED

With the ignition on.

SET CONDITION

The Cluster detects the Headlamp Switch function inoperative.

POSSIBLE CAUSES

Possible Causes
LEFT MULTIFUNCTION SWITCH

DIAGNOSTIC TEST

CHECK FOR AN ACTIVE DTC

NOTE: Before proceeding with this diagnostic procedure, verify the Left and Right Multifunction Switch and Clockspring harness connectors are properly seated and verify proper pin terminal tension. A loose connection at any of these connectors may cause this DTC to set.

1. Turn the ignition on.

2. Turn the Headlamps on.
3. With the scan tool, read DTCs.

   Does the scan tool display this DTC as active?

   Yes

   - Replace the Left Multifunction Switch in accordance with the Service Information.
   - Perform the BODY VERIFICATION TEST. Refer to **STANDARD PROCEDURE** .

   No

   - Test complete, the condition or conditions that originally set this DTC are not present at this time. Using the wiring diagrams as a guide, check all related splices and connectors for signs of water intrusion, corrosion, pushed out or bent terminals, and correct pin tension.

B178F-TURN SWITCH INPUT CIRCUIT

For a complete wiring diagram, **refer to appropriate SYSTEM WIRING DIAGRAMS article** .

WHEN MONITORED

With the ignition on.

SET CONDITION

The Cluster detects the Turn Signal function inoperative.

POSSIBLE CAUSES

Possible Causes
LEFT MULTIFUNCTION SWITCH

DIAGNOSTIC TEST

CHECK FOR AN ACTIVE DTC

NOTE: Before proceeding with this diagnostic procedure, verify

the Left and Right Multifunction Switch and Clockspring harness connectors are properly seated and verify proper pin terminal tension. A loose connection at any of these connectors may cause this DTC to set.

1. Turn the ignition on.
2. Actuate the left and right turn signals with the Left Multifunction Switch.
3. With the scan tool, read DTCs.

Does the scan tool display this DTC as active?

Yes

- Replace the Left Multifunction Switch in accordance with the Service Information.
- Perform the BODY VERIFICATION TEST. Refer to **STANDARD PROCEDURE** .

No

- Test complete, the condition or conditions that originally set this DTC are not present at this time. Using the wiring diagrams as a guide, check all related splices and connectors for signs of water intrusion, corrosion, pushed out or bent terminals, and correct pin tension.

B1800-DRIVER DOOR LOCK/UNLOCK SWITCH CIRCUIT PERFORMANCE

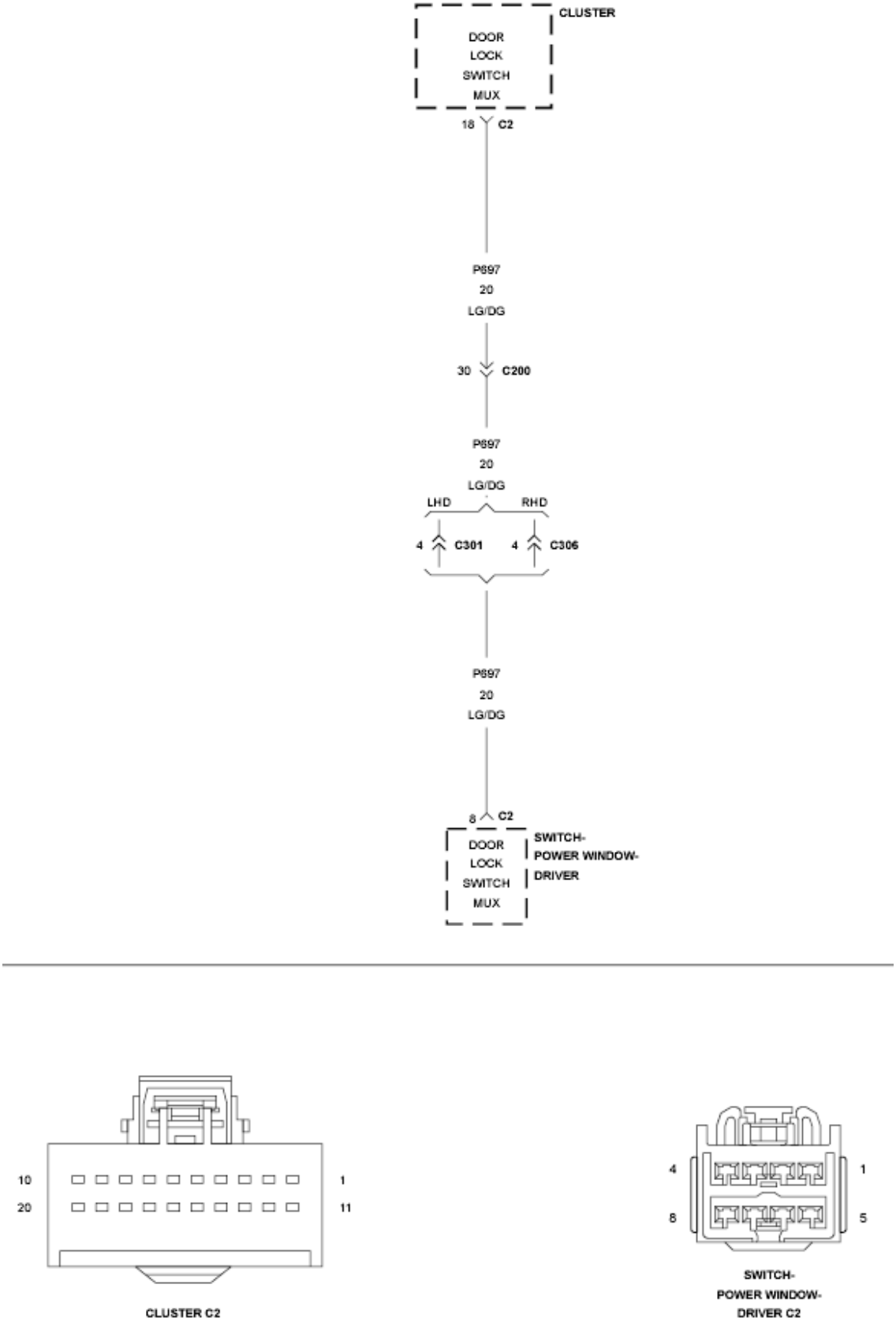

Fig. 27: Driver Door Lock/Unlock Switch Circuit Diagram

Courtesy of CHRYSLER GROUP, LLC

For a complete wiring diagram, **refer to appropriate SYSTEM WIRING DIAGRAMS article** .

POSSIBLE CAUSES

Possible Causes
(P697) DOOR LOCK SWITCH MUX CIRCUIT SHORT TO GROUND
(P697) DOOR LOCK SWITCH MUX CIRCUIT OPEN
(P697) DOOR LOCK SWITCH MUX CIRCUIT SHORT TO BATTERY
(Z961) GROUND CIRCUIT OPEN
DOOR LOCK SWITCH
INSTRUMENT CLUSTER

DIAGNOSTIC TEST

1. **TEST THE DOOR LOCK SWITCH**

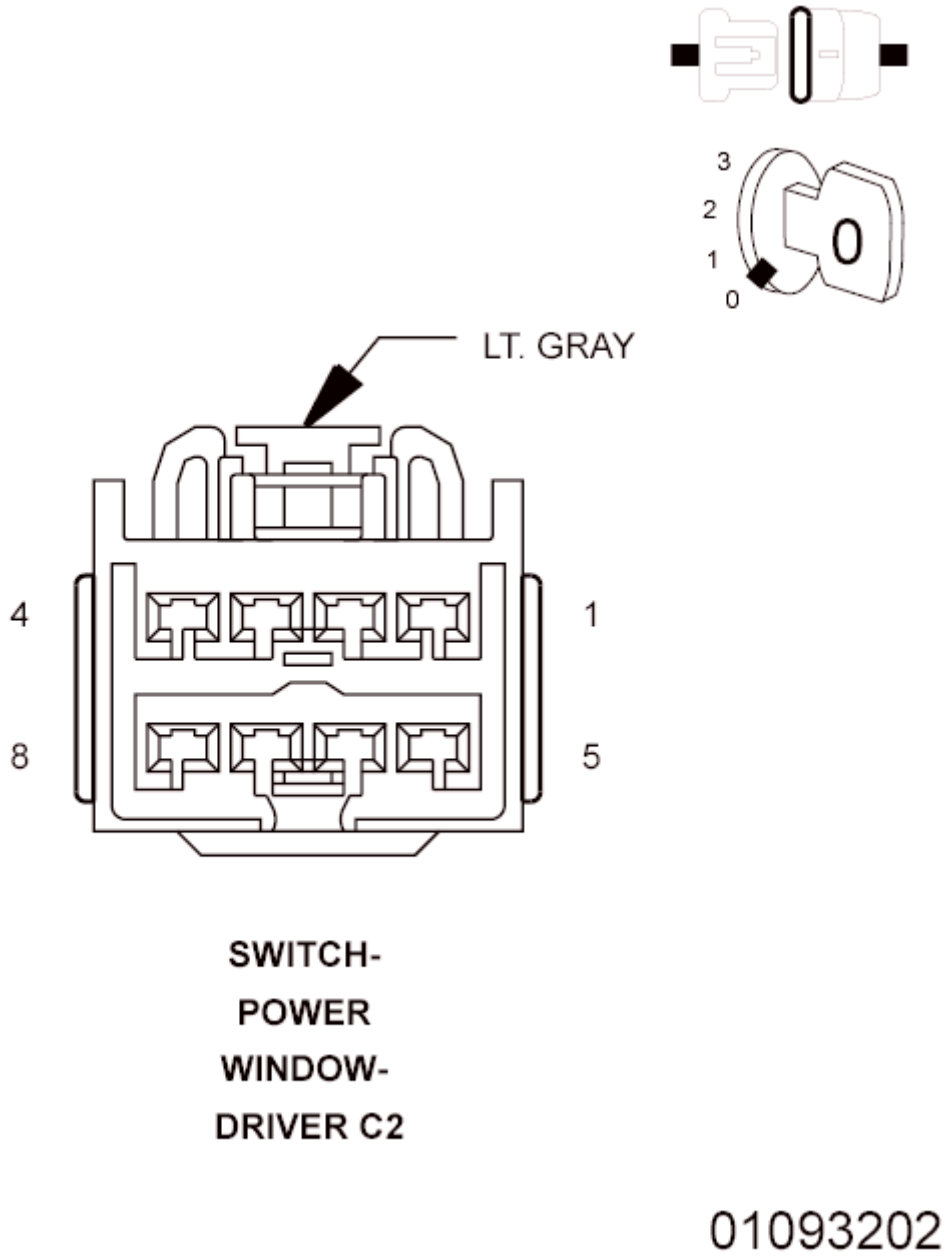

Fig. 28: Checking Driver Window/Door Lock Switch
Courtesy of CHRYSLER GROUP, LLC

NOTE: The graphic for this step shows the connector for terminal reference only.

1. Turn the ignition off.
2. Disconnect the Driver Window/Door Lock Switch C2 connector.
3. Connect an ohmmeter between terminals number 3 and 8 of the switch (not the connector).
4. With the switch in the neutral position, the resistance should be greater

than 1, 000, 000 ohms (open circuit)

5. While holding the switch in the Lock position, the resistance should be 330 ohms (+/- 33 ohms).
6. While holding the switch in the Unlock position, the resistance should be 100 ohms (+/- 10 ohms).

Does the switch pass all three tests?

No

- Replace the Driver Window/Door Lock Switch.
- Perform the BODY VERIFICATION TEST. Refer to **STANDARD PROCEDURE** .

Yes

- Go To 2

2. **(Z961) GROUND CIRCUIT OPEN**

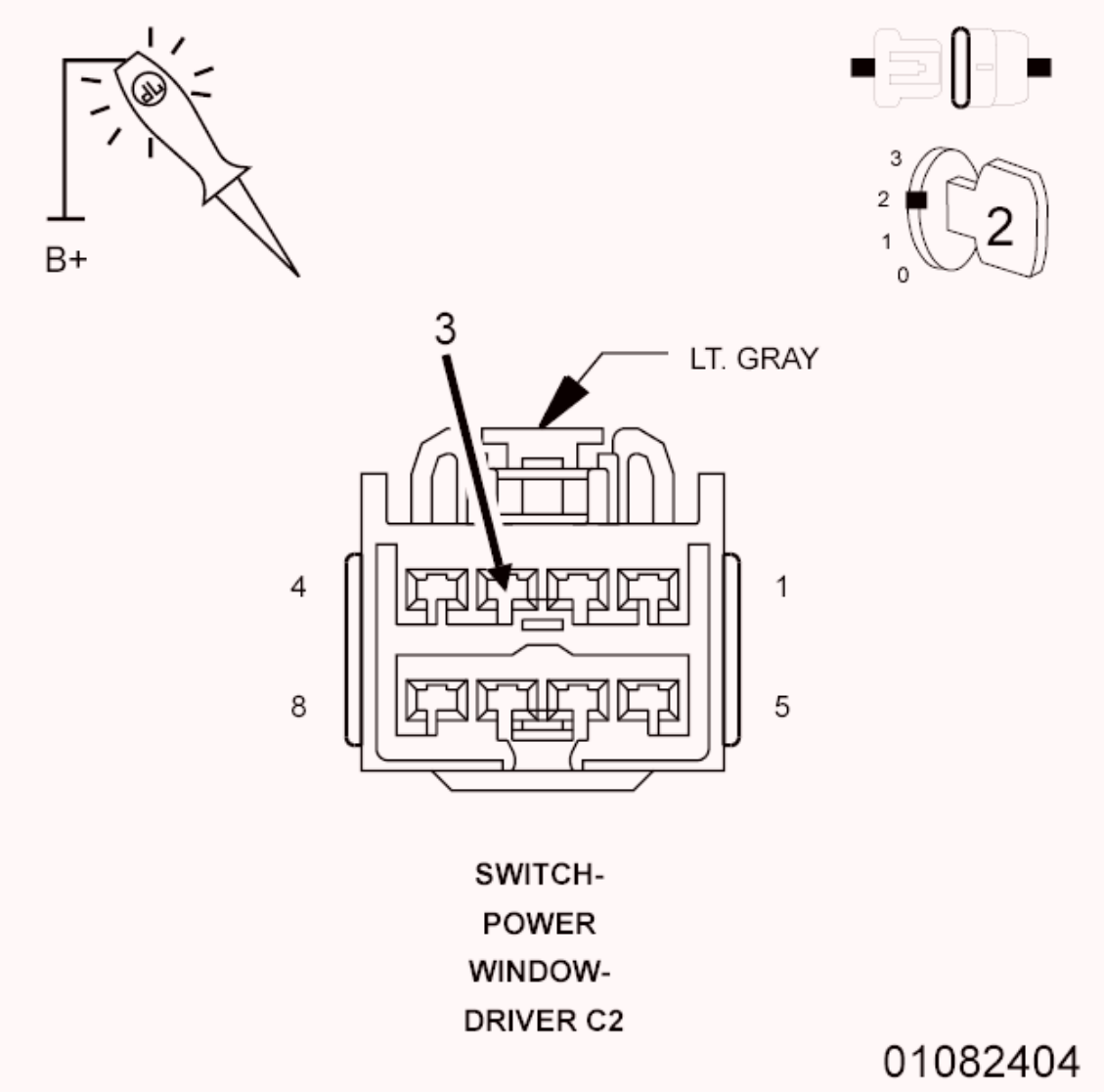

Fig. 29: Checking Ground Circuit Open
Courtesy of CHRYSLER GROUP, LLC

1. Turn the ignition on.
2. Using a 12-volt test light connected to 12-volts, check the (Z961) Ground circuit in the Driver Window/Door Lock Switch C2 connector.

   Does the test light illuminate brightly

   No

   - Repair the (Z961) Ground circuit for an open.
   - Perform the BODY VERIFICATION TEST. Refer to **STANDARD PROCEDURE** .

Yes

- Go To 3

3. **(P697) DOOR LOCK SWITCH MUX CIRCUIT SHORT TO BATTERY**

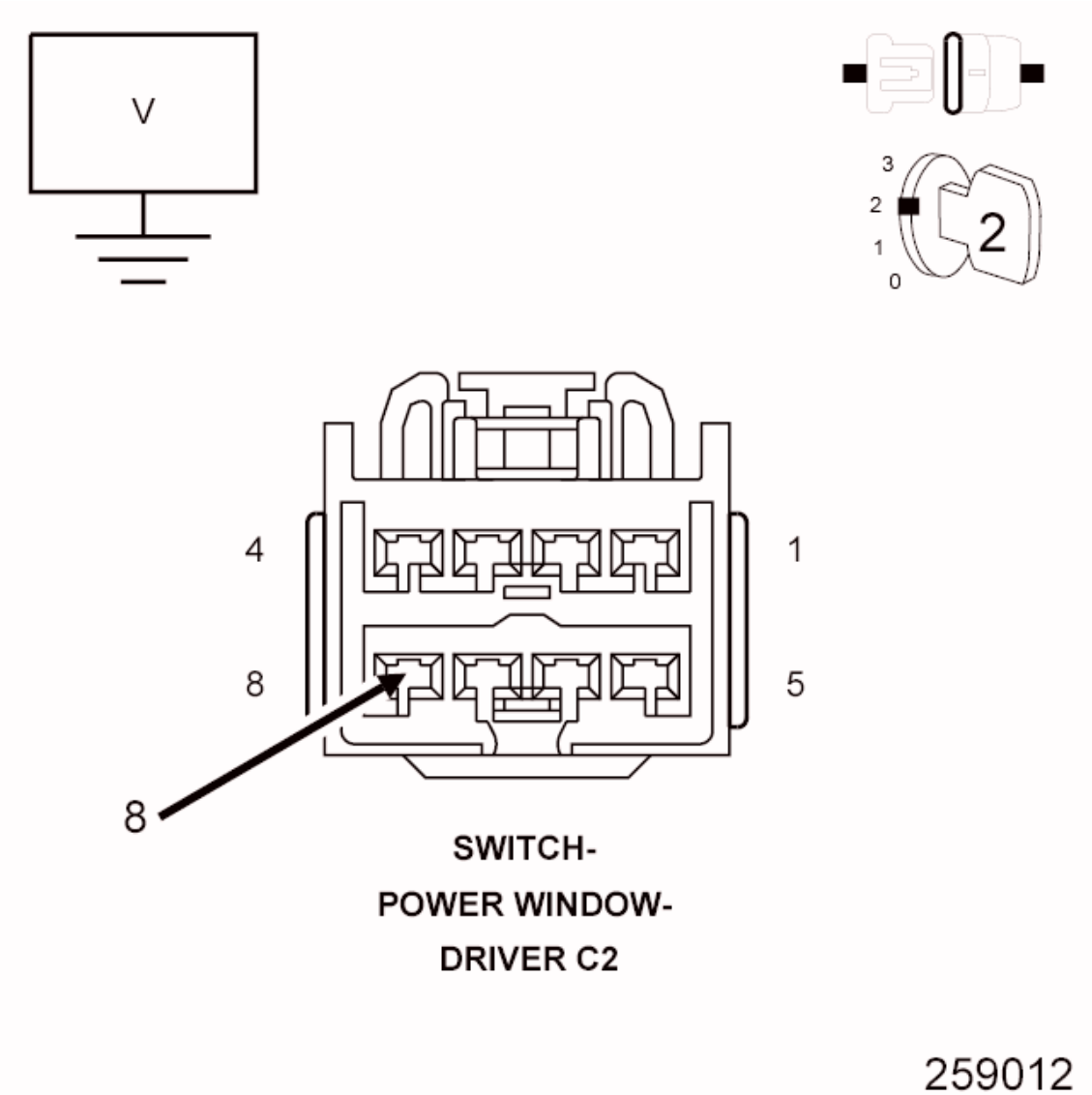

Fig. 30: Measuring Voltage Between Door Lock Switch Mux Circuit & Ground
Courtesy of CHRYSLER GROUP, LLC

1. Measure the voltage between the (P697) Door Lock Switch Mux circuit and ground.

   Is the voltage above 5.2 volts?

Yes

- Repair the (P697) Door Lock Switch Mux circuit for a short to battery.
- Perform the BODY VERIFICATION TEST. Refer to **STANDARD PROCEDURE** .

No

- Go To 4

4. **(P697) DOOR LOCK SWITCH MUX CIRCUIT SHORT TO GROUND**

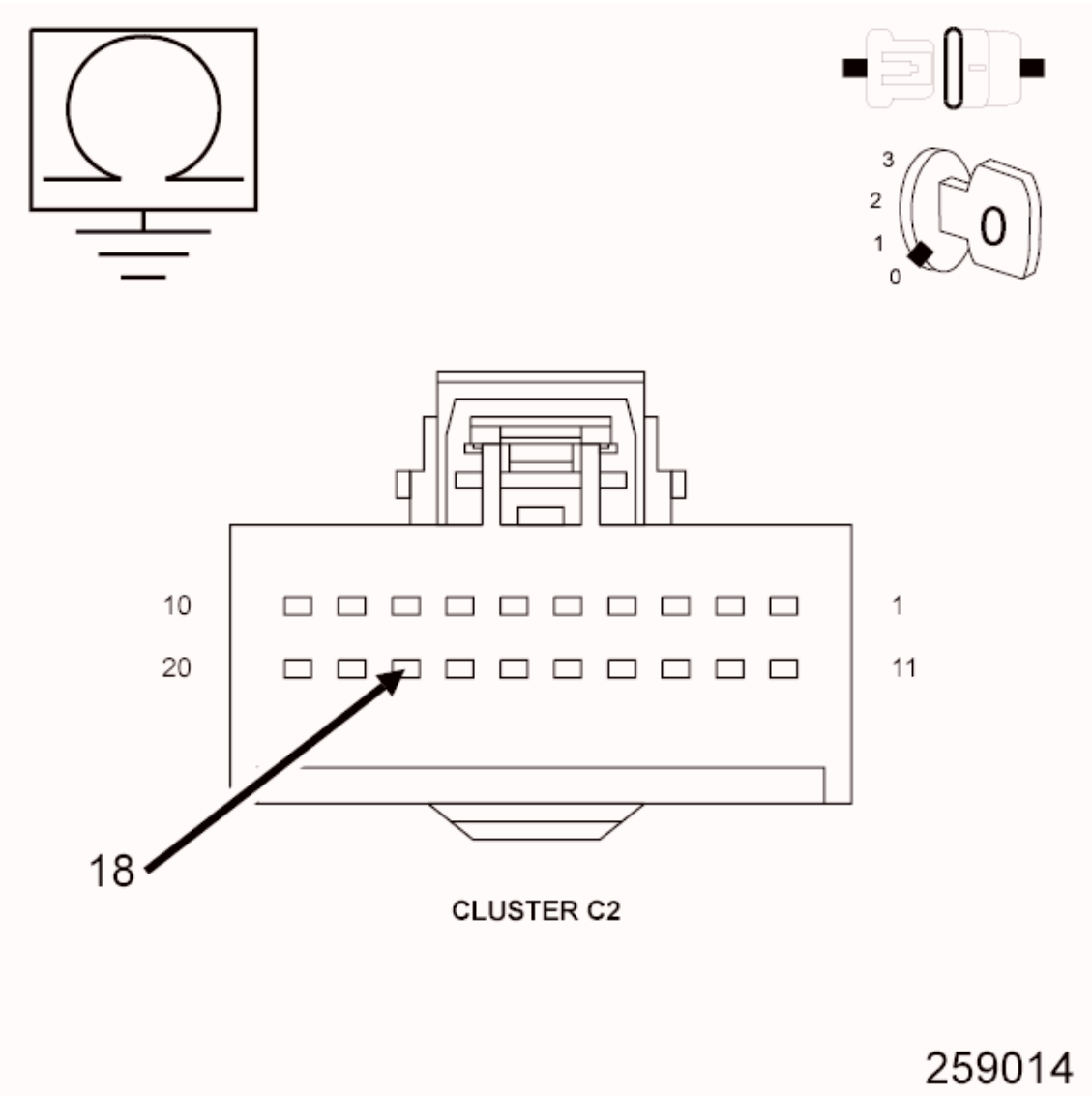

Fig. 31: Measuring Resistance Between Ground & Door Lock Switch MUX Circuit

Courtesy of CHRYSLER GROUP, LLC

1. Turn the ignition off.
2. Disconnect the Cluster C2 connector.
3. Measure the resistance between ground and the (P697) Door Lock Switch Mux circuit.

   Is the resistance below 10, 000 ohms?

   Yes

   - Repair the (P697) Door Lock Switch Mux circuit for a short to ground.
   - Perform the BODY VERIFICATION TEST. Refer to **STANDARD PROCEDURE** .

   No

   - Go To 5

5. **(P697) DOOR LOCK SWITCH MUX CIRCUIT OPEN**

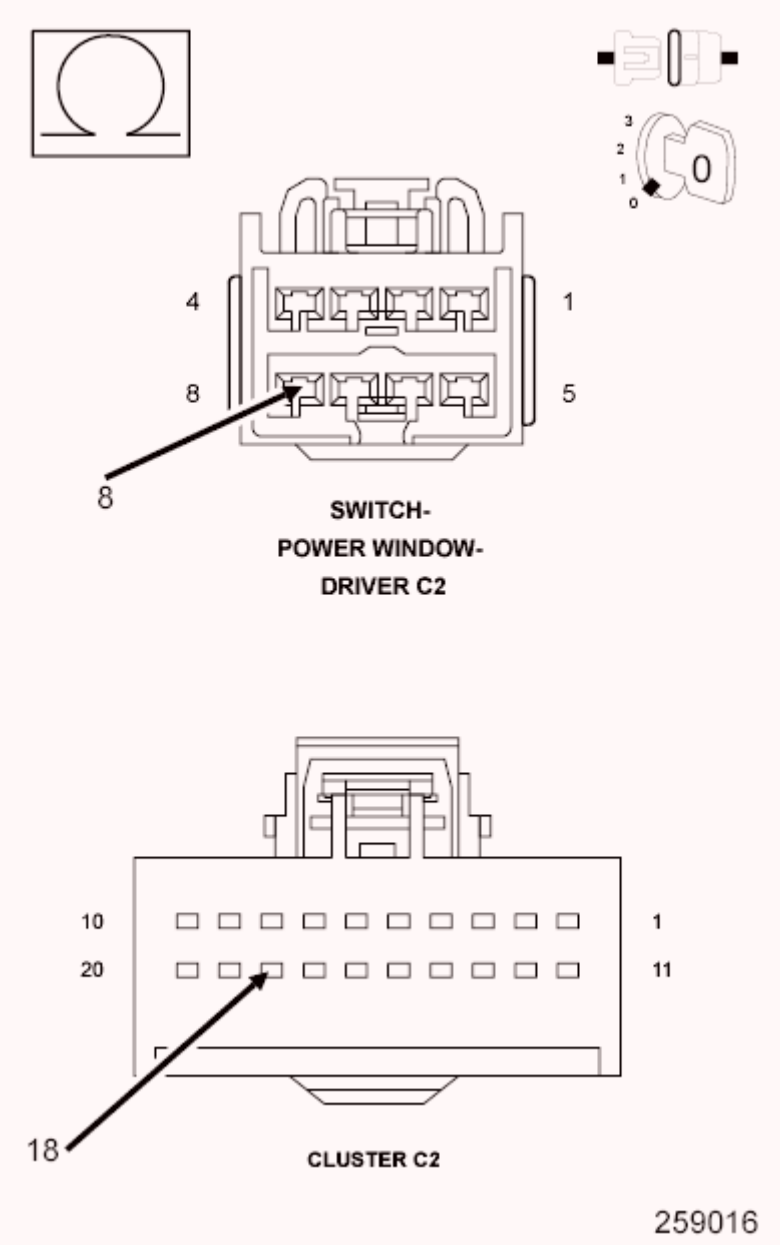

Fig. 32: Checking Door Lock Switch MUX Circuit Open
Courtesy of CHRYSLER GROUP, LLC

1. Measure the resistance of the (P697) Door Lock Switch Mux circuit between the Cluster C2 connector and the Driver Window/Door Lock Switch connector.

   Is the resistance below 5.0 ohms?

   No

   - Repair the (P697) Door Lock Switch Mux circuit for an open.
   - Perform the BODY VERIFICATION TEST. Refer to

STANDARD PROCEDURE .

Yes

- Replace the Instrument Cluster in accordance with Service Information.
- Perform the BODY VERIFICATION TEST. Refer to **STANDARD PROCEDURE** .

B1801 DRIVER DOOR LOCK/UNLOCK SWITCH CIRCUIT LOW

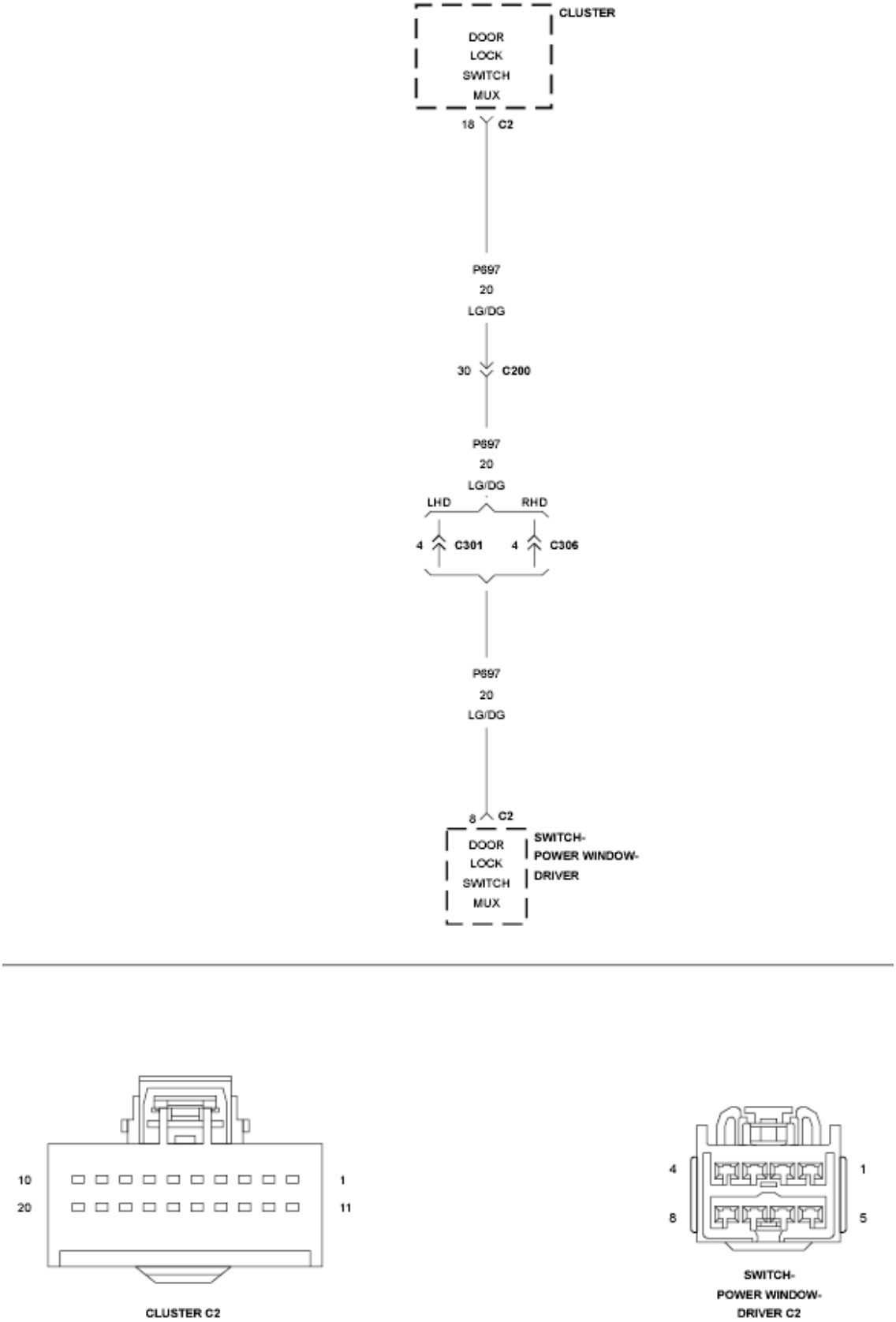

Fig. 33: Driver Door Lock/Unlock Switch Circuit Diagram

Courtesy of CHRYSLER GROUP, LLC

For a complete wiring diagram, **refer to appropriate SYSTEM WIRING DIAGRAMS article** .

WHEN MONITORED

Continuously

SET CONDITION

When the Door Lock Switch Mux circuit is below 0.15 volts for over 10 seconds.

POSSIBLE CAUSES

Possible Causes
(P697) DOOR LOCK SWITCH MUX CIRCUIT SHORT TO GROUND DOOR LOCK SWITCH INSTRUMENT CLUSTER

DIAGNOSTIC TEST

1. **TEST FOR INTERMITTENT CONDITION**
    1. With the scan tool, record and erase DTCs
    2. Operate the Driver Door Lock Switch in all positions several times.
    3. Cycle the ignition from on to off.
    4. Turn the ignition on.
    5. With the scan tool, read DTCs.

    Does the scan tool display B1801-DRIVER DOOR LOCK/UNLOCK SWITCH CIRCUIT LOW?

    Yes

    - Go To 2

    No

    - The conditions that caused this code to set are not present at this time. Using the wiring diagram/schematic as a guide, inspect the wiring and connectors.

- Perform the BODY VERIFICATION TEST. Refer to **STANDARD PROCEDURE** .

2. **DOOR LOCK SWITCH SHORTED**

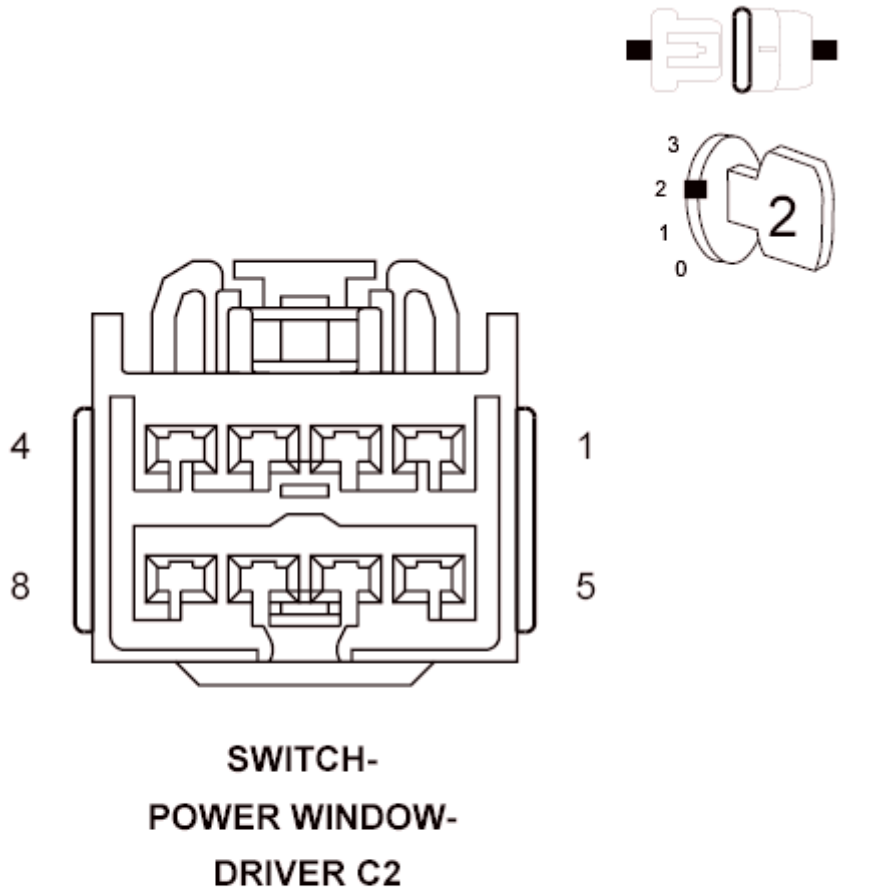

Fig. 34: Checking Door Lock Switch For A Short
Courtesy of CHRYSLER GROUP, LLC

1. With the scan tool, erase DTCs.
2. Disconnect the Driver Window/Door Lock Switch C2 connector.
3. With the scan tool, read DTCs.

   Does the scan tool display B1801-DRIVER DOOR LOCK/UNLOCK SWITCH CIRCUIT LOW?

No

- Replace the Driver Window/Door Lock Switch.
- Perform the BODY VERIFICATION TEST. Refer to **STANDARD PROCEDURE** .

Yes

- Go To 3

3. **(P697) DOOR LOCK SWITCH MUX CIRCUIT SHORT TO GROUND**

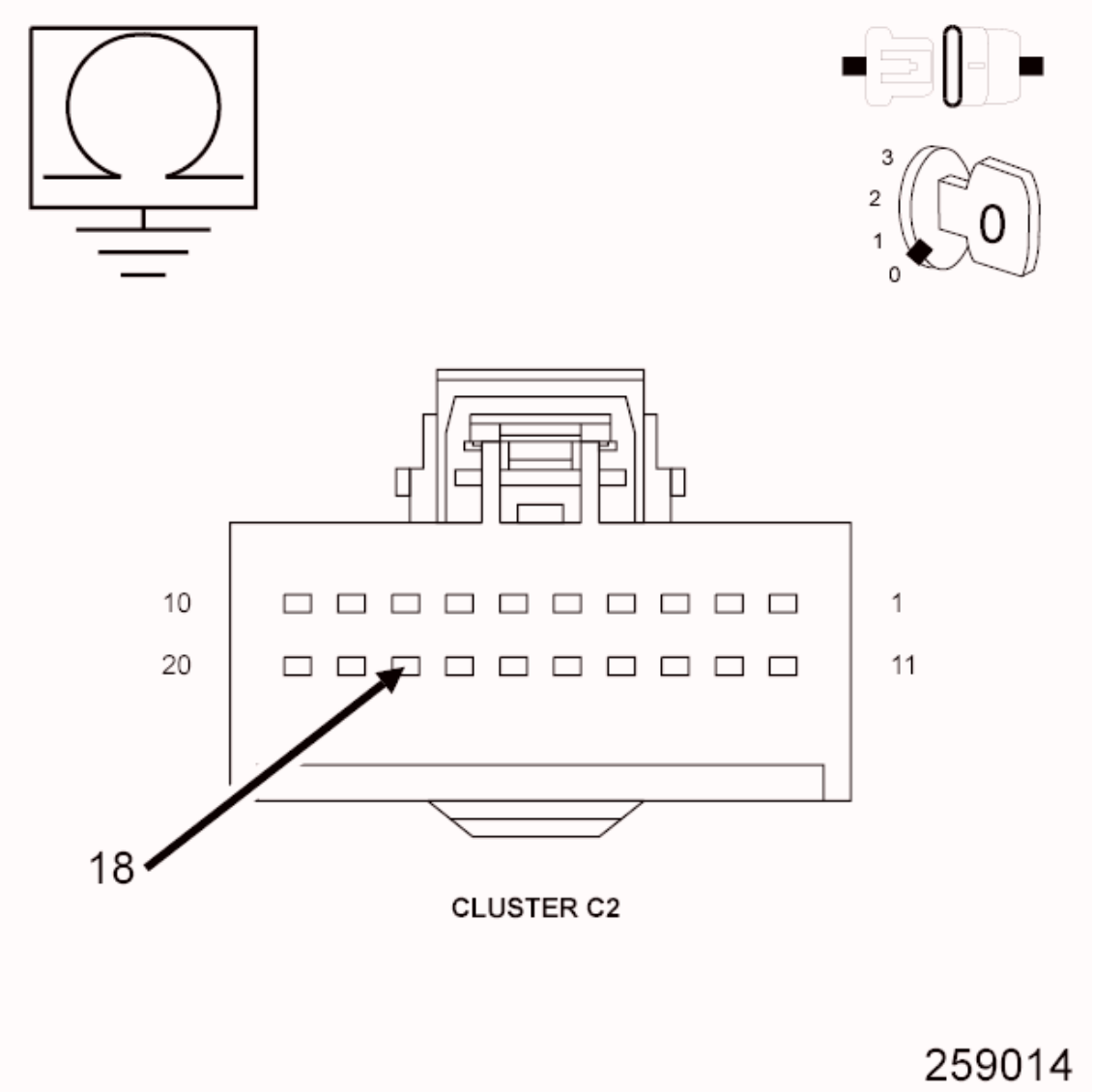

Fig. 35: Measuring Resistance Between Ground & Door Lock Switch Mux Circuit
Courtesy of CHRYSLER GROUP, LLC

1. Turn the ignition off.
2. Disconnect the Cluster C2 connector.
3. Measure the resistance between ground and the (P697) Door Lock Switch Mux circuit.

   Is the resistance below 10, 000 ohms?

   Yes

   - Repair the (P697) Door Lock Switch Mux circuit for a short to ground.
   - Perform the BODY VERIFICATION TEST. Refer to **STANDARD PROCEDURE** .

   No

   - Replace the Instrument Cluster in accordance with Service Information.
   - Perform the BODY VERIFICATION TEST. Refer to **STANDARD PROCEDURE** .

B1806-PASSENGER DOOR LOCK/UNLOCK SWITCH CIRCUIT LOW

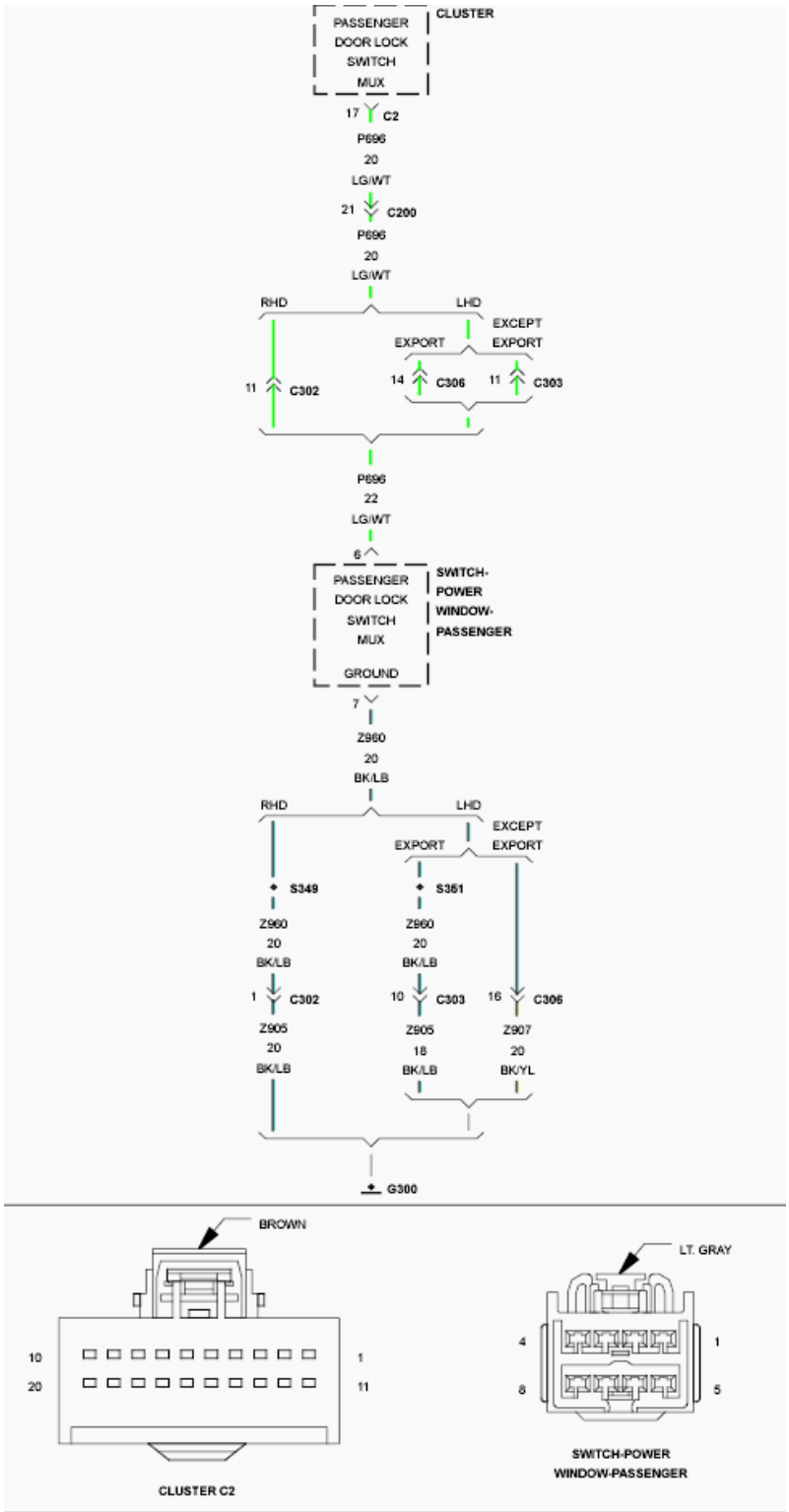

Fig. 36: Passenger Door Lock/Unlock Switch Circuit Diagram
Courtesy of CHRYSLER GROUP, LLC

For a complete wiring diagram, **refer to appropriate SYSTEM WIRING DIAGRAMS article** .

WHEN MONITORED

Continuously

SET CONDITION

When the Door Lock Switch Mux circuit is below 0.15 volts for over 10 seconds.

POSSIBLE CAUSES

Possible Causes
(P696) PASSENGER DOOR LOCK SWITCH MUX CIRCUIT SHORT TO GROUND DOOR LOCK SWITCH INSTRUMENT CLUSTER

DIAGNOSTIC TEST

1. **TEST FOR INTERMITTENT CONDITION**
    1. With the scan tool, record and erase the DTCs
    2. Operate the Passenger Door Lock Switch in all positions several times.
    3. Cycle the ignition from on to off.
    4. Turn the ignition on.
    5. With the scan tool, read the DTCs.

    Does the scan tool display B1806-PASSENGER DOOR LOCK/UNLOCK SWITCH CIRCUIT LOW?

    Yes

    - Go To 2

    No

    - The conditions that caused this code to set are not present at this time. Using the wiring diagram/schematic as a guide, inspect the wiring and connectors.
    - Perform the BODY VERIFICATION TEST. Refer to **STANDARD PROCEDURE** .
2. **DOOR LOCK SWITCH SHORTED**

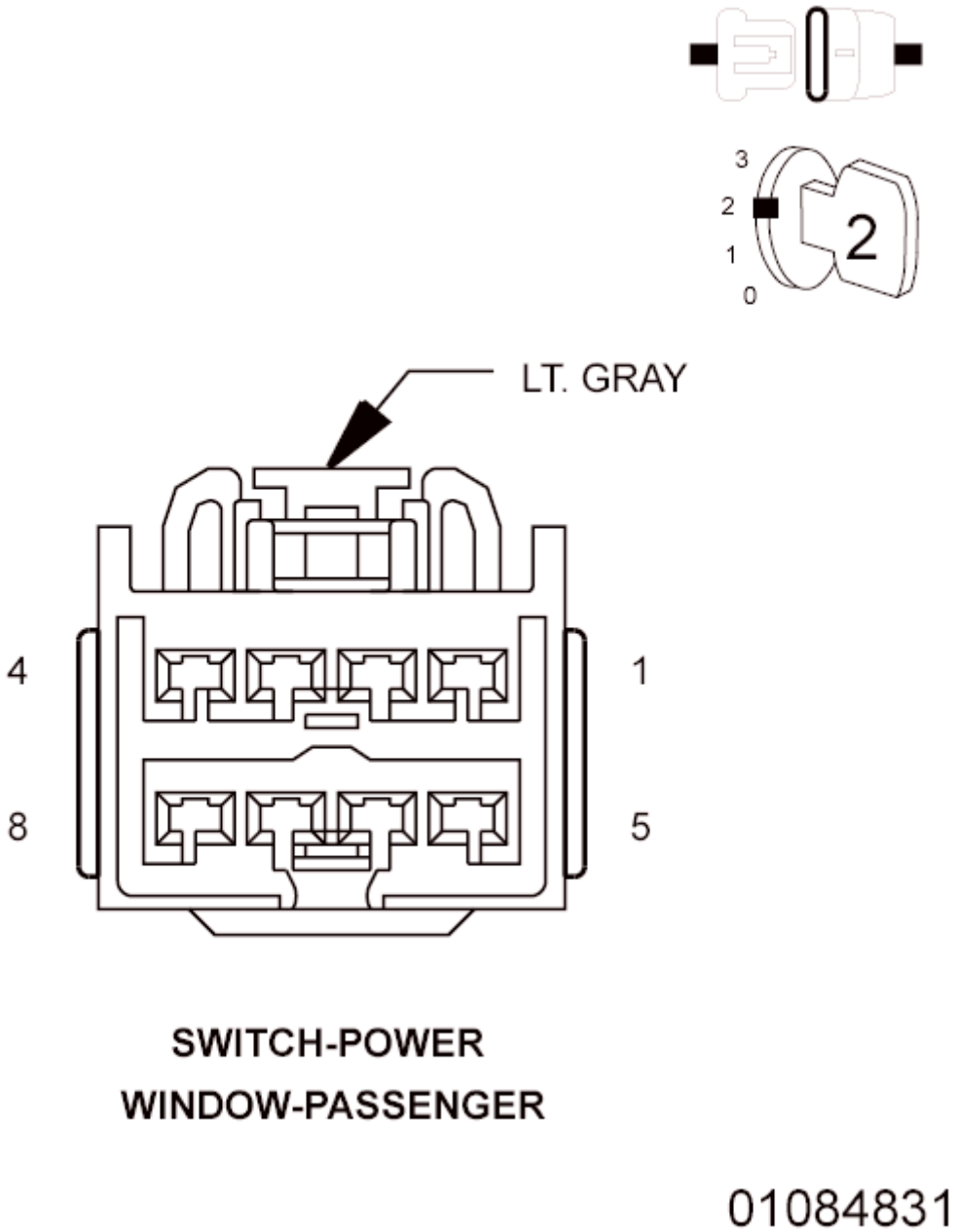

Fig. 37: Checking Door Lock Switch For Short
Courtesy of CHRYSLER GROUP, LLC

1. With the scan tool, erase the DTCs.
2. Disconnect the Passenger Window/Door Lock Switch connector.
3. With the scan tool, read the DTCs.

   Does the scan tool display B1806-PASSENGER DOOR LOCK/UNLOCK SWITCH CIRCUIT LOW?

   No

- Replace the Passenger Window/Door Lock Switch.
- Perform the BODY VERIFICATION TEST. Refer to **STANDARD PROCEDURE** .

Yes

- Go To 3

3. **(P696) PASSENGER DOOR LOCK SWITCH MUX CIRCUIT SHORT TO GROUND**

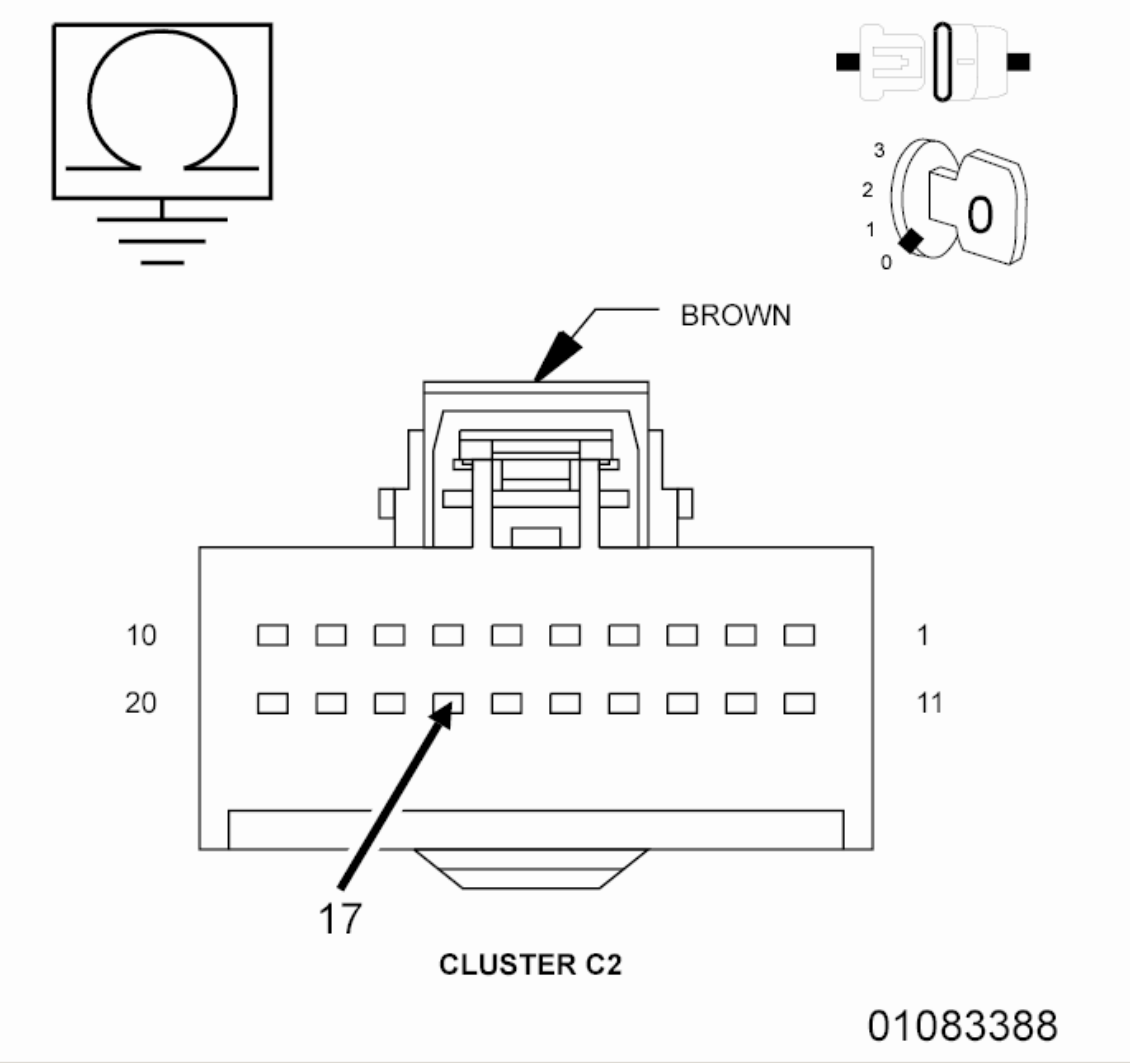

Fig. 38: Measuring Resistance Between Ground And Passenger Door Lock Switch Mux Circuit
Courtesy of CHRYSLER GROUP, LLC

1. Turn the ignition off.
2. Disconnect the Cluster C2 connector.

3. Measure the resistance between ground and the (P696) Passenger Door Lock Switch Mux circuit.

   Is the resistance below 10, 000 ohms?

   Yes

   - Repair the (P696) Passenger Door Lock Switch Mux circuit for a short to ground.
   - Perform the BODY VERIFICATION TEST. Refer to **STANDARD PROCEDURE** .

   No

   - Replace the Instrument Cluster in accordance with the Service Information.
   - Perform the BODY VERIFICATION TEST. Refer to **STANDARD PROCEDURE** .

B1934-DRIVER DOOR LOCK/UNLOCK SWITCH CIRCUIT STUCK

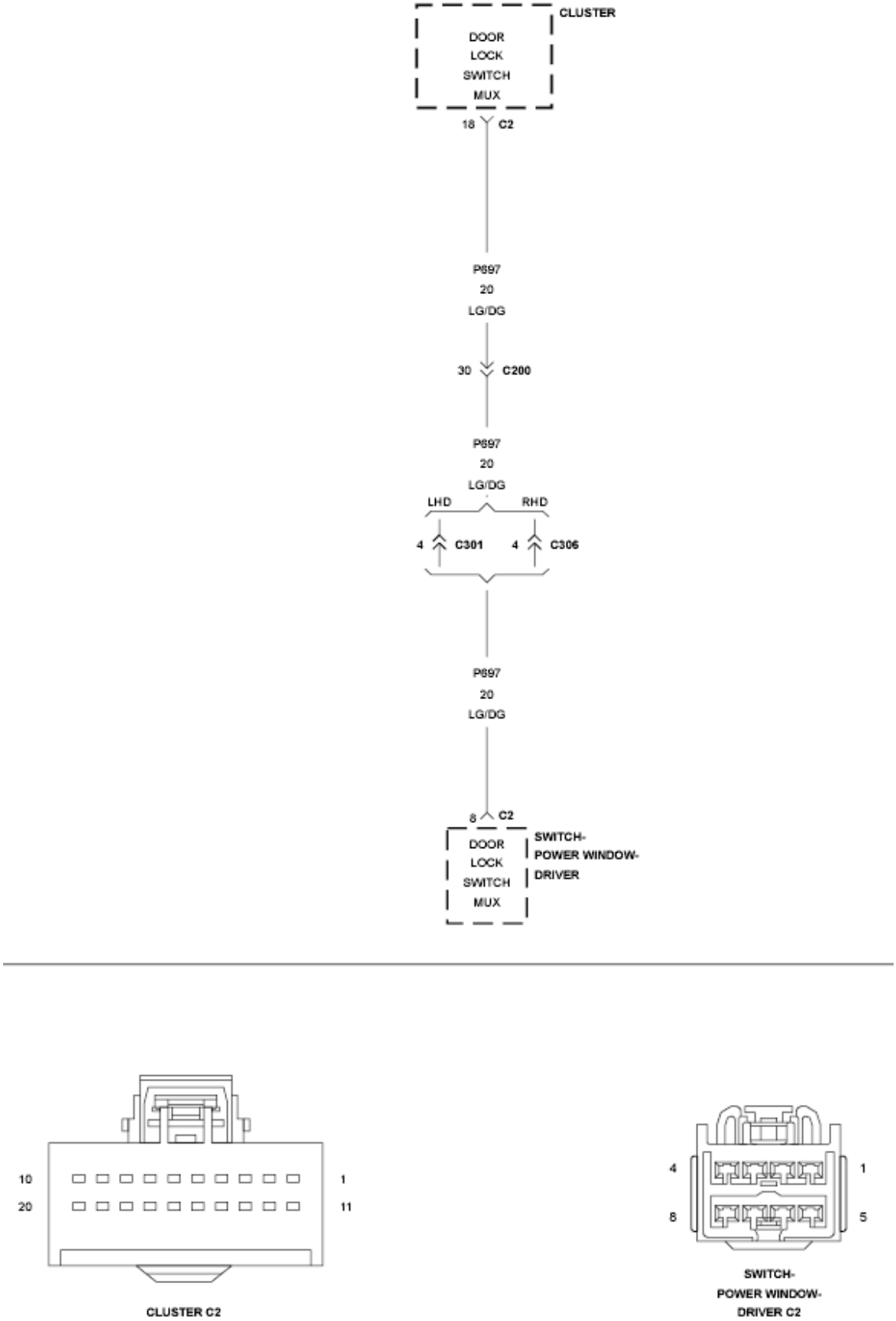

Fig. 39: Driver Door Lock/Unlock Switch Circuit Diagram

Courtesy of CHRYSLER GROUP, LLC

For a complete wiring diagram, **refer to appropriate SYSTEM WIRING DIAGRAMS article** .

WHEN MONITORED

Continuously

SET CONDITION

When the Driver Door Lock Switch Mux circuit is between 0.8 and 3.5 volts for over 10 seconds.

POSSIBLE CAUSES

Possible Causes
(P697) DOOR LOCK SWITCH MUX CIRCUIT PARTIAL SHORT TO GROUND DOOR LOCK SWITCH INSTRUMENT CLUSTER

DIAGNOSTIC TEST

1. **TEST FOR INTERMITTENT CONDITION**
   1. With the scan tool, record and erase DTCs
   2. Operate the Driver Door Lock Switch in all positions several times.

      NOTE: If at anytime, in the previous step, the switch stuck, replace the switch and start this test from the beginning.

   3. Cycle the ignition from on to off.
   4. Turn the ignition on.
   5. With the scan tool, read DTCs.

      Does the scan tool display B1934-DRIVER DOOR LOCK/UNLOCK SWITCH CIRCUIT STUCK?

      Yes

- Go To 2

No

- The conditions that caused this code to set are not present at this time. Using the wiring diagram/schematic as a guide, inspect the wiring and connectors.
- Perform the BODY VERIFICATION TEST. Refer to **STANDARD PROCEDURE** .

2. **DOOR LOCK SWITCH SHORTED**

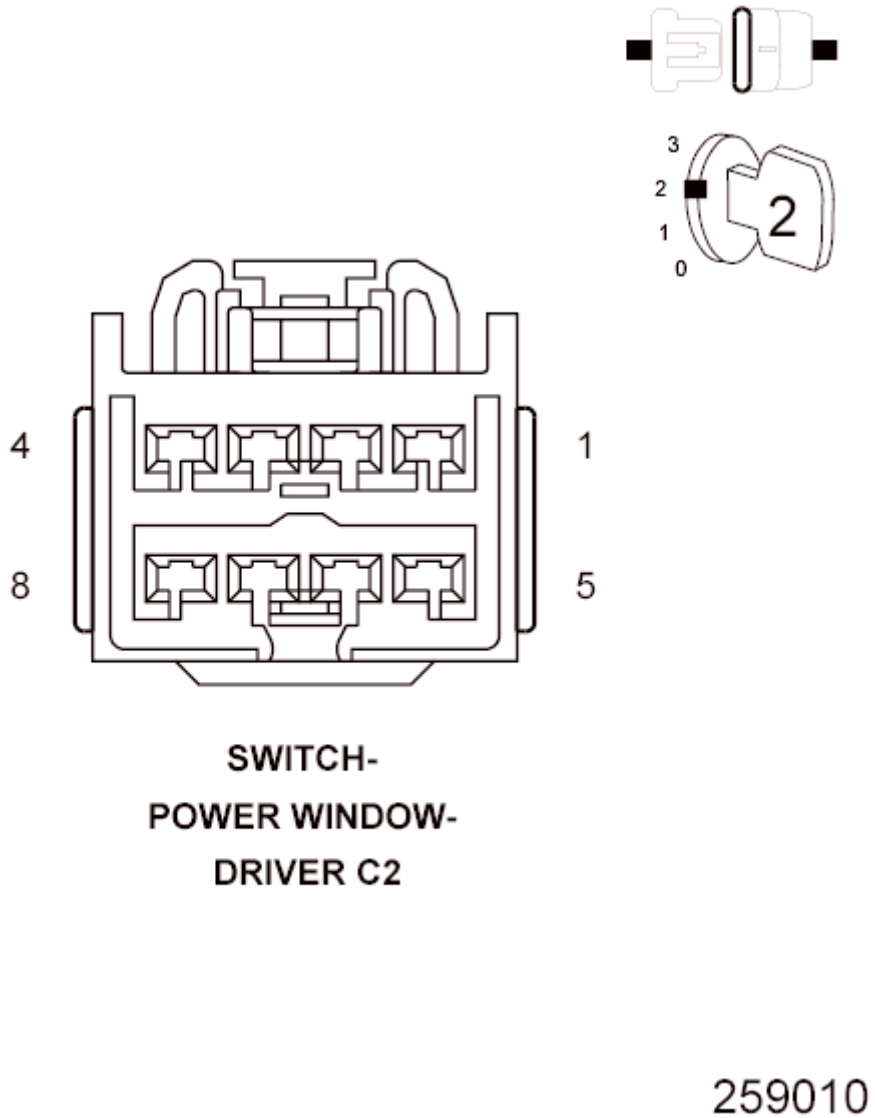

Fig. 40: Checking Door Lock Switch For A Short
Courtesy of CHRYSLER GROUP, LLC

1. With the scan tool, erase DTCs.
2. Disconnect the Driver Window/Door Lock Switch C2 connector.
3. With the scan tool, read DTCs.

   Does the scan tool display B1934-DRIVER DOOR LOCK/UNLOCK SWITCH CIRCUIT STUCK?

   No

   - Replace the Driver Window/Door Lock Switch.
   - Perform the BODY VERIFICATION TEST. Refer to **STANDARD PROCEDURE** .

   Yes

   - Go To 3

3. **(P697) DOOR LOCK SWITCH MUX CIRCUIT PARTIAL SHORT TO GROUND**

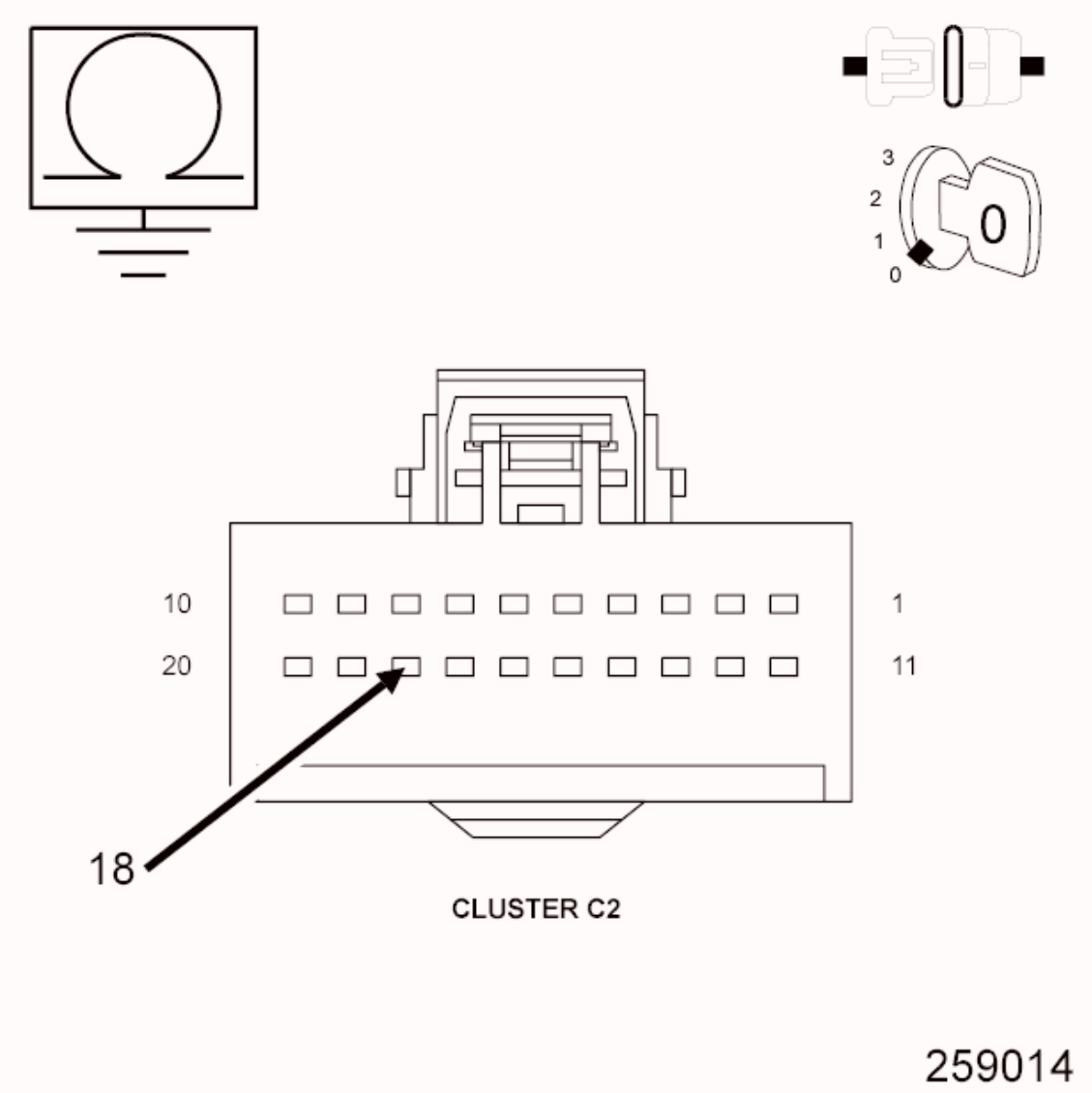

Fig. 41: Measuring Resistance Between Ground & Door Lock Switch Mux Circuit
Courtesy of CHRYSLER GROUP, LLC

1. Turn the ignition off.
2. Disconnect the Cluster C2 connector.
3. Measure the resistance between ground and the (P697) Door Lock Switch Mux circuit.

   Is the resistance below 1.0 megohms (1, 000, 000)?

   Yes

   - Repair the (P697) Door Lock Switch Mux circuit for a short to ground.

- Perform the BODY VERIFICATION TEST. Refer to **STANDARD PROCEDURE** .

No

- Replace the Instrument Cluster in accordance with Service Information.
- Perform the BODY VERIFICATION TEST. Refer to **STANDARD PROCEDURE** .

B1935-PASSENGER DOOR LOCK/UNLOCK SWITCH CIRCUIT STUCK

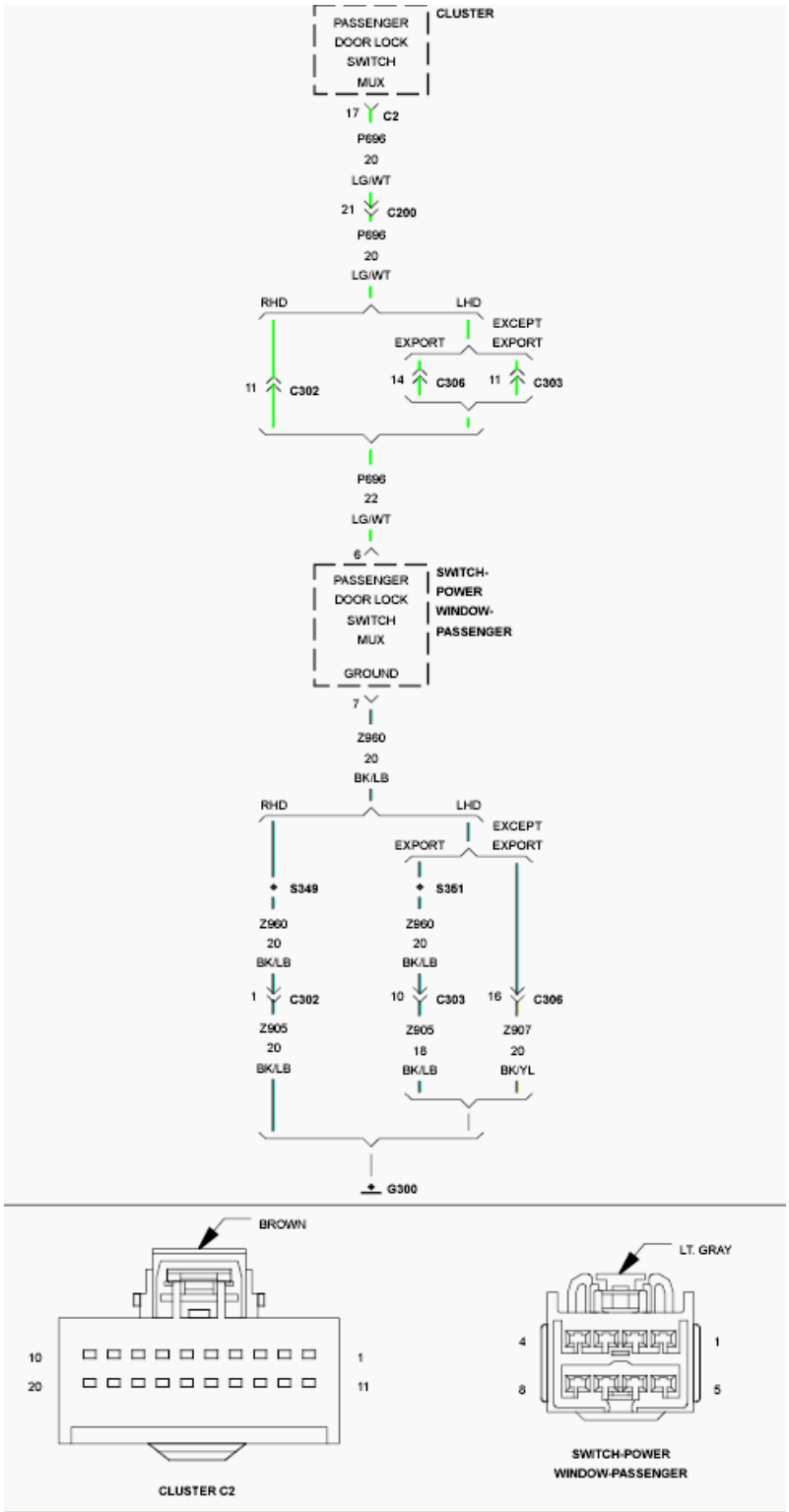

Fig. 42: Passenger Door Lock/Unlock Switch Circuit Diagram
Courtesy of CHRYSLER GROUP, LLC

For a complete wiring diagram, **refer to appropriate SYSTEM WIRING DIAGRAMS article** .

WHEN MONITORED

Continuously

SET CONDITION

When the Passenger Door Lock Switch Mux circuit is between 0.8 and 3.5 volts for over 10 seconds.

POSSIBLE CAUSES

Possible Causes
(P696) PASSENGER DOOR LOCK SWITCH MUX CIRCUIT PARTIAL SHORT TO GROUND DOOR LOCK SWITCH INSTRUMENT CLUSTER

DIAGNOSTIC TEST

1. **TEST FOR INTERMITTENT CONDITION**
   1. With the scan tool, record and erase the DTCs
   2. Operate the Passenger Door Lock Switch in all positions several times.

      NOTE: If at anytime, in the previous step, the switch stuck, replace the switch.

   3. Cycle the ignition from on to off.
   4. Turn the ignition on.
   5. With the scan tool, read the DTCs.

      Does the scan tool display B1935-PASSENGER DOOR LOCK/UNLOCK SWITCH CIRCUIT STUCK?

      Yes

      - Go To 2

      No

      - The conditions that caused this code to set are not present at this time. Operate the switch in all positions several times. If it does not move smoothly, replace it. Using the wiring diagram/schematic as

a guide, inspect the wiring and connectors.

- Perform the BODY VERIFICATION TEST. Refer to **STANDARD PROCEDURE** .

2. **DOOR LOCK SWITCH SHORTED**

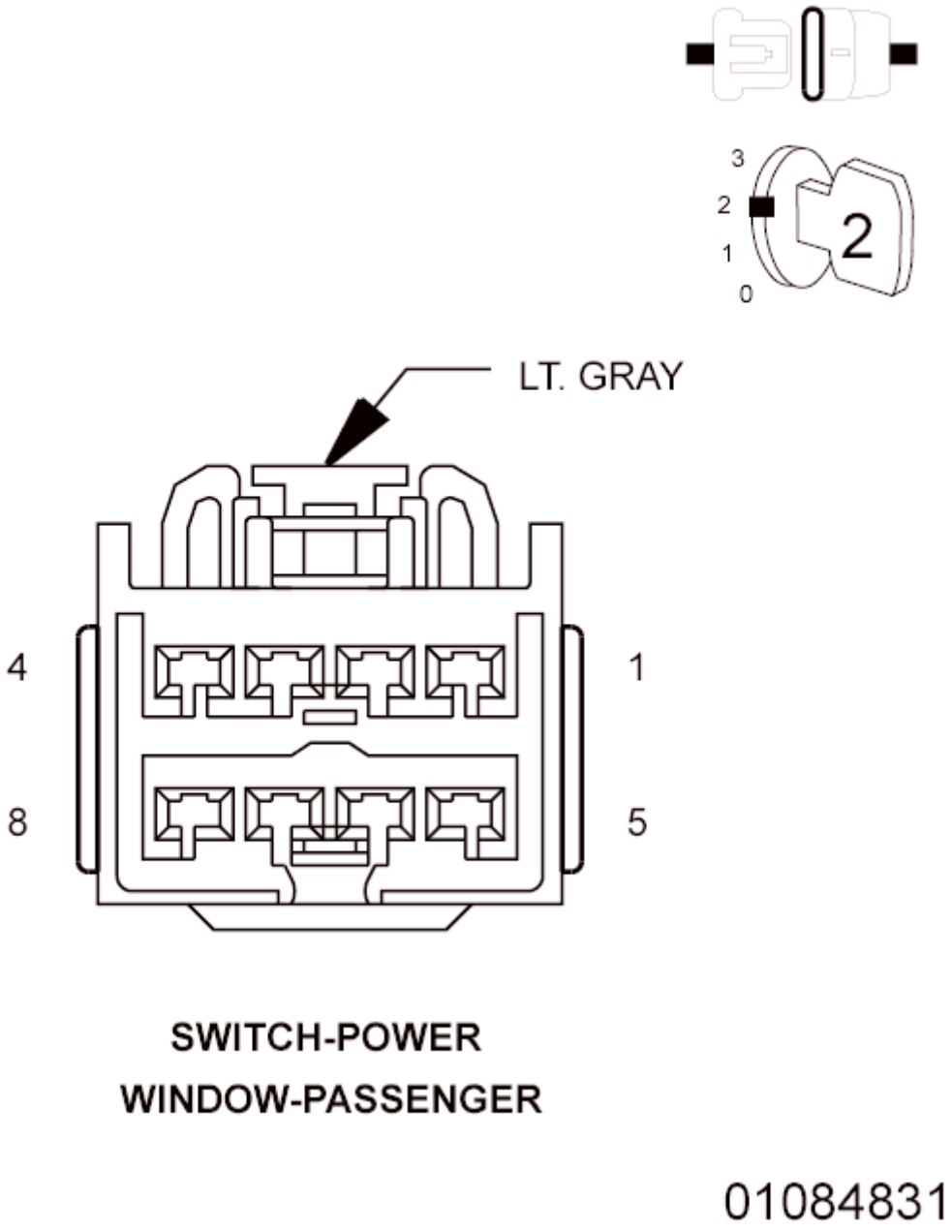

Fig. 43: Checking Door Lock Switch For Short
Courtesy of CHRYSLER GROUP, LLC

1. With the scan tool, erase the DTCs.
2. Disconnect the Driver Window/Door Lock Switch C2 connector.

3. With the scan tool, read the DTCs.

   Does the scan tool display B1935-PASSENGER DOOR LOCK/UNLOCK SWITCH CIRCUIT STUCK?

   No

   - Replace the Passenger Window/Door Lock Switch.
   - Perform the BODY VERIFICATION TEST. Refer to **STANDARD PROCEDURE** .

   Yes

   - Go To 3

3. **(P696) PASSENGER DOOR LOCK SWITCH MUX CIRCUIT PARTIAL SHORT TO GROUND**

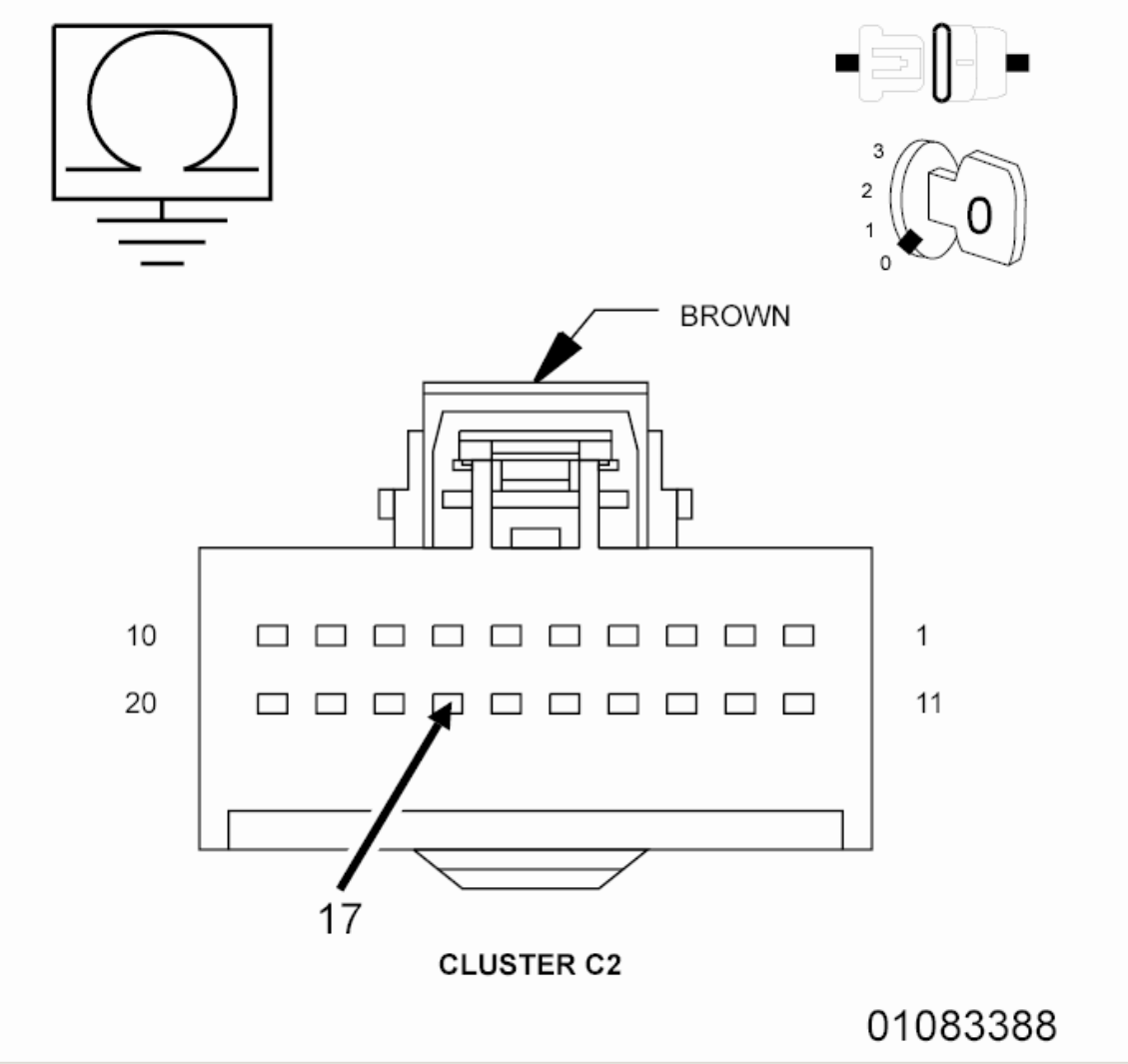

Fig. 44: Measuring Resistance Between Ground And Passenger Door Lock Switch Mux Circuit
Courtesy of CHRYSLER GROUP, LLC

1. Turn the ignition off.
2. Disconnect the Cluster C2 connector.
3. Measure the resistance between ground and the (P696) Passenger Door Lock Switch Mux circuit.

   Is the resistance below 1.0 megohms (1, 000, 000)?

   Yes

   - Repair the (P696) Passenger Door Lock Switch Mux circuit for a short to ground.
   - Perform the BODY VERIFICATION TEST. Refer to

STANDARD PROCEDURE .

No

- Replace the Instrument Cluster in accordance with the Service Information.
- Perform the BODY VERIFICATION TEST. Refer to **STANDARD PROCEDURE** .

B2181-HEATED SEAT MODULE POWER SUPPLY LOW

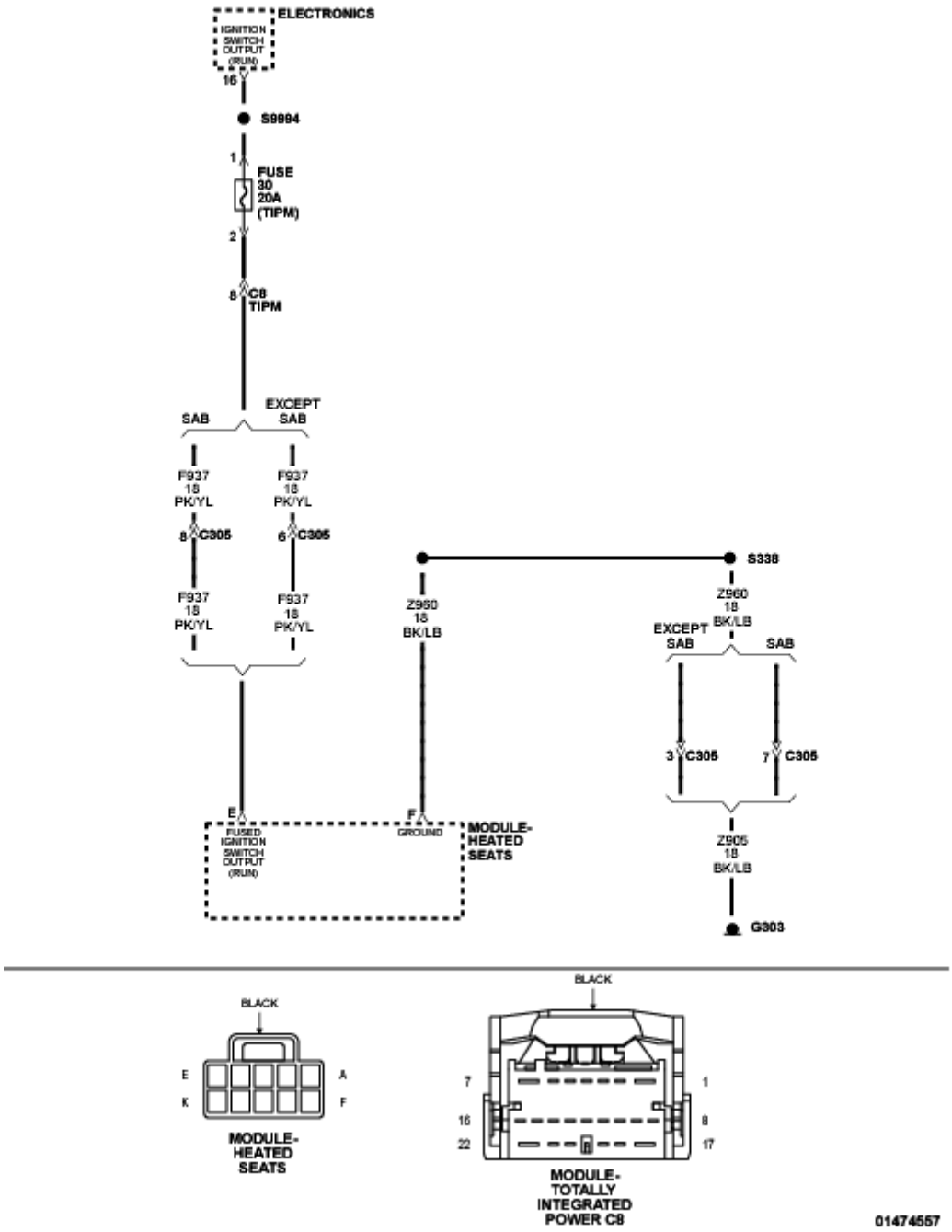

Fig. 45: Heated Seat Module Power Supply Circuit Diagram
Courtesy of CHRYSLER GROUP, LLC

For a complete wiring diagram, **refer to appropriate SYSTEM WIRING DIAGRAMS article** .

WHEN MONITORED

With ignition on.

SET CONDITION

If the Heated Seat Module (HSM) detects voltage under 10 volts on the (F937) Fused Ignition Switch Output (Run) circuit.

POSSIBLE CAUSES

Possible Causes
CHARGING SYSTEM VOLTAGE LOW (F937) FUSED IGNITION SWITCH OUTPUT (RUN) CIRCUIT HEATED SEAT MODULE (HSM)

DIAGNOSTIC TEST

1. **CHECK FOR CHARGING SYSTEM DIAGNOSTIC TROUBLE CODES (DTCs)**
   1. Turn the ignition on.
   2. With the scan tool, read Powertrain Control Module (PCM) DTCs.

      Are there any Charging System DTCs set in the PCM?

      Yes

      - Refer to **DIAGNOSIS AND TESTING** and **DTC INDEX** for Charging System diagnostic procedures. .

      No

      - Go To 2
2. **VERIFY DTC B2181-HEATED SEAT MODULE POWER SUPPLY LOW IS ACTIVE**
   1. With the scan tool, record and erase DTCs.
   2. Turn the ignition off.
   3. Start the engine and let it run for one minute.
   4. With the scan tool, read DTCs.

      Does the scan tool display this DTC as active?

      Yes

- Go To 3

No

- Test complete, the condition or conditions that originally set this DTC are not present at this time. Using the wiring diagrams as a guide, check all related splices and connectors for signs of water intrusion, corrosion, pushed out or bent terminals, and correct pin tension. Attempt to reproduce condition by adjusting the seat.
- Perform the BODY VERIFICATION TEST. Refer to **STANDARD PROCEDURE** .

3. **CHECK (F937) FUSED IGNITION SWITCH OUTPUT (RUN) CIRCUIT VOLTAGE**

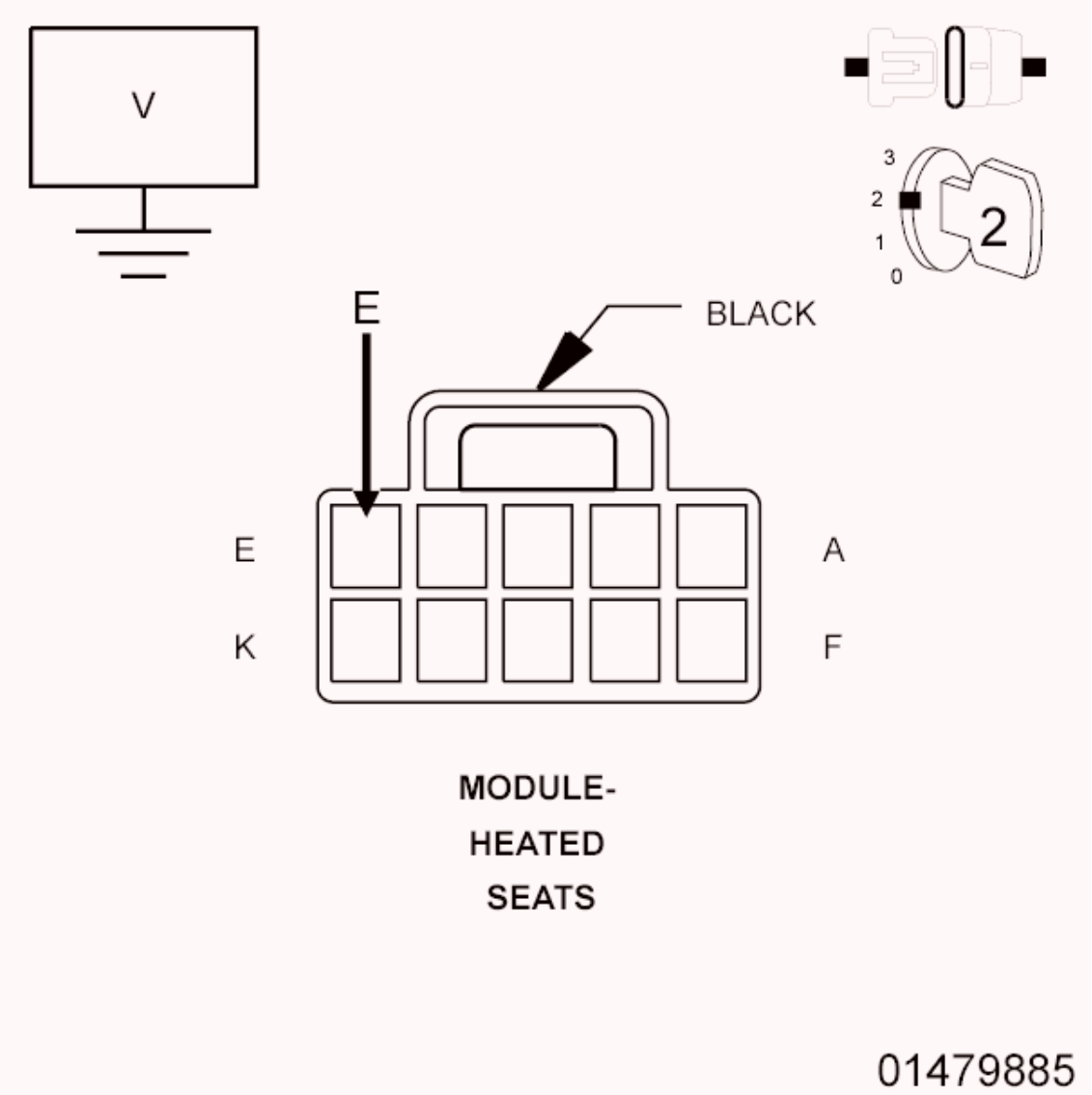

Fig. 46: Measuring Voltage Of Fused Ignition Switch Output (Run) Circuit
Courtesy of CHRYSLER GROUP, LLC

1. Turn the ignition off.
2. Disconnect the HSM harness connector.

NOTE: Check connectors. Clean and repair as necessary.

3. Start the engine and let idle.
4. Measure the voltage of the (F937) Fused Ignition Switch Output (Run) circuit between the HSM connector and ground and compare it to the voltage at the vehicle battery.

   Is the voltage measured at the HSM connector the same as the voltage measured at the battery?

   Yes

   - Replace the Heated Seat Module (HSM) in accordance with the Service Information.
   - Perform the BODY VERIFICATION TEST. Refer to **STANDARD PROCEDURE** .

   No

   - Repair the (F937) Fused Ignition Switch Output (Run) circuit for the cause of the low voltage condition at the HSM.
   - Perform the BODY VERIFICATION TEST. Refer to **STANDARD PROCEDURE** .

B2182-HEATED SEAT MODULE POWER SUPPLY HIGH

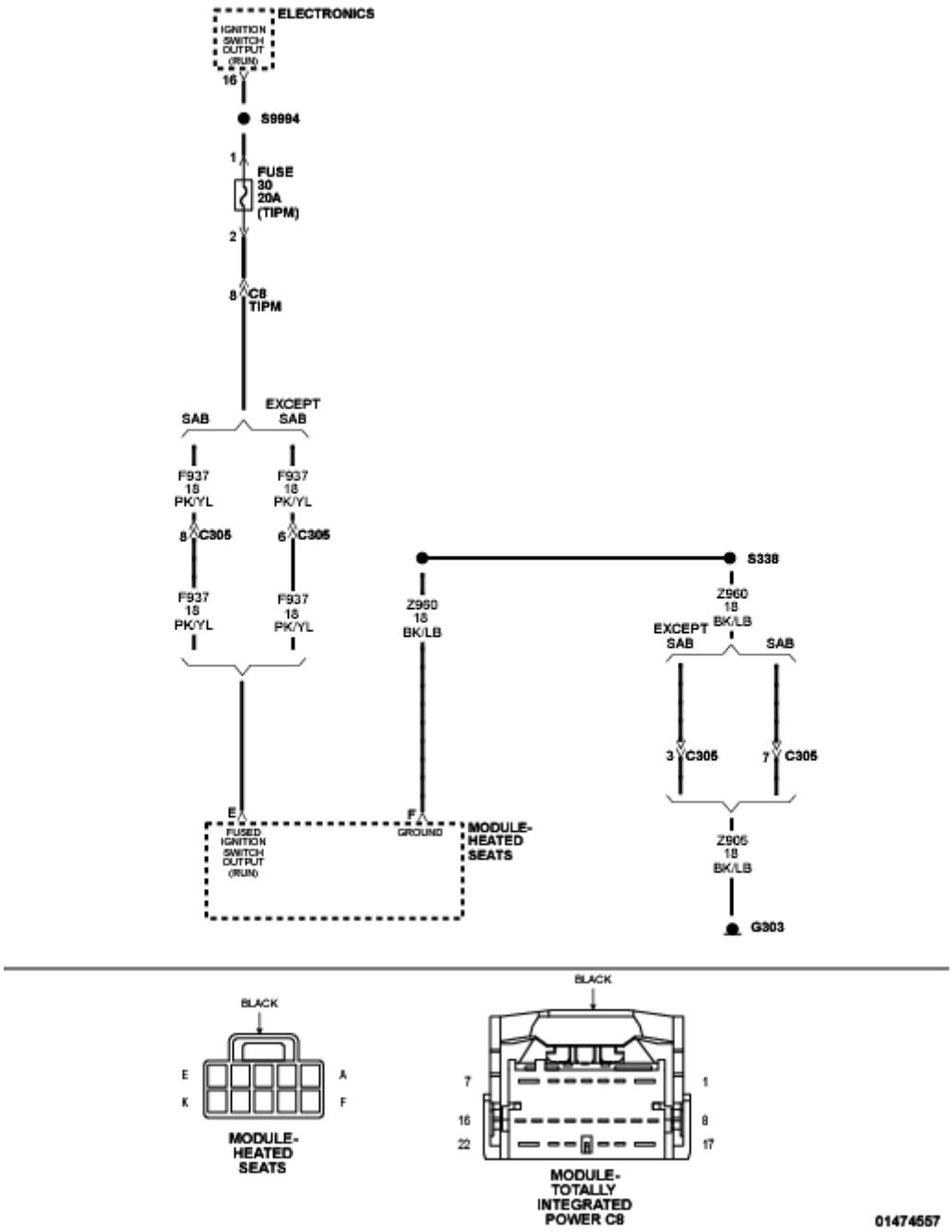

Fig. 47: Heated Seat Module Power Supply Circuit Diagram
Courtesy of CHRYSLER GROUP, LLC

For a complete wiring diagram, **refer to appropriate SYSTEM WIRING DIAGRAMS article** .

WHEN MONITORED

With ignition on.

SET CONDITION

If the Heated Seat Module detects voltage over 16.0 volts on the on the (F937) Fused Ignition Switch Output (Run) circuit.

POSSIBLE CAUSES

Possible Causes
CHARGING SYSTEM VOLTAGE HIGH (F937) FUSED IGNITION SWITCH OUTPUT (RUN) CIRCUIT HEATED SEAT MODULE (HSM)

DIAGNOSTIC TEST

1. **CHECK FOR CHARGING SYSTEM DIAGNOSTIC TROUBLE CODES (DTCs)**
   1. Turn the ignition on.
   2. With the scan tool, read Powertrain Control Module (PCM) DTCs.

      Are there any Charging System DTCs set in the PCM?

      Yes

      - Refer to **DIAGNOSIS AND TESTING** and **DTC INDEX** for Charging System diagnostic procedures. .

      No

      - Go To 2
2. **VERIFY DTC B2182-HEATED SEAT MODULE POWER SUPPLY HIGH IS ACTIVE**
   1. With the scan tool, record and erase DTCs.
   2. Turn the ignition off.
   3. Start the engine and let it run for one minute.
   4. With the scan tool, read DTCs.

      Does the scan tool display this DTC as active?

      Yes

- Go To 3

No

- Test complete, the condition or conditions that originally set this DTC are not present at this time. Using the wiring diagrams as a guide, check all related splices and connectors for signs of water intrusion, corrosion, pushed out or bent terminals, and correct pin tension.
- Perform the BODY VERIFICATION TEST. Refer to **STANDARD PROCEDURE** .

3. **CHECK (F937) FUSED IGNITION SWITCH OUTPUT (RUN) CIRCUIT VOLTAGE**

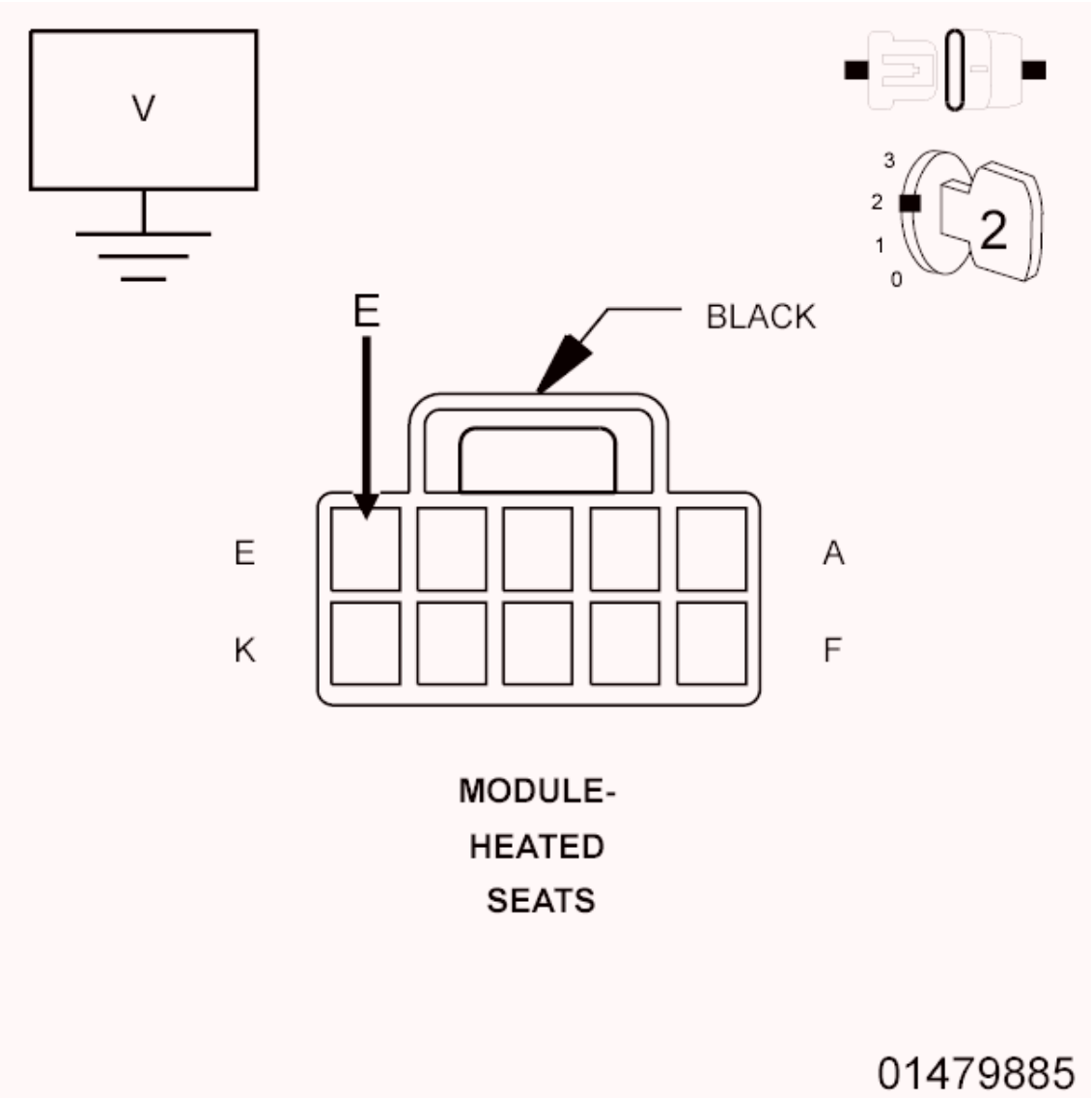

Fig. 48: Measuring Voltage Of Fused Ignition Switch Output (Run) Circuit
Courtesy of CHRYSLER GROUP, LLC

1. Turn the ignition off.
2. Disconnect the HSM harness connector.

NOTE: Check connectors. Clean and repair as necessary.

3. Start the engine and let idle.
4. Measure the voltage of the (F937) Fused Ignition Switch Output (Run) circuit between the HSM connector and ground and compare it to the voltage at the vehicle battery.

   Is the voltage measured at the HSM connector the same as the voltage measured at the battery?

   Yes

   - Replace the Heated Seat Module (HSM) in accordance with the Service Information.
   - Perform the BODY VERIFICATION TEST. Refer to **STANDARD PROCEDURE** .

   No

   - Repair the (F937) Fused Ignition Switch Output (Run) circuit for the cause of the high voltage condition at the HSM.
   - Perform the BODY VERIFICATION TEST. Refer to **STANDARD PROCEDURE** .

B225C-COMPASS MODULE INTERNAL

For a complete wiring diagram, **refer to appropriate SYSTEM WIRING DIAGRAMS article** .

WHEN MONITORED

With the ignition on.

SET CONDITION

The Compass Module detects an internal failure.

POSSIBLE CAUSES

Possible Causes
COMPASS MODULE

DIAGNOSTIC TEST

CHECK FOR AN ACTIVE DTC

1. Turn the ignition on.
2. With the scan tool, read DTCs.

   Does the scan tool display: B225C-COMPASS MODULE INTERNAL?

   Yes

   - Replace the Compass Module in accordance with the service information.
   - Perform the BODY VERIFICATION TEST. Refer to **STANDARD PROCEDURE** .

   No

   - Test Complete.

B2300-WIPER MODE SWITCH INPUT CIRCUIT PERFORMANCE

For a complete wiring diagram, **refer to appropriate SYSTEM WIRING DIAGRAMS article** .

WHEN MONITORED

With the ignition on.

SET CONDITION

The Cluster detects the Wiper Mode Switch function is inoperative.

POSSIBLE CAUSES

Possible Causes
RIGHT MULTIFUNCTION SWITCH

DIAGNOSTIC TEST

CHECK FOR AN ACTIVE DIAGNOSTIC TROUBLE CODE (DTC)

NOTE: Before proceeding with this diagnostic procedure, verify the Left and Right Multifunction Switch and Clockspring harness connectors are properly seated and verify proper pin terminal tension. A loose connection at any of these connectors may cause this DTC to set.

1. Turn the ignition on.
2. Actuate the Wipers with the Right Multifunction Switch.
3. Using the scan tool, read DTCs.

   Does the scan tool display this DTC as Active?

   Yes

   - Replace the Right Multifunction Switch in accordance with the Service Information.
   - Perform the BODY VERIFICATION TEST. Refer to **STANDARD PROCEDURE** .

   No

   - Test complete, the condition or conditions that originally set this DTC are not present at this time. Using the wiring diagrams as a guide, check all related splices and connectors for signs of water intrusion, corrosion, pushed out or bent terminals, and correct pin tension.

B2339-HORN SWITCH STUCK

For a complete wiring diagram, **refer to appropriate SYSTEM WIRING DIAGRAMS article** .

WHEN MONITORED

Continuously with the ignition on.

SET CONDITION

The Cluster senses that the Horn Switch is pressed for greater than 45 seconds.

POSSIBLE CAUSES

Possible Causes
HORN SWITCH

DIAGNOSTIC TEST

CHECK FOR AN ACTIVE DTC

NOTE: Before proceeding with the diagnostic procedure, verify that the connections are proper made, properly seated and verify proper pin terminal tension. A loose connection at any of the related connectors may cause the DTC to set.

1. Turn the ignition on.
2. With the scan tool, read DTCs.

   Does the scan tool display this DTC as active?

   Yes

   WARNING: Turn the ignition off disconnect the 12-volt battery and wait two minutes before proceeding. Failure to follow these instructions may result in possible serious or fatal injury.

   WARNING: Do not place an intact non-deployed airbag face down on a hard surface, the airbag propels into the air if accidentally deployed. Failure to follow these instructions may result in possible serious or fatal injury.

   NOTE: Visually and physically inspect the wiring harness between the Horn Switch harness connector and the

Right Steering Wheel Switch (Speed Control Switch) harness connector. Repair any damaged wires, connectors, and open/spread terminals. If harness is OK, proceed with test.

- Replace the Horn Switch in accordance with the Service Information.
- Perform the BODY VERIFICATION TEST. Refer to **STANDARD PROCEDURE** .

No

- Test complete, the condition or conditions that originally set this DTC are not present at this time. Using the wiring diagrams as a guide, check all related splices and connectors for signs of water intrusion, corrosion, pushed out or bent terminals, and correct pin tension.
- Perform the BODY VERIFICATION TEST. Refer to **STANDARD PROCEDURE** .

B2372-HIGH BEAM SWITCH CIRCUIT

For a complete wiring diagram, **refer to appropriate SYSTEM WIRING DIAGRAMS article** .

WHEN MONITORED

With the ignition on.

SET CONDITION

The Cluster detects the Flash to Pass function inoperative.

POSSIBLE CAUSES

Possible Causes
LEFT MULTIFUNCTION SWITCH

DIAGNOSTIC TEST

CHECK FOR AN ACTIVE DTC

NOTE: Before proceeding with this diagnostic procedure, verify

the Left and Right Multifunction Switch and Clockspring harness connectors are properly seated and verify proper pin terminal tension. A loose connection at any of these connectors may cause this DTC to set.

1. Turn the ignition on.
2. Actuate the High Beams with the Left Multifunction Switch.
3. Using the scan tool, read DTCs.

Does the scan tool display this DTC as Active?

Yes

- Replace the Left Multifunction Switch in accordance with the Service Information.
- Perform the BODY VERIFICATION TEST. Refer to **STANDARD PROCEDURE** .

No

- Test complete, the condition or conditions that originally set this DTC are not present at this time. Using the wiring diagrams as a guide, check all related splices and connectors for signs of water intrusion, corrosion, pushed out or bent terminals, and correct pin tension.

B2374-WASHER SWITCH INPUT CIRCUIT

For a complete wiring diagram, **refer to appropriate SYSTEM WIRING DIAGRAMS article** .

WHEN MONITORED

Continuously with the ignition on.

SET CONDITION

The Cluster senses that the Washer Switch is in the Set position for greater than 50 seconds.

POSSIBLE CAUSES

Possible Causes
INTERMITTENT WASHER SWITCH INPUT CIRCUIT RIGHT MULTIFUNCTION SWITCH CLUSTER

DIAGNOSTIC TEST

1. **DTC IS ACTIVE**

NOTE: Before proceeding with this diagnostic procedure, verify the Left and Right Multifunction Switch and Clockspring harness connectors are properly seated and verify proper pin terminal tension. A loose connection at any of these connectors may cause this DTC to set.

NOTE: If U1149-LOST COMMUNICATION WITH MULTI-FUNCTION SWITCH is set along with this DTC, diagnose the communication DTC first.

NOTE: If U1008-LIN 1 BUS is set along with this DTC, diagnose the communication DTC first.

NOTE: If P0562-BATTERY VOLTAGE LOW or P0563-BATTERY VOLTAGE HIGH is set along with this DTC, diagnose the battery voltage DTC first.

1. Turn the ignition on.
2. With the scan tool, read DTCs.

Does the scan tool display this DTC as active?

Yes

- Go To 2

No

- Test complete, the condition or conditions that originally set this

DTC are not present at this time. Using the wiring diagrams as a guide, check all related splices and connectors for signs of water intrusion, corrosion, pushed out or bent terminals, and correct pin tension.

2. **RIGHT MULTIFUNCTION SWITCH**
   1. Turn the ignition off.
   2. Replace the Right Multifunction Switch in accordance with the Service Information.
   3. Turn the ignition on.
   4. Press and release the Washer Switch several times.
   5. With the scan tool, clear stored DTCs in the Cluster.
   6. With the scan tool, select Data Display and view the Washer Switch data.
   7. While monitoring the Washer Switch data, press and release the Washer Switch several times.

      Does the Washer Switch data change states when the switch is pressed and released?

      Yes

      - Test complete.
      - Perform the BODY VERIFICATION TEST. Refer to **STANDARD PROCEDURE** .

      No

      - Replace the Cluster in accordance with the Service Information.
      - Perform the BODY VERIFICATION TEST. Refer to **STANDARD PROCEDURE** .

B2375-MIST SWITCH INPUT CIRCUIT

For a complete wiring diagram, **refer to appropriate SYSTEM WIRING DIAGRAMS article** .

WHEN MONITORED

Continuously with the ignition on.

SET CONDITION

The Cluster senses that the Mist Switch is in the Set position for greater than 50 seconds.

POSSIBLE CAUSES

Possible Causes
INTERMITTENT MIST SWITCH INPUT CIRCUIT RIGHT MULTIFUNCTION SWITCH CLUSTER

DIAGNOSTIC TEST

1. **DTC IS ACTIVE**

NOTE: Before proceeding with this diagnostic procedure, verify the Left and Right Multifunction Switch and Clockspring harness connectors are properly seated and verify proper pin terminal tension. A loose connection at any of these connectors may cause this DTC to set.

NOTE: If U1149-LOST COMMUNICATION WITH MULTI-FUNCTION SWITCH is set along with this DTC, diagnose the communication DTC first.

NOTE: If U1008-LIN 1 BUS is set along with this DTC, diagnose the communication DTC first.

NOTE: If P0562-BATTERY VOLTAGE LOW or P0563-BATTERY VOLTAGE HIGH is set along with this DTC, diagnose the battery voltage DTC first.

1. Turn the ignition on.
2. With the scan tool, read DTCs.

   Does the scan tool display this DTC as active?

   Yes

- Go To 2

No

- Test complete, the condition or conditions that originally set this DTC are not present at this time. Using the wiring diagrams as a guide, check all related splices and connectors for signs of water intrusion, corrosion, pushed out or bent terminals, and correct pin tension.

2. **RIGHT MULTIFUNCTION SWITCH**
   1. Turn the ignition off.
   2. Replace the Right Multifunction Switch in accordance with the Service Information.
   3. Turn the ignition on.
   4. Press and release the Mist Switch several times.
   5. With the scan tool, clear stored DTCs in the Cluster.
   6. With the scan tool, select Data Display and view the Mist Switch data.
   7. While monitoring the Mist Switch data, press and release the Mist Switch several times.

   Does the Mist Switch data change states when the switch is pressed and released?

   Yes

   - Test complete.
   - Perform the BODY VERIFICATION TEST. Refer to **STANDARD PROCEDURE** .

   No

   - Replace the Cluster in accordance with the Service Information.
   - Perform the BODY VERIFICATION TEST. Refer to **STANDARD PROCEDURE** .

B2376-REAR WIPER SWITCH INPUT CIRCUIT

For a complete wiring diagram, **refer to appropriate SYSTEM WIRING**

DIAGRAMS article .

WHEN MONITORED

Continuously with the ignition on.

SET CONDITION

The Cluster senses that the Rear Wiper Switch is in the Set position for greater than 50 seconds.

POSSIBLE CAUSES

Possible Causes
INTERMITTENT REAR WIPER SWITCH INPUT CIRCUIT RIGHT MULTIFUNCTION SWITCH CLUSTER

DIAGNOSTIC TEST

1. **DTC IS ACTIVE**

NOTE: Before proceeding with this diagnostic procedure, verify the Left and Right Multifunction Switch and Clockspring harness connectors are properly seated and verify proper pin terminal tension. A loose connection at any of these connectors may cause this DTC to set.

NOTE: If U1149-LOST COMMUNICATION WITH MULTI-FUNCTION SWITCH is set along with this DTC, diagnose the communication DTC first.

NOTE: If U1008-LIN 1 BUS is set along with this DTC, diagnose the communication DTC first.

NOTE: If P0562-BATTERY VOLTAGE LOW or P0563-BATTERY VOLTAGE HIGH is set along with this DTC, diagnose the battery voltage DTC first.

1. Turn the ignition on.

2. With the scan tool, read DTCs.

   Does the scan tool display this DTC as active?

   Yes

   - Go To 2

   No

   - Test complete, the condition or conditions that originally set this DTC are not present at this time. Using the wiring diagrams as a guide, check all related splices and connectors for signs of water intrusion, corrosion, pushed out or bent terminals, and correct pin tension.

2. **RIGHT MULTIFUNCTION SWITCH**
   1. Turn the ignition off.
   2. Replace the Right Multifunction Switch in accordance with the Service Information.
   3. Turn the ignition on.
   4. Press and release the Rear Wiper Switch several times.
   5. With the scan tool, clear stored DTCs in the Cluster.
   6. With the scan tool, select Data Display and view the Rear Wiper Switch data.
   7. While monitoring the Rear Wiper Switch data, press and release the Rear Wiper Switch several times.

      Does the Rear Wiper Switch data change states when the switch is pressed and released?

      Yes

      - Test complete.
      - Perform the BODY VERIFICATION TEST. Refer to **STANDARD PROCEDURE** .

      No

- Replace the Cluster in accordance with the Service Information.
- Perform the BODY VERIFICATION TEST. Refer to **STANDARD PROCEDURE** .

B2377-REAR WASHER SWITCH INPUT CIRCUIT

For a complete wiring diagram, **refer to appropriate SYSTEM WIRING DIAGRAMS article** .

WHEN MONITORED

Continuously with the ignition on.

SET CONDITION

The Cluster senses that the Rear Washer Switch is in the Set position for greater than 50 seconds.

POSSIBLE CAUSES

Possible Causes
INTERMITTENT REAR WASHER SWITCH INPUT CIRCUIT RIGHT MULTIFUNCTION SWITCH CLUSTER

DIAGNOSTIC TEST

1. **DTC IS ACTIVE**

NOTE: Before proceeding with this diagnostic procedure, verify the Left and Right Multifunction Switch and Clockspring harness connectors are properly seated and verify proper pin terminal tension. A loose connection at any of these connectors may cause this DTC to set.

NOTE: If U1149-LOST COMMUNICATION WITH MULTI-FUNCTION SWITCH is set along with this DTC, diagnose the communication DTC first.

NOTE: If U1008-LIN 1 BUS is set along with this DTC,

diagnose the communication DTC first.

NOTE: If P0562-BATTERY VOLTAGE LOW or P0563-BATTERY VOLTAGE HIGH is set along with this DTC, diagnose the battery voltage DTC first.

1. Turn the ignition on.
2. With the scan tool, read DTCs.

   Does the scan tool display this DTC as active?

   Yes

   - Go To 2

   No

   - Test complete, the condition or conditions that originally set this DTC are not present at this time. Using the wiring diagrams as a guide, check all related splices and connectors for signs of water intrusion, corrosion, pushed out or bent terminals, and correct pin tension.

2. **RIGHT MULTIFUNCTION SWITCH**
   1. Turn the ignition off.
   2. Replace the Right Multifunction Switch in accordance with the Service Information.
   3. Turn the ignition on.
   4. Press and release the Rear Washer Switch several times.
   5. With the scan tool, clear stored DTCs in the Cluster.
   6. With the scan tool, select Data Display and view the Rear Washer Switch data.
   7. While monitoring the Rear Washer Switch data, press and release the Rear Washer Switch several times.

      Does the Rear Washer Switch data change states when the switch is pressed and released?

      Yes

- Test complete.
- Perform the BODY VERIFICATION TEST. Refer to **STANDARD PROCEDURE** .

No

- Replace the Cluster in accordance with the Service Information.
- Perform the BODY VERIFICATION TEST. Refer to **STANDARD PROCEDURE** .

B2378-FLASH TO PASS SWITCH CIRCUIT

For a complete wiring diagram, **refer to appropriate SYSTEM WIRING DIAGRAMS article** .

WHEN MONITORED

With the ignition on.

SET CONDITION

The Cluster detects the Flash to Pass function inoperative.

POSSIBLE CAUSES

Possible Causes
LEFT MULTIFUNCTION SWITCH

DIAGNOSTIC TEST

CHECK FOR AN ACTIVE DIAGNOSTIC TROUBLE CODE (DTC)

NOTE: Before proceeding with this diagnostic procedure, verify the Left and Right Multifunction Switch and Clockspring harness connectors are properly seated and verify proper pin terminal tension. A loose connection at any of these connectors may cause this DTC to set.

1. Turn the ignition on.
2. Actuate the Optical Horn with the Multifunction Switch.
3. Using the scan tool, read DTCs.

Does the scan tool display this DTC as Active?

Yes

- Replace the Left Multifunction Switch in accordance with the Service Information.
- Perform the BODY VERIFICATION TEST. Refer to **STANDARD PROCEDURE** .

No

- Test complete, the condition or conditions that originally set this DTC are not present at this time. Using the wiring diagrams as a guide, check all related splices and connectors for signs of water intrusion, corrosion, pushed out or bent terminals, and correct pin tension.

C2312-TRAC/ESP OFF SWITCH STUCK

For a complete wiring diagram, **refer to appropriate SYSTEM WIRING DIAGRAMS article** .

NOTE: The Electronic Stability Control (ESC) may also be referred to as Electronic Stability Program (ESP) depending on the vehicle model year and configuration.

WHEN MONITORED

With the ignition on.

SET CONDITION

The Cluster detects the TRAC/ESP Off Switch active for greater than 20 seconds.

POSSIBLE CAUSES

Possible Causes
SWITCH BANK

DIAGNOSTIC TEST

CHECK FOR AN ACTIVE DTC

1. Turn the ignition on.
2. Press the TRAC/ESP Off Switch three times.
3. With the scan tool, read DTCs.

   Does the scan tool display this DTC as active?

   Yes

   - Replace the Switch Bank in accordance with the Service Information.
   - Perform the BODY VERIFICATION TEST. Refer to **STANDARD PROCEDURE** .

   No

   - Test complete.

P0462-FUEL LEVEL SENSOR 1 CIRCUIT LOW

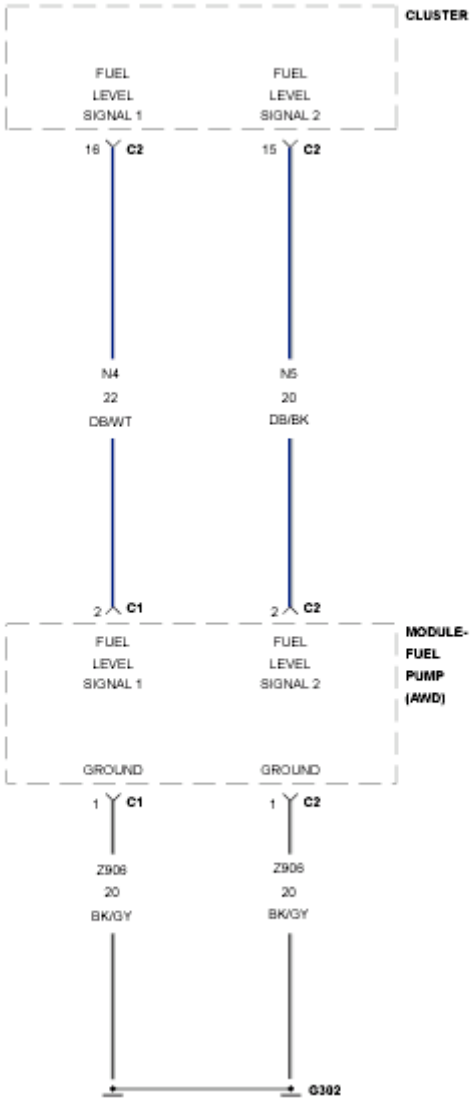

Fig. 49: Fuel Level Signal Circuit Diagram
Courtesy of CHRYSLER GROUP, LLC

For a complete wiring diagram, **refer to appropriate SYSTEM WIRING DIAGRAMS article** .

WHEN MONITORED

With the ignition on.

SET CONDITION

The Cluster detects that the Fuel Level Sensor input voltage is below the minimum acceptable value.

POSSIBLE CAUSES

Possible Causes
(N4) FUEL LEVEL SIGNAL 1 CIRCUIT SHORTED TO GROUND FUEL PUMP MODULE CLUSTER

DIAGNOSTIC TEST

1. **CHECK FOR AN ACTIVE DTC**
    1. Turn the ignition on.
    2. With the scan tool, read DTCs.

    Does the scan tool display this DTC as active?

    Yes

    - Go To 2

    No

    - Test complete, the condition or conditions that originally set this DTC are not present at this time. Using the wiring diagrams as a guide, check all related splices and connectors for signs of water intrusion, corrosion, pushed out or bent terminals, and correct pin tension.
2. **FUEL PUMP MODULE**
    1. Turn the ignition off.
    2. Disconnect the Fuel Pump Module C1 harness connector.
    3. Turn the ignition on.
    4. Wait 30 seconds.
    5. With the scan tool, read DTCs

    Does the scan tool display this DTC as active?

    Yes

    - Go To 3

    No

- Replace the Fuel Pump Module in accordance with the Service Information.
- Perform the BODY VERIFICATION TEST. Refer to **STANDARD PROCEDURE** .

3. **(N4) FUEL LEVEL SIGNAL 1 CIRCUIT SHORTED TO GROUND**

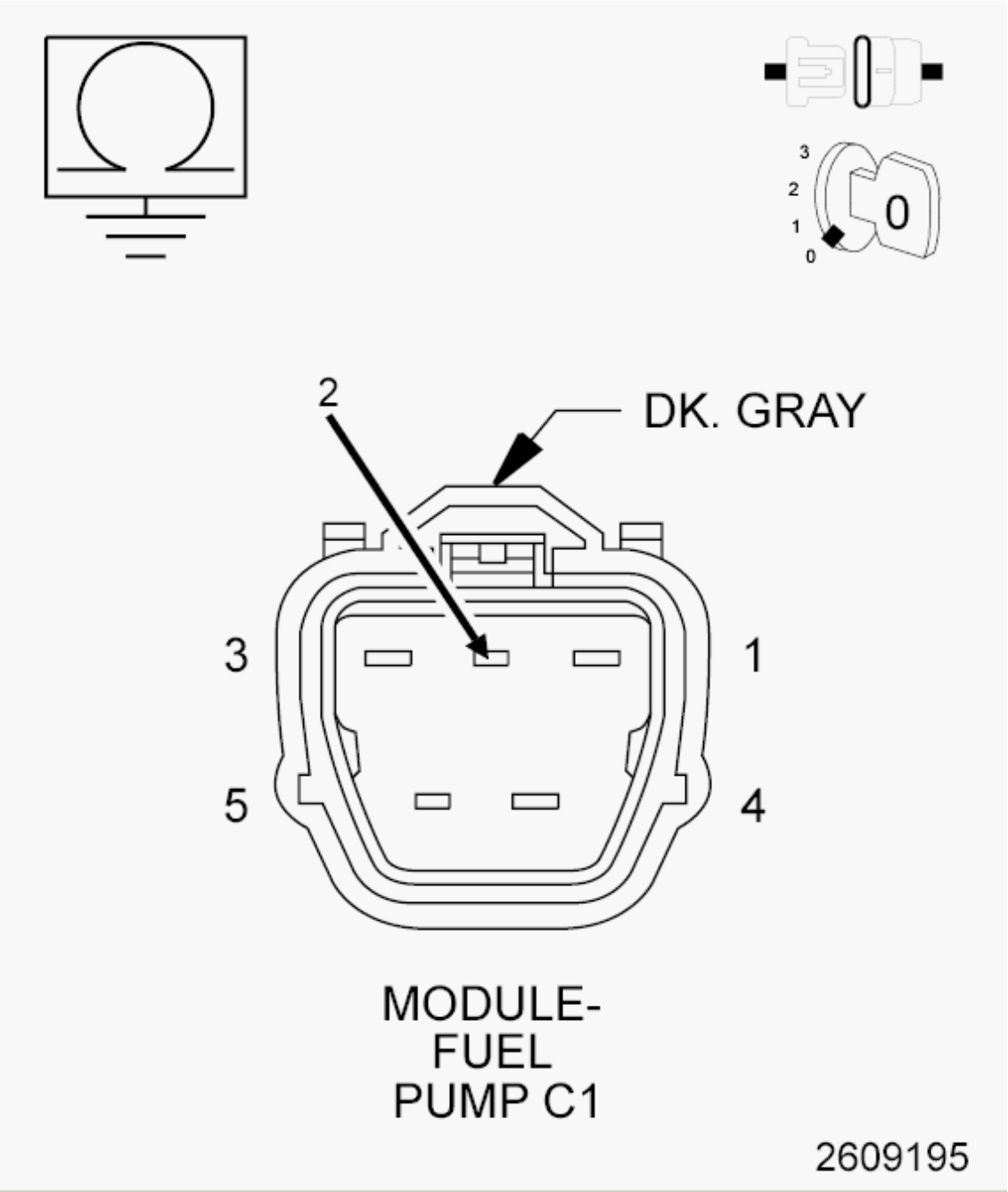

Fig. 50: Measuring Resistance Between Ground & Fuel Level Signal 1 Circuit
Courtesy of CHRYSLER GROUP, LLC

1. Turn the ignition off.
2. Disconnect the Cluster C2 harness connector.
3. Measure the resistance between ground and the (N4) Fuel Level Signal 1 circuit in the Fuel Pump Module C1 harness connector.

   Is the resistance below 10K Ohms?

   Yes

   - Repair the short to ground in the (N4) Fuel Level Signal 1 circuit.
   - Perform the BODY VERIFICATION TEST. Refer to **STANDARD PROCEDURE** .

   No

   - Replace the Cluster in accordance with the Service Information.
   - Perform the BODY VERIFICATION TEST. Refer to **STANDARD PROCEDURE** .

P0463-FUEL LEVEL SENSOR 1 CIRCUIT HIGH

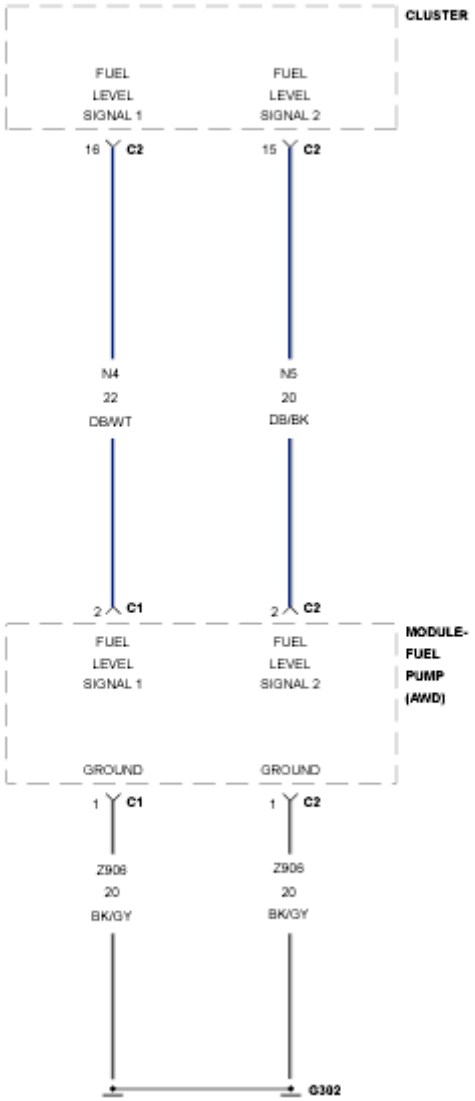

Fig. 51: Fuel Level Signal Circuit Diagram
Courtesy of CHRYSLER GROUP, LLC

For a complete wiring diagram, **refer to appropriate SYSTEM WIRING DIAGRAMS article** .

WHEN MONITORED

With the ignition on.

SET CONDITION

The Cluster detects that the Fuel Level Sensor input voltage is above the maximum acceptable value.

POSSIBLE CAUSES

Possible Causes
(N4) FUEL LEVEL SIGNAL 1 CIRCUIT SHORTED TO VOLTAGE (N4) FUEL LEVEL SIGNAL 1 CIRCUIT OPEN OR HIGH RESISTANCE (Z906) GROUND CIRCUIT OPEN OR HIGH RESISTANCE FUEL PUMP MODULE CLUSTER

DIAGNOSTIC TEST

1. **CHECK FOR AN ACTIVE DTC**
   1. Turn the ignition on.
   2. With the scan tool, read DTCs.

   Does the scan tool display this DTC as active?

   Yes

   - Go To 2

   No

   - Test complete, the condition or conditions that originally set this DTC are not present at this time. Using the wiring diagrams as a guide, check all related splices and connectors for signs of water intrusion, corrosion, pushed out or bent terminals, and correct pin tension.
2. **(N4) FUEL LEVEL SIGNAL 1 CIRCUIT SHORTED TO VOLTAGE**

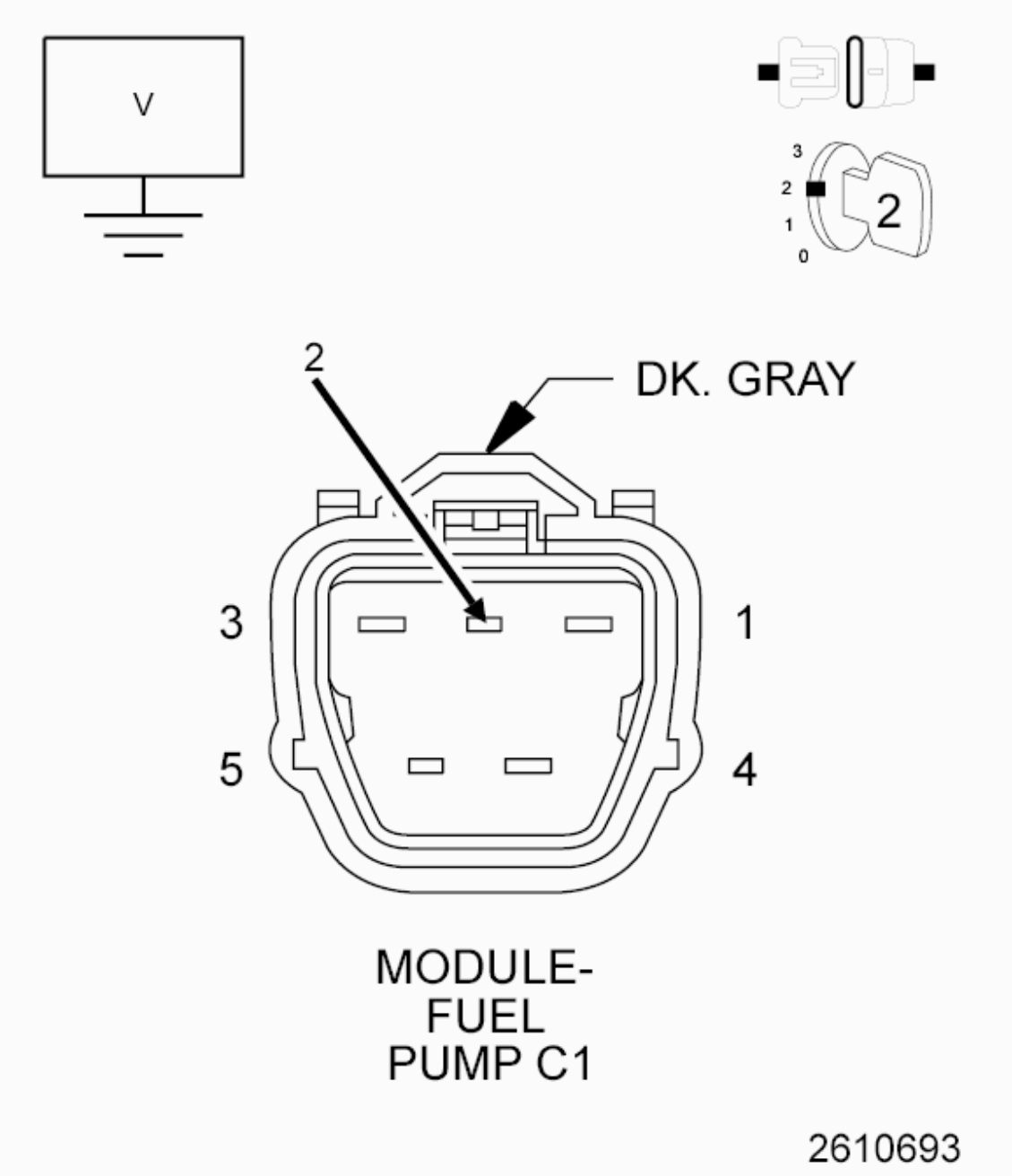

Fig. 52: Measuring Voltage Of Fuel Level Signal 1 Circuit
Courtesy of CHRYSLER GROUP, LLC

1. Turn the ignition off.
2. Disconnect the Fuel Pump Module C1 harness connector.
3. Disconnect the Cluster C2 harness connector.
4. Turn the ignition on.
5. Measure the voltage of the (N4) Fuel Level Signal 1 circuit in the Fuel Pump Module harness connector.

Is there any voltage present?

Yes

- Repair the (N4) Fuel Level Signal 1 circuit for a short to voltage.
- Perform the BODY VERIFICATION TEST. Refer to **STANDARD PROCEDURE** .

No

- Go To 3

3. **FUEL PUMP MODULE**
   1. Turn the ignition off.
   2. Reconnect the Cluster C2 harness connector.
   3. Connect a jumper wire between the (N4) Fuel Level Signal 1 circuit and the (Z906) Ground in the Fuel Pump Module C1 harness connector.
   4. Turn the ignition on.
   5. With the scan tool, read DTCs

   Does the scan tool display this DTC as active?

   Yes

   - Go To 4

   No

   - Replace the Fuel Pump Module in accordance with the Service Information.
   - Perform the BODY VERIFICATION TEST. Refer to **STANDARD PROCEDURE** .
4. **(N4) FUEL LEVEL SIGNAL 1 OPEN OR HIGH RESISTANCE**

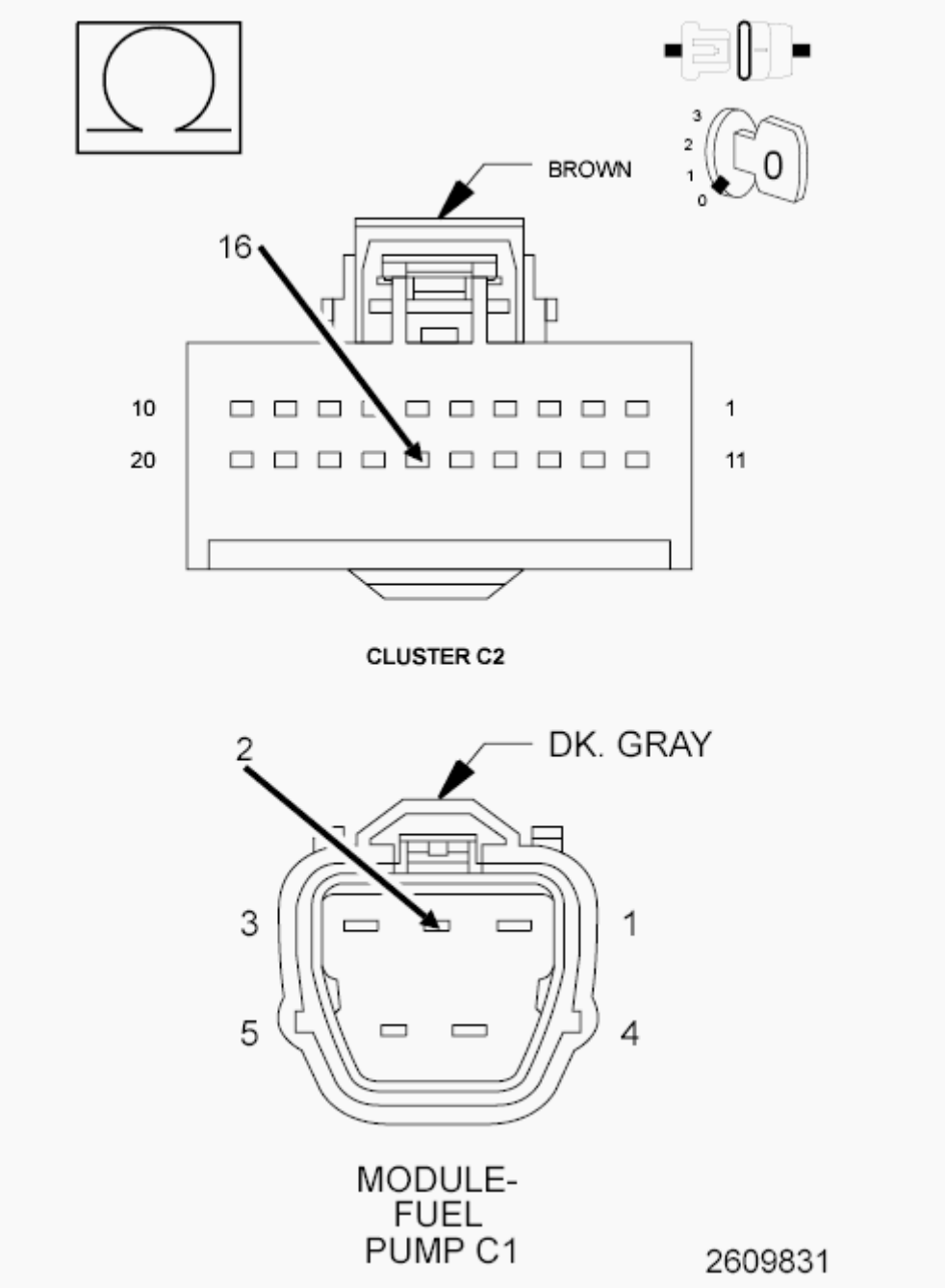

Fig. 53: Measuring Resistance Of Fuel Level Signal 1 Circuit Between Fuel Pump Module C1 Harness Connector & Cluster Harness Connector
Courtesy of CHRYSLER GROUP, LLC

1. Turn the ignition off.
2. Disconnect the Cluster C2 harness connector.
3. Measure the resistance of the (N4) Fuel Level Signal 1 circuit between the Fuel Pump Module C1 harness connector and the Cluster harness connector.

Is the resistance above 5.0 Ohms?

Yes

- Repair the (N4) Fuel Level Signal 1 circuit for an open circuit or high resistance.
- Perform the BODY VERIFICATION TEST. Refer to **STANDARD PROCEDURE** .

No

- Go To 5

5. **(Z906) GROUND CIRCUIT OPEN OR HIGH RESISTANCE**

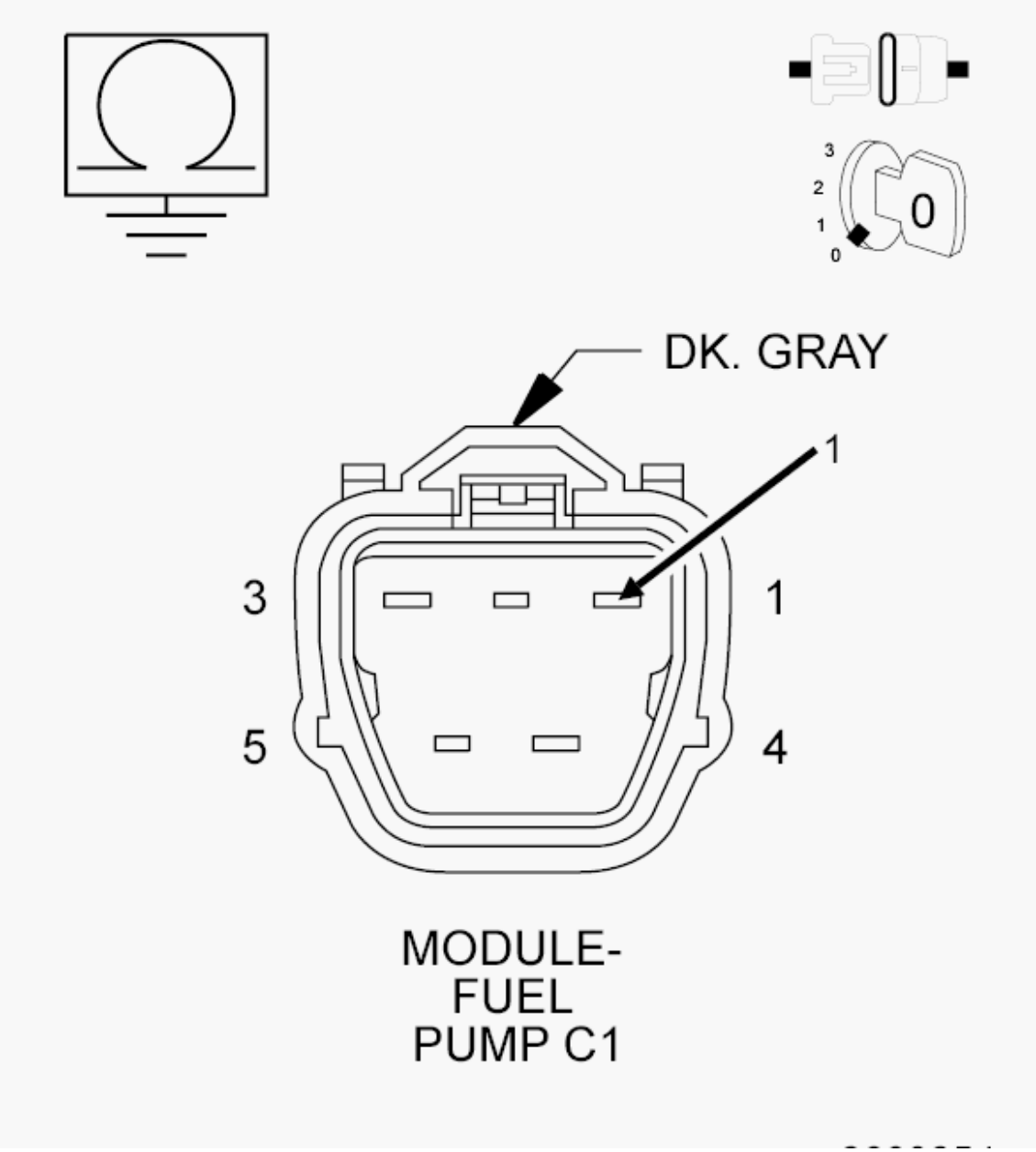

Fig. 54: Measuring Resistance Between Ground & Ground Circuit In Fuel Pump Module C1 Harness Connector
Courtesy of CHRYSLER GROUP, LLC

1. Measure the resistance between ground and the (Z906) Ground circuit in the Fuel Pump Module C1 harness connector.

   Is the resistance above 5.0 Ohms?

   Yes

   - Repair the (Z906) Ground circuit for an open circuit or high resistance.

- Perform the BODY VERIFICATION TEST. Refer to **STANDARD PROCEDURE** .

No

- Replace the Cluster in accordance with the Service Information.
- Perform the BODY VERIFICATION TEST. Refer to **STANDARD PROCEDURE** .

P2067-FUEL LEVEL SENSOR 2 CIRCUIT LOW

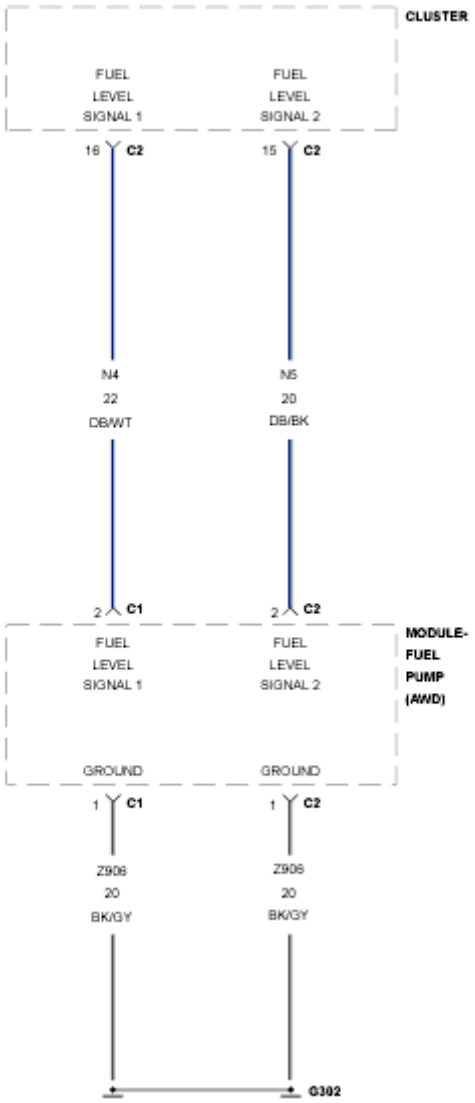

Fig. 55: Fuel Level Signal Circuit Diagram
Courtesy of CHRYSLER GROUP, LLC

For a complete wiring diagram, **refer to appropriate SYSTEM WIRING DIAGRAMS article** .

WHEN MONITORED

With the ignition on.

SET CONDITION

The Cluster detects that the Fuel Level Sensor input voltage is below the minimum acceptable value.

POSSIBLE CAUSES

Possible Causes
(N5) FUEL LEVEL SIGNAL 2 CIRCUIT SHORTED TO GROUND FUEL PUMP MODULE CLUSTER

DIAGNOSTIC TEST

1. **CHECK FOR AN ACTIVE DTC**
    1. Turn the ignition on.
    2. With the scan tool, read DTCs.

    Does the scan tool display this DTC as active?

    Yes

    - Go To 2

    No

    - Test complete, the condition or conditions that originally set this DTC are not present at this time. Using the wiring diagrams as a guide, check all related splices and connectors for signs of water intrusion, corrosion, pushed out or bent terminals, and correct pin tension.
2. **FUEL PUMP MODULE**
    1. Turn the ignition off.
    2. Disconnect the Fuel Pump Module C2 harness connector.
    3. Turn the ignition on.
    4. Wait 30 seconds.

5. With the scan tool, read DTCs

   Does the scan tool display this DTC as active?

   Yes

   - Go To 3

   No

   - Replace the Fuel Pump Module in accordance with the Service Information.
   - Perform the BODY VERIFICATION TEST. Refer to **STANDARD PROCEDURE** .

3. **(N5) FUEL LEVEL SIGNAL 2 CIRCUIT SHORTED TO GROUND**

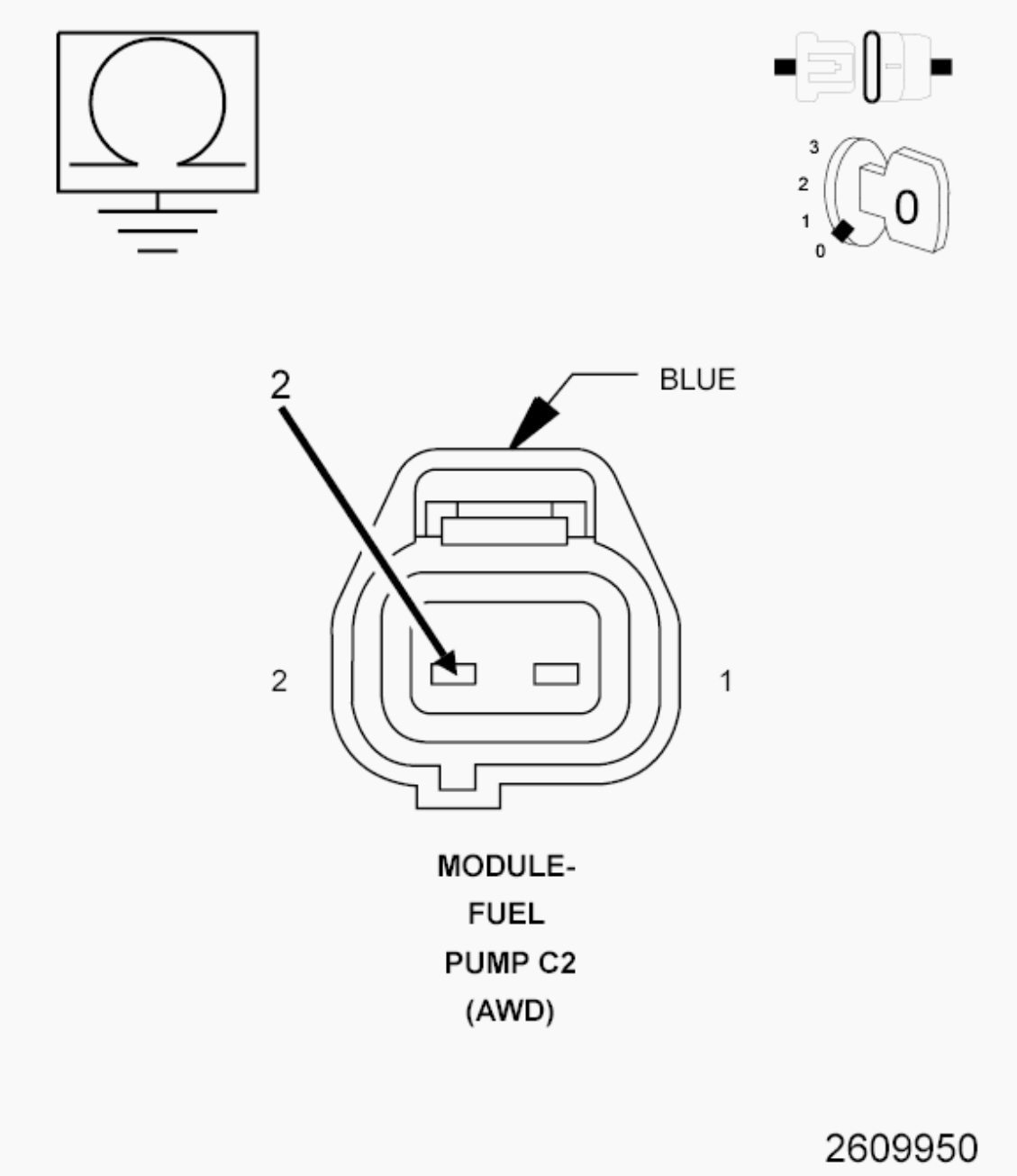

Fig. 56: Measuring Resistance Between Ground & Fuel Level Signal 2 Circuit
Courtesy of CHRYSLER GROUP, LLC

1. Turn the ignition off.
2. Disconnect the Cluster C2 harness connector.
3. Measure the resistance between ground and the (N5) Fuel Level Signal 2 circuit in the Fuel Pump Module C2 harness connector.

   Is the resistance below 10K Ohms?

Yes

- Repair the short to ground in the (N5) Fuel Level Signal 2 circuit.
- Perform the BODY VERIFICATION TEST. Refer to **STANDARD PROCEDURE** .

No

- Replace the Cluster in accordance with the Service Information.
- Perform the BODY VERIFICATION TEST. Refer to **STANDARD PROCEDURE** .

P2068-FUEL LEVEL SENSOR 2 CIRCUIT HIGH

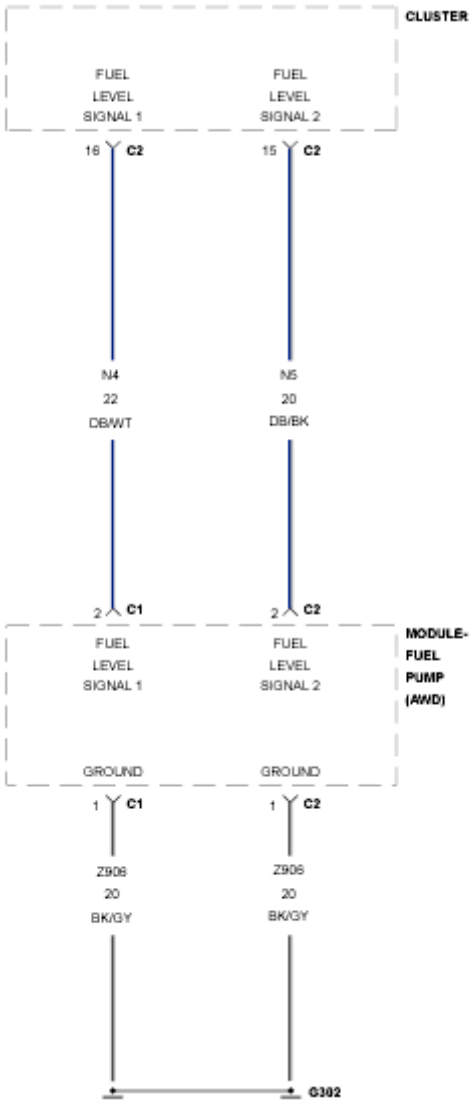

Fig. 57: Fuel Level Signal Circuit Diagram
Courtesy of CHRYSLER GROUP, LLC

For a complete wiring diagram, **refer to appropriate SYSTEM WIRING DIAGRAMS article** .

WHEN MONITORED

With the ignition on.

SET CONDITION

The Cluster detects that the Fuel Level Sensor input voltage is above the maximum acceptable value.

POSSIBLE CAUSES

Possible Causes
(N5) FUEL LEVEL SIGNAL 2 CIRCUIT SHORTED TO VOLTAGE
(N5) FUEL LEVEL SIGNAL 2 CIRCUIT OPEN OR HIGH RESISTANCE
(Z906) GROUND CIRCUIT OPEN OR HIGH RESISTANCE
FUEL PUMP MODULE
CLUSTER

DIAGNOSTIC TEST

1. **CHECK FOR AN ACTIVE DTC**
    1. Turn the ignition on.
    2. With the scan tool, read DTCs.

    Does the scan tool display this DTC as active?

    Yes

    - Go To 2

    No

    - Test complete, the condition or conditions that originally set this DTC are not present at this time. Using the wiring diagrams as a guide, check all related splices and connectors for signs of water intrusion, corrosion, pushed out or bent terminals, and correct pin tension.
2. **(N5) FUEL LEVEL SIGNAL 2 CIRCUIT SHORTED TO VOLTAGE**

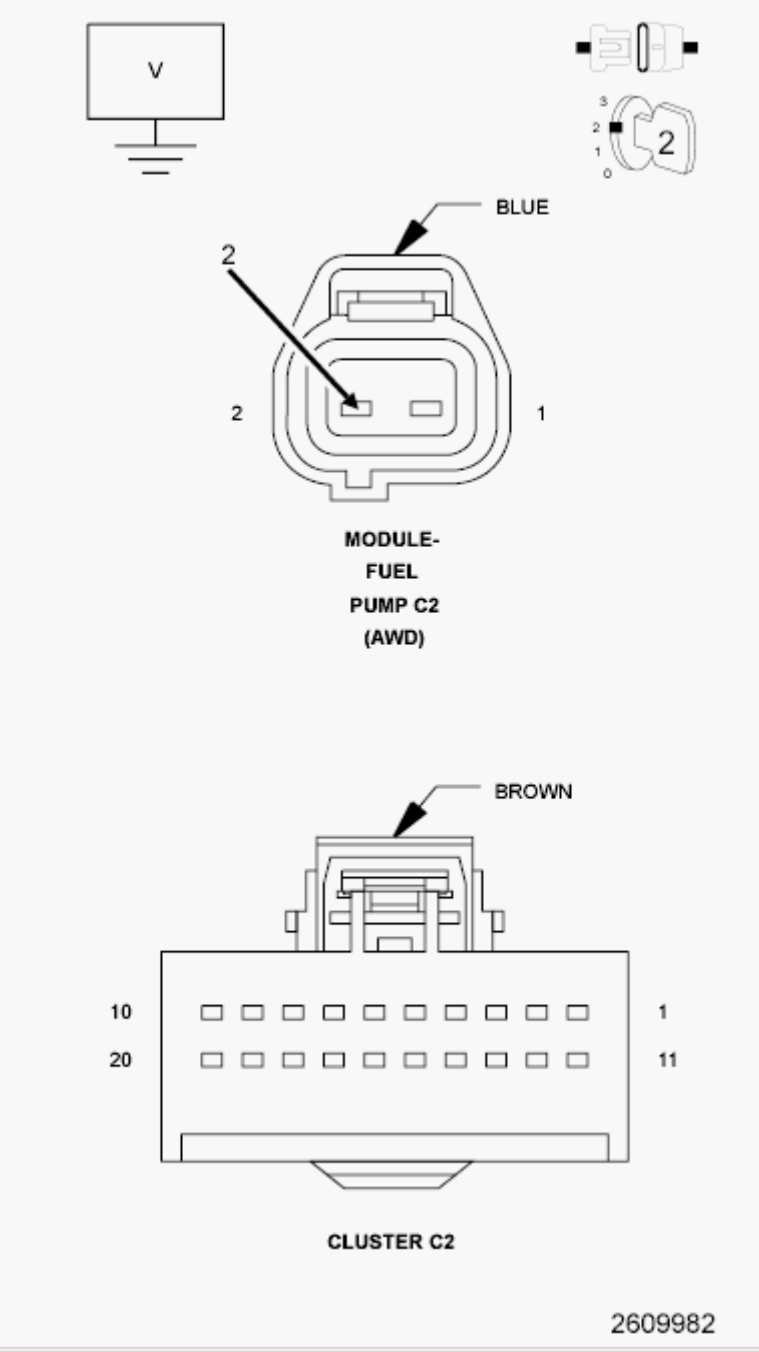

Fig. 58: Measuring Voltage Of Fuel Level Signal 2 Circuit
Courtesy of CHRYSLER GROUP, LLC

1. Turn the ignition off.
2. Disconnect the Fuel Pump Module C2 harness connector.
3. Disconnect the Cluster C2 harness connector.
4. Turn the ignition on.
5. Measure the voltage of the (N5) Fuel Level Signal 2 circuit in the Fuel Pump Module C2 harness connector.

Is there any voltage present?

Yes

- Repair the (N5) Fuel Level Signal 2 circuit for a short to voltage.
- Perform the BODY VERIFICATION TEST. Refer to **STANDARD PROCEDURE** .

No

- Go To 3

3. **FUEL PUMP MODULE**
   1. Turn the ignition off.
   2. Reconnect the Cluster C2 harness connector.
   3. Connect a jumper wire between the (N5) Fuel Level Signal 2 circuit and the (Z906) Ground in the Fuel Pump Module C2 harness connector.
   4. Turn the ignition on.
   5. With the scan tool, read DTCs

   Does the scan tool display this DTC as active?

   Yes

   - Go To 4

   No

   - Replace the Fuel Pump Module in accordance with the Service Information.
   - Perform the BODY VERIFICATION TEST. Refer to **STANDARD PROCEDURE** .
4. **(N5) FUEL LEVEL SIGNAL 2 OPEN OR HIGH RESISTANCE**

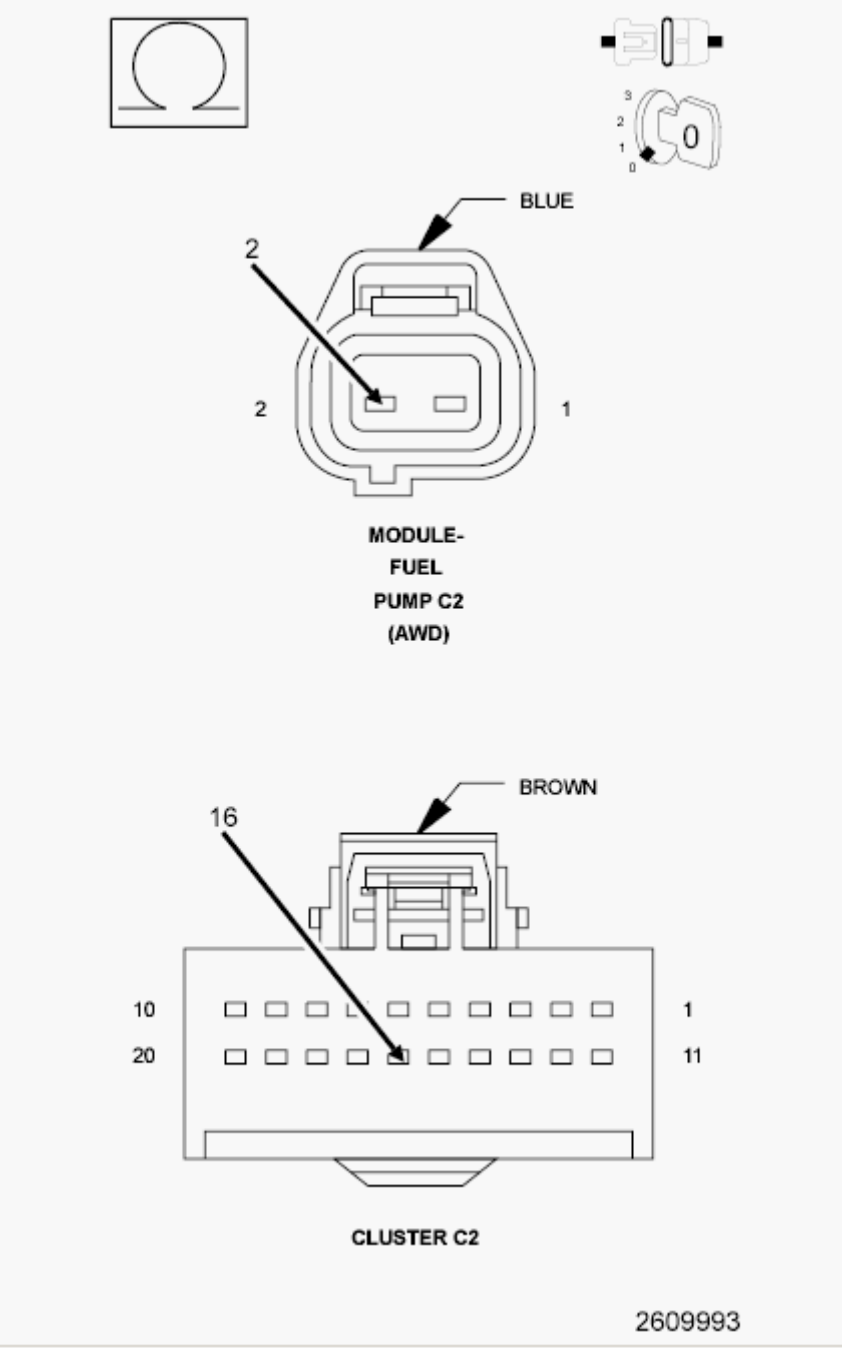

Fig. 59: Measuring Resistance Of Fuel Level Signal 2 Circuit
Courtesy of CHRYSLER GROUP, LLC

1. Turn the ignition off.
2. Disconnect the Cluster C2 harness connector.
3. Measure the resistance of the (N5) Fuel Level Signal 2 circuit between the Fuel Pump Module C2 harness connector and the Cluster harness connector.

   Is the resistance above 5.0 Ohms?

Yes

- Repair the (N5) Fuel Level Signal 2 circuit for an open circuit or high resistance.
- Perform the BODY VERIFICATION TEST. Refer to **STANDARD PROCEDURE** .

No

- Go To 5

5. **(Z906) GROUND CIRCUIT OPEN OR HIGH RESISTANCE**

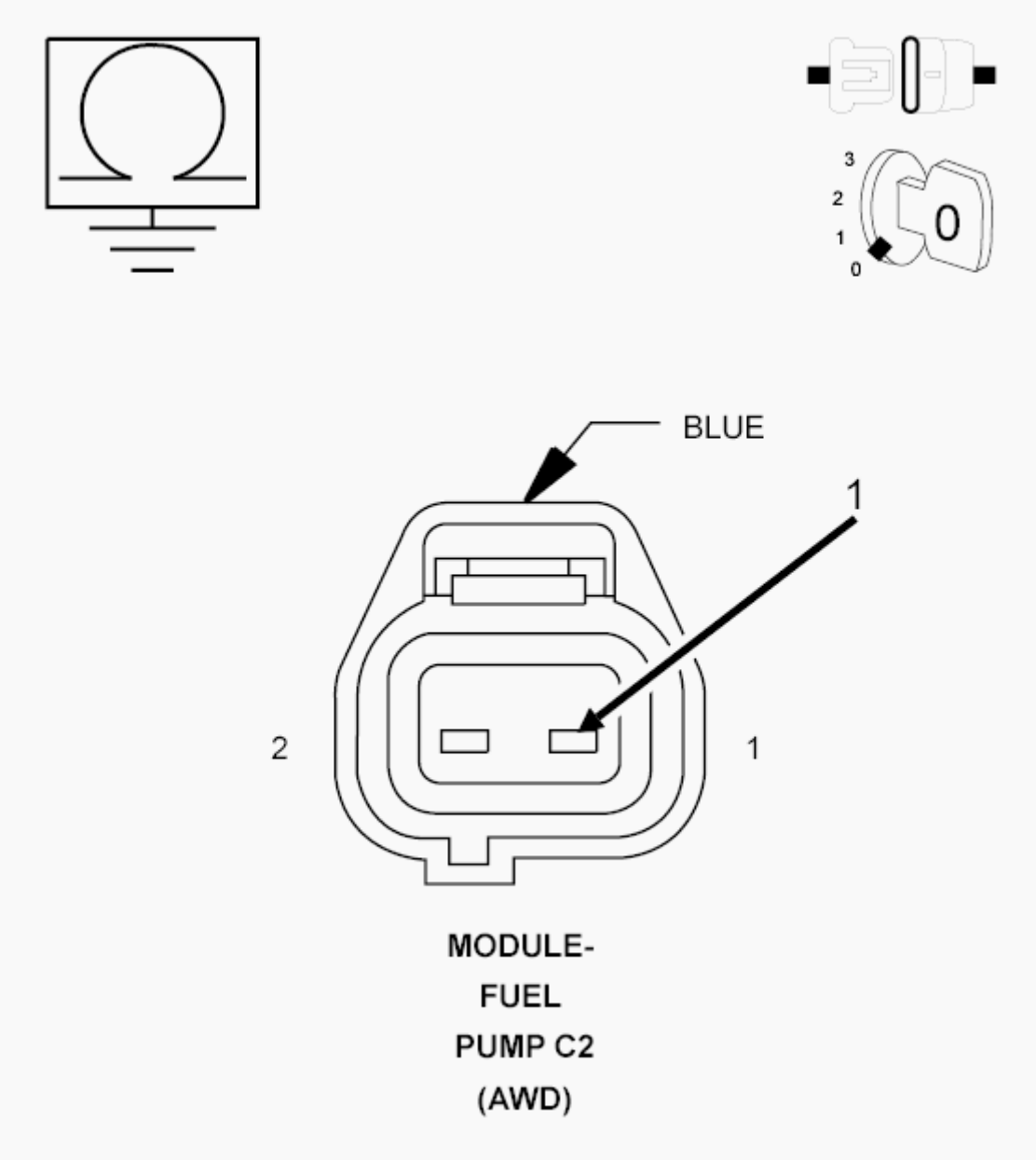

Fig. 60: Measuring Resistance Between Ground & Ground Circuit In Fuel Pump Module C2 Harness Connector
Courtesy of CHRYSLER GROUP, LLC

1. Measure the resistance between ground and the (Z906) Ground circuit in the Fuel Pump Module C2 harness connector.

   Is the resistance above 5.0 Ohms?

   Yes

   - Repair the (Z906) Ground circuit for an open circuit or high resistance.
   - Perform the BODY VERIFICATION TEST. Refer to **STANDARD PROCEDURE** .

   No

   - Replace the Cluster in accordance with the Service Information.
   - Perform the BODY VERIFICATION TEST. Refer to **STANDARD PROCEDURE** .

U0141-LOST COMMUNICATION WITH IPM (FCM/TIPM)

For a complete wiring diagram, **refer to appropriate SYSTEM WIRING DIAGRAMS article** .

WHEN MONITORED

Continuously when the ignition is on.

Battery voltage between 10 and 16 volts.

Ignition Off Draw (IOD) fuse installed.

Totally Integrated Power Module (TIPM) is configured correctly.

SET CONDITION

Bus messages not received from the TIPM for approximately two to five seconds.

POSSIBLE CAUSES

Possible Causes
CAN BUS CIRCUITS OPEN OR SHORTED
DTCS RELATED TO BATTERY VOLTAGE, IGNITION, OR VIN MESSAGES
TIPM NOT CONFIGURED CORRECTLY
TOTALLY INTEGRATED POWER MODULE (TIPM)
TIPM POWER AND GROUND
MODULE THAT SET THIS DTC

DIAGNOSTIC TEST

VERIFY DIAGNOSTIC TROUBLE CODE (DTC) IS ACTIVE

NOTE: Make sure the IOD fuse is installed and battery voltage is between 10 and 16 volts before proceeding.

1. With the scan tool, read active Cluster DTCs.

   Is this DTC active?

   Yes

   - Refer to **DIAGNOSIS AND TESTING** and perform the U0141-LOST COMMUNICATION WITH IPM (FCM/TIPM) diagnostic procedure.

   No

   - Refer to **DIAGNOSIS AND TESTING** and perform the STORED LOST COMMUNICATION DTCs diagnostic procedure.

U0151-LOST COMMUNICATION WITH OCCUPANT RESTRAINT CONTROLLER (ORC)

For a complete wiring diagram, **refer to appropriate SYSTEM WIRING DIAGRAMS article** .

WHEN MONITORED

Continuously when the ignition is on.

Battery voltage between 10 and 16 volts.

Ignition Off Draw (IOD) fused installed.

Totally Integrated Power Module (TIPM) is configured correctly.

SET CONDITION

Bus messages not received from the Occupant Restraint Controller (ORC) for approximately two to five seconds.

POSSIBLE CAUSES

Possible Causes
CAN BUS CIRCUITS OPEN OR SHORTED DTCS RELATED TO BATTERY VOLTAGE, IGNITION, OR VIN MESSAGES OCCUPANT RESTRAINT CONTROLLERS POWER AND GROUND TIPM NOT CONFIGURED CORRECTLY OCCUPANT RESTRAINT CONTROLLER MODULE THAT SET THIS DTC

DIAGNOSTIC TEST

VERIFY THE DIAGNOSTIC TROUBLE CODE (DTC) IS ACTIVE

NOTE: Make sure the IOD fuse is installed and the battery is fully charged before proceeding.

1. Turn the ignition on.
2. With the scan tool, read the active Door Module DTCs.

   Is this DTC active?

   Yes

   - Refer to **DIAGNOSIS AND TESTING** and perform the U0151-LOST COMMUNICATION WITH OCCUPANT RESTRAINT CONTROLLER (ORC) diagnostic procedure.

   No

   - Refer to **DIAGNOSIS AND TESTING** and perform the STORED

LOST COMMUNICATION DTCs diagnostic procedure.

U0161-LOST COMMUNICATION WITH COMPASS MODULE

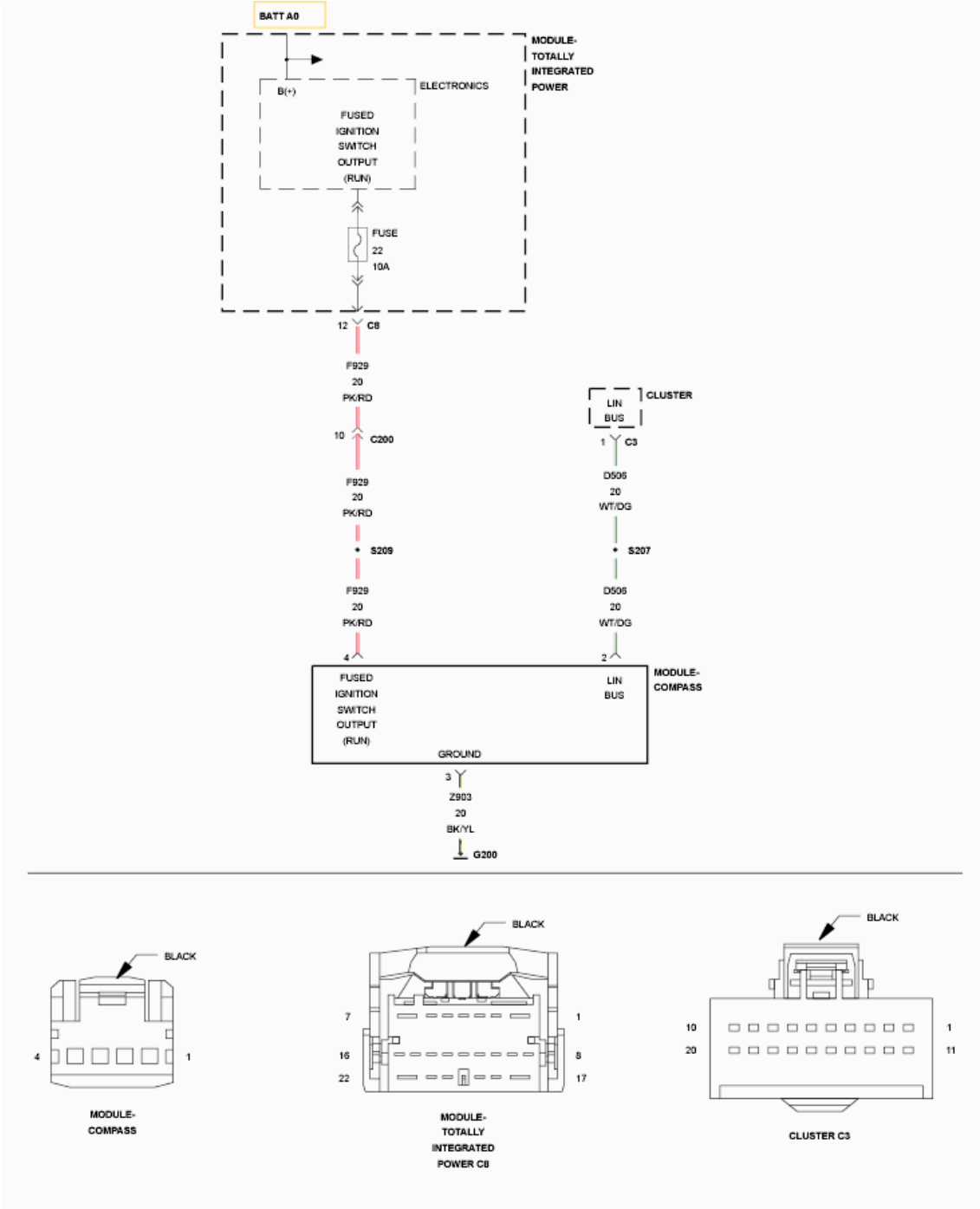

Fig. 61: Compass Module Circuit Diagram
Courtesy of CHRYSLER GROUP, LLC

For a complete wiring diagram, **refer to appropriate SYSTEM WIRING DIAGRAMS article** .

WHEN MONITORED

With the ignition on.

SET CONDITION

The Cluster does not receive information from the Compass Module.

POSSIBLE CAUSES

Possible Causes
(D506) LIN BUS CIRCUIT OPEN (F929) FUSED IGNITION SWITCH OUTPUT (RUN) CIRCUIT OPEN (Z903) GROUND CIRCUIT OPEN COMPASS MODULE CLUSTER

DIAGNOSTIC TEST

1. **CHECK FOR AN ACTIVE DTC**
   1. Turn the ignition on.
   2. With the scan tool, read DTCs.

      Does the scan tool display: U0161-LOST COMMUNICATION WITH COMPASS MODULE?

      Yes

      - Go To 2

      No

      - Test complete, the condition or conditions that originally set this DTC are not present at this time. Using the wiring diagrams as a guide, check all related splices and connectors for signs of water intrusion, corrosion, pushed out or bent terminals, and correct pin tension.
2. **(D506) LIN BUS CIRCUIT OPEN**

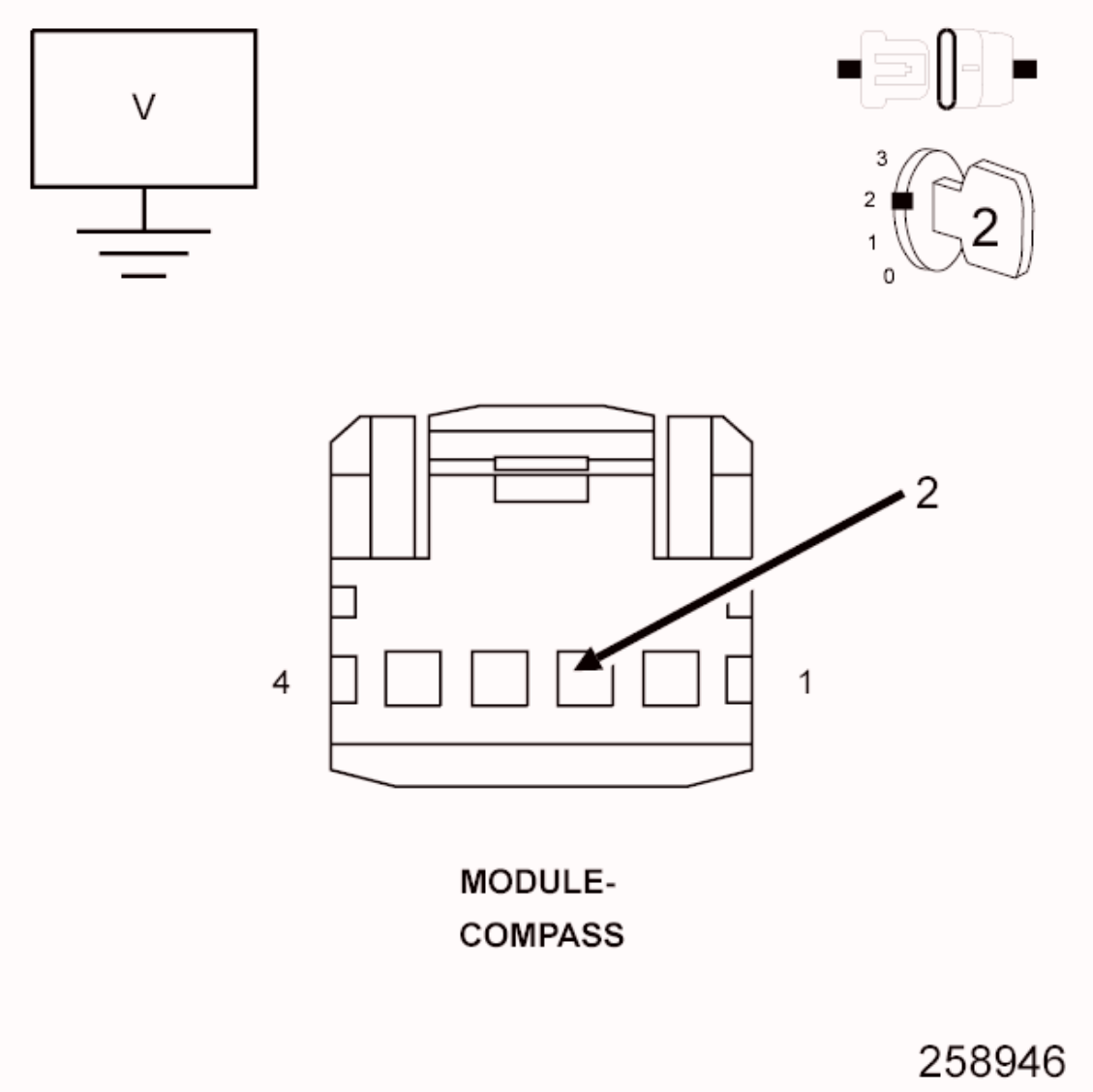

Fig. 62: Checking LIN Bus Circuit Open
Courtesy of CHRYSLER GROUP, LLC

1. Turn the ignition off.
2. Disconnect the Compass Module harness connector.
3. Turn the ignition on.
4. Measure the voltage of the (D506) LIN BUS circuit.

   Is the voltage above 5.0 volts?

   Yes

   - Go To 4

   No

- Go To 3

3. **(D506) LIN BUS CIRCUIT OPEN**

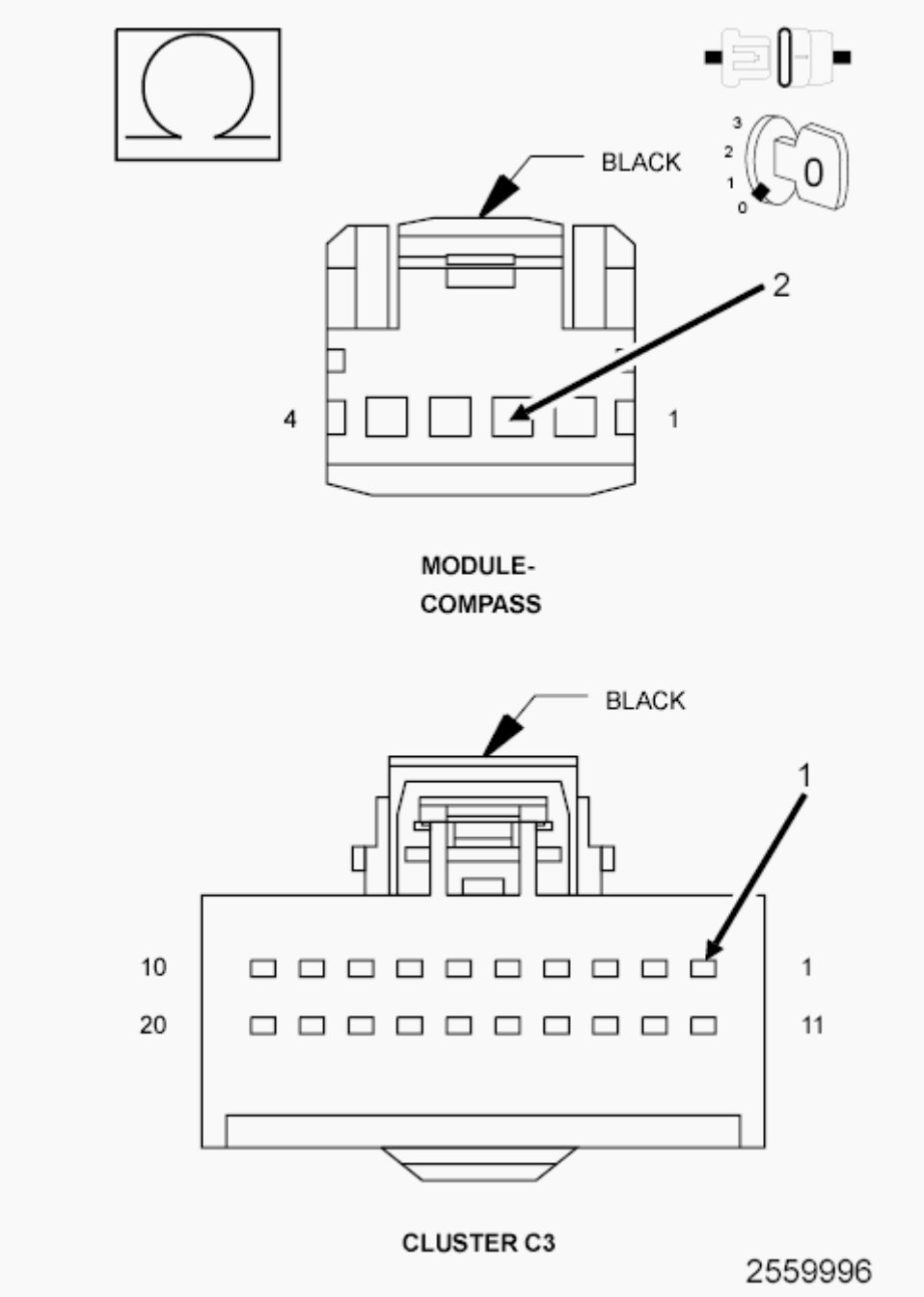

Fig. 63: Measuring Resistance Of LIN Bus Circuit
Courtesy of CHRYSLER GROUP, LLC

1. Turn the ignition off.
2. Disconnect the Cluster C3 harness connector.
3. Measure the resistance of the (D506) LIN BUS circuit.

Is the resistance below 5.0 Ohms?

Yes

- Replace the Cluster in accordance with the Service Information.
- Perform the BODY VERIFICATION TEST. Refer to **STANDARD PROCEDURE** .

No

- Repair the open in the (D506) LIN BUS circuit.
- Perform the BODY VERIFICATION TEST. Refer to **STANDARD PROCEDURE** .

4. **(F929) FUSED IGNITION SWITCH OUTPUT (RUN) CIRCUIT OPEN**

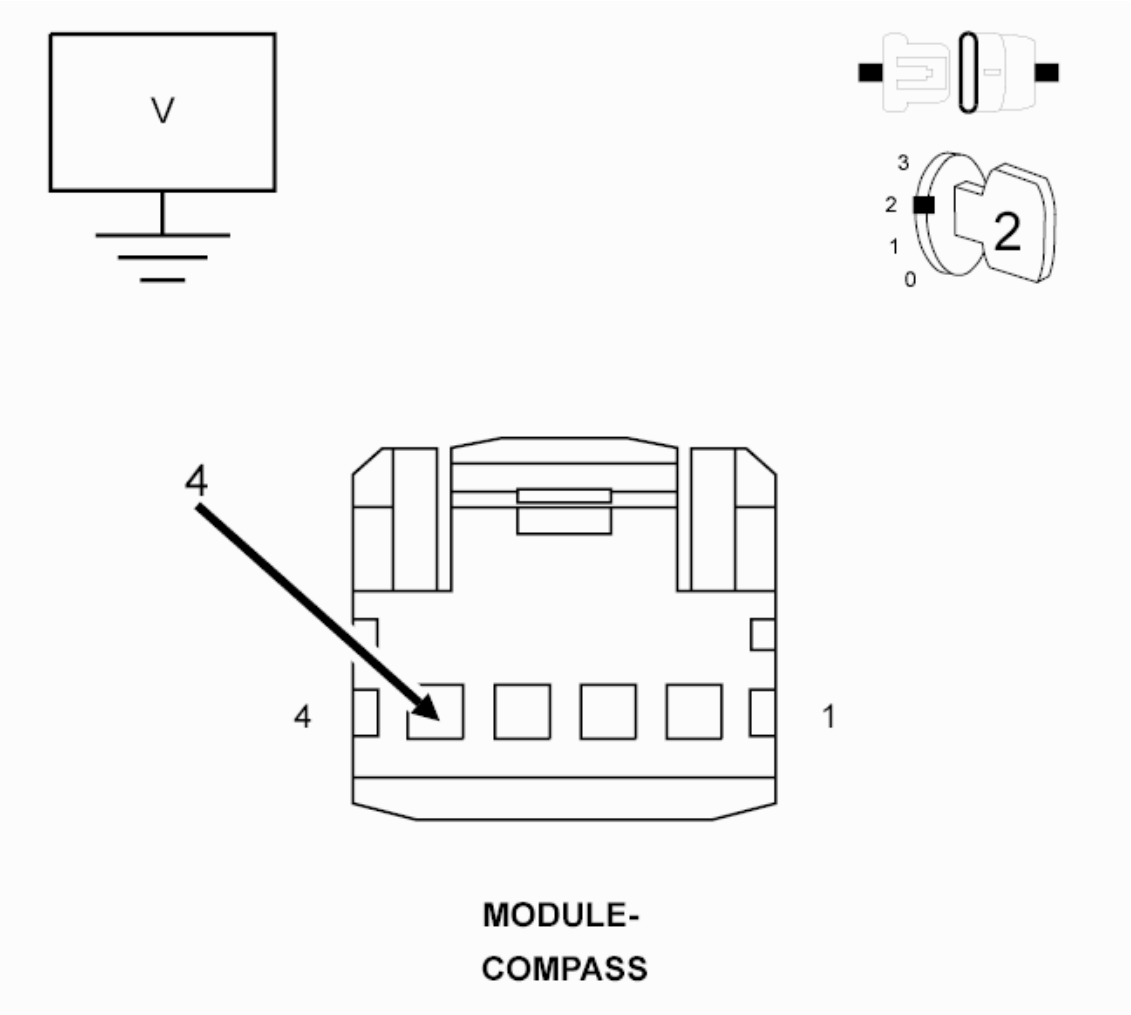

Fig. 64: Measuring Voltage Of Fused Ignition Switch Output (RUN)

Circuit
Courtesy of CHRYSLER GROUP, LLC

1. Measure the voltage of the (F929) Fused Ignition Switch Output (RUN) circuit.

   Is the voltage above 10.0 volts?

   Yes

   - Go To 5

   No

   - Repair the open in the (F929) Fused Ignition Switch Output (RUN) circuit.
   - Perform the BODY VERIFICATION TEST. Refer to **STANDARD PROCEDURE** .

5. **(Z903) GROUND CIRCUIT OPEN**

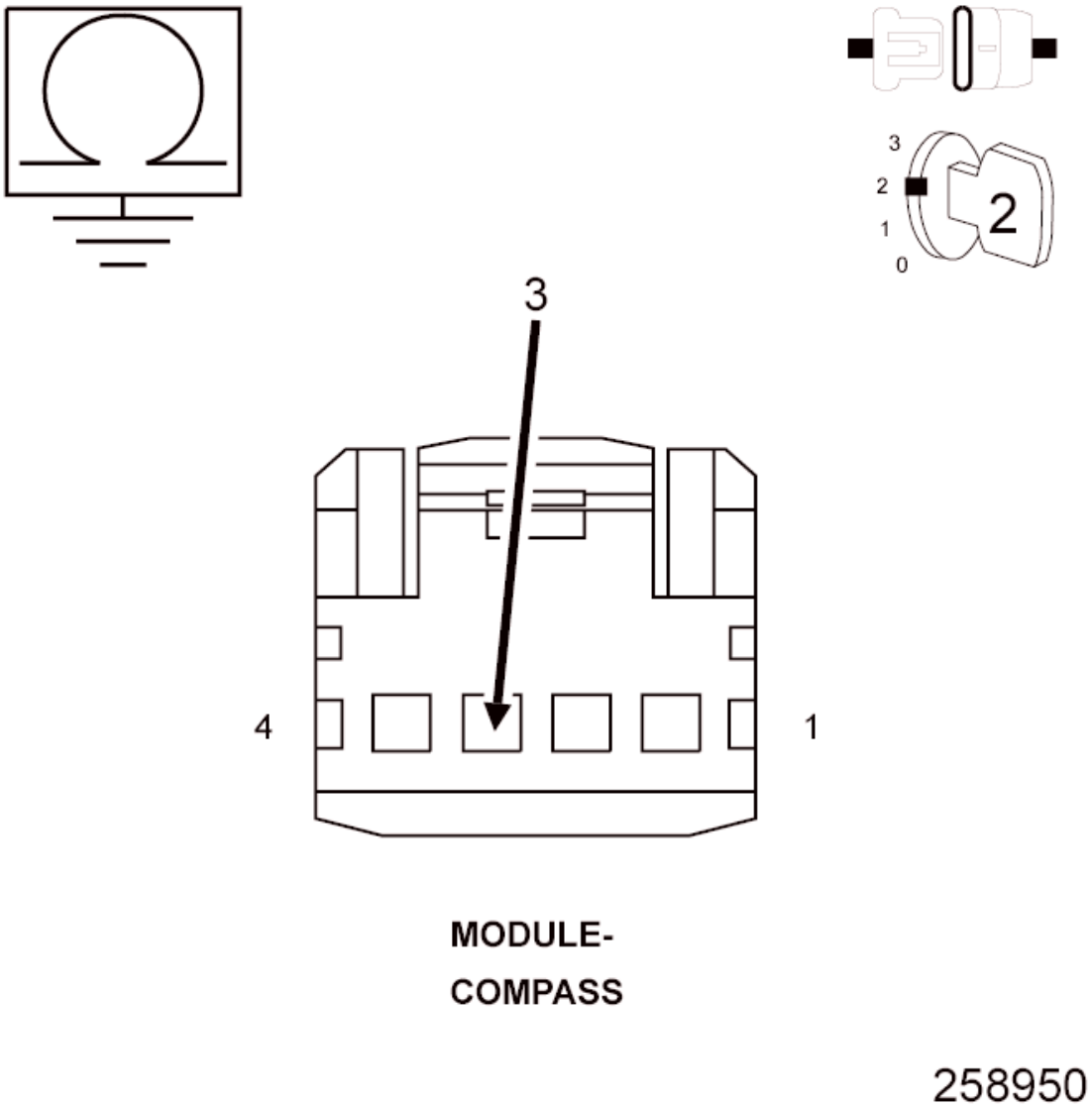

Fig. 65: Measuring Resistance Between Ground & Ground Circuit
Courtesy of CHRYSLER GROUP, LLC

1. Measure the resistance between ground and the (Z903) Ground circuit.

   Is the resistance below 10K Ohms?

   Yes

   - Replace the Compass Module in accordance with the Service Information.
   - Perform the BODY VERIFICATION TEST. Refer to **STANDARD PROCEDURE** .

   No

- Repair the open in the (Z903) Ground circuit.
- Perform the BODY VERIFICATION TEST. Refer to **STANDARD PROCEDURE** .

U0164-LOST COMMUNICATION WITH HVAC CONTROL MODULE

For a complete wiring diagram, **refer to appropriate SYSTEM WIRING DIAGRAMS article** .

WHEN MONITORED

Continuously when the ignition is on.

Battery voltage between 10 and 16 volts.

Ignition Off Draw (IOD) fuse installed.

Totally Integrated Power Module (TIPM) is configured correctly.

SET CONDITION

Bus messages not received from the A/C Heater Control for approximately two to five seconds.

POSSIBLE CAUSES

Possible Causes
CAN BUS CIRCUITS OPEN OR SHORTED
DTCS RELATED TO BATTERY VOLTAGE, IGNITION, OR VIN MESSAGES
A/C HEATER CONTROLS POWER AND GROUND
TIPM NOT CONFIGURED CORRECTLY
A/C HEATER CONTROL
MODULE THAT SET THIS DTC

DIAGNOSTIC TEST

VERIFY THE DIAGNOSTIC TROUBLE CODE (DTC) IS ACTIVE

NOTE: Make sure the IOD fuse is installed and the battery is fully charged before proceeding.

1. Turn the ignition on.
2. With the scan tool, read the active Door Module DTCs.

   Is this DTC active?

   Yes

   - Refer to **DIAGNOSIS AND TESTING** and perform the U0164-LOST COMMUNICATION WITH HVAC CONTROL MODULE diagnostic procedure.

   No

   - Refer to **DIAGNOSIS AND TESTING** and perform the STORED LOST COMMUNICATION DTCs diagnostic procedure.

U0167-LOST COMMUNICATION WITH INTRUSION TRANSCEIVER CONTROL MODULE

For a complete wiring diagram, **refer to appropriate SYSTEM WIRING DIAGRAMS article** .

WHEN MONITORED

Continuously when the ignition is on.

Battery voltage between 10 and 16 volts.

Ignition Off Draw (IOD) fused installed.

Totally Integrated Power Module (TIPM) is configured correctly.

SET CONDITION

Bus messages not received from the Intrusion Transceiver Control Module for approximately two to five seconds.

POSSIBLE CAUSES

Possible Causes
CAN BUS CIRCUITS OPEN OR SHORTED DTCS RELATED TO BATTERY VOLTAGE, IGNITION, OR VIN MESSAGES

INTRUSION TRANSCEIVER CONTROL MODULE POWER AND GROUND
TIPM NOT CONFIGURED CORRECTLY
INTRUSION TRANSCEIVER CONTROL MODULE
MODULE THAT SET THIS DTC

DIAGNOSTIC TEST

VERIFY DTC IS ACTIVE

NOTE: Make sure the IOD fuse is installed and the battery is fully charged before proceeding.

1. Turn the ignition on.
2. With the scan tool, read the active DTCs.

   Is this DTC active?

   Yes

   - Refer to **DIAGNOSIS AND TESTING** and perform the U0167-LOST COMMUNICATION WITH INTRUSION TRANSCEIVER CONTROL MODULE diagnostic procedure.

   No

   - Refer to **DIAGNOSIS AND TESTING** and perform the STORED LOST COMMUNICATION DTCs diagnostic procedure.

U0168-LOST COMMUNICATION WITH VEHICLE SECURITY CONTROL MODULE (SKREEM/WCM)

For a complete wiring diagram, **refer to appropriate SYSTEM WIRING DIAGRAMS article** .

WHEN MONITORED

Continuously when the ignition is on.

Battery voltage between 10 and 16 volts.

Ignition Off Draw (IOD) fused installed.

Totally Integrated Power Module (TIPM) is configured correctly.

SET CONDITION

Bus messages not received from the Wireless Control Module (WCM) for approximately two to five seconds.

POSSIBLE CAUSES

Possible Causes
CAN BUS CIRCUITS OPEN OR SHORTED
DTCS RELATED TO BATTERY VOLTAGE, IGNITION, OR VIN MESSAGES
SENTRY KEY REMOTE ENTRY MODULE POWER AND GROUND
TIPM NOT CONFIGURED CORRECTLY
SENTRY KEY REMOTE ENTRY MODULE
MODULE THAT SET THIS DTC

DIAGNOSTIC TEST

VERIFY THE DIAGNOSTIC TROUBLE CODE (DTC) IS ACTIVE

NOTE: Make sure the IOD fuse is installed and the battery is fully charged before proceeding.

1. Turn the ignition on.
2. With the scan tool, read the active Door Module DTCs.

   Is this DTC active?

   Yes

   - Refer to **DIAGNOSIS AND TESTING** and perform the U0168-LOST COMMUNICATION WITH VEHICLE SECURITY CONTROL MODULE (SKREEM/WCM) diagnostic procedure.

   No

   - Refer to **DIAGNOSIS AND TESTING** and perform the STORED LOST COMMUNICATION DTCs diagnostic procedure.

U0184-LOST COMMUNICATION WITH RADIO

For a complete wiring diagram, **refer to appropriate SYSTEM WIRING DIAGRAMS article** .

WHEN MONITORED

Continuously when the ignition is on.

Battery voltage between 10 and 16 volts.

Ignition Off Draw (IOD) fused installed.

Totally Integrated Power Module (TIPM) is configured correctly.

SET CONDITION

Bus messages not received from the Radio for approximately two to five seconds.

POSSIBLE CAUSES

Possible Causes
CAN BUS CIRCUITS OPEN OR SHORTED DTCS RELATED TO BATTERY VOLTAGE, IGNITION, OR VIN MESSAGES RADIO POWER AND GROUND TIPM NOT CONFIGURED CORRECTLY RADIO MODULE THAT SET THIS DTC

DIAGNOSTIC TEST

VERIFY THE DIAGNOSTIC TROUBLE CODE (DTC) IS ACTIVE

NOTE: Make sure the IOD fuse is installed and the battery is fully charged before proceeding.

1. Turn the ignition on.
2. With the scan tool, read the active DTCs.

   Is this DTC active?

Yes

- Refer to **DIAGNOSIS AND TESTING** and perform the U0184-LOST COMMUNICATION WITH RADIO diagnostic procedure.

No

- Refer to **DIAGNOSIS AND TESTING** and perform the STORED LOST COMMUNICATION DTCs diagnostic procedure.

U0195-LOST COMMUNICATION WITH SDARS

For a complete wiring diagram, **refer to appropriate SYSTEM WIRING DIAGRAMS article** .

WHEN MONITORED

Continuously when the ignition is on.

The battery voltage is between 10 and 16 volts.

Ignition Off Draw (IOD) fused installed.

Totally Integrated Power Module (TIPM) is configured correctly.

SET CONDITION

Bus messages not received from the Satellite Receiver (SDAR) for approximately two to five seconds.

POSSIBLE CAUSES

Possible Causes
CAN BUS CIRCUITS OPEN OR SHORTED
DTCS RELATED TO BATTERY VOLTAGE, IGNITION, OR VIN MESSAGES
SATELLITE RECEIVER POWER AND GROUND
TIPM NOT CONFIGURED CORRECTLY
SATELLITE RECEIVER
MODULE THAT SET THIS DTC

DIAGNOSTIC TEST

VERIFY THE DIAGNOSTIC TROUBLE CODE (DTC) IS ACTIVE

NOTE: Make sure the IOD fuse is installed and the battery is fully charged before proceeding.

1. Turn the ignition on.
2. With the scan tool, read the active DTCs.

   Is this DTC active?

   Yes

   - Refer to **DIAGNOSIS AND TESTING** and perform the U0195-LOST COMMUNICATION WITH SDARS diagnostic procedure.

   No

   - Refer to **DIAGNOSIS AND TESTING** and perform the STORED LOST COMMUNICATION DTCs diagnostic procedure.

U0197-LOST COMMUNICATION WITH HANDS FREE PHONE MODULE

For a complete wiring diagram, **refer to appropriate SYSTEM WIRING DIAGRAMS article** .

WHEN MONITORED

Continuously when the ignition is on.

The battery voltage is between 10 and 16 volts.

Ignition Off Draw (IOD) fused installed.

Totally Integrated Power Module (TIPM) is configured correctly.

SET CONDITION

Bus messages not received from the Hands Free Module (HFM) for approximately two to five seconds.

POSSIBLE CAUSES

Possible Causes

CAN BUS CIRCUITS OPEN OR SHORTED
DTCS RELATED TO BATTERY VOLTAGE, IGNITION, OR VIN MESSAGES
HANDS FREE MODULE POWER AND GROUND
TIPM NOT CONFIGURED CORRECTLY
HANDS FREE MODULE
MODULE THAT SET THIS DTC

DIAGNOSTIC TEST

VERIFY THE DIAGNOSTIC TROUBLE CODE (DTC) IS ACTIVE

NOTE: Make sure the IOD fuse is installed and the battery is fully charged before proceeding.

1. Turn the ignition on.
2. With the scan tool, read the active Door Module DTCs.

   Is this DTC active?

   Yes

   - Refer to **DIAGNOSIS AND TESTING** and perform the U0197-LOST COMMUNICATION WITH HANDS FREE PHONE MODULE diagnostic procedure.

   No

   - Refer to **DIAGNOSIS AND TESTING** and perform the STORED LOST COMMUNICATION DTCs diagnostic procedure.

U0208-LOST COMMUNICATION WITH HEATED SEAT CONTROL MODULE

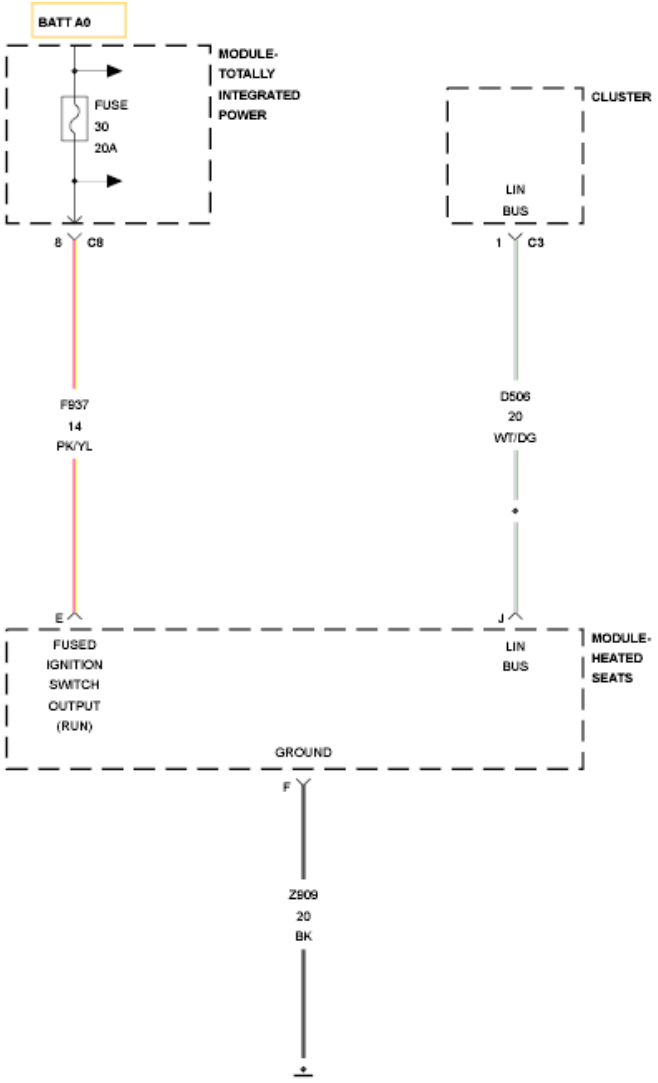

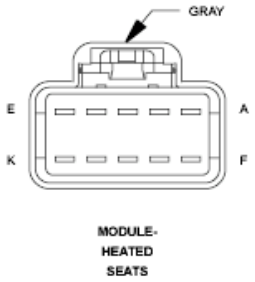

Fig. 66: Heated Seat Control Module Circuit Diagram
Courtesy of CHRYSLER GROUP, LLC

For a complete wiring diagram, **refer to appropriate SYSTEM WIRING DIAGRAMS article** .

WHEN MONITORED

With the ignition on.

SET CONDITION

The Cluster does not receive information from the Heated Seats Module.

POSSIBLE CAUSES

Possible Causes
(F937) FUSED IGNITION SWITCH OUTPUT (RUN) CIRCUIT OPEN OR SHORTED TO GROUND (D506) LIN BUS CIRCUIT OPEN (Z909) GROUND CIRCUIT OPEN HEATED SEATS MODULE

DIAGNOSTIC TEST

1. **CHECK FOR AN ACTIVE DTC**
    1. Turn the ignition on.
    2. With the scan tool, read DTCs.

    Does the scan tool display this DTC as active?

    Yes

    - Go To 2

    No

    - Test complete, the condition or conditions that originally set this DTC are not present at this time. Using the wiring diagrams as a guide, check all related splices and connectors for signs of water intrusion, corrosion, pushed out or bent terminals, and correct pin tension.
    - Perform the BODY VERIFICATION TEST. Refer to **STANDARD PROCEDURE** .
2. **CHECK POWER TO HEATED SEATS MODULE**

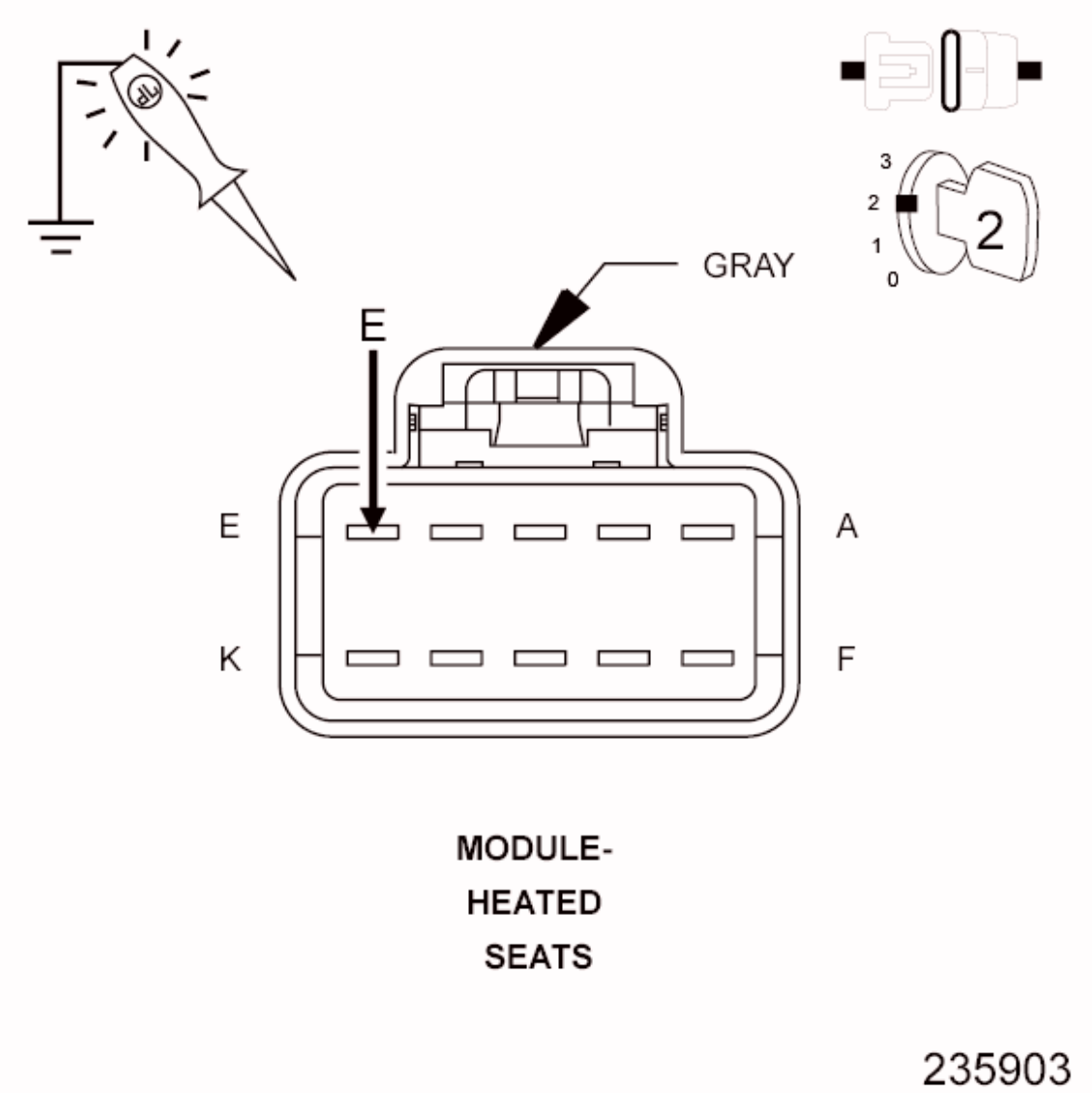

Fig. 67: Checking Fused Ignition Switch Output (Run) Circuit At Heated Seat Module Harness Connector
Courtesy of CHRYSLER GROUP, LLC

NOTE: Check the related TIPM fuse. Repair if necessary.

1. Turn the ignition off.
2. Disconnect the Heated Seats Module harness connector.
3. Turn the ignition on.
4. Using a 12-volt test light connected to ground, check the (F937) Fused Ignition Switch Output (Run) circuit at the Heated Seat Module harness connector.

NOTE: The test light must illuminate brightly. Compare

the brightness to that of a direct connection to the battery.

Does the test light illuminate brightly?

Yes

- Go To 3

No

- Repair the open in the (F937) Fused Ignition Switch Output (Run) circuit. Inspect the related fuse. If the fuse is open, check the circuit for a short to ground.
- Perform the BODY VERIFICATION TEST. Refer to **STANDARD PROCEDURE** .

3. **CHECK (D506) LIN BUS CIRCUIT VOLTAGE TO HEATED SEATS MODULE**

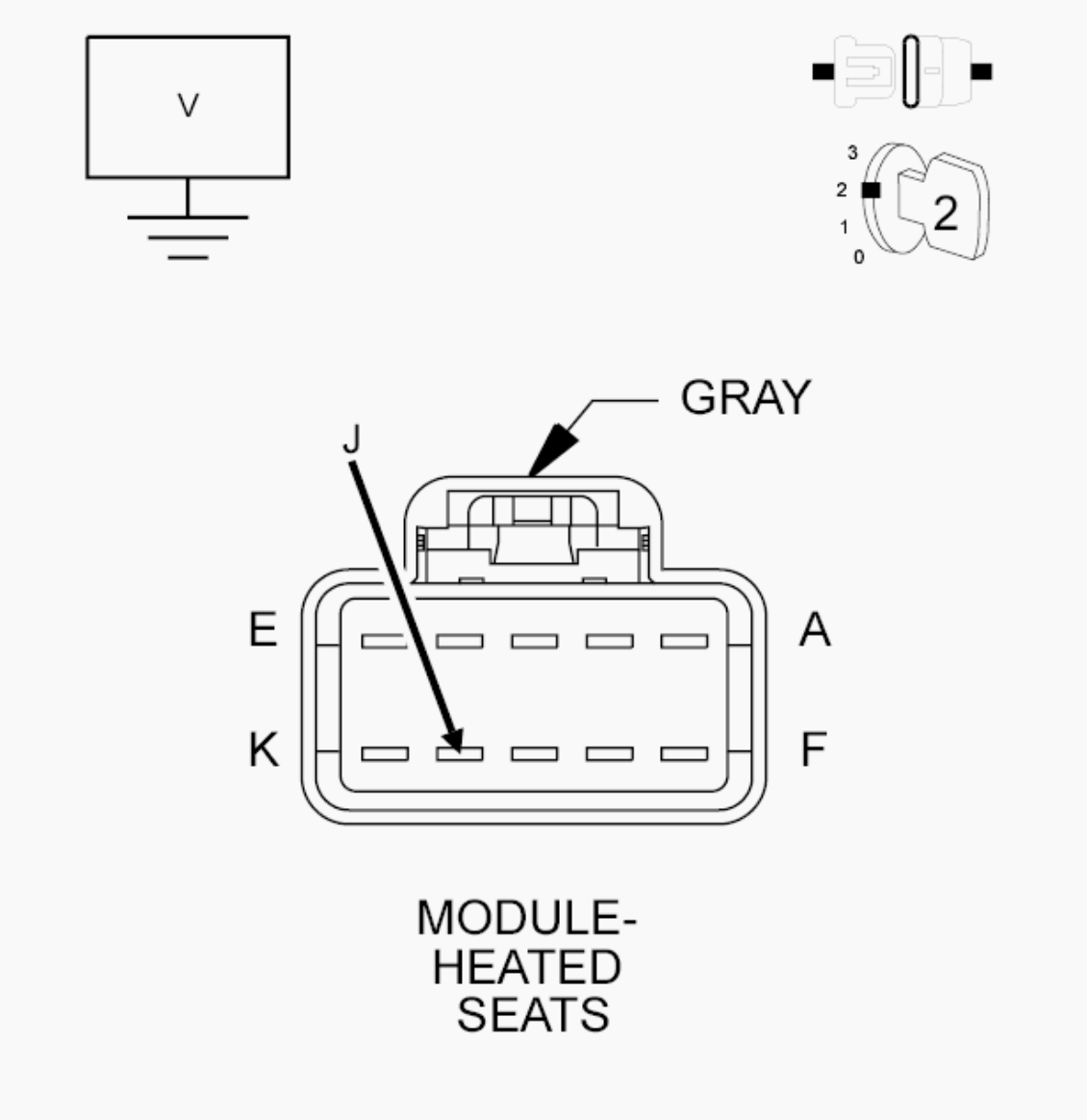

Fig. 68: Measuring Voltage Of LIN Bus Circuit
Courtesy of CHRYSLER GROUP, LLC

1. Measure the voltage of the (D506) LIN BUS circuit between the Heated Seats Module harness connector and ground.

   Is the voltage above 5.0 volts?

   Yes

   - Go To 4

   No

   - Repair the open in the (D506) LIN BUS circuit.

- Perform the BODY VERIFICATION TEST. Refer to **STANDARD PROCEDURE** .

4. **CHECK (Z909) GROUND CIRCUIT FOR AN OPEN**

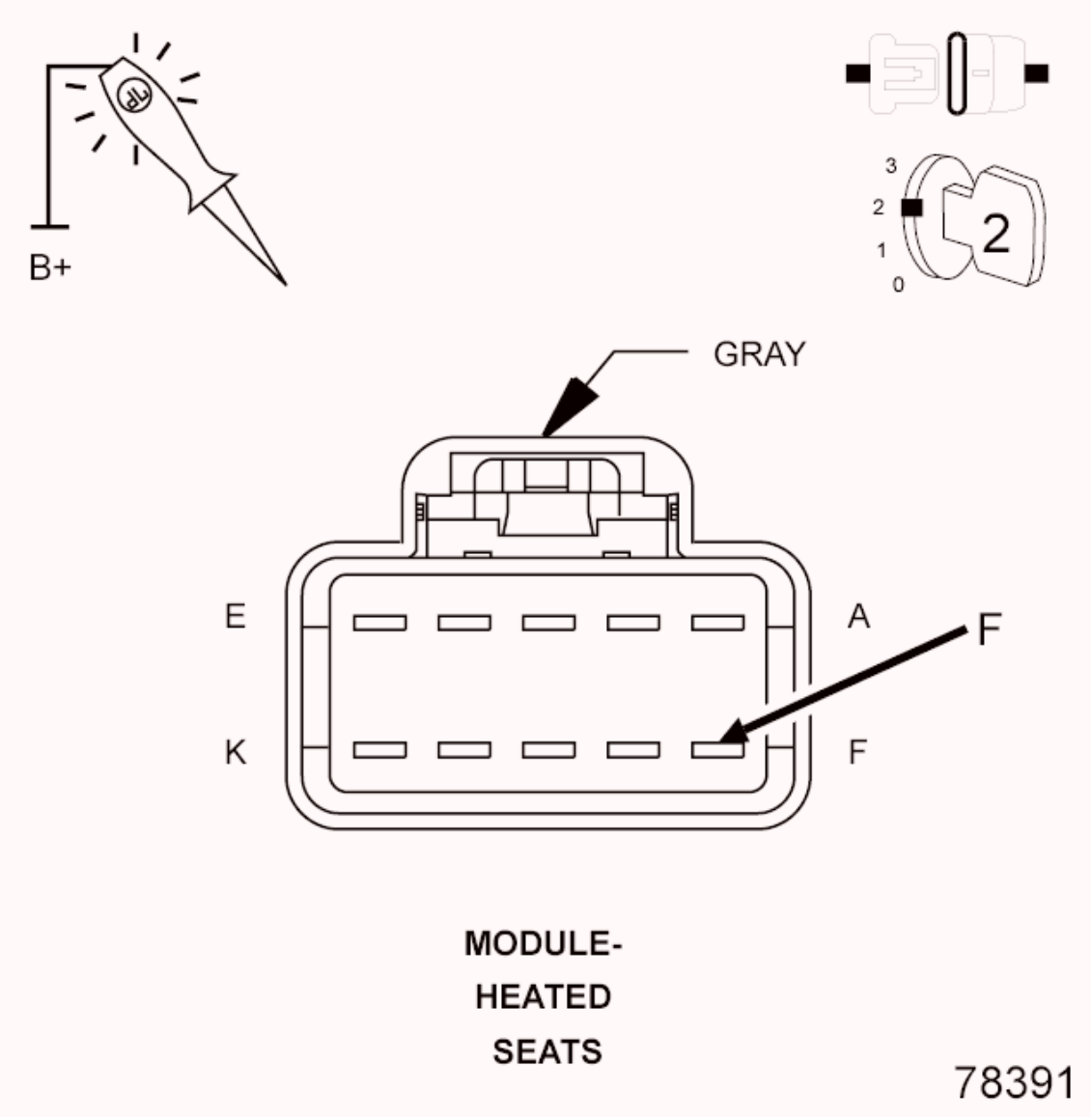

Fig. 69: Checking Ground Circuit For Open
Courtesy of CHRYSLER GROUP, LLC

1. Using a 12-volt test light connected to 12 volts, check the (Z909) Ground circuit at the Heated Seats Module harness connector.

NOTE: The test light must illuminate brightly. Compare the brightness to that of a direct connection to the battery.

Does the test light illuminate brightly?

Yes

- Replace the Heated Seats Module in accordance with the Service Information.
- Perform the BODY VERIFICATION TEST. Refer to **STANDARD PROCEDURE** .

No

- Repair the (Z909) ground circuit for an open.
- Perform the BODY VERIFICATION TEST. Refer to **STANDARD PROCEDURE** .

U1008-LIN 1 BUS

For a complete wiring diagram, **refer to appropriate SYSTEM WIRING DIAGRAMS article** .

WHEN MONITORED

With the ignition on.

SET CONDITION

LIN 1 Bus Performance.

POSSIBLE CAUSES

Possible Causes
(D506) LIN BUS CIRCUIT OPEN (D506) LIN BUS CIRCUIT SHORTED TO GROUND SHORTED LIN BUS COMPONENT CLUSTER

DIAGNOSTIC TEST

1. **CHECK FOR AN ACTIVE DTC**

NOTE: Before proceeding with this diagnostic procedure, verify the Left and Right Multifunction Switch and

Clockspring harness connectors are properly seated and verify proper pin terminal tension. A loose connection at any of these connectors may cause this DTC to set.

1. Turn the ignition on.
2. With the scan tool, read DTCs.

   Does the scan tool display: U1008-LIN 1 BUS?

   Yes

   - Go To 2

   No

   - Test complete, the condition or conditions that originally set this DTC are not present at this time. Using the wiring diagrams as a guide, check all related splices and connectors for signs of water intrusion, corrosion, pushed out or bent terminals, and correct pin tension.

2. **SHORTED LIN BUS COMPONENT**

NOTE: After disconnecting each component, check DTCs with the scan tool.

1. Turn the ignition on.
2. Disconnect the Switch Bank Module harness connector.
3. Disconnect the Remote Compass Module harness connector.
4. Disconnect the Heated Seat Module harness connector.
5. Disconnect the Left Multifunction Switch harness connector.
6. Disconnect the Right Steering Wheel Switch (Speed Control Switch) harness connector.

   With each component disconnected, did the DTC U1008-LIN 1 BUS change from active to stored?

   Yes

- Replace the component that caused the DTC U1008-LIN 1 BUS change from active to stored.
- Perform the BODY VERIFICATION TEST. Refer to **STANDARD PROCEDURE** .

No

- Go To 3

3. **(D506) LIN BUS CIRCUIT OPEN**
   1. Turn the ignition off.
   2. Disconnect the Cluster C3 harness connector.
   3. Disconnect the Switch Bank harness connector.
   4. Measure the resistance of the (D506) LIN Bus circuit between the Cluster C3 and Switch Bank harness connectors.

   Is the resistance above 10K Ohms?

   Yes

   - Repair the open in the (D506) LIN Bus circuit.
   - Perform the BODY VERIFICATION TEST. Refer to **STANDARD PROCEDURE** .

   No

   - Go To 4

4. **(D506) LIN BUS CIRCUIT SHORTED TO GROUND**

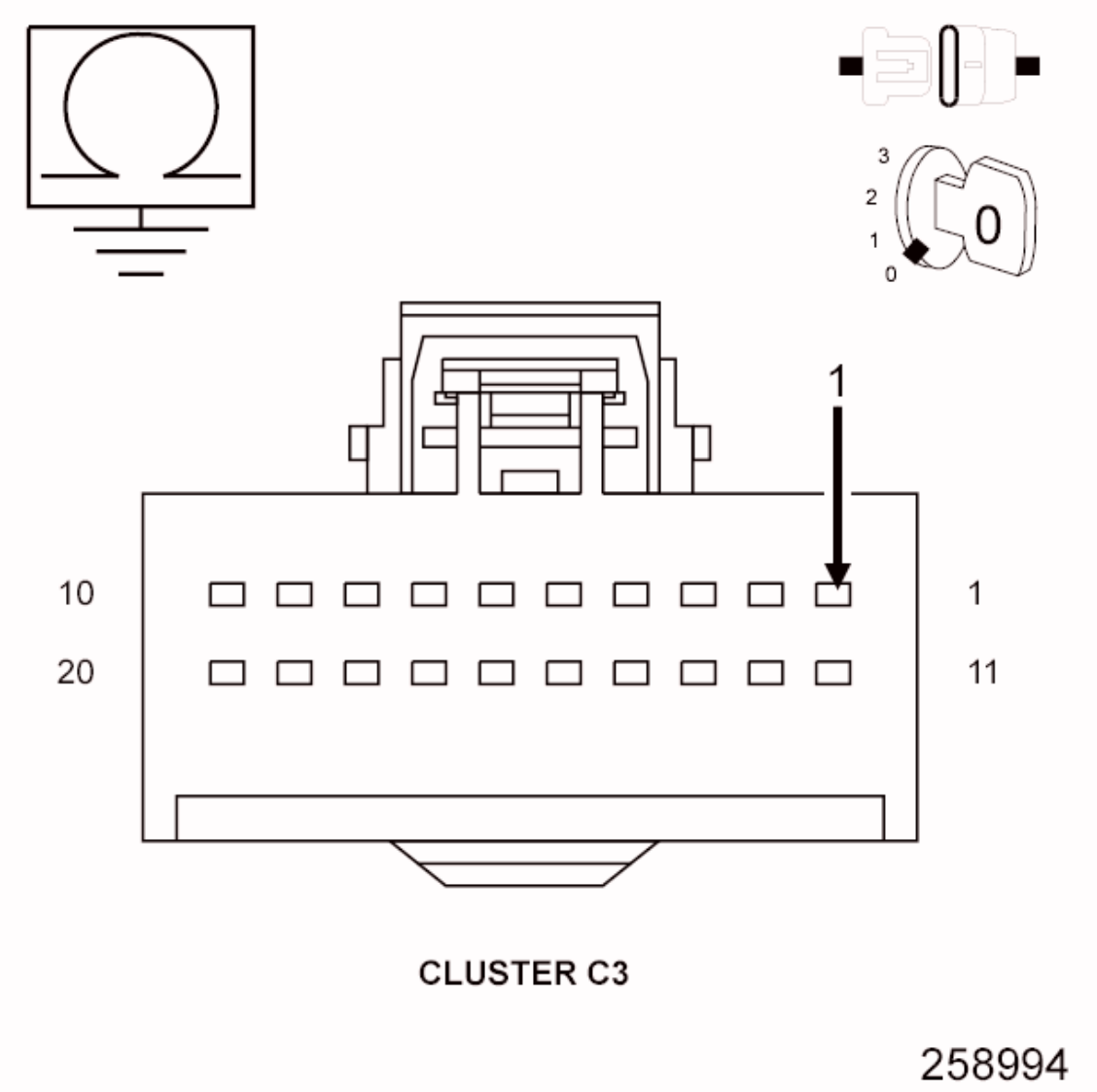

Fig. 70: Measuring Resistance To Ground On LIN BUS Circuit
Courtesy of CHRYSLER GROUP, LLC

1. Turn the ignition off.
2. Measure the resistance to ground on the (D506) LIN Bus circuit.

   Is the resistance below 10K Ohms?

   Yes

   - Repair the short to ground (D506) LIN Bus circuit.
   - Perform the BODY VERIFICATION TEST. Refer to **STANDARD PROCEDURE** .

   No

- Replace the Cluster in accordance with the Service Information.
- Perform the BODY VERIFICATION TEST. Refer to **STANDARD PROCEDURE** .

U1109-LOST COMMUNICATION WITH LIN STEERING WHEEL CONTROLS

For a complete wiring diagram, **refer to appropriate SYSTEM WIRING DIAGRAMS article** .

WHEN MONITORED

With the ignition on.

SET CONDITION

The Cluster does not receive information from the Right Steering Wheel Switch (Speed Control Switch).

POSSIBLE CAUSES

Possible Causes
(D506) LIN BUS CIRCUIT OPEN
(A952) FUSED B (+) CIRCUIT OPEN
(Z903) GROUND CIRCUIT OPEN
RIGHT STEERING WHEEL SWITCH (SPEED CONTROL SWITCH)
CLOCKSPRING

DIAGNOSTIC TEST

1. **CHECK FOR AN ACTIVE DTC**

NOTE: Before proceeding with the diagnostic procedure, verify that the connections are proper made, properly seated and verify proper pin terminal tension. A loose connection at any of the related connectors may cause the DTC to set.

1. Turn the ignition on.
2. With the scan tool, read DTCs.

Does the scan tool display this DTC as active?

Yes

- Go To 2

No

- Test complete, the condition or conditions that originally set this DTC are not present at this time. Using the wiring diagrams as a guide, check all related splices and connectors for signs of water intrusion, corrosion, pushed out or bent terminals, and correct pin tension.

2. **CHECK THE VOLTAGE OF (D506) LIN BUS CIRCUIT AT THE RIGHT STEERING WHEEL SWITCH (SPEED CONTROL SWITCH)**
   1. Turn the ignition off.

      WARNING: **Turn the ignition off disconnect the 12-volt battery and wait two minutes before proceeding. Failure to follow these instructions may result in possible serious or fatal injury.**

      WARNING: **Do not place an intact non-deployed airbag face down on a hard surface, the airbag propels into the air if accidentally deployed. Failure to follow these instructions may result in possible serious or fatal injury.**

   2. Disconnect the Right Steering Wheel Switch (Speed Control Switch) harness connector.
   3. Turn the ignition on.
   4. Measure the voltage of the (D506) LIN Bus circuit.

      Is the voltage above 5.0 volts?

      Yes

      - Go To 5

No

- Go To 3

3. **(D506) LIN BUS CIRCUIT OPEN BETWEEN THE RIGHT STEERING WHEEL SWITCH (SPEED CONTROL SWITCH) AND CLOCKSPRING**
   1. Turn the ignition off.
   2. Disconnect the Clockspring C8 harness connector.
   3. Measure the resistance of the (D506) LIN Bus circuit between the Right Steering Wheel Switch (Speed Control Switch) and Clockspring C8 harness connectors.

   Is the resistance below 5.0 Ohms?

   Yes

   - Go To 4

   No

   - Repair the open in the (D506) LIN Bus circuit.
   - Perform the BODY VERIFICATION TEST. Refer to **STANDARD PROCEDURE** .

4. **CHECK THE VOLTAGE OF (D506) LIN BUS CIRCUIT AT THE CLOCKSPRING**
   1. Disconnect the Clockspring C2 harness connector.
   2. Turn the ignition on.
   3. Measure the voltage of the (D506) LIN Bus circuit at the Clockspring C2 harness connector.

   Is the voltage above 5.0 volts?

   Yes

   - Replace the Clockspring in accordance with the Service Information.
   - Perform the BODY VERIFICATION TEST. Refer to **STANDARD PROCEDURE** .

No

- Repair the open in the (D506) LIN Bus circuit.
- Perform the BODY VERIFICATION TEST. Refer to **STANDARD PROCEDURE** .

5. **CHECK THE VOLTAGE OF (A952) FUSED B (+) CIRCUIT AT THE RIGHT STEERING WHEEL SWITCH (SPEED CONTROL SWITCH)**
   1. Measure the voltage of the (A952) Fused B (+) circuit at the Right Steering Wheel Switch (Speed Control Switch) harness connector.

      Is the voltage above 10.0 volts?

      Yes

      - Go To 8

      No

      - Go To 6
6. **(A952) FUSED B (+) CIRCUIT OPEN BETWEEN THE RIGHT STEERING WHEEL SWITCH (SPEED CONTROL SWITCH) AND CLOCKSPRING**
   1. Turn the ignition off.
   2. Disconnect the Clockspring C8 harness connector.
   3. Measure the resistance of the (A952) Fused B (+) circuit between the Right Steering Wheel Switch (Speed Control Switch) and Clockspring C8 harness connectors.

      Is the resistance below 5.0 Ohms?

      Yes

      - Go To 7

      No

      - Repair the open in the (A952) Fused B (+) circuit.
      - Perform the BODY VERIFICATION TEST. Refer to

STANDARD PROCEDURE .

7. **(A952) FUSED B (+) CIRCUIT OPEN BETWEEN THE CLOCKSPRING AND TOTALLY INTEGRATED POWER MODULE**
   1. Turn the ignition off.
   2. Disconnect the Clockspring C2 harness connector.
   3. Turn the ignition on.
   4. Measure the voltage of the (A952) Fused B (+) circuit at the Clockspring C2 harness connectors.

      Is the voltage above 10.0 volts?

      Yes

      - Replace the Clockspring in accordance with the Service Information.
      - Perform the BODY VERIFICATION TEST. Refer to **STANDARD PROCEDURE** .

      No

      - Repair the open in the (A952) Fused B (+) circuit.
      - Perform the BODY VERIFICATION TEST. Refer to **STANDARD PROCEDURE** .
8. **CHECK THE (Z903) GROUND CIRCUIT AT THE RIGHT STEERING WHEEL SWITCH (SPEED CONTROL SWITCH)**
   1. Turn the ignition off.
   2. Measure the resistance between ground and the (Z903) Ground circuit at the Right Steering Wheel Switch (Speed Control Switch) harness connector.

      Is the resistance below 5.0 Ohms?

      Yes

      - Replace the Right Steering Wheel Switch (Speed Control Switch) in accordance with the Service Information.
      - Perform the BODY VERIFICATION TEST. Refer to **STANDARD PROCEDURE** .

No

- Go To 9

9. **(Z903) GROUND CIRCUIT OPEN BETWEEN THE RIGHT STEERING WHEEL SWITCH (SPEED CONTROL SWITCH) AND CLOCKSPRING**
   1. Disconnect the Clockspring C8 harness connector.
   2. Measure the resistance of the (Z903) Ground circuit between the Right Steering Wheel Switch (Speed Control Switch) and Clockspring C8 harness connectors.

   Is the resistance below 5.0 Ohms?

   Yes

   - Go To 10

   No

   - Repair the open in the (Z903) Ground circuit.
   - Perform the BODY VERIFICATION TEST. Refer to **STANDARD PROCEDURE** .

10. **(Z903) GROUND CIRCUIT OPEN BETWEEN THE CLOCKSPRING AND GROUND**
    1. Disconnect the Clockspring C2 harness connector.
    2. Measure the resistance between ground and the (Z903) Ground circuit at the Clockspring C2 harness connector.

    Is the resistance below 5.0 Ohms?

    Yes

    - Replace the Clockspring in accordance with the Service Information.
    - Perform the BODY VERIFICATION TEST. Refer to **STANDARD PROCEDURE** .

    No

- Repair the open in the (Z903) Ground circuit.
- Perform the BODY VERIFICATION TEST. Refer to **STANDARD PROCEDURE** .

U113B-LOST COMMUNICATION WITH SWITCH BANK MODULE

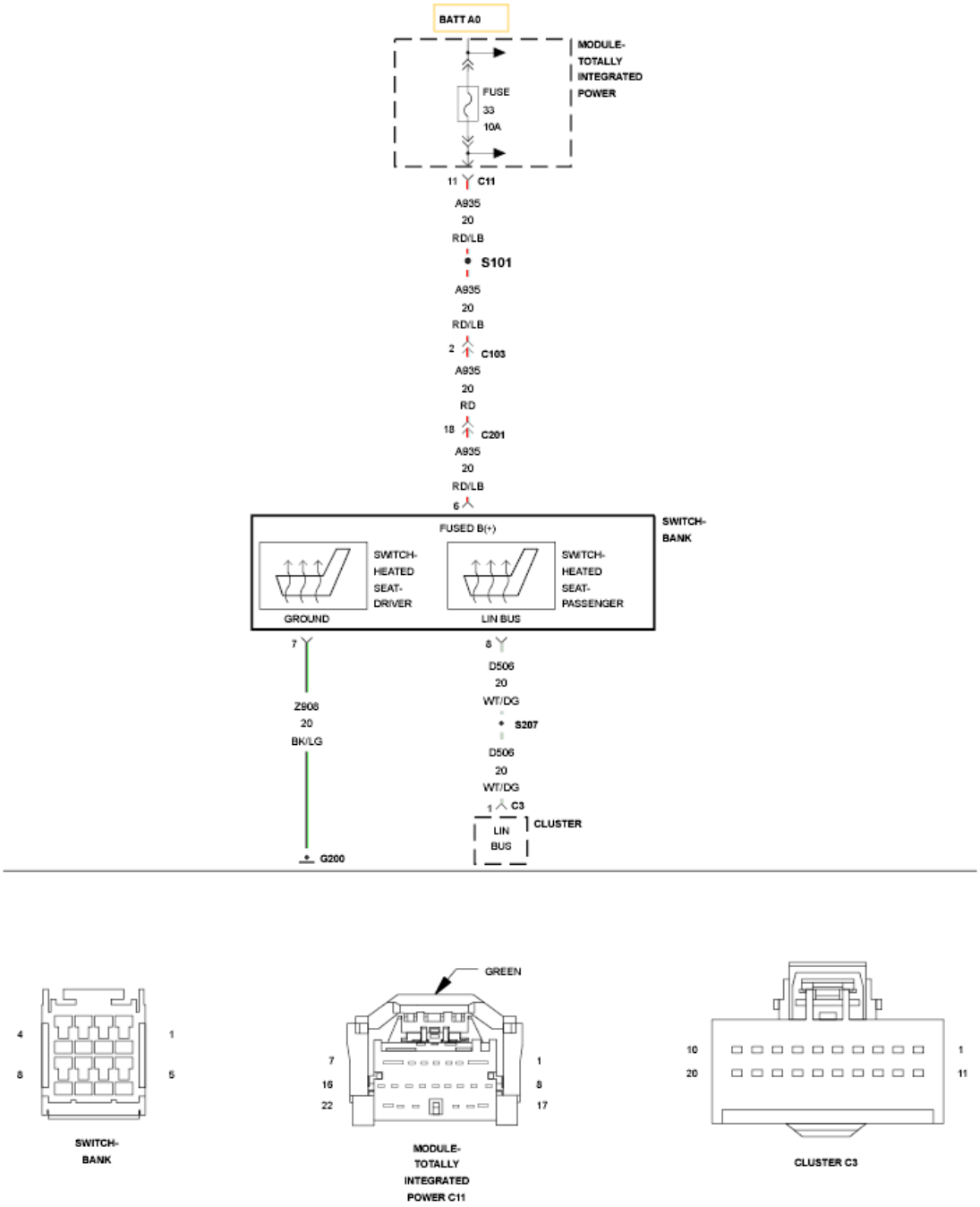

Fig. 71: Switch Bank Module Circuit Diagram
Courtesy of CHRYSLER GROUP, LLC

For a complete wiring diagram, **refer to appropriate SYSTEM WIRING**

DIAGRAMS article .

WHEN MONITORED

With the ignition on.

SET CONDITION

The Cluster does not receive information from the Switch Bank Module.

POSSIBLE CAUSES

Possible Causes
(D506) LIN BUS CIRCUIT OPEN (A935) FUSED B+ CIRCUIT OPEN (Z908) GROUND CIRCUIT OPEN SWITCH BANK

DIAGNOSTIC TEST

1. **CHECK FOR AN ACTIVE DTC**
   1. Turn the ignition on.
   2. With the scan tool, read DTCs.

      Does the scan tool display: U113B-LOST COMMUNICATION WITH SWITCH BANK MODULE?

      Yes

      - Go To 2

      No

      - Test complete, the condition or conditions that originally set this DTC are not present at this time. Using the wiring diagrams as a guide, check all related splices and connectors for signs of water intrusion, corrosion, pushed out or bent terminals, and correct pin tension.
2. **(D506) LIN BUS CIRCUIT OPEN**

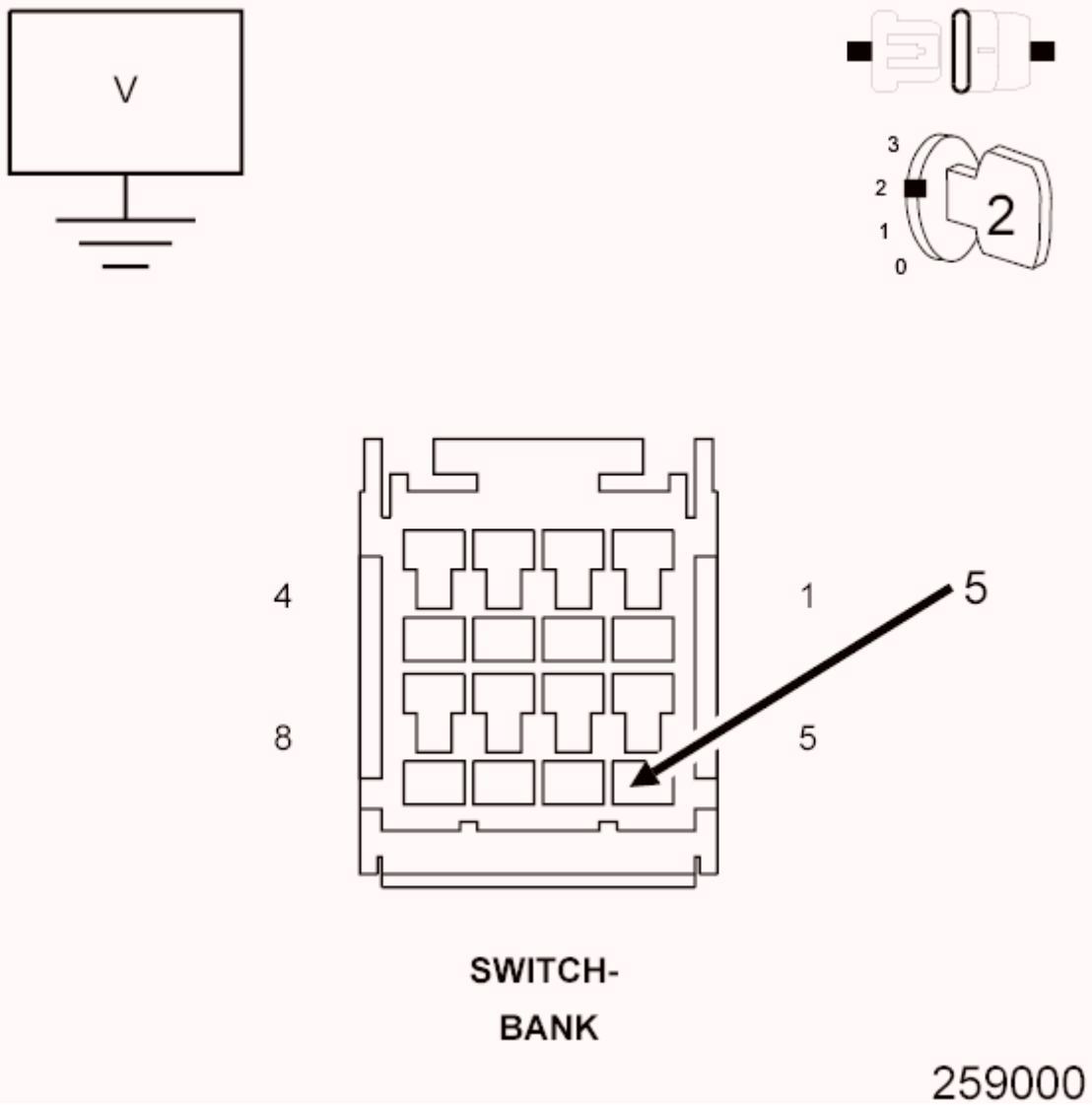

Fig. 72: Measuring Voltage Of LIN BUS Circuit
Courtesy of CHRYSLER GROUP, LLC

1. Turn the ignition off.
2. Disconnect the Switch Bank harness connector.
3. Turn the ignition on.
4. Measure the voltage of the (D506) LIN BUS circuit.

   Is the voltage above 5.0 volts?

   Yes

   - Go To 3

   No

- Repair the (D506) LIN BUS circuit for an open.
- Perform the BODY VERIFICATION TEST. Refer to **STANDARD PROCEDURE** .

3. **(A935) FUSED B+ CIRCUIT OPEN**

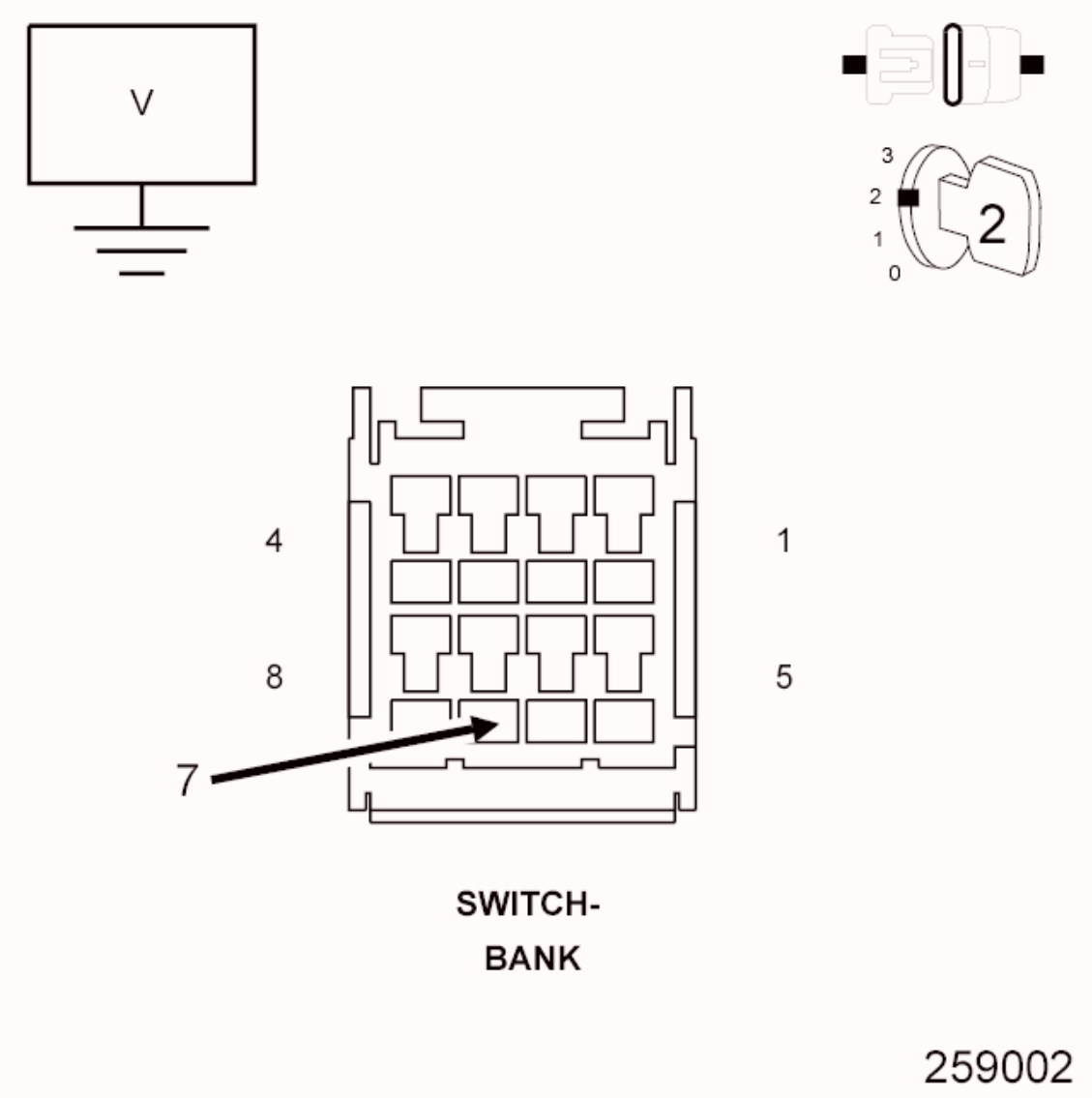

Fig. 73: Measuring Voltage Of Fused B (+) Circuit
Courtesy of CHRYSLER GROUP, LLC

1. Measure the voltage of the (A935) Fused B+ circuit.

   Is the voltage above 10.0 volts?

   Yes

   - Go To 4

No

- Repair the (A935) Fused B+ circuit for an open.
- Perform the BODY VERIFICATION TEST. Refer to **STANDARD PROCEDURE** .

4. **(Z908) GROUND CIRCUIT OPEN**

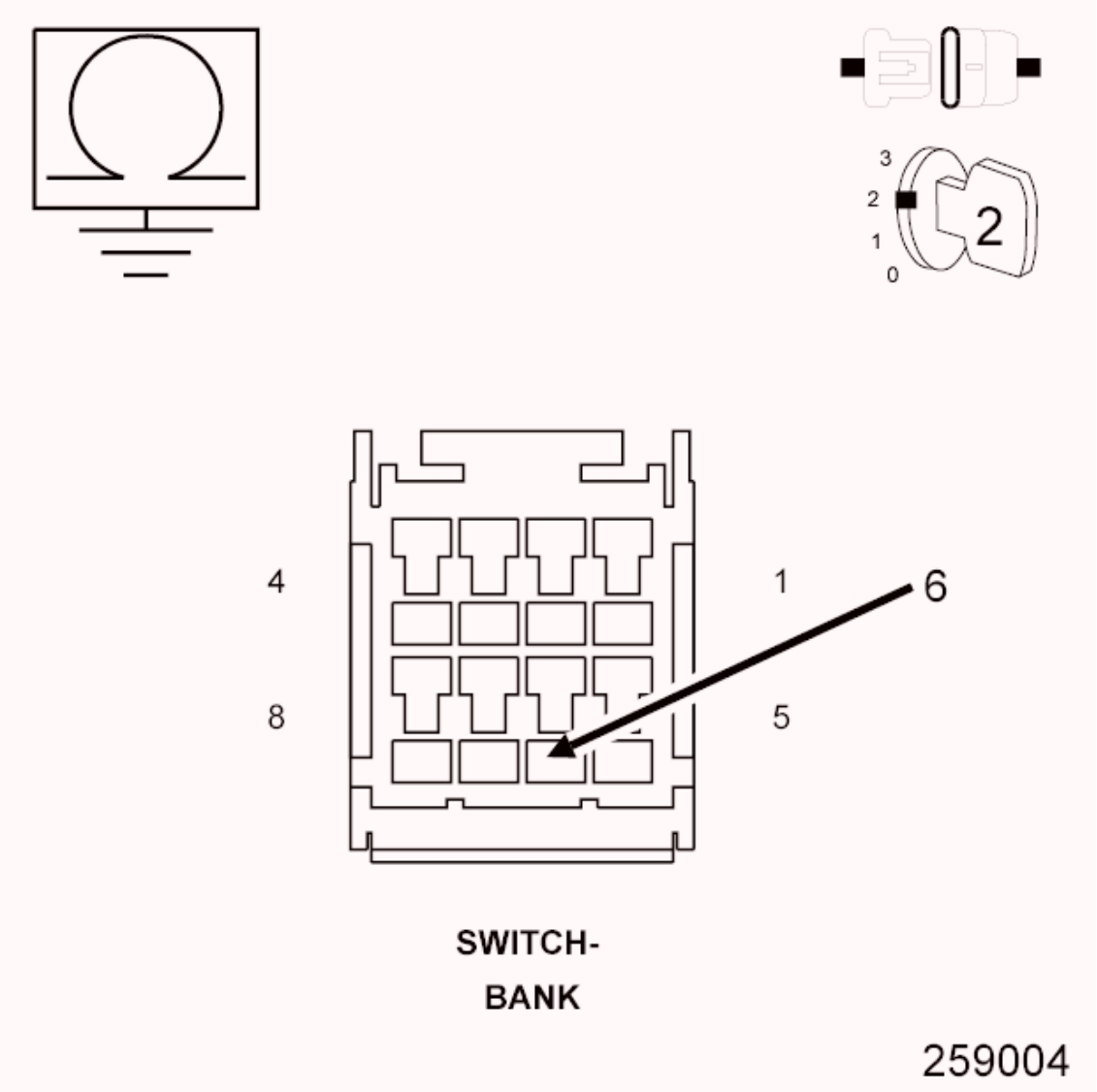

Fig. 74: Measuring Resistance Between Ground & Ground Circuit
Courtesy of CHRYSLER GROUP, LLC

1. Measure the resistance between ground and the (Z908) Ground circuit.

   Is the resistance below 10K Ohms?

   Yes

- Replace the Switch Bank in accordance with the Service Information.
- Perform the BODY VERIFICATION TEST. Refer to **STANDARD PROCEDURE** .

No

- Repair the (Z908) Ground circuit for an open.
- Perform the BODY VERIFICATION TEST. Refer to **STANDARD PROCEDURE** .

U1149-LOST COMMUNICATION WITH MULTI-FUNCTION SWITCH

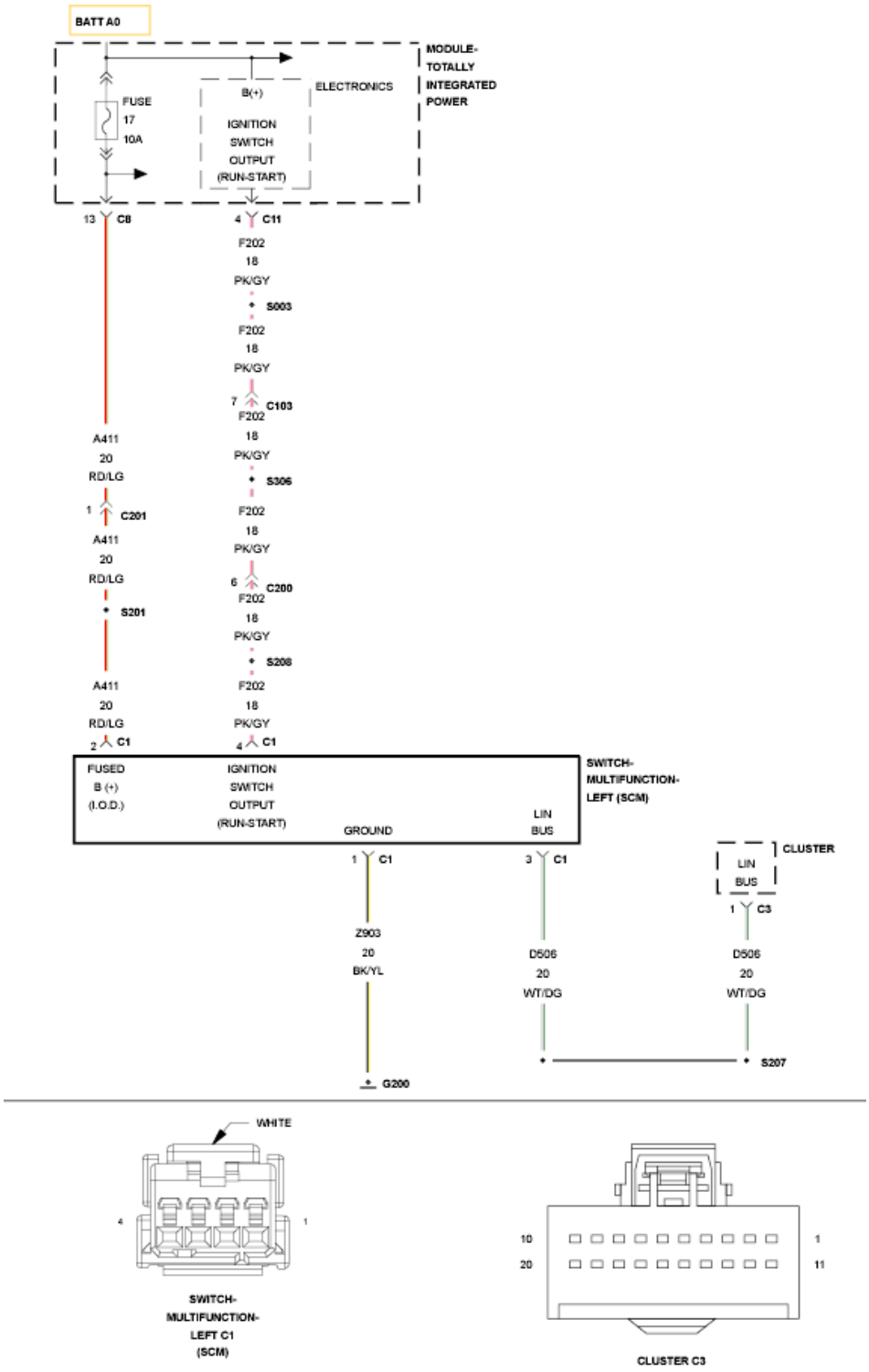

Fig. 75: Multifunction Switch Circuit Diagram
Courtesy of CHRYSLER GROUP, LLC

For a complete wiring diagram, **refer to appropriate SYSTEM WIRING DIAGRAMS article** .

WHEN MONITORED

With the ignition on.

SET CONDITION

The Cluster does not receive any LIN Bus messages from the Left Multifunction Switch.

POSSIBLE CAUSES

Possible Causes
(D506) LIN BUS CIRCUIT OPEN
(F202) IGNITION SWITCH OUTPUT (RUN/START) CIRCUIT OPEN
(A411) FUSED B(+) (I.O.D.) CIRCUIT OPEN
(Z903) GROUND CIRCUIT OPEN
LEFT MULTIFUNCTION SWITCH

DIAGNOSTIC TEST

1. **CHECK FOR AN ACTIVE DTC**

NOTE: Before proceeding with this diagnostic procedure, verify the Left and Right Multifunction Switch and Clockspring harness connectors are properly seated and verify proper pin terminal tension. A loose connection at any of these connectors may cause this DTC to set.

1. Turn the ignition on.
2. With the scan tool, read DTCs.

Does the scan tool display this DTC as active?

Yes

- Go To 2

No

- Test complete, the condition or conditions that originally set this DTC are not present at this time. Using the wiring diagrams as a guide, check all related splices and connectors for signs of water

intrusion, corrosion, pushed out or bent terminals, and correct pin tension.

2. **(D506) LIN BUS CIRCUIT OPEN**

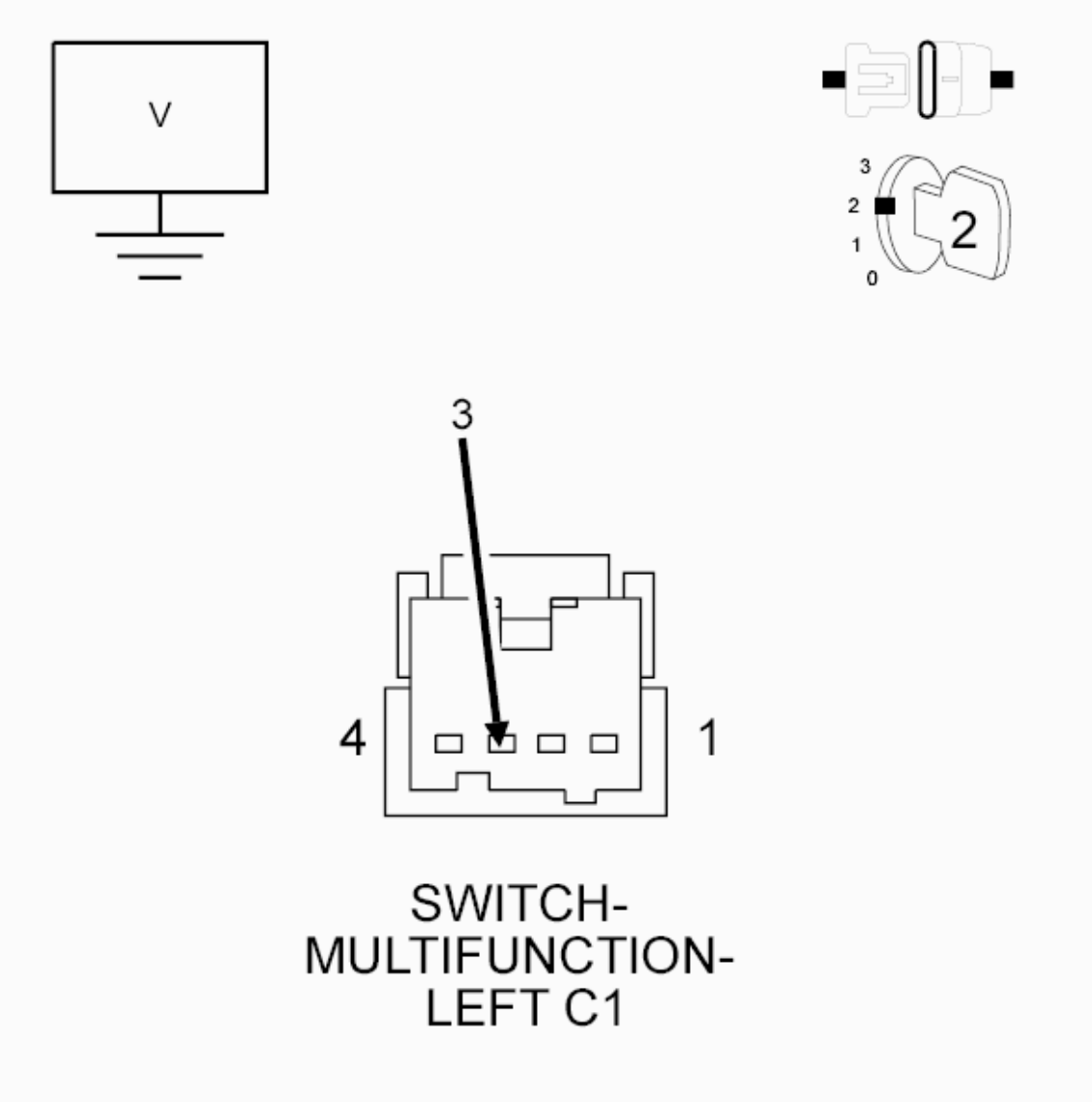

Fig. 76: Measuring Voltage Of LIN BUS Circuit
Courtesy of CHRYSLER GROUP, LLC

1. Turn the ignition off.
2. Disconnect the Left Multifunction Switch C1 harness connector.
3. Turn the ignition on.
4. Measure the voltage of the (D506) LIN BUS circuit.

   Is the voltage above 5.0 volts?

Yes

- Go To 3

No

- Repair the open in the (D506) LIN BUS circuit.
- Perform the BODY VERIFICATION TEST. Refer to **STANDARD PROCEDURE** .

3. **(F202) IGNITION SWITCH OUTPUT (RUN/START) CIRCUIT OPEN**

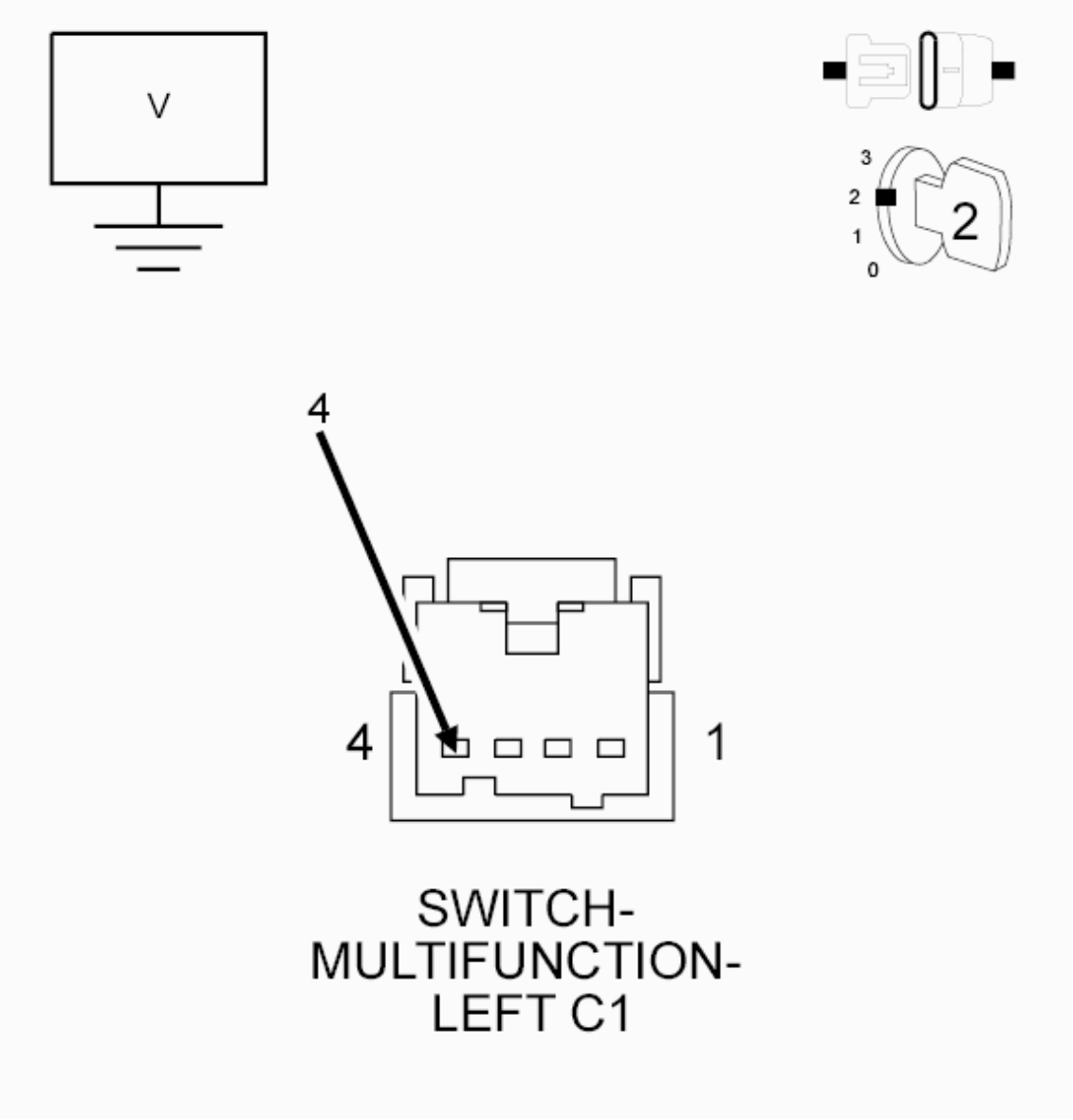

Fig. 77: Measuring Voltage Of Ignition Switch Output (RUN/START) Circuit

Courtesy of CHRYSLER GROUP, LLC

1. Measure the voltage of the (F202) Ignition Switch Output (RUN/START) circuit.

   Is the voltage above 10.0 volts?

   Yes

   - Go To 4

   No

   - Repair the open in the (F202) Ignition Switch Output (RUN/START) circuit.
   - Perform the BODY VERIFICATION TEST. Refer to **STANDARD PROCEDURE** .

4. **(A411) FUSED B(+) (I.O.D.) CIRCUIT OPEN**

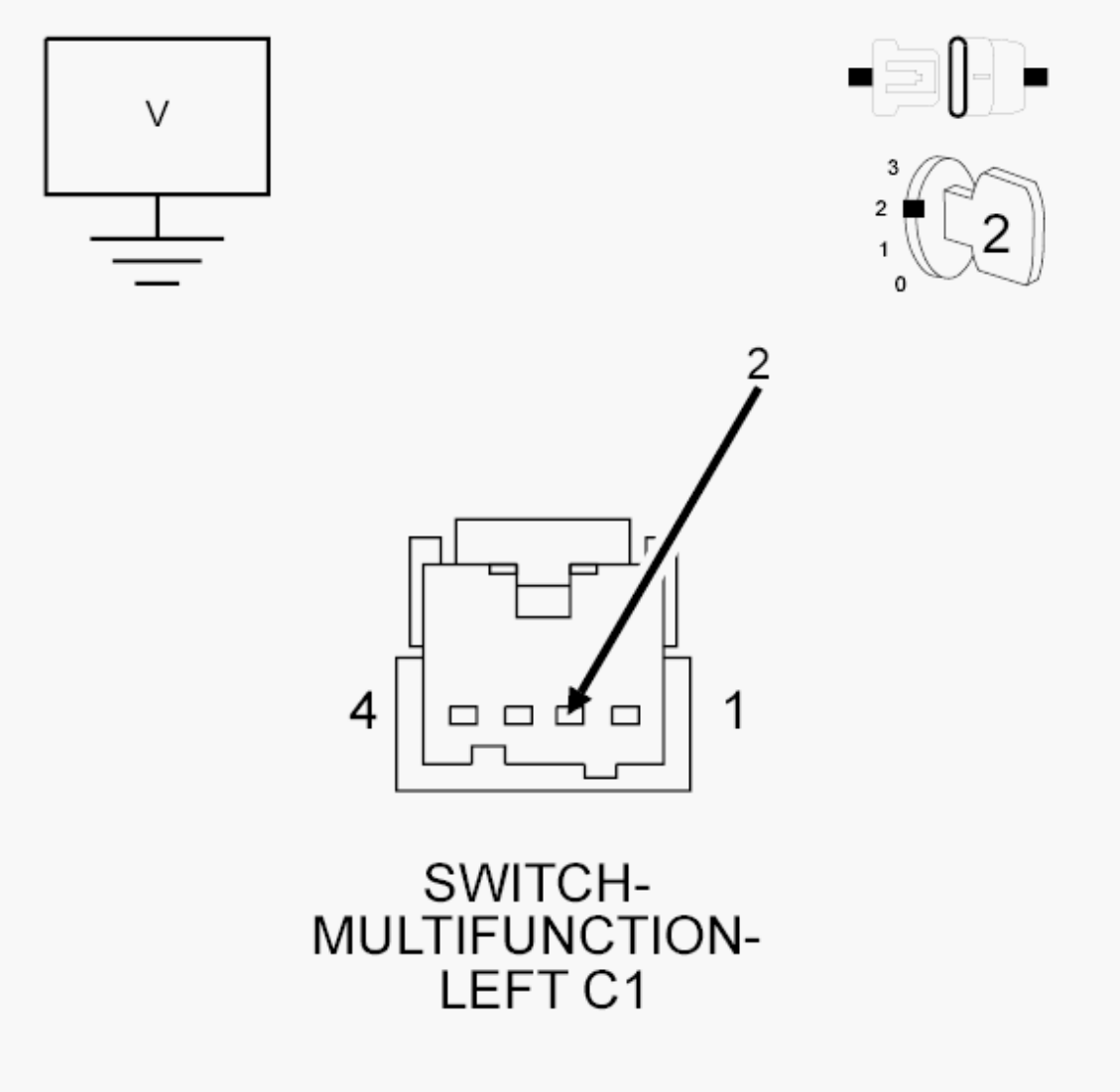

Fig. 78: Measuring Voltage Of Fused B (+) (I.O.D.) Circuit
Courtesy of CHRYSLER GROUP, LLC

1. Measure the voltage of the (A411) Fused B(+) (I.O.D.) circuit.

   Is the voltage above 10.0 volts?

   Yes

   - Go To 5

   No

   - Repair the open in the (A411) Fused B(+) (I.O.D.) circuit.
   - Perform the BODY VERIFICATION TEST. Refer to **STANDARD PROCEDURE** .

5. **(Z903) GROUND CIRCUIT OPEN**

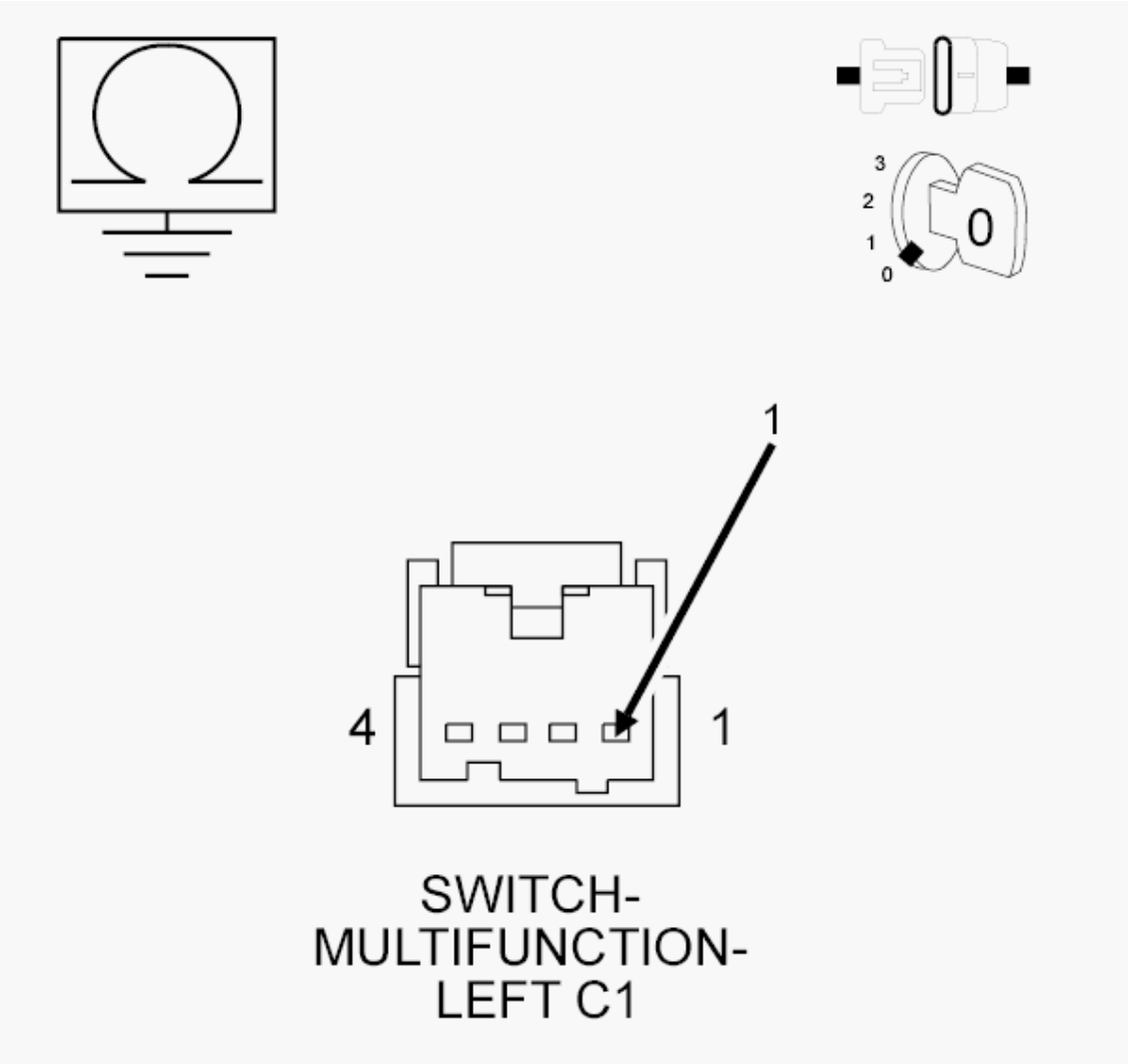

Fig. 79: Measuring Resistance Between Ground & Ground Circuit
Courtesy of CHRYSLER GROUP, LLC

1. Measure the resistance between ground and the (Z903) Ground circuit.

   Is the resistance below 10K Ohms?

   Yes

   - Replace the Left Multifunction Switch in accordance with the Service Information.
   - Perform the BODY VERIFICATION TEST. Refer to **STANDARD PROCEDURE** .

   No

- Repair the open in the (Z903) Ground circuit.
- Perform the BODY VERIFICATION TEST. Refer to **STANDARD PROCEDURE** .

2014 ACCESSORIES AND EQUIPMENT

Chime/Buzzer/Driver Assist - Service Information - Compass & Patriot

DESCRIPTION

DESCRIPTION

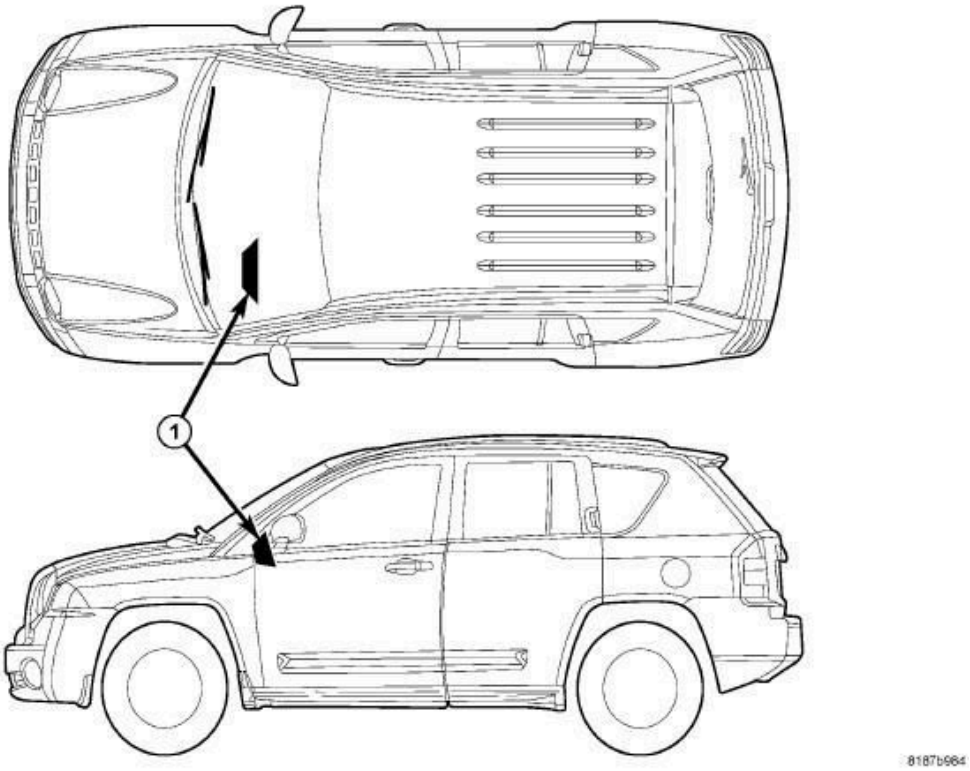

Fig. 1: Electromechanical Instrument Cluster
Courtesy of CHRYSLER GROUP, LLC

A chime warning system is standard factory-installed equipment. The chime warning system uses an electromechanical transducer and an electromechanical relay that are soldered onto the electronic circuit board inside of the instrument cluster (1) to provide audible indications of various vehicle conditions that may require the attention of the vehicle operator or occupants. The instrument cluster includes the hardware and software necessary to serve as the electronic body control module and is also referred to as the Cab Compartment Node or (CCN).

The electromechanical transducer generates beep tones and chime tones, while the electromechanical relay generates click tones to emulate the sounds associated with conventional turn signal and hazard warning flasher operation. The microprocessor-based CCN utilizes electronic **chime request** messages received from other modules in the vehicle over the Controller Area Network

(CAN) data bus along with hard wired inputs to monitor many sensors and switches throughout the vehicle. In response to those inputs, the circuitry and programming of the CCN allow it to control the audible outputs that are produced through its on-board transducer and relay.

The CCN is capable of producing the following audible outputs:

- **Slow Rate Repetitive Click** - Repeated **click** tones that are issued at a slow rate of about 90 clicks per minute.
- **Fast Rate Repetitive Click** - Repeated **click** tones that are issued at a fast rate of more than about 180 clicks per minute.
- **Single Chime Tone** - A single **chime** tone.
- **Slow Rate Repetitive Chime** - Repeated **chime** tones that are issued at a slow rate of about 50 chimes per minute.
- **Fast Rate Repetitive Chime** - Repeated **chime** tones that are issued at a fast rate of about 180 chimes per minute.

Hard wired circuitry connects the CCN and the various chime warning system switch and sensor inputs to their modules and to each other through the electrical system of the vehicle. These hard wired circuits are integral to several wire harnesses, which are routed throughout the vehicle and retained by many different methods. These circuits may be connected to each other, to the vehicle electrical system and to the CCN through the use of a combination of soldered splices, splice block connectors, and many different types of wire harness terminal connectors and insulators. Refer to the appropriate wiring information. The wiring information includes wiring diagrams, proper wire and connector repair procedures, further details on wire harness routing and retention, as well as pin out and location views for the various wire harness connectors, splices and grounds.

The CCN chime warning system circuits and components cannot be adjusted or repaired. If the CCN circuitry, the on-board transducer or the relay are damaged or ineffective, the instrument cluster assembly must be replaced.

OPERATION

OPERATION

The chime warning system operates on battery voltage received through a fuse in

the Totally Integrated Power Module (TIPM) on a non-switched fused B(+) circuit so that the system may operate regardless of the ignition switch position. The chime warning system also monitors the ignition switch position so that some chime features are functional only with the ignition switch in the ON position, while others are functional regardless of the ignition switch position.

The chime warning system provides an audible indication to the vehicle operator or occupants under the following conditions:

- **Airbag Indicator Warning** - The instrument cluster, also known as the Cab Compartment Node (CCN) transducer will generate one short chime when the ignition switch is in the ON position, and the airbag indicator is illuminated. This warning indicates that a failure condition has been monitored affecting the operation of the Supplemental Restraint System (SRS) related components or circuits. This warning will only occur following completion of the airbag indicator bulb test, and will only occur once during any ignition cycle.
- **Door Ajar Warning** - The CCN will generate one short chime when the ignition switch is in the ON position, when the door ajar indicator is illuminated, or when a **DOOR(S) OPEN** textual message is displayed in the reconfigurable display of the instrument cluster. This warning indicates that a door is, or multiple doors are not closed or completely latched while the vehicle is moving.
- **Fasten Seat Belt Indicator Warning** - The CCN transducer will generate repetitive chimes at a slow rate to announce that the seat belt switches and the ignition switch indicate that a front seat belt is not fastened with the ignition switch in the ON position. Vehicles with the optional Occupant Classification System (OCS) monitor both outboard front seat belts, while vehicles without OCS monitor only the driver side front seat belt. The chime warning system also supports the enhanced seat belt reminder (beltminder) when this feature is enabled. Refer to **INDICATORS, INSTRUMENT CLUSTER, OPERATION** .
- **Gate Ajar Indicator Warning** - The CCN transducer will generate one short chime when the liftgate ajar indicator is illuminated, or when a **LIFTGATE OPEN** textual message is displayed in the reconfigurable display of the instrument cluster. This warning indicates that the liftgate is not closed or completely latched while the vehicle is moving.
- **Head/Park Lamps-On Warning** - The CCN transducer will generate

repetitive chimes at a fast rate to indicate that inputs from the headlamp switch and the ignition switch indicate that the exterior lamps are turned ON with the ignition switch in the OFF position, and a hard wired input is received indicating that the driver side front door is open. The chimes will continue to sound until the exterior lamps are turned OFF, the driver side front door is closed, or the ignition switch is turned to the ON position, whichever occurs first.

- **Key-In-Ignition Warning** - The CCN transducer will generate repetitive chimes at a fast rate to indicate that inputs from the key-in ignition switch, the ignition switch, and the driver side front door ajar switch indicate that the key is in the ignition lock cylinder with the ignition switch in the OFF position with the driver side front door open. The chimes will continue to sound until the key is removed from the ignition lock cylinder, the driver side front door is closed, or the ignition switch is turned to the ON position, whichever occurs first.
- **Low Fuel Indicator Warning** - The CCN transducer will generate one short chime when the low fuel indicator is illuminated in the instrument cluster. This warning indicates that the monitored fuel level in the fuel tank is low. This chime will only occur once during any ignition cycle.
- **Overspeed Warning** - The CCN transducer will generate one short chime when the vehicle speed is over a pre-programmed speed value. This feature is only enabled on vehicles that have been configured for sale in a Middle East Gulf Coast Country (GCC).
- **Park Brake Reminder** - The CCN transducer will generate one short chime when the brake/park brake indicator is illuminated to announce that the park brake is applied or not fully released and the vehicle is moving. This chime will repeat each time the input conditions are met.
- **Sentry Key Customer Learn Mode Announcement** - The CCN transducer will generate one short chime to confirm that the Sentry Key electronic **Customer Learn** mode is active, which indicates that the Sentry Key Remote Entry Module/Wireless Control Module (SKREEM/WCM) is prepared for programming additional Sentry Key transponders. This chime feature is only active on vehicles equipped with the optional Sentry Key system, and sold in a market where Customer Learn programming is an allowed feature.
- **Turn Signal/Hazard Warning Flasher Emulation** - The CCN relay will generate repetitive clicks at a slow rate to emulate an electromechanical

flasher when the turn signal or hazard warning system are operating. The CCN relay will generate repetitive clicks at a fast rate to indicate that the right or left turn signals are operating with one or more bulbs ineffective. In either case, the clicks will continue until the turn signal and hazard warning systems are turned OFF.

- **Turn Signal On Warning** - The CCN transducer will generate repetitive chimes at a slow rate to indicate that a turn signal has been active continuously for 1.6 kilometers (1 mile) with the vehicle speed greater than 22 kilometers-per-hour (15 miles-per hour). Vehicles built for markets other than the United States and Canada have a revised distance threshold of 4 kilometers (2.49 miles) for this feature. The chime will continue until the turn signal input becomes inactive or until the vehicle speed message indicates that the speed is less than 22 kilometers-per-hour (15 miles-per-hour), whichever occurs first. The hazard warning flashers will not activate this chime feature.
- **Warning Indicator Announcement** - The CCN transducer will generate one short chime each time the Malfunction Indicator Lamp (MIL) lamp or certain other indicators are illuminated by the instrument cluster circuitry. The MIL and certain other indicators may be illuminated when any critical engine or transmission systems are operating outside of their normal parameters. The instrument cluster monitors electronic messages received over the CAN data bus to determine when to illuminate these indicators.

The CCN provides chime service for all available features in the chime warning system, except for the audible warning function provided by each of the optional park assist system display modules. The CCN relies upon its internal programming, numerous hard wired inputs, and electronic message inputs received from other modules over the Controller Area Network (CAN) and the Local Interface Network (LIN) data buses to provide the chime warning system features. The internal programming of the CCN determines the priority of each chime request input that is received, as well as the rate and duration of each chime that is to be generated.

The hard wired circuits between components related to the chime warning system may be diagnosed using conventional diagnostic tools and procedures. Refer to the appropriate wiring information. The wiring information includes wiring diagrams, proper wire and connector repair procedures, details of wire harness routing and retention, connector pin out information and location views

for the various wire harness connectors, splices and grounds.

However, conventional diagnostic methods will not prove conclusive in the diagnosis of the chime warning system or the electronic controls and communication between modules and other devices that provide some features of the chime warning system. The most reliable, efficient and accurate means to diagnose the chime warning system or the electronic controls and communication related to chime warning system operation requires the use of a diagnostic scan tool. Refer to the appropriate diagnostic information.

DIAGNOSIS AND TESTING

DIAGNOSIS AND TESTING - CHIME WARNING SYSTEM

WARNING: **To avoid serious or fatal injury on vehicles equipped with airbags, disable the Supplemental Restraint System (SRS) before attempting any steering wheel, steering column, airbag, seat belt tensioner, impact sensor or instrument panel component diagnosis or service. Disconnect and isolate the battery negative (ground) cable, then wait two minutes for the system capacitor to discharge before performing further diagnosis or service. This is the only sure way to disable the SRS. Failure to take the proper precautions could result in accidental airbag deployment.**

The hard wired circuits between components related to the chime warning system may be diagnosed using conventional diagnostic tools and procedures. Refer to the appropriate wiring information. The wiring information includes wiring diagrams, proper wire and connector repair procedures, details of wire harness routing and retention, connector pin out information and location views for the various wire harness connectors, splices and grounds.

However, conventional diagnostic methods will not prove conclusive in the diagnosis of the chime warning system or the electronic controls and communication between modules and other devices that provide some features of the chime warning system. The most reliable, efficient and accurate means to diagnose the chime warning system or the electronic controls and communication related to chime warning system operation requires the use of a diagnostic scan

tool. Refer to the appropriate diagnostic information.

2014 ACCESSORIES AND EQUIPMENT

Communication - Non-DTC Based Diagnostics - Compass & Patriot

DIAGNOSIS AND TESTING

BOTH DIAGNOSTIC CAN C (+) AND DIAGNOSTIC CAN C (-) CIRCUITS OPEN

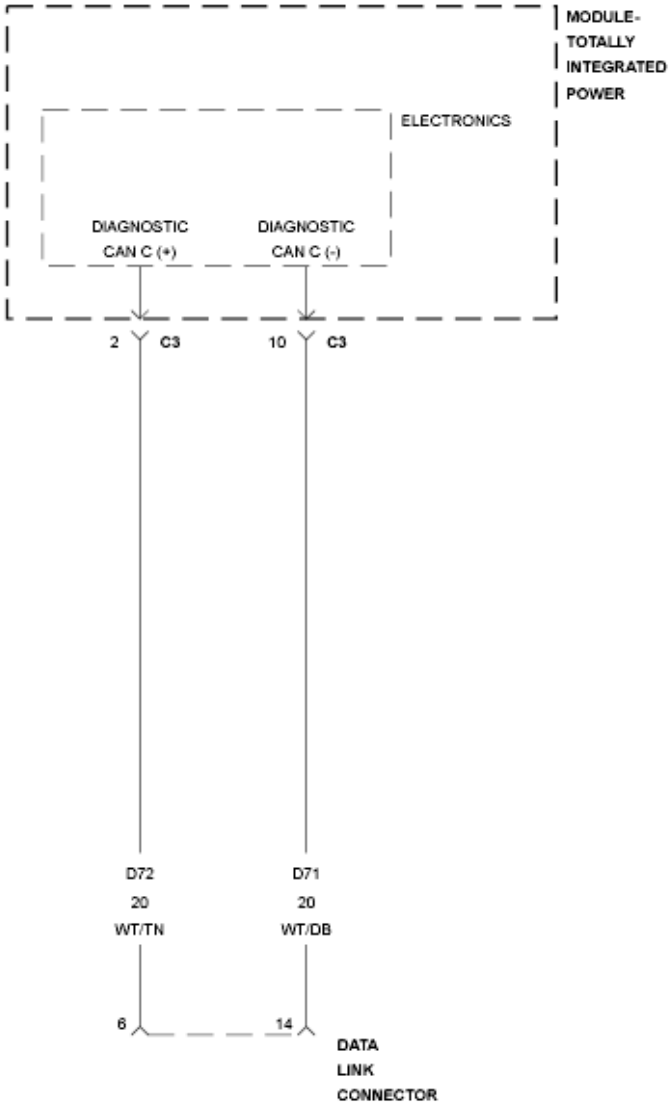

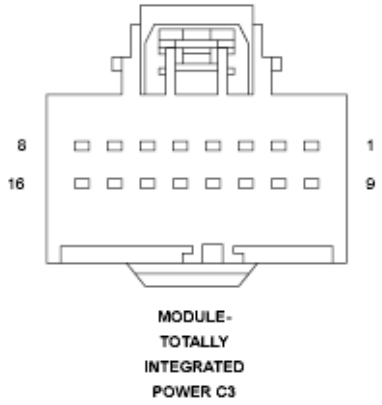

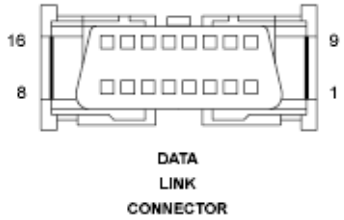

Fig. 1: Diagnostic Can C (+) And/Or (-) Wiring Diagram

Courtesy of CHRYSLER GROUP, LLC

For a complete wiring diagram, **refer to appropriate SYSTEM WIRING DIAGRAMS article** .

WHEN MONITORED

When the scan tool queries the Totally Integrated Power Module (TIPM).

SET CONDITION

The scan tool has detected an open condition on both Diagnostic CAN C circuits.

POSSIBLE CAUSES

Possible Causes
(D72) DIAGNOSTIC CAN C (+) CIRCUIT OPEN
(D71) DIAGNOSTIC CAN C (-) CIRCUIT OPEN
TOTALLY INTEGRATED POWER MODULE

DIAGNOSTIC TEST

1. **CHECK THE STATUS OF THE ERROR MESSAGE**

NOTE: Ensure the vehicle being tested is a CAN BUS VEHICLE. If not, false error messages may be displayed.

NOTE: Ensure the scan tool is updated to the latest software.

NOTE: Check for any TSB(s) related to the condition. If a TSB applies, perform the procedure outlined in the TSB before continuing.

1. With the scan tool, record the error message.
2. Disconnect the scan tool from the DLC.
3. Cycle the ignition from on to off 3 times.
4. Turn the ignition on.

Does the scan tool display this same error message?

Yes

- Go To 2

No

- The conditions that caused this error message to set are not present at this time. Using the wiring diagram/schematic as a guide, inspect the wiring and connectors.

2. **(D72) CAN C DIAGNOSTIC (+) CIRCUIT OPEN**

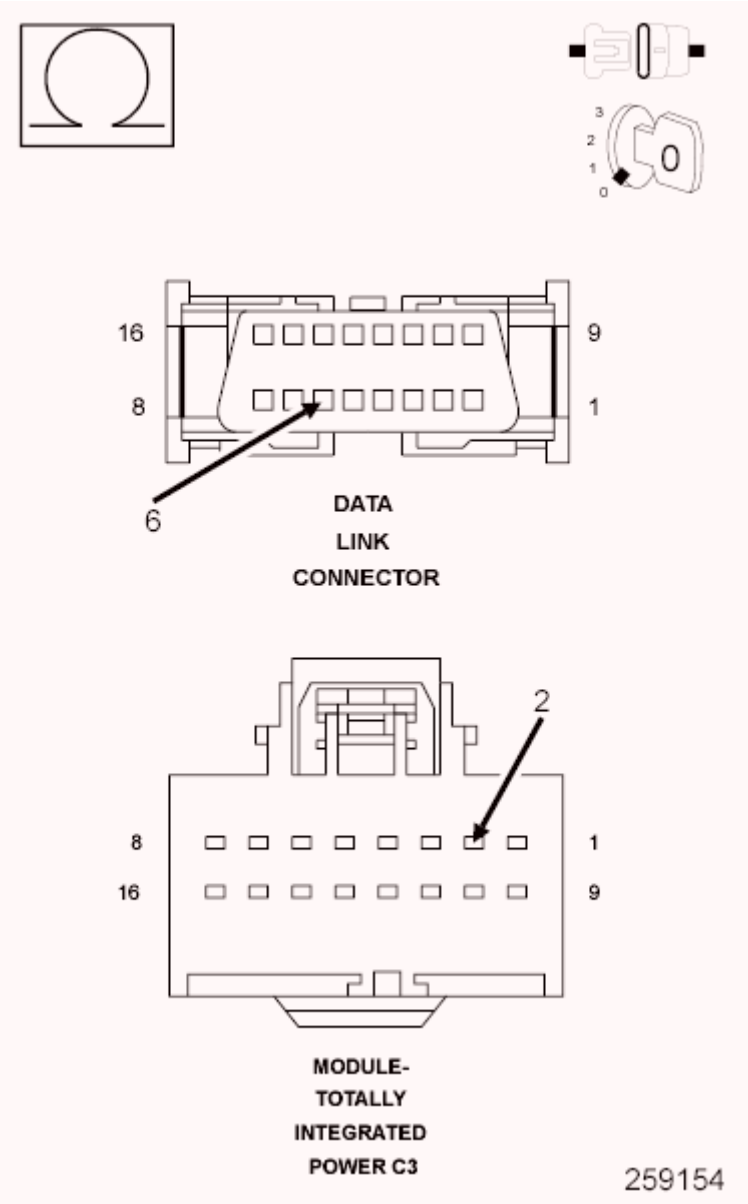

Fig. 2: Measuring Resistance Of Diagnostic Can C (+) Circuit Between

TIPM Connector & DLC
Courtesy of CHRYSLER GROUP, LLC

1. Turn the ignition off.
2. Disconnect the TIPM C3 harness connector.
3. Disconnect the scan tool from the DLC.

NOTE: Check the connectors at both the DLC and the TIPM.

4. Measure the resistance of the (D72) Diagnostic CAN C (+) circuit between the TIPM connector and the DLC.

   Is the resistance below 5.0 ohms?

   Yes

   - Go To 3

   No

   - Repair the (D72) Diagnostic CAN C (+) circuit for an open.
   - Perform the BODY VERIFICATION TEST. Refer to **STANDARD PROCEDURE** .

3. **(D71) DIAGNOSTIC CAN C (-) CIRCUIT OPEN**

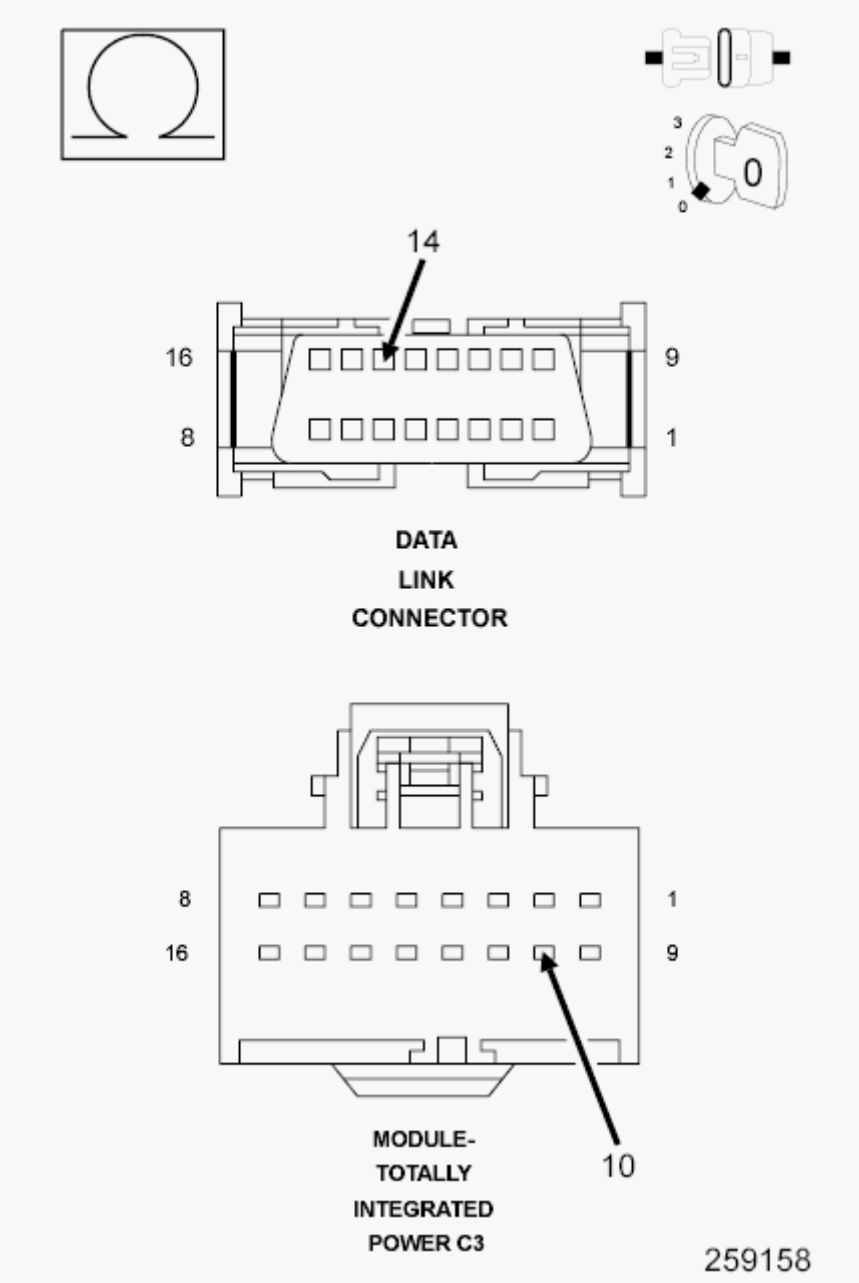

Fig. 3: Measuring Resistance Of Diagnostic Can C (-) Circuit Between TIPM Harness Connector & DLC
Courtesy of CHRYSLER GROUP, LLC

1. Measure the resistance of the (D71) Diagnostic CAN C (-) circuit between the TIPM C3 harness connector and the DLC.

   Is the resistance below 5.0 ohms?

   Yes

   - Inspect the wiring and connectors for damage or shorted circuits. If

OK, replace the Totally Integrated Power Module in accordance with the Service Information.

- Perform the BODY VERIFICATION TEST. Refer to **STANDARD PROCEDURE** .

No

- Repair the (D71) Diagnostic CAN C (-) circuit for an open.
- Perform the BODY VERIFICATION TEST. Refer to **STANDARD PROCEDURE** .

DIAGNOSTIC CAN C (+) AND/OR DIAGNOSTIC CAN C (-) CIRCUITS HIGH

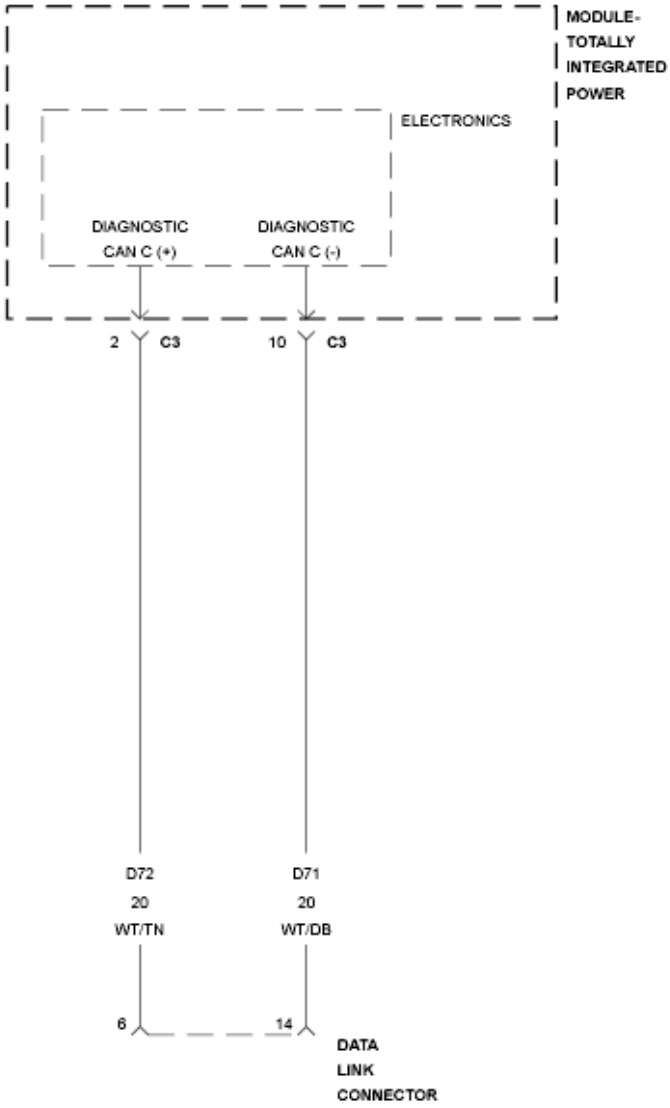

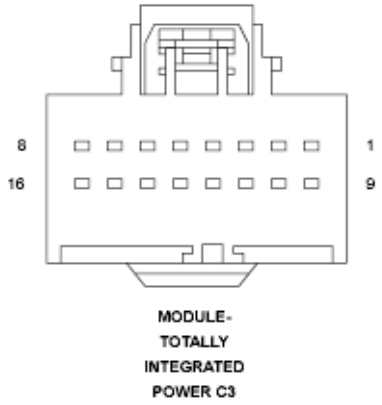

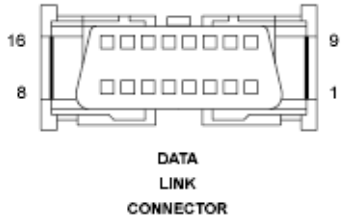

Fig. 4: Diagnostic Can C (+) And/Or (-) Wiring Diagram

Courtesy of CHRYSLER GROUP, LLC

For a complete wiring diagram, **refer to appropriate SYSTEM WIRING DIAGRAMS article** .

WHEN MONITORED

When the scan tool queries the Totally Integrated Power Module (TIPM).

SET CONDITION

The scan tool has detected a shorted high condition on either or both Diagnostic CAN C circuits.

POSSIBLE CAUSES

Possible Causes
(D72) DIAGNOSTIC CAN C (+) CIRCUIT SHORTED TO VOLTAGE
(D71) DIAGNOSTIC CAN C (-) CIRCUIT SHORTED TO VOLTAGE
TOTALLY INTEGRATED POWER MODULE

DIAGNOSTIC TEST

1. **CHECK THE STATUS OF THE ERROR MESSAGE**

NOTE: Ensure the vehicle being tested is a CAN BUS VEHICLE. If not, false error messages may be displayed.

NOTE: Ensure the scan tool is updated to the latest software.

NOTE: Check for any TSB(s) related to the condition. If a TSB applies, perform the procedure outlined in the TSB before continuing.

1. With the scan tool, record the error message.
2. Disconnect the scan tool from the Data Link Connector (DLC).
3. Cycle the ignition from on to off 3 times.
4. Turn the ignition on.

Does the scan tool display this same error message?

Yes

- Go To 2

No

- The conditions that caused this error message to set are not present at this time. Using the wiring diagram/schematic as a guide, inspect the wiring and connectors.

2. **DIAGNOSTIC CAN C CIRCUITS SHORTED TO VOLTAGE**

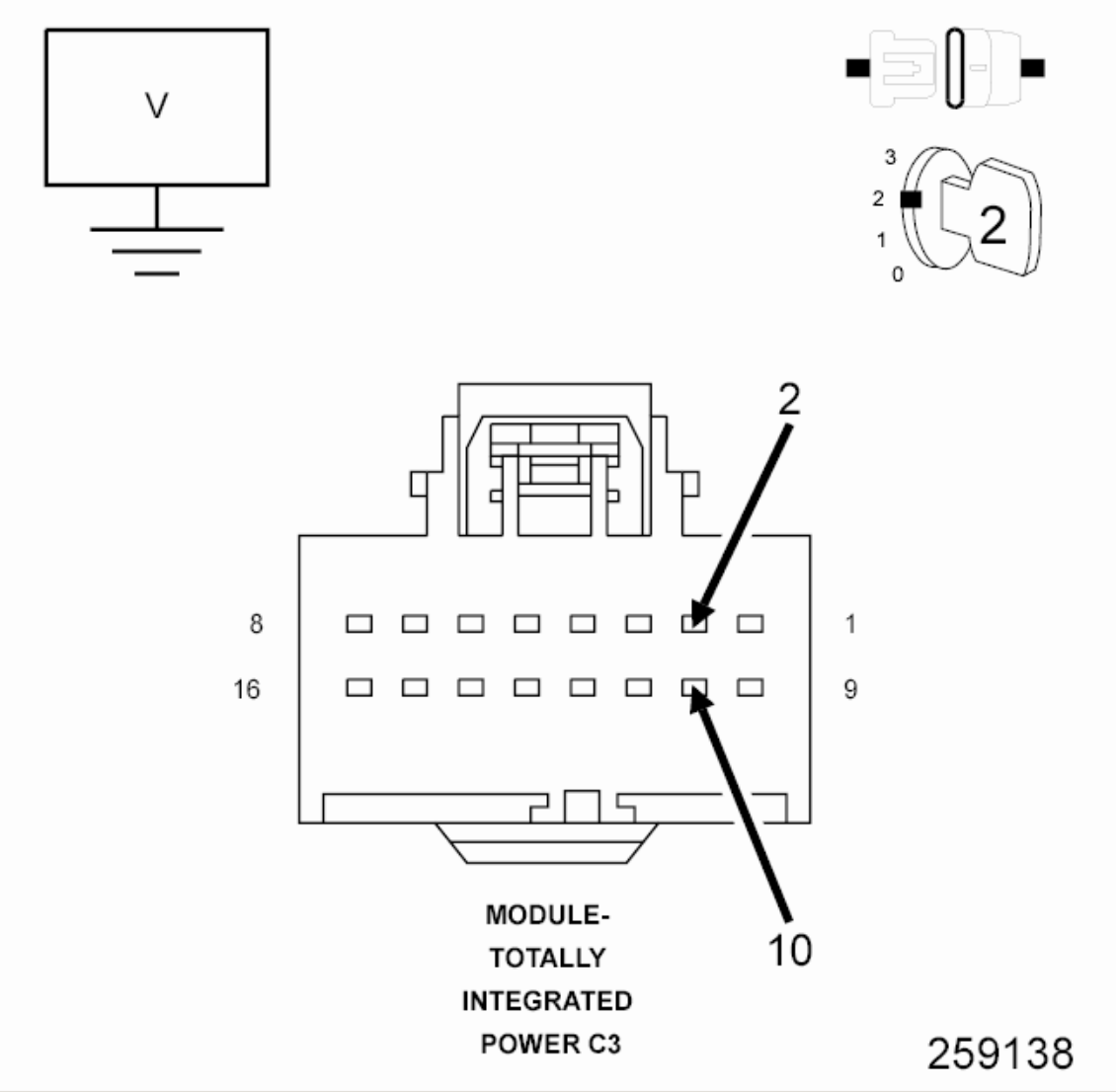

Fig. 5: Checking Diagnostic CAN C Circuits For A Short To Voltage
Courtesy of CHRYSLER GROUP, LLC

1. Turn the ignition off.
2. Disconnect the Totally Integrated Power Module (TIPM) C3 harness connector.
3. Disconnect the scan tool from the DLC.
4. Turn the ignition on.
5. Measure the voltage of the Diagnostic CAN C circuits at the TIPM C3 harness connector.

   Is the voltage above 6.0 volts on either circuit?

   Yes

   - Repair the Diagnostic CAN C circuits for a short to voltage.
   - Perform the BODY VERIFICATION TEST. Refer to **STANDARD PROCEDURE** .

   No

   - Inspect the wiring and connectors for damage or shorted circuits. If OK, replace the Totally Integrated Power Module in accordance with the Service Information.
   - Perform the BODY VERIFICATION TEST. Refer to **STANDARD PROCEDURE** .

DIAGNOSTIC CAN C (+) SHORTED TO DIAGNOSTIC CAN C (-)

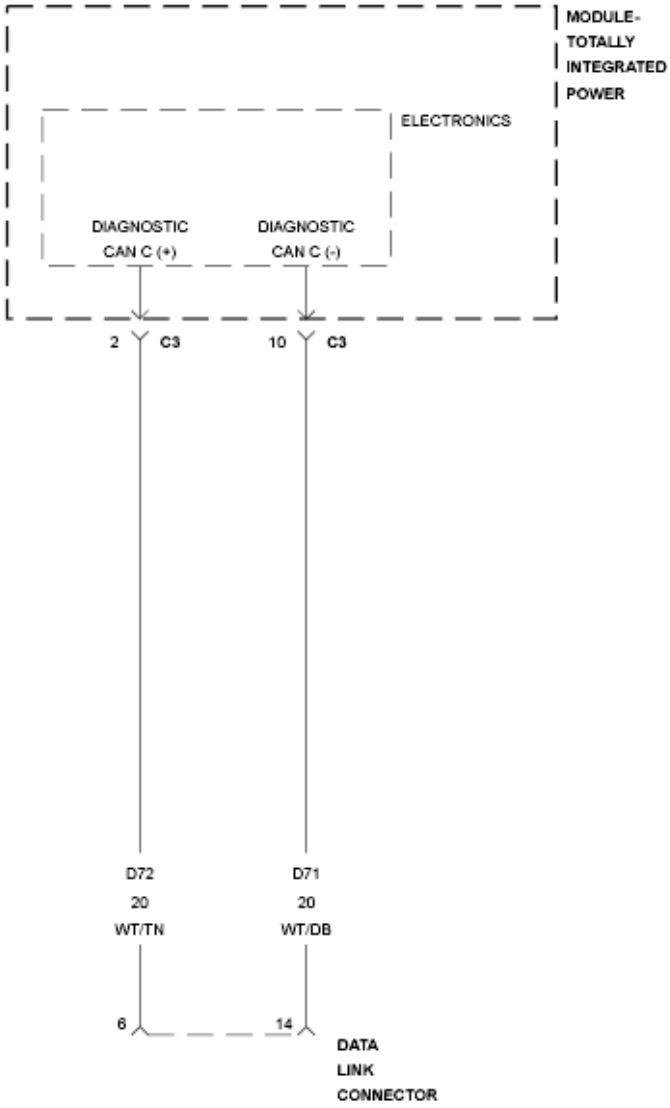

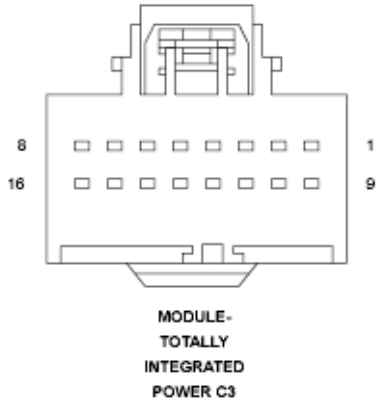

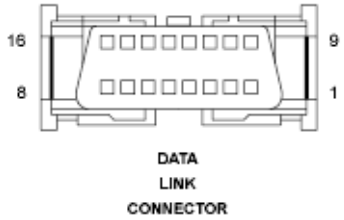

Fig. 6: Diagnostic Can C (+) And/Or (-) Wiring Diagram

Courtesy of CHRYSLER GROUP, LLC

For a complete wiring diagram, **refer to appropriate SYSTEM WIRING DIAGRAMS article** .

WHEN MONITORED

When the scan tool queries the Totally Integrated Power Module (TIPM).

SET CONDITION

The scan tool has detected a shorted together condition on the Diagnostic CAN C circuits.

POSSIBLE CAUSES

Possible Causes
(D72) DIAGNOSTIC CAN C (+) CIRCUIT SHORTED TO (D71) DIAGNOSTIC CAN C (-) CIRCUIT TOTALLY INTEGRATED POWER MODULE

DIAGNOSTIC TEST

1. **CHECK THE STATUS OF THE ERROR MESSAGE**

NOTE: Ensure the vehicle being tested is a CAN BUS VEHICLE. If not, false error messages may be displayed.

NOTE: Ensure the scan tool is updated to the latest software.

NOTE: Check for any TSB(s) related to the condition. If a TSB applies, perform the procedure outlined in the TSB before continuing.

1. With the scan tool, record the error message.
2. Disconnect the scan tool from the DLC.
3. Cycle the ignition from on to off 3 times.
4. Turn the ignition on.

Does the scan tool display this same error message?

Yes

- Go To 2

No

- The conditions that caused this error message to set are not present at this time. Using the wiring diagram/schematic as a guide, inspect the wiring and connectors.

2. **(D72) DIAGNOSTIC CAN C (+) CIRCUIT SHORTED TO (D71) DIAGNOSTIC CAN C (-) CIRCUIT**

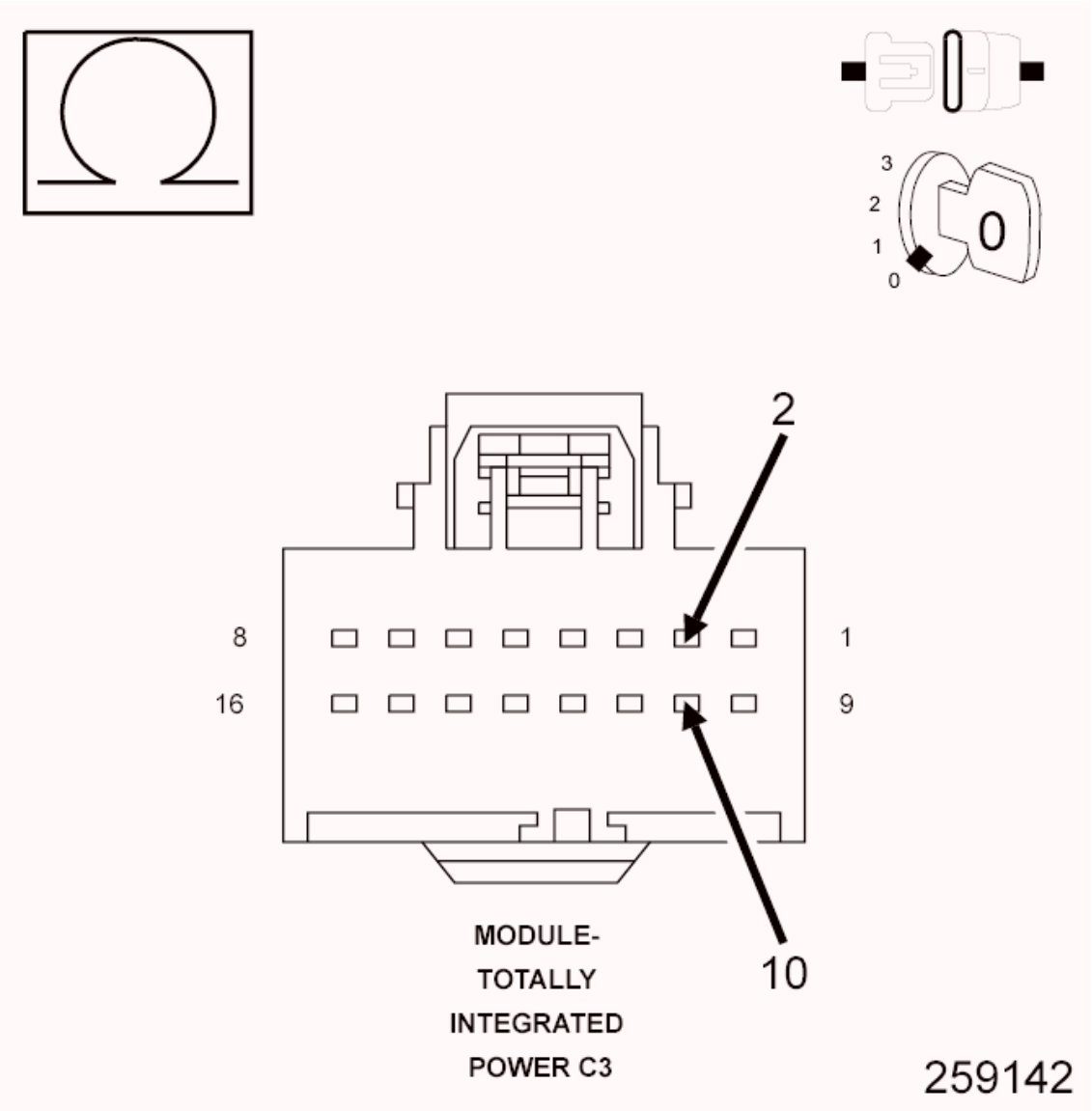

Fig. 7: Measuring Resistance Between Diagnostic Can C (+) Circuit &

Diagnostic Can C (-) Circuit At TIPM C3 Harness Connector
Courtesy of CHRYSLER GROUP, LLC

1. Turn the ignition off.
2. Disconnect the Totally Integrated Power Module (TIPM) C3 harness connector.
3. Disconnect the scan tool from the DLC.
4. Measure the resistance between the (D72) Diagnostic CAN C (+) circuit and the (D71) Diagnostic CAN C (-) circuit at the TIPM C3 harness connector.

   Is the resistance below 100.0 ohms?

   Yes

   - Repair the (D72) Diagnostic CAN C (+) circuit for a short to the (D71) Diagnostic CAN C (-) circuit.
   - Perform the BODY VERIFICATION TEST. Refer to **STANDARD PROCEDURE** .

   No

   - Inspect the wiring and connectors for damage or shorted circuits. If OK, replace the Totally Integrated Power Module in accordance with the Service Information.
   - Perform the BODY VERIFICATION TEST. Refer to **STANDARD PROCEDURE** .

DIAGNOSTIC CAN C (+) CIRCUIT LOW

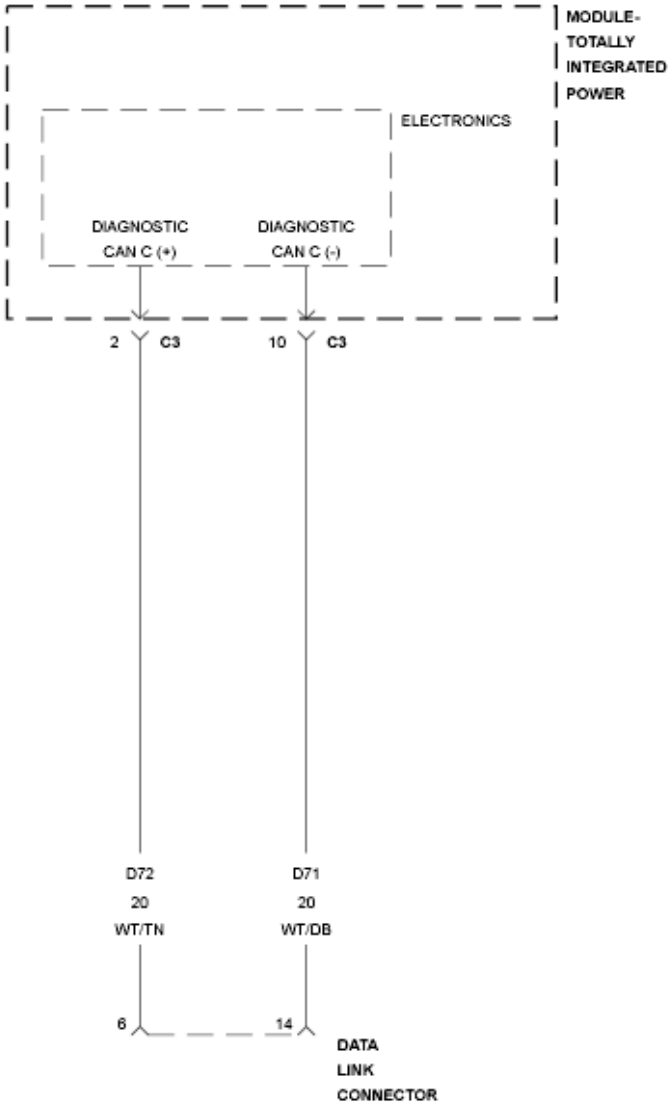

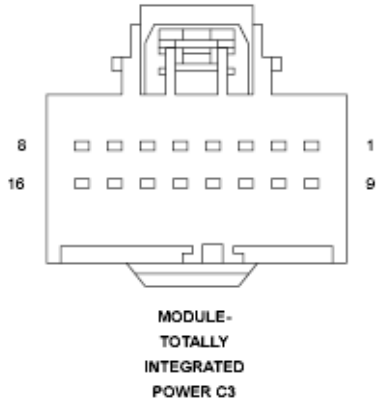

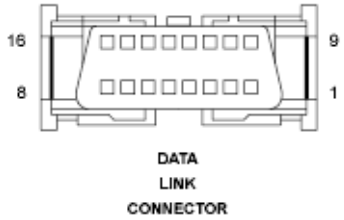

Fig. 8: Diagnostic Can C (+) And/Or (-) Wiring Diagram

Courtesy of CHRYSLER GROUP, LLC

For a complete wiring diagram, **refer to appropriate SYSTEM WIRING DIAGRAMS article** .

WHEN MONITORED

When the scan tool queries the Totally Integrated Power Module (TIPM).

SET CONDITION

The scan tool has detected a shorted low condition on the (D72) Diagnostic CAN C (+) circuit.

POSSIBLE CAUSES

Possible Causes
(D72) DIAGNOSTIC CAN C (+) CIRCUIT SHORTED TO GROUND TOTALLY INTEGRATED POWER MODULE

DIAGNOSTIC TEST

1. **CHECK THE STATUS OF THE ERROR MESSAGE**

NOTE: Ensure the vehicle being tested is a CAN BUS VEHICLE. If not, false error messages may be displayed.

NOTE: Ensure the scan tool is updated to the latest software.

NOTE: Check for any TSB(s) related to the condition. If a TSB applies, perform the procedure outlined in the TSB before continuing.

1. With the scan tool, record the error message.
2. Disconnect the scan tool from the DLC.
3. Cycle the ignition from on to off 3 times.
4. Turn the ignition on.

Does the scan tool display this same error message?

Yes

- Go To 2

No

- The conditions that caused this error message to set are not present at this time. Using the wiring diagram/schematic as a guide, inspect the wiring and connectors.

2. **(D72) DIAGNOSTIC CAN C (+) CIRCUIT SHORTED TO GROUND**

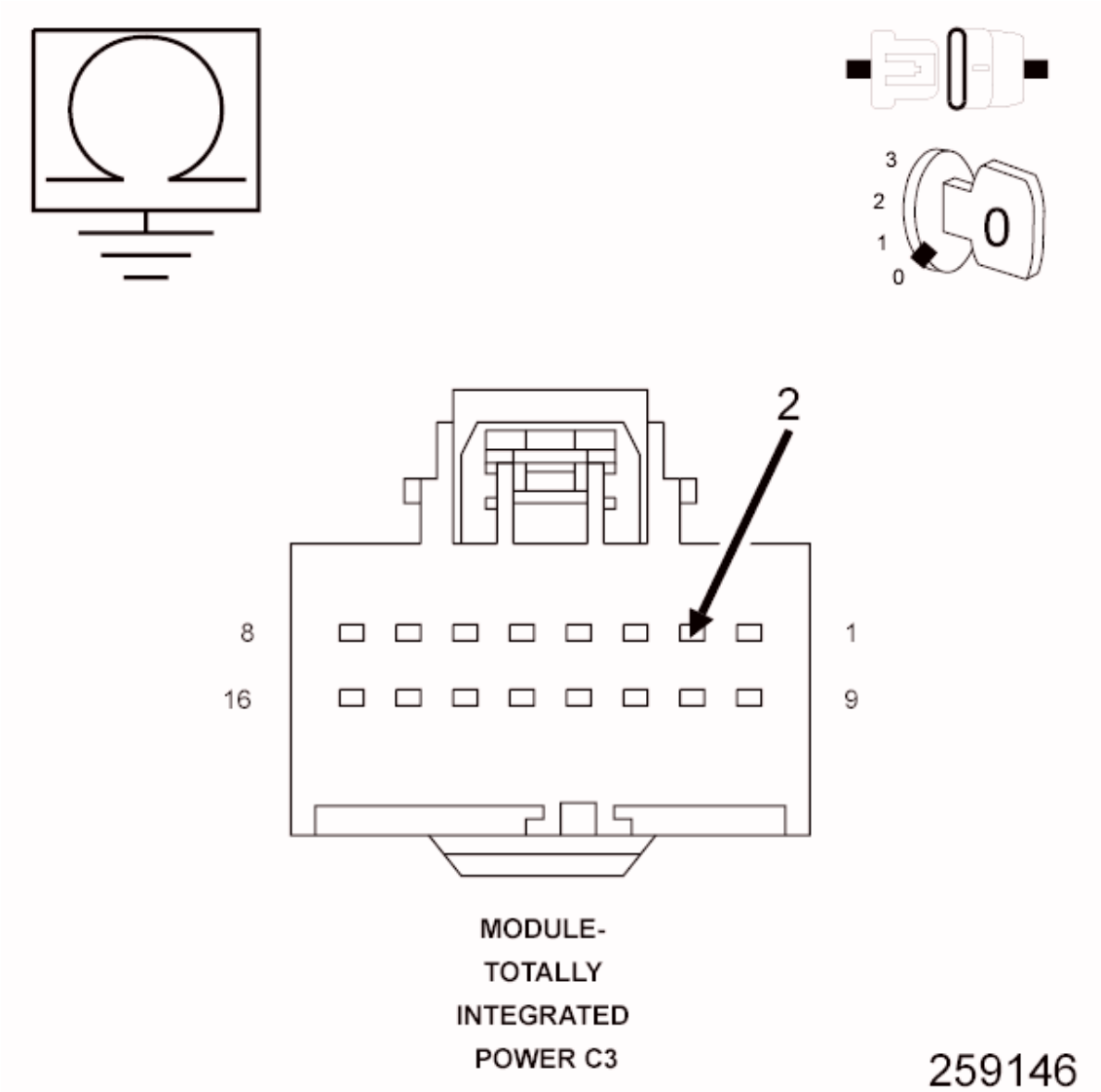

Fig. 9: Measuring Resistance Between Ground & Diagnostic Can C (+) Circuit At TIPM C3 Harness Connector
Courtesy of CHRYSLER GROUP, LLC

1. Turn the ignition off.
2. Disconnect the Totally Integrated Power Module (TIPM) C3 harness connector.
3. Disconnect the scan tool from the DLC.
4. Measure the resistance between ground and the (D72) Diagnostic CAN C (+) circuit at the TIPM C3 harness connector.

   Is the resistance below 100.0 ohms?

   Yes

   - Repair the (D72) Diagnostic CAN C (+) circuit for a short to ground.
   - Perform the BODY VERIFICATION TEST. Refer to **STANDARD PROCEDURE** .

   No

   - Inspect the wiring and connectors for damage or shorted circuits. If OK, replace the Totally Integrated Power Module in accordance with the Service Information.
   - Perform the BODY VERIFICATION TEST. Refer to **STANDARD PROCEDURE** .

DIAGNOSTIC CAN C (-) CIRCUIT LOW

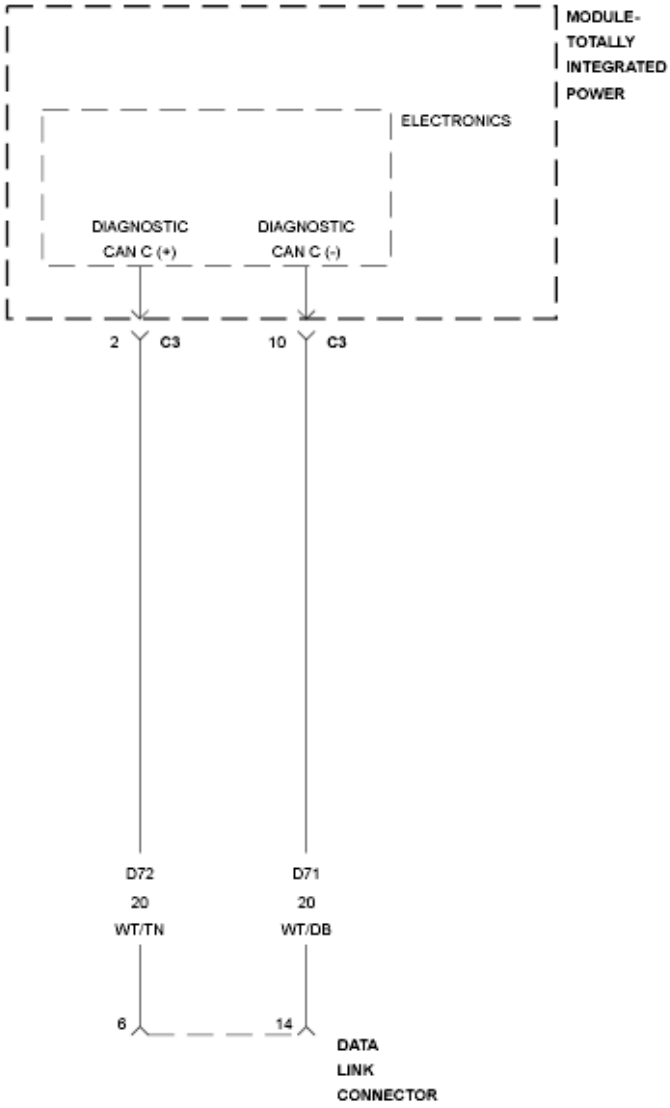

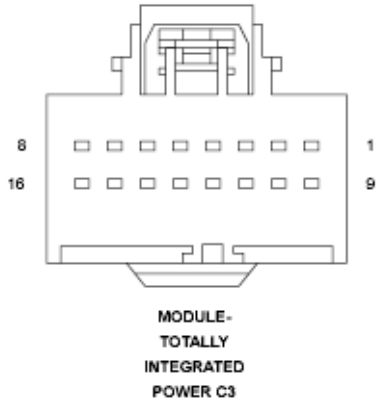

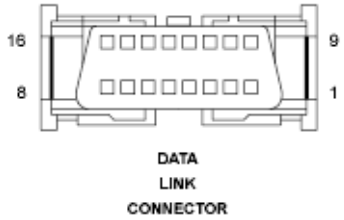

Fig. 10: Diagnostic Can C (+) And/Or (-) Wiring Diagram

Courtesy of CHRYSLER GROUP, LLC

For a complete wiring diagram, **refer to appropriate SYSTEM WIRING DIAGRAMS article** .

WHEN MONITORED

When the scan tool queries the Totally Integrated Power Module (TIPM).

SET CONDITION

The scan tool has detected a shorted low condition on the (D71) Diagnostic CAN C (-) circuit.

POSSIBLE CAUSES

Possible Causes
(D71) DIAGNOSTIC CAN C (-) CIRCUIT SHORTED TO GROUND TOTALLY INTEGRATED POWER MODULE

DIAGNOSTIC TEST

1. **CHECK THE STATUS OF THE ERROR MESSAGE**

NOTE: Ensure the vehicle being tested is a CAN BUS VEHICLE. If not, false error messages may be displayed.

NOTE: Ensure the scan tool is updated to the latest software.

NOTE: Check for any TSB(s) related to the condition. If a TSB applies, perform the procedure outlined in the TSB before continuing.

1. With the scan tool, record the error message.
2. Disconnect the scan tool from the DLC.
3. Cycle the ignition from on to off 3 times.
4. Turn the ignition on.

Does the scan tool display this same error message?

Yes

- Go To 2

No

- The conditions that caused this error message to set are not present at this time. Using the wiring diagram/schematic as a guide, inspect the wiring and connectors.

2. **(D71) DIAGNOSTIC CAN C (-) CIRCUIT SHORTED TO GROUND**

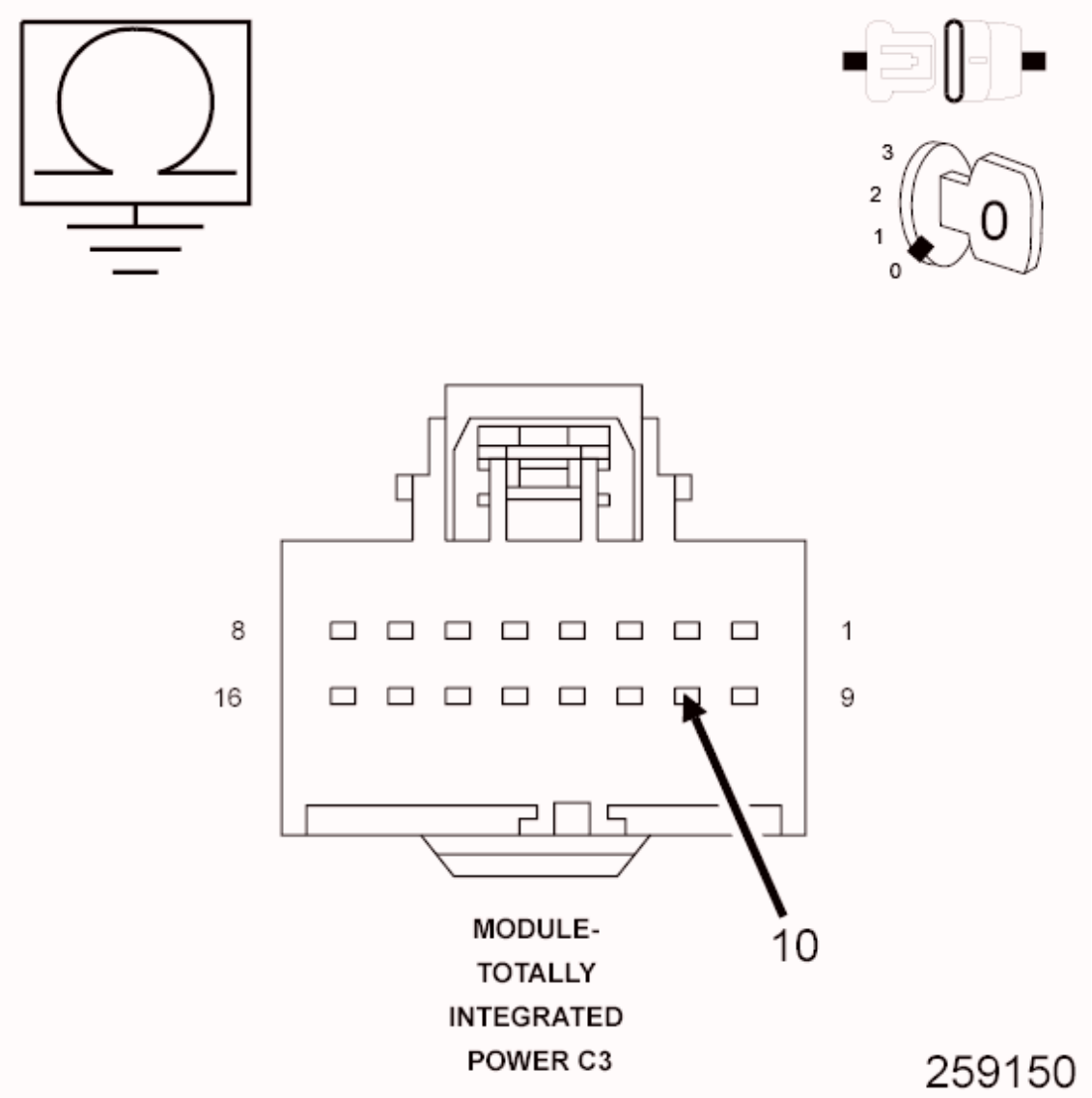

Fig. 11: Measuring Resistance Between Ground & Diagnostic Can C (-) Circuit At TIPM C3 Harness Connector
Courtesy of CHRYSLER GROUP, LLC

1. Turn the ignition off.
2. Disconnect the Totally Integrated Power Module (TIPM) C3 harness connector.
3. Disconnect the scan tool from the DLC.
4. Measure the resistance between ground and the (D71) Diagnostic CAN C (-) circuit at the TIPM C3 harness connector.

   Is the resistance below 100.0 ohms?

   Yes

   - Repair the (D71) Diagnostic CAN C (-) circuit for a short to ground.
   - Perform the BODY VERIFICATION TEST. Refer to **STANDARD PROCEDURE** .

   No

   - Inspect the wiring and connectors for damage or shorted circuits. If OK, replace the Totally Integrated Power Module in accordance with the Service Information.
   - Perform the BODY VERIFICATION TEST. Refer to **STANDARD PROCEDURE** .

DIAGNOSTIC CAN C (+) CIRCUIT OPEN

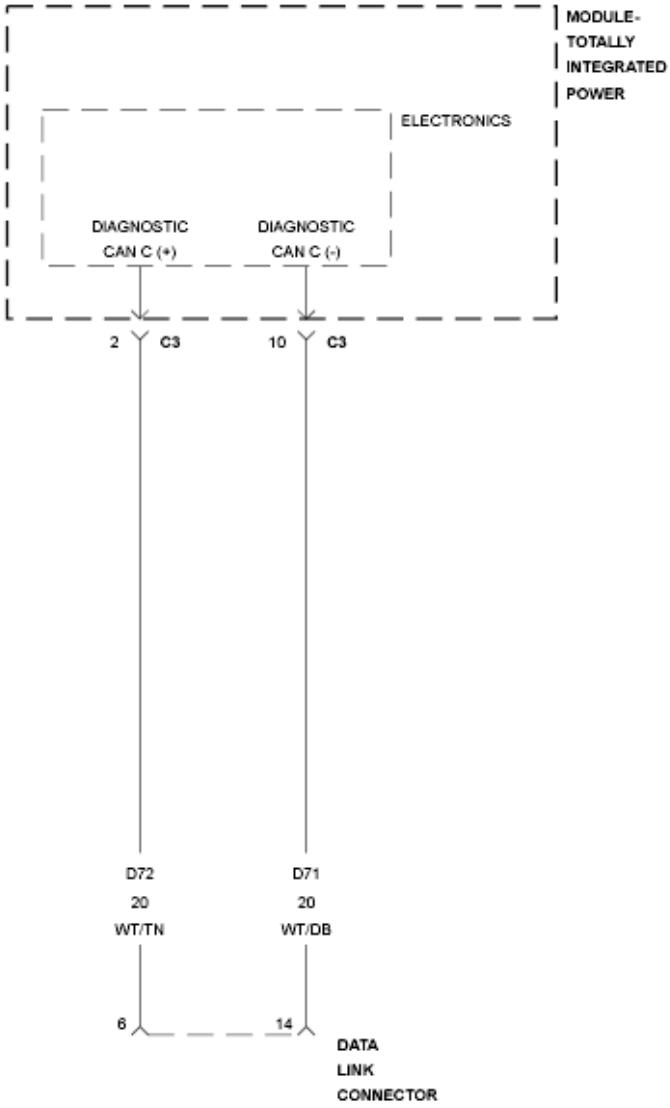

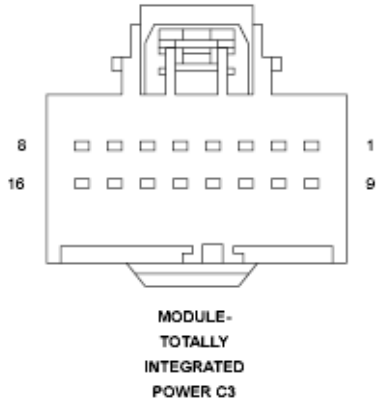

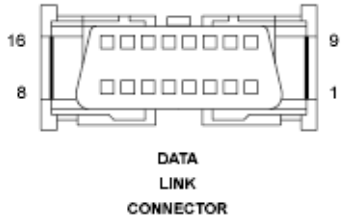

Fig. 12: Diagnostic Can C (+) And/Or (-) Wiring Diagram

Courtesy of CHRYSLER GROUP, LLC

For a complete wiring diagram, **refer to appropriate SYSTEM WIRING DIAGRAMS article** .

WHEN MONITORED

When the scan tool queries the Totally Integrated Power Module (TIPM).

SET CONDITION

The scan tool has detected an open condition on the (D72) Diagnostic CAN C (+) circuit.

POSSIBLE CAUSES

Possible Causes
(D72) DIAGNOSTIC CAN C (+) CIRCUIT OPEN TOTALLY INTEGRATED POWER MODULE

DIAGNOSTIC TEST

1. **CHECK THE STATUS OF THE ERROR MESSAGE**

NOTE: Ensure the vehicle being tested is a CAN BUS VEHICLE. If not, false error messages may be displayed.

NOTE: Ensure the scan tool is updated to the latest software.

NOTE: Check for any TSB(s) related to the condition. If a TSB applies, perform the procedure outlined in the TSB before continuing.

1. With the scan tool, record the error message.
2. Disconnect the scan tool from the DLC.
3. Cycle the ignition from on to off 3 times.
4. Turn the ignition on.

Does the scan tool display this same error message?

Yes

- Go To 2

No

- The conditions that caused this error message to set are not present at this time. Using the wiring diagram/schematic as a guide, inspect the wiring and connectors.

2. **(D72) DIAGNOSTIC CAN C (+) CIRCUIT OPEN**

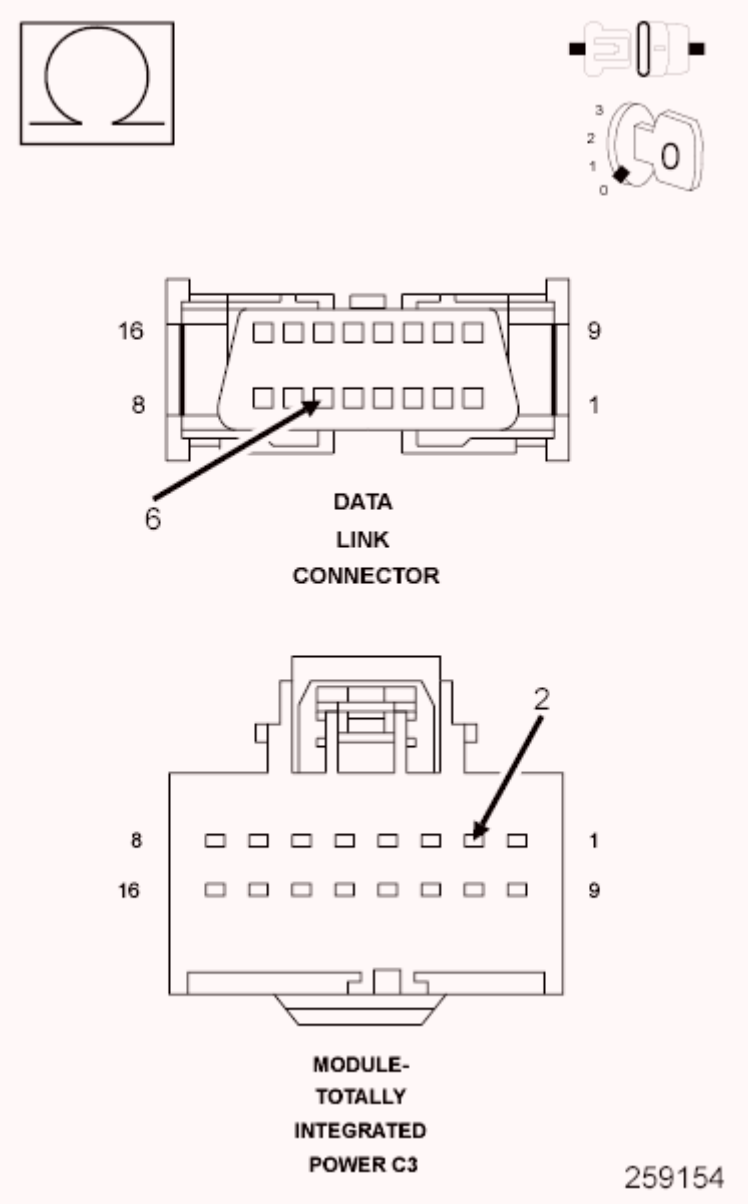

Fig. 13: Measuring Resistance Of Diagnostic Can C (+) Circuit Between TIPM Connector & DLC

Courtesy of CHRYSLER GROUP, LLC

1. Turn the ignition off.
2. Disconnect the Totally Integrated Power Module (TIPM) C3 harness connector.
3. Disconnect the scan tool from the DLC.
4. Measure the resistance of the (D72) Diagnostic CAN C (+) circuit between the TIPM C3 harness connector and the DLC.

   Is the resistance below 5.0 ohms?

   Yes

   - Inspect the wiring and connectors for damage or shorted circuits. If OK, replace the Totally Integrated Power Module in accordance with the Service Information.
   - Perform the BODY VERIFICATION TEST. Refer to **STANDARD PROCEDURE** .

   No

   - Repair the (D72) Diagnostic CAN C (+) circuit for an open.
   - Perform the BODY VERIFICATION TEST. Refer to **STANDARD PROCEDURE** .

DIAGNOSTIC CAN C (-) CIRCUIT OPEN

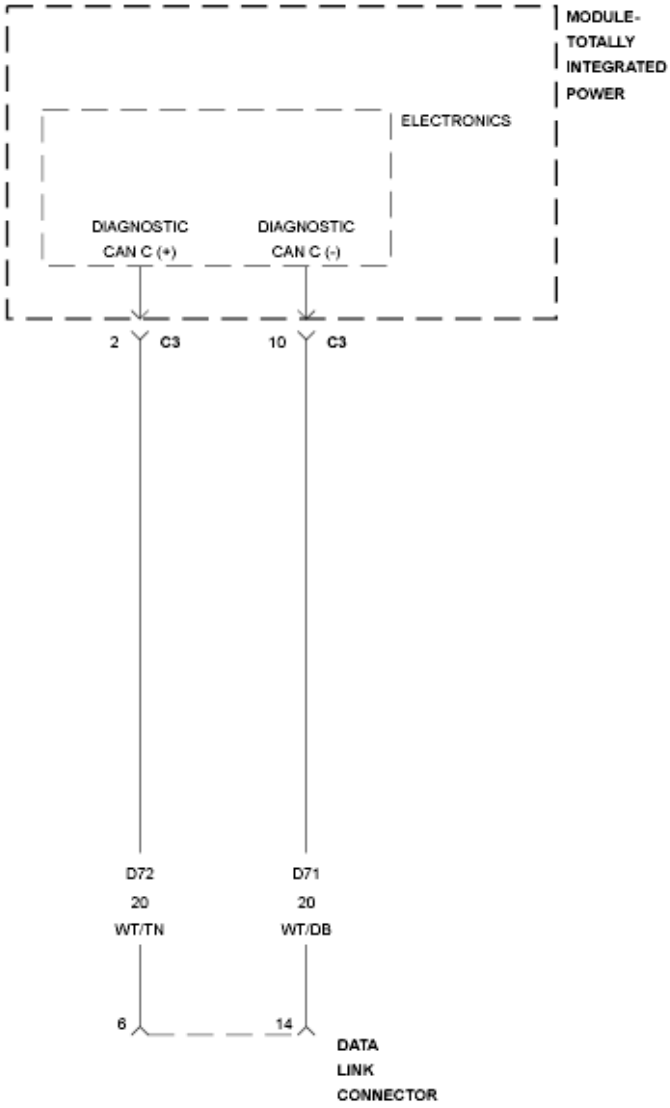

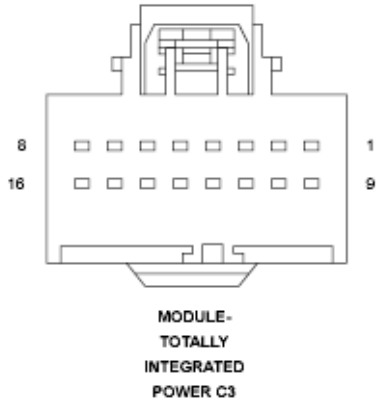

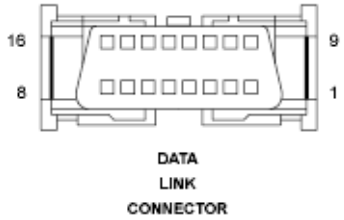

Fig. 14: Diagnostic Can C (+) And/Or (-) Wiring Diagram

Courtesy of CHRYSLER GROUP, LLC

For a complete wiring diagram, **refer to appropriate SYSTEM WIRING DIAGRAMS article** .

WHEN MONITORED

When the scan tool queries the Totally Integrated Power Module (TIPM).

SET CONDITION

The scan tool has detected an open condition on the (D71) Diagnostic CAN C (-) circuit.

POSSIBLE CAUSES

Possible Causes
(D71) DIAGNOSTIC CAN C (-) CIRCUIT OPEN TOTALLY INTEGRATED POWER MODULE

DIAGNOSTIC TEST

1. **CHECK THE STATUS OF THE ERROR MESSAGE**

NOTE: Ensure the vehicle being tested is a CAN BUS VEHICLE. If not, false error messages may be displayed.

NOTE: Ensure the scan tool is updated to the latest software.

NOTE: Check for any TSB(s) related to the condition. If a TSB applies, perform the procedure outlined in the TSB before continuing.

1. With the scan tool, record the error message.
2. Disconnect the scan tool from the DLC.
3. Cycle the ignition from on to off 3 times.
4. Turn the ignition on.

Does the scan tool display this same error message?

Yes

- Go To 2

No

- The conditions that caused this error message to set are not present at this time. Using the wiring diagram/schematic as a guide, inspect the wiring and connectors.

2. **(D71) DIAGNOSTIC CAN C (-) CIRCUIT OPEN**

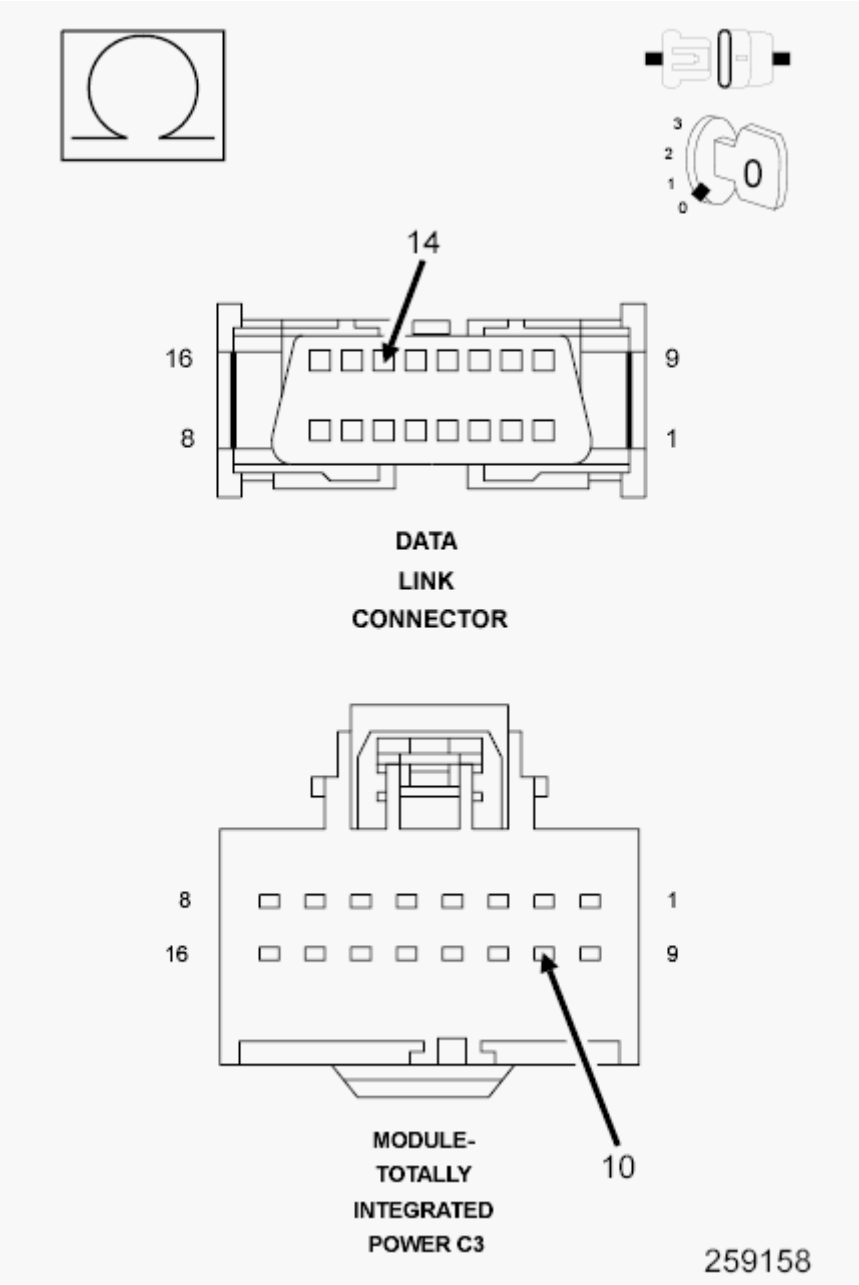

Fig. 15: Measuring Resistance Of Diagnostic Can C (-) Circuit Between

TIPM Harness Connector & DLC
Courtesy of CHRYSLER GROUP, LLC

1. Turn the ignition off.
2. Disconnect the TIPM C3 harness connector.
3. Disconnect the scan tool from the DLC.
4. Measure the resistance of the (D71) Diagnostic CAN C (-) circuit between the TIPM C3 harness connector and the DLC.

   Is the resistance below 5.0 ohms?

   Yes

   - Inspect the wiring and connectors for damage or shorted circuits. If OK, replace the Totally Integrated Power Module in accordance with the Service Information.
   - Perform the BODY VERIFICATION TEST. Refer to **STANDARD PROCEDURE** .

   No

   - Repair the (D71) Diagnostic CAN C (-) circuit for an open.
   - Perform the BODY VERIFICATION TEST. Refer to **STANDARD PROCEDURE** .

NO RESPONSE FROM ABS (ANTILOCK BRAKE MODULE)

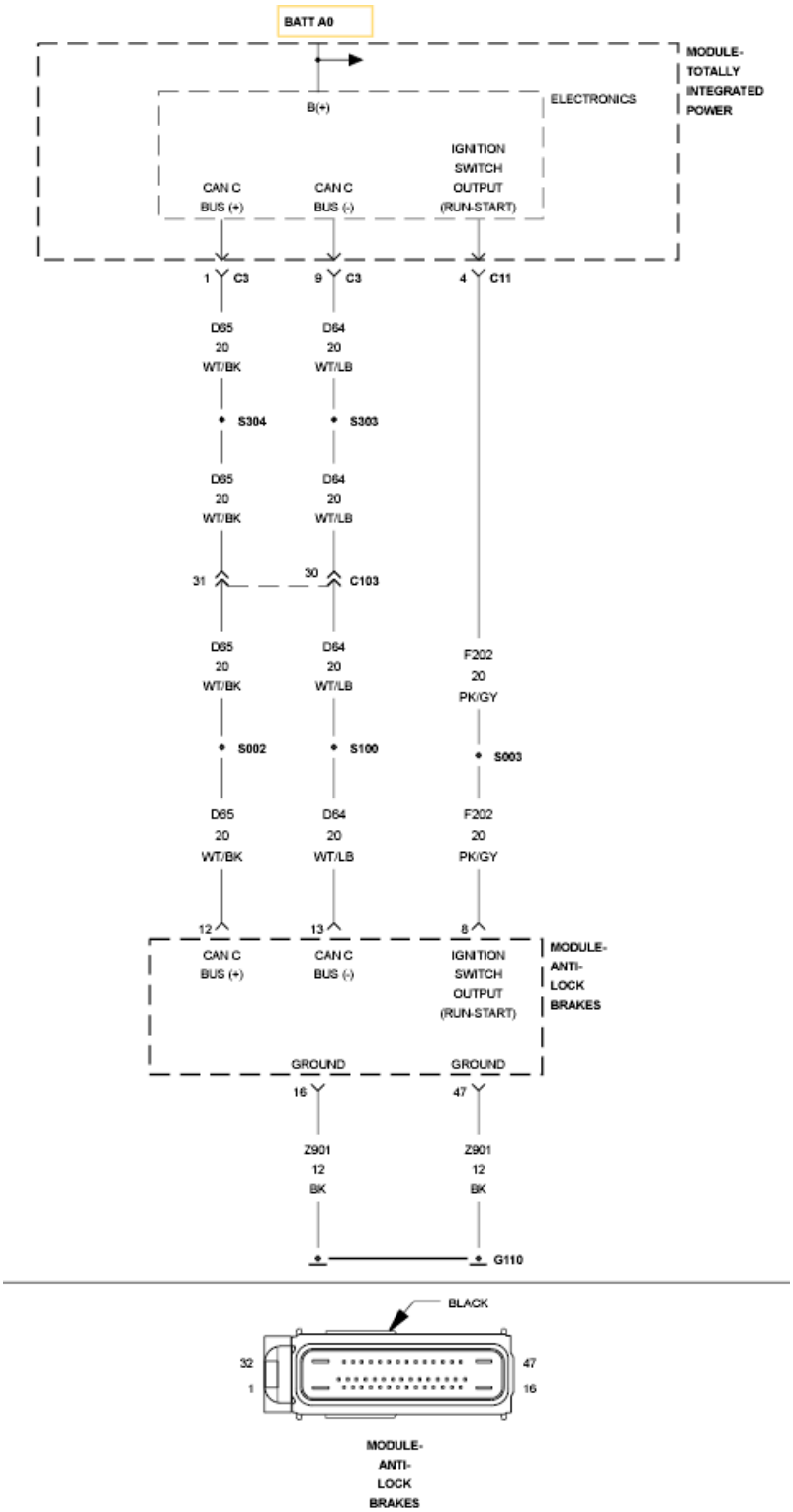

Fig. 16: Antilock Brake Module Wiring Diagram
Courtesy of CHRYSLER GROUP, LLC

For a complete wiring diagram, **refer to appropriate SYSTEM WIRING DIAGRAMS article** .

POSSIBLE CAUSES

Possible Causes
(Z901) GROUND CIRCUITS OPEN
(F202) IGNITION SWITCH OUTPUT (RUN-START) CIRCUIT OPEN OR SHORTED
(D65) CAN C BUS (+) CIRCUIT OPEN
(D64) CAN C BUS (-) CIRCUIT OPEN
ANTILOCK BRAKE MODULE

DIAGNOSTIC TEST

1. **TEST FOR INTERMITTENT CONDITION**

NOTE: Check for any TSB(s) related to the condition. If a TSB applies, perform the procedure outlined in the TSB before continuing.

1. Turn the ignition on.

NOTE: Ensure the IOD fuse is installed and battery voltage is between 10.0 and 16.0 volts.

2. With the scan tool, select ECU View.

NOTE: A red "X" will be next to the module that is not communicating, indicating that the module is not active on the Bus network. A green check indicates that the module is active on the Bus network.

NOTE: Check the TIPM for any active CAN C hardware DTCs, perform DTC before proceeding.

Does the scan tool display a red "X" next to the module?

Yes

- Go To 2

No

- The no response condition is not present at this time. Using the wiring diagram/schematic as a guide, inspect the wiring for chafed, pierced, pinched, and partially broken wires and the wiring harness connectors for broken, bent, pushed out, and corroded terminals.

2. **(Z901) GROUND CIRCUITS OPEN**

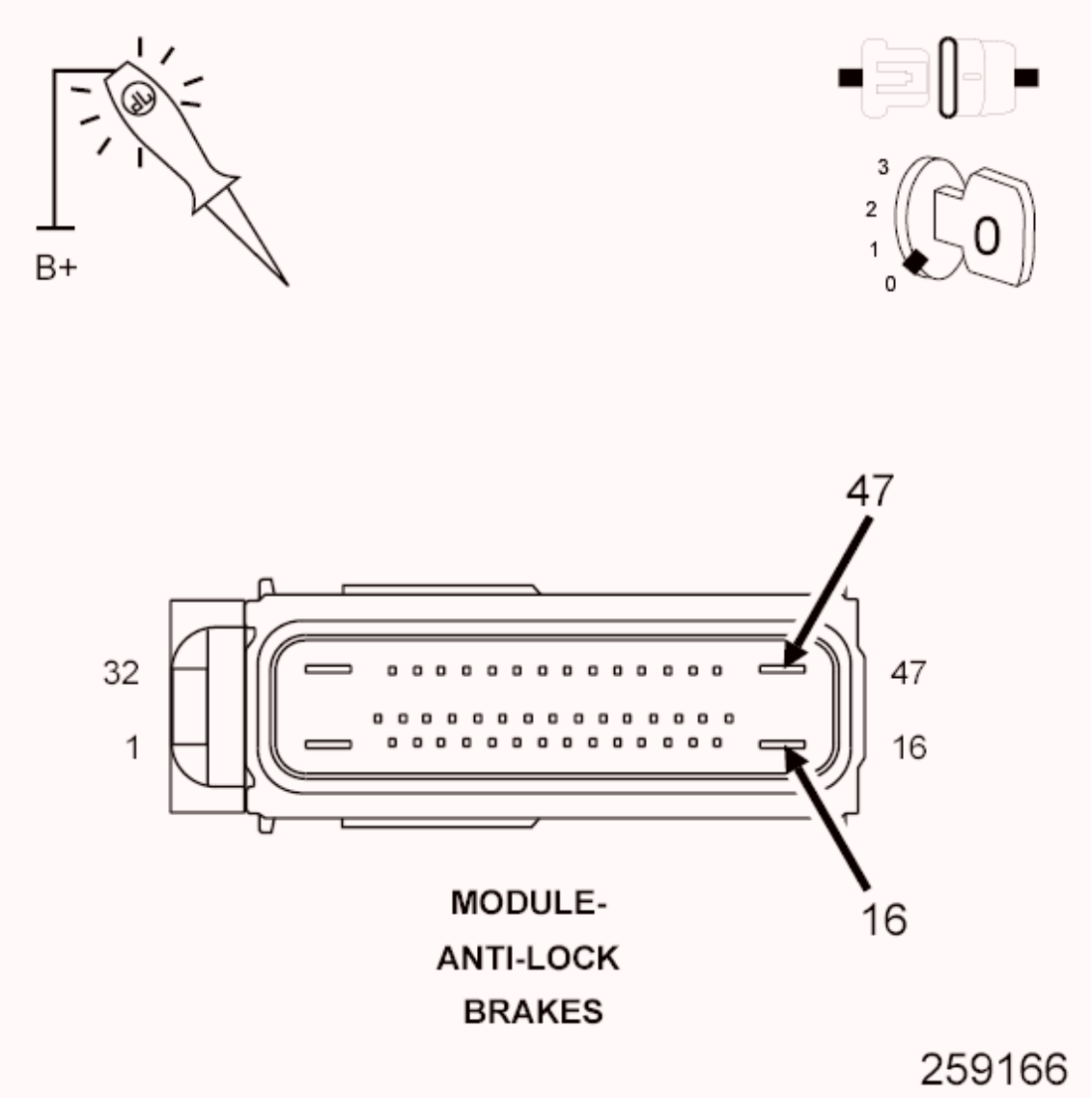

Fig. 17: Checking Ground Circuits For Open
Courtesy of CHRYSLER GROUP, LLC

1. Turn the ignition off.
2. Disconnect the ABS harness connector.
3. Using a 12-volt test light connected to 12-volts, check both (Z901) ground circuits.

Does the test light illuminate brightly for each circuit?

Yes

- Go To 3

No

- Repair the (Z901) ground circuits for an open.
- Perform the ABS VERIFICATION TEST. Refer to **STANDARD PROCEDURE** .

3. **(F202) IGNITION SWITCH OUTPUT (RUN-START) CIRCUIT OPEN OR SHORTED**

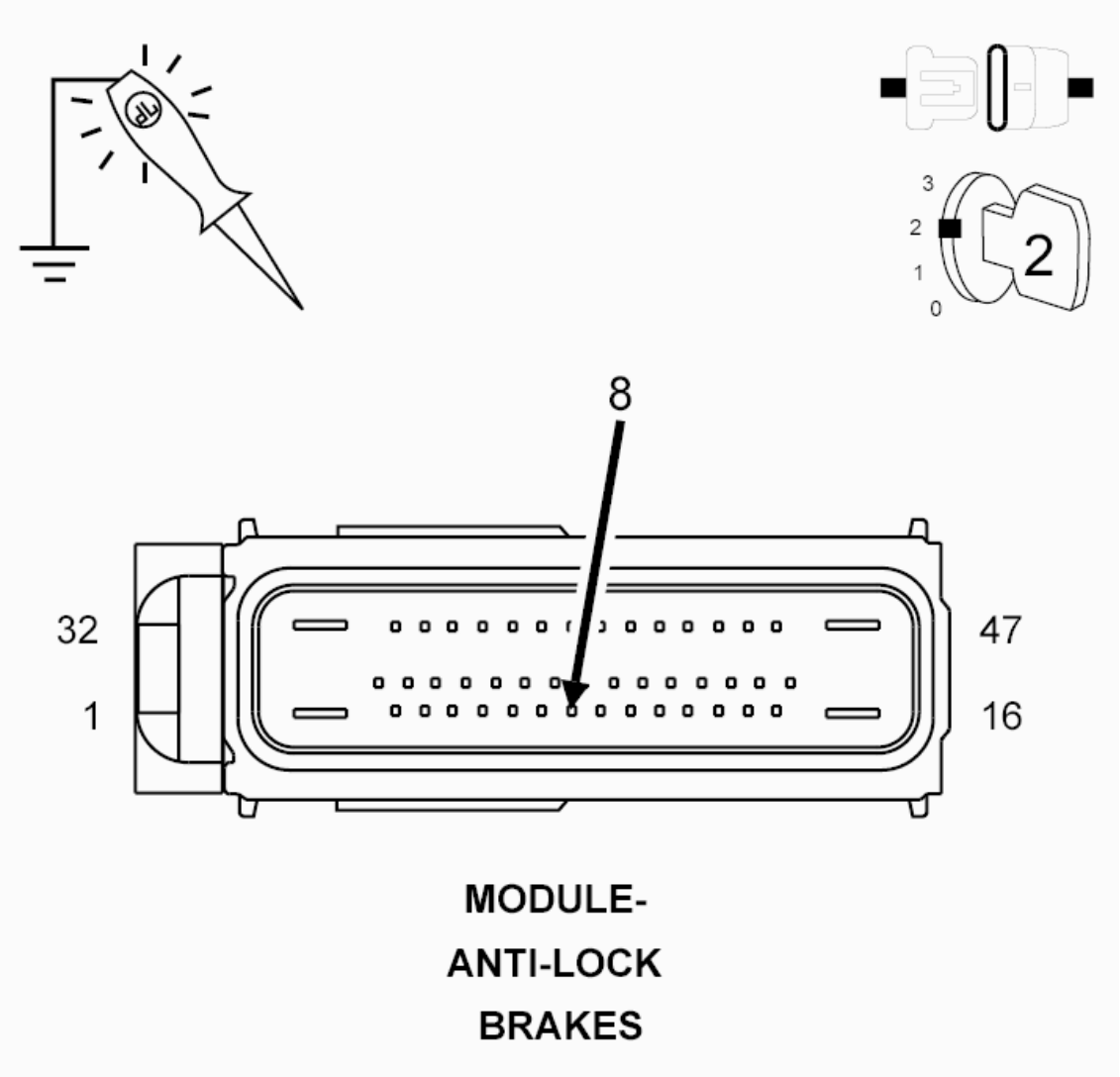

Fig. 18: Checking Ignition Switch Output (Run-Start) Circuit Using 12-Volt Test Light Connected To Ground

Courtesy of CHRYSLER GROUP, LLC

1. Turn the ignition on.
2. Using a 12-volt test light connected to ground, check the (F202) Ignition Switch Output (Run-Start) circuit.

   Does the test light illuminate brightly?

   Yes

   - Go To 4

   No

   - Repair the (F202) Ignition Switch Output (Run-Start) circuit for an open or short.
   - Perform the ABS VERIFICATION TEST. Refer to **STANDARD PROCEDURE** .

4. **(D65) CAN C BUS (+) CIRCUIT OPEN**

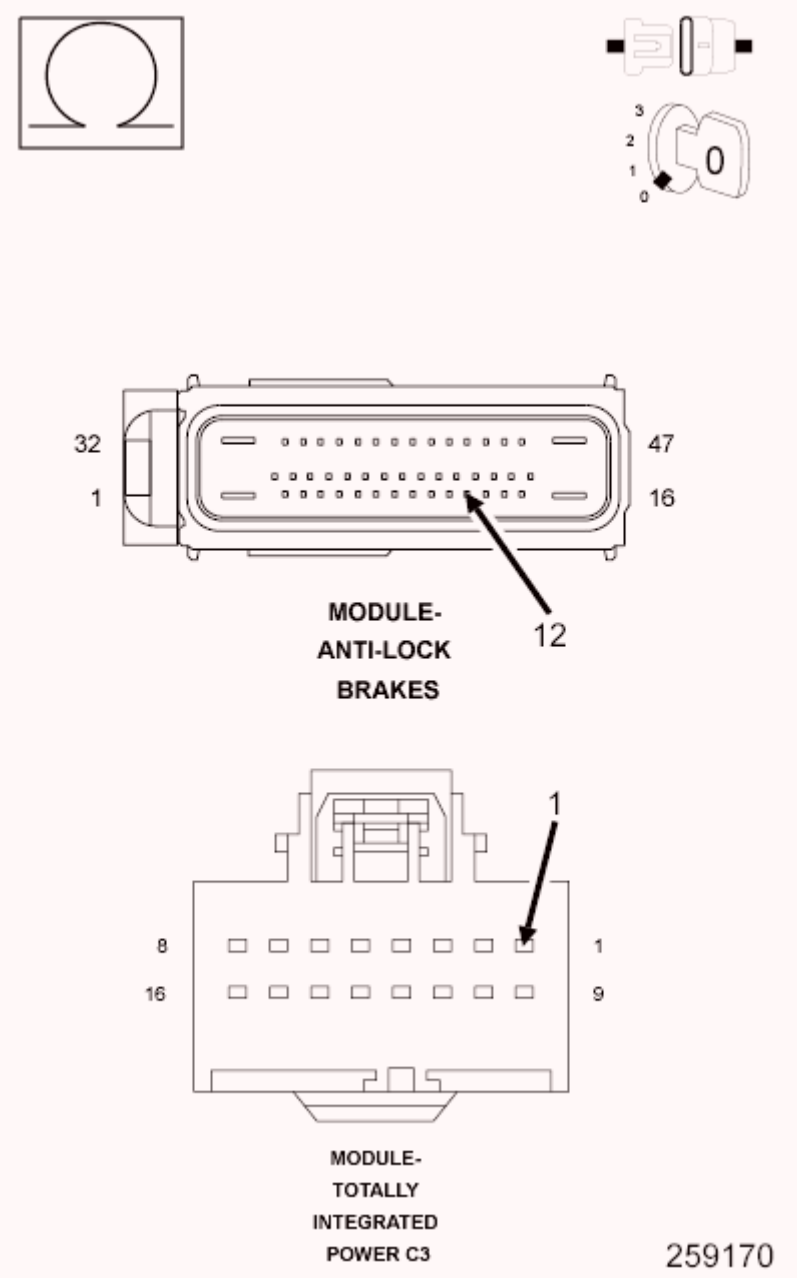

Fig. 19: Measuring Resistance Of Can C Bus (+) Circuit Between TIPM Connector & Antilock Brake Module Connector
Courtesy of CHRYSLER GROUP, LLC

1. Turn the ignition off.
2. Disconnect the TIPM C3 harness connector.
3. Measure the resistance of the (D65) CAN C Bus (+) circuit between the TIPM connector and the Antilock Brake Module connector.

   Is resistance below 5.0 ohms?

Yes

- Go To 5

No

- Repair the (D65) CAN C Bus (+) circuit for an open.
- Perform the ABS VERIFICATION TEST. Refer to **STANDARD PROCEDURE** .

5. **(D64) CAN C BUS (-) CIRCUIT OPEN**

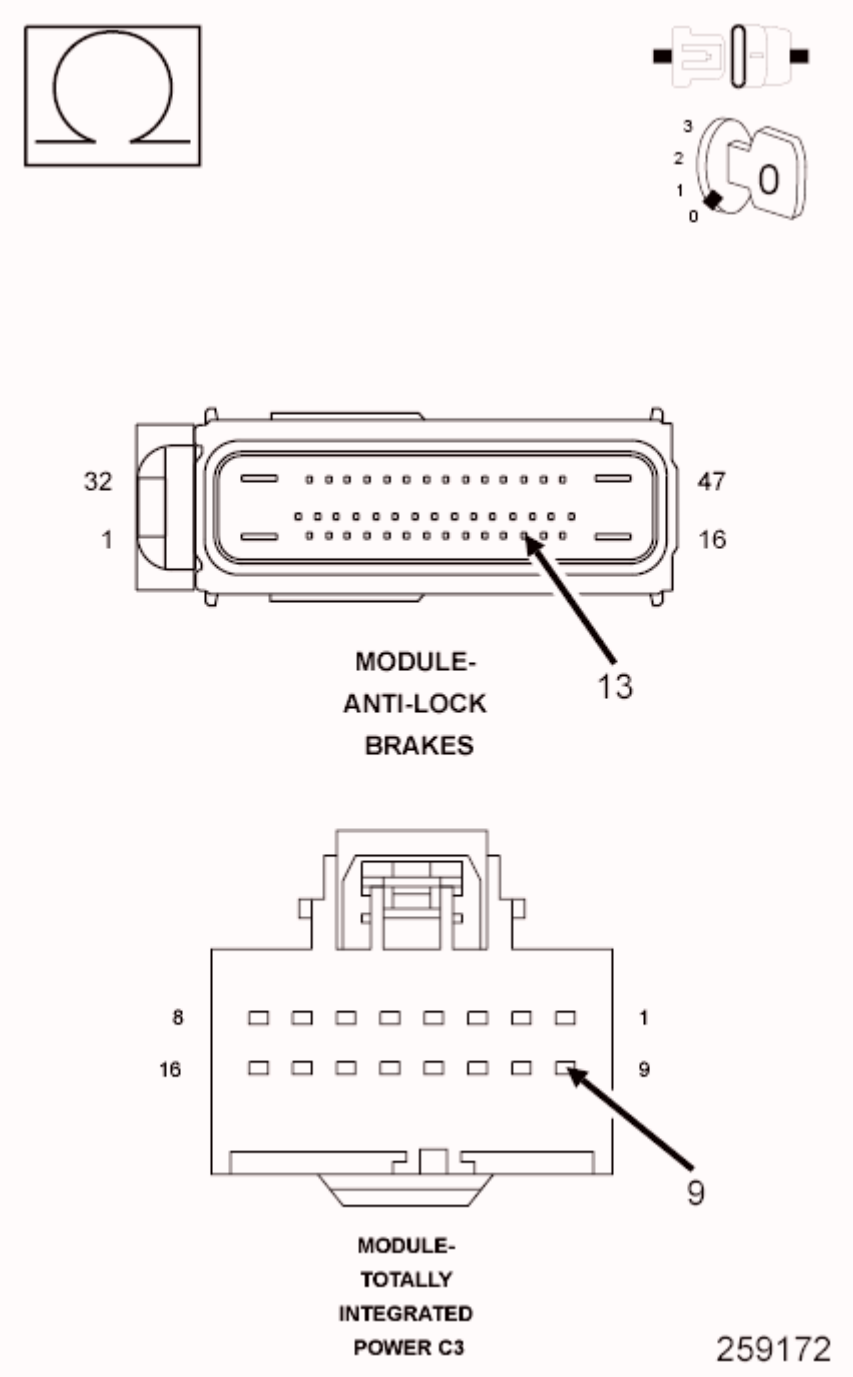

Fig. 20: Measuring Resistance Of Can C Bus (-) Circuit Between TIPM Connector & Antilock Brake Module Connector
Courtesy of CHRYSLER GROUP, LLC

1. Measure the resistance of the (D64) CAN C Bus (-) circuit between the TIPM connector and the Antilock Brake Module connector.

   Is resistance below 5.0 ohms?

   Yes

- Replace the Antilock Brake Module in accordance with the Service Information.
- Perform the ABS VERIFICATION TEST. Refer to **STANDARD PROCEDURE** .

No

- Repair the (D64) CAN C Bus (-) circuit for an open.
- Perform the ABS VERIFICATION TEST. Refer to **STANDARD PROCEDURE** .

NO RESPONSE FROM AMP (AMPLIFIER)

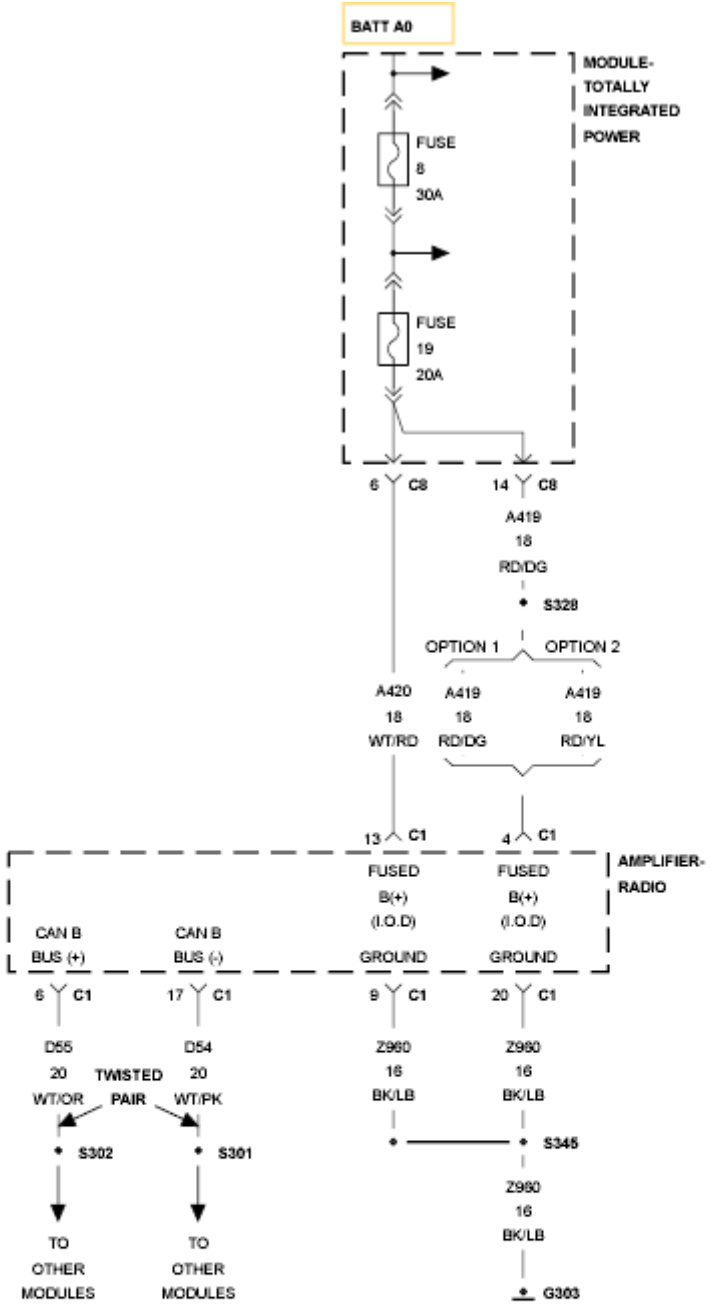

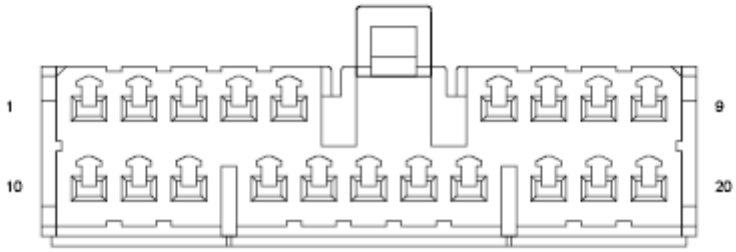

AMPLIFIER-
RADIO C1

Fig. 21: Radio Amplifier Wiring Diagram
Courtesy of CHRYSLER GROUP, LLC

For a complete wiring diagram, **refer to appropriate SYSTEM WIRING DIAGRAMS article** .

POSSIBLE CAUSES

Possible Causes
(A419) (A420) FUSED B (+) CIRCUIT OPEN OR SHORTED
(Z960) GROUND CIRCUIT OPEN
(D55) AND (D54) CAN B BUS CIRCUITS OPEN
AMPLIFIER

DIAGNOSTIC TEST

1. **TEST FOR INTERMITTENT CONDITION**

NOTE: Check for any TSB(s) related to the condition. If a TSB applies, perform the procedure outlined in the TSB before continuing.

1. Turn the ignition on.

NOTE: Ensure the IOD fuse is installed and battery voltage is between 10.0 and 16.0 volts.

2. With the scan tool, select ECU View.

NOTE: A red "X" will be next to the module that is not communicating, indicating that the module is not active on the Bus network. A green check indicates that the module is active on the Bus network.

Does the scan tool display a red "X" next to the module?

Yes

- Go To 2

No

- The no response condition is not present at this time. Using the wiring diagram/schematic as a guide, inspect the wiring for chafed, pierced, pinched, and partially broken wires and the wiring harness connectors for broken, bent, pushed out, and corroded terminals.

2. **(A419) (A420) FUSED B(+) CIRCUIT OPEN OR SHORTED**

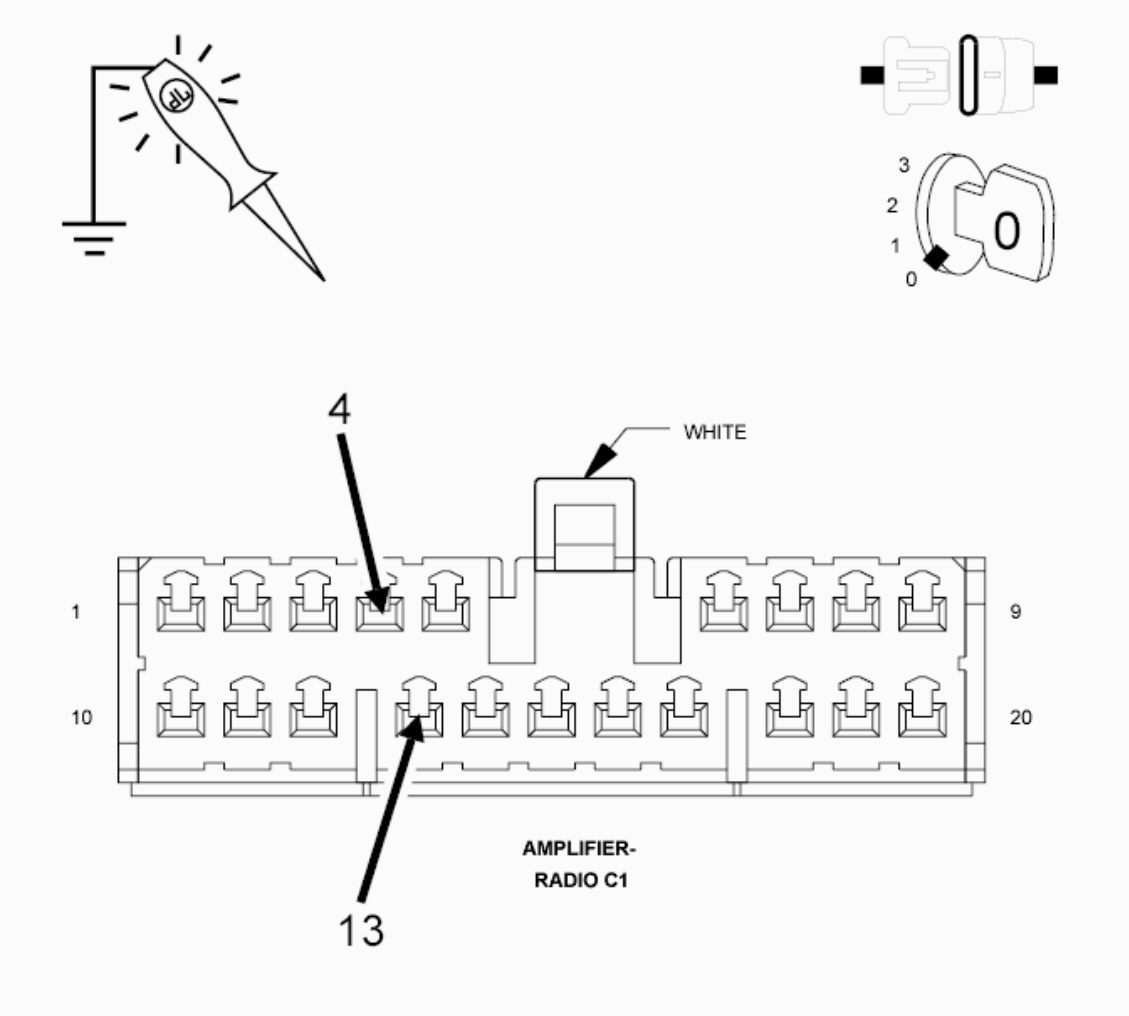

Fig. 22: Checking Fused B(+) Circuits Using 12-Volt Test Light Connected To Ground
Courtesy of CHRYSLER GROUP, LLC

1. Turn the ignition off.
2. Disconnect the Radio Amplifier C1 harness connector.
3. Using a 12-volt test light connected to ground, check each (A419) and (A420) Fused B(+) circuit.

Does the test light illuminate brightly for each circuit?

Yes

- Go To 3

No

- Repair the (A419) or (A420) Fused B(+) circuit for an open or short.
- Perform the BODY VERIFICATION TEST. Refer to **STANDARD PROCEDURE** .

3. **(Z960) GROUND CIRCUIT OPEN**

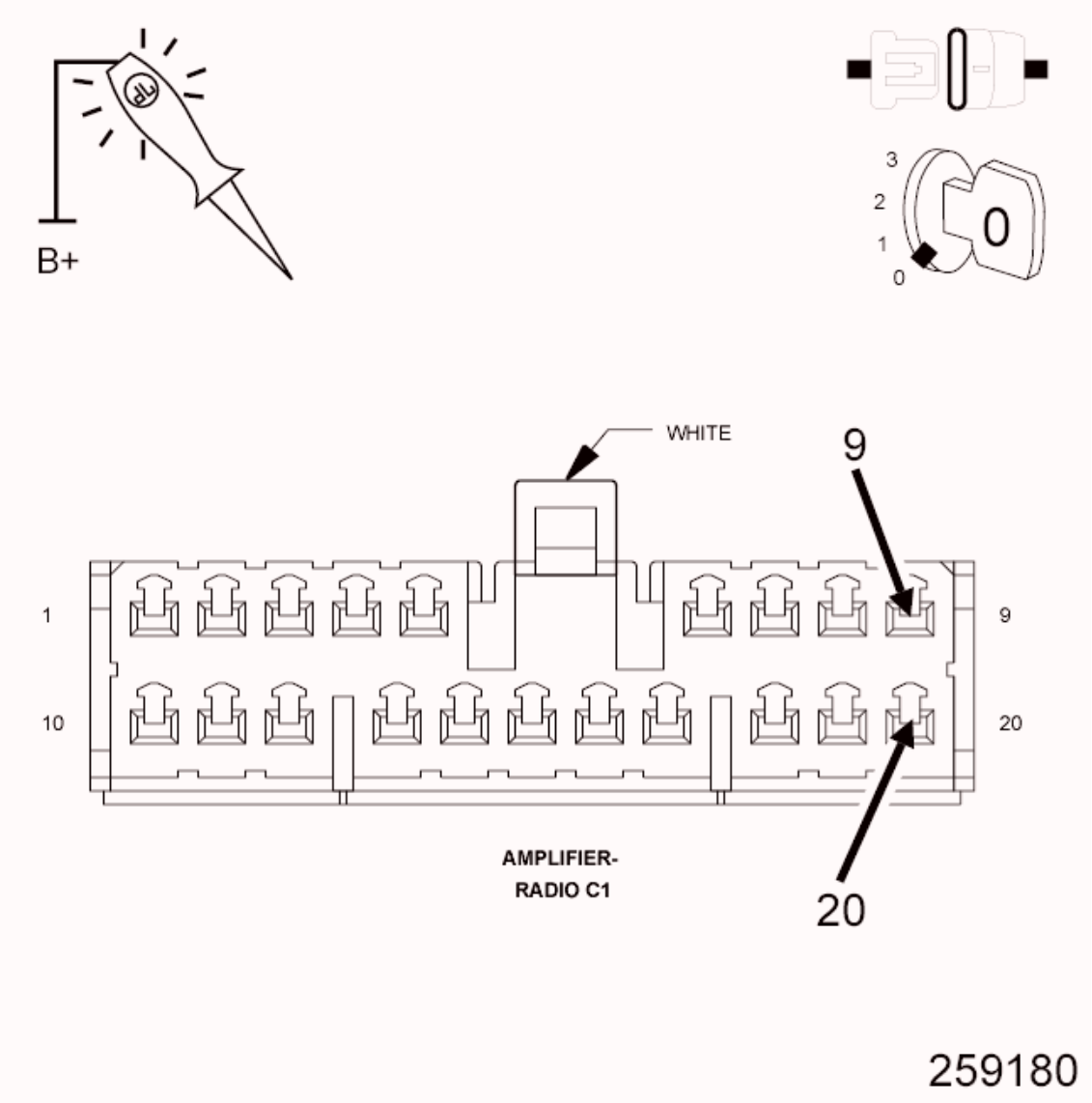

Fig. 23: Checking Ground Circuits Using 12-Volt Test Light Connected

To 12-Volts
Courtesy of CHRYSLER GROUP, LLC

1. Using a 12-volt test light connected to 12-volts, check each (Z960) ground circuit.

   Does the test light illuminate brightly for each circuit?

   Yes

   - Go To 4

   No

   - Repair the (Z960) ground circuit for an open.
   - Perform the BODY VERIFICATION TEST. Refer to **STANDARD PROCEDURE** .

4. **(D55) AND (D54) CAN B BUS CIRCUITS OPEN**

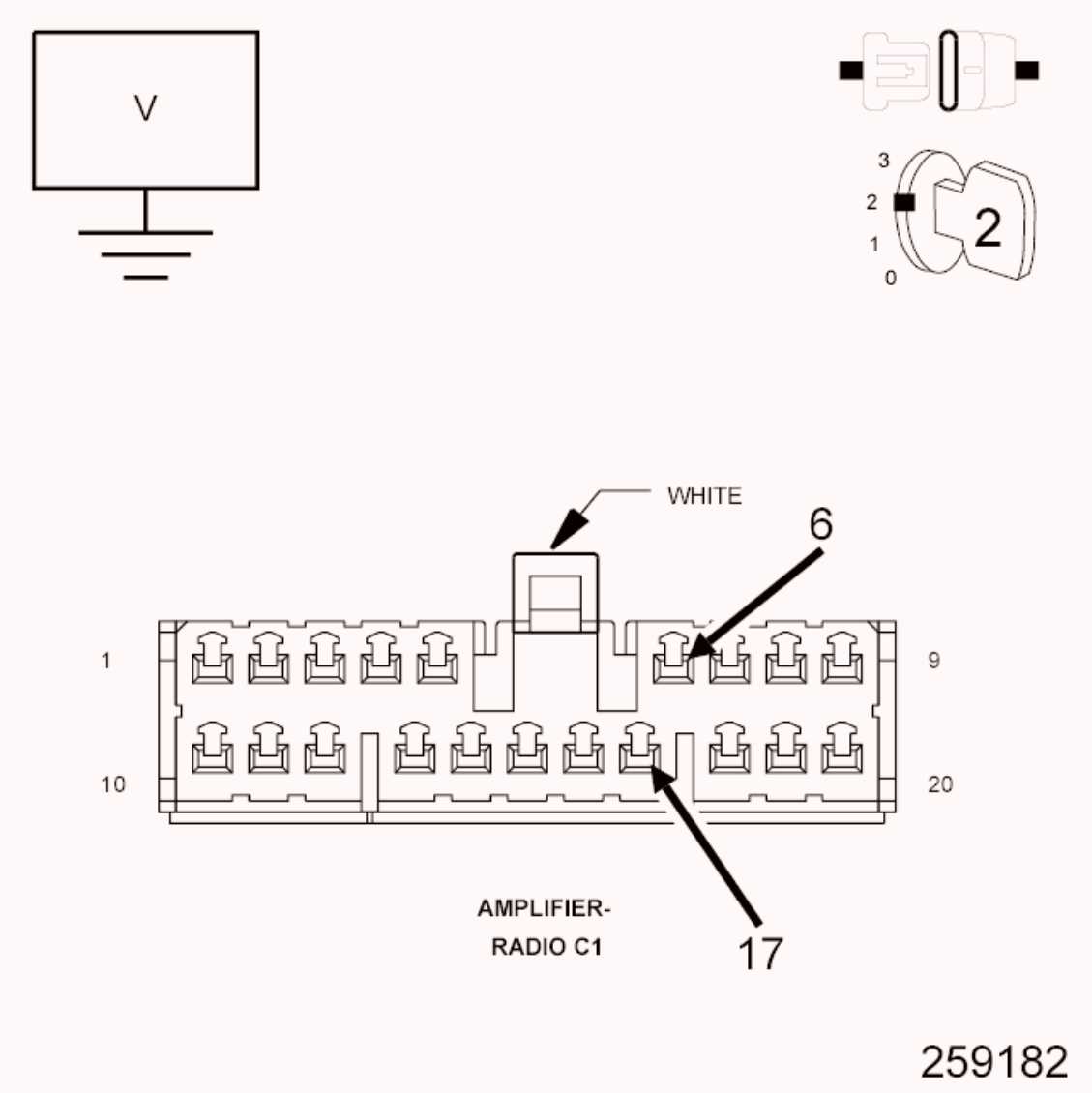

Fig. 24: Measuring Voltage Between Can B Bus (-) Circuit & Ground And Between Can B Bus (+) Circuit & Ground
Courtesy of CHRYSLER GROUP, LLC

1. Turn the ignition on.

NOTE: One open circuit will not cause this condition.

2. Measure the voltage between the (D54) CAN B Bus (-) circuit and ground.
3. Measure the voltage between the (D55) CAN B Bus (+) circuit and ground.

Is there any voltage present on either circuit?

Yes

- Replace the Radio Amplifier in accordance with the Service Information.
- Perform the BODY VERIFICATION TEST. Refer to **STANDARD PROCEDURE** .

No

- Repair the (D55) and (D54) CAN B Bus circuits for an open. Inspect the connector for damage.
- Perform the BODY VERIFICATION TEST. Refer to **STANDARD PROCEDURE** .

NO RESPONSE FROM ALL WHEEL DRIVE CONTROL (AWD) MODULE

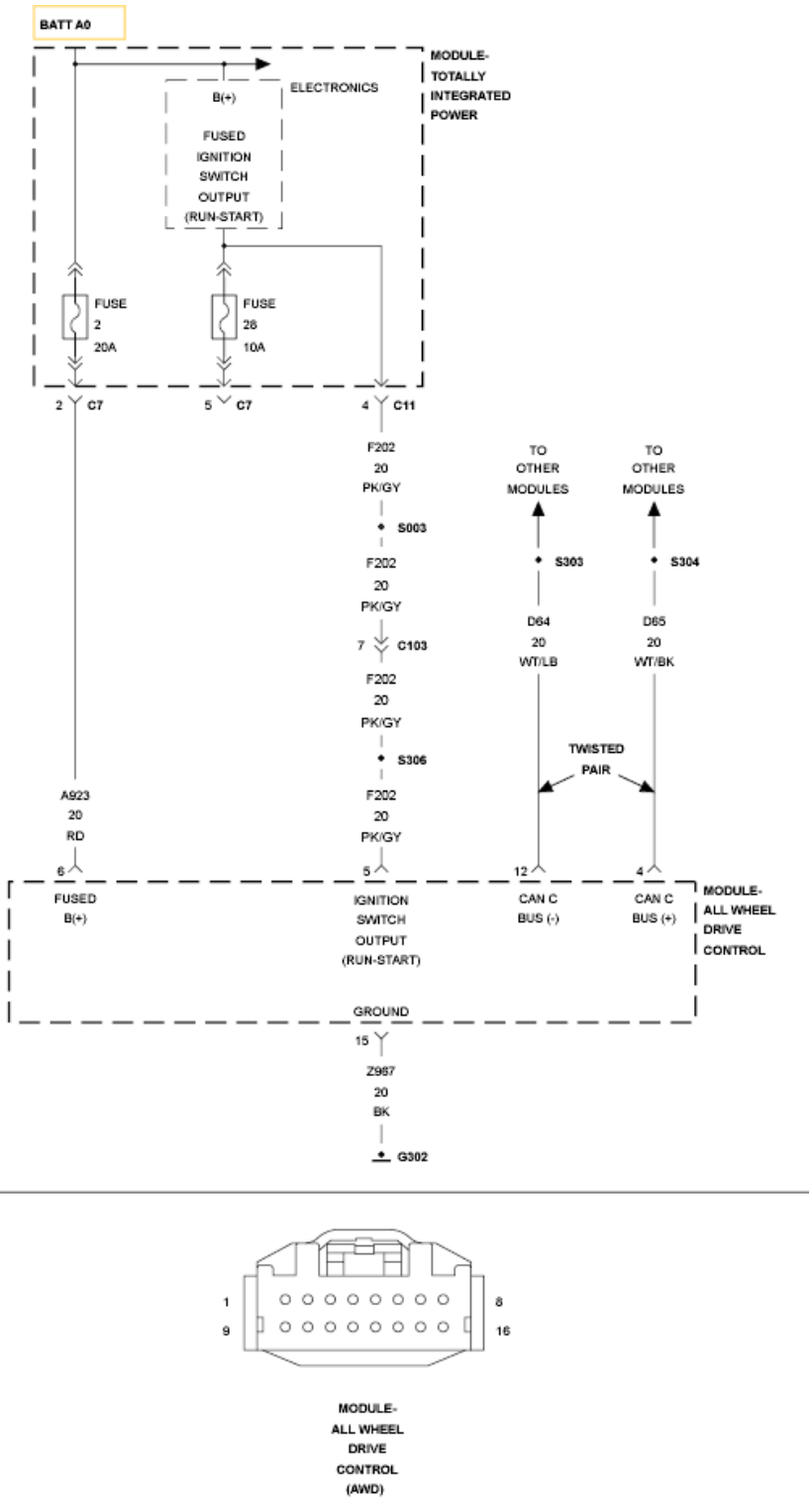

Fig. 25: All Wheel Drive Control Module Circuit Diagram
Courtesy of CHRYSLER GROUP, LLC

For a complete wiring diagram, **refer to appropriate SYSTEM WIRING DIAGRAMS article** .

POSSIBLE CAUSES

Possible Causes
(F202) IGNITION SWITCH OUTPUT (RUN-START) CIRCUIT OPEN OR SHORTED
(A923) FUSED B(+) CIRCUIT OPEN OR SHORTED
(Z967) GROUND CIRCUIT OPEN
(D65) CAN C BUS (+) CIRCUIT OPEN
(D64) CAN C BUS (-) CIRCUIT OPEN
ALL WHEEL DRIVE CONTROL (AWD) MODULE

DIAGNOSTIC TEST

1. **TEST FOR INTERMITTENT CONDITION**

NOTE: Check for any TSB(s) related to the condition. If a TSB applies, perform the procedure outlined in the TSB before continuing.

1. Turn the ignition on.

NOTE: Ensure the IOD fuse is installed and battery voltage is between 10.0 and 16.0 volts.

2. With the scan tool, select ECU View.

NOTE: A red "X" will be next to the module that is not communicating, indicating that the module is not active on the Bus network. A green check indicates that the module is active on the Bus network.

NOTE: Check the TIPM for any active CAN C hardware DTCs, perform DTC before proceeding.

Does the scan tool display a red "X" next to the module?

Yes

- Go To 2

No

- The no response condition is not present at this time. Using the wiring diagram/schematic as a guide, inspect the wiring for chafed, pierced, pinched, and partially broken wires and the wiring harness connectors for broken, bent, pushed out, and corroded terminals.

2. **(F202) IGNITION SWITCH OUTPUT (RUN-START) CIRCUIT OPEN OR SHORTED**

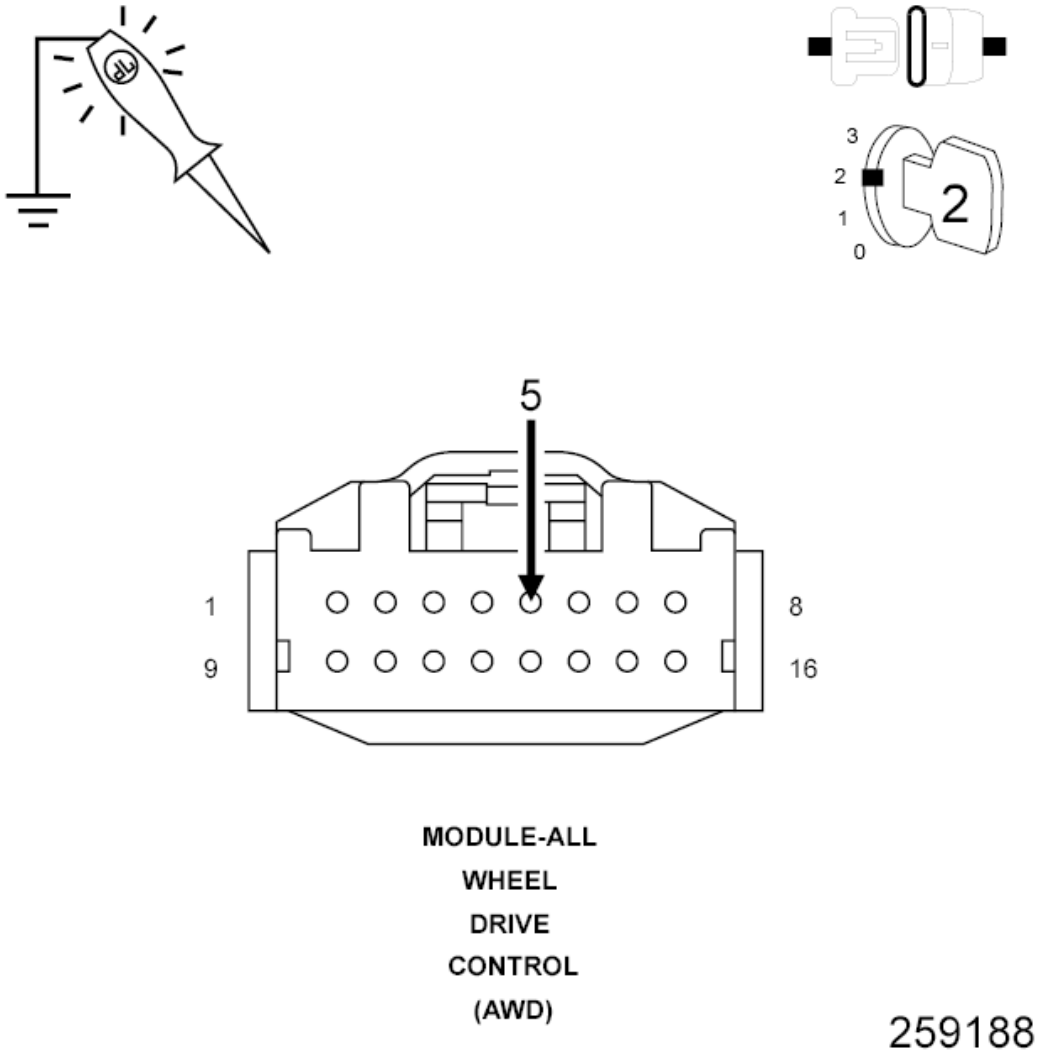

Fig. 26: Checking Ignition Switch Output (Run-Start) Circuit For An Open Or Short
Courtesy of CHRYSLER GROUP, LLC

1. Turn the ignition off.
2. Disconnect the AWD harness connector.

3. Turn the ignition on.
4. Using a 12-volt test light connected to ground, check the (F202) Ignition Switch Output (Run-Start) circuit.

   Does the test light illuminate brightly?

   Yes

   - Go To 3

   No

   - Repair the (F202) Ignition Switch Output (Run-Start) circuit for an open or short.
   - Perform the AWD VERIFICATION TEST. Refer to **STANDARD PROCEDURE** .

3. **(A923) FUSED B(+) CIRCUIT OPEN OR SHORTED**

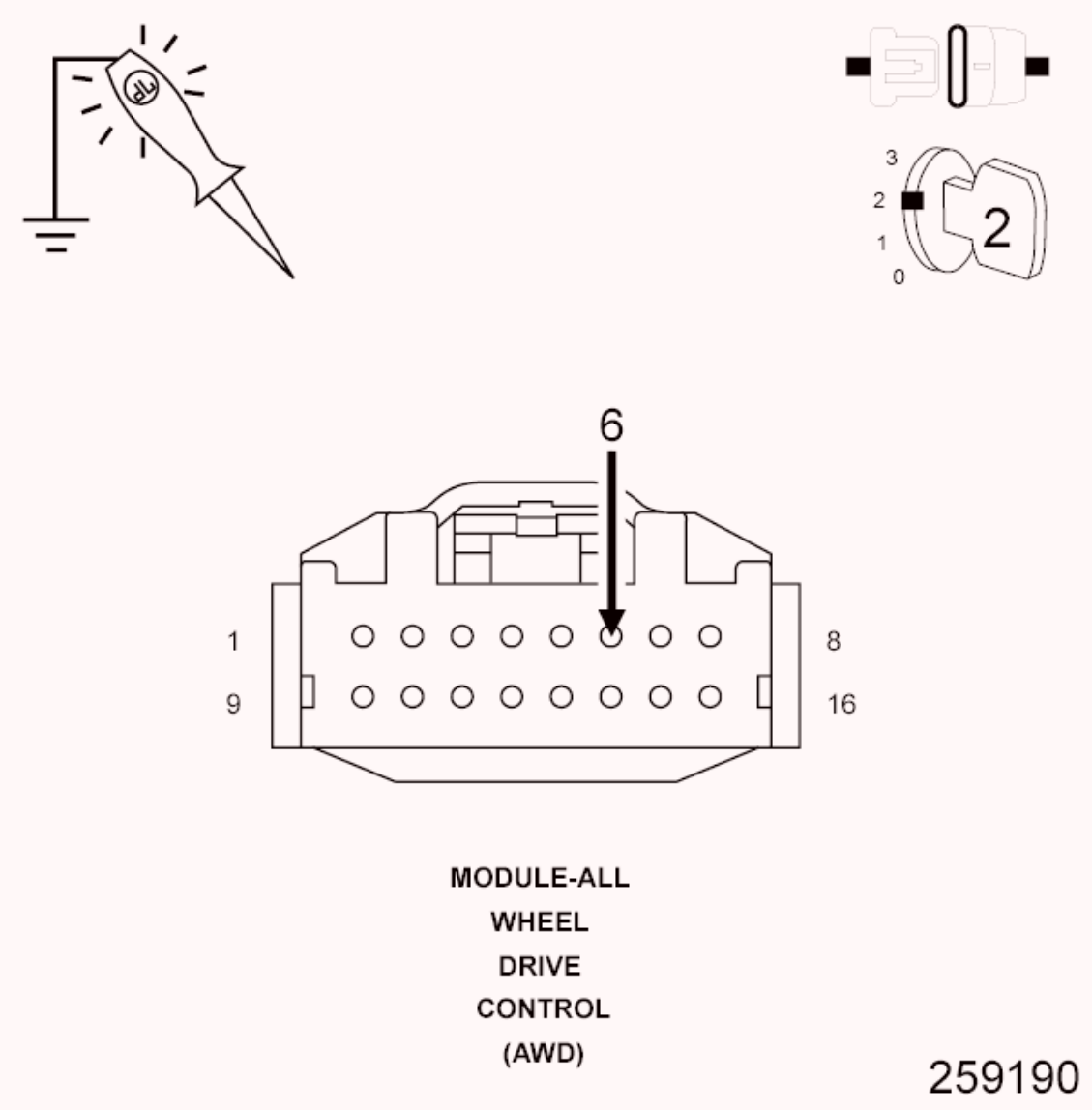

Fig. 27: Checking Fused B(+) Circuit For An Open Or Short
Courtesy of CHRYSLER GROUP, LLC

1. Using a 12-volt test light connected to ground, check the (A923) Fused B+ circuit.

   Does the test light illuminate brightly?

   Yes

   - Go To 4

   No

   - Repair the (A923) Fused B+ circuit for an open or short.

- Perform the AWD VERIFICATION TEST. Refer to **STANDARD PROCEDURE** .

4. **(Z967) GROUND CIRCUIT OPEN**

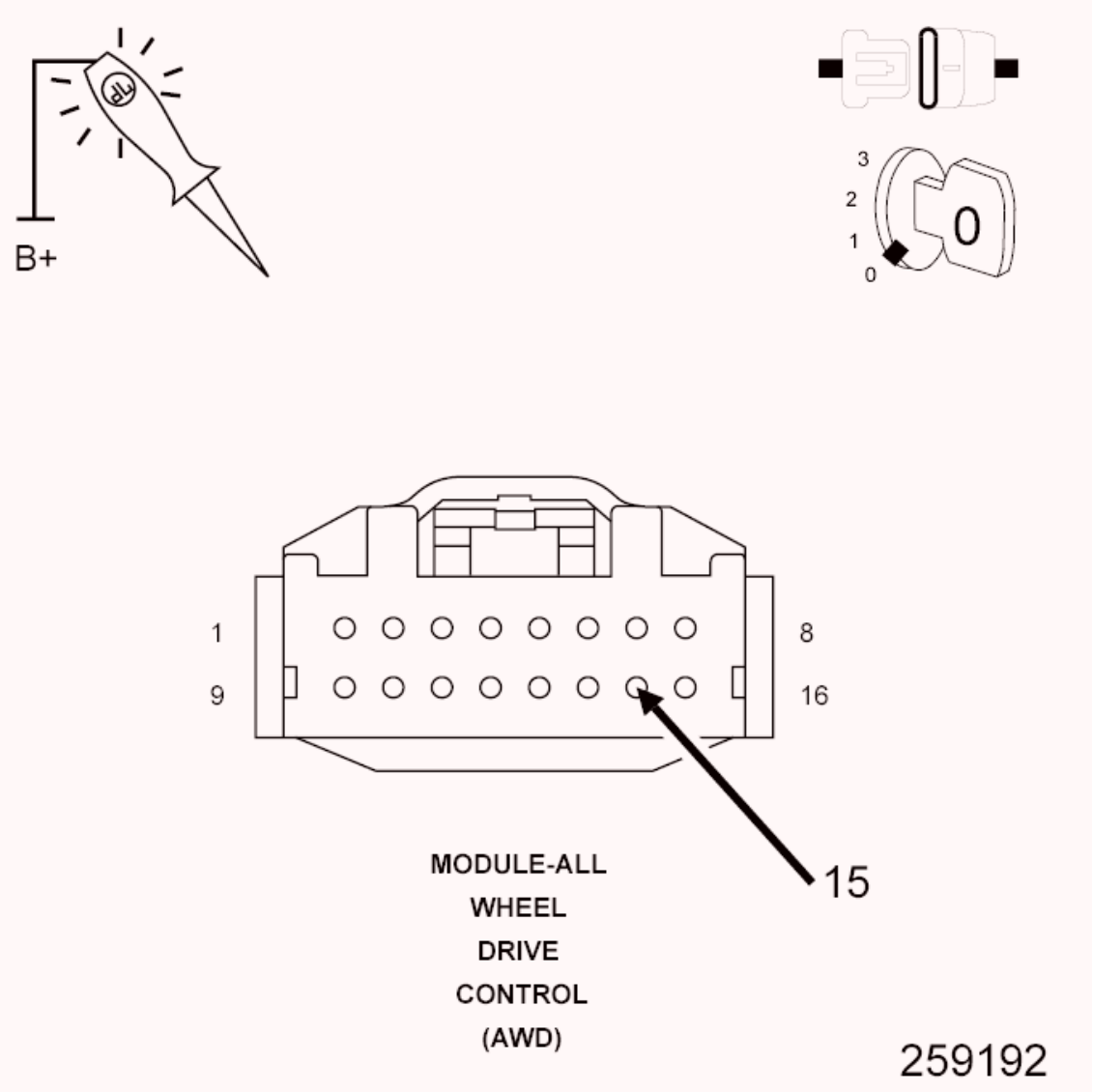

Fig. 28: Checking Ground Circuit For An Open
Courtesy of CHRYSLER GROUP, LLC

1. Turn the ignition off.
2. Using a 12-volt test light connected to 12-volts, check the (Z967) ground circuit.

   Does the test light illuminate brightly?

   Yes

- Go To 5

No

- Repair the (Z967) ground circuit for an open.
- Perform the AWD VERIFICATION TEST. Refer to **STANDARD PROCEDURE** .

5. **(D65) CAN C BUS (+) CIRCUIT OPEN**

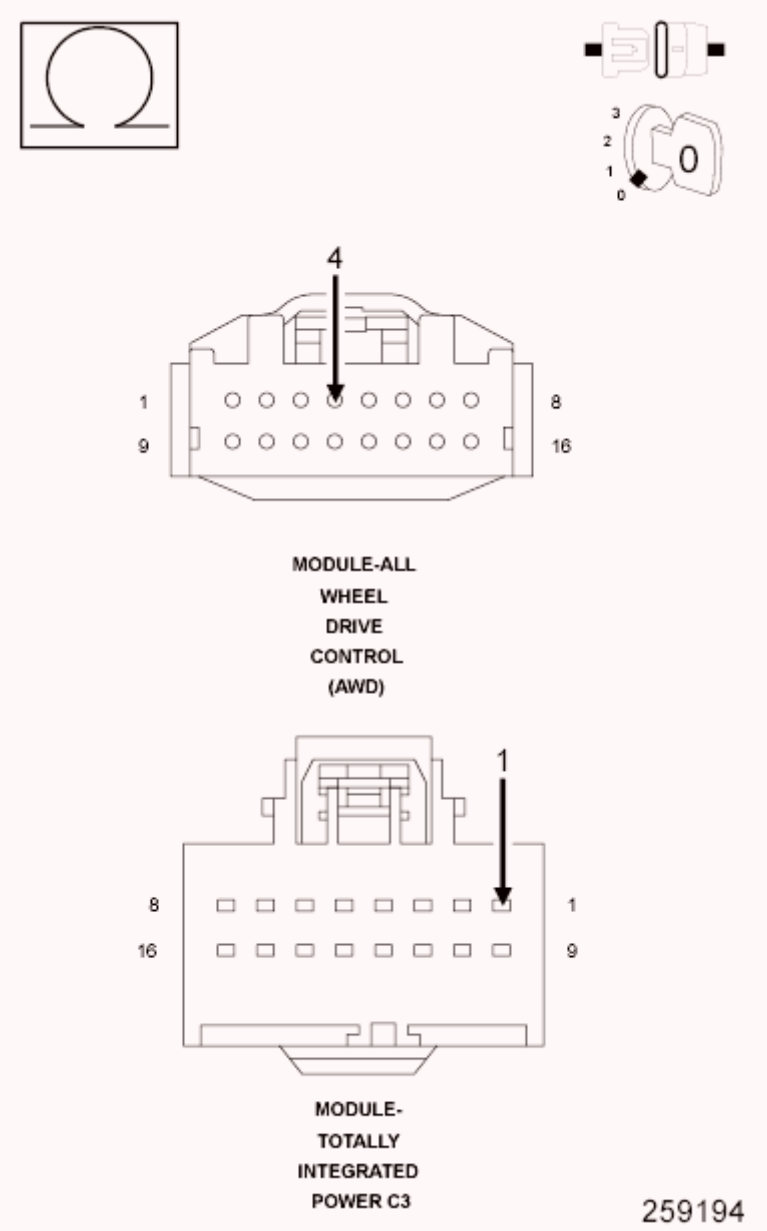

Fig. 29: Checking CAN C BUS (+) Circuit For An Open
Courtesy of CHRYSLER GROUP, LLC

1. Disconnect the TIPM C3 harness connector.
2. Measure the resistance of the (D65) CAN C Bus (+) circuit between the TIPM C3 harness connector and the AWD harness connector.

   Is the resistance below 5.0 ohms?

   Yes

   - Go To 6

   No

   - Repair the (D65) CAN C Bus (+) circuit for an open.
   - Perform the AWD VERIFICATION TEST. Refer to **STANDARD PROCEDURE** .

6. **(D64) CAN C BUS (-) CIRCUIT OPEN**

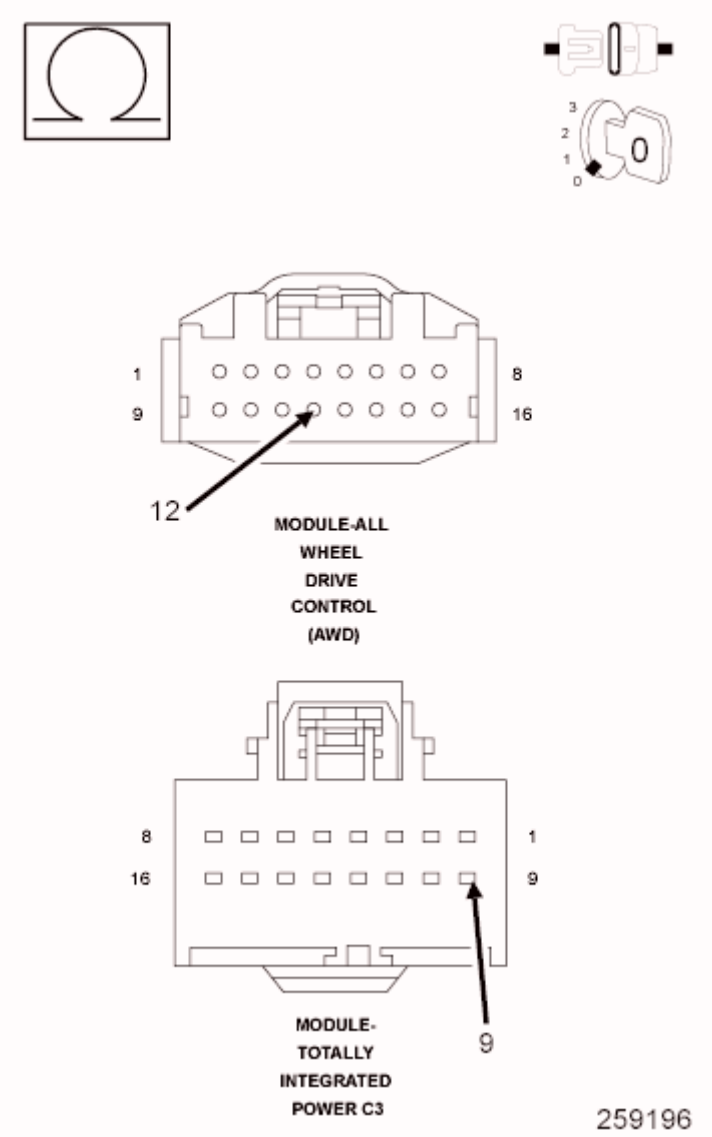

Fig. 30: Checking Can C Bus (-) Circuit For An Open
Courtesy of CHRYSLER GROUP, LLC

1. Measure the resistance of the (D64) CAN C Bus (-) circuit between the TIPM C3 harness connector and the AWD harness connector.

   Is the resistance below 5.0 ohms?

   Yes

   - Replace and program the All Wheel Drive Control (AWD) Module in accordance with the Service Information.
   - Perform the AWD VERIFICATION TEST. Refer to **STANDARD PROCEDURE** .

No

- Repair the (D64) CAN C Bus (-) circuit for an open.
- Perform the AWD VERIFICATION TEST. Refer to **STANDARD PROCEDURE** .

NO RESPONSE FROM CCN (CLUSTER)

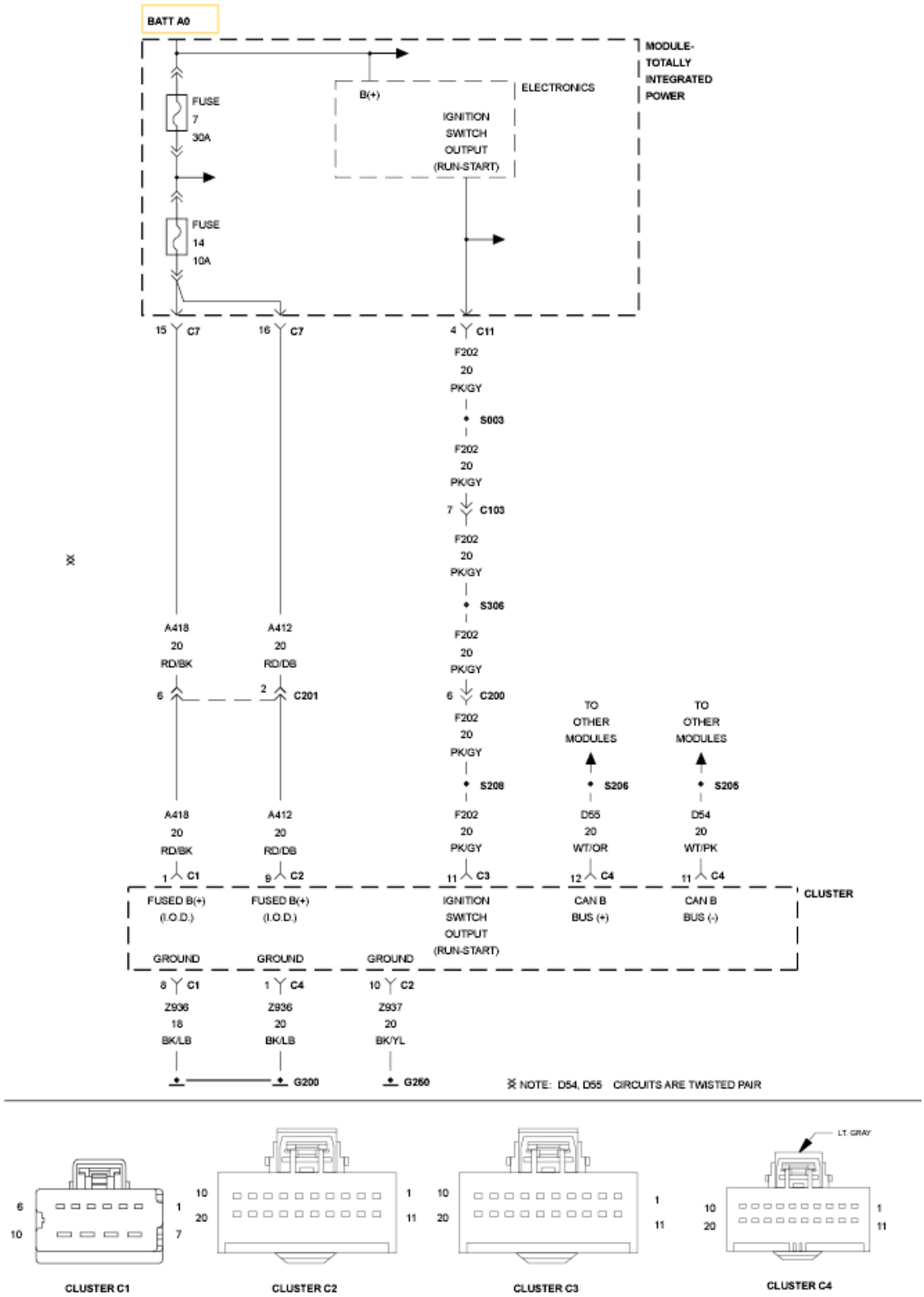

Fig. 31: Cluster Wiring Diagram
Courtesy of CHRYSLER GROUP, LLC

For a complete wiring diagram, **refer to appropriate SYSTEM WIRING DIAGRAMS article** .

POSSIBLE CAUSES

Possible Causes
(A418) (A412) FUSED B(+) CIRCUITS OPEN OR SHORTED
(Z936) (Z937) GROUND CIRCUITS OPEN
(F202) IGNITION SWITCH OUTPUT CIRCUIT OPEN OR SHORTED
(D55) AND (D54) CAN B BUS CIRCUITS OPEN
CLUSTER (CCN)

DIAGNOSTIC TEST

1. **TEST FOR INTERMITTENT CONDITION**

NOTE: Check for any TSB(s) related to the condition. If a TSB applies, perform the procedure outlined in the TSB before continuing.

1. Turn the ignition on.

NOTE: Ensure the IOD fuse is installed and battery voltage is between 10.0 and 16.0 volts.

2. With the scan tool, select ECU View.

NOTE: A red "X" will be next to the module that is not communicating, indicating that the module is not active on the Bus network. A green check indicates that the module is active on the Bus network.

Does the scan tool display a red "X" next to the module?

Yes

- Go To 2

No

- The no response condition is not present at this time. Using the wiring diagram/schematic as a guide, inspect the wiring for chafed,

pierced, pinched, and partially broken wires and the wiring harness connectors for broken, bent, pushed out, and corroded terminals.

2. **(A418) (A412) FUSED B(+) CIRCUIT OPEN OR SHORTED**

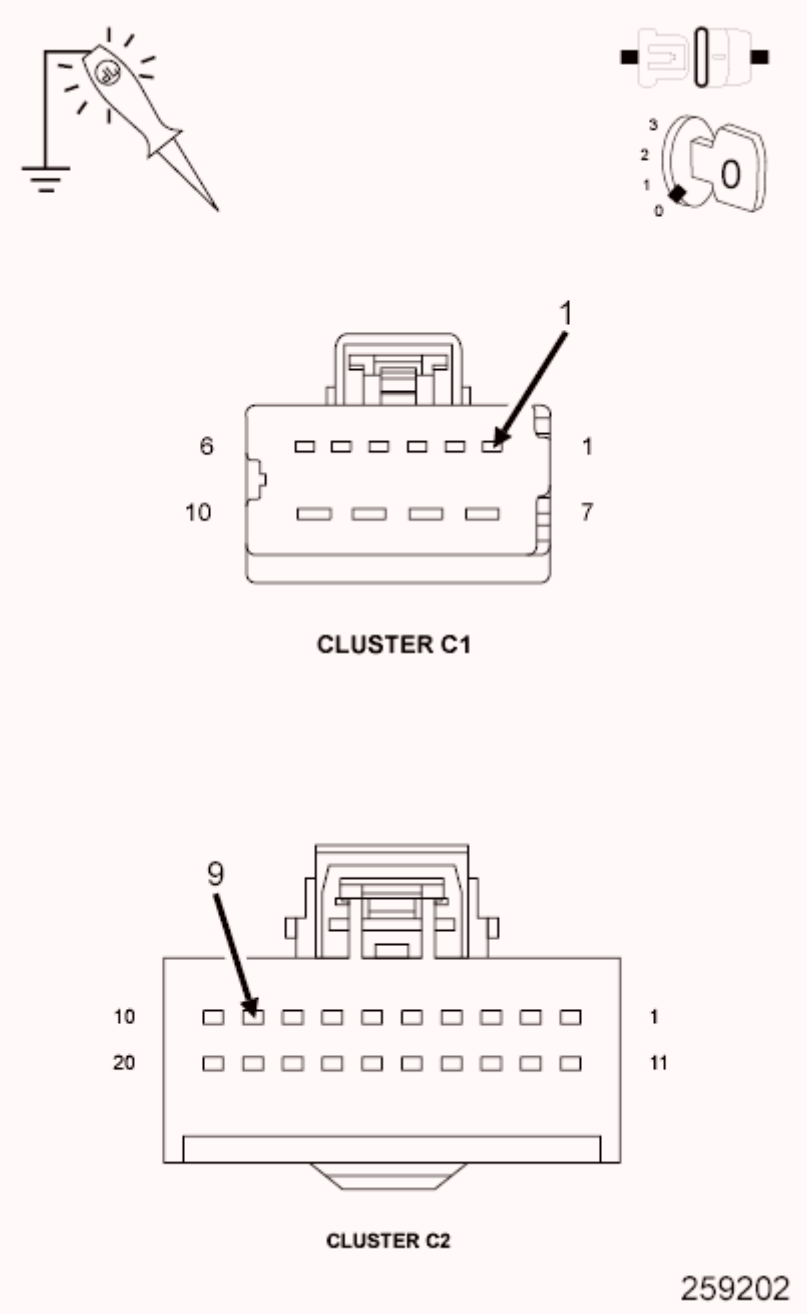

Fig. 32: Checking Fused B(+) Circuits Using 12-Volt Test Light Connected To Ground
Courtesy of CHRYSLER GROUP, LLC

1. Turn the ignition off.
2. Disconnect all Cluster harness connectors.

3. Using a 12-volt test light connected to ground, check each (A418) and (A412) Fused B(+) circuit.

   Does the test light illuminate brightly for each circuit?

   Yes

   - Go To 3

   No

   - Repair the Fused B(+) circuit for an open or short.
   - Perform the BODY VERIFICATION TEST. Refer to **STANDARD PROCEDURE** .

3. **(Z936) (Z937) GROUND CIRCUITS OPEN**

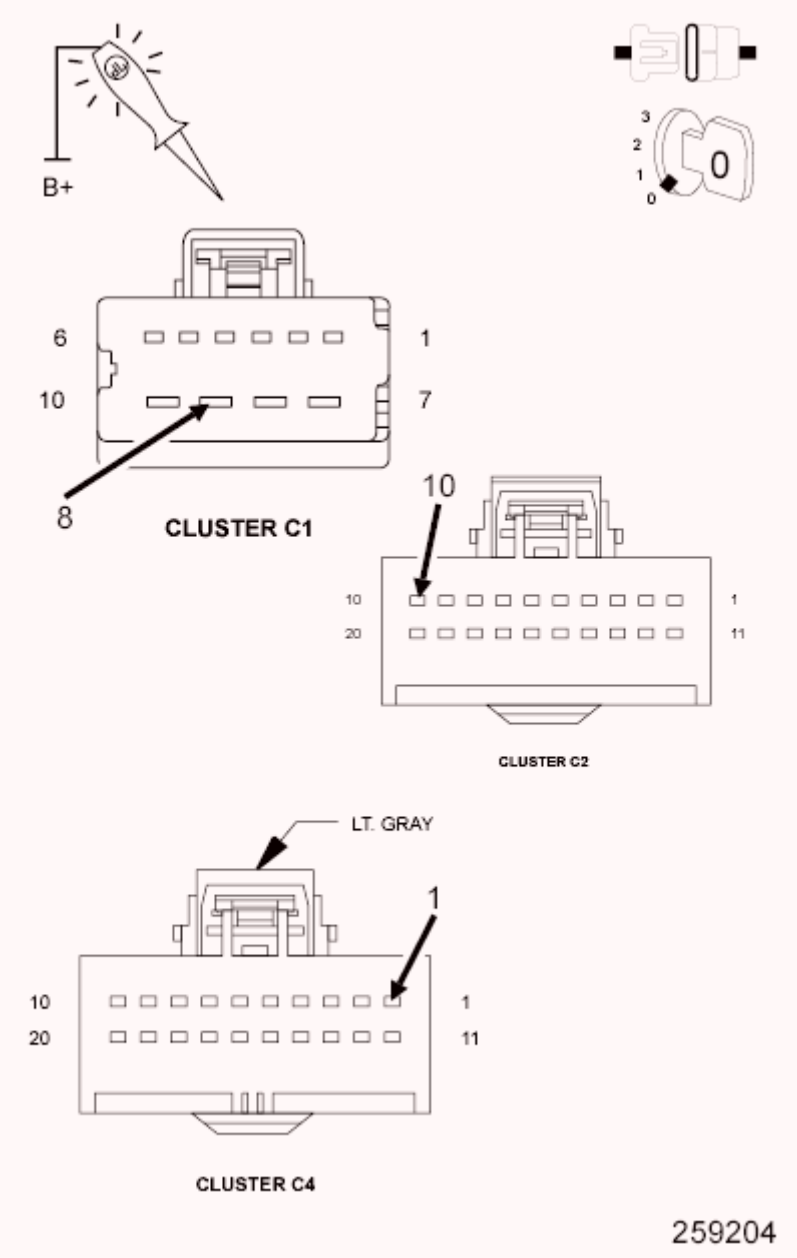

Fig. 33: Checking Ground Circuits Using 12-Volt Test Light Connected To 12-Volts
Courtesy of CHRYSLER GROUP, LLC

1. Using a 12-volt test light connected to 12-volts, check each (Z936) and (Z937) ground circuit.

   Does the test light illuminate brightly for each circuit?

   Yes

   - Go To 4

No

- Repair the (Z936) or (Z937) ground circuit for an open.
- Perform the BODY VERIFICATION TEST. Refer to **STANDARD PROCEDURE** .

4. **(F202) IGNITION SWITCH OUTPUT CIRCUIT OPEN OR SHORTED**

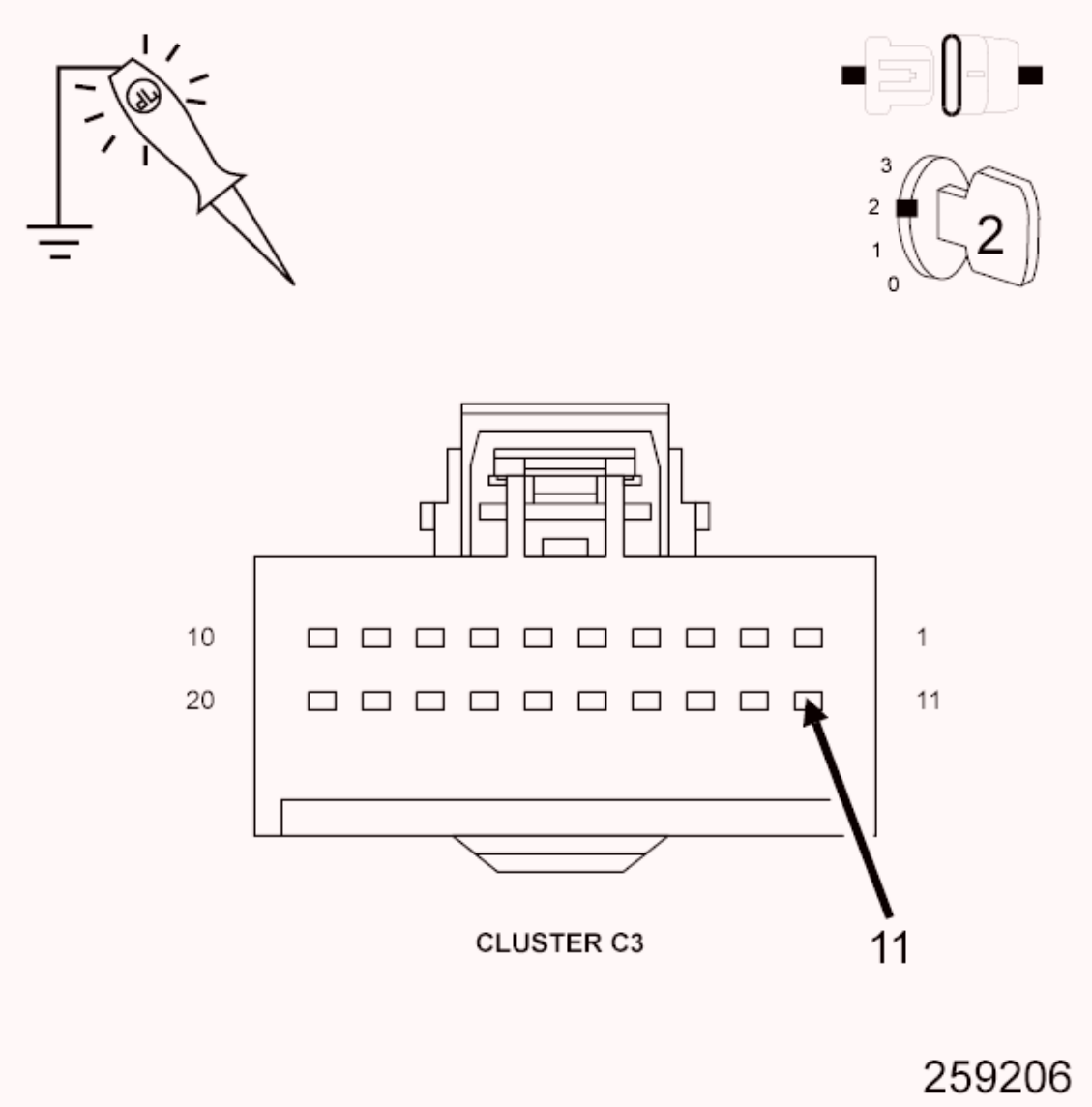

Fig. 34: Checking Ignition Switch Output Circuit Using 12-Volt Test Light Connected To Ground
Courtesy of CHRYSLER GROUP, LLC

1. Turn the ignition on.
2. Using a 12-volt test light connected to ground, check the (F202)

Ignition Switch Output circuit.

Does the test light illuminate brightly?

Yes

- Go To 5

No

- Repair the (F202) Ignition Switch Output circuit for an open or short.
- Perform the BODY VERIFICATION TEST. Refer to **STANDARD PROCEDURE** .

5. **(D55) AND (D54) CAN B BUS CIRCUITS OPEN**

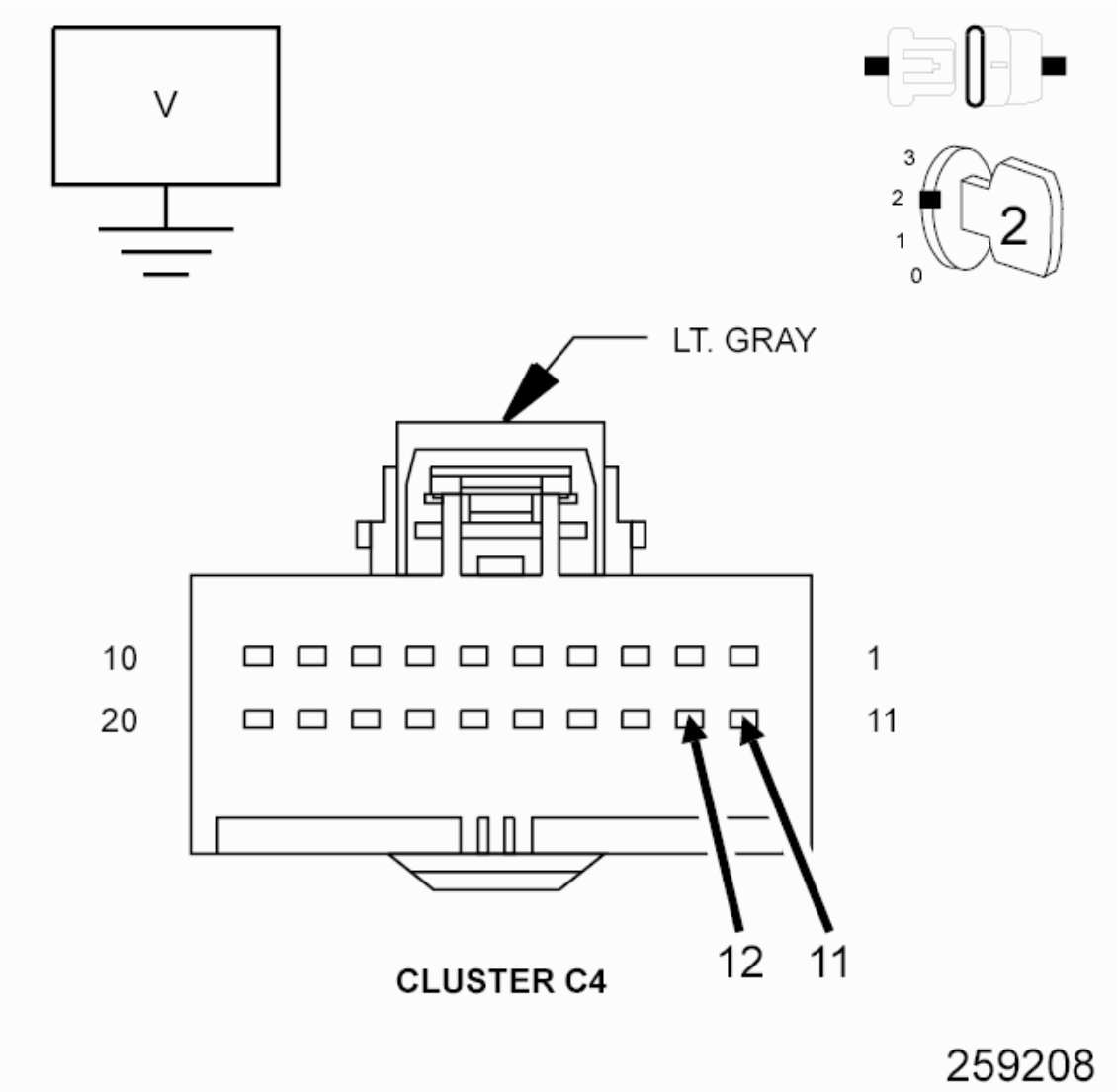

Fig. 35: Measuring Voltage Between Can B Bus (-) Circuit & Ground And Between Can B Bus (+) Circuit & Ground
Courtesy of CHRYSLER GROUP, LLC

NOTE: One open circuit will not cause this condition.

1. Measure the voltage between the (D54) CAN B Bus (-) circuit and ground.
2. Measure the voltage between the (D55) CAN B Bus (+) circuit and ground.

Is there any voltage present on either circuit?

Yes

- Replace the Cluster in accordance with the Service Information.
- Perform the BODY VERIFICATION TEST. Refer to **STANDARD PROCEDURE** .

No

- Repair the (D55) and (D54) CAN B Bus circuits for an open. Inspect the connector for damage.
- Perform the BODY VERIFICATION TEST. Refer to **STANDARD PROCEDURE** .

NO RESPONSE FROM HFM (HANDS FREE MODULE)

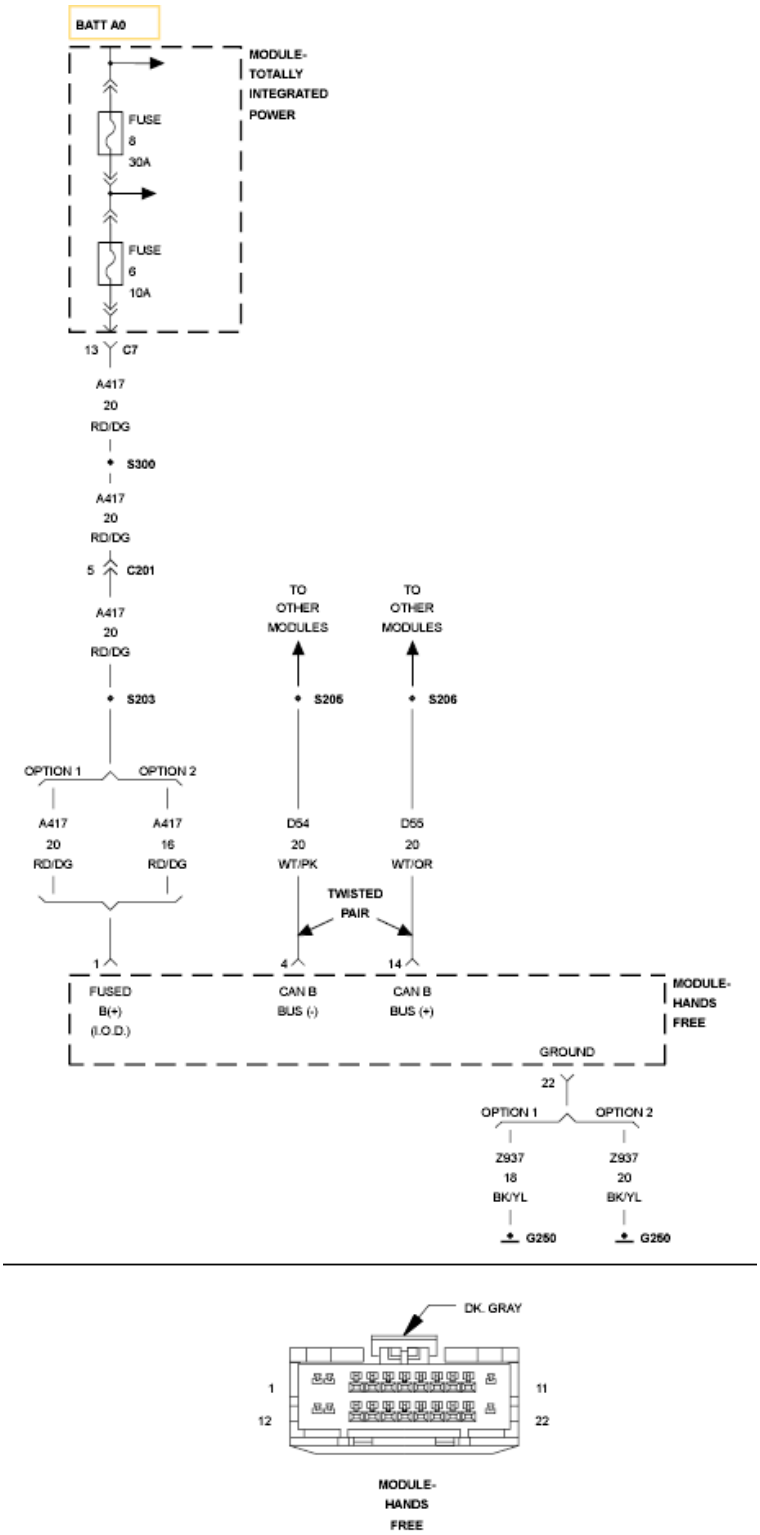

Fig. 36: Hands Free Module Wiring Diagram
Courtesy of CHRYSLER GROUP, LLC

For a complete wiring diagram, **refer to appropriate SYSTEM WIRING DIAGRAMS article** .

POSSIBLE CAUSES

Possible Causes
(A417) FUSED B(+) CIRCUIT OPEN OR SHORTED
(Z937) GROUND CIRCUIT OPEN
(D55) AND (D54) CAN B BUS CIRCUITS OPEN
HANDS FREE MODULE

DIAGNOSTIC TEST

1. **TEST FOR INTERMITTENT CONDITION**

NOTE: Check for any TSB(s) related to the condition. If a TSB applies, perform the procedure outlined in the TSB before continuing.

1. Turn the ignition on.

NOTE: Ensure the IOD fuse is installed and battery voltage is between 10.0 and 16.0 volts.

2. With the scan tool, select ECU View.

NOTE: A red "X" will be next to the module that is not communicating, indicating that the module is not active on the Bus network. A green check indicates that the module is active on the Bus network.

Does the scan tool display a red "X" next to the module?

Yes

- Go To 2

No

- The no response condition is not present at this time. Using the wiring diagram/schematic as a guide, inspect the wiring for chafed, pierced, pinched, and partially broken wires and the wiring harness connectors for broken, bent, pushed out, and corroded terminals.

2. (A417) FUSED B(+) CIRCUIT OPEN OR SHORTED

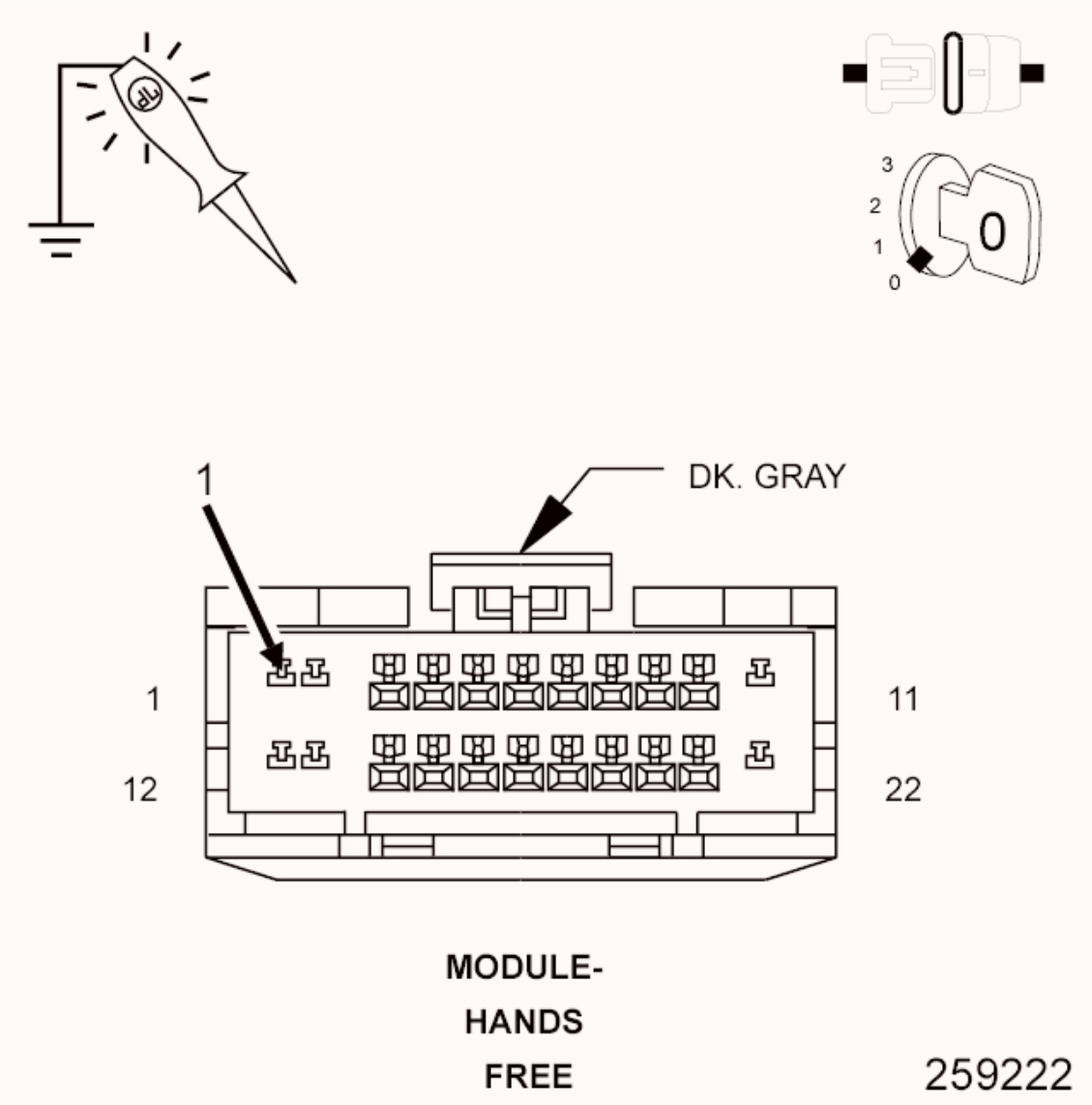

Fig. 37: Checking Fused B(+) Circuit Using 12-Volt Test Light Connected To Ground
Courtesy of CHRYSLER GROUP, LLC

1. Turn the ignition off.
2. Disconnect the Hands Free Module harness connector.
3. Using a 12-volt test light connected to ground, check the (A417) Fused B(+) circuit.

   Does the test light illuminate brightly?

   Yes

- Go To 3

No

- Repair the (A417) Fused B(+) circuit for an open or short.
- Perform the BODY VERIFICATION TEST. Refer to **STANDARD PROCEDURE** .

3. **(Z937) GROUND CIRCUIT OPEN**

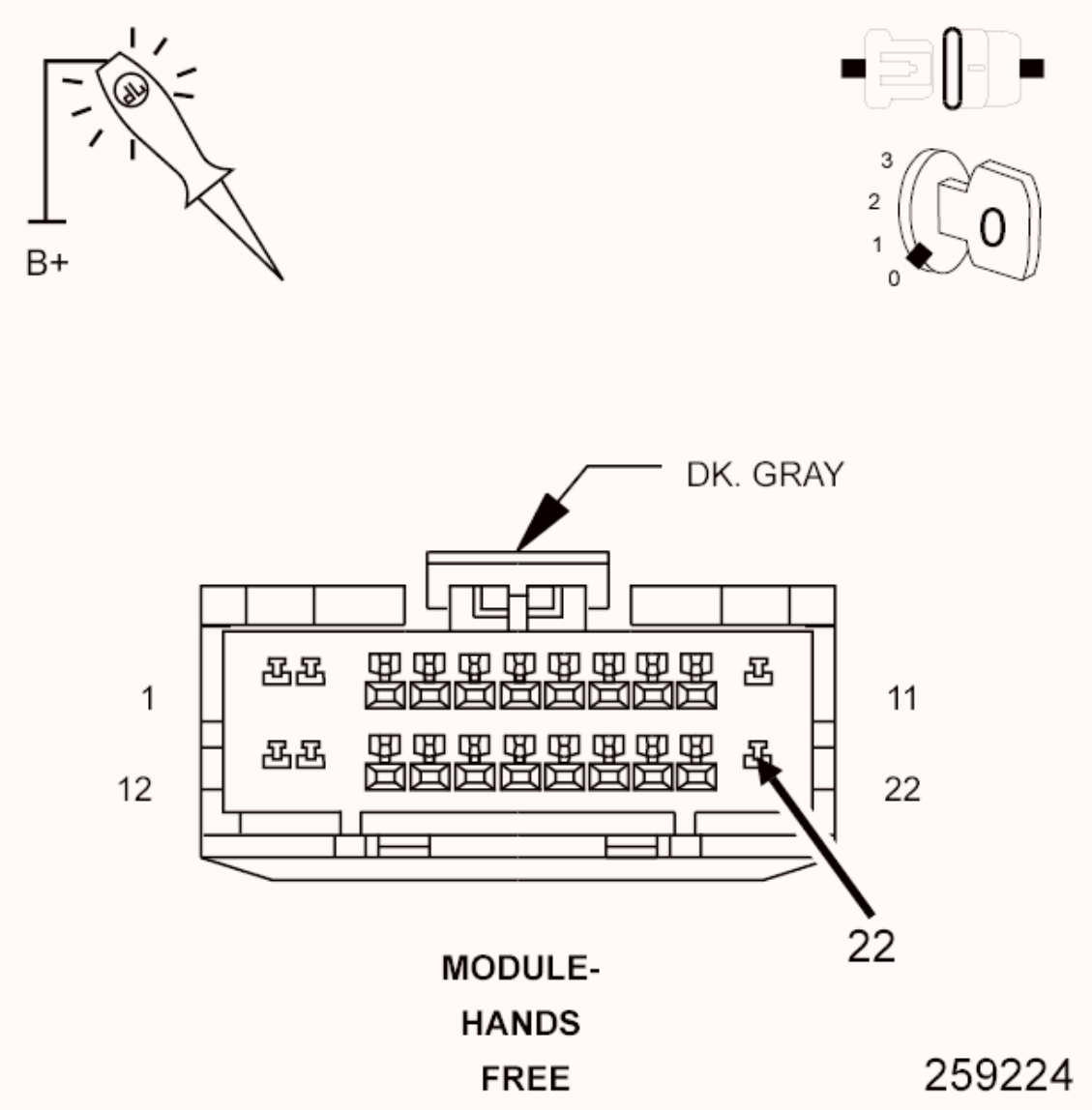

Fig. 38: Checking Ground Circuit Using 12-Volt Test Light Connected To 12-Volts
Courtesy of CHRYSLER GROUP, LLC

1. Using a 12-volt test light connected to 12-volts, check the (Z937)

ground circuit.

Does the test light illuminate brightly?

Yes

- Go To 4

No

- Repair the (Z937) ground circuit for an open.
- Perform the BODY VERIFICATION TEST. Refer to **STANDARD PROCEDURE** .

4. **(D55) AND (D54) CAN B BUS CIRCUITS OPEN**

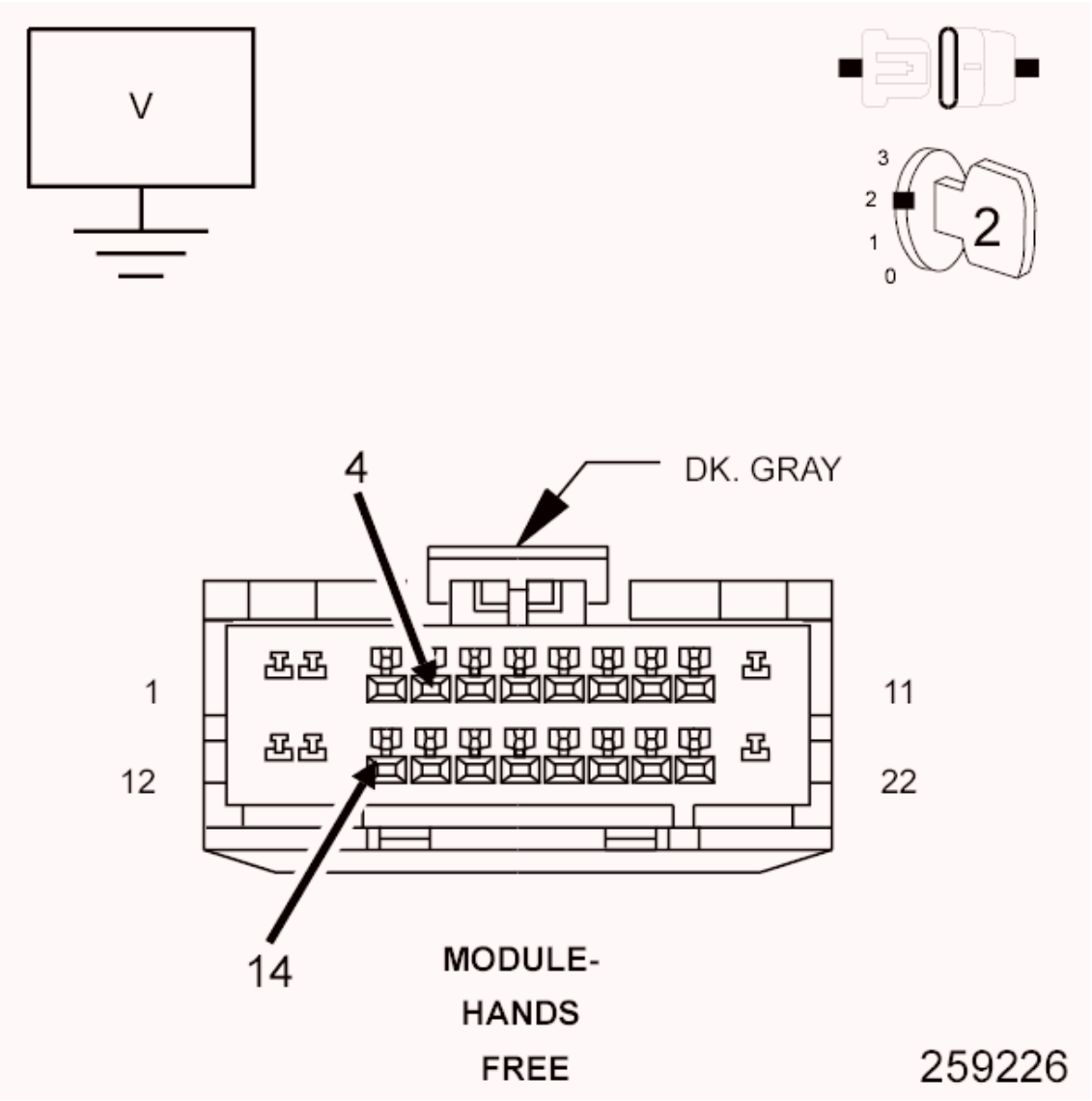

Fig. 39: Measuring Voltage Between Can B Bus (-) Circuit & Ground And Between Can B Bus (+) Circuit & Ground
Courtesy of CHRYSLER GROUP, LLC

NOTE: One open circuit will not cause this condition.

1. Measure the voltage between the (D54) CAN B Bus (-) circuit and ground.
2. Measure the voltage between the (D55) CAN B Bus (+) circuit and ground.

Is there any voltage present on either circuit?

Yes

- Replace the Hands Free Module in accordance with the Service Information.
- Perform the BODY VERIFICATION TEST. Refer to **STANDARD PROCEDURE** .

No

- Repair the (D55) and (D54) CAN B Bus circuits for an open. Inspect the connector for damage.
- Perform the BODY VERIFICATION TEST. Refer to **STANDARD PROCEDURE** .

NO RESPONSE FROM HVAC (A/C HEATER CONTROL)

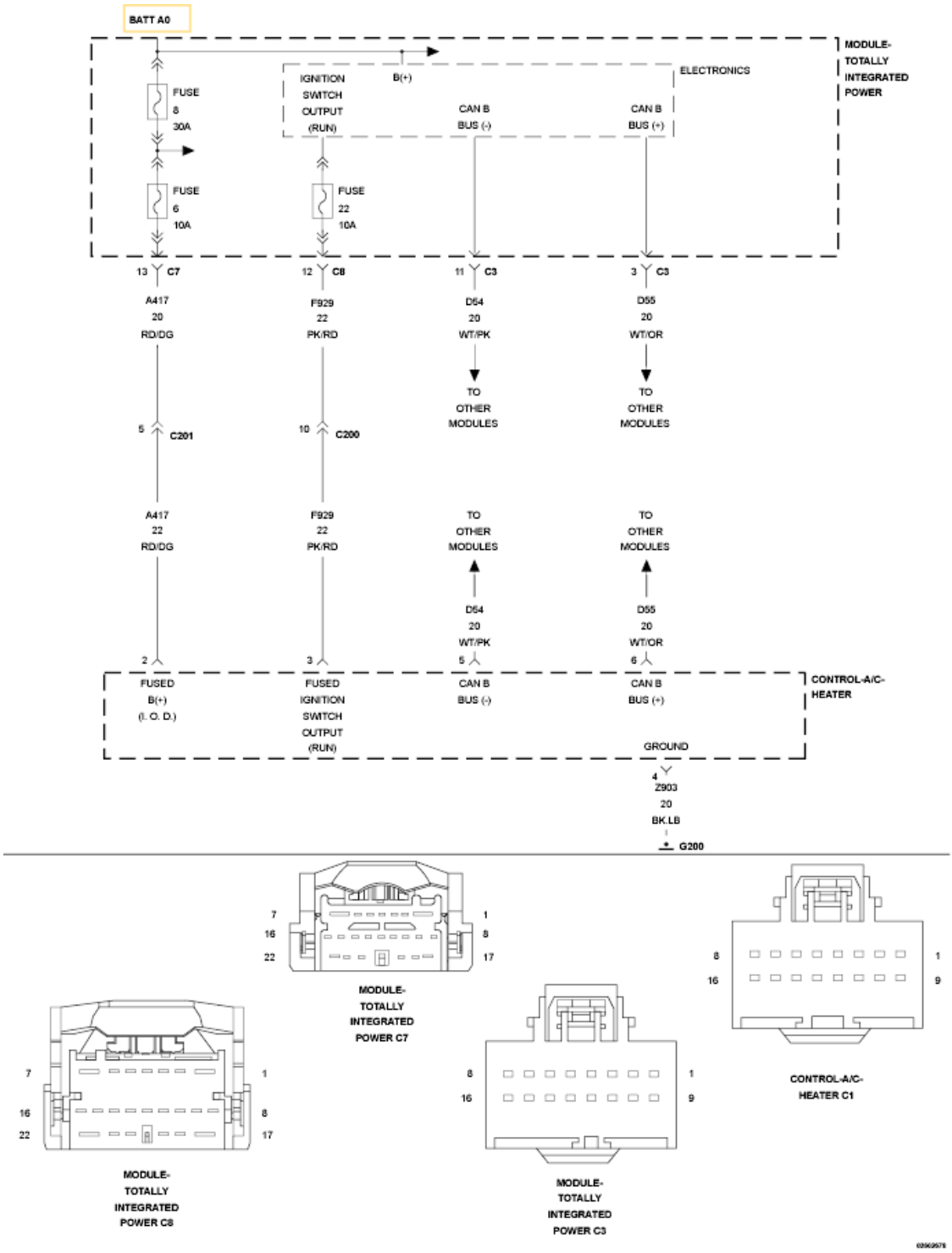

Fig. 40: HVAC Control Module Wiring Diagram
Courtesy of CHRYSLER GROUP, LLC

For a complete wiring diagram, **refer to appropriate SYSTEM WIRING DIAGRAMS article** .

POSSIBLE CAUSES

Possible Causes
(Z903) GROUND CIRCUIT OPEN
(A417) FUSED B+ (I.O.D.) CIRCUIT OPEN OR SHORTED
(F929) FUSED IGNITION SWITCH OUTPUT (RUN) CIRCUIT OPEN OR SHORTED
(D55) AND (D54) CAN B BUS CIRCUITS OPEN
A/C HEATER CONTROL

DIAGNOSTIC TEST

1. **TEST FOR INTERMITTENT CONDITION**

NOTE: Check for any TSB(s) related to the condition. If a TSB applies, perform the procedure outlined in the TSB before continuing.

1. Turn the ignition on.

NOTE: Ensure the IOD fuse is installed and battery voltage is between 10.0 and 16.0 volts.

2. With the scan tool, select ECU View.

NOTE: A red "X" will be next to the module that is not communicating, indicating that the module is not active on the Bus network. A green check indicates that the module is active on the Bus network.

Does the scan tool display a red "X" next to the module?

Yes

- Go To 2

No

- Test complete, the condition or conditions that originally set this DTC are not present at this time. Using the wiring diagrams as a

guide, check all related splices and connectors for signs of water intrusion, corrosion, pushed out or bent terminals, and correct pin tension.

2. **(Z903) GROUND CIRCUIT OPEN**

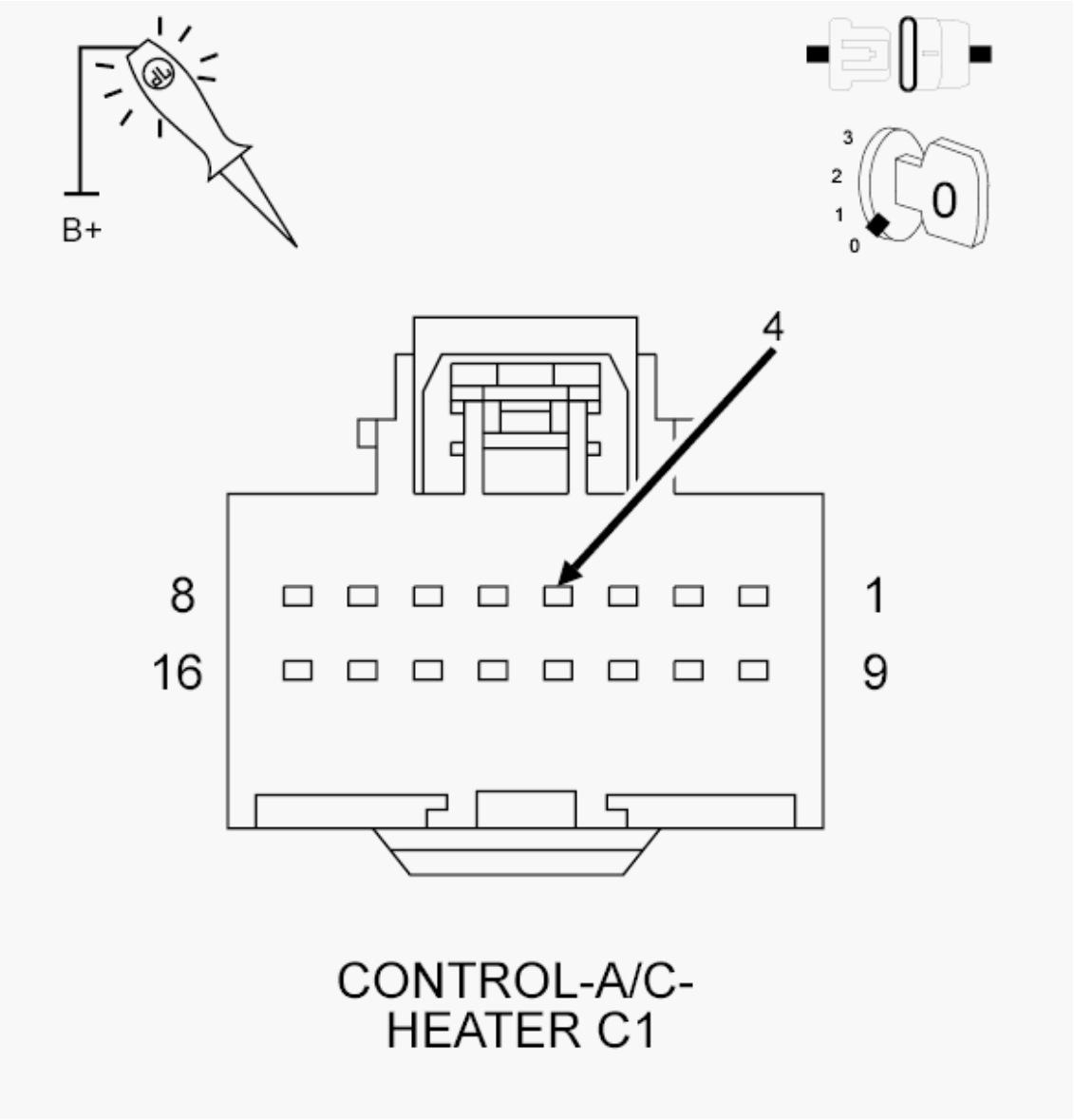

Fig. 41: Checking Ground Circuit Using 12-Volt Test Light Connected To 12-Volts
Courtesy of CHRYSLER GROUP, LLC

1. Turn the ignition off.
2. Disconnect the A/C Heater Control C1 harness connector.
3. Using a 12-volt test light connected to 12-volts check the (Z903) Ground circuit.

Does the test light illuminate brightly?

Yes

- Go To 3

No

- Repair the open in the (Z903) Ground circuit.
- Perform the BODY VERIFICATION TEST. Refer to **STANDARD PROCEDURE** .

3. **(A417) FUSED B+ (I.O.D.) CIRCUIT OPEN OR SHORTED**

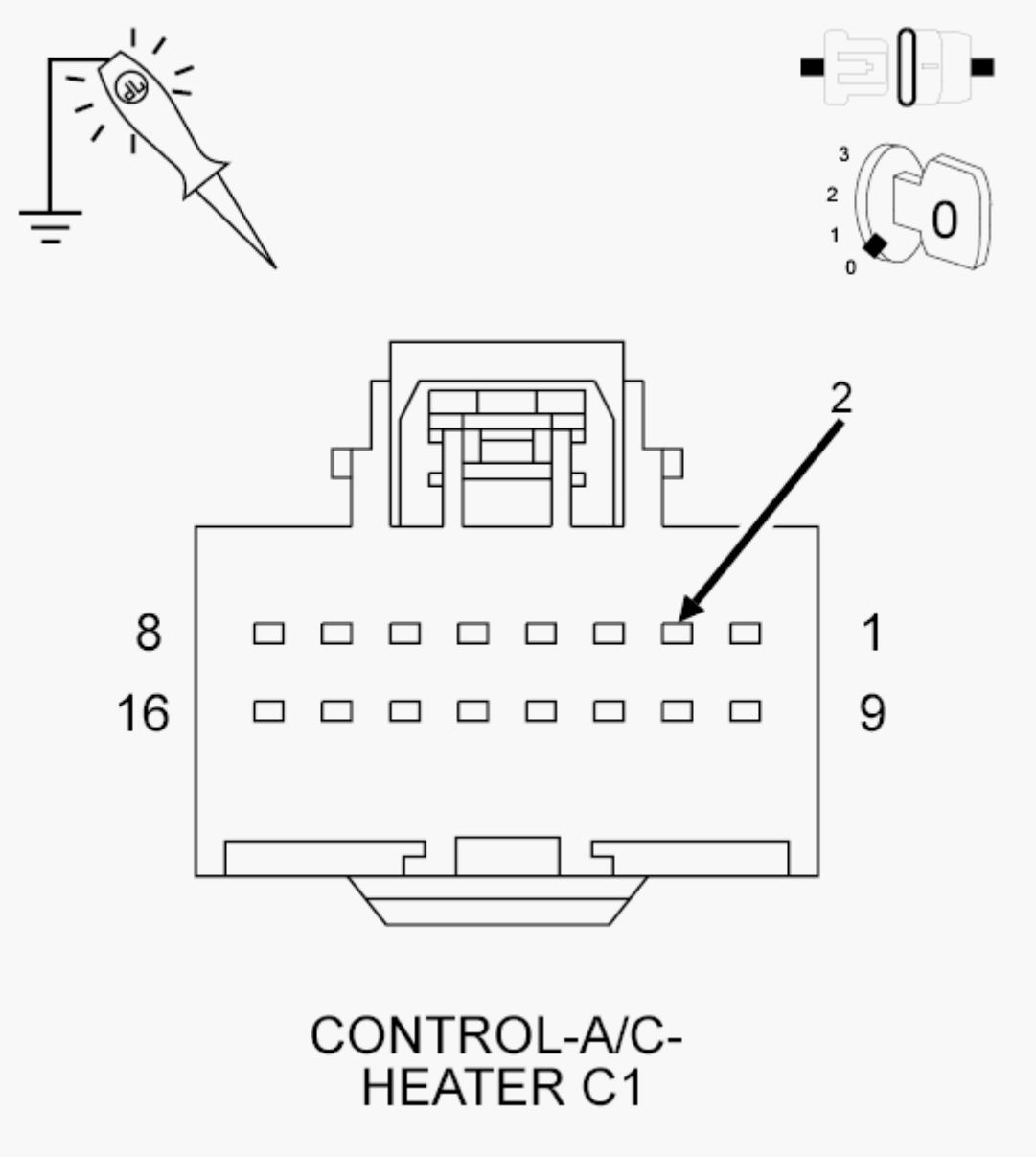

Fig. 42: Checking Fused B+ (I.O.D.) Circuit For An Open Or A Short
Courtesy of CHRYSLER GROUP, LLC

1. Using a 12-volt test light connected to ground, check the (A417) Fused B+ (I.O.D.) circuit.

   Does the test light illuminate brightly?

   Yes

   - Go To 4

   No

   - Repair the open or short in the (A417) Fused B+ (I.O.D.) circuit.
   - Perform the BODY VERIFICATION TEST. Refer to **STANDARD PROCEDURE** .

4. **(F929) FUSED IGNITION SWITCH OUTPUT (RUN) CIRCUIT OPEN OR SHORTED**

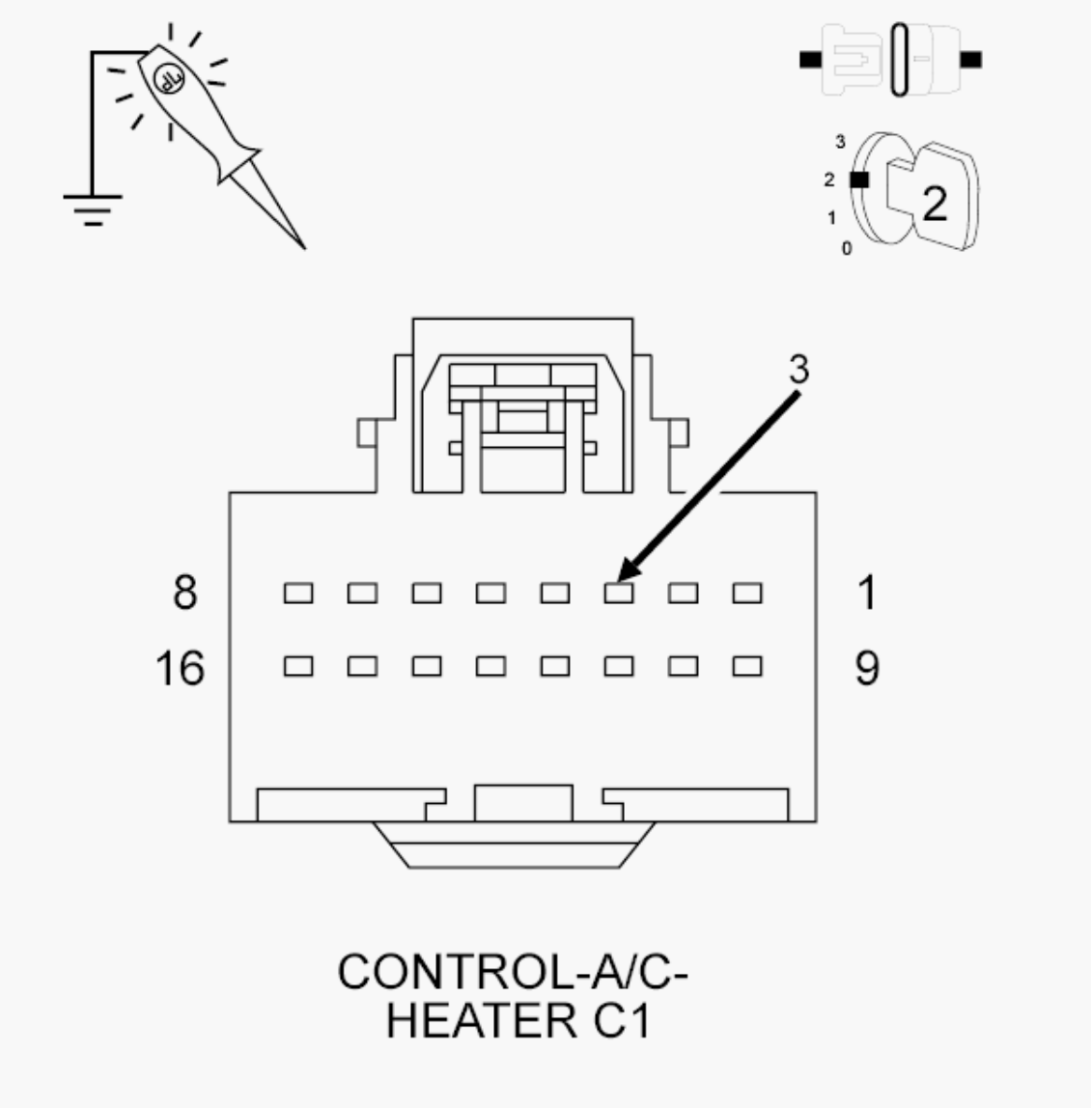

Fig. 43: Checking Fused Ignition Switch Output (Run) Circuit For An Open Or Short
Courtesy of CHRYSLER GROUP, LLC

1. Turn the ignition on.
2. Using a 12-volt test light connected to ground, check the (F929) Fused Ignition Switch Output (RUN) circuit.

   Does the test light illuminate brightly?

   Yes

   - Go To 5

   No

- Repair the open or short in the (F929) Fused Ignition Switch Output (RUN) circuit.
- Perform the BODY VERIFICATION TEST. Refer to **STANDARD PROCEDURE** .

5. **(D55) AND (D54) CAN B BUS CIRCUITS OPEN**

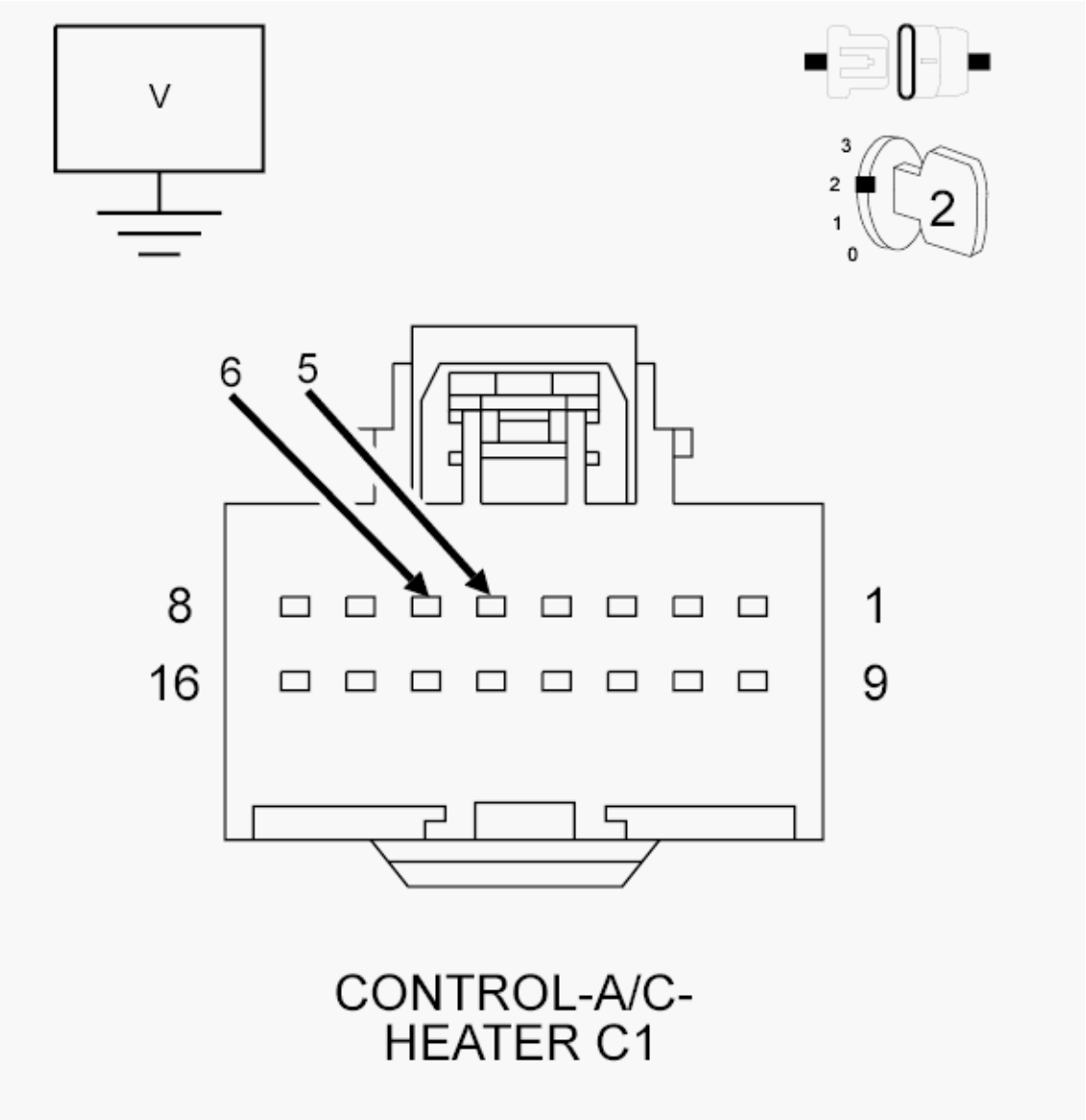

Fig. 44: Measuring Voltage Between Ground & (D54/D55) CAN B Bus (-/+) Circuit
Courtesy of CHRYSLER GROUP, LLC

NOTE: One open circuit will not cause this condition.

1. Measure the voltage between ground and the (D54) CAN B Bus (-)

circuit.

2. Measure the voltage between ground and the (D55) CAN B Bus (+) circuit.

   Is there any voltage present on either circuit?

   Yes

   - Replace the Heating, Ventilation and Air Conditioning Control Head in accordance with the Service Information.
   - Perform the BODY VERIFICATION TEST. Refer to **STANDARD PROCEDURE** .

   No

   - Repair the open in the (D55) and (D54) CAN B Bus circuits. Inspect the connector for damage.
   - Perform the BODY VERIFICATION TEST. Refer to **STANDARD PROCEDURE** .

NO RESPONSE FROM ITM (INTRUSION TRANSCEIVER MODULE)

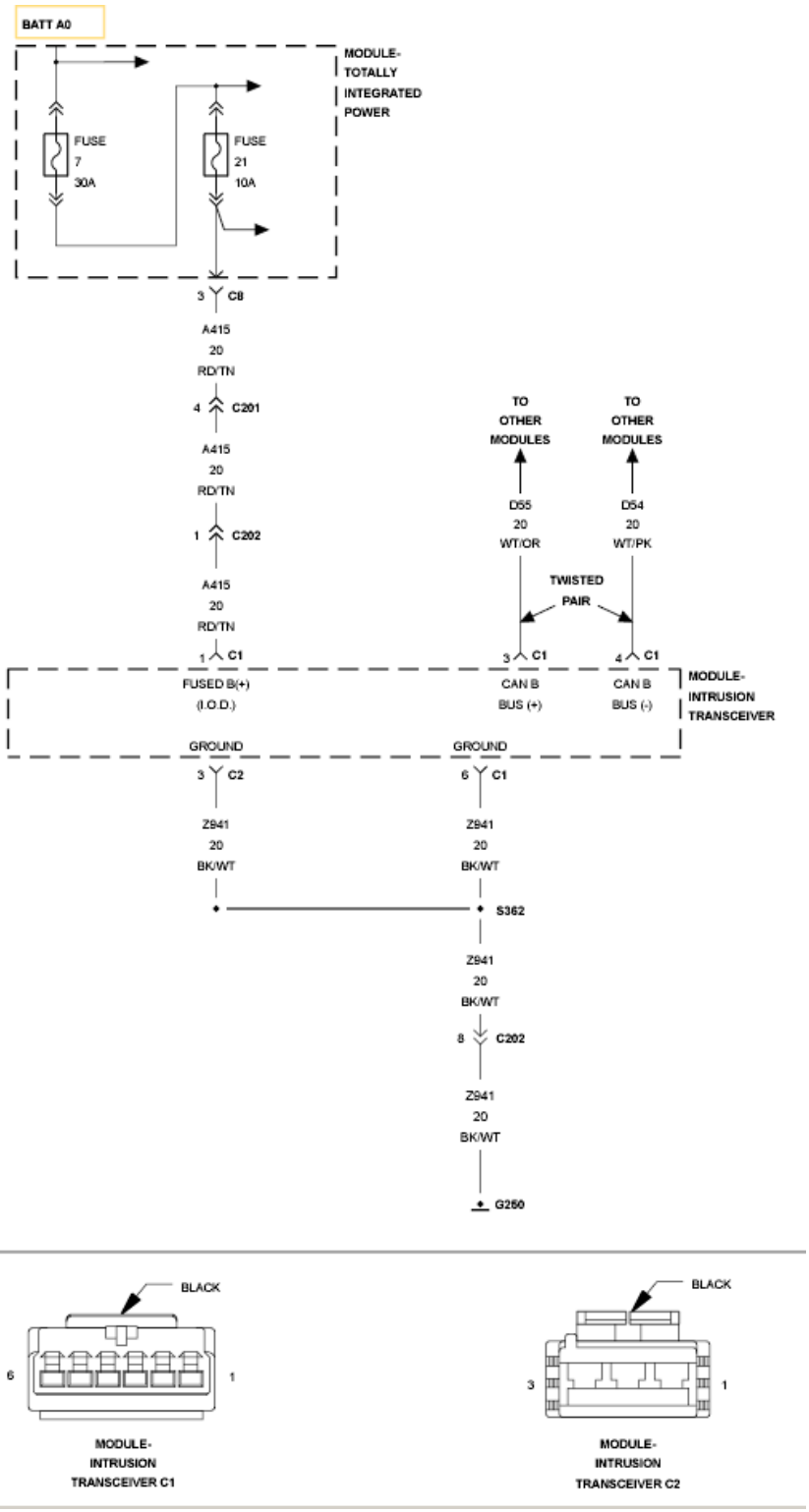

Fig. 45: Intrusion Transceiver Module Wiring Diagram
Courtesy of CHRYSLER GROUP, LLC

For a complete wiring diagram, **refer to appropriate SYSTEM WIRING DIAGRAMS article** .

POSSIBLE CAUSES

Possible Causes
(A415) FUSED B (+) CIRCUIT OPEN OR SHORTED
(Z941) GROUND CIRCUIT OPEN
(D55) AND (D54) CAN B BUS CIRCUITS OPEN
INTRUSION TRANSCEIVER MODULE

DIAGNOSTIC TEST

1. **TEST FOR INTERMITTENT CONDITION**

NOTE: Check for any TSB(s) related to the condition. If a TSB applies, perform the procedure outlined in the TSB before continuing.

1. Turn the ignition on.

NOTE: Ensure the IOD fuse is installed and battery voltage is between 10.0 and 16.0 volts.

2. With the scan tool, select ECU View.

NOTE: A red "X" will be next to the module that is not communicating, indicating that the module is not active on the Bus network. A green check indicates that the module is active on the Bus network.

Does the scan tool display a red "X" next to the module?

Yes

- Go To 2

No

- The no response condition is not present at this time. Using the wiring diagram/schematic as a guide, inspect the wiring for chafed, pierced, pinched, and partially broken wires and the wiring harness connectors for broken, bent, pushed out, and corroded terminals.

2. (A415) FUSED B(+) CIRCUIT OPEN OR SHORTED

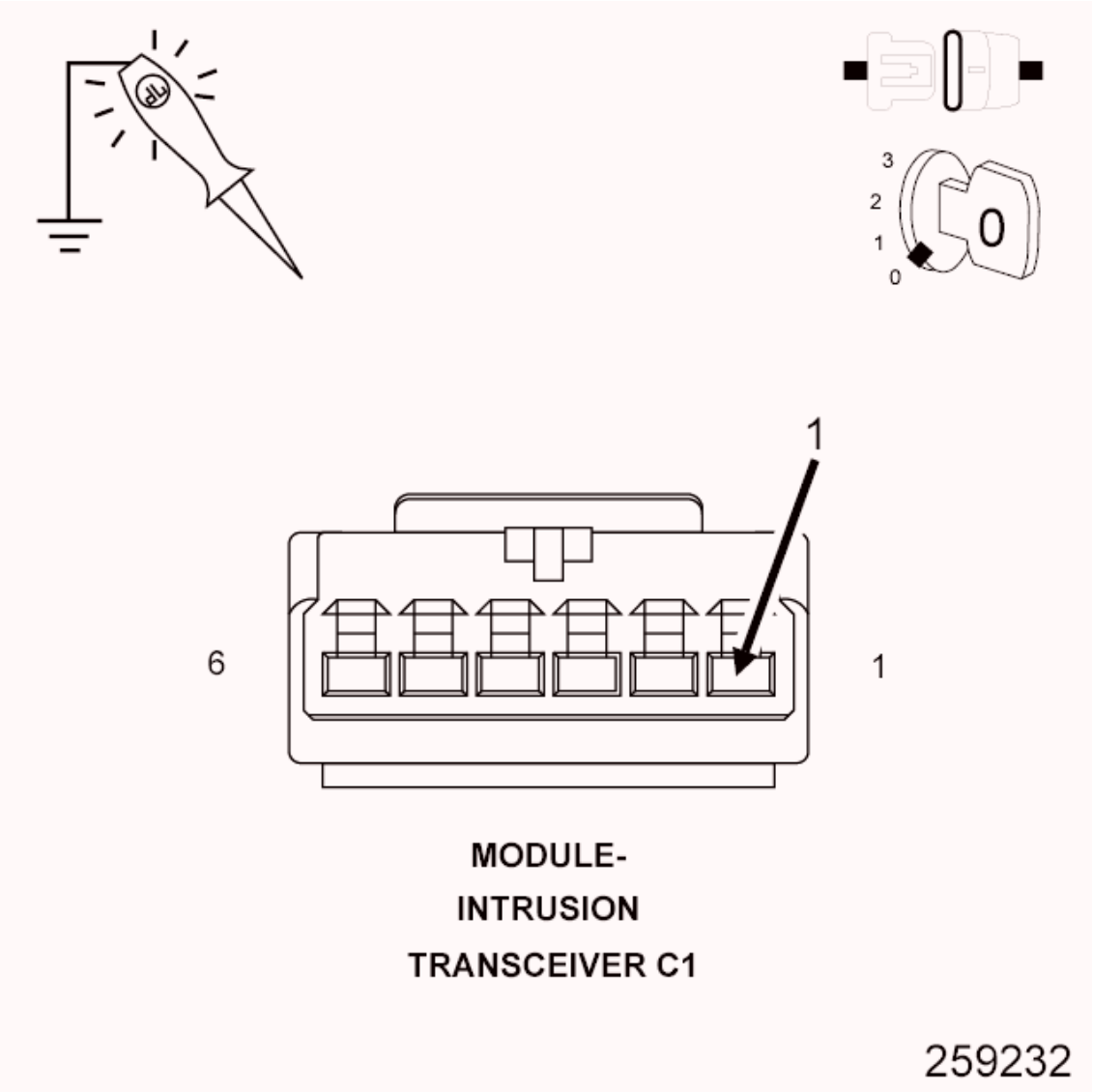

Fig. 46: Checking Fused B(+) Circuit Using 12-Volt Test Light Connected To Ground
Courtesy of CHRYSLER GROUP, LLC

1. Turn the ignition off.
2. Disconnect the Intrusion Transceiver Module C1 and C2 harness connectors.
3. Using a 12-volt test light connected to ground, check the (A415) Fused B(+) circuit.

   Does the test light illuminate brightly?

   Yes

- Go To 3

No

- Repair the (A415) Fused B(+) circuit for an open or short.
- Perform the BODY VERIFICATION TEST. Refer to **STANDARD PROCEDURE** .

3. **(Z941) GROUND CIRCUITS OPEN**

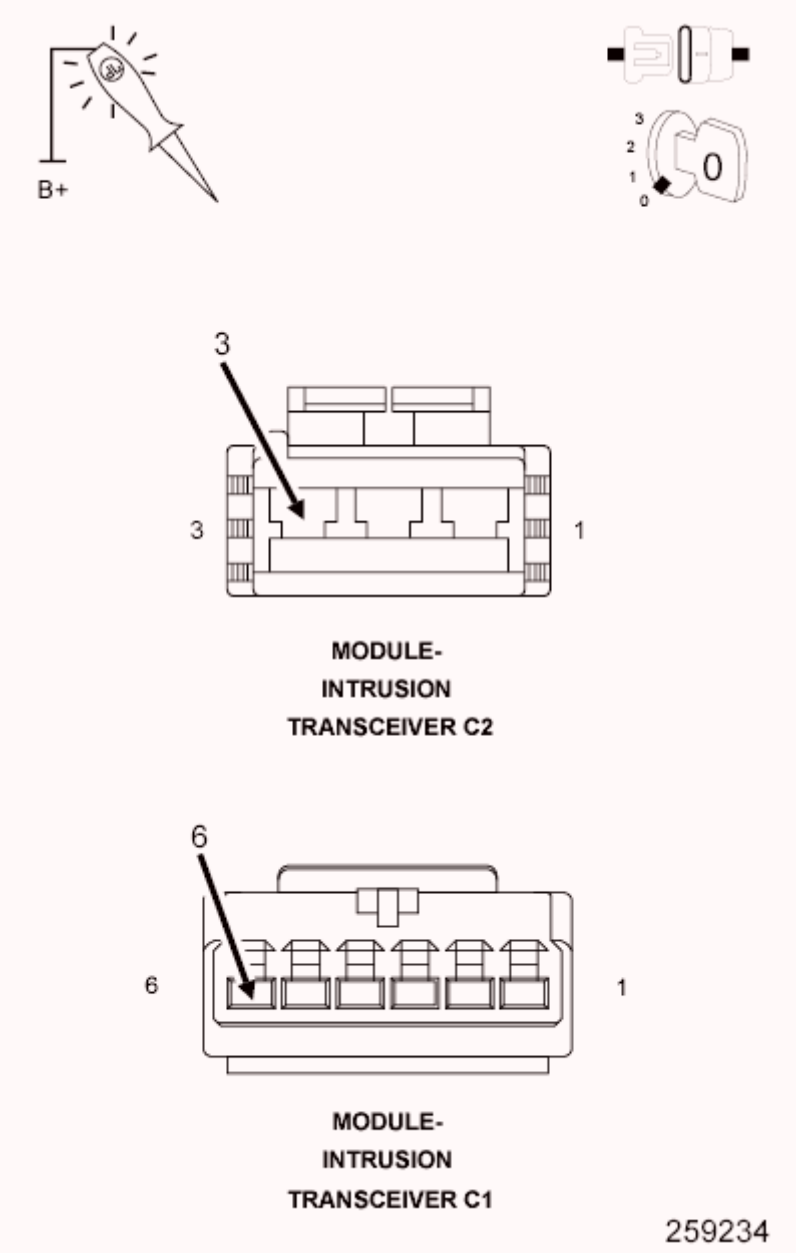

Fig. 47: Checking Ground Circuits Using 12-Volt Test Light Connected To 12-Volts
Courtesy of CHRYSLER GROUP, LLC

1. Using a 12-volt test light connected to 12-volts, check the (Z941) ground circuits.

   Does the test light illuminate brightly for each circuit?

   Yes

   - Go To 4

   No

   - Repair the (Z941) ground circuits for an open.
   - Perform the BODY VERIFICATION TEST. Refer to **STANDARD PROCEDURE** .

4. **(D55) AND (D54) CAN B BUS CIRCUITS OPEN**

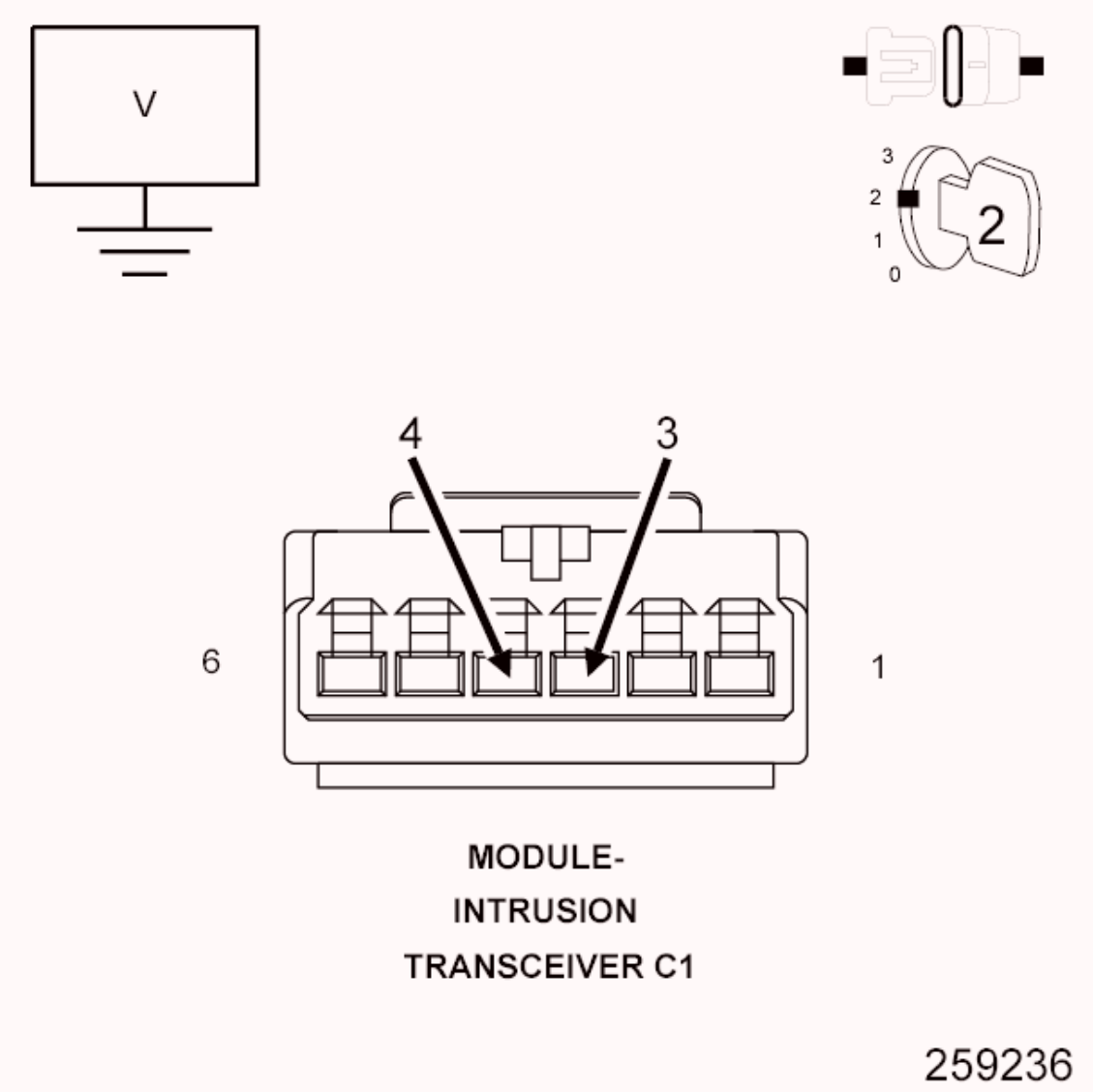

Fig. 48: Measuring Voltage Between CAN B Bus (-) Circuit & Ground And Between CAN B Bus (+) Circuit & Ground
Courtesy of CHRYSLER GROUP, LLC

NOTE: One open circuit will not cause this condition.

1. Measure the voltage between the (D54) CAN B Bus (-) circuit and ground.
2. Measure the voltage between the (D55) CAN B Bus (+) circuit and ground.

   Is there any voltage present on either circuit?

   Yes

- Replace the Intrusion Transceiver Module in accordance with the Service Information.
- Perform the BODY VERIFICATION TEST. Refer to **STANDARD PROCEDURE** .

No

- Repair the (D55) and (D54) CAN B Bus circuits for an open. Inspect the connector for damage.
- Perform the BODY VERIFICATION TEST. Refer to **STANDARD PROCEDURE** .

NO RESPONSE FROM PCM (POWERTRAIN CONTROL MODULE) (GPEC)

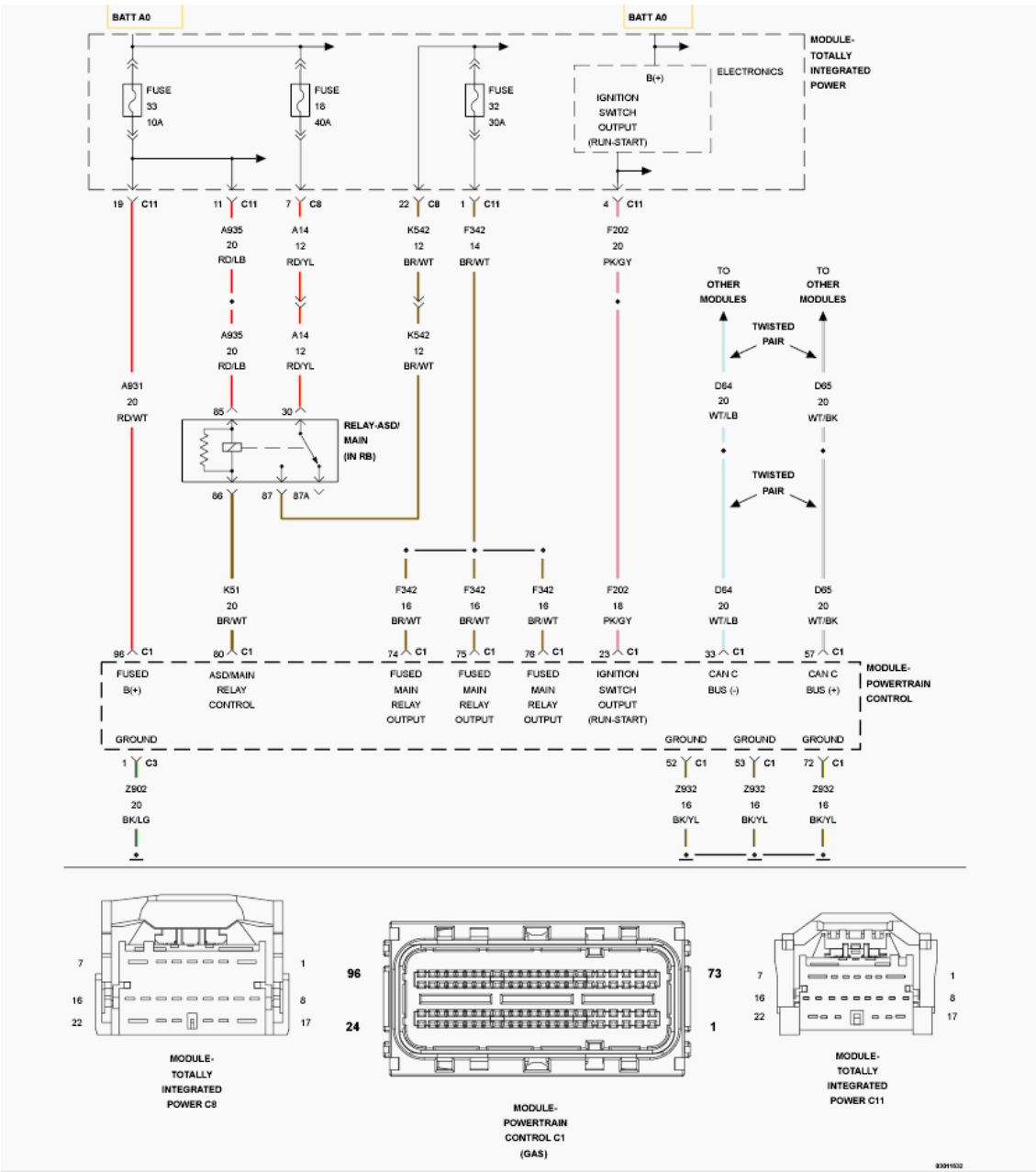

Fig. 49: Powertrain Control Module Wiring Diagram (GPEC)
Courtesy of CHRYSLER GROUP, LLC

For a complete wiring diagram, **refer to appropriate SYSTEM WIRING DIAGRAMS article** .

POSSIBLE CAUSES

Possible Causes
(A931) FUSED B(+) CIRCUIT OPEN OR SHORTED
(Z932) GROUND CIRCUIT OPEN
(Z902) GROUND CIRCUIT OPEN

(F202) IGNITION SWITCH OUTPUT CIRCUIT OPEN OR SHORTED
(F342) FUSED MAIN RELAY OUTPUT CIRCUIT OPEN OR SHORTED
(D65) CAN C BUS (+) CIRCUIT OPEN
(D64) CAN C BUS (-) CIRCUIT OPEN
POWERTRAIN CONTROL MODULE (PCM)

DIAGNOSTIC TEST

1. **TEST FOR INTERMITTENT CONDITION**

   NOTE: Check for any TSB(s) related to the condition. If a TSB applies, perform the procedure outlined in the TSB before continuing.

   1. Turn the ignition on.

      NOTE: Make sure the Ignition Off Draw (IOD) fuse is installed and battery voltage is between 10.0 and 16.0 volts.

   2. With the scan tool, read the module status.

      NOTE: Check the TIPM for any active CAN hardware DTCs, perform DTC before proceeding.

   Does the scan tool indicate that the module is active on the bus?

   Yes

   - The no response condition is not present at this time. Using the wiring diagrams as a guide, check all related splices and connectors for signs of water intrusion, corrosion, pushed out or bent terminals, and correct pin tension.

   No

   - Go To 2

2. **CHECK THE (A931) FUSED B(+) CIRCUIT FOR AN OPEN OR SHORT**

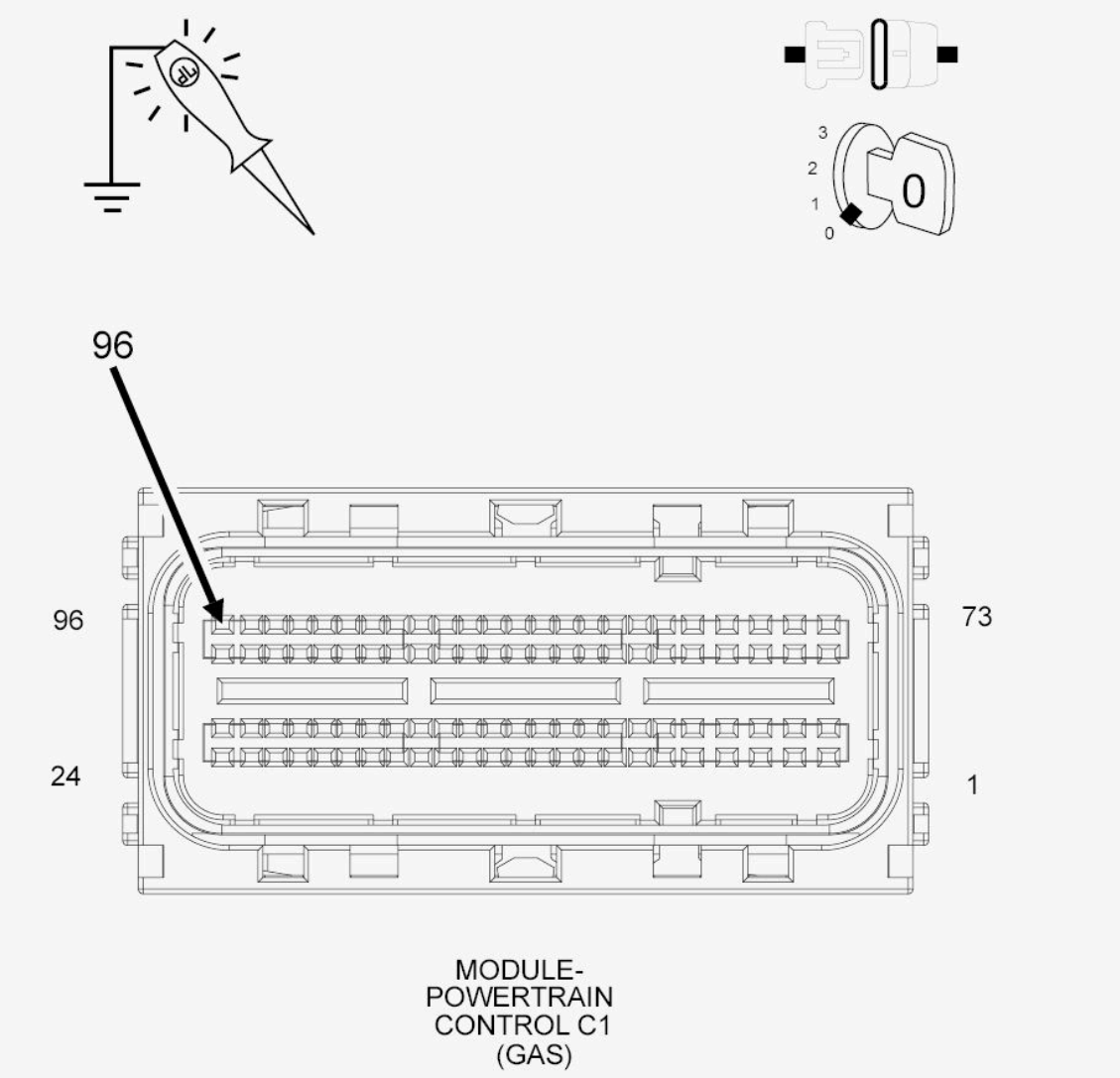

Fig. 50: Checking Fused B(+) Circuit For An Open Or Short
Courtesy of CHRYSLER GROUP, LLC

1. Turn the ignition off.
2. Disconnect the PCM C1 harness connector.
3. Using a 12-volt test light connected to ground, check the (A931) Fused B(+) circuit.

   Does the test light illuminate brightly?

   Yes

   - Go To 3

   No

- Repair the open or short in the (A931) Fused B(+) circuit.
- Perform the POWERTRAIN VERIFICATION TEST. Refer to appropriate Diagnostic Information .

3. **CHECK THE (Z932) GROUND CIRCUIT FOR AN OPEN**

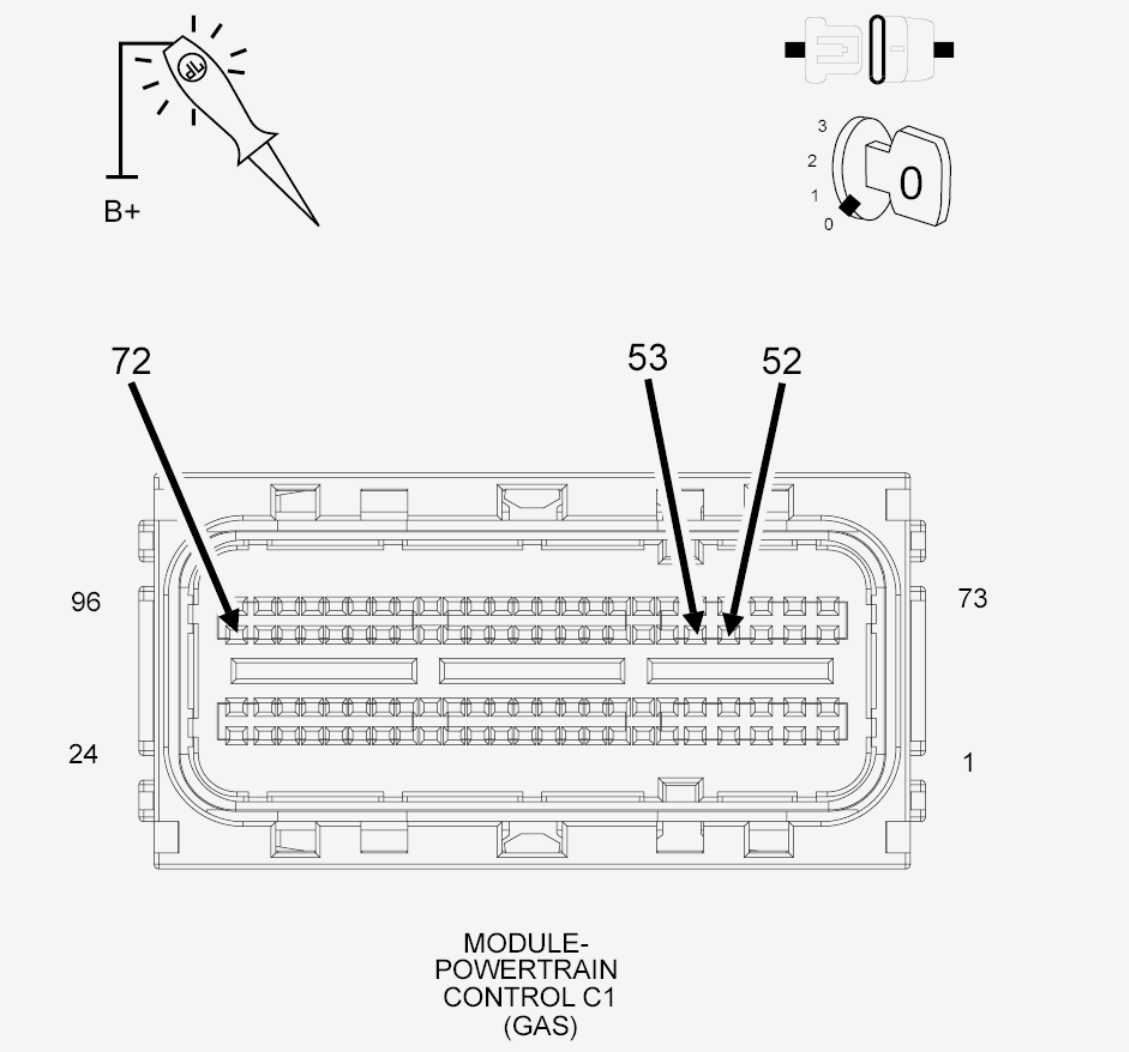

Fig. 51: Checking Ground Circuit For An Open
Courtesy of CHRYSLER GROUP, LLC

1. Using a 12-volt test light connected to 12-volts, check the (Z932) Ground circuit.

   Does the test light illuminate brightly?

   Yes

   - Go To 4

No

- Repair the open in the (Z932) Ground circuit.
- Perform the POWERTRAIN VERIFICATION TEST. Refer to appropriate Diagnostic Information .

4. **CHECK THE (Z902) GROUND CIRCUIT FOR AN OPEN**
   1. Disconnect the PCM C3 harness connector.
   2. Using a 12-volt test light connected to 12-volts, check the (Z902) Ground circuit.

   Does the test light illuminate brightly?

   Yes

   - Go To 5

   No

   - Repair the open in the (Z902) Ground circuit.
   - Perform the POWERTRAIN VERIFICATION TEST. Refer to appropriate Diagnostic Information .

5. **CHECK THE (F202) IGNITION SWITCH OUTPUT CIRCUIT FOR AN OPEN OR SHORT**

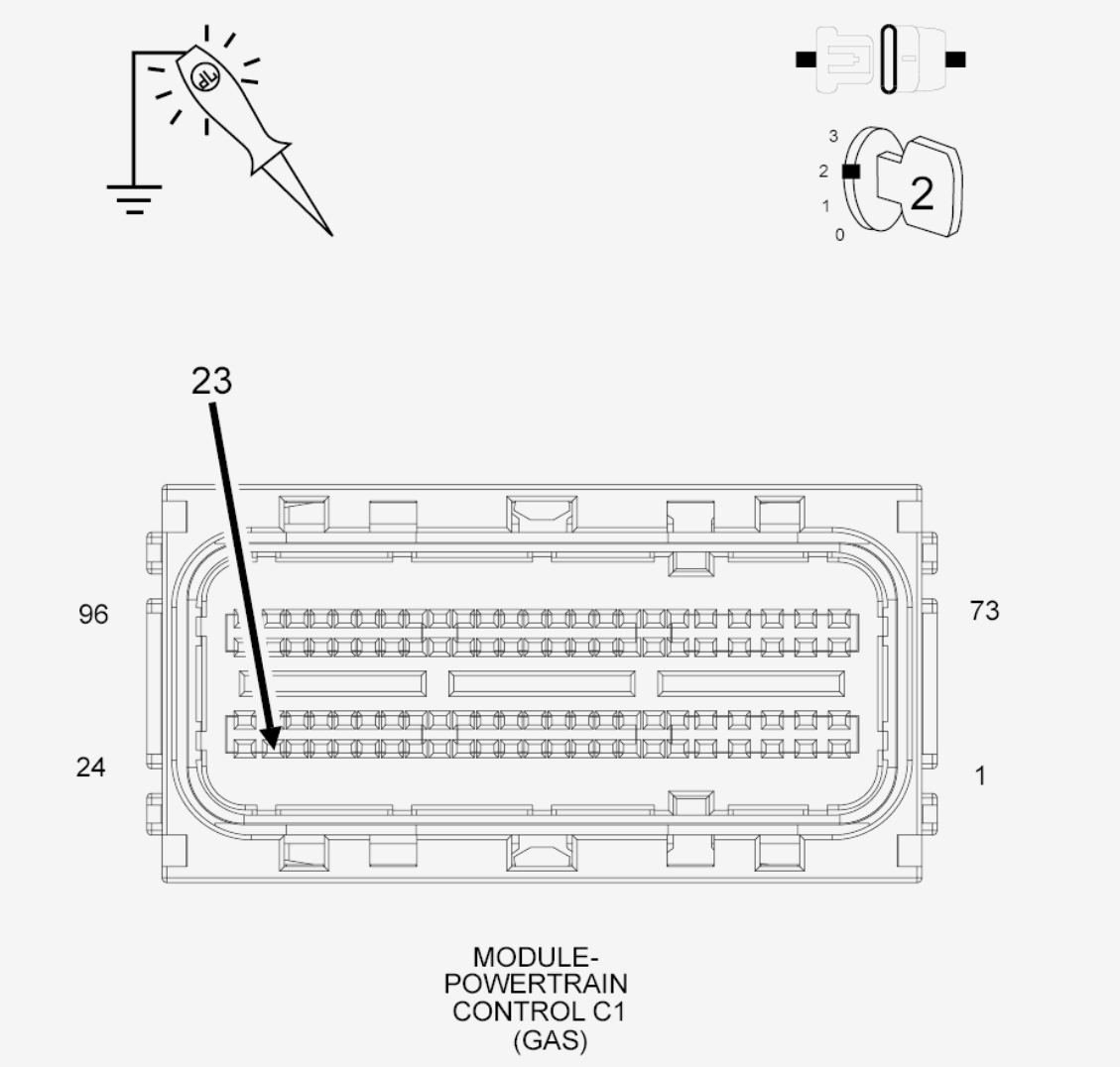

Fig. 52: Checking Run/Start Relay Output Circuit For An Open Or Short
Courtesy of CHRYSLER GROUP, LLC

1. Turn the ignition on.
2. Using a 12-volt test light connected to ground, check the (F202) Ignition Switch Output circuit.

   Does the test light illuminate brightly?

   Yes

   - Go To 6

   No

- Repair the open or short in the (F202) Ignition Switch Output circuit.
- Perform the POWERTRAIN VERIFICATION TEST. Refer to appropriate Diagnostic Information .

6. **CHECK THE (F342) FUSED MAIN RELAY OUTPUT CIRCUIT FOR AN OPEN OR SHORT**

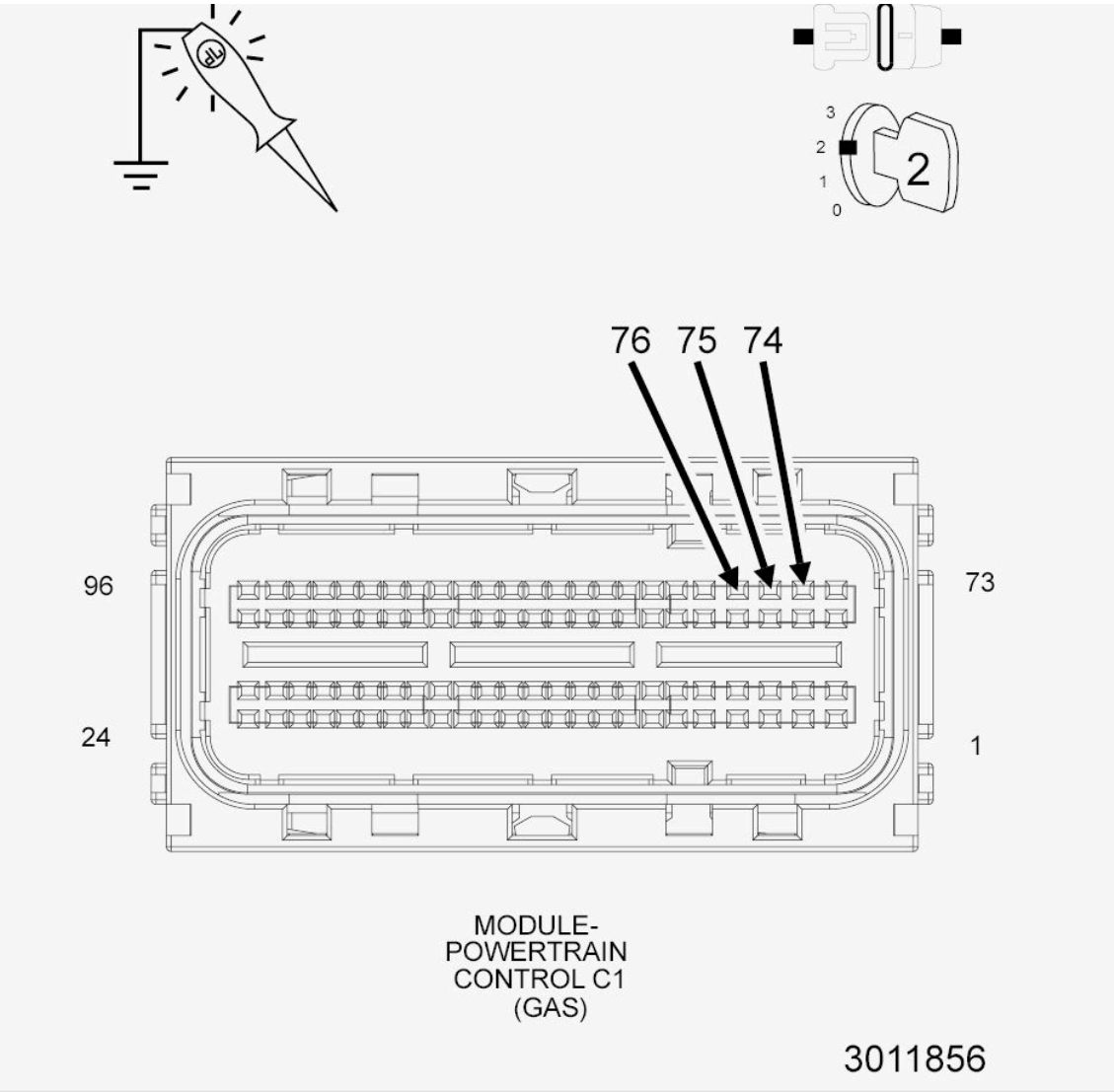

Fig. 53: Checking Fused ASD Relay Output Circuits For An Open Or Short
Courtesy of CHRYSLER GROUP, LLC

1. Remove the ASD/Main Relay.
2. Connect a fused jumper wire between terminals 30 and 87.
3. Using a 12-volt test light connected to ground, check the (F342) Fused

Main Relay Output circuit.

Does the test light illuminate brightly?

Yes

- Go To 7

No

- Repair the open or short in the (F342) Fused Main Relay Output circuit.
- Perform the POWERTRAIN VERIFICATION TEST. Refer to appropriate Diagnostic Information .

7. **CHECK THE (D65) CAN C BUS (+) CIRCUIT FOR AN OPEN**

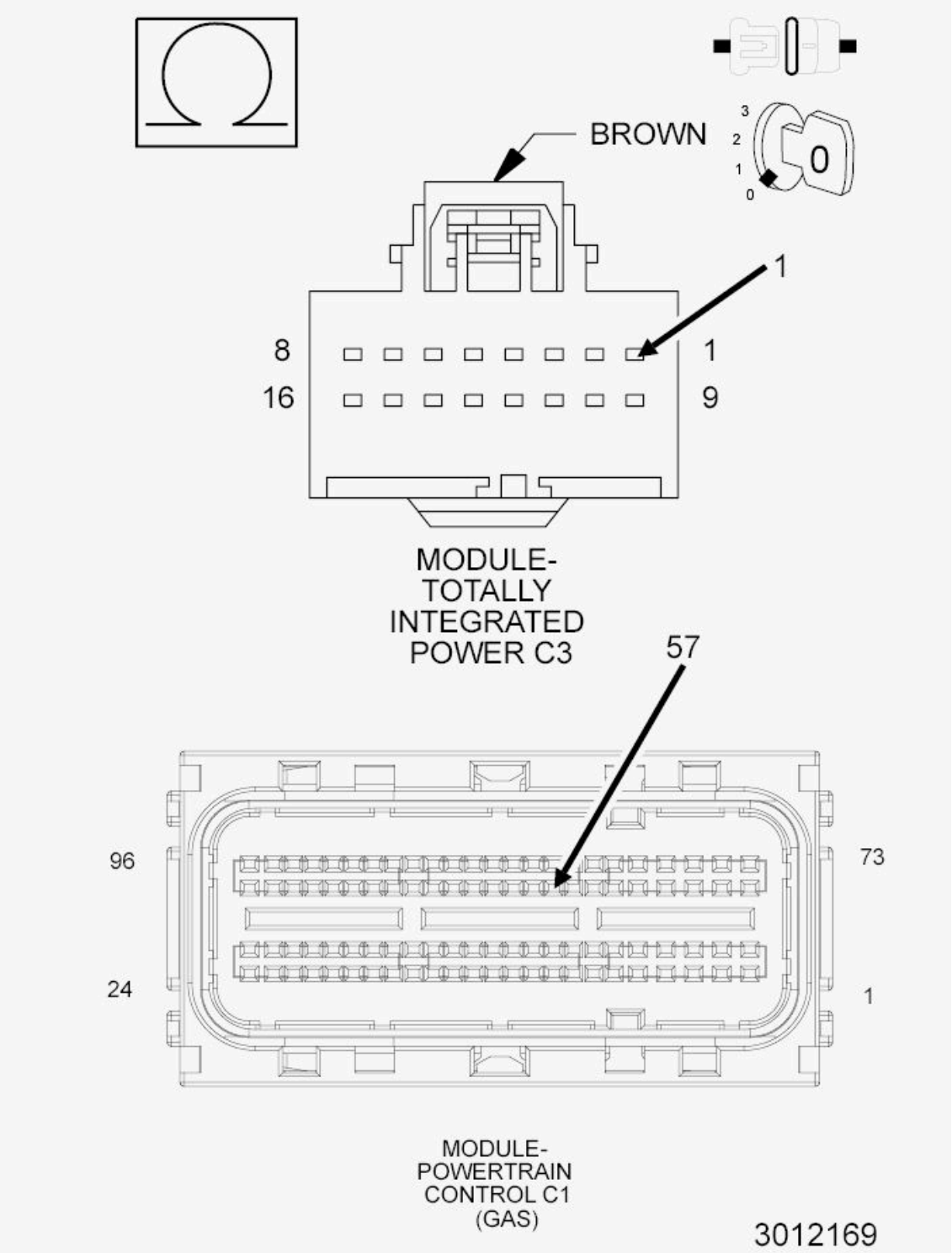

Fig. 54: Checking Can C Bus (+) Circuit For An Open
Courtesy of CHRYSLER GROUP, LLC

1. Turn the ignition off.
2. Disconnect the TIPM C3 harness connector.
3. Measure the resistance of the (D65) CAN C Bus (+) circuit between the TIPM C3 harness connector and the PCM C1 harness connector.

Is the resistance below 5.0 Ohms?

Yes

- Go To 8

No

- Repair the open in the (D65) CAN C Bus (+) circuit.
- Perform the POWERTRAIN VERIFICATION TEST. Refer to appropriate Diagnostic Information .

8. **CHECK THE (D64) CAN C BUS (-) CIRCUIT FOR AN OPEN**

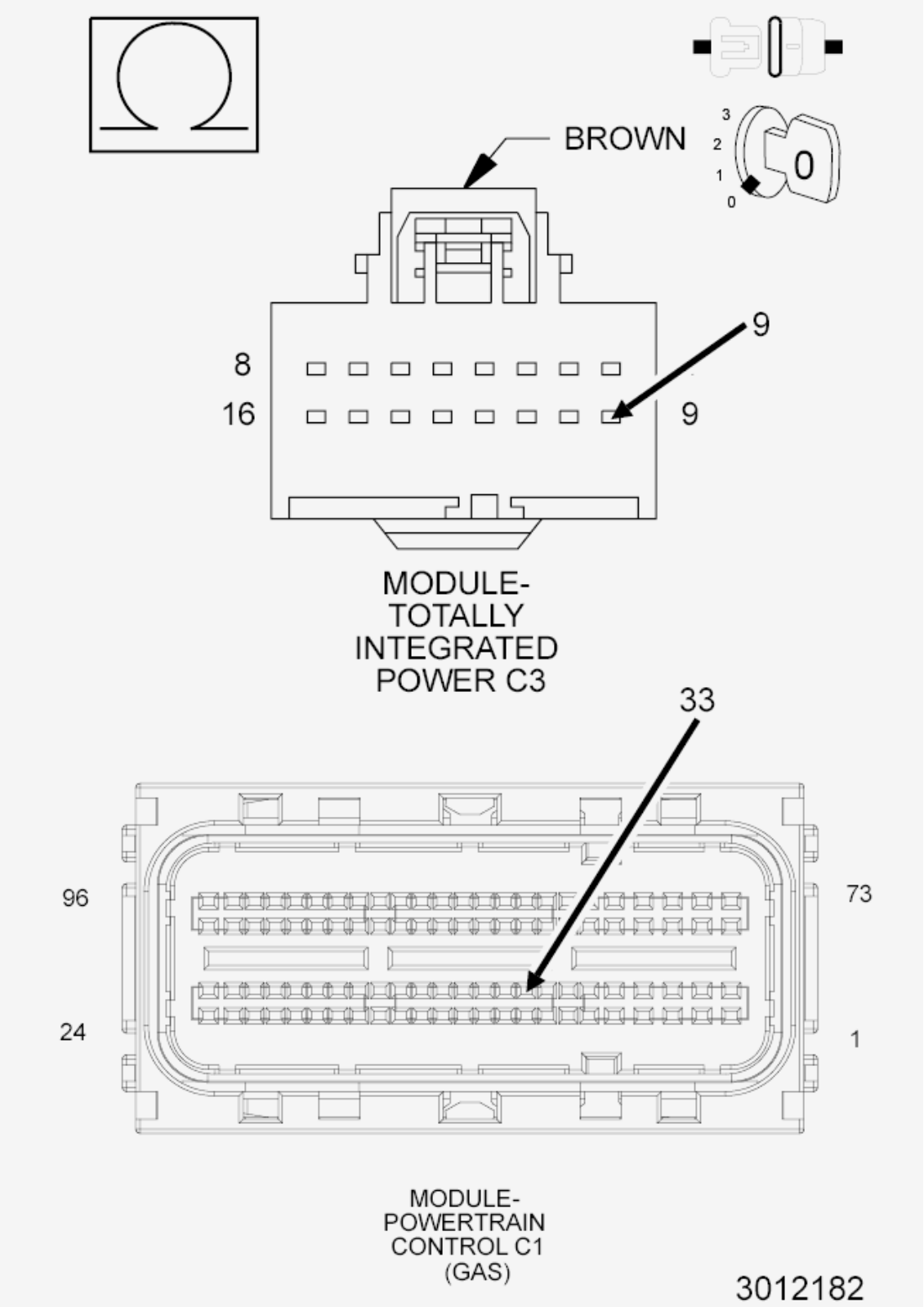

Fig. 55: Checking Can C Bus (-) Circuit For An Open
Courtesy of CHRYSLER GROUP, LLC

1. Measure the resistance of the (D64) CAN C Bus (-) circuit between the TIPM C3 harness connector and the PCM C1 harness connector.

Is the resistance below 5.0 Ohms?

Yes

- Replace and program the Powertrain Control Module in accordance with the Service Information.
- Perform the POWERTRAIN VERIFICATION TEST. Refer to appropriate Diagnostic Information .

No

- Repair the open in the (D64) CAN C Bus (-) circuit.
- Perform the POWERTRAIN VERIFICATION TEST. Refer to appropriate Diagnostic Information .

NO RESPONSE FROM PCM (POWERTRAIN CONTROL MODULE) (DIESEL)

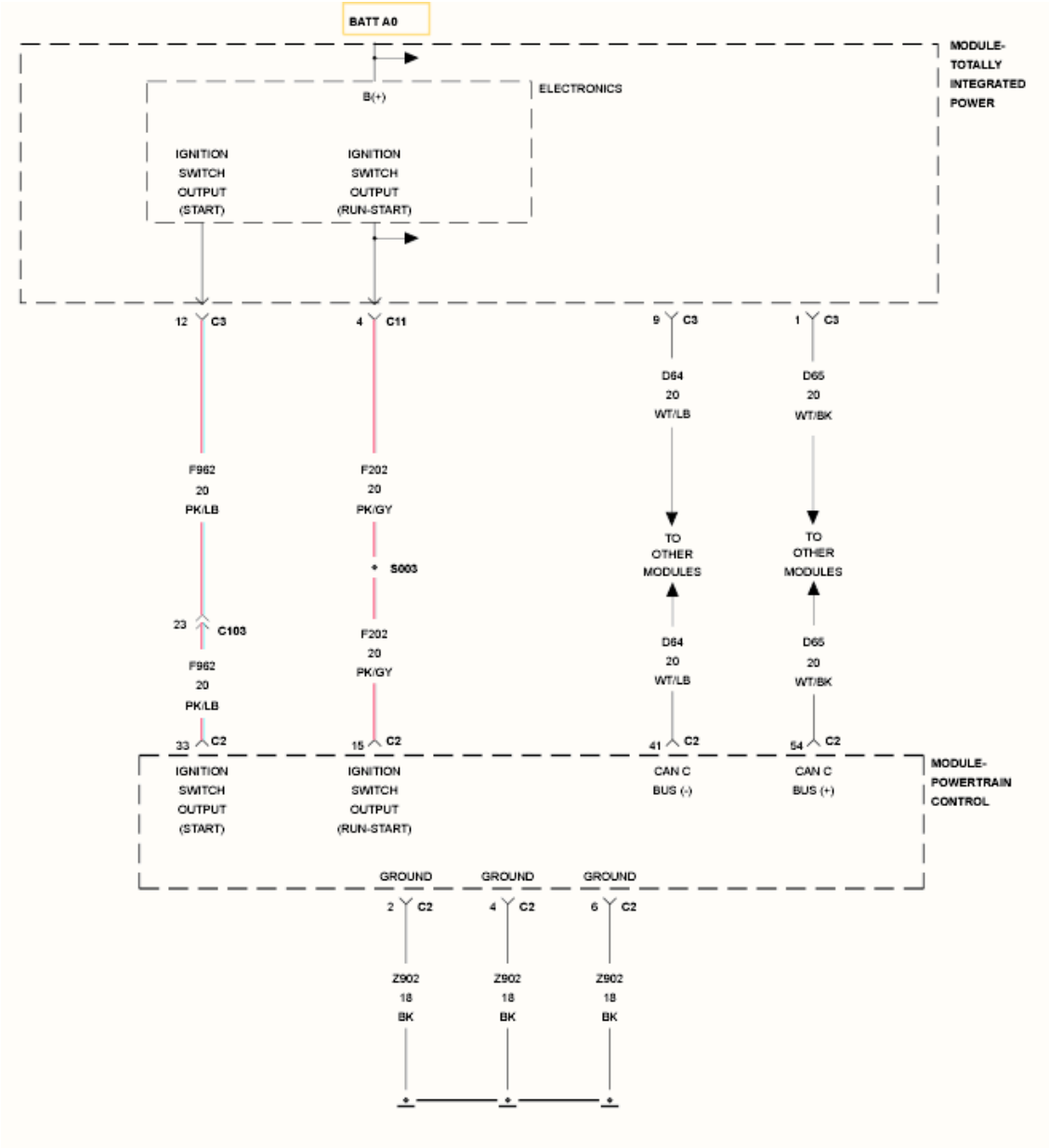

Fig. 56: Powertrain Control Module Wiring Diagram (Diesel)
Courtesy of CHRYSLER GROUP, LLC

For a complete wiring diagram, **refer to appropriate SYSTEM WIRING DIAGRAMS article** .

POSSIBLE CAUSES

Possible Causes
POWERTRAIN CONTROL MODULE POWER AND GROUND
(D65) CAN C BUS (+) CIRCUIT OPEN
(D64) CAN C BUS (-) CIRCUIT OPEN

POWERTRAIN CONTROL MODULE (PCM)

DIAGNOSTIC TEST

1. **TEST FOR INTERMITTENT CONDITION**

NOTE: Check for any TSB(s) related to the condition. If a TSB applies, perform the procedure outlined in the TSB before continuing.

1. Turn the ignition on.

NOTE: Make sure the IOD fuse is installed and battery voltage is between 10.0 and 16.0 volts.

2. With the scan tool, select ECU View.

NOTE: A red "X" will be next to the module that is not communicating, indicating that the module is not active on the Bus network. A green check indicates that the module is active on the Bus network.

NOTE: Check the TIPM for any active CAN C hardware and any ignition related DTCs, perform DTCs before proceeding.

Does the scan tool display a red "X" next to the module?

Yes

- Go To 2

No

- The no response condition is not present at this time. Using the wiring diagram/schematic as a guide, inspect the wiring for chafed, pierced, pinched, and partially broken wires and the wiring harness connectors for broken, bent, pushed out, and corroded terminals.

2. **CHECK PCM POWER AND GROUND**

1. Check the PCM power and ground circuits. Refer to **DIAGNOSIS AND TESTING** .

   Were any problems found?

   Yes

   - Repair as necessary.
   - Perform the PCM VERIFICATION TEST. Refer to appropriate Diagnostic Information .

   No

   - Go To 3

3. **(D65) CAN C BUS (+) CIRCUIT OPEN**
   1. Turn the ignition off.
   2. Disconnect the TIPM C3 harness connector.
   3. Disconnect the PCM C2 harness connector.
   4. Measure the resistance of the (D65) CAN C Bus (+) circuit between the TIPM connector and the PCM C2 connector.

      Is resistance below 5.0 Ohms?

      Yes

      - Go To 4

      No

      - Repair the (D65) CAN C Bus (+) circuit for an open.
      - Perform the PCM VERIFICATION TEST. Refer to appropriate Diagnostic Information .

4. **(D64) CAN C BUS (-) CIRCUIT OPEN**
   1. Measure the resistance of the (D64) CAN C Bus (-) circuit between the TIPM connector and the PCM C2 connector.

      Is resistance below 5.0 Ohms?

      Yes

- Replace and program the Powertrain Control Module in accordance with the Service Information.
- Perform the PCM VERIFICATION TEST. Refer to appropriate Diagnostic Information .

No

- Repair the (D64) CAN C Bus (-) circuit for an open.
- Perform the PCM VERIFICATION TEST. Refer to appropriate Diagnostic Information .

NO RESPONSE FROM RADIO

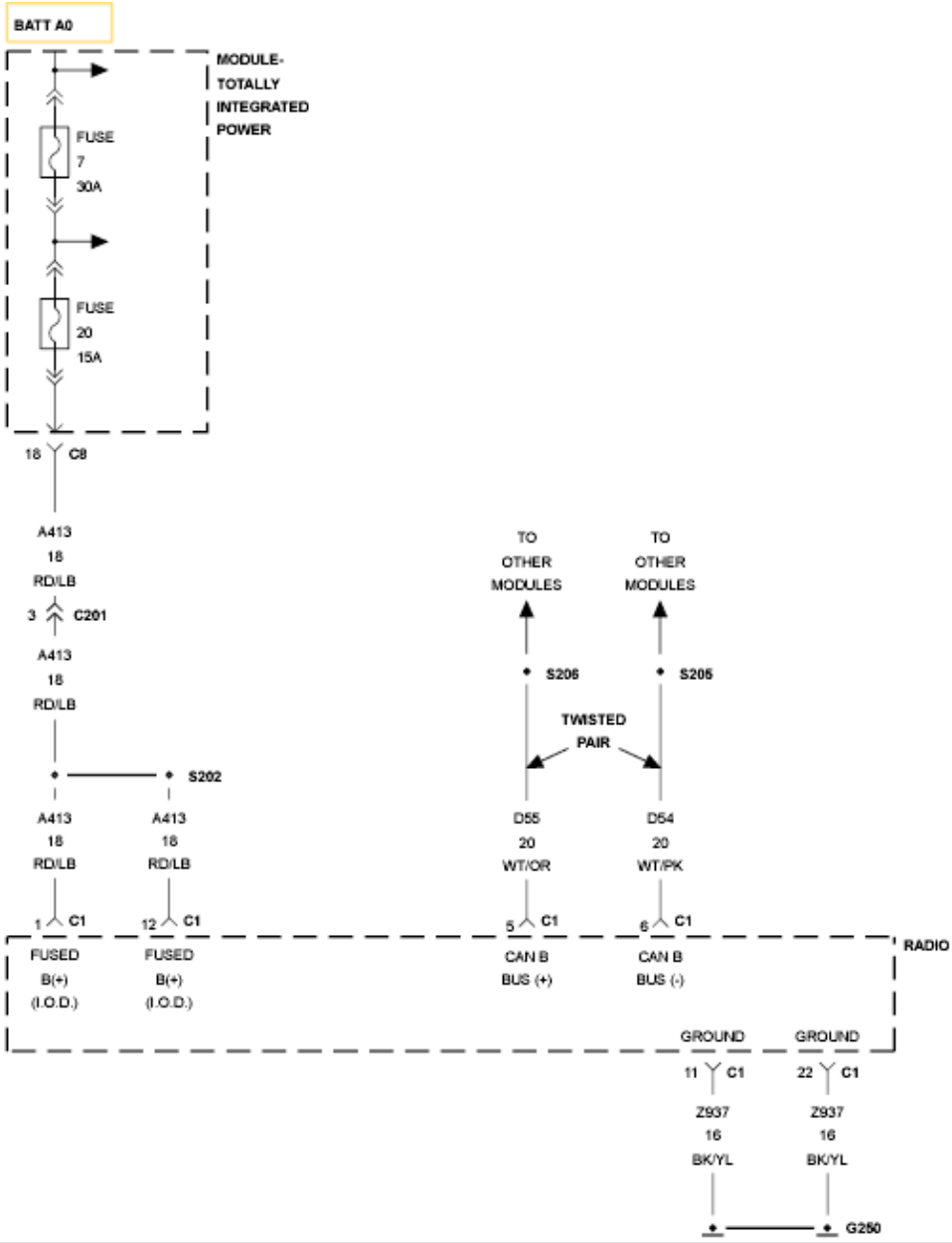

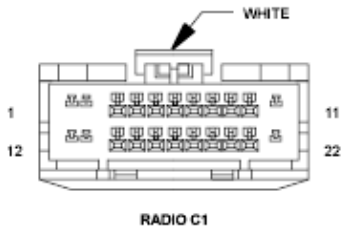

Fig. 57: Radio Wiring Diagram
Courtesy of CHRYSLER GROUP, LLC

For a complete wiring diagram, **refer to appropriate SYSTEM WIRING DIAGRAMS article** .

POSSIBLE CAUSES

Possible Causes
(A413) FUSED B (+) CIRCUIT OPEN OR SHORTED
(Z937) GROUND CIRCUIT OPEN
(D55) AND (D54) CAN B BUS CIRCUITS OPEN
RADIO

DIAGNOSTIC TEST

1. **TEST FOR INTERMITTENT CONDITION**

NOTE: Check for any TSB(s) related to the condition. If a TSB applies, perform the procedure outlined in the TSB before continuing.

1. Turn the ignition on.

NOTE: Ensure the IOD fuse is installed and battery voltage is between 10.0 and 16.0 volts.

2. With the scan tool, select ECU View.

NOTE: A red "X" will be next to the module that is not communicating, indicating that the module is not active on the Bus network. A green check indicates that the module is active on the Bus network.

Does the scan tool display a red "X" next to the module?

Yes

- Go To 2

No

- The no response condition is not present at this time. Using the wiring diagram/schematic as a guide, inspect the wiring for chafed, pierced, pinched, and partially broken wires and the wiring harness connectors for broken, bent, pushed out, and corroded terminals.

2. **(A413) FUSED B(+) CIRCUIT OPEN OR SHORTED**

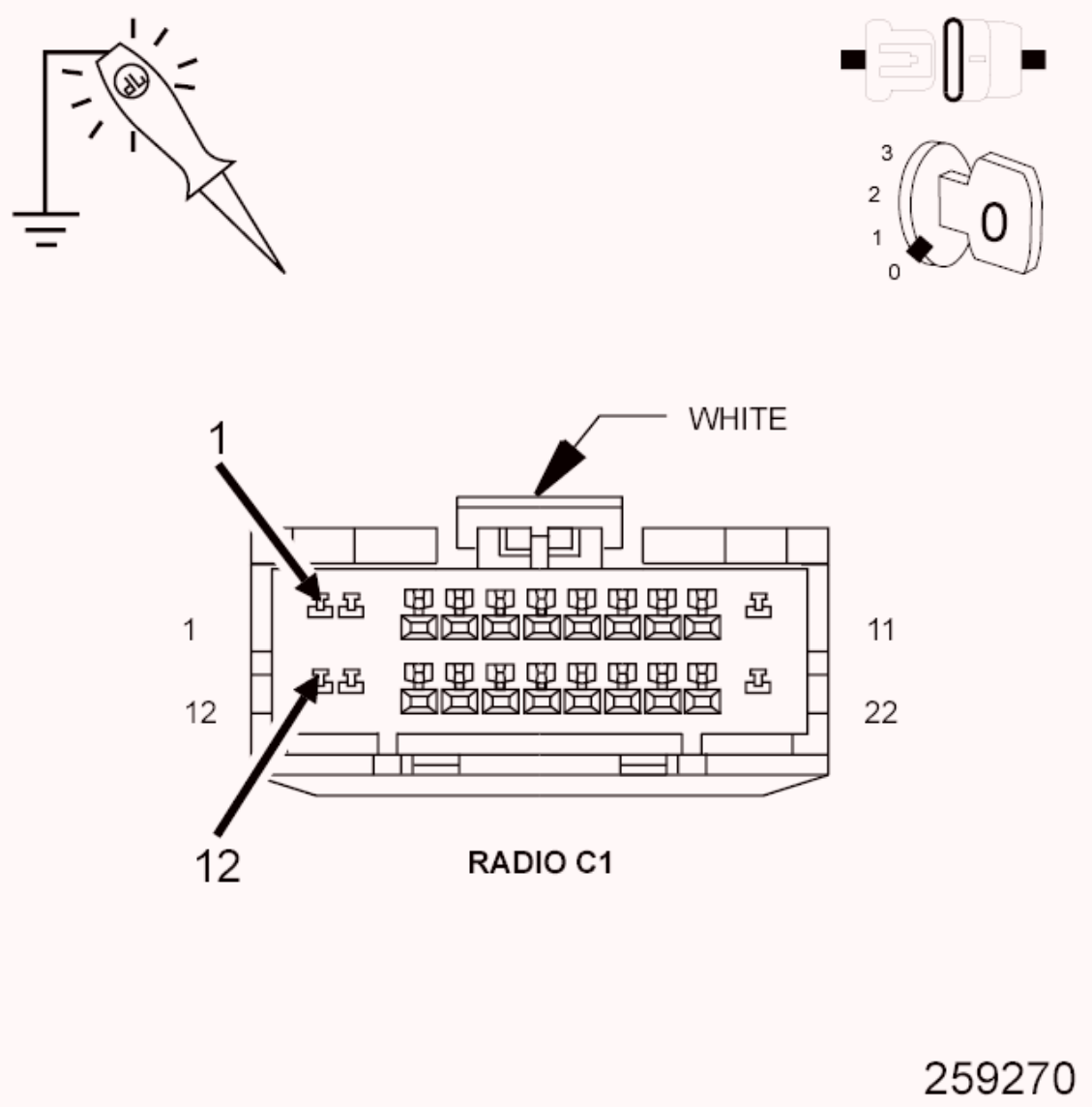

Fig. 58: Checking Fused B(+) Circuits Using 12-Volt Test Light Connected To Ground
Courtesy of CHRYSLER GROUP, LLC

1. Turn the ignition off.
2. Disconnect the Radio C1 harness connector.
3. Using a 12-volt test light connected to ground, check each (A413) Fused B(+) circuit.

Does the test light illuminate brightly for each circuit?

Yes

- Go To 3

No

- Repair the (A413) Fused B(+) circuit for an open or short.
- Perform the BODY VERIFICATION TEST. Refer to **STANDARD PROCEDURE** .

3. **(Z937) GROUND CIRCUIT OPEN**

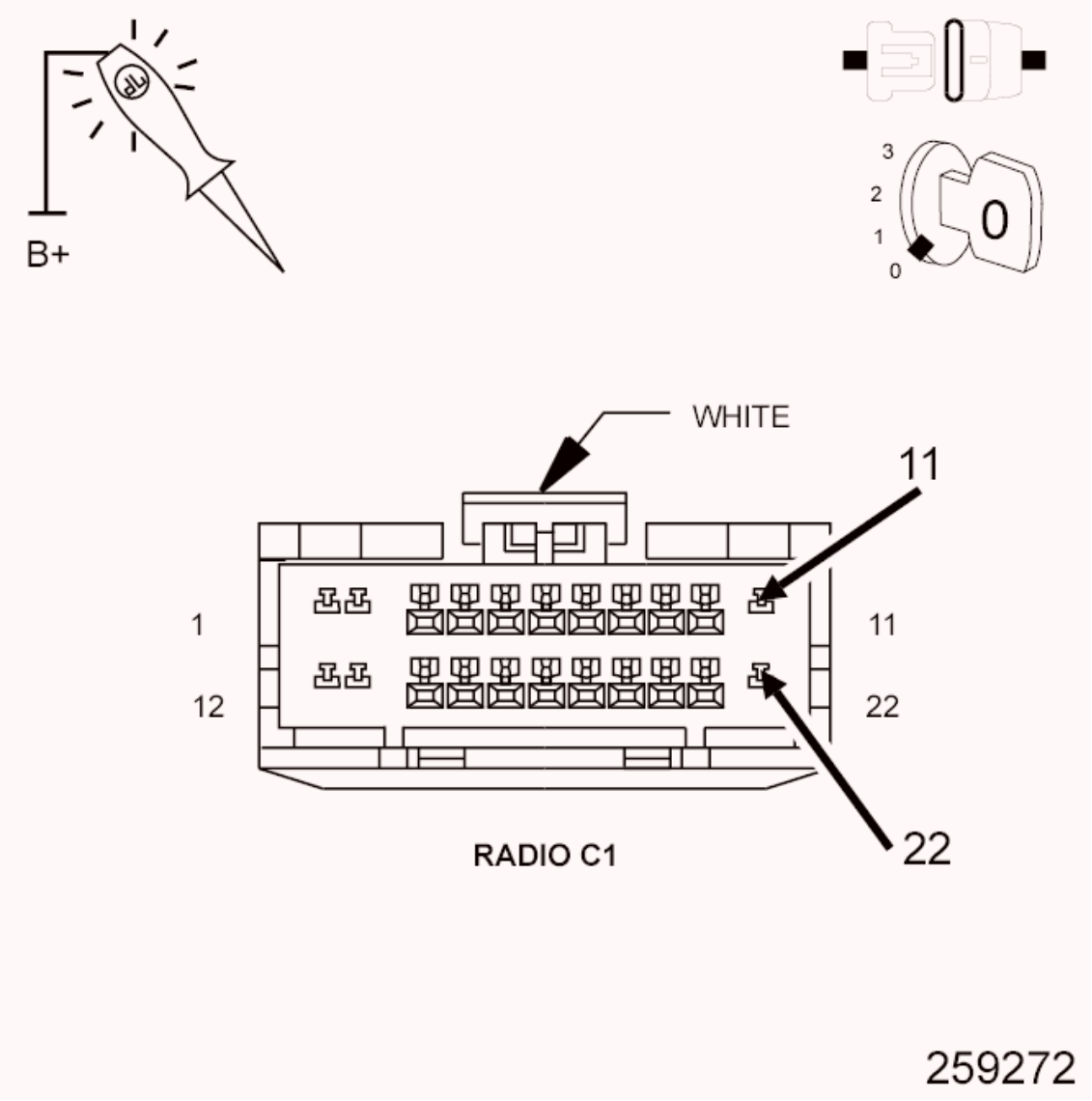

Fig. 59: Checking Ground Circuits Using 12-Volt Test Light Connected To 12-Volts

Courtesy of CHRYSLER GROUP, LLC

1. Using a 12-volt test light connected to 12-volts, check each (Z937) ground circuit.

   Does the test light illuminate brightly for each circuit?

   Yes

   - Go To 4

   No

   - Repair the (Z937) ground circuit for an open.
   - Perform the BODY VERIFICATION TEST. Refer to **STANDARD PROCEDURE** .

4. **(D55) AND (D54) CAN B BUS CIRCUITS OPEN**

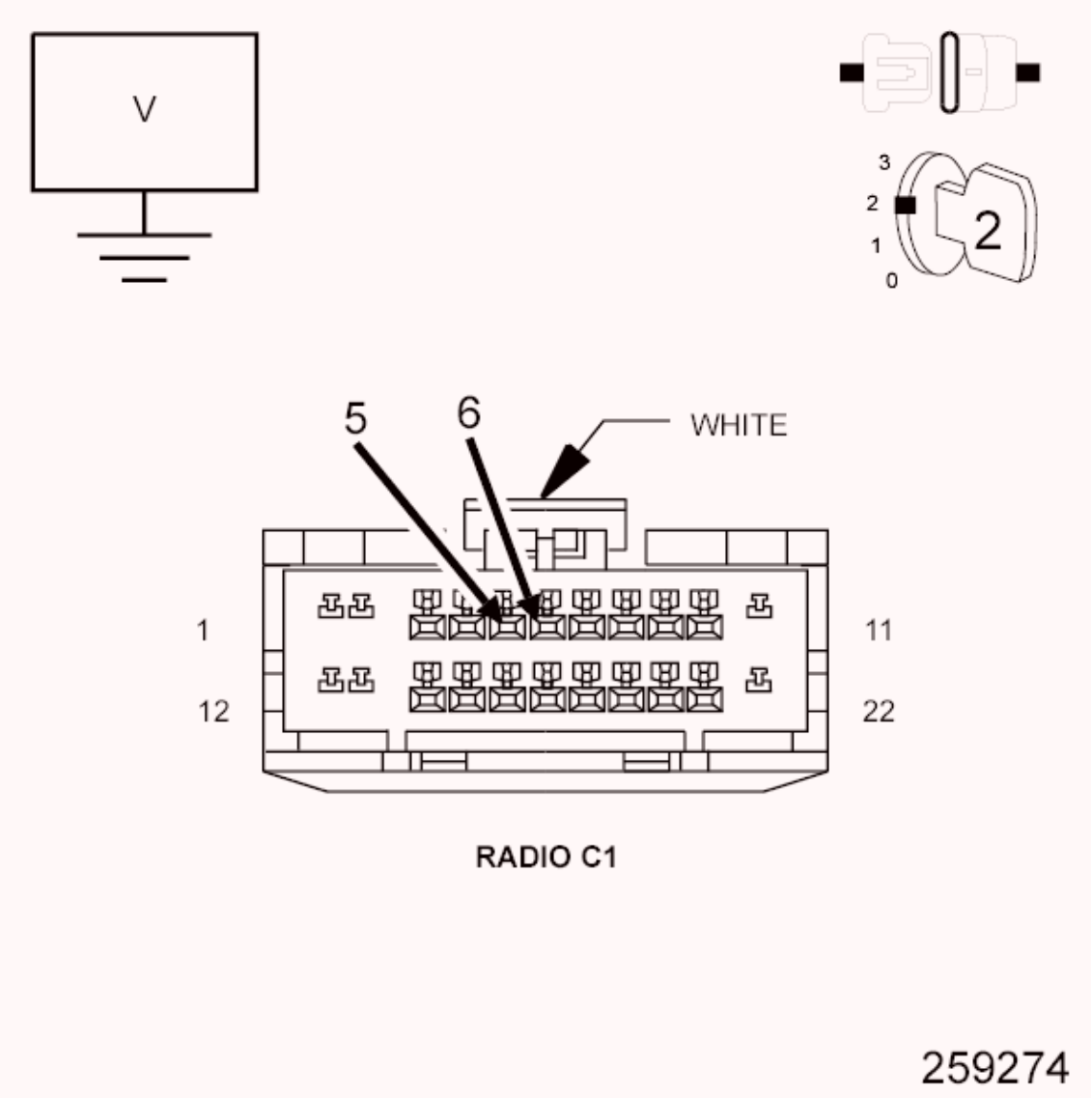

Fig. 60: Measuring Voltage Between CAN B Bus (-) Circuit & Ground And Between CAN B Bus (+) Circuit & Ground
Courtesy of CHRYSLER GROUP, LLC

1. Turn the ignition on.

NOTE: One open circuit will not cause this condition.

2. Measure the voltage between the (D54) CAN B Bus (-) circuit and ground.
3. Measure the voltage between the (D55) CAN B Bus (+) circuit and ground.

Is there any voltage present on either circuit?

Yes

- Replace the Radio in accordance with the Service Information.
- Perform the BODY VERIFICATION TEST. Refer to **STANDARD PROCEDURE** .

No

- Repair the (D55) and (D54) CAN B Bus circuits for an open. Inspect the connector for damage.
- Perform the BODY VERIFICATION TEST. Refer to **STANDARD PROCEDURE** .

NO RESPONSE FROM TCM (TRANSMISSION CONTROL MODULE) (6F24)

For a complete wiring diagram, **refer to appropriate SYSTEM WIRING DIAGRAMS article** .

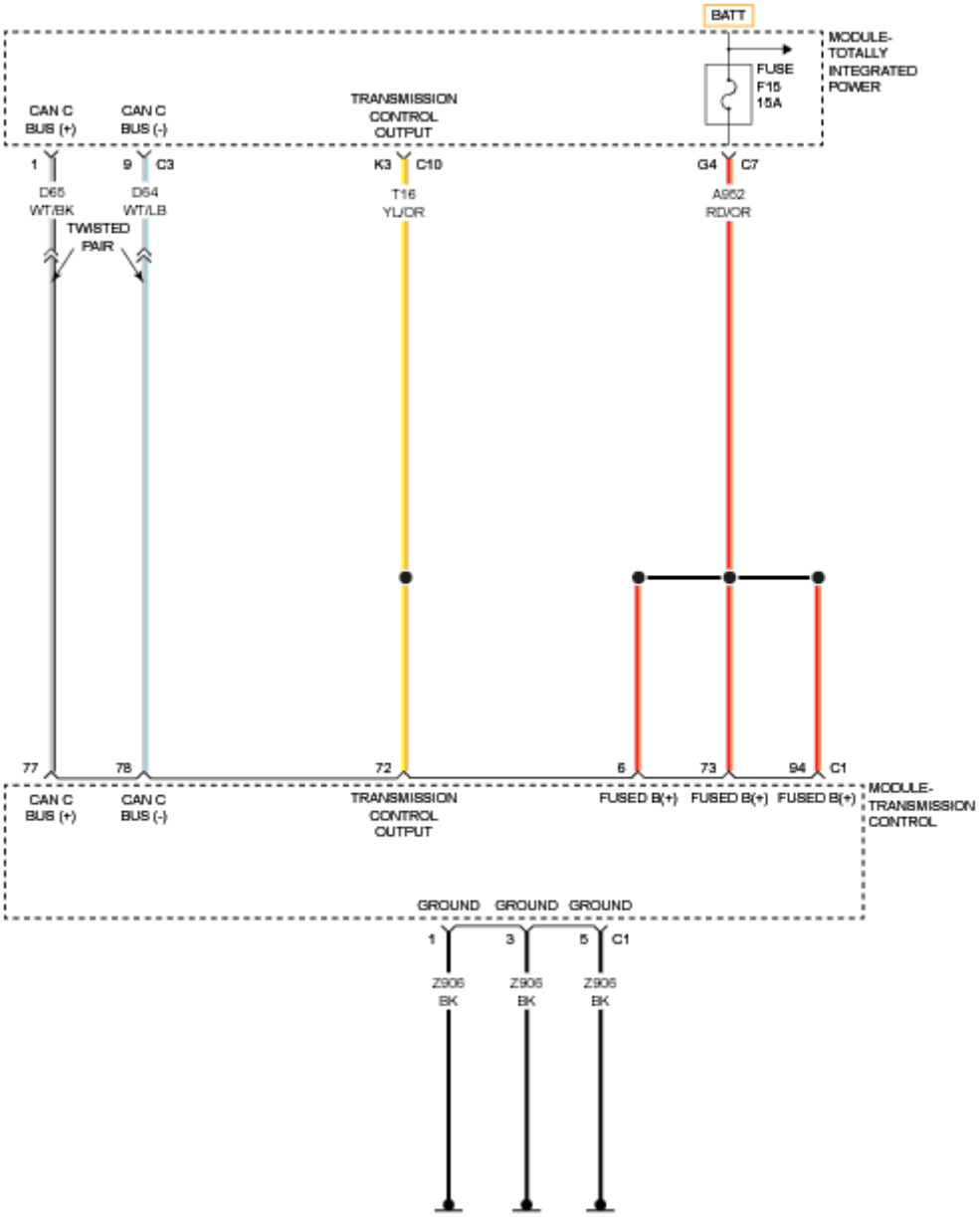

Fig. 61: Transmission Control Module Circuit Diagram
Courtesy of CHRYSLER GROUP, LLC

POSSIBLE CAUSES

Possible Causes
(A952) FUSED B(+) CIRCUIT OPEN OR SHORTED
(Z906) GROUND CIRCUIT OPEN
(T16) TRANSMISSION CONTROL OUTPUT CIRCUIT OPEN OR SHORTED
(D65) CAN C BUS (+) CIRCUIT OPEN

(D64) CAN C BUS (-) CIRCUIT OPEN
TRANSMISSION CONTROL MODULE

DIAGNOSTIC TEST

1. **TEST FOR INTERMITTENT CONDITION**

NOTE: Check for any TSB(s) related to the condition. If a TSB applies, perform the procedure outlined in the TSB before continuing.

1. Turn the ignition on.

NOTE: Make sure the IOD fuse is installed and battery voltage is between 10.0 and 16.0 volts.

2. With the scan tool, select ECU View.

NOTE: A red "X" will be next to the module that is not communicating, indicating that the module is not active on the Bus network. A green check indicates that the module is active on the Bus network.

NOTE: Check the TIPM for any active CAN C hardware DTCs, perform DTC before proceeding.

Does the scan tool display a red "X" next to the module?

Yes

- Go To 2

No

- The no response condition is not present at this time. Using the wiring diagram/schematic as a guide, inspect the wiring for chafed, pierced, pinched, and partially broken wires and the wiring harness connectors for broken, bent, pushed out, and corroded terminals.

2. **(A952) FUSED B(+) CIRCUIT OPEN OR SHORTED**

1. Turn the ignition off.
2. Disconnect the TCM C1 harness connector.
3. Using a 12-volt test light connected to ground, check the (A952) Fused B(+) circuits.

   Does the test light illuminate brightly for each circuit?

   Yes

   - Go To 3

   No

   - Repair the (A952) Fused B(+) circuit for an open or short.
   - Perform the TRANSMISSION VERIFICATION TEST. Refer to appropriate Diagnostic Information .

3. **(Z906) GROUND CIRCUIT OPEN**
   1. Using a 12-volt test light connected to 12-volts, check each (Z906) ground circuits.

      Does the test light illuminate brightly for each circuit?

      Yes

      - Go To 4

      No

      - Repair the (Z906) ground circuit for an open.
      - Perform the TRANSMISSION VERIFICATION TEST. Refer to appropriate Diagnostic Information .

4. **(T16) TRANSMISSION CONTROL OUTPUT CIRCUITS OPEN OR SHORTED**
   1. Turn the ignition on.
   2. Using a 12-volt test light connected to ground, check the (T16) Transmission Control Output circuit.

      Does the test light illuminate brightly?

Yes

- Go To 5

No

- Repair the (T16) Transmission Control Output circuit for an open or short.
- Perform the TRANSMISSION VERIFICATION TEST. Refer to appropriate Diagnostic Information .

5. **(D65) CAN C BUS (+) CIRCUIT OPEN**
   1. Turn the ignition off.
   2. Disconnect the TIPM C3 harness connector.
   3. Measure the resistance of the (D65) CAN C Bus (+) circuit between the TIPM C3 harness connector and the TCM C1 harness connector.

   Is the resistance below 5.0 Ohms?

   Yes

   - Go To 6

   No

   - Repair the (D65) CAN C Bus (+) circuit for an open.
   - Perform the TRANSMISSION VERIFICATION TEST. Refer to appropriate Diagnostic Information .

6. **(D64) CAN C BUS (-) CIRCUIT OPEN**
   1. Measure the resistance of the (D64) CAN C Bus (-) circuit between the TIPM C3 harness connector and the TCM C1 harness connector.

   Is the resistance below 5.0 Ohms?

   Yes

   - Replace and program the Transmission Control Module in accordance with the Service Information.
   - Perform the TRANSMISSION VERIFICATION TEST. Refer to appropriate Diagnostic Information .

No

- Repair the (D64) CAN C Bus (-) circuit for an open.
- Perform the TRANSMISSION VERIFICATION TEST. Refer to appropriate Diagnostic Information .

NO RESPONSE FROM TCM (TRANSMISSION CONTROL MODULE) (CVT)

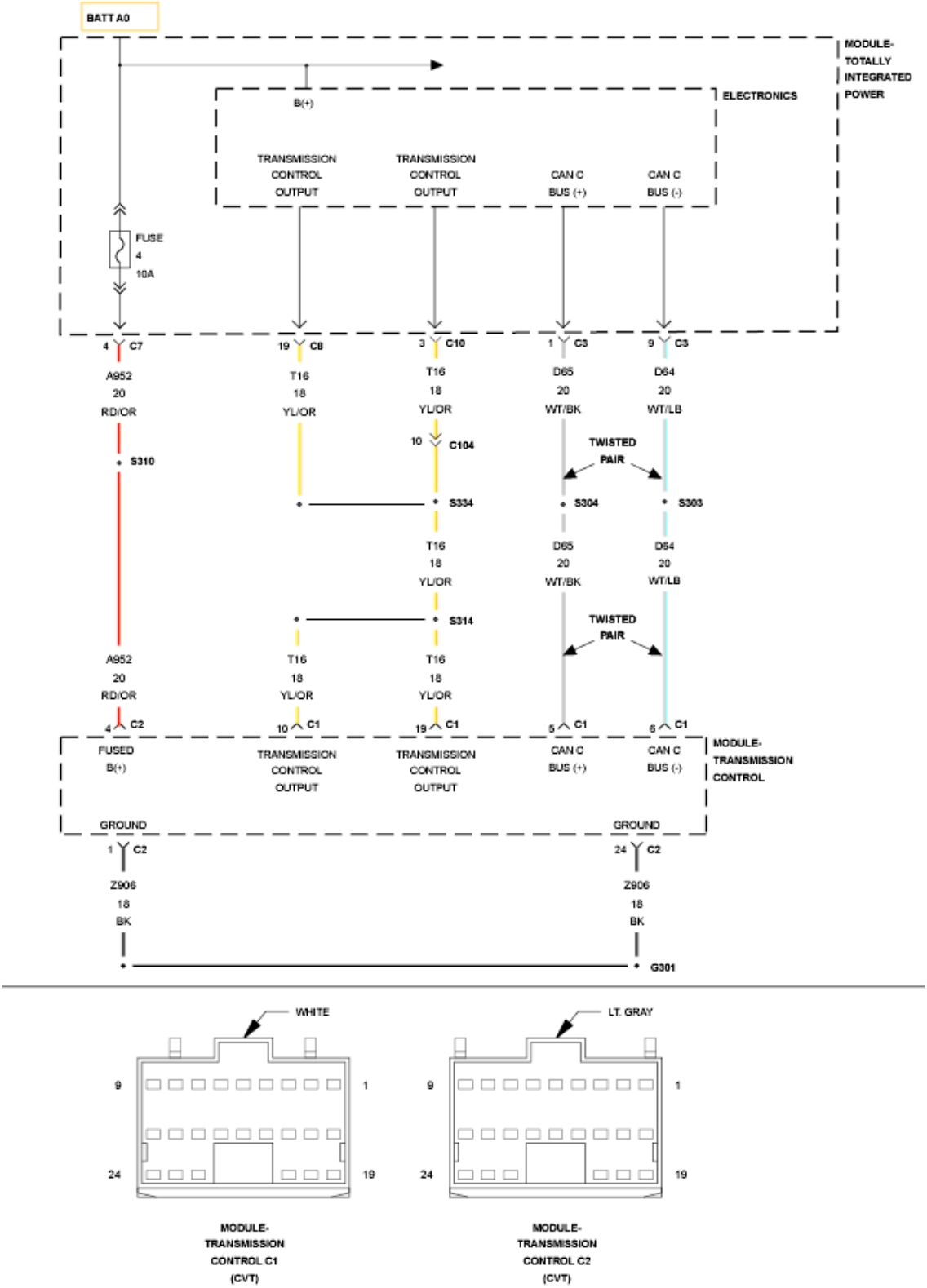

Fig. 62: Transmission Control Module Wiring Diagram (CVT)
Courtesy of CHRYSLER GROUP, LLC

For a complete wiring diagram, **refer to appropriate SYSTEM WIRING DIAGRAMS article** .

POSSIBLE CAUSES

Possible Causes
(A952) FUSED B(+) CIRCUIT OPEN OR SHORTED
(Z906) GROUND CIRCUIT OPEN
(T16) TRANSMISSION CONTROL OUTPUT CIRCUIT OPEN OR SHORTED
(D65) CAN C BUS (+) CIRCUIT OPEN
(D64) CAN C BUS (-) CIRCUIT OPEN
TRANSMISSION CONTROL MODULE

DIAGNOSTIC TEST

1. **TEST FOR INTERMITTENT CONDITION**

NOTE: Check for any TSB(s) related to the condition. If a TSB applies, perform the procedure outlined in the TSB before continuing.

1. Turn the ignition on.

NOTE: Make sure the IOD fuse is installed and battery voltage is between 10.0 and 16.0 volts.

2. With the scan tool, select ECU View.

NOTE: A red "X" will be next to the module that is not communicating, indicating that the module is not active on the Bus network. A green check indicates that the module is active on the Bus network.

NOTE: Check the TIPM for any active CAN C hardware DTCs, perform DTC before proceeding.

Does the scan tool display a red "X" next to the module?

Yes

- Go To 2

No

- The no response condition is not present at this time. Using the wiring diagram/schematic as a guide, inspect the wiring for chafed, pierced, pinched, and partially broken wires and the wiring harness connectors for broken, bent, pushed out, and corroded terminals.

2. **(A952) FUSED B(+) CIRCUIT OPEN OR SHORTED**

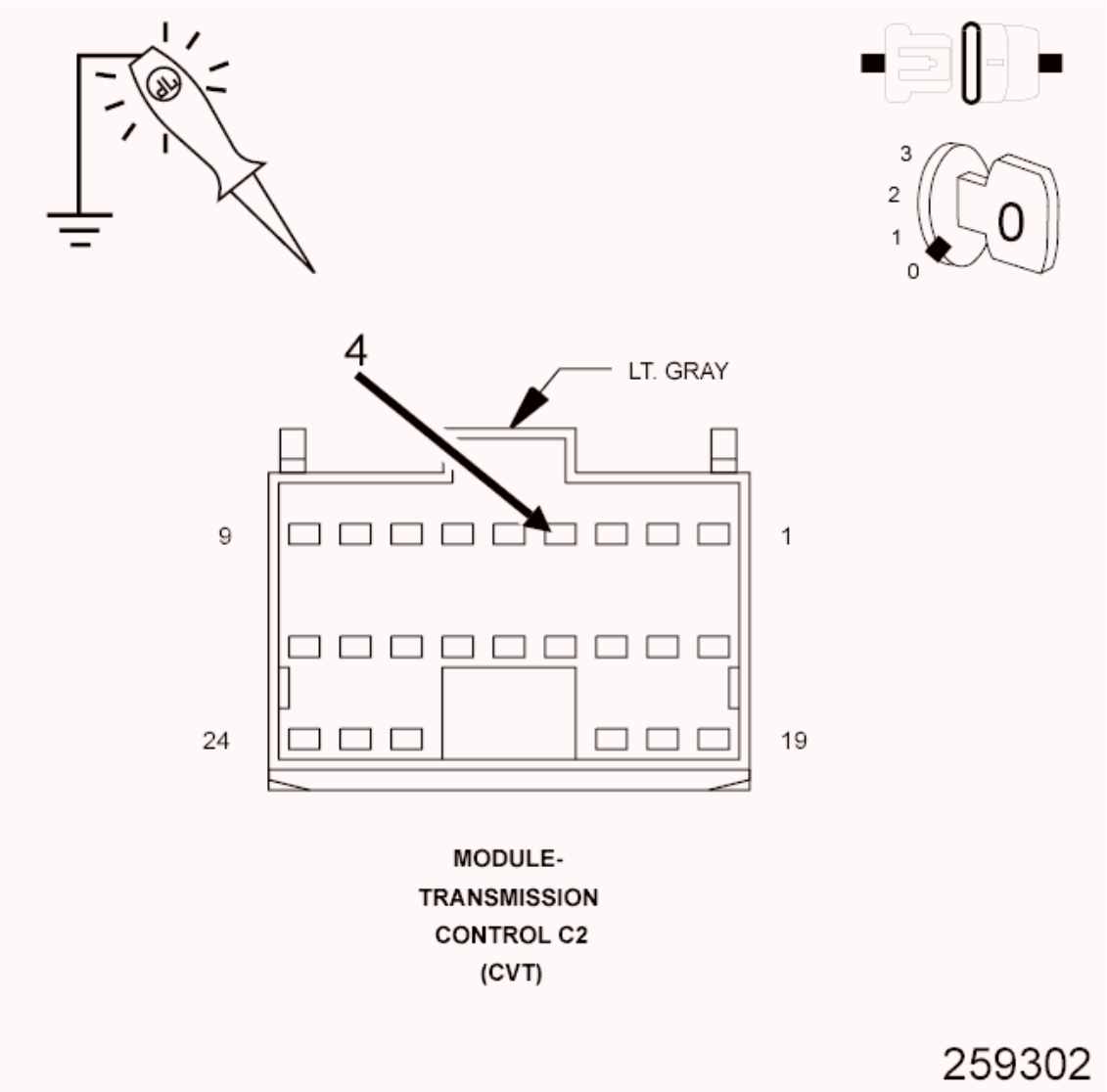

Fig. 63: Checking Fused B(+) Circuit Using 12-Volt Test Light Connected To Ground
Courtesy of CHRYSLER GROUP, LLC

1. Turn the ignition off.

2. Disconnect the TCM C2 harness connector.
3. Using a 12-volt test light connected to ground, check the (A952) Fused B(+) circuit.

   Does the test light illuminate brightly?

   Yes

   - Go To 3

   No

   - Repair the (A952) Fused B(+) circuit for an open or short.
   - Perform the CVT VERIFICATION TEST. Refer to **STANDARD PROCEDURE** .

3. **(Z906) GROUND CIRCUIT OPEN**

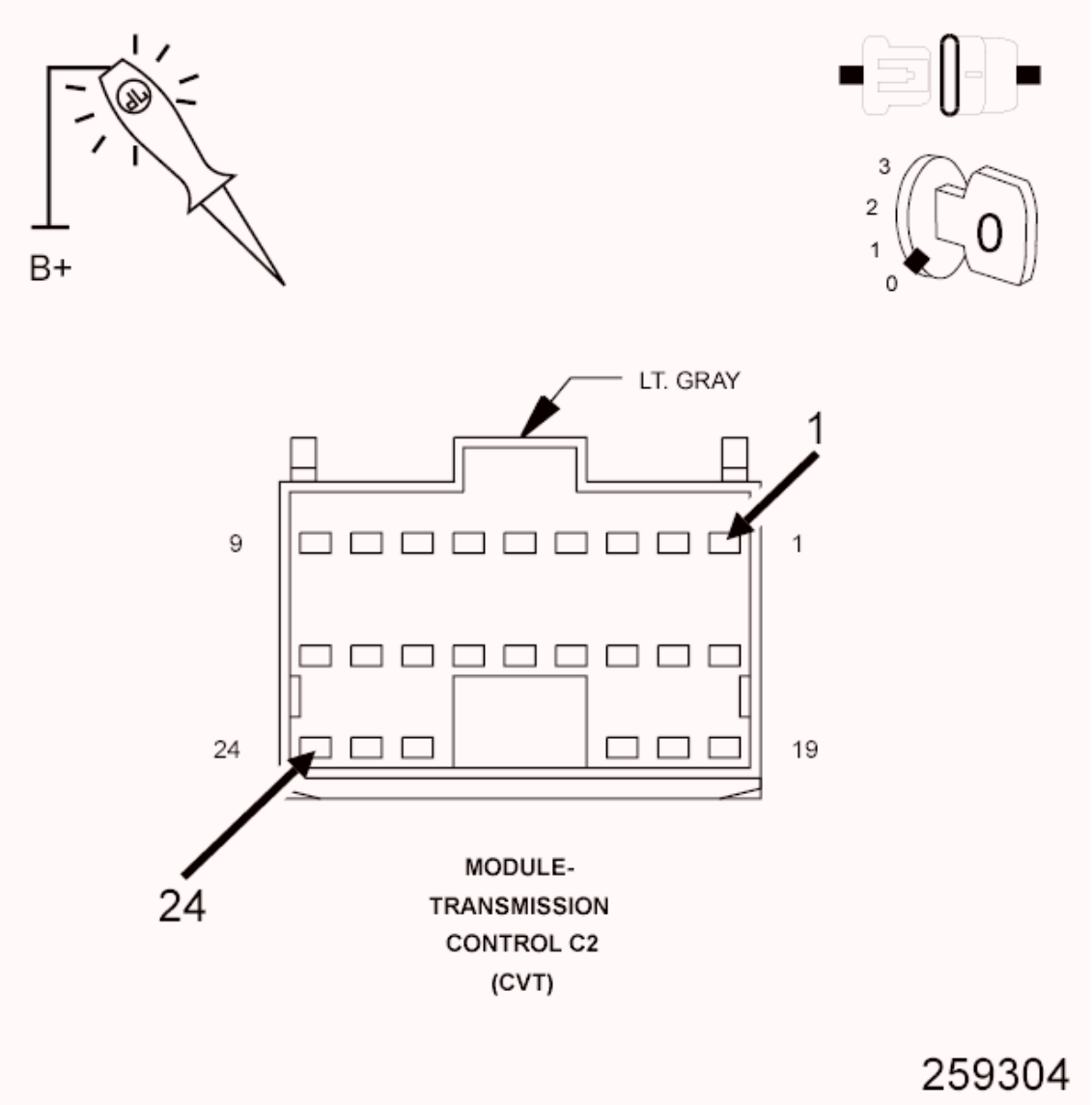

Fig. 64: Checking Ground Circuits Using 12-Volt Test Light Connected To 12-Volts
Courtesy of CHRYSLER GROUP, LLC

1. Using a 12-volt test light connected to 12-volts, check each (Z906) ground circuit.

   Does the test light illuminate brightly?

   Yes

   - Go To 4

   No

- Repair the (Z906) ground circuit for an open.
- Perform the CVT VERIFICATION TEST. Refer to **STANDARD PROCEDURE** .

4. **(T16) TRANSMISSION CONTROL OUTPUT CIRCUITS OPEN OR SHORTED**

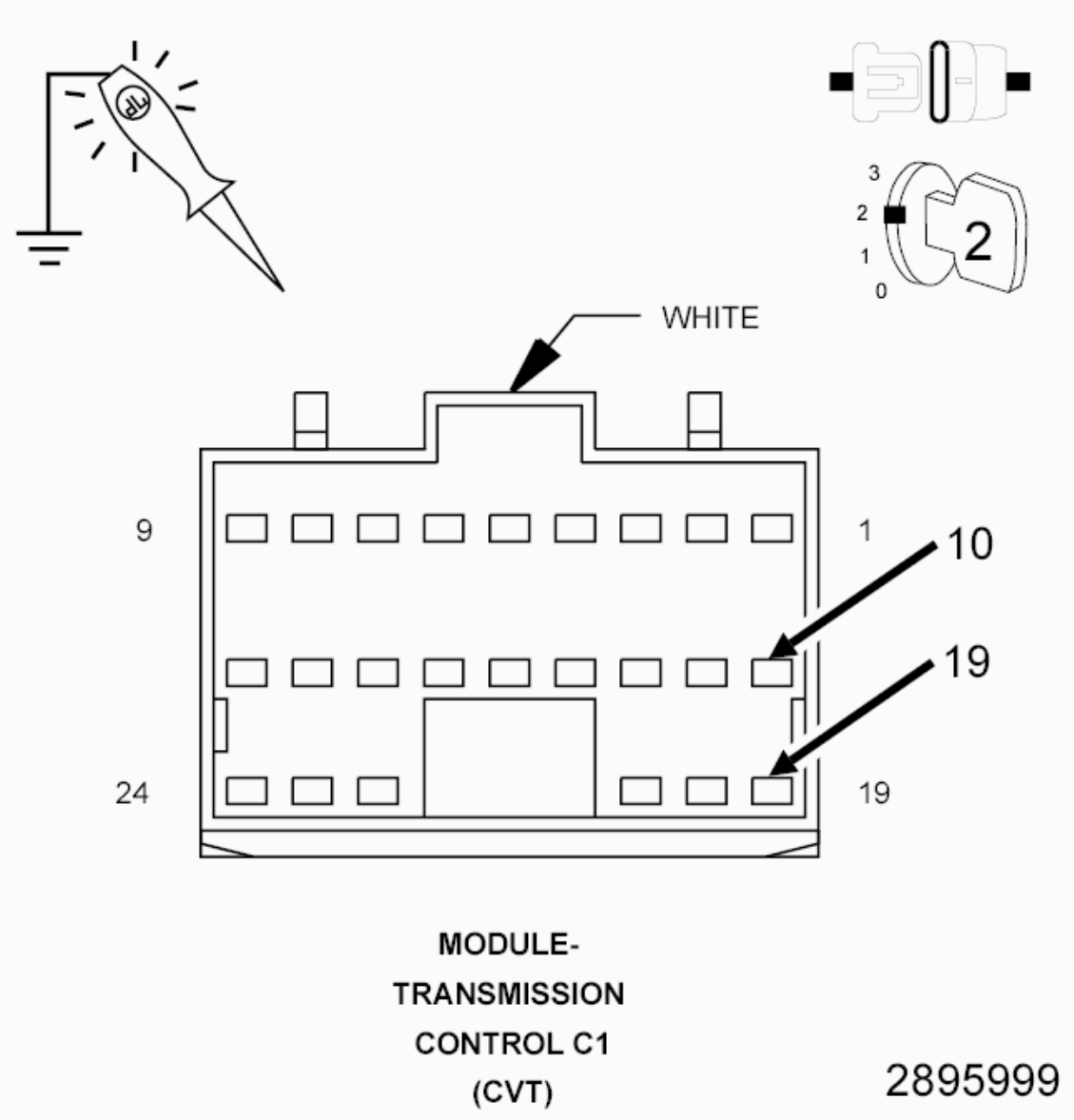

Fig. 65: Checking Transmission Control Output Circuits Using 12-Volt Test Light Connected To Ground
Courtesy of CHRYSLER GROUP, LLC

1. Disconnect the TCM C1 harness connector.
2. Turn the ignition on.
3. Using a 12-volt test light connected to ground, check the (T16)

Transmission Control Output circuits.

Does the test light illuminate brightly for each circuit?

Yes

- Go To 5

No

- Repair the (T16) Transmission Control Output circuit for an open or short.
- Perform the CVT VERIFICATION TEST. Refer to **STANDARD PROCEDURE** .

5. **(D65) CAN C BUS (+) CIRCUIT OPEN**

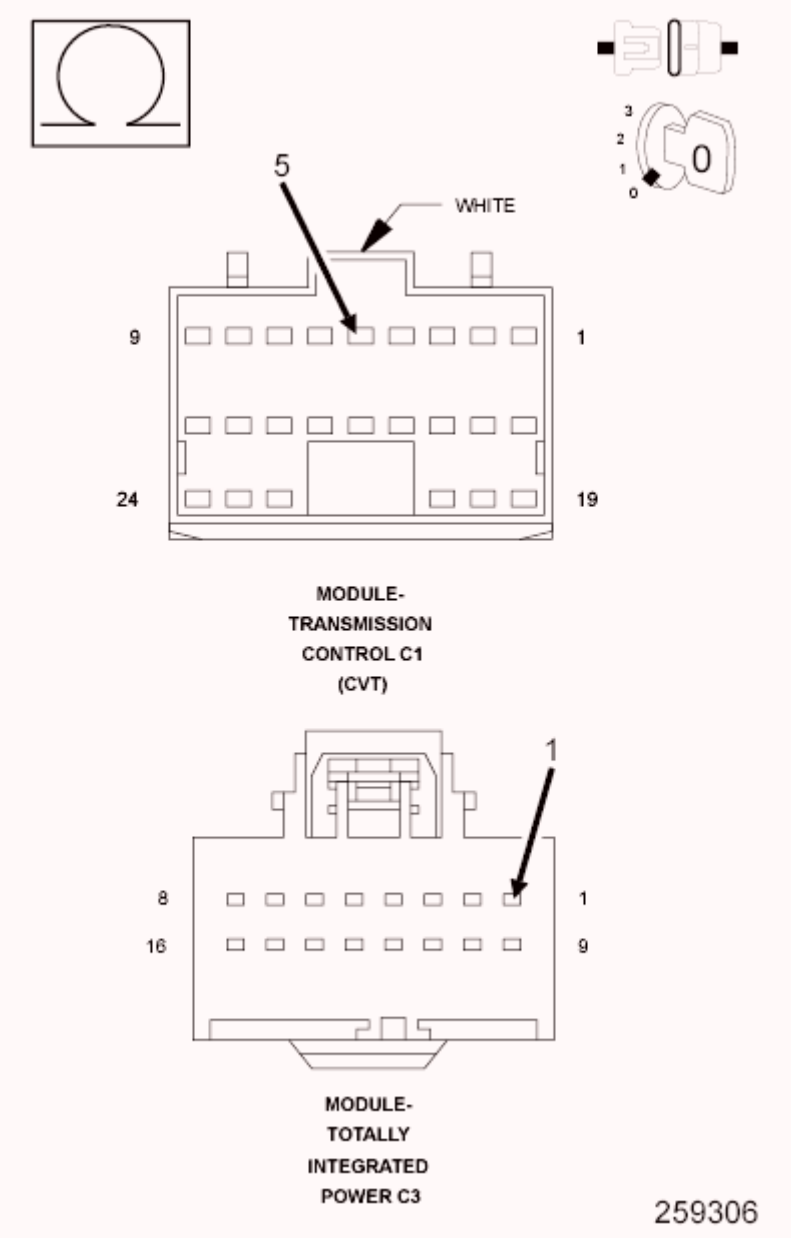

Fig. 66: Measuring Resistance Of CAN C Bus (+) Circuit Between TIPM C3 Harness Connector & TCM C1 Harness Connector
Courtesy of CHRYSLER GROUP, LLC

1. Turn the ignition off.
2. Disconnect the TIPM C3 harness connector.
3. Disconnect the TCM C1 harness connector.
4. Measure the resistance of the (D65) CAN C Bus (+) circuit between the TIPM C3 harness connector and the TCM C1 harness connector.

   Is the resistance below 5.0 Ohms?

Yes

- Go To 6

No

- Repair the (D65) CAN C Bus (+) circuit for an open.
- Perform the CVT VERIFICATION TEST. Refer to **STANDARD PROCEDURE** .

6. **(D64) CAN C BUS (-) CIRCUIT OPEN**

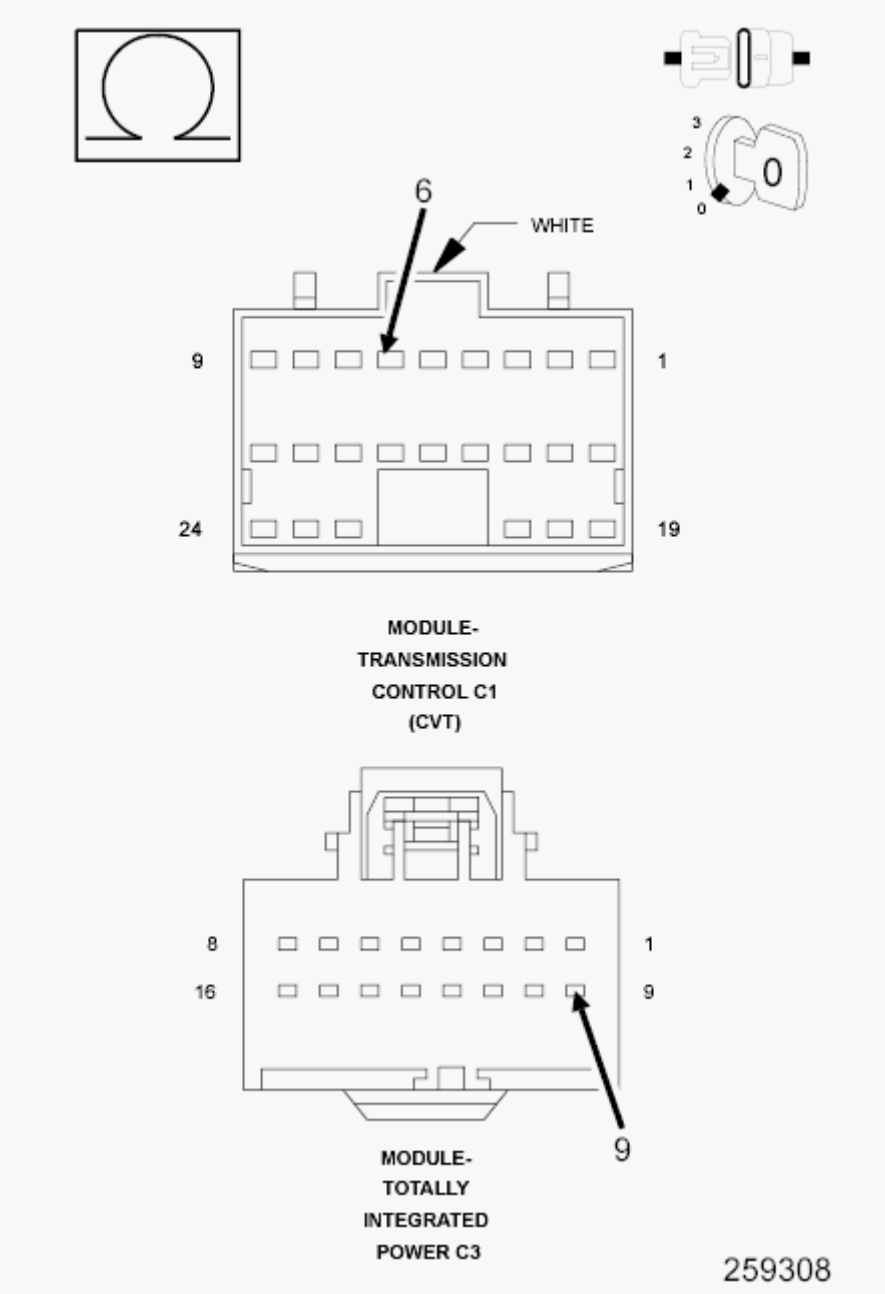

Fig. 67: Measuring Resistance Of CAN C Bus (-) Circuit Between TIPM C3 Harness Connector & TCM C1 Harness Connector
Courtesy of CHRYSLER GROUP, LLC

1. Measure the resistance of the (D64) CAN C Bus (-) circuit between the TIPM C3 harness connector and the TCM C1 harness connector.

   Is the resistance below 5.0 Ohms?

   Yes

   - Replace and program the Transmission Control Module in accordance with the Service Information.
   - Perform the CVT VERIFICATION TEST. Refer to **STANDARD PROCEDURE** .

   No

   - Repair the (D64) CAN C Bus (-) circuit for an open.
   - Perform the CVT VERIFICATION TEST. Refer to **STANDARD PROCEDURE** .

NO RESPONSE FROM THE STEERING ANGLE SENSOR (SAS)

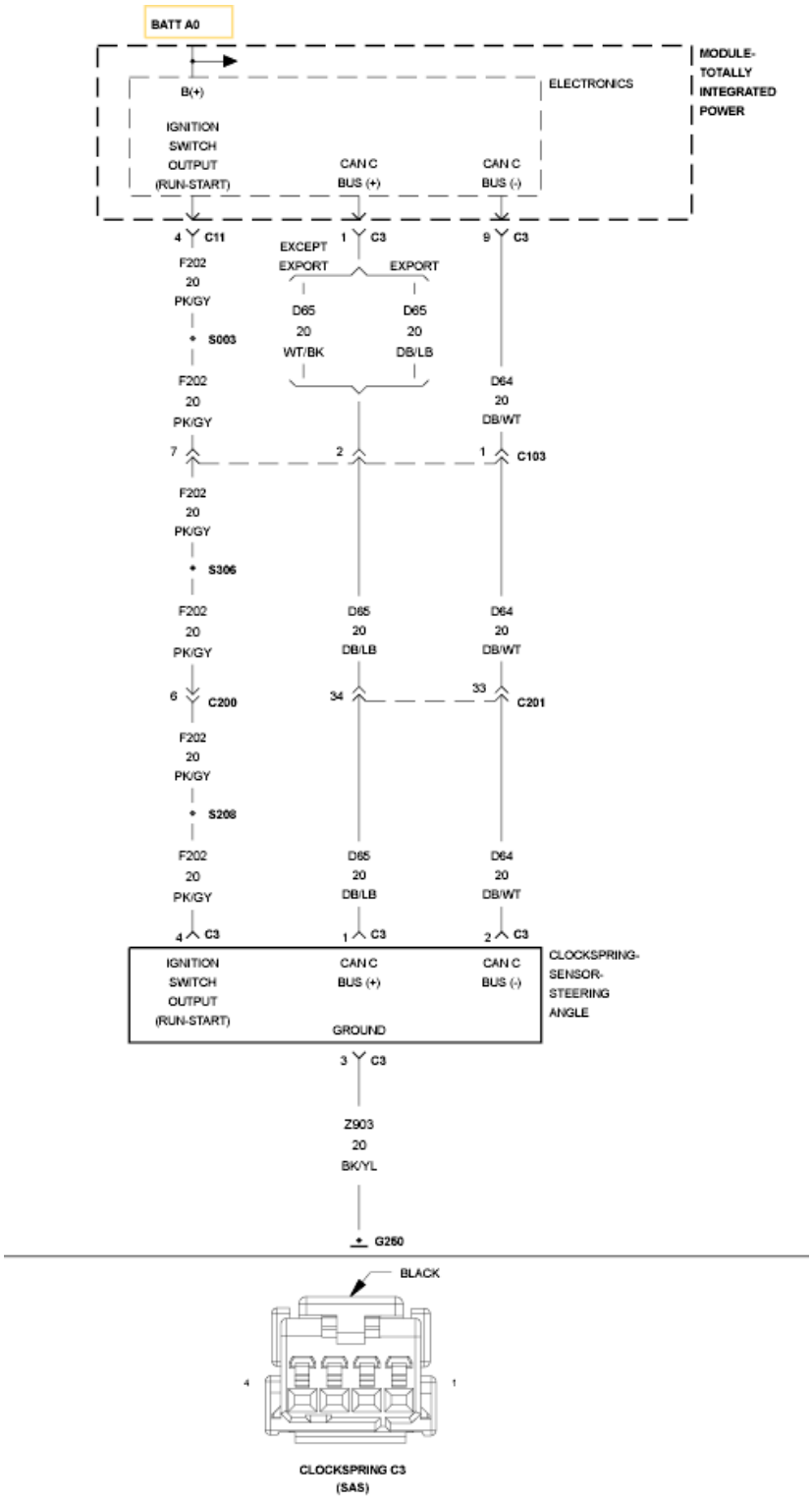

Fig. 68: Steering Angle Sensor Wiring Diagram
Courtesy of CHRYSLER GROUP, LLC

For a complete wiring diagram, **refer to appropriate SYSTEM WIRING DIAGRAMS article** .

POSSIBLE CAUSES

Possible Causes
(F202) IGNITION SWITCH OUTPUT CIRCUIT OPEN OR SHORTED
(Z903) GROUND CIRCUIT OPEN
(D65) CAN C BUS (+) CIRCUIT OPEN
(D64) CAN C BUS (-) CIRCUIT OPEN
CLOCKSPRING (SAS)

DIAGNOSTIC TEST

1. **TEST FOR INTERMITTENT CONDITION**

NOTE: Check for any TSB(s) related to the condition. If a TSB applies, perform the procedure outlined in the TSB before continuing.

1. Turn the ignition on.

NOTE: Make sure the IOD fuse is installed and battery voltage is between 10.0 and 16.0 volts.

2. With the scan tool, select ECU View.

NOTE: A red "X" will be next to the module that is not communicating, indicating that the module is not active on the Bus network. A green check indicates that the module is active on the Bus network.

Does the scan tool display a red "X" next to the sensor?

Yes

- Go To 2

No

- The no response condition is not present at this time. Using the wiring diagram/schematic as a guide, inspect the wiring for chafed, pierced, pinched, and partially broken wires and the wiring harness

connectors for broken, bent, pushed out, and corroded terminals.

2. **(F202) IGNITION SWITCH OUTPUT CIRCUIT OPEN OR SHORTED**

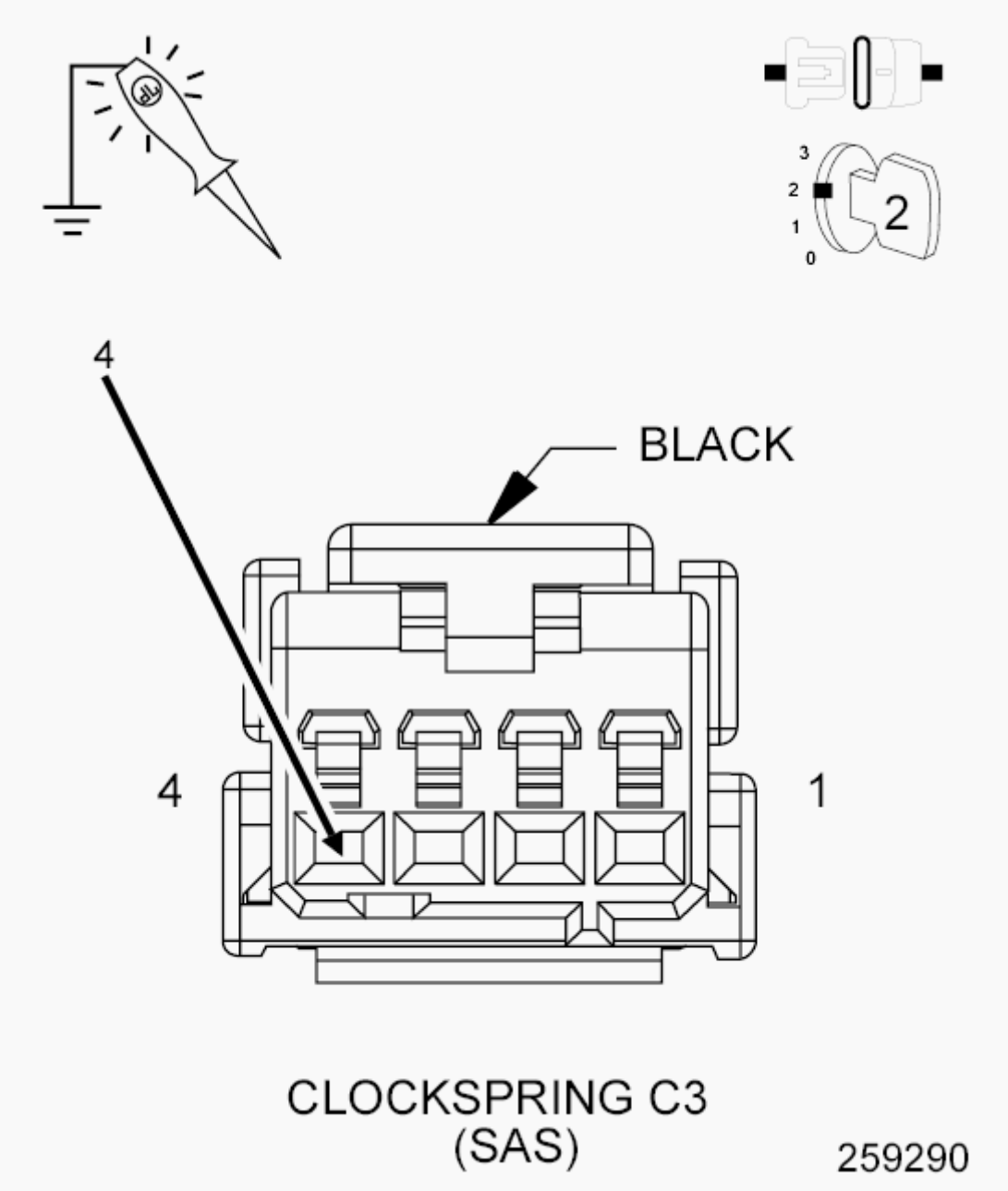

Fig. 69: Ignition Switch Output Circuit
Courtesy of CHRYSLER GROUP, LLC

1. Turn the ignition off.
2. Disconnect the Clockspring C3 (SAS) harness connector.
3. Turn the ignition on.
4. Using a 12-volt test light connected to ground, check the (F202)

Ignition Switch Output circuit.

Does the test light illuminate brightly?

Yes

- Go To 3

No

- Repair the (F202) Ignition Switch Output circuit for an open or short.
- Perform the BODY VERIFICATION TEST. Refer to **STANDARD PROCEDURE** .

3. **(Z903) GROUND CIRCUIT OPEN**

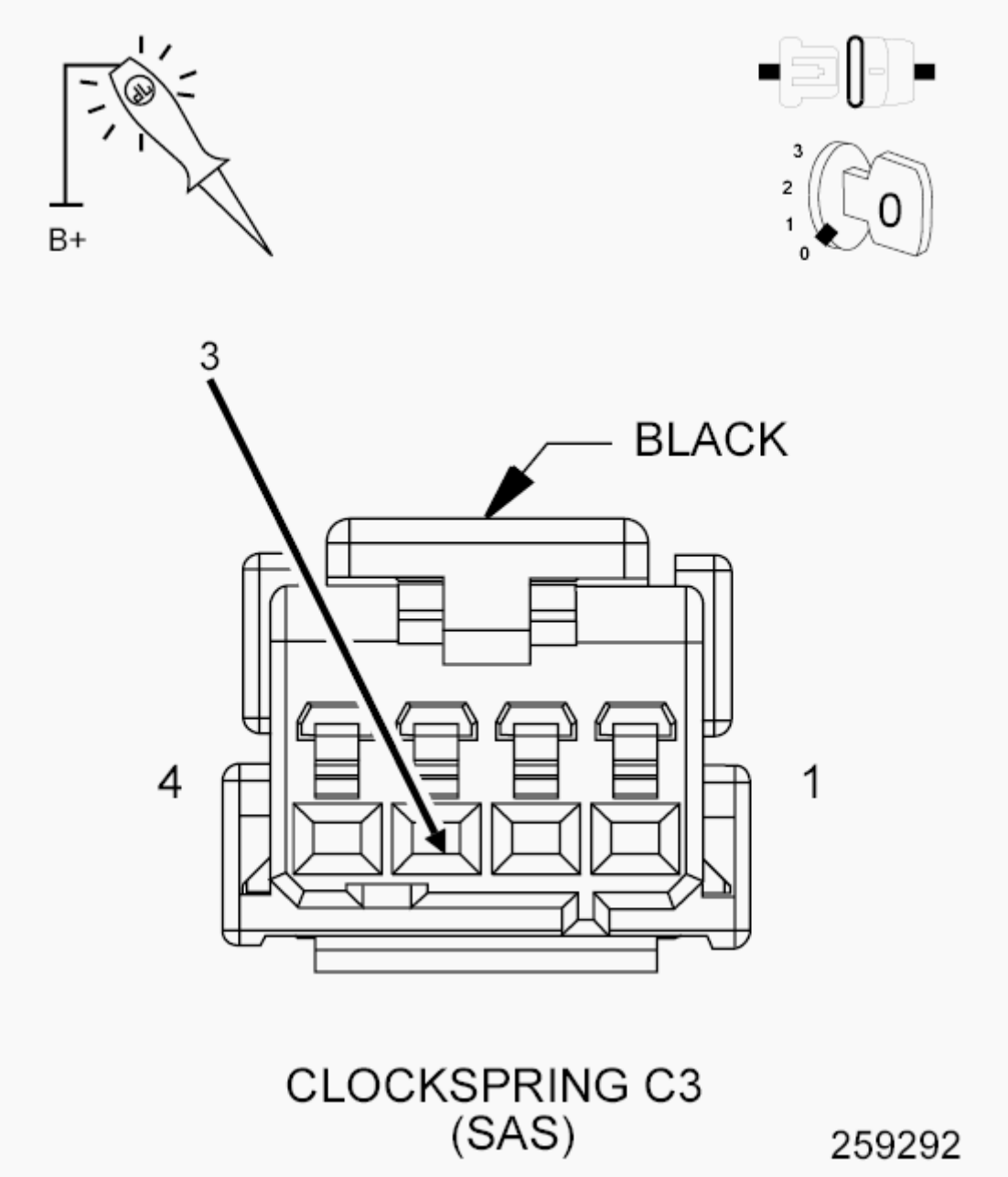

Fig. 70: Checking Ground Circuit Using 12-Volt Test Light Connected To 12-Volts
Courtesy of CHRYSLER GROUP, LLC

1. Turn the ignition off.
2. Using a 12-volt test light connected to 12-volts, check the (Z903) ground circuit.

   Does the test light illuminate brightly?

   Yes

- Go To 4

No

- Repair the (Z903) ground circuit for an open.
- Perform the BODY VERIFICATION TEST. Refer to **STANDARD PROCEDURE** .

4. **(D65) CAN C BUS (+) CIRCUIT OPEN**

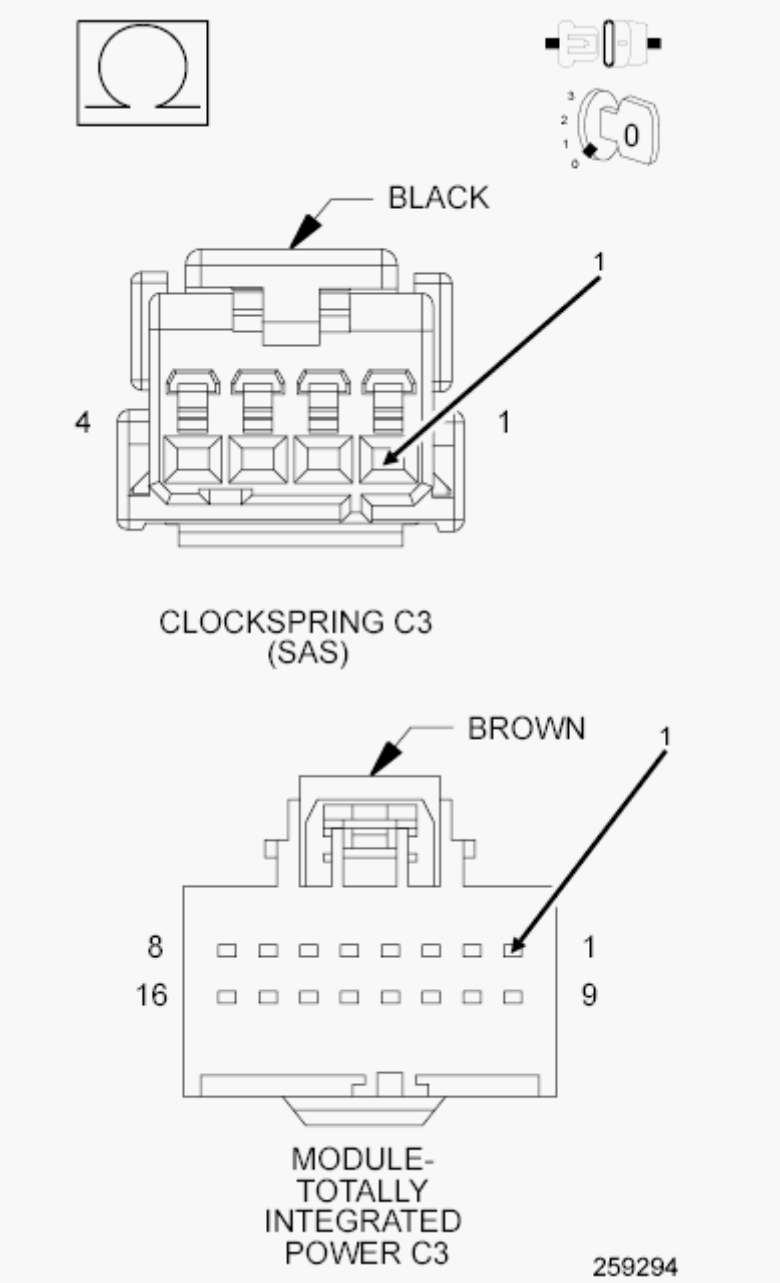

Fig. 71: Measuring Resistance Of Can C Bus (+) Circuit Between The Tipm C2 Harness Connector And The Steering Angle Sensor Connector

Courtesy of CHRYSLER GROUP, LLC

1. Disconnect the TIPM C3 harness connector.
2. Measure the resistance of the (D65) CAN C Bus (+) circuit between the TIPM C3 harness connector and the Clockspring C3 (SAS) connector.

   Is resistance below 5.0 Ohms?

   Yes

   - Go To 5

   No

   - Repair the (D65) CAN C Bus (+) circuit for an open.
   - Perform the BODY VERIFICATION TEST. Refer to **STANDARD PROCEDURE** .

5. **(D64) CAN C BUS (-) CIRCUIT OPEN**

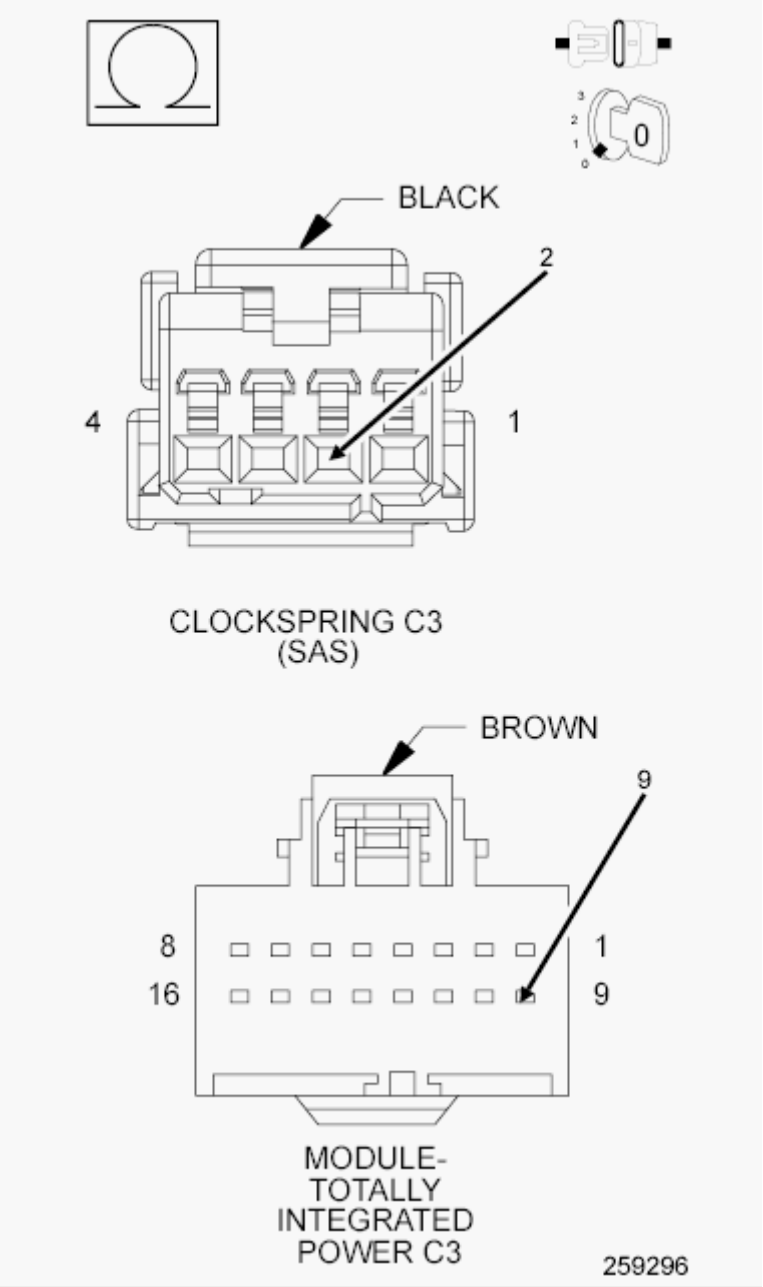

Fig. 72: Measuring Resistance Of Can C Bus (-) Circuit Between The Tipm C2 Harness Connector And The Steering Angle Sensor Connector
Courtesy of CHRYSLER GROUP, LLC

1. Measure the resistance of the (D64) CAN C Bus (-) circuit between the TIPM C3 harness connector and the Clockspring C3 (SAS) connector.

   Is resistance below 5.0 Ohms?

   Yes

   - Replace the Clockspring in accordance with the Service

Information.

- Perform the BODY VERIFICATION TEST. Refer to **STANDARD PROCEDURE** .

No

- Repair the (D64) CAN C Bus (-) circuit for an open.
- Perform the BODY VERIFICATION TEST. Refer to **STANDARD PROCEDURE** .

NO RESPONSE FROM TIPM (TOTALLY INTEGRATED POWER MODULE)

For a complete wiring diagram, **refer to appropriate SYSTEM WIRING DIAGRAMS article** .

POSSIBLE CAUSES

Possible Causes
DIRECT BATTERY FEED CIRCUIT OPEN
GROUND CIRCUITS OPEN
DIAGNOSTIC CAN C CIRCUITS OPEN
DIAGNOSTIC CAN C CIRCUITS SHORTED TO GROUND
DIAGNOSTIC CAN C CIRCUITS SHORTED TOGETHER
TOTALLY INTEGRATED POWER MODULE

DIAGNOSTIC TEST

1. **TEST FOR INTERMITTENT CONDITION**

NOTE: Check for any TSB(s) related to the condition. If a TSB applies, perform the procedure outlined in the TSB before continuing.

NOTE: Ensure the IOD fuse is installed and battery voltage is between 10.0 and 16.0 volts.

NOTE: Ensure the scan tool is updated to the latest software.

NOTE: If the scan tool displays any error messages involving the Diagnostic CAN C circuits, diagnose and repair the errors before proceeding. Refer to DTC INDEX .

NOTE: A loss of communication with the TIPM can cause the ECU View button on the scan tool to be inoperative (not highlighted).

1. Turn the ignition on.
2. With the scan tool, attempt to select ECU View.

   Can the scan tool communicate with the TIPM?

   Yes

   - The no response condition is not present at this time. Using the wiring diagram/schematic as a guide, inspect the wiring for chafed, pierced, pinched, and partially broken wires and the wiring harness connectors for broken, bent, pushed out, and corroded terminals.

   No

   - Go To 2

2. **DIRECT BATTERY FEED CIRCUIT OPEN AT TIPM**
   1. Disconnect the scan tool from the DLC.
   2. Using a 12-volt test light connected to ground, and using the wiring diagram as a guide, check the direct battery feed circuit at the TIPM.

      Does the test light illuminate brightly?

      Yes

      - Go To 3

      No

      - Repair the direct battery feed circuit for an open.
      - Perform the BODY VERIFICATION TEST. Refer to

STANDARD PROCEDURE .

3. **GROUND CIRCUITS OPEN AT TIPM**
   1. Turn the ignition off.
   2. Using a 12-volt test light connected to 12-volts, and using the wiring diagram as a guide, check all ground circuits at the TIPM.

      Does the test light illuminate brightly on each circuit?

      Yes

      - Go To 4

      No

      - Repair the ground circuit that did not light the test light for an open.
      - Perform the BODY VERIFICATION TEST. Refer to **STANDARD PROCEDURE** .
4. **CHECK FOR (D72) DIAGNOSTIC CAN C (+) CIRCUIT OPEN AT DLC**

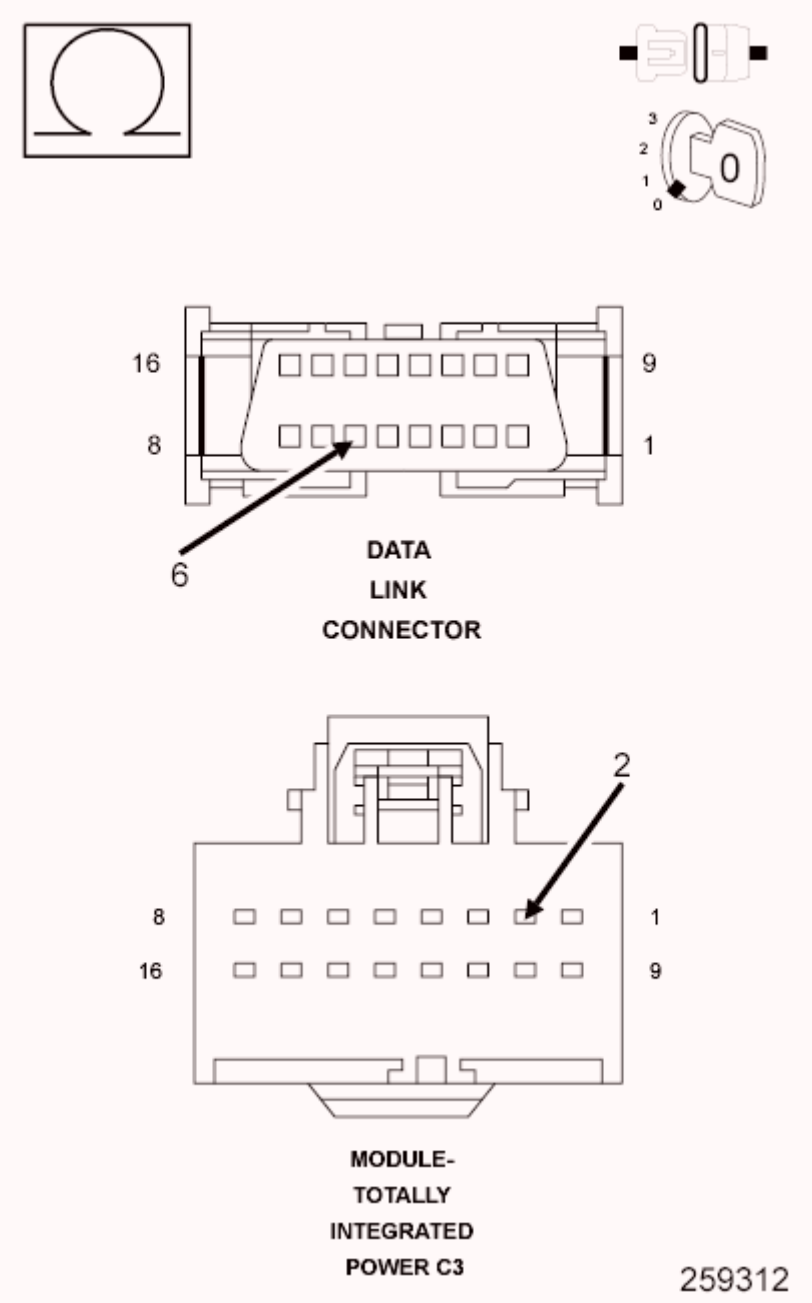

Fig. 73: Measuring Resistance On Diagnostic CAN C (+) Circuit Between TIPM C3 Harness Connector & DLC
Courtesy of CHRYSLER GROUP, LLC

1. Disconnect the TIPM C3 harness connector.
2. Measure the resistance on the (D72) Diagnostic CAN C (+) circuit between the TIPM C3 harness connector and the DLC.

   Is the resistance above 10.0 ohms?

   Yes

- Repair the (D72) Diagnostic CAN C (+) circuit for an open.
- Perform the BODY VERIFICATION TEST. Refer to **STANDARD PROCEDURE** .

No

- Go To 5

5. **CHECK FOR (D71) DIAGNOSTIC CAN C (-) CIRCUIT OPEN AT DLC**

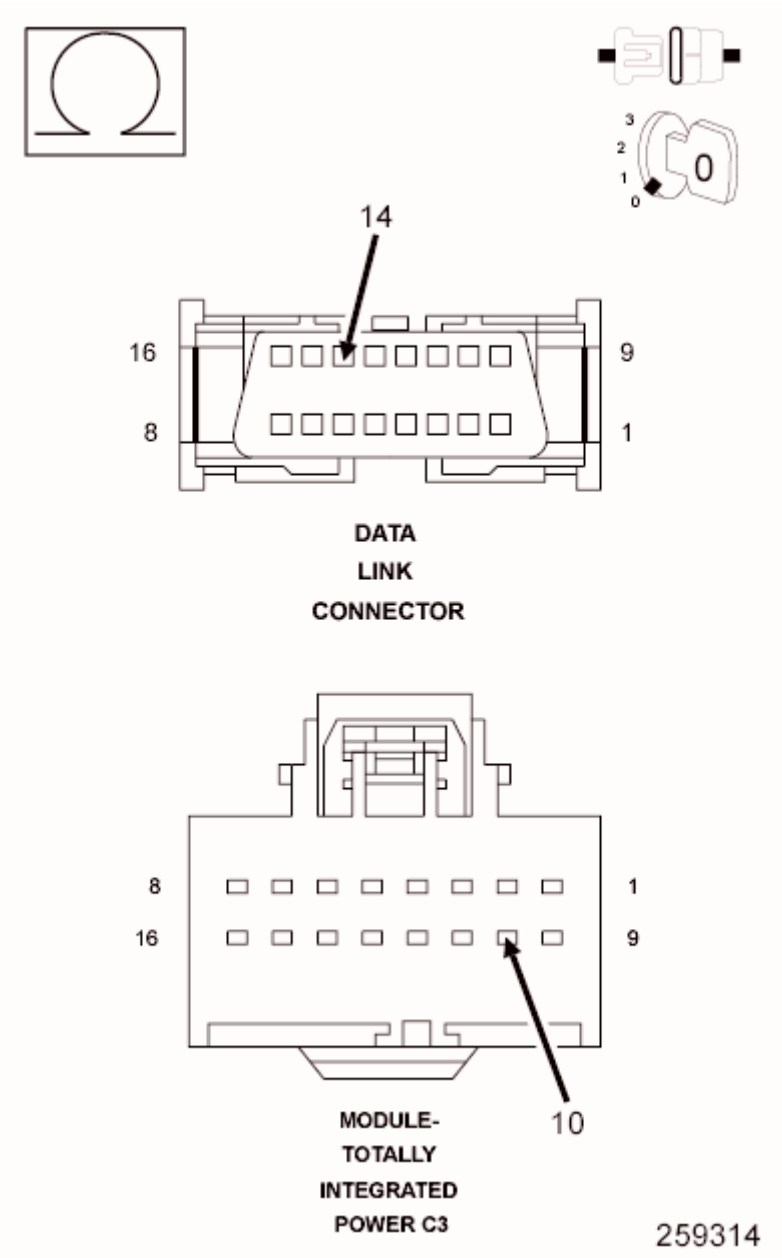

Fig. 74: Measuring Resistance On Diagnostic CAN C (-) Circuit Between TIPM C3 Harness Connector & DLC

Courtesy of CHRYSLER GROUP, LLC

1. Measure the resistance on the (D71) Diagnostic CAN C (-) circuit between the TIPM C3 harness connector and the DLC.

   Is the resistance above 10.0 ohms?

   Yes

   - Repair the (D71) Diagnostic CAN C (-) circuit for an open.
   - Perform the BODY VERIFICATION TEST. Refer to **STANDARD PROCEDURE** .

   No

   - Go To 6

6. **CHECK FOR (D72) DIAGNOSTIC CAN C (+) CIRCUIT SHORTED TO GROUND**

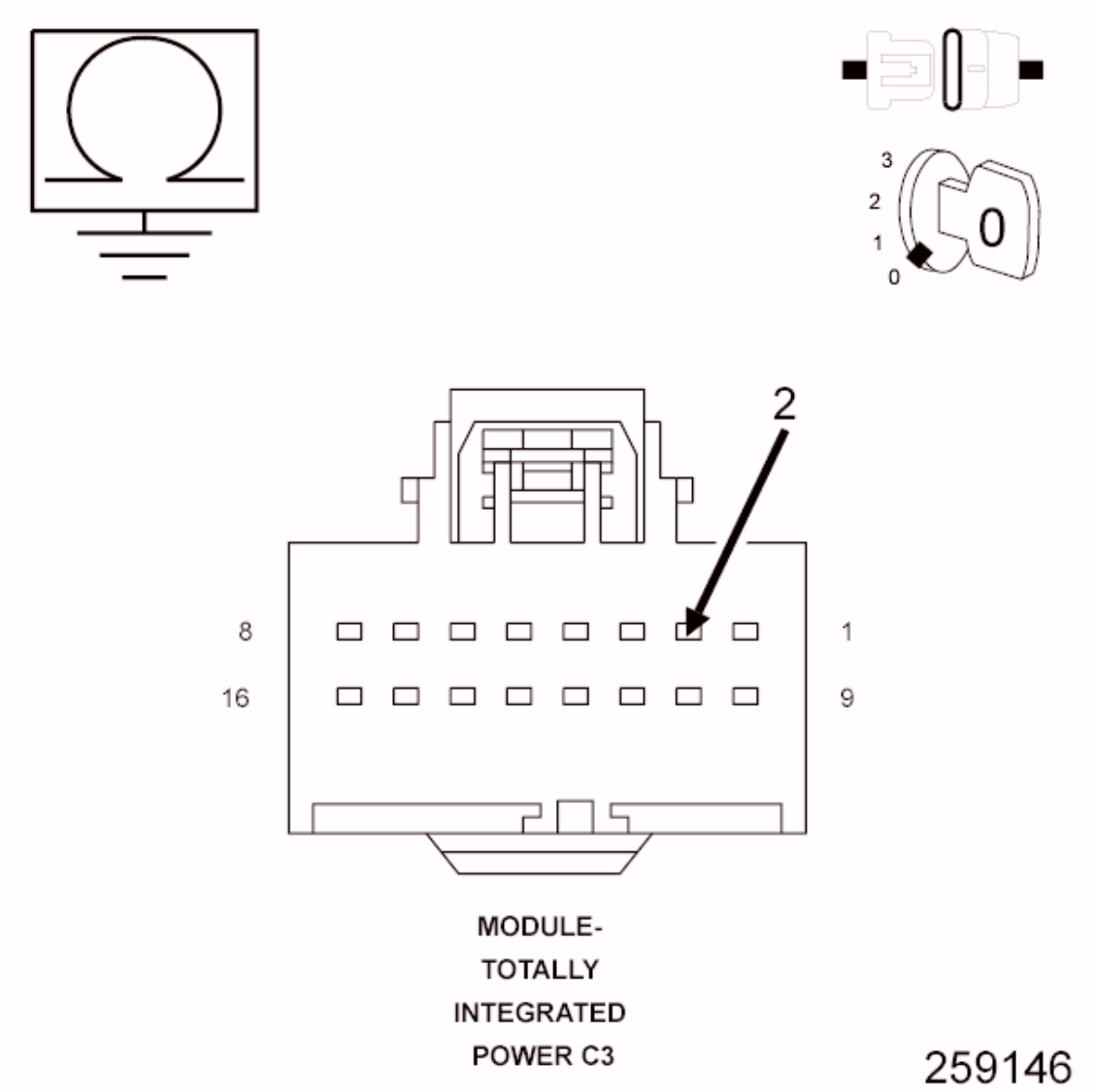

Fig. 75: Measuring Resistance Between Ground & Diagnostic Can C (+) Circuit At TIPM C3 Harness Connector
Courtesy of CHRYSLER GROUP, LLC

1. Measure the resistance between ground and the (D72) Diagnostic CAN C (+) circuit at the TIPM C3 harness connector.

   Is the resistance below 100.0 ohms?

   Yes

   - Repair the (D72) Diagnostic CAN C (+) circuit for a short to ground.
   - Perform the BODY VERIFICATION TEST. Refer to **STANDARD PROCEDURE** .

No

- Go To 7

7. **CHECK FOR (D71) DIAGNOSTIC CAN C (-) CIRCUIT SHORTED TO GROUND**

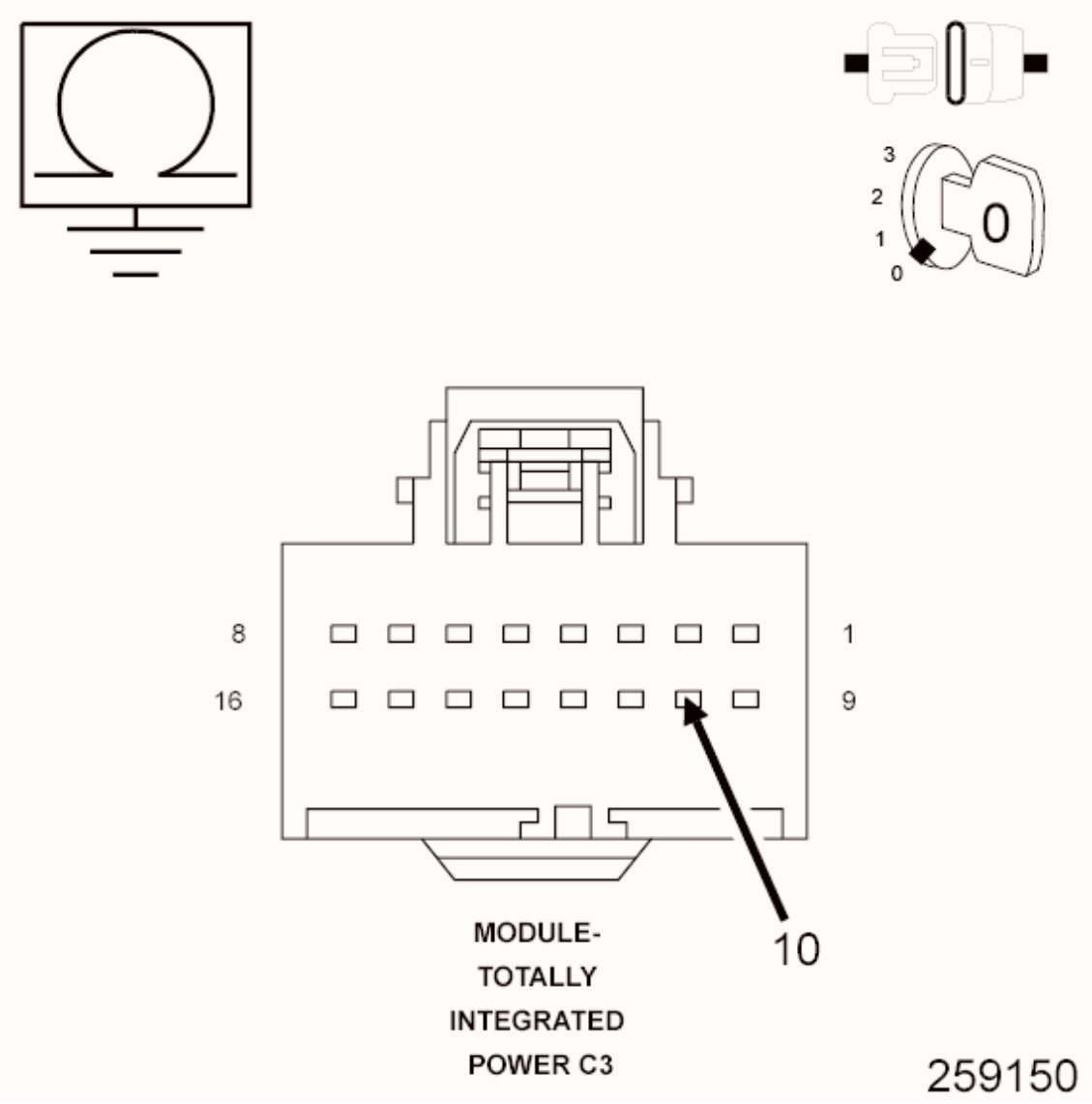

Fig. 76: Measuring Resistance Between Ground & Diagnostic Can C (-) Circuit At TIPM C3 Harness Connector
Courtesy of CHRYSLER GROUP, LLC

1. Measure the resistance between ground and the (D71) Diagnostic CAN C (-) circuit at the TIPM C3 harness connector.

   Is the resistance below 100.0 ohms?

Yes

- Repair the (D71) Diagnostic CAN C (-) circuit for a short to ground.
- Perform the BODY VERIFICATION TEST. Refer to **STANDARD PROCEDURE** .

No

- Go To 8

8. **CHECK FOR DIAGNOSTIC CAN C CIRCUITS SHORTED TOGETHER**

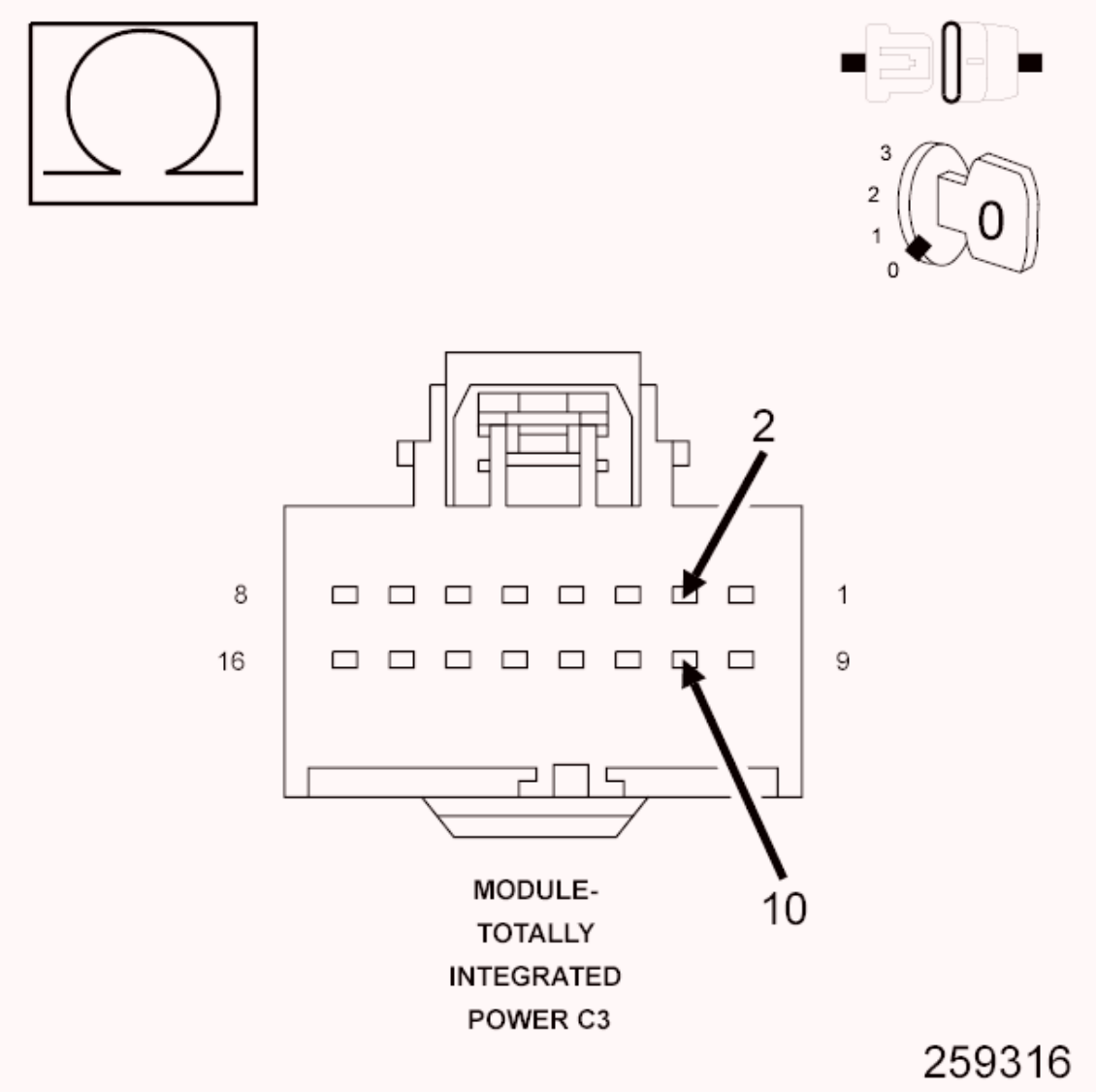

Fig. 77: Measuring Resistance Between Diagnostic CAN C (+) Circuit & Diagnostic CAN C (-) Circuit At TIPM C3 Harness Connector

Courtesy of CHRYSLER GROUP, LLC

1. Measure the resistance between the (D72) Diagnostic CAN C (+) circuit and the (D71) Diagnostic CAN C (-) circuit at the TIPM C3 harness connector.

   Is the resistance below 100.0 ohms?

   Yes

   - Repair the (D72) Diagnostic CAN C (+) circuit for a short to the (D71) Diagnostic CAN C (-) circuit.
   - Perform the BODY VERIFICATION TEST. Refer to **STANDARD PROCEDURE** .

   No

   - Replace the Totally Integrated Power Module in accordance with the Service Information.
   - Perform the BODY VERIFICATION TEST. Refer to **STANDARD PROCEDURE** .

NO RESPONSE FROM WCM (SENTRY KEY REMOTE ENTRY MODULE)

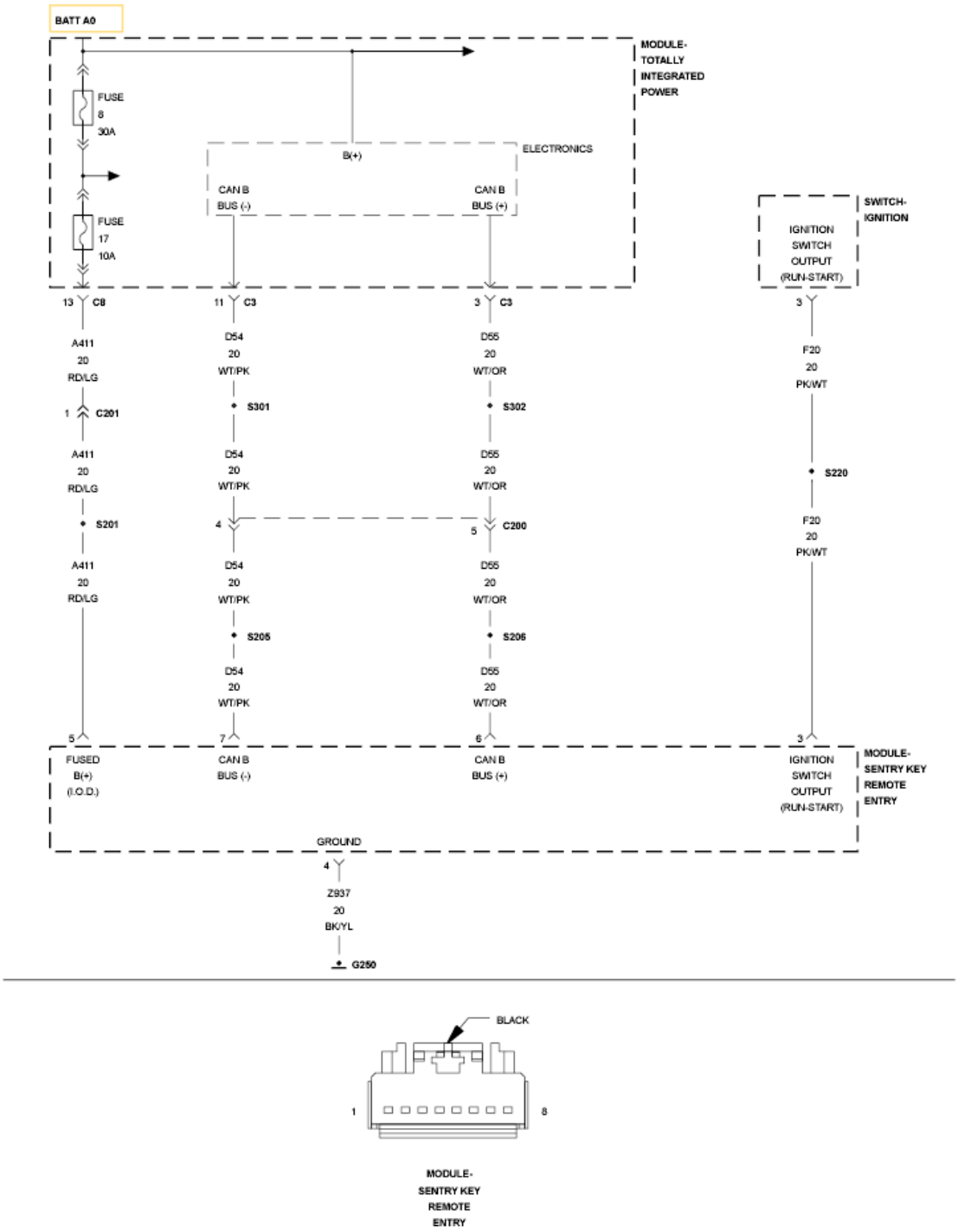

Fig. 78: Sentry Key Remote Entry Module Wiring Diagram
Courtesy of CHRYSLER GROUP, LLC

For a complete wiring diagram, **refer to appropriate SYSTEM WIRING DIAGRAMS article** .

POSSIBLE CAUSES

Possible Causes

(A411) FUSED B(+) CIRCUIT OPEN OR SHORTED
(Z937) GROUND CIRCUIT OPEN
(F20) IGNITION SWITCH OUTPUT CIRCUIT OPEN OR SHORTED
(D55) AND (D54) CAN B BUS CIRCUITS OPEN
SENTRY KEY REMOTE ENTRY MODULE

DIAGNOSTIC TEST

1. **TEST FOR INTERMITTENT CONDITION**

NOTE: Check for any TSB(s) related to the condition. If a TSB applies, perform the procedure outlined in the TSB before continuing.

1. Turn the ignition on.

NOTE: Ensure the IOD fuse is installed and battery voltage is between 10.0 and 16.0 volts.

2. With the scan tool, select ECU View.

NOTE: A red "X" will be next to the module that is not communicating, indicating that the module is not active on the Bus network. A green check indicates that the module is active on the Bus network.

Does the scan tool display a red "X" next to the module?

Yes

- Go To 2

No

- The no response condition is not present at this time. Using the wiring diagram/schematic as a guide, inspect the wiring for chafed, pierced, pinched, and partially broken wires and the wiring harness connectors for broken, bent, pushed out, and corroded terminals.

2. (A411) FUSED B(+) CIRCUIT OPEN OR SHORTED

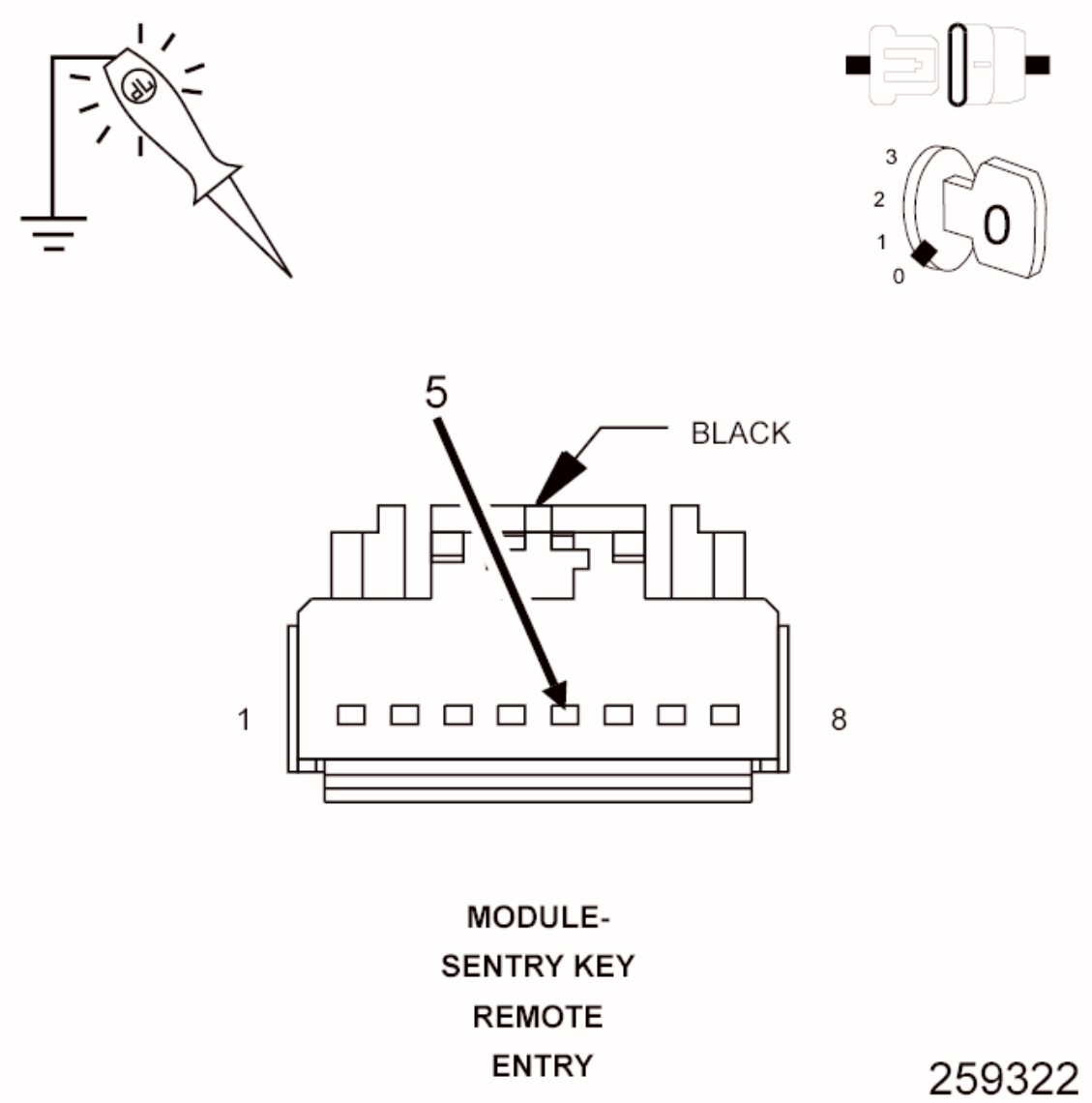

Fig. 79: Checking Fused B(+) Circuit Using 12-Volt Test Light Connected To Ground
Courtesy of CHRYSLER GROUP, LLC

1. Turn the ignition off.
2. Disconnect the Wireless Control Module harness connector.
3. Using a 12-volt test light connected to ground, check the (A411) Fused B(+) circuit.

   Does the test light illuminate brightly?

   Yes

- Go To 3

No

- Repair the (A411) Fused B(+) circuit for an open or short.
- Perform the WCM VERIFICATION TEST. Refer to **STANDARD PROCEDURE** .

3. **(Z937) GROUND CIRCUIT OPEN**

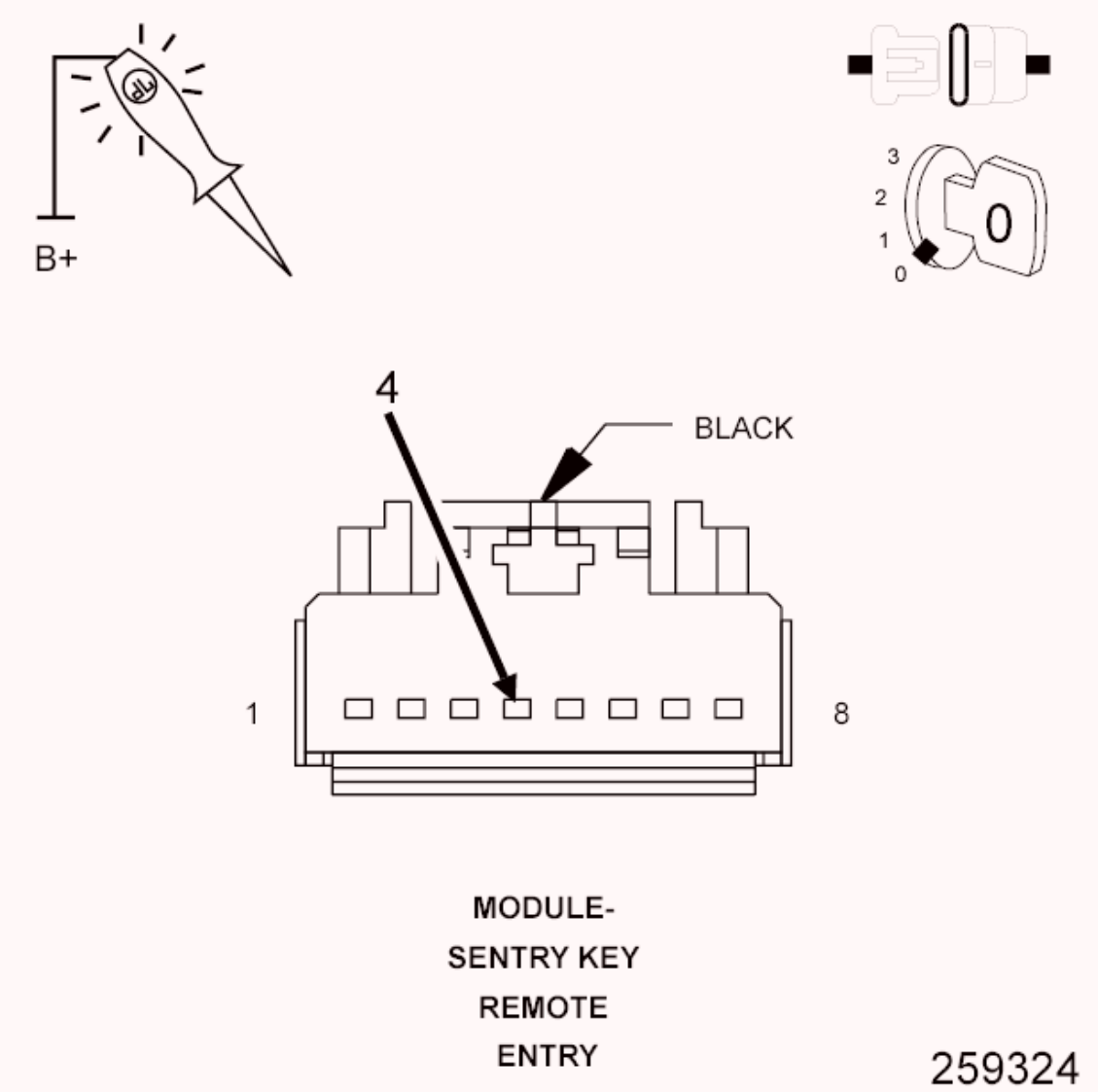

Fig. 80: Checking Ground Circuit Using 12-Volt Test Light Connected To 12-Volts
Courtesy of CHRYSLER GROUP, LLC

1. Using a 12-volt test light connected to 12-volts, check the (Z937) ground circuit.

Does the test light illuminate brightly?

Yes

- Go To 4

No

- Repair the (Z937) ground circuit for an open.
- Perform the WCM VERIFICATION TEST. Refer to **STANDARD PROCEDURE** .

4. **(F20) IGNITION SWITCH OUTPUT CIRCUIT OPEN OR SHORTED**

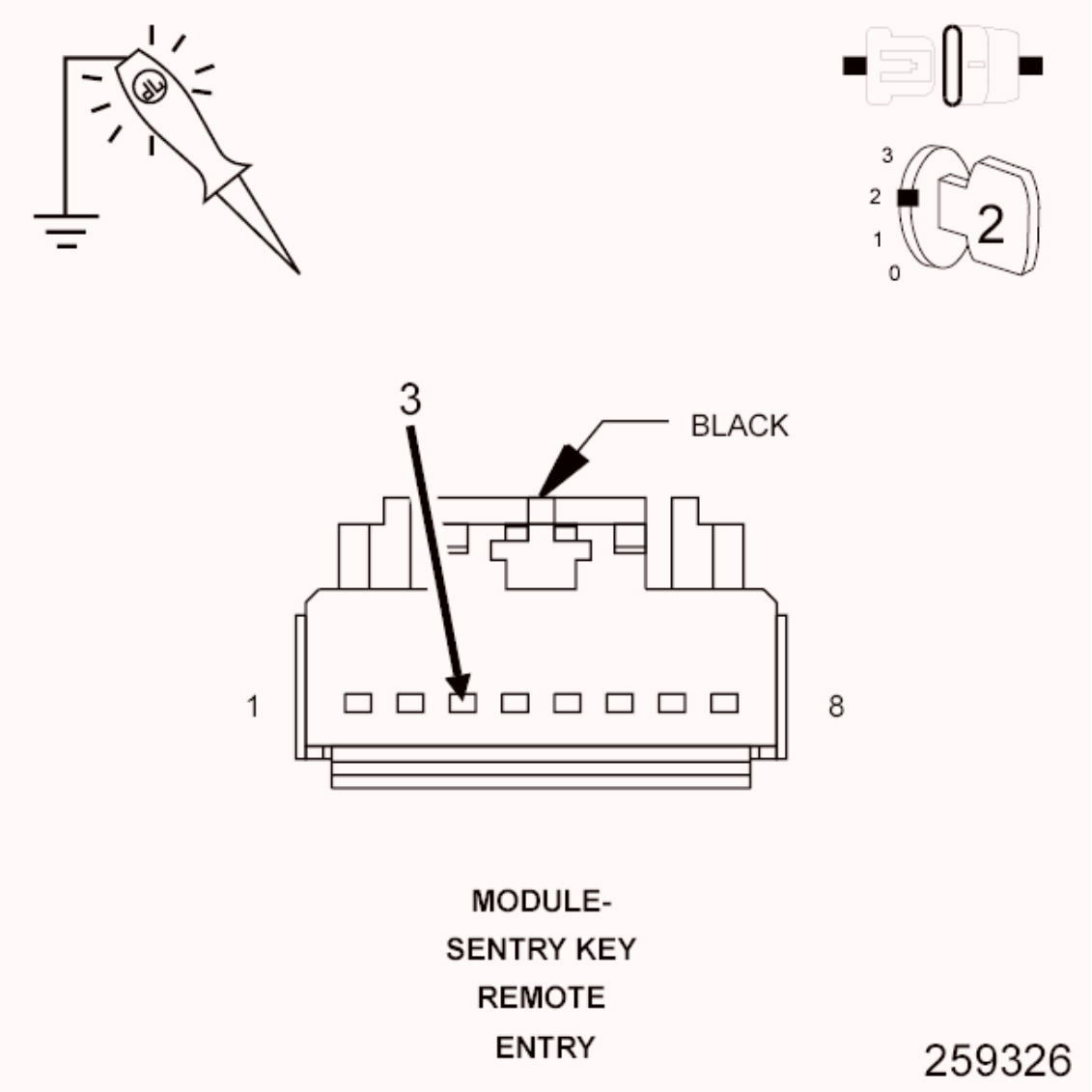

Fig. 81: Checking Ignition Switch Output Circuit Using 12-Volt Test Light Connected To Ground

Courtesy of CHRYSLER GROUP, LLC

1. Turn the ignition on.
2. Using a 12-volt test light connected to ground, check the (F20) Ignition Switch Output circuit.

   Does the test light illuminate brightly?

   Yes

   - Go To 5

   No

   - Repair the (F20) Ignition Switch Output circuit for an open or short.
   - Perform the WCM VERIFICATION TEST. Refer to **STANDARD PROCEDURE** .

5. **(D55) AND (D54) CAN B BUS CIRCUITS OPEN**

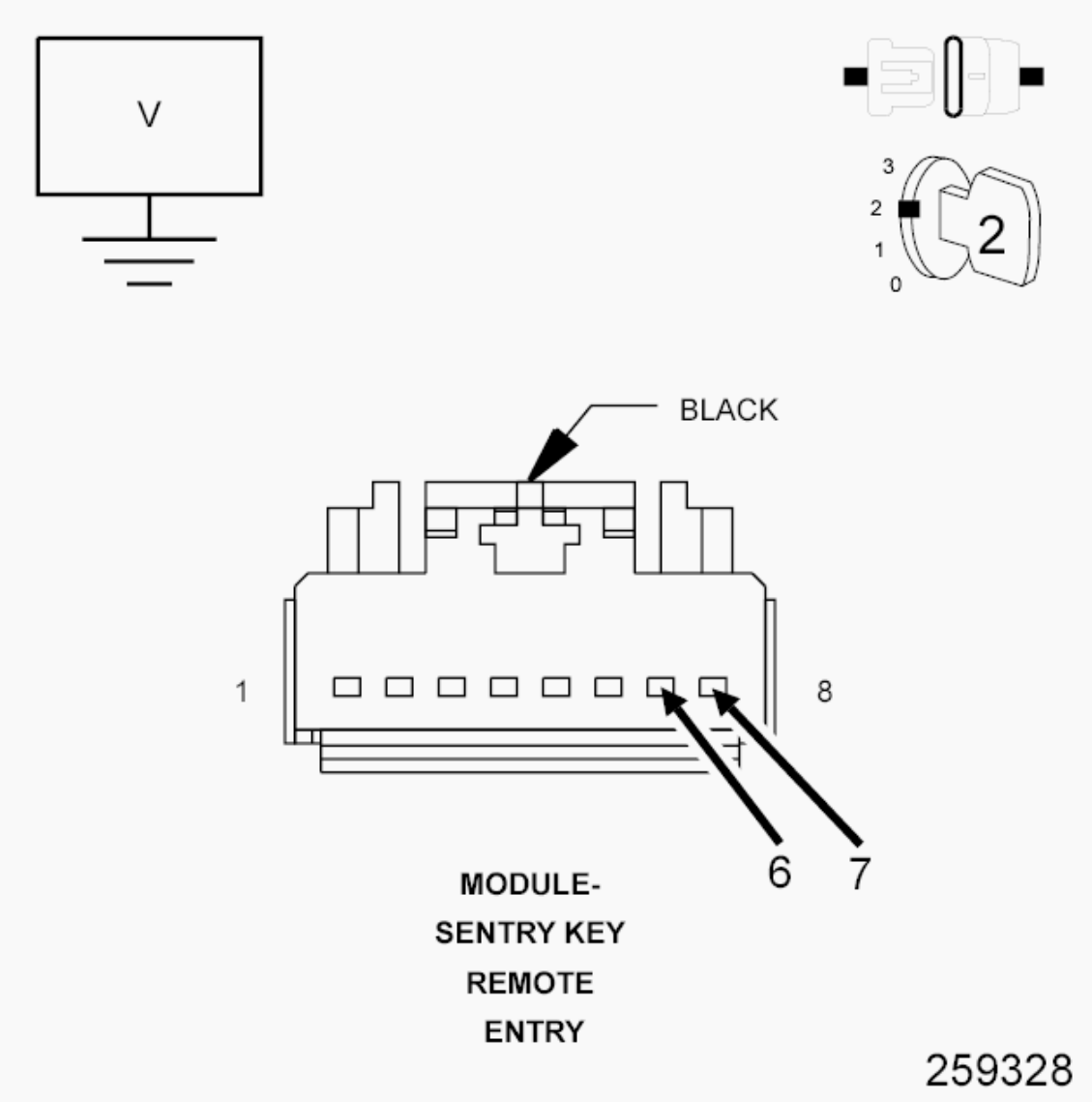

Fig. 82: Measuring Voltage Between CAN B Bus (-) Circuit & Ground And Between CAN B Bus (+) Circuit & Ground
Courtesy of CHRYSLER GROUP, LLC

NOTE: One open circuit will not cause this condition.

1. Measure the voltage between the (D54) CAN B Bus (-) circuit and ground.
2. Measure the voltage between the (D55) CAN B Bus (+) circuit and ground.

   Is there any voltage present on either circuit?

   Yes

- Replace the Wireless Control Module in accordance with the Service Information.
- Perform the WCM VERIFICATION TEST. Refer to **STANDARD PROCEDURE** .

No

- Repair the (D55) and (D54) CAN B Bus circuits for an open. Inspect the connector for damage.
- Perform the WCM VERIFICATION TEST. Refer to **STANDARD PROCEDURE** .

NO RESPONSE FROM ORC (OCCUPANT RESTRAINT CONTROLLER)

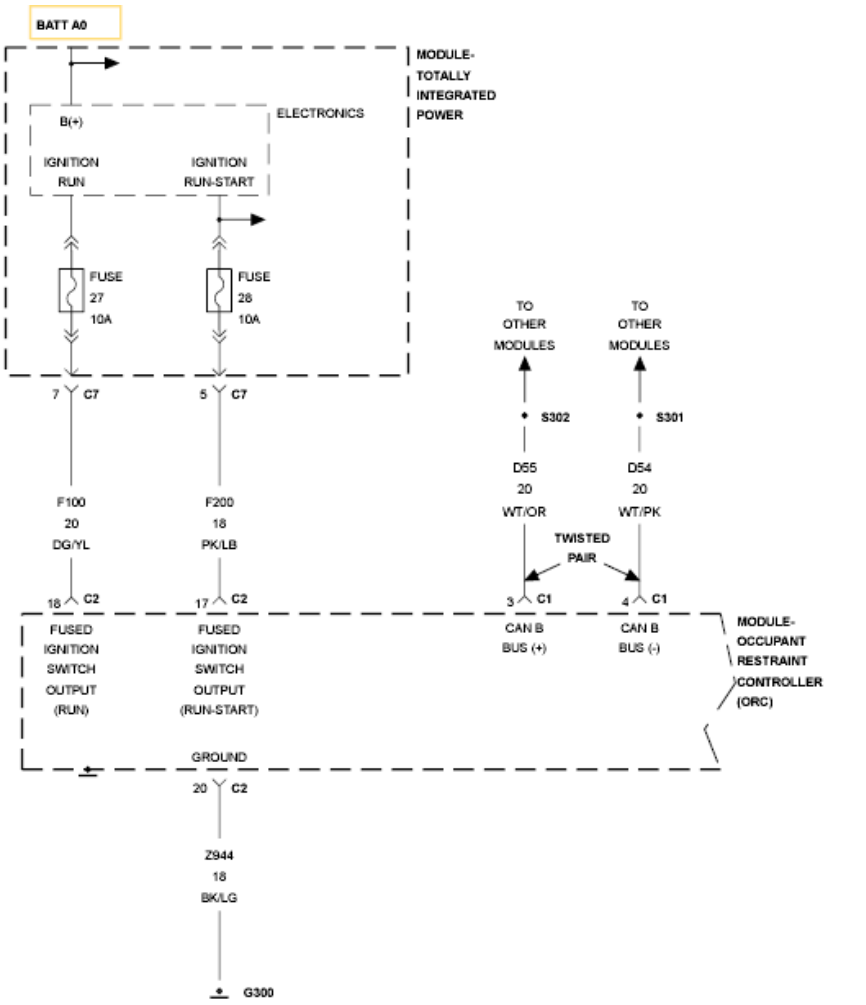

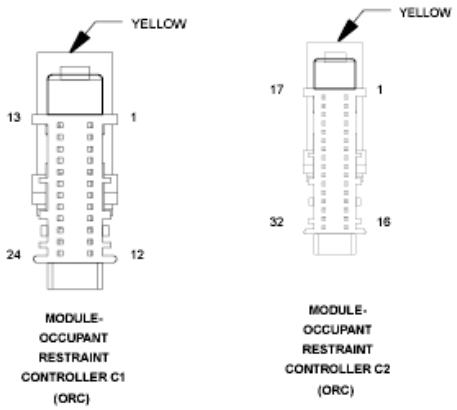

Fig. 83: Occupant Restraint Controller Wiring Diagram
Courtesy of CHRYSLER GROUP, LLC

For a complete wiring diagram, **refer to appropriate SYSTEM WIRING DIAGRAMS article** .

POSSIBLE CAUSES

Possible Causes
(Z944) GROUND CIRCUIT OPEN
(F100) FUSED IGNITION SWITCH OUTPUT (RUN) CIRCUIT OPEN OR SHORTED
(F200) FUSED IGNITION SWITCH OUTPUT (RUN/START) CIRCUIT OPEN OR SHORTED
(D55) AND (D54) CAN B BUS CIRCUITS OPEN
OCCUPANT RESTRAINT CONTROLLER MODULE

DIAGNOSTIC TEST

1. **TEST FOR INTERMITTENT CONDITION**

NOTE: Check for any TSB(s) related to the condition. If a TSB applies, perform the procedure outlined in the TSB before continuing.

1. Turn the ignition on.

NOTE: Ensure the IOD fuse is installed and battery voltage is between 10.0 and 16.0 volts.

2. With the scan tool, select ECU View.

NOTE: A red "X" will be next to the module that is not communicating, indicating that the module is not active on the Bus network. A green check indicates that the module is active on the Bus network.

Does the scan tool display a red "X" next to the module?

Yes

- Go To 2

No

- The no response condition is not present at this time. Using the

wiring diagram/schematic as a guide, inspect the wiring for chafed, pierced, pinched, and partially broken wires and the wiring harness connectors for broken, bent, pushed out, and corroded terminals.

2. **(Z944) GROUND CIRCUIT OPEN**

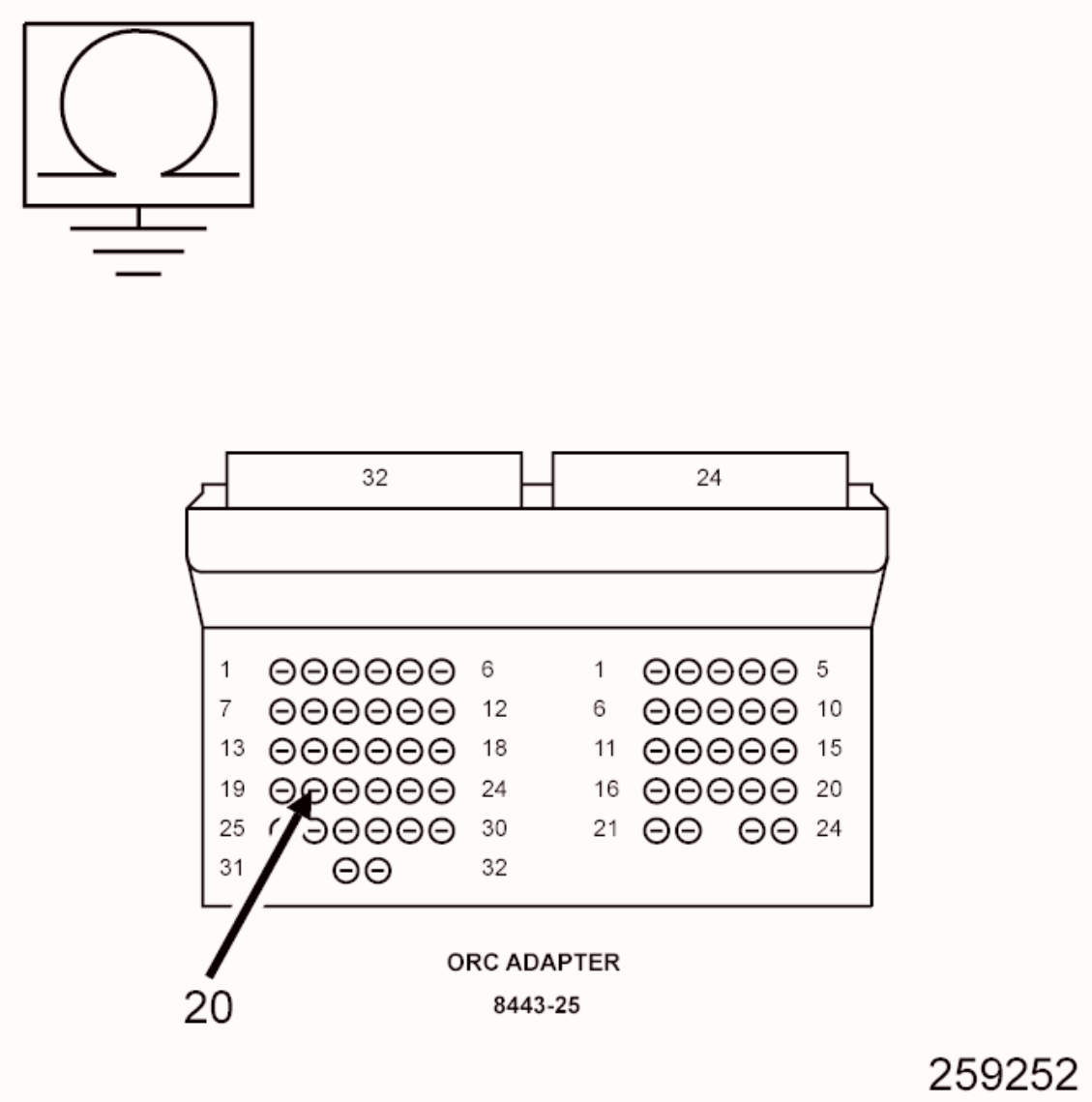

Fig. 84: Measuring Resistance Between Ground & Ground Circuit
Courtesy of CHRYSLER GROUP, LLC

WARNING: **Turn the ignition off disconnect the 12-volt battery and wait two minutes before proceeding. Failure to follow these instructions may result in possible serious or fatal injury.**

1. Disconnect the Occupant Restraint Controller Module C1 and C2 harness connectors.
2. Connect the appropriate Load Tool ACM Adaptor to the ORC connectors.
3. Measure the resistance between ground and the (Z944) ground circuit.

   Is the resistance below 10k ohms?

   Yes

   - Go To 3

   No

   - Repair the (Z944) ground circuit for an open.
   - Perform the AIRBAG SYSTEM VERIFICATION TEST. Refer to **STANDARD PROCEDURE** .

3. **(F100) FUSED IGNITION SWITCH OUTPUT (RUN) CIRCUIT OPEN OR SHORTED**

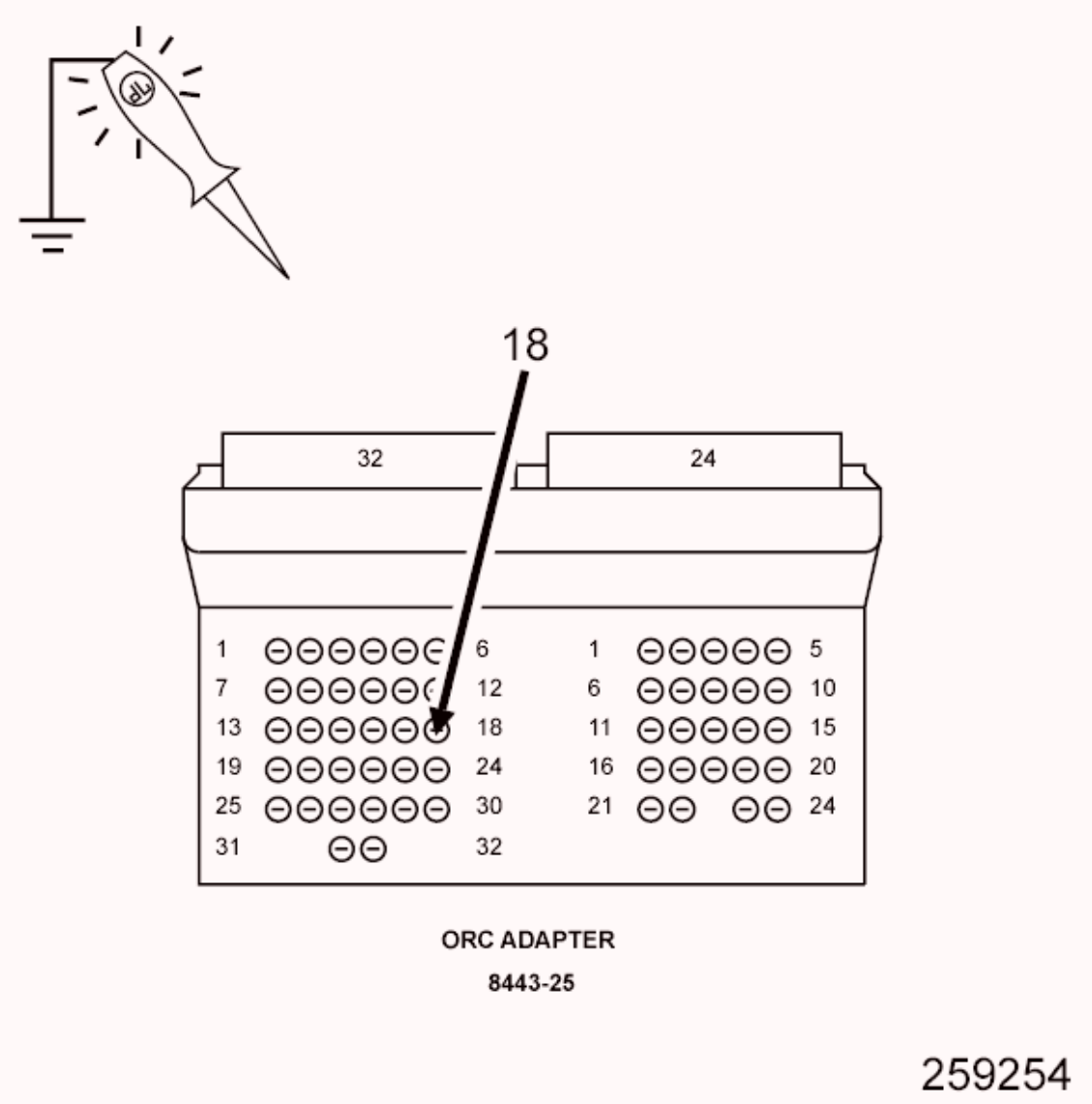

Fig. 85: Checking Fused Ignition Switch Output (Run) Circuit For An Open Or A Short
Courtesy of CHRYSLER GROUP, LLC

NOTE: Check the TIPM for and diagnose any ignition related DTCs before proceeding.

WARNING: Turn the ignition on, then reconnect the 12-volt battery and wait two minutes before proceeding. Failure to follow these instructions may result in possible serious or fatal injury.

1. Using a 12-volt test light connected to ground, check the (F100) Fused

Ignition Switch Output (RUN) circuit.

Does the test light illuminate brightly?

Yes

- Go To 4

No

- Repair the (F100) Fused Ignition Switch Output (RUN) circuit for an open or short.
- Perform the AIRBAG SYSTEM VERIFICATION TEST. Refer to **STANDARD PROCEDURE** .

4. **(F200) FUSED IGNITION SWITCH OUTPUT (RUN/START) CIRCUIT OPEN OR SHORTED**

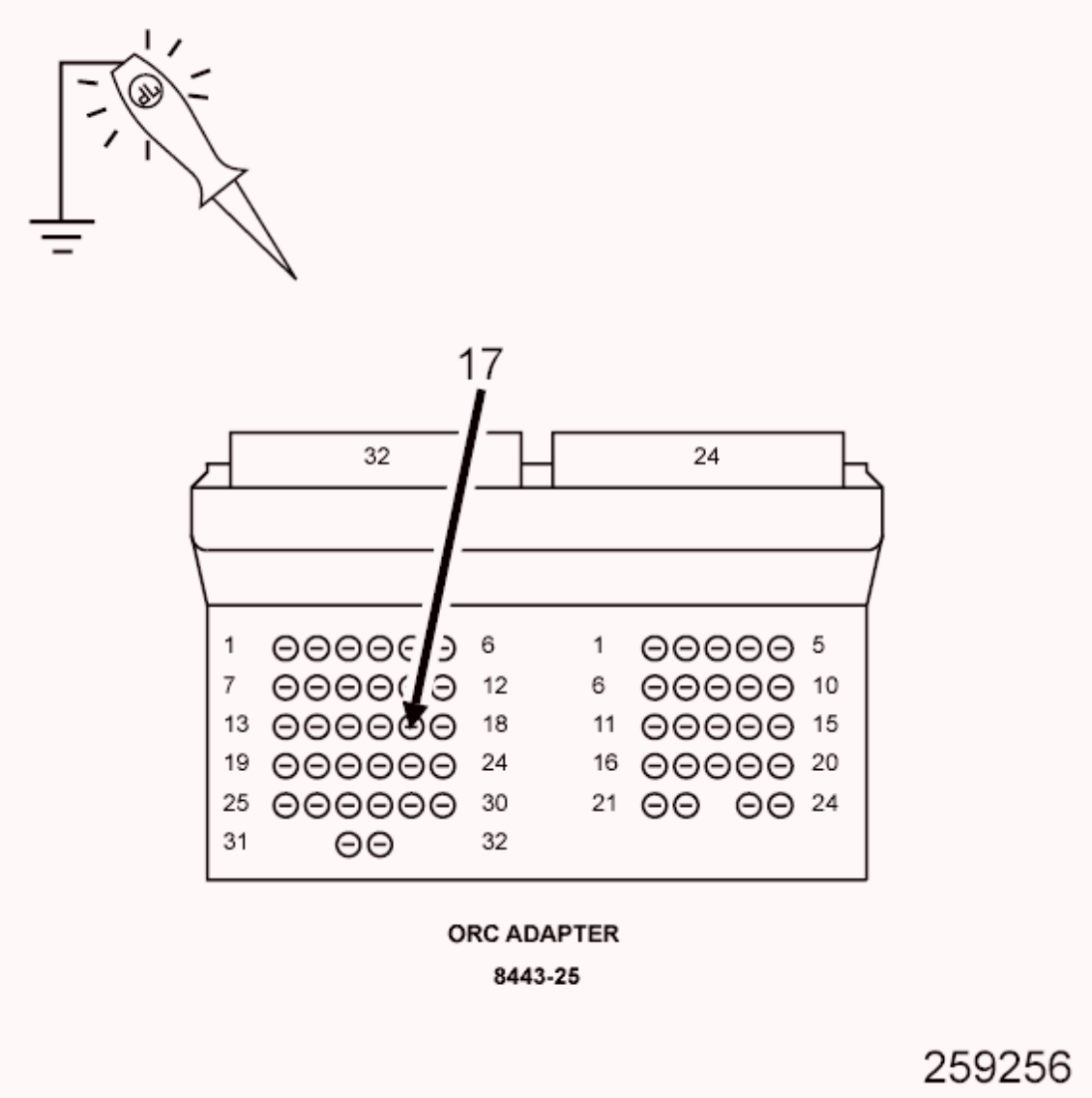

Fig. 86: Checking Fused Ignition Switch Output (Run/Start) Circuit For An Open Or A Short
Courtesy of CHRYSLER GROUP, LLC

1. Using a 12-volt test light connected to ground, check the (F200) Fused Ignition Switch Output (RUN/START) circuit.

   Does the test light illuminate brightly?

   Yes

   - Go To 5

   No

- Repair the (F200) Fused Ignition Switch Output (RUN/START) circuit for an open or short.
- Perform the AIRBAG SYSTEM VERIFICATION TEST. Refer to **STANDARD PROCEDURE** .

5. **(D55) AND (D54) CAN B BUS CIRCUITS OPEN**

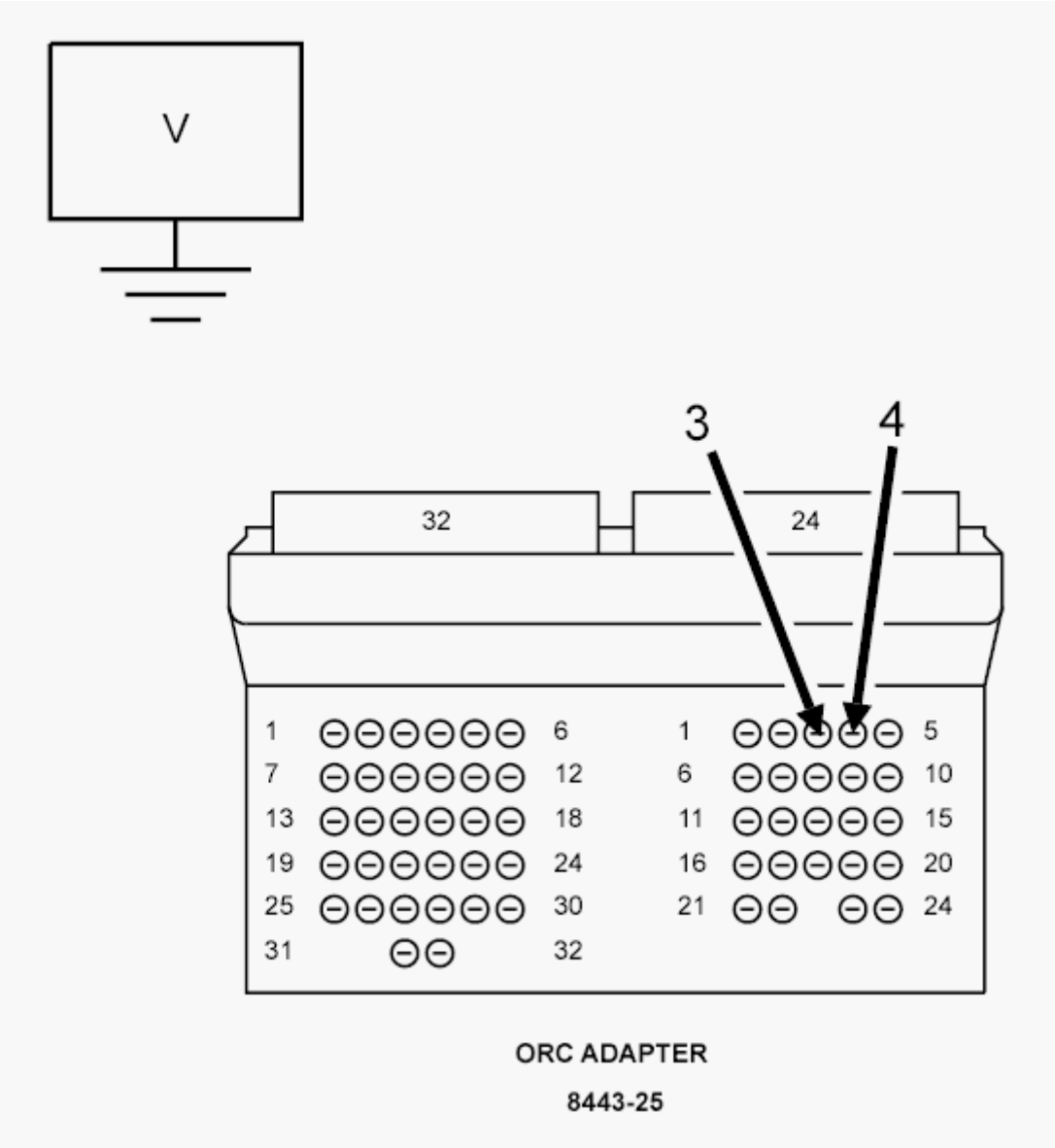

Fig. 87: Measuring Voltage Between CAN B Bus (-) Circuit & Ground
Courtesy of CHRYSLER GROUP, LLC

WARNING: If the Occupant Restraint Controller is dropped at any time, it must be replaced. Failure to take the proper precautions could result in accidental airbag deployment and

cause serious or fatal injury.

NOTE: One open circuit will not cause this condition.

1. Measure the voltage between the (D54) CAN B Bus (-) circuit and ground.
2. Measure the voltage between the (D55) CAN B Bus (+) circuit and ground.

Is there any voltage present on either circuit?

Yes

- Replace the Occupant Restraint Controller Module in accordance with the Service Information.
- Perform the AIRBAG SYSTEM VERIFICATION TEST. Refer to **STANDARD PROCEDURE** .

No

- Repair the (D55) and (D54) CAN B Bus circuits for an open. Inspect the connector for damage.
- Perform the AIRBAG SYSTEM VERIFICATION TEST. Refer to **STANDARD PROCEDURE** .

STORED LOST COMMUNICATION DTCS

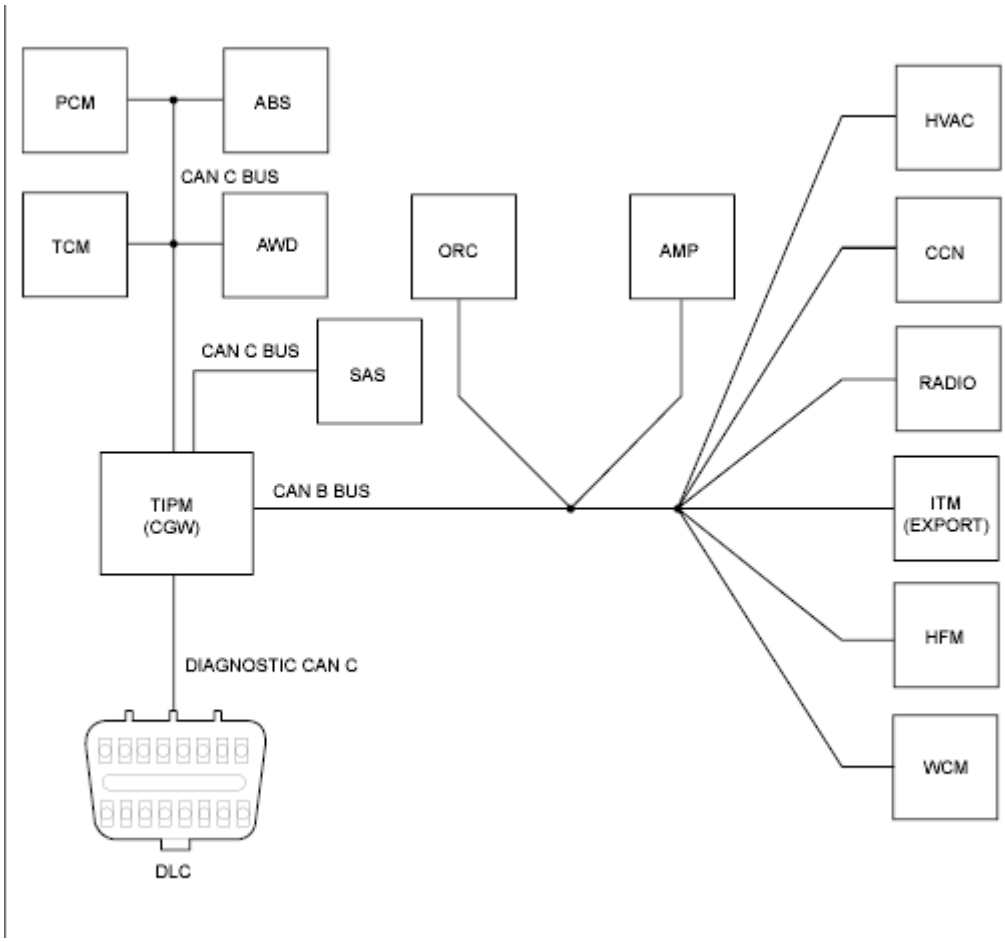

Fig. 88: Totally Integrated Power Module Diagram
Courtesy of CHRYSLER GROUP, LLC

For a complete wiring diagram, **refer to appropriate SYSTEM WIRING DIAGRAMS article** .

WHEN MONITORED

With the ignition on.

Battery voltage between 10 and 16 volts.

Ignition Off Draw (IOD) fused installed.

Totally Integrated Power Module (TIPM) is configured correctly.

SET CONDITION

Bus messages not received for approximately two to five seconds.

POSSIBLE CAUSES

Possible Causes
CAN B BUS CIRCUITS OPEN OR SHORTED
CAN C BUS CIRCUITS OPEN OR SHORTED
DTCS RELATED TO BATTERY VOLTAGE, IGNITION, OR VIN MESSAGES
TIPM NOT CONFIGURED CORRECTLY
POWER OR GROUND FROM THE REPORTING MODULE
MODULE THAT SET THIS DTC
PREVIOUS SERVICE PERFORMED WITHIN THE LAST 100 KEY CYCLES (FUSE/RELAYS REMOVED, WIRING SERVICE, BATTERY DISCONNECT)
LOW BATTERY/JUMP START CONDITION
IOD FUSE WAS REMOVED DURING SHIPPING
CHECK FOR RELATED TSB'S

DIAGNOSTIC TEST

1. **VERIFY DTC IS STORED**

NOTE: Stored faults may indicate a customer perceived intermittent condition.

NOTE: Make sure the IOD fuse is installed and battery voltage is between 10 and 16 volts before proceeding.

NOTE: Check for any TSB(s) related to the condition. If a TSB applies, perform the procedure outlined in the TSB before continuing.

1. With the scan tool, read stored DTCs.

   Is this DTC stored?

   Yes

   - Go To 2

   No

- Perform the appropriate diagnostic procedure.

2. **CHECK THE ENVIRONMENTAL DATA**
   1. With the scan tool, read the loss of communication environmental data.

      Does the loss of communication environmental odometer data match up to any of the previous service procedures listed in the possible causes or are there any stored CAN B or C hardware electrical, battery, ignition voltage, VIN missing/mismatch, TIPM configuration DTCs present with matching environmental data?

      Yes

      - These DTCs may have been the result of other service procedures performed. Clear DTCs.

      No

      - Go To 3

3. **VERIFY INTERMITTENT LOST COMMUNICATION DTC - WIRING CONCERNS**
   1. Turn the ignition on.
   2. With the scan tool, select Network View and select Advanced.

      Is there more than one ECU with stored DTCs "Logged Against" the module and one or more lost communication DTCs stored in the offending module?

      Yes

      - Verify if the vehicle was recently in for this type of service. Otherwise, visually inspect the related wiring harness for chafed, pierced, pinched, and partially broken wires and the wiring harness connectors for broken, bent, pushed out, and corroded terminals. Repair as necessary.

      No

      - Go To 4

4. **VERIFY INTERMITTENT LOST COMMUNICATION DTC -**

OFFENDING MODULE

1. Turn the ignition on.
2. With the scan tool, select Network View and select Advanced.

   Is there more than one ECU with stored DTCs "Logged Against" the module and NO lost communication DTCs stored in the offending module?

   Yes

   - Check for TSB(s) related to this offending module.

   No

   - Go To 5

5. **VERIFY INTERMITTENT LOST COMMUNICATION DTC - REPORTING MODULE**
   1. Turn the ignition on.
   2. With the scan tool, select Network View and select Advanced.

      Is there ONLY ONE ECU with stored DTCs "Logged Against" the module?

      Yes

      - Check for TSB(s) related to the module that set this DTC.

      No

      - Verify if the vehicle was recently in for this type of service. Otherwise, visually inspect the related wiring harness for chafed, pierced, pinched, and partially broken wires and the wiring harness connectors for broken, bent, pushed out, and corroded terminals. Repair as necessary.

2014 ACCESSORIES AND EQUIPMENT

Electronic Control Modules - Service Information - Compass & Patriot

STANDARD PROCEDURE

FLASH PROGRAMMING

NOTE: The wiTECH diagnostic application is the preferred method for flashing ECUs.

NOTE: Help using the wiTECH diagnostic application for flashing an ECU is available by selecting "Help" then "Help Contents" at the top of the wiTECH diagnostic application window.

NOTE: The wiTECH software level must be at the latest release to perform this procedure.

NOTE: The StarMobile Desktop Client may also be used to perform this flash procedure.

STANDARD PROCEDURE - SKREEM PROGRAMMING

When a Powertrain Control Module (PCM) for a gasoline engine, or an Engine Control Module (ECM) for a diesel engine and the Sentry Key Remote Entry Module (SKREEM) (also known as the Wireless Control Module/WCM) on vehicles equipped with the Sentry Key Immobilizer System (SKIS) are replaced at the same time, perform the following steps in order:

NOTE: If the PCM and the SKREEM are replaced at the same time, program the PCM VIN into the PCM first.

1. If applicable first replace the PCM/ECM with the original WCM still connected to the vehicle.
2. Using the appropriate service information program the new PCM/ECM. (This will ensure the Secret Key Transfer from the original WCM into the new PCM/ECM).
3. Now replace and program the WCM. This will retain the Secret Key from the PCM/ECM back into the new WCM.

4. With the scan tool, select Miscellaneous Functions, WCM/Wireless Control Module. Then select the desired procedure and follow the display on the scan tool.
5. If the vehicle is equipped with Tire Pressure Monitoring System program the Placard Pressure Values into the WCM/SKREEM.
6. Ensure all the customer's keys have been programmed into the new module if necessary.

NOTE: If the original keys do not successfully program to the new SKREEM after the proper procedures are followed correctly, programming new keys will be necessary.

NOTE: Before replacing the ECU for a failed driver, control circuit or ground circuit, be sure to check the related component/circuit integrity for failures not detected due to a double fault in the circuit. Most ECM driver/control circuit failures are caused by internal component failures (i.e. relay and solenoids) and shorted circuits (i.e. pull-ups, drivers and switched circuits). These failures are difficult to detect when a double fault has occurred and only one DTC has set.

PROGRAMMING THE SKREEM

The SKIS Secret Key is an ID code that is unique to each SKREEM/WCM. This code is programmed and stored in the SKREEM/WCM, the PCM/ECM, and each ignition key transponder chip. When the PCM/ECM or SKREEM/WCM is replaced, it is necessary to program the Secret Key into the new module using a diagnostic scan tool. Follow the programming steps outlined in the diagnostic scan tool for **PCM REPLACED** , **ECM REPLACED** , **WCM REPLACED** , or **GATEWAY REPLACED** under **MISCELLANEOUS FUNCTIONS** for the **WIRELESS CONTROL MODULE/WCM** menu item as appropriate.

NOTE: Programming the PCM/ECM or SKREEM is done using a diagnostic scan tool and a PIN to enter secure access mode. If three attempts are made to enter secure access mode using an incorrect PIN, secure access mode will be locked out for one hour. To exit this lockout mode, turn

the ignition to the RUN position for one hour then enter the correct PIN. Be certain that all accessories are turned OFF. Also monitor the battery state and connect a battery charger if necessary.

ECM/SKIM/WCM PROGRAMMING

When a ECM and the SKIM are replaced at the same time perform the following steps in order:

1. Program the new SKIM
2. Program the new ECM
3. Replace all ignition keys and program them to the new SKIM.

ECM/SKIM/WCM PROGRAMMING

When an ECM (Bosch) and the SKIM are replaced at the same time perform the following steps in order:

1. Program the new SKIM
2. Program the new ECM (Bosch)
3. Replace all ignition keys and program them to the new SKIM.

PROGRAMMING THE SKIM

CAUTION: Read all notes and cautions for programming procedures.

1. Connect a battery charger to the vehicle.
2. Connect the StarSCAN®.

CAUTION: If the ECM/PCM and SKREEM/WCM are replaced at the same time, the ECM/PCM MUST be programmed before the SKREEM/WCM.

3. Select "ECU View".
4. Select "WCM Wireless Control Module".
5. Select "Miscellaneous Functions".
6. Select WCM replaced.

7. Enter the PIN when prompted.
8. Verify the correct information.

NOTE: If the ECM and the SKIM are replaced at the same time, all vehicle keys will need to be replaced and programmed to the new SKIM.

PROGRAMMING IGNITION KEYS TO THE SKREEM

Each ignition key transponder also has a unique ID code that is assigned at the time the key is manufactured. When a key is programmed into the SKREEM/WCM, the transponder ID code is learned by the module and the transponder acquires the unique Secret Key ID code from the SKREEM/WCM. To program ignition keys into the SKREEM/WCM, follow the programming steps outlined in the diagnostic scan tool for **PROGRAM IGNITION KEYS OR KEY FOBS** under **MISCELLANEOUS FUNCTIONS** for the **WIRELESS CONTROL MODULE/WCM** menu item.

NOTE: If the original keys do not successfully program to the new SKREEM after the proper procedures are followed correctly, programming new keys will be necessary.

NOTE: A maximum of eight keys can be learned to each SKREEM. Once a key is learned to a SKREEM, that key has acquired the Secret Key for that SKREEM and cannot be transferred to any other SKREEM or vehicle.

If ignition key programming is unsuccessful, the scan tool will display one of the following error messages:

- **PROGRAMMING NOT ATTEMPTED** - The scan tool attempts to read the programmed key status and there are no keys programmed into SKREEM memory.
- **PROGRAMMING KEY FAILED (POSSIBLE USED KEY FROM WRONG VEHICLE)** - SKREEM is unable to program an ignition key transponder due to one of the following:
-

  A. The ignition key transponder is ineffective.

B. The ignition key transponder is or has been already programmed to another vehicle.

- **8 KEYS ALREADY LEARNED, PROGRAMMING NOT DONE** - The SKREEM transponder ID memory is full.
- **LEARNED KEY IN IGNITION** - The ID for the ignition key transponder currently in the ignition lock cylinder is already programmed into SKREEM memory.

VEHICLE SCAN AND CONFIGURATION REPORTS

	A multimedia supplement to the instructions contained in this article is available. To view the multimedia example of the condition described go to; **http://www.youtube.com/user/Mitchell1Tips then type, "A00612709.vid1" into the "Search Channel" box.**

COMMUNICATION

DESCRIPTION

DESCRIPTION

The primary on-board communication network between microprocessor-based electronic control modules in this vehicle is the Controller Area Network (CAN) data bus system. A data bus network minimizes redundant wiring connections; and, at the same time, reduces wire harness complexity, sensor current loads and controller hardware by allowing each sensing device to be connected to only one module (also referred to as a node). Each node reads, then broadcasts its sensor data over the bus for use by all other nodes requiring that data. Each node ignores the messages on the bus that it cannot use.

The CAN bus is a two-wire multiplex system. Multiplexing is any system that enables the transmission of multiple messages over a single channel or circuit. The CAN bus is used for communication between most vehicle nodes. However, in addition to the CAN bus network, certain nodes may also be equipped with a Local Interface Network (LIN) data bus. The LIN data bus is a single wire low-speed (9.6 Kbps) serial link bus used to provide direct communication between a LIN master module and certain switch or sensor inputs.

There are actually three separate CAN bus systems used in the vehicle. They are designated: the CAN-B, the CAN-C and the Diagnostic CAN-C. The CAN-B and CAN-C systems provide on-board communication between all nodes in the vehicle. The CAN-C is the faster of the two systems providing near real-time communication (500 Kbps), but is less fault tolerant than the CAN-B system. The CAN-C is used typically for communications between more critical nodes, while the slower (83.3 Kbps), but more fault tolerant CAN-B system is used for communications between less critical nodes. The CAN-B fault tolerance comes from its ability to revert to a single wire communication mode if there is a fault in the bus wiring.

The added speed of the CAN data bus is many times faster than previous data bus systems. This added speed facilitates the addition of more electronic control modules or nodes and the incorporation of many new electrical and electronic features in the vehicle.

The Diagnostic CAN-C bus is also capable of 500 Kbps communication, and is sometimes informally referred to as the CAN-D system to differentiate it from the other high speed CAN-C bus. The Diagnostic CAN-C is used exclusively for the transmission of diagnostic information between the Totally Integrated Power Module/Central GateWay (TIPM or TIPMCGW) and a diagnostic scan tool connected to the industry-standard 16-way Data Link Connector (DLC) located beneath the instrument panel on the driver side of the vehicle.

The TIPM is located in the engine compartment near the battery. The central CAN gateway or hub module integral to the TIPM is connected to all three CAN buses. This gateway physically and electrically isolates the CAN buses from each other and coordinates the bi-directional transfer of messages between them.

OPERATION

OPERATION

The Controller Area Network (CAN) data bus allows all electronic modules or nodes connected to the bus to share information with each other. Regardless of whether a message originates from a module on the lower speed CAN-B bus or on the higher speed CAN-C or CAN-D bus, the message structure and layout is similar, which allows the Totally Integrated Power Module/Central GateWay (TIPM or TIPMCGW) to process and transfer messages between the CAN buses. The TIPM also stores a Diagnostic Trouble Code (DTC) for certain bus network

faults.

All modules (also referred to as nodes) transmit and receive messages over one of these buses. Data exchange between nodes is achieved by serial transmission of encoded data messages. Each node can both send and receive serial data simultaneously. Each digital bit of a CAN bus message is carried over the bus as a voltage differential between the two bus circuits which, when strung together, form a message. Each node uses arbitration to sort the message priority if two competing messages are attempting to be broadcast at the same time.

The ElectroMechanical Instrument Cluster (EMIC) (also known as the Cab Compartment Node/CCN) is the Local Interface Network (LIN) master module in this vehicle and it gathers information from the compass module, the instrument panel switch bank, the Steering Control Module (SCM), and the Heated Seat Module (HSM) through the LIN data bus. There is also LIN bus communication between the individual Tire Pressure Monitor (TPM) transponders and the Sentry Key REmote Entry Module (SKREEM) (also known as the Wireless Control Module/WCM). Both the EMIC and the SKREEM either act directly upon the information received through the LIN data bus, relay the information to other nodes in the vehicle using electronic messages placed on the CAN bus, or both.

The voltage network used to transmit messages requires biasing and termination. Each module on the CAN bus network provides its own biasing and termination. There are two types of nodes used in the CAN bus network. On the CAN-C bus, a dominant node has a 120 ohm termination resistance, while a non-dominant (or recessive) node has about a 2500 to 3000 ohm (2.5 to 3.0 kilohm) termination resistance. The dominant nodes on the CAN-C bus are the TIPM and the Powertrain Control Module (PCM).

The termination resistance of two dominant nodes is combined in parallel to provide a total of about 60 ohms. This resistance value may vary somewhat by application, depending upon the number of non-dominant nodes on the CAN-C bus. On the CAN-D bus (or Diagnostic CAN-C) all of the 60 ohm termination resistance is present in the Central GateWay (TIPMCGW).

NOTE: All measurement of termination resistance is done with the vehicle battery disconnected.

NOTE: Termination resistance of a CAN-B node cannot be verified with a Digital Multi-Meter (DMM) or Digital Volt-Ohm Meter (DVOM). The transceiver of each CAN-B node connects to termination resistors internally. When the vehicle battery is disconnected, the internal connections of all CAN-B node transceivers are switched open, disconnecting the termination resistors. Therefore, the total bus resistance measured under these conditions will be extremely high or infinite, which does not accurately reflect the actual termination resistance of the CAN-B bus.

The communication protocol being used for the CAN data bus is a non-proprietary, open standard adopted from the Bosch CAN Specification 2.0b. The CAN-C is the faster of the two primary buses in the CAN bus system, providing near real-time communication (500 Kbps).

The CAN bus nodes are connected in parallel to the two-wire bus using a twisted pair, where the wires are wrapped around each other to provide shielding from unwanted electromagnetic induction, thus preventing interference with the relatively low voltage signals being carried through them. The twisted pairs have between 33 and 50 twists per meter (yard). While the CAN bus is operating (active), one of the bus wires will carry a higher voltage and is referred to as the CAN High or CAN bus (+) wire, while the other bus wire will carry a lower voltage and is referred to as the CAN Low or CAN bus (-) wire. Refer to the CAN Bus Voltages table.

CAN BUS VOLTAGES TABLE

CAN Bus Voltages (Normal Operation)								
CAN-C Bus Circuits	**Sleep**	**Recessive (Bus Idle)**	**Dominant (Bus Active)**	**CAN-L Short to Ground**	**CAN-H Short to Ground**	**CAN-L Short to Battery**	**CAN-H Short to Battery**	**CAN-H Short to CAN-L**
CAN-L (-)	0 V	2.4 - 2.5 V	1.3 - 2.3 V	0 V	0.3 - 0.5V	Battery Voltage	Battery Voltage Less	2.45 V

							0.75 V	
CAN-H (+)	0 V	2.4 - 2.5 V	2.6 - 3.5 V	0.02 V	0 V	Battery Voltage Less 0.75 V	Battery Voltage	2.45 V
CAN-B Bus Circuits	**Key-Off (Bus Asleep)**		**Key-On (Bus Active)**	**CAN-L Short to Ground**	**CAN-H Short to Ground**	**CAN-L Short to Battery**	**CAN-H Short to Battery**	**CAN-H Short to CAN-L**
CAN-L (-)	10.99 V		4.65 - 4.98 V	0 V	4.5 - 4.7 V	Battery Voltage	4.5 - 4.7 V	0.3 - 0.7 V
CAN-H (+)	0.0 V		0.39 - 0.46 V	0.3 - 0.7 V	0 V	0.3 - 0.7 V	Battery Voltage	0.3 - 0.7 V
Notes								
All measurements taken between node ground and CAN terminal with a standard DVOM. DVOM will display average network voltage. Total resistance of CAN-C network can also be measured (60 ohms). Cannot measure total resistance of CAN-B network.								

In order to minimize the potential effects of Ignition-OFF Draw (IOD), the CAN-B network employs a sleep strategy. However, a network sleep strategy should not be confused with the sleep strategy of the individual nodes on that network, as they may differ. For example: The CAN-C bus network is awake only when the ignition switch is in the ON or START positions; however, the TIPM, which is on the CAN-C bus, may still be awake with the ignition switch in the ACCESSORY or UNLOCK positions. The integrated circuitry of an individual node may be capable of processing certain sensor inputs and outputs without the need to utilize network resources.

The CAN-B bus network remains active until all nodes on that network are ready for sleep. This is determined by the network using tokens in a manner similar to polling. When the last node that is active on the network is ready for sleep, and it has already received a token indicating that all other nodes on the bus are ready for sleep, it broadcasts a **bus sleep acknowledgment** message that causes the network to sleep. Once the CAN-B bus network is asleep, any node on the bus

can awaken it by transmitting a message on the network. The TIPM will keep either the CAN-B or the CAN-C bus awake for a timed interval after it receives a diagnostic message for that bus over the Diagnostic CAN-C bus.

In the CAN system, available options are configured into the TIPM at the assembly plant, but additional options can be added in the field using the diagnostic scan tool. The configuration settings are stored in non-volatile memory. The TIPM also has two 64-bit registers, which track each of the **as-built** and **currently responding** nodes on the CAN-B and CAN-C buses. The TIPM stores a Diagnostic Trouble Code (DTC) in one of two caches for any detected active or stored faults in the order in which they occur. One cache stores powertrain (P-Code), chassis (C-Code) and body (B-Code) DTCs, while the second cache is dedicated to storing network (U-Code) DTCs.

If there are intermittent or active faults in the CAN network, a diagnostic scan tool connected to the Diagnostic CAN-C bus through the 16-way Data Link Connector (DLC) may only be able to communicate with the TIPM. To aid in CAN network diagnosis, the TIPM will provide CAN-B and CAN-C network status information to the scan tool using certain diagnostic signals. In addition, the transceiver in each node on the CAN-C bus will identify a **bus off hardware failure** , while the transceiver in each node on the CAN-B bus will identify a **general bus hardware failure** . The transceivers for some CAN-B nodes will also identify certain failures for both CAN-B bus signal wires.

CONNECTOR, DATA LINK

DESCRIPTION

DESCRIPTION

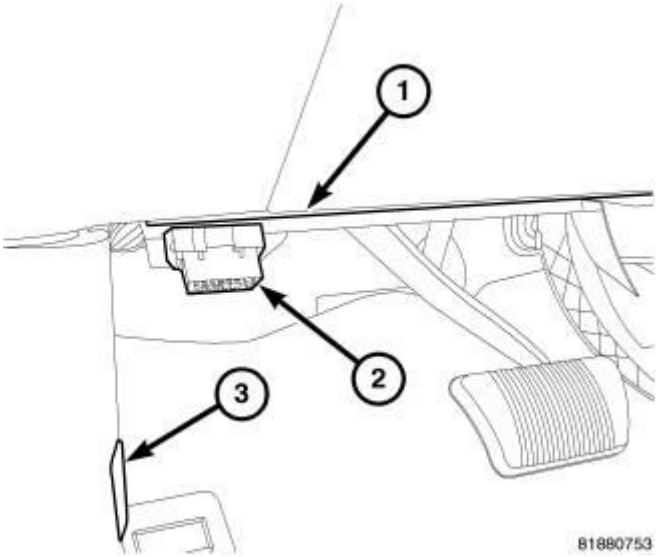

Fig. 1: Locating Data Link Connector
Courtesy of CHRYSLER GROUP, LLC

The Data Link Connector (DLC) (2) is a 16-way molded plastic connector insulator on a dedicated take out of the instrument panel wire harness. This connector is located at the lower edge of the instrument panel, outboard of the steering column. The connector insulator is retained by integral snap features within a rectangular cutout in the instrument panel lower structural support (1) just below the lower instrument panel base trim and just outboard of the instrument panel steering column opening cover and inboard of the inside hood release (3) on the inner cowl side trim.

OPERATION

OPERATION

The Data Link Connector (DLC) is an industry-standard 16-way connector that permits the connection of a diagnostic scan tool to the Controller Area Network (CAN) data bus for interfacing with, configuring, and retrieving Diagnostic Trouble Code (DTC) data from the electronic modules that reside on the data bus network of the vehicle.

MODULE, ALL WHEEL DRIVE CONTROL

DESCRIPTION

DESCRIPTION

The All Wheel Drive (AWD) Control Module controls the Electronically

Controlled Coupling (ECC) mounted on the rear axle. It is located in the left kick panel area and gets signals over the vehicle bus.

OPERATION

OPERATION

NOTE: The Electronic Stability Control (ESC) may also be referred to as Electronic Stability Program (ESP) depending on the vehicle model year and configuration. Certain components may also reference ESP, ESC, or use the traction control symbol.

The all-wheel-drive system requires no driver input or control. Under most driving conditions, it is passive and power is transmitted to the front wheels alone. Unlike all-wheel drive systems that rely on pumps or viscous fluids to transfer torque, this system requires no front-to-rear slippage for activation. This allows the system to transfer torque solely in response to accelerator pedal position. If the driver is asking for a lot of power, the system immediately starts clamping the electronically controlled coupling (ECC), transferring a high percentage of power to the rear wheels. This avoids front wheel slippage, as power to propel the car is transmitted through all four tires. This mode of operation is called open-loop operation in that there is no feedback to affect the torque transfer.

A second, closed loop, operating mode uses feedback from the wheel-speed sensors to determine the appropriate torque transfer. When the front wheels slip, the All Wheel Drive (AWD) Control Module tells the ECC to start clamping, sending power to the rear wheels. Attempting the same aggressive launch described above with the front wheels on ice and the rear wheels on dry pavement, the ECC sends even more torque to the rear wheels to minimize slippage and launch the vehicle. Both modes are always active with the closed loop mode layered on top of open loop mode to increase torque to the rear wheels when needed to maintain traction in extreme cases.

Power to the rear wheels is modulated under the following conditions:

- Slipping on ice while backing up will send a lot of power to the rear axle
- Loss of traction while traveling at freeway speeds, for example hydroplaning on a puddle of water, will send very little power to the rear

wheels because the controller knows at those speeds a lot of power is not needed at the rear wheels

- A third condition, which is independent of the others, uses wheel speed differences to determine when the vehicle is turning in a tight circle. This condition, which is indicated by a large discrepancy in side-to-side wheel speeds, causes the electronic control module to reduce torque to the rear wheels to prevent binding in the driveline. The electronic control module is always checking for this condition as well.
- A fourth condition that is unique to this system is to influence vehicle dynamics. Other systems limit AWD to aiding traction or providing off-road capability. The primary focus is on launching the vehicle or going off road at speeds up to about 25 mph (40 km/hr). Above that speed range, they use it to limit wheel slip for traction. On this system, additional ECM calibration controls torque to the rear wheels for improved handling in the 25-65 mph (40-105 km/hr) range. In this speed range, the system increases torque to the rear wheels during cornering with the throttle open to make the car turn more easily - make the handling more neutral. This is more readily accomplished with an electronically controlled system, than with viscous-coupling or gerotor systems that require some degree of front-to-rear slip to transfer torque to the rear wheels. Above 70 mph (113 km/hr), the control strategy provides minimal torque to the rear wheels under normal driving conditions to aid fuel economy.

The control module also interfaces with the Electronic Stability Control (ESC) and traction control systems. The interface allows the ESC system to use the ECC to help gain control of the vehicle. For this purpose, torque transmitted to the rear wheels by the ECC can be reduced. This system is not traction control. It only works on situations where front-to-rear traction varies, for instance, front wheels on ice, rear wheels on dry pavement or climbing steep grades. AWD does not aid side-to-side traction. ESC does that through brake intervention on this system.

REMOVAL

REMOVAL

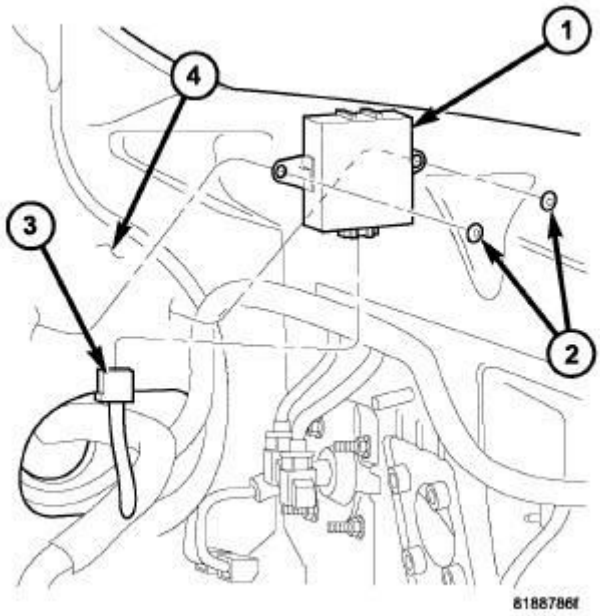

Fig. 2: ECC Control Module
Courtesy of CHRYSLER GROUP, LLC

1. Remove the left front kick panel. Refer to **PANEL, COWL TRIM, SIDE, REMOVAL** .
2. Remove module retaining bolts (2).
3. Remove electrical connector (3).
4. Remove ECC module (1).

INSTALLATION

INSTALLATION

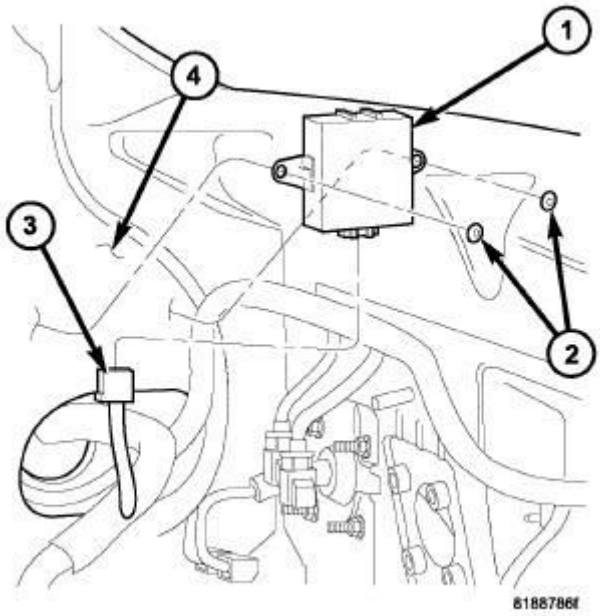

Fig. 3: ECC Control Module
Courtesy of CHRYSLER GROUP, LLC

1. Plug ECC module in (3).
2. Move into place, install bolts (2) and tighten to 11 N.m (97 in. lbs.).
3. Install the left front kick panel. Refer to **PANEL, COWL TRIM, SIDE, INSTALLATION** .

MODULE, ANTI-LOCK BRAKE SYSTEM

DESCRIPTION

DESCRIPTION

NOTE: The Electronic Stability Control (ESC) may also be referred to as Electronic Stability Program (ESP) depending on the vehicle model year and configuration. Certain components may also reference ESP, ESC, or use the traction control symbol.

The Antilock Brake Module (ABM) is a microprocessor-based device which monitors the antilock brake system (ABS) during normal braking and controls it when the vehicle is in an ABS stop or when in a traction control or Electronic Stability Control (ESC) situation. The ABM utilizes a 47-way electrical connector on the vehicle wiring harness. The power source for the ABM is

through the ignition switch in the RUN or ON position.

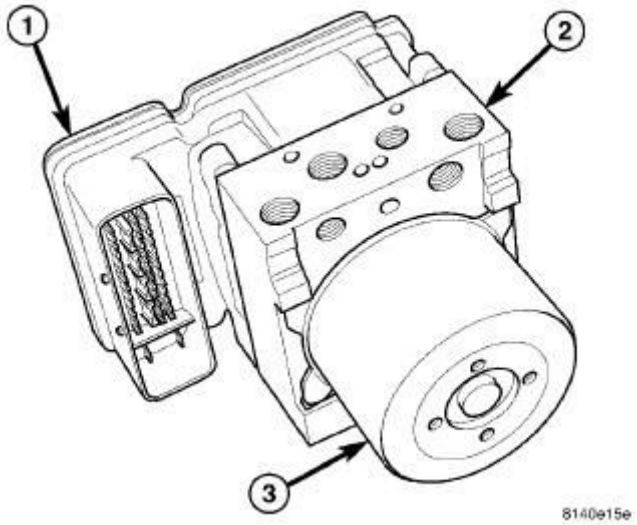

Fig. 4: Integrated Control Unit
Courtesy of CHRYSLER GROUP, LLC

1 - ANTILOCK BRAKE MODULE (ABM)
2 - HYDRAULIC CONTROL UNIT (HCU)
3 - PUMP/MOTOR

The ABM (1) is mounted to the HCU (2) as part of the Integrated Control Unit (ICU). The ICU is located in the engine compartment on the inboard side of the right body frame rail behind the strut tower. For information on the ICU, refer to **INTEGRATED CONTROL UNIT (ICU), DESCRIPTION** .

OPERATION

OPERATION

NOTE: The Electronic Stability Control (ESC) may also be referred to as Electronic Stability Program (ESP) depending on the vehicle model year and configuration. Certain components may also reference ESP, ESC, or use the traction control symbol.

The primary functions of the Antilock Brake Module (ABM) are to:

- Monitor the Antilock Brake System (ABS) and Electronic Stability Control

(ESC) for proper operation.

- Detect wheel locking or wheel slipping tendencies by monitoring the speed of all four wheels of the vehicle.
- Control fluid modulation to the wheel brakes while the system is in ABS or traction control mode.
- Modulates fluid pressure to the wheel brakes to control vehicle yaw rate in ESC mode.
- Store diagnostic information.
- Provide communication to the scan tool while in diagnostic mode.
- Illuminate the amber ABS indicator in the instrument cluster.
- Illuminate the yellow ESC/BAS indicator in the instrument cluster (if equipped).

The ABM constantly monitors the ABS and ESC (if equipped) for proper operation. If the ABM detects a fault, it will turn on the amber ABS and yellow ESC/BAS indicators and disable the ABS or ESC if so equipped. The normal base braking system will remain operational at that time.

The ABM continuously monitors the speed of each wheel through the signals generated by the wheel speed sensors to determine if any wheel is beginning to lock. When a wheel locking tendency is detected, the ABM commands the ABM solenoid coils to actuate. The coils then open and close the valves in the HCU that modulate brake fluid pressure in some or all of the hydraulic circuits. The ABM continues to control pressure in individual hydraulic circuits until a locking tendency is no longer present.

REMOVAL

REMOVAL

Due to packaging and limited space it is necessary to remove and disassemble the Integrated Control Unit (ICU) to service the Antilock Brake Module (ABM) on this vehicle. Refer to **INTEGRATED CONTROL UNIT (ICU), REMOVAL** .

INSTALLATION

INSTALLATION

Due to packaging and limited space it is necessary to install the Antilock Brake

Module (ABM) on the Hydraulic Control Unit (HCU), then install the Integrated Control Unit (ICU) on the vehicle as an assembly. Refer to **INTEGRATED CONTROL UNIT (ICU), ASSEMBLY** .

MODULE, COMPASS

DESCRIPTION

DESCRIPTION

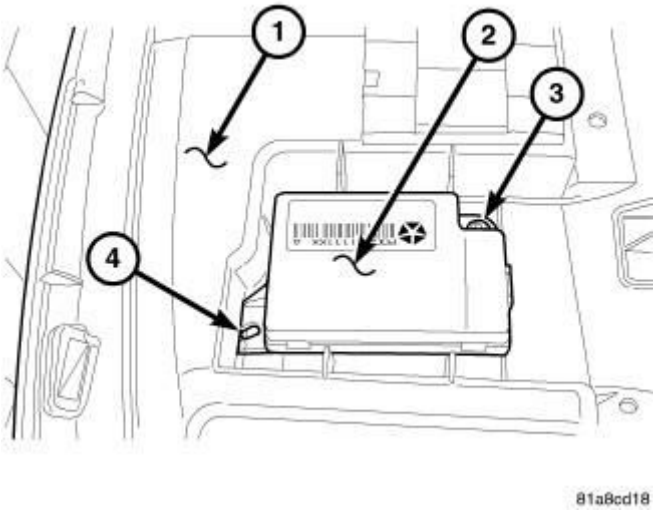

Fig. 5: View Of Remote Compass Module (Rcm)
Courtesy of CHRYSLER GROUP, LLC

On vehicles **Not** equipped with a Navigational (NAV) Radio, the Remote Compass Module (RCM) (2) is a separate stand alone module mounted to the top of the instrument panel (1). Vehicles equipped with a Navigational (NAV) Radio, the compass feature is an integral part of the NAV system and does not require calibration or adjustment, and is only serviced as an assembly with the radio. For more information on the NAV Radio, refer to **DESCRIPTION** .

For information on diagnosis and testing or programming of the RCM, refer to **MODULE, COMPASS, DIAGNOSIS AND TESTING** and **MODULE, COMPASS, STANDARD PROCEDURE** .

REMOVAL

REMOVAL

WARNING: Disable the airbag system before attempting any

steering wheel, steering column, or instrument panel component diagnosis or service. Disconnect and isolate the negative battery (ground) cable, then wait two minutes for the airbag system capacitor to discharge before performing further diagnosis or service. This is the only sure way to disable the airbag system. Failure to follow these instructions may result in accidental airbag deployment and possible serious or fatal injury.

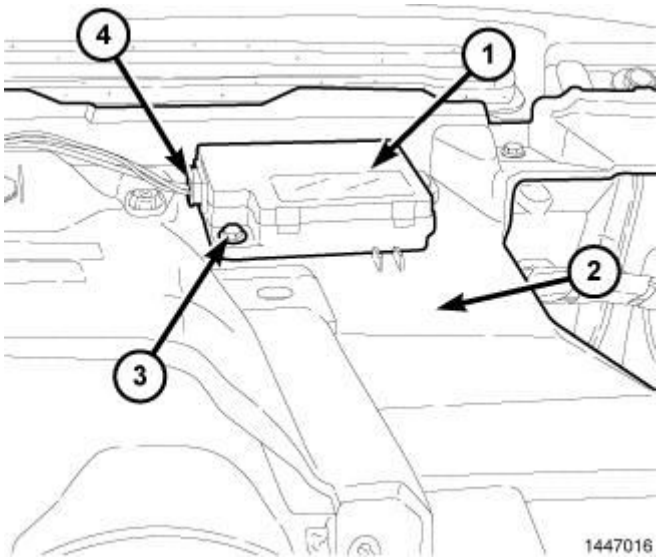

Fig. 6: Identifying Remote Compass Module (RCM), Instrument Panel, Screws & Electrical Connector
Courtesy of CHRYSLER GROUP, LLC

1. Disconnect and isolate the battery negative cable.
2. Remove the instrument panel top cover. Refer to **COVER, INSTRUMENT PANEL, REMOVAL** .
3. Remove the screws (3) securing the Remote Compass Module (RCM) (1) to the instrument panel (2).
4. Disconnect the electrical connector (4) and remove the RCM from the vehicle.

INSTALLATION

INSTALLATION

NOTE: The Remote Compass Module (RCM) must be calibrated after installation.

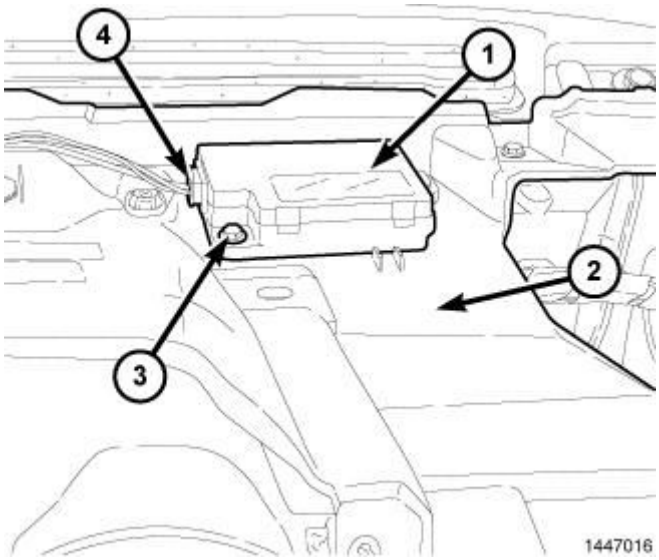

Fig. 7: Identifying Remote Compass Module (RCM), Instrument Panel, Screws & Electrical Connector
Courtesy of CHRYSLER GROUP, LLC

1. Position the RCM (1) on top of the instrument panel (2).
2. Install the screws (3) that secure the RCM to the instrument panel.
3. Connect the electrical connector (4).
4. Install the instrument panel top cover. Refer to **COVER, INSTRUMENT PANEL, INSTALLATION** .
5. Reconnect the negative battery cable.
6. Calibrate the compass module.

MODULE, HANDS FREE

DESCRIPTION

DESCRIPTION

Refer to **MODULE, HANDS FREE (HFM), DESCRIPTION** .

OPERATION

OPERATION

Refer to **MODULE, HANDS FREE (HFM), OPERATION** .

REMOVAL

REMOVAL

Refer to **MODULE, HANDS FREE (HFM), REMOVAL** .

INSTALLATION

INSTALLATION

Refer to **MODULE, HANDS FREE (HFM), INSTALLATION** .

MODULE, HEATED SEAT

DESCRIPTION

DESCRIPTION

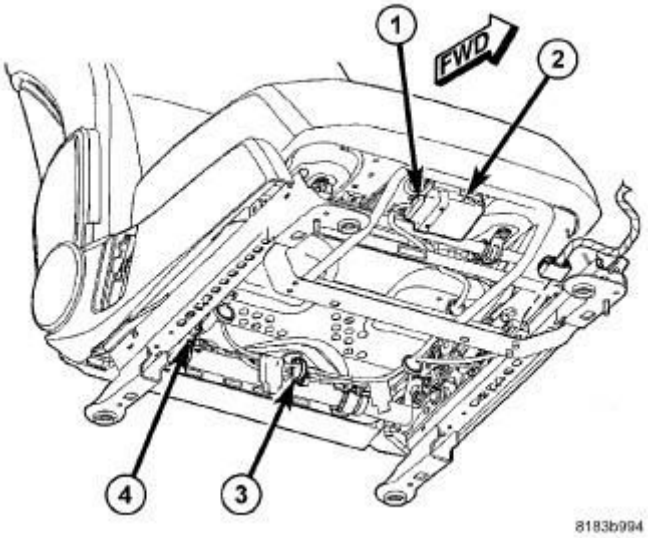

Fig. 8: Heated Seat Module
Courtesy of CHRYSLER GROUP, LLC

The heated seat module (2) is located under the left front seat. It has a single electrical connector (1) and a push pin style retainer that secures it to the seat pan. The module can be accessed from under the front left seat with the seat in the full back position.

The heated seat module is a microprocessor designed to use the Local Interface Network (LIN) data bus messages from the instrument cluster also known as the Cabin Compartment Node (CCN). The CCN receives inputs from the heated seat switches and in turn signals the heated seat module to operate the heated seat

elements for both front seats.

OPERATION

OPERATION

The heated seat module operates on fused battery current received from the ignition switch. The module is grounded to the body at all times through the electrical connector. Inputs to the module include Local Interface Network (LIN) data bus messages and standard hardwired 12 volt power and ground. In response to the LIN inputs the heated seat module will control the battery current to the appropriate heated seat elements.

When a heated seat switch LIN data bus signal is received by the heated seat module, the module energizes the selected heated seat element. The Low heat set point is about 38° C (100.4° F), and the High heat set point is about 42° C (107.6° F).

In addition to operating the heated seat elements, the heated seat module sends LED illumination messages to the CCN via the LIN data bus. The CCN then sends the LED illumination message to the accessory switch bank so that the appropriate LEDs are illuminated for any given heating level. Pressing the switch once will select high-level heating. Pressing the switch a second time will select low-level heating. Pressing the switch a third time will shut the heating elements off.

If the heated seat module detects a heated seat element OPEN or SHORT circuit, it will record and store the appropriate diagnostic trouble code (DTC).

DIAGNOSIS AND TESTING

DIAGNOSIS AND TESTING - HEATED SEAT MODULE

In order to obtain conclusive testing, the heated seat system and the Local Interface Network (LIN) data bus circuit must be checked. **Any diagnosis of the heated seat system should begin with, the use of a scan tool and the appropriate diagnostic Service Information.**

Refer to the appropriate wiring information for complete circuit schematic or connector pin-out information.

NOTE: Vehicles equipped with the heated seat option utilize a

low voltage cut-off feature. This feature turns off power to the heated seat system anytime vehicle voltage is below 11.7v or above 15.5v. Be certain to check the vehicle electrical system for proper voltage anytime the power seat system appears inoperative.

Before any testing of the heated seat system is attempted, the battery should be fully-charged.

REMOVAL

REMOVAL

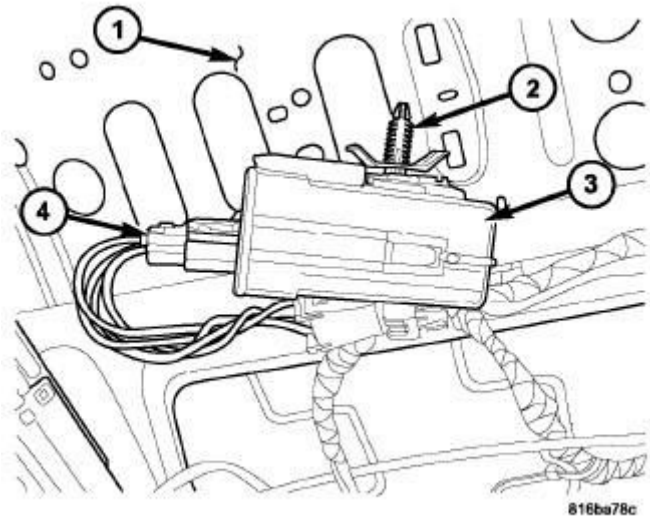

Fig. 9: Locating Heated Seat Module
Courtesy of CHRYSLER GROUP, LLC

CAUTION: The Heated Seat Module mounting tab can be damaged during module removal and installation. Use care to properly align tab to prevent binding that could result in tab breakage.

1. Position the left front seat to the full rearward position.
2. Disconnect and isolate the battery negative cable.
3. Disconnect the wire harness connector (4) from the heated seat module (3).
4. Unsnap the heated seat module retaining tab (2) from the seat pan (1).
5. Remove the heated seat module (3) from the vehicle.

INSTALLATION

INSTALLATION

CAUTION: The Heated Seat Module mounting tab can be damaged during module removal and installation. Use care to properly align tab to prevent binding that could result in tab breakage.

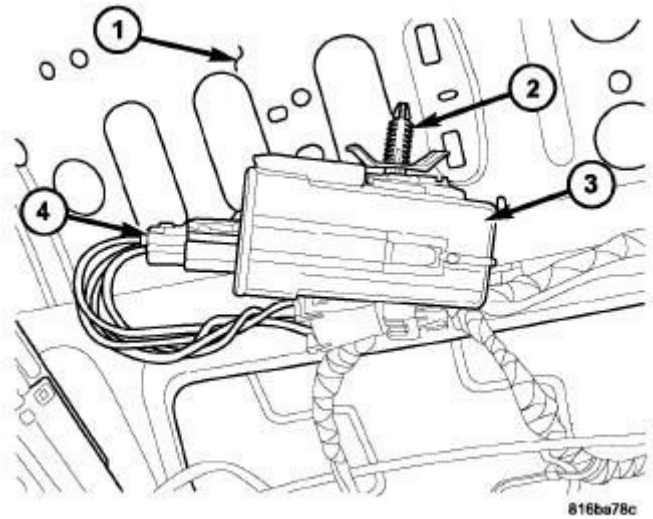

Fig. 10: Locating Heated Seat Module
Courtesy of CHRYSLER GROUP, LLC

1. Install the heated seat module (3) into the vehicle.
2. Position the retaining tab (2) with the mounting hole in the seat pan (1). Firmly apply even pressure to the module (3) until the mounting tab is fully seated.
3. Connect the wire harness connector (4) to the heated seat module (3).
4. Connect the battery negative cable.
5. Check for proper heated seat system operation.

MODULE, INTRUSION TRANSCEIVER

DESCRIPTION

DESCRIPTION

Refer to **MODULE, INTRUSION, DESCRIPTION** .

OPERATION

OPERATION

Refer to **MODULE, INTRUSION, OPERATION** .

REMOVAL

REMOVAL

Refer to **MODULE, INTRUSION, REMOVAL** .

INSTALLATION

INSTALLATION

Refer to **MODULE, INTRUSION, INSTALLATION** .

MODULE, POWERTRAIN CONTROL

DESCRIPTION

DESCRIPTION

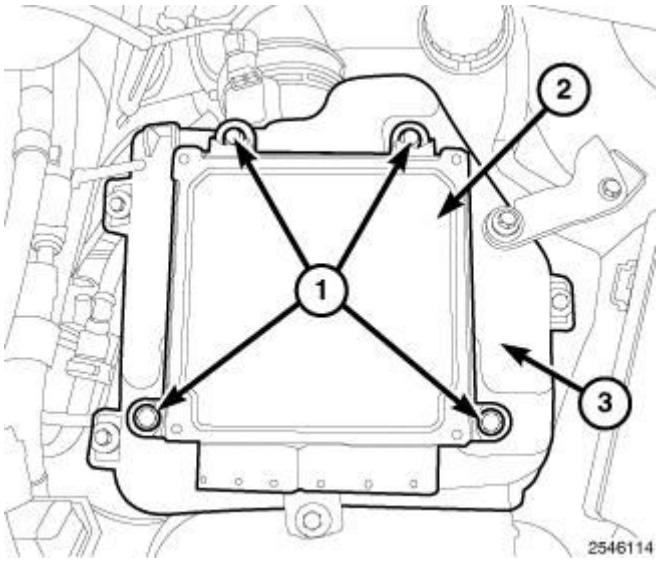

Fig. 11: Identifying Powertrain Control Module Components
Courtesy of CHRYSLER GROUP, LLC

The Powertrain Control Module (PCM) is located in the left side of engine compartment and is attached to the top of air cleaner housing (2).

PCM GROUND

Ground is provided through multiple pins of the PCM connector. Depending on the vehicle there may be as many as two different ground pins. There are power grounds and sensor grounds.

The power grounds are used to control the ground side relays, solenoids, ignition coil or injectors. The signal ground is used for any input that uses sensor return for ground, and the ground side of any internal processing component.

The PCM case is shielded to prevent RFI and EMI. The PCM case is grounded and must be firmly attached to a good, clean body ground.

Internally all grounds are connected together, however there is noise suppression on the sensor ground. For EMI and RFI protection the housing and cover are also grounded separately from the ground pins.

SENSOR RETURN - PCM INPUT

The sensor return circuit provides a low electrical noise ground reference for all of the systems sensors. The sensor return circuit connects to internal ground circuits within the Powertrain Control Module (PCM).

OPERATION

OPERATION

The Powertrain Control Module (PCM) has been programmed to monitor different circuits of the diesel fuel injection system. This monitoring is called on-board diagnostics. Certain criteria must be met for a diagnostic trouble code to be entered into the PCM memory. The criteria may be a range of: engine RPM, engine temperature, time or other input signals to the PCM. If all of the criteria for monitoring a system or circuit are met, and a problem is sensed, then a Diagnostic Trouble Codes (DTC) will be stored in the PCM memory. It is possible that a DTC for a monitored circuit may not be entered into the PCM memory, even though a malfunction has occurred. This may happen when the monitoring criteria have not been met. The PCM compares input signal voltages from each input device with specifications (the established high and low limits of the input range) that are programmed into it for that device. If the input voltage is not within the specifications and other trouble code criteria are met, a DTC will be stored in the PCM memory.

The PCM supplies two regulated 5 volts supplies - a 5V primary and a 5V

secondary (auxiliary) to the following sensors:

- 1. Camshaft Position Sensor (5V secondary)
- 2. Crankshaft Position Sensor (5V primary)
- 3. EGR Position feedback sensor (5V secondary) (if equipped)
- 4. Engine coolant temperature sensor (connected to 5V internal via a pullup resistor)
- 5. Inlet Air Temperature Sensor (connected to 5V internal via a pullup resistor)
- 6. Knock sensor (connected to 5V internal via a pullup resistor)
- 7. Manifold absolute pressure sensor (5V secondary)
- 8. Oil Pressure Switch (connected to 5V internal via pullup resistor)
- 9. Pedal Value Sensor #1 (5V Primary)
- 10. Pedal Value Sensor #2 (5V Secondary)
- 11. SRV Position Feedback Sensor (5V Secondary)
- 12. Throttle Position Sensors (5V Primary)
- 13. Variable Line Pressure Sensor (5V Secondary)

PCM OPERATING MODES

As input signals to the PCM change, the PCM adjusts its response to the output devices. For example, the PCM must calculate a different fuel quantity and fuel timing for engine idle condition than it would for a wide open throttle condition. There are several different modes of operation that determine how the PCM responds to the various input signals.

IGNITION SWITCH ON (ENGINE OFF)

When the ignition is turned on, the PCM activates the glow plug relay for a time period that is determined by engine coolant temperature, atmospheric temperature and battery voltage.

ENGINE START-UP MODE

The PCM uses the engine temperature sensor and the crankshaft position sensor (engine speed) inputs to determine fuel injection quantity.

NORMAL DRIVING MODES

Engine idle, warm-up, acceleration, deceleration and wide open throttle modes are controlled based on all of the sensor inputs to the PCM. The PCM uses these sensor inputs to adjust fuel quantity and fuel injector timing.

LIMP-IN MODE

If there is a fault detected with the accelerator pedal position sensor, the PCM will set the engine speed at 1100 RPM.

OVERSPEED DETECTION MODE

If the PCM detects engine RPM that exceeds 5200 RPM, the PCM will set a DTC in memory and illuminate the MIL until the DTC is cleared.

AFTER-RUN MODE

The PCM transfers RAM information to ROM and performs an Input/Output state check.

MONITORED CIRCUITS

The PCM is able to monitor and identify most driveability related trouble conditions. Some circuits are directly monitored through PCM feedback circuitry. In addition, the PCM monitors the voltage state of some circuits and compares those states with expected values. Other systems are monitored indirectly when the PCM conducts a rationality test to identify problems. Although most subsystems of the engine control module are either directly or indirectly monitored, there may be occasions when diagnostic trouble codes are not immediately identified. For a trouble code to set, a specific set of conditions must occur and unless these conditions occur, a DTC will not set.

DIAGNOSTIC TROUBLE CODES

Each diagnostic trouble code (DTC) is diagnosed by following a specific procedure. The diagnostic test procedure contains step-by-step instruction for determining the cause of the DTC as well as no trouble code problems. For more information, refer to the appropriate Diesel Powertrain Diagnostic Information .

HARD CODE

A DTC that comes back within one cycle of the ignition key is a hard code. This means that the problem is current every time the PCM/SKIM checks that circuit or function. Procedures in this Service Information verify if the DTC is a hard

code at the beginning of each test. When the fault is not a hard code, an intermittent test must be performed. NOTE: If the scantool displays faults for multiple components (i.e. ECT, VSS, IAT sensors) identify and check the shared circuits for possible problems before continuing (i.e. sensor grounds or 5-volt supply circuits). Refer to the appropriate schematic to identify shared circuits. For more information, refer to the appropriate Diesel Powertrain Diagnostic Information .

INTERMITTENT CODE

A DTC that is not current every time the PCM/SKIM checks the circuit or function is an intermittent code. Most intermittent DTCs are caused by wiring or connector problems. Problems that come and go like this are the most difficult to diagnose; they must be looked for under specific conditions that cause them. **NOTE: Electromagnetic (radio) interference can cause an intermittent system malfunction.** This interference can interrupt communication between the ignition key transponder and the SKIM.

The following checks may assist you in identifying a possible intermittent problem:

- Visually inspect the related wire harness connectors. Look for broken, bent, pushed out or corroded terminals.
- Visually inspect the related wire harness. Look for chafed, pierced or partially broken wire.
- Refer to hotlines or technical service bulletins that may apply.

PCM DIAGNOSTIC TROUBLE CODES

NOTE: Before replacing the PCM for a failed driver, control circuit or ground circuit, be sure to check the related component/circuit integrity for failures not detected due to a double fault in the circuit. Most PCM driver/control circuit failures are caused by internal failures to components (i.e. relays and solenoids) and shorted circuits (i.e. sensor pull-ups, drivers and ground circuits). These faults are difficult to detect when a double fault has occurred and only one DTC has set. If the scan tool displays faults for multiple components (i.e.VSS, ECT, Batt Temp, etc.) identify and check the shared circuits for

possible problems before continuing (i.e. sensor grounds or 5-volt supply circuits). Refer to the appropriate wiring diagrams to identify shared circuits. For more information, refer to the appropriate Diesel Powertrain Diagnostic Information .

POWERTRAIN CONTROL MODULE

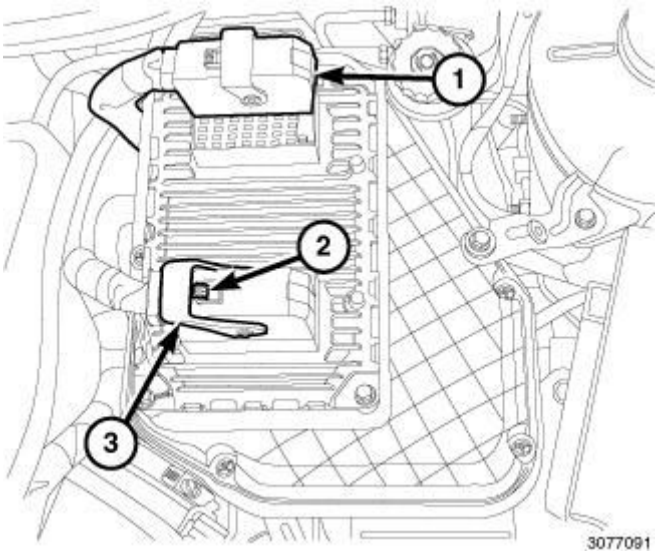

Fig. 12: Powertrain Control Module connectors
Courtesy of CHRYSLER GROUP, LLC

The PCM receives input signals from various switches and sensors that are referred to as PCM Inputs. Based on these inputs, the PCM adjusts various engine and vehicle operations through devices that are referred to as PCM Outputs.

NOTE: PCM Inputs:

- Air Conditioning Controls
- Battery Voltage
- Brake Switch
- Camshaft Position Sensor
- Clutch Upstop Switch
- Clutch Interlock
- Crankshaft Position Sensor
- Engine Coolant Temperature Sensor

- Fuel Level Sensor (Bus message)
- Ignition Switch
- Intake Air Temperature Sensor
- Knock Sensor
- Evaporative System Integrity Monitor
- Manifold Absolute Pressure (MAP) Sensor
- Oil Pressure Switch
- Oxygen Sensors
- Power Steering Pressure Switch
- Speed Control Switches
- Vehicle Speed Sensor (MTX-equipped models)

NOTE: PCM Outputs:

- Air Conditioning Clutch Relay
- Charging Indicator Lamp (Bus Message)
- Proportional Purge Solenoid
- Fuel Injectors
- Generator Field
- Ignition Coils
- Malfunction Indicator (Check Engine) Lamp (Bus Message)
- Manifold Flow Valve
- Oxygen Sensors Heater Controls
- Variable Valve Timing
- Vehicle Speed (Manual Transmission)

Based on inputs it receives, the PCM adjusts fuel injector pulse width, idle speed, ignition spark advance, ignition coil dwell and EVAP canister purge operation. The PCM also determines the appropriate transmission shift schedule and shift points, depending on the present operating conditions and driver demand. The PCM regulates the cooling fan, air conditioning and speed control systems. The PCM changes generator charge rate by adjusting the generator field. The PCM also performs diagnostics.

The PCM adjusts injector pulse width (air-fuel ratio) based on the following

inputs.

- Battery voltage
- Coolant temperature
- Exhaust gas content (oxygen sensor)
- Engine speed (crankshaft position sensor)
- Intake air temperature
- Manifold absolute pressure
- Throttle position

The PCM adjusts ignition timing based on the following inputs.

- Coolant temperature
- Engine speed (crankshaft position sensor)
- Knock sensor
- Manifold absolute pressure
- Throttle position
- Transmission gear selection (park/neutral switch)
- Intake air temperature

The PCM also adjusts engine idle speed through the idle air control motor based on the following inputs.

- Air conditioning sense
- Battery voltage
- Brake switch
- Coolant temperature
- Engine speed (crankshaft position sensor)
- Engine run time
- Manifold absolute pressure
- Power steering pressure switch
- Throttle position
- Transmission gear selection (park/neutral switch)
- Vehicle distance (speed)

The camshaft position sensor and crankshaft position sensor signals are sent to the PCM. If the PCM does not receive the signal within approximately 1 second of engine cranking, it deactivates the fuel pump. When these are deactivated, power is shut off to the fuel injectors, ignition coils, oxygen sensor heating elements and fuel pump.

The PCM contains a voltage converter that changes battery voltage to a regulated 5 volts direct current to power the camshaft position sensor, crankshaft position sensor, manifold absolute pressure sensor, throttle position sensor, A/C pressure switch, A/C pressure transducer, and vehicle speed sensor.

STANDARD PROCEDURE

OBTAINING DIAGNOSTIC TROUBLE CODES

BULB CHECK

Key on: Bulb illuminated until vehicle starts, as long as all once per trip (readiness) monitors completed. If monitors have **not** been completed, then: Key on: bulb check for about 5 to 8 seconds, lamp then flashes if once per trip (readiness) monitors have **not** been completed until vehicle is started, then MIL is extinguished.

OBTAINING DTC'S USING SCAN TOOL

1. Connect the scan tool to the data link (diagnostic) connector. This connector is located in the passenger compartment; at the lower edge of instrument panel; near the steering column.
2. Turn the ignition switch on and access the "Read Fault" screen.
3. Record all the DTC's and "freeze frame" information shown on the scan tool.
4. To erase DTC's, use the "Erase Trouble Code" data screen on the scan tool.**Do not erase any DTC's until problems have been investigated and repairs have been performed.**

PINION FACTOR SETTING

NOTE: This procedure must be performed if the PCM has been replaced with a NEW or replacement unit. Failure to perform this procedure will result in an inoperative or improperly calibrated speedometer.

The vehicle speed readings for the speedometer are taken from the output speed sensor. The PCM must be calibrated to the different combinations of equipment (final drive and tires) available. Pinion Factor allows the technician to set the Powertrain Control Module initial setting so that the speedometer readings will be correct. To properly read and/or reset the Pinion Factor, it is necessary to use a scan tool.

1. Plug the scan tool into the diagnostic connector located under the instrument panel.
2. Select the Transmission menu.
3. Select the Miscellaneous menu.
4. Select Pinion Factor. Then follow the instructions on the scan tool screen.

STANDARD PROCEDURE - PCM/ECM REPROGRAMMING - GAS

Refer to **STANDARD PROCEDURE** and perform the PCM/TCM PROGRAMMING procedure.

STANDARD PROCEDURE - PCM/ECM REPROGRAMMING - DIESEL

Refer to **STANDARD PROCEDURE** and perform the PCM/ECM / TCM PROGRAMMING procedure.

REMOVAL

REMOVAL - PCM

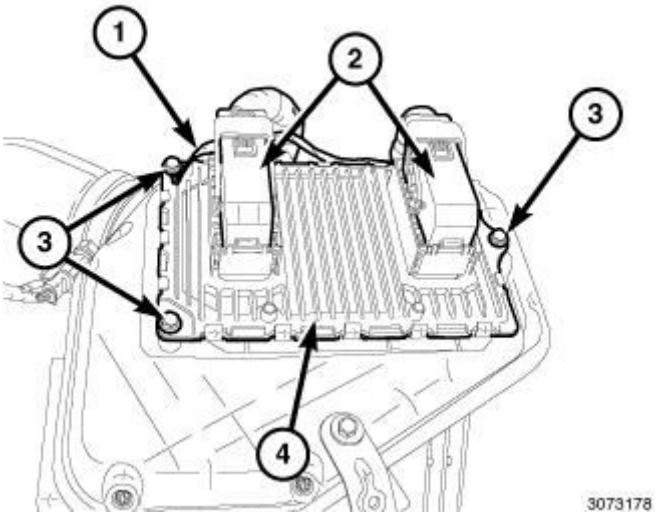

Fig. 13: Electrical Connectors, PCM, Three Mounting Bolts & Ground Wire
Courtesy of CHRYSLER GROUP, LLC

USE THE SCAN TOOL TO REPROGRAM THE NEW POWERTRAIN CONTROL MODULE (PCM) WITH THE VEHICLES ORIGINAL IDENTIFICATION NUMBER (VIN) AND THE VEHICLES ORIGINAL MILEAGE. IF THIS STEP IS NOT DONE, A DIAGNOSTIC TROUBLE CODE (DTC) MAY BE SET.

To avoid possible voltage spike damage to PCM, ignition key must be off, and negative battery cable must be disconnected before unplugging PCM connectors.

1. Disconnect and isolate the negative battery cable.
2. Unlock and disconnect the electrical connectors (2) from the PCM (4).
3. Remove the three mounting bolts (3) and ground wire (1).
4. Remove the PCM (4) from the air cleaner body cover.

PCM DIESEL

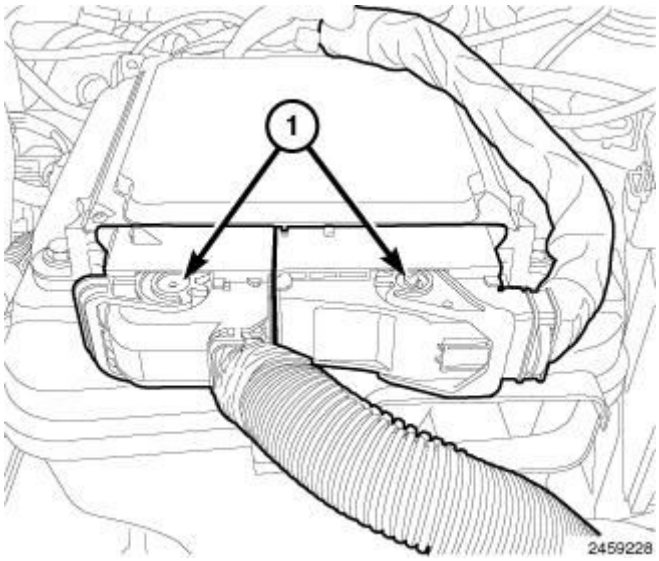

Fig. 14: PCM Harness Connectors
Courtesy of CHRYSLER GROUP, LLC

1. Disconnect negative battery cable.
2. Disconnect the Powertrain Control Module (PCM) harness connectors (1).

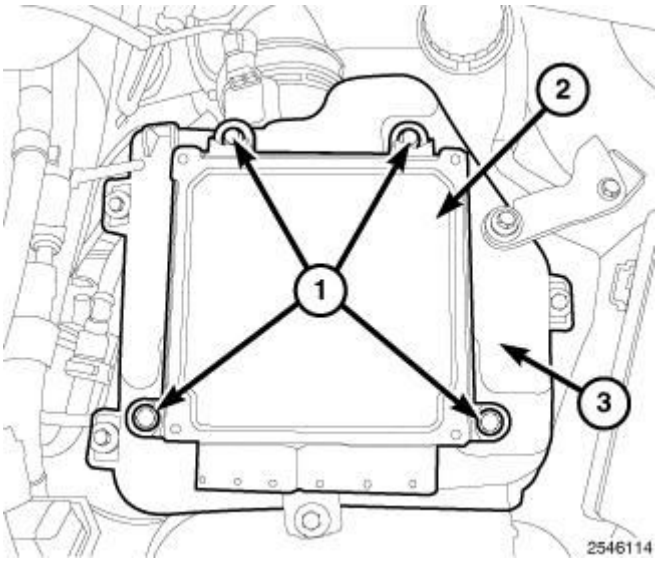

Fig. 15: Identifying Powertrain Control Module Components
Courtesy of CHRYSLER GROUP, LLC

3. Remove bolts (1) and the PCM (2) from the air cleaner housing (3).

INSTALLATION

INSTALLATION - PCM

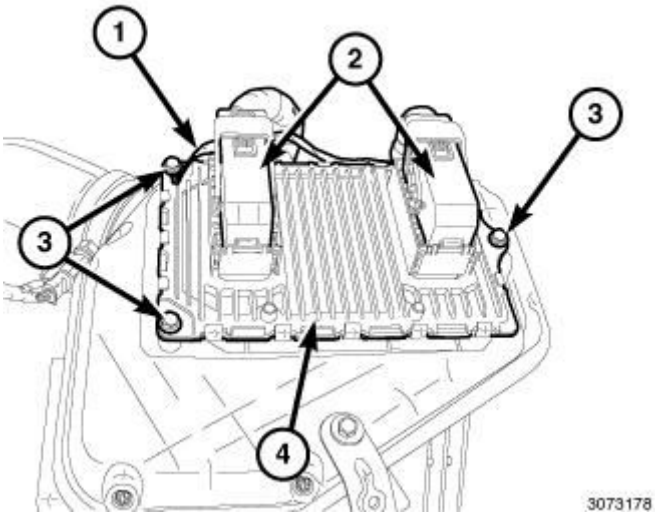

Fig. 16: Electrical Connectors, PCM, Three Mounting Bolts & Ground Wire
Courtesy of CHRYSLER GROUP, LLC

USE THE SCAN TOOL TO REPROGRAM THE NEW POWERTRAIN CONTROL MODULE (PCM) WITH THE VEHICLES ORIGINAL IDENTIFICATION NUMBER (VIN) AND THE VEHICLES ORIGINAL MILEAGE. IF THIS STEP IS NOT DONE, A DIAGNOSTIC TROUBLE

CODE (DTC) MAY BE SET.

1. Position the PCM (4) on the air cleaner body cover.
2. Install three mounting bolts (3) with one ground wire (1) and tighten to 10 N.m (89 in. lbs.).
3. Check pins in electrical connectors for damage. Repair as necessary.
4. Connect and lock the electrical connectors (2).
5. Connect the negative battery cable and tighten nut to 5 N.m (45 in. lbs.).
6. Use the scan tool to reprogram new PCM with vehicles original Identification Number (VIN) and original vehicle mileage.

PCM DIESEL

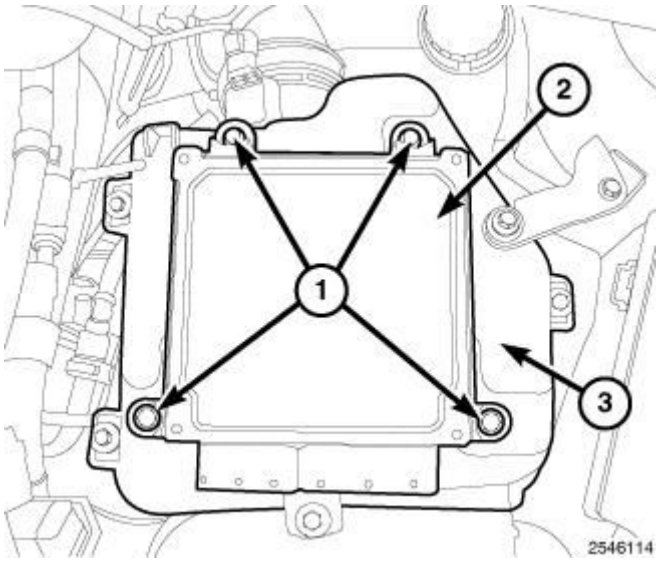

Fig. 17: Identifying Powertrain Control Module Components
Courtesy of CHRYSLER GROUP, LLC

1. Install Powertrain Control Module (PCM) onto the air cleaner housing. Tighten bolts to 11 N.m (97 in. lbs.).

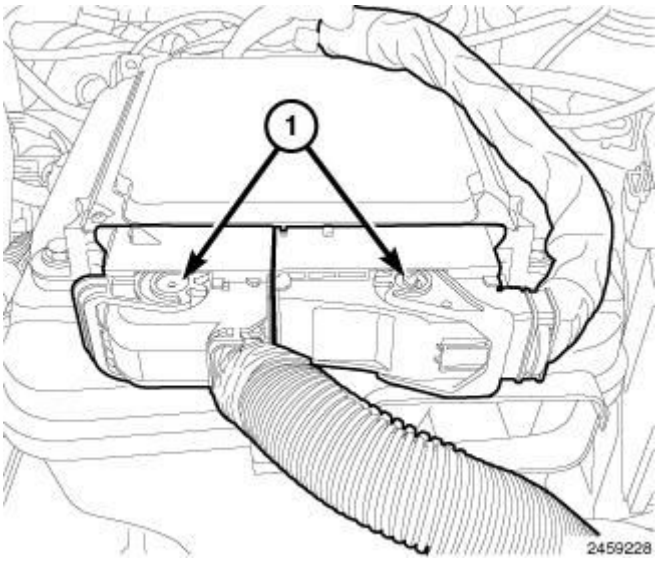

Fig. 18: PCM Harness Connectors
Courtesy of CHRYSLER GROUP, LLC

2. Connect both PCM (2) harness connectors.
3. Connect negative battery cable.
4. Reprogram the PCM. Refer to **MODULE, POWERTRAIN CONTROL, STANDARD PROCEDURE**.

MODULE, STEERING COLUMN

DESCRIPTION

DESCRIPTION

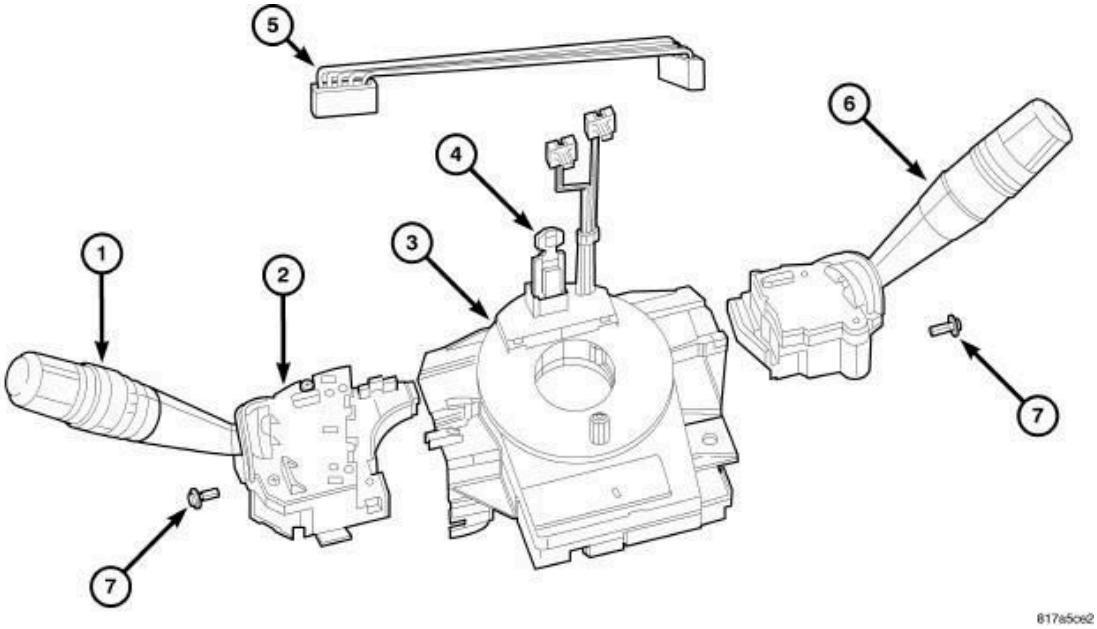

Fig. 19: Steering Control Module
Courtesy of CHRYSLER GROUP, LLC

This vehicle is equipped with a Steering Control Module (SCM) that is internal to the left multifunction switch housing (2). The left (lighting) multifunction switch is located on the left side of the steering column, just below the steering wheel. This switch is the primary control for the interior and exterior lighting systems. The only visible components of the switch are the control stalk (1), control knob and control sleeve that extend through the steering column shrouds on the left side of the column. The remainder of the switch including its mounting provisions and electrical connections are concealed beneath the shrouds.

The switch housing and controls are constructed of molded black plastic. A single screw (7) through a mounting tab integral to the back of the switch housing, and a slide tab integral to the bottom of the switch housing secure the switch to the mounting bracket integral to the clockspring (3). A connector receptacle containing seven terminal pins is integral to the inboard end of the switch housing and connects the SCM through a jumper wire harness (5) directly to the right (wiper) multifunction switch (6). A second connector receptacle containing four terminal pins is integral to the back of the switch housing and connects the SCM to the vehicle electrical system through a dedicated takeout and connector of the instrument panel wire harness.

The SCM cannot be adjusted or repaired. If ineffective or damaged the entire left multifunction switch must be replaced. Refer to **SWITCH, MULTIFUNCTION, LEFT, REMOVAL** . The clockspring (with the multifunction switch mounting bracket), the left multifunction switch (with the SCM), the right multifunction switch and the jumper wire harness are each available for separate service replacement.

OPERATION

OPERATION

The microprocessor-based Steering Control Module (SCM) utilizes integrated circuitry to monitor hard wired analog and multiplexed inputs from both the right and left multifunction switches. In response to those inputs, the internal circuitry of the SCM allow it to transmit electronic message outputs to the ElectroMechanical Instrument Cluster (EMIC) (also known as the Cab

Compartment Node/CCN) over the Local Interface Network (LIN) data bus.

In response to the SCM inputs the internal circuitry and programming of the EMIC, which is also the LIN master module in the vehicle, allow it to control and integrate many electronic functions and features of the vehicle through both hard wired outputs and the transmission of electronic message outputs to other electronic modules in the vehicle over the Controller Area Network (CAN) data bus. Refer to **COMMUNICATION, DESCRIPTION**.

The SCM is connected to both a fused B(+) circuit and a fused ignition switch output (run-start) circuit. It receives a path to ground at all times. These connections allow it to remain functional regardless of the ignition switch position. Any input to the SCM that controls a vehicle system function that does not require that the ignition switch be in the ON position such as turning on the lights, prompts the SCM to wake up and transmit on the LIN data bus.

The hard wired circuits between components related to the SCM may be diagnosed using conventional diagnostic tools and procedures. Refer to the appropriate wiring information. The wiring information includes wiring diagrams, proper wire and connector repair procedures, details of wire harness routing and retention, connector pin out information and location views for the various wire harness connectors, splices and grounds.

However, conventional diagnostic methods will not prove conclusive in the diagnosis of the SCM or the electronic controls and communication between modules and other devices that provide some features of the SCM. The most reliable, efficient and accurate means to diagnose the SCM or the electronic controls and communication related to SCM operation requires the use of a diagnostic scan tool. Refer to the appropriate diagnostic information.

DIAGNOSIS AND TESTING

DIAGNOSIS AND TESTING - STEERING COLUMN MODULE

WARNING: To avoid serious or fatal injury on vehicles equipped with airbags, disable the Supplemental Restraint System (SRS) before attempting any steering wheel, steering column, airbag, seat belt tensioner, impact sensor or instrument panel component diagnosis or service. Disconnect and

isolate the battery negative (ground) cable, then wait two minutes for the system capacitor to discharge before performing further diagnosis or service. This is the only sure way to disable the SRS. Failure to take the proper precautions could result in accidental airbag deployment.

The hard wired circuits between components related to the Steering Control Module (SCM) may be diagnosed using conventional diagnostic tools and procedures. Refer to the appropriate wiring information. The wiring information includes wiring diagrams, proper wire and connector repair procedures, details of wire harness routing and retention, connector pin out information and location views for the various wire harness connectors, splices and grounds.

However, conventional diagnostic methods will not prove conclusive in the diagnosis of the SCM or the electronic controls and communication between modules and other devices that provide some features of the SCM. The most reliable, efficient and accurate means to diagnose the SCM or the electronic controls and communication related to SCM operation requires the use of a diagnostic scan tool. Refer to the appropriate diagnostic information.

MODULE, TRANSMISSION CONTROL

DESCRIPTION

DESCRIPTION

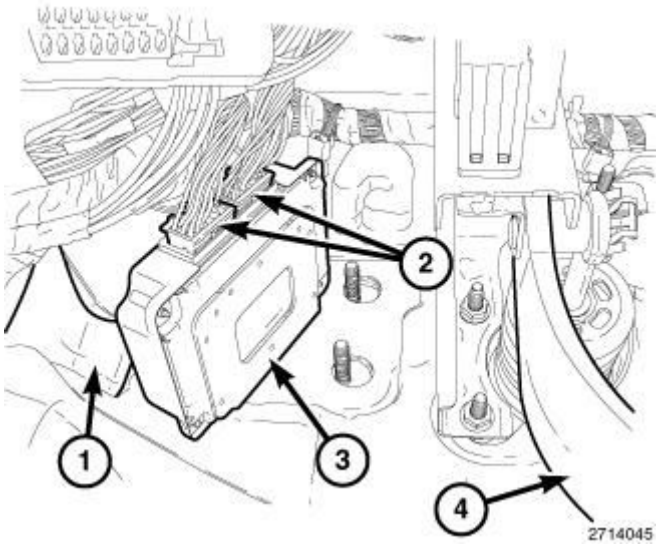

Fig. 20: Transmission Control Module (TCM)

Courtesy of CHRYSLER GROUP, LLC

The transmission control module (TCM) (3) is inside the car, behind the instrument panel to the right of the left kick panel (1) where the clutch pedal would be located. New controllers are shipped with generic software but need to be initialized for the vehicle into which it is installed. Refer to **MODULE, TRANSMISSION CONTROL, STANDARD PROCEDURE**.

OPERATION

OPERATION

SHIFT CONTROL

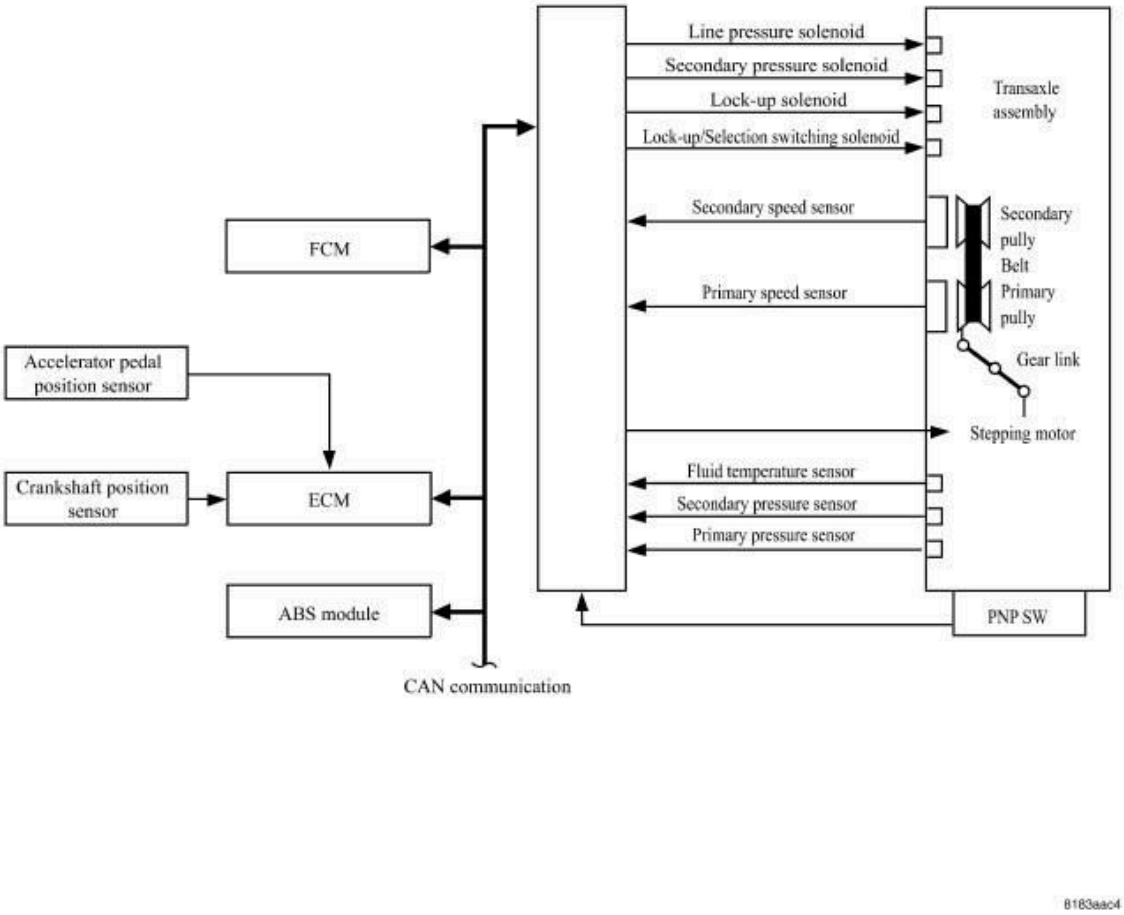

Fig. 21: CAN Communication Schematic
Courtesy of CHRYSLER GROUP, LLC

In order to select the gear ratio which can obtain the driving force in accordance with driver's intention and the vehicle condition, TCM monitors the driving conditions, such as the vehicle speed and the throttle position and selects the optimum gear ratio, and determines the gear change steps to the gear ratio. Then it sends the command to the stepping motor, and controls the flow-in/flow-out of line pressure to/from the primary pulley to determine the position of the moving-pulley and control the gear ratio.

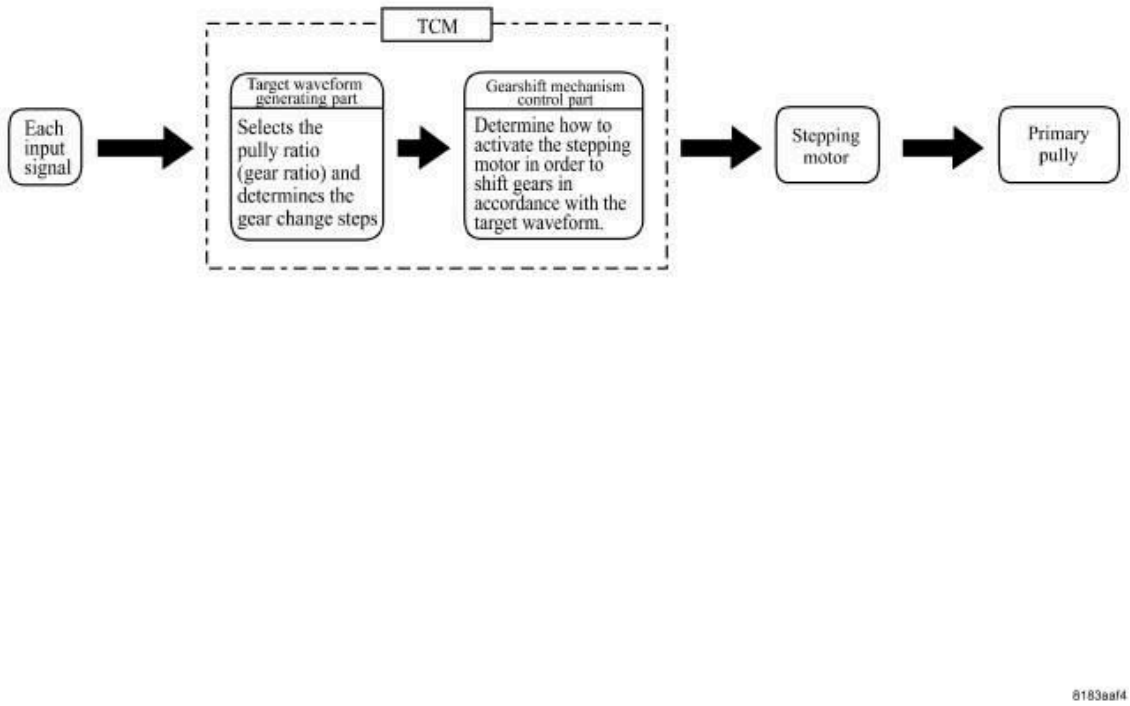

Fig. 22: Gear Ratio
Courtesy of CHRYSLER GROUP, LLC

Selection of the gear ratio is set for every position separately.

"DRIVE" POSITION

Shifting is available over all the ranges of gear ratios from the lowest to the

highest.

WHEN USING THE MANUAL MODE (VEHICLES WITH THE MANUAL MODE)

When the manual mode switch is turned ON, the fixed changing gear line is set. By moving the switch to + side or - side, shift change is like a M/T and selects from a range of 6 pre-programmed gear ranges.

By limiting the shift to the area nearest the low side of the gear ratio, a larger driving force and engine brake are secured.

DOWNHILL ENGINE BRAKE CONTROL

When a downhill condition is detected while the accelerator pedal is released, the engine brake will be increased by downshifting so as to limit acceleration of the vehicle. Also, if uphill is detected, acceleration performance is improved by limiting the shift area on the highest side of the gear ratio.

ACCELERATION CONTROL

According to vehicle speed and a increase of accelerator pedal angle, driver's request for acceleration as well as driving conditions are measured. At the time of starting or acceleration while moving, this function improves in acceleration feeling by making the engine speed proportionate to the vehicle speed. Even at the time of slower acceleration, a shift map which can gain a larger driving force is chosen for compatibility of mileage with driveability.

LINE PRESSURE AND SECONDARY PRESSURE CONTROL

Control of line pressure and secondary pressure with a high degree of accuracy has reduced friction and improved fuel economy.

NORMAL FLUID PRESSURE CONTROL

The line pressure and the secondary pressure are optimized depending on driving conditions, on the basis of the throttle position, the engine speed, the primary pulley (input) revolution speed, the secondary pulley (output) revolution speed, the stop lamp SW signal, the PNP switch signal, the lock-up signal, the voltage, the target gear ratio, the fluid temperature, and the fluid pressure.

SECONDARY PRESSURE FEEDBACK CONTROL

When controlling the normal fluid pressure or the fluid pressure at the time of

selection, the secondary pressure can be set more accurately by using the fluid pressure sensor to detect the secondary pressure and performing the feedback control.

LOCK-UP CONTROL

The lock-up applied gear range has been expanded by locking up the torque converter at a lower vehicle speed than conventional A/T models.

SELECTION CONTROL

When selecting between N (P) and D (R) position, the optimum operating pressure is set on the basis of the throttle position, the engine speed, and the secondary pulley (output) revolution speed to lessen the select shock.

CAN COMMUNICATION

Real-time communications (signal exchanges) are maintained among the control units such as the CVT, C/U, ECM, combination meter etc. Each unit is controlled optimally depending on vehicle driving conditions while sharing information and in cooperating with the other control units.

In CAN (Controller Area Network) communication, control units are connected with two communication lines (CAN-H line, CAN-L line) allowing a high rate of information to be transmitted by fewer wirings. Each control unit transmits/receives data but selectively reads required data only.

INPUTS AND OUTPUTS

Item		Shift Control	Line Pressure Control	Selection Control	Lock-up Control	CAN Communication Control	Fail-sa Functi (Note
	Engine speed signal		X	X	X	X	X
	Accelerator pedal position signal	X	X	X	X	X	X
	Closed throttle position	X			X	X	

	signal						
	Stop lamp SW signal	X	X		X	X	X
	Primary pressure sensor		X				
	Secondary pressure sensor		X	X			X
Input	Fluid temperature sensor	X	X	X	X		X
	Primary speed sensor	X	X		X		X
	Secondary speed sensor	X	X	x	X		X
	PNP switch	X	X	X	X		X
	Line pressure solenoid value		X	x			X
	Secondary pressure solenoid value		X	X			X
Output	Lock-up solenoid value			X	X		X
	Lock-up/Selection switching solenoid value			X	X		X
	Stepping motor	X					X

ENGINE/CVT INTEGRATION CONTROL (CAN COMMUNICATION CONTROL)

In order to improve gearshift feeling and to perform controls such as prevention of engine slowdown, engine power control signals are intercommunicated between the engine ECM and the TCM, and real-time cooperative controls depending on vehicle driving conditions are performed.

TCM sends information such as fast slowdown signals, lock-up signals, torque down request signals to ECM, while receiving information such as torque down permission/prohibition signals, lock-up permission/prohibition signals, throttle position from ECM.

FAIL-SAFE FUNCTION

If an unexpected signal is sent from any sensor, switch, solenoid etc., this function controls the CVT to make driving as smooth as possible.

SECONDARY SPEED SENSOR

The shift pattern is changed in accordance with throttle position when an unexpected signal is sent from the output speed sensor (secondary speed sensor) to the TCM. The manual mode position or the sports mode position is inhibited, and the transaxle is put in "D".

PRIMARY SPEED SENSOR

The shift pattern is changed in accordance with throttle position and secondary speed (vehicle speed) when an unexpected signal is sent from the primary speed sensor to the TCM. The manual mode function or the sports mode function is inhibited, and the transaxle is put in "D".

PNP SWITCH

If an unexpected signal is sent from the PNP switch to the TCM, the transaxle is put in "D".

FLUID TEMPERATURE SENSOR

If an unexpected signal is sent from the fluid temperature sensor to the TCM, the gear ratio obtained immediately before receiving the unexpected signal is maintained and the gear ratio is controlled to keep engine speed under 5, 000 rpm (approximately), depending on driving conditions.

SECONDARY PRESSURE SENSOR

If an unexpected signal is sent from the secondary pressure sensor to the TCM, the secondary pressure feedback control is stopped and the offset value obtained immediately before the non-standard condition occurs is used to control line pressure.

LINE PRESSURE SOLENOID

If an unexpected condition of the solenoid is detected by the TCM, the line pressure solenoid is turned OFF to achieve the maximum fluid pressure.

SECONDARY PRESSURE SOLENOID

If an unexpected condition of the secondary solenoid is detected by the TCM, the secondary pressure solenoid is turned OFF to achieve the maximum fluid pressure.

LOCK-UP SOLENOID

If an unexpected condition of the lock-up solenoid is detected by the TCM, the lock-up solenoid is turned OFF to cancel the lock-up.

STEPPING MOTOR

If an unexpected condition of the stepping motor is detected by the TCM, the stepping motor coil phases "A" through "D" are all turned OFF to hold the gear ratio used immediately before the unexpected condition occurred.

LOCK-UP/SELECTION SWITCHING SOLENOID

If an unexpected condition of the solenoid is detected by the TCM, the lock-up/selection switching solenoid is turned OFF to cancel the lock-up.

BACKUP POWER SUPPLY

Transaxle assembly is protected by limiting the engine torque when the memory back-up power supply for controlling from the battery is not supplied to the TCM. Normal status is restored when turning the ignition switch OFF to ON after power is normally supplied

TCM

- 1. Shift control
- 2. Line pressure control

- 3. Selection control
- 4. Lock-up control
- 5. Engine/CVT integration control [CAN communication control]
- 6. Self-diagnosis function
- 7. Fail-safe function

PRIMARY SPEED SENSOR, SECONDARY SPEED SENSOR

Primary Speed Sensor It is installed near the CVT fluid cooler in the transaxle case. It sends rotating speed of the primary pulley (input shaft) to the TCM as a pulse signal.

Secondary Speed Sensor It is installed near the output gear part in the transaxle case. It sends rotating speed of the secondary pulley (output shaft) to the TCM as a pulse signal. TCM converts the pulse signal to vehicle speed.

STANDARD PROCEDURE

STANDARD PROCEDURE - TRANSMISSION CONTROL MODULE INITIALIZATION

NOTE: Refer to the following chart when the Transmission Control Module (TCM) and/or transaxle has been replaced to determine if the TCM memory must be erased.

TCM	Transaxle	Erase Memory?
New Module	Not Replaced	Not Required
Not Replaced	Replaced	Required, Refer to RELEARN, AFTER REPLACING A TRANSAXLE.
Replaced With Used Module	N/A	

INITIAL LEARN (BRAND-NEW MODULE, MEMORY ALREADY CLEAR)

Battery must be connected. If the Totally Integrated Power Module (TIPM) is to be configured, configure the TIPM and then turn ignition key to OFF/LOCKED briefly, then back to RUN. The shifter must be in PARK or NEUTRAL, engine not running.

1. Turn the ignition key to RUN for 4 seconds to allow reading of new values.
2. Turn ignition key to OFF/LOCKED for 2 seconds to allow storing new values in EEROM.
3. Turn the ignition key to RUN, with scan tool clear DTCs.
4. Turn ignition key to OFF/LOCKED for 2 seconds.
5. After at least 7 seconds, read DTCs.
6. If DTCs resets, refer to **DIAGNOSIS AND TESTING** .

RELEARN, AFTER REPLACING A TRANSAXLE

1. Turn ignition key to RUN.
2. Clear learning memory using the scan tool.
3. Turn the ignition key to OFF/LOCKED for 2 seconds.
4. Turn the ignition key to RUN Clear DTCs.
5. Turn the ignition key to OFF/LOCKED for 2 seconds.
6. Turn ignition key to RUN.
7. After at least 7 seconds, read DTCs.
8. If DTCs resets, refer to **DIAGNOSIS AND TESTING** .

REMOVAL

REMOVAL

NOTE: LHD model shown in illustrations. RHD model TCM located in similar area on Left side of interior.

1. Disconnect negative battery cable.

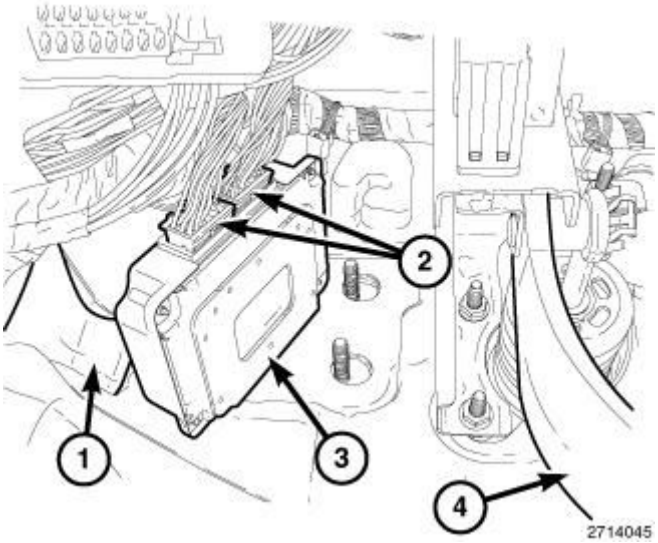

Fig. 23: Transmission Control Module (TCM)
Courtesy of CHRYSLER GROUP, LLC

NOTE: The TCM is located on the bulkhead near the left kick panel.

2. If equipped, remove silencer pad on left side.

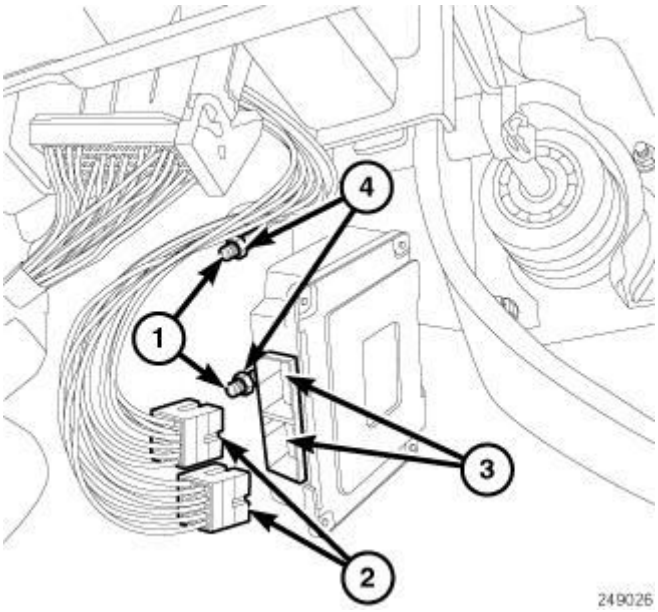

Fig. 24: TCM Unplugged
Courtesy of CHRYSLER GROUP, LLC

3. Disconnect the two electrical connectors (2) at the TCM (3).
4. Position body harness to the side to gain access to the TCM mounting studs.
5. Remove the two nuts that hold the TCM to the bulkhead.

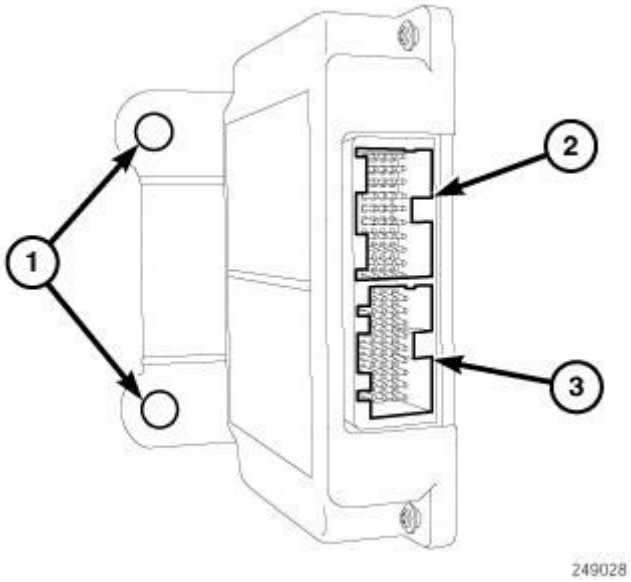

Fig. 25: TCM Out
Courtesy of CHRYSLER GROUP, LLC

6. Slide the TCM off the mounting studs (1) and remove from the vehicle.

INSTALLATION

INSTALLATION

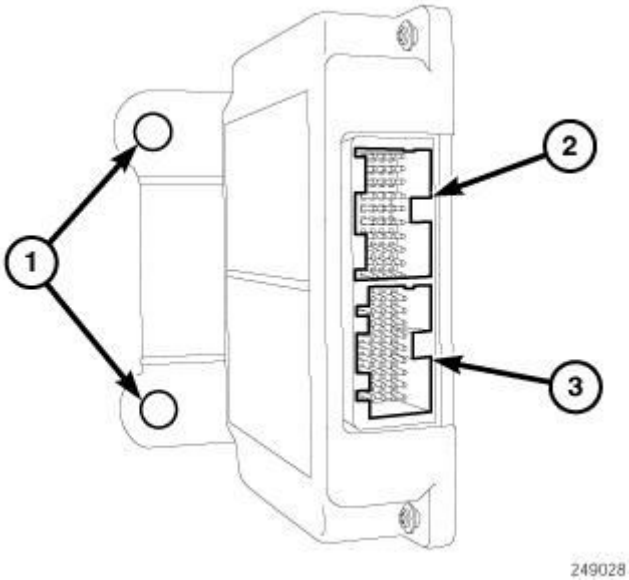

Fig. 26: TCM Out
Courtesy of CHRYSLER GROUP, LLC

1. Install the TCM mounting bracket holes (1) over the two studs on the bulkhead.

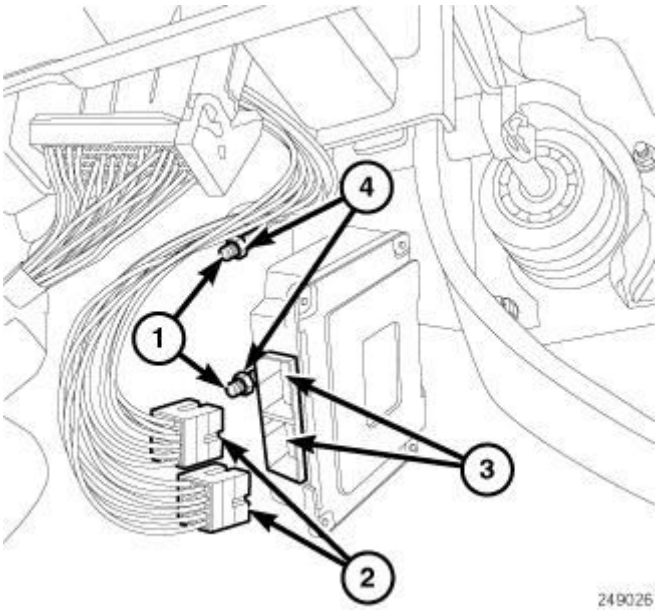

Fig. 27: TCM Unplugged
Courtesy of CHRYSLER GROUP, LLC

2. Install the two nuts (4) to mounting studs (1) on the bulkhead.
3. Position the body harness aside to gain access to the mounting studs.
4. Tighten nuts (4) to 15 N.m (133 in. lbs.).
5. Plug in electrical connectors (2) to TCM (3).
6. If a new TCM is installed a learn procedure must be performed.

2014 ACCESSORIES AND EQUIPMENT

Frame and Bumpers - Compass & Patriot

BUMPERS

SPECIFICATIONS

SPECIFICATIONS

SPECIFICATIONS

DESCRIPTION	N.m	Ft. Lbs.	In. Lbs.
Front bumper reinforcement nuts	23	17	-
Rear bumper reinforcement nuts	23	17	-

FASCIA, FRONT

REMOVAL

REMOVAL

COMPASS AND PATRIOT

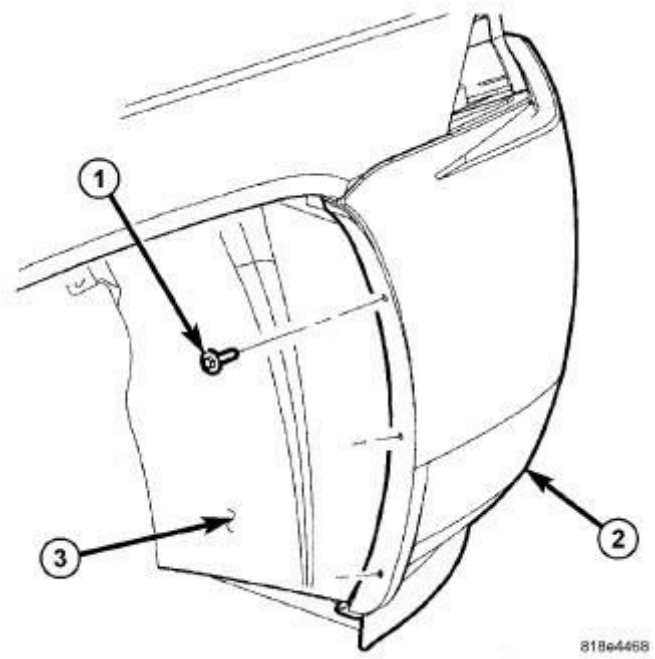

Fig. 1: Front 1
Courtesy of CHRYSLER GROUP, LLC

1. Remove the fascia (2) to splash shield screws (1).

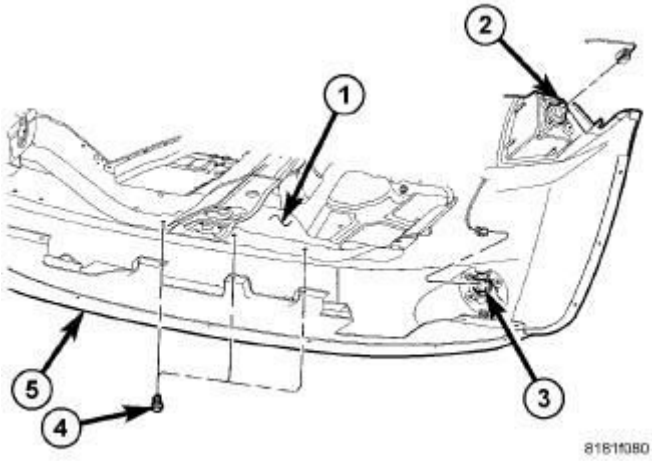

Fig. 2: Front Fascia 2
Courtesy of CHRYSLER GROUP, LLC

2. Remove the lower fasteners (4) and disconnect the electrical connectors (2 and 3).

COMPASS

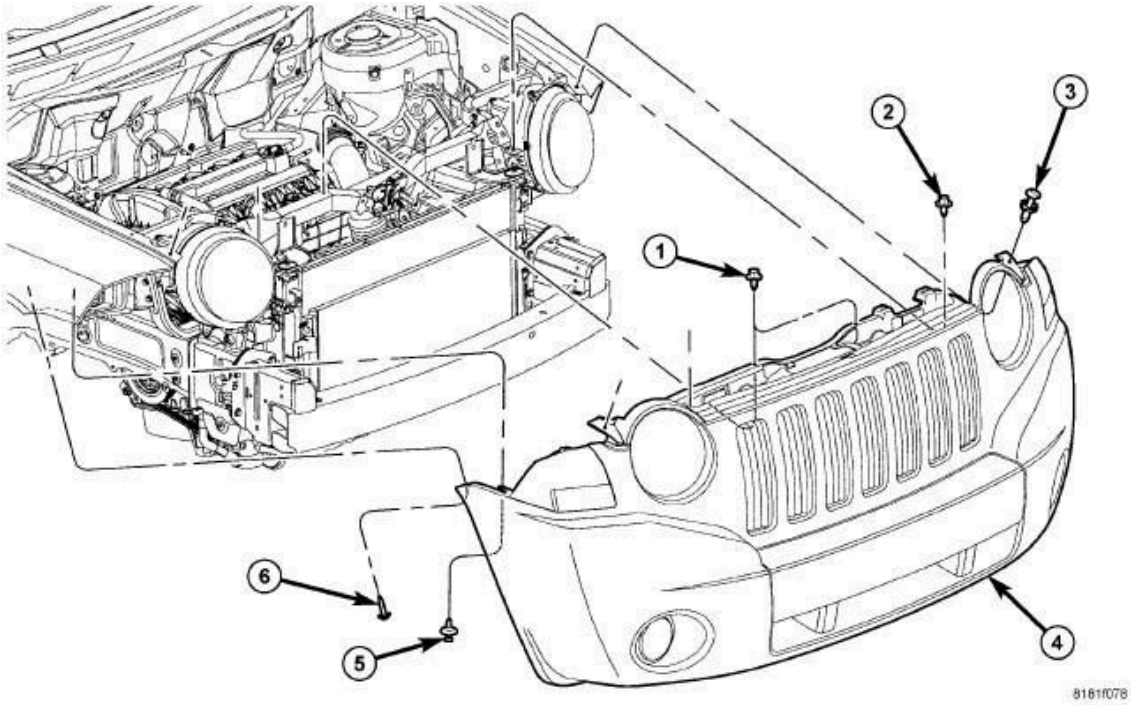

Fig. 3: Front Fascia Components (Compass)
Courtesy of CHRYSLER GROUP, LLC

1. Remove the fasteners (1 and 2).
2. Remove the push pin fasteners (3).

3. Loosen the fasteners (5 and 6) and remove the fascia (4).

PATRIOT

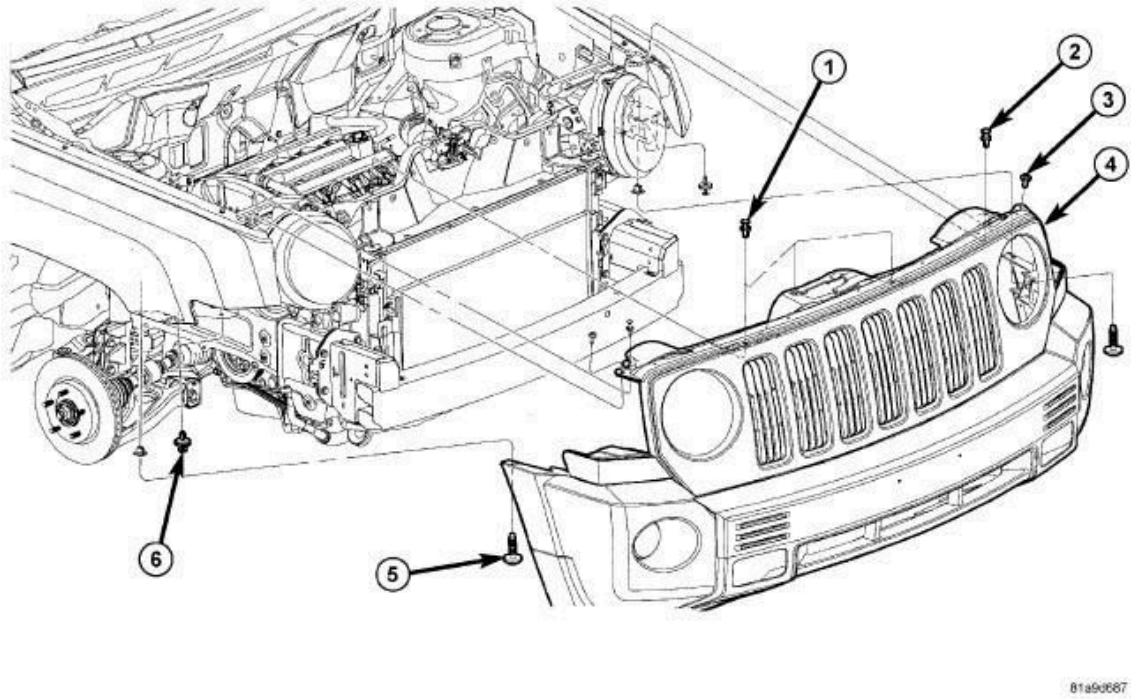

Fig. 4: Front Fascia Components (Patriot)
Courtesy of CHRYSLER GROUP, LLC

1. Remove the push pin fasteners (6) from the wheel wells.
2. Remove the screws (5) from the wheel wells.
3. Remove the screws (3).
4. Remove the push pin fasteners (1 and 2) and remove the fascia (4).

INSTALLATION

INSTALLATION

COMPASS

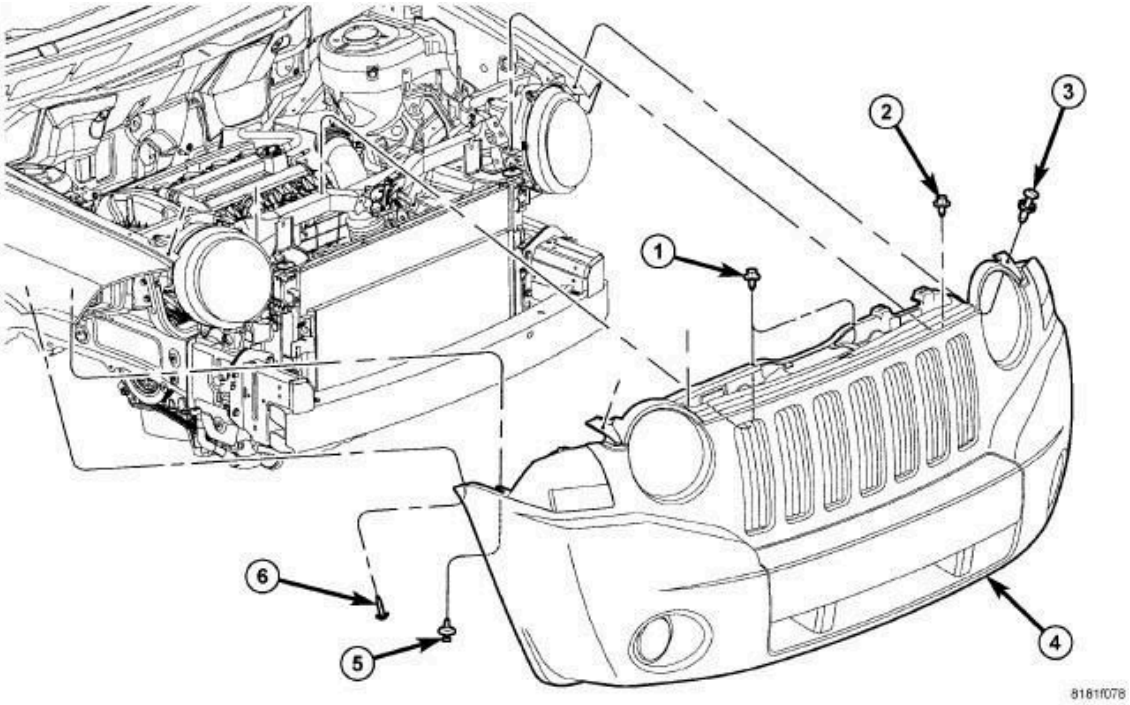

Fig. 5: Front Fascia Components (Compass)
Courtesy of CHRYSLER GROUP, LLC

1. Install the fascia (4) onto the fasteners (5 and 6).
2. Install the fasteners (1 and 2).
3. Install the push pin fasteners (3).

PATRIOT

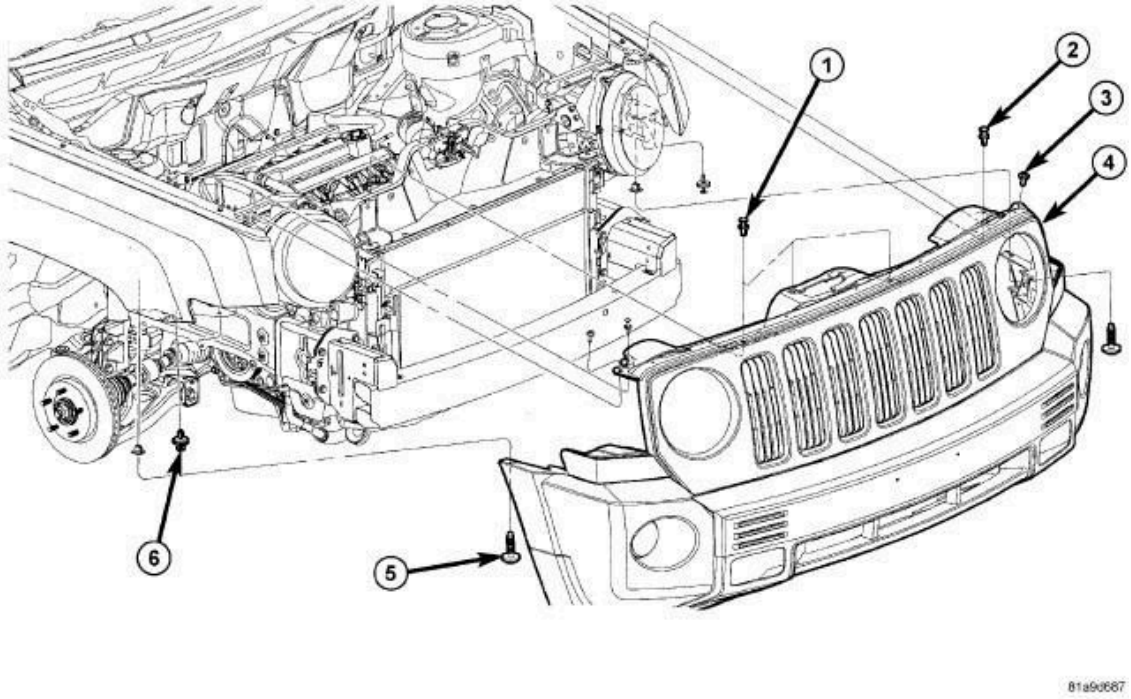

Fig. 6: Front Fascia Components (Patriot)
Courtesy of CHRYSLER GROUP, LLC

1. Position the fascia (4) onto the front of the vehicle and install the push pin fasteners (1 and 2).
2. Install the screws (3).
3. Install the screws (5) from inside the wheel wells.
4. Install the push pin fasteners (6) from inside the wheel wells.

COMPASS AND PATRIOT

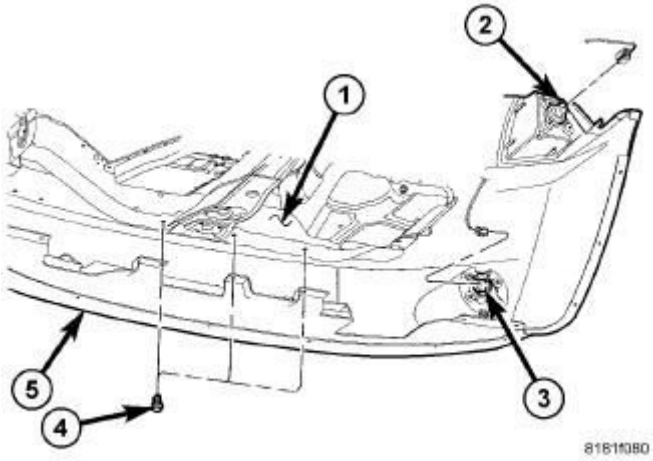

Fig. 7: Front Fascia 2
Courtesy of CHRYSLER GROUP, LLC

1. Install the fasteners (4) and connect the electrical connectors (2 and 3).

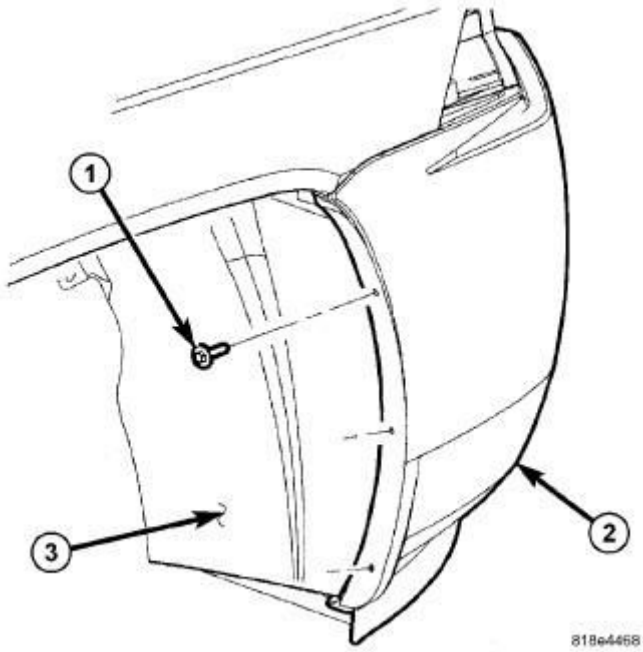

Fig. 8: Front 1
Courtesy of CHRYSLER GROUP, LLC

2. Install the fascia (2) to splash shield screws (1).

FASCIA, REAR

REMOVAL

REMOVAL

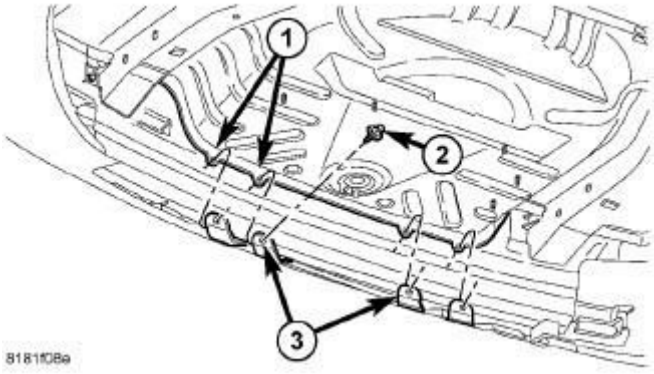

Fig. 9: Rear Fascia 2
Courtesy of CHRYSLER GROUP, LLC

1. Remove the lower fasteners (3).

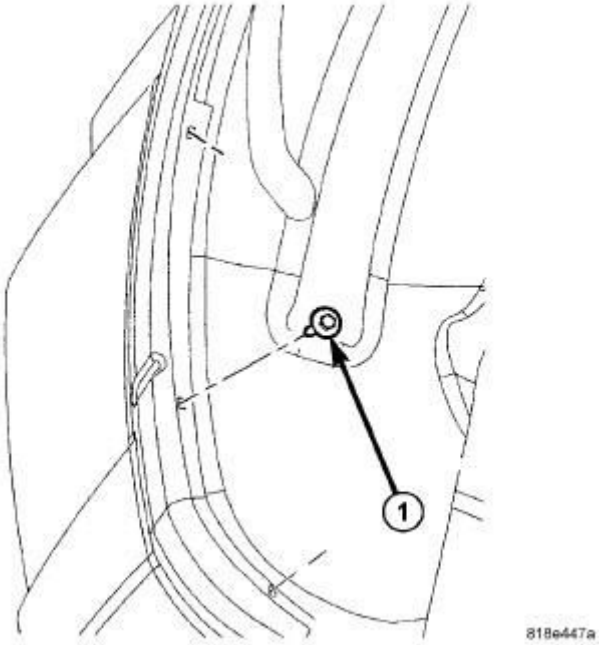

Fig. 10: Rear Fascia Splash Shield Fasteners
Courtesy of CHRYSLER GROUP, LLC

2. Remove the fascia to splash shield fasteners (1).

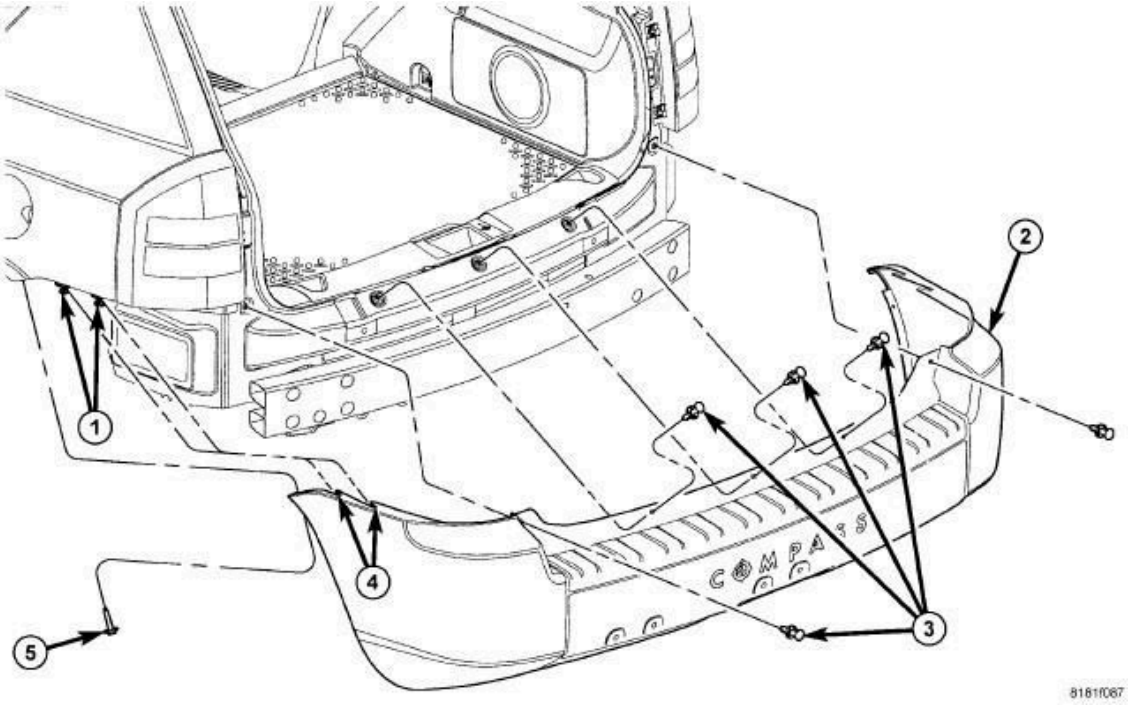

Fig. 11: Rear Fascia Components
Courtesy of CHRYSLER GROUP, LLC

3. Loosen the fasteners (1 and 5)

4. Remove the push pin fasteners (3) and remove the fascia (2).

INSTALLATION

INSTALLATION

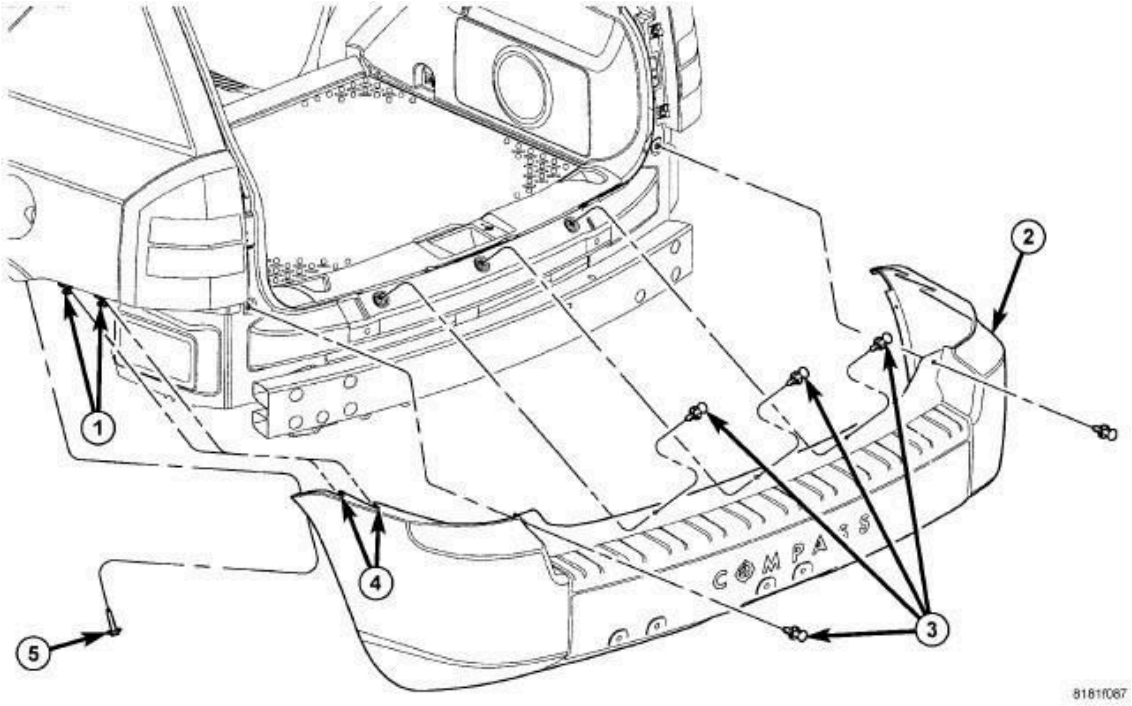

Fig. 12: Rear Fascia Components
Courtesy of CHRYSLER GROUP, LLC

1. Install the fascia and line up the slots (4) with the screws (1 and 5) and seat fully.
2. Tighten the screws (1 and 5).
3. Install the push pin fasteners (3).

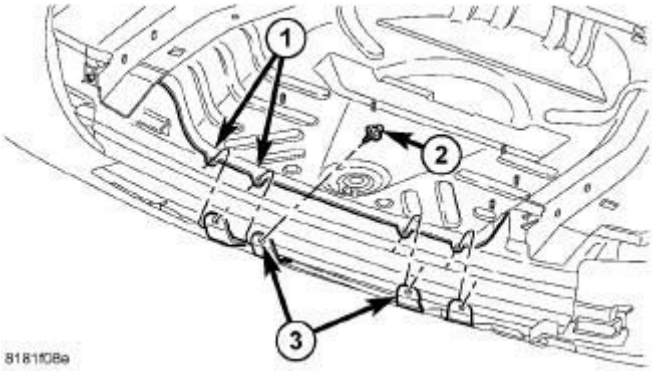

Fig. 13: Rear Fascia 2
Courtesy of CHRYSLER GROUP, LLC

4. Install the lower fasteners (3).

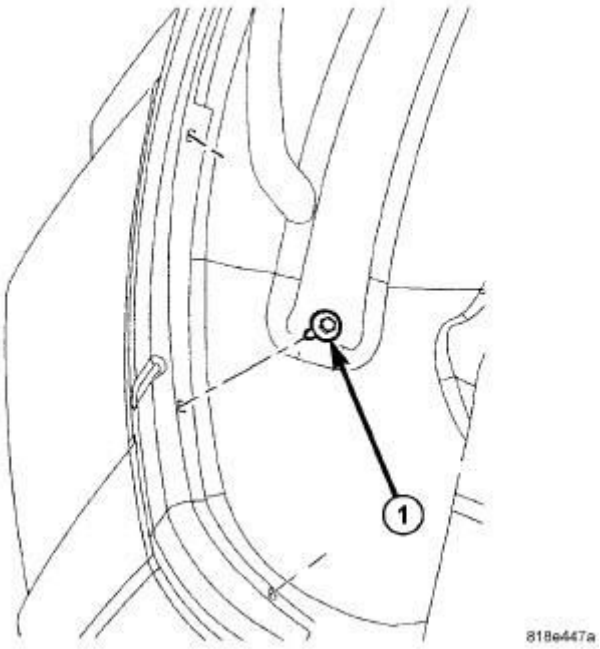

Fig. 14: Rear Fascia Splash Shield Fasteners
Courtesy of CHRYSLER GROUP, LLC

5. Install the fascia to splash shield screws (1).

REINFORCEMENT, BUMPER, FRONT

REMOVAL

REMOVAL

1. Remove fascia. Refer to **FASCIA, FRONT, REMOVAL**.

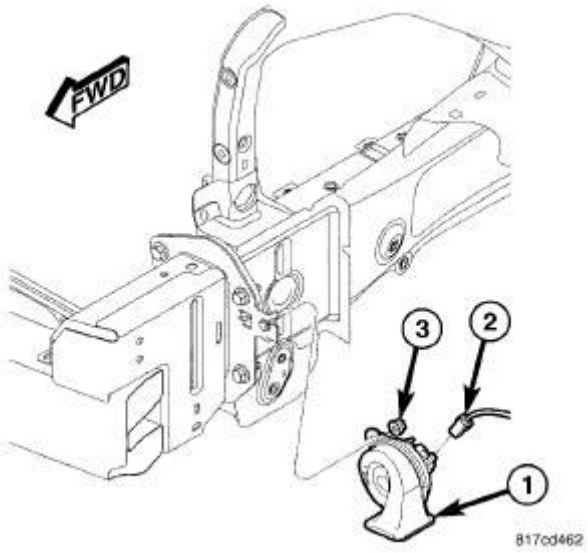

Fig. 15: Horn
Courtesy of CHRYSLER GROUP, LLC

2. Disconnect wire connector (2) and remove horn (1). Refer to **HORN, REMOVAL** .

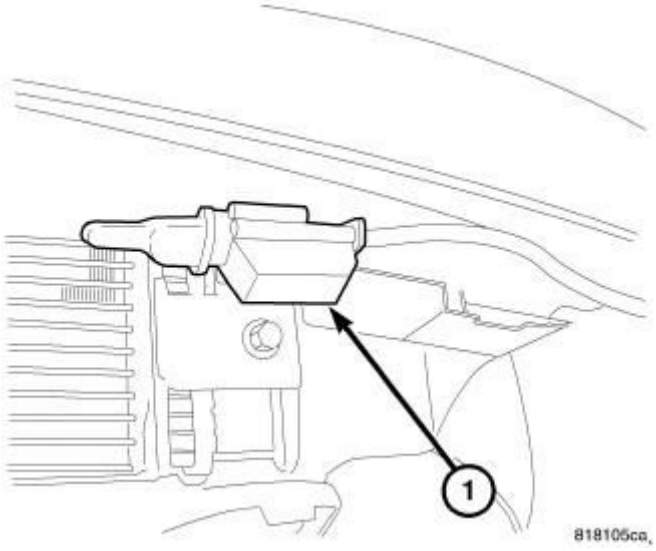

Fig. 16: Wire Harness Push Pin
Courtesy of CHRYSLER GROUP, LLC

3. Remove wire harness push pin fastener (1).

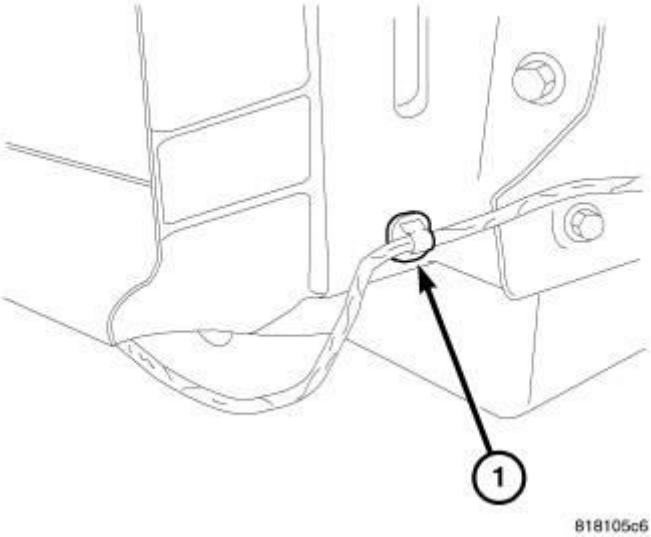

Fig. 17: Wire Connector
Courtesy of CHRYSLER GROUP, LLC

4. Remove wire harness (1) from bottom of bumper reinforcement.

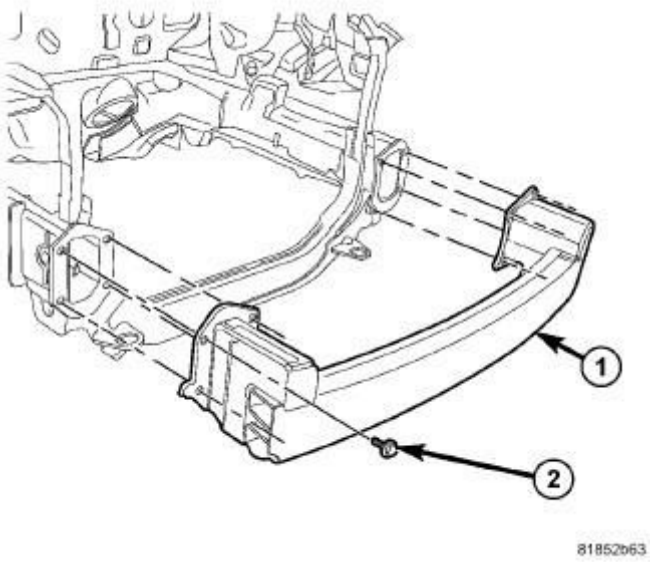

Fig. 18: Front Bumper Reinforcement
Courtesy of CHRYSLER GROUP, LLC

5. Remove 8 fasteners (2) from bumper reinforcement (1).

INSTALLATION

INSTALLATION

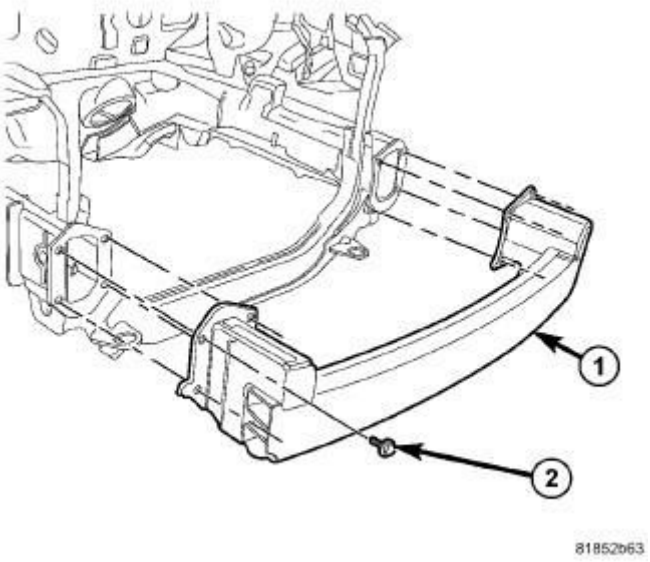

Fig. 19: Front Bumper Reinforcement
Courtesy of CHRYSLER GROUP, LLC

1. Install fasteners (2) and tighten to 23 N.m (17 ft. lbs.).

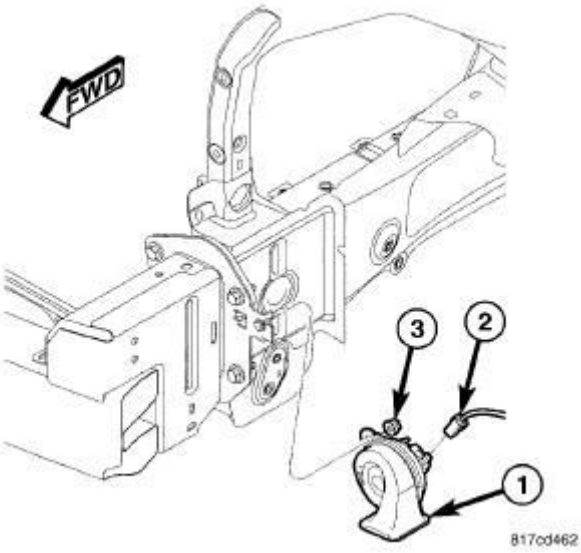

Fig. 20: Horn
Courtesy of CHRYSLER GROUP, LLC

2. Connect wire connector (2) and install horn (1). Refer to **HORN, INSTALLATION** .

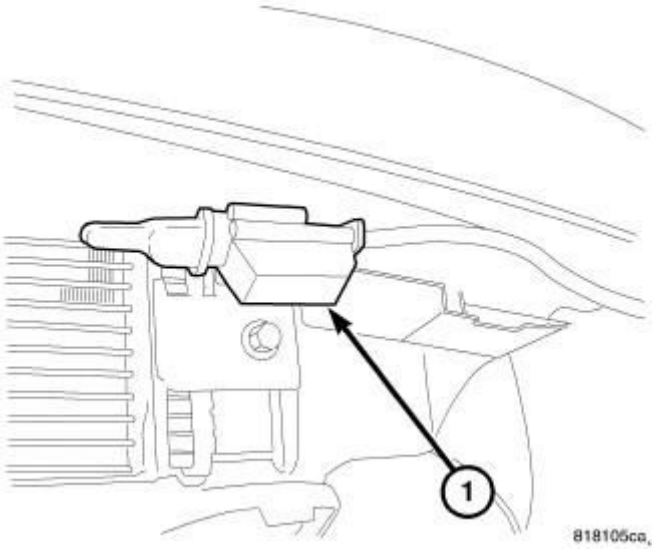

Fig. 21: Wire Harness Push Pin
Courtesy of CHRYSLER GROUP, LLC

3. Install wiring harness push pin.

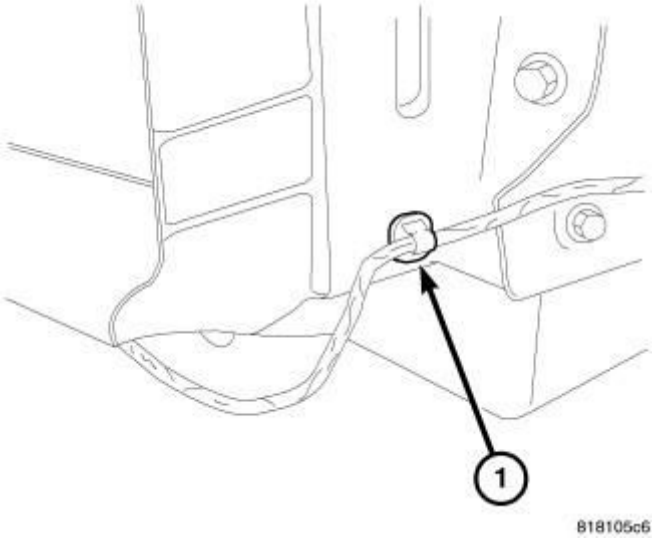

Fig. 22: Wire Connector
Courtesy of CHRYSLER GROUP, LLC

4. Install wire connector (1) to bumper reinforcement.
5. Install front fascia. Refer to **FASCIA, FRONT, INSTALLATION**.

REINFORCEMENT, BUMPER, REAR

REMOVAL

REMOVAL

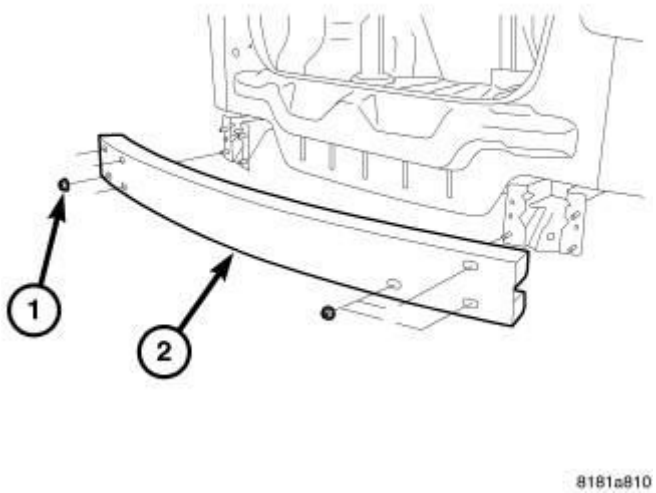

Fig. 23: Rear Bumper Reinforcement
Courtesy of CHRYSLER GROUP, LLC

1. Remove rear fascia. Refer to **FASCIA, REAR, REMOVAL**.
2. Remove seven bumper reinforcement nuts (1).
3. Remove bumper reinforcement (2).

INSTALLATION

INSTALLATION

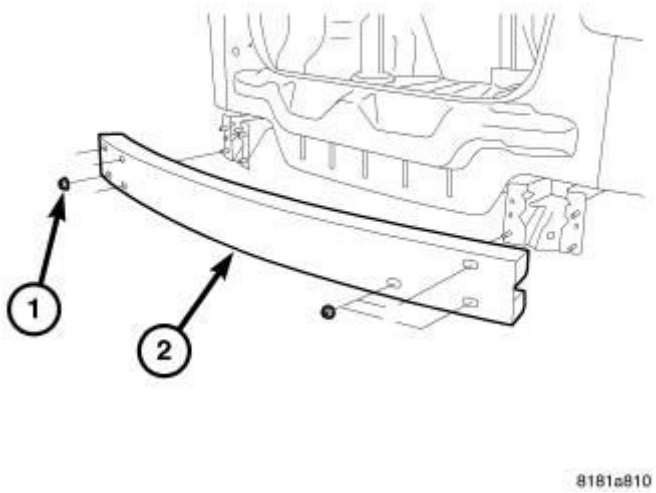

Fig. 24: Rear Bumper Reinforcement
Courtesy of CHRYSLER GROUP, LLC

1. Place bumper reinforcement (2) up to frame locations.
2. Install seven nuts (1) and tighten to 23 N.m (17 ft. lbs.).

3. Install fascia. Refer to **FASCIA, REAR, INSTALLATION**.

FRAME

WARNING

USE OF HEAT DURING REPAIR

WARNING: Chrysler Group LLC engineering's position on the use of heat during collision repair is as follows:

- **Any body panel or frame component damaged which is to be repaired and reused, must be repaired using the "cold straightening" method. No heat may be used during the straightening process.**
- **During rough straightening prior to panel replacement, damaged panels or frame components may be heated to assist in body/frame realignment. The application of heat must be constrained to the parts which will be replaced and not allowed to affect any other components.**

This "no heat" recommendation is due to the extensive use of high strength and advanced high strength steels in Chrysler Group LLC products. High-strength materials can be substantially and negatively affected from heat input which will not be obviously known to the repairer or consumer.

Ignoring these recommendations may lead to serious compromises in the ability to protect occupants in a future collision event, reduce the engineered qualities and attributes, or decrease the durability and reliability of the vehicle.

This statement supersedes any previously released information by the Chrysler Group LLC.

Failure to follow these instructions may result in serious or fatal injury.

WARNINGS

WARNING: Use an Occupational Safety and Health Administration (OSHA) approved breathing filter, when spraying paint or solvents in a confined area. Failure to follow these instructions may result in possible serious or fatal injury.

- **avoid prolonged skin contact with petroleum or alcohol based cleaning solvents.**
- **do not stand under a hoisted vehicle that is not properly supported on safety stands. Failure to follow these instructions may result in possible serious or fatal injury.**

CAUTION: When holes are drilled or punched in an inner body panel, verify the depth of space to the outer body panel, electrical wiring or other components. Damage to the vehicle can result.

- **do not weld exterior panels unless combustible material on the interior of vehicle is removed from the repair area. Fire or hazardous conditions, can result.**
- **always have a fire extinguisher ready for use when welding.**
- **disconnect the negative (-) cable clamp from the battery when servicing electrical components that are live when the ignition is off. Damage to electrical system can result.**
- **do not use abrasive chemicals or compounds on painted surfaces. Damage to finish can result.**
- **do not use harsh alkaline based cleaning solvents on painted or upholstered surfaces.**

Damage to finish or color can result.

- **do not hammer or pound on plastic trim panel when servicing interior trim. Plastic panels can break.**

RESTRAINT WARNINGS

WARNING: **To avoid potential physical injury, or damage to sensitive electronic circuits and systems, always disconnect and isolate the battery negative (ground) cable and the positive cable, then ground the positive cable to discharge the ORC capacitor before performing any welding operations on the vehicle. Failure to take the proper precautions could result in accidental airbag deployment, possible damage to the Supplemental Restraint System (SRS) circuits and components, and possible damage to other electronic circuits and components. Whenever a welding process is being performed within 30 cm (12 in) of an electronic module/harness, then that module/harness should be relocated out of the way, or disconnected. Always protect against component or vehicle damage from weld spatter by using weld blankets and screens. Failure to follow these instructions may result in serious or fatal injury.**

WARNING: **To avoid serious or fatal injury on vehicles equipped with the Supplemental Restraint System (SRS), never attempt to repair the electrically conductive circuits or wiring components related to the SRS for which there is no MOPAR wiring repair kit. It is important to use ONLY the recommended splicing kit and procedure. For applicable and available MOPAR wiring repair kits, please visit the MOPAR Connector Web Site at the following address on the internet:**

(http://dto.vftis.com/mopar/disclaimer.asp). Inappropriate repairs can compromise the conductivity and current carrying capacity of those critical electrical circuits, which may cause SRS components not to deploy when required, or to deploy when not required. Only minor cuts or abrasions of wire and terminal insulation where the conductive material has not been damaged, or connector insulators where the integrity of the latching and locking mechanisms have not been compromised may be repaired using appropriate methods.

WARNING: **To avoid serious or fatal injury during and following any seat belt or child restraint anchor service, carefully inspect all seat belts, buckles, mounting hardware, retractors, tether straps, and anchors for proper installation, operation, or damage. Replace any belt that is cut, frayed, or torn. Straighten any belt that is twisted. Tighten any loose fasteners. Replace any belt that has a damaged or ineffective buckle or retractor. Replace any belt that has a bent or damaged latch plate or anchor plate. Replace any child restraint anchor or the unit to which the anchor is integral that has been bent or damaged. Never attempt to repair a seat belt or child restraint component. Always replace damaged or ineffective seat belt and child restraint components with the correct, new and unused replacement parts listed in the Chrysler Mopar® Parts Catalog. Failure to follow these instructions may result in possible serious or fatal injury.**

WARNING: **To avoid serious or fatal injury on vehicles equipped with airbags, disable the Supplemental Restraint System (SRS) before attempting any steering wheel, steering column, airbag, Occupant**

Classification System (OCS), seat belt tensioner, impact sensor or instrument panel component diagnosis or service. Disconnect and isolate the battery negative (ground) cable, then wait two minutes for the system capacitor to discharge before performing further diagnosis or service. This is the only sure way to disable the SRS. Failure to follow these instructions may result in accidental airbag deployment.

WARNING: **To avoid potential physical injury or damage to sensitive electronic circuits and systems, always disconnect and isolate the battery negative (ground) cable and the positive cable, then ground the positive cable to discharge the Occupant Restraint Controller (ORC) capacitor before performing any welding operations on the vehicle. Failure to take the proper precautions could result in accidental airbag deployment, possible damage to the Supplemental Restraint System (SRS) circuits and components, and possible damage to other electronic circuits and components. Whenever a welding process is being performed within 12 inches (30 centimeters) of an electronic module or wiring harness, then that module or harness should be relocated out of the way, or disconnected. Always protect against component or vehicle damage from weld spatter by using weld blankets and screens.**

WARNING: **To avoid serious or fatal injury, do not attempt to dismantle an airbag unit or tamper with its inflator. Do not puncture, incinerate or bring into contact with electricity. Do not store at temperatures exceeding 93° C (200° F). An airbag inflator unit may contain sodium azide and potassium nitrate. These materials are poisonous and extremely flammable. Contact with acid, water, or heavy**

metals may produce harmful and irritating gases (sodium hydroxide is formed in the presence of moisture) or combustible compounds. An airbag inflator unit may also contain a gas canister pressurized to over 17.24 kPa (2500 psi). Failure to follow these instructions may result in possible serious or fatal injury.

WARNING: To avoid serious or fatal injury when handling a seat belt tensioner retractor. Exercise proper care to keep fingers out from under the retractor cover and away from the seat belt webbing where it exits from the retractor cover. Failure to follow these instructions may result in possible serious or fatal injury.

WARNING: To avoid serious or fatal injury, replace all Supplemental Restraint System (SRS) components only with parts specified in the Chrysler Mopar® Parts Catalog. Substitute parts may appear interchangeable, but internal differences may result in inferior occupant protection.

WARNING: To avoid serious or fatal injury, the fasteners, screws, and bolts originally used for the Supplemental Restraint System (SRS) components must never be replaced with any substitutes. These fasteners have special coatings and are specifically designed for the SRS. Anytime a new fastener is needed, replace it with the correct fasteners provided in the service package or specified in the Chrysler Mopar® Parts Catalog.

WARNING: To avoid serious or fatal injury when a steering column has an airbag unit attached, never place the column on the floor or any other surface with

the steering wheel or airbag unit face down. Failure to follow these instructions may result in possible serious or fatal injury.

STANDARD PROCEDURE

STANDARD PROCEDURE - FRONT FRAME RAIL TIP REPLACEMENT

CAUTION: This procedure is designed to replace the front frame rail tips that have been damaged in the crush initiator zones. Prior to any cutting, the vehicle must be mounted on the appropriate frame repair equipment (frame rack), checked with three dimensional measuring equipment, and the necessary pull corrections made without the use of heat.

- **If damage remains in the frame beyond the area covered by this service part after the pull, the frame must be replaced in its entirety.**
- **If damage to the front body structure is evident, repair the Front End Sheet Metal (FESM) fender rails as necessary.**

Refer to **FRAME, WARNING** and **FRAME, SPECIFICATIONS**.

CAUTION: Inspect the tire winch assembly for damage. If any one or more of the following are evident, replace the winch assembly.

- **Indications of cracked or bulging plastic.**
- **Housing flanges are bent or cracked.**
- **If winch was loose before repair.**
- **If the rivet heads are separated from the housing in any way.**

1. Before proceeding with this repair procedure review the required service warnings and precautions. Refer to **FRAME, WARNING**.
2. Disconnect and isolate the battery negative cable.

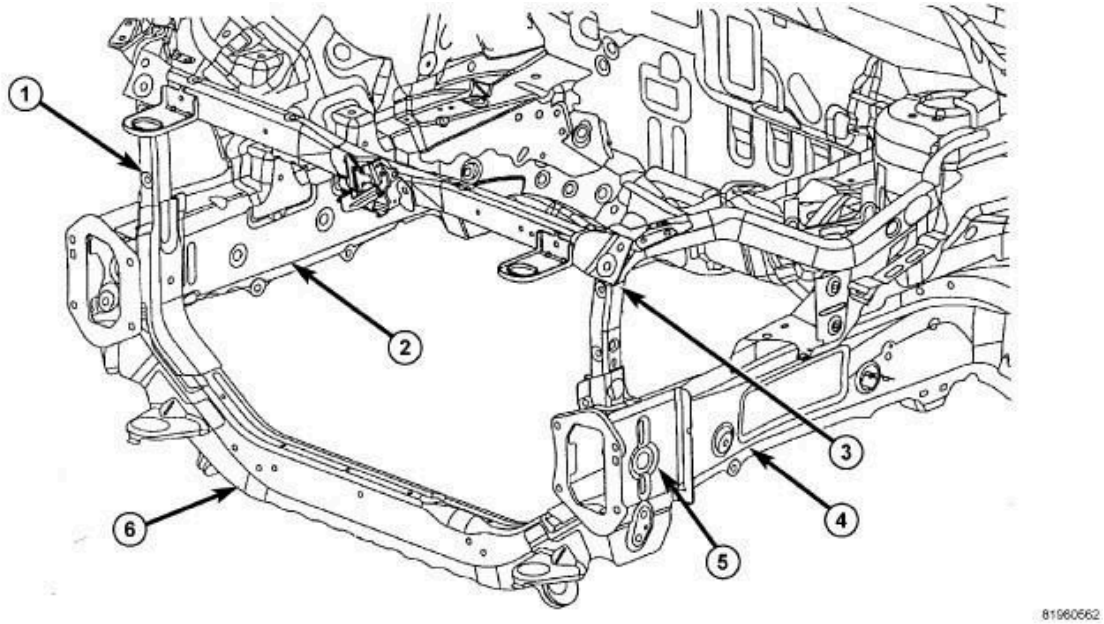

Fig. 25: Front Structure
Courtesy of CHRYSLER GROUP, LLC

1 - FESM STRUCTURE
2 - RIGHT SIDE FRAME RAIL
3 - FESM STRUCTURE
4 - LEFT SIDE FRAME RAIL
5 - FRONT RAIL CAP PANEL (TYPICAL BOTH SIDES)
6 - LOWER RADIATOR CROSSMEMBER

3. With vehicle mounted to appropriate pulling and 3-dimensional measuring equipment, complete the following procedure paying particular attention to body dimensions while fitting and welding panels.
4. Remove bumper components, cooling module, headlamp, and all other components for clear access to repair area.
5. Remove front rail cap panel (5) on damaged rail.
6. Remove welds holding lower radiator crossmember (6) to damaged rail (if crossmember is damaged, remove completely).
7. Remove welds holding FESM structure (1 and 3) to rail (if damaged, remove complete assembly).

MARK EXISTING RAIL AS FOLLOWS:

RIGHT SIDE

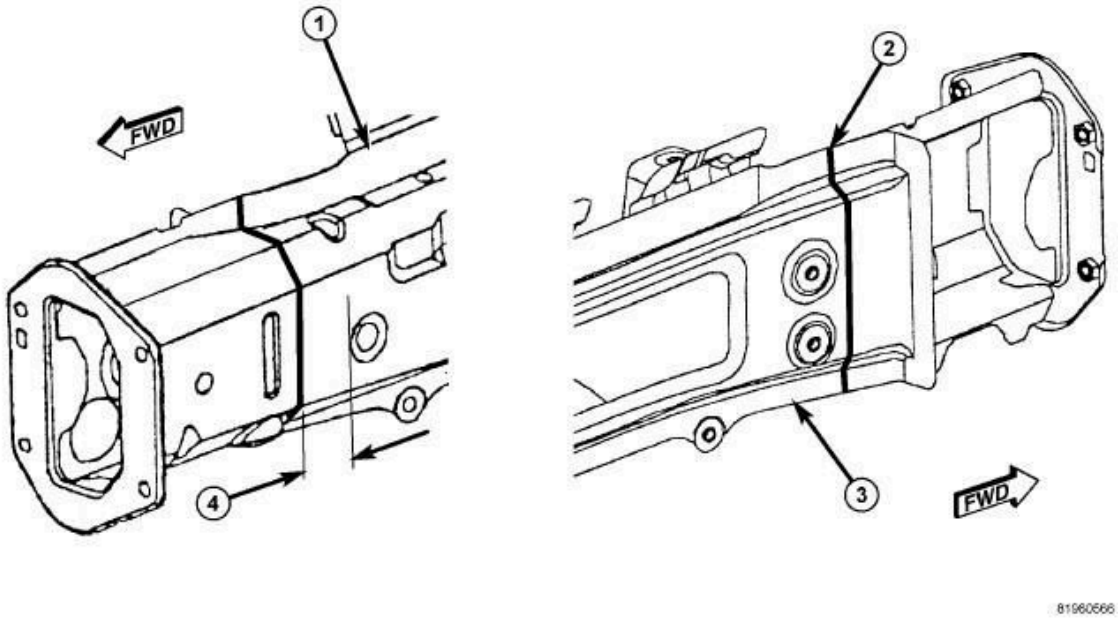

Fig. 26: Right Side Rail
Courtesy of CHRYSLER GROUP, LLC

1 - INNER RAIL
2 - CONTINUE MARK FROM INNER RAIL
3 - OUTER RAIL
4 - MARK LOCATION 50 mm (2 in)

1. On inner rail (1), mark at 50 mm (2 in) (4) forward of the leading edge of flanged hole in rail.
2. On outer rail (3), continue mark (2) from inner rail.

LEFT SIDE

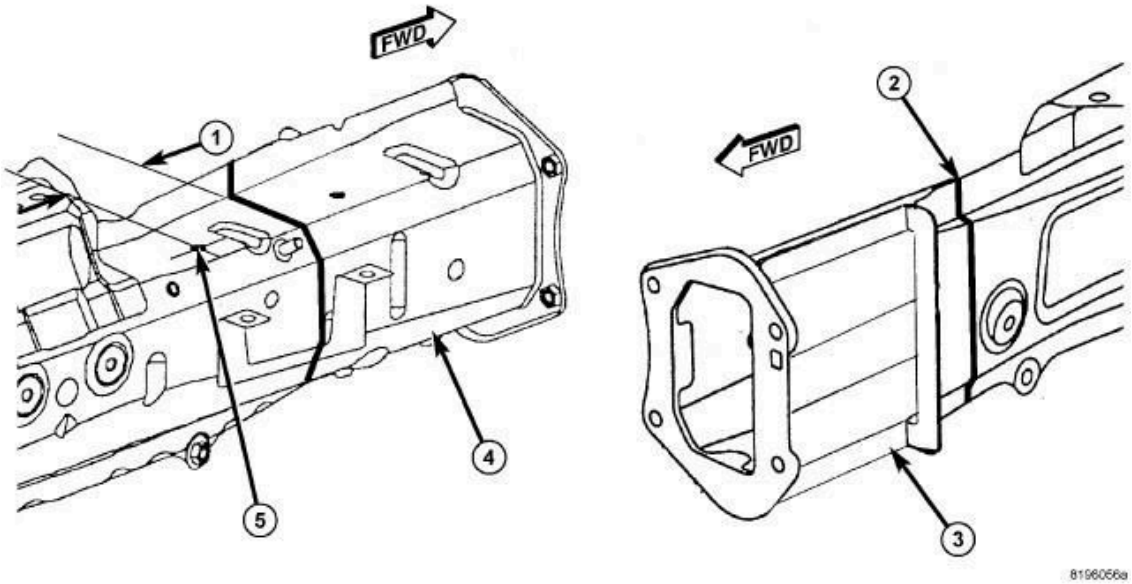

Fig. 27: Left Side Rail
Courtesy of CHRYSLER GROUP, LLC

1 - MARK LOCATION 80 mm (3.2 in)
2 - CONTINUE MARK FROM INNER RAIL
3 - OUTER RAIL
4 - INNER RAIL
5 - REAR BATTERY TRAY WELD NUT

1. On inner rail (4), mark at 80 mm (3.2 in) (1) forward of centerline of rear battery tray weld-nut (located on top of rail).
2. On outer rail (3), continue mark (2) from inner rail (4).

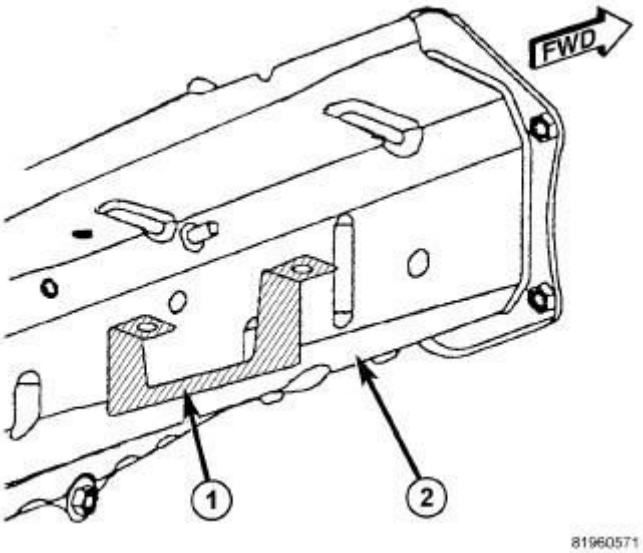

Fig. 28: Battery Tray Bracket
Courtesy of CHRYSLER GROUP, LLC

3. Mark replacement part in same location.
4. On left rail (2), remove bracket (1) located on inner rail.

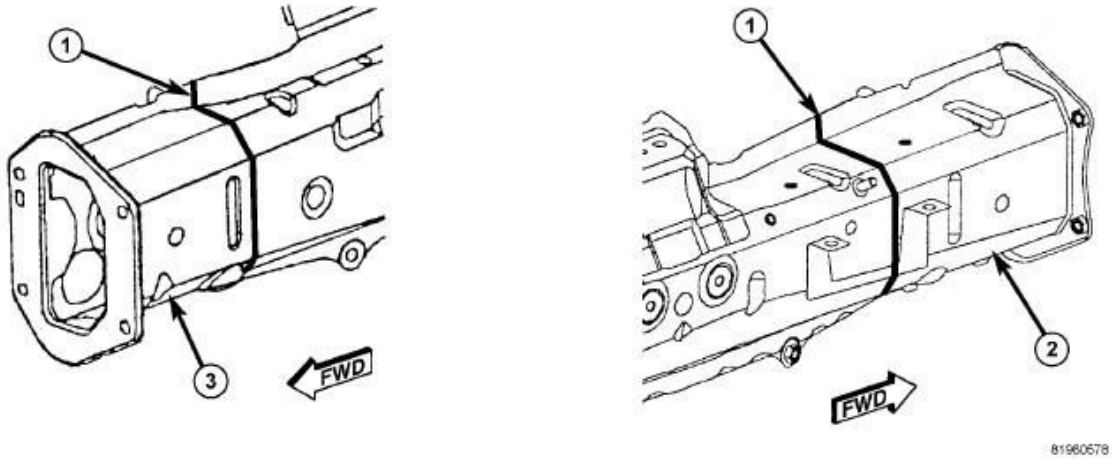

Fig. 29: Cut Locations
Courtesy of CHRYSLER GROUP, LLC

1 - CUT EXISTING PARTS ON FORWARD SIDE OF SCRIBED LINE 2 - LEFT SIDE 3 - RIGHT SIDE

5. Using a cut-off wheel, reciprocating saw or equivalent, cut all existing parts on the forward side of the scribe line (1) using care not to damage the

material that will not be removed.

NOTE: Right rail section location: When installation of new tip is complete, there is a 6 mm (0.25 in) hole on the inner rail at the forward edge of the section joint which may need to be recreated or restored.

NOTE: Left rail section location: When installation of new tip is complete, there is a 10 mm (0.40 in) hole in bottom horizontal surface of rail which may need to be restored.

6. Cut all replacement parts on the rearward side of the scribe line again using care not to make any additional damage but do not discard any material yet.
7. Clean all sharp edges and create a slight taper for weld purposes.

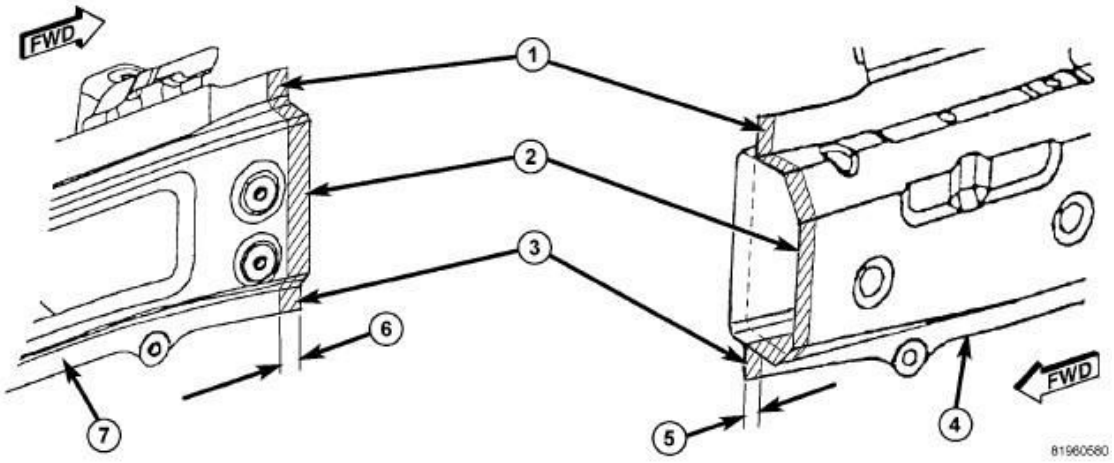

Fig. 30: Cut Locations
Courtesy of CHRYSLER GROUP, LLC

1 - CUT OFF FLANGES
2 - CUT, REMOVE AND SAVE THESE PIECES (WELD BACKERS)
3 - CUT OFF FLANGES
4 - INNER RAIL
5 - CUT STRIP 19 mm (0.75 in)
6 - CUT STRIP 19 mm (0.75 in)
7 - OUTER RAIL

8. From the remaining replacement part, cut a 19 mm (0.75 in) strip (2) from both the inner and outer rail. Clip off the weld flanges (1 and 3), top and bottom, and dress edges. These pieces will be the weld-backer.
9. Prepare welding equipment per the weld chart at the end of procedure. Refer to **FRAME, SPECIFICATIONS**.

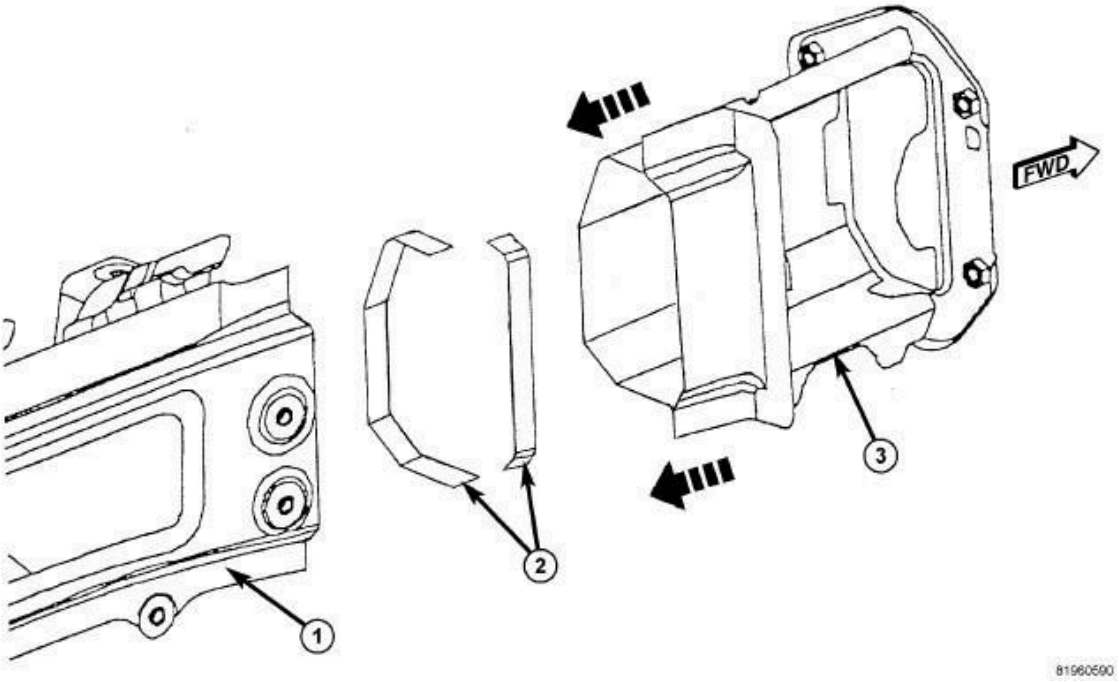

Fig. 31: Frame TIP Assembly
Courtesy of CHRYSLER GROUP, LLC

1 - FRAME RAIL
2 - WELD BACKERS
3 - REPLACEMENT FRAME RAIL TIP

10. Install the weld-backers (2) into the frame rail (1), centering them on cut edge. Clamp and tack the weld-backers in position when proper fit is confirmed.
11. Dry fit the new rail tip (3) to verify alignment, fit and make any adjustments as necessary.

NOTE: Any burned surface coatings will need to be removed prior to application of corrosion preventative coatings.

CAUTION: Shield the surrounding area and components from exposure to the welding spatter and heat.

12. Using the appropriate measuring equipment, verify the front frame rail tip's location in all three (X, Y and Z) planes of space. Refer to **FRAME, SPECIFICATIONS** and adjust if required.
13. Weld using a skip-stitch method until the full length of the joint is completed on both the inner and outer rail. To avoid excessive heat buildup, move between inner and outer rail during welding.
14. Dress welds without removing any base material paying particular attention to the mounting surface of the outer rail.
15. Install the bracket removed from the left rail.

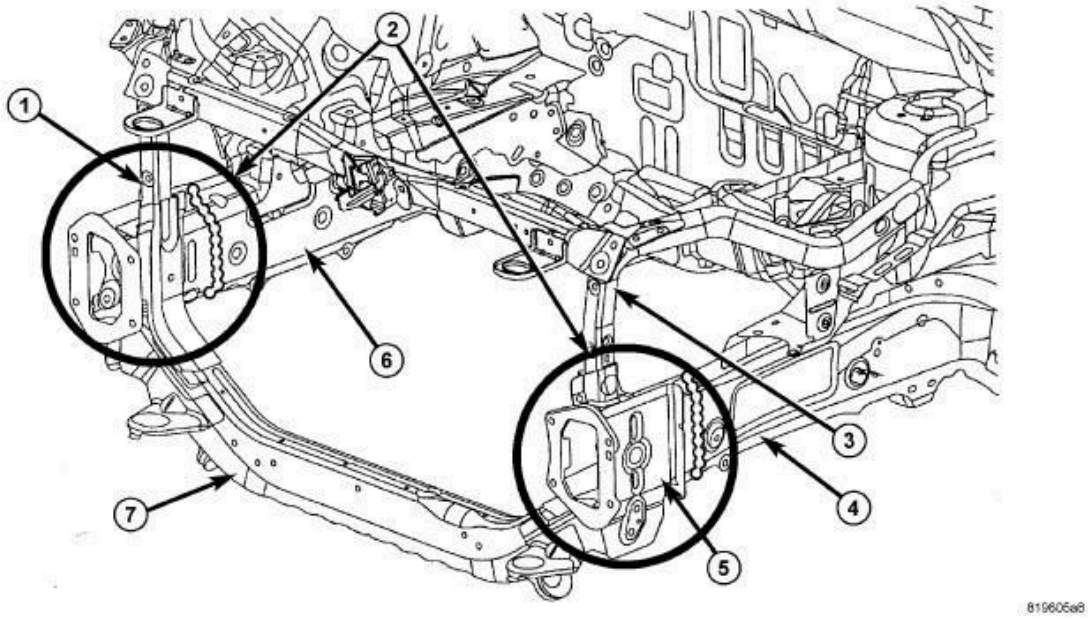

Fig. 32: Repair Complete
Courtesy of CHRYSLER GROUP, LLC

1 - FESM STRUCTURE
2 - CLEAN AND REFINISH REPAIRED AREAS
3 - FESM STRUCTURE
4 - LEFT SIDE FRAME RAIL
5 - FRONT RAIL CAP PANEL
6 - RIGHT SIDE FRAME RAIL
7 - LOWER RADIATOR CROSSMEMBER

16. Either install new or reposition the lower radiator crossmember (7) and FESM structure (1 and 3) and clamp in place and weld.
17. Install new front rail cap panel (5).
18. Clean all repaired areas and apply appropriate refinish and corrosion protection materials.

SPECIFICATIONS

FASTENER TORQUE

FASTENER TORQUE SPECIFICATIONS

DESCRIPTION	N.m	Ft. Lbs.	In. Lbs.
Ball joint stud pinch bolt	82	60	-
Brake Flex Hose Trailing Link Mounting Nut	15	11	-
Brake flex hose trailing link mounting screw	23	17	-
Cradle bolts front, rear, inboard and outboard	110	81	-
Crossmember Mounting Bolts	150	111	-
Crossmember rear roll mount through bolt	65	48	-
Engine Anti Roll Bolt	65	48	-
Front Fore/aft inboard and outboard crossmember bolts	78	58	-
Front Fore/aft rearward crossmember bolt	129	95	-
Hub nut	244	180	-
Lower control arm front pivot bolts (Built before 8/1/08)	135	100	-
Lower control arm front pivot bolts (Built after 8/1/08)	160	118	
Lower control arm rear isolator bushings	183	135	-
Lower Control Arm Trailing Link Bolt Nut	95	70	-
Lower link bolts at cradle	90	70	-
Lower strut bolts	99	73	-
Power steering line brackets	8	-	70
Rear Fore/aft cross member bolts	129	95	-
Rear roll mount rearward crossmember bolts	153	112	-

Stabilizer bar bushing bolts	61	45	-
Stabilizer bar cushion retainer	28	20	-
Stabilizer bar link nuts	58	43	-
Steering gear mounting bolts	70	52	-
Toe link cam bolts	35	26	-
Trailing link bushing bolts	110	81	-
Upper Control Arm Trailing Link Bolt Nut	95	70	-
Upper link bolts at cradle	90	70	-

FRAME DIMENSIONS

Frame dimensions are listed in metric scale. All dimensions are from center to center of Principal Locating Point (PLP), or from center to center of PLP and fastener location.

VEHICLE PREPARATION-

Position the vehicle on a level work surface. Using screw or bottle jacks, adjust the vehicle PLP heights to the specified dimension above a level work surface. Vertical dimensions can be taken from the work surface to the locations indicated were applicable.

INDEX

DESCRIPTION	FIGURE
COMPASS AND PATRIOT	
FRAME DIMENSIONS - PLAN VIEW	Refer to **Fig. 33**.
FRAME DIMENSIONS - SIDE VIEW	Refer to **Fig. 34**.

COMPASS AND PATRIOT

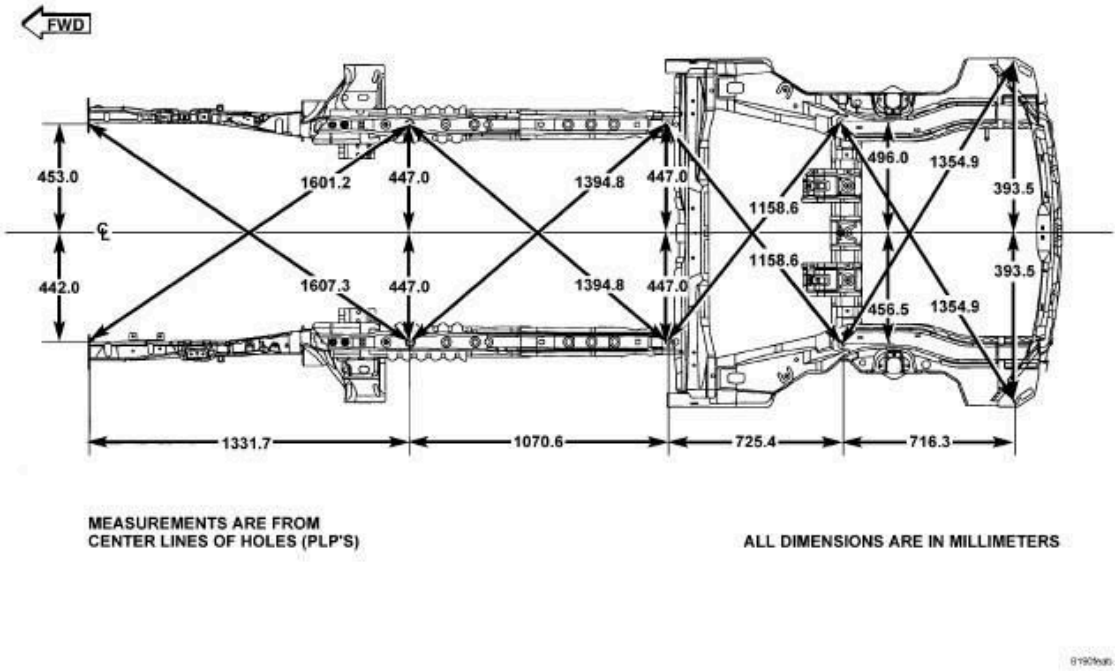

Fig. 33: Frame Dimensions - Plan View
Courtesy of CHRYSLER GROUP, LLC

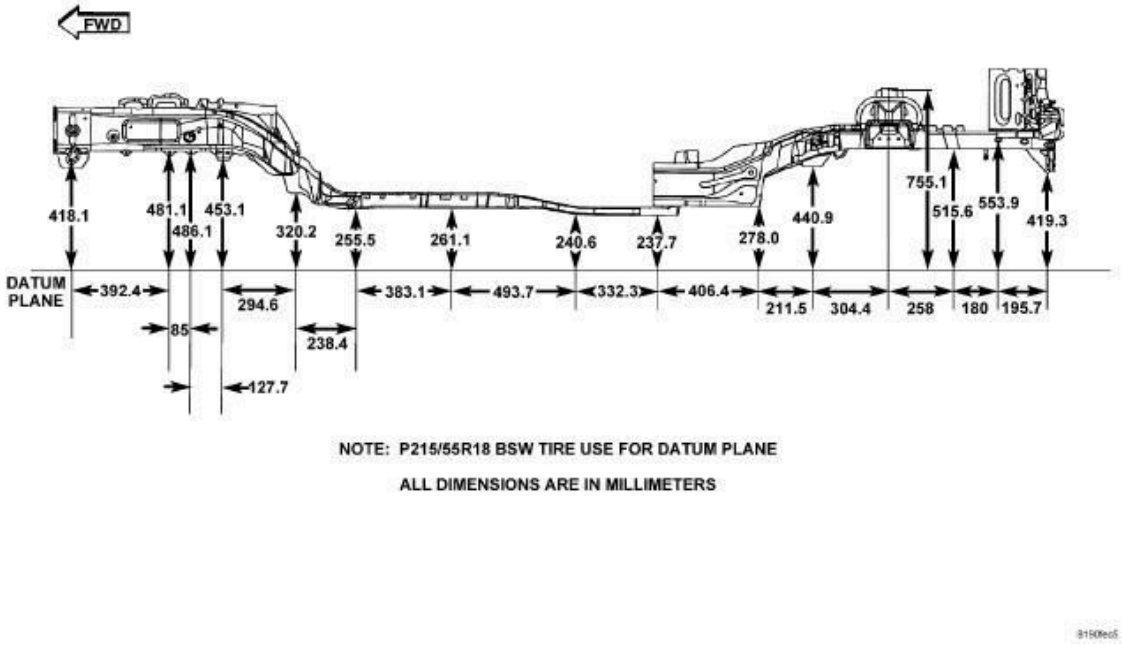

Fig. 34: Frame Dimensions - Side View

Courtesy of CHRYSLER GROUP, LLC

WELDING

CAUTION: All welds should conform to the Chrysler LLC vehicle engineering process standard PS 9472.

WELDING PARAMETERS

WELDING PROCESS	*FLUX CORED ARC	GAS METAL (MIG) ARC	SHIELDED METAL ARC (STICK)	
Material Thickness	1.80 mm	1.80 mm	1.80 mm	1.80 mm
Electrode Type	Lincoln Electric Co. Product No. NP-211 MP	Lincoln Electric Co. Product No. NP-211 MP **(Do Not Substitute)**	AWS ER70S-3 **(Do Not Substitute)**	AWS E 7018
Electrodes Size Inches	.035 Tubular	.045 Tubular	.035 Solid	3/32
Polarity	3/8"	3/8" - 1/2"	1/2" - 5/8"	N/A
Shielding Gas	Electrode "-" Work Piece "+"	Electrode "-" Work Piece "+"	Electrode "+" Work Piece "-"	Electrode "+" Work Piece "-"
Gas Flow Rate	N/A	N/A	75% Ar 25 - 35 CFH	N/A
Wire Feed Speed (inches per minute)	90 - 110 Vertical Down 60 - 70 Flat AND Horizontal	110 - 130 Vertical Down 70 - 90 Flat AND Overhead	245 - 250 Vertical Down 210 - 225 Flat AND Overhead	N/A
Approximate Amperage				
Vertical	110 - 120	160 - 170	175	85 (3/32 Dia.)
Flat AND Overhead	50 - 60	120 - 140	155	90 (3/32 Dia.)

Voltage	15 - 16	15 - 18	19 - 20	
Direction of Welding				
Vertical	Vertical Down Hill (only)	Vertical Down Hill (only)	Vertical Down Hill (only)	Vertical Up Hill (only)
Flat AND Overhead	Flat - Push or Drag	Flat - Push or Drag	Flat - Push or Drag	Flat - Drag

***First choice - Flux Cored Arc Welding Process:** Butt joints - Vertical position welds - maintain end of electrode wire at leading edge of weld puddle while traveling down hill to produce maximum penetration into sleeve. This technique works for Gas Metal Arc (MIG) as well.

NOTE: If MIG welding process is selected the galvannealed coating must be removed from both sides of the material adjacent to the weld joint.

CROSSMEMBER, FRONT FORE AND AFT

REMOVAL

REMOVAL

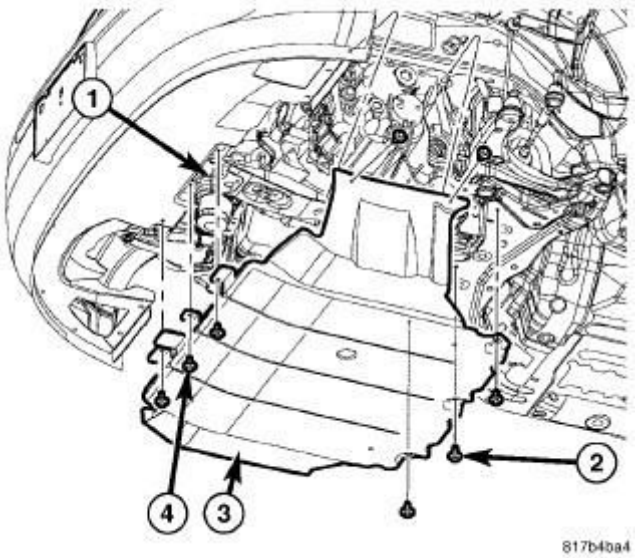

Fig. 35: Belly Pan
Courtesy of CHRYSLER GROUP, LLC

1. Raise and support the vehicle. Refer to **HOISTING, STANDARD PROCEDURE** .

2. Remove the four wheel well screws.
3. If equipped, remove the three front screws (4), the three rear screws (2) and one push pin fastener from the center of the belly pan.

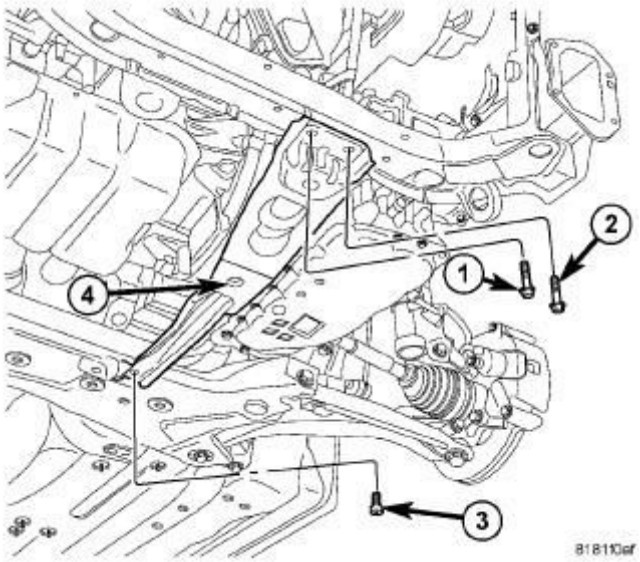

Fig. 36: Fore/Aft Crossmember 1
Courtesy of CHRYSLER GROUP, LLC

4. Remove the crossmember bolts (1, 2 and 3).

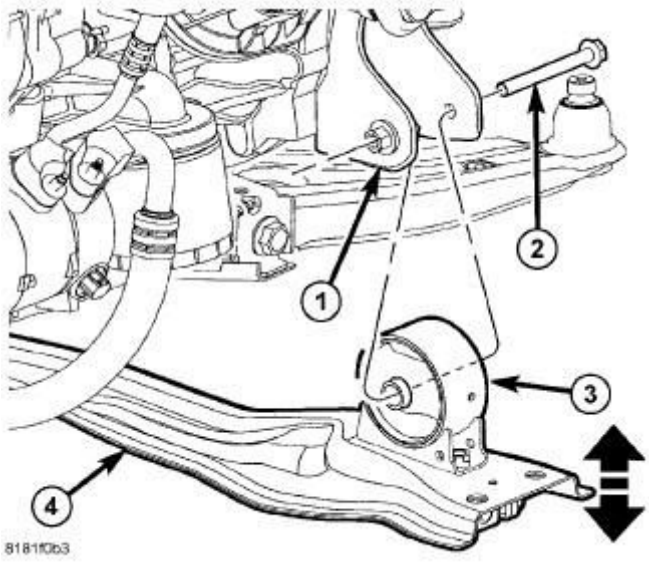

Fig. 37: Fore/Aft Crossmember 2
Courtesy of CHRYSLER GROUP, LLC

5. Remove the engine roll mount (3) through bolt (2) and remove the fore/aft

crossmember (4).

INSTALLATION

INSTALLATION

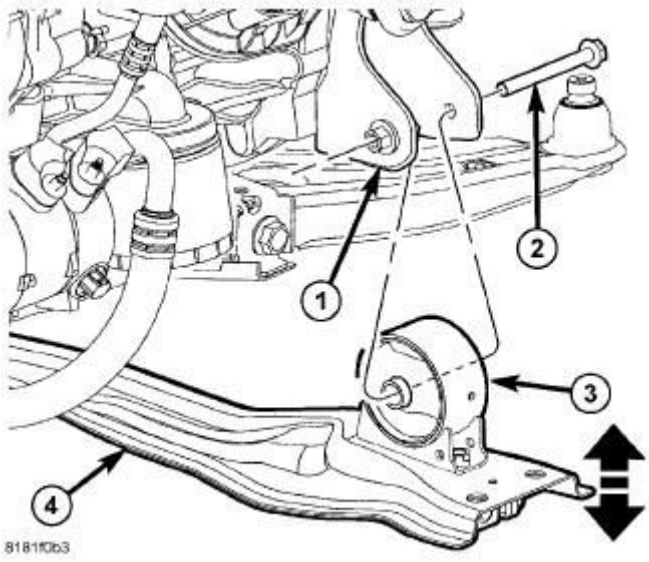

Fig. 38: Fore/Aft Crossmember 2
Courtesy of CHRYSLER GROUP, LLC

1. Install the fore/aft crossmember and install the engine anti-roll mount (3) through bolt (2).

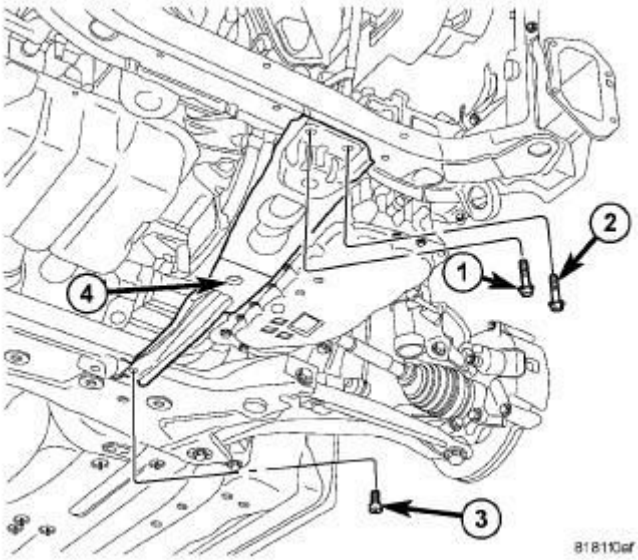

Fig. 39: Fore/Aft Crossmember 1
Courtesy of CHRYSLER GROUP, LLC

2. Install the bolts (1, 2 and 3), and tighten using the following sequence:
   a. Tighten the bolt (1) to 78 N.m (58 ft. lbs.).
   b. Tighten the bolt (2) to 78 N.m (58 ft. lbs.).
   c. Tighten the bolt (3) to 129 N.m (95 ft. lbs.).

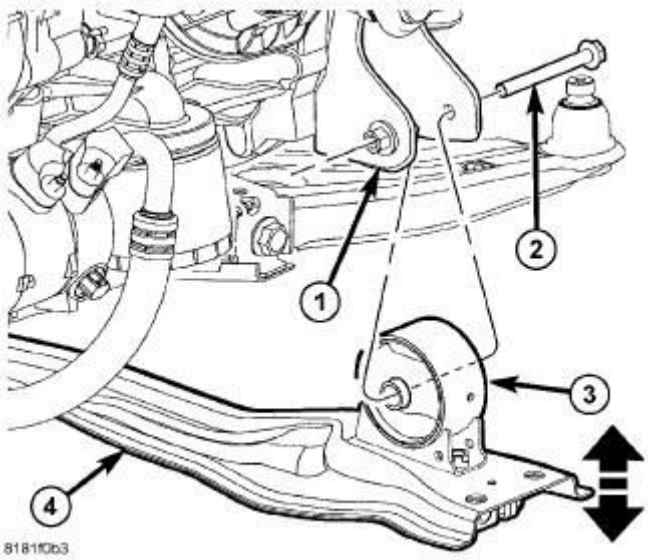

Fig. 40: Fore/Aft Crossmember 2
Courtesy of CHRYSLER GROUP, LLC

3. Tighten the bolt (2) to 65 N.m (48 ft. lbs.).

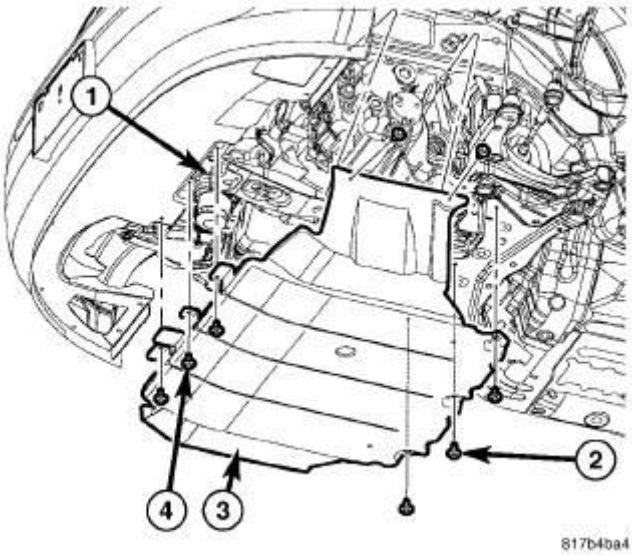

Fig. 41: Belly Pan
Courtesy of CHRYSLER GROUP, LLC

4. If equipped, install the belly pan.
5. Install the three front screws (4), the three rear screws (2) and on push pin fastener into the center of the belly pan.

CROSSMEMBER, FRONT SUSPENSION

REMOVAL

REMOVAL

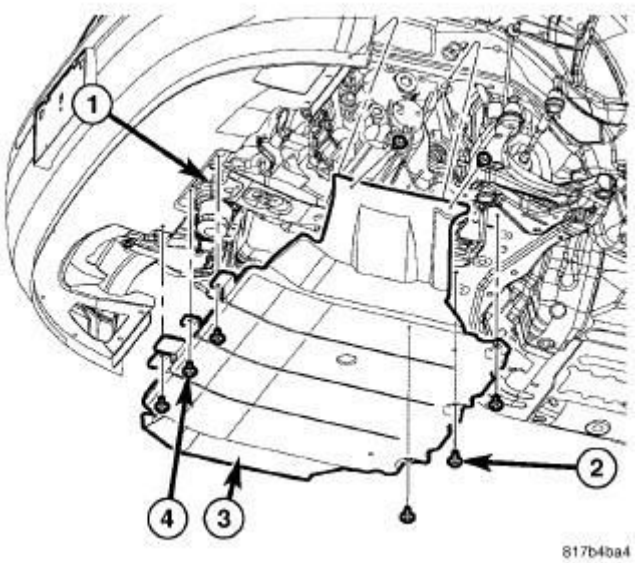

Fig. 42: Belly Pan
Courtesy of CHRYSLER GROUP, LLC

1. Raise and support the vehicle. Refer to **HOISTING, STANDARD PROCEDURE** .
2. Remove the four wheel well screws.
3. If equipped, remove the three front screws (4), the three rear screws (2) and one push pin fastener from the center of the belly pan.

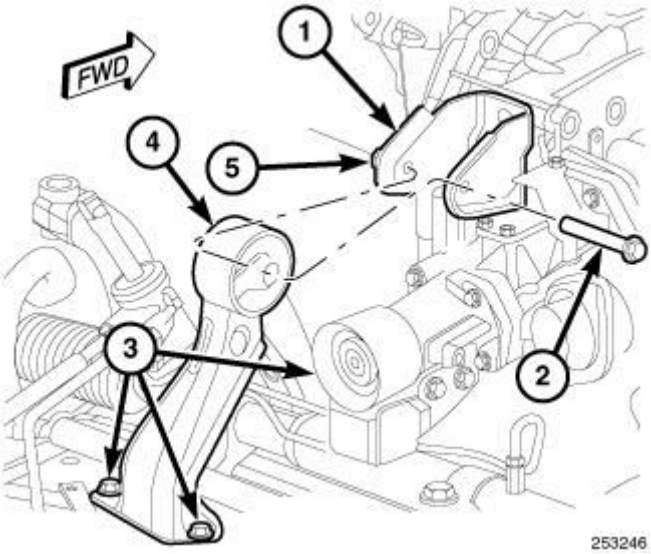

Fig. 43: Rear Roll Mount
Courtesy of CHRYSLER GROUP, LLC

4. Remove the rear roll mount (4) through bolt (2).
5. Remove the three bolts (3) attaching the rear roll mount (5) to the crossmember and remove the mount.

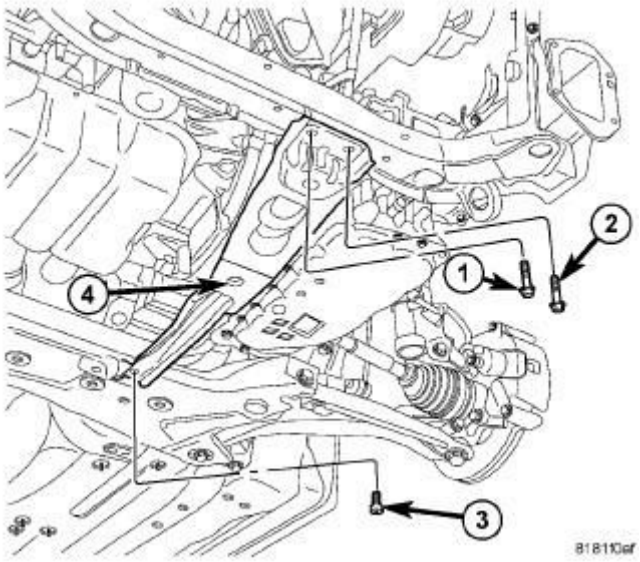

Fig. 44: Fore/Aft Crossmember 1
Courtesy of CHRYSLER GROUP, LLC

6. Remove the for/aft crossmember (4). Refer to **CROSSMEMBER, FRONT FORE AND AFT, REMOVAL** .

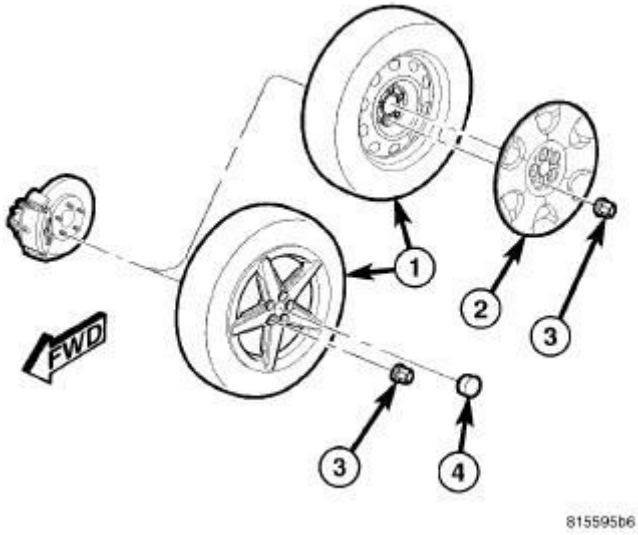

Fig. 45: Tire & Wheel Mounting Method
Courtesy of CHRYSLER GROUP, LLC

7. Remove the front wheels (1). Refer to **REMOVAL** .

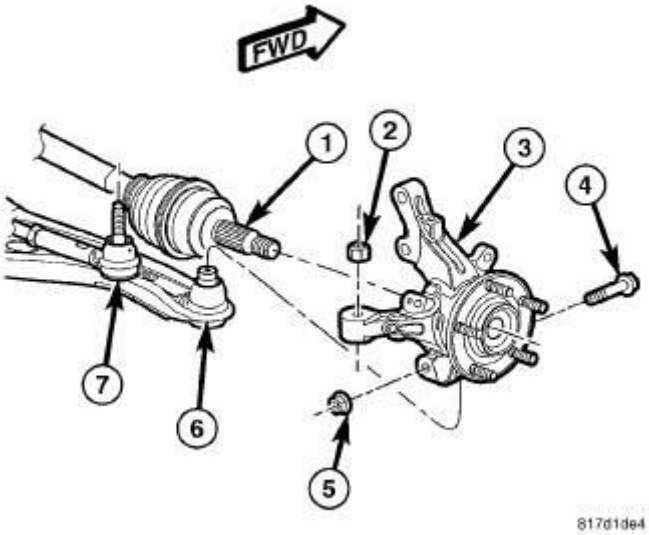

Fig. 46: Front Knuckle Mounting
Courtesy of CHRYSLER GROUP, LLC

8. Remove the lower ball joint (6) pinch bolts (4) and nuts (5).

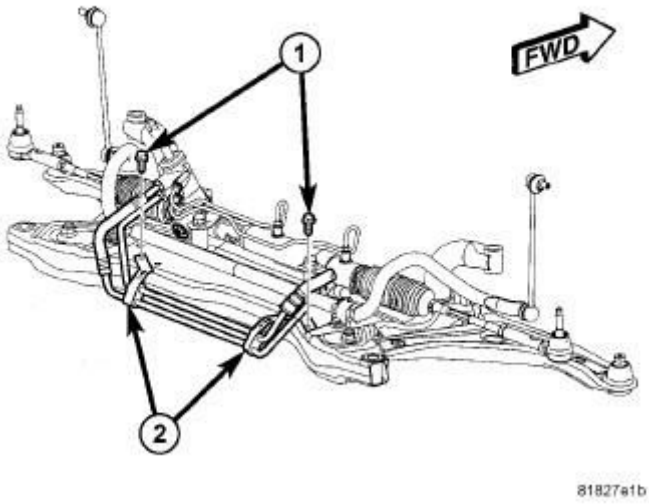

Fig. 47: Hose Routing Bracket Screws AT Crossmember
Courtesy of CHRYSLER GROUP, LLC

9. Remove the bolt attaching the pressure line routing bracket to the steering gear.
10. Remove the bolt attaching the return line to the crossmember.

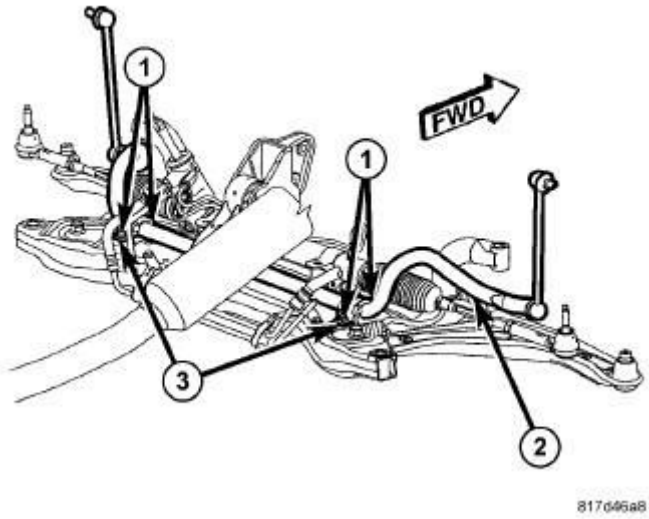

Fig. 48: Stabilizer Bar Mounting To Crossmember
Courtesy of CHRYSLER GROUP, LLC

11. Remove the sway bar bushing bolts (1) and support the sway bar (2) up in the vehicle.

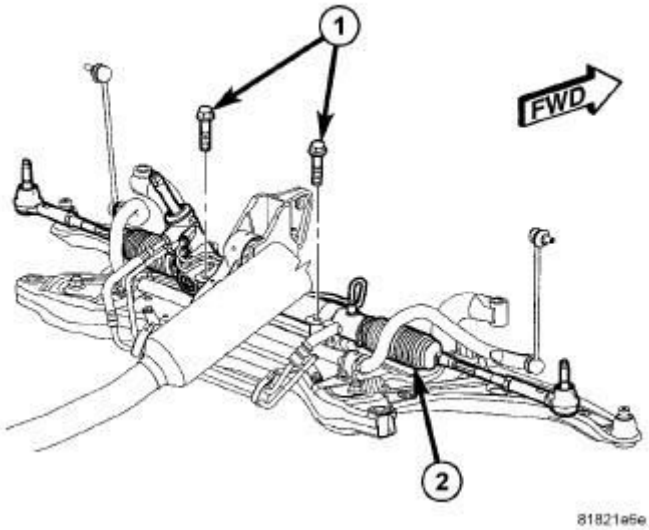

Fig. 49: Gear Mounting Bolts
Courtesy of CHRYSLER GROUP, LLC

12. Remove the steering gear mounting bolts (1) and support the steering gear (2) up in the vehicle.

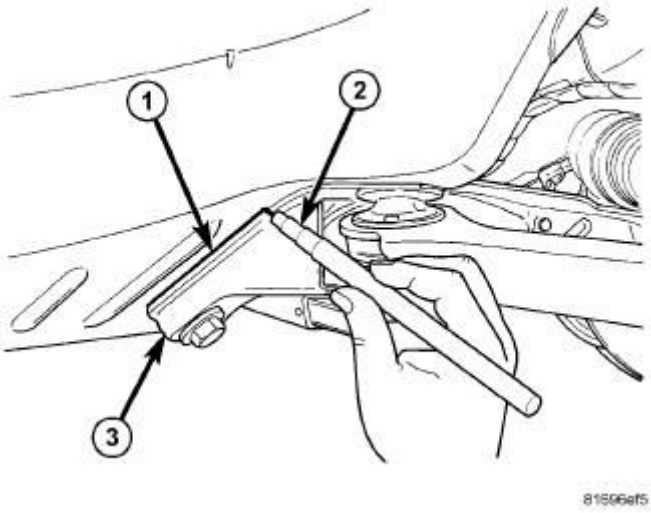

Fig. 50: Marking Crossmember Location
Courtesy of CHRYSLER GROUP, LLC

13. Mark the crossmember (3) to body location (1) using a grease pencil (2) or equivalent.

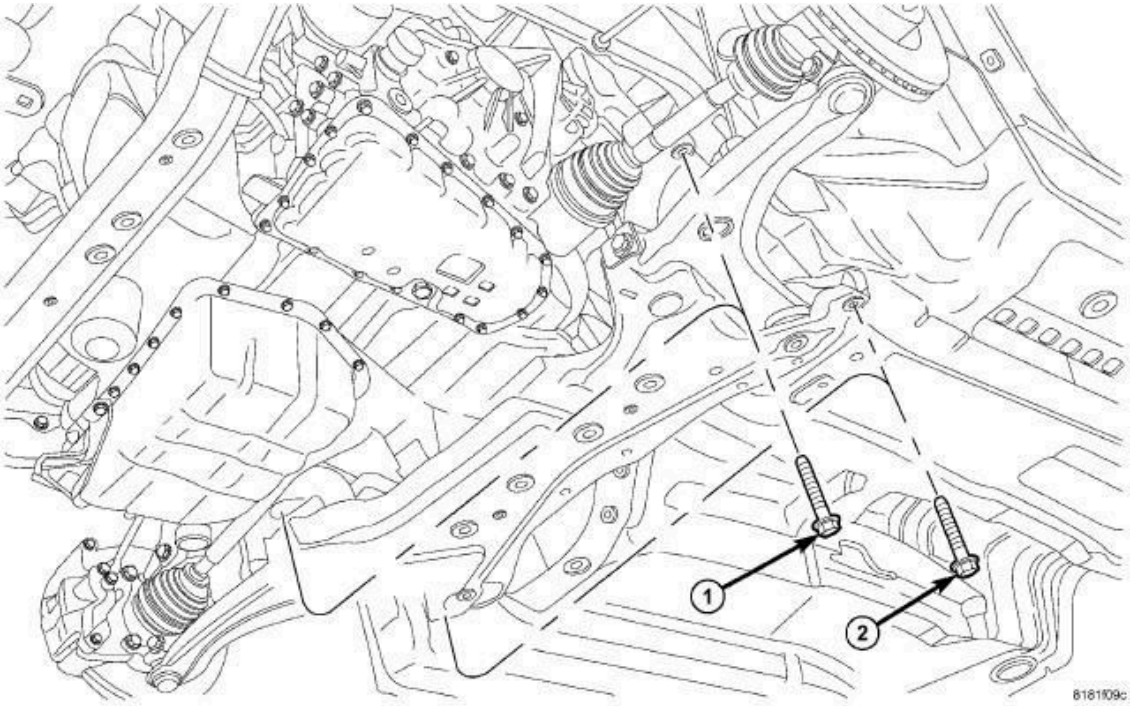

Fig. 51: Front Crossmember
Courtesy of CHRYSLER GROUP, LLC

14. Support the crossmember with a suitable lifting device.
15. Remove the crossmember bolts (1 and 2) and lower the crossmember from the vehicle.

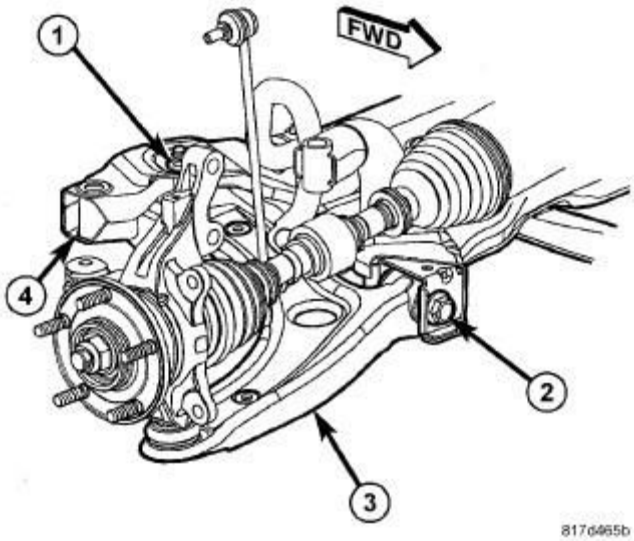

Fig. 52: Lower Control Arm Mounting
Courtesy of CHRYSLER GROUP, LLC

16. Remove the lower control arm (3) front pivot bolts (2).

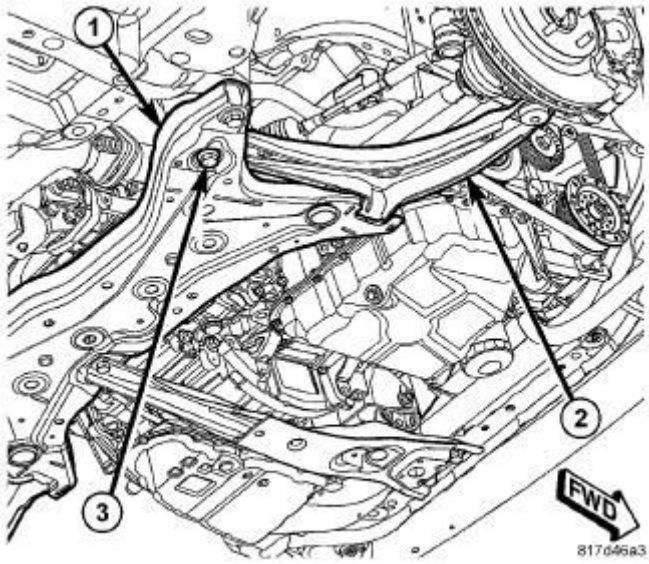

Fig. 53: Lower Control Arm Rear Mounting Bolt
Courtesy of CHRYSLER GROUP, LLC

17. Remove the lower control arm rear pivot bolts (3) and separate the lower control arms from the crossmember (1).

INSTALLATION

INSTALLATION

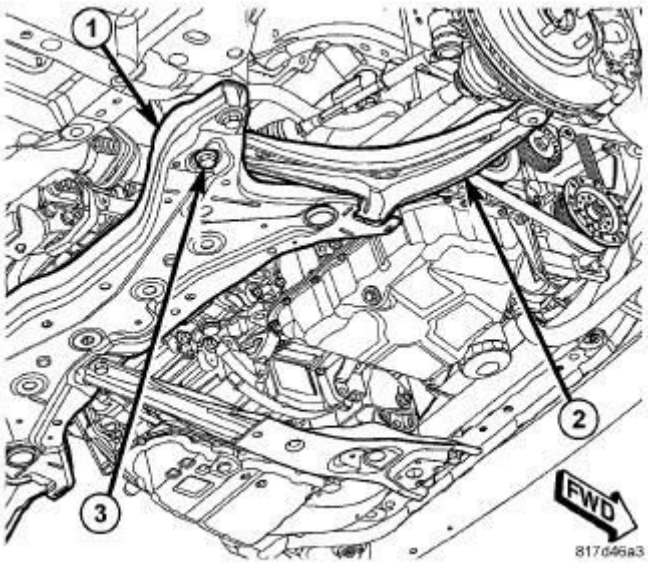

Fig. 54: Lower Control Arm Rear Mounting Bolt
Courtesy of CHRYSLER GROUP, LLC

1. Install the lower control arms and install the rear pivot bolts (3).

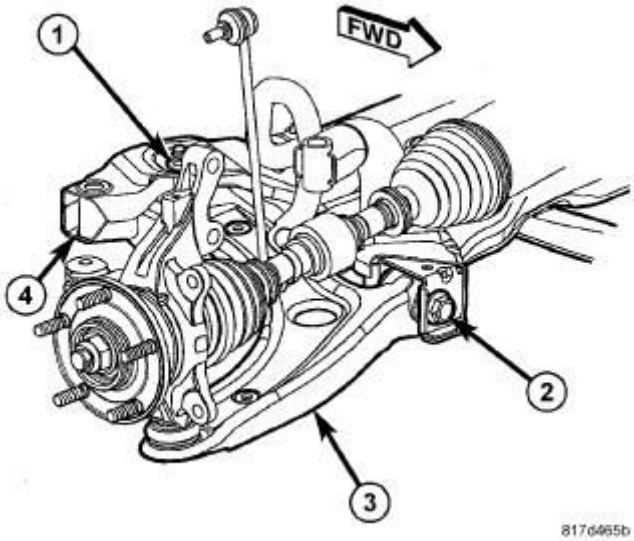

Fig. 55: Lower Control Arm Mounting
Courtesy of CHRYSLER GROUP, LLC

2. Install the front pivot bolts (2). If built before 8/1/08, tighten to 135 N-m (100 ft. lbs.). If built after 8/1/08, tighten to 160 N-m (118 ft. lbs.).

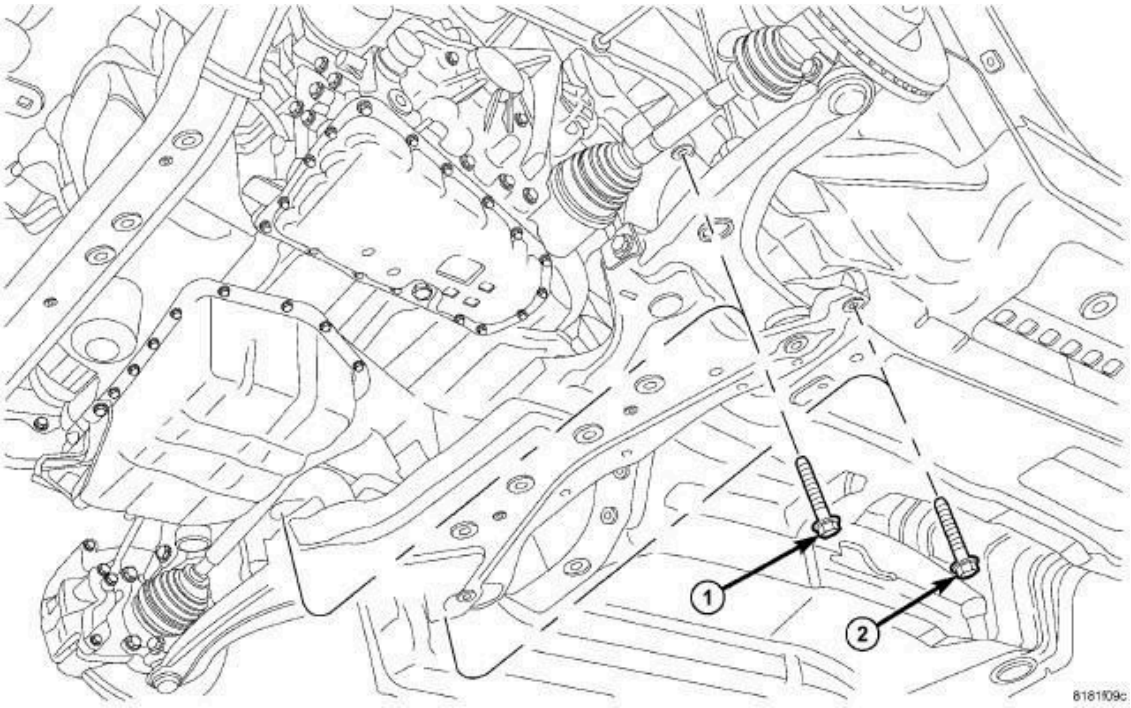

Fig. 56: Front Crossmember
Courtesy of CHRYSLER GROUP, LLC

3. Support the crossmember on a suitable lifting device.
4. Raise the crossmember into position onto the vehicle.

5. Install the bolts (1 and 2) and align the engine cradle to the marks made during removal.
6. Tighten the bolts to 150 N.m (111 ft. lbs.).

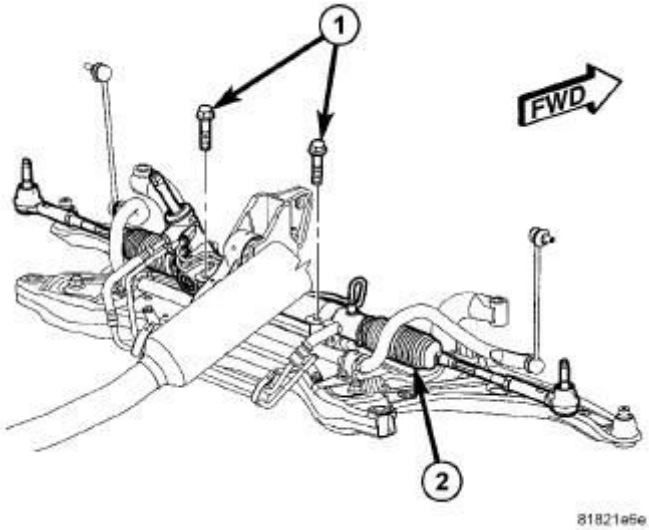

Fig. 57: Gear Mounting Bolts
Courtesy of CHRYSLER GROUP, LLC

7. Position the steering gear back into place and install the bolts (1).
8. Tighten the bolts to 70 N.m (52 ft. lbs.).

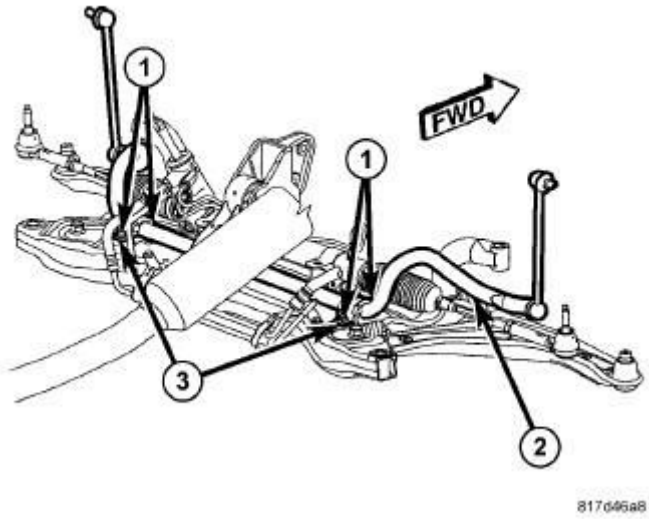

Fig. 58: Stabilizer Bar Mounting To Crossmember
Courtesy of CHRYSLER GROUP, LLC

9. Position the stabilizer bar (2) back into place and install the bushing bolts (1).
10. Tighten the bolts to 61 N.m (45 ft. lbs.).

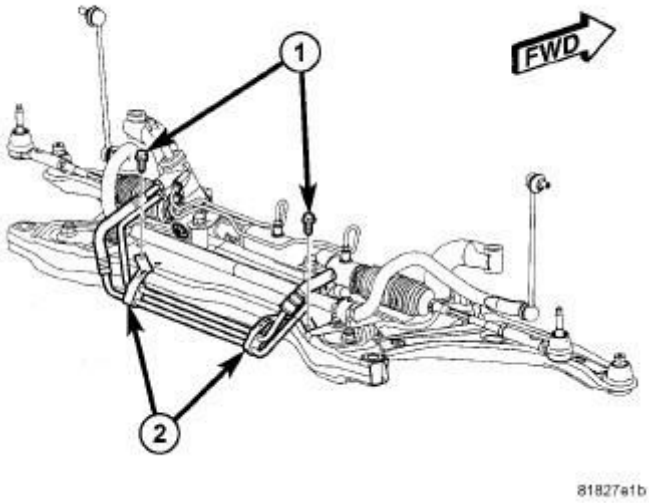

Fig. 59: Hose Routing Bracket Screws AT Crossmember
Courtesy of CHRYSLER GROUP, LLC

11. Position the power steering lines back into place and install the support bracket (2) bolts (1).
12. Tighten the bolts to 8 N.m (70 ft. lbs.).

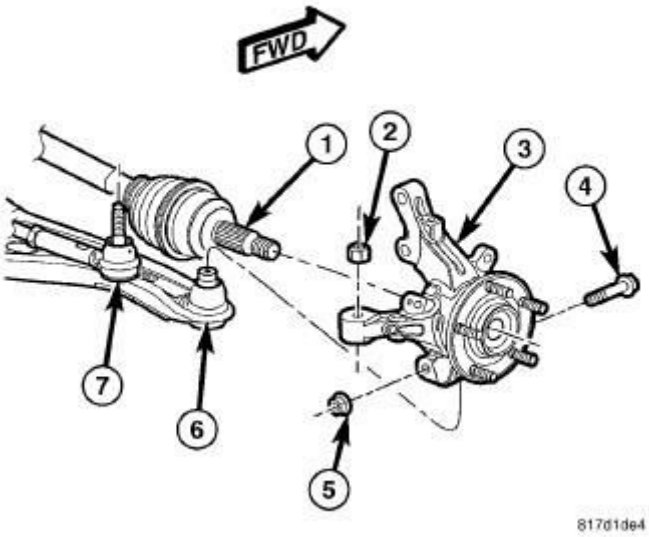

Fig. 60: Front Knuckle Mounting
Courtesy of CHRYSLER GROUP, LLC

13. Connect the lower ball joint stud (6) to the knuckle (3).
14. Install a NEW ball joint stud pinch bolt (4) and nut (5). Tighten the nut to 82 N.m (60 ft. lbs.).

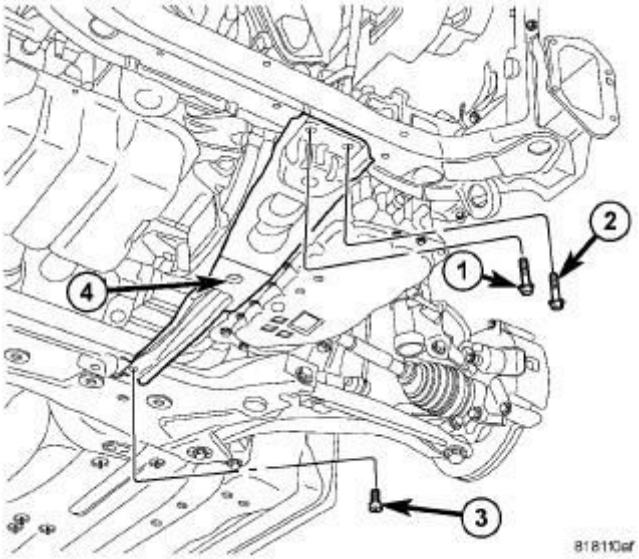

Fig. 61: Fore/Aft Crossmember 1
Courtesy of CHRYSLER GROUP, LLC

15. Install the fore/aft crossmember (4), Refer to **CROSSMEMBER, FRONT FORE AND AFT, INSTALLATION** .

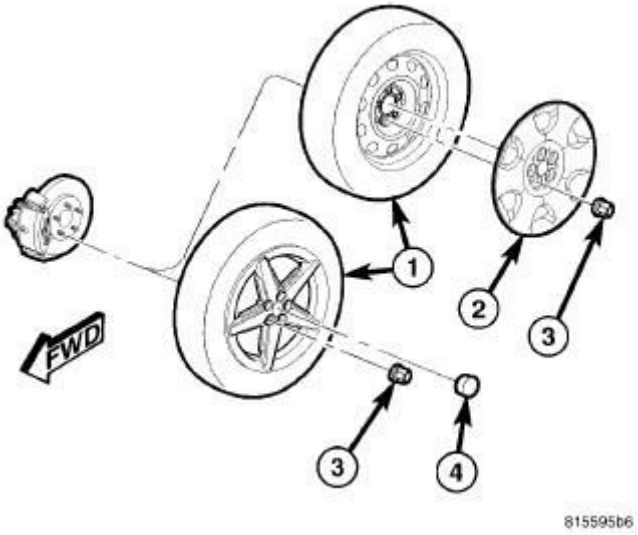

Fig. 62: Tire & Wheel Mounting Method
Courtesy of CHRYSLER GROUP, LLC

16. Install the front wheels (1), Refer to **INSTALLATION** .
17. With the full weight of the vehicle on the suspension tighten the front control arm bushing bolts to 123 N.m (91 ft. lbs.)
18. Perform wheel alignment as necessary. Refer to **WHEEL ALIGNMENT, STANDARD PROCEDURE** .

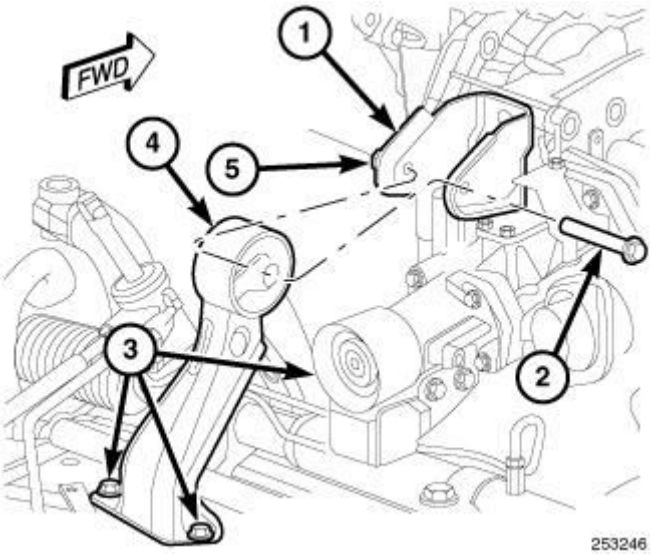

Fig. 63: Rear Roll Mount
Courtesy of CHRYSLER GROUP, LLC

19. Install the rear roll mount (4) and install the three bolts (3) attaching it to the crossmember.
20. Tighten the bolts (3) to 153 N.m (112 ft. lbs.).
21. Install the through bolt (2) and tighten to 65 N.m (48 ft. lbs.).

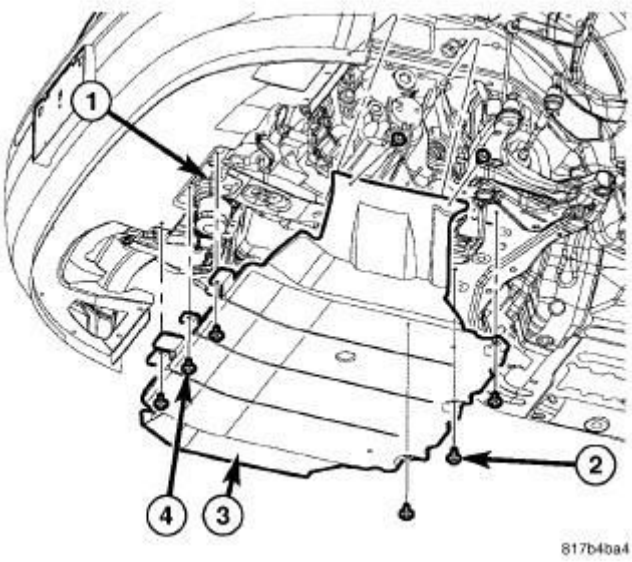

Fig. 64: Belly Pan
Courtesy of CHRYSLER GROUP, LLC

22. If equipped, install the belly pan.
23. Install the three front screws (4), the three rear screws (2) and push pin fasteners into the center of the belly pan.

CROSSMEMBER, REAR SUSPENSION

REMOVAL

REMOVAL

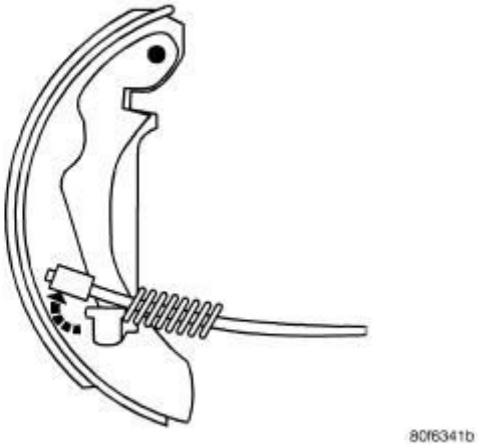

Fig. 65: Removing Cable From Lever
Courtesy of CHRYSLER GROUP, LLC

1. Remove the park brake shoes. Refer to **SHOES, PARKING BRAKE, REMOVAL** .
2. Park brake cable from lever.

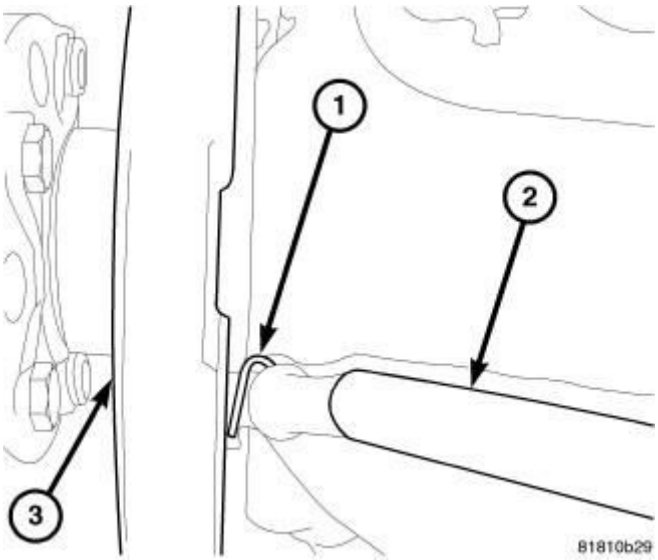

Fig. 66: Parking Brake Cable Hair Pin
Courtesy of CHRYSLER GROUP, LLC

3. Remove the hair pin clip and separate the brake cable (2) from the backing plate (3).

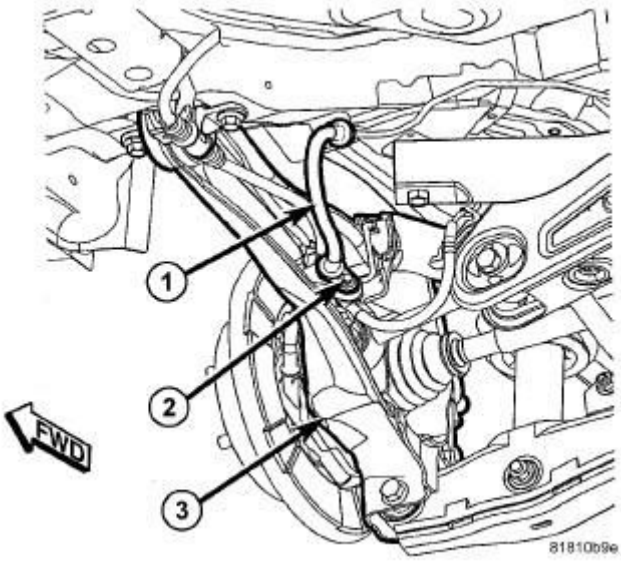

Fig. 67: Brake Hose Mounting To Trailing Arm
Courtesy of CHRYSLER GROUP, LLC

4. Remove the bolt (2) and separate the brake line (1) from the trailing arm (3).

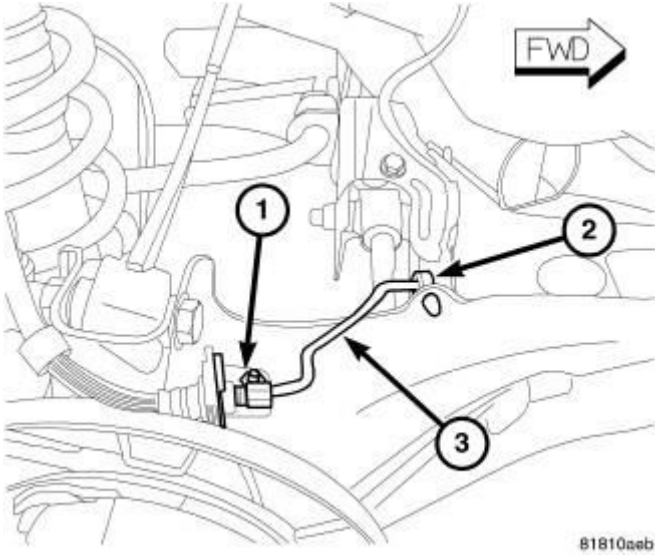

Fig. 68: Brake Line Mounting To Trailing Arm
Courtesy of CHRYSLER GROUP, LLC

5. Remove the bolt (1), the clip (2) and separate the brake line (3) from the trailing arm.
6. Separate the wheel speed sensors and position aside as necessary to remove the crossmember. Refer to **SENSOR, WHEEL SPEED, REAR, REMOVAL** .

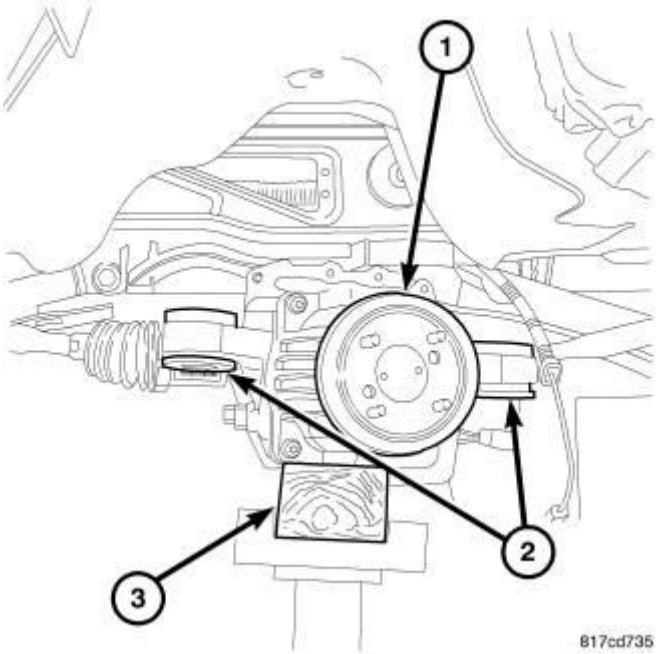

Fig. 69: Rear Axle Remove And Install
Courtesy of CHRYSLER GROUP, LLC

7. If equipped, remove the rear drive module. Refer to **REMOVAL** .

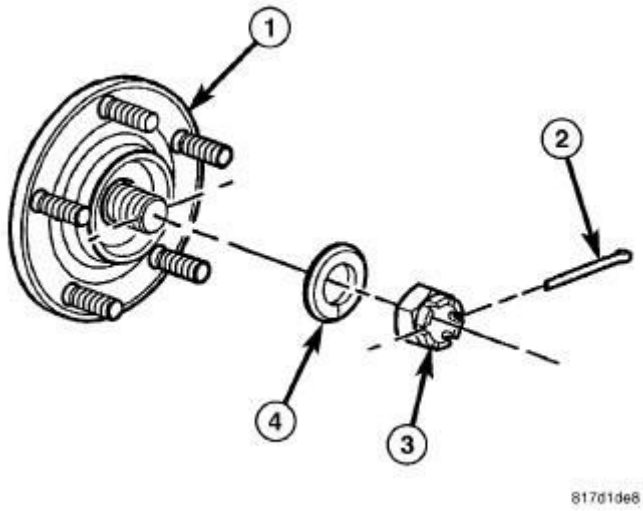

Fig. 70: Hub Nut And Washer
Courtesy of CHRYSLER GROUP, LLC

8. Remove the cotter pins (2), the nuts (3) and the washers (4).
9. Remove both half shafts.

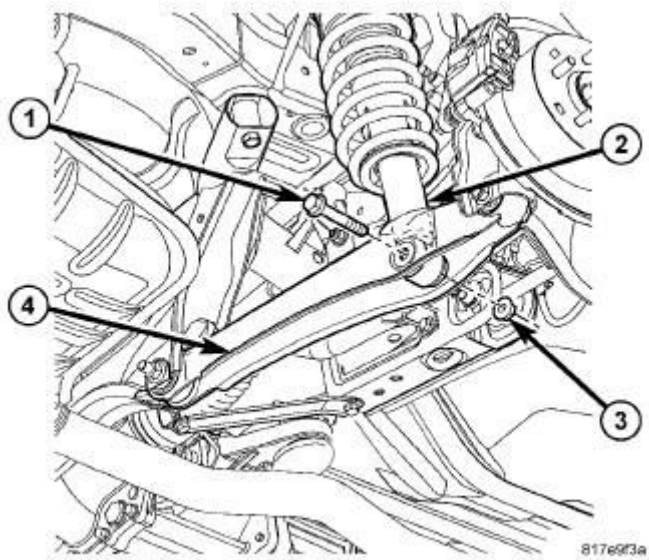

Fig. 71: Lower Strut Mounting
Courtesy of CHRYSLER GROUP, LLC

10. Remove the lower strut bolts.

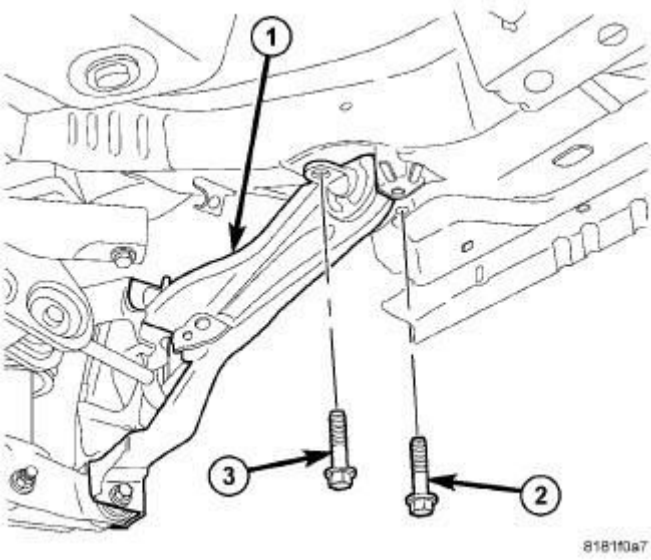

Fig. 72: Rear Crossmember 1
Courtesy of CHRYSLER GROUP, LLC

11. Remove the trailing link bushing bolts.

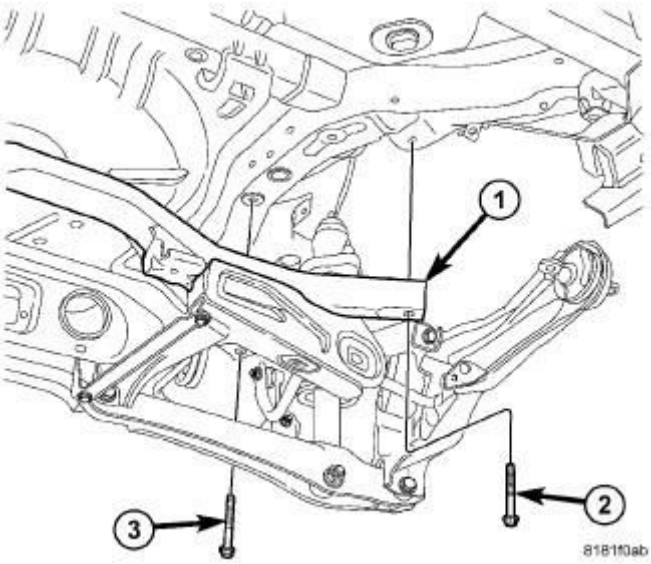

Fig. 73: Rear Crossmember 2
Courtesy of CHRYSLER GROUP, LLC

12. Support the rear cradle with a suitable lifting device.
13. Remove the rear cradle bolts and lower the cradle assembly from vehicle.

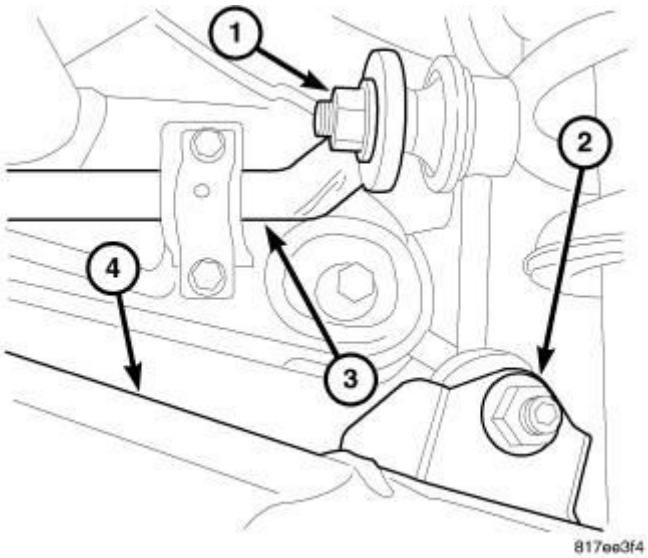

Fig. 74: Rear Stabilizer Bar Link
Courtesy of CHRYSLER GROUP, LLC

14. Remove the lower stabilizer link nuts (2).

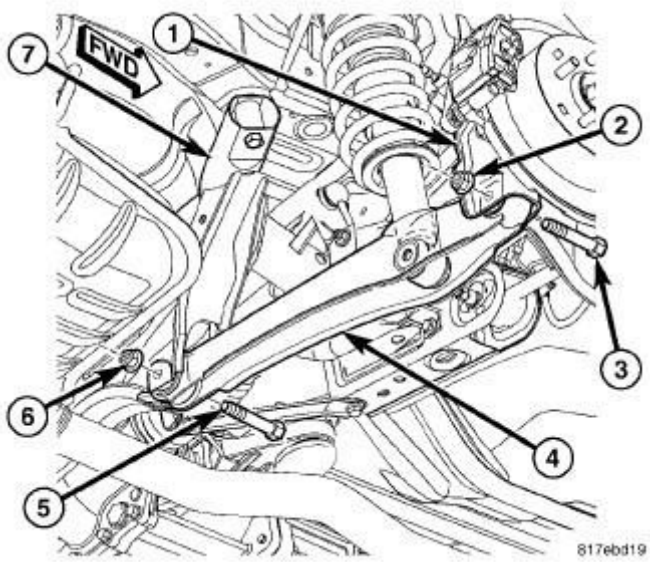

Fig. 75: Rear Lower Control Arm Mounting
Courtesy of CHRYSLER GROUP, LLC

15. Remove the lower link bolts (5 and 6) at the cradle.

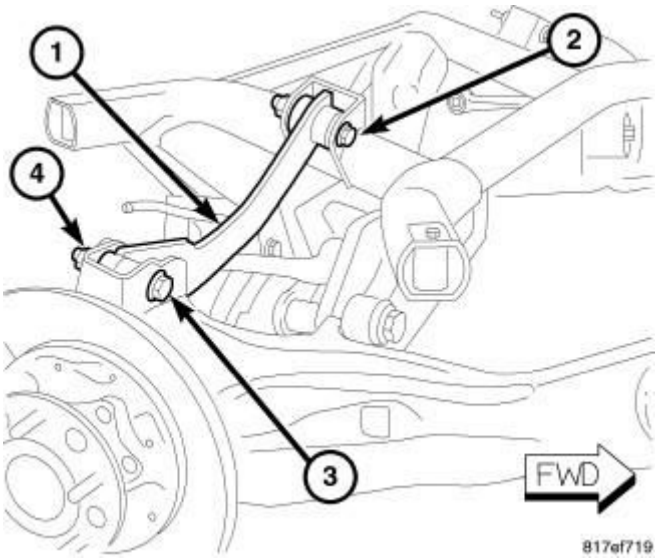

Fig. 76: Rear Upper Control Arm Mounting
Courtesy of CHRYSLER GROUP, LLC

16. Remove the upper link bolts (2) at the cradle.

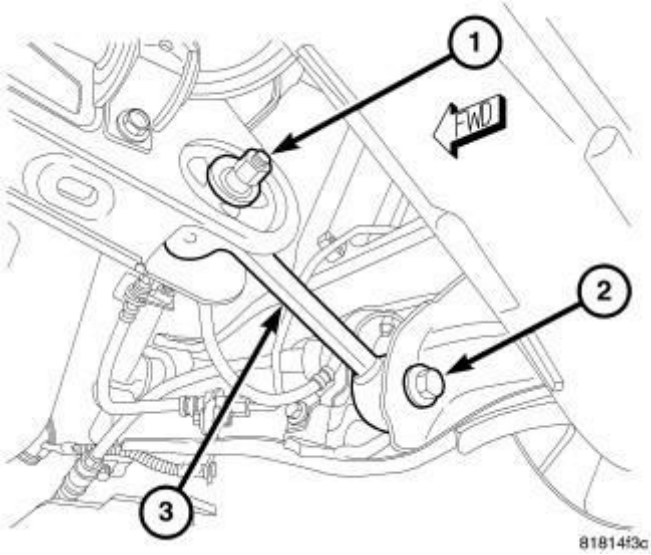

Fig. 77: Toe Link
Courtesy of CHRYSLER GROUP, LLC

17. Remove the toe link cam bolts (1) at the cradle.

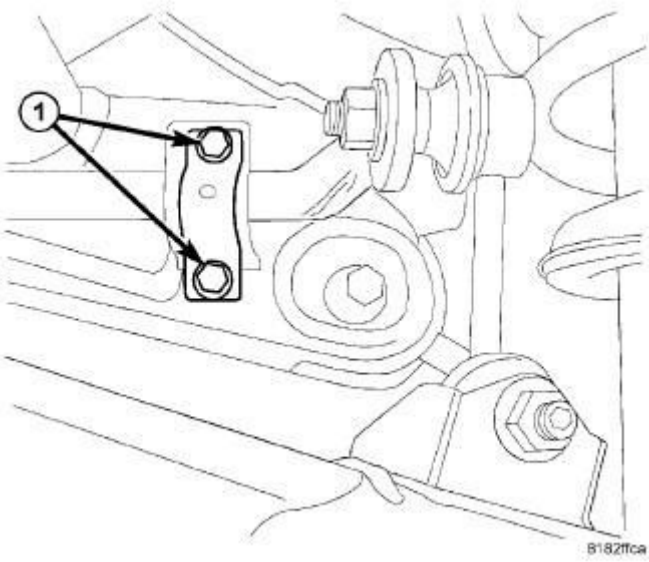

Fig. 78: Sway Bar Bushings
Courtesy of CHRYSLER GROUP, LLC

18. Remove the suspension knuckle assemblies.
19. Remove the stabilizer bushing bolts (1) and separate the stabilizer bar from the cradle.

INSTALLATION

INSTALLATION

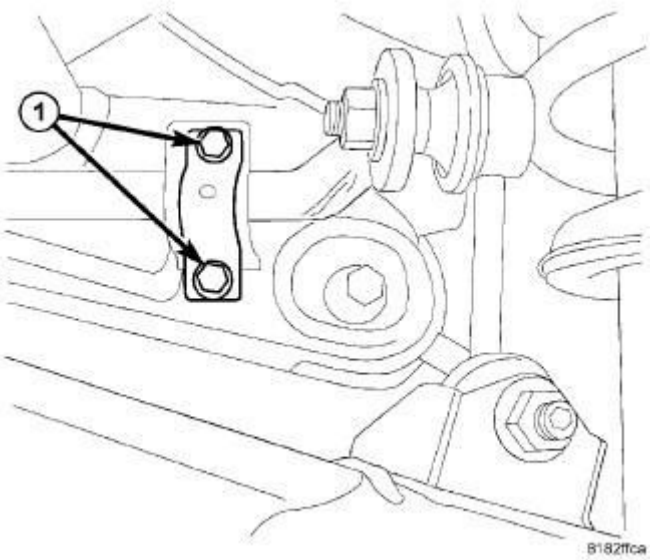

Fig. 79: Sway Bar Bushings
Courtesy of CHRYSLER GROUP, LLC

1. Install the stabilizer bar and install the bushings and bolts (1).
2. Tighten the bolts to 61 N.m (45 ft. lbs.).

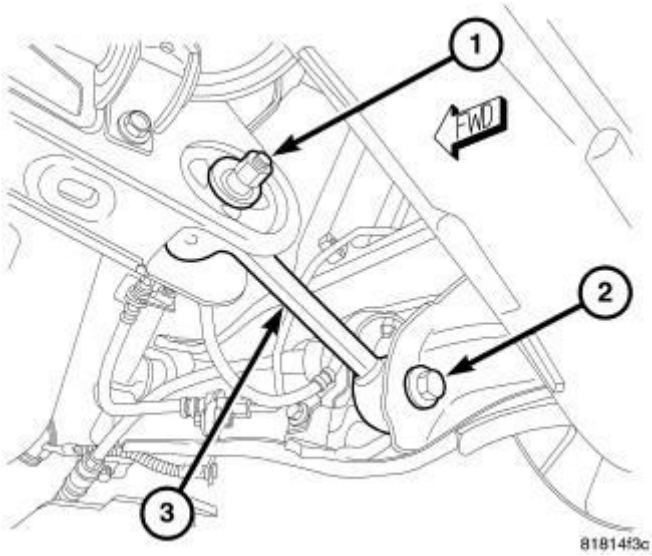

Fig. 80: Toe Link
Courtesy of CHRYSLER GROUP, LLC

3. Position the suspension knuckle assemblies back into position onto the crossmember.
4. Install the toe link cam bolts (1) at the cradle.
5. Tighten the bolts to 35 N.m (26 ft. lbs.).

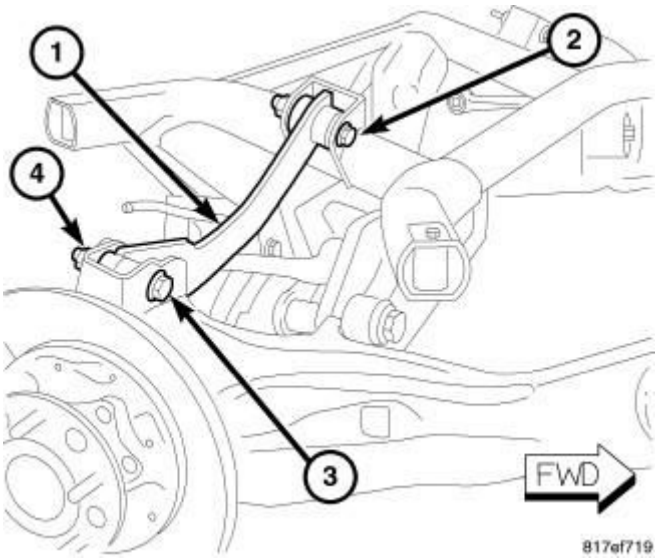

Fig. 81: Rear Upper Control Arm Mounting
Courtesy of CHRYSLER GROUP, LLC

6. Install the upper link bolts (2) at the cradle.

7. Tighten the bolts to 90 N.m (70 ft. lbs.).

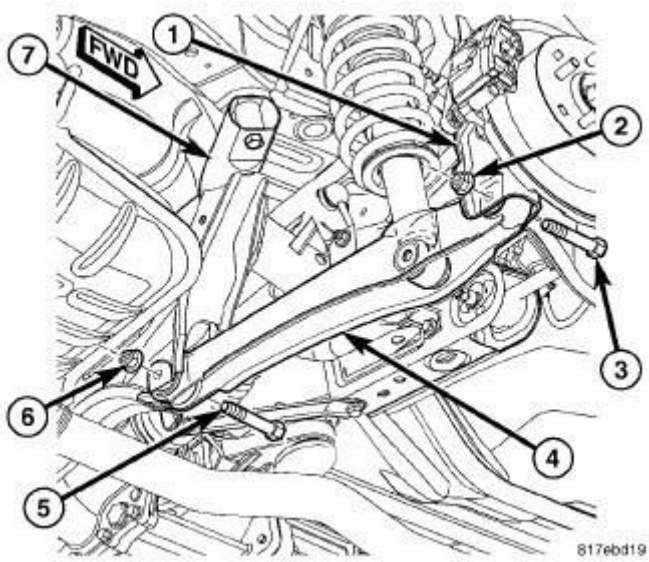

Fig. 82: Rear Lower Control Arm Mounting
Courtesy of CHRYSLER GROUP, LLC

8. Install the lower link bolts (5 and 6) at the cradle.
9. Tighten the bolts to 90 N.m (70 ft. lbs.).

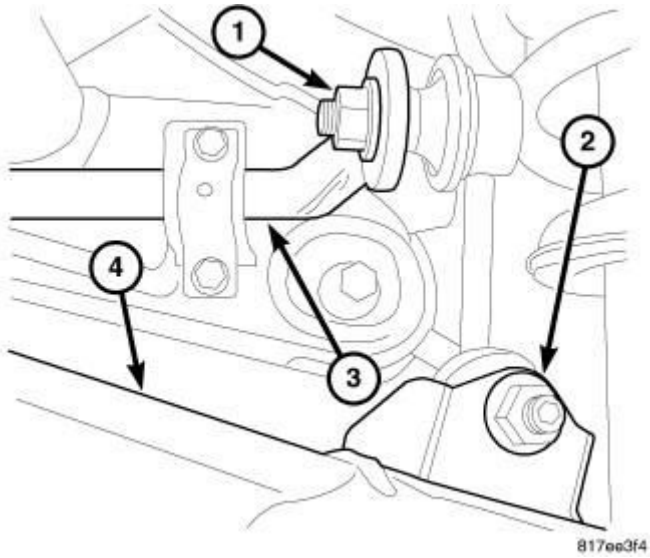

Fig. 83: Rear Stabilizer Bar Link
Courtesy of CHRYSLER GROUP, LLC

10. Install the stabilizer link nuts (2).
11. Tighten the nuts to 58 N.m (43 ft. lbs.).

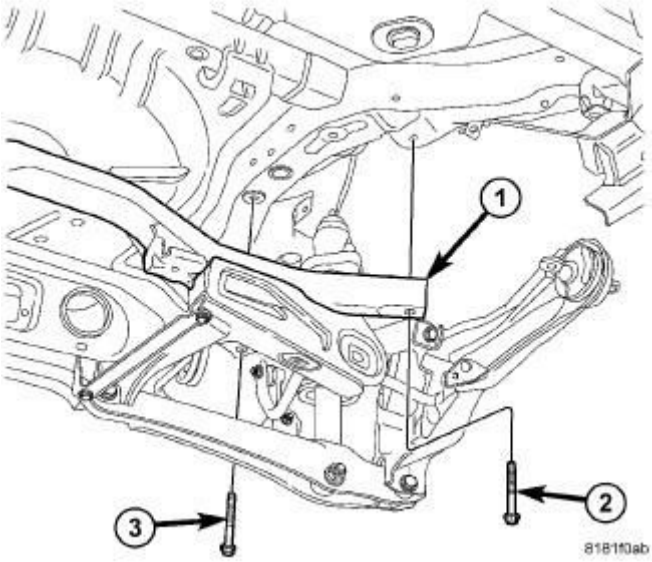

Fig. 84: Rear Crossmember 2
Courtesy of CHRYSLER GROUP, LLC

12. Support the rear cradle assembly (1) with a suitable lifting device and position back into the vehicle.
13. Install the cradle bolts (2 and 3):
    a. Tighten the front bolt (2) first to 110 N.m (81 ft. lbs.).
    b. Tighten the rear bolt (3) next to 110 N.m (81 ft. lbs.).

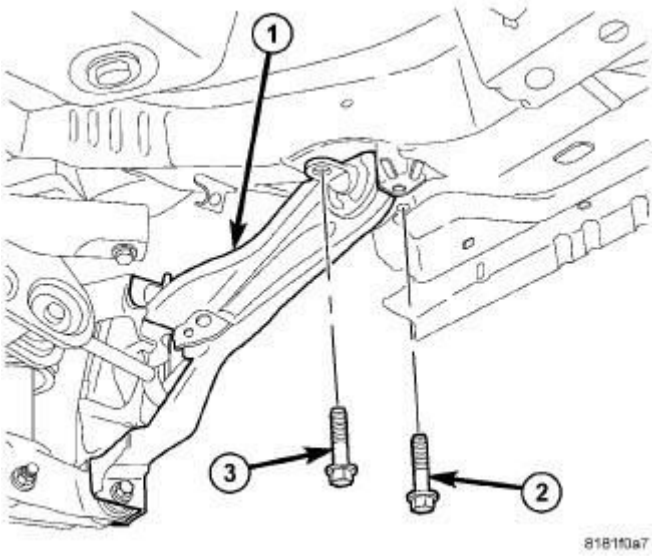

Fig. 85: Rear Crossmember 1
Courtesy of CHRYSLER GROUP, LLC

14. Install the trailing link (1) bushing bolts (2 and 3):

a. Tighten the inboard bolt (3) first to 110 N.m (81 ft. lbs.).
b. Tighten the outboard bolt (2) next to 110 N.m (81 ft. lbs.).

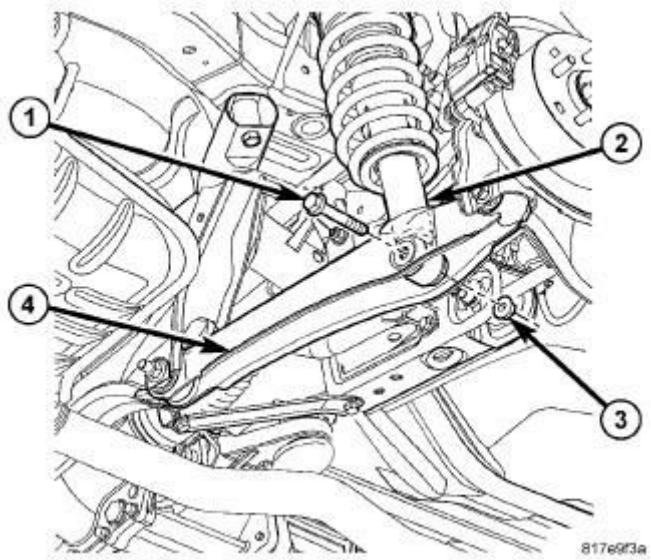

Fig. 86: Lower Strut Mounting
Courtesy of CHRYSLER GROUP, LLC

15. Install the lower strut bolts (1).
16. Tighten the bolts to 99 N.m 73 ft. lbs.).

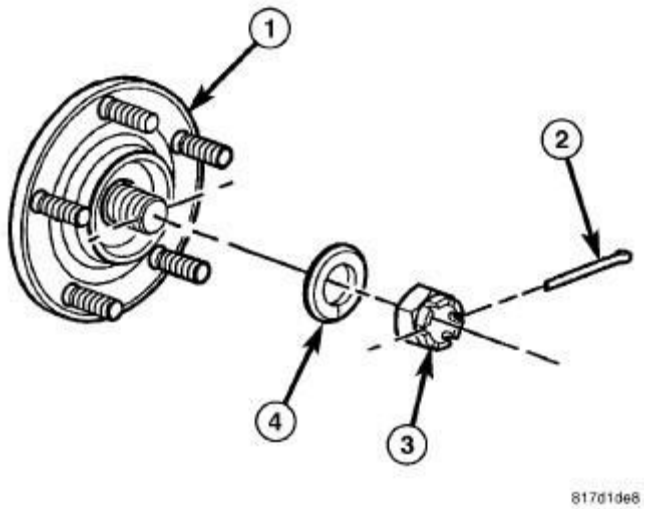

Fig. 87: Hub Nut And Washer
Courtesy of CHRYSLER GROUP, LLC

17. If equipped, install the rear half shafts.

18. Install the nuts (3) and washers (4).
19. Tighten the nuts to 244 N.m (180 ft. lbs.).
20. Install new cotter pins (2).

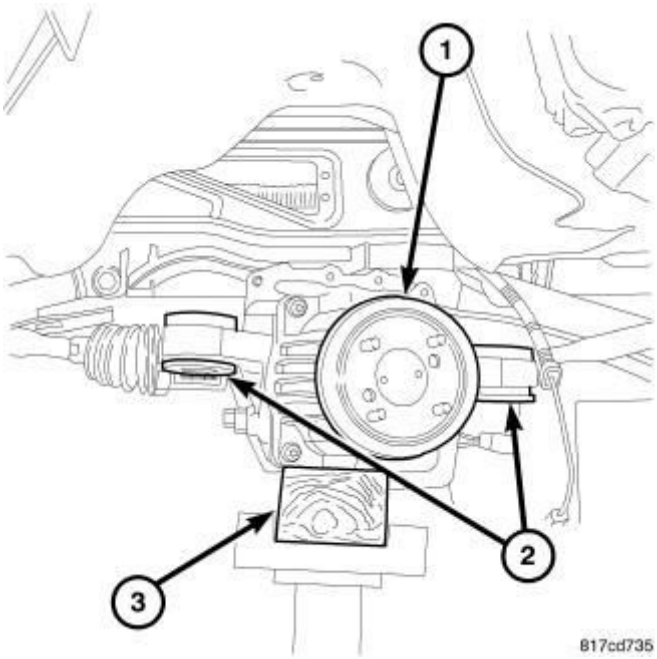

Fig. 88: Rear Axle Remove And Install
Courtesy of CHRYSLER GROUP, LLC

21. Install the rear drive module (1). Refer to **INSTALLATION** .
22. Install the wheel speed sensor back. Refer to **SENSOR, WHEEL SPEED, REAR, INSTALLATION** .

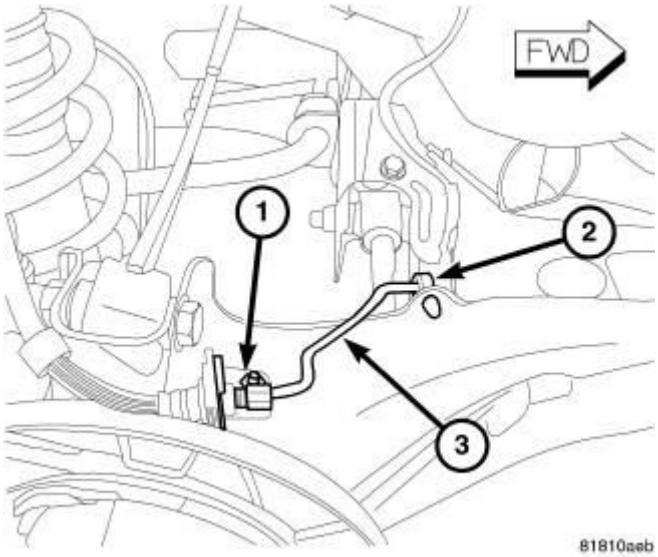

Fig. 89: Brake Line Mounting To Trailing Arm

Courtesy of CHRYSLER GROUP, LLC

23. Position the brake lines (3) back into place, connect the clips (2) and install the bolts (1).
24. Tighten the bolts to 15 N.m (11 ft. lbs.).

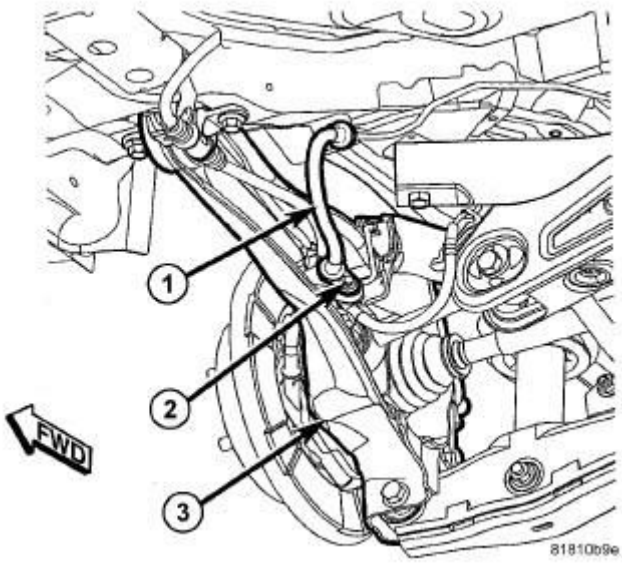

Fig. 90: Brake Hose Mounting To Trailing Arm
Courtesy of CHRYSLER GROUP, LLC

25. Position the brake lines (1) back into place, and install the bolts (2).
26. Tighten the bolts to 23 N.m (17 ft. lbs.).

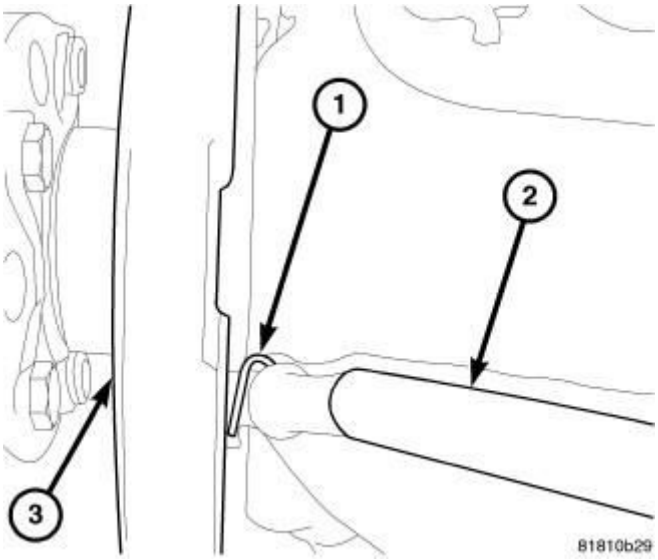

Fig. 91: Parking Brake Cable Hair Pin
Courtesy of CHRYSLER GROUP, LLC

27. Install the brake cable (2) onto the backing plate (3) and install the hair pin clip (1).

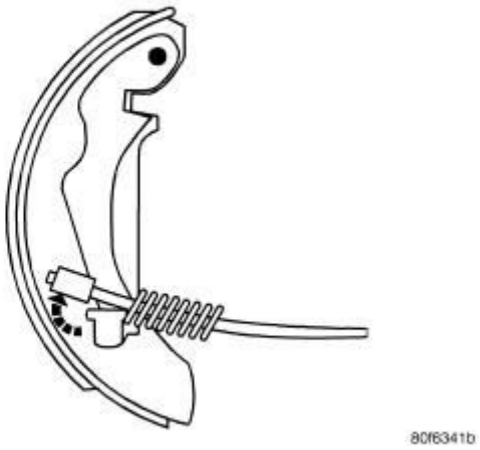

Fig. 92: Removing Cable From Lever
Courtesy of CHRYSLER GROUP, LLC

28. Connect the brake cable to the park brake lever.
29. Install the park brake shoes. Refer to **SHOES, PARKING BRAKE, INSTALLATION** .
30. Check and adjust wheel alignment as necessary. Refer to **WHEEL ALIGNMENT, STANDARD PROCEDURE** .

ISOLATOR, REAR CROSSMEMBER, DIFFERENTIAL

REMOVAL

REMOVAL

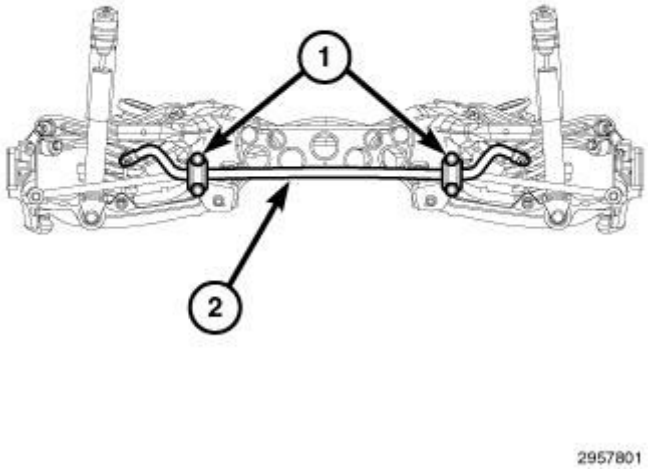

Fig. 93: Bolts & Stabilizer Bar
Courtesy of CHRYSLER GROUP, LLC

1. Remove the rear differential (1) as necessary to gain enough access to the differential support isolators. Refer to **REMOVAL** .
2. Remove the bolts (1) and lower the stabilizer bar (2).

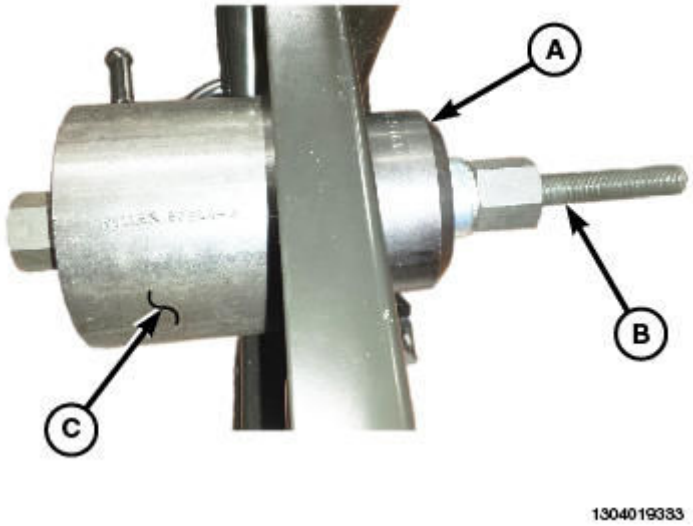

Fig. 94: Special Tool #C-3716-A Bearing Installer
Courtesy of CHRYSLER GROUP, LLC

NOTE: Prior to using special tools, lubricate Screw Assembly (2) threads to provide ease of use and

promote tool longevity.

NOTE: When installing thrust bearing, be sure to place hardened side toward bolt head.

3. Assemble tools over isolator crossmember assembly as shown:
   1. (special tool #C-3716-A, Installer, Bearing)
   2. Forcing Screw - 8839-1 and 8839-2 also use with bearing. (special tool #8839, Screw Assembly)
   3. Receiver - 6062A-3 of (special tool #6062A, Puller, Bearing Cup)
4.
5. While holding Nut from rotating, **using hand tools** , tighten Screw Assembly until Remover/Installer comes in contact with isolator and Receiver sets squarely against crossmember.
6. Continue to tighten Screw Assembly, pressing isolator out of crossmember.
7. Remove tools with isolator.

INSTALLATION

INSTALLATION

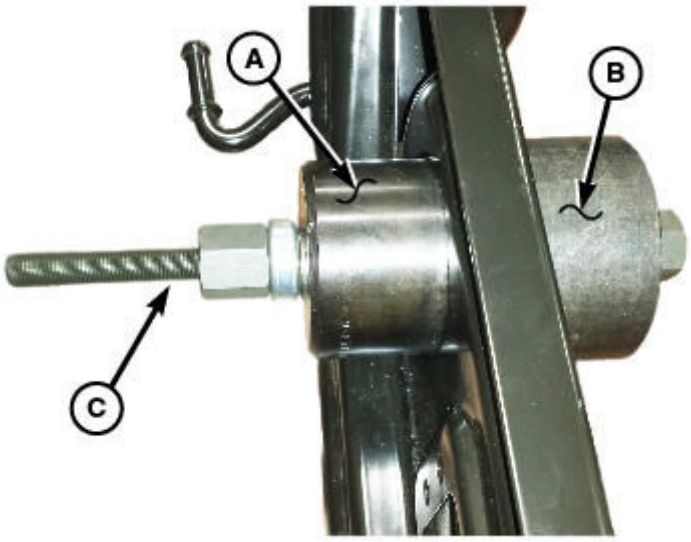

Fig. 95: Special Tool #6062A Bearing Cup Puller
Courtesy of CHRYSLER GROUP, LLC

NOTE: Prior to using special tools, lubricate Screw Assembly (C)

threads to provide ease of use and promote tool longevity.

NOTE: When installing thrust bearing, be sure to place hardened side toward bolt head.

1. Assemble tools over isolator crossmember assembly as shown:
   1. (special tool #6536-A, Installer, Bearing/Seal)
   2. Receiver - 6062A-3 of (special tool #6062A, Puller, Bearing Cup)
   3. Forcing Screw - 8839-1 and 8839-2 also use with bearing. (special tool #8839, Screw Assembly)
2. While holding Nut from rotating, tighten Screw Assembly (C) **using hand tools** , pressing isolator into crossmember. Stop when the isolator bottoms against Remover/Installer, Bushing.

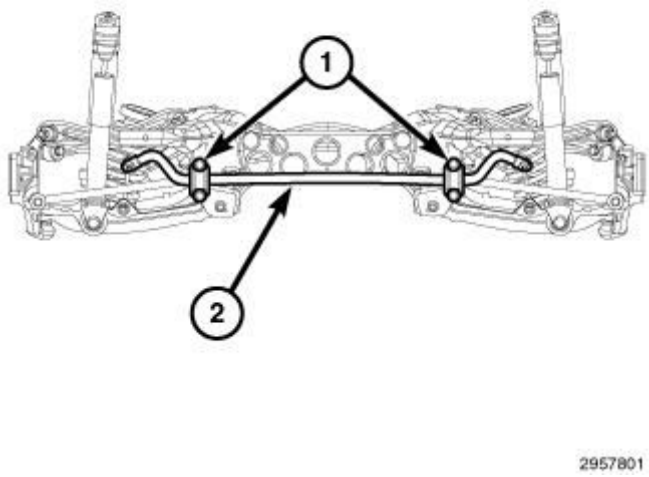

Fig. 96: Bolts & Stabilizer Bar
Courtesy of CHRYSLER GROUP, LLC

3. Position the stabilizer bar (2) and install the upper and lower stabilizer bar to cradle bolts (1) and tighten to 110 N.m (81 ft. lbs.).
4. Install the rear differential. Refer to **INSTALLATION** .

UNDER BODY PROTECTION

BELLY PAN

REMOVAL

REMOVAL

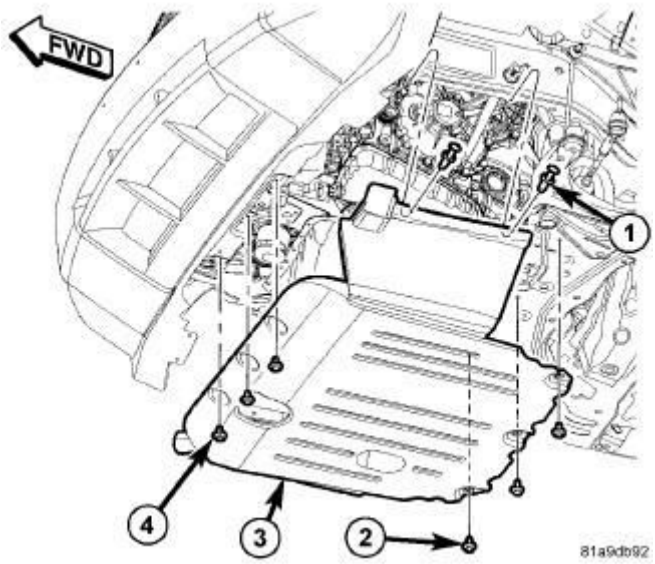

Fig. 97: Belly Pan & Fasteners
Courtesy of CHRYSLER GROUP, LLC

1. If necessary, position aside the front wheelhouse splash shield, Refer to **SHIELD, SPLASH, FRONT WHEELHOUSE, REMOVAL** .
2. Remove the four side push pin fasteners (1).
3. Remove the rear screws (2).
4. Remove the front screws (4) and remove the belly pan (3).

INSTALLATION

INSTALLATION

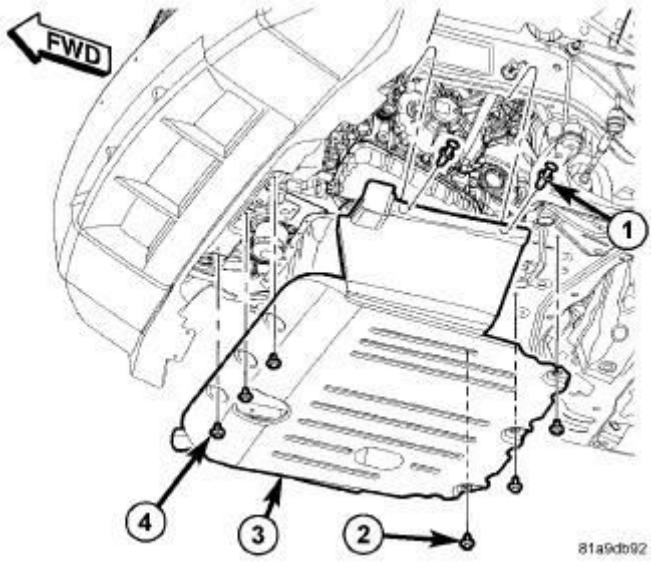

Fig. 98: Belly Pan & Fasteners
Courtesy of CHRYSLER GROUP, LLC

1. Install the belly pan (3) and install the front (4) and rear (2) screws.
2. Install the side push pin fasteners (1).
3. If required, position the wheelhouse splash shield back. Refer to **SHIELD, SPLASH, FRONT WHEELHOUSE, INSTALLATION** .

PLATE, SKID, FRONT

REMOVAL

REMOVAL

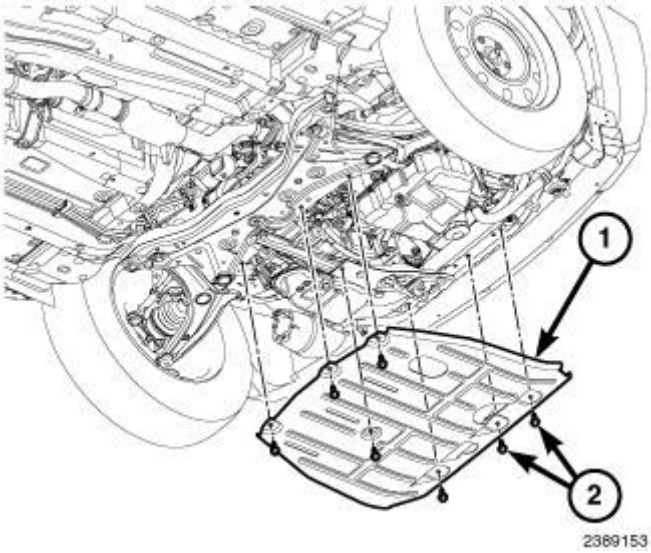

Fig. 99: Removal/Installation Front Skid Plate And Bolts

Courtesy of CHRYSLER GROUP, LLC

1. Raise and support the vehicle. Refer to **HOISTING, STANDARD PROCEDURE** .
2. Remove the bolts (2).
3. Remove the skid plate (1).

INSTALLATION

INSTALLATION

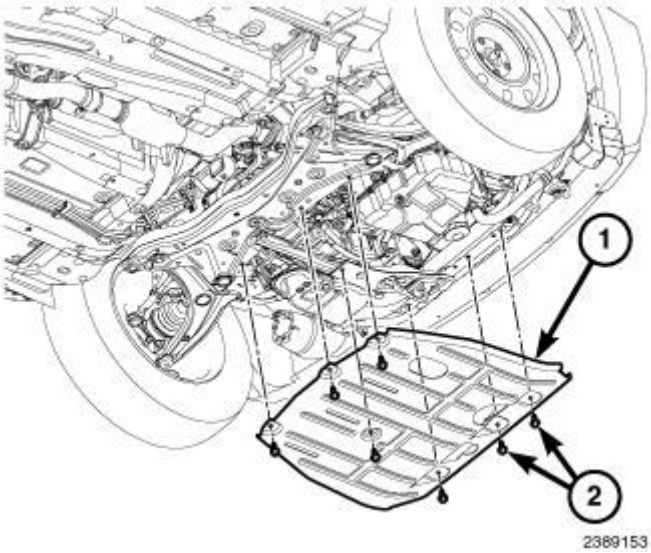

Fig. 100: Removal/Installation Front Skid Plate And Bolts
Courtesy of CHRYSLER GROUP, LLC

1. Position the skid plate (1) onto the vehicle and line up the holes.
2. Install the bolts (2) and tighten to 30 N.m (22 ft. lbs.).

PLATE, SKID, FUEL TANK

REMOVAL

REMOVAL

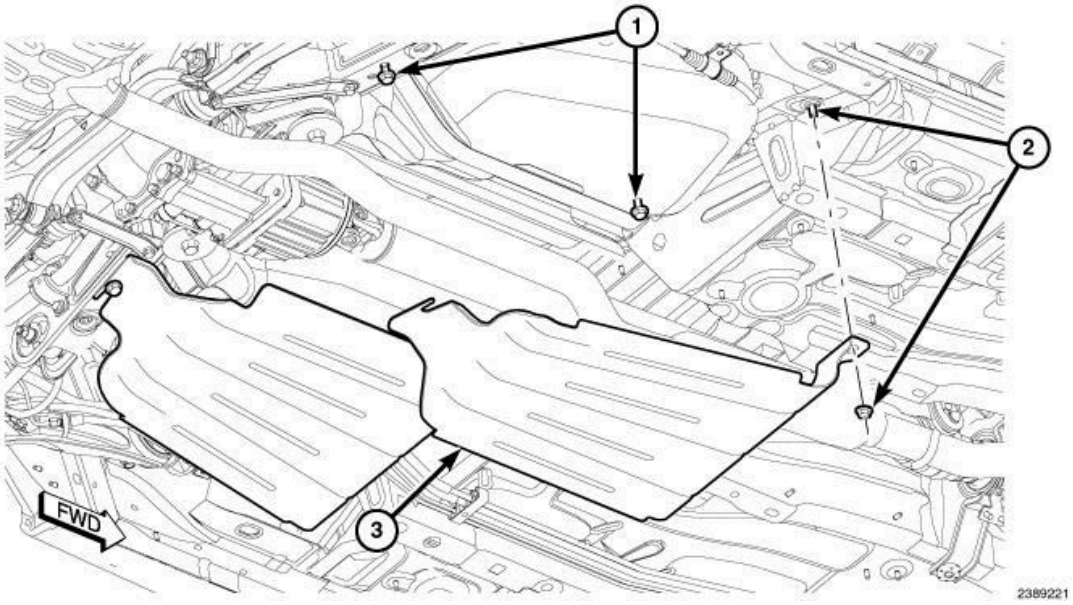

Fig. 101: Removal/Installation Skid Plate & Nuts And Bolts
Courtesy of CHRYSLER GROUP, LLC

NOTE: Right side plate shown, left side plate is similar.

1. Raise and support the vehicle. Refer to **HOISTING, STANDARD PROCEDURE** .
2. Loosen the bolts (1).
3. Remove the nut (2) and remove the skid plate (3).

INSTALLATION

INSTALLATION

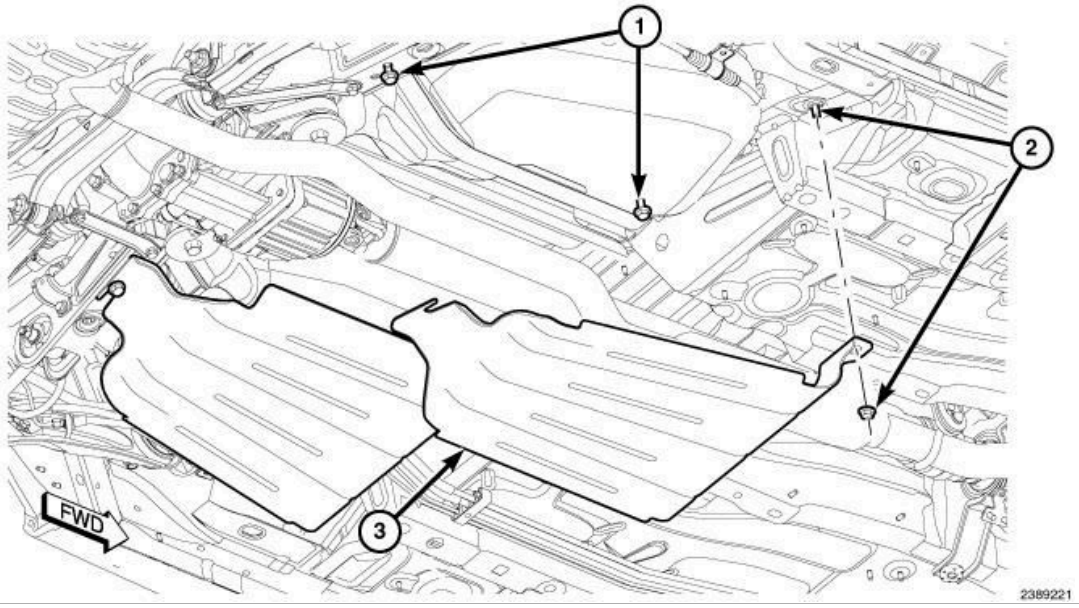

Fig. 102: Removal/Installation Skid Plate & Nuts And Bolts
Courtesy of CHRYSLER GROUP, LLC

NOTE: Right side plate shown, left side plate is similar.

1. Hand start the bolts (1).
2. Position the skid plate over the bolts (1) and stud (2).
3. Tighten the bolts (1) to 30 N.m (22 ft. lbs.).
4. Tighten the nut (2) to 25 N.m (18 ft. lbs.).

2014 ACCESSORIES AND EQUIPMENT

Hands Free Module (HFM) - Electrical Diagnostics - Compass & Patriot

DIAGNOSTIC CODE INDEX

DIAGNOSTIC CODE INDEX

DTC	Description
B143B	MICROPHONE 1 CIRCUIT LOW
B143C	MICROPHONE 1 CIRCUIT HIGH
B143E	MICROPHONE 2 CIRCUIT LOW
B143F	MICROPHONE 2 CIRCUIT HIGH
B2205	ORIGINAL VIN MISSING/MISMATCH
U0019	CAN B BUS
U0141	LOST COMMUNICATION WITH IPM (FCM/TIPM)
U0155	LOST COMMUNICATION WITH CLUSTER/CCN
U0184	LOST COMMUNICATION WITH RADIO

DIAGNOSIS AND TESTING

B143B-MICROPHONE 1 CIRCUIT LOW

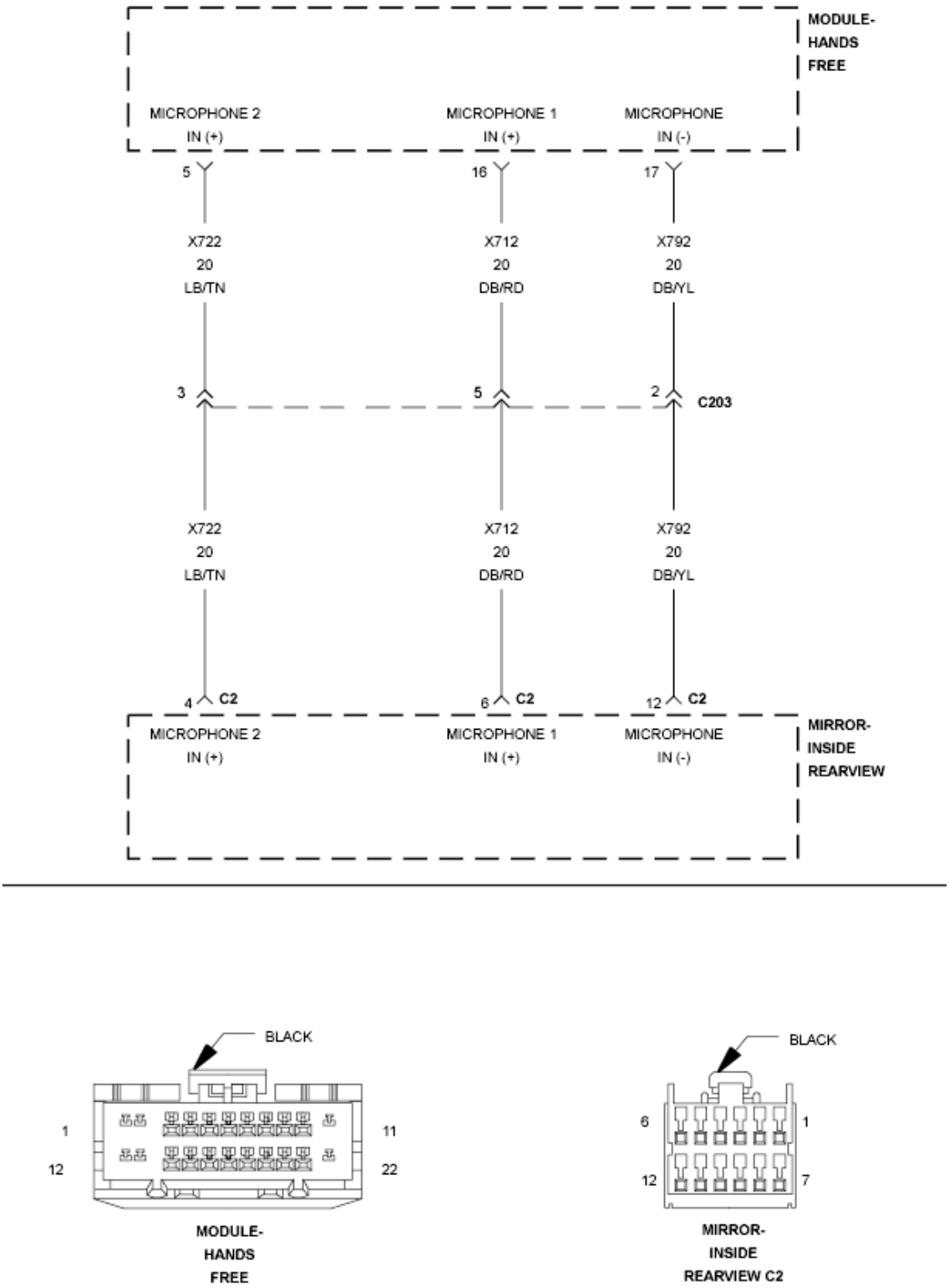

Fig. 1: Microphone Control Wiring Diagram
Courtesy of CHRYSLER GROUP, LLC

For a complete wiring diagram, **refer to appropriate SYSTEM WIRING**

DIAGRAMS article .

WHEN MONITORED

With the ignition on.

SET CONDITION

The Hands Free Module detects a fault in any of the microphone circuits.

POSSIBLE CAUSES

Possible Causes
(X712) MICROPHONE 1 IN (+) CIRCUIT SHORTED TO GROUND INSIDE REARVIEW MIRROR HANDS FREE MODULE

DIAGNOSTIC TEST

1. **CHECK FOR ACTIVE DTC**
    1. With the scan tool, read the active DTCs.
    2. Cycle the ignition switch from off to on at least 5 times, leaving the ignition on for a minimum of 90 seconds per cycle.
    3. Attempt to make a phone call with the system.
    4. With the scan tool, read the active DTCs.

    Does the scan tool display this DTC as active?

    Yes

    - Go To 2

    No

    - If the DTC is stored, check for an intermittent condition. Visually inspect the related wiring harness connectors. Look for broken, bent, pushed out, or corroded terminals.
2. **INSIDE REARVIEW MIRROR**

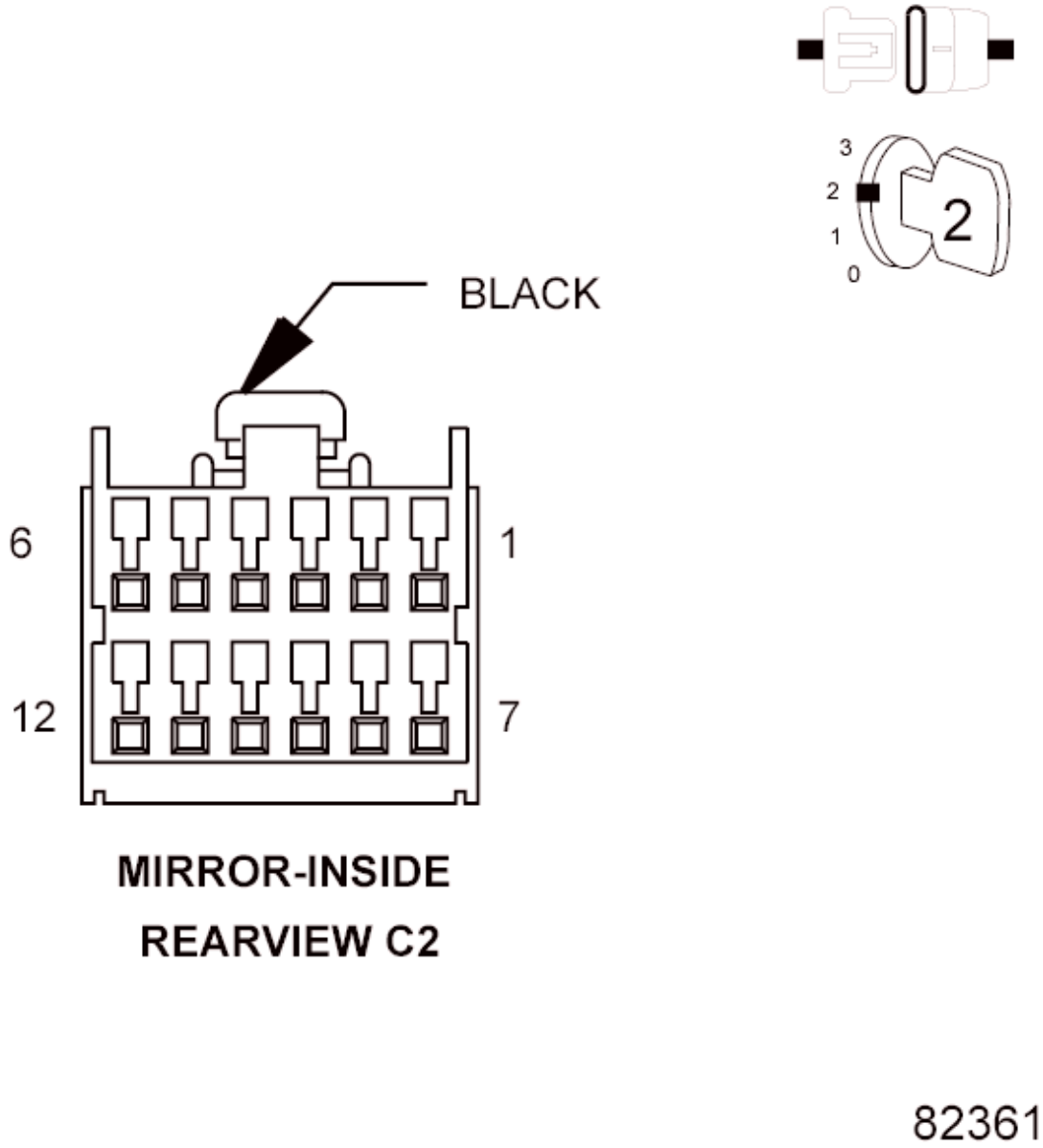

Fig. 2: Inside Rearview Mirror Connector End View
Courtesy of CHRYSLER GROUP, LLC

1. Turn the ignition off.
2. Disconnect the Inside Rearview Mirror C2 harness connector.
3. Turn the ignition on.
4. With the scan tool, read the DTCs.

   Does the scan tool display this DTC as active?

   Yes

   - Go To 3

No

- Replace the Inside Rearview Mirror in accordance with the Service Information.
- Perform the BODY VERIFICATION TEST. Refer to **STANDARD PROCEDURE** .

3. **(X712) MICROPHONE 1 IN (+) CIRCUIT SHORTED TO GROUND**

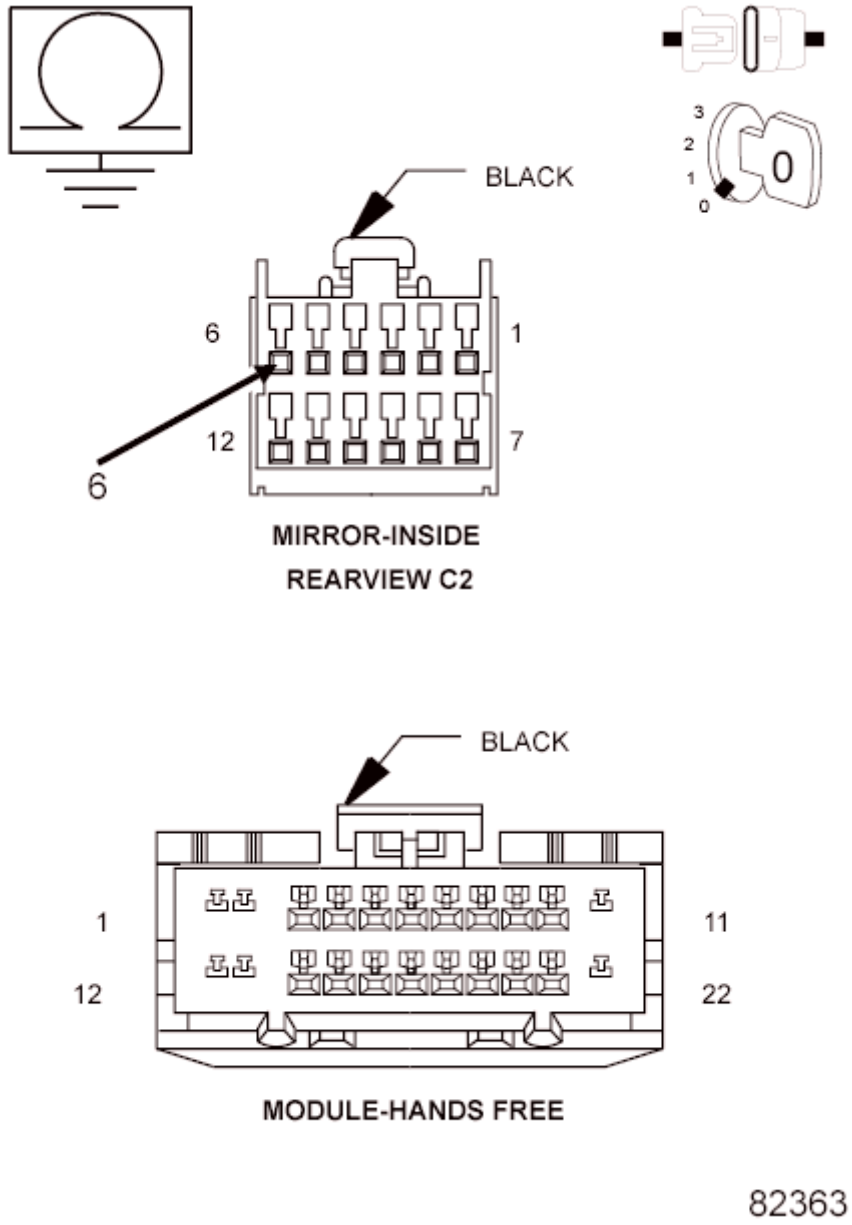

Fig. 3: Checking Microphone 1 IN (+) Circuit Shorted To Ground
Courtesy of CHRYSLER GROUP, LLC

1. Turn the ignition off.

2. Disconnect the Hands Free Module harness connector.
3. Measure the resistance between ground and the (X712) Microphone 1 IN (+) circuit.

   Is the resistance below 10K ohms?

   Yes

   - Repair the (X712) Microphone 1 IN (+) circuit for short to ground.
   - Perform the BODY VERIFICATION TEST. Refer to **STANDARD PROCEDURE** .

   No

   - Replace the Hands Free Module in accordance with the Service Information.
   - Perform the BODY VERIFICATION TEST. Refer to **STANDARD PROCEDURE** .

B143C-MICROPHONE 1 CIRCUIT HIGH

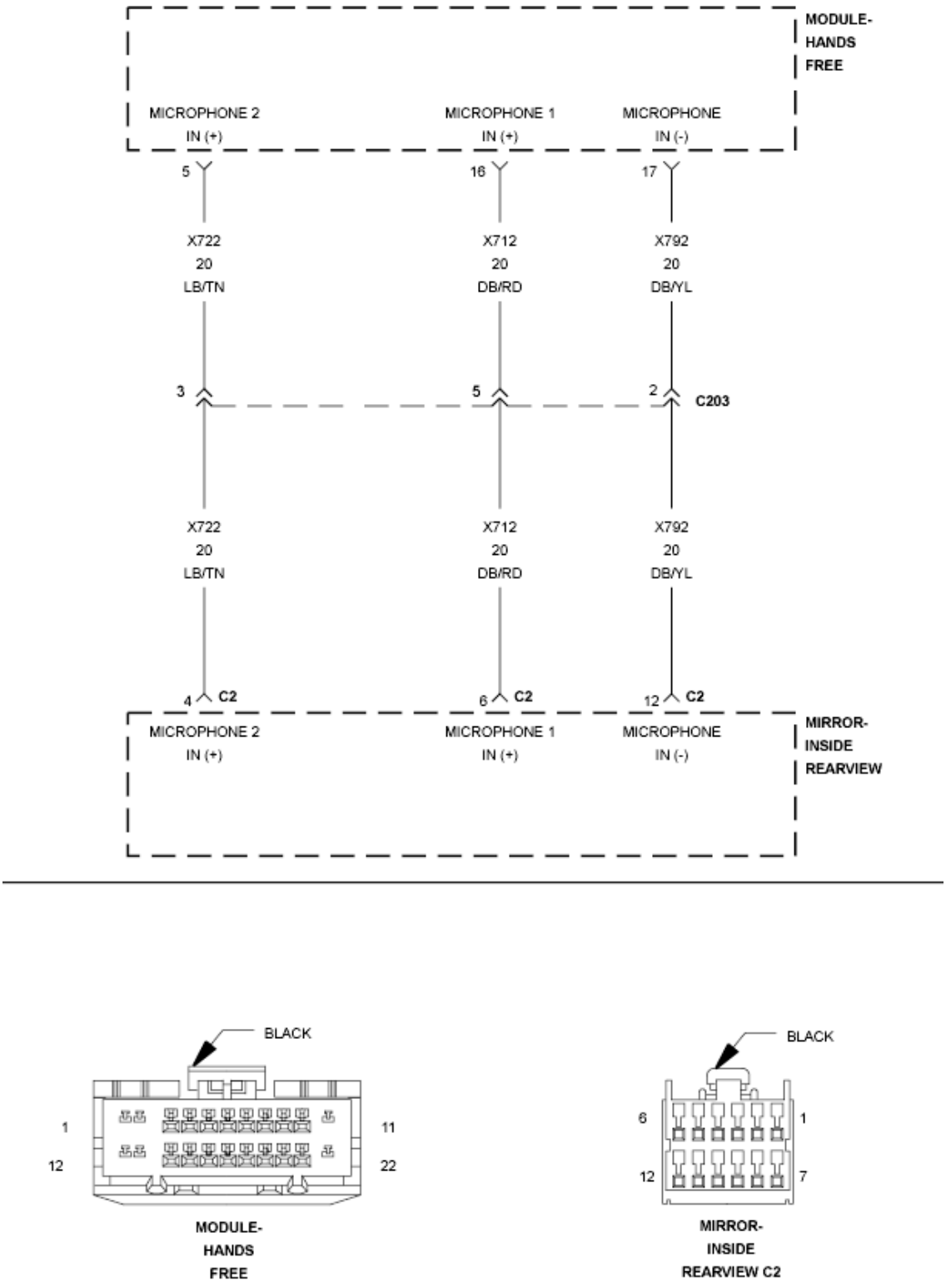

Fig. 4: Microphone Control Wiring Diagram
Courtesy of CHRYSLER GROUP, LLC

For a complete wiring diagram, **refer to appropriate SYSTEM WIRING**

DIAGRAMS article .

WHEN MONITORED

With the ignition on.

SET CONDITION

The Hands Free Module detects a fault in any of the microphone circuits.

POSSIBLE CAUSES

Possible Causes
(X712) MICROPHONE 1 IN (+) CIRCUIT OPEN
(X712) MICROPHONE 1 IN (+) CIRCUITS SHORTED TO VOLTAGE
INSIDE REARVIEW MIRROR
HANDS FREE MODULE

DIAGNOSTIC TEST

1. **CHECK FOR ACTIVE DTC**
    1. With the scan tool, read the active DTCs.
    2. Cycle the ignition switch from off to on at least 5 times, leaving the ignition on for a minimum of 90 seconds per cycle.
    3. Attempt to make a phone call with the system.
    4. With the scan tool, read the active DTCs.

    Does the scan tool display this DTC as active?

    Yes

    - Go To 2

    No

    - If the DTC is stored, check for an intermittent condition. Visually inspect the related wiring harness connectors. Look for broken, bent, pushed out, or corroded terminals.
    - Perform the BODY VERIFICATION TEST. Refer to **STANDARD PROCEDURE** .

2. INSIDE REARVIEW MIRROR

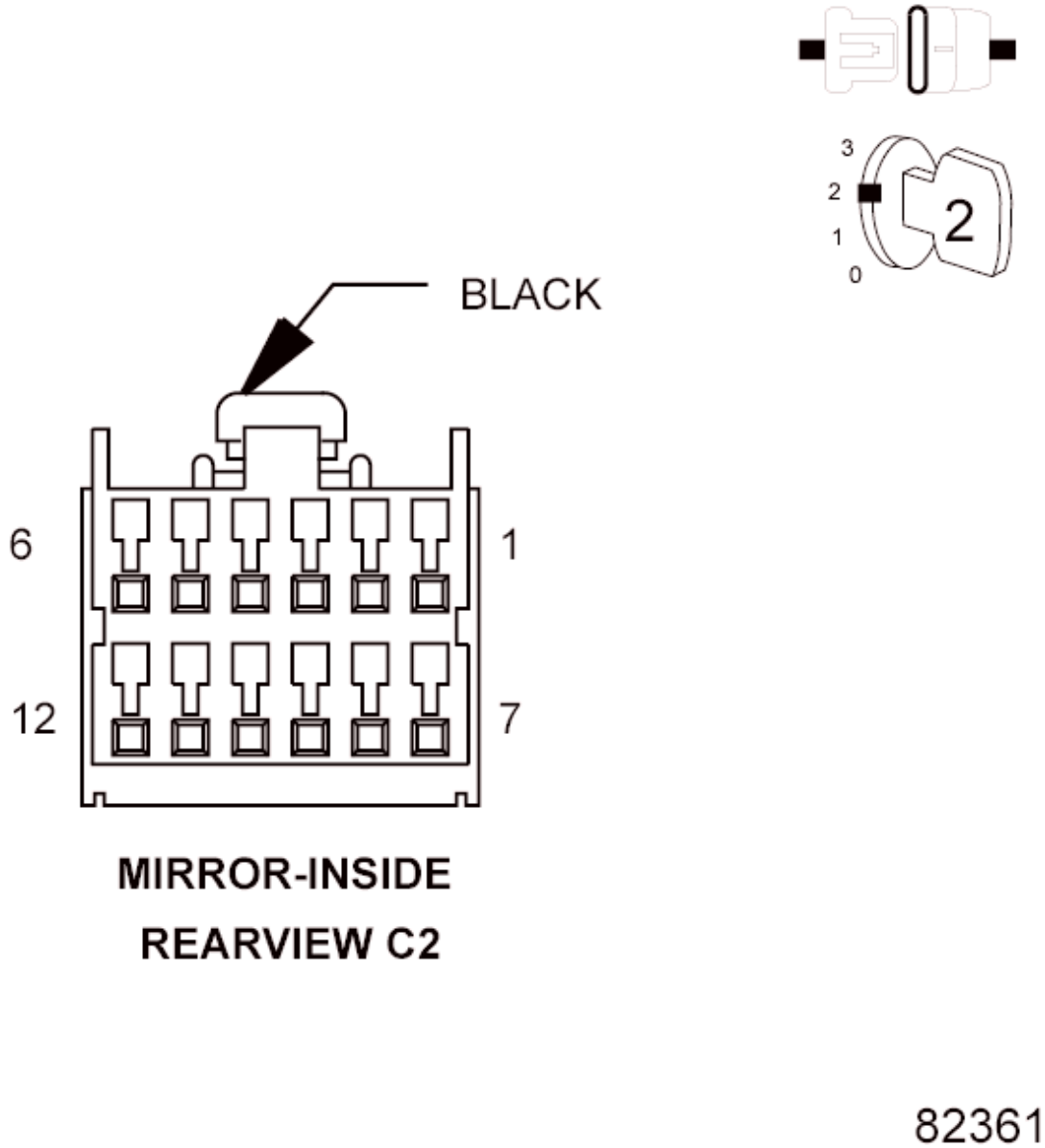

Fig. 5: Inside Rearview Mirror Connector End View
Courtesy of CHRYSLER GROUP, LLC

1. Turn the ignition off.
2. Disconnect the Rearview Mirror C2 harness connector.
3. Turn the ignition on.
4. With the scan tool, read the active DTCs.

   Does the scan tool display this DTC as active?

Yes

- Go To 3

No

- Replace the Rearview Mirror in accordance with the Service Information.
- Perform the BODY VERIFICATION TEST. Refer to **STANDARD PROCEDURE** .

3. **(X712) MICROPHONE CIRCUITS SHORTED TO VOLTAGE**

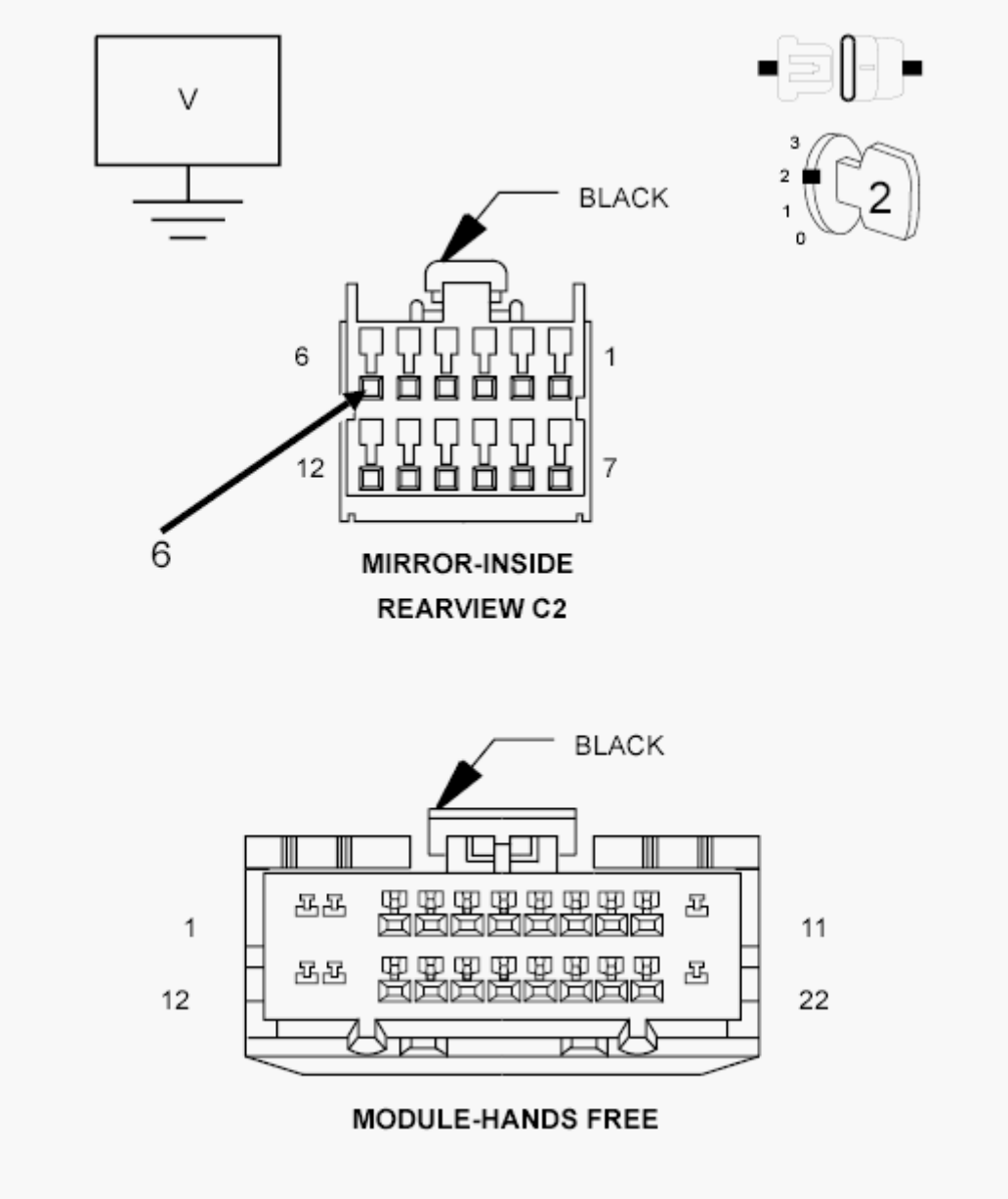

Fig. 6: Checking Microphone Circuits For Short To Voltage

Courtesy of CHRYSLER GROUP, LLC

1. Turn the ignition off.
2. Disconnect the Hands Free Module harness connector.
3. Turn the ignition on.
4. Measure the voltage of the (X712) Microphone circuit.

   Is the voltage above 1.0 volt?

   Yes

   - Repair the (X712) Microphone circuit for a short to voltage.
   - Perform the BODY VERIFICATION TEST. Refer to **STANDARD PROCEDURE** .

   No

   - Go To 4

4. **(X712) MICROPHONE 1 IN (+) CIRCUIT OPEN**

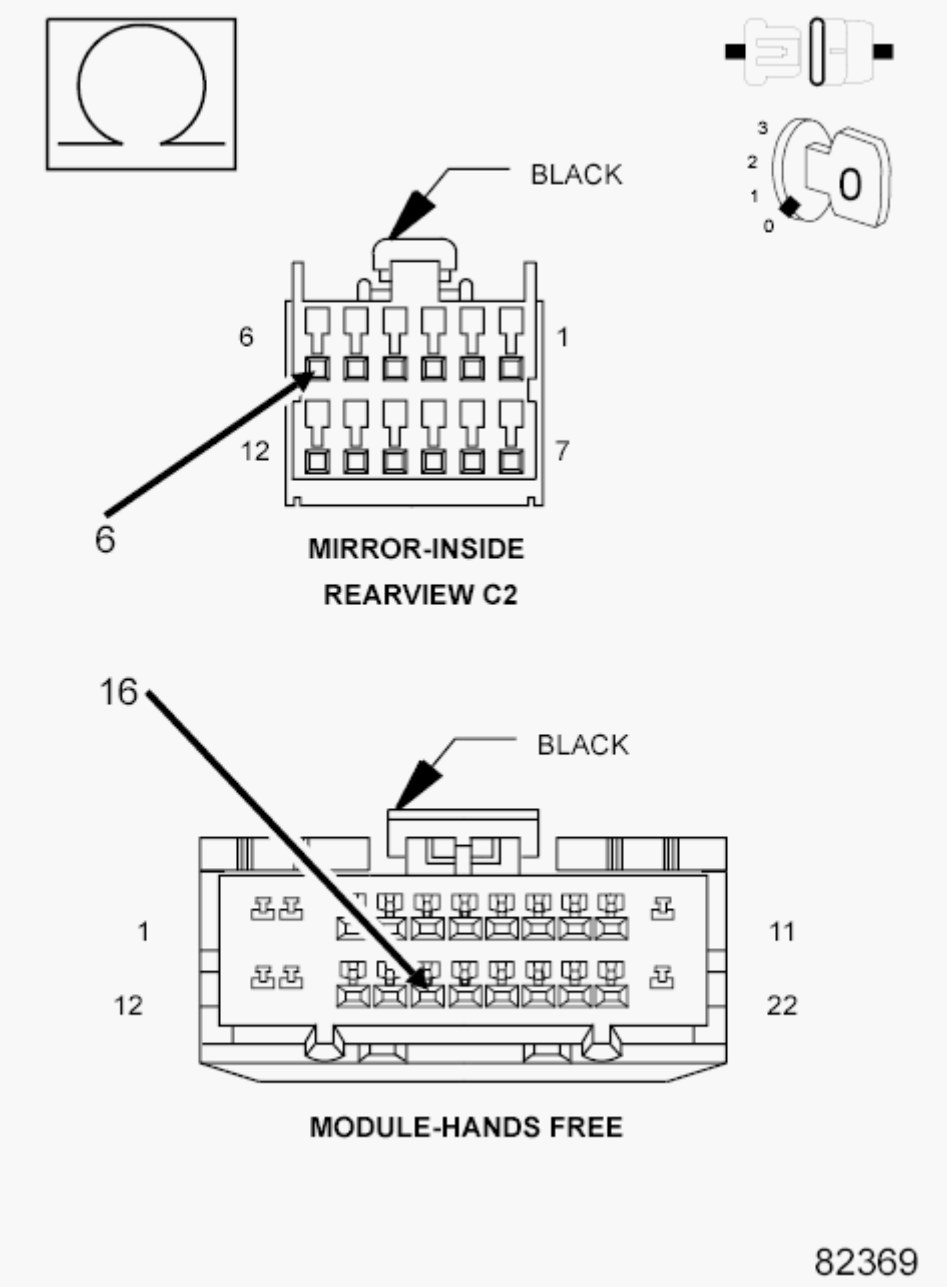

Fig. 7: Checking Microphone 1 In (+) Circuit For Open
Courtesy of CHRYSLER GROUP, LLC

1. Turn the ignition off.
2. Measure the resistance of the (X712) Microphone 1 IN (+) circuit between the HFM connector and the inside rearview mirror connector.

   Is the resistance below 5.0 ohms?

   Yes

   - Replace the Hands Free Module in accordance with the Service

Information.

- Perform the BODY VERIFICATION TEST. Refer to **STANDARD PROCEDURE** .

No

- Repair the (X712) Microphone 1 IN (+) circuit for an open.
- Perform the BODY VERIFICATION TEST. Refer to **STANDARD PROCEDURE** .

B143E-MICROPHONE 2 CIRCUIT LOW

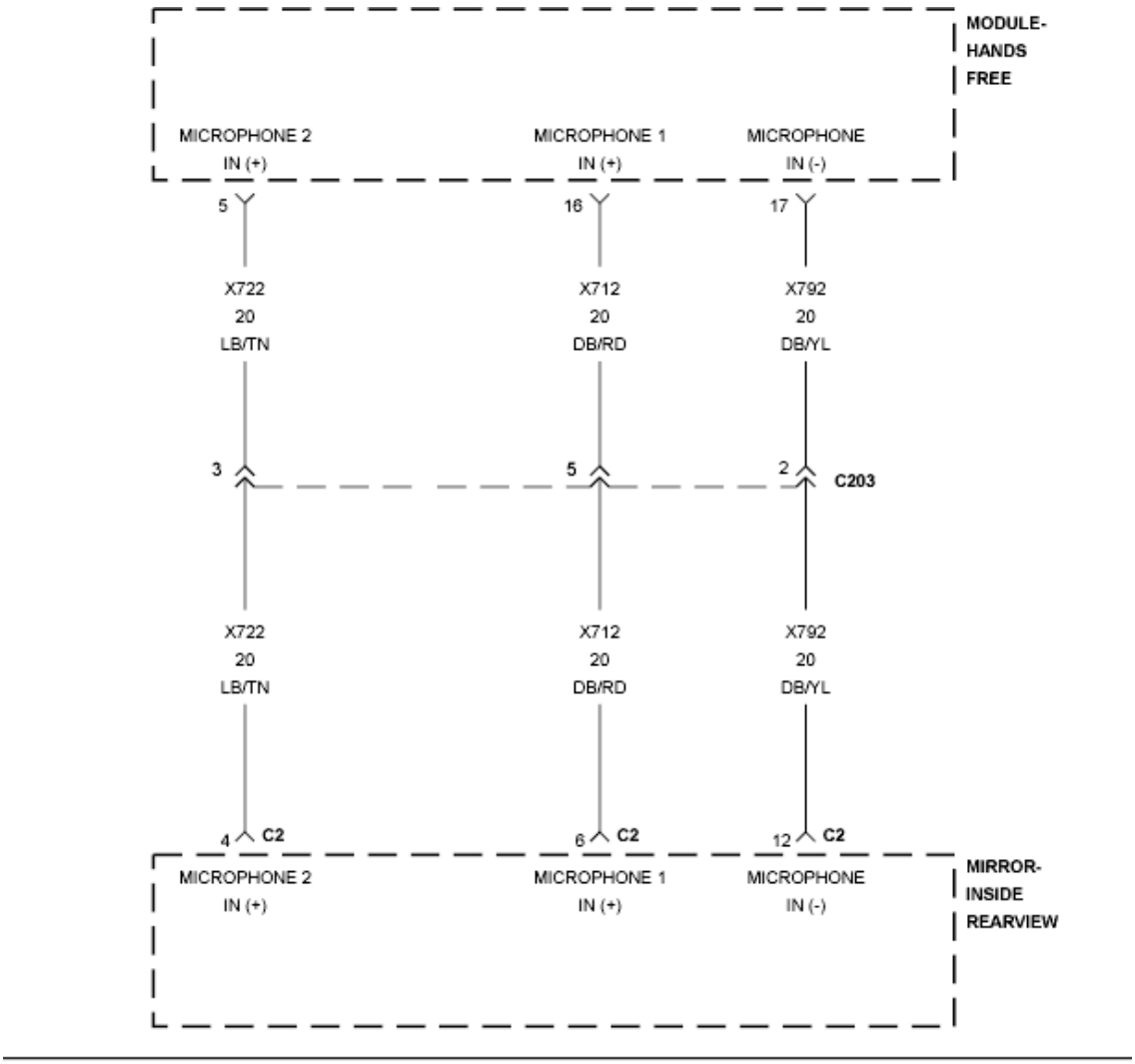

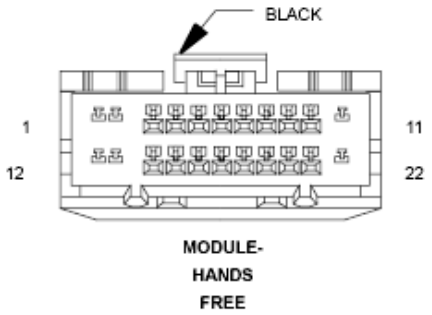

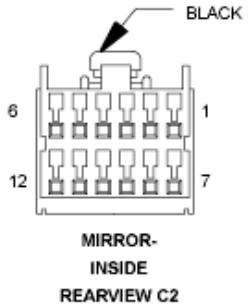

Fig. 8: Microphone Control Wiring Diagram
Courtesy of CHRYSLER GROUP, LLC

For a complete wiring diagram, **refer to appropriate SYSTEM WIRING**

DIAGRAMS article .

WHEN MONITORED

With the ignition on.

SET CONDITION

The Hands Free Module detects a fault in any of the microphone circuits.

POSSIBLE CAUSES

Possible Causes
(X722) MICROPHONE 2 IN (+) CIRCUIT SHORTED TO GROUND INSIDE REARVIEW MIRROR HANDS FREE MODULE

DIAGNOSTIC TEST

1. **CHECK FOR ACTIVE DTC**
    1. With the scan tool, read the active DTCs.
    2. Cycle the ignition switch from off to on at least 5 times, leaving the ignition on for a minimum of 90 seconds per cycle.
    3. Attempt to make a phone call with the system.
    4. With the scan tool, read the active DTCs.

    Does the scan tool display this DTC as active?

    Yes

    - Go To 2

    No

    - If the DTC is stored, check for an intermittent condition. Visually inspect the related wiring harness connectors. Look for broken, bent, pushed out, or corroded terminals.
    - Perform the BODY VERIFICATION TEST. Refer to **STANDARD PROCEDURE** .
2. **INSIDE REARVIEW MIRROR**

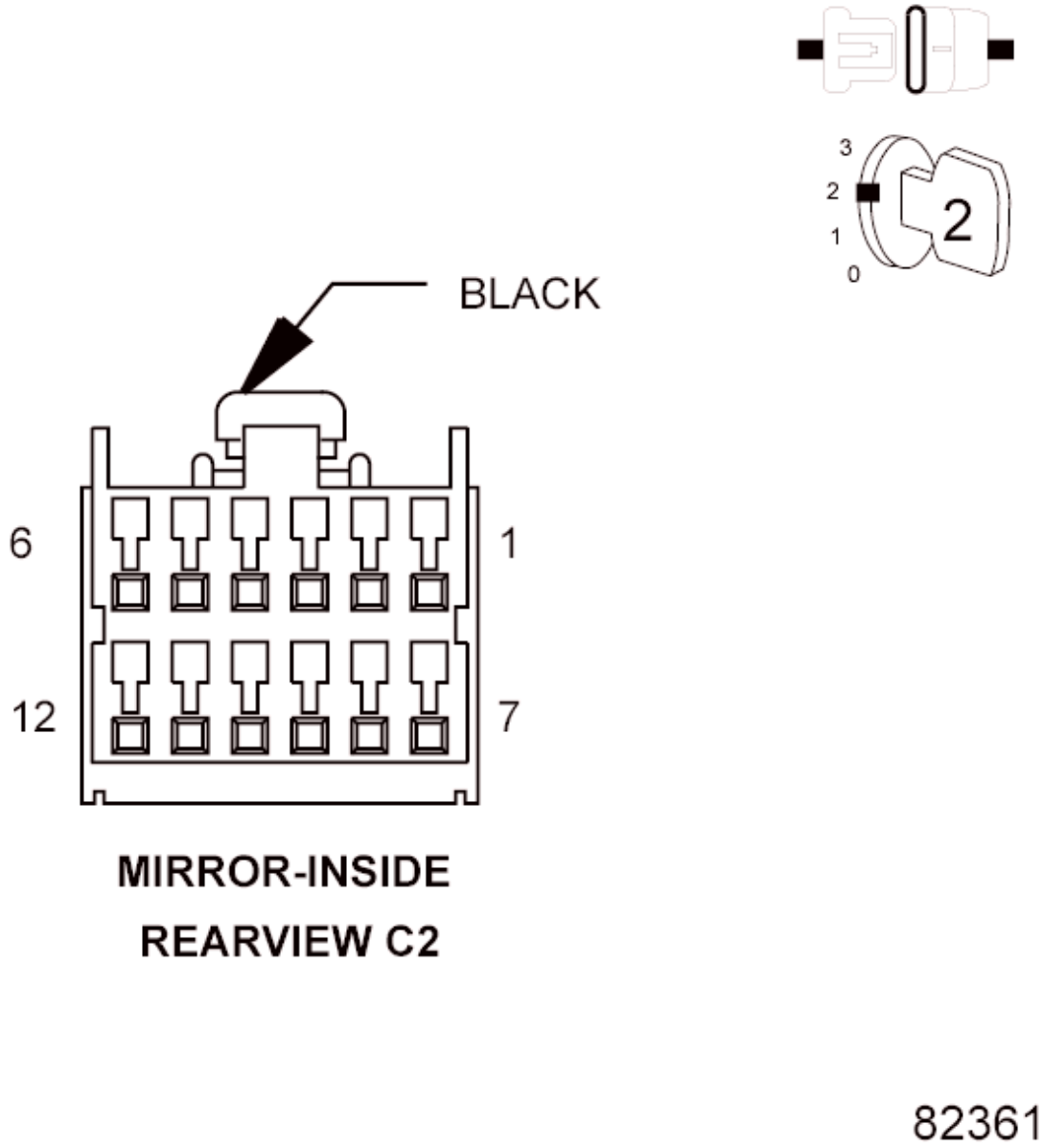

Fig. 9: Inside Rearview Mirror Connector End View
Courtesy of CHRYSLER GROUP, LLC

1. Turn the ignition off.
2. Disconnect the Inside Rearview Mirror C2 harness connector.
3. Turn the ignition on.
4. With the scan tool, read the DTCs.

   Does the scan tool display this DTC as active?

   Yes

   - Go To 3

No

- Replace the Inside Rearview Mirror in accordance with the Service Information.
- Perform the BODY VERIFICATION TEST. Refer to **STANDARD PROCEDURE** .

3. **(X722) MICROPHONE 2 IN (+) CIRCUIT SHORTED TO GROUND**

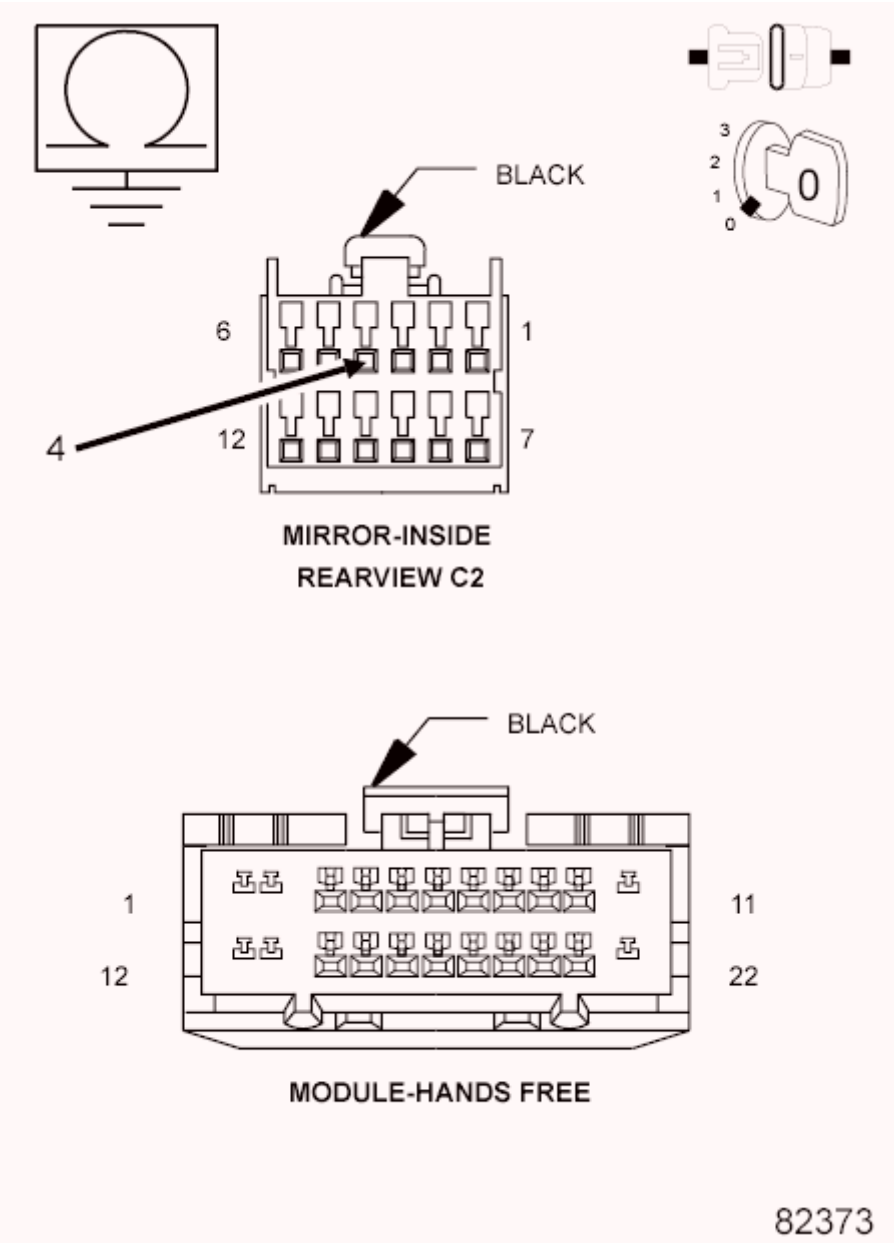

Fig. 10: Checking Microphone 2 IN (+) Circuit Shorted To Ground
Courtesy of CHRYSLER GROUP, LLC

1. Turn the ignition off.

2. Disconnect the Hands Free Module harness connector.
3. Measure the resistance between ground and the (X722) Microphone 2 IN (+) circuit.

   Is the resistance below 10K ohms?

   Yes

   - Repair the (X722) Microphone 2 IN (+) circuit for short to ground.
   - Perform the BODY VERIFICATION TEST. Refer to **STANDARD PROCEDURE** .

   No

   - Replace the Hands Free Module in accordance with the Service Information.
   - Perform the BODY VERIFICATION TEST. Refer to **STANDARD PROCEDURE** .

B143F-MICROPHONE 2 CIRCUIT HIGH

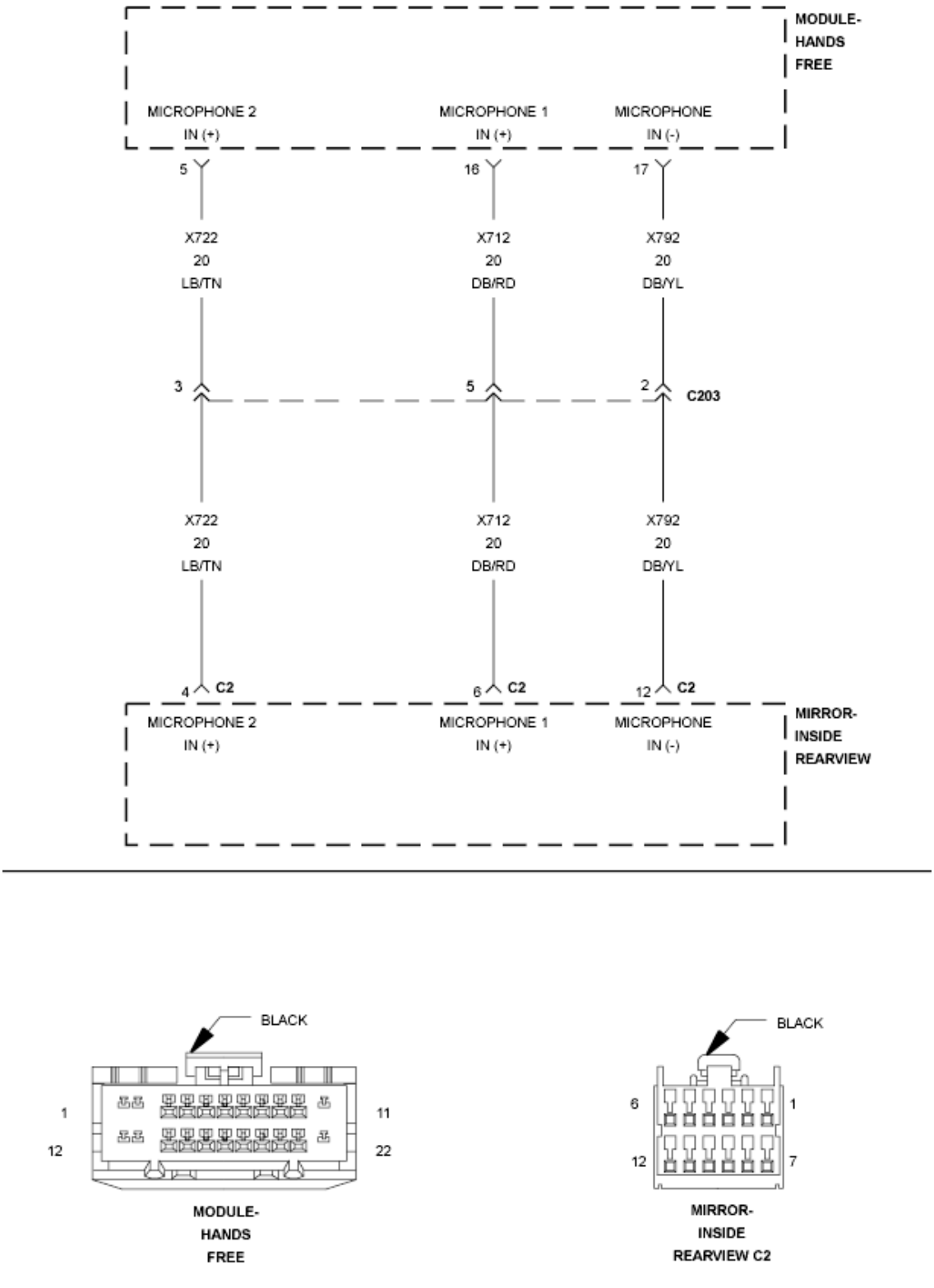

Fig. 11: Microphone Control Wiring Diagram
Courtesy of CHRYSLER GROUP, LLC

For a complete wiring diagram, **refer to appropriate SYSTEM WIRING**

DIAGRAMS article .

WHEN MONITORED

With the ignition on.

SET CONDITION

The Hands Free Module detects a fault in any of the microphone circuits.

POSSIBLE CAUSES

Possible Causes
(X722) MICROPHONE 2 IN (+) CIRCUIT OPEN
(X722) MICROPHONE 2 IN (+) CIRCUITS SHORTED TO VOLTAGE
INSIDE REARVIEW MIRROR
HANDS FREE MODULE

DIAGNOSTIC TEST

1. **CHECK FOR ACTIVE DTC**
    1. With the scan tool, read the active DTCs.
    2. Cycle the ignition switch from off to on at least 5 times, leaving the ignition on for a minimum of 90 seconds per cycle.
    3. Attempt to make a phone call with the system.
    4. With the scan tool, read the active DTCs.

    Does the scan tool display this DTC as active?

    Yes

    - Go To 2

    No

    - If the DTC is stored, check for an intermittent condition. Visually inspect the related wiring harness connectors. Look for broken, bent, pushed out, or corroded terminals.
    - Perform the BODY VERIFICATION TEST. Refer to **STANDARD PROCEDURE** .

2. INSIDE REARVIEW MIRROR

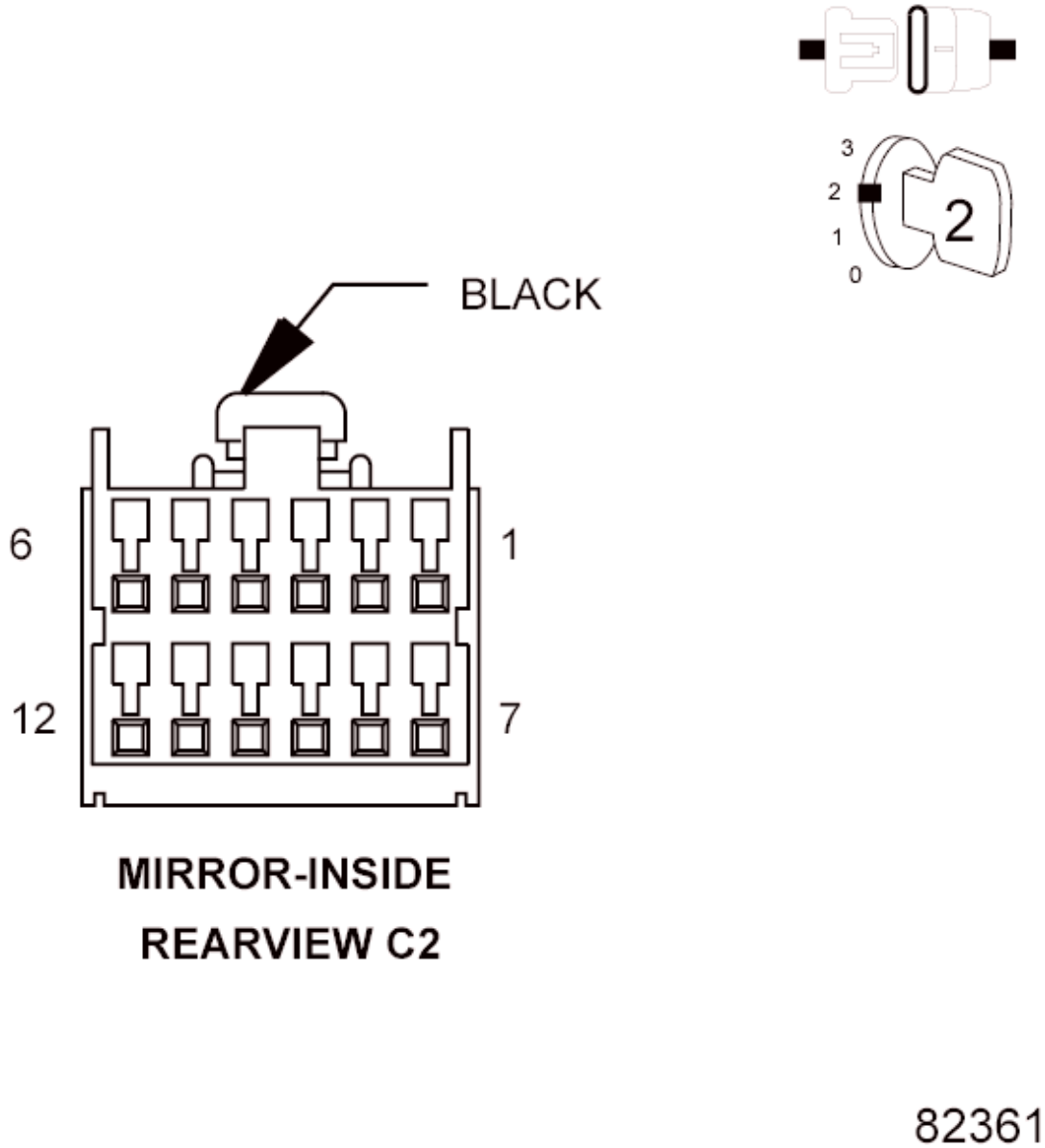

Fig. 12: Inside Rearview Mirror Connector End View
Courtesy of CHRYSLER GROUP, LLC

1. Turn the ignition off.
2. Disconnect the Rearview Mirror C2 harness connector.
3. Turn the ignition on.
4. With the scan tool, read the active DTCs.

   Does the scan tool display this DTC as active?

Yes

- Go To 3

No

- Replace the Rearview Mirror in accordance with the Service Information.
- Perform the BODY VERIFICATION TEST. Refer to **STANDARD PROCEDURE** .

3. **(X722) MICROPHONE CIRCUITS SHORTED TO VOLTAGE**

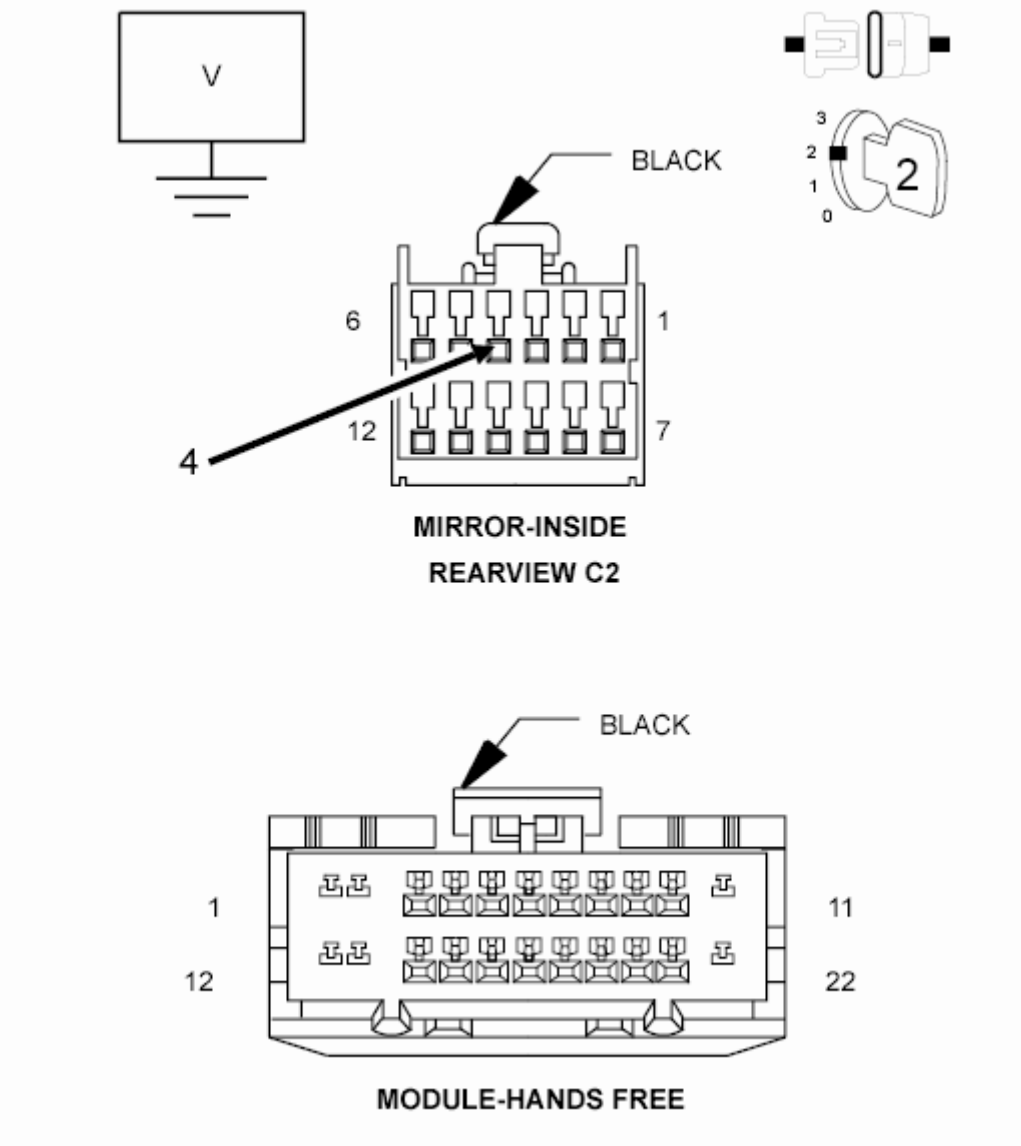

Fig. 13: Checking Microphone Circuits Shorted To Voltage
Courtesy of CHRYSLER GROUP, LLC

1. Turn the ignition off.
2. Disconnect the Hands Free Module harness connector.
3. Turn the ignition on.
4. Measure the voltage of the (X722) Microphone circuit.

   Is the voltage above 1.0 volt?

   Yes

   - Repair the (X722) Microphone circuit for a short to voltage.
   - Perform the BODY VERIFICATION TEST. Refer to **STANDARD PROCEDURE** .

   No

   - Go To 4

4. **(X722) MICROPHONE 2 IN (+) CIRCUIT OPEN**

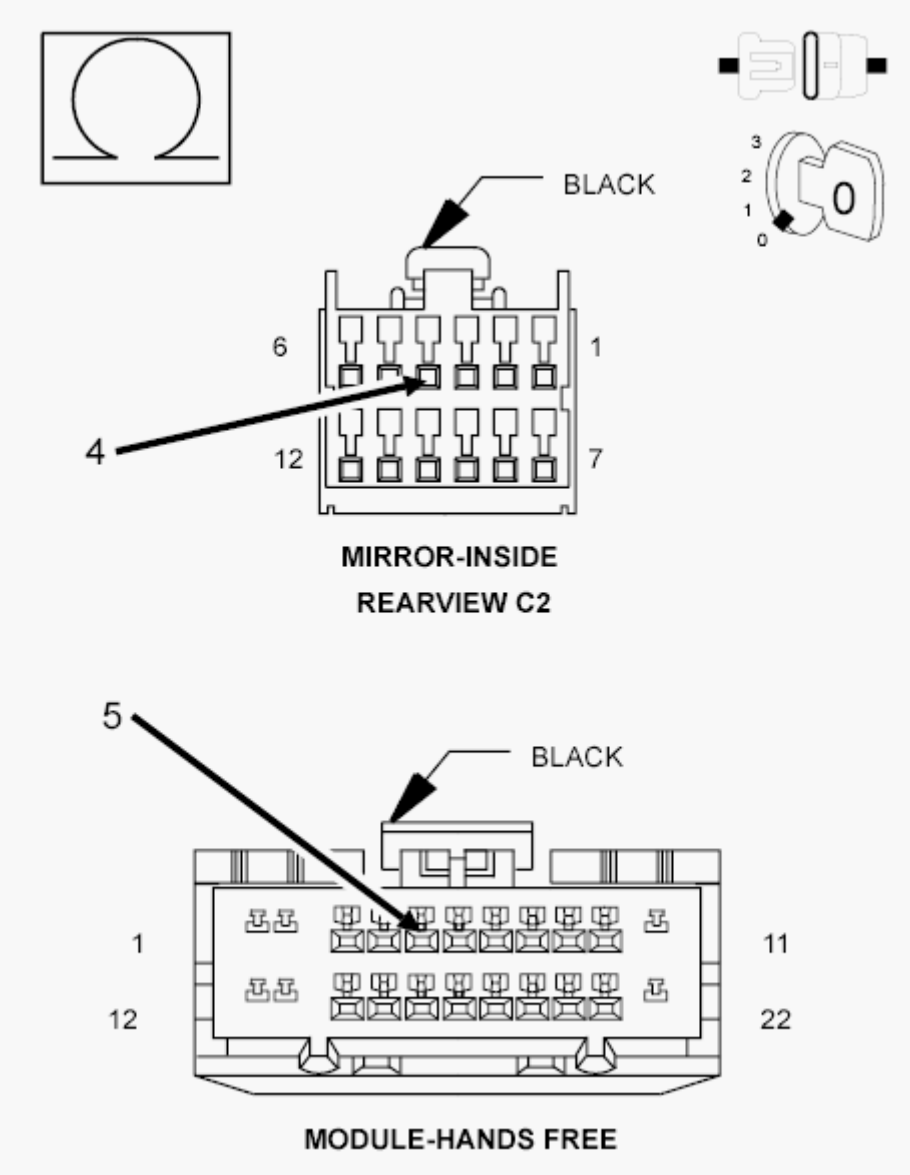

Fig. 14: Checking Microphone 2 IN (+) Circuit For Open
Courtesy of CHRYSLER GROUP, LLC

1. Turn the ignition off.
2. Measure the resistance of the (X722) Microphone 2 IN (+) circuit between the HFM connector and the inside rearview mirror connector.

   Is the resistance below 5.0 ohms?

   Yes

   - Replace the Hands Free Module in accordance with the Service Information.
   - Perform the BODY VERIFICATION TEST. Refer to

STANDARD PROCEDURE .

No

- Repair the (X722) Microphone 2 IN (+) circuit for an open.
- Perform the BODY VERIFICATION TEST. Refer to **STANDARD PROCEDURE** .

B2205-ORIGINAL VIN MISSING/MISMATCH

For a complete wiring diagram, **refer to appropriate SYSTEM WIRING DIAGRAMS article** .

WHEN MONITORED

With the ignition on.

SET CONDITION

The Hands Free Module will receive and monitor the VIN message from the PCM. The Hands Free Module will set this code if the VIN recorded in the module is different from the VIN message received from the PCM.

POSSIBLE CAUSES

Possible Causes
INCORRECT VIN PROGRAMMED IN PCM HANDS FREE MODULE

DIAGNOSTIC TEST

1. **CHECK FOR ACTIVE DTC**
    1. Turn the ignition on.
    2. With the scan tool, record and erase the Hands Free Module DTCs.
    3. Cycle the ignition switch from on to off, wait five seconds and then back to on.
    4. With the scan tool, read the active Hands Free Module DTCs.

    Does the scan tool display this DTC as active?

    Yes

- Go To 2

No

- Test complete, the condition or conditions that originally set this DTC are not present at this time. Using the wiring diagrams as a guide, check all related splices and connectors for signs of water intrusion, corrosion, pushed out or bent terminals and correct pin tension.

2. **CHECK VIN IN PCM**
   1. With the scan tool, compare the VIN that is programmed into the PCM to the VIN on the vehicle.

      Does the VIN programmed into the PCM match the vehicle VIN?

      Yes

      - Inspect the wiring and connectors for damage or shorted circuits. If OK, replace and program the Hands Free Module in accordance with the Service Information.
      - Perform the BODY VERIFICATION TEST. Refer to **STANDARD PROCEDURE** .

      No

      - Program the correct VIN into the PCM and retest the Hands Free Module system.

U0019-CAN B BUS

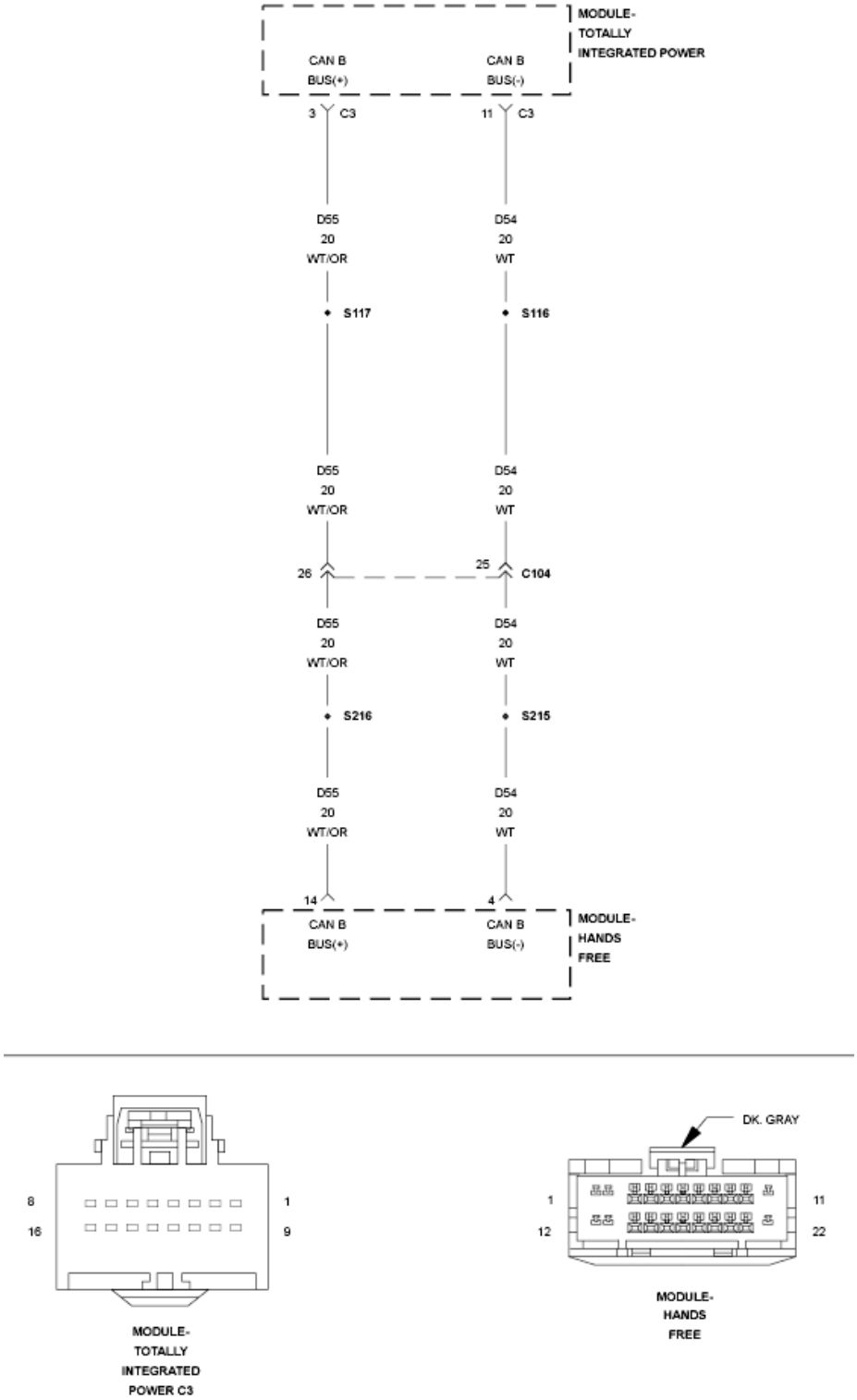

Fig. 15: CAN B BUS Wiring Diagram
Courtesy of CHRYSLER GROUP, LLC

For a complete wiring diagram, **refer to appropriate SYSTEM WIRING DIAGRAMS article** .

WHEN MONITORED

Continuously

SET CONDITION

Whenever the CAN B Bus (+) or CAN B Bus (-) circuit is open, shorted to voltage or shorted to ground.

POSSIBLE CAUSES

Possible Causes
CAN B BUS DTCs IN THE TOTALLY INTEGRATED POWER MODULE (D55) CAN B BUS (+) CIRCUIT OPEN (D54) CAN B BUS (-) CIRCUIT OPEN HANDS FREE MODULE

DIAGNOSTIC TEST

1. **CHECK FOR ACTIVE DTCS**
   1. With the scan tool, read the active DTCs.
   2. Cycle the ignition switch from off to on at least 5 times, leaving the ignition on for a minimum of 90 seconds per cycle.
   3. With the scan tool, read the active DTCs.

      Does the scan tool display this DTC as active?

      Yes

      - Go To 2

      No

      - If the DTC is stored, check for an intermittent condition. Visually inspect the related wiring harness connectors. Look for broken, bent, pushed out, or corroded terminals.
      - Perform the BODY VERIFICATION TEST. Refer to **STANDARD PROCEDURE** .
2. **CHECK THE TOTALLY INTEGRATED POWER MODULE DTCs**
   1. With the scan tool, read the Totally Integrated Power Module active DTCs.

Does the scan tool display any CAN B BUS DTCs - ACTIVE?

Yes

- Refer to **DIAGNOSIS AND TESTING** .

No

- Go To 3

3. **(D55) CAN B BUS (+) CIRCUIT OPEN**

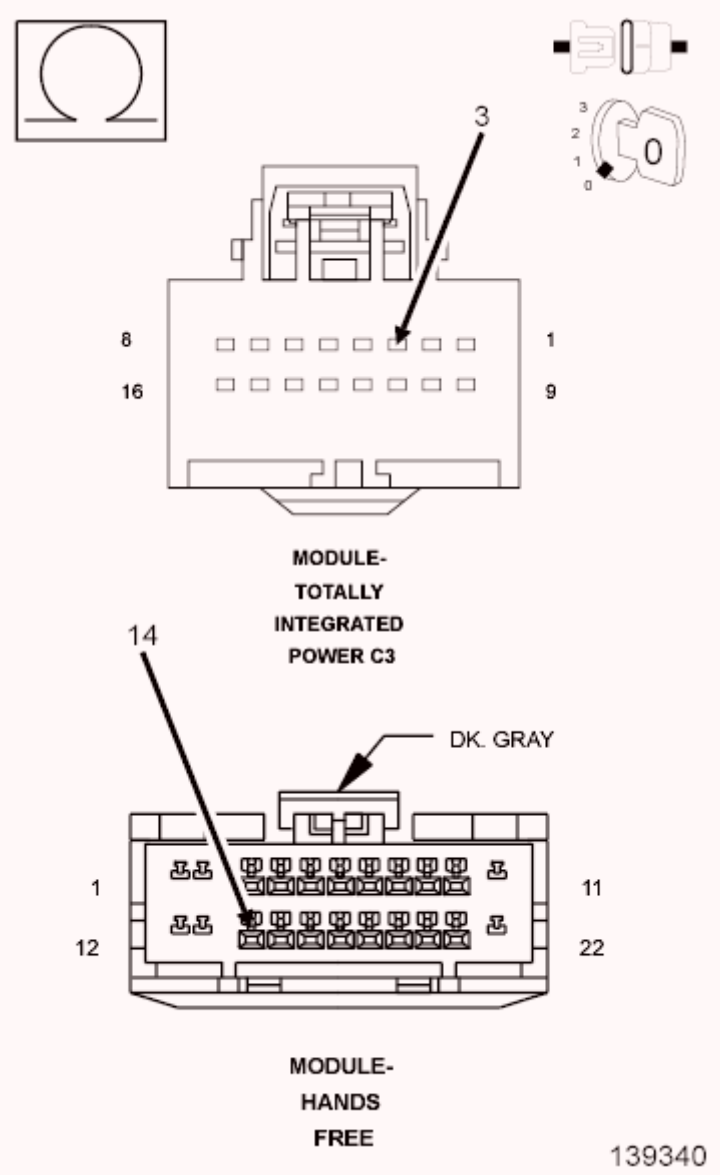

Fig. 16: Checking CAN B Bus (+) Circuit For Open
Courtesy of CHRYSLER GROUP, LLC

1. Turn the ignition off.
2. Disconnect the negative battery cable.
3. Disconnect the Hands Free Module harness connector.
4. Disconnect the Totally Integrated Power Module harness connector.
5. Measure the resistance of the (D55) CAN B Bus (+) circuit between the Totally Integrated Power Module connector and the Hands Free Module connector.

   Is the resistance below 2.0 ohms?

   Yes

   - Go To 4

   No

   - Repair the (D55) CAN B Bus (+) circuit for an open.
   - Perform the BODY VERIFICATION TEST. Refer to **STANDARD PROCEDURE** .

4. **(D54) CAN B BUS (-) CIRCUIT OPEN**

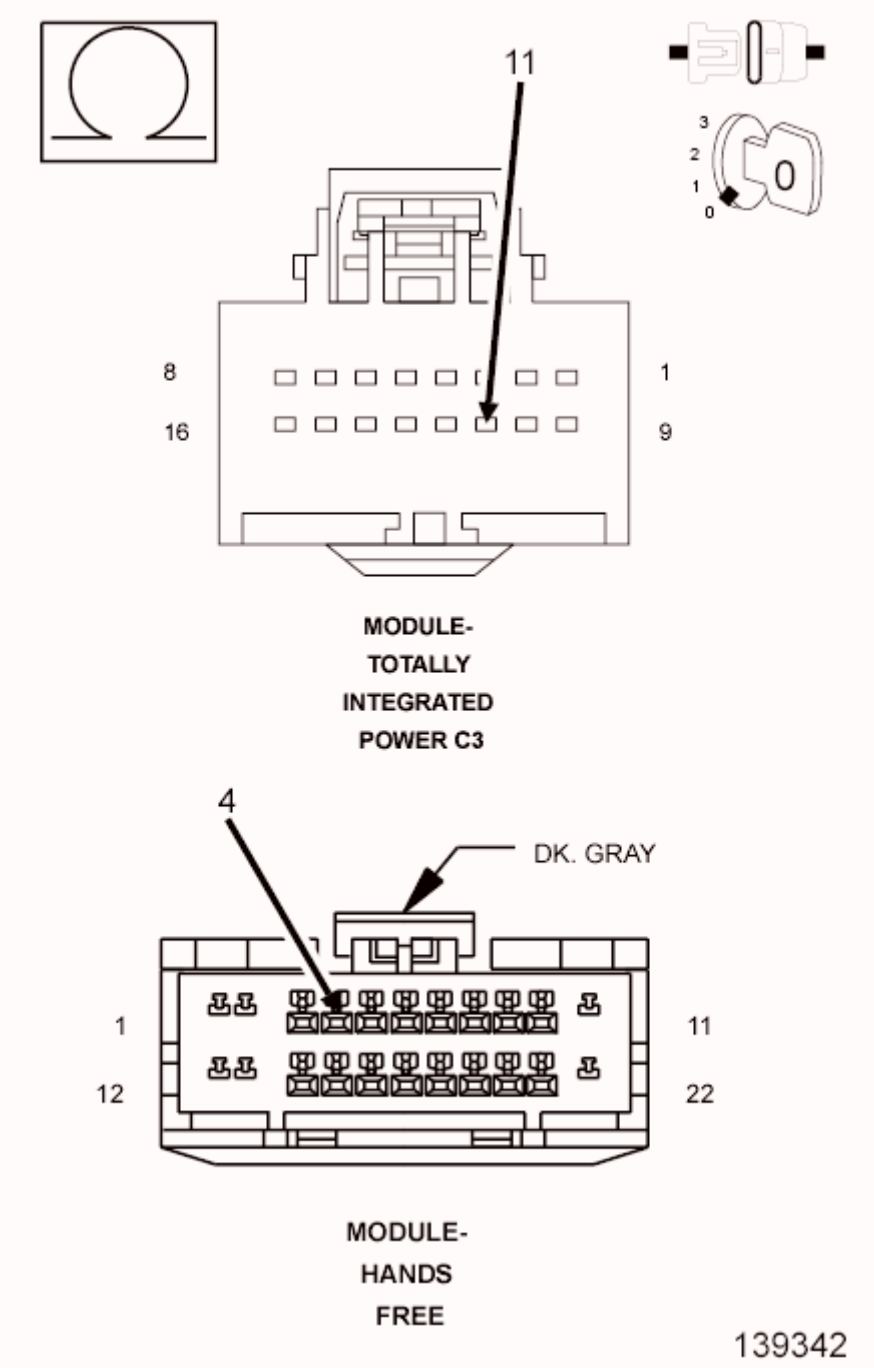

Fig. 17: Checking CAN B Bus (-) Circuit For Open
Courtesy of CHRYSLER GROUP, LLC

1. Measure the resistance of the (D54) CAN B Bus (-) circuit between the Totally Integrated Power Module connector and the Hands Free Module connector.

   Is the resistance below 2.0 ohms?

   Yes

- Replace the Hands Free Module in accordance with the Service Information.
- Perform the BODY VERIFICATION TEST. Refer to **STANDARD PROCEDURE** .

No

- Repair the (D54) CAN B Bus (-) circuit for an open.
- Perform the BODY VERIFICATION TEST. Refer to **STANDARD PROCEDURE** .

U0141-LOST COMMUNICATION WITH IPM (FCM/TIPM)

For a complete wiring diagram, **refer to appropriate SYSTEM WIRING DIAGRAMS article** .

WHEN MONITORED

Continuously when the ignition is on.

The battery voltage between 10.0 and 16.0 Volts.

Ignition Off Draw (IOD) fuse installed.

Totally Integrated Power Module (TIPM) is configured correctly.

SET CONDITION

Bus messages not received from the Totally Integrated Power Module (TIPM) for approximately two to five seconds.

POSSIBLE CAUSES

Possible Causes
CAN BUS CIRCUITS OPEN OR SHORTED
DTCS RELATED TO BATTERY VOLTAGE, IGNITION, OR VIN MESSAGES
TOTALLY INTEGRATED POWER MODULE POWER AND GROUND
TIPM NOT CONFIGURED CORRECTLY
TOTALLY INTEGRATED POWER MODULE (TIPM)
MODULE THAT SET THIS DTC

DIAGNOSTIC TEST

VERIFY DTC IS ACTIVE

NOTE: Make sure the IOD fuse is installed and the battery is fully charged before proceeding.

1. Turn the ignition on.
2. With the scan tool, read active DTCs.

   Is this DTC active?

   Yes

   - Refer to **DIAGNOSIS AND TESTING** and perform the U0141-LOST COMMUNICATION WITH IPM (FCM/TIPM) diagnostic procedure.

   No

   - Refer to **DIAGNOSIS AND TESTING** and perform the STORED LOST COMMUNICATION DTCs diagnostic procedure.

U0155-LOST COMMUNICATION WITH CLUSTER/CCN

For a complete wiring diagram, **refer to appropriate SYSTEM WIRING DIAGRAMS article** .

WHEN MONITORED

Continuously when the ignition is on.

The battery voltage is between 10 and 16 volts.

Ignition Off Draw (IOD) fuse installed.

Totally Integrated Power Module (TIPM) is configured correctly.

SET CONDITION

Bus messages not received from the Instrument Cluster (CCN) for approximately two to five seconds.

POSSIBLE CAUSES

Possible Causes
CAN BUS CIRCUITS OPEN OR SHORTED
DTCS RELATED TO BATTERY VOLTAGE, IGNITION, OR VIN MESSAGES
INSTRUMENT CLUSTER POWER AND GROUND
TIPM NOT CONFIGURED CORRECTLY
INSTRUMENT CLUSTER (CCN)
MODULE THAT SET THIS DTC

DIAGNOSTIC TEST

VERIFY THE DIAGNOSTIC TROUBLE CODE (DTC) IS ACTIVE

NOTE: Make sure the IOD fuse is installed and the battery is fully charged before proceeding.

1. Turn the ignition on.
2. With the scan tool, read active DTCs.

   Is this DTC active?

   Yes

   - Refer to **DIAGNOSIS AND TESTING** and perform the U0155-LOST COMMUNICATION WITH CLUSTER/CCN diagnostic procedure.

   No

   - Refer to **DIAGNOSIS AND TESTING** and perform the STORED LOST COMMUNICATION DTCs diagnostic procedure.

U0184-LOST COMMUNICATION WITH RADIO

For a complete wiring diagram, **refer to appropriate SYSTEM WIRING DIAGRAMS article** .

WHEN MONITORED

Continuously when the ignition is on.

Battery voltage between 10 and 16 volts.

Ignition Off Draw (IOD) fused installed.

Totally Integrated Power Module (TIPM) is configured correctly.

SET CONDITION

Bus messages not received from the Radio for approximately two to five seconds.

POSSIBLE CAUSES

Possible Causes
CAN BUS CIRCUITS OPEN OR SHORTED DTCS RELATED TO BATTERY VOLTAGE, IGNITION, OR VIN MESSAGES RADIO POWER AND GROUND TIPM NOT CONFIGURED CORRECTLY RADIO MODULE THAT SET THIS DTC

DIAGNOSTIC TEST

VERIFY THE DIAGNOSTIC TROUBLE CODE (DTC) IS ACTIVE

NOTE: Make sure the IOD fuse is installed and the battery is fully charged before proceeding.

1. Turn the ignition on.
2. With the scan tool, read the active DTCs.

   Is this DTC active?

   Yes

   - Refer to **DIAGNOSIS AND TESTING** and perform the U0184-87-LOST COMMUNICATION WITH RADIO - MISSING MESSAGE diagnostic procedure.

   No

   - Refer to **DIAGNOSIS AND TESTING** and perform the STORED

LOST COMMUNICATION DTCs diagnostic procedure.

2014 ACCESSORIES AND EQUIPMENT

Heated Glass - Service Information - Compass & Patriot

DESCRIPTION

DESCRIPTION

CAUTION: Grid lines can be damaged or scraped off with sharp instruments. Care should be taken when cleaning or removing foreign materials, decals or stickers from the rear glass. Normal glass cleaning solvents or hot water used with soft toweling is recommended.

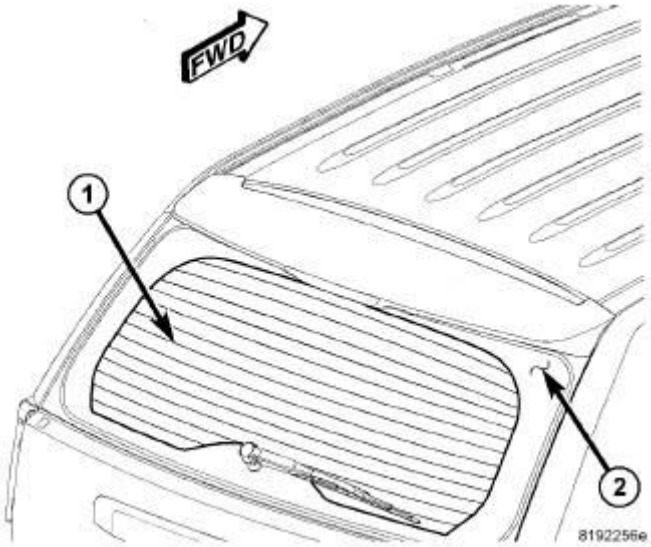

Fig. 1: Electric Backlight
Courtesy of CHRYSLER GROUP, LLC

The rear window defogger system, also known as electric backlight (EBL), consists of two vertical bus bars and a series of grid lines (1) fired onto the inside surface of the rear window (2).

The EBL system is turned on or off by a push-button switch located in the A/C-heater control. Refer to **CONTROL, A/C AND HEATER, DESCRIPTION** .

OPERATION

OPERATION

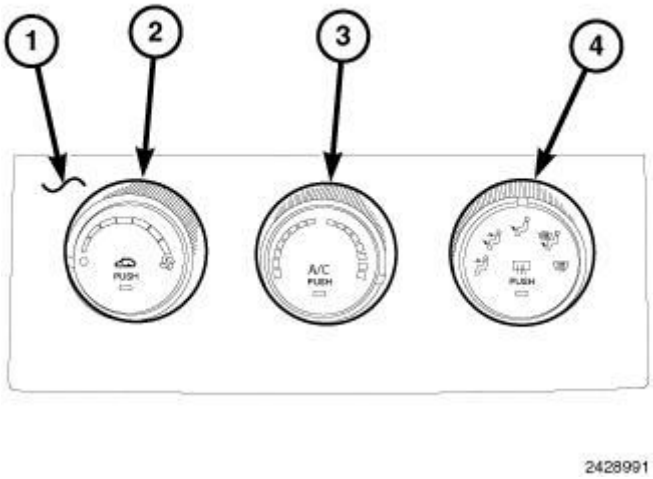

Fig. 2: A/C Heater Control
Courtesy of CHRYSLER GROUP, LLC

NOTE: MTC A/C-heater control shown. ATC A/C-heater control similar.

The electric backlight (EBL) system is controlled by a momentary push-button switch inside of the mode control knob (4) on the A/C-heater control (1), located in the instrument panel center bezel. When the rear window defogger switch is pressed to ON with the ignition switch in RUN, the switch sends a request signal to the Cabin Compartment Node (CCN), which sends a message on the CAN-B Bus to the Totally Integrated Power Module (TIPM) to energize the internal EBL high side driver. When energized, the EBL high side driver provides battery current to the rear window defogger grid lines and the heated side view mirrors (when equipped). The grid lines heat the glass to help clear the rear window and side mirror surfaces of fog or frost.

An amber indicator in the rear window defogger switch will illuminate when the EBL system is turned on.

NOTE: The EBL system turns off automatically after 10 minutes of initial operation. Each following activation cycle of the EBL system will last 5 minutes.

The EBL system will automatically turn off after an initial programmed time interval of about 10 minutes as long as the ignition switch is in RUN. After the initial time interval has expired, if the rear window defogger switch is pressed to

ON again during the same ignition cycle, the EBL system will automatically turn off after about 5 minutes. The EBL system will also turn off if the ignition switch is turned to any position other than RUN or by manually pressing the rear window defogger switch a second time.

Repair of the rear window defogger grid lines, bus bars, terminals or pigtail wires can be accomplished using the Mopar® Rear Window Defogger Repair Kit (Part Number 04549275) or equivalent. Refer to **GRID, DEFOGGER, STANDARD PROCEDURE**.

The EBL control system is diagnosed using a scan tool (refer to appropriate Electrical Diagnostics for more information).

DIAGNOSIS AND TESTING

DIAGNOSIS AND TESTING - ELECTRIC BACKLIGHT (EBL) SYSTEM

NOTE: Illumination of the defogger switch indicator lamp does not necessarily mean that electrical current is reaching the rear window glass and/or the outside rear view mirror heating grids (when equipped).

NOTE: For circuit descriptions and diagrams of the rear window defogger (EBL) and heated mirror systems, refer to the appropriate Wiring Information.

Operation of the electrical backlight (EBL) system can be confirmed by the following:

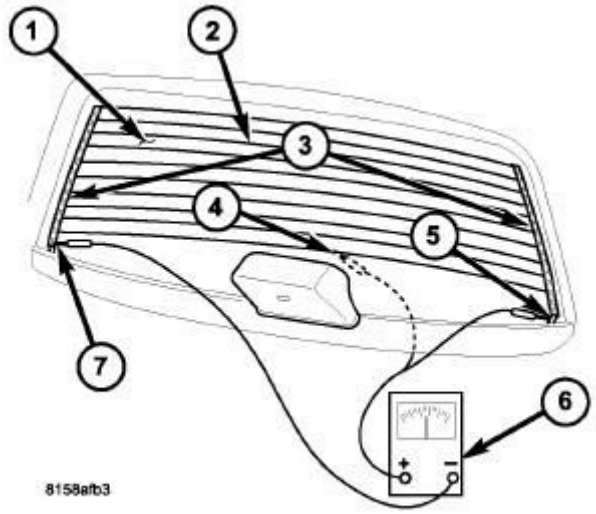

Fig. 3: View Of Rear Window Glass Grid Test
Courtesy of CHRYSLER GROUP, LLC

NOTE: Typical heated rear window glass shown.

1. Use a scan tool and check for diagnostic trouble codes (DTCs) related to the rear window defogger switch, cabin compartment node (CCN) and the totally integrated power module (TIPM). If no DTCs are found, go to 2. If any DTCs are found, repair as required, then proceed to step 2.
2. Turn the ignition switch to RUN. Set the rear window defogger switch to ON. Rear window defogger operation can be checked by feeling the rear window glass (1), or the heated outside rear view mirror glass when equipped with heated mirrors. A distinct difference in temperature between the grid lines (2) and the adjacent clear glass or the heated mirror glass should be detected within 3 to 4 minutes of operation.
3. If a temperature difference is not detected, use a 12-volt DC voltmeter (6) and contact the rear glass heating grid terminal A (5) with the positive lead, and terminal B (7) with the negative lead. The voltmeter should read battery voltage. If the voltmeter does not read battery voltage, check the following:
   - Confirm the ignition switch is in RUN.
   - Confirm the rear window defogger switch is ON.
   - Confirm the EBL feed wire is connected to the heating grid positive terminal and that there is continuity between the TIPM and the heating grid.
   - Confirm the EBL ground wire is connected to the heating grid negative

terminal and that there is continuity to ground.

- When diagnosing a heated mirror concern, check the heated mirror circuit fuse located in the TIPM. The fuse must be in the receptacle and all electrical connections must be secure.

4. If broken defogger grid lines or bus bars (3) are suspected, use a 12-volt DC voltmeter and contact terminal B with the negative lead and each rear glass heating grid line at its mid-point C (4) with the positive lead. The voltmeter should read approximately 6 volts at each grid line mid-point. If the voltmeter does not read approximately 6 volts, repair the open grid line(s) or bus bar(s). Refer to **GRID, DEFOGGER, STANDARD PROCEDURE**.
5. If EBL system operation has been verified but the rear window defogger indicator does not illuminate, replace the A/C-heater control. Refer to **CONTROL, A/C AND HEATER, REMOVAL** .

GRID, DEFOGGER

STANDARD PROCEDURE

STANDARD PROCEDURE - GRID LINE AND TERMINAL REPAIR

WARNING: **Materials contained in the Repair Kit (Part Number 04549275) may cause skin or eye irritation. The kit contains epoxy resin and amine type hardener, which are harmful if swallowed. Avoid contact with the skin and eyes. For skin contact, wash the affected areas with soap and water. For contact with the eyes, flush with plenty of water. Do not take internally. If taken internally, induce vomiting and call a physician immediately. Use with adequate ventilation. Do not use near fire or flame. Contains flammable solvents. Keep out of the reach of children. Failure to follow these instructions may result in serious or fatal injury.**

Repair of the rear glass heating grid lines, bus bars, terminals or pigtail wires can be accomplished using the Mopar® Rear Window Defogger Repair Kit (Part Number 04549275) or equivalent.

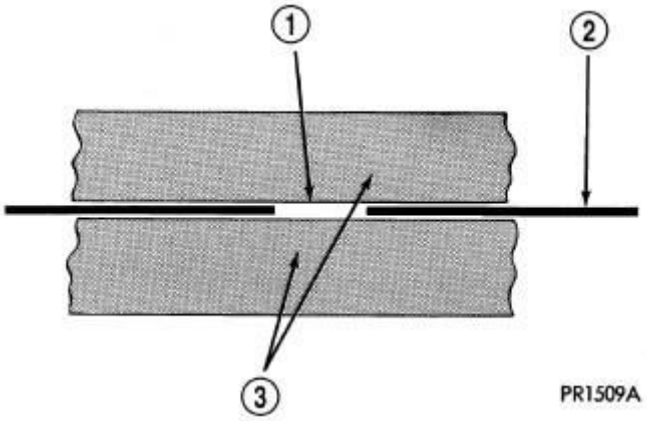

Fig. 4: Grid Line Repair - Typical
Courtesy of CHRYSLER GROUP, LLC

1. Mask the repair area with masking tape (3) so that the conductive epoxy can be applied neatly. Extend the epoxy application onto the grid line (2) or the bus bar on each side of the break (1).
2. Follow the instructions in the repair kit for preparing the damaged area.
3. Remove the package separator clamp and mix the two conductive epoxy components thoroughly within the packaging. Fold the package in half and cut the center corner to dispense the epoxy.
4. Apply the epoxy through the slit in the masking tape or template. Overlap both ends of the break by at least 19 millimeters (0.75 inch).
5. For a terminal or pigtail wire replacement, mask the adjacent areas so the epoxy can be extended onto the adjacent grid line as well as the bus bar. Apply a thin layer of epoxy to the area where the terminal or pigtail wire was fastened and onto the adjacent grid line.
6. Apply a thin layer of conductive epoxy to the terminal or bare wire end of the pigtail and place it in the proper location on the bus bar. To prevent the terminal or pigtail wire from moving while the epoxy is curing, it must be wedged or clamped.
7. Carefully remove the masking tape or template.

CAUTION: Do not allow the glass surface to exceed 204° C (400° F) when using a heat gun, or the glass may fracture.

8. Allow the epoxy to cure 24 hours at room temperature or carefully use a heat gun for 15 minutes. When using a heat gun, hold it approximately 25.4

centimeters (10 inches) from the repair and do not allow the glass surface to exceed 204° C (400° F).

9. After the conductive epoxy is properly cured, remove the wedge or clamp from the terminal or pigtail wire.
10. Connect the wire harness leads to the grid terminals or pigtail wires and verify EBL operation.

SWITCH, DEFOGGER

DESCRIPTION

DESCRIPTION

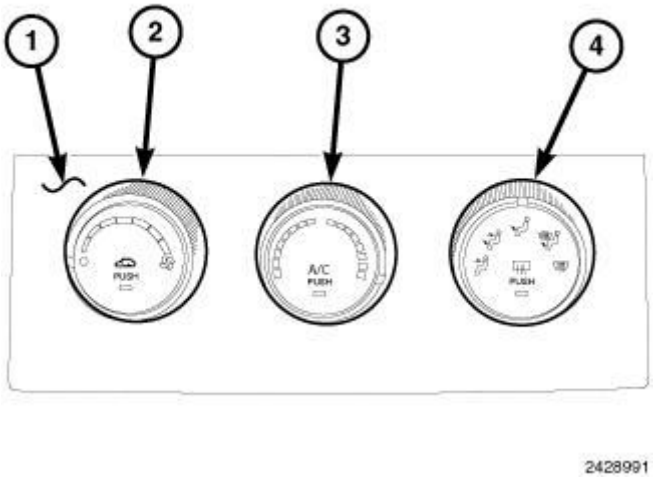

Fig. 5: A/C Heater Control
Courtesy of CHRYSLER GROUP, LLC

NOTE: MTC A/C-heater control shown. ATC A/C-heater control similar.

The switch for the rear window defogger (EBL) system is integral the mode control knob (4) located on the A/C-heater control (1), in the instrument panel. When the rear window defogger switch is pressed to the On position a request signal is sent to the Cabin Compartment Node (CCN), which sends a message to the Totally Integrated Power Module (TIPM) to operate the EBL system.

When the high side driver in the TIPM is energized, current is directed to the rear defogger grid lines and to the heated side view mirrors (when equipped) to help clear the glass surfaces of fog or frost.

An amber indicator in the mode control knob will illuminate when the EBL system is turned on.

OPERATION

OPERATION

An amber indicator will illuminate when the rear window defogger switch is activated. When activated, the switch sends a request signal to the cabin compartment node (CCN), which sends a message to the totally integrated power module (TIPM) to energize the internal EBL high side driver to provide battery current to the rear window defogger grid lines and to the heated side view mirrors, when equipped.

NOTE: The EBL system turns off automatically after 10 minutes of initial operation. Each following activation cycle of the EBL system will last 5 minutes.

The EBL system will automatically turn off after an initial programmed time interval of about 10 minutes as long as the ignition switch is in RUN. After the initial time interval has expired, if the rear window defogger switch is pressed to ON again during the same ignition cycle, the EBL system will automatically turn off after about 5 minutes. The EBL system will also turn off if the ignition switch is turned to any position other than RUN or by manually pressing the rear window defogger switch a second time.

The rear window defogger switch is diagnosed using a scan tool (refer to appropriate Heated Glass Electrical Diagnostics for more information).

The rear window defogger switch and indicator cannot be adjusted or repaired. The A/C-heater control must be replaced if the rear window defogger switch or indicator is found inoperative or damaged. Refer to **CONTROL, A/C AND HEATER, REMOVAL** .

2014 ACCESSORIES AND EQUIPMENT

Heated Mirrors - Service Information - Compass & Patriot

DESCRIPTION

DESCRIPTION

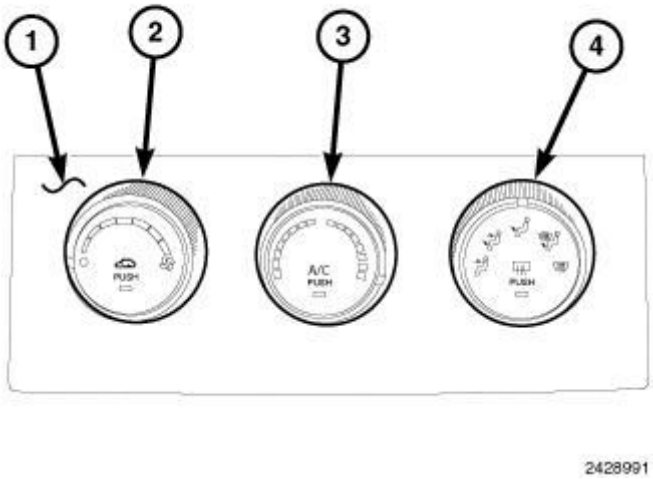

Fig. 1: A/C Heater Control
Courtesy of CHRYSLER GROUP, LLC

NOTE: MTC A/C-heater control shown. ATC A/C-heater control similar.

When equipped, the heated mirror system operates in concert with the rear window defogger (EBL) system and is controlled by the rear window defogger switch located inside the mode control knob (4), on the A/C-heater control (1). An amber indicator lamp in the mode control knob will illuminate to indicate when the heated mirror system is turned on.

The heated mirror system will be automatically turned off after an initial programmed time interval of about 10 minutes as long as the ignition switch is in RUN. After the initial time interval has expired, if the rear window defogger switch is pressed to ON again during the same ignition cycle, the heated mirror system will automatically turn off after about 5 minutes. The heated mirror system will also turn off if the ignition switch is turned to any position other than RUN or by manually pressing the rear window defogger switch a second time.

Circuit protection for the heated mirror system is provided by a fuse located in

the Totally Integrated Power Module (TIPM).

OPERATION

OPERATION

When equipped, the heated mirror system is activated when the rear window defogger (EBL) system is turned on. Refer to **OPERATION** . When the heated mirror system is activated, an electric grid located behind the glass of each outside rear view mirror becomes energized and produces heat to help clear the mirror of ice, snow, or fog.

If both outside mirror heating grids are inoperative, test the EBL system for proper operation. Refer to **DIAGNOSIS AND TESTING** . If only one outside mirror heating grid is inoperative, most likely the concern lies with the mirror itself. Refer to **DIAGNOSIS AND TESTING** .

The heating grid behind the outside rear view mirror glass cannot be repaired and the mirror assembly must be replaced if the heating grid is found to be inoperative. Refer to **MIRROR, OUTSIDE REARVIEW, REMOVAL** .

2014 ACCESSORIES AND EQUIPMENT

Heated Seats - Service Information - Compass & Patriot

DESCRIPTION

DESCRIPTION

WARNING: The front passenger seat assembly contains critical components that affect the front passenger airbag deployment. Correctly functioning front passenger seat components are critical for the Occupant Classification System (OCS) to properly classify the front passenger and calculate the proper airbag deployment. Unapproved modifications or service procedures to the front passenger seat assembly, its related components, or trim cover may inadvertently change the airbag deployment in case of a frontal crash. This could result in death or serious injury to the front seat passenger if the vehicle is involved in an accident. The following requirements must be strictly adhered to:

- **Do not modify the front passenger seat assembly or components in any way.**
- **Do not modify the front seat center console or center position seat in any way.**
- **Do not use prior or future model year seat trim covers not designated for the specific model being repaired. Always use the correct seat trim cover specified for the vehicle.**
- **Do not replace the seat trim cover with an aftermarket trim cover.**
- **Do not add a secondary trim cover other than those approved by Chrysler/Mopar®.**
- **At no time should any Supplemental Restraint System (SRS) component or SRS related component or fastener be modified or**

replaced with any part except those which are approved by Chrysler/Mopar®.

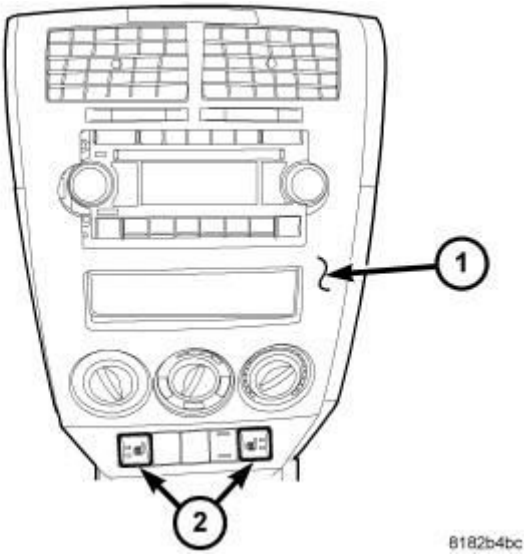

Fig. 1: Center Stack & Accessory Switch Bank
Courtesy of CHRYSLER GROUP, LLC

Vehicles with the heated seat option can be visually identified by the two heated seat switches located in the center stack (1) of the instrument panel. The switches are located on the outer edges of the accessory switch bank (2). The heated seat system allows the driver and front seat passenger to select from two different levels of electrical seat heating (HI/LO). The heated seat system for this vehicle includes the following major components, which are described in further detail later in this Service Information:

- **Heated Seat Elements** - Four heated seat elements are used per vehicle. Two heated seat elements are integral to each seat, one in the seat back and the other in the seat cushion.
- **Heated Seat Module** - One heated seat module is used per vehicle. The Heated Seat Module is mounted under the left front seat. This module contains the control logic and software for the front heated seat system. The module communicates on the Local Interface Network (LIN) data bus.
- **Heated Seat Switches** - Two heated seat switches are used per vehicle, one for each heated seat. Both switches are mounted in the instrument panel center stack.
- **Instrument Cluster (CCN)** - A Cab Compartment Node (CCN) is part of the instrument cluster on this vehicle. The CCN utilizes integrated software

and information carried on the LIN data bus. The CCN serves as the link between the heated seat switches and the heated seat module.

OPERATION

OPERATION

The heated seat system operates on battery current received through a fuse in the Totally Integrated Power Module (TIPM). Fused ignition switch output (Run) circuits are used, so that the heated seat system will only operate when the ignition switch is in the ON position. The heated seat system will turn Off automatically whenever the ignition switch is turned to any position except ON.

A Heated Seat Module is used to control the heated seat system. The module responds to heated seat switch messages and ignition switch status inputs by controlling the 12v output to the front seat heating elements through integral solid-state relays.

When either of the heated seat switches are depressed a switch status message is sent to the Cab Compartment Node (CCN) or instrument cluster via the Local Interface Network (LIN) data bus. The CCN then sends a message via the LIN data bus to the heated seat module, signaling the module to energize the heating element for the selected seat. Amber Light Emitting Diodes (LEDs) in the top portion of each switch indicate the level of heat in use: Two LEDs are illuminated for high, one for low, and none for off. The heated seat module sends the LED illumination message to the CCN via the LIN data bus. The CCN then sends the LED illumination message to the accessory switch bank so that the appropriate LEDs are illuminated for any given heating level. Pressing the switch once will select high-level heating. Pressing the switch a second time will select low-level heating. Pressing the switch a third time will shut the heating elements off.

The heated seat module energizes an integral solid-state relay, which supplies battery current to the heating elements. When high-temperature heating is selected, the heaters provide a boosted heat level during the first four minutes of operation after heating is activated once per ignition cycle. The heat output then drops to the normal high-temperature level. If high-level heating is selected, the control system will automatically switch to the low level after thirty minutes (twenty six minutes on first activation of an ignition cycle) of continuous operation. At that time, the number of illuminated LEDs changes from two to

one, indicating the change. Operation on the low setting also turns off automatically after thirty minutes.

The module will automatically turn off the heating elements if it detects an OPEN or LOW short in the heating element circuit. In the event an OPEN or LOW short in the heating element circuit is detected when the heated seats are first initialized, the two LEDs will light for two seconds and go out as an indicator of a system problem.

DIAGNOSIS AND TESTING

DIAGNOSIS AND TESTING - HEATED SEAT SYSTEM

In order to obtain conclusive testing, the heated seat system and the Local Interface Network (LIN) data bus circuit must be checked. **Any diagnosis of the heated seat system should begin with, the use of a scan tool and the appropriate diagnostic service information.**

Refer to the appropriate wiring information for complete circuit schematic or connector pin-out information.

NOTE: Vehicles equipped with the heated seat option utilize a low voltage cut-off feature. This feature turns off power to the heated seat system anytime vehicle voltage is below 11.7v or above 15.5v. Be certain to check the vehicle electrical system for proper voltage anytime the power seat system appears inoperative.

Before any testing of the heated seat system is attempted, the battery should be fully-charged.

MODULE, HEATED SEAT

DESCRIPTION

DESCRIPTION

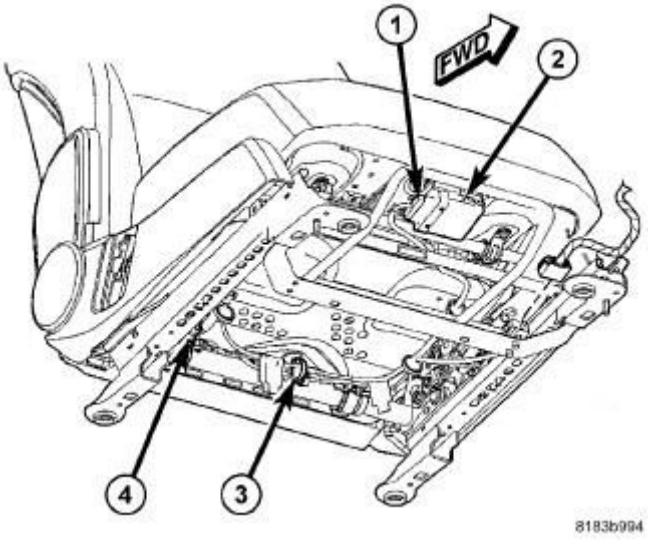

Fig. 2: Heated Seat Module
Courtesy of CHRYSLER GROUP, LLC

The heated seat module (2) is located under the left front seat. It has a single electrical connector (1) and a push pin style retainer that secures it to the seat pan. The module can be accessed from under the front left seat with the seat in the full back position.

The heated seat module is a microprocessor designed to use the Local Interface Network (LIN) data bus messages from the instrument cluster also known as the Cabin Compartment Node (CCN). The CCN receives inputs from the heated seat switches and in turn signals the heated seat module to operate the heated seat elements for both front seats.

OPERATION

OPERATION

The heated seat module operates on fused battery current received from the ignition switch. The module is grounded to the body at all times through the electrical connector. Inputs to the module include Local Interface Network (LIN) data bus messages and standard hardwired 12 volt power and ground. In response to the LIN inputs the heated seat module will control the battery current to the appropriate heated seat elements.

When a heated seat switch LIN data bus signal is received by the heated seat module, the module energizes the selected heated seat element. The Low heat set

point is about 38° C (100.4° F), and the High heat set point is about 42° C (107.6° F).

In addition to operating the heated seat elements, the heated seat module sends LED illumination messages to the CCN via the LIN data bus. The CCN then sends the LED illumination message to the accessory switch bank so that the appropriate LEDs are illuminated for any given heating level. Pressing the switch once will select high-level heating. Pressing the switch a second time will select low-level heating. Pressing the switch a third time will shut the heating elements off.

If the heated seat module detects a heated seat element OPEN or SHORT circuit, it will record and store the appropriate diagnostic trouble code (DTC).

DIAGNOSIS AND TESTING

DIAGNOSIS AND TESTING - HEATED SEAT MODULE

In order to obtain conclusive testing, the heated seat system and the Local Interface Network (LIN) data bus circuit must be checked. **Any diagnosis of the heated seat system should begin with, the use of a scan tool and the appropriate diagnostic service information.**

Refer to the appropriate wiring information for complete circuit schematic or connector pin-out information.

NOTE: Vehicles equipped with the heated seat option utilize a low voltage cut-off feature. This feature turns off power to the heated seat system anytime vehicle voltage is below 11.7v or above 15.5v. Be certain to check the vehicle electrical system for proper voltage anytime the power seat system appears inoperative.

Before any testing of the heated seat system is attempted, the battery should be fully-charged.

REMOVAL

REMOVAL

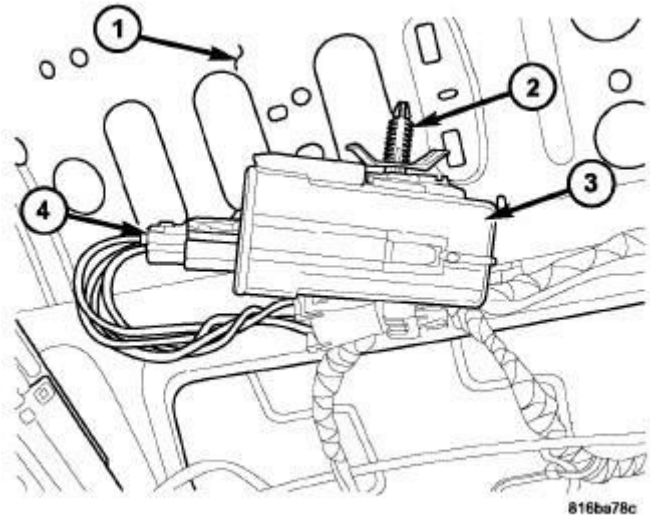

Fig. 3: Locating Heated Seat Module
Courtesy of CHRYSLER GROUP, LLC

CAUTION: The Heated Seat Module mounting tab can be damaged during module removal and installation. Use care to properly align tab to prevent binding that could result in tab breakage.

1. Position the left front seat to the full rearward position.
2. Disconnect and isolate the battery negative cable.
3. Disconnect the wire harness connector (4) from the heated seat module (3).
4. Unsnap the heated seat module retaining tab (2) from the seat pan (1).
5. Remove the heated seat module (3) from the vehicle.

INSTALLATION

INSTALLATION

CAUTION: The Heated Seat Module mounting tab can be damaged during module removal and installation. Use care to properly align tab to prevent binding that could result in tab breakage.

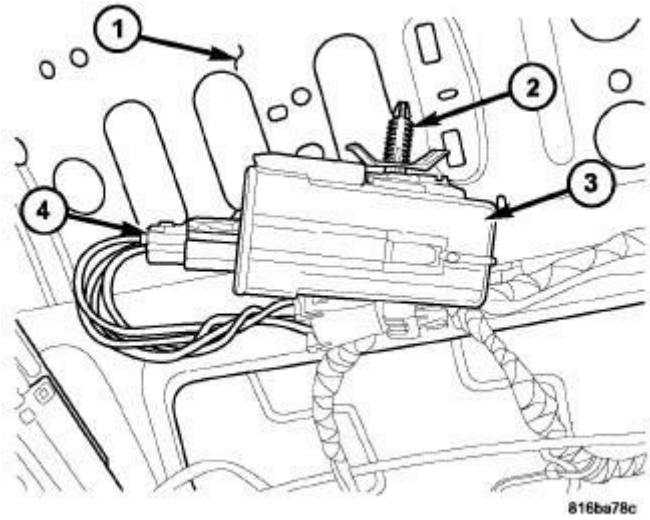

Fig. 4: Locating Heated Seat Module
Courtesy of CHRYSLER GROUP, LLC

1. Install the heated seat module (3) into the vehicle.
2. Position the retaining tab (2) with the mounting hole in the seat pan (1). Firmly apply even pressure to the module (3) until the mounting tab is fully seated.
3. Connect the wire harness connector (4) to the heated seat module (3).
4. Connect the battery negative cable.
5. Check for proper heated seat system operation.

PAD, HEATER

DESCRIPTION

DESCRIPTION

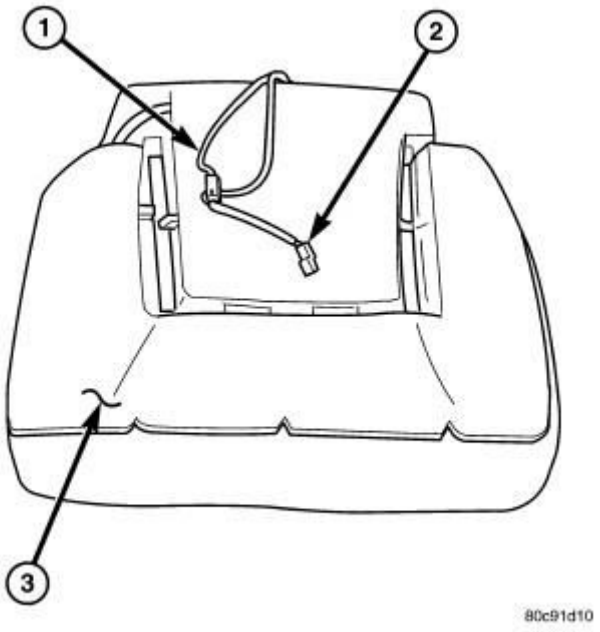

Fig. 5: Removing/Installing Heated Seat Element
Courtesy of CHRYSLER GROUP, LLC

Vehicles equipped with the optional front heated seat system use four heated seat elements (1). One heating element is used for each seat bottom cushion and another heating element is used for each seat back cushion.

All of the heated seat elements consist of multiple heating circuits operating in parallel throughout the element and a wire lead and connector (2). The heated seat elements are located between the seat trim cover and the seat cushion (3). If a malfunction occurs in one or more of the individual circuits, the remaining operational circuits will continue to provide heat.

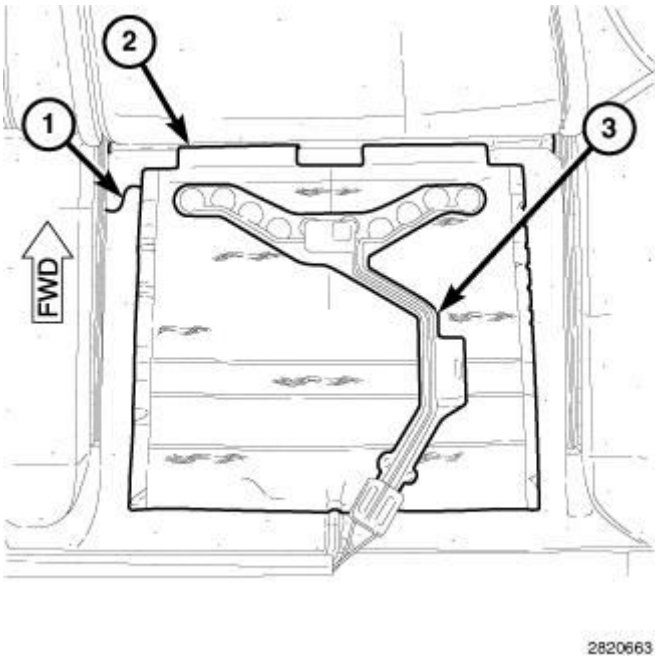

Fig. 6: Front Passenger Seat Bottom Cushion, Occupant Detection Sensor (ODS) & Heater Element
Courtesy of CHRYSLER GROUP, LLC

NOTE: Typical Occupant Detection Sensor (ODS) shown.

All models have an Occupant Detection Sensor (ODS) (3) on the front passenger seat bottom cushion (1). The ODS is located directly below the seat bottom cover. This sensor provides information to the Occupant Restraint Controller (ORC) used for control of the passenger belt alert feature. Refer to **SENSOR, OCCUPANT DETECTION, DESCRIPTION** .

Whenever an ODS has been removed from a heater element (2), it must be replaced with a new ODS unit. Refer to **SENSOR, OCCUPANT DETECTION, REMOVAL** .

OPERATION

OPERATION

One end of the heated seat element is connected to ground at all times through a splice under the seat. Battery current is directed to the other end of the heated seat element by the heated seat module. The heated seat module will energize the heated seat element when the heated seat switch is depressed in the LOW or HIGH position.

As electrical current passes through the heated seat element, the resistance of the wire used in the element disperses some of the electrical current in the form of heat. The heat produced by the heated seat element then radiates through the underside of the seat cushion and seat back trim covers, warming the seat cover and its occupant.

DIAGNOSIS AND TESTING

DIAGNOSIS AND TESTING - HEATED SEAT ELEMENT

NOTE: For complete circuit diagrams, refer to appropriate Wiring Information. Wiring Information includes wiring diagrams, connector pin-out and location views, details of wire harness routing and retention, splice and ground locations and proper wire and connector repair procedures.

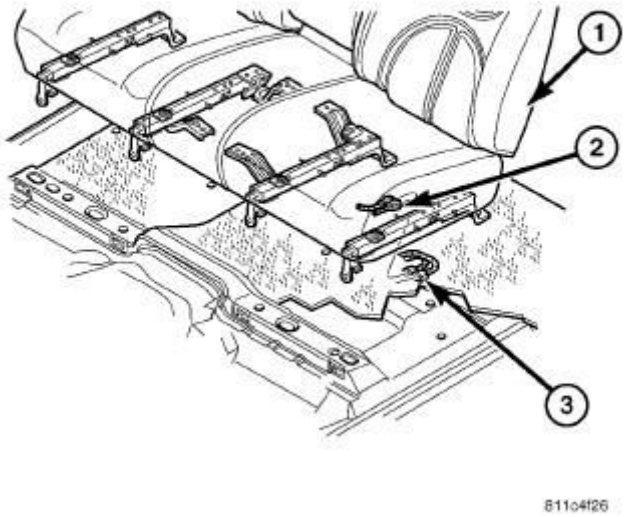

Fig. 7: Locating Seat & Connectors
Courtesy of CHRYSLER GROUP, LLC

The wire harness connectors (2 and 3) for the heated seat elements are located under the seat (1).

NOTE: When testing the heated seat elements for resistance, be certain to sit in the seat in question and move around the

heating elements within the seat while testing. Moving the heating elements will help eliminate the possibility of an intermittent open in the element, which would only be evident in a certain position.

1. Locate and disconnect the seat electrical connector.
2. Check the resistance between the circuits leading in and out of the suspect heated seat element. The resistance should be between the specifications listed in the following Heated Seat Element Resistance chart. If OK, refer to **DIAGNOSIS AND TESTING**. If not OK, replace the inoperative heated seat element. Refer to **PAD, HEATER, REMOVAL**.

HEATED SEAT ELEMENT RESISTANCE

Element Location	Acceptable Resistance Value
Seat Bottom Cushion	7.0 - 4.7 ohms
Seat Back Cushion	8.5 - 5.6 ohms

REMOVAL

REMOVAL

WARNING: **Disable the airbag system before attempting any component diagnosis or service of the front seats, when equipped with front seat air bags. Disconnect and isolate the negative battery (ground) cable, then wait two minutes for the airbag system capacitor to discharge before performing further diagnosis or service. This is the only sure way to disable the airbag system. Failure to follow these instructions may result in accidental airbag deployment and possible serious or fatal injury.**

NOTE: **Seat bottom cushion shown in illustrations. Seat back cushion similar.**

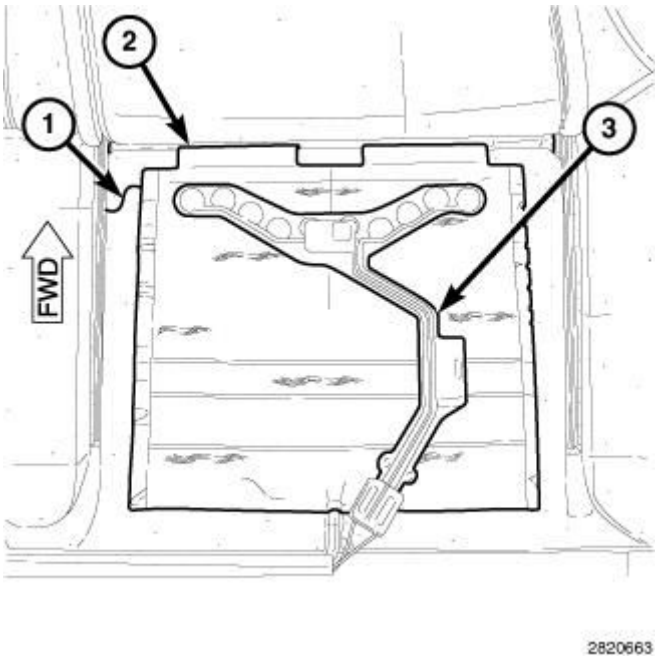

Fig. 8: Front Passenger Seat Bottom Cushion, Occupant Detection Sensor (ODS) & Heater Element
Courtesy of CHRYSLER GROUP, LLC

NOTE: Typical Occupant Detection Sensor (ODS) shown.

1. Disconnect and isolate the negative battery cable.
2. Remove the appropriate seat bottom or seat back cushion and place it on a workbench (Refer to **SEATS**).
3. Remove the seat bottom or seat back cover from the cushion (1) (Refer to **SEATS**).

NOTE: On all models, the front passenger seat contains an Occupant Detection Sensor (ODS) to provide information to the Occupant Restraint Controller (ORC).

4. When servicing the front passenger seat bottom cushion heating element (2), be sure to replace the Occupant Detection Sensor (ODS) (3). Refer to **SENSOR, OCCUPANT DETECTION, DESCRIPTION** .

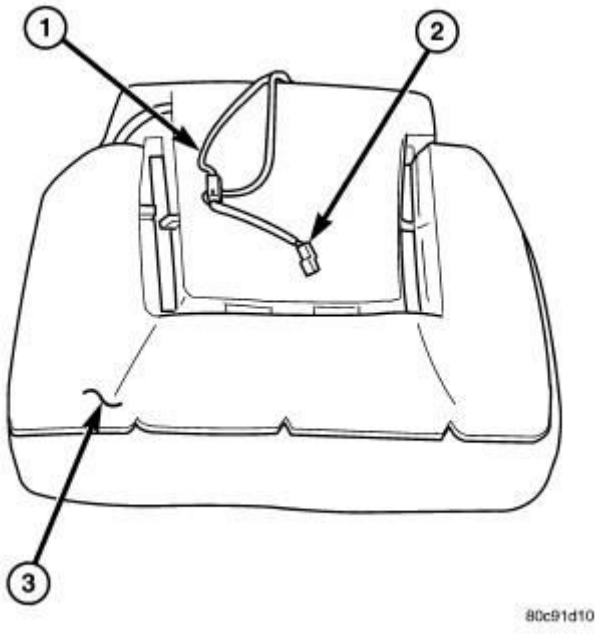

Fig. 9: Removing/Installing Heated Seat Element
Courtesy of CHRYSLER GROUP, LLC

5. Make note of the installed location of the heated seat element (1) on the cushion (3) being serviced.
6. Remove the heated seat element from the foam cushion by peeling the element away from the cushion. Be careful not to remove excessive foam from the cushion.

INSTALLATION

INSTALLATION

CAUTION: During heated seat element replacement, be careful not to fold or crease the new heating element. Folds or creases will cause premature heated seat element failure.

NOTE: Front seat bottom cushion shown. Rear seat and seat back cushions similar.

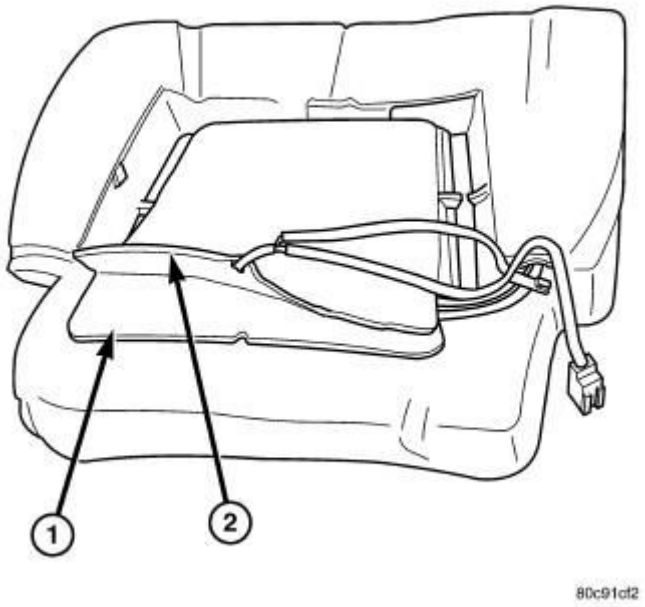

Fig. 10: Identifying Replacement Heating Element And Factory Installed Heating Element
Courtesy of CHRYSLER GROUP, LLC

1. Peel off the adhesive backing from the replacement heated seat element (2).
2. Position the heated seat element to the foam cushion directly where the original heater element was located. There will be adhesive marks on the cushion outlining the factory installed location (1).
3. Firmly press the heated seat element onto the foam cushion. Make sure the adhesive is fully adhered to the cushion.

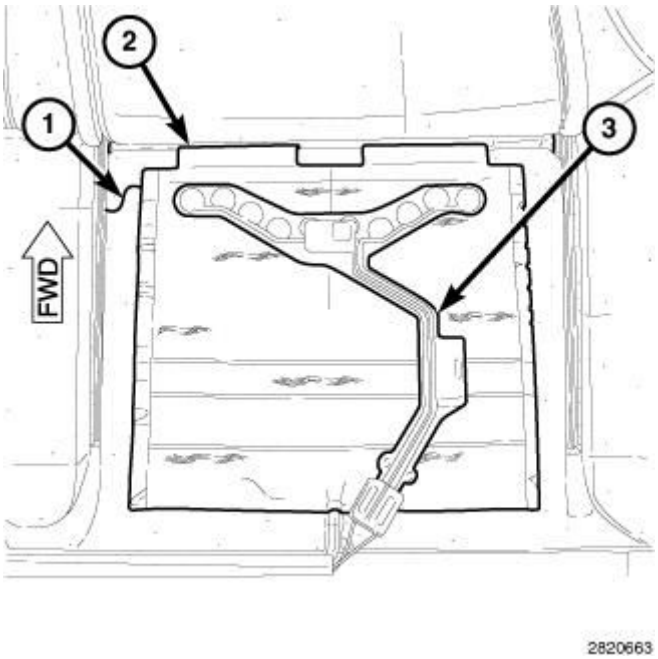

Fig. 11: Front Passenger Seat Bottom Cushion, Occupant Detection Sensor (ODS) & Heater Element
Courtesy of CHRYSLER GROUP, LLC

NOTE: Typical Occupant Detection Sensor (ODS) shown.

4. Install a new Occupant Detection Sensor (ODS) (3) when servicing the front passenger seat bottom heating element (2). Refer to **SENSOR, OCCUPANT DETECTION, INSTALLATION** .
5. Install the cover onto the seat bottom or seat back cushion (1) (Refer to **SEATS**).

NOTE: Make certain the heated seat element wire harness and ODS harness (when equipped) is correctly routed through the seat bottom cushion and cover. Any excess wire should be securely placed between the rear of the foam cushion and the rear seat cover flap.

6. Install the seat bottom or seat back cushion (Refer to **SEATS**).
7. Install the seat. Refer to **SEAT, FRONT, INSTALLATION** .
8. Reconnect the negative battery cable.
9. Verify proper heated seat system operation.

SWITCH, HEATED SEAT

DESCRIPTION

DESCRIPTION

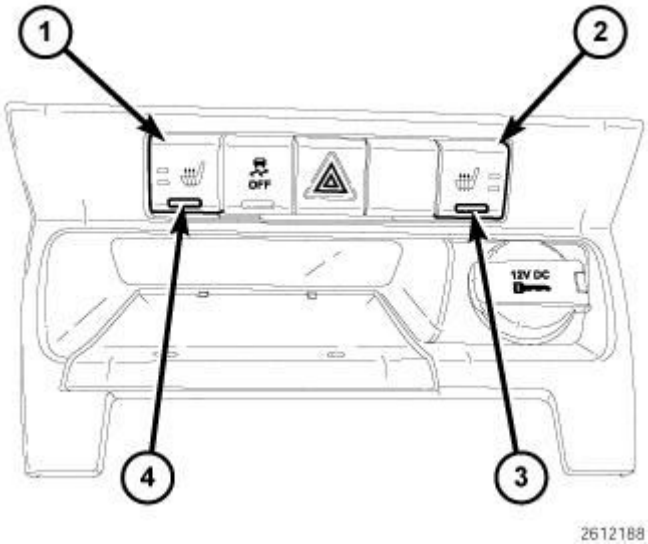

Fig. 12: Identifying Heated Seat Switches & Amber Light Emitting Diodes
Courtesy of CHRYSLER GROUP, LLC

NOTE: Typical accessory switch bank and bezel shown.

The heated seat switches (1 and 2) are part of the accessory switch bank located near the bottom center of the instrument panel.

When either of the heated seat switches are pressed, a switch status message is sent to the Cab Compartment Node (CCN) or instrument cluster via the Local Interface Network (LIN) data bus. The CCN then sends a message via the LIN data bus to the heated seat module, signaling the module to energize the heating element for the selected seat. Amber Light Emitting Diodes (LEDs) (3 and 4) in each heated seat switch indicate the level of heat in use: Two LEDs are illuminated for high, one for low, and none for off. The heated seat module sends the LED illumination message to the CNN via the LIN data bus. The CNN then sends the LED illumination message to the accessory switch bank so that the appropriate LEDs are illuminated for any given heating level. Pressing the switch once will select high-level heating. Pressing the switch a second time will select low-level heating. Pressing the switch a third time will shut the heating elements off.

The heated seat switches and LEDs cannot be adjusted or repaired and the entire accessory switch bank must be replaced if damaged or inoperative.

OPERATION

OPERATION

The heated seat switches are active any time the Local Interface Network (LIN) data bus is active. Depressing the heated seat switch provides a switch status message to the Cabin Compartment Node (CCN) via the LIN data bus. The CCN is responsible for supplying the LIN data bus message to the heated seat module, signaling the module to power the heated seat element of the selected seat and maintain the temperature setting. If the heated seat switch is depressed to a different position (Low or High) than the currently selected state, the CCN will go through the process again to change the temperature setting.

DIAGNOSIS AND TESTING

DIAGNOSIS AND TESTING - HEATED SEAT SWITCH

In order to obtain conclusive testing, the heated seat system and the Local Interface Network (LIN) data bus circuit must be checked. **Any diagnosis of the heated seat system should begin with, the use of a scan tool and the appropriate diagnostic service information.**

Refer to the appropriate wiring information for complete circuit schematic or connector pin-out information.

NOTE: Vehicles equipped with the heated seat option utilize a low voltage cut-off feature. This feature turns off power to the heated seat system anytime vehicle voltage is below 11.7v or above 15.5v. Be certain to check the vehicle electrical system for proper voltage anytime the power seat system appears inoperative.

Before any testing of the heated seat system is attempted, the battery should be fully-charged.

REMOVAL

REMOVAL

WARNING: Disable the airbag system before attempting any steering wheel, steering column, or instrument panel component diagnosis or service.

Disconnect and isolate the negative battery (ground) cable, then wait two minutes for the airbag system capacitor to discharge before performing further diagnosis or service. This is the only sure way to disable the airbag system. Failure to follow these instructions may result in accidental airbag deployment and possible serious or fatal injury.

NOTE: Take the proper precautions to protect the front face of the accessory switch bank bezel from cosmetic damage while performing this procedure.

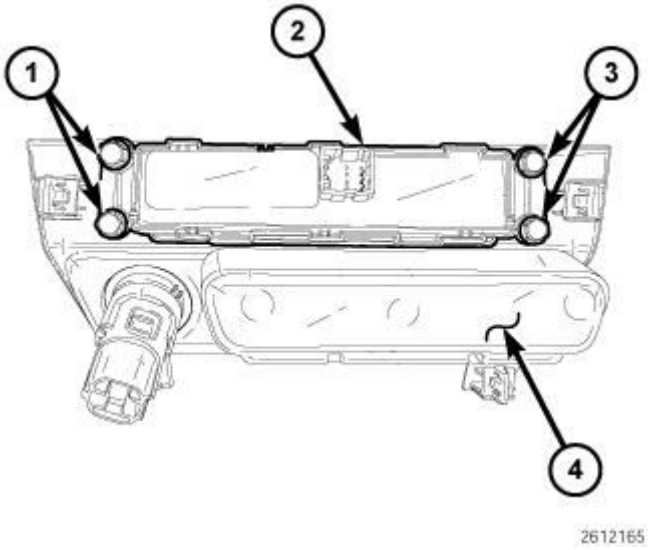

Fig. 13: Screws, Accessory Switch Bank & Bezel
Courtesy of CHRYSLER GROUP, LLC

NOTE: Typical accessory switch bank and bezel shown.

1. Disconnect and isolate the negative battery cable.
2. Remove the accessory switch bank bezel (4) from the instrument panel and place it on a work bench.
3. Remove the four screws (1 and 3) that secure the accessory switch bank (2) to the back of the bezel and remove the switch bank.

INSTALLATION

INSTALLATION

NOTE: There are different instrument panel accessory switch banks available based on the option content of the vehicle. Ensure the accessory switch bank being installed matches the vehicle options.

NOTE: Take the proper precautions to protect the front face of the accessory switch bank bezel from cosmetic damage while performing this procedure.

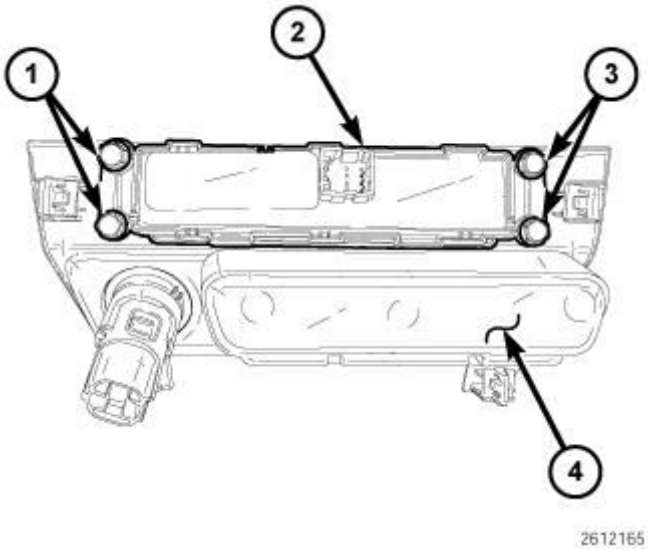

Fig. 14: Screws, Accessory Switch Bank & Bezel
Courtesy of CHRYSLER GROUP, LLC

NOTE: Typical accessory switch bank and bezel shown.

1. Position the accessory switch bank (2) onto the back of the bezel (4).
2. Install the four screws (1 and 3) that secure the accessory switch bank to the bezel. Tighten the screws to 1 N.m (8 in. lbs.).
3. Install the bezel onto the instrument panel.
4. Reconnect the negative battery cable.
5. Verify heated seat system operation.

2014 ACCESSORIES AND EQUIPMENT

Horn System - Service Information - Compass & Patriot

DESCRIPTION

DESCRIPTION

An electrically-operated horn system is standard factory-installed equipment in this vehicle. A single note system is standard for vehicles manufactured for domestic markets, while a dual note system is used in vehicles manufactured for most export markets. Through the horn switch, either horn system provides the vehicle operator with a convenient, audible signaling device that can be used to gain the attention of pedestrians or to alert other vehicles in close proximity.

On vehicles so equipped, the horn system can also be activated by the Totally Integrated Power Module (TIPM) in response to certain electronic requests from other systems in the vehicle. The Remote Keyless Entry (RKE) system can provide a customer programmable audible horn chirp verification that a valid Lock request was received from the RKE transmitter. The horn system provides the RKE system Panic mode audible alert or deterrent on vehicles so equipped. The horn system also serves as the Vehicle Theft Security System (VTSS) audible alarm in vehicles that are not equipped with the optional siren.

The horn system includes the following major components, which are described in further detail elsewhere in this service information:

- **Horn** - A low-note horn is located on the outboard side of the left frame rail, just forward of the left front wheel house splash shield in all vehicles. A high-note horn is located on the outboard side of the right frame rail just forward of the right front wheel house splash shield in vehicles so equipped.
- **Horn Switch** - A floating-type horn switch and mounting plate unit is secured on the back of the Driver AirBag (DAB) housing with four screws. The DAB, horn switch and mounting plate are secured to the steering wheel armature with two screws.

Certain functions and features of the horn system rely upon resources shared with other electronic modules in the vehicle over a Local Interface Network (LIN) data bus as well as over the Controller Area Network (CAN) data bus. Other electronic modules in the vehicle that may affect horn system operation are:

- **ElectroMechanical Instrument Cluster** - The ElectroMechanical Instrument Cluster (EMIC) (also known as the Cab Compartment Node/CCN) is located in the instrument panel, directly in front of the driver. In addition to instrumentation, the EMIC provides many electronic interior body control functions and is a Local Interface Network (LIN) master node as well as a gateway to the Controller Area Network (CAN) data bus. Refer to **DESCRIPTION** .
- **Speed Control Switch Pod** - The speed control switch pod in the right horizontal spoke bezel of the steering wheel includes a Local Interface Network (LIN) slave node that monitors and transmits the status of the horn switch. Refer to **SWITCH, SPEED CONTROL, DESCRIPTION** .
- **Totally Integrated Power Module** - The Totally Integrated Power Module (TIPM) is located in the engine compartment, near the battery. The TIPM also communicates with other electronic modules on the CAN data bus network. Refer to **MODULE, TOTALLY INTEGRATED POWER (TIPM), DESCRIPTION** .

The EMIC and the TIPM each contain a microcontroller and programming that allow them to communicate with each other using the Controller Area Network (CAN) data bus. In addition the speed control switch pod and the EMIC communicate with each other using a Local Interface Network (LIN) data bus. Refer to **COMMUNICATION, DESCRIPTION** .

Hard wired circuitry connects the horn system components to the electrical system of the vehicle. These hard wired circuits are integral to several wire harnesses, which are routed throughout the vehicle and retained by many different methods. These circuits may be connected to each other, to the vehicle electrical system and to the horn system components through the use of a combination of soldered splices, splice block connectors, and many different types of wire harness terminal connectors and insulators. Refer to the appropriate wiring information. The wiring information includes wiring diagrams, proper wire and connector repair procedures, further details on wire harness routing and retention, as well as pin out and location views for the various wire harness connectors, splices and grounds.

OPERATION

OPERATION

The horn system operates on battery current received from an output of the Totally Integrated Power Module (TIPM) through a high side driver. The horn system circuit is designed so that the system will remain operational, regardless of the ignition switch position.

The vehicle operator can control typical horn system signaling through the horn switch within the hub of the steering wheel. When the Driver AirBag (DAB) trim cover is depressed, it provides a hard wired analog input to the Local Interface Network (LIN) slave node integral to the speed control switch pod. The LIN slave node then sends electronic **horn switch status** messages to the LIN master node integral to the ElectroMechanical Instrument Cluster (EMIC) (also known as the Cab Compartment Node/CCN). The EMIC then relays an electronic **horn request** message to the Totally Integrated Power Module (TIPM) over the Controller Area Network (CAN) data bus.

In addition, the Remote Keyless Entry (RKE) system will send electronic **horn request** messages to the TIPM over the CAN data bus in response to inputs received from the RKE transmitter through the Wireless Control Module (WCM) (also known as the Sentry Key Immobilizer Module/SKIM or the Sentry Key REmote Entry Module/SKREEM). Lastly, as the Vehicle Theft Security System (VTSS) controller, the TIPM can activate the horn system based upon programming and both hard wired and electronic message inputs from the various VTSS components.

The hard wired inputs and outputs for the horn system may be diagnosed using conventional diagnostic tools and procedures. Refer to the appropriate wiring information. However, conventional diagnostic methods will not prove conclusive in the diagnosis of the speed control switch pod, the EMIC, the WCM, the TIPM or the electronic controls and communication between other modules and devices that provide features of the horn system. The most reliable, efficient and accurate means to diagnose the speed control switch pod, the EMIC, the WCM, the TIPM or the electronic controls and communication related to horn system operation requires the use of a diagnostic scan tool. Refer to the appropriate diagnostic information.

DIAGNOSIS AND TESTING

DIAGNOSIS AND TESTING - HORN SYSTEM

WARNING: Disable the airbag system before attempting any

steering wheel, steering column, seat belt tensioner, side airbag or instrument panel component diagnosis or service. Disconnect and isolate the negative battery (ground) cable. Wait two minutes for the airbag system capacitor to discharge before performing further diagnosis or service. This is the only sure way to disable the airbag system. Failure to follow these instructions may result in accidental airbag deployment and possible serious or fatal injury.

NOTE: In most cases, any problem involving continually sounding horns can be quickly alleviated by removing the horn fuse from the Totally Integrated Power Module (TIPM).

HORN SYSTEM DIAGNOSIS		
CONDITION	**POSSIBLE CAUSES**	**CORRECTION**
BOTH HORNS INOPERATIVE	1. Ineffective fuse.	1. Check the fuses in the Totally Integrated Power Module (TIPM). Replace the fuse and repair the shorted circuit or component, if required.
	2. Ineffective horn switch.	2. Test the horn switch and switch circuits for proper operation. Replace the horn switch or repair the horn switch wiring, if required.
	3. Ineffective horns.	3. Test the horn and horn circuits for proper operation. Replace the horns or repair the horn wiring, if required.
	4. Ineffective EMIC (CCN)	4. Use a diagnostic scan tool to test the EMIC (CCN) inputs and outputs. Refer to

	inputs or outputs.	the appropriate diagnostic information.
	5. Ineffective TIPM inputs or outputs.	5. Use a diagnostic scan tool to test the TIPM inputs and outputs. Refer to the appropriate diagnostic information.
ONE HORN INOPERATIVE	1. Ineffective horn.	1. Test the horn and horn circuits for proper operation. Replace the horns or repair the horn wiring, if required.
HORN SOUNDS CONTINUOUSLY	1. Ineffective horn switch.	1. Test the horn switch and switch circuits for proper operation. Replace the horn switch or repair the horn switch wiring, if required.

HORN

DESCRIPTION

DESCRIPTION

Electromagnetic diaphragm-type horns are standard equipment on this vehicle. Vehicles equipped with a single horn have a low note trumpet-style horn secured by a mounting bracket to the back of the front bumper reinforcement to left frame rail mounting flange, forward of the left front wheel house splash shield. Vehicles equipped with dual horns add a single high note trumpet-style horn secured by a mounting bracket to the back of the front bumper reinforcement to right frame rail mounting flange, forward of the right front wheel house splash shield. With the exception of their unique notes, the two horns are nearly identical except for symmetrically opposite molded plastic trumpet formations.

Vehicles manufactured for sale in domestic markets are equipped with a single horn system, while those manufactured for sale in many export markets are equipped with a dual horn system. Each horn in either horn system is connected to the vehicle electrical system through dedicated take outs and connectors of the headlamp and dash wire harness. Each horn may is fitted with either two male spade terminals or a single sealed two-pin connector, dependent upon the

requirements of the market for which the vehicle is manufactured.

Each horn is serviced as a unit with the appropriate mounting bracket. These horns cannot be adjusted or repaired. If ineffective or damaged they must be replaced with a new unit.

OPERATION

OPERATION

The horns are connected to the vehicle electrical system through dedicated take outs and connectors of the headlamp and dash wire harness. Each horn receives a path to ground at all times through its wire harness connection to an eyelet terminal secured to the body sheet metal, and receives battery feed from an output of the Totally Integrated Power Module (TIPM) through a high side driver.

Within the two halves of the horn housing are a flexible diaphragm, a plunger, an electromagnetic coil and a set of contact points. The diaphragm is secured in suspension around its perimeter by the mating surfaces of the horn housing. The plunger is secured to the center of the diaphragm and extends into the center of the electromagnetic coil. The contact points control the current flow through the windings of the electromagnetic coil.

When the horn is energized, electrical current flows through the closed contact points to the electromagnetic coil. The resulting electromagnetic field draws the plunger and diaphragm toward it until that movement mechanically opens the contact points. When the contact points open, the electromagnetic field collapses allowing the plunger and diaphragm to return to their relaxed positions and closing the contact points again. This cycle continues repeating at a very rapid rate producing the vibration and movement of air that creates the sound that is directed through the horn trumpet outlet.

The horns as well as the hard wired input circuits for the horns may be diagnosed using conventional diagnostic tools and procedures. Refer to the appropriate wiring information.

DIAGNOSIS AND TESTING

DIAGNOSIS AND TESTING - HORN

Refer to the appropriate wiring information. The wiring information includes

wiring diagrams, proper wire and connector repair procedures, details of wire harness routing and retention, connector pin out information and location views for the various wire harness connectors, splices and grounds.

1. Disconnect the wire harness connectors from the horn terminal connectors. Check for continuity between the horn ground circuit connector and a good ground. There should be continuity. If OK, go to 2. If not OK, repair the open ground circuit to ground as required.
2. Check for battery voltage at the horn output circuit connector. There should be zero volts. If OK, go to 3. If not OK, repair the shorted horn output circuit between the horn and the Totally Integrated Power Module (TIPM) as required.
3. Depress the horn switch. There should now be battery voltage at the horn output circuit connector for the horn. If OK, replace the faulty horn. If not OK, use a diagnostic scan tool and the appropriate diagnostic information for further diagnosis of the TIPM, the Local Interface Network (LIN) master node of the ElectroMechanical Instrument Cluster (EMIC) (also known as the Cab Compartment Node/CCN), the LIN slave node of the speed control switch pod, the horn switch, the LIN data bus and the CAN data bus.

REMOVAL

REMOVAL

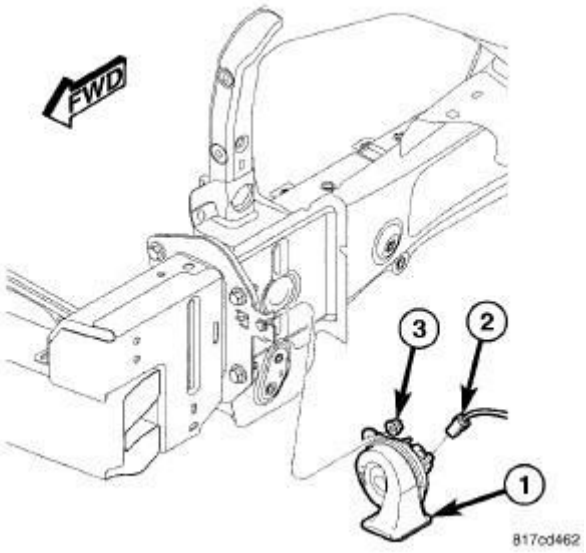

Fig. 1: Horn
Courtesy of CHRYSLER GROUP, LLC

1. Disconnect and isolate the negative cable from the battery.
2. Remove the left (low note horn) or right (high note horn) front wheelhouse splash shield. Refer to **SHIELD, SPLASH, FRONT WHEELHOUSE, REMOVAL** .
3. Disconnect the headlamp and dash wire harness connector from the horn.
4. Remove the nut that secures the horn mounting bracket to the weld stud on the back of the tab of the front bumper reinforcement to frame rail mounting flange.
5. Remove the horn and mounting bracket from the stud as a unit.

INSTALLATION

INSTALLATION

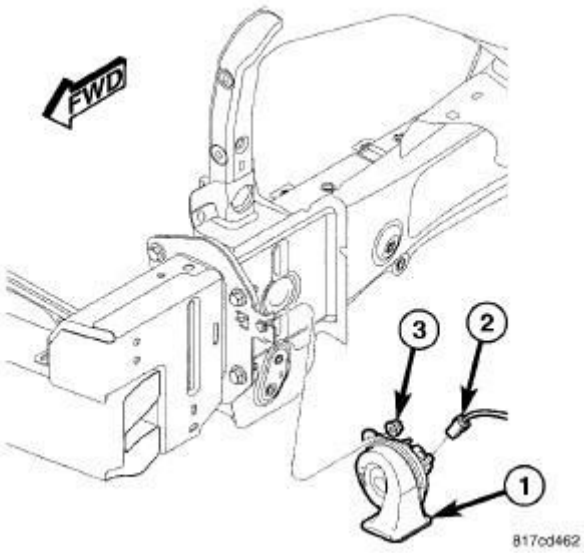

Fig. 2: Horn
Courtesy of CHRYSLER GROUP, LLC

1. Position the horn mounting bracket to the weld stud on the back of the tab of the left (low note horn) or right (high note horn) front bumper reinforcement to frame rail mounting flange.
2. Install and tighten the nut that secures the horn mounting bracket to the weld stud. Tighten the nut securely.
3. Reconnect the headlamp and dash wire harness connector to the horn.
4. Reinstall the left or right front wheelhouse splash shield. Refer to **SHIELD, SPLASH, FRONT WHEELHOUSE, INSTALLATION** .

5. Reconnect the negative cable to the battery.

SWITCH, HORN

DESCRIPTION

DESCRIPTION

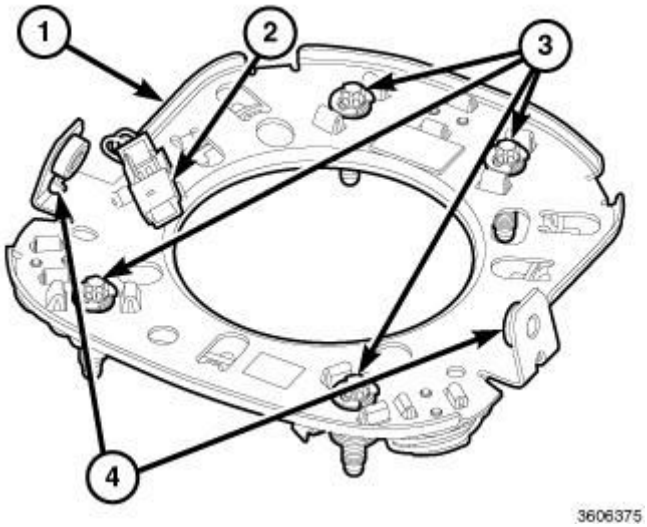

Fig. 3: Mounting Plate, Mounting Screw, Connector & Threaded Insert
Courtesy of CHRYSLER GROUP, LLC

A normally open floating-type horn switch and mounting plate (1) is secured to the back of the Driver AirBag (DAB) housing within the hub cavity of the steering wheel. The four sets of switch electrical contacts are each held open by a coiled spring and captured by a mounting screw (3) and E-clips arranged around the perimeter of the mounting plate. A switch wire harness joins the contacts in a parallel circuit to a connector (2) that is connected to the vehicle electrical system through a dedicated take out and connector of the steering wheel wire harness.

The stamped metal switch mounting plate has a mounting tab with a threaded insert (4) on each side, which is used to secure the DAB and floating horn switch assembly within the steering wheel hub cavity with a screw installed through each side of the steering wheel armature. The floating horn switch contacts, mounting plate and wire harness are serviced as a unit. If the horn switch is ineffective or damaged, the entire floating horn switch assembly must be replaced.

OPERATION

OPERATION

When the Driver AirBag (DAB) trim cover in the center of the steering wheel is depressed, the springs between the electrically conductive horn switch contacts are compressed allowing them to contact each other, closing the switch circuit. When the DAB trim cover is released, the springs between the switch contacts expand, opening the switch circuit.

When any one of the four sets of horn switch contacts forms a completed circuit, a horn request signal is provided to the Local Interface Network (LIN) slave node integral to the speed control switch pod in the right horizontal spoke of the steering wheel. The LIN slave node sends an electronic **horn switch status** message to the LIN master node and Controller Area Network (CAN) data bus gateway integral to the ElectroMechanical Instrument Cluster (EMIC) (also known as the Cab Compartment Node/CCN). The EMIC then relays an electronic **horn request** message to the Totally Integrated Power Module (TIPM) over the CAN data bus, and the TIPM activates a high side driver to energize the horn feed circuit.

The horn switch as well as the hard wired output circuits for the horn switch may be diagnosed using conventional diagnostic tools and procedures. Refer to the appropriate wiring information.

DIAGNOSIS AND TESTING

DIAGNOSIS AND TESTING - HORN SWITCH

WARNING: **To avoid serious or fatal injury on vehicles equipped with airbags, disable the Supplemental Restraint System (SRS) before attempting any steering wheel, steering column, airbag, seat belt tensioner, impact sensor or instrument panel component diagnosis or service. Disconnect and isolate the battery negative (ground) cable, then wait two minutes for the system capacitor to discharge before performing further diagnosis or service. This is the only sure way to disable the SRS. Failure to take the proper precautions could result in accidental airbag deployment.**

Refer to the appropriate wiring information. The wiring information includes wiring diagrams, proper wire and connector repair procedures, details of wire harness routing and retention, connector pin out information and location views for the various wire harness connectors, splices and grounds.

1. Remove the Driver AirBag (DAB) from the steering wheel. Refer to **AIR BAG, DRIVER, REMOVAL** .
2. Disconnect the steering wheel wire harness connector from the horn switch wire harness connector.
3. With the horn switch mounting plate released, check for continuity between the two terminals in the horn switch wire harness connector. There should be no continuity. If OK, go to Step 4. If not OK, replace the ineffective horn switch.
4. With the horn switch mounting plate depressed, check for continuity between the two terminals in the horn switch wire harness connector. There should now be continuity. If OK, go to Step 5. If not OK, replace the ineffective horn switch.
5. Check the steering wheel wire harness for shorts or opens between the horn switch and the speed control switch pod connector. If OK, use a diagnostic scan tool and the appropriate diagnostic procedures for further diagnosis. If not OK, repair or replace the steering wheel wire harness as required.

REMOVAL

REMOVAL

WARNING: **To avoid serious or fatal injury on vehicles equipped with airbags, disable the Supplemental Restraint System (SRS) before attempting any steering wheel, steering column, airbag, seat belt tensioner, impact sensor or instrument panel component diagnosis or service. Disconnect and isolate the battery negative (ground) cable, then wait two minutes for the system capacitor to discharge before performing further diagnosis or service. This is the only sure way to disable the SRS. Failure to take the proper precautions could result in accidental airbag deployment.**

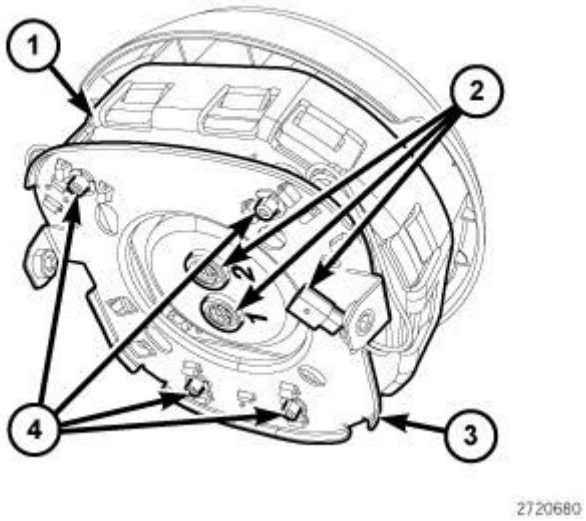

Fig. 4: Driver Side Airbag Assembly, Electrical Connectors, Four E-Clip Retainers & Airbag Mounting Bracket
Courtesy of CHRYSLER GROUP, LLC

1. Remove the Driver AirBag (DAB) (1) and floating horn switch (3) from the steering wheel as a unit. Refer to **AIR BAG, DRIVER, REMOVAL** .
2. Pull the DAB and floating horn switch unit away from the steering wheel far enough to access the electrical connections (2) at the back of the unit.
3. Disconnect the steering wheel wire harness connector from the floating horn switch connector on the back of the switch.

CAUTION: Do not pull on the clockspring pigtail wires or pry on the connector insulators to disengage them from the Driver AirBag (DAB) inflator initiator connector receptacles. Improper removal of these pigtail wires and their connector insulators can result in damage to the airbag circuits or the connector insulators.

4. The clockspring DAB pigtail wire connector insulators are secured by integral latches and a Connector Position Assurance (CPA) lock to the airbag inflator connector receptacles, which are located on the back of the DAB housing. Pull the lock straight out from the connector insulator, then pull the insulators straight out from the airbag inflator to disengage the latches and disconnect them from the connector receptacles.
5. Fully loosen each of the four captive screws (4) that secure the floating horn

switch unit to the airbag housing.

6. Remove the switch and mounting plate as a unit from the airbag housing.

INSTALLATION

INSTALLATION

WARNING: To avoid serious or fatal injury on vehicles equipped with airbags, disable the Supplemental Restraint System (SRS) before attempting any steering wheel, steering column, airbag, seat belt tensioner, impact sensor or instrument panel component diagnosis or service. Disconnect and isolate the battery negative (ground) cable, then wait two minutes for the system capacitor to discharge before performing further diagnosis or service. This is the only sure way to disable the SRS. Failure to take the proper precautions could result in accidental airbag deployment.

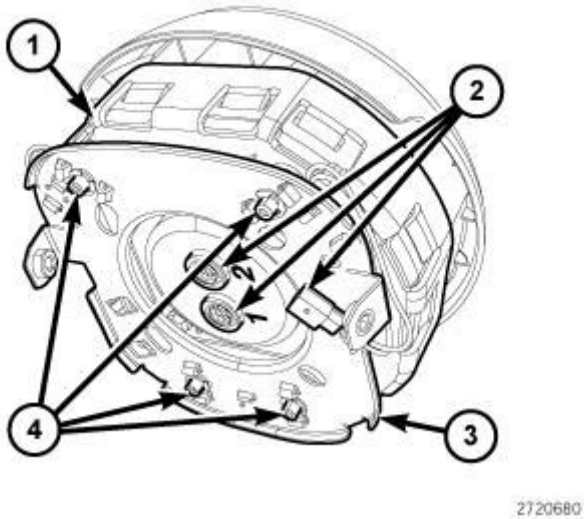

Fig. 5: Driver Side Airbag Assembly, Electrical Connectors, Four E-Clip Retainers & Airbag Mounting Bracket
Courtesy of CHRYSLER GROUP, LLC

1. Position the floating horn switch and mounting plate unit (3) to the Driver AirBag (DAB) housing (1).
2. Tighten the four captive screws (4) that secure the switch and mounting

plate to the DAB housing. Tighten the screws securely.

3. Position the DAB and floating horn switch unit close enough to the steering wheel to reconnect the electrical connections (2) at the back of the airbag housing.
4. Reconnect the steering wheel wire harness connector to the floating horn switch connector on the back of the switch.
5. Reconnect the wire connectors to the airbag inflator connector receptacles by pressing straight in on the connector insulator. Be certain to engage each keyed and color-coded connector to the matching connector receptacle. You can be certain that each connector is fully engaged in its receptacle by listening carefully for a distinct, audible click as the connector latches snap into place.
6. Push each of the Connector Position Assurance (CPA) locks firmly into the DAB connector insulator until it is flush with the upper surface of the insulator.
7. Reinstall the DAB into the steering wheel. Refer to **AIR BAG, DRIVER, INSTALLATION** .

2014 ACCESSORIES AND EQUIPMENT

Instrument Cluster - Service Information - Compass & Patriot

DESCRIPTION

DESCRIPTION

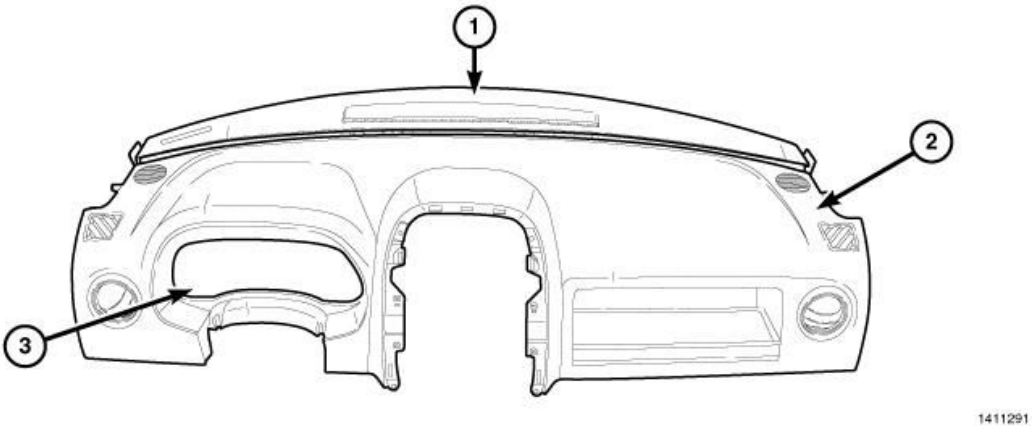

Fig. 1: Upper Instrument Panel Cover
Courtesy of CHRYSLER GROUP, LLC

The instrument cluster (3) is located in the instrument panel above the steering column opening, directly in front of the driver. The main body of the instrument cluster, including the mounts and the electrical connections, are concealed within the instrument panel below the instrument panel top over (2). The instrument cluster includes the hardware and software necessary to serve as the electronic body control module and is also known as the Cab Compartment Node or (CCN).

Besides analog gauges and indicators, the CCN module incorporates one standard and one optional blue-green digital Vacuum Fluorescent Display (VFD) units. The standard VFD is a fixed segment unit for displaying odometer information, automatic transmission gear selector position (PRNDL), and several other indicators. The optional VFD is a large, reconfigurable display unit which serves as the visual display for the compass, the outside temperature, the trip computer, and the audio system settings as well as the user interface for the customer programmable features, numerous textual warning or reminder indicators and certain diagnostic information.

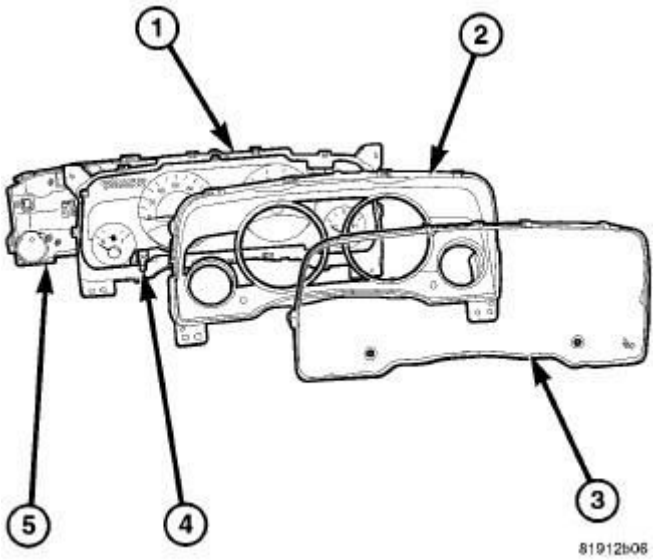

Fig. 2: Exploded View Of Instrument Cluster
Courtesy of CHRYSLER GROUP, LLC

The instrument cluster gauges and Light Emitting Diode (LED) indicators are visible through a dedicated opening in the instrument panel below the cluster hood and are protected by a clear plastic cluster lens (3). Nine integral latch formations on the lens secure it to the cluster hood and mask unit (2) as well as the cluster housing (1). Just behind the cluster lens is the cluster hood and integral mask, which are constructed of molded black plastic. The hood serves as a visor and shields the face of the cluster from ambient light and reflections to reduce glare, while the cluster mask serves to separate and define the individual gauges from the indicator areas and trims the outside perimeter of the cluster overlay. The hood and mask has six integral latch features that secure it to the outer perimeter of the cluster housing. The hood and mask unit also has two integral mounting tabs on the lower corners that combine with the tabs integral to the cluster housing to secure the bottom of the CCN to the molded plastic instrument panel cluster carrier with two screws.

The rear of the cluster housing and the CCN electronic circuitry are protected by a molded white plastic rear cover (5), which is also secured to the cluster housing by integral latch features. The rear cover includes clearance holes for the four cluster connector receptacles. The connector receptacles on the back of the cluster electronic circuit board connect the CCN to the vehicle electrical system through four take outs with connectors from the instrument panel wire harness.

Sandwiched between the rear cover and the lens and hood unit is the cluster

housing. The molded white plastic cluster housing serves as the carrier for the cluster circuit board and circuitry, the cluster connector receptacles, the two major and two minor gauges, a LED's for each cluster indicator, the VFD display units, an audible tone transducer, several LED units for general cluster illumination, the cluster overlay, and the gauge pointers. The standard equipment molded black plastic odometer/trip odometer switch button as well as the optional reconfigurable display switch button (4) extend from the face of the cluster housing through dedicated holes in the cluster mask and the cluster lens adjacent to their respective VFD units. The cluster housing also has four integral mounting tabs, one on each upper and lower corner of the housing.

The cluster overlay is a laminated plastic unit. The dark, visible, outer surface of the overlay is marked with all of the gauge dial faces and graduations, but this layer is also translucent. The darkness of this outer layer prevents the cluster from appearing cluttered or busy by concealing the cluster indicators that are not illuminated, while the translucence of this layer allows those indicators and icons that are illuminated to be readily visible. The underlying layer of the overlay is opaque and allows light from the LED for each of the various indicators and illumination lamps behind it to be visible through the outer layer of the overlay through predetermined stencil-like cutouts. Openings in the overlay at the base of the speedometer and tachometer dial faces have smoked clear lenses through which the illuminated VFD units can be viewed.

Several versions of the CCN module are offered on this vehicle. These versions accommodate all of the variations of optional equipment and regulatory requirements for the various markets in which the vehicle is offered. The microprocessor-based CCN utilizes integrated circuitry and information carried on the Controller Area Network (CAN) data bus and the Local Interface Network (LIN) data bus along with several hard wired analog and multiplexed inputs to monitor sensors and switches throughout the vehicle. In response to those inputs, the internal circuitry and programming of the CCN allow it to control and integrate many electronic functions and features of the vehicle through both hard wired outputs and the transmission of electronic message outputs to other electronic modules in the vehicle over the CAN and LIN data busses. Refer to **COMMUNICATION, DESCRIPTION** .

The instrument cluster gauges, indicators, VFD units, as well as the cluster illumination are all integral components of the CCN and its electronic circuit board. If any part of the internal working components of the instrument cluster

become damaged or ineffective, the entire instrument cluster assembly must be replaced. The cluster lens and the cluster hood and mask unit are the only components of the instrument cluster assembly that can be serviced separately.

VEHICLE SYSTEMS SUPPORT

Besides typical instrument cluster gauge and indicator support, the electronic functions and features that the CCN supports or controls include the following:

- **A/C Select and Evaporator Probe Support** - The CCN monitors hard wired inputs from the A/C select switch in the air conditioner-heater control and evaporator temperature sensor inputs, then transmits electronic **A/C clutch request** messages over the CAN data bus when appropriate to support the A/C clutch control feature.
- **Audible Warnings** - The CCN electronic circuit board is equipped with an audible tone transducer and programming that allows it to provide various audible alerts to the vehicle operator. These alerts include single chime tones and continuous slow or fast tones. An electromechanical relay is also soldered onto the circuit board to produce audible clicks that are used to emulate the sound of a conventional turn signal or hazard warning flasher.
- **Electric Backlight Support** - The CCN monitors Electric BackLight (EBL) switch hard wired inputs from the air conditioner-heater control, then transmits the appropriate electronic **EBL request** messages over the CAN data bus to support the EBL function.
- **Enhanced Accident Response Support** - The CCN monitors an input from the Occupant Restraint Controller (ORC) and, following an airbag deployment, will immediately disable the power lock output, unlock all doors by activating the power unlock output, then enables the power lock output if the power lock switch input remains inactive for two seconds. The CCN also monitors an input from the Powertrain Control Module (PCM) to automatically turn ON the interior lighting after an airbag deployment event, 10 seconds after the vehicle speed is zero. The interior lighting remains illuminated until the key is removed from the ignition switch lock cylinder, at which time the interior lighting returns to normal operation and control. These Enhanced Accident Response System (EARS) features are each dependent upon a functional vehicle electrical system following the vehicle impact event.
- **Exterior Lighting Switch Support** - The CCN monitors electronic **exterior lighting switch** , and **turn signal switch status** messages from the Steering

Control Module (SCM) on the steering column over the LIN data bus and transmits the appropriate electronic **exterior lighting** and **turn signal request** messages to the Totally Integrated Power Module (TIPM) over the CAN data bus to support the exterior lighting functions.

- **Four Wheel Drive (4WD) Lock Switch Support** - The CCN monitors a hard wired input from the 4WD Lock switch on the center floor console then transmits the appropriate electronic **4WD Lock request** and **Unlock request** messages to the All Wheel Drive Control Module (AWDCM) over the CAN data bus to support the 4WD Lock mode functions.
- **Fuel Level Data Support** - The CCN provides a current source for and receives a hard wired analog input from the fuel level sending unit located on the fuel pump module in the fuel tank. The CCN uses this input to calculate the proper fuel gauge needle position and to control low fuel indicator operation. Based upon this input, the CCN also uses electronic messaging to transmit this data over the CAN data bus for use by other electronic modules in the vehicle.
- **Hazard Switch Support** - The CCN monitors electronic **hazard switch status** messages from the instrument panel switch pod on the instrument panel over the LIN data bus and transmits the appropriate electronic **hazard lamp request** messages to the Totally Integrated Power Module (TIPM) over the CAN data bus to support the hazard lamps function.
- **Heated Seat Switch Support** - On vehicles equipped with optional heated seats, the CCN monitors electronic **heated seat switch status** messages from the heated seat switches in the instrument panel switch pod and transmits electronic **heated seat request** messages to the Heated Seat Module (HSM) over the LIN data bus. This message wakes up the HSM when the switch is actuated.
- **Horn Switch Support** - The CCN receives a hard wired input from the horn switch on the steering wheel then provides electronic **horn request** messages over the CAN data bus to support the horn function.
- **Interior Lamp Load Shedding** - The CCN provides a battery saver feature which will automatically turn OFF all interior lamps if they remain ON after a timed interval of about ten minutes.
- **Interior Lighting Control** - The CCN monitors electronic messages and hard wired inputs from the interior lighting switch, the door ajar switches, the liftgate ajar switch, the reading lamp switches, and the Sentry Key REmote Entry Module (SKREEM) (also known as the Wireless Control

Module/WCM) to provide courtesy lamp control. This includes support for timed illuminated entry with theater-style fade-to-OFF and courtesy illumination DEFEAT features.

- **Local Interface Network Master Module** - The CCN is the master module for the LIN data bus. In this role it gathers information from the compass sensor, the Heated Seat Module (HSM), the instrument panel switch pod and the SCM, then either acts on that information directly or places electronic messages on the CAN data bus for use by other modules
- **Panel Lamps Dimming Control** - The CCN monitors electronic **dimming level** messages received from the panel lamps dimmer switch input to the SCM over the LIN data bus, then provides both a hard wired 12-volt Pulse-Width Modulated (PWM) output and electronic message outputs over the LIN data bus that synchronizes the dimming level of all panel lamps dimmer controlled lamps with that of the cluster general illumination lighting.
- **Power Lock System Control** - The CCN monitors inputs from the power lock switches and the SKREEM (also known as the Wireless Control Module/WCM) to provide control of the power lock motors through high side and low side driver outputs. This includes support for rolling door locks (also known as automatic door locks), automatic door unlock, and a door lock inhibit mode.
- **Reconfigurable Display Support** - The CCN provides support for each of the functions and features of the reconfigurable display. This includes support for the compass, thermometer, audio system mode, customer programmable features, textual warnings, premium Tire Pressure Monitor (TPM), trip computer, U-Connect™ Hands-Free communication, HomeLink™ Universal Garage Door Opener (UGDO) and the reconfigurable display switch inputs that are used to control and configure many of the displays. This also includes display arbitrator programming, which controls the priorities, sequences, and transition of information that is displayed in the reconfigurable display, particularly when multiple display requests are received simultaneously.
- **Remote Keyless Entry Support** - The CCN supports the Remote Keyless Entry (RKE) system features, including support for the RKE LOCK, UNLOCK (with optional driver-door-only unlock, and unlock-all-doors), PANIC, audible chirp, optical chirp, illuminated entry modes, an RKE programming mode, as well as optional Vehicle Theft Security System (VTSS) arming (when the proper VTSS arming conditions are met) and

disarming.

- **Remote Radio Switch Support** - The CCN receives a hard wired input from the remote radio switches on the steering wheel then provides electronic **radio request** messages over the CAN data bus to support the remote radio switch function.
- **Vehicle Theft Security System Control** - The CCN monitors inputs from the door ajar switches, the SCM, the SKREEM (also known as the Wireless Control Module/WCM) and, on vehicles so equipped, the intrusion module then provides electronic **horn** and **lighting request** messages to the TIPM for the appropriate VTSS alarm output features.
- **Wiper and Washer Switch Support** - The CCN monitors electronic **wiper switch** and **washer switch status** messages from the SCM on the steering column over the LIN data bus and transmits the appropriate electronic **wiper** and **washer request** messages to the TIPM over the CAN data bus to support the wiper and washer system functions, including the headlamps-on with wipers programmable feature.

VACUUM-FLUORESCENT DISPLAYS

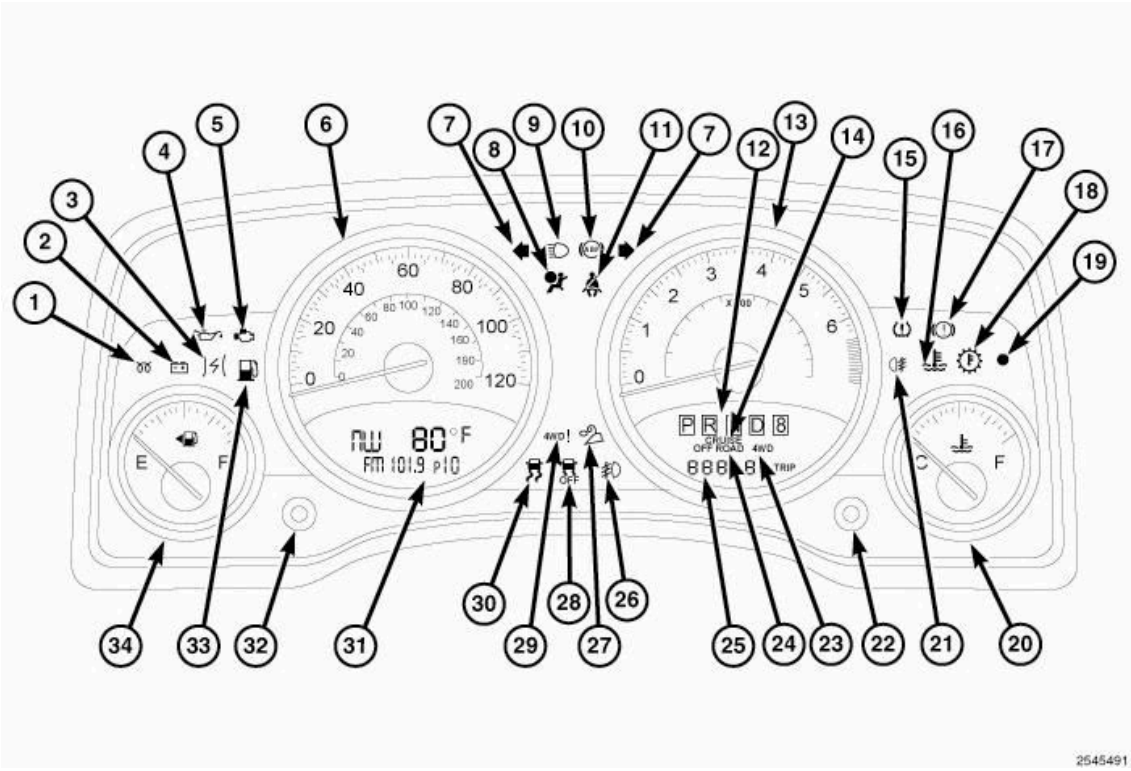

Fig. 3: Exploded View Of Electronic Vehicle Information Center (EVIC)
Courtesy of CHRYSLER GROUP, LLC

The Vacuum-Fluorescent Display (VFD) (25) (31) units are soldered to the CCN electronic circuit board. Both the standard one located below the tachometer and the optional Compass Mini-Trip Computer (CMTC) display located below the speedometer are fixed segment displays.

An odometer and trip odometer are standard factory-installed equipment in all instrument clusters. The odometer and trip odometer are displayed in a common electronic, blue-green Vacuum-Fluorescent Display (VFD) unit. This VFD unit is soldered onto the cluster electronic circuit board, and is visible through a window with a smoked clear lens located on the lower edge of the tachometer in the lower right area of the cluster overlay. The dark lens over the VFD prevents the indicator from being clearly visible when it is not illuminated.

The odometer and trip odometer information are not displayed simultaneously. The trip odometer reset switch on the instrument cluster circuit board toggles the display between odometer and trip odometer modes by depressing the odometer/trip odometer switch button that extends through the lower edge of the cluster lens, just left of the minor gauge set. When the trip odometer information is displayed, the text **TRIP A** or **TRIP B** is also illuminated in the lower right corner of the odometer/trip odometer VFD in a blue-green color and at the same lighting level as the trip odometer information.

The odometer and trip odometer information are stored in the instrument cluster memory. This information can be increased when the proper inputs are provided to the instrument cluster, but the information cannot be decreased. The odometer can display values up to 999, 999 kilometers (999, 999 miles). The odometer latches at these values, and will not roll over to zero. The trip odometer can display values up to 999.9 kilometers (999.9 miles) before it rolls over to zero.

The odometer display does not show leading zeroes, does not have a decimal point and will not show values less than a full unit (kilometer or mile). The unit of measure (**km** or **miles**) for the odometer display is not shown in the VFD. The unit of measure for the instrument cluster odometer/trip odometer is selected at the time that it is manufactured, and cannot be changed. The odometer has a RENTAL CAR mode, which will illuminate the odometer information in the VFD whenever the driver side front door is opened with the ignition switch in the OFF or ACCESSORY positions.

During daylight hours (exterior lamps are OFF) the odometer VFD is illuminated

at full brightness for clear visibility. At night (exterior lamps are ON), the VFD lighting level is adjusted with the other cluster general illumination lamps using the panel lamps dimmer function of the interior lighting control sleeve on the left multi-function switch control stalk. However, a PARADE mode position of the control sleeve allows the VFD to be illuminated at full brightness if the exterior lamps are turned ON during daylight hours.

The odometer/trip odometer VFD, the trip odometer switch and the trip odometer push button are serviced as a unit with the instrument cluster.

OPERATION

OPERATION

The instrument cluster in this vehicle includes the hardware and software necessary to serve as the electronic body control module and is referred to as the Cab Compartment Node (CCN). The following information deals primarily with the instrument cluster functions of this unit. Additional details of the electronic body control functions of this unit may be found within the service information for the system or component that the CCN controls. For example: Additional details of the audible warning functions of the CCN are found within the Chime/Buzzer service information.

The instrument cluster display is designed to allow the vehicle operator to monitor the conditions of many of the vehicle components and operating systems. The gauges and indicators in the instrument cluster provide valuable information about the various standard and optional powertrains, fuel and emissions systems, cooling systems, lighting systems, safety systems and many other convenience items. The instrument cluster is installed in the instrument panel so that all of these monitors can be easily viewed by the vehicle operator when driving, while still allowing relative ease of access for service.

The microprocessor-based CCN hardware and software uses various inputs to control the gauges and indicators visible on the face of the cluster. Some of these inputs are hard wired, but most are in the form of electronic messages that are transmitted by other electronic modules over the Controller Area Network (CAN) data bus or the Local Interface Network (LIN data bus. The CCN is the master node for the LIN data bus. Refer to **COMMUNICATION, OPERATION** .

The CCN microprocessor smooths the input data using algorithms to provide gauge readings that are accurate, stable and responsive to operating conditions. These algorithms are designed to provide gauge readings during normal operation that are consistent with customer expectations. However, when abnormal conditions exist such as high coolant temperature, the algorithm can drive the gauge pointer to an extreme position and the microprocessor can sound a chime through the on-board audible tone transducer to provide distinct visual and audible indications of a problem to the vehicle operator. The CCN may also produce audible warnings for other electronic modules in the vehicle based upon electronic **tone request** messages received over the CAN or LIN data bus. Each audible warning is intended to provide the vehicle operator with an audible alert to supplement a visual indication.

The CCN circuitry operates on battery current received through a fused B(+) fuse on a non-switched fused B(+) circuit, and on battery current received through a fused ignition switch output (run-start) fuse on a fused ignition switch output (run-start) circuit. This arrangement allows the CCN to provide some features regardless of the ignition switch position, while other features will operate only with the ignition switch in the ON or START positions. The CCN circuitry is grounded through a ground circuit and take out of the instrument panel wire harness with an eyelet terminal connector that is secured by a ground screw to a ground location on the instrument panel structural support.

The CCN also has a self-diagnostic test capability, which will test each of the CAN or LIN bus message-controlled functions of the cluster by lighting the appropriate indicators, positioning the gauge needles at several predetermined calibration points across the gauge faces, and illuminating all segments of the Vacuum-Fluorescent Display (VFD) units. Refer to **DIAGNOSIS AND TESTING**.

VACUUM-FLUORESCENT DISPLAYS

With the ignition switch in the OFF or ACCESSORY positions, both VFD displays are activated and the total odometer information is displayed when the driver door is opened (Rental Car Mode) and are deactivated when the driver door is closed or after five minutes, whichever occurs first. Otherwise, both display units are active when the ignition switch is in the ON or START positions, and inactive when the ignition switch is in the OFF or ACCESSORY positions.

- **Odometer/Trip Odometer Display Toggling** - Actuating the odometer/trip odometer push button momentarily with the ignition switch in the ON position will toggle the odometer VFD between the odometer and trip odometer modes. Depressing the odometer/trip odometer push button for about two seconds while the VFD is in the trip odometer mode will reset the trip odometer value to zero. Holding the odometer/trip odometer push button depressed while turning the ignition switch from the OFF position to the ON position will initiate the instrument cluster self-diagnostic test. Refer to **DIAGNOSIS AND TESTING** for additional details. The CCN microprocessor remembers which odometer display mode is active when the ignition switch is turned to the OFF position, and returns the display to that mode when the ignition switch is turned ON again
- **Trip Odometer Reset** - When the trip odometer reset switch button is pressed and held for longer than about two seconds with the ignition switch in the ON or START positions, the trip odometer will be reset to **0.0** kilometers (miles). The VFD must be displaying the trip odometer information in order for the trip odometer information to be reset.
- **GasCap Message Display** - On vehicles manufactured with a United States country code, each time the cluster receives an electronic message from the PCM indicating a monitored leak in the evaporative emissions system, the cluster replaces the displayed odometer/trip odometer value with the textual message, **gascap** . This message serves as a reminder to the vehicle operator to check that the gas cap is properly installed and tightened, but could also indicate another source of air leakage in the on-board evaporative and vapor recovery emissions systems. Unless the leak is corrected, this message will latch and remain displayed during the current and each subsequent ignition cycle until the trip odometer reset button is pressed and released momentarily, which will revert the display to the odometer/trip odometer information that was last displayed for the remainder of that ignition cycle. Once the source of a leak has been corrected, either momentarily pressing the trip odometer reset button or cycling the ignition switch will unlatch the message and return the odometer/trip odometer to normal operation.
- **Communication Error** - If the cluster fails to receive an electronic **distance** message during normal operation, it will hold and display the last data received until the ignition switch is turned to the OFF position. If the cluster does not receive a **distance** message within one second after the ignition switch is turned to the ON position, it will display the last distance value stored in the cluster memory. If the cluster is unable to display

odometer information due to an error internal to the cluster, the VFD will display **error** .

The PCM continually monitors the vehicle speed pulse information received from the wheel speed sensors, then sends the proper messages to the CCN. For proper diagnosis of the wheel speed sensors, the PCM, the CCN, the CAN data bus or the electronic communication related to odometer/trip odometer operation a diagnostic scan tool is required. Refer to the appropriate diagnostic information.

Proper testing of the CAN or LIN data bus message inputs to the CCN that control some of the VFD functions requires the use of a diagnostic scan tool. Refer to the appropriate diagnostic information.

CLUSTER ILLUMINATION

The CCN has several Light Emitting Diode (LED) units that provide cluster back lighting whenever the exterior lighting is turned ON. The illumination intensity of these LED units is adjusted when the panel lamps dimmer function of the control sleeve on the control stalk of the left (lighting) multi-function switch is rotated to one of six available minor detent positions. The CCN monitors an electronic **dimming level** message input received over the LIN data bus from the Steering Control Module (SCM) to determine the selected lighting level. In response to that input, the CCN electronic circuitry converts a fused 12-volt input it receives on a hard wired panel lamps dimmer switch signal circuit into a 12-volt Pulse Width Modulated (PWM) output.

The CCN uses this PWM output to control the illumination intensity of the cluster general illumination lighting and the VFD units on the CCN circuit board, then provides a synchronized PWM output on various hard wired fused panel lamps dimmer switch signal circuits to control and synchronize the illumination intensity of other incandescent illumination lamps in the vehicle. The CCN also transmits electronic **dimming level** messages over the CAN and LIN data bus to other electronic modules in the vehicle to control and synchronize the illumination intensity of their display units to that of the CCN displays.

The hard wired panel lamps dimmer outputs from the CCN may be diagnosed using conventional diagnostic tools and procedures. However, proper testing of the PWM processing of the CCN and the electronic **dimming level** messages received by the CCN over the LIN data bus requires the use of a diagnostic scan

tool. Refer to the appropriate diagnostic information.

DIAGNOSIS AND TESTING

DIAGNOSIS AND TESTING - INSTRUMENT CLUSTER

WARNING: To avoid serious or fatal injury on vehicles equipped with airbags, disable the Supplemental Restraint System (SRS) before attempting any steering wheel, steering column, airbag, seat belt tensioner, impact sensor or instrument panel component diagnosis or service. Disconnect and isolate the battery negative (ground) cable, then wait two minutes for the system capacitor to discharge before performing further diagnosis or service. This is the only sure way to disable the SRS. Failure to take the proper precautions could result in accidental airbag deployment.

If all of the instrument cluster gauges and indicators are ineffective, be certain to check the instrument cluster fused B(+) fuse and the instrument cluster fused B (+) and ground circuits for shorts or opens. Refer to the appropriate wiring information. The wiring information includes wiring diagrams, proper wire and connector repair procedures, details of wire harness routing and retention, connector pin-out information and location views for the various wire harness connectors, splices and grounds.

If an individual hard wired gauge or indicator is ineffective, refer to the diagnosis and testing service information for that specific gauge or indicator. If an individual Controller Area Network (CAN) or Local Interface Network (LIN) data bus message-controlled gauge or indicator is ineffective, perform the instrument cluster Self Test as follows:

CAUTION: Instrument clusters used in this vehicle automatically configure themselves for compatibility with the features and optional equipment in the vehicle in which they are initially installed. The instrument cluster is programmed to do this by embedding the Vehicle Identification

Number (VIN) and other information critical to proper cluster operation into electronic memory. This embedded information is learned through electronic messages received from other electronic modules in the vehicle over the Controller Area Network (CAN) data bus, and through certain hard wired inputs received when the cluster is connected to the vehicle electrically. Once configured, the instrument cluster memory may be irreparably damaged and certain irreversible configuration errors may occur if the cluster is connected electrically to another vehicle; or, if an electronic module from another vehicle is connected that provides data to the instrument cluster (including odometer values) that conflicts with that which was previously learned and stored. Therefore, the practice of exchanging (swapping) instrument clusters and other electronic modules in this vehicle with those removed from another vehicle must always be avoided. Failure to observe this caution may result in instrument cluster damage, which is not reimbursable under the terms of the product warranty. Service replacement instrument clusters are provided with the correct VIN, and the certified odometer and engine hours values embedded into cluster memory, but will otherwise be automatically configured for compatibility with the features and optional equipment in the vehicle in which they are initially installed.

NOTE: **Certain indicators in this instrument cluster are automatically configured. This feature allows those indicators to be activated or deactivated for compatibility with certain optional equipment. If the problem being diagnosed involves improper illumination of the cruise indicator, the electronic throttle control indicator, the fog lamp indicator, any of the four-wheel drive indicators, the**

transmission overtemp indicator, the security indicator or the gear selector indicator, disconnect and isolate the battery negative cable. After about five minutes, reconnect the battery negative cable and turn the ignition switch to the ON position. The instrument cluster should automatically relearn the equipment in the vehicle and properly configure the configurable indicators accordingly.

SELF TEST

The instrument cluster self test will put the instrument cluster into its self diagnostic mode. In this mode the instrument cluster can perform a diagnostic test that will confirm that the instrument cluster circuitry, the gauges and the indicators are capable of operating as designed. During the test, the Cab Compartment Node (CCN) circuitry will position each of the gauge needles at various calibration points, illuminate each of the segments in the Vacuum-Fluorescent Display (VFD) units, and turn all of the indicators ON and OFF again.

Successful completion of the self test will confirm that the instrument cluster is operational. However, there may still be a problem with the CAN or LIN data bus, the Powertrain Control Module (PCM), the Totally Integrated Power Module (TIPM), the Controller Antilock Brake (CAB), the All-Wheel Drive Control Module (AWDCM), the Occupant Restraint Controller (ORC), the compass module, the Sentry Key REmote Entry Module (SKREEM) (also known as the Wireless Control Module/WCM), or the inputs to one of these electronic control modules. Use a diagnostic scan tool to diagnose these components. Refer to the appropriate diagnostic information.

1. Begin the test with the ignition switch in the OFF position.
2. Depress the odometer/trip odometer switch button.
3. While still holding the odometer/trip odometer switch button depressed, turn the ignition switch to the ON position, but do not start the engine.
4. Release the odometer/trip odometer switch button.
5. The instrument cluster will simultaneously begin to illuminate all of the operational segments in the VFD units, and perform a bulb check of each operational LED indicator. The VFD segments and LED indicators remain

illuminated as each gauge needle is swept to several calibration points and back. If a VFD segment or an LED indicator fails to illuminate, or if a gauge needle fails to sweep through the calibration points and back during this test, the instrument cluster must be replaced.

6. The self test is now completed. The instrument cluster will automatically exit the self diagnostic mode and return to normal operation at the completion of the test. The self test will be aborted if the ignition switch is turned to the OFF position, or if an electronic **vehicle speed** message indicating that the vehicle is moving is received over the CAN data bus during the test.
7. Go back to step 1 to repeat the test, if necessary.

REMOVAL

REMOVAL

WARNING: To avoid serious or fatal injury on vehicles equipped with airbags, disable the Supplemental Restraint System (SRS) before attempting any steering wheel, steering column, airbag, seat belt tensioner, impact sensor or instrument panel component diagnosis or service. Disconnect and isolate the battery negative (ground) cable, then wait two minutes for the system capacitor to discharge before performing further diagnosis or service. This is the only sure way to disable the SRS. Failure to take the proper precautions could result in accidental airbag deployment.

CLUSTER ASSEMBLY

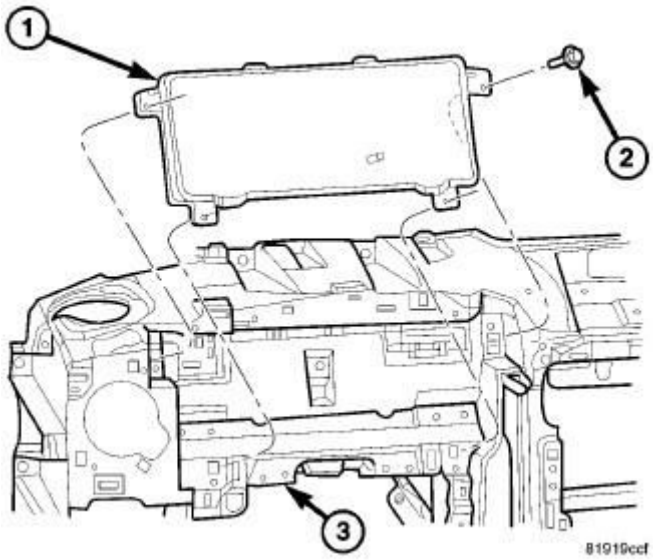

Fig. 4: Replacing Instrument Cluster
Courtesy of CHRYSLER GROUP, LLC

1. Disconnect and isolate the battery negative cable.
2. Remove the instrument panel top cover. Refer to **COVER, INSTRUMENT PANEL, REMOVAL** .
3. Remove the four screws (2) that secure the instrument cluster (1) to the instrument panel structural support (3).
4. Pull the top of the instrument cluster rearward far enough to access and disconnect the instrument panel wire harness connectors from the connector receptacles on the back of the cluster housing.
5. Remove the instrument cluster from the instrument panel.

CLUSTER LENS, HOOD AND MASK

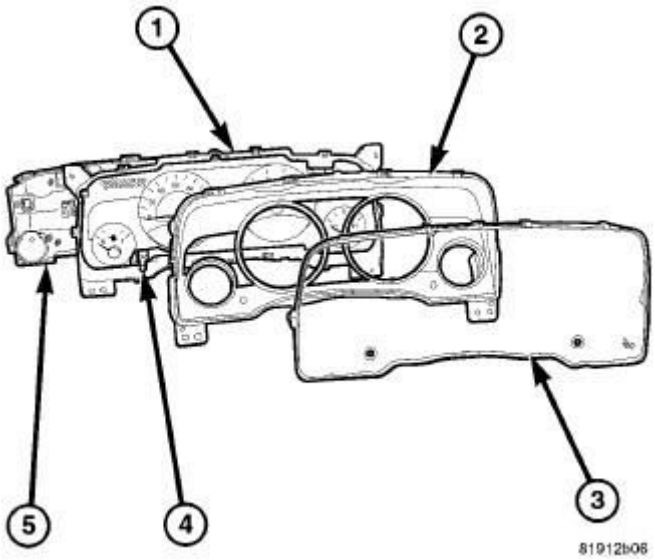

Fig. 5: Exploded View Of Instrument Cluster
Courtesy of CHRYSLER GROUP, LLC

1. Working around the perimeter of the cluster, disengage each of the nine integral latch features that secure the cluster lens (3) to the cluster hood and mask unit (2) and to the cluster housing (1).
2. Remove the lens from the face of the cluster hood and mask unit.
3. Working around the perimeter of the cluster, disengage each of the six integral latch features that secure the cluster hood and mask unit to the cluster housing (1).
4. Remove the hood and mask unit from the face of the instrument cluster.

INSTALLATION

INSTALLATION

WARNING: To avoid serious or fatal injury on vehicles equipped with airbags, disable the Supplemental Restraint System (SRS) before attempting any steering wheel, steering column, airbag, seat belt tensioner, impact sensor or instrument panel component diagnosis or service. Disconnect and isolate the battery negative (ground) cable, then wait two minutes for the system capacitor to discharge before performing further diagnosis or service. This is the only sure way to disable the

SRS. Failure to take the proper precautions could result in accidental airbag deployment.

NOTE: Certain indicators in this instrument cluster are automatically configured. This feature allows those indicators to be activated or deactivated for compatibility with certain optional equipment. If a problem is noted that involves improper illumination of an indicator, disconnect and isolate the battery negative cable. After about five minutes, reconnect the battery negative cable and turn the ignition switch to the ON position. The instrument cluster should automatically relearn the equipment in the vehicle and properly configure the configurable indicators accordingly.

NOTE: Some of the components for the instrument cluster used in this vehicle are serviced individually. The serviced components include the cluster lens and the cluster hood and mask unit. Following are the procedures for assembling these components onto the instrument cluster.

CLUSTER ASSEMBLY

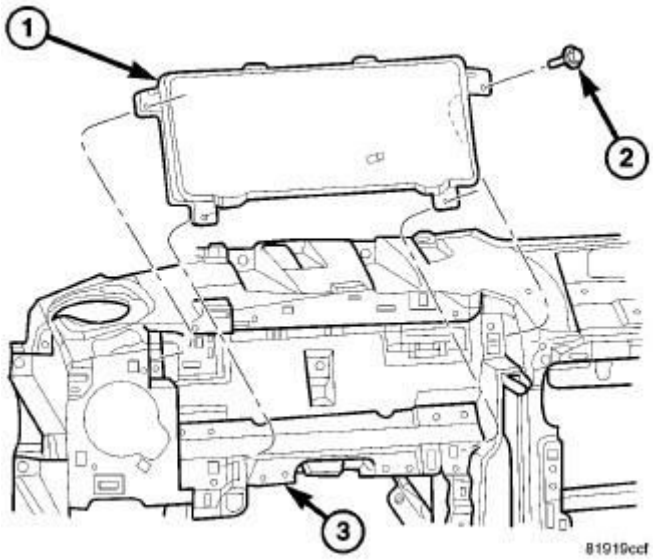

Fig. 6: Replacing Instrument Cluster
Courtesy of CHRYSLER GROUP, LLC

1. Position the instrument cluster (1) close enough to the instrument panel to reconnect the instrument panel wire harness connectors to the connector receptacles on the back of the cluster housing.
2. Position the instrument cluster mounting tabs to the mounting holes in the instrument panel structural support (3).
3. Install and tighten the four screws (2) that secure the mounting tabs of the instrument cluster. Tighten the screws to 2 N.m (17 in. lbs.).
4. Reinstall the instrument panel top cover. Refer to **COVER, INSTRUMENT PANEL, INSTALLATION** .
5. Reconnect the battery negative cable.

CLUSTER LENS, HOOD AND MASK

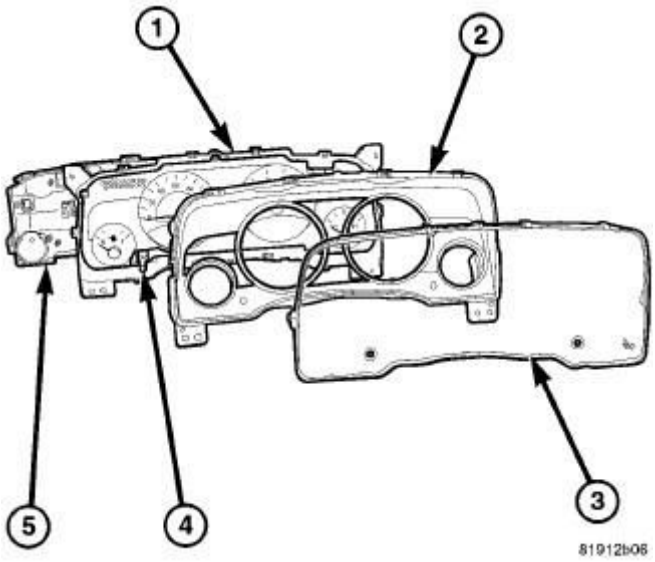

Fig. 7: Exploded View Of Instrument Cluster
Courtesy of CHRYSLER GROUP, LLC

1. Position the cluster hood and mask unit (2) over the face of the cluster housing (1). Be certain that the odometer/trip odometer switch and reconfigurable display switch push buttons (4) are inserted through the proper clearance holes in the mask.
2. Working around the perimeter of the cluster, press the hood and mask over the face of the cluster housing until each of the integral latch features is fully engaged in the receptacles of the housing.
3. Position the cluster lens (3) over the face of the cluster hood and mask unit (2). Be certain that the odometer/trip odometer switch and reconfigurable

display switch push buttons (4) are inserted through the proper clearance holes in the lens.

4. Working around the perimeter of the cluster, press the lens over the face of the hood and mask until each of the integral latch features is fully engaged in the receptacles of the hood and mask or the cluster housing (1).
5. Reinstall the instrument cluster onto the instrument panel.

GAUGE PACK, INSTRUMENT CLUSTER

DESCRIPTION

DESCRIPTION

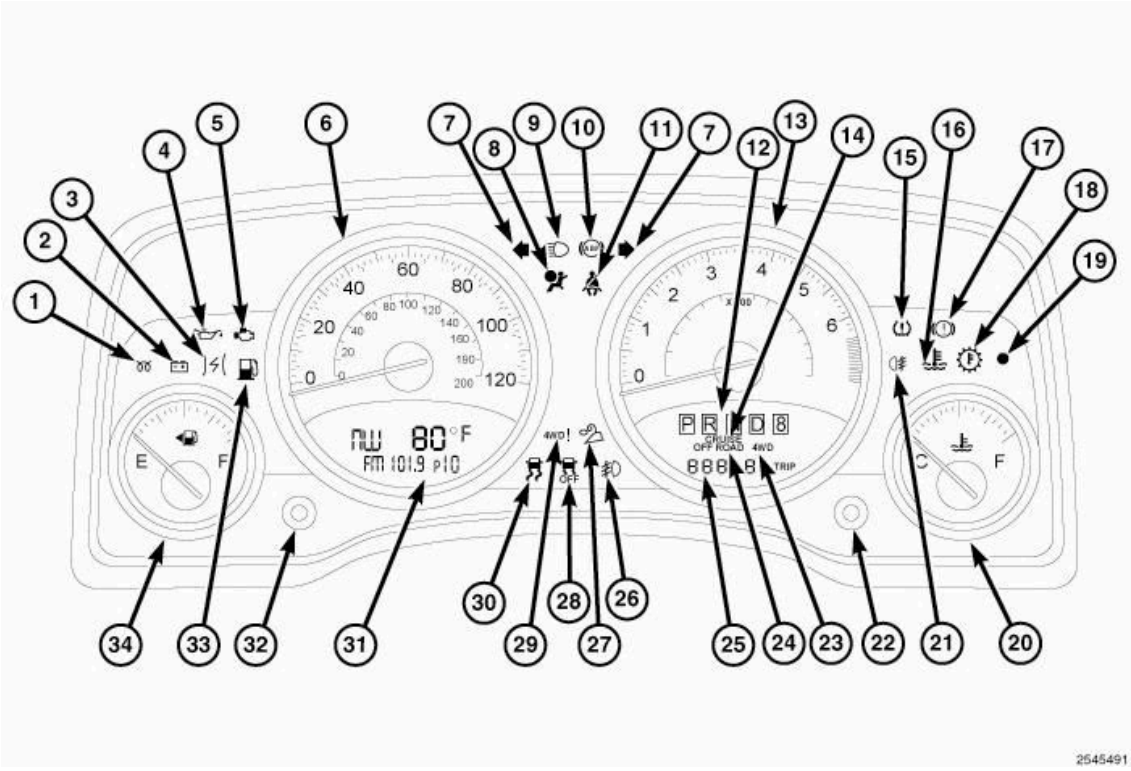

Fig. 8: Exploded View Of Electronic Vehicle Information Center (EVIC)
Courtesy of CHRYSLER GROUP, LLC

The instrument cluster assembly houses 4 analog gauges standard on all models and has provisions for up to 25 International Control and Display Symbol icon indicators, that are all controlled by the Cab Compartment Node (CCN). Refer to **INDICATORS, INSTRUMENT CLUSTER, DESCRIPTION**. The gauge graphics are white against a black field except for a single red graduation at the high end of the gauge scale on both the engine temperature and fuel level gauges, and several red graduations at the high end of the gauge scale on the tachometer

that designate the red line area, making them clearly visible within the instrument cluster in daylight. When illuminated by the cluster illumination lighting, the white text and graphics as well as the red graphics still appear the same, the red gauge needles have internal optical illumination. Gauge illumination is provided by dimmer controlled Light Emitting Diode (LED) units soldered onto the CCN circuit board. The Gauge set and indicators shown above are an integrated part of the CCN, therefore are only serviced as a unit with the instrument cluster. The cluster lens and the cluster hood and mask unit are the only components of the instrument cluster assembly that can be serviced separately

The instrument cluster includes the following analog gauges:

- **Engine Temperature Gauge (20)**
- **Fuel Gauge (34)**
- **Speedometer (6)**
- **Tachometer (13)**

ENGINE TEMPERATURE

The standard equipment engine temperature gauge is located on the right side of the instrument cluster, just to the right and below the tachometer. The gauge consists of a movable gauge needle or pointer controlled by the CCN circuitry and a fixed 90 degree gauge scale on the cluster overlay that reads left-to-right from **C** (or Cold) to **H** (or Hot). An International Control and Display Symbol icon for **Engine Coolant Temperature** is located on the cluster overlay, directly above the hub of the gauge needle. Refer to **INTERNATIONAL VEHICLE CONTROL AND DISPLAY SYMBOLS, DESCRIPTION** for more information.

FUEL LEVEL

A fuel gauge is standard equipment on all instrument clusters. This gauge is located on the left side of the instrument cluster, just to the left and below the speedometer. Similar to the engine temperature gauge, the fuel level gauge consists of a movable gauge needle or pointer controlled by the CCN circuitry and a fixed 90 degree gauge scale on the cluster overlay that reads left-to-right from **E** (or Empty) to **F** (or Full). The International Control and Display Symbol icon for **Fuel** is located on the cluster overlay, directly above the hub of the gauge needle. An arrowhead pointed to the left side of the vehicle is imprinted on the cluster overlay next to the **Fuel** icon on the gauge to provide the driver with a

reminder as to the location of the fuel filler access.

SPEEDOMETER

Standard equipment on all instrument clusters, the speedometer is located to the left of center in the instrument cluster, between the tachometer and the fuel gauge. The speedometer consists of a movable gauge needle or pointer controlled by the instrument cluster circuitry and a fixed 185 degree primary scale on the gauge dial face that reads left-to-right either from **0** to **120** mph, or from **0** to **240** km/h, depending upon the market for which the vehicle is manufactured.

Each version also has a secondary inner scale on the gauge dial face that provides the equivalent opposite units from the primary scale. Text appearing on the cluster overlay above the hub of the speedometer needle and below the primary scale abbreviates the unit of measure for the primary scale (either **MPH** or **km/h**), and text above the hub of the speedometer needle and below the secondary scale indicates the unit of measure for that scale.

TACHOMETER

The standard equipment tachometer is located to the right of center in the instrument cluster, between the speedometer and the coolant temperature gauge. The tachometer consists of a movable gauge needle or pointer controlled by the instrument cluster circuitry and a fixed 185 degree scale on the gauge dial face that reads left-to-right either from **0** to **6** . The text **RPM X 1000** imprinted on the cluster overlay directly above the hub of the tachometer needle identifies that each number on the tachometer scale is to be multiplied by 1000 rpm.

OPERATION

OPERATION

GAUGES

All gauges receive battery current through the Cab Compartment Node (CCN) circuitry only when the ignition switch is in the ON or START positions. With the ignition switch in the OFF position battery current is not supplied to any gauges, and the CCN circuitry is programmed to move all of the gauge needles back to the low end of their respective scales. Therefore, the gauges do not accurately indicate any vehicle condition unless the ignition switch is in the ON or START positions.

All of the CCN gauges are driven by stepper motors. Two fixed electromagnetic coils are located within each gauge. These coils are wrapped at right angles to each other around a movable permanent magnet. The movable magnet is suspended within the coils on one end of a pivot shaft, while the gauge needle is attached to the other end of the shaft. One of the coils has a fixed current flowing through it to maintain a constant magnetic field strength. Current flow through the second coil changes, which causes changes in its magnetic field strength. The current flowing through the second coil is changed by the CCN circuitry in response to messages received over the CAN data bus. The gauge needle moves as the movable permanent magnet aligns itself to the changing magnetic fields created around it by the electromagnets.

The gauges are diagnosed using the CCN self-diagnostic test. Refer to **DIAGNOSIS AND TESTING**. Proper testing of the CAN data bus and the electronic data bus message inputs to the CCN that control each gauge require the use of a diagnostic scan tool. Refer to the appropriate diagnostic information.

ENGINE TEMPERATURE

This gauge is controlled by the CCN circuit board based upon programming and electronic messages received from the Powertrain Control Module (PCM) over the CAN data bus.

The engine coolant temperature gauge is a stepper motor gauge that receives battery current on the CCN electronic circuit board through the fused ignition switch output (run-start) circuit whenever the ignition switch is in the ON or START positions. The CCN is programmed to move the gauge needle back to the low end of the scale after the ignition switch is turned to the Off position. The CCN circuitry controls the gauge needle position and provides the following features:

- **Engine Temperature Message** - Each time the CCN receives an electronic **engine temperature** message from the PCM indicating the temperature is between the low end of normal [about 41 °C (105 °F) for gasoline engines, or about 28 °C (82 °F) for diesel engines] and the high end of normal [about 124 °C (255 °F) for gasoline engines, or about 118 °C (244 °F) for diesel engines], the gauge needle is moved to the actual relative temperature position on the gauge scale.
- **Engine Temperature Low Message** - Each time the CCN receives an electronic **engine temperature** message from the PCM indicating the

temperature is low [at or below about 40 °C (104 °F) for gasoline engines, or about 27 °C (81 °F) for diesel engines], the gauge needle is held below the graduation on the far left end of the gauge scale. The gauge needle remains below the low end of the gauge scale until the CCN receives a message from the PCM indicating that the temperature is above the low end of normal, or until the ignition switch is turned to the OFF position, whichever occurs first.

- **Engine Temperature High or Critical Message** - Each time the CCN receives an electronic **engine temperature** message from the PCM indicating the temperature is high [at or above about 127 °C (261 °F) for gasoline engines, or about 128 °C (262 °F) for diesel engines], the gauge needle is moved to the red graduation at the high end of the gauge scale, the engine temperature indicator is illuminated and a single chime tone is sounded. The gauge needle remains at the red graduation and the engine temperature indicator remains illuminated until the CCN receives a message from the PCM indicating that the temperature is below about 124 °C (255 ° F) for gasoline engines, or about 115 °C (239 °F) for diesel engines, or until the ignition switch is turned to the OFF position, whichever occurs first. The chime tone feature will only repeat during the same ignition cycle if the engine temperature indicator is cycled OFF and then ON again by the appropriate messages from the PCM.
- **Communication Error** - If the CCN fails to receive an **engine temperature** message, it will hold the gauge needle at the last indication for about five seconds or until the ignition switch is turned to the OFF position, whichever occurs first. After five seconds, the CCN will move the gauge needle to the low end of the gauge scale.

The PCM continually monitors the engine coolant temperature sensor to determine the engine operating temperature. The PCM then sends the proper engine coolant temperature messages to the CCN. For further diagnosis of the engine coolant temperature gauge or the CCN circuitry that controls the gauge, refer to **DIAGNOSIS AND TESTING**. If the CCN turns on the engine temperature indicator due to a high engine temperature gauge reading, it may indicate that the engine or the engine cooling system requires service. The engine coolant temperature gauge is serviced as a unit with the instrument cluster.

FUEL GAUGE

The fuel gauge gives an indication to the vehicle operator of the level of fuel in

the fuel tank. This gauge is controlled by the CCN circuit board based upon programming and a hard wired input received from the fuel level sending unit on the fuel pump module in the fuel tank.

The fuel gauge is a stepper motor design gauge that receives battery current on the CCN electronic circuit board through the fused ignition switch output (run-start) circuit whenever the ignition switch is in the On or Start positions. The CCN is programmed to move the gauge needle back to the low end of the scale after the ignition switch is turned to the Off position. The CCN circuitry controls the gauge needle position and provides the following features:

- **Fuel Level Message** - The TIPM provides a constant current source to the fuel level sending unit and monitors a return input on a fuel level sense circuit. The resistance through the fuel level sending unit increases as the fuel level rises and decreases as the fuel level falls causing changes in the fuel level sense input voltage. The TIPM then sends the appropriate electronic **fuel level** messages to the CCN. The CCN programming applies an algorithm to calculate the proper fuel gauge needle position based upon the fuel level message input, then moves the gauge needle to the proper relative position on the gauge scale. This algorithm is used to dampen gauge needle movement against the negative effect that fuel sloshing within the fuel tank can have on accurate inputs from the fuel tank sending unit to the TIPM.
- **Less Than 11 Percent Tank Full Message** - Each time the fuel level message to the CCN indicates the fuel tank is about 11 percent full or less for 10 consecutive seconds and the vehicle speed is zero, or for 60 consecutive seconds and the vehicle speed is greater than zero, the gauge needle is moved to about the one-sixteenth graduation on the gauge scale, the low fuel indicator is illuminated, and a single chime tone is sounded. The low fuel indicator remains illuminated until the fuel level message indicates that the fuel tank is greater than about 14 percent full for 10 consecutive seconds and the vehicle speed is zero, or for 60 consecutive seconds and the vehicle speed is greater than zero, or until the ignition switch is turned to the OFF position, whichever occurs first. The chime tone feature will only repeat during the same ignition cycle if the low fuel indicator is cycled OFF and then ON again by the appropriate messages from the TIPM.
- **Less Than Empty Stop Message** - Each time the CCN receives a fuel level

message indicating the fuel level in the fuel tank is less than the **E** (or Empty) gauge needle stop position for five consecutive seconds, the gauge needle is moved to the low end of the gauge scale and the low fuel indicator is illuminated immediately. This input would indicate that the fuel level sense input to the TIPM is a short circuit.

- **More Than Full Stop Message** - Each time the CCN receives a fuel level message indicating the fuel level in the fuel tank is more than the **F** (or Full) gauge needle stop position for five consecutive seconds, the gauge needle is moved to the low end of the gauge scale and the low fuel indicator is illuminated immediately. This input would indicate that the fuel level sense input to the TIPM is an open circuit.

The CCN continually monitors the fuel tank sending unit to determine the level of fuel in the fuel tank. The CCN then sends the proper fuel level messages to other electronic modules in the vehicle over the CAN data bus. For further diagnosis of the fuel gauge or the CCN circuitry that controls the gauge, refer to **DIAGNOSIS AND TESTING**. The fuel gauge is serviced as a unit with the instrument cluster.

SPEEDOMETER

The speedometer gives an indication to the vehicle operator of the vehicle road speed. This gauge is controlled by the CCN circuit board based upon programming and electronic messages received from the Totally Integrated Power Module (TIPM). The TIPM is provided the vehicle speed information across the CAN data bus by either the PCM, the ESP module or the ABS module.

The CCN circuitry controls the gauge needle position and provides the following features:

- **Vehicle Speed Message** - Each time the CCN receives an electronic **vehicle speed** message from the PCM it will calculate the correct vehicle speed reading and position the gauge needle at that relative speed position on the gauge scale. The CCN will receive a new message and reposition the gauge pointer accordingly about every 88 milliseconds. The gauge needle will continually be positioned at the relative vehicle speed position on the gauge scale until the vehicle stops moving, or until the ignition switch is turned to the OFF position, whichever occurs first.

- **Communication Error** - If the CCN fails to receive a speed message, it will hold the gauge needle at the last indication for about three seconds, or until the ignition switch is turned to the OFF position, whichever occurs first. After three seconds, the gauge needle will return to the left end of the gauge scale.

The PCM continually monitors the vehicle speed sensor to determine the vehicle road speed. The PCM then sends the proper vehicle speed messages to the CCN. For further diagnosis of the speedometer or the CCN circuitry that controls the gauge, refer to **DIAGNOSIS AND TESTING**. The speedometer is serviced as a unit with the instrument cluster.

TACHOMETER

The tachometer gives an indication to the vehicle operator of the engine speed. This gauge is controlled by the CCN circuit board based upon programming and electronic messages received from the PCM over the CAN data bus.

The tachometer is a stepper motor design gauge that receives battery current on the CCN electronic circuit board through the fused ignition switch output (run-start) circuit whenever the ignition switch is in the ON or START positions. The CCN is programmed to move the gauge needle back to the low end of the scale after the ignition switch is turned to the OFF position. The CCN circuitry controls the gauge needle position and provides the following features:

- **Engine Speed Message** - Each time the CCN receives an electronic **engine speed** message from the PCM it will calculate the correct engine speed reading and position the gauge needle at that relative speed position on the gauge scale. The CCN will receive a new message and reposition the gauge pointer accordingly about every 88 milliseconds. The gauge needle will continually be repositioned at the relative engine speed position on the gauge scale until the engine stops running, or until the ignition switch is turned to the OFF position, whichever occurs first.
- **Communication Error** - If the CCN fails to receive a speed message, it will hold the gauge needle at the last indication for about three seconds, or until the ignition switch is turned to the OFF position, whichever occurs first. After three seconds, the gauge needle will return to the left end of the gauge scale.

The PCM continually monitors the crankshaft position sensor to determine the

engine speed. The PCM then sends the proper engine speed messages to the CCN. The tachometer is serviced as a unit with the instrument cluster.

INDICATORS, INSTRUMENT CLUSTER

DESCRIPTION

DESCRIPTION

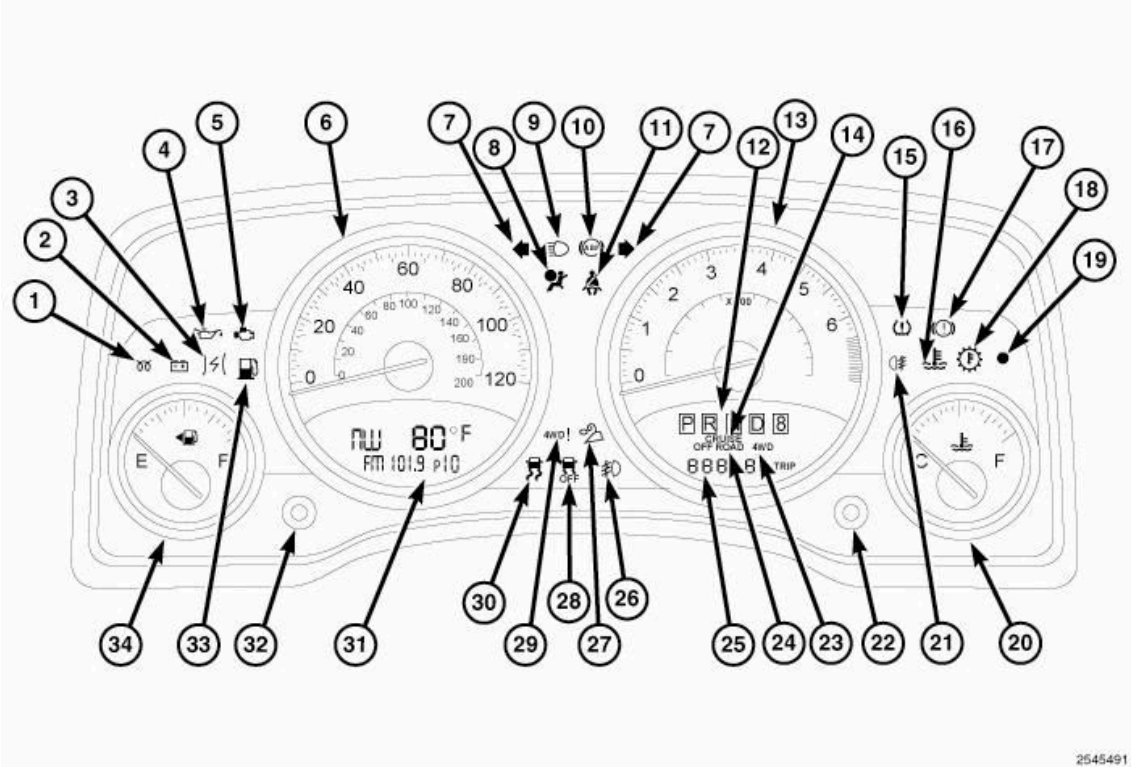

Fig. 9: Exploded View Of Electronic Vehicle Information Center (EVIC)
Courtesy of CHRYSLER GROUP, LLC

The instrument cluster assembly has provisions for up to 25 International Control and Display Symbol icon indicators and 4 analog gauges, that are all controlled by the Cab Compartment Node (CCN) and standard on all models. Refer to **GAUGE PACK, INSTRUMENT CLUSTER, DESCRIPTION**. Some of the indicators are automatically configured when the CCN is connected to the vehicle's electrical system for compatibility with certain optional equipment or equipment required for regulatory purposes in certain markets. While each instrument cluster may have provisions for indicators to support every available option, the configurable indicators will not function in vehicles that do not have the equipment that an indicator supports.

The instrument cluster includes provisions for the following indicators:

- **Airbag Indicator (8)**
- **Antilock Brake System (ABS) Indicator (10)**
- **Brake Indicator (17)** - text only for U.S. market, icon only for markets outside U.S.
- **Charging Indicator (2)**
- **Cruise Indicator (14)**
- **Traction Control/Electronic Stability Control (ESC) System Activation Indicator (30)**
- **Electronic Stability Control (ESC) OFF Indicator (28)**
- **Electronic Throttle Control (ETC) Indicator (3)**
- **Engine Coolant Temperature Indicator (16)**
- **Four-Wheel Drive Lock (Off Road) Indicator (24)** - Not Used
- **Front Fog Lamp Indicator (26)** - with optional front fog lamps only
- **Gear Selector Indicator (12)** - with automatic transmission only
- **High Beam Indicator (9)**
- **Low Fuel Indicator (33)**
- **Low Oil Pressure Indicator (4)**
- **Malfunction Indicator Lamp (MIL) (5)** - only on domestic market vehicles. On export market vehicles, this indicator is located on the right side of the cluster overlay near the top, above the engine coolant temperature gauge.
- **Rear Fog Lamp Indicator (21)** - in markets where rear fog lamps are available only
- **Seat Belt Indicator (11)**
- **Tire Pressure Monitor (TPM) Indicator (15)**
- **Turn Signal (Right and Left) Indicators (7)**
- **Wait-To-Start Indicator (1)** - with diesel engine only

The instrument cluster also includes the following Vacuum Florescent Display (VFD) units:

- **Compass Mini-Trip Computer Display (31)** - includes Push Button (35).
- **Odometer Display (25)** - includes Cruise indicator (14), Gear Selector indicator (12), Off Road indicator (24), and 4WD indicator (23).

For more information on the International Control and Display Symbol icons, refer to **INTERNATIONAL VEHICLE CONTROL AND DISPLAY SYMBOLS, DESCRIPTION** .

Each indicator in the instrument cluster, except those located within a VFD unit, is illuminated by a dedicated Light Emitting Diode (LED) that is soldered onto the CCN electronic circuit board. Cluster illumination is accomplished by several dimmable LED units, which illuminate each of the gauge dial faces for visibility when the exterior lighting is turned ON. These LED units as well as the CCN module are serviced only as a complete unit with the instrument cluster and, if damaged or ineffective, the entire instrument cluster assembly must be replaced. The cluster lens and the cluster hood and mask unit are the only components of the instrument cluster assembly that can be serviced separately.

OPERATION

OPERATION

The hard wired indicator inputs may be diagnosed using conventional diagnostic tools and procedures. However, the CCN circuitry and electronic CAN or LIN data bus message controlled indicators are diagnosed using the self-diagnostic CCN **Self test** . Refer to **DIAGNOSIS AND TESTING**. For proper testing of the CAN or LIN data bus and the electronic data bus message inputs to the CCN that control each indicator requires the use of a diagnostic scan tool. Refer to the appropriate diagnostic information.

INDICATORS

Indicators are located in various positions within the instrument cluster and are all connected to the Cab Compartment Node (CCN) electronic circuit board. All the indicators are completely controlled by the CCN microprocessor. The various indicators are controlled by different strategies; some receive fused ignition switch output from the CCN circuitry and have a switched ground, while others are grounded through the CCN circuitry and have a switched battery feed. However, most are controlled by Controller Area Network (CAN) or Local Interface Network (LIN) data bus messages from other electronic modules in the vehicle but some are controlled by a combination of hard wired inputs, electronic messaging and CCN programming. If the CCN loses CAN data bus communication, the CCN circuitry will automatically turn ON the Malfunction Indicator Lamp (MIL) until CAN data bus communication is restored.

The blue/green indicators located within the Vacuum Florescent Display (VFD) unit will dim accordingly with the instrument panel dimming. The red indicators within the VFD are at a fixed intensity. The cruise and 4WD indicators located within the odometer VFD unit are dimmable. All other indicators are illuminated at a fixed intensity, which is not affected by the selected illumination intensity of the instrument cluster general illumination Light Emitting Diode (LED) units. The illumination intensity of the dimmable indicators is synchronized with that of the general illumination lighting.

In addition, certain indicators in this instrument cluster are automatically or self-configured. This feature allows the configurable indicators to be enabled by the CCN circuitry for compatibility with certain optional equipment. These indicators are enabled or disabled by an electronic **configuration** message sent to the CCN by the Totally Integrated Power Module (TIPM). The TIPM defaults for the Anti-lock Brake System (ABS), and the airbag indicator's are enabled, and these configuration settings must be programmatically disabled in the TIPM using a diagnostic scan tool for vehicles that do not have this equipment. The automatically or self-configured indicators remain latent in each CCN at all times and will be active only when the CCN receives the appropriate CAN or LIN bus message inputs for that optional system or equipment.

Below are brief explanations of the indicators available on this vehicle. More detailed information may be available elsewhere in this Service Information under the module or system information that control or influence the illumination of an indicator located within the instrument cluster or the VFD display's. For information on diagnosis and testing of the indicators, refer to **DIAGNOSIS AND TESTING**. The indicators, VFD displays as well as the gauges are only serviceable with the instrument cluster as an assembly. The cluster lens and hood and mask assembly are the only components serviceable separate of the instrument cluster.

ABS INDICATOR

The ABS indicator gives an indication to the vehicle operator when the ABS system is faulty or inoperative. This indicator is controlled by a low side driver on the CCN circuit board based upon programming and electronic messages received by the CCN from the Controller Antilock Brake (CAB) over the Controller Area Network (CAN) data bus. The CCN will illuminate the ABS indicator for about three seconds each time the ignition is turned to the ON position, during the bulb test.

The ABS indicator Light Emitting Diode (LED) is completely controlled by the CCN logic circuit, and that logic will only allow this indicator to operate when the instrument cluster receives a battery current input on the fused ignition switch output (run-start) circuit. Therefore, the LED will always be off when the ignition switch is in any position except ON or START. The LED only illuminates when it is provided a path to ground by the CCN transistor. The CCN will also illuminate the ABS indicator for the following reasons:

- **ABS Lamp-ON Message** - Each time the CCN a lamp-on message from the CAB, the ABS indicator will be illuminated. The indicator remains illuminated until the CCN receives a lamp-off message from the CAB, or until the ignition switch is turned to the OFF position, whichever occurs first.
- **Communication Error** - If the CCN receives no lamp-on or lamp-off messages from the CAB for five consecutive message cycles, the ABS indicator is illuminated. The indicator remains illuminated until a valid message from the CAB is received, or until the ignition switch is turned to the OFF position, whichever occurs first.
- **ABS Diagnostic Test** - The ABS indicator is blinked on and off by lamp-on and lamp-off messages from the CAB during the performance of the ABS diagnostic tests.

The CAB continually monitors the ABS circuits and sensors to decide whether the system is in good operating condition. The CAB then sends the proper lamp-on or lamp-off messages to the CCN. If the CAB sends a lamp-on message after the bulb test, it indicates that the CAB has detected a system malfunction and/or that the ABS system has become inoperative. The CAB will store a Diagnostic Trouble Code (DTC) for any malfunction it detects. Each time the ABS indicator fails to light due to an open or short in the cluster ABS indicator circuit, the cluster sends a message notifying the CAB of the condition, then the instrument cluster and the CAB will each store a DTC.

AIRBAG INDICATOR

The airbag indicator gives an indication to the vehicle operator when the airbag system is faulty or inoperative. The airbag indicator is controlled by a transistor on the CCN circuit board based upon programming and electronic messages received from the Occupant Restraint Controller (ORC) over the CAN data bus. Based on messages received from the ORC, the CCN will illuminate the airbag

indicator for about six seconds each time the ignition is turned to the ON position, during the bulb test.

The airbag indicator LED is completely controlled by the CCN logic circuit, and that logic will only allow this indicator to operate when the instrument cluster receives a battery current input on the fused ignition switch output (run-start) circuit. Therefore, the LED will always be off when the ignition switch is in any position except ON or START. The LED only illuminates when it is provided a path to ground by the CCN transistor. The CCN will also illuminate the airbag indicator for the following reasons:

- **ORC Lamp-ON Message** - Each time the CCN receives a lamp-on message from the ORC, the airbag indicator will be illuminated. The indicator remains illuminated for about twelve seconds or until a lamp-off message from the ORC is received, whichever is longer.
- **Communication Error** - If the CCN receives no airbag messages for ten consecutive message cycles, the airbag indicator is illuminated. The indicator remains illuminated until the CCN receives a single lamp-off message from the ORC.

The ORC continually monitors the airbag system circuits and sensors to decide whether the system is in good operating condition. The ORC then sends the proper lamp-on or lamp-off messages to the CCN. If the ORC sends a lamp-on message after the bulb test, it indicates that the ORC has detected a system malfunction and/or that the airbags and seat belt tensioners may not deploy when required, or may deploy when not required. The ORC will store a DTC for any malfunction it detects. Each time the airbag indicator fails to illuminate due to an open or short in the CCN airbag indicator circuit, the CCN sends a message notifying the ORC of the condition, the CCN and the ORC will each store a DTC, and the seat belt indicator will flash on and off as a backup to notify the vehicle operator.

BRAKE/PARK BRAKE INDICATOR

The brake indicator gives an indication to the vehicle operator when the parking brake is applied, when there are certain brake hydraulic system malfunctions as indicated by a low brake hydraulic fluid level condition, or when the brake fluid level switch is disconnected. The brake indicator can also give an indication when certain faults are detected in the ABS. This indicator is controlled by a transistor on the CCN circuit board based upon programming, electronic

messages received from the CAB over the CAN data bus, and a hard wired input from the park brake switch. The CCN will illuminate the brake indicator for about three seconds each time the ignition is turned to the ON position, during the bulb test.

The brake indicator LED is completely controlled by the CCN logic circuit, and that logic will only allow this indicator to operate when the instrument cluster receives a battery current input on the fused ignition switch output (run-start) circuit. Therefore, the LED will always be off when the ignition switch is in any position except ON or START. The LED only illuminates when it is provided a path to ground by the CCN transistor. The CCN will also illuminate the brake indicator for the following reasons:

- **Brake Lamp-ON Message** - Each time the CCN receives a lamp-on message from the CAB, the brake indicator will be illuminated. The CAB can also send brake lamp-on messages as feedback during ABS diagnostic procedures. The indicator remains illuminated until the a lamp-off message from the CAB is received, or until the ignition switch is turned to the OFF position, whichever occurs first.
- **Park Brake Switch Input** - Each time the CCN detects ground on the park brake switch sense circuit (park brake switch closed = park brake applied or not fully released) while the ignition switch is in the ON position, and vehicle speed in 8km (4.9 mph) or greater, the brake indicator flashes on and off. The indicator continues to flash until the park brake switch sense input to the CCN is an open circuit (park brake switch open = park brake fully released), or until the ignition switch is turned to the OFF position, whichever occurs first.

The park brake switch on the park brake pedal mechanism provides a hard wired ground input to the CCN circuitry through the park brake switch sense circuit whenever the park brake is applied or not fully released. The CAB continually monitors the ABS system circuits and sensors, including the brake fluid level switch on the brake master cylinder reservoir, to decide whether the system is in good operating condition. The CAB then sends the proper lamp-on or lamp-off messages to the CCN. If the CAB sends a lamp-on message after the bulb test, it indicates that the CAB has detected a brake hydraulic system malfunction and/or that the ABS system has become inoperative. The CAB will store a DTC for any malfunction it detects.

CHANGE OIL INDICATOR

The change oil indicator gives an indication to the vehicle operator when a duty-cycle algorithm contained within the software of the Powertrain Control Module (PCM) determines that a recommended oil change interval has been attained. This indicator is controlled by the CCN logic circuit based upon programming and electronic messages received from the PCM over the CAN data bus.

The change oil indicator function of the VFD is completely controlled by the CCN logic circuit, and that logic will only allow this indicator to operate when the instrument cluster receives a battery current input on the fused ignition switch output (run-start) circuit. Therefore, the VFD change oil indication will always be OFF when the ignition switch is in any position except ON or START. The CCN will illuminate the change oil indicator for the following reasons:

- **Change Oil Indicator Lamp-ON Message** - Each time the ignition switch is turned to the ON position and the CCN receives an electronic **change oil indicator lamp-ON** message from the PCM indicating that a duty-cycle based recommended oil change interval has been attained, the change oil indicator will be illuminated for about three seconds, until the trip odometer reset switch button is depressed, or until the ignition switch is turned to the OFF position, whichever occurs first.
- **Change Oil Indicator Reset Procedure** - Once an engine oil change has been completed, the PCM duty cycle counters can be reset using the following procedure. Turn the ignition switch to the ON position, but DO NOT start the engine. Slowly depress and release the accelerator pedal fully three times within ten seconds. Turn the ignition switch to the OFF position. If the change oil indicator illuminates the next time the engine is started, repeat this procedure.

The PCM continually monitors numerous sensor inputs to determine the duty-cycles to which the engine is being subjected. A pre-programmed algorithm within the PCM then determines when to send the proper lamp-ON or lamp-OFF message to the CCN.

CHARGING INDICATOR

The charging indicator gives an indication to the vehicle operator when the electrical system voltage is too low or too high. This indicator is controlled by a transistor on the CCN circuit board based upon programming and electronic

messages received Powertrain Control Module (PCM) over the CAN data bus. The CCN will illuminate the charge indicator for about three seconds each time the ignition is turned to the ON position, during the bulb test.

The charging indicator LED is completely controlled by the CCN logic circuit, and that logic will only allow this indicator to operate when the instrument cluster receives a battery current input on the fused ignition switch output (run-start) circuit. Therefore, the LED will always be off when the ignition switch is in any position except ON or START. The LED only illuminates when it is provided a path to ground by the CCN transistor. The CCN will also turn on the charging indicator for the following reasons:

- **Voltage Low Message** - Each time the CCN receives a message from the PCM indicating the electrical system voltage is low (less than about 11.5 volts is a charge fail condition), the charging indicator will be illuminated. The indicator remains illuminated until a message from the PCM indicating the electrical system voltage is normal (greater than about 12.0 volts, but less than 16.0 volts) is received, or until the ignition switch is turned to the OFF position, whichever occurs first.
- **Voltage High Message** - Each time the CCN receives a message from the PCM indicating the electrical system voltage is high (greater than about 16.0 volts), the charging indicator will be illuminated. The indicator remains illuminated until a message from the PCM indicating the electrical system voltage is normal (less than about 15.5 volts, but greater than 11.5 volts) is received, or until the ignition switch is turned to the OFF position, whichever occurs first.

The PCM continually monitors the electrical system voltage to control the generator output. The PCM then sends the proper system voltage messages to the CCN. If the charging indicator is turned on due to a charge fail or voltage high condition, it may indicate that the charging system requires service.

CRUISE INDICATOR

The cruise indicator gives an indication to the vehicle operator when the speed control system is ON, regardless of whether the speed control is engaged. This indicator is controlled by the CCN circuit board based upon programming and electronic messages received from the PCM over the CAN data bus.

The cruise indicator is completely controlled by the CCN logic circuit, and that

logic will only allow this indicator to operate when the instrument cluster receives a battery current input on the fused ignition switch output (run-start) circuit. Therefore, the indicator will always be OFF when the ignition switch is in any position except ON or START. The indicator only illuminates when it is energized by the instrument cluster logic circuit. The instrument cluster will illuminate the cruise indicator for the following reasons:

- **Cruise Indicator Lamp-ON Message** - Each time the CCN receives an electronic **cruise indicator lamp-ON** message from the PCM indicating the speed control system is On, the cruise indicator is illuminated. The indicator remains illuminated until the cluster receives a lamp-OFF message from the PCM, or until the ignition switch is turned to the OFF position, whichever occurs first.

The PCM continually monitors the speed control switches to determine the appropriate outputs to control the vehicle speed. The PCM then sends the proper lamp-ON or lamp-OFF message to the CCN.

DOOR AJAR INDICATOR

The ajar indicators give an indication to the vehicle operator that one or more of the passenger compartment doors or the swing gate may be open or not completely latched. These indicators are controlled by the CCN logic circuit based upon programming and electronic **ajar switch status** messages from the TIPM over the CAN data bus.

The ajar indicator function of the odometer VFD unit is completely controlled by the instrument cluster logic circuit, and that logic will only allow this indicator to operate when the instrument cluster receives a battery current input on the fused B(+) circuit. Therefore, the VFD ajar indications can occur regardless of the ignition switch position. The CCN will turn On the ajar indicator for the following reasons:

- **Ajar Switch Message Input** - Each time the CCN receives a door or swing gate ajar switch status message indicating that a door, the swing gate or any combination of these is open or not completely latched with the ignition switch in any position, the appropriate ajar textual message will be illuminated. If the cluster detects a vehicle speed input greater than zero (kilometers or miles-per-hour) while the ignition switch is in the ON or START positions, the ajar indication will be accompanied by a single chime

tone. When the ignition switch is in any position except ON or START, any and all ajar indications will time out after about five minutes.

The TIPM continually monitors the door and swing gate ajar switches to determine the status of the doors and swing gate. The TIPM then sends the proper ajar switch status messages to the CCN. The door and swing gate ajar switches and their circuits may be diagnosed using conventional diagnostic tools and methods. Refer to the appropriate wiring information.

ELECTRONIC THROTTLE CONTROL INDICATOR

The Electronic Throttle Control (ETC) indicator gives an indication to the vehicle operator when the ETC system is faulty or inoperative. The ETC indicator is controlled by a transistor on the CCN circuit board based upon programming and electronic messages received from the PCM over the CAN data bus. The CCN will illuminate the ETC indicator for about fifteen seconds each time the ignition is turned to the ON position, during the bulb test.

The ETC indicator LED is completely controlled by the CCN logic circuit, and that logic will only allow this indicator to operate when the instrument cluster receives a battery current input on the fused ignition switch output (run-start) circuit. Therefore, the LED will always be off when the ignition switch is in any position except ON or START. The LED only illuminates when it is provided a path to ground by the CCN transistor. The CCN will also turn on the ETC indicator for the following reasons:

- **ETC Lamp-ON Message** - Each time the CCN receives a lamp-on message from the PCM, the ETC indicator will be illuminated. The indicator can be flashed on and off, or illuminated solid, as dictated by the PCM message. The indicator remains illuminated solid or continues to flash for about twelve seconds or until a lamp-off message from the PCM is received, whichever is longer. If the indicator is illuminated solid with the engine running the vehicle will usually remain drivable. If the indicator is flashing with the engine running the vehicle may require towing. A flashing indicator means the ETC system requires immediate service.

The PCM continually monitors the ETC system circuits and sensors to decide whether the system is in good operating condition. The PCM then sends the proper lamp-on or lamp-off messages to the CCN. If the PCM sends a lamp-on message after the bulb test, it indicates that the PCM has detected an ETC system

malfunction and/or that the ETC system is inoperative. The PCM will store a DTC for any malfunction it detects. Each time the ETC indicator fails to illuminate due to an open or short in the CCN ETC indicator circuit, the CCN sends a message notifying the PCM of the condition and the CCN and the PCM will each store a DTC.

ENGINE TEMPERATURE INDICATOR

The engine temperature indicator gives an indication to the vehicle operator when the engine temperature gauge reading reflects a condition requiring immediate attention. This indicator is controlled by a transistor on the CCN circuit board based upon programming and electronic messages received from the PCM over the CAN data bus. The CCN will illuminate the engine temperature indicator for about three seconds each time the ignition is turned to the ON position, during the bulb test.

The engine temperature indicator LED is completely controlled by the CCN logic circuit, and that logic will only allow this indicator to operate when the instrument cluster receives a battery current input on the fused ignition switch output (run-start) circuit. Therefore, the LED will always be off when the ignition switch is in any position except ON or START. The LED only illuminates when it is provided a path to ground by the CCN transistor. The engine temperature indicator will also be turned on for the following reasons:

- **Engine Temperature High Message** - Each time the CCN receives a message from the PCM indicating the engine coolant temperature is above about **252° F** (122° C), the engine temperature indicator will be illuminated and a single chime tone is sounded. The indicator remains illuminated until a message from the PCM indicating that the engine coolant temperature is below about **246° F** (119° C) is received, or until the ignition switch is turned to the OFF position, whichever occurs first. The chime tone feature will only repeat during the same ignition cycle if the engine temperature indicator is cycled off and then on again by the appropriate engine temperature messages from the PCM.

The PCM continually monitors the engine coolant temperature sensor to determine the engine operating temperature. The PCM then sends the proper engine coolant temperature messages to the CCN. If the CCN turns on the engine temperature indicator due to a high engine temperature gauge reading, it may indicate that the engine or the engine cooling system requires service.

ESC INDICATOR

The Electronic Stability Control (ESC) indicator gives an indication to the vehicle operator when the ESC system has been activated. This indicator is controlled by a transistor on the CCN circuit board based upon programming and electronic messages received from the Controller Antilock Brake (CAB) and the All-Wheel Drive Control Module (AWDCM) over the CAN data bus. The CCN will illuminate the ESC indicator for about four seconds each time the ignition is turned to the ON position, during the bulb test.

The ESC indicator LED is completely controlled by the instrument cluster logic circuit, and that logic will only allow this indicator to operate when the instrument cluster receives a battery current input on the fused ignition switch output (run-start) circuit. Therefore, the LED will always be OFF when the ignition switch is in any position except ON or START. The LED only illuminates when it is provided a path to ground by the instrument cluster transistor. The CCN will illuminate the ESC indicator for the following reasons:

- **ESC Indicator Lamp-ON Message** - Each time the cluster receives an electronic **ESC indicator lamp-ON** message from the CAB indicating that the ESP/BAS system has been activated, the ESP/BAS indicator will be illuminated. The indicator remains illuminated until the cluster receives a lamp-OFF message from the CAB, or until the ignition switch is turned to the OFF position, whichever occurs first.
- **ESC Deactivated Textual Message** - Each time the cluster receives an electronic **ESC OFF indicator lamp-ON** message from the CAB indicating that the ESP/BAS system has been manually disabled, an **ESC Deactivated** textual message will appear within the cluster odometer display. The **ESC Deactivated** textual message remains displayed until the cluster receives a lamp-OFF message from the CAB, or until the ignition switch is turned to the OFF position, whichever occurs first.

The CAB continually monitors the ESP/BAS circuits and sensors to decide whether the system is in good operating condition and the proper outputs to the components of the system. The CAB then sends the proper lamp-ON or lamp-OFF message to the CCN.

For proper diagnosis of the ESP/BAS system, the CAB, the AWDCM, the CCN the CAN data bus or the electronic communication related to the ESP/BAS indicator operation a diagnostic scan tool is required. Refer to the appropriate

diagnostic information.

FOG LAMP INDICATOR

The fog lamp indicator gives an indication to the vehicle operator whenever the optional fog lamps are illuminated. This indicator is controlled by a transistor on the CCN circuit board based upon programming and electronic messages from the Total Integrated Power Module (TIPM) over the CAN data bus.

The fog lamp indicator LED is completely controlled by the CCN logic circuit, and that logic will allow this indicator to operate whenever the instrument cluster receives a battery current input on the fused B(+) circuit. Therefore, the LED can be illuminated regardless of the ignition switch position. The LED only illuminates when it is provided a path to ground by the CCN transistor. The CCN will turn on the fog lamp indicator for the following reasons:

- **Fog Lamp-ON Message** - Each time the CCN receives a fog lamp-on message from the TIPM indicating the fog lamp relay is energized, the fog lamp indicator will be illuminated. The indicator remains illuminated until the cluster receives a fog lamp-off message from the TIPM.

The CCN continually monitors a hard wired input from the headlamp switch to determine the selected fog lamp switch status. The CCN then sends the proper fog lamp-on and lamp-off messages to the TIPM over the CAN data bus. The TIPM activates the fog lamp relay then sends the proper fog lamp indicator lamp-on and lamp-off messages to the CCN.

4WD INDICATOR

The four-wheel drive indicator gives an indication to the vehicle operator when the Four Wheel Drive (4WD) Lock mode of the Continuously Variable Transmission (CVT) is activated. This indicator is controlled by the instrument cluster circuit board based upon cluster programming and electronic messages received by the cluster from the All Wheel Drive Control Module (AWDCM) over the Controller Area Network (CAN) data bus.

The four-wheel drive indicator is completely controlled by the instrument cluster logic circuit, and that logic will only allow this indicator to operate when the instrument cluster receives a battery current input on the fused ignition switch output (run-start) circuit. Therefore, the indicator will always be OFF when the ignition switch is in any position except ON or START. The indicator only

illuminates when it is energized by the instrument cluster logic circuit. The instrument cluster will turn ON the four-wheel drive indicator for the following reasons:

- **Four-Wheel Drive Indicator Lamp-On Message** - Each time the cluster receives an electronic **four-wheel drive indicator lamp-ON** message from the AWDCM indicating the Lock mode is activated, the four-wheel drive indicator is illuminated. The indicator remains illuminated until the cluster receives a lamp-OFF message from the AWDCM, or until the ignition switch is turned to the OFF position, whichever occurs first.
- **Actuator Test** - Each time the cluster is put through the actuator test, the four-wheel drive indicator will be turned ON, then OFF again during the Vacuum Fluorescent Display (VFD) portion of the test in order to confirm the functionality of the VFD and the cluster control circuitry.

The AWDCM continually monitors electronic **four-wheel drive Lock switch request** messages from the CCN to determine when the Lock mode should be activated. The AWDCM then sends the proper lamp-ON or lamp-OFF message back to the CCN after the Lock mode is activated or deactivated.

For proper diagnosis of the four-wheel drive Lock switch, the AWDCM, the CCN, the CAN data bus or the electronic communication related to four-wheel drive indicator operation a diagnostic scan tool is required. Refer to the appropriate diagnostic information.

GAS CAP INDICATOR

The gas cap indicator gives an indication to the vehicle operator when there is a gross leak detected in the on-board fuel vapor recovery system. This indicator is controlled by the CCN logic circuit based upon programming and electronic messages received from the PCM over the CAN data bus.

The gas cap indicator function of the odometer VFD unit is completely controlled by the CCN logic circuit, and that logic will only allow this indicator to operate when the instrument cluster receives a battery current input on the fused ignition switch output (run-start) circuit. Therefore, the odometer VFD gas cap indication will always be OFF when the ignition switch is in any position except ON or START. The CCN will illuminate the gas cap indicator for the following reasons:

- **Gas Cap Indicator Lamp-ON Message** - Each time the CCN receives an electronic **gas cap indicator lamp-ON** message from the PCM indicating there is a gross leak in the vapor recovery system, the gas cap indicator will be illuminated. The indicator remains illuminated until the cluster receives a lamp-OFF message from the PCM, or until the ignition switch is turned to the OFF position, whichever occurs first.

The PCM continually monitors the on board vapor recovery system to determine whether there are air leaks in the system. The PCM then sends the proper lamp-ON or lamp-OFF message to the CCN. If the CCN illuminates the gas cap indicator due to a monitored gross leak in the vapor recovery system, it may indicate that the gas cap has been removed or is improperly installed.

HIGH BEAM INDICATOR

The high beam indicator gives an indication to the vehicle operator whenever the headlamp high beams are illuminated. The TIPM sends a data Bus message for high beam indicator illumination, in turn the CCN takes this data Bus message directive to turn on the indicator.

The high beam indicator LED is completely controlled by the CCN logic circuit, and that logic will allow this indicator to operate whenever the instrument cluster receives a battery current input on the fused B(+) circuit. Therefore, the LED can be illuminated regardless of the ignition switch position. The LED only illuminates when it is provided a path to ground by the CCN transistor. The CCN will turn on the high beam indicator for the following reasons:

- **High Beam Headlamps-ON Input** - Each time the CCN detects a high beam headlamps-on input from the headlamp beam select switch circuitry of the multi-function switch on the washer/beam select switch mux circuit, the headlamp high beams and the high beam indicator will be illuminated. The headlamp high beams and the high beam indicator remain illuminated until the CCN receives a high beam headlamps-off input from the multi-function switch, or until the exterior lamp load shedding (battery saver) timed interval expires, whichever occurs first.

The CCN continually monitors the headlamp switch and the multi-function switch to determine the proper headlamp low beam and high beam control. The CCN then sends the proper low beam and high beam lamp-on and lamp-off messages to the TIPM over the CAN data bus and turns the high beam indicator

on or off accordingly.

LOW FUEL INDICATOR

The low fuel indicator gives an indication to the vehicle operator when the level of fuel in the fuel tank becomes low. This indicator is controlled by a transistor on the CCN circuit board based upon programming and electronic **fuel level** messages received from the TIPM over the CAN data bus. The CCN will illuminate the low fuel indicator for about three seconds each time the ignition is turned to the ON position, during the bulb test

The low fuel indicator LED is completely controlled by the CCN logic circuit, and that logic will only allow this indicator to operate when the instrument cluster receives a battery current input on the fused ignition switch output (run-start) circuit. Therefore, the LED will always be OFF when the ignition switch is in any position except ON or START. The LED only illuminates when it is provided a path to ground by the CCN transistor. The CCN will illuminate the low fuel indicator for the following reasons:

- **Less Than 11 Percent Tank Full Message** - The cluster provides a constant current source to the fuel level sending unit and monitors a return input on a fuel level sense circuit. The resistance through the fuel level sending unit increases as the fuel level rises and decreases as the fuel level falls causing changes in the fuel level sense input voltage. The TIPM then sends the appropriate electronic **fuel level** messages to the cluster. Each time the fuel level messages to the cluster indicate the fuel tank is about 11 percent full or less for 10 consecutive seconds and the vehicle speed is zero, or for 60 consecutive seconds and the vehicle speed is greater than zero, the gauge needle is moved to the appropriate position on the gauge scale, the low fuel indicator is illuminated, and a single chime tone is sounded. The low fuel indicator remains illuminated until the fuel level messages indicate that the fuel tank is greater than about 14 percent full for 10 consecutive seconds and the vehicle speed is zero, or for 60 consecutive seconds and the vehicle speed is greater than zero, or until the ignition switch is turned to the OFF position, whichever occurs first. The chime tone feature will only repeat during the same ignition cycle if the low fuel indicator is cycled OFF and then ON again by the appropriate messages from the TIPM.
- **Less Than Empty Stop Message** - Each time the cluster receives a fuel level message indicating the fuel level in the fuel tank is less than the **E** (or

Empty) gauge needle stop position for five consecutive seconds, the gauge needle is moved to the low end of the gauge scale and the low fuel indicator is illuminated immediately. This input would indicate that the fuel level sense input to the TIPM is a short circuit.

- **More Than Full Stop Message** - Each time the cluster receives a fuel level message indicating the fuel level in the fuel tank is more than the **F** (or Full) gauge needle stop position for five consecutive seconds, the gauge needle is moved to the low end of the gauge scale and the low fuel indicator is illuminated immediately. This input would indicate that the fuel level sense input to the TIPM is an open circuit.

The CCN continually monitors the fuel tank sending unit to determine the level of fuel in the fuel tank. The CCN then sends the proper electronic **fuel level** message to other electronic modules in the vehicle over the CAN data bus. The CCN will store a Diagnostic Trouble Code (DTC) for any fault detected in the fuel level sense circuit.

LOW OIL PRESSURE INDICATOR

The low oil pressure indicator gives an indication to the vehicle operator when the engine oil pressure reading reflects a condition requiring immediate attention. This indicator is controlled by a transistor on the CCN circuit board based upon programming and electronic messages received from the PCM over the CAN data bus.

The low oil pressure indicator LED is completely controlled by the instrument cluster logic circuit, and that logic will only allow this indicator to operate when the instrument cluster receives a battery current input on the fused ignition switch output (run-start) circuit. Therefore, the LED will always be off when the ignition switch is in any position except ON or START. The LED only illuminates when it is provided a path to ground by the CCN transistor. The CCN will turn on the low oil pressure indicator for the following reasons:

- **Engine Oil Pressure Low Message** - Each time the CCN receives a message from the PCM indicating the engine oil pressure is about **1 psi** (6.9 kPa) or lower, the low oil pressure indicator will be illuminated. The indicator remains illuminated until the CCN receives a message from the PCM indicating that the engine oil pressure is above about **1 psi** (6.9 kPa), or until the ignition switch is turned to the OFF position, whichever occurs first. The CCN will only turn the indicator on in response to an engine oil

pressure low message if the engine speed is greater than zero.

The PCM continually monitors the engine oil pressure sensor to determine the engine oil pressure. The PCM then sends the proper engine oil pressure messages to the CCN.

LOW TIRE PRESSURE INDICATOR

The Tire Pressure Monitor (TPM) indicator gives an indication to the vehicle operator of the status of the TPM system. The TPM indicator is controlled by the CCN circuit board based upon programming and electronic messages received from the Wireless Control Module (WCM) over the CAN data bus. The CCN will illuminate the TPM indicator for about three seconds each time the ignition is turned to the ON position, during the bulb test

The TPM indicator is completely controlled by the CCN logic circuit, that logic only allow's this indicator to operate when the CCN receives a battery current input on the fused ignition switch output (run-start) circuit. Therefore, the indicator will always be OFF when the ignition switch is in any position except ON or START. The indicator only illuminates when it is energized by the instrument cluster logic circuit. The CCN will illuminate the TPM indicator for the following reasons:

- **TPM Indicator Lamp-On Message** - Each time the cluster receives an electronic **TPM indicator lamp-ON** message from the SKREEM, the TPM indicator will be illuminated. The indicator can be flashed ON and OFF, or illuminated solid, as dictated by the SKREEM message. The indicator remains illuminated until the cluster receives a lamp-OFF message from the SKREEM, or until the ignition switch is turned to the OFF position, whichever occurs first.
- **Premium Cluster TPM Pressure Indication** - On vehicles equipped with the optional premium cluster with a reconfigurable VFD, an icon representing an overhead view of the vehicle is displayed in the reconfigurable VFD with the actual monitored pressure of each tire.
- **Communication Error** - If the cluster receives no TPM lamp-ON or lamp-OFF messages from the SKREEM for six consecutive seconds, the TPM indicator is illuminated by the instrument cluster. The indicator remains controlled and illuminated by the cluster until a valid lamp-ON or lamp-OFF message is received from the SKREEM.

The SKREEM performs a self-test each time the ignition switch is turned to the ON position to decide whether the TPM system is in good operating condition and whether the tire inflation pressures are too high or too low. The SKREEM then sends the proper lamp-ON or lamp-OFF message to the CCN. If the instrument cluster turns ON the TPM indicator after the bulb test, it indicates that the inflation pressure of a tire is too low or that a malfunction has occurred and the TPM system is ineffective.

MALFUNCTION INDICATOR LAMP

The Malfunction Indicator Lamp (MIL) gives an indication to the vehicle operator when the PCM has recorded a DTC for an ON-Board Diagnostics II (OBDII) emissions-related circuit or component malfunction. The MIL is controlled by a transistor on the CCN circuit board based upon programming and electronic messages received from the PCM over the CAN data bus. The CCN will illuminate the MIL indicator for about fifteen seconds each time the ignition is turned to the ON position, during the bulb test.

The MIL LED is completely controlled by the CCN logic circuit, and that logic will only allow this indicator to operate when the instrument cluster receives a battery current input on the fused ignition switch output (run-start) circuit. Therefore, the LED will always be off when the ignition switch is in any position except ON or START. The LED only illuminates when it is provided a path to ground by the CCN transistor. The CCN will also turn on the MIL for the following reasons:

- **MIL Lamp-ON Message** - Each time the CCN receives a MIL lamp-on message from the PCM, the indicator will be illuminated. The indicator can be flashed on and off, or illuminated solid, as dictated by the PCM message. For some DTC's, if a problem does not recur, the PCM will send a lamp-off message automatically. Other DTC's may require that a fault be repaired and the PCM be reset before a lamp-off message will be sent.
- **Communication Error** - If the CCN receives no messages from the PCM for ten consecutive message cycles, the MIL is illuminated by the CCN to indicate a loss of bus communication. The indicator remains illuminated until a valid message is received from the PCM.

The PCM continually monitors the fuel and emissions system circuits and sensors to decide whether the system is in good operating condition. The PCM then sends the proper lamp-on or lamp-off messages to the CCN. If the CCN

turns on the MIL after the bulb test, it may indicate that a malfunction has occurred and that the fuel and emissions systems may require service.

REAR FOG LAMP INDICATOR

The rear fog lamp indicator gives an indication to the vehicle operator whenever the rear fog lamps are illuminated. This indicator is controlled by a transistor on the CCN circuit board based upon programming and electronic messages received from the TIPM over the CAN data bus.

The rear fog lamp indicator LED is completely controlled by the CCN logic circuit, and that logic will allow this indicator to operate whenever the instrument cluster receives a battery current input on the fused B(+) circuit. Therefore, the LED can be illuminated regardless of the ignition switch position. The LED only illuminates when it is provided a path to ground by the CCN transistor. The CCN will turn ON the rear fog lamp indicator for the following reasons:

- **Rear Fog Indicator Lamp-ON Message** - Each time the CCN receives an electronic **rear fog indicator lamp-ON** message from the TIPM indicating the rear fog lamps are turned ON, the rear fog lamp indicator will be illuminated. The indicator remains illuminated until the CCN receives a lamp-OFF message from the TIPM, or until the exterior lamp load shedding (battery saver) timed interval expires, whichever occurs first.

The TIPM continually monitors electronic **exterior lighting request** messages from the CCN to determine the appropriate outputs to the rear fog lamps. The TIPM activates or deactivates the rear fog lamps then sends the proper lamp-ON or lamp-OFF message back to the CCN.

SEAT BELT INDICATOR

The seat belt indicator gives an indication to the vehicle operator of the status of the driver side front seat belt. This indicator is controlled by a transistor on the CCN circuit board based upon cluster programming and a hard wired input from the seat belt switch in the driver side front seat belt retractor through the seat belt indicator driver circuit.

The seat belt indicator also includes a programmable enhanced seat belt reminder or "beltminder" feature that is enabled when the vehicle is shipped from the factory. This beltminder feature can be disabled and enabled by the customer using a specific programming event sequence, or by the dealer using a diagnostic

scan tool.

The seat belt indicator LED is completely controlled by the CCN logic circuit, and that logic will only allow this indicator to operate when the instrument cluster receives a battery current input on the fused ignition switch output (run-start) circuit. Therefore, the LED will always be off when the ignition switch is in any position except ON or START. The LED only illuminates when it is provided a path to ground by the CCN transistor. The CCN will turn on the seat belt indicator for the following reasons:

- **Seat Belt Reminder Function** - Each time the CCN receives a battery current input on the fused ignition switch output (run-start) circuit, the indicator will be illuminated as a seat belt reminder for about six seconds, or until the ignition switch is turned to the OFF position, whichever occurs first. This reminder function will occur regardless of the status of the seat belt switch input to the cluster.
- **Driver Side Front Seat Belt Not Buckled - Beltminder Active** - Following the seat belt reminder function, each time the CCN detects an open circuit on the seat belt indicator driver circuit (seat belt switch open = seat belt unbuckled) with the ignition switch in the START or ON positions, the indicator will be illuminated. In addition, if the driver side front seat belt remains unbuckled after the conclusion of the seat belt reminder function, with the vehicle speed greater than about **5 MPH** (8 Kph), the seat belt indicator will begin to cycle between flashing on and off for three seconds, then lighting solid for two seconds. The seat belt indicator will continue to cycle between flashing and solid illumination for thirteen complete cycles, until the seat belt indicator driver input to the cluster is closed to ground (seat belt switch closed = seat belt buckled), or until the ignition switch is turned to the OFF position, whichever occurs first.
- **Driver Side Front Seat Belt Not Buckled - Beltminder Inactive** - Following the seat belt reminder function, each time the cluster detects an open circuit on the seat belt indicator driver circuit (seat belt switch open = seat belt unbuckled) with the ignition switch in the START or ON positions, the indicator will be illuminated. The seat belt indicator remains illuminated until the seat belt indicator driver input to the cluster is closed to ground (seat belt switch closed = seat belt buckled), or until the ignition switch is turned to the OFF position, whichever occurs first.

The seat belt switch is connected in series between ground and the seat belt

indicator driver input to the instrument cluster. The seat belt switch input to the instrument cluster circuitry may be diagnosed using conventional diagnostic tools and methods. Refer to the appropriate wiring information.

SECURITY INDICATOR

The security indicator gives an indication to the vehicle operator when the Vehicle Theft Security System (VTSS) is arming or is armed. ON models equipped with the Sentry Key Immobilizer System (SKIS), the security indicator also gives an indication to the vehicle operator of the status of the SKIS. This indicator is controlled by a transistor on the CCN circuit board based upon programming, hard wired inputs to the CCN from the various security system components, electronic messages received from the WIN over the CAN data bus. The CCN will illuminate the security indicator for about three seconds each time the ignition is turned to the ON position, during the bulb test.

The security indicator LED is completely controlled by the CCN logic circuit, and that logic will allow this indicator to operate whenever the instrument cluster receives a battery current input on the fused B(+) circuit. Therefore, the LED can be illuminated regardless of the ignition switch position. The LED only illuminates when it is provided a path to ground by the instrument cluster transistor. Depending upon the programmed condition, the indicator can be illuminated solid, flashed at a slow rate (0.5 Hertz, 12.5 percent duty cycle), or flashed at a fast rate (1 Hertz, 50 percent duty cycle). The instrument cluster will turn ON the security indicator for the following reasons:

- **VTSS Indication** - During the 16 second VTSS arming function, the cluster will flash the security indicator ON and OFF repeatedly at a steady, fast rate to indicate that the VTSS is in the process of arming. Following successful VTSS arming, the cluster flashes the security indicator ON and OFF continuously at a slower rate to indicate that the VTSS is armed. The security indicator continues flashing at the slower rate until the VTSS is disarmed or triggered. If the VTSS has alarmed and rearmed, the cluster will flash the security indicator at a steady, slow rate for about 30 seconds after the VTSS is disarmed.
- **SKIS Indicator Lamp-On Message** - Each time the cluster receives an electronic **SKIS indicator lamp-ON** message from the SKREEM, the security indicator will be illuminated. The indicator can be flashed ON and OFF, or illuminated solid, as dictated by the SKREEM message. The

indicator remains illuminated solid or continues to flash until the cluster receives a lamp-OFF message from the SKREEM, or until the ignition switch is turned to the OFF position, whichever occurs first. For more information on the SKIS and the security indicator control parameters, refer to **OPERATION** .

- **Communication Error** - If the cluster receives no lamp-ON or lamp-OFF messages from the SKREEM for 10 consecutive message cycles, the security indicator is illuminated by the instrument cluster. The indicator remains controlled and illuminated by the cluster until a valid lamp-ON or lamp-OFF message is received from the SKREEM.

The CCN circuitry controls the security indicator whenever the ignition switch is in the OFF position and the VTSS is arming, armed, or alarming. Whenever the ignition switch is in the ON or START positions, the WIN performs a self-test to decide whether the SKIS is in good operating condition and whether a valid key is present in the ignition lock cylinder. The WIN then sends the proper lamp-on or lamp-off messages to the CCN. If the instrument cluster flashes the security indicator upon ignition ON, or turns on the security indicator solid after the bulb test, it indicates that a SKIS malfunction has occurred or that the SKIS is inoperative.

TRACTION CONTROL INDICATOR

The traction control indicator gives an indication to the vehicle operator when the electronic Traction Control System (TCS) has been activated. This indicator is controlled by the CCN circuit board based upon programming and electronic messages received from the CAB over the CAN data bus. The CCN will illuminate the traction control indicator for about four seconds each time the ignition is turned to the ON position, during the bulb test.

The traction control indicator is completely controlled by the instrument cluster logic circuit, and that logic will only allow this indicator to operate when the instrument cluster receives a battery current input on the fused ignition switch output (run-start) circuit. Therefore, the indicator will always be off when the ignition switch is in any position except ON or START. The indicator only illuminates when it is switched to ground by the instrument cluster circuitry. The instrument cluster will turn on the traction control indicator for the following reasons:

- **Traction Control Lamp-ON Message** - Each time the CCN receives a

traction control lamp-ON message from the CAB indicating that the TCS has been activated, the traction control indicator will be illuminated. The indicator remains illuminated until a traction control lamp-off message from the CAB is received, or until the ignition switch is turned to the OFF position, whichever occurs first.

The CAB continually monitors the traction control switch to determine the proper outputs to the components of the ABS. The CAB then sends the proper traction control lamp-on and lamp-OFF messages to the CCN.

TRANSMISSION RANGE INDICATOR

The electronic gear selector indicator gives an indication to the vehicle operator of the transmission gear that has been selected with the automatic transmission gear selector lever. This indicator is controlled by the instrument cluster circuit board based upon cluster programming and electronic messages received from the Powertrain Control Module (PCM) over the Controller Area Network (CAN) data bus.

The gear selector indicator information is displayed by the odometer Vacuum Fluorescent Display (VFD) unit soldered onto the instrument cluster electronic circuit board, and the VFD will not display the gear selector indicator information after the ignition switch is turned to the OFF position. Each time the cluster is disconnected from battery current for more than about five minutes, it must configure itself for the automatic transmission type that is in the vehicle once it is reconnected to battery current. The instrument cluster circuitry operates the gear selector indicator to provide the following features:

- **Selected Gear Message** - Each time the cluster receives an electronic **selected gear** message from the PCM, a box will be illuminated around the appropriate character in the gear selector indicator. The box will remain illuminated until the cluster receives a different **selected gear** message, or until the ignition switch is turned to the OFF position, whichever occurs first.
- **Communication Error** - If the cluster fails to receive a **selected gear** message from the PCM within three seconds, the instrument cluster circuitry will display all gear selector positions boxed (selected) until a valid **selected gear** message is received or until the ignition switch is turned to the OFF position, whichever occurs first.

The PCM continually monitors a hard wired multiplex input from the Transmission Range Sensor (TRS), then sends the proper message to the CCN.

TRANSMISSION TEMPERATURE INDICATOR

The transmission over-temperature indicator gives an indication to the vehicle operator when the transmission fluid temperature is excessive, which may lead to accelerated transmission component wear or failure. This indicator is controlled by a transistor on the instrument cluster circuit board based upon cluster programming and electronic messages received by the cluster from the Powertrain Control Module (PCM) over the Controller Area Network (CAN) data bus.

The transmission over-temperature indicator LED is completely controlled by the instrument cluster logic circuit, and that logic will only allow this indicator to operate when the instrument cluster receives a battery current input on the fused ignition switch output (run-start) circuit. Therefore, the LED will always be OFF when the ignition switch is in any position except ON or START. The LED only illuminates when it is provided a path to ground by the instrument cluster transistor. The instrument cluster will turn ON the transmission over-temperature indicator for the following reason:

- **Trans Over-Temp Indicator Lamp-On Message** - Each time the cluster receives an electronic **trans over-temp indicator lamp-ON** message from the PCM indicating that the transmission fluid temperature is 135 °C (275 ° F) or higher, the indicator will be illuminated and a single chime tone is sounded. The indicator remains illuminated until the cluster receives a lamp-OFF message from the PCM, or until the ignition switch is turned to the OFF position, whichever occurs first. The chime tone feature will only repeat during the same ignition cycle if the indicator is cycled OFF and then ON again by the appropriate lamp-ON and lamp-OFF messages from the PCM.

The PCM continually monitors the transmission temperature sensor to determine the transmission operating condition. The PCM then sends the proper lamp-ON or lamp-OFF message to the CCN. If the instrument cluster illuminates the transmission over-temperature indicator due to a high transmission oil temperature condition, it may indicate that the transmission or the transmission cooling system are being overloaded, or that they require service.

TURN SIGNAL INDICATORS

The turn signal indicators give an indication to the vehicle operator that the turn signal (left or right indicator flashing) or hazard warning (both left and right indicators flashing) have been selected and are operating. These indicators are controlled by transistors on the CCN electronic circuit board based upon the cluster programming, a hard wired multiplex input received by the cluster from the turn signal and hazard warning switch circuitry of the multi-function switch on the turn/hazard switch mux circuit, and electronic messages received from the TIPM over the CAN data bus.

Each turn signal indicator LED is completely controlled by the CCN logic circuit, and that logic will allow this indicator to operate whenever the instrument cluster receives a battery current input on the fused B(+) circuit. Therefore, each LED can be illuminated regardless of the ignition switch position. The LED only illuminates when it is provided a path to ground by the CCN transistor. The CCN will turn on the turn signal indicators for the following reasons:

- **Turn Signal-ON Input** - The Steering Control Module (SCM) sends a Data Bus message to the TIPM to turn on the turn signals. The TIPM also sends out a message to the CCN to illuminate the appropriate electronic turn signal switch indicator. The TIPM controls the output and the flash rate for either the right or left turn signal lamps and sends this message to the CCN. The CCN will then control the illumination and flash rate of the right or left turn signal indicators, as well as to control the click rate of an electromechanical relay soldered onto the CCN electronic circuit board that emulates the sound emitted by a conventional turn signal flasher. The turn signals and the turn signal indicators continue to flash on and off until the cluster receives a turn signal-off input from the multi-function switch, or until the ignition switch is turned to the OFF position, whichever occurs first.
- **Hazard Warning-ON Input** - The turn signal flashers are also controlled by the TIPM. The SCM sends a Data Bus message to the TIPM and the TIPM responds to these messages by controlling a battery voltage output and the flash rate for each of the right and left turn signal lamps. The TIPM also sends the appropriate electronic messages back to the CCN to control the illumination and flash rate of the right and left turn signal indicators, as well as to control the click rate of an electromechanical relay soldered onto the CCN electronic circuit board that emulates the sound emitted by a conventional hazard warning flasher. The turn signals and the turn signal

indicators continue to flash on and off until the cluster receives a hazard warning-off input from the multi-function switch.

- **Lamp Out Mode** - The CCN also sends electronic turn signal on and off messages to the TIPM over the CAN data bus, and the TIPM flashes the appropriate exterior turn signal lamps. If the TIPM detects an inoperative turn signal lamp or circuit, it increases the flash rate for the remaining operative turn signals and sends an electronic message back to the instrument cluster. The instrument cluster then increases the flash rate of the turn signal indicator(s) and the clicking rate of the electromechanical relay to provide an indication of the problem to the vehicle operator.

The CCN continually monitors the multi-function switch and electronic messages from the TIPM to determine the proper turn signal and hazard warning system control.

WAIT-TO-START INDICATOR

The wait-to-start indicator gives an indication to the vehicle operator when the diesel engine is too cool for efficient and reliable engine starting, and the engine glow plugs are energized in their pre-heat operating mode. This indicator is controlled by a transistor on the CCN circuit board based upon programming and electronic messages received from the PCM over the CAN data bus.

The wait-to-start indicator LED is completely controlled by the CCN logic circuit, and that logic will only allow this indicator to operate when the instrument cluster receives a battery current input on the fused ignition switch output (run-start) circuit. Therefore, the LED will always be OFF when the ignition switch is in any position except ON or START. The LED only illuminates when it is provided a path to ground by the CCN transistor. The CCN will illuminate the wait-to-start indicator for the following reasons:

- **Wait-To-START Indicator Lamp-ON Message** - Each time the CCN receives an electronic **wait-to-start indicator lamp-ON** message from the PCM indicating that the air temperature is too cool for efficient and reliable engine starting and the glow plugs are energized in their pre-heat mode, the wait-to-start indicator will be illuminated. The indicator remains illuminated until the cluster receives a lamp-OFF message from the PCM, until the PCM detects that the engine is running, or until the ignition switch is turned to the OFF position, whichever occurs first.

The PCM continually monitors the glow plug control circuits to determine when they are energized in their pre-heat operating mode. The PCM then sends the proper lamp-ON or lamp-OFF message to the CCN.

POD, SWITCH

DESCRIPTION

DESCRIPTION

The instrument panel switch pod (1) is located just below the heater and air conditioner controls in the center stack area of the instrument panel. This switch is available in multiple configurations, which varies from two single push button switches to as many as five push button switches depending upon the optional equipment in the vehicle. The pod may include the following switches:

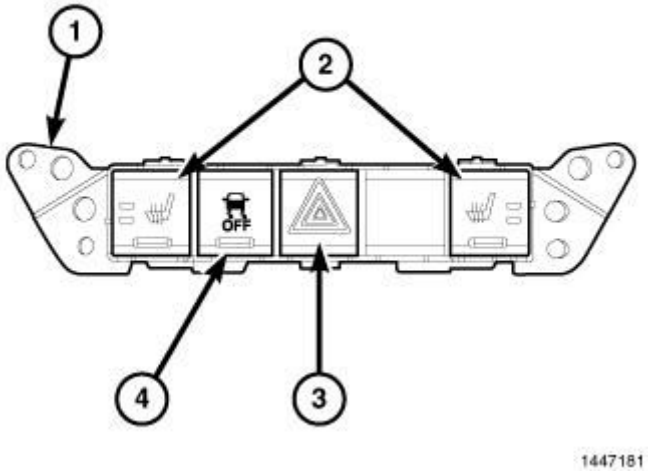

Fig. 10: Instrument Panel Switch Pod
Courtesy of CHRYSLER GROUP, LLC

- **Heated Seat Switches (2)**
- **Hazard Warning Switch (3)**
- **Electronic Stability Program (ESP) Switch (4)**

The switch housing and the push buttons are constructed of molded plastic. Each push button has a smooth finish and is clearly identified with the appropriate text and International Control and Display Symbol icons. Several of the push buttons feature Light Emitting Diode (LED) units to give the vehicle operator an indication when the function of that switch is currently active. Only the hazard

warning switch push button latches, while the remaining switches feature momentary operation.

Four screws secure the switch to the back of the instrument panel center bezel through integral mounting tabs that are molded into each corner of the switch housing. The back of the switch housing has an integral connector receptacle containing terminal pins that connect the switch to the vehicle electrical system through a dedicated take out and connector of the instrument panel wire harness.

Panel lamps dimmer controlled illumination lamps integral to the circuit board within the switch provide back lighting for visibility at night, but these lamps are not serviceable. The individual switches in the lower instrument panel switch pod cannot be repaired and are not serviced individually. If any component within the switch pod is ineffective or damaged, the entire switch pod must be replaced.

OPERATION

OPERATION

For information covering details of operation for the individual switches contained within the instrument panel switch pod, refer to the specific service information covering the system to which that switch or indicator belongs.

REMOVAL

REMOVAL

WARNING: **To avoid serious or fatal injury on vehicles equipped with airbags, disable the Supplemental Restraint System (SRS) before attempting any steering wheel, steering column, airbag, seat belt tensioner, impact sensor or instrument panel component diagnosis or service. Disconnect and isolate the battery negative (ground) cable, then wait two minutes for the system capacitor to discharge before performing further diagnosis or service. This is the only sure way to disable the SRS. Failure to take the proper precautions could result in accidental airbag deployment.**

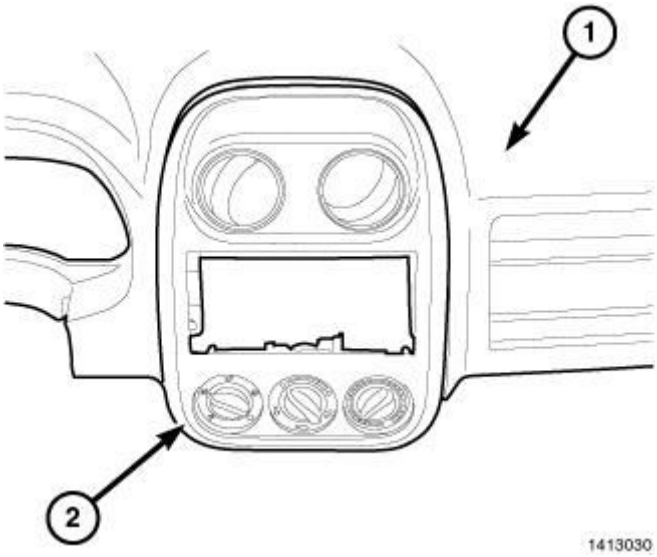

Fig. 11: Identifying Center Bezel
Courtesy of CHRYSLER GROUP, LLC

1. Disconnect and isolate the battery negative cable.
2. Using trim stick (special tool #C-4755, Trim Stick) or equivalent, carefully pry the center bezel (2) away from the instrument panel (1), disengaging the spring clip retainers.
3. Disconnect the electrical and mechanical connections from the HVAC controls.
4. Remove the center bezel from the vehicle.

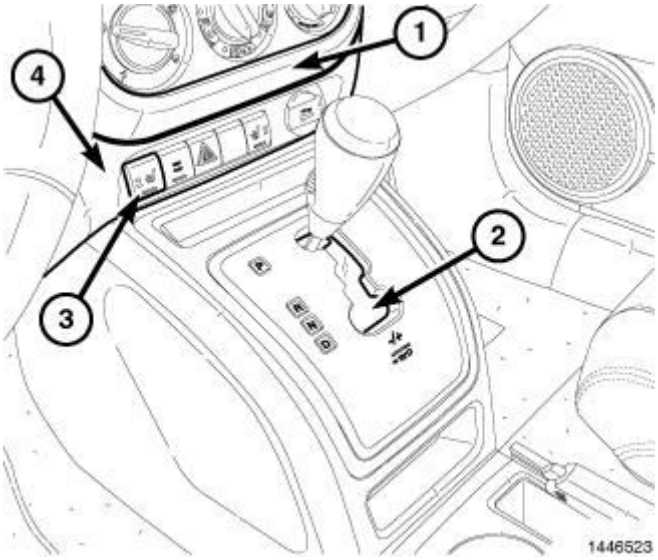

Fig. 12: Instrument Panel Switch Pod
Courtesy of CHRYSLER GROUP, LLC

5. Remove the shifter assembly (2). Refer to **SHIFTER, TRANSMISSION,**

REMOVAL or **MECHANISM, GEARSHIFT, REMOVAL** or **MECHANISM, GEARSHIFT, REMOVAL** .

6. Disconnect the wire harness connector from the back of the instrument panel switch pod (3).
7. Remove the screws that secure the switch pod to the back of the instrument panel lower cover.
8. Remove the switch pod from the instrument panel.

INSTALLATION

INSTALLATION

WARNING: To avoid serious or fatal injury on vehicles equipped with airbags, disable the Supplemental Restraint System (SRS) before attempting any steering wheel, steering column, airbag, seat belt tensioner, impact sensor or instrument panel component diagnosis or service. Disconnect and isolate the battery negative (ground) cable, then wait two minutes for the system capacitor to discharge before performing further diagnosis or service. This is the only sure way to disable the SRS. Failure to take the proper precautions could result in accidental airbag deployment.

NOTE: There are several different instrument panel switch pods available, depending upon the optional equipment content of the vehicle. Be certain that a replacement switch pod matches the optional equipment of the vehicle into which it is being installed.

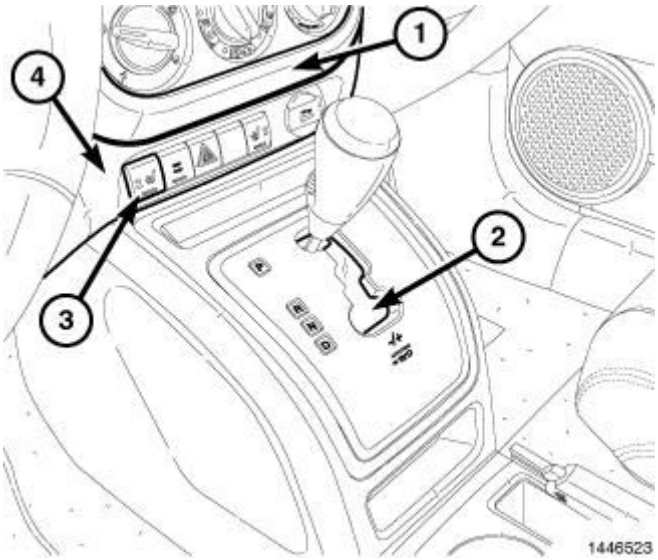

Fig. 13: Instrument Panel Switch Pod
Courtesy of CHRYSLER GROUP, LLC

1. Position the instrument panel switch pod (3) to the back of the instrument panel lower cover (4).
2. Install and tighten the screws that secure the switch pod to the lower cover. Tighten the screws to 2 N.m (17 in. lbs.).
3. Reconnect the wire harness connector to the back of the switch pod.
4. Reinstall the shifter assembly (2). Refer to **SHIFTER, TRANSMISSION, INSTALLATION** or **MECHANISM, GEARSHIFT, INSTALLATION** or **MECHANISM, GEARSHIFT, INSTALLATION** .

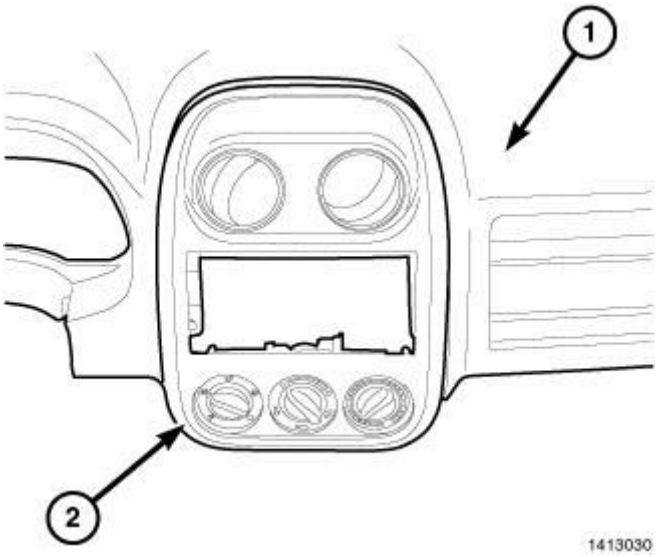

Fig. 14: Identifying Center Bezel
Courtesy of CHRYSLER GROUP, LLC

5. Place the center bezel into position to the instrument panel.
6. Connect the electrical and mechanical connections from the HVAC controls.
7. Firmly seat the center bezel (2) to the instrument panel (1), engaging the spring clip retainers.
8. Reconnect the battery negative cable.

SWITCH, ODOMETER

DESCRIPTION

DESCRIPTION

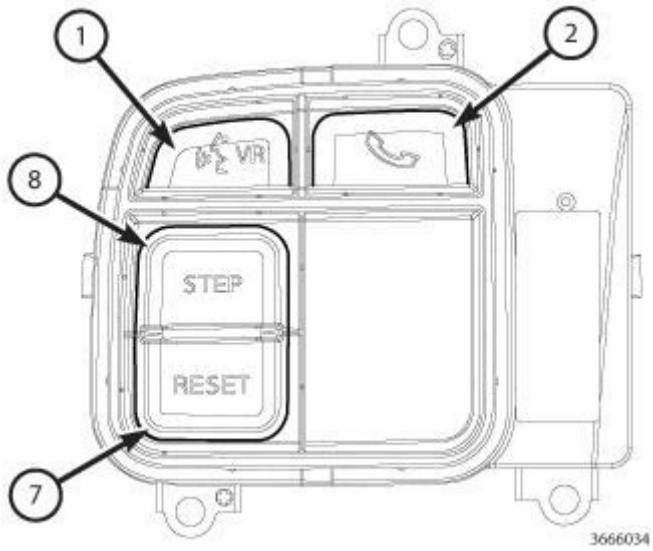

Fig. 15: Control Switch Pod Without EVIC
Courtesy of CHRYSLER GROUP, LLC

The odometer switch pod is located in the left spoke of the steering wheel spoke bezel. This switch has up to four push buttons. Two of the push buttons (7 and 8) are used on all vehicles not equipped with the Electronic Vehicle Information Center (EVIC). Two additional push buttons (1 and 2) are found on vehicles equipped with the optional Uconnect™ Hands-Free Communication System. The only visible components of the switch pod are the switch push buttons and a decorative bezel around the push buttons, which stands slightly proud of the steering wheel spoke bezel. The remainder of the switch pod including its mounting provisions and its electrical connection are concealed beneath the spoke bezel.

The switch pod housing and push buttons are constructed of molded plastic. Each of the push buttons has white International Control and Display Symbol graphics

or text applied to it, which clearly identify the function of each push button. The switch pod is secured through three integral mounting tabs to mounting bosses on the back of the spoke bezel by three screws. A connector receptacle integral to the inboard end of the switch pod housing connects the odometer switch pod to the vehicle electrical system through a dedicated take out and connector of the steering wheel wire harness.

The odometer switch pod cannot be adjusted or repaired. If any function of the switch is ineffective or damaged, the entire switch pod unit must be replaced.

OPERATION

OPERATION

The odometer switch pod is a resistor multiplexed unit that receives source current from and provides hard wired inputs to the Local Interface Network (LIN) slave node integral to the speed control switch pod in the right spoke of the steering wheel spoke bezel. The LIN slave node communicates the switch states of the odometer switch pod, the remote radio switches and the horn switch over the LIN data bus to the ElectroMechanical Instrument Cluster (EMIC) (also known as the Cab Compartment Node/CCN), which is the LIN master node.

The odometer switch pod (also known as the odometer switch) is used only for vehicles not equipped with the Electronic Vehicle Information Center (EVIC) system and contains two switch push buttons whose functions are:

- **Reset** - This switch button allows the operator to reset the trip odometer (A or B) currently displayed in the odometer display unit of the instrument cluster.
- **Step** - This switch button allows the operator to step through the total odometer, trip odometer A and trip odometer B display options of the odometer display of the instrument cluster.

For vehicles equipped with the Uconnect™ Hands-Free Communication System, the odometer switch pod contains two additional switch push buttons whose functions are:

- **VR (Voice Recognition)** - This switch button activates the Uconnect™ Voice Command system.
- **Phone** - This switch push button activates the Uconnect™ Hands-Free

Phone system.

The EMIC LIN master node provides a clean ground and fused B(+) current for all of the switches and sensors on the rotating steering wheel through the LIN slave node circuitry of the speed control switch pod as well as for the Light Emitting Diode (LED) back lighting of both the speed control and the odometer switch pods. The EMIC continually monitors the LIN bus data and will store a Signal Not Available (SNA) code for any LIN bus input errors. The EMIC also communicates with other electronic modules over the Controller Area Network (CAN) data bus. Therefore, any EMIC DTC information can be retrieved using a diagnostic scan tool connected to the Data Link Connector (DLC).

The analog resistor multiplexed circuits of the odometer switch pod as well as the hard wired circuits between the switch pod and the LIN slave node within the speed control switch pod may be diagnosed using conventional diagnostic tools and procedures. Refer to the appropriate wiring information. The wiring information includes wiring diagrams, proper wire and connector repair procedures, details of wire harness routing and retention, connector pin-out information and location views for the various wire harness connectors, splices and grounds.

However, conventional diagnostic methods will not prove conclusive in the diagnosis of the LIN slave or master nodes, the EMIC or the electronic controls and communication between modules and other devices that provide some features of the odometer system. The most reliable, efficient, and accurate means to diagnose the odometer switch pod, the LIN slave or master nodes, the EMIC or the electronic controls and communication related to odometer system operation requires the use of a diagnostic scan tool. Refer to the appropriate diagnostic information.

REMOVAL

REMOVAL

The odometer switch pod is serviced in exactly the same manner as the Electronic Vehicle Information Center (EVIC) control switch. Refer to **SWITCH, EVIC CONTROL, REMOVAL** .

INSTALLATION

INSTALLATION

The odometer switch pod is serviced in exactly the same manner as the Electronic Vehicle Information Center (EVIC) control switch. Refer to **SWITCH, EVIC CONTROL, INSTALLATION** .

2014 ACCESSORIES AND EQUIPMENT

Intrusion Transceiver Module (ITM) - Electrical Diagnostics - Compass & Patriot

DIAGNOSTIC CODE INDEX

DIAGNOSTIC CODE INDEX

DTC	Description
B1A20	PRE-ARM TIMEOUT
B1A3C	INTERNAL SIREN BATTERY
B1A3D	SIREN BATTERY TAMPER / LOSS OF POWER SUPPLY
B1A3E	SIREN / ITM MISMATCH
B1A3F	ITM ARMING SEQUENCE PERFORMANCE
B2206	CURRENT VIN MISSING/MISMATCH
B222A	VEHICLE LINE MISMATCH
B223C	INTRUSION TRANSCEIVER MODULE INTERNAL
U0019	CAN B BUS
U0151	LOST COMMUNICATION WITH OCCUPANT RESTRAINT CONTROLLER (ORC)
U0155	LOST COMMUNICATION WITH CLUSTER/CCN
U110D	LOST COMMUNICATION WITH SECURITY SIREN
U1416	IMPLAUSIBLE SECURITY SIREN SIGNAL RECEIVED

DIAGNOSIS AND TESTING

B1A20-PRE-ARM TIMEOUT

For a complete wiring diagram, **refer to appropriate SYSTEM WIRING DIAGRAMS article** .

WHEN MONITORED

During the Vehicle Theft and Security System (VTSS) pre-arm process.

SET CONDITION

If the VTSS pre-arm sequence is interrupted within 16 seconds after securing the vehicle.

POSSIBLE CAUSES

Possible Causes
INTERMITTENT PROBLEM WITH FUSED (B+) TO CLUSTER INTERMITTENT PROBLEM WITH CAN B BUS CIRCUITS TO CLUSTER

DIAGNOSTIC TEST

DETERMINING IF DIAGNOSTIC TROUBLE CODE (DTC) IS CURRENT

NOTE: Diagnose any related Communication DTCs before continuing.

1. With a scan tool, read and record DTCs.
2. With the scan tool, clear DTCs.
3. Turn the ignition off and remove the key from the ignition.
4. Lock and close all doors to allow the VTSS to go from pre-arm to armed status and wait one minute.
5. Disarm the VTSS.
6. Using the scan tool, read the ITM DTCs.

   Does the DTC reset?

   Yes

   - Remove the Cluster and inspect the Fused B (+) and both CAN B BUS circuits for spread terminals or intermittent opens.
   - Perform the BODY VERIFICATION TEST. Refer to **STANDARD PROCEDURE** .

   No

   - DTC is not active at this time. Test complete.
   - Perform the BODY VERIFICATION TEST. Refer to **STANDARD PROCEDURE** .

B1A3C-INTERNAL SIREN BATTERY

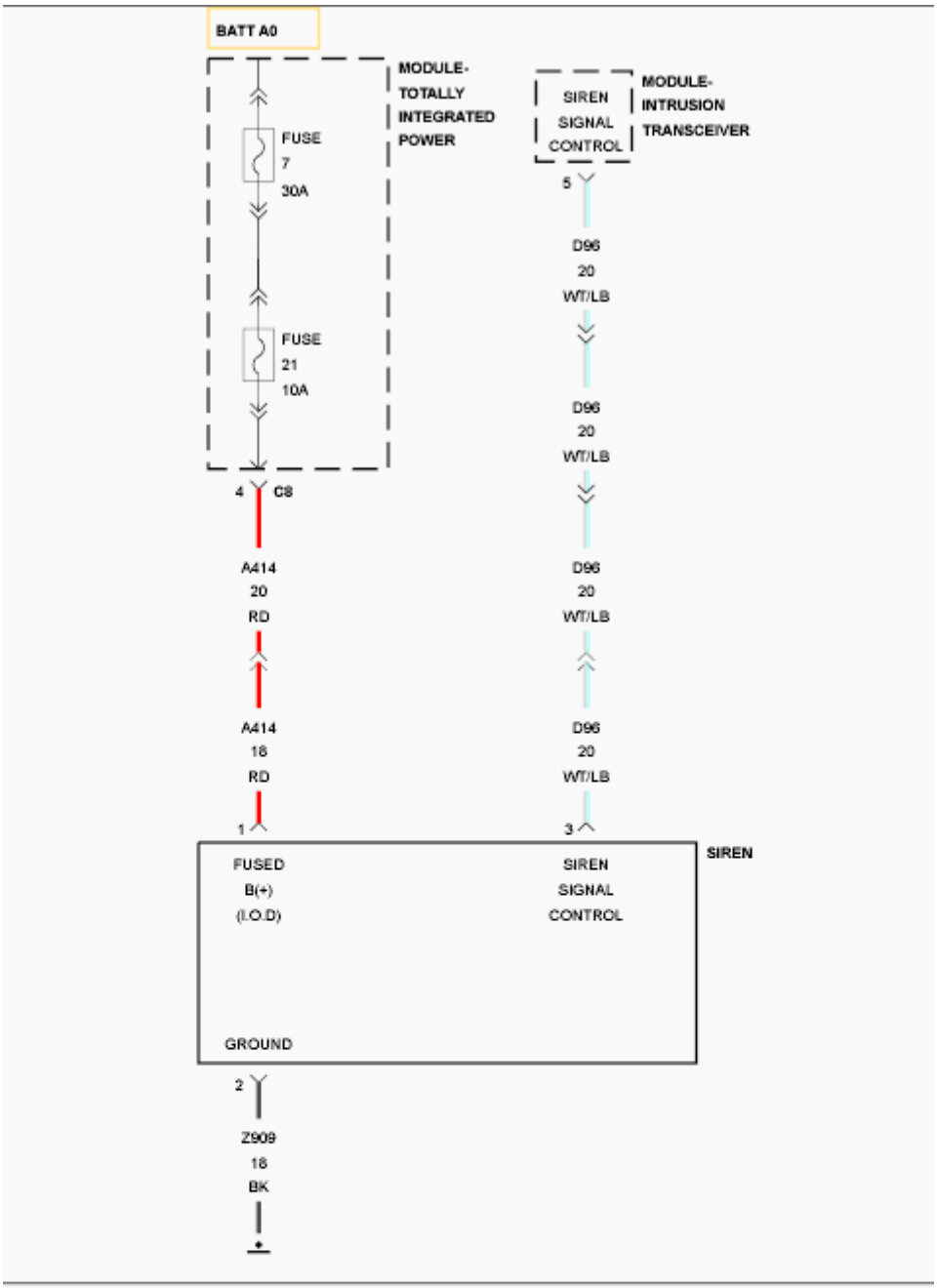
BATT A0
MODULE-
TOTALLY
INTEGRATED
POWER
FUSE
7
30A
FUSE
21
10A
4
C8
A414
20
RD
A414
18
RD
1
MODULE-
INTRUSION
TRANSCEIVER
SIREN
SIGNAL
CONTROL
5
D96
20
WT/LB
D96
20
WT/LB
D96
20
WT/LB
D96
20
WT/LB
3
SIREN
FUSED
B(+)
(I.O.D)
SIREN
SIGNAL
CONTROL
GROUND
2
Z909
18
BK

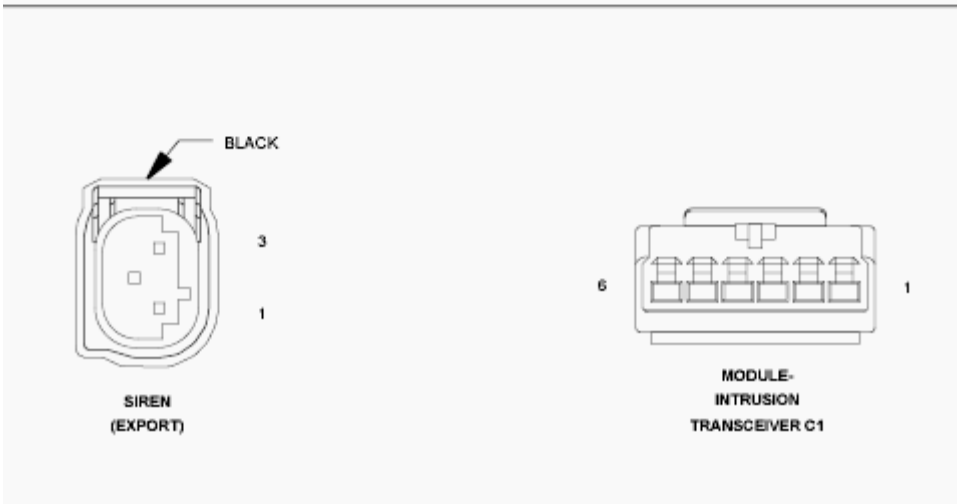
BLACK
3
1
SIREN
(EXPORT)
6
1
MODULE-
INTRUSION
TRANSCEIVER C1

Fig. 1: Internal Siren Battery Wiring Diagram
Courtesy of CHRYSLER GROUP, LLC

For a complete wiring diagram, **refer to appropriate SYSTEM WIRING DIAGRAMS article** .

WHEN MONITORED

Continuously with the ignition on.

SET CONDITION

When the internal battery within the siren does not charge as expected, the Intrusion Transceiver Module (ITM) sets this code.

POSSIBLE CAUSES

Possible Causes
VEHICLE STORED WITH NO BATTERY VOLTAGE FOR EXTENDED PERIOD OF TIME SIREN

DIAGNOSTIC TEST

1. **CHECK FOR AN ACTIVE DTC**
    1. Turn the ignition on.
    2. Using the scan tool, read DTCs.

    Does the scan tool display this DTC as active?

    Yes

    - Go To 2

    No

    - Test complete, the condition or conditions that originally set this DTC are not present at this time. Using the wiring diagrams as a guide, check all related splices and connectors for signs of water intrusion, corrosion, pushed out or bent terminals, and correct pin tension.

2. **VEHICLE STORED WITH NO BATTERY VOLTAGE FOR EXTENDED PERIOD OF TIME**

NOTE: If the vehicle was allowed to sit with no battery voltage for an extended period of time the back up battery located in the siren may discharge and need to be recharged.

Was the vehicle battery power just restored after the vehicle was stored with no power for an extended period of time?

Yes

- Allow the vehicle to sit with a fully charged battery for two hours then restart this procedure.

No

- Replace the Siren the in accordance with the Service Information.
- Perform the BODY VERIFICATION TEST. Refer to **STANDARD PROCEDURE** .

B1A3D-SIREN BATTERY TAMPER / LOSS OF POWER SUPPLY

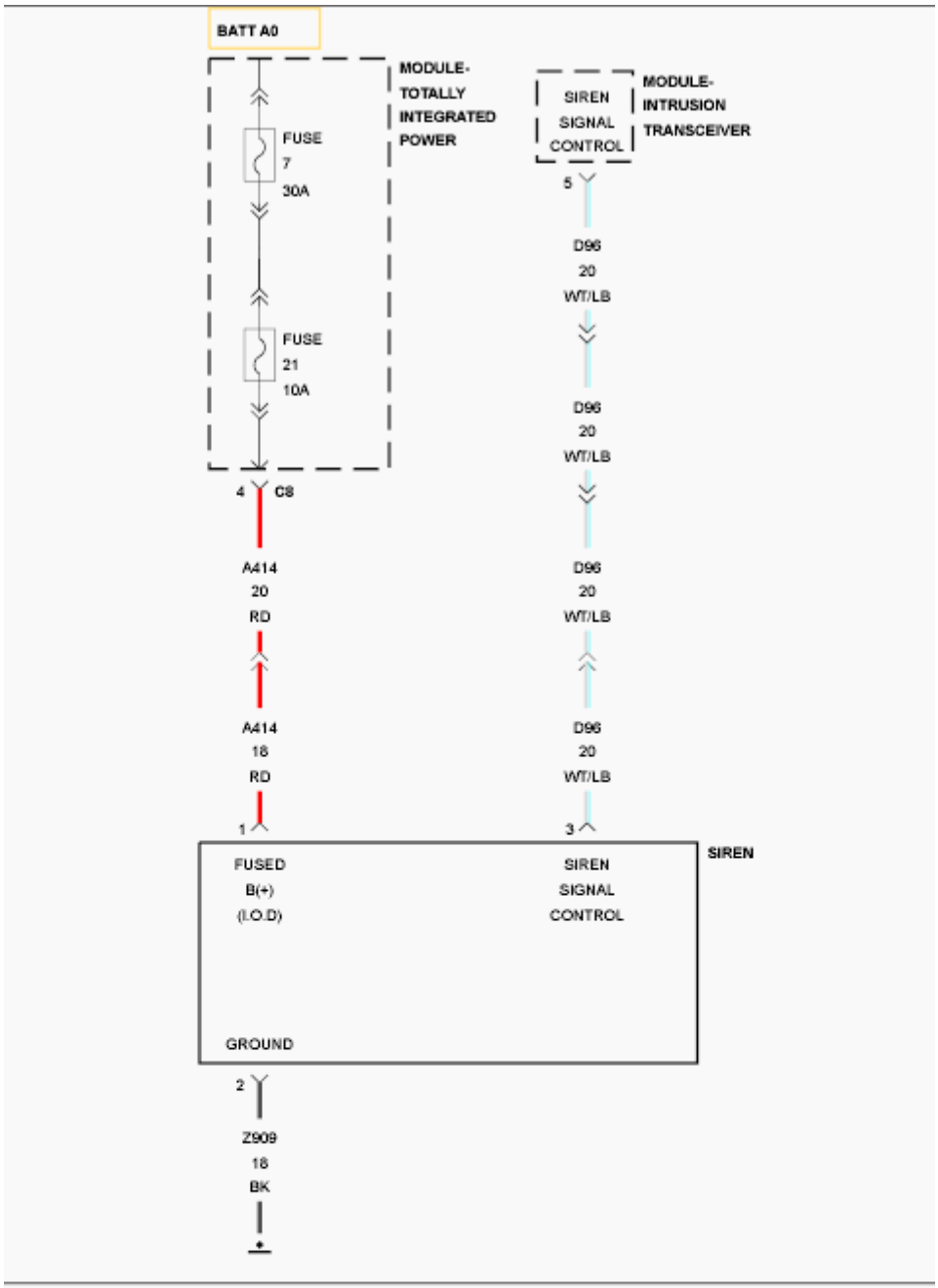
BATT A0
MODULE-
TOTALLY
INTEGRATED
POWER
FUSE
7
30A
FUSE
21
10A
4
C8
A414
20
RD
A414
18
RD
1
MODULE-
INTRUSION
TRANSCEIVER
SIREN
SIGNAL
CONTROL
5
D96
20
WT/LB
D96
20
WT/LB
D96
20
WT/LB
D96
20
WT/LB
3
SIREN
FUSED
B(+)
(I.O.D)
SIREN
SIGNAL
CONTROL
GROUND
2
Z909
18
BK

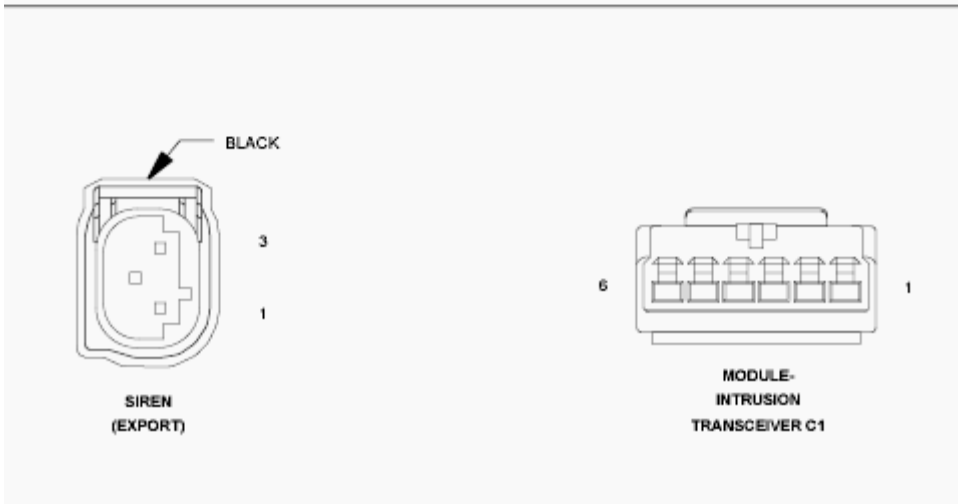
BLACK
3
1
SIREN
(EXPORT)
6
1
MODULE-
INTRUSION
TRANSCEIVER C1

Fig. 2: Internal Siren Battery Wiring Diagram
Courtesy of CHRYSLER GROUP, LLC

For a complete wiring diagram, **refer to appropriate SYSTEM WIRING DIAGRAMS article** .

WHEN MONITORED

Continuously with the Vehicle Theft and Security System (VTSS) armed.

SET CONDITION

If the Intrusion Transceiver Module (ITM) detects incorrect voltage at the siren this code will set.

POSSIBLE CAUSES

Possible Causes
HARNESS TAMPERING (A414) FUSED B(+) CIRCUIT (Z909) GROUND OPEN SIREN

DIAGNOSTIC TEST

1. **INSPECT SIREN HARNESS**
    1. Inspect the wiring harness to the siren for any signs of tampering or intermittent condition.

       Were there any problems found?

       Yes

       - Repair wiring as necessary.
       - Perform the BODY VERIFICATION TEST. Refer to **STANDARD PROCEDURE** .

       No

       - Go To 2
2. **CHECK FOR AN ACTIVE DTC**

1. Turn the ignition off and remove the key from the ignition.
2. Lock and close all doors to allow the VTSS to go from pre-arm to armed status and wait one minute.
3. Disarm the VTSS.
4. Using the scan tool, read the ITM DTCs.

   Does the scan tool display this DTC as active?

   Yes

   - Go To 3

   No

   - Test complete, the condition or conditions that originally set this DTC are not present at this time. Using the wiring diagrams as a guide, check all related splices and connectors for signs of water intrusion, corrosion, pushed out or bent terminals, and correct pin tension.
   - Perform the BODY VERIFICATION TEST. Refer to **STANDARD PROCEDURE** .

3. **CHECK THE (A414) FUSED B(+) CIRCUIT AT THE SIREN**

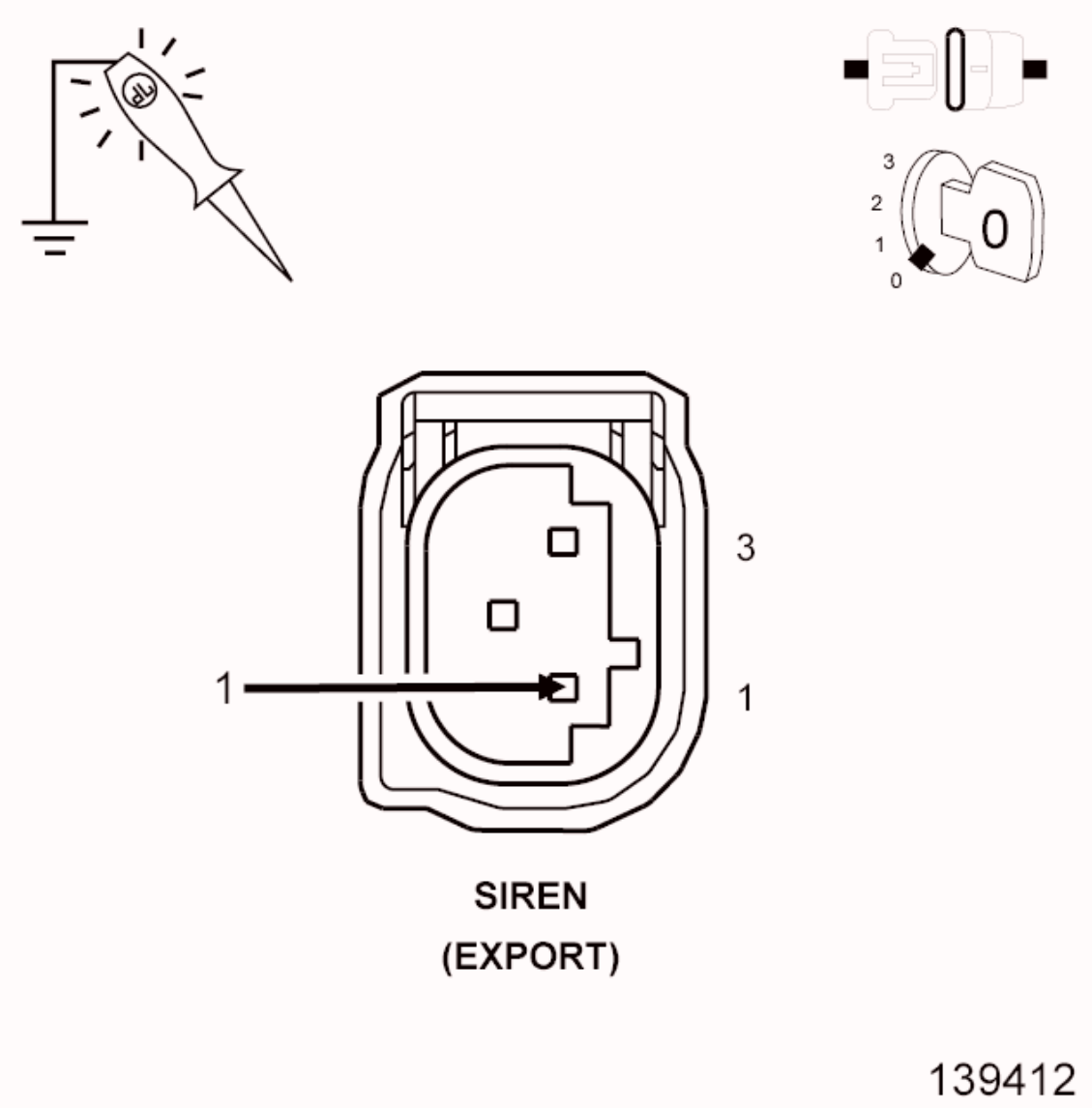

Fig. 3: Checking Fused B(+) Circuit At The Siren
Courtesy of CHRYSLER GROUP, LLC

1. Turn the ignition off.
2. Disconnect the Siren harness connector.
3. Using a 12-volt test light connected to ground, check the (A414) Fused B(+) circuit at the siren harness connector.

   Does the test light illuminate brightly?

   Yes

   - Go To 4

   No

- Repair the (A414) Fused B(+) circuit for an open.
- Perform the BODY VERIFICATION TEST. Refer to **STANDARD PROCEDURE** .

4. **CHECK THE (Z909) GROUND CIRCUIT AT THE SIREN**

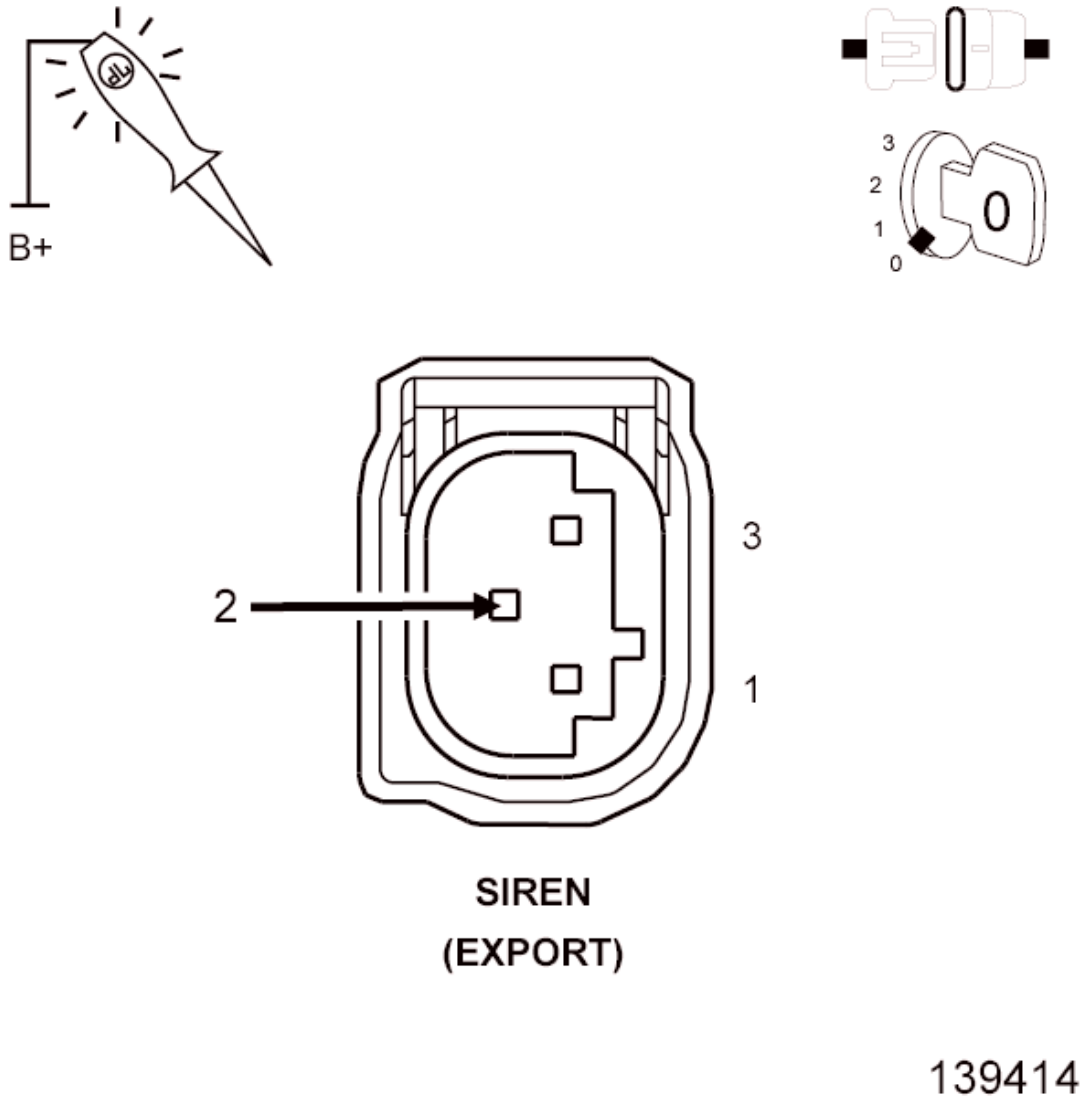

Fig. 4: Checking Ground Circuit At The Siren
Courtesy of CHRYSLER GROUP, LLC

1. Using a 12-volt test light connected to 12-volts, check the (Z909) Ground circuit at the siren harness connector.

   Does the test light illuminate brightly?

   Yes

- Replace the Siren in accordance with the Service Information.
- Perform the BODY VERIFICATION TEST. Refer to **STANDARD PROCEDURE** .

No

- Repair the (Z909) Ground circuit for an open.
- Perform the BODY VERIFICATION TEST. Refer to **STANDARD PROCEDURE** .

B1A3E-SIREN / ITM MISMATCH

For a complete wiring diagram, **refer to appropriate SYSTEM WIRING DIAGRAMS article** .

WHEN MONITORED

While the Vehicle Theft and Security System (VTSS) is armed.

SET CONDITION

Intrusion Transceiver Module (ITM) losses battery voltage.

POSSIBLE CAUSES

Possible Causes
CAN B BUS COMMUNICATION PROBLEMS INTERMITTENT LOSS OF FUSED B(+) TO THE ITM WITH THE VTSS ARMED

DIAGNOSTIC TEST

DETERMINING IF DIAGNOSTIC TROUBLE CODE (DTC) IS CURRENT

NOTE: Diagnose any related Communication DTCs before continuing.

1. With a scan tool, read and record DTCs.
2. With the scan tool, clear DTCs.
3. Turn the ignition off and remove the key from the ignition.

4. Lock and close all doors to allow the VTSS to go from pre-arm to armed status and wait one minute.
5. Disarm the VTSS.
6. Using the scan tool, read DTCs.

   Does the DTC reset?

   Yes

   - Check for and correct any CAN B Bus DTCs set in the ITM or other modules. Also check for intermittent loss Fused B(+) to the ITM.
   - Perform the BODY VERIFICATION TEST. Refer to **STANDARD PROCEDURE** .

   No

   - DTC is not active at this time. Test complete.
   - Perform the BODY VERIFICATION TEST. Refer to **STANDARD PROCEDURE** .

B1A3F-ITM ARMING SEQUENCE PERFORMANCE

For a complete wiring diagram, **refer to appropriate SYSTEM WIRING DIAGRAMS article** .

WHEN MONITORED

During the Vehicle Theft and Security System (VTSS) pre-arm process.

SET CONDITION

Intrusion Transceiver Module (ITM) losses battery voltage.

POSSIBLE CAUSES

Possible Causes
CAN B BUS COMMUNICATION PROBLEMS INTERMITTENT LOSS OF FUSED B(+) TO THE ITM DURING THE VTSS PRE-ARM PROCESS

DIAGNOSTIC TEST

DETERMINING IF DIAGNOSTIC TROUBLE CODE (DTC) IS CURRENT

NOTE: Diagnose any related Communication DTCs before continuing.

1. With a scan tool, read and record DTCs.
2. With the scan tool, clear DTCs.
3. Turn the ignition off and remove the key from the ignition.
4. Lock and close all doors to allow the VTSS to go from pre-arm to armed status and wait one minute.
5. Disarm the VTSS.
6. Using the scan tool, read DTCs.

   Does the DTC reset?

   Yes

   - Check for and correct any CAN B Bus DTCs set in the ITM or other modules. Also check for intermittent loss Fused B(+) to the ITM.
   - Perform the BODY VERIFICATION TEST. Refer to **STANDARD PROCEDURE** .

   No

   - DTC is not active at this time. Test complete.
   - Perform the BODY VERIFICATION TEST. Refer to **STANDARD PROCEDURE** .

B2206-CURRENT VIN MISSING/MISMATCH

For a complete wiring diagram, **refer to appropriate SYSTEM WIRING DIAGRAMS article** .

WHEN MONITORED

Anytime the ignition key is in the ON position.

SET CONDITION

VIN stored in Intrusion Transceiver Module (ITM) does not match the VIN stored in the Cluster.

POSSIBLE CAUSES

Possible Causes
INTRUSION TRANSCEIVER MODULE SWAPPED FROM DIFFERENT VEHICLE

DIAGNOSTIC TEST

DETERMINING IF DIAGNOSTIC TROUBLE CODE (DTC) IS CURRENT

1. With a scan tool, read and record DTC.
2. With the scan tool, clear DTC.
3. Turn the ignition off and remove the key from the ignition.
4. Lock and close all doors to allow the VTSS to go from pre-arm to armed status and wait one minute.
5. Disarm the VTSS.
6. Using the scan tool, read ITM DTC.

   Does the DTC reset?

   Yes

   - Using the scan tool under Miscellaneous functions initialize the Intrusion Transceiver Module.
   - Perform the BODY VERIFICATION TEST. Refer to **STANDARD PROCEDURE** .

   No

   - DTC is not active at this time. Test complete.
   - Perform the BODY VERIFICATION TEST. Refer to **STANDARD PROCEDURE** .

B222A-VEHICLE LINE MISMATCH

For a complete wiring diagram, **refer to appropriate SYSTEM WIRING**

DIAGRAMS article .

WHEN MONITORED

Anytime the ignition key is in the ON position.

SET CONDITION

If the Intrusion Transceiver Module (ITM) is not configured.

POSSIBLE CAUSES

Possible Causes
INTRUSION TRANSCEIVER MODULE CONFIGURATION

DIAGNOSTIC TEST

CONFIGURE THE INTRUSION TRANSCEIVER MODULE

1. Using the scan tool under miscellaneous functions perform the initialization procedure for the Intrusion Transceiver Module.
2. With the scan tool, clear DTCs.
3. Turn the ignition off and remove the key from the ignition.
4. Lock and close all doors to allow the VTSS to go from pre-arm to armed status and wait one minute.
5. Disarm the VTSS.
6. Using the scan tool, read DTCs.

   Does the DTC reset?

   Yes

   - Replace the Intrusion Transceiver Module in accordance with the Service Information.
   - Perform the BODY VERIFICATION TEST. Refer to **STANDARD PROCEDURE** .

   No

   - Test complete.
   - Perform the BODY VERIFICATION TEST. Refer to **STANDARD**

PROCEDURE .

B223C-INTRUSION TRANSCEIVER MODULE INTERNAL

For a complete wiring diagram, **refer to appropriate SYSTEM WIRING DIAGRAMS article** .

WHEN MONITORED

Ignition on.

SET CONDITION

Internal Intrusion Transceiver Module (ITM) test failed.

POSSIBLE CAUSES

Possible Causes
INTRUSION TRANSCEIVER MODULE

DIAGNOSTIC TEST

DETERMINING IF DIAGNOSTIC TROUBLE CODE (DTC) IS CURRENT

1. With a scan tool, read and record DTCs.
2. With the scan tool, clear DTCs.
3. Turn the ignition off and remove the key from the ignition.
4. Lock and close all doors to allow the VTSS to go from pre-arm to armed status and wait one minute.
5. Disarm the VTSS.
6. Using the scan tool, read ITM DTCs.

   Does the DTC reset?

   Yes

   - Replace the Intrusion Transceiver Module in accordance with the Service Information.
   - Perform the BODY VERIFICATION TEST. Refer to **STANDARD PROCEDURE** .

No

- DTC is not active at this time. Test complete.
- Perform the BODY VERIFICATION TEST. Refer to **STANDARD PROCEDURE** .

U0019-CAN B BUS

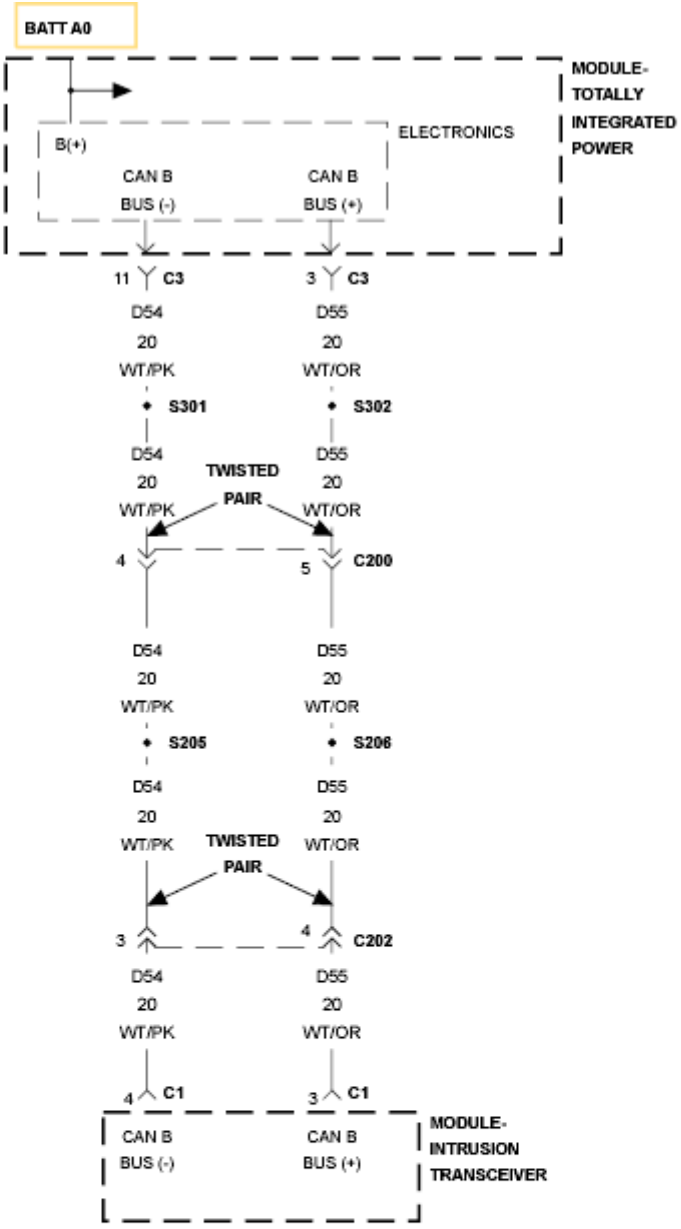

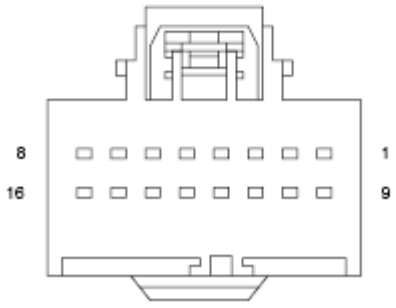

MODULE-
TOTALLY
INTEGRATED
POWER C3

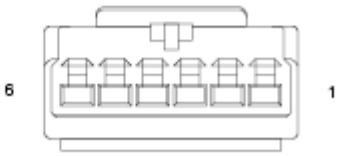

MODULE-
INTRUSION
TRANSCEIVER C1

Fig. 5: Intrusion Transceiver Module CAN B Bus Wiring Diagram
Courtesy of CHRYSLER GROUP, LLC

For a complete wiring diagram, **refer to appropriate SYSTEM WIRING DIAGRAMS article** .

WHEN MONITORED

Continuously

SET CONDITION

Whenever the CAN B Bus (+) or CAN B Bus (-) circuit is open, shorted to voltage or shorted to ground.

POSSIBLE CAUSES

Possible Causes
CAN B BUS DTCs IN TOTALLY INTEGRATED POWER MODULE (D55) CAN B BUS (+) CIRCUIT OPEN (D54) CAN B BUS (-) CIRCUIT OPEN INTRUSION TRANSCEIVER MODULE (ITM)

DIAGNOSTIC TEST

1. **CHECK FOR ACTIVE DIAGNOSTIC TROUBLE CODE (DTC)S**
    1. With the scan tool, read the active DTCs.
    2. Cycle the ignition switch from off to on at least 5 times, leaving the ignition on for a minimum of 90 seconds per cycle.
    3. With the scan tool, read the active DTCs.

    Does the scan tool display this DTC as active?

    Yes

    - Go To 2

    No

    - If the DTC is stored, check for an intermittent condition. Visually inspect the related wiring harness connectors. Look for broken,

bent, pushed out, or corroded terminals.

2. **CHECK TOTALLY INTEGRATED POWER MODULE DTCs**
   1. With the scan tool, read Totally Integrated Power Module (TIPM) active DTCs.

      Does the scan tool display any CAN B BUS DTCs as active?

      Yes

      - Go to the **DTC INDEX** article and perform the appropriate diagnostic procedure.

      No

      - Go To 3
3. **(D55) CAN B BUS (+) CIRCUIT OPEN**

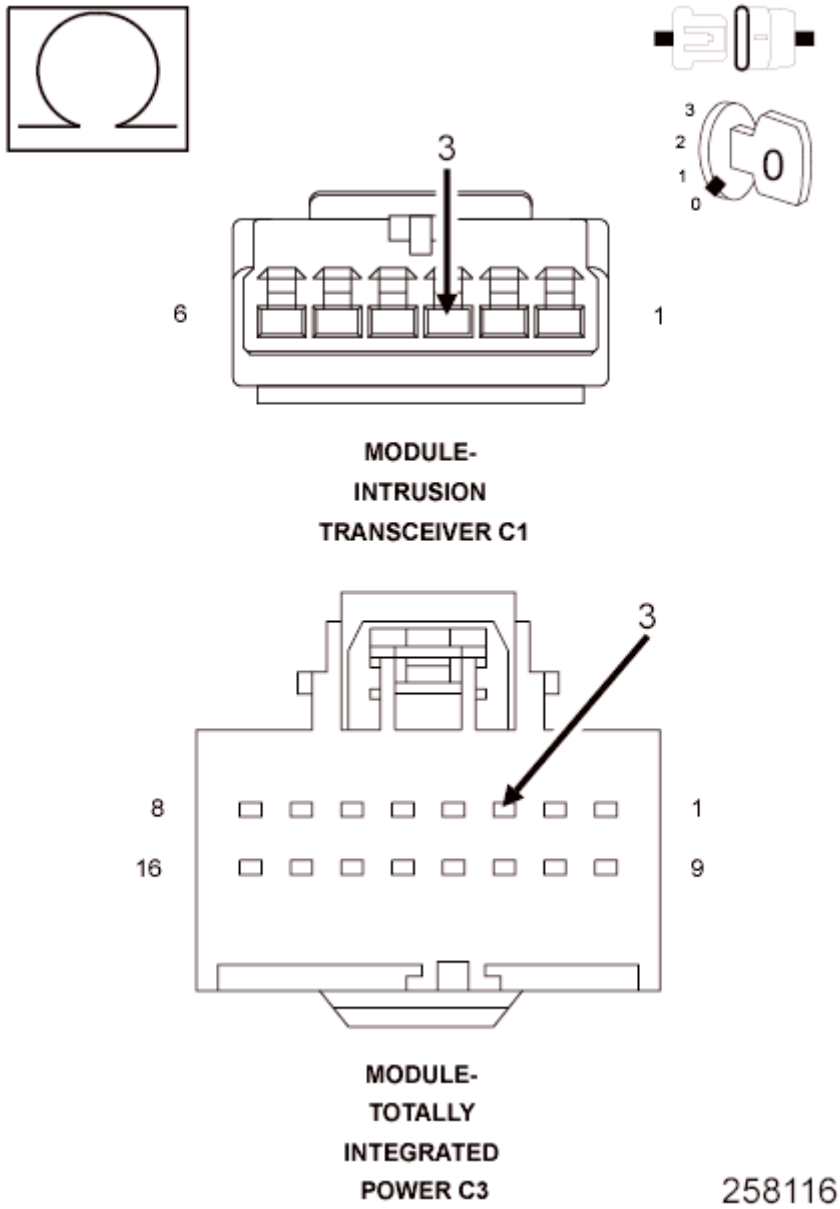

Fig. 6: Checking CAN B BUS (+) Circuit Open
Courtesy of CHRYSLER GROUP, LLC

1. Turn the ignition off.
2. Disconnect the negative battery cable.
3. Disconnect the ITM harness connector.
4. Disconnect the TIPM C3 connector.
5. Measure the resistance of the (D55) CAN B Bus (+) circuit between the TIPM C3 connector and the ITM harness connector.

   Is the resistance below 2.0 ohms?

Yes

- Go To 4

No

- Repair the (D55) CAN B Bus (+) circuit for an open.
- Perform the BODY VERIFICATION TEST. Refer to **STANDARD PROCEDURE** .

4. **(D54) CAN B BUS (-) CIRCUIT OPEN**

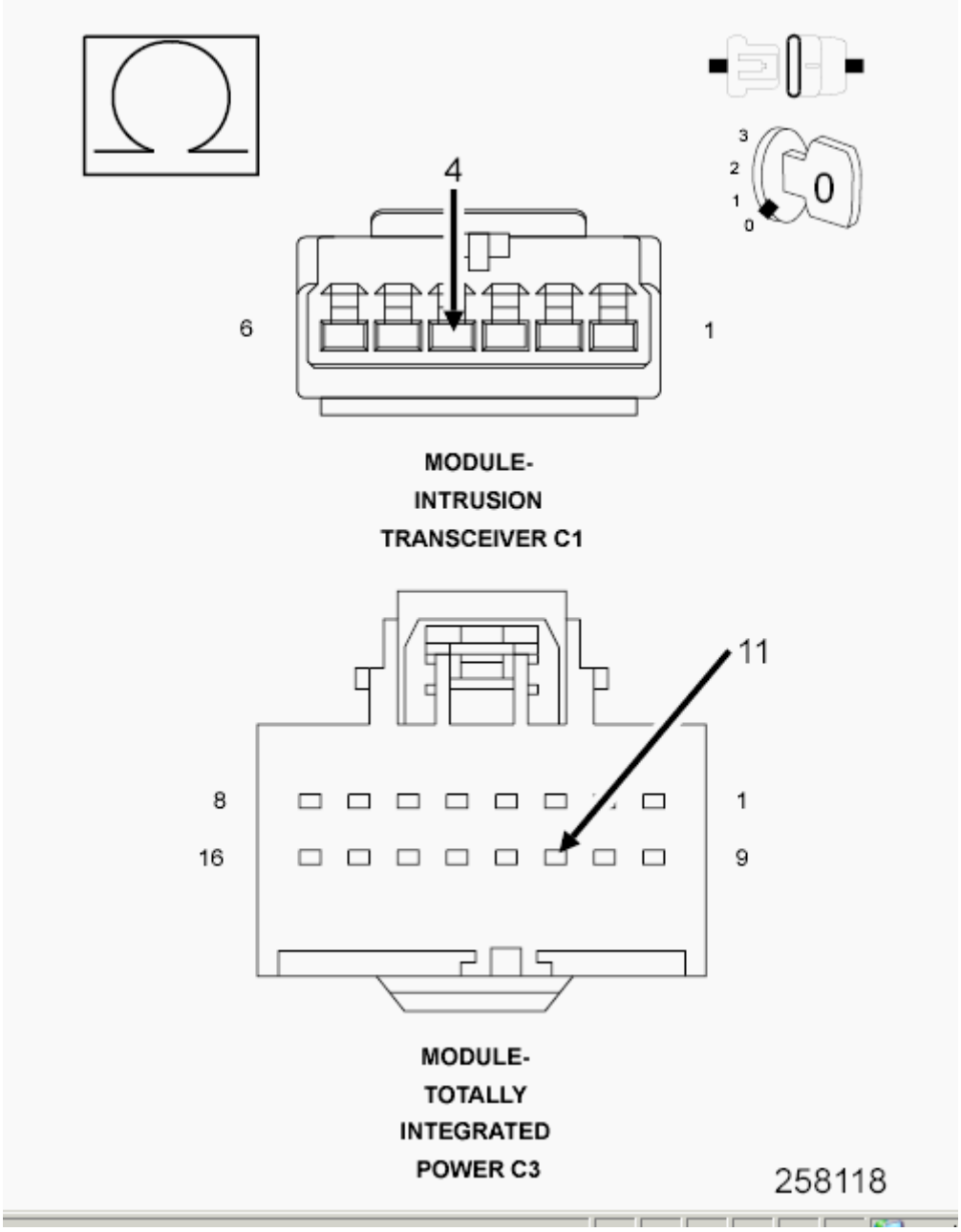

Fig. 7: Checking CAN B BUS (-) Circuit Open
Courtesy of CHRYSLER GROUP, LLC

1. Measure the resistance of the (D54) CAN B Bus (-) circuit between the TIPM C3 connector and the ITM harness connector.

   Is the resistance below 2.0 ohms?

   Yes

   - Replace the Intrusion Transceiver Module in accordance with the Service Information.
   - Perform the BODY VERIFICATION TEST. Refer to **STANDARD PROCEDURE** .

   No

   - Repair the (D54) CAN B Bus (-) circuit for an open.
   - Perform the BODY VERIFICATION TEST. Refer to **STANDARD PROCEDURE** .

U0151-LOST COMMUNICATION WITH OCCUPANT RESTRAINT CONTROLLER (ORC)

For a complete wiring diagram, **refer to appropriate SYSTEM WIRING DIAGRAMS article** .

WHEN MONITORED

Continuously when the ignition is on.

Battery voltage between 10 and 16 volts.

Ignition Off Draw (IOD) fuse installed.

Totally Integrated Power Module (TIPM) is configured correctly.

SET CONDITION

Bus messages not received from the Occupant Restraint Controller (ORC) for approximately two to five seconds.

POSSIBLE CAUSES

Possible Causes
CAN BUS CIRCUITS OPEN OR SHORTED DTCS RELATED TO BATTERY VOLTAGE, IGNITION, OR VIN MESSAGES OCCUPANT RESTRAINT CONTROLLERS POWER AND GROUND TIPM NOT CONFIGURED CORRECTLY OCCUPANT RESTRAINT CONTROLLER MODULE THAT SET THIS DTC

DIAGNOSTIC TEST

VERIFY THE DIAGNOSTIC TROUBLE CODE (DTC) IS ACTIVE

NOTE: Make sure the IOD fuse is installed and the battery is fully charged before proceeding.

1. Turn the ignition on.
2. With the scan tool, read active DTCs.

   Is this DTC active?

   Yes

   - Refer to **DIAGNOSIS AND TESTING** and perform the U0151-LOST COMMUNICATION WITH OCCUPANT RESTRAINT CONTROLLER (ORC) diagnostic procedure.

   No

   - Refer to **DIAGNOSIS AND TESTING** and perform the STORED LOST COMMUNICATION DTCs diagnostic procedure.

U0155-LOST COMMUNICATION WITH CLUSTER/CCN

For a complete wiring diagram, **refer to appropriate SYSTEM WIRING DIAGRAMS article** .

WHEN MONITORED

Continuously when the ignition is on.

The battery voltage is between 10 and 16 volts.

Ignition Off Draw (IOD) fuse installed.

Totally Integrated Power Module (TIPM) is configured correctly.

SET CONDITION

Bus messages not received from the Instrument Cluster (CCN) for approximately two to five seconds.

POSSIBLE CAUSES

Possible Causes
CAN BUS CIRCUITS OPEN OR SHORTED
DTCS RELATED TO BATTERY VOLTAGE, IGNITION, OR VIN MESSAGES
INSTRUMENT CLUSTER POWER AND GROUND
TIPM NOT CONFIGURED CORRECTLY
INSTRUMENT CLUSTER (CCN)
MODULE THAT SET THIS DTC

DIAGNOSTIC TEST

VERIFY THE DIAGNOSTIC TROUBLE CODE (DTC) IS ACTIVE

NOTE: Make sure the IOD fuse is installed and the battery is fully charged before proceeding.

1. Turn the ignition on.
2. With the scan tool, read active DTCs.

   Is this DTC active?

   Yes

   - Refer to **DIAGNOSIS AND TESTING** and perform the U0155-LOST COMMUNICATION WITH CLUSTER/CCN diagnostic procedure.

   No

- Refer to **DIAGNOSIS AND TESTING** and perform the STORED LOST COMMUNICATION DTCs diagnostic procedure.

U110D-LOST COMMUNICATION WITH SECURITY SIREN

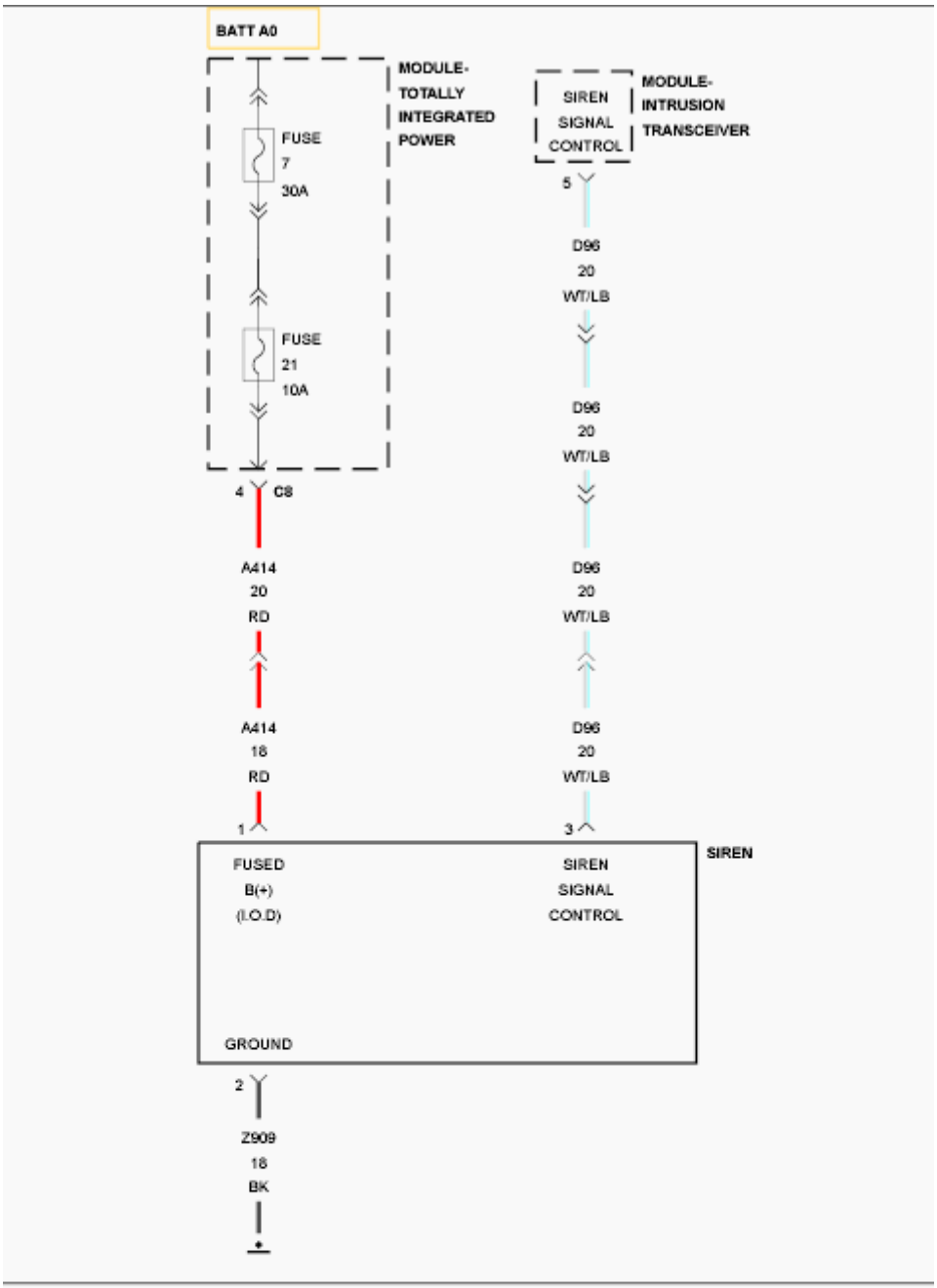
BATT A0
MODULE-
TOTALLY
INTEGRATED
POWER
FUSE
7
30A
FUSE
21
10A
4
C8
A414
20
RD
A414
18
RD
1
MODULE-
INTRUSION
TRANSCEIVER
SIREN
SIGNAL
CONTROL
5
D96
20
WT/LB
D96
20
WT/LB
D96
20
WT/LB
D96
20
WT/LB
3
SIREN
FUSED
B(+)
(I.O.D)
SIREN
SIGNAL
CONTROL
GROUND
2
Z909
18
BK

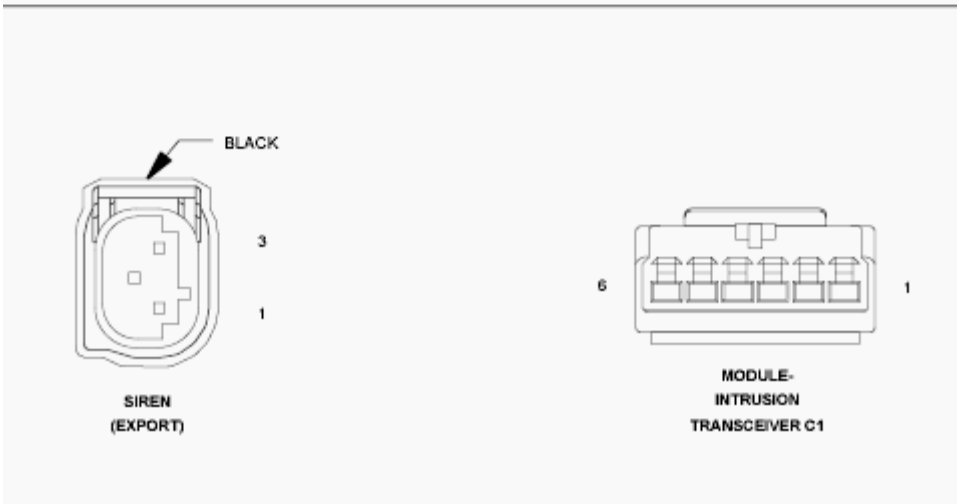
BLACK
3
1
SIREN
(EXPORT)
6
1
MODULE-
INTRUSION
TRANSCEIVER C1

Fig. 8: Internal Siren Battery Wiring Diagram
Courtesy of CHRYSLER GROUP, LLC

For a complete wiring diagram, **refer to appropriate SYSTEM WIRING DIAGRAMS article** .

WHEN MONITORED

Continuously while the Vehicle Theft Security System (VTSS) is armed.

SET CONDITION

If the Intrusion Transceiver Module does not receive messages from the Siren.

POSSIBLE CAUSES

Possible Causes
(A414) FUSED B+ CIRCUIT OPEN
(Z909) GROUND CIRCUIT OPEN
(D96) SIREN SIGNAL CONTROL CIRCUIT SHORT TO BATTERY
(D96) SIREN SIGNAL CONTROL CIRCUIT OPEN
(D96) SIREN SIGNAL CONTROL CIRCUIT SHORT TO GROUND
SIREN
INTRUSION TRANSCEIVER MODULE

DIAGNOSTIC TEST

1. **CHECK FOR AN ACTIVE DTC**
    1. Turn the ignition on.
    2. With the scan tool, read DTCs.

    Does the scan tool display this DTC as active?

    Yes

    - Go To 2

    No

    - Test complete, the condition or conditions that originally set this DTC are not present at this time. Using the wiring diagrams as a

guide, check all related splices and connectors for signs of water intrusion, corrosion, pushed out or bent terminals, and correct pin tension.

- Perform the BODY VERIFICATION TEST. Refer to **STANDARD PROCEDURE** .

2. **(A414) FUSED B+**

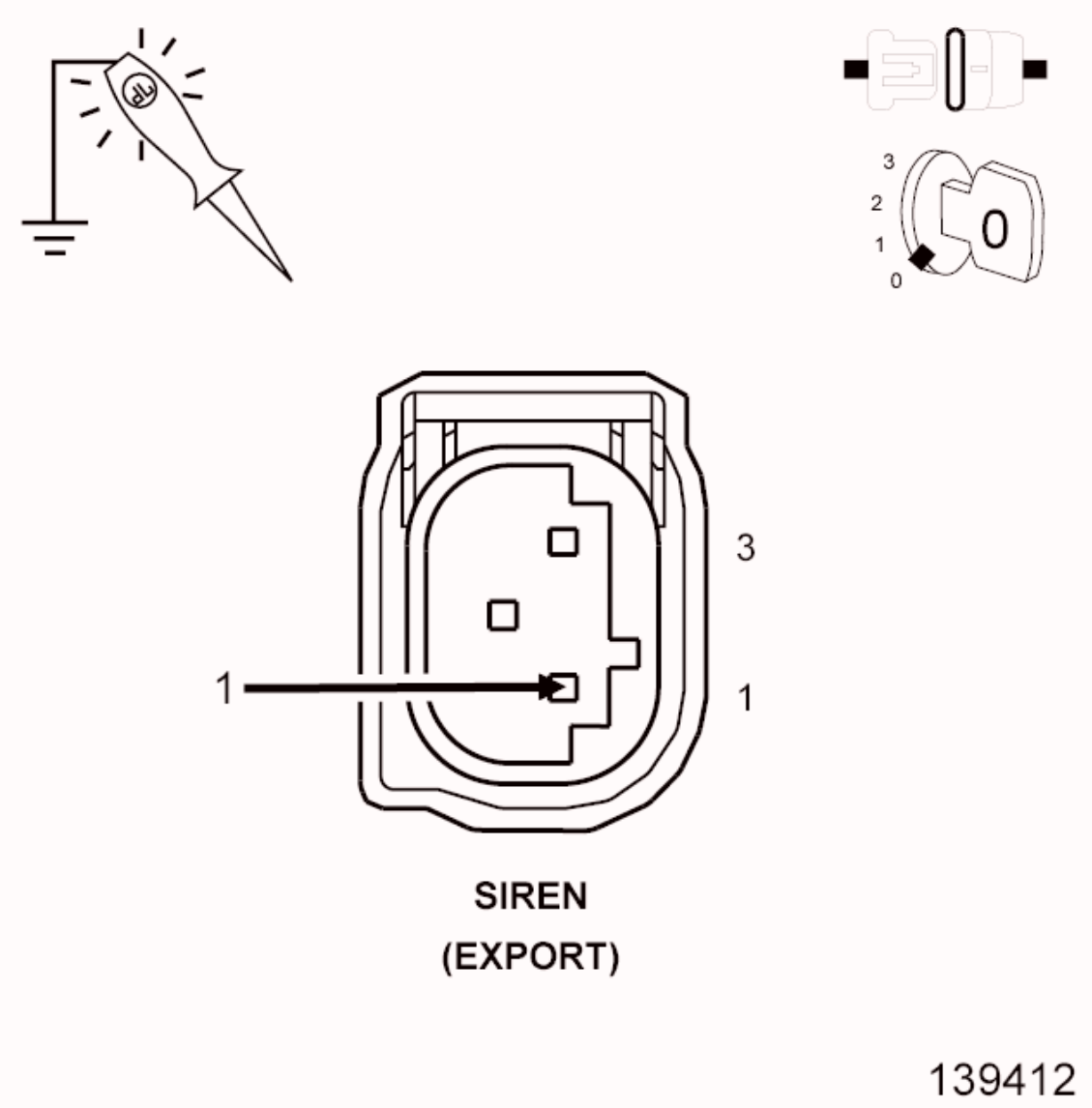

Fig. 9: Checking Fused B(+) Circuit At Siren
Courtesy of CHRYSLER GROUP, LLC

1. Gain access to the VTSS Siren.
2. Disconnect the Siren harness connector.
3. Using a 12-volt test light connected to ground, check the (A414) Fused B(+) circuit in the Siren harness connector.

Does the test light illuminate brightly?

Yes

- Go To 3

No

- Repair the (A414) Fused B+ circuit for an open.
- Perform the BODY VERIFICATION TEST. Refer to **STANDARD PROCEDURE** .

3. **(Z909) GROUND CIRCUIT**

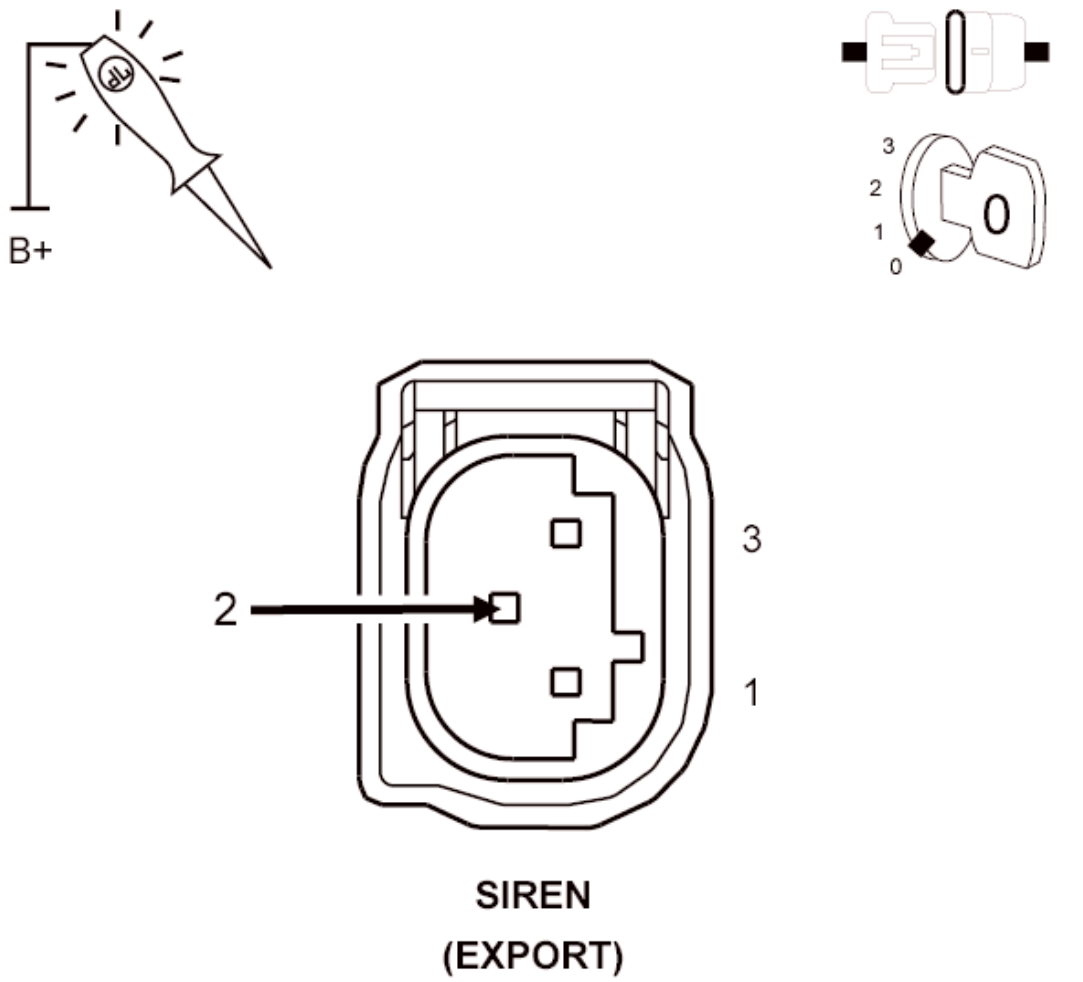

Fig. 10: Checking Ground Circuit At Siren
Courtesy of CHRYSLER GROUP, LLC

1. Using a 12-volt test light connected to 12-volts, check the (Z909) Ground circuit at the siren harness connector.

   Does the test light illuminate brightly?

   Yes

   - Go To 4

   No

   - Repair the (Z909) Ground circuit for an open.
   - Perform the BODY VERIFICATION TEST. Refer to **STANDARD PROCEDURE** .

4. **FAULTY SIREN**

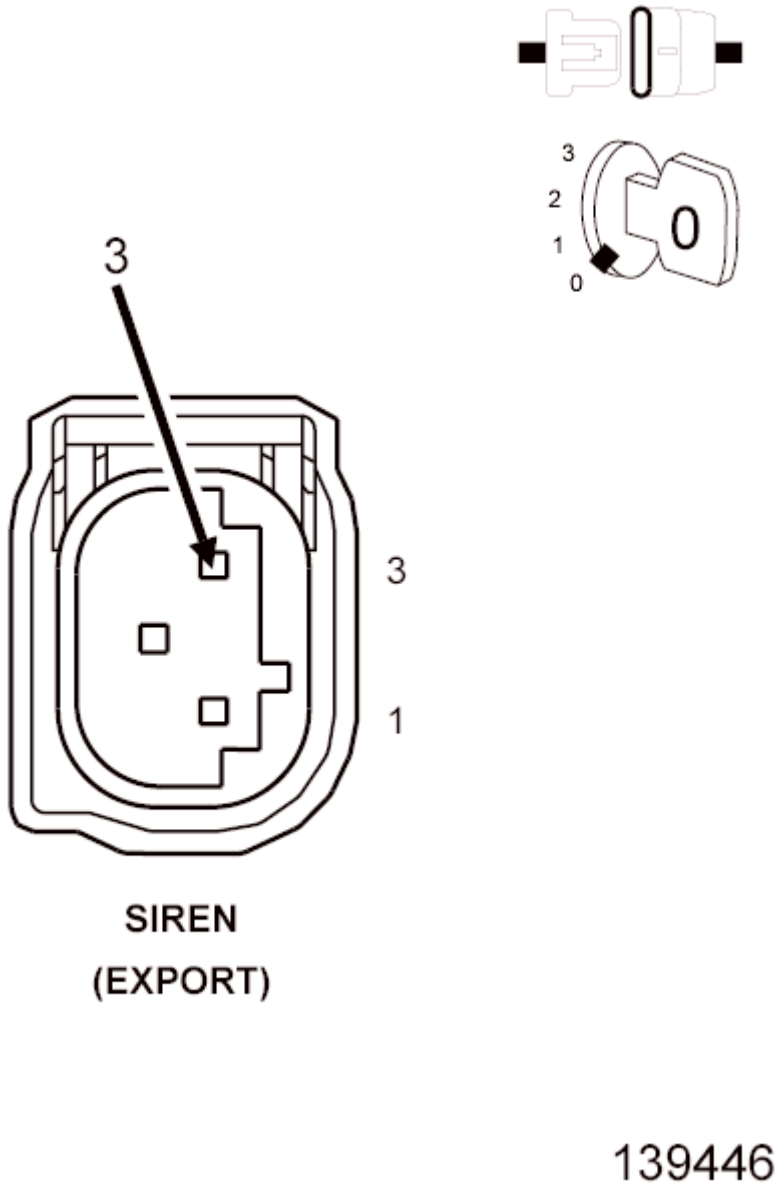

Fig. 11: Checking For Faulty Siren
Courtesy of CHRYSLER GROUP, LLC

1. Use the DRBIII® and set up as follows:
2. Use the Scope input cable CH7058, Cable to Probe adapter CH7062, and the red and black test probes.
3. Connect the scope input cable to the channel one connector on the DRBIII®. Attach the red and black leads and the cable to probe adapter to the scope input cable.
4. Select DRBIII® Stand-alone.
5. Select lab scope.
6. Select Live.

7. Select 12 volt square wave.
8. Press F2 for Scope.
9. Press F2 and use the down arrow to set voltage range to 20 volts. Press F2 again when complete.
10. Disconnect the Siren harness connector.
11. Connect the black lead to the chassis ground. Connect the red lead to the (D96) Siren Signal Control circuit in the Siren harness connector.
12. Close all doors and arm the VTSS.
13. Observe the voltage displayed on the DRBIII® Lab Scope.

    Is there a voltage square wave present 1 to 2 seconds?

    Yes

    - Connect a known good siren and try to reset the DTC. If the DTC does not reset the original siren needs to be replaced. If the DTC does reset replace the Intrusion Transceiver Module in accordance with the Service Information.
    - Perform the BODY VERIFICATION TEST. Refer to **STANDARD PROCEDURE** .

    No

    - Go To 5

5. **(D96) SIREN SIGNAL CONTROL CIRCUIT SHORT TO BATTERY**

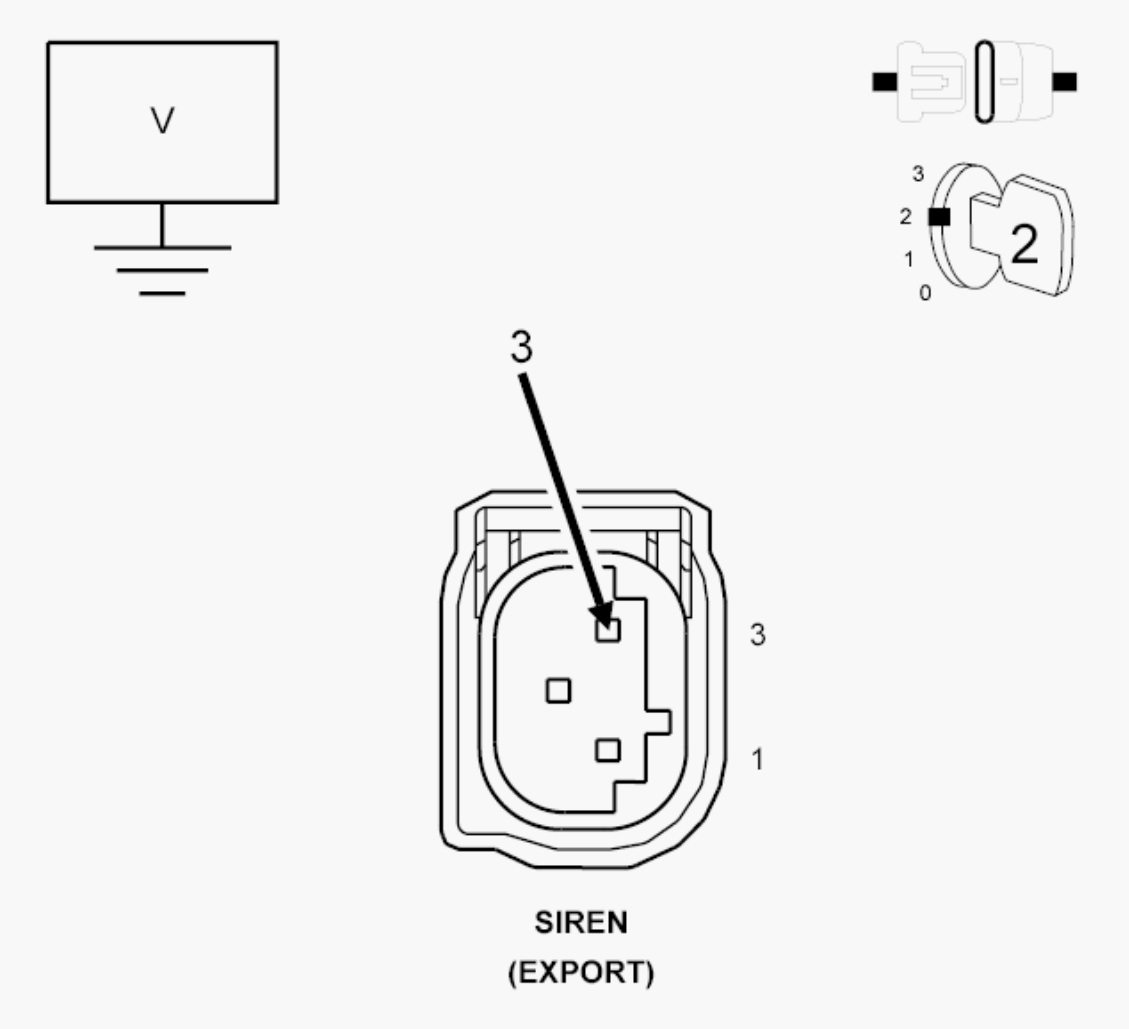

Fig. 12: Checking Siren Signal Control Circuit Short To Battery
Courtesy of CHRYSLER GROUP, LLC

1. Disconnect the Siren harness connector.
2. Measure the voltage of the (D96) Siren Signal Control circuit.

   Is there any voltage present?

   Yes

   - Repair the (D96) Siren Signal Control circuit for a short to voltage.
   - Perform the BODY VERIFICATION TEST. Refer to **STANDARD PROCEDURE** .

   No

   - Go To 6

6. **(D96) SIREN SIGNAL CONTROL CIRCUIT SHORTED TO GROUND**

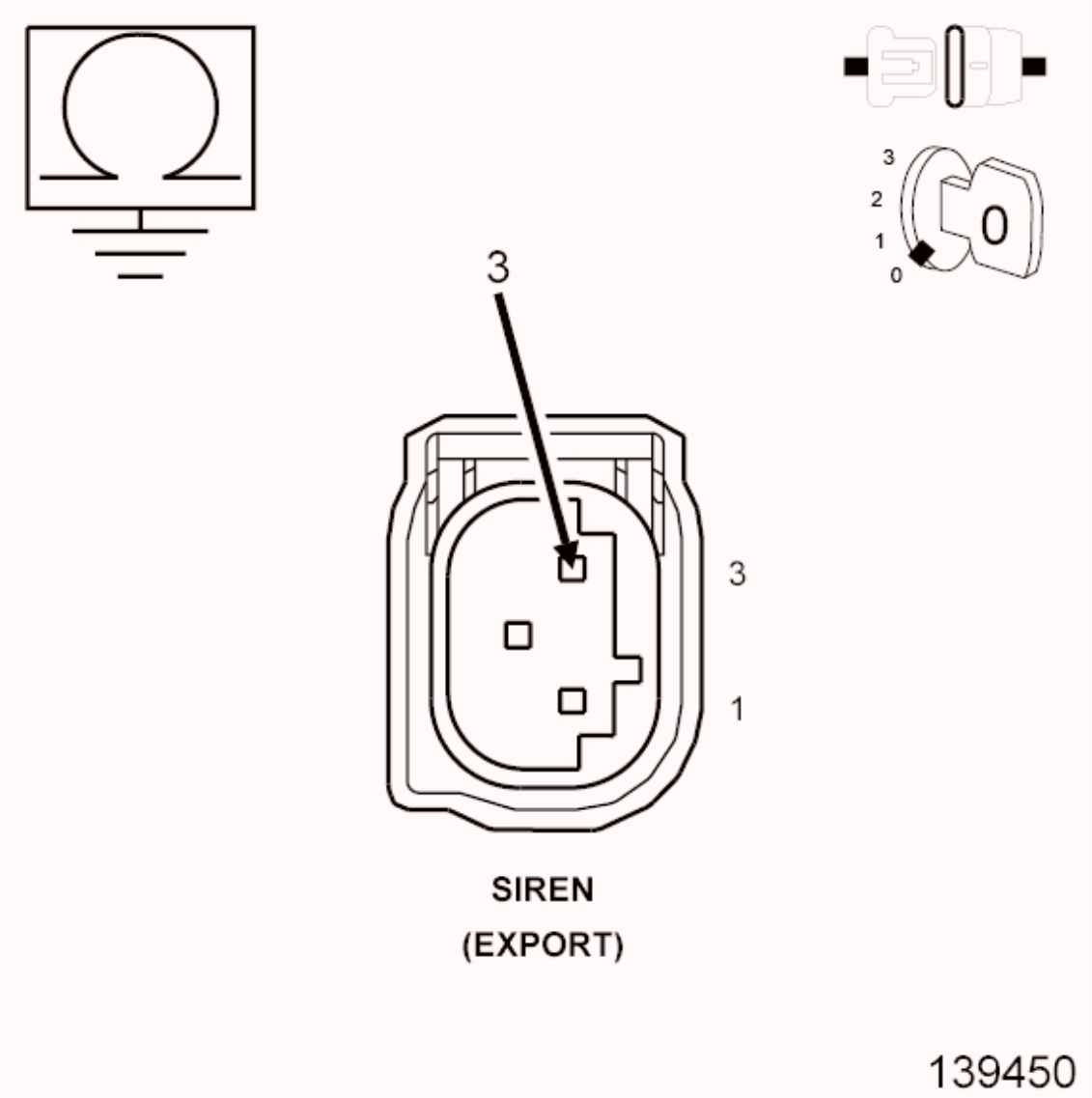

Fig. 13: Checking Siren Signal Control Circuit Short To Ground
Courtesy of CHRYSLER GROUP, LLC

1. Turn the ignition off.
2. Disconnect the Intrusion Transceiver Module harness connector.
3. Measure the resistance between ground and the (D96) Siren Signal Control circuit.

   Is the resistance above 5.0 Ohms?

   Yes

- Go To 7

No

- Repair the (D96) Siren Signal Control circuit for a short to ground.
- Perform the BODY VERIFICATION TEST. Refer to **STANDARD PROCEDURE** .

7. **(D96) SIREN SIGNAL CONTROL CIRCUIT OPEN**

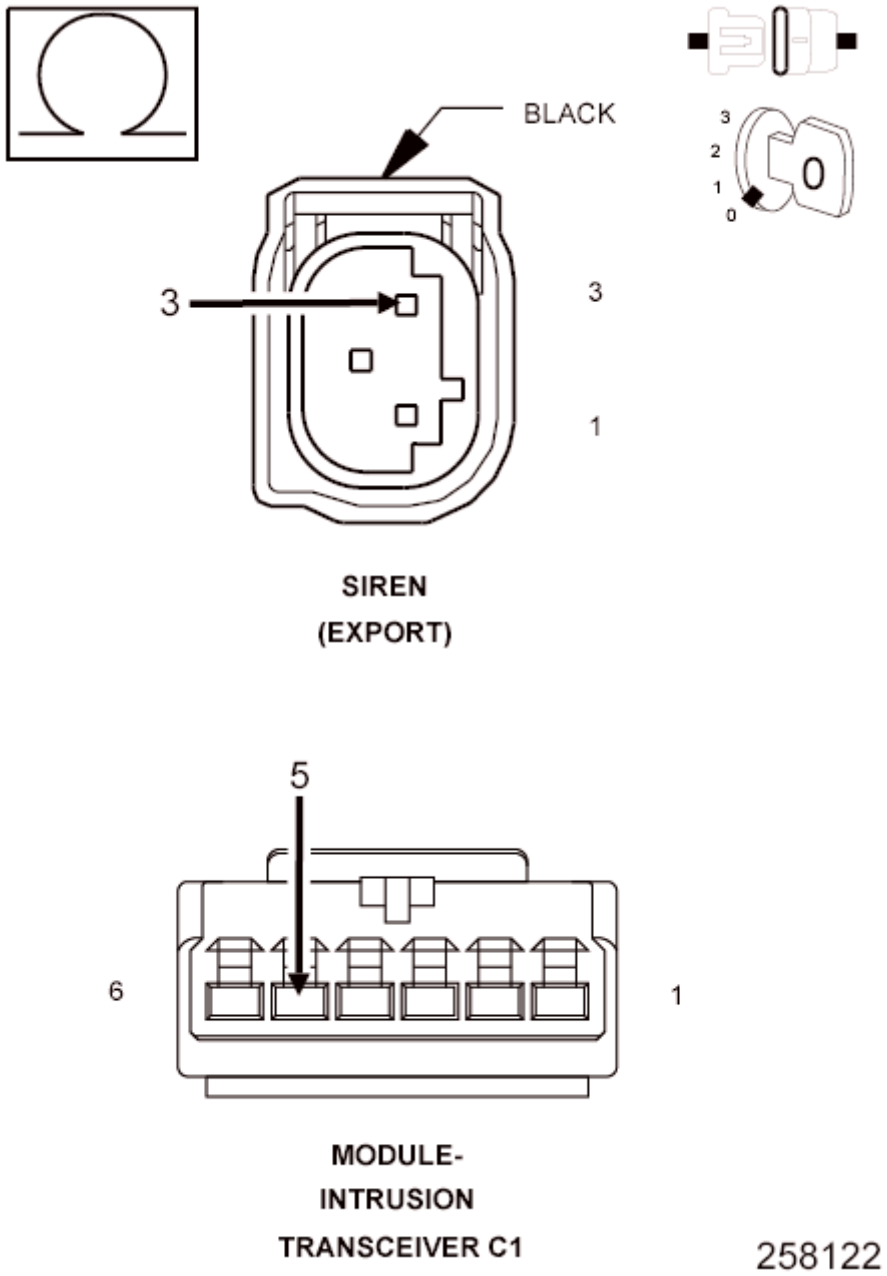

Fig. 14: Checking Siren Signal Control Circuit Open
Courtesy of CHRYSLER GROUP, LLC

1. Disconnect the Intrusion Transceiver Module harness connector.
2. Measure the resistance of the (D96) Siren Signal Control circuit between the Intrusion Transceiver Module and the Siren harness connector.

   Is the resistance below 5.0 Ohms?

   Yes

   - Replace the Intrusion Transceiver Module in accordance with the Service Information.
   - Perform the BODY VERIFICATION TEST. Refer to **STANDARD PROCEDURE** .

   No

   - Repair the (D96) Siren Signal Control circuit for an open.
   - Perform the BODY VERIFICATION TEST. Refer to **STANDARD PROCEDURE** .

U1416-IMPLAUSIBLE SECURITY SIREN SIGNAL RECEIVED

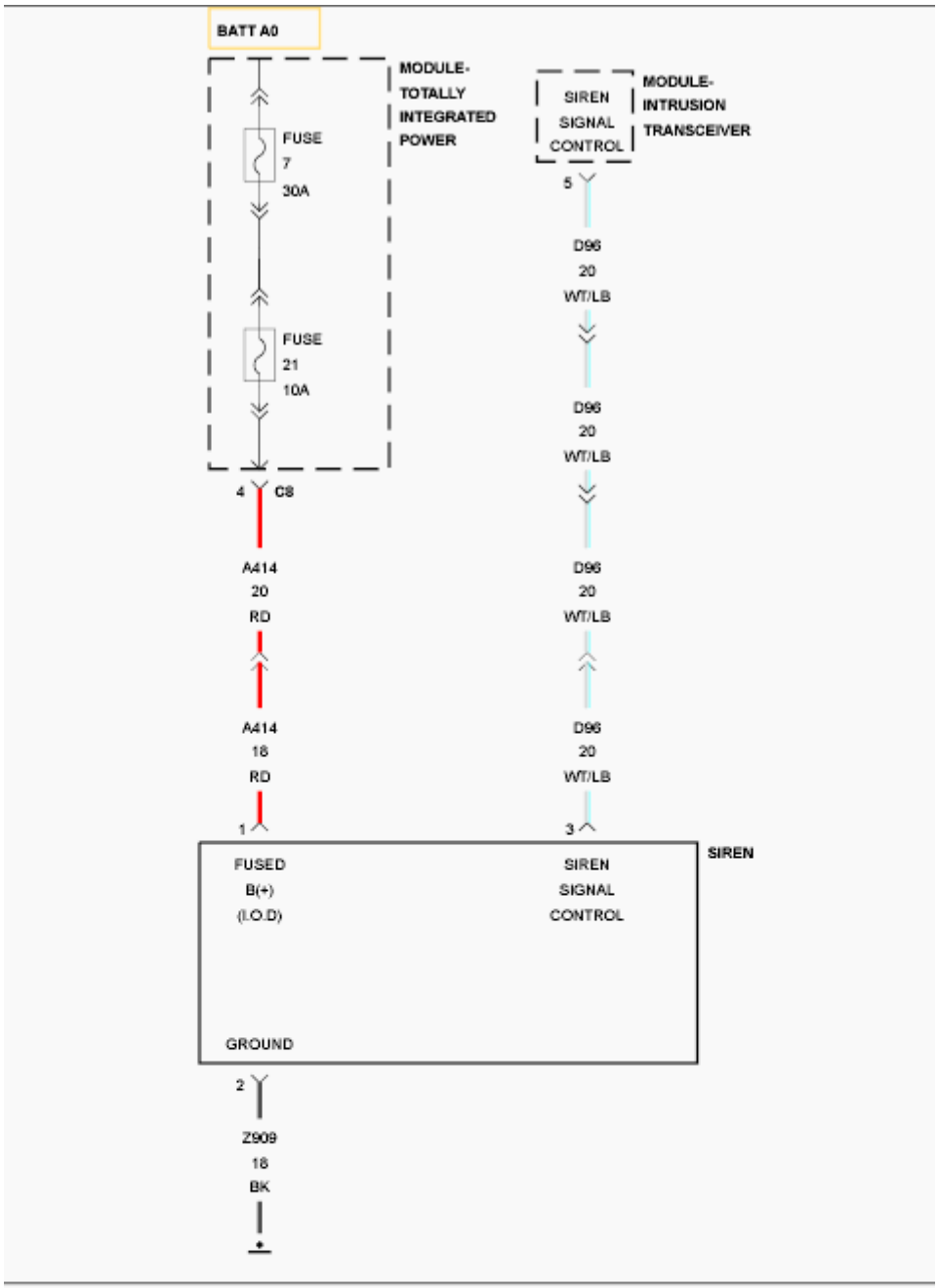
BATT A0
MODULE-
TOTALLY
INTEGRATED
POWER
FUSE
7
30A
FUSE
21
10A
4
C8
A414
20
RD
A414
18
RD
1
MODULE-
INTRUSION
TRANSCEIVER
SIREN
SIGNAL
CONTROL
5
D96
20
WT/LB
D96
20
WT/LB
D96
20
WT/LB
D96
20
WT/LB
3
SIREN
FUSED
B(+)
(I.O.D)
SIREN
SIGNAL
CONTROL
GROUND
2
Z909
18
BK

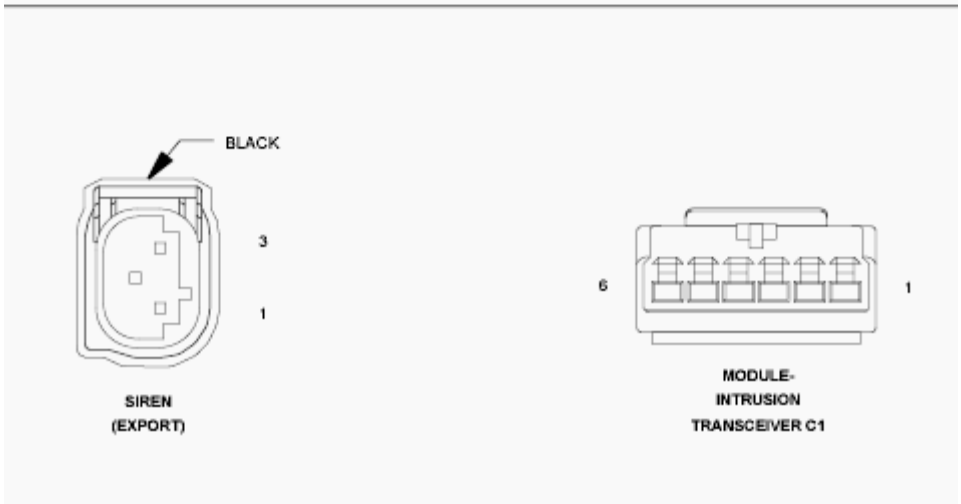
BLACK
3
1
SIREN
(EXPORT)
6
1
MODULE-
INTRUSION
TRANSCEIVER C1

Fig. 15: Internal Siren Battery Wiring Diagram
Courtesy of CHRYSLER GROUP, LLC

For a complete wiring diagram **refer to appropriate SYSTEM WIRING DIAGRAMS article** .

WHEN MONITORED

Continuously while the Vehicle Theft Security System (VTSS) is armed.

SET CONDITION

If the Intrusion Transceiver Module does not receive messages from the Siren.

POSSIBLE CAUSES

Possible Causes
(A414) FUSED B+ CIRCUIT OPEN
(Z909) GROUND CIRCUIT OPEN
(D96) SIREN SIGNAL CONTROL CIRCUIT SHORT TO BATTERY
(D96) SIREN SIGNAL CONTROL CIRCUIT OPEN
(D96) SIREN SIGNAL CONTROL CIRCUIT SHORT TO GROUND
SIREN
INTRUSION TRANSCEIVER MODULE

DIAGNOSTIC TEST

1. **CHECK FOR AN ACTIVE DTC**
    1. Turn the ignition on.
    2. With the scan tool, read DTCs.

    Does the scan tool display this DTC as active?

    Yes

    - Go To 2

    No

    - Test complete, the condition or conditions that originally set this DTC are not present at this time. Using the wiring diagrams as a

guide, check all related splices and connectors for signs of water intrusion, corrosion, pushed out or bent terminals, and correct pin tension.

- Perform the BODY VERIFICATION TEST. Refer to **STANDARD PROCEDURE** .

2. **(A414) FUSED B+**

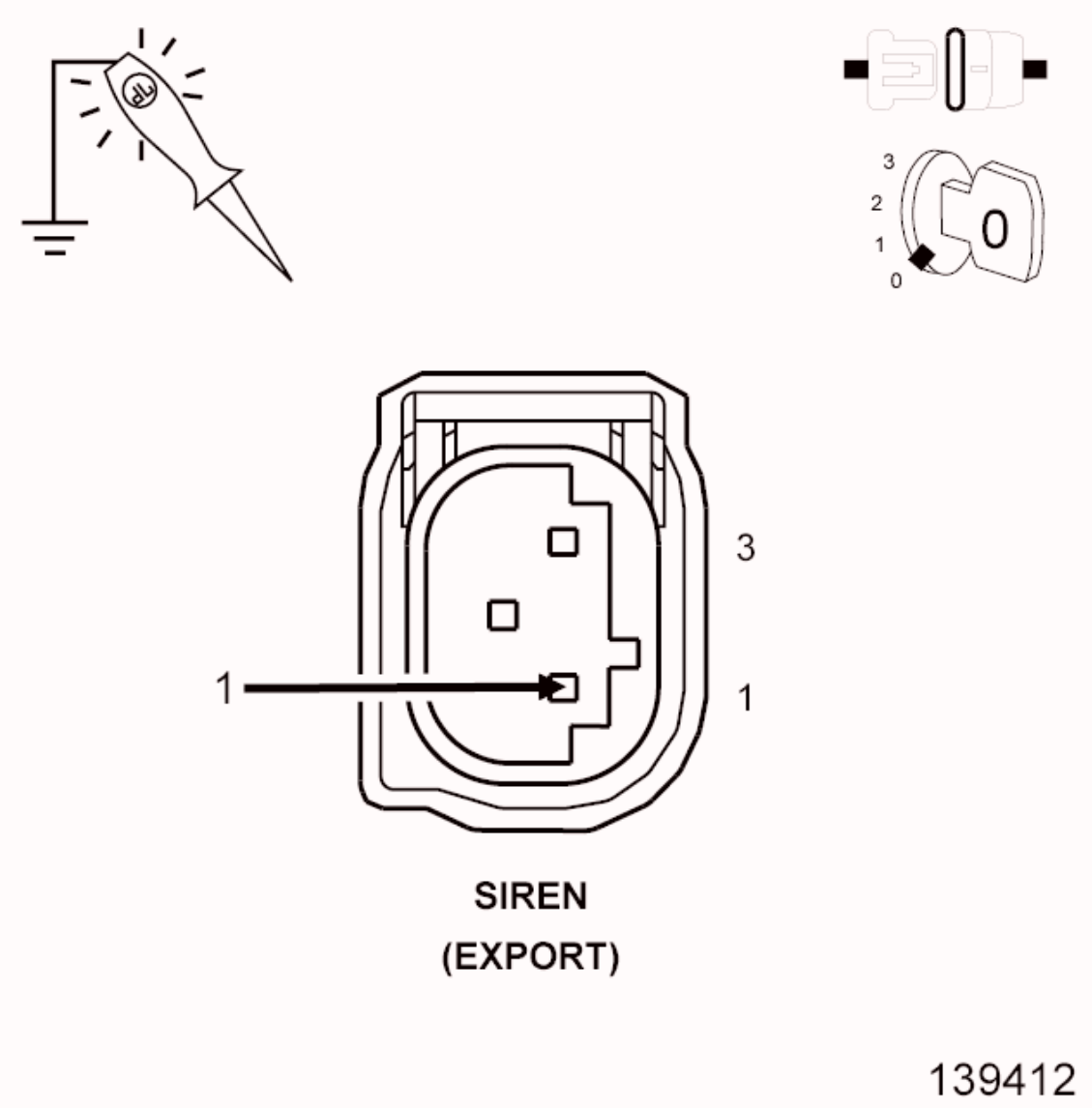

Fig. 16: Checking Fused B(+) Circuit At Siren
Courtesy of CHRYSLER GROUP, LLC

1. Gain access to the VTSS Siren.
2. Disconnect the Siren connector.
3. Using a 12-volt test light connected to ground, check the (A414) Fused B(+) circuit in the Siren connector.

Does the test light illuminate brightly?

Yes

- Go To3

No

- Repair the (A414) Fused B+ circuit for an open.
- Perform the BODY VERIFICATION TEST. Refer to **STANDARD PROCEDURE** .

3. **(Z909) GROUND CIRCUIT**

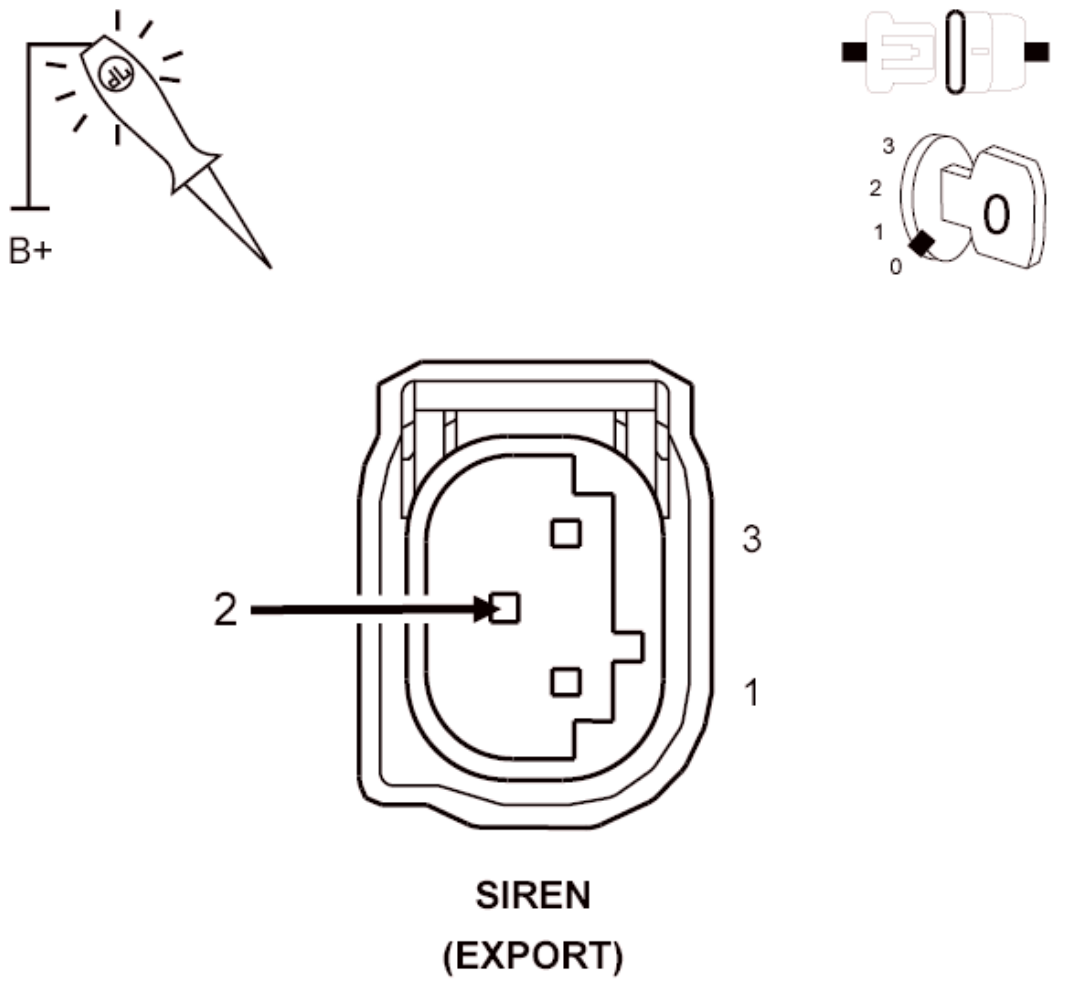

Fig. 17: Checking Ground Circuit At Siren
Courtesy of CHRYSLER GROUP, LLC

1. Using a 12-volt test light connected to 12-volts, check the (Z909) Ground circuit at the siren connector.

   Does the test light illuminate brightly?

   Yes

   - Go To4

   No

   - Repair the (Z909) Ground circuit for an open.
   - Perform the BODY VERIFICATION TEST. Refer to **STANDARD PROCEDURE** .

4. **FAULTY SIREN**

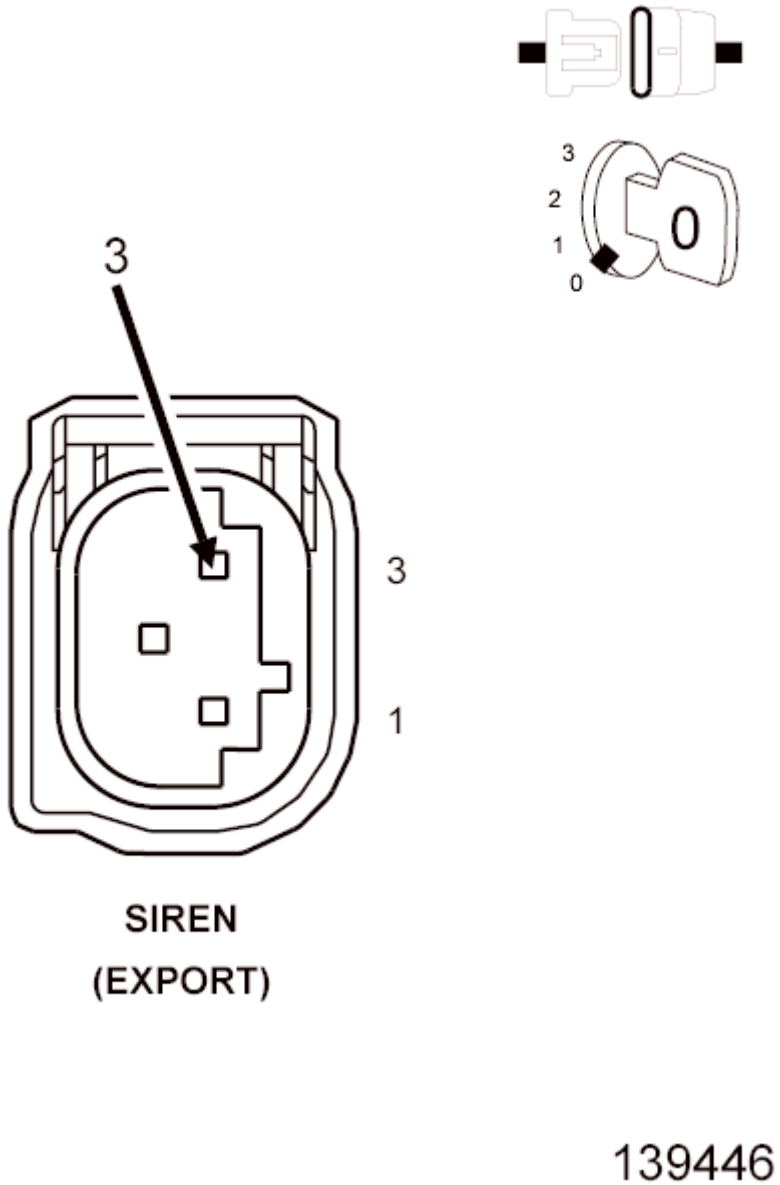

Fig. 18: Checking For Faulty Siren
Courtesy of CHRYSLER GROUP, LLC

1. Use the DRBIII® and set up as follows:
2. Use the Scope input cable CH7058, Cable to Probe adapter CH7062, and the red and black test probes.
3. Connect the scope input cable to the channel one connector on the DRBIII®. Attach the red and black leads and the cable to probe adapter to the scope input cable.
4. Select DRBIII® Stand-alone.
5. Select lab scope.
6. Select Live.

7. Select 12 volt square wave.
8. Press F2 for Scope.
9. Press F2 and use the down arrow to set voltage range to 20 volts. Press F2 again when complete.
10. Disconnect the Siren connector.
11. Connect the black lead to the chassis ground. Connect the red lead to the (D96) Siren Signal Control circuit in the Siren connector.
12. Close all doors and arm the VTSS.
13. Observe the voltage displayed on the DRBIII® Lab Scope.

    Is there a voltage square wave present 1 to 2 seconds?

    Yes

    - Connect a known good siren and try to reset the DTC. If the DTC does not reset the original siren needs to be replaced. If the DTC does reset replace the Intrusion Transceiver Module in accordance with the Service Information.
    - Perform the BODY VERIFICATION TEST. Refer to **STANDARD PROCEDURE** .

    No

    - Go To5

5. **(D96) SIREN SIGNAL CONTROL CIRCUIT SHORT TO BATTERY**

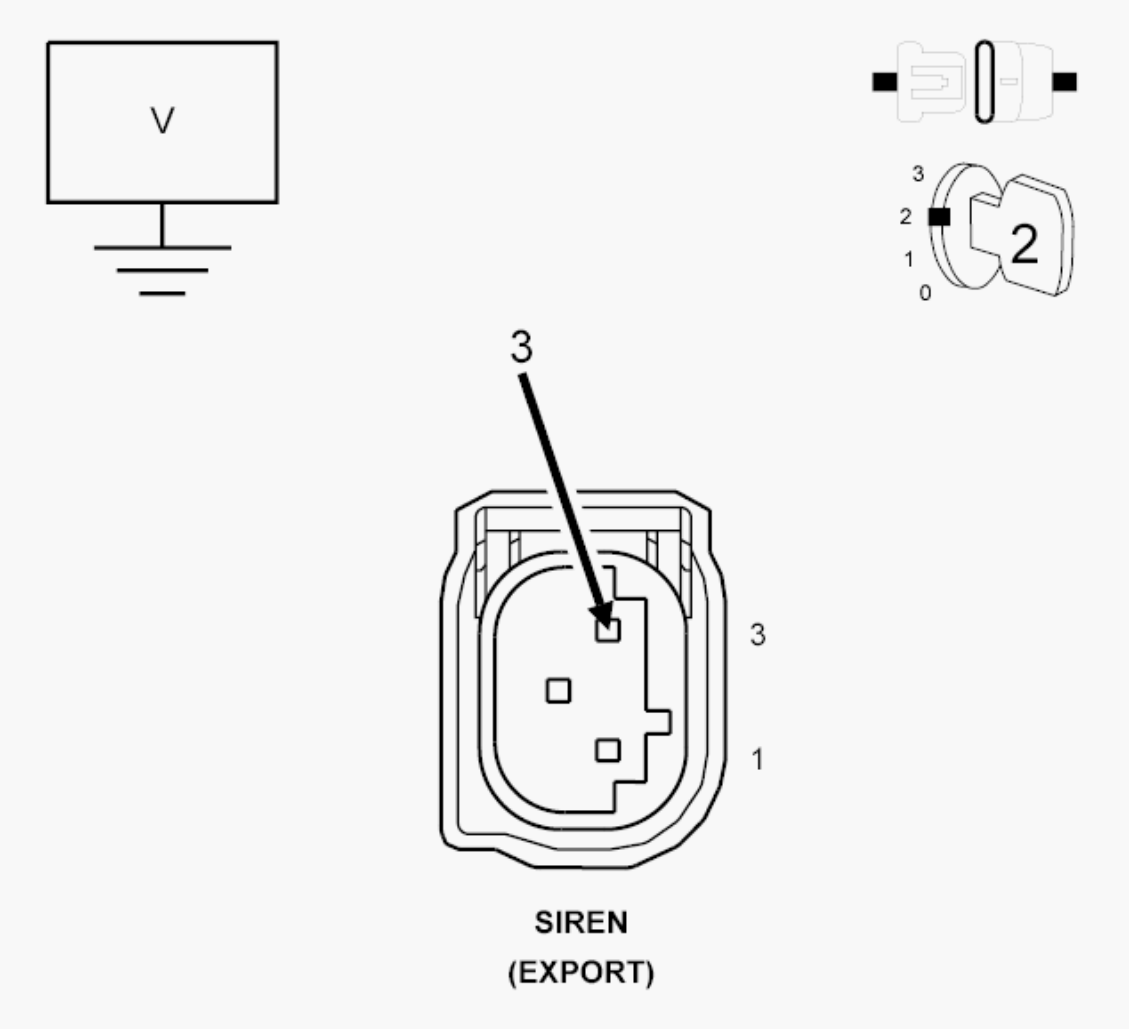

Fig. 19: Checking Siren Signal Control Circuit Short To Battery
Courtesy of CHRYSLER GROUP, LLC

1. Disconnect the Siren harness connector.
2. Measure the voltage of the (D96) Siren Signal Control circuit.

   Is there any voltage present?

   Yes

   - Repair the (D96) Siren Signal Control circuit for a short to voltage.
   - Perform the BODY VERIFICATION TEST. Refer to **STANDARD PROCEDURE** .

   No

   - Go To6

6. (D96) SIREN SIGNAL CONTROL CIRCUIT SHORT TO GROUND

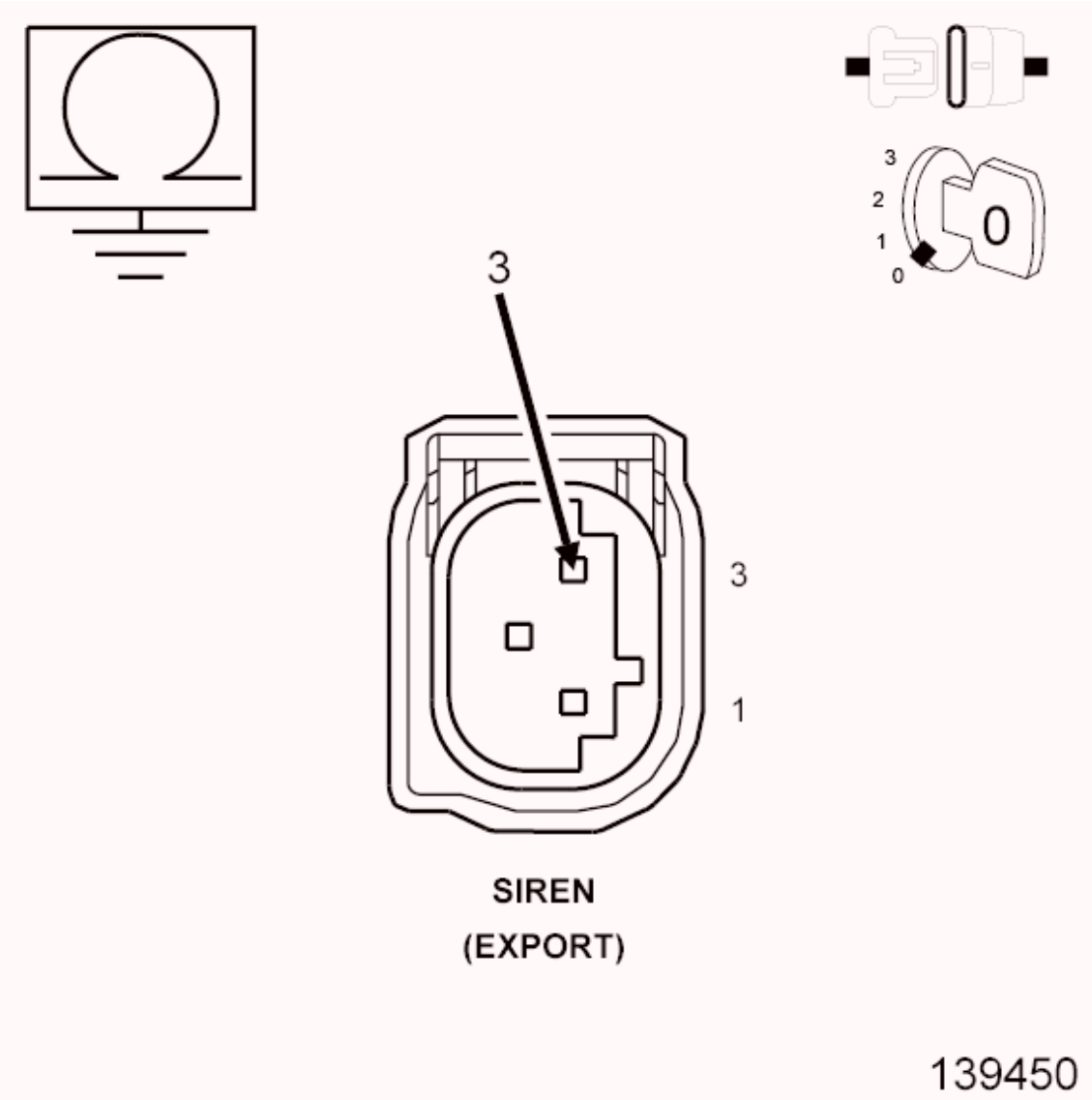

Fig. 20: Checking Siren Signal Control Circuit Short To Ground
Courtesy of CHRYSLER GROUP, LLC

1. Disconnect the Siren harness connector.
2. Disconnect the Intrusion Transceiver Module harness connector.
3. Measure the resistance between ground and the (D96) Siren Signal Control circuit.

   Is the resistance above 5.0 Ohms?

   Yes

   - Go To7

No

- Repair the (D96) Siren Signal Control circuit for a short to ground.
- Perform the BODY VERIFICATION TEST. Refer to **STANDARD PROCEDURE** .

7. **(D96) SIREN SIGNAL CONTROL CIRCUIT OPEN**

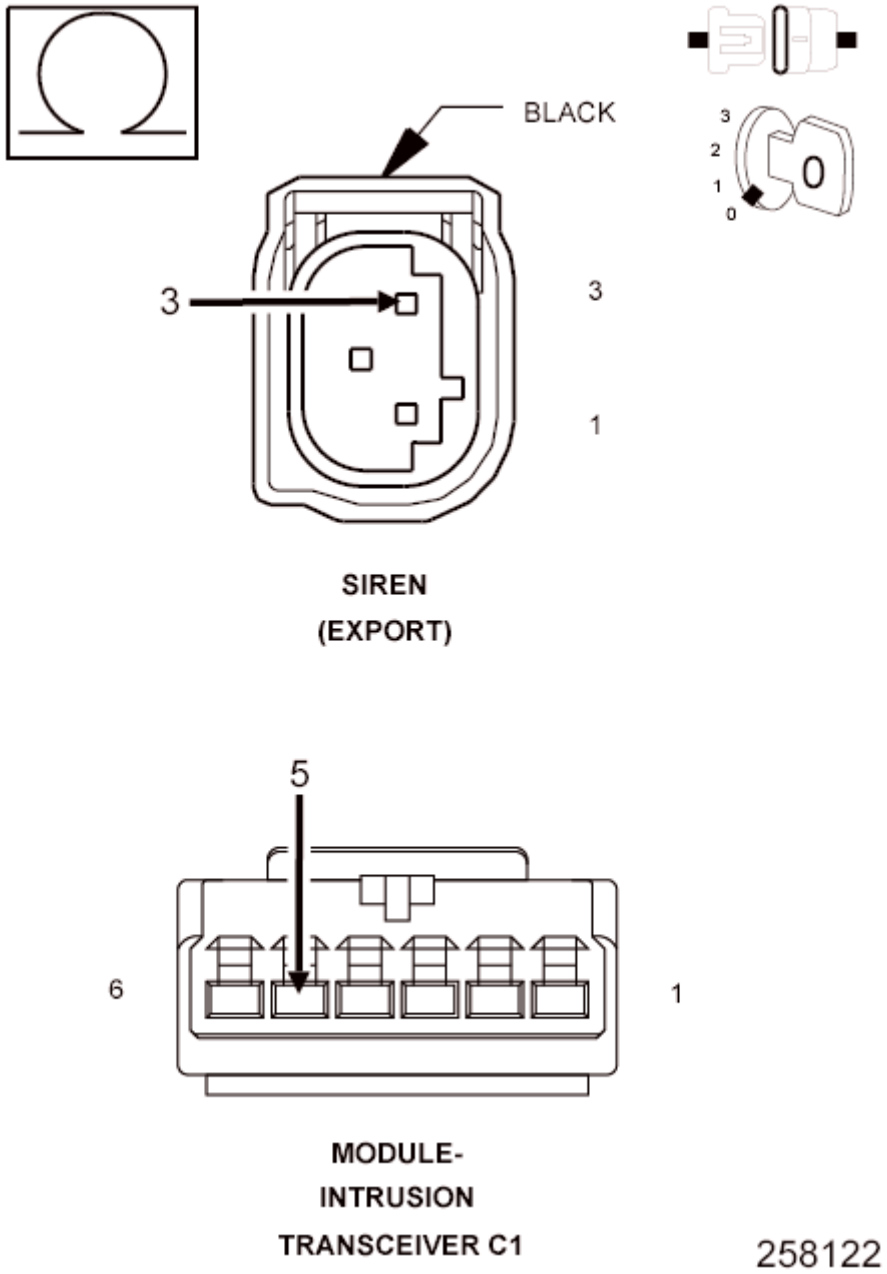

Fig. 21: Checking Siren Signal Control Circuit Open
Courtesy of CHRYSLER GROUP, LLC

1. Disconnect the Intrusion Transceiver Module harness connector.

2. Measure the resistance of the (D96) Siren Signal Control circuit between the Intrusion Transceiver Module and the Siren connector.

   Is the resistance below 5.0 Ohms?

   Yes

   - Replace the Intrusion Transceiver Module in accordance with the Service Information.
   - Perform the BODY VERIFICATION TEST. Refer to **STANDARD PROCEDURE** .

   No

   - Repair the (D96) Siren Signal Control circuit for an open.
   - Perform the BODY VERIFICATION TEST. Refer to **STANDARD PROCEDURE** .

2014 ACCESSORIES AND EQUIPMENT

Lamps/Lighting - Exterior - Service Information - Compass & Patriot

WARNING

WARNING

WARNING: To avoid serious or fatal injury, eye protection should be used when servicing any glass components.

CAUTION: Do not contaminate the glass of halogen bulbs with fingerprints or allow contact with other possibly oily surfaces. Reduced bulb life will result.

CAUTION: Do not use bulbs with higher candle power than indicated in the Bulb Application table. In addition, do not use fuses, circuit breakers or relays having greater amperage value than indicated on the fuse panel or in the Owner's Manual. Damage to lamps, lenses, wiring and other related electrical components can result.

DESCRIPTION

DESCRIPTION

The exterior lighting system for this vehicle includes the following exterior lamp units:

- **Center High Mounted Stop Lamp** - A standard equipment Center High Mounted Stop Lamp (CHMSL) is centered on the liftgate spoiler just above the liftgate glass opening at the rear of the vehicle.
- **Front Fog Lamps** - Standard equipment front fog lamp units are mounted near each outboard end of the front fascia, below the front lamp units (MK49 - Compass) or headlamp units (MK74 - Patriot).
- **Front Park/Turn Lamps** - A standard equipment front park/turn lamp unit is mounted high at each outboard end of the front fascia of the MK74 -

Patriot model. These lamps are integrated into the front lamp units of the MK49 - Compass model.

- **Front Position Lamps** - A front position lamp is integral to each front lamp unit (MK49 - Compass) or headlamp unit (MK74 - Patriot) in certain markets where they are required.
- **Headlamps** - A standard equipment front headlamp unit is mounted to the front end sheet metal on each side of the grille opening of the MK74 - Patriot model. These lamps are integrated into the front lamp units of the MK49 - Compass model.
- **License Plate Lamps** - Two standard equipment rear license plate lamp units are integral to the light bar assembly, just above the license plate tub formation in the outer liftgate panel.
- **Rear Fog Lamp Units** - In certain markets where they are required a rear fog lamp unit is mounted to the rear fascia below each rear lamp unit on MK49 - Compass models. These lamps are integrated into the rear lamp units of the MK74 - Patriot model.
- **Rear Lamp Units** - A standard equipment rear lamp unit is mounted to the rear of each quarter panel on either side of the liftgate opening.
- **Repeater Lamps** - A repeater lamp is mounted to each front fender just behind the front wheel opening on vehicles manufactured for certain markets where they are required.

These exterior lighting lamp units and their controls are combined to provide the following exterior lighting features:

- **Backup Lamps** - The backup (or reverse) lamps include a clear bulb, reflector and clear lens that are integral to each rear lamp unit.
- **Brake Lamps** - On the MK49 - Compass model, the brake (or stop) lamps include the red lens and multiple Light-Emitting Diode (LED) units of the rear lamp unit. On the MK74 - Patriot model, the brake lamps include the clear bulb, reflector and red lens that are integral to each rear lamp unit. On all models, the brake lamps also include the red lens and multiple Light-Emitting Diode (LED) units of the CHMSL.
- **Daytime Running Lamps** - Daytime Running Lamps (DRL) are standard equipment on vehicles manufactured for sale in Canada and optional on vehicles manufactured for the United States. Vehicles with DRL enabled illuminate the high beam filament of each headlamp bulb (except Patriot

with Trail-Rated option for the United States market, which uses the low beam filament) at a reduced intensity to serve as the DRL.

- **Exterior Lamp Fail-Safe Operation** - The ElectroMechanical Instrument Cluster (EMIC) (also known as the Cab Compartment Node/CCN) and the Totally Integrated Power Module (TIPM) provide a fail-safe feature which will automatically turn ON the low beam headlamps and all park lamps when the ignition switch is in the ON position and there is no detected input from the Steering Control Module (SCM), or when there is no communication over the Local Interface Network (LIN) or Controller Area Network (CAN) data buses.
- **Exterior Lamp Load Shedding** - The TIPM provides a battery saver feature which will automatically turn OFF all exterior lamps that remain ON with the ignition switch in the LOCK position after a timed interval of about eight minutes.
- **Front Fog Lamps** - The standard equipment front fog lamps include the clear bulb, reflector and clear lens of each adjustable front fog lamp unit. The front fog lamps of MK49 - Compass models incorporate a projector lens.
- **Hazard Warning Lamps** - The hazard warning lamps include the bulbs, reflectors and lenses of each lamp in the right and left, front and rear turn signal circuits.
- **Headlamp Delay** - The standard equipment low or high beam headlamps remain illuminated for a customer-programmable delay period of 0 (disabled), 30, 60 or 90 seconds when the headlamps are turned OFF after the ignition switch has been turned to the OFF position.
- **Headlamps** - On MK49 Compass models for domestic markets the headlamps include a single halogen bulb for low or high beam headlamps and a projector lens. An electric motor and mechanism internal to each front lamp unit closes a shutter for low beams and opens the shutter for high beams. For MK74 - Patriot models each headlamp unit includes a single dual filament halogen bulb. All headlamp systems also include an adjustable reflector and clear lens integral to each lamp unit.
- **Headlamp Leveling** - Headlamp leveling is available only in certain markets where it is required equipment. A headlamp leveling actuator motor on each front lamp unit (MK49 - Compass) or headlamp unit (MK74 - Patriot) and a headlamp leveling switch integral to the switch pod in the instrument panel center stack allow the headlamp beam pattern to be

adjusted by the vehicle operator from the interior of the vehicle to compensate for passenger or cargo loads.

- **Optical Horn** - Also known as flash-to-pass, the beam selection function of the left (lighting) multi-function switch control stalk has a momentary intermediate position that allows the headlamp high beams to be flashed momentarily, without changing the headlamp beam selection.
- **Park Lamps** - On MK49 - Compass models the front park lamps include either the amber bulbs, the reflectors and the clear lenses of the park lamp compartment in both front lamp units or the clear position lamp bulb within the park lamp compartment of both front lamp units. On vehicles not equipped with repeater lamp units, the front lamp units also include the front side marker lamp bulbs and amber reflectors. On vehicles equipped with repeater lamp units, only the amber side marker reflectors are retained in the front lamp units. The rear park lamps include the red lens and multiple Light-Emitting Diode (LED) units of the rear lamp unit as well as the bulbs and lenses of the rear license plate lamps. On MK74 - Patriot models the front park lamps include the amber bulbs, reflectors and clear lenses integral to each front park/turn lamp unit and, if the vehicle is so equipped, the clear position lamp bulb integral to each headlamp unit. The rear park lamps include the clear bulbs, reflectors and red lenses integral to each rear lamp unit as well as the bulbs and lenses of the rear license plate lamps.
- **Rear Fog Lamps** - Rear fog lamps are available only in certain markets where they are required equipment. On MK49 - Compass models the rear fog lamps include a clear bulb and a red lens and reflector that are integral to each rear fog lamp unit located below the outer tail lamps in the rear fascia. On domestic market vehicles, only the red reflector is retained in the rear fascia. On MK74 - Patriot models the rear fog lamps include a clear bulb and a red lens and reflector that are integral to each rear lamp unit.
- **Turn Signal Lamps** - On MK49 - Compass models the front turn signal lamps include an amber bulb, a reflector, and a clear lens that are integral to each front lamp unit. The rear turn signal lamps include an amber bulb, a reflector and a clear lens that are integral to each rear lamp unit. On MK74 - Patriot models the front turn signal lamps include an amber bulb, a reflector and a clear lens that are integral to each front park/turn lamp unit. In certain markets where they are required, both models have repeater lamps on each front fender that will also be included in the front turn signal circuits. The rear turn signal lamps include an amber bulb, a reflector and a clear lens that are integral to each rear lamp unit.

Other components of the exterior lighting system for this vehicle include:

- **Backup Lamp Switch** - A plunger-type backup lamp switch is installed through the transmission housing of vehicles equipped with a manual transmission and is actuated by the shifter mechanism within the transmission when REVERSE gear is selected. On vehicles with an optional automatic transmission a stand-alone Transmission Range Sensor (TRS) performs the backup lamp switch function.
- **Brake Lamp Switch** - A plunger-type brake lamp switch is located on the brake pedal support bracket under the instrument panel and is actuated by the brake pedal arm when the brake pedal is depressed.
- **Clockspring** - The clockspring includes an integral turn signal cancel cam, which provides automatic turn signal cancellation as the steering wheel is rotated back to its centered position following a vehicle turning maneuver. The clockspring is located near the top of the steering column, directly beneath the steering wheel. Refer to **CLOCKSPRING, DESCRIPTION** .
- **Hazard Switch** - A latching push button-actuated hazard switch is integral to the switch pod located just below the heater and air conditioner controls in the center stack area of the instrument panel.
- **Headlamp Leveling Switch** - A four mode push button-actuated headlamp leveling switch is integral to the switch pod located just below the heater and air conditioner controls in the center stack area of the instrument panel of vehicles manufactured for certain markets where the headlamp leveling feature is required.
- **Instrument Cluster** - The ElectroMechanical Instrument Cluster (EMIC) is also known as the Cab Compartment Node (CCN) in this vehicle. The EMIC/CCN is located in the instrument panel above the steering column opening, directly in front of the driver. Refer to **DESCRIPTION** .
- **Instrument Panel Switch Pod** - The instrument panel switch pod contains the hazard switch and, on vehicles so equipped, the headlamp leveling switch. The switch pod is located just below the heater and air conditioner controls in the center stack area of the instrument panel. Refer to **POD, SWITCH, DESCRIPTION** .
- **Left Multi-Function Switch** - The left (lighting) multi-function switch is located on the steering column, just below the steering wheel. A control stalk that extends from the left side of the switch is used to select the turn signal lamps (right or left) and to select the headlamp beam (low, high or

optical horn). A control knob on the control stalk is used to select the park lamps, headlamps or fog lamps.

- **Park Brake Switch** - A park brake switch is located on the park brake lever mechanism on the floor panel transmission tunnel between the two front seats.
- **Steering Control Module** - The Steering Control Module (SCM) is located within the left multi-function switch housing on the top of the steering column, just below the steering wheel. Refer to **MODULE, STEERING COLUMN, DESCRIPTION** .
- **Totally Integrated Power Module** - The Totally Integrated Power Module (TIPM) is located in the engine compartment, near the battery. Refer to **DESCRIPTION** .
- **Trailer Tow Wiring** - Vehicles equipped with an optional Trailer Tow Prep package have a trailer tow wiring jumper harness, relay pack and an instruction card that are placed in the cargo area of the vehicle when it is shipped from the factory. This package also includes an additional fused B (+) circuit in the unibody wire harness behind the right D-pillar trim for a feed connection to the relay pack in the trailer tow wiring jumper harness.

Hard wired circuitry connects the exterior lighting system components to the electrical system of the vehicle. These hard wired circuits are integral to several wire harnesses, which are routed throughout the vehicle and retained by many different methods. These circuits may be connected to each other, to the vehicle electrical system and to the exterior lighting components through the use of a combination of soldered splices, splice block connectors, and many different types of wire harness terminal connectors and insulators. Refer to the appropriate wiring information. The wiring information includes wiring diagrams, proper wire and connector repair procedures, further details on wire harness routing and retention, as well as pin-out and location views for the various wire harness connectors, splices and grounds.

OPERATION

OPERATION

Following are paragraphs that briefly describe the operation of each of the major exterior lighting systems. The lamps and the hard wired circuits between components related to the exterior lighting system may be diagnosed using conventional diagnostic tools and procedures. Refer to the appropriate wiring

information. The wiring information includes wiring diagrams, proper wire and connector repair procedures, details of wire harness routing and retention, connector pin-out information and location views for the various wire harness connectors, splices and grounds.

However, conventional diagnostic methods will not prove conclusive in the diagnosis of the exterior lighting system or the electronic controls or communication between modules and other devices that provide some features of the exterior lighting system. The most reliable, efficient, and accurate means to diagnose the exterior lighting system or the electronic controls and communication related to exterior lighting system operation requires the use of a diagnostic scan tool. Refer to the appropriate diagnostic information.

BACKUP LAMPS

The backup (or reverse) lamps have a path to ground at all times through a takeout and eyelet terminal of the unibody wire harness that is secured by a nut to a ground stud on the body sheet metal within the passenger compartment. On vehicles with a manual transmission, the backup lamp switch provides a hard wired input to the Totally Integrated Power Module (TIPM) through a reverse switch signal circuit and the TIPM provides battery voltage to the backup lamps on the backup lamp feed circuit whenever the ignition switch is in the ON position and the REVERSE position is selected with the transmission shift linkage.

On vehicles with an automatic transmission the Transmission Control Module (TCM) monitors a multiplex input from the Transmission Range Sensor (TRS), then sends the proper electronic **transmission gear selector status** messages to other electronic modules over the Controller Area Network (CAN) data bus. Whenever the ignition switch is in the ON position and the TIPM receives an electronic message indicating the status of the transmission gear selector is REVERSE, it provides a battery voltage output through a high side driver to the backup lamps on the backup lamp feed circuit.

BRAKE LAMPS

The brake (or stop) lamps and the Center High Mounted Stop Lamp (CHMSL) each have a path to ground at all times through a takeout and eyelet terminal of the unibody wire harness that is secured by a nut to a ground stud on the body sheet metal within the passenger compartment. The CHMSL receives battery

voltage directly on the brake lamp switch output circuit when the brake lamp switch is closed by the brake pedal arm. The TIPM also receives battery voltage on the brake lamp switch output circuit, which it uses as a signal to energize the brake lamps. The TIPM provides battery voltage to the brake lamps through a high side driver on the tail/stop lamp rear feed circuit when it receives the proper input from the closed brake lamp switch.

DAYTIME RUNNING LAMPS

Vehicles equipped with the Daytime Running Lamps (DRL) feature enabled illuminate the high beam filament (except Patriot with Trail-Rated option for the United States market, which uses the low beam filament) of both headlamp bulbs at a reduced intensity when the engine is running, the parking brake is released, the headlamps are turned OFF, and the optional automatic transmission gear selector lever is in any position except PARK. The park lamps may be ON or OFF for DRL to operate. For vehicles with a manual transmission, the DRL will operate in any transmission gear selector lever position. The TIPM must be programmed appropriately for this feature to be enabled.

Once enabled, anytime the TIPM receives electronic messages over the CAN data bus from the Powertrain Control Module (PCM) indicating the engine is running, from the ElectroMechanical Instrument Cluster (EMIC) (also known as the Cab Compartment Node/CCN) indicating the status of the left (lighting) multi-function switch is in any position except headlamps ON and the parking brake lever is released, and from the Transmission Control Module (TCM) indicating the automatic transmission gear selector lever is in any position except PARK, the TIPM provides a pulse width modulated voltage output to the headlamp high beam bulb filaments through high side drivers on the right and left high beam feed circuits to produce illumination at a reduced intensity.

FRONT FOG LAMPS

The front fog lamps have a path to ground at all times through their connection to the engine compartment wire harness. The engine compartment wire harness has takeouts with eyelet terminals that are secured by nuts to ground studs on the front end sheet metal within the engine compartment. The Steering Control Module (SCM) monitors a hard wired multiplex input from the left multi-function switch to determine whether the fog lamps are selected, then sends an electronic **front fog lamp switch status** message to the EMIC over the Local Interface Network (LIN) data bus and the EMIC relays an electronic **front fog**

lamp request message to the TIPM over the CAN data bus.

When the TIPM receives a **front fog lamp request** message it then controls front fog lamp operation by controlling a battery voltage output through high side drivers on right and left fog lamp feed circuits. The TIPM also sends the appropriate electronic message back to the EMIC to illuminate or extinguish the front fog lamp indicator. In certain markets where required, the TIPM will automatically de-energize the front fog lamps any time the headlamp high beams are selected.

The TIPM also provides a battery saver (load shedding) feature for the front fog lamps, which will turn these lamps OFF if they are left ON for more than about eight minutes with the ignition switch in the LOCK position, if there is a charging system failure, or if the electrical system voltage falls below about 11.75 volts for more than about 30 seconds. The TIPM will return the front fog lamps to normal operation when it detects that system voltage is greater than 13.0 volts for more than about 30 seconds.

Each front fog lamp includes an integral adjustment screw to be used for static aiming of the fog lamp beams.

HAZARD WARNING LAMPS

The hazard warning system includes the EMIC, the TIPM and the hazard switch in the switch pod located in the center stack area of the instrument panel, below the air conditioner and heater controls. The switch pod circuitry monitors the hazard switch push button to determine whether the hazard warning system has been selected, then sends an electronic **hazard switch status** message to the EMIC over the LIN data bus and the EMIC responds to this input by sending the appropriate electronic **hazard system request** messages to the TIPM over the CAN data bus.

When the TIPM receives a **hazard system request** message it then controls hazard warning system operation and flash rate by controlling battery voltage outputs through high side drivers on the right and left turn signal feed circuits. The TIPM also sends the appropriate electronic messages back to the EMIC to control the illumination and flash rate of the right and left turn signal indicators, as well as to control the click rate of an electromechanical relay soldered onto the EMIC electronic circuit board that emulates the sound emitted by a conventional hazard warning flasher. The EMIC then sends messages back to the instrument

panel switch pod to control the illumination of the hazard switch push button.

HEADLAMPS

The headlamp system includes the SCM, the EMIC, the TIPM, and the left (lighting) multi-function switch on the steering column. The headlamp bulbs have a path to ground at all times through their connection to the engine compartment wire harness. The engine compartment harness has takeouts with eyelet terminals that are secured by nuts to ground studs on the front end sheet metal within the engine compartment. The TIPM will store a Diagnostic Trouble Code (DTC) for any shorts or opens in the headlamp circuits.

The SCM monitors a hard wired multiplex input to determine the status of the left multi-function switch and whether the headlamp high or low beams are selected. The SCM then sends the appropriate electronic **headlamp switch** and **headlamp beam select switch status** messages to the EMIC over the LIN data bus. The EMIC then sends the appropriate electronic **headlamp** and **headlamp beam request** messages to the TIPM over the CAN data bus. The TIPM responds to these messages by providing a pulse width modulated voltage output to the headlamps through high side drivers on the right and left low and high beam feed circuits to illuminate the selected headlamp filaments. The TIPM also sends the appropriate electronic messages to the EMIC to control the illumination of the high beam indicator. When the optical horn feature is selected, the low beams will shut OFF about 200 milliseconds after the high beams are activated. Also on MK49 - Patriot export models equipped with the bi-halogen projector headlamps, an electric motor drives a shutter within each front lamp unit and the position of the shutter controls whether the low beams (shutter closed) or high beams (shutter open) are illuminated.

The TIPM also remembers which beams (LOW or HIGH) were selected when the headlamps were last turned OFF, and energizes those beams again the next time the headlamps are turned ON. The TIPM provides a battery saver (load shedding) feature for the headlamps, which will turn these lamps OFF if they are left ON for more than about eight minutes with the ignition switch in the LOCK position. The SCM and the EMIC each provide a fail-safe feature for the headlamps, which will cause the TIPM to turn the low beam headlamps ON automatically if there is no input available from the left multi-function switch. The TIPM also provides a fail-safe feature for the headlamps that will turn the headlamps ON automatically whenever a loss of CAN bus communication is detected with the ignition switch in the ON position.

Each headlamp includes an integral reflector adjustment screw to be used for static aiming of the headlamps.

HEADLAMP DELAY

The headlamp delay feature includes the left (lighting) multi-function switch, the SCM, the EMIC and the TIPM. This feature has customer programmable delay intervals of 0 seconds (disabled), 30 seconds, 60 seconds and 90 seconds. If the left multi-function switch remains in the headlamp ON position until after the ignition switch is turned to the OFF position, then the headlamps will remain illuminated until after the selected delay interval has elapsed. The park lamps will not stay ON during the headlamp delay interval. The default delay interval is zero seconds (disabled), but can be reprogrammed by the customer using the customer programmable features function of the EMIC.

HEADLAMP LEVELING

In certain markets where required, a headlamp leveling system is provided on the vehicle. The headlamp leveling system includes unique front lamp units each equipped with a headlamp leveling actuator motor, and a rocker-actuated headlamp leveling switch integral to the switch pod in the instrument panel center stack. The headlamp leveling system allows the headlamp beams to be adjusted to one of four vertical positions to compensate for changes in inclination caused by the loading of the vehicle suspension. The leveling motors are mechanically connected through an integral pushrod to the adjustable headlamp reflector.

Each time the headlamp leveling switch is depressed the circuitry of the switch pod provides an electronic **select status up** or **select status down** message input to the EMIC over the LIN data bus. The EMIC then sends the appropriate electronic **select request up** or **select request down** messages to the TIPM over the CAN data bus. The TIPM responds to these messages by providing a voltage output to the headlamp leveling motors through high side drivers on the headlamp leveling motor right and left signal circuits to move the headlamp reflectors to the selected position based upon the voltage input received from the TIPM. The TIPM also sends the appropriate electronic messages back to the EMIC and the EMIC relays the message back to the switch to control the illumination of the **1** , **2** , or **3** Light Emitting Diode (LED) selected position indicator in the leveling switch button. The EMIC and TIPM logic will only allow the headlamp leveling system to operate while the ignition switch is in the

ON position and the exterior lighting is turned ON.

PARK LAMPS

The park lamps system includes the left (lighting) multi-function switch, the SCM, the EMIC and the TIPM. The front park/turn lamp and the position lamp bulbs each have a path to ground at all times through their connection to the engine compartment wire harness. The engine compartment wire harness has takeouts with eyelet terminals that are secured by nuts to ground studs on the front end sheet metal within the engine compartment. The rear lamp units and license plate lamp bulbs have a path to ground at all times through a takeout and eyelet terminal of the unibody wire harness that is secured by a nut to a ground stud on the body sheet metal within the passenger compartment.

The SCM monitors a hard wired multiplex input from the left multi-function switch, then sends the appropriate electronic **headlamp switch status** messages to the EMIC over the LIN data bus. Then the EMIC relays the appropriate electronic message to the TIPM over the CAN data bus. The TIPM responds to these messages by providing a battery voltage output to the appropriate lamp bulbs through high side drivers on the proper park/tail/license/running lamp right and left circuits. The TIPM and the SCM also send the appropriate electronic messages to the EMIC to control the illumination and lighting level of the panel lamps.

The TIPM provides a battery saver (load shedding) feature for the park lamps, which will turn these lamps OFF if they are left ON for more than about eight minutes with the ignition switch in the LOCK position. The SCM and the EMIC each provide a fail-safe feature for the park lamps, which will send an electronic message to the TIPM to turn these lamps ON automatically if there is no input available from the left multi-function switch. The TIPM also provides a fail-safe feature for the park lamps that will turn these lamps ON automatically whenever a loss of CAN bus communication is detected with the ignition switch in the ON position.

REAR FOG LAMPS

Rear fog lamps are installed on vehicles manufactured for certain markets where they are required. The rear fog lamp system includes the left (lighting) multi-function switch, the SCM, the EMIC and the TIPM. The rear fog lamp bulbs have a path to ground at all times through a takeout and eyelet terminal of the

unibody wire harness that is secured by a nut to a ground stud on the body sheet metal within the passenger compartment.

The SCM monitors a hard wired multiplex input from the left multi-function switch to determine whether the rear fog lamps are selected, then sends electronic **rear fog lamp switch status** messages to the EMIC over the LIN data bus. Then the EMIC relays an electronic **rear fog lamp request** message to the TIPM over the CAN data bus. The TIPM responds to this message by providing a battery voltage output to the rear fog lamp bulbs through high side drivers on the fog lamp relay control rear circuit. The TIPM also sends the appropriate electronic message back to the EMIC to control the rear fog lamp indicator.

The TIPM will automatically energize and de-energize the front fog lamps in concert with the rear fog lamps. The TIPM also provides a battery saver (load shedding) feature for the rear fog lamps, which will turn these lamps OFF if they are left ON for more than about eight minutes with the ignition switch in the LOCK position.

TRAILER TOW WIRING

Vehicles equipped with an optional trailer tow preparation package include a trailer tow battery feed circuit and connector located in the unibody wire harness located near the take out for the right rear lamp unit. The connector is accessed by removing the right rear lamp unit from the vehicle and dislodging the rubber grommet on the take outs for the lamp from the clearance hole in the body sheet metal. This circuit is protected by a 20 ampere fuse located in the TIPM.

Vehicles equipped with an optional trailer tow package are shipped from the factory with a trailer tow wiring harness that is packaged with an instruction card and placed in the cargo area of the vehicle. The trailer tow harness includes a relay pack designed to isolate the trailer lighting from the rear vehicle lighting and prevent overloading of the rear lighting circuits and the rear lighting drivers in the TIPM. The trailer wiring also has a connector that is designed to interface with the trailer tow battery feed circuit connector in the unibody wire harness as well as connectors that are designed to be sandwiched between the right rear lamp unit and the unibody wire harness connectors for the lamp.

If the trailer lighting is connected directly to the vehicle wiring without using the necessary relay pack, the vehicle electrical system will become overloaded and the rear lighting of the vehicle will cease to function. The TIPM will store a

Diagnostic Trouble Code (DTC) for this condition.

TURN SIGNAL LAMPS

The turn signal lamps system includes the left (lighting) multi-function switch, the SCM, the EMIC and the TIPM. The front turn signal lamp bulbs each have a path to ground at all times through their connection to the engine compartment wire harness. The engine compartment wire harness has a takeout with an eyelet terminal that is secured by a nut to a ground stud on the body sheet metal within the engine compartment. The rear turn signal lamp bulbs have a path to ground at all times through a takeout and eyelet terminal of the unibody wire harness that is secured by a nut to a ground stud on the body sheet metal within the passenger compartment.

The SCM monitors a hard wired multiplex input from the left multi-function switch to determine the status of the turn signal switch, then sends the appropriate electronic **turn signal switch status** messages to the EMIC over the LIN data bus. Then the EMIC relays an electronic **turn signal request** message to the TIPM over the CAN data bus. The TIPM responds to these messages by controlling a battery voltage output and the flash rate for either the right or left turn signal lamps through high side drivers on the appropriate right or left turn signal feed circuits. The TIPM also sends the appropriate electronic messages back to the EMIC to control the illumination and flash rate of the right or left turn signal indicators, as well as to control the click rate of an electromechanical relay soldered onto the EMIC electronic circuit board that emulates the sound emitted by a conventional turn signal flasher.

The EMIC also provides a **turn signal ON warning** that will generate repetitive chimes to indicate that a turn signal has been active continuously for 1.6 kilometers (1 mile) with the vehicle speed greater than 22 kilometers-per-hour (15 miles-per hour). Vehicles built for markets other than the United States and Canada have a revised distance threshold of 4 kilometers (2.49 miles) for this feature. The chime will continue until the turn signal input becomes inactive or until the vehicle speed message indicates that the speed is less than 22 kilometers-per-hour (15 miles-per-hour), whichever occurs first.

DIAGNOSIS AND TESTING

DIAGNOSIS AND TESTING - EXTERIOR LIGHTING

WARNING: To avoid serious or fatal injury on vehicles equipped with airbags, disable the Supplemental Restraint System (SRS) before attempting any steering wheel, steering column, airbag, seat belt tensioner, impact sensor or instrument panel component diagnosis or service. Disconnect and isolate the battery negative (ground) cable, then wait two minutes for the system capacitor to discharge before performing further diagnosis or service. This is the only sure way to disable the SRS. Failure to take the proper precautions could result in accidental airbag deployment.

NOTE: When diagnosing the exterior lighting circuits, remember that high generator output can burn out bulbs rapidly and repeatedly; and, that dim or flickering bulbs can be caused by low generator output or poor battery condition. If one of these symptoms is a problem on the vehicle, be certain to diagnose the battery and charging system, then repair as necessary.

NOTE: A good ground is necessary for proper lighting operation. If a lighting problem is being diagnosed that involves multiple symptoms, systems, or components, the problem can often be traced to a loose, corroded, or open ground.

The lamps and the hard wired circuits between components related to the exterior lighting system may be diagnosed using conventional diagnostic tools and procedures. Refer to the appropriate wiring information. The wiring information includes wiring diagrams, proper wire and connector repair procedures, details of wire harness routing and retention, connector pin-out information and location views for the various wire harness connectors, splices and grounds.

However, conventional diagnostic methods will not prove conclusive in the diagnosis of the electronic controls or communication between modules and other devices that provide some features of the exterior lighting system. The most reliable, efficient and accurate means to diagnose the exterior lighting

system or the electronic controls and communication related to exterior lighting system operation requires the use of a diagnostic scan tool. Refer to the appropriate diagnostic information.

BACKUP LAMPS

CONDITION	POSSIBLE CAUSES	CORRECTION
BACKUP LAMP DOES NOT ILLUMINATE	1. Ineffective or missing bulb.	1. Test and replace backup lamp bulb if required.
	2. Ineffective ground circuit.	2. Test and repair open backup lamp ground circuit if required.
	3. Ineffective feed circuit.	3. Test and repair open backup lamp feed circuit if required.
	4. Ineffective switch.	4. Test and replace backup lamp switch (manual transmission) or transmission range sensor (automatic transmission) if required.
	5. Ineffective TIPM inputs or outputs.	5. Use a diagnostic scan tool to test the TIPM inputs and outputs. Refer to the appropriate diagnostic information.
BACKUP LAMP DOES NOT EXTINGUISH	1. Ineffective feed circuit.	1. Test and repair shorted backup lamp feed circuit if required.
	2. Ineffective switch.	2. Test and replace backup lamp switch (manual transmission) or transmission range sensor (automatic transmission) if required.
	3. Ineffective TIPM inputs or outputs.	3. Use a diagnostic scan tool to test the TIPM inputs and outputs. Refer to the appropriate diagnostic

		information.

BRAKE LAMPS

NOTE: The Center High Mounted Stop Lamp (CHMSL) is illuminated by several Light-Emitting Diode (LED) units that are soldered to the electronic circuit board within the lamp housing. The CHMSL is hard wired to the output of the brake lamp switch, while the brake lamps are powered by high side drivers within the TIPM based upon an input from the brake lamp switch. If the brake lamps and all of the LED units within the CHMSL fail to operate, diagnose and repair the brake lamps before attempting to repair the CHMSL. If the brake lamps operate but none of the CHMSL LED units illuminate, test and repair the CHMSL ground or feed circuit if required. If some of the CHMSL LED units operate and others do not, the CHMSL assembly must be replaced with a new unit.

CONDITION	POSSIBLE CAUSES	CORRECTION
BRAKE LAMP DOES NOT ILLUMINATE	1. Ineffective or missing bulb.	1. Test and replace brake lamp bulb if required.
	2. Ineffective ground circuit.	2. Test and repair open brake lamp ground circuit if required.
	3. Ineffective fuse.	3. Test and replace the fuse in the TIPM if required.
	4. Ineffective feed circuit.	4. Test and repair open brake lamp switch output circuit or stop lamp output circuit if required.
	5. Ineffective switch.	5. Test and replace brake lamp switch if required.
	6. Ineffective TIPM inputs or outputs.	6. Use a diagnostic scan tool to test the TIPM inputs and outputs. Refer to the appropriate diagnostic

		information.
BRAKE LAMP DOES NOT EXTINGUISH	1. Ineffective feed circuit.	1. Test and repair shorted brake lamp switch output circuit or stop lamp output circuit if required.
	2. Improperly adjusted switch.	2. Adjust the brake lamp switch if required.
	3. Ineffective switch.	3. Test and replace brake lamp switch if required.
	4. Ineffective TIPM inputs or outputs.	4. Use a diagnostic scan tool to test the TIPM inputs and outputs. Refer to the appropriate diagnostic information.

DAYTIME RUNNING LAMPS

NOTE: Before performing the following tests, determine whether the headlamp low and high beams operate. If the headlamp low and high beams are also ineffective, diagnose and repair that problem before attempting to repair the Daytime Running Lamps.

CONDITION	POSSIBLE CAUSES	CORRECTION
DAYTIME RUNNING LAMPS WILL NOT ILLUMINATE	1. Incorrect TIPM programming.	1. Use a diagnostic scan tool to check and configure TIPM if required.
	2. Automatic transmission in PARK position.	2. Place the transmission gear selector lever in any position except PARK.
	3. Parking brake applied.	3. Release the parking brake.
	4. Engine not running.	4. Start the engine.
	5. Ineffective TIPM inputs or outputs.	5. Use a diagnostic scan tool to test the TIPM inputs and outputs. Refer to the appropriate diagnostic information.

FRONT FOG LAMPS

NOTE: The front fog lamp switch is integral to the left multi-function switch/Steering Control Module (SCM), which communicates with the ElectroMechanical Instrument Cluster (EMIC)/Cab Compartment Node (CCN) over the Local Interface Network (LIN) data bus. Before performing any of the following tests, determine whether the other functions of the left multi-function switch/SCM are operational. If the other left multi-function switch/SCM functions are ineffective, diagnose and repair that problem before attempting to repair the Front Fog Lamps.

CONDITION	POSSIBLE CAUSES	CORRECTION
FRONT FOG LAMP DOES NOT ILLUMINATE	1. Ineffective or missing bulb.	1. Test and replace front fog lamp bulb if required.
	2. Ineffective ground circuit.	2. Test and repair open front fog lamp ground circuit if required.
	3. Ineffective feed circuit.	3. Test and repair open front fog lamp feed circuit if required.
	4. Ineffective EMIC (CCN) inputs or outputs.	4. Use a diagnostic scan tool and the appropriate diagnostic information for further EMIC diagnosis.
	5. Ineffective TIPM inputs or outputs.	5. Use a diagnostic scan tool to test the TIPM inputs and outputs. Refer to the appropriate diagnostic information.
FRONT FOG LAMP DOES NOT EXTINGUISH	1. Ineffective feed circuit.	1. Test and repair shorted front fog lamp feed circuit if required.
	2. Ineffective EMIC (CCN) inputs or	2. Use a diagnostic scan tool and the appropriate diagnostic information for

	outputs.	further EMIC diagnosis.
	3. Ineffective TIPM inputs or outputs.	3. Use a diagnostic scan tool to test the TIPM inputs and outputs. Refer to the appropriate diagnostic information.

HAZARD WARNING LAMPS

NOTE: The hazard switch is integral to the instrument panel switch bank, which communicates with the EMIC/CCN over the LIN data bus. Before performing any of the following tests, confirm whether the left and right turn signals operate satisfactorily. Then determine whether the other functions of the instrument panel switch bank are operational. If the turn signals are ineffective or operate improperly, or if the other instrument panel switch bank functions are ineffective, diagnose and repair those problems before attempting to repair the Hazard Warning Lamps.

CONDITION	POSSIBLE CAUSES	CORRECTION
HAZARD WARNING LAMPS DO NOT FLASH	1. Ineffective EMIC (CCN) inputs or outputs. 2. Ineffective TIPM inputs or outputs.	1. Use a diagnostic scan tool and the appropriate diagnostic information for further EMIC diagnosis. 2. Use a diagnostic scan tool to test the TIPM inputs and outputs. Refer to the appropriate diagnostic information.
HAZARD WARNING LAMPS DO NOT STOP FLASHING	1. Ineffective EMIC (CCN) inputs or outputs.	1. Use a diagnostic scan tool and the appropriate diagnostic information for further EMIC diagnosis. 2. Use a diagnostic scan tool to test the TIPM inputs and

	2. Ineffective TIPM inputs or outputs.	outputs. Refer to the appropriate diagnostic information.

HEADLAMPS

NOTE: As part of the exterior lighting failsafe feature, upon ignition ON, all exterior park lamps and the headlamp low beams will illuminate regardless of the left multi-function switch control knob position if the SCM cannot detect an input from the left multi-function switch, or if there is a loss of communication between the left multi-function switch/SCM and the EMIC or between the EMIC and the TIPM. Diagnose and repair those problems before attempting to repair the Headlamps. In addition, the TIPM will store a Diagnostic Trouble Code (DTC) for an open or shorted headlamp circuit.

CONDITION	POSSIBLE CAUSES	CORRECTION
HEADLAMP DOES NOT ILLUMINATE	1. Ineffective or missing bulb.	1. Test and replace headlamp bulb if required.
	2. Ineffective ground circuit.	2. Test and repair open headlamp ground circuit if required.
	3. Ineffective feed circuit.	3. Test and repair open headlamp low beam or high beam feed circuit if required.
	4. Ineffective EMIC (CCN) inputs or outputs.	4. Use a diagnostic scan tool and the appropriate diagnostic information for further EMIC diagnosis.
	5. Ineffective TIPM inputs or outputs.	5. Use a diagnostic scan tool to test the TIPM inputs and outputs. Refer to the appropriate diagnostic information.
HEADLAMP DOES	1. Ineffective feed	1. Test and repair shorted

NOT EXTINGUISH	circuit.	headlamp low beam or high beam feed circuit if required.
	2. Ineffective EMIC (CCN) inputs or outputs.	2. Use a diagnostic scan tool and the appropriate diagnostic information for further EMIC diagnosis.
	3. Ineffective TIPM inputs or outputs.	3. Use a diagnostic scan tool to test the TIPM inputs and outputs. Refer to the appropriate diagnostic information.
HEADLAMPS ILLUMINATE WITH IGNITION ON AND HEADLAMP SWITCH OFF (FAIL-SAFE OPERATION)	1. Loss of LIN or CAN data bus communication.	1. Test and repair the LIN or CAN data bus if required. Refer to the appropriate diagnostic information.
HEADLAMPS WILL NOT SWITCH FROM HIGH TO LOW BEAMS, OR FROM LOW TO HIGH BEAMS	1. Ineffective EMIC (CCN) inputs or outputs.	1. Use a diagnostic scan tool and the appropriate diagnostic information for further EMIC diagnosis.
	2. Ineffective TIPM inputs or outputs.	2. Use a diagnostic scan tool to test the TIPM inputs and outputs. Refer to the appropriate diagnostic information.

HEADLAMP LEVELING

NOTE: The headlamp leveling switch is integral to the instrument panel switch bank, which communicates with the EMIC/CCN over the LIN data bus. Before performing any of the following tests, confirm whether the park lamps operate satisfactorily. Then determine whether the other functions of the instrument panel switch bank are operational. If the park lamps are ineffective or operate improperly, or if the other instrument panel switch bank

functions are ineffective, diagnose and repair those problems before attempting to repair the Headlamp Leveling function.

CONDITION	POSSIBLE CAUSES	CORRECTION
ONE LEVELING MOTOR IS INEFFECTIVE	1. Ineffective ground circuit.	1. Test and repair open leveling motor ground circuit if required.
	2. Ineffective feed circuit.	2. Test and repair open leveling motor feed circuit if required.
	3. Ineffective signal circuit.	3. Test and repair open headlamp leveling motor signal circuit if required.
	4. Ineffective motor.	4. Test and replace headlamp leveling motor (headlamp unit) if required.
BOTH LEVELING MOTORS ARE INEFFECTIVE	1. Ineffective EMIC (CCN) inputs or outputs.	1. Use a diagnostic scan tool and the appropriate diagnostic information for further EMIC diagnosis.
	2. Ineffective motor ground circuit.	2. Test and repair open leveling motor ground circuit if required.
	3. Ineffective motor feed circuit.	3. Test and repair open leveling motor feed circuit if required.
	4. Ineffective signal circuit.	4. Test and repair open or shorted headlamp leveling motor signal circuit if required.
	5. Ineffective TIPM inputs or outputs.	5. Use a diagnostic scan tool to test the TIPM inputs and outputs. Refer to the appropriate diagnostic information.

	6. Ineffective motors.	6. Test and replace leveling motors (headlamp units) if required.

PARK LAMPS

NOTE: As part of the exterior lighting failsafe feature, upon ignition ON, all exterior park lamps and the headlamp low beams will illuminate regardless of the left multi-function switch control knob position if the SCM cannot detect an input from the left multi-function switch, or if there is a loss of communication between the left multi-function switch/SCM and the EMIC or between the EMIC and the TIPM. Diagnose and repair those problems before attempting to repair the Park Lamps.

CONDITION	POSSIBLE CAUSES	CORRECTION
PARK LAMP DOES NOT ILLUMINATE	1. Ineffective or missing bulb.	1. Test and replace park lamp bulb if required.
	2. Ineffective ground circuit.	2. Test and repair open park lamp ground circuit if required.
	3. Ineffective feed circuit.	3. Test and repair open park lamp feed circuit if required.
	4. Ineffective EMIC (CCN) inputs or outputs.	4. Use a diagnostic scan tool and the appropriate diagnostic information for further EMIC diagnosis.
	5. Ineffective TIPM inputs or outputs.	5. Use a diagnostic scan tool to test the TIPM inputs and outputs. Refer to the appropriate diagnostic information.
PARK LAMP DOES NOT EXTINGUISH	1. Ineffective feed circuit.	1. Test and repair shorted park lamp feed circuit if required.
		2. Use a diagnostic scan tool

	2. Ineffective EMIC (CCN) inputs or outputs.	and the appropriate diagnostic information for further EMIC diagnosis.
	3. Ineffective TIPM inputs or outputs.	3. Use a diagnostic scan tool to test the TIPM inputs and outputs. Refer to the appropriate diagnostic information.

REAR FOG LAMPS

NOTE: The rear fog lamp switch is integral to the left multi-function switch/SCM, which communicates with the EMIC/CCN over the LIN data bus. Before performing any of the following tests, determine whether the other functions of the left multi-function switch/SCM are operational. If the other left multi-function switch/SCM functions are ineffective, diagnose and repair that problem before attempting to repair the Rear Fog Lamps.

CONDITION	POSSIBLE CAUSES	CORRECTION
REAR FOG LAMP DOES NOT ILLUMINATE	1. Ineffective or missing bulb.	1. Test and replace rear fog lamp bulb if required.
	2. Ineffective ground circuit.	2. Test and repair open rear fog lamp ground circuit if required.
	3. Ineffective feed circuit.	3. Test and repair open fog lamp relay control rear circuit if required.
	4. Ineffective EMIC (CCN) inputs or outputs.	4. Use a diagnostic scan tool and the appropriate diagnostic information for further EMIC diagnosis.
	5. Incorrect TIPM configuration.	5. Use a diagnostic scan tool to check and correct the TIPM configuration settings if required. Refer to the appropriate diagnostic

	6. Ineffective TIPM inputs or outputs.	information. 6. Use a diagnostic scan tool to test the TIPM inputs and outputs. Refer to the appropriate diagnostic information.
REAR FOG LAMP DOES NOT EXTINGUISH	1. Ineffective feed circuit.	1. Test and repair shorted fog lamp relay control rear circuit if required.
	2. Ineffective EMIC (CCN) inputs or outputs.	2. Use a diagnostic scan tool and the appropriate diagnostic information for further EMIC diagnosis.
	3. Ineffective TIPM inputs or outputs.	3. Use a diagnostic scan tool to test the TIPM inputs and outputs. Refer to the appropriate diagnostic information.

TURN SIGNAL LAMPS

NOTE: The turn signal switch is integral to the left multi-function switch/SCM, which communicates with the EMIC/CCN over the LIN data bus. Before performing any of the following tests, determine whether the other functions of the left multi-function switch/SCM are operational. If the other left multi-function switch/SCM functions are ineffective, diagnose and repair that problem before attempting to repair the Turn Signal Lamps.

CONDITION	POSSIBLE CAUSES	CORRECTION
ONE TURN SIGNAL LAMP DOES NOT ILLUMINATE	1. Ineffective or missing bulb.	1. Test and replace turn signal bulb if required.
	2. Ineffective ground circuit.	2. Test and repair open ground circuit if required.
	3. Ineffective feed	3. Test and repair open right or left turn signal feed

	circuit.	circuit if required.
	4. Ineffective TIPM inputs or outputs.	4. Use a diagnostic scan tool to test the TIPM inputs and outputs. Refer to the appropriate diagnostic information.
ALL RIGHT SIDE OR ALL LEFT SIDE TURN SIGNAL LAMPS (OR BOTH SIDES) DO NOT FLASH	1. Ineffective feed circuit.	1. Test and repair open right or left turn signal feed circuit if required.
	2. Ineffective EMIC (CCN) inputs or outputs.	2. Use a diagnostic scan tool and the appropriate diagnostic information for further EMIC diagnosis.
	3. Ineffective TIPM inputs or outputs.	3. Use a diagnostic scan tool to test the TIPM inputs and outputs. Refer to the appropriate diagnostic information.
ALL RIGHT SIDE OR ALL LEFT SIDE TURN SIGNALS FLASH TOO RAPIDLY (MORE THAN 100 FLASHES PER MINUTE)	1. Ineffective or missing bulb.	1. Test and replace turn signal bulb if required.
	2. Ineffective ground circuit.	2. Test and repair open bulb ground circuit if required.
	3. Ineffective feed circuit.	3. Test and repair open right or left turn signal feed circuit if required.
TURN SIGNALS DO NOT AUTOMATICALLY CANCEL	1. Ineffective cancel cam.	1. Inspect and replace the turn signal cancel cam (clockspring) if required.
	2. Ineffective cancel actuator.	2. Inspect and replace the turn signal cancel actuator (left multi-function switch) if required.

STANDARD PROCEDURE

STANDARD PROCEDURE - LAMP ALIGNMENT

VEHICLE PREPARATION FOR LAMP ALIGNMENT

1. Check for and correct any burnt out bulbs.
2. If the vehicle is equipped with headlamp leveling, be certain that the headlamp leveling switch is in the **0** position.
3. Repair or replace any ineffective, worn or damaged body or suspension components that could hinder proper lamp alignment.
4. Verify proper tire inflation pressures.
5. Remove any accumulations of mud, snow or ice from the vehicle underbody and clean the front lamp lenses.
6. Verify that there is no load in the vehicle (cargo or passengers), except for the driver.
7. The fuel tank should be FULL. Add 2.94 kilograms (6.5 pounds) of weight over the fuel tank for each estimated gallon of missing fuel.
8. Verify correct vehicle suspension height.

LAMP ALIGNMENT SCREEN PREPARATION

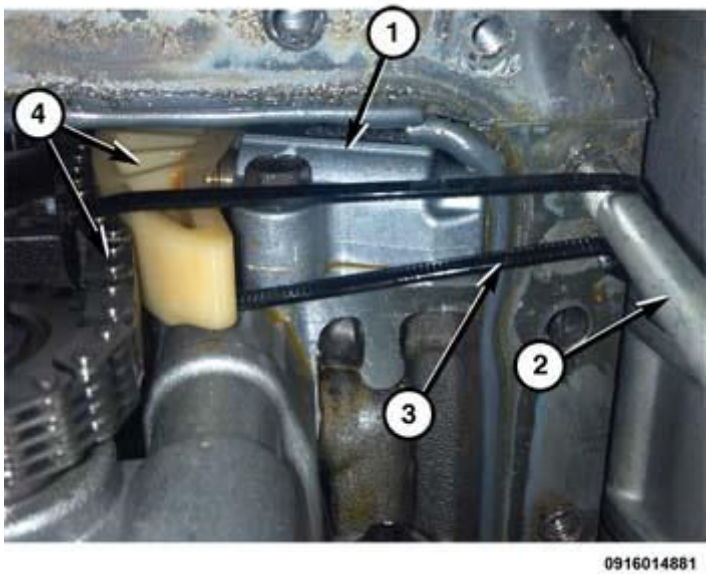

Fig. 1: Lamp Alignment Screen Preparation
Courtesy of CHRYSLER GROUP, LLC

The procedure that follows will prepare a suitable front lamp alignment screen.

1. Tape a line on a level floor at the appropriate distance away from and parallel to the flat wall that will be used as the lamp alignment screen. Refer to **LAMP ALIGNMENT SCREEN DISTANCE TABLE** for the

appropriate measurement. The level floor will be used as the horizontal zero reference.

2. An adjacent wall or floor member that is perpendicular to the alignment screen can be used as the vertical zero reference. If there is no adjacent wall or floor member that is perpendicular to the screen, tape a second line on the floor perpendicular to both the alignment screen and the first line, and outboard of either side of where the vehicle will be positioned. This will be used as the vertical zero reference.
3. Position the vehicle so that the side of the vehicle is parallel to the vertical zero reference, and so that the front of the lamp lenses are in the vertical plane of the parallel line taped on the floor 7.62 meters (25 feet) away from the screen.
4. Rock the vehicle side-to-side three times to allow the suspension to stabilize.
5. Jounce the front suspension three times by pushing downward on the front bumper and releasing.
6. Measure the distance between the optical center of one of the lamps being aimed (head or fog) and the floor (horizontal zero reference). Transfer this measurement to the alignment screen with a piece of tape placed horizontally to the floor. This line will be used as the lamp horizontal reference.
7. Measure the distance between the vertical zero reference and the optical center of the nearest lamp being aimed (head or fog). Transfer this measurement to the alignment screen with a piece of tape placed vertically across the appropriate (head or fog) lamp horizontal reference. This is the centerline reference for the first lamp.
8. Measure the distance on center between the first and the second lamp being aimed. Transfer this measurement to the alignment screen with a second piece of tape placed vertically across the appropriate (head or fog) lamp horizontal reference. This is the centerline reference for the second lamp.

LAMP ALIGNMENT SCREEN DISTANCE TABLE

LAMP ALIGNMENT SCREEN DISTANCE		
LAMP	MARKET	
	DOMESTIC	EXPORT
HEADLAMPS	7.62 meters (25.0 feet)	10.0 meters (32.81 feet)

FRONT FOG LAMPS	7.62 meters (25.0 feet)	10.0 meters (32.81 feet)

HEADLAMP ALIGNMENT

NOTE: Due to the linear nature of the headlamp cutoff, a properly aimed low beam headlamp will project the top edge of the high intensity pattern on the alignment screen from the horizontal line to 50 millimeters (2 inches) below the horizontal line for domestic market vehicles, or to 125 millimeters (5 inches) below the horizontal line for export market vehicles. No horizontal (right/left) adjustment is required for this headlamp beam pattern in domestic market vehicles. Export market vehicles have a second horizontal (right/left) adjustment screw provided on the outboard side of the headlamp unit rear housing. The high beam pattern will be correct when the low beams are properly aimed.

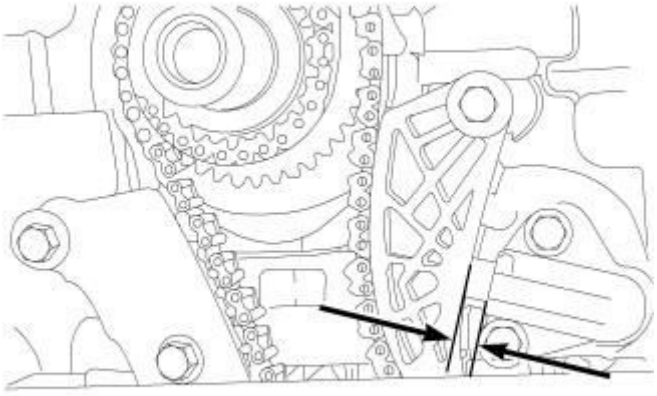

8188d7c0

Fig. 2: Quad Halogen - Domestic MK49 - Compass
Courtesy of CHRYSLER GROUP, LLC

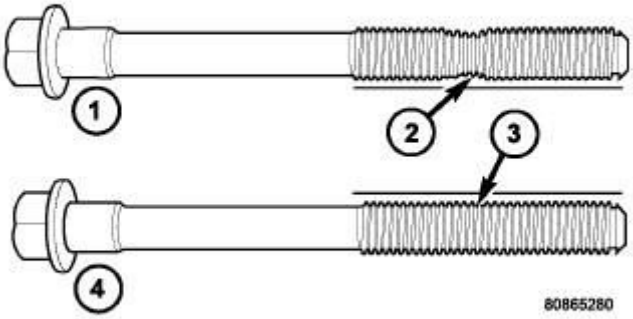

Fig. 3: Bi-Halogen - Export MK49 - Compass
Courtesy of CHRYSLER GROUP, LLC

Fig. 4: Headlamp Vertical Adjustment Screws
Courtesy of CHRYSLER GROUP, LLC

1. Turn the headlamps ON and select the LOW beams for vehicles in all markets except Japan. Vehicles for the Japanese market should have the headlamp HIGH beams selected.
2. Use a screwdriver to rotate the headlamp vertical adjustment screw (callout 3 on MK49 - Compass, callout 2 on MK74 - Patriot) on each headlamp unit (callout 1 on MK49 - Compass, callout 3 on MK74 - Patriot) to adjust the beam height as required.

3. For export markets only, use a screwdriver to rotate the headlamp horizontal adjustment screw (callout 2 on MK49 - Compass, callout 1 on MK74 - Patriot) on each headlamp to adjust the beam right or left as required.

FOG LAMP ALIGNMENT

NOTE: A properly aimed front fog lamp will project a pattern on the alignment screen 100 millimeters (4 inches) below the fog lamp centerline and straight ahead of the lamp for domestic market vehicles, or to 203 millimeters (8 inches) below the fog lamp centerline and straight ahead of the lamp for export market vehicles.

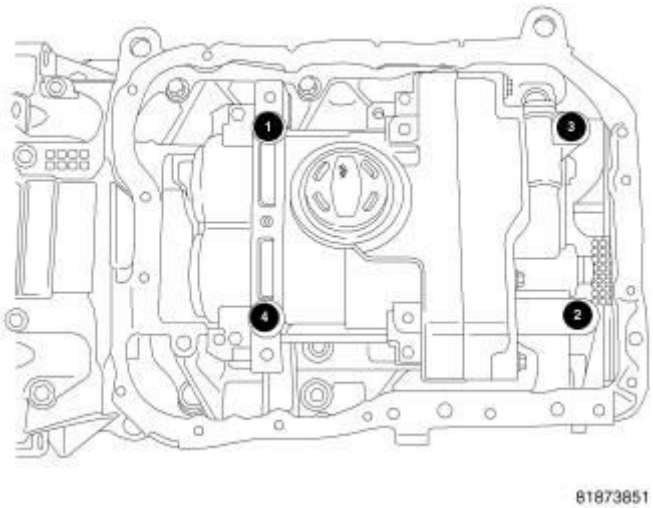

Fig. 5: MK49 - Compass
Courtesy of CHRYSLER GROUP, LLC

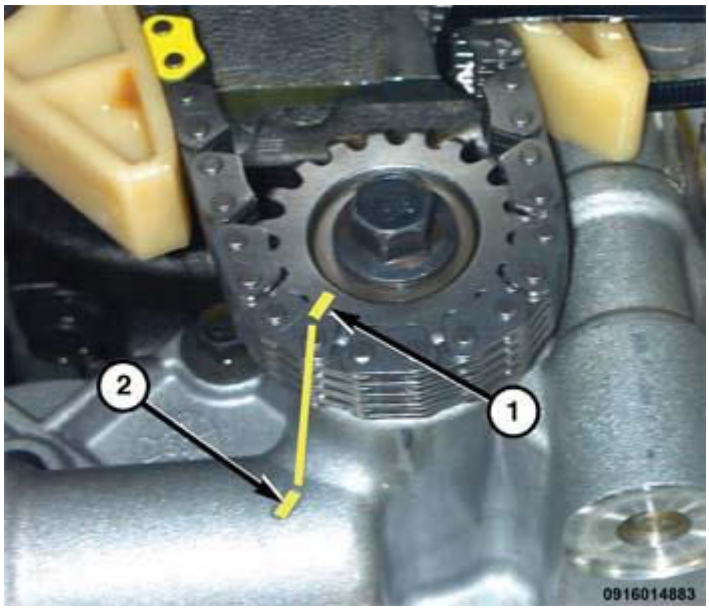

Fig. 6: Adjusting Fog Lamp
Courtesy of CHRYSLER GROUP, LLC

1. Turn the fog lamps ON.
2. On MK49 - Compass, insert a screwdriver through the clearance slot in the underside of the front fascia (3) closure panel below each fog lamp (2) to rotate the vertical adjustment screw (1) on each lamp to adjust the beam height as required. On MK74 - Patriot, insert a screwdriver through the clearance notch (1) at the top of the front fog lamp (2) seat of the front fascia (3) to rotate the vertical adjustment screw on each lamp to adjust the beam height as required.

SPECIFICATIONS

SPECIFICATIONS

BULB APPLICATION TABLE

LAMP	BULB
BACKUP (MK49 - COMPASS)	7440 (W21W)
BACKUP (MK74 - PATRIOT)	921 (W16W)
BRAKE (MK49 - COMPASS)	LIGHT-EMITTING DIODES SERVICED IN ASSEMBLY
BRAKE (MK74 - PATRIOT)	3157 (P27/7W)
CENTER HIGH MOUNTED STOP	LIGHT-EMITTING DIODES SERVICED IN ASSEMBLY

DAYTIME RUNNING LAMP (EXPORT MK49 - COMPASS)	3157K (P27/7WK)
FRONT FOG (MK49 - COMPASS)	H11LL/55W
FRONT FOG (MK74 - PATRIOT)	PSX24W
FRONT PARK (DOMESTIC MK49 - COMPASS)	7444NA
FRONT PARK (MK74 - PATRIOT)	3757KA (PY27/7W)
FRONT SIDE MARKER (DOMESTIC MK49 - COMPASS)	W5W
FRONT SIDE MARKER (MK74 - PATRIOT)	3757KA (PY27/7W)
FRONT TURN SIGNAL (MK49 - COMPASS)	7444NA - DOMESTIC 7440NA (WY21W) - EXPORT
FRONT TURN SIGNAL (MK74 - PATRIOT)	3757KA (PY27/7W)
HEADLAMP HIGH BEAM (DOMESTIC MK49 - COMPASS)	9005 (HB3)
HEADLAMP LOW BEAM (DOMESTIC MK49 - COMPASS)	H11/55W
HEADLAMP (EXPORT MK49 - COMPASS)	H9/65W
HEADLAMP (MK74 - PATRIOT)	9008 (H13 60/55W) - DOMESTIC 9003 (H4 60/55W) - EXPORT
LICENSE PLATE	W5W
POSITION (EXPORT MK49 - COMPASS)	3157K (P27/7WK)
POSITION (EXPORT MK74 - PATRIOT)	W5W
REAR FOG (MK49 - COMPASS - EXPORT)	7440 (W21W)
REAR FOG (MK74 - PATRIOT - EXPORT)	3157 (P27/7W)
REAR PARK (MK49 - COMPASS)	LIGHT-EMITTING DIODES SERVICED IN ASSEMBLY
REAR PARK (MK74 - PATRIOT)	3157 (P27/7W)
REAR SIDE MARKER (MK49 -	LIGHT-EMITTING DIODES

COMPASS)	SERVICED IN ASSEMBLY
REAR SIDE MARKER (MK74 - PATRIOT)	3157 (P27/7W)
REAR TURN SIGNAL (MK49 - COMPASS)	7440NA (WY21W)
REAR TURN SIGNAL (MK74 - PATRIOT)	3157 (P27/7W) - DOMESTIC 3757A (PY27/7W) - EXPORT
REPEATER (EXPORT ONLY)	WY5W

TORQUE SPECIFICATIONS

DESCRIPTION	N.m	Ft. Lbs.	In. Lbs.
Center High Mounted Stop Lamp (CHMSL) Mounting Screws	3	-	27
Front Wheel House Splash Shield to Front Fascia Screws	2	-	19
Front Fog Lamp Mounting Screws (MK74 - Patriot)	2	-	14
Headlamp Unit Mounting Nuts (MK74 - Patriot)	3	-	25
Left Multi-Function Switch Mounting Screw	1	-	10
Park Brake Switch Mounting Screw	2.5	-	24
Park/Turn Signal Lamp Mounting Screws (MK74 - Patriot)	2	-	14

CAM, TURN SIGNAL CANCEL

DESCRIPTION

DESCRIPTION

The turn signal cancel cam is concealed within the clockspring case on the steering column. The turn signal cancel cam consists of integral eccentrics on the

outer circumference of the molded plastic clockspring rotor. The clockspring mechanism provides turn signal cancellation as well as a constant electrical connection between the horn switch, driver airbag, speed control switches, and remote radio switches on the steering wheel and the instrument panel wire harness on the steering column. The housing of the clockspring is secured to the steering column and remains stationary. The rotor of the clockspring, including the turn signal cancel cam lobes rotate with the steering wheel.

The turn signal cancel cam is serviced as a unit with the clockspring and cannot be repaired. If ineffective or damaged, the entire clockspring unit must be replaced. Refer to **CLOCKSPRING, REMOVAL** .

OPERATION

OPERATION

When the left multi-function switch control stalk is moved to a latched turn signal ON position, a turn signal cancel actuator is extended from the inside surface of the switch housing through a small rectangular opening on the left side of the clockspring case toward the turn signal cancel cam. As the steering wheel is rotated to complete the turn, one of the cam eccentrics will contact the actuator, automatically cancelling the turn signal event and releasing the latched left multi-function switch control stalk to the neutral or OFF position.

LAMP, CENTER HIGH MOUNTED STOP

REMOVAL

COMPASS

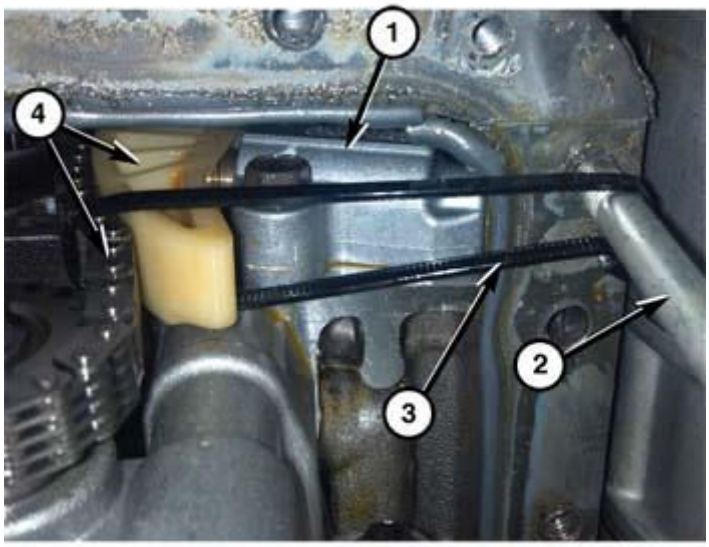

Fig. 7: Center High Mounted Stop Lamp Replacement
Courtesy of CHRYSLER GROUP, LLC

1. Disconnect and isolate the battery negative cable.
2. Remove the spoiler assembly (1) from the top of the outer liftgate panel. Refer to **SPOILER, LIFTGATE, REMOVAL** .
3. Remove the two screws (3) that secure the Center High Mounted Stop Lamp (CHMSL) (2) to the back of the liftgate spoiler.
4. Remove the CHMSL from the back of the liftgate spoiler.

PATRIOT

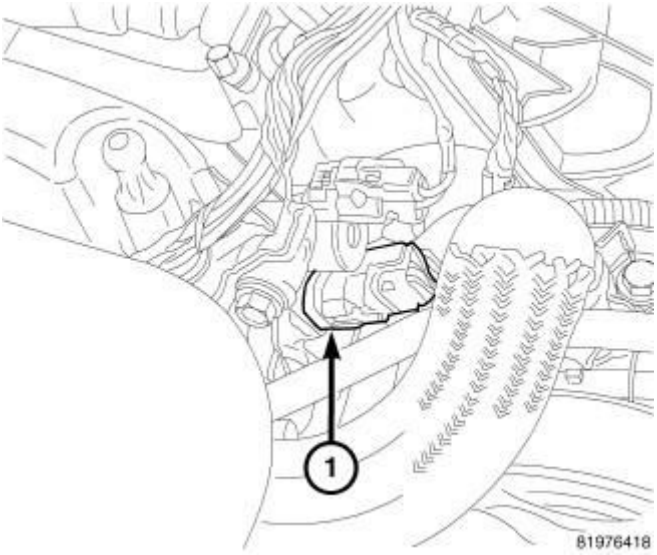

Fig. 8: Disconnecting/Connecting Liftgate Wire Harness Connector
Courtesy of CHRYSLER GROUP, LLC

1. Disconnect and isolate the battery negative cable.
2. Remove the two screws (1) that secure the Center High Mounted Stop Lamp (CHMSL) (2) to the top of the outer liftgate panel.
3. Pull the CHMSL away from the liftgate far enough to access and disconnect the washer supply hose (5) from the barbed nipple of the rear washer nozzle at the back of the lamp housing.
4. Disconnect the liftgate wire harness connector (4) from the back of the lamp housing.
5. Remove the CHMSL from the liftgate.

INSTALLATION

COMPASS

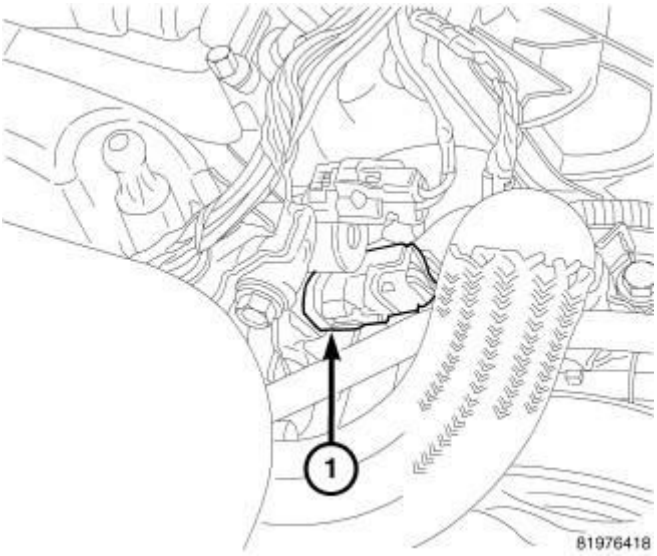

Fig. 9: Center High Mounted Stop Lamp Replacement
Courtesy of CHRYSLER GROUP, LLC

1. Position the Center High Mounted Stop Lamp (CHMSL) (2) to the opening from the back of the liftgate spoiler assembly (1).
2. Install and tighten the two screws (3) that secure the CHMSL to the liftgate spoiler assembly. Tighten the screws to 3 N.m (27 in. lbs.).
3. Reinstall the liftgate spoiler assembly onto the top of the outer liftgate panel. Refer to **SPOILER, LIFTGATE, INSTALLATION** .
4. Reconnect the battery negative cable.

PATRIOT

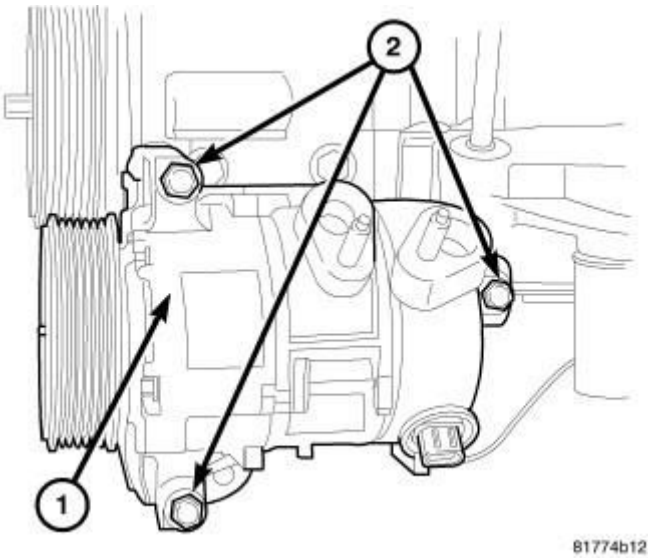

Fig. 10: Disconnecting/Connecting Liftgate Wire Harness Connector
Courtesy of CHRYSLER GROUP, LLC

1. Check to be certain that the two plastic nuts (3) are properly installed and in good condition on each side of the Center High Mounted Stop Lamp (CHMSL) (2) opening in the upper header of the liftgate outer panel.
2. Position the CHMSL near the liftgate opening.
3. Reconnect the liftgate wire harness connector (4) to the back of the lamp housing.
4. Reconnect the washer supply hose (5) to the barbed nipple of the rear washer nozzle at the back of the lamp housing.
5. Position the CHMSL into the liftgate opening.
6. Install and tighten the two screws (1) that secure the CHMSL to the liftgate outer panel. Tighten the screws to 2 N.m (19 in. lbs.).
7. Reconnect the battery negative cable.

LAMP, FOG, REAR

REMOVAL

BULB - MK49

NOTE: The rear fog lamp for MK74 models is integral to the tail, stop and turn lamp unit. Refer to LAMP, TAIL STOP TURN, REMOVAL.

NOTE: The following procedure applies only to vehicles

manufactured for certain export markets where rear fog lamps are optional or required equipment. In North American markets, a rear reflex (reflector) is installed in each rear fascia opening used for the rear fog lamps, but rear fog lamps are not available in vehicles manufactured for North American markets.

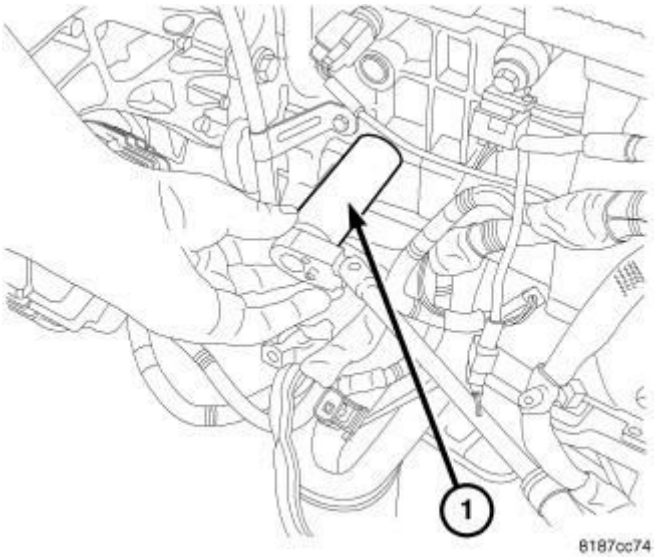

Fig. 11: Rear Fascia Wire Harness, Connector & Lamp Socket
Courtesy of CHRYSLER GROUP, LLC

1. Disconnect and isolate the battery negative cable.
2. Remove the rear fog lamp from the rear fascia. Refer to **LAMP, FOG, REAR, REMOVAL** .
3. Pull the lamp away from the rear fascia opening far enough to access and disconnect the rear fascia wire harness (1) connector (4) from the lamp socket (3) on the back of the lamp housing.
4. Firmly grasp the socket on the back of the lamp housing and rotate it counterclockwise about 30 degrees to unlock it.
5. Pull the socket and bulb straight out from the keyed opening in the lamp housing.
6. Pull the base of the bulb straight out of the socket.

LAMP - MK49

NOTE: The rear fog lamp for MK74 models is integral to the tail, stop and turn lamp unit. Refer to LAMP, TAIL STOP

TURN, REMOVAL.

NOTE: The following procedure applies only to vehicles manufactured for certain export markets where rear fog lamps are optional or required equipment. In North American markets, a rear reflex (reflector) is installed in each rear fascia opening used for the rear fog lamps, but rear fog lamps are not available in vehicles manufactured for North American markets.

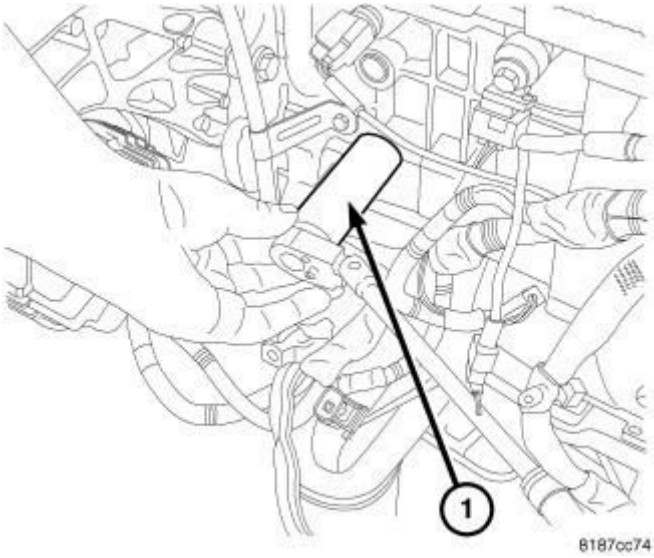

Fig. 12: Bumper Fascia & Rear Fog Lamp Housing
Courtesy of CHRYSLER GROUP, LLC

1. Disconnect and isolate the battery negative cable.
2. Using a trim stick or another suitable wide flat-bladed tool, gently pry the outboard edge of the rear fog lamp housing (2) out from the rear bumper fascia (1) far enough to disengage the snap feature integral to the outboard side of the lamp housing from the rear fascia opening.
3. Pull the lamp housing slightly outboard to disengage the retention feature integral to the inboard side of the lamp housing from the rear fascia opening.
4. Pull the lamp away from the rear fascia opening far enough to access and disconnect the rear fascia wire harness connector from the lamp socket on the back of the lamp housing.
5. Remove the lamp from the back of the rear fascia.

INSTALLATION

BULB - MK49

CAUTION: Always use the correct bulb size and type for replacement. An incorrect bulb size or type may overheat and cause damage to the lamp, the socket or the lamp wiring.

NOTE: The rear fog lamp for MK74 models is integral to the tail, stop and turn lamp unit. Refer to LAMP, TAIL STOP TURN, INSTALLATION.

NOTE: The following procedure applies only to vehicles manufactured for certain export markets where rear fog lamps are optional or required equipment. In North American markets, a rear reflex (reflector) is installed in each rear fascia opening used for the rear fog lamps, but rear fog lamps are not available in vehicles manufactured for North American markets.

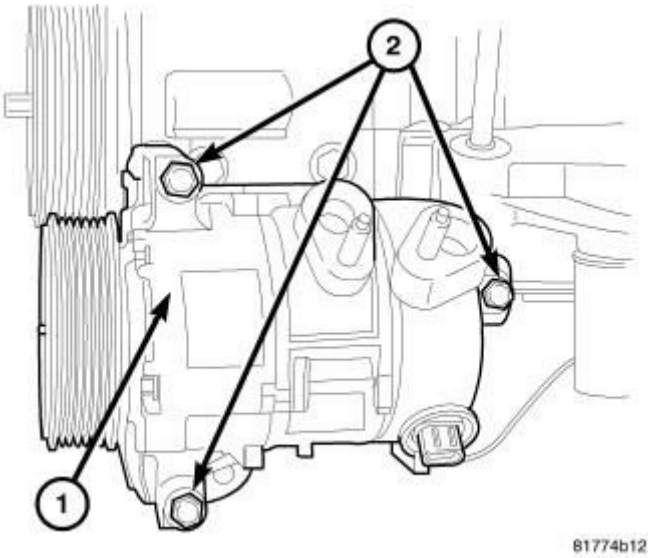

Fig. 13: Rear Fascia Wire Harness, Connector & Lamp Socket
Courtesy of CHRYSLER GROUP, LLC

1. Align the base of the rear fog lamp bulb with the bulb socket (3).
2. Push the bulb straight into the socket until the base is firmly seated.
3. Align the socket and bulb with the keyed opening on the back of the rear fog lamp housing (2).

4. Insert the socket and bulb into the housing until the socket is firmly seated.
5. Rotate the socket clockwise about 30 degrees to lock it into place.
6. Position the lamp close enough to the rear fascia opening to access and reconnect the rear fascia wire harness (1) connector (4) to the lamp socket on the back of the lamp housing.
7. Reinstall the rear fog lamp into the rear fascia. Refer to **LAMP, FOG, REAR, INSTALLATION** .
8. Reconnect the battery negative cable.

LAMP - MK49

NOTE: The rear fog lamp for MK74 models is integral to the tail, stop and turn lamp unit. Refer to LAMP, TAIL STOP TURN, INSTALLATION.

NOTE: The following procedure applies only to vehicles manufactured for certain export markets where rear fog lamps are optional or required equipment. In North American markets, a rear reflex (reflector) is installed in each rear fascia opening used for the rear fog lamps, but rear fog lamps are not available in vehicles manufactured for North American markets.

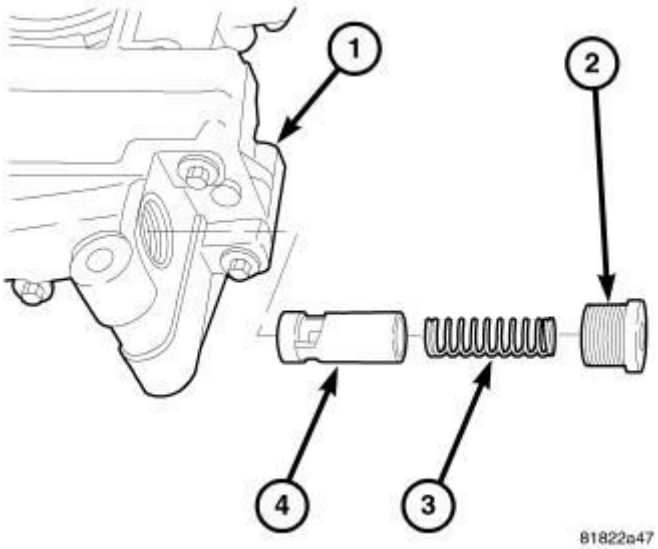

Fig. 14: Bumper Fascia & Rear Fog Lamp Housing
Courtesy of CHRYSLER GROUP, LLC

1. Position the rear fog lamp (2) close enough to the lamp opening of the rear fascia (1) to access and reconnect the rear fascia wire harness connector to the lamp socket on the back of the lamp housing.
2. Engage the retention feature integral to the inboard side of the lamp housing with the inboard side of the rear fascia opening for the lamp.
3. Using hand pressure, press firmly and evenly on the outboard side of the lamp until the snap feature integral to the outboard side of the lamp housing snaps into engagement with the rear fascia opening.
4. Reconnect the battery negative cable.

LAMP, FOG, FRONT

REMOVAL

BULB

MK49

CAUTION: Do not contaminate the bulb glass by touching it with your fingers or by allowing it to contact other oily surfaces. Shortened bulb life will result.

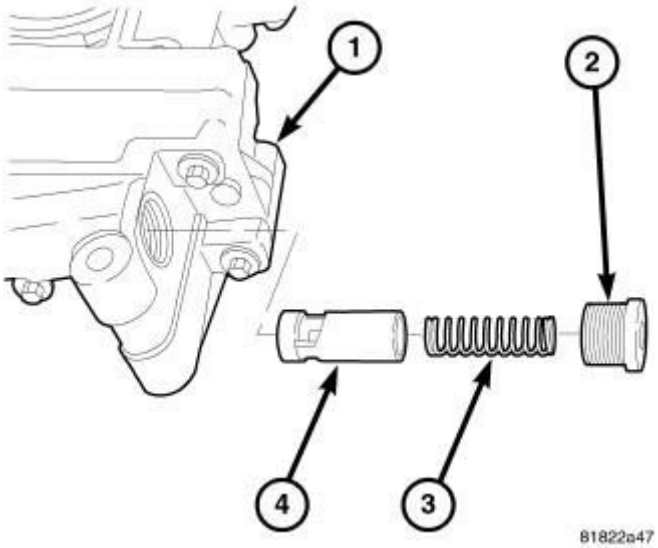

Fig. 15: Removing/Installing Front Fog Lamp
Courtesy of CHRYSLER GROUP, LLC

1. Disconnect and isolate the battery negative cable.
2. Raise and support the vehicle.

3. Remove the front wheel and tire on the same side of the vehicle as the fog lamp being serviced. Refer to **REMOVAL** .
4. Remove the three screws (1) that secure the outboard side of the front wheel house splash shield (4) to the front fascia (2).
5. Remove the push pin fastener (3) that secures the inboard side of the splash shield to the front end sheet metal.
6. Remove the two push pin fasteners that secure the forward edge of the splash shield to the front fascia closeout panel.
7. Fold the front of the splash shield rearward far enough to access the back of the front fascia.

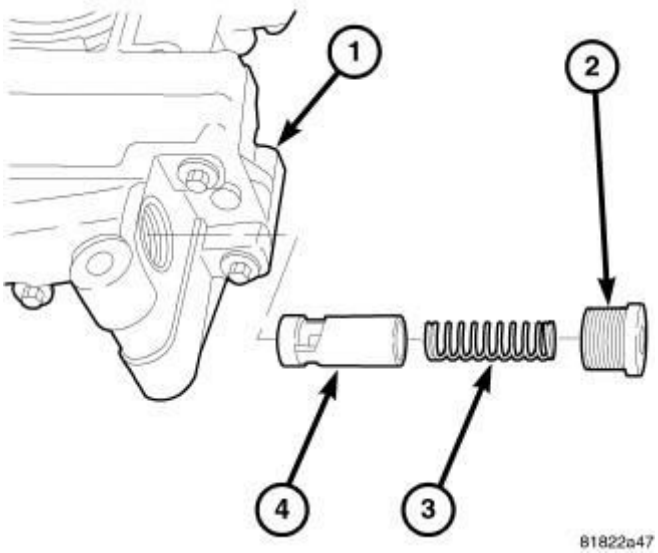

Fig. 16: Front Fascia, Connector Receptacle & Front Fog Lamp Housing
Courtesy of CHRYSLER GROUP, LLC

8. From behind the front fascia fog lamp bezel (3), disconnect the engine compartment wire harness connector from the front fog lamp bulb connector receptacle (2).
9. Firmly grasp the fog lamp bulb on the back of the front fog lamp housing (1) and rotate it counterclockwise about 30 degrees to unlock it.
10. Pull the bulb straight out from the keyed opening in the housing.

MK74

CAUTION: Do not contaminate the bulb glass by touching it with your fingers or by allowing it to contact other

oily surfaces. Shortened bulb life will result.

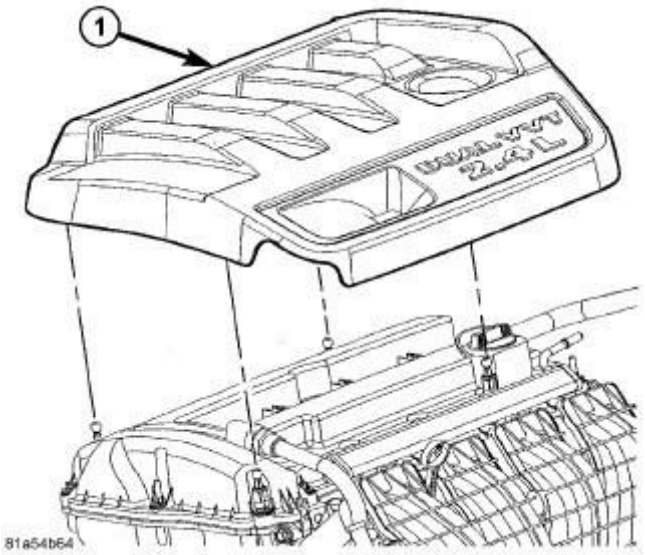

Fig. 17: Removing/Installing Front Fog Lamp
Courtesy of CHRYSLER GROUP, LLC

1. Disconnect and isolate the battery negative cable.
2. Raise and support the vehicle.
3. Remove the front wheel and tire on the same side of the vehicle as the fog lamp being serviced. Refer to **REMOVAL** .
4. Remove the three screws (1) that secure the outboard side of the front wheel house splash shield (4) to the front fascia (2).
5. Remove the push pin fastener (3) that secures the inboard side of the splash shield to the front end sheet metal.
6. Remove the two push pin fasteners that secure the forward edge of the splash shield to the front fascia closure panel.
7. Fold the front of the splash shield rearward far enough to access the back of the front fascia.

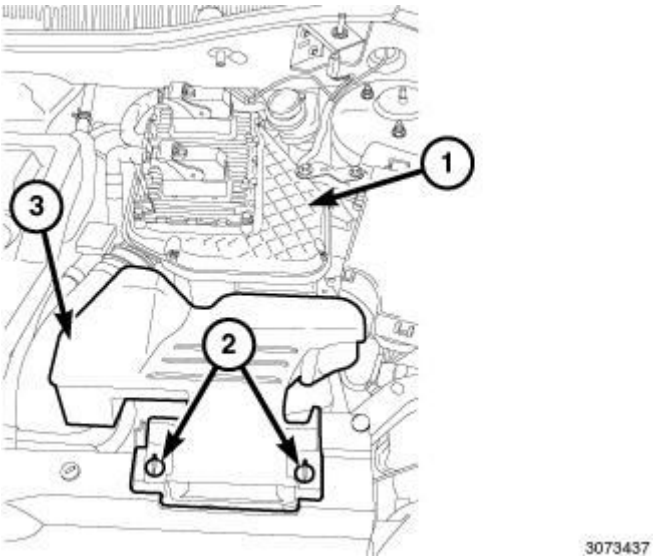

Fig. 18: Identifying Front Fog Lamp Bulb Connector Receptacle, Latch Features & Front Fog Lamp Housing
Courtesy of CHRYSLER GROUP, LLC

8. From behind the front fascia disconnect the engine compartment wire harness connector from the front fog lamp bulb connector receptacle (1).
9. Firmly grasp the bulb by the two latch features (2) and squeeze them together to unlock the bulb from the back of the front fog lamp housing (3).
10. Pull the bulb straight out from the keyed opening in the housing.

LAMP

MK49

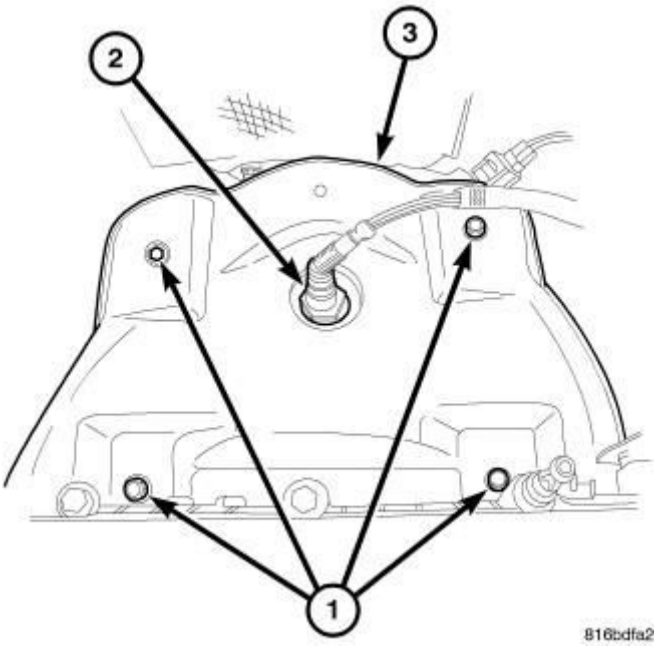

Fig. 19: Removing/Installing Front Fog Lamp
Courtesy of CHRYSLER GROUP, LLC

1. Disconnect and isolate the battery negative cable.
2. Raise and support the vehicle.
3. Remove the front wheel and tire on the same side of the vehicle as the fog lamp being serviced. Refer to **REMOVAL** .
4. Remove the three screws (1) that secure the outboard side of the front wheel house splash shield (4) to the front fascia (2).
5. Remove the push pin fastener (3) that secures the inboard side of the splash shield to the front end sheet metal.
6. Remove the two push pin fasteners that secure the forward edge of the splash shield to the front fascia closeout panel.
7. Fold the front of the splash shield rearward far enough to access the back of the front fascia.

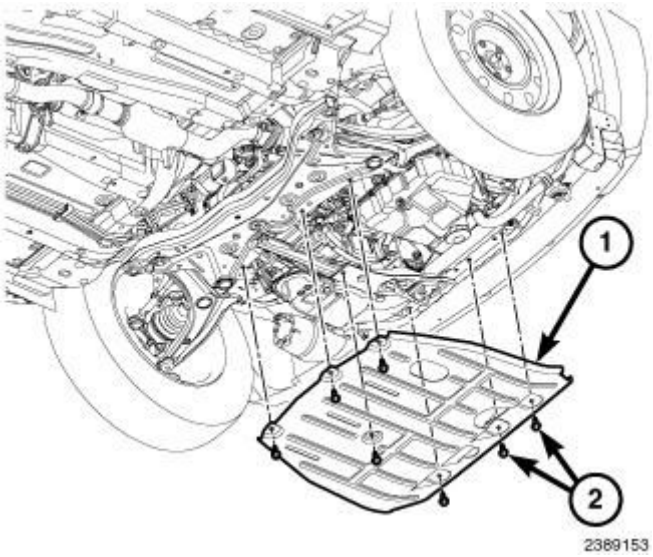

Fig. 20: Front Fascia, Connector Receptacle, Latch Features & Front Fog Lamp Mounting Ring
Courtesy of CHRYSLER GROUP, LLC

8. From behind the front fascia fog lamp bezel (2), disconnect the engine compartment wire harness connector from the front fog lamp bulb connector receptacle (3).
9. Using a trim stick or another suitable wide flat-bladed tool, carefully pry between the front fog lamp mounting ring (1) and the back of the front fascia fog lamp bezel as necessary to separate the four latch features (4)

integral to the back of the fog lamp bezel from the slots in the mounting ring.

10. Remove the front fog lamp unit from the fascia.

MK74

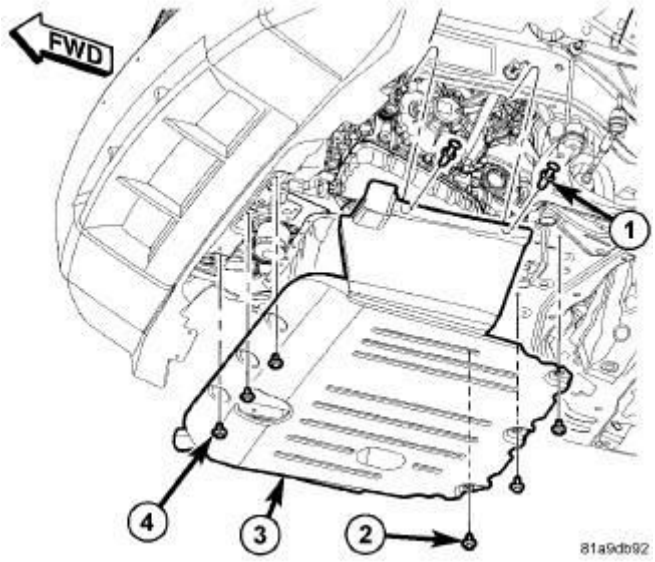

Fig. 21: Removing/Installing Front Fog Lamp
Courtesy of CHRYSLER GROUP, LLC

1. Disconnect and isolate the battery negative cable.
2. Raise and support the vehicle.
3. Remove the front wheel and tire on the same side of the vehicle as the fog lamp being serviced. Refer to **REMOVAL** .
4. Remove the three screws (1) that secure the outboard side of the front wheel house splash shield (4) to the front fascia (2).
5. Remove the push pin fastener (3) that secures the inboard side of the splash shield to the front end sheet metal.
6. Remove the two push pin fasteners that secure the forward edge of the splash shield to the front fascia closure panel.
7. Fold the front of the splash shield rearward far enough to access the back of the front fascia.

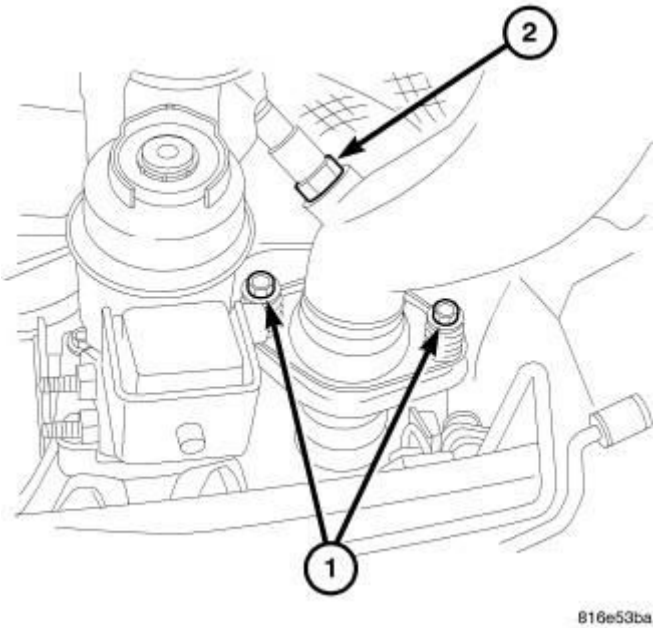

Fig. 22: Identifying Fog Lamp Seat, Latch Features, Front fog Lamp Bulb Connector Receptacle & Screws
Courtesy of CHRYSLER GROUP, LLC

8. Disconnect the engine compartment wire harness connector from the front fog lamp bulb connector receptacle (3).
9. Remove the two screws (4) that secure the lamp bracket to the back of the fog lamp seat (1) in the front fascia.
10. Disengage the three latch features (2) of the fog lamp bracket from the opening on the back of the seat and push the fog lamp forward far enough so the latch features are clear of the opening.
11. From the face of the front fascia, remove the fog lamp and bracket from the seat as a unit.

INSTALLATION

BULB

MK49

CAUTION: Always use the correct bulb size and type for replacement. An incorrect bulb size or type may overheat and cause damage to the lamp, the socket or the lamp wiring.

CAUTION: Do not contaminate the bulb glass by touching it with your fingers or by allowing it to contact other oily surfaces. Shortened bulb life will result.

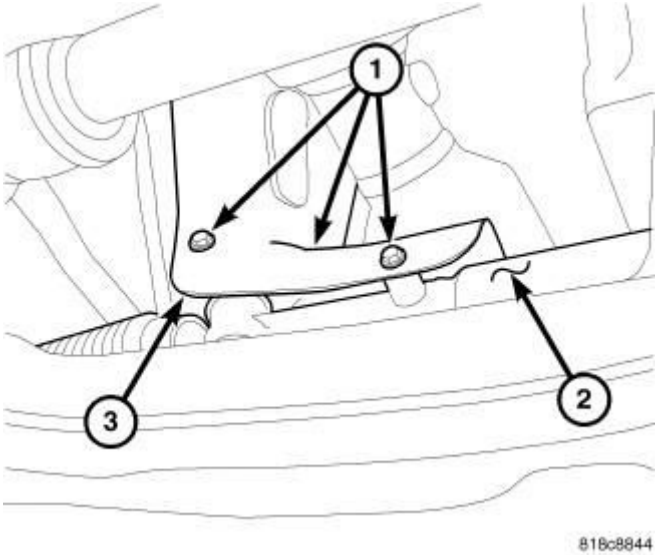

Fig. 23: Front Fascia, Connector Receptacle & Front Fog Lamp Housing
Courtesy of CHRYSLER GROUP, LLC

1. From behind the front fascia fog lamp bezel (3), align the front fog lamp bulb with the keyed opening on the back of the front fog lamp housing (1).
2. Insert the bulb into the housing until the base is firmly seated.
3. Rotate the bulb clockwise about 30 degrees to lock it into place. The bulb connector receptacle (2) should be pointed straight downward.
4. Reconnect the engine compartment wire harness connector to the bulb connector receptacle.

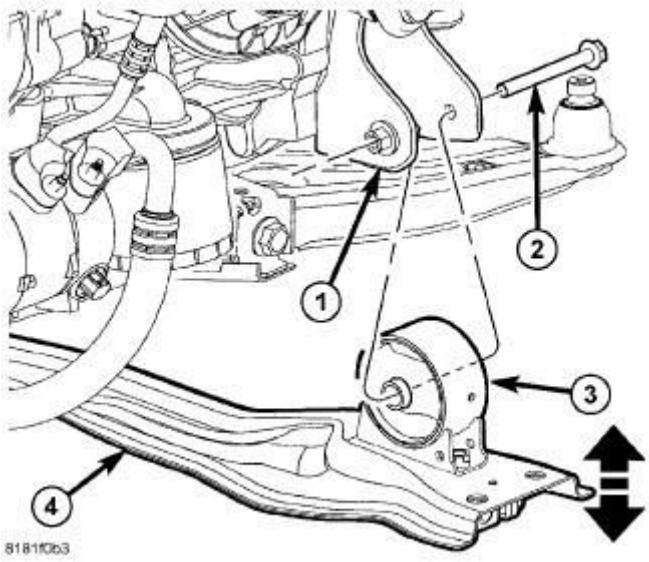

Fig. 24: Removing/Installing Front Fog Lamp
Courtesy of CHRYSLER GROUP, LLC

5. Position the front of the front wheel house splash shield (4) to the front fascia (2) closeout panel and secure it with two push pin fasteners (3).
6. Install the push pin fastener (3) that secures the inboard side of the splash shield to the front end sheet metal.
7. Install and tighten the three screws (1) that secure the outboard side of the splash shield to the front fascia. Tighten the screws to 2 N.m (19 in. lbs.).
8. Reinstall the front wheel and tire. Refer to **INSTALLATION** .
9. Lower the vehicle.
10. Reconnect the battery negative cable.

MK74

CAUTION: Always use the correct bulb size and type for replacement. An incorrect bulb size or type may overheat and cause damage to the lamp, the socket or the lamp wiring.

CAUTION: Do not contaminate the bulb glass by touching it with your fingers or by allowing it to contact other oily surfaces. Shortened bulb life will result.

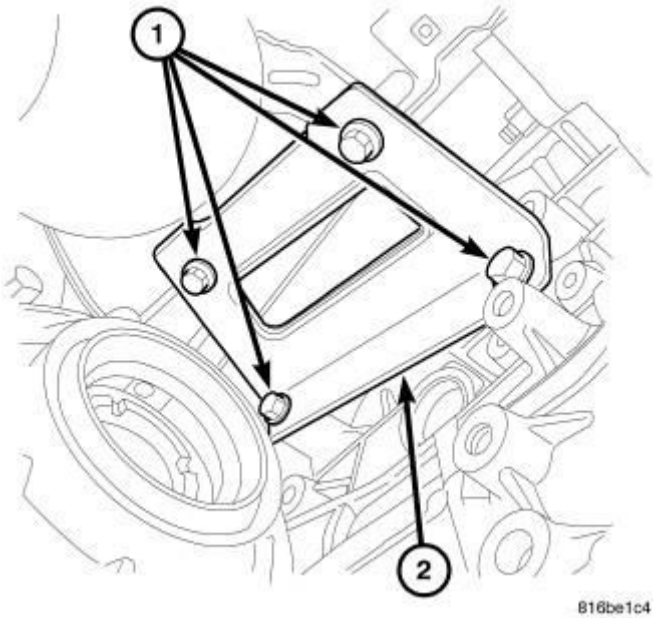

Fig. 25: Identifying Front Fog Lamp Bulb Connector Receptacle, Latch Features & Front Fog Lamp Housing
Courtesy of CHRYSLER GROUP, LLC

1. Reach up behind the front fascia to access and align the index tabs (4) of the front fog lamp bulb with the slots in the collar of the bulb opening on the back of the front fog lamp housing (3).
2. Insert the bulb into the housing until the index tabs are engaged in the slots of the collar.
3. Firmly and evenly push the bulb straight into the lamp housing until both bulb latch features (2) snap into place and are fully engaged.
4. Reconnect the engine compartment wire harness connector to the front fog lamp bulb connector receptacle (1).

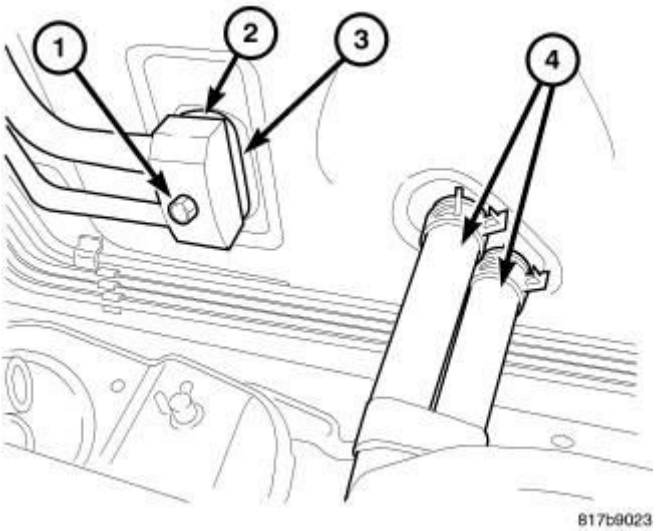

Fig. 26: Removing/Installing Front Fog Lamp
Courtesy of CHRYSLER GROUP, LLC

5. Position the front of the front wheel house splash shield (4) to the front fascia (2) closure panel and secure it with two push pin fasteners (3).
6. Install the push pin fastener (3) that secures the inboard side of the splash shield to the front end sheet metal.
7. Install and tighten the three screws (1) that secure the outboard side of the splash shield to the front fascia. Tighten the screws to 2 N.m (19 in. lbs.).
8. Reinstall the front wheel and tire. Refer to **INSTALLATION** .
9. Lower the vehicle.
10. Reconnect the battery negative cable.

LAMP

MK49

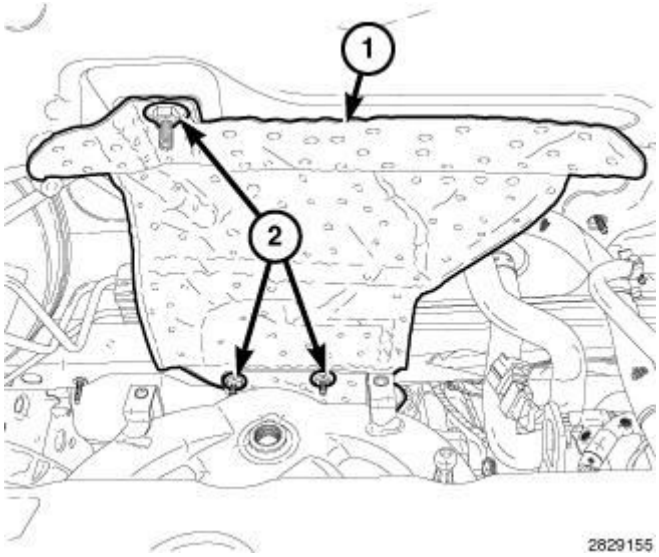

Fig. 27: Front Fascia, Connector Receptacle, Latch Features & Front Fog Lamp Mounting Ring
Courtesy of CHRYSLER GROUP, LLC

1. From the back of the front fascia, position the front fog lamp and mounting ring (1) onto the back of the fog lamp bezel (2).
2. Align the four slots in the front fog lamp mounting ring with the four latch features (4) integral to the back of the fog lamp bezel.
3. Press firmly and evenly on the fog lamp mounting ring until the four latch features snap into place through the mounting ring slots.
4. Reconnect the engine compartment wire harness connector to the front fog lamp bulb connector receptacle (3).

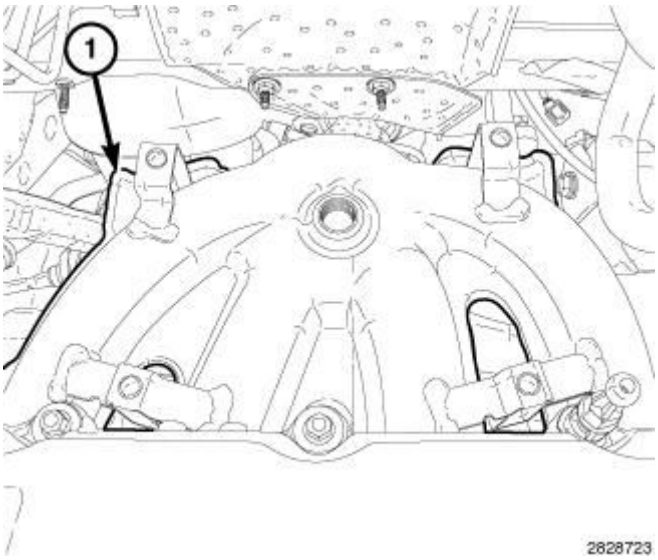

Fig. 28: Removing/Installing Front Fog Lamp
Courtesy of CHRYSLER GROUP, LLC

5. Position the front of the front wheel house splash shield (4) to the front fascia (2) closeout panel and secure it with two push pin fasteners (3).
6. Install the push pin fastener (3) that secures the inboard side of the splash shield to the front end sheet metal.
7. Install and tighten the three screws (1) that secure the outboard side of the splash shield to the front fascia. Tighten the screws to 2 N.m (19 in. lbs.).
8. Reinstall the front wheel and tire. Refer to **INSTALLATION** .
9. Lower the vehicle.
10. Reconnect the battery negative cable.
11. Confirm proper front fog lamp alignment. Refer to **STANDARD PROCEDURE**.

MK74

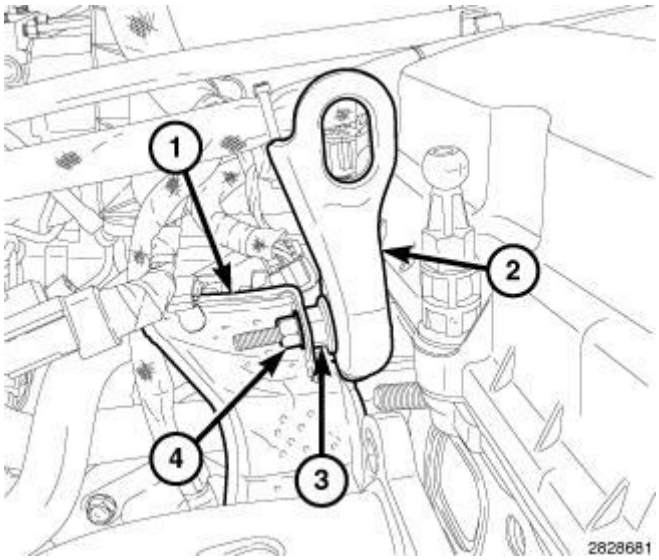

Fig. 29: Identifying Fog Lamp Seat, Latch Features, Front fog Lamp Bulb Connector Receptacle & Screws
Courtesy of CHRYSLER GROUP, LLC

1. From the face of the front fascia, position the front fog lamp and bracket unit into the fascia seat (1).
2. Engage the two alignment pins on the back of the fog lamp bracket with the alignment holes in the seat, then push the lamp rearward far enough to engage the three latch features (2) of the fog lamp bracket with the opening on the back of the seat.
3. Reach up behind the front fascia to install and tighten the two screws (4) that secure the lamp to the back of the fascia. Tighten the screws to 2 N.m (14 in.

lbs.).

4. Reconnect the engine compartment wire harness connector to the front fog lamp bulb connector receptacle (3).

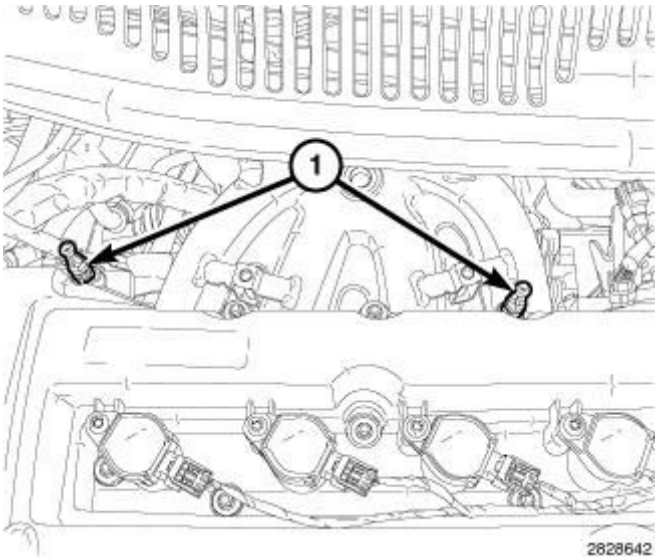

Fig. 30: Removing/Installing Front Fog Lamp
Courtesy of CHRYSLER GROUP, LLC

5. Position the front of the front wheel house splash shield (4) to the front fascia (2) closure panel and secure it with two push pin fasteners (3).
6. Install the push pin fastener (3) that secures the inboard side of the splash shield to the front end sheet metal.
7. Install and tighten the three screws (1) that secure the outboard side of the splash shield to the front fascia. Tighten the screws to 2 N.m (19 in. lbs.).
8. Reinstall the front wheel and tire. Refer to **INSTALLATION** .
9. Lower the vehicle.
10. Reconnect the battery negative cable.
11. Confirm proper front fog lamp alignment. Refer to **STANDARD PROCEDURE**.

LAMP, LICENSE PLATE

REMOVAL

REMOVAL

NOTE: The following procedure is for replacement of a license plate lamp bulb. The license plate lamps are integral to

the liftgate handle and light bar unit. If any part of this unit is ineffective or damaged, the entire handle and light bar unit must be replaced.

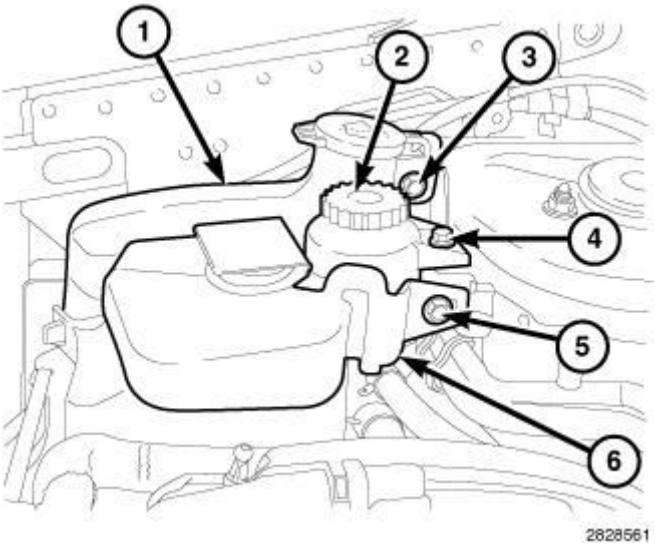

Fig. 31: License Plate Lamp Lens
Courtesy of CHRYSLER GROUP, LLC

1. Disconnect and isolate the battery negative cable.
2. Reach under the liftgate handle and light bar unit (2) to access and depress the latch tab (3) on the outboard side of the license plate lamp lens toward the lens (1).
3. Pull the outboard side of the lens downward far enough to disengage the two tabs on the inboard side of the lens from the lamp housing.
4. Remove the lens from under the handle and light bar.

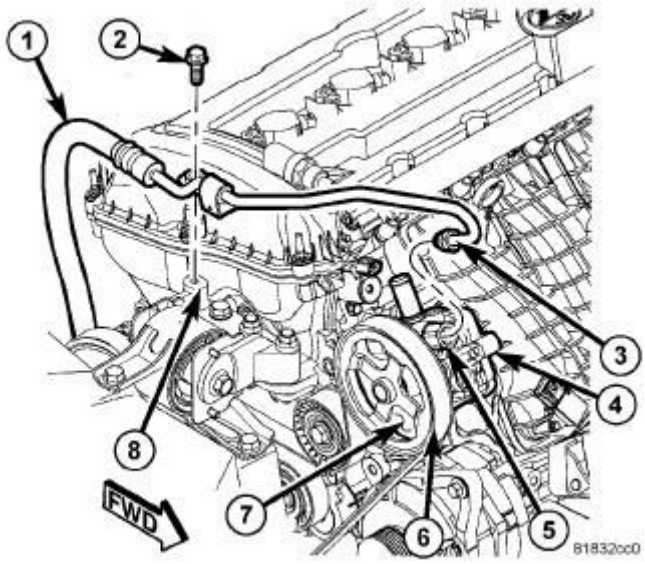

Fig. 32: License Plate Lamp Bulb Replacement
Courtesy of CHRYSLER GROUP, LLC

5. Firmly grasp and pull the bulb (1) straight out of the socket (2) in the outboard side of the lamp housing.

INSTALLATION

INSTALLATION

CAUTION: Always use the correct bulb size and type for replacement. An incorrect bulb size or type may overheat and cause damage to the lamp, the socket or the lamp wiring.

NOTE: The following procedure is for replacement of a license plate lamp bulb. The license plate lamps are integral to the liftgate handle and light bar unit. If any part of this unit is ineffective or damaged, the entire handle and light bar unit must be replaced.

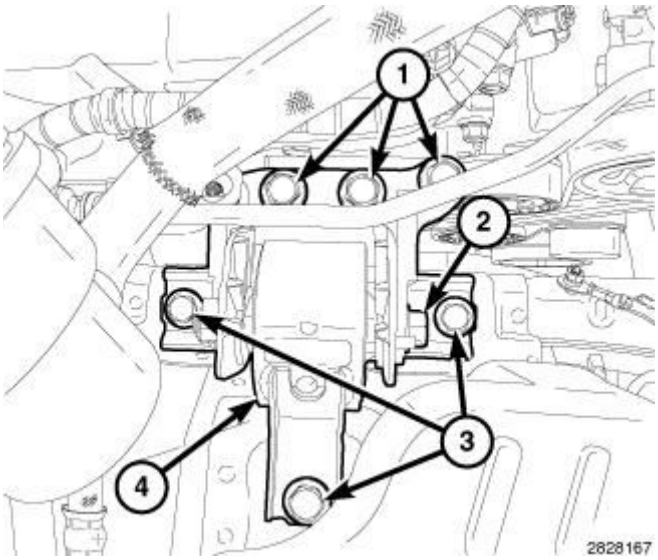

Fig. 33: License Plate Lamp Bulb Replacement
Courtesy of CHRYSLER GROUP, LLC

1. Align the base of the bulb (1) with the socket (2) in the outboard side of the license plate lamp housing.
2. Push the bulb straight into the socket until the base is firmly seated.

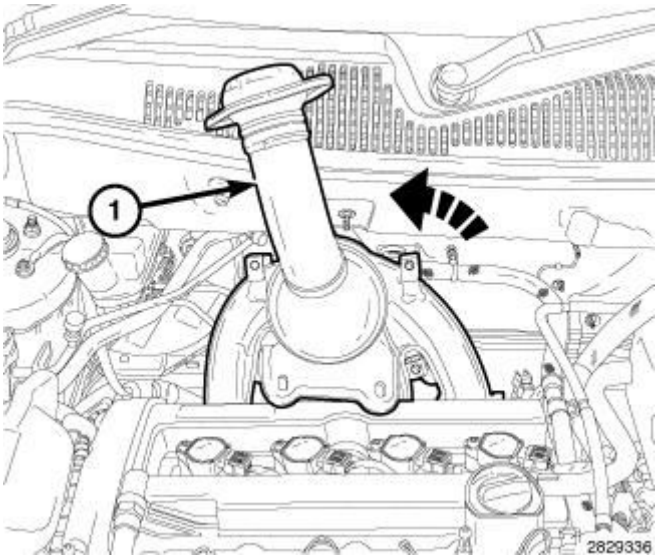

Fig. 34: License Plate Lamp Lens
Courtesy of CHRYSLER GROUP, LLC

3. Position the lens (1) over the lamp housing under the handle and light bar unit (2).
4. Engage the two tabs on the inboard side of the lens into the slots on the inboard side of the lamp housing.
5. Push the outboard side of the lens upward until the lens latch tab (3) is fully

engaged in the lamp housing.

6. Reconnect the battery negative cable.

LAMP, PARK AND TURN SIGNAL

REMOVAL

BULB - MK74

NOTE: The front park and turn signal lamp for MK49 models is integral to the front lamp unit. Refer to UNIT, FRONT LAMP, REMOVAL.

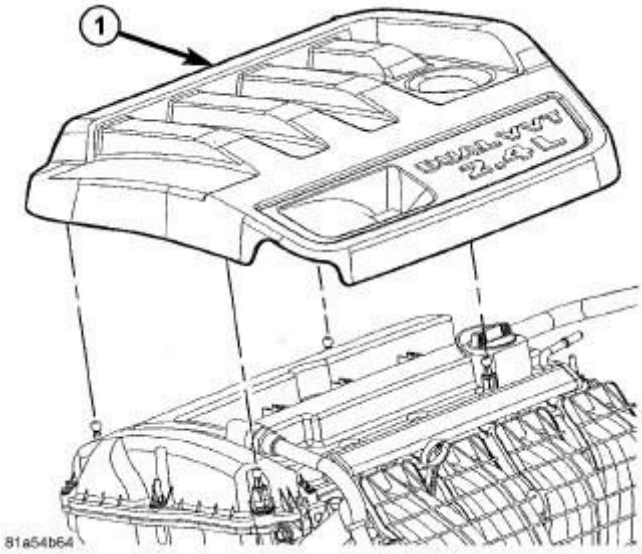

Fig. 35: Removing/Installing Front Fog Lamp
Courtesy of CHRYSLER GROUP, LLC

1. Turn the steering wheel to move the front of the wheel and tire toward the opposite side of the vehicle from the park/turn signal lamp being serviced.
2. Disconnect and isolate the battery negative cable.
3. Remove the three screws (1) that secure the outboard side of the front wheel house splash shield (4) to the front fascia (2).
4. Remove the push pin fastener (3) that secures the inboard side of the splash shield to the front end sheet metal.
5. Remove the two push pin fasteners that secure the forward edge of the splash shield to the front fascia closure panel.
6. Fold the front of the splash shield rearward far enough to access the back of

the front fascia.

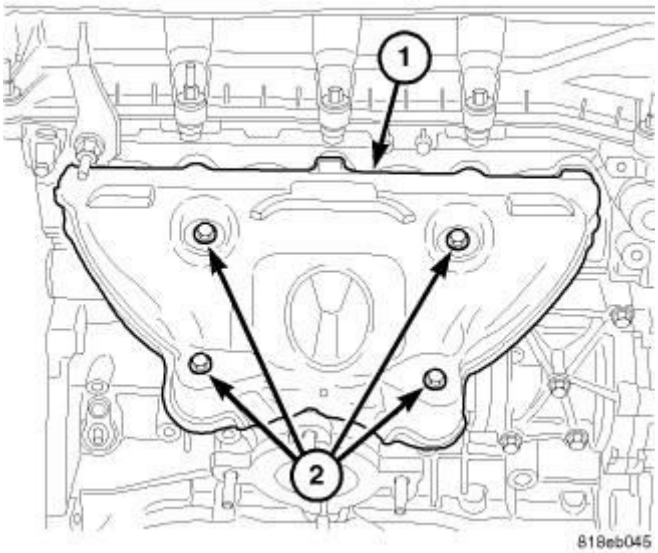

Fig. 36: Park/Turn Signal Bulb Replacement
Courtesy of CHRYSLER GROUP, LLC

7. From behind the front fascia (3) disconnect the engine compartment wire harness connector (2) from the park/turn signal bulb socket (1) connector receptacle.
8. Firmly grasp the bulb socket on the back of the park turn signal lamp housing (4) and rotate it counterclockwise about 30 degrees to unlock it.
9. Pull the socket and bulb straight out from the keyed opening in the housing.
10. Pull the base of the bulb straight out of the socket.

LAMP - MK74

NOTE: The front park and turn signal lamp for MK49 models is integral to the front lamp unit. Refer to UNIT, FRONT LAMP, REMOVAL.

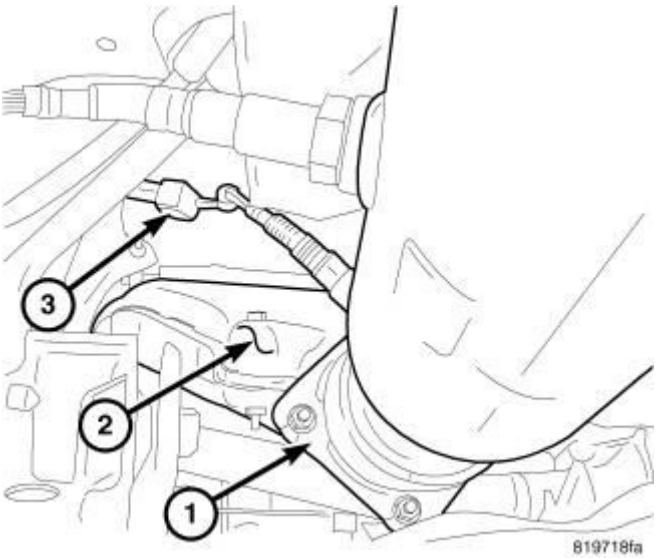

Fig. 37: Removing/Installing Front Fog Lamp
Courtesy of CHRYSLER GROUP, LLC

1. Disconnect and isolate the battery negative cable.
2. Raise and support the vehicle.
3. Remove the front wheel and tire on the same side of the vehicle as the park/turn signal lamp being serviced. Refer to **REMOVAL** .
4. Remove the three screws (1) that secure the outboard side of the front wheel house splash shield (4) to the front fascia (2).
5. Remove the push pin fastener (3) that secures the inboard side of the splash shield to the front end sheet metal.
6. Remove the two push pin fasteners that secure the forward edge of the splash shield to the front fascia closure panel.
7. Fold the front of the splash shield rearward far enough to access the back of the front fascia.

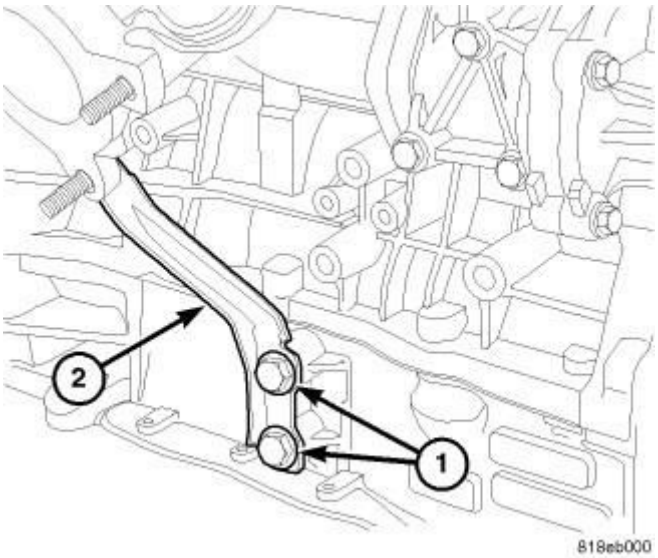

Fig. 38: Park/Turn Signal Lamp Replacement
Courtesy of CHRYSLER GROUP, LLC

8. From the back side of the front fascia (4), disconnect the engine compartment wire harness (1) connector (3) from the park/turn signal bulb socket (2) connector receptacle.
9. Remove the three screws (5) that secure the lamp to the back of the front fascia.
10. Remove the lamp from the seat in the face of the fascia.

INSTALLATION

BULB - MK74

CAUTION: Always use the correct bulb size and type for replacement. An incorrect bulb size or type may overheat and cause damage to the lamp, the socket or the lamp wiring.

NOTE: The front park and turn signal lamp for MK49 models is integral to the front lamp unit. Refer to UNIT, FRONT LAMP, INSTALLATION.

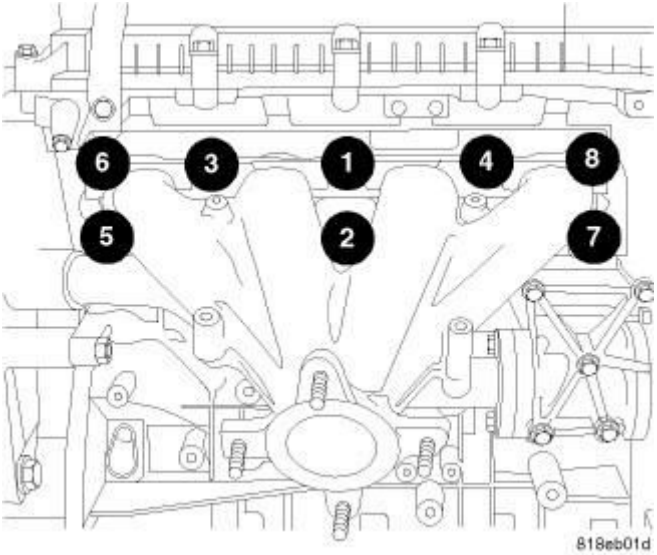

Fig. 39: Park/Turn Signal Bulb Replacement
Courtesy of CHRYSLER GROUP, LLC

1. Align the base of the bulb with the park/turn signal lamp socket (1).
2. Push the bulb straight into the socket until the base is firmly seated.
3. Align the socket and bulb with the keyed opening on the back of the park/turn signal lamp housing (4).
4. Insert the socket and bulb into the housing until the socket is firmly seated.
5. Rotate the socket clockwise about 30 degrees to lock it into place.
6. Reconnect the engine compartment wire harness connector (2) to the bulb socket connector receptacle.

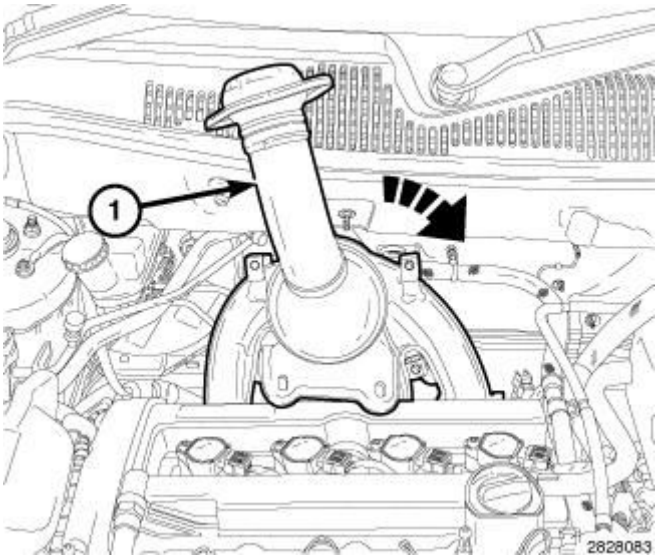

Fig. 40: Removing/Installing Front Fog Lamp
Courtesy of CHRYSLER GROUP, LLC

7. Position the front of the front wheel house splash shield (4) to the front fascia (2) closure panel and secure it with two push pin fasteners (3).
8. Install the push pin fastener (3) that secures the inboard side of the splash shield to the front end sheet metal.
9. Install and tighten the three screws (1) that secure the outboard side of the splash shield to the front fascia. Tighten the screws to 2 N.m (19 in. lbs.).
10. Reconnect the battery negative cable.

LAMP - MK74

NOTE: The front park and turn signal lamp for MK49 models is integral to the front lamp unit. Refer to UNIT, FRONT LAMP, INSTALLATION.

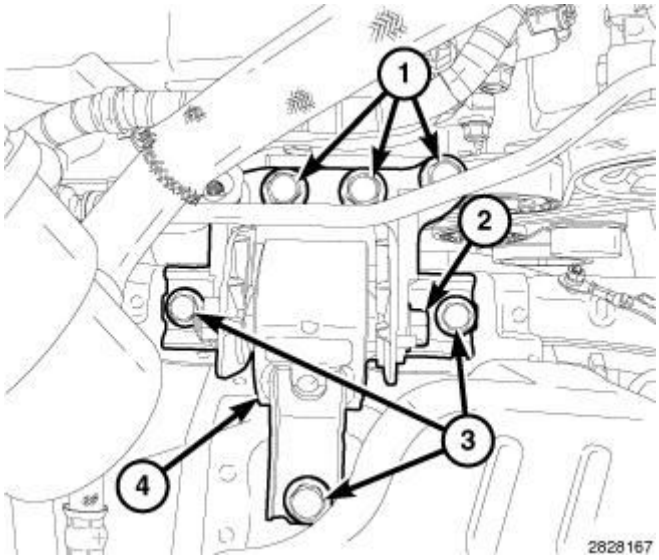

Fig. 41: Park/Turn Signal Lamp Replacement
Courtesy of CHRYSLER GROUP, LLC

1. Position the park/turn signal lamp into the seat in the face of the front fascia (4). Be certain that the three alignment tabs on the lamp housing are engaged in the alignment slots in the seat.
2. Install and tighten the three screws (5) that secure the lamp to the back of the fascia. Tighten the screws to 2 N.m (14 in. lbs.).
3. Reconnect the engine compartment wire harness (1) connector (3) to the park/turn signal bulb socket (2) connector receptacle.

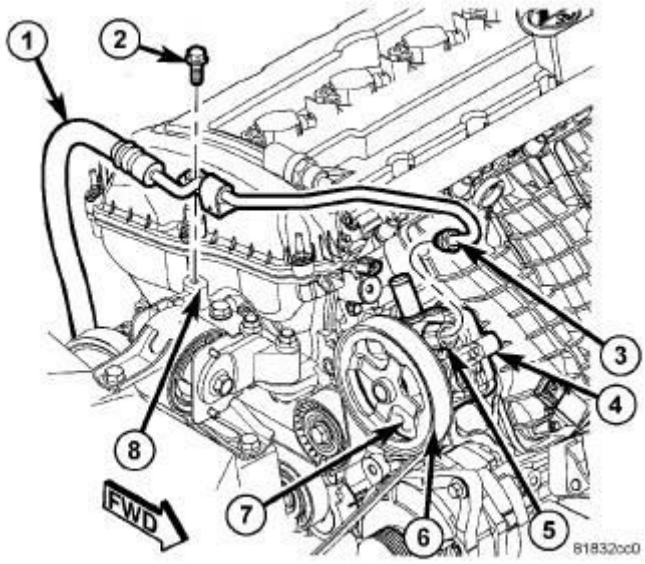

Fig. 42: Removing/Installing Front Fog Lamp
Courtesy of CHRYSLER GROUP, LLC

4. Position the front of the front wheel house splash shield (4) to the front fascia (2) closure panel and secure it with two push pin fasteners (3).
5. Install the push pin fastener (3) that secures the inboard side of the splash shield to the front end sheet metal.
6. Install and tighten the three screws (1) that secure the outboard side of the splash shield to the front fascia. Tighten the screws to 2 N.m (19 in. lbs.).
7. Reinstall the front wheel and tire. Refer to **INSTALLATION** .
8. Lower the vehicle.
9. Reconnect the battery negative cable.

LAMP, SIDE REPEATER

REMOVAL

BULB

NOTE: Repeater lamps are used only on vehicles manufactured for certain markets where these lamps are required.

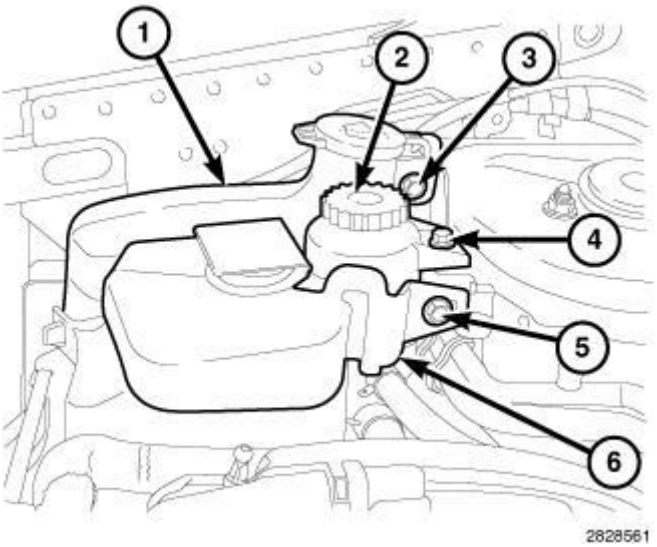

Fig. 43: Remove/Install Repeater Lamp Bulb
Courtesy of CHRYSLER GROUP, LLC

1. Disconnect and isolate the battery negative cable.
2. Remove the repeater lamp from the fender mounting hole, but do not disconnect the wire harness connector. Refer to **LAMP, SIDE REPEATER, REMOVAL**.
3. Firmly grasp the bulb socket (1) on the back of the lamp lens/housing (4) and rotate it counterclockwise about 30 degrees to unlock it.
4. Pull the socket and bulb straight out from the keyed opening in the housing.
5. Pull the base of the bulb (3) straight out of the socket.

LAMP

NOTE: Repeater lamps are used only on vehicles manufactured for certain markets where these lamps are required.

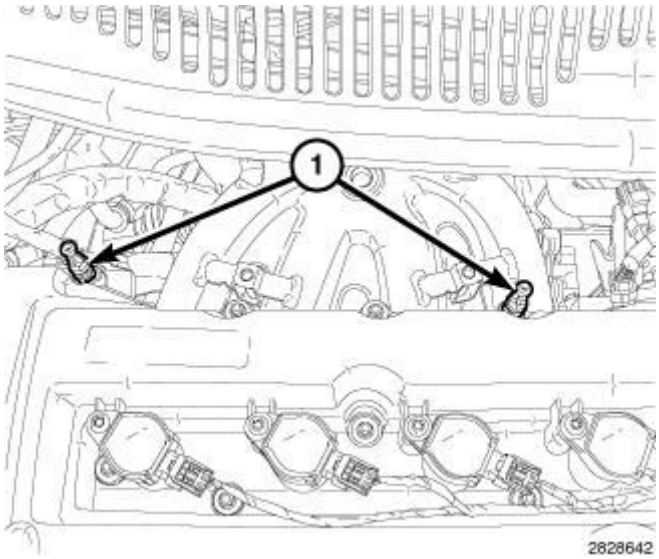

Fig. 44: Remove/Install Repeater Lamp
Courtesy of CHRYSLER GROUP, LLC

1. Disconnect and isolate the battery negative cable.

NOTE: The same repeater lamp is used on both sides of the vehicle. Regardless of which side of the vehicle the lamp is on, when properly oriented the fixed hook tab integral to the back of the lamp housing is on the right-hand side of the lamp and the latch feature is on the left-hand side.

2. Using hand pressure, press the right edge of the repeater lamp lens/housing (1) toward the left against the spring pressure of the latch feature, then pull the right edge of the lamp outward far enough to disengage the hook tab from the right side of the fender mounting hole (3).
3. Pull the lamp out from the fender far enough to access and disconnect the wire harness connector (2) from the bulb socket on the back of the lamp lens/housing.
4. Remove the repeater lamp from the fender.

INSTALLATION

BULB

CAUTION: Always use the correct bulb size and type for replacement. An incorrect bulb size or type may

overheat and cause damage to the lamp, the socket or the lamp wiring.

NOTE: Repeater lamps are used only on vehicles manufactured for certain markets where these lamps are required.

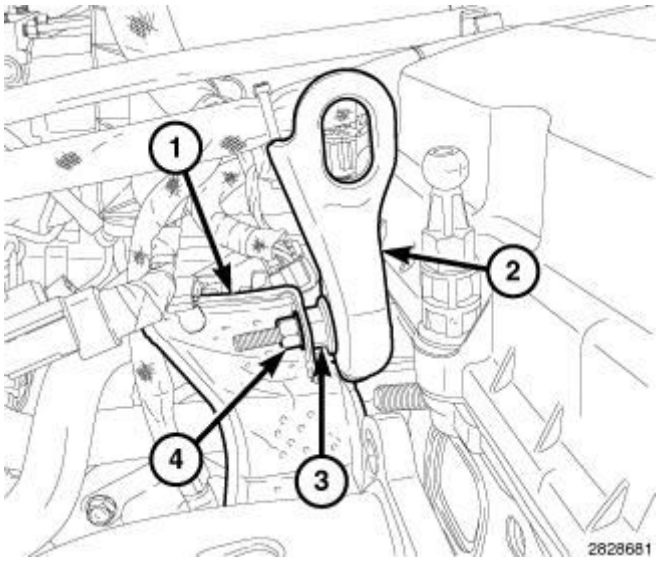

Fig. 45: Remove/Install Repeater Lamp Bulb
Courtesy of CHRYSLER GROUP, LLC

1. Align the base of the bulb (3) with the socket (1).
2. Push the bulb straight into the socket until the base is firmly seated.
3. Be certain that a rubber O-ring seal (2) is properly installed and in good condition around the base of the bulb socket.
4. Align the socket and bulb with the keyed opening on the back of the repeater lamp lens/housing (4).
5. Insert the socket and bulb into the housing until the socket is firmly seated.
6. Rotate the socket clockwise about 30 degrees to lock it into place.
7. Reinstall the repeater lamp into the fender mounting hole. Refer to **LAMP, SIDE REPEATER, INSTALLATION**.
8. Reconnect the battery negative cable.

LAMP

NOTE: Repeater lamps are used only on vehicles manufactured for certain markets where these lamps are required.

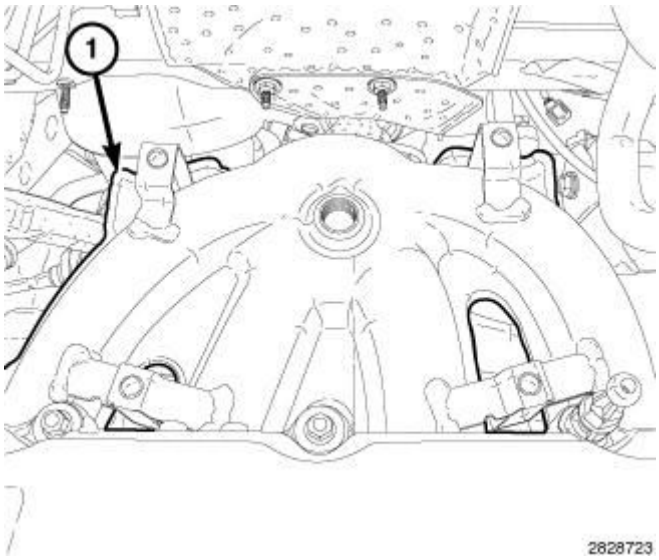

Fig. 46: Remove/Install Repeater Lamp
Courtesy of CHRYSLER GROUP, LLC

1. Position the repeater lamp lens/housing (1) close enough to the fender mounting hole (3) to access and reconnect the wire harness connector (2) to the bulb socket on the back of the lamp lens/housing.

NOTE: The same repeater lamp is used on both sides of the vehicle. Regardless of which side of the vehicle the lamp is on, when properly oriented the fixed hook tab integral to the back of the lamp housing is on the right-hand side of the lamp and the latch feature is on the left-hand side.

2. With the lamp lens/housing properly oriented, engage the hook tab on the back of the right side of the lamp with the right edge of the fender mounting hole.
3. Using hand pressure, press the left side of the lamp lens/housing into the mounting hole against the spring pressure of the latch feature until the latch snaps into place.
4. Reconnect the battery negative cable.

LAMP, TAIL STOP TURN

REMOVAL

BULB - MK49

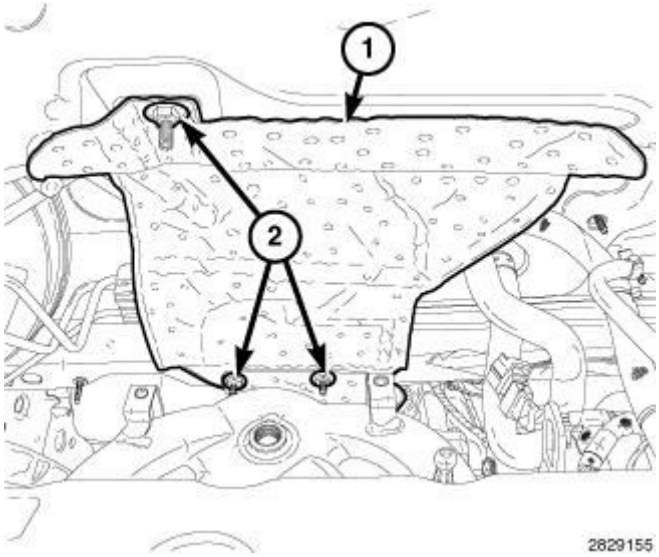

Fig. 47: Rear Lamp Unit, Light Emitting Diode (LED) Module, Incandescent Bulbs & Turn Signal
Courtesy of CHRYSLER GROUP, LLC

NOTE: The rear lamp unit (2) contains two incandescent bulbs and an integral Light Emitting Diode (LED) module (1). The incandescent bulbs are: backup (3) and turn signal (4). The tail, stop and side marker lighting functions are all performed by the LED module, which is integral to the rear lamp unit. If the tail, stop or side marker functions are ineffective the entire rear lamp unit must be replaced. The service procedures for each incandescent bulb are the same, only the bulb sizes and types may differ.

1. Disconnect and isolate the battery negative cable.
2. Remove the rear lamp unit (2) from the end of the quarter panel. Refer to **LAMP, TAIL STOP TURN, REMOVAL**.
3. Firmly grasp the appropriate bulb socket (3 or 4) on the back of the rear lamp unit housing and rotate it counterclockwise about 30 degrees to unlock it.
4. Pull the socket and bulb straight out from the keyed opening in the housing.
5. Pull the base of the bulb straight out of the socket.

BULB - MK74

DOMESTIC

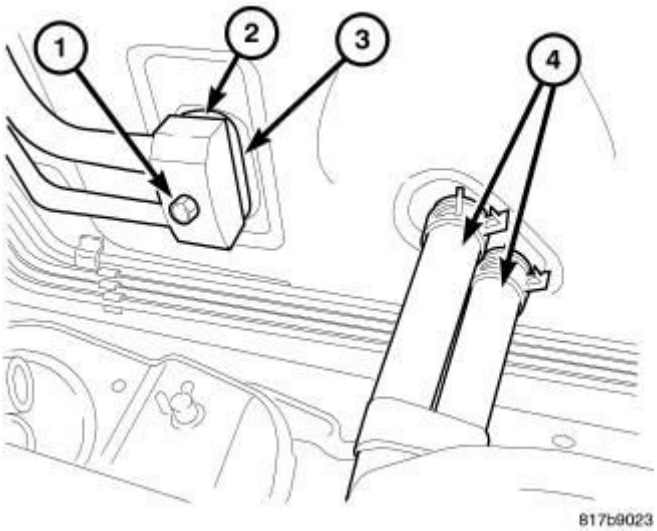

Fig. 48: Rear Lamp Unit, Backup & Park/Stop/Turn Signal/Rear Side Marker
Courtesy of CHRYSLER GROUP, LLC

NOTE: The rear lamp unit (2) contains two bulbs. They are: backup (3) and park/stop/turn signal/rear side marker (1). The service procedures for each bulb are the same, only the bulb sizes and types may differ.

1. Disconnect and isolate the battery negative cable.
2. Remove the rear lamp unit (2) from the end of the quarter panel. Refer to **LAMP, TAIL STOP TURN, REMOVAL**.
3. Firmly grasp the appropriate bulb socket (1 or 3) on the back of the rear lamp unit housing and rotate it counterclockwise about 30 degrees to unlock it.
4. Pull the socket and bulb straight out from the keyed opening in the housing.
5. Pull the base of the bulb straight out of the socket.

EXPORT

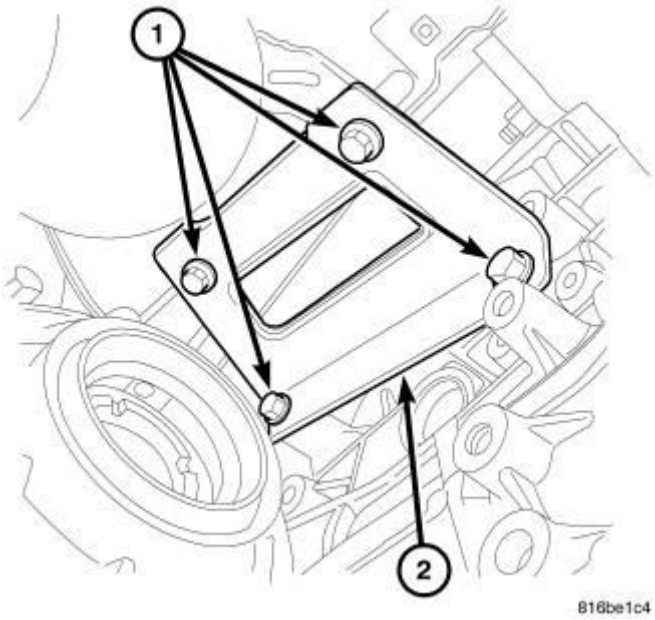

Fig. 49: Rear Lamp Bulb Replacement - Patriot
Courtesy of CHRYSLER GROUP, LLC

NOTE: The rear lamp unit (2) contains four bulbs. They are: backup (4), park/stop/rear side marker (1), rear fog (3) and turn signal (5). The service procedures for each bulb are the same, only the bulb sizes and types may differ.

1. Disconnect and isolate the battery negative cable.
2. Remove the rear lamp unit (2) from the end of the quarter panel. Refer to **LAMP, TAIL STOP TURN, REMOVAL**.
3. Firmly grasp the appropriate bulb socket (1, 3, 4 or 5) on the back of the rear lamp unit housing and rotate it counterclockwise about 30 degrees to unlock it.
4. Pull the socket and bulb straight out from the keyed opening in the housing.
5. Pull the base of the bulb straight out of the socket.

LAMP - DOMESTIC

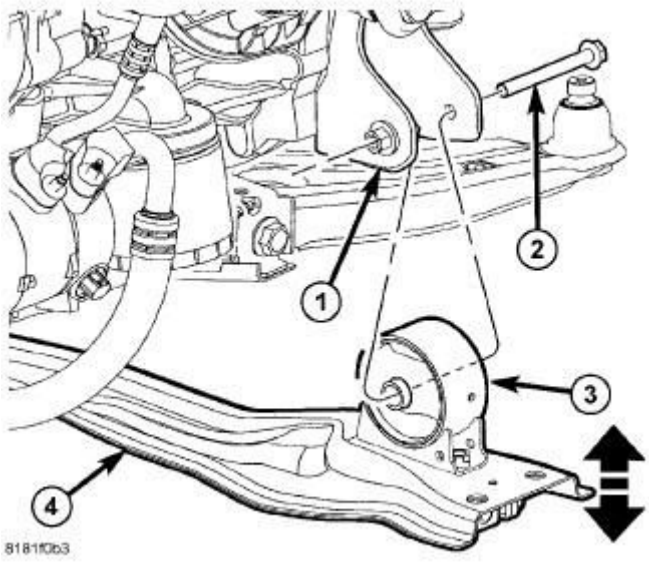

Fig. 50: Rear Lamp Unit Replacement - Compass
Courtesy of CHRYSLER GROUP, LLC

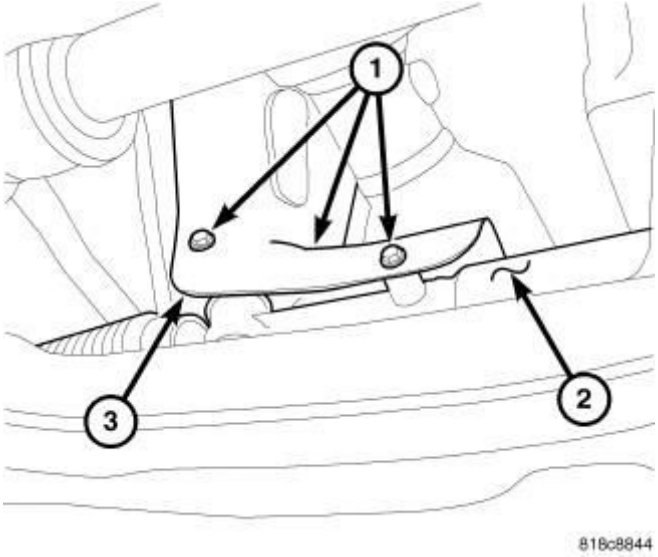

Fig. 51: Rear Lamp Unit Replacement - Patriot
Courtesy of CHRYSLER GROUP, LLC

1. Disconnect and isolate the battery negative cable.
2. Open the liftgate to access and remove the two push pin fasteners (5) that secure the rear lamp unit (4) to the side trough of the liftgate opening.
3. Pull the outboard side of the rear lamp unit rearward far enough to unsnap the two ball studs on the outboard side of the lamp housing from the two plastic grommets (3) in the quarter outer panel (2).
4. Pull the lamp away from the vehicle far enough to access and disconnect the unibody wire harness connectors (1, 6 and 8) from the bulb socket connector

receptacles and the pigtail wire connector on the back of the lamp housing.

5. Remove the lamp from the lamp opening of the quarter outer panel.

LAMP - EXPORT

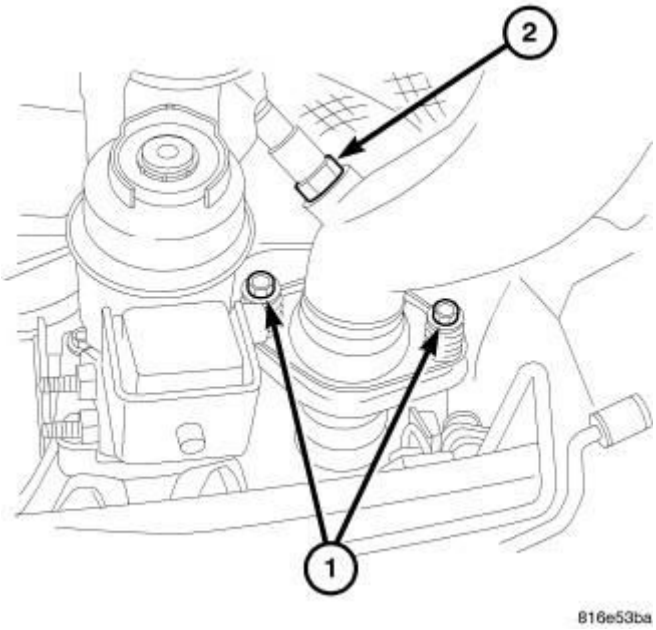

Fig. 52: Rear Lamp Unit Replacement - Compass
Courtesy of CHRYSLER GROUP, LLC

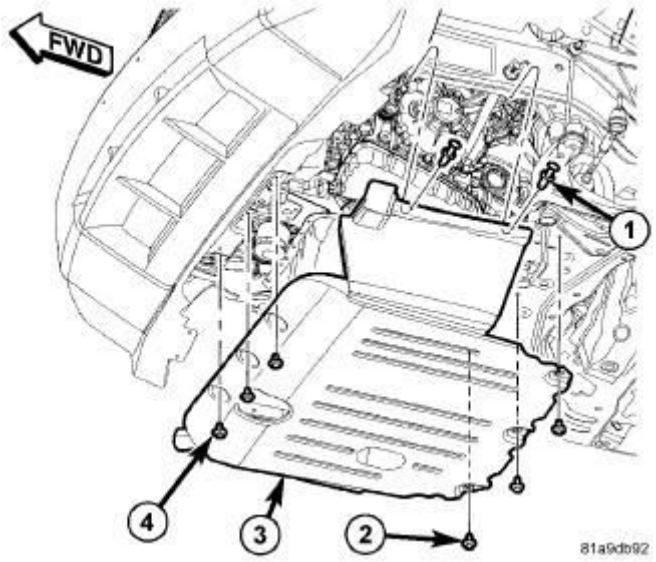

Fig. 53: Rear Lamp Unit Replacement - Patriot
Courtesy of CHRYSLER GROUP, LLC

1. Disconnect and isolate the battery negative cable.

2. Open the liftgate to access and remove the two push pin fasteners (6) that secure the rear lamp unit (5) to the side trough of the liftgate opening.
3. Pull the outboard side of the rear lamp unit rearward far enough to unsnap the two ball studs on the outboard side of the lamp housing from the two plastic grommets (4) in the quarter outer panel (3).
4. Pull the lamp away from the vehicle far enough to access and disconnect the unibody wire harness connectors (1, 2 and 7) from the bulb socket connector receptacles and the pigtail wire connector on the back of the lamp housing.
5. Remove the lamp from the lamp opening of the quarter outer panel.

INSTALLATION

BULB - MK49

CAUTION: Always use the correct bulb size and type for replacement. An incorrect bulb size or type may overheat and cause damage to the lamp, the socket or the lamp wiring.

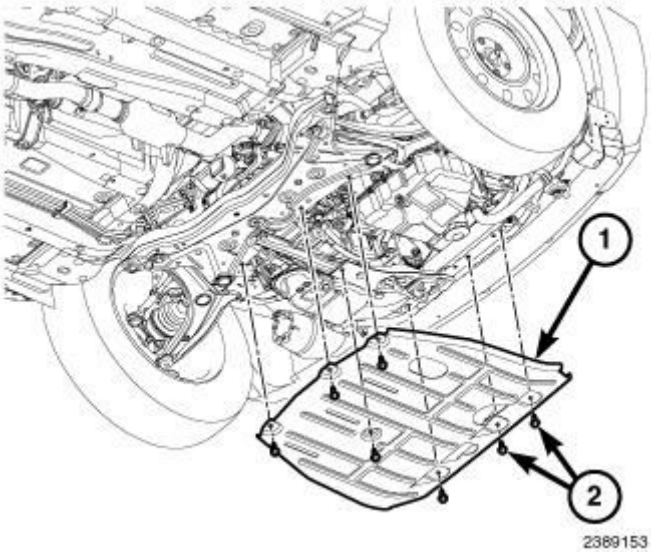

Fig. 54: Rear Lamp Unit, Light Emitting Diode (LED) Module, Incandescent Bulbs & Turn Signal
Courtesy of CHRYSLER GROUP, LLC

NOTE: The rear lamp unit (2) contains two incandescent bulbs and an integral Light Emitting Diode (LED) module (1). The incandescent bulbs are: backup (3) and turn signal (4). The tail, stop and side marker lighting functions are

all performed by the LED module, which is integral to the rear lamp unit. If the tail, stop or side marker functions are ineffective the entire rear lamp unit must be replaced. The service procedures for each incandescent bulb are the same, only the bulb sizes and types may differ.

1. Align the base of the bulb with the appropriate lamp socket (3 or 4).
2. Push the bulb straight into the socket until the base is firmly seated.
3. Align the socket and bulb with the keyed opening on the back of the rear lamp unit (2) housing.
4. Insert the socket and bulb into the housing until the socket is firmly seated.
5. Rotate the socket clockwise about 30 degrees to lock it into place.
6. Reinstall the rear lamp unit onto the end of the quarter panel. Refer to **LAMP, TAIL STOP TURN, INSTALLATION**.
7. Reconnect the battery negative cable.

BULB - MK74

DOMESTIC

CAUTION: Always use the correct bulb size and type for replacement. An incorrect bulb size or type may overheat and cause damage to the lamp, the socket or the lamp wiring.

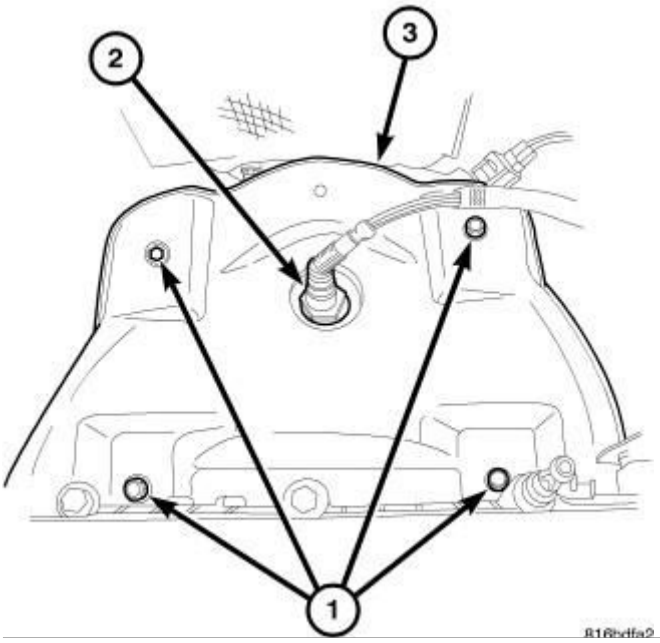

Fig. 55: Rear Lamp Unit, Backup & Park/Stop/Turn Signal/Rear Side Marker
Courtesy of CHRYSLER GROUP, LLC

NOTE: The rear lamp unit (2) contains two bulbs. They are: backup (3) and park/stop/turn signal/rear side marker (1). The service procedures for each bulb are the same, only the bulb sizes and types may differ.

1. Align the base of the bulb with the appropriate lamp socket (1 or 3).
2. Push the bulb straight into the socket until the base is firmly seated.
3. Align the socket and bulb with the keyed opening on the back of the rear lamp unit (2) housing.
4. Insert the socket and bulb into the housing until the socket is firmly seated.
5. Rotate the socket clockwise about 30 degrees to lock it into place.
6. Reinstall the rear lamp unit onto the end of the quarter panel. Refer to **LAMP, TAIL STOP TURN, INSTALLATION**.
7. Reconnect the battery negative cable.

EXPORT

CAUTION: Always use the correct bulb size and type for replacement. An incorrect bulb size or type may overheat and cause damage to the lamp, the socket or the lamp wiring.

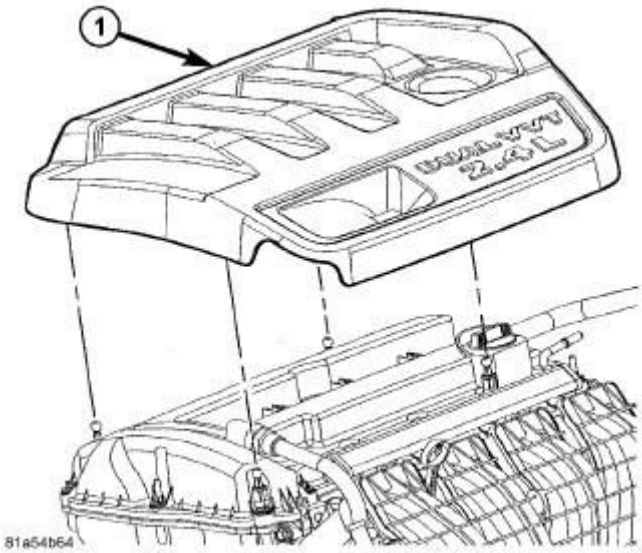

Fig. 56: Rear Lamp Bulb Replacement - Patriot
Courtesy of CHRYSLER GROUP, LLC

NOTE: The rear lamp unit (2) contains four bulbs. They are: backup (4), park/stop/rear side marker (1), rear fog (3) and turn signal (5). The service procedures for each bulb are the same, only the bulb sizes and types may differ.

1. Align the base of the bulb with the appropriate lamp socket (1, 3, 4 or 5).
2. Push the bulb straight into the socket until the base is firmly seated.
3. Align the socket and bulb with the keyed opening on the back of the rear lamp unit (2) housing.
4. Insert the socket and bulb into the housing until the socket is firmly seated.
5. Rotate the socket clockwise about 30 degrees to lock it into place.
6. Reinstall the rear lamp unit onto the end of the quarter panel. Refer to **LAMP, TAIL STOP TURN, INSTALLATION**.
7. Reconnect the battery negative cable.

LAMP - DOMESTIC

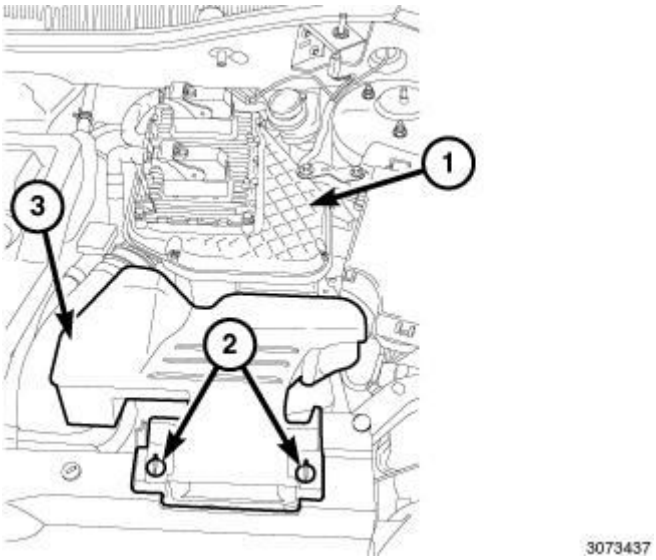

Fig. 57: Rear Lamp Unit Replacement - Compass
Courtesy of CHRYSLER GROUP, LLC

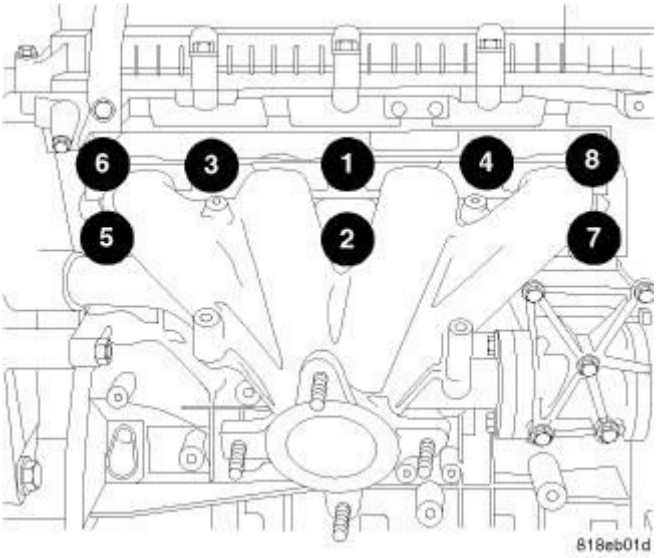

Fig. 58: Rear Lamp Unit Replacement - Patriot
Courtesy of CHRYSLER GROUP, LLC

1. Check to be certain that the two plastic seal grommets (7) are in good condition and properly installed in the side trough of the liftgate opening.
2. Check to be certain that the two plastic ball stud grommets (3) are in good condition and properly installed in the quarter outer panel (2).
3. Position the rear lamp unit (4) to the lamp opening of the quarter outer panel.
4. Reconnect the unibody wire harness connectors (1, 6 and 8) to the bulb socket connector receptacles and the pigtail wire connector on the back of the lamp housing.

5. Align the two ball studs on the outboard side of the lamp housing with the two grommets in the quarter outer panel.

CAUTION: Apply firm and even pressure to the rear lamp ONLY at the top and bottom of the unit. Applying pressure at the side or center of the lamp may result in damage to the lamp lens or reflector.

6. Using hand pressure, push firmly and evenly on the outboard top and bottom of the lamp until both ball studs snap into the grommets.
7. Install the two push pin fasteners (6) that secure the rear lamp unit to the side trough of the liftgate opening.
8. Reconnect the battery negative cable.

LAMP - EXPORT

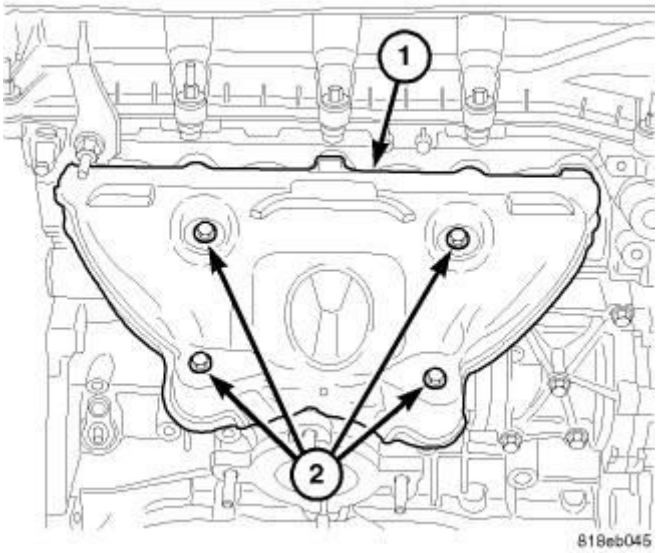

Fig. 59: Rear Lamp Unit Replacement - Compass
Courtesy of CHRYSLER GROUP, LLC

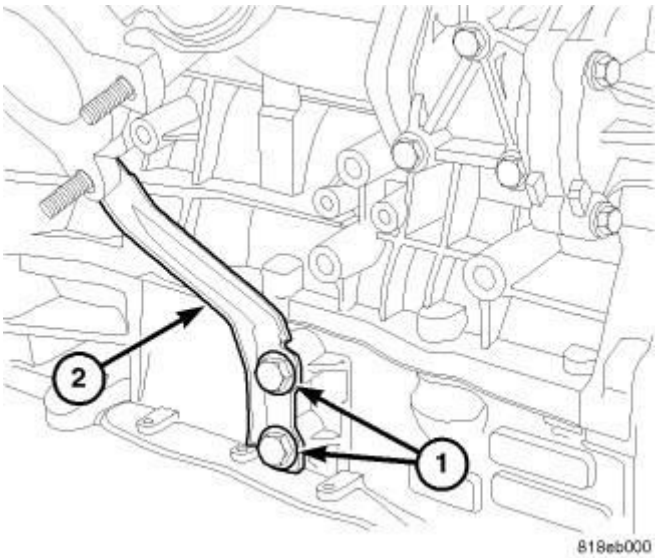

Fig. 60: Rear Lamp Unit Replacement - Patriot
Courtesy of CHRYSLER GROUP, LLC

1. Check to be certain that the two plastic seal grommets (8) are in good condition and properly installed in the side trough of the liftgate opening.
2. Check to be certain that the two plastic ball stud grommets (4) are in good condition and properly installed in the quarter outer panel (3).
3. Position the rear lamp unit (5) to the lamp opening of the quarter outer panel.
4. Reconnect the unibody wire harness connectors (1, 2 and 7) to the two bulb socket connector receptacles and the pigtail wire connector on the back of the lamp housing.
5. Align the two ball studs on the outboard side of the lamp housing with the two grommets in the quarter outer panel.

CAUTION: Apply firm and even pressure to the rear lamp ONLY at the top and bottom of the unit. Applying pressure at the side or center of the lamp may result in damage to the lamp lens or reflector.

6. Using hand pressure, push firmly and evenly on the outboard top and bottom of the lamp until both ball studs snap into the grommets.
7. Install the two push pin fasteners (6) that secure the rear lamp unit to the side trough of the liftgate opening.
8. Reconnect the battery negative cable.

MOTOR, HEADLAMP LEVELING

DESCRIPTION

DESCRIPTION

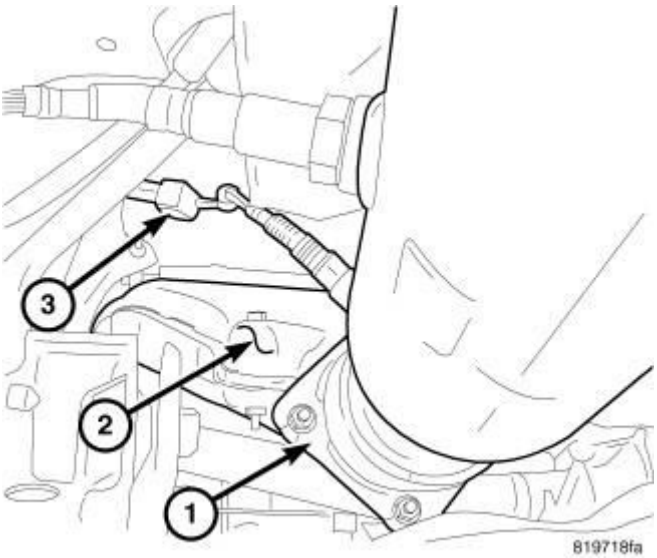

Fig. 61: Headlamp Leveling Motor
Courtesy of CHRYSLER GROUP, LLC

The headlamp leveling motor (1) is located on the rear surface of each front lamp unit (MK49 - Compass) or headlamp unit (MK74 - Patriot) on vehicles equipped with the headlamp leveling system, which is available only in certain markets where it is required equipment. The motor is encased within a molded plastic housing and is secured by an integral wedge-type mounting boss (2) to a keyed flange on the back of the front lamp or headlamp unit housing. A rubber seal around the circumference of the mounting boss seals the motor to the lamp housing.

The outside of the motor housing features an integral molded connector (4) on its lower rearward surface and a plastic pushrod with a ball formation (3) on its free end extends from the motor mounting boss. Within the motor housing is a 12-volt Direct Current (DC) servo motor, an electronic controller board that includes the motor logic circuits, and an integral screw-drive transmission. The headlamp leveling motor is connected to the vehicle electrical system through a dedicated take out and connector of the Front End Module (FEM) wire harness.

The headlamp leveling motor is serviced as a unit with the front lamp or headlamp unit. The motor cannot be repaired and, if ineffective or damaged, the

entire front lamp or headlamp unit must be replaced.

OPERATION

OPERATION

The controller board and logic circuitry of the headlamp leveling motor control motor operation based upon a voltage signal input received from the Totally Integrated Power Module (TIPM). The TIPM uses electronic messages received over the Controller Area Network (CAN) data bus from the ElectroMechanical Instrument Cluster (EMIC) (also known as the Cab Compartment Node/CCN) to determine the correct voltage signal to provide the leveling motor, while the EMIC uses electronic messages received over the Local Interface Network (LIN) data bus from the instrument panel switch pod to monitor the headlamp leveling switch selection.

The headlamp leveling motors have a path to ground at all times. The headlamp leveling motors operate on battery voltage received through the headlamp low beam feed circuits so that the system will only operate when the headlamp low beams are turned ON. When the motor is energized it will extend or retract the motor pushrod through an integral screw-drive transmission. The ball on the end of the pushrod is snapped into a socket on the back of the reflector within the front lamp unit (MK49 - Compass) or headlamp unit housing (MK74 - Patriot), which will cause the reflector to move as the pushrod is extended or retracted, changing the angle at which the light is projected from the headlamp low beam bulb filaments.

The hard wired circuits for the headlamp leveling motors may be diagnosed using conventional diagnostic tools and procedures. Refer to the appropriate wiring information. However, conventional diagnostic methods will not prove conclusive in the diagnosis of the active electronic elements within the headlamp leveling motors or the electronic controls and communication between other modules and devices that provide some features of the headlamp leveling system. The most reliable, efficient, and accurate means to diagnose the headlamp leveling motor or the electronic controls and communication related to headlamp leveling system operation requires the use of a diagnostic scan tool. Refer to the appropriate diagnostic information.

SWITCH, BACKUP LAMP

DESCRIPTION

DESCRIPTION

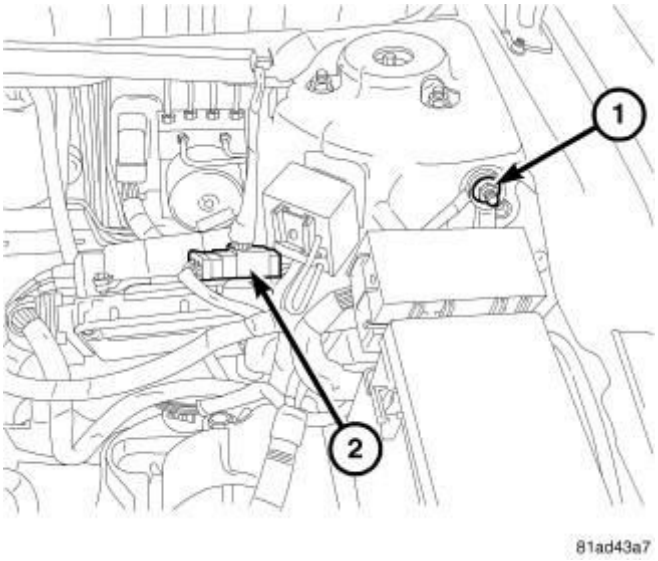

Fig. 62: Backup Lamp Switch
Courtesy of CHRYSLER GROUP, LLC

Vehicles equipped with a manual transmission (2) have a normally open, spring-loaded plunger type backup lamp switch (1). Vehicles with an optional electronic automatic transmission have a Transmission Range Sensor (TRS) that is used to perform several functions, including that of the backup lamp switch. The TRS is described in further detail elsewhere in this service information. Refer to the appropriate service and diagnostic information for the automatic transmission type installed in the vehicle.

The backup lamp switch is located in a threaded hole on the forward-facing surface of the manual transmission housing. The switch has a threaded body and a hex formation near the plunger end of the switch. An integral connector receptacle at the end of the switch opposite the plunger connects the switch to the vehicle electrical system through a take out and connector of the engine wire harness. When installed, only the switch connector and the hex formation are visible on the outside of the transmission housing.

The backup lamp switch cannot be adjusted or repaired and, if ineffective or damaged, the entire switch unit must be replaced.

OPERATION

OPERATION

The backup lamp switch controls a path to ground for the Totally Integrated

Power Module (TIPM) on the reverse switch signal circuit. The TIPM reads this input through an internal pull-up, then controls an output through a high side driver that regulates the flow of battery voltage to the backup lamp bulbs as appropriate on the backup lamp feed circuit. The switch plunger is mechanically actuated by the gearshift mechanism within the transmission, which will depress the switch plunger and close the switch contacts whenever the REVERSE gear has been selected. The switch receives ground at all times through a take out and eyelet terminal of the unibody wire harness that is secured by a nut to a ground stud on the body sheet metal within the passenger compartment of the vehicle.

The backup lamp switch as well as the hard wired inputs and outputs of the switch may be diagnosed using conventional diagnostic tools and procedures. Refer to the appropriate wiring information.

DIAGNOSIS AND TESTING

DIAGNOSIS AND TESTING - BACKUP LAMP SWITCH

1. Disconnect and isolate the battery negative cable.
2. Locate and disconnect the engine wire harness connector from the backup lamp switch connector receptacle.
3. Check for continuity between the two terminal pins in the backup lamp switch connector receptacle.
   a. With the gear selector lever in the REVERSE position, there should be continuity.
   b. With the gear selector lever in any position other than REVERSE, there should be no continuity.
4. If the switch fails either of these two continuity tests, replace the ineffective backup lamp switch.

SWITCH, HAZARD WARNING

DESCRIPTION

DESCRIPTION

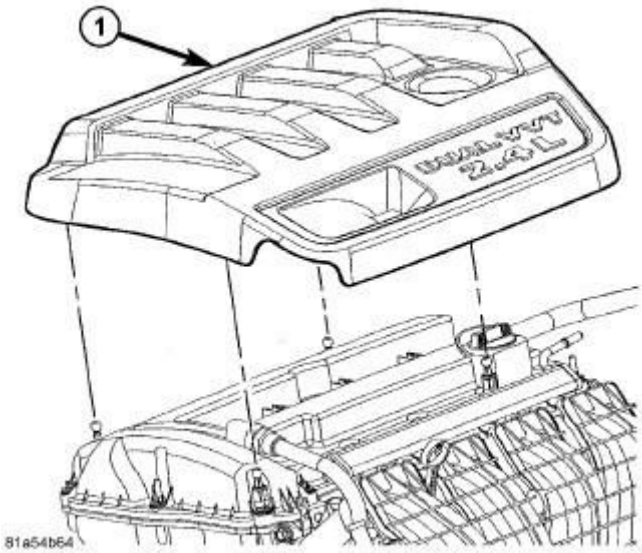

Fig. 63: Instrument Panel Switch Pod
Courtesy of CHRYSLER GROUP, LLC

The hazard switch (4) is integral to the instrument panel switch pod (1), which is secured to the instrument panel center bezel just below the heater and air conditioner controls. A red, stencil-like International Control and Display Symbol icon for **Hazard Warning** identifies the hazard switch button. The remainder of the hazard switch circuitry is concealed within the instrument panel switch pod.

The hazard switch button has panel lamps dimmer controlled illumination for night visibility. The switch button unlatches to a slightly raised position when the hazard warning system is activated and the icon on the switch button will illuminate at an increased intensity while the turn signals and turn signal indicators are flashing. The switch button latches to a lowered position flush with the other push buttons in the switch pod when the hazard warning is deactivated.

All of the circuitry and components of the hazard switch are contained within a molded black plastic instrument panel switch pod housing. A single connector receptacle is integral to the back of the switch pod housing. The switch is connected to the vehicle electrical system through a dedicated take out and connector of the instrument panel wire harness.

The hazard switch cannot be adjusted or repaired and, if ineffective or damaged, the entire instrument panel switch pod unit must be replaced. Refer to **POD, SWITCH, REMOVAL** .

OPERATION

OPERATION

The status of the hazard switch is continually monitored by the circuitry within the instrument panel switch pod. The switch pod receives battery voltage at all times on a fused battery feed circuit, and a path to ground at all times through the instrument panel wire harness. The only other inputs to and outputs from the switch pod consist of electronic communication with the ElectroMechanical Instrument Cluster (EMIC) (also known as the Cab Compartment Node/CCN) over the single wire Local Interface Network (LIN) data bus.

Whenever the hazard switch is in its unlatched and raised position, the hazard warning system is selected and the switch pod circuitry sends an electronic **hazard switch status** message to the EMIC over the LIN data bus and the EMIC responds to this input by sending the appropriate electronic **hazard system request** messages to the Totally Integrated Power Module over the CAN data bus.

When the TIPM receives a **hazard system request** message it then controls hazard warning system operation and flash rate by controlling battery voltage outputs through high side drivers on the right and left turn signal feed circuits. The TIPM also sends the appropriate electronic messages back to the EMIC to control the illumination and flash rate of the right and left turn signal indicators, as well as to control the click rate of an electromechanical relay soldered onto the EMIC electronic circuit board that emulates the sound emitted by a conventional hazard warning flasher. The EMIC then sends messages back to the switch pod to control the illumination of the hazard switch push button.

The hard wired circuits for the instrument panel switch pod may be diagnosed using conventional diagnostic tools and procedures. Refer to the appropriate wiring information. However, conventional diagnostic methods will not prove conclusive in the diagnosis of the hazard warning switch or the electronic controls and communication between other modules and devices that provide some features of the hazard warning system. The most reliable, efficient, and accurate means to diagnose the hazard switch or the electronic controls and communication related to hazard warning system operation requires the use of a diagnostic scan tool. Refer to the appropriate diagnostic information.

SWITCH, HEADLAMP LEVELING

DESCRIPTION

DESCRIPTION

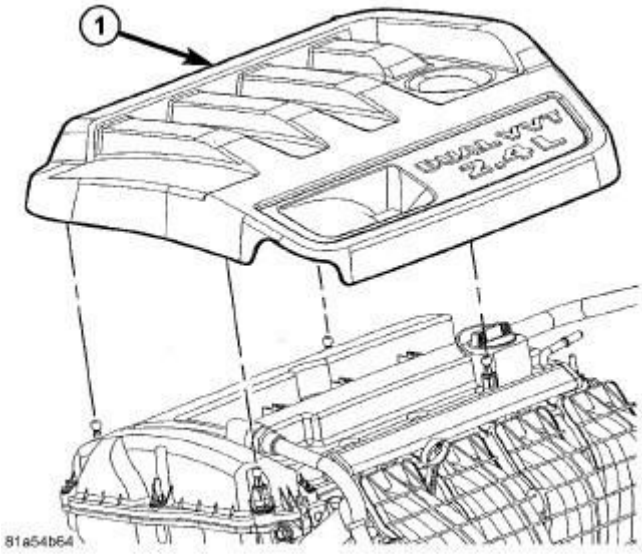

Fig. 64: Headlamp Leveling Switch
Courtesy of CHRYSLER GROUP, LLC

The headlamp leveling switch (2) is used only on vehicles manufactured for certain markets where the headlamp leveling system is required. The headlamp leveling switch is integral to the switch pod (1) on the instrument panel. A stencil-like International Control and Display Symbol icon for **Headlamp Levelling Control** identifies the headlamp leveling switch button. The switch push button is also marked with the numbers **0** , **1** , **2** , and **3** , which indicates each of the four headlamp leveling positions. Each higher number represents a lower aiming position of the headlamp beam relative to the road surface.

The headlamp leveling switch button has panel lamps dimmer controlled illumination for night visibility. The switch button also features a jewel like Light Emitting Diode (LED) indicator adjacent to the numbers **1** , **2** , and **3** . The appropriate LED is illuminated when that headlamp position is currently selected. The momentary switch push button is operated by depressing, then releasing the top or bottom of the button in a rocker manner to enable the selection of a sequentially higher or lower position with each button press.

All of the circuitry and components of the headlamp leveling switch are contained within a molded black plastic instrument panel switch pod housing. A single connector receptacle is integral to the back of the switch pod housing. The

switch is connected to the vehicle electrical system through a dedicated take out and connector of the instrument panel wire harness.

The headlamp leveling switch cannot be adjusted or repaired and, if ineffective or damaged, the entire instrument panel switch pod unit must be replaced. Refer to **POD, SWITCH, REMOVAL** .

OPERATION

OPERATION

The status of the headlamp leveling switch is continually monitored by the circuitry within the instrument panel switch pod. The switch pod receives battery voltage at all times on a fused battery feed circuit, and a path to ground at all times through the instrument panel wire harness. The only other inputs to and outputs from the switch pod consist of electronic communication with the ElectroMechanical Instrument Cluster (EMIC) (also known as the Cab Compartment Node/CCN) over the single wire Local Interface Network (LIN) data bus.

Whenever the headlamp leveling switch push button is depressed the switch pod circuitry sends an electronic **select status up** or **select status down** message input to the EMIC over the LIN data bus. The EMIC then sends the appropriate electronic **select request up** or **select request down** message to the TIPM over the CAN data bus.

The TIPM responds to these messages by providing a voltage output to the headlamp leveling motors through high side drivers on the headlamp leveling motor right and left signal circuits to move the headlamp reflectors to the selected position based upon the voltage input received from the TIPM. The TIPM also sends the appropriate electronic messages back to the EMIC and the EMIC relays the messages back to the switch pod to control the illumination of the **1** , **2** , or **3** Light Emitting Diode (LED) selected position indicator in the leveling switch button. The EMIC and TIPM logic will only allow the headlamp leveling system to operate while the ignition switch is in the ON position and the exterior lighting is turned ON.

The hard wired circuits for the instrument panel switch pod may be diagnosed using conventional diagnostic tools and procedures. Refer to the appropriate wiring information. However, conventional diagnostic methods will not prove

conclusive in the diagnosis of the headlamp leveling switch or the electronic controls and communication between other modules and devices that provide some features of the headlamp leveling system. The most reliable, efficient, and accurate means to diagnose the headlamp leveling switch or the electronic controls and communication related to headlamp leveling system operation requires the use of a diagnostic scan tool. Refer to the appropriate diagnostic information.

SWITCH, MULTIFUNCTION, LEFT

DESCRIPTION

DESCRIPTION

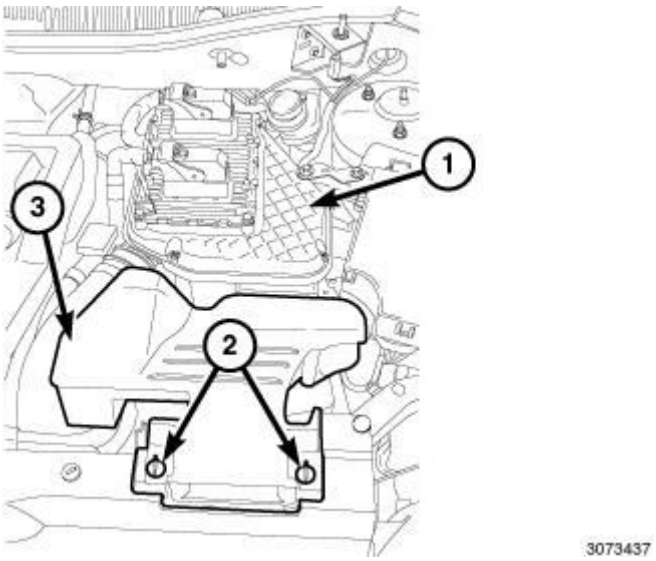

Fig. 65: Left Multi-Function Switch
Courtesy of CHRYSLER GROUP, LLC

The left (lighting) multi-function switch is located on the left side of the steering column, just below the steering wheel. This switch is the primary control for the interior and exterior lighting systems. The only visible components of the switch are the control stalk (2), control knob (1) and control sleeve (3) that extend through the steering column shrouds on the left side of the column. The remainder of the switch including its mounting provisions, its electrical connection, and the turn signal cancel actuator are concealed beneath the shrouds.

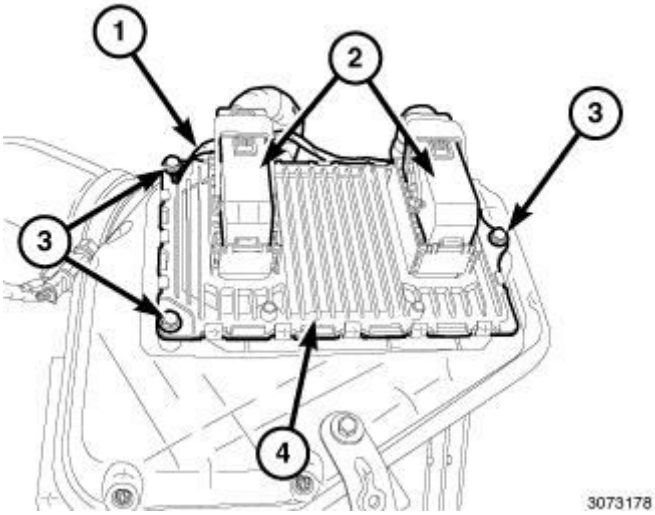

Fig. 66: Steering Control Module
Courtesy of CHRYSLER GROUP, LLC

The switch housing (2) and controls (1) are constructed of molded black plastic. Each of the switch controls has white International Control and Display Symbol graphics applied to it, which clearly identify its many functions. A single screw (7) through a mounting tab integral to the back of the switch housing, and a slide tab integral to the bottom of the switch housing secure the switch to the mounting bracket integral to the clockspring (3).

The Steering Control Module (SCM) is internal to the switch housing. The switch outputs are internally connected directly to the SCM. A single connector receptacle containing seven terminal pins is integral to the inboard end of the switch housing and connects the right multi-function switch (6) through a jumper wire harness (5) directly to the SCM. An integral connector receptacle on the back of the switch housing connects the SCM to the vehicle electrical system through a dedicated take out and connector of the instrument panel wire harness.

The left multi-function switch provides the vehicle operator with a control interface for the following exterior lighting system functions:

- **Front Fog Lamps** - For vehicles so equipped, the left multi-function switch control knob provides detent switching for the optional front fog lamps.
- **Headlamps** - The left multi-function switch control knob provides detent switching for the headlamps.
- **Headlamp Beam Selection** - The left multi-function switch control stalk provides detent switching for selection of the headlamp high or low beams.

- **Headlamp Optical Horn** - The left multi-function switch control stalk includes momentary switching of the headlamp high beam circuits to provide an optical horn feature (sometimes referred to as flash-to-pass), which allows the vehicle operator to momentarily flash the headlamp high beams as an optical signalling device.
- **Park Lamps** - The left multi-function switch control knob provides detent switching for the park lamps.
- **Rear Fog Lamps** - For vehicles so equipped, the left multi-function switch control knob provides detent switching for the optional rear fog lamps. Rear fog lamps are optional only for vehicles manufactured for certain markets, where they are required.
- **Turn Signal Control** - The left multi-function switch control stalk provides both momentary non-detent switching and detent switching with automatic cancellation for both the left and right turn signal lamps.

The left multi-function switch also provides the vehicle operator with a control interface for the following interior lighting functions:

- **Interior Lamps Defeat** - The left multi-function switch control ring provides detent switching to DEFEAT the illumination of all interior courtesy lamps when a door, the rear flip-up glass, or the liftgate are opened.
- **Interior Lamps On** - The left multi-function switch control ring provides detent switching to simultaneously illuminate all interior courtesy lamps.
- **Panel Lamps Dimming** - The left multi-function switch control ring provides simultaneous adjustable control of the illumination intensity of all instrument panel lighting at one of five available illumination intensity levels.
- **Parade Mode** - The left multi-function switch control ring provides detent switching for a PARADE mode that maximizes the illumination intensity of all instrument panel lighting for visibility when driving in daylight with the exterior lamps turned ON.

The left multi-function switch cannot be adjusted or repaired. If any function of the switch is ineffective, or if the switch is damaged, the entire switch unit must be replaced. The clockspring (with the multi-function switch mounting bracket), the left multi-function switch (with the SCM), the right multi-function switch and the jumper wire harness are each available for separate service replacement.

OPERATION

OPERATION

The left (lighting) multi-function switch uses resistor multiplexing to control the many functions and features it provides using a minimal number of hard wired circuits. The switch receives clean grounds from the Steering Control Module (SCM), then provides resistor multiplexed return outputs to the SCM to indicate the selected switch positions. The SCM then sends electronic **switch status** messages over a Local Interface Network (LIN) data bus to the ElectroMechanical Instrument Cluster (EMIC) (also known as the Cab Compartment Node/CCN), and the EMIC relays electronic **switch request** messages over the Controller Area Network (CAN) data bus to other electronic modules in the vehicle.

If the SCM detects no inputs from the left multi-function switch, it transmits an electronic **Signal Not Available (SNA)** status message over the LIN data bus. The SNA status signals the EMIC to request other electronic modules to implement a failsafe mode of operation for the exterior lighting systems. The failsafe mode automatically turns the exterior lighting ON when the ignition switch is in the ON position, and OFF when the ignition switch is in the OFF position.

The hard wired inputs and outputs of the left multi-function switch and SCM may be diagnosed using conventional diagnostic tools and procedures. Refer to the appropriate wiring information. However, the most reliable, efficient and accurate means to diagnose this component requires the use of a diagnostic scan tool. Refer to the appropriate diagnostic information.

EXTERIOR LIGHTING

Following are descriptions of how the left multi-function switch is operated to control the many exterior lighting functions and features it provides:

- **Front Fog Lamps** - The optional front fog lamps are requested when the left multi-function switch control knob is pulled outward to the front fog lamps detent position. The SCM reads the resistor multiplexed input from the left multi-function switch and sends an electronic **exterior lighting switch status** message over the LIN data bus to the EMIC, which relays an electronic **exterior lighting switch request** message over the CAN data bus to other electronic modules in the vehicle. The switch control knob

incorporates an internal cam mechanism that will only allow the front fog lamps to be selected while the headlamp ON position is also selected, and will automatically move the control knob to the front fog lamps OFF position when the control knob is rotated to deselect the headlamps.

- **Headlamps** - The headlamps are requested when the left multi-function switch control knob is rotated to the headlamps ON detent position. The SCM reads the resistor multiplexed input from the left multi-function switch and sends an electronic **exterior lighting switch status** message over the LIN data bus to the EMIC, which relays an electronic **exterior lighting switch request** message over the CAN data bus to other electronic modules in the vehicle.
- **Headlamp Beam Selection** - The headlamp high beams are selected when the left multi-function switch control stalk is pushed forward to the high beam selection detent position. The low beams are selected when the control stalk is pulled rearward to the low beam selection detent position. The SCM reads the resistor multiplexed input from the left multi-function switch and sends an electronic **beam select switch status** message over the LIN data bus to the EMIC, which relays an electronic **beam select switch request** message over the CAN data bus to other electronic modules in the vehicle.
- **Headlamp Optical Horn** - The headlamp optical horn is selected each time the left multi-function switch control stalk is pulled fully rearward to a momentary position. The headlamp high beams will remain illuminated for as long as the control stalk is held in this momentary position and the low beams will be restored when the control stalk is released. The SCM reads the resistor multiplexed input from the left multi-function switch and sends an electronic **beam select switch status** message over the LIN data bus to the EMIC, which relays an electronic **beam select switch request** message over the CAN data bus to other electronic modules in the vehicle.
- **Park Lamps** - The headlamps are requested when the left multi-function switch control knob is rotated to the park lamps ON detent position. The SCM reads the resistor multiplexed input from the left multi-function switch and sends an electronic **exterior lighting switch status** message over the LIN data bus to the EMIC, which relays an electronic **exterior lighting switch request** message over the CAN data bus to other electronic modules in the vehicle.
- **Rear Fog Lamps** - The optional rear fog lamps are requested when the left multi-function switch control knob is pulled outward to the front fog lamps

detent position and then rotated to the rear fog lamps detent position. The SCM reads the resistor multiplexed input from the left multi-function switch and sends an electronic **exterior lighting switch status** message over the LIN data bus to the EMIC, which relays an electronic **exterior lighting switch request** message over the CAN data bus to other electronic modules in the vehicle. The switch control knob incorporates an internal cam mechanism that will only allow the rear fog lamps to be selected while the front fog lamps ON position is also selected, and will automatically move the control knob to the rear fog lamp OFF position when the control knob is pushed in to deselect the front fog lamps.

- **Turn Signal Control** - The turn signals are requested when the left multi-function switch control stalk is moved downward (left signal) or upward (right signal). The control stalk has a detent position in each direction that provides turn signals with automatic cancellation, and an intermediate, momentary position in each direction that automatically provides three turn signal blinks as a LANE CHANGE feature when the control stalk is tapped or will energize the turn signals for as long as the control stalk is held in the momentary position. When the control stalk is moved to a detent turn signal switch position, a cancel actuator extends through an opening in the side of the clockspring case toward the center of the steering column. A turn signal cancel cam that is integral to the clockspring rotor rotates with the steering wheel and the cam lobes contact the cancel actuator when it is extended from the left multi-function switch. When the steering wheel is rotated during a turning maneuver, one of the turn signal cancel cam lobes will contact the turn signal cancel actuator. The cancel actuator latches against the cancel cam rotation in the direction opposite that which is signaled. If the left turn signal detent is selected, the lobes of the cancel cam will ratchet past the cancel actuator when the steering wheel is rotated to the left, but will unlatch the cancel actuator as the steering wheel rotates to the right and returns to center, which will cancel the turn signal event and release the control stalk from the detent so it returns to the neutral OFF position. The SCM reads the resistor multiplexed input from the left multi-function switch and sends an electronic **exterior lighting switch status** message over the LIN data bus to the EMIC, which relays an electronic **exterior lighting switch request** message over the CAN data bus to other electronic modules in the vehicle.

INTERIOR LIGHTING

Following are descriptions of the how the left multi-function switch is operated to control the many interior lighting functions and features it provides:

- **Interior Lamps Defeat** - The interior lamps defeat feature is requested when the left multi-function switch control sleeve is rotated to the interior lamps DEFEAT detent position. The SCM reads the resistor multiplexed input from the left multi-function switch and sends an electronic **interior lighting switch status** message over the LIN data bus to the EMIC, which relays an electronic **interior lighting switch request** message over the CAN data bus to other electronic modules in the vehicle.
- **Interior Lamps On** - The interior lamps ON feature is requested when the left multi-function switch control sleeve is rotated to the interior lamps ON detent position. The SCM reads the resistor multiplexed input from the left multi-function switch and sends an electronic **interior lighting switch status** message over the LIN data bus to the EMIC, which relays an electronic **interior lighting switch request** message over the CAN data bus to other electronic modules in the vehicle.
- **Panel Lamps Dimming** - The panel lamps dimming function is active only when the left multi-function switch control knob is in any exterior lighting ON position. With the exterior lighting ON, the panel lamps dimming level is requested when the left multi-function switch control sleeve is rotated to any one of five minor detent positions. The SCM reads the resistor multiplexed input from the left multi-function switch and sends an electronic **interior lighting switch status** message over the LIN data bus to the EMIC, which relays an electronic **interior lighting switch request** message over the CAN data bus to other electronic modules in the vehicle.
- **Parade Mode** - The PARADE (or funeral) mode is active only when the left multi-function switch control knob is in any exterior lighting ON position. With the exterior lighting ON, the PARADE mode is requested when the left multi-function switch control sleeve is rotated to the PARADE mode detent position. The SCM reads the resistor multiplexed input from the left multi-function switch and sends an electronic **interior lighting switch status** message over the LIN data bus to the EMIC, which relays an electronic **interior lighting switch request** message over the CAN data bus to other electronic modules in the vehicle.

REMOVAL

REMOVAL

WARNING: To avoid serious or fatal injury on vehicles equipped with airbags, disable the Supplemental Restraint System (SRS) before attempting any steering wheel, steering column, airbag, seat belt tensioner, impact sensor or instrument panel component diagnosis or service. Disconnect and isolate the battery negative (ground) cable, then wait two minutes for the system capacitor to discharge before performing further diagnosis or service. This is the only sure way to disable the SRS. Failure to take the proper precautions could result in accidental airbag deployment.

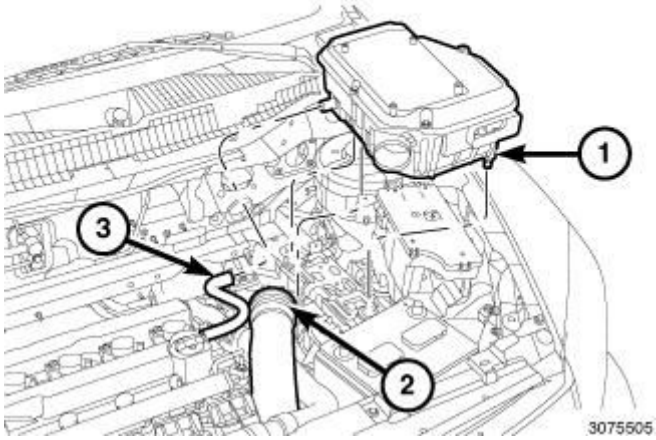

Fig. 67: Identifying Left Multi-Function Switch, Screw & Clockspring
Courtesy of CHRYSLER GROUP, LLC

1. Disconnect and isolate the battery negative cable.
2. Remove both the upper and lower shrouds from the steering column. Refer to **SHROUD, STEERING COLUMN, LOWER, REMOVAL** and **SHROUD, STEERING COLUMN, UPPER, REMOVAL** .
3. Disconnect the instrument panel wire harness connector from the connector receptacle on the back of the left multi-function switch.
4. Remove the screw (2) that secures the left multi-function switch (1) to the mounting bracket integral to the left side of the clockspring (3) on the steering column.
5. Slide the switch away from the clockspring far enough to disengage the slide

tabs on the switch housing from the channel formations in the mounting bracket.

6. Disconnect the jumper wire harness connector from the connector receptacle on the inboard end of the left multi-function switch.
7. Remove the switch from the clockspring.

INSTALLATION

INSTALLATION

WARNING: To avoid serious or fatal injury on vehicles equipped with airbags, disable the Supplemental Restraint System (SRS) before attempting any steering wheel, steering column, airbag, seat belt tensioner, impact sensor or instrument panel component diagnosis or service. Disconnect and isolate the battery negative (ground) cable, then wait two minutes for the system capacitor to discharge before performing further diagnosis or service. This is the only sure way to disable the SRS. Failure to take the proper precautions could result in accidental airbag deployment.

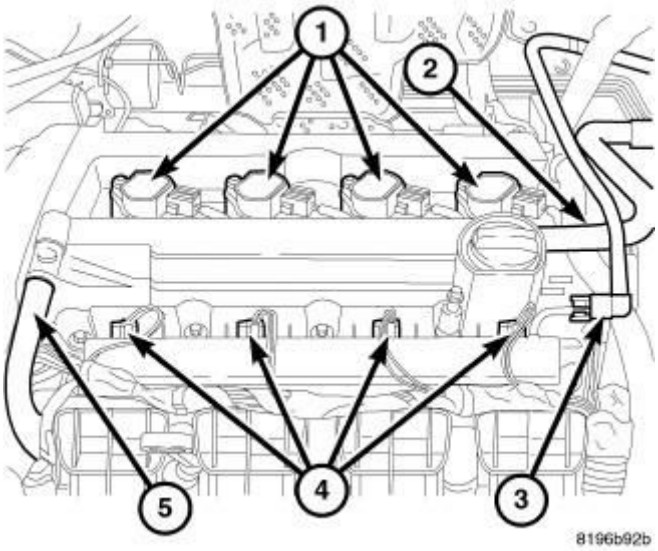

Fig. 68: Identifying Left Multi-Function Switch, Screw & Clockspring
Courtesy of CHRYSLER GROUP, LLC

1. Position the left multi-function switch (1) close enough to the mounting

bracket (3) integral to the left side of the clockspring to reconnect the jumper wire harness connector to the connector receptacle on the inboard side of the switch housing.

2. Align the slide tabs on the switch housing with the channel formations integral to the clockspring mounting bracket, then slide the switch into the bracket until it is firmly seated.
3. Install and tighten the screw (2) that secures the mounting tab on the front of the left multi-function switch to the mounting bracket on the clockspring. Tighten the screw to 1 N.m (10 in. lbs.).
4. Reconnect the instrument panel wire harness connector to the connector receptacle on the back of the switch housing.
5. Reinstall the upper and lower shrouds onto the steering column. Refer to **SHROUD, STEERING COLUMN, LOWER, INSTALLATION** and **SHROUD, STEERING COLUMN, UPPER, INSTALLATION** .
6. Reconnect the battery negative cable.

SWITCH, PARKING BRAKE

DESCRIPTION

DESCRIPTION

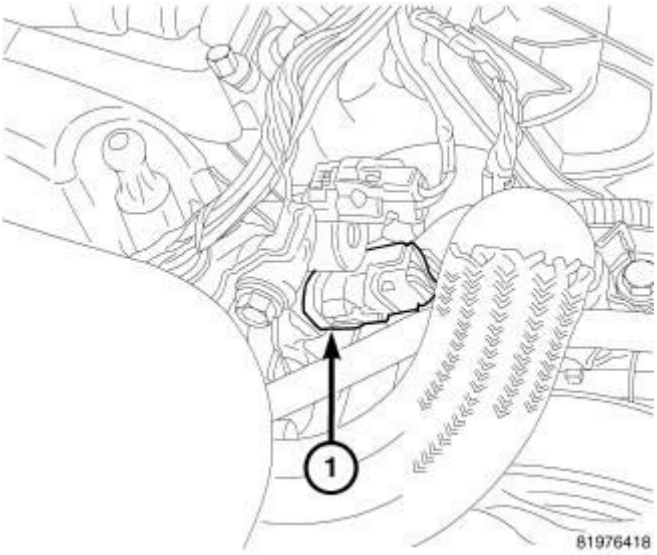

Fig. 69: Park Brake Switch
Courtesy of CHRYSLER GROUP, LLC

The park brake switch (1) is located on the park brake lever mechanism on the floor panel transmission tunnel below the center floor console. This switch

includes a spade-type output terminal (2) that connects the switch to the vehicle electrical system through a dedicated take out and connector of the body wire harness. The output terminal is integral to the stationary contact within a molded plastic insulator. A locating tab (4) on the insulator engages a slot in the park brake lever mechanism for positive switch location. External to the insulator is a movable leaf contact (3) with an integral grounding lug on one end and an integral actuating lever and follower on the opposite end. The switch is secured to and grounded by a single screw to the park brake lever mechanism.

The park brake switch cannot be adjusted or repaired and, if ineffective or damaged, it must be replaced.

OPERATION

OPERATION

The park brake switch is a normally closed, mechanically actuated leaf contact switch that is operated by the park brake lever mechanism. The switch is grounded through its mounting to the park brake lever mechanism and provides a ground input to the ElectroMechanical Instrument Cluster (EMIC) (also known as the Cab Compartment Node/CCN) on a park brake switch sense circuit whenever the park brake is applied, and opens this circuit whenever the park brake is released. The park brake switch sense input to the EMIC is used for control of the brake indicator and may also be used as a logic input for other electronic features in the vehicle.

The park brake switch as well as the hard wired inputs and outputs of the switch may be diagnosed using conventional diagnostic tools and procedures. Refer to the appropriate wiring information.

DIAGNOSIS AND TESTING

DIAGNOSIS AND TESTING - PARK BRAKE SWITCH

WARNING: **To avoid serious or fatal injury on vehicles equipped with airbags, disable the Supplemental Restraint System (SRS) before attempting any steering wheel, steering column, airbag, seat belt tensioner, impact sensor or instrument panel component diagnosis or service. Disconnect and isolate the battery negative (ground) cable, then**

wait two minutes for the system capacitor to discharge before performing further diagnosis or service. This is the only sure way to disable the SRS. Failure to take the proper precautions could result in accidental airbag deployment.

NOTE: If the brake indicator stays ON with the ignition switch in the ON position and the park brake released, or comes ON while driving, the brake system must be diagnosed and repaired prior to performing the following tests. Refer to DIAGNOSIS AND TESTING . If no brake system problem is found, the following procedures will help to locate a shorted or open park brake switch sense circuit, or an ineffective park brake switch.

PARK BRAKE SWITCH

INDICATOR ILLUMINATES DURING BULB TEST, BUT DOES NOT WHEN PARK BRAKE APPLIED

1. Disconnect and isolate the battery negative cable. Disconnect the instrument panel wire harness connector for the park brake switch from the switch terminal. Apply the parking brake. Check for continuity between the park brake switch terminal and a good ground. There should be continuity. If OK, go to 2. If not OK, replace the ineffective park brake switch.
2. Disconnect the instrument panel wire harness connector (Connector C2) for the instrument cluster from the cluster connector receptacle. Check for continuity between the park brake switch sense circuit cavities of the instrument panel wire harness connectors for the park brake switch and the instrument cluster. There should be continuity. If not OK, repair the open park brake switch sense circuit between the park brake switch and the instrument cluster as required.

INDICATOR REMAINS ILLUMINATED - BRAKE SYSTEM CHECKS OK

1. Disconnect and isolate the battery negative cable. Disconnect the instrument panel wire harness connector for the park brake switch from the switch terminal. Check for continuity between the terminal of the park brake switch and a good ground. There should be no continuity with the park brake released, and continuity with the park brake applied. If OK, go to 2. If not OK, replace the ineffective park brake switch.

2. Disconnect the instrument panel wire harness connector (Connector C2) for the instrument cluster from the cluster connector receptacle. Check for continuity between the park brake switch sense circuit cavity of the connector for the park brake switch and a good ground. There should be no continuity. If not OK, repair the shorted park brake switch sense circuit between the park brake switch and the instrument cluster as required.

REMOVAL

REMOVAL

WARNING: To avoid serious or fatal injury on vehicles equipped with airbags, disable the Supplemental Restraint System (SRS) before attempting any steering wheel, steering column, airbag, seat belt tensioner, impact sensor or instrument panel component diagnosis or service. Disconnect and isolate the battery negative (ground) cable, then wait two minutes for the system capacitor to discharge before performing further diagnosis or service. This is the only sure way to disable the SRS. Failure to take the proper precautions could result in accidental airbag deployment.

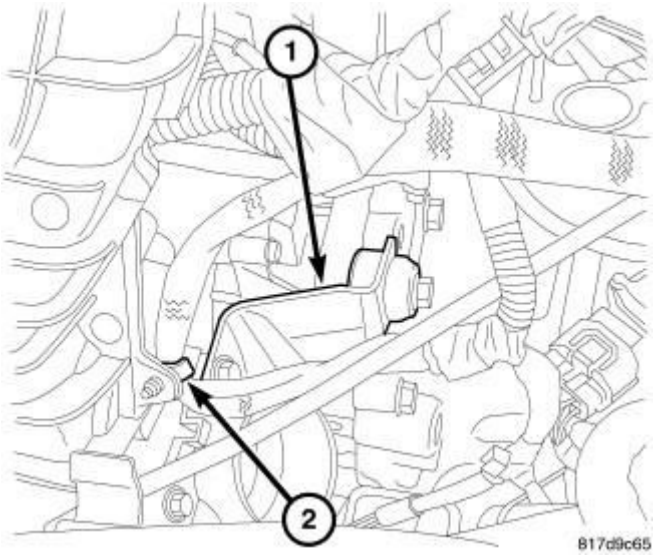

Fig. 70: Park Brake Switch Replacement
Courtesy of CHRYSLER GROUP, LLC

1. Disconnect and isolate the battery negative cable.

2. Remove the console from the floor panel transmission tunnel (3). Refer to **CONSOLE, FLOOR, REMOVAL** .
3. Pull the parking brake lever (1) upward to apply the parking brake.
4. Disconnect the instrument panel wire harness connector from the terminal of the park brake switch (4) located on the inboard side of the park brake lever mechanism.
5. Remove the screw (5) that secures the switch to the park brake lever bracket.
6. Remove the switch from the park brake lever bracket.

INSTALLATION

INSTALLATION

WARNING: To avoid serious or fatal injury on vehicles equipped with airbags, disable the Supplemental Restraint System (SRS) before attempting any steering wheel, steering column, airbag, seat belt tensioner, impact sensor or instrument panel component diagnosis or service. Disconnect and isolate the battery negative (ground) cable, then wait two minutes for the system capacitor to discharge before performing further diagnosis or service. This is the only sure way to disable the SRS. Failure to take the proper precautions could result in accidental airbag deployment.

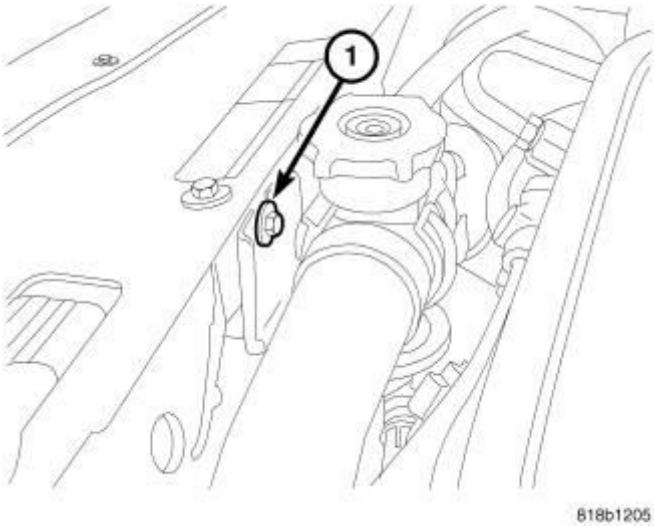

Fig. 71: Park Brake Switch Replacement

Courtesy of CHRYSLER GROUP, LLC

1. Position park brake switch (4) onto the inboard side of the park brake lever (1) bracket. Be certain to engage the locating pin on the back of the switch insulator into the locating slot in the lever bracket.
2. Install and tighten the screw (5) that secures the switch to the lever bracket. Tighten the screw to 2.5 N.m (24 in. lbs.).
3. Reconnect the instrument panel wire harness connector (2) to the terminal of the switch.
4. Reinstall the console onto the floor panel transmission tunnel (3). Refer to **CONSOLE, FLOOR, INSTALLATION** .
5. Reconnect the battery negative cable.
6. Turn the ignition switch to the ON position and check for proper brake indicator operation with the parking brake applied, then release the parking brake and check that the brake indicator extinguishes.

SWITCH, STOP LAMP

DESCRIPTION

DESCRIPTION

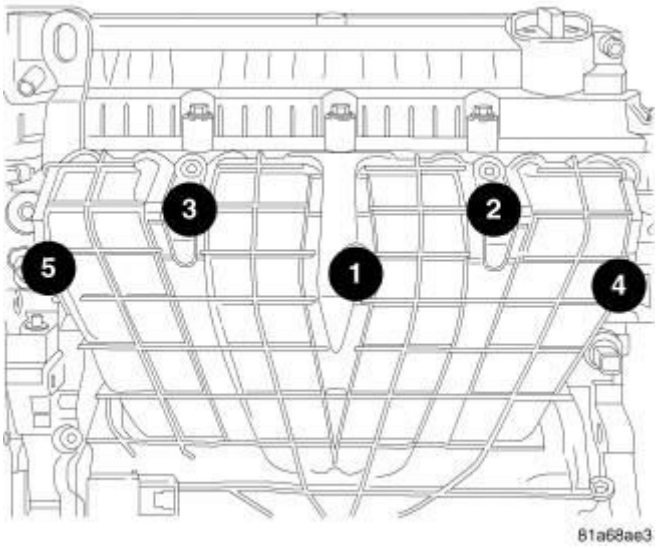

Fig. 72: Stop Lamp Switch Components
Courtesy of CHRYSLER GROUP, LLC

The brake (or stop) lamp switch (1) is a three circuit, spring-loaded plunger actuated switch that is secured to the brake pedal support bracket under the

instrument panel on the driver side of the vehicle. The molded plastic switch housing has an integral connector receptacle (4) containing six terminal pins. The switch is connected to the vehicle electrical system through a dedicated take out of the body wire harness.

The switch plunger (3) extends through a mounting collar (2) on one end of the switch housing. The plunger has a telescoping self-adjustment feature that is activated after the switch is installed by the brake pedal moving upward to its normal at-rest position. The telescoping plunger can be pulled outward from the switch housing to repeat the self-adjustment procedure if necessary.

The brake lamp switch cannot be repaired. If the switch is damaged or ineffective it must be replaced with a new unit.

OPERATION

OPERATION

The brake (or stop) lamp switch controls three independent circuits. These circuits are described as follows:

- **Brake Lamp Switch Circuit** - A normally open brake lamp switch circuit receives a battery voltage input, and supplies this battery voltage to the Center High Mounted Stop Lamp (CHMSL) and the Totally Integrated Power Module (TIPM) on a brake lamp switch output circuit only when the brake pedal is depressed (brake lamp switch plunger released).
- **Brake Lamp Switch Signal Circuit** - A normally closed brake lamp switch signal circuit receives a direct path to ground, and supplies this ground input to the Powertrain Control Module (PCM) on a brake signal 1 circuit only when the brake pedal is released (brake lamp switch plunger is depressed).
- **Speed Control Circuit** - A normally closed speed control circuit receives a battery voltage input from the Totally Integrated Power Module (TIPM) on an ignition run/start control output circuit, and supplies this battery voltage to the PCM on a brake signal 2 circuit only when the brake pedal is released (brake lamp switch plunger is depressed).

The PCM sends electronic **brake lamp switch status** messages to other electronic modules in the vehicle over the Controller Area Network (CAN) data bus for use as an additional logic input for controlling many other vehicle functions and features.

The brake lamp switch as well as the hard wired inputs and outputs of the switch may be diagnosed using conventional diagnostic tools and procedures. Refer to the appropriate wiring information. However, conventional diagnostic methods will not prove conclusive in the diagnosis of the electronic controls and communication that provide some features related to brake lamp switch operation. The most reliable, efficient and accurate means to diagnose the electronic controls and communication related to brake lamp switch operation requires the use of a diagnostic scan tool. Refer to the appropriate diagnostic information.

DIAGNOSIS AND TESTING

DIAGNOSIS AND TESTING - STOP LAMP SWITCH

WARNING: To avoid serious or fatal injury on vehicles equipped with airbags, disable the Supplemental Restraint System (SRS) before attempting any steering wheel, steering column, airbag, seat belt tensioner, impact sensor or instrument panel component diagnosis or service. Disconnect and isolate the battery negative (ground) cable, then wait two minutes for the system capacitor to discharge before performing further diagnosis or service. This is the only sure way to disable the SRS. Failure to take the proper precautions could result in accidental airbag deployment.

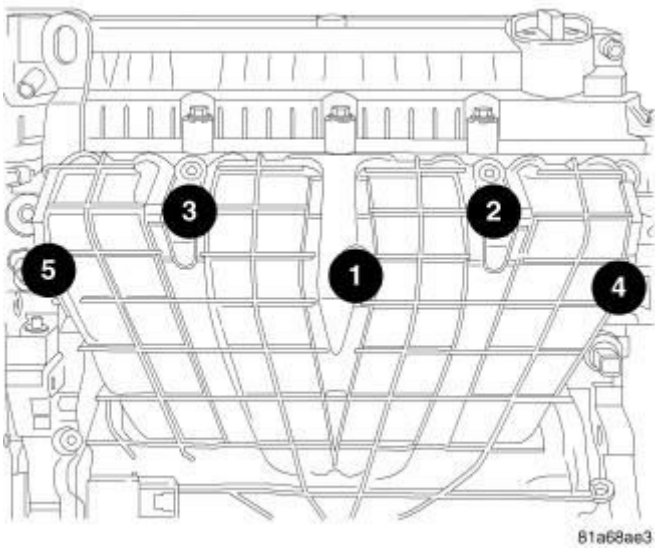

Fig. 73: Stop Lamp Switch Terminal Pins

Courtesy of CHRYSLER GROUP, LLC

1. Disconnect and isolate the battery negative cable.
2. Disconnect the wire harness connector from the brake lamp switch.
3. Using an ohmmeter, perform the continuity tests at the terminal pins (1) in the brake lamp switch connector receptacle as shown in the Brake Lamp Switch Tests table.

BRAKE LAMP SWITCH TESTS TABLE

BRAKE LAMP SWITCH TESTS	
PLUNGER POSITION (2)	**CONTINUITY BETWEEN**
Released (Extended)	Pins 1 and 2
Compressed (Depressed)	Pins 3 and 4, 5 and 6

4. If the switch fails any of the continuity tests, replace the ineffective brake lamp switch as required.

ADJUSTMENTS

ADJUSTMENT

WARNING: To avoid serious or fatal injury on vehicles equipped with airbags, disable the Supplemental Restraint System (SRS) before attempting any steering wheel, steering column, airbag, seat belt tensioner, impact sensor or instrument panel component diagnosis or service. Disconnect and isolate the battery negative (ground) cable, then wait two minutes for the system capacitor to discharge before performing further diagnosis or service. This is the only sure way to disable the SRS. Failure to take the proper precautions could result in accidental airbag deployment.

1. Disconnect and isolate the battery negative cable.
2. Depress and hold the brake pedal in the depressed position.
3. Pull the brake lamp switch plunger all the way out of the switch housing to its fully extended position.

4. Release the brake pedal. The pedal will set the plunger to the correct position as the pedal pushes the plunger into the switch housing. The switch plunger will make a light audible ratcheting noise as it self-adjusts.
5. Reconnect the battery negative cable.

REMOVAL

REMOVAL

WARNING: To avoid serious or fatal injury on vehicles equipped with airbags, disable the Supplemental Restraint System (SRS) before attempting any steering wheel, steering column, airbag, seat belt tensioner, impact sensor or instrument panel component diagnosis or service. Disconnect and isolate the battery negative (ground) cable, then wait two minutes for the system capacitor to discharge before performing further diagnosis or service. This is the only sure way to disable the SRS. Failure to take the proper precautions could result in accidental airbag deployment.

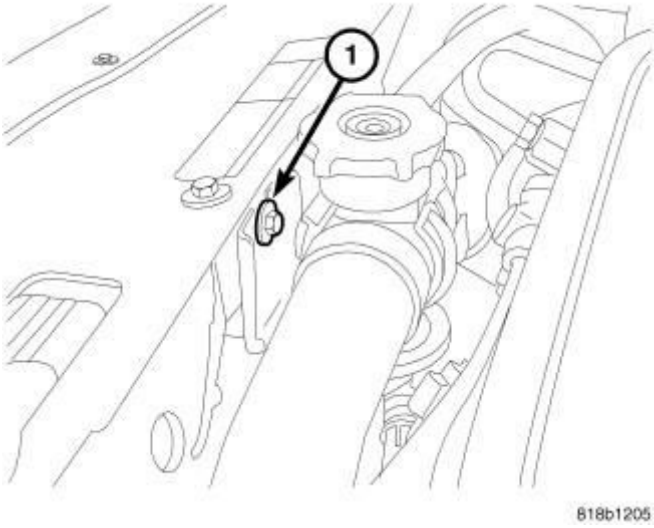

Fig. 74: Stop Lamp Switch, Support Bracket & Connector
Courtesy of CHRYSLER GROUP, LLC

1. Disconnect and isolate the battery negative cable.
2. Locate the brake lamp switch (2) on the pedal support bracket (4) under the

instrument panel.

3. Depress and hold the brake pedal in the depressed position.
4. Rotate the brake lamp switch housing counterclockwise about 30 degrees to align the tabs on the switch locking collar with the keyed square hole in the pedal support bracket.
5. Pull the switch straight rearward from the keyed hole to remove it from the bracket.
6. Release the brake pedal.
7. Disconnect the wire harness connector (1) from the brake lamp switch.

INSTALLATION

INSTALLATION

WARNING: To avoid serious or fatal injury on vehicles equipped with airbags, disable the Supplemental Restraint System (SRS) before attempting any steering wheel, steering column, airbag, seat belt tensioner, impact sensor or instrument panel component diagnosis or service. Disconnect and isolate the battery negative (ground) cable, then wait two minutes for the system capacitor to discharge before performing further diagnosis or service. This is the only sure way to disable the SRS. Failure to take the proper precautions could result in accidental airbag deployment.

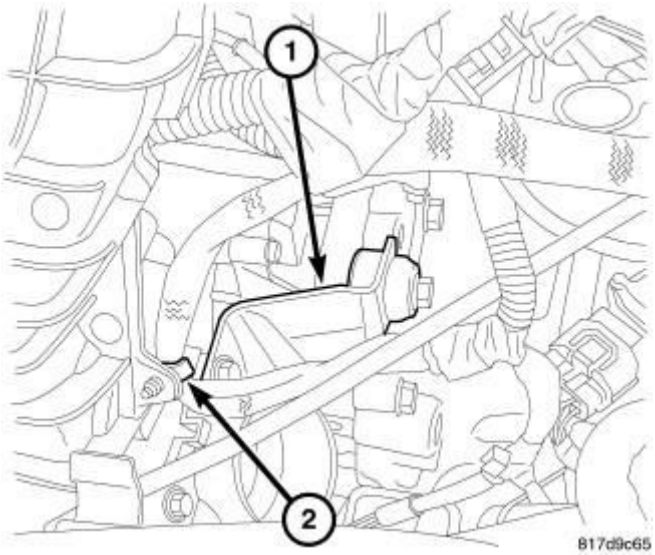

Fig. 75: Stop Lamp Switch, Support Bracket & Connector
Courtesy of CHRYSLER GROUP, LLC

1. Be certain that the brake lamp switch (2) plunger is pulled all the way out of the switch housing to its fully extended position.
2. Reconnect the wire harness connector (1) to the connector receptacle on the switch.
3. Depress and hold the brake pedal in the depressed position.
4. Align the keyed locking collar on the brake lamp switch with the keyed square hole in the pedal support bracket (4).
5. Insert the brake lamp switch locking collar through the keyed hole in the support bracket until the switch housing is firmly seated against the bracket.
6. Rotate the switch housing clockwise about 30 degrees to engage the locking collar with the support bracket.
7. Release the brake pedal. The pedal will set the plunger to the correct position as the pedal pushes the plunger into the switch housing. The switch plunger will make a light audible ratcheting noise as it self-adjusts.
8. Reconnect the battery negative cable.

UNIT, FRONT LAMP

STANDARD PROCEDURE

STANDARD PROCEDURE - LAMP LENS FOGGING

Some customers may report that on occasion, vehicle exterior lamp assemblies are fogged with a light layer of condensation on the inside of the lenses. This may be reported after the lamps have been turned on and brought up to operating temperature, turned off, and then rapidly cooled by cold water (such as rain, or the water from a car wash). Lens fogging can also occur under certain atmospheric conditions after a vehicle has been parked outside overnight (i.e., a warm humid day followed by clear cool night). This will usually clear as atmospheric conditions change to allow the condensation to change back into a vapor. Turning the lamps on will usually accelerate this process.

A lamp that exhibits condensation/fogging should be evaluated in a service bay environment by first drying all water from the outside surface of the lens and operating the lamp for 20 minutes. If the condensation/fogging has begun to clear from the lamp lens after 20 minutes with the lamps operating, this indicates the

lamp sealing has not been breached, and the lamp does not need to be replaced.

If the condensation/fogging has not begun to clear after 20 minutes with the lamps operating, or the lamp has large amounts of water droplets visible on most internal surfaces, this indicates a problem with the lamp sealing that has allowed water to enter the lamp. In this instance, the customer is also likely to report that moisture in the lamp is always present and never disappears. A lamp that exhibits internal moisture permanently should be replaced.

REMOVAL

BULB - BI-HALOGEN HEADLAMP - EXPORT MK49

CAUTION: Do not contaminate the bulb glass by touching it with your fingers or by allowing it to contact other oily surfaces. Shortened bulb life will result.

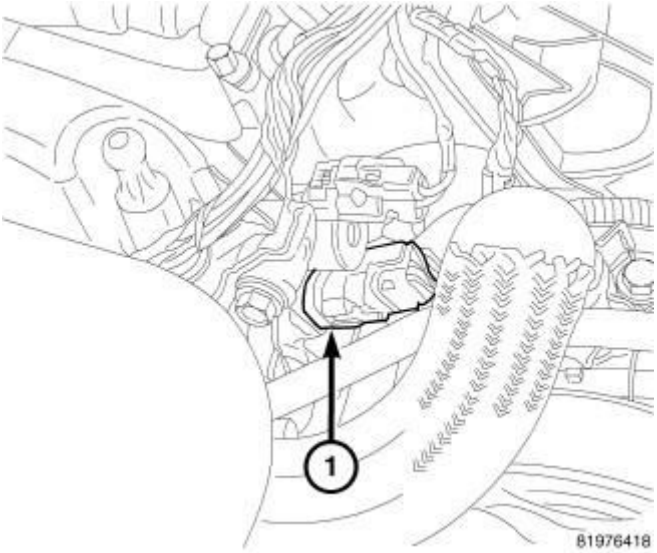

Fig. 76: High Intensity Discharge (HID) - Export
Courtesy of CHRYSLER GROUP, LLC

1. Disconnect and isolate the battery negative cable.
2. Reach behind the front lamp unit to access the bulbs from the back of the lamp housing (1).
3. Remove the molded rubber cover (2) from the back of the housing to access the bi-halogen bulb base on the reflector within the lamp housing.
4. Disengage the two metal latch tabs of the lamp wiring connector while disconnecting it from the bulb connector receptacle.

5. Firmly grasp the bulb base on the back of the front lamp unit reflector and rotate it counterclockwise about 30 degrees to unlock it.
6. Pull the bulb and base straight out from the keyed opening in the reflector.

BULB - DRL AND POSITION LAMP - EXPORT MK49

NOTE: The following procedure applies only to export vehicles with bi-halogen projector headlamps and Daytime Running Lamps (DRL). This procedure also applies to the position lamp bulb for export markets only. Vehicles equipped with quad halogen headlamps (domestic market only) modulate either the low beam or high beam headlamp bulb to serve as the DRL.

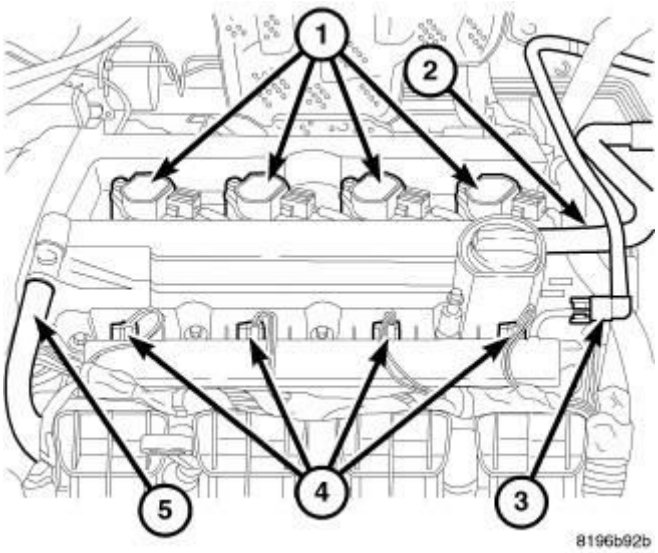

Fig. 77: High Intensity Discharge (HID) - Export
Courtesy of CHRYSLER GROUP, LLC

1. Disconnect and isolate the battery negative cable.
2. Reach behind the front lamp unit to access the bulbs from the back of the lamp housing (1).
3. Disconnect the Front End Module (FEM) wire harness connector from the Daytime Running Lamp (DRL) and position lamp bulb socket connector receptacle (5).
4. Firmly grasp the DRL and position lamp bulb socket on the back of the front lamp unit housing and rotate it counterclockwise about 30 degrees to unlock it.

5. Pull the socket and bulb straight out from the keyed opening in the housing.
6. Pull the base of the bulb straight out of the socket.

BULB - HALOGEN HEADLAMP - DOMESTIC MK49

CAUTION: Do not contaminate the bulb glass by touching it with your fingers or by allowing it to contact other oily surfaces. Shortened bulb life will result.

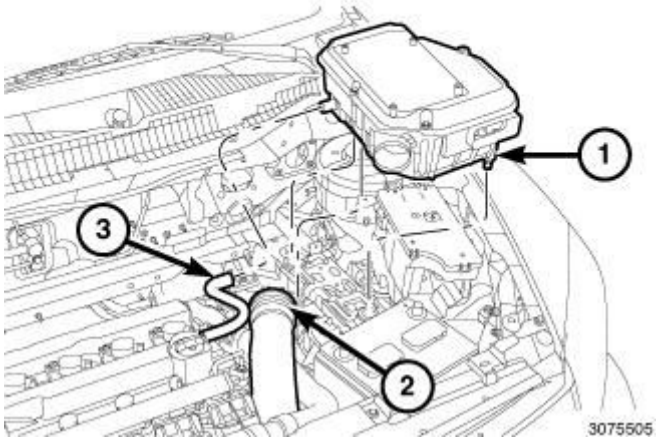

Fig. 78: Quad Halogen - Domestic
Courtesy of CHRYSLER GROUP, LLC

1. Disconnect and isolate the battery negative cable.
2. Reach behind the front lamp unit to access the bulbs from the back of the lamp housing (1).
3. Disconnect the Front End Module (FEM) wire harness connector from the low beam (2) or high beam (5) bulb base connector receptacle.
4. Firmly grasp the low beam or high beam bulb base on the back of the front lamp unit housing and rotate it counterclockwise about 30 degrees to unlock it.
5. Pull the bulb and base straight out from the keyed opening in the reflector.

BULB - PARK AND TURN SIGNAL - MK49

NOTE: Although the park and turn signal lamp location is the same in both domestic and export market vehicles, the park lamp function is disabled and the amber bulb type is

different in export market vehicles where that function is performed by the clear position lamp bulb.

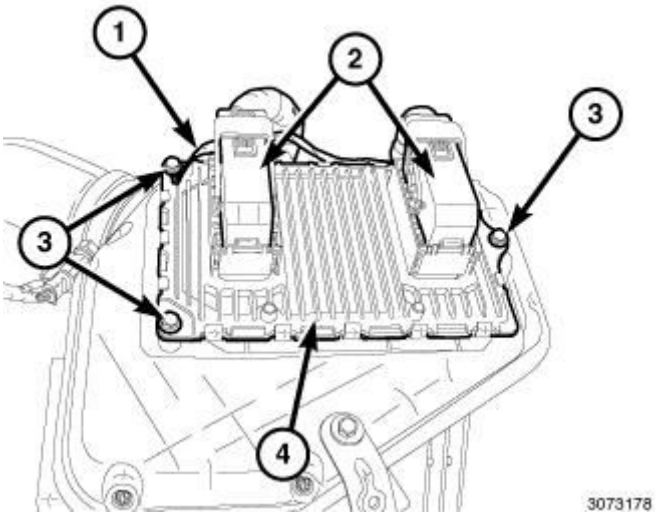

Fig. 79: Quad Halogen - Domestic
Courtesy of CHRYSLER GROUP, LLC

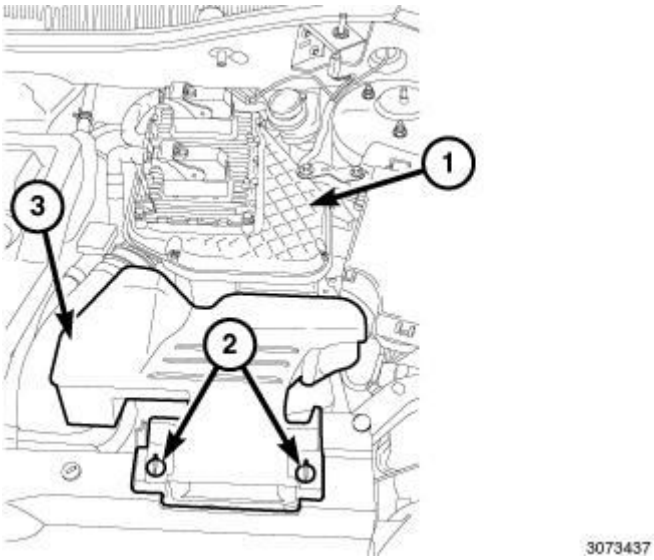

Fig. 80: Bi-Halogen Projector - Export
Courtesy of CHRYSLER GROUP, LLC

1. Disconnect and isolate the battery negative cable.
2. Reach behind the front lamp unit to access the bulbs from the back of the lamp housing (1).
3. Disconnect the Front End Module (FEM) wire harness connector from the park and turn signal bulb socket connector receptacle (4).
4. Firmly grasp the park and turn signal bulb socket on the back of the front

lamp unit housing and rotate it counterclockwise about 30 degrees to unlock it.

5. Pull the socket and bulb straight out from the keyed opening in the housing.
6. Pull the base of the bulb straight out of the socket.

BULB - SIDE MARKER - DOMESTIC MK49

NOTE: The following procedure applies only to vehicles manufactured for the North American market. Vehicles manufactured for export markets do not have a bulb, socket or wiring provided to illuminate the front side marker compartment of the front lamp unit. The front side marker lens and reflex is present, but serves only as a reflector on export market vehicles.

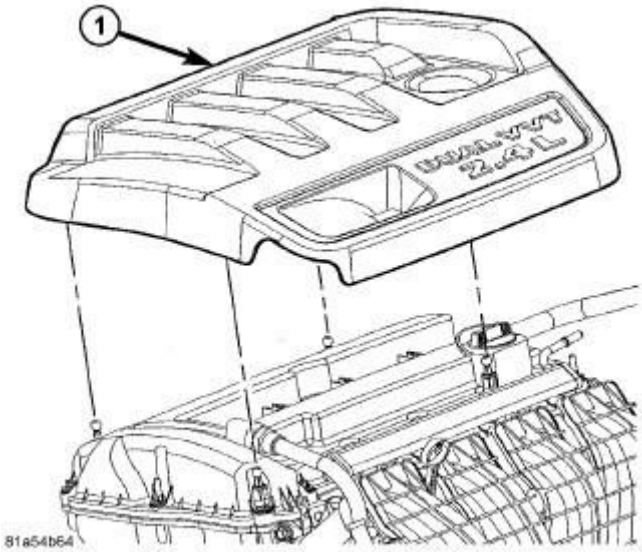

Fig. 81: Quad Halogen - Domestic
Courtesy of CHRYSLER GROUP, LLC

1. Disconnect and isolate the battery negative cable.
2. Reach behind the front lamp unit to access the bulbs from the back of the lamp housing (1).
3. Disconnect the Front End Module (FEM) wire harness connector from the front side marker bulb socket connector receptacle (3).
4. Firmly grasp the front side marker bulb socket on the back of the front lamp unit housing and rotate it counterclockwise about 30 degrees to unlock it.

5. Pull the socket and bulb straight out from the keyed opening in the housing.
6. Pull the base of the bulb straight out of the socket.

LAMP - MK49

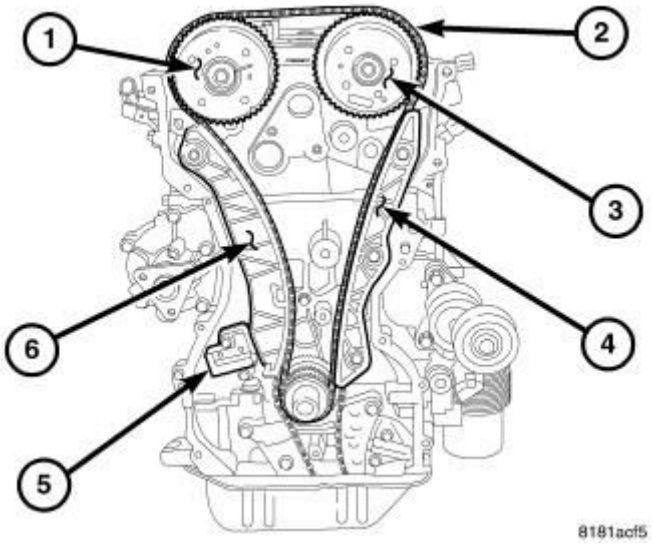

Fig. 82: Screw, Upper Front Lamp Unit, Nut & Gap Adjuster
Courtesy of CHRYSLER GROUP, LLC

1. Disconnect and isolate the battery negative cable.
2. Remove the fascia from the front of the vehicle. Refer to **FASCIA, FRONT, REMOVAL** .
3. Remove the screw (1) that secures the upper front lamp unit (5) mounting bracket to the upper Front End Module (FEM) hydroform support structure.
4. Remove the nut (4) that secures the lower inboard front lamp unit mounting bracket to the stud on the inboard end of the lower FEM hydroform support structure.

NOTE: During front lamp unit removal, it is NOT necessary to loosen or remove the nut that secures the gap adjuster (3) to the lower outboard front lamp unit mounting bracket.

5. Remove the screw (2) that secures the gap adjuster (3) on the lower outboard front lamp unit mounting bracket to the outboard end of the lower FEM hydroform support structure.
6. Pull the lamp away from the front of the vehicle far enough to access and

disconnect the FEM wire harness connections on the back of the lamp housing.

7. Remove the front lamp unit from the vehicle.

INSTALLATION

BULB - BI-HALOGEN HEADLAMP - EXPORT MK49

CAUTION: Always use the correct bulb size and type for replacement. An incorrect bulb size or type may overheat and cause damage to the lamp, the socket or the lamp wiring.

CAUTION: Do not contaminate the bulb glass by touching it with your fingers or by allowing it to contact other oily surfaces. Shortened bulb life will result.

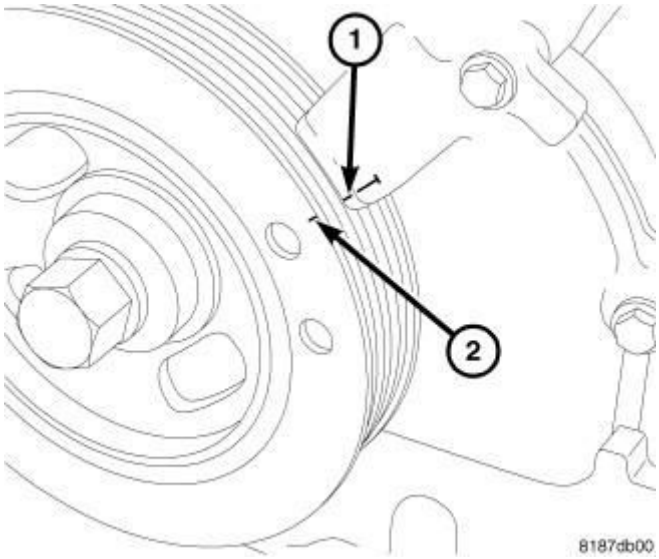

Fig. 83: High Intensity Discharge (HID) - Export
Courtesy of CHRYSLER GROUP, LLC

1. Reach behind the front lamp unit to access the bulb openings on the back of the lamp housing (1).
2. Align the bulb with the keyed opening on the back of the front lamp unit reflector.
3. Insert the bulb into the reflector opening until the base is firmly seated.
4. Rotate the base clockwise about 30 degrees to lock it into place.
5. Reconnect the lamp wiring connector to the bulb connector receptacle. Be

certain that the metal latch tabs of the connector are fully engaged.

6. Reinstall the molded rubber cover (2) over the opening on the back of the front lamp unit housing.
7. Reconnect the battery negative cable.

BULB - DRL AND POSITION LAMP - EXPORT MK49

NOTE: The following procedure applies only to export vehicles with bi-halogen projector headlamps and Daytime Running Lamps (DRL). This procedure also applies to the position lamp bulb for export markets only. Vehicles equipped with quad halogen headlamps (domestic market only) modulate either the low beam or high beam headlamp bulb to serve as the DRL.

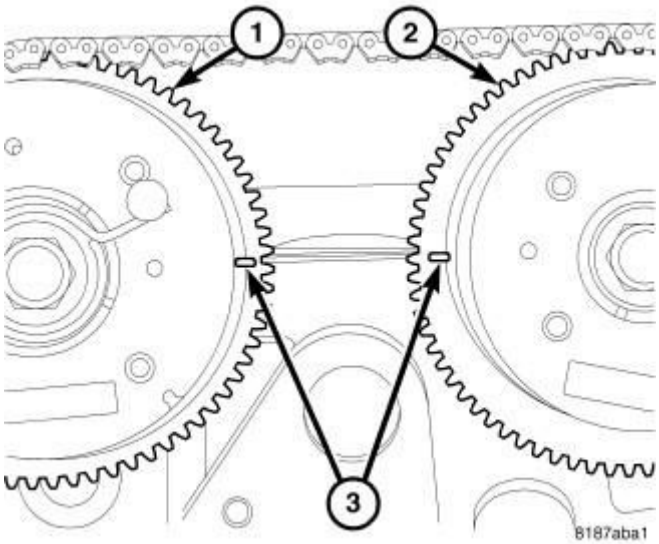

Fig. 84: High Intensity Discharge (HID) - Export
Courtesy of CHRYSLER GROUP, LLC

1. Align the base of the bulb with the Daytime Running Lamp (DRL) and position lamp bulb socket (5).
2. Push the bulb straight into the socket until the base is firmly seated.
3. Reach behind the front lamp unit to access the bulb opening on the back of the lamp housing (1).
4. Align the socket and bulb with the keyed opening on the back of the housing.
5. Insert the socket and bulb into the housing until the socket is firmly seated.

6. Rotate the socket clockwise about 30 degrees to lock it into place.
7. Reconnect the Front End Module (FEM) wire harness connector to the DRL and position lamp bulb socket connector receptacle.
8. Reconnect the battery negative cable.

BULB - HALOGEN HEADLAMP - DOMESTIC MK49

CAUTION: Always use the correct bulb size and type for replacement. An incorrect bulb size or type may overheat and cause damage to the lamp, the socket or the lamp wiring.

CAUTION: Do not contaminate the bulb glass by touching it with your fingers or by allowing it to contact other oily surfaces. Shortened bulb life will result.

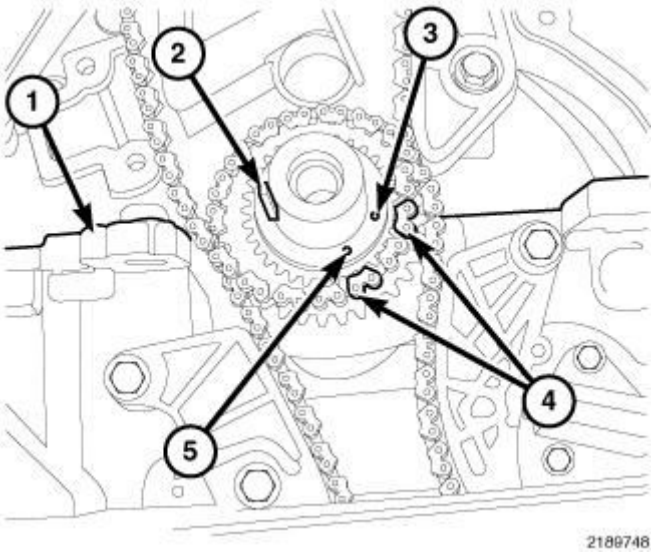

Fig. 85: Quad Halogen - Domestic
Courtesy of CHRYSLER GROUP, LLC

1. Reach behind the front lamp unit to access the bulb openings on the back of the lamp housing (1).
2. Align the low beam (2) or high beam (5) bulb with the keyed opening on the back of the front lamp unit reflector.
3. Insert the bulb into the reflector opening until the base is firmly seated.
4. Rotate the base clockwise about 30 degrees to lock it into place.
5. Reconnect the Front End Module (FEM) wire harness connector to the low

beam or high beam headlamp bulb base connector receptacle.

6. Reconnect the battery negative cable.

BULB - PARK AND TURN SIGNAL - MK49

CAUTION: Always use the correct bulb size and type for replacement. An incorrect bulb size or type may overheat and cause damage to the lamp, the socket or the lamp wiring.

NOTE: Although the park and turn signal lamp location is the same in both domestic and export market vehicles, the park lamp function is disabled and the amber bulb type is different in export market vehicles where that function is performed by the clear position lamp bulb.

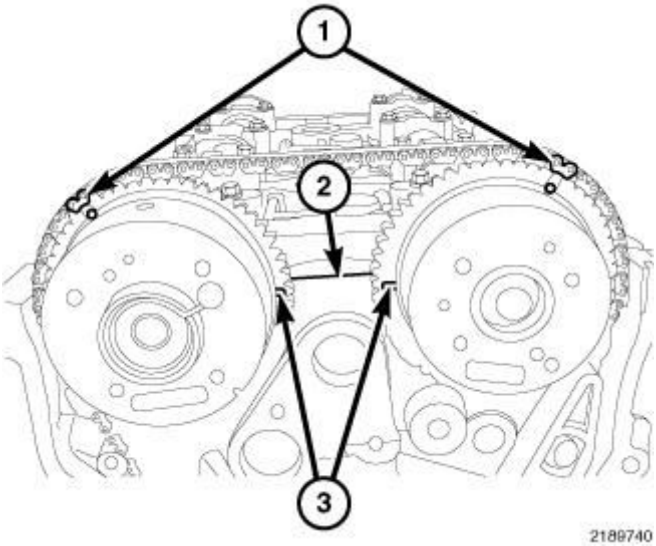

Fig. 86: Quad Halogen - Domestic
Courtesy of CHRYSLER GROUP, LLC

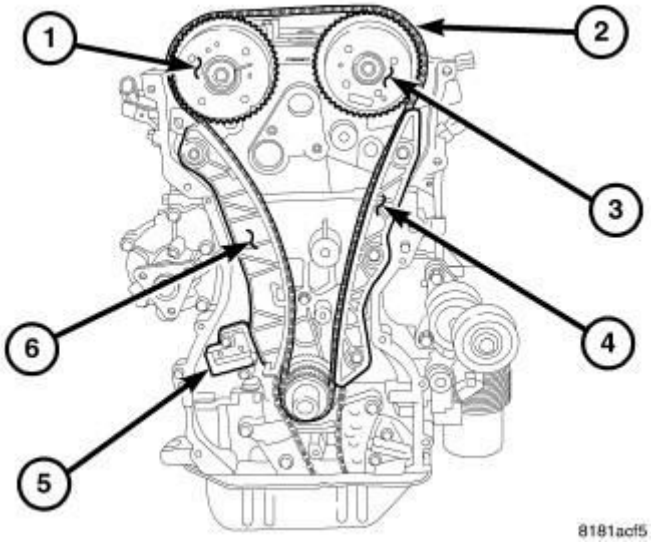

Fig. 87: Bi-Halogen Projector - Export
Courtesy of CHRYSLER GROUP, LLC

1. Align the base of the bulb with the park and turn signal bulb socket (4).
2. Push the bulb straight into the socket until the base is firmly seated.
3. Reach behind the front lamp unit to access the bulb opening on the back of the lamp housing (1).
4. Align the socket and bulb with the keyed opening on the back of the housing.
5. Insert the socket and bulb into the housing until the socket is firmly seated.
6. Rotate the socket clockwise about 30 degrees to lock it into place.
7. Reconnect the Front End Module (FEM) wire harness connector to the park and turn signal bulb socket connector receptacle.
8. Reconnect the battery negative cable.

BULB - SIDE MARKER - DOMESTIC MK49

CAUTION: Always use the correct bulb size and type for replacement. An incorrect bulb size or type may overheat and cause damage to the lamp, the socket or the lamp wiring.

NOTE: The following procedure applies only to vehicles manufactured for the North American market. Vehicles manufactured for export markets do not have a bulb, socket or wiring provided to illuminate the front side

marker compartment of the front lamp unit. The front side marker lens and reflex is present, but serves only as a reflector on export market vehicles.

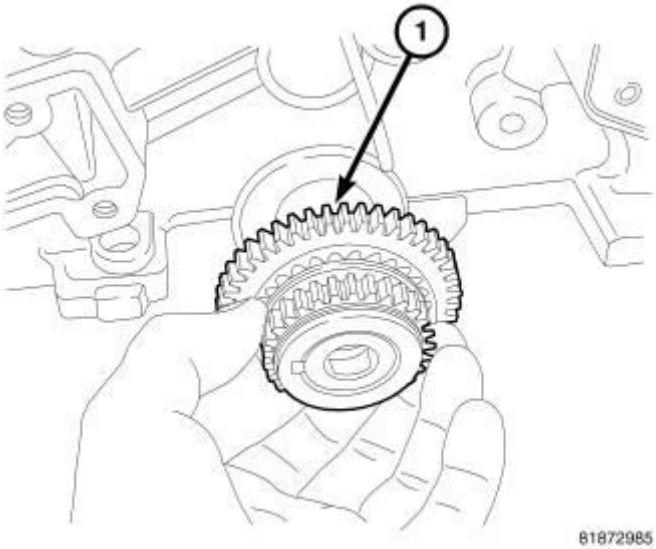

Fig. 88: Quad Halogen - Domestic
Courtesy of CHRYSLER GROUP, LLC

1. Align the base of the bulb with the front side marker bulb socket (3).
2. Push the bulb straight into the socket until the base is firmly seated.
3. Reach behind the front lamp unit to access the bulb opening on the back of the lamp housing (1).
4. Align the socket and bulb with the keyed opening on the back of the housing.
5. Insert the socket and bulb into the housing until the socket is firmly seated.
6. Rotate the socket clockwise about 30 degrees to lock it into place.
7. Reconnect the Front End Module (FEM) wire harness connector to the front side marker bulb socket connector receptacle.
8. Reconnect the battery negative cable.

LAMP - MK49

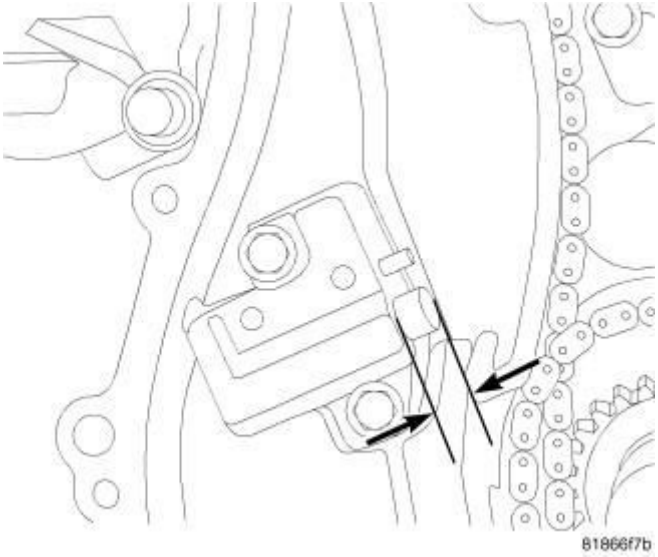

Fig. 89: Screw, Upper Front Lamp Unit, Nut & Gap Adjuster
Courtesy of CHRYSLER GROUP, LLC

1. Position the front lamp unit (5) close enough to the front of the vehicle to reconnect the Front End Module (FEM) wire harness connections to the back of the lamp housing.
2. Position the lamp to the FEM support structure on the front of the vehicle.
3. Install and tighten the screw (2) that secures the gap adjuster (3) on the lower outboard front lamp unit mounting bracket to the outboard end of the lower FEM hydroform support structure. Tighten the screw to 2.8 N.m (25 in. lbs.).
4. Install and tighten the nut (4) that secures the lower inboard front lamp unit mounting bracket to the stud on the inboard end of the lower FEM hydroform support structure. Tighten the nut to 2.8 N.m (25 in. lbs.).
5. Install and tighten the screw (1) that secures the upper front lamp unit mounting bracket to the upper FEM hydroform support structure. Tighten the screw to 2.8 N.m (25 in. lbs.).
6. If necessary, loosen the nut on the gap adjuster to adjust the clearance between the front lamp unit and the front fender lamp opening. Acceptable clearance is from 0 to 4 millimeters (0 to 0.15 inches).
7. Reinstall the fascia onto the front of the vehicle. Refer to **FASCIA, FRONT, INSTALLATION** .
8. Reconnect the battery negative cable.
9. Confirm proper headlamp alignment. Refer to **STANDARD PROCEDURE**.

UNIT, HEADLAMP

STANDARD PROCEDURE

STANDARD PROCEDURE

Some customers may report that on occasion, vehicle exterior lamp assemblies are fogged with a light layer of condensation on the inside of the lenses. This may be reported after the lamps have been turned on and brought up to operating temperature, turned off, and then rapidly cooled by cold water (such as rain, or the water from a car wash). Lens fogging can also occur under certain atmospheric conditions after a vehicle has been parked outside overnight (i.e., a warm humid day followed by clear cool night). This will usually clear as atmospheric conditions change to allow the condensation to change back into a vapor. Turning the lamps on will usually accelerate this process.

A lamp that exhibits condensation/fogging should be evaluated in a service bay environment by first drying all water from the outside surface of the lens and operating the lamp for 20 minutes. If the condensation/fogging has begun to clear from the lamp lens after 20 minutes with the lamps operating, this indicates the lamp sealing has not been breached, and the lamp does not need to be replaced.

If the condensation/fogging has not begun to clear after 20 minutes with the lamps operating, or the lamp has large amounts of water droplets visible on most internal surfaces, this indicates a problem with the lamp sealing that has allowed water to enter the lamp. In this instance, the customer is also likely to report that moisture in the lamp is always present and never disappears. A lamp that exhibits internal moisture permanently should be replaced.

REMOVAL

BULB - HEADLAMP - DOMESTIC MK74

CAUTION: Do not contaminate the bulb glass by touching it with your fingers or by allowing it to contact other oily surfaces. Shortened bulb life will result.

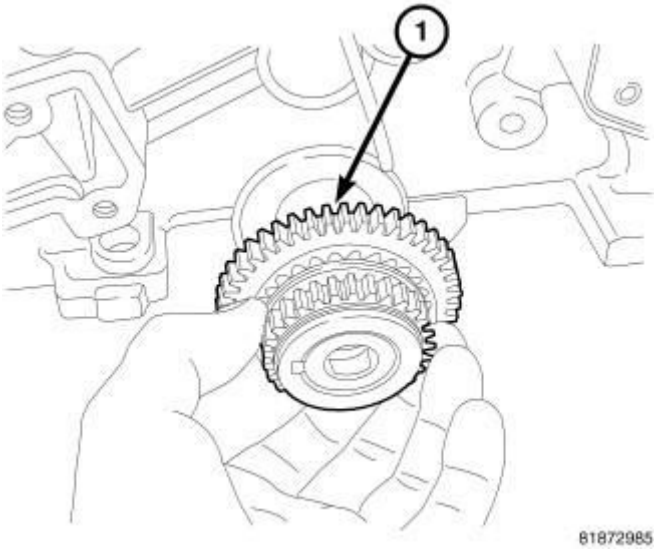

Fig. 90: Headlamp Bulb Replacement
Courtesy of CHRYSLER GROUP, LLC

1. Disconnect and isolate the battery negative cable.
2. Disconnect the engine compartment wire harness connector from the connector receptacle integral to the headlamp bulb base (3) on the back of the headlamp unit housing (1).
3. Using the tabs on each side of the connector receptacle, firmly grasp the bulb base and rotate it counterclockwise about 30 degrees to unlock it.
4. Pull the bulb and base straight out from the keyed opening in the headlamp reflector (2).

BULB - HEADLAMP - EXPORT MK74

CAUTION: Do not contaminate the bulb glass by touching it with your fingers or by allowing it to contact other oily surfaces. Shortened bulb life will result.

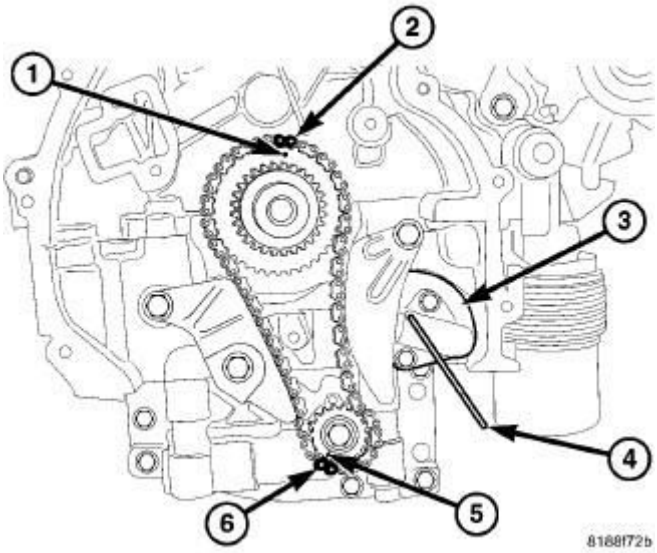

Fig. 91: Headlamp Bulb - Export
Courtesy of CHRYSLER GROUP, LLC

1. Disconnect and isolate the battery negative cable.
2. Disconnect the engine compartment wire harness connector from the headlamp bulb base (3) on the back of the headlamp unit housing (1).
3. Firmly grasp one of the tabs (2) of the headlamp boot seal on the back of the housing.
4. Pull the tab away from the back of the headlamp unit housing to remove the boot seal from the housing and the headlamp bulb base.

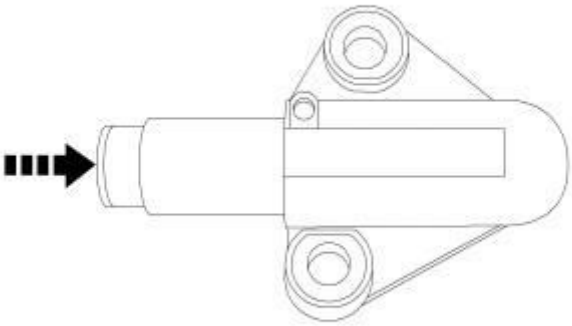

Fig. 92: Headlamp Unit Housing And Wire Retainer
Courtesy of CHRYSLER GROUP, LLC

5. Removal of the boot seal from the headlamp unit housing (1) will reveal the wire retainer (4) for the headlamp bulb (2) on the headlamp reflector (3).
6. Pinch the two ends of the wire retainer together and disengage them from the hooks that secure them to the bulb flange on the reflector.
7. Pivot the wire retainer up off of the flange of the headlamp bulb base and out of the way.
8. Pull the bulb straight out of the keyed opening in the headlamp reflector.

LAMP - MK74

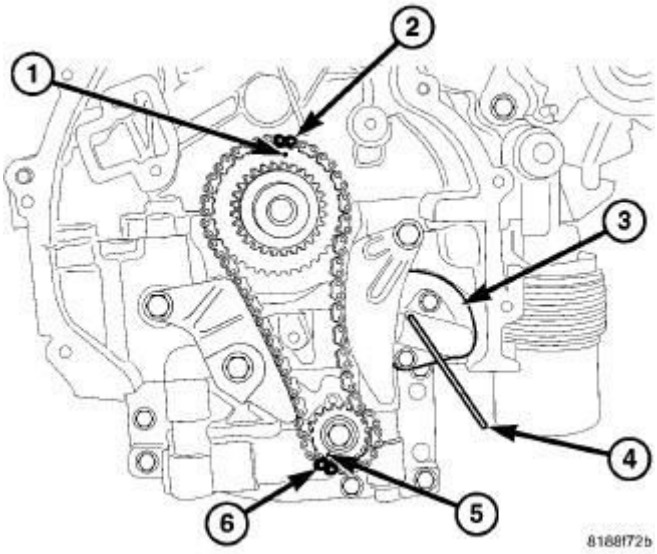

Fig. 93: Headlamp Unit Replacement
Courtesy of CHRYSLER GROUP, LLC

1. Disconnect and isolate the battery negative cable.
2. Remove the fascia from the front of the vehicle. Refer to **FASCIA, FRONT, REMOVAL** .
3. Remove the three nuts (2) that secure the headlamp unit (1) mounting brackets to the three studs (3) on the front fender and front end support structure.
4. Pull the headlamp unit away from the front of the vehicle far enough to access the wiring connections on the back of the lamp housing.

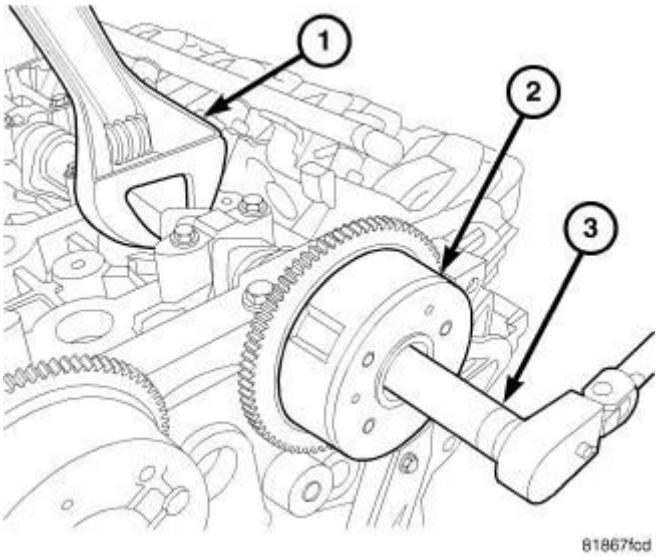

Fig. 94: Engine Compartment Wire Harness Connector
Courtesy of CHRYSLER GROUP, LLC

5. On domestic market vehicles only, disconnect the engine compartment wire harness (3) connector (4) from the headlamp bulb connector receptacle (2).

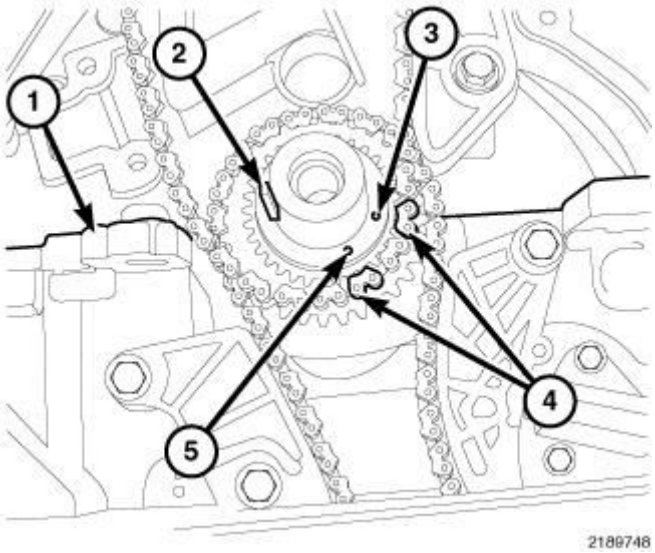

Fig. 95: Headlamp Leveling Motor Connector Receptacle
Courtesy of CHRYSLER GROUP, LLC

6. On export market vehicles only, disconnect the engine compartment wire harness (6) connector (4) from the headlamp bulb terminals (2), the connector (7) from the position lamp connector receptacle (8), and the connector (5) from the headlamp leveling motor connector receptacle (3).
7. Remove the headlamp unit (1) from the vehicle.

BULB - POSITION LAMP - MK74

NOTE: The following procedure applies only to vehicles manufactured for export markets. Vehicles manufactured for domestic markets do not have a position lamp bulb, socket or wiring provided in the headlamp unit.

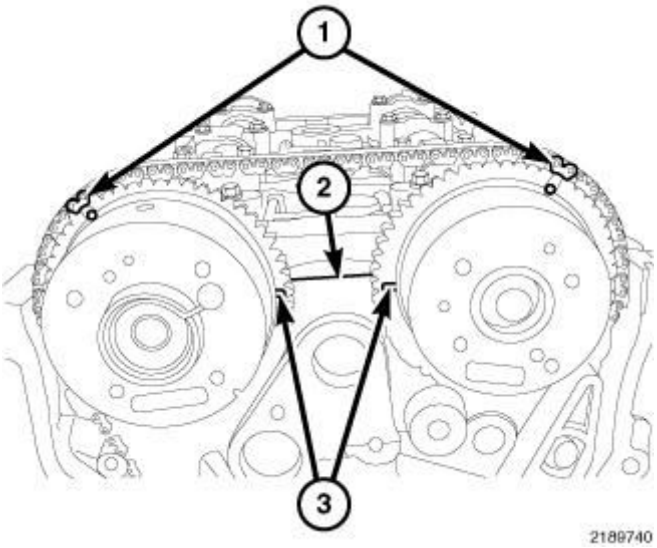

Fig. 96: Headlamp Bulb - Export
Courtesy of CHRYSLER GROUP, LLC

1. Disconnect and isolate the battery negative cable.
2. Disconnect the engine compartment wire harness connector from the position lamp bulb socket (4) on the back of the headlamp unit housing (1) near the bottom.
3. Firmly grasp the position lamp socket and rotate it counterclockwise about 30 degrees to unlock it.
4. Pull the socket and bulb straight out from the keyed opening in the housing.
5. Pull the base of the bulb straight out of the socket.

INSTALLATION

BULB - HEADLAMP - DOMESTIC MK74

CAUTION: Always use the correct bulb size and type for replacement. An incorrect bulb size or type may overheat and cause damage to the lamp, the socket or the lamp wiring.

CAUTION: Do not contaminate the bulb glass by touching it

with your fingers or by allowing it to contact other oily surfaces. Shortened bulb life will result.

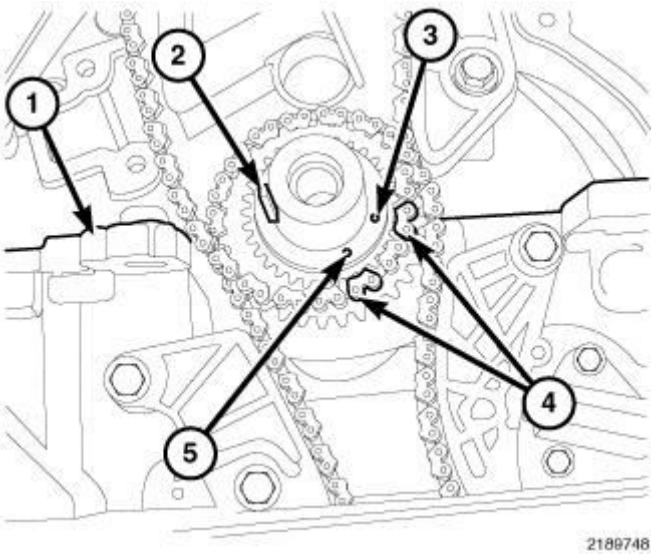

Fig. 97: Headlamp Bulb Replacement
Courtesy of CHRYSLER GROUP, LLC

1. Align the headlamp bulb base (3) with the keyed opening on the back of the headlamp reflector (2).
2. Insert the bulb and base into the reflector until the base is firmly seated.
3. Using the tabs on each side of the connector receptacle, rotate the bulb base clockwise about 30 degrees to lock it into place.
4. Reconnect the engine compartment wire harness connector to the connector receptacle integral to the bulb base on the back of the headlamp unit housing (1).
5. Reconnect the battery negative cable.

BULB - HEADLAMP - EXPORT MK74

CAUTION: Always use the correct bulb size and type for replacement. An incorrect bulb size or type may overheat and cause damage to the lamp, the socket or the lamp wiring.

CAUTION: Do not contaminate the bulb glass by touching it with your fingers or by allowing it to contact other oily surfaces. Shortened bulb life will result.

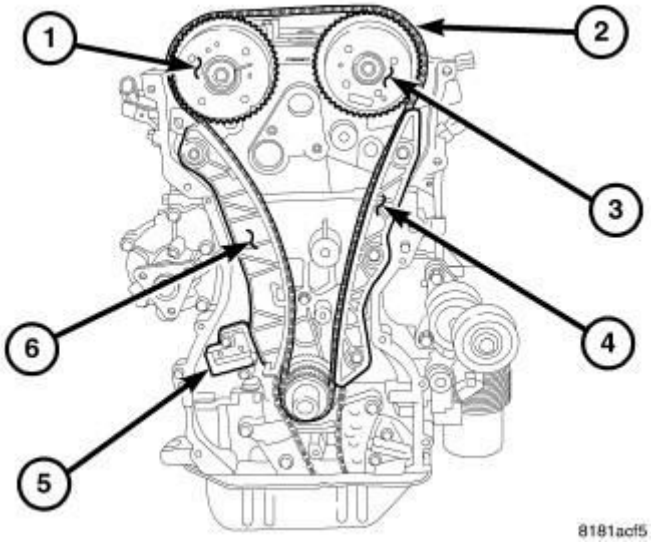

Fig. 98: Headlamp Unit Housing And Wire Retainer
Courtesy of CHRYSLER GROUP, LLC

1. Position the headlamp bulb (2) through the opening in the back of the headlamp unit housing (1) into the keyed opening in the headlamp reflector (3).
2. Be certain the bulb is fully seated in the reflector, then pivot the wire bulb retainer (4) back over the bulb flange.
3. Pinch the two ends of the wire bulb retainer together and engage them under the hooks to secure them to the bulb flange of the reflector.

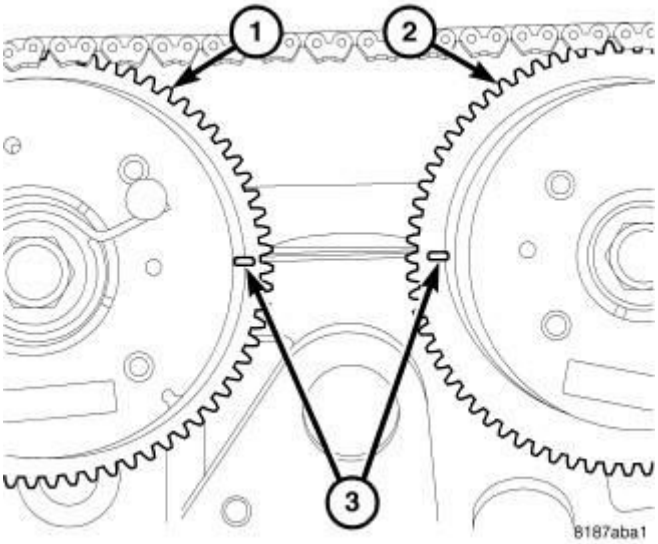

Fig. 99: Headlamp Bulb - Export
Courtesy of CHRYSLER GROUP, LLC

4. Position the center opening of the boot seal (2) over the base of the

headlamp bulb (3) and push it fully over the bulb base.

5. Position the outer circumference of the boot seal over the flange on the back of the headlamp unit housing (1) and use the three tabs to pull it over the housing flange until the seal is fully engaged.
6. Reconnect the engine compartment wire harness connector to the headlamp bulb base on the back of the headlamp unit housing.
7. Reconnect the battery negative cable.

LAMP - MK74

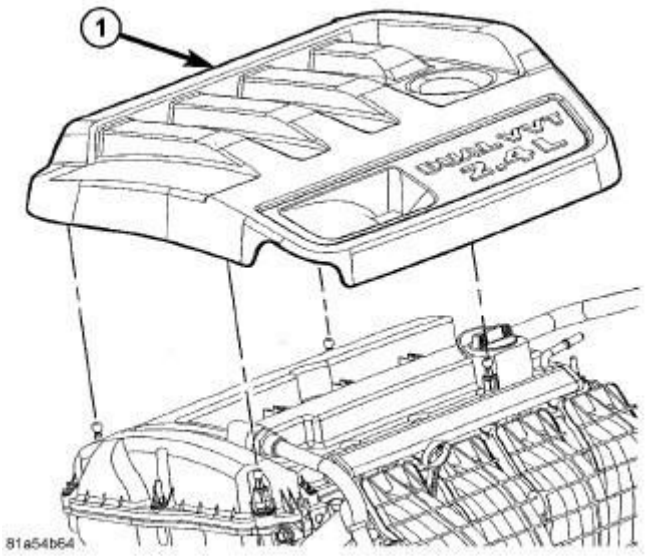

Fig. 100: Headlamp Leveling Motor Connector Receptacle
Courtesy of CHRYSLER GROUP, LLC

1. Position the headlamp unit (1) close enough to the front of the vehicle to reconnect the engine compartment wire harness connectors to the back of the lamp housing.
2. On export market vehicles only, reconnect the engine compartment wire harness (6) connector (5) to the headlamp leveling motor connector receptacle (3), the connector (7) to the position lamp connector receptacle (8), and the connector (4) to the headlamp bulb terminals (2).

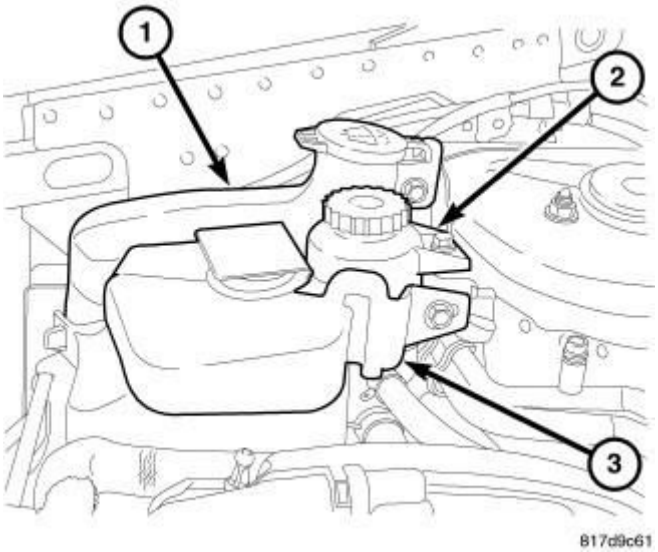

Fig. 101: Engine Compartment Wire Harness Connector
Courtesy of CHRYSLER GROUP, LLC

3. On domestic market vehicles only, reconnect the engine compartment wire harness (3) connector (4) to the headlamp bulb connector receptacle (2).

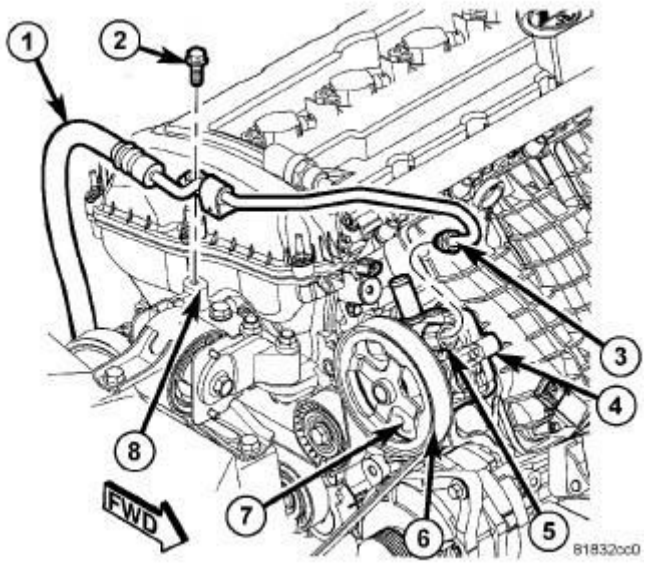

Fig. 102: Headlamp Unit Replacement
Courtesy of CHRYSLER GROUP, LLC

4. Position the headlamp unit (1) mounting brackets onto the three studs (3) on the front fender and front end support structure.
5. Install and tighten the three nuts (2) that secure the lamp mounting brackets to the studs. Tighten the nuts to 3 N.m (25 in. lbs.).
6. Reinstall the fascia onto the front of the vehicle. Refer to **FASCIA,**

FRONT, INSTALLATION .

7. Reconnect the battery negative cable.
8. Confirm proper headlamp alignment. Refer to **STANDARD PROCEDURE**.

BULB - POSITION LAMP - MK74

CAUTION: Always use the correct bulb size and type for replacement. An incorrect bulb size or type may overheat and cause damage to the lamp, the socket or the lamp wiring.

NOTE: The following procedure applies only to vehicles manufactured for export markets. Vehicles manufactured for domestic markets do not have a position lamp bulb, socket or wiring provided in the headlamp unit.

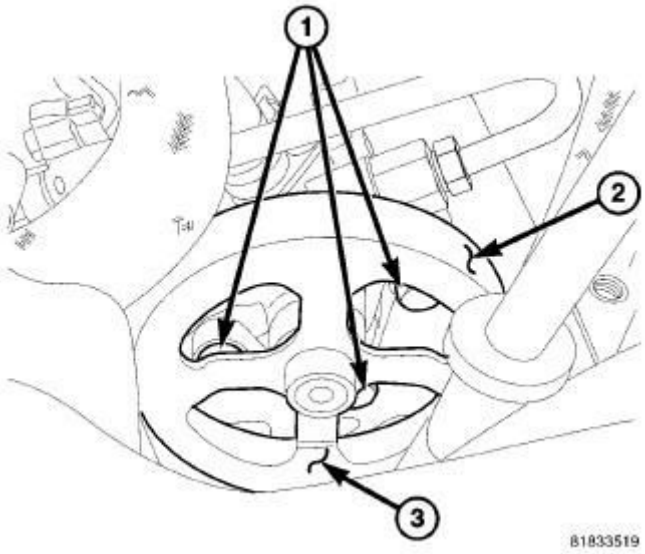

Fig. 103: Headlamp Bulb - Export
Courtesy of CHRYSLER GROUP, LLC

1. Align the base of the bulb with the position lamp bulb socket (4).
2. Push the bulb straight into the socket until the base is firmly seated.
3. Align the socket and bulb with the keyed opening near the bottom on the back of the headlamp unit housing (1).
4. Insert the socket and bulb into the housing until the socket is firmly seated.

5. Rotate the socket clockwise about 30 degrees to lock it into place.
6. Reconnect the engine compartment wire harness connector to the position lamp bulb socket.
7. Reconnect the battery negative cable.

WIRING, TRAILER TOW

DESCRIPTION

DESCRIPTION

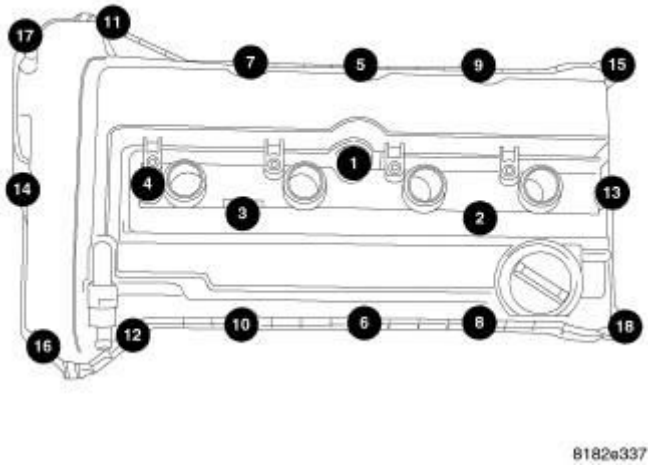

Fig. 104: Instruction Card
Courtesy of CHRYSLER GROUP, LLC

Vehicles equipped with an optional Trailer Tow Prep package have a trailer tow wiring jumper harness and an instruction card (1) that are placed in the cargo area of the vehicle when it is shipped from the factory. This package also includes an additional fused B(+) circuit in the unibody wire harness behind the right D-pillar trim for connection to the trailer tow wiring jumper harness.

OPERATION

OPERATION

The trailer tow wiring jumper harness is connected to the unibody wire harness at the right rear lamp unit connections. The fused B(+) circuit take out is located near the rubber grommet for the right rear lamp wiring take outs of the unibody wire harness behind the right rear D-pillar trim. The jumper harness can be connected by removing the right rear lamp unit and unseating the rubber

grommet from the D-pillar to access the fused B(+) circuit take out. Refer to the Instruction Card packaged with the jumper harness for additional details.

2014 ACCESSORIES AND EQUIPMENT

Lamps/Lighting - Interior - Service Information - Compass & Patriot

WARNING

WARNING

WARNING: To avoid serious or fatal injury, eye protection should be used when servicing any glass components.

CAUTION: Do not use bulbs with higher candle power than indicated in the Bulb Application table. In addition, do not use fuses, circuit breakers or relays having greater amperage value than indicated on the fuse panel or in the Owner's Manual. Damage to lamps, lenses, wiring and other related electrical components can result.

DESCRIPTION

DESCRIPTION

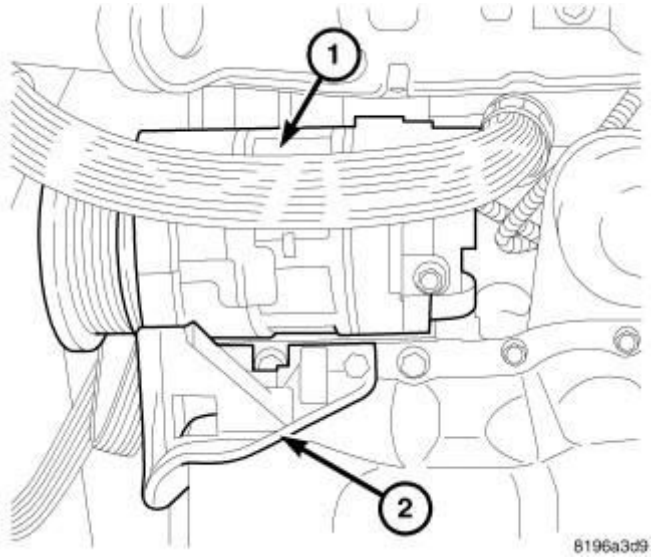

Fig. 1: Interior Lamps/Lighting Components
Courtesy of CHRYSLER GROUP, LLC

The interior lighting system for this vehicle includes incandescent lighting on two separate circuits: the dome/courtesy lamp circuit and the panel lamps

dimmer circuit. The lamps on the dome/courtesy circuit include:

- **Cargo Lamp (3)** - A standard equipment cargo lamp is located in the headliner above the cargo area near the upper liftgate opening header at the back of the vehicle and is controlled by the courtesy lamp circuit.
- **Cargo Lamp with Flashlight (3)** - An optional equipment cargo lamp is located in the headliner above the cargo area near the upper liftgate opening header at the back of the vehicle and is controlled by the courtesy lamp circuit. This lamp includes a removable twin Light Emitting Diode (LED) flashlight powered by rechargeable lithium batteries.
- **Front Dome Lamp (1)** - A standard equipment front dome lamp is located on the headliner above the instrument panel near the upper windshield opening header and is controlled by the courtesy lamp circuit.
- **Front Dome/Reading Lamps (1)** - Optional front seat driver side and passenger side dome/reading lamps located on the headliner above the instrument panel near the upper windshield header are controlled by both the courtesy lamp circuit and independent push button switches adjacent to each lamp.
- **Rear Dome Lamp (2)** - A rear dome lamp is optional equipment on vehicles manufactured for domestic markets. This lamp is located near the center of the headliner over the rear seating area and is controlled by the courtesy lamp circuit. On vehicles manufactured for certain export markets where an intrusion system is a required feature of the Vehicle Theft Security System (VTSS), a rear dome lamp is located near the center of the headliner over the rear seating area. This dome lamp houses an integral Intrusion Transceiver Module (ITM) and is controlled by the courtesy lamp circuit.

Most controls on the instrument panel and elsewhere in the interior of the vehicle are illuminated by the panel lamps dimmer circuit for night visibility. All except the automatic transmission gear selector bezel lamp have miniature incandescent bulbs, Light-Emitting Diode (LED) units or a combination of the two lighting types that are soldered to internal circuit boards and are not serviceable.

The optional automatic transmission gear selector bezel lamp is located on the left side of the gear selector lever mechanism just beneath the bezel on the forward end of the center floor console. This lamp has a replaceable incandescent bulb.

Other components of the interior lighting system for this vehicle include:

- **Door Ajar Switches** - A door ajar switch is integral to the door latch mechanism of each front and rear door.
- **Instrument Cluster** - The ElectroMechanical Instrument Cluster (EMIC) is also known as the Cab Compartment Node (CCN) in this vehicle. The EMIC/CCN is located in the instrument panel above the steering column opening, directly in front of the driver. Refer to **DESCRIPTION** .
- **Left Multi-Function Switch** - The left (lighting) multi-function switch is located on the steering column, just below the steering wheel. A control sleeve on the control stalk that extends from the left side of the switch is used to select the panel lamps dimmer lighting level or the courtesy lamp circuit operating mode. Refer to **SWITCH, MULTIFUNCTION, LEFT, DESCRIPTION** .
- **Liftgate Ajar Switch** - A liftgate ajar switch is integral to the latch mechanism of the liftgate.
- **Steering Control Module** - The Steering Control Module (SCM) is located within the left multi-function switch housing on the top of the steering column, just below the steering wheel. Refer to **MODULE, STEERING COLUMN, DESCRIPTION** .

Hard wired circuitry connects the interior lighting system components to the electrical system of the vehicle. These hard wired circuits are integral to several wire harnesses, which are routed throughout the vehicle and retained by many different methods. These circuits may be connected to each other, to the vehicle electrical system and to the interior lighting components through the use of a combination of soldered splices, splice block connectors, and many different types of wire harness terminal connectors and insulators. Refer to the appropriate wiring information. The wiring information includes wiring diagrams, proper wire and connector repair procedures, further details on wire harness routing and retention, as well as pin-out and location views for the various wire harness connectors, splices and grounds.

OPERATION

OPERATION

The lamps of the interior lighting system can be divided into two general classifications based upon the circuit that controls their operation: The courtesy

lamp circuit, or the panel lamps dimmer circuit. Following are paragraphs that briefly describe the operation of each of these interior lighting circuits.

The lamps and the hard wired circuits between components related to the interior lighting system may be diagnosed using conventional diagnostic tools and procedures. Refer to the appropriate wiring information. The wiring information includes wiring diagrams, proper wire and connector repair procedures, details of wire harness routing and retention, connector pin-out information and location views for the various wire harness connectors, splices and grounds.

However, conventional diagnostic methods will not prove conclusive in the diagnosis of the interior lighting system or the electronic controls or communication between modules and other devices that provide some features of the interior lighting system. The most reliable, efficient, and accurate means to diagnose the interior lighting system or the electronic controls and communication related to interior lighting system operation requires the use of a diagnostic scan tool. Refer to the appropriate diagnostic information.

COURTESY LAMP CIRCUIT

The courtesy lamp circuit includes the front dome or map/reading lamps located on the headliner near the center of the windshield opening upper header, the cargo lamp or cargo lamp/flashlight located on the headliner near the center of the upper liftgate opening header, an optional rear dome lamp on the headliner near the center over the rear seating positions and, on vehicles manufactured for certain markets where an intrusion system is required equipment, a combination rear dome lamp/intrusion module unit on the headliner near the center over the rear seating positions.

The lamps in the courtesy lamp circuit are provided with battery voltage and ground by the ElectroMechanical Instrument Cluster (EMIC) (also known as the Cab Compartment Node/CCN) using internal drivers through a courtesy lamp driver circuit and two ground circuits based upon hard wired inputs from the door ajar switches and the liftgate ajar switch. The EMIC also uses electronic **left multi-function switch** and **ignition switch status** message inputs received from the Steering Control Module (SCM) over the Local Interface Network (LIN) data bus to control these outputs.

After all of the ajar switch inputs to the EMIC transition to open, the EMIC will keep the courtesy lamps illuminated for about 30 seconds, then fade the lamps to

OFF (theater dimming) over about 3 seconds. The EMIC also provides courtesy lamp operation based upon the electronic **left multi-function switch status** messages received from the SCM, and provides an illuminated entry feature in response to certain electronic message inputs received from the Sentry Key REmote Entry Module (SKREEM) (also known as the Wireless Control Module/WCM) and the Occupant Restraint Controller (ORC) over the Controller Area Network (CAN) data bus. A courtesy lamp DEFEAT mode based upon an electronic **left multi-function switch status** message received from the SCM will cause the EMIC to override normal courtesy lamp operation based upon any ajar switch inputs.

For those lamps in the courtesy lamp circuit with independent switching such as the optional front map/reading lamps, the EMIC provides a second battery feed to the switches using another internal driver through a separate courtesy lamp load shed circuit. The EMIC provides a battery saver (load shedding) feature for all courtesy lamps, which will automatically turn these lamps OFF if they are left ON for more than about eight minutes with the ignition switch in the OFF position.

PANEL LAMPS DIMMER CIRCUIT

The panel lamps dimmer circuit actually includes several circuits. These circuits control the illumination and dimming level of the heater-air conditioner controls, the four-wheel drive selector switch and the automatic transmission gear selector bezel lamp. All lamps in the panel lamps dimmer circuits are provided a path to ground at all times through a hard wired ground circuit. These lamps are illuminated by a 12-volt Pulse Width Modulated (PWM) output of the EMIC through the panel lamps dimmer circuit.

This shared PWM output synchronizes the selected illumination intensity level of all of the lamps in the panel lamps dimmer circuits. The EMIC uses electronic **left multi-function switch status** and **dimming level** message inputs received from the SCM over the LIN data bus. The SCM sends the proper **left multi-function switch status** and **dimming level** messages based upon the exterior lighting selection of the control knob and the dimming level selection of the control sleeve on the left multi-function switch control stalk.

The EMIC, the instrument panel switch pod and the radio use the **dimming level** messages from the SCM to control the illumination intensity of their own back lighting and controls. In addition, when the control sleeve of the left multi-

function switch is moved to the PARADE (or funeral) mode detent position, all of the Vacuum Fluorescent Display (VFD) units in the vehicle are illuminated at their full intensity levels for increased visibility when the vehicle is driven during daylight hours with the exterior lights turned ON. The PARADE mode has no effect on the illumination intensity of incandescent panel lamps.

DIAGNOSIS AND TESTING

DIAGNOSIS AND TESTING - LAMPS/LIGHTING - INTERIOR

WARNING: To avoid serious or fatal injury on vehicles equipped with airbags, disable the Supplemental Restraint System (SRS) before attempting any steering wheel, steering column, airbag, seat belt tensioner, impact sensor or instrument panel component diagnosis or service. Disconnect and isolate the battery negative (ground) cable, then wait two minutes for the system capacitor to discharge before performing further diagnosis or service. This is the only sure way to disable the SRS. Failure to take the proper precautions could result in accidental airbag deployment.

NOTE: When diagnosing the interior lighting circuits, remember that high generator output can burn out bulbs rapidly and repeatedly; and, that dim or flickering bulbs can be caused by low generator output or poor battery condition. If one of these symptoms is a problem on the vehicle, be certain to diagnose the battery and charging system, then repair as necessary.

NOTE: A good ground is necessary for proper lighting operation. If a lighting problem is being diagnosed that involves multiple symptoms, systems, or components, the problem can often be traced to a loose, corroded, or open ground.

The lamps and the hard wired circuits between components related to the interior lighting system may be diagnosed using conventional diagnostic tools and

procedures. Refer to the appropriate wiring information. The wiring information includes wiring diagrams, proper wire and connector repair procedures, details of wire harness routing and retention, connector pin-out information and location views for the various wire harness connectors, splices and grounds.

However, conventional diagnostic methods will not prove conclusive in the diagnosis of the interior lighting system or the electronic controls or communication between modules and other devices that provide some features of the interior lighting system. The most reliable, efficient, and accurate means to diagnose the interior lighting system or the electronic controls and communication related to interior lighting system operation requires the use of a diagnostic scan tool. Refer to the appropriate diagnostic information.

COURTESY LAMP CIRCUIT

CONDITION	POSSIBLE CAUSES	CORRECTION
A SINGLE LAMP IN THE COURTESY LAMP CIRCUIT DOES NOT ILLUMINATE	1. Ineffective or missing bulb.	1. Test and replace the courtesy lamp bulb if required.
	2. Ineffective lamp switch.	2. Test and replace a map/reading lamp switch if required.
	3. Ineffective ground circuit.	3. Test and repair the open ground circuit if required.
	4. Ineffective feed circuit.	4. Test and repair the open feed circuit if required.
ALL LAMPS IN THE COURTESY LAMP CIRCUIT DO NOT ILLUMINATE	1. Ineffective ground circuit.	1. Test and repair the open ground circuit if required.
	2. Ineffective feed circuit.	2. Test and repair the open feed circuit if required.
	3. Courtesy DEFEAT feature turned ON.	3. Turn courtesy DEFEAT feature OFF.
	4. Ineffective courtesy lamp control circuit.	4. Test and repair the courtesy lamp control circuit if required.
	5. Ineffective SCM inputs or outputs.	5. Use a diagnostic scan tool to test the SCM inputs and

		outputs. Refer to the appropriate diagnostic information.
	6. Ineffective EMIC inputs or outputs.	6. Use a diagnostic scan tool to test the EMIC inputs and outputs. Refer to the appropriate diagnostic information.
A SINGLE LAMP IN THE COURTESY LAMP CIRCUIT DOES NOT EXTINGUISH	1. Ineffective lamp switch.	1. Test and replace a map/reading lamp switch if required.
ALL LAMPS IN THE COURTESY LAMP CIRCUIT DO NOT EXTINGUISH	1. Ineffective ajar switch.	1. Test and replace a door ajar or liftgate ajar switch if required.
	2. Ineffective ajar switch sense circuit.	2. Test and repair the shorted ajar switch sense circuit if required.
	3. Ineffective EMIC inputs or outputs.	3. Use a diagnostic scan tool to test the EMIC inputs and outputs. Refer to the appropriate diagnostic information.

PANEL LAMPS DIMMER CIRCUIT

NOTE: As part of the exterior lighting failsafe feature, upon ignition ON, all of the panel lamps dimmer circuit lamps will illuminate at full intensity and the exterior park lamps and headlamp low beams will illuminate regardless of the left multi-function switch control knob position if the Steering Control Module (SCM) cannot detect an input from the left multi-function switch, or if there is a loss of data bus communication.

CONDITION	POSSIBLE CAUSES	CORRECTION
A SINGLE LAMP	1. Ineffective or	1. Test and replace the lamp

DOES NOT ILLUMINATE	missing bulb or Light Emitting Diode (LED) unit.	bulb or LED unit if required.
	2. Ineffective ground circuit.	2. Test and repair the open lamp ground circuit if required.
	3. Ineffective feed circuit.	3. Test and repair the open lamp feed circuit if required.
A SINGLE LAMP DOES NOT EXTINGUISH	1. Ineffective feed circuit.	1. Test and repair the shorted lamp feed circuit if required.
ALL LAMPS DO NOT ILLUMINATE	1. Ineffective ground circuit.	1. Test and repair the open lamp ground circuit if required.
	2. Ineffective feed circuit.	2. Test and repair the open lamp feed circuit if required.
	3. Ineffective EMIC inputs or outputs.	3. Use a diagnostic scan tool to test the EMIC inputs and outputs. Refer to the appropriate diagnostic information.
ALL LAMPS ILLUMINATE AT FULL INTENSITY AT IGNITION ON	1. Ineffective SCM inputs or outputs.	1. Use a diagnostic scan tool to test the SCM inputs and outputs. Refer to the appropriate diagnostic information.
	2. Loss of data bus communication.	2. Use a diagnostic scan tool to test the data bus. Refer to the appropriate diagnostic information.

SPECIFICATIONS

SPECIFICATIONS

COURTESY LAMPS

BULB APPLICATION TABLE

LAMP	BULB
FRONT DOME	578
FRONT MAP/READING	212-2
REAR DOME (EXCEPT WITH INTRUSION ALARM)	578
REAR DOME (WITH INTRUSION ALARM)	212-2
CARGO (WITHOUT REMOVABLE FLASHLIGHT FEATURE)	578
CARGO (WITH REMOVABLE FLASHLIGHT FEATURE)	C5W

PANEL LAMPS

BULB APPLICATION TABLE

LAMP	BULB
GEAR SELECTOR BEZEL	37

LAMP, CARGO

DESCRIPTION

DESCRIPTION

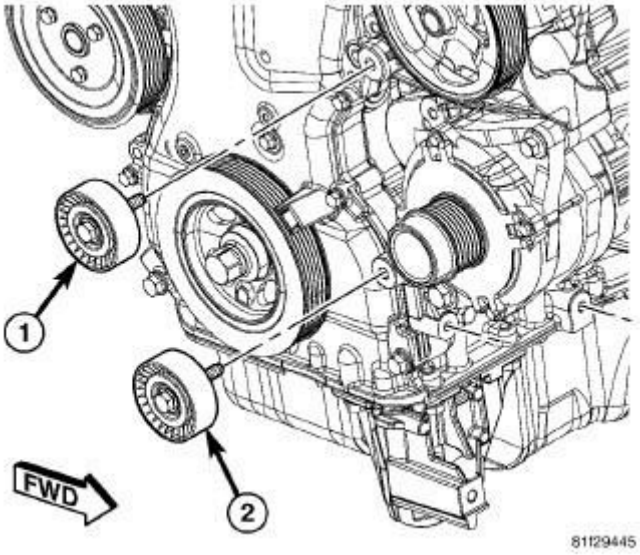

Fig. 2: Dual-Purpose Cargo Lamp Components

Courtesy of CHRYSLER GROUP, LLC

An optional dual-purpose cargo lamp (1) includes a removable and rechargeable flashlight (5). The flashlight is encased within a molded plastic housing, which is secured within the cargo lamp housing by two tabs on the end opposite the clear flashlight lens and a push-push type latch mechanism. The cargo lamp remains functional with or without the flashlight installed in the lamp housing.

The flashlight is powered by a rechargeable and replaceable lithium battery. A momentary switch on the flashlight electronic circuit board is actuated by a plastic push button (3) located on the side of the flashlight housing. When the flashlight is turned ON it illuminates two clear Light Emitting Diode (LED) units (2) to create a wide and bright light beam. A red LED unit (4) on the side of the flashlight housing behind the push button illuminates as the battery becomes discharged to indicate that the unit requires recharging.

The incandescent cargo lamp bulb, the cargo lamp lens, the flashlight battery and the flashlight unit are each available for separate service replacement. If any other component of the lamp or the flashlight are damaged or ineffective, the complete cargo lamp or flashlight unit must be replaced.

OPERATION

OPERATION

The rechargeable lithium battery within the flashlight automatically recharges while the flashlight is nested in its receptacle within the cargo lamp housing and the ignition switch is in the ON or START positions. The flashlight has a pair of electrical contacts that mate with contacts within the cargo lamp housing that provide a source of recharging current regardless of whether the cargo lamp is illuminated. The red Light Emitting Diode (LED) unit on the side of the flashlight behind the ON-OFF push button illuminates when the charge of the flashlight battery is becoming depleted.

The flashlight is removed from the cargo lamp housing by pushing it momentarily upward at the depression marked **PUSH** on the flashlight, then releasing it and swinging it downward far enough to disengage two slots on the right end of the flashlight from two tabs within the cargo lamp housing. When the flashlight is removed from its receptacle in the cargo lamp housing, it can be used as an auxiliary light source in emergencies or other situations. The

flashlight is turned ON or OFF by momentarily depressing and releasing the ON-OFF push button on the side of the flashlight housing. Reverse the removal procedure to restore the flashlight to the cargo lamp housing and to recharge the flashlight battery.

STANDARD PROCEDURE

STANDARD PROCEDURE - FLASHLIGHT BATTERY REPLACEMENT

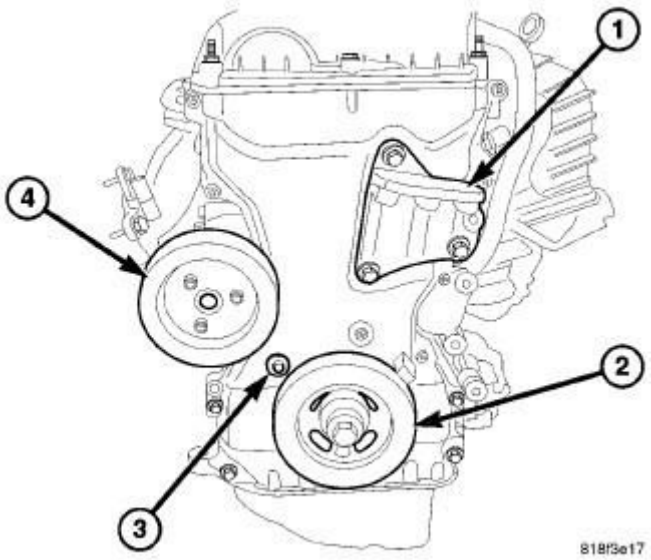

Fig. 3: Flashlight Battery Replacement (1 Of 2)
Courtesy of CHRYSLER GROUP, LLC

1. Insert a small screwdriver or another suitable tool into each of the two notches (2) between the upper (1) and lower (3) case halves of the flashlight and use a twisting action to separate the case.

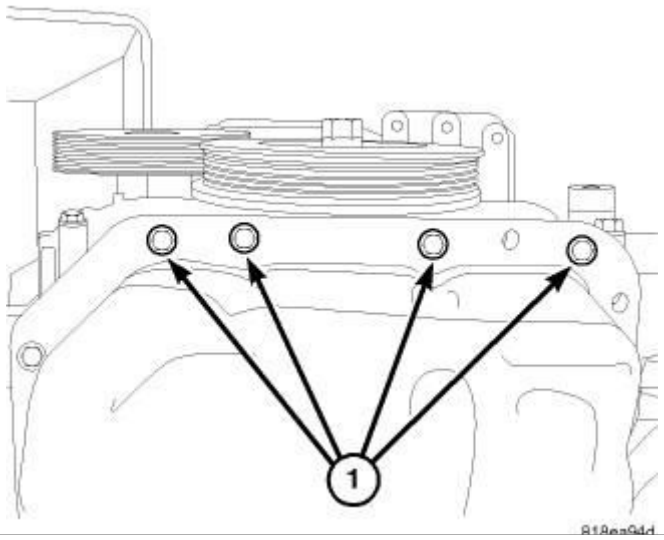

Fig. 4: Flashlight Battery Replacement (2 Of 2)
Courtesy of CHRYSLER GROUP, LLC

2. Remove the lower case (4) from the upper case (3) and set it aside.
3. Lightly lift the latch tab (2) at the back of the upper case and slide the battery (1) rearward far enough to remove it from the case.
4. Install the new battery by sliding it between the latch tab and the case until it is engaged by the latch tab. The battery **must** be installed with the positive (+) terminal oriented toward the upper case (3).

REMOVAL

BULB - WITH FLASHLIGHT FEATURE

NOTE: There are two types of cargo lamps available in this vehicle; one with and one without a removable flashlight feature.

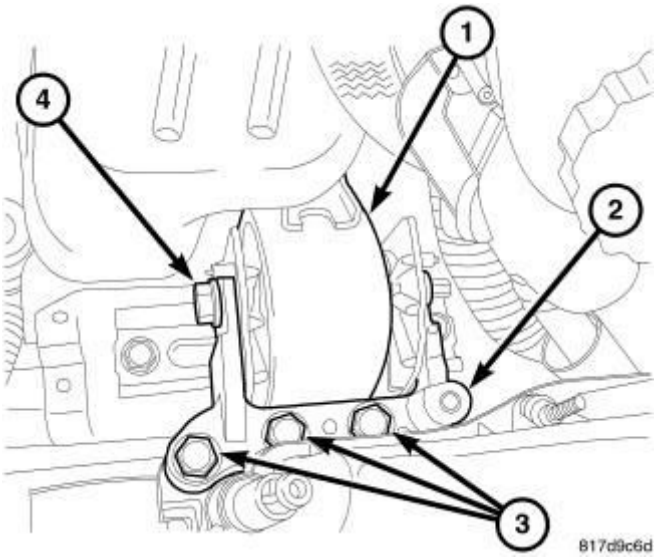

Fig. 5: Replacing Cargo Lamp Bulb
Courtesy of CHRYSLER GROUP, LLC

1. Disconnect and isolate the battery negative cable.
2. Remove the flashlight from the cargo lamp housing (2).
3. Pull downward on the straight edge of the lens (1) to unsnap it from the lamp housing, then disengage the curved edge of the lens from the housing.
4. Carefully unsnap the bulb (3) from the two bulb holders within the cargo lamp housing.

BULB - WITHOUT FLASHLIGHT FEATURE

NOTE: There are two types of cargo lamps available in this vehicle; one with and one without a removable flashlight feature.

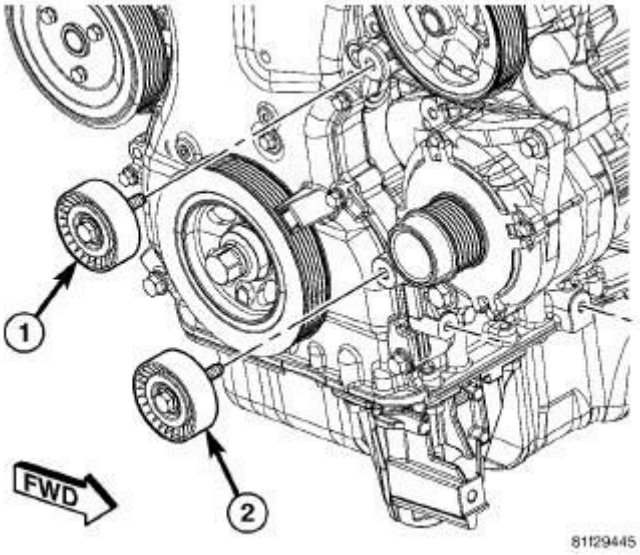

Fig. 6: Installing Dome Lamp Bulb (Rear)
Courtesy of CHRYSLER GROUP, LLC

1. Disconnect and isolate the battery negative cable.
2. Insert the tip of a small flat-bladed screwdriver into the notch on one side of the cargo lamp between the lens (4) and the lamp housing (1).
3. Gently pry the notched edge of the lens downward until it unsnaps from the housing.
4. Swing the notched end of the lens downward far enough to access the bulb (3).
5. Carefully unsnap the bulb from the two bulb holders within the cargo lamp housing.

LAMP - WITH FLASHLIGHT FEATURE

NOTE: There are two types of cargo lamps available in this vehicle; one with and one without a removable flashlight feature.

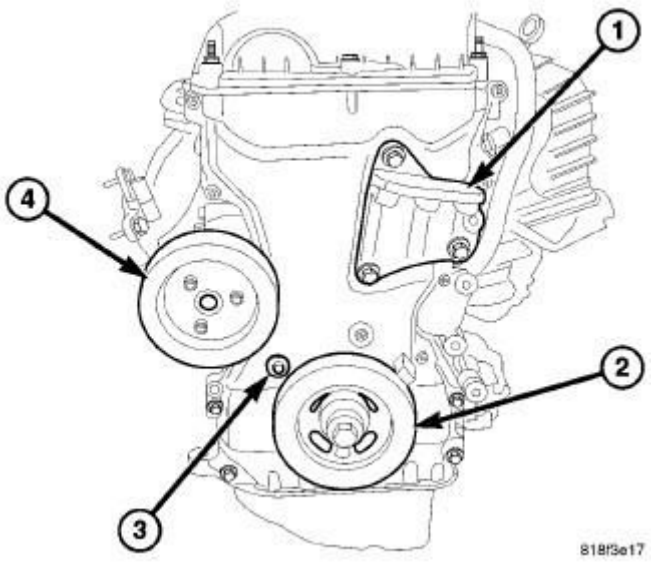

Fig. 7: Identifying Cargo Lamp Components
Courtesy of CHRYSLER GROUP, LLC

1. Disconnect and isolate the battery negative cable.
2. Remove the flashlight from the cargo lamp housing (1).
3. Remove the trim from the inside of both upper C-pillars. Refer to **PANEL, C-PILLAR TRIM, REMOVAL** .
4. Remove the push pin fastener (4) adjacent to each side of the cargo lamp that secures the headliner (5) to the upper D-pillar reinforcement (2).
5. Carefully pull down the rear edge of the headliner from the upper liftgate opening header (3) far enough to insert a trim stick or another suitable wide flat-bladed tool between the back of the lamp housing and the header.

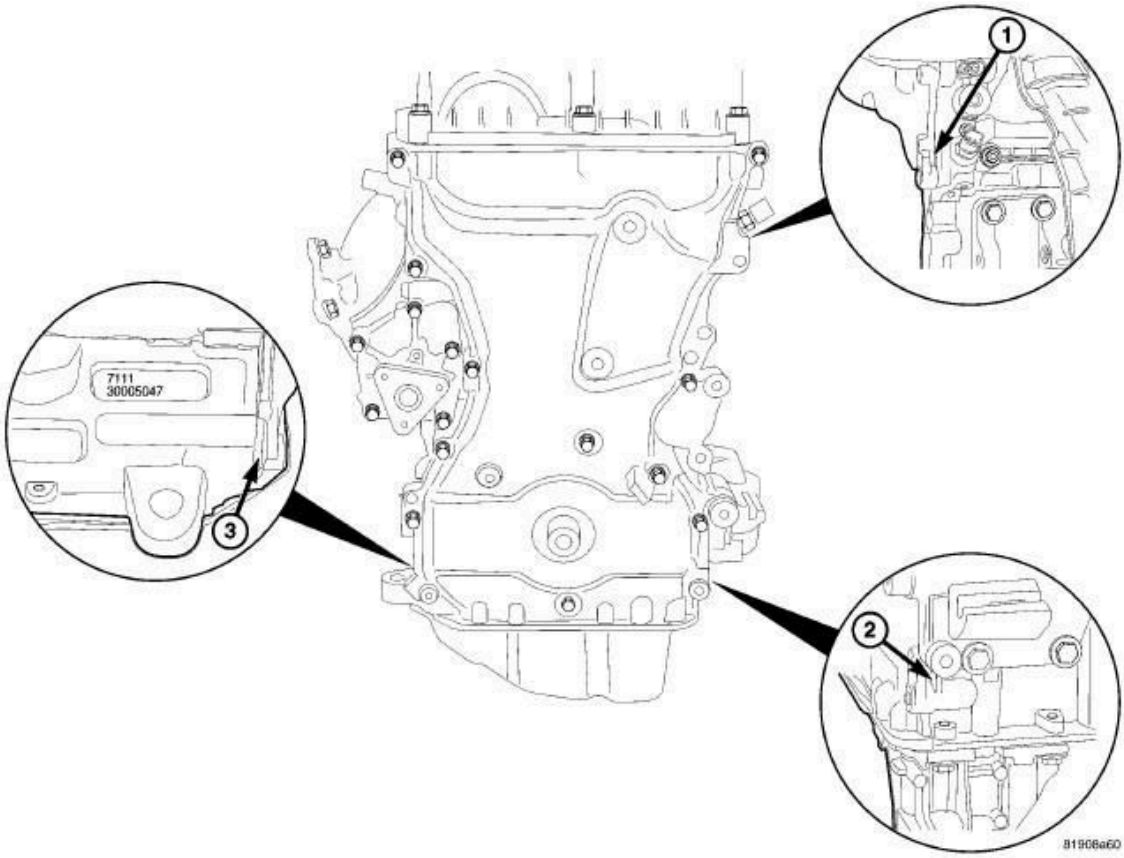

Fig. 8: Identfying Cargo Lamp Housing Components
Courtesy of CHRYSLER GROUP, LLC

6. Gently pry the lamp housing (1) downward far enough to disengage the snap clip retainer (3) from the upper liftgate opening header.
7. Reach between the headliner and the header to access and depress the two spring tabs (2) far enough to disengage the forward edge of the lamp housing from the mounting hole in the headliner.
8. Slide the lamp housing forward far enough to disengage the two fixed retainers (5) from the rear edge of the headliner mounting hole.
9. Pull the lamp downward from the headliner far enough to access and disconnect the headliner wire harness connector from the connector receptacle (4) on the back of the lamp housing.
10. Remove the cargo lamp from the vehicle.

LAMP - WITHOUT FLASHLIGHT FEATURE

NOTE: There are two types of cargo lamps available in this vehicle; one with and one without a removable flashlight feature.

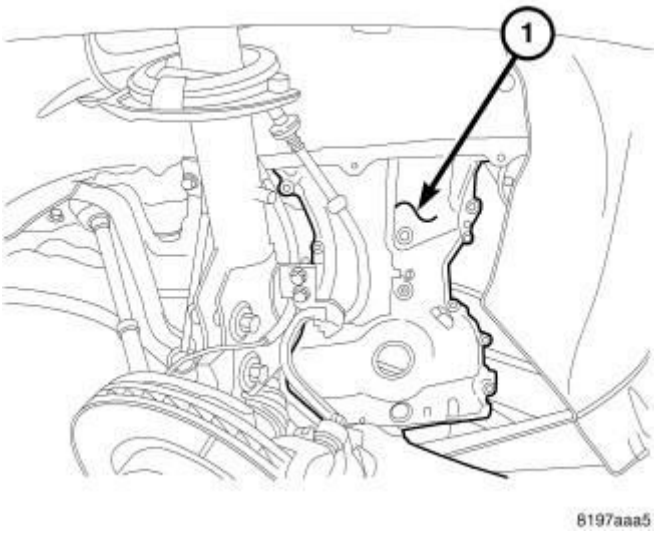

Fig. 9: Removing/Installing Rear Lamp
Courtesy of CHRYSLER GROUP, LLC

1. Disconnect and isolate the battery negative cable.
2. Insert the tip of a small flat bladed screwdriver into the notch (5) between the lens (2) and the housing (1) on one side of the cargo lamp unit.
3. Gently pry the end of the lens downward until it unsnaps from the housing.
4. Swing the lens downward until it is perpendicular to the housing.
5. Pull the lens hinge/retainer end (3) of the housing downward slightly from the headliner, then slide the exposed end of the housing away from the mounting hole far enough to disengage the fixed retainer (4) on the notched end from the headliner.
6. Pull the lamp away from the headliner mounting hole far enough to access and disconnect the wire harness connector from the connector receptacle on the back of the lamp housing.
7. Remove the lamp from the vehicle.

INSTALLATION

BULB - WITH FLASHLIGHT FEATURE

CAUTION: Always use the correct bulb size and type for replacement. An incorrect bulb size or type may overheat and cause damage to the lamp, the socket or the lamp wiring.

NOTE: There are two types of cargo lamps available in this vehicle; one with and one without a removable flashlight feature.

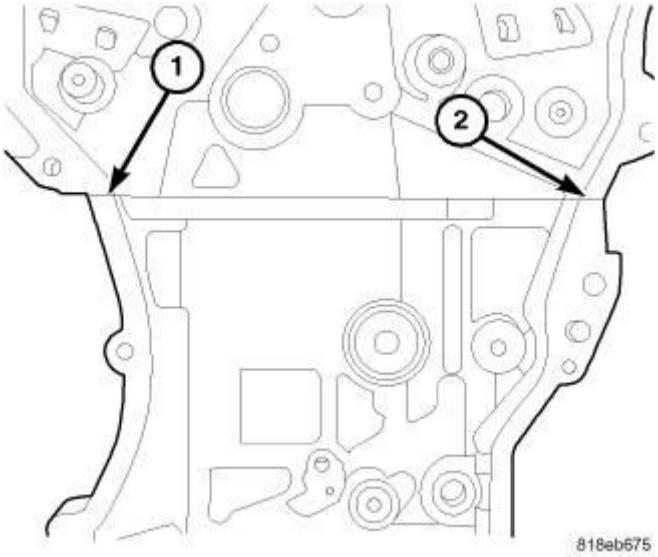

Fig. 10: Replacing Cargo Lamp Bulb
Courtesy of CHRYSLER GROUP, LLC

1. Align the ends of the bulb (3) with the two bulb holders within the cargo lamp housing (2).
2. Carefully press the bulb firmly and evenly into the bulb holders until it snaps into place.
3. Position the curved edge of the lens (1) into position against the housing, then press upward on the straight edge of the lens firmly and evenly until it snaps into the housing.
4. Reinstall the flashlight into the cargo lamp housing.
5. Reconnect the battery negative cable.

BULB - WITHOUT FLASHLIGHT FEATURE

CAUTION: Always use the correct bulb size and type for replacement. An incorrect bulb size or type may overheat and cause damage to the lamp, the socket or the lamp wiring.

NOTE: There are two types of cargo lamps available in this vehicle; one with and one without a removable flashlight

feature.

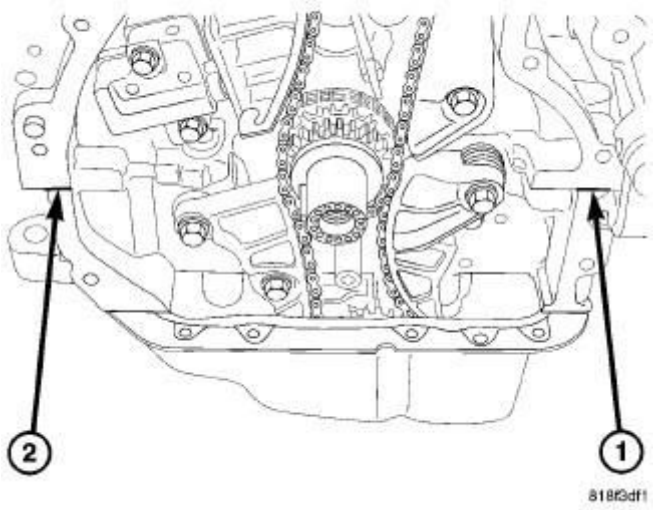

Fig. 11: Installing Dome Lamp Bulb (Rear)
Courtesy of CHRYSLER GROUP, LLC

1. Align the ends of the bulb (3) with the two bulb holders within the cargo lamp housing (1).
2. Carefully press the bulb firmly and evenly into the bulb holders until it snaps into place.
3. Swing the notched end of the lens (4) up into position against the housing, then press upward on the lens firmly and evenly until it snaps into the housing.
4. Reconnect the battery negative cable.

LAMP - WITH FLASHLIGHT FEATURE

NOTE: There are two types of cargo lamps available in this vehicle; one with and one without a removable flashlight feature.

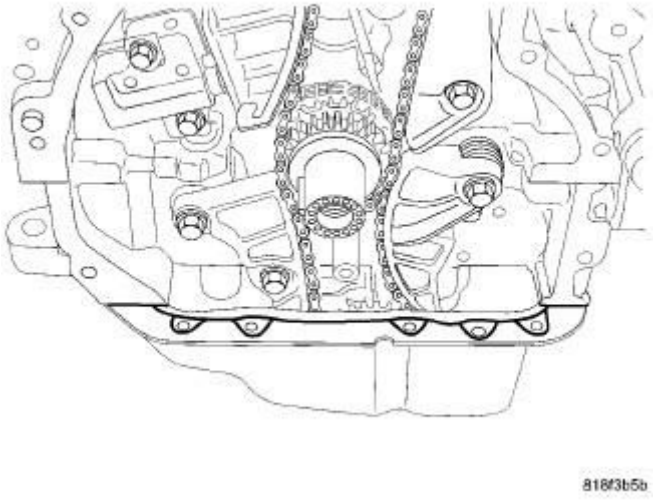

Fig. 12: Identfying Cargo Lamp Housing Components
Courtesy of CHRYSLER GROUP, LLC

1. Position the cargo lamp (1) with the flashlight removed close enough to the headliner to reconnect the headliner wire harness connector to the connector receptacle (4) on the back of the lamp.
2. Engage the two fixed retainers (5) into the rear edge of the headliner mounting hole.
3. Slide the lamp housing rearward far enough to obtain clearance between the front edge of the lamp housing and the front of the headliner mounting hole for the lamp.
4. Depress the two spring tabs (2) far enough to push the forward edge of the lamp housing up into the mounting hole in the headliner, then release the spring tabs to engage the back of the headliner substrate.
5. Align the snap clip retainer (3) with the hole in the upper liftgate opening header.

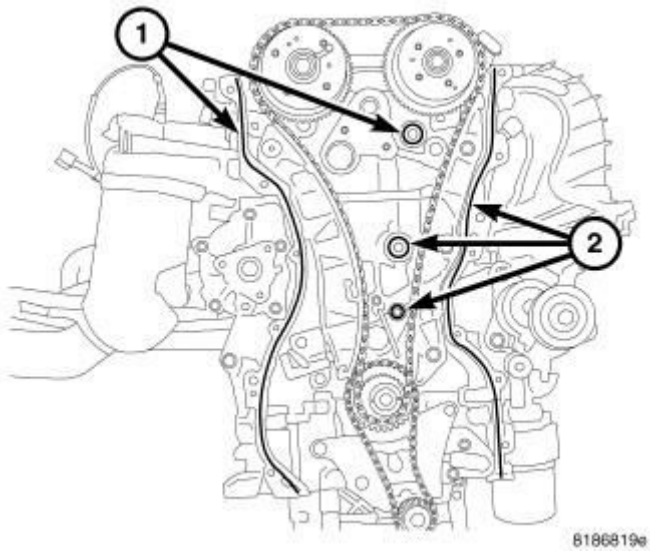

Fig. 13: Identifying Cargo Lamp Components
Courtesy of CHRYSLER GROUP, LLC

6. Press firmly and evenly upward on the center of the flashlight receptacle in the cargo lamp housing (1) until the snap clip retainer on the back of the lamp snaps into place in the hole in the upper liftgate opening header (3).
7. Reinstall the push pin fastener (4) adjacent to each side of the cargo lamp that secures the headliner (5) to the upper D-pillar reinforcement (2).
8. Reinstall the trim onto the inside of both upper C-pillars. Refer to **PANEL, C-PILLAR TRIM, INSTALLATION** .
9. Reinstall the flashlight into the cargo lamp housing.
10. Reconnect the battery negative cable.

LAMP - WITHOUT FLASHLIGHT FEATURE

NOTE: There are two types of cargo lamps available in this vehicle; one with and one without a removable flashlight feature.

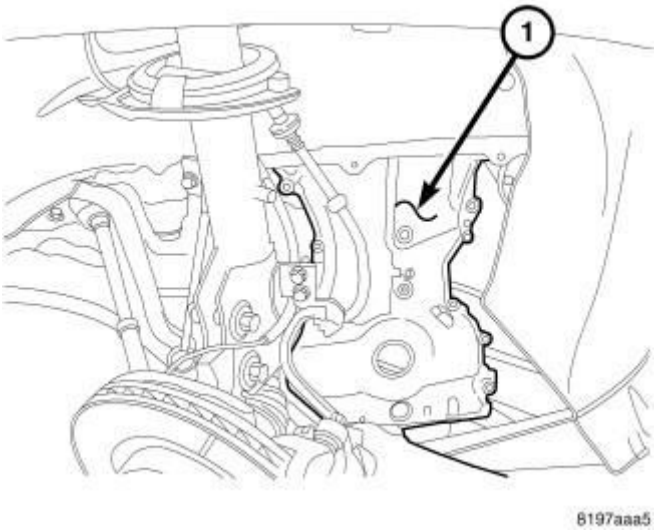

Fig. 14: Removing/Installing Rear Lamp
Courtesy of CHRYSLER GROUP, LLC

1. Position the cargo lamp unit (1) to the mounting hole in the headliner.
2. Reconnect the wire harness connector to the connector receptacle on the back of the lamp housing.
3. Insert the fixed retainer (4) on the notched end (5) of the lamp housing up into one side of the mounting hole in the headliner.
4. Slide the notched end of the housing into the mounting hole far enough to engage the lens hinge/retainer (3) into the opposite side of the hole in the headliner.
5. Gently and evenly press the lens hinge/retainer end of the lamp into the mounting hole until the bezel of the lamp housing is flush with the headliner.
6. Swing the notched end of the lamp lens (2) into position against the lamp housing, then press on the lens firmly and evenly until it snaps into the housing.
7. Reconnect the battery negative cable.

LAMP, DOME

REMOVAL

BULB - FRONT

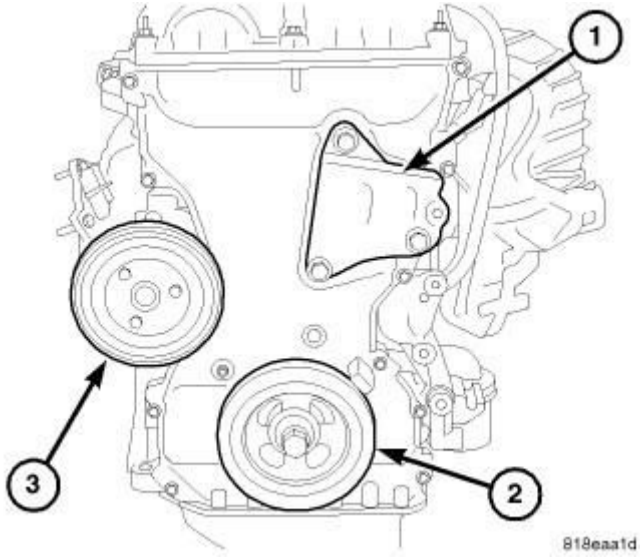

Fig. 15: Installing Dome Lamp Bulb (Rear)
Courtesy of CHRYSLER GROUP, LLC

1. Disconnect and isolate the battery negative cable.
2. Insert the tip of a small flat-bladed screwdriver into the notch on one side of the front dome lamp between the lens (4) and the lamp housing (1).
3. Gently pry the notched edge of the lens downward until it unsnaps from the housing.
4. Swing the notched end of the lens downward far enough to access the bulb (3).
5. Carefully unsnap the bulb from the two bulb holders within the dome lamp housing.

LAMP - FRONT

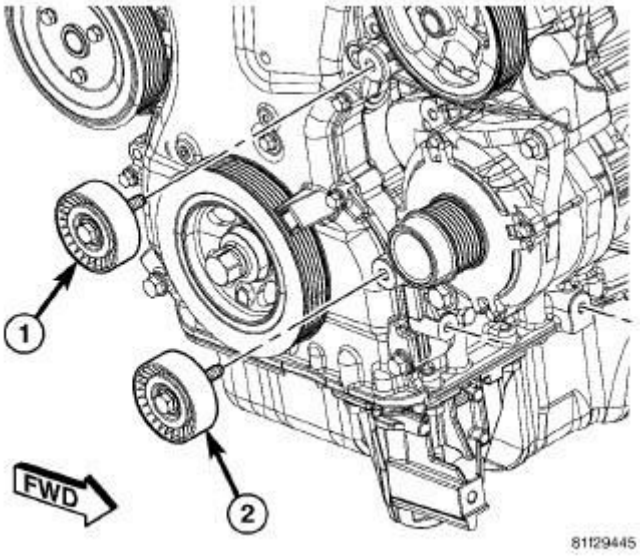

Fig. 16: Removing/Installing Rear Lamp
Courtesy of CHRYSLER GROUP, LLC

1. Disconnect and isolate the battery negative cable.
2. Insert the tip of a small flat bladed screwdriver into the notch (5) between the lens (2) and the housing (1) on one side of the dome lamp unit.
3. Gently pry the end of the lens outward until it unsnaps from the housing.
4. Swing the lens outward until it is perpendicular to the housing.
5. Pull the lens hinge/retainer end (3) of the housing outward slightly from the headliner, then slide the exposed end of the housing away from the mounting hole far enough to disengage the fixed retainer (4) on the notched end from the headliner.
6. Pull the lamp away from the headliner mounting hole far enough to access and disconnect the wire harness connector from the back of the lamp.
7. Remove the lamp from the vehicle.

LAMP - REAR - WITHOUT INTRUSION ALARM

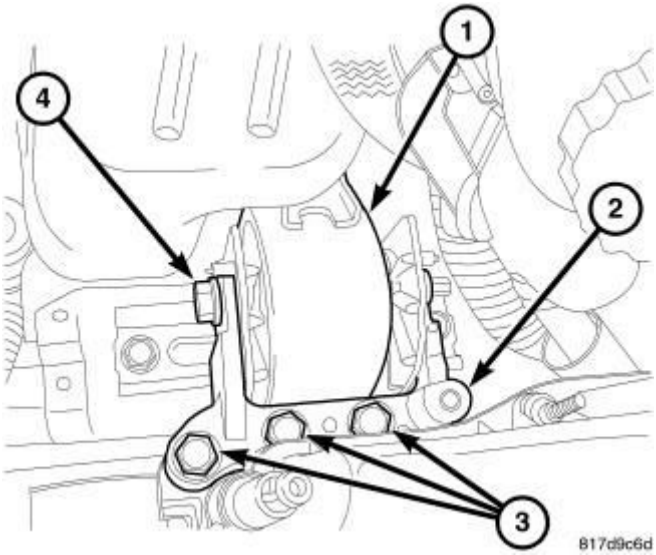

Fig. 17: Removing/Installing Rear Lamp
Courtesy of CHRYSLER GROUP, LLC

1. Disconnect and isolate the battery negative cable.
2. Insert the tip of a small flat bladed screwdriver into the notch (5) between the lens (2) and the housing (1) on one side of the dome lamp unit.
3. Gently pry the end of the lens outward until it unsnaps from the housing.
4. Swing the lens outward until it is perpendicular to the housing.
5. Pull the lens hinge/retainer end (3) of the housing outward slightly from the headliner, then slide the exposed end of the housing away from the mounting hole far enough to disengage the fixed retainer (4) on the notched end from the headliner.
6. Pull the lamp away from the headliner mounting hole far enough to access and disconnect the wire harness connector from the back of the lamp.
7. Remove the lamp from the vehicle.

BULB - REAR - WITHOUT INTRUSION ALARM

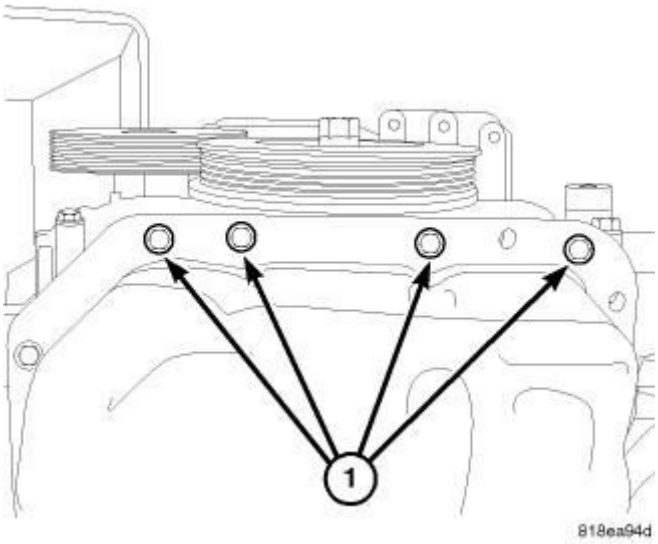

Fig. 18: Installing Dome Lamp Bulb (Rear)
Courtesy of CHRYSLER GROUP, LLC

1. Disconnect and isolate the battery negative cable.
2. Insert the tip of a small flat-bladed screwdriver into the notch on one side of the dome lamp between the lens (4) and the lamp housing (1).
3. Gently pry the notched edge of the lens downward until it unsnaps from the housing.
4. Swing the notched end of the lens downward far enough to access the bulb (3).
5. Carefully unsnap the bulb from the two bulb holders within the dome lamp housing.

BULB - REAR - WITH INTRUSION ALARM

NOTE: On vehicles with the intrusion alarm, the rear dome lamp is integral to the optional Intrusion Transceiver Module (ITM).

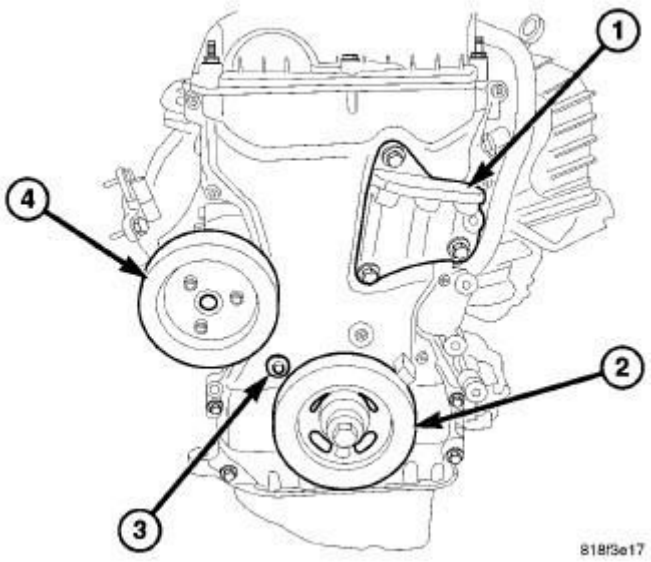

Fig. 19: Identifying Rear Dome Lamp Components
Courtesy of CHRYSLER GROUP, LLC

1. Disconnect and isolate the battery negative cable.
2. Insert the tip of a small flat-bladed screwdriver into the notch (4) on one side of the Intrusion Transceiver Module (ITM) housing (1) between the rear dome lamp lens (2) and the lamp housing.
3. Gently pry the notched edge of the lens downward until it unsnaps from the housing.
4. Swing the notched end of the lens downward far enough to access the bulb (3).
5. Carefully unsnap the bulb from the two bulb holders within the lamp housing.

INSTALLATION

BULB - FRONT

CAUTION: Always use the correct bulb size and type for replacement. An incorrect bulb size or type may overheat and cause damage to the lamp, the socket or the lamp wiring.

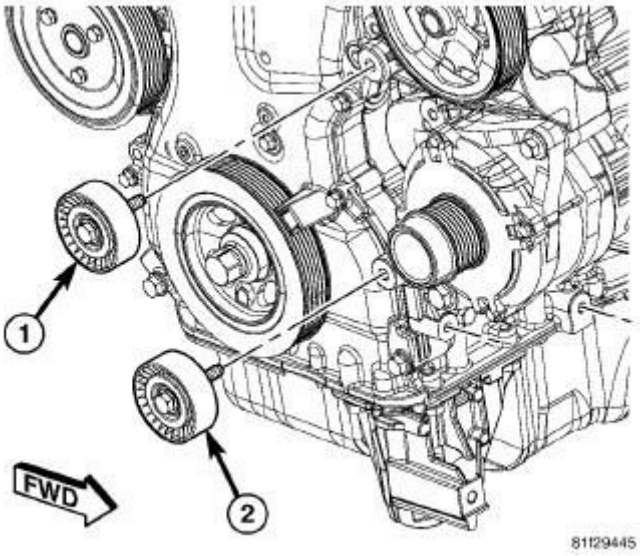

Fig. 20: Installing Dome Lamp Bulb (Rear)
Courtesy of CHRYSLER GROUP, LLC

1. Align the ends of the bulb (3) with the two bulb holders within the dome lamp housing (1).
2. Carefully press the bulb firmly and evenly into the bulb holders until it snaps into place.
3. Swing the notched end of the lens (4) up into position against the housing, then press upward on the lens firmly and evenly until it snaps into the housing.
4. Reconnect the battery negative cable.

LAMP - FRONT

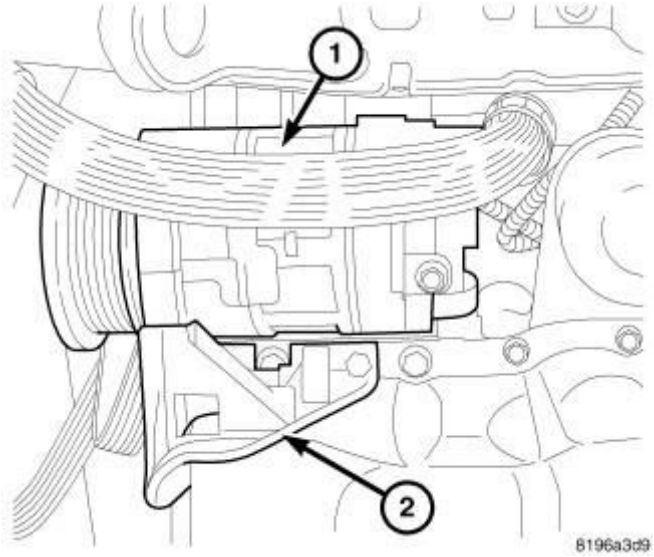

Fig. 21: Removing/Installing Rear Lamp
Courtesy of CHRYSLER GROUP, LLC

1. Position the dome lamp unit (1) to the mounting hole in the headliner.
2. Reconnect the wire harness connector to the connector on the back of the lamp.
3. Insert the fixed retainer (4) on the notched end (5) of the lamp housing up into one side of the mounting hole in the headliner.
4. Slide the notched end of the housing into the mounting hole far enough to engage the lens hinge/retainer (3) into the opposite side of the hole in the headliner.
5. Gently and evenly press the lens hinge/retainer end of the lamp into the mounting hole until the bezel of the lamp housing is flush with the headliner.
6. Swing the notched end of the lamp lens (2) into position against the lamp housing, then press on the lens firmly and evenly until it snaps into the housing.
7. Reconnect the battery negative cable.

LAMP - REAR - WITHOUT INTRUSION ALARM

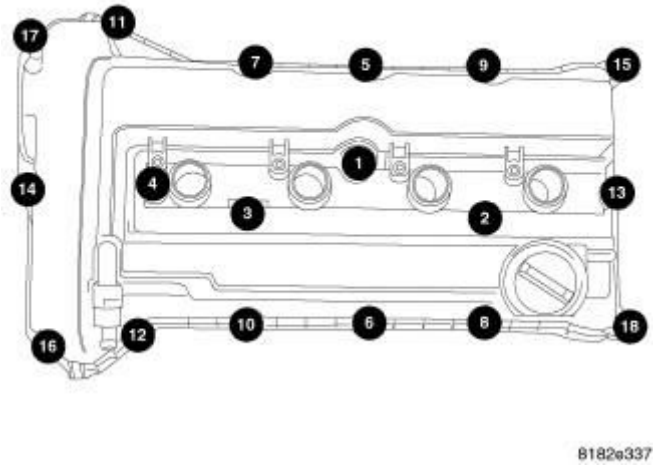

Fig. 22: Removing/Installing Rear Lamp
Courtesy of CHRYSLER GROUP, LLC

1. Position the dome lamp unit (1) to the mounting hole in the headliner.
2. Reconnect the wire harness connector to the connector on the back of the

lamp.

3. Insert the fixed retainer on the notched end (4) of the lamp housing up into one side of the mounting hole in the headliner.
4. Slide the notched end of the housing into the mounting hole far enough to engage the lens hinge/retainer (3) into the opposite side of the hole in the headliner.
5. Gently and evenly press the lens hinge/retainer end of the lamp into the mounting hole until the bezel of the lamp housing is flush with the headliner.
6. Swing the notched end of the lamp lens (2) into position against the lamp housing, then press on the lens firmly and evenly until it snaps into the housing.
7. Reconnect the battery negative cable.

BULB - REAR - WITHOUT INTRUSION ALARM

CAUTION: Always use the correct bulb size and type for replacement. An incorrect bulb size or type may overheat and cause damage to the lamp, the socket or the lamp wiring.

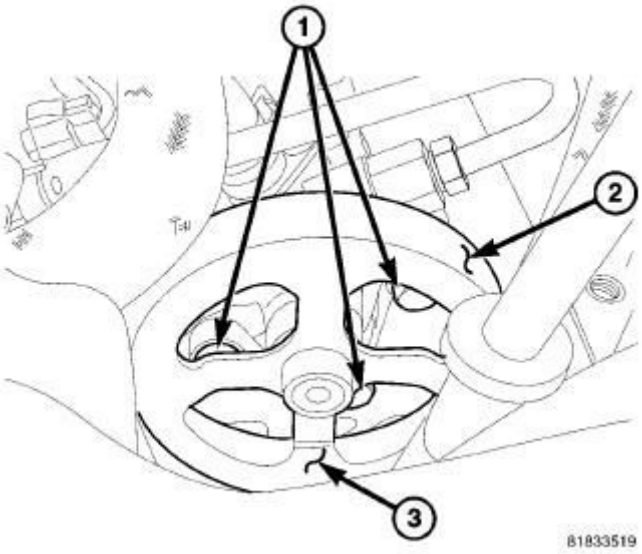

Fig. 23: Installing Dome Lamp Bulb (Rear)
Courtesy of CHRYSLER GROUP, LLC

1. Align the ends of the bulb (3) with the two bulb holders within the dome

lamp housing (1).

2. Carefully press the bulb firmly and evenly into the bulb holders until it snaps into place.
3. Swing the notched end of the lens (4) up into position against the housing, then press upward on the lens firmly and evenly until it snaps into the housing.
4. Reconnect the battery negative cable.

BULB - REAR - WITH INTRUSION ALARM

CAUTION: Always use the correct bulb size and type for replacement. An incorrect bulb size or type may overheat and cause damage to the lamp, the socket or the lamp wiring.

NOTE: On vehicles with the intrusion alarm, the rear dome lamp is integral to the optional Intrusion Transceiver Module (ITM).

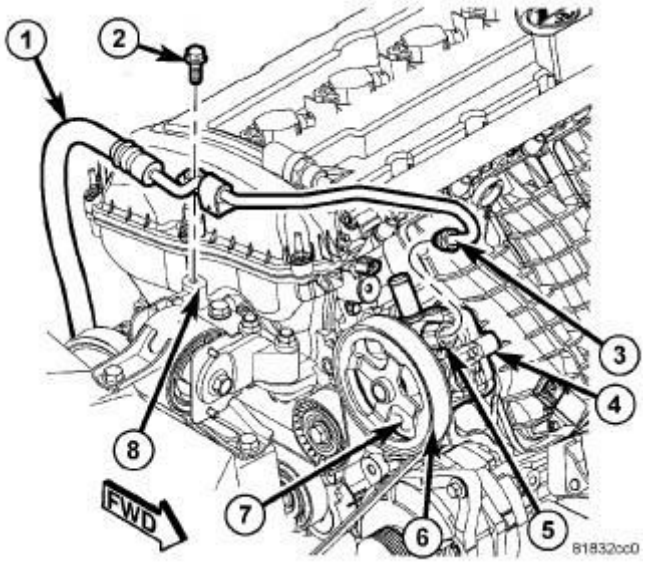

Fig. 24: Identifying Rear Dome Lamp Components
Courtesy of CHRYSLER GROUP, LLC

1. Align the ends of the bulb (3) with the two bulb holders within the lamp housing of the Intrusion Transceiver Module (ITM) housing (1).
2. Carefully press the bulb firmly and evenly into the bulb holders until it snaps into place.

3. Swing the notched end of the rear dome lamp lens (2) up into position against the lamp housing, then press upward on the lens firmly and evenly until it snaps into the housing.
4. Reconnect the battery negative cable.

LAMP, READING

REMOVAL

BULB

NOTE: This lamp also houses a switch for the power operated sunroof on vehicles that are so equipped.

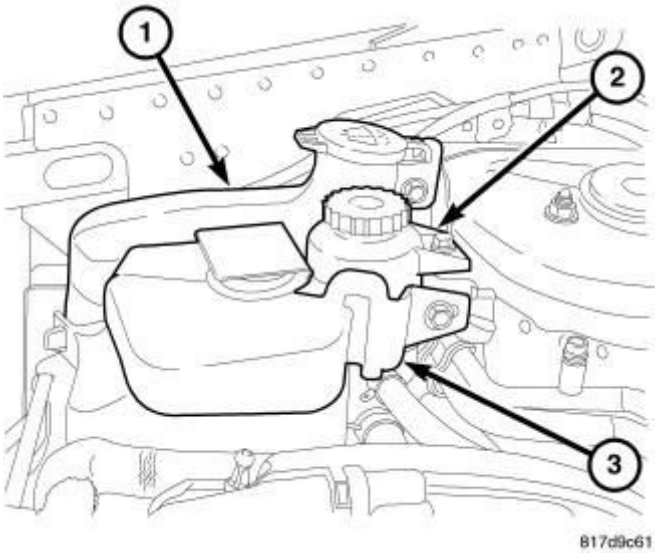

Fig. 25: Locating Dome Lamp Bulb
Courtesy of CHRYSLER GROUP, LLC

1. Disconnect and isolate the battery negative cable.
2. Remove the reading lamp (2) from the headliner. Refer to **LAMP, READING, REMOVAL**.
3. With the lamp lens (1) in the open position, carefully unsnap the bulb (3) from the two bulb holders within the lamp housing.

LAMP

NOTE: This lamp also houses a switch for the power operated sunroof on vehicles that are so equipped.

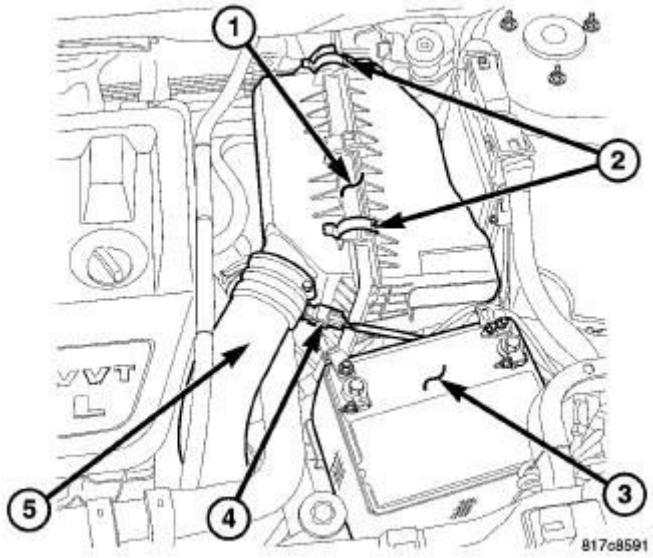

Fig. 26: View Of Dome Lamp Unit
Courtesy of CHRYSLER GROUP, LLC

1. Disconnect and isolate the battery negative cable.
2. Insert the tip of a small flat bladed screwdriver into the notch (3) between the lens (2) and the housing (1) on one side of the reading lamp unit.
3. Gently pry the end of the lens downward until it unsnaps from the housing.
4. Swing the lens downward until it is perpendicular to the housing.
5. Pull the lens hinge/retainer end (4) of the housing downward slightly from the headliner, then slide the lowered end of the housing away from the mounting hole far enough to disengage the fixed retainer on the notched end from the headliner.
6. Pull the lamp away from the headliner mounting hole far enough to disconnect the wire harness connector from the back of the lamp.
7. Remove the lamp from the vehicle.

INSTALLATION

BULB

CAUTION: Always use the correct bulb size and type for replacement. An incorrect bulb size or type may overheat and cause damage to the lamp, the socket or the lamp wiring.

NOTE: This lamp also houses a switch for the power operated sunroof on vehicles that are so equipped.

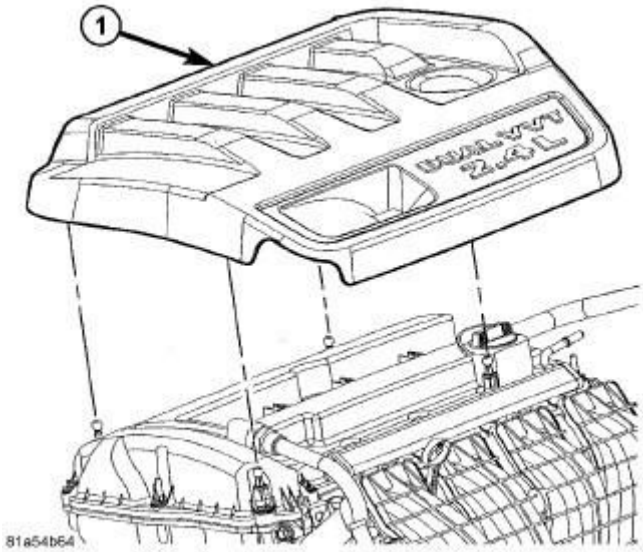

Fig. 27: Locating Dome Lamp Bulb
Courtesy of CHRYSLER GROUP, LLC

1. With the reading lamp lens (1) in the open position, align the ends of the bulb (3) with the two bulb holders within the lamp housing (2).
2. Carefully press the bulb firmly and evenly into the bulb holders until it snaps into place.
3. Reinstall the lamp into the headliner. Refer to **LAMP, READING, INSTALLATION**.
4. Reconnect the battery negative cable.

LAMP

NOTE: This lamp also houses a switch for the power operated sunroof on vehicles that are so equipped.

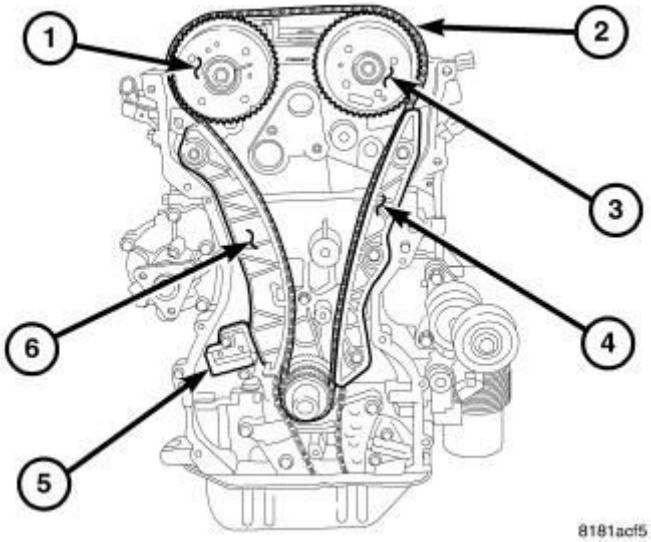

Fig. 28: View Of Dome Lamp Unit
Courtesy of CHRYSLER GROUP, LLC

1. Position the reading lamp unit (1) to the mounting hole in the headliner.
2. Reconnect the wire harness connector to the connector receptacle on the back of the lamp.
3. Insert the fixed retainer on the notched end (3) of the lamp housing up into one side of the mounting hole in the headliner.
4. Slide the notched end of the housing into the mounting hole far enough to engage the lens hinge/retainer (4) into the opposite side of the hole in the headliner.
5. Gently and evenly press the lens hinge/retainer end of the lamp upward into the mounting hole until the bezel of the lamp housing is flush with the headliner.
6. Swing the notched end of the lamp lens (2) up into position against the lamp housing, then press upward on the lens firmly and evenly until it snaps into the housing.
7. Reconnect the battery negative cable.

LAMP, TRANSMISSION RANGE INDICATOR

REMOVAL

REMOVAL

NOTE: This procedure applies only to vehicles equipped with an optional automatic transmission.

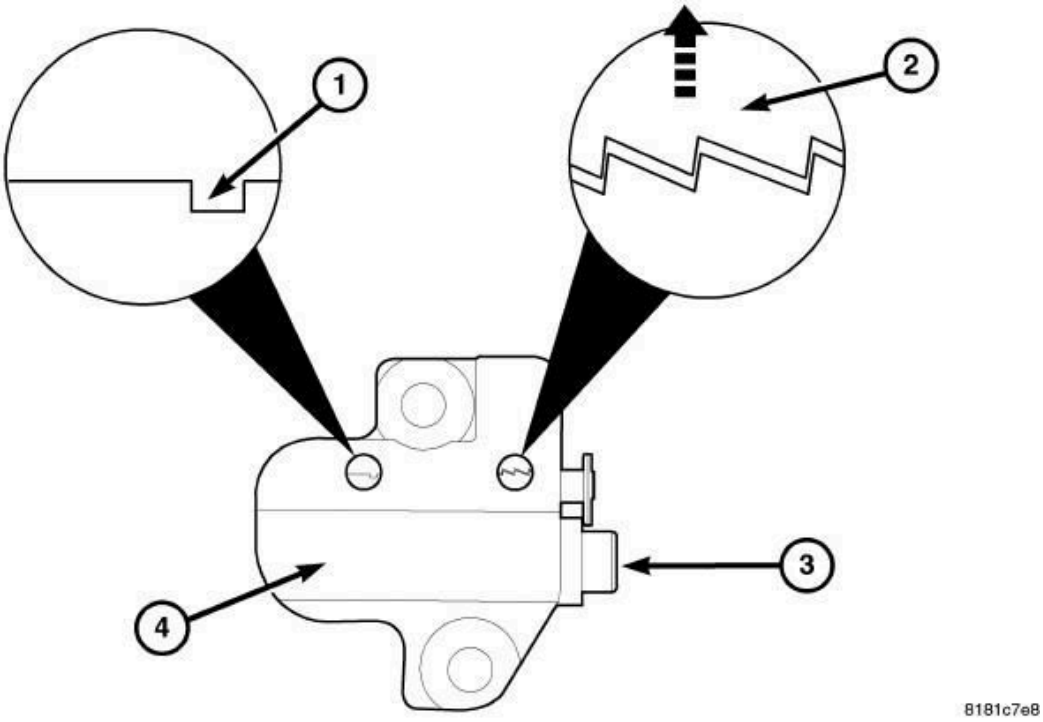

Fig. 29: Identifying Gear Selector Components
Courtesy of CHRYSLER GROUP, LLC

1. Disconnect and isolate the battery negative cable.
2. Remove the gear selector bezel from the center floor console (1). Refer to **BEZEL, SHIFTER, REMOVAL** .
3. Firmly grasp and pull the bulb (5) straight out of the socket (4) in the light box (3) on the left side of the gear selector mechanism (2).

INSTALLATION

INSTALLATION

CAUTION: Always use the correct bulb size and type for replacement. An incorrect bulb size or type may overheat and cause damage to the lamp, the socket or the lamp wiring.

NOTE: This procedure applies only to vehicles equipped with an optional automatic transmission.

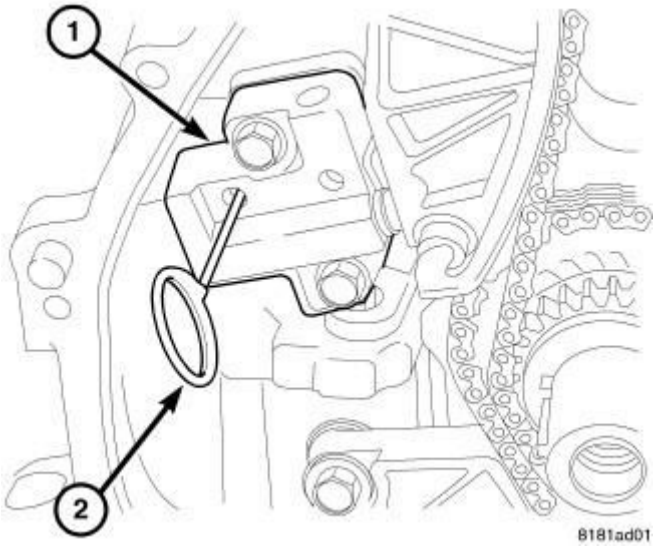

Fig. 30: Identifying Gear Selector Components
Courtesy of CHRYSLER GROUP, LLC

1. Align the base of the bulb (5) with the socket (4) in the light box (3) on the left side of the gear selector mechanism (2).
2. Push the bulb straight into the socket until the base is firmly seated.
3. Reinstall the gear selector bezel onto the center floor console (1). Refer to **BEZEL, SHIFTER, INSTALLATION** .
4. Reconnect the battery negative cable.

SWITCH, DOOR AJAR

DESCRIPTION

DOOR

This vehicle has four door ajar switches, one for each door. Each switch is concealed within and integral to its respective door latch unit. The switches are momentary leaf contact-type units that are actuated by the mechanisms internal to the door latch. A short pigtail wire and connector on each door latch connects the door ajar switch to the vehicle electrical system through its respective door wire harness.

The door ajar switches cannot be adjusted or repaired and, if ineffective or damaged, the door latch unit must be replaced. Refer to **LATCH, DOOR, REMOVAL** or **LATCH, DOOR, REMOVAL** .

LIFTGATE

A liftgate ajar switch is standard equipment on this vehicle. The switch is concealed within and integral to the liftgate latch unit. The switch is a momentary leaf contact-type unit that is actuated by the liftgate latch mechanism. An integral connector receptacle on the liftgate latch connects the liftgate ajar switch to the vehicle electrical system through the liftgate wire harness.

The liftgate ajar switch cannot be adjusted or repaired and, if ineffective or damaged, the liftgate latch unit must be replaced. Refer to **LATCH, REMOVAL** .

OPERATION

DOOR

The door ajar switches are actuated by the mechanisms internal to the door latch. When a door is closed and properly latched, its door ajar switch is an open circuit. When a door is open or only partially latched, the door ajar switch is a closed circuit. The door ajar switches are hard wired in series between a body ground and the ElectroMechanical Instrument Cluster (EMIC) (also known as the Cab Compartment Node/CCN). The EMIC reads the hard wired door ajar switch inputs through internal pull-ups, then uses these inputs to control many electronic functions and features of the vehicle. The EMIC also sends electronic door ajar switch status messages over the Controller Area Network (CAN) data bus.

The door ajar switches as well as the hard wired inputs and outputs of the switches may be diagnosed using conventional diagnostic tools and procedures. Refer to the appropriate wiring information.

LIFTGATE

The liftgate ajar switch is actuated by the liftgate latch mechanism. When the liftgate is closed and properly latched, its liftgate ajar switch is an open circuit. When the liftgate is open or only partially latched, the liftgate ajar switch is a closed circuit. The liftgate ajar switch is hard wired in series between a body ground and the ElectroMechanical Instrument Cluster (EMIC) (also known as the Cab Compartment Node/CCN). The EMIC reads the hard wired liftgate ajar switch input through an internal pull-up, then uses this input to control many electronic functions and features of the vehicle.

The liftgate ajar switch as well as the hard wired inputs and outputs of the switch may be diagnosed using conventional diagnostic tools and procedures. Refer to

the appropriate wiring information.

2014 ACCESSORIES AND EQUIPMENT

Message Center - Service Information - Compass & Patriot

CENTER, ELECTRONIC VEHICLE INFORMATION

DESCRIPTION

DESCRIPTION

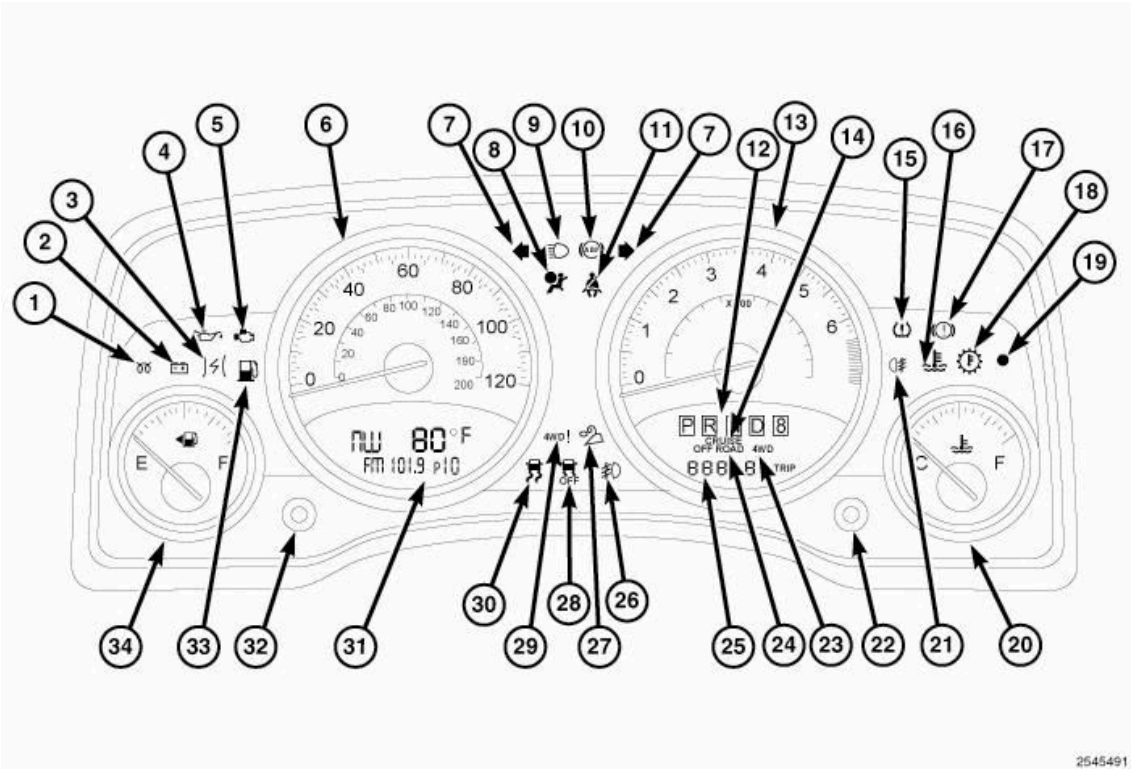

Fig. 1: Exploded View Of Electronic Vehicle Information Center (EVIC)
Courtesy of CHRYSLER GROUP, LLC

The Electronic Vehicle Information Center (EVIC) features a driver-interactive display (31). The display is located in the lower left part of the instrument cluster at the bottom of the speedometer (6). This system conveniently allows the driver to select a variety of useful information by pressing the **STEP** button (32) to the left of the EVIC display.

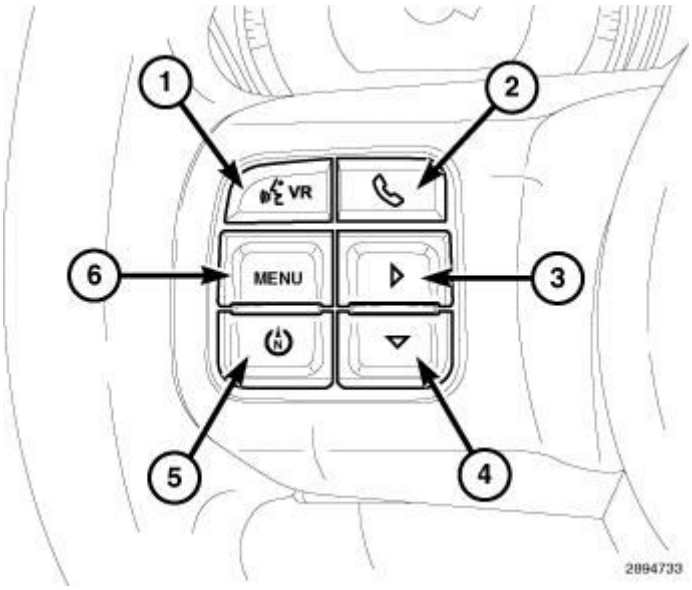

Fig. 2: EVIC SWITCHES
Courtesy of CHRYSLER GROUP, LLC

In addition to the **STEP** button located on the instrument cluster, the EVIC system conveniently allows the driver to navigate through and select the information by pressing the EVIC function buttons located on the steering wheel. The EVIC displays information related to the following:

- System Status
- Vehicle information warning message displays
- Personal Settings (customer programmable features)
- Compass display
- Outside temperature display
- Trip computer functions
- UConnect™ hands-free communication system displays - If Equipped
- Navigation system screens - If Equipped
- Audio mode display

The EVIC system is comprised of several different components. Those components are:

- Instrument Cluster
- EVIC **STEP** Button
- Ambient Temperature Sensor

- Remote Compass Module (RCM)
- Controller Area Network (CAN) Data Bus
- Local Interface Network (LIN) Data Bus

The EVIC display and **STEP** button are part of the Instrument Cluster assembly and cannot be serviced as separate components. If the display or button are inoperative the complete Instrument Cluster assembly must be replaced. Refer to **REMOVAL** .

OPERATION

OPERATION

The Electronic Vehicle Information Center (EVIC) uses both non-switched and ignition switched sources of battery current so that some of its features remain operational at any time, while others may only operate with the ignition switch in the "ON" position. When the ignition switch is turned to the "ON" position, the EVIC display will return to the last function being displayed before the ignition was turned to the "OFF" position.

The EVIC system is comprised of several different components that communicate over the Controller Area Network (CAN) and Local Interface Network (LIN) Data Buses. **If the system is inoperative a scan tool and the appropriate diagnostic information must be used to diagnose the system.**

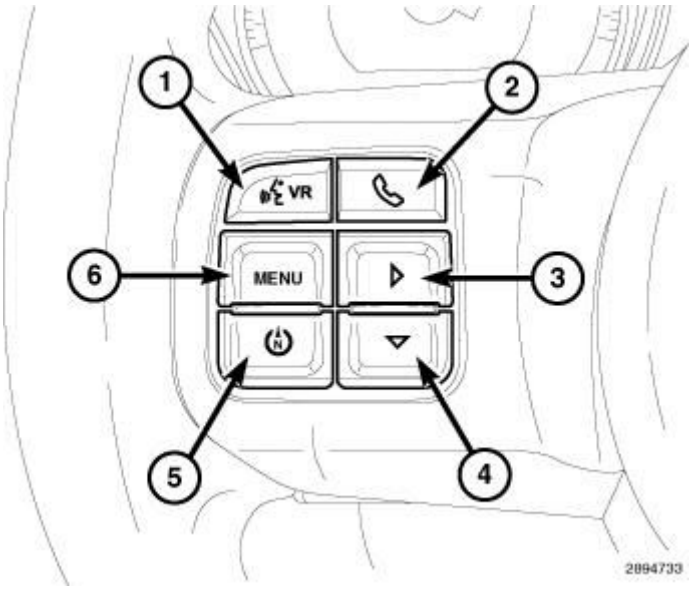

Fig. 3: EVIC SWITCHES
Courtesy of CHRYSLER GROUP, LLC

The EVIC function buttons are used to operate the different functions of the EVIC system. Pressing and releasing the **MENU** button (1) allows the driver to select the Compass/Temperature, Trip Computer, Personal Settings or System Status functions. The **STEP** button (4) is used to toggle through options or features of the Trip Computer, Personal Settings or System Status functions. Pressing and releasing the **RESET** button (3) allows the selection of setting or resetting of the function currently displayed at that time. Pressing and releasing the **C/T** (compass/temperature) button (5) will cause the EVIC to return to the compass/temperature display mode from any other mode.

EVIC DISPLAY MODES

SYSTEM STATUS MODE

System display mode displays warnings and user interaction messages on the EVIC display. The driver can scroll to view multiple messages by using the **STEP** button.

When the appropriate conditions exist, the EVIC displays the following messages:

- Turn Signal On (with a continuous warning chime)
- Left Front Turn Signal Lamp Out (with a single chime)
- Left Rear Turn Signal Lamp Out (with a single chime)
- Right Front Turn Signal Lamp Out (with a single chime)
- Right Rear Turn Signal Lamp Out (with a single chime)
- Personal Settings Not Available - Vehicle Not in Park (automatic transmissions) or vehicle in motion (manual transmissions)
- Left/Right Front Door Ajar (one or more, with a single chime if speed is above 1 mph (1.6 km/h))
- Left/Right Rear Door Ajar (one or more, with a single chime if speed is above 1 mph (1.6 km/h))
- Door(s) Ajar (with a single chime if vehicle is in motion)
- Trunk Ajar (with a single chime)
- Headlamps On/Lights On With Key Out Of Ignition.

COMPASS/TEMPERATURE/AUDIO

Compass heading and outside temperature are displayed at the top of the EVIC

display screen. On the lower half of the screen the audio mode is displayed along with the odometer. One of eight compass headings to indicate the direction the vehicle is facing (N, S, E, W, NE, NW, SE, SW) and to select one of 15 compass variance settings. Outside temperature is displayed in °C (degrees Celsius) or °F (degrees Fahrenheit). Audio mode can display any one of 12 radio station preset frequencies, CD disc number, CD track number, tape, and one of 200 Satellite Radio Channels - if equipped.

For additional information regarding the compass, refer to Personal Settings (Customer Programmable Features) in this Service Information.

AVERAGE FUEL ECONOMY

Shows the average fuel economy since the last reset. When the fuel economy is reset, the display will read "RESET" or show dashes for two seconds. Then, the history information will be erased, and the averaging will continue from where it was before the reset.

DISTANCE TO EMPTY (DTE)

NOTE: Significant changes in driving style or vehicle loading will greatly affect the actual drivable distance of the vehicle, regardless of the DTE displayed value.

Shows the estimated distance that can be travelled with the fuel remaining in the tank. This estimated distance is determined by a weighted average of the instantaneous and average fuel economy, according to the current fuel tank level. This is not resettable.

When the DTE value is less than 48 kilometers (30 miles) estimated driving distance, the DTE display will change to a text display of "LOW FUEL". This display will continue until the vehicle runs out of fuel. Adding a significant amount of fuel to the vehicle will turn off the "LOW FUEL" text and a new DTE value will be displayed, based on the current values in the DTE calculation and the current fuel tank level.

ELAPSED TIME

Shows the total elapsed time of travel since the last reset when the ignition switch is in the ACC position. Elapsed time will increment when the ignition switch is in the ON or START position.

HANDS FREE TELEPHONE MODE - IF EQUIPPED

Provides the following information and features for the optional hands-free communications system:

- Phone status: idle, voice mail, roaming, battery strength and signal strength in increments of 20 percent
- Call status: Incoming call, connecting, connected, air time in minutes and seconds, call ended, busy, call failed, roaming and no phone connection
- Caller ID phone number display

PERSONAL SETTINGS MODE (CUSTOMER PROGRAMMABLE FEATURES)

Allows the driver to set and recall features when the transmission is in Park by pressing and releasing the **STEP** button until Personal Settings is displayed in the EVIC.

The following personal settings can be set and recalled:

- Language settings: English, Spanish and French for domestic markets. and additional German, Italian and Dutch are available for export markets.
- Lock doors automatically at 24 km/h (15 mph), On or Off.
- Unlock door automatically on exit, On or Off.
- Remote Keyless Entry unlock driver door on first press or unlock all doors on first press.
- Sound horn with Remote Keyless Entry Lock, On or Off.
- Turn headlamps on with Remote Keyless Entry Lock, On or Off.
- Delay turning headlamps off for 0, 30, 60 or 90 seconds.
- Key-Off Power Delay (delay power off to accessories until exit off, 45-seconds maximum, 5-minute maximum, 10-minute maximum).
- Illuminated Approach - Turn headlamps on with Remote Keyless Entry Unlock, Off or 30, 60 or 90 seconds.
- Display units in English or Metric.
- Compass Variance Setting 1 through 15.
- Calibrate Compass Yes/No.

DIAGNOSIS AND TESTING

DIAGNOSIS AND TESTING - ELECTRONIC VEHICLE INFORMATION CENTER

CAUTION: Do not place any external magnets, such as magnetic roof mount antennas, in the vicinity of the compass. Do not place any electronic devices (cell phones, laptop computers, PDAs, portable DVD players, etc), on or near the instrument panel as the Remote Compass Module (RCM) performance may be effected. Do not use magnetic tools when servicing the RCM.

The Electronic Vehicle Information Center (EVIC) data is obtained from several components on the Controller Area Network (CAN) and Local Interface Network (LIN) Data Bus circuits. The EVIC will not function properly if the bus messages from any of these components is not receive. If no EVIC data is displayed or the display indicates dashes "- -", check the CAN and LIN Data Bus circuit communications, the Instrument Cluster functions, the Navigational (NAV) radio, the Remote Compass Module (RCM), and the Totally Integrated Power Module (TIPM). On vehicles equipped with an RCM, should it become disconnected the instrument cluster display will go blank.

The use of a scan tool and the proper diagnostic procedures information are recommended for further testing of the Instrument Cluster, the NAV radio, the RCM, the CAN Data Bus and the LIN Data Bus circuits. Refer to the appropriate wiring information for complete circuit schematic or connector pin-out information.

MODULE, COMPASS

DESCRIPTION

DESCRIPTION

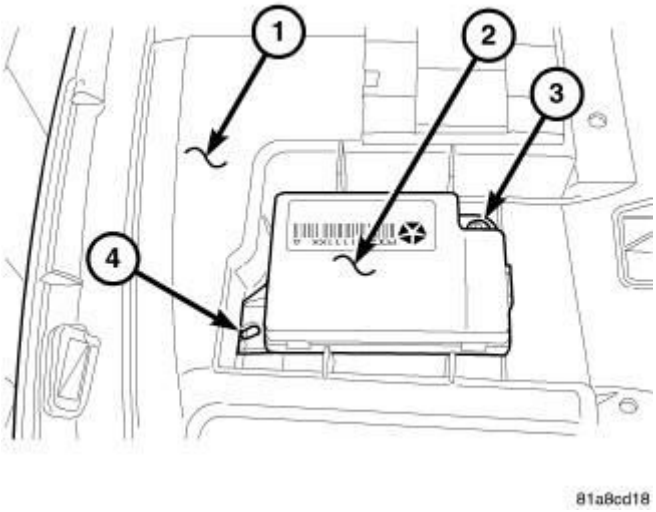

Fig. 4: View Of Remote Compass Module (RCM)
Courtesy of CHRYSLER GROUP, LLC

On vehicles **Not** equipped with a Navigational (NAV) Radio, the Remote Compass Module (RCM) (2) is a separate stand alone module mounted to the top of the instrument panel (1). The RCM can be accessed by removing the instrument panel top pad. Refer to **COVER, INSTRUMENT PANEL, REMOVAL** .

If the compass position sensor (Remote Compass Module) is inoperative and requires replacement, for the appropriate procedure. Refer to **MODULE, COMPASS, REMOVAL**.

On vehicles equipped with a Navigational (NAV) Radio, the compass feature is an integral part of the NAV system and does not require calibration or adjustment, and is only serviced as an assembly with the radio. For more information on the NAV Radio. Refer to **DESCRIPTION** .

DIAGNOSIS AND TESTING

DIAGNOSIS AND TESTING - REMOTE COMPASS MODULE

CAUTION: Do not place any external magnets, such as magnetic roof mount antennas, in the vicinity of the compass. Do not place any electronic devices (cell phones, laptop computers, PDAs, portable DVD players, etc), on or near the instrument panel as the Remote Compass Module (RCM)

performance may be effected. Do not use magnetic tools when servicing the RCM.

The Remote Compass Module (RCM) data is transferred on the Controller Area Network (CAN) Data Bus circuit. The RCM and Electronic Vehicle Information Center (EVIC) will not function properly if the bus messages are not properly received. If no EVIC data is displayed, check the CAN Data Bus circuit communications, the RCM, the Instrument Cluster functions and the Totally Integrated Power Module (TIPM). **Any diagnosis of the RCM and EVIC display should begin with the use of a scan tool and the appropriate diagnostic service information.**

NOTE: Vehicles equipped with a NAV radio, the compass feature is an integral part of the NAV system and is only serviced as an assembly with the radio. For more information, refer to DIAGNOSIS AND TESTING .

For complete circuit diagrams, refer to the appropriate wiring information. The wiring information includes wiring diagrams, proper wire and connector repair procedures, details of wire harness routing and retention, connector pin-out information and location views for the various wire harness connectors, splices and grounds.

STANDARD PROCEDURE

MANUAL COMPASS CALIBRATION

CAUTION: Do not place any external magnets, such as magnetic roof mount antennas, in the vicinity of the Remote Compass Module (RCM) located at the top center of the instrument panel. Do not place any electronic devices (cell phones, laptop computers, Personal Digital Assistants (PDAs), portable DVD players, etc.) on or near the instrument panel as the RCM performance may be affected. Do not use magnetic tools when servicing the RCM.

NOTE: Manual calibration is required anytime a new Remote

Compass Module (RCM) is installed. Upon installation of the new RCM, the CAL (calibrate) message will appear in the instrument cluster display. The RCM will automatically calibrate if the vehicle is driven very slowly in two or more complete circles, away from large metal objects. The RCM can also be manually calibrated by performing the following procedure.

NOTE: Confirmation that the proper variance zone is programmed is recommended whenever manual compass calibration is performed. Refer to MODULE, COMPASS, STANDARD PROCEDURE.

NOTE: If the vehicle is equipped with a Chrysler Uconnect™ GPS (Navigation Radio), the navigation system will provide the compass direction, so the Variance and Calibration menus will be unavailable. The compass performs accurately based upon GPS signals rather than based upon the Earth's magnetic field.

The electronic compass unit features a self-calibrating design, which simplifies the calibration procedure. This feature automatically updates the compass calibration while the vehicle is being driven. This allows the compass unit to compensate for small changes in the residual magnetism that the vehicle may acquire during normal use. If the compass readings appear to be erratic or the **CAL** (calibrate) indicator is displayed, perform the appropriate manual calibration procedure. Also, any time a new RCM is installed, it must be manually calibrated using the appropriate procedure.

EXCEPT WITH ELECTRONIC VEHICLE INFORMATION CENTER

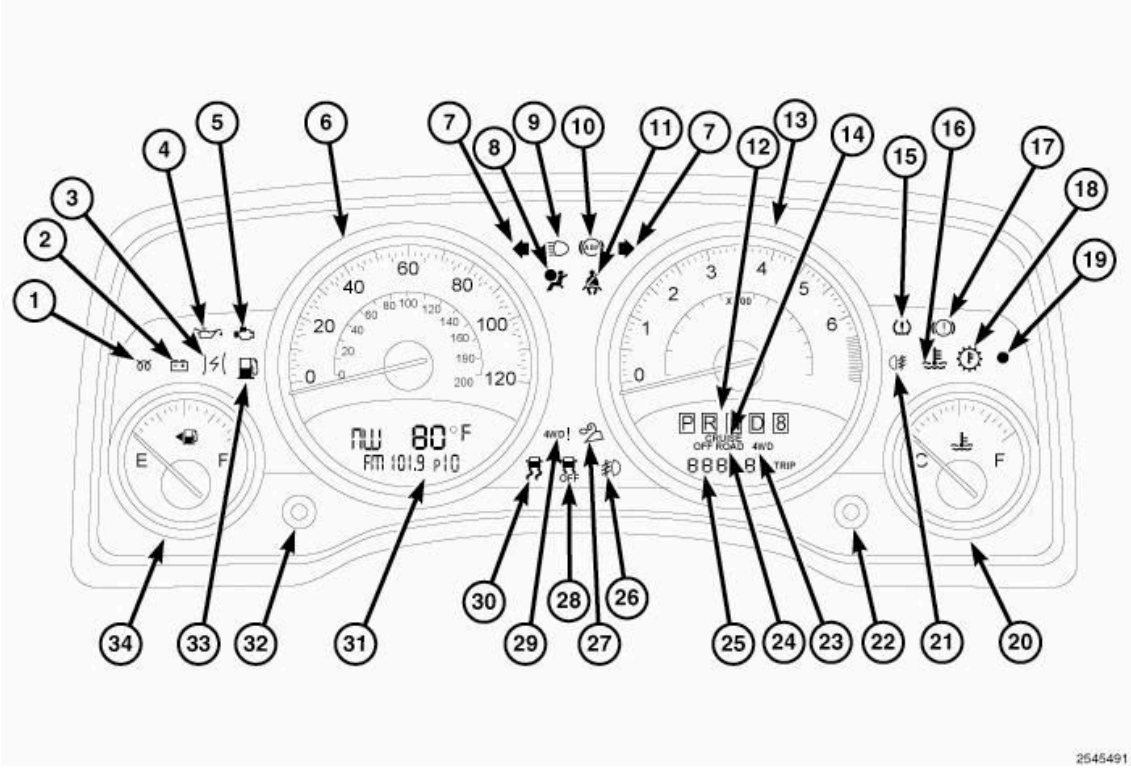

Fig. 5: Exploded View Of Electronic Vehicle Information Center (EVIC)
Courtesy of CHRYSLER GROUP, LLC

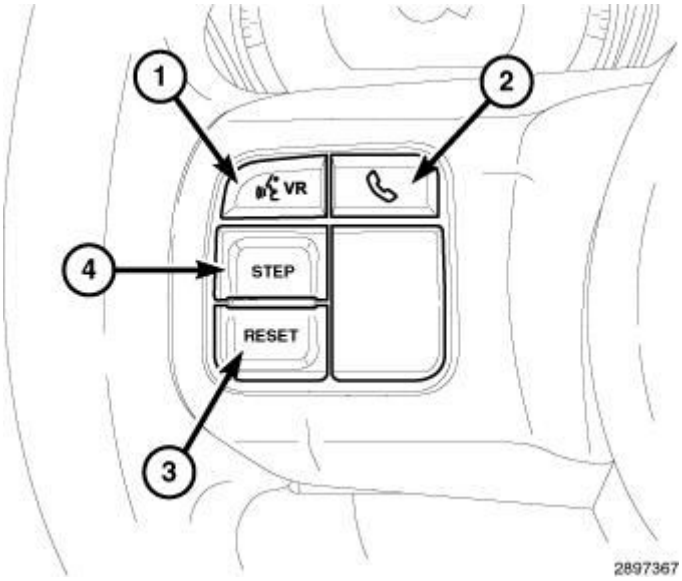

Fig. 6: RESET Push Button
Courtesy of CHRYSLER GROUP, LLC

In vehicles not equipped with the optional Electronic Vehicle Information Center (EVIC), there are two methods for initiating compass calibration. The compass calibration can be initiated by depressing the odometer/trip odometer push button (22) located on the instrument cluster face just below, and to the right of the

odometer; or, by using the RESET push button (3) in the EVIC switch pod (also known as the odometer switch pod) located in the left horizontal spoke of the steering wheel.

Manually calibrate the compass as follows:

NOTE: Do not attempt to calibrate the compass near large metal objects such as other vehicles, large buildings, or bridges; or, near overhead or underground power lines.

1. Start the engine but leave the manual transmission in the Neutral (**N**) position or the automatic transmission in the Park (**P**) position.
2. Depress and hold the odometer/trip odometer push button or the **RESET** push button for approximately 10 seconds, until the current variance (**VAR**) zone number is displayed.
3. Release the odometer/trip odometer push button or the **RESET** push button, then depress and hold it again for approximately 10 seconds, until the direction is displayed, with the **CAL** symbol on solid (not blinking) in the display.

   NOTE: A blinking CAL symbol within the display indicates the RCM has determined that it is no longer within calibration parameters and the calibration procedure must be performed.

4. To complete the compass calibration, drive the vehicle in one or more **complete** 360 degree circles, under 8 km/h (5 mph) in an area free from overhead or underground power lines and large metal objects such as other vehicles, large buildings or bridges. The **CAL** symbol will disappear from the display to indicate successful compass calibration.
5. Confirm that the correct direction is now indicated by the compass.

NOTE: If the calibration CAL symbol remains in the display or if the compass heading is inaccurate following the calibration procedure and there are no internal compass faults, either there is excessive magnetism near the compass, or the unit is inoperative. Repeat the calibration procedure at least one more time prior to performing any

system diagnosis.

NOTE: If the wrong direction is still indicated in the compass display, the area selected for calibration may be too close to a strong magnetic field. Repeat the calibration procedure in another location.

WITH ELECTRONIC VEHICLE INFORMATION CENTER

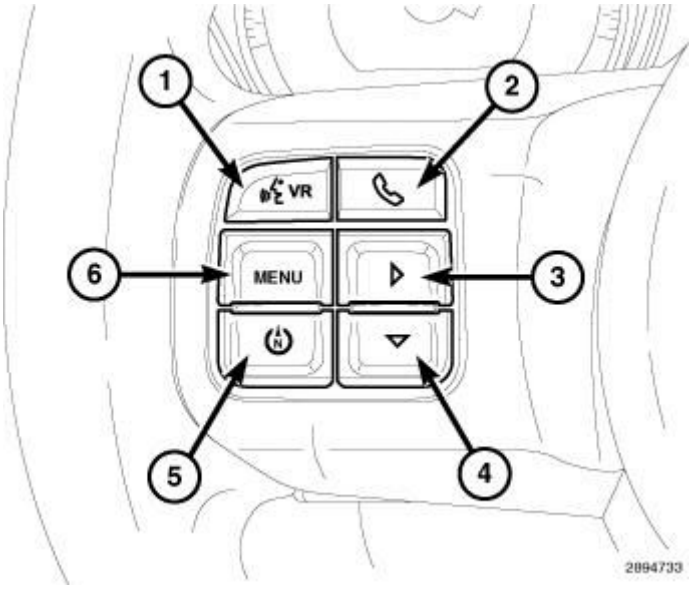

Fig. 7: With Electronic Vehicle Information Center
Courtesy of CHRYSLER GROUP, LLC

Manually calibrate the compass as follows:

NOTE: Do not attempt to calibrate the compass near large metal objects such as other vehicles, large buildings, or bridges; or, near overhead or underground power lines.

1. Start the engine but leave the manual transmission in the Neutral (**N**) position or the automatic transmission in the Park (**P**) position.
2. Depress and release the **MENU** push button (6), until the **Personal Settings** (Customer Programmable Features) menu appears in the display.
3. Depress and release the **Step / Down Scroll** push button (4), until **Calibrate Compass** appears in the display.
4. Depress and release the **Select / Reset** push button (3) to start the calibration. The **CAL** symbol should appear solid (not blinking) in the

display.

NOTE: A blinking CAL symbol within the display indicates the RCM has determined that it is no longer within calibration parameters and the calibration procedure must be performed.

5. To complete the compass calibration, drive the vehicle in one or more **complete** 360 degree circles, under 8 km/h (5 mph) in an area free from overhead or underground power lines and large metal objects such as other vehicles, large buildings or bridges. The **CAL** symbol will disappear from the display to indicate successful compass calibration.
6. Confirm that the correct direction is now indicated by the compass.

NOTE: If the calibration CAL symbol remains in the display or if the compass heading is inaccurate following the calibration procedure and there are no internal compass faults, either there is excessive magnetism near the compass, or the unit is inoperative. Repeat the calibration procedure at least one more time prior to performing any system diagnosis.

NOTE: If the wrong direction is still indicated in the compass display, the area selected for calibration may be too close to a strong magnetic field. Repeat the calibration procedure in another location.

COMPASS VARIANCE ADJUSTMENT

CAUTION: Do not place any external magnets, such as magnetic roof mount antennas, in the vicinity of the Remote Compass Module (RCM) located at the top center of the instrument panel. Do not place any electronic devices (cell phones, laptop computers, Personal Digital Assistants (PDAs), portable DVD players, etc.) on or near the instrument panel as the RCM performance may be affected. Do not use magnetic tools when servicing the RCM.

NOTE: If the vehicle is equipped with a Chrysler Uconnect™ GPS (Navigation Radio), the navigation system will provide the compass direction, so the Variance and Calibration menus will be unavailable. The compass performs accurately based upon GPS signals rather than based upon the Earth's magnetic field.

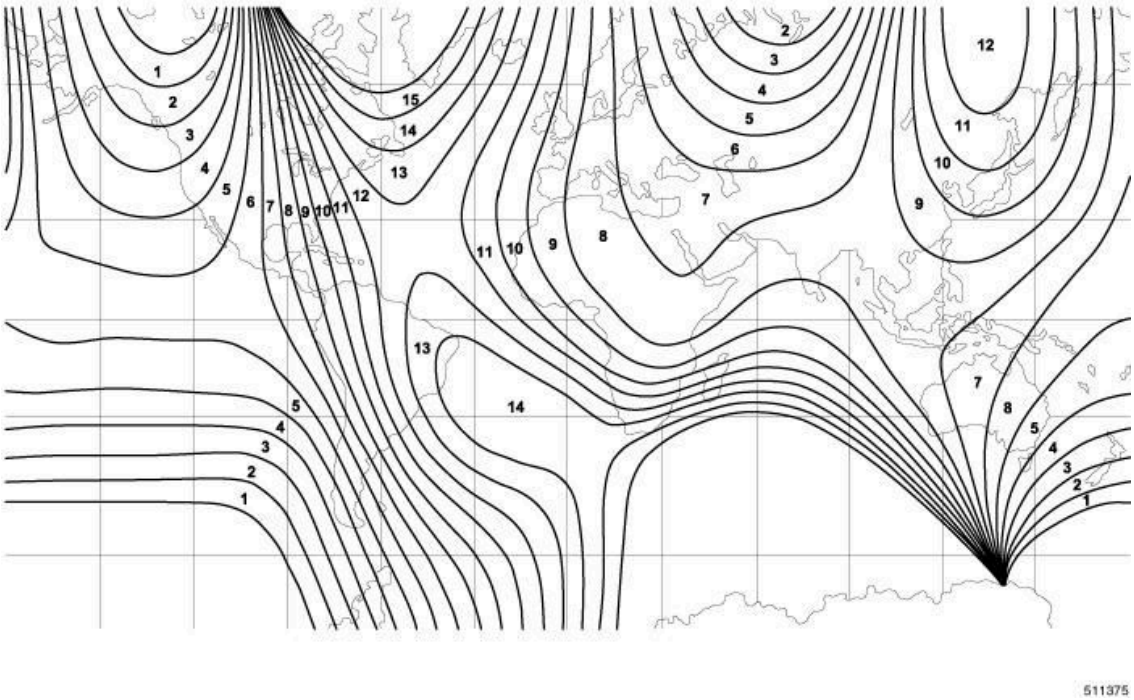

Fig. 8: Magnetic And Geographic North MAP
Courtesy of CHRYSLER GROUP, LLC

NOTE: If the vehicle is taken on long trips into a new variance zone, the compass accuracy may be affected. Compass variance may need to be manually adjusted to the proper variance zone setting to restore accurate compass indications.

NOTE: The factory default for the compass variance zone setting is zone 8.

Compass variance, also known as magnetic declination, is the difference in angle between magnetic north and geographic north. In some geographic locations, the difference between magnetic and geographic north is great enough to cause the

compass to give inaccurate readings. To optimize compass accuracy, the compass variance should be properly set according to the compass variance map zone for the region where the vehicle is being operated.

If the Remote Compass Module (RCM) is being replaced with a new unit, if compass readings appear to be inaccurate or if a manual compass calibration is being performed, check and adjust the variance zone setting using the appropriate procedure.

EXCEPT WITH ELECTRONIC VEHICLE INFORMATION CENTER

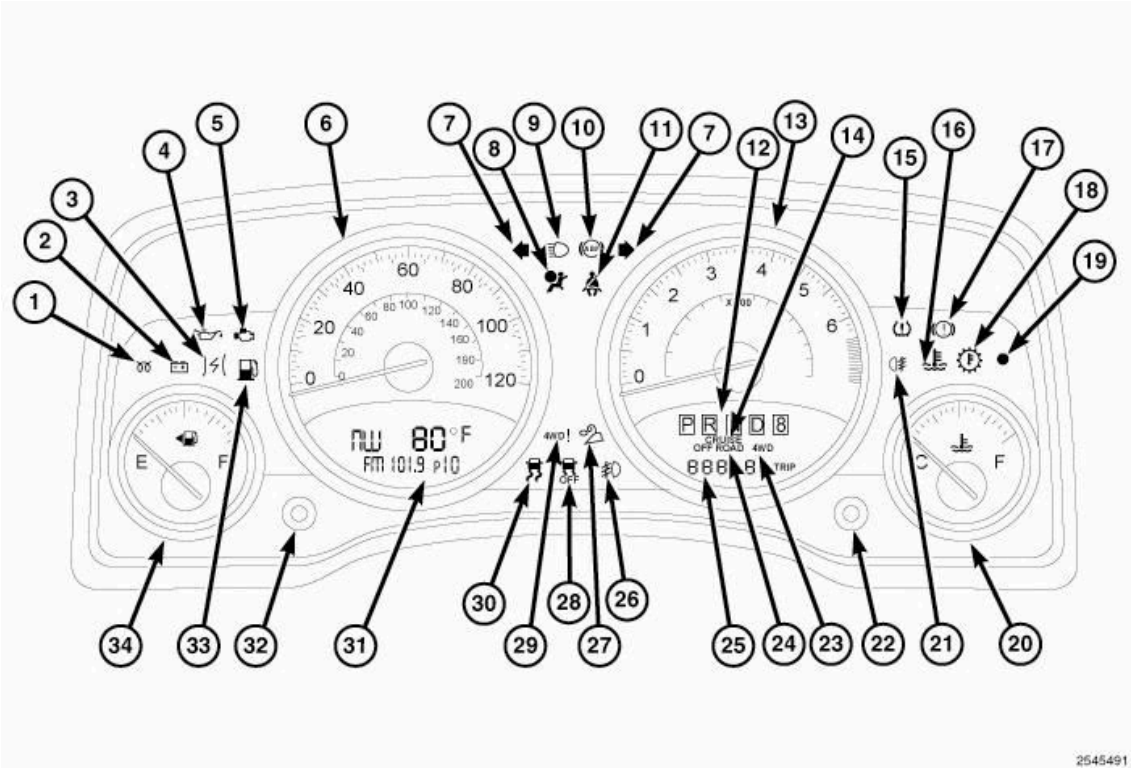

Fig. 9: Exploded View Of Electronic Vehicle Information Center (EVIC)
Courtesy of CHRYSLER GROUP, LLC

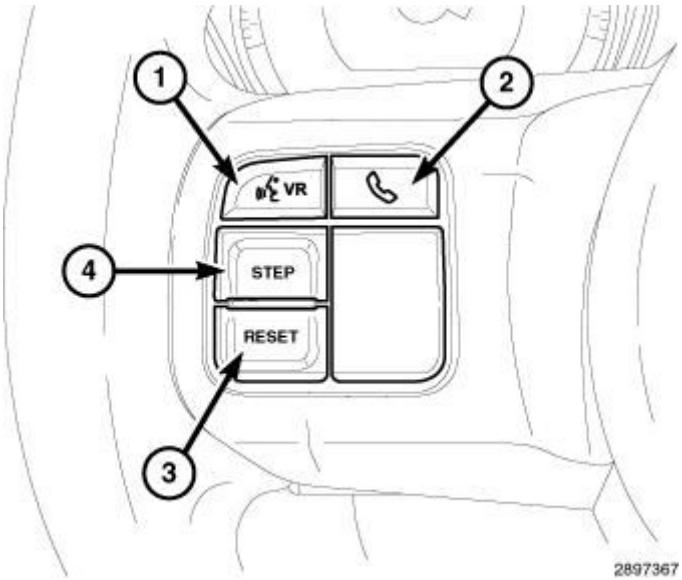

Fig. 10: RESET Push Button
Courtesy of CHRYSLER GROUP, LLC

In vehicles not equipped with the optional Electronic Vehicle Information Center (EVIC), there are two methods for checking and adjusting the variance zone setting. The variance zone can be displayed by depressing the odometer/trip odometer push button (22) located on the instrument cluster face just below and to the right of the odometer; or, by using the RESET push button (3) in the EVIC switch pod (also known as the odometer switch pod) located in the left horizontal spoke of the steering wheel. Once the current zone is displayed, it can be adjusted using either the odometer/trip odometer push button on the instrument cluster, or by using the STEP push button (4) in the EVIC switch pod.

To view or adjust the compass variance zone setting:

1. Using the Variance Settings Map, find your geographic location and note the zone number.
2. Start the engine but leave the manual transmission in the Neutral (**N**) position or the automatic transmission in the Park (**P**) position.
3. Depress and hold the odometer/trip odometer push button or the **RESET** push button for approximately 10 seconds, until the current variance (**VAR**) zone number is displayed. Then release the push button.

NOTE: The default variance zone number setting is 8. During programming, the variance zone number will wrap around, from zone 15 back to zone 1.

4. To change the zone, press and release the odometer/trip odometer push button or the **STEP** push button to increase the variance zone number upward incrementally. Repeat pressing and releasing the appropriate push button as necessary, until the desired variance zone number is reached.
5. After about 10 seconds, the new variance zone number is stored in memory and the compass will resume normal operation.
6. Confirm that the correct directions are now indicated by the compass.

WITH ELECTRONIC VEHICLE INFORMATION CENTER

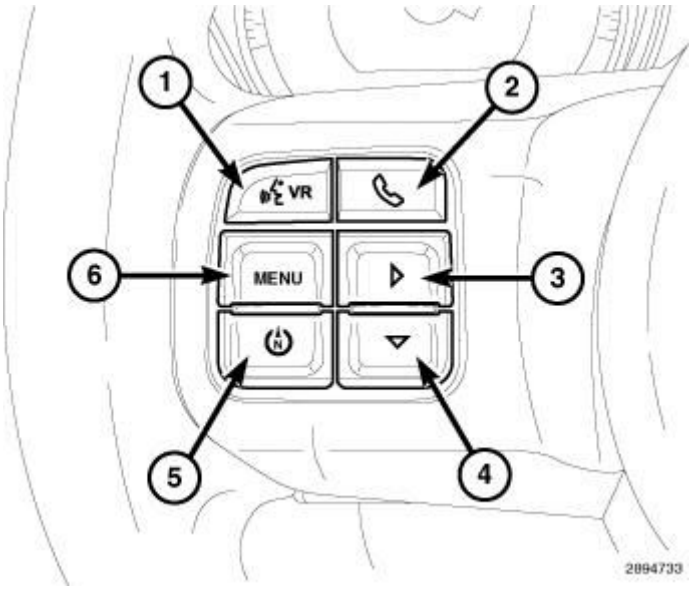

Fig. 11: With Electronic Vehicle Information Center
Courtesy of CHRYSLER GROUP, LLC

To view or adjust the compass variance zone setting:

1. Using the Variance Settings Map, find your geographic location and note the zone number.
2. Start the engine but leave the manual transmission in the Neutral (**N**) position or the automatic transmission in the Park (**P**) position.
3. Depress and hold the **MENU** push button (6), until the **Personal Settings** (Customer Programmable Features) menu appears in the display.
4. Depress and release the **Step / Down Scroll** push button (4), until **Compass Variance** along with the current variance (**VAR**) zone number appears in the display.

NOTE: The default variance zone number setting is 8. During

programming, the variance zone number will wrap around, from zone 15 back to zone 1.

5. Depress and release the **Select / Reset** push button (3) to increase the variance zone number upward incrementally. Repeat pressing and releasing the push button as necessary, until the desired variance zone number is reached.
6. After about 10 seconds, the new variance zone number is stored in memory and the compass will resume normal operation.
7. Confirm that the correct directions are now indicated by the compass.

REMOVAL

REMOVAL

WARNING: **Disable the airbag system before attempting any steering wheel, steering column, or instrument panel component diagnosis or service. Disconnect and isolate the negative battery (ground) cable, then wait two minutes for the airbag system capacitor to discharge before performing further diagnosis or service. This is the only sure way to disable the airbag system. Failure to follow these instructions may result in accidental airbag deployment and possible serious or fatal injury.**

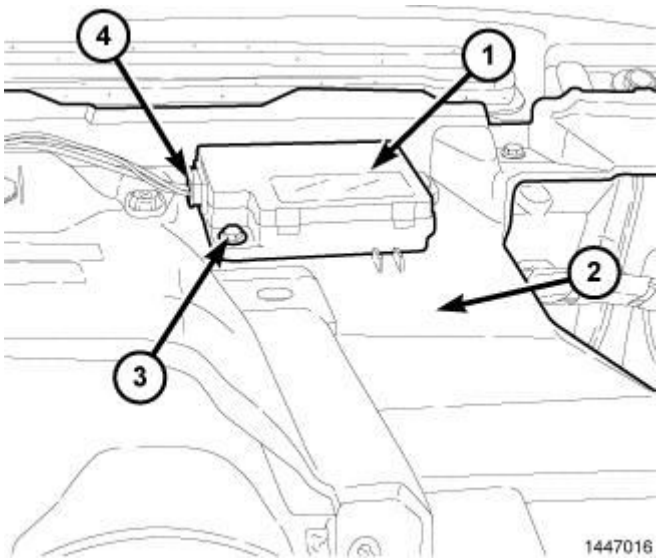

Fig. 12: Identifying Remote Compass Module (RCM), Instrument Panel, Screws & Electrical Connector
Courtesy of CHRYSLER GROUP, LLC

1. Disconnect and isolate the battery negative cable.
2. Remove the instrument panel top cover. Refer to **COVER, INSTRUMENT PANEL, REMOVAL** .
3. Remove the screws (3) securing the Remote Compass Module (RCM) (1) to the instrument panel (2).
4. Disconnect the electrical connector (4) and remove the RCM from the vehicle.

INSTALLATION

INSTALLATION

NOTE: The Remote Compass Module (RCM) must be calibrated after installation.

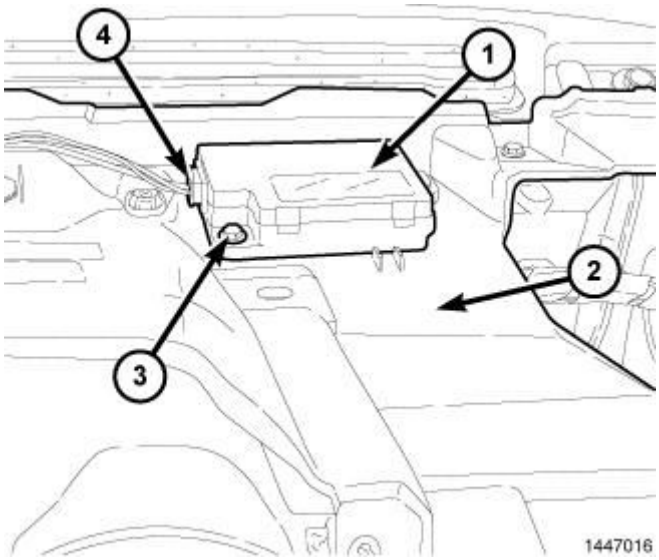

Fig. 13: Identifying Remote Compass Module (RCM), Instrument Panel, Screws & Electrical Connector
Courtesy of CHRYSLER GROUP, LLC

1. Position the RCM (1) on top of the instrument panel (2).
2. Install the screws (3) that secure the RCM to the instrument panel.
3. Connect the electrical connector (4).
4. Install the instrument panel top cover. Refer to **COVER, INSTRUMENT**

PANEL, INSTALLATION .

5. Reconnect the negative battery cable.
6. Calibrate the compass module.

SENSOR, AMBIENT TEMPERATURE

DESCRIPTION

DESCRIPTION

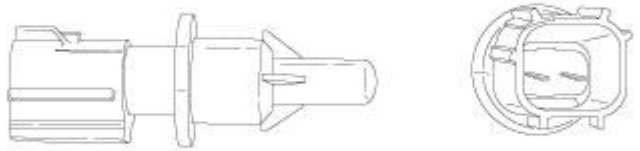

Fig. 14: Ambient Temperature Sensor
Courtesy of CHRYSLER GROUP, LLC

The ambient temperature sensor is a variable resistor type sensor. It is mounted in the lower radiator grille opening, below the bumper and in front of the engine compartment.

The ambient temperature sensor cannot be adjusted or repaired and, if inoperative or damaged, it must be replaced.

OPERATION

OPERATION

The ambient temperature sensor is a variable resistor that operates on a five-volt reference signal. The resistance in the sensor changes as temperature changes, changing the temperature sensor signal circuit voltage to the Totally Integrated Power Module (TIPM). Based upon the resistance in the sensor, the instrument cluster or Cab Compartment Node (CCN) display senses a specific voltage on the

Controller Area Network (CAN) data bus circuit, which corresponds to a specific temperature. The compass/temperature display unit then displays the proper ambient temperature.

DIAGNOSIS AND TESTING

DIAGNOSIS AND TESTING - AMBIENT TEMPERATURE SENSOR

The thermometer function is supported by the ambient temperature sensor, the Totally Integrated Power Module (TIPM), the Controller Area Network (CAN) data bus circuit, and the instrument cluster or Cab Compartment Node (CCN) compass/temperature display unit.

NOTE: The system displays the last known temperature when starting the vehicle and may take some time/mileage to update to an accurate current reading, up to 5 minutes at a maintained speed above 40 mph (64.3 kph). Customers with very short commutes may not get an updated reading before the vehicle is turned off, or if the ignition does not remain in the OFF position for more than 255 minutes (4hrs. 15min.). This strategy was intended to eliminate wildly fluctuating readings and may cause some customer confusion leading to unnecessary diagnostics/parts replacements.

If the display shows " _ _ _ ", there is an OPEN or SHORT CIRCUIT that must be repaired. The ambient temperature sensor can be diagnosed using the following Sensor Test.

The most reliable, efficient and accurate means to diagnose the ambient temperature circuit requires the use of a scan tool and the proper diagnostic procedure information. Refer to the appropriate wiring information.

SENSOR TESTING

1. Turn the ignition switch to the OFF position. Disconnect and isolate the battery negative cable.
2. Disconnect the ambient temperature sensor wire harness connector.
3. Measure the resistance of the ambient temperature sensor. At room temperature (approx. 20° C (68°F)), the sensor resistance should be between

9-11 Kilohms (9000-11000 ohms). The sensor resistance should read between these two values. If OK, refer to the appropriate diagnostic information to continue diagnosis of the Totally Integrated Power Module (TIPM), the Controller Area Network (CAN) data bus circuit, and the instrument cluster or CCN. If not OK, replace the inoperative ambient temperature sensor.

REMOVAL

REMOVAL

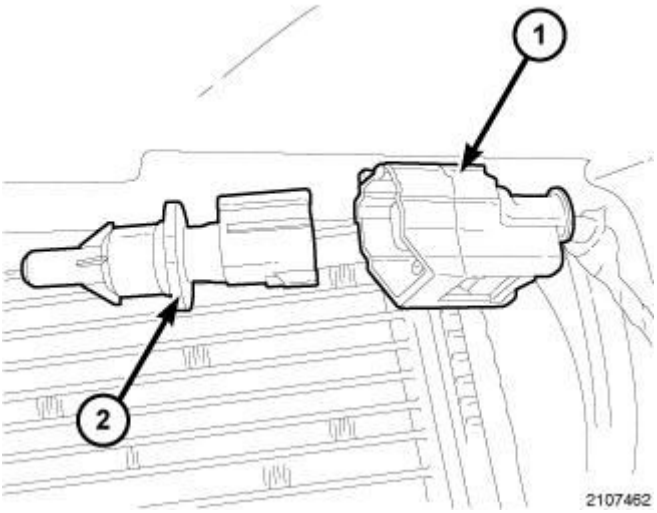

Fig. 15: Identifying Ambient Temperature Sensor & Wire Harness Connector
Courtesy of CHRYSLER GROUP, LLC

1. Disconnect and isolate the battery negative cable.
2. Using a suitable tool, release the push pin type retainer that secures the ambient temperature sensor to the lower left side of the front bumper.
3. Disconnect the wire harness connector (1) from the ambient temperature sensor (2).
4. Remove the ambient temperature sensor from the vehicle.

INSTALLATION

INSTALLATION

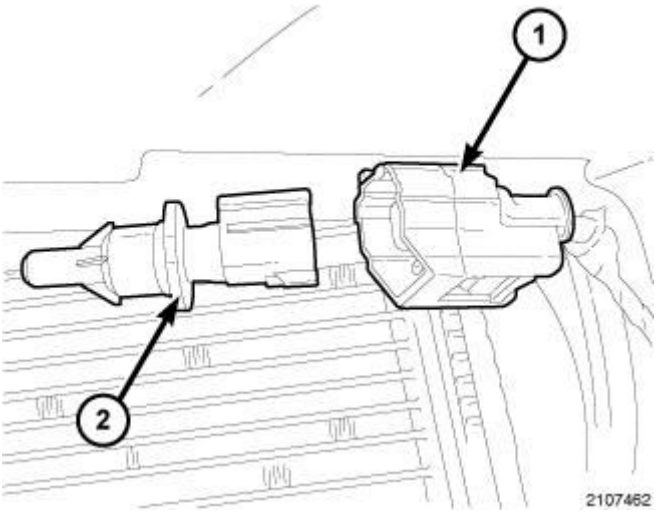

Fig. 16: Identifying Ambient Temperature Sensor & Wire Harness Connector
Courtesy of CHRYSLER GROUP, LLC

1. Connect the wire harness connector (1) to the ambient temperature sensor (2).
2. Position the ambient temperature sensor in the vehicle.
3. Install the push pin type retainer that secures the ambient temperature sensor to the lower left side of the front bumper.
4. Connect the battery negative cable.

SWITCH, EVIC CONTROL

DESCRIPTION

DESCRIPTION

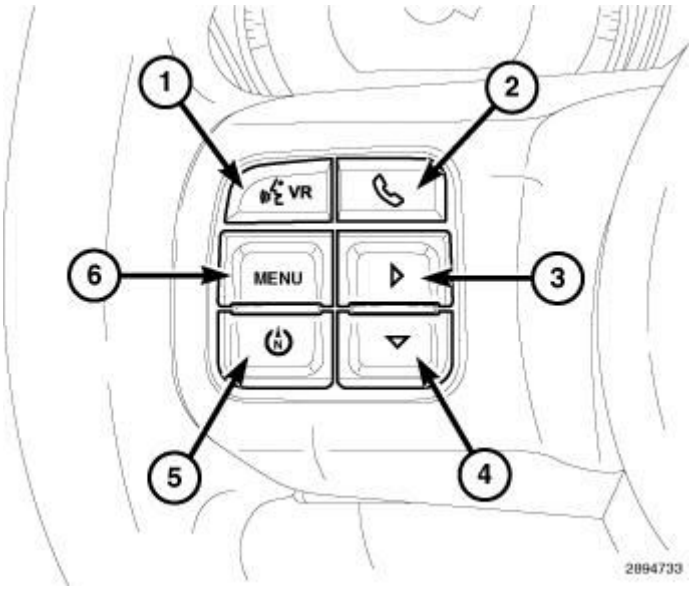

Fig. 17: With Electronic Vehicle Information Center
Courtesy of CHRYSLER GROUP, LLC

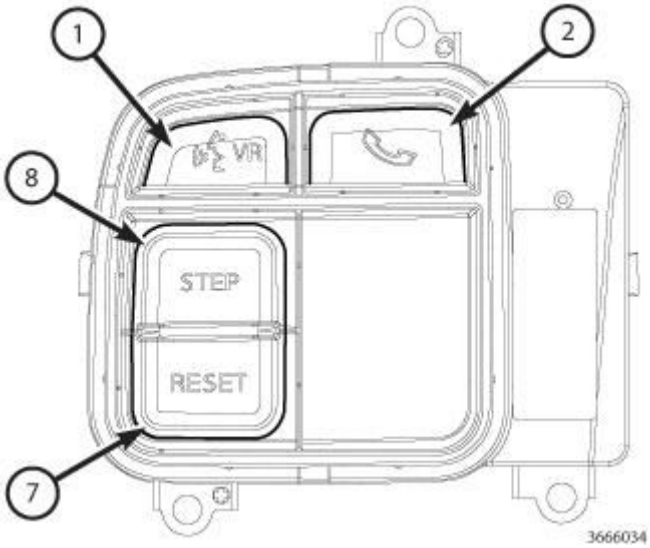

Fig. 18: Without Electronic Vehicle Information Center
Courtesy of CHRYSLER GROUP, LLC

The Electronic Vehicle Information Center (EVIC) control switch pod is located in the left spoke of the steering wheel spoke bezel. This switch has up to six push buttons. Four of the push buttons (3 through 6) are used on all vehicles equipped with the EVIC and two of the push buttons (7 and 8) are used on vehicles not equipped with the EVIC. Two additional push buttons (1 and 2) are found on vehicles equipped with the optional Uconnect™ Hands-Free Communication System. The only visible components of the switch pod are the switch push buttons and a decorative bezel around the push buttons, which stands slightly proud of the steering wheel spoke bezel. The remainder of the switch pod

including its mounting provisions and its electrical connection are concealed beneath the spoke bezel.

The switch pod housing and push buttons are constructed of molded plastic. Each of the push buttons has white International Control and Display Symbol graphics or text applied to it, which clearly identify the function of each push button. The switch pod is secured through three integral mounting tabs to mounting bosses on the back of the spoke bezel by three screws. A connector receptacle integral to the inboard end of the switch pod housing connects the EVIC control switch pod to the vehicle electrical system through a dedicated take out and connector of the steering wheel wire harness.

The EVIC control switch pod cannot be adjusted or repaired. If any function of the switch is ineffective or damaged, the entire switch pod unit must be replaced.

OPERATION

OPERATION

The Electronic Vehicle Information Center (EVIC) control switch pod is a resistor multiplexed unit that receives source current from and provides hard wired inputs to the Local Interface Network (LIN) slave node integral to the speed control switch pod in the right spoke of the steering wheel spoke bezel. The LIN slave node communicates the switch states of the EVIC control switch pod, the remote radio switches and the horn switch over the LIN data bus to the ElectroMechanical Instrument Cluster (EMIC) (also known as the Cab Compartment Node/CCN), which is the LIN master node.

The EVIC control switch pod (also known as the odometer switch) for vehicles not equipped with the EVIC system contains two switch push buttons whose functions are:

- **Reset** - This switch button allows the operator to reset the trip odometer (A or B) currently displayed in the odometer display unit of the instrument cluster.
- **Step** - This switch button allows the operator to step through the total odometer, trip odometer A and trip odometer B display options of the odometer display of the instrument cluster.

The EVIC control switch pod for vehicles equipped with the EVIC system

contains four switch push buttons whose functions are:

- **Menu** - This switch button allows the operator to view the available EVIC menu items, including Compass/Temperature, Trip Computer, Navigation (if equipped), Personal Settings (also known as customer programmable features) or System Status.
- **Select / Reset** - This switch button allows the operator to select or reset the feature or function currently displayed in the EVIC.
- **Compass** - This switch button provides instant access to the compass/temperature EVIC display mode from any other mode.
- **Step / Scroll Down** - This switch button allows the operator to step or scroll down through options or features of the Trip Computer, Personal Settings or System Status functions.

For vehicles equipped with the Uconnect™ Hands-Free Communication System, the EVIC control switch pod contains two additional switch push buttons whose functions are:

- **VR (Voice Recognition)** - This switch button activates the Uconnect™ Voice Command system.
- **Phone** - This switch push button activates the Uconnect™ Hands-Free Phone system.

The EMIC LIN master node provides a clean ground and fused B(+) current for all of the switches and sensors on the rotating steering wheel through the LIN slave node circuitry of the speed control switch pod as well as for the Light Emitting Diode (LED) back lighting of both the speed control and the EVIC switch pods. The EMIC continually monitors the LIN bus data and will store a Signal Not Available (SNA) code for any LIN bus input errors. The EMIC also communicates with other electronic modules over the Controller Area Network (CAN) data bus. Therefore, any EMIC DTC information can be retrieved using a diagnostic scan tool connected to the Data Link Connector (DLC).

The analog resistor multiplexed circuits of the EVIC control switch pod as well as the hard wired circuits between the switch pod and the LIN slave node within the speed control switch pod may be diagnosed using conventional diagnostic tools and procedures. Refer to the appropriate wiring information. The wiring information includes wiring diagrams, proper wire and connector repair procedures, details of wire harness routing and retention, connector pin-out

information and location views for the various wire harness connectors, splices and grounds.

However, conventional diagnostic methods will not prove conclusive in the diagnosis of the LIN slave or master nodes, the EMIC or the electronic controls and communication between modules and other devices that provide some features of the EVIC system. The most reliable, efficient, and accurate means to diagnose the EVIC control switch pod, the LIN slave or master nodes, the EMIC or the electronic controls and communication related to EVIC system operation requires the use of a diagnostic scan tool. Refer to the appropriate diagnostic information.

REMOVAL

REMOVAL

WARNING: **To avoid serious or fatal injury on vehicles equipped with airbags, disable the Supplemental Restraint System (SRS) before attempting any steering wheel, steering column, airbag, seat belt tensioner, impact sensor or instrument panel component diagnosis or service. Disconnect and isolate the battery negative (ground) cable, then wait two minutes for the system capacitor to discharge before performing further diagnosis or service. This is the only sure way to disable the SRS. Failure to take the proper precautions could result in accidental airbag deployment.**

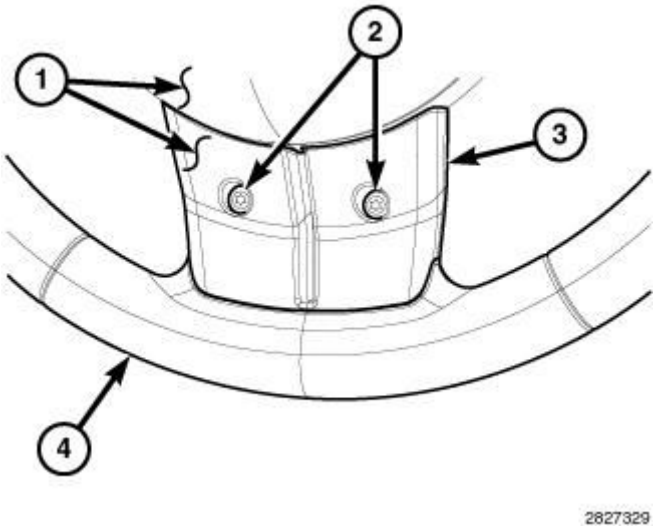

Fig. 19: Rear Cover, Two Screws, Steering Wheel Spoke Front Bezel & Steering Wheel Component Location
Courtesy of CHRYSLER GROUP, LLC

1. Disconnect and isolate the battery negative cable.
2. Remove the driver airbag assembly from the steering wheel. Refer to **AIR BAG, DRIVER, REMOVAL** .
3. From the back of the steering wheel (4), remove the two screws (2) that secure the center spoke of the rear cover (1) to the center spoke of the steering wheel spoke front bezel (3).

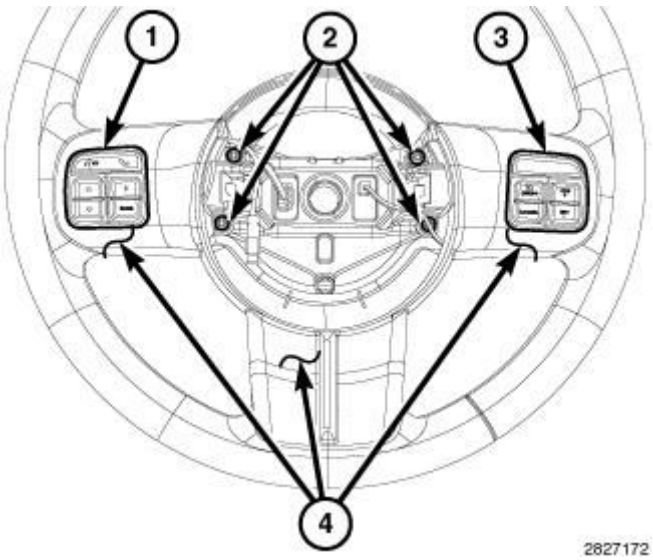

Fig. 20: Installing EVIC Switch Pod, Speed Control Switch Pod, Four Screws & Front Spoke Bezel
Courtesy of CHRYSLER GROUP, LLC

4. From the face of the steering wheel, remove the four screws (2) that secure the front spoke bezel (4) to the steering wheel armature within the steering wheel hub cavity.
5. Using a trim stick (special tool # (special tool #C-4755, Trim Stick)) or equivalent, carefully pry at the parting line between the front spoke bezel and the steering wheel rear cover enough to unsnap the two horizontal members of the bezel from those of the rear cover.
6. Pull the front spoke bezel away from the steering wheel far enough to access and disconnect the steering wheel wire harness connections from the Electronic Vehicle Information Center (EVIC) switch pod (1) and the speed control switch pod (3).

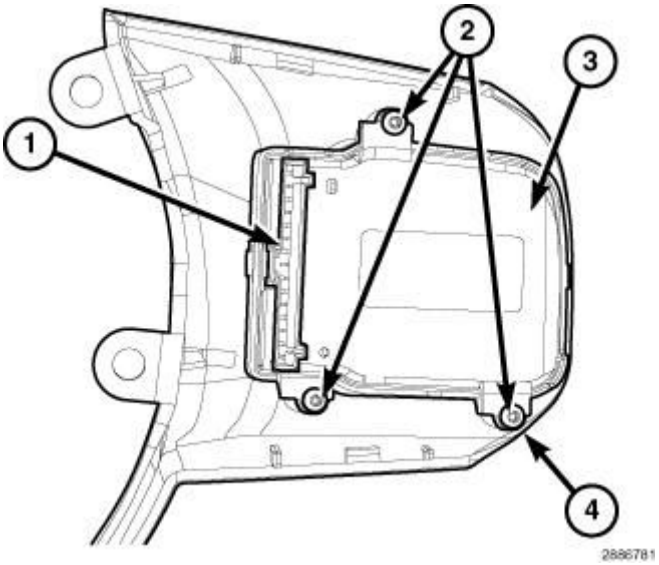

Fig. 21: Steering Wheel Spoke Front Bezel, Screws, EVIC Switch Pod And Mounting Tabs
Courtesy of CHRYSLER GROUP, LLC

7. From the back of the steering wheel spoke front bezel (4), remove the three screws (2) that secure the EVIC switch pod (3) mounting tabs to the bezel.
8. Remove the switch from the bezel.

INSTALLATION

INSTALLATION

WARNING: To avoid serious or fatal injury on vehicles equipped with airbags, disable the Supplemental Restraint System (SRS) before attempting any

steering wheel, steering column, airbag, seat belt tensioner, impact sensor or instrument panel component diagnosis or service. Disconnect and isolate the battery negative (ground) cable, then wait two minutes for the system capacitor to discharge before performing further diagnosis or service. This is the only sure way to disable the SRS. Failure to take the proper precautions could result in accidental airbag deployment.

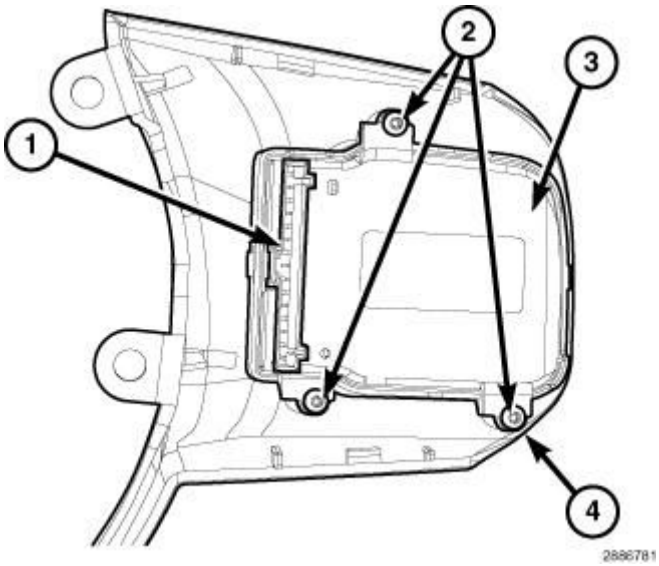

Fig. 22: Steering Wheel Spoke Front Bezel, Screws, EVIC Switch Pod And Mounting Tabs
Courtesy of CHRYSLER GROUP, LLC

1. Position the Electronic Vehicle Information center (EVIC) switch pod (3) to the back of the steering wheel spoke front bezel (4).
2. Install and tighten the three screws (2) that secure the switch mounting tabs to the bezel. Tighten the screws securely.
3. Position the front spoke bezel close enough to the steering wheel to reconnect the steering wheel wire harness connections to the Electronic Vehicle Information Center (EVIC) switch pod and the speed control switch pod connector receptacles (3).

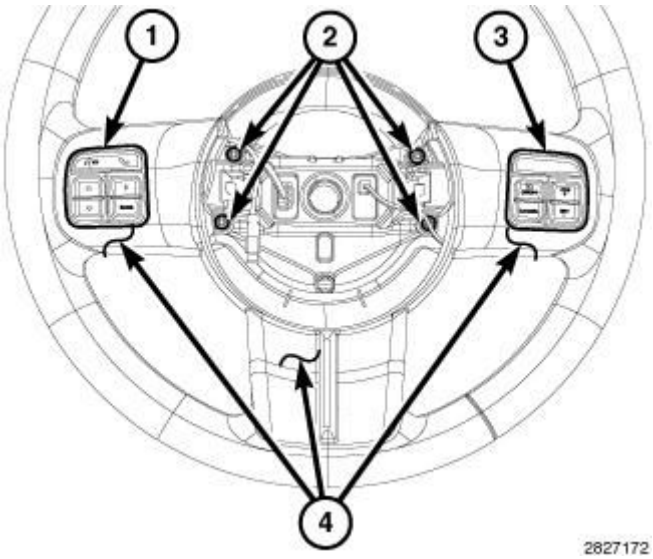

Fig. 23: Installing EVIC Switch Pod, Speed Control Switch Pod, Four Screws & Front Spoke Bezel
Courtesy of CHRYSLER GROUP, LLC

4. Position the front spoke bezel (4), EVIC switch pod (1) and speed control switch pod (3) as a unit to the steering wheel. Be certain that the steering wheel wire harness is routed between the lower or upper bezel stanchions and the inside circumference of the steering wheel hub cavity so that the wiring will not be pinched when the driver airbag is reinstalled.
5. Use hand pressure to squeeze the horizontal spokes of both the front spoke bezel and the steering wheel rear cover together until all of the snap features are fully engaged.
6. Install and tighten the four screws that secure the stanchions of the front spoke bezel to the steering wheel armature within the steering wheel hub cavity. Tighten the screws securely.

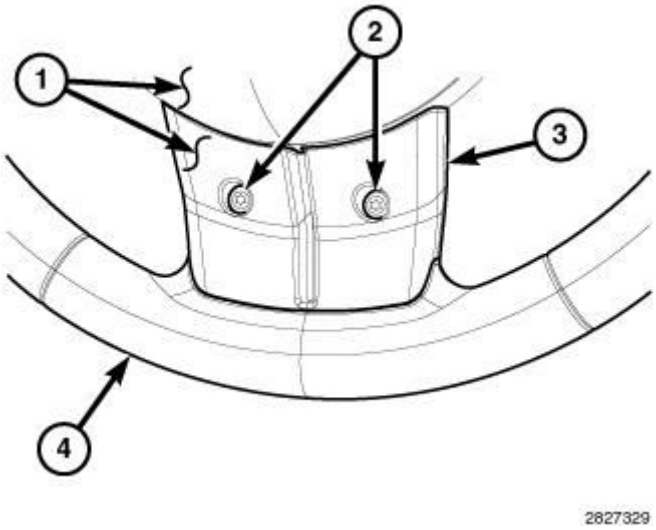

Fig. 24: Rear Cover, Two Screws, Steering Wheel Spoke Front Bezel & Steering Wheel Component Location
Courtesy of CHRYSLER GROUP, LLC

7. From the back of the steering wheel (4), install and tighten the two screws (2) that secure the center spoke of the rear cover (1) to the center spoke of the steering wheel spoke front bezel (3). Tighten the screws securely.

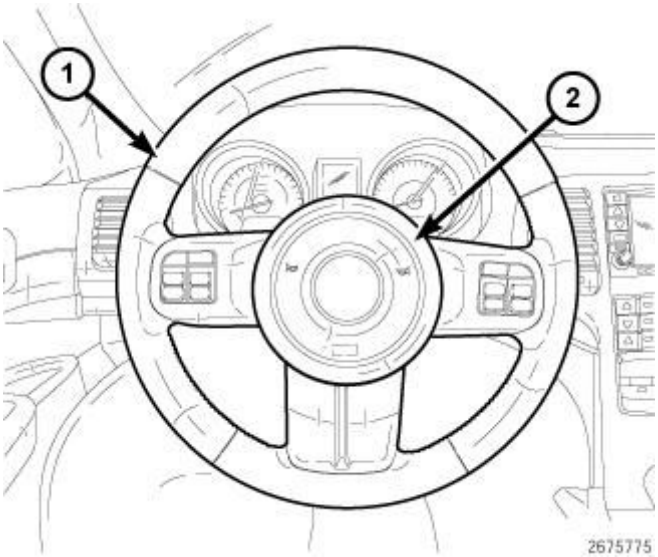

Fig. 25: Driver Airbag Protective Trim Cover
Courtesy of CHRYSLER GROUP, LLC

8. Install the driver airbag assembly (2). Refer to **AIR BAG, DRIVER, INSTALLATION** .
9. Do not reconnect the battery negative cable at this time. The Supplemental Restraint System (SRS) verification test procedure should be performed

following service of any SRS component. Refer to **STANDARD PROCEDURE** .

10. Connect the negative battery cable.

2014 ACCESSORIES AND EQUIPMENT

Navigation/Telecommunication - Service Information - Compass & Patriot

DESCRIPTION

HANDS FREE PHONE

A Uconnect™ Hands Free Phone system is factory-installed optional equipment. This system allows hands free use of compatible mobile phones for sending and receiving phone calls and text messages as well as for streaming audio from those devices through the audio system in the vehicle. The Hands Free Phone system includes the following major components, which are described in further detail elsewhere in this service information:

- **Bluetooth™ Phone** - A compatible, customer-supplied and paired Bluetooth™ phone is a required component of the hands free phone system. A list of suggested phones and providers is available at: **http://www.chrysler.com/uconnect**
- **Electronic Vehicle Information Center Switch Pod** - The Electronic Vehicle Information Center (EVIC) switch pod is located in the left horizontal spoke of the steering wheel. In addition to the EVIC switch buttons this switch pod contains the Uconnect™ Voice Recognition (VR) (also known as Voice Command) switch button and the Uconnect™ Phone switch button of the Hands Free Phone system.
- **Hands Free Module** - The Hands Free Module (HFM) (also known as the Bluetooth™ module) is concealed within the instrument panel behind the instrument panel center bezel. The HFM includes a microcontroller, a Bluetooth™ antenna, a Bluetooth™ transceiver and sophisticated Advanced Speech Recognition (ASR) input capability through Voice Recognition (VR) software. The ASR software includes many different available languages. Each vehicle is equipped with a list of available languages, which are made available from the factory based upon languages most commonly used for the market destination. Refer to **MODULE, HANDS FREE (HFM), DESCRIPTION**.
- **Instrument Cluster** - The ElectroMechanical Instrument Cluster (EMIC) is also known as the Cab Compartment Node (CCN) in this vehicle. The EMIC/CCN is located in the instrument panel above the steering column opening, directly in front of the driver. Refer to **DESCRIPTION** .

- **Microphone** - A microphone is integral to the inside rear view mirror in vehicles equipped with the Uconnect™ Hands Free Phone system. This microphone is concealed on the upper surface of the inside rear view mirror housing. Refer to **MICROPHONE, DESCRIPTION**.
- **Radio Receiver Module** - The Radio Receiver Module (RRM) (also known as the radio or the head unit) is located within the instrument panel. The RRM also contains a Uconnect™ Voice Recognition (VR) (also known as Voice Command) switch button and a Uconnect™ Phone switch button for the Hands Free Phone system. Depending upon selected vehicle optional equipment the RRM may also include a navigation module (also known as the Telematics Gateway Module/TGW). Refer to **RADIO, DESCRIPTION** .

The EMIC, the EVIC switches, the HFM and the RRM each also contain a microcontroller and programming that allow them to communicate with other electronic modules in the vehicle over either the Local Interface Network (LIN) data bus or the Controller Area Network - B (CAN-B) data bus. Refer to **COMMUNICATION, DESCRIPTION** .

The Uconnect™ Hands Free Phone system components cannot be adjusted or repaired. If any Hands Free Phone system component is damaged or ineffective, that component must be replaced. The Hands Free Phone system software is flash programmable.

NAVIGATION

A factory-installed satellite navigation system based upon the Global Positioning System (GPS) is an available option on this vehicle. A color touchscreen electronic display in the Radio Receiver Module (RRM) (also known as the radio or the head unit) provides a graphical interface for programming, searching for and selecting destinations.

This navigation system provides visual guidance through dynamic maps, while voice prompts through the audio system of the vehicle provide the vehicle operator with audible alerts and directions coordinated with the visual displays. The system also displays and logs valuable trip information such as speed, posted speed limit, distance and Estimated Time of Arrival (ETA).

The navigation system includes the following major components, which are

described in further detail elsewhere in this service information:

- **Combination Antenna** - The navigation module acquires GPS position data through a roof-mounted combination antenna that also receives satellite audio and cellular signals. Refer to **ANTENNA, SATELLITE, OPERATION** .
- **Radio Receiver Module** - The Radio Receiver Module (RRM) (also known as the radio or the head unit) is located within the instrument panel and is the primary component of the navigation system in this vehicle. In vehicles equipped with the optional navigation system the RRM includes a microcontroller, a navigation module and flash memory. Refer to **RADIO, DESCRIPTION** .

The RRM also contains a microcontroller and programming that allows it to communicate with other electronic modules in the vehicle using the Controller Area Network - B (CAN-B) data bus. Refer to **COMMUNICATION, DESCRIPTION** .

The navigation system components cannot be adjusted or repaired. If any of the navigation system components is damaged or ineffective, that component must be replaced. The external combination antenna can be repaired separately from the RRM. The navigation system software as well as the map data is flash programmable through a Universal Serial Bus (USB) port.

OPERATION

HANDS FREE PHONE

The Uconnect™ Hands Free Phone system relies upon Bluetooth™ technology to enable wireless connectivity between Bluetooth™ compatible, paired and turned On mobile devices and the on-board entertainment system components. This system also relies upon Advanced Speech Recognition (ASR) software to enable Voice Commands to control the mobile device as well as the components and features of some other on-board systems.

The system will recognize up to ten Bluetooth™ compatible devices, each of which is identified within the system by the name acquired from the device during the pairing process. The Hands Free Phone system will communicate with a paired device that is anywhere within the vehicle. However, covering the paired device with a metal object may block the signal.

The Hands Free Phone system is operated in one of two ways: actively or passively. Active operation begins with the vehicle operator depressing a push button in the Electronic Vehicle Information Center (EVIC) switch pod in the left horizontal spoke of the steering wheel. The Uconnect™ Voice Recognition (**VR**) (also known as Voice Command) button is depressed for hands free Voice Command access to available features other than the phone, or the Uconnect™ Phone (**Phone** is identified by a phone handset icon) button is depressed for hands free phone access.

The **VR** or **Phone** button press provides a resistor multiplexed input to the Steering Control Module (SCM) in the right (also known as the speed control) switch pod. The SCM sends a switch status message over the Local Interface Network (LIN) data bus to the ElectroMechanical Instrument Cluster (EMIC) (also known as the Cab Compartment Node/CCN). The EMIC is a gateway to the Controller Area Network - B (CAN-B) data bus and sends an electronic **switch press** message over the CAN-B data bus to the Hands Free Module (HFM) (also known as the Bluetooth™ module) and the Radio Receiver Module (RRM) (also known as the radio or the head unit).

When the RRM receives the electronic **switch press** message, the RRM suppresses any current audio output and issues an audible **beep** to indicate that the VR hardware within the HFM is prepared to receive a Voice Command. Part of the Uconnect™ Hands Free Phone system hardware includes the VR microphone integral to the inside rear view mirror. The microphone provides a hard wired input of Voice Commands to the VR engine within the HFM, and the ASR software converts that input into an electronic instruction message broadcast over the CAN-B data bus to invoke the appropriate system response. If no appropriate Voice Command is received within a few seconds following the audible **beep** , the system will provide an audible verbal output listing a menu of the available Voice Command options.

Passive operation begins when an incoming cellular call is received. If the Bluetooth™ phone is Short Message Service (SMS) text message capable and compatible with the Uconnect™ system (see the Uconnect™ web site), passive operation will also begin when an SMS text message is received. The call or SMS text message is relayed to the Bluetooth™ transceiver embedded within the RRM. The Bluetooth™ transceiver then instructs the RRM to announce the incoming call or message. The vehicle operator presses the Uconnect™ **Phone** button in the steering wheel switch pod or the soft button that will appear in the

RRM display to accept the call or to accept the message.

The Bluetooth™ transceiver connects the voices of the two phone parties using outputs through the audio system speakers and inputs through the Uconnect™ hands free microphone. In the case of a text message, the Bluetooth™ transceiver sends the message to the VR hardware and the ASR software converts the message from text to voice and plays it through the audio system speakers. The text message can then be replied to by depressing the Uconnect™ **VR** button and giving an **SMS** Voice Command to select from several predetermined short text phrase responses.

The Hands Free Phone system operates on battery current received through a fused B(+) circuit, but also monitors the ignition switch status through electronic messages received over the CAN-B data bus. If a call is in progress when the status of the ignition switch transitions to Off, the system will continue to operate until the call has been completed.

The RRM receives electronic message inputs over the CAN-B data bus related to the Hands Free Phone system. The RRM is also connected to the CAN-C data bus; however, the RRM is not a CAN gateway. All electronic message outputs of the RRM are carried over the CAN-B data bus. When the HFM or the RRM monitors a problem in any of the audio system circuits and components, or in any of the Bluetooth™ transceiver circuits, it stores a fault code or Diagnostic Trouble Code (DTC) in its memory circuit.

The hard wired circuits between components related to the HFM, the RRM and the Hands Free Phone system may be diagnosed using conventional diagnostic tools and procedures. Refer to the appropriate wiring information. The wiring information includes wiring diagrams, proper wire and connector repair procedures, details of wire harness routing and retention, connector pin out information and location views for the various wire harness connectors, splices and grounds.

However, conventional diagnostic methods will not prove conclusive in the diagnosis of the HFM, the RRM or the electronic controls and communication between modules and other devices that provide some features of the Hands Free Phone system. The most reliable, efficient and accurate means to diagnose the HFM, the RRM or the electronic controls and communication related to Hands Free Phone system operation requires the use of a diagnostic scan tool. Refer to

the appropriate diagnostic information.

NAVIGATION

The optional navigation system is active whenever the Radio Receiver Module (RRM) (also known as the radio or the head unit) electronic display is powered On. If a navigation system menu or map isn't being actively displayed, the system is still operating in the background. The menu, map or route that was active when the RRM was powered Off along with all other user-relevant information is saved in nonvolatile memory by the navigation module for display again the next time the RRM is powered On and the navigation system is selected.

Once a destination is selected, the navigation system uses information from stored map data to quickly calculate a route. As the vehicle is driven along that route, the vehicle operator is guided with visual displays and voice prompts. Any variances from that route will cause the navigation system to automatically recalculate and deliver a revised route to the chosen destination.

All vehicles have their original map and Points-Of-Interest (POI) data stored in nonvolatile flash memory integral to the navigation module integral and internal to the RRM. Updated map and POI data as well as updated navigation software for these vehicles can be uploaded to the system using Universal Serial Bus (USB) media. The originally installed data is based upon the market for which the vehicle was manufactured. Navigation software updates are also uploaded to the system using USB media.

The Global Positioning System (GPS) receiver of the navigation module is capable of acquiring and tracking GPS signal inputs through the roof-mounted combination antenna from numerous satellites simultaneously to calculate and display the position and direction of the vehicle. However, when access to satellite signals is blocked by bridges, tunnels or other obstacles, the navigation module relies upon Dead Reckoning (DR) to aid in calculating vehicle position and direction. The navigation module uses pulse signals from the wheel speed sensors, a Reverse gear indicator input and an internal electronic gyroscope sensor to provide DR vehicle position and direction calculations to supplement GPS satellite signals.

The user input mechanism for the navigation system is the RRM touchscreen. For safety reasons some input, editing and setting features of the navigation

system are restricted when the vehicle is in motion or when a hands free phone call is active. This includes many features that require touchscreen inputs.

The navigation module receives electronic message inputs within the RRM over the Controller Area Network - B (CAN-B) data bus; however, the RRM is not a CAN gateway. All electronic message outputs of the navigation module and the RRM are carried over the CAN-B data bus. When the RRM monitors a problem in any of the navigation system antenna circuits, it stores a fault code or Diagnostic Trouble Code (DTC) in its memory circuit. The external combination antenna may be diagnosed separately from the RRM.

The hard wired circuits between components related to the RRM and the navigation system may be diagnosed using conventional diagnostic tools and procedures. Refer to the appropriate wiring information. The wiring information includes wiring diagrams, proper wire and connector repair procedures, details of wire harness routing and retention, connector pin out information and location views for the various wire harness connectors, splices and grounds.

However, conventional diagnostic methods will not prove conclusive in the diagnosis of the RRM or the electronic controls and communication between modules and other devices that provide some features of the navigation system. The most reliable, efficient and accurate means to diagnose the RRM or the electronic controls and communication related to navigation system operation requires the use of a diagnostic scan tool. Refer to the appropriate diagnostic information.

DIAGNOSIS AND TESTING

DIAGNOSIS AND TESTING - HANDS FREE PHONE

WARNING: **To avoid serious or fatal injury on vehicles equipped with airbags, disable the Supplemental Restraint System (SRS) before attempting any steering wheel, steering column, airbag, seat belt tensioner, impact sensor or instrument panel component diagnosis or service. Disconnect and isolate the battery negative (ground) cable, then wait two minutes for the system capacitor to discharge before performing further diagnosis or service. This is the only sure way to disable the**

SRS. Failure to take the proper precautions could result in accidental airbag deployment.

The hard wired circuits between components related to the Hands Free Module (HFM) (also known as the Bluetooth™ module), the Radio Receiver Module (RRM) (also known as the radio or the head unit) and the Uconnect™ Hands Free Phone system may be diagnosed using conventional diagnostic tools and procedures. Refer to the appropriate wiring information. The wiring information includes wiring diagrams, proper wire and connector repair procedures, details of wire harness routing and retention, connector pin out information and location views for the various wire harness connectors, splices and grounds.

However, conventional diagnostic methods will not prove conclusive in the diagnosis of the HFM, the RRM or the electronic controls and communication between modules and other devices that provide some features of the Uconnect™ Hands Free Phone system. The most reliable, efficient and accurate means to diagnose the HFM, the RRM or the electronic controls and communication related to Uconnect™ Hands Free Phone system operation requires the use of a diagnostic scan tool. Refer to the appropriate diagnostic information.

NOTE: Validation and diagnosis of many of the conditions listed below will require access to both the paired Bluetooth™ device and the PIN required for that device.

HANDS FREE PHONE DIAGNOSIS		
CONDITION	**POSSIBLE CAUSES**	**CORRECTION**
PHONE NOT AVAILABLE	1. Bluetooth phone not paired to the HFM. 2. Bluetooth phone not present or turned Off. 3. Bluetooth phone has low battery.	1. Be certain that the phone is Bluetooth compatible and is paired to the HFM. 2. Be certain that the paired phone is present, turned On and that the Bluetooth option is enabled in the phone. 3. At low battery levels, some phones will turn Off Bluetooth functionality. Be certain that the phone battery is charged to an adequate level.

	4. The boot procedure for the HFM, the phone or both did not complete successfully.	4. Cycle both the HFM and the phone Off, then On again in an attempt to complete a successful boot procedure.
	5. A phone freeze has occurred.	5. Power cycle the phone. Refer to the operator's manual for the phone.
PHONE PAIRING FAILED	1. The phone is not Bluetooth enabled.	1. The Bluetooth transceiver requires that the cellular phone be Bluetooth enabled. The phone must be upgraded to one that is Bluetooth enabled. A list of suggested phones is available at: **http://www.chrysler.com/uconnect**
	2. The phone does not support the Bluetooth Hands Free Profile.	2. The Bluetooth transceiver requires that the cellular phone support the Hands Free Profile. The phone must be upgraded to one that supports the Hands Free Profile. A list of suggested phones is available at: **http://www.chrysler.com/uconnect**
	3. Incorrect discovered Bluetooth device selected in phone.	3. Be certain to select Uconnect in the discovered Bluetooth™ devices in the phone for pairing.
	4. The PIN of the phone is not the same as the PIN assigned by the HFM during pairing.	4. The PIN assigned by the HFM during pairing must match the PIN of the phone.
	5. Phone pairing is locked (password protected).	5. To unlock phone pairing in the phone, be certain that password protection is turned Off.
	6. The HFM has reached the	

	maximum number of allowed devices paired. 7. The phone has reached the maximum number of allowed devices paired. 8. The boot procedure for the HFM, the phone or both did not complete successfully. 9. A phone freeze has occurred.	6. Remove one of the previously paired devices from the paired list of the HFM. 7. Remove one of the previously paired devices from the paired list of the phone, or delete the pairing history from the phone. Refer to the operator's manual for the phone. 8. Cycle both the HFM and the phone Off, then On again in an attempt to complete a successful boot procedure. 9. Perform a hard reset (power cycle) to the phone. Refer to the operator's manual for the phone.
PHONE WILL NOT RECONNECT AFTER PAIRING	1. Bluetooth settings in phone are incorrect. 2. Phone pairing is locked (password protected). 3. The boot procedure for the HFM, the phone or both did not complete successfully. 4. A phone freeze has occurred.	1. Bluetooth settings in phone should be set to auto-connect or select Uconnect™ as a trusted device in phone. 2. To unlock phone pairing in the phone, be certain that password protection is turned Off. 3. Cycle both the HFM and the phone Off, then On again in an attempt to complete a successful boot procedure. 4. Perform a hard reset (power cycle) to the phone. Refer to the operator's manual for the phone.
	1. User is not	

POOR VOICE RECOGNITION	waiting for the **beep** tone acknowledgment before issuing Voice Commands.	1. Be certain the user knows to wait for the acknowledgment **beep** tone prior to issuing Voice Commands.
	2. User is not issuing Voice Commands in a smooth and consistent speaking voice.	2. Be certain the user is issuing Voice Commands in a normal, smooth and consistent speaking voice. The Advanced Speech Recognition (ASR) engine is designed to recognize normal speech patterns and at a normal tone. Some users tend to speak to a computer loud and slow, which results in reduced performance.
	3. User is not using proper Voice Command syntax.	3. User must speak using proper Voice Command syntax.
	4. High noise levels within the passenger compartment.	4. ASR engine performance is increased when noise conditions in the passenger compartment are lowered. Ideal conditions include having the windows closed and the blower fan set to Low or Off.
	5. Passengers are talking while the user is attempting to issue a Voice Command.	5. Although designed to focus on sounds from the driver's seated position, the directional microphone will pick up sounds from any seating position in the vehicle. ASR engine performance is increased in low noise environments.
	6. Foreign objects interfering with microphone input.	6. Verify that there are no foreign objects hanging from the inside rear view mirror or driver side sun visor that could be interfering with microphone reception.
		7. Phone features are accessed using

	7. The incorrect Uconnect switch button is being depressed.	the Uconnect **Phone** button on the steering wheel or the **Phone** button in the RRM. Other Uconnect Voice Command features are accessed using either Uconnect **VR** button.
	8. Microphone failure.	8. Use a diagnostic scan tool and the appropriate diagnostic procedures for further diagnosis of the microphone.
PHONE BOOK DOES NOT DOWNLOAD	1. Phone does not support the Phone Book Access Profile (PBAP).	1. The Uconnect system requires that the cellular phone support the PBAP profile. To enable the Uconnect phone book download feature, the phone must be upgraded to one that is PBAP enabled. A list of suggested phones is available at: **http://www.chrysler.com/uconnect**
	2. Phone book transfer not enabled in phone during pairing.	2. Be certain that phone book transfer is accepted or enabled in the phone during pairing to enable the Uconnect phone book download feature.
	3. Missing contacts from downloaded phone book.	3. Only contacts with a phone number are downloaded from phone and the number of contacts downloaded is limited to 1000.
	1. User is not waiting for the **beep** tone acknowledgment before issuing Voice Commands.	1. Be certain the user knows to wait for the acknowledgment **beep** tone prior to issuing Voice Commands.
	2. User is not issuing Voice Commands in a smooth and consistent	2. Be certain the user is issuing Voice Commands in a normal, smooth and consistent speaking voice. The Advanced Speech Recognition (ASR) engine is designed to recognize normal speech patterns and at a normal tone. Some users tend to

	speaking voice.	speak to a computer loud and slow, which results in reduced performance.
	3. User is not using proper Voice Command syntax.	3. User must speak using proper Voice Command syntax (i.e.: say **Call** - then name, or say **Dial** - then number).
	4. Phone book names too short.	4. For increased performance, it is recommended to use both first and last names for phone book entries. Example: **Daniel Johnson** as opposed to **Dan** .
	5. Name not spoken by user as it appears in the phone book.	5. Speak the full contact name as it appears in the phone book. Do not use nicknames.
PHONE BOOK NAMES NOT RECOGNIZED CONSISTENTLY	6. Multiple similar sounding names in the phone book.	6. For increased performance it is recommended that the user do not enter similar sounding names in the phone book.
	7. Phone book download not yet completed.	7. Depending upon the size of the contact list on the phone, the download may not have had time to complete. If the Phone Book button on the RRM phone screen appears grayed out, the contact list download is still in progress. Wait until download completes.
	8. High noise levels within the passenger compartment.	8. ASR engine performance is increased when noise conditions in the passenger compartment are lowered. Ideal conditions include having the windows closed and the blower fan set to Low or Off.
	9. Passengers are talking while the user is attempting to issue a Voice	9. Although designed to focus on sounds from the driver's seated position, the directional microphone will pick up sounds from any seating position in the vehicle. ASR engine

	Command.	performance is increased in low noise environments.
	10. Foreign objects interfering with microphone input.	10. Verify that there are no foreign objects hanging from the inside rear view mirror or the driver side sun visor that could be interfering with microphone reception.
	11. The incorrect Uconnect switch button is being depressed.	11. Phone features are accessed using the Uconnect **Phone** button on the steering wheel or the **Phone** button in the RRM. Other Uconnect Voice Command features are accessed using either Uconnect **VR** button.
	12. Microphone failure.	12. Use a diagnostic scan tool and the appropriate diagnostic procedures for further diagnosis of the microphone.
POOR PHONE AUDIO QUALITY	1. High noise levels within the passenger compartment.	1. ASR engine performance is increased when noise conditions in the passenger compartment are lowered. Ideal conditions include having the windows closed and the blower fan set to Low or Off.
	2. Passengers are talking while the user is attempting to issue a Voice Command.	2. Although designed to focus on sounds from the driver's seated position, the directional microphone will pick up sounds from any seating position in the vehicle. ASR engine performance is increased in low noise environments.
	3. Foreign objects interfering with microphone input.	3. Verify that there are no foreign objects hanging from the inside rear view mirror or the driver side sun visor that could be interfering with microphone reception.
	4. Microphone failure.	4. Use a diagnostic scan tool and the appropriate diagnostic procedures for further diagnosis of the microphone.

NO PHONE AUDIO	1. The settings in the phone cause the phone audio to be routed to a handset.	1. Route the phone audio to the hands free device.
CALL LOG INOPERATIVE OR INACCURATE	1. Call log not supported by phone. 2. The phone is not providing accurate call log data.	1. The Uconnect system requires that the cellular phone support the call log feature. To enable the Uconnect call log feature, the phone must be upgraded to one that is call log enabled. A list of suggested phones is available at: **http://www.chrysler.com/uconnect** 2. Refer to the operator's manual for the phone.
AUDIO OUTPUT TOO LOW	1. Volume setting on the Bluetooth device set too low. 2. Volume setting on the RRM set too low.	1. Set the volume of the phone or other Bluetooth device to about three quarters (3/4) of full or maximum volume. 2. Set the volume of the RRM to the desired level during an active Uconnect Hands Free Phone call session.

DIAGNOSIS AND TESTING - NAVIGATION

WARNING: **To avoid serious or fatal injury on vehicles equipped with airbags, disable the Supplemental Restraint System (SRS) before attempting any steering wheel, steering column, airbag, seat belt tensioner, impact sensor or instrument panel component diagnosis or service. Disconnect and isolate the battery negative (ground) cable, then wait two minutes for the system capacitor to discharge before performing further diagnosis or service. This is the only sure way to disable the**

SRS. Failure to take the proper precautions could result in accidental airbag deployment.

The hard wired circuits between components related to the Radio Receiver Module (RRM) (also known as the radio or the head unit) and the Uconnect™ Navigation system may be diagnosed using conventional diagnostic tools and procedures. Refer to the appropriate wiring information. The wiring information includes wiring diagrams, proper wire and connector repair procedures, details of wire harness routing and retention, connector pin out information and location views for the various wire harness connectors, splices and grounds.

However, conventional diagnostic methods will not prove conclusive in the diagnosis of the RRM or the electronic controls and communication between modules and other devices that provide some features of the Uconnect™ Navigation system. The most reliable, efficient and accurate means to diagnose the RRM or the electronic controls and communication related to Uconnect™ Navigation system operation requires the use of a diagnostic scan tool. Refer to the appropriate diagnostic information.

STANDARD PROCEDURE

STANDARD PROCEDURE - NAVIGATION SYSTEM - RESTORE OR UPDATE

Navigation System map and Point-Of-Interest (POI) data updates may become available occasionally through the Navteq Maps web site (www.navigation.com). The updated information as well as some additional feature applications can be downloaded and copied to Universal Serial Bus (USB) media for transfer and installation to the navigation module within the Radio Receiver Module (RRM) (also known as the radio or the head unit) in the vehicle. These are fee-based applications and updates, which are made at the option and expense of the customer.

However, a new RRM is equipped with only a standard base version of the map and POI data. Before an original RRM is replaced by the dealer with a new unit, the version of the map and POI data on the original RRM must be noted. If the version of the map and POI data found on the new RRM is not equal to or newer than the version that was found on the replaced RRM, updated data will have to be downloaded and installed to the new RRM at the expense of the dealer.

ANTENNA, NAVIGATION

DESCRIPTION

DESCRIPTION

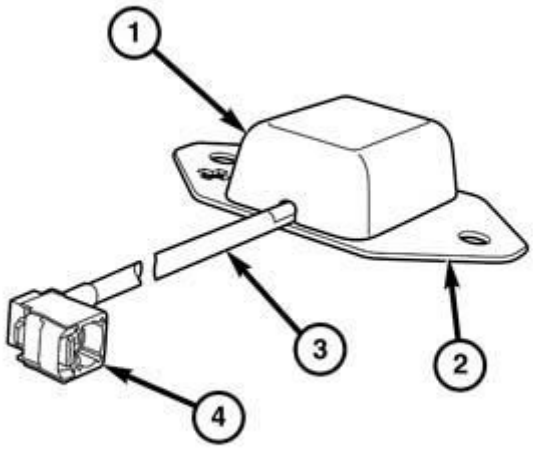

Fig. 1: Navigation Antenna Module, Mounting Flange, Pigtail Cable & Connector
Courtesy of CHRYSLER GROUP, LLC

In vehicles equipped with the navigation system and the optional satellite audio feature the navigation antenna has been integrated into the satellite antenna on the roof of the vehicle. Refer to **ANTENNA, SATELLITE, OPERATION** . In vehicles equipped with the navigation system, but not equipped with the optional satellite audio feature, a dedicated navigation antenna module (1) is used.

The dedicated navigation antenna module is located near the top of the instrument panel base trim, concealed behind the instrument panel center bezel. The navigation antenna module has a stamped metal mounting flange (2) that is secured to the instrument panel base trim by two push-in plastic fasteners. A single pigtail cable (3) with an integral connector (4) exits the antenna module and is routed through the instrument panel to the navigation unit (also known as the Telematics Gateway Module/TGW), which is integral to the Radio Receiver Module (RRM) (also known as the radio or the head unit).

The dedicated navigation antenna module cannot be adjusted or repaired. If damaged or ineffective the entire unit must be replaced.

OPERATION

OPERATION

The navigation module acquires Global Positioning System (GPS) position data through a navigation antenna module. Vehicles equipped with the optional satellite radio system have a roof-mounted combination antenna that also receives satellite audio and cellular signals. Refer to **ANTENNA, SATELLITE, OPERATION** . Vehicles not equipped with the optional satellite radio system have a dedicated navigation antenna module mounted near the top of the instrument panel below the windshield.

The navigation antenna module is used to provide satellite information for route calculation and vehicle positioning purposes to the navigation unit (also known as the Telematics Gateway Module/TGW), which is integral to the Radio Receiver Module (RRM) (also known as the radio or the head unit). The antenna modules receive time pulse information from the GPS satellites, then calculate and transmit altitude, latitude, longitude, number of satellites, satellite direction, satellite angle of elevation, direction, signal to noise ratio and accuracy information.

The hard wired circuits between components related to the navigation antenna module may be diagnosed using conventional diagnostic tools and procedures. Refer to the appropriate wiring information. The wiring information includes wiring diagrams, proper wire and connector repair procedures, details of wire harness routing and retention, connector pin out information and location views for the various wire harness connectors, splices and grounds.

However, conventional diagnostic methods will not prove conclusive in the diagnosis of the navigation antenna module or the electronic controls and communication between modules and other devices that provide some features of the navigation system. The most reliable, efficient and accurate means to diagnose the navigation antenna module or the electronic controls and communication related to navigation system operation requires the use of a diagnostic scan tool. Refer to the appropriate diagnostic information.

DIAGNOSIS AND TESTING

DIAGNOSIS AND TESTING - NAVIGATION ANTENNA

The hard wired circuits between components related to the navigation antenna

module may be diagnosed using conventional diagnostic tools and procedures. Refer to the appropriate wiring information. The wiring information includes wiring diagrams, proper wire and connector repair procedures, details of wire harness routing and retention, connector pin out information and location views for the various wire harness connectors, splices and grounds.

However, conventional diagnostic methods will not prove conclusive in the diagnosis of the navigation antenna module or the electronic controls and communication between modules and other devices that provide some features of the navigation system. The most reliable, efficient and accurate means to diagnose the navigation antenna module or the electronic controls and communication related to navigation system operation requires the use of a diagnostic scan tool. Refer to the appropriate diagnostic information.

REMOVAL

REMOVAL

WARNING: **To avoid serious or fatal injury on vehicles equipped with airbags, disable the Supplemental Restraint System (SRS) before attempting any steering wheel, steering column, airbag, seat belt tensioner, impact sensor or instrument panel component diagnosis or service. Disconnect and isolate the battery negative (ground) cable, then wait two minutes for the system capacitor to discharge before performing further diagnosis or service. This is the only sure way to disable the SRS. Failure to take the proper precautions could result in accidental airbag deployment.**

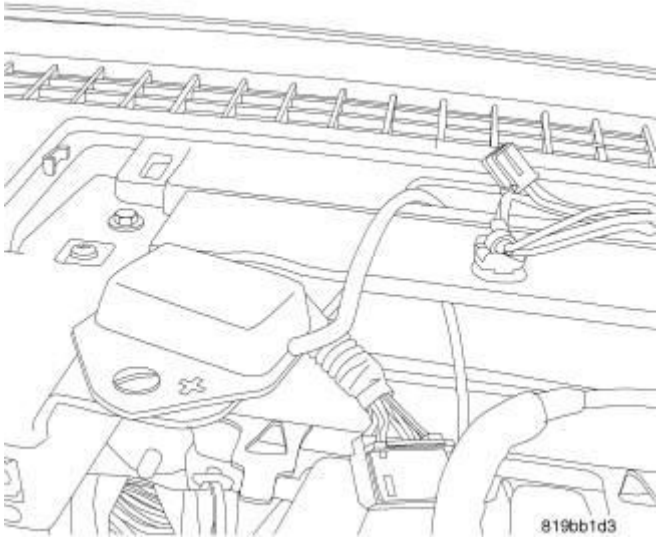

Fig. 2: Disconnecting/Re-Connecting Battery Negative Cable
Courtesy of CHRYSLER GROUP, LLC

In vehicles equipped with the optional satellite radio system, the navigation antenna is serviced as a unit with the combination antenna located on the roof panel. Refer to **ANTENNA, SATELLITE, REMOVAL** .

1. Disconnect and isolate the negative cable from the battery.
2. Remove the center bezel from the instrument panel. Refer to **BEZEL, INSTRUMENT PANEL, CENTER, REMOVAL** .
3. Remove the Radio Receiver Module (RRM) (also known as the radio or the head unit) from the instrument panel. Refer to **RADIO, REMOVAL** .
4. Remove the two plastic push-in fasteners that secure the Global Positioning System (GPS) antenna to the instrument panel base trim.
5. Remove the GPS antenna from the instrument panel.

INSTALLATION

INSTALLATION

WARNING: To avoid serious or fatal injury on vehicles equipped with airbags, disable the Supplemental Restraint System (SRS) before attempting any steering wheel, steering column, airbag, seat belt tensioner, impact sensor or instrument panel component diagnosis or service. Disconnect and isolate the battery negative (ground) cable, then

wait two minutes for the system capacitor to discharge before performing further diagnosis or service. This is the only sure way to disable the SRS. Failure to take the proper precautions could result in accidental airbag deployment.

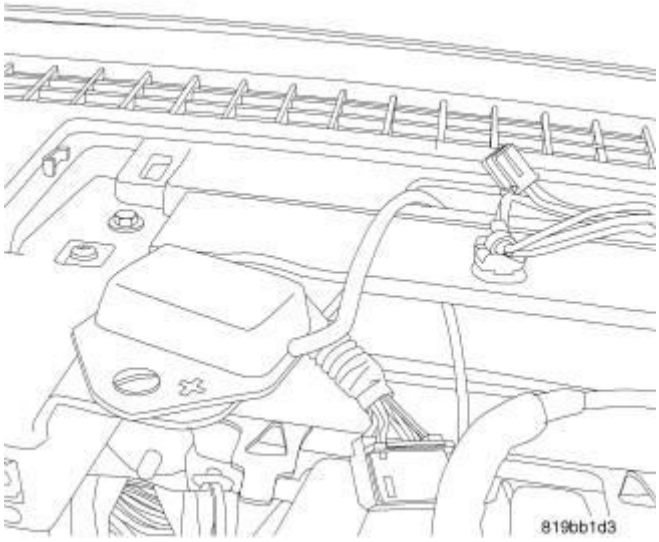

Fig. 3: Disconnecting/Re-Connecting Battery Negative Cable
Courtesy of CHRYSLER GROUP, LLC

In vehicles equipped with the optional satellite radio system, the navigation antenna is serviced as a unit with the combination antenna located on the roof panel. Refer to **ANTENNA, SATELLITE, REMOVAL** .

1. Position the Global Positioning System (GPS) antenna to the instrument panel base trim.
2. Reinstall the two plastic push-in fasteners that secure the GPS antenna to the instrument panel base trim.
3. Reinstall the Radio Receiver Module (RRM) (also known as the radio or the head unit) into the instrument panel. Refer to **RADIO, INSTALLATION** .
4. Reinstall the center bezel onto the instrument panel. Refer to **BEZEL, INSTRUMENT PANEL, CENTER, INSTALLATION** .
5. Reconnect the negative cable to the battery.

MICROPHONE

DESCRIPTION

DESCRIPTION

Vehicles equipped with the optional hands-free system have two stereo microphones mounted in the top surface of the inside rear view mirror housing, one to each side of center. The two microphones are individually powered by and provide hard wired inputs to the Radio Receiver Module (RRM) (also known as the radio or the head unit) in the instrument panel whenever the Voice Recognition (VR) feature of the hands-free system is active. These two microphones are connected to the vehicle electrical system through a connector receptacle integral to the forward-facing surface of the inside rear view mirror housing by a dedicated take out and connector of the overhead wire harness.

The microphones cannot be adjusted or repaired and, if damaged or ineffective, they must be replaced as a unit with the inside rear view mirror assembly.

OPERATION

OPERATION

When the hands-free Voice Recognition (VR) control circuitry integral and internal to the Radio Receiver Module (RRM) (also known as the radio or the head unit) detects the appropriate inputs or requests, it energizes the circuitry of the two stereo microphones within the inside rear view mirror housing. The microphones remain active until they are deactivated by the hands-free VR control circuitry, or until the status of the ignition switch transitions to Off, whichever occurs first.

The input from the microphone is processed, filtered and redirected by the VR control circuitry and logic as appropriate. Those inputs can be redirected to the Advanced Speech Recognition (ASR) engine or to the audio send circuitry of the Bluetooth™ transceiver within the Hands Free Module (HFM) (also known as the Bluetooth™ module).

The hard wired inputs and outputs of the microphones in the inside rear view mirror may be diagnosed using conventional diagnostic tools and procedures. Refer to the appropriate wiring information. However, conventional diagnostic methods will not prove conclusive in the diagnosis of the microphone or the electronic controls and communication between modules and other devices that provide some features of the RRM controlled microphones. The most reliable, efficient and accurate means to diagnose the RRM or the electronic controls and communication related to RRM-controlled microphone operation requires the use

of a diagnostic scan tool. Refer to the appropriate diagnostic information.

DIAGNOSIS AND TESTING

DIAGNOSIS AND TESTING - MICROPHONE

> WARNING: **To avoid serious or fatal injury on vehicles equipped with airbags, disable the Supplemental Restraint System (SRS) before attempting any steering wheel, steering column, airbag, seat belt tensioner, impact sensor or instrument panel component diagnosis or service. Disconnect and isolate the battery negative (ground) cable, then wait two minutes for the system capacitor to discharge before performing further diagnosis or service. This is the only sure way to disable the SRS. Failure to take the proper precautions could result in accidental airbag deployment.**

The hard wired inputs and outputs of the microphones in the inside rear view mirror may be diagnosed using conventional diagnostic tools and procedures. Refer to the appropriate wiring information. However, conventional diagnostic methods will not prove conclusive in the diagnosis of the microphone or the electronic controls and communication between modules and other devices that provide some features of the Radio Receiver Module (RRM) (also known as the radio or the head unit) controlled microphones. The most reliable, efficient and accurate means to diagnose the RRM or the electronic controls and communication related to RRM-controlled microphone operation requires the use of a diagnostic scan tool. Refer to the appropriate diagnostic information.

REMOVAL

REMOVAL

The inside rear view mirror mounted microphones used in this vehicle are integral to and serviced only as a unit with the inside rear view mirror. Refer to **MIRROR, REARVIEW, REMOVAL** .

INSTALLATION

INSTALLATION

The inside rear view mirror mounted microphones used in this vehicle are integral to and serviced only as a unit with the inside rear view mirror. Refer to **MIRROR, REARVIEW, INSTALLATION** .

MODULE, HANDS FREE (HFM)

DESCRIPTION

DESCRIPTION

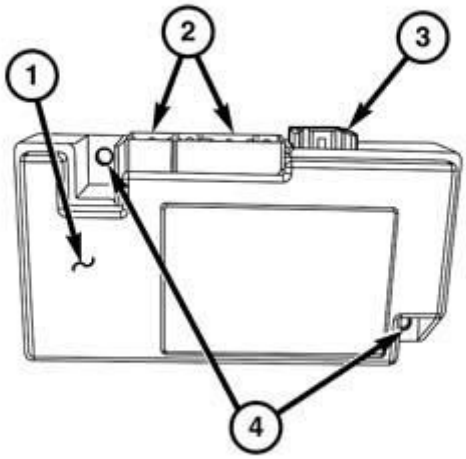

0819006411

Fig. 4: Hands Free Module
Courtesy of CHRYSLER GROUP, LLC

The Hands Free Module (HFM) (1) (also known as the Bluetooth™ module) is found in vehicles equipped with the optional Uconnect® Hands Free Communication System. This module is located on the inboard side of the instrument panel support structure end bracket outboard of the glove box opening. The HFM hardware and circuitry is contained and protected within a molded black plastic housing that has two integral mounts (4). The HFM is positioned to the die cast end bracket, then secured to the bracket by two screws.

The HFM has three integral connector receptacles that are oriented toward the dash panel when it is installed in the vehicle. The two largest receptacles (2) connect the HFM to the vehicle electrical system through dedicated take outs and connectors of the instrument panel wire harness. The smallest connector (3)

accepts a Universal Serial Bus (USB) cable connector that connects the HFM to the Radio Receiver Module (RRM) (also known as the radio or the head unit).

The internal circuitry of the HFM includes a microcontroller, flash memory and a Bluetooth™ module. The module also includes sophisticated Voice Recognition (VR) software. The HFM software is flash programmable.

The HFM cannot be adjusted or repaired and, if damaged or ineffective, the entire HFM must be replaced.

OPERATION

OPERATION

The Hands Free Module (HFM) (also known as the Bluetooth™ module) is used only in vehicles equipped with the optional Uconnect™ Hands Free Communication System. The HFM contains the microcontroller, logic and memory circuits of the Hands Free Communication System. The HFM uses On-Board Diagnostics (OBD) and can communicate with other electronic modules in the vehicle as well as with the diagnostic scan tool using the Controller Area Network (CAN) data bus. This method of communication is also used for Hands Free Communication System diagnosis and testing through the 16-way data link connector located on the driver side lower edge of the instrument panel and is used by the HFM to acquire vehicle configuration data.

The HFM brings together several technologies in the vehicle. The HFM uses Bluetooth® technology to provide wireless connectivity between a paired compatible personal cellular telephone or a paired personal wireless audio streaming device and other on board vehicle systems. The HFM also uses sophisticated Voice Recognition (VR) software to recognize and respond appropriately to certain verbal commands, which allows hands free control of a number of optional vehicle systems and features. In addition to English, the VR software includes Spanish and French language capability. Incoming call voices are broadcast through the front audio system speakers of the vehicle, automatically overriding any other audio signals on the front speakers while the Hands Free Phone is in use.

The HFM circuitry receives battery current through a fused ignition output (unlock - run - start) circuit and fuse through the Totally Integrated Power Module (TIPM). The HFM also has a path to ground at all times received

through a ground circuit and take out of the instrument panel wire harness that is secured to the body sheet metal. These connections allow the HFM to operate whenever the status of the ignition switch is Unlock, Run or Start. Other inputs to the HFM include:

- **Cellular Telephone** - Using the Bluetooth® wireless standard, the Bluetooth® transceiver within the HFM can pair and prioritize up to 10 combined personal cellular telephones and Bluetooth® capable portable media devices, each of which is given a spoken identification by the user during the setup process. The phone connectivity enables wireless calling, text messaging and cellular phone contact list synchronization features. The HFM will communicate with a paired device that is anywhere within the vehicle. However, placing metal between the HFM and the device may result in unwanted shielding of the signals.
- **Electronic Vehicle Information Center Switch Pod** - Vehicles equipped with the Uconnect™ Hands Free Communication System feature have two push buttons added to the Electronic Vehicle Information Center (EVIC) switch pod located in the left horizontal spoke of the steering wheel. One push button is labeled **VR** (Voice Recognition) and initiates the Uconnect™ Voice Command feature. The second button is identified by a telephone hand set icon and initiates the Uconnect™ Hands Free Phone feature. The HFM monitors electronic messages received over the CAN data bus from the Steering Control Module (SCM) indicating the status of each of these two switches.
- **Radio Receiver Module Switches** - Vehicles equipped with the Uconnect™ Hands Free Communication System feature two push buttons available within the Radio Receiver Module (RRM) located in the instrument panel center bezel above the instrument panel center stack. One push button is labeled **VR** (Voice Recognition) and activates the Uconnect™ Voice Command feature. The second button is identified by a telephone hand set icon and activates the Uconnect™ Hands Free Phone feature. The HFM monitors electronic messages received over the CAN data bus from the RRM indicating the status of each of these two switches.
- **Streaming Audio** - BlueTooth® Streaming Audio (BTSA) allows audio content from any paired personal Bluetooth® capable portable media device or from an Internet radio application on a Bluetooth® capable smart phone to be accessed and listened to through the audio system of the vehicle.
- **Universal Serial Bus** - For music stored on a Universal Serial Bus (USB)

flash drive, the HFM receives metadata such as artist names and song titles from the RRM over a dedicated USB connection. This allows the audio content of these connected devices to be searched for and accessed using the Uconnect™ Voice Command feature.

- **Verbal Commands** - Two wired microphones integral to the inside rear view mirror provide verbal commands from the vehicle operator to both the HFM and the RRM, which enables the control of several vehicle systems and features using the Uconnect™ Voice Command feature through the Voice Recognition (VR) software.

Outputs of the HFM include:

- **Analog Audio Outputs** - The HFM has both left and right channel analog audio output circuits. The HFM provides Uconnect™ Hands Free call audio, BlueTooth® Streaming Audio (BTSA) and Hands Free voice prompt audio to the RRM through these circuits.
- **Digital Electronic Messages** - The VR software within the HFM is programmed to convert Uconnect™ Voice Command verbal inputs into the appropriate electronic request message, which is then transmitted by the HFM over the CAN data bus. When the Electronic Control Unit (ECU) that controls the requested feature receives the electronic request message over the CAN data bus, it will invoke the requested action.
- **Wireless Messages** - The VR software within the HFM is also programmed to convert Uconnect™ Voice Command verbal inputs into the appropriate Bluetooth® wireless request message, which is then transmitted by the Bluetooth® transceiver to the appropriate paired wireless device to invoke the requested action.

The HFM uses On-Board Diagnostics (OBD) to monitor all of the systems and circuits it controls, then sets active and stored Diagnostic Trouble Codes (DTC) for any monitored system faults it detects. The HFM will also send electronic message requests to the Instrument Cluster (IC) (also known as the ElectroMechanical Instrument Cluster/EMIC) for the display of certain textual warning messages related to some detected system conditions or faults.

The hard wired circuits of the HFM may be diagnosed using conventional diagnostic tools and procedures. Refer to the appropriate wiring information. The wiring information includes wiring diagrams, proper wire and connector repair procedures, details of wire harness routing and retention, connector pin out

information and location views for the various wire harness connectors, splices and grounds.

However, conventional diagnostic methods will not prove conclusive in the diagnosis of the HFM or the electronic controls and communication between modules and other devices that provide some features of the Uconnect™ Hands Free Communication system. The most reliable, efficient and accurate means to diagnose the HFM or the electronic controls and communication related to Uconnect™ Hands Free Communication system operation requires the use of a diagnostic scan tool. Refer to the appropriate diagnostic information.

DIAGNOSIS AND TESTING

DIAGNOSIS AND TESTING - HANDS FREE MODULE

The hard wired circuits of the Hands Free Module (HFM) (also known as the Bluetooth™ module) may be diagnosed using conventional diagnostic tools and procedures. Refer to the appropriate wiring information. The wiring information includes wiring diagrams, proper wire and connector repair procedures, details of wire harness routing and retention, connector pin out information and location views for the various wire harness connectors, splices and grounds.

However, conventional diagnostic methods will not prove conclusive in the diagnosis of the HFM or the electronic controls and communication between modules and other devices that provide some features of the Uconnect™ Hands Free Communication system. The most reliable, efficient and accurate means to diagnose the HFM or the electronic controls and communication related to Uconnect™ Hands Free Communication system operation requires the use of a diagnostic scan tool. Refer to the appropriate diagnostic information.

REMOVAL

REMOVAL

WARNING: **To avoid serious or fatal injury on vehicles equipped with airbags, disable the Supplemental Restraint System (SRS) before attempting any steering wheel, steering column, airbag, seat belt tensioner, impact sensor or instrument panel component diagnosis or service. Disconnect and isolate the battery negative (ground) cable, then**

wait two minutes for the system capacitor to discharge before performing further diagnosis or service. This is the only sure way to disable the SRS. Failure to take the proper precautions could result in accidental airbag deployment.

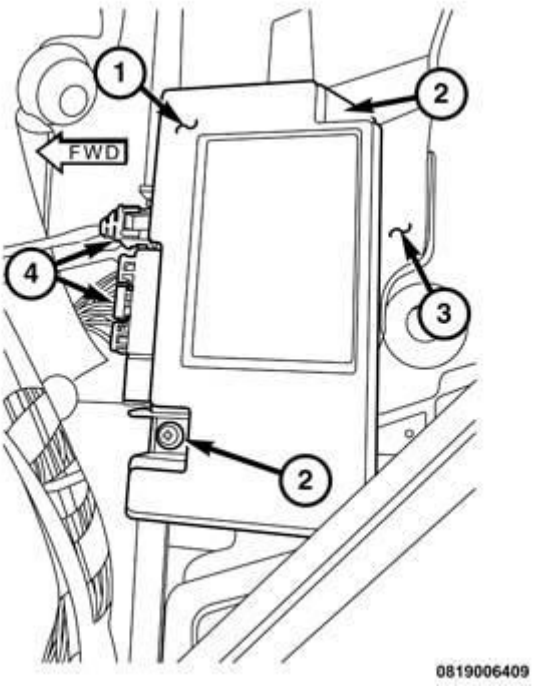

Fig. 5: Hands Free Module
Courtesy of CHRYSLER GROUP, LLC

1. Disconnect and isolate the negative cable from the battery.
2. Remove the glove box from the instrument panel. Refer to **GLOVE BOX, INSTRUMENT PANEL, REMOVAL** .
3. Locate the Hands Free Module (HFM) (1) on the end bracket (3) of the instrument panel support structure outboard of the glove box opening.
4. Remove the two screws (2) that secure the HFM to the inboard side of the instrument panel end bracket.
5. Pull the HFM away from the dash panel far enough to access and disconnect the two wire harness connectors (4) from the HFM connector receptacles.
6. Remove the HFM from the vehicle.

INSTALLATION

INSTALLATION

WARNING: To avoid serious or fatal injury on vehicles equipped with airbags, disable the Supplemental Restraint System (SRS) before attempting any steering wheel, steering column, airbag, seat belt tensioner, impact sensor or instrument panel component diagnosis or service. Disconnect and isolate the battery negative (ground) cable, then wait two minutes for the system capacitor to discharge before performing further diagnosis or service. This is the only sure way to disable the SRS. Failure to take the proper precautions could result in accidental airbag deployment.

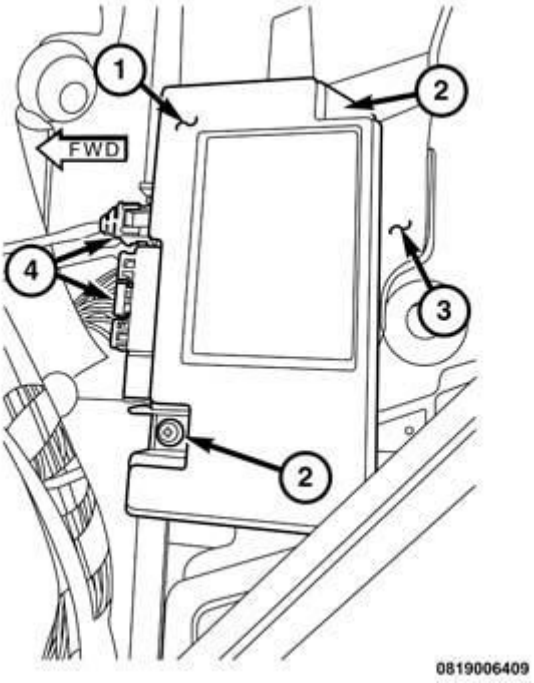

Fig. 6: Hands Free Module
Courtesy of CHRYSLER GROUP, LLC

1. Insert the Hands Free Module (HFM) (1) through the outboard side of the instrument panel glove box opening.
2. Position the HFM close enough to the dash panel to access and reconnect the wire harness connectors (4) to the HFM connector receptacles.
3. Position the HFM to the inboard side of the instrument panel support structure end bracket (3).
4. Install and tighten the two screws (2) that secure the HFM to the end

bracket. Tighten the screws securely.

5. Reinstall the glove box into the instrument panel. Refer to **GLOVE BOX, INSTRUMENT PANEL, INSTALLATION** .
6. Reconnect the negative cable to the battery.

MODULE, TRAFFIC

DESCRIPTION

DESCRIPTION

The Traffic Module (also known as the Traffic Message Channel/TMC module) provides traffic information to the navigation system to update planned routes in the event of a traffic accident, construction delays or any other condition that causes increased traffic congestion. This allows the users to avoid these congested areas and be automatically rerouted to get to their destination. This optional is available only for certain export markets where the TMC broadcasting is available.

REMOVAL

REMOVAL

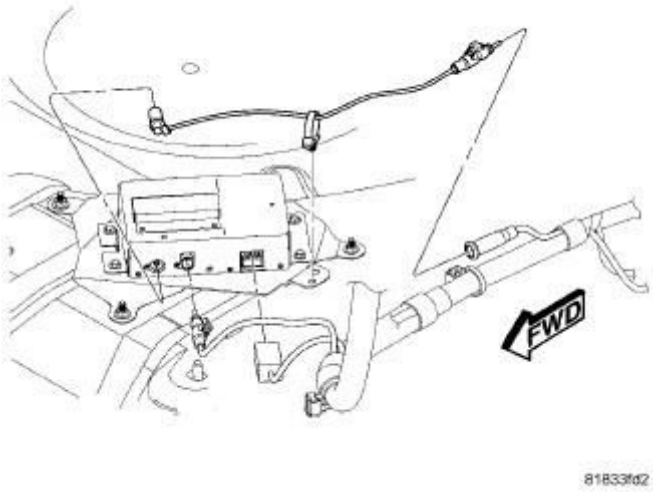

Fig. 7: Removing/Installing Traffic Message Center Module
Courtesy of CHRYSLER GROUP, LLC

1. Disconnect and isolate the negative cable from the battery.
2. Disconnect the antenna cables.

3. Disconnect the wire harness connector.
4. Remove the retaining fasteners.
5. Remove the Traffic Message Channel module (TMC).

INSTALLATION

INSTALLATION

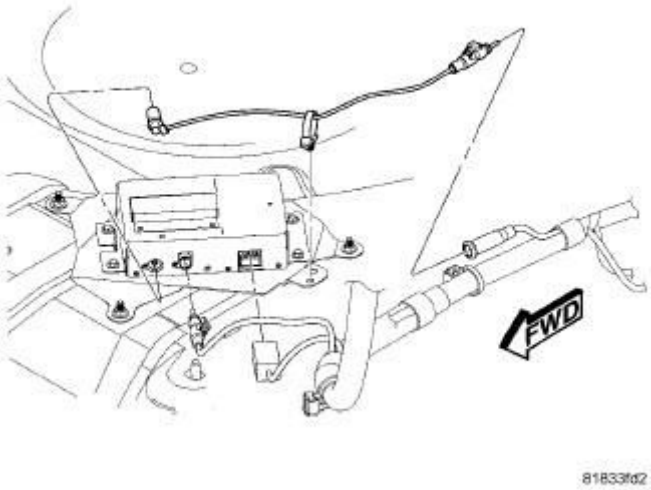

Fig. 8: Removing/Installing Traffic Message Center Module
Courtesy of CHRYSLER GROUP, LLC

1. Install TMC.
2. Install the mounting fasteners.
3. Connect the wire harness connector.
4. Connect the antenna cables.
5. Reconnect the negative cable to the battery.

2014 ACCESSORIES AND EQUIPMENT

Power Doors - Non-DTC Based Diagnostics - Compass & Patriot

DIAGNOSIS AND TESTING

ALL DOORS FAIL TO LOCK AND UNLOCK

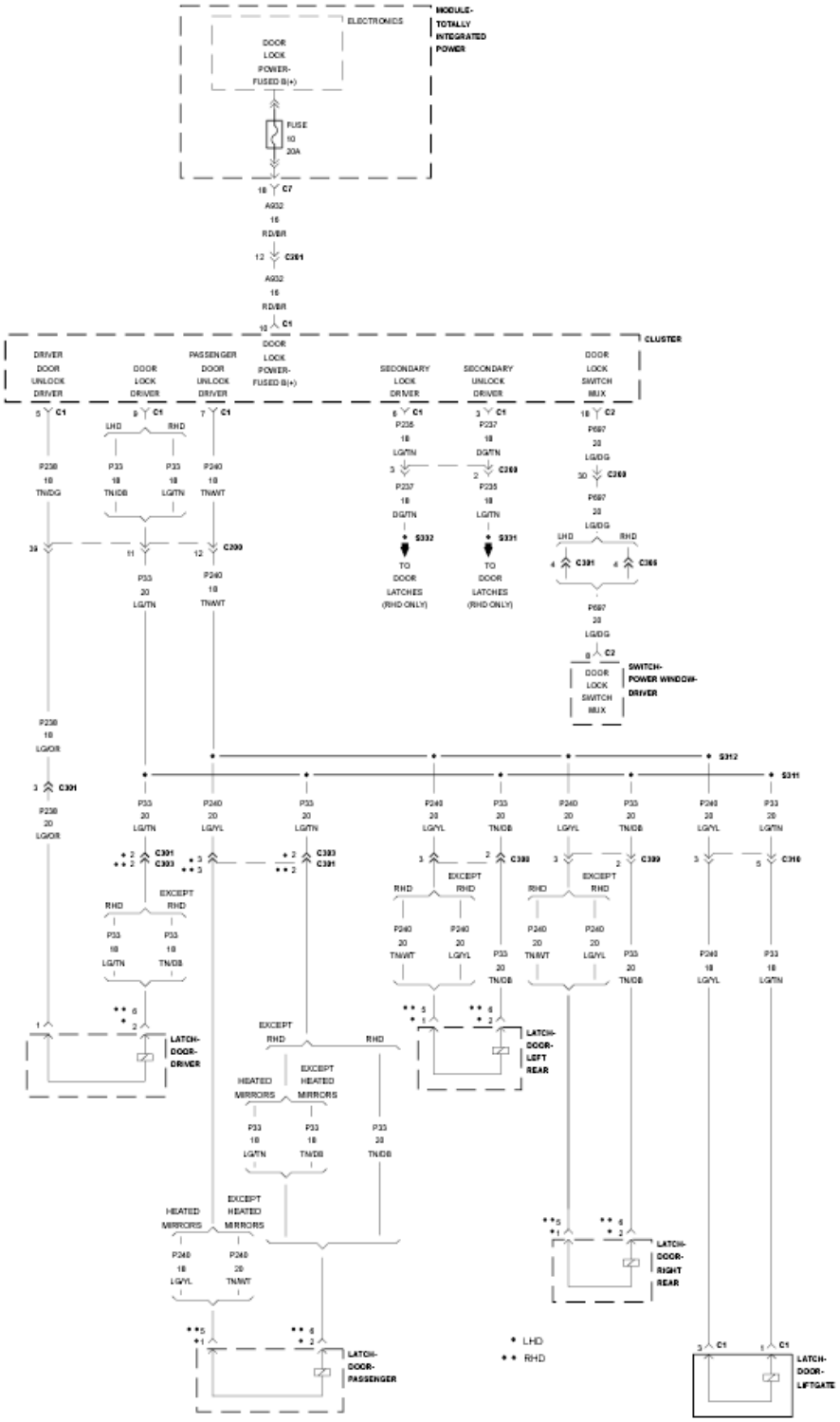

Fig. 1: Power Door Lock Circuit Diagram
Courtesy of CHRYSLER GROUP, LLC

For a complete wiring diagram, **refer to appropriate SYSTEM WIRING DIAGRAMS article** .

THEORY OF OPERATION

This test does not cover a secondary latch problem on a right hand drive vehicle.

Possible Causes
DTCs PRESENT
TIPM FUSE NUMBER 10 OPEN
(P33) DOOR LOCK DRIVER WIRE OPEN
(A932) FUSED B+ CIRCUIT OPEN
INSTRUMENT CLUSTER

DIAGNOSTIC TEST

1. **TEST FOR DIAGNOSTIC TROUBLE CODES**
    1. Turn the ignition on.
    2. With the scan tool, record and erase DTCs
    3. Operate the Driver Door Lock Switch in all positions several times.
    4. Cycle the ignition from on to off and wait for five seconds.
    5. Turn the ignition on.
    6. With the scan tool, read the active DTCs.

    Does the scan tool display any Power Door Lock related DTCs?

    No

    - Go To 2

    Yes

    - Refer to **DIAGNOSIS AND TESTING** to diagnose and repair the DTCs.
2. **TIPM FUSE NUMBER 10 OPEN**

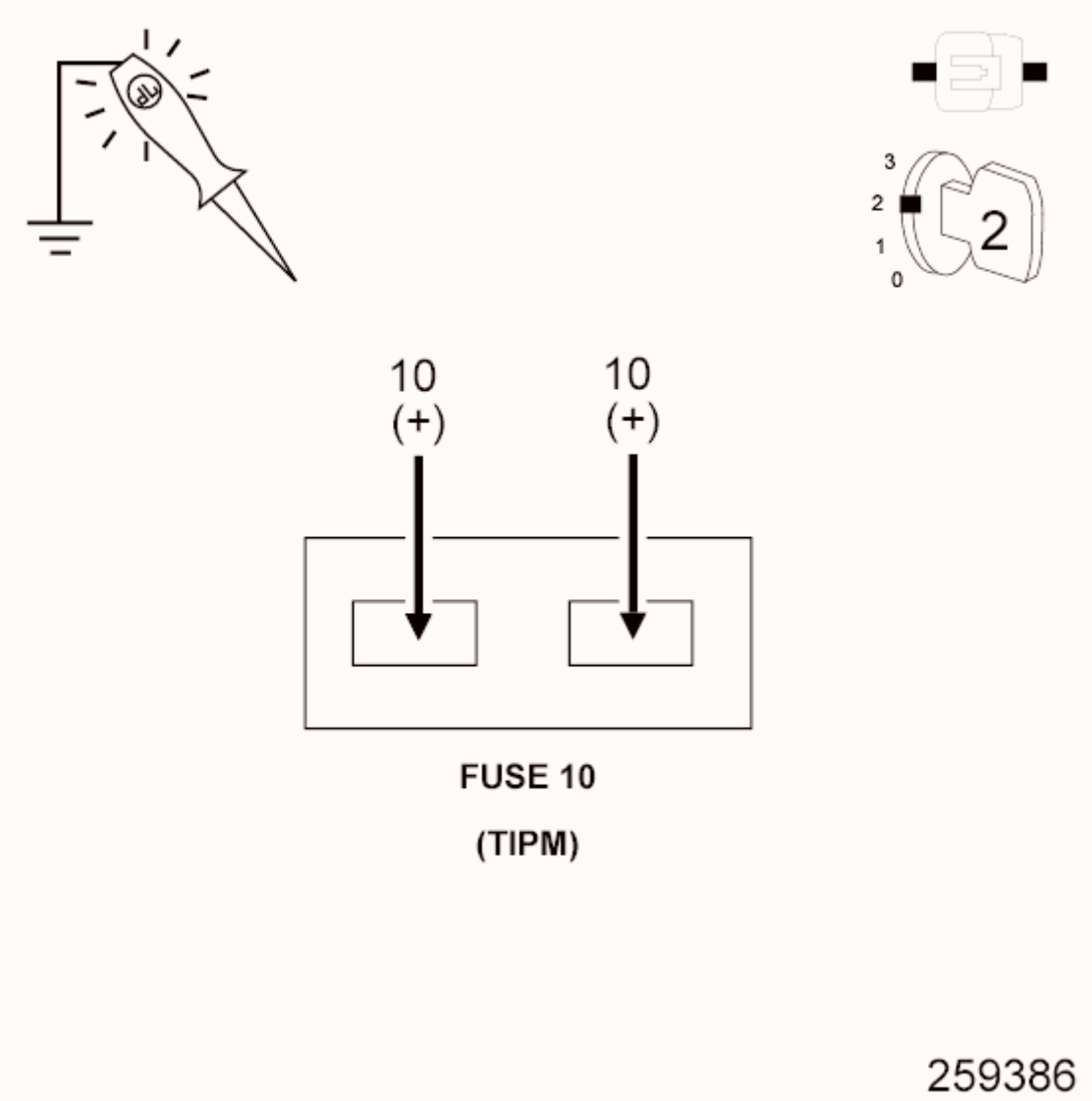

Fig. 2: Checking TIPM Fuse Number 10 For Open
Courtesy of CHRYSLER GROUP, LLC

1. Using a test light connected to ground, check both sides of the TIPM fuse number 10.

   Does the test light illuminate brightly on both sides of the fuse?

   No

   - Repair the open circuit as necessary. If the fuse is blown, replace it and try the locks. If it blows again, use the schematics and locate and repair the short circuit.
   - Perform the BODY VERIFICATION TEST. Refer to **STANDARD PROCEDURE** .

Yes

- Go To 3

3. **(A 932) FUSED B+ CIRCUIT OPEN**

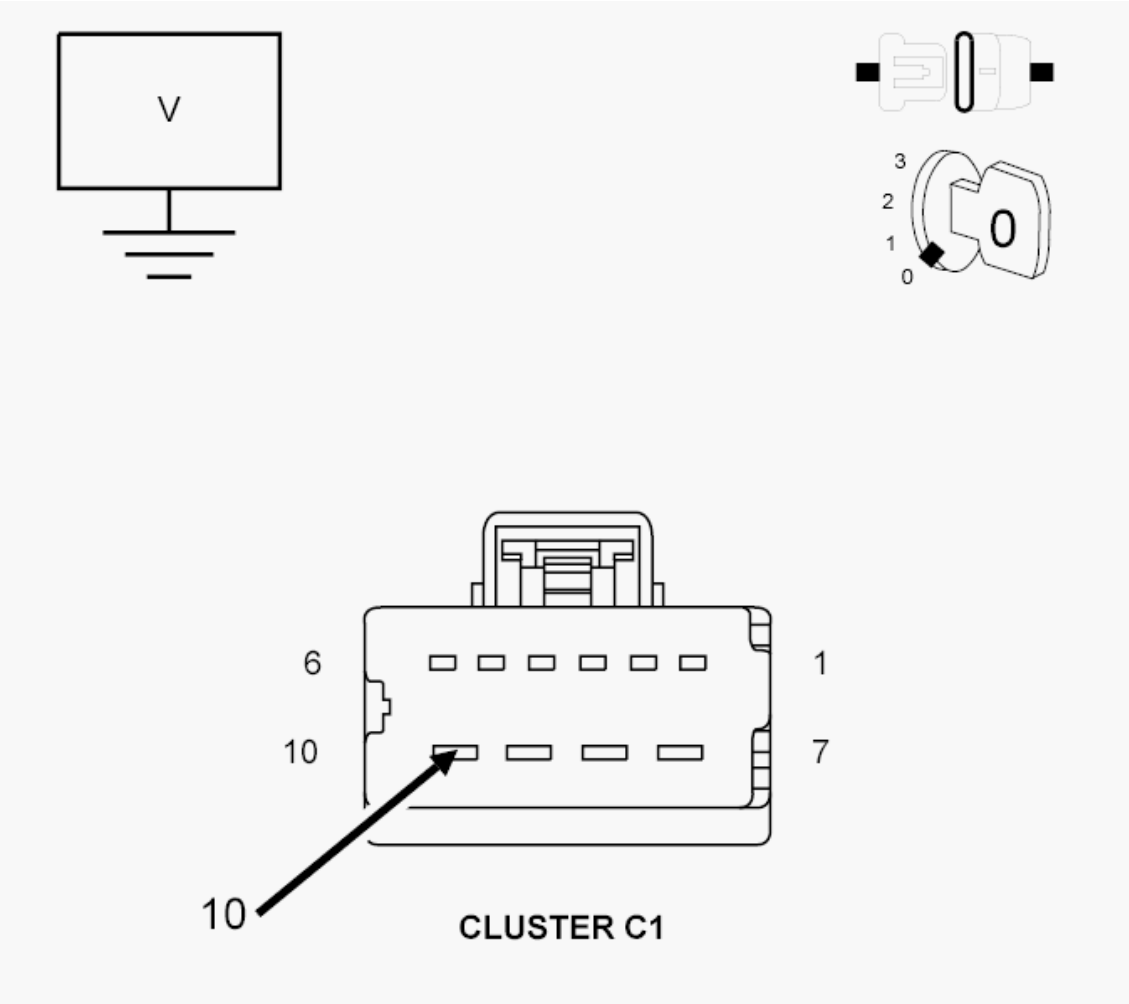

Fig. 3: Checking Fused B+ Circuit For Open
Courtesy of CHRYSLER GROUP, LLC

1. Disconnect the Instrument Cluster C1 connector.
2. Measure the voltage of the (A932) Fused B+ circuit in the Cluster C1 connector.

   Is the voltage above 11.0 volts?

   Yes

   - Go To 4

No

- Repair the (A932) Fused B+ circuit for an open.
- Perform the BODY VERIFICATION TEST. Refer to **STANDARD PROCEDURE** .

4. **(P33) DOOR LOCK DRIVER WIRE OPEN**

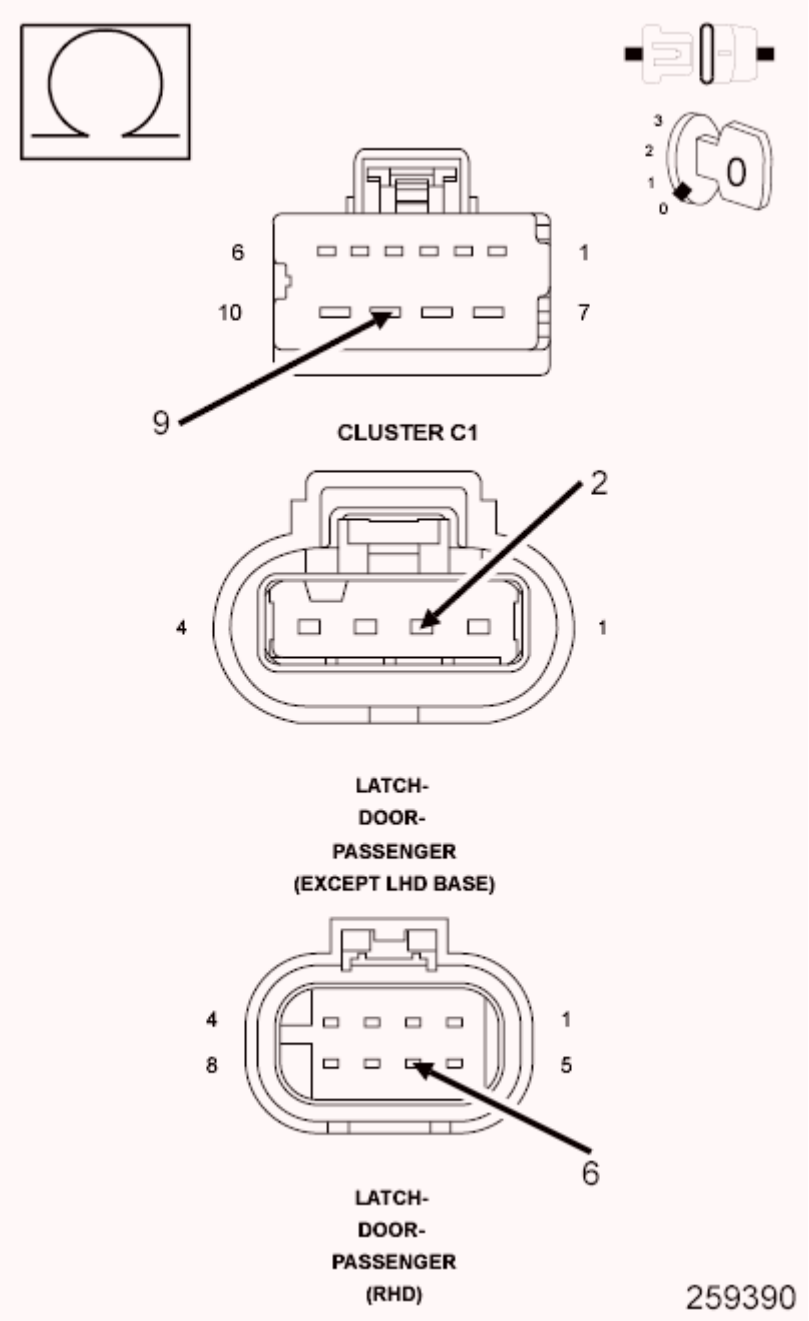

Fig. 4: Checking Door Lock Driver Wire For Open
Courtesy of CHRYSLER GROUP, LLC

1. Disconnect any Door Latch Connector.
2. Measure the resistance of the (P33) Door Lock Driver wire between the Cluster C1 connector and the door latch connector.

   Is the resistance below 5.0 Ohms?

   Yes

   - Replace the Instrument Cluster in accordance with Service Information.
   - Perform the BODY VERIFICATION TEST. Refer to **STANDARD PROCEDURE** .

   No

   - Repair the (P33) Door Lock Driver wire for an open.
   - Perform the BODY VERIFICATION TEST. Refer to **STANDARD PROCEDURE** .

ALL DOORS FAIL TO LOCK

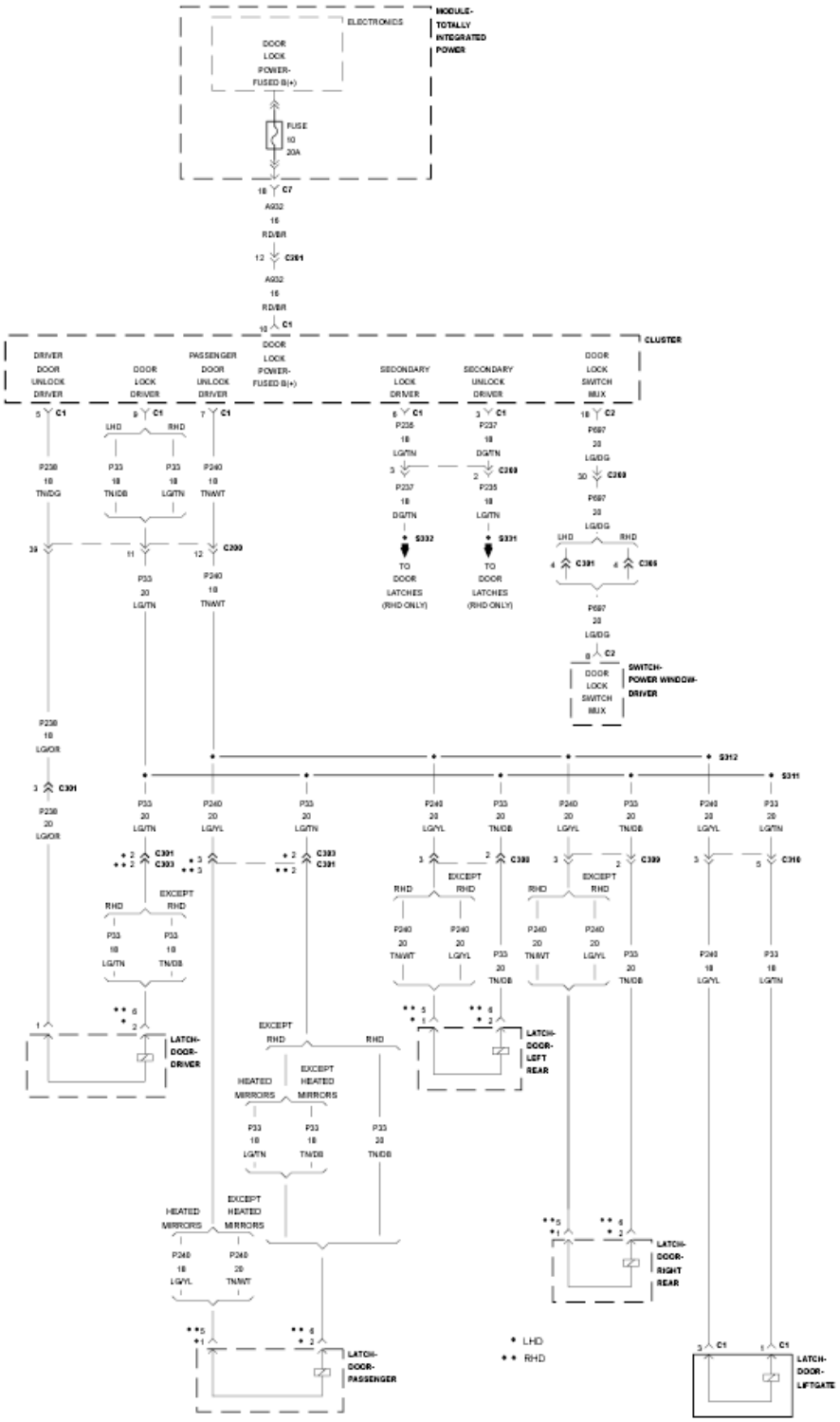

Fig. 5: Power Door Lock Circuit Diagram
Courtesy of CHRYSLER GROUP, LLC

For a complete wiring diagram, **refer to appropriate SYSTEM WIRING DIAGRAMS article** .

POSSIBLE CAUSES

Possible Causes
(P33) DOOR LOCK DRIVER WIRE SHORT TO GROUND
INSTRUMENT CLUSTER

THEORY OF OPERATION

This test does not cover a secondary latch problem on a right hand drive vehicle.

DIAGNOSTIC TEST

(P33) DOOR LOCK DRIVER WIRE SHORT TO GROUND

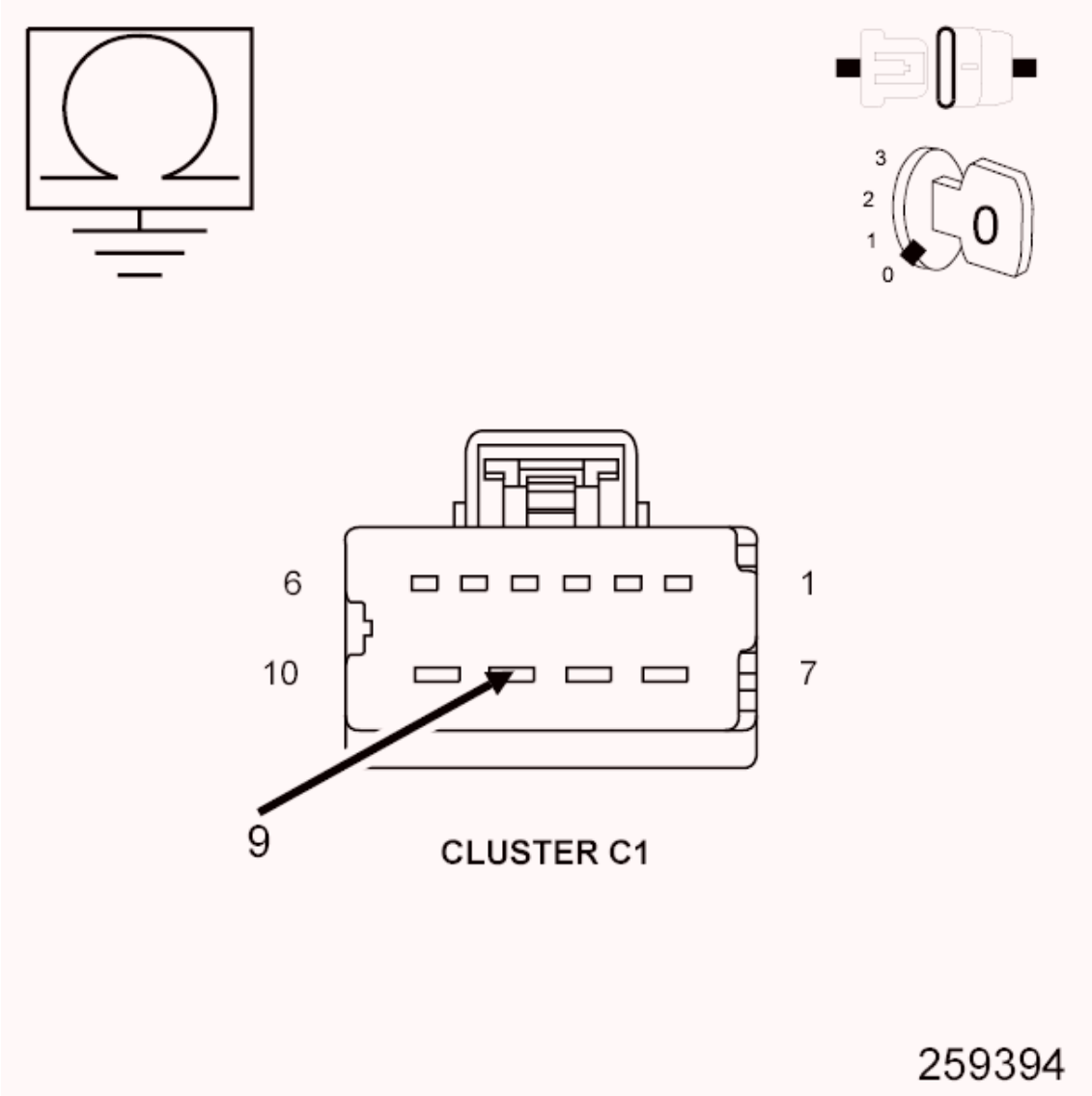

Fig. 6: Checking Door Lock Driver Wire For Short To Ground
Courtesy of CHRYSLER GROUP, LLC

1. Turn the ignition off.

2. Disconnect the Instrument Cluster C1 connector.
3. Measure the resistance between ground and the (P33) Door Lock Driver circuit.

   Is the resistance below 5.0 ohms?

   No

   - Replace the Instrument Cluster in accordance with Service Information.
   - Perform the BODY VERIFICATION TEST. Refer to **STANDARD PROCEDURE** .

   Yes

   - Repair the (P33) Door Lock Driver wire for a short to ground.
   - Perform the BODY VERIFICATION TEST. Refer to **STANDARD PROCEDURE** .

ALL PASSENGER DOORS FAIL TO LOCK AND UNLOCK

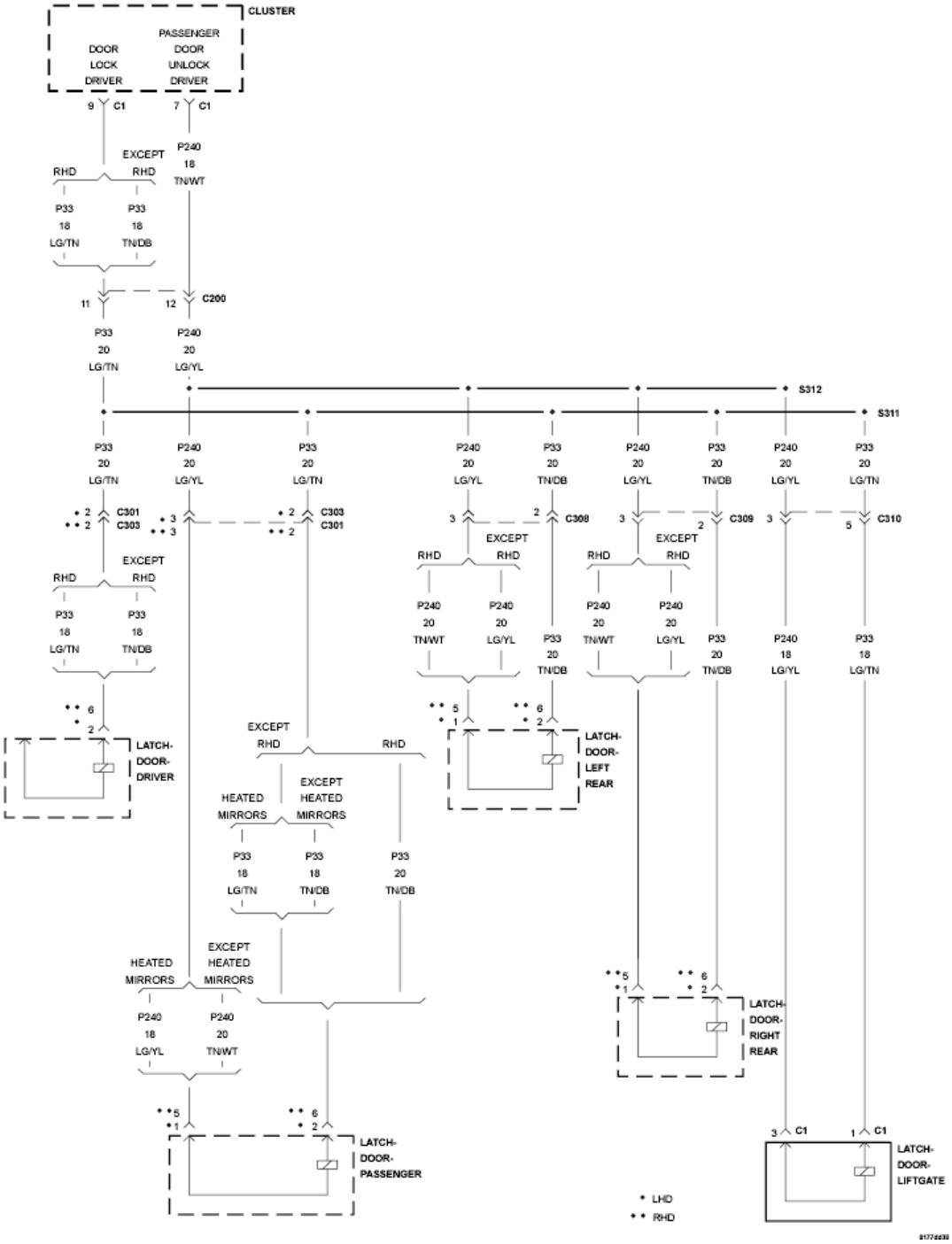

Fig. 7: Door Latch - Circuit Diagram
Courtesy of CHRYSLER GROUP, LLC

For a complete wiring diagram, **refer to appropriate SYSTEM WIRING DIAGRAMS article** .

THEORY OF OPERATION

This test does not cover a secondary latch problem on a right hand drive vehicle.

Possible Causes
DTCs PRESENT
(P240) PASSENGER DOORS UNLOCK DRIVER WIRE OPEN
INSTRUMENT CLUSTER

DIAGNOSTIC TEST

1. **TEST FOR DIAGNOSTIC TROUBLE CODES**
    1. Turn the ignition on.
    2. With the scan tool, record and erase DTCs
    3. Operate the Driver Door Lock Switch in all positions several times.
    4. Cycle the ignition from on to off and wait for five seconds.
    5. Turn the ignition on.
    6. With the scan tool, read the active DTCs.

    Does the scan tool display any Power Door Lock related DTCs?

    No

    - Go To 2

    Yes

    - Perform the appropriate diagnostic procedure. Refer to **DIAGNOSIS AND TESTING** .
2. **(P240) PASSENGER DOORS UNLOCK DRIVER WIRE OPEN**

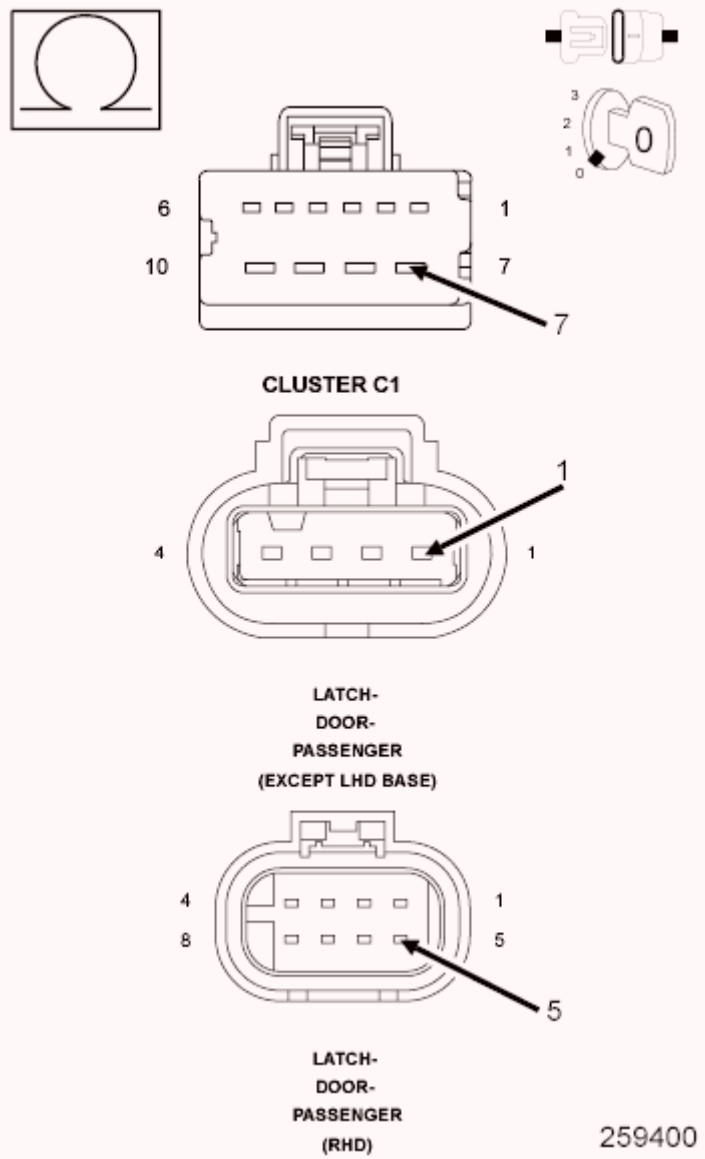

Fig. 8: Checking Passenger Doors Unlock Driver Wire For Open
Courtesy of CHRYSLER GROUP, LLC

1. Turn the ignition off.
2. Disconnect any Door Latch Connector.
3. Measure the resistance of the (P240) Passenger Doors Unlock Driver wire between the Cluster C1 connector and the door latch connector.

   Is the resistance below 5.0 Ohms?

   Yes

   - Replace the Instrument Cluster in accordance with Service Information.

- Perform the BODY VERIFICATION TEST. Refer to **STANDARD PROCEDURE** .

No

- Repair the (P240) Passenger Doors Unlock Driver wire for an open.
- Perform the BODY VERIFICATION TEST. Refer to **STANDARD PROCEDURE** .

ALL PASSENGER DOORS FAIL TO UNLOCK

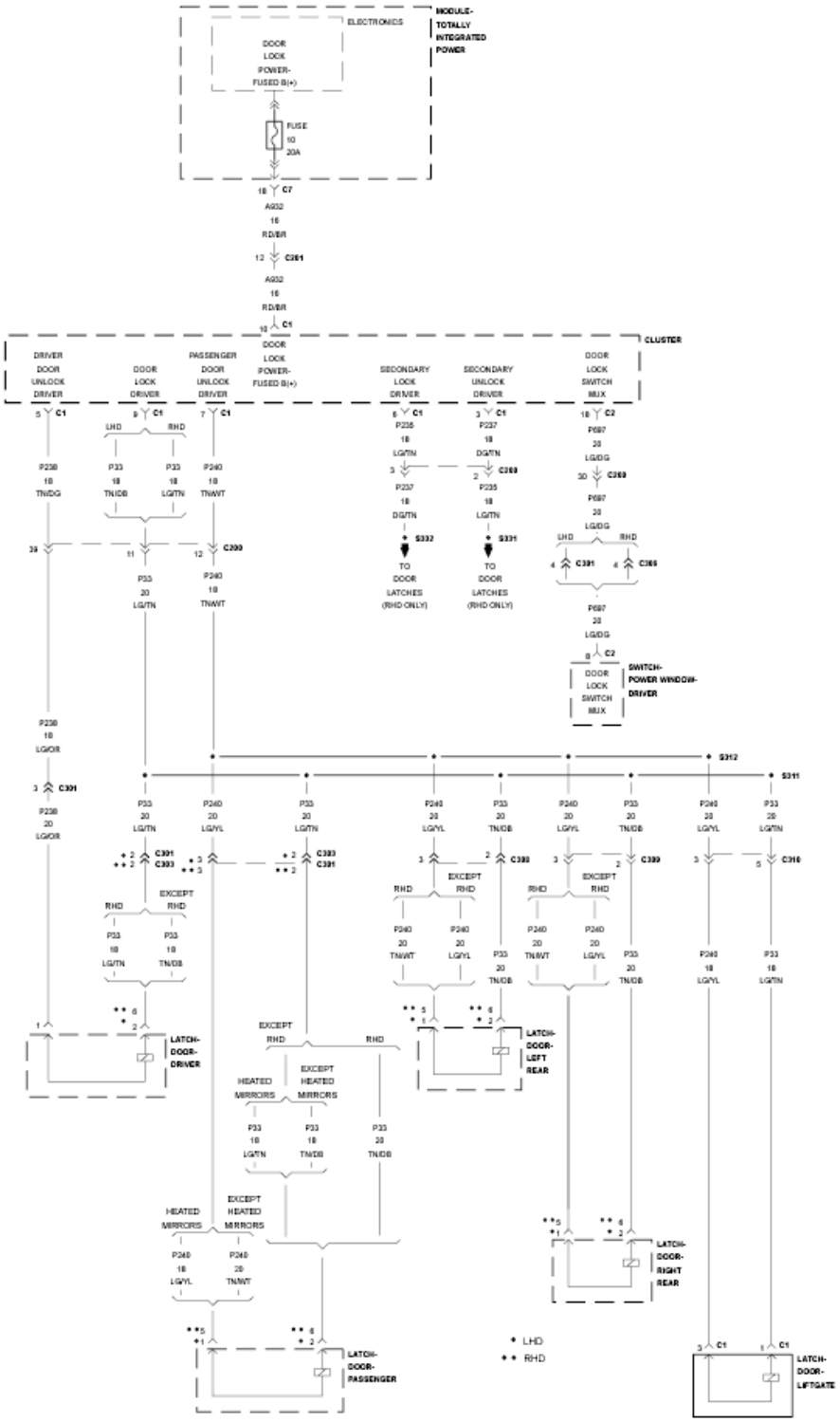

Fig. 9: Power Door Lock Circuit Diagram
Courtesy of CHRYSLER GROUP, LLC

For a complete wiring diagram, **refer to appropriate SYSTEM WIRING DIAGRAMS article** .

POSSIBLE CAUSES

Possible Causes
(P240) PASSENGER DOORS UNLOCK DRIVER WIRE SHORT TO GROUND
INSTRUMENT CLUSTER

THEORY OF OPERATION

This test does not cover a secondary latch problem on a right hand drive vehicle.

DIAGNOSTIC TEST

(P240) PASSENGER DOORS UNLOCK DRIVER WIRE SHORT TO GROUND

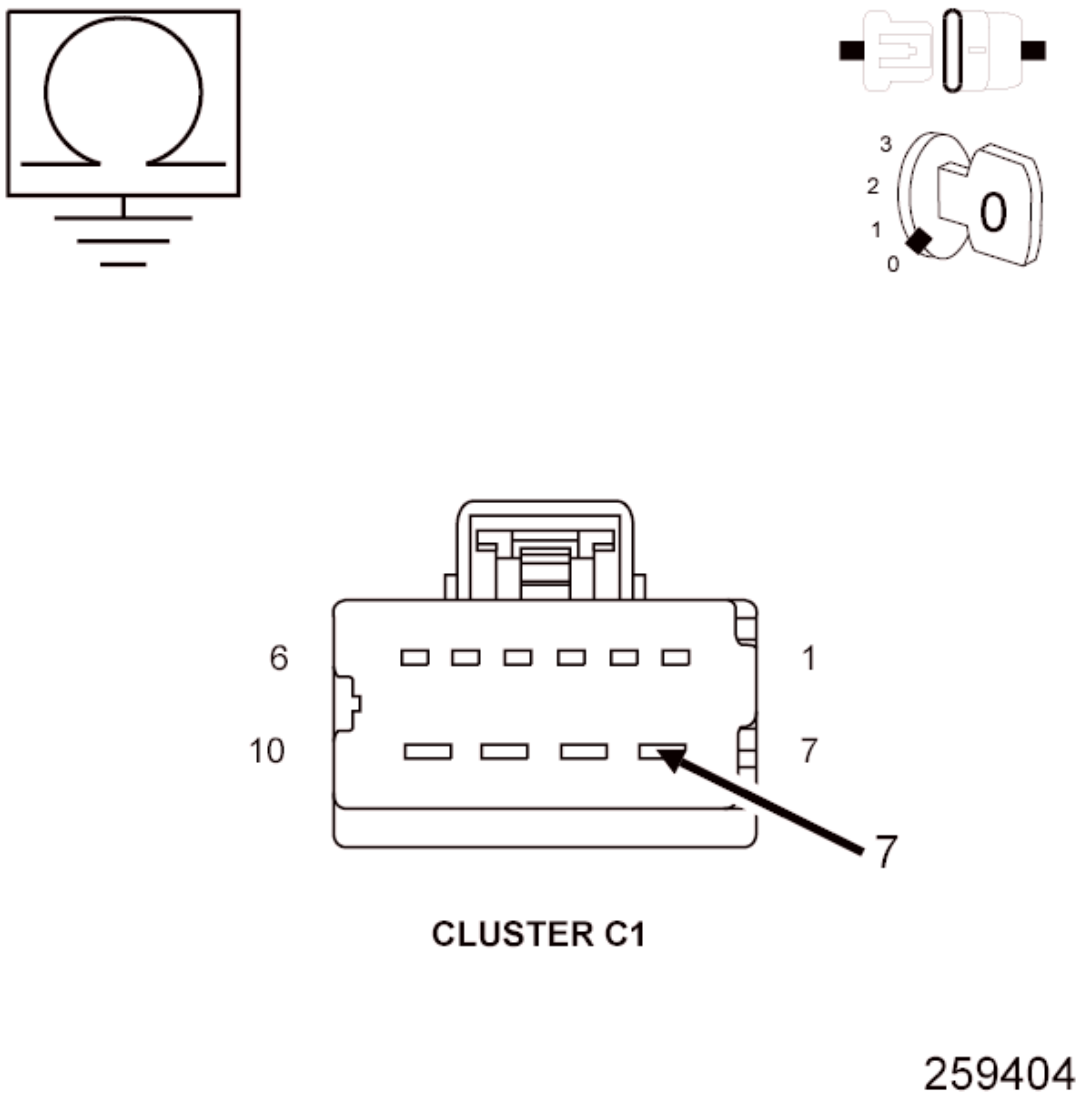

Fig. 10: Checking Passenger Doors Unlock Driver Wire For Short To Ground

Courtesy of CHRYSLER GROUP, LLC

1. Turn the ignition off.
2. Disconnect the Instrument Cluster C1 connector.
3. Measure the resistance between ground and the (P240) Passenger Doors Unlock Driver circuit.

   Is the resistance below 1, 000 ohms?

   No

   - Replace the Instrument Cluster in accordance with Service Information.
   - Perform the BODY VERIFICATION TEST. Refer to **STANDARD PROCEDURE** .

   Yes

   - Repair the (P240) Passenger Doors Unlock Driver wire for a short to ground.
   - Perform the BODY VERIFICATION TEST. Refer to **STANDARD PROCEDURE** .

ALL PASSENGER DOORS UNLOCK CONTROL CIRCUIT PERFORMANCE

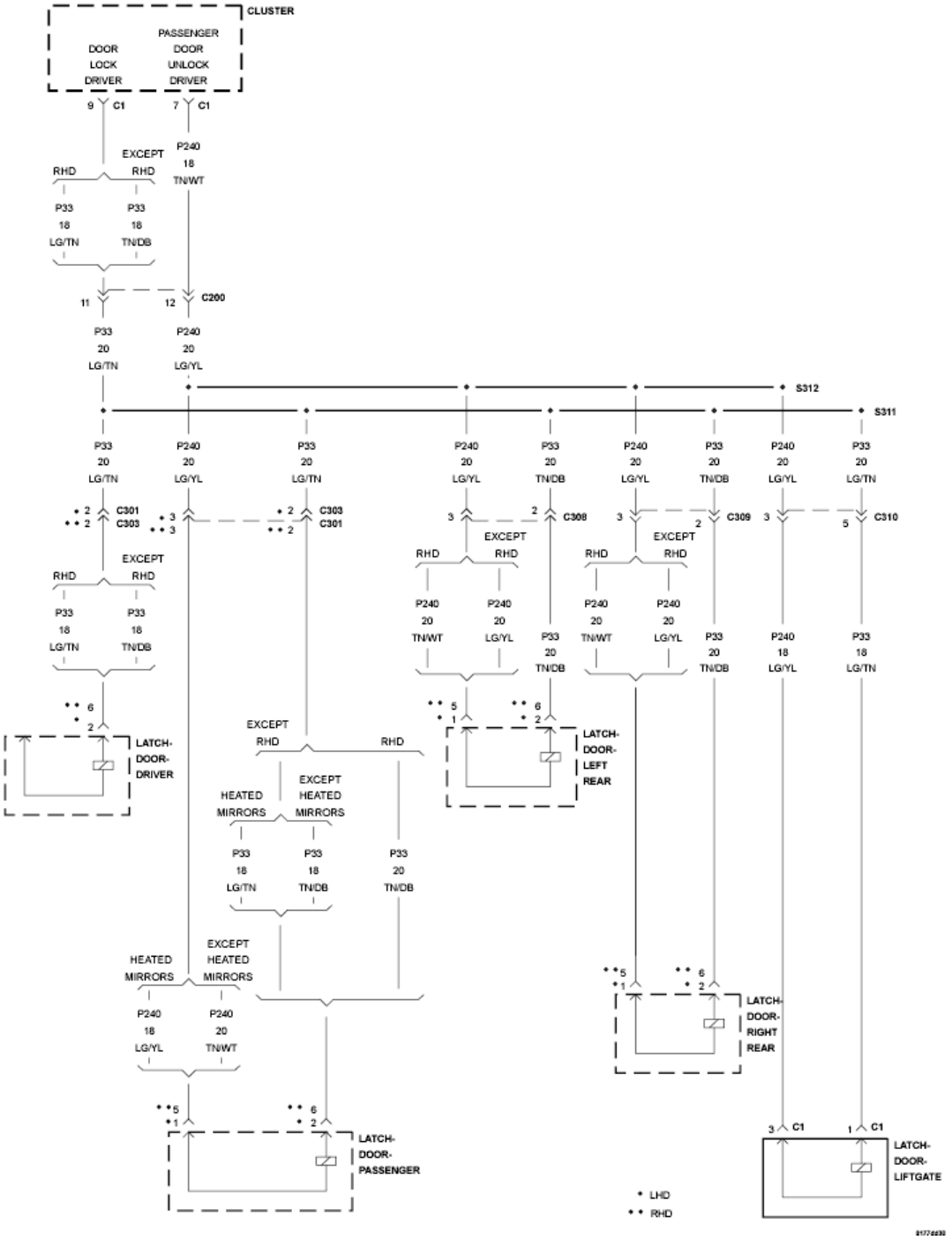

Fig. 11: Door Latch - Circuit Diagram
Courtesy of CHRYSLER GROUP, LLC

For a complete wiring diagram, **refer to appropriate SYSTEM WIRING DIAGRAMS article** .

POSSIBLE CAUSES

Possible Causes

(P240) PASSENGER DOORS UNLOCK DRIVER CIRCUIT SHORT TO GROUND
(P240) PASSENGER DOORS UNLOCK DRIVER CIRCUIT SHORT TO VOLTAGE
(P240) PASSENGER DOORS UNLOCK DRIVER CIRCUIT OPEN
(P33) DOOR LOCK DRIVER CIRCUIT SHORT TO THE (P240) PASSENGER DOORS UNLOCK DRIVER CIRCUIT
INSTRUMENT CLUSTER

DIAGNOSTIC TEST

1. **(P240) PASSENGER DOORS UNLOCK DRIVER CIRCUIT SHORT TO GROUND**

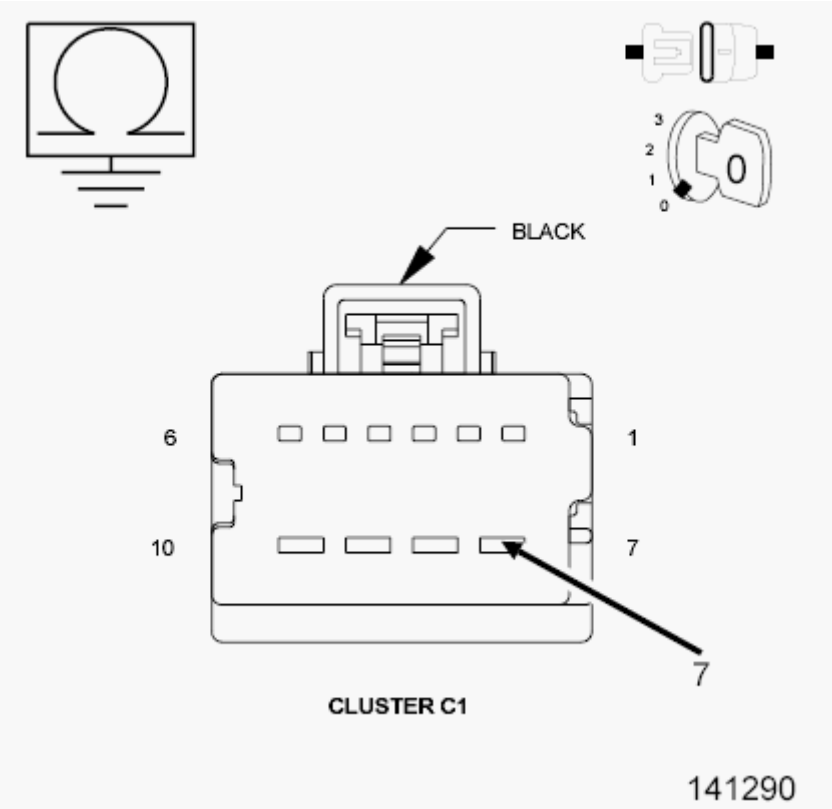

Fig. 12: Checking Passenger Doors Unlock Driver Circuit Short To Ground
Courtesy of CHRYSLER GROUP, LLC

1. Turn the ignition off.
2. Disconnect the Instrument Cluster C1 connector.
3. Measure the resistance between ground and the (P240) Passenger Doors

Unlock Driver circuit in the Cluster C1 connector.

Is the resistance below 1, 000 ohms?

Yes

- Repair the (P240) Passenger Doors Unlock Driver circuit for a short to ground.
- Perform the BODY VERIFICATION TEST. Refer to **STANDARD PROCEDURE** .

No

- Go To 2

2. **(P240) PASSENGER DOORS UNLOCK DRIVER CIRCUIT SHORTED TO BATTERY**

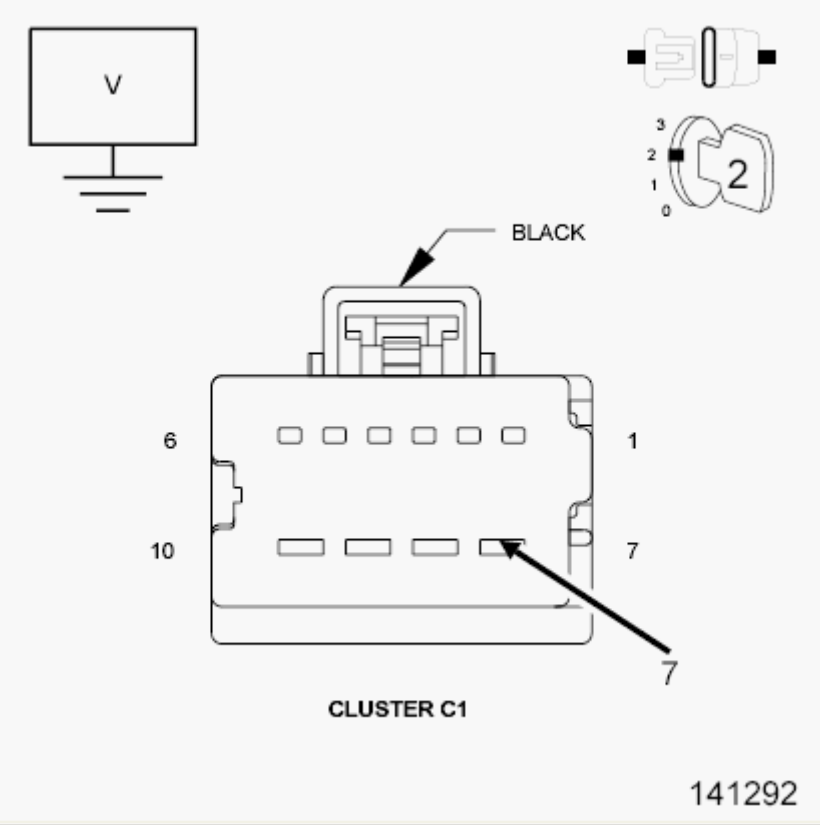

Fig. 13: Checking Passenger Doors Unlock Driver Circuit For A Short To Battery
Courtesy of CHRYSLER GROUP, LLC

1. Turn the ignition on.

2. Measure the voltage between ground and the (P240) Passenger Doors Unlock Driver circuit in the Cluster C1 connector.

   Is there any voltage present?

   Yes

   - Repair the (P240) Passenger Doors Unlock Driver circuit for a short to voltage.
   - Perform the BODY VERIFICATION TEST. Refer to **STANDARD PROCEDURE** .

   No

   - Go To 3

3. **(P240) PASSENGER DOORS UNLOCK DRIVER CIRCUIT OPEN**

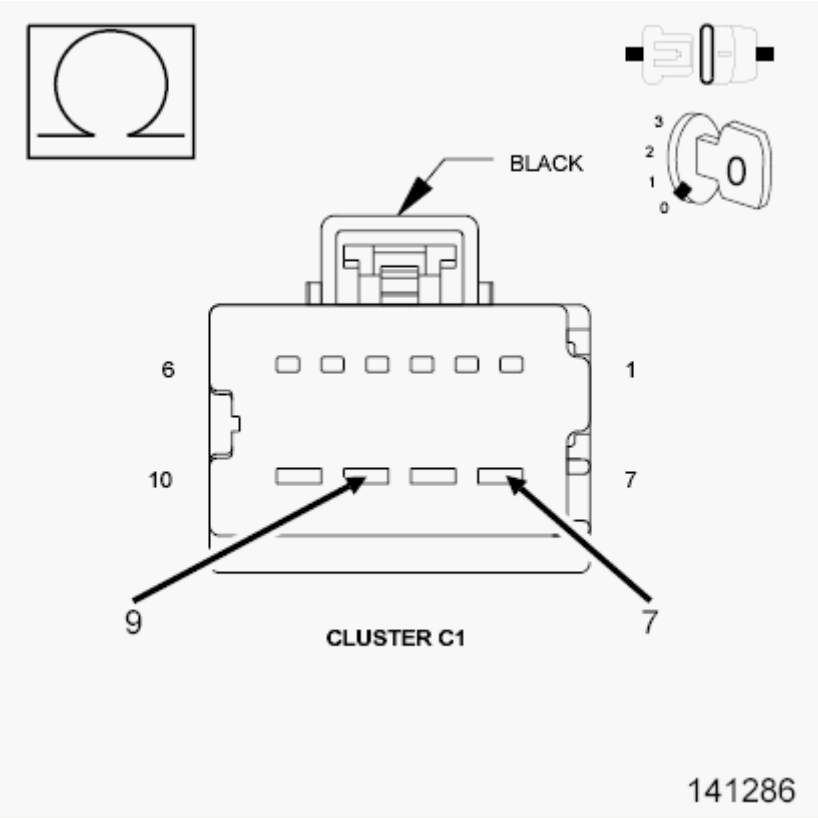

Fig. 14: Checking Passenger Doors Unlock Driver Circuit Open
Courtesy of CHRYSLER GROUP, LLC

1. Turn the ignition off.
2. Measure the resistance between the (P33) Door Lock Driver circuit and

the (P240) Passenger Doors Unlock Driver circuit in the Cluster C1 connector.

Is the resistance above 4.5 ohms?

Yes

- Repair the (P33) Door Lock Driver or the (P240) Passenger Doors Unlock Driver circuit for an open.
- Perform the BODY VERIFICATION TEST. Refer to **STANDARD PROCEDURE** .

No

- Go To 4

4. **(P33) DOOR LOCK DRIVER SHORTED TO THE (P240) PASSENGER DOORS UNLOCK DRIVER CIRCUIT**

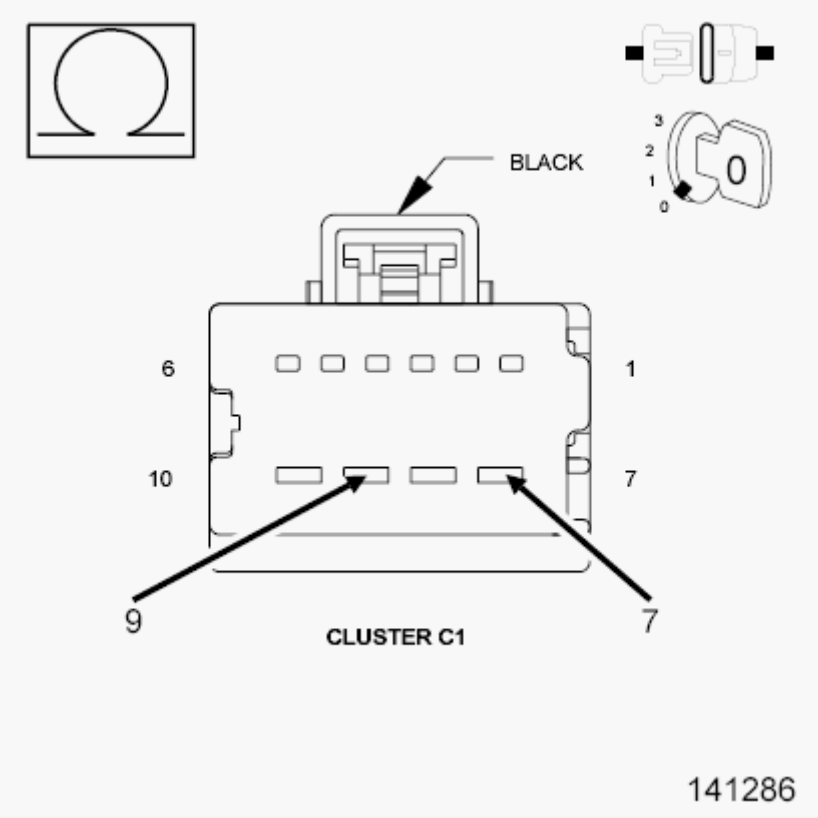

Fig. 15: Checking Door Lock Driver For Short To Passenger Doors Unlock Driver Circuit
Courtesy of CHRYSLER GROUP, LLC

1. Measure the resistance between the (P33) Door Lock Driver circuit and the (P238) Driver Door Unlock Driver circuit in the Cluster C1 connector.

   Is the resistance below 2.0 ohms?

   Yes

   - Repair the (P33) Door Lock Driver for a short to the (P240) Passenger Doors Unlock Driver circuit.
   - Perform the BODY VERIFICATION TEST. Refer to **STANDARD PROCEDURE** .

   No

   - Replace the Instrument Cluster in accordance with the Service Information.
   - Perform the BODY VERIFICATION TEST. Refer to **STANDARD PROCEDURE** .

DOOR LOCK CONTROL CIRCUIT PERFORMANCE

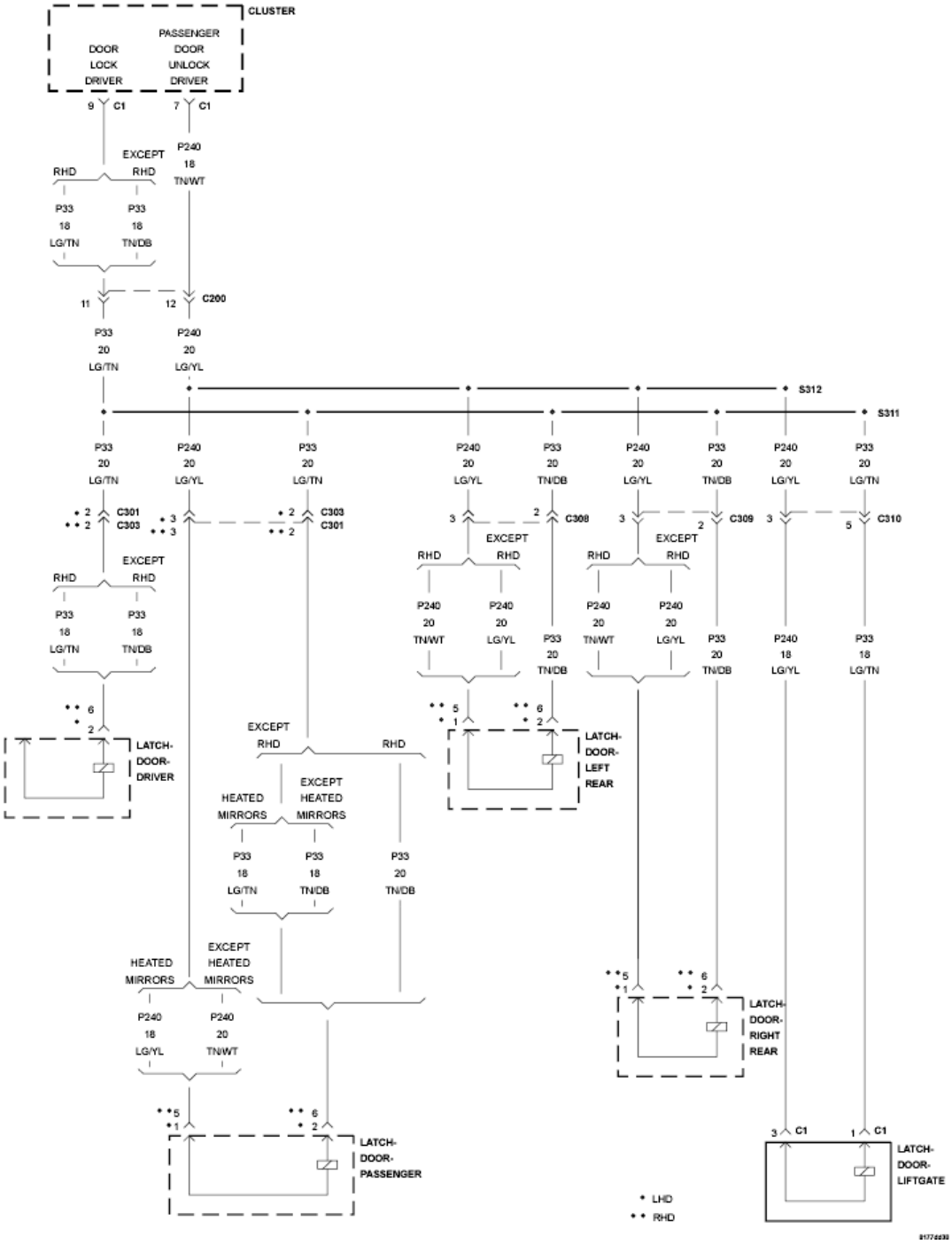

Fig. 16: Door Latch - Circuit Diagram
Courtesy of CHRYSLER GROUP, LLC

For a complete wiring diagram, **refer to appropriate SYSTEM WIRING DIAGRAMS article** .

POSSIBLE CAUSES

Possible Causes

(P33) DOOR LOCK DRIVER CIRCUIT SHORT TO GROUND
(P33) DOOR LOCK DRIVER CIRCUIT SHORT TO VOLTAGE
(P33) DOOR LOCK DRIVER CIRCUIT OPEN
(P33) DOOR LOCK DRIVER CIRCUIT SHORT TO THE (P240) PASSENGER DOORS UNLOCK DRIVER CIRCUIT
INSTRUMENT CLUSTER

DIAGNOSTIC TEST

1. **TEST FOR INTERMITTENT CONDITION**
    1. With the scan tool, record and erase DTCs
    2. Operate the door locks several times.
    3. Cycle the ignition from on to off.
    4. Turn the ignition on.
    5. With the scan tool, read DTCs.

    Are there any Door Lock related DTC's?

    No

    - Go To 2

    Yes

    - Refer to **DIAGNOSIS AND TESTING** for problems relating to Power Door Locks
    - Perform the BODY VERIFICATION TEST. Refer to **STANDARD PROCEDURE** .
2. **(P33) DOOR LOCK DRIVER CIRCUIT SHORT TO GROUND**

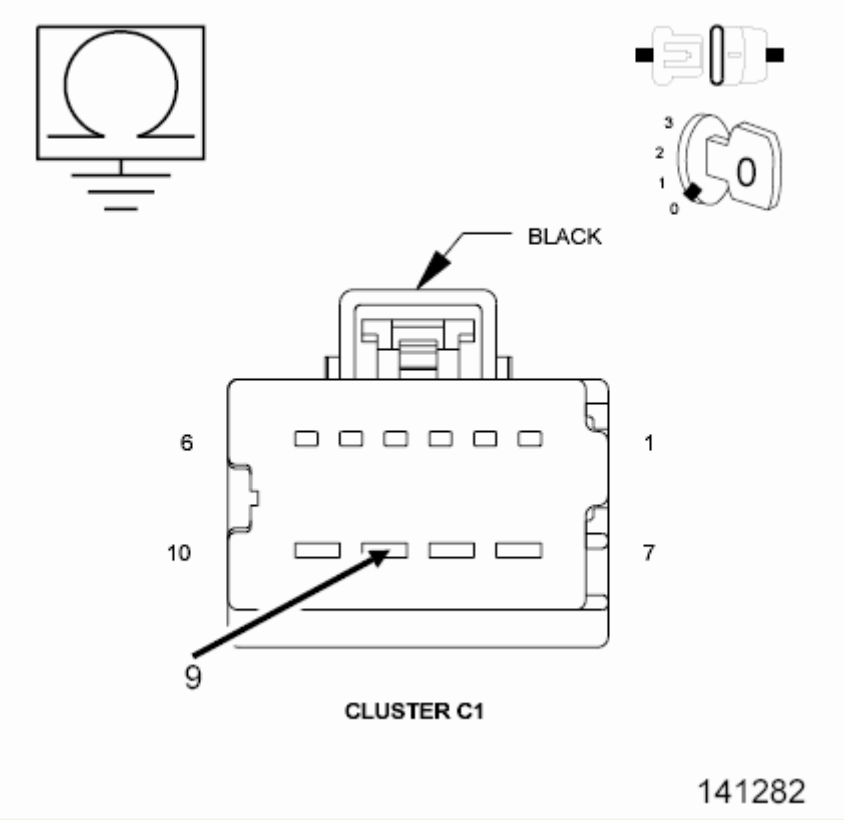

Fig. 17: Checking Door Lock Driver Circuit For Short To Ground
Courtesy of CHRYSLER GROUP, LLC

1. Turn the ignition off.
2. Disconnect the Instrument Cluster C1 connector.
3. Measure the resistance between ground and the (P33) Door Lock Driver circuit in the Cluster C1 connector.

   Is the resistance below 1, 000 ohms?

   Yes

   - Repair the (P33) Door Lock Driver circuit for a short to ground.
   - Perform the BODY VERIFICATION TEST. Refer to **STANDARD PROCEDURE** .

   No

   - Go To 3

3. **(P33) DOOR LOCK DRIVER CIRCUIT SHORTED TO BATTERY**

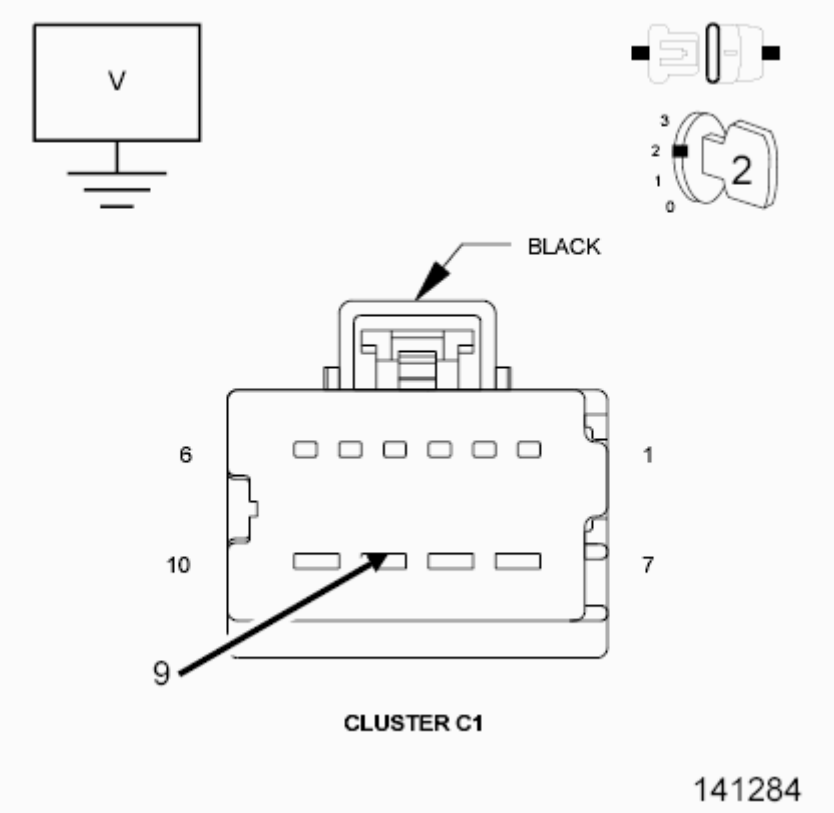

Fig. 18: Checking Door Lock Driver Circuit For A Short To Battery
Courtesy of CHRYSLER GROUP, LLC

1. Turn the ignition on.
2. Measure the voltage between ground and the (P33) Door Lock Driver circuit in the Cluster C1 connector.

   Is there any voltage present?

   Yes

   - Repair the (P33) Door Lock Driver circuit for a short to voltage.
   - Perform the BODY VERIFICATION TEST. Refer to **STANDARD PROCEDURE** .

   No

   - Go To 4

4. **(P33) DOOR LOCK DRIVER SHORTED TO THE (P240) PASSENGER DOORS UNLOCK DRIVER CIRCUIT**

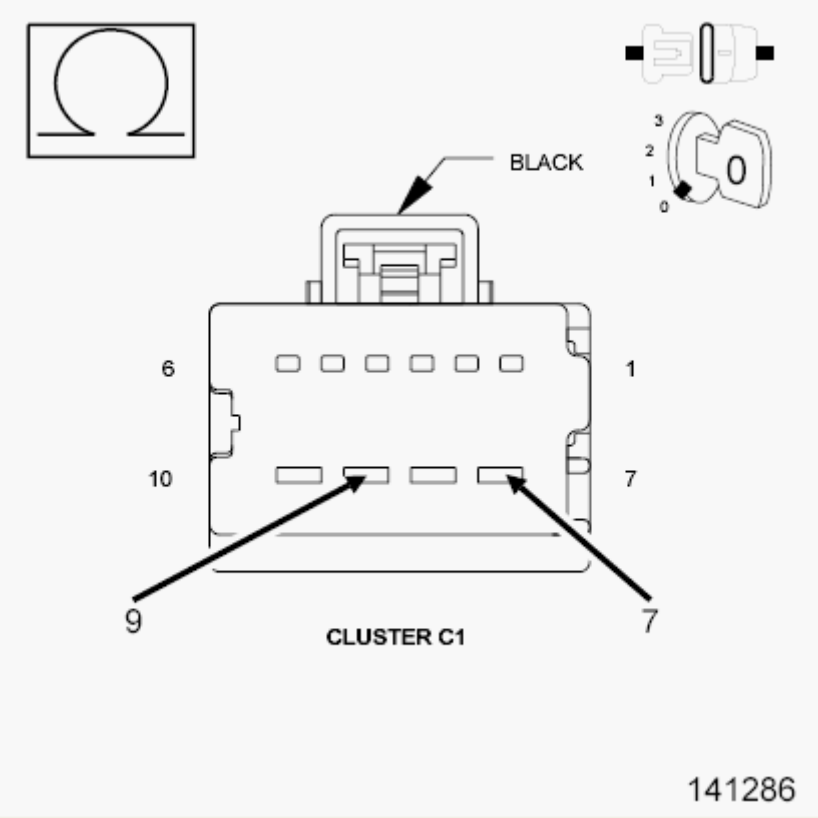

Fig. 19: Checking Door Lock Driver For Short To Passenger Doors Unlock Driver Circuit
Courtesy of CHRYSLER GROUP, LLC

1. Turn the ignition off.
2. Measure the resistance between the (P33) Door Lock Driver circuit and the (P240) Passenger Doors Unlock Driver circuit in the Cluster C1 connector.

   Is the resistance below 1.0 ohm?

   Yes

   - Repair the (P33) Door Lock Driver for a short to the (P240) Passenger Doors Unlock Driver circuit.
   - Perform the BODY VERIFICATION TEST. Refer to **STANDARD PROCEDURE** .

   No

   - Go To 5

5. **(P33) DOOR LOCK DRIVER CIRCUIT OPEN**

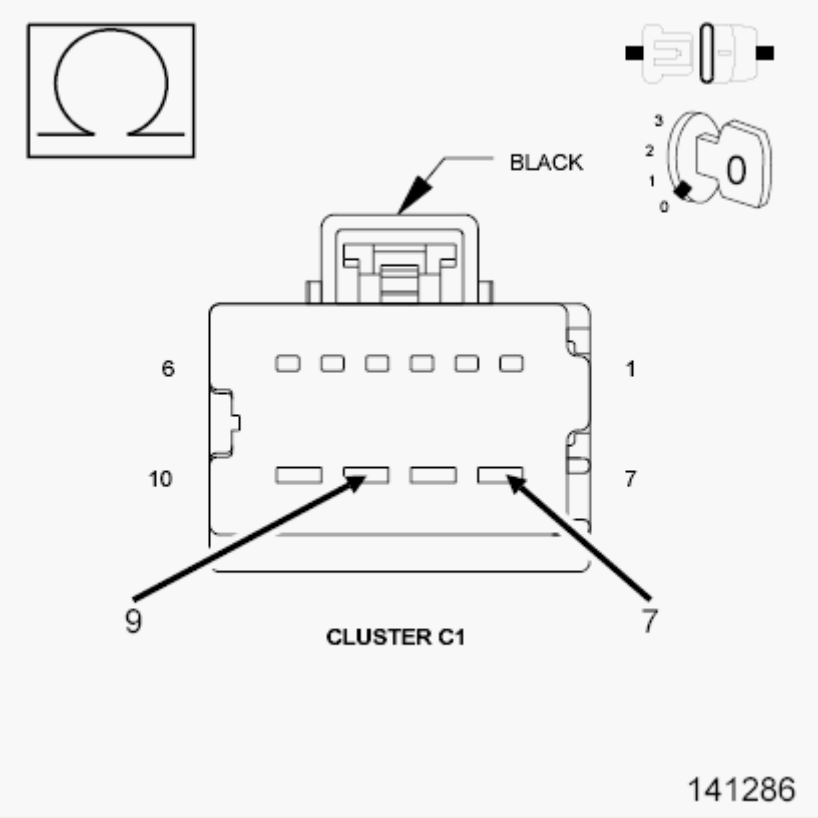

Fig. 20: Checking Door Lock Driver or Passenger Doors Unlock Driver Circuit For Open
Courtesy of CHRYSLER GROUP, LLC

1. Measure the resistance between the (P33) Door Lock Driver circuit and the (P240) Passenger Doors Unlock Driver circuit in the Cluster C1 connector.

   Is the resistance above 4.0 ohms?

   Yes

   - Repair the (P33) Door Lock Driver or the (P240) Passenger Doors Unlock Driver circuit for an open.
   - Perform the BODY VERIFICATION TEST. Refer to **STANDARD PROCEDURE** .

   No

   - Replace the Instrument Cluster in accordance with the Service Information.
   - Perform the BODY VERIFICATION TEST. Refer to

STANDARD PROCEDURE .

DRIVER DOOR UNLOCK CONTROL CIRCUIT PERFORMANCE

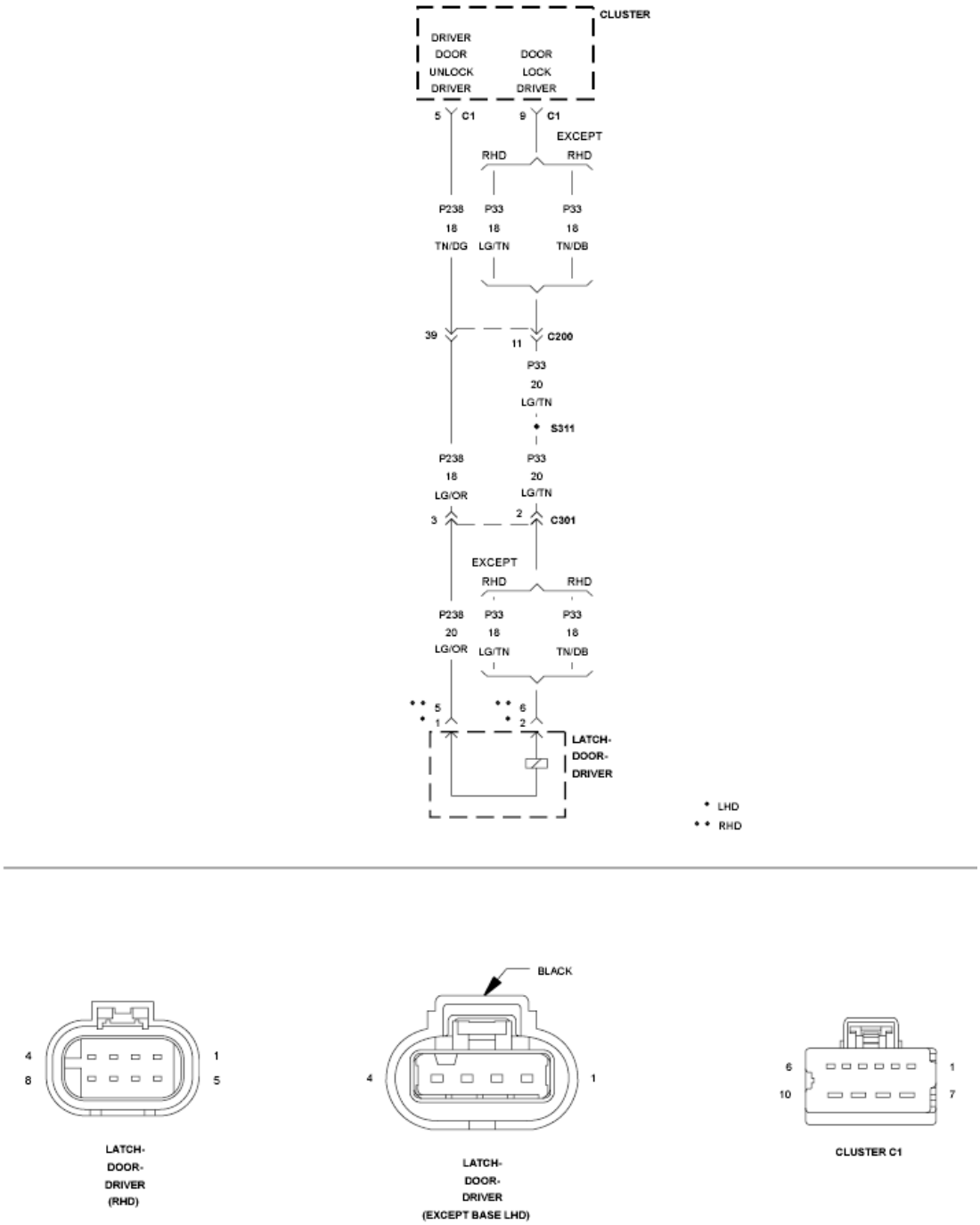

Fig. 21: Driver Door Latch - Circuit Diagram
Courtesy of CHRYSLER GROUP, LLC

For a complete wiring diagram, **refer to appropriate SYSTEM WIRING DIAGRAMS article** .

POSSIBLE CAUSES

Possible Causes
(P238) DRIVER DOOR UNLOCK DRIVER CIRCUIT SHORT TO GROUND
(P238) DRIVER DOOR UNLOCK DRIVER CIRCUIT SHORT TO VOLTAGE
(P238) DRIVER DOOR UNLOCK DRIVER CIRCUIT OPEN
(P33) DOOR LOCK DRIVER CIRCUIT SHORT TO THE (P238) DRIVER DOOR UNLOCK DRIVER CIRCUIT
INSTRUMENT CLUSTER

DIAGNOSTIC TEST

1. **(P238) DRIVER DOOR UNLOCK DRIVER CIRCUIT SHORT TO GROUND**

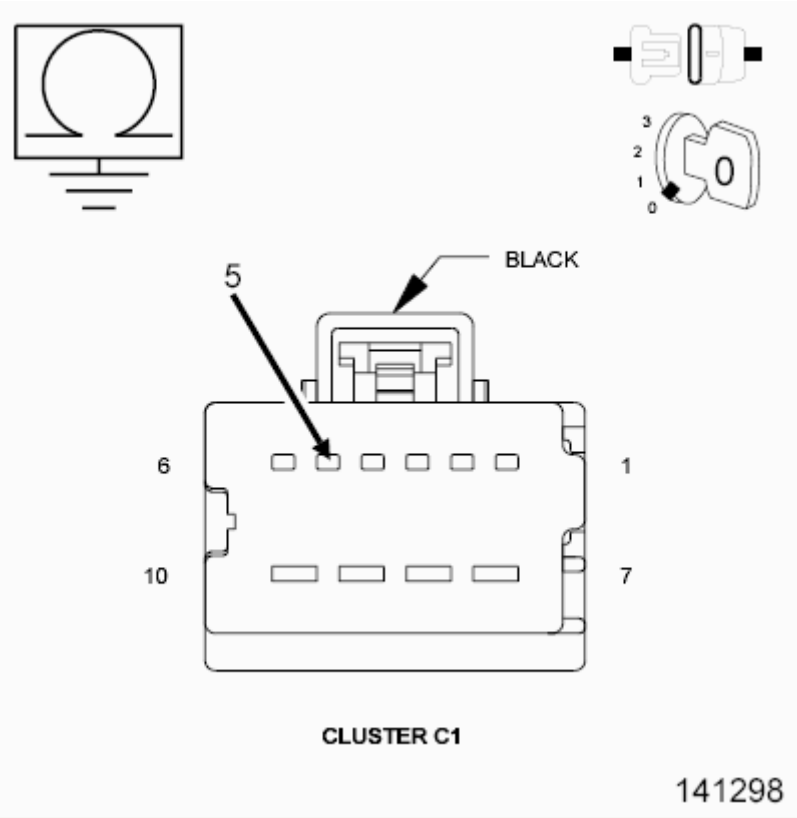

Fig. 22: Checking Driver Door Unlock Driver Circuit For Short To Ground
Courtesy of CHRYSLER GROUP, LLC

1. Turn the ignition off.

2. Disconnect the Instrument Cluster C1 connector.
3. Measure the resistance between ground and the (P238) Driver Door Unlock Driver circuit in the Cluster C1 connector.

   Is the resistance below 1, 000 ohms?

   Yes

   - Repair the (P238) Driver Door Unlock Driver circuit for a short to ground.
   - Perform the BODY VERIFICATION TEST. Refer to **STANDARD PROCEDURE** .

   No

   - Go To 2

2. **(P238) DRIVER DOOR UNLOCK DRIVER CIRCUIT SHORTED TO BATTERY**

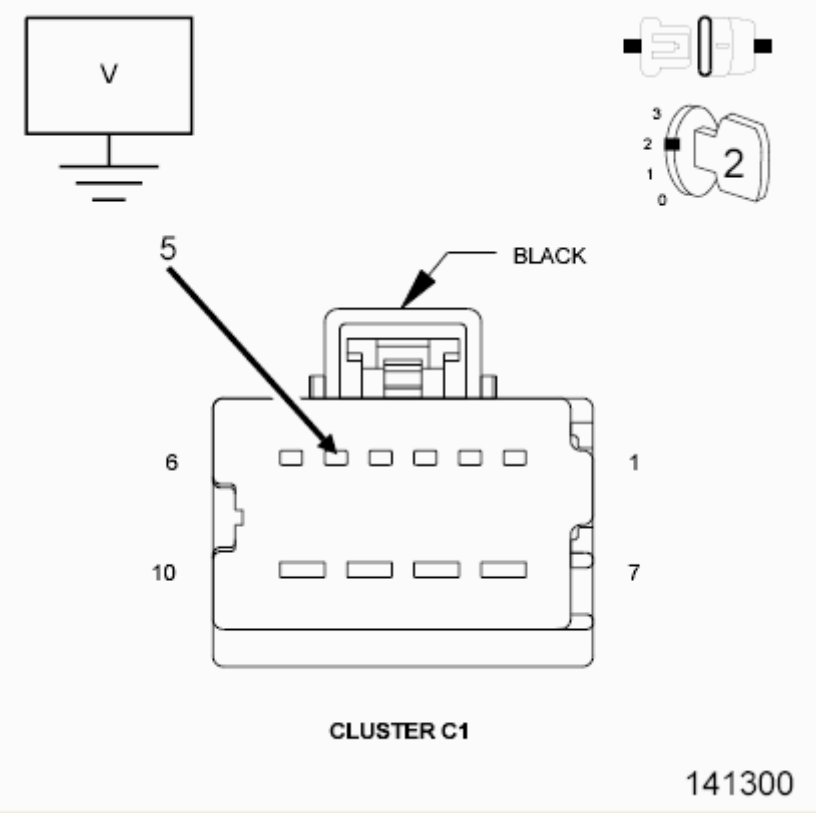

Fig. 23: Checking Driver Door Unlock Driver Circuit For Short To Battery

Courtesy of CHRYSLER GROUP, LLC

1. Turn the ignition on.
2. Measure the voltage between ground and the (P238) Driver Door Unlock Driver circuit in the Cluster C1 connector.

   Is there any voltage present?

   Yes

   - Repair the (P238) Driver Door Unlock Driver circuit for a short to voltage.
   - Perform the BODY VERIFICATION TEST. Refer to **STANDARD PROCEDURE** .

   No

   - Go To 3

3. **(P238) DRIVER DOOR UNLOCK DRIVER CIRCUIT OPEN**

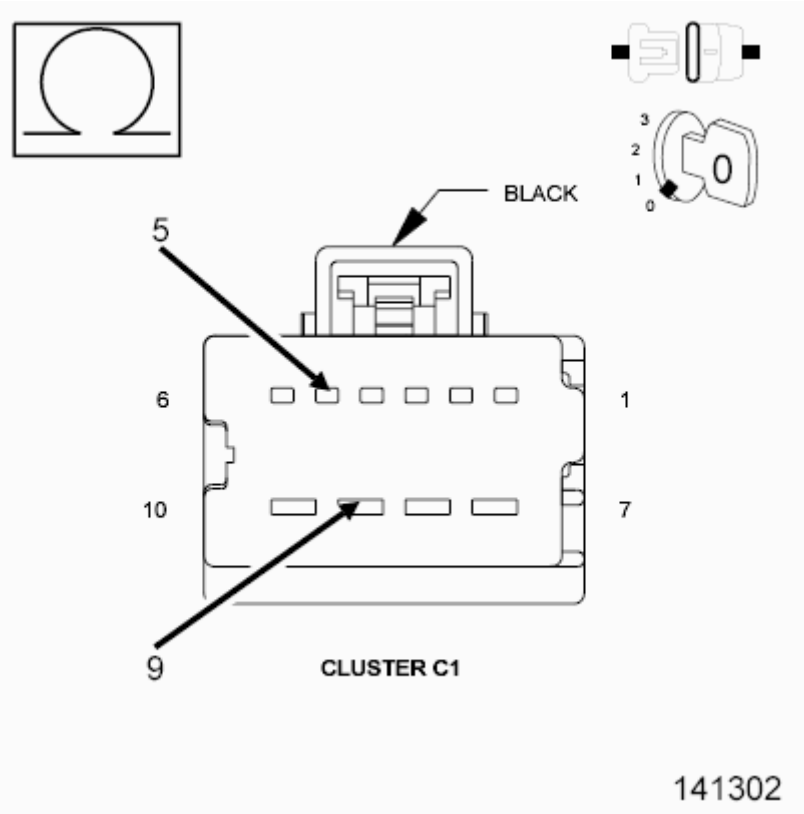

Fig. 24: Checking Driver Door Unlock Driver Circuit For Open
Courtesy of CHRYSLER GROUP, LLC

1. Turn the ignition off.
2. Measure the resistance between the (P33) Door Lock Driver circuit and the (P238) Driver Door Unlock Driver circuit in the Cluster C1 connector.

   Is the resistance above 4.5 ohms?

   Yes

   - Check and repair (if necessary) the (P33) Door Lock Driver or the (P238) Driver Door Unlock Driver circuit for an open. If the wiring is okay, replace the driver door latch.
   - Perform the BODY VERIFICATION TEST. Refer to **STANDARD PROCEDURE** .

   No

   - Go To 4

4. **(P33) DOOR LOCK DRIVER SHORTED TO THE (P238) DRIVER DOOR UNLOCK DRIVER CIRCUIT**

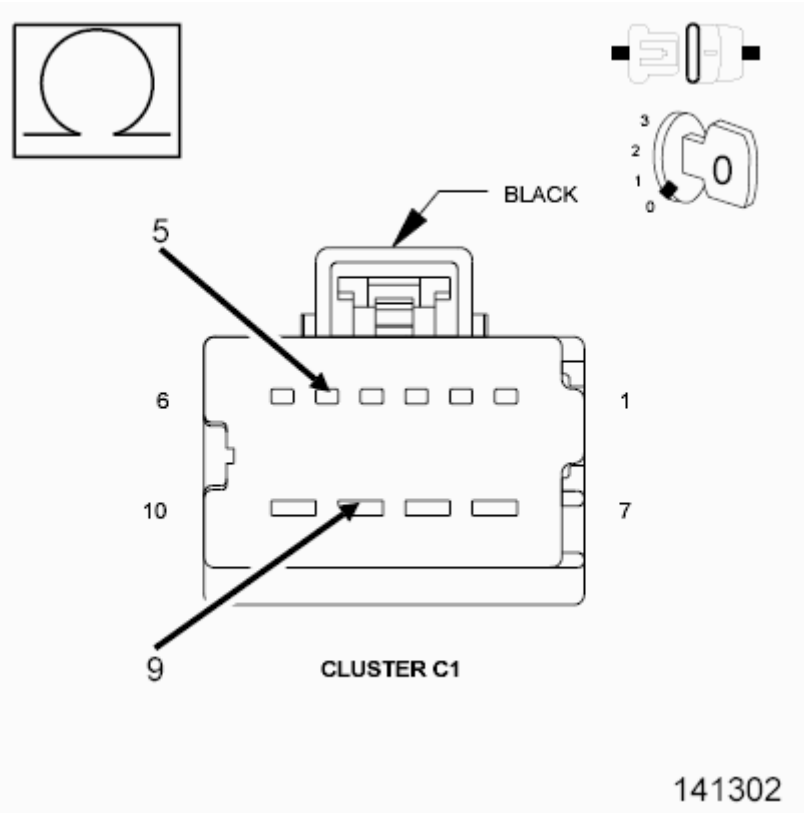

Fig. 25: Checking Door Lock Driver For Short To Driver Door Unlock Driver Circuit
Courtesy of CHRYSLER GROUP, LLC

1. Measure the resistance between the (P33) Door Lock Driver circuit and the (P238) Driver Door Unlock Driver circuit in the Cluster C1 connector.

   Is the resistance below 2.0 ohms?

   Yes

   - Repair the (P33) Door Lock Driver for a short to the (P238) Driver Door Unlock Driver circuit.
   - Perform the BODY VERIFICATION TEST. Refer to **STANDARD PROCEDURE** .

   No

   - Replace the Instrument Cluster in accordance with the Service Information.
   - Perform the BODY VERIFICATION TEST. Refer to **STANDARD PROCEDURE** .

ONE PASSENGER DOOR FAILS TO LOCK AND UNLOCK

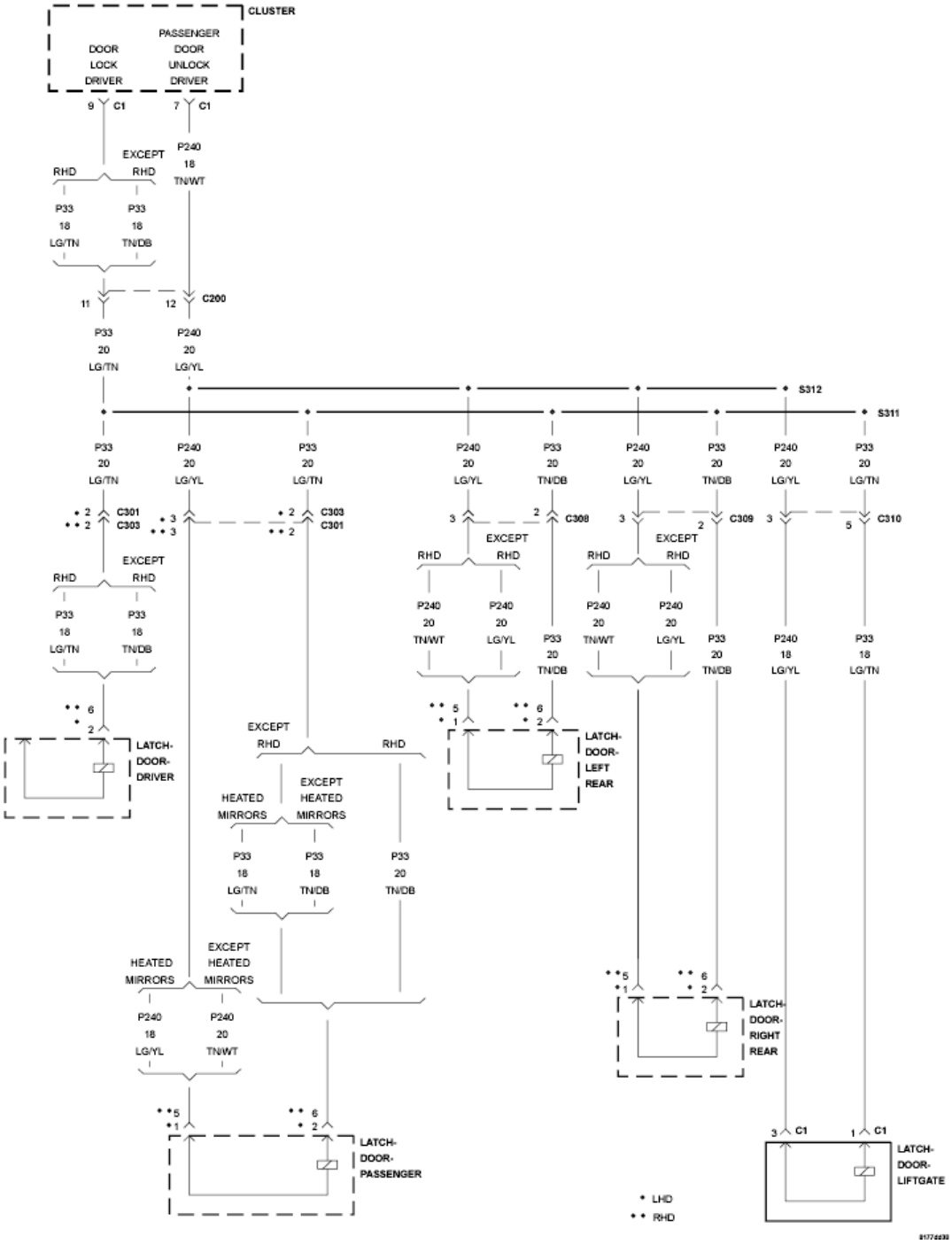

Fig. 26: Door Latch - Circuit Diagram
Courtesy of CHRYSLER GROUP, LLC

For a complete wiring diagram, **refer to appropriate SYSTEM WIRING DIAGRAMS article** .

THEORY OF OPERATION

This test does not cover a secondary latch problem on a right hand drive vehicle.

Possible Causes
(P33) DOOR LOCK DRIVER WIRE OPEN
(P240) PASSENGER DOOR UNLOCK DRIVER WIRE OPEN
DOOR LATCH OR LIFTGATE MOTOR

DIAGNOSTIC TEST

1. **TEST FOR DIAGNOSTIC TROUBLE CODES**
    1. Turn the ignition on.
    2. With the scan tool, record and erase the DTCs
    3. Operate the Driver Door Lock Switch in all positions several times.
    4. Cycle the ignition from on to off and wait for five seconds.
    5. Turn the ignition on.
    6. With the scan tool, read the active DTCs.

    Does the scan tool display any Power Door Lock related DTCs?

    No

    - Go To 2

    Yes

    - Perform the appropriate diagnostic procedure. Refer to **DIAGNOSIS AND TESTING** .
2. **CHECK DOOR LOCK MOTOR CIRCUIT**

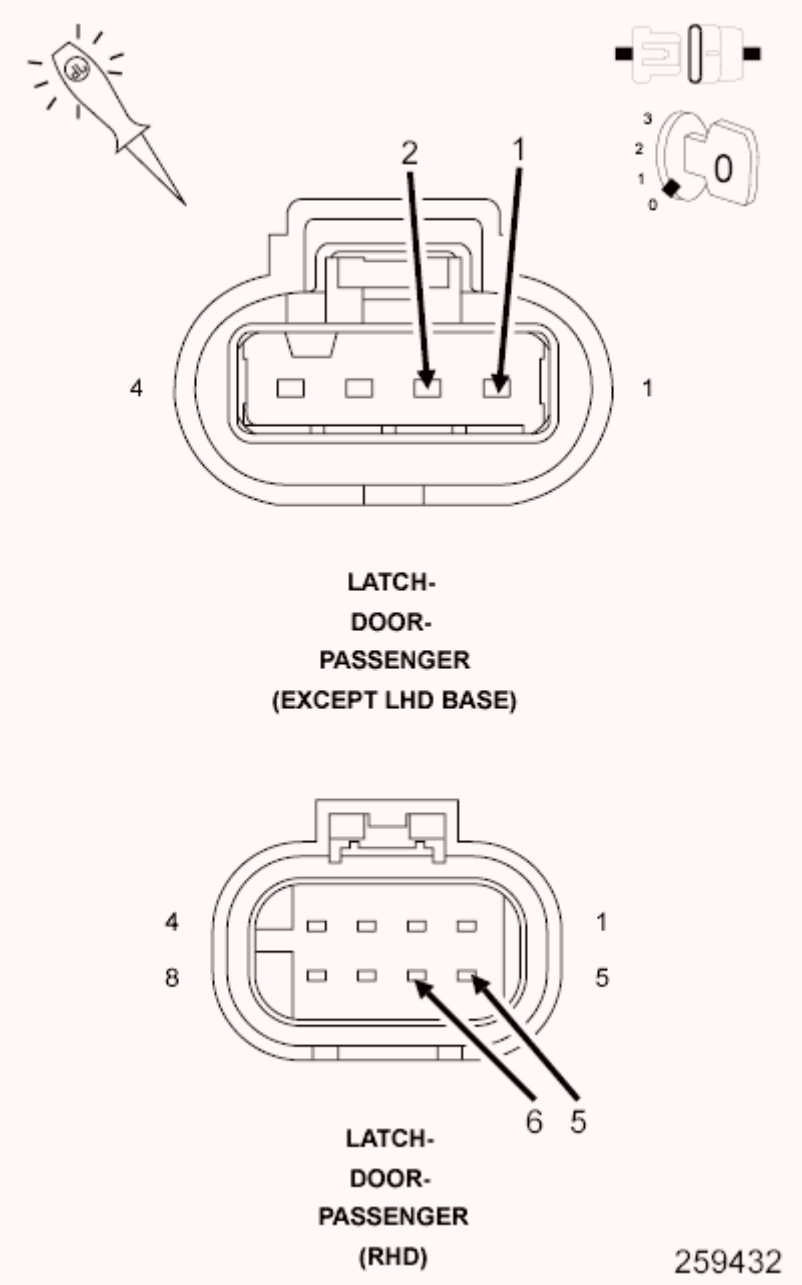

Fig. 27: Checking Door Lock Motor Circuit
Courtesy of CHRYSLER GROUP, LLC

1. Turn the ignition off.
2. Disconnect the inoperative Door Latch (Motor) connector.
3. Connect a 12-volt test light between the (P33) Door Lock Driver and the (P240) Passenger Door Unlock Driver circuits in the latch connector.

NOTE: Graphic shows the Passenger Front Latch - all others similar.

4. Remove the key from the ignition switch.
5. Operate the door locks several times in the lock and unlock positions from the door lock switch and observe the test light.

   Does the test light illuminate brightly when the locks are actuated in both directions?

   Yes

   - Replace the Door latch Assembly (or motor).
   - Perform the BODY VERIFICATION TEST. Refer to **STANDARD PROCEDURE** .

   No

   - Go To 3

3. **(P240) PASSENGER DOOR UNLOCK DRIVER WIRE OPEN**

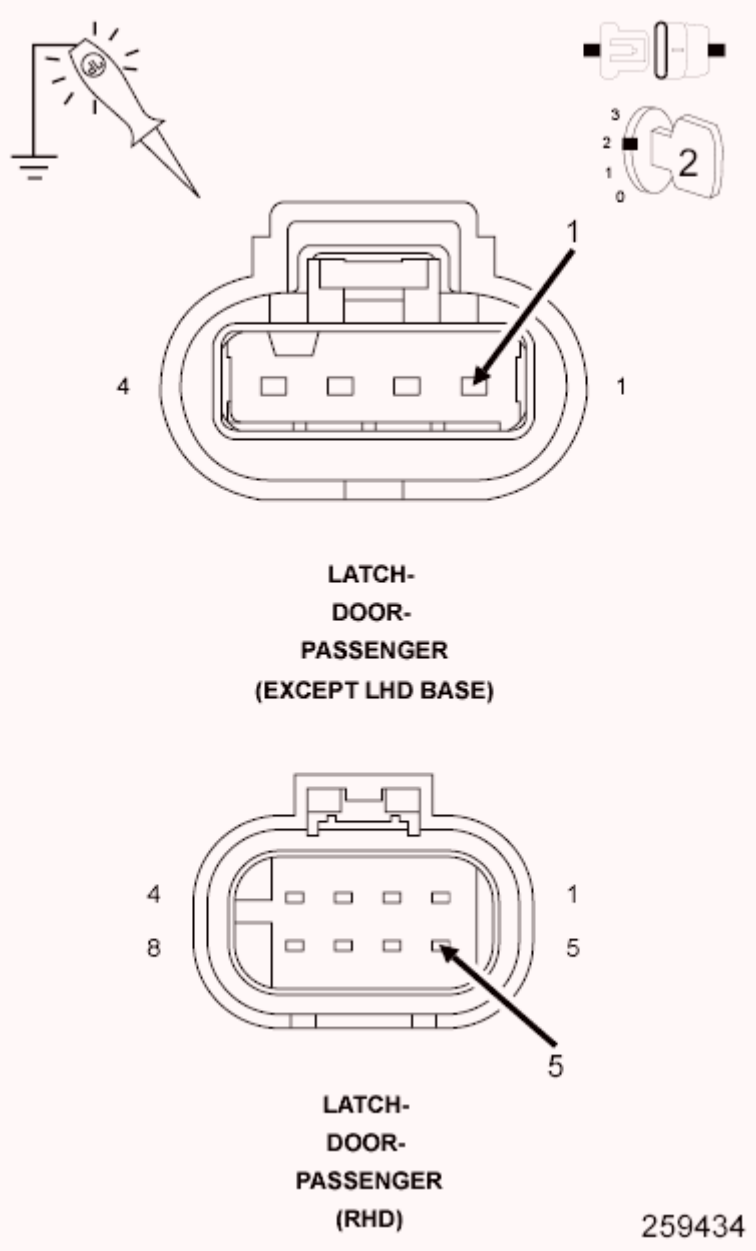

Fig. 28: Checking Passenger Door Unlock Driver Wire For Open
Courtesy of CHRYSLER GROUP, LLC

1. Turn the ignition on.
2. Using a 12-volt test light connected to ground, check the (P240) Passenger Door Unlock Driver circuit.
3. With the scan tool, actuate the Passenger Door Unlock Relay.

   Does the test light illuminate brightly when the relay is actuated?

   Yes

- Go To 4

No

- Repair the (P240) Passenger Door Unlock Driver wire for an open.
- Perform the BODY VERIFICATION TEST. Refer to **STANDARD PROCEDURE** .

4. **(P33) DOOR LOCK DRIVER WIRE OPEN**

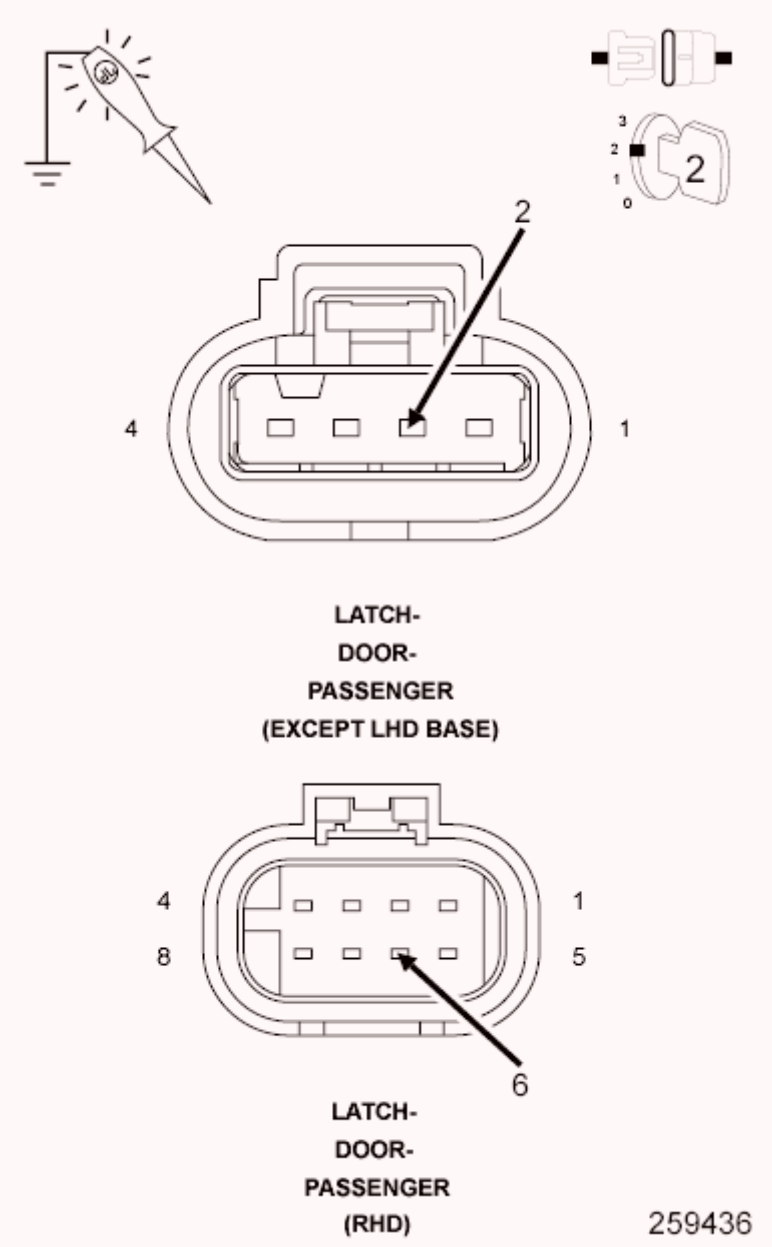

Fig. 29: Checking Door Lock Driver Wire For Open
Courtesy of CHRYSLER GROUP, LLC

1. Using a 12-volt test light connected to ground, check the (P33) Door Lock Driver circuit.
2. With the scan tool, actuate the Door Lock Relay.

   Does the test light illuminate brightly when the relay is actuated?

   Yes

   - Test Complete.
   - Perform the BODY VERIFICATION TEST. Refer to **STANDARD PROCEDURE** .

   No

   - Repair the (P33) Door Lock Driver wire for an open.
   - Perform the BODY VERIFICATION TEST. Refer to **STANDARD PROCEDURE** .

ONE SECONDARY DOOR LOCK INOPERATIVE - RHD ONLY

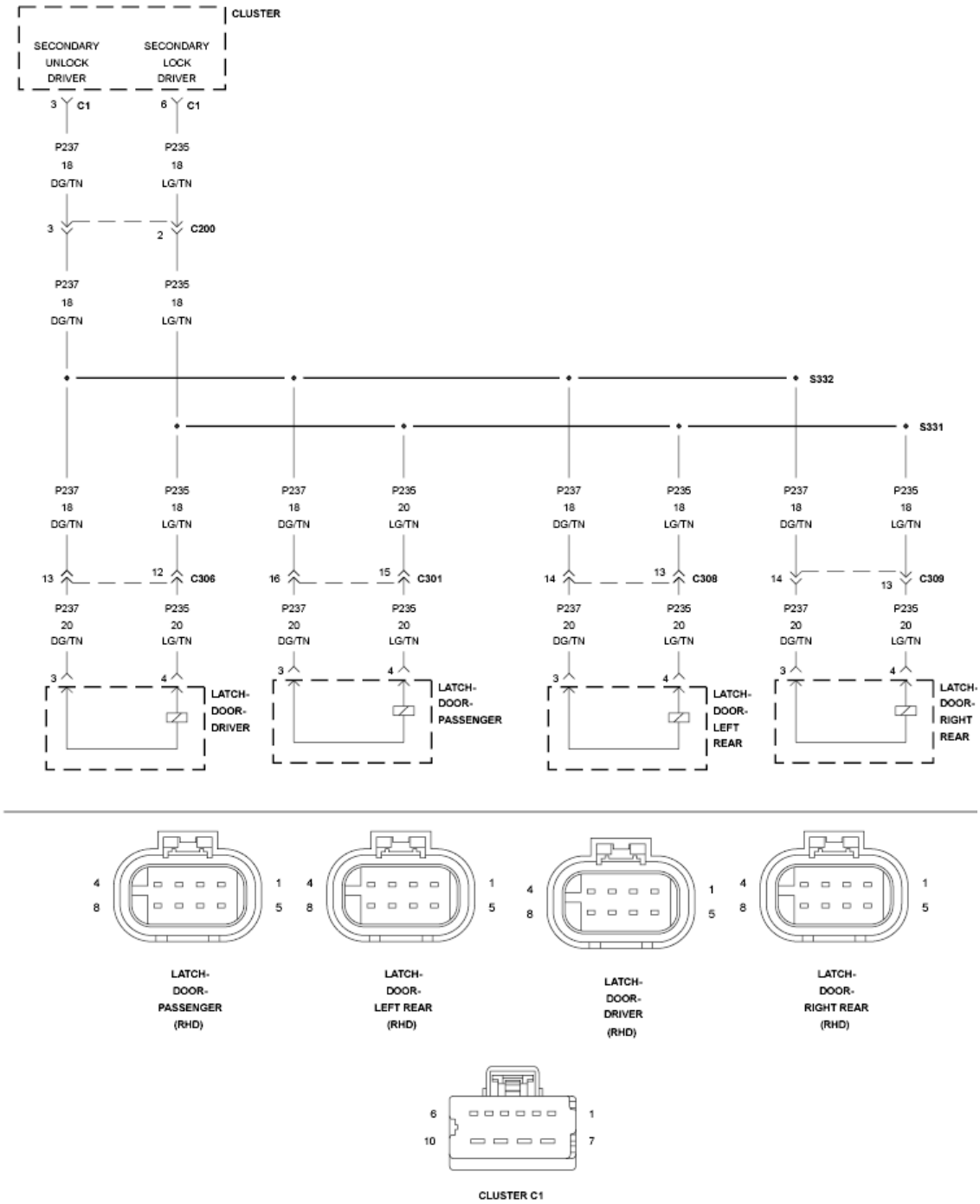

Fig. 30: Secondary Door Lock - Circuit Diagram
Courtesy of CHRYSLER GROUP, LLC

For a complete wiring diagram, **refer to appropriate SYSTEM WIRING DIAGRAMS article** .

THEORY OF OPERATION

The secondary lock is a dead bolt that prevents the door from being opened when the vehicle has been armed. It can only be locked when the key is out of the

ignition, all doors are closed, the front door ajar switch transition has been completed and the RKE fob is pressed in the armed position. The secondary lock will operate approximately 18 seconds after the door latches are locked. The secondary locks are unlocked by a RKE fob unlock command after approximately 375 ms later than the door latches. They will also unlock when a valid SKIM key is turned to the ON position or the vehicle is driven and reaches Auto Door Lock (rolling) status. This system is only used on Right Hand Drive vehicles.

Possible Causes
(P237) SECONDARY UNLOCK DRIVER WIRE OPEN
(P235) SECONDARY LOCK DRIVER WIRE OPEN
DOOR LATCH OR LIFTGATE MOTOR

DIAGNOSTIC TEST

1. **TEST FOR DIAGNOSTIC TROUBLE CODES**
    1. Turn the ignition on.
    2. With the scan tool, record and erase DTCs.
    3. Operate the Driver Door Lock Switch in all positions several times.
    4. Cycle the ignition from on to off and wait for five seconds.
    5. Turn the ignition on.
    6. With the scan tool, read the active DTCs.

    Does the scan tool display any Power Door Lock related DTCs?

    No

    - Go To 2

    Yes

    - Perform the appropriate diagnostic procedure. Refer to **DIAGNOSIS AND TESTING** .
2. **DOOR LOCK MOTOR CIRCUIT**

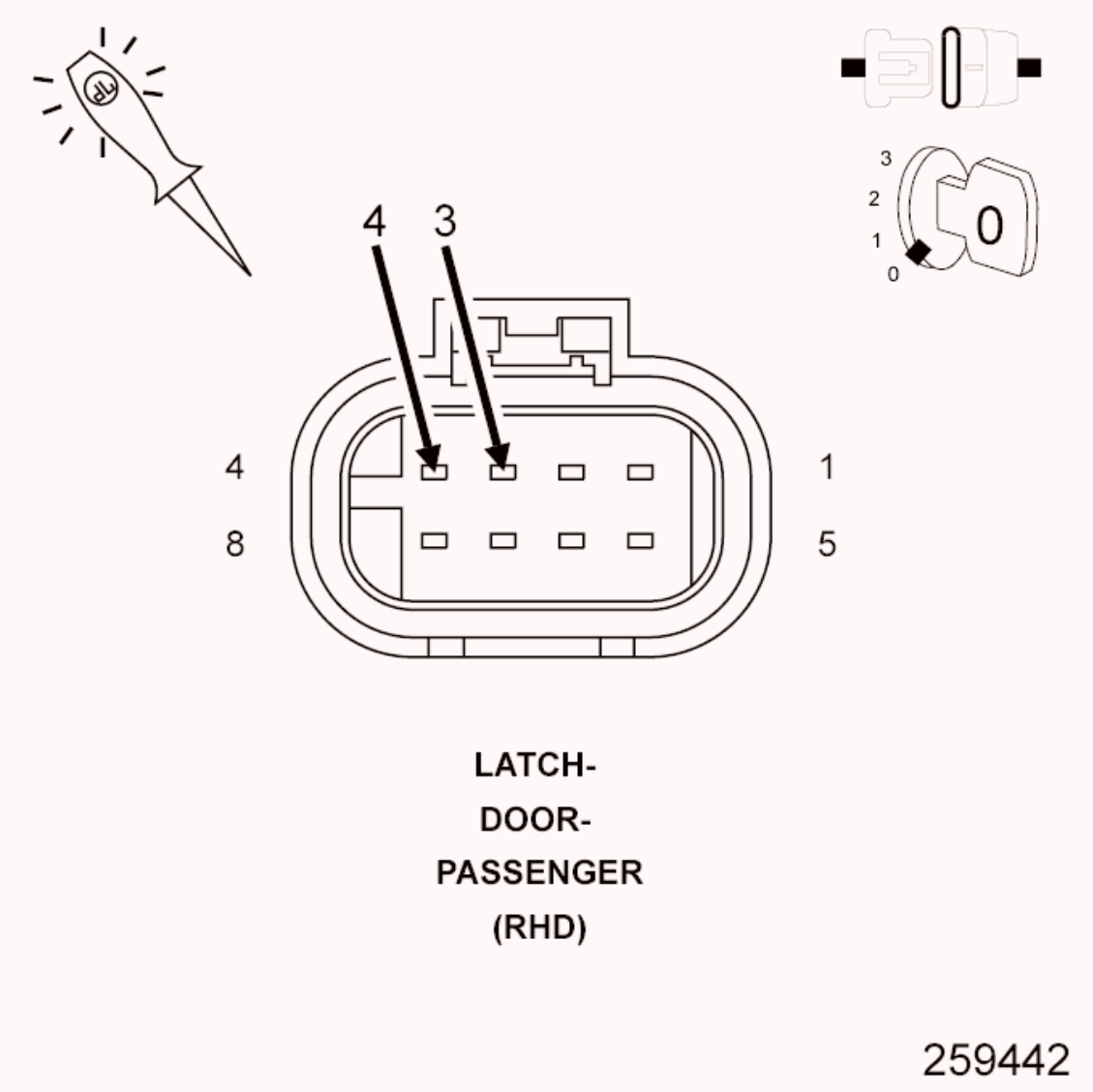

Fig. 31: Checking Door Lock Motor Circuit
Courtesy of CHRYSLER GROUP, LLC

1. Lower the driver window.
2. Turn the ignition off.
3. Disconnect the inoperative Door Latch (Motor) connector.
4. Connect a 12-volt test light between the (P235) Secondary Lock Driver and the (P237) Secondary Unlock Driver circuits in the latch connector.

NOTE: Graphic shows the Passenger Front Latch - all others similar.

5. Remove the key from the ignition switch.
6. Using the RKE fob, operate the door lock. Wait 30 seconds and then

operate the door unlock. Repeat this several times while observing the test light.

Does the test light illuminate brightly when the locks are actuated in both directions?

Yes

- Replace the Door latch Assembly (or motor).
- Perform the BODY VERIFICATION TEST. Refer to **STANDARD PROCEDURE** .

No

- Go To 3

3. **(P237) SECONDARY UNLOCK DRIVER WIRE OPEN**

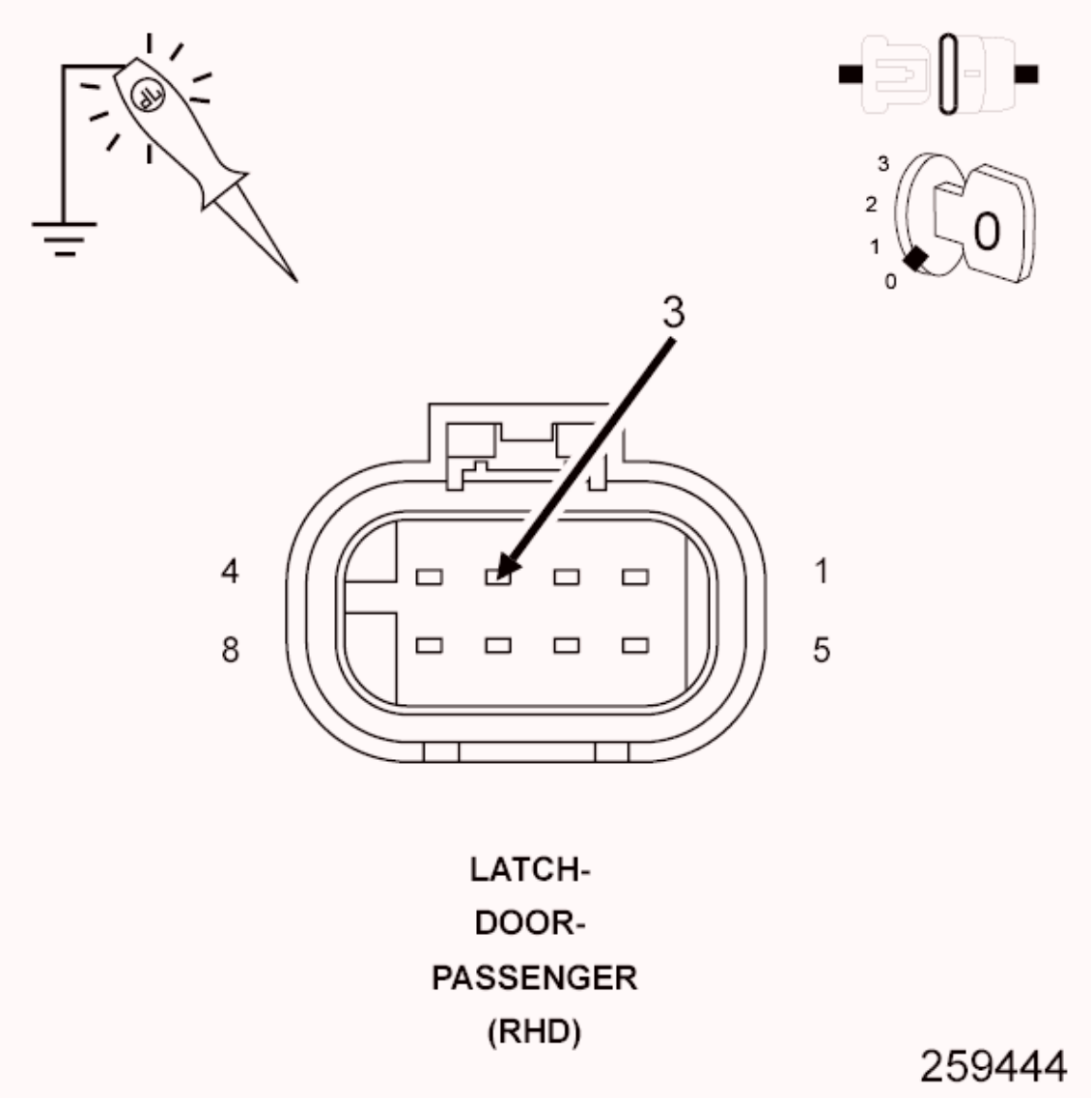

Fig. 32: Checking Secondary Unlock Driver Wire For Open
Courtesy of CHRYSLER GROUP, LLC

1. Using a 12-volt test light connected to ground, check the (P237) Secondary Unlock Driver circuit.
2. Using the RKE fob, operate the door lock. Wait 30 seconds and then operate the door unlock. Wait 30 seconds and repeat this several times, waiting 30 seconds between fob presses, while observing the test light.

   Does the test light illuminate brightly when the unlock cycle is actuated?

   Yes

   - Go To 4

No

- Repair the (P237) Secondary Unlock Driver wire for an open.
- Perform the BODY VERIFICATION TEST. Refer to **STANDARD PROCEDURE** .

4. **(P235) SECONDARY LOCK DRIVER WIRE OPEN**

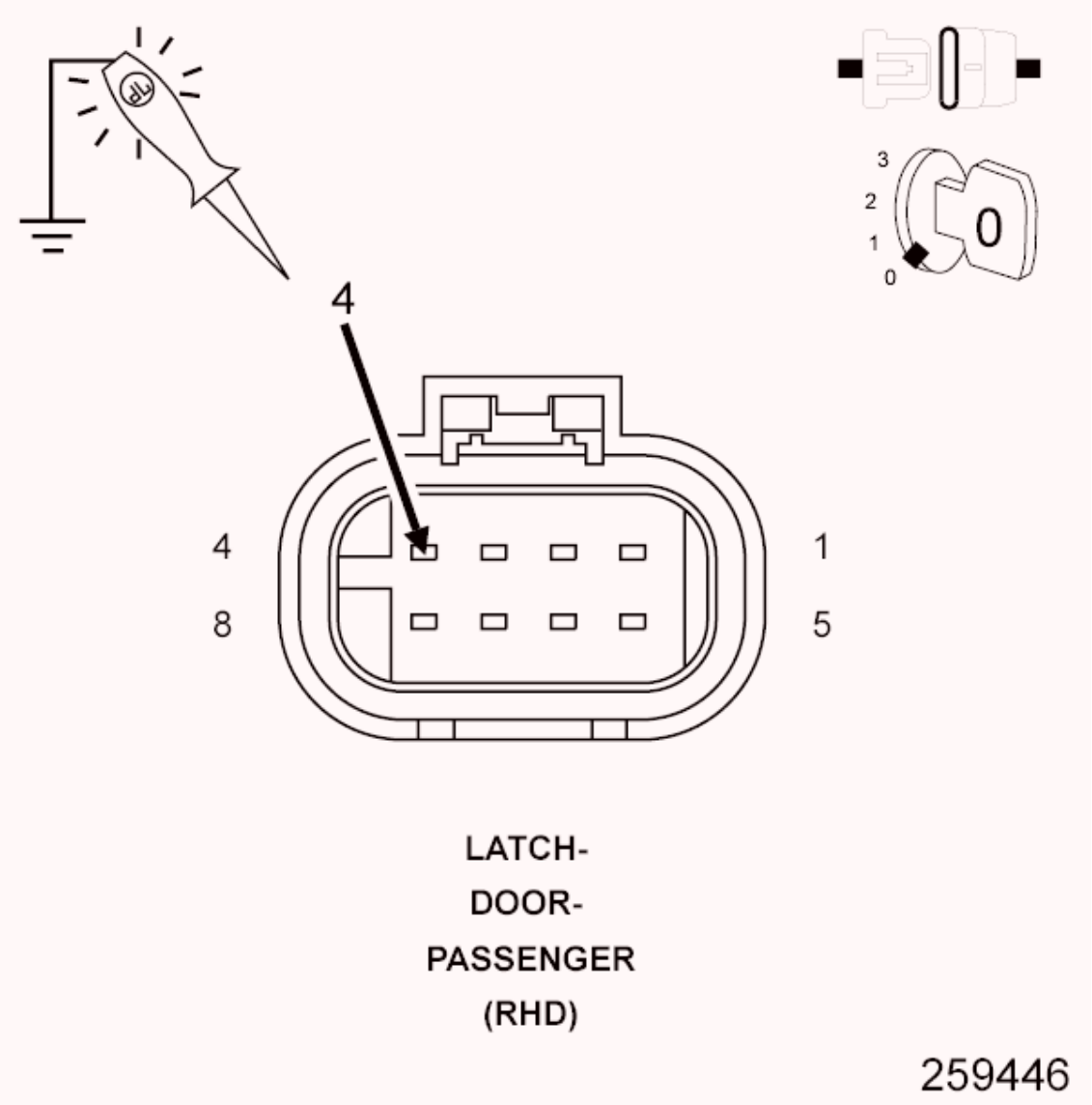

Fig. 33: Checking Secondary Lock Driver Wire For Open
Courtesy of CHRYSLER GROUP, LLC

1. Using a 12-volt test light connected to ground, check the (P235) Secondary Lock Driver circuit.
2. Close all doors.
3. Using the RKE fob, operate the door lock. Wait 30 seconds and then

operate the door unlock. Wait 30 seconds and repeat this several times, waiting 30 seconds between fob presses, while observing the test light.

Does the test light illuminate brightly when the lock cycle is actuated?

Yes

- Test Complete.
- Perform the BODY VERIFICATION TEST. Refer to **STANDARD PROCEDURE** .

No

- Repair the (P235) Secondary Lock Driver wire for an open.
- Perform the BODY VERIFICATION TEST. Refer to **STANDARD PROCEDURE** .

DRIVER DOOR FAILS TO LOCK AND UNLOCK

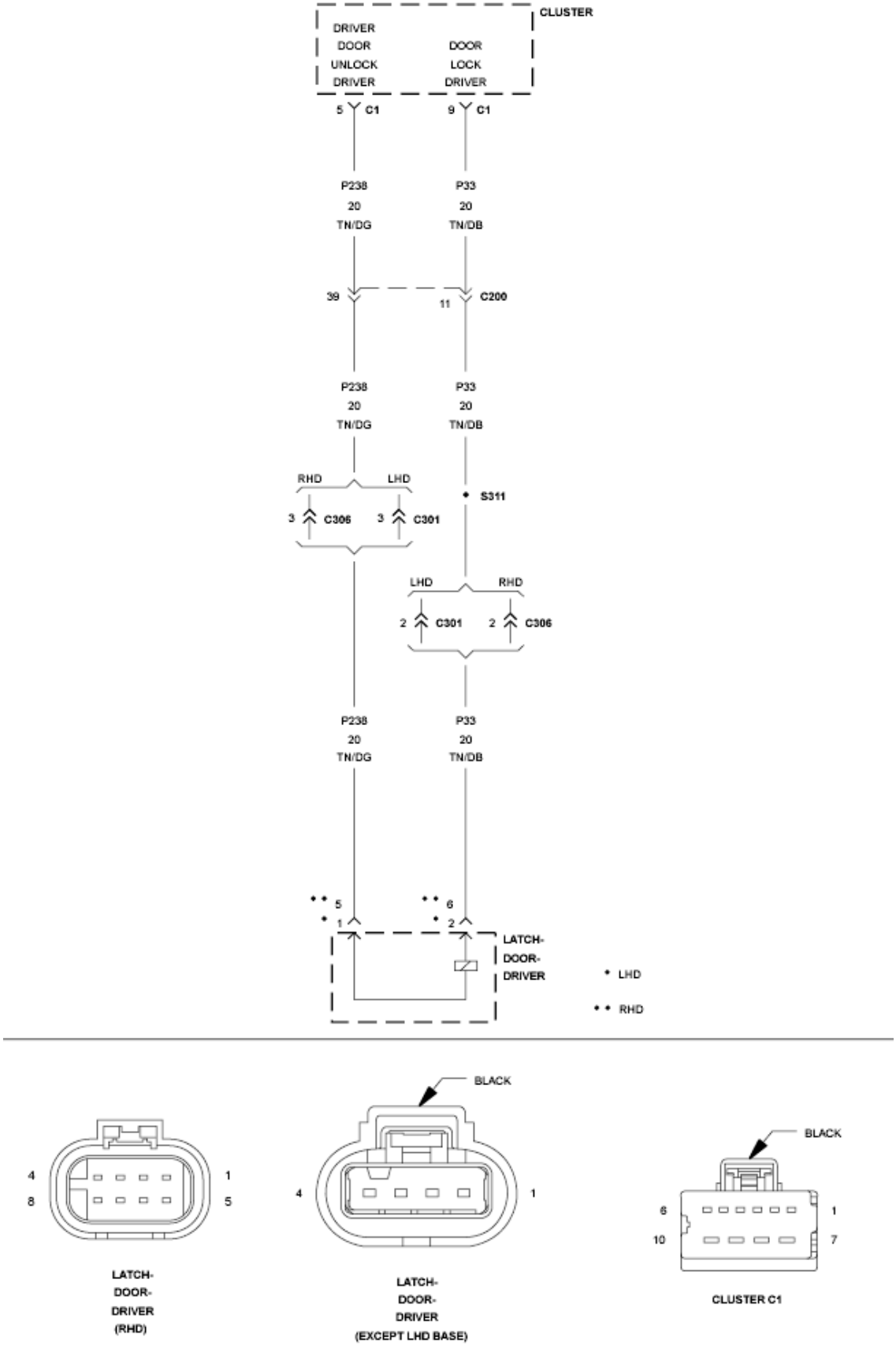

Fig. 34: Driver Door Lock System - Circuit Diagram
Courtesy of CHRYSLER GROUP, LLC

For a complete wiring diagram, **refer to appropriate SYSTEM WIRING DIAGRAMS article** .

POSSIBLE CAUSES

Possible Causes
DTC's PRESENT
(P238) DRIVER DOOR UNLOCK DRIVER WIRE OPEN
(P33) DOOR LOCK DRIVER WIRE OPEN
INSTRUMENT CLUSTER
DRIVER DOOR LATCH

THEORY OF OPERATION

This test does not cover a secondary latch problem on a right hand drive vehicle.

DIAGNOSTIC TEST

1. **TEST FOR DIAGNOSTIC TROUBLE CODES**
    1. Turn the ignition on.
    2. With the scan tool, record and erase DTCs
    3. Operate the Driver Door Lock Switch in all positions several times.
    4. Cycle the ignition from on to off and wait for five seconds.
    5. Turn the ignition on.
    6. With the scan tool, read the active DTCs.

    Does the scan tool display any Power Door Lock related DTCs?

    No

    - Go To 2

    Yes

    - Perform the appropriate diagnostic procedure. Refer to **DIAGNOSIS AND TESTING** .
2. **CHECK DOOR LOCK MOTOR CIRCUIT**

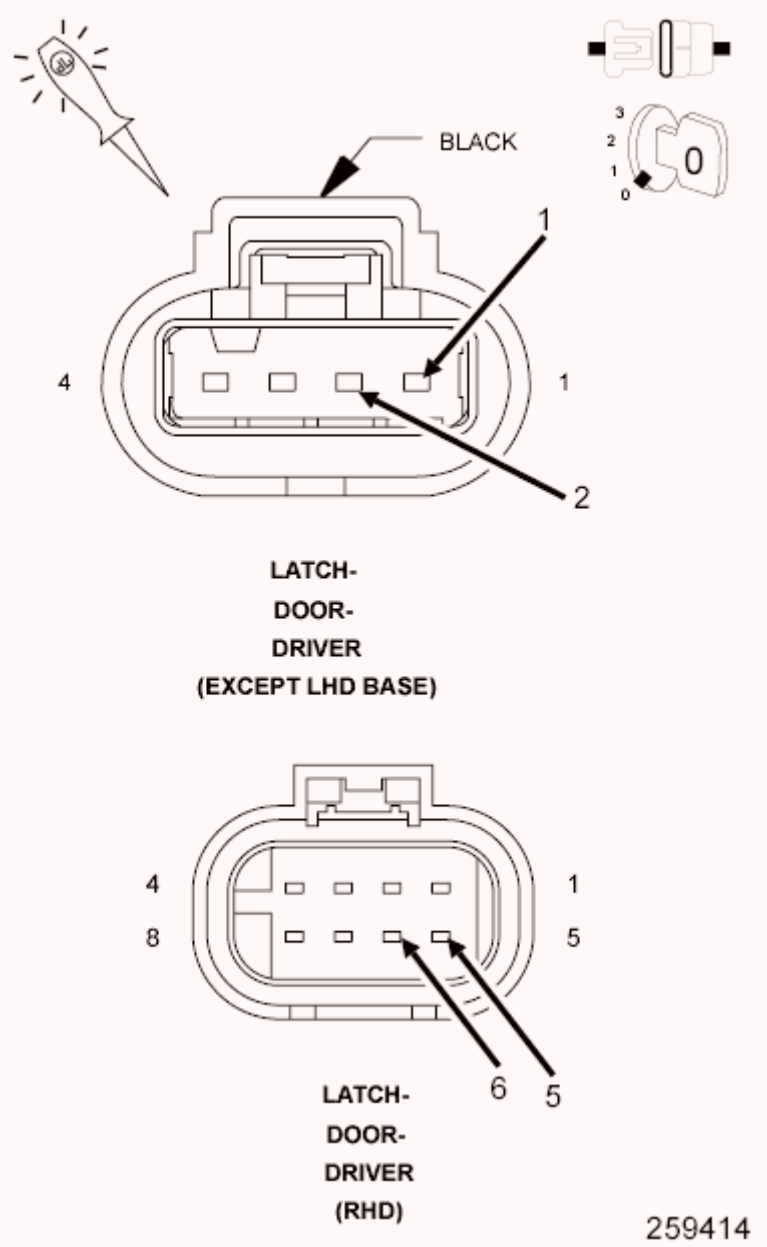

Fig. 35: Checking Door Lock Motor Circuit
Courtesy of CHRYSLER GROUP, LLC

1. Turn the ignition off.
2. Disconnect the Driver Door Latch connector.
3. Connect a 12-volt test light between the (P33) Door Lock Driver and the (P238) Driver Door Unlock Driver circuits in the latch connector.
4. Remove the key from the ignition switch.
5. Close the driver door or trip the latch to the door closed position
6. Operate the door locks several times in the lock and unlock positions from the door lock switch and observe the test light.

Does the test light illuminate brightly when the locks are actuated in both directions?

Yes

- Replace the Driver Door Latch Assembly.
- Perform the BODY VERIFICATION TEST. Refer to **STANDARD PROCEDURE** .

No

- Go To 3

3. **(P238) DRIVER DOOR UNLOCK DRIVER CIRCUIT OPEN**

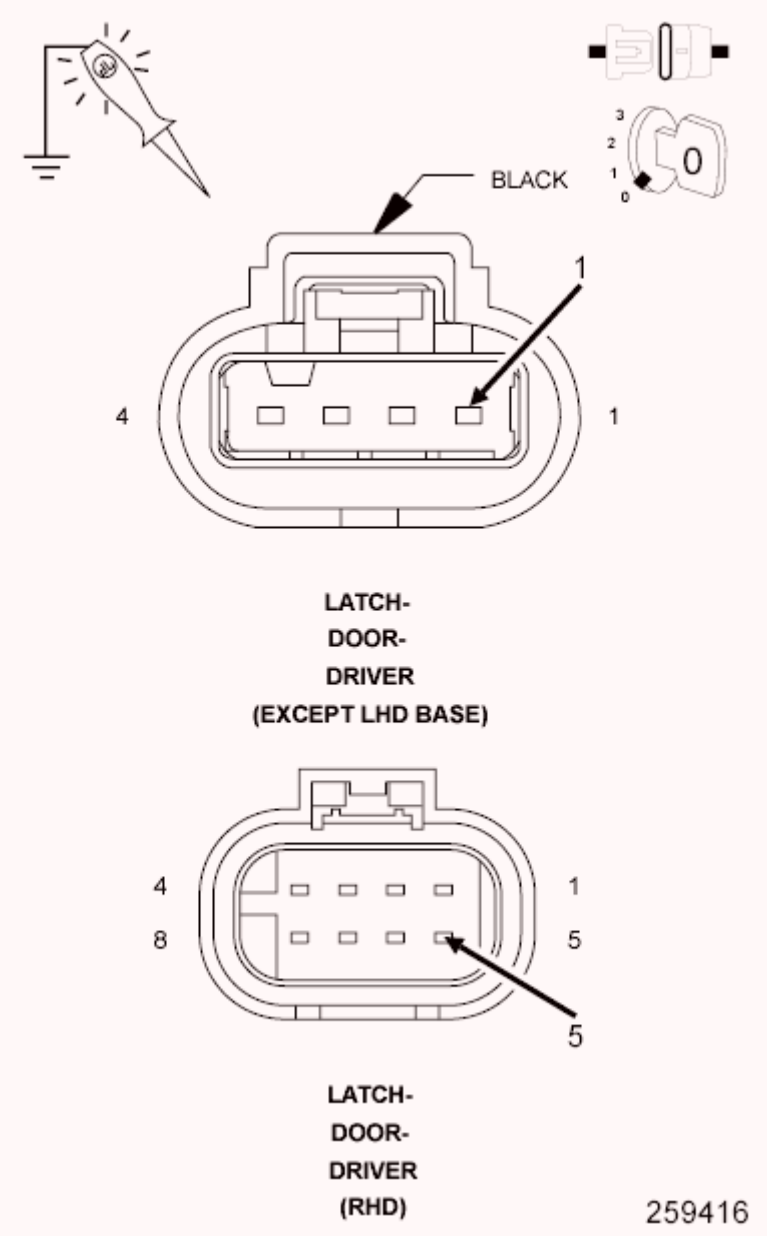

Fig. 36: Checking Driver Door Unlock Driver Circuit Open
Courtesy of CHRYSLER GROUP, LLC

1. Using a 12-volt test light connected to ground, check the (P238) Driver Door Unlock Driver circuit.
2. Close the driver door or trip the latch to the door closed position
3. With the scan tool, actuate the Driver Door Unlock Relay.

   Does the test light illuminate brightly when the driver door unlock is actuated?

   Yes

- Go To 4

No

- Go To 5

4. **(P33) DOOR LOCK DRIVER WIRE OPEN**

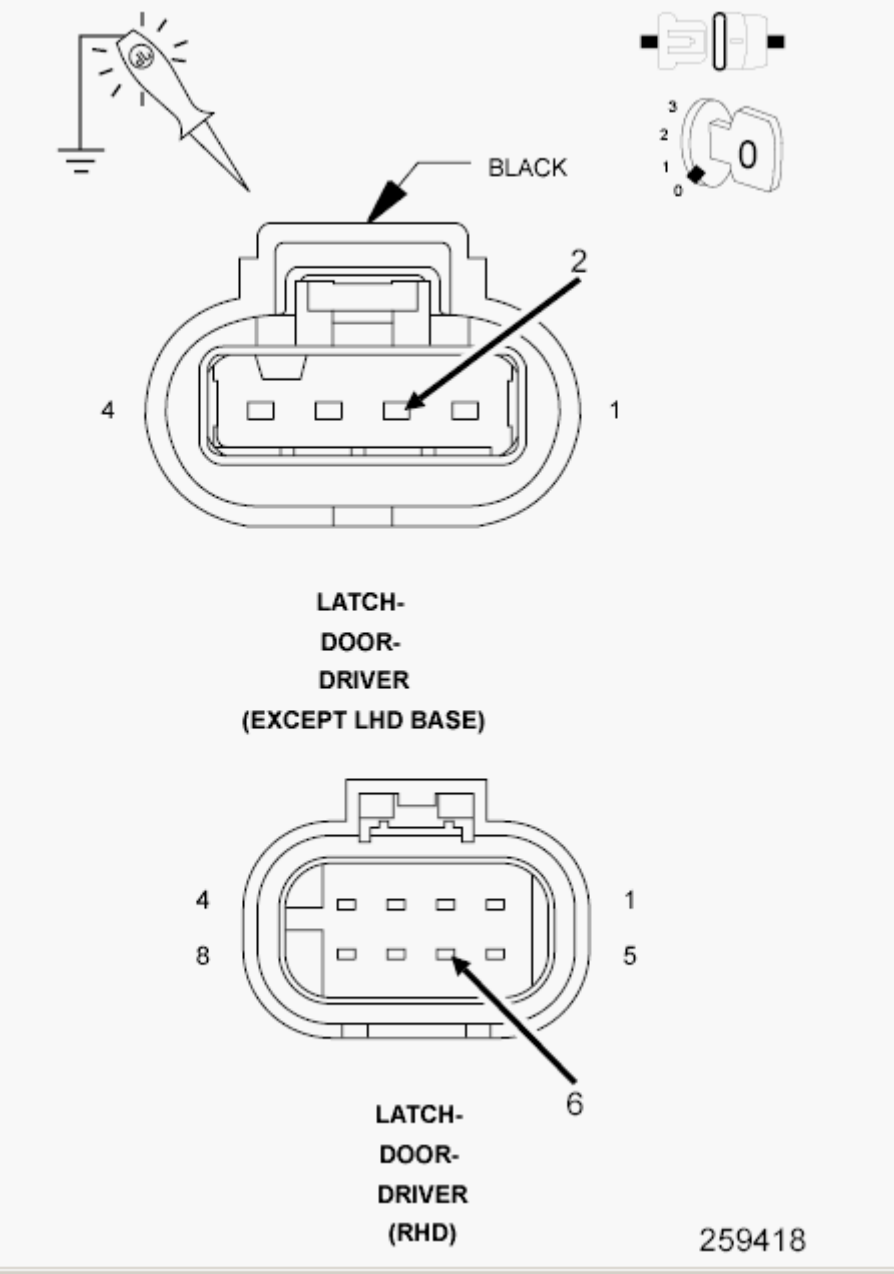

Fig. 37: Checking Door Lock Driver Wire For Open
Courtesy of CHRYSLER GROUP, LLC

1. Using a 12-volt test light connected to ground, check the (P33) Door Lock Driver circuit.

2. Close the driver door or trip the latch to the door closed position
3. With the scan tool, actuate the Door Lock Relay.

   Does the test light illuminate brightly when the door lock is actuated?

   Yes

   - Test Complete.
   - Perform the BODY VERIFICATION TEST. Refer to **STANDARD PROCEDURE** .

   No

   - Repair the (P33) Door Lock Driver wire for an open.
   - Perform the BODY VERIFICATION TEST. Refer to **STANDARD PROCEDURE** .

5. **(P238) DRIVER DOOR UNLOCK DRIVER WIRE OPEN**

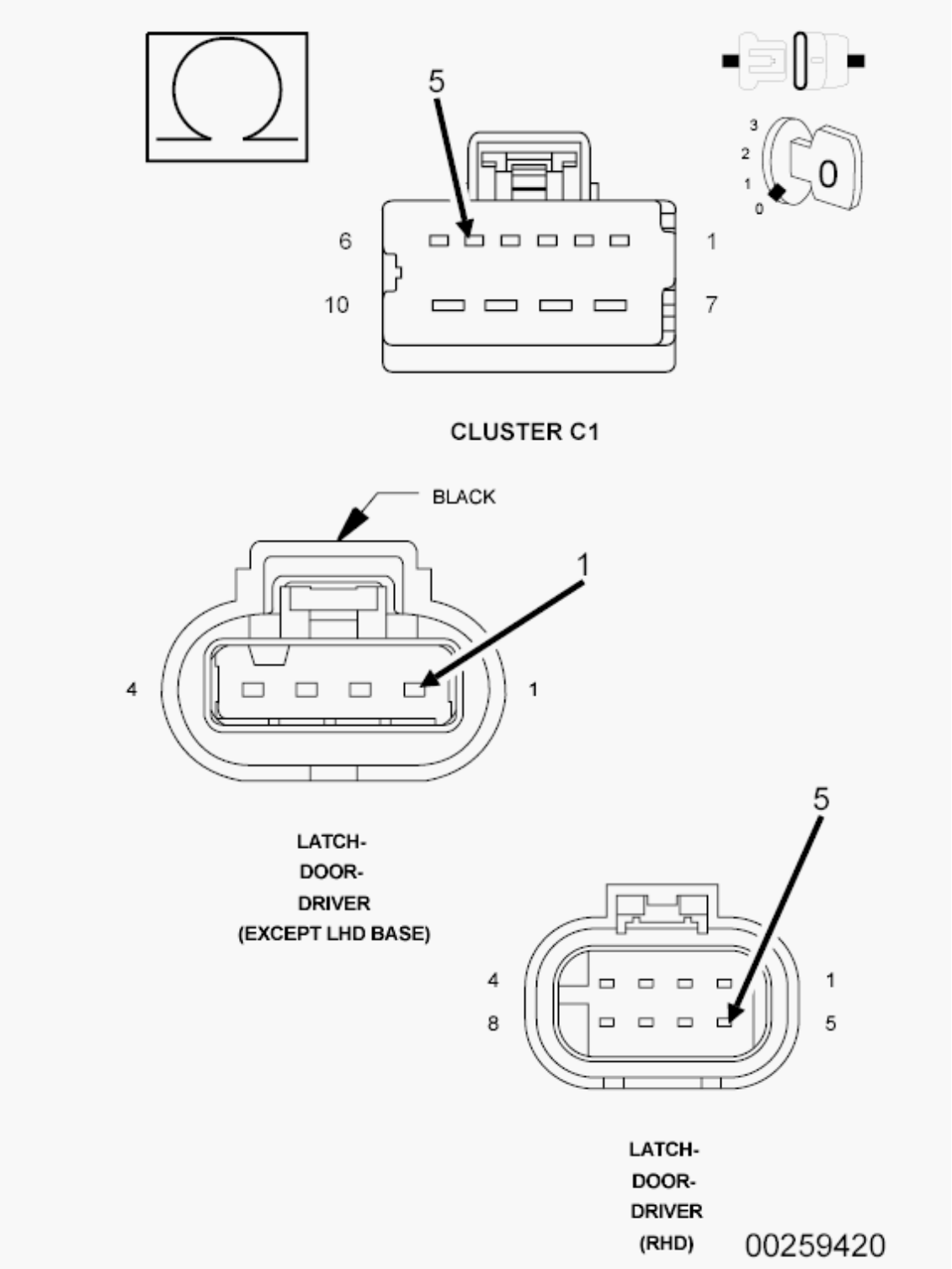

Fig. 38: Checking Driver Door Unlock Driver Wire For Open
Courtesy of CHRYSLER GROUP, LLC

1. Disconnect the Cluster C1 connector.
2. Measure the resistance of the (P238) Driver Door Unlock Driver wire between the Cluster C1 connector and the Driver Door Latch connector.

Is the resistance below 2.0 ohms?

Yes

- Replace the Instrument Cluster in accordance with the Service Information.
- Perform the BODY VERIFICATION TEST. Refer to **STANDARD PROCEDURE** .

No

- Repair the (P238) Driver Door Unlock Driver wire for an open.
- Perform the BODY VERIFICATION TEST. Refer to **STANDARD PROCEDURE** .

DRIVER DOOR FAILS TO UNLOCK

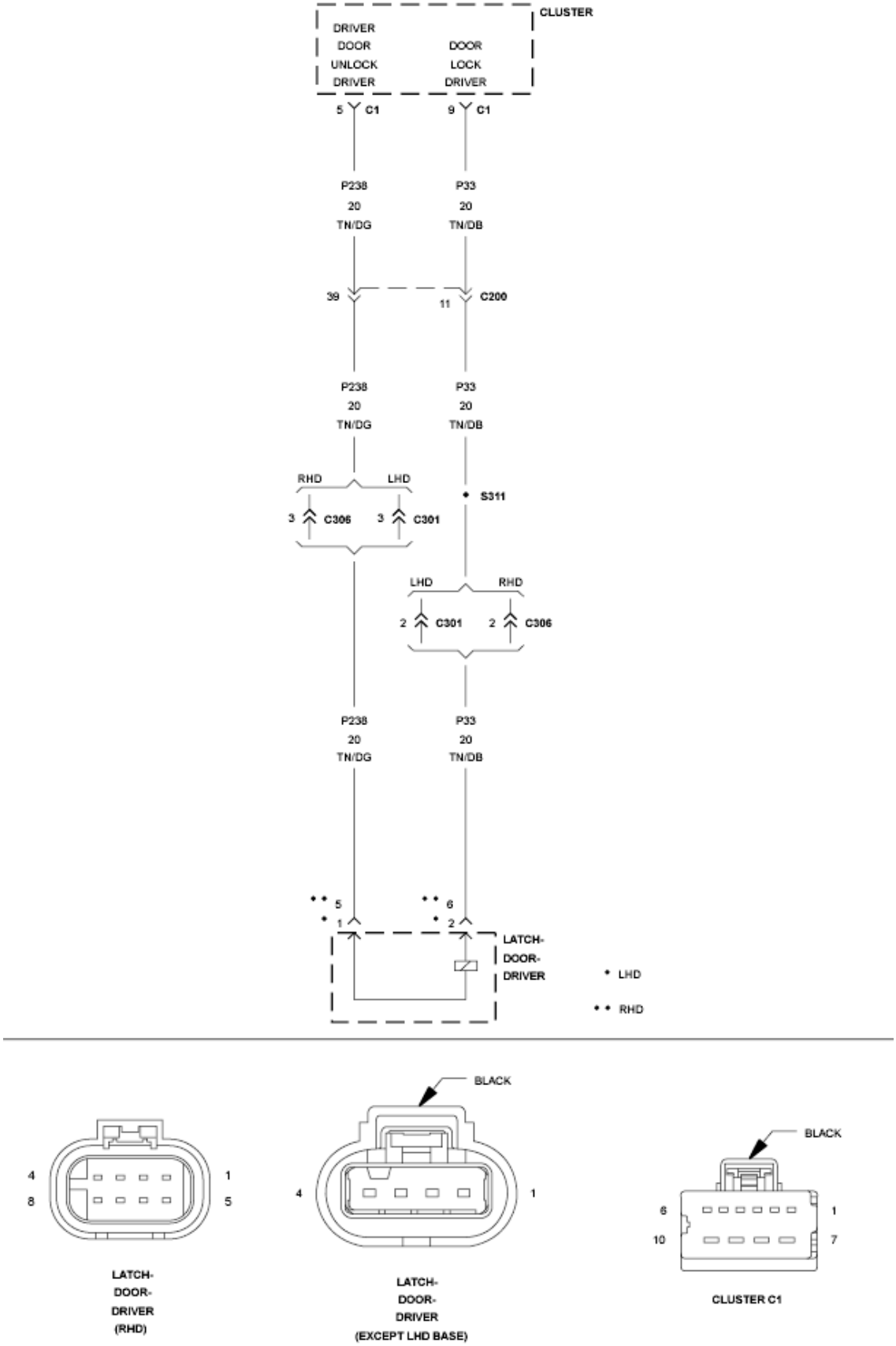

Fig. 39: Driver Door Lock System - Circuit Diagram
Courtesy of CHRYSLER GROUP, LLC

For a complete wiring diagram, **refer to appropriate SYSTEM WIRING DIAGRAMS article** .

POSSIBLE CAUSES

Possible Causes
(P238) DRIVER DOOR UNLOCK DRIVER WIRE SHORT TO GROUND
INSTRUMENT CLUSTER

THEORY OF OPERATION

This test does not cover a secondary latch problem on a right hand drive vehicle.

DIAGNOSTIC TEST

(P238) DRIVER DOOR UNLOCK DRIVER WIRE SHORT TO GROUND

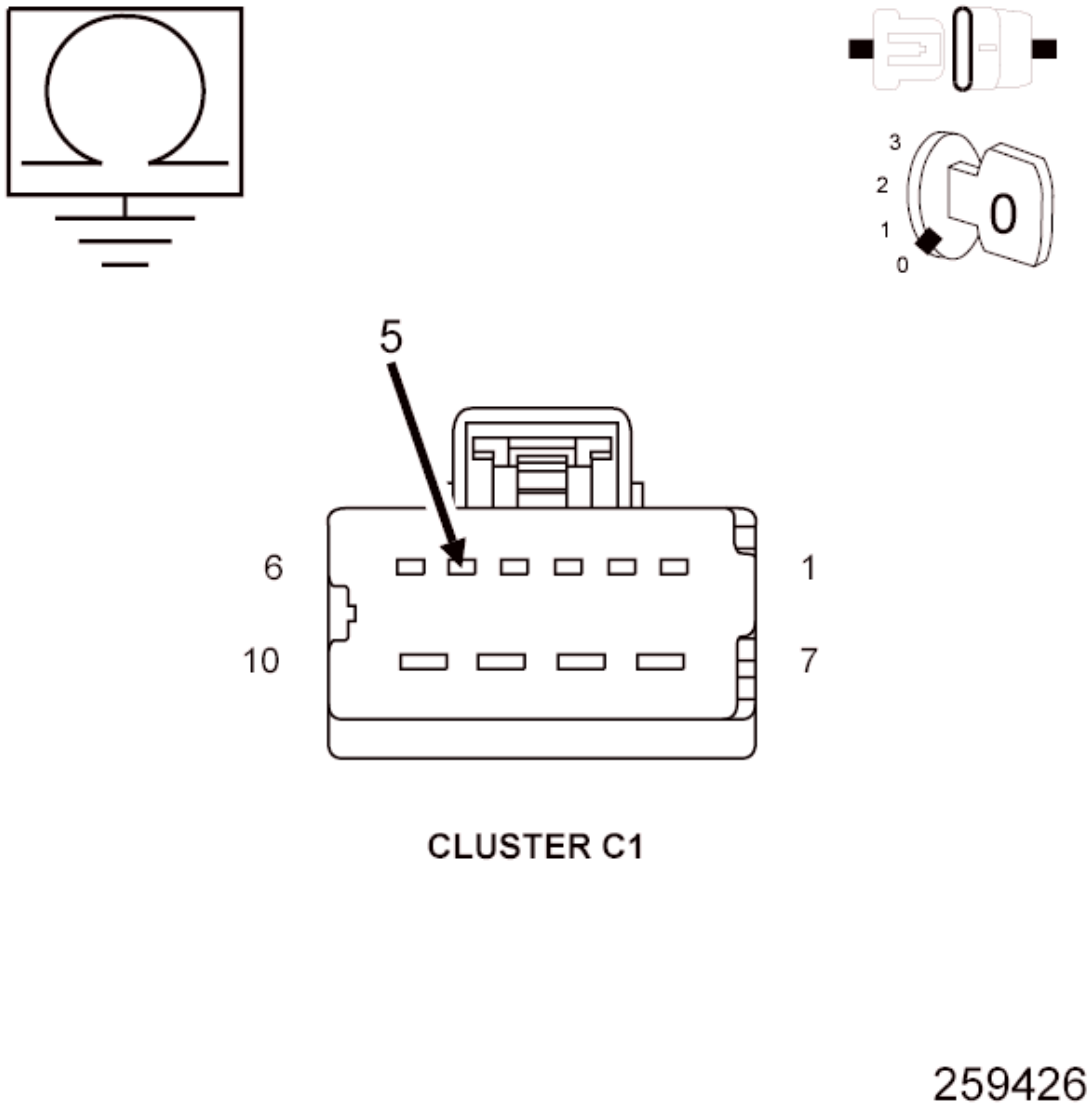

Fig. 40: Checking Driver Door Unlock Driver Wire For Short To Ground
Courtesy of CHRYSLER GROUP, LLC

1. Turn the ignition off.
2. Disconnect the Instrument Cluster C1 connector.
3. Measure the resistance between ground and the (P238) Driver Door Unlock Driver circuit.

   Is the resistance below 1, 000 ohms?

   Yes

   - Repair the (P238) Driver Door Unlock Driver wire for a short to ground.

- Perform the BODY VERIFICATION TEST. Refer to **STANDARD PROCEDURE** .

No

- Replace the Instrument Cluster in accordance with the Service Information.
- Perform the BODY VERIFICATION TEST. Refer to **STANDARD PROCEDURE** .

DRIVER DOOR LOCK/UNLOCK SWITCH CIRCUIT PERFORMANCE

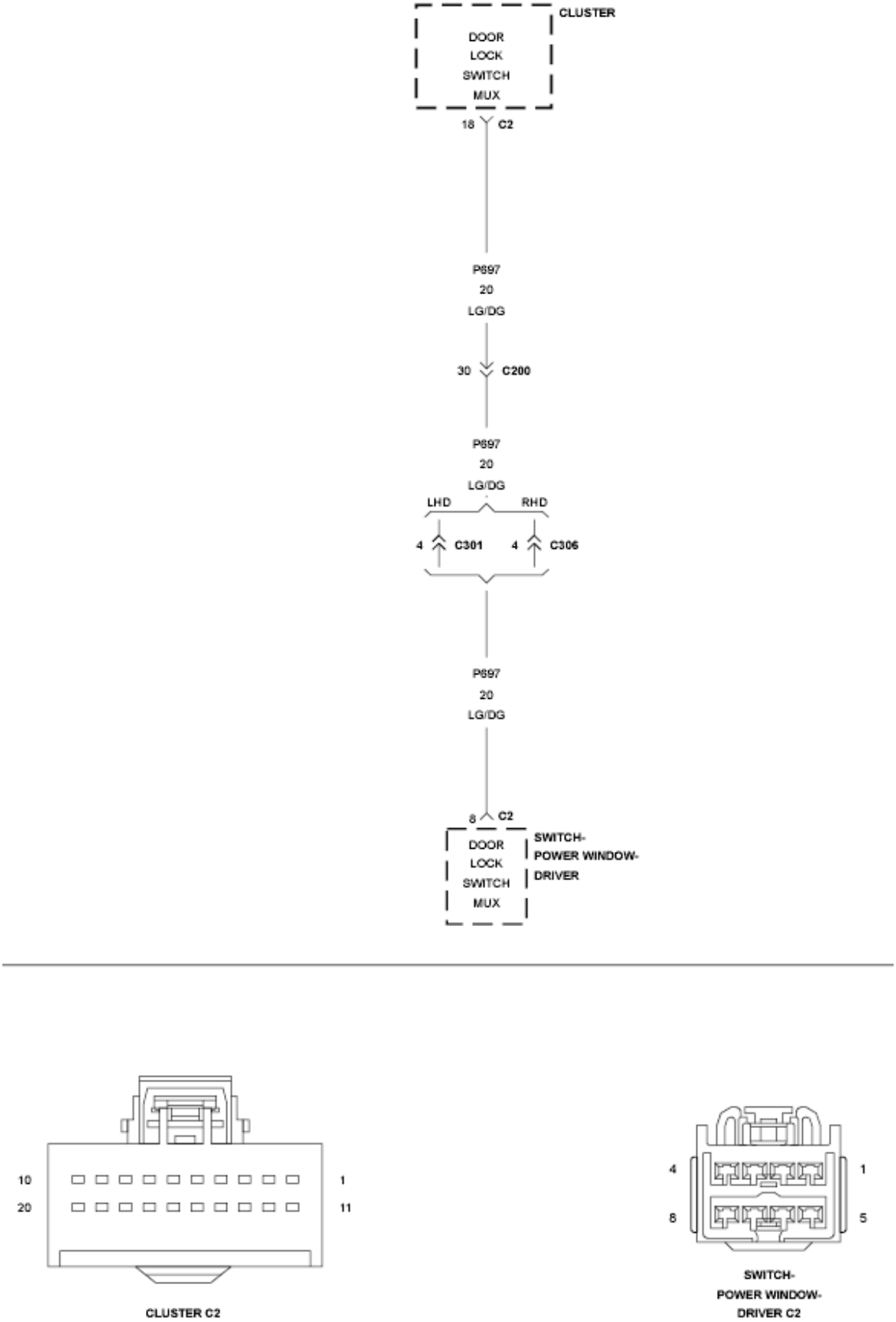

Fig. 41: Driver Door Lock/Unlock Switch Circuit Diagram

Courtesy of CHRYSLER GROUP, LLC

For a complete wiring diagram, **refer to appropriate SYSTEM WIRING DIAGRAMS article** .

POSSIBLE CAUSES

Possible Causes
(P697) DOOR LOCK SWITCH MUX CIRCUIT SHORT TO GROUND
(P697) DOOR LOCK SWITCH MUX CIRCUIT OPEN
(P697) DOOR LOCK SWITCH MUX CIRCUIT SHORT TO BATTERY
(Z961) GROUND CIRCUIT OPEN
DOOR LOCK SWITCH
INSTRUMENT CLUSTER

DIAGNOSTIC TEST

1. **TEST THE DOOR LOCK SWITCH**

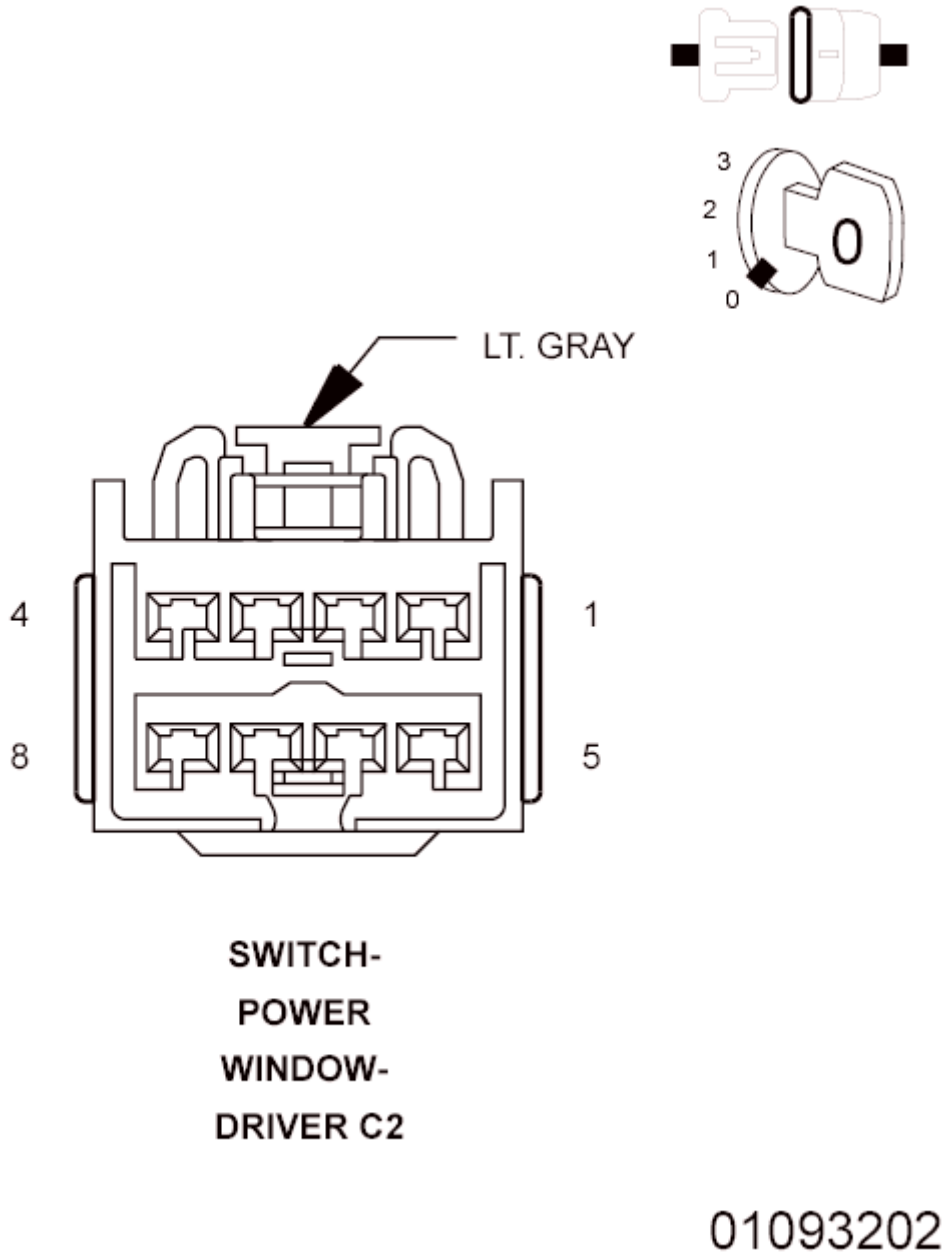

Fig. 42: Driver Window/Door Lock Switch Connector End View
Courtesy of CHRYSLER GROUP, LLC

NOTE: The graphic for this step shows the connector for terminal reference only.

1. Turn the ignition off.
2. Disconnect the Driver Window/Door Lock Switch C2 connector.
3. Connect an ohmmeter between terminals number 3 and 8 of the switch (not the connector).
4. With the switch in the neutral position, the resistance should be greater

than 1, 000, 000 Ohms (open circuit)

5. While holding the switch in the Lock position, the resistance should be 330 Ohms (+/- 33 Ohms).
6. While holding the switch in the Unlock position, the resistance should be 100 Ohms (+/- 10 Ohms).

Does the switch pass all three tests?

No

- Replace the Driver Window/Door Lock Switch.
- Perform the BODY VERIFICATION TEST. Refer to **STANDARD PROCEDURE** .

Yes

- Go To 2

2. **(Z961) GROUND CIRCUIT OPEN**

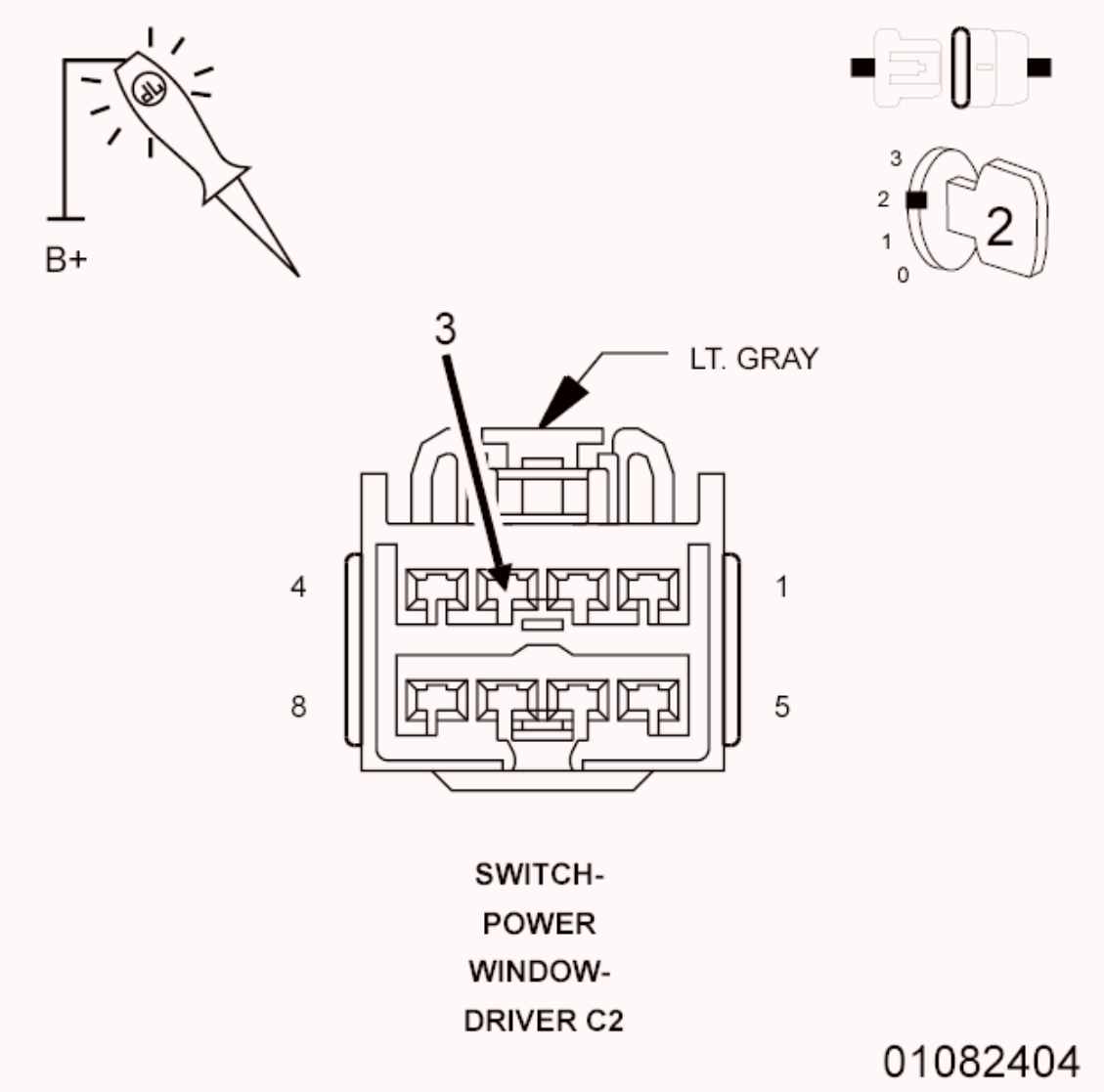

Fig. 43: Checking Ground Circuit Open
Courtesy of CHRYSLER GROUP, LLC

1. Turn the ignition on.
2. Using a 12-volt test light connected to 12-volts, check the (Z961) Ground circuit in the Driver Window/Door Lock Switch C2 connector.

   Does the test light illuminate brightly

   No

   - Repair the (Z961) Ground circuit for an open.
   - Perform the BODY VERIFICATION TEST. Refer to **STANDARD PROCEDURE** .

Yes

- Go To 3

3. **(P697) DOOR LOCK SWITCH MUX CIRCUIT SHORT TO BATTERY**

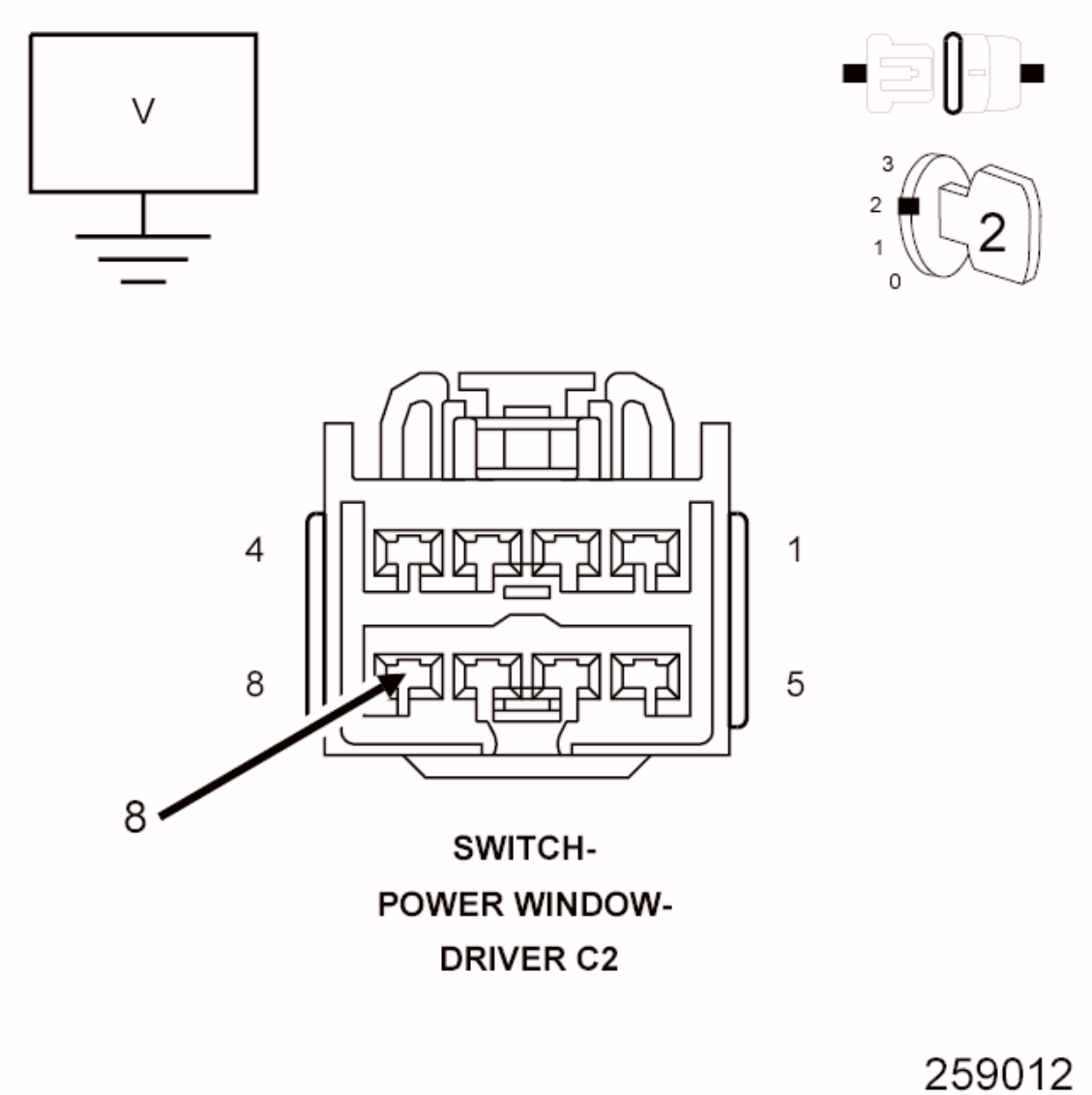

Fig. 44: Checking Door Lock Switch MUX Circuit Short To Battery
Courtesy of CHRYSLER GROUP, LLC

1. Measure the voltage between the (P697) Door Lock Switch Mux circuit and ground.

   Is the voltage above 5.2 volts?

   Yes

- Repair the (P697) Door Lock Switch Mux circuit for a short to battery.
- Perform the BODY VERIFICATION TEST. Refer to **STANDARD PROCEDURE** .

No

- Go To 4

4. **(P697) DOOR LOCK SWITCH MUX CIRCUIT SHORT TO GROUND**

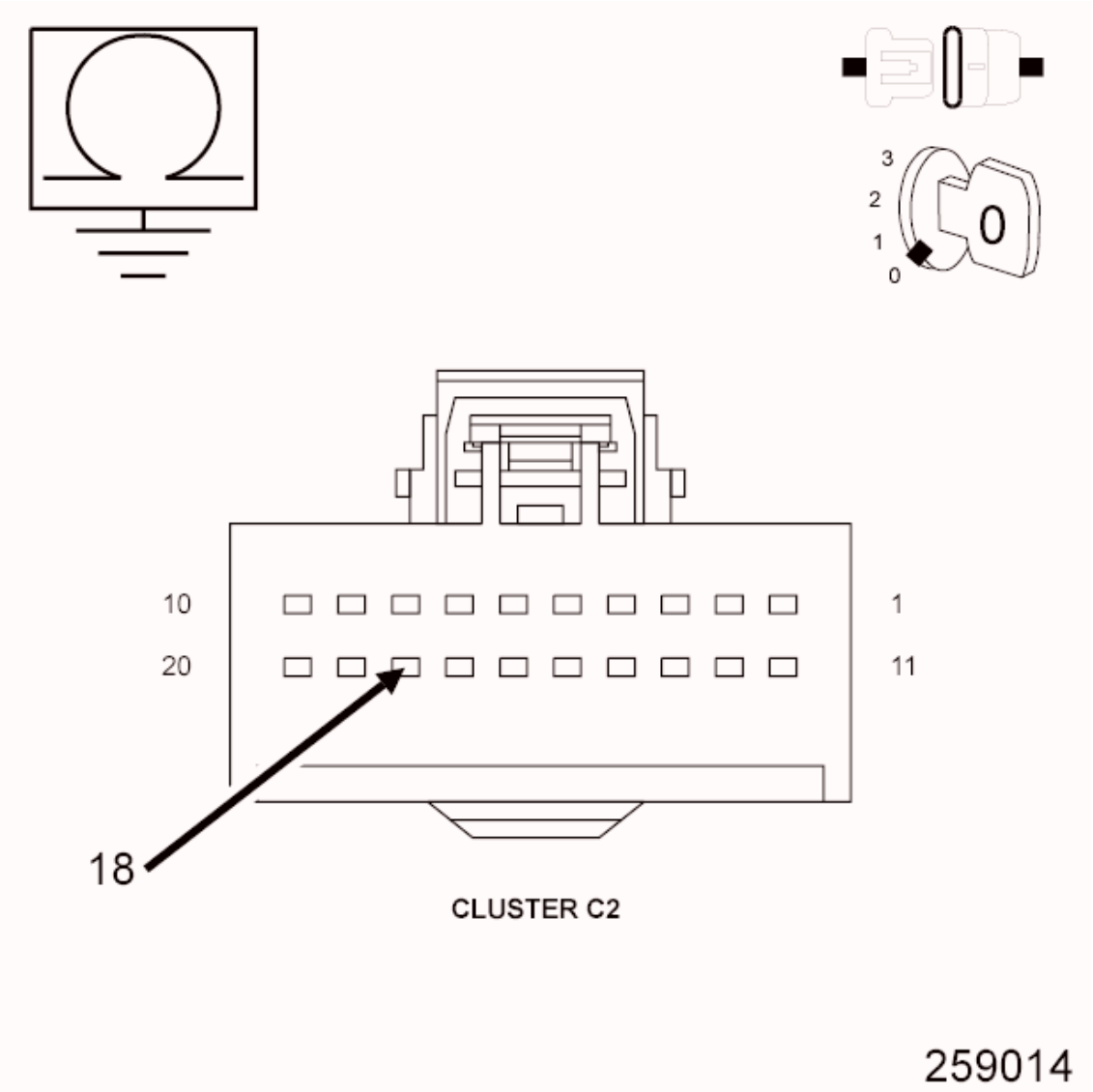

Fig. 45: Checking Driver Door Lock Switch MUX Circuit For A Short To Ground
Courtesy of CHRYSLER GROUP, LLC

1. Turn the ignition off.
2. Disconnect the Cluster C2 connector.
3. Measure the resistance between ground and the (P697) Door Lock Switch Mux circuit.

   Is the resistance below 10, 000 Ohms?

   Yes

   - Repair the (P697) Door Lock Switch Mux circuit for a short to ground.
   - Perform the BODY VERIFICATION TEST. Refer to **STANDARD PROCEDURE** .

   No

   - Go To 5

5. **(P697) DOOR LOCK SWITCH MUX CIRCUIT OPEN**

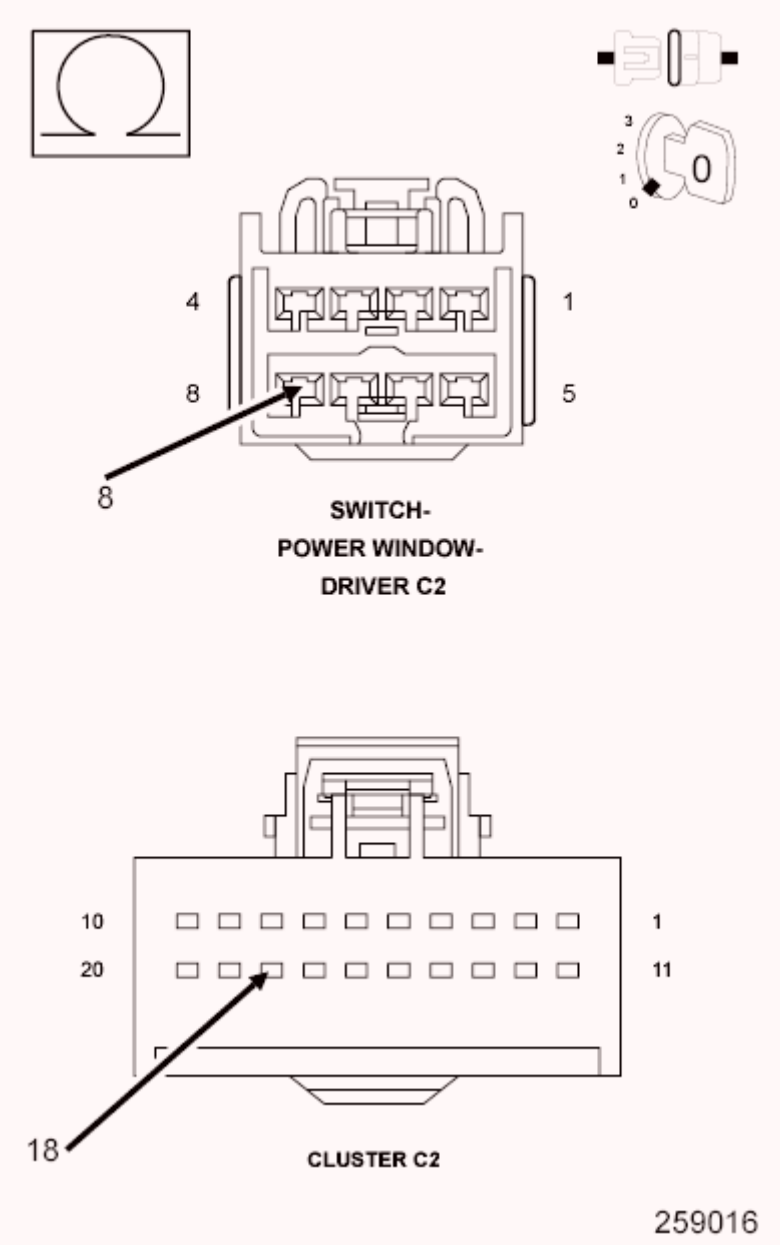

Fig. 46: Checking Door Lock Switch Mux Circuit For Open
Courtesy of CHRYSLER GROUP, LLC

1. Measure the resistance of the (P697) Door Lock Switch Mux circuit between the Cluster C2 connector and the Driver Window/Door Lock Switch connector.

   Is the resistance below 5.0 Ohms?

   No

   - Repair the (P697) Door Lock Switch Mux circuit for an open.
   - Perform the BODY VERIFICATION TEST. Refer to

STANDARD PROCEDURE .

Yes

- Replace the Instrument Cluster in accordance with Service Information.
- Perform the BODY VERIFICATION TEST. Refer to **STANDARD PROCEDURE** .

PASSENGER DOOR LOCK/UNLOCK SWITCH CIRCUIT PERFORMANCE

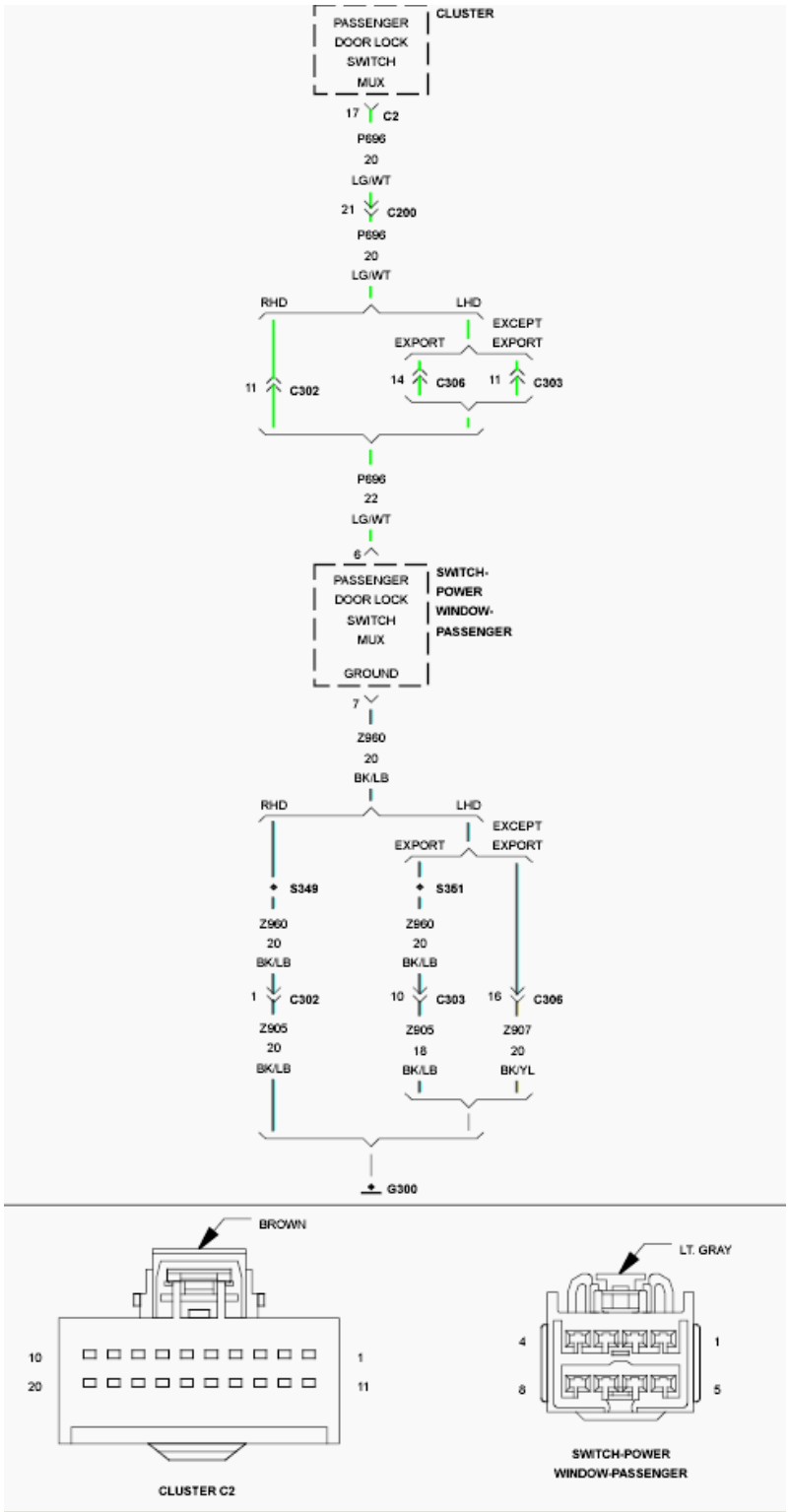

Fig. 47: Passenger Door Lock/Unlock Switch - Circuit Diagram
Courtesy of CHRYSLER GROUP, LLC

For a complete wiring diagram, **refer to appropriate SYSTEM WIRING DIAGRAMS article** .

WHEN MONITORED

Continuously

SET CONDITION

When the Door Lock Switch Mux circuit is below 1.5 volts or over 4.3 volts for 10 seconds, this code will set.

POSSIBLE CAUSES

Possible Causes
(P696) PASSENGER DOOR LOCK SWITCH MUX CIRCUIT SHORT TO GROUND
(P696) PASSENGER DOOR LOCK SWITCH MUX CIRCUIT OPEN
(P696) PASSENGER DOOR LOCK SWITCH MUX CIRCUIT SHORT TO BATTERY
(Z960) GROUND CIRCUIT OPEN
PASSENGER DOOR LOCK SWITCH
INSTRUMENT CLUSTER

DIAGNOSTIC TEST

1. **TESTING THE DOOR LOCK SWITCH**

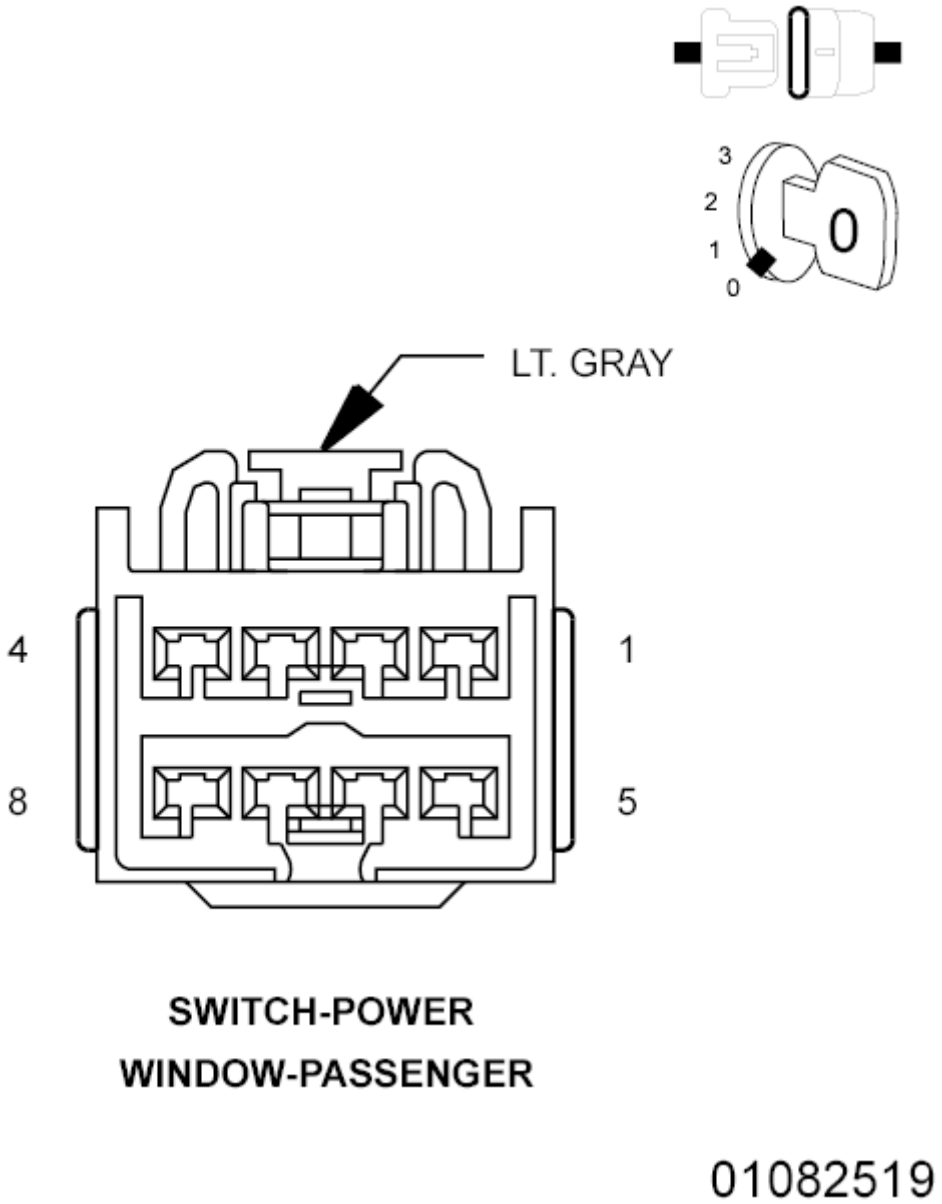

Fig. 48: Testing Door Lock Switch
Courtesy of CHRYSLER GROUP, LLC

NOTE: The graphic for this step shows the connector for terminal reference only.

1. Turn the ignition off.
2. Disconnect the Passenger Window/Door Lock Switch connector.
3. Connect an ohmmeter between terminals number 6 and 7 of the switch (not the connector).
4. With the switch in the neutral position, the resistance should be greater

than 1, 000, 000 Ohms (open circuit)

5. While holding the switch in the Lock position, the resistance should be 330 Ohms (+/- 33 Ohms).
6. While holding the switch in the Unlock position, the resistance should be 100 Ohms (+/- 10 Ohms).

Does the switch pass all three tests?

No

- Replace the Passenger Window/Door Lock Switch.
- Perform the BODY VERIFICATION TEST. Refer to **STANDARD PROCEDURE** .

Yes

- Go To 2

2. **(Z960) GROUND CIRCUIT OPEN**

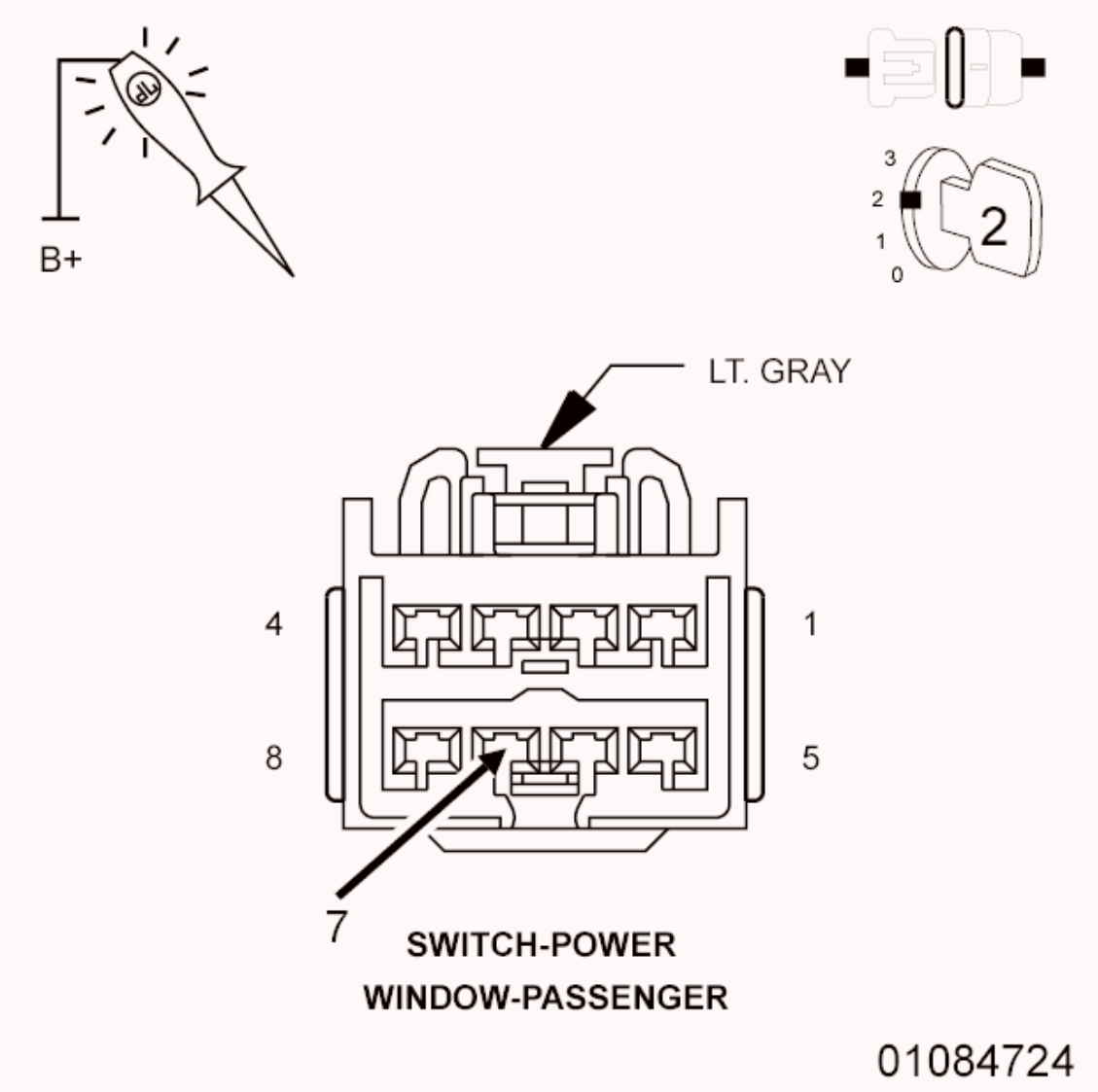

Fig. 49: Checking Ground Circuit For Open
Courtesy of CHRYSLER GROUP, LLC

1. Turn the ignition on.
2. Using a 12-volt test light connected to 12-volts, check the (Z960) Ground circuit in the Passenger Window/Door Lock Switch connector.

   Does the test light illuminate brightly

   No

   - Repair the (Z960) Ground circuit for an open.
   - Perform the BODY VERIFICATION TEST. Refer to **STANDARD PROCEDURE** .

Yes

- Go To 3

3. **(P696) PASSENGER DOOR LOCK SWITCH MUX CIRCUIT SHORTED TO BATTERY**

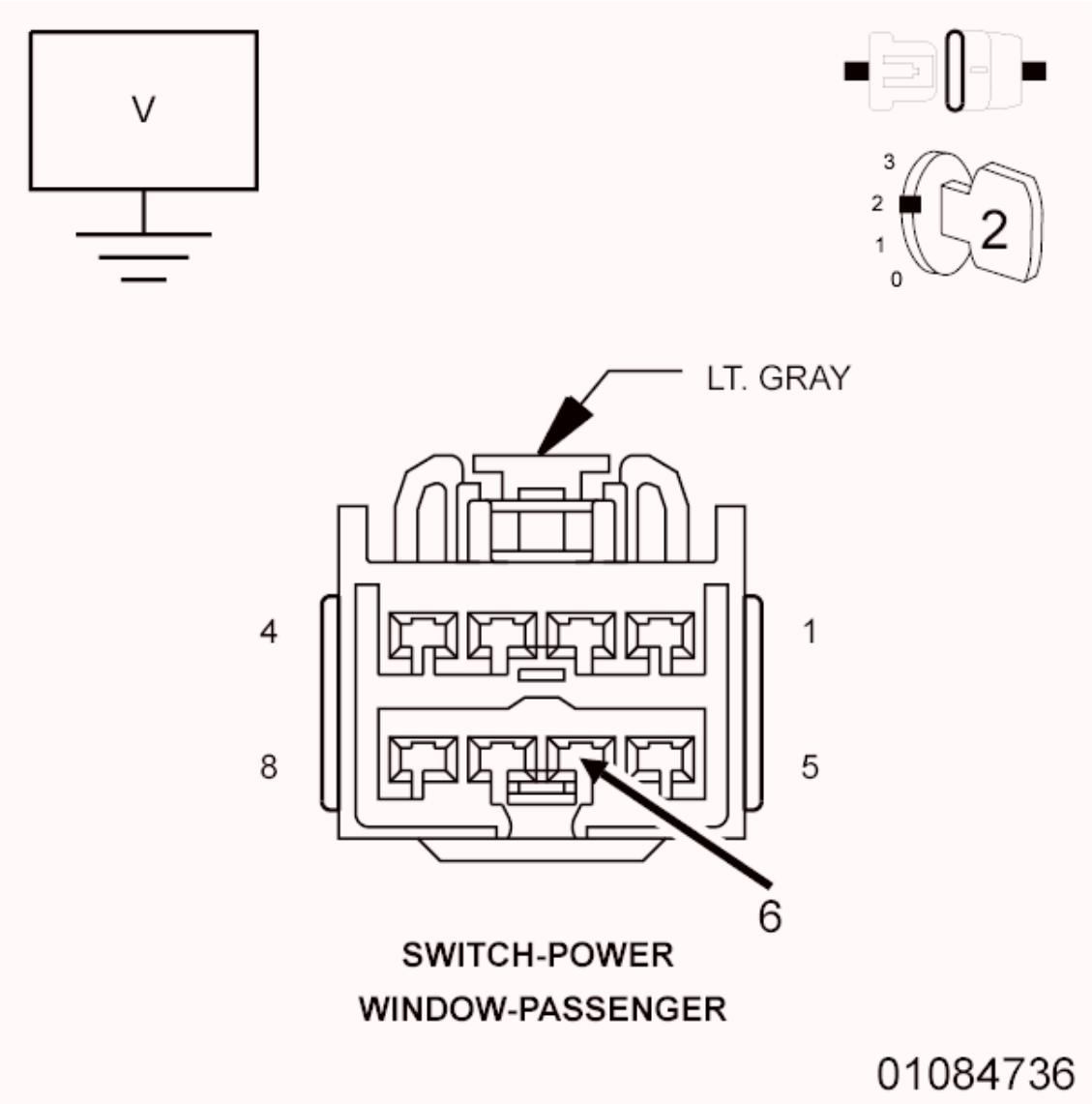

Fig. 50: Measuring Voltage Between Passenger Door Lock Switch Mux Circuit & Ground
Courtesy of CHRYSLER GROUP, LLC

1. Measure the voltage between the (P696) Passenger Door Lock Switch Mux circuit and ground.

   Is the voltage above 5.2 volts?

Yes

- Repair the (P696) Passenger Door Lock Switch Mux circuit for a short to battery.
- Perform the BODY VERIFICATION TEST. Refer to **STANDARD PROCEDURE** .

No

- Go To 4

4. **(P696) PASSENGER DOOR LOCK SWITCH MUX CIRCUIT SHORT TO GROUND**

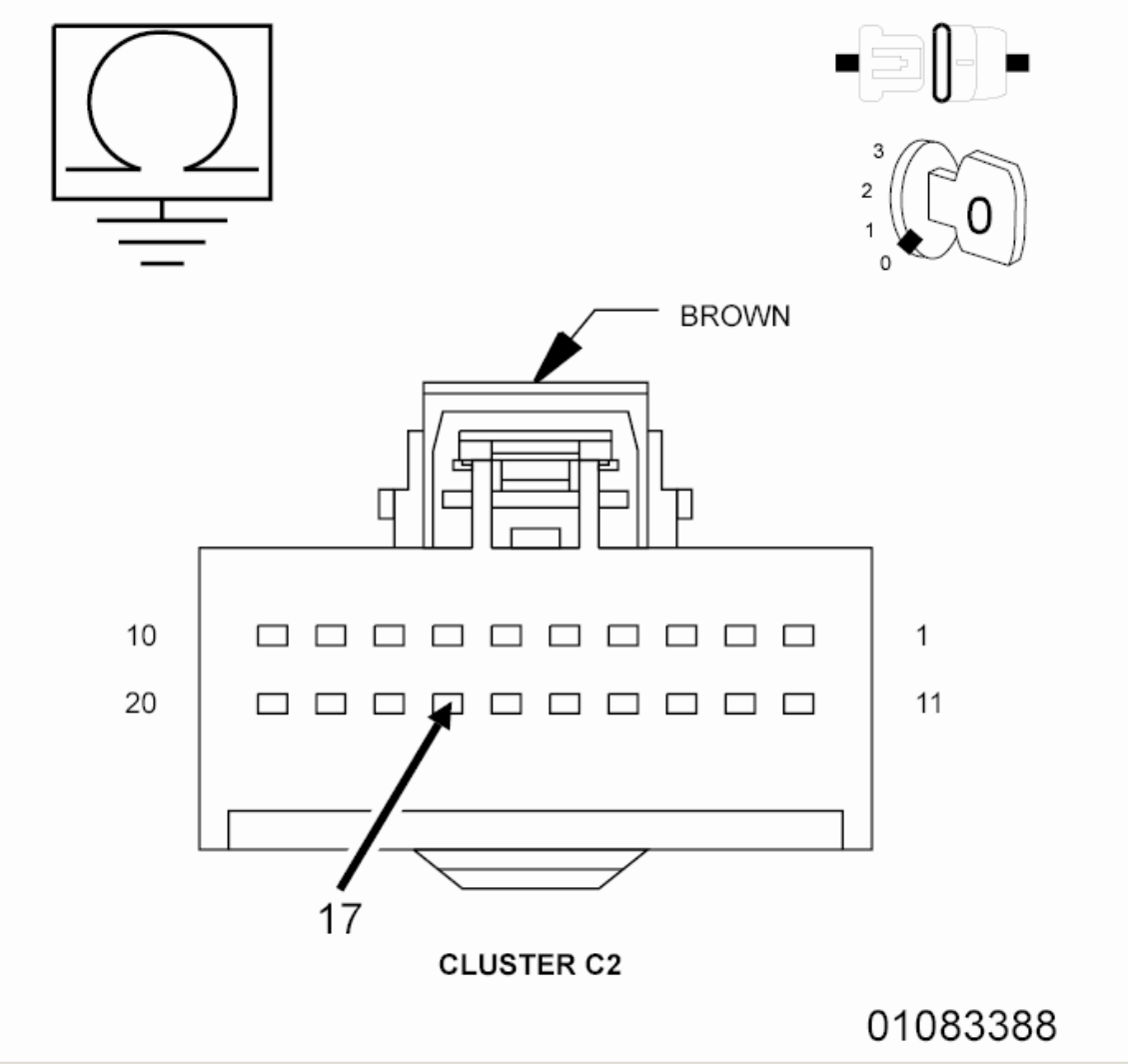

Fig. 51: Measuring Resistance Between Ground And Passenger Door Lock Switch Mux Circuit
Courtesy of CHRYSLER GROUP, LLC

1. Turn the ignition off.
2. Disconnect the Cluster C2 connector.
3. Measure the resistance between ground and the (P696) Passenger Door Lock Switch Mux circuit.

   Is the resistance below 10, 000 Ohms?

   Yes

   - Repair the (P696) Passenger Door Lock Switch Mux circuit for a short to ground.
   - Perform the BODY VERIFICATION TEST. Refer to **STANDARD PROCEDURE** .

   No

   - Go To 5

5. **(P696) PASSENGER DOOR LOCK SWITCH MUX CIRCUIT OPEN**

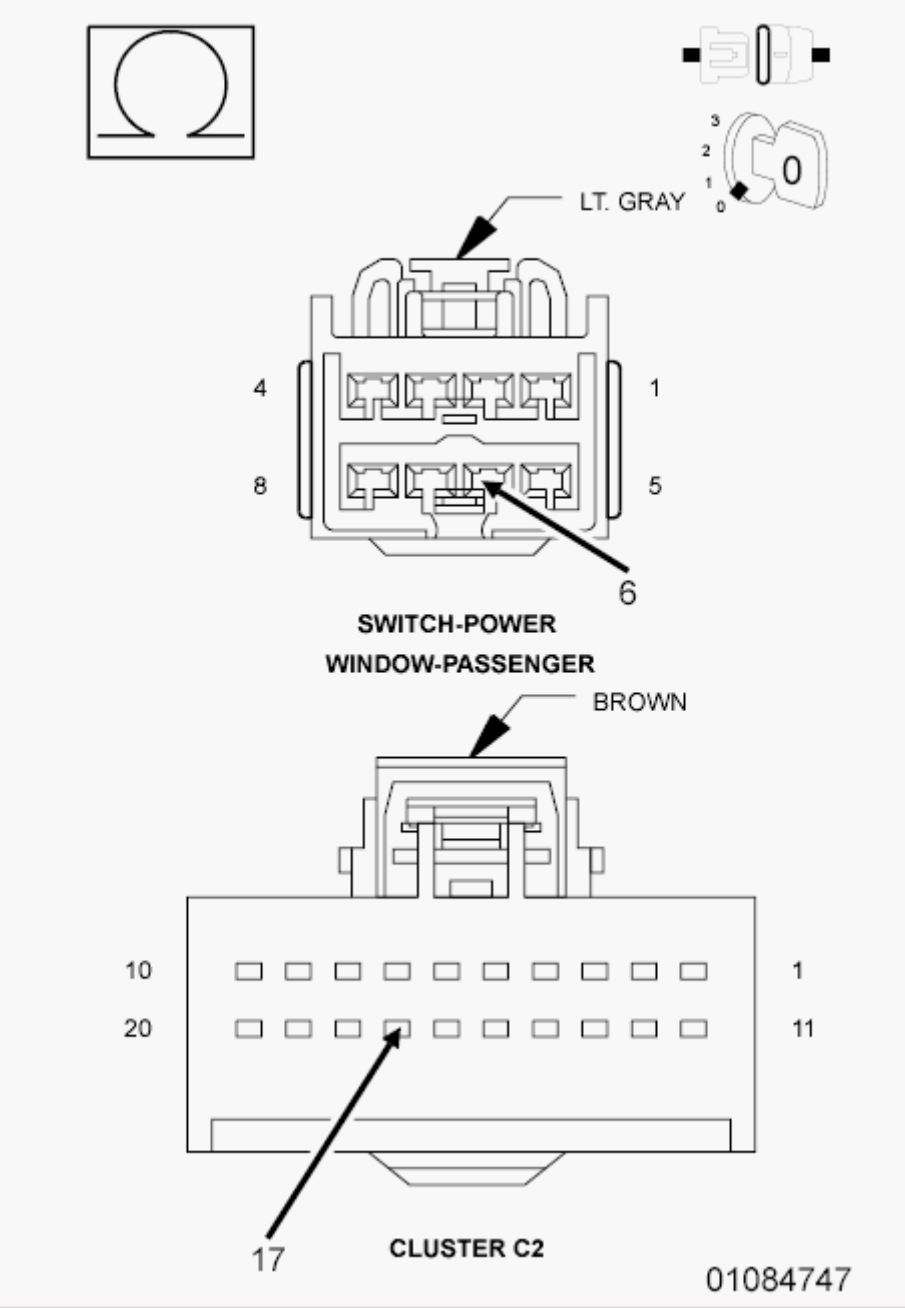

Fig. 52: Checking Passenger Door Lock Switch MUX Circuit For Open
Courtesy of CHRYSLER GROUP, LLC

1. Measure the resistance of the (P696) Passenger Door Lock Switch Mux circuit between the Cluster C2 connector and the Passenger Window/Door Lock Switch connector.

   Is the resistance below 3.0 Ohms?

   No

- Repair the (P696) Passenger Door Lock Switch Mux circuit for an open.
- Perform the BODY VERIFICATION TEST. Refer to **STANDARD PROCEDURE** .

Yes

- Replace the Instrument Cluster in accordance with the Service Information.
- Perform the BODY VERIFICATION TEST. Refer to **STANDARD PROCEDURE** .

2014 ACCESSORIES AND EQUIPMENT

Power Locks - Service Information - Compass & Patriot

DESCRIPTION

DESCRIPTION

POWER LOCKS

The power lock system allows all of the doors and the liftgate to be locked or unlocked electrically by operating a switch on either front door trim panel. The power lock system receives non-switched battery current through a fuse in the Fuse Block, so that the power locks remain operational, regardless of the ignition switch position.

This vehicle also offers several customer programmable features, which allows the selection of several optional electronic features to suit individual preferences.

The power lock system for this vehicle can also be operated remotely using the available Remote Keyless Entry (RKE) system Radio Frequency (RF) transmitters, if equipped.

Certain functions and features of the power lock system rely upon resources shared with other electronic modules in the vehicle over the Controller Area Network (CAN) data bus network. For proper diagnosis of these electronic modules or of the CAN data bus network, the use of a scan tool and the appropriate diagnostic information are required.

CHILD PROTECTION LOCKS

To provide a safer environment for children riding in the rear seat, the rear doors have the "child protection" door lock system.

The child protection locks are on the rear doors only. The lock, when engaged, will disable the inside door handle from opening the door. The lock is part of the latch/lock assembly.

DOOR LOCK INHIBIT

With the key in the ignition switch and the driver door open, the Remote Keyless Entry (RKE) module will ignore the command to lock the power door locks using the interior door lock switches. Once the key is removed, or the drivers

door is closed, the RKE module will allow the power locks to lock using the door lock switch.

REMOTE KEYLESS ENTRY

The remote keyless entry system allows locking and unlocking of the vehicle door(s) liftgate, panic alarm and arming or disarming of the vehicle theft security system (if equipped), using the hand held (RF) transmitter.

The RKE module is also referred to as the Wireless Control Module (WCM). It also contains the functionality for the Vehicle Theft Security System (VTSS).

The module may receive signals from up to four transmitters. Each transmitter has its own code, and the code is programmed and stored into the module memory. If a transmitter is replaced or additional transmitters are added, the codes for all units have to be reprogrammed into the RKE module or WCM memory. If a module is replaced, the transmitter codes must be stored in the new memory (by performing the steps for programming transmitters). The RKE or WCM is capable of retaining all transmitter codes when power is removed from the module.

SECONDARY LOCKS - RHD ONLY

The secondary lock is a dead bolt that prevents the door from being opened when the vehicle is armed. It can only be actuated when the key is out of the ignition, all doors are closed and the lock function on the RKE fob is pressed. The secondary lock will arm approximately 16 seconds after the door latches are locked. The secondary locks are unlocked by a RKE fob unlock command approximately 375 milliseconds after the door latches are unlocked. They will also unlock when a valid SKIM key is turned to the ON position. The secondary locks will also be unlocked when the vehicle is driven and reaches the Auto Door Lock (rolling) status for safety reasons. This system is only used on Right Hand Drive vehicles.

OPERATION

OPERATION

POWER LOCKS

NOTE: The Cab Compartment Node (CCN) receives the door

lock/unlock request from the key fob or the door lock switch. If the CCN receives this signal more than 21 times, in less than 2.5 minutes, the CCN enters a protect mode. In this protect mode the CCN will only allow door lock/unlock operation once every 7 seconds. If the CCN enters protect mode, do not operate the door locks for approximately 3 minutes. After the 3 minutes, door lock operation will continue functioning as normal.

All doors can be locked or unlocked mechanically and independently with their respective locking knobs. The front doors can also be unlocked by actuation of the inside remote door handle.

CENTRAL LOCKING/UNLOCKING (IF EQUIPPED)

The door locks can be locked or unlocked electrically via the exterior door key cylinders to provide the central locking/unlocking feature. The central locking/unlocking feature incorporates a customer programmable "Double activation unlock" feature which operates in the following manner: When enabled, the first turn of the key cylinder to the UNLOCK position (toward the front of the vehicle) will mechanically unlock the door whose key cylinder is being turned. A second turn of the key cylinder to the UNLOCK position (within five seconds of the first turn) will cause all vehicle doors and liftgate to unlock electrically. When this feature is disabled, all vehicle doors and liftgate will be unlocked electrically upon the first turn of a key cylinder to the UNLOCK position. The vehicle is locked electrically by turning the key cylinder to the LOCK position once, regardless of the state of the double activation unlock feature.

REMOTE KEYLESS ENTRY

The transmitter has three buttons for operation: LOCK, UNLOCK and PANIC.

- Pressing the UNLOCK button will unlock the driver's door, flash the park lamps twice and enable illuminated entry. Pressing and releasing the button once will unlock the drivers door. Pressing and releasing the button two times within a five second interval will unlock all doors.
- Pressing the LOCK button will cause the horn to sound a short chirp (if enabled) and flash the park lamps to notify that the all door lock signal was received and set. Illuminated entry is cancelled and the interior lamps are

faded to off.

- Pressing the PANIC button will cause the panic alarm to sound for three minutes, until the PANIC button is pressed a second time, or the vehicle reaches a speed of 25.7 Km/h (15 mph). The receiver is capable of retaining a Vehicle Access Code (VAC) even when power is removed. Each Remote Keyless Entry (RKE) module must have at least one and no more than four transmitters.

ROLLING DOOR LOCKS

When the rolling door lock system is enabled, the RKE module will automatically lock all the vehicle doors and liftgate when all of the following conditions are met:

- All doors are closed
- The vehicle speed exceeds 25.7 Km/h (15 +/- 1 mph).
- The throttle position sensor tip-in is greater than 10 +/- 2 degrees.

The RKE module will automatically re-lock all doors if the above conditions are met and if any of the doors become ajar and then closed again.

The enabling/disabling of the rolling door lock feature is customer programmable, as well as programmable with the scan tool.

The power lock motors are also equipped with a thermal protection system which prevents the motors from burning out. The motors may chatter if they are continuously activated.

DIAGNOSIS AND TESTING

DIAGNOSIS AND TESTING - POWER LOCKS

The most reliable, efficient, and accurate means to diagnose the power lock system requires the use of a scan tool and the proper Diagnostic information. The scan tool can provide confirmation that the CAN data bus is functional, that all of the electronic modules are sending and receiving the proper messages on the CAN data bus, and that the power lock motors are being sent the proper hard wired outputs by the relays for them to perform their power lock system functions.

STANDARD PROCEDURE

DOUBLE ACTIVATION UNLOCK

The toggling of the double activation unlock feature (between enabled and disabled) can be performed with the use of the scan tool, or by the customer.

SCAN TOOL PROGRAMMING

When using the scan tool, select:

1. "CCN"
2. "Miscellaneous Functions"

and then the desired function.

CUSTOMER PROGRAMMING

1. Open the driver door, sit in the driver seat, and close the driver door.
2. Turn the ignition switch to the RUN position (without starting the vehicle) and then back to OFF. Repeat this step three additional times (for a total of four key ON/OFF cycles).
3. Within 10 seconds of switching the ignition switch to the OFF position for the last time (at the end of the fourth cycle in the above step), press the driver interior door lock switch to UNLOCK.
4. A single chime will be heard to verify that the customer programmable toggle of the double activation unlock was successfully completed.

Steps 2 and 3 must be completed within 10 seconds.

NOTE: When toggling the double activation unlock feature (customer programmable), the toggle that happens will be from the last state of the double activation unlock. If the double activation unlock feature was enabled, after the toggle process, it will now be disabled and vice versa. There is no telltale to inform you of which state the double activation unlock feature is in.

ROLLING DOOR LOCKS

The toggling of the rolling door lock feature (between enabled and disabled) can be performed with the use of the scan tool or by the customer.

SCAN TOOL PROGRAMMING

When using the scan tool, select:

1. "Theft Alarm"
2. "VTSS"
3. "Miscellaneous"

and then the desired function.

CUSTOMER PROGRAMMING

1. Open the driver door, sit in the driver seat, and close the driver door.
2. Turn the ignition switch to the RUN position (without starting the vehicle) and then back to OFF. Repeat this step three additional times (for a total of four key ON/OFF cycles).
3. Within 10 seconds of switching the ignition switch to the OFF position for the last time (at the end of the fourth cycle in the above step), press the driver interior door lock switch to LOCK.
4. A single chime will be heard to verify that the customer programmable toggle of the rolling door locks was successfully completed.

Steps 2 and 3 must be completed within 10 seconds.

NOTE: When toggling the rolling door locks (customer programmable), the toggle that happens will be from the last state of the rolling door locks. If the rolling door locks were enabled, after the toggle process, they will now be disabled and vice versa. There is no telltale to inform you of which state the rolling door locks are in.

MODULE, KEYLESS ENTRY

DIAGNOSIS AND TESTING

DIAGNOSIS AND TESTING - REMOTE KEYLESS ENTRY MODULE

The most reliable, efficient, and accurate means to diagnose the power lock system requires the use of a scan tool and the proper Diagnostic information.

Refer to the appropriate wiring information.

REMOVAL

REMOVAL

Refer to **MODULE, SENTRY KEY IMMOBILIZER (SKREEM), REMOVAL** .

INSTALLATION

INSTALLATION

Refer to **MODULE, SENTRY KEY IMMOBILIZER (SKREEM), INSTALLATION** .

MOTOR, DOOR LOCK

DESCRIPTION

DESCRIPTION

The lock mechanisms are actuated by a reversible electric motor mounted within each door and tailgate. The power lock motors are integral to the door latch units.

The power lock motors cannot be adjusted or repaired and, if inoperative or damaged, the door latch unit must be replaced.

OPERATION

OPERATION

The door lock motors are controlled by relays. A positive and negative battery connection to the two motor terminals will cause the motor to move in one direction. Reversing the current will cause the motor to move in the opposite direction.

DIAGNOSIS AND TESTING

DIAGNOSIS AND TESTING - DOOR LOCK MOTOR

The most reliable, efficient, and accurate means to diagnose the power lock system requires the use of a scan tool and the proper Diagnostic information.

Refer to the appropriate wiring information.

1. Make certain battery is in normal condition and fuses powering the RKE

module aren't blown before circuits are tested.

2. To determine which motor is inoperative, check each individual door for electrical lock and unlock or disconnect the motor connectors one at a time, while operating the door lock switch.
3. In the event that none of the motors work, the problem maybe caused by a shorted motor, a bad switch or a bad relay internal to the RKE module. Disconnecting a defective motor will allow the others to work.
4. To test an individual door lock motor, disconnect the electrical connector from the motor.
5. To lock the door, connect a 12 volt power source to one pin of the lock motor and a ground wire to the other pin.
6. To unlock the door, reverse the wire connections at the motor pin terminals.
7. If these results are NOT obtained, replace the motor.

MOTOR, DOOR LOCK, LIFTGATE

REMOVAL

REMOVAL

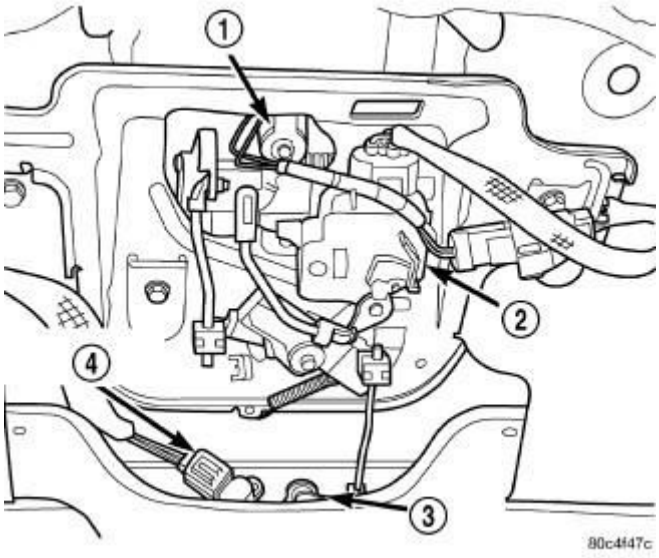

Fig. 1: Locating Liftgate Lock Motor And Latch Assembly
Courtesy of CHRYSLER GROUP, LLC

1. Disconnect and isolate the battery negative cable.
2. Remove liftgate trim panel.
3. Disconnect motor wire harness connector.

4. Remove liftgate lock motor (2) from liftgate by gently unsnapping.

INSTALLATION

INSTALLATION

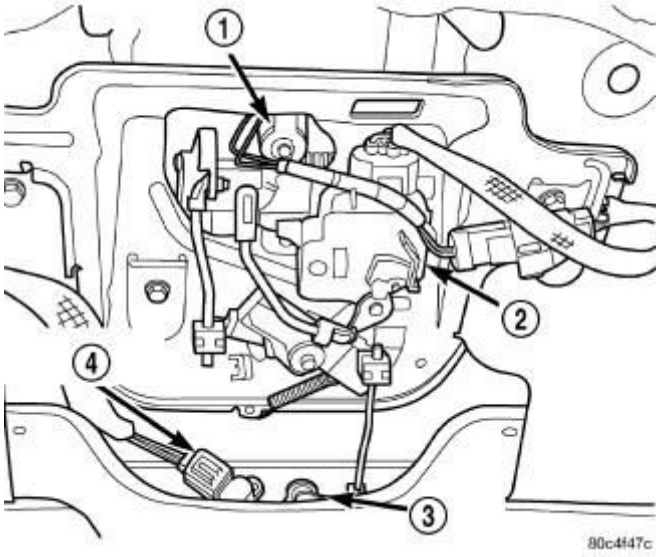

Fig. 2: Locating Liftgate Lock Motor And Latch Assembly
Courtesy of CHRYSLER GROUP, LLC

1. Install liftgate lock motor (2) on the liftgate.
2. Install motor wire harness connector.
3. Install the liftgate trim panel.
4. Connect the battery negative cable.

SWITCH, LOCK

DIAGNOSIS AND TESTING

DIAGNOSIS AND TESTING - DOOR LOCK SWITCH

1. Remove the switch.
2. Using an ohmmeter, refer to Door Lock Switch Test table to determine if switch resistance is correct in the Lock and Unlock switch positions. Refer to appropriate Wiring Diagrams for harness connector pin-outs.

DOOR LOCK SWITCH TEST

SWITCH POSITION	PINS	RESISTANCE VALUE

LOCK	3 AND 8	330 OHM ±10 %
UNLOCK	3 AND 8	100 OHM ± 10 %

REMOVAL

REMOVAL

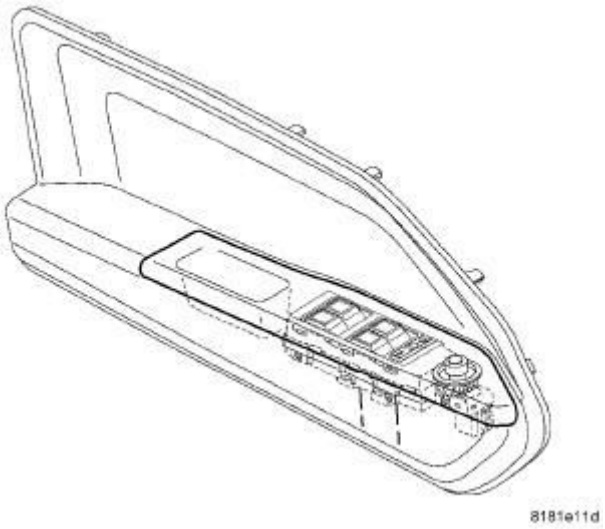

Fig. 3: Power Window Switch
Courtesy of CHRYSLER GROUP, LLC

1. Disconnect and isolate the battery negative cable.
2. Remove the front door bolster. Refer to **DOOR, REMOVAL** .
3. Disconnect the electrical harness connectors.
4. With the bolster on the bench, gently pry in on the tabs of the mirror switch and push through the front of the cover and remove.

INSTALLATION

INSTALLATION

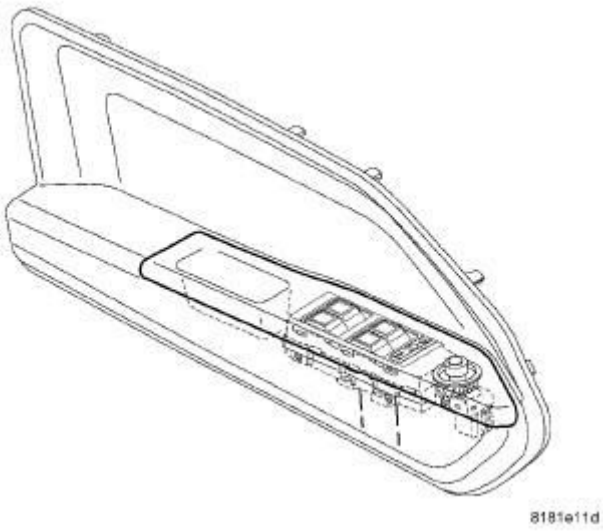

Fig. 4: Power Window Switch
Courtesy of CHRYSLER GROUP, LLC

1. Place the mirror switch in bolster opening and firmly snap into place.
2. Connect the electrical harness connectors.
3. Install the front door bolster. Refer to **DOOR, INSTALLATION** .
4. Connect the battery negative cable.

TRANSMITTER, INTEGRATED KEY FOB

DESCRIPTION

DESCRIPTION

Fig. 5: Transmitter Buttons
Courtesy of CHRYSLER GROUP, LLC

The transmitter has three buttons for operation. They are **LOCK** , **UNLOCK** , and **PANIC** .

OPERATION

OPERATION

- The **UNLOCK** button will unlock the driver door, flash the Park lamps twice and enable illuminated entry. Pushing and releasing the button once will unlock the driver door. Pushing and releasing the button two times within a five second period will unlock all doors (double unlock activation enabled).
- Upon pressing the **LOCK** button, the horn will sound a short chirp (if enabled) and flash the park lamps to notify that the all door lock signal was received and acted upon. Illuminated entry is cancelled and the interior lamps are faded to off.
- Pushing the **PANIC** button will cause the panic alarm to sound for three minutes, until the panic button is pressed a second time, or until the vehicle reaches a speed of 15 m/ph (24 k/ph).

DIAGNOSIS AND TESTING

DIAGNOSIS AND TESTING - REMOTE KEYLESS ENTRY TRANSMITTER

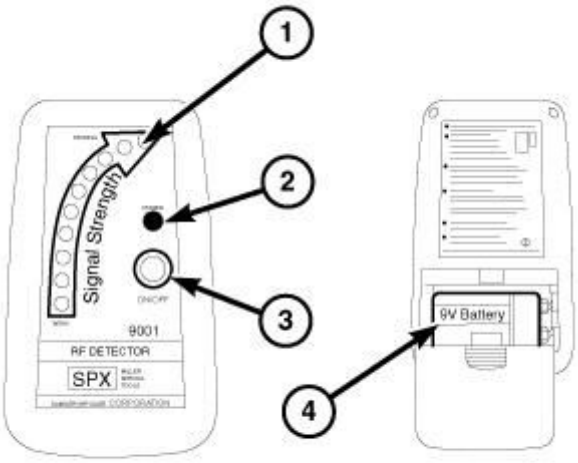

Fig. 6: Radio Frequency Detector #9001
Courtesy of CHRYSLER GROUP, LLC

Using special tool (special tool #9001, RF Detector), first test to ensure that the transmitter is functioning. Typical testing distance is 2.5 centimeters (1 inch) for Asian transmitters and 30.5 centimeters (12 inches) for all others. To test, position the transmitter as shown. Press any transmitter button, then test each button individually. The tool will beep if a radio signal strength that lights five or more LEDs is detected. Repeat this test three times. If transmitter fails any of the test refer to the appropriate Diagnostic information.

STANDARD PROCEDURE

HORN CHIRP TOGGLE

The toggling of the horn chirp (between enabled and disabled) can be performed with the use of the scan tool or by the customer.

SCAN TOOL PROGRAMMING

When using the scan tool, select:

1. "TIPM"
2. "Miscellaneous Functions"

and then the desired function.

CUSTOMER PROGRAMMING

Using a transmitter programmed to the Sentry Key Remote Entry Module, the status of the horn chirp may be toggled by the customer.

NOTE: The SKREEM is responsible for keeping track of the horn chirp status; thus this procedure does not need to be repeated for each transmitter programmed to the system.

1. With the ignition switch in RUN position, press and hold the transmitter Unlock button for a minimum of 4 seconds to a maximum of 10 seconds.
2. While holding the UNLOCK button for 4-10 seconds, press the LOCK button. A chime will be heard to indicate a successful toggle, at which time both buttons may be released.

TRANSMITTER PROGRAMMING

New Remote Keyless Entry (RKE) transmitters can be programed using the scan tool and the proper Diagnostic Information Procedures , if no functioning transmitter is available.

The following procedure can be used as long as one functioning transmitter is available:

1. Insert the key into the ignition switch, and turn the ignition switch to the RUN position (without starting the vehicle).
2. Using the RKE transmitter programmed to the RKE module, press and continuously hold down the UNLOCK button for 4-10 seconds.
3. Within the 4-10 second time range, continue to hold the UNLOCK button and press the PANIC button. Both buttons may then be released. Upon the PANIC button being depressed, the message for customer programming mode will be transmitted to the RKE module.
4. A chime will be heard to verify that the customer programming mode has been entered.
5. Press and release any button on each transmitter that is to be programmed to the RKE module, including any transmitters which were previously programmed to the RKE module (with a maximum of four possible). After

each transmitter is successfully programmed, a chime will be heard to verify that successful programming of the transmitter has occurred.

6. After 30 seconds, or upon the ignition switch being turned OFF, a chime will indicate that the RKE module has exited the programming mode.

RKE TRANSMITTER BATTERIES

The Remote Keyless Entry (RKE) transmitter case snaps open and shut for battery access. To replace the RKE transmitter batteries:

1. Using a thin coin, gently pry at the notch in the center seam of the RKE transmitter case halves near the key ring until the two halves unsnap.
2. Lift the back half of the transmitter case off of the RKE transmitter.
3. Remove the two batteries from the RKE transmitter.
4. Replace the two batteries with new Panasonic 2016, or equivalent. Be certain that the batteries are installed with their polarity correctly oriented.
5. Align the two RKE transmitter case halves with each other, and squeeze them firmly and evenly together until they snap back into place.

SPECIFICATIONS

SPECIFICATIONS

BATTERY

The transmitter has two 3 volt batteries, which can be removed and replaced without special tools. Insert a dime in the side slot of the transmitter case and twist. The halves should separate and the batteries are stacked on top of each other. The batteries are available at local retail stores. Recommended batteries are Panasonic CR 2016 or equivalent. Typical battery life is about two years.

CAUTION: Do not handle the batteries any more than necessary. Hands must be clean and dry.

RANGE

Normal Remote Keyless Entry (RKE) transmitter operation range for vehicles manufactured for domestic markets is up to 20 meters (66 feet) away from the vehicle. On vehicles manufactured for export markets, normal RKE transmitter range is up to 10 meters (33 feet) away from the vehicle. If a domestic market vehicle is equipped with the optional factory-installed Remote Start System, the

normal transmitter range is increased to up to 91 meters (300 feet). Please note that the actual RKE transmitter range values may be better or worse than specified above, depending upon many possible variables in the environment at the specific time and location that any RKE transmission is attempted.

2014 ACCESSORIES AND EQUIPMENT

Power Mirrors - Service Information - Compass & Patriot

DESCRIPTION

DESCRIPTION

The mirrors are controlled by a single switch assembly located on the driver's door trim panel. A three-position rotary joystick switch selects the right or left power mirror for adjustment, or turns the power mirror system Off in the center position. A momentary joystick directional switch allows the driver to adjust the selected power mirror in the Up, Down, Right or Left directions.

The motors which operate the mirrors are part of the mirror assembly and cannot be replaced separately.

These vehicles may be equipped with power foldaway mirrors. This feature allows both the driver and passenger side view mirrors to fold inward (retract) on demand. The vehicle has an additional switch located below the power mirror switch that controls the folding function of the mirror assembly.

The foldaway side view mirror is attached to the vehicle's door in the same manner as mirrors without the foldaway option. The foldaway mirrors unique option is the internal motor which allows the mirrors to fold inward. The fold-away mirror motor is not serviceable separately and if a motor is found to be inoperative, the entire side view mirror must be replaced.

DIAGNOSIS AND TESTING

DIAGNOSIS AND TESTING - POWER MIRRORS

WIRING VOLTAGE TEST (LHD)

The following wiring test determines whether or not voltage is continuous through the body harness to switch.

1. Remove the power mirror switch.
2. Disconnect wire connector from back of power mirror switch.
3. Connect the clip end of a 12 volt test light to Pin 7 in the harness connector at the mirror switch. Touch the test light probe to Pin 3.

If the test light illuminates, the wiring circuit between the battery and switch is OK.

If the lamp does not illuminate, first check fuse 18 in the Junction Block (JB). If fuse 18 is OK, then check for a broken wire.

Refer to the appropriate wiring information.

POWER MIRROR MOTOR TEST (LHD)

If the power mirror switch is receiving proper current and ground and mirrors do not operate, proceed with power mirror motor test. Refer to the appropriate wiring information.

1. Disconnect wire harness connector to power mirror switch.
2. Using two jumper wires:
   - Connect one to a 12 volt source
   - Connect the other to a good body ground
   - Refer to the Mirror Motor Test Chart for proper wire connections at the switch connector.

MIRROR MOTOR TEST CHART

12 VOLTS	GROUND	MIRROR REACTION	
SWITCH CONNECTOR	RIGHT	LEFT	
PIN 4	PIN 1	-	UP
PIN 8	PIN 1	-	LEFT
PIN 1	PIN 4	-	DOWN
PIN 1	PIN 8	-	RIGHT
PIN 9	PIN 10	UP	-
PIN 2	PIN 10	LEFT	-
PIN 10	PIN 9	DOWN	-
PIN 10	PIN 2	RIGHT	-

3. If results shown in chart are not obtained, check for open or shorted circuit. Replace mirror assembly as necessary.

SWITCH, MIRROR, LHD

DIAGNOSIS AND TESTING

DIAGNOSIS AND TESTING - POWER MIRROR SWITCH - LHD

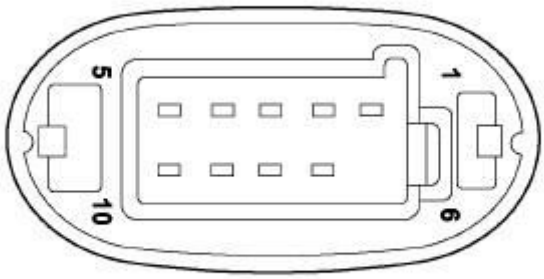

811677ae

Fig. 1: Identifying Power Mirror Switch Terminals
Courtesy of CHRYSLER GROUP, LLC

1. Disconnect and isolate the battery negative cable.
2. Remove power mirror switch. Refer to **SWITCH, MIRROR, LHD, REMOVAL**.
3. Using an ohmmeter, test for continuity between the terminals of the switch as shown in the Mirror Switch Test table.
4. If test results are not obtained as shown in the Mirror Switch Test table, replace the switch.

MIRROR SWITCH TEST TABLE

SWITCH POSITION MOVE BUTTON	CONTINUITY BETWEEN TERMINALS
MIRROR IN "L" POSITION	
UP	PIN 2 TO 4 PIN 4 TO 7 PIN 8 TO 10
RIGHT	PIN 3 TO 8 PIN 8 TO 9 PIN 4 TO 10
DOWN	PIN 2 TO 8

	PIN 7 TO 8 PIN 4 TO 10
LEFT	PIN 3 TO 4 PIN 4 TO 9 PIN 8 TO 10
MIRROR IN "R" POSITION	
UP	PIN 2 TO 4 PIN 4 TO 7 PIN 1 TO 8
RIGHT	PIN 1 TO 4 PIN 3 TO 8 PIN 8 TO 9
DOWN	PIN 1 TO 4 PIN 2 TO 8 PIN 7 TO 8
LEFT	PIN 3 TO 4 PIN 1 TO 8 PIN 4 TO 9

REMOVAL

REMOVAL

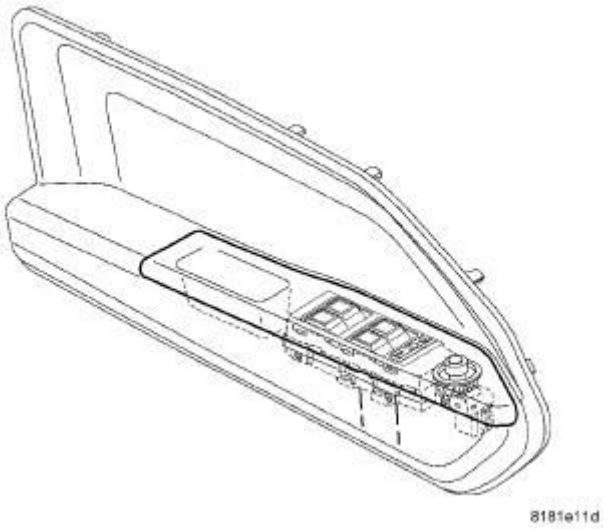

Fig. 2: Power Window Switch
Courtesy of CHRYSLER GROUP, LLC

1. Disconnect and isolate the battery negative cable.
2. Remove the front door bolster. Refer to **DOOR, REMOVAL** .
3. Disconnect the electrical harness connectors.
4. With the bolster on the bench, gently pry in on the tabs of the mirror switch and push through the front of the cover and remove.

INSTALLATION

INSTALLATION

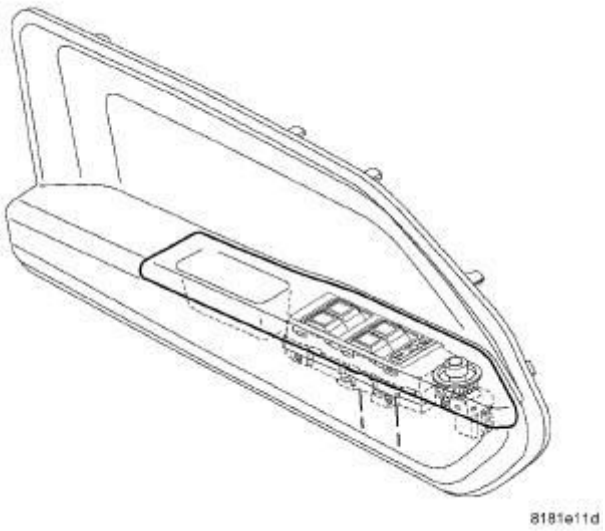

Fig. 3: Power Window Switch
Courtesy of CHRYSLER GROUP, LLC

1. Place the mirror switch in bolster opening and firmly snap into place.
2. Connect the electrical harness connectors.
3. Install the front door bolster. Refer to **PANEL, DOOR TRIM, BOLSTER, INSTALLATION** .
4. Connect the battery negative cable.

SWITCH, POWER FOLDAWAY MIRROR, RHD

DIAGNOSIS AND TESTING

DIAGNOSIS AND TESTING - POWER FOLDAWAY MIRROR SWITCH - RHD

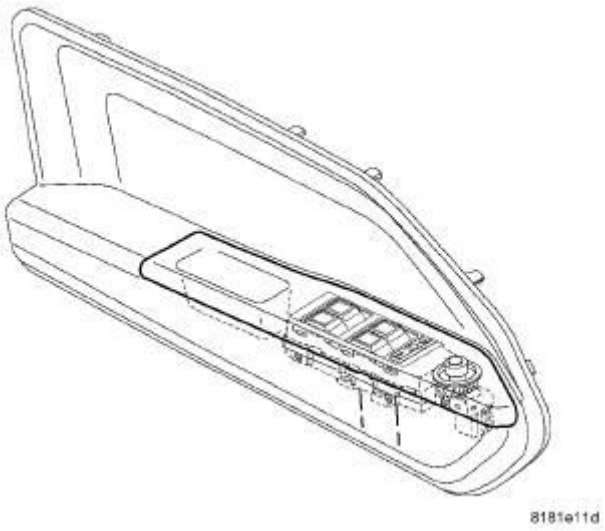

Fig. 4: Power Window Switch
Courtesy of CHRYSLER GROUP, LLC

The following test is designed to be used only on vehicles equipped with power foldaway side view mirrors.

1. Remove power mirror switch from mounting position. Refer to **SWITCH, POWER FOLDAWAY MIRROR, RHD, REMOVAL**.
2. Using an ohmmeter, test for continuity between the terminals of the switch as shown in the tables below.

NOTE: When testing using the chart below be certain to read the chart correctly. Example - When testing left mirror "DOWN?", pins 1, 9, 10 will show continuity to each other but not with 3, 4, 5.

3. If test results are not obtained as shown in the tables below, replace the switch.

EXTENDED MIRROR SWITCH CIRCUIT TEST

NOTE: Mirror position switch must be in the "extended" position to use chart below.

WOBBLE PLATE POSITION	LEFT MIRROR SELECTED	RIGHT MIRROR SELECTED

	CONTINUITY BETWEEN PINS	CONTINUITY BETWEEN PINS
DOWN 3, 4, 5	1, 9, 10 3, 4, 5	6, 9, 10
UP 3, 9, 10	1, 4, 5 3, 9, 10	6, 4, 5
RIGHT 3, 4, 5	2, 9, 10 3, 4, 5	7, 9, 10
LEFT 3, 9, 10	2, 4, 5 3, 9, 10	7, 4, 5

RETRACTED MIRROR SWITCH CIRCUIT TEST

NOTE: Mirror position switch must be in the "retracted" position to use chart below.

WOBBLE PLATE POSITION	LEFT MIRROR SELECTED	RIGHT MIRROR SELECTED
	CONTINUITY BETWEEN PINS	CONTINUITY BETWEEN PINS
DOWN	1, 3, 4, 9	3, 4, 6, 9
UP	1, 3, 4, 9	3, 4, 6, 9
RIGHT	2, 3, 4, 9	3, 4, 7, 9
LEFT	2, 3, 4, 9	3, 4, 7, 9

REMOVAL

REMOVAL

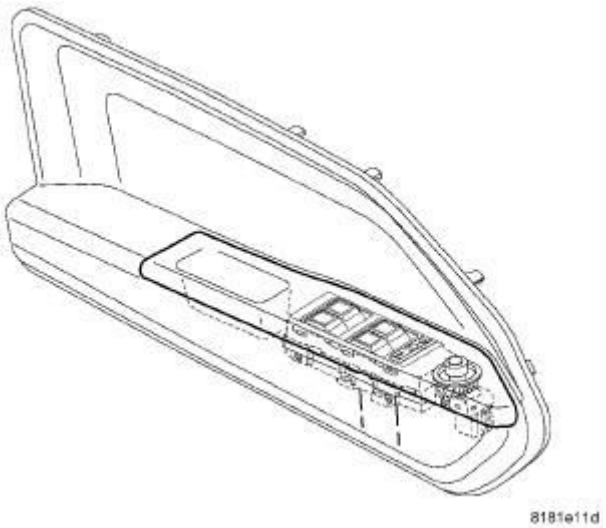

Fig. 5: Power Window Switch
Courtesy of CHRYSLER GROUP, LLC

1. Disconnect and isolate the battery negative cable.
2. Remove the front door bolster. Refer to **PANEL, DOOR TRIM, BOLSTER, REMOVAL** .
3. Disconnect the electrical harness connectors.
4. With the bolster on the bench, gently pry in on the tabs of the mirror switch and push through the front of the cover and remove.

INSTALLATION

INSTALLATION

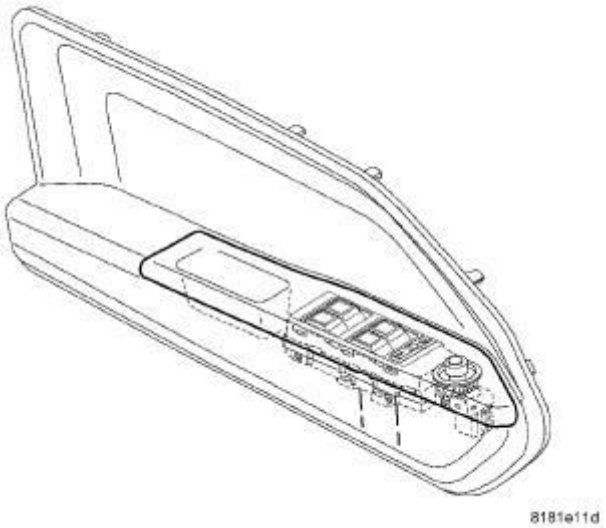

Fig. 6: Power Window Switch
Courtesy of CHRYSLER GROUP, LLC

1. Place the mirror switch in bolster opening and firmly snap into place.
2. Connect the electrical harness connectors.
3. Install the front door bolster. Refer to **PANEL, DOOR TRIM, BOLSTER, INSTALLATION** .
4. Connect the battery negative cable.

2014 ACCESSORIES AND EQUIPMENT

Power Seats - Service Information - Compass & Patriot

DESCRIPTION

DESCRIPTION

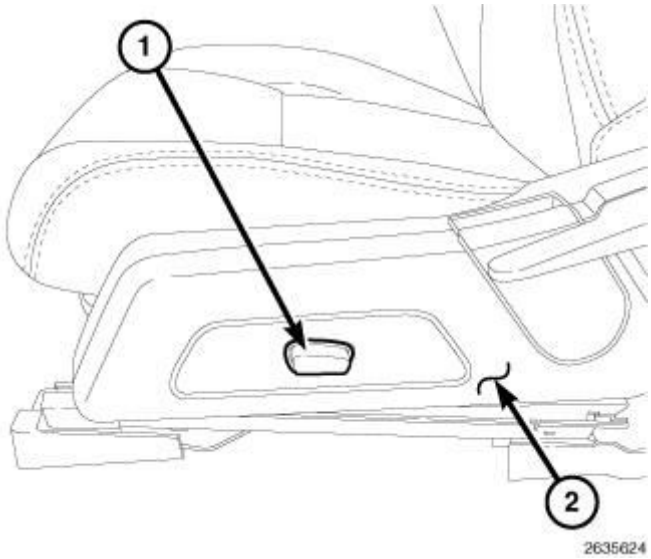

Fig. 1: Identifying Power Seat Switch & Outboard Seat Cushion Side Shield
Courtesy of CHRYSLER GROUP, LLC

A driver side six-way power seat is available on this vehicle. The power seat system allows the driver to electrically adjust the seating position using the power seat switch (1) located on the outboard seat cushion side shield (2).

The six-way power seat can be adjusted with the rear of the seat cushion either up or down, front of seat cushion either up or down, both the front and rear of the seat cushion adjusted up or down together, and the seat assembly positioned forward and rearward. The power seat system may also be equipped with heated seats. Refer to **DESCRIPTION** .

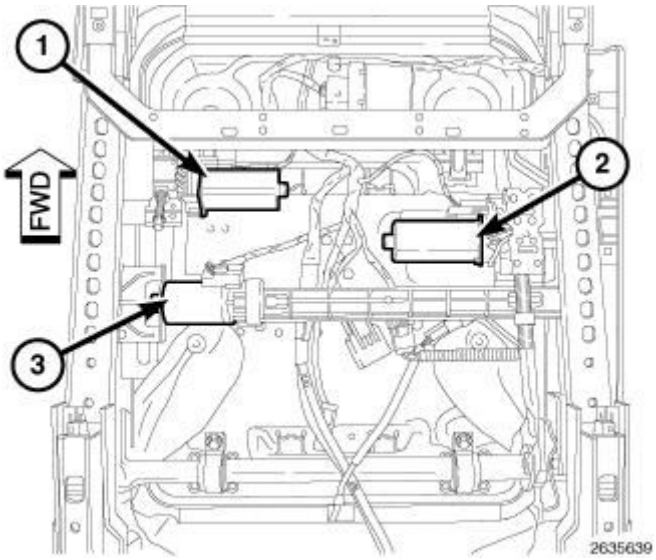

Fig. 2: Reversible Motor, Up/Down Seat Motor & Forward/Rearward Seat Motor
Courtesy of CHRYSLER GROUP, LLC

The power seat adjuster assembly is made up of an upper and a lower power seat adjuster. The upper power seat adjuster contains one reversible motor (1) that is connected to a gearbox that tilts the front of the seat cushion up and down. The lower power seat adjusted contains two reversible motors connected to gearboxes. One motor (2) tilts the rear of the seat up and down and the other motor (3) moves the seat assembly forward and rearward. When the rear and front tilt motors are activated together, the height of the driver seat raises and lowers. Each motor contains a self-resetting circuit breaker to protect it from overload. Consecutive or frequent resetting of the circuit breakers may damage the motors.

The power seat motors cannot be adjusted or repaired and if inoperative or damaged, the entire power seat adjuster assembly must be replaced. Refer to **TRACK, SEAT, REMOVAL**.

OPERATION

OPERATION

The power seat system receives battery current through a fuse in the Totally Integrated Power Module (TIPM) so that the power seats remain operational, regardless of the ignition switch position.

When a power seat switch is actuated, a battery feed and a ground path are

applied through the power seat switch contacts to the appropriate motor or motors. The motor and drive unit operate to move the seat in the selected direction until the switch is released, or until the travel limit of the power seat track is reached. When the switch is moved in the opposite direction, the battery feed and ground path to the motor is reversed through the switch contacts. This causes the motor to run in the opposite direction.

DIAGNOSIS AND TESTING

DIAGNOSIS AND TESTING - POWER SEAT SYSTEM

Operate the power seat switch and move the seat in all directions. The seat should move in each of the selected directions.

If the power seat adjuster fails to operate in more than one direction, proceed as follows:

1. Inspect the power seat track adjuster motors to ensure the electrical connectors are fully seated to the motors. If OK, go to 2. If not OK, connect the electrical connector to the fully seated position.
2. Check the power seat fuse in the Totally Integrated Power Module (TIPM). If OK, go to 3. If not OK, replace the inoperative fuse.
3. Remove the power seat switch from the seat cushion side shield. Refer to **SWITCH, SEAT, REMOVAL**. Check for battery voltage at the fused B(+) circuit cavity of the power seat switch wire harness connector. If OK, go to 4. If not OK, repair the open circuit to the TIPM as required.
4. Check for continuity between the ground circuit cavity of the power seat switch wire harness connector and a good ground. There should be continuity. If OK, go to 5. If not OK, repair the open circuit to ground as required.
5. Refer to **SWITCH, SEAT, DIAGNOSIS AND TESTING**. If the switch tests OK, check the wire harness between the power seat switch and the motor. If the circuits check OK, replace the faulty power seat track assembly. If the circuits are not OK, repair the wire harness as required.

SWITCH, SEAT

DESCRIPTION

DESCRIPTION

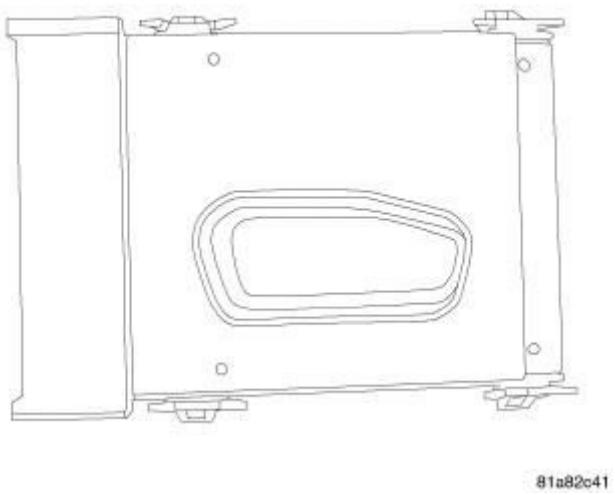

Fig. 3: Power Seat Switch
Courtesy of CHRYSLER GROUP, LLC

The driver power seat can be adjusted in six different ways using the power seat switch. The power seat switch is located on the lower outboard side of the seat cushion and incorporates a switch with a control paddle.

The power seat switch cannot be adjusted or repaired and must be replaced if inoperative or damaged.

OPERATION

OPERATION

When a power seat switch is actuated, a battery feed and a ground path are applied through the switch contacts to the power seat track adjuster motor. The selected adjuster motor operates to move the seat through its drive unit in the selected direction until the switch is released, or until the travel limit of the adjuster is reached. When the switch is moved in the opposite direction, the battery feed and ground path to the motor are reversed through the switch contacts. This causes the adjuster motor to run in the opposite direction.

No power seat switch should be held applied in any direction after the adjuster has reached its travel limit. The power seat adjuster motors each contain a self-resetting circuit breaker to protect them from overload. However, consecutive or frequent resetting of the circuit breaker may result in motor damage.

DIAGNOSIS AND TESTING

DIAGNOSIS AND TESTING - POWER SEAT SWITCH

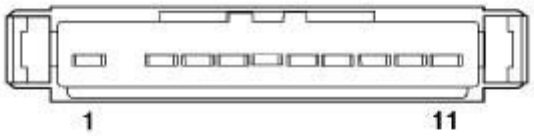

8132c253

Fig. 4: Power Seat Switch Terminals
Courtesy of CHRYSLER GROUP, LLC

1. Disconnect and isolate the battery negative cable.
2. Remove the power seat switch from the power seat. Refer to **SWITCH, SEAT, REMOVAL**.
3. Use an ohmmeter to test the continuity of the power seat switch. Refer to **POWER SEAT SWITCH CONTINUITY**. If not OK, replace the faulty power seat switch. If switch tests OK, refer to **DIAGNOSIS AND TESTING**.

POWER SEAT SWITCH CONTINUITY

SWITCH POSITION	CONTINUITY BETWEEN
OFF	7-1, 7-3, 7-4, 7-5, 7-8, 7-9, 7-10, 7-11
HORIZONTAL FORWARD	6-8, 7-1, 7-3, 7-4, 7-5, 7-9, 7-10, 7-11
HORIZONTAL REARWARD	6-4, 7-1, 7-3, 7-5, 7-8, 7-9, 7-10, 7-11
FRONT TILT DOWN	6-5, 7-1, 7-3, 7-4, 7-8, 7-9, 7-10, 7-11
FRONT TILT UP	6-9, 7-1, 7-3, 7-4, 7-5, 7-8, 7-10, 7-11
REAR TILT DOWN	6-10, 7-1, 7-3, 7-4, 7-5, 7-8, 7-9, 7-11
REAR TILT UP	6-11, 7-1, 7-3, 7-4, 7-5, 7-8, 7-9, 7-10

REMOVAL

REMOVAL

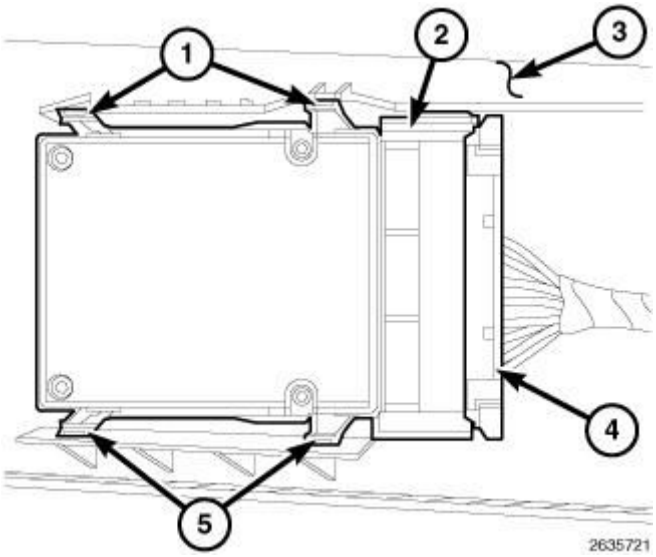

Fig. 5: Identifying Tabs, Seat Switch, Outboard Seat Cushion Side Shield & Wiring Harness Connector
Courtesy of CHRYSLER GROUP, LLC

1. Disconnect and isolate the negative battery cable.
2. Remove the outboard seat cushion side shield (3).
3. Disconnect the wiring harness connector (4) from the power seat switch (2).
4. Using a small flat bladed tool, gently disengage the four tabs (1 and 5) that secure the power seat switch to the seat cushion side shield and remove the switch.

INSTALLATION

INSTALLATION

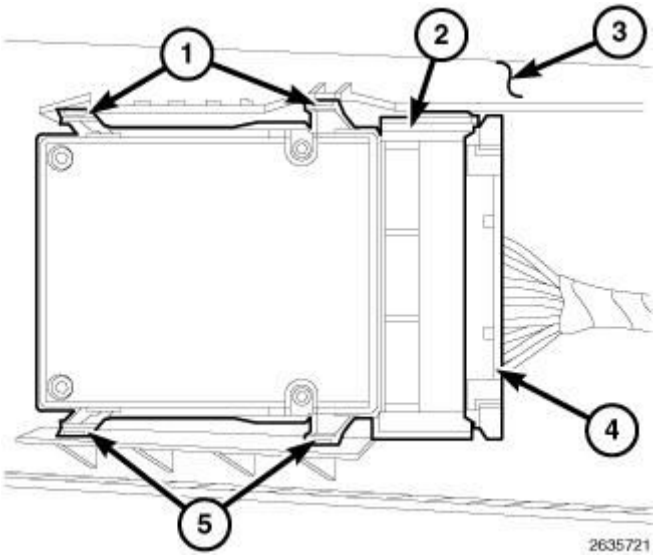

Fig. 6: Identifying Tabs, Seat Switch, Outboard Seat Cushion Side Shield &

Wiring Harness Connector
Courtesy of CHRYSLER GROUP, LLC

1. Install the power seat switch (2) onto the seat cushion side shield (3). Make sure the retaining tabs (1 and 5) are fully engaged.
2. Connect the wiring harness connector (4) to the power seat switch.
3. Install the seat cushion side shield.
4. Reconnect the negative battery cable.
5. Verify power seat operation.

TRACK, SEAT

REMOVAL

REMOVAL

NOTE: Take the proper precautions to protect the seat from cosmetic damage while performing this procedure.

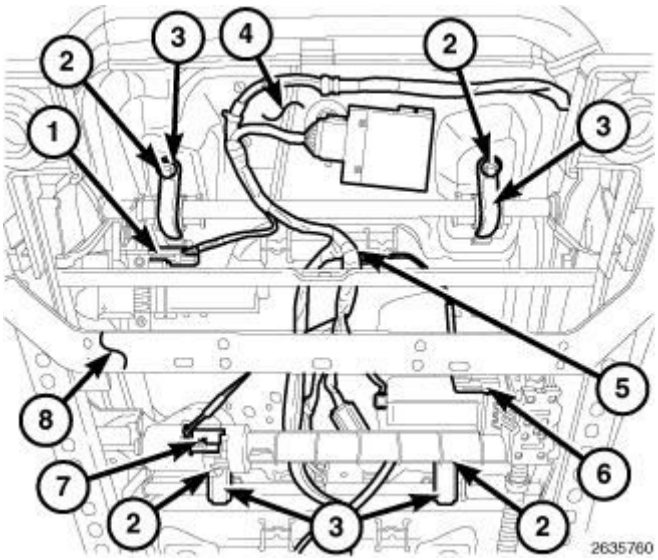

Fig. 7: Identifying Harness Connectors, Bolts, Seat Cushion Pan Brackets, Seat Cushion Pan, Wire Harness & Power Seat Adjuster Assembly
Courtesy of CHRYSLER GROUP, LLC

1. Disconnect and isolate the negative battery cable.
2. Remove the front seat and place it on a workbench. Refer to **SEAT, FRONT, REMOVAL** .
3. Disconnect the wire harness connectors (1, 6 and 7) from the three power

seat motors.

4. Remove the wire harness (5) from the power seat adjuster assembly (8).
5. Remove the four bolts (2) that secure the four seat cushion pan brackets (3) to the seat cushion pan (4) and remove the brackets.
6. Remove the seat cushion and pan from the power seat adjuster assembly.
7. Remove the seat cushion side shields and the seat back. Refer to **SEAT BACK, FRONT, REMOVAL** and **SEAT BACK, REAR, REMOVAL** .
8. Transfer any parts from power seat adjuster assembly as necessary.

INSTALLATION

INSTALLATION

NOTE: Take the proper precautions to protect the seat from cosmetic damage while performing this procedure.

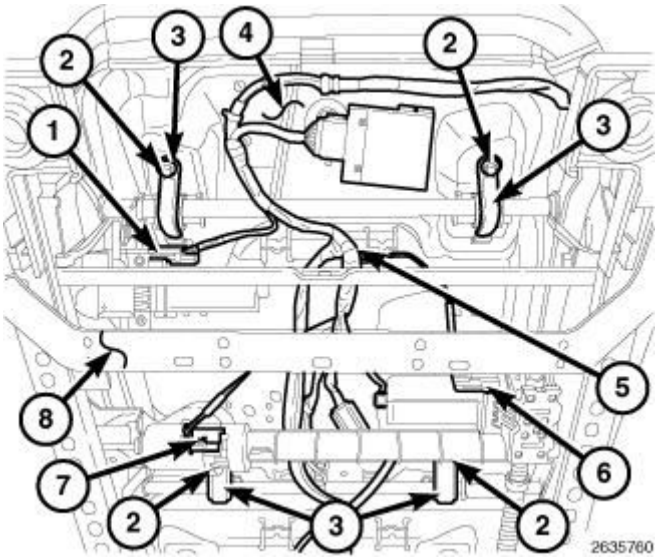

Fig. 8: Identifying Harness Connectors, Bolts, Seat Cushion Pan Brackets, Seat Cushion Pan, Wire Harness & Power Seat Adjuster Assembly
Courtesy of CHRYSLER GROUP, LLC

1. Transfer any parts onto power seat adjuster assembly (8) as necessary.
2. Install the seat back and seat cushion side shields. Refer to **SEAT BACK, FRONT, INSTALLATION** and **SEAT BACK, REAR, INSTALLATION** .
3. Position the seat cushion and pan (4) onto the power seat adjuster assembly.
4. Install the four seat cushion pan brackets (3) and bolts (2). Tighten the bolts

securely.

5. Install the wire harness (5). Make sure all harness retainers are fully engaged to the adjuster assembly and seat cushion pan.
6. Connect the wire harness connectors (1, 6 and 7) to the three power seat motors.
7. Install the front seat. Refer to **SEAT, FRONT, INSTALLATION** .
8. Reconnect the negative battery cable.
9. Verify power seat operation.

2014 ACCESSORIES AND EQUIPMENT

Power Top - Service Information - Compass & Patriot

DESCRIPTION

DESCRIPTION

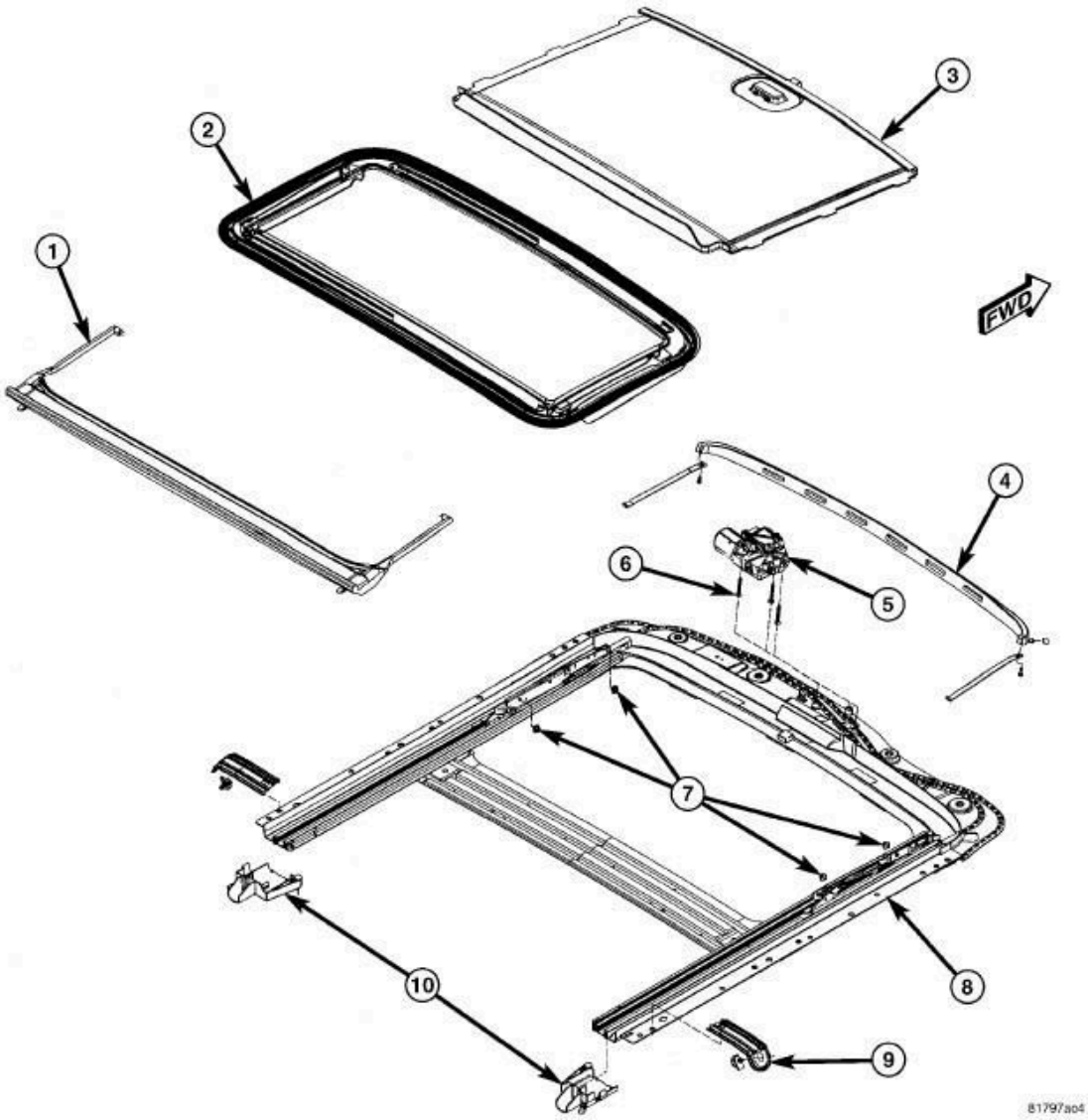

Fig. 1: Exploded View
Courtesy of CHRYSLER GROUP, LLC

1 - DRAIN TROUGH
2 - GLASS ASSEMBLY
3 - SUN SHADE
4 - WIND DEFLECTOR
5 - MOTOR

6 - MOTOR SCREWS (3) 3 N.m (26 in. lbs.)
7 - GLASS ASSEMBLY SCREWS (4) 3.5 N.m (31 in. lbs.)
8 - FRAME ASSEMBLY
9 - BRACKETS
10 - END CAPS

WARNING: Keep fingers and other body parts away from sunroof and sunroof opening at all times. Failure to follow these instruction may result in serious or fatal injury.

The sunroof features a power sliding glass panel and a sunshade which can be manually positioned anywhere along its travel, rearward of glass panel front edge.

The sunroof is electrically operated from two switches located on the windshield header, between the map lamp. To operate the sunroof the ignition switch must be in either the Accessory or On/Run position. One switch (vent) is a push button type and opens the sunroof to the vent position only. The other switch (open/close) is a rocker type for opening and closing the sunroof. Pressing and releasing the open button once the sunroof will express open and the wind deflector will raise. If the button is pressed a second time the sunroof will stop in that position. Pressing and holding the close button will close the sunroof. If the close button is released the sunroof will stop in that position. Also, by pressing the close button the sunroof will close automatically.

SUNROOF OPERATION INSTRUCTIONS

SWITCH INPUTS			
	OPEN	CLOSE	VENT
FULL VENT	1. Push and hold switch until glass stops in flush closed position glass will then express open 2. Press switch	1. Push and hold switch until glass stops in flush closed position. 2. Press switch for	No action

	for less than 0.65 seconds for express to full open.	less than 0.65 seconds for express to flush closed.	
VENT RANGE	1. Push and hold switch until glass passes through flush closed position. Glass will then open 2. Press switch for less than 0.65 seconds for express to full open.	1. Push and hold switch until glass stops in flush closed position. 2. Press switch for less than 0.65 seconds for express to flush closed.	1. Push and hold switch until glass stops in full vent position. 2. Press switch for less than 0.65 seconds for express to full vent.
FLUSH	1. Press switch for less than 0.65 seconds for express to full open. 2. Press switch for more than 0.65 seconds and glass will stop when switch is released	No action	1. Press and hold switch. Glass will travel through flush closed to full vent. Glass will stop when switch is released or when fully vented. 2. Press switch for less than 0.65 seconds for express to full vent.
FULL OPEN	No action	1. Press and hold switch until glass stops in flush closed position or anywhere in between. 2. Press switch for	1. Press and hold switch. Glass will travel through flush closed to full vent. Glass will stop when switch is released. 2. Press switch for

		less than 0.65 seconds for express to flush closed.	less than 0.65 seconds for express to full vent.

OPERATION

OPERATION

This vehicle has a vent, tilt and slide power sunroof system with express (one-touch) open/close feature. The sunroof system receives battery feed through the "sunroof" relay and a 25 amp mini fuse located in the Totally Integrated Power Module (TIPM). The sunroof system power is supplied when the ignition switch is in the RUN and ACCESSORY positions. The sunroof will operate normally with the key in any position while the Accessory Delay system is active.

The sunroof is electrically operated from two switches located in the overhead console in between the two reading lamps. The "VENT" switch is a push button type switch and opens the sunroof to the vent position only. The other switch "OPEN/CLOSED" is a rocker type switch for opening and closing the sunroof. Pressing and releasing the open button once, the sunroof will express open and the wind deflector will raise. If the button is pressed a second time the sunroof will stop in that position. Pressing and releasing the close button once will express close the sunroof. If the close button is pressed a second time during the express close operation the sunroof will stop in that position.

DIAGNOSIS AND TESTING

DIAGNOSIS AND TESTING - SUNROOF

Before beginning sunroof diagnostics verify that all other power accessories are in proper operating condition. Refer to Sunroof Diagnostic Chart for possible causes. If not, a common electrical problem may exist. Refer to the appropriate Wiring Diagrams in this Service Information for circuit, splice and component descriptions. Check the condition of the circuit protection (20 amp circuit breaker in the Totally Integrated Power Module (TIPM)). Inspect all wiring connector pins for proper engagement and continuity. Check for battery voltage at the power sunroof drive motor. Refer to the appropriate Wiring Diagrams for circuit information. If battery voltage of more than 9 volts is detected at the drive motor, proceed with the following tests (the drive motor will not operate at less than 9

volts).

Before beginning diagnosis for wind noise or water leaks, verify that the problem was not caused by releasing the control switch before the sunroof was fully closed. The sunroof module has a water-management system. If however, the sunroof glass is in a partial closed position, high pressure water may be forced beyond the water management system boundaries and onto the headlining.

SUNROOF DIAGNOSIS CHART

SYMPTOM	POSSIBLE CAUSE
Sunroof motor inoperative.	Faulty control switch. Faulty circuit ground between sunroof drive motor, control switch, and body harness. Faulty power circuit between sunroof drive motor, control switch, and body harness. Faulty drive motor. Faulty drive motor electrical connector.
Audible whine when switch is depressed, sunroof does not operate.	Faulty drive motor. Binding cable.
Audible clicking or ratcheting when switch is pressed, sunroof does not operate.	Broken or worn drive cable. Worn drive motor gear. Mechanisms not synchronized.
Sunroof vents and opens, but does not close.	Binding cable. Faulty circuit. Faulty control switch. Faulty drive motor. Broken trough guide
Sunroof vents, but does not open.	Binding cable or mechanism. Faulty circuit. Faulty switch. Faulty drive motor.
Sunroof does not vent.	Binding cable or mechanism. Faulty circuit. Faulty control switch.

	Faulty drive motor.
Sunroof water leak.	Drain tubes clogged or kinked or disconnected from the sunroof. Glass panel improperly adjusted. Faulty glass panel seal.
Gurgling sound from sunroof.	Low spot in drain hose routing, allowing water to stand.
Wind noise from sunroof.	Front of glass panel to high or rear to low. Wind deflector not deploying. Glass not centered in opening. Faulty glass panel seal.
Rattles from open sunroof while driving.	Loose or broken attaching hardware. Worn or broken mechanism.
Sunroof does not stop in the fully closed position.	Drive motor has lost position of glass, teach procedure required to reprogram drive motor. Refer to **STANDARD PROCEDURE - DRIVE MOTOR TEACH PROCEDURE** .

MOTOR, SUNROOF

STANDARD PROCEDURE

STANDARD PROCEDURE - DRIVE MOTOR TEACH PROCEDURE

REPLACEMENT DRIVE MOTOR

1. Upon first powering up the sunroof, **continuously** press the close button on the power sunroof switch. The sunroof will begin moving in the tilt up direction.
2. The glass panel will move to the hard stop (just past the full tilt position) and then reverse to the soft stop (the full tilt position).
3. Once the sunroof has reversed **immediately** (within 5 seconds of stopping travel), release the switch and **continuously** press the close button again.
4. The sunroof glass will continue to move to the fully closed position. Once fully closed the close button can be released.

ORIGINAL DRIVE MOTOR

1. Cycle the sunroof to full close position and release close button on the power sunroof switch.
2. Once the sunroof is in the fully closed position, press and **continuously** hold the close button again.
3. After a ten second delay the sunroof will begin to move past the normal vent position to the hard stop position. It will then reverse to the normal full vent position (also called the soft stop).
4. Once the sunroof has reversed to the vent soft stop, **immediately** (within 5 seconds of stopping travel) release the close button and **continuously** press it again.
5. After a three second delay the sunroof glass will continue to move to the fully closed position. Once fully closed the close button can be released.

REMOVAL

REMOVAL

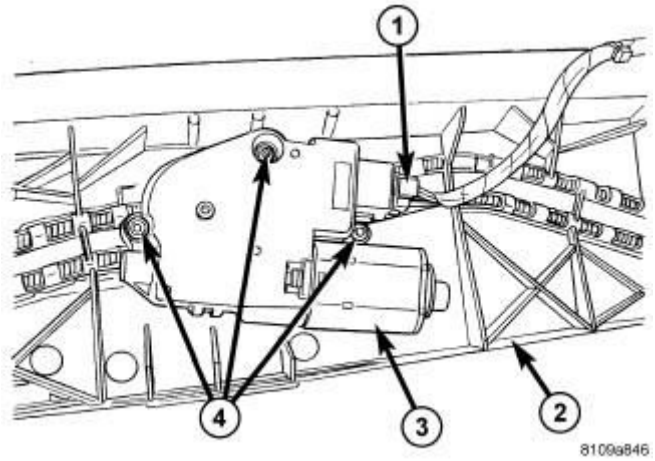

Fig. 2: Identifying Electrical Connector, Motor Bracket, Motor Assembly And Screws
Courtesy of CHRYSLER GROUP, LLC

1 - ELECTRICAL CONNECTOR
2 - MODULE ASSEMBLY
3 - DRIVE MOTOR
4 - MOUNTING SCREWS

1. Remove headliner. Refer to **HEADLINER, REMOVAL** .

2. Disconnect the electrical connector (1).
3. Remove three motor assembly attaching screws (4) from bottom side of motor assembly (3) and remove motor assembly from the motor bracket.

INSTALLATION

INSTALLATION

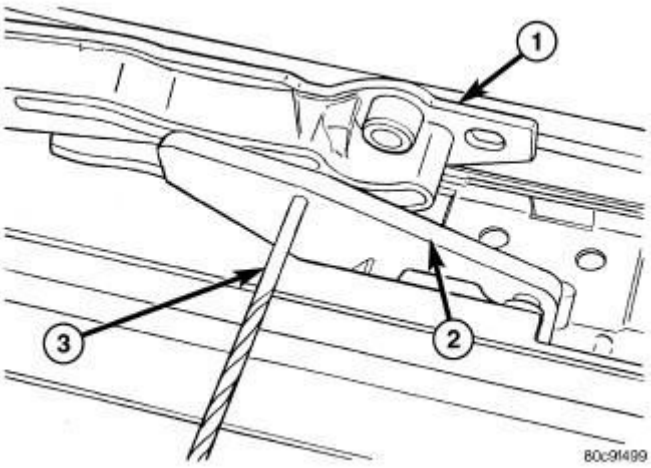

Fig. 3: Lift Arm Positioning
Courtesy of CHRYSLER GROUP, LLC

1 - LIFTER ARM
2 - TROLLEY
3 - ALIGNMENT PIN

1. If sunroof was open when drive motor was removed, carefully move glass panel into closed position and remove glass panel. Refer to **GLASS, SUNROOF, REMOVAL** .
2. Set lifter arm timing by manually sliding the mechanisms (1) in the track until timing holes in the trollies are aligned with the timing holes in the lifter arm cams (2) and insert pins (3) into the mechanisms to hold mechanisms in closed position.

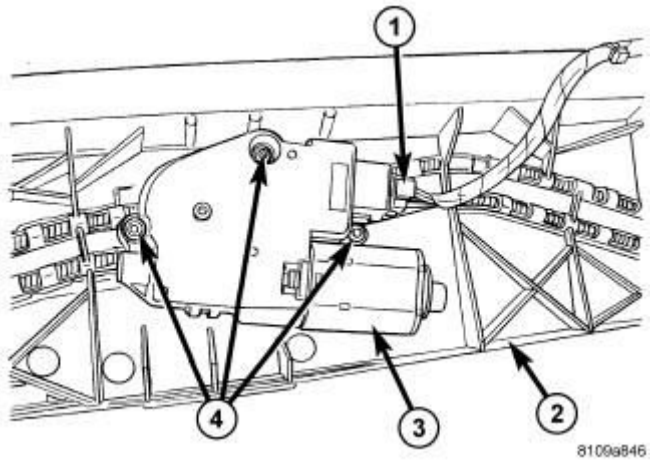

Fig. 4: Identifying Electrical Connector, Motor Bracket, Motor Assembly And Screws
Courtesy of CHRYSLER GROUP, LLC

1 - ELECTRICAL CONNECTOR
2 - MODULE ASSEMBLY
3 - DRIVE MOTOR
4 - MOUNTING SCREWS

3. Place motor (3) into position and install screws (4) attaching motor to bracket (2).
4. Tighten the screws (4) to 3 N.m (26 in. lbs.).
5. If sunroof glass panel was removed previously, remove the timing pins and install the sunroof glass panel. Refer to **GLASS, SUNROOF, INSTALLATION** .
6. Partially install the headliner and connect the sunroof wiring electrical connectors. Refer to **HEADLINER, INSTALLATION** .
7. Temporarily install sunroof switch and perform the sunroof motor teach procedure. Refer to **MOTOR, SUNROOF, STANDARD PROCEDURE**.
8. Test sunroof operation, adjust glass as necessary. Refer to **GLASS, SUNROOF, ADJUSTMENTS** .
9. Complete the headliner installation. Refer to **HEADLINER, INSTALLATION** .

SWITCH, SUNROOF

DESCRIPTION

DESCRIPTION

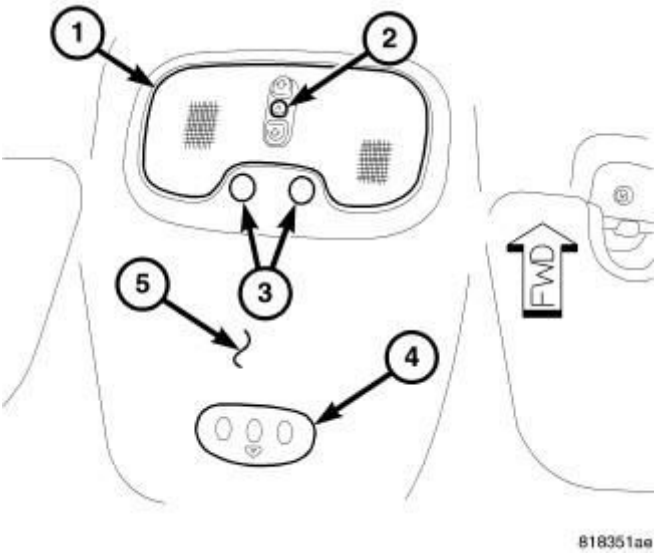

Fig. 5: Sunroof Switch
Courtesy of CHRYSLER GROUP, LLC

The power sunroof switch (2) is a combination push-button and rocker switch module mounted in the Courtesy/Reading Lamp assembly (1). The sunroof switch is a direct contact unit that is directly wired to the sunroof motor/module assembly. The sunroof switch performs the following functions:

- Power sunroof open (back of switch pushed)
- Power sunroof express open (back of switch pushed and released)
- Power sunroof closed (front of switch pushed)
- Power sunroof express closed (front of switch pushed and released)
- Power sunroof vent (switch center button pushed)

The power sunroof switch cannot be repaired. If the individual components are damaged or inoperative the switch assembly must be replaced. Refer to **SWITCH, SUNROOF, REMOVAL**.

OPERATION

OPERATION

The sunroof is electrically operated from two switches located in the headliner on the courtesy/reading lamp assembly. The power sunroof switch is hard wired to the sunroof motor/module assembly. The "VENT" switch is a push button type switch and opens the sunroof to the vent position only. The other switch

"OPEN/CLOSED" is a rocker type switch for opening and closing the sunroof. Pressing and releasing the open button once, the sunroof will express open and the wind deflector will raise. If the button is pressed a second time the sunroof will stop in that position. Pressing and releasing the close button once will express close the sunroof. If the close button is pressed a second time during the express close operation the sunroof will stop in that position.

The switch is grounded at one terminal and receives a 5 volt signal from the sunroof motor/module on the remaining three terminals. The switch pulls down the 5 volt reference voltage from the module signaling it to perform the desired function.

For complete circuit diagrams, refer to the appropriate wiring information. The wiring information includes wiring diagrams, proper wire and connector repair procedures, details of wire harness routing and retention, connector pin-out information and location views for the various wire harness connectors, splices and grounds.

DIAGNOSIS AND TESTING

DIAGNOSIS AND TESTING - SUNROOF SWITCH

For complete circuit diagrams, refer to the appropriate wiring information. The wiring information includes wiring diagrams, proper wire and connector repair procedures, details of wire harness routing and retention, connector pin-out information and location views for the various wire harness connectors, splices and grounds.

1. Remove the power sunroof switch. Refer to **SWITCH, SUNROOF, REMOVAL**.
2. Disconnect the power sunroof switch wire harness connector.
3. With the ignition key in the "RUN" position check for 5 volts on the "OPEN", "CLOSE" and "VENT" circuits of the sunroof switch harness connector. If OK, go to 4. If not OK, inspect the wiring harness and connectors between the motor/module and switch for damage and repair as necessary.
4. With the ignition key in the "OFF" position check for continuity between the ground circuit of the sunroof switch harness connector and a known good ground. Continuity should be present. If OK, go to 5. If not OK, inspect the wiring harness and connector and repair the ground circuit as necessary.

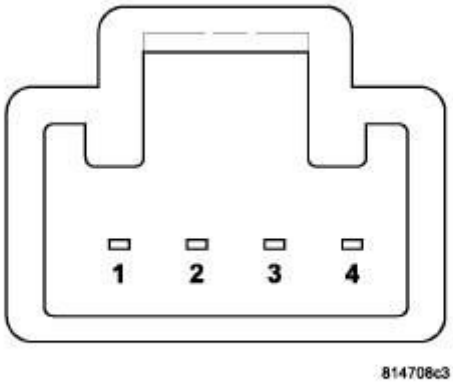

Fig. 6: Sunroof Switch Pinout
Courtesy of CHRYSLER GROUP, LLC

5. Using an ohmmeter, test the continuity of the power sunroof switch in each switch position. Refer to **POWER SUNROOF SWITCH CONTINUITY TABLE**. If OK, inspect the wiring harness and connectors for damage and repair as necessary. If not OK, replace the power sunroof switch. Refer to **SWITCH, SUNROOF, REMOVAL**.

POWER SUNROOF SWITCH CONTINUITY TABLE

SWITCH POSITION	CONTINUITY BETWEEN PINS
OFF	NO CONTINUITY
SUNROOF OPEN	2 AND 3
SUNROOF CLOSED	2 AND 4
SUNROOF VENT	2 AND 1

REMOVAL

REMOVAL

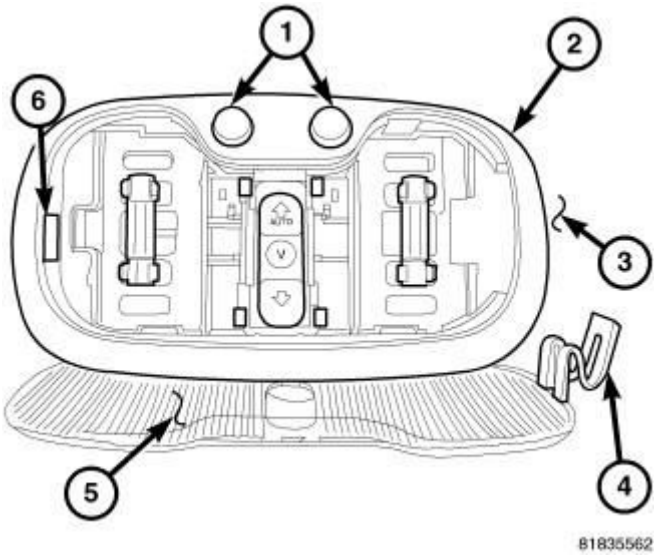

Fig. 7: Message Center Components
Courtesy of CHRYSLER GROUP, LLC

1. Disconnect and isolate the negative battery cable.
2. Remove the courtesy/reading lamp lens (5). Insert a suitable flat bladed tool into the slot (6) in the courtesy/reading lamp assembly (2). Pivot the lens down and to the left to release the holding tab (4).

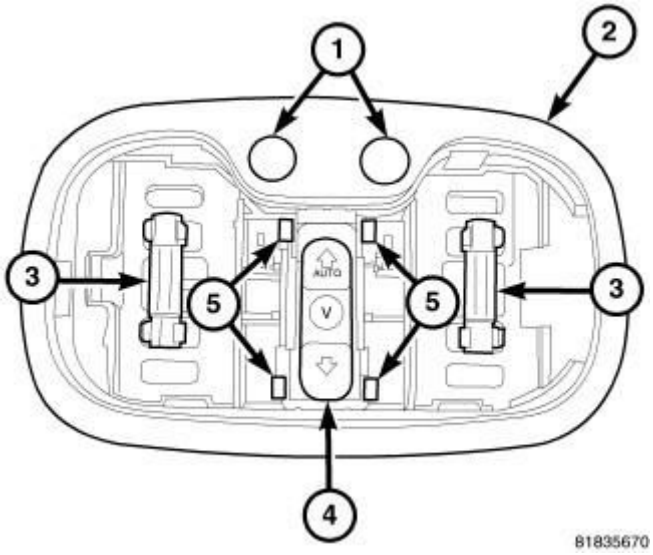

Fig. 8: Message Center Components
Courtesy of CHRYSLER GROUP, LLC

3. Using a suitable flat bladed tool, release the mounting tabs (5) from the sides of the sunroof control switch (4) and pull the switch down from the courtesy/reading lamp assembly (2).

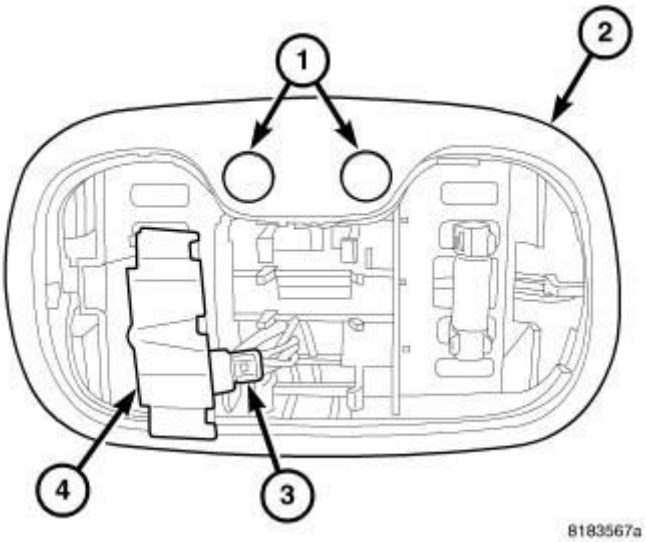

Fig. 9: Message Center Components
Courtesy of CHRYSLER GROUP, LLC

4. Disconnect the electrical connector (3) from the sunroof control switch (4).
5. Remove the switch from the vehicle.

INSTALLATION

INSTALLATION

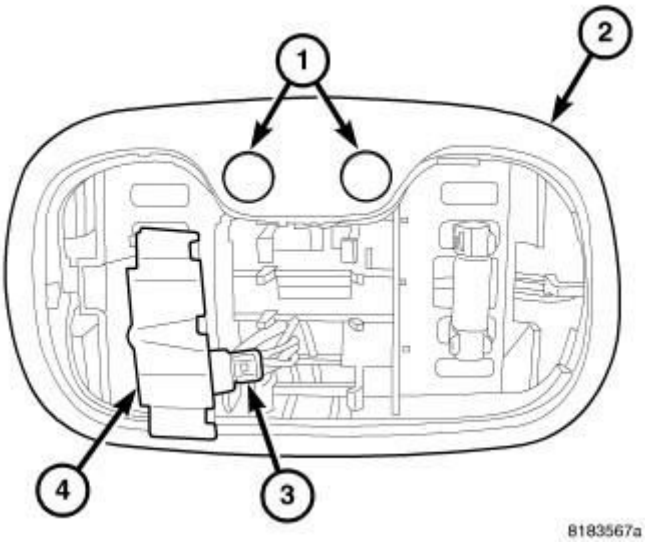

Fig. 10: Message Center Components
Courtesy of CHRYSLER GROUP, LLC

1. Position the sunroof control switch (4) into the vehicle.
2. Connect the sunroof control switch electrical connector (3).

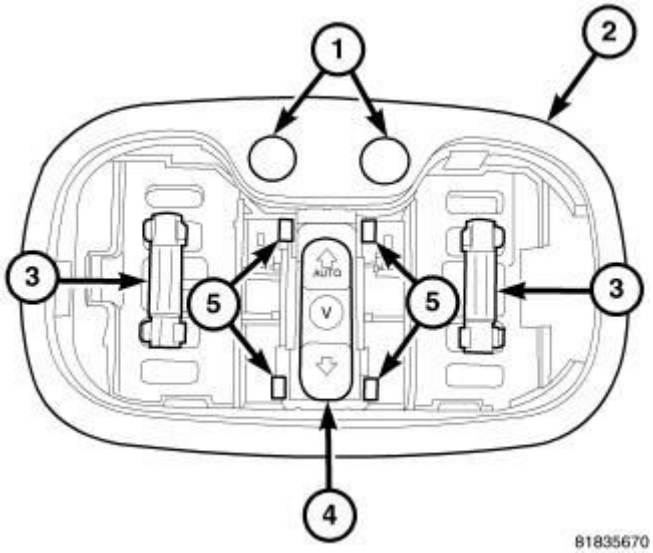

Fig. 11: Message Center Components
Courtesy of CHRYSLER GROUP, LLC

3. Insert the sunroof control switch (4) into the courtesy/reading lamp assembly (2). Push up on the switch until it is securely held in place by the mounting tabs (5).

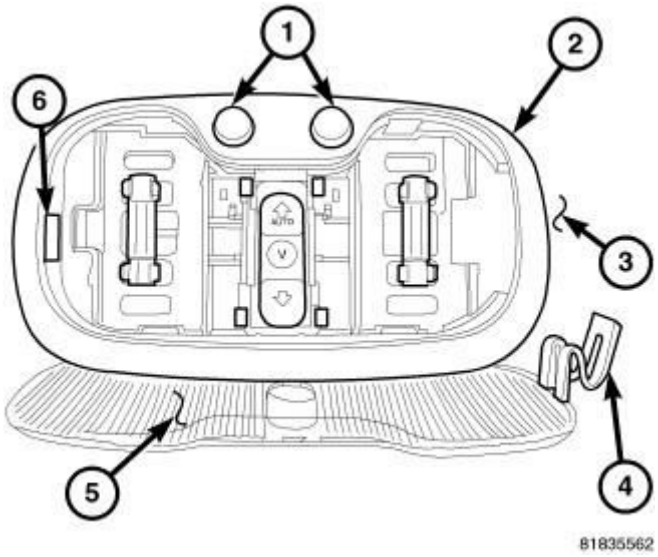

Fig. 12: Message Center Components
Courtesy of CHRYSLER GROUP, LLC

4. Insert the mounting tab (4) on the lamp lens (5) into the right side of the lamp assembly and pivot the lens up until it snaps securely in place.
5. Connect the negative battery cable.

2014 ACCESSORIES AND EQUIPMENT

Power Windows - Non-DTC-Based Diagnostics - Compass & Patriot

DIAGNOSIS AND TESTING

DIAGNOSIS AND TESTING - REAR WINDOW MOTOR INOPERATIVE

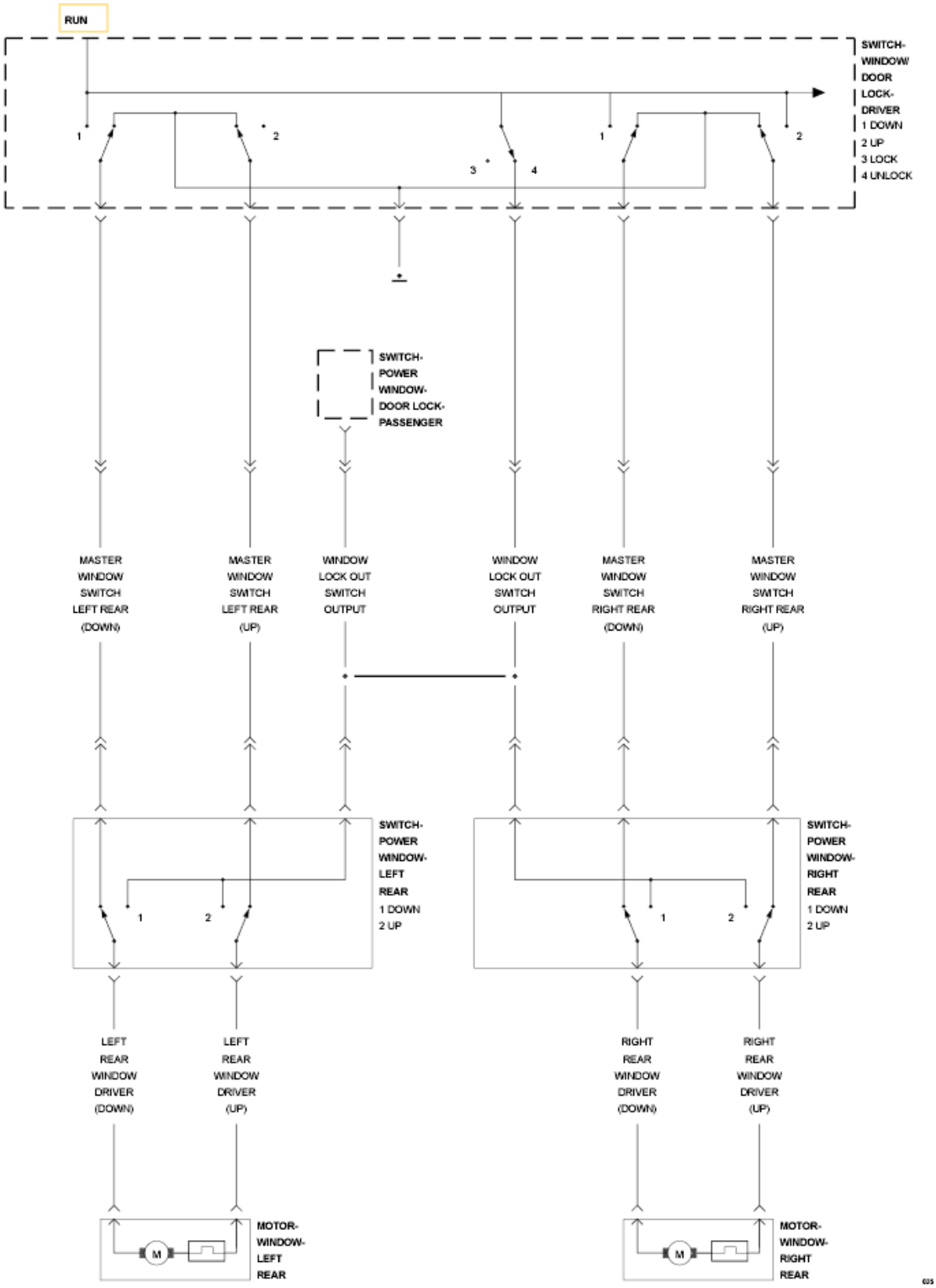

Fig. 1: Rear Window Motor Wiring Diagram
Courtesy of CHRYSLER GROUP, LLC

For a complete wiring diagram, **refer to appropriate SYSTEM WIRING DIAGRAMS article** .

NOTE: The graphics in this test show the Left Rear connectors, the Right side connectors are similar, refer to the appropriate Wiring Information for the connector pinouts.

THEORY OF OPERATION

By studying the schematic above, you will notice that the window driver circuits both go to ground when the switches are in the neutral position. In the driver switch, when a switch is moved to lower or raise a window, the switch leaves the ground contact, and supplies 12 volts to the Master Window Switch Rear Up or Down circuit. Likewise in the rear switch, when a switch is moved it leaves the ground contact and supplies 12 volts (through the window lockout switch output circuit) to the Rear Window Driver Up or Down circuit.

Possible Causes
MASTER WINDOW SWITCH REAR (UP) CIRCUIT OPEN
MASTER WINDOW SWITCH REAR (DOWN) CIRCUIT OPEN
MASTER WINDOW SWITCH REAR (UP) CIRCUIT SHORTED TO GROUND
MASTER WINDOW SWITCH REAR (DOWN) CIRCUIT SHORTED TO GROUND
MASTER WINDOW SWITCH REAR (UP) CIRCUIT SHORTED TO THE MASTER WINDOW SWITCH REAR (DOWN) CIRCUIT
REAR WINDOW DRIVER (UP) CIRCUIT OPEN
REAR WINDOW DRIVER (DOWN) CIRCUIT OPEN
REAR WINDOW DRIVER (UP) CIRCUIT SHORTED TO GROUND
REAR WINDOW DRIVER (DOWN) CIRCUIT SHORTED TO GROUND
REAR WINDOW DRIVER (UP) CIRCUIT SHORTED TO THE REAR WINDOW DRIVER (DOWN) CIRCUIT
MASTER WINDOW SWITCH
REAR WINDOW SWITCH
REAR WINDOW MOTOR

DIAGNOSTIC TEST

1. **TEST FOR DIAGNOSTIC TROUBLE CODES**
   1. Turn the ignition on.
   2. With the scan tool, read the DTCs.

      Does the scan tool display any Power Window related DTCs?

      Yes

      - Refer to **DIAGNOSIS AND TESTING** and perform the appropriate diagnostic procedure.

      No

      - Go To 2
2. **CHECK FOR OPEN OR SHORTED TOGETHER CIRCUIT**

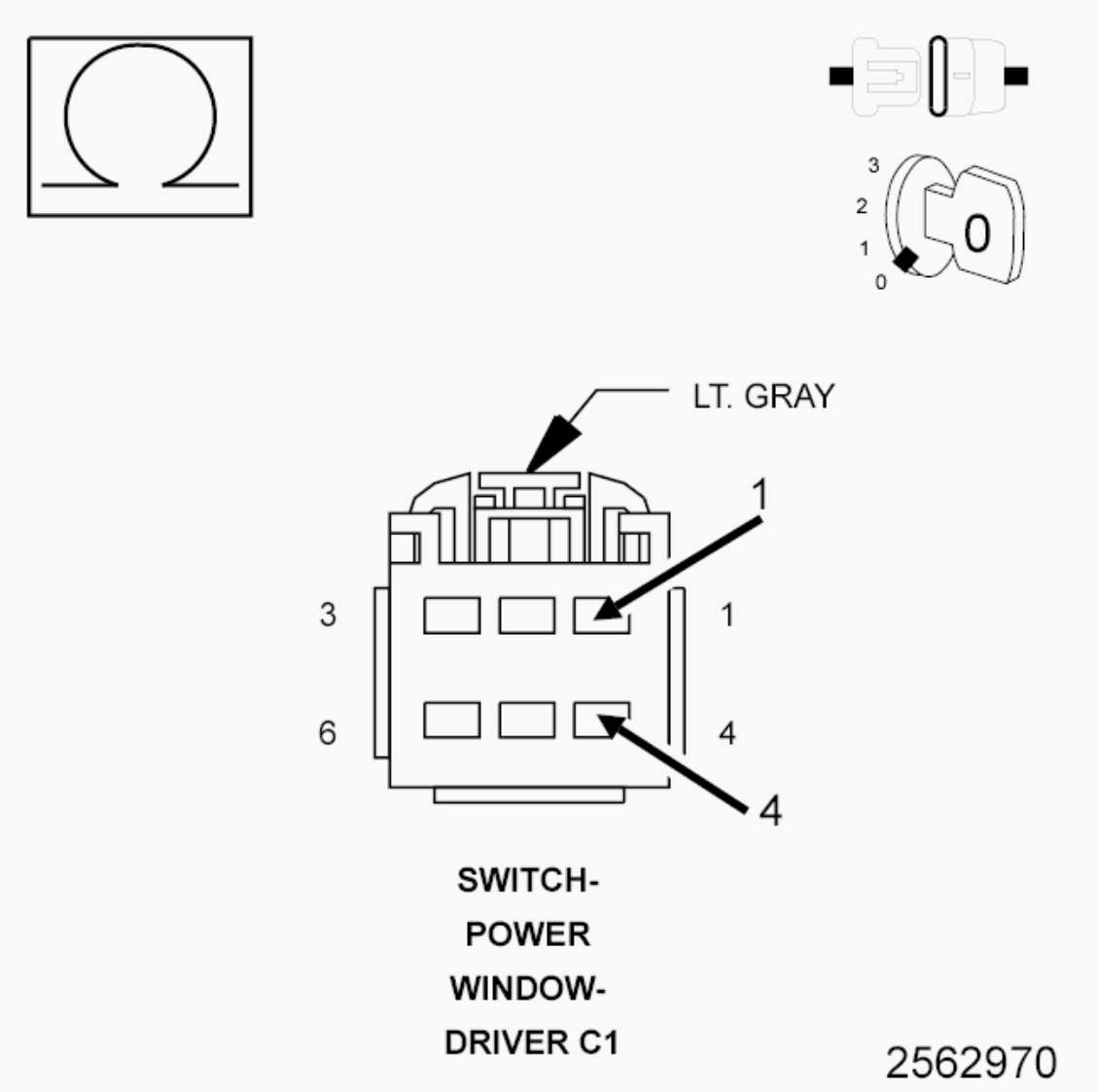

Fig. 2: Checking Master Window Switch Up/Down Circuit For Open Or Short Circuit
Courtesy of CHRYSLER GROUP, LLC

1. Turn the ignition off.
2. Disconnect the Driver Window Switch C1 connector.
3. Measure the resistance between the Master Window Switch Left Rear (Up) circuit and the Master Window Switch Left Rear (Down) circuit in the Driver Switch C1 connector.

   Select the appropriate reading.

   Below.05 of an Ohm

   - Go To 11

Between 0.6 and 15.5 Ohms

- Go To 3

Above 15.6 Ohms

- Go To 5

3. **CHECK FOR SHORTED CIRCUIT**

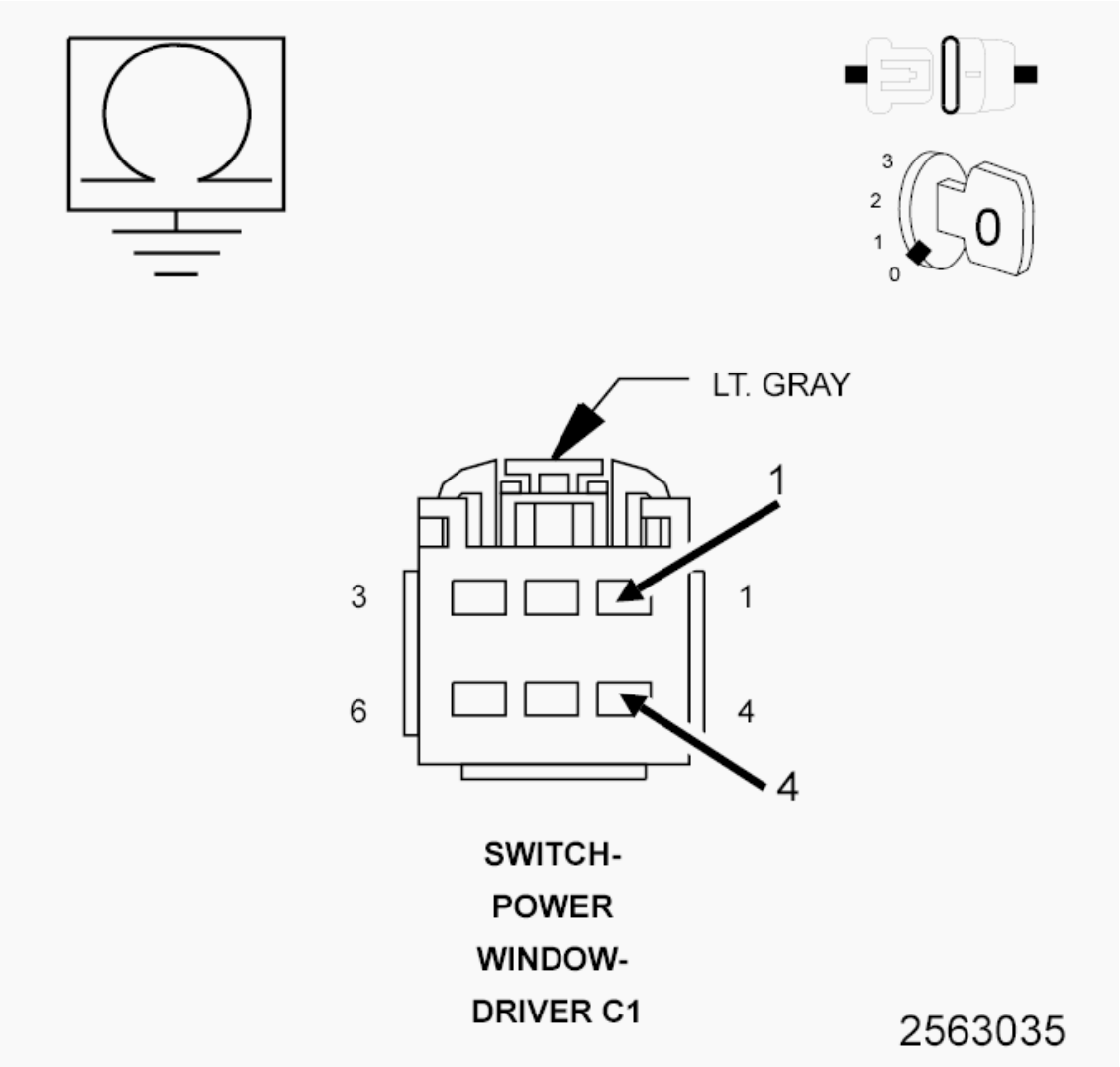

Fig. 3: Checking For Shorted Circuit
Courtesy of CHRYSLER GROUP, LLC

1. Measure the resistance between ground and the Master Window Switch Left Rear (Up) circuit in the Driver Switch C1 connector.
2. Measure the resistance between ground and the Master Window Switch Left Rear (Down) circuit in the Driver Switch C1 connector.

Is the resistance below 20k Ohms on either or both circuits?

Yes

- Go To 14

No

- Go To 4

4. **DRIVER WINDOW SWITCH OR MOTOR**

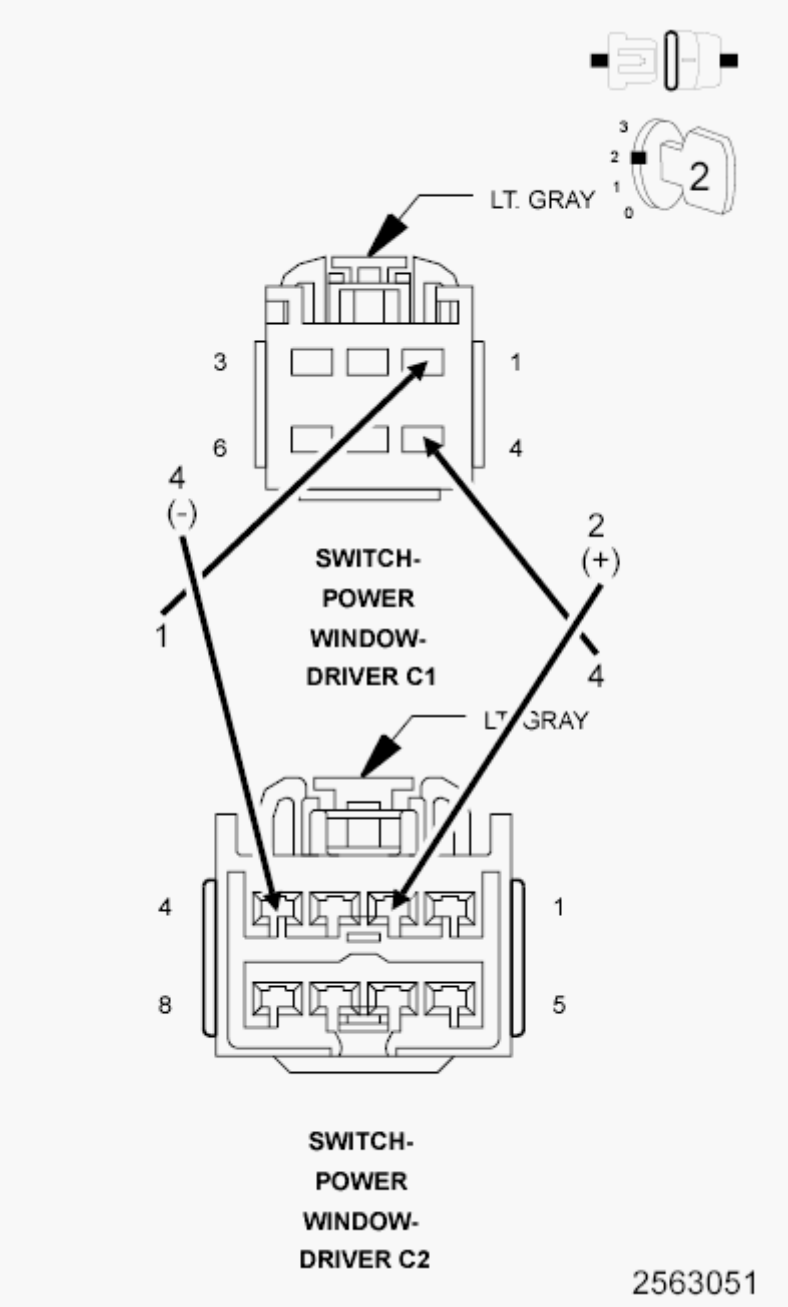

Fig. 4: Checking Driver Window Switch Or Motor
Courtesy of CHRYSLER GROUP, LLC

1. Disconnect the Driver Window Switch C2 connector.
2. Turn the ignition on.
3. Connect a Jumper wire between the Ignition Switch Output circuit (cavity 2 in the Driver Switch C2 connector) and the Master Window Switch Left Rear (Down) circuit (Cavity 4 in the Driver Switch C1 connector).
4. Connect a Jumper wire between the Master Window Switch Left Rear (Up) circuit (Cavity 1 in the Driver Switch C1 connector) and momentarily touch it to the Ground circuit (cavity 4 in the Driver Switch C2 connector). Reverse the wires at the C1 connector if there is a short to ground.

   NOTE: For the Right Rear Motor, substitute cavities 2 and 3 for cavities 1 and 4.

5. If the motor ran in one direction, reverse the jumper wires (in the C1 connector) to run the motor in the opposite direction.

   Did the window motor operate properly in both directions?

   Yes

   - Replace the Driver Window Switch in accordance with the Service Information.
   - Perform the BODY VERIFICATION TEST. Refer to **STANDARD PROCEDURE** .

   No

   - Replace the Window Motor (regulator) in accordance with the Service Information.
   - Perform the BODY VERIFICATION TEST. Refer to **STANDARD PROCEDURE** .

5. **OPEN WINDOW (UP) CIRCUIT**

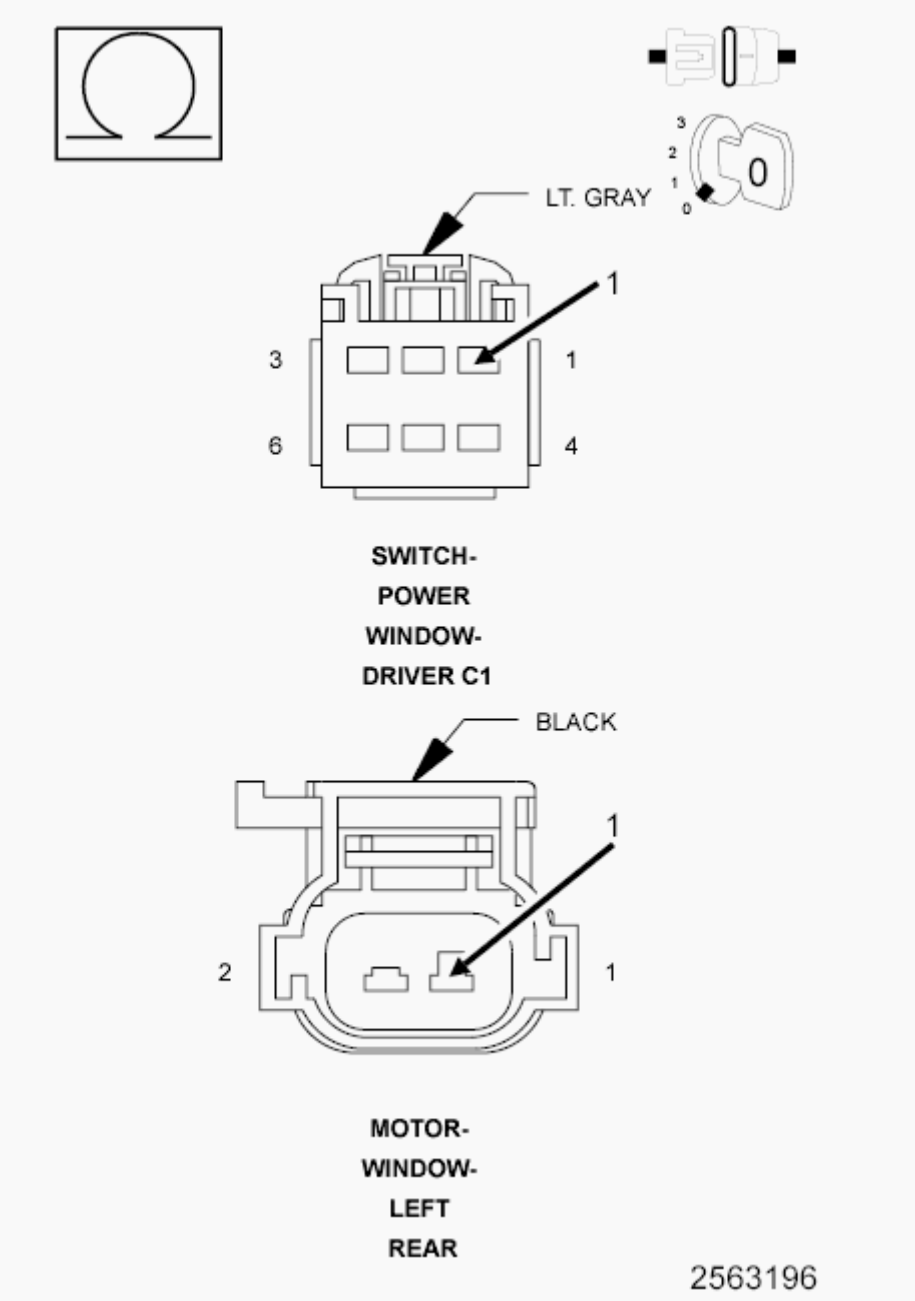

Fig. 5: Checking Window (Up) Circuit For Open
Courtesy of CHRYSLER GROUP, LLC

1. Disconnect the Left Rear Window Motor connector.
2. Measure the resistance between the Master Window Switch Left Rear (Up) circuit in the Driver Window Switch C1 connector and the Left Rear Window Driver (Up) circuit in the Left Rear Window Motor connector.

   Is the resistance below 3.0 Ohms?

Yes

- Go To 8

No

- Go To 6

6. **OPEN MASTER WINDOW SWITCH LEFT REAR (UP) CIRCUIT**

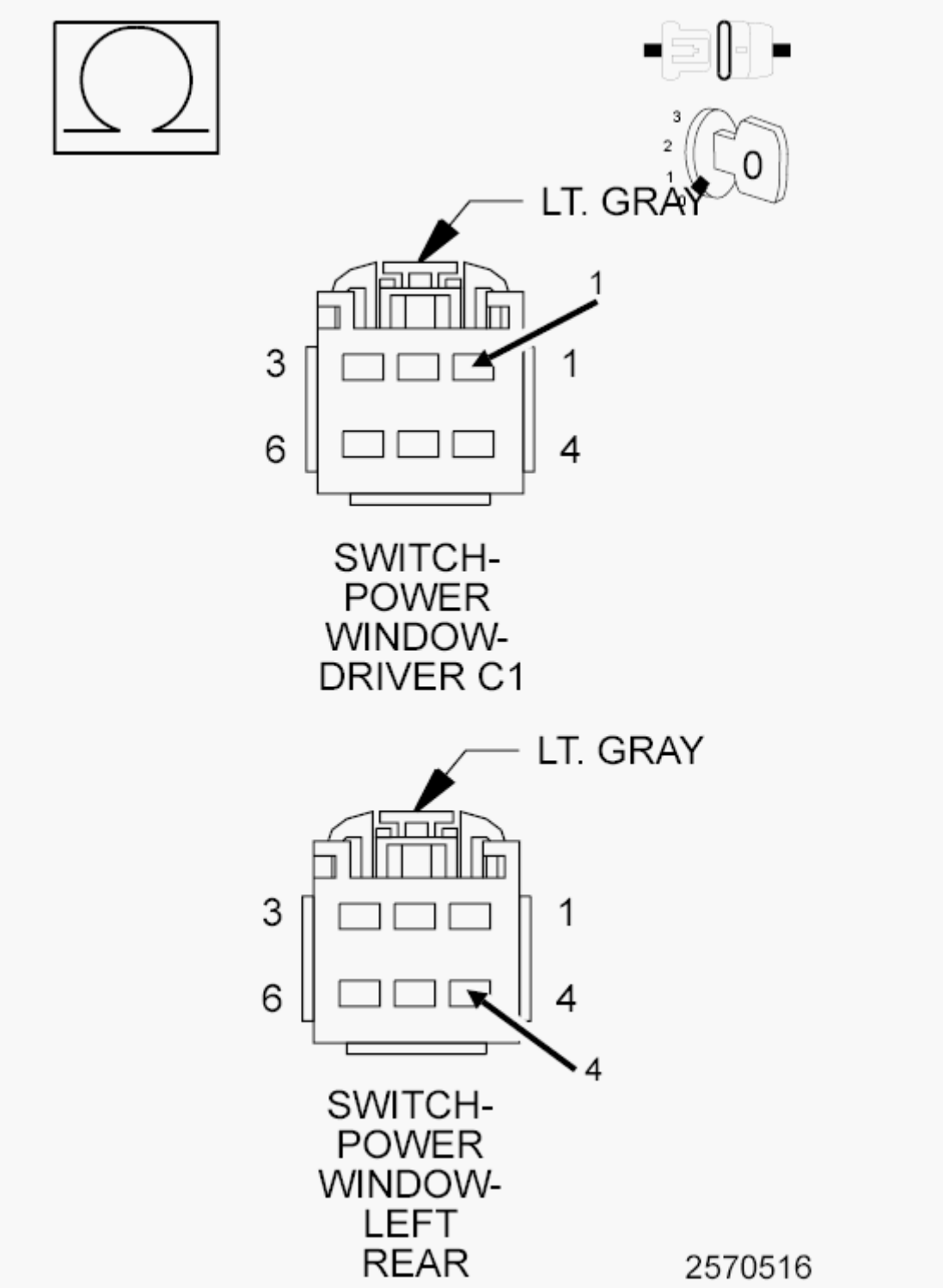

Fig. 6: Checking Open Master Window Switch Left Rear (UP) Circuit
Courtesy of CHRYSLER GROUP, LLC

1. Disconnect the Left Rear Window Switch connector.
2. Measure the resistance of the Master Window Switch Left Rear (Up) circuit between the Driver Window Switch C1 connector and the Left Rear Window Switch connector.

Is the resistance below 3.0 Ohms?

Yes

- Go To 7

No

- Repair the open in the Master Window Switch Left Rear (Up) circuit.
- Perform the BODY VERIFICATION TEST. Refer to **STANDARD PROCEDURE** .

7. **OPEN LEFT REAR WINDOW DRIVER (UP) CIRCUIT**

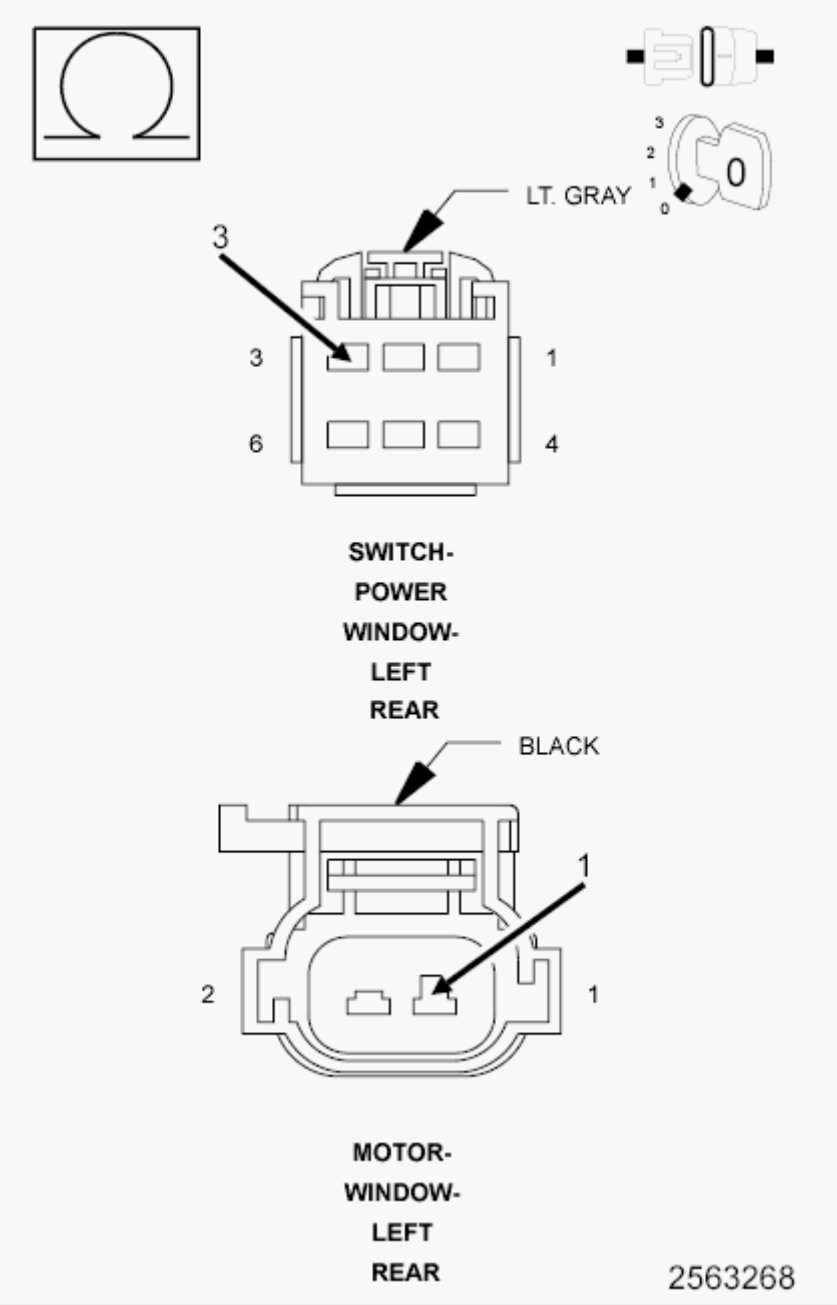

Fig. 7: Checking Open Left Rear Window Driver (UP) Circuit
Courtesy of CHRYSLER GROUP, LLC

1. Measure the resistance of the Left Rear Window Driver (Up) circuit between the Left Rear Window Switch connector and the Left Rear Window Motor connector.

   Is the resistance below 3.0 Ohms?

   Yes

- Replace the Left Rear Window Switch.
- Perform the BODY VERIFICATION TEST. Refer to **STANDARD PROCEDURE** .

No

- Repair the open in the Left Rear Window Driver (Up) circuit.
- Perform the BODY VERIFICATION TEST. Refer to **STANDARD PROCEDURE** .

8. **OPEN WINDOW (DOWN) CIRCUIT**

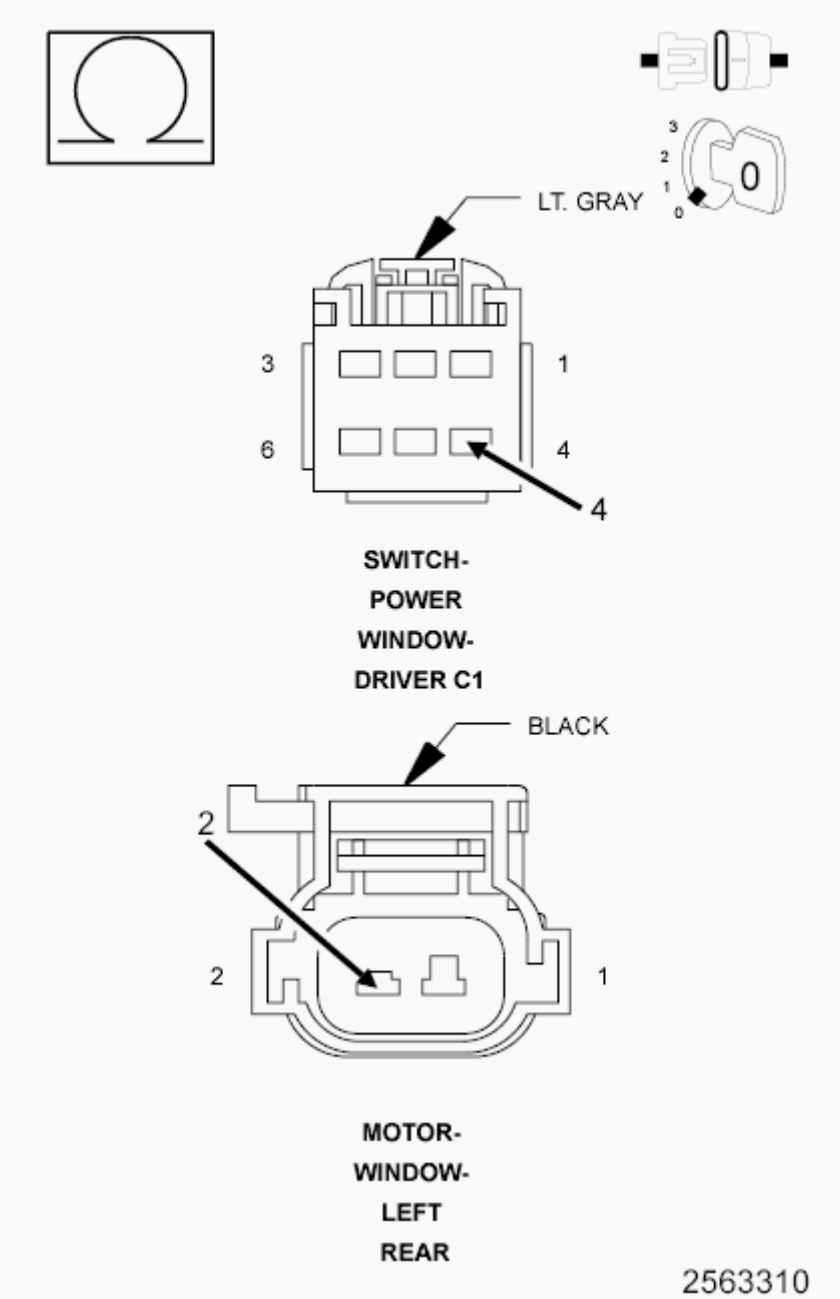

Fig. 8: Checking Window (Down) Circuit For Open
Courtesy of CHRYSLER GROUP, LLC

1. Measure the resistance between the Master Window Switch Left Rear (Down) circuit in the Driver Window Switch C1 connector and the Left Rear Window Driver (Down) circuit in the Left Rear Window Motor connector.

   Is the resistance below 3.0 Ohms?

   Yes

   - Replace the Left Rear Window Motor in accordance with the Service Information.
   - Perform the BODY VERIFICATION TEST. Refer to **STANDARD PROCEDURE** .

   No

   - Go To 9

9. **OPEN MASTER WINDOW SWITCH LEFT REAR (DOWN) CIRCUIT**

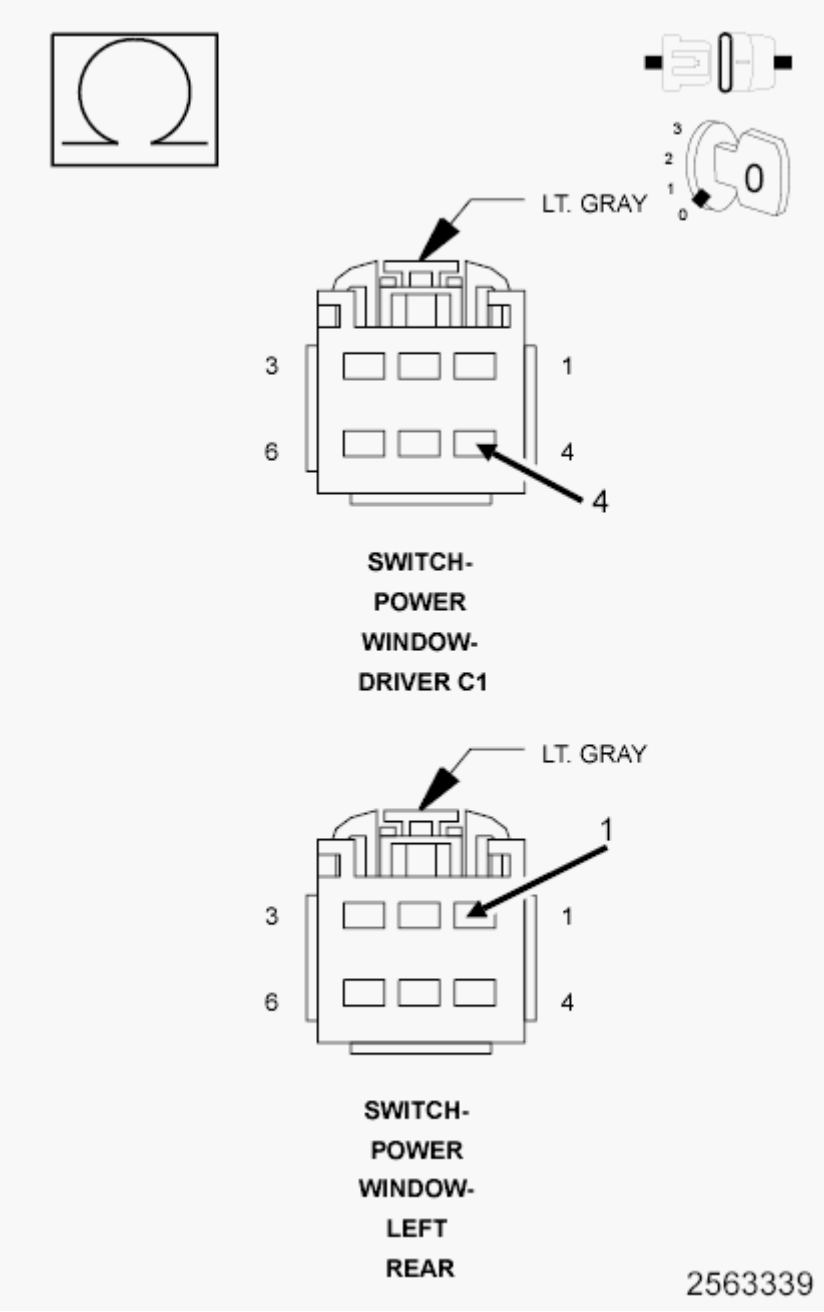

Fig. 9: Checking Open Master Window Switch Left Rear (Down) Circuit
Courtesy of CHRYSLER GROUP, LLC

1. Disconnect the Left Rear Window Switch connector.
2. Measure the resistance of the Master Window Switch Left Rear (Down) circuit between the Driver Window Switch C1 connector and the Left Rear Window Switch connector.

   Is the resistance below 3.0 Ohms?

Yes

- Go To 10

No

- Repair the open in the Master Window Switch Left Rear (Down) circuit.
- Perform the BODY VERIFICATION TEST. Refer to **STANDARD PROCEDURE** .

10. **OPEN LEFT REAR WINDOW DRIVER (DOWN) CIRCUIT**

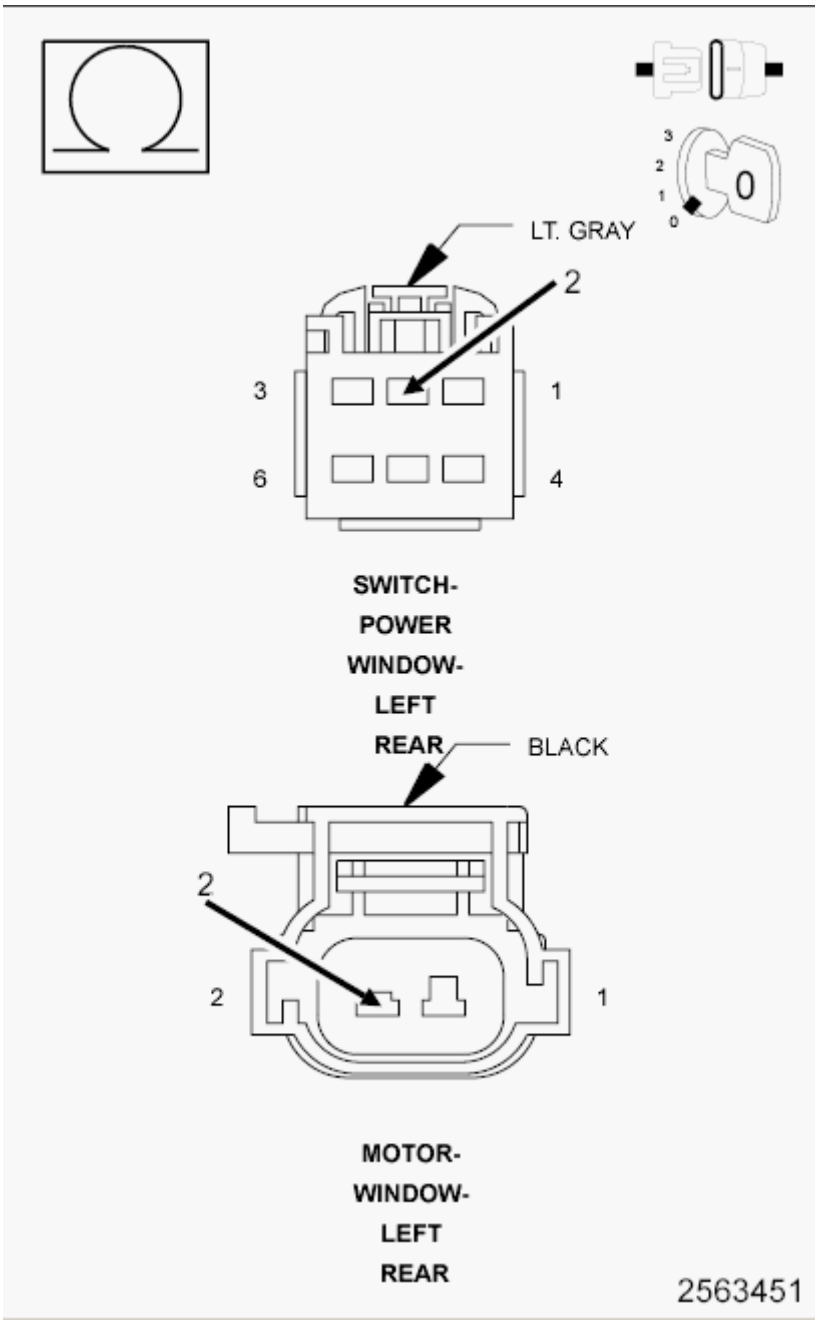

Fig. 10: Checking Open Left Rear Window Driver (Down) Circuit
Courtesy of CHRYSLER GROUP, LLC

1. Measure the resistance of the Left Rear Window Driver (Down) circuit between the Left Rear Window Switch connector and the Left Rear Window Motor connector.

   Is the resistance below 3.0 Ohms?

   Yes

- Replace the Left Rear Window Switch.
- Perform the BODY VERIFICATION TEST. Refer to **STANDARD PROCEDURE** .

No

- Repair the open in the Left Rear Window Driver (Down) circuit.
- Perform the BODY VERIFICATION TEST. Refer to **STANDARD PROCEDURE** .

11. **SHORTED REAR MOTOR**

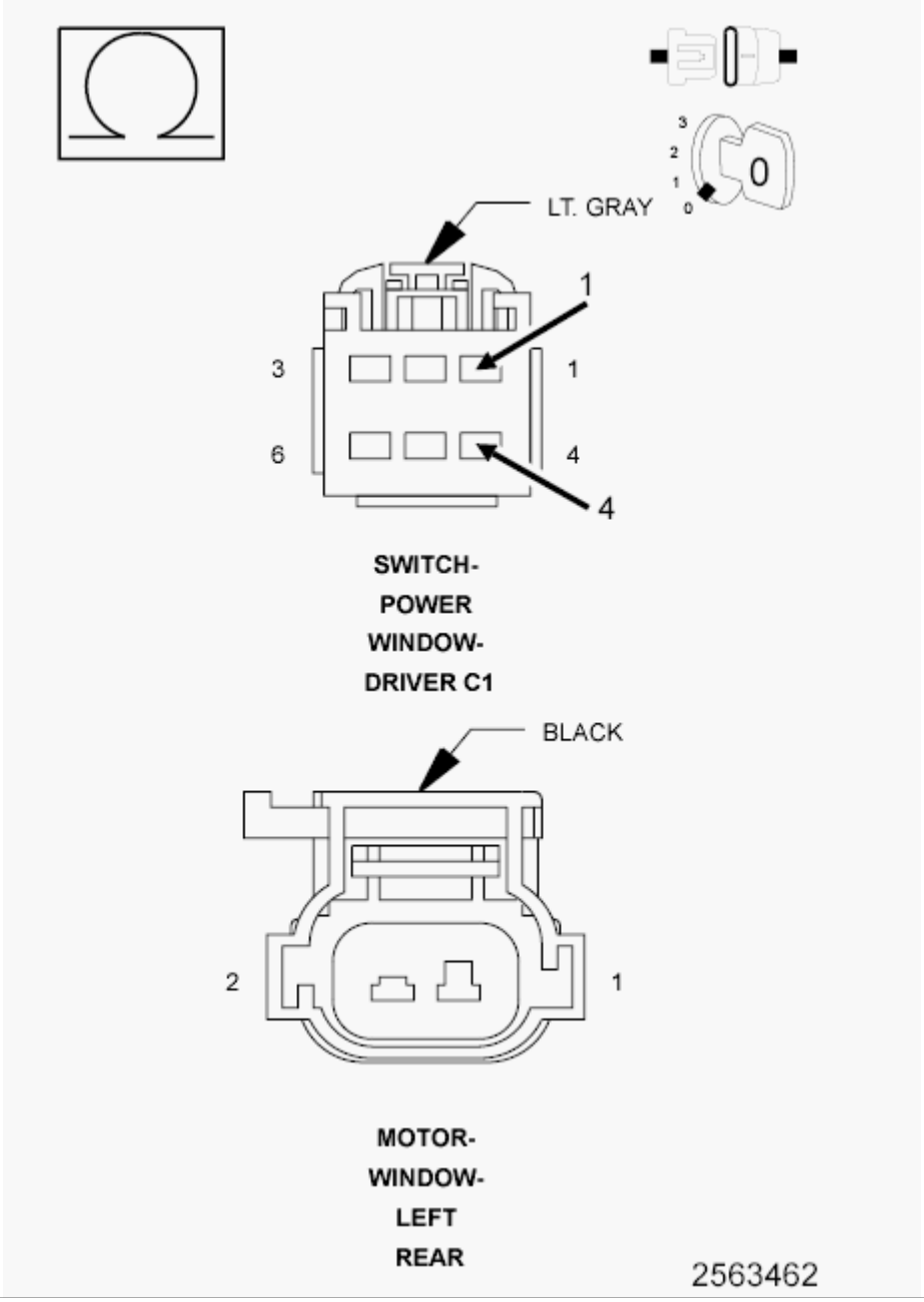

Fig. 11: Checking Shorted Rear Motor
Courtesy of CHRYSLER GROUP, LLC

NOTE: The graphics show the Left Rear Motor circuit, the Right Rear uses Cavities 2 and 3.

1. Disconnect the Rear Window Motor connector.
2. Measure the resistance between the Master Window Switch Left Rear (Up) circuit and the Master Window Switch Left Rear (Down) circuit in the Driver Window Switch C1 connector.

   Is the resistance below 20k Ohms?

   Yes

   - Go To 12

   No

   - Replace the Rear Window Motor in accordance with the Service Information.
   - Perform the BODY VERIFICATION TEST. Refer to **STANDARD PROCEDURE** .

12. **MASTER WINDOW SWITCH LEFT REAR (UP) CIRCUIT SHORTED TO THE MASTER WINDOW SWITCH LEFT REAR (DOWN) CIRCUIT**

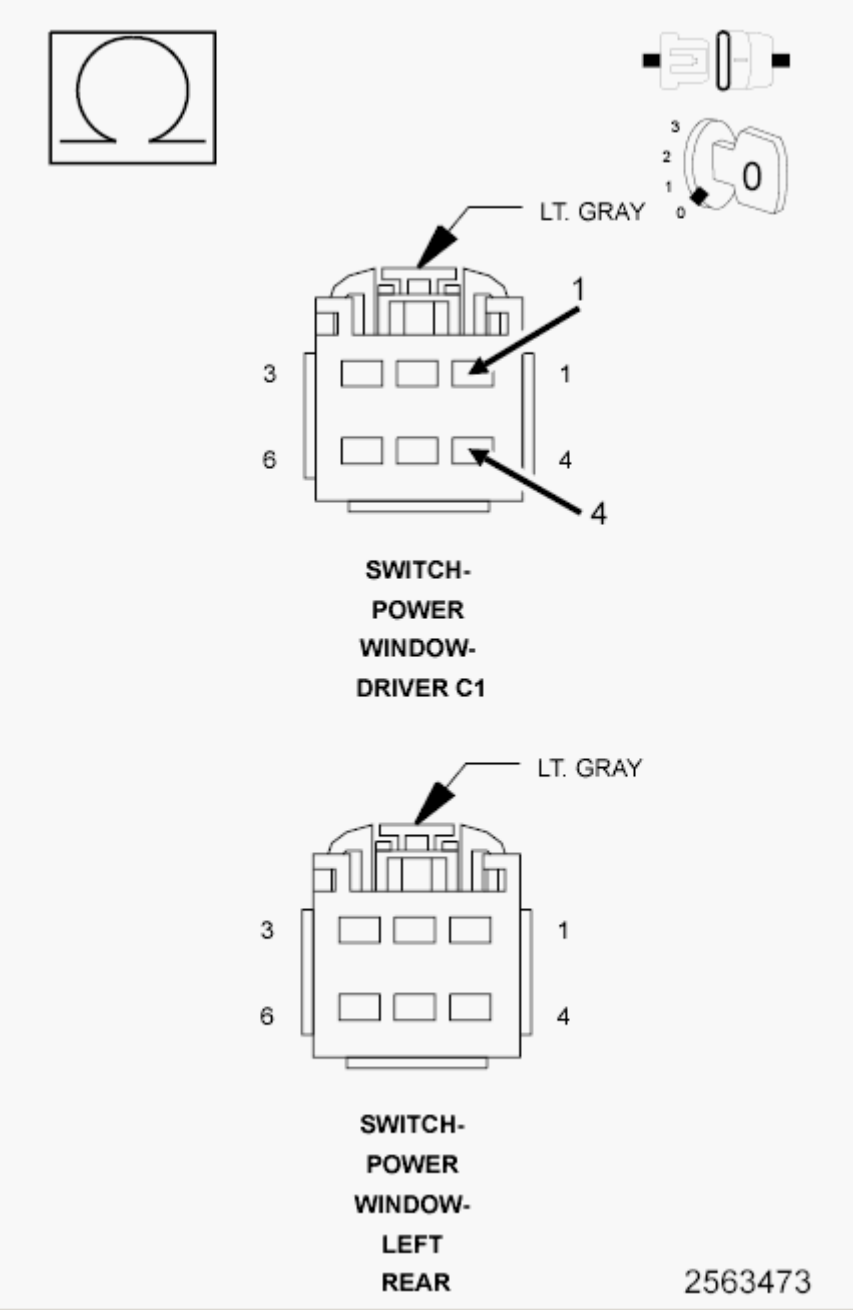

Fig. 12: Measuring Resistance Between Master Window Switch Left Rear Up & Down Circuits
Courtesy of CHRYSLER GROUP, LLC

1. Disconnect the Left Rear Window Switch connector.
2. Measure the resistance between the Master Window Switch Left Rear (Up) circuit and the Master Window Switch Left Rear (Down) circuit in the Driver Window Switch C1 connector.

   Is the resistance below 20k Ohms?

Yes

- Repair the short between the Master Window Switch Left Rear (Up) circuit and the Master Window Switch Left Rear (Down) circuit.
- Perform the BODY VERIFICATION TEST. Refer to **STANDARD PROCEDURE** .

No

- Go To 13

13. **REAR WINDOW DRIVER (UP) CIRCUIT SHORTED TO THE REAR WINDOW DRIVER (DOWN) CIRCUIT**

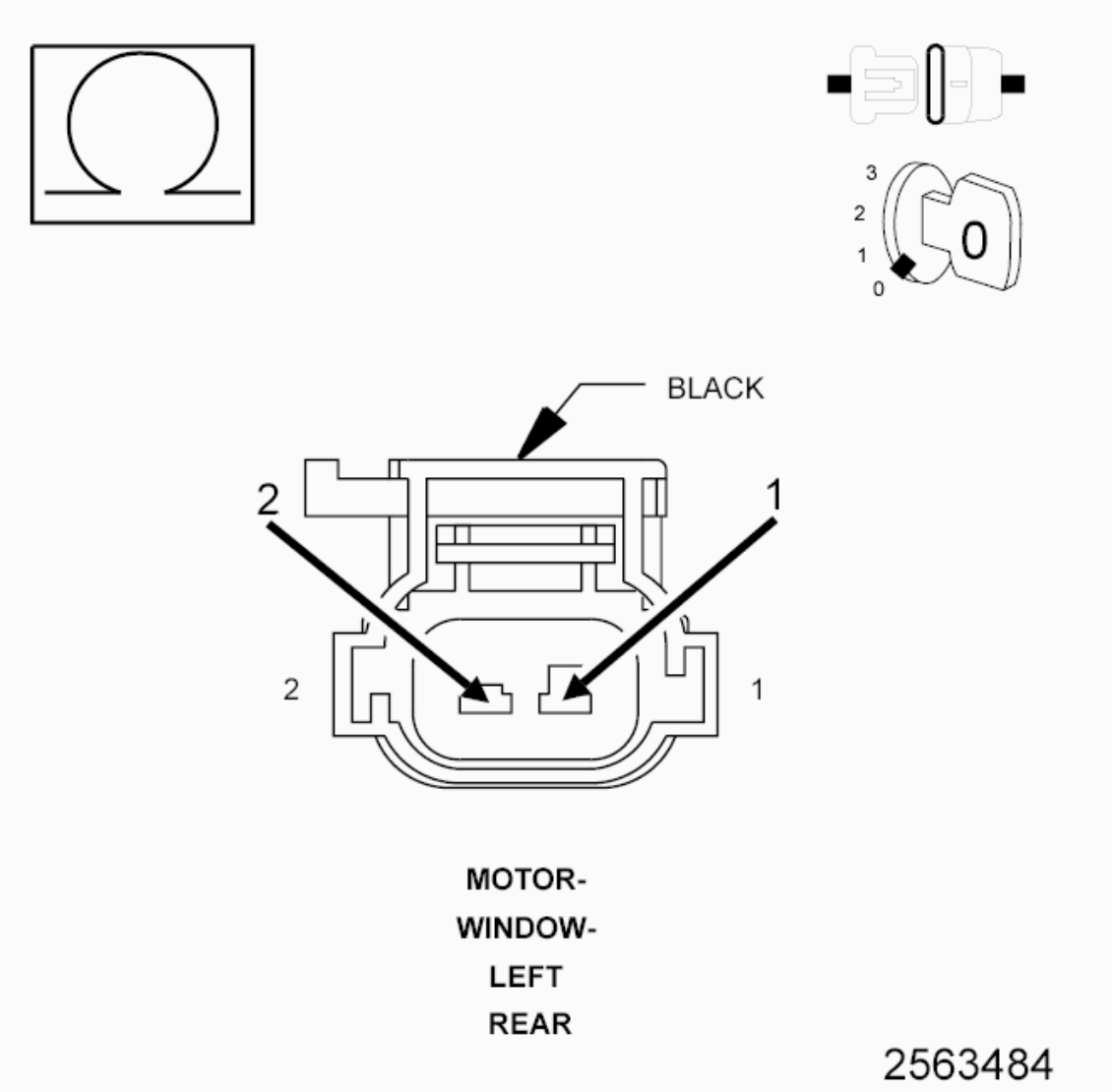

Fig. 13: Measuring Resistance Between Left Rear Window Driver Up &

Down Circuits
Courtesy of CHRYSLER GROUP, LLC

1. Measure the resistance between the Left Rear Window Driver (Up) circuit and the Left Rear Window Driver (Down) circuit in the Left Rear Window Motor connector.

   Is the resistance below 20k Ohms?

   Yes

   - Repair the short between the Left Rear Window Driver (Up) circuit and the Left Rear Window Driver (Down) circuit.
   - Perform the BODY VERIFICATION TEST. Refer to **STANDARD PROCEDURE** .

   No

   - Replace the Rear Window Switch.
   - Perform the BODY VERIFICATION TEST. Refer to **STANDARD PROCEDURE** .

14. **CHECK FOR SHORTED MOTOR**

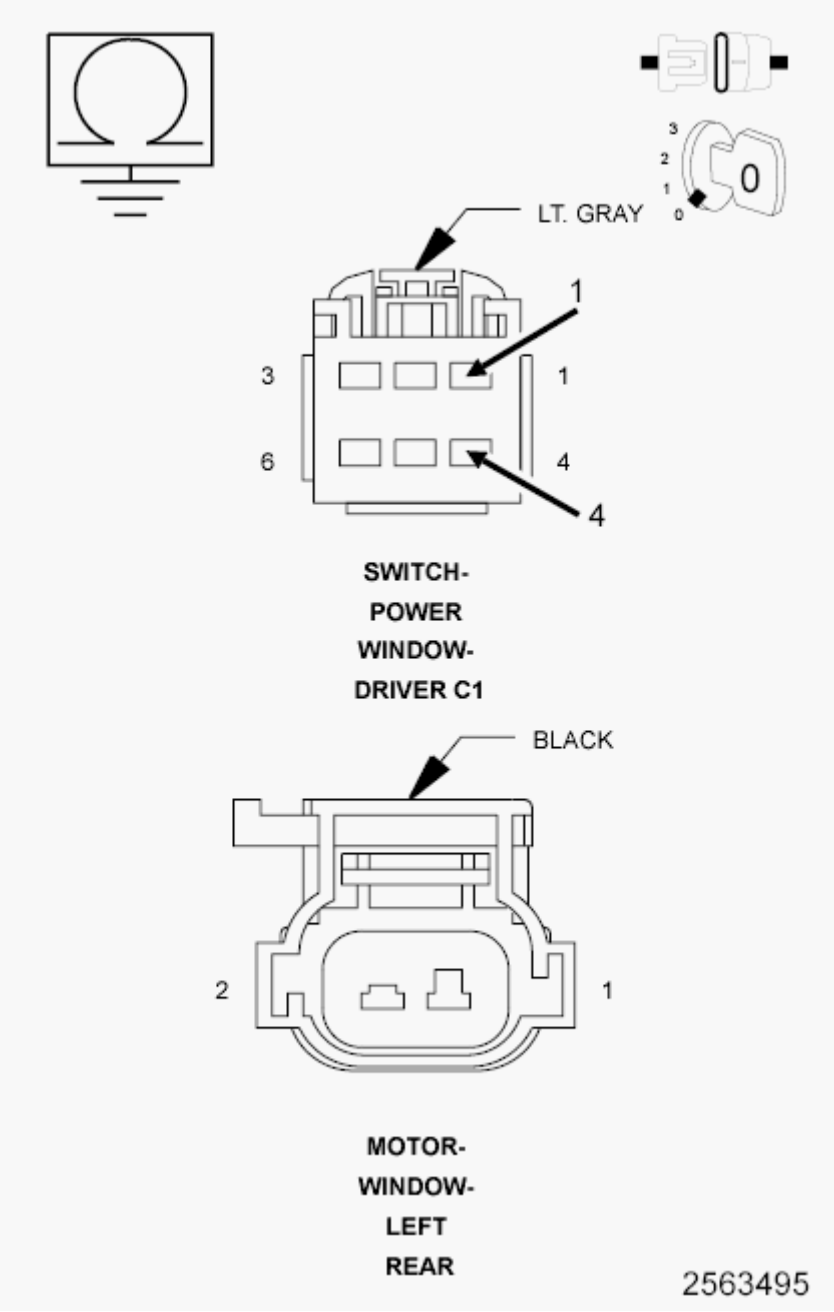

Fig. 14: Checking For Shorted Motor
Courtesy of CHRYSLER GROUP, LLC

1. Disconnect the Left Rear Window Motor connector.
2. Measure the resistance between ground and the Master Window Switch Left Rear (Up) circuit in the Driver Switch C1 connector.
3. Measure the resistance between ground and the Master Window Switch Left Rear (Down) circuit in the Driver Switch C1 connector.

   Is the resistance below 20k Ohms on either or both circuits?

Yes

- Go To 15

No

- Replace the Window Motor (regulator) in accordance with the Service Information.
- Perform the BODY VERIFICATION TEST. Refer to **STANDARD PROCEDURE** .

15. **CHECK FOR SHORT TO GROUND**

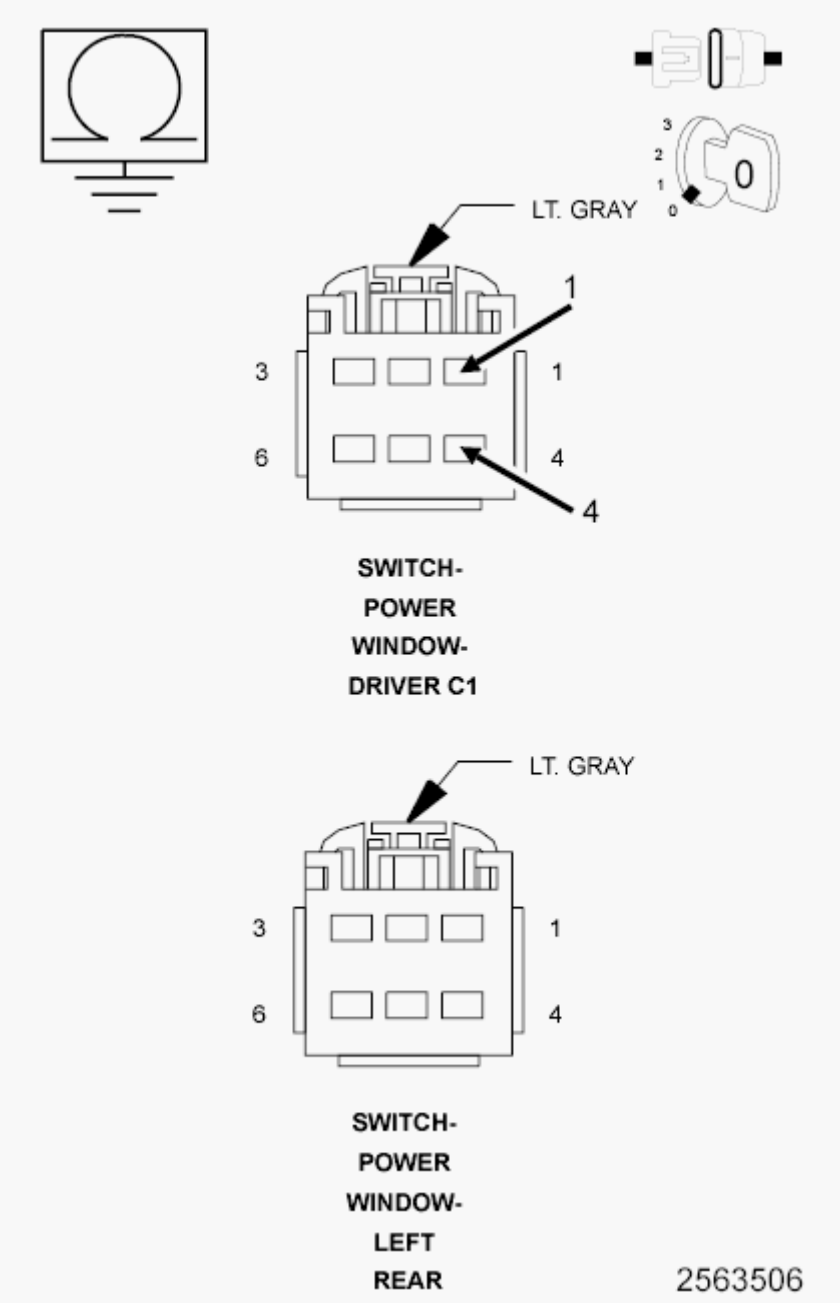

Fig. 15: Checking For Short To Ground
Courtesy of CHRYSLER GROUP, LLC

1. Disconnect the Left Rear Window Switch connector.
2. Measure the resistance between ground and the Master Window Switch Left Rear (Up) circuit in the Driver Switch C1 connector.
3. Measure the resistance between ground and the Master Window Switch Left Rear (Down) circuit in the Driver Switch C1 connector.

   Is the resistance below 20k Ohms on either or both circuits?

Yes

- Repair the short to ground in the Master Window Switch Left Rear (Up) or (Down) circuit.
- Perform the BODY VERIFICATION TEST. Refer to **STANDARD PROCEDURE** .

No

- Repair the short to ground in the Left Rear Window Driver (Up) or (Down) circuit between the Motor and the Rear Window Switch.
- Perform the BODY VERIFICATION TEST. Refer to **STANDARD PROCEDURE** .

2014 ACCESSORIES AND EQUIPMENT

Power Windows - Service Information - Compass & Patriot

OPERATION

OPERATION

The front and rear window lift motors are of the permanent magnet type. A battery positive and negative connection to either of the two motor terminals will cause the motor to rotate in one direction. Reversing current through these same two connections will cause the motor to rotate in the opposite direction.

Each individual motor is grounded through their respective switch.

DIAGNOSIS AND TESTING

DIAGNOSIS AND TESTING - POWER WINDOWS

WIRING VOLTAGE TEST

The following wiring test determines whether or not voltage is continuous through the body harness to the front switch.

1. Remove the power window switch and bezel.
2. Disconnect wire connector from back of power window switch.
3. Switch ignition to the ON position.
4. Connect the clip end of a 12 volt test light to Pin 4 of the window switch harness connector. Touch the test light probe to Pin 3.

- If the test light illuminates, the wiring circuit between the battery and switch is OK.
- If the lamp does not illuminate, first check 30 amp circuit breaker in the fuse block. If circuit breaker is OK, then check for a broken wire.

For complete circuit diagrams, refer to the appropriate wiring information.

POWER WINDOW MOTOR TEST

If the power window motor is receiving proper current and ground and does not operate, proceed with motor test.

For complete circuit diagrams, refer to the appropriate wiring information.

1. Remove front door trim panel as necessary to gain access to power window motor wire connector.
2. Disconnect power window motor wire connector from door harness.
3. Using two jumper wires, connect one to a battery (+) source and the other to a good ground (-).
4. Connect the Negative (-) jumper probe to one of the motor connector terminals.
5. Momentarily touch the Positive (+) jumper probe to the other motor connector terminal.

   When positive probe is connected the motor should rotate in one direction to either move window up or down. If window is all the way up or down the motor will grunt and the inner door panel will flex when actuated in that one direction.

6. Reverse jumper probes at the motor connector terminals and window should now move in opposite direction. If window does not move or grunt, replace the motor.

If window moved completely up or down, reverse the jumper probes and cycle window to the opposite position to verify full operation.

If motor grunts and does not move, verify that regulator is not binding.

MODULE, WINDOW REGULATOR

DESCRIPTION

DESCRIPTION

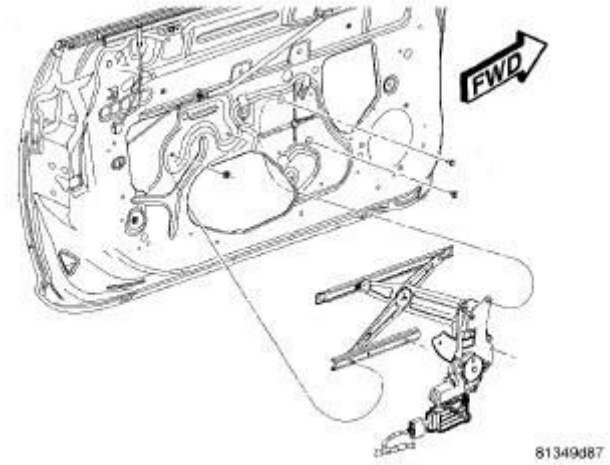

Fig. 1: Window Regulator Module
Courtesy of CHRYSLER GROUP, LLC

The window regulator modules are directly connected to each of the front door window regulator motors. The window switches are hard wired by a mux circuit to the respective window regulator module. The respective rear window motor is hard wired to the module. The front window motor is directly attached to the module. Both front door window switches have the express down feature. The module will cease lowering the front glass when a fully down position is sensed through the hall effect sensor.

When a module must be replaced, it is necessary to replace the entire regulator assembly.

OPERATION

OPERATION

When a door is opened, the respective module will receive a signal from the door ajar switch or the window drop switch. The window drop switch is directly controlled by both the interior and the exterior door handle switches. The drop switch is part of the door latch. This switch is faster than the door ajar switch to signal an open door operation. At that point the module will drop the front door glass 10 mm (0.5 in). However, if the window drop switch should fail, the door ajar sense would also drop the window 10 mm (0.5 in) and the module would set a trouble code. When the module then receives a door ajar switch open (door closed) it would raise the window 10 mm (0.5 in). The module knows the position of the window by counting the motor rotation through the hall effect sensor in the module. If a door window is raised while that door is open, the

module will raise the glass up, but when the door is closed it will raise the glass an additional 10 mm (0.5 in). When the convertible top down switch is pressed to the first detent, input is received by the driver window regulator module and passenger window regulator module, which will lower the front windows approximately 40 mm (1.6 in), and lower the rear windows approximately 55 mm (2.0 in). After a 200 ms delay, it energizes the power top down relay to lower the convertible top.

DIAGNOSIS AND TESTING

DIAGNOSIS AND TESTING - WINDOW REGULATOR MODULE

Any diagnosis of the Window Regulator Modules should begin with the use of the scan tool. For information on the use of the scan tool, refer to the appropriate Diagnostic Service Information.

For complete circuit diagrams, refer to the appropriate wiring information.

WARNING: **Disable the airbag system before attempting any steering wheel, steering column, seat belt tensioner, side airbag or instrument panel component diagnosis or service. Disconnect and isolate the negative battery (ground) cable. Wait two minutes for the airbag system capacitor to discharge before performing further diagnosis or service. This is the only sure way to disable the airbag system. Failure to follow these instructions may result in accidental airbag deployment and possible serious or fatal injury.**

MOTOR, WINDOW REGULATOR

REMOVAL

REMOVAL

1. Move the window to the full UP position, if possible.
2. Disconnect and isolate the battery negative cable.
3. Remove the front door module. Refer to **PANEL, DOOR TRIM, BOLSTER, REMOVAL** .

4. Disconnect electrical harness connector from motor.
5. Remove window regulator.
6. With regulator on bench, remove four screws retaining the motor to the regulator and remove motor.

INSTALLATION

INSTALLATION

1. With regulator on bench, install four screws retaining the motor to the regulator.
2. Install the window regulator.
3. Connect the electrical harness connector to window motor.
4. Install the door module. Refer to **PANEL, DOOR TRIM, BOLSTER, INSTALLATION** .
5. Connect battery negative cable.

SWITCH, POWER WINDOW

REMOVAL

REMOVAL

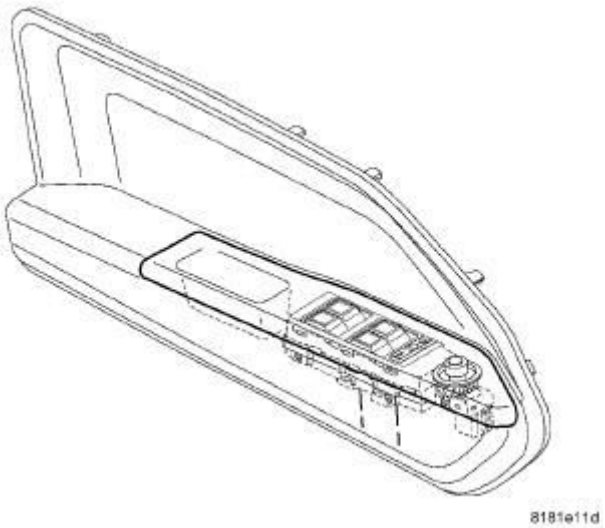

Fig. 2: Power Window Switch
Courtesy of CHRYSLER GROUP, LLC

1. Disconnect and isolate the battery negative cable.

2. Remove the front door bolster. Refer to **PANEL, DOOR TRIM, BOLSTER, REMOVAL** .
3. Disconnect the electrical harness connectors.
4. With the bolster on the bench, gently pry in on the tabs of the mirror switch and push through the front of the cover and remove.

INSTALLATION

INSTALLATION

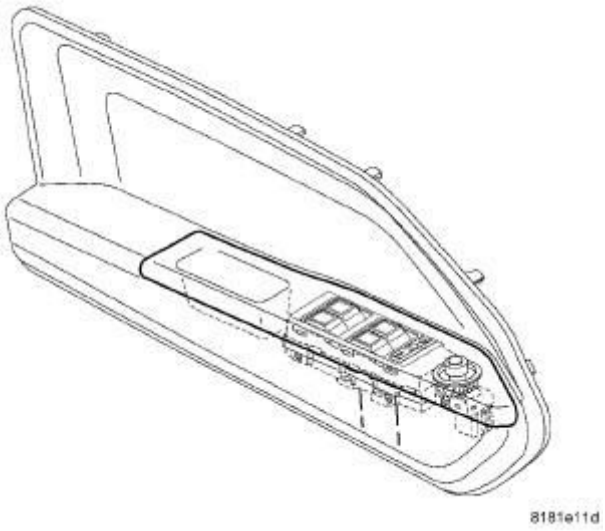

Fig. 3: Power Window Switch
Courtesy of CHRYSLER GROUP, LLC

1. Place the mirror switch in bolster opening and firmly snap into place.
2. Connect the electrical harness connectors.
3. Install the front door bolster. Refer to **PANEL, DOOR TRIM, BOLSTER, INSTALLATION** .
4. Connect the battery negative cable.

2014 ACCESSORIES AND EQUIPMENT

Speed Control - Service Information - Compass & Patriot

DESCRIPTION

DESCRIPTION

An electronic speed control (also known as cruise control) system is available factory-installed equipment on this vehicle. The electronic speed control system includes the following major components, which are described in further detail elsewhere in this service information:

- **Antilock Brake Module** - An Antilock Brake Module (ABM) (also known as Controller Antilock Brake/CAB or the Electronic Stability Control/ESC module) is located on the antilock brake Hydraulic Control Unit (HCU) in the engine compartment. Refer to **MODULE, ANTI-LOCK BRAKE SYSTEM, DESCRIPTION** .
- **Brake Lamp Switch** - The brake (also known as stop) lamp switch is located on the brake pedal support bracket under the driver side of the instrument panel. Refer to **SWITCH, STOP LAMP, DESCRIPTION** .
- **ElectroMechanical Instrument Cluster** - A CRUISE indicator is located in the fixed segment display of the ElectroMechanical Instrument Cluster (EMIC) (also known as the Cab Compartment Node/CCN) that provides an indication to the vehicle operator when the speed control system is turned ON. Refer to **DESCRIPTION** .
- **Powertrain Control Module** - The Powertrain Control Module (PCM) located in the left front corner of the engine compartment contains the software and hardware that monitors all of the speed control system inputs and controls all of the speed control system outputs. Refer to **MODULE, POWERTRAIN CONTROL, DESCRIPTION** .
- **Speed Control Switches** - A speed control switch pod containing four momentary switch push buttons is located in the right horizontal spoke of the steering wheel.
- **Wheel Speed Sensors** - A wheel speed sensor is located on the knuckle of each front and rear wheel. Refer to **SENSOR, WHEEL SPEED, FRONT, DESCRIPTION** .

The ABM, the EMIC and the PCM each contain a microprocessor and

programming that allow them to communicate with each other using the Controller Area Network (CAN) data bus. This method of communication is used by the PCM for control of the CRUISE indicator in the EMIC. Refer to **COMMUNICATION, DESCRIPTION** .

Hard wired circuitry connects the conventional electronic speed control system components to the electrical system of the vehicle. These hard wired circuits are integral to several wire harnesses, which are routed throughout the vehicle and retained by many different methods. These circuits may be connected to each other, to the vehicle electrical system and to the speed control system components through the use of a combination of soldered splices, splice block connectors, and many different types of wire harness terminal connectors and insulators. Refer to the appropriate wiring information. The wiring information includes wiring diagrams, proper wire and connector repair procedures, further details on wire harness routing and retention, as well as pin-out and location views for the various wire harness connectors, splices and grounds.

OPERATION

OPERATION

The vehicle operator controls all speed control system features through the speed control switch pod on the face of the right horizontal spoke of the steering wheel. When a push button of the switch pod is depressed, it provides a hard wired resistor multiplexed analog input to the Powertrain Control Module (PCM).

The PCM reads the speed control switch input, along with other hard wired and electronic message inputs received from other electronic modules in the vehicle over the Controller Area Network (CAN) data bus. The PCM software continually monitors these inputs as well as electronic **vehicle distance** message inputs from the Antilock Brake Module (ABM) (also known as the Controller Antilock Brake/CAB or the Electronic Stability Control/ESC module) and numerous hard wired inputs including the brake (or stop) lamp switch, then provides the appropriate electronic message and hard wired outputs to invoke the requested and programmed electronic speed control features.

The PCM microprocessor continuously monitors all of the speed control system electrical circuits to determine the system readiness. If the PCM detects a monitored system fault, it sets and stores a Diagnostic Trouble Code (DTC). The PCM uses On-Board Diagnostics (OBD) and can communicate with other

electronic modules in the vehicle as well as with the diagnostic scan tool using the CAN data bus. This method of communication is used for control of the Cruise indicator and the Malfunction Indicator Lamp (MIL) (also known as the Check Engine lamp) in the ElectroMechanical Instrument Cluster (EMIC) (also known as the Cab Compartment Node/CCN) and for system diagnosis and testing through the 16-way Data Link Connector (DLC) located on the driver side lower edge of the instrument panel.

The hard wired inputs and outputs for the PCM may be diagnosed using conventional diagnostic tools and procedures. Refer to the appropriate wiring information. However, conventional diagnostic methods will not prove conclusive in the diagnosis of the PCM or the electronic controls or communication between other modules and devices that provide features of the speed control system. The most reliable, efficient, and accurate means to diagnose the PCM or the electronic controls and communication related to speed control system operation requires the use of a diagnostic scan tool. Refer to the appropriate diagnostic information.

SWITCH, SPEED CONTROL

DESCRIPTION

DESCRIPTION

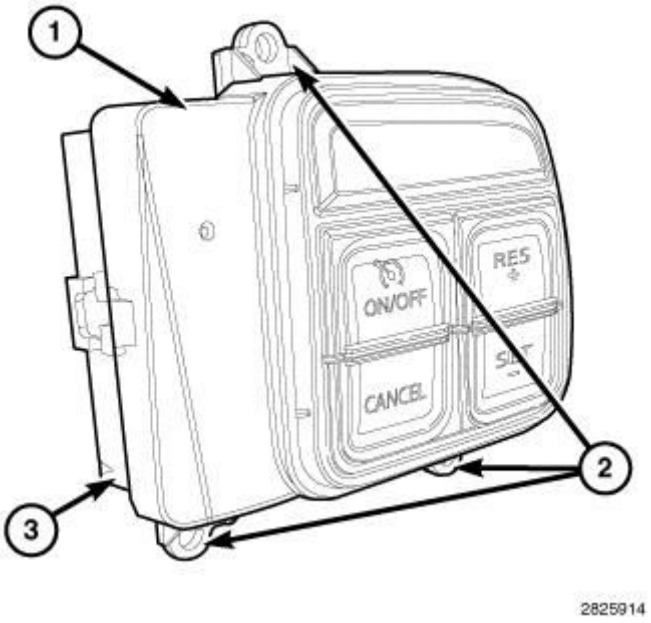

Fig. 1: Speed Control Switch Pod, Mounting Tabs & Connector Receptacle
Courtesy of CHRYSLER GROUP, LLC

The speed control switch pod (1) is located in the right spoke of the steering wheel spoke bezel. This switch has four push buttons and is used on all vehicles equipped with the optional speed control (also known as cruise control) system. The only visible components of the switch pod are the switch push buttons and a decorative bezel around the push buttons, which stands slightly proud of the steering wheel spoke bezel. The remainder of the switch pod including its mounting provisions and its electrical connection are concealed beneath the spoke bezel.

The switch pod housing and push buttons are constructed of molded plastic. Each of the push buttons has white International Control and Display Symbol graphics or text applied to it, which clearly identify the function of each push button. The switch pod is secured through three integral mounting tabs (2) to mounting bosses on the back of the spoke bezel by three screws. A connector receptacle (3) integral to the inboard end of the switch pod housing connects the speed control switch and the Local Interface Network (LIN) slave node circuitry integral to the switch pod to the vehicle electrical system through a dedicated take out and connector of the steering wheel wire harness.

The speed control switch pod cannot be adjusted or repaired. If any function of the switch or the LIN slave node is ineffective or damaged, the entire switch pod unit must be replaced.

OPERATION

OPERATION

The speed control switch pod is a resistor multiplexed unit that provides hard wired inputs to the Powertrain Control Module (PCM) microprocessor. The speed control switch pod also contains the circuitry of a Local Interface Network (LIN) slave node, which provides source current for and communicates the switch or sensor states of the Electronic Vehicle Information Center (EVIC) switches, the remote radio switches and the horn switch over the LIN data bus to the ElectroMechanical Instrument Cluster (EMIC) (also known as the Cab Compartment Node/CCN), which is the LIN master node.

The speed control switch pod for vehicles equipped with the electronic speed control system contains four switch push buttons whose functions are:

- **On/Off** - This switch button enables or disables the speed control system

and clears any previous speed control set speed from system memory.

- **Resume / +** - This switch button restores the vehicle to a previously stored set speed or accelerates the vehicle from an already attained set speed.
- **Cancel** - This switch button cancels the current speed control event, but does not turn the system OFF or clear the currently stored set speed.
- **Set / -** - This switch button sets the current vehicle speed as the stored set speed or decelerates (coasts) the vehicle to a speed that is slower than the already attained set speed.

The EMIC LIN master node provides a clean ground and fused B(+) current for all of the switches and sensors on the rotating steering wheel through the LIN slave node circuitry of the speed control switch pod as well as for the Light Emitting Diode (LED) back lighting of both the speed control and the EVIC switch pods. The PCM continually monitors all of the hard wired speed control switch circuits, while the EMIC continually monitors the LIN bus data. The PCM will set a Diagnostic Trouble Code (DTC) for any problem it detects in the speed control switch circuits, and the EMIC will store a Signal Not Available (SNA) code for any LIN bus input errors. The PCM and EMIC also communicate with other electronic modules over the Controller Area Network (CAN) data bus. Therefore, any PCM or EMIC DTC information can be retrieved using a diagnostic scan tool connected to the Data Link Connector (DLC).

The analog resistor multiplexed circuits of the speed control switch pod as well as the hard wired circuits between the switch pod and the PCM or EMIC may be diagnosed using conventional diagnostic tools and procedures. Refer to the appropriate wiring information. The wiring information includes wiring diagrams, proper wire and connector repair procedures, details of wire harness routing and retention, connector pin-out information and location views for the various wire harness connectors, splices and grounds.

However, conventional diagnostic methods will not prove conclusive in the diagnosis of the LIN slave or master nodes, the PCM, the EMIC or the electronic controls and communication between modules and other devices that provide some features of the speed control system. The most reliable, efficient, and accurate means to diagnose the speed control switch pod, the LIN slave or master nodes, the PCM, the EMIC or the electronic controls and communication related to speed control system operation requires the use of a diagnostic scan tool. Refer to the appropriate diagnostic information.

DIAGNOSIS AND TESTING

DIAGNOSIS AND TESTING - SPEED CONTROL SWITCH

WARNING: To avoid serious or fatal injury on vehicles equipped with airbags, disable the Supplemental Restraint System (SRS) before attempting any steering wheel, steering column, airbag, seat belt tensioner, impact sensor or instrument panel component diagnosis or service. Disconnect and isolate the battery negative (ground) cable, then wait two minutes for the system capacitor to discharge before performing further diagnosis or service. This is the only sure way to disable the SRS. Failure to take the proper precautions could result in accidental airbag deployment.

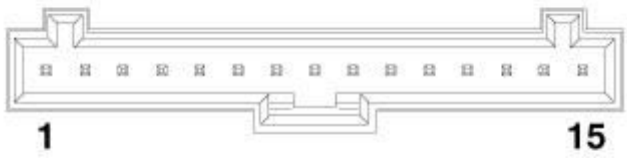

2827003

Fig. 2: Speed Control Switch Harness Connector Terminal Identification
Courtesy of CHRYSLER GROUP, LLC

NOTE: The following test confirms only correct speed control switch functions. It does not test or confirm any of the Local Interface Network (LIN) slave node inputs, outputs or functions. LIN slave node testing requires the use of a diagnostic scan tool. Refer to the appropriate diagnostic information.

1. Remove the speed control switch pod from the steering wheel. Refer to

SWITCH, SPEED CONTROL, REMOVAL.

2. Disconnect the steering wheel wire harness connector from the back of the speed control switch pod.
3. Using an ohmmeter, test the resistance between the terminals of the switch as shown in the Speed Control Switch Tests table.

SPEED CONTROL SWITCH TESTS TABLE

SPEED CONTROL SWITCH TESTS	
SWITCH POSITION	**PINS (*RESISTANCE - OHMS)**
NO PUSH BUTTONS DEPRESSED	13 and 14 (20708) 14 and 15 (20591)
ON / OFF	13 and 14 (464) 14 and 15 (133)
CANCEL	13 and 14 (896) 14 and 15 (457)
SET / - (DECEL)	13 and 14 (4088) 14 and 15 (2471)
RESUME / + (ACCEL)	13 and 14 (7408) 14 and 15 (4091)
*All resistance values are plus or minus 5%.	

4. If the switch fails any of the tests, replace the ineffective speed control switch pod as required.

REMOVAL

REMOVAL

WARNING: To avoid serious or fatal injury on vehicles equipped with airbags, disable the Supplemental Restraint System (SRS) before attempting any steering wheel, steering column, airbag, seat belt tensioner, impact sensor or instrument panel component diagnosis or service. Disconnect and isolate the battery negative (ground) cable, then wait two minutes for the system capacitor to discharge before performing further diagnosis or service. This is the only sure way to disable the

SRS. Failure to take the proper precautions could result in accidental airbag deployment.

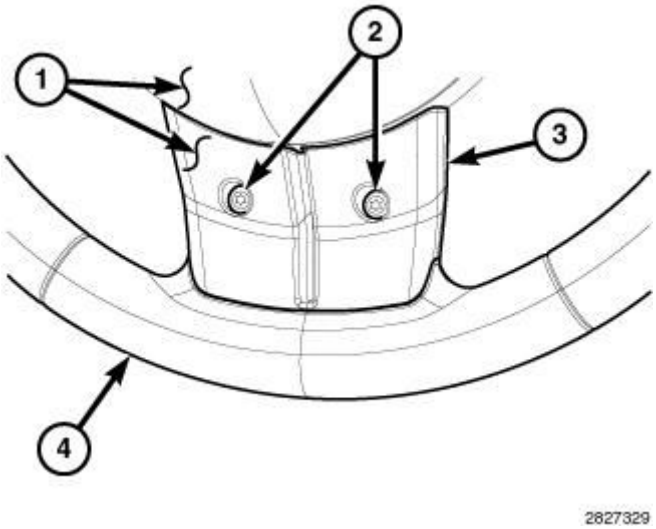

Fig. 3: Rear Cover, Two Screws, Steering Wheel Spoke Front Bezel & Steering Wheel Component Location
Courtesy of CHRYSLER GROUP, LLC

1. Disconnect and isolate the battery negative cable.
2. Remove the driver airbag from the steering wheel. Refer to **AIR BAG, DRIVER, REMOVAL** .
3. From the back of the steering wheel (4), remove the two screws (2) that secure the center spoke of the rear cover (1) to the center spoke of the steering wheel spoke front bezel (3).

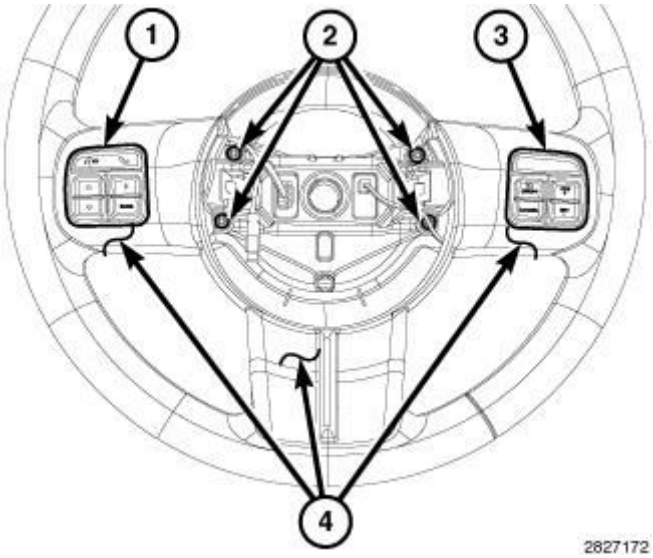

Fig. 4: Installing EVIC Switch Pod, Speed Control Switch Pod, Four

Screws & Front Spoke Bezel
Courtesy of CHRYSLER GROUP, LLC

4. From the face of the steering wheel, remove the four screws (2) that secure the front spoke bezel (4) to the steering wheel armature within the steering wheel hub cavity.
5. Using a trim stick or another suitable wide flat-bladed tool, carefully pry at the parting line between the front spoke bezel and the steering wheel rear cover enough to unsnap the two horizontal members of the bezel from those of the rear cover.
6. Pull the front spoke bezel away from the steering wheel far enough to access and disconnect the steering wheel wire harness connections from the Electronic Vehicle Information Center (EVIC) switch pod (1) and the speed control switch pod (3).

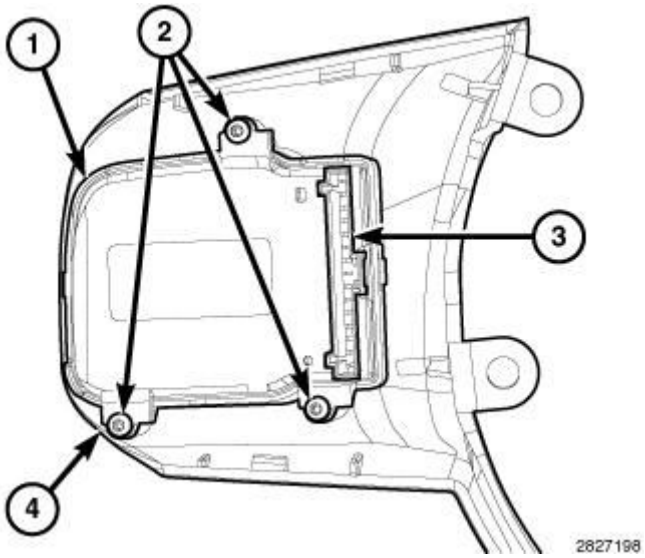

Fig. 5: Steering Wheel Spoke Front Bezel, Screws, Speed Control Switch Pod & Harness Connector Component Location
Courtesy of CHRYSLER GROUP, LLC

7. From the back of the steering wheel spoke front bezel (4), remove the three screws (2) that secure the speed control switch pod (1) mounting tabs to the bezel.
8. Remove the switch from the bezel.

INSTALLATION

INSTALLATION

WARNING: To avoid serious or fatal injury on vehicles equipped with airbags, disable the Supplemental Restraint System (SRS) before attempting any steering wheel, steering column, airbag, seat belt tensioner, impact sensor or instrument panel component diagnosis or service. Disconnect and isolate the battery negative (ground) cable, then wait two minutes for the system capacitor to discharge before performing further diagnosis or service. This is the only sure way to disable the SRS. Failure to take the proper precautions could result in accidental airbag deployment.

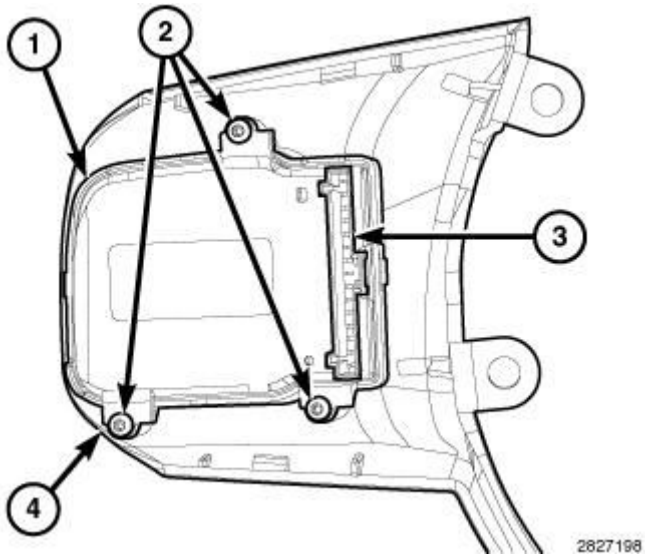

Fig. 6: Steering Wheel Spoke Front Bezel, Screws, Speed Control Switch Pod & Harness Connector Component Location
Courtesy of CHRYSLER GROUP, LLC

1. Position the speed control switch pod (1) to the back of the steering wheel spoke front bezel (4).
2. Install and tighten the three screws (2) that secure the switch mounting tabs to the bezel. Tighten the screws securely.
3. Position the front spoke bezel close enough to the steering wheel to reconnect the steering wheel wire harness connections to the Electronic Vehicle Information Center (EVIC) switch pod and the speed control switch pod connector receptacles (3).

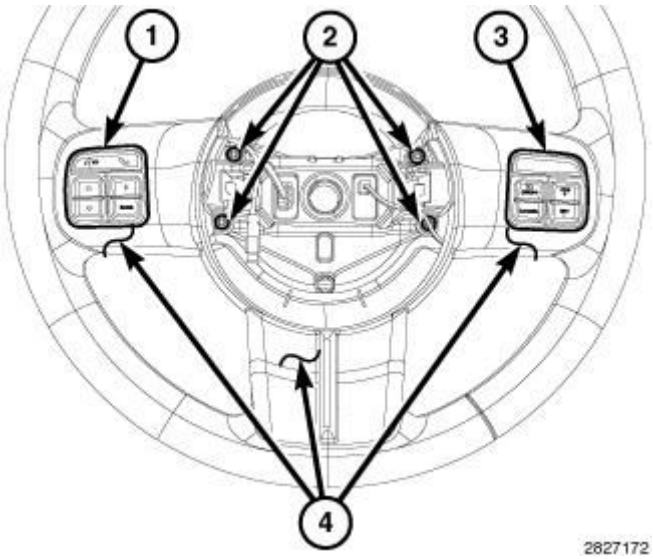

Fig. 7: Installing EVIC Switch Pod, Speed Control Switch Pod, Four Screws & Front Spoke Bezel
Courtesy of CHRYSLER GROUP, LLC

4. Position the front spoke bezel (4), EVIC switch pod (1) and speed control switch pod (3) as a unit to the steering wheel. Be certain that the steering wheel wire harness is routed between the lower or upper bezel stanchions and the inside circumference of the steering wheel hub cavity so that the wiring will not be pinched when the driver airbag is reinstalled.
5. Use hand pressure to squeeze the horizontal spokes of both the front spoke bezel and the steering wheel rear cover together until all of the snap features are fully engaged.
6. Install and tighten the four screws that secure the stanchions of the front spoke bezel to the steering wheel armature within the steering wheel hub cavity. Tighten the screws securely.

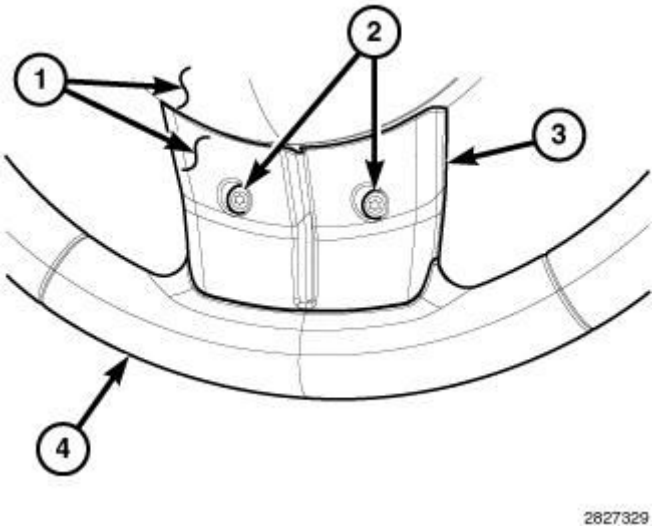

Fig. 8: Rear Cover, Two Screws, Steering Wheel Spoke Front Bezel & Steering Wheel Component Location
Courtesy of CHRYSLER GROUP, LLC

7. From the back of the steering wheel (4), install and tighten the two screws (2) that secure the center spoke of the rear cover (1) to the center spoke of the steering wheel spoke front bezel (3). Tighten the screws securely.
8. Reinstall the driver airbag onto the steering wheel. Refer to **AIR BAG, DRIVER, INSTALLATION** .
9. Reconnect the battery negative cable.

2014 ACCESSORIES AND EQUIPMENT

Totally Integrated Power Module (TIPM) - Electrical Diagnostics - Compass & Patriot

STANDARD PROCEDURE

STANDARD PROCEDURE - BODY VERIFICATION TEST

DIAGNOSTIC TEST

Perform Body Verification Test

NOTE: If the WCM or PCM/ECM was replaced, refer to the appropriate Service Information for proper programming procedures.

1. Disconnect all jumper wires and reconnect all previously disconnected components and connectors.
2. Ensure that all accessories are turned off.
3. Ensure that the battery is fully charged.
4. Turn the ignition on.
5. With the scan tool, record and erase DTCs from all modules.
6. If an electronic control module was replaced, select the applicable module from the scan tool menu and press "Misc. Functions". If the module has programmable features, program as necessary.
7. (Export only) If the Intrusion Transceiver Module (ITM) and/or Siren was replaced, select ITM from the scan tool ECU View menu then "Misc. Functions" and perform the applicable replacement procedure.
8. Turn the ignition off, wait 10 seconds, and then turn the ignition on.
9. Operate all functions of the system that caused the original concern.
10. With the scan tool, select ECU View and check for DTCs in the modules.

Are DTCs present in any of the modules or is the original condition still present?

Yes

- The repair is not complete. Diagnose and repair the appropriate DTCs.

No

- The repair is complete.

2014 ACCESSORIES AND EQUIPMENT

Totally Integrated Power Module (TIPM) - Electrical Diagnostics - Compass & Patriot

DIAGNOSIS AND TESTING

B106B-REAR DEFROST CONTROL CIRCUIT LOW

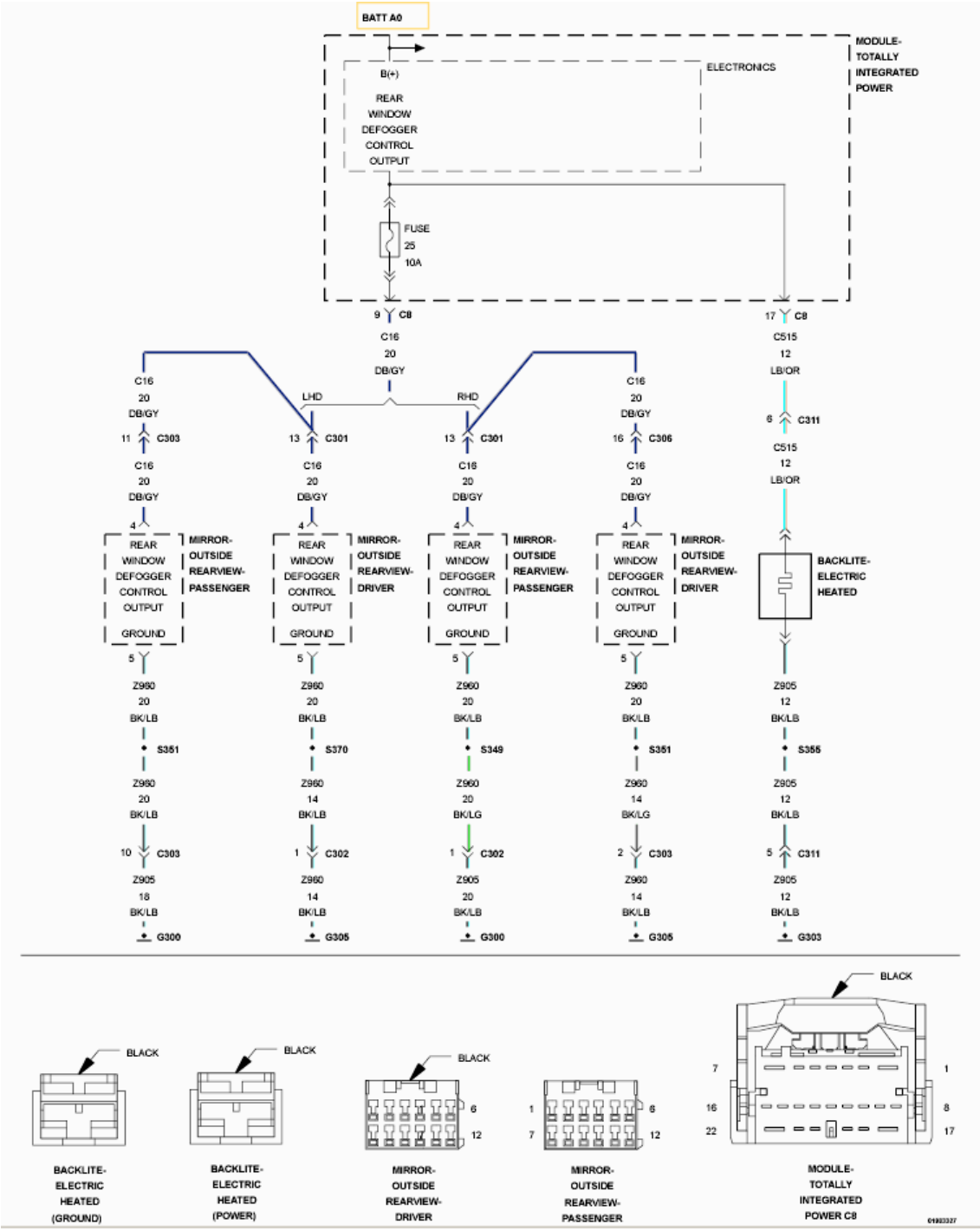

Fig. 1: Rear Defrost Control Wiring Diagram
Courtesy of CHRYSLER GROUP, LLC

For a complete wiring diagram, **refer to appropriate SYSTEM WIRING DIAGRAMS article** .

WHEN MONITORED

With the ignition on. Battery voltage greater than 10.4 volts.

SET CONDITION

A shorted low condition on the (C515) Rear Defogger Control Output or (C16) Fused Rear Defogger Control Output circuit.

POSSIBLE CAUSES

Possible Causes
(C515) REAR WINDOW DEFOGGER CONTROL OUTPUT CIRCUIT SHORTED TO GROUND
(C16) FUSED REAR WINDOW DEFOGGER CONTROL OUTPUT CIRCUIT PARTIAL SHORT TO GROUND (IF EQUIPPED WITH HEATED MIRRORS)
HEATED MIRRORS (IF EQUIPPED)
TOTALLY INTEGRATED POWER MODULE (TIPM)

DIAGNOSTIC TEST

1. **VERIFY DTC B106B-REAR DEFROST CONTROL CIRCUIT LOW IS ACTIVE**
    1. Make sure the rear defogger switch is off.
    2. With the scan tool, erase the TIPM DTCs.
    3. Operate the rear defogger switch several times.
    4. With the scan tool, read the TIPM DTCs.

    Does the scan tool display active DTC: B106B-REAR DEFROST CONTROL CIRCUIT LOW?

    Yes

    - Go To 2

    No

- Check for an intermittent condition by inspecting the related wiring harness for chafed, pierced, pinched and partially broken wires. Also, inspect the related connectors for broken, bent, corroded or contaminated terminals.
- Perform the BODY VERIFICATION TEST. Refer to **STANDARD PROCEDURE** .

2. **INSPECT (C515) REAR WINDOW DEFOGGER CONTROL OUTPUT CIRCUIT AT REAR WINDOW GRID**
   1. Inspect the (C515) Rear Window Defogger Control Output wiring at the rear window grid. If necessary remove the trim around the rear window.
   2. Check for a chafed, pierced or pinched wire. Also look for a metal object that may cause a short to ground condition at the grid.

   Were there any problems found?

   Yes

   - Repair as necessary.
   - Perform the BODY VERIFICATION TEST. Refer to **STANDARD PROCEDURE** .

   No

   - Go To 3

3. **VEHICLE EQUIPPED WITH HEATED MIRRORS**

   Is this vehicle equipped with heated mirrors?

   Yes

   - Go To 4

   No

   - Go To 6

4. **DISCONNECT MIRROR AND RECHECK DTC**

NOTE: For this step, disconnect each outside rearview

mirror one at a time and then recheck for DTCs.

1. With the scan tool, erase the TIPM DTCs.
2. Operate the rear defogger switch several times.
3. With the scan tool, read the TIPM DTCs.

   Does the scan tool display active DTC: B106B-REAR DEFROST CONTROL CIRCUIT LOW?

   Yes

   - Go To 5

   No

   - Inspect the mirror pigtail wiring. If the wiring is OK, replace the outside rearview mirror in accordance with the Service Information.
   - Perform the BODY VERIFICATION TEST. Refer to **STANDARD PROCEDURE** .

5. **(C16) FUSED REAR WINDOW DEFOGGER CONTROL OUTPUT CIRCUIT SHORTED TO GROUND**

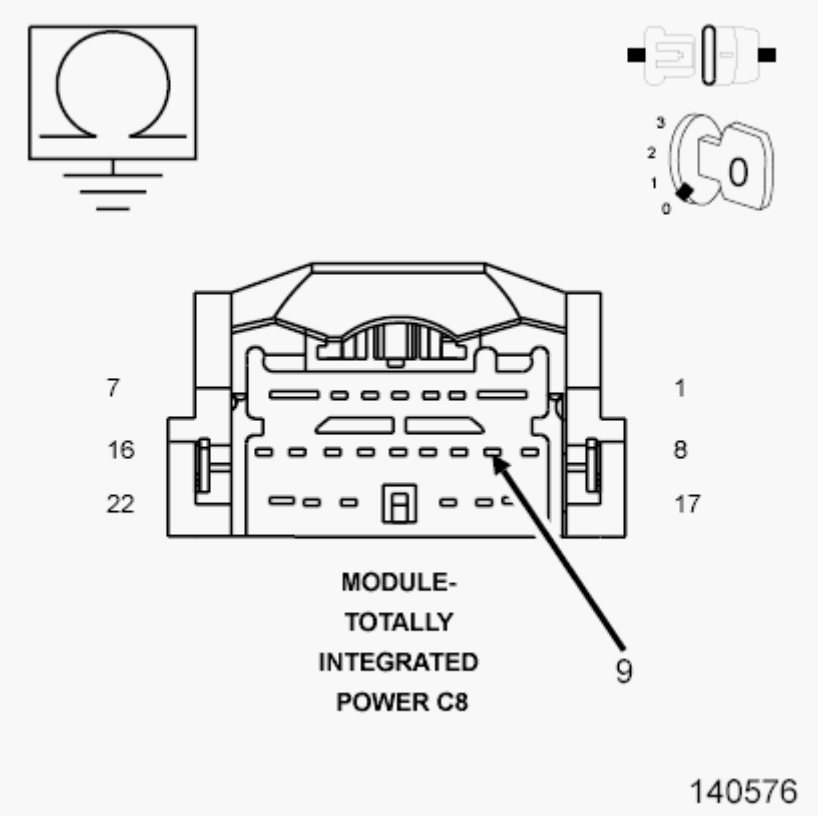

Fig. 2: Checking Fused Rear Window Defogger Control Output Circuit For Short To Ground
Courtesy of CHRYSLER GROUP, LLC

1. Turn the ignition off.
2. Disconnect both outside review mirrors.
3. Disconnect the TIPM C8 harness connector.
4. Measure the resistance between ground and the (C16) Fused Rear Window Defogger Control Output circuit at the TIPM C8 harness connector.

   Is the resistance below 100 Ohms?

   Yes

   - Repair the short to ground in the (C16) Fused Rear Window Defogger Control Output circuit.
   - Perform the BODY VERIFICATION TEST. Refer to **STANDARD PROCEDURE** .

   No

- Go To 6

6. **(C515) REAR WINDOW DEFOGGER CONTROL OUTPUT CIRCUIT SHORTED TO GROUND**

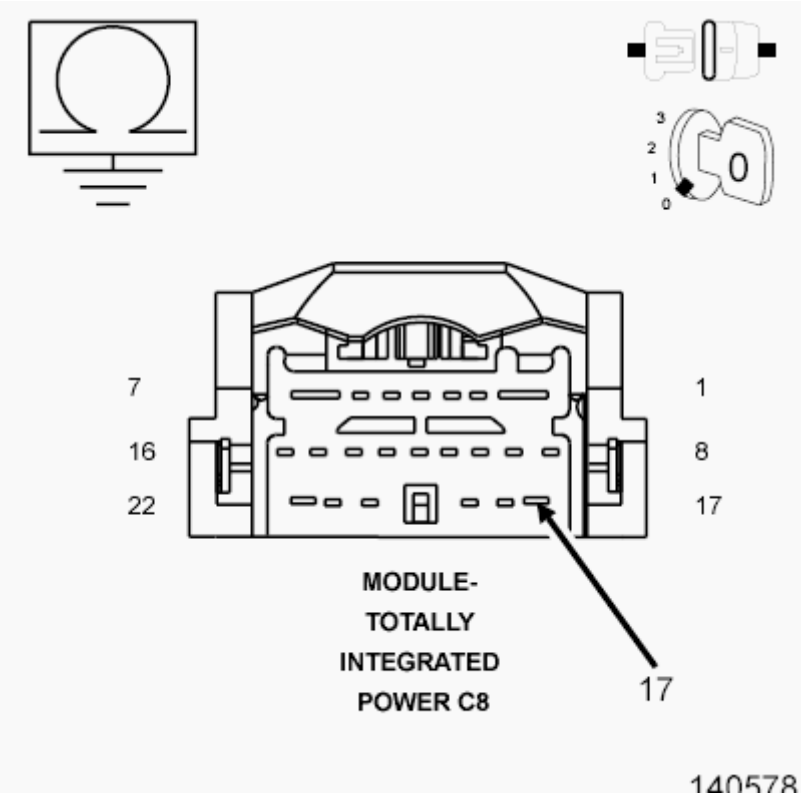

Fig. 3: Checking Rear Window Defogger Control Output Circuit For Short To Ground
Courtesy of CHRYSLER GROUP, LLC

1. Disconnect the electric heated backlite (power) 1-way connector.
2. Measure the resistance between ground and the (C515) Rear Window Defogger Control Output circuit at the TIPM C8 harness connector.

   Is the resistance below 100 Ohms?

   Yes

   - Repair the short to ground in the (C515) Rear Window Defogger Control Output circuit.
   - Perform the BODY VERIFICATION TEST. Refer to **STANDARD PROCEDURE** .

   No

- Go To 7

7. **TOTALLY INTEGRATED POWER MODULE (TIPM)**

NOTE: Before continuing, check the TIPM harness connector terminals for corrosion, damage or terminal push out. Repair as necessary.

1. Using the schematics as a guide, inspect the wire harness and connectors.
2. Pay particular attention to all Power and Ground circuits.

Were any problems found?

Yes

- Repair as necessary.
- Perform the BODY VERIFICATION TEST. Refer to **STANDARD PROCEDURE** .

No

- Replace the Totally Integrated Power Module (TIPM) in accordance with the Service Information.
- Perform the BODY VERIFICATION TEST. Refer to **STANDARD PROCEDURE** .

B106C-REAR DEFROST CONTROL CIRCUIT HIGH

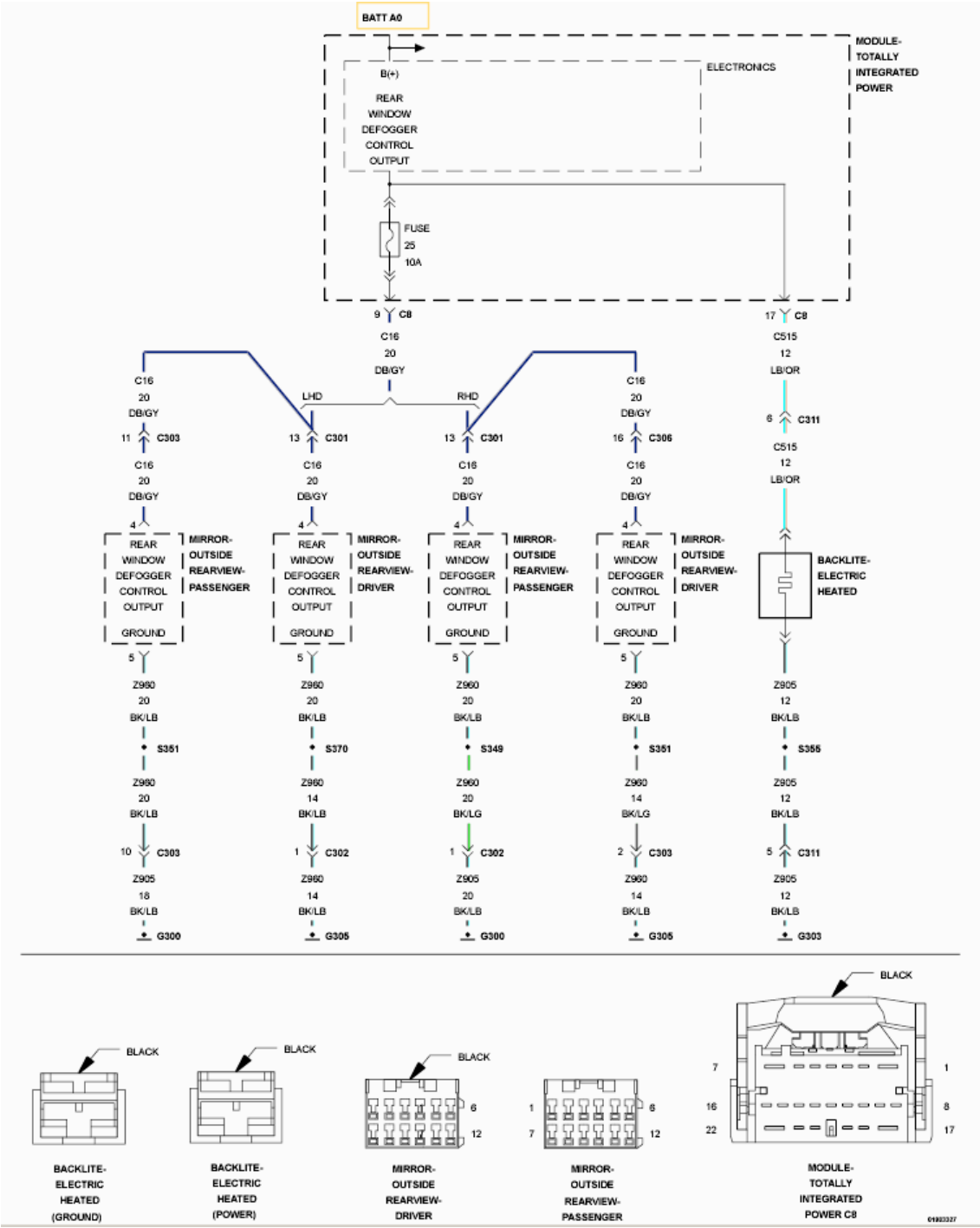

Fig. 4: Rear Defrost Control Wiring Diagram
Courtesy of CHRYSLER GROUP, LLC

For a complete wiring diagram, **refer to appropriate SYSTEM WIRING DIAGRAMS article** .

WHEN MONITORED

With the ignition on. Battery voltage greater than 10.4 volts.

SET CONDITION

A shorted high condition in the (C515) Rear Defogger Control Output circuit or (C16) Fused Rear Defogger Control Output circuit.

POSSIBLE CAUSES

Possible Causes
(C515) REAR DEFOGGER CONTROL OUTPUT CIRCUIT SHORTED TO BATTERY VOLTAGE
EXCESSIVE RESISTANCE IN THE DEFOGGER GRID OR (Z905) GROUND CIRCUIT FOR THE GRID
(C16) FUSED REAR DEFOGGER CONTROL OUTPUT CIRCUIT SHORTED TO BATTERY VOLTAGE (IF EQUIPPED WITH HEATED MIRRORS)
(Z960) GROUND CIRCUIT (IF EQUIPPED WITH HEATED MIRRORS)
HEATED MIRRORS (IF EQUIPPED)
TOTALLY INTEGRATED POWER MODULE (TIPM)

DIAGNOSTIC TEST

1. **CHECK FOR ACTIVE DTC B106C-REAR DEFROST CONTROL CIRCUIT HIGH IN THE TIPM**
   1. Turn the ignition on.
   2. With the scan tool, record and erase the DTCs.
   3. Operate the rear defogger switch several times.
   4. With the scan tool, read the DTCs.

   Does the scan tool display active DTC: B106C-REAR DEFROST CONTROL CIRCUIT HIGH?

   Yes

   - Go To 2

   No

   - The conditions that caused this code to set are not present at this time. Using the wiring diagram/schematic as a guide, inspect the wiring and connectors.

- Perform the BODY VERIFICATION TEST. Refer to **STANDARD PROCEDURE** .

2. **CHECKING THE WINDOW GRID AND (Z905) GROUND CIRCUIT**
   1. Turn the ignition off.
   2. Disconnect the electric heated backlite (power) 1-way connector.
   3. Using a 12-volt test light connected to 12-volts, check the power terminal at the window defogger grid.

      Does the test light illuminate? If necessary, compare with a known good vehicle.

      Yes

      - Go To 4

      No

      - Go To 3

3. **(Z905) GROUND CIRCUIT OPEN**

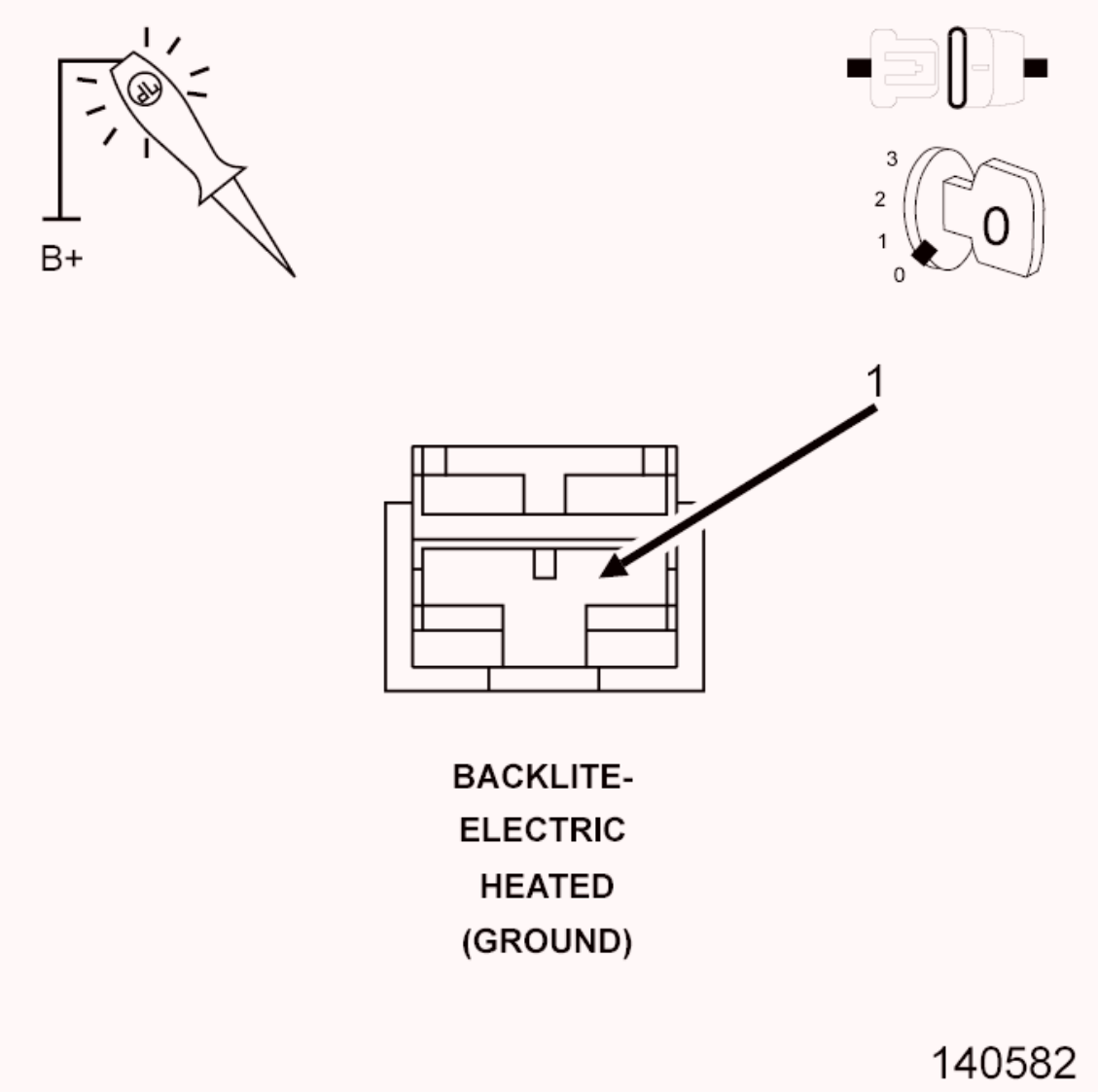

Fig. 5: Checking Ground Circuit For Open
Courtesy of CHRYSLER GROUP, LLC

1. Turn the ignition off.
2. Disconnect the electric heated backlite (ground) 1-way connector.
3. Using a 12-volt test light connected to 12-volts, check the (Z905) Ground circuit at the 1-way connector.

   Does the test light illuminate brightly?

   Yes

   - Repair the open or excessive resistance in the rear window defogger grid.
   - Perform the BODY VERIFICATION TEST. Refer to

STANDARD PROCEDURE .

No

- Repair the open or excessive resistance in the (Z905) Ground circuit.
- Perform the BODY VERIFICATION TEST. Refer to **STANDARD PROCEDURE** .

4. **VEHICLE EQUIPPED WITH HEATED MIRRORS**

Is vehicle equipped with heated mirrors?

Yes

- Go To 5

No

- Go To 7

5. **DISCONNECT ONE MIRROR AND RECHECK DTC**

NOTE: For this step, disconnect each outside rearview mirror one at a time and then recheck for DTCs.

1. Ignition on, engine not running.
2. With the scan tool, erase the TIPM DTCs.
3. Operate the rear defogger switch several times.
4. With the scan tool, read the TIPM DTCs.

Does the scan tool display active DTC: B106C-REAR DEFROST CONTROL CIRCUIT HIGH?

Yes

- Go To 7

No

- Go To 6

6. MIRROR GROUND CIRCUIT

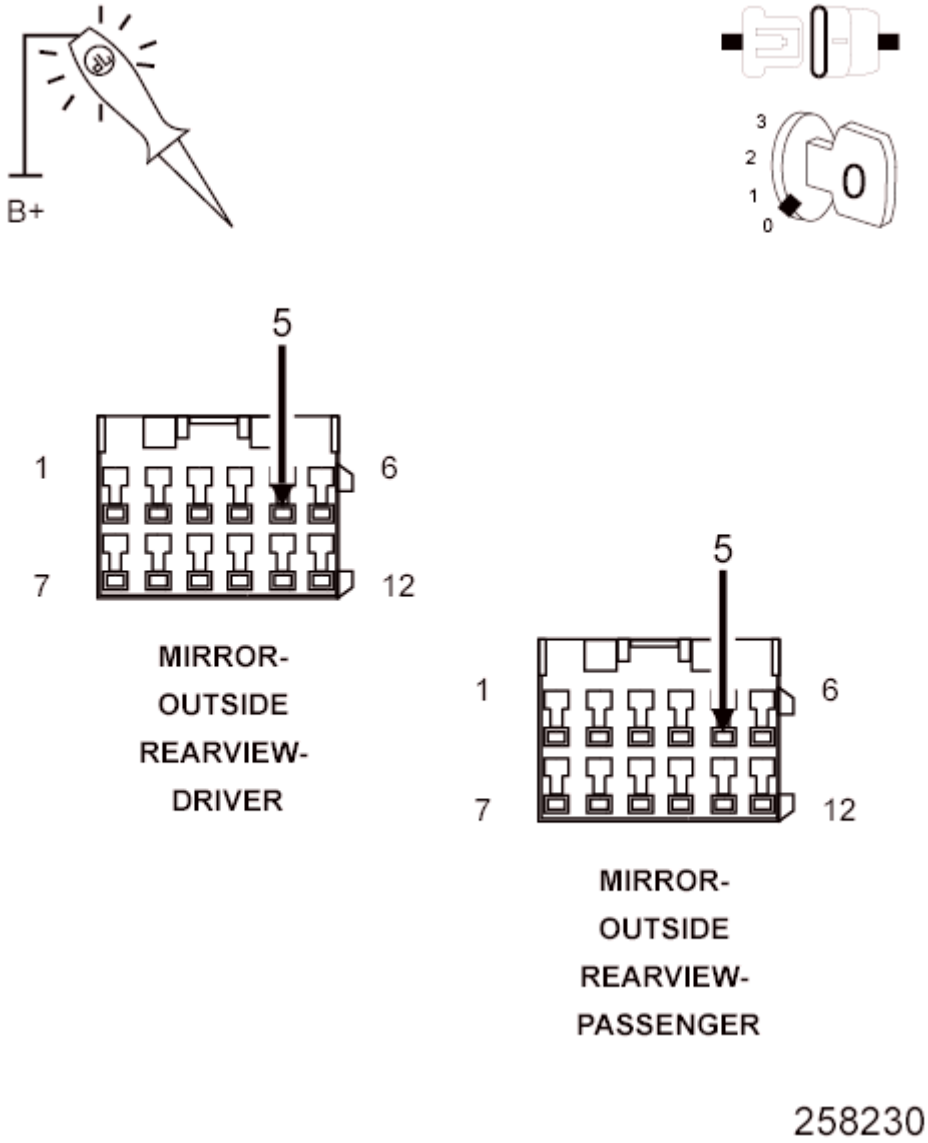

Fig. 6: Checking Mirror Ground Circuit Using 12-Volt Test Light
Courtesy of CHRYSLER GROUP, LLC

1. Using a 12-volt test light connected to 12-volts, check the (Z960) Ground circuit at the mirror connector.

   Does the test light illuminate brightly?

   Yes

   - Inspect the mirror pigtail wiring. If the wiring is OK, replace the outside rearview mirror in accordance with the Service

Information.

- Perform the BODY VERIFICATION TEST. Refer to **STANDARD PROCEDURE** .

No

- Repair the excessive resistance in the (Z960) Ground circuit.
- Perform the BODY VERIFICATION TEST. Refer to **STANDARD PROCEDURE** .

7. **(C515) REAR WINDOW DEFOGGER CONTROL OUTPUT CIRCUIT SHORTED TO BATTERY VOLTAGE**

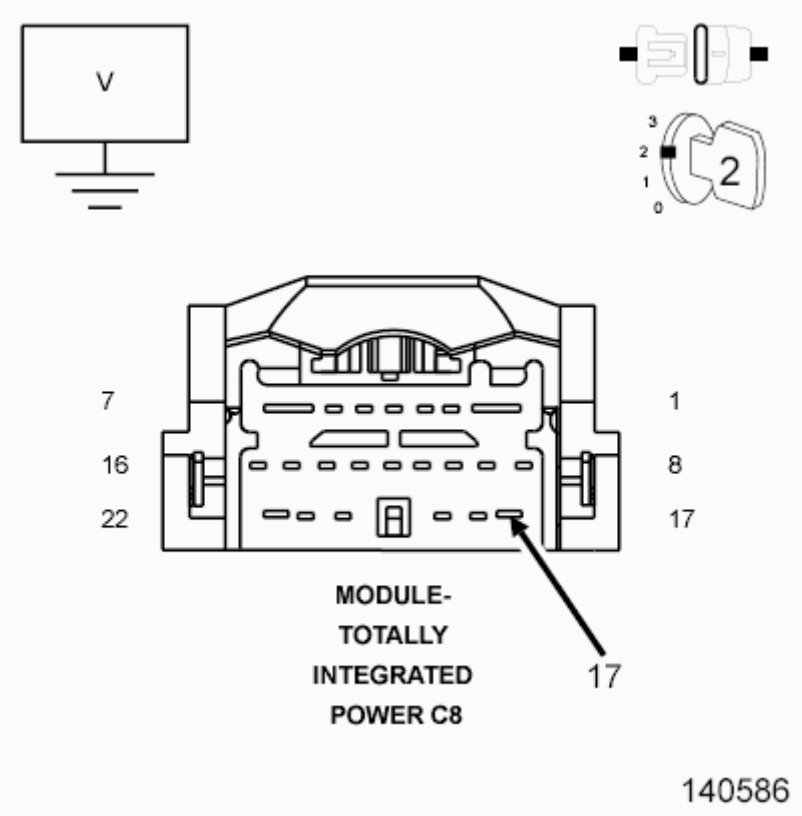

Fig. 7: Checking Rear Window Defogger Control Output Circuit For Short To Voltage
Courtesy of CHRYSLER GROUP, LLC

1. Turn the ignition off.
2. Disconnect the TIPM C8 harness connector.
3. Ignition on, engine not running.
4. Measure the voltage between the (C515) Rear Window Defogger Control Output circuit and ground at the TIPM C8 harness connector.

Is there any voltage present?

Yes

- Repair the short to battery voltage in the (C515) Rear Window Defogger Control Output circuit.
- Perform the BODY VERIFICATION TEST. Refer to **STANDARD PROCEDURE** .

No

- Go To 8

8. **(C16) FUSED REAR WINDOW DEFOGGER CONTROL OUTPUT CIRCUIT SHORTED TO BATTERY VOLTAGE**

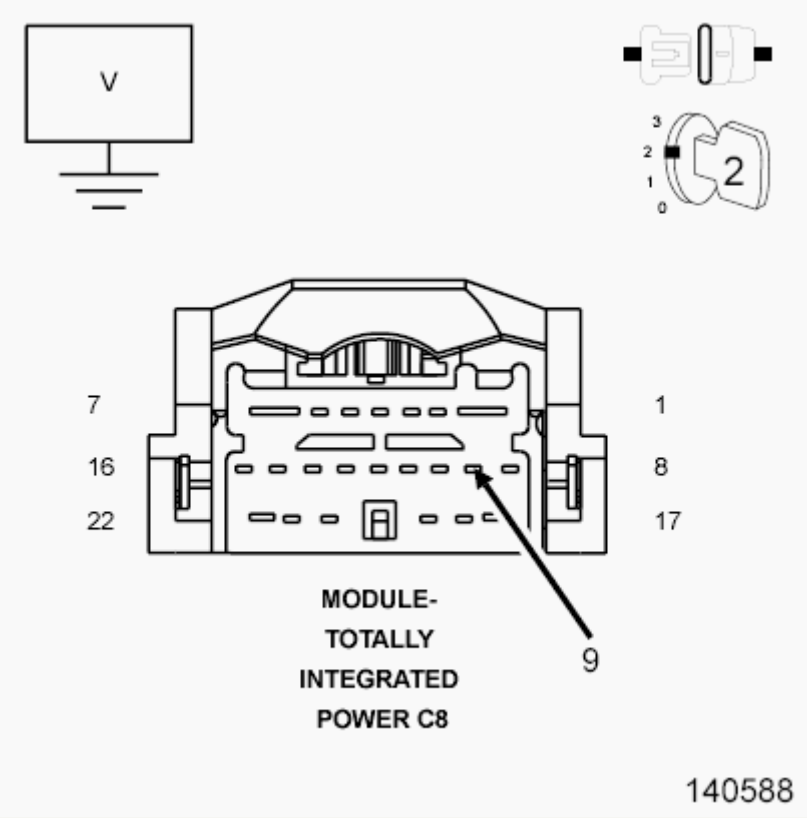

Fig. 8: Checking Fused Rear Window Defogger Control Output Circuit For Short To Voltage
Courtesy of CHRYSLER GROUP, LLC

1. Measure the voltage between the (C16) Fused Rear Window Defogger Control Output circuit and ground at the TIPM C8 harness connector.

Is there any voltage present?

Yes

- Repair the short to battery voltage in the (C16) Fused Rear Window Defogger Control Output circuit.
- Perform the BODY VERIFICATION TEST. Refer to **STANDARD PROCEDURE** .

No

- Go To 9

9. **TOTALLY INTEGRATED POWER MODULE (TIPM)**

NOTE: Before continuing, check the TIPM harness connector terminals for corrosion, damage or terminal push out. Repair as necessary.

1. Using the schematics as a guide, inspect the wire harness and connectors.
2. Pay particular attention to all Power and Ground circuits.

Were any problems found?

Yes

- Repair as necessary.
- Perform the BODY VERIFICATION TEST. Refer to **STANDARD PROCEDURE** .

No

- Replace the Totally Integrated Power Module (TIPM) in accordance with the Service Information.
- Perform the BODY VERIFICATION TEST. Refer to **STANDARD PROCEDURE** .

B106D-REAR DEFROST CONTROL CIRCUIT OPEN

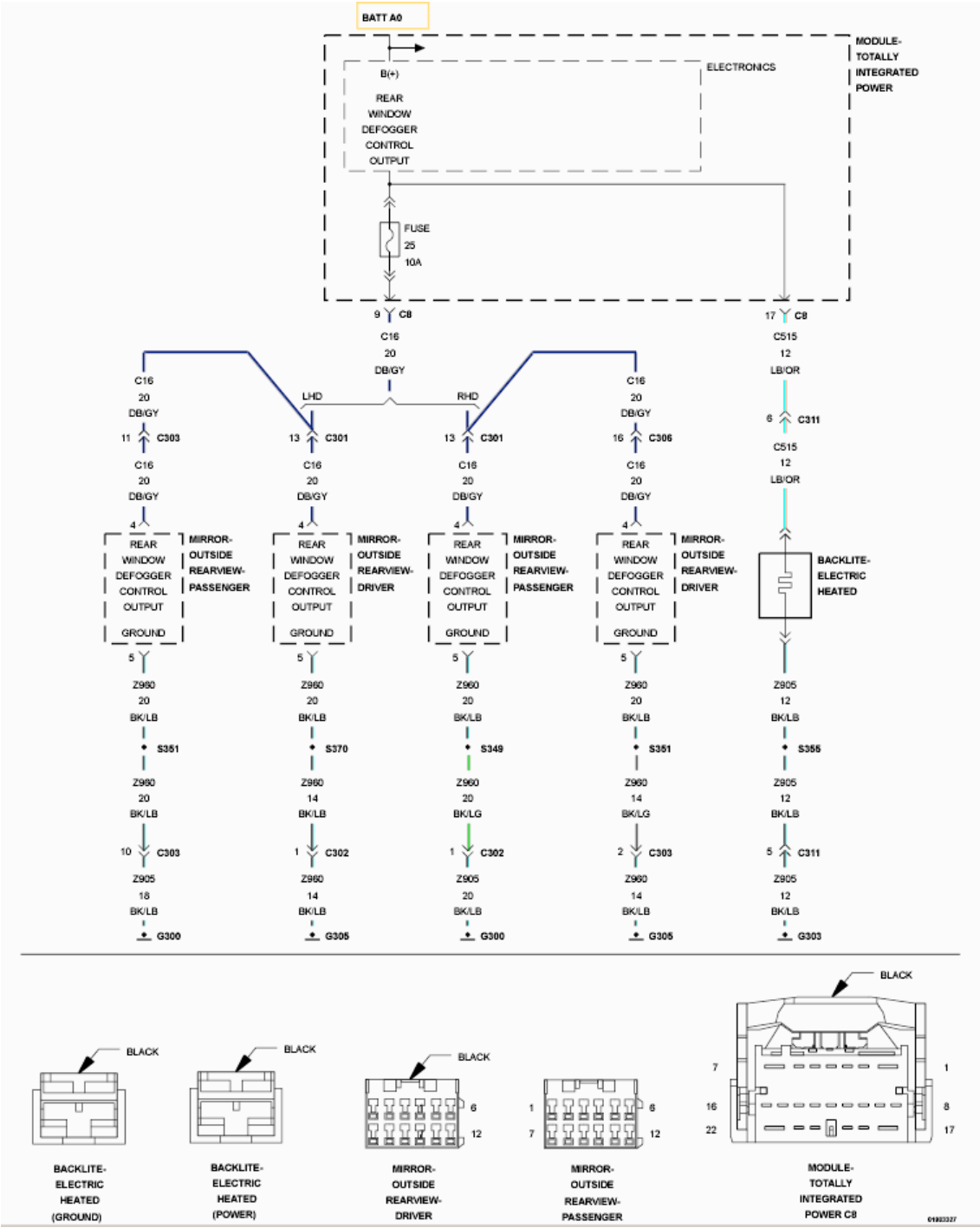

Fig. 9: Rear Defrost Control Wiring Diagram
Courtesy of CHRYSLER GROUP, LLC

For a complete wiring diagram, **refer to appropriate SYSTEM WIRING DIAGRAMS article** .

WHEN MONITORED

With the ignition on. Battery voltage greater than 10.4 volts.

SET CONDITION

An open condition on the (C515) Rear Defogger Control Output circuit.

POSSIBLE CAUSES

Possible Causes
TERMINAL DAMAGE OR CORROSION
(C515) REAR DEFOGGER CONTROL OUTPUT CIRCUIT OPEN
WINDOW DEFOGGER GRID OR (Z905) GROUND CIRCUIT FOR THE GRID OPEN
TOTALLY INTEGRATED POWER MODULE (TIPM)

DIAGNOSTIC TEST

1. **CHECK FOR ACTIVE DTC B106D-REAR DEFROST CONTROL CIRCUIT OPEN**
   1. Turn the ignition on.
   2. With the scan tool, record and erase the DTCs.
   3. Operate the rear defogger switch several times.
   4. With the scan tool, read the DTCs.

   Does the scan tool display active DTC: B106D-REAR DEFROST CONTROL CIRCUIT OPEN?

   Yes

   - Go To 2

   No

   - The conditions that caused this code to set are not present at this time. Using the wiring diagram/schematic as a guide, inspect the wiring and connectors.
   - Perform the BODY VERIFICATION TEST. Refer to **STANDARD PROCEDURE** .
2. **VISUAL AND PHYSICAL INSPECTION OF THE CONNECTOR AND TERMINAL**
   1. Turn the ignition off.

2. Check for signs of corrosion build up and damage at all connection points.

NOTE: Make sure all in-line connectors are inspected for corrosion and damage.

3. Disconnect the electric heated backlite (power) 1-way connector.
4. Disconnect the electric heated backlite (ground) 1-way connector.
5. Disconnect the TIPM C8 harness connector.
6. Visually inspect the wiring harness. Look for any chafed, pierced, pinched or partially broken wires hidden in the wire insulation.

Were any of the above conditions found?

Yes

- Repair or replace as necessary.
- Perform the BODY VERIFICATION TEST. Refer to **STANDARD PROCEDURE** .

No

- Go To 3

3. **(C515) REAR DEFOGGER CONTROL OUTPUT CIRCUIT OPEN**

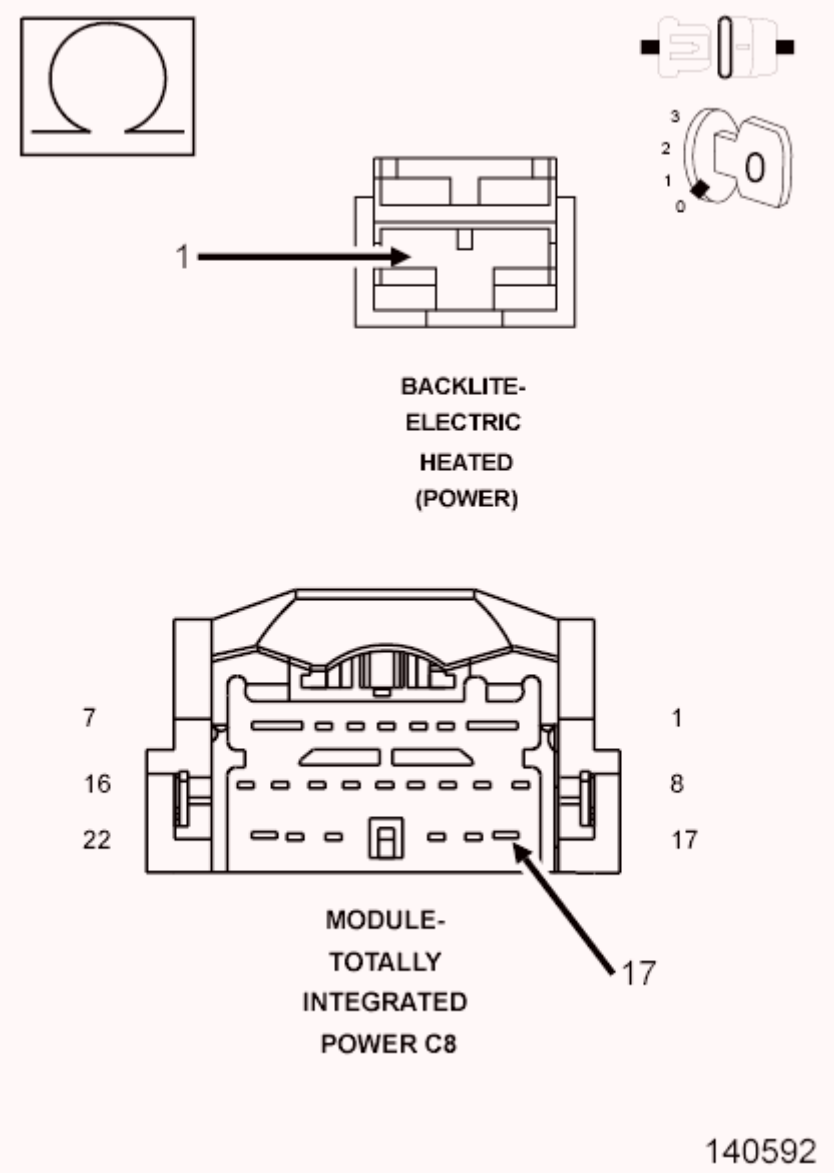

Fig. 10: Checking Rear Defogger Control Output Circuit For Open
Courtesy of CHRYSLER GROUP, LLC

1. Connect any disconnected in-line connectors.
2. Measure the resistance of the (C515) Rear Defogger Control Output circuit between the TIPM C8 harness connector and the electric heated backlite (power) 1-way harness connector.

   Is the resistance below 5.0 Ohms?

   Yes

   - Go To 4

No

- Repair the open in the (C515) Rear Defogger Control Output circuit.
- Perform the BODY VERIFICATION TEST. Refer to **STANDARD PROCEDURE** .

4. **CHECK THE WINDOW DEFOGGER GRID AND (Z905) GROUND CIRCUIT**
   1. Connect the electric heated backlite (ground) 1-way connector.
   2. Using a 12-volt test light connected to 12-volts, check the electric heated backlite (power) terminal at the window defogger grid.

   Does the test light illuminate?

   Yes

   - Go To 6

   No

   - Go To 5
5. **(Z905) GROUND CIRCUIT OPEN**

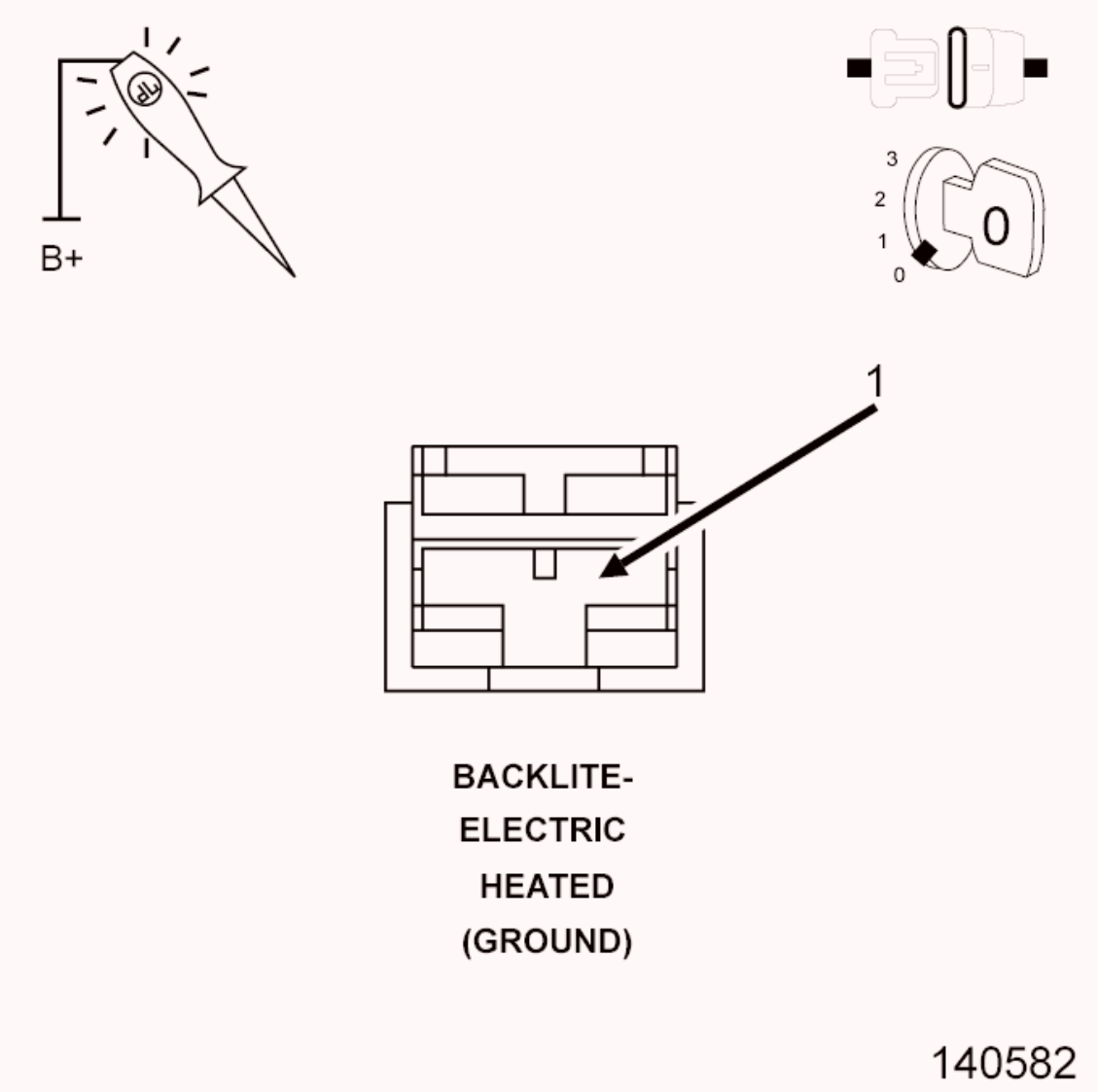

Fig. 11: Checking Ground Circuit For Open
Courtesy of CHRYSLER GROUP, LLC

1. Disconnect the electric heated backlite (ground) 1-way connector.
2. Using a 12-volt test light connected to 12-volts, check the (Z905) ground circuit at the electric heated backlite (ground) 1-way connector.

   Does the test light illuminate brightly?

   Yes

   - Repair the open in the rear window defogger grid in accordance with the Service Information.
   - Perform the BODY VERIFICATION TEST. Refer to **STANDARD PROCEDURE** .

No

- Repair the open in the (Z905) Ground circuit.
- Perform the BODY VERIFICATION TEST. Refer to **STANDARD PROCEDURE** .

6. **TOTALLY INTEGRATED POWER MODULE (TIPM)**

NOTE: Before continuing, check the TIPM harness connector terminals for corrosion, damage or terminal push out. Repair as necessary.

1. Using the schematics as a guide, inspect the wire harness and connectors.
2. Pay particular attention to all Power and Ground circuits.

Were any problems found?

Yes

- Repair as necessary.
- Perform the BODY VERIFICATION TEST. Refer to **STANDARD PROCEDURE** .

No

- Replace the Totally Integrated Power Module (TIPM) in accordance with the Service Information.
- Perform the BODY VERIFICATION TEST. Refer to **STANDARD PROCEDURE** .

B10B4-CABIN HEATER 1 CONTROL CIRCUIT LOW

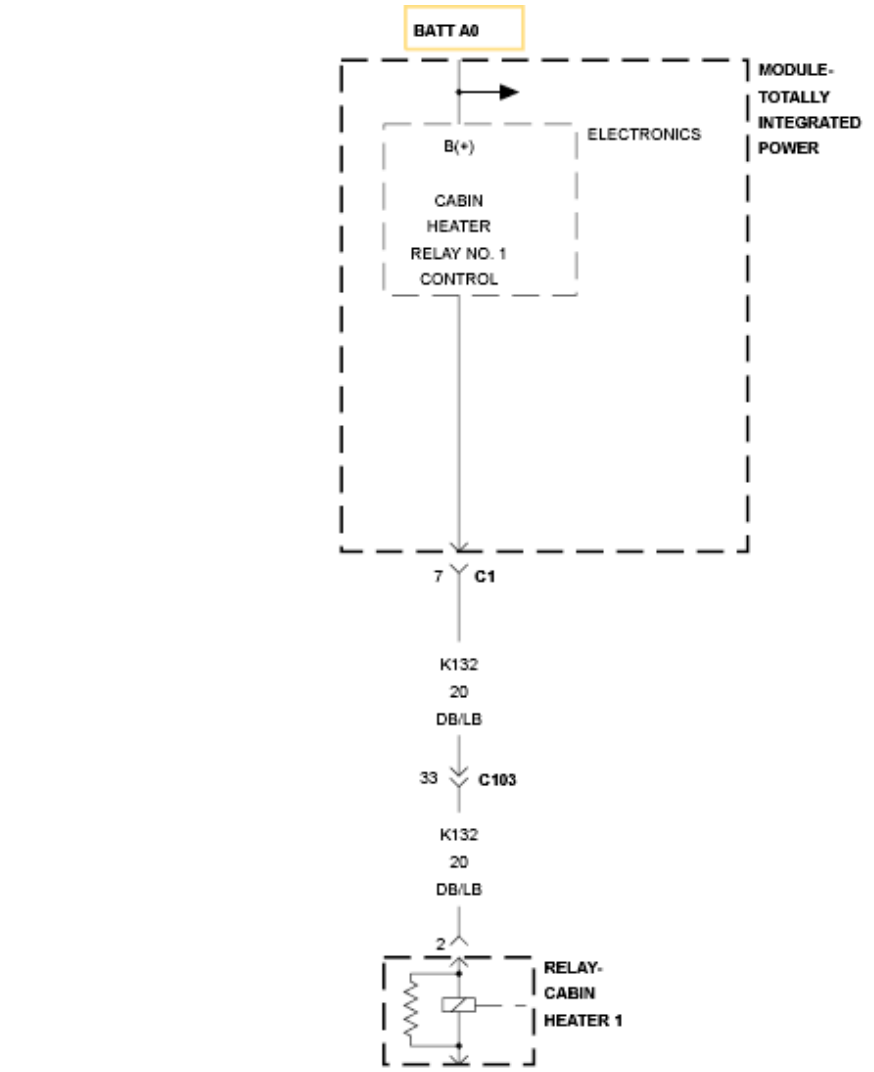

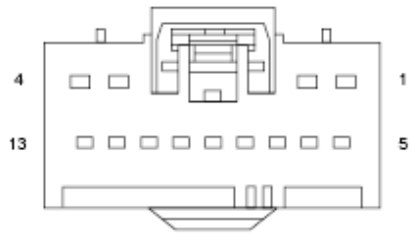

MODULE-
TOTALLY
INTEGRATED
POWER C1

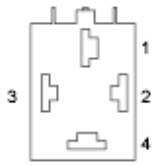

RELAY-
CABIN
HEATER 1
(DIESEL)

Fig. 12: Cabin Heater 1 Control Wiring Diagram

Courtesy of CHRYSLER GROUP, LLC

For a complete wiring diagram, **refer to appropriate SYSTEM WIRING DIAGRAMS article**

WHEN MONITORED

With the ignition on, the Cabin Heater Relay 1 commanded on.

SET CONDITION

If the Totally Integrated Power Module detects the (K132) Cabin Heater Relay 1 Control circuit is shorted to ground.

POSSIBLE CAUSES

Possible Causes
(K132) CABIN HEATER RELAY 1 CONTROL CIRCUIT SHORTED TO GROUND
CABIN HEATER 1 RELAY
TOTALLY INTEGRATED POWER MODULE (TIPM)

DIAGNOSTIC TEST

1. **VERIFY THAT THE DTC IS ACTIVE**
    1. Turn the ignition on.
    2. With the scan tool, erase DTCs.
    3. With the scan tool, actuate the Cabin Heater 1 Relay.
    4. Monitor the scan tool for at least two minutes.
    5. With the scan tool, read DTCs.

    Does the scan tool display active: B10B4-CABIN HEATER 1 CONTROL CIRCUIT LOW?

    Yes

    - Go To 2

    No

    - The condition that caused this symptom is currently not present.

Check for an intermittent condition by inspecting the related wiring harness for chafed, pierced, pinched, and partially broken wires. Also, inspect the related connectors for broken, bent, pushed out, spread, corroded, or contaminated terminals. Repair as necessary.

- Perform the BODY VERIFICATION TEST. Refer to **STANDARD PROCEDURE** .

2. **CHECK (K132) CABIN HEATER RELAY 1 OUTPUT CIRCUIT FOR SHORT TO GROUND**

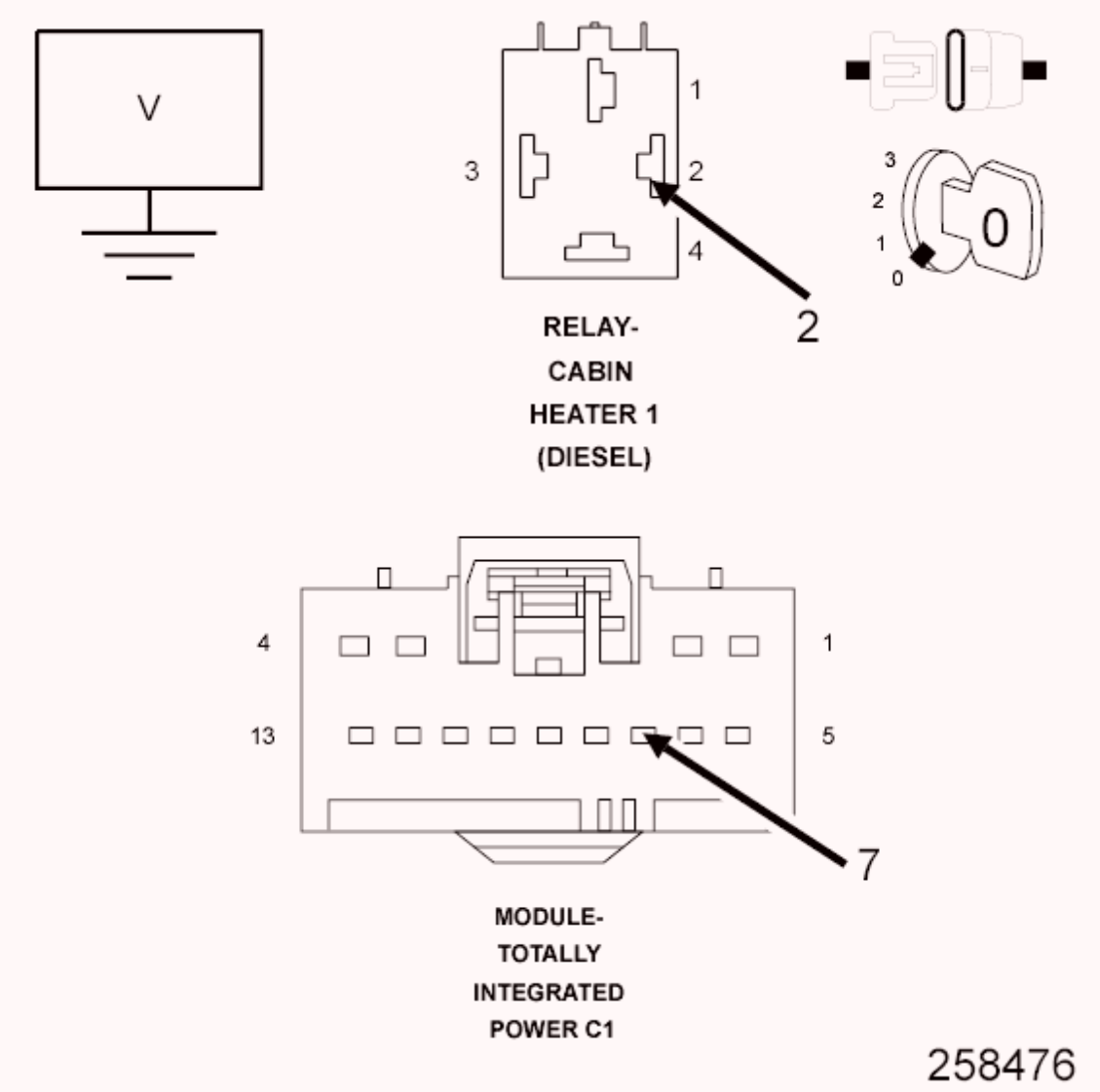

Fig. 13: Measuring Resistance Between Cabin Heater Relay 1 Output Circuit & Ground
Courtesy of CHRYSLER GROUP, LLC

1. Turn the ignition off.

2. Disconnect the TIPM C1 harness connector.
3. Remove the Cabin Heater Relay 1.
4. Using an ohm meter measure the resistance between the (K132) Cabin Heater Relay 1 Output circuit and ground.

   Does the ohm meter read open circuit?

   Yes

   - Go To 3

   No

   - Repair the (K132) Cabin Heater Relay 1 Output circuit for a short to ground.
   - Perform the BODY VERIFICATION TEST. Refer to **STANDARD PROCEDURE** .

3. **TOTALLY INTEGRATED POWER MODULE (TIPM)**

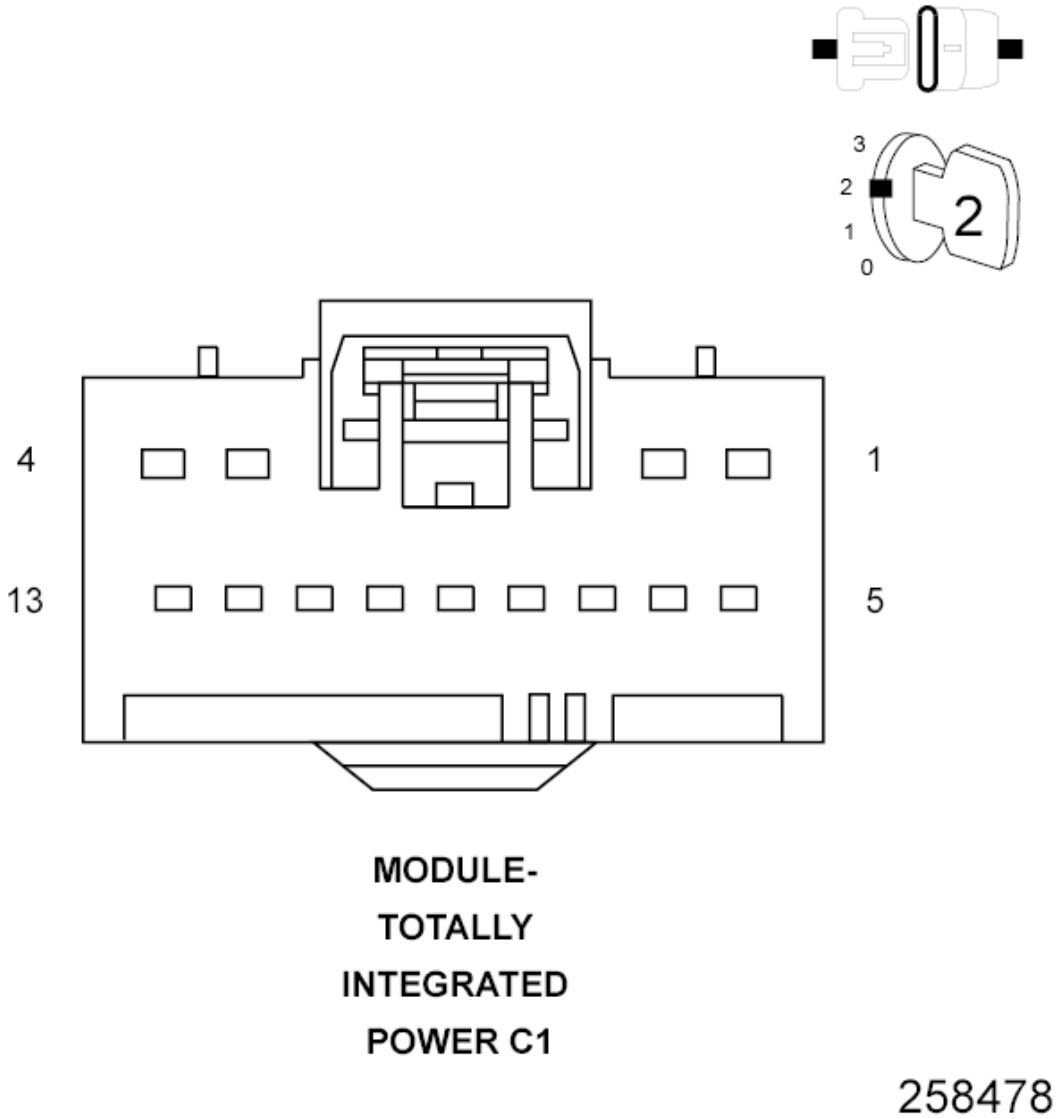

Fig. 14: Totally Integrated Power Module (TIPM) Connector End View
Courtesy of CHRYSLER GROUP, LLC

1. Turn the ignition on.
2. With the scan tool, erase DTCs.
3. With the scan tool, actuate the Cabin Heater 1 Relay.
4. Monitor the scan tool for at least two minutes.
5. With the scan tool, read DTCs.

   Does the scan tool display active: B10B4-CABIN HEATER 1 CONTROL CIRCUIT LOW?

   Yes

- Replace the Totally Integrated Power Module (TIPM) in accordance with the Service Information.
- Perform the BODY VERIFICATION TEST. Refer to **STANDARD PROCEDURE** .

No

- Replace the Cabin Heater Relay 1 in accordance with the Service Information.
- Perform the BODY VERIFICATION TEST. Refer to **STANDARD PROCEDURE** .

B10B5-CABIN HEATER 1 CONTROL CIRCUIT HIGH

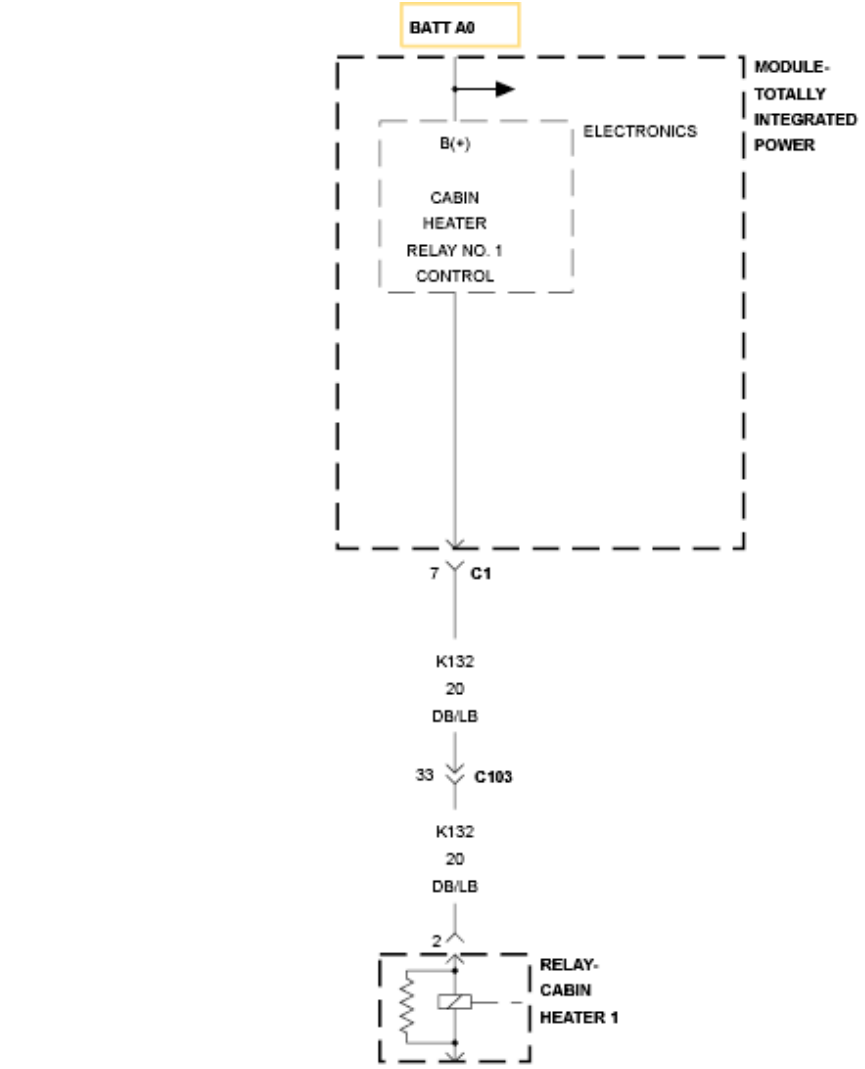

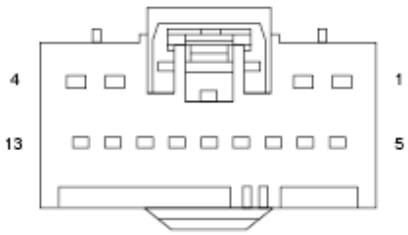

MODULE-
TOTALLY
INTEGRATED
POWER C1

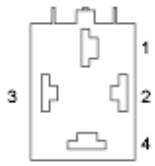

RELAY-
CABIN
HEATER 1
(DIESEL)

Fig. 15: Cabin Heater 1 Control Wiring Diagram

Courtesy of CHRYSLER GROUP, LLC

For a complete wiring diagram, **refer to appropriate SYSTEM WIRING DIAGRAMS article** .

WHEN MONITORED

With the ignition on, the Cabin Heater Relay 1 is commanded on.

SET CONDITION

If the Totally Integrated Power Module detects a short to voltage on the (K132) Cabin Heater Relay 1 Control circuit.

POSSIBLE CAUSES

Possible Causes
(K132) CABIN HEATER RELAY 1 CONTROL CIRCUIT SHORTED TO VOLTAGE
CABIN HEATER RELAY 1
TOTALLY INTEGRATED POWER MODULE (TIPM)

DIAGNOSTIC TEST

1. **VERIFY THAT THE DTC IS ACTIVE**
    1. Turn the ignition on.
    2. With the scan tool, erase DTCs.
    3. With the scan tool, actuate the Cabin Heater 1 Relay.
    4. Monitor the scan tool for at least two minutes.
    5. With the scan tool, read DTCs.

    Does the scan tool display active: B10B5-CABIN HEATER 1 CONTROL CIRCUIT HIGH?

    Yes

    - Go To 2

    No

    - The condition that caused this symptom is currently not present.

Check for an intermittent condition by inspecting the related wiring harness for chafed, pierced, pinched, and partially broken wires. Also, inspect the related connectors for broken, bent, pushed out, spread, corroded, or contaminated terminals. Repair as necessary.

- Perform the BODY VERIFICATION TEST. Refer to **STANDARD PROCEDURE** .

2. **CHECK THE (K132) CABIN HEATER RELAY 1 CONTROL CIRCUIT FOR SHORT TO VOLTAGE**

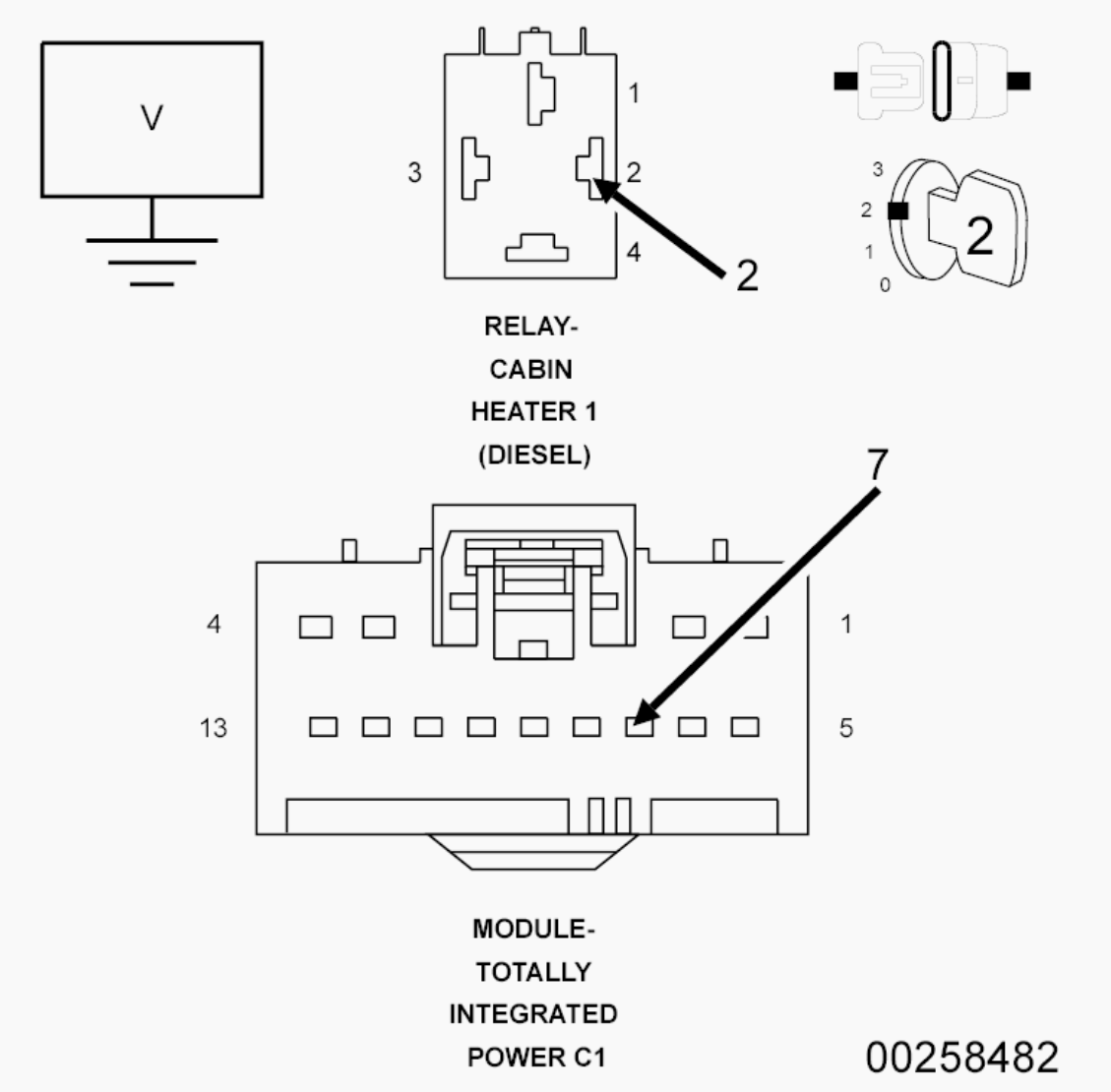

Fig. 16: Measuring Voltage On Cabin Heater Relay 1 Control Circuit
Courtesy of CHRYSLER GROUP, LLC

1. Turn the ignition off.
2. Disconnect the TIPM C1 harness connector.

3. Remove the Cabin Heater Relay 1.
4. Turn the ignition on.
5. With a volt meter, measure the voltage on the (K132) Cabin Heater Relay 1 Control circuit.

   Does the volt meter read 1.0 volt or above?

   Yes

   - Repair short to voltage on the (K132) Cabin Heater Relay 1 Control circuit.
   - Perform the BODY VERIFICATION TEST. Refer to **STANDARD PROCEDURE** .

   No

   - Go To3

3. **TOTALLY INTEGRATED POWER MODULE**

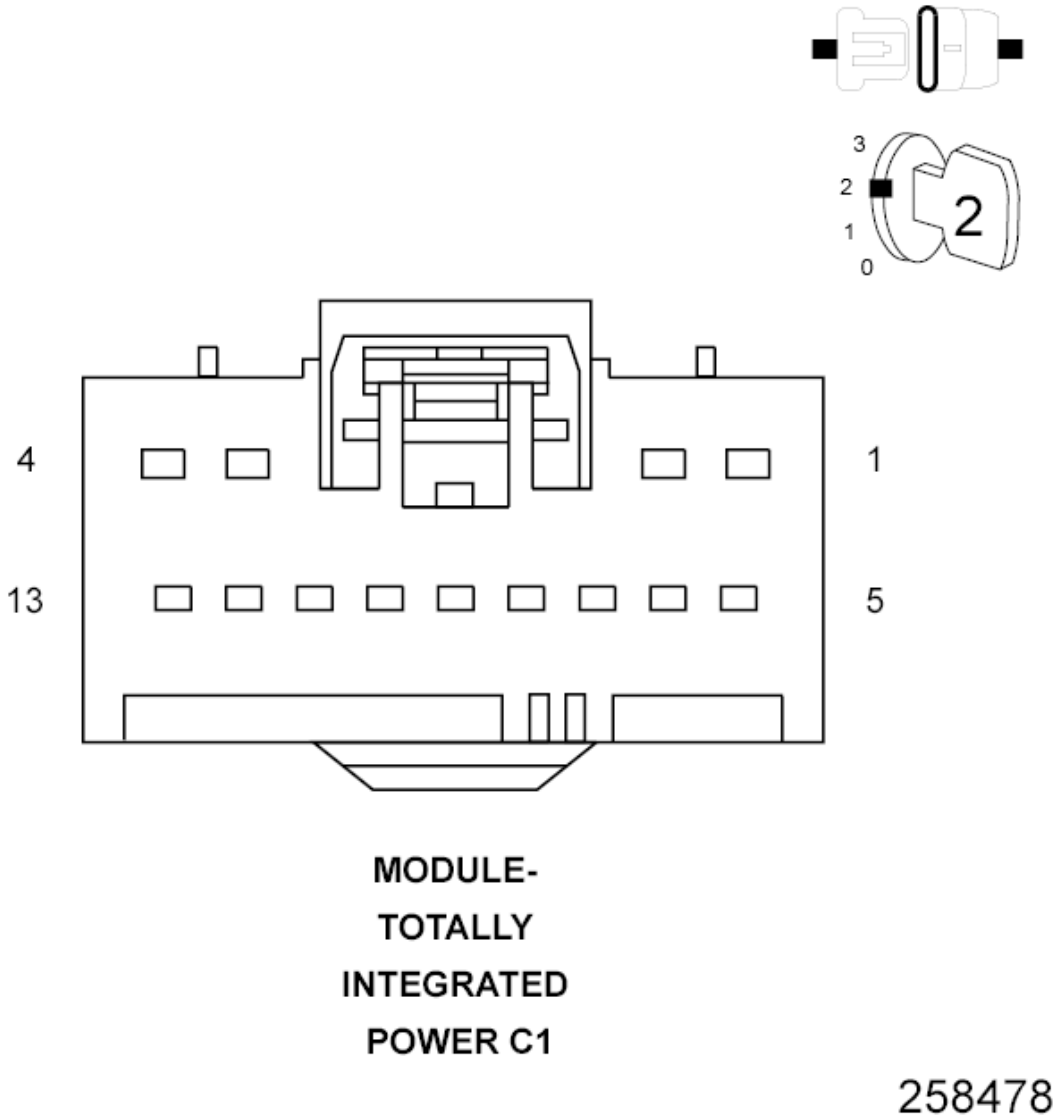

Fig. 17: Totally Integrated Power Module (TIPM) Connector End View
Courtesy of CHRYSLER GROUP, LLC

1. Turn the ignition on.
2. With the scan tool, erase DTCs.
3. With the scan tool, actuate the Cabin Heater 1 Relay.
4. Monitor the scan tool for at least two minutes.
5. With the scan tool, read DTCs.

   Does the scan tool display active: B10B5-CABIN HEATER 1 CONTROL CIRCUIT HIGH?

   Yes

- Replace the Totally Integrated Power Module (TIPM) in accordance with the Service Information.
- Perform the BODY VERIFICATION TEST. Refer to **STANDARD PROCEDURE** .

No

- Replace the Cabin Heater Relay 1 in accordance with the Service Information.
- Perform the BODY VERIFICATION TEST. Refer to **STANDARD PROCEDURE** .

B10B6-CABIN HEATER 1 CONTROL CIRCUIT OPEN

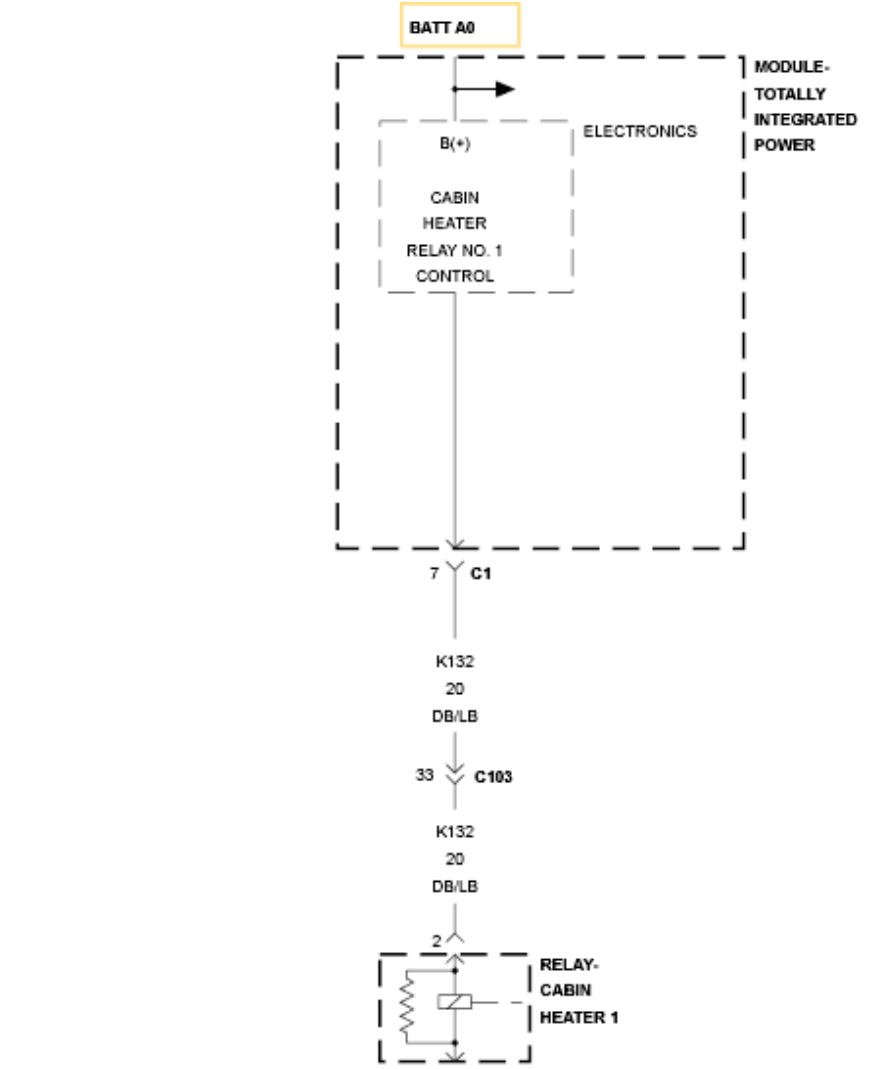

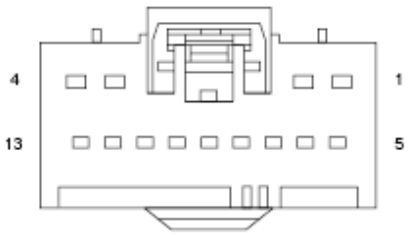

MODULE-
TOTALLY
INTEGRATED
POWER C1

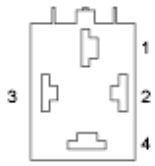

RELAY-
CABIN
HEATER 1
(DIESEL)

Fig. 18: Cabin Heater 1 Control Wiring Diagram

Courtesy of CHRYSLER GROUP, LLC

For a complete wiring diagram, **refer to appropriate SYSTEM WIRING DIAGRAMS article**

WHEN MONITORED

With the ignition on, and the Cabin Heater Relay 1 commanded on.

SET CONDITION

If the Totally Integrated Power Module (TIPM) detects that the (K132) Cabin Heater Relay 1 Control circuit is open.

POSSIBLE CAUSES

Possible Causes
(K132) CABIN HEATER RELAY 1 OUTPUT CIRCUIT OPEN
CABIN HEATER RELAY 1
TOTALLY INTEGRATED POWER MODULE (TIPM)

DIAGNOSTIC TEST

1. **VERIFY THAT THE DTC IS ACTIVE**
    1. Turn the ignition on.
    2. With the scan tool, erase DTCs.
    3. With the scan tool, actuate the Cabin Heater Relay 1.
    4. Monitor the scan tool for at least two minutes.
    5. With the scan tool, read DTCs.

    Does the scan tool display active: B10B6-CABIN HEATER 1 CONTROL CIRCUIT OPEN?

    Yes

    - Go To 2

    No

    - The condition that caused this symptom is currently not present. Check for an intermittent condition by inspecting the related wiring

harness for chafed, pierced, pinched, and partially broken wires. Also, inspect the related connectors for broken, bent, pushed out, spread, corroded, or contaminated terminals. Repair as necessary.

2. **CHECK (K132) CABIN HEATER RELAY 1 CONTROL CIRCUIT FOR AN OPEN**

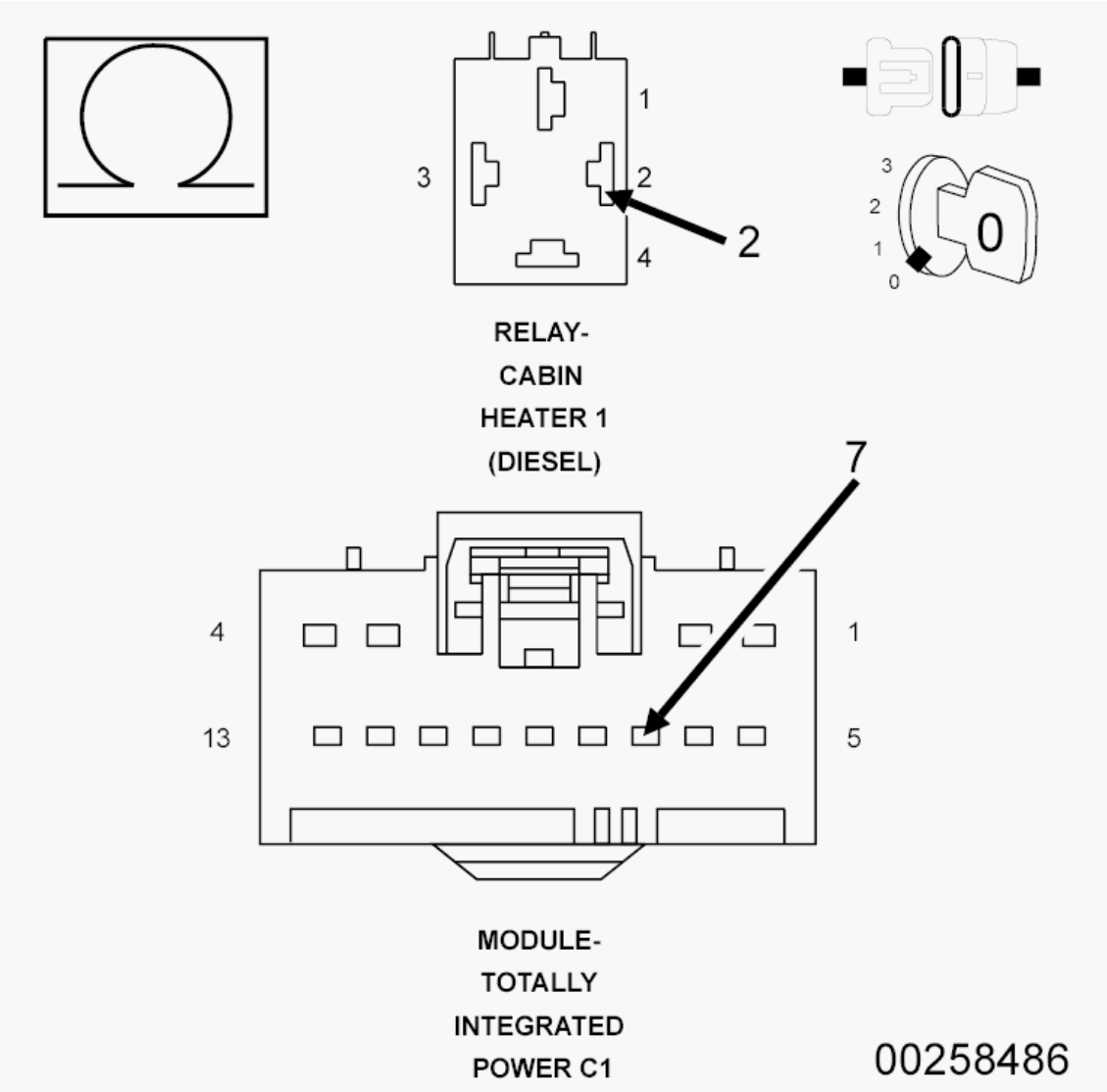

Fig. 19: Measuring Resistance Of Cabin Heater Relay 1 Control Circuit
Courtesy of CHRYSLER GROUP, LLC

1. Turn the ignition off.
2. Disconnect the TIPM C1 harness connector.
3. Remove the Cabin Heater Relay 1.
4. Using an ohm meter, measure the resistance of the (K132) Cabin Heater Relay 1 Control circuit between the TIPM C1 harness connector, and

the Cabin Heater Relay 1 harness connector.

Does the ohm meter read open circuit?

Yes

- Repair the (K132) Cabin Heater Relay 1 Control circuit for an open.
- Perform the BODY VERIFICATION TEST. Refer to **STANDARD PROCEDURE** .

No

- Go To3

3. **TOTALLY INTEGRATED POWER MODULE**

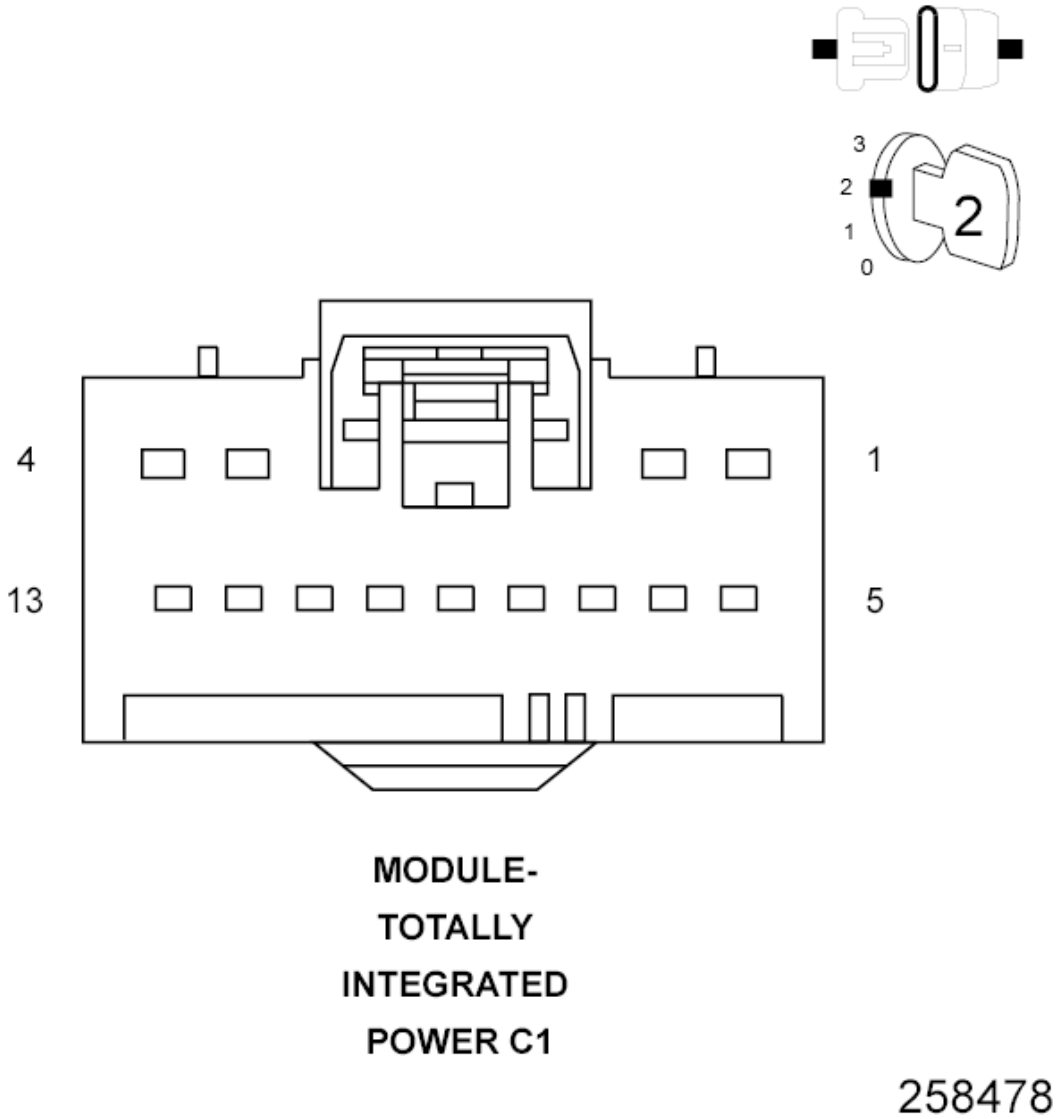

Fig. 20: Totally Integrated Power Module (TIPM) Connector End View
Courtesy of CHRYSLER GROUP, LLC

1. Turn the ignition on.
2. With the scan tool, erase DTCs.
3. With the scan tool, actuate the Cabin Heater Relay 1.
4. With the scan tool, read DTCs.

   Does the scan tool display active: B10B6-CABIN HEATER 1 CONTROL CIRCUIT OPEN?

   Yes

   - Replace the Totally Integrated Power Module (TIPM) in

accordance with the Service Information.

- Perform the BODY VERIFICATION TEST. Refer to **STANDARD PROCEDURE** .

No

- Replace the Cabin Heater Relay 1 in accordance with the Service Information.
- Perform the BODY VERIFICATION TEST. Refer to **STANDARD PROCEDURE** .

B10B8-CABIN HEATER 2 CONTROL CIRCUIT LOW

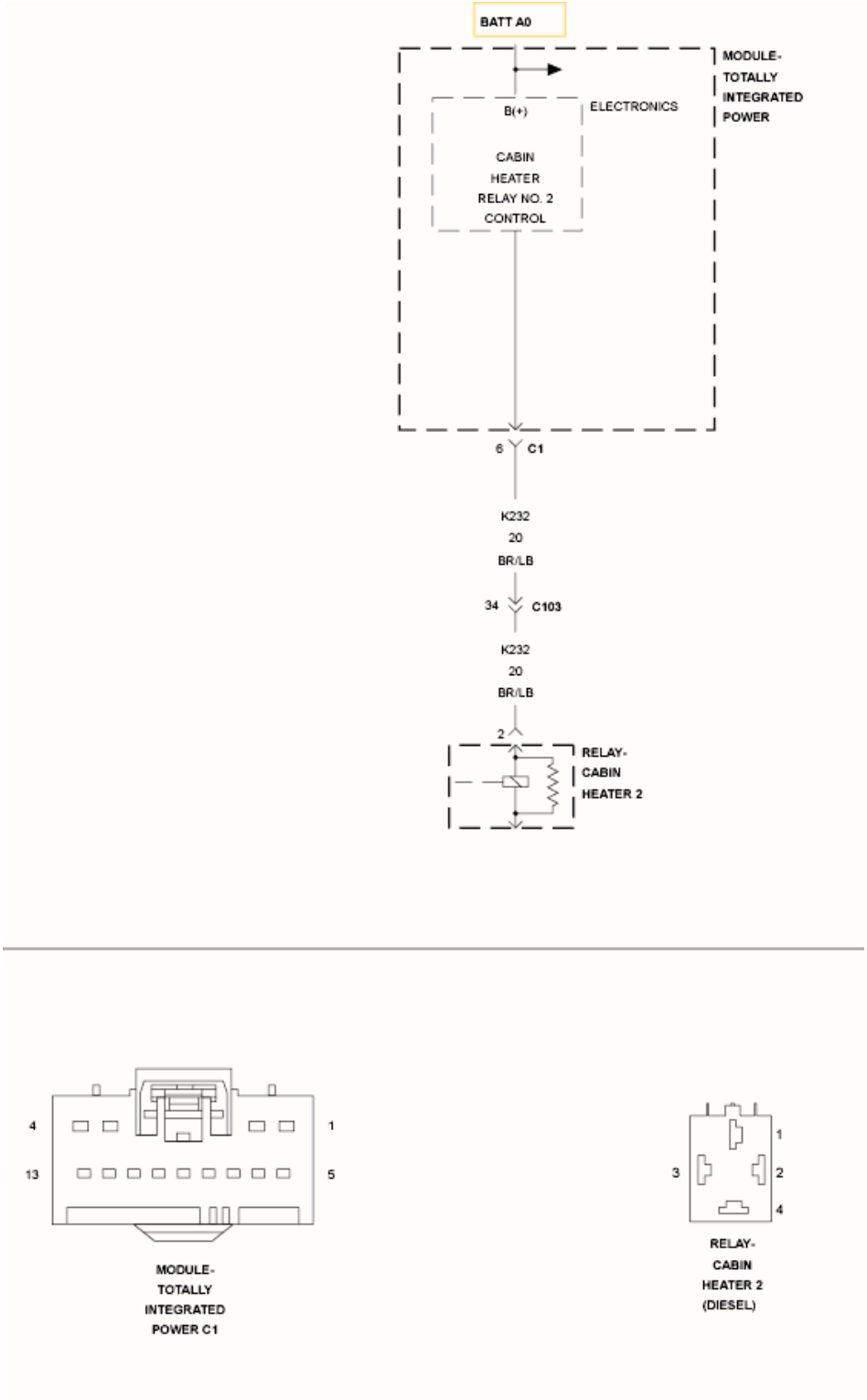

Fig. 21: Cabin Heater 2 Control Wiring Diagram
Courtesy of CHRYSLER GROUP, LLC

For a complete wiring diagram, **refer to appropriate SYSTEM WIRING DIAGRAMS article**

WHEN MONITORED

With the ignition on, the Cabin Heater Relay 2 commanded on.

SET CONDITION

If the Totally Integrated Power Module detects the (K232) Cabin Heater Relay 2 Control circuit is shorted to ground.

POSSIBLE CAUSES

Possible Causes
(K232) CABIN HEATER RELAY 2 CONTROL CIRCUIT SHORTED TO GROUND
CABIN HEATER 2 RELAY
TOTALLY INTEGRATED POWER MODULE (TIPM)

DIAGNOSTIC TEST

1. **VERIFY THAT THE DTC IS ACTIVE**
    1. Turn the ignition on.
    2. With the scan tool, erase DTCs.
    3. With the scan tool, actuate the Cabin Heater 2 Relay.
    4. Monitor the scan tool, for at least two minutes.
    5. With the scan tool, read DTCs.

    Does the scan tool, display active: B10B8-CABIN HEATER 2 CONTROL CIRCUIT LOW?

    Yes

    - Go To 2

    No

    - The condition that caused this symptom is currently not present. Check for an intermittent condition by inspecting the related wiring harness for chafed, pierced, pinched, and partially broken wires. Also, inspect the related connectors for broken, bent, pushed out, spread, corroded, or contaminated terminals. Repair as necessary.
    - Perform the BODY VERIFICATION TEST. Refer to **STANDARD PROCEDURE** .

2. CHECK (K232) CABIN HEATER RELAY 2 OUTPUT CIRCUIT FOR SHORT TO GROUND

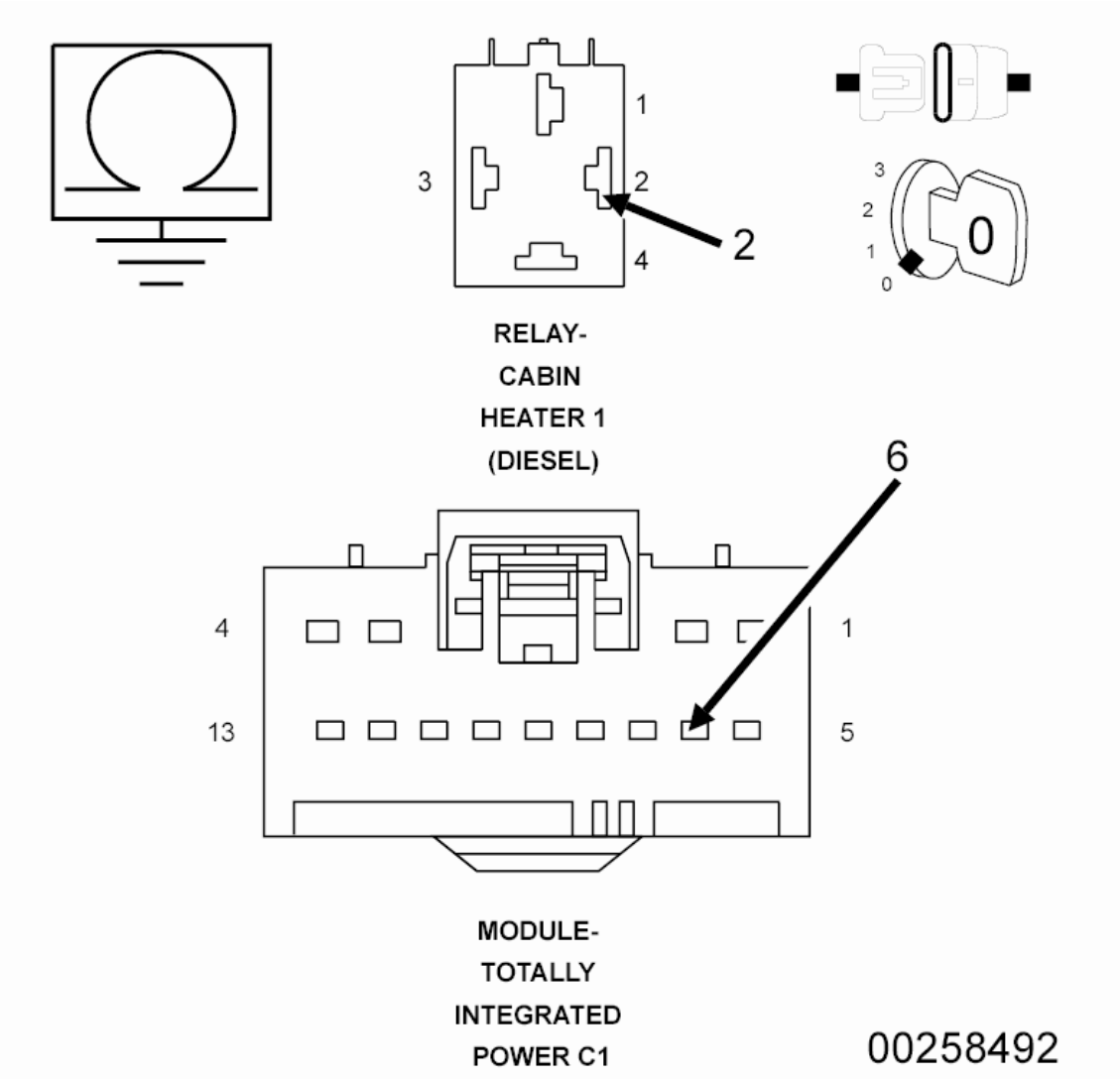

Fig. 22: Measuring Resistance Between Cabin Heater Relay 2 Output Circuit & Ground
Courtesy of CHRYSLER GROUP, LLC

1. Turn the ignition off.
2. Disconnect the TIPM C1 harness connector.
3. Remove the Cabin Heater Relay 2.
4. Using an ohm meter measure the resistance between the (K232) Cabin Heater Relay 2 Output circuit and ground.

   Does the ohm meter read open circuit?

Yes

- Go To 3

No

- Repair the (K232) Cabin Heater Relay 2 Output circuit for a short to ground.
- Perform the BODY VERIFICATION TEST. Refer to **STANDARD PROCEDURE** .

3. **TOTALLY INTEGRATED POWER MODULE (TIPM)**

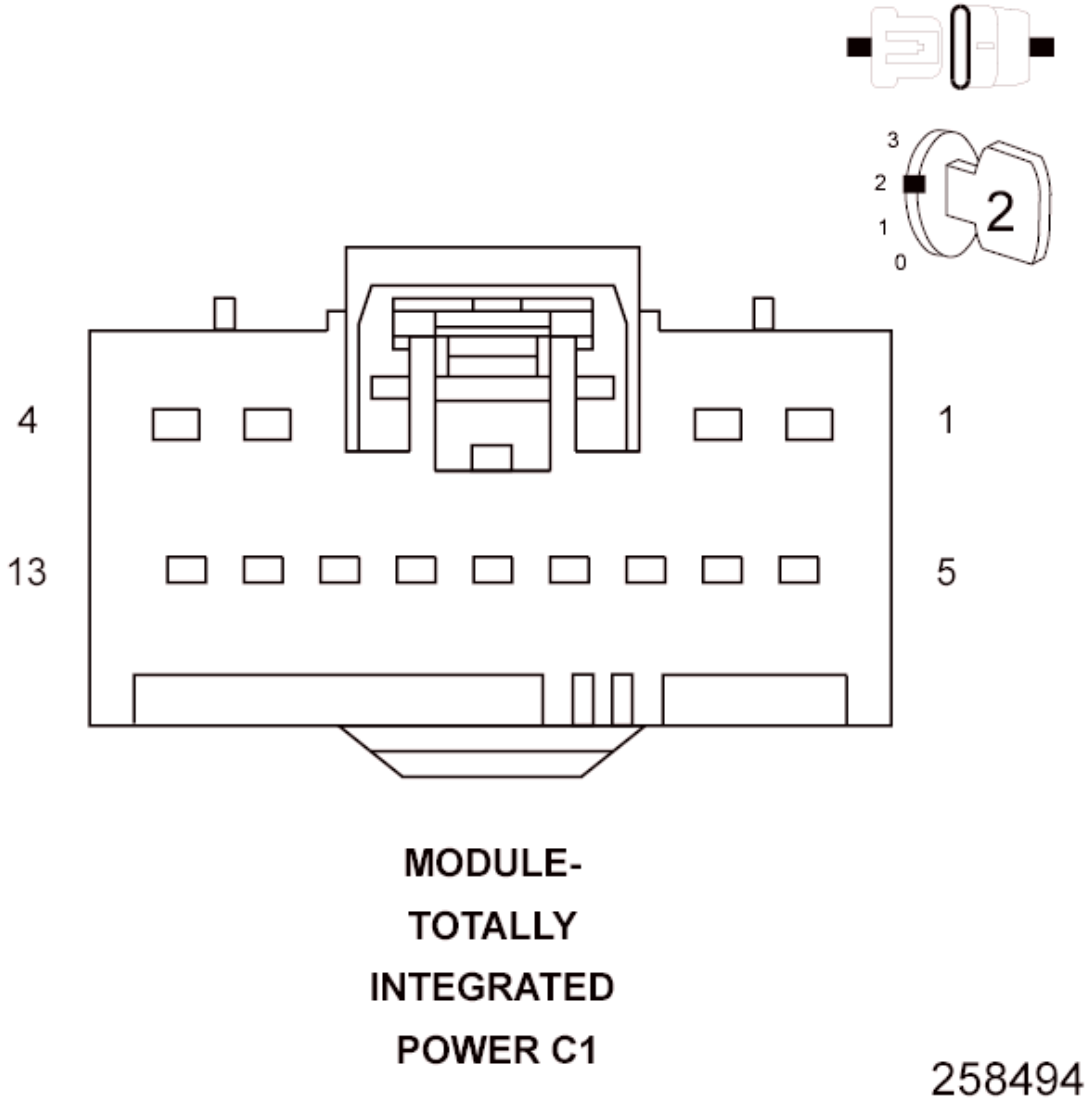

Fig. 23: Totally Integrated Power Module (TIPM) Connector End View
Courtesy of CHRYSLER GROUP, LLC

1. Turn the ignition on.
2. With the scan tool, erase DTCs.
3. With the scan tool, actuate the Cabin Heater 2 Relay.
4. Monitor the scan tool for at least two minutes.
5. With the scan tool, read DTCs.

   Does the scan tool display active: B10B8-CABIN HEATER 2 CONTROL CIRCUIT LOW?

   Yes

   - Replace the Totally Integrated Power Module (TIPM) in accordance with the Service Information.
   - Perform the BODY VERIFICATION TEST. Refer to **STANDARD PROCEDURE** .

   No

   - Replace the Cabin Heater Relay 2 in accordance with the Service Information.
   - Perform the BODY VERIFICATION TEST. Refer to **STANDARD PROCEDURE** .

B10B9-CABIN HEATER 2 CONTROL CIRCUIT HIGH

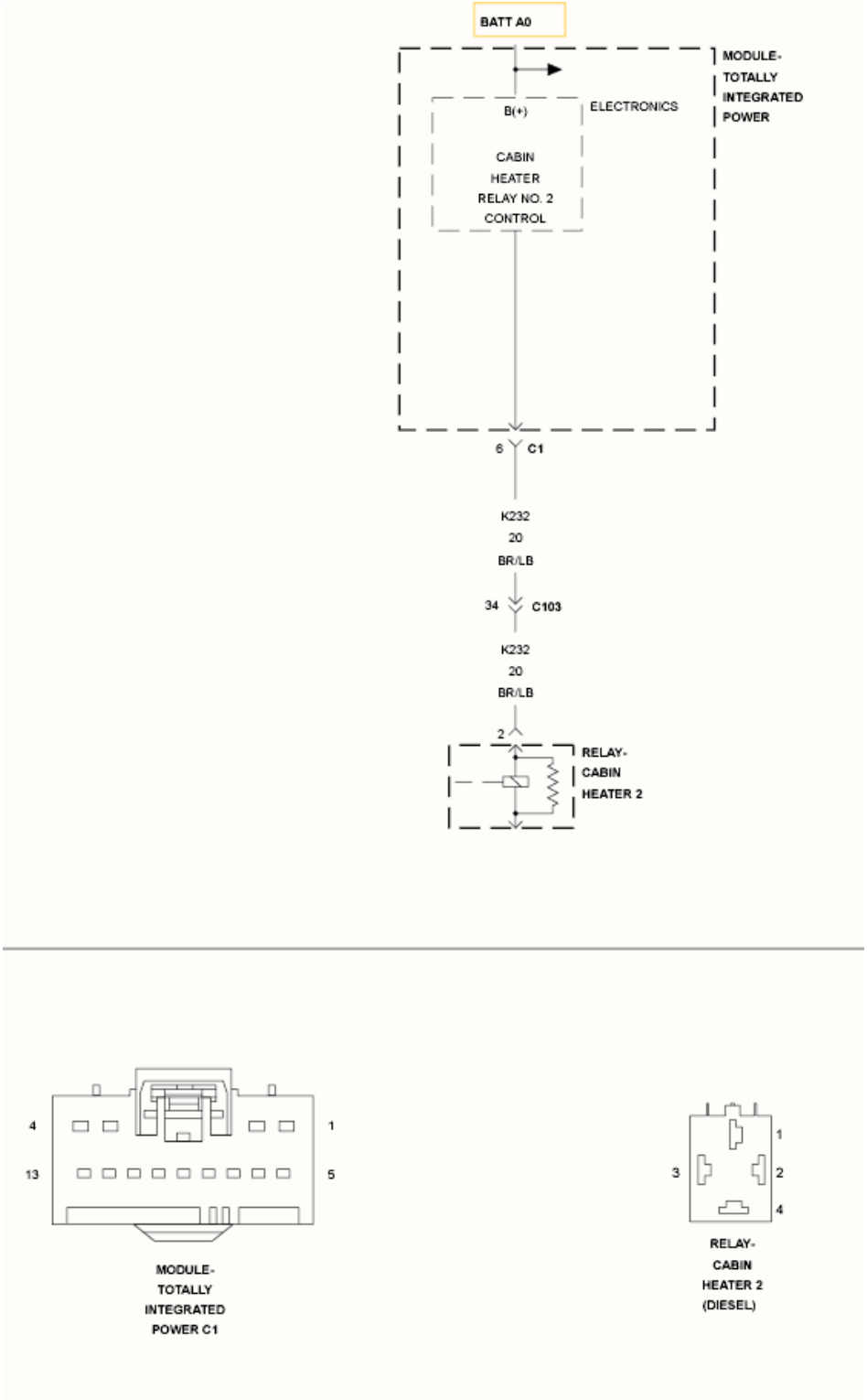

Fig. 24: Cabin Heater 2 Control Wiring Diagram
Courtesy of CHRYSLER GROUP, LLC

For a complete wiring diagram, **refer to appropriate SYSTEM WIRING DIAGRAMS article**

WHEN MONITORED

With the ignition on, the Cabin Heater Relay 2 is commanded on.

SET CONDITION

If the Totally Integrated Power Module detects a short to voltage on the (K232) Cabin Heater Relay 2 Control circuit.

POSSIBLE CAUSES

Possible Causes
(K232) CABIN HEATER RELAY 2 CONTROL CIRCUIT SHORTED TO VOLTAGE
CABIN HEATER RELAY 2
TOTALLY INTEGRATED POWER MODULE (TIPM)

DIAGNOSTIC TEST

1. **VERIFY THAT THE DTC IS ACTIVE**
    1. Turn the ignition on.
    2. With the scan tool, erase DTCs.
    3. With the scan tool, actuate the Cabin Heater 2 Relay.
    4. Monitor the scan tool for at least two minutes.
    5. With the scan tool, read DTCs.

    Does the scan tool, display active: B10B9-CABIN HEATER 2 CONTROL CIRCUIT HIGH?

    Yes

    - Go To 2

    No

    - The condition that caused this symptom is currently not present. Check for an intermittent condition by inspecting the related wiring harness for chafed, pierced, pinched, and partially broken wires. Also, inspect the related connectors for broken, bent, pushed out, spread, corroded, or contaminated terminals. Repair as necessary.
    - Perform the BODY VERIFICATION TEST. Refer to **STANDARD PROCEDURE** .

2. CHECK THE (K232) CABIN HEATER RELAY 2 CONTROL CIRCUIT FOR SHORT TO VOLTAGE

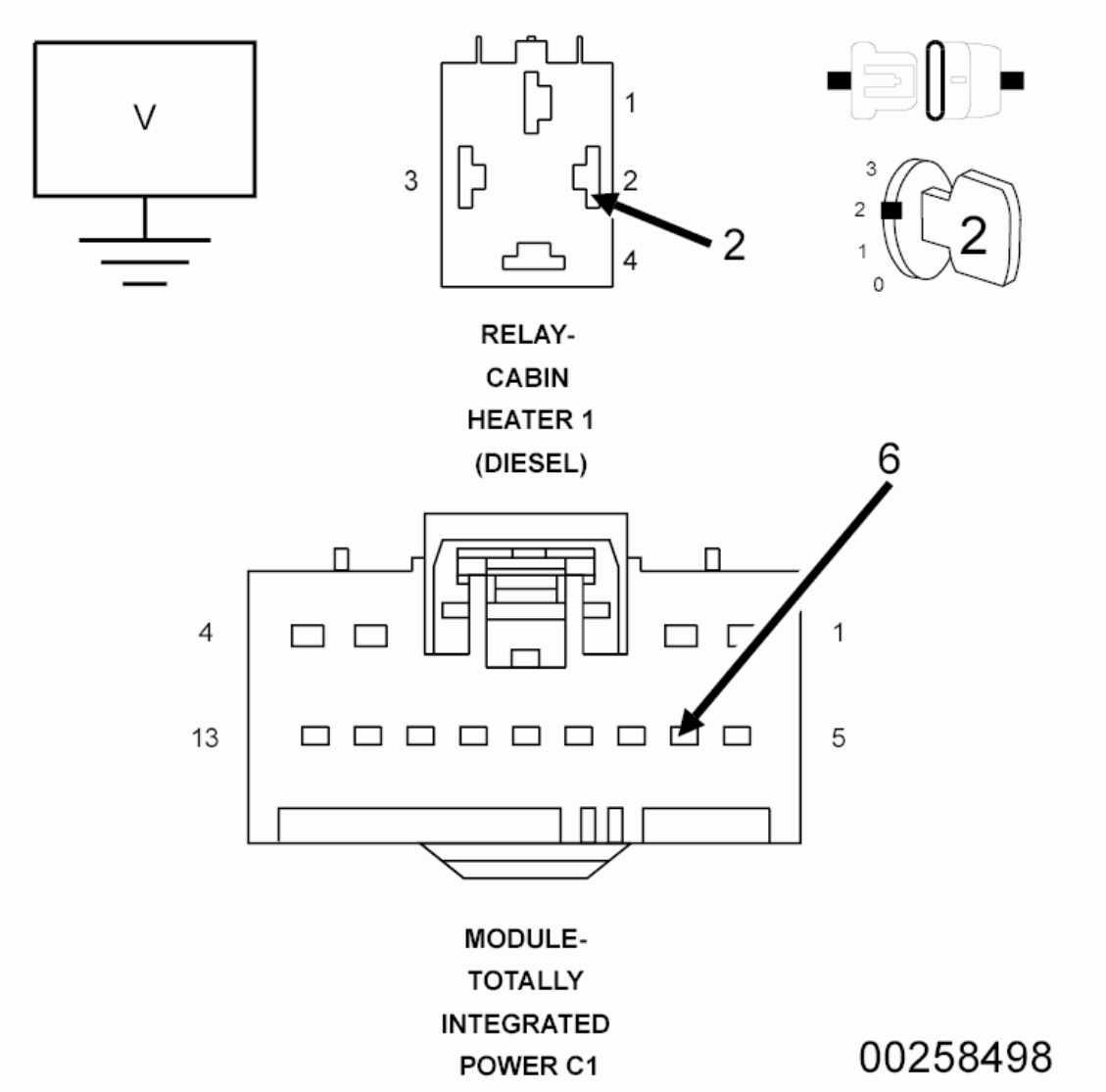

Fig. 25: Measuring Voltage On Cabin Heater Relay 2 Control Circuit
Courtesy of CHRYSLER GROUP, LLC

1. Turn the ignition off.
2. Disconnect the TIPM C1 harness connector.
3. Remove the Cabin Heater Relay 2.
4. Turn the ignition on.
5. With a volt meter, measure the voltage on the (K232) Cabin Heater Relay 2 Control circuit.

   Does the volt meter read 1.0 volt or above?

Yes

- Repair short to voltage on the (K232) Cabin Heater Relay 2 Control circuit.
- Perform the BODY VERIFICATION TEST. Refer to **STANDARD PROCEDURE** .

No

- Go To3

3. **TOTALLY INTEGRATED POWER MODULE**

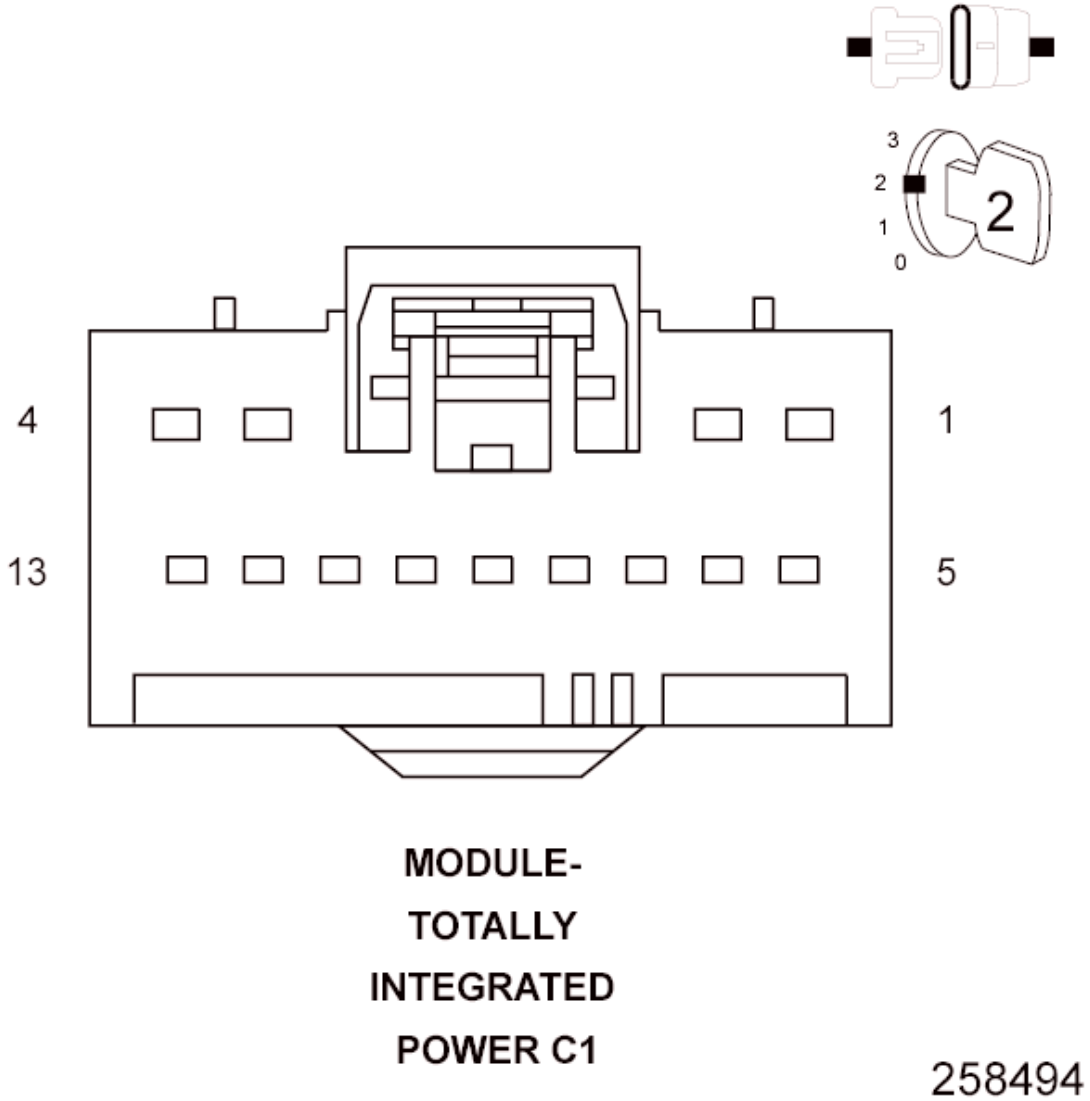

Fig. 26: Totally Integrated Power Module (TIPM) Connector End View
Courtesy of CHRYSLER GROUP, LLC

1. Turn the ignition on.
2. With the scan tool, erase DTCs.
3. With the scan tool, actuate the Cabin Heater 2 Relay.
4. Monitor the scan tool for at least two minutes.
5. With the scan tool, read DTCs.

   Does the scan tool display active: B10B9-CABIN HEATER 2 CONTROL CIRCUIT HIGH?

   Yes

   - Replace the Totally Integrated Power Module in accordance with the Service Information.
   - Perform the BODY VERIFICATION TEST. Refer to **STANDARD PROCEDURE** .

   No

   - Replace the Cabin Heater Relay 2 in accordance with the Service Information.
   - Perform the BODY VERIFICATION TEST. Refer to **STANDARD PROCEDURE** .

B10BA-CABIN HEATER 2 CONTROL CIRCUIT OPEN

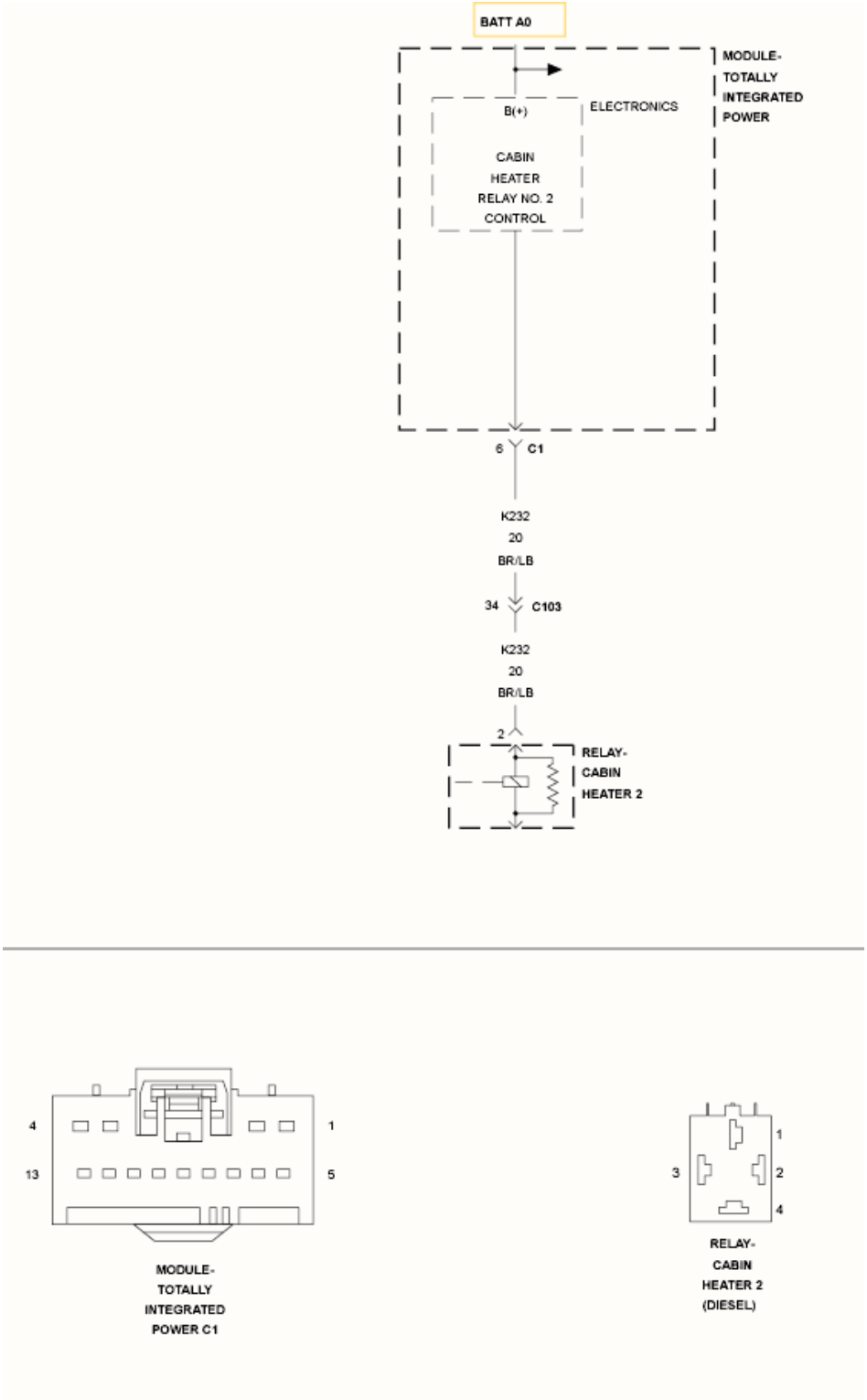

Fig. 27: Cabin Heater 2 Control Wiring Diagram
Courtesy of CHRYSLER GROUP, LLC

For a complete wiring diagram, **refer to appropriate SYSTEM WIRING DIAGRAMS article**

WHEN MONITORED

With the ignition on, and the Cabin Heater Relay 2 commanded on.

SET CONDITION

If the Totally Integrated Power Module (TIPM) detects that the (K232) Cabin Heater Relay 2 Control circuit is open.

POSSIBLE CAUSES

Possible Causes
(K232) CABIN HEATER RELAY 2 OUTPUT CIRCUIT OPEN
CABIN HEATER RELAY 2
TOTALLY INTEGRATED POWER MODULE (TIPM)

DIAGNOSTIC TEST

1. **VERIFY THAT THE DTC IS ACTIVE**
   1. Turn the ignition on.
   2. With the scan tool, erase DTCs.
   3. With the scan tool, actuate the Cabin Heater Relay 2.
   4. Monitor the scan tool for at least two minutes.
   5. With the scan tool, read DTCs.

   Does the scan tool display active: B10BA-CABIN HEATER 2 CONTROL CIRCUIT OPEN?

   Yes

   - Go To 2

   No

   - The condition that caused this symptom is currently not present. Check for an intermittent condition by inspecting the related wiring harness for chafed, pierced, pinched, and partially broken wires. Also, inspect the related connectors for broken, bent, pushed out, spread, corroded, or contaminated terminals. Repair as necessary.
2. **CHECK (K232) CABIN HEATER RELAY 2 CONTROL CIRCUIT FOR AN OPEN**

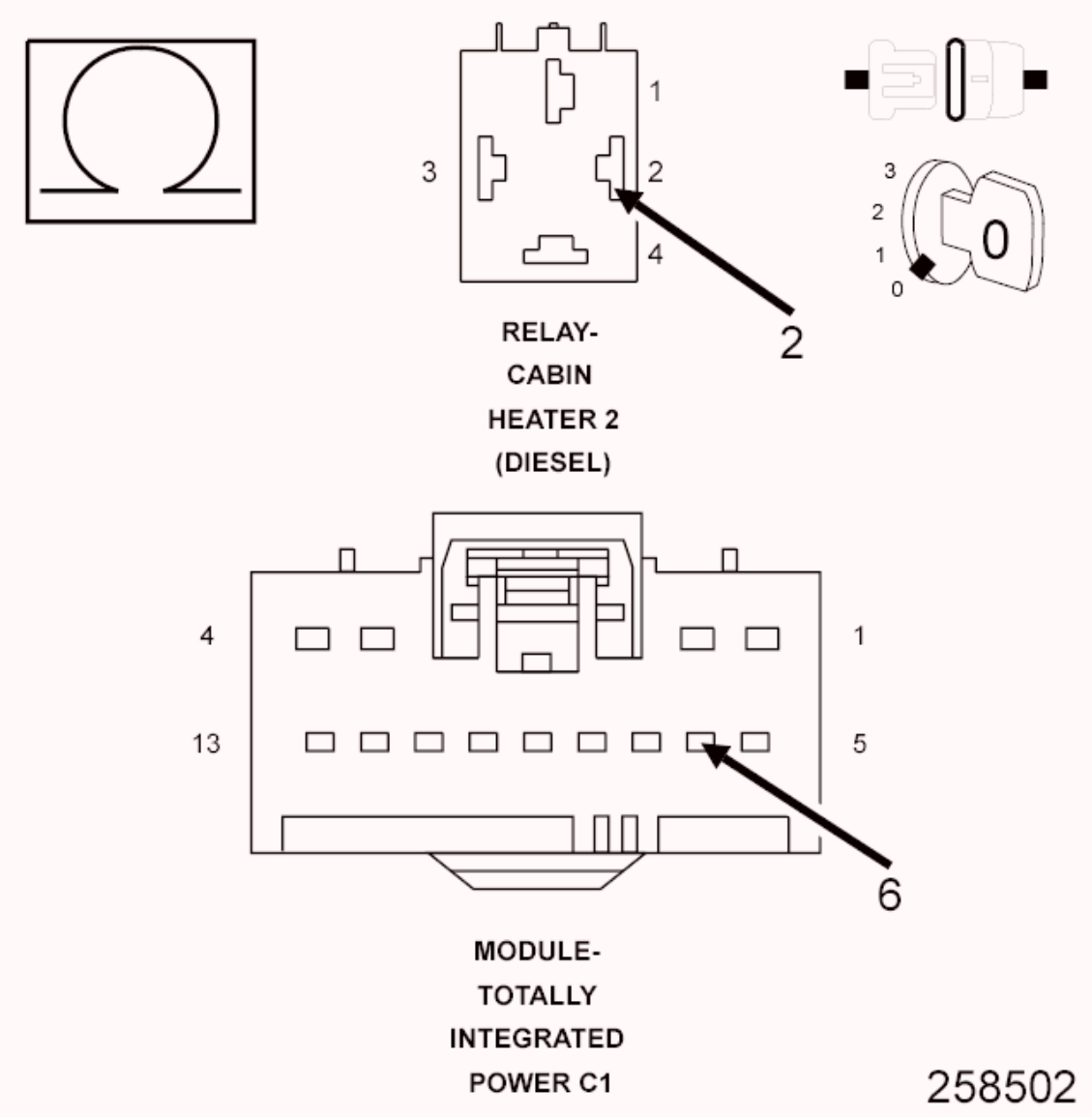

Fig. 28: Measuring Resistance Of Cabin Heater Relay 2 Control Circuit
Courtesy of CHRYSLER GROUP, LLC

1. Turn the ignition off.
2. Disconnect the TIPM C1 harness connector.
3. Remove the Cabin Heater Relay 2.
4. Using an ohm meter, measure the resistance of the (K232) Cabin Heater Relay 2 Control circuit between the TIPM C1 harness connector, and the Cabin Heater Relay 2 harness connector.

   Does the ohm meter read open circuit?

   Yes

- Repair the (K232) Cabin Heater Relay 2 Control circuit for an open.
- Perform the BODY VERIFICATION TEST. Refer to **STANDARD PROCEDURE** .

No

- Go To3

3. **TOTALLY INTEGRATED POWER MODULE**

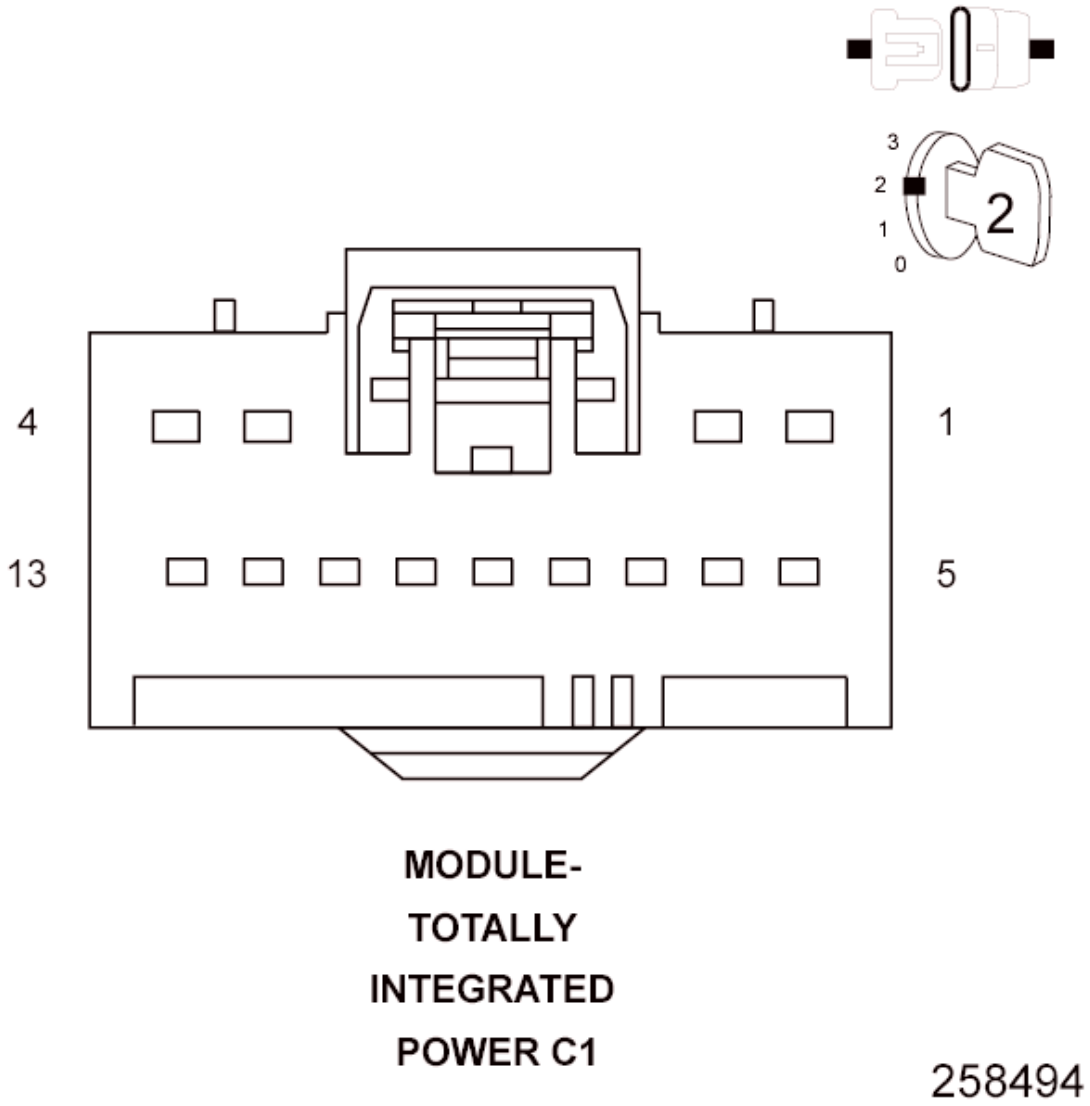

Fig. 29: Totally Integrated Power Module (TIPM) Connector End View
Courtesy of CHRYSLER GROUP, LLC

1. Turn the ignition on.

2. With the scan tool, erase DTCs.
3. With the scan tool, actuate the Cabin Heater Relay 2.
4. With the scan tool, read DTCs.

   Does the scan tool display active: B10BA-CABIN HEATER 2 CONTROL CIRCUIT OPEN?

   Yes

   - Replace the Totally Integrated Power Module (TIPM) in accordance with the Service Information.
   - Perform the BODY VERIFICATION TEST. Refer to **STANDARD PROCEDURE** .

   No

   - Replace the Cabin Heater Relay 2 in accordance with the Service Information.
   - Perform the BODY VERIFICATION TEST. Refer to **STANDARD PROCEDURE** .

B10BE-CONDENSER FAN CONTROL CIRCUIT LOW

For a complete wiring diagram, **refer to appropriate SYSTEM WIRING DIAGRAMS article** .

WHEN MONITORED

With the ignition on. Battery voltage greater than 10.4 volts.

SET CONDITION

If the Totally Integrated Power Module (TIPM) detects a shorted low condition in the (C123) Condenser Fan Control circuit.

POSSIBLE CAUSES

Possible Causes
(C123) CONDENSER FAN CONTROL OUTPUT CIRCUIT SHORTED TO GROUND
CONDENSER FAN MOTOR

TIPM

DIAGNOSTIC TEST

1. **VERIFY THE DIAGNOSTIC TROUBLE CODE (DTC) IS ACTIVE**
   1. Turn the ignition on.
   2. With the scan tool, erase TIPM DTCs.
   3. Turn the ignition off, wait 10 seconds, and turn the ignition on.
   4. With the scan tool, actuate the Condenser Fan.
   5. With the scan tool, read TIPM DTCs.

   Does this DTC reset?

   Yes

   - With the scan tool, de-actuate the Condenser Fan. Then, Go To 2

   No

   - With the scan tool, de-actuate the Condenser Fan. Then, check for an intermittent condition by inspecting the related wiring harness for chafed, pierced, pinched, and partially broken wires. Also, inspect the related connectors for broken, bent, corroded, and contaminated terminals.
   - Perform the BODY VERIFICATION TEST. Refer to **STANDARD PROCEDURE** .
2. **CHECK (C123) CONDENSER FAN CONTROL OUTPUT CIRCUIT FOR A SHORT TO GROUND**
   1. Turn the ignition off.
   2. Disconnect the TIPM C8 harness connector.
   3. Disconnect the Condenser Fan Motor harness connector.
   4. Measure the resistance of the (C123) Condenser Fan Control Output circuit between ground and the Condenser Fan Motor harness connector.

   Is the resistance below 100 ohms?

   Yes

- Repair the (C123) Condenser Fan Control Output circuit for a short to ground.
- Perform the BODY VERIFICATION TEST. Refer to **STANDARD PROCEDURE** .

No

- Go To 3

3. **CHECK FOR A SHORTED CONDENSER FAN MOTOR**
   1. Reconnect the TIPM C8 harness connector.
   2. Ignition on, engine not running.
   3. With the scan tool, actuate the Condenser Fan.
   4. Using a 12-volt test light connected to ground, probe the (C123) Condenser Fan Control Output circuit at the Condenser Fan Motor harness connector.

   Does the test light illuminate brightly and flash on and off?

   Yes

   - With the scan tool, de-actuate the Condenser Fan. Then, replace the Condenser Fan Motor in accordance with the Service Information.
   - Perform the BODY VERIFICATION TEST. Refer to **STANDARD PROCEDURE** .

   No

   - With the scan tool, de-actuate the Condenser Fan. Then, Go To 4

4. **INSPECT RELATED WIRING**

   NOTE: Before continuing, check the TIPM harness connector terminals for corrosion, damage, or terminal push out. Repair as necessary.

   1. Turn the ignition off.
   2. Using the schematics as a guide, inspect the related wiring harness and connectors.

3. Pay particular attention to all Power and Ground circuits.

   Were any problems found?

   Yes

   - Repair as necessary.
   - Perform the BODY VERIFICATION TEST. Refer to **STANDARD PROCEDURE** .

   No

   - Replace the TIPM in accordance with the Service Information.
   - Perform the BODY VERIFICATION TEST. Refer to **STANDARD PROCEDURE** .

B10BF-CONDENSER FAN CONTROL CIRCUIT HIGH

For a complete wiring diagram **refer to appropriate SYSTEM WIRING DIAGRAMS article** .

WHEN MONITORED

With the ignition on. Battery voltage greater than 10.4 volts.

SET CONDITION

If the Totally Integrated Power Module (TIPM) detects a shorted high condition in the (N112) High Speed Radiator Fan Control circuit.

POSSIBLE CAUSES

Possible Causes
(N112) HIGH SPEED RADIATOR FAN CONTROL CIRCUIT SHORTED TO BATTERY VOLTAGE
RADIATOR FAN MOTOR
TOTALLY INTEGRATED POWER MODULE (TIPM)

DIAGNOSTIC TEST

1. **VERIFY THE DIAGNOSTIC TROUBLE CODE (DTC) IS ACTIVE**
   1. Turn the ignition on.

2. With the scan tool, erase DTCs.
3. Turn the ignition off, wait 10 seconds, and turn the ignition on.
4. With the scan tool, actuate the Radiator Fan.
5. With the scan tool, read DTCs.

   Does the scan tool display active: B10BF-CONDENSER FAN CONTROL CIRCUIT HIGH?

   Yes

   - With the scan tool, de-actuate the Radiator Fan. Then, Go To 2

   No

   - With the scan tool, de-actuate the Radiator Fan. The condition that caused this symptom is currently not present. Check for an intermittent condition by inspecting the related wiring harness for chafed, pierced, pinched, and partially broken wires. Also, inspect the related connectors for broken, bent, pushed out, spread, corroded, or contaminated terminals. Repair as necessary.
   - Perform the BODY VERIFICATION TEST. Refer to **STANDARD PROCEDURE** .

2. **CHECK (N112) HIGH SPEED RADIATOR FAN CONTROL CIRCUIT FOR A SHORT TO BATTERY VOLTAGE**
   1. Turn the ignition off
   2. Disconnect the TIPM C11 harness connector.
   3. Disconnect the Radiator Fan Motor harness connector.
   4. Turn the ignition on.
   5. Using a volt meter, measure the voltage on the (N112) High Speed Radiator Fan Control circuit at the Radiator Fan Motor harness connector.

      Does the volt meter read 10 volts, or above?

      Yes

      - Repair the (N112) High Speed Radiator Fan Control circuit for a short to battery voltage.

- Perform the BODY VERIFICATION TEST. Refer to **STANDARD PROCEDURE** .

No

- Go To 3

3. **CHECK (Z823) GROUND CIRCUIT FOR AN OPEN**
   1. Turn the ignition off.
   2. Reconnect the TIPM C8 harness connector.

   NOTE: The test light should illuminate brightly. Compare the brightness to that of a direct connection to the battery.

   3. Using a 12-volt test light connected to 12 volts, probe the (Z823) Ground circuit at the Condenser Fan Motor harness connector.

   Does the test light illuminate brightly?

   Yes

   - Go To 4

   No

   - Repair the excessive resistance in the (Z823) Ground circuit.
   - Perform the BODY VERIFICATION TEST. Refer to **STANDARD PROCEDURE** .

4. **CHECK RADIATOR FAN MOTOR**
   1. Ignition on, engine not running.
   2. With the scan tool, actuate the Radiator Fan.
   3. Using a 12-volt test light connected to ground, probe the (C123) Condenser Fan Control Output circuit at the Condenser Fan Motor harness connector.

   Does the test light illuminate brightly and flash on and off?

   Yes

- With the scan tool, de-actuate the Condenser Fan. Then, replace the Condenser Fan Motor in accordance with the Service Information.
- Perform the BODY VERIFICATION TEST. Refer to **STANDARD PROCEDURE** .

No

- With the scan tool, de-actuate the Condenser Fan. Then, Go To 5

5. **INSPECT RELATED WIRING**

NOTE: Before continuing, check the TIPM harness connector terminals for corrosion, damage, or terminal push out. Repair as necessary.

1. Using the schematics as a guide, inspect the related wiring harness and connectors.
2. Pay particular attention to all Power and Ground circuits.

Were any problems found?

Yes

- Repair as necessary.
- Perform the BODY VERIFICATION TEST. Refer to **STANDARD PROCEDURE** .

No

- Replace the TIPM in accordance with the Service Information.
- Perform the BODY VERIFICATION TEST. Refer to **STANDARD PROCEDURE** .

B10C0-CONDENSER FAN CONTROL CIRCUIT OPEN

For a complete wiring diagram, **refer to appropriate SYSTEM WIRING DIAGRAMS article** .

WHEN MONITORED

With the ignition on. Battery voltage greater than 10.4 volts. TIPM requesting Condenser Fan operation.

SET CONDITION

If the Totally Integrated Power Module (TIPM) detects an open condition in the (C123) Condenser Fan Control circuit.

POSSIBLE CAUSES

Possible Causes
(C123) CONDENSER FAN CONTROL OUTPUT CIRCUIT OPEN
CONDENSER FAN MOTOR
TIPM

DIAGNOSTIC TEST

1. **VERIFY THE DIAGNOSTIC TROUBLE CODE (DTC) IS ACTIVE**
   1. Turn the ignition on.
   2. With the scan tool, erase TIPM DTCs.
   3. Turn the ignition off, wait 10 seconds, and turn the ignition on.
   4. With the scan tool, actuate the Condenser Fan.
   5. With the scan tool, read TIPM DTCs.

   Does this DTC reset?

   Yes

   - With the scan tool, de-actuate the Condenser Fan. Then, Go To 2

   No

   - With the scan tool, de-actuate the Condenser Fan. Then, check for an intermittent condition by inspecting the related wiring harness for chafed, pierced, pinched, and partially broken wires. Also, inspect the related connectors for broken, bent, corroded, and contaminated terminals.
   - Perform the BODY VERIFICATION TEST. Refer to **STANDARD PROCEDURE** .
2. **CHECK (C123) CONDENSER FAN CONTROL OUTPUT CIRCUIT**

OPEN

1. Turn the ignition off.
2. Disconnect the TIPM C8 harness connector.
3. Disconnect the Condenser Fan harness connector.
4. Measure the resistance of the (C123) Condenser Fan Control Output circuit between the TIPM C8 harness connector and the Condenser Fan harness connector.

   Is the resistance below 5.0 ohms?

   Yes

   - Go To 3

   No

   - Repair the (C123) Condenser Fan Control Output circuit for an open.
   - Perform the BODY VERIFICATION TEST. Refer to **STANDARD PROCEDURE** .

3. **CHECK CONDENSER FAN MOTOR**
   1. Reconnect the TIPM C8 harness connector.
   2. Ignition on, engine not running.
   3. With the scan tool, actuate the Condenser Fan.
   4. Using a 12-volt test light connected to ground, probe the (C123) Condenser Fan Control Output circuit at the Condenser Fan harness connector.

      Does the test light illuminate brightly and flash on and off?

      Yes

      - With the scan tool, de-actuate the Condenser Fan. Then, replace the Condenser Fan Motor in accordance with the Service Information.
      - Perform the BODY VERIFICATION TEST. Refer to **STANDARD PROCEDURE** .

No

- With the scan tool, de-actuate the Condenser Fan. Then, Go To 4

4. **INSPECT RELATED WIRING**

NOTE: Before continuing, check the TIPM harness connector terminals for corrosion, damage, or terminal push out. Repair as necessary.

1. Using the schematics as a guide, inspect the wire harness and connectors.
2. Pay particular attention to all Power and Ground circuits.

Were any problems found?

Yes

- Repair as necessary.
- Perform the BODY VERIFICATION TEST. Refer to **STANDARD PROCEDURE** .

No

- Replace the Totally Integrated Power Module in accordance with the Service Information.
- Perform the BODY VERIFICATION TEST. Refer to **STANDARD PROCEDURE** .

B10E9-BLOWER MOTOR CONTROL CIRCUIT LOW

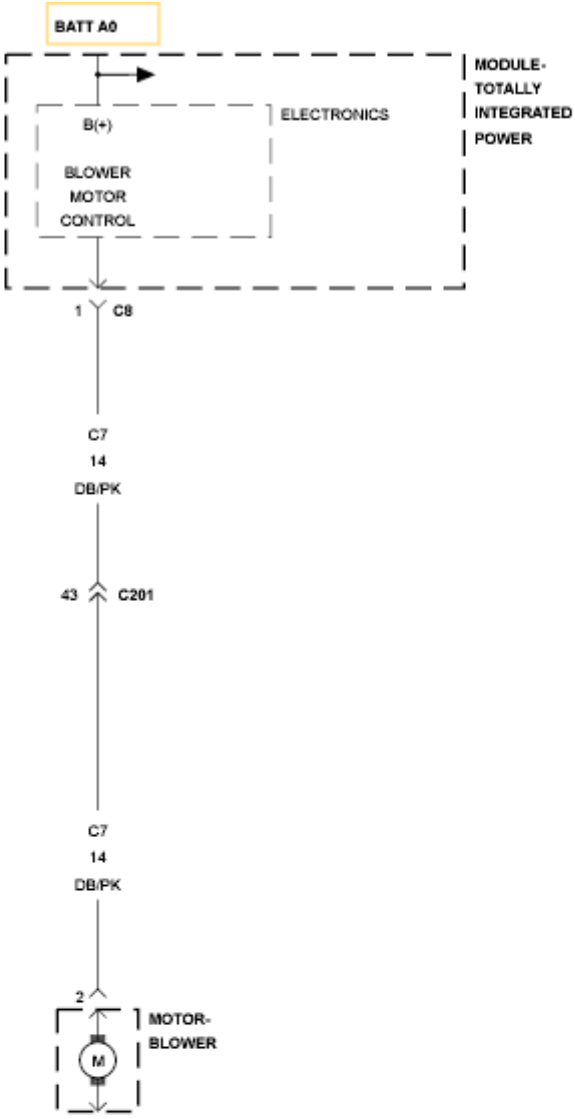
BATT A0
MODULE-
TOTALLY
INTEGRATED
POWER
ELECTRONICS
B(+)
BLOWER
MOTOR
CONTROL
1
C8
C7
14
DB/PK
43
C201
C7
14
DB/PK
2
M
MOTOR-
BLOWER

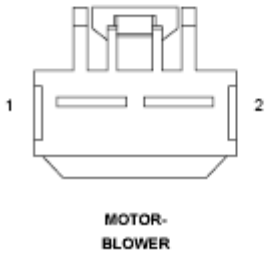
1
2
MOTOR-
BLOWER

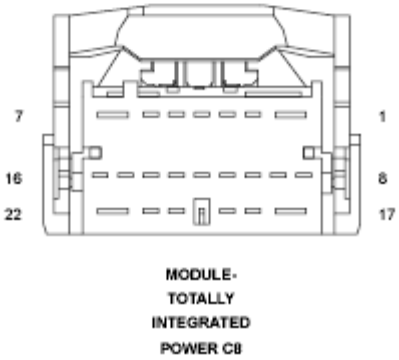
7
1
16
8
22
17
MODULE-
TOTALLY
INTEGRATED
POWER C8

Fig. 30: Blower Motor Control Wiring Diagram
Courtesy of CHRYSLER GROUP, LLC

For a complete wiring diagram, **refer to appropriate SYSTEM WIRING DIAGRAMS article** .

WHEN MONITORED

With the ignition on.

SET CONDITION

If the Totally Integrated Power Module (TIPM) detects a short to ground on the (C7) Blower Motor Control circuit, when blower motor operation is requested.

POSSIBLE CAUSES

Possible Causes
(C7) BLOWER MOTOR CONTROL CIRCUIT SHORTED TO GROUND
BLOWER MOTOR
TOTALLY INTEGRATED POWER MODULE (TIPM)

DIAGNOSTIC TEST

1. **VERIFY THE DIAGNOSTIC TROUBLE CODE (DTC) IS ACTIVE**
    1. Turn the blower control switch to off.
    2. Turn the ignition off, wait 10 seconds, and turn the ignition on.
    3. With the scan tool, erase DTCs.
    4. Turn the ignition off, wait 10 seconds, and turn the ignition on.
    5. Turn the blower control switch to on.
    6. With the scan tool, read DTCs.

    Does the scan tool display active: B10E9-BLOWER MOTOR CONTROL CIRCUIT LOW?

    Yes

    - Go To 2

    No

- The condition that caused this symptom is currently not present. Check for an intermittent condition by inspecting the related wiring harness for chafed, pierced, pinched, and partially broken wires. Also, inspect the related connectors for broken, bent, pushed out, spread, corroded, or contaminated terminals. Repair as necessary.
- Perform the BODY VERIFICATION TEST. Refer to **STANDARD PROCEDURE** .

2. **CHECK FOR ACTIVE DIAGNOSTIC TROUBLE CODE (DTC) B10E9-BLOWER MOTOR CONTROL CIRCUIT LOW WITH BLOWER MOTOR HARNESS CONNECTOR DISCONNECTED**

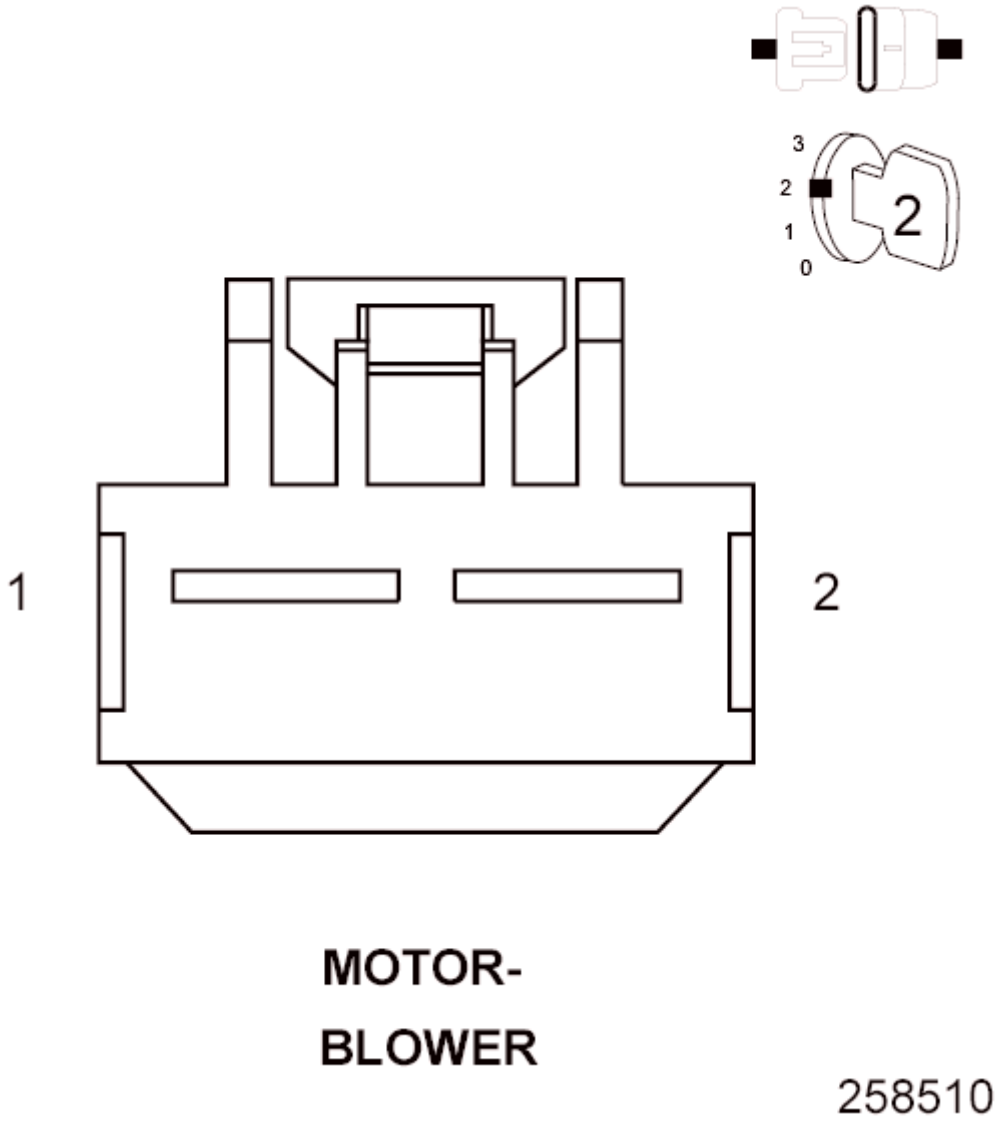

Fig. 31: Identifying Blower Motor Harness Connector
Courtesy of CHRYSLER GROUP, LLC

1. Turn the blower control switch to off.
2. Disconnect the Blower Motor harness connector.
3. Turn the ignition off, wait 10 seconds, and turn the ignition on.
4. With the scan tool, erase DTCs.
5. Turn the ignition off, wait 10 seconds, and turn the ignition on.
6. Turn the blower control switch to on.
7. With the scan tool, read DTCs.

   Does the scan tool display active: B10E9-BLOWER MOTOR CONTROL CIRCUIT LOW?

   Yes

   - Go To 3

   No

   - Replace the Blower Motor in accordance with the Service Information.
   - Perform the BODY VERIFICATION TEST. Refer to **STANDARD PROCEDURE** .

3. **CHECK THE (C7) BLOWER MOTOR CONTROL CIRCUIT FOR A SHORT TO GROUND**

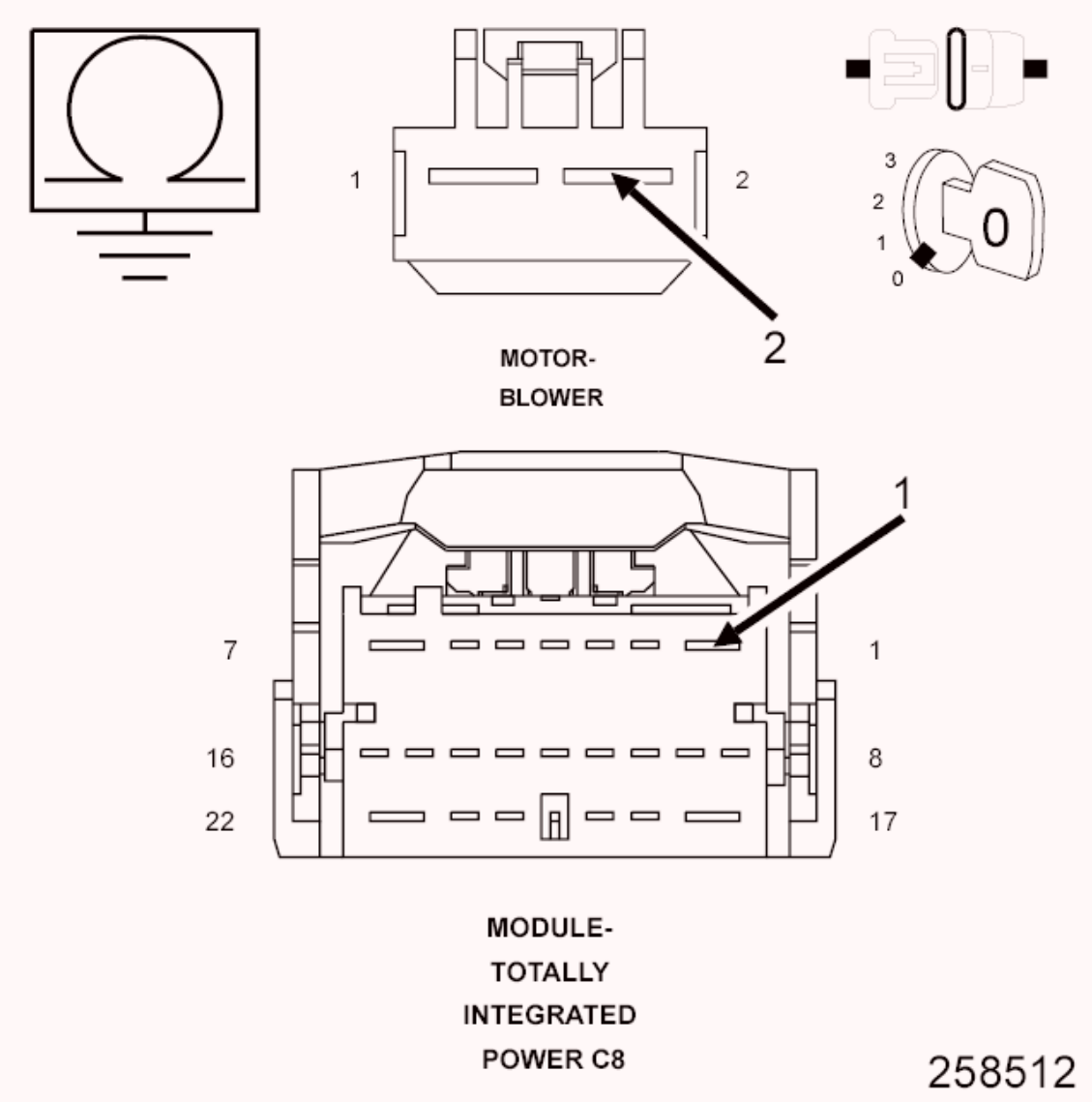

Fig. 32: Checking Blower Motor Control Circuit For Short To Ground
Courtesy of CHRYSLER GROUP, LLC

1. Turn the ignition off.
2. Disconnect the TIPM C8 harness connector.
3. Measure the resistance of the (C7) Blower Motor Control circuit between ground and the Blower Motor harness connector.

   Does the ohm meter read open circuit?

   Yes

   - Replace the Totally Integrated Power Module (TIPM) in accordance with the Service Information.

- Perform the BODY VERIFICATION TEST. Refer to **STANDARD PROCEDURE** .

No

- Repair the (C7) Blower Motor Control circuit for a short to ground.
- Perform the BODY VERIFICATION TEST. Refer to **STANDARD PROCEDURE** .

B10EA-BLOWER MOTOR CONTROL CIRCUIT HIGH

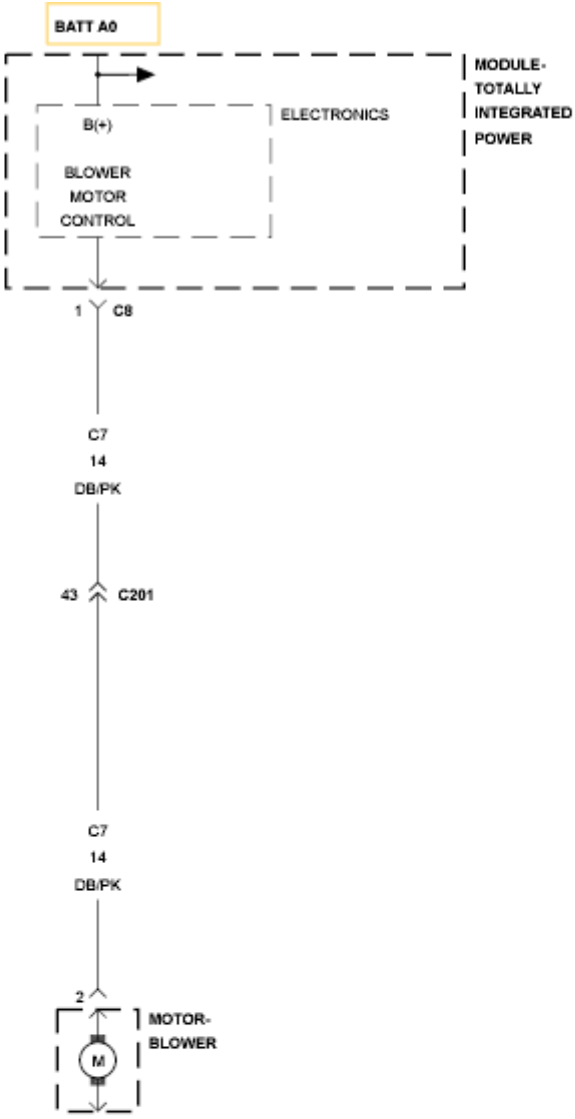
BATT A0
MODULE-
TOTALLY
INTEGRATED
POWER
ELECTRONICS
B(+)
BLOWER
MOTOR
CONTROL
1
C8
C7
14
DB/PK
43
C201
C7
14
DB/PK
2
M
MOTOR-
BLOWER

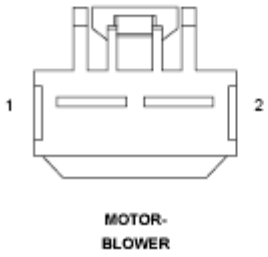
1
2
MOTOR-
BLOWER

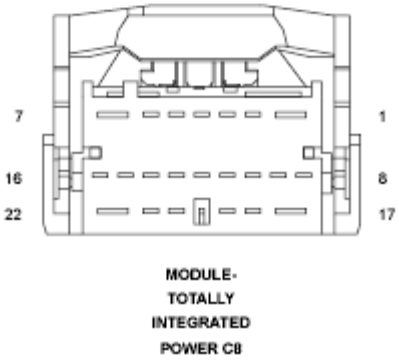
7
1
16
8
22
17
MODULE-
TOTALLY
INTEGRATED
POWER C8

Fig. 33: Blower Motor Control Wiring Diagram
Courtesy of CHRYSLER GROUP, LLC

For a complete wiring diagram, **refer to appropriate SYSTEM WIRING DIAGRAMS article** .

WHEN MONITORED

With the ignition on. Battery voltage greater than 10.4 volts. TIPM requesting Blower Motor operation.

SET CONDITION

If the Totally Integrated Power Module (TIPM) detects a short to voltage condition on the (C7) Blower Motor Control circuit.

POSSIBLE CAUSES

Possible Causes
(C7) BLOWER MOTOR CONTROL CIRCUIT SHORTED TO VOLTAGE
(C7) BLOWER MOTOR CONTROL CIRCUIT OPEN
BLOWER MOTOR
TOTALLY INTEGRATED POWER MODULE (TIPM)

DIAGNOSTIC TEST

1. **VERIFY THE DIAGNOSTIC TROUBLE CODE (DTC) IS ACTIVE**
    1. Turn the ignition on.
    2. With the scan tool, erase DTCs.
    3. Turn the ignition off, wait 10 seconds, and turn the ignition on.
    4. With the a/c control, turn on the Blower Motor.
    5. With the scan tool, read DTCs.

    Does the scan tool display active: B10EA-BLOWER MOTOR CONTROL CIRCUIT HIGH?

    Yes

    - Go To 2

No

- The condition that caused this symptom is currently not present. Check for an intermittent condition by inspecting the related wiring harness for chafed, pierced, pinched, and partially broken wires. Also, inspect the related connectors for broken, bent, pushed out, spread, corroded, or contaminated terminals. Repair as necessary.
- Perform the BODY VERIFICATION TEST. Refer to **STANDARD PROCEDURE** .

2. **CHECK (C7) BLOWER MOTOR CONTROL CIRCUIT FOR AN OPEN**

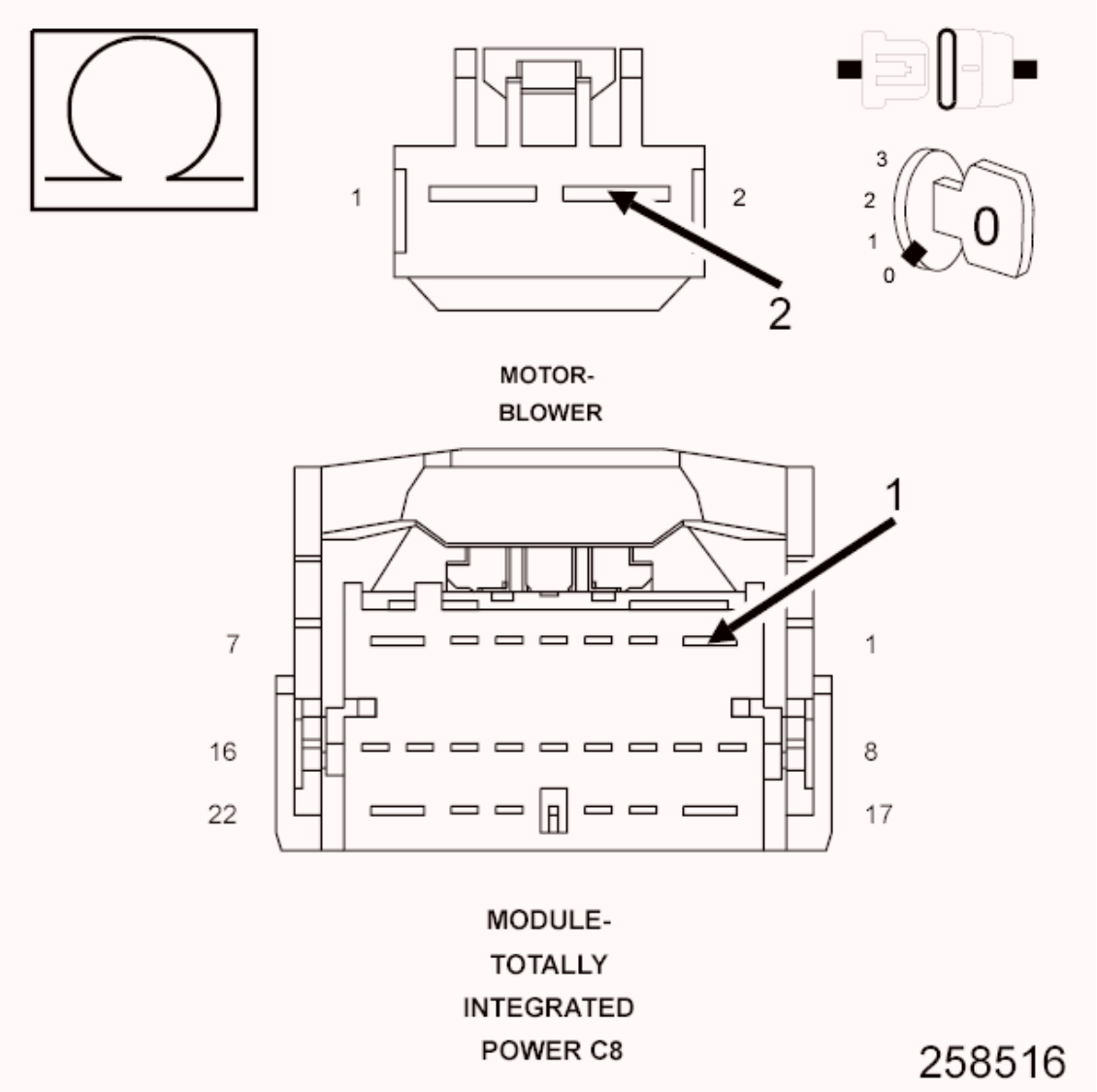

Fig. 34: Checking Blower Motor Control Circuit For Open
Courtesy of CHRYSLER GROUP, LLC

1. Turn the ignition off.
2. Disconnect the TIPM C8 harness connector.
3. Disconnect the Blower Motor harness connector.
4. Measure the resistance of the (C7) Blower Motor Control circuit between the TIPM C8 harness connector and the Blower Motor harness connector.

   Does the ohm meter read open circuit?

   Yes

   - Repair the (C7) Blower Motor Control circuit for an open.
   - Perform the BODY VERIFICATION TEST. Refer to **STANDARD PROCEDURE** .

   No

   - Go To 3

3. **CHECK (C7) BLOWER MOTOR CONTROL CIRCUIT FOR SHORT TO VOLTAGE**

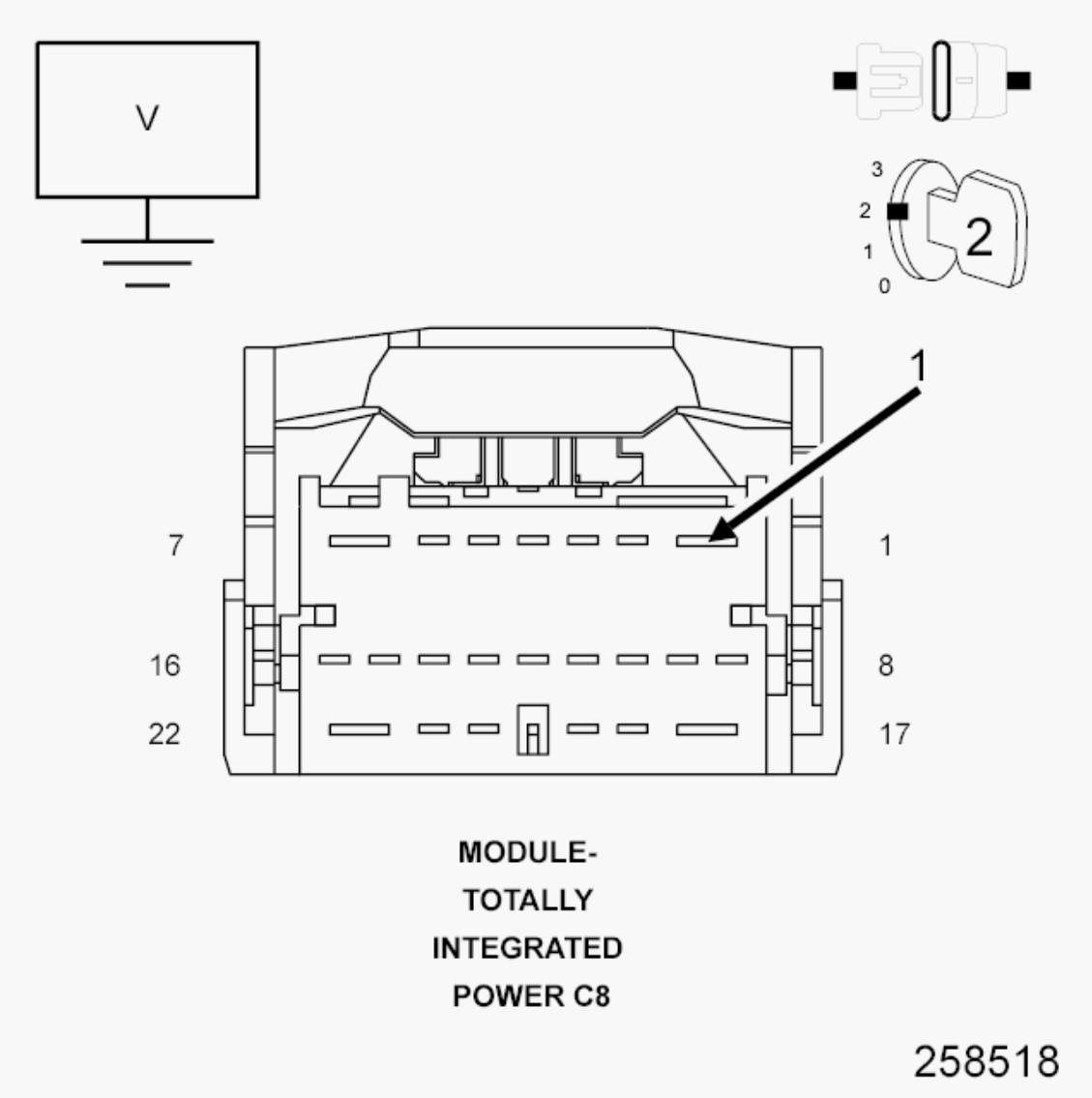

Fig. 35: Checking Blower Motor Control Circuit For Short To Voltage
Courtesy of CHRYSLER GROUP, LLC

1. Turn the ignition on.
2. With a volt meter measure the voltage on the (C7) Blower Motor Control circuit.

   Does the volt meter read above 10.0 volts?

   Yes

   - Repair the (C7) Blower Motor Control circuit for a short to voltage.
   - Perform the BODY VERIFICATION TEST. Refer to **STANDARD PROCEDURE** .

No

- Go To 4

4. **TOTALLY INTEGRATED POWER MODULE**

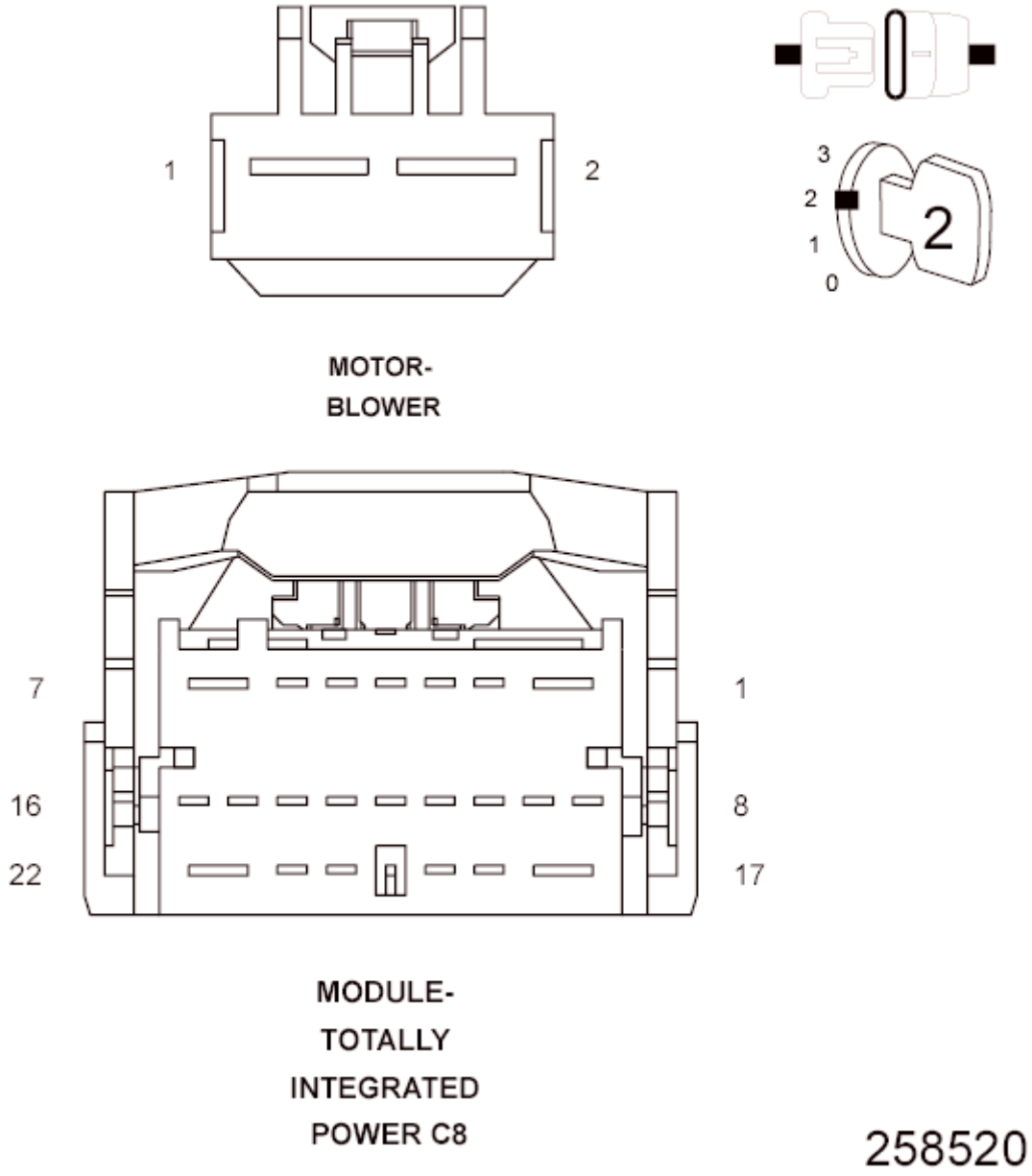

Fig. 36: Totally Integrated Power Module & Blower Motor Connectors
Courtesy of CHRYSLER GROUP, LLC

1. Turn the ignition on.
2. With the scan tool, erase DTCs.
3. Turn the ignition off, wait 10 seconds, and turn the ignition on.
4. With the a/c control, turn on the Blower Motor.

5. With the scan tool, read DTCs.

   Does the scan tool display active: B10EA-BLOWER MOTOR CONTROL CIRCUIT HIGH?

   Yes

   - Replace the Totally Integrated Power Module (TIPM) in accordance with the Service Information.
   - Perform the BODY VERIFICATION TEST. Refer to **STANDARD PROCEDURE** .

   No

   - Replace the Blower Motor in accordance with the Service Information.
   - Perform the BODY VERIFICATION TEST. Refer to **STANDARD PROCEDURE** .

B10EC-BLOWER MOTOR CONTROL CIRCUIT OVERCURRENT

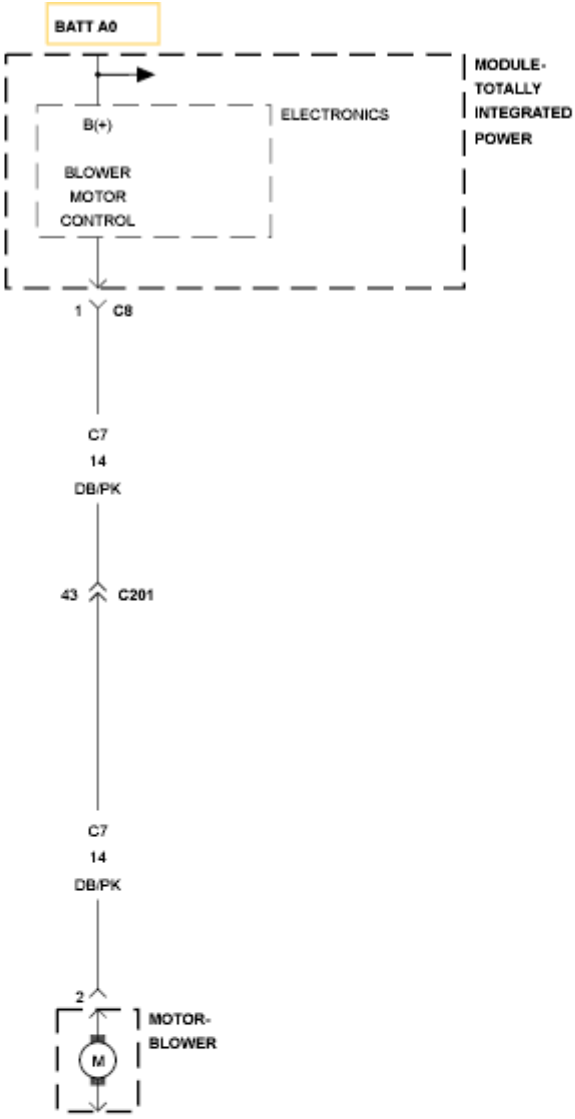
BATT A0
MODULE-
TOTALLY
INTEGRATED
POWER
ELECTRONICS
B(+)
BLOWER
MOTOR
CONTROL
1
C8
C7
14
DB/PK
43
C201
C7
14
DB/PK
2
M
MOTOR-
BLOWER

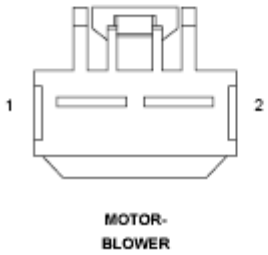
1
2
MOTOR-
BLOWER

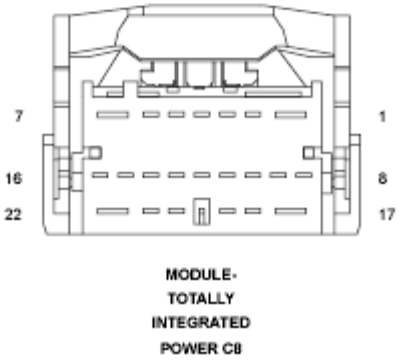
7
1
16
8
22
17
MODULE-
TOTALLY
INTEGRATED
POWER C8

Fig. 37: Blower Motor Control Wiring Diagram
Courtesy of CHRYSLER GROUP, LLC

For a complete wiring diagram, **refer to appropriate SYSTEM WIRING DIAGRAMS article**

WHEN MONITORED

With the ignition on.

SET CONDITION

The Totally Integrated Power Module (TIPM) will set this DTC if it detects an overcurrent condition on the (C7) Blower Motor Control circuit for more than 500 ms when blower motor operation is requested.

POSSIBLE CAUSES

Possible Causes
BLOCKAGE STALLING BLOWER MOTOR
BLOWER MOTOR
TOTALLY INTEGRATED POWER MODULE (TIPM)

DIAGNOSTIC TEST

1. **VERIFY DTC B10EC-BLOWER MOTOR CONTROL CIRCUIT OVERCURRENT IS ACTIVE**
    1. Turn the ignition on.
    2. With the scan tool, erase DTCs.
    3. Turn the ignition off, wait 10 seconds, and turn the ignition on.
    4. With the scan tool, read DTCs.

    Does the scan tool display active: B10EC-BLOWER MOTOR CONTROL CIRCUIT OVERCURRENT?

    Yes

    - Go To2

    No

- The condition that caused this symptom is currently not present. Check for an intermittent condition by inspecting the related wiring harness for chafed, pierced, pinched, and partially broken wires. Also, inspect the related connectors for broken, bent, pushed out, spread, corroded, or contaminated terminals. Repair as necessary.
- Perform the BODY VERIFICATION TEST. Refer to **STANDARD PROCEDURE** .

2. **CHECK FOR PROPER BLOWER MOTOR OPERATION**
   1. Turn the ignition on.
   2. Turn the Blower Motor on.

   Does the Blower Motor operate normally?

   Yes

   - Go To4

   No

   - Go To3

3. **CHECK FOR ACTIVE: B10E9-BLOWER MOTOR CONTROL CIRCUIT LOW**
   1. Turn the ignition on.
   2. With the scan tool, erase DTCs.
   3. Turn the ignition off, wait 10 seconds, and turn the ignition on.
   4. Turn on the Blower Motor.
   5. With the scan tool, read DTCs.

   Does the scan tool display active: B10E9-BLOWER MOTOR CONTROL CIRCUIT LOW?

   Yes

   - Follow the diagnostics for Code B10E9-BLOWER MOTOR CONTROL CIRCUIT LOW.
   - Perform the BODY VERIFICATION TEST. Refer to **STANDARD PROCEDURE** .

No

- Go To4

4. **CHECK FOR 12 VOLTS TO THE BLOWER MOTOR**

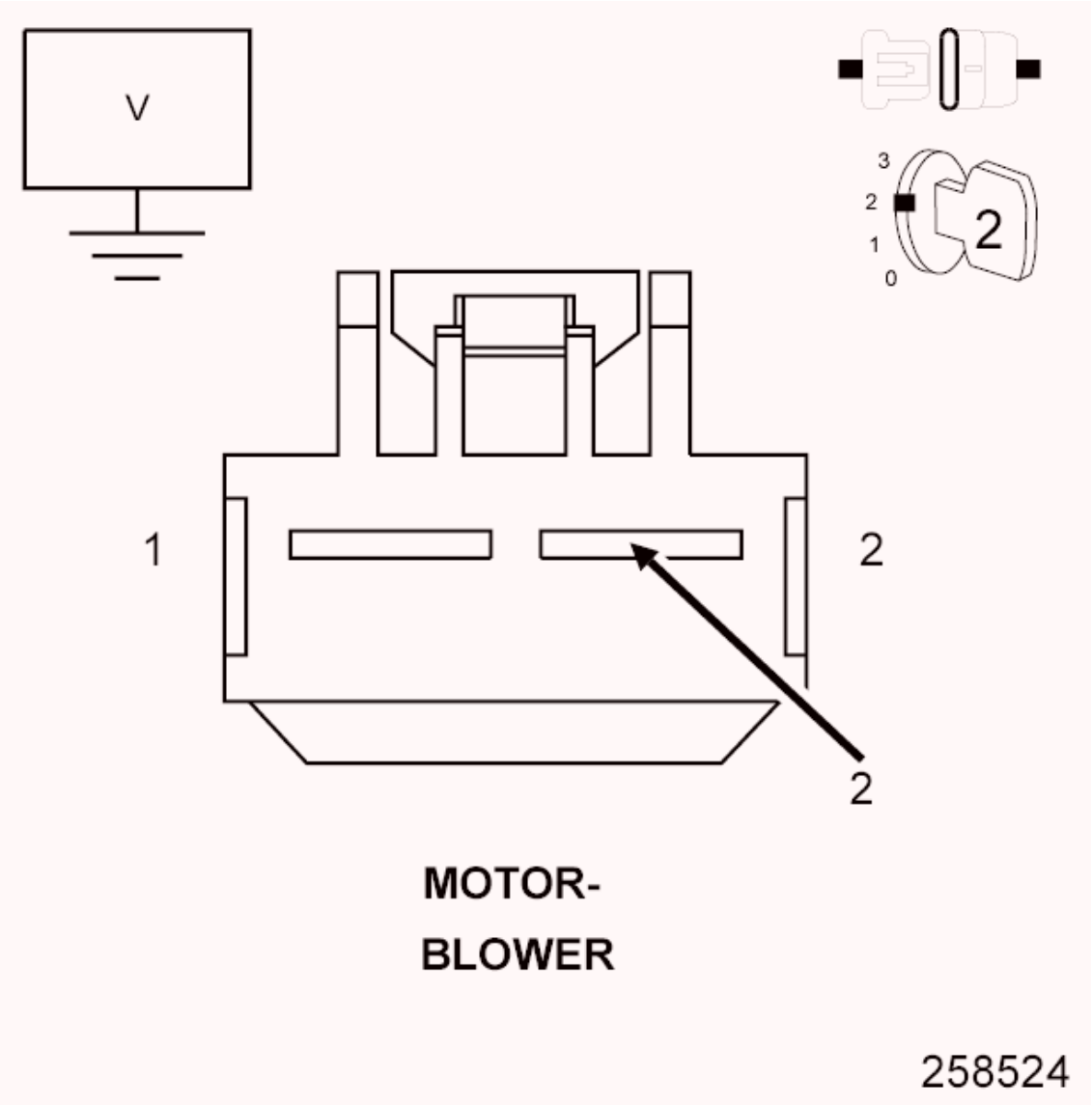

Fig. 38: Measuring Voltage On Blower Motor Control Circuit
Courtesy of CHRYSLER GROUP, LLC

1. Turn the ignition off.
2. Disconnect the Blower Motor harness connector.
3. Turn the ignition on.
4. Turn the Blower Motor control on.
5. Using a volt meter measure the voltage on the (C7) Blower Motor Control circuit in the Blower Motor harness connector.

Does the volt meter read 12 volts?

Yes

- Go To5

No

- Go To6

5. **CHECK FOR A BLOCKAGE STALLING THE BLOWER MOTOR**
   1. Turn the ignition off.
   2. Remove the Blower Motor from the HVAC housing assembly.
   3. Look for anything on the Blower Motor and in the HVAC housing that is physically preventing Blower Motor operation.

   Is anything physically preventing Blower Motor operation?

   Yes

   - Repair as necessary. Also, check Blower Motor for proper operation. Reinstall, or replace the Blower Motor as necessary in accordance with the Service Information.

   No

   - Replace the Blower Motor in accordance with the Service Information.
   - Perform the BODY VERIFICATION TEST. Refer to **STANDARD PROCEDURE** .

6. **CHECK FOR CHAFING IN THE (C7) BLOWER MOTOR CONTROL CIRCUIT**
   1. Turn the ignition off.
   2. Check the (C7) Blower Motor Control circuit for wire chafing.

   Is any wire chafing present?

   Yes

   - Repair the wire chafing on the (C7) Blower Motor Control circuit.

- Perform the BODY VERIFICATION TEST. Refer to **STANDARD PROCEDURE** .

No

- Replace the Totally Integrated Power Module (TIPM) in accordance with the Service Information.
- Perform the BODY VERIFICATION TEST. Refer to **STANDARD PROCEDURE** .

B10ED-REAR DEFROST CONTROL CIRCUIT OVERCURRENT

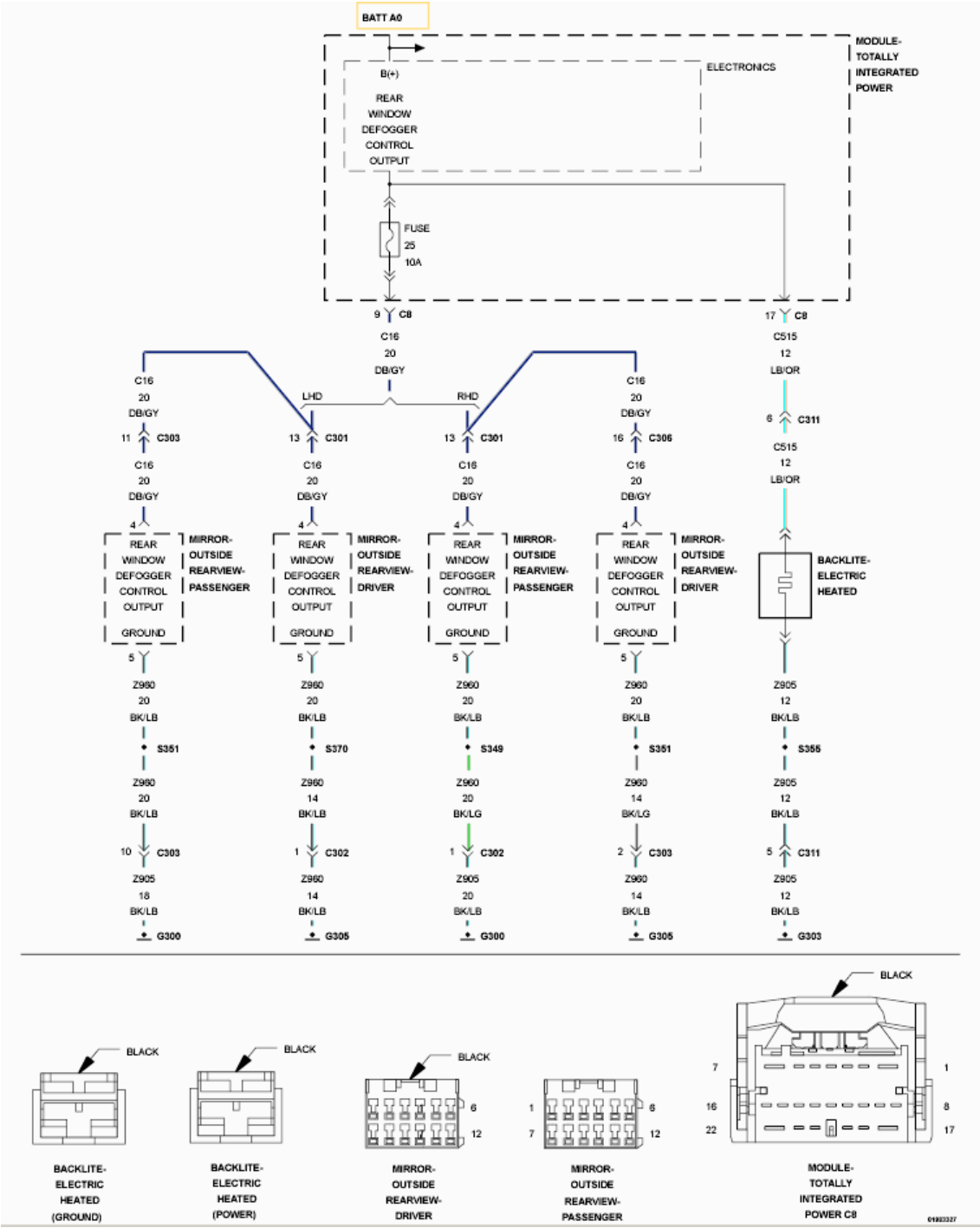

Fig. 39: Rear Defrost Control Wiring Diagram
Courtesy of CHRYSLER GROUP, LLC

For a complete wiring diagram, **refer to appropriate SYSTEM WIRING DIAGRAMS article** .

WHEN MONITORED

With the ignition on. Battery voltage greater than 10.4 volts.

SET CONDITION

An overcurrent condition on the (C515) Rear Defogger Control Output circuit or the (C16) Fused Rear Defogger Control Output circuit.

POSSIBLE CAUSES

Possible Causes
TERMINAL DAMAGE OR CORROSION
EXCESSIVE RESISTANCE IN THE REAR WINDOW DEFOGGER GRID OR (Z905) GROUND CIRCUIT FOR THE GRID
(C515) REAR DEFOGGER CONTROL OUTPUT CIRCUIT HIGH RESISTANCE
(C16) FUSED REAR DEFOGGER CONTROL OUTPUT CIRCUIT HIGH RESISTANCE (IF EQUIPPED WITH HEATED MIRRORS)
(Z960) GROUND CIRCUIT (IF EQUIPPED WITH HEATED MIRRORS)
HEATED MIRRORS (IF EQUIPPED)
TOTALLY INTEGRATED POWER MODULE (TIPM)

DIAGNOSTIC TEST

1. **CHECK FOR ACTIVE DTC B10ED-REAR DEFROST CONTROL CIRCUIT OVERCURRENT**
   1. Turn the ignition on.
   2. With the scan tool, record and erase the DTCs.
   3. Operate the rear defogger switch several times.
   4. With the scan tool, read the DTCs.

   Does the scan tool display active DTC: B10ED-REAR DEFROST CONTROL CIRCUIT OVERCURRENT?

   Yes

   - Go To 2

   No

   - The conditions that caused this code to set are not present at this time. Using the wiring diagram/schematic as a guide, inspect the

wiring and connectors.

- Perform the BODY VERIFICATION TEST. Refer to **STANDARD PROCEDURE** .

2. **VISUAL AND PHYSICAL INSPECTION OF THE CONNECTOR AND TERMINAL**
   1. Turn the ignition off.
   2. Check for signs of corrosion build up and damage at all connection points.

      NOTE: Make sure all in-line connectors are inspected for corrosion and damage.

   3. Disconnect the TIPM C8 harness connector.
   4. Visually inspect the wiring harness. Look for any chafed, pierced, pinched or partially broken wires hidden in the wire insulation.

      Were any of the above conditions found?

      Yes

      - Repair or replace as necessary.
      - Perform the BODY VERIFICATION TEST. Refer to **STANDARD PROCEDURE** .

      No

      - Go To 3

3. **VEHICLE EQUIPPED WITH HEATED MIRRORS**

   Is vehicle equipped with heated mirrors?

   Yes

   - Go To 4

   No

   - Go To 7

4. **(C16) FUSED REAR DEFOGGER CONTROL OUTPUT CIRCUIT**

HIGH RESISTANCE

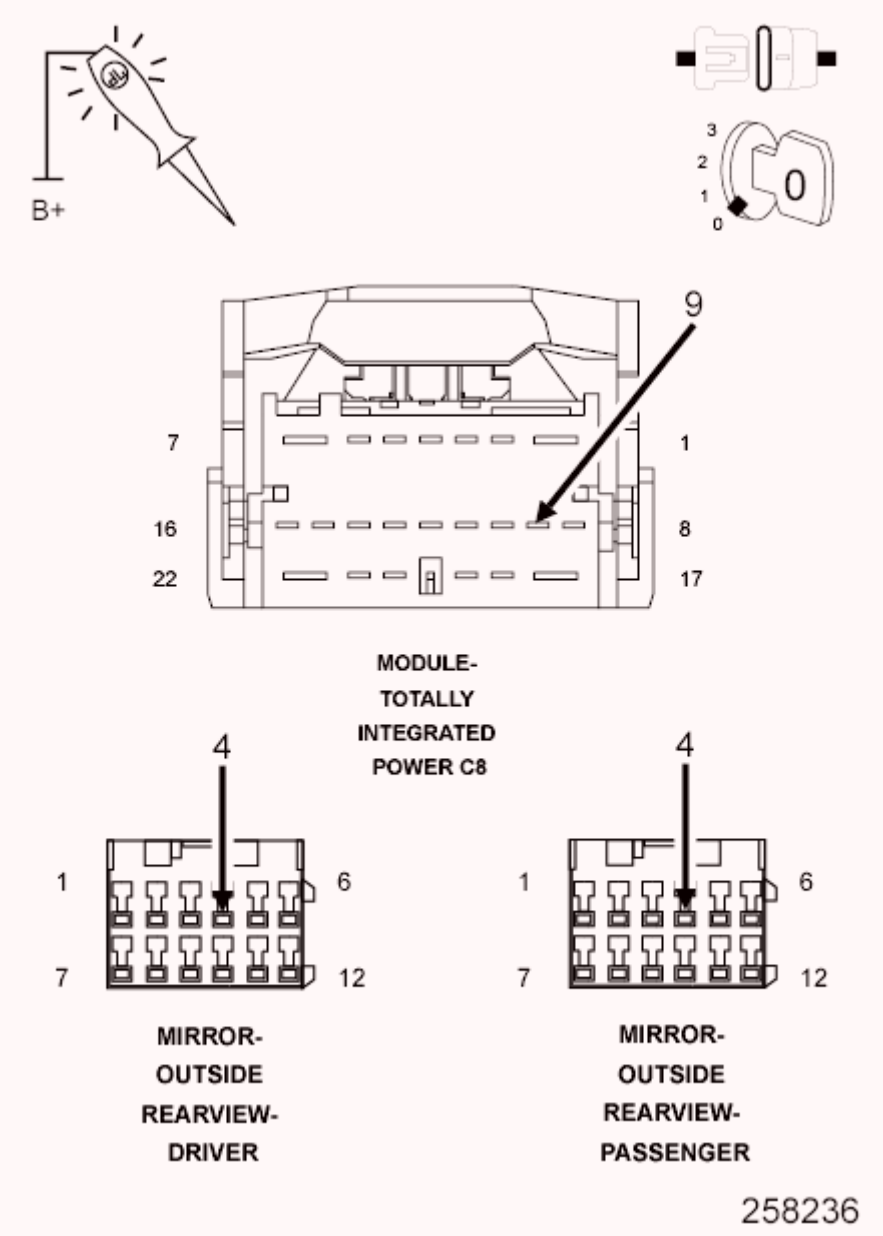

Fig. 40: Checking Fused Rear Defogger Control Output Circuit For High Resistance
Courtesy of CHRYSLER GROUP, LLC

1. Disconnect both outside rearview mirror connectors.
2. Connect a jumper wire between the (C16) Fused Rear Defogger Control Output circuit and ground at one of the outside rearview mirror harness connectors.
3. Using a 12-volt test light connected to 12-volts, check the (C16) Rear Defogger Control Output circuit in the TIPM C8 harness connector.

NOTE: The test light should be illuminated and bright. Compare the brightness to that of a direct connection to the battery.

NOTE: Repeat this test for each outside rearview mirror.

Does the test light illuminate brightly for each outside rearview mirror circuit?

Yes

- Go To 5

No

- Repair the excessive resistance in the (C16) Fused Rear Defogger Control Output circuit.
- Perform the BODY VERIFICATION TEST. Refer to **STANDARD PROCEDURE** .

5. **DISCONNECT ONE MIRROR AND RECHECK DTC**

NOTE: For this step, disconnect each outside rearview mirror one at a time and then recheck for DTCs.

1. Reconnect the TIPM and one outside rearview mirror.
2. Ignition on, engine not running.
3. With the scan tool, erase the TIPM DTCs.
4. Operate the rear defogger switch several times.
5. With the scan tool, read the TIPM DTCs.

Does the scan tool display active DTC: B10ED-REAR DEFROST CONTROL CIRCUIT OVERCURRENT for each mirror?

Yes

- Go To 7

No

- Go To 6

6. **(Z960) GROUND CIRCUIT**

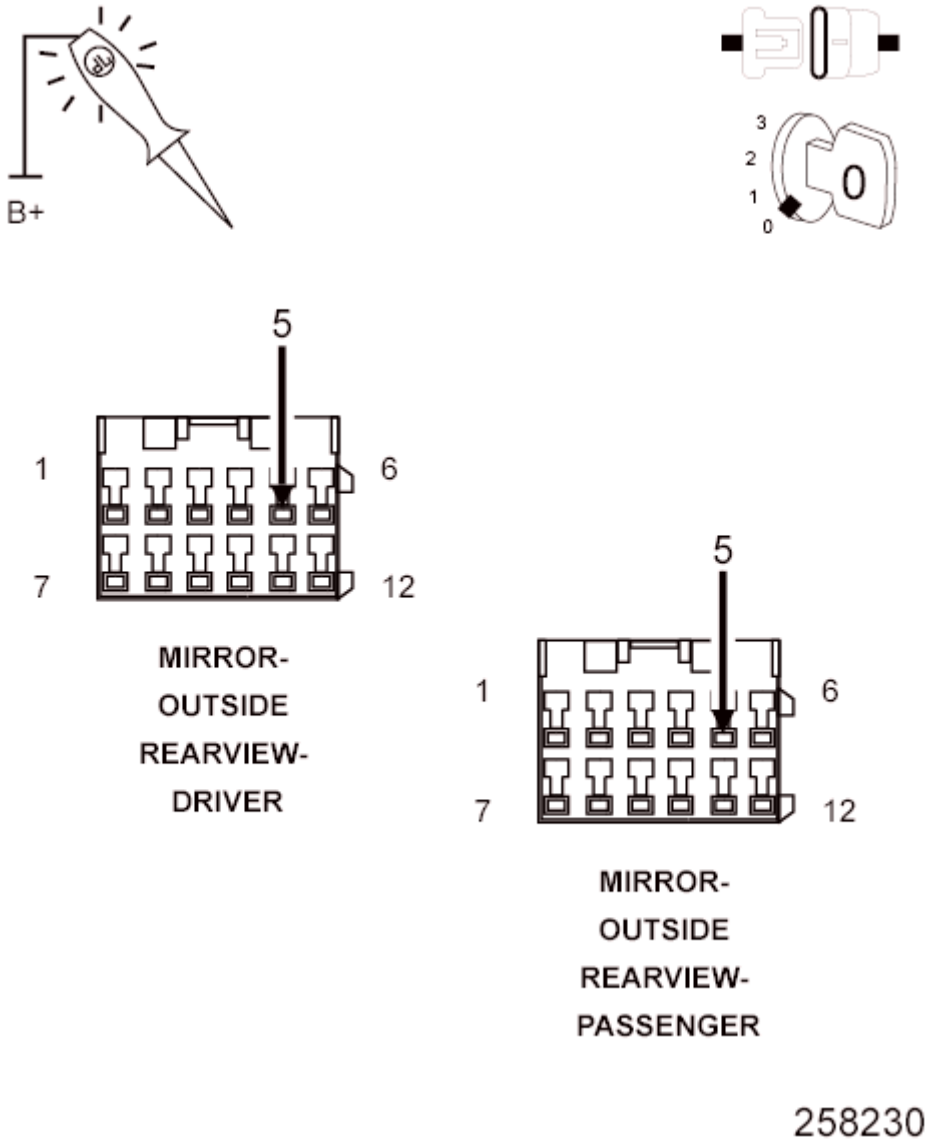

Fig. 41: Checking Mirror Ground Circuit Using 12-Volt Test Light
Courtesy of CHRYSLER GROUP, LLC

NOTE: Perform this test on the outside rearview mirror that caused the DTC to set.

1. Using a 12-volt test light connected to 12-volts, check the (Z960) Ground circuit at the outside rearview mirror connector.

   Does the test light illuminate brightly?

Yes

- Inspect the mirror pigtail wiring. If the wiring is OK, replace the outside rearview mirror in accordance with the Service Information.
- Perform the BODY VERIFICATION TEST. Refer to **STANDARD PROCEDURE** .

No

- Repair the excessive resistance in the (Z960) Ground circuit.
- Perform the BODY VERIFICATION TEST. Refer to **STANDARD PROCEDURE** .

7. **(C515) REAR DEFOGGER CONTROL OUTPUT CIRCUIT HIGH RESISTANCE**

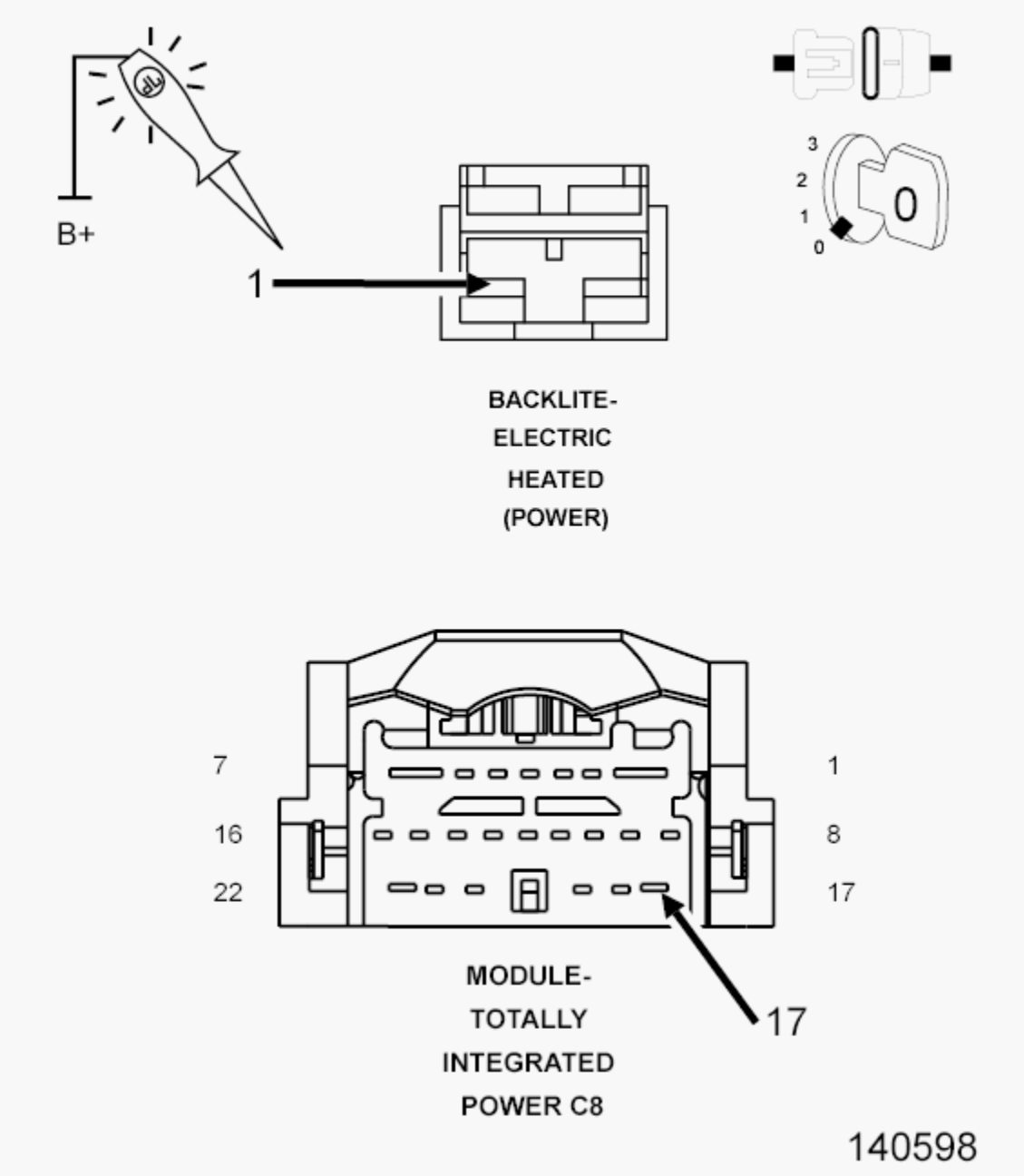

Fig. 42: Checking Rear Defogger Control Output Circuit For High Resistance
Courtesy of CHRYSLER GROUP, LLC

1. Turn the ignition off.
2. Disconnect the TIPM C8 connector.
3. Disconnect the electric heated backlite (power) 1-way connector.
4. Connect a jumper wire between the (C515) Rear Defogger Control Output circuit and ground at the electric heated backlite (power) 1-way connector.

5. Using a 12-volt test light connected to 12-volts, check the (C515) Rear Defogger Control Output circuit in the TIPM C8 harness connector.

   NOTE: The test light should be illuminated and bright. Compare the brightness to that of a direct connection to the battery.

   Does the test light illuminate brightly?

   Yes

   - Go To 8

   No

   - Repair the excessive resistance in the (C515) Rear Defogger Control Output circuit.
   - Perform the BODY VERIFICATION TEST. Refer to **STANDARD PROCEDURE** .

8. **CHECK THE WINDOW DEFOGGER GRID AND (Z905) GROUND CIRCUIT**
   1. Disconnect the jumper wire.
   2. Using a 12-volt test light connected to 12-volts, check the electric heated backlite (power) terminal at the window defogger grid.

      Does the test light illuminate? Compare with a known good vehicle, if necessary.

      Yes

      - Go To 10

      No

      - Go To 9

9. **(Z905) GROUND CIRCUIT OPEN**

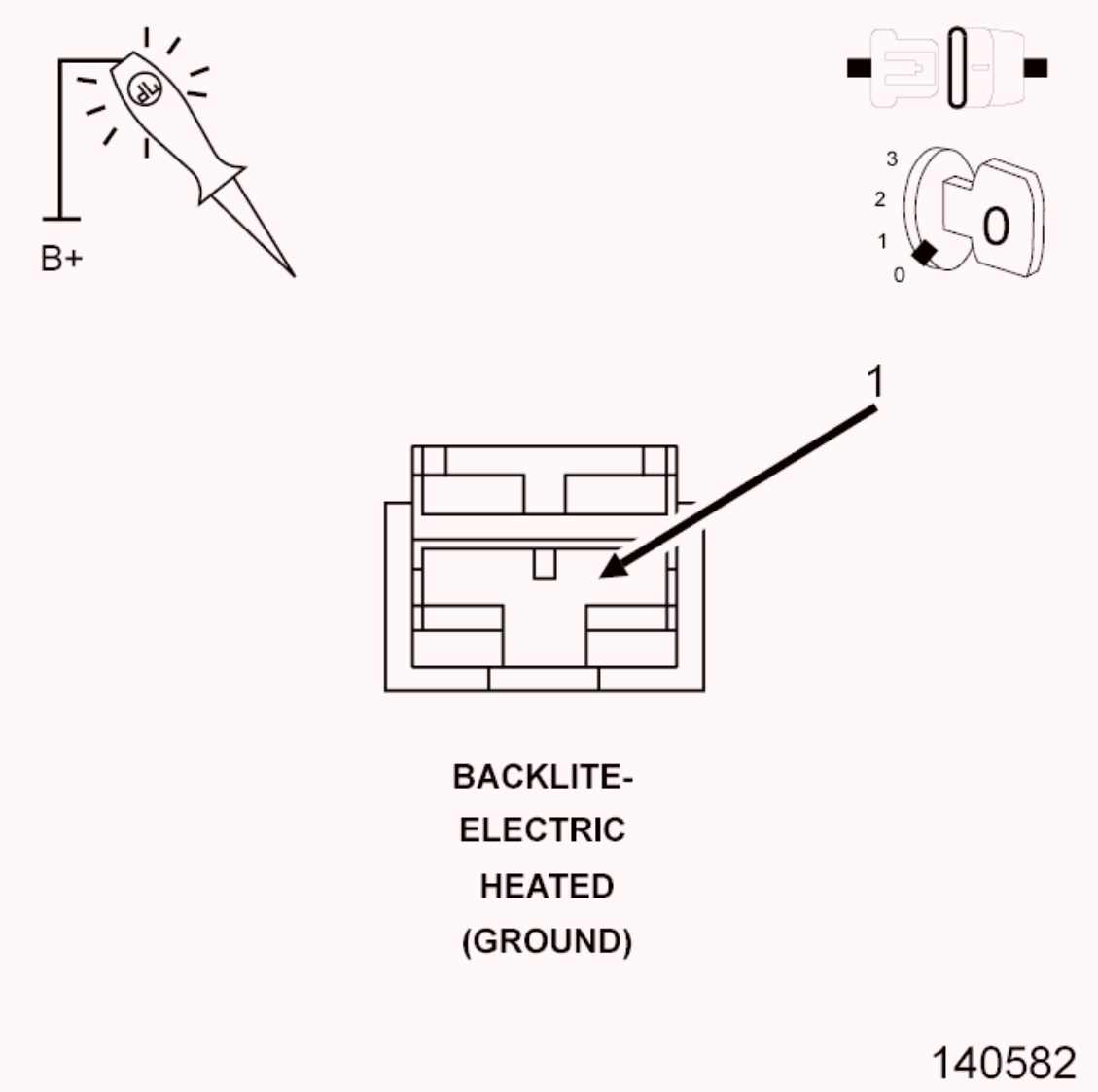

Fig. 43: Checking Ground Circuit For Open
Courtesy of CHRYSLER GROUP, LLC

1. Disconnect the electric heated backlite (ground) 1-way connector.
2. Using a 12-volt test light connected to 12-volts, check the (Z905) ground circuit at the electric heated backlite (ground) 1-way connector.

   Does the test light illuminate brightly?

   Yes

   - Repair the open or excessive resistance in the rear window defogger grid in accordance with the Service Information.
   - Perform the BODY VERIFICATION TEST. Refer to **STANDARD PROCEDURE** .

No

- Repair the open or excessive resistance in the (Z905) Ground circuit.
- Perform the BODY VERIFICATION TEST. Refer to **STANDARD PROCEDURE** .

10. **TOTALLY INTEGRATED POWER MODULE (TIPM)**

NOTE: Before continuing, check the TIPM harness connector terminals for corrosion, damage or terminal push out. Repair as necessary.

1. Using the schematics as a guide, inspect the wire harness and connectors.
2. Pay particular attention to all Power and Ground circuits.

Were any problems found?

Yes

- Repair as necessary.
- Perform the BODY VERIFICATION TEST. Refer to **STANDARD PROCEDURE** .

No

- Replace the Totally Integrated Power Module (TIPM) in accordance with the Service Information.
- Perform the BODY VERIFICATION TEST. Refer to **STANDARD PROCEDURE** .

B10EE-CONDENSOR FAN CONTROL CIRCUIT OVERCURRENT

For a complete wiring diagram, **refer to appropriate SYSTEM WIRING DIAGRAMS article**

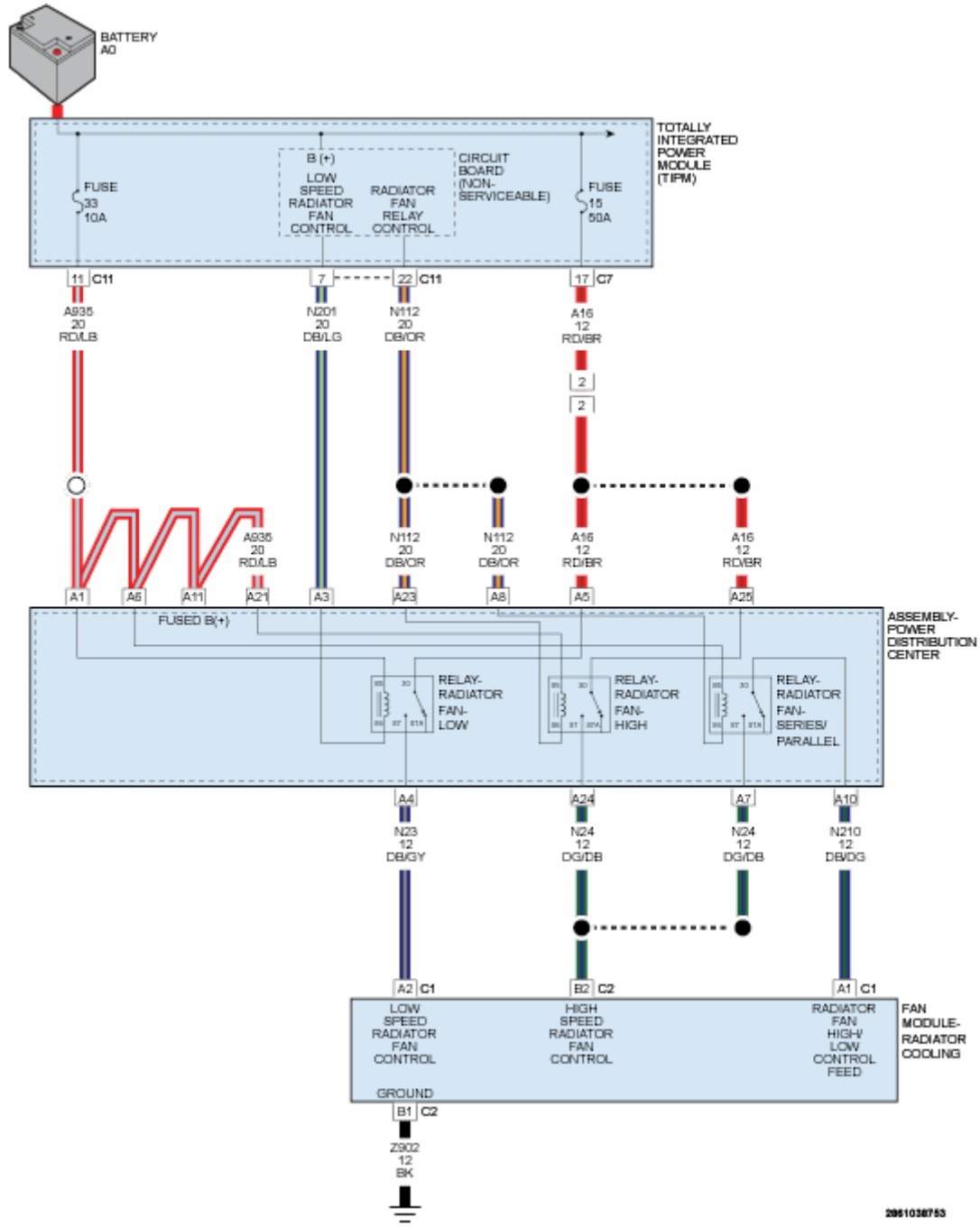

Fig. 44: Condenser Fan Control - Circuit Diagram
Courtesy of CHRYSLER GROUP, LLC

WHEN MONITORED

With the ignition on.

SET CONDITION

The Totally Integrated Power Module (TIPM) will set this DTC if it detects an

overcurrent condition on the (N112) High Speed Radiator Fan Control circuit for more than 500 ms when Radiator Fan operation is requested.

POSSIBLE CAUSES

Possible Causes
BLOCKAGE STALLING RADIATOR FAN
RADIATOR FAN
TIPM

DIAGNOSTIC TEST

1. **VERIFY DTC B10EE-CONDENSER FAN CONTROL CIRCUIT OVERCURRENT IS ACTIVE**
   1. Turn the ignition on.
   2. With the scan tool, erase DTCs.
   3. Turn the ignition off, wait 10 seconds, and turn the ignition on.
   4. With the scan tool, read DTCs.

      Does the scan tool display active: B10EE-CONDENSER FAN CONTROL CIRCUIT OVERCURRENT?

      Yes

      - Go To2

      No

      - The condition that caused this symptom is currently not present. Check for an intermittent condition by inspecting the related wiring harness for chafed, pierced, pinched, and partially broken wires. Also, inspect the related connectors for broken, bent, pushed out, spread, corroded, or contaminated terminals. Repair as necessary.
      - Perform the BODY VERIFICATION TEST. Refer to **STANDARD PROCEDURE** .
2. **CHECK FOR PROPER RADIATOR FAN OPERATION**
   1. Turn the ignition on.
   2. With the scan tool, activate the Radiator Fan.

Does the Radiator Fan operate normally?

Yes

- Go To4

No

- Go To3

3. **CHECK FOR ACTIVE: B10BE-CONDENSER FAN CONTROL CIRCUIT LOW**
   1. Turn the ignition on.
   2. With the scan tool, erase DTCs.
   3. Turn the ignition off, wait 10 seconds, and turn the ignition on.
   4. Use the scan tool, to activate the Condenser Fan.
   5. With the scan tool, read DTCs.

   Does the scan tool display active: B10BE-CONDENSER FAN CONTROL CIRCUIT LOW?

   Yes

   - Follow the diagnostics for Code B10BE-CONDENSER FAN CONTROL CIRCUIT LOW.
   - Perform the BODY VERIFICATION TEST. Refer to **STANDARD PROCEDURE** .

   No

   - Go To4

4. **CHECK FOR 12 VOLTS TO THE RADIATOR FAN**
   1. Turn the ignition off.
   2. Disconnect the Radiator Fan harness connector.
   3. Turn the ignition on.
   4. With the scan tool, activate the Radiator Fan.
   5. Using a volt meter measure the voltage on the (N112) High Speed Radiator Fan Control circuit in the Radiator Fan harness connector.

Does the volt meter read 12 volts?

Yes

- Go To5

No

- Go To6

5. **CHECK FOR A BLOCKAGE STALLING THE RADIATOR FAN**
   1. Turn the ignition off.
   2. Look for anything that may be physically preventing the Radiator Fan from operating normally.

   Is anything physically preventing Blower Motor operation?

   Yes

   - Repair as necessary. Also, check the Radiator Fan for proper operation. Reinstall or replace the Radiator Fan as necessary in accordance with the Service Information.

   No

   - Replace the Radiator Fan in accordance with the Service Information.
   - Perform the BODY VERIFICATION TEST. Refer to **STANDARD PROCEDURE** .

6. **CHECK FOR CHAFFING IN THE (N112) HIGH SPEED RADIATOR FAN CONTROL CIRCUIT**
   1. Turn the ignition off.
   2. Check the (N112) High Speed Radiator Fan Control circuit for wire chafing.

   Is any wire chafing present?

   Yes

   - Repair the wire chafing on the (N112) High Speed Radiator Fan

Control circuit.

- Perform the BODY VERIFICATION TEST. Refer to **STANDARD PROCEDURE** .

No

- Replace the Totally Integrated Power Module (TIPM) in accordance with the Service Information.
- Perform the BODY VERIFICATION TEST. Refer to **STANDARD PROCEDURE** .

B162B-LEFT LOW BEAM CONTROL CIRCUIT LOW

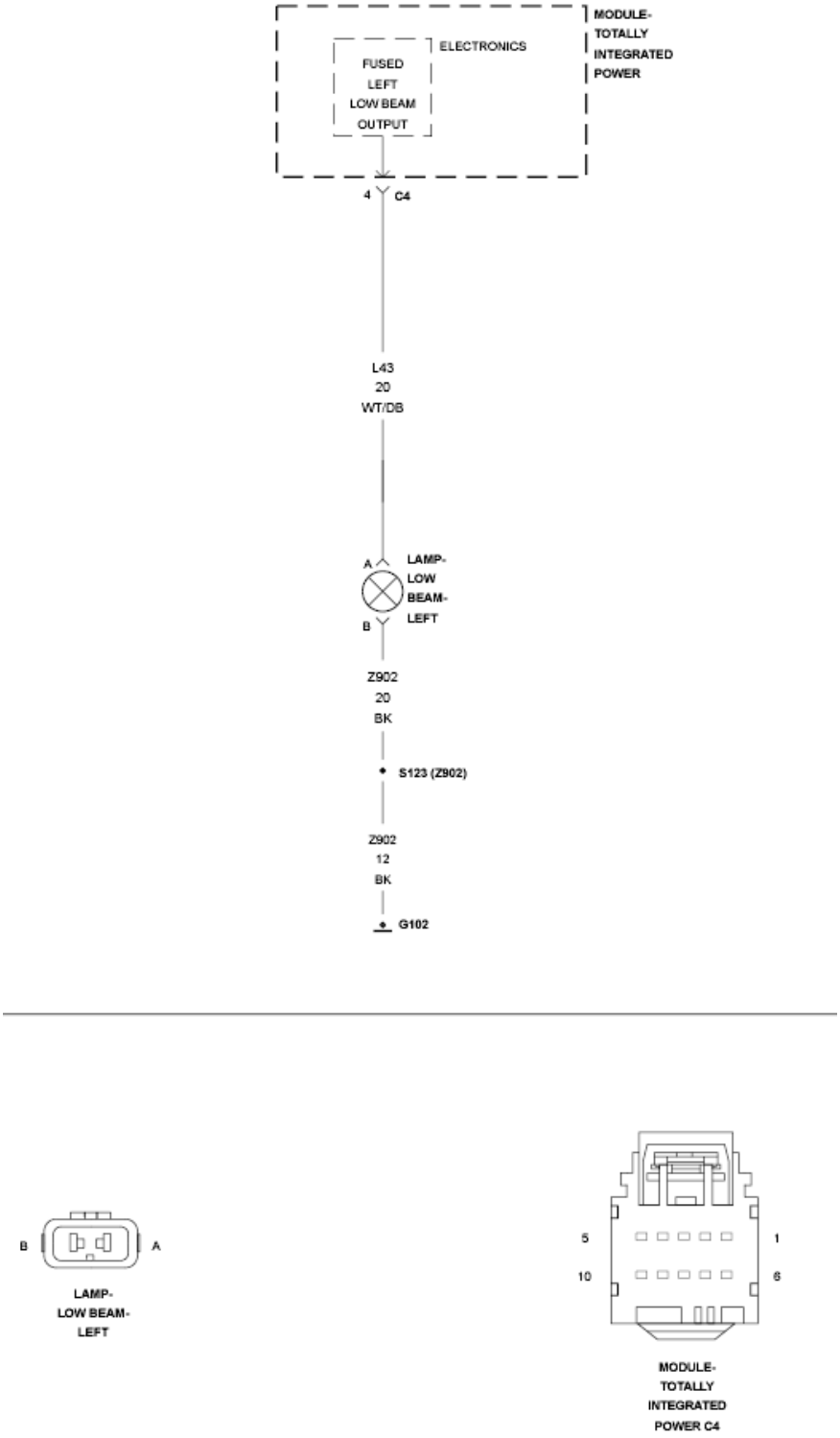

Fig. 45: Left Low Beam Control Wiring Diagram
Courtesy of CHRYSLER GROUP, LLC

For a complete wiring diagram, **refer to appropriate SYSTEM WIRING DIAGRAMS article** .

WHEN MONITORED

With the Headlamps activated.

SET CONDITION

When the TIPM detects a low condition.

POSSIBLE CAUSES

Possible Causes
(L43) LEFT LOW BEAM CONTROL CIRCUIT SHORT TO GROUND TOTALLY INTEGRATED POWER MODULE

DIAGNOSTIC TEST

1. **INTERMITTENT CONDITION**
    1. Turn the ignition on.
    2. With the scan tool, clear all TIPM DTCs.
    3. Turn the Headlamps on.
    4. With the scan tool read the DTC information.

    Does the scan tool read: B162B-LEFT LOW BEAM CONTROL CIRCUIT LOW?

    Yes

    - Go To 2

    No

    - The condition that caused the symptom is currently not present. Inspect the related wiring for a possible intermittent condition. Look for any chafed, pierced, pinched, or partially broken wires.
    - Perform the BODY VERIFICATION TEST. Refer to **STANDARD PROCEDURE** .
2. **(L43) LEFT LOW BEAM CONTROL CIRCUIT SHORT TO GROUND**

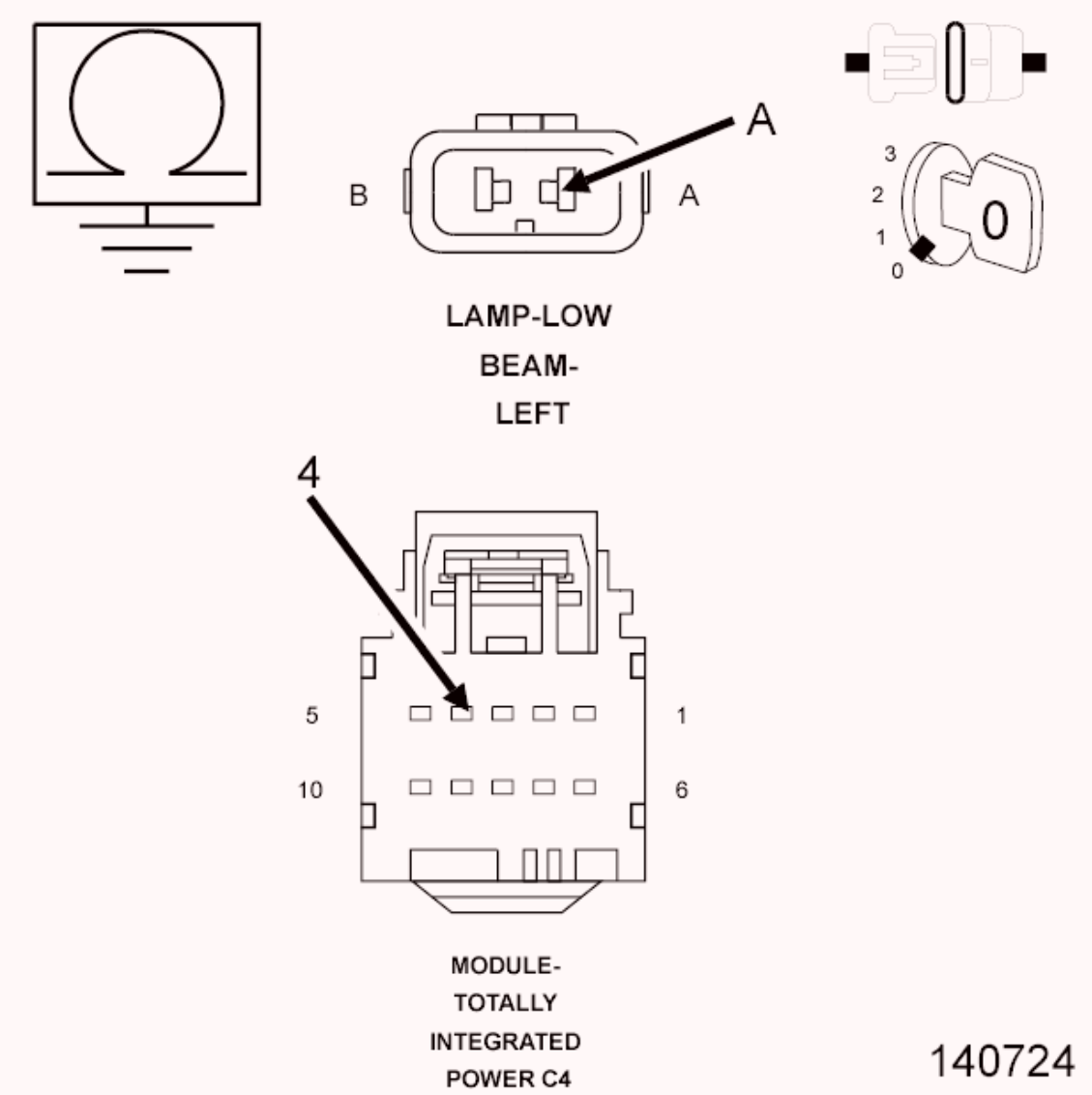

Fig. 46: Checking Left Low Beam Control Circuit For Short To Ground
Courtesy of CHRYSLER GROUP, LLC

1. Turn the ignition off.
2. Disconnect the TIPM C4 harness connector.
3. Disconnect the Left Headlamp harness connector.
4. Measure the resistance between ground and the (L43) Left Low Beam Control circuit.

   Is the resistance below 5.0 Ohms?

   Yes

   - Repair the (L43) Left Low Beam Control circuit for a short to ground condition.

- Perform the BODY VERIFICATION TEST. Refer to **STANDARD PROCEDURE** .

No

- Replace the Totally Integrated Power Module (TIPM) in accordance with the service information.
- Perform the BODY VERIFICATION TEST. Refer to **STANDARD PROCEDURE** .

B162C-LEFT LOW BEAM CONTROL CIRCUIT HIGH

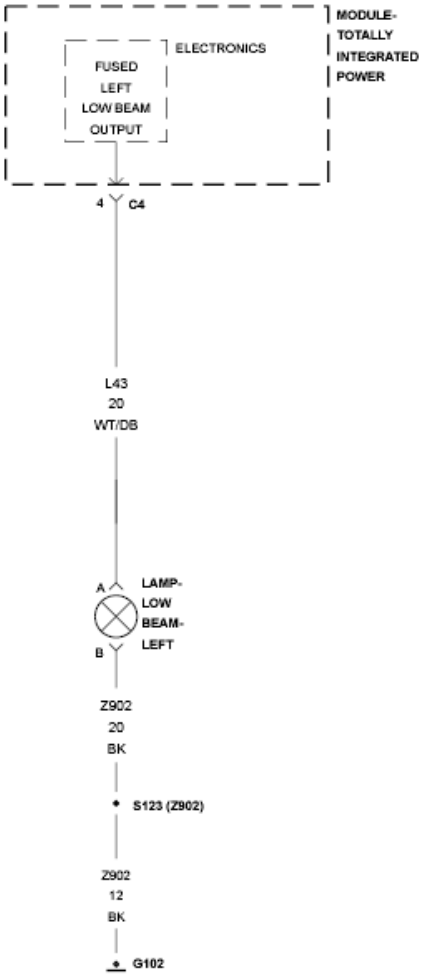

Fig. 47: Left Low Beam Control Wiring Diagram
Courtesy of CHRYSLER GROUP, LLC

For a complete wiring diagram, **refer to appropriate SYSTEM WIRING DIAGRAMS article** .

WHEN MONITORED

With the headlamps activated.

SET CONDITION

When the TIPM detects a high condition.

POSSIBLE CAUSES

Possible Causes
(L43) LEFT LOW BEAM CONTROL CIRCUIT OPEN
(L43) LEFT LOW BEAM CONTROL CIRCUIT SHORTED TO VOLTAGE
LEFT LOW BEAM BULB
TOTALLY INTEGRATED POWER MODULE

DIAGNOSTIC TEST

1. **INTERMITTENT CONDITION**
    1. Turn the ignition on.
    2. With the scan tool, clear all TIPM DTCs.
    3. Turn the headlamps on.
    4. With the scan tool read the DTC information.

    Does the scan tool read: B162C-LEFT LOW BEAM CONTROL CIRCUIT HIGH?

    Yes

    - Go To 2

    No

    - The condition that caused the symptom is currently not present. Inspect the related wiring for a possible intermittent condition. Look for any chafed, pierced, pinched, or partially broken wires.
    - Perform the BODY VERIFICATION TEST. Refer to **STANDARD PROCEDURE** .
2. **LEFT LOW BEAM BULB**
    1. Turn the ignition off.

2. Inspect the Left Low Beam Bulb Assembly.

   Is the inoperative bulb OK?

   Yes

   - Go To 3

   No

   - Replace the inoperative bulb in accordance with the service information.
   - Perform the BODY VERIFICATION TEST. Refer to **STANDARD PROCEDURE** .

3. **(L43) LEFT LOW BEAM CONTROL CIRCUIT OPEN**

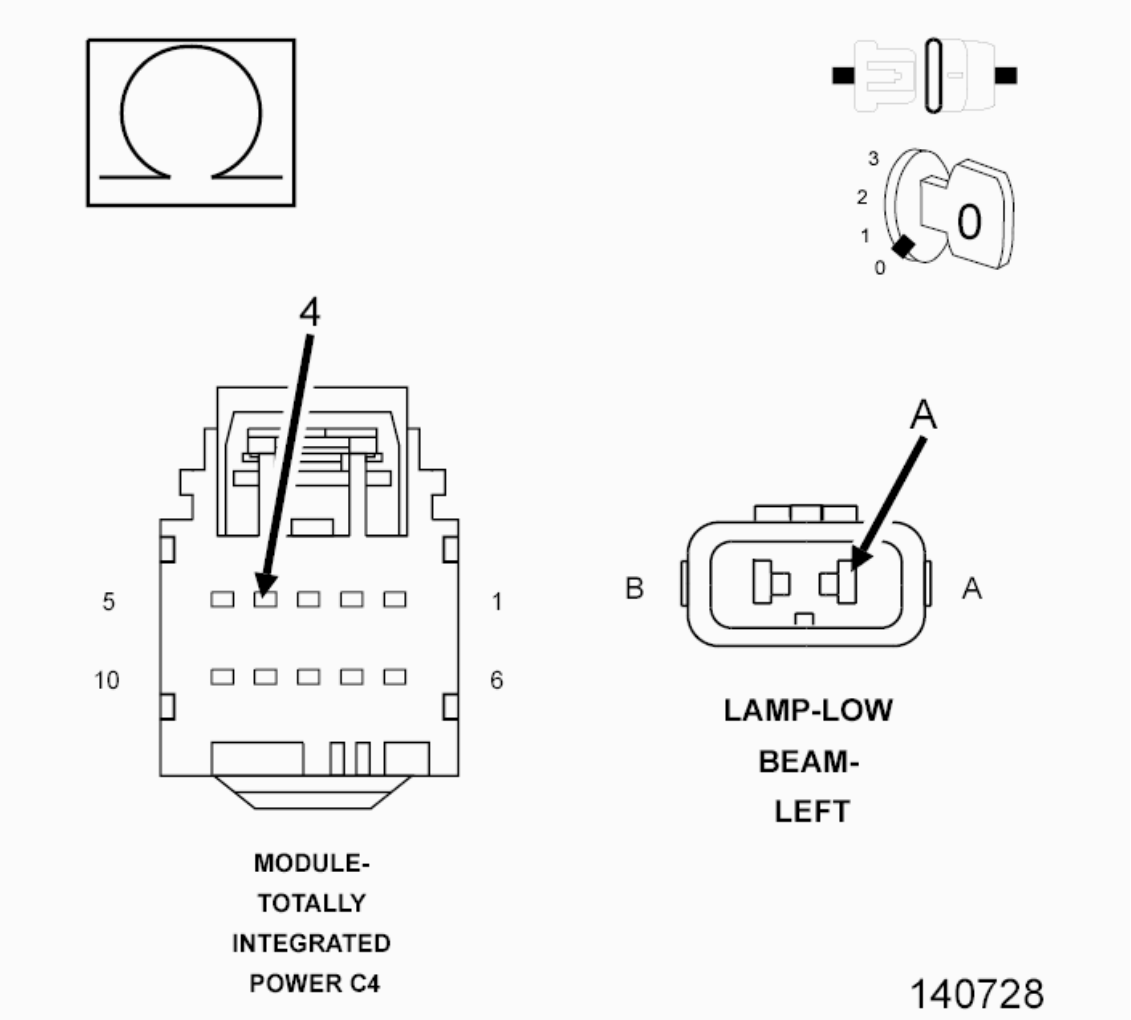

Fig. 48: Checking Left Low Beam Control Circuit For Open

Courtesy of CHRYSLER GROUP, LLC

1. Turn the ignition off.
2. Disconnect the TIPM C4 harness connector.
3. Disconnect the Left Low Beam Lamp harness connector.
4. Measure the resistance of the (L43) Left Low Beam Control circuit.

   Is the resistance above 5.0 Ohms?

   Yes

   - Repair the (L43) Left Low Beam Control circuit for an open condition.
   - Perform the BODY VERIFICATION TEST. Refer to **STANDARD PROCEDURE** .

   No

   - Go To 4
   - Perform the BODY VERIFICATION TEST. Refer to **STANDARD PROCEDURE** .

4. **(L43) LEFT LOW BEAM CONTROL CIRCUIT SHORTED TO VOLTAGE**

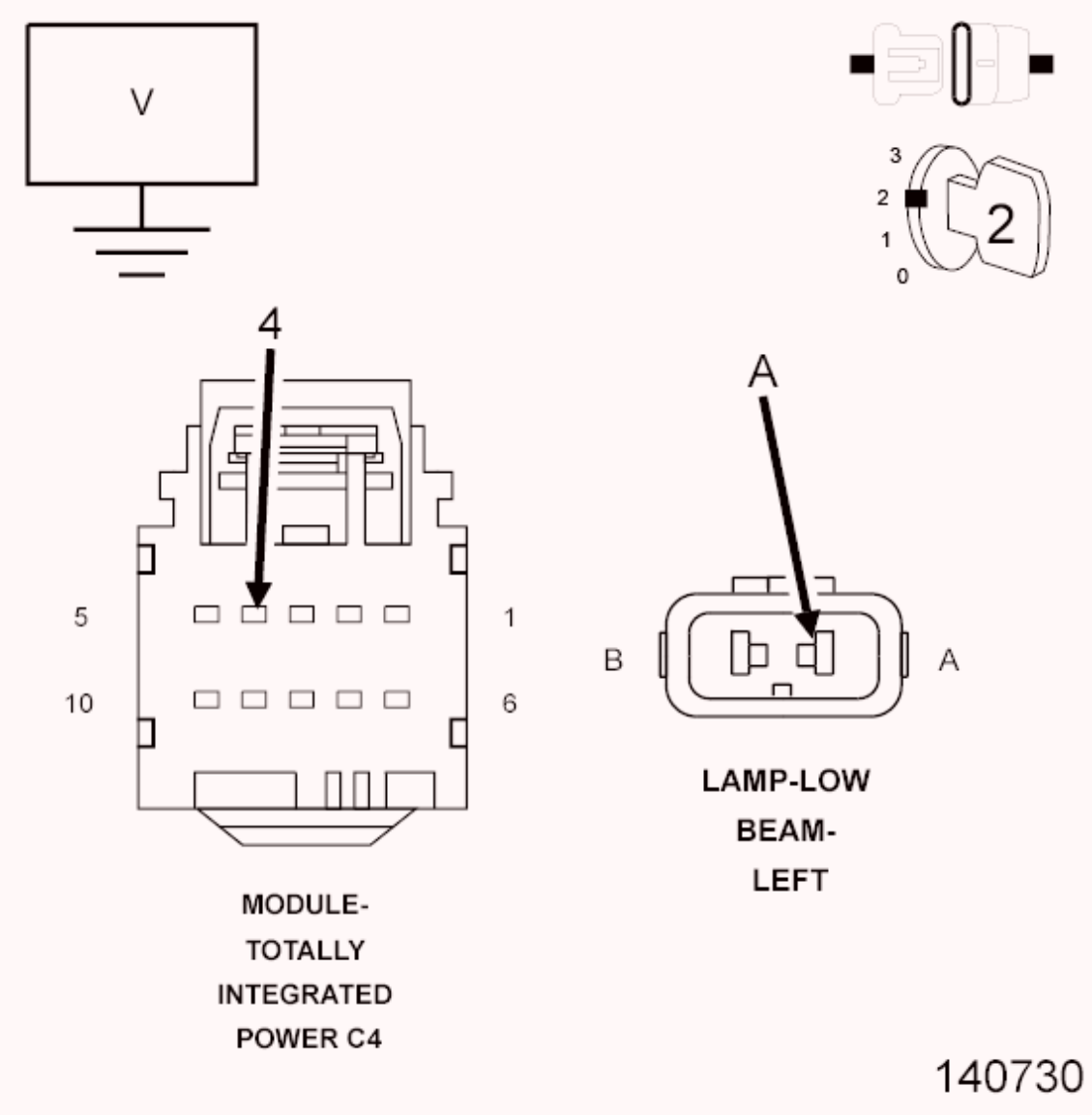

Fig. 49: Checking Left Low Beam Control Circuit For Short To Voltage
Courtesy of CHRYSLER GROUP, LLC

1. Turn the ignition off.
2. Disconnect the TIPM C4 harness connector.
3. Disconnect the Left Low Beam Lamp harness connector.
4. Turn the ignition on.
5. Measure for voltage on the (L43) Left Low Beam Control circuit.

   Is the voltage above 10.0 volts?

   Yes

   - Repair the (L43) Left Low Beam Control circuit for a short to

voltage condition.

- Perform the BODY VERIFICATION TEST. Refer to **STANDARD PROCEDURE** .

No

- Replace the Totally Integrated Power Module (TIPM) in accordance with the service information.
- Perform the BODY VERIFICATION TEST. Refer to **STANDARD PROCEDURE** .

B162F-RIGHT LOW BEAM CONTROL CIRCUIT LOW

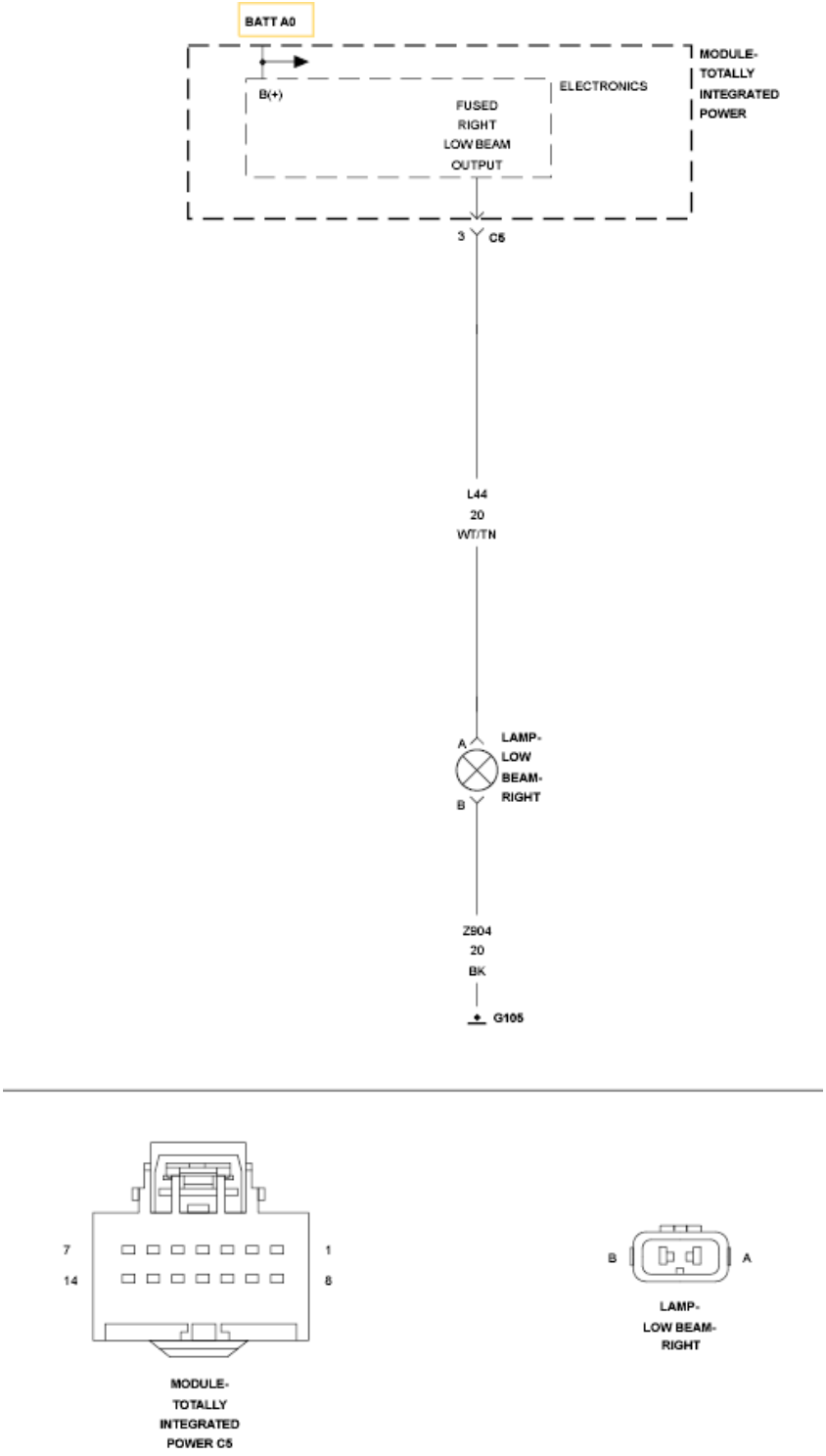

Fig. 50: Right Low Beam Control Wiring Diagram
Courtesy of CHRYSLER GROUP, LLC

For a complete wiring diagram, **refer to appropriate SYSTEM WIRING DIAGRAMS article** .

WHEN MONITORED

With the Headlamps activated.

SET CONDITION

When the TIPM detects a low condition.

POSSIBLE CAUSES

Possible Causes
(L44) RIGHT LOW BEAM CONTROL CIRCUIT TOTALLY INTEGRATED POWER MODULE

DIAGNOSTIC TEST

1. **INTERMITTENT CONDITION**
    1. Turn the ignition on.
    2. With the scan tool, clear all TIPM DTCs.
    3. Turn the Headlamps on.
    4. With the scan tool read the DTC information.

    Does the scan tool read: B162F-RIGHT LOW BEAM CONTROL CIRCUIT LOW?

    Yes

    - Go To 2

    No

    - The condition that caused the symptom is currently not present. Inspect the related wiring for a possible intermittent condition. Look for any chafed, pierced, pinched, or partially broken wires.
    - Perform the BODY VERIFICATION TEST. Refer to **STANDARD PROCEDURE** .
2. **(L44) RIGHT LOW BEAM CONTROL CIRCUIT**

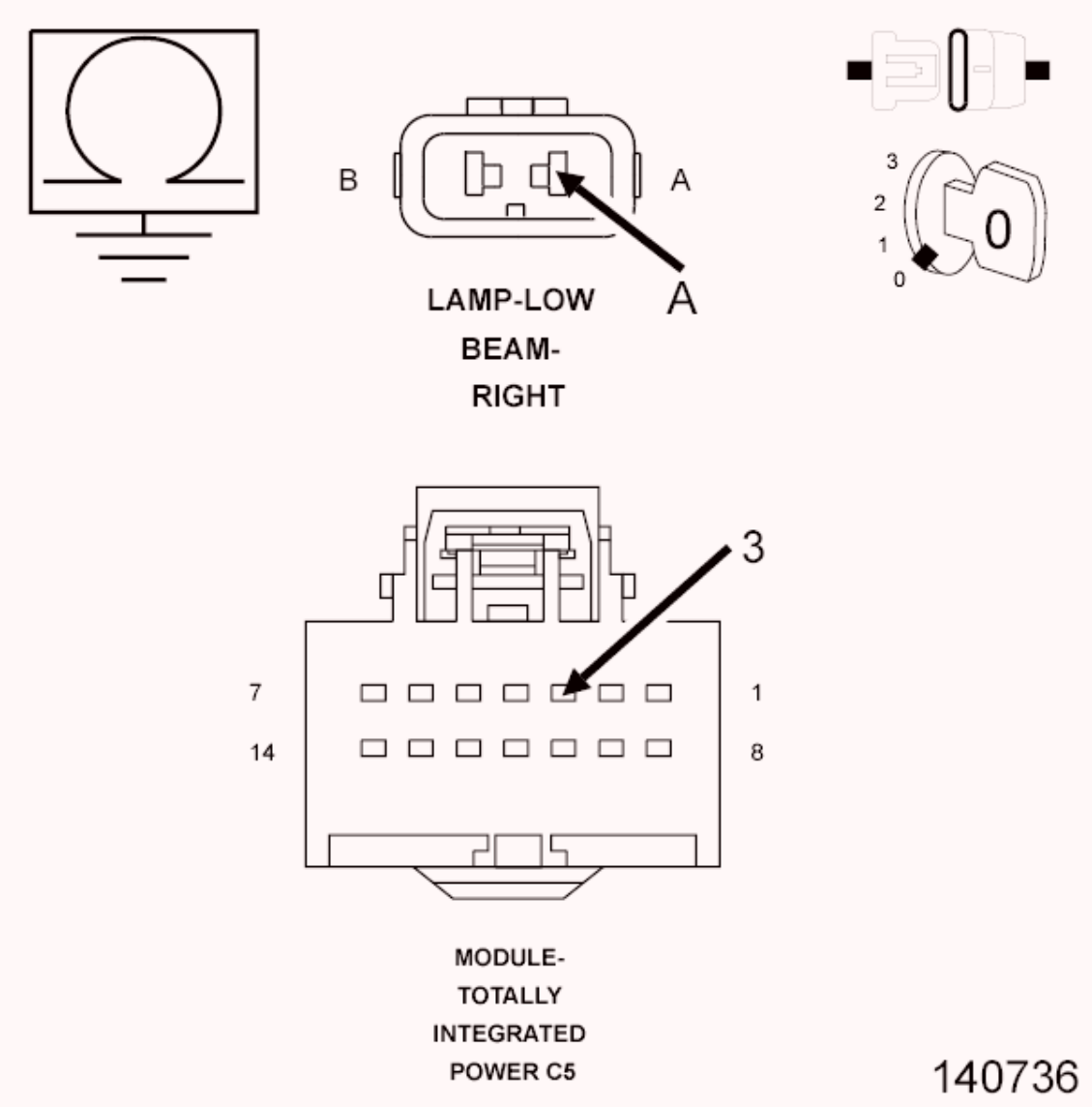

Fig. 51: Measuring Resistance Between Ground & Right Low Beam Control Circuit
Courtesy of CHRYSLER GROUP, LLC

1. Turn the ignition off.
2. Disconnect the TIPM C5 harness connector.
3. Disconnect the Right Headlamp harness connector.
4. Measure the resistance between ground and the (L44) Right Low Beam Control circuit.

   Is the resistance below 5.0 Ohms?

   Yes

- Repair the (L44) Right Low Beam Control circuit for a short to ground condition.
- Perform the BODY VERIFICATION TEST. Refer to **STANDARD PROCEDURE** .

No

- Replace the Totally Integrated Power Module (TIPM) in accordance with the service information.
- Perform the BODY VERIFICATION TEST. Refer to **STANDARD PROCEDURE** .

B1630-RIGHT LOW BEAM CONTROL CIRCUIT HIGH

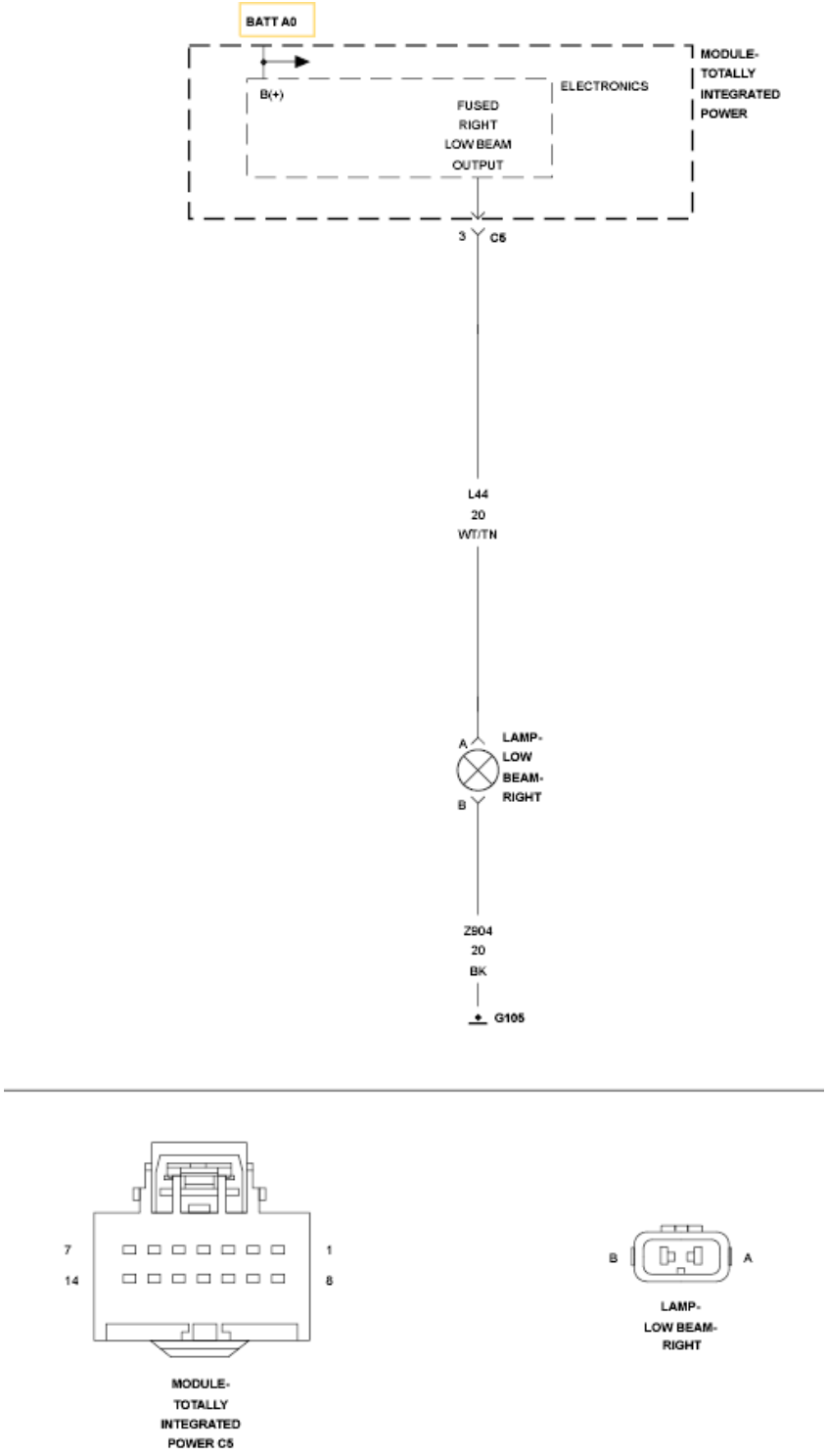

Fig. 52: Right Low Beam Control Wiring Diagram
Courtesy of CHRYSLER GROUP, LLC

For a complete wiring diagram, **refer to appropriate SYSTEM WIRING DIAGRAMS article** .

WHEN MONITORED

With the Headlamps activated.

SET CONDITION

When the TIPM detects a high condition.

POSSIBLE CAUSES

Possible Causes
(L44) RIGHT LOW BEAM CONTROL CIRCUIT OPEN
(L44) RIGHT LOW BEAM CONTROL CIRCUIT SHORTED TO VOLTAGE
RIGHT LOW BEAM BULB
TOTALLY INTEGRATED POWER MODULE

DIAGNOSTIC TEST

1. **INTERMITTENT CONDITION**
    1. Turn the ignition on.
    2. With the scan tool, clear all TIPM DTCs.
    3. Turn the Headlamps on.
    4. With the scan tool read the DTC information.

    Does the scan tool read: B1630-RIGHT LOW BEAM CONTROL CIRCUIT HIGH?

    Yes

    - Go To 2

    No

    - The condition that caused the symptom is currently not present. Inspect the related wiring for a possible intermittent condition. Look for any chafed, pierced, pinched, or partially broken wires.
    - Perform the BODY VERIFICATION TEST. Refer to **STANDARD PROCEDURE** .
2. **RIGHT LOW BEAM BULB**
    1. Turn the ignition off.

2. Inspect the Right Low Beam Bulb Assembly.

   Is the inoperative bulb OK?

   Yes

   - Go To 3

   No

   - Replace the Inoperative bulb in accordance with the service information.
   - Perform the BODY VERIFICATION TEST. Refer to **STANDARD PROCEDURE** .

3. **(L44) RIGHT LOW BEAM CONTROL CIRCUIT OPEN**

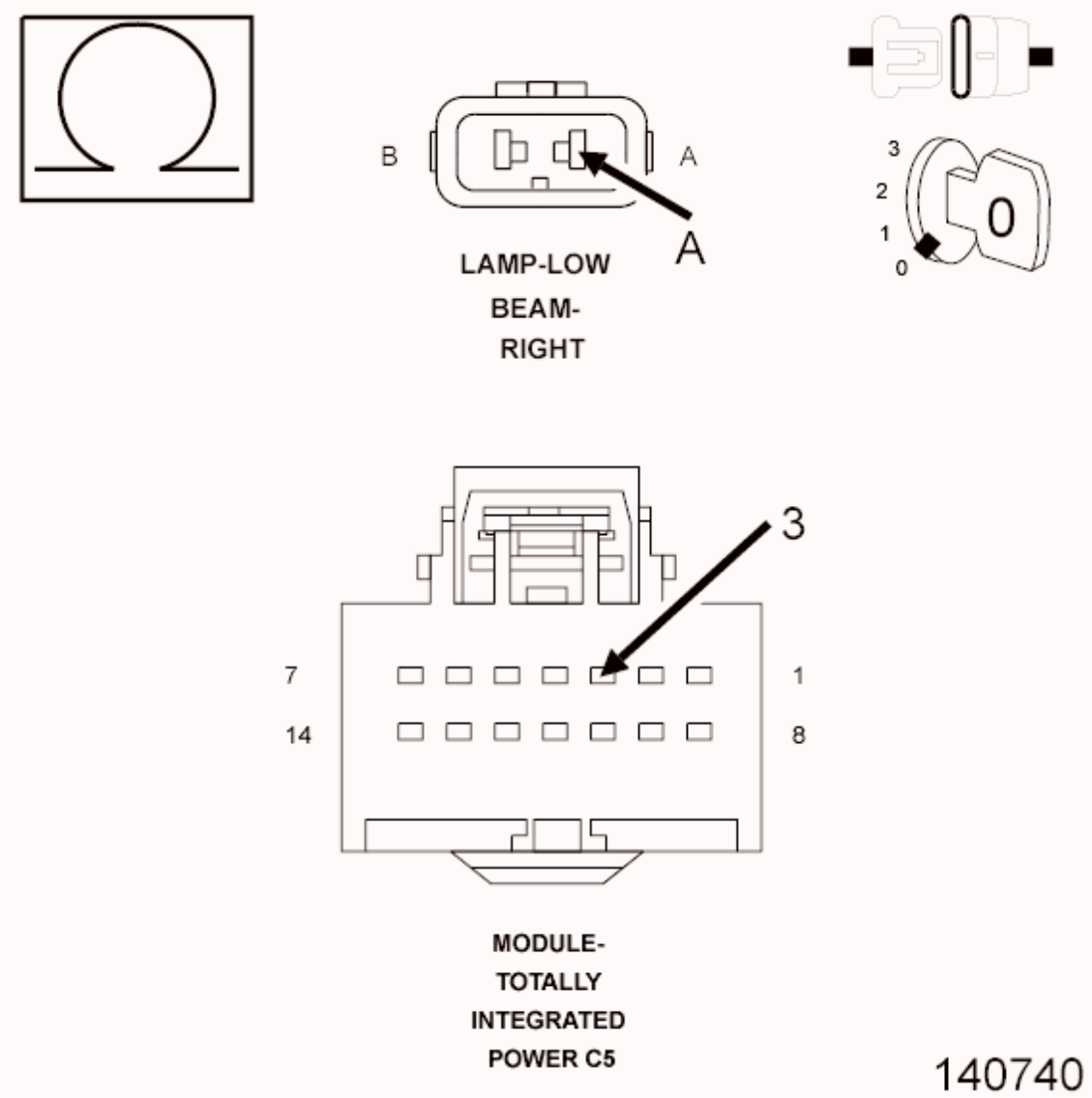

Fig. 53: Checking Right Low Beam Control Circuit For Open
Courtesy of CHRYSLER GROUP, LLC

1. Turn the ignition off.
2. Disconnect the TIPM C5 harness connector.
3. Disconnect the Right Low Beam Lamp harness connector.
4. Measure the resistance of the (L44) Right Low Beam Control circuit.

   Is the resistance above 5.0 Ohms?

   Yes

   - Repair the (L44) Right Low Beam Control circuit for an open condition.

- Perform the BODY VERIFICATION TEST. Refer to **STANDARD PROCEDURE** .

No

- Go To 4
- Perform the BODY VERIFICATION TEST. Refer to **STANDARD PROCEDURE** .

4. **(L44) RIGHT LOW BEAM CONTROL CIRCUIT SHORTED TO VOLTAGE**

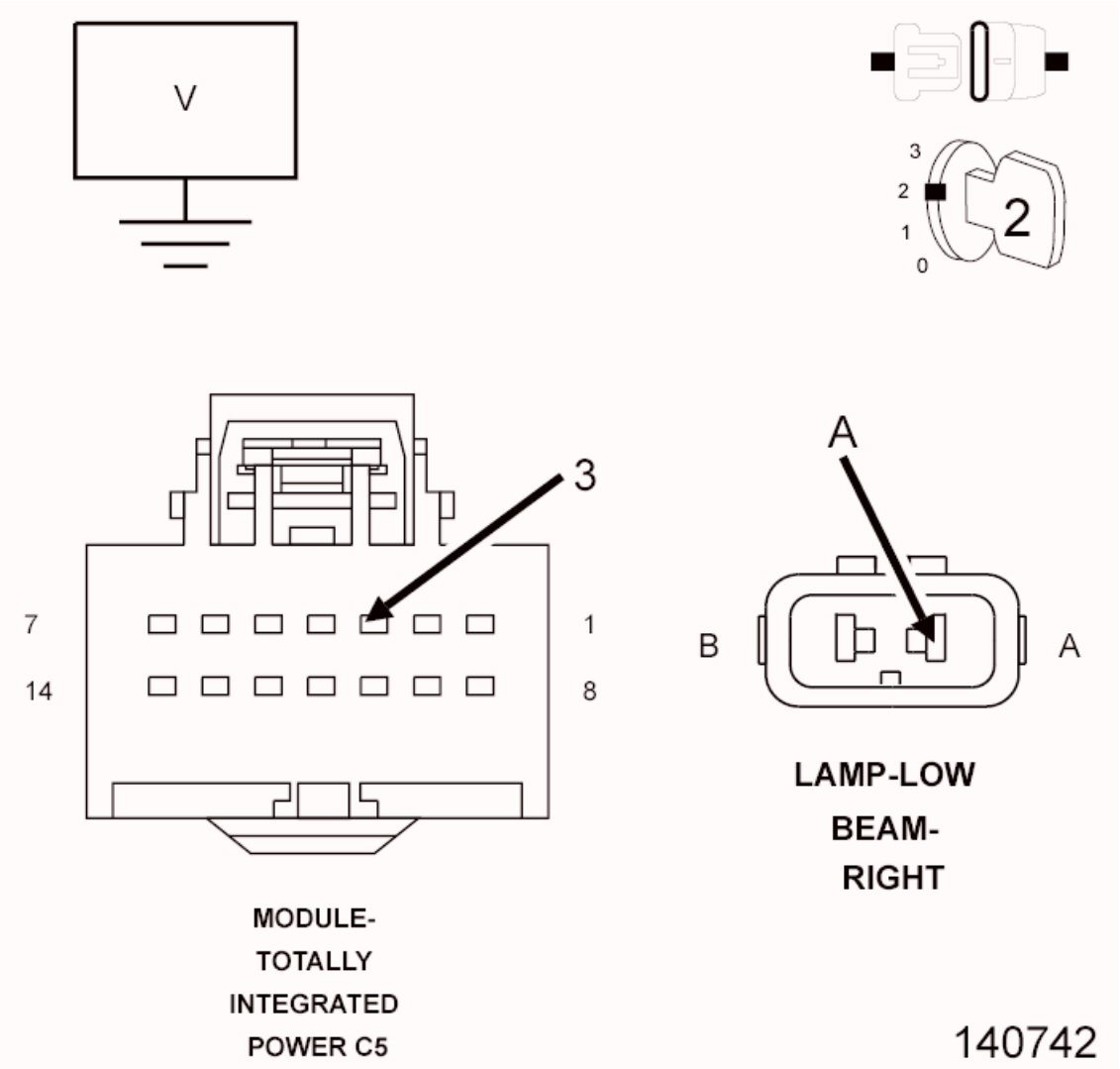

Fig. 54: Checking Right Low Beam Control Circuit For Short To Voltage
Courtesy of CHRYSLER GROUP, LLC

1. Turn the ignition off.

2. Disconnect the TIPM C5 harness connector.
3. Disconnect the Right Low Beam Lamp harness connector.
4. Turn the ignition on.
5. Measure for voltage on the (L44) Right Low Beam Control circuit.

   Is the voltage above 10.0 volts?

   Yes

   - Repair the (L44) Right Low Beam Control circuit for a short to voltage condition.
   - Perform the BODY VERIFICATION TEST. Refer to **STANDARD PROCEDURE** .

   No

   - Replace the Totally Integrated Power Module (TIPM) in accordance with the service information.
   - Perform the BODY VERIFICATION TEST. Refer to **STANDARD PROCEDURE** .

B1633-LEFT HI BEAM CONTROL CIRCUIT LOW

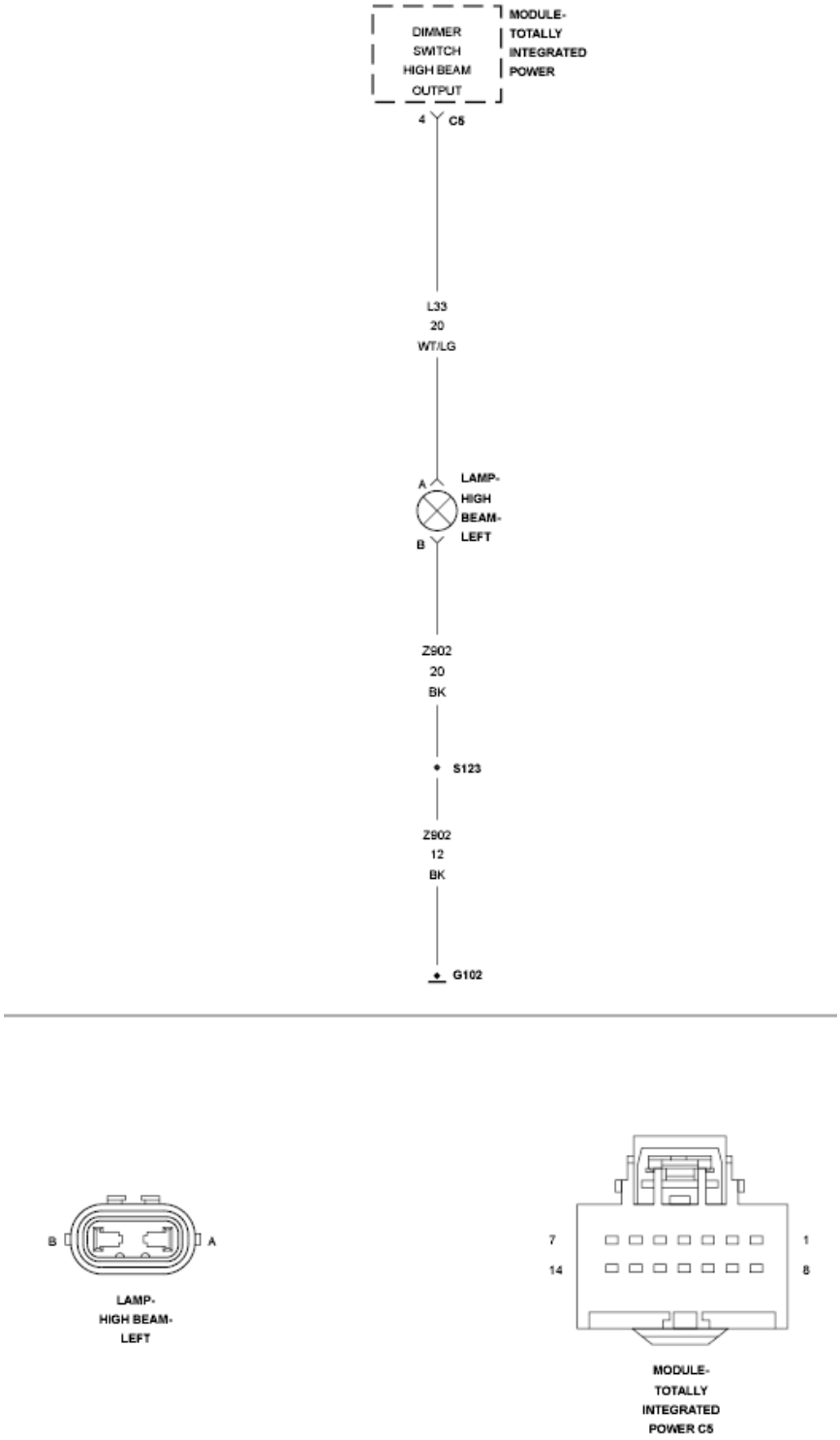

Fig. 55: Left Hi Beam Control Wiring Diagram
Courtesy of CHRYSLER GROUP, LLC

For a complete wiring diagram, **refer to appropriate SYSTEM WIRING DIAGRAMS article** .

WHEN MONITORED

With the Headlamps activated.

SET CONDITION

When the TIPM detects a low condition.

POSSIBLE CAUSES

Possible Causes
(L33) LEFT HIGHBEAM OUTPUT CIRCUIT TOTALLY INTEGRATED POWER MODULE

DIAGNOSTIC TEST

1. **INTERMITTENT CONDITION**
    1. Turn the ignition on.
    2. With the scan tool, clear all TIPM DTCs.
    3. Turn the Highbeam Headlamps on.
    4. With the scan tool read the DTC information.

    Does the scan tool read: B1633-LEFT HI BEAM CONTROL CIRCUIT LOW?

    Yes

    - Go To 2

    No

    - The condition that caused the symptom is currently not present. Inspect the related wiring for a possible intermittent condition. Look for any chafed, pierced, pinched, or partially broken wires.
    - Perform the BODY VERIFICATION TEST. Refer to **STANDARD PROCEDURE** .
2. **(L33) LEFT HIGHBEAM OUTPUT CIRCUIT**

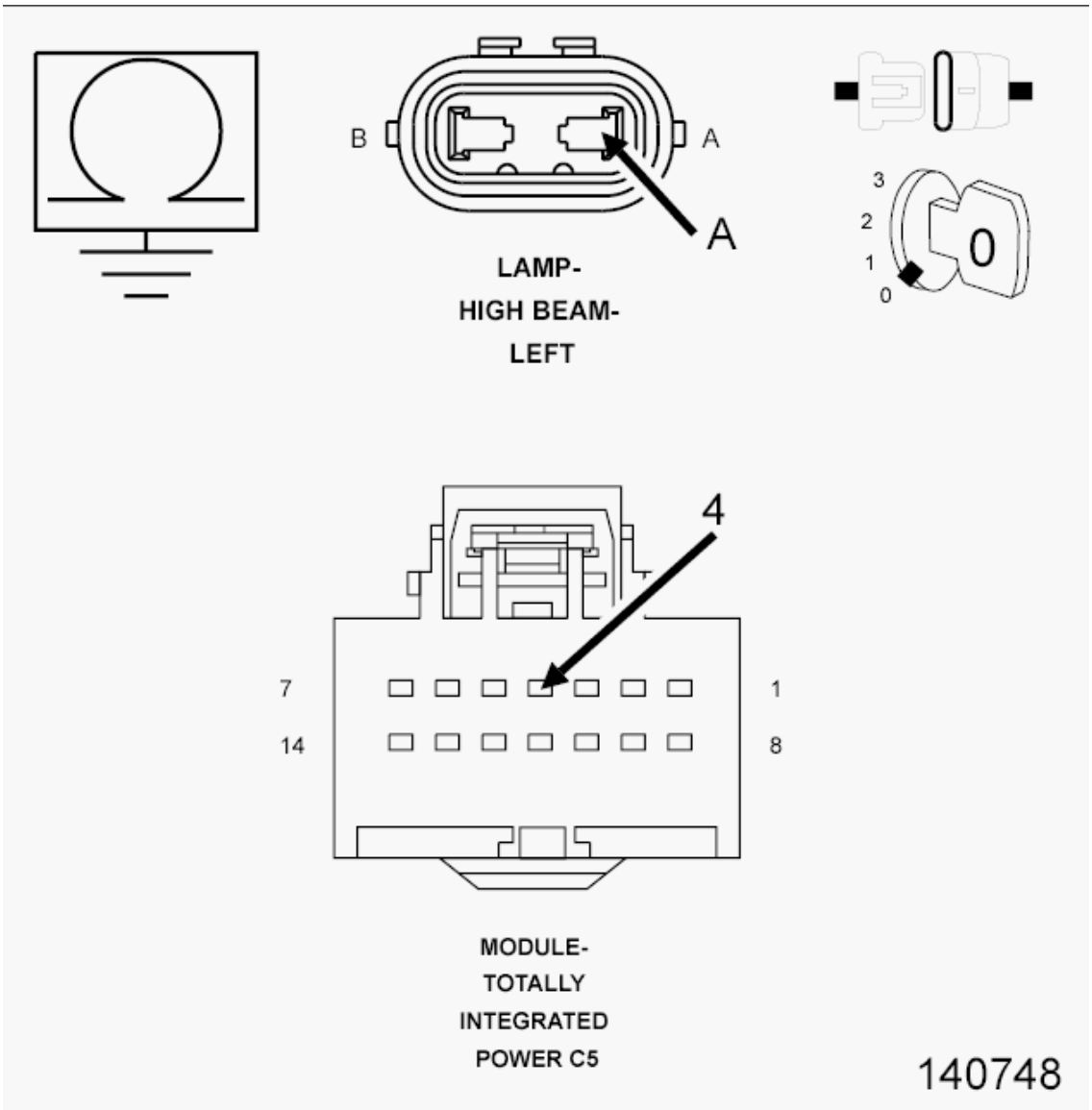

Fig. 56: Measuring Resistance Between Ground & Left High Beam Output Circuit
Courtesy of CHRYSLER GROUP, LLC

1. Turn the ignition off.
2. Disconnect the TIPM C5 harness connector.
3. Disconnect the Left Headlamp harness connector.
4. Measure the resistance between ground and the Left Highbeam Output circuit.

   Is the resistance below 5.0 Ohms?

   Yes

- Repair the (L33) Left Highbeam Output circuit for a short to ground condition.
- Perform the BODY VERIFICATION TEST. Refer to **STANDARD PROCEDURE** .

No

- Replace the Totally Integrated Power Module (TIPM) in accordance with the service information.
- Perform the BODY VERIFICATION TEST. Refer to **STANDARD PROCEDURE** .

B1634-LEFT HI BEAM CONTROL CIRCUIT HIGH

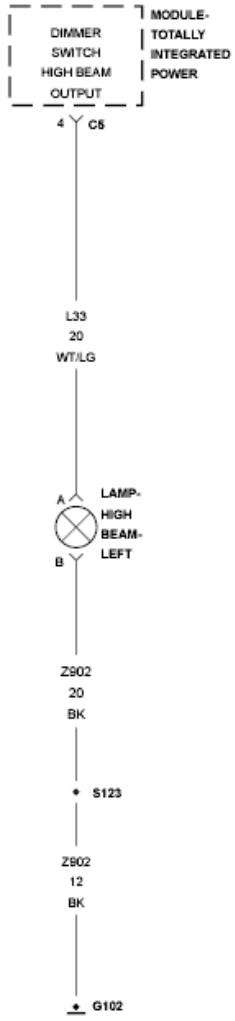

Fig. 57: Left Hi Beam Control Wiring Diagram
Courtesy of CHRYSLER GROUP, LLC

For a complete wiring diagram, **refer to appropriate SYSTEM WIRING DIAGRAMS article** .

WHEN MONITORED

With the Headlamps activated.

SET CONDITION

When the TIPM detects a high condition.

POSSIBLE CAUSES

Possible Causes
(L33) HIGH BEAM CONTROL CIRCUIT OPEN
(L33) HIGH BEAM CONTROL CIRCUIT SHORTED TO VOLTAGE
LEFT HIGH BEAM BULB
TOTALLY INTEGRATED POWER MODULE

DIAGNOSTIC TEST

1. **INTERMITTENT CONDITION**
    1. Turn the ignition on.
    2. With the scan tool, clear all TIPM DTCs.
    3. Turn the Headlamps on.
    4. With the scan tool read the DTC information.

    Does the scan tool read: B1634-LEFT HI BEAM CONTROL CIRCUIT HIGH?

    Yes

    - Go To 2

    No

    - The condition that caused the symptom is currently not present. Inspect the related wiring for a possible intermittent condition. Look for any chafed, pierced, pinched, or partially broken wires.
    - Perform the BODY VERIFICATION TEST. Refer to **STANDARD PROCEDURE** .
2. **LEFT HIGH BEAM BULB**
    1. Turn the ignition off.
    2. Inspect the Left High Beam Bulb Assembly.

Is the inoperative bulb OK?

Yes

- Go To 3

No

- Replace the Inoperative bulb in accordance with the Service Information.
- Perform the BODY VERIFICATION TEST. Refer to **STANDARD PROCEDURE** .

3. **(L33) HIGH BEAM CONTROL CIRCUIT**

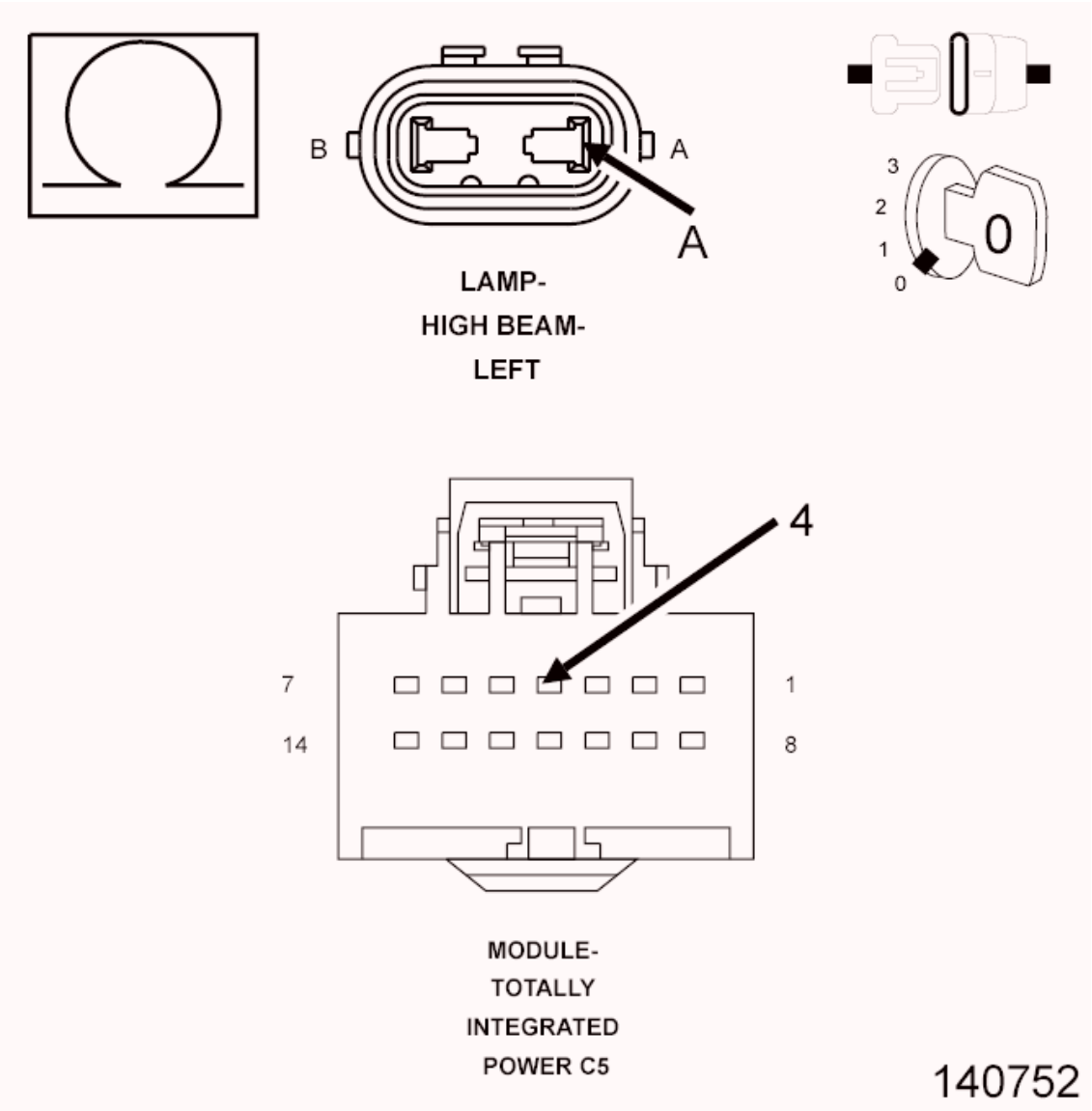

Fig. 58: Measuring Resistance Of High Beam Control Circuit

Courtesy of CHRYSLER GROUP, LLC

1. Turn the ignition off.
2. Disconnect the TIPM C5 harness connector.
3. Disconnect the Left High Beam Lamp harness connector.
4. Measure the resistance of the (L33) High Beam Control circuit.

   Is the resistance above 5.0 Ohms?

   Yes

   - Repair the (L33) High Beam Control circuit for an open condition.
   - Perform the BODY VERIFICATION TEST. Refer to **STANDARD PROCEDURE** .

   No

   - Go To 4

4. **(L33) HIGH BEAM CONTROL CIRCUIT SHORT TO VOLTAGE**

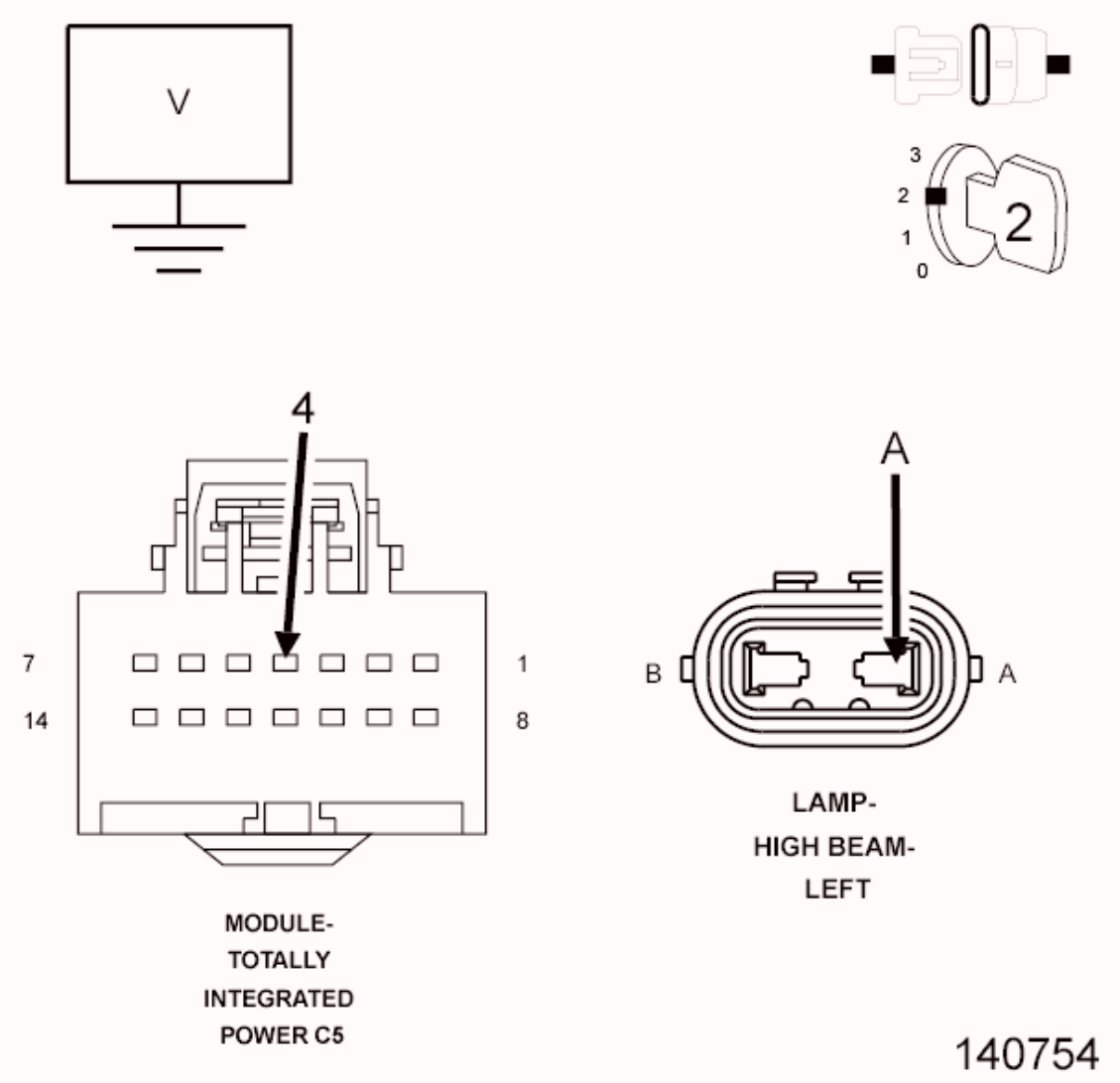

Fig. 59: Measuring Voltage On High Beam Control Circuit
Courtesy of CHRYSLER GROUP, LLC

1. Turn the ignition off.
2. Disconnect the TIPM C5 harness connector.
3. Disconnect the Left High Beam Lamp harness connector.
4. Turn the ignition on.
5. Measure for voltage on the (L33) High Beam Control circuit.

   Is the voltage above 10.0 volts?

   Yes

   - Repair the (L33) High Beam Control circuit for a short to voltage condition.

- Perform the BODY VERIFICATION TEST. Refer to **STANDARD PROCEDURE** .

No

- Replace the Totally Integrated Power Module (TIPM) in accordance with the Service Information.
- Perform the BODY VERIFICATION TEST. Refer to **STANDARD PROCEDURE** .

B1637-RIGHT HIGH BEAM CONTROL CIRCUIT LOW

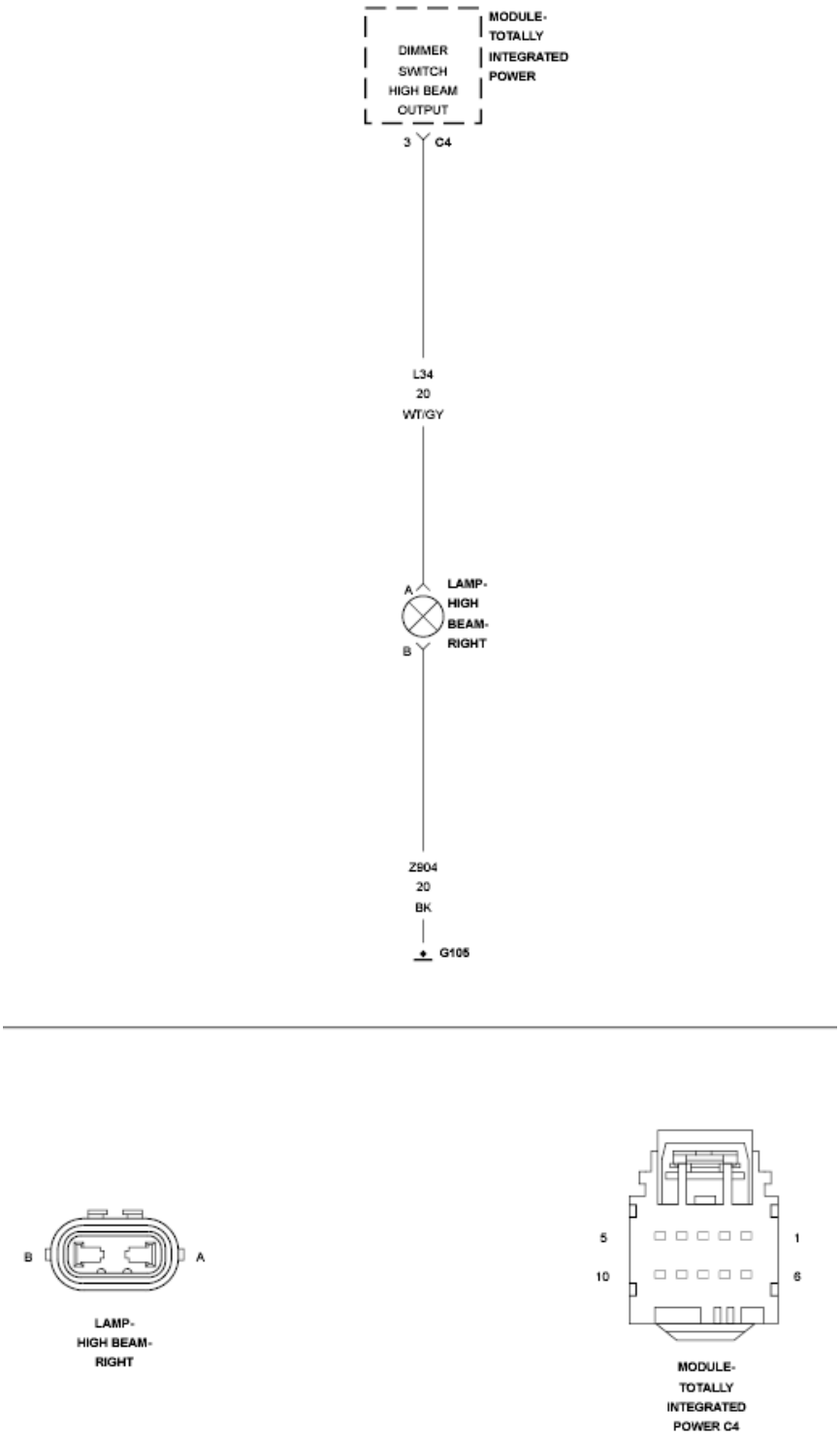

Fig. 60: Right High Beam Control Wiring Diagram
Courtesy of CHRYSLER GROUP, LLC

For a complete wiring diagram, **refer to appropriate SYSTEM WIRING DIAGRAMS article** .

WHEN MONITORED

With the High Beam Headlamps activated.

SET CONDITION

When the TIPM detects a low condition.

POSSIBLE CAUSES

Possible Causes
(L34) RIGHT HIGHBEAM OUTPUT CIRCUIT TOTALLY INTEGRATED POWER MODULE

DIAGNOSTIC TEST

1. **INTERMITTENT CONDITION**
    1. Turn the ignition on.
    2. With the scan tool, clear all TIPM DTCs.
    3. Turn the Highbeam Headlamps on.
    4. With the scan tool read the DTC information.

    Does the scan tool read: B1637-RIGHT HI BEAM CONTROL CIRCUIT LOW?

    Yes

    - Go To 2

    No

    - The condition that caused the symptom is currently not present. Inspect the related wiring for a possible intermittent condition. Look for any chafed, pierced, pinched, or partially broken wires.
    - Perform the BODY VERIFICATION TEST. Refer to **STANDARD PROCEDURE** .
2. **(L34) RIGHT HIGHBEAM OUTPUT CIRCUIT**

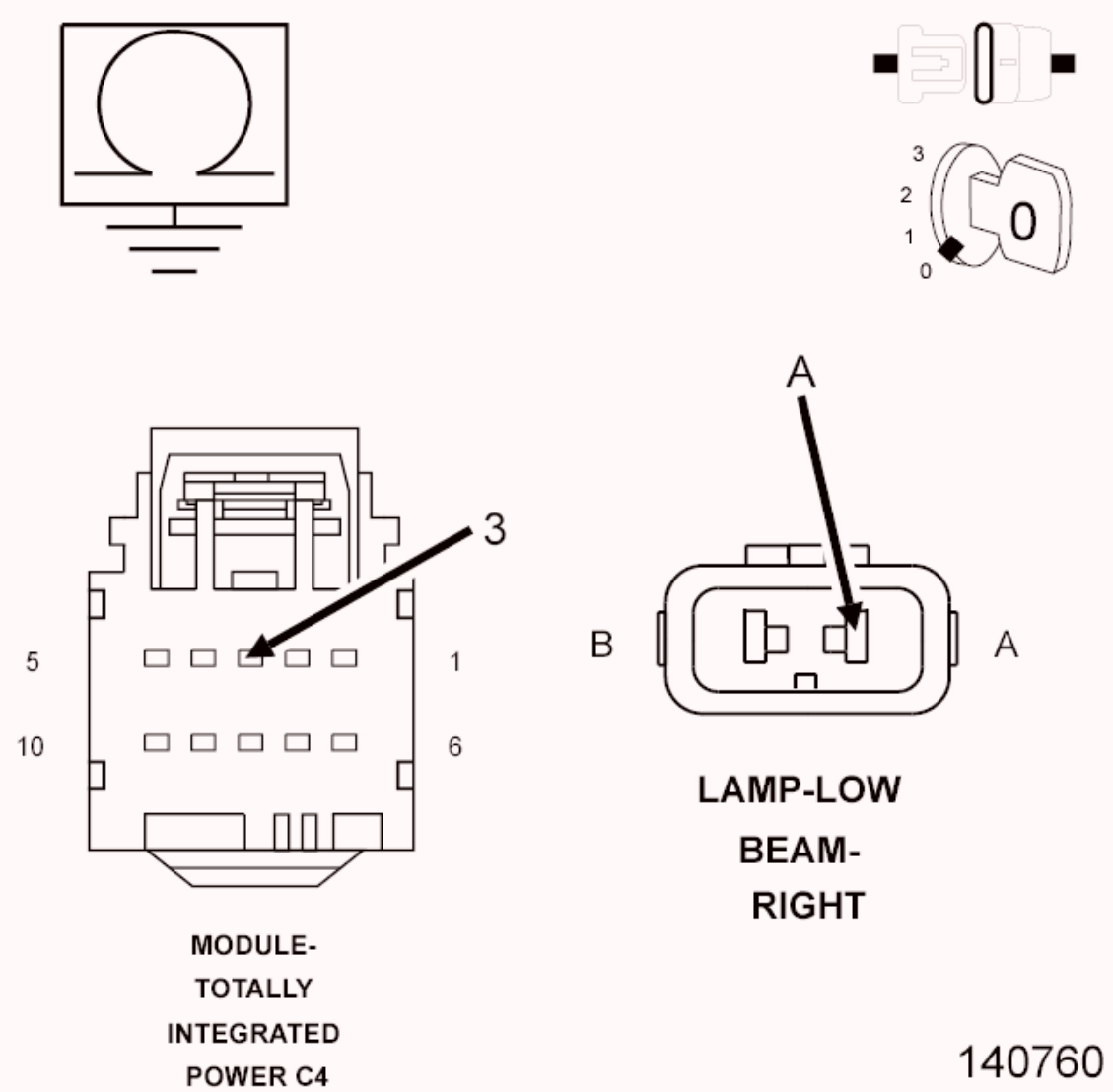

Fig. 61: Measuring Resistance Between Ground & Right High Beam Output Circuit
Courtesy of CHRYSLER GROUP, LLC

1. Turn the ignition off.
2. Disconnect the TIPM C4 harness connector.
3. Disconnect the Right Highbeam Lamp harness connector.
4. Measure the resistance between ground and the Right Highbeam Output circuit.

   Is the resistance below 5.0 Ohms?

   Yes

   - Repair the (L34) Right Highbeam Output circuit for a short to

ground condition.

- Perform the BODY VERIFICATION TEST. Refer to **STANDARD PROCEDURE** .

No

- Replace the Totally Integrated Power Module (TIPM) in accordance with the service information.
- Perform the BODY VERIFICATION TEST. Refer to **STANDARD PROCEDURE** .

B1638-RIGHT HI BEAM CONTROL CIRCUIT HIGH

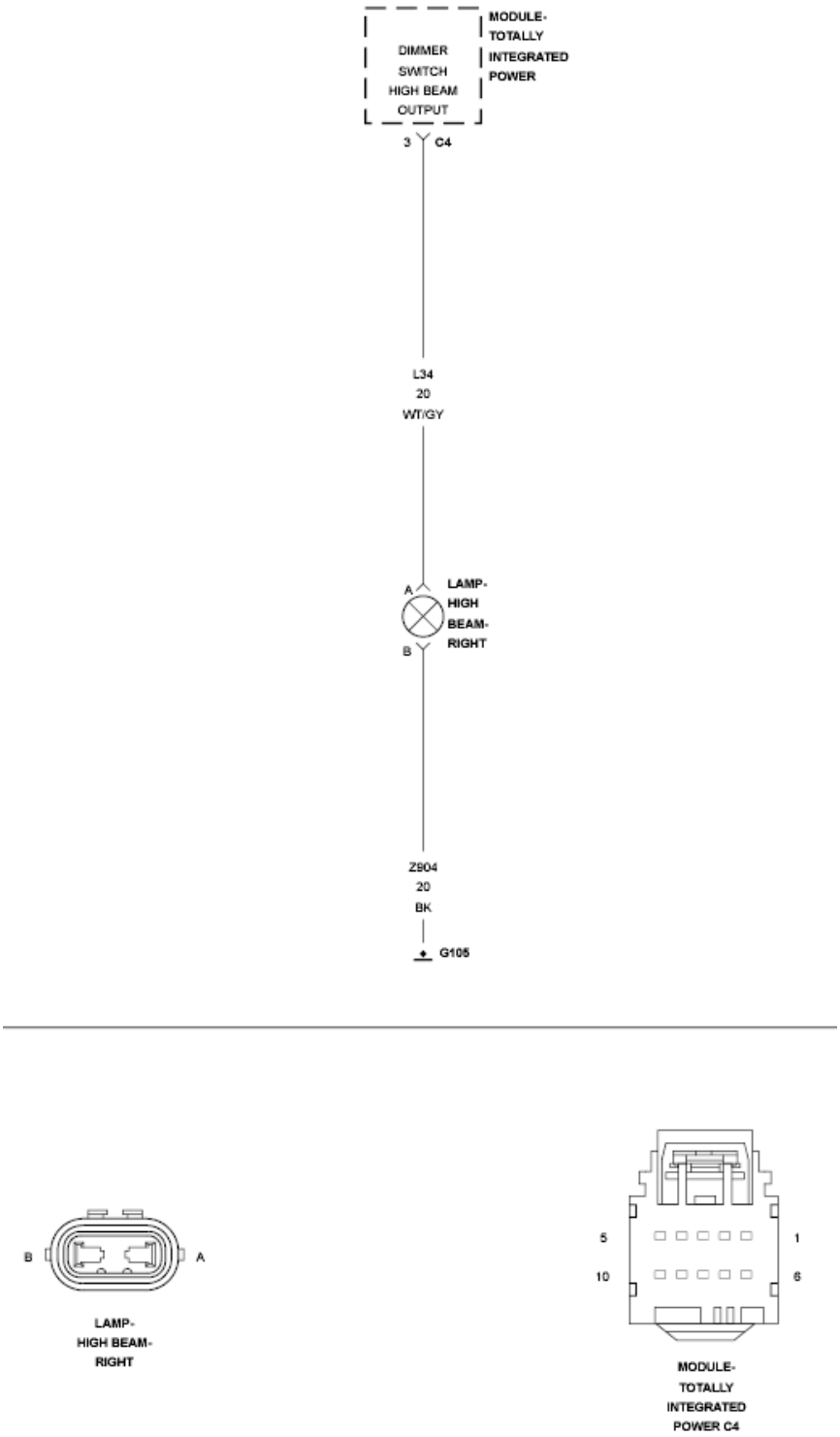

Fig. 62: Right High Beam Control Wiring Diagram
Courtesy of CHRYSLER GROUP, LLC

For a complete wiring diagram, **refer to appropriate SYSTEM WIRING DIAGRAMS article** .

WHEN MONITORED

With the Headlamps activated.

SET CONDITION

When the TIPM detects a high condition.

POSSIBLE CAUSES

Possible Causes
(L34) HIGH BEAM CONTROL CIRCUIT OPEN
(L34) HIGH BEAM CONTROL SHORT TO VOLTAGE
RIGHT HIGH BEAM BULB
TOTALLY INTEGRATED POWER MODULE

DIAGNOSTIC TEST

1. **INTERMITTENT CONDITION**
    1. Turn the ignition on.
    2. With the scan tool, clear all TIPM DTCs.
    3. Turn the Headlamps on.
    4. With the scan tool read the DTC information.

    Does the scan tool read: B1638-RIGHT HI BEAM CONTROL CIRCUIT HIGH?

    Yes

    - Go To 2

    No

    - The condition that caused the symptom is currently not present. Inspect the related wiring for a possible intermittent condition. Look for any chafed, pierced, pinched, or partially broken wires.
    - Perform the BODY VERIFICATION TEST. Refer to **STANDARD PROCEDURE** .
2. **RIGHT LOW BEAM BULB**
    1. Turn the ignition off.
    2. Inspect the Right High Beam Bulb Assembly.

Is the inoperative bulb OK?

Yes

- Go To 3

No

- Replace the Inoperative bulb in accordance with the service information.
- Perform the BODY VERIFICATION TEST. Refer to **STANDARD PROCEDURE** .

3. **(L34) HIGH BEAM CONTROL CIRCUIT OPEN**

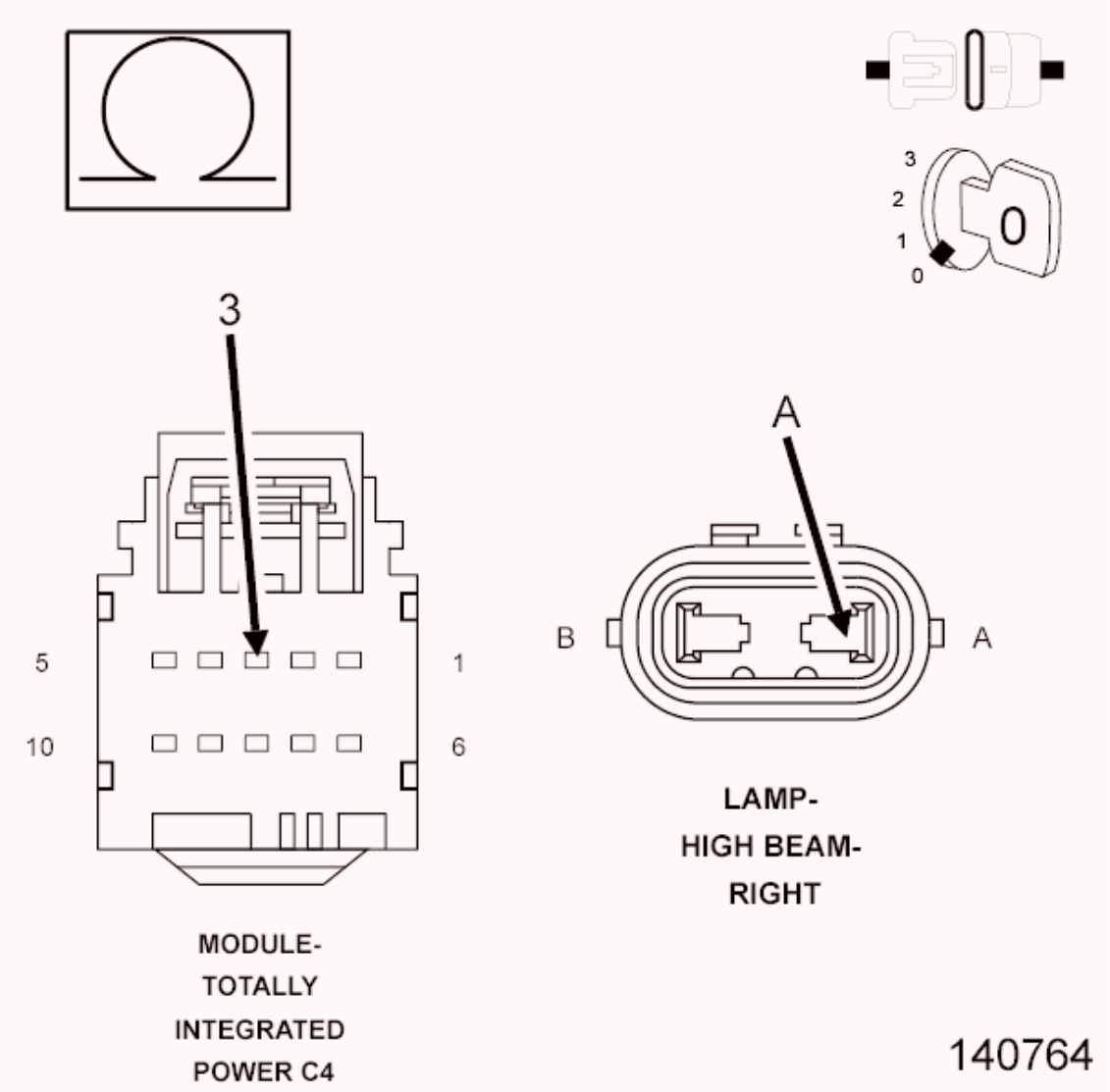

Fig. 63: Measuring Resistance Of High Beam Control Circuit

Courtesy of CHRYSLER GROUP, LLC

1. Turn the ignition off.
2. Disconnect the TIPM C4 harness connector.
3. Disconnect the Right Highbeam Lamp harness connector.
4. Measure the resistance of the (L34) High Beam Control circuit.

   Is the resistance above 5.0 Ohms?

   Yes

   - Repair the (L34) High Beam Control circuit for an open condition.
   - Perform the BODY VERIFICATION TEST. Refer to **STANDARD PROCEDURE** .

   No

   - Go To 4

4. **(L34) HIGH BEAM CONTROL CIRCUIT SHORT TO VOLTAGE**

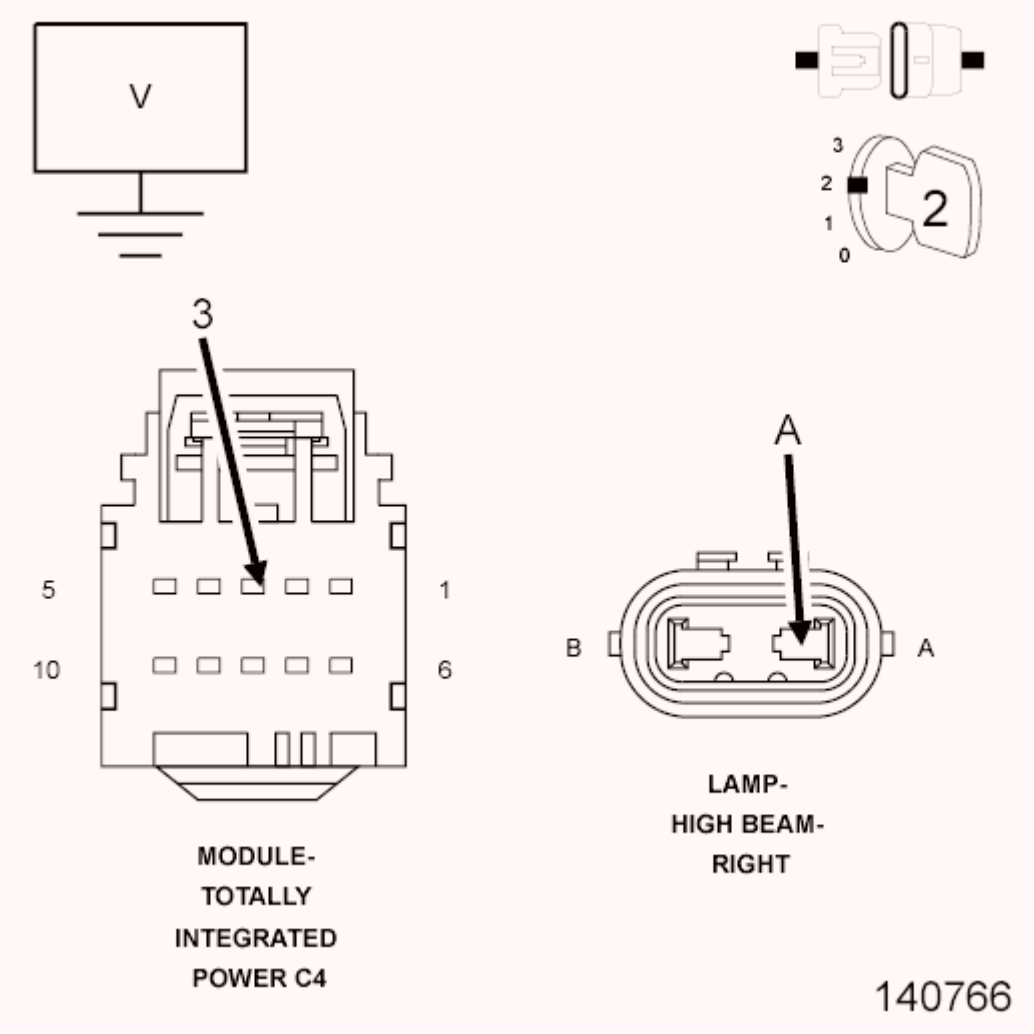

Fig. 64: Measuring Voltage On High Beam Control Circuit
Courtesy of CHRYSLER GROUP, LLC

1. Turn the ignition off.
2. Disconnect the TIPM C4 harness connector.
3. Disconnect the Right Highbeam Lamp harness connector.
4. Turn the ignition on.
5. Measure for voltage on the (L34) High Beam Control circuit.

   Is the voltage above 10.0 volts?

   Yes

   - Repair the (L34) High Beam Control circuit for a short to voltage condition.
   - Perform the BODY VERIFICATION TEST. Refer to

STANDARD PROCEDURE .

No

- Replace the Totally Integrated Power Module (TIPM) in accordance with the service information.
- Perform the BODY VERIFICATION TEST. Refer to **STANDARD PROCEDURE** .

B163B-FRONT LEFT TURN CONTROL CIRCUIT LOW

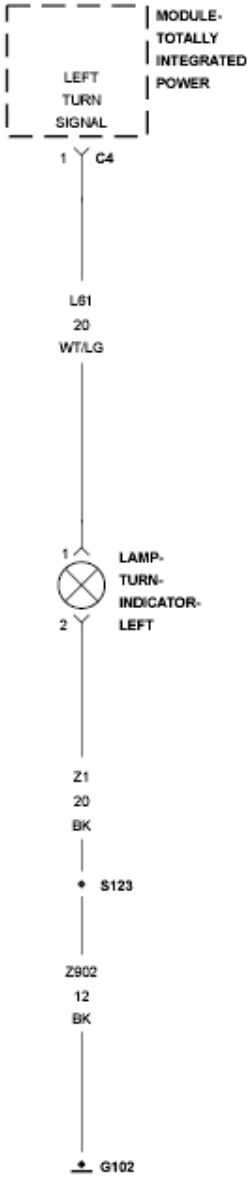

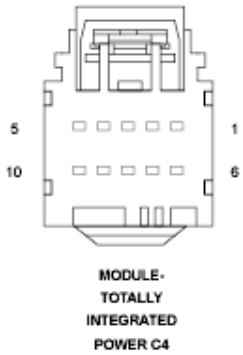

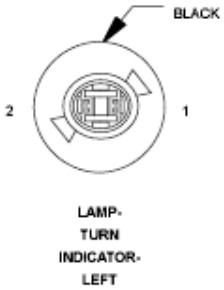

Fig. 65: Front Left Turn Control Wiring Diagram
Courtesy of CHRYSLER GROUP, LLC

For a complete wiring diagram, **refer to appropriate SYSTEM WIRING DIAGRAMS article** .

WHEN MONITORED

With the Headlamps activated.

SET CONDITION

When the Totally Integrated Power Module (TIPM) detects a LOW condition.

POSSIBLE CAUSES

Possible Causes
(L61) FRONT LEFT TURN SIGNAL CONTROL CIRCUIT SHORTED TO GROUND TOTALLY INTEGRATED POWER MODULE

DIAGNOSTIC TEST

1. **INTERMITTENT CONDITION**
    1. Turn the ignition on.
    2. With the scan tool, clear all TIPM DTCs.
    3. Turn the Left Turn Signals on.
    4. With the scan tool read the DTC information.

    Does the Scan Tool read: B163B-FRONT LEFT TURN CONTROL CIRCUIT LOW?

    Yes

    - Go To 2

    No

    - The condition that caused the symptom is currently not present. Inspect the related wiring for a possible intermittent condition. Look for any chafed, pierced, pinched or partially broken wires.
    - Perform the BODY VERIFICATION TEST. Refer to **STANDARD PROCEDURE** .
2. **(L61) FRONT LEFT TURN SIGNAL CONTROL CIRCUIT**

1. Turn the ignition off.
2. Disconnect the TIPM C2 connector.
3. Disconnect the Left Turn Signal Lamp harness connector.
4. Measure the resistance between ground and the (L61) Front Left Turn Signal Control circuit.

   Is the resistance below 5.0 Ohms?

   Yes

   - Repair the (L61) Front Left Turn Signal Control circuit for a short to ground.
   - Perform the BODY VERIFICATION TEST. Refer to **STANDARD PROCEDURE** .

   No

   - Replace the Totally Integrated Power Module in accordance with the Service Information.
   - Perform the BODY VERIFICATION TEST. Refer to **STANDARD PROCEDURE** .

B163C-FRONT LEFT TURN CONTROL CIRCUIT HIGH

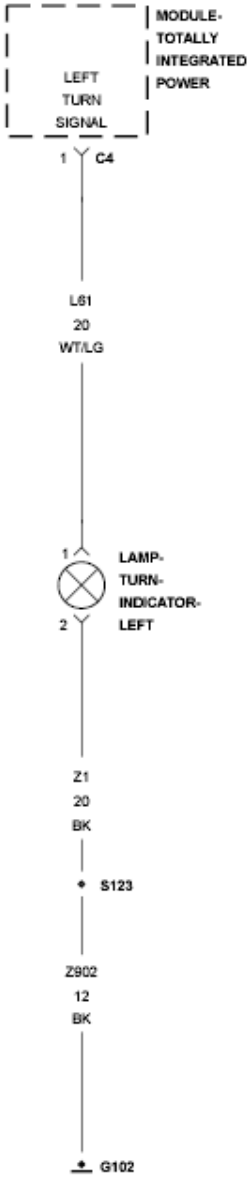

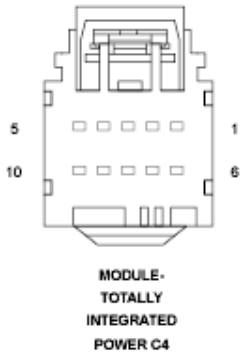

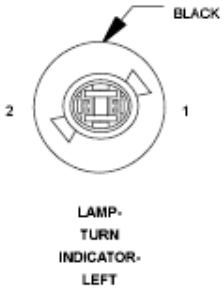

Fig. 66: Front Left Turn Control Wiring Diagram
Courtesy of CHRYSLER GROUP, LLC

For a complete wiring diagram, **refer to appropriate SYSTEM WIRING DIAGRAMS article** .

WHEN MONITORED

Continuously

SET CONDITION

When the Totally Integrated Power Module (TIPM) detects a short to battery on the Control circuit.

POSSIBLE CAUSES

Possible Causes
(L61) TURN SIGNAL CONTROL CIRCUIT OPEN
(L61) TURN SIGNAL CONTROL CIRCUIT SHORTED TO VOLTAGE
FRONT LEFT TURN SIGNAL BULB
TOTALLY INTEGRATED POWER MODULE (TIPM)

DIAGNOSTIC TEST

1. **TEST FOR INTERMITTENT CONDITION**
    1. Turn the ignition on.
    2. Clear all TIPM DTCs.
    3. Turn the Left Turn Signal on.
    4. With the scan tool, read DTCs.

    Does the scan tool read: B163C-FRONT LEFT TURN CONTROL CIRCUIT HIGH?

    Yes

    - Go To 2

    No

    - The conditions that caused this code to set are not present at this time. Using the wiring diagram/schematic as a guide, inspect the wiring and connectors.
    - Perform the BODY VERIFICATION TEST. Refer to

STANDARD PROCEDURE .

2. **FRONT LEFT TURN SIGNAL BULB**
   1. Turn the ignition off.
   2. Inspect the Front Left Turn Signal Bulb Assembly.

      Is the inoperative bulb OK?

      Yes

      - Go To 3

      No

      - Replace the Inoperative bulb in accordance with the service information.
      - Perform the BODY VERIFICATION TEST. Refer to **STANDARD PROCEDURE** .
3. **(L61) LEFT TURN SIGNAL CONTROL CIRCUIT OPEN**
   1. Turn the ignition off.
   2. Disconnect the TIPM C4 connector.
   3. Disconnect the Front Left Turn Signal Lamp harness connector.
   4. Measure the resistance of the (L61) Front Left Turn Signal Control circuit.

      Is the resistance above 5.0 Ohms?

      Yes

      - Repair the (L61) Turn Signal Control circuit for an open.
      - Perform the BODY VERIFICATION TEST. Refer to **STANDARD PROCEDURE** .

      No

      - Go To 4
4. **L61 LEFT TURN SIGNAL CONTROL CIRCUIT SHORTED TO VOLTAGE**

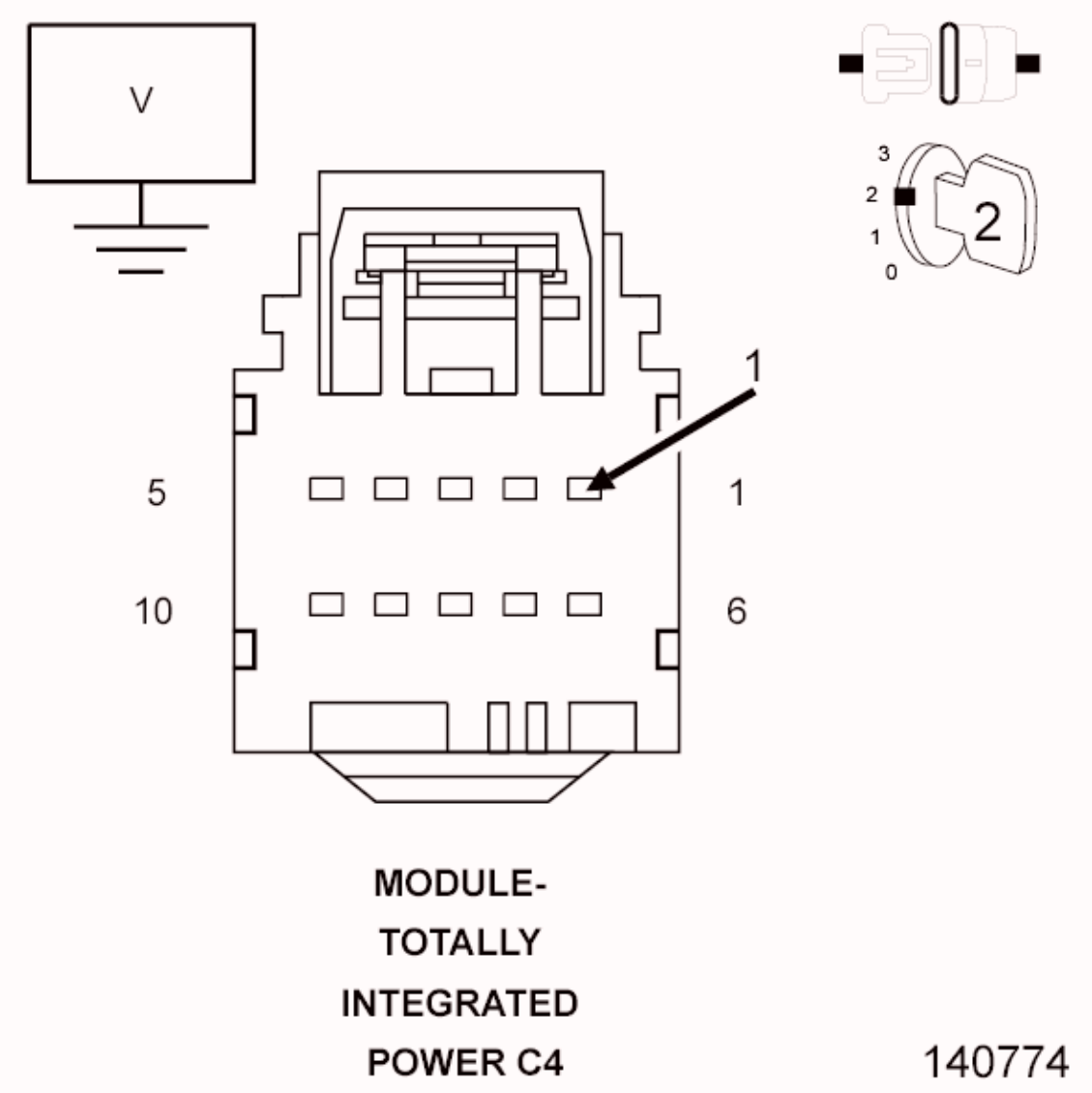

Fig. 67: Checking Front Left Turn Signal Control Circuit For Short To Voltage
Courtesy of CHRYSLER GROUP, LLC

1. Turn the ignition off.
2. Disconnect the TIPM C4 connector.
3. Turn the ignition on.
4. Check for voltage on the (L61) Front Left Turn Signal Control circuit.

   Is the voltage above 10.0 volts?

   Yes

   - Repair the (L61) Turn Signal Control circuit for a short to voltage.

- Perform the BODY VERIFICATION TEST. Refer to **STANDARD PROCEDURE** .

No

- Replace the Totally Integrated Power Module (TIPM) in accordance with the service information.
- Perform the BODY VERIFICATION TEST. Refer to **STANDARD PROCEDURE** .

B163F-FRONT RIGHT TURN CONTROL CIRCUIT LOW

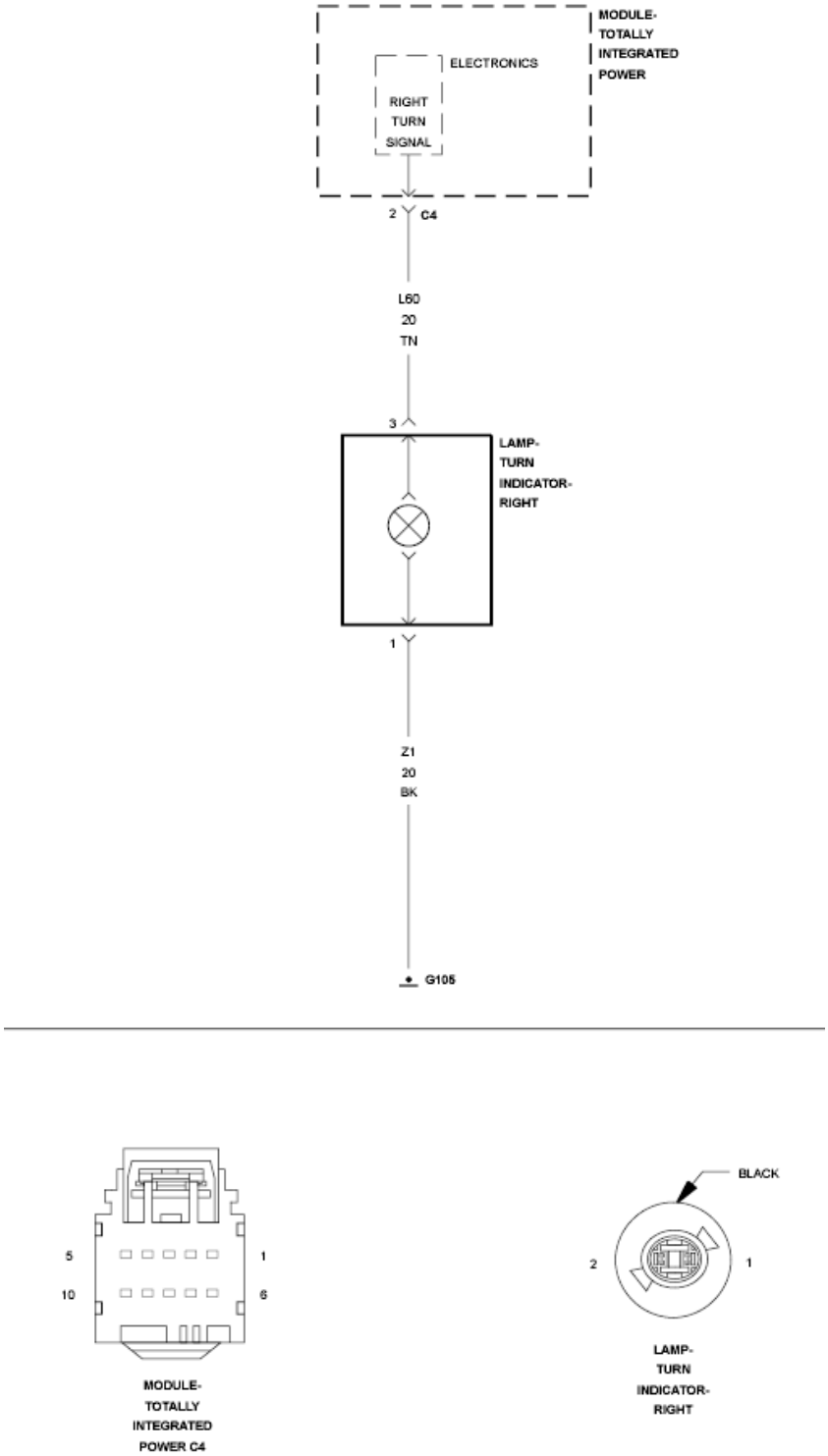

Fig. 68: Front Right Turn Control Wiring Diagram
Courtesy of CHRYSLER GROUP, LLC

For a complete wiring diagram, **refer to appropriate SYSTEM WIRING DIAGRAMS article** .

WHEN MONITORED

With the Turn Signal activated.

SET CONDITION

When the Totally Integrated Power Module (TIPM) detects a low condition.

POSSIBLE CAUSES

Possible Causes
(L60) FRONT RIGHT TURN SIGNAL CONTROL CIRCUIT TOTALLY INTEGRATED POWER MODULE (TIPM)

DIAGNOSTIC TEST

1. **INTERMITTENT CONDITION**
    1. Turn the ignition on.
    2. With the scan tool, clear all TIPM DTCs.
    3. Turn the Right Turn Signals on.
    4. With the scan tool read the DTC information.

    Does the scan tool read: B163F-FRONT RIGHT TURN CONTROL CIRCUIT LOW?

    Yes

    - Go To 2

    No

    - The condition that caused the symptom is currently not present. Inspect the related wiring for a possible intermittent condition. Look for any chafed, pierced, pinched, or partially broken wires.
    - Perform the BODY VERIFICATION TEST. Refer to **STANDARD PROCEDURE** .
2. **(L60) FRONT RIGHT TURN SIGNAL CONTROL CIRCUIT**

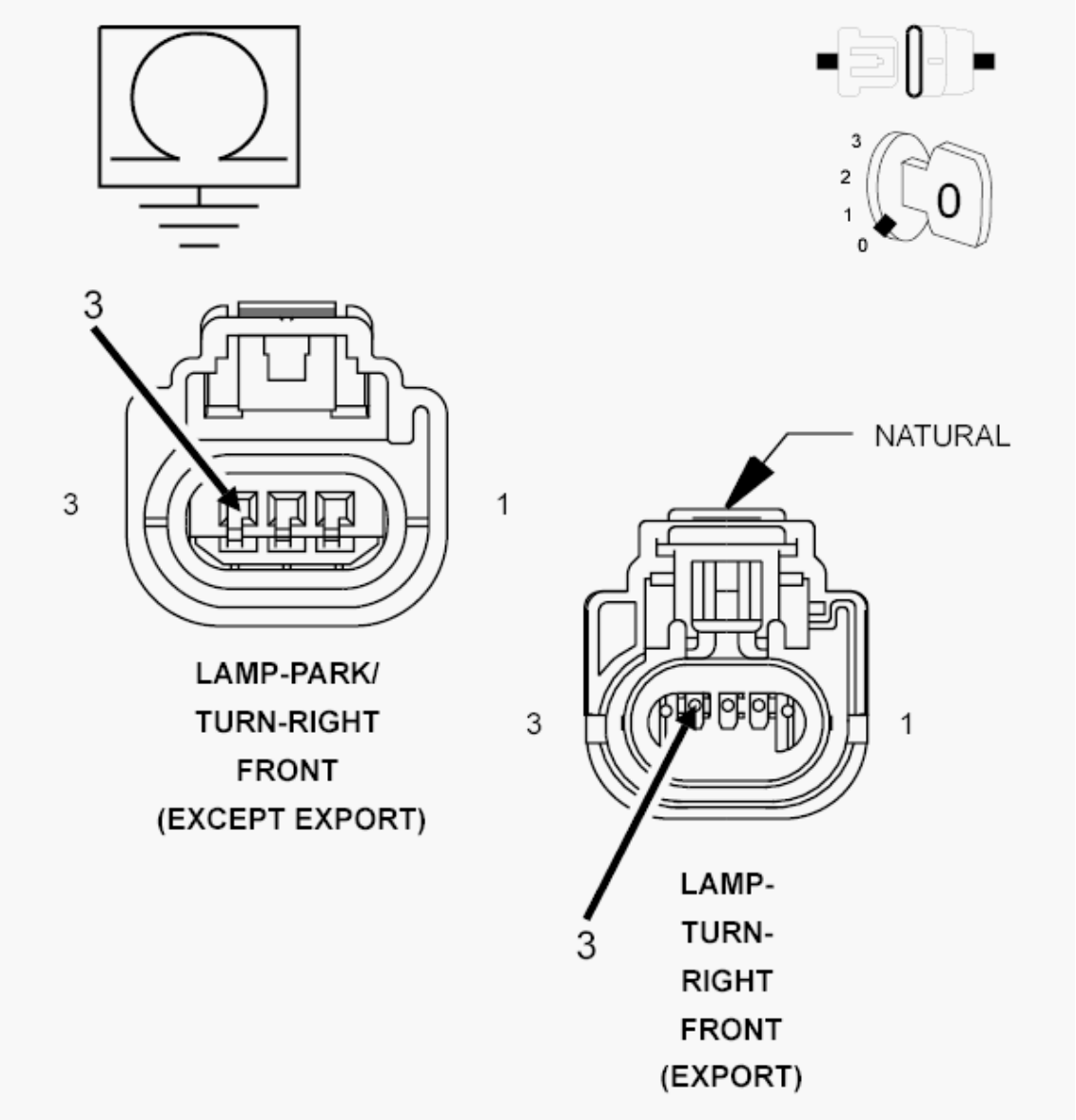

Fig. 69: Measuring Resistance Between Ground & Right Front Turn Signal Control circuit
Courtesy of CHRYSLER GROUP, LLC

1. Turn the ignition off.
2. Disconnect the TIPM C4 harness connector.
3. Disconnect the Right Front Park/Turn Lamp harness connector.
4. Measure the resistance between ground and the (L60) Right Front Turn Signal Control circuit.

   Is the resistance below 5.0 Ohms?

   Yes

- Repair the (L60) Front Right Turn Signal Control circuit for a short to ground.
- Perform the BODY VERIFICATION TEST. Refer to **STANDARD PROCEDURE** .

No

- Replace the Totally Integrated Power Module (TIPM) in accordance with the service information.
- Perform the BODY VERIFICATION TEST. Refer to **STANDARD PROCEDURE** .

B1640-FRONT RIGHT TURN CONTROL CIRCUIT HIGH

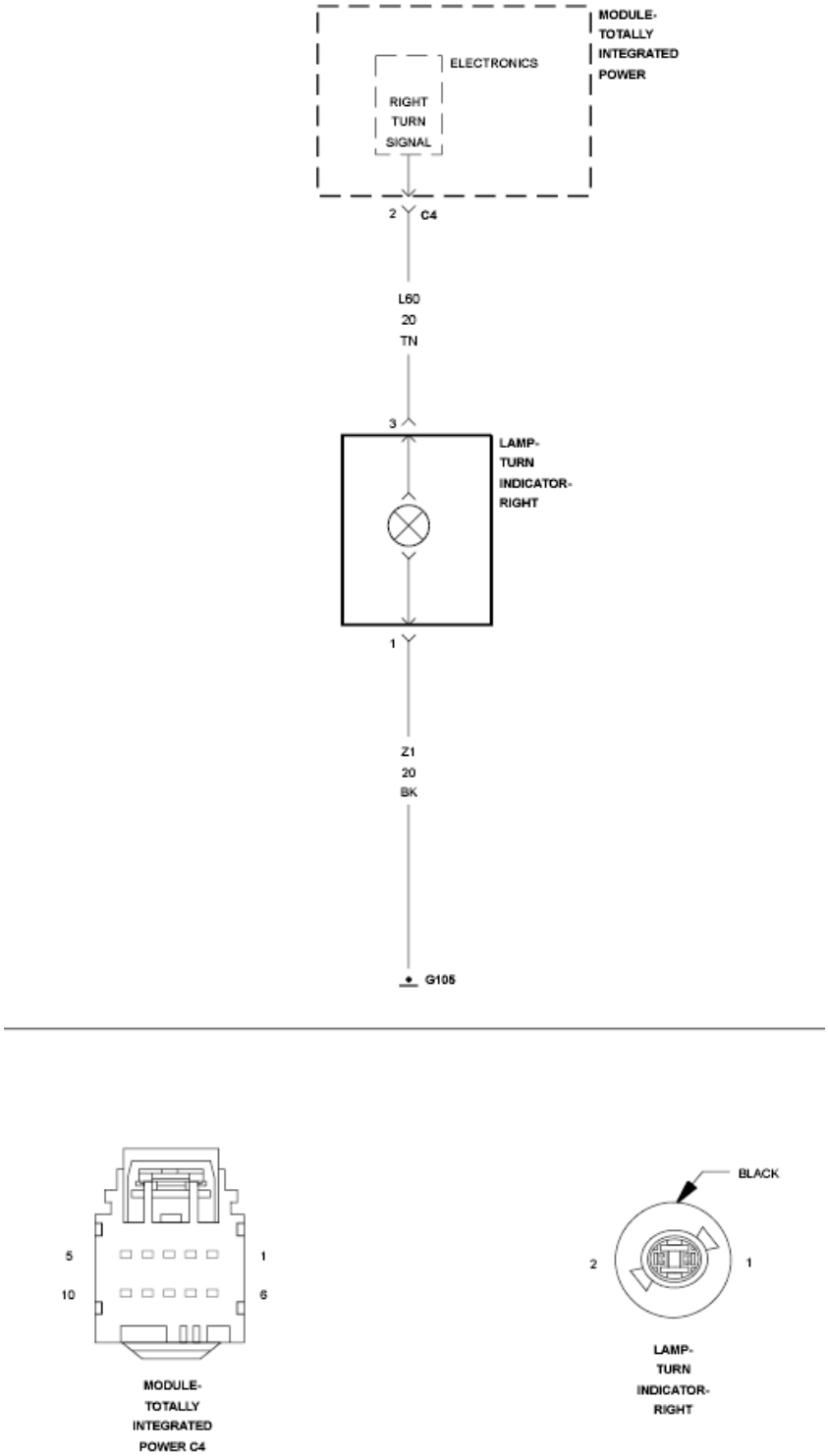

Fig. 70: Front Right Turn Control Wiring Diagram
Courtesy of CHRYSLER GROUP, LLC

For a complete wiring diagram, **refer to appropriate SYSTEM WIRING DIAGRAMS article** .

WHEN MONITORED

Continuously

SET CONDITION

When the Totally Integrated Power Module (TIPM) detects a short to battery on the Control circuit.

POSSIBLE CAUSES

Possible Causes
(L60) TURN SIGNAL CONTROL CIRCUIT OPEN
(L60) TURN SIGNAL CONTROL CIRCUIT SHORTED TO VOLTAGE
FRONT RIGHT TURN SIGNAL BULB
TOTALLY INTEGRATED POWER MODULE (TIPM)

DIAGNOSTIC TEST

1. **TEST FOR INTERMITTENT CONDITION**
    1. Turn the ignition on.
    2. Clear all TIPM DTCs.
    3. Turn the Right Turn Signal on.
    4. With the scan tool, read DTCs.

    Does the scan tool read: B1640-FRONT RIGHT TURN CONTROL CIRCUIT HIGH?

    Yes

    - Go To 2

    No

    - The conditions that caused this code to set are not present at this time. Using the wiring diagram/schematic as a guide, inspect the wiring and connectors.
    - Perform the BODY VERIFICATION TEST. Refer to **STANDARD PROCEDURE** .
2. **FRONT RIGHT TURN SIGNAL BULB**
    1. Turn the ignition off.

2. Inspect the Front Right Turn Signal Bulb Assembly.

   Is the inoperative bulb OK?

   Yes

   - Go To 3

   No

   - Replace the Inoperative bulb in accordance with the service information.
   - Perform the BODY VERIFICATION TEST. Refer to **STANDARD PROCEDURE** .

3. **(L60) RIGHT TURN SIGNAL CONTROL CIRCUIT OPEN**
   1. Turn the ignition off.
   2. Disconnect the TIPM C4 connector.
   3. Disconnect the Front Right Turn Signal harness connector.
   4. Measure the resistance of the (L60) Front Right Turn Signal Control circuit.

      Is the resistance above 5.0 Ohms?

      Yes

      - Repair the (L60) Turn Signal Control circuit for an open.
      - Perform the BODY VERIFICATION TEST. Refer to **STANDARD PROCEDURE** .

      No

      - Go To 4

4. **(L60) RIGHT TURN SIGNAL CONTROL CIRCUIT SHORT TO VOLTAGE**
   1. Turn the ignition off.
   2. Disconnect the TIPM C4 connector.
   3. Disconnect the Front Right Turn Signal harness connector.
   4. Turn the ignition on.

5. Measure for voltage on the (L60) Front Right Turn Signal Control circuit.

   Is the voltage above 10.0 volts?

   Yes

   - Repair the (L60) Turn Signal Control circuit for a short to voltage.
   - Perform the BODY VERIFICATION TEST. Refer to **STANDARD PROCEDURE** .

   No

   - Replace the Totally Integrated Power Module (TIPM) in accordance with the service information.
   - Perform the BODY VERIFICATION TEST. Refer to **STANDARD PROCEDURE** .

B1643-REAR LEFT TURN CONTROL CIRCUIT LOW

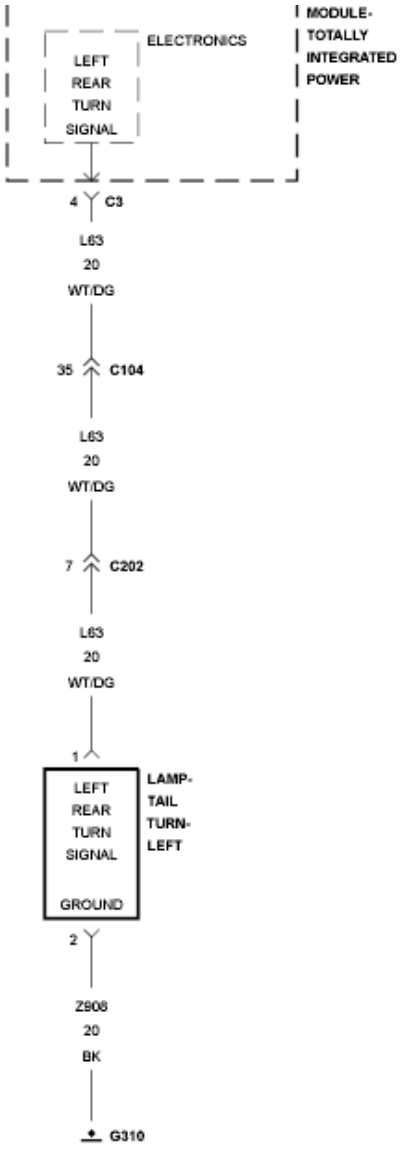

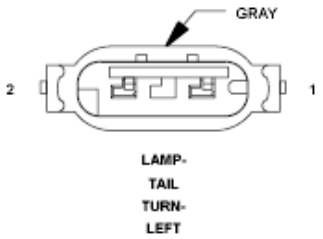

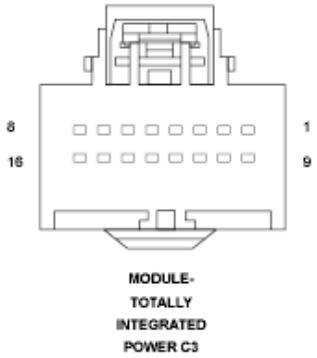

Fig. 71: Rear Left Turn Control Wiring Diagram
Courtesy of CHRYSLER GROUP, LLC

For a complete wiring diagram, **refer to appropriate SYSTEM WIRING DIAGRAMS article** .

WHEN MONITORED

With the Turn Signal activated.

SET CONDITION

When the TIPM detects a low condition.

POSSIBLE CAUSES

Possible Causes
(L63) REAR LEFT TURN SIGNAL CONTROL CIRCUIT
TOTALLY INTEGRATED POWER MODULE

DIAGNOSTIC TEST

1. **INTERMITTENT CONDITION**
    1. Turn the ignition on.
    2. With the scan tool, clear all TIPM DTCs.
    3. Turn the Left Turn Signals on.
    4. With the scan tool read the DTC information.

    Does the scan tool read: B1643-REAR LEFT TURN CONTROL CIRCUIT LOW?

    Yes

    - Go To 2

    No

    - The condition that caused the symptom is currently not present. Inspect the related wiring for a possible intermittent condition. Look for any chafed, pierced, pinched, or partially broken wires.
    - Perform the BODY VERIFICATION TEST. Refer to **STANDARD PROCEDURE** .
2. **(L63) LEFT TURN SIGNAL CONTROL CIRCUIT**

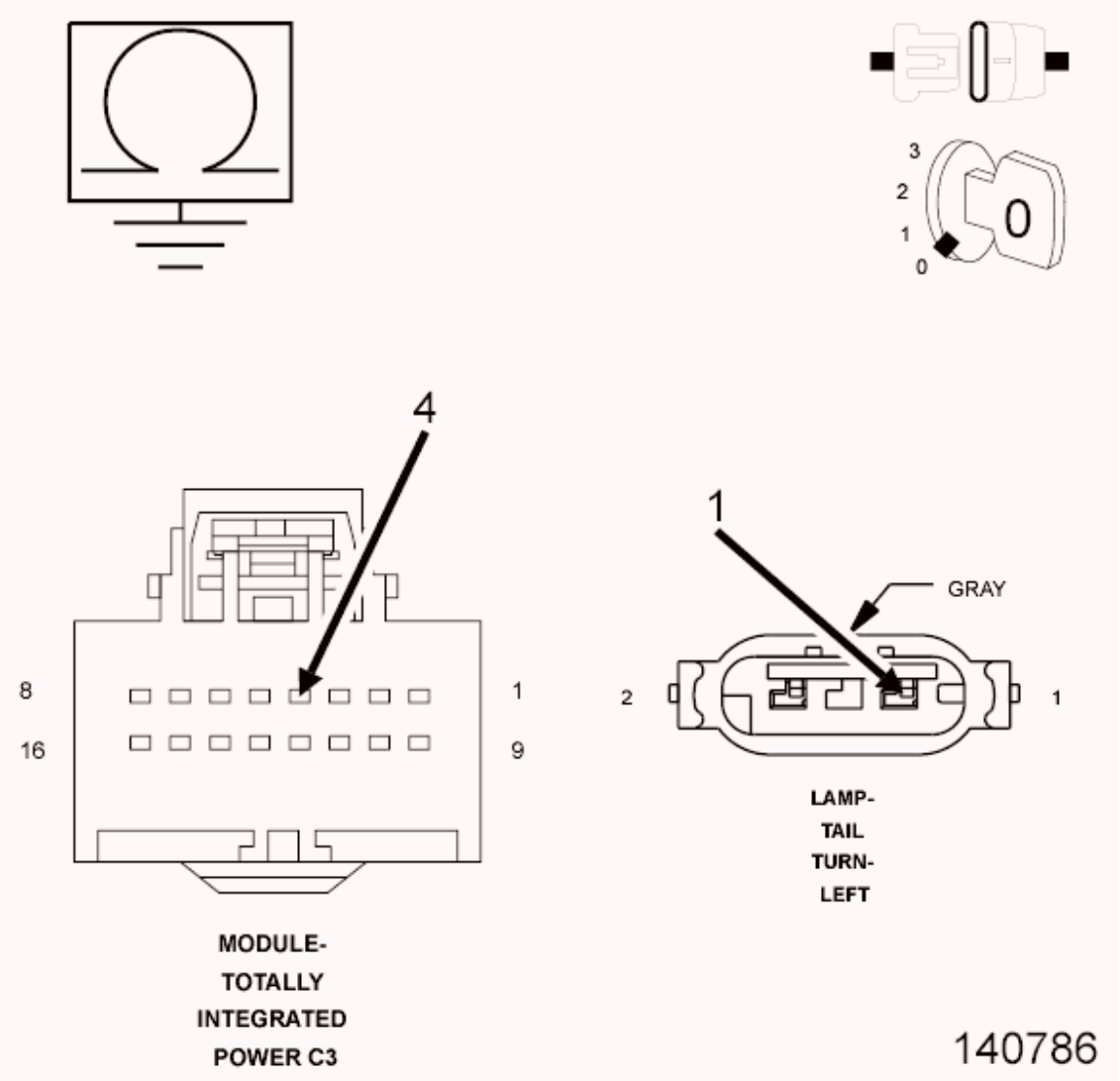

Fig. 72: Measuring Resistance Between Ground & Rear Left Rear Turn Signal Control Circuit
Courtesy of CHRYSLER GROUP, LLC

1. Turn the ignition off.
2. Disconnect the TIPM C3 connector.
3. Disconnect the Left Rear Tail Lamp connector.
4. Measure the resistance between ground and the (L63) Rear Left Rear Turn Signal Control circuit.

   Is the resistance below 5.0 Ohms?

   Yes

   - Repair the (L63) Rear Left Turn Signal Control circuit for a short

to ground.

- Perform the BODY VERIFICATION TEST. Refer to **STANDARD PROCEDURE** .

No

- Replace the Totally Integrated Power Module in accordance with the service information.
- Perform the BODY VERIFICATION TEST. Refer to **STANDARD PROCEDURE** .

B1644-REAR LEFT TURN CONTROL CIRCUIT HIGH

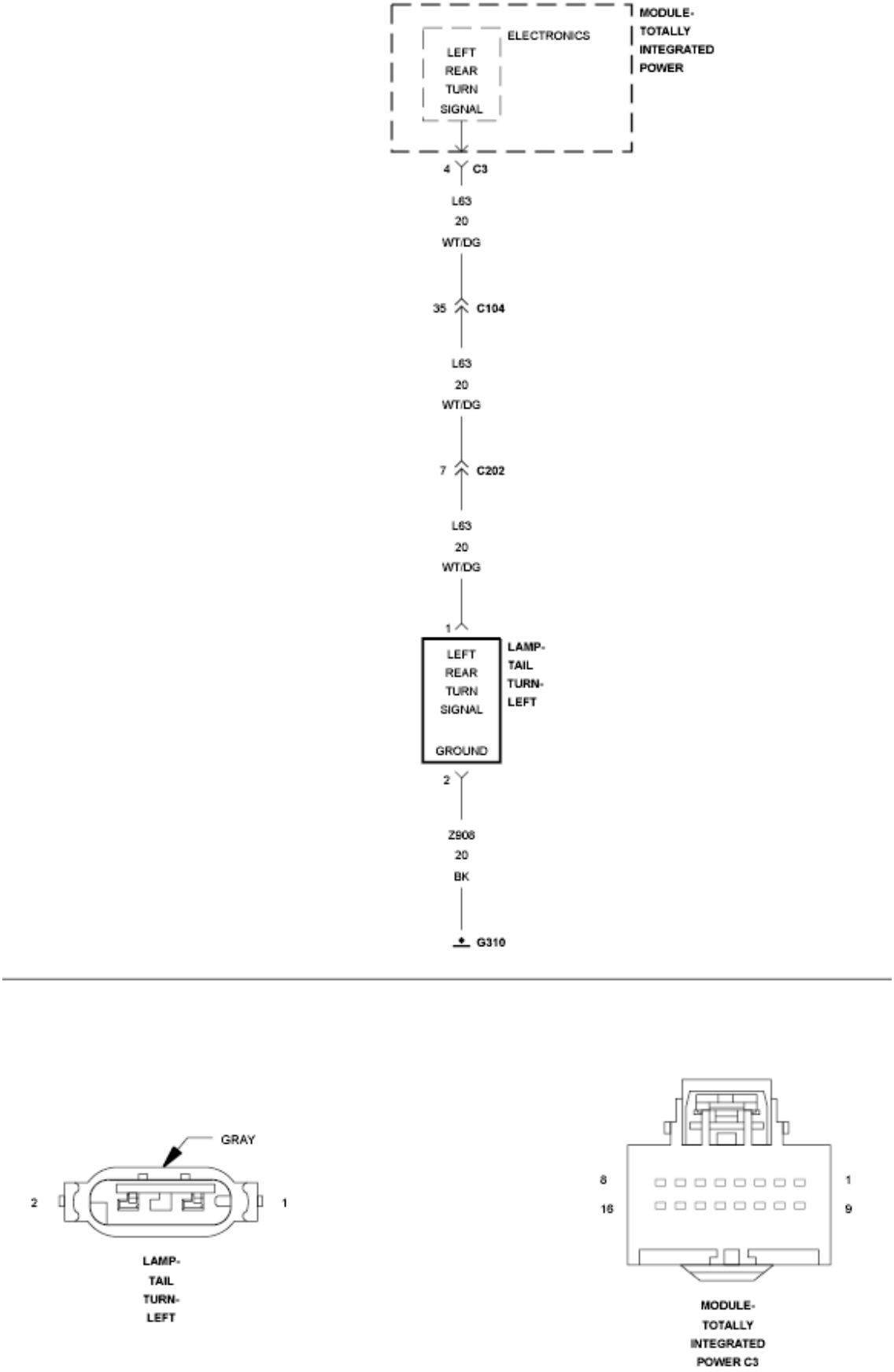

Fig. 73: Rear Left Turn Control Wiring Diagram

Courtesy of CHRYSLER GROUP, LLC

For a complete wiring diagram, **refer to appropriate SYSTEM WIRING DIAGRAMS article** .

WHEN MONITORED

Continuously

SET CONDITION

When the Totally Integrated Power Module (TIPM) detects a short to battery on the Left Rear Turn Signal Control circuit.

POSSIBLE CAUSES

Possible Causes
(L63) LEFT REAR TURN SIGNAL CONTROL CIRCUIT OPEN
(L63) LEFT REAR TURN SIGNAL CONTROL CIRCUIT SHORTED TO VOLTAGE
TOTALLY INTEGRATED POWER MODULE

DIAGNOSTIC TEST

1. **TEST FOR INTERMITTENT CONDITION**
    1. Turn the ignition on.
    2. Clear all TIPM DTCs
    3. Turn the Left Turn Signal on.
    4. Using the scan tool, read DTCs.

    Does the scan tool read: B1644-REAR LEFT TURN CONTROL CIRCUIT HIGH?

    Yes

    - Go To 2

    No

    - The conditions that caused this code to set are not present at this time. Using the wiring diagram/schematic as a guide, inspect the

wiring and connectors.

- Perform the BODY VERIFICATION TEST. Refer to **STANDARD PROCEDURE** .

2. **LEFT REAR TURN SIGNAL BULB**
   1. Turn the ignition off.
   2. Inspect the Left Rear Turn Signal Bulb Assembly.

   Is the inoperative bulb OK?

   Yes

   - Go To 3

   No

   - Replace the Inoperative bulb in accordance with the Service Information.
   - Perform the BODY VERIFICATION TEST. Refer to **STANDARD PROCEDURE** .

3. **(L63) LEFT REAR TURN SIGNAL CONTROL CIRCUIT OPEN**

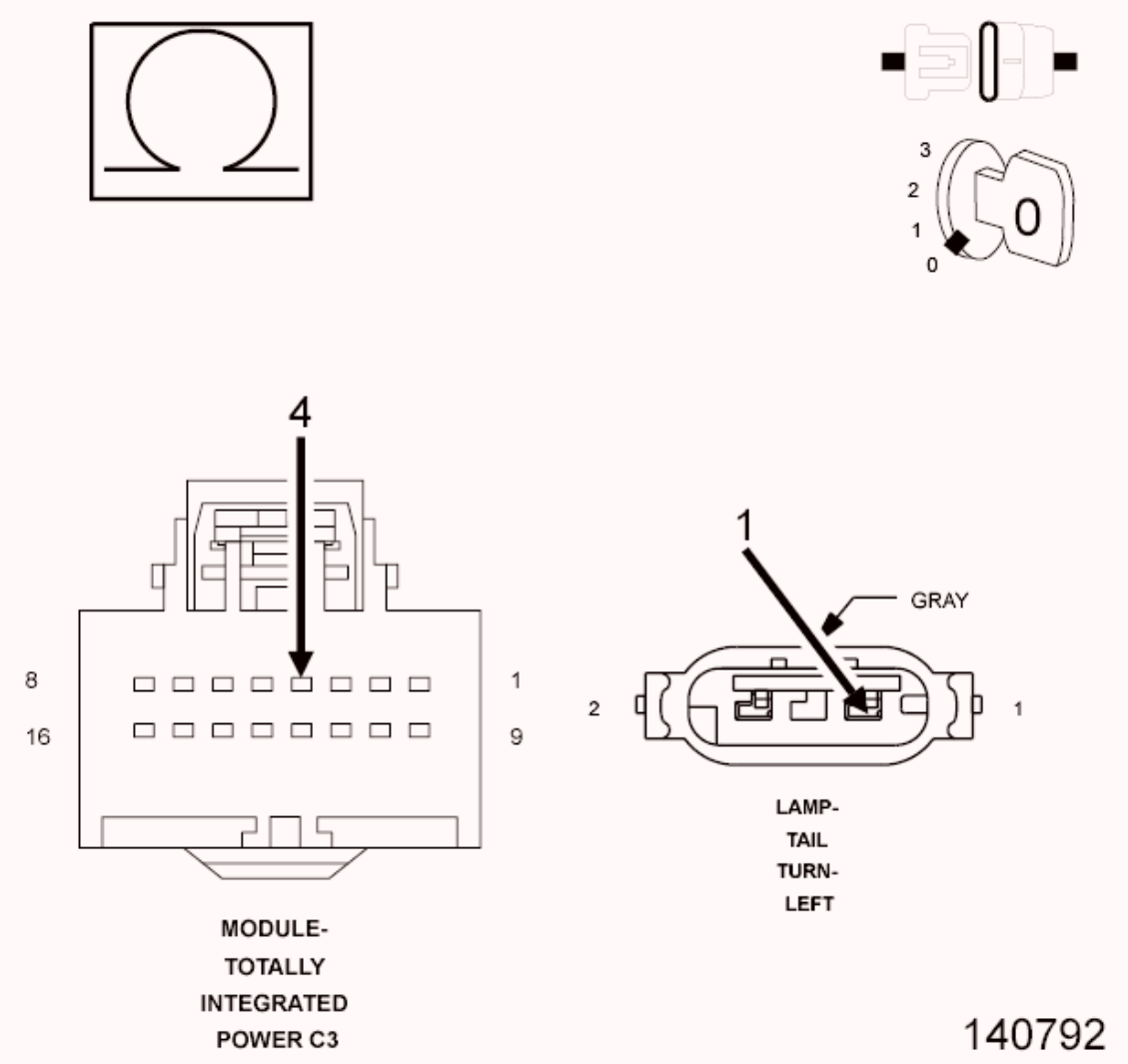

Fig. 74: Measuring Resistance Of Left Rear Turn Signal Control circuit
Courtesy of CHRYSLER GROUP, LLC

1. Turn the ignition off.
2. Disconnect the TIPM C3 harness connector.
3. Disconnect the Left Rear Tail Lamp harness connector.
4. Measure the resistance of the (L63) Left Rear Turn Signal Control circuit.

   Is the resistance above 5.0 Ohms?

   Yes

   - Repair the (L63) Turn Signal Control circuit for an open.
   - Perform the BODY VERIFICATION TEST. Refer to **STANDARD PROCEDURE** .

No

- Go To 4

4. **(L63) LEFT REAR TURN SIGNAL CONTROL CIRCUIT SHORTED TO VOLTAGE**

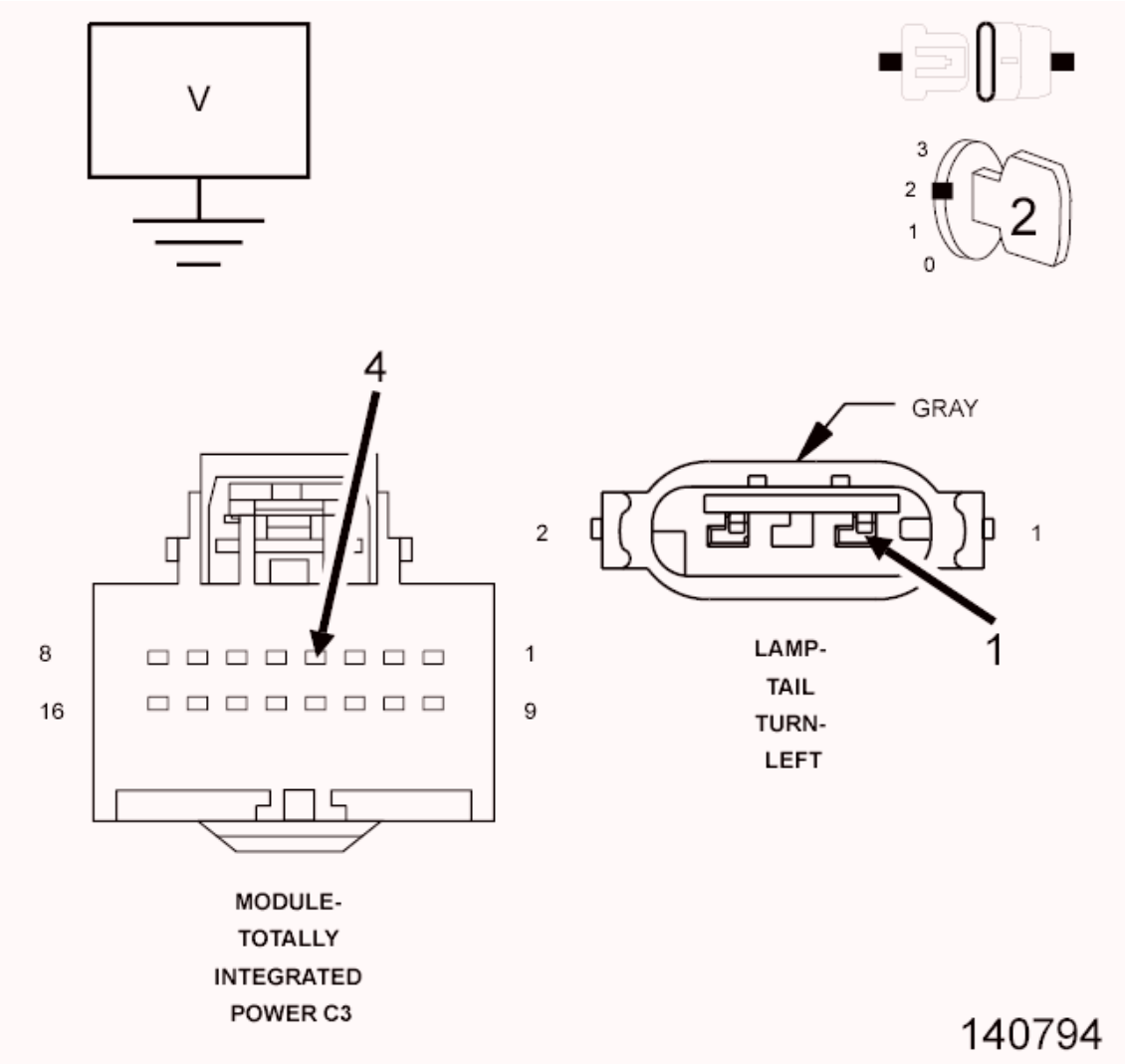

Fig. 75: Measuring For Voltage On Left Rear Turn Signal Control Circuit
Courtesy of CHRYSLER GROUP, LLC

1. Turn the ignition on.
2. Measure for voltage on the (L63) Left Rear Turn Signal Control circuit.

   Is there any voltage present?

   Yes

- Repair short to voltage on the (L63) Left Rear Turn Signal Control circuit
- Perform the BODY VERIFICATION TEST. Refer to **STANDARD PROCEDURE** .

No

- Replace the Totally Integrated Power Module (TIPM) in accordance with the Service Information.
- Perform the BODY VERIFICATION TEST. Refer to **STANDARD PROCEDURE** .

B1647-REAR RIGHT TURN CONTROL CIRCUIT LOW

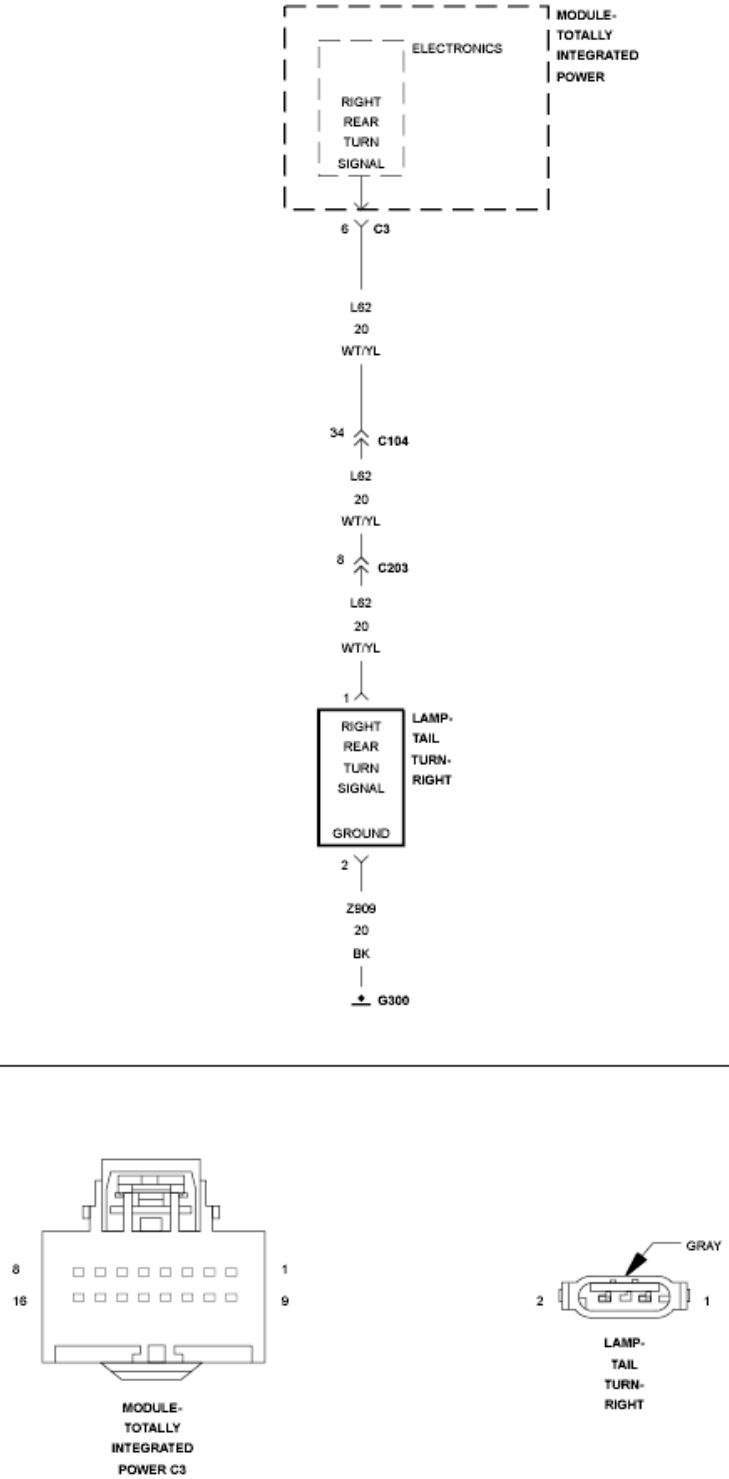

Fig. 76: Rear Right Turn Control Wiring Diagram
Courtesy of CHRYSLER GROUP, LLC

For a complete wiring diagram, **refer to appropriate SYSTEM WIRING DIAGRAMS article** .

WHEN MONITORED

With the Turn Signal activated.

SET CONDITION

When the TIPM detects a LOW condition.

POSSIBLE CAUSES

Possible Causes
(L62) REAR RIGHT TURN SIGNAL CONTROL CIRCUIT
TOTALLY INTEGRATED POWER MODULE

DIAGNOSTIC TEST

1. **INTERMITTENT CONDITION**
    1. Turn the ignition on.
    2. With the scan tool, clear all TIPM DTCs.
    3. Turn the Right Turn Signals on.
    4. With the scan tool read the DTC information.

    Does the scan tool read: B1647-REAR RIGHT TURN CONTROL CIRCUIT LOW?

    Yes

    - Go To 2

    No

    - The condition that caused the symptom is currently not present. Inspect the related wiring for a possible intermittent condition. Look for any chafed, pierced, pinched, or partially broken wires.
    - Perform the BODY VERIFICATION TEST. Refer to **STANDARD PROCEDURE** .
2. **(L62) RIGHT REAR TURN SIGNAL CONTROL CIRCUIT**

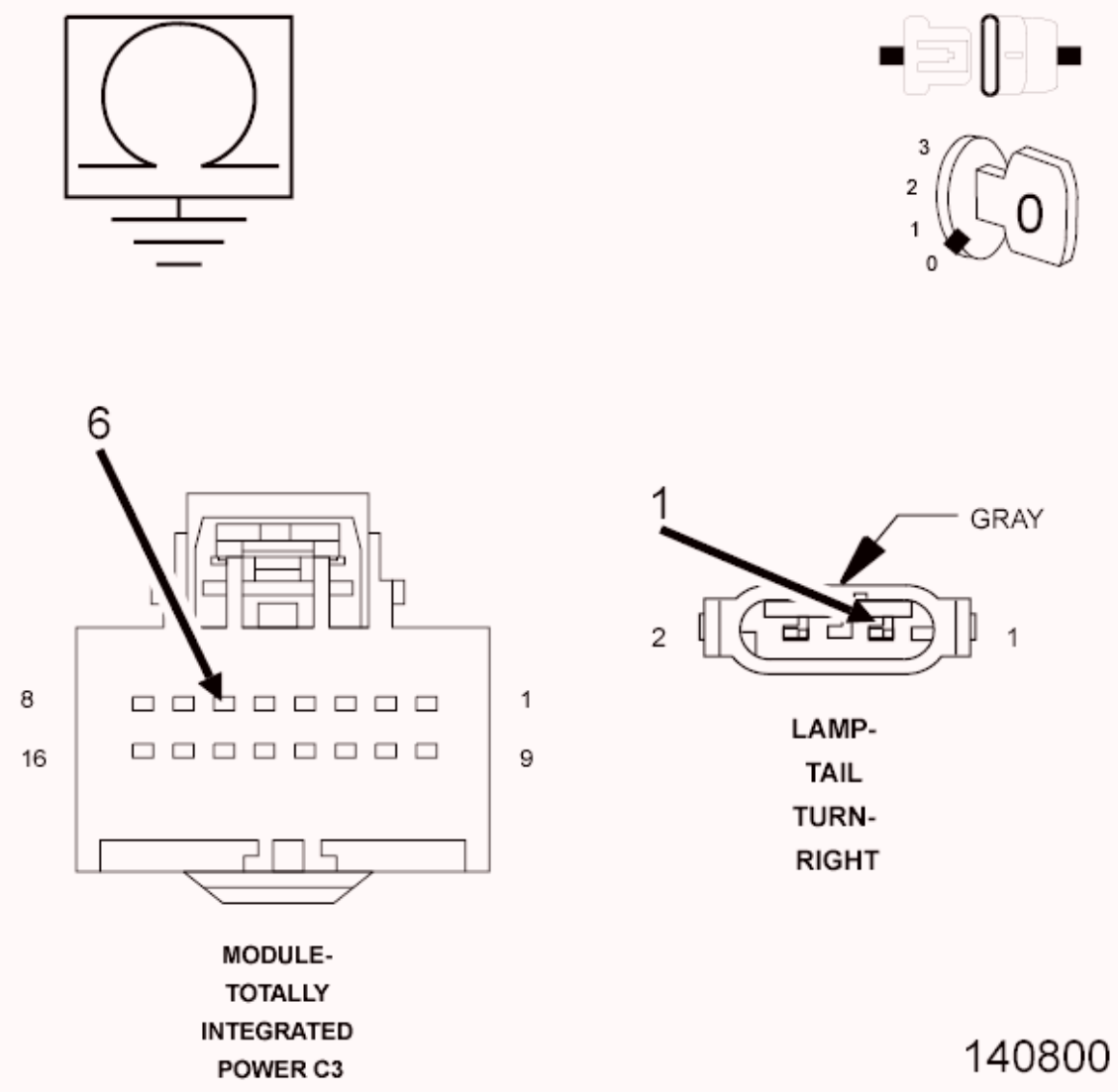

Fig. 77: Measuring Resistance Between Ground & Right Rear Turn Signal Control Circuit
Courtesy of CHRYSLER GROUP, LLC

1. Turn the ignition off.
2. Disconnect theTIPM C3 connector.
3. Disconnect the Right Rear Tail Lamp harness connector.
4. Measure the resistance between ground and the (L62) Right Rear Turn Signal Control circuit.

   Is the resistance below 5.0 Ohms?

   Yes

   - Repair the (L62) Right Rear Turn Signal Control circuit for a short

to ground.

- Perform the BODY VERIFICATION TEST. Refer to **STANDARD PROCEDURE** .

No

- Replace the Totally Integrated Power Module (TIPM) in accordance with the Service Information.
- Perform the BODY VERIFICATION TEST. Refer to **STANDARD PROCEDURE** .

B1648-REAR RIGHT TURN CONTROL CIRCUIT HIGH

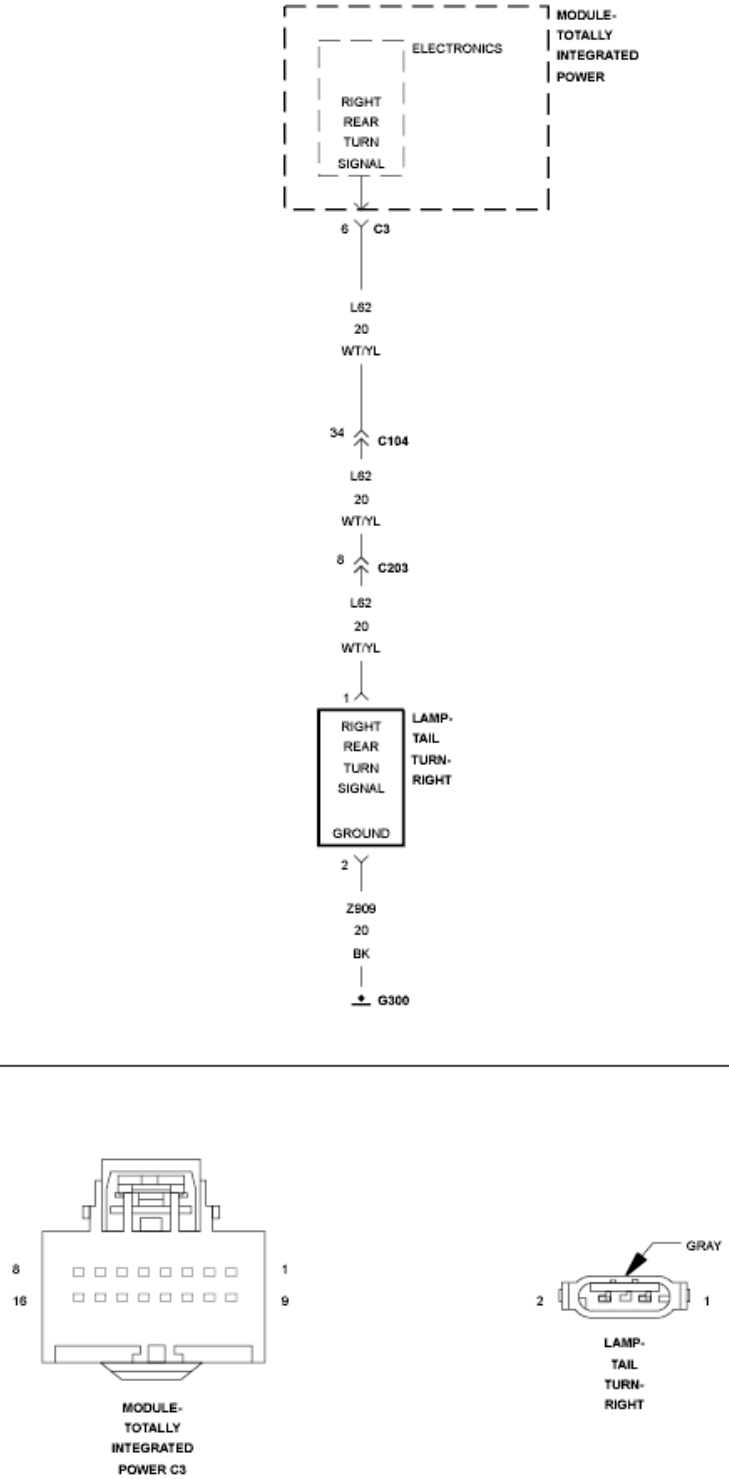

Fig. 78: Rear Right Turn Control Wiring Diagram
Courtesy of CHRYSLER GROUP, LLC

For a complete wiring diagram, **refer to appropriate SYSTEM WIRING DIAGRAMS article** .

WHEN MONITORED

Continuously

SET CONDITION

When the Totally Integrated Power Module (TIPM) detects a short to battery on the Control circuit.

POSSIBLE CAUSES

Possible Causes
(L62) RIGHT REAR TURN SIGNAL CONTROL CIRCUIT OPEN
(L62) RIGHT REAR TURN SIGNAL CONTROL CIRCUIT SHORTED TO VOLTAGE
TOTALLY INTEGRATED POWER MODULE

DIAGNOSTIC TEST

1. **TEST FOR INTERMITTENT CONDITION**
    1. Turn the ignition on.
    2. Clear all TIPM DTCs.
    3. Turn the Right Turn Signal on.
    4. With the scan tool, read DTCs.

    Does the scan tool read: B1648-REAR RIGHT TURN CONTROL CIRCUIT HIGH?

    Yes

    - Go To 2

    No

    - The conditions that caused this code to set are not present at this time. Using the wiring diagram/schematic as a guide, inspect the wiring and connectors.
    - Perform the BODY VERIFICATION TEST. Refer to **STANDARD PROCEDURE** .
2. **RIGHT REAR TURN SIGNAL BULB**
    1. Turn the ignition off.

2. Inspect the Right Rear Turn Signal Bulb Assembly.

   Is the inoperative bulb OK?

   Yes

   - Go To 3

   No

   - Replace the Inoperative bulb in accordance with the service information.
   - Perform the BODY VERIFICATION TEST. Refer to **STANDARD PROCEDURE** .

3. **(L62) RIGHT REAR TURN SIGNAL CONTROL CIRCUIT OPEN**

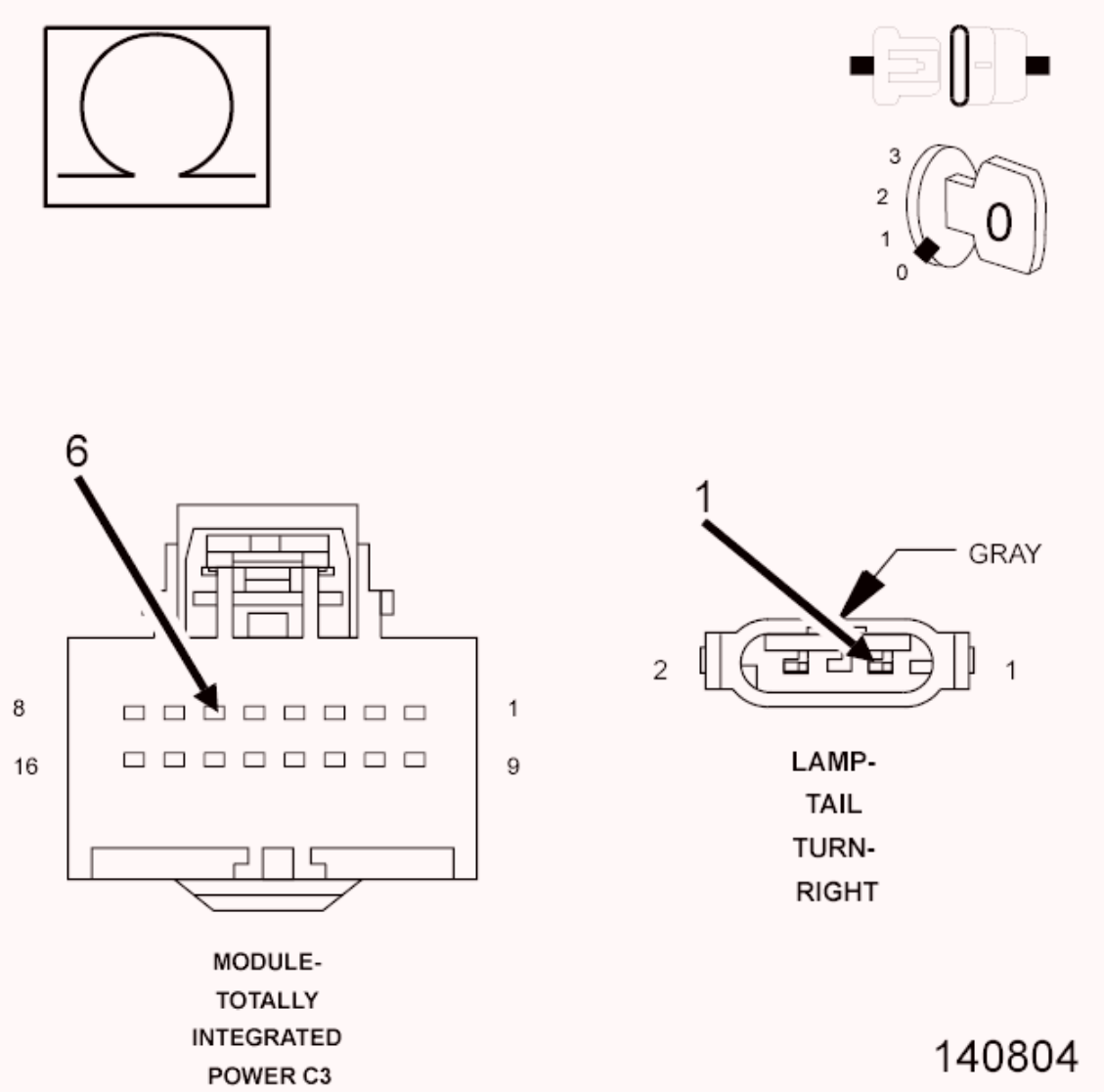

Fig. 79: Measuring Resistance Of Right Rear Turn Signal Control Circuit
Courtesy of CHRYSLER GROUP, LLC

1. Turn the ignition off.
2. Disconnect the TIPM C3 harness connector.
3. Disconnect the Right Rear Tail Lamp harness connector.
4. Measure the resistance of the (L62) Right Rear Turn Signal Control circuit.

   Is the resistance above 5.0 Ohms?

   Yes

   - Repair the (L62) Right Rear Turn Signal Control circuit for an

open.

- Perform the BODY VERIFICATION TEST. Refer to **STANDARD PROCEDURE** .

No

- Go To 4

4. **(L62) RIGHT REAR TURN SIGNAL CONTROL CIRCUIT SHORTED TO VOLTAGE**

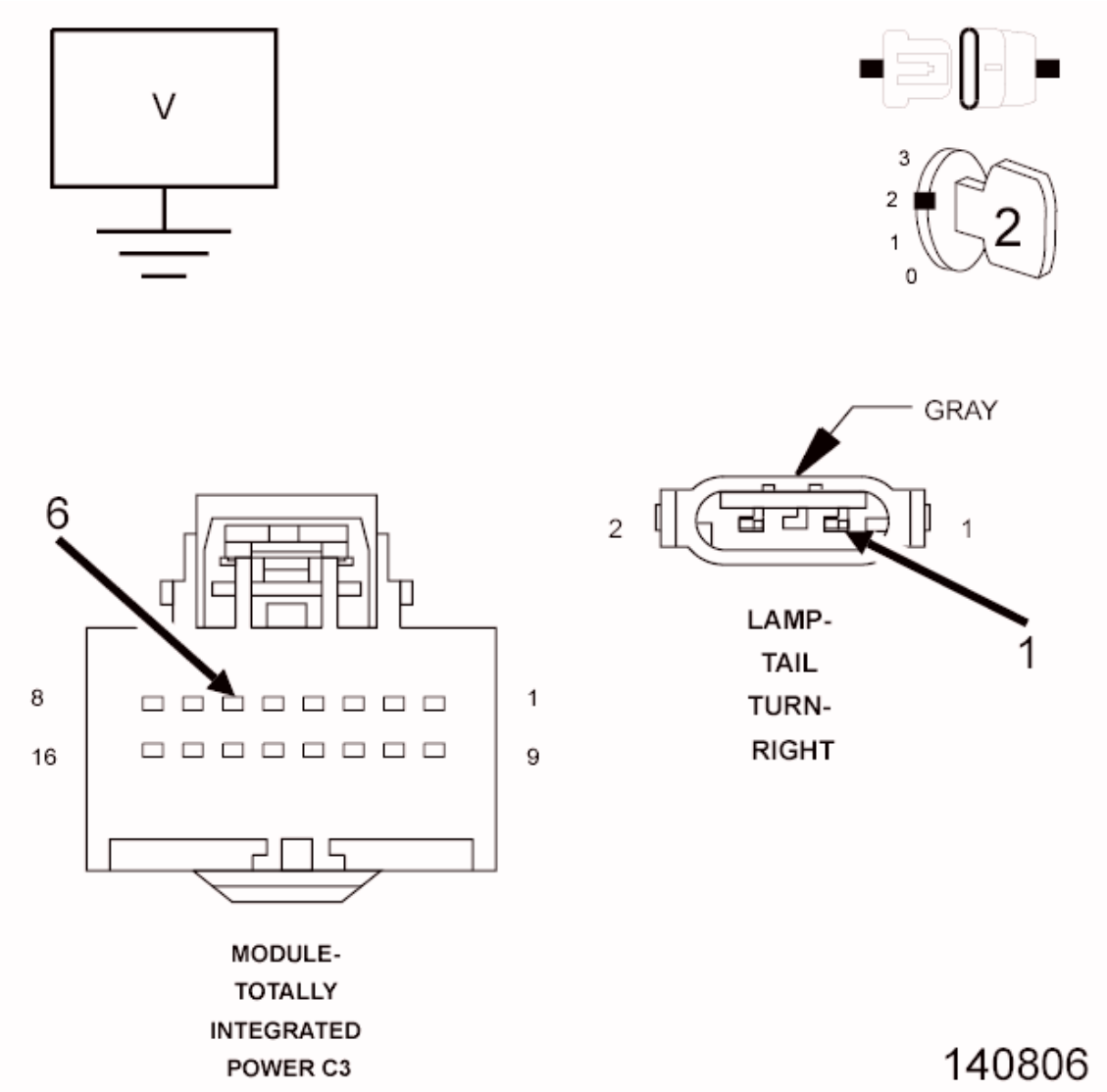

Fig. 80: Measuring Right Rear Turn Signal Control Circuit For Short To Voltage
Courtesy of CHRYSLER GROUP, LLC

1. Turn the ignition on.

2. Measure the (L62) Right Rear Turn Signal Control circuit for short to voltage.

   Is there any voltage present?

   Yes

   - Repair short to voltage on the (L62) Right Rear Turn Signal Control circuit.
   - Perform the BODY VERIFICATION TEST. Refer to **STANDARD PROCEDURE** .

   No

   - Replace the Totally Integrated Power Module (TIPM) in accordance with the service information.
   - Perform the BODY VERIFICATION TEST. Refer to **STANDARD PROCEDURE** .

B1659-FRONT FOG LAMP CONTROL CIRCUIT LOW

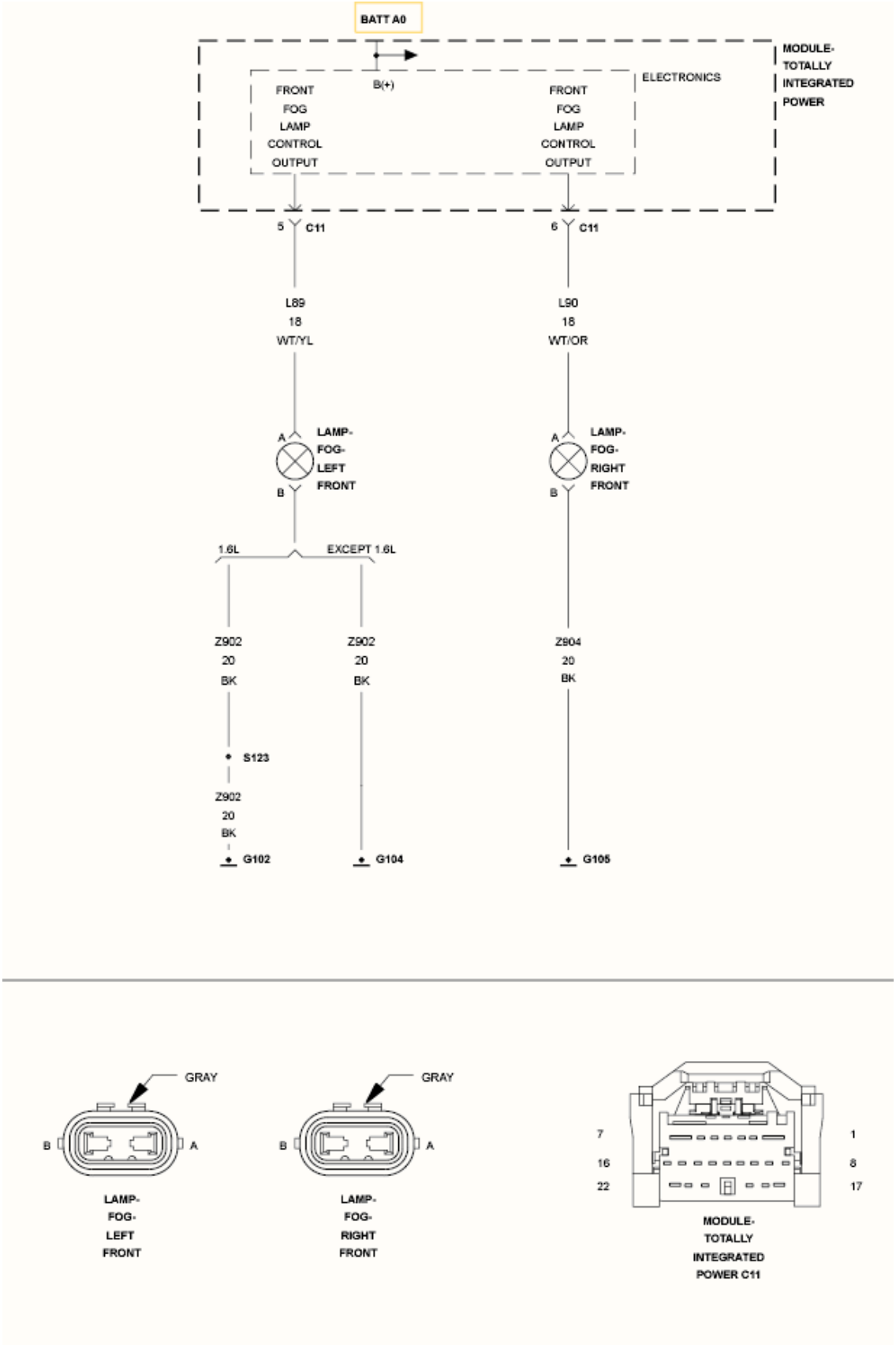

Fig. 81: Front Fog Lamp Control Wiring Diagram
Courtesy of CHRYSLER GROUP, LLC

For a complete wiring diagram, **refer to appropriate SYSTEM WIRING DIAGRAMS article** .

WHEN MONITORED

With the Front Fog Lamps activated.

SET CONDITION

When the TIPM detects a low condition.

POSSIBLE CAUSES

Possible Causes
(L89) (L90) FRONT FOG LAMP CONTROL CIRCUIT SHORT TO GROUND TOTALLY INTEGRATED POWER MODULE

DIAGNOSTIC TEST

1. **INTERMITTENT CONDITION**
    1. Turn the ignition on.
    2. With the scan tool, clear all TIPM DTCs.
    3. Turn the Front Fog Lamps on.
    4. With the scan tool read the DTC information.

    Does the scan tool read: B1659-FRONT FOG LAMP CONTROL CIRCUIT LOW?

    Yes

    - Go To 2

    No

    - The condition that caused the symptom is currently not present. Inspect the related wiring for a possible intermittent condition. Look for any chafed, pierced, pinched, or partially broken wires.
    - Perform the BODY VERIFICATION TEST. Refer to **STANDARD PROCEDURE** .
2. **(L89) (L90) FRONT FOG LAMP CONTROL CIRCUIT SHORT TO**

GROUND

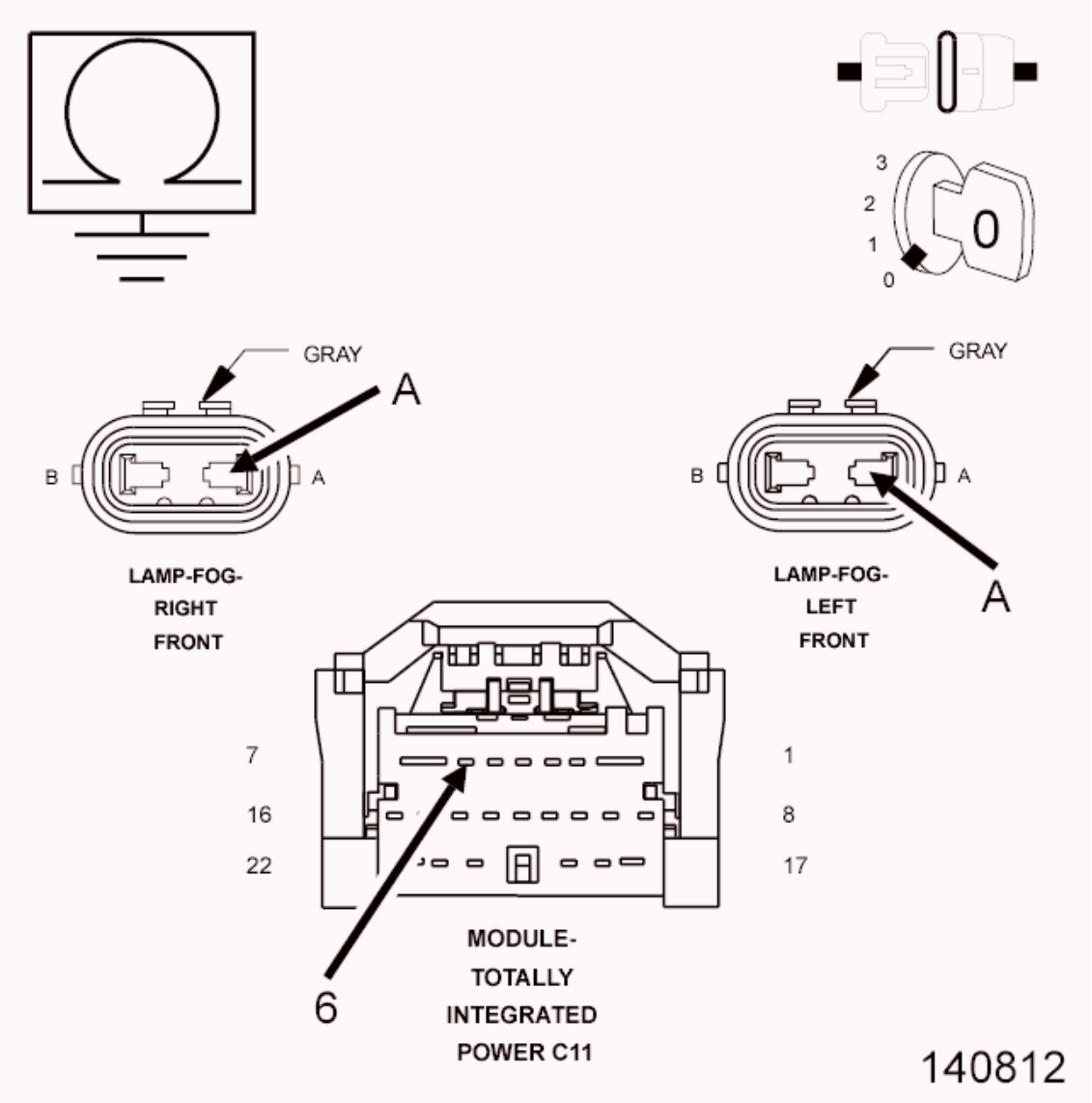

Fig. 82: Measuring Resistance Between Ground & Front Fog Lamp Control Circuit
Courtesy of CHRYSLER GROUP, LLC

1. Turn the ignition off.
2. Disconnect the TIPM C11 harness connector.
3. Disconnect the Front Fog Lamp harness connector.
4. Measure the resistance between ground and the (L89) (L90) Front Fog Lamp Control circuit.

   Is the resistance below 5.0 Ohms?

Yes

- Repair the (L89) (L90) Front Fog Lamp Control circuit for a short to ground condition.
- Perform the BODY VERIFICATION TEST. Refer to **STANDARD PROCEDURE** .

No

- Replace the Totally Integrated Power Module (TIPM) in accordance with the service information.
- Perform the BODY VERIFICATION TEST. Refer to **STANDARD PROCEDURE** .

B1659-FRONT FOG LAMP CONTROL CIRCUIT LOW - MK49

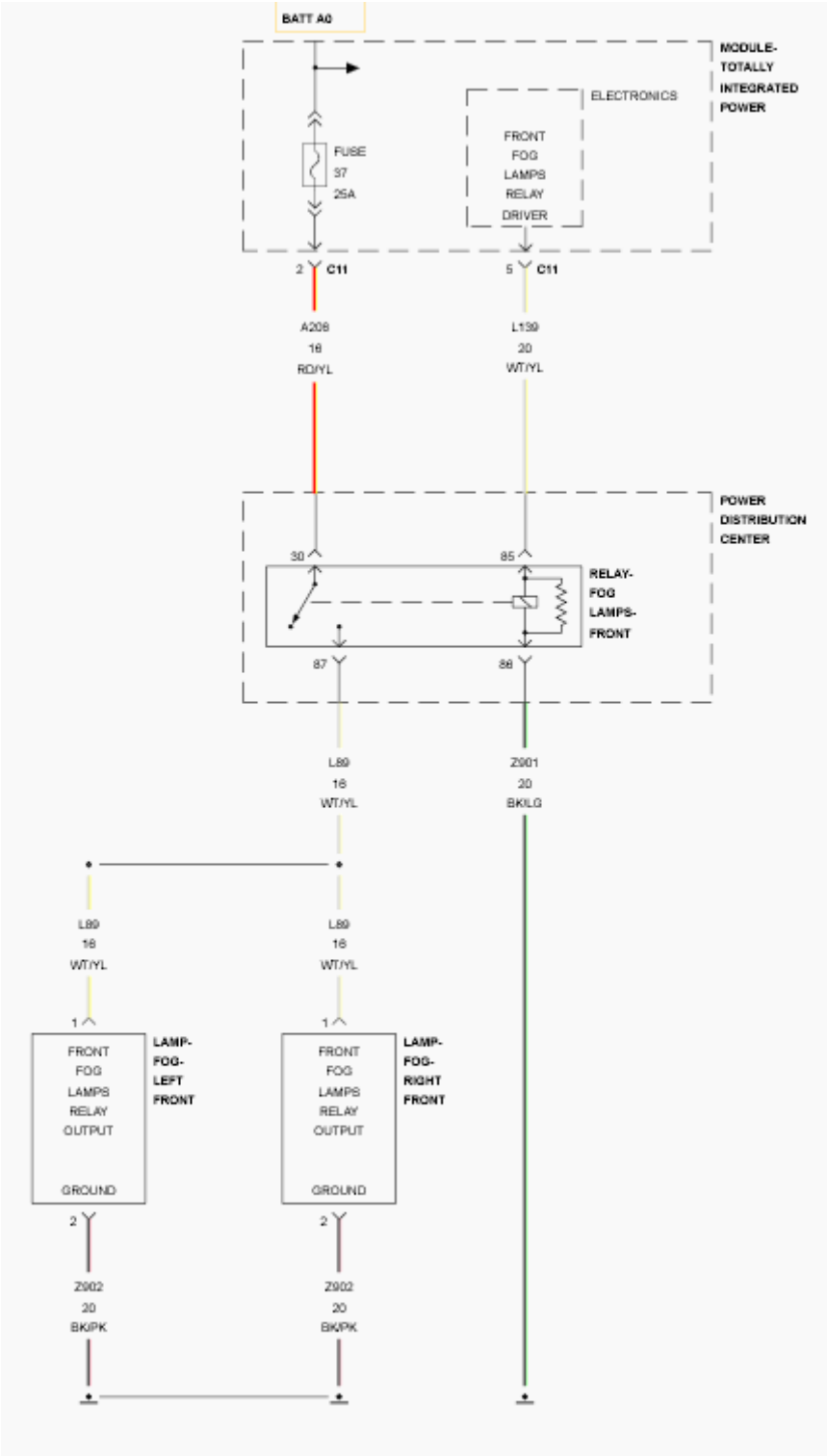

Fig. 83: Front Fog Lamp Control Wiring Diagram
Courtesy of CHRYSLER GROUP, LLC

For a complete wiring diagram, **refer to appropriate SYSTEM WIRING DIAGRAMS article** .

WHEN MONITORED

With the fog lamps active.

SET CONDITION

When the Totally Integrated Power Module (TIPM) detects a low condition on the (L139) Front Fog Lamps Relay Driver circuit.

POSSIBLE CAUSES

Possible Causes
(L139) FRONT FOG LAMPS RELAY DRIVER CIRCUIT SHORTED TO GROUND
FRONT FOG LAMPS RELAY
TOTALLY INTEGRATED POWER MODULE (TIPM)

DIAGNOSTIC TEST

1. **INTERMITTENT CONDITION**
    1. Turn the ignition on.
    2. With the scan tool, clear all DTCs.
    3. Turn the ignition on.
    4. Turn the fog lamps on.
    5. With the scan tool, read DTCs.

    Does the scan tool display DTC: B1659-FRONT FOG LAMP CONTROL CIRCUIT LOW?

    Yes

    - Go To 2

    No

    - Test complete, the condition or conditions that originally set this DTC are not present at this time. Using the wiring diagrams as a guide, check all related splices and connectors for signs of water intrusion, corrosion, pushed out or bent terminals, and correct pin tension.
    - Perform the BODY VERIFICATION TEST. Refer to **STANDARD PROCEDURE** .

2. **CHECK THE FRONT FOG LAMPS RELAY**
   1. Turn the fog lamps off.
   2. Turn the ignition off.
   3. Remove the Front Fog Lamps Relay and substitute it with a known good relay.
   4. Turn the ignition on.
   5. With the scan tool, clear all DTCs.
   6. Turn the fog lamps on.
   7. With the scan tool, read DTCs.

   Does the scan tool display DTC: B1659-FRONT FOG LAMP CONTROL CIRCUIT LOW?

   Yes

   - Go To 3

   No

   - Replace the Front Fog Lamps Relay.
   - Perform the BODY VERIFICATION TEST. Refer to **STANDARD PROCEDURE** .
3. **CHECK THE (L139) FRONT FOG LAMPS RELAY DRIVER CIRCUIT FOR A SHORT TO GROUND**

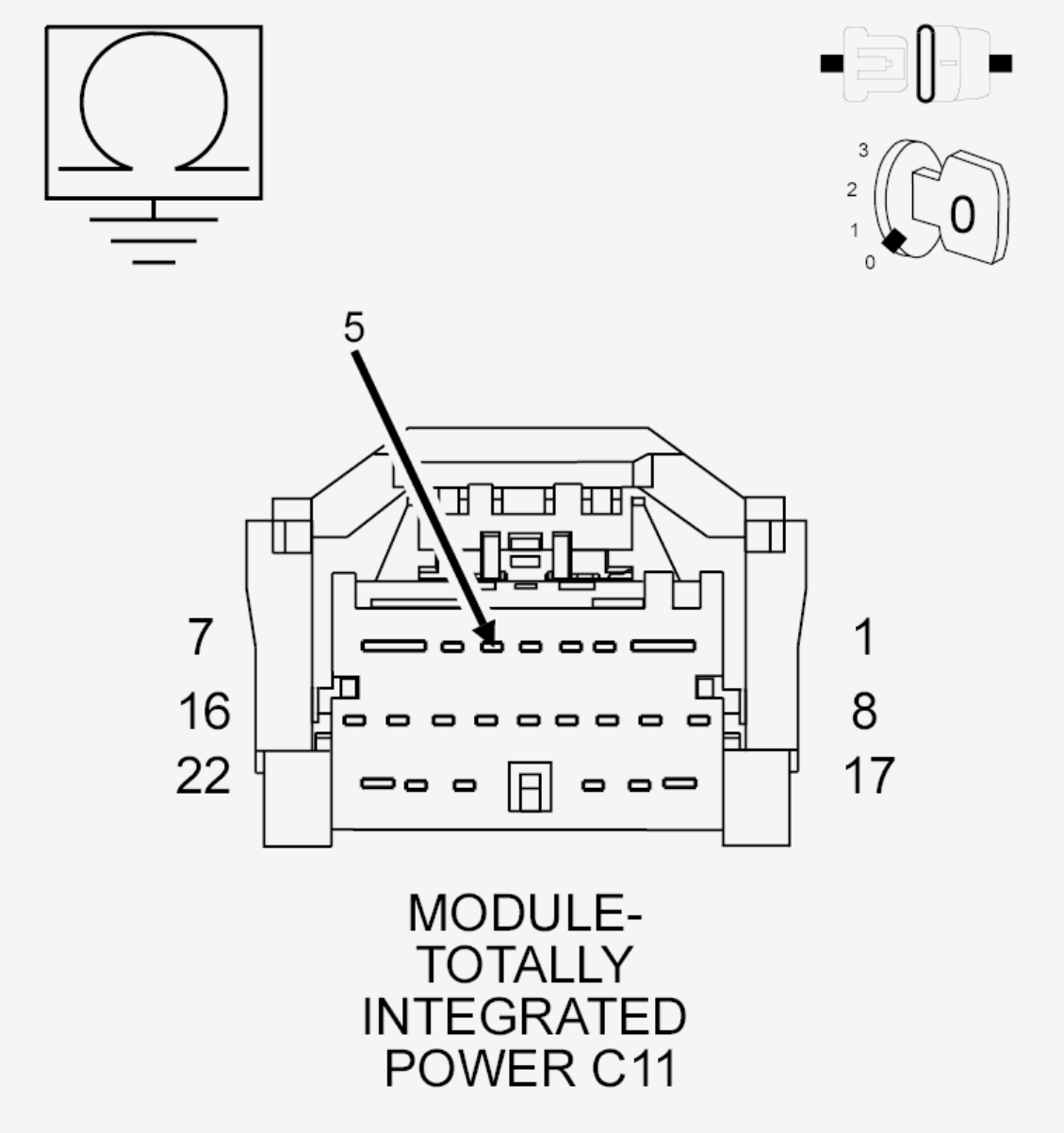

Fig. 84: Checking Front Fog Lamps Relay Driver Circuit For A Short To Ground
Courtesy of CHRYSLER GROUP, LLC

1. Turn the ignition off.
2. Remove the Front Fog Lamps Relay.
3. Disconnect the TIPM C11 harness connector.
4. Measure the resistance between ground and the (L139) Front Fog Lamps Relay Driver circuit at the TIPM C11 harness connector.

   Is the resistance above 10k Ohms?

   Yes

- Replace the TIPM in accordance with the Service Information.
- Perform the BODY VERIFICATION TEST. Refer to **STANDARD PROCEDURE** .

No

- Repair the short to ground in the (L139) Front Fog Lamps Relay Driver circuit.
- Perform the BODY VERIFICATION TEST. Refer to **STANDARD PROCEDURE** .

B165C-PARK LAMP CONTROL CIRCUIT LOW

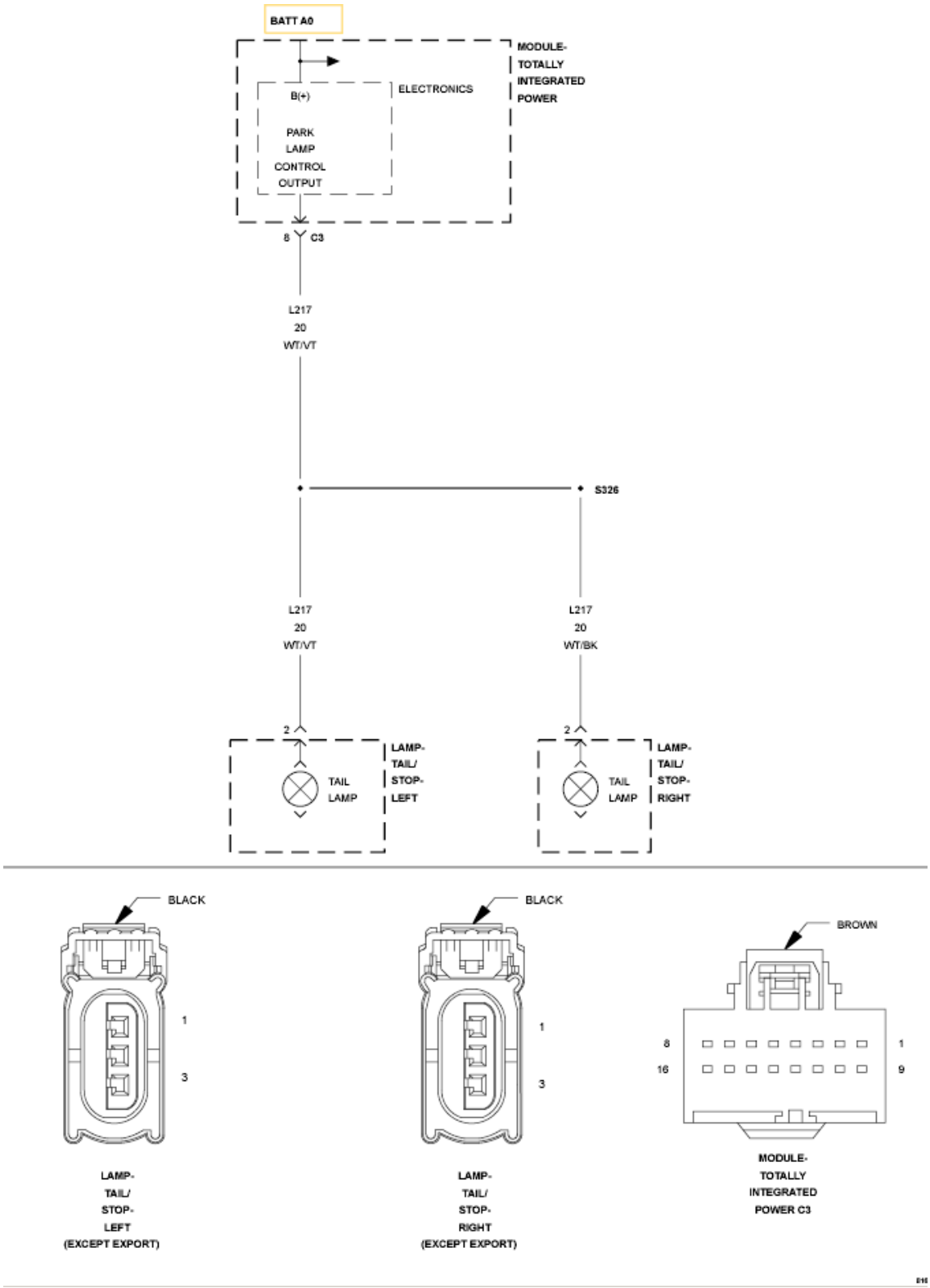

Fig. 85: Park Lamp Control - Circuit Diagram
Courtesy of CHRYSLER GROUP, LLC

For a complete wiring diagram, **refer to appropriate SYSTEM WIRING DIAGRAMS article** .

WHEN MONITORED

With the Parklamps activated.

SET CONDITION

When the TIPM detects a low condition.

POSSIBLE CAUSES

Possible Causes
(L217) PARK LAMP CONTROL CIRCUIT SHORT TO GROUND TOTALLY INTEGRATED POWER MODULE

DIAGNOSTIC TEST

1. **INTERMITTENT CONDITION**
    1. Turn the ignition on.
    2. With the scan tool, clear all TIPM DTCs.
    3. Turn the Park Lamps on.
    4. With the scan tool read the DTC information.

    Does the scan tool read: B165C-PARK LAMP CONTROL CIRCUIT LOW?

    Yes

    - Go To 2

    No

    - The condition that caused the symptom is currently not present. Inspect the related wiring for a possible intermittent condition. Look for any chafed, pierced, pinched, or partially broken wires.
    - Perform the BODY VERIFICATION TEST. Refer to **STANDARD PROCEDURE** .
2. **(L217) PARK LAMP CONTROL CIRCUIT SHORT TO GROUND**

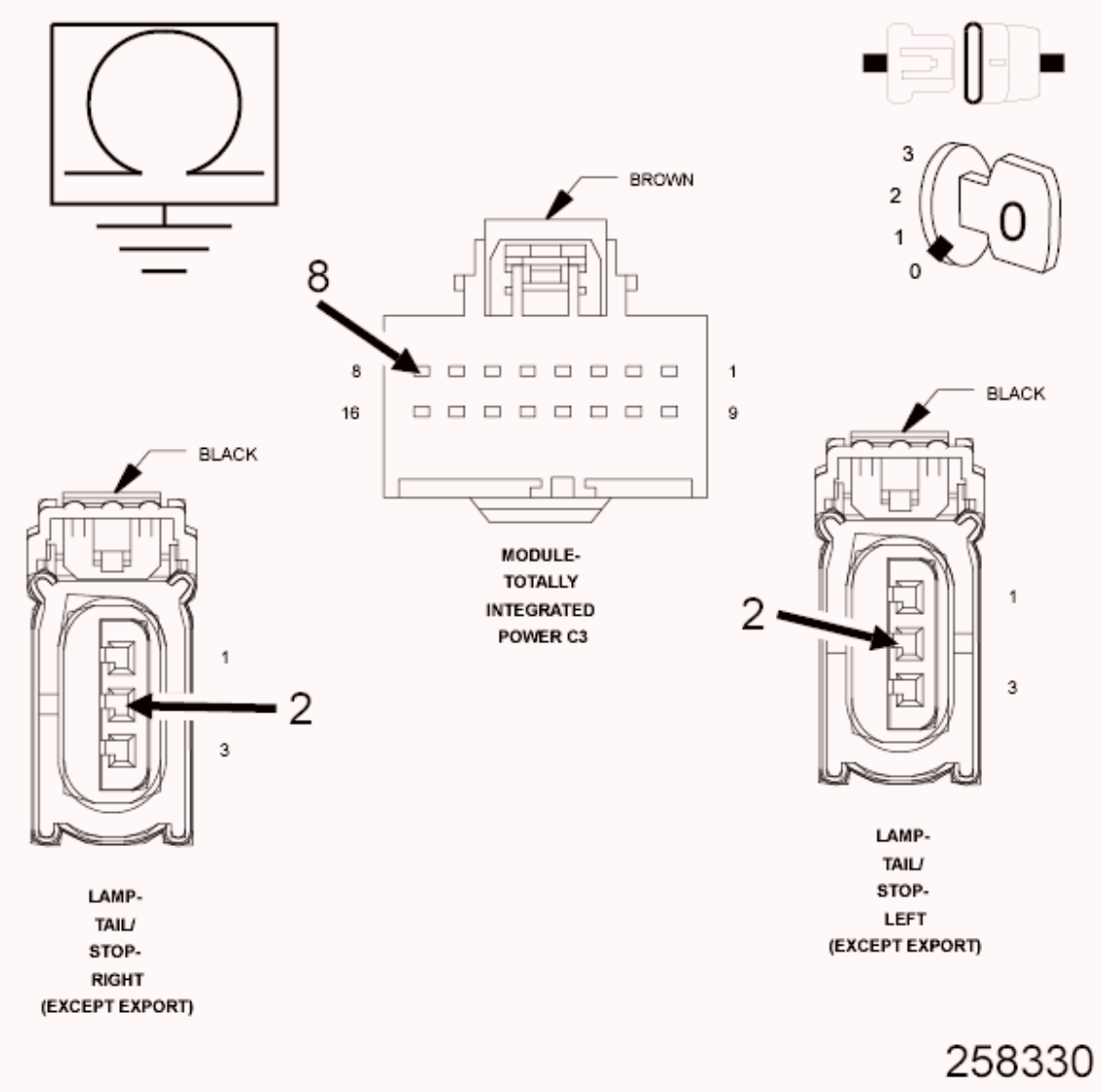

Fig. 86: Checking Park Lamp Control Circuit For Short To Ground
Courtesy of CHRYSLER GROUP, LLC

1. Turn the ignition off.
2. Disconnect the TIPM C3 harness connector.
3. Disconnect the Left and Right Park Lamp harness connectors.
4. Measure the resistance between ground and the (L217) Park Lamp Control circuit.

   Is the resistance below 5.0 Ohms?

   Yes

   - Repair the (L217) Park Lamp Control circuit for a short to ground condition.

- Perform the BODY VERIFICATION TEST. Refer to **STANDARD PROCEDURE** .

No

- Replace the Totally Integrated Power Module (TIPM) in accordance with the service information.
- Perform the BODY VERIFICATION TEST. Refer to **STANDARD PROCEDURE** .

B165D-LEFT PARK LAMP CONTROL CIRCUIT HIGH

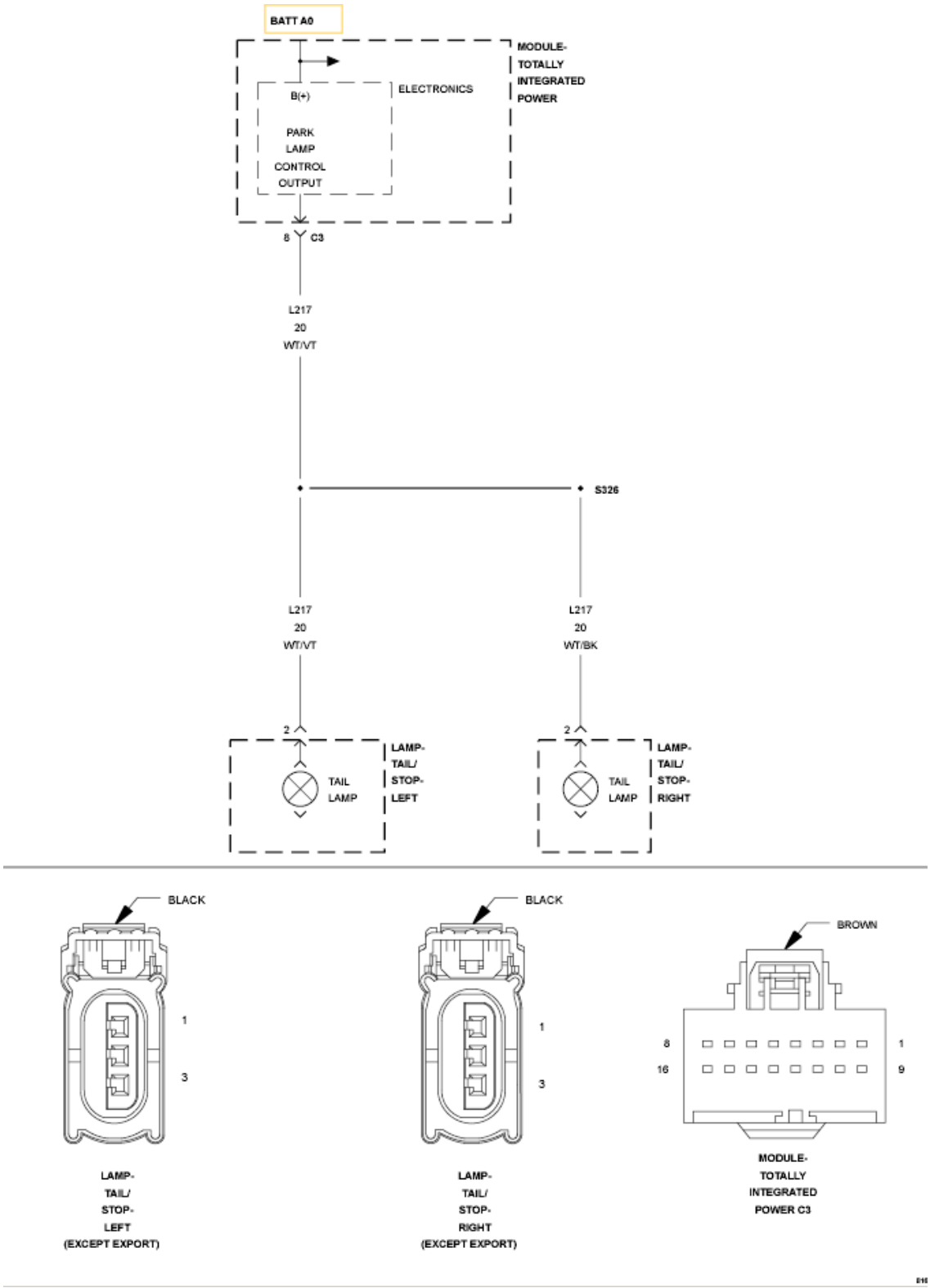

Fig. 87: Park Lamp Control - Circuit Diagram
Courtesy of CHRYSLER GROUP, LLC

For a complete wiring diagram, **refer to appropriate SYSTEM WIRING DIAGRAMS article** .

WHEN MONITORED

With the Park Lamps are activated.

SET CONDITION

When the TIPM detects a high condition.

POSSIBLE CAUSES

Possible Causes
(L217) PARK LAMP CONTROL CIRCUIT OPEN
(L217) PARK LAMP CONTROL CIRCUIT SHORTED TO VOLTAGE
LEFT AND/OR RIGHT PARK LAMP BULBS
TOTALLY INTEGRATED POWER MODULE

DIAGNOSTIC TEST

1. **INTERMITTENT CONDITION**
    1. Turn the ignition on.
    2. With the scan tool, clear all TIPM DTCs.
    3. Turn the Park Lamps on.
    4. With the scan tool read the DTC information.

    Does the scan tool read: B165D-PARK LAMP CONTROL CIRCUIT HIGH?

    Yes

    - Go To 2

    No

    - The condition that caused the symptom is currently not present. Inspect the related wiring for a possible intermittent condition. Look for any chafed, pierced, pinched, or partially broken wires.
    - Perform the BODY VERIFICATION TEST. Refer to **STANDARD PROCEDURE** .
2. **LEFT AND RIGHT PARK LAMP BULBS**
    1. Turn the ignition off.

2. Inspect the Left and Right Park Lamp Bulb Assemblies.

   Are the inoperative bulbs OK?

   Yes

   - Go To 3

   No

   - Replace the Inoperative bulb(s) in accordance with the service information.
   - Perform the BODY VERIFICATION TEST. Refer to **STANDARD PROCEDURE** .

3. **(L217) PARK LAMP CONTROL CIRCUIT OPEN**

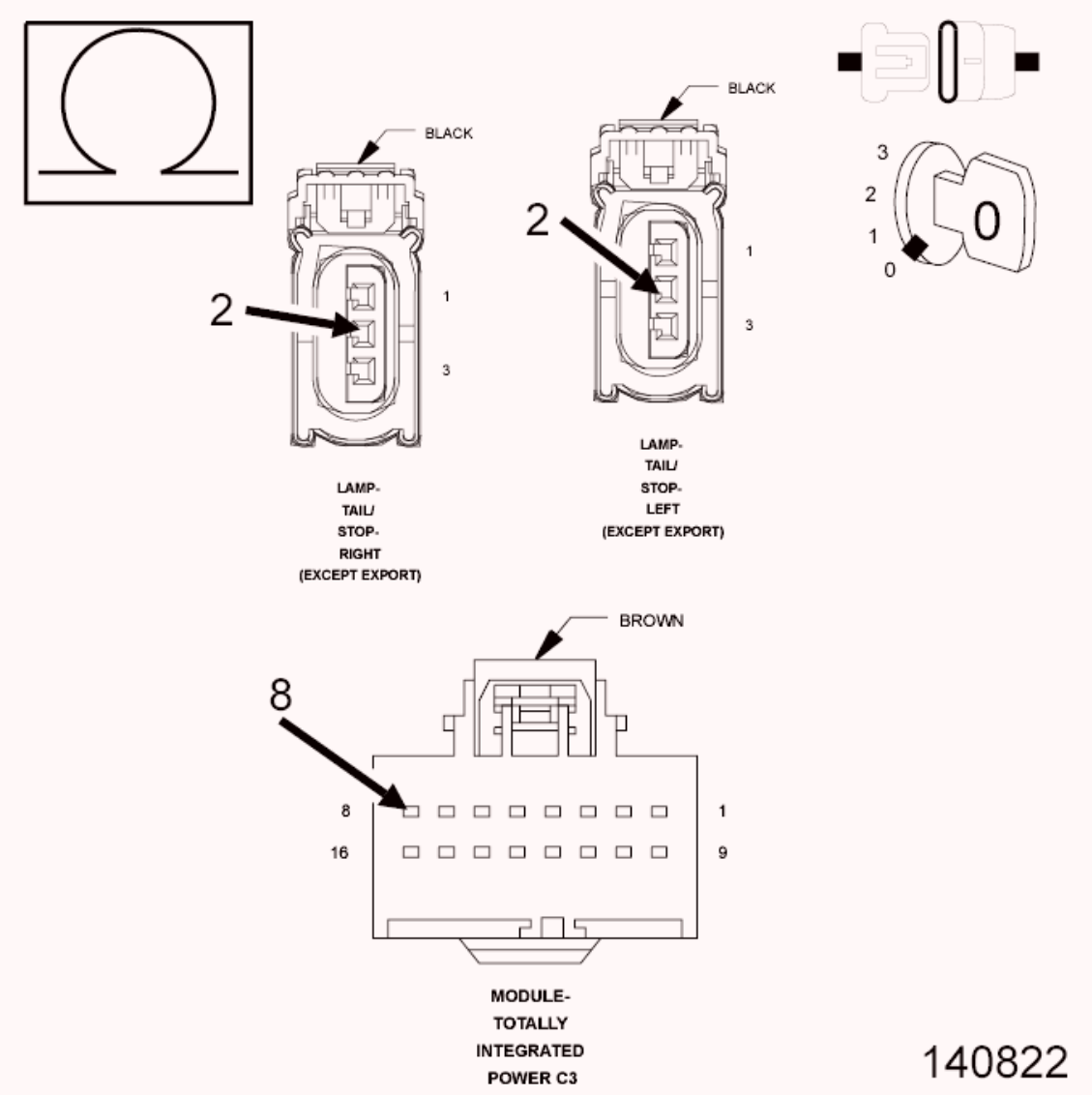

Fig. 88: Checking Park Lamp Control Circuit For Open
Courtesy of CHRYSLER GROUP, LLC

1. Turn the ignition off.
2. Disconnect the TIPM C3 harness connector.
3. Disconnect the Left and Right Park Lamp harness connectors.
4. Measure the resistance of the (L217) Park Lamp Control circuit.

   Is the resistance above 5.0 Ohms?

   Yes

   - Repair the (L217) Park Lamp Control circuit for an open condition.
   - Perform the BODY VERIFICATION TEST. Refer to

STANDARD PROCEDURE .

No

- Replace the Totally Integrated Power Module (TIPM) in accordance with the service information.
- Perform the BODY VERIFICATION TEST. Refer to **STANDARD PROCEDURE** .

B165E-PARK LAMP CONTROL CIRCUIT OPEN

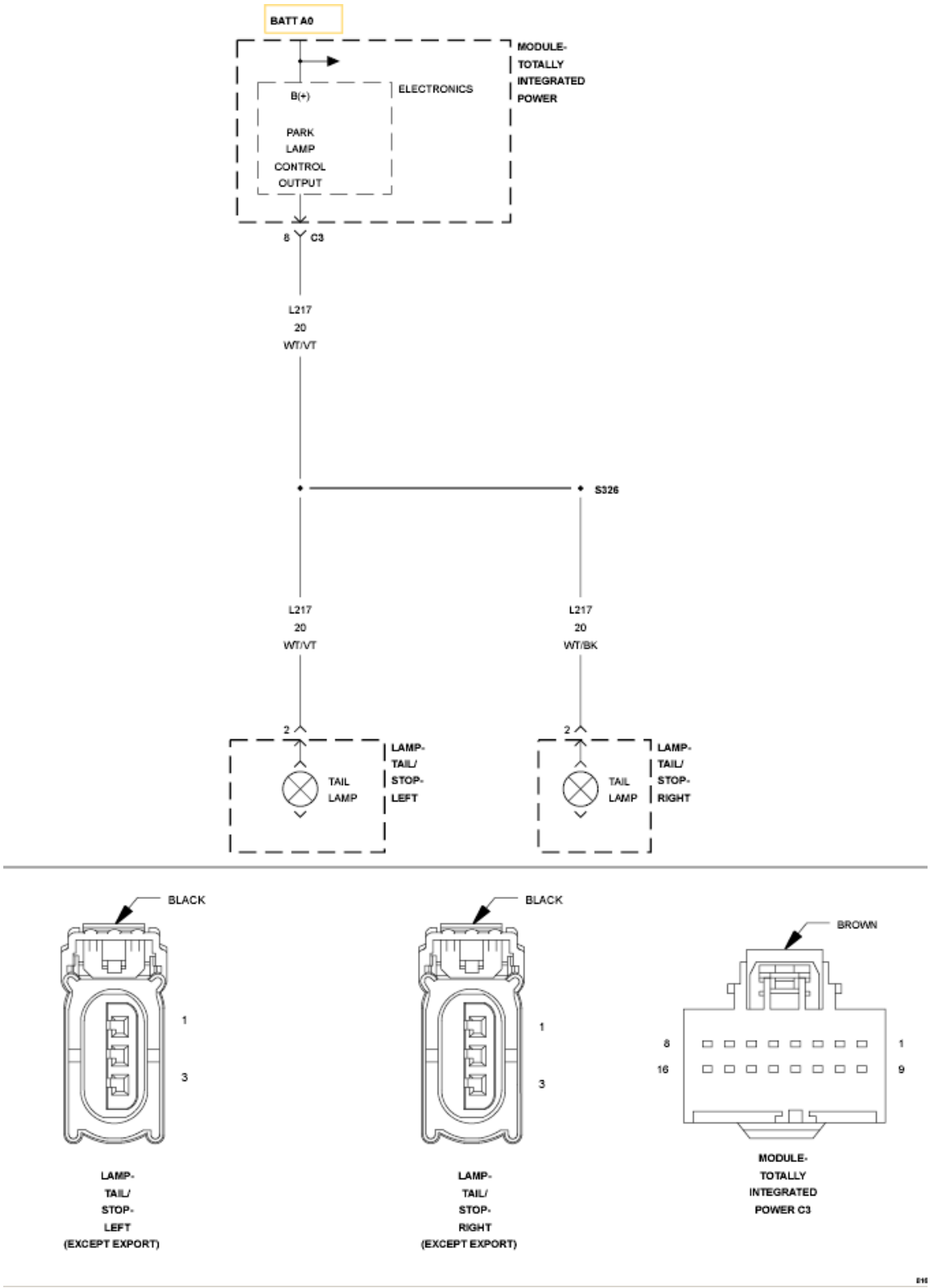

Fig. 89: Park Lamp Control - Circuit Diagram
Courtesy of CHRYSLER GROUP, LLC

For a complete wiring diagram, **refer to appropriate SYSTEM WIRING DIAGRAMS article** .

WHEN MONITORED

With the Park Lamps Activated.

SET CONDITION

When the TIPM detects a high condition.

POSSIBLE CAUSES

Possible Causes
(L217) PARK LAMP CONTROL CIRCUIT OPEN
LEFT AND/OR RIGHT PARK LAMP BULBS
TOTALLY INTEGRATED POWER MODULE

DIAGNOSTIC TEST

1. **INTERMITTENT CONDITION**
    1. Turn the ignition on.
    2. With the scan tool, clear all TIPM DTCs.
    3. Turn the Stop Lamps on.
    4. With the scan tool read the DTC information.

    Does the scan tool read: B165E-PARK LAMP CONTROL CIRCUIT OPEN?

    Yes

    - Go To 2

    No

    - The condition that caused the symptom is currently not present. Inspect the related wiring for a possible intermittent condition. Look for any chafed, pierced, pinched, or partially broken wires.
    - Perform the BODY VERIFICATION TEST. Refer to **STANDARD PROCEDURE** .
2. **PARK LAMP BULBS**
    1. Turn the ignition off.
    2. Inspect the Left and Right Park Lamp Bulb Assemblies.

Are the inoperative bulbs OK?

Yes

- Go To 3

No

- Replace the Inoperative bulb or bulbs in accordance with the service information.
- Perform the BODY VERIFICATION TEST. Refer to **STANDARD PROCEDURE** .

3. **(L217) PARK LAMP CONTROL CIRCUIT OPEN**

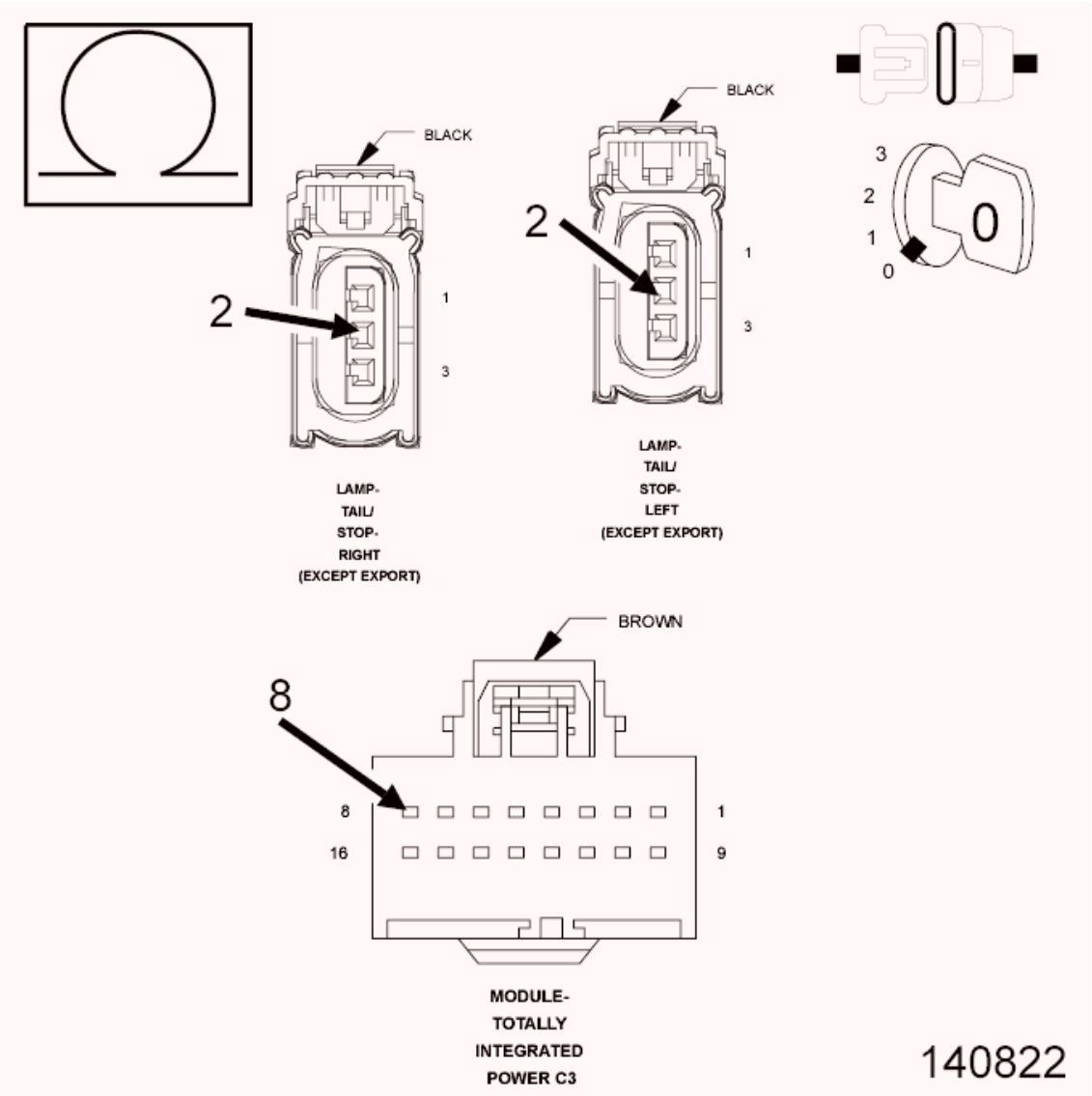

Fig. 90: Checking Park Lamp Control Circuit For Open

Courtesy of CHRYSLER GROUP, LLC

1. Turn the ignition off.
2. Disconnect the TIPM C3 harness connector.
3. Disconnect the Left and Right Park Lamp harness connectors.
4. Measure the resistance of the (L217) Park Lamp Control circuit.

Is the resistance above 5.0 Ohms?

Yes

- Repair the (L217) Park Lamp Control circuit for an open condition.
- Perform the BODY VERIFICATION TEST. Refer to **STANDARD PROCEDURE** .

No

- Replace the Totally Integrated Power Module (TIPM) in accordance with the service information.
- Perform the BODY VERIFICATION TEST. Refer to **STANDARD PROCEDURE** .

B1660-FRONT FOG LAMP CONTROL CIRCUIT HIGH

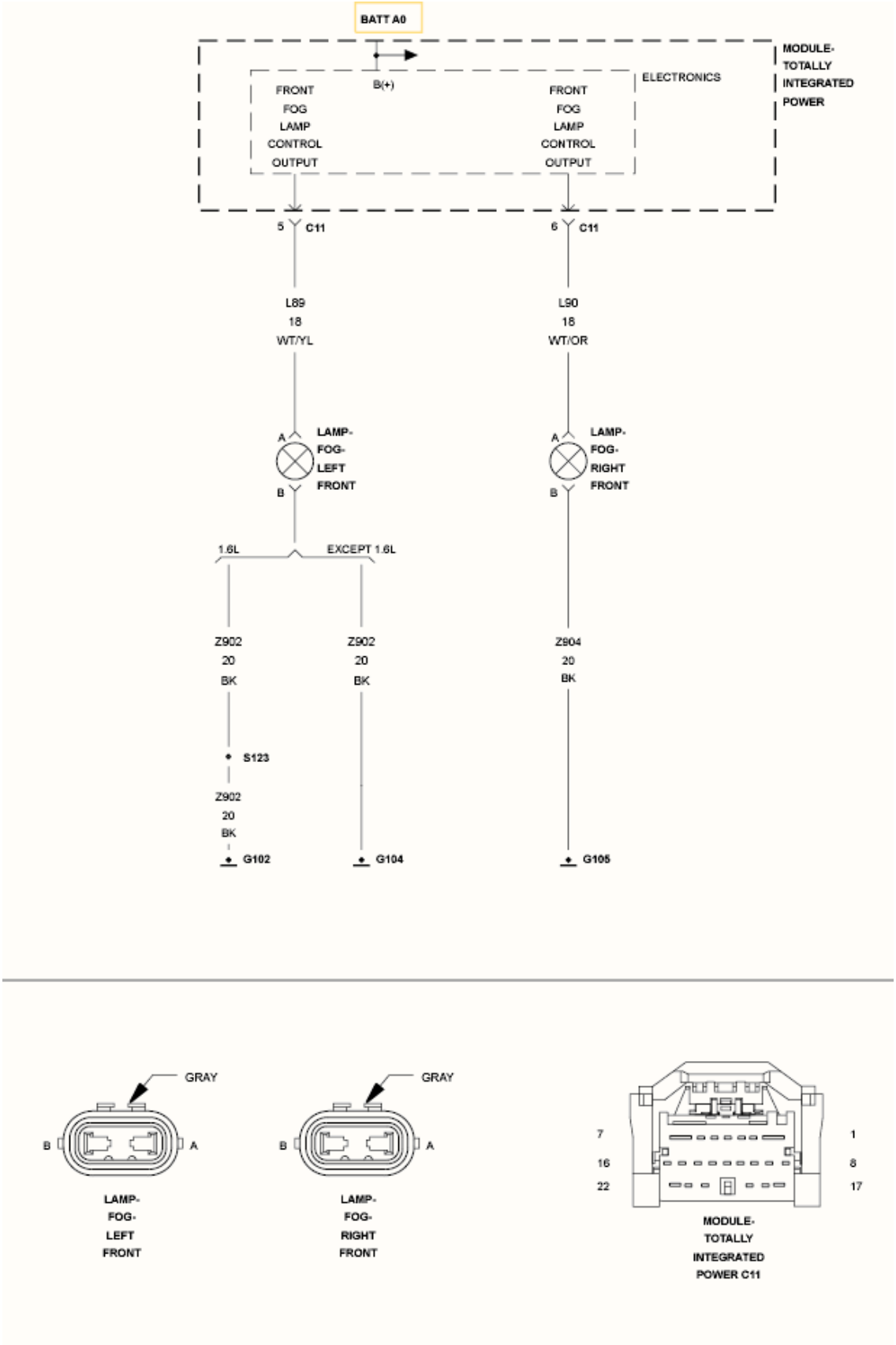

Fig. 91: Front Fog Lamp Control Wiring Diagram
Courtesy of CHRYSLER GROUP, LLC

For a complete wiring diagram, **refer to appropriate SYSTEM WIRING DIAGRAMS article** .

WHEN MONITORED

With the Front Fog Lamps activated.

SET CONDITION

When the TIPM detects a high condition.

POSSIBLE CAUSES

Possible Causes
(L89) (L90) FRONT FOG LAMP CONTROL CIRCUIT OPEN
(L89) (L90) FRONT FOG LAMP CONTROL CIRCUIT SHORTED TO VOLTAGE
LEFT AND/OR RIGHT FRONT FOG LAMP BULBS
TOTALLY INTEGRATED POWER MODULE

DIAGNOSTIC TEST

1. **INTERMITTENT CONDITION**
    1. Turn the ignition on.
    2. With the scan tool, clear all TIPM DTCs.
    3. Turn the Front Fog Lamps on.
    4. With the scan tool read the DTC information.

    Does the scan tool read: B1660-FRONT FOG LAMP CONTROL CIRCUIT HIGH?

    Yes

    - Go To 2

    No

    - The condition that caused the symptom is currently not present. Inspect the related wiring for a possible intermittent condition. Look for any chafed, pierced, pinched, or partially broken wires.
    - Perform the BODY VERIFICATION TEST. Refer to

STANDARD PROCEDURE .

2. **FRONT FOG LAMP BULBS**
   1. Turn the ignition off.
   2. Inspect the Left and Right Front Fog Lamp Bulb Assemblies.

      Are the inoperative bulbs OK?

      Yes

      - Go To 3

      No

      - Replace the Inoperative bulb(s) in accordance with the service information.
      - Perform the BODY VERIFICATION TEST. Refer to **STANDARD PROCEDURE** .
3. **(L89) (L90) FRONT FOG LAMP CONTROL CIRCUIT OPEN**

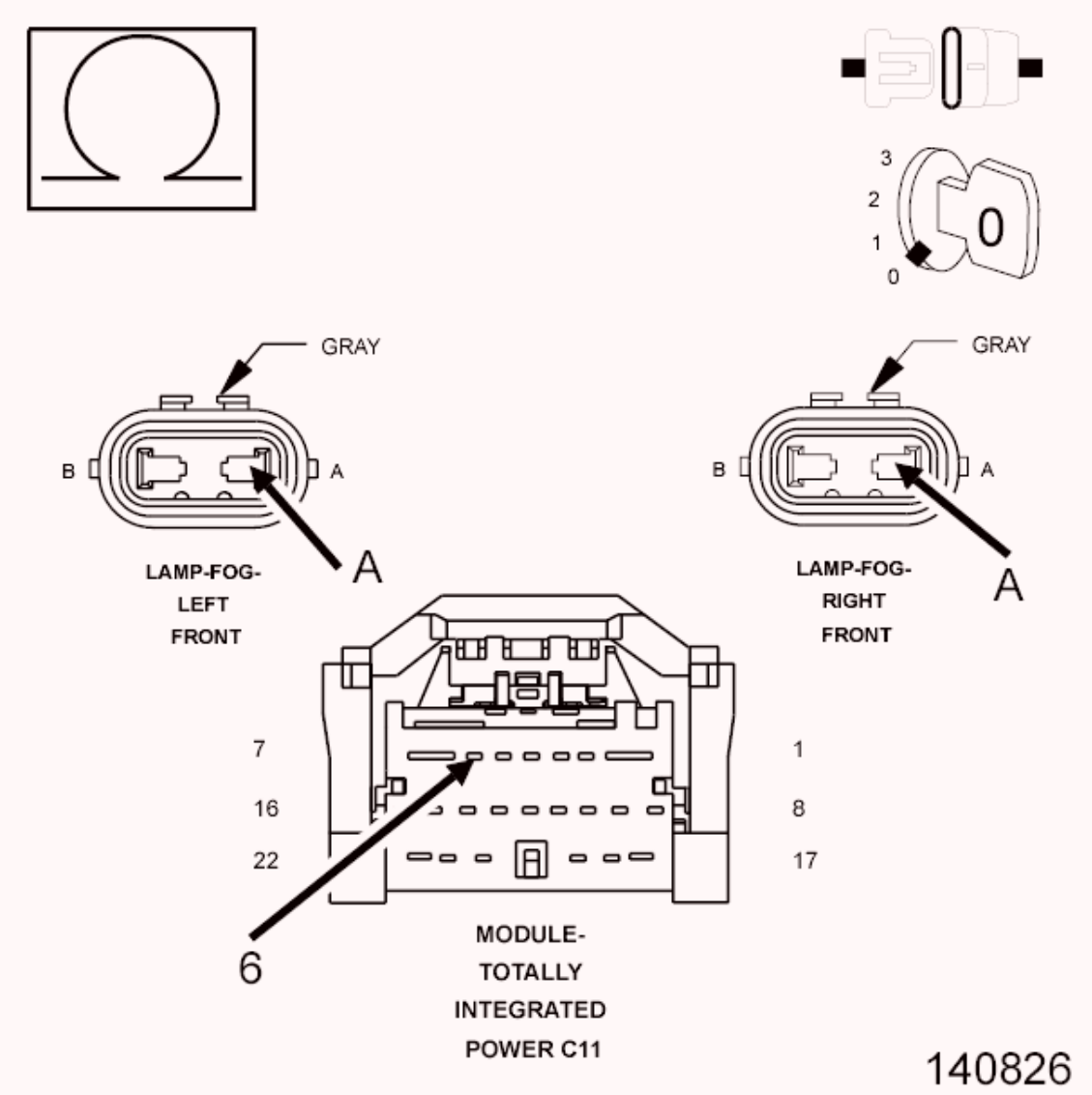

Fig. 92: Measuring Resistance Of Front Fog Lamp Control Circuit
Courtesy of CHRYSLER GROUP, LLC

1. Turn the ignition off.
2. Disconnect the TIPM C11 harness connector.
3. Disconnect the Left and Right Front Fog Lamp harness connectors.
4. Measure the resistance of the (L89) (L90) Front Fog Lamp Control circuit.

   Is the resistance above 5.0 Ohms?

   Yes

   - Repair the (L89) (L90) Front Fog Lamp Control circuit for an open

condition.

- Perform the BODY VERIFICATION TEST. Refer to **STANDARD PROCEDURE** .

No

- Go To 4

4. **(L89) (L90) FRONT FOG LAMP CONTROL CIRCUIT SHORTED TO VOLTAGE**

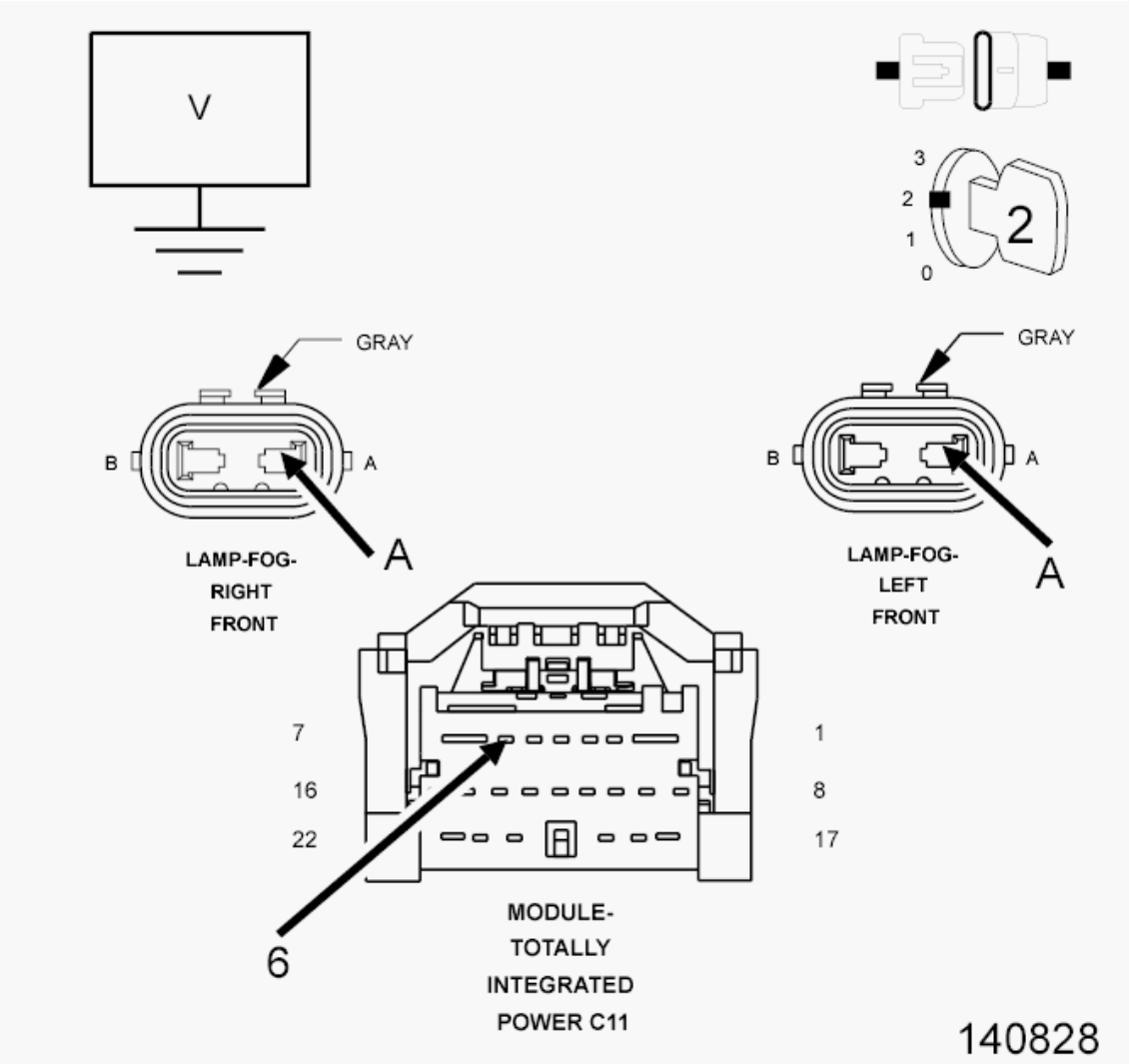

Fig. 93: Measuring Voltage On Front Fog Lamp Control Circuit
Courtesy of CHRYSLER GROUP, LLC

1. Turn the ignition off.
2. Disconnect the TIPM C11 harness connector.
3. Disconnect the Left and Right Front Fog Lamp harness connectors.

4. Turn the ignition on.
5. Measure for voltage on the (L89) (L90) Front Fog Lamp Control circuit.

   Is the voltage above 10.0 volts?

   Yes

   - Repair the (L89) (L90) Front Fog Lamp Control circuit for a short to voltage condition.
   - Perform the BODY VERIFICATION TEST. Refer to **STANDARD PROCEDURE** .

   No

   - Replace the Totally Integrated Power Module (TIPM) in accordance with the service information.
   - Perform the BODY VERIFICATION TEST. Refer to **STANDARD PROCEDURE** .

B1660-FRONT FOG LAMP CONTROL CIRCUIT HIGH - MK49

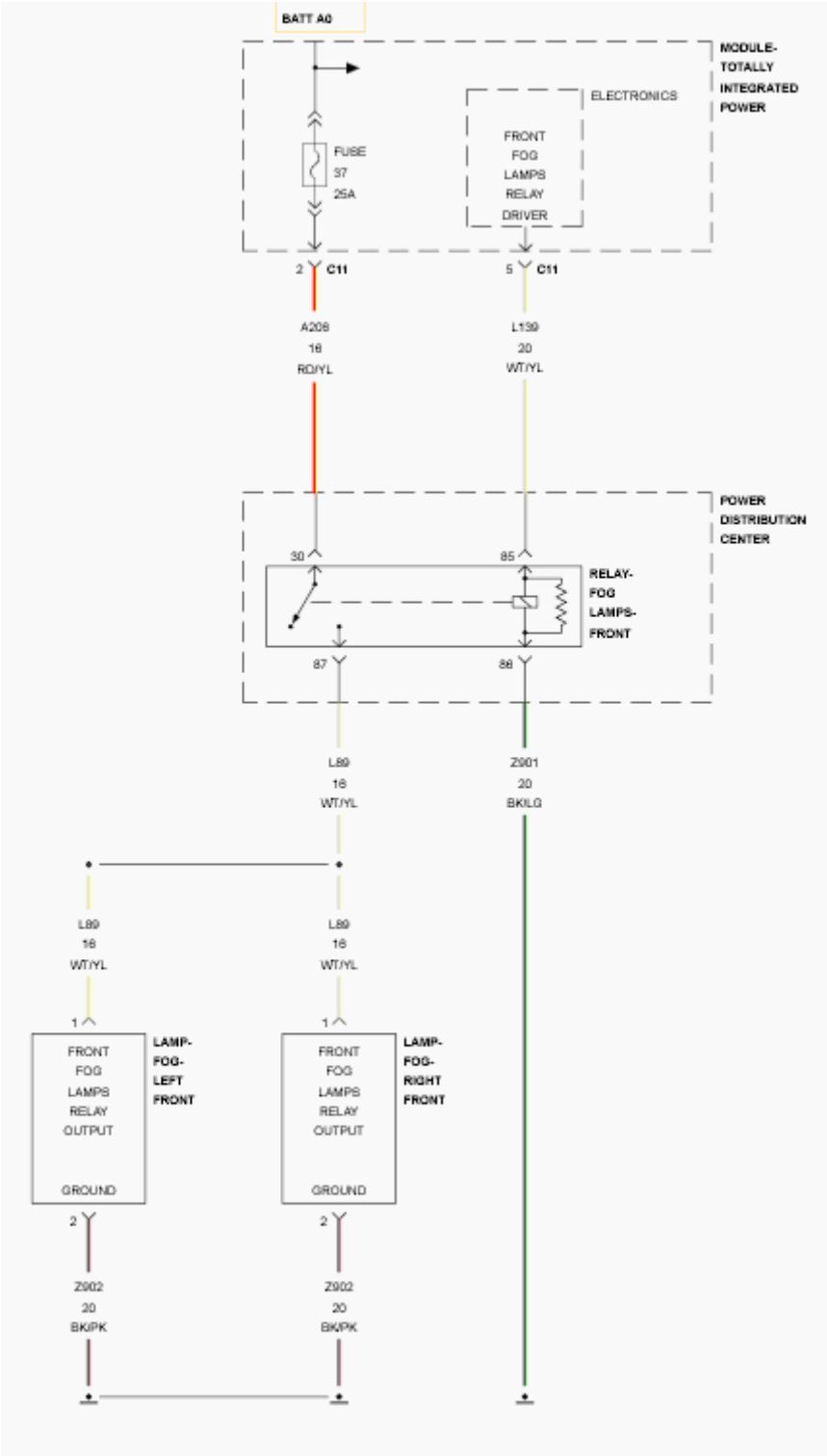

Fig. 94: Front Fog Lamp Control Wiring Diagram
Courtesy of CHRYSLER GROUP, LLC

For a complete wiring diagram, **refer to appropriate SYSTEM WIRING DIAGRAMS article** .

WHEN MONITORED

With the fog lamps active.

SET CONDITION

When the Totally Integrated Power Module (TIPM) detects a high condition on the (L139) Front Fog Lamps Relay Driver circuit.

POSSIBLE CAUSES

Possible Causes
(L139) FRONT FOG LAMPS RELAY DRIVER CIRCUIT SHORTED TO VOLTAGE
FRONT FOG LAMPS RELAY
TOTALLY INTEGRATED POWER MODULE (TIPM)

DIAGNOSTIC TEST

1. **INTERMITTENT CONDITION**
    1. Turn the ignition on.
    2. With the scan tool, clear all DTCs.
    3. Turn the ignition on.
    4. Turn the fog lamps on.
    5. With the scan tool, read DTCs.

    Does the scan tool display DTC: B1660-FRONT FOG LAMP CONTROL CIRCUIT HIGH?

    Yes

    - Go To 2

    No

    - Test complete, the condition or conditions that originally set this DTC are not present at this time. Using the wiring diagrams as a guide, check all related splices and connectors for signs of water intrusion, corrosion, pushed out or bent terminals, and correct pin tension.
    - Perform the BODY VERIFICATION TEST. Refer to **STANDARD PROCEDURE** .

2. **CHECK THE FRONT FOG LAMPS RELAY**
   1. Turn the fog lamps off.
   2. Turn the ignition off.
   3. Remove the Front Fog Lamps Relay and substitute it with a known good relay.
   4. Turn the ignition on.
   5. With the scan tool, clear all DTCs.
   6. Turn the fog lamps on.
   7. With the scan tool, read DTCs.

   Does the scan tool display DTC: B1660-FRONT FOG LAMP CONTROL CIRCUIT HIGH?

   Yes

   - Go To 3

   No

   - Replace the Front Fog Lamps Relay.
   - Perform the BODY VERIFICATION TEST. Refer to **STANDARD PROCEDURE** .

3. **CHECK THE (L139) FRONT FOG LAMPS RELAY DRIVER CIRCUIT FOR A SHORT TO VOLTAGE**
   1. Turn the fog lamps off.
   2. Turn the ignition off.
   3. Remove the Front Fog Lamps Relay.
   4. Disconnect the TIPM C11 harness connector.
   5. Turn the ignition on.
   6. Measure the voltage between ground and the (L139) Front Fog Lamps Relay Driver circuit at the Front Fog Lamps Relay in the Power Distribution Center.

   Is there any voltage present?

   Yes

- Repair the short to voltage in the (L139) Front Fog Lamps Relay Driver circuit.
- Perform the BODY VERIFICATION TEST. Refer to **STANDARD PROCEDURE** .

No

- Replace the TIPM in accordance with the Service Information.
- Perform the BODY VERIFICATION TEST. Refer to **STANDARD PROCEDURE** .

B1661-FRONT FOG LAMP CONTROL CIRCUIT OPEN

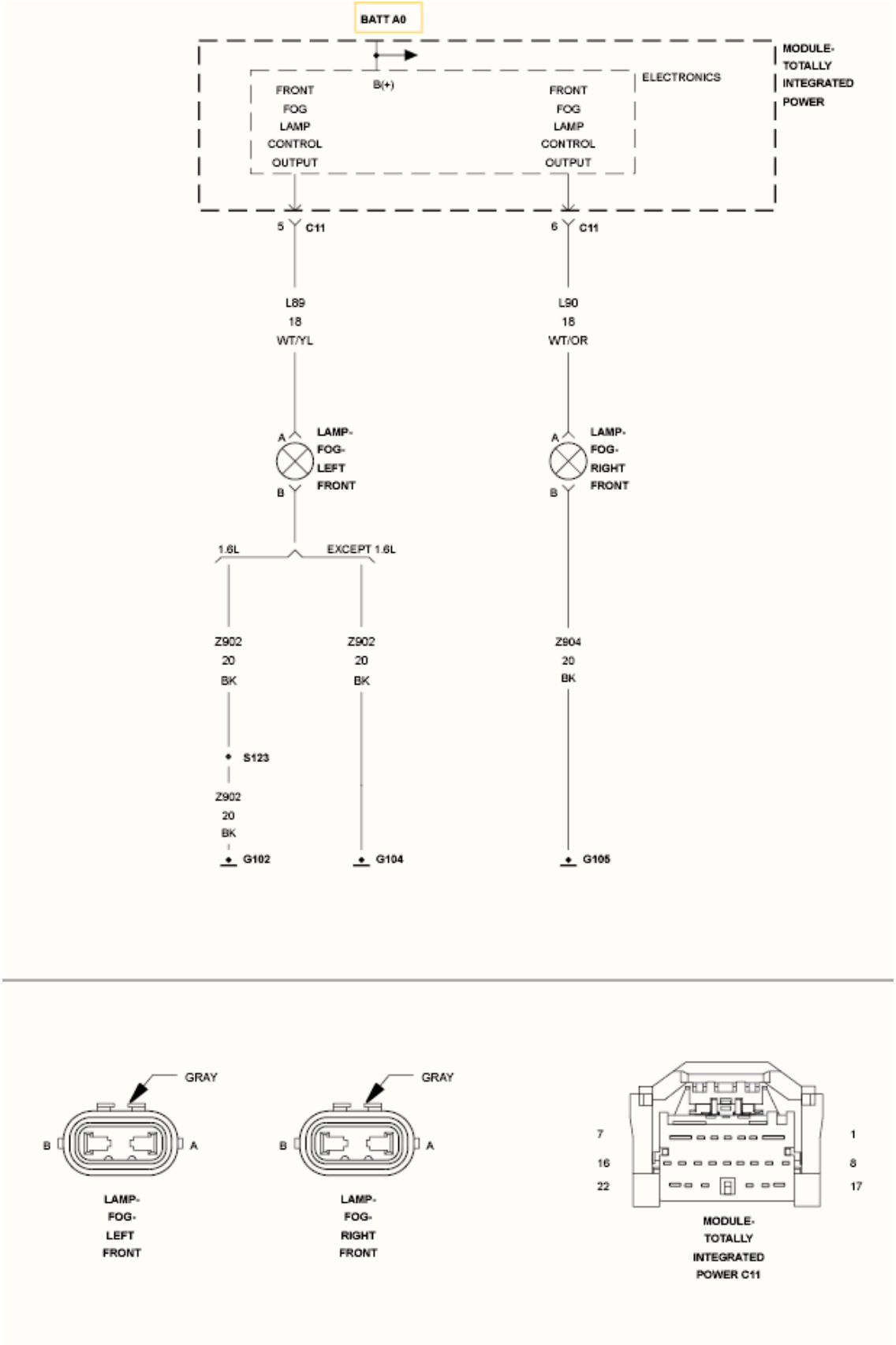

Fig. 95: Front Fog Lamp Control Wiring Diagram
Courtesy of CHRYSLER GROUP, LLC

For a complete wiring diagram, **refer to appropriate SYSTEM WIRING DIAGRAMS article** .

WHEN MONITORED

With the Front fog Lamps Activated.

SET CONDITION

When the TIPM detects a high condition.

POSSIBLE CAUSES

Possible Causes
(L89) (L90) FRONT FOG LAMP CONTROL CIRCUIT OPEN
LEFT AND/OR RIGHT FRONT FOG LAMP BULBS
TOTALLY INTEGRATED POWER MODULE

DIAGNOSTIC TEST

1. **INTERMITTENT CONDITION**
    1. Turn the ignition on.
    2. With the scan tool, clear all TIPM DTCs.
    3. Turn the Front Fog Lamps on.
    4. With the scan tool read the DTC information.

    Does the scan tool read: B1661-FRONT FOG LAMP CONTROL CIRCUIT OPEN?

    Yes

    - Go To 2

    No

    - The condition that caused the symptom is currently not present. Inspect the related wiring for a possible intermittent condition. Look for any chafed, pierced, pinched, or partially broken wires.
    - Perform the BODY VERIFICATION TEST. Refer to **STANDARD PROCEDURE** .

2. **FRONT FOG LAMP BULBS**
    1. Turn the ignition off.
    2. Inspect the Left and Right Front Fog Lamp Bulb Assemblies.

    Are the inoperative bulbs OK?

    Yes

    - Go To 3

    No

    - Replace the Inoperative bulb(s) in accordance with the service information.
    - Perform the BODY VERIFICATION TEST. Refer to **STANDARD PROCEDURE** .
3. **(L89) (L90) FRONT FOG LAMP CONTROL CIRCUIT OPEN**

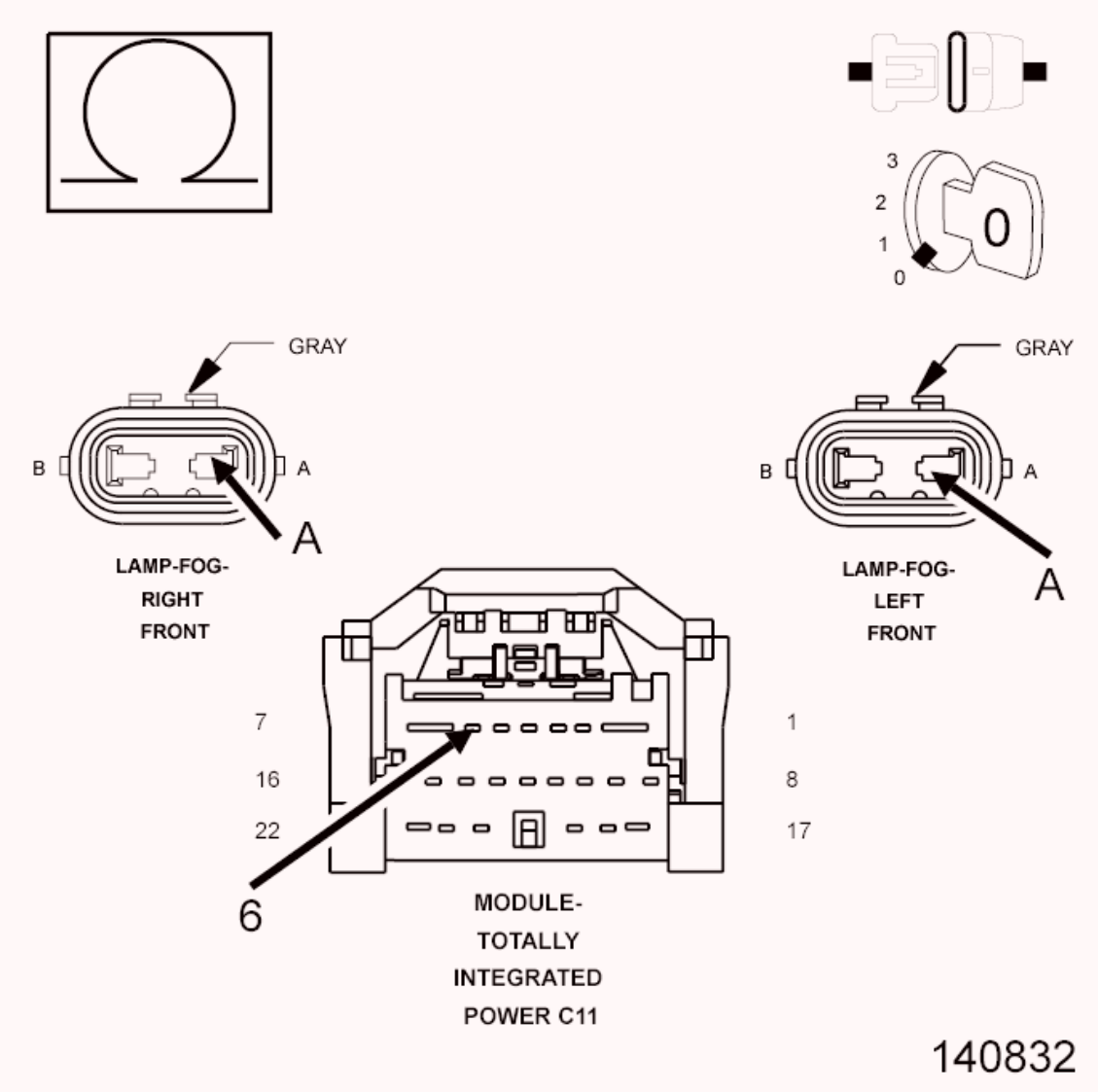

Fig. 96: Measuring Resistance Of Front Fog Lamp Control Circuit
Courtesy of CHRYSLER GROUP, LLC

1. Turn the ignition off.
2. Disconnect the TIPM C11 harness connector.
3. Disconnect the Left and Right Front Fog Lamp harness connectors.
4. Measure the resistance of the (L89) (L90) Front Fog Lamp Control circuit.

   Is the resistance above 5.0 Ohms?

   Yes

   - Repair the (L89) (L90) Front Fog Lamp Control circuit for an open condition.

- Perform the BODY VERIFICATION TEST. Refer to **STANDARD PROCEDURE** .

No

- Replace the Totally Integrated Power Module (TIPM) in accordance with the service information.
- Perform the BODY VERIFICATION TEST. Refer to **STANDARD PROCEDURE** .

B1661-FRONT FOG LAMP CONTROL CIRCUIT OPEN - MK49

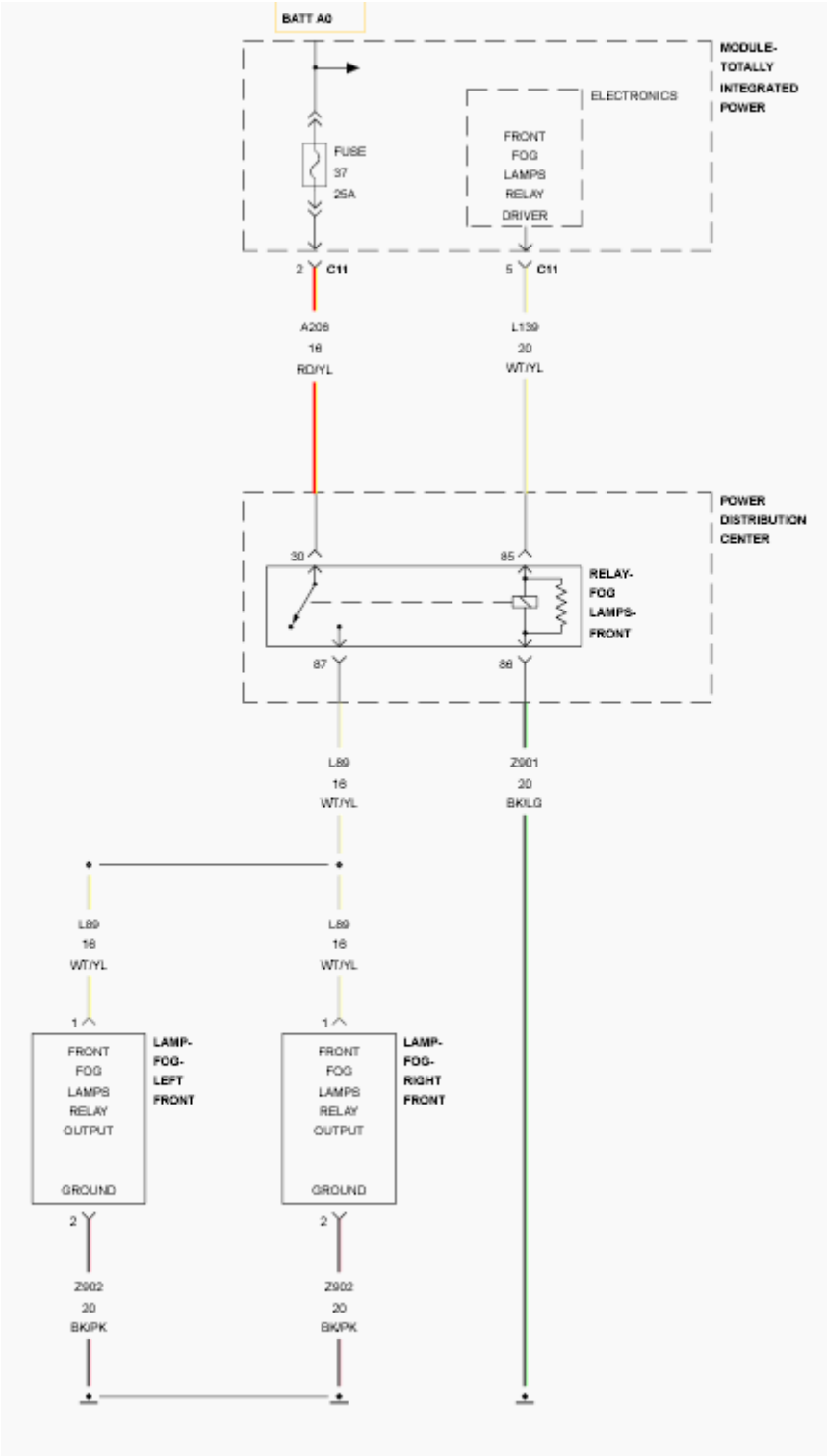

Fig. 97: Front Fog Lamp Control Wiring Diagram
Courtesy of CHRYSLER GROUP, LLC

For a complete wiring diagram, **refer to appropriate SYSTEM WIRING DIAGRAMS article** .

WHEN MONITORED

With the fog lamps active.

SET CONDITION

When the Totally Integrated Power Module (TIPM) detects an open condition on the (L139) Front Fog Lamps Relay Driver circuit.

POSSIBLE CAUSES

Possible Causes
(L139) FRONT FOG LAMPS RELAY DRIVER CIRCUIT OPEN
FRONT FOG LAMPS RELAY
TOTALLY INTEGRATED POWER MODULE (TIPM)

DIAGNOSTIC TEST

1. **INTERMITTENT CONDITION**
    1. Turn the ignition on.
    2. With the scan tool, clear all DTCs.
    3. Turn the ignition on.
    4. Turn the fog lamps on.
    5. With the scan tool, read DTCs.

    Does the scan tool display DTC: B1661-FRONT FOG LAMP CONTROL CIRCUIT OPEN?

    Yes

    - Go To 2

    No

    - Test complete, the condition or conditions that originally set this DTC are not present at this time. Using the wiring diagrams as a guide, check all related splices and connectors for signs of water intrusion, corrosion, pushed out or bent terminals, and correct pin tension.
    - Perform the BODY VERIFICATION TEST. Refer to **STANDARD PROCEDURE** .
2. **CHECK THE FRONT FOG LAMPS RELAY**

1. Turn the fog lamps off.
2. Turn the ignition off.
3. Remove the Front Fog Lamps Relay and substitute it with a known good relay.
4. Turn the ignition on.
5. With the scan tool, clear all DTCs.
6. Turn the fog lamps on.
7. With the scan tool, read DTCs.

   Does the scan tool display DTC: B1661-FRONT FOG LAMP CONTROL CIRCUIT OPEN?

   Yes

   - Go To 3

   No

   - Replace the Front Fog Lamps Relay.
   - Perform the BODY VERIFICATION TEST. Refer to **STANDARD PROCEDURE** .

3. **CHECK THE (L139) FRONT FOG LAMPS RELAY DRIVER CIRCUIT FOR AN OPEN**
   1. Turn the fog lamps off.
   2. Turn the ignition off.
   3. Remove the Front Fog Lamps Relay.
   4. Disconnect the TIPM C11 harness connector.
   5. Measure the resistance of the (L139) Front Fog Lamps Relay Driver circuit between the Front Fog Lamps Relay in the Power Distribution Center and the TIPM C11 harness connector.

      Is the resistance below 5.0 Ohms?

      Yes

      - Replace the TIPM in accordance with the Service Information.
      - Perform the BODY VERIFICATION TEST. Refer to

STANDARD PROCEDURE .

No

- Repair the open in the (L139) Front Fog Lamps Relay Driver circuit.
- Perform the BODY VERIFICATION TEST. Refer to **STANDARD PROCEDURE** .

B1663-REAR FOG LAMP CONTROL CIRCUIT LOW

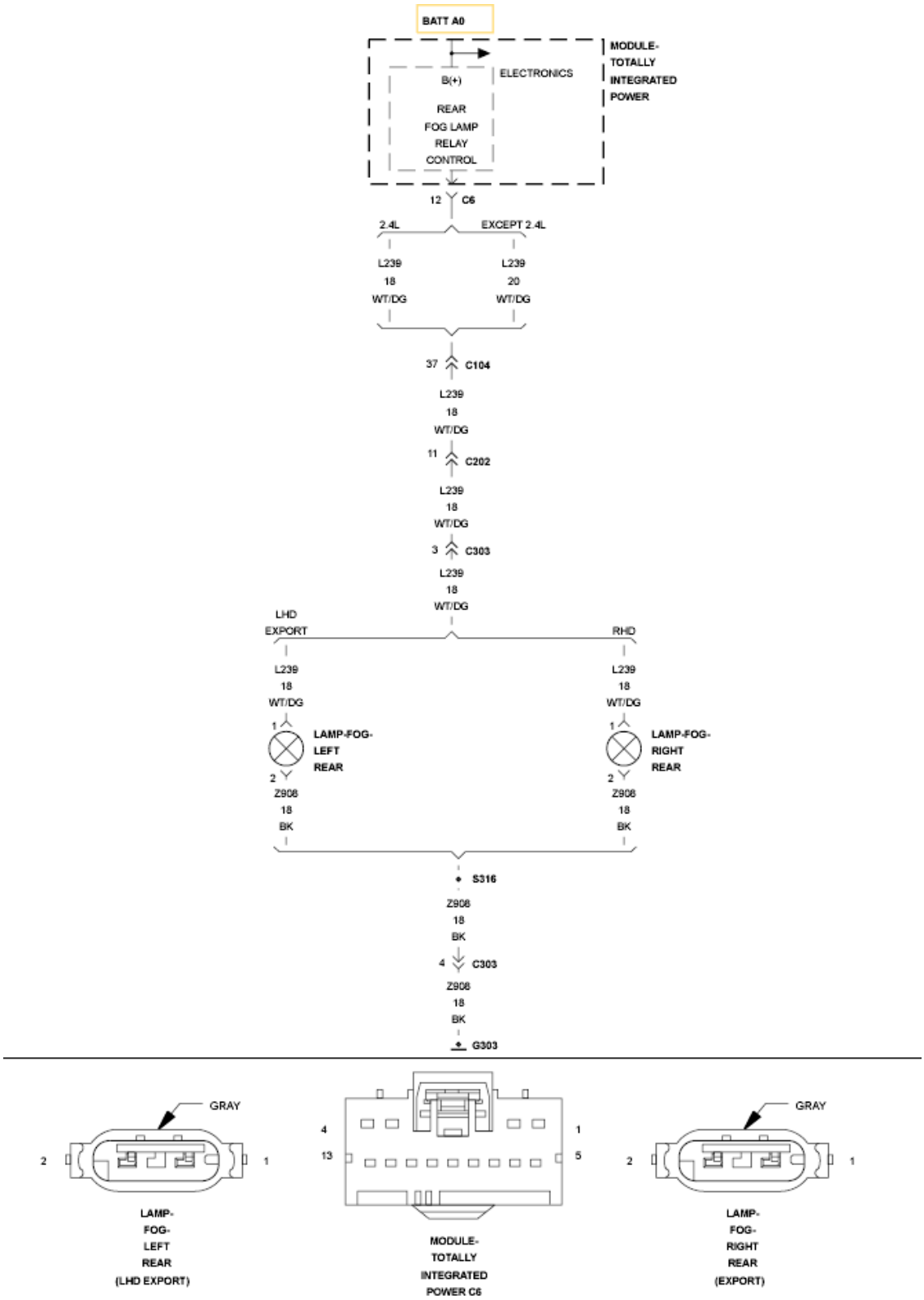

Fig. 98: Rear Fog Lamp Control Wiring Diagram
Courtesy of CHRYSLER GROUP, LLC

For a complete wiring diagram, **refer to appropriate SYSTEM WIRING DIAGRAMS article** .

WHEN MONITORED

With the Rear Fog Lamps activated.

SET CONDITION

When the TIPM detects a low condition.

POSSIBLE CAUSES

Possible Causes
(L239) REAR FOG LAMP CONTROL CIRCUIT SHORT TO GROUND TOTALLY INTEGRATED POWER MODULE

DIAGNOSTIC TEST

1. **INTERMITTENT CONDITION**
    1. Turn the ignition on.
    2. With the scan tool, clear all TIPM DTCs.
    3. Turn the Rear Fog Lamps on.
    4. With the scan tool read the DTC information.

    Does the scan tool read: B1663-REAR FOG LAMP CONTROL CIRCUIT LOW?

    Yes

    - Go To 2

    No

    - The condition that caused the symptom is currently not present. Inspect the related wiring for a possible intermittent condition. Look for any chafed, pierced, pinched, or partially broken wires.
    - Perform the BODY VERIFICATION TEST. Refer to **STANDARD PROCEDURE** .
2. **(L239) REAR FOG LAMP CONTROL CIRCUIT SHORT TO GROUND**

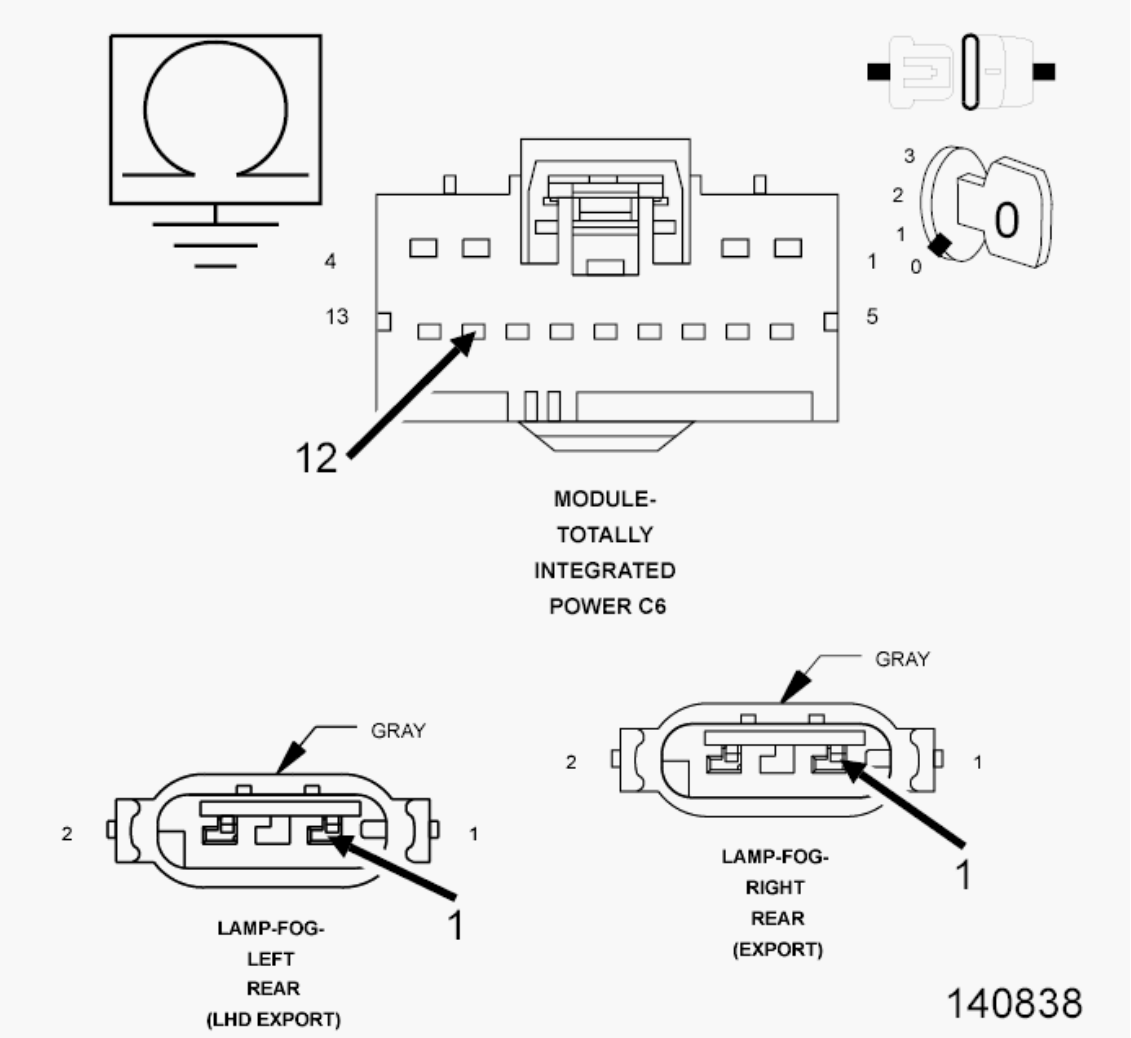

Fig. 99: Measuring Resistance Between Ground & Right Low Beam Control Circuit
Courtesy of CHRYSLER GROUP, LLC

1. Turn the ignition off.
2. Disconnect the TIPM C6 harness connector.
3. Disconnect the Left and Right Fog Lamp harness connectors.
4. Measure the resistance between ground and the (L239) Right Low Beam Control circuit.

   Is the resistance below 5.0 Ohms?

   Yes

   - Repair the (L239) Rear Fog Lamp Control circuit for a short to ground condition.

- Perform the BODY VERIFICATION TEST. Refer to **STANDARD PROCEDURE** .

No

- Replace the Totally Integrated Power Module (TIPM) in accordance with the service information.
- Perform the BODY VERIFICATION TEST. Refer to **STANDARD PROCEDURE** .

B1664-REAR FOG LAMP CONTROL CIRCUIT HIGH

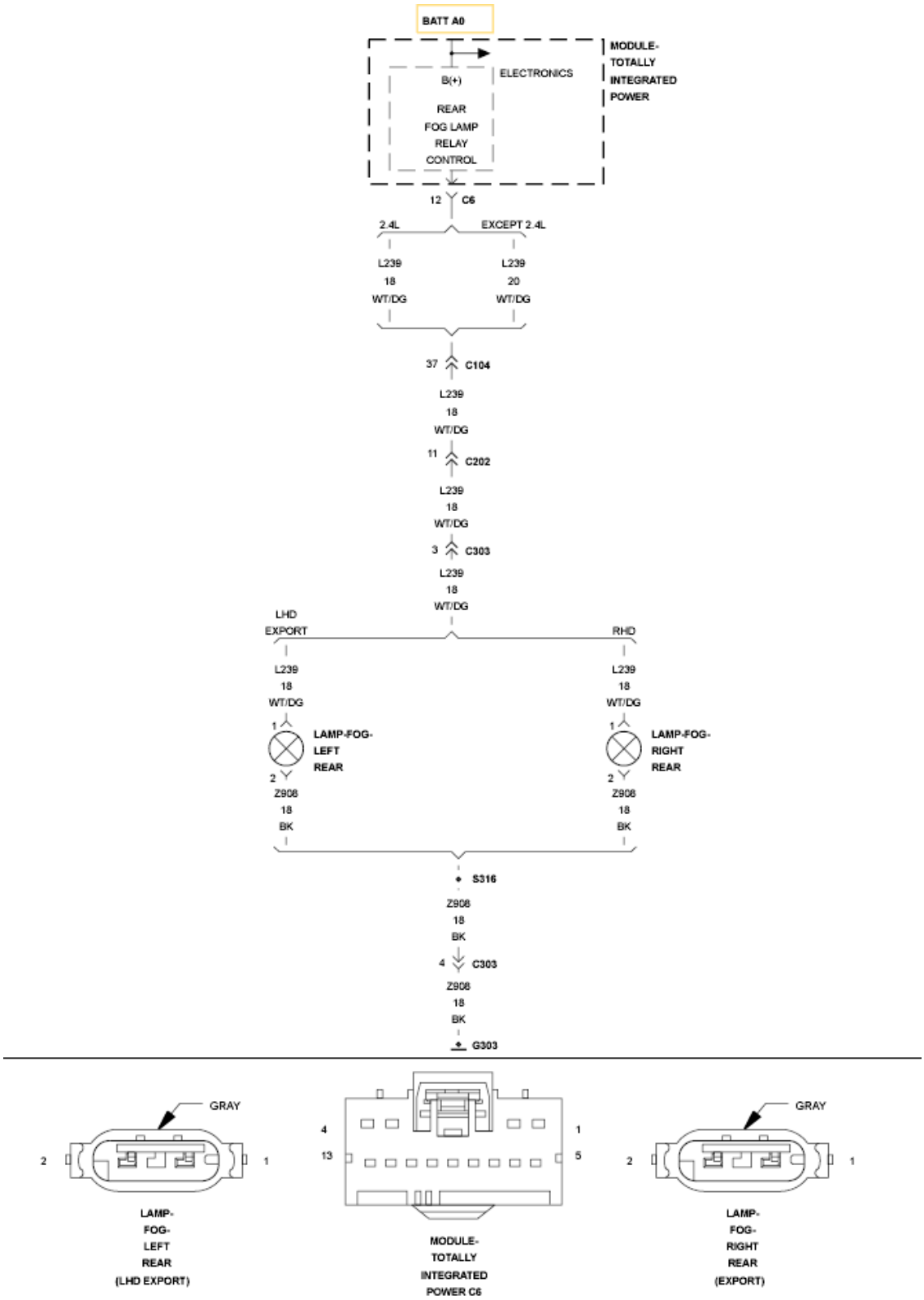

Fig. 100: Rear Fog Lamp Control Wiring Diagram
Courtesy of CHRYSLER GROUP, LLC

For a complete wiring diagram, **refer to appropriate SYSTEM WIRING DIAGRAMS article** .

WHEN MONITORED

With the Rear Fog Lamps activated.

SET CONDITION

When the Totally Integrated Power Module (TIPM) detects a high condition.

POSSIBLE CAUSES

Possible Causes
(L239) REAR FOG LAMP CONTROL CIRCUIT OPEN
(L239) REAR FOG LAMP CONTROL CIRCUIT SHORTED TO VOLTAGE
LEFT AND/OR RIGHT REAR FOG LAMP BULBS
TOTALLY INTEGRATED POWER MODULE (TIPM)

DIAGNOSTIC TEST

1. **INTERMITTENT CONDITION**
    1. Turn the ignition on.
    2. With the scan tool, clear all TIPM DTCs.
    3. Turn the Rear Fog Lamps on.
    4. With the scan tool read the DTC information.

    Does the scan tool read: B1664-REAR FOG LAMP CONTROL CIRCUIT HIGH?

    Yes

    - Go To 2

    No

    - The condition that caused the symptom is currently not present. Inspect the related wiring for a possible intermittent condition. Look for any chafed, pierced, pinched, or partially broken wires.
    - Perform the BODY VERIFICATION TEST. Refer to **STANDARD PROCEDURE** .
2. **LEFT AND RIGHT REAR FOG LAMP BULBS**

1. Turn the ignition off.
2. Inspect the Left and Right Fog Lamp Bulb Assemblies.

   Are the inoperative bulbs OK?

   Yes

   - Go To 3

   No

   - Replace the Inoperative bulb(s) in accordance with the service information.
   - Perform the BODY VERIFICATION TEST. Refer to **STANDARD PROCEDURE** .

3. **(L239) REAR FOG LAMP CONTROL CIRCUIT OPEN**

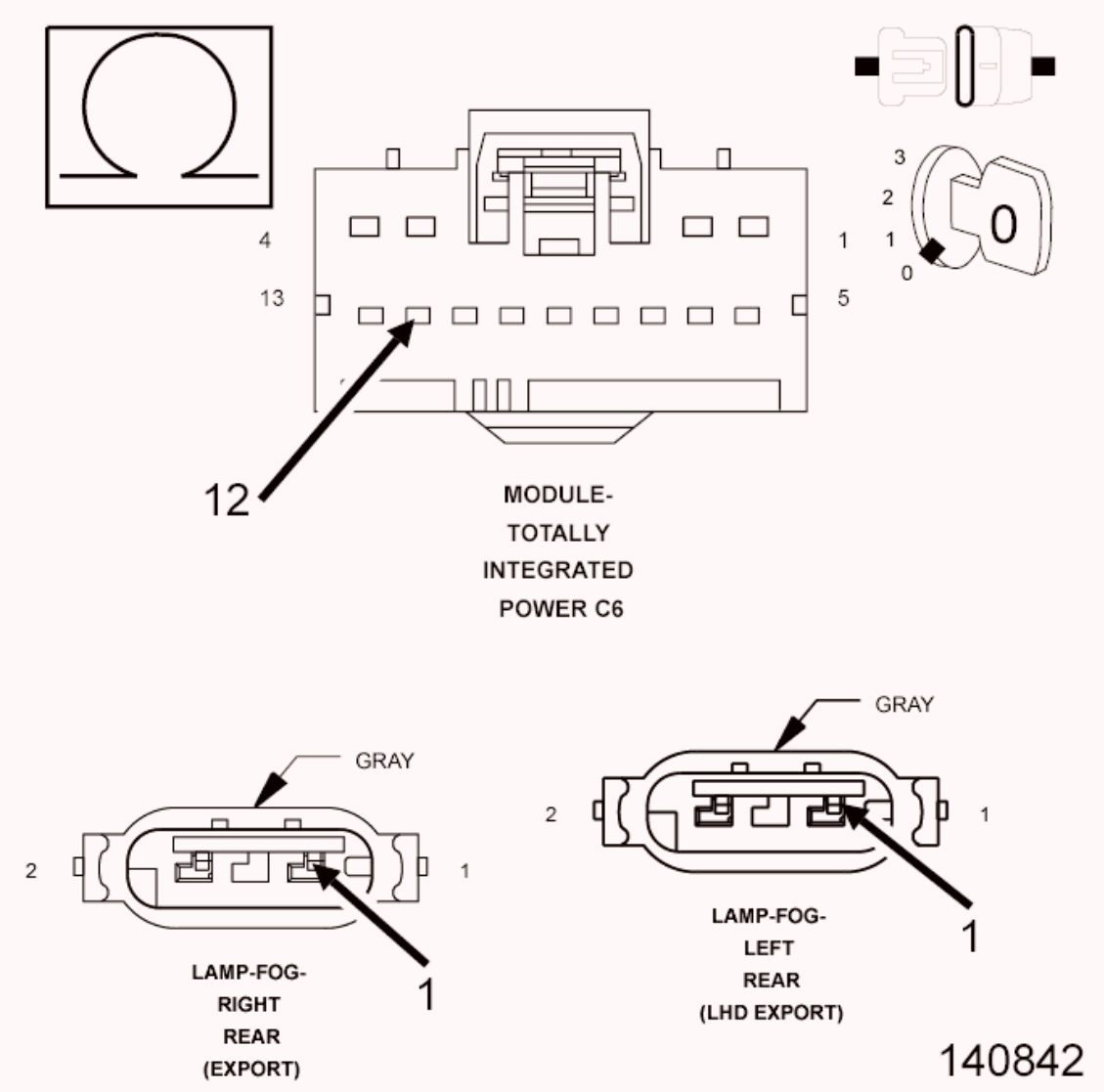

Fig. 101: Measuring Resistance Of Rear Fog Lamp Control Circuit
Courtesy of CHRYSLER GROUP, LLC

1. Turn the ignition off.
2. Disconnect the TIPM C6 harness connector.
3. Disconnect the Left and Right Rear Fog Lamp harness connectors.
4. Measure the resistance of the (L239) Rear Fog Lamp Control circuit.

   Is the resistance above 5.0 Ohms?

   Yes

   - Repair the (L239) Rear Fog Lamp Control circuit for an open condition.
   - Perform the BODY VERIFICATION TEST. Refer to

STANDARD PROCEDURE .

No

- Go To 4

4. **(L239) REAR FOG LAMP CONTROL CIRCUIT SHORTED TO VOLTAGE**

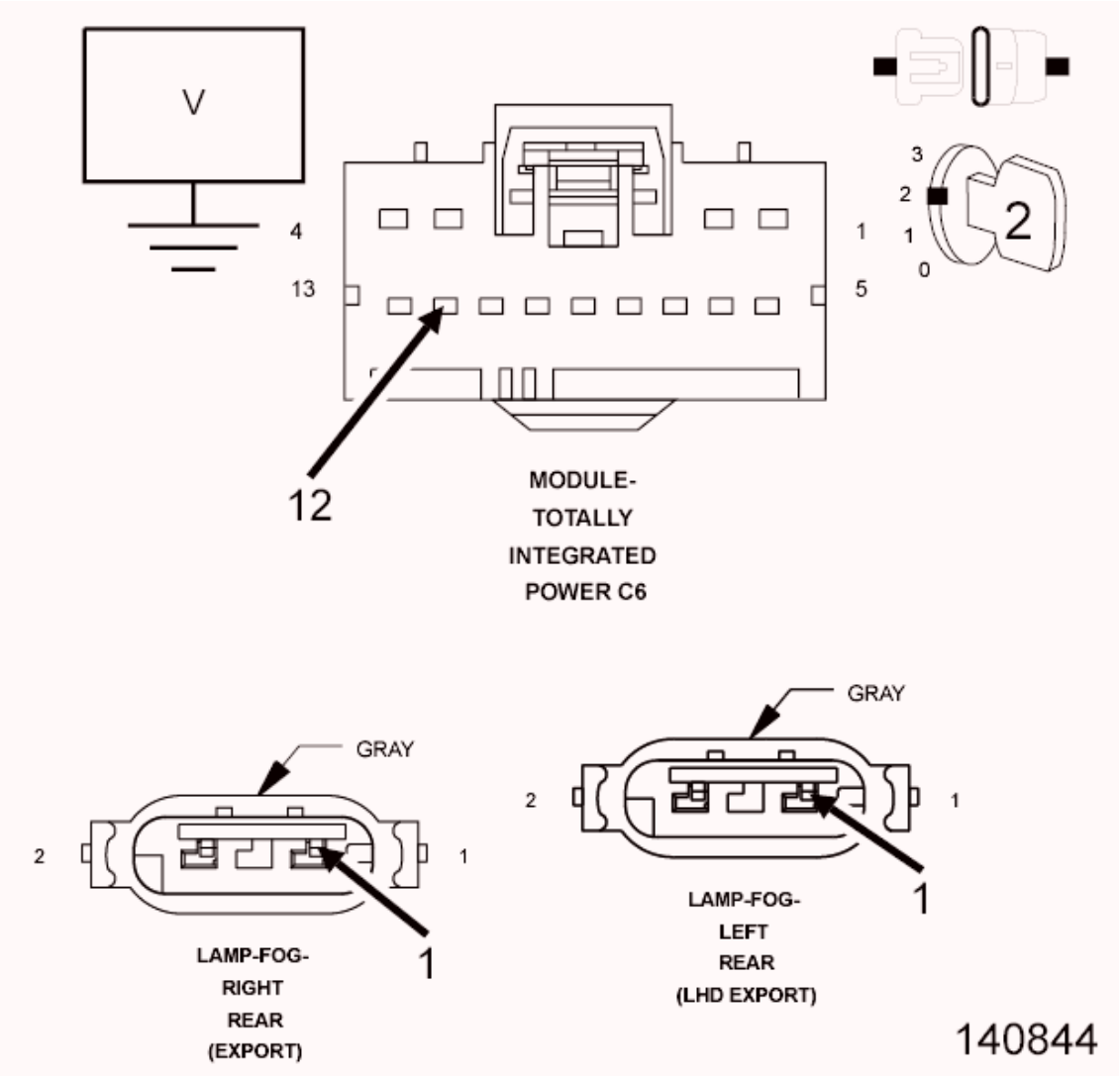

Fig. 102: Measuring Voltage On Rear Fog Lamp Control Circuit
Courtesy of CHRYSLER GROUP, LLC

1. Turn the ignition off.
2. Disconnect the TIPM C6 harness connector.
3. Disconnect the Left and Right Rear Fog Lamp harness connectors.
4. Turn the ignition on.

5. Measure for voltage on the (L239) Rear Fog Lamp Control circuit.

   Is the voltage above 10.0 volts?

   Yes

   - Repair the (L239) Rear Fog Lamp Control circuit for a short to voltage condition.
   - Perform the BODY VERIFICATION TEST. Refer to **STANDARD PROCEDURE** .

   No

   - Replace the Totally Integrated Power Module (TIPM) in accordance with the service information.
   - Perform the BODY VERIFICATION TEST. Refer to **STANDARD PROCEDURE** .

B1667-REVERSE LAMP CONTROL CIRCUIT-LOW

For a complete wiring diagram, **refer to appropriate SYSTEM WIRING DIAGRAMS article** .

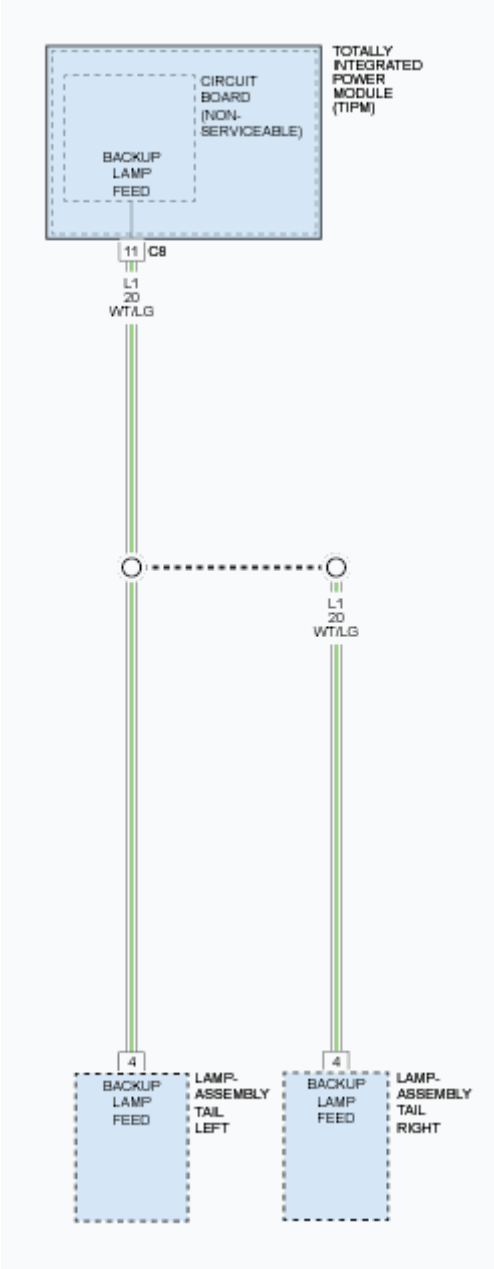

Fig. 103: Reverse Lamp Control - Circuit Diagram
Courtesy of CHRYSLER GROUP, LLC

WHEN MONITORED

With the ignition on.

SET CONDITION

The TIPM Detects a Short to ground condition.

POSSIBLE CAUSES

Possible Causes
(L1) BACK-UP LAMP FEED CIRCUIT SHORT TO GROUND TOTALLY INTEGRATED POWER MODULE

DIAGNOSTIC TEST

1. **INTERMITTENT CONDITION**
    1. Turn the ignition on.
    2. With the scan tool, clear all TIPM DTCs.
    3. Shift the transmission into reverse.
    4. With the scan tool read the DTC information.

    Does the scan tool this DTC as active?

    Yes

    - Go To 2

    No

    - Test complete. The condition that caused the symptom is currently not present. Inspect the related wiring for a possible intermittent condition. Look for any chafed, pierced, pinched, or partially broken wires.
    - Perform the BODY VERIFICATION TEST. Refer to **STANDARD PROCEDURE** .
2. **(L1) BACK-UP LAMP FEED CIRCUIT SHORT TO GROUND**
    1. Turn the ignition off.
    2. Disconnect the TIPM C8 connector.
    3. Measure the resistance between ground and the (L1) Back-up Lamp circuit.

    Is the resistance below 5.0 Ohms?

    Yes

    - Repair the (L1) Back-up Lamp circuit for a short to ground.
    - Perform the BODY VERIFICATION TEST. Refer to

STANDARD PROCEDURE .

No

- Replace the Totally Integrated Power Module (TIPM) in accordance with the service information.
- Perform the BODY VERIFICATION TEST. Refer to **STANDARD PROCEDURE** .

B1668-REVERSE LAMP CONTROL CIRCUIT-HIGH

For a complete wiring diagram, **refer to appropriate SYSTEM WIRING DIAGRAMS article** .

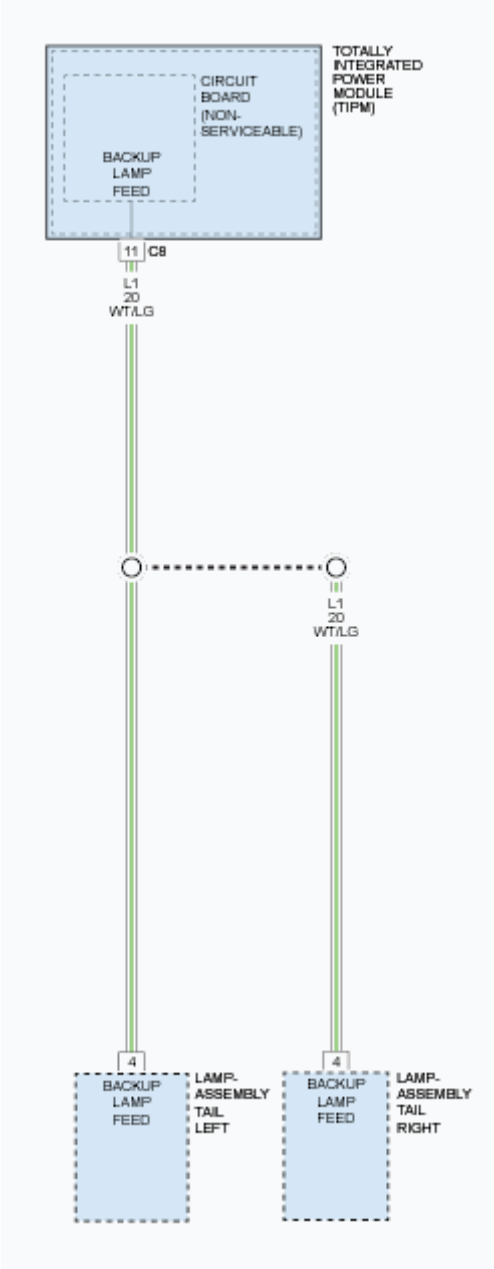

Fig. 104: Reverse Lamp Control - Circuit Diagram
Courtesy of CHRYSLER GROUP, LLC

WHEN MONITORED

With the ignition on.

SET CONDITION

The TIPM detects an open condition.

POSSIBLE CAUSES

Possible Causes
(L1) BACK-UP LAMP FEED CIRCUIT SHORT TO VOLTAGE TIPM

DIAGNOSTIC TEST

1. **TEST FOR INTERMITTENT CONDITION**
    1. Turn the ignition on.
    2. Clear all TIPM DTCs.
    3. Shift the transmission into reverse.
    4. With the scan tool, read DTCs.

    Does the scan tool this DTC as active?

    Yes

    - Go To 2

    No

    - Test complete. The conditions that caused this code to set are not present at this time. Using the wiring diagram/schematic as a guide, inspect the wiring and connectors.
    - Perform the BODY VERIFICATION TEST. Refer to **STANDARD PROCEDURE** .
2. **(L1) BACK-UP LAMP FEED CIRCUIT SHORT TO VOLTAGE**
    1. Turn the ignition off.
    2. Disconnect the TIPM C8 harness connector.
    3. Turn the ignition on.
    4. Measure the voltage on the (L1) Back-up Lamp Feed circuit.

    Is the voltage greater than 10.0 volts?

    Yes

    - Repair the (L1) Back-up Lamp Feed circuit for a short to voltage.
    - Perform the BODY VERIFICATION TEST. Refer to **STANDARD PROCEDURE** .

No

- Replace the Totally Integrated Power Module (TIPM) in accordance with the service information.
- Perform the BODY VERIFICATION TEST. Refer to **STANDARD PROCEDURE** .

B1669-REVERSE LAMP CONTROL CIRCUIT-OPEN

For a complete wiring diagram, **refer to appropriate SYSTEM WIRING DIAGRAMS article** .

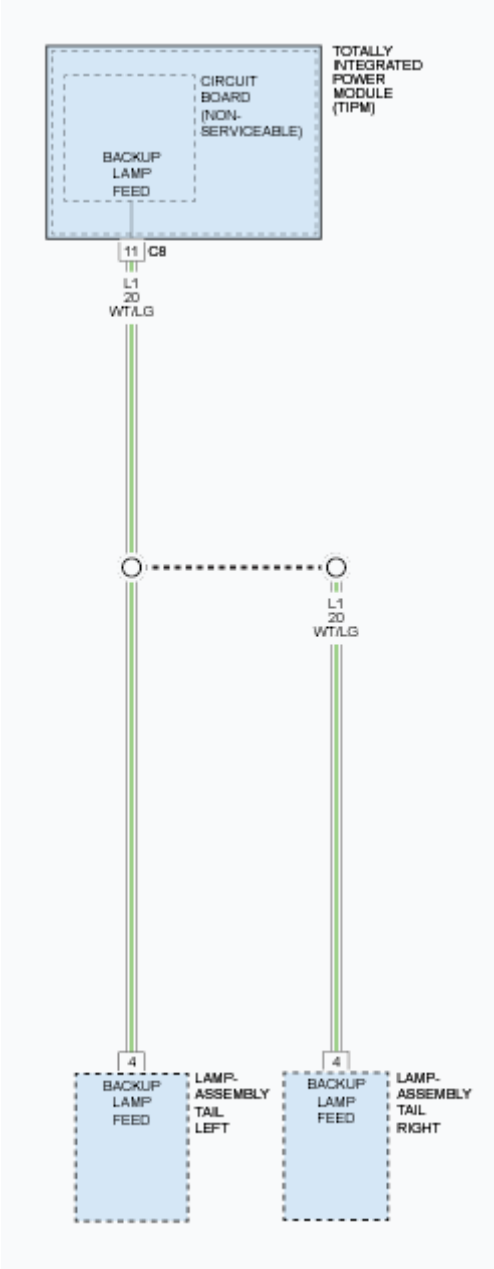

Fig. 105: Reverse Lamp Control - Circuit Diagram
Courtesy of CHRYSLER GROUP, LLC

WHEN MONITORED

With the Reverse Lamps Activated.

SET CONDITION

When the TIPM detects a high condition.

POSSIBLE CAUSES

Possible Causes
(L1) REVERSE LAMP CONTROL CIRCUIT OPEN
LEFT AND/OR RIGHT REVERSE LAMP BULBS
TOTALLY INTEGRATED POWER MODULE

DIAGNOSTIC TEST

1. **INTERMITTENT CONDITION**
    1. Turn the ignition on.
    2. With the scan tool, clear all TIPM DTCs.
    3. Turn the Reverse Lamps on.
    4. With the scan tool read the DTC information.

    Does the scan tool this DTC as active?

    Yes

    - Go To 2

    No

    - Test complete. The condition that caused the symptom is currently not present. Inspect the related wiring for a possible intermittent condition. Look for any chafed, pierced, pinched, or partially broken wires.
    - Perform the BODY VERIFICATION TEST. Refer to **STANDARD PROCEDURE** .

2. **REVERSE LAMP BULBS**
   1. Turn the ignition off.
   2. Inspect the Left and Right Reverse Lamp Bulb Assemblies.

   Are the inoperative bulbs OK?

   Yes

   - Go To 3

   No

   - Replace the Inoperative bulb or bulbs in accordance with the service information.
   - Perform the BODY VERIFICATION TEST. Refer to **STANDARD PROCEDURE** .
3. **(L1) REVERSE LAMP CONTROL CIRCUIT OPEN**
   1. Turn the ignition off.
   2. Disconnect the TIPM C8 harness connector.
   3. Disconnect the Left and Right Reverse Lamp harness connectors.
   4. Measure the resistance of the (L1) Reverse Lamp Control circuit.

   Is the resistance above 5.0 Ohms?

   Yes

   - Repair the (L1) Reverse Lamp Control circuit for an open condition.
   - Perform the BODY VERIFICATION TEST. Refer to **STANDARD PROCEDURE** .

   No

   - Replace the Totally Integrated Power Module (TIPM) in accordance with the service information.
   - Perform the BODY VERIFICATION TEST. Refer to **STANDARD PROCEDURE** .

B16D0-LEFT DRL LAMP CONTROL CIRCUIT LOW

For a complete wiring diagram, **refer to appropriate SYSTEM WIRING DIAGRAMS article** .

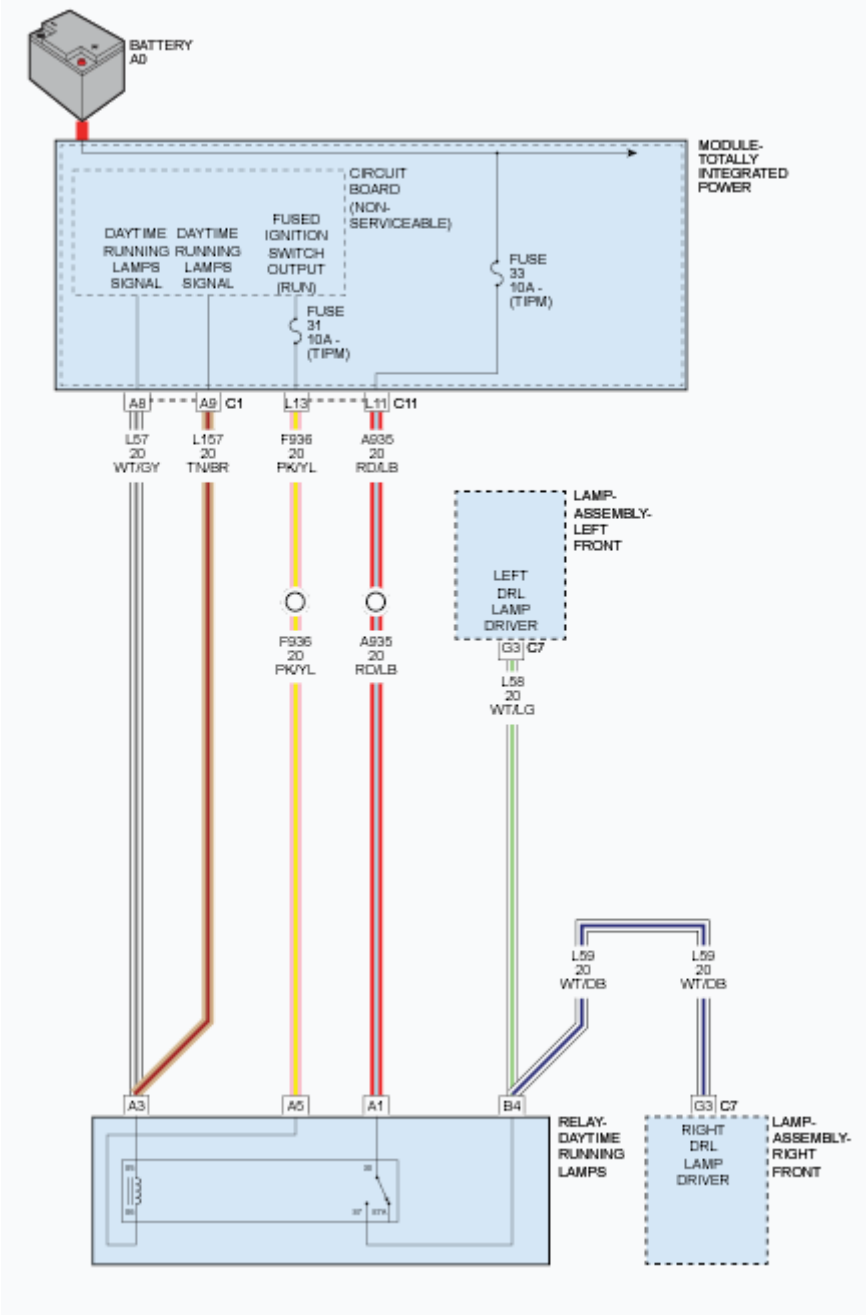

Fig. 106: Left/Right DRL Lamp Control - Circuit Diagram
Courtesy of CHRYSLER GROUP, LLC

THEORY OF OPERATION

The Totally Integrated Power Module (TIPM) controls the Daytime Running Lamps (DRL) relays by providing a ground path for the coil side of the relays. An ignition run circuit provides the supply voltage to the coil. For additional

information on the Daytime Running Lamps operation, refer to **OPERATION** .

WHEN MONITORED

With the DRL active

SET CONDITION

When the TIPM detects a low condition on the (L57) Left Daytime Running Lamp Relay Control circuit.

POSSIBLE CAUSES

Possible Causes
(L57) LEFT DAYTIME RUNNING LAMP RELAY CONTROL CIRCUIT OPEN
LEFT DRL RELAY
TOTALLY INTEGRATED POWER MODULE (TIPM)

DIAGNOSTIC TEST

1. **INTERMITTENT CONDITION**
    1. Turn the ignition on.
    2. With the scan tool, clear all DTCs.
    3. Start the engine.
    4. With the brakes firmly applied, shift the gear selector into Drive.
    5. With the scan tool, read DTCs.

    Does the scan tool display DTC: B16D0-LEFT DRL LAMP CONTROL CIRCUIT LOW?

    Yes

    - Go To 2

    No

    - Test complete, the condition or conditions that originally set this DTC are not present at this time. Using the wiring diagrams as a guide, check all related splices and connectors for signs of water intrusion, corrosion, pushed out or bent terminals, and correct pin

tension.

- Perform the BODY VERIFICATION TEST. Refer to **STANDARD PROCEDURE** .

2. **CHECK THE LEFT DRL RELAY**
   1. Shift the gear selector into Park.
   2. Turn the ignition off.
   3. Remove the Left DRL Relay and substitute it with a known good relay.
   4. Turn the ignition on.
   5. With the scan tool, clear all DTCs.
   6. Start the engine.
   7. With the brakes firmly applied, shift the gear selector into Drive.
   8. With the scan tool, read DTCs.

   Does the scan tool display DTC: B16D0-LEFT DRL LAMP CONTROL CIRCUIT LOW?

   Yes

   - Go To 3

   No

   - Replace the Left DRL Relay.
   - Perform the BODY VERIFICATION TEST. Refer to **STANDARD PROCEDURE** .

3. **CHECK THE (L57) LEFT DAYTIME RUNNING LAMP RELAY CONTROL CIRCUIT FOR AN OPEN**
   1. Shift the gear selector into Park.
   2. Turn the ignition off.
   3. Disconnect the TIPM C1 harness connector.
   4. Measure the resistance of the (L57) Left Daytime Running Lamp Relay Control circuit between the TIPM C1 harness connector and the Left DRL Relay.

   Is the resistance below 5.0 Ohms?

Yes

- Replace the TIPM in accordance with the Service Information.
- Perform the BODY VERIFICATION TEST. Refer to **STANDARD PROCEDURE** .

No

- Repair the open or high resistance in the (L57) Left Daytime Running Lamp Relay Control circuit.
- Perform the BODY VERIFICATION TEST. Refer to **STANDARD PROCEDURE** .

B16D1-LEFT DRL LAMP CONTROL CIRCUIT HIGH

For a complete wiring diagram, **refer to appropriate SYSTEM WIRING DIAGRAMS article** .

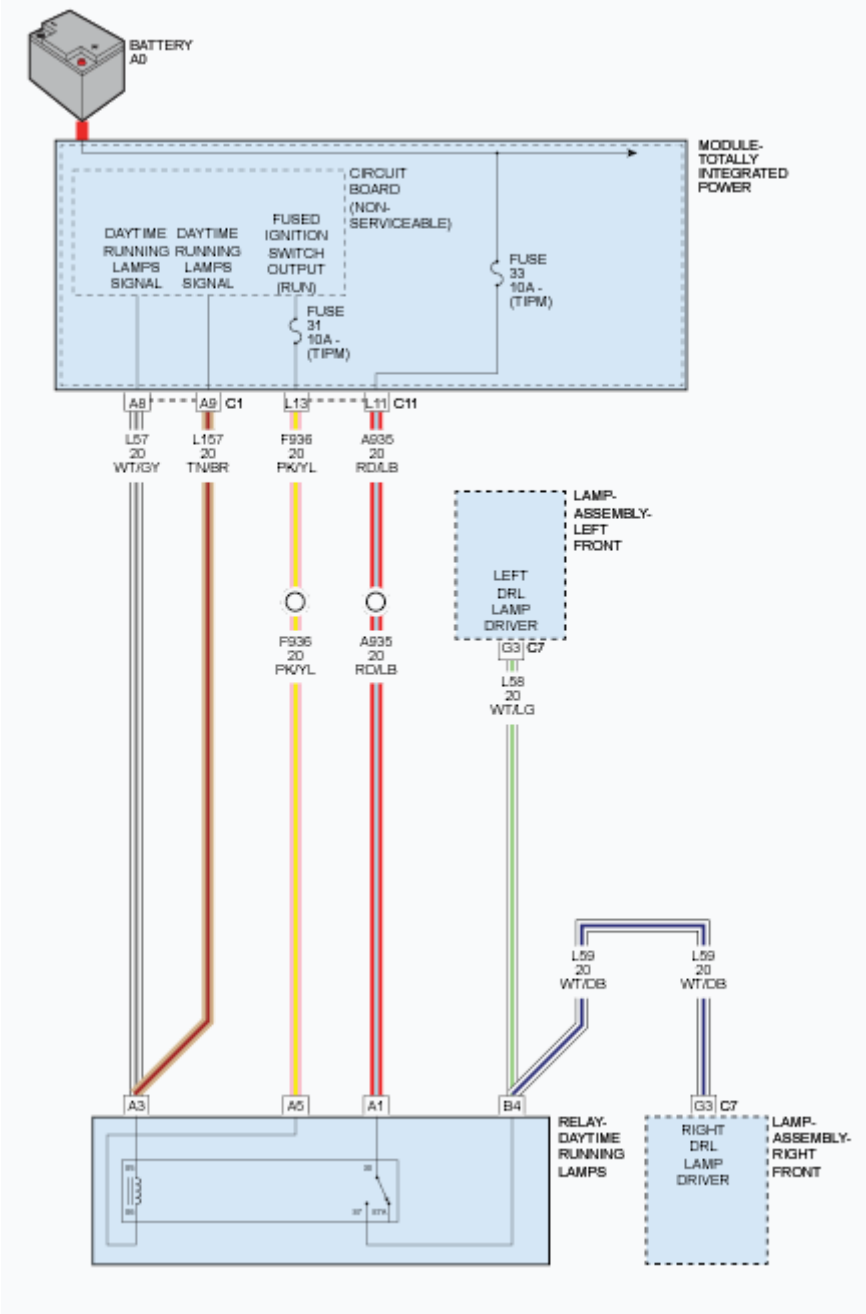

Fig. 107: Left/Right DRL Lamp Control - Circuit Diagram
Courtesy of CHRYSLER GROUP, LLC

THEORY OF OPERATION

The Totally Integrated Power Module (TIPM) controls the Daytime Running Lamps (DRL) relays by providing a ground path for the coil side of the relays. An ignition run circuit provides the supply voltage to the coil. For additional information on the Daytime Running Lamps operation, refer to **OPERATION** .

WHEN MONITORED

With the DRL active

SET CONDITION

When the TIPM detects a high condition on the (L57) Left Daytime Running Lamp Relay Control circuit.

POSSIBLE CAUSES

Possible Causes
(L57) LEFT DAYTIME RUNNING LAMP RELAY CONTROL CIRCUIT SHORTED TO VOLTAGE
LEFT DRL RELAY
TOTALLY INTEGRATED POWER MODULE (TIPM)

DIAGNOSTIC TEST

1. **INTERMITTENT CONDITION**
    1. Turn the ignition on.
    2. With the scan tool, clear all DTCs.
    3. Start the engine.
    4. With the brakes firmly applied, shift the gear selector into Drive.
    5. With the scan tool, read DTCs.

    Does the scan tool display DTC: B16D1-LEFT DRL LAMP CONTROL CIRCUIT HIGH?

    Yes

    - Go To 2

    No

    - Test complete, the condition or conditions that originally set this DTC are not present at this time. Using the wiring diagrams as a guide, check all related splices and connectors for signs of water intrusion, corrosion, pushed out or bent terminals, and correct pin tension.
    - Perform the BODY VERIFICATION TEST. Refer to **STANDARD PROCEDURE** .

2. **CHECK THE LEFT DRL RELAY**
   1. Shift the gear selector into Park.
   2. Turn the ignition off.
   3. Remove the Left DRL Relay and substitute it with a known good relay.
   4. Turn the ignition on.
   5. With the scan tool, clear all DTCs.
   6. Start the engine.
   7. With the brakes firmly applied, shift the gear selector into Drive.
   8. With the scan tool, read DTCs.

   Does the scan tool display DTC: B16D1-LEFT DRL LAMP CONTROL CIRCUIT HIGH?

   Yes

   - Go To 3

   No

   - Replace the Left DRL Relay.
   - Perform the BODY VERIFICATION TEST. Refer to **STANDARD PROCEDURE** .

3. **CHECK THE (L57) LEFT DAYTIME RUNNING LAMP RELAY CONTROL CIRCUIT FOR A SHORT TO VOLTAGE**
   1. Shift the gear selector into Park.
   2. Turn the ignition off.
   3. Remove the Left DRL Relay.
   4. Disconnect the TIPM C1 harness connector.
   5. Turn the ignition on.
   6. Measure the voltage between ground and the (L57) Left Daytime Running Lamp Relay Control circuit at the TIPM C1 harness connector.

   Is there any voltage present?

   Yes

- Repair the short to voltage in the (L57) Left Daytime Running Lamp Relay Control circuit.
- Perform the BODY VERIFICATION TEST. Refer to **STANDARD PROCEDURE** .

No

- Replace the TIPM in accordance with the Service Information.
- Perform the BODY VERIFICATION TEST. Refer to **STANDARD PROCEDURE** .

B16D4-RIGHT DRL LAMP CONTROL CIRCUIT LOW

For a complete wiring diagram, **refer to appropriate SYSTEM WIRING DIAGRAMS article** .

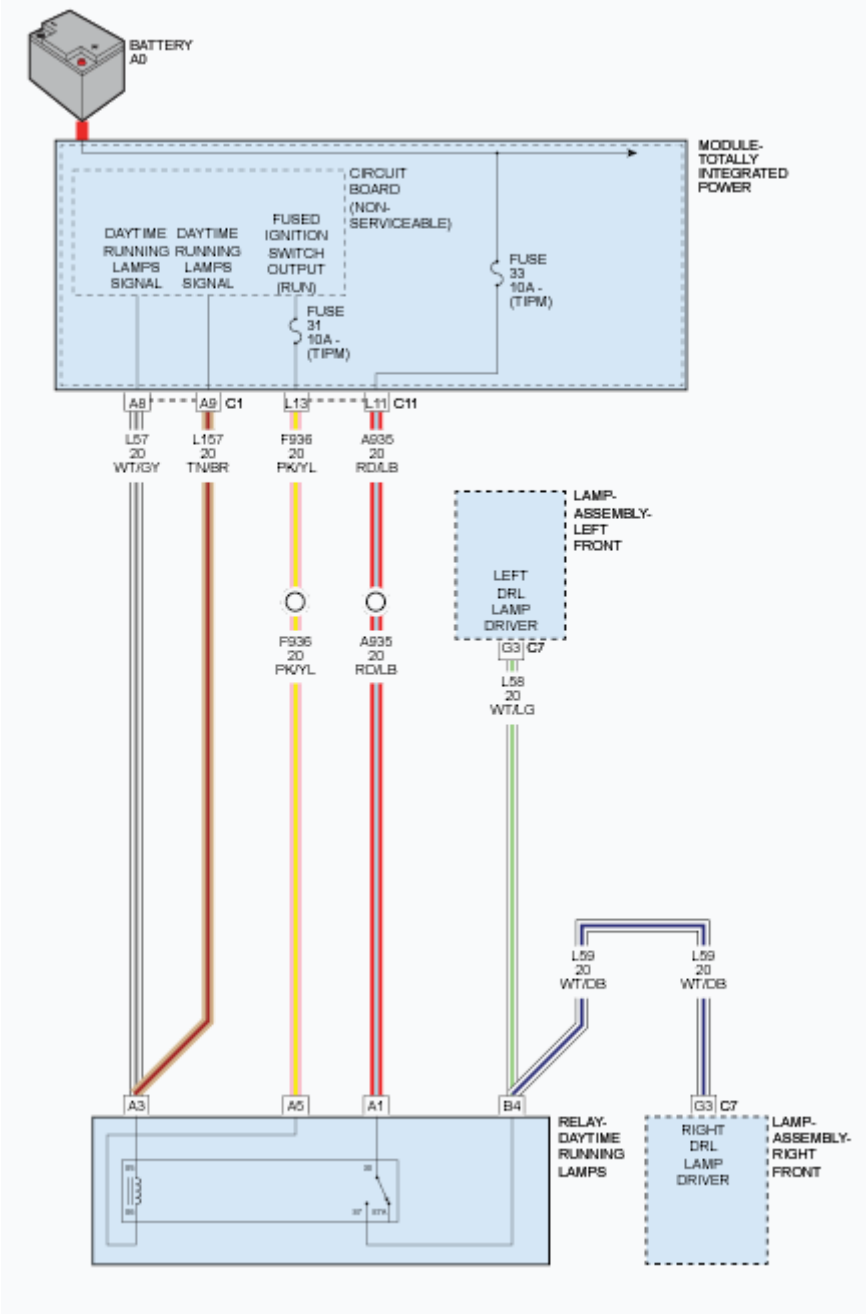

Fig. 108: Left/Right DRL Lamp Control - Circuit Diagram
Courtesy of CHRYSLER GROUP, LLC

THEORY OF OPERATION

The Totally Integrated Power Module (TIPM) controls the Daytime Running Lamps (DRL) relays by providing a ground path for the coil side of the relays. An ignition run circuit provides the supply voltage to the coil. For additional information on the Daytime Running Lamps operation, refer to **OPERATION** .

WHEN MONITORED

With the DRL active

SET CONDITION

When the TIPM detects a low condition on the (L157) Right Daytime Running Lamp Relay Control circuit.

POSSIBLE CAUSES

Possible Causes
(L157) RIGHT DAYTIME RUNNING LAMP RELAY CONTROL CIRCUIT OPEN
RIGHT DRL RELAY
TOTALLY INTEGRATED POWER MODULE (TIPM)

DIAGNOSTIC TEST

1. **INTERMITTENT CONDITION**
    1. Turn the ignition on.
    2. With the scan tool, clear all DTCs.
    3. Start the engine.
    4. With the brakes firmly applied, shift the gear selector into Drive.
    5. With the scan tool, read DTCs.

    Does the scan tool display DTC: B16D4-RIGHT DRL LAMP CONTROL CIRCUIT LOW?

    Yes

    - Go To 2

    No

    - Test complete, the condition or conditions that originally set this DTC are not present at this time. Using the wiring diagrams as a guide, check all related splices and connectors for signs of water intrusion, corrosion, pushed out or bent terminals, and correct pin tension.
    - Perform the BODY VERIFICATION TEST. Refer to **STANDARD PROCEDURE** .

2. **CHECK THE RIGHT DRL RELAY**
   1. Shift the gear selector into Park.
   2. Turn the ignition off.
   3. Remove the Right DRL Relay and substitute it with a known good relay.
   4. Turn the ignition on.
   5. With the scan tool, clear all DTCs.
   6. Start the engine.
   7. With the brakes firmly applied, shift the gear selector into Drive.
   8. With the scan tool, read DTCs.

   Does the scan tool display DTC: B16D4-RIGHT DRL LAMP CONTROL CIRCUIT LOW?

   Yes

   - Go To 3

   No

   - Replace the Right DRL Relay.
   - Perform the BODY VERIFICATION TEST. Refer to **STANDARD PROCEDURE** .

3. **CHECK THE (L157) RIGHT DAYTIME RUNNING LAMP RELAY CONTROL CIRCUIT FOR AN OPEN**
   1. Shift the gear selector into Park.
   2. Turn the ignition off.
   3. Disconnect the TIPM C1 harness connector.
   4. Measure the resistance of the (L157) Right Daytime Running Lamp Relay Control circuit between the TIPM C1 harness connector and the Right DRL Relay.

   Is the resistance below 5.0 Ohms?

   Yes

   - Replace the TIPM in accordance with the Service Information.

- Perform the BODY VERIFICATION TEST. Refer to **STANDARD PROCEDURE** .

No

- Repair the open or high resistance in the (L157) Right Daytime Running Lamp Relay Control circuit.
- Perform the BODY VERIFICATION TEST. Refer to **STANDARD PROCEDURE** .

B16D5-RIGHT DRL LAMP CONTROL CIRCUIT HIGH

For a complete wiring diagram, **refer to appropriate SYSTEM WIRING DIAGRAMS article** .

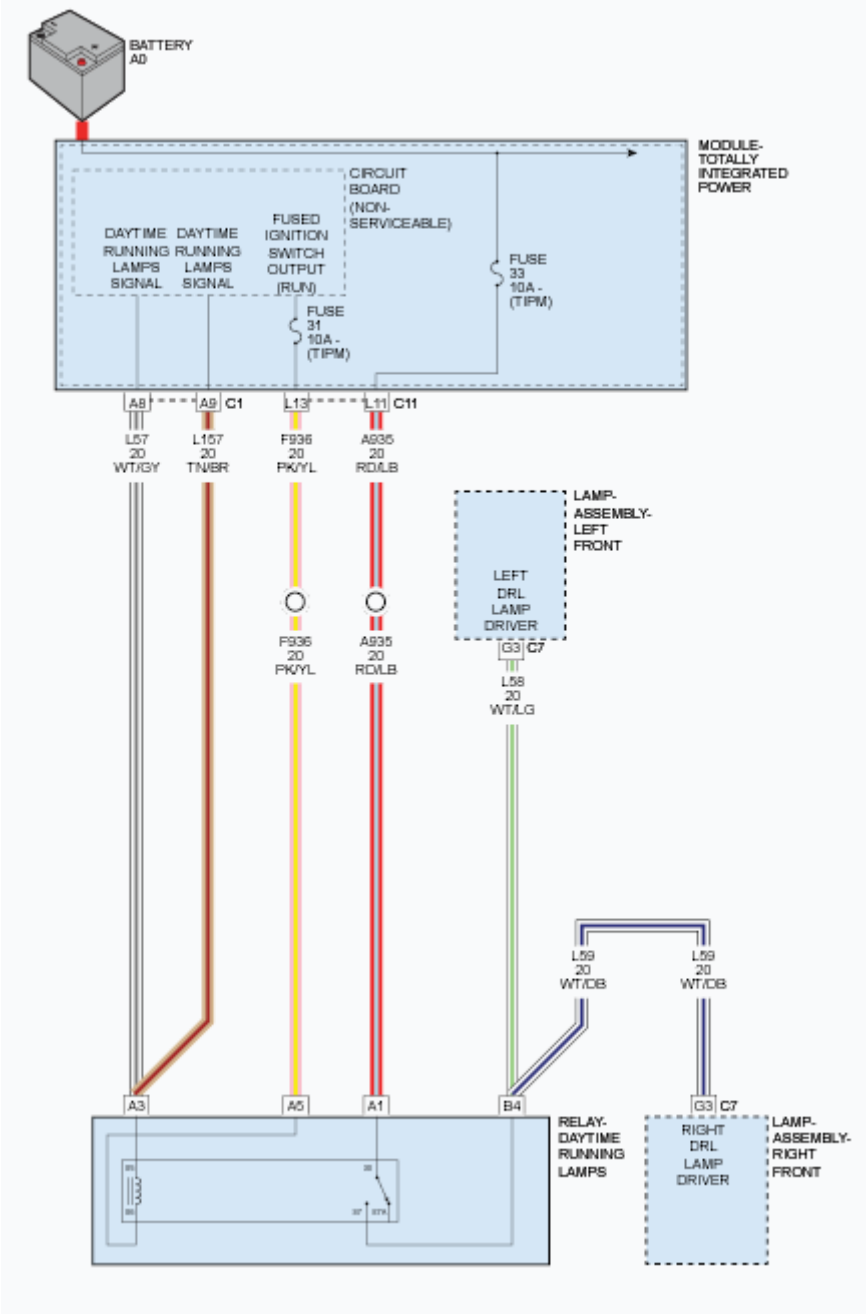

Fig. 109: Left/Right DRL Lamp Control - Circuit Diagram
Courtesy of CHRYSLER GROUP, LLC

THEORY OF OPERATION

The Totally Integrated Power Module (TIPM) controls the Daytime Running Lamps (DRL) relays by providing a ground path for the coil side of the relays. An ignition run circuit provides the supply voltage to the coil. For additional information on the Daytime Running Lamps operation, refer to **OPERATION** .

WHEN MONITORED

With the DRL active

SET CONDITION

When the TIPM detects a high condition on the (L157) Right Daytime Running Lamp Relay Control circuit.

POSSIBLE CAUSES

Possible Causes
(L157) RIGHT DAYTIME RUNNING LAMP RELAY CONTROL CIRCUIT SHORTED TO VOLTAGE
RIGHT DRL RELAY
TOTALLY INTEGRATED POWER MODULE (TIPM)

DIAGNOSTIC TEST

1. **INTERMITTENT CONDITION**
    1. Turn the ignition on.
    2. With the scan tool, clear all DTCs.
    3. Start the engine.
    4. With the brakes firmly applied, shift the gear selector into Drive.
    5. With the scan tool, read DTCs.

    Does the scan tool display DTC: B16D5-RIGHT DRL LAMP CONTROL CIRCUIT HIGH?

    Yes

    - Go To 2

    No

    - Test complete, the condition or conditions that originally set this DTC are not present at this time. Using the wiring diagrams as a guide, check all related splices and connectors for signs of water intrusion, corrosion, pushed out or bent terminals, and correct pin tension.
    - Perform the BODY VERIFICATION TEST. Refer to **STANDARD PROCEDURE** .

2. **CHECK THE RIGHT DRL RELAY**
   1. Shift the gear selector into Park.
   2. Turn the ignition off.
   3. Remove the Right DRL Relay and substitute it with a known good relay.
   4. Turn the ignition on.
   5. With the scan tool, clear all DTCs.
   6. Start the engine.
   7. With the brakes firmly applied, shift the gear selector into Drive.
   8. With the scan tool, read DTCs.

   Does the scan tool display DTC: B16D5-RIGHT DRL LAMP CONTROL CIRCUIT HIGH?

   Yes

   - Go To 3

   No

   - Replace the Right DRL Relay.
   - Perform the BODY VERIFICATION TEST. Refer to **STANDARD PROCEDURE** .

3. **CHECK THE (L157) RIGHT DAYTIME RUNNING LAMP RELAY CONTROL CIRCUIT FOR A SHORT TO VOLTAGE**
   1. Shift the gear selector into Park.
   2. Turn the ignition off.
   3. Remove the Right DRL Relay.
   4. Disconnect the TIPM C1 harness connector.
   5. Turn the ignition on.
   6. Measure the voltage between ground and the (L157) Right Daytime Running Lamp Relay Control circuit at the TIPM C1 harness connector.

   Is there any voltage present?

   Yes

- Repair the short to voltage in the (L157) Right Daytime Running Lamp Relay Control circuit.
- Perform the BODY VERIFICATION TEST. Refer to **STANDARD PROCEDURE** .

No

- Replace the TIPM in accordance with the Service Information.
- Perform the BODY VERIFICATION TEST. Refer to **STANDARD PROCEDURE** .

B1784-STOP LAMP CONTROL CIRCUIT LOW

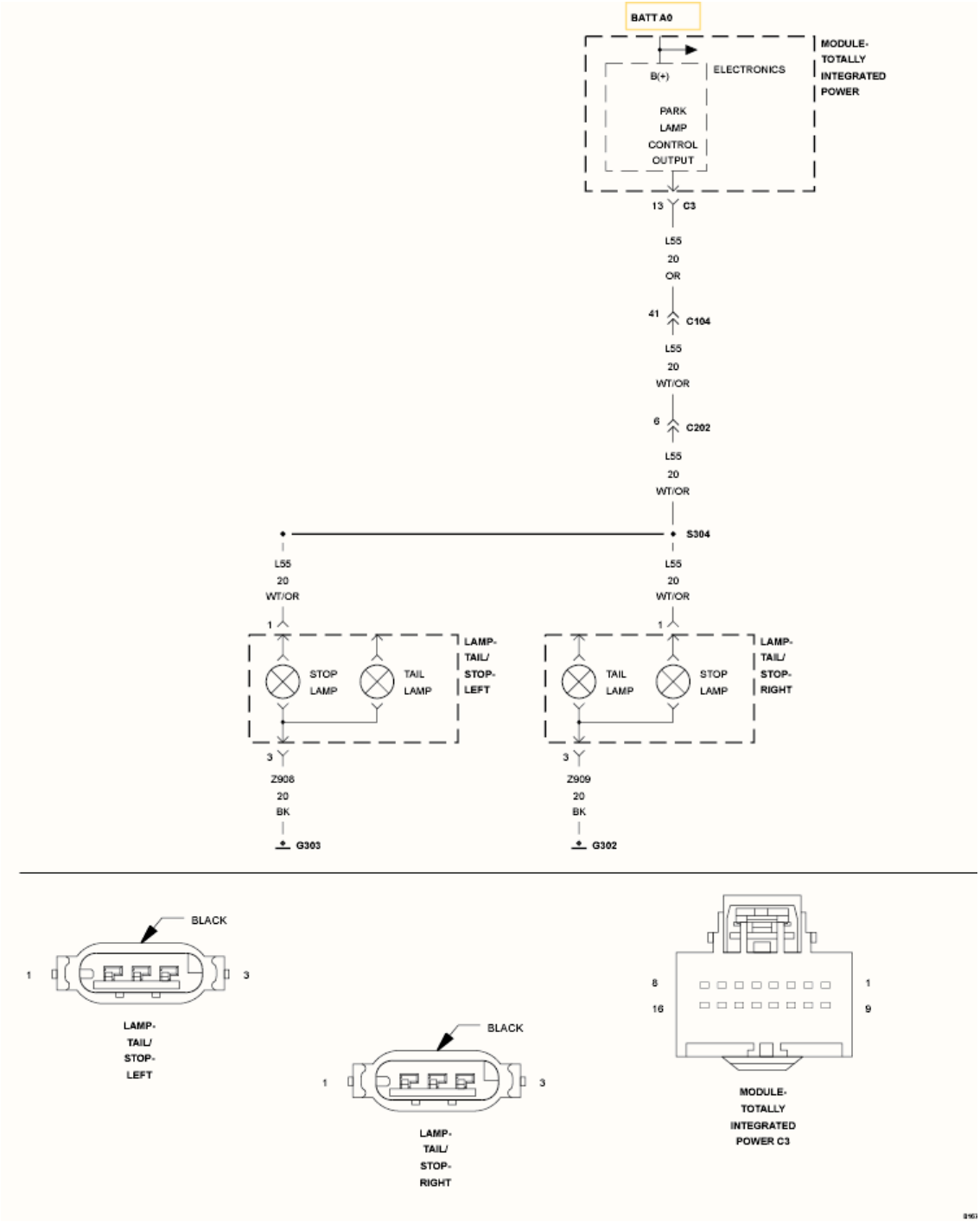

Fig. 110: Stop Lamp Control Wiring Diagram
Courtesy of CHRYSLER GROUP, LLC

For a complete wiring diagram, **refer to appropriate SYSTEM WIRING DIAGRAMS article** .

WHEN MONITORED

With the Stop Lamps activated.

SET CONDITION

When the TIPM detects a low condition.

POSSIBLE CAUSES

Possible Causes
(L55) STOP LAMP CONTROL CIRCUIT SHORTED TO GROUND
TOTALLY INTEGRATED POWER MODULE

DIAGNOSTIC TEST

1. **INTERMITTENT CONDITION**
    1. Turn the ignition on.
    2. With the scan tool, clear all TIPM DTCs.
    3. Turn the Stop Lamps on.
    4. With the scan tool read the DTC information.

    Does the scan tool read: B1784-STOP LAMP CONTROL CIRCUIT LOW?

    Yes

    - Go To 2

    No

    - The condition that caused the symptom is currently not present. Inspect the related wiring for a possible intermittent condition. Look for any chafed, pierced, pinched, or partially broken wires.
    - Perform the BODY VERIFICATION TEST. Refer to **STANDARD PROCEDURE** .
2. **(L55) STOP LAMP CONTROL CIRCUIT SHORTED TO GROUND**

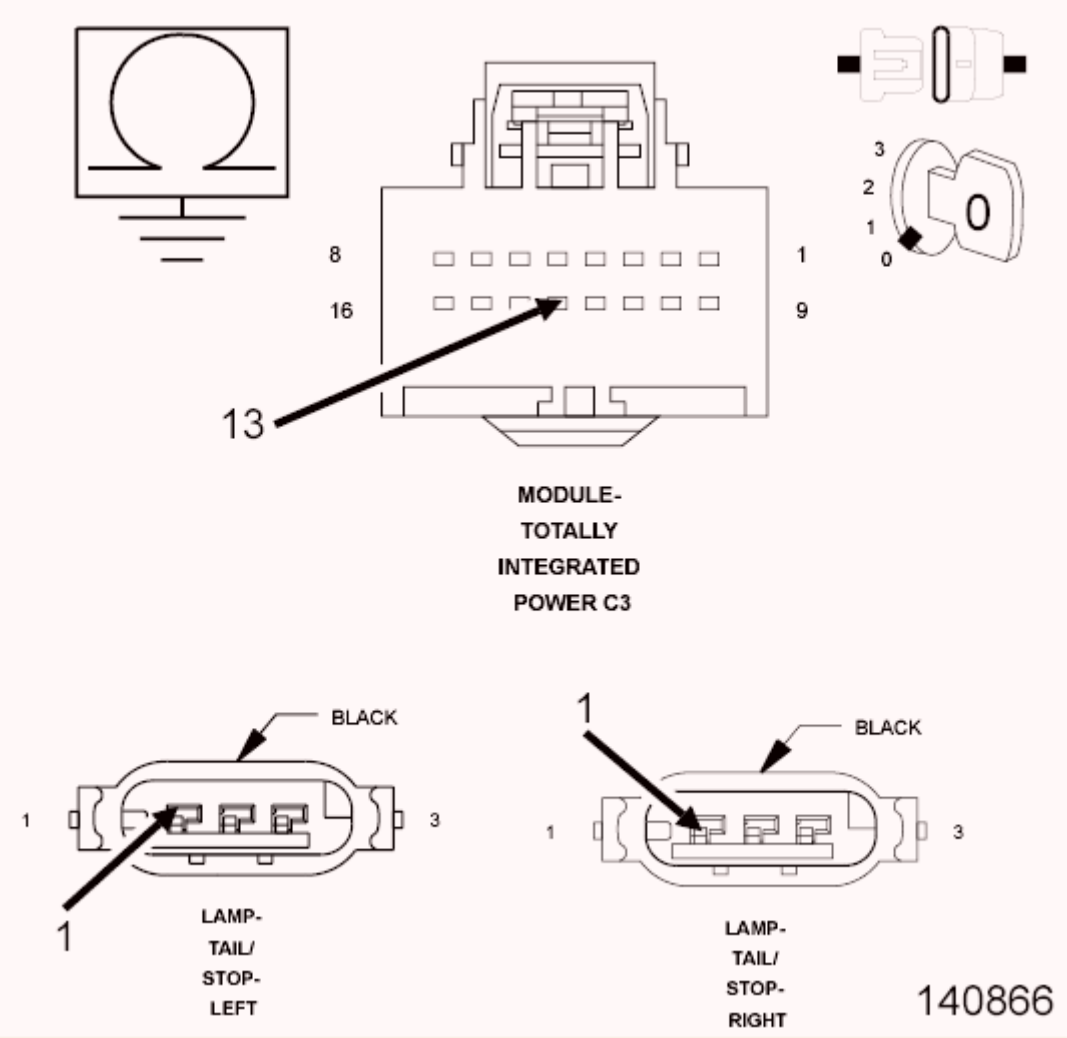

Fig. 111: Measuring Resistance Between Ground & Stop Lamp Control Circuit
Courtesy of CHRYSLER GROUP, LLC

1. Turn the ignition off.
2. Disconnect the TIPM C3 connector.
3. Disconnect the Left and Right Rear Tail Lamp harness connectors.
4. Measure the resistance between ground and the (L55) Stop Lamp Control circuit.

   Is the resistance below 5.0 Ohms?

   Yes

   - Repair the (L55) Stop Lamp Control circuit for a short to ground.
   - Perform the BODY VERIFICATION TEST. Refer to

STANDARD PROCEDURE .

No

- Replace the Totally Integrated Power Module (TIPM) in accordance with the service information.
- Perform the BODY VERIFICATION TEST. Refer to **STANDARD PROCEDURE** .

B1785-STOP LAMP CONTROL CIRCUIT HIGH

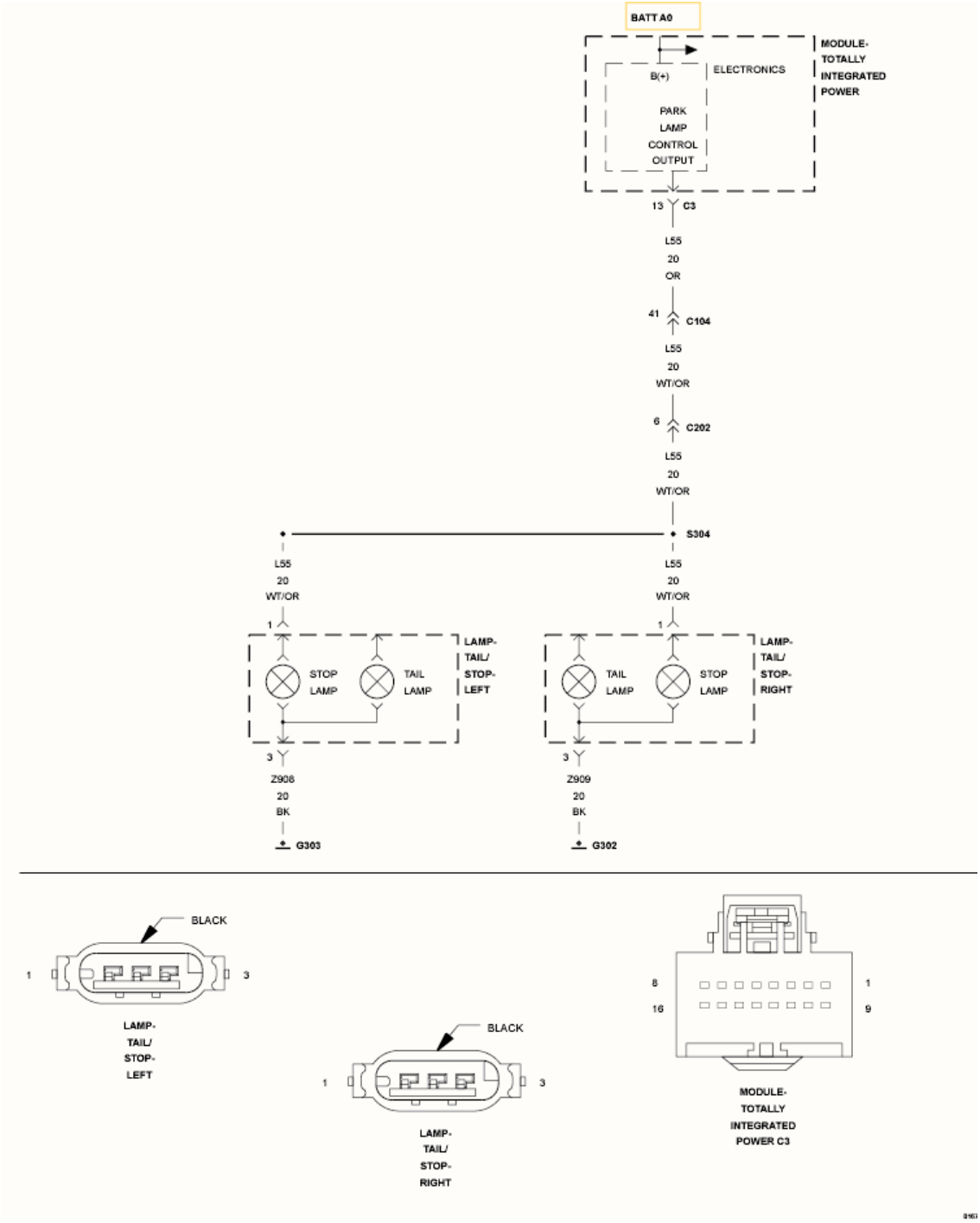

Fig. 112: Stop Lamp Control Wiring Diagram
Courtesy of CHRYSLER GROUP, LLC

For a complete wiring diagram, **refer to appropriate SYSTEM WIRING DIAGRAMS article** .

WHEN MONITORED

With the Stop Lamps Activated.

SET CONDITION

When the TIPM detects a high condition.

POSSIBLE CAUSES

Possible Causes
(L55) STOP LAMP CONTROL CIRCUIT OPEN
(L55) STOP LAMP CONTROL CIRCUIT SHORTED TO VOLTAGE
LEFT AND/OR RIGHT STOP LAMP BULBS
TOTALLY INTEGRATED POWER MODULE

DIAGNOSTIC TEST

1. **INTERMITTENT CONDITION**
    1. Turn the ignition on.
    2. With the scan tool, clear all TIPM DTCs.
    3. Turn the Stop Lamps on.
    4. With the scan tool read the DTC information.

    Does the scan tool read: B1785-STOP LAMP CONTROL CIRCUIT HIGH?

    Yes

    - Go To 2

    No

    - The condition that caused the symptom is currently not present. Inspect the related wiring for a possible intermittent condition. Look for any chafed, pierced, pinched, or partially broken wires.
    - Perform the BODY VERIFICATION TEST. Refer to **STANDARD PROCEDURE** .
2. **STOP LAMP BULBS**
    1. Turn the ignition off.
    2. Inspect the Left and Right Stop Lamp Bulb Assemblies.

    Are the inoperative bulbs OK?

Yes

- Go To 3

No

- Replace the Inoperative bulb or bulbs in accordance with the service information.
- Perform the BODY VERIFICATION TEST. Refer to **STANDARD PROCEDURE** .

3. **(L55) STOP LAMP CONTROL CIRCUIT OPEN**

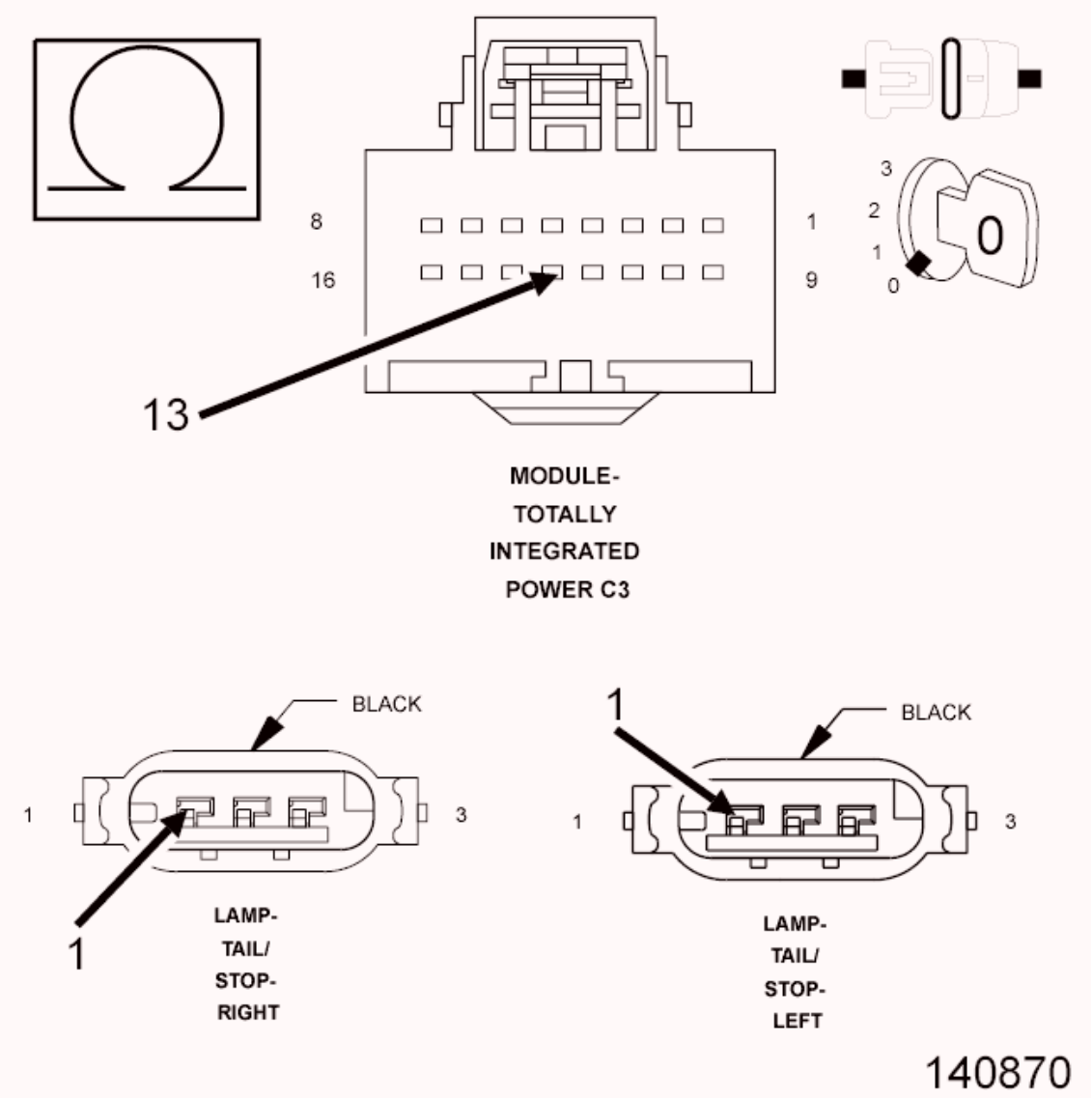

Fig. 113: Measuring Resistance Of Stop Lamp Control Circuit For Open
Courtesy of CHRYSLER GROUP, LLC

1. Turn the ignition off.
2. Disconnect the TIPM C3 harness connector.
3. Disconnect the Left and Right Stop Lamp harness connectors.
4. Measure the resistance of the (L55) Stop Lamp Control circuit.

   Is the resistance above 5.0 Ohms?

   Yes

   - Repair the (L55) Stop Lamp Control circuit for an open condition.
   - Perform the BODY VERIFICATION TEST. Refer to **STANDARD PROCEDURE** .

   No

   - Go To4

4. **(L55) STOP LAMP CONTROL CIRCUIT SHORTED TO VOLTAGE**

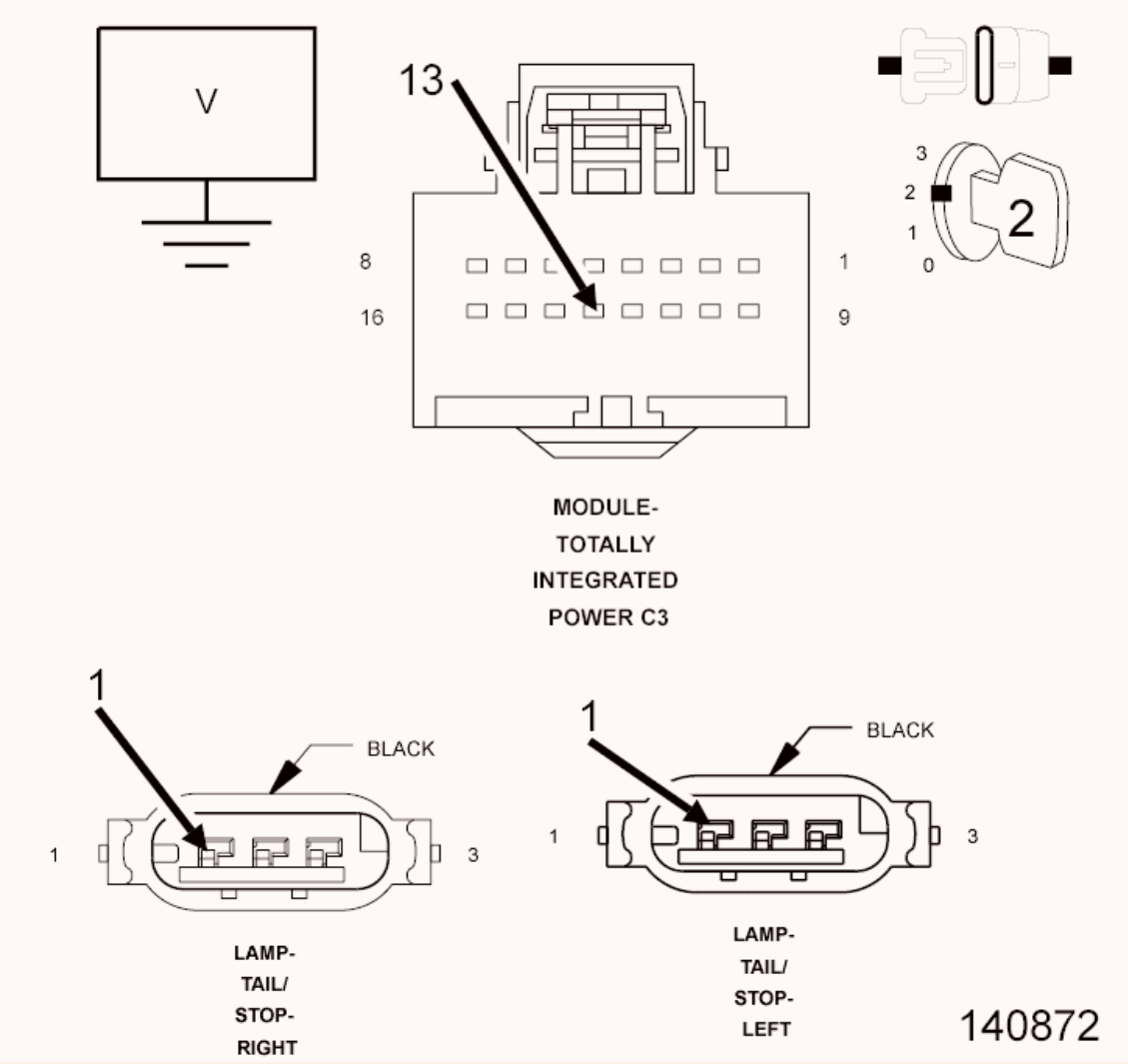

Fig. 114: Measuring Voltage On Stop Lamp Control circuit
Courtesy of CHRYSLER GROUP, LLC

1. Turn the ignition off.
2. Disconnect the TIPM C3 harness connector.
3. Disconnect the Left and Right Stop Lamp harness connectors.
4. Turn the ignition on.
5. Measure for voltage on the (L55) Stop Lamp Control circuit.

   Is the voltage above 10.0 volts?

   Yes

   - Repair the (L55) Stop Lamp Control circuit for a short to voltage condition.
   - Perform the BODY VERIFICATION TEST. Refer to

STANDARD PROCEDURE .

No

- Replace the Totally Integrated Power Module (TIPM) in accordance with the service information.
- Perform the BODY VERIFICATION TEST. Refer to **STANDARD PROCEDURE** .

B1786-STOP LAMP CONTROL CIRCUIT OPEN

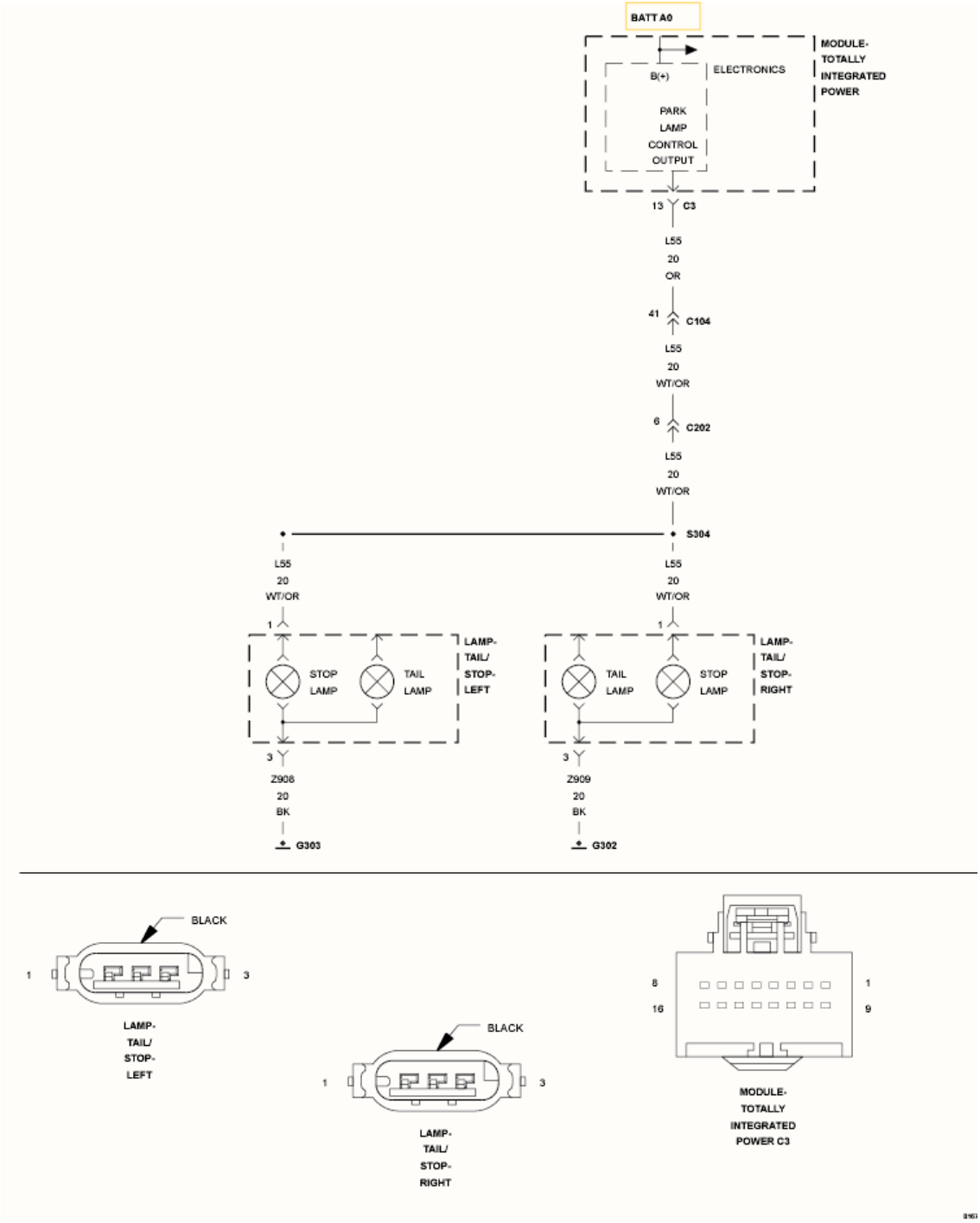

Fig. 115: Stop Lamp Control Wiring Diagram
Courtesy of CHRYSLER GROUP, LLC

For a complete wiring diagram, **refer to appropriate SYSTEM WIRING DIAGRAMS article** .

WHEN MONITORED

With the Stop Lamps Activated.

SET CONDITION

When the TIPM detects a high condition.

POSSIBLE CAUSES

Possible Causes
(L55) STOP LAMP CONTROL CIRCUIT OPEN
LEFT AND/OR RIGHT STOP LAMP BULBS
TOTALLY INTEGRATED POWER MODULE

DIAGNOSTIC TEST

1. **INTERMITTENT CONDITION**
    1. Turn the ignition on.
    2. With the scan tool, clear all TIPM DTCs.
    3. Turn the Stop Lamps on.
    4. With the scan tool read the DTC information.

    Does the scan tool read: B1786-STOP LAMP CONTROL CIRCUIT OPEN?

    Yes

    - Go To 2

    No

    - The condition that caused the symptom is currently not present. Inspect the related wiring for a possible intermittent condition. Look for any chafed, pierced, pinched, or partially broken wires.
    - Perform the BODY VERIFICATION TEST. Refer to **STANDARD PROCEDURE** .
2. **STOP LAMP BULBS**
    1. Turn the ignition off.
    2. Inspect the Left and Right Stop Lamp Bulb Assemblies.

    Are the inoperative bulbs OK?

    Yes

- Go To 3

No

- Replace the Inoperative bulb or bulbs in accordance with the service information.
- Perform the BODY VERIFICATION TEST. Refer to **STANDARD PROCEDURE** .

3. **(L55) STOP LAMP CONTROL CIRCUIT OPEN**

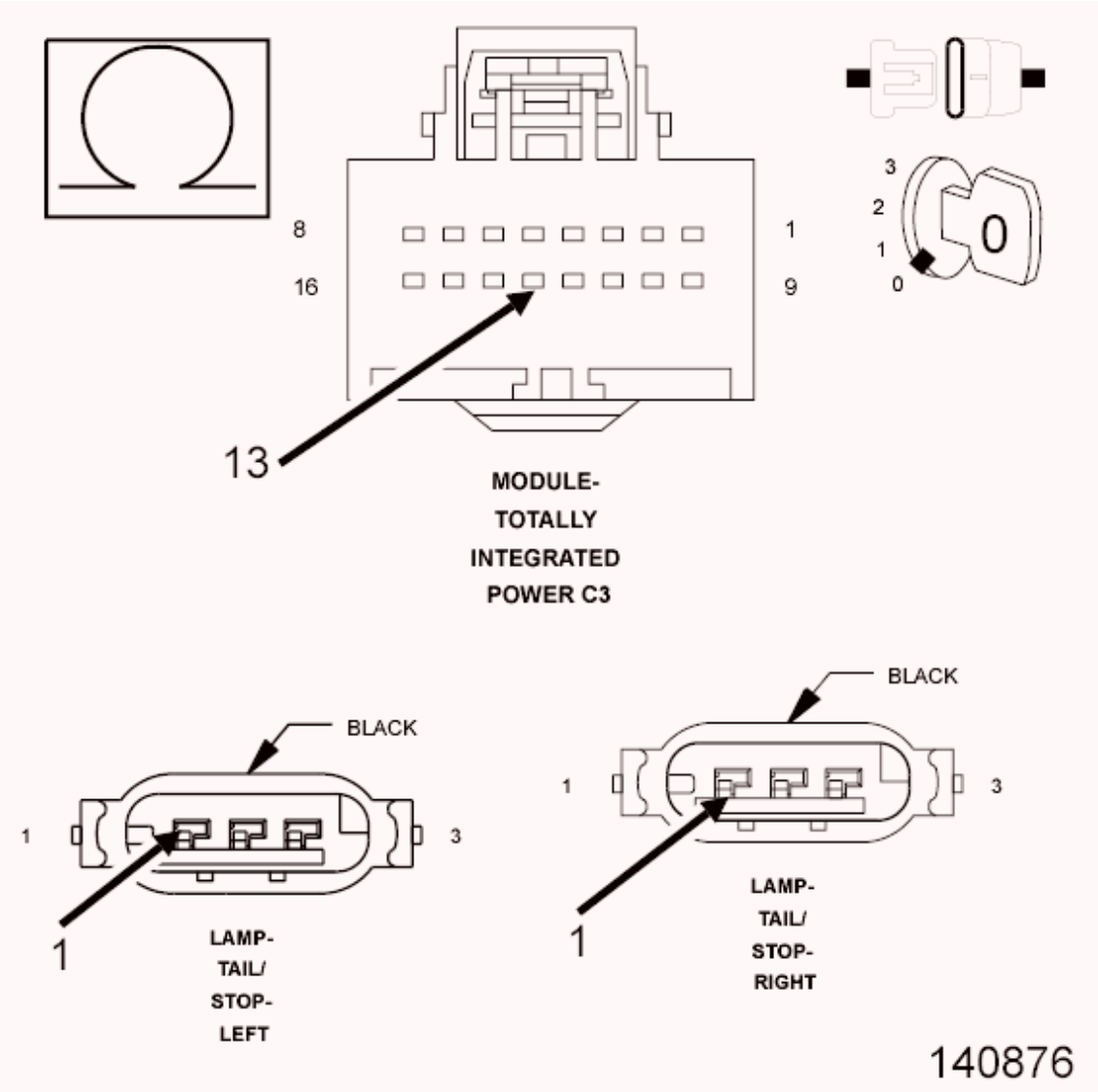

Fig. 116: Measuring Resistance Of Stop Lamp Control circuit
Courtesy of CHRYSLER GROUP, LLC

1. Turn the ignition off.

2. Disconnect the TIPM C3 harness connector.
3. Disconnect the Left and Right Stop Lamp harness connectors.
4. Measure the resistance of the (L55) Stop Lamp Control circuit.

   Is the resistance above 5.0 Ohms?

   Yes

   - Repair the (L55) Stop Lamp Control circuit for an open condition.
   - Perform the BODY VERIFICATION TEST. Refer to **STANDARD PROCEDURE** .

   No

   - Replace the Totally Integrated Power Module (TIPM) in accordance with the service information.
   - Perform the BODY VERIFICATION TEST. Refer to **STANDARD PROCEDURE** .

B178B-REVERSE LAMP CONTROL CIRCUIT - OVERCURRENT

For a complete wiring diagram, **refer to appropriate SYSTEM WIRING DIAGRAMS article** .

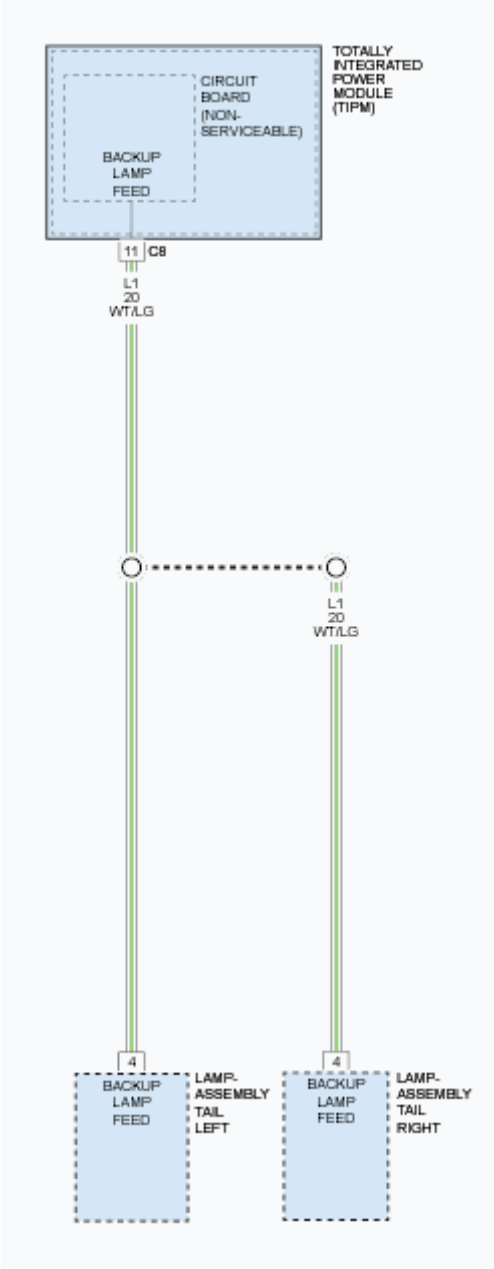

Fig. 117: Reverse Lamp Control - Circuit Diagram
Courtesy of CHRYSLER GROUP, LLC

WHEN MONITORED

With the ignition on.

SET CONDITION

The Totally Integrated Power Module (TIPM) will set this DTC if it detects an overcurrent condition on the (L1) Backup Lamp Feed circuit.

POSSIBLE CAUSES

Possible Causes
(L1) BACKUP LAMP FEED CIRCUIT HIGH RESISTANCE
BACKUP LAMP BULB
TOTALLY INTEGRATED POWER MODULE (TIPM)

DIAGNOSTIC TEST

1. **VERIFY THE DTC IS ACTIVE**
    1. Turn the ignition on.
    2. With the scan tool, read DTCs.

    Does the scan tool display this DTC as active?

    Yes

    - Go To2

    No

    - Test complete. The condition that caused this symptom is currently not present. Check for an intermittent condition by inspecting the related wiring harness for chafed, pierced, pinched, and partially broken wires. Also, inspect the related connectors for broken, bent, pushed out, spread, corroded, or contaminated terminals. Repair as necessary.
    - Perform the BODY VERIFICATION TEST. Refer to **STANDARD PROCEDURE** .
2. **CHECK THE LEFT BACKUP LAMP**
    1. Turn the ignition off.
    2. Disconnect the Left Tail Lamp Assembly harness connector.
    3. Turn the ignition on.
    4. Apply the park brake.
    5. Position the selector lever Reverse.

    Does the scan tool display this DTC as active?

    Yes

- Go To3

No

- Replace the Left Backup Lamp Bulb in accordance with the Service Information.
- Perform the BODY VERIFICATION TEST. Refer to **STANDARD PROCEDURE** .

3. **CHECK THE RIGHT BACKUP LAMP**
   1. Turn the ignition off.
   2. Disconnect the Right Tail Lamp Assembly harness connector.
   3. Turn the ignition on.
   4. With the park brake applied, position the selector lever in Reverse.

   Does the scan tool display this DTC as active?

   Yes

   - Go To4

   No

   - Replace the Right Backup Lamp Bulb in accordance with the Service Information.
   - Perform the BODY VERIFICATION TEST. Refer to **STANDARD PROCEDURE** .

4. **CHECK THE (L1) BACKUP LAMP FEED CIRCUIT**
   1. Turn the ignition off.
   2. Disconnect the TIPM C8 harness connector.
   3. Turn the ignition on.
   4. With the park brake applied, position the selector lever in Reverse.

   Does the scan tool display this DTC as active?

   Yes

   - Replace the Totally Integrated Power Module (TIPM) in accordance with the Service Information.

- Perform the BODY VERIFICATION TEST. Refer to **STANDARD PROCEDURE** .

No

- Repair the high resistance in the (L1) Backup Lamp Feed circuit. Inspect the related wiring harness for chafed, corroded, pierced, pinched, and partially broken wires. Also, inspect the related connectors for broken, bent, pushed out, spread, corroded, or contaminated terminals.
- Perform the BODY VERIFICATION TEST. Refer to **STANDARD PROCEDURE** .

B178D-FRONT FOG LAMP CONTROL CIRCUIT -OVERCURRENT

For a complete wiring diagram, **refer to appropriate SYSTEM WIRING DIAGRAMS article** .

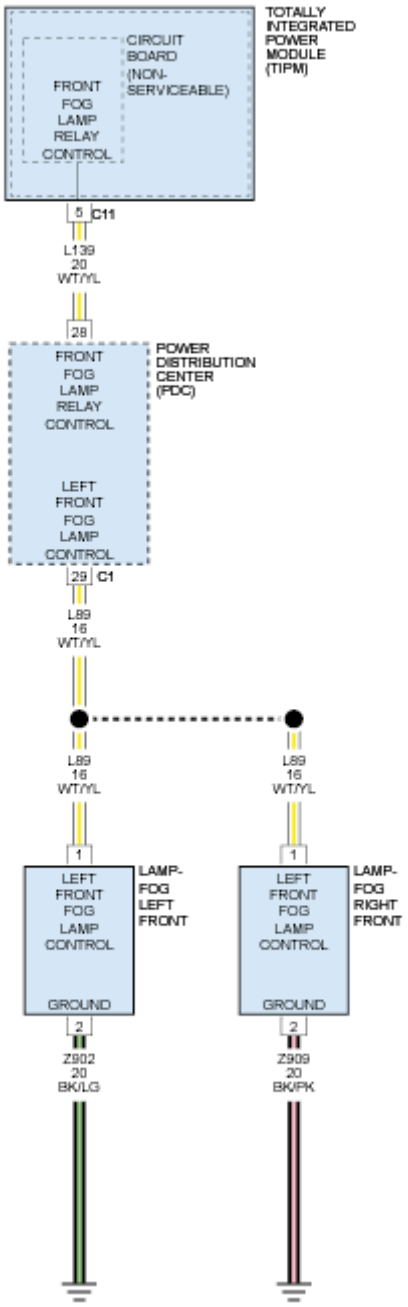

Fig. 118: Front Fog Lamp Control - Circuit Diagram
Courtesy of CHRYSLER GROUP, LLC

WHEN MONITORED

With the ignition on.

SET CONDITION

The Totally Integrated Power Module (TIPM) will set this DTC if it detects an overcurrent condition on the (L139) Front Fog Lamp Relay Control circuit.

POSSIBLE CAUSES

Possible Causes
(L139) FRONT FOG LAMP RELAY CONTROL CIRCUIT HIGH RESISTANCE
FRONT FOG LAMP RELAY
TOTALLY INTEGRATED POWER MODULE (TIPM)

DIAGNOSTIC TEST

1. **VERIFY THE DTC IS ACTIVE**
    1. Turn the ignition on.
    2. Turn the Front Fog Lamps on.
    3. With the scan tool, read DTCs.

    Does the scan tool display this DTC as active?

    Yes

    - Go To2

    No

    - Test complete. The condition that caused this symptom is currently not present. Check for an intermittent condition by inspecting the related wiring harness for chafed, pierced, pinched, and partially broken wires. Also, inspect the related connectors for broken, bent, pushed out, spread, corroded, or contaminated terminals. Repair as necessary.
    - Perform the BODY VERIFICATION TEST. Refer to **STANDARD PROCEDURE** .
2. **CHECK THE FRONT FOG LAMP RELAY**
    1. Turn the ignition off.
    2. Remove the Front Fog Lamp Relay.
    3. Turn the ignition on.
    4. Turn the Front Fog Lamps on.

    Does the scan tool display this DTC as active?

Yes

- Go To3

No

- Replace the Front Fog Lamp Relay.
- Perform the BODY VERIFICATION TEST. Refer to **STANDARD PROCEDURE** .

3. **CHECK THE (L1) BACKUP LAMP FEED CIRCUIT**
   1. Turn the ignition off.
   2. Disconnect the TIPM C11 harness connector.
   3. Turn the ignition on.
   4. Turn the Front Fog Lamps on.

   Does the scan tool display this DTC as active?

   Yes

   - Replace the Totally Integrated Power Module (TIPM) in accordance with the Service Information.
   - Perform the BODY VERIFICATION TEST. Refer to **STANDARD PROCEDURE** .

   No

   - Repair the high resistance in the (L139) Front Fog Lamp Relay Control circuit. Inspect the related wiring harness for chafed, corroded, pierced, pinched, and partially broken wires. Also, inspect the related connectors for broken, bent, pushed out, spread, corroded, or contaminated terminals.
   - Perform the BODY VERIFICATION TEST. Refer to **STANDARD PROCEDURE** .

B181E-HOOD AJAR INPUT CIRCUIT-PERFORMANCE

For a complete wiring diagram, **refer to appropriate SYSTEM WIRING DIAGRAMS article** .

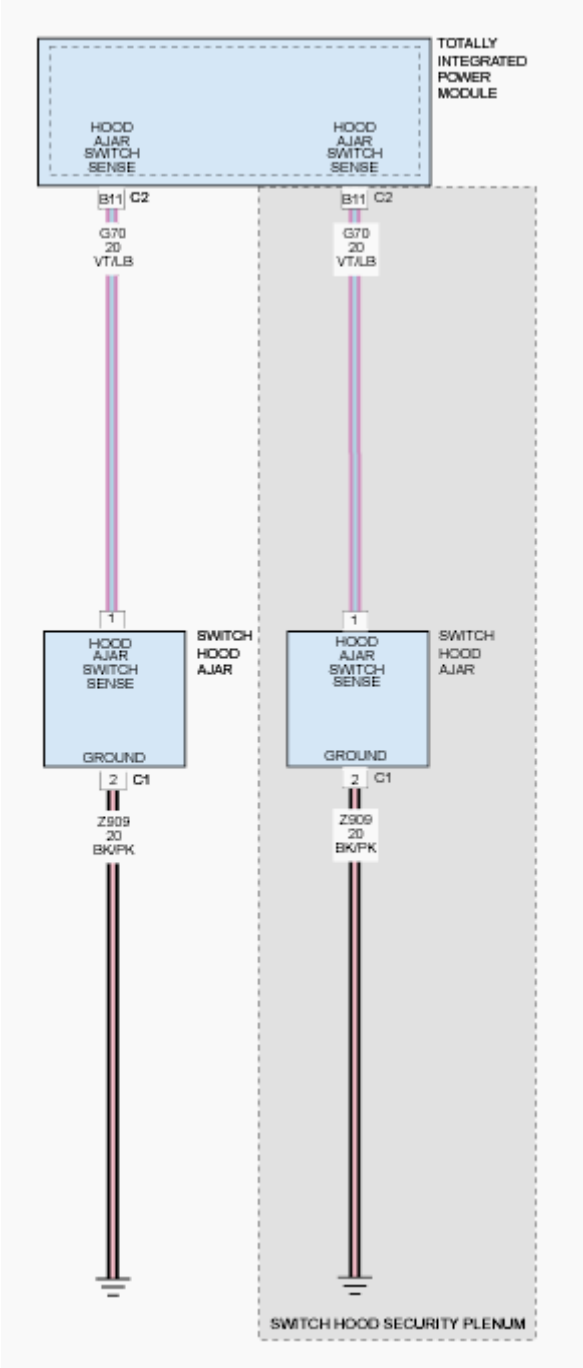

Fig. 119: Hood Ajar Input - Circuit Diagram
Courtesy of CHRYSLER GROUP, LLC

WHEN MONITORED

Continuously.

SET CONDITION

When the Totally Integrated Power Module senses 12 Volts on the Hood Ajar Switch Sense circuit for over 10 seconds, this code will set.

POSSIBLE CAUSES

Possible Causes
(Z909) GROUND CIRCUIT OPEN
(G70) HOOD AJAR SWITCH SENSE CIRCUIT SHORT TO VOLTAGE
(G70) HOOD AJAR SWITCH SENSE CIRCUIT SHORT TO GROUND
(G70) HOOD AJAR SWITCH SENSE CIRCUIT OPEN
HOOD AJAR SWITCH
TOTALLY INTEGRATED POWER MODULE (TIPM)

DIAGNOSTIC TEST

1. **TEST FOR INTERMITTENT CONDITION**

   NOTE: Open the hood and ensure the Hood Ajar Switch is connected before proceeding

   1. Using the scan tool, record and erase DTCs
   2. Close the hood.
   3. Cycle the ignition from on to off.
   4. Turn the ignition on.
   5. Open then close the hood.
   6. Using the scan tool, read DTCs.

   Does the scan tool display this DTC as active?

   Yes

   - Go To 2

   No

   - Test complete. The conditions that caused this code to set are not present at this time. Using the wiring diagram/schematic as a guide, inspect the wiring and connectors.
   - Perform the BODY VERIFICATION TEST. Refer to **STANDARD PROCEDURE** .

2. **INCORRECT HOOD AJAR SWITCH INSTALLED**

1. Inspect the retainer ring on the hood ajar switch.
2. A dark brown retainer ring identifies the hood ajar switch used for certain export applications, while a white retainer ring identifies the remote starter system application.

   Is the correct switch installed?

   Yes

   - Go To 3

   No

   - Replace the Hood Ajar Switch.
   - Perform the BODY VERIFICATION TEST. Refer to **STANDARD PROCEDURE** .

3. **HOOD AJAR SWITCH**
   1. Turn the ignition off.
   2. Disconnect the Hood Ajar Switch harness connector.
   3. Turn the ignition on.
   4. Using a scan tool view the Hood Ajar Switch state.
   5. Connect a jumper wire across the (G70) Hood Ajar Switch Sense circuit and (Z909) Ground circuit at the Hood Ajar Switch harness connector.

      Did the Hood Ajar Switch state change?

      Yes

      - Replace the Hood Ajar Switch.
      - Perform the BODY VERIFICATION TEST. Refer to **STANDARD PROCEDURE** .

      No

      - Go To 4

4. **(Z909) GROUND CIRCUIT OPEN**
   1. Turn the ignition off.
   2. Using a 12-volt Test Light connected to 12-volts, check the (Z909)

Ground circuit.

Does the test light illuminate?

Yes

- Go To 5

No

- Repair the (Z909) Ground circuit for an open.
- Perform the BODY VERIFICATION TEST. Refer to **STANDARD PROCEDURE** .

5. **(G70) HOOD AJAR SWITCH SENSE CIRCUIT SHORT TO VOLTAGE**
   1. Disconnect the TIPM C2 harness connector.
   2. Turn the ignition on.
   3. Measure the voltage between the (G70) Hood Ajar Switch Sense circuit and ground.

   Is there any voltage present?

   Yes

   - Repair the (G70) Hood Ajar Switch Sense circuit for a short to voltage.
   - Perform the BODY VERIFICATION TEST. Refer to **STANDARD PROCEDURE** .

   No

   - Go To 6
6. **(G70) HOOD AJAR SWITCH SENSE CIRCUIT SHORT TO GROUND**
   1. Turn the ignition off.
   2. Measure the resistance between the (G70) Hood Ajar Switch Sense circuit and ground.

   Is the resistance below 10K Ohms?

Yes

- Repair the (G70) Hood Ajar Switch Sense circuit for a short to ground.
- Perform the BODY VERIFICATION TEST. Refer to **STANDARD PROCEDURE** .

No

- Go To 7

7. **(G70) HOOD AJAR SWITCH SENSE CIRCUIT OPEN**
   1. Measure the resistance of the (G70) Hood Ajar Switch Sense circuit between the TIPM C2 connector and the Hood Ajar Switch connector.

      Is the resistance below 5.0 Ohms?

      Yes

      - Replace the Totally Integrated Power Module (TIPM) in accordance with the Service Information.
      - Perform the BODY VERIFICATION TEST. Refer to **STANDARD PROCEDURE** .

      No

      - Repair the (G70) Hood Ajar Switch Sense circuit for an open.
      - Perform the BODY VERIFICATION TEST. Refer to **STANDARD PROCEDURE** .

B181F-HOOD AJAR INPUT CIRCUIT - LOW

For a complete wiring diagram, **refer to appropriate SYSTEM WIRING DIAGRAMS article** .

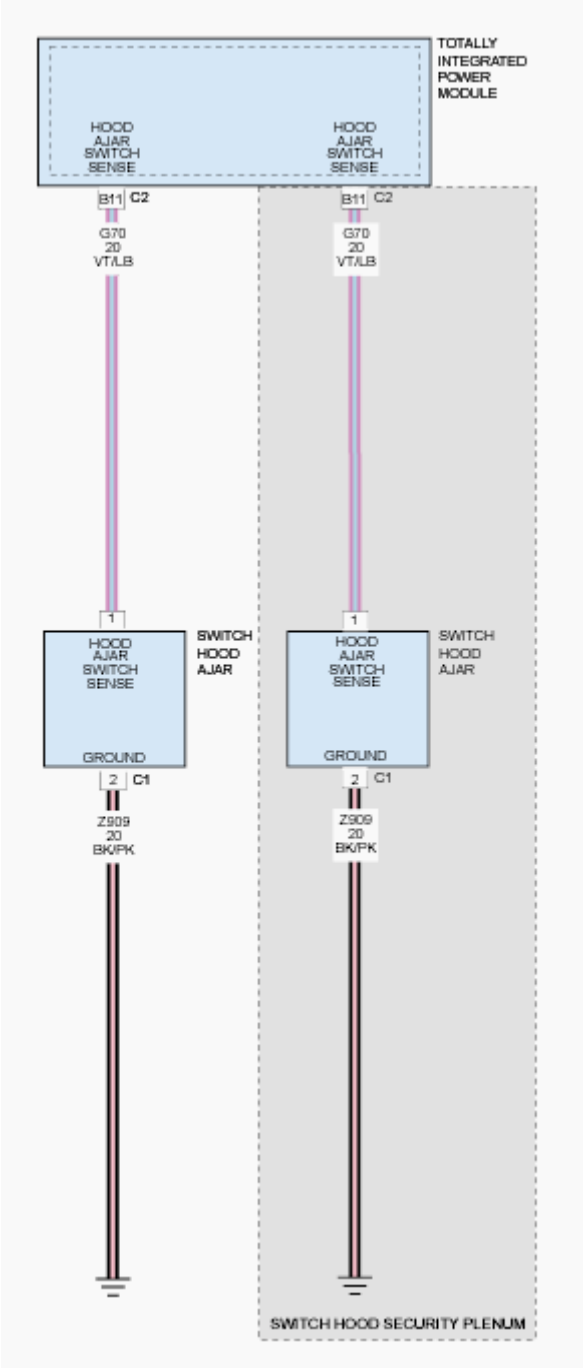

Fig. 120: Hood Ajar Input - Circuit Diagram
Courtesy of CHRYSLER GROUP, LLC

WHEN MONITORED

With the ignition on.

SET CONDITION

When the Totally Integrated Power Module (TIPM) detects a short to ground on the (G70) Hood Ajar Switch Sense circuit.

POSSIBLE CAUSES

Possible Causes
(G70) HOOD AJAR SWITCH SENSE CIRCUIT SHORTED TO GROUND
HOOD AJAR SWITCH
TOTALLY INTEGRATED POWER MODULE

DIAGNOSTIC TEST

1. **CHECK FOR AN ACTIVE DTC**
    1. Turn the ignition on.
    2. With the scan tool, read the DTCs

    Does the scan tool display the DTC as active?

    Yes

    - Go To 2

    No

    - Test complete. The condition that caused the symptom is currently not present. Inspect the related wiring for a possible intermittent condition. Look for any chafed, pierced, pinched, or partially broken wires.
    - Perform the BODY VERIFICATION TEST. Refer to **STANDARD PROCEDURE** .
2. **CHECK FOR A SHORTED HOOD AJAR SWITCH**
    1. Turn the ignition off.
    2. Disconnect the Hood Ajar Switch harness connector.
    3. Turn the ignition on.
    4. With the scan tool read the DTCs

    Does the scan tool display the DTC as active?

    Yes

    - Go To 3

No

- Replace the Hood Ajar Switch in accordance with the service information.
- Perform the BODY VERIFICATION TEST. Refer to **STANDARD PROCEDURE** .

3. **CHECK THE (G70) HOOD AJAR SWITCH SENSE CIRCUIT FOR A SHORT TO GROUND**
   1. Turn the ignition off.
   2. Disconnect the TIPM C2 harness connector.
   3. Measure the resistance between ground and the (G70) Hood Ajar Switch Sense circuit.

   Is the resistance below 5.0 Ohms?

   Yes

   - Repair the (G70) Hood Ajar Switch Sense circuit for a short to ground.
   - Perform the BODY VERIFICATION TEST. Refer to **STANDARD PROCEDURE** .

   No

   - Replace the Totally Integrated Power Module (TIPM) in accordance with the service information.
   - Perform the BODY VERIFICATION TEST. Refer to **STANDARD PROCEDURE** .

B1820-HOOD AJAR INPUT CIRCUIT - HIGH

For a complete wiring diagram, **refer to appropriate SYSTEM WIRING DIAGRAMS article** .

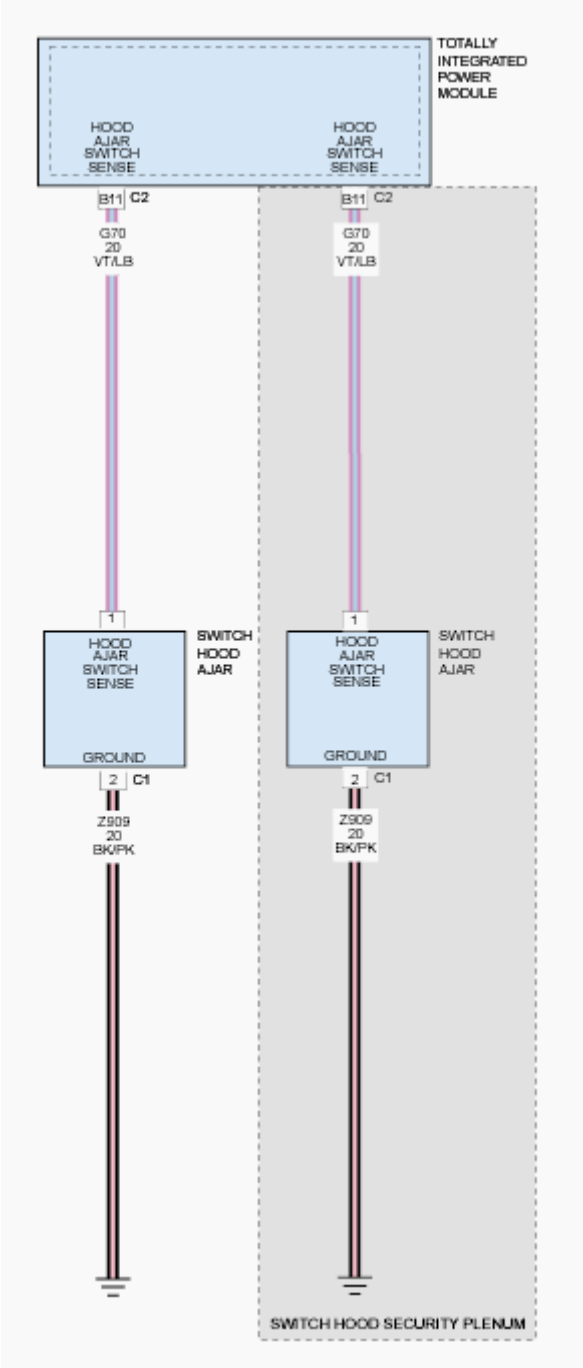

Fig. 121: Hood Ajar Input - Circuit Diagram
Courtesy of CHRYSLER GROUP, LLC

WHEN MONITORED

With the ignition on.

SET CONDITION

When the Totally Integrated Power Module (TIPM) detects a short to voltage on the (G70) Hood Ajar Switch Sense circuit.

POSSIBLE CAUSES

Possible Causes
(G70) HOOD AJAR SWITCH SENSE CIRCUIT SHORTED TO VOLTAGE
HOOD AJAR SWITCH
TOTALLY INTEGRATED POWER MODULE

DIAGNOSTIC TEST

1. **CHECK FOR AN ACTIVE DTC**
    1. Turn the ignition on.
    2. With the scan tool, read the DTCs

    Does the scan tool display the DTC as active?

    Yes

    - Go To 2

    No

    - Test complete. The condition that caused the symptom is currently not present. Inspect the related wiring for a possible intermittent condition. Look for any chafed, pierced, pinched, or partially broken wires.
    - Perform the BODY VERIFICATION TEST. Refer to **STANDARD PROCEDURE** .
2. **CHECK FOR A SHORTED HOOD AJAR SWITCH**
    1. Turn the ignition off.
    2. Disconnect the Hood Ajar Switch harness connector.
    3. Turn the ignition on.
    4. With the scan tool read the DTCs

    Does the scan tool display the DTC as active?

    Yes

    - Go To 3

No

- Replace the Hood Ajar Switch in accordance with the service information.
- Perform the BODY VERIFICATION TEST. Refer to **STANDARD PROCEDURE** .

3. **CHECK THE (G70) HOOD AJAR SWITCH SENSE CIRCUIT FOR A SHORT TO VOLTAGE**
   1. Turn the ignition off.
   2. Disconnect the TIPM C2 harness connector.
   3. Measure the voltage of the (G70) Hood Ajar Switch Sense circuit.

   Is there any voltage present?

   Yes

   - Repair the (G70) Hood Ajar Switch Sense circuit for a short to voltage.
   - Perform the BODY VERIFICATION TEST. Refer to **STANDARD PROCEDURE** .

   No

   - Replace the Totally Integrated Power Module (TIPM) in accordance with the service information.
   - Perform the BODY VERIFICATION TEST. Refer to **STANDARD PROCEDURE** .

B18BB-WINDOW CONTROL CIRCUIT LOW

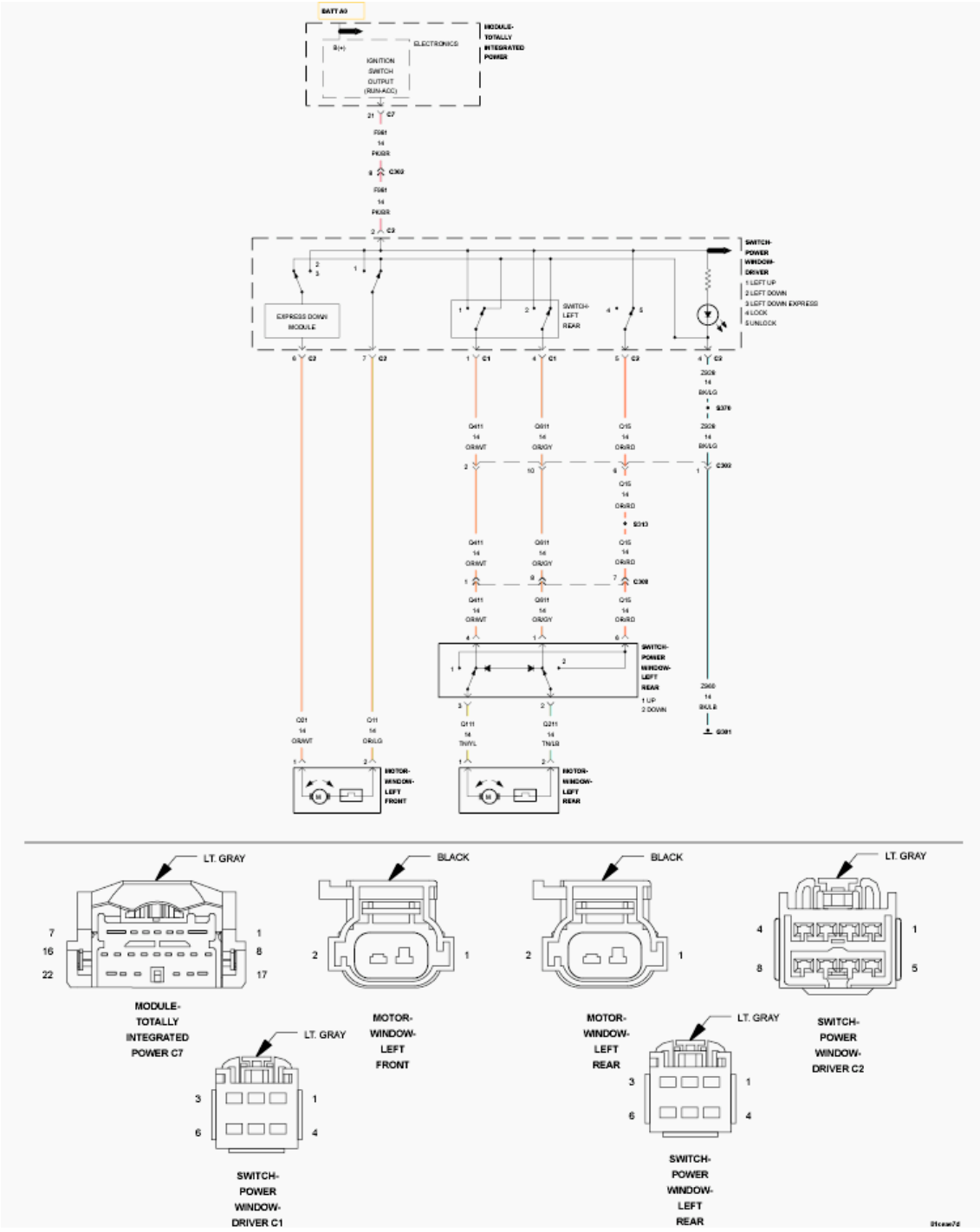

Fig. 122: Window Control Circuit Diagram
Courtesy of CHRYSLER GROUP, LLC

NOTE: **For a Right Hand Drive Vehicle, refer to the master schematic, in the Wiring Service Information , for correct connector pinouts**

NOTE: **The schematic shows just the Left Rear Window Motor**

circuit. The other Passenger Window Motor circuits are similar.

For a complete wiring diagram, **refer to appropriate SYSTEM WIRING DIAGRAMS article** .

WHEN MONITORED

Whenever the module is awake.

SET CONDITION

When the Totally Integrated Power Module (TIPM) senses a draw of between 65 and 100 amps for 80 ms., this code will set.

NOTE: The most probable cause for this DTC to set is that the driver held all four window switches down or up for an extended period of time thereby causing the high side driver, in the TIPM, to overheat and cut out. Once the high side driver is opened, it will remain open for approximately 10 seconds or until the next key cycle. However, the code will remain as stored.

POSSIBLE CAUSES

Possible Causes
(F981) IGNITION SWITCH OUTPUT CIRCUIT SHORTED TO GROUND
ALL FOUR WINDOW SWITCHES HELD DOWN FOR AN EXTENDED PERIOD OF TIME
(Q15) WINDOW LOCK OUT SWITCH OUTPUT CIRCUIT SHORTED TO GROUND
ANY WINDOW DRIVER (UP) CIRCUIT SHORTED TO GROUND
ANY WINDOW DRIVER (DOWN) CIRCUIT SHORTED TO GROUND
ANY WINDOW DRIVER (UP) CIRCUIT SHORTED TO THE WINDOW DRIVER (DOWN) CIRCUIT
ANY MASTER WINDOW SWITCH (UP) CIRCUIT SHORTED TO GROUND
ANY MASTER WINDOW SWITCH (DOWN) CIRCUIT SHORTED TO

GROUND
ANY MASTER WINDOW SWITCH (UP) CIRCUIT SHORTED TO THE MASTER WINDOW SWITCH (DOWN) CIRCUIT
ANY SHORTED WINDOW MOTOR
ANY PASSENGER WINDOW SWITCH
DRIVER POWER WINDOW SWITCH
TOTALLY INTEGRATED POWER MODULE (TIPM)

DIAGNOSTIC TEST

1. **TEST FOR INTERMITTENT CONDITION**
    1. Turn the ignition on.
    2. With the scan tool, record and erase DTCs.
    3. Cycle the ignition switch off for 30 seconds then on.
    4. Make sure the Window Lock Out Switch is ON.
    5. Operate the Driver Window Switch in all positions several times.
    6. Operate each Passenger Window Switch in both directions several times.
    7. Wait 30 seconds.
    8. With the scan tool, read DTCs.

    Does the scan tool display B18BB-WINDOW CONTROL CIRCUIT LOW?

    Yes

    - Go To 2

    No

    - The conditions that caused this code to set are not present at this time. Check for a sticking switch or any window motor that is not operating properly and using the wiring diagram/schematic as a guide, inspect the wiring and connectors.
    - Perform the BODY VERIFICATION TEST. Refer to **STANDARD PROCEDURE** .
2. **(F981) IGNITION SWITCH OUTPUT CIRCUIT SHORT TO**

GROUND

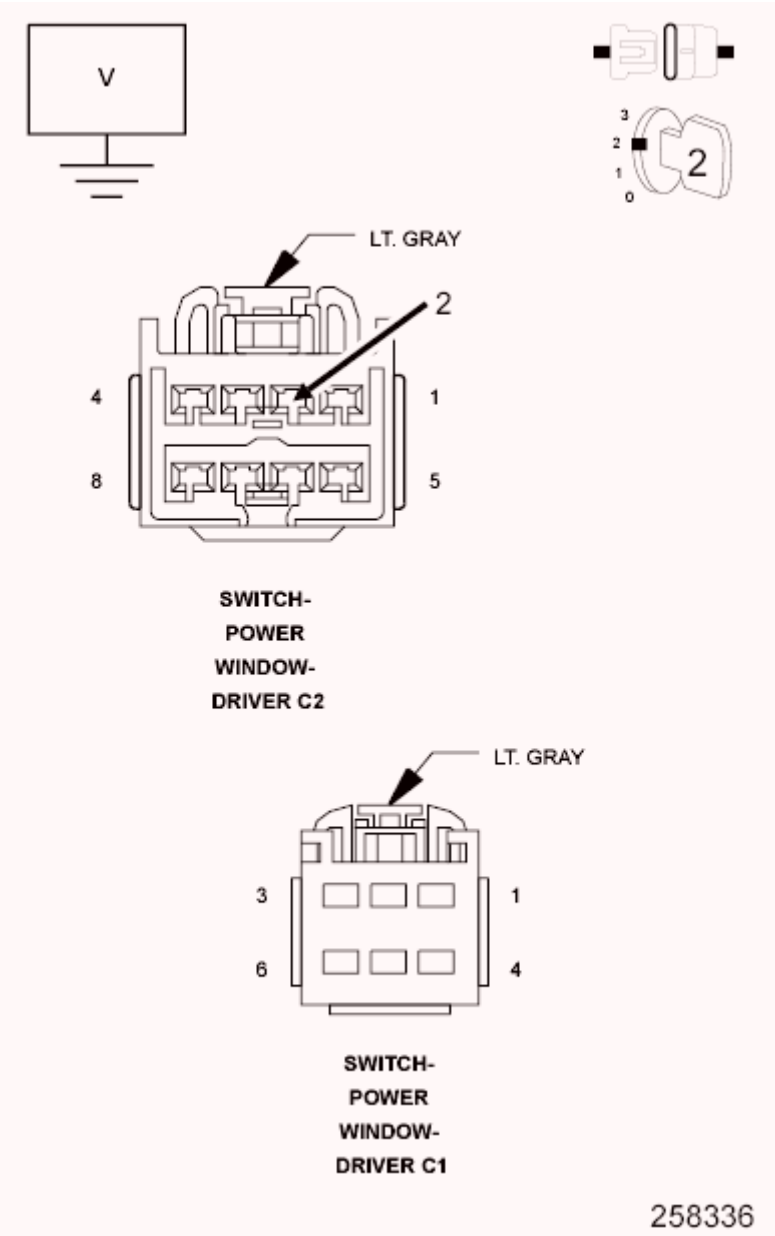

Fig. 123: Checking Ignition Switch Output Circuit For Short To Ground
Courtesy of CHRYSLER GROUP, LLC

1. Turn the ignition off.
2. Disconnect the Driver Power Window Switch C1 and C2 connectors.
3. Check the Master Switch for an internal short. Replace if necessary.
4. Turn the ignition on.
5. Measure the voltage between ground and the (F981) Ignition Switch Output circuit in the Driver Power Window Switch C2 connector

Is the voltage above 11.5 volts?

Yes

- Go To 3

No

- Go To 7

3. **WINDOW DRIVER CIRCUITS SHORTED TO GROUND**

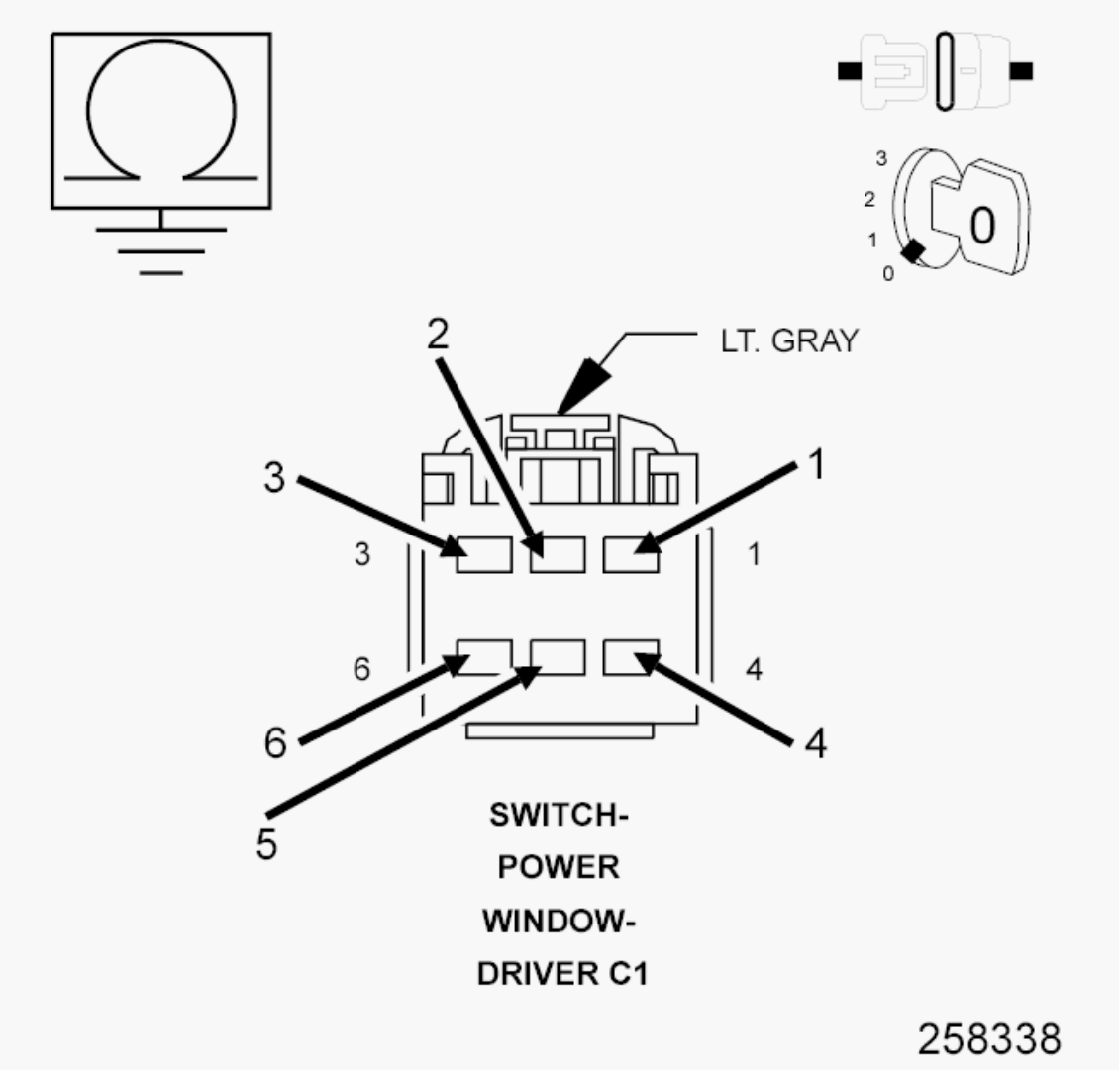

Fig. 124: Checking Window Driver Circuit For Short To Ground
Courtesy of CHRYSLER GROUP, LLC

1. Turn the ignition off.
2. Measure the resistance between ground and each Window Driver (Up

and Down) circuit in the Driver Window Switch C1 connector.

Is the resistance below 10, 000 Ohms in any Window Driver circuit in the C1 connector?

Yes

- Locate and repair the Window Driver circuit for a short to ground. The short circuit could be in either Window Driver wire or the affected motor.
- Perform the BODY VERIFICATION TEST. Refer to **STANDARD PROCEDURE** .

No

- Go To 4

4. **FRONT WINDOW DRIVER CIRCUIT SHORTED TO GROUND**

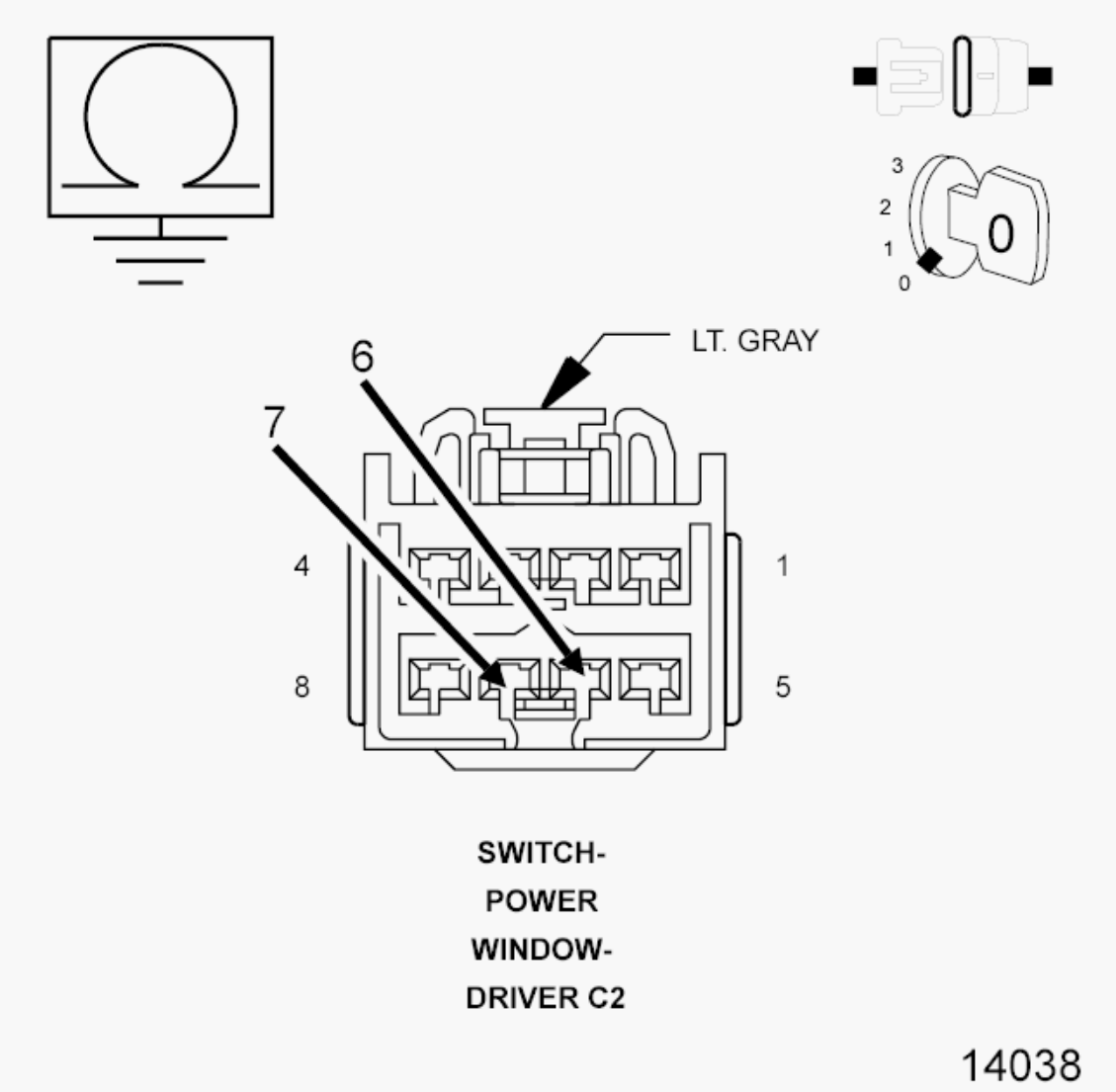

Fig. 125: Checking Front Window Driver Circuit For Short To Ground
Courtesy of CHRYSLER GROUP, LLC

1. Measure the resistance between ground and the Front Window Driver (Up and Down) circuits in the Driver Window Switch C2 connector.

   Is the resistance below 10, 000 Ohms in either or both circuits?

   Yes

   - Repair the Window Driver circuit for a short to ground. The short circuit could be in either Window Driver wire or the motor.
   - Perform the BODY VERIFICATION TEST. Refer to **STANDARD PROCEDURE** .

   No

- Go To 5

5. **(Q15) WINDOW LOCK OUT SWITCH OUTPUT CIRCUIT SHORTED TO GROUND**

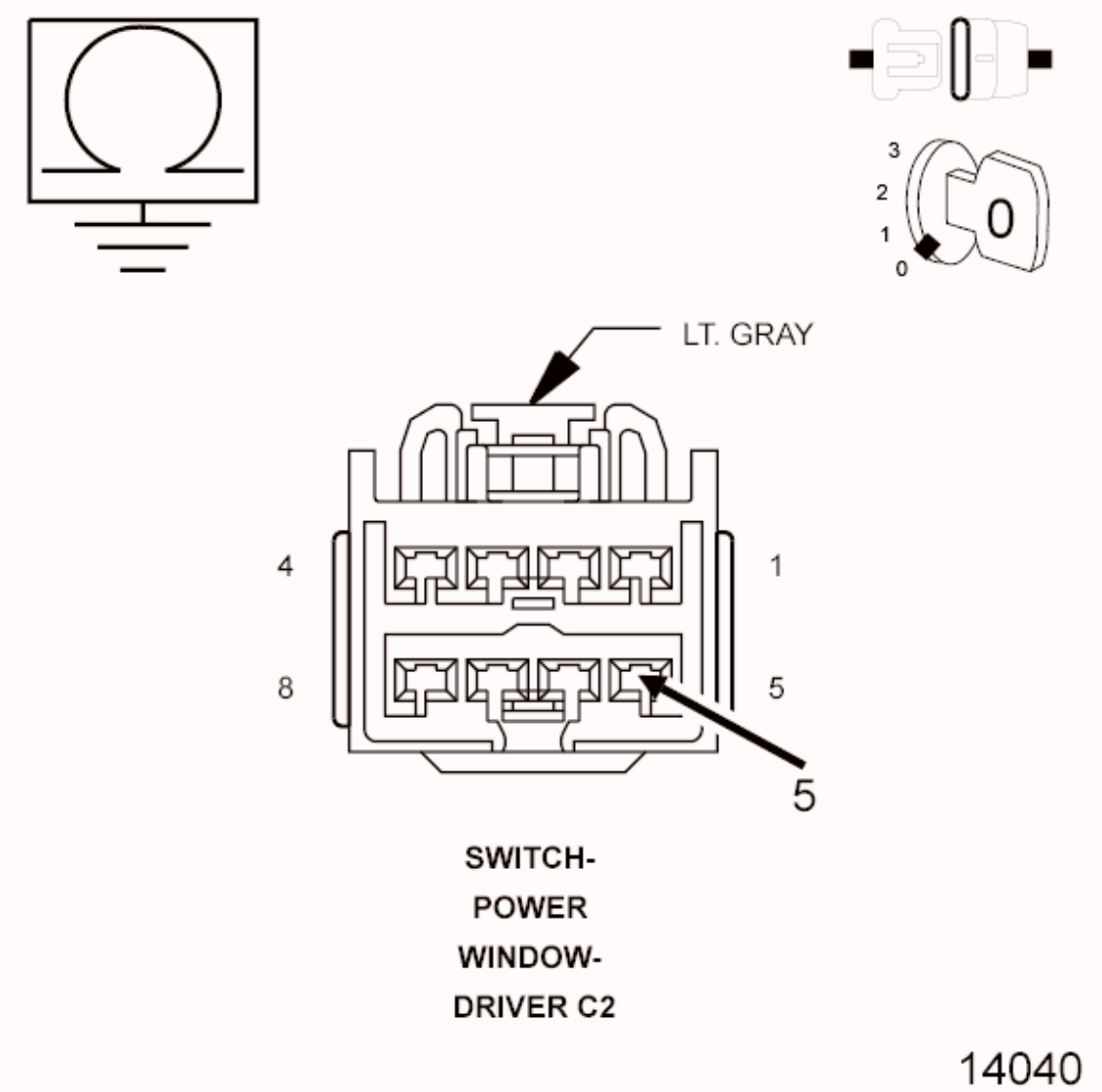

Fig. 126: Checking Window Lock Out Switch Output Circuit For Short To Ground
Courtesy of CHRYSLER GROUP, LLC

1. Measure the resistance between ground and the (Q15) Window Lock Out Switch Output circuit

   Is the resistance below 10, 000 Ohms?

   Yes

- Repair the (Q15) Window Lock Out Switch Output circuit for a short to ground. The short could be in any wire going to a Passenger Window Switch or in one of the Passenger Window Switches
- Perform the BODY VERIFICATION TEST. Refer to **STANDARD PROCEDURE** .

No

- Go To 6

6. **CHECK EACH WINDOW DRIVER UP CIRCUIT FOR A SHORTED TO THE WINDOW DRIVER DOWN CIRCUIT**

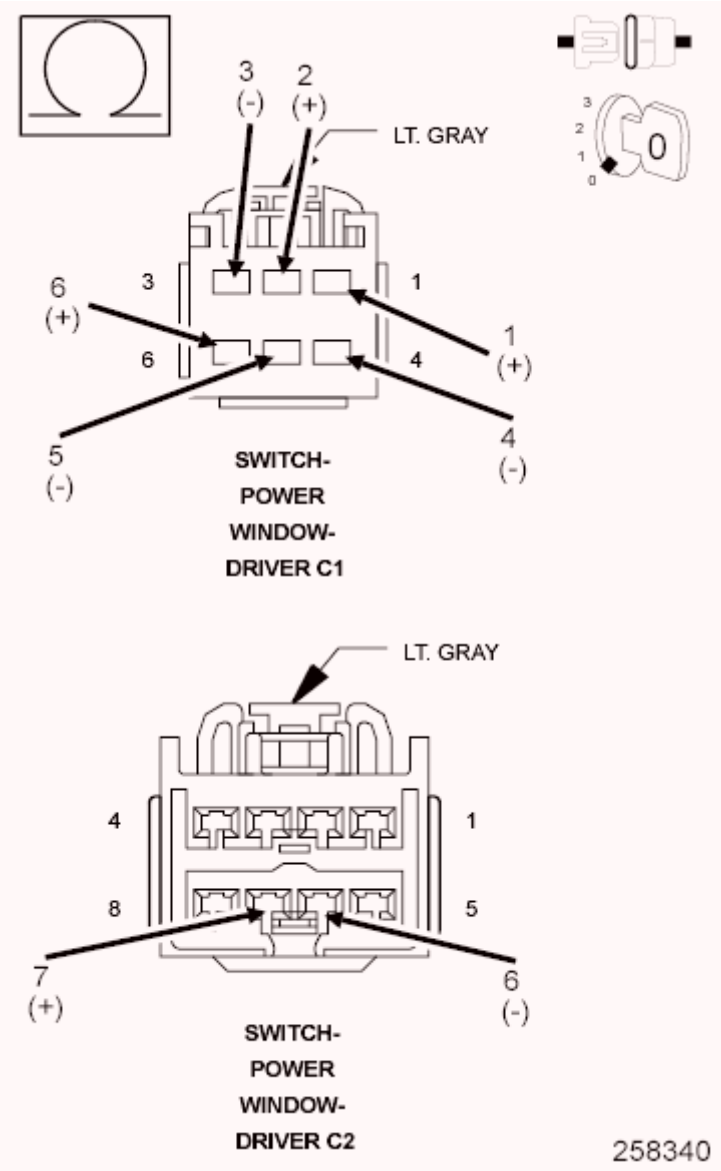

Fig. 127: Checking Window Driver Up Circuit For Short To Window

Driver Down Circuit
Courtesy of CHRYSLER GROUP, LLC

1. Measure the resistance of each window motor circuit between the Window Up circuit and the Window Down circuit in the Master Window Switch C1 and C2 connectors. Do this test for all four motors.

   Is the resistance below 0.5 of an Ohm in any of the Window Motor circuits?

   Yes

   - Disconnect the Window Motor and retest the circuits. If the resistance between the circuits is above 20, 000.0 Ohms, replace the motor in accordance with service information. If the resistance is still low, check the Passenger Window Switch. If the switch is not shorted, repair the Window Driver or Master Window Switch circuits for a short to each other.
   - Perform the BODY VERIFICATION TEST. Refer to **STANDARD PROCEDURE** .

   No

   - Test complete.
   - Perform the BODY VERIFICATION TEST. Refer to **STANDARD PROCEDURE** .

7. **(F981) IGNITION SWITCH OUTPUT CIRCUIT SHORTED TO GROUND**

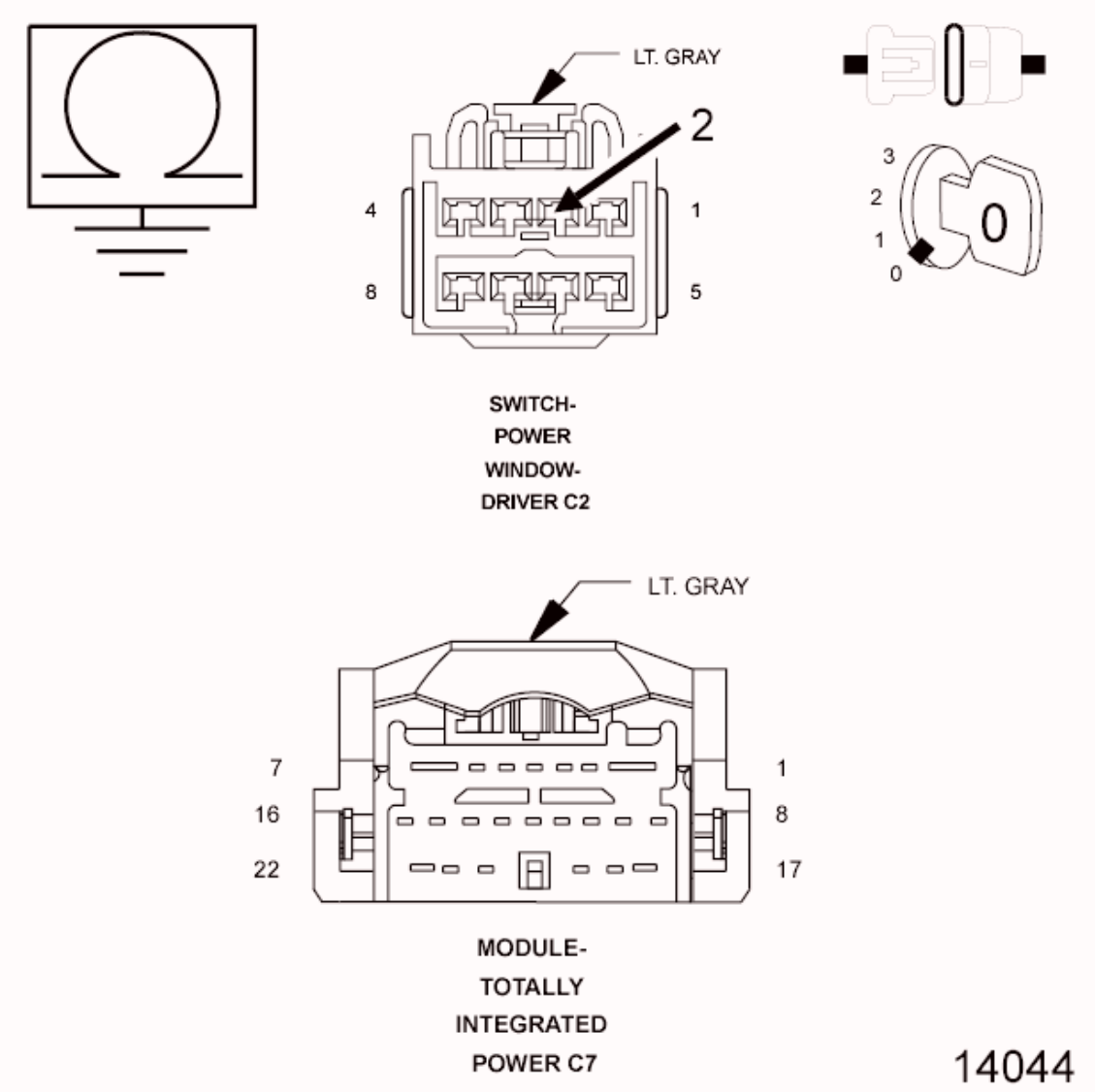

Fig. 128: Checking Ignition Switch Output Circuit For Short To Ground
Courtesy of CHRYSLER GROUP, LLC

1. Turn the ignition off.
2. Disconnect the TIPM C7 connector.
3. Measure the resistance between ground and the (F981) Ignition Switch Output circuit in the TIPM C7 connector.

   Is the resistance below 10, 000 Ohms?

   Yes

   - Repair the (F981) Ignition Switch Output circuit for a short to ground.

- Perform the BODY VERIFICATION TEST. Refer to **STANDARD PROCEDURE** .

No

- Go To 8

8. **(F981) IGNITION SWITCH OUTPUT CIRCUIT OPEN**

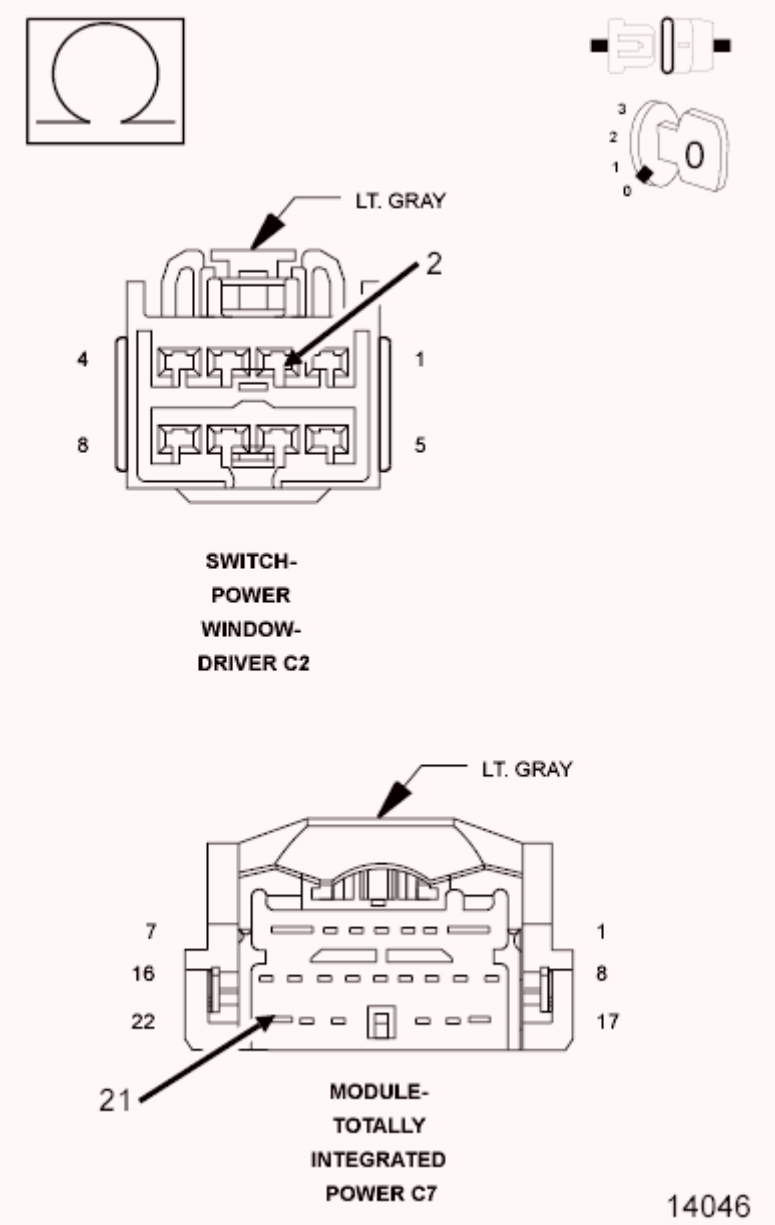

Fig. 129: Checking Ignition Switch Output Circuit For Open
Courtesy of CHRYSLER GROUP, LLC

1. Measure the resistance of the (F981) Ignition Switch Output circuit between the TIPM C7 connector and the Driver Power Window Switch

C2 connector.

Is the resistance below 5.0 Ohms?

Yes

- Repair the (F981) Ignition Switch Output circuit for an open
- Perform the BODY VERIFICATION TEST. Refer to **STANDARD PROCEDURE** .

No

- Replace the Totally Integrated Power Module in accordance with Service Information
- Perform the BODY VERIFICATION TEST. Refer to **STANDARD PROCEDURE** .

B191D-WINDOW CONTROL CIRCUIT OVERCURRENT

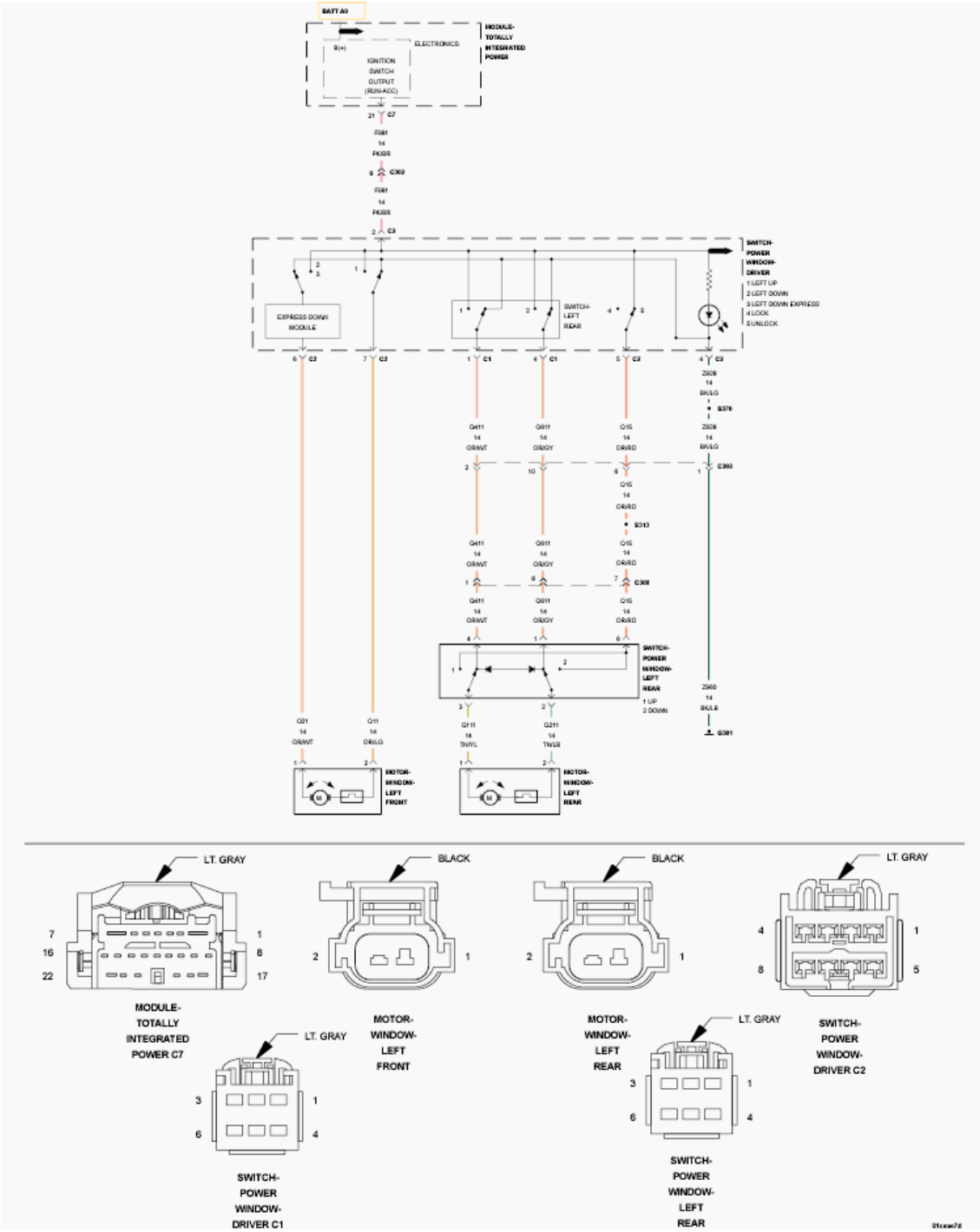

Fig. 130: Window Control Circuit Diagram
Courtesy of CHRYSLER GROUP, LLC

NOTE: The schematic shows just the Left Rear Window Motor circuit. The other Passenger Window Motor circuits are similar.

For a complete wiring diagram, **refer to appropriate SYSTEM WIRING**

DIAGRAMS article .

WHEN MONITORED

Whenever the module is awake.

SET CONDITION

When the Totally Integrated Power Module (TIPM) senses a draw of over 35 amps for over 120 ms. on the F981 Ignition Switch Output circuit, this code will set

NOTE: A possible cause for this DTC to set would be if the driver held more than one window switch down for an extended period of time thereby causing the high side driver, in the TIPM, to overheat and cut out. Once the high side driver is opened, it will remain open until the next key cycle. However, the code will remain as stored.

POSSIBLE CAUSES

Possible Causes
MORE THAN ONE WINDOW SWITCH HELD DOWN TOO LONG
ANY WINDOW DRIVER (DOWN) CIRCUIT SHORTED TO GROUND
ANY WINDOW DRIVER (UP) CIRCUIT SHORTED TO GROUND
ANY WINDOW MOTOR
TOTALLY INTEGRATED POWER MODULE (TIPM)

DIAGNOSTIC TEST

1. **TEST FOR INTERMITTENT CONDITION**
    1. Turn the ignition on.
    2. With the scan tool, record and erase DTCs.
    3. Cycle the ignition switch off then on.
    4. Make sure the Window Lock Out Switch is ON.
    5. Operate the Driver Window Switch in all positions several times.
    6. Operate each Passenger Window Switch in both directions several times.
    7. Wait 30 seconds.

8. With the scan tool, read DTCs.

   Does the scan tool display B191D-WINDOW CONTROL CIRCUIT OVERCURRENT?

   Yes

   - Go To 2

   No

   - The conditions that caused this code to set are not present at this time. Check for a sticking switch and using the wiring diagram/schematic as a guide, inspect the wiring and connectors.
   - Perform the BODY VERIFICATION TEST. Refer to **STANDARD PROCEDURE** .

2. **TEST WINDOW MOTORS**

   Do all window motors operate properly at this time?

   Yes

   - Check for any sticking switches, restrictions in any window channels or binding regulators and repair or replace as necessary.
   - Perform the BODY VERIFICATION TEST. Refer to **STANDARD PROCEDURE** .

   No

   - Go To 3

3. **WINDOW MOTOR**

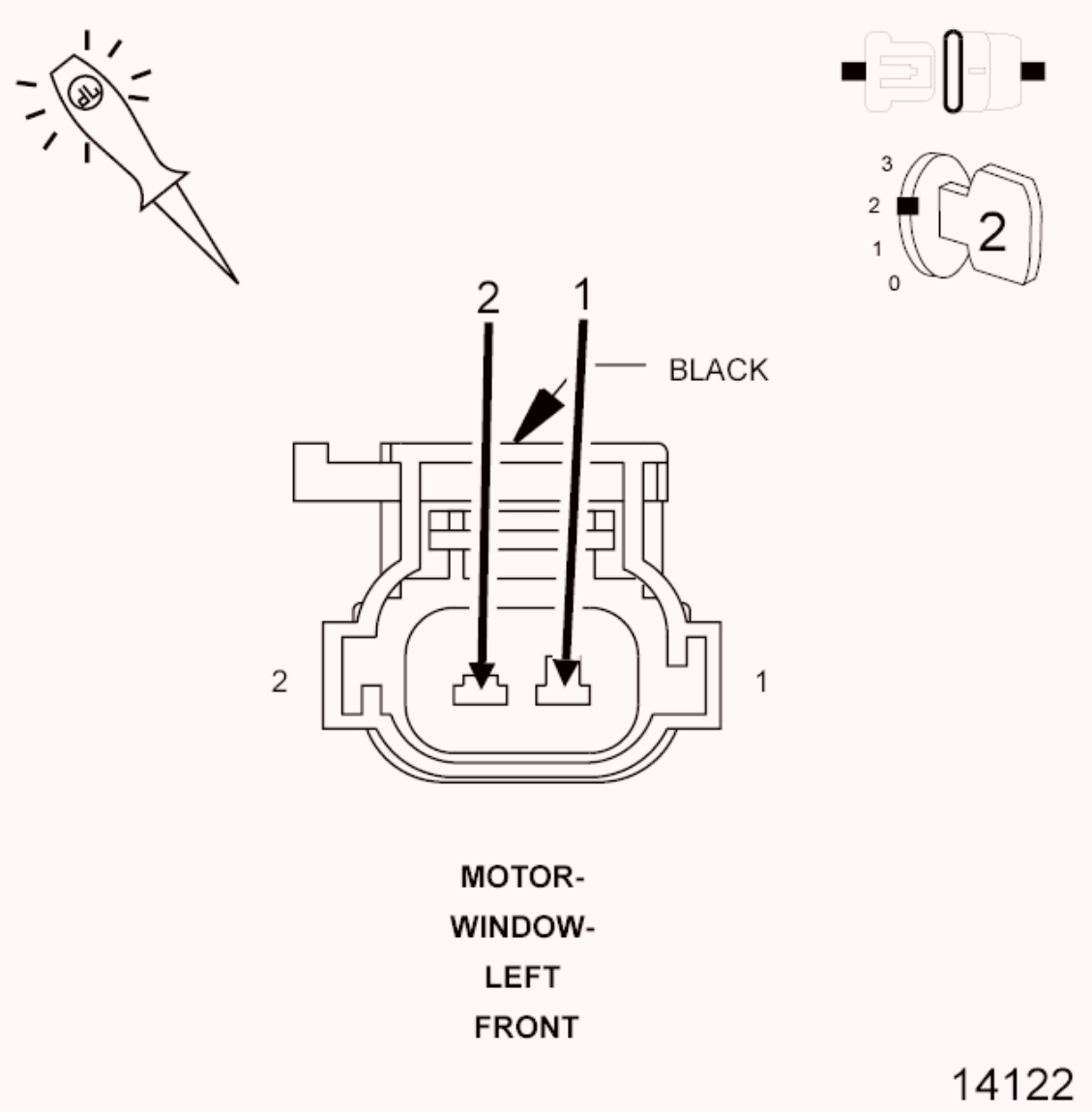

Fig. 131: Checking Window Motor
Courtesy of CHRYSLER GROUP, LLC

1. Turn the ignition off.
2. Disconnect the inoperative window motor connector.
3. Turn the ignition on.
4. Connect a 12-volt test light between the Window Driver (UP) circuit and the Window Driver (DOWN) circuit.

NOTE: The graphic shows the Left Front Window Motor (LHD), all others are similar,

5. Turn the ignition on.

6. Operate the Window Switch in both directions while observing the test light.

   Does the test light illuminate brightly when the switch in held in both directions?

   Yes

   - Replace the window motor or regulator as necessary in accordance with the Service Information.
   - Perform the BODY VERIFICATION TEST. Refer to **STANDARD PROCEDURE** .

   No

   - Go To 4

4. **WINDOW DRIVER (UP) CIRCUIT SHORT TO GROUND**

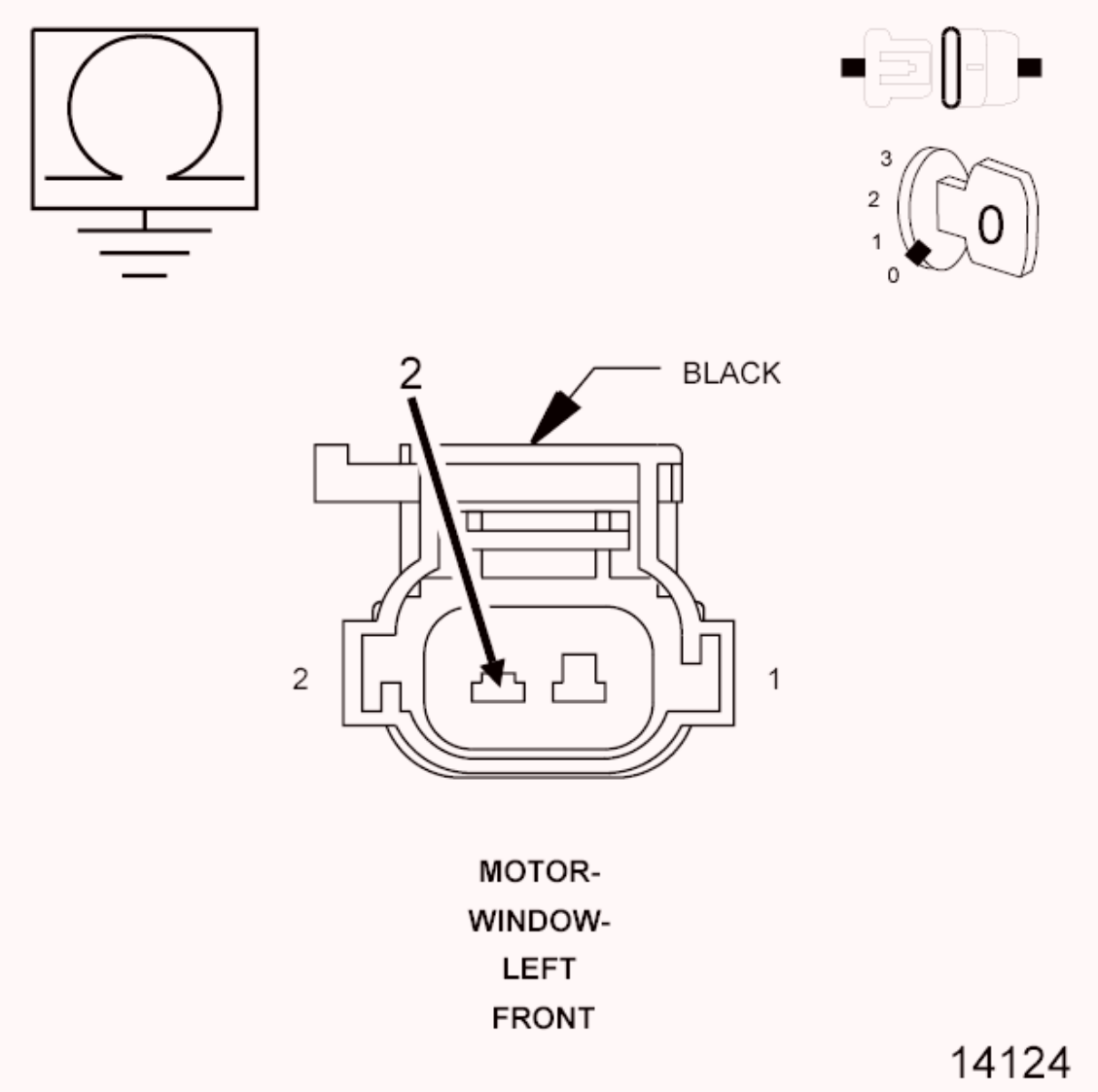

Fig. 132: Checking Window Driver (Up) Circuit Short To Ground
Courtesy of CHRYSLER GROUP, LLC

1. Turn the ignition off.
2. Disconnect the Driver Power Window Switch C1 and C2 connectors.
3. Measure the resistance between ground and the Window Driver (Up) circuit in the motor connector.

   Is the resistance below 10, 000.0 Ohms?

   Yes

   - Repair the Window Driver (Up) circuit for a short to ground. If this is not the driver window, the short could be from the master switch to the motor. Using the Power Window Schematic, check for the

proper circuit.

- Perform the BODY VERIFICATION TEST. Refer to **STANDARD PROCEDURE** .

No

- Go To 5

5. **WINDOW DRIVER (DOWN) CIRCUIT SHORT TO GROUND**

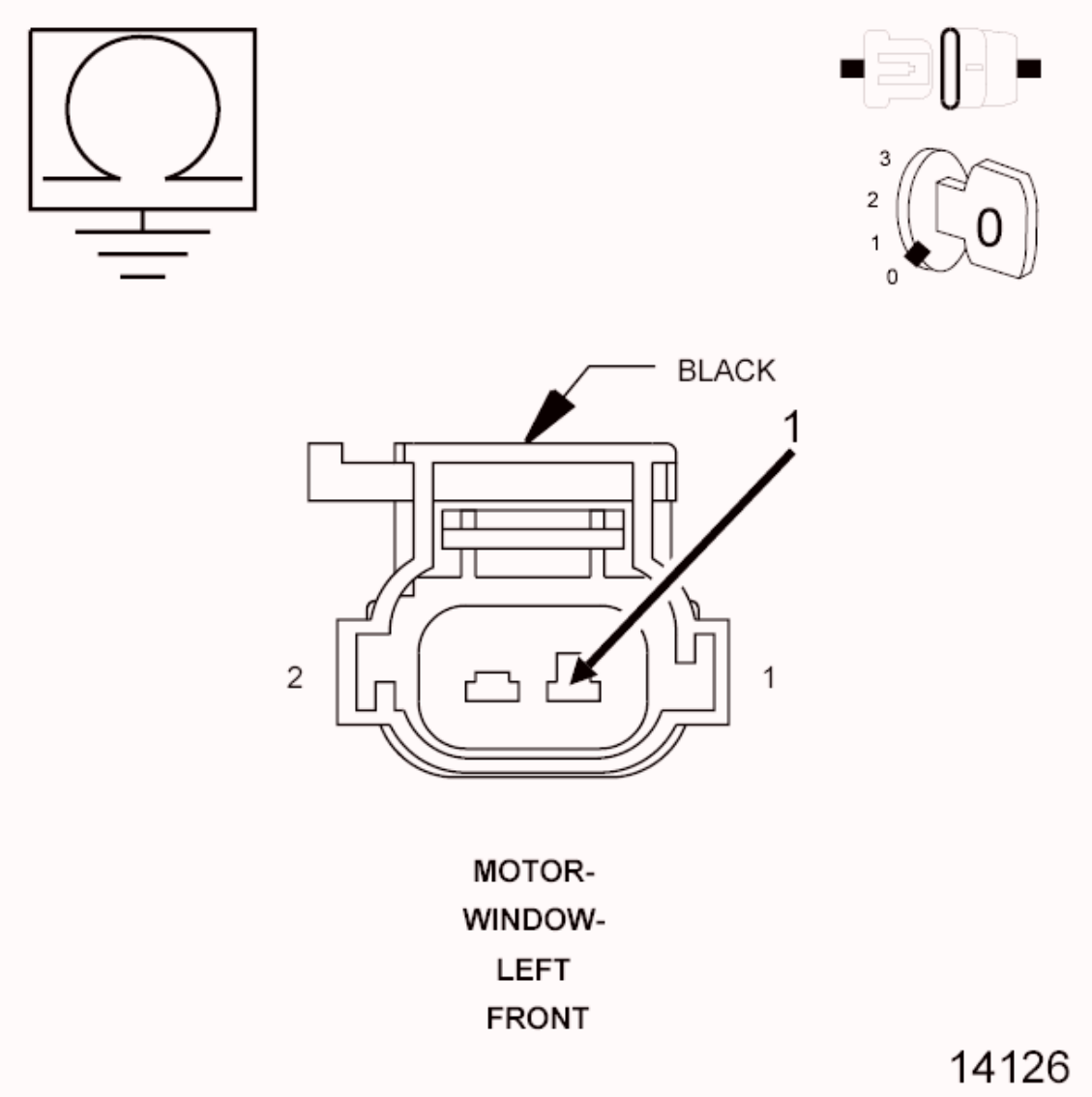

Fig. 133: Checking Window Driver (Down) Circuit For Short To Ground
Courtesy of CHRYSLER GROUP, LLC

1. Measure the resistance between ground and the Window Driver (Down) circuit in the motor connector.

Is the resistance below 10, 000 Ohms?

Yes

- Repair the Window Driver (Down) circuit for a short to ground. If this is not the driver window, the short could be from the master switch to the motor. Check the Power Window Schematic for the proper circuit.
- Perform the BODY VERIFICATION TEST. Refer to **STANDARD PROCEDURE** .

No

- Check the Window Driver (Up) circuit for a short to the Window Driver Down circuit. Repair if the resistance is under 10, 000.0 Ohms. If okay, check all the windows for alignment or any reason for the heavy current draw.
- Perform the BODY VERIFICATION TEST. Refer to **STANDARD PROCEDURE** .

B2104-IGNITION RUN/START CONTROL CIRCUIT LOW

For a complete wiring diagram, **refer to appropriate SYSTEM WIRING DIAGRAMS article** .

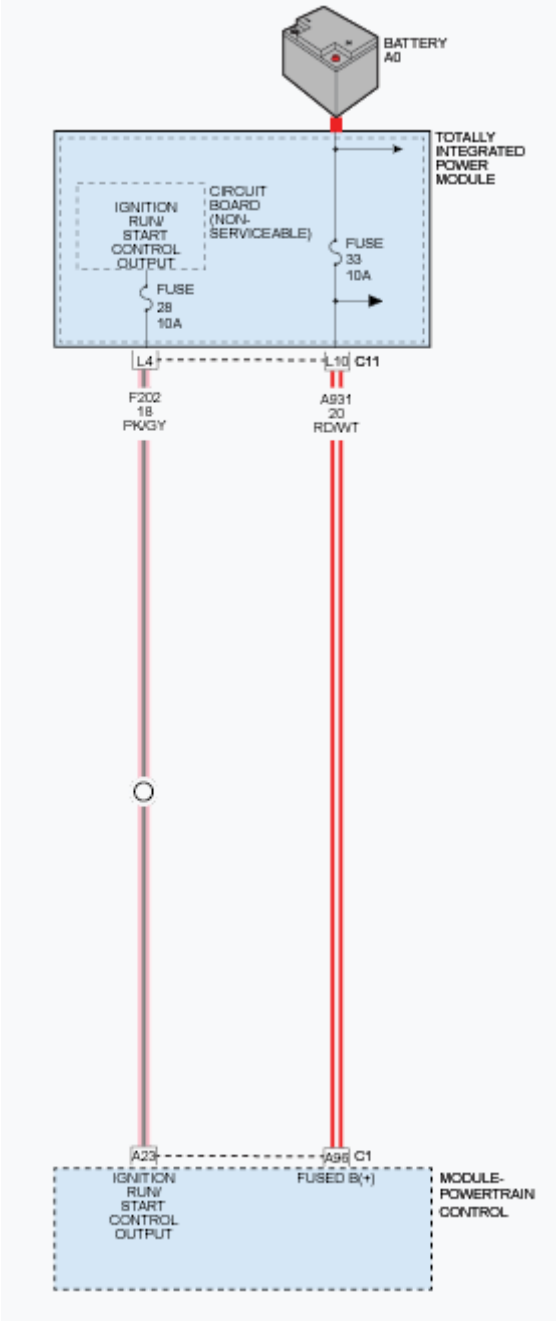

Fig. 134: Ignition Run/Start Control - Circuit Diagram
Courtesy of CHRYSLER GROUP, LLC

WHEN MONITORED

With the ignition on.

SET CONDITION

The Totally Integrated Power Module (TIPM) detects a short to ground on the (F202) Ignition Run/Start Control Output circuit.

POSSIBLE CAUSES

Possible Causes
(F202) IGNITION RUN/START CONTROL OUTPUT CIRCUIT SHORT TO GROUND
INTERNALLY SHORTED MODULE
INTERNALLY SHORTED COMPONENT
TIPM

DIAGNOSTIC TEST

1. **CHECK FOR ACTIVE DTC**
   1. Check all fuses.
   2. With the scan tool, read the active DTC's.
   3. Cycle the ignition switch from off to on, leaving the ignition off for a minimum of 30 seconds.
   4. With the scan tool, read the DTC's.

   Does the scan tool display this DTC as active?

   Yes

   - Go To 2

   No

   - If the DTC is stored, check for an intermittent condition. Using the wiring diagram/schematic as a guide, visually inspect the related wiring harness connectors. Look for broken, bent, pushed out, or corroded terminals.
   - Perform the BODY VERIFICATION TEST. Refer to **STANDARD PROCEDURE** .
2. **CHECK FOR AN INTERNALLY SHORTED COMPONENT OR MODULE**

   NOTE: The (F202) Ignition Run/Start Control Output circuit is the power supply for multiple modules and components.

1. Turn the ignition off.
2. Using the wiring diagrams as a guide, disconnect each component and module that is fed by the (F202) Ignition Run/Start Control Output circuit one at a time while checking for the DTC to become stored.
3. With the scan tool, read DTCs.

   Did the DTC changed from active to stored?

   Yes

   - Replace the shorted component or module in accordance with the service information.
   - Perform the BODY VERIFICATION TEST. Refer to **STANDARD PROCEDURE** .

   No

   - Go To 3

3. **CHECK (F202) IGNITION RUN/START CONTROL OUTPUT CIRCUIT FOR A SHORT TO GROUND**
   1. Turn the ignition off.
   2. Disconnect the TIPM C11 harness connector.
   3. Measure the resistance between ground and the (F202) Ignition Run/Start Control Output circuit.

      Is the resistance less than 10k Ohms?

      Yes

      - Repair the (F202) Ignition Run/Start Control Output circuit for a short to ground.
      - Perform the BODY VERIFICATION TEST. Refer to **STANDARD PROCEDURE** .

      No

      - Replace the TIPM in accordance with the service information.
      - Perform the BODY VERIFICATION TEST. Refer to

STANDARD PROCEDURE .

B2105-IGNITION RUN/START 1 CONTROL CIRCUIT - HIGH

For a complete wiring diagram, **refer to appropriate SYSTEM WIRING DIAGRAMS article** .

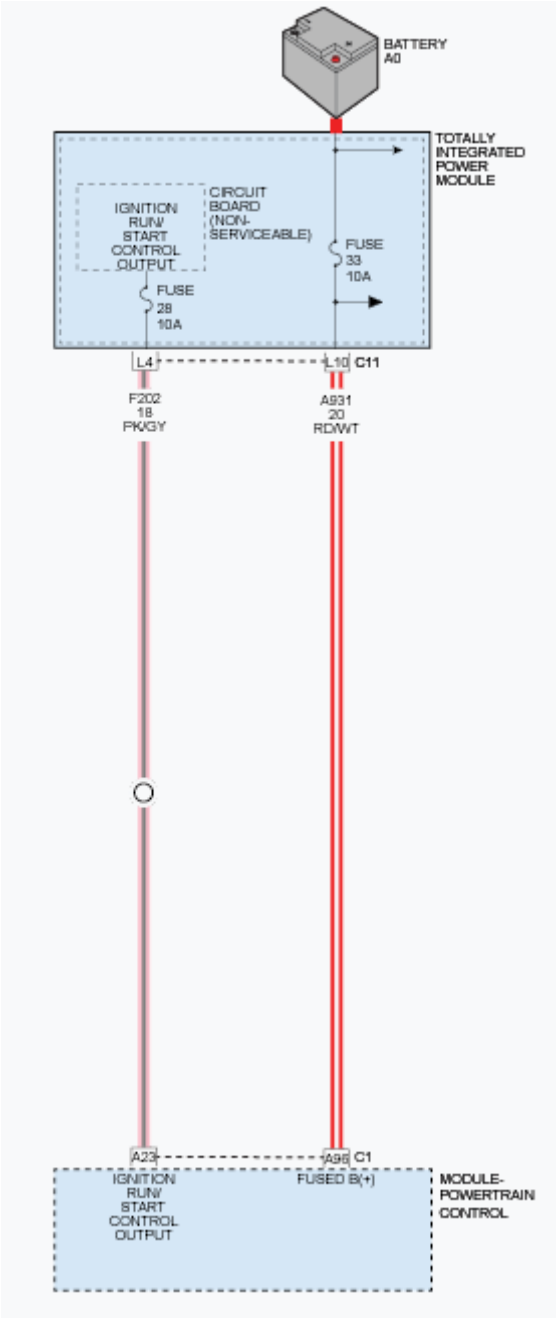

Fig. 135: Ignition Run/Start Control - Circuit Diagram
Courtesy of CHRYSLER GROUP, LLC

WHEN MONITORED

With the ignition on.

SET CONDITION

The Totally Integrated Power Module (TIPM) detects a short to voltage on the (F202) Ignition Run/Start Control Output circuit.

POSSIBLE CAUSES

Possible Causes
(F202) IGNITION RUN/START CONTROL OUTPUT CIRCUIT SHORT TO VOLTAGE
INTERNALLY SHORTED MODULE
INTERNALLY SHORTED COMPONENT
TIPM

DIAGNOSTIC TEST

1. **CHECK FOR ACTIVE DTC**
   1. Check all fuses.
   2. With the scan tool, read the active DTC's.
   3. Cycle the ignition switch from off to on, leaving the ignition off for a minimum of 30 seconds.
   4. With the scan tool, read the DTC's.

      Does the scan tool display this DTC as active?

      Yes

      - Go To 2

      No

      - If the DTC is stored, check for an intermittent condition. Using the wiring diagram/schematic as a guide, visually inspect the related wiring harness connectors. Look for broken, bent, pushed out, or corroded terminals.
      - Perform the BODY VERIFICATION TEST. Refer to **STANDARD PROCEDURE** .
2. **CHECK FOR AN INTERNALLY SHORTED COMPONENT OR**

MODULE

NOTE: The (F202) Ignition Run/Start Control Output circuit is the power supply for multiple modules and components.

1. Turn the ignition off.
2. Using the wiring diagrams as a guide, disconnect each component and module that is fed by the (F202) Ignition Run/Start Control Output circuit one at a time while checking for the DTC to become stored.
3. With the scan tool, read DTCs.

   Did the DTC changed from active to stored?

   Yes

   - Replace the shorted component or module in accordance with the service information.
   - Perform the BODY VERIFICATION TEST. Refer to **STANDARD PROCEDURE** .

   No

   - Go To 3

3. **CHECK (F202) IGNITION RUN/START CONTROL OUTPUT CIRCUIT FOR A SHORT TO VOLTAGE**
   1. Turn the ignition off.
   2. Disconnect the TIPM C11 harness connector.
   3. Turn the ignition on.
   4. Measure the voltage of the (F202) Ignition Run/Start Control Output circuit.

      Is there any voltage present?

      Yes

      - Repair the (F202) Ignition Run/Start Control Output circuit for a short to voltage.

- Perform the BODY VERIFICATION TEST. Refer to **STANDARD PROCEDURE** .

No

- Replace the TIPM in accordance with the service information.
- Perform the BODY VERIFICATION TEST. Refer to **STANDARD PROCEDURE** .

B2106-IGNITION RUN/START 1 CONTROL CIRCUIT - OPEN

For a complete wiring diagram, **refer to appropriate SYSTEM WIRING DIAGRAMS article** .

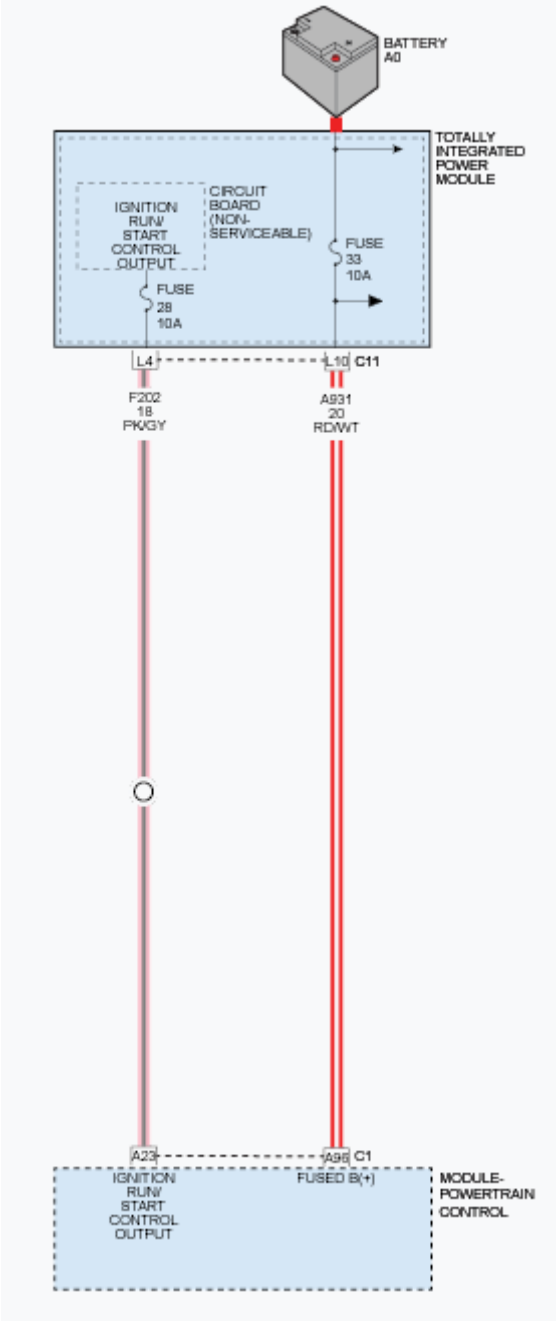

Fig. 136: Ignition Run/Start Control - Circuit Diagram
Courtesy of CHRYSLER GROUP, LLC

WHEN MONITORED

With the ignition on.

SET CONDITION

The Totally Integrated Power Module (TIPM) detects an open on the (F202) Ignition Run/Start Control Output circuit.

POSSIBLE CAUSES

Possible Causes
(F202) IGNITION RUN/START CONTROL OUTPUT CIRCUIT OPEN
FAULTY INTERNALLY MODULE
FAULTY INTERNALLY COMPONENT
TIPM

DIAGNOSTIC TEST

1. **CHECK FOR ACTIVE DTC**
   1. Check all fuses.
   2. With the scan tool, read the active DTC's.
   3. Cycle the ignition switch from off to on, leaving the ignition off for a minimum of 30 seconds.
   4. With the scan tool, read the active DTC's.

   Does the scan tool display this DTC as active?

   Yes

   - Go To 2

   No

   - If the DTC is stored, check for an intermittent condition. Using the wiring diagram/schematic as a guide, visually inspect the related wiring harness connectors. Look for broken, bent, pushed out, or corroded terminals.
   - Perform the BODY VERIFICATION TEST. Refer to **STANDARD PROCEDURE** .
2. **CHECK FOR A FAULTY COMPONENT OR MODULE**

   NOTE: The (F202) Ignition Run/Start Control Output circuit is the power supply for multiple modules and components.

   1. Turn the ignition off.
   2. Using the wiring diagrams as a guide, disconnect each component and

module that is fed by the (F202) Ignition Run/Start Control Output circuit one at a time while checking for the DTC to become stored.

3. With the scan tool, read DTCs.

   Did the DTC changed from active to stored?

   Yes

   - Replace the faulty component or module in accordance with the service information.
   - Perform the BODY VERIFICATION TEST. Refer to **STANDARD PROCEDURE** .

   No

   - Go To 3

3. **CHECK (F202) IGNITION RUN/START CONTROL OUTPUT CIRCUIT FOR AN OPEN**

   NOTE: Using the wiring diagrams as a guide, disconnect each component and module that is fed by the (F202) Ignition Run/Start Control Output circuit.

   1. Turn the ignition off.
   2. Disconnect the TIPM C11 harness connector.
   3. Turn the ignition on.
   4. Measure the resistance of the (F202) Ignition Run/Start Control Output circuit between the TIPM C11 harness connector and each component or module on the (F202) Ignition Run/Start Control Output circuit.

      Is the resistance greater than 5 Ohms for any of the measurements?

      Yes

      - Repair the open in the (F202) Ignition Run/Start Control Output circuit.
      - Perform the BODY VERIFICATION TEST. Refer to **STANDARD PROCEDURE** .

No

- Replace the TIPM in accordance with the service information.
- Perform the BODY VERIFICATION TEST. Refer to **STANDARD PROCEDURE** .

B210D-BATTERY VOLTAGE - LOW

For a complete wiring diagram, **refer to appropriate SYSTEM WIRING DIAGRAMS article** .

WHEN MONITORED

With the ignition on.

SET CONDITION

Battery voltage less than 9 volts for approximately five to six seconds.

POSSIBLE CAUSES

Possible Causes
RESISTANCE IN THE BATTERY POSITIVE CIRCUIT
RESISTANCE IN THE GENERATOR CASE GROUND
GENERATOR OPERATION
GROUND CIRCUIT OPEN
POWERTRAIN CONTROL MODULE (PCM)

DIAGNOSTIC TEST

CHECK FOR ANY POWERTRAIN CONTROL MODULES DTCS

NOTE: Make sure the Battery is in good condition. Refer to DIAGNOSIS AND TESTING and perform the Battery System diagnostic procedure.

NOTE: Inspect the vehicle for after market accessories that may exceed the Generator System output.

NOTE: Make sure the generator drive belt is in good operating condition.

NOTE: Inspect the fuses in the TIPM. If an open fuse is found, use the wire diagram/schematic as a guide, inspect the wiring and connectors for damage.

1. Turn the ignition on.
2. With the scan tool, read active PCM DTCs.

   Does the scan tool display any active PCM DTCs?

   Yes

   - Refer to **DTC INDEX** and perform the appropriate diagnostic test procedure.

   No

   - Check the above conditions that can cause a low voltage condition. Repair as necessary.
   - Perform the BODY VERIFICATION TEST. Refer to **STANDARD PROCEDURE** .

B210E-BATTERY VOLTAGE - HIGH

For a complete wiring diagram, **refer to appropriate SYSTEM WIRING DIAGRAMS article** .

WHEN MONITORED

With the ignition on.

SET CONDITION

Battery voltage greater than 16 volts for approximately five to six seconds.

POSSIBLE CAUSES

Possible Causes
GENERATOR OPERATION
POWERTRAIN CONTROL MODULE (PCM)

DIAGNOSTIC TEST

CHECK FOR ANY POWERTRAIN CONTROL MODULES DTCS

NOTE: Make sure the Battery is in good condition. Refer to DIAGNOSIS AND TESTING and perform the Battery System diagnostic procedure.

NOTE: Inspect the vehicle for after market accessories that may exceed the Generator System output.

NOTE: Make sure the generator drive belt is in good operating condition.

NOTE: Inspect the fuses in the TIPM. If an open fuse is found, use the wire diagram/schematic as a guide, inspect the wiring and connectors for damage.

1. Turn the ignition on.
2. With the scan tool, read active PCM DTCs.

   Does the scan tool display any active PCM DTCs?

   Yes

   - Refer to **DTC INDEX** and perform the appropriate diagnostic test procedure.

   No

   - Check the above conditions that can cause a high voltage condition. Repair as necessary.
   - Perform the BODY VERIFICATION TEST. Refer to **STANDARD PROCEDURE** .

B2112-5-VOLT SUPPLY CIRCUIT LOW

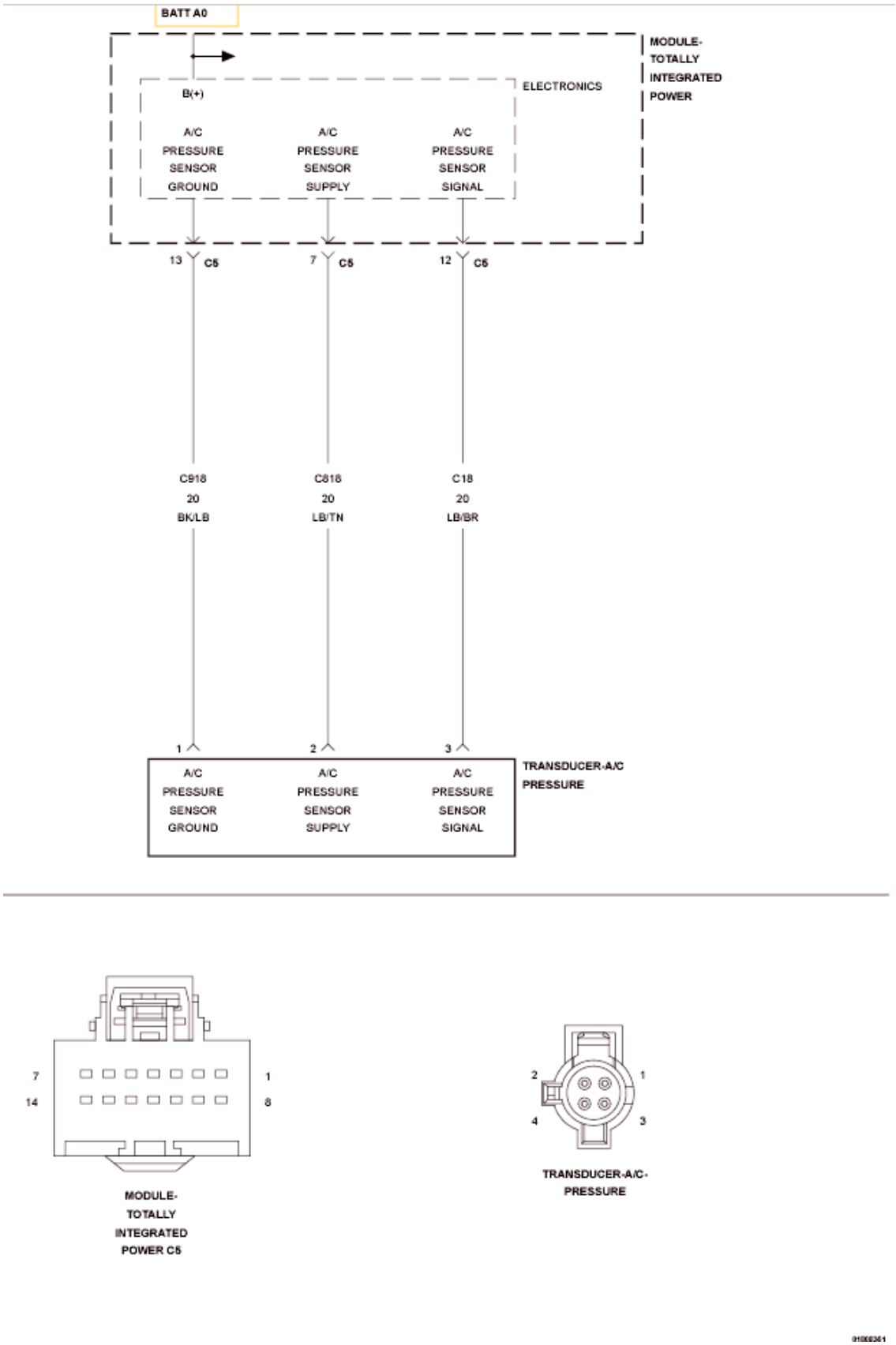

Fig. 137: Volt Supply Wiring Diagram
Courtesy of CHRYSLER GROUP, LLC

For a complete wiring diagram, **refer to appropriate SYSTEM WIRING DIAGRAMS article** .

WHEN MONITORED

With the ignition on.

SET CONDITION

The Totally Integrated Power Module (TIPM) detects a short to ground on the A/C Pressure Sensor Supply circuit.

POSSIBLE CAUSES

Possible Causes
(C818) A/C PRESSURE SENSOR SUPPLY SHORTED TO GROUND
(C818) A/C PRESSURE SENSOR SUPPLY SHORTED TO THE (C918) A/C PRESSURE SENSOR GROUND CIRCUIT
A/C PRESSURE TRANSDUCER
TOTALLY INTEGRATED POWER MODULE (TIPM)

DIAGNOSTIC TEST

1. **CHECK FOR ACTIVE DIAGNOSTIC TROUBLE CODE (DTC)**
   1. Turn the ignition on.
   2. Using the scan tool, read the DTCs.

      Does the scan tool display this DTC as active?

      Yes

      - Go To 2

      No

      - If the DTC is stored, check for an intermittent condition. Using the wiring diagram/schematic as a guide, visually inspect the related wiring harness connectors. Look for broken, bent, pushed out or corroded terminals.
      - Perform the BODY VERIFICATION TEST. Refer to **STANDARD PROCEDURE** .

2. **A/C PRESSURE TRANSDUCER**
    1. Turn the ignition off.
    2. Disconnect the A/C Pressure Transducer harness connector.
    3. Turn the ignition on.
    4. Wait 30 seconds.
    5. Using the scan tool, read DTCs.

    Does the scan tool display this DTC as active?

    Yes

    - Go To 3

    No

    - Replace the A/C Pressure Transducer in accordance with the Service Information.
    - Perform the BODY VERIFICATION TEST. Refer to **STANDARD PROCEDURE** .
3. **(C818) A/C PRESSURE SENSOR SUPPLY SHORTED TO GROUND**

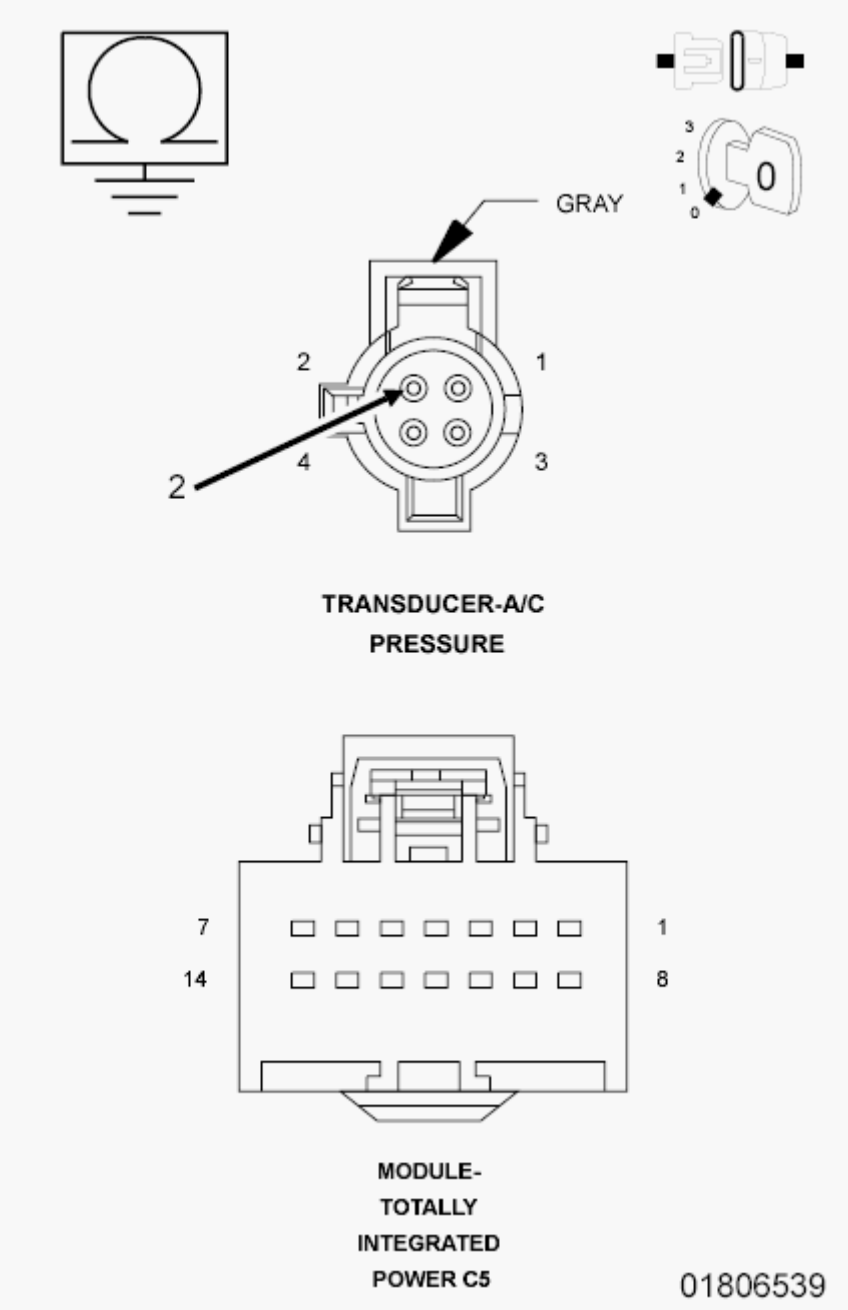

Fig. 138: Measuring Resistance Between Ground & A/C Pressure Sensor Supply Circuit
Courtesy of CHRYSLER GROUP, LLC

1. Turn the ignition off.
2. Disconnect the TIPM C5 harness connector.
3. Measure the resistance between ground and the (C818) A/C Pressure Sensor Supply circuit.

   Is the resistance below 10K Ohms?

Yes

- Repair the (C818) A/C Pressure Sensor Supply circuit for a short to ground.
- Perform the BODY VERIFICATION TEST. Refer to **STANDARD PROCEDURE** .

No

- Go To 4

4. **(C818) A/C PRESSURE SENSOR SUPPLY SHORTED TO THE (C918) A/C PRESSURE SENSOR GROUND CIRCUIT**

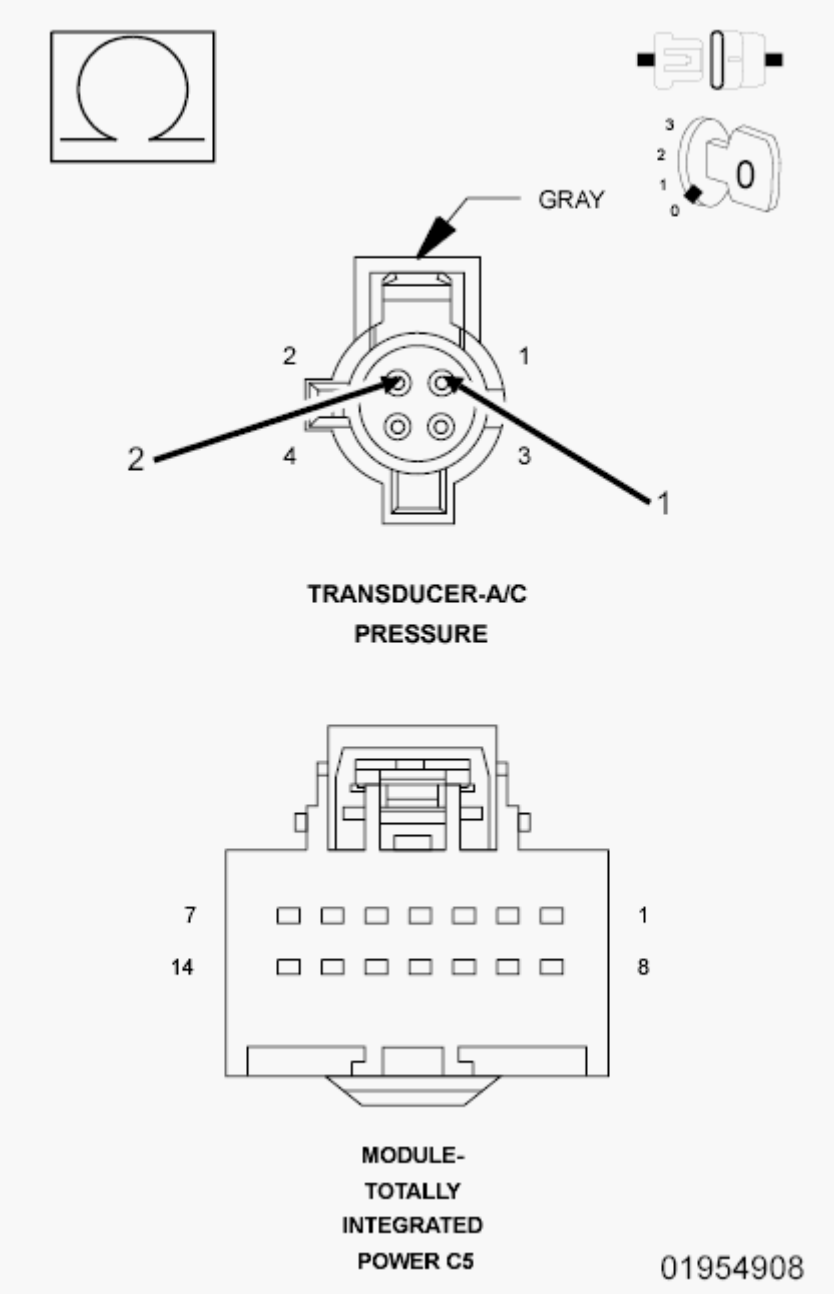

Fig. 139: Measuring Resistance Between A/C Pressure Sensor Supply Circuit & A/C Pressure Sensor Ground Circuit
Courtesy of CHRYSLER GROUP, LLC

1. Measure the resistance between the (C818) A/C Pressure Sensor Supply circuit and the (C918) A/C Pressure Sensor Ground circuit.

   Is the resistance below 10K Ohms?

   Yes

   - Repair the (C818) A/C Pressure Sensor Supply circuit for a short to

the (C918) A/C Pressure Sensor Ground circuit.

- Perform the BODY VERIFICATION TEST. Refer to **STANDARD PROCEDURE** .

No

- Replace the Totally Integrated Power Module (TIPM) in accordance with the Service Information.
- Perform the BODY VERIFICATION TEST. Refer to **STANDARD PROCEDURE** .

B2113-5-VOLT SUPPLY CIRCUIT HIGH

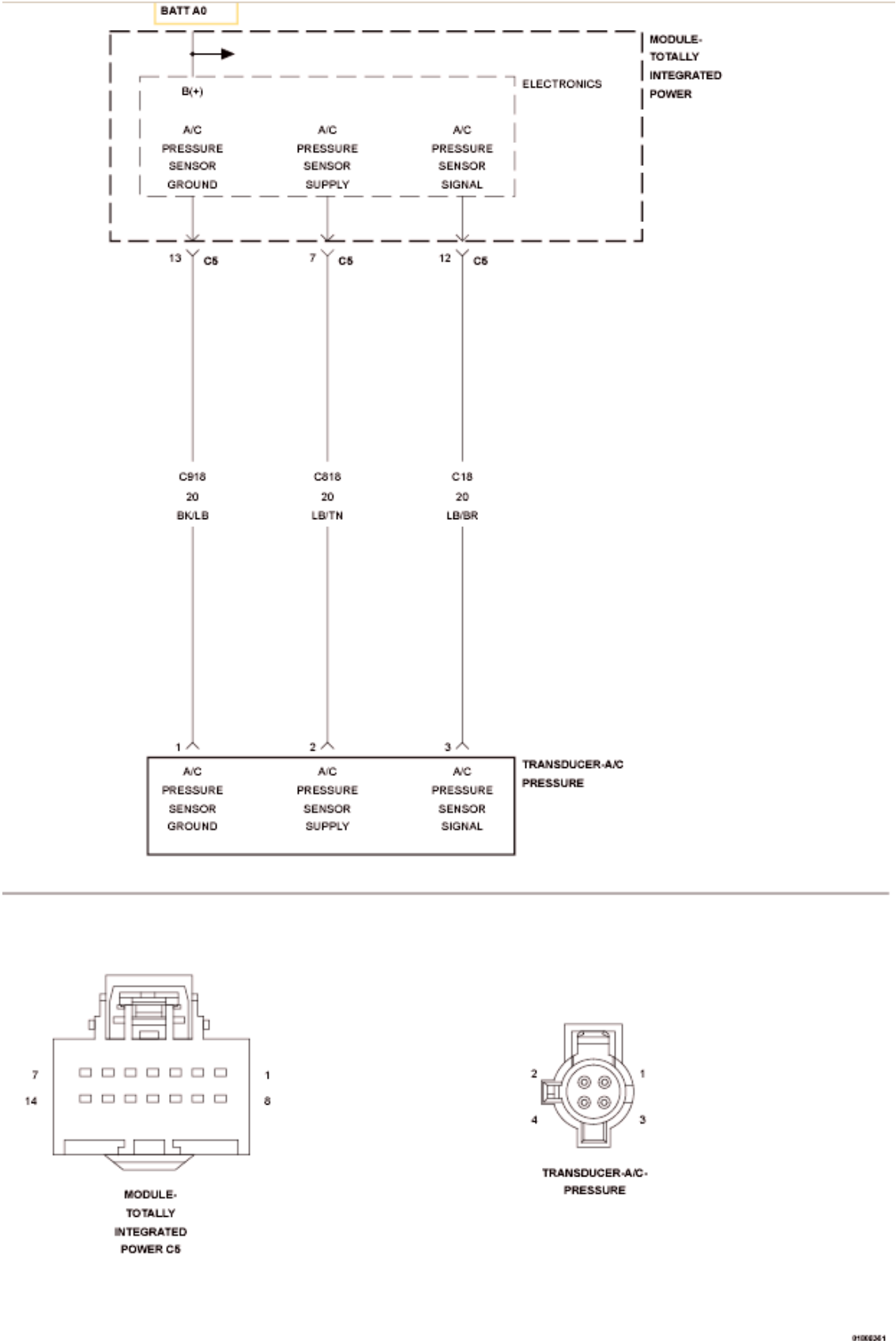

Fig. 140: Volt Supply Wiring Diagram
Courtesy of CHRYSLER GROUP, LLC

For a complete wiring diagram, **refer to appropriate SYSTEM WIRING DIAGRAMS article** .

WHEN MONITORED

With the ignition on.

SET CONDITION

The Totally Integrated Power Module detects a short to battery voltage on the A/C Pressure Sensor Supply circuit.

POSSIBLE CAUSES

Possible Causes
(C818) A/C PRESSURE SENSOR SUPPLY SHORTED TO VOLTAGE
A/C PRESSURE TRANSDUCER
TOTALLY INTEGRATED POWER MODULE (TIPM)

DIAGNOSTIC TEST

1. **CHECK FOR ACTIVE DIAGNOSTIC TROUBLE CODE (DTC)**
   1. Turn the ignition on.
   2. Using the scan tool, read the DTCs.

      Does the scan tool display this DTC as active?

      Yes

      - Go To 2

      No

      - If the DTC is stored, check for an intermittent condition. Using the wiring diagram/schematic as a guide, visually inspect the related wiring harness connectors. Look for broken, bent, pushed out or corroded terminals.
      - Perform the BODY VERIFICATION TEST. Refer to **STANDARD PROCEDURE** .
2. **(C818) A/C PRESSURE SENSOR SUPPLY SHORTED TO VOLTAGE**

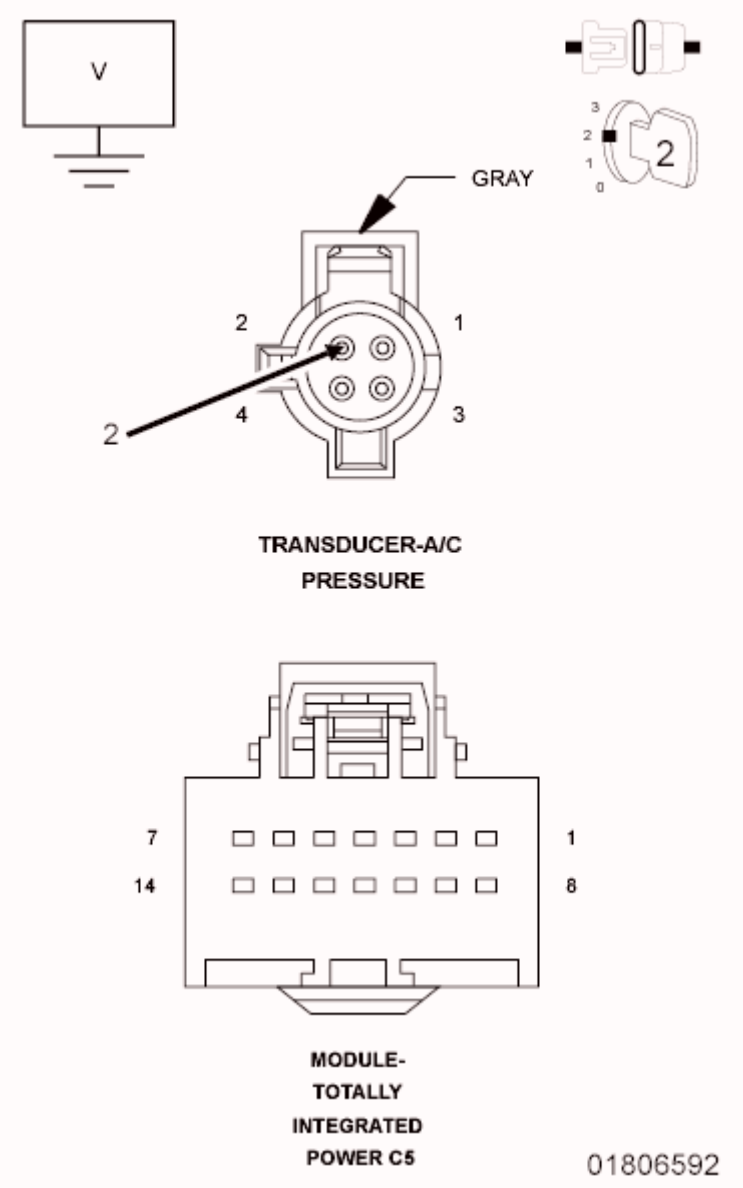

Fig. 141: Measuring Voltage Of A/C Pressure Sensor Supply Circuit
Courtesy of CHRYSLER GROUP, LLC

1. Turn the ignition off.
2. Disconnect the A/C Pressure Transducer harness connector.
3. Disconnect the TIPM C5 harness connector.
4. Turn the ignition on.
5. Measure the voltage of the (C818) A/C Pressure Sensor Supply circuit.

   Is the voltage above 10.0 Volts?

   Yes

- Repair the (C818) A/C Pressure Sensor Supply circuit for a short to voltage.
- Perform the BODY VERIFICATION TEST. Refer to **STANDARD PROCEDURE** .

No

- Replace the TIPM in accordance with the Service Information.
- Perform the BODY VERIFICATION TEST. Refer to **STANDARD PROCEDURE** .

B2122-IGNITION RUN CONTROL 1 CIRCUIT LOW

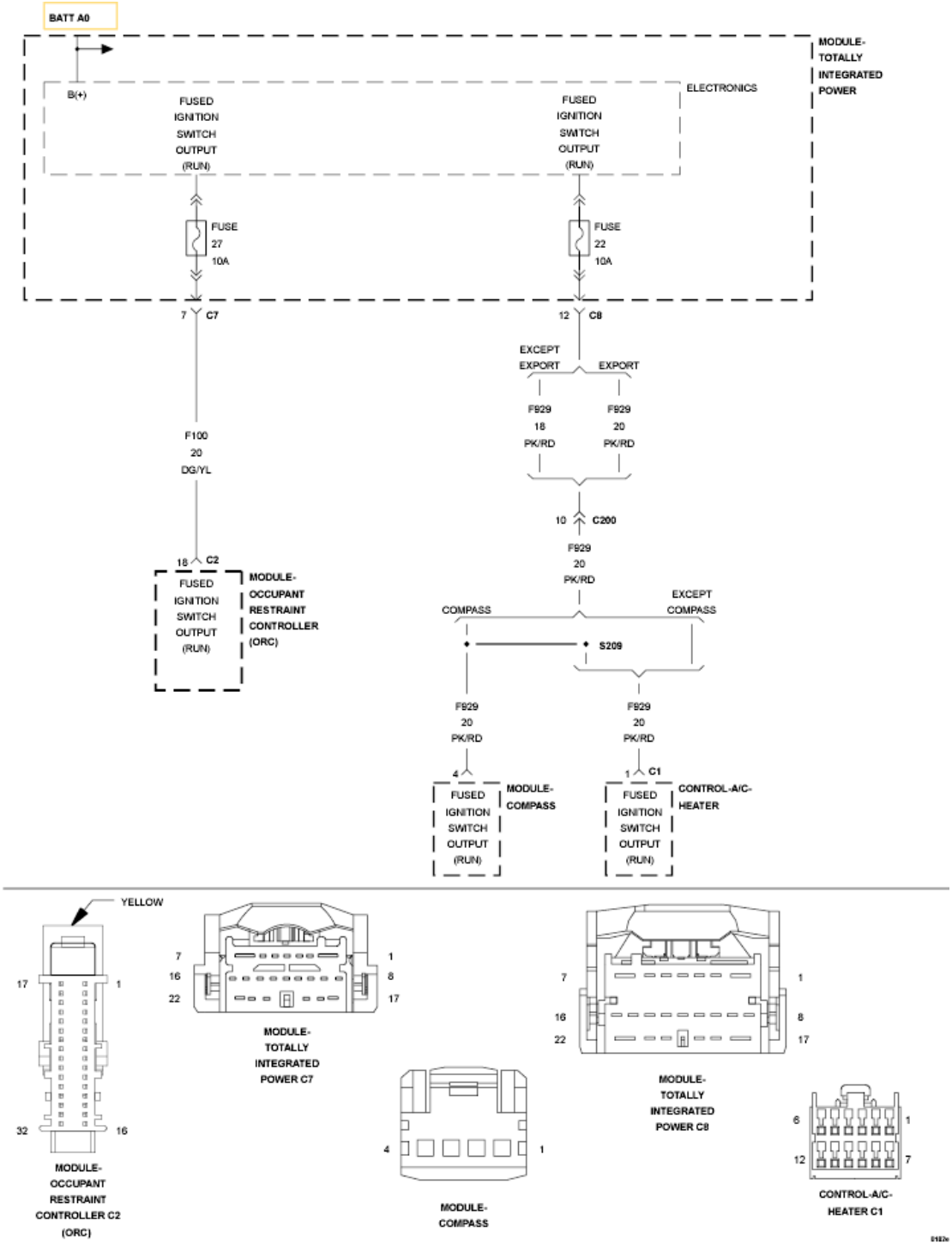

Fig. 142: Ignition Run Control 1 - Circuit Diagram
Courtesy of CHRYSLER GROUP, LLC

For a complete wiring diagram **refer to appropriate SYSTEM WIRING DIAGRAMS article** .

WHEN MONITORED

With the ignition on.

SET CONDITION

The TIPM detects a short to ground condition on the Fused Ignition Switch Output (RUN).

POSSIBLE CAUSES

Possible Causes
SHORT TO GROUND ON (F100) FUSED IGNITION SWITCH OUTPUT (RUN) CIRCUIT
SHORT TO GROUND ON (F929) FUSED IGNITION SWITCH OUTPUT (RUN) CIRCUIT
A/C HEATER CONTROL
COMPASS MODULE
ORC
TIPM

DIAGNOSTIC TEST

1. **CHECK FOR ACTIVE DTC**
    1. Check all fuses. If any fuses are open, diagnose the appropriate circuit.
    2. With the scan tool, read the DTCs.
    3. Cycle the ignition switch from off to on, leaving the ignition on for a minimum of 10 seconds.
    4. With the scan tool, read the DTCs.

    Does the scan tool display this DTC as active?

    Yes

    - Go To 2

    No

    - If the DTC is stored, check for an intermittent condition. Using the wiring diagram/schematic as a guide, visually inspect the related wiring harness connectors. Look for broken, bent, pushed out, or corroded terminals.
2. **CHECK FOR SHORT TO GROUND ON (F100) FUSED IGNITION**

SWITCH OUTPUT (RUN) CIRCUIT

1. Turn the ignition off.
2. Remove fuse number 27.
3. Turn the ignition on.
4. With the scan tool, read the DTCs.

   Does the scan tool display this DTC as active?

   Yes

   - Go To 5

   No

   - Go To 3

3. **CHECK ORC FOR A SHORT TO GROUND**

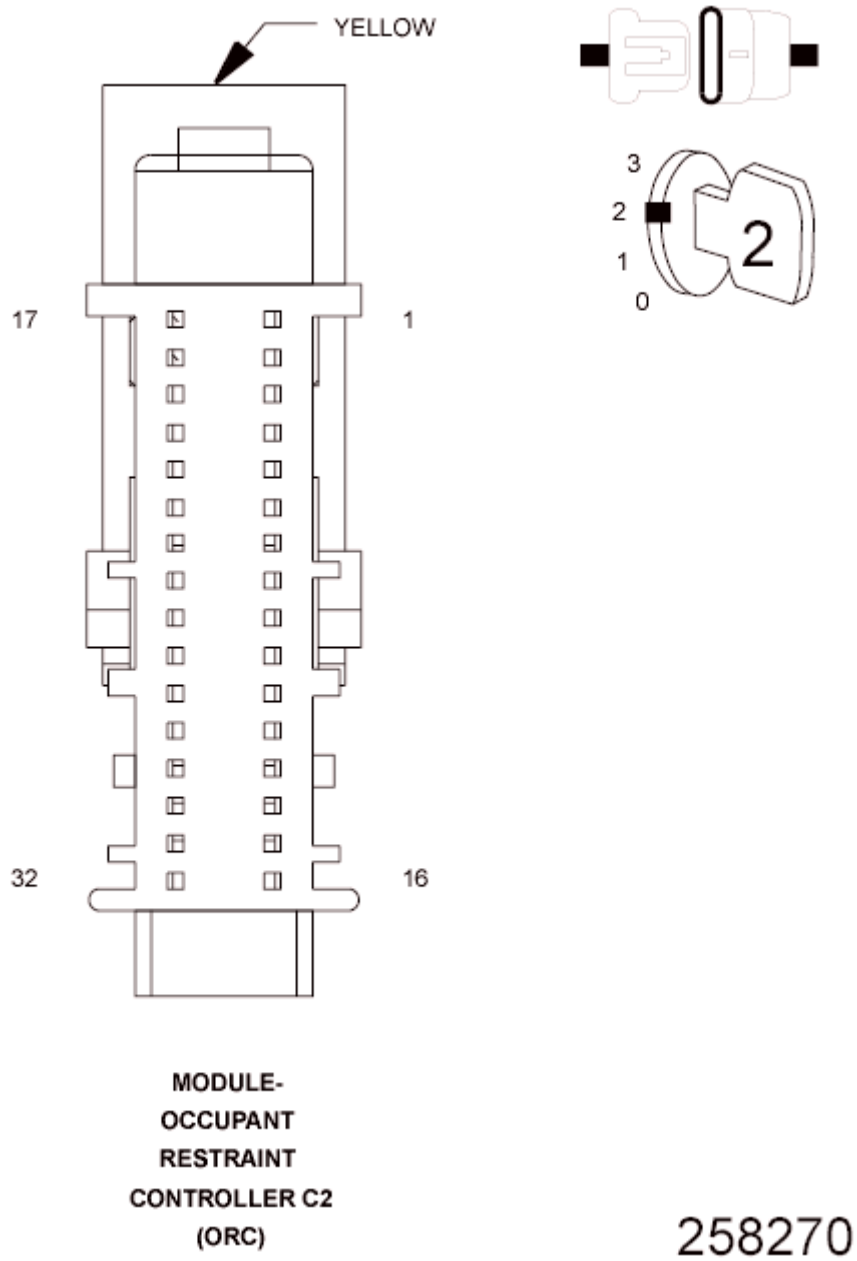

Fig. 143: Checking ORC For Short To Ground
Courtesy of CHRYSLER GROUP, LLC

WARNING: To avoid possible serious or fatal injury, turn the ignition off, disconnect the battery and wait two minutes before proceeding.

1. Turn the ignition off.
2. Disconnect the ORC harness connector.
3. Reinstall fuse number 27.

4. Turn the ignition on.
5. With the scan tool, read the DTCs.

   Does the scan tool display this DTC as active?

   Yes

   - Go To 4

   No

   - Replace the ORC in accordance with the service information.
   - Perform the AIRBAG SYSTEM VERIFICATION TEST. Refer to **STANDARD PROCEDURE** .

4. **CHECK FOR SHORT TO GROUND ON (F100) FUSED IGNITION SWITCH OUTPUT (RUN) CIRCUIT**

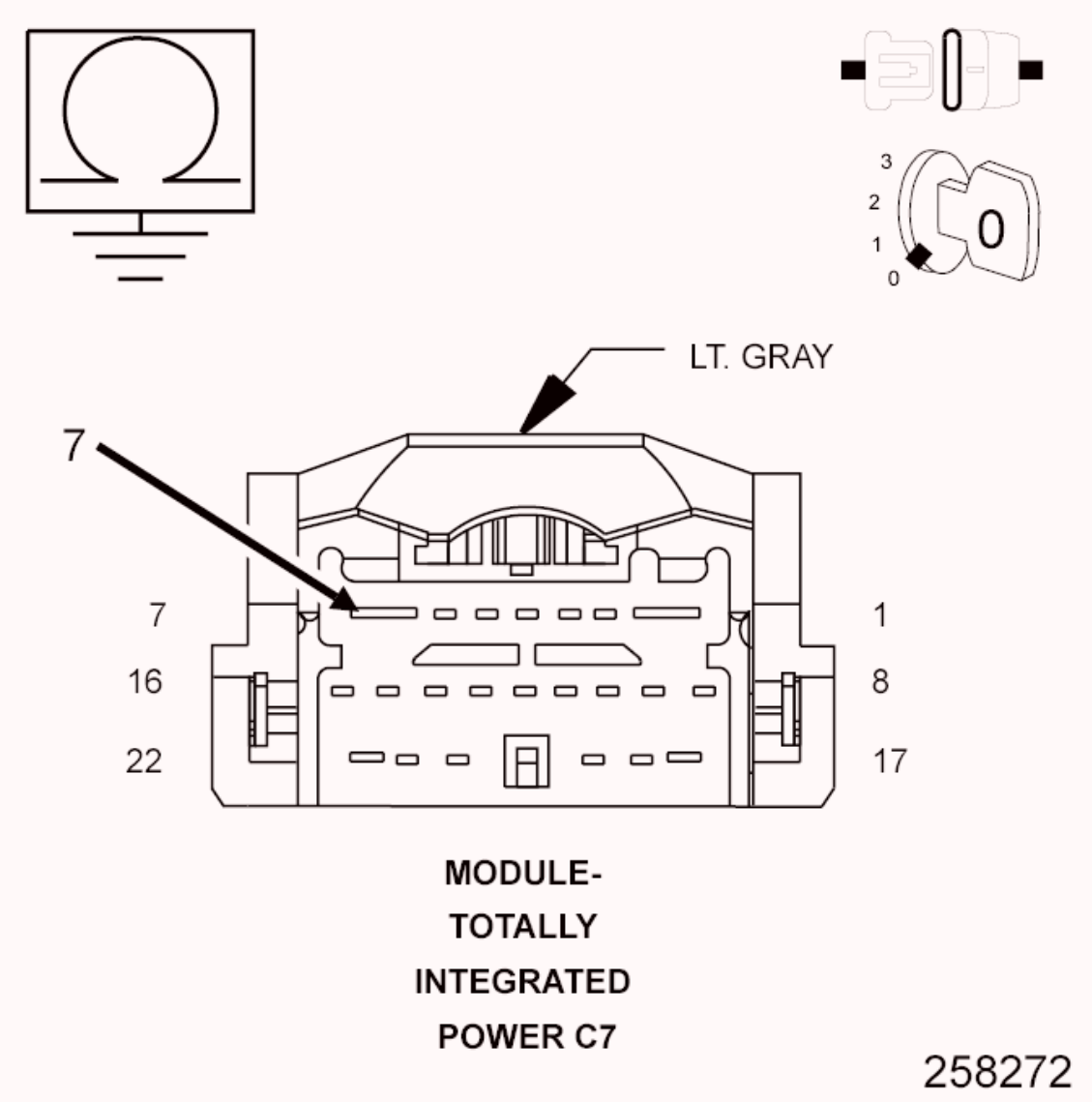

Fig. 144: Checking For Short To Ground On Fused Ignition Switch Output (Run) Circuit
Courtesy of CHRYSLER GROUP, LLC

1. Turn the ignition off.
2. Disconnect the TIPM C7 harness connector.
3. Measure the resistance between the (F100) Fused Ignition Switch Output (Run) circuit and ground.

   Is the resistance below 10K ohms?

   Yes

   - Repair the (F100) Fused Ignition Switch Output (Run) circuit for a short to ground.

- Perform the BODY VERIFICATION TEST VER 1. Refer to **STANDARD PROCEDURE** .

No

- Test complete.

5. **CHECK FOR SHORT TO GROUND ON (F929) FUSED IGNITION SWITCH OUTPUT (RUN) CIRCUIT**
   1. Turn the ignition off.
   2. Remove fuse number 22.
   3. Turn the ignition on.
   4. With the scan tool, read the DTCs.

   Does the scan tool display this DTC as active?

   Yes

   - Replace the TIPM in accordance with the service information.
   - Perform the BODY VERIFICATION TEST VER 1. Refer to **STANDARD PROCEDURE** .

   No

   - Go To 6

6. **CHECK THE A/C HEATER CONTROL FOR A SHORT TO GROUND**

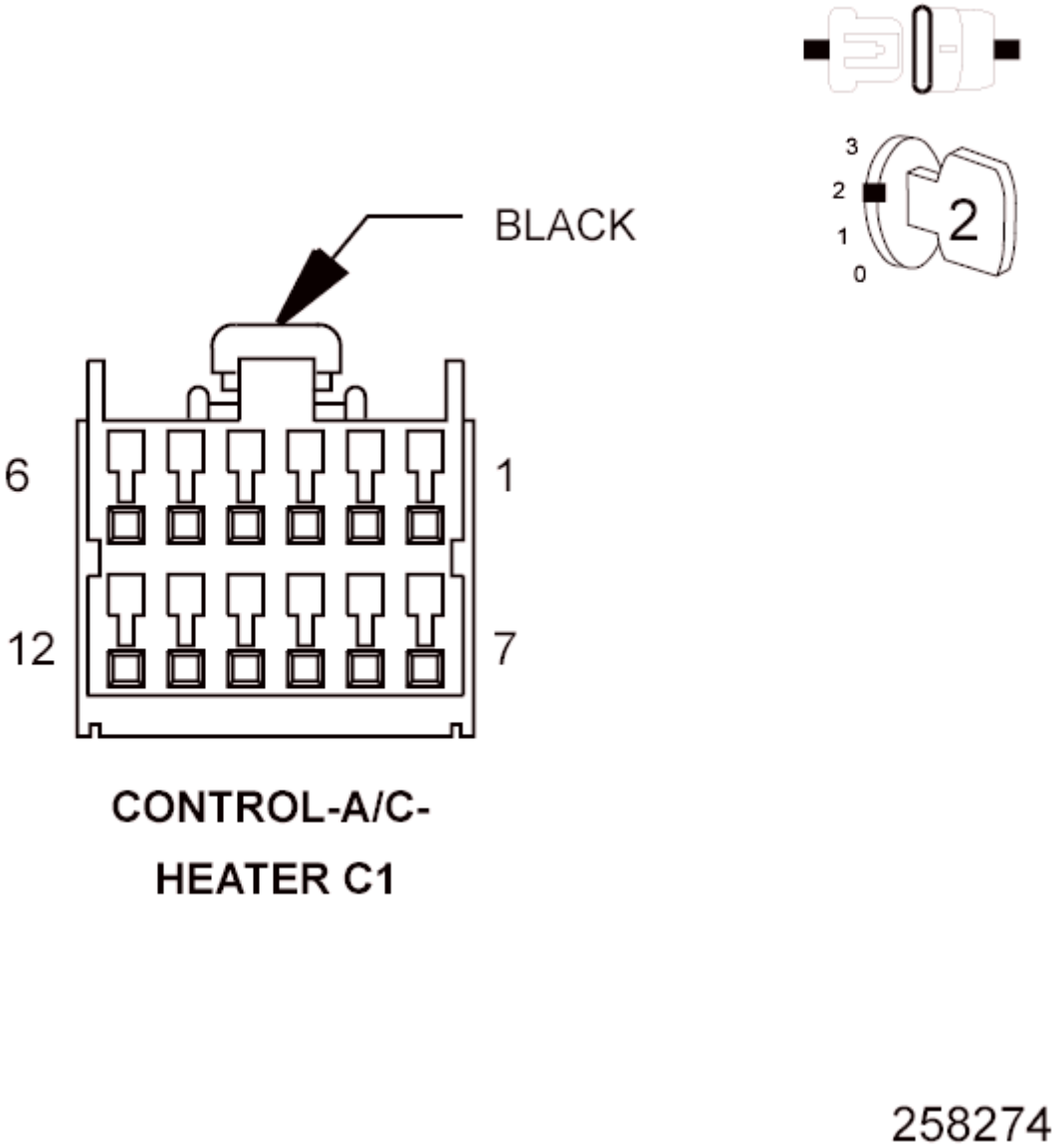

Fig. 145: Checking A/C Heater Control For Short To Ground
Courtesy of CHRYSLER GROUP, LLC

1. Turn the ignition off.
2. Disconnect the A/C Heater Control harness connector.
3. Reinstall fuse number 22.
4. Turn the ignition on.
5. With the scan tool, read the DTCs.

   Does the scan tool display this DTC as active?

   Yes

- Go To 7

No

- Replace the A/C Heater Control in accordance with the service information.
- Perform the BODY VERIFICATION TEST VER 1. Refer to **STANDARD PROCEDURE** .

7. **CHECK COMPASS MODULE FOR A SHORT TO GROUND**

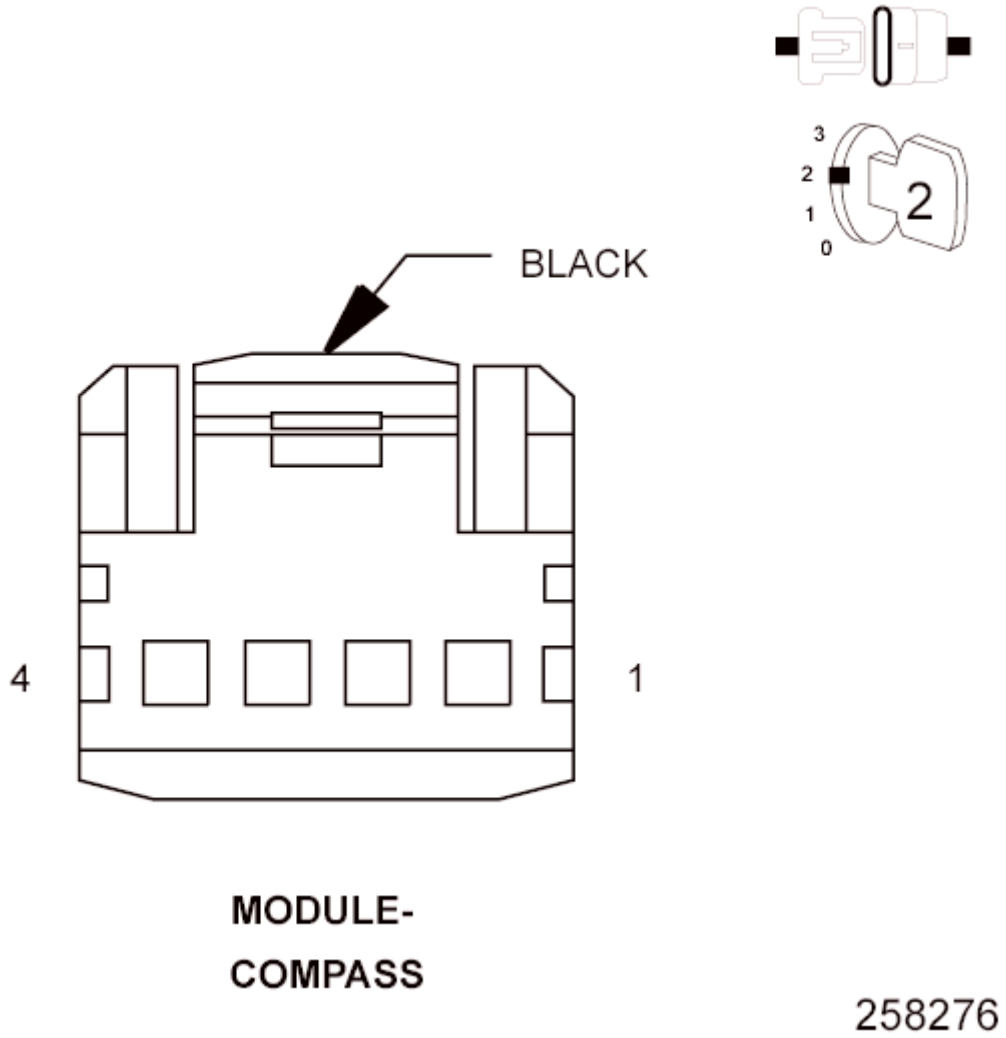

Fig. 146: Checking Compass Module For Short To Ground
Courtesy of CHRYSLER GROUP, LLC

1. Turn the ignition off.
2. Disconnect the Compass Module harness connector.
3. Turn the ignition on.

4. With the scan tool, read the DTCs.

   Does the scan tool display this DTC as active?

   Yes

   - Go To 8

   No

   - Replace the Compass Module in accordance with the service information.
   - Perform the BODY VERIFICATION TEST VER 1. Refer to **STANDARD PROCEDURE** .

8. **CHECK FOR SHORT TO GROUND ON (F929) FUSED IGNITION SWITCH OUTPUT (RUN) CIRCUIT**

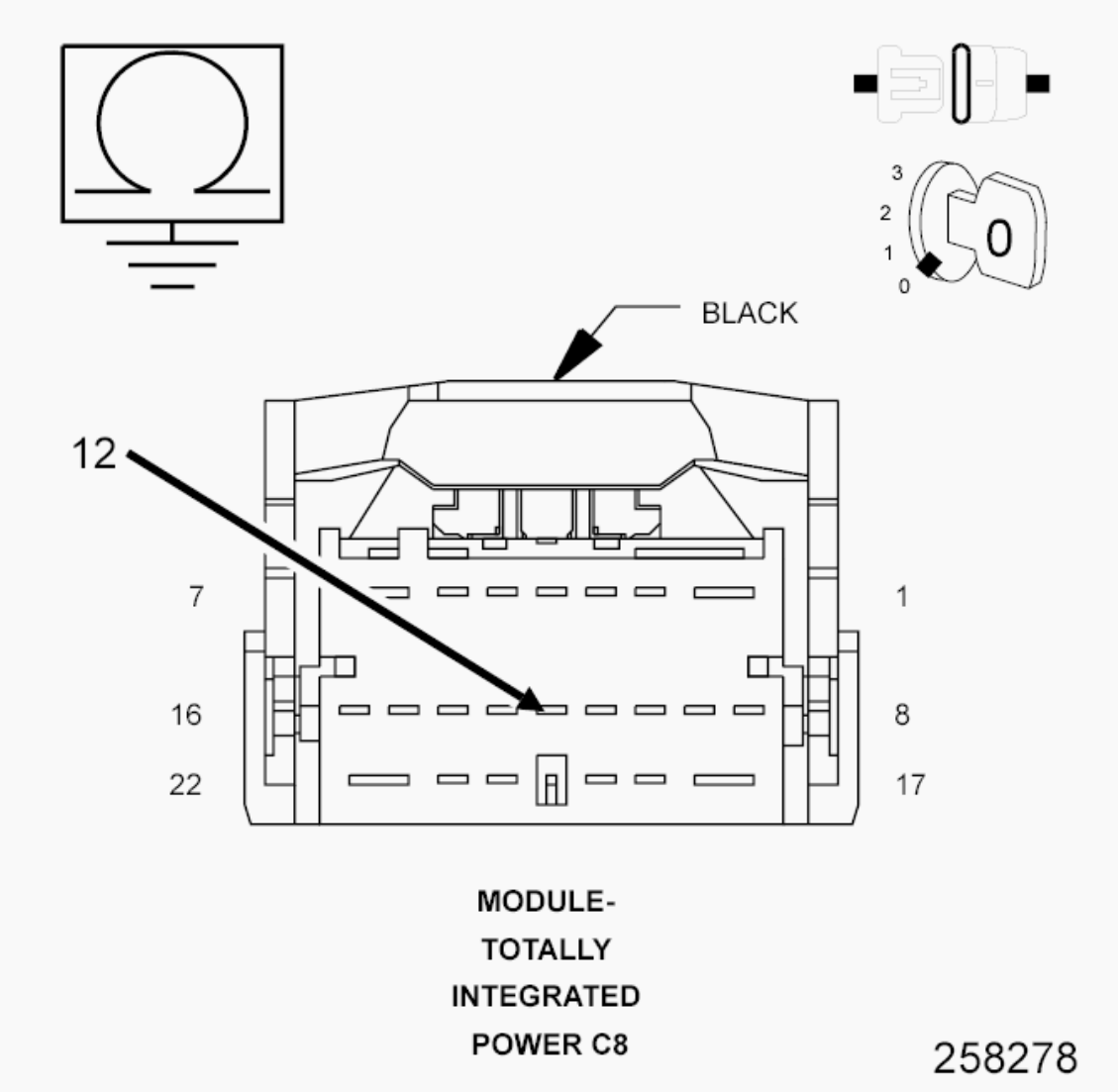

Fig. 147: Checking For Short To Ground On Fused Ignition Switch Output (Run) Circuit
Courtesy of CHRYSLER GROUP, LLC

1. Turn the ignition off.
2. Disconnect the TIPM C8 harness connector.
3. Measure the resistance between the (F929) Fused Ignition Switch Output (Run) circuit and ground.

   Is the resistance below 10K ohms?

   Yes

   - Repair the (F929) Fused Ignition Switch Output (Run) circuit for a short to ground.

- Perform the BODY VERIFICATION TEST VER 1. Refer to **STANDARD PROCEDURE** .

No

- Replace the TIPM in accordance with the service information.
- Perform the BODY VERIFICATION TEST VER 1. Refer to **STANDARD PROCEDURE** .

B212F-IGNITION RUN/ACC CONTROL CIRCUIT LOW

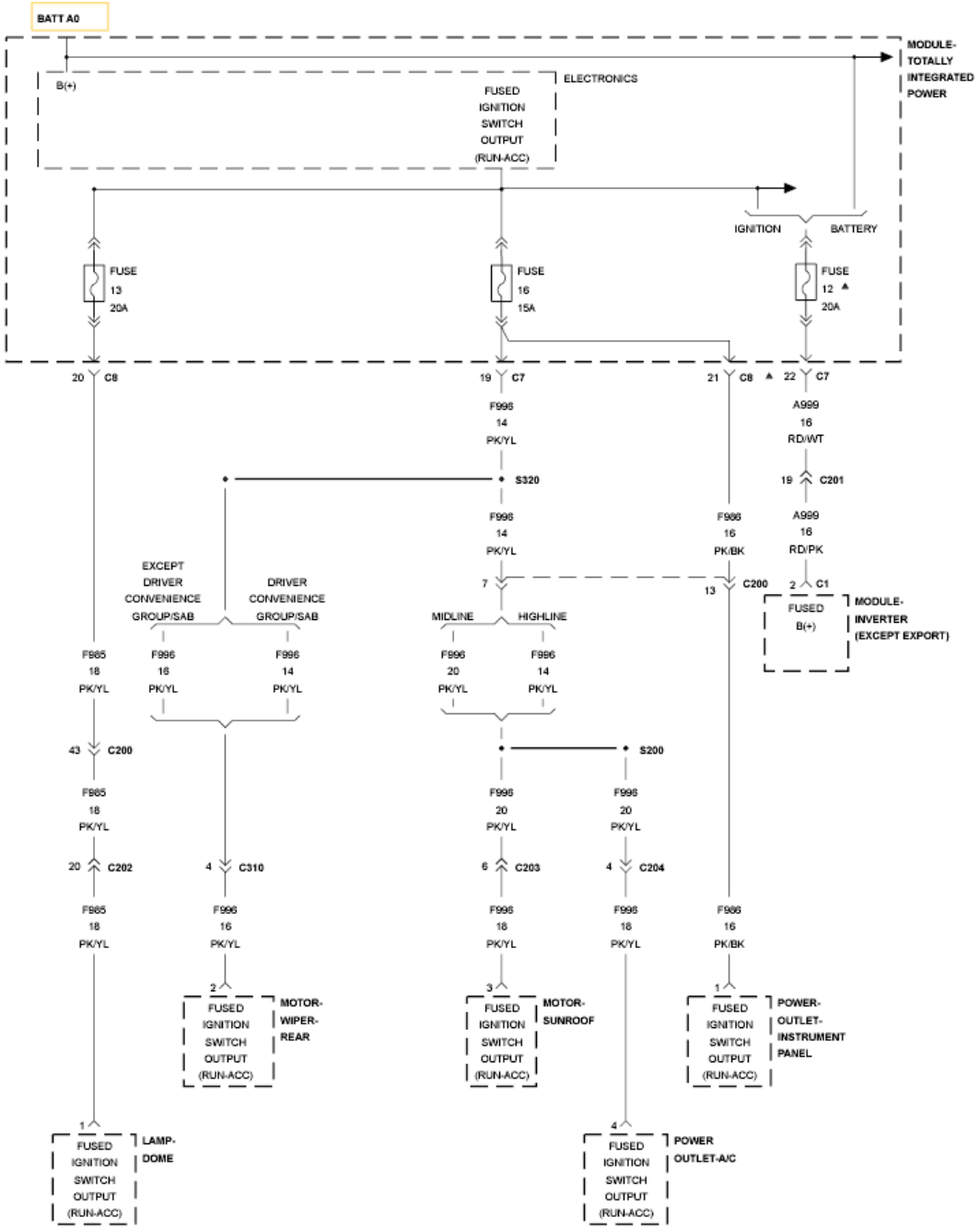

Fig. 148: Ignition Run/Acc Control - Circuit Diagram
Courtesy of CHRYSLER GROUP, LLC

For a complete wiring diagram, **refer to appropriate SYSTEM WIRING DIAGRAMS article** .

WHEN MONITORED

With the ignition on.

SET CONDITION

The Totally Integrated Power Module (TIPM) detects a short to ground condition on the Fused Ignition Switch Output (RUN/ACC) circuit.

POSSIBLE CAUSES

Possible Causes
SHORT TO GROUND ON THE (F996) FUSED IGNITION SWITCH OUTPUT (RUN/ACC) CIRCUIT
SHORT TO GROUND ON THE (F985) FUSED IGNITION SWITCH OUTPUT (RUN/ACC) CIRCUIT
SHORT TO GROUND ON THE (A999) FUSED B+ CIRCUIT
SUNROOF MOTOR
A/C POWER OUTLET
REAR WIPER MOTOR
DOME LAMP
INVERTER MODULE
TOTALLY INTEGRATED POWER MODULE (TIPM)

DIAGNOSTIC TEST

1. **CHECK FOR ACTIVE DTC**
    1. Check all fuses.
    2. With the scan tool, read the DTCs.
    3. Cycle the ignition switch from off to on, leaving the ignition on for a minimum of 10 seconds.
    4. With the scan tool, read the DTCs.

    Does the scan tool display this DTC as active?

    Yes

    - Go To 2

    No

    - If the DTC is stored, check for an intermittent condition. Using the wiring diagram/schematic as a guide, visually inspect the related wiring harness connectors. Look for broken, bent, pushed out, or corroded terminals.

- Perform the BODY VERIFICATION TEST. Refer to **STANDARD PROCEDURE** .

2. **CHECK TIPM FOR AN INTERNAL SHORT TO GROUND**
   1. Turn the ignition off.
   2. Remove fuses 13, 16, and 12.
   3. Turn the ignition on.
   4. With the scan tool, read the DTCs.

   Does the scan tool display this DTC as active?

   Yes

   - Replace the TIPM in accordance with the Service Information.
   - Perform the BODY VERIFICATION TEST. Refer to **STANDARD PROCEDURE** .

   No

   - Go To 3

3. **CHECK FOR SHORT TO GROUND ON THE (F996) FUSED IGNITION SWITCH OUTPUT CIRCUIT**
   1. Turn the ignition off.
   2. Reinstall fuses 12, 13, and 16.
   3. Remove fuse number 16.
   4. Turn the ignition on.
   5. With the scan tool, read the DTCs.

   Does the scan tool display this DTC as active?

   Yes

   - Go To 4

   No

   - Go To 6

4. **CHECK FOR SHORT TO GROUND ON THE (F985) FUSED**

IGNITION SWITCH OUTPUT CIRCUIT

1. Turn the ignition off.
2. Remove fuse number 13.
3. Turn the ignition on.
4. With the scan tool, read the DTCs.

   Does the scan tool display this DTC as active?

   Yes

   - Go To 5

   No

   - Go To 9

5. **CHECK FOR SHORT TO GROUND ON THE (A999) FUSED B+ CIRCUIT**
   1. Turn the ignition off.
   2. Remove fuse number 12.
   3. Turn the ignition on.
   4. With the scan tool, read the DTCs.

   Does the scan tool display this DTC as active?

   Yes

   - Replace the TIPM in accordance with the Service Information.
   - Perform the BODY VERIFICATION TEST. Refer to **STANDARD PROCEDURE** .

   No

   - Go To 10

6. **CHECK SUNROOF MOTOR FOR A SHORT TO GROUND**

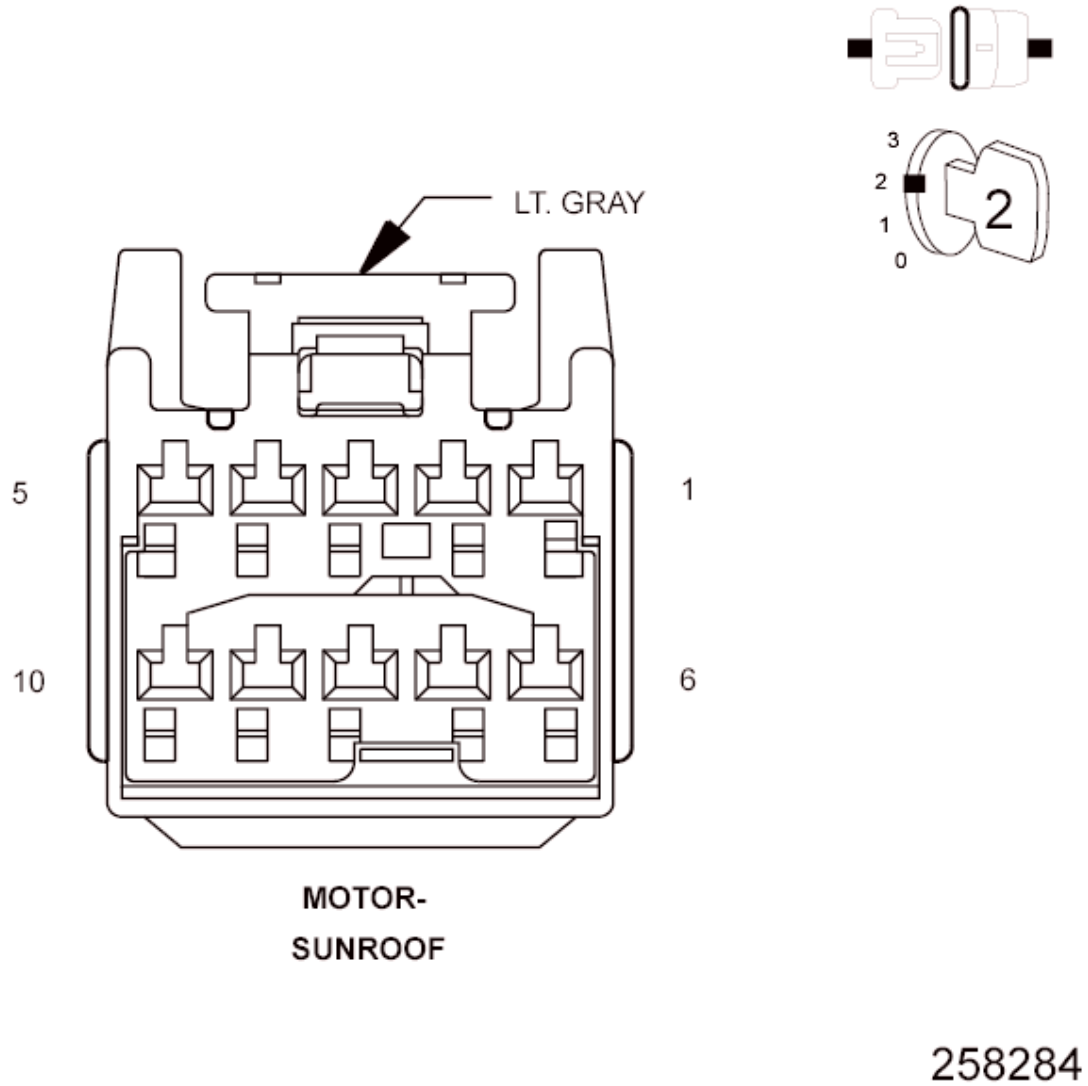

Fig. 149: Checking Sunroof Motor For Short To Ground
Courtesy of CHRYSLER GROUP, LLC

1. Turn the ignition off.
2. Disconnect the Sunroof Motor harness connector.
3. Turn the ignition on.
4. With the scan tool, read the DTCs.

   Does the scan tool display this DTC as active?

   Yes

   - Go To 7

   No

- Replace the Sunroof Motor in accordance with the Service Information.
- Perform the BODY VERIFICATION TEST. Refer to **STANDARD PROCEDURE** .

7. **CHECK A/C POWER OUTLET FOR A SHORT TO GROUND**

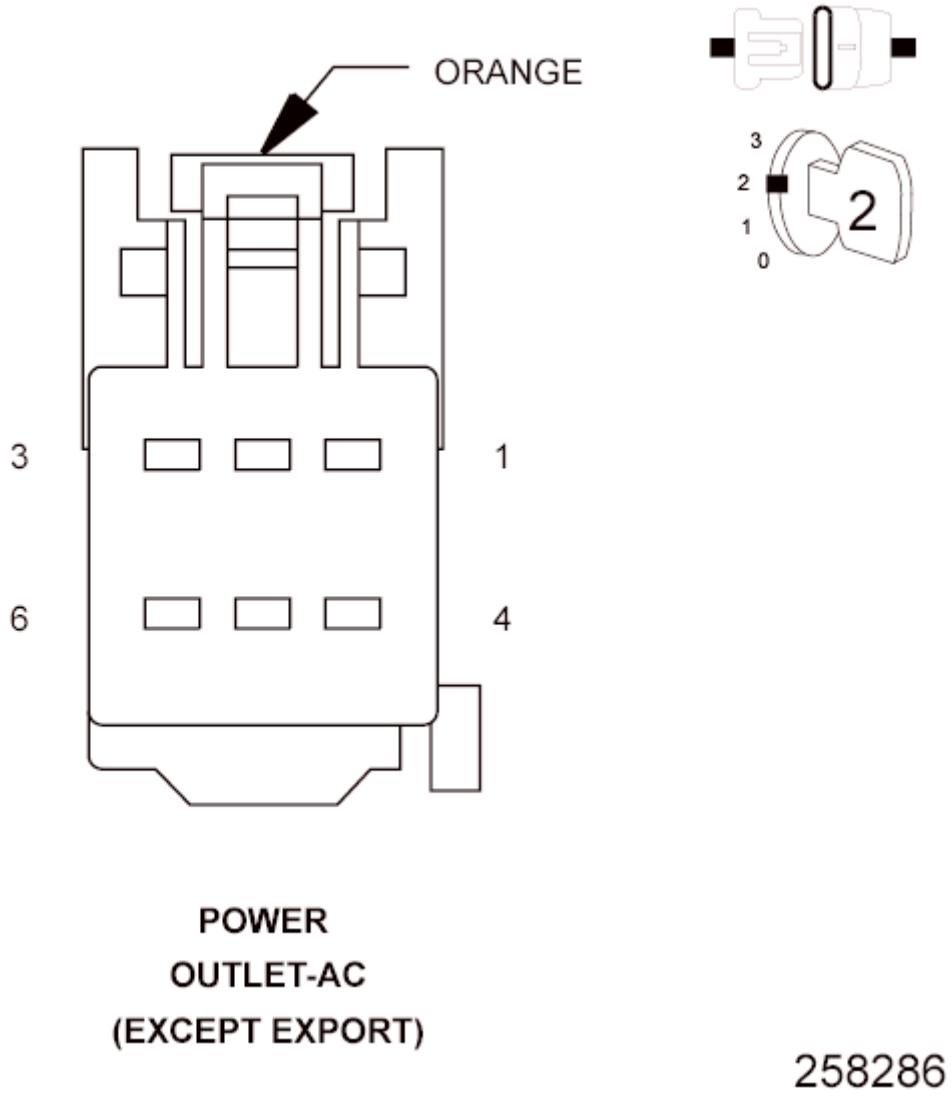

Fig. 150: Checking A/C Power Outlet For Short To Ground
Courtesy of CHRYSLER GROUP, LLC

1. Turn the ignition off.
2. Disconnect the A/C Power Outlet harness connector.
3. Turn the ignition on.
4. With the scan tool, read the DTCs.

Does the scan tool display this DTC as active?

Yes

- Go To 8

No

- Replace the A/C Power Outlet in accordance with the Service Information.
- Perform the BODY VERIFICATION TEST. Refer to **STANDARD PROCEDURE** .

8. **CHECK REAR WIPER MOTOR FOR A SHORT TO GROUND**

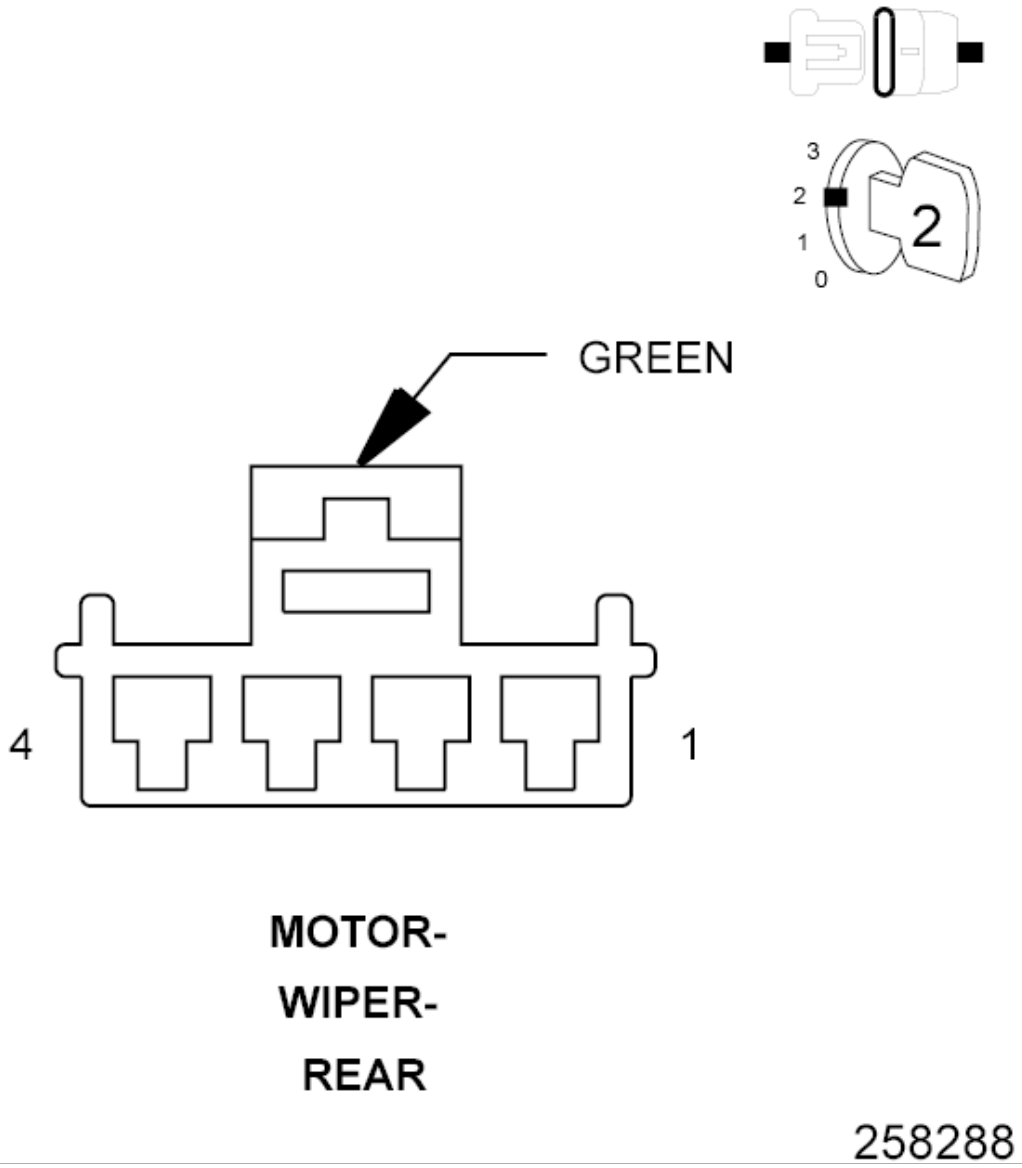

Fig. 151: Checking Rear Wiper Motor For Short To Ground
Courtesy of CHRYSLER GROUP, LLC

1. Turn the ignition off.
2. Disconnect the Rear Wiper Motor harness connector.
3. Turn the ignition on.
4. With the scan tool, read the DTCs.

   Does the scan tool display this DTC as active?

   Yes

   - Repair the (F996) Fused Ignition Switch Output (Run-Acc) circuit for a short to ground.
   - Perform the BODY VERIFICATION TEST. Refer to **STANDARD PROCEDURE** .

   No

   - Replace the Rear Wiper Motor in accordance with the Service Information.
   - Perform the BODY VERIFICATION TEST. Refer to **STANDARD PROCEDURE** .

9. **CHECK DOME LAMP FOR A SHORT TO GROUND**

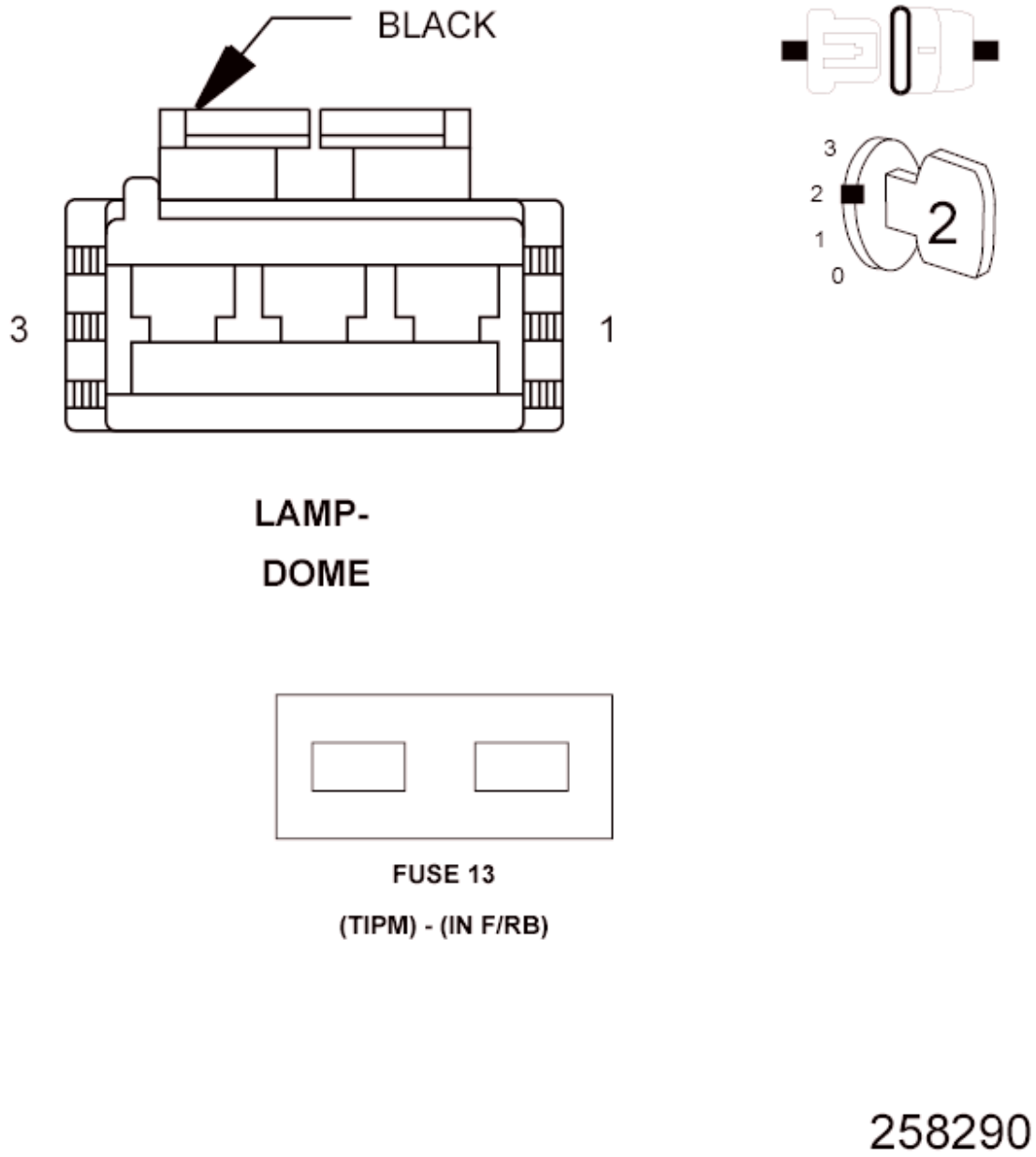

Fig. 152: Checking Dome Lamp For Short To Ground
Courtesy of CHRYSLER GROUP, LLC

1. Turn the ignition off.
2. Reinstall Fuse number 13.
3. Disconnect the Dome Lamp harness connector.
4. Turn the ignition on. Activate Dome Lamp.
5. With the scan tool, read the DTCs.

   Does the scan tool display this DTC as active?

Yes

- Repair the (F985) Fused Ignition Switch Output (Run-Acc) circuit for a short to ground.
- Perform the BODY VERIFICATION TEST. Refer to **STANDARD PROCEDURE** .

No

- Replace the Dome Lamp in accordance with the Service Information.
- Perform the BODY VERIFICATION TEST. Refer to **STANDARD PROCEDURE** .

10. **CHECK INVERTER MODULE FOR A SHORT TO GROUND**

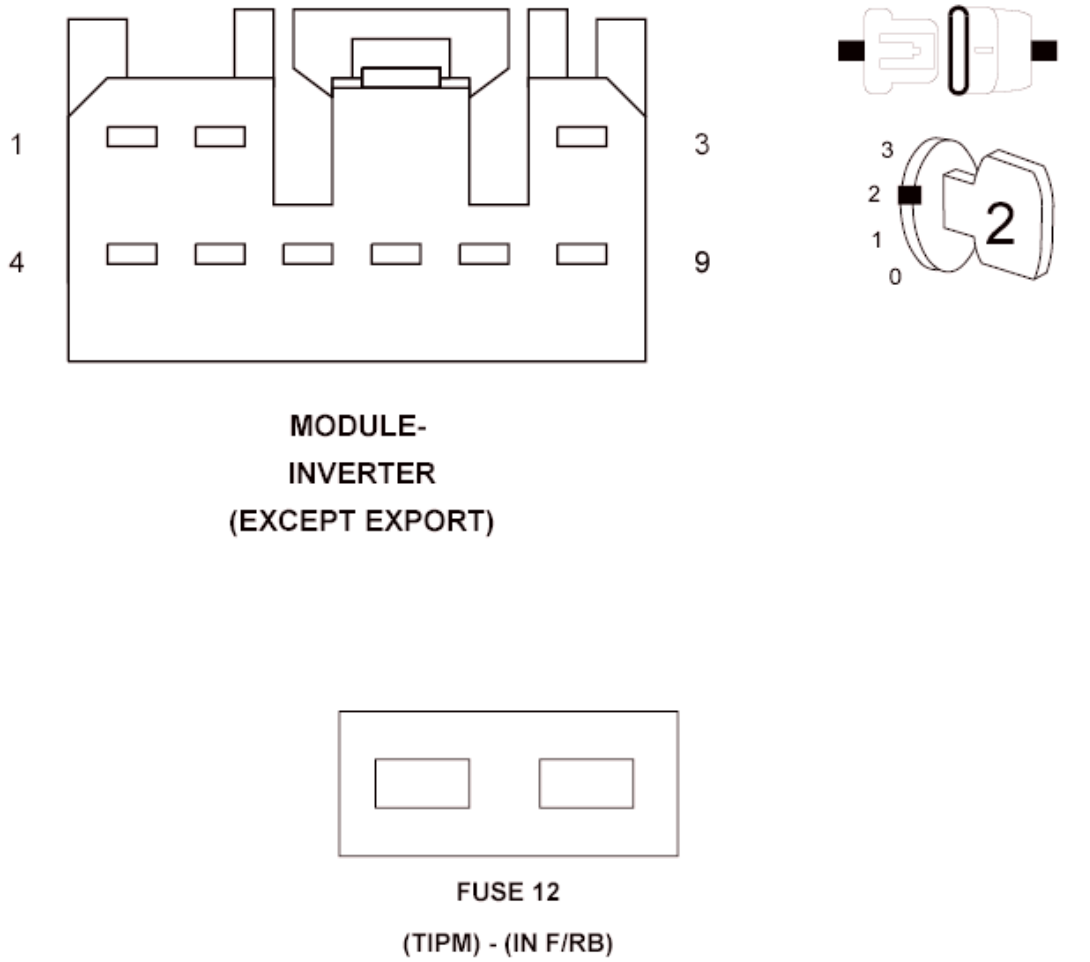

Fig. 153: Checking Inverter Module For Short To Ground
Courtesy of CHRYSLER GROUP, LLC

1. Turn the ignition off.
2. Reinstall fuse number 12.
3. Disconnect the Inverter Module harness connector.
4. Turn the ignition on.
5. With the scan tool, read the DTCs.

   Does the scan tool display this DTC as active?

   Yes

- Repair the (A999) Fused B+ circuit for a short to ground.
- Perform the BODY VERIFICATION TEST. Refer to **STANDARD PROCEDURE** .

No

- Replace the Inverter Module in accordance with the Service Information.
- Perform the BODY VERIFICATION TEST. Refer to **STANDARD PROCEDURE** .

B2148-IGNITION RUN CONTROL 2 CIRCUIT LOW

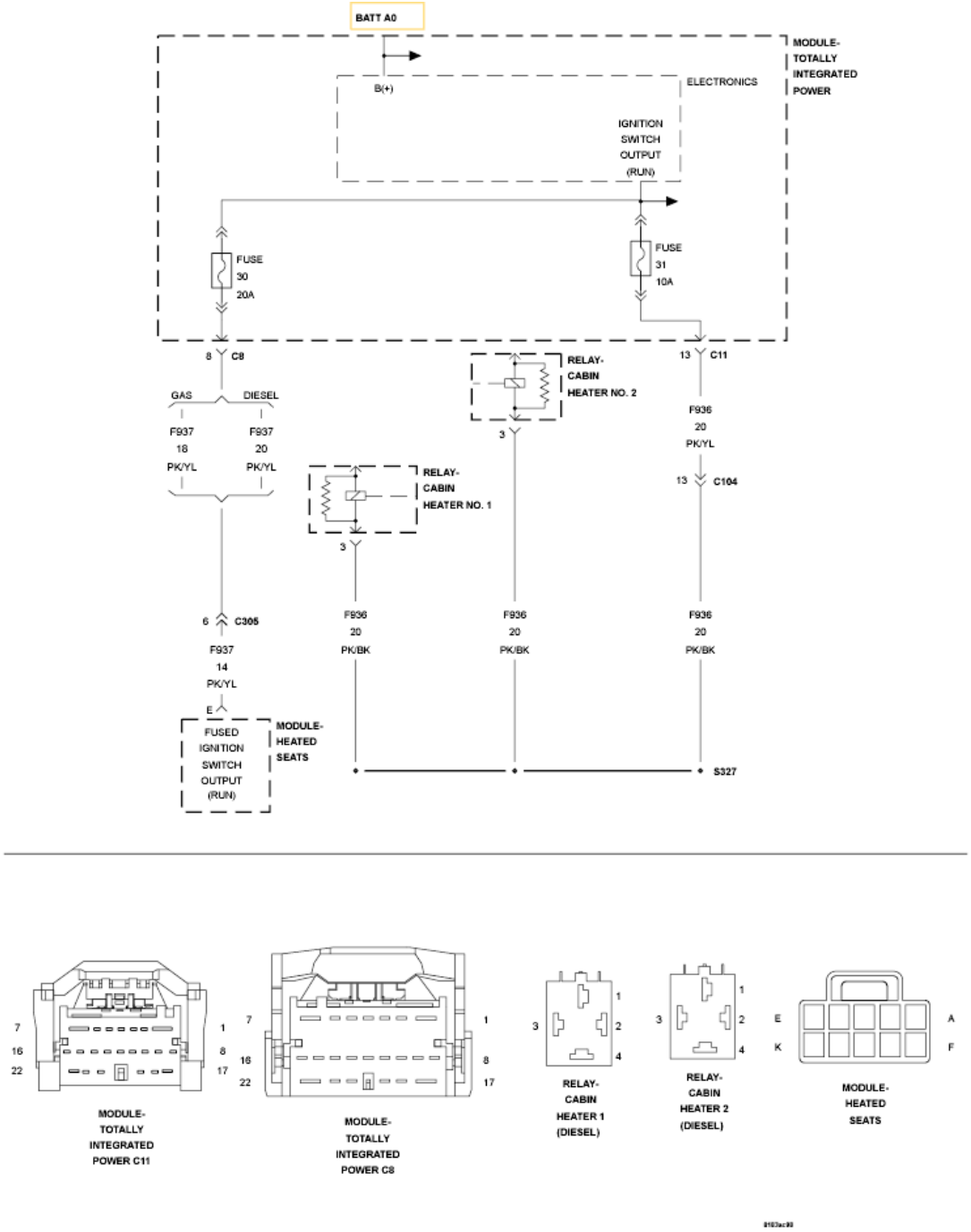

Fig. 154: Ignition Run Control 2 - Circuit Diagram
Courtesy of CHRYSLER GROUP, LLC

For a complete wiring diagram **refer to appropriate SYSTEM WIRING DIAGRAMS article** .

WHEN MONITORED

With the ignition on.

SET CONDITION

Ignition Run Control 2 Circuit Low.

POSSIBLE CAUSES

Possible Causes
(F937) FUSED IGNITION SWITCH OUTPUT (RUN) SHORTED TO GROUND
(F936) FUSED IGNITION SWITCH OUTPUT (RUN) SHORTED TO GROUND
HEATED SEATS MODULE
CABIN HEATER RELAY NUMBER 1
CABIN HEATER RELAY NUMBER 2
TIPM

DIAGNOSTIC TEST

1. **CHECK FOR ACTIVE DTC**
   1. Check all fuses. If any fuses are open, diagnose the appropriate circuit.
   2. With the scan tool, read the DTCs.
   3. Cycle the ignition switch from off to on, leaving the ignition on for a minimum of 10 seconds.
   4. With the scan tool, read the DTCs.

   Does the scan tool display this DTC as active?

   Yes

   - Go To 2

   No

   - If the DTC is stored, check for an intermittent condition. Using the wiring diagram/schematic as a guide, visually inspect the related wiring harness connectors. Look for broken, bent, pushed out, or corroded terminals.
2. **(F937) CIRCUIT SHORT TO GROUND**
   1. Remove fuse number 30.
   2. With the scan tool, read the DTCs.

Does the scan tool display this DTC as active?

Yes

- Go To 3

No

- Go To 4

3. **(F936) CIRCUIT SHORT TO GROUND**
   1. Remove fuse number 31.
   2. With the scan tool, read the DTCs.

   Does the scan tool display this DTC as active?

   Yes

   - Replace the TIPM in accordance with the Service Information.
   - Perform the BODY VERIFICATION TEST. Refer to **STANDARD PROCEDURE** .

   No

   - Go To 6
4. **HEATED SEATS MODULE SHORTED TO GROUND**

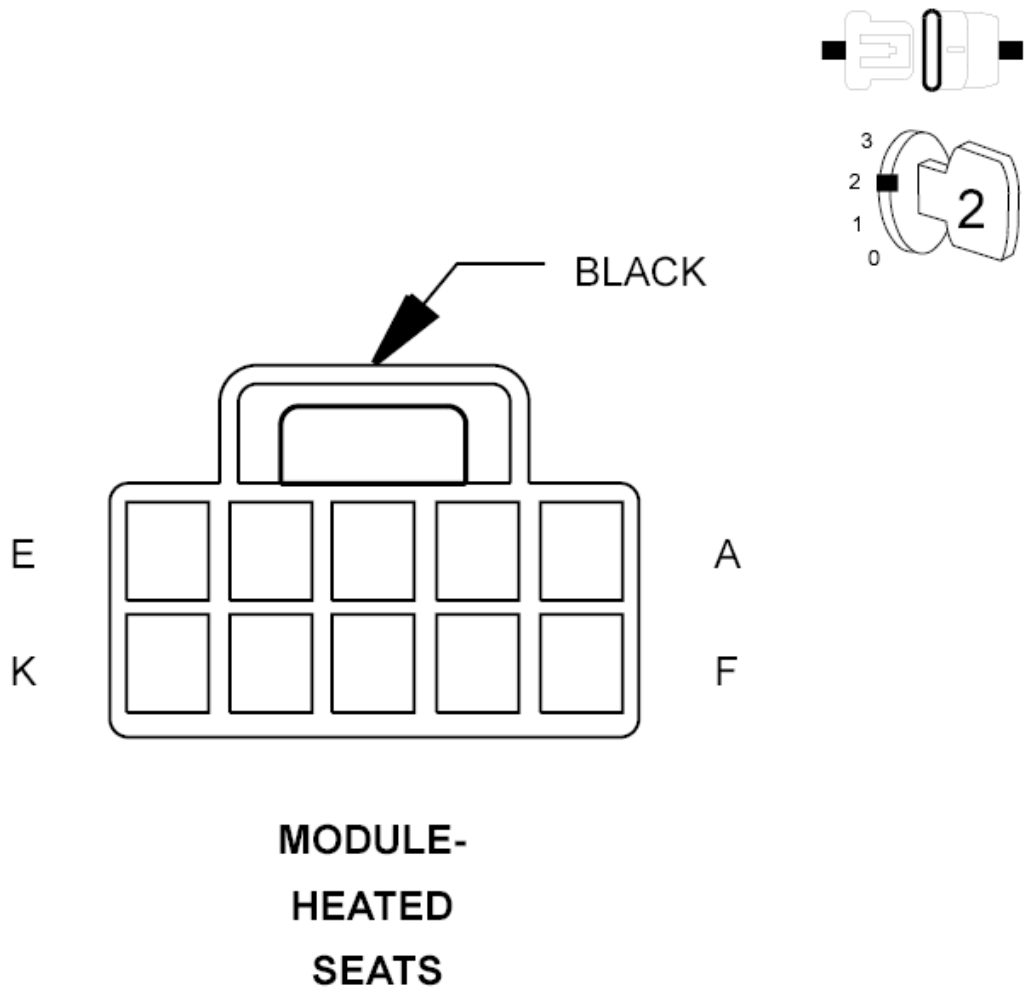

Fig. 155: Checking Heated Seats Module For Short To Ground
Courtesy of CHRYSLER GROUP, LLC

1. Turn the ignition off.
2. Disconnect the Heated Seats Module harness connector.
3. Reinstall fuse number 30.
4. Turn the ignition on.
5. With the scan tool, read the DTCs.

   Does the scan tool display this DTC as active?

   Yes

   - Go To 5

   No

- Replace the Heated Seats Module in accordance with the Service Information.
- Perform the BODY VERIFICATION TEST. Refer to **STANDARD PROCEDURE** .

5. **(F937) FUSED IGNITION SWITCH OUTPUT (RUN) SHORTED TO GROUND**

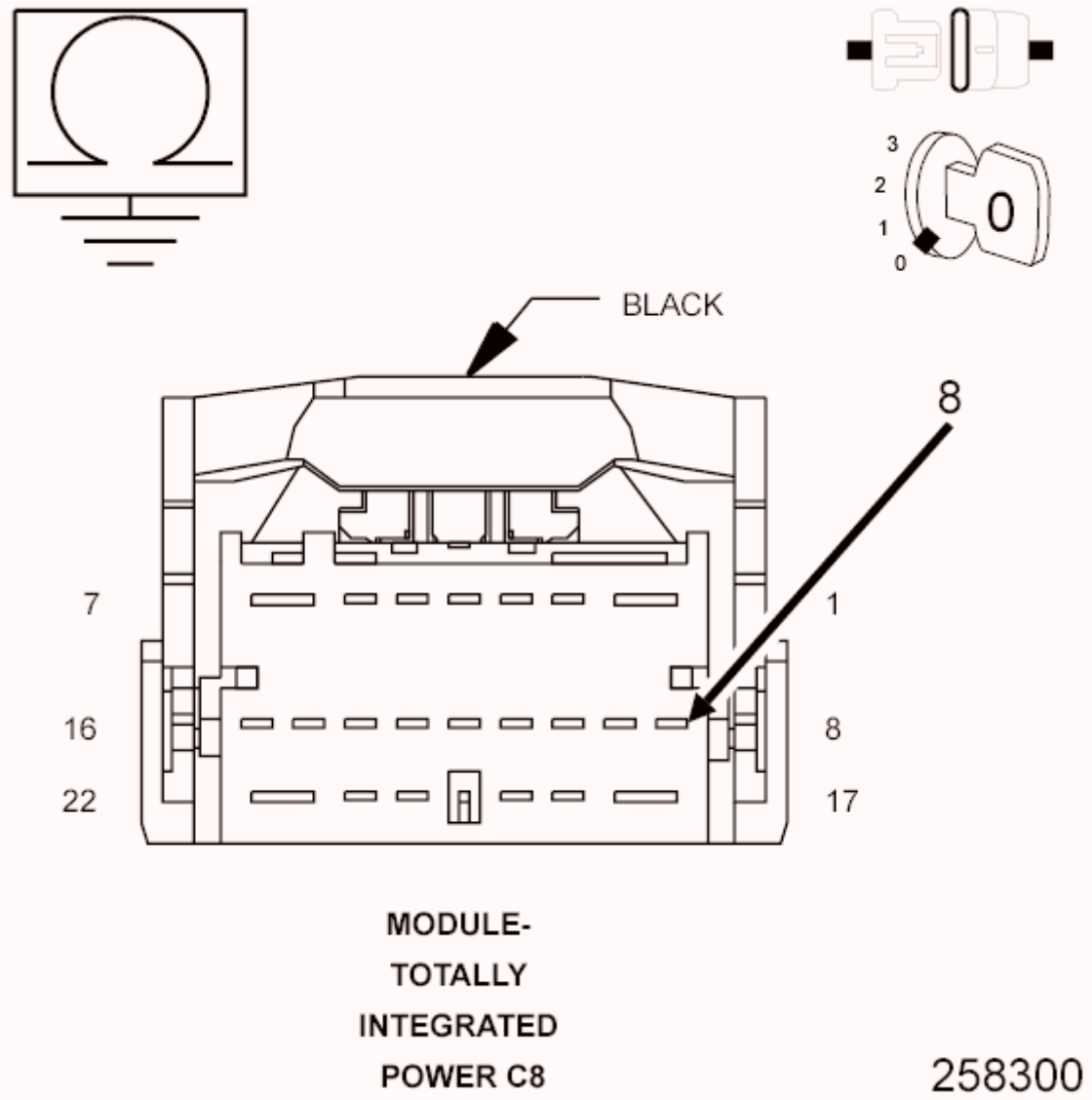

Fig. 156: Checking Fused Ignition Switch Output (Run) For Short To Ground
Courtesy of CHRYSLER GROUP, LLC

1. Turn the ignition off.
2. Disconnect the TIPM C8 harness connector.
3. Measure the resistance between ground and the (F937) Fused Ignition

Switch Output (Run) circuit and ground.

Is the resistance below 10K ohms?

Yes

- Repair the (F937) Fused Ignition Switch Output (Run) circuit for a short to ground.
- Perform the BODY VERIFICATION TEST. Refer to **STANDARD PROCEDURE** .

No

- Replace the TIPM in accordance with the Service Information.
- Perform the BODY VERIFICATION TEST. Refer to **STANDARD PROCEDURE** .

6. **CABIN HEATER RELAY NUMBER 1 SHORTED TO GROUND**

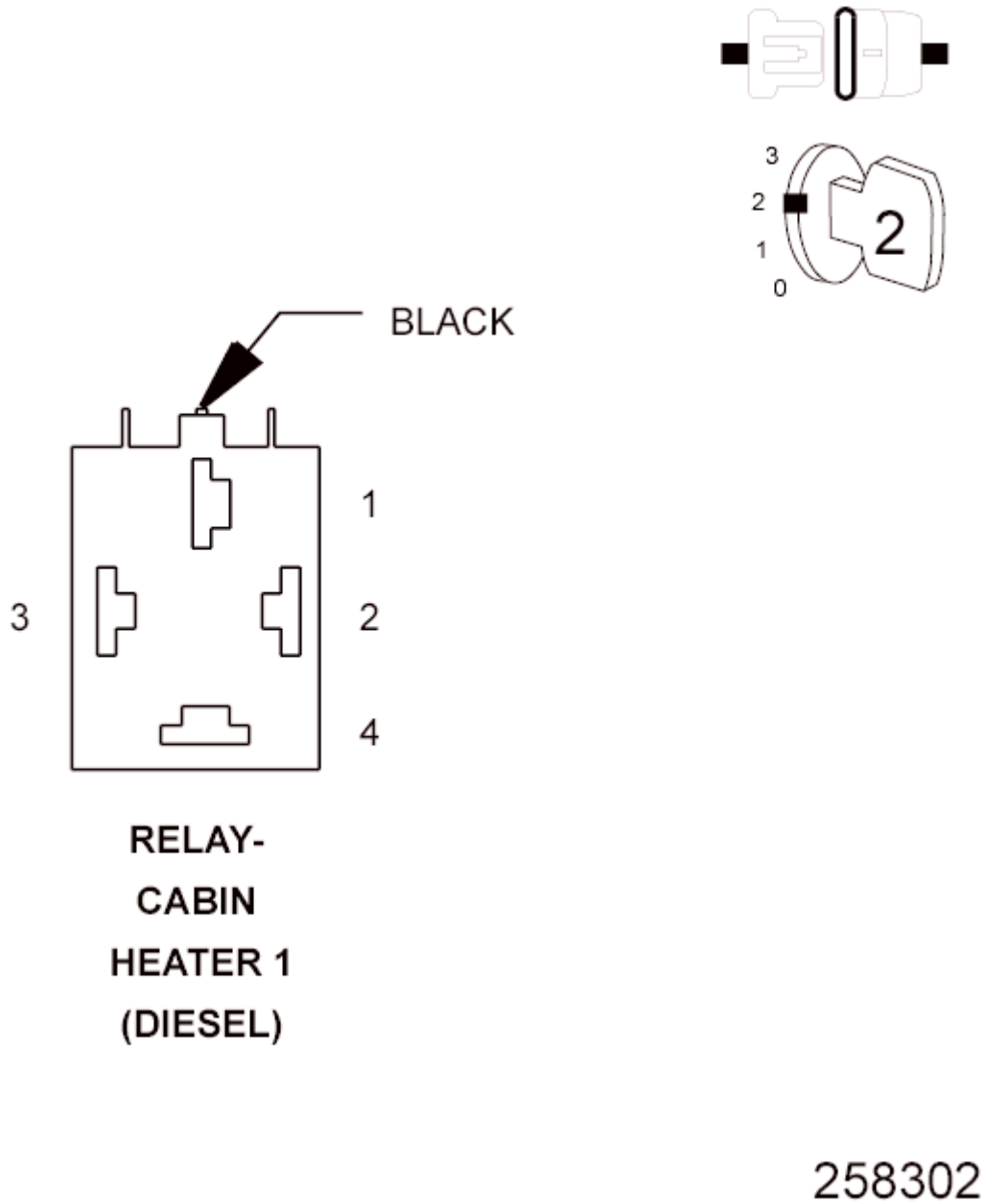

Fig. 157: Checking Cabin Heater Relay 1 For Short To Ground
Courtesy of CHRYSLER GROUP, LLC

1. Turn the ignition off.
2. Disconnect the Cabin Heater Relay Number 1 harness connector.
3. Reinstall fuse number 31.
4. Turn the ignition on.
5. With the scan tool, read the DTCs.

   Does the scan tool display this DTC as active?

Yes

- Go To 7

No

- Replace the Cabin Heater Relay Number 1 in accordance with the Service Information.
- Perform the BODY VERIFICATION TEST. Refer to **STANDARD PROCEDURE** .

7. **CABIN HEATER RELAY NUMBER 2 SHORTED TO GROUND**

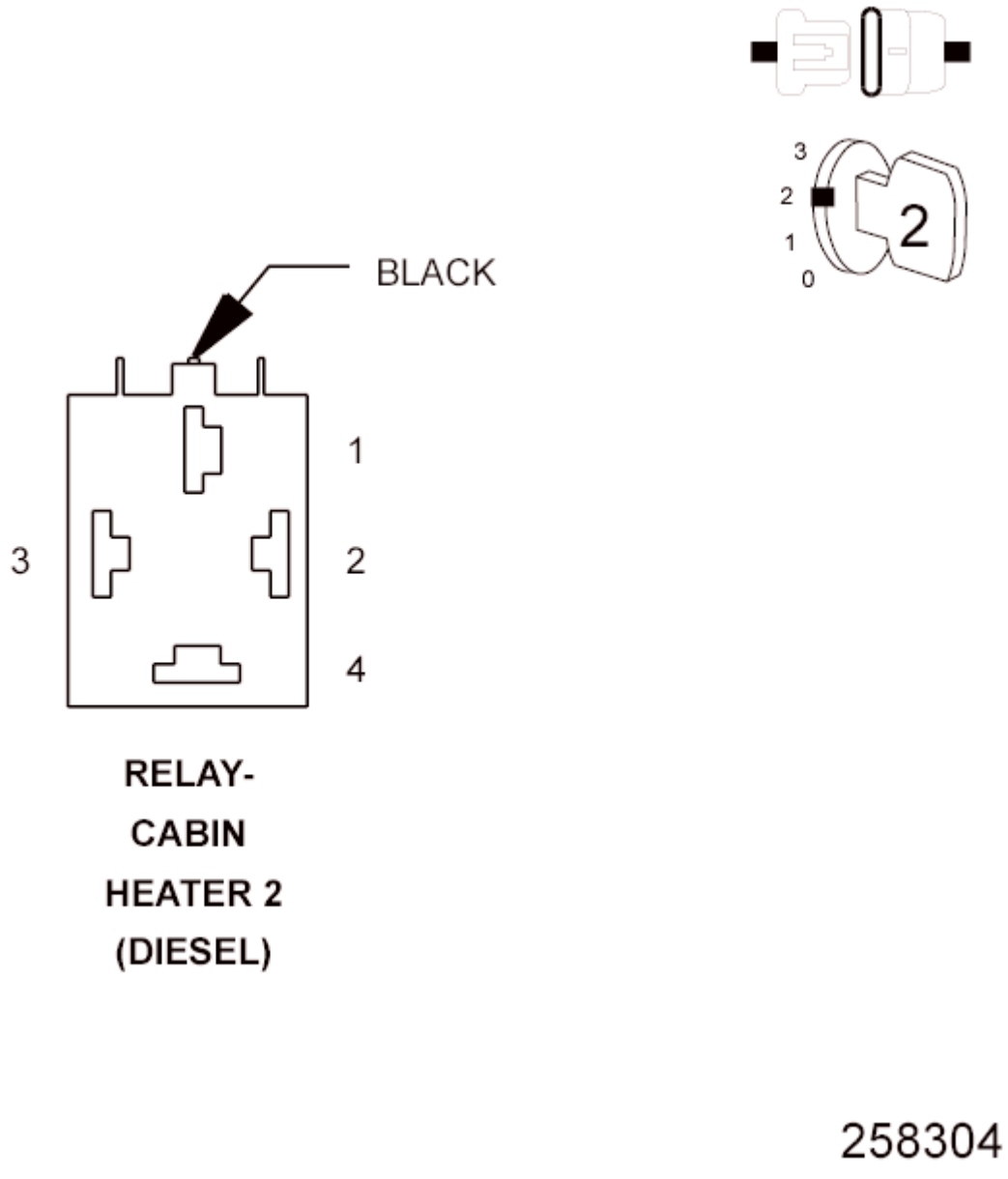

Fig. 158: Checking Heater Relay Number 2 For Short To Ground

Courtesy of CHRYSLER GROUP, LLC

1. Turn the ignition off.
2. Disconnect the Cabin Heater Relay Number 2 harness connector.
3. Turn the ignition on.
4. With the scan tool, read the DTCs.

   Does the scan tool display this DTC as active?

   Yes

   - Go To 8

   No

   - Replace the Cabin Heater Relay Number 2 in accordance with the Service Information.
   - Perform the BODY VERIFICATION TEST. Refer to **STANDARD PROCEDURE** .

8. **(F936) FUSED IGNITION SWITCH OUTPUT (RUN) SHORTED TO GROUND**

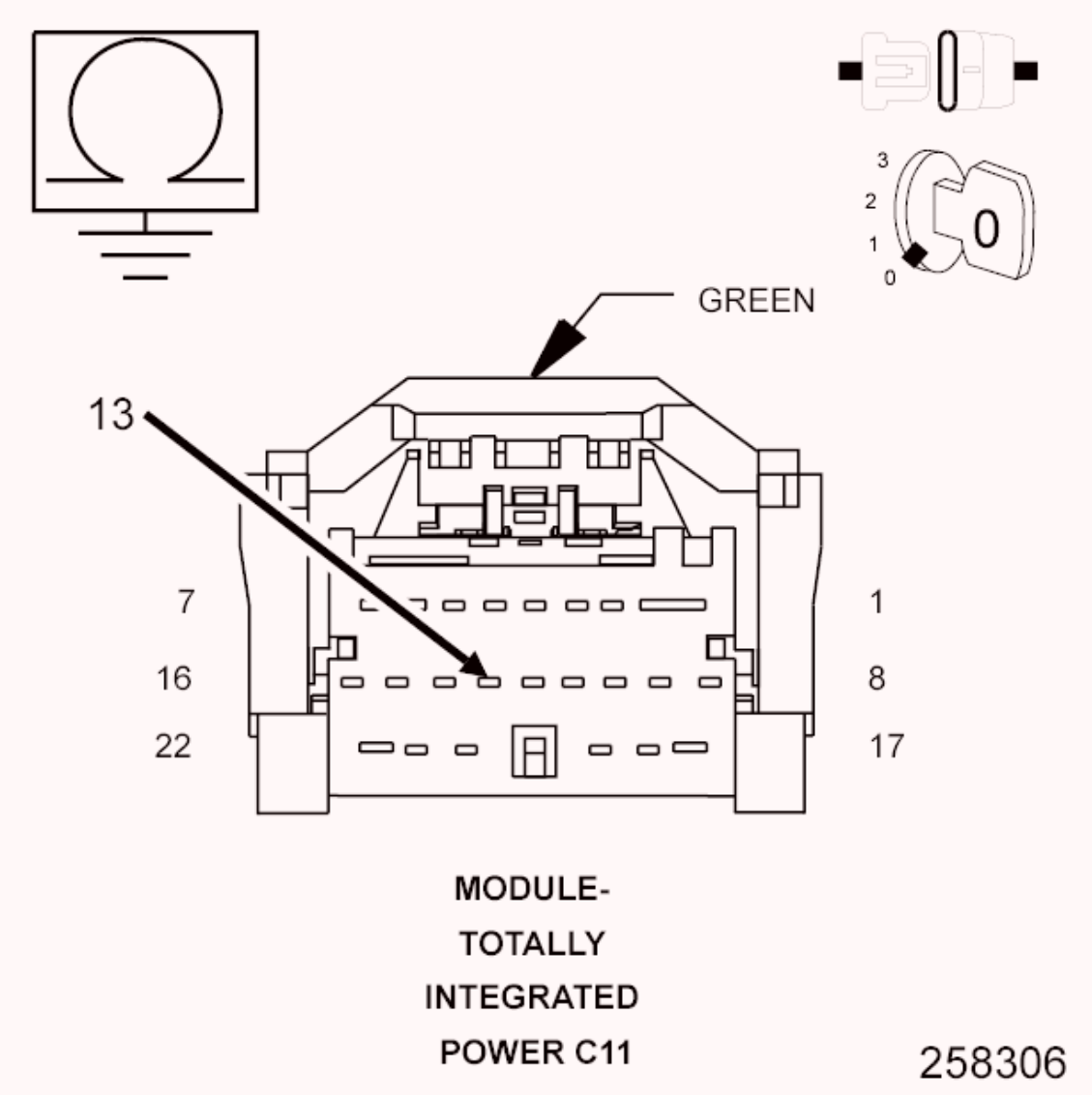

Fig. 159: Checking Fused Ignition Switch Output (Run) Short To Ground
Courtesy of CHRYSLER GROUP, LLC

1. Turn the ignition off.
2. Disconnect the TIPM C11 harness connector.
3. Measure the resistance between ground and the (F936) Fused Ignition Switch Output (Run) circuit and ground.

   Is the resistance below 10K ohms?

   Yes

   - Repair the (F936) Fused Ignition Switch Output (Run) circuit for a short to ground.

- Perform the BODY VERIFICATION TEST. Refer to **STANDARD PROCEDURE** .

No

- Replace the TIPM in accordance with the Service Information.
- Perform the BODY VERIFICATION TEST. Refer to **STANDARD PROCEDURE** .

B2184-IGNITION UNLOCK RUN/START CONTROL CIRCUIT LOW

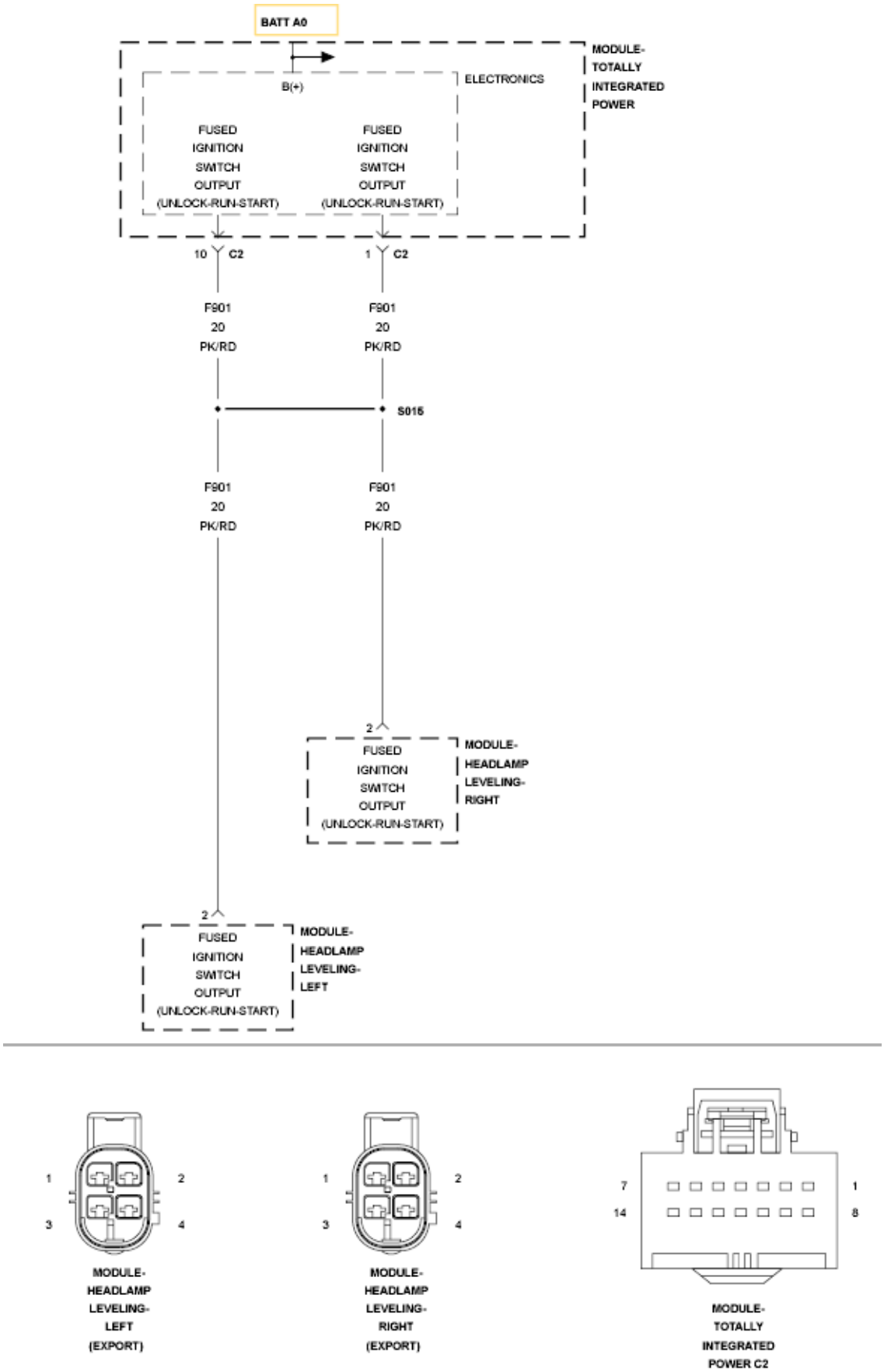

Fig. 160: Ignition Unlock Run/Start Control - Circuit Diagram

Courtesy of CHRYSLER GROUP, LLC

For a complete wiring diagram **refer to appropriate SYSTEM WIRING DIAGRAMS article** .

WHEN MONITORED

With the ignition on.

SET CONDITION

(F901) Fused Ignition Switch Output (Unlock-Run-Start) circuit low.

POSSIBLE CAUSES

Possible Causes
(F901) FUSED IGNITION SWITCH OUTPUT (UNLOCK-RUN-START) CIRCUIT SHORT TO GROUND
LEFT HEADLAMP LEVELING MODULE
RIGHT HEADLAMP LEVELING MODULE
TIPM

DIAGNOSTIC TEST

1. **CHECK FOR ACTIVE DTC**
    1. With the scan tool, read the DTC's.
    2. Cycle the ignition switch from off to on, leaving the ignition on for a minimum of 10 seconds.
    3. With the scan tool, read the DTC's.

    Does the scan tool display this DTC as active?

    Yes

    - Go To 2

    No

    - If the DTC is stored, check for an intermittent condition. Using the wiring diagram/schematic as a guide, visually inspect the related wiring harness connectors. Look for broken, bent, pushed out, or

corroded terminals.

2. **LEFT HEADLAMP LEVELING MODULE INTERNAL SHORT**

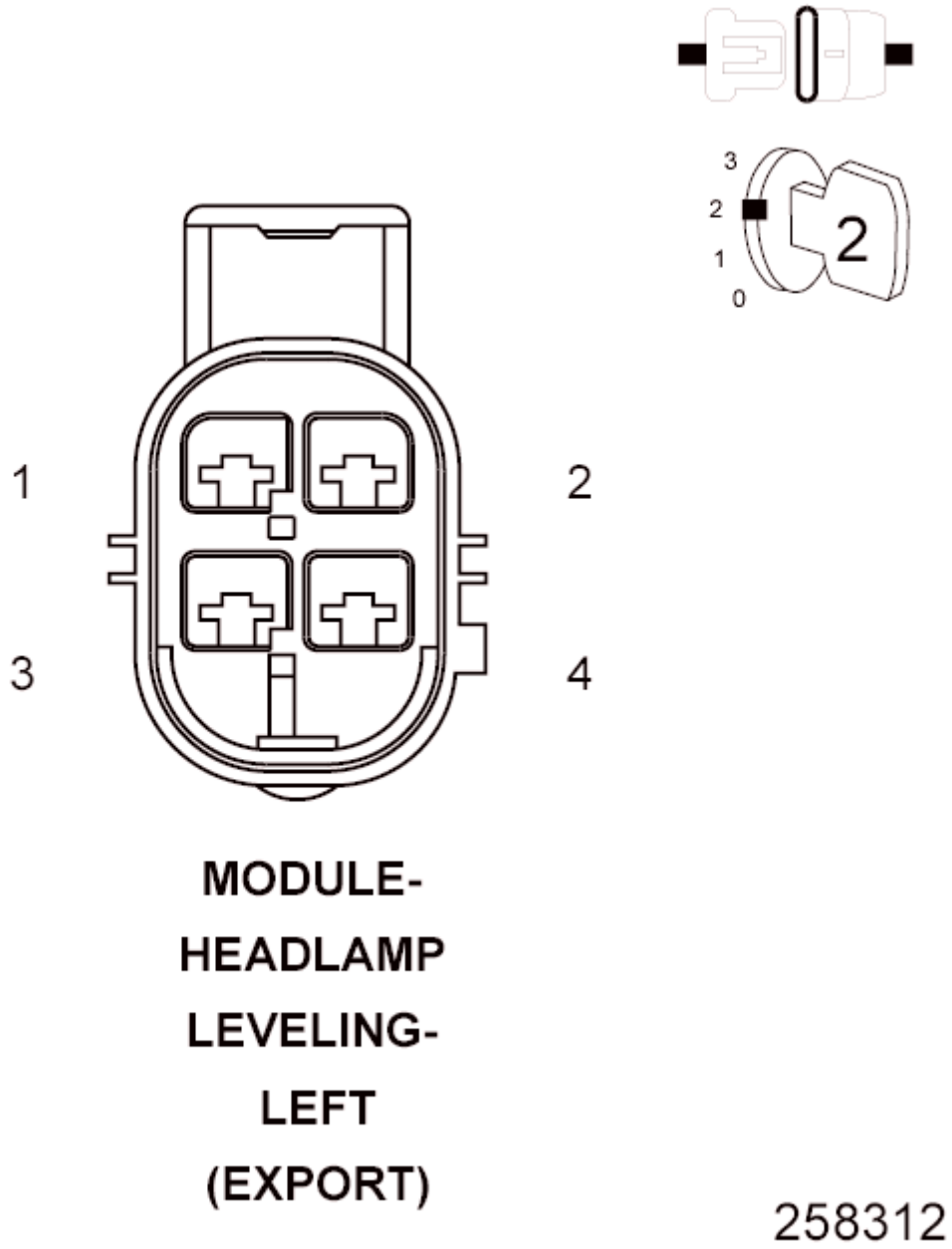

Fig. 161: Checking Left Headlamp Leveling Module For Internal Short
Courtesy of CHRYSLER GROUP, LLC

1. Turn the ignition off.
2. Disconnect the Left Headlamp Leveling Module harness connector.
3. Turn the ignition on.
4. With the scan tool, read DTCs.

Does the scan tool display this DTC as active?

Yes

- Go To 3

No

- Replace the Left Headlamp Leveling Module in accordance with the service information.
- Perform BODY VERIFICATION TEST VER 1. Refer to **STANDARD PROCEDURE** .

3. **RIGHT HEADLAMP LEVELING MODULE INTERNAL SHORT**

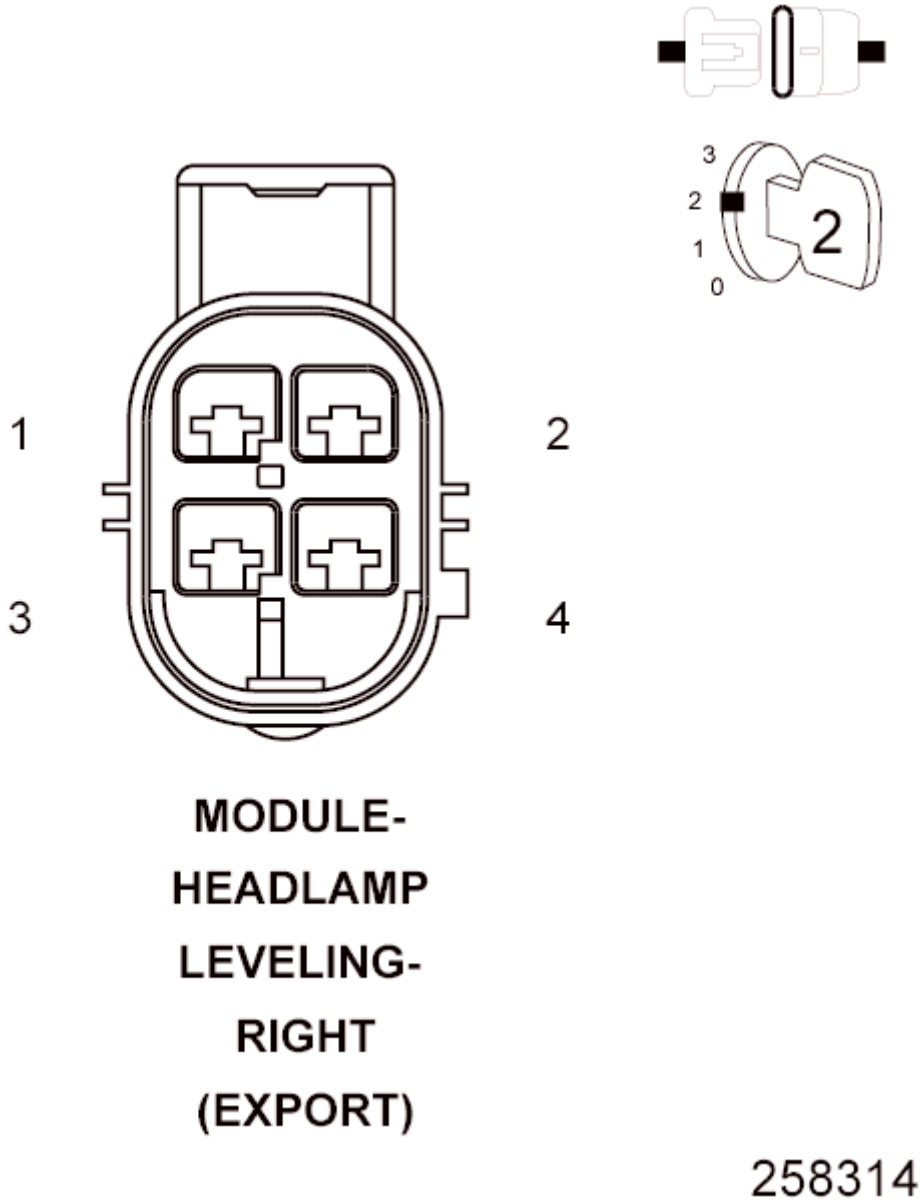

Fig. 162: Checking Right Headlamp Leveling Module For Internal Short
Courtesy of CHRYSLER GROUP, LLC

1. Turn the ignition off.
2. Disconnect the Right Headlamp Leveling Module harness connector.
3. Turn the ignition on.
4. With the scan tool, read DTCs.

   Does the scan tool display this DTC as active?

   Yes

- Go To 4

No

- Replace the Right Headlamp Leveling Module in accordance with the service information.
- Perform BODY VERIFICATION TEST VER 1. Refer to **STANDARD PROCEDURE** .

4. **(F901) FUSED IGNITION SWITCH OUTPUT (UNLOCK-RUN-START) CIRCUIT SHORT TO GROUND**

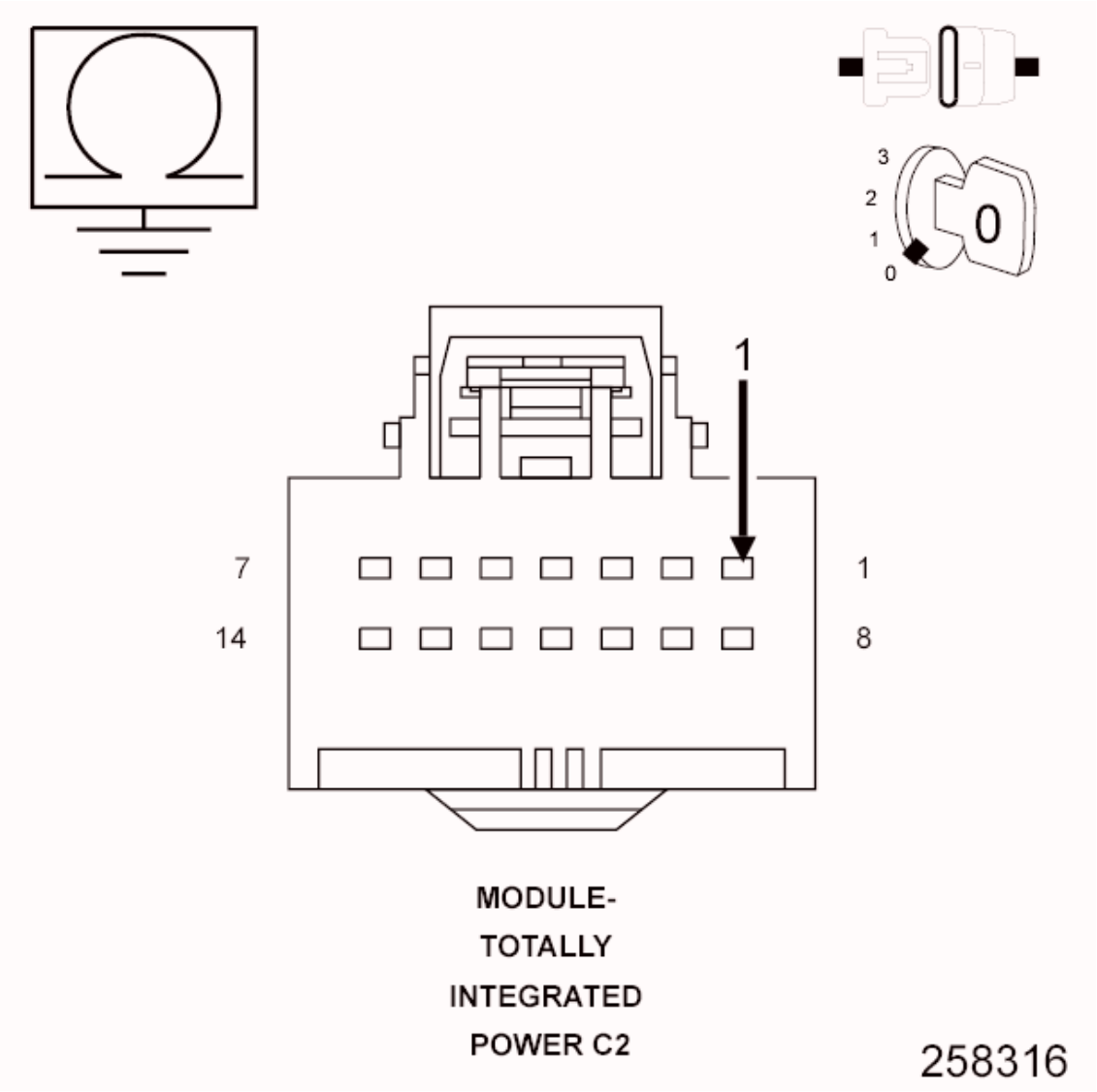

Fig. 163: Checking Fused Ignition Switch Output (Unlock-Run-Start) Circuit For Short To Ground
Courtesy of CHRYSLER GROUP, LLC

1. Turn the ignition off.
2. Disconnect the TIPM C2 harness connector.
3. Measure the resistance between ground and the (F901) Fused Ignition Switch Output (Unlock-Run-Start) circuit.

   Is the resistance below 10K ohms?

   Yes

   - Repair the (F901) Fused Ignition Switch Output (Unlock-Run-Start) circuit for a short to ground.
   - Perform BODY VERIFICATION TEST VER 1. Refer to **STANDARD PROCEDURE** .

   No

   - Replace the TIPM in accordance with the service information.
   - Perform BODY VERIFICATION TEST VER 1. Refer to **STANDARD PROCEDURE** .

B2188-IGNITION START CONTROL CIRCUIT LOW

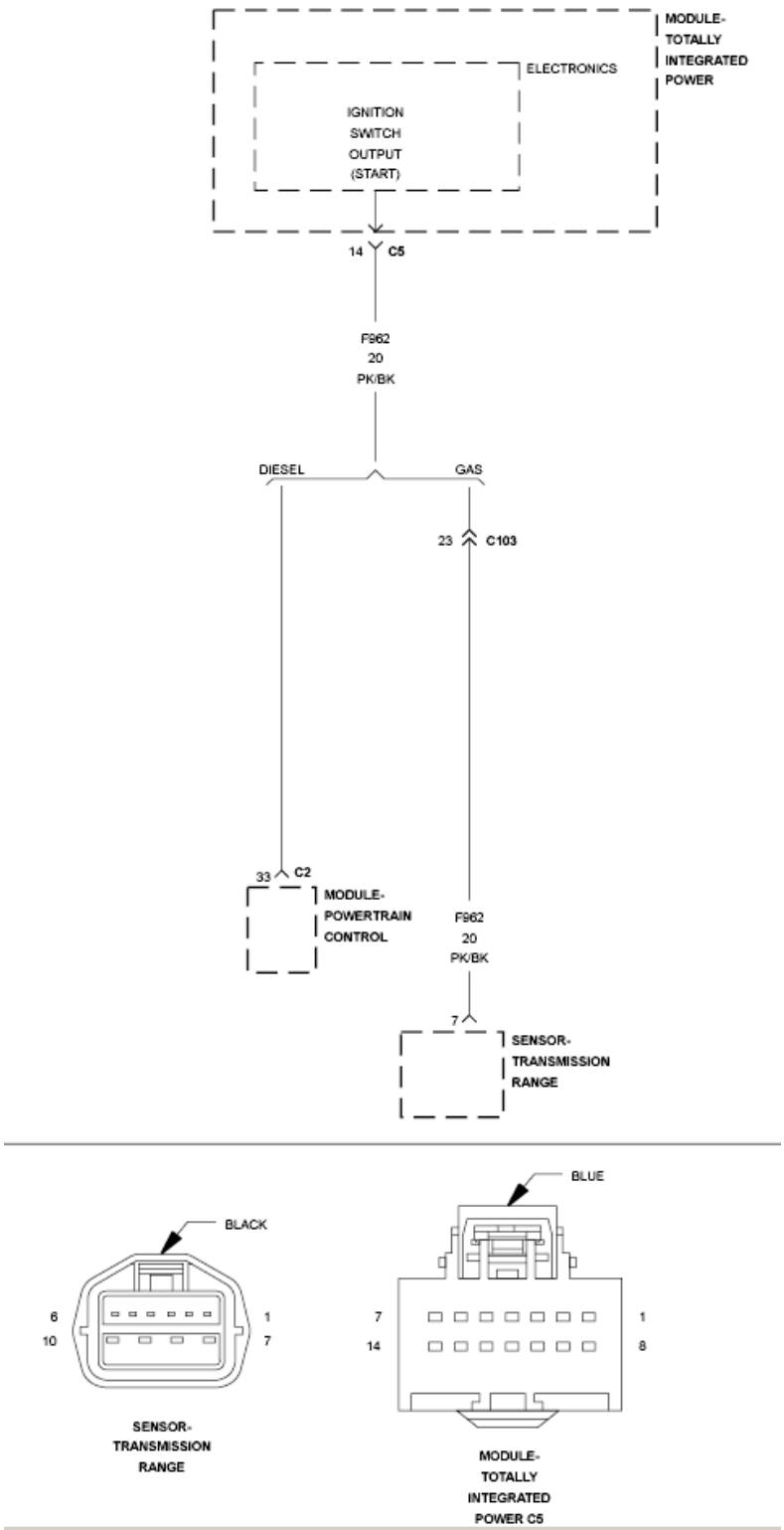

Fig. 164: Ignition Start Control Wiring Diagram
Courtesy of CHRYSLER GROUP, LLC

For a complete wiring diagram, **refer to appropriate SYSTEM WIRING DIAGRAMS article** .

WHEN MONITORED

With the ignition in the Start position.

SET CONDITION

The Totally Integrated Power Module (TIPM) detects a short to ground condition in the (F962) Fused Ignition Switch Output (Start) circuit.

POSSIBLE CAUSES

Possible Causes
(F962) FUSED IGNITION SWITCH OUTPUT (START) CIRCUIT SHORTED TO GROUND
TRANSMISSION RANGE SENSOR (TRS)
TOTALLY INTEGRATED POWER MODULE (TIPM)

DIAGNOSTIC TEST

1. **CHECK FOR ACTIVE DTC**
   1. With the scan tool, read the DTCs.
   2. Cycle the ignition switch from off to on, leaving the ignition on for a minimum of 10 seconds.
   3. With the scan tool, read the DTCs.

      Does the scan tool display this DTC as active?

      Yes

      - Go To 2

      No

      - If the DTC is stored, check for an intermittent condition. Using the wiring diagram/schematic as a guide, visually inspect the related wiring harness connectors. Look for broken, bent, pushed out, or corroded terminals.
2. **TRANSMISSION RANGE SENSOR**

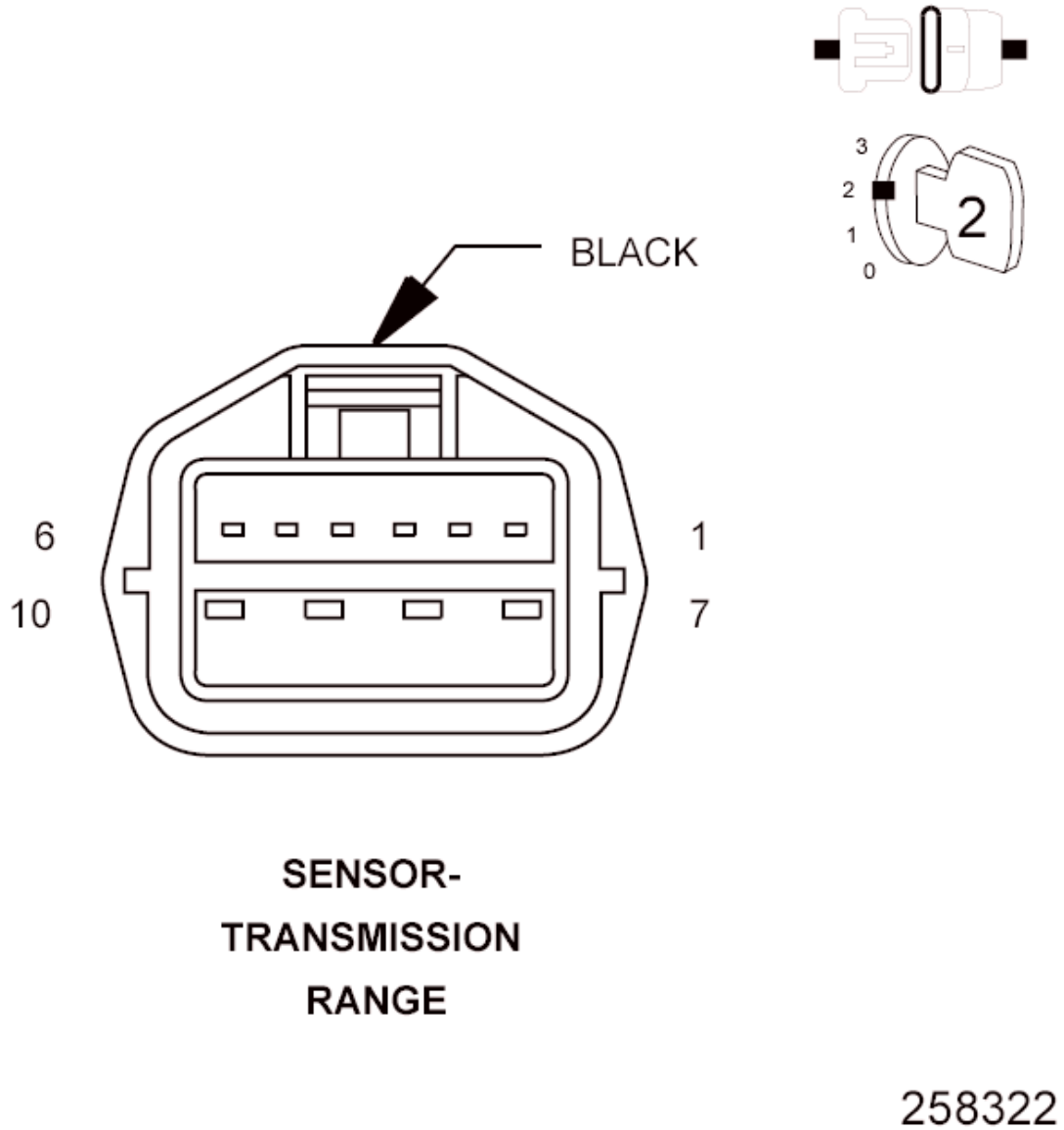

Fig. 165: Checking Transmission Range Sensor
Courtesy of CHRYSLER GROUP, LLC

1. Turn the ignition off.
2. Disconnect the Transmission Range Sensor harness connector.
3. Turn the ignition on, wait 30 seconds.
4. With the scan tool, read TIPM DTCs.

   Does the scan tool display this DTC as active?

   Yes

   - Go To 3

No

- Replace the Transmission Range Sensor in accordance with the Service Information.
- Perform the BODY VERIFICATION TEST. Refer to **STANDARD PROCEDURE** .

3. **POWERTRAIN CONTROL MODULE (DIESEL)**
   1. Turn the ignition off.
   2. Disconnect the PCM C2 harness connector.
   3. Turn the ignition on, wait 30 seconds.
   4. With the scan tool, read TIPM DTCs.

   Does the scan tool display this DTC as active?

   Yes

   - Go To 4

   No

   - Replace the PCM in accordance with the Service Information.
   - Perform the PCM VERIFICATION TEST. Refer to appropriate Diagnostic Information .
4. **(F962) FUSED IGNITION SWITCH OUTPUT (START) CIRCUIT SHORTED TO GROUND**

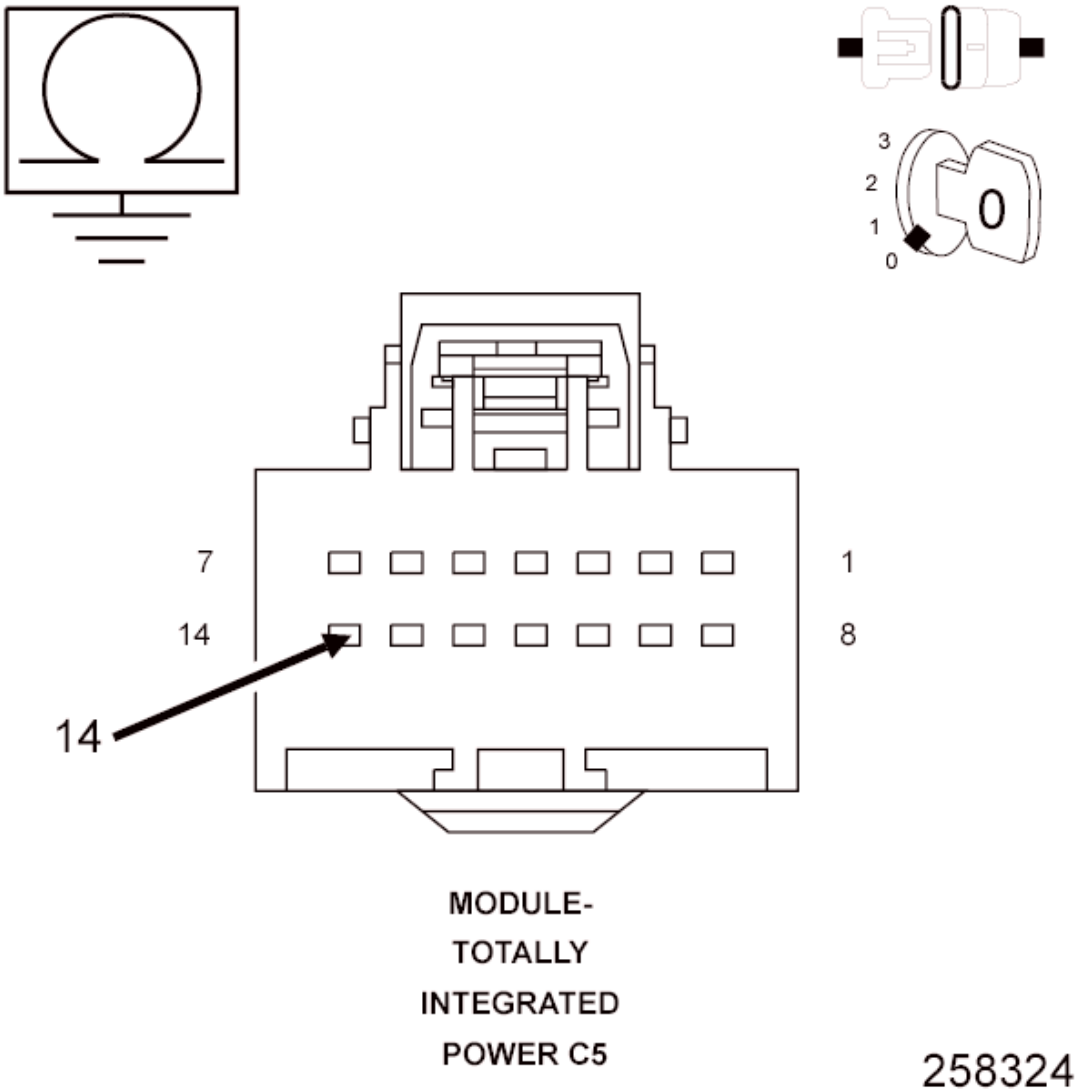

Fig. 166: Checking Fused Ignition Switch Output (Start) Circuit For Short To Ground
Courtesy of CHRYSLER GROUP, LLC

1. Turn the ignition off.
2. Disconnect the TIPM C5 harness connector.
3. Measure the resistance between ground and the (F962) Fused Ignition Switch Output (Start) circuit.

   Is the resistance above 10k Ohms?

   Yes

   - Replace the TIPM in accordance with the Service Information.
   - Perform the BODY VERIFICATION TEST. Refer to

STANDARD PROCEDURE .

No

- Repair the short to ground in the (F962) Fused Ignition Switch Output (Start) circuit.
- Perform the BODY VERIFICATION TEST. Refer to **STANDARD PROCEDURE** .

B218B-IGNITION RUN/START 1 CONTROL CIRCUIT OVERCURRENT

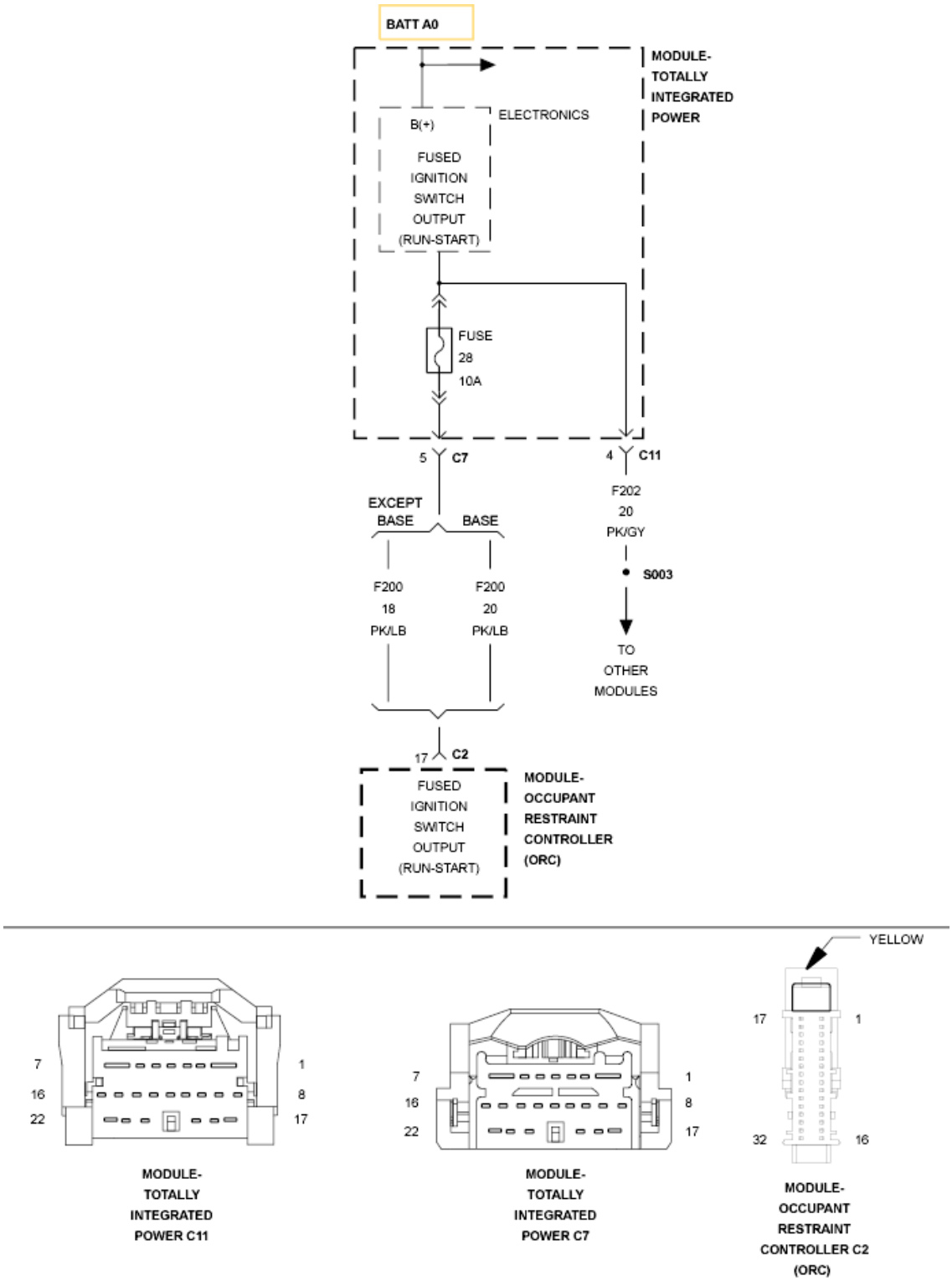

Fig. 167: Ignition Run/Start 1 Control - Circuit Diagram
Courtesy of CHRYSLER GROUP, LLC

For a complete wiring diagram **refer to appropriate SYSTEM WIRING DIAGRAMS article** .

WHEN MONITORED

With the ignition on.

SET CONDITION

Over current condition detected on the Fused Ignition Switch Output (Run-Start) circuit.

POSSIBLE CAUSES

Possible Causes
TERMINAL DAMAGE OR CORROSION
HIGH RESISTANCE ON THE (F200) FUSED IGNITION SWITCH OUTPUT (RUN-START) CIRCUIT
OCCUPANT RESTRAINT CONTROLLER (ORC)
TIPM

DIAGNOSTIC TEST

1. **CHECK FOR ACTIVE DTC**
   1. With the scan tool, read the DTCs.
   2. Cycle the ignition switch from off to on, leaving the ignition on for a minimum of 10 seconds.
   3. With the scan tool, read the DTCs.

      Does the scan tool display this DTC as active?

      Yes

      - Go To 2

      No

      - If the DTC is stored, check for an intermittent condition. Using the wiring diagram/schematic as a guide, visually inspect the related wiring harness connectors. Look for broken, bent, pushed out, or corroded terminals.
2. **INSPECT THE TIPM AND ORC TERMINALS AND WIRE HARNESS FOR A CONDITION CAUSING HIGH CIRCUIT RESISTANCE**

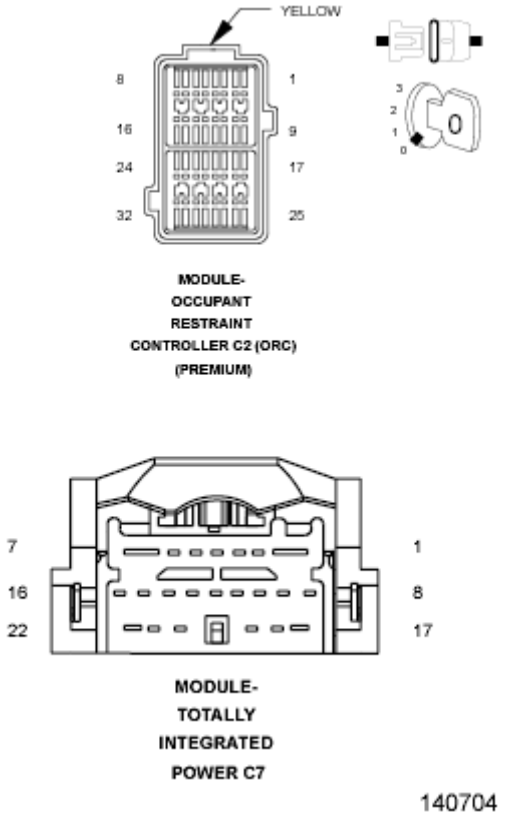

Fig. 168: Checking TIPM & ORC Terminals With Wire Harness
Courtesy of CHRYSLER GROUP, LLC

WARNING: To avoid possible serious or fatal injury, turn the ignition off, disconnect the battery and wait two minutes before proceeding.

1. Disconnect the TIPM C7 harness connector.
2. Disconnect the ORC C2 harness connector.
3. Inspect the connector terminal for signs of corrosion build up and damage.
4. Visually inspect the wiring harness for any chafed, pierced, pinched or partially broken wires hidden in the wire insulation.

   Were any of the above conditions found?

   Yes

   - Repair as necessary.
   - Perform the BODY VERIFICATION TEST. Refer to **STANDARD PROCEDURE** .

No

- Go To 3

3. **INSPECT THE (F202) FUSED IGNITION SWITCH OUTPUT (RUN-START) CIRCUIT FOR A CONDITION CAUSING HIGH CIRCUIT RESISTANCE**
   1. Disconnect the TIPM C11 harness connector.
   2. Inspect the connector terminal for signs of corrosion build up and damage.
   3. Using the wiring diagrams, visually inspect the associated wiring harnesses and connectors for any chafed, pierced, pinched or partially broken wires hidden in the wire insulation.

   Were any of the above conditions found?

   Yes

   - Repair as necessary.
   - Perform the BODY VERIFICATION TEST. Refer to **STANDARD PROCEDURE** .

   No

   - Replace the TIPM in accordance with the Service Information.
   - Perform the BODY VERIFICATION TEST. Refer to **STANDARD PROCEDURE** .

B2206-CURRENT VIN MISSING - MISMATCH

For a complete wiring diagram, **refer to appropriate SYSTEM WIRING DIAGRAMS article** .

WHEN MONITORED

With the ignition on.

SET CONDITION

A Powertrain Control Module (PCM) from another vehicle has been installed in the vehicle.

POSSIBLE CAUSES

Possible Causes
PCM FROM ANOTHER VEHICLE INSTALLED

DIAGNOSTIC TEST

1. **PCM FROM ANOTHER VEHICLE INSTALLED**

   NOTE: This Diagnostic Trouble Code (DTC) is set when a PCM from another vehicle is installed into the current vehicle.

   Has another PCM been installed?

   Yes

   - Replace the Powertrain Control Module in accordance with the Service Information.
   - Perform the POWERTRAIN VERIFICATION TEST. Refer to appropriate Diagnostic Information .

   No

   - Go To 2

2. **OTHER CAN-C MODULES SET VIN MISMATCH**

   Is VIN Mismatch DTC set in other CAN-C modules?

   Yes

   - Replace the Powertrain Control Module in accordance with the Service Information.
   - Perform the POWERTRAIN VERIFICATION TEST. Refer to appropriate Diagnostic Information .

   No

   - Replace the Totally Integrated Power Module in accordance with the Service Information.

- Perform the BODY VERIFICATION TEST. Refer to **STANDARD PROCEDURE** .

B2215-FRONT CONTROL MODULE INTERNAL (TIPM)

For a complete wiring diagram, **refer to appropriate SYSTEM WIRING DIAGRAMS article** .

WHEN MONITORED

Continuously.

SET CONDITION

The Totally Integrated Power Module (TIPM) detects an internal fault.

POSSIBLE CAUSES

Possible Causes
TOTALLY INTEGRATED POWER MODULE

DIAGNOSTIC TEST

REPLACE THE TOTALLY INTEGRATED POWER MODULE IF DTC IS ACTIVE

1. With the scan tool, read the active TIPM DTCs.

   Does the scan tool display this DTC as active?

   Yes

   - Replace and program the Totally Integrated Power Module in accordance with the Service Information.
   - Perform the BODY VERIFICATION TEST. Refer to **STANDARD PROCEDURE** .

   No

   - If the DTC is stored, check for an intermittent condition. Visually inspect the related wiring harness connectors. Look for broken, bent, pushed out, or corroded terminals.

2014 ACCESSORIES AND EQUIPMENT

Totally Integrated Power Module (TIPM) - Electrical Diagnostics - Compass & Patriot

DIAGNOSIS AND TESTING

B222C-VEHICLE CONFIGURATION - NOT PROGRAMMED

For a complete wiring diagram, **refer to appropriate SYSTEM WIRING DIAGRAMS article** .

WHEN MONITORED

Continuously

SET CONDITION

The TIPM is not configured for the vehicle.

POSSIBLE CAUSES

Possible Causes
TIPM

DIAGNOSTIC TEST

1. **CHECK FOR ACTIVE DTC**
    1. Turn the ignition on.
    2. With the scan tool, read DTCs.

    Does the scan tool display this DTC as active?

    Yes

    - Go To 2

    No

    - Test complete.
2. **ACTIVE TIPM DTC**
    1. Cycle the ignition from off to run remaining in run.
    2. With the scan tool, read DTCs.

Does the scan tool display this DTC as active?

Yes

- Go To 3

No

- Test complete.

3. **VIN MISMATCH DTC PRESENT**
   1. Turn the ignition on.
   2. With the scan tool, read DTCs.

   Is DTC: B2206-CURRENT VIN MISSING / MISMATCH also active?

   Yes

   - Refer to repair procedure for DTC-B2206-CURRENT VIN MISSING / MISMATCH. Refer to **DIAGNOSIS AND TESTING** .

   No

   - Replace the TIPM in accordance with the Service Information.
   - Perform the BODY VERIFICATION TEST. Refer to **STANDARD PROCEDURE** .

B2304-WIPER PARK SWITCH INPUT CIRCUIT LOW

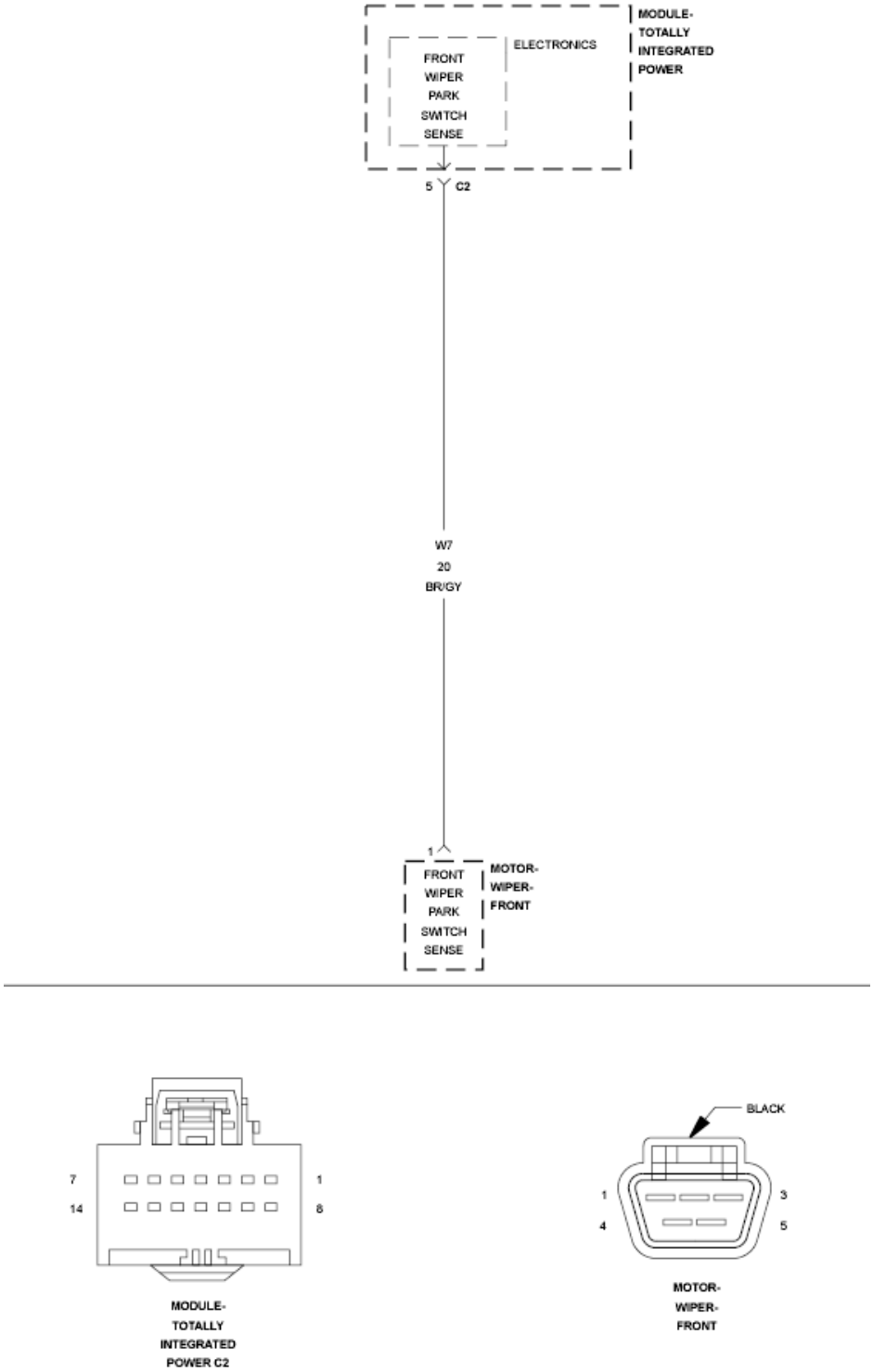

Fig. 1: Wiper Park Switch Input Wiring Diagram
Courtesy of CHRYSLER GROUP, LLC

For a complete wiring diagram, **refer to appropriate SYSTEM WIRING DIAGRAMS article** .

WHEN MONITORED

With the ignition on.

SET CONDITION

The Totally Integrated Power Module (TIPM) detects a short to ground condition.

POSSIBLE CAUSES

Possible Causes
FRONT WIPER MOTOR
(W7) FRONT WIPER PARK SWITCH SENSE CIRCUIT SHORTED TO GROUND
TOTALLY INTEGRATED POWER MODULE (TIPM)

DIAGNOSTIC TEST

1. **INTERMITTENT CONDITION**
    1. Turn the ignition on.
    2. With the scan tool, clear all TIPM DTCs.
    3. Turn the Wipers on.
    4. With the scan tool, read the Wiper DTCs.

    Does the scan tool read: B2304-WIPER PARK SWITCH INPUT CIRCUIT LOW?

    Yes

    - Go To 2

    No

    - The condition that caused the symptom is currently not present. Inspect the related wiring for a possible intermittent condition. Look for any chafed, pierced, pinched, or partially broken wires.
    - Perform the BODY VERIFICATION TEST. Refer to **STANDARD PROCEDURE** .
2. **WIPER MOTOR**

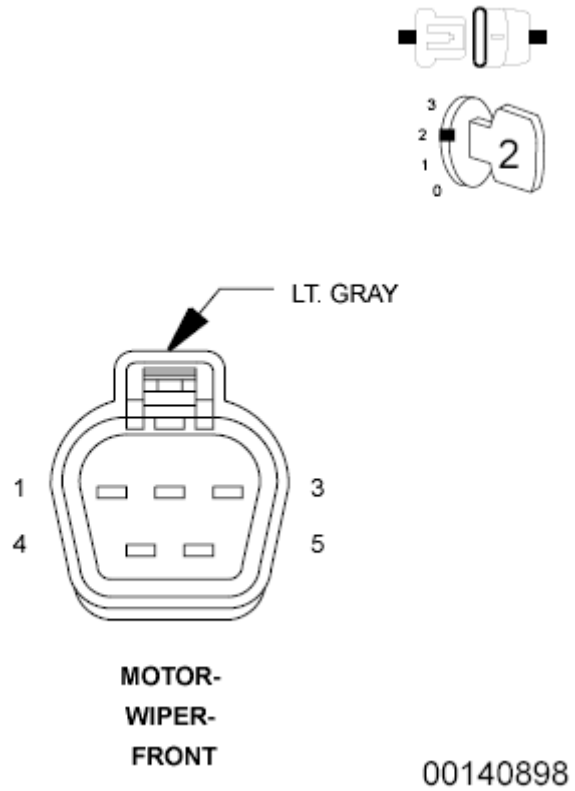

Fig. 2: Wiper Motor Connector End View
Courtesy of CHRYSLER GROUP, LLC

1. With the scan tool, erase DTCs.
2. Turn the ignition off.
3. Disconnect the Front Wiper Motor harness connector.
4. Turn the ignition on.
5. Wait 30 seconds
6. With the scan tool, read DTCs.

   Does the Scan Tool read: B2305-WIPER PARK SWITCH INPUT CIRCUIT HIGH?

   Yes

   - Replace the Front Wiper Motor in accordance with the service information.
   - Perform the BODY VERIFICATION TEST. Refer to **STANDARD PROCEDURE** .

   No

- Go To 3

3. **(W7) FRONT WIPER MOTOR PARK SWITCH SENSE CIRCUIT SHORTED TO GROUND**

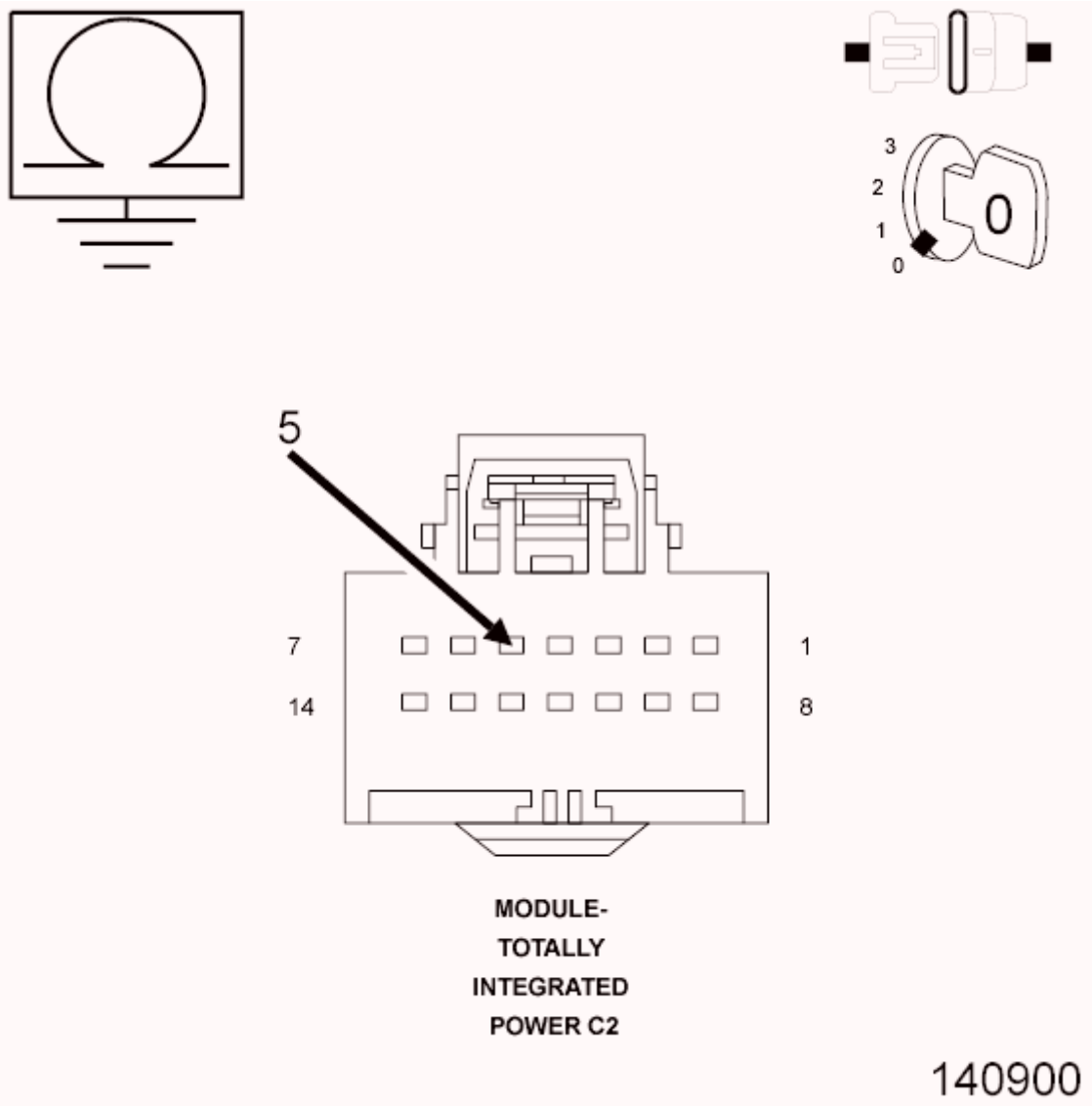

Fig. 3: Measuring Resistance Between Ground & Front Wiper Park Switch Sense Circuit
Courtesy of CHRYSLER GROUP, LLC

1. Turn the ignition off.
2. Disconnect the TIPM C2 harness connector.
3. Measure the resistance between ground and the (W7) Front Wiper Park Switch Sense circuit.

   Is the resistance below 5.0 Ohms?

Yes

- Repair the (W7) Front Wiper Park Switch Sense circuit for a short to ground condition.
- Perform the BODY VERIFICATION TEST. Refer to **STANDARD PROCEDURE** .

No

- Replace the Totally Integrated Power Module in accordance with the service information.
- Perform the BODY VERIFICATION TEST. Refer to **STANDARD PROCEDURE** .

B2305-WIPER PARK SWITCH INPUT CIRCUIT HIGH

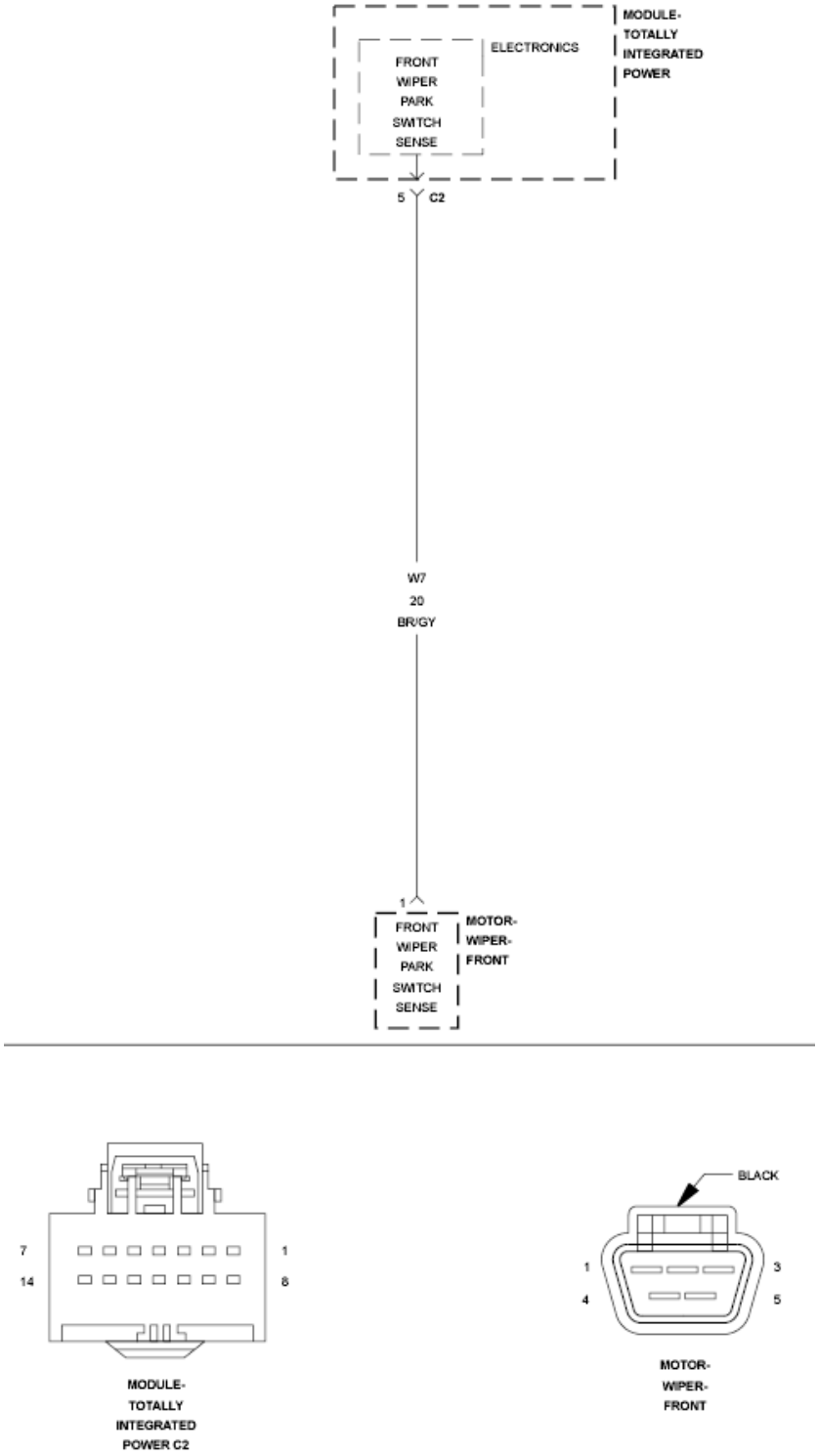

Fig. 4: Wiper Park Switch Input Wiring Diagram
Courtesy of CHRYSLER GROUP, LLC

For a complete wiring diagram, **refer to appropriate SYSTEM WIRING DIAGRAMS article** .

WHEN MONITORED

With the ignition on.

SET CONDITION

The Totally Integrated Power Module (TIPM) detects an open condition in the front wiper park switch sense circuit.

POSSIBLE CAUSES

Possible Causes
(W7) FRONT WIPER PARK SWITCH SENSE CIRCUIT SHORTED TO VOLTAGE TOTALLY INTEGRATED POWER MODULE (TIPM)

DIAGNOSTIC TEST

1. **INTERMITTENT CONDITION**
    1. Turn the ignition on.
    2. With the scan tool, clear all TIPM DTCs.
    3. Turn the Front Wipers on.
    4. With the scan tool, read the Front Wiper DTCs.

    Does the scan tool read: B2305-WIPER PARK SWITCH INPUT CIRCUIT HIGH?

    Yes

    - Go To 2

    No

    - The condition that caused the symptom is currently not present. Inspect the related wiring for a possible intermittent condition. Look for any chafed, pierced, pinched, or partially broken wires.
    - Perform the BODY VERIFICATION TEST. Refer to **STANDARD PROCEDURE** .
2. **(W7) FRONT WIPER PARK SWITCH SENSE CIRCUIT SHORTED TO VOLTAGE**

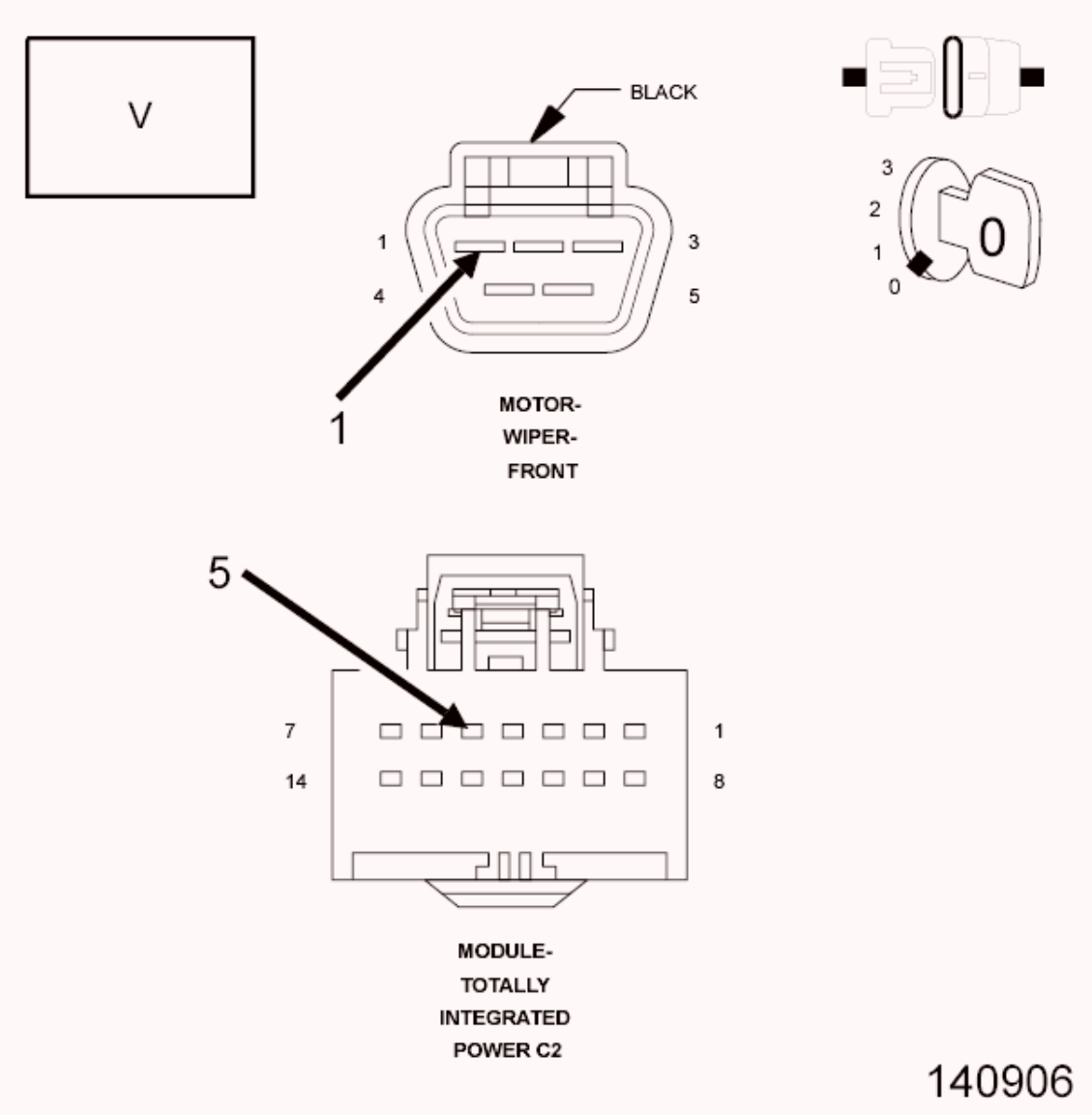

Fig. 5: Measuring Voltage On Front Wiper Park Switch Sense circuit
Courtesy of CHRYSLER GROUP, LLC

1. Turn the ignition off.
2. Disconnect the Front Wiper Motor harness connector.
3. Disconnect the TIPM C2 harness connector.
4. Measure the voltage on the (W7) Front Wiper Park Switch Sense circuit.

   Is the voltage above 5.0 volts?

   Yes

   - Repair the (W7) Front Wiper Park Switch Sense circuit for a short

to voltage.

- Perform the BODY VERIFICATION TEST. Refer to **STANDARD PROCEDURE** .

No

- Replace the Totally Integrated Power Module in accordance with the service information.
- Perform the BODY VERIFICATION TEST. Refer to **STANDARD PROCEDURE** .

B231B-REAR WIPER MOTOR CONTROL CIRCUIT LOW

For a complete wiring diagram, **refer to appropriate SYSTEM WIRING DIAGRAMS article** .

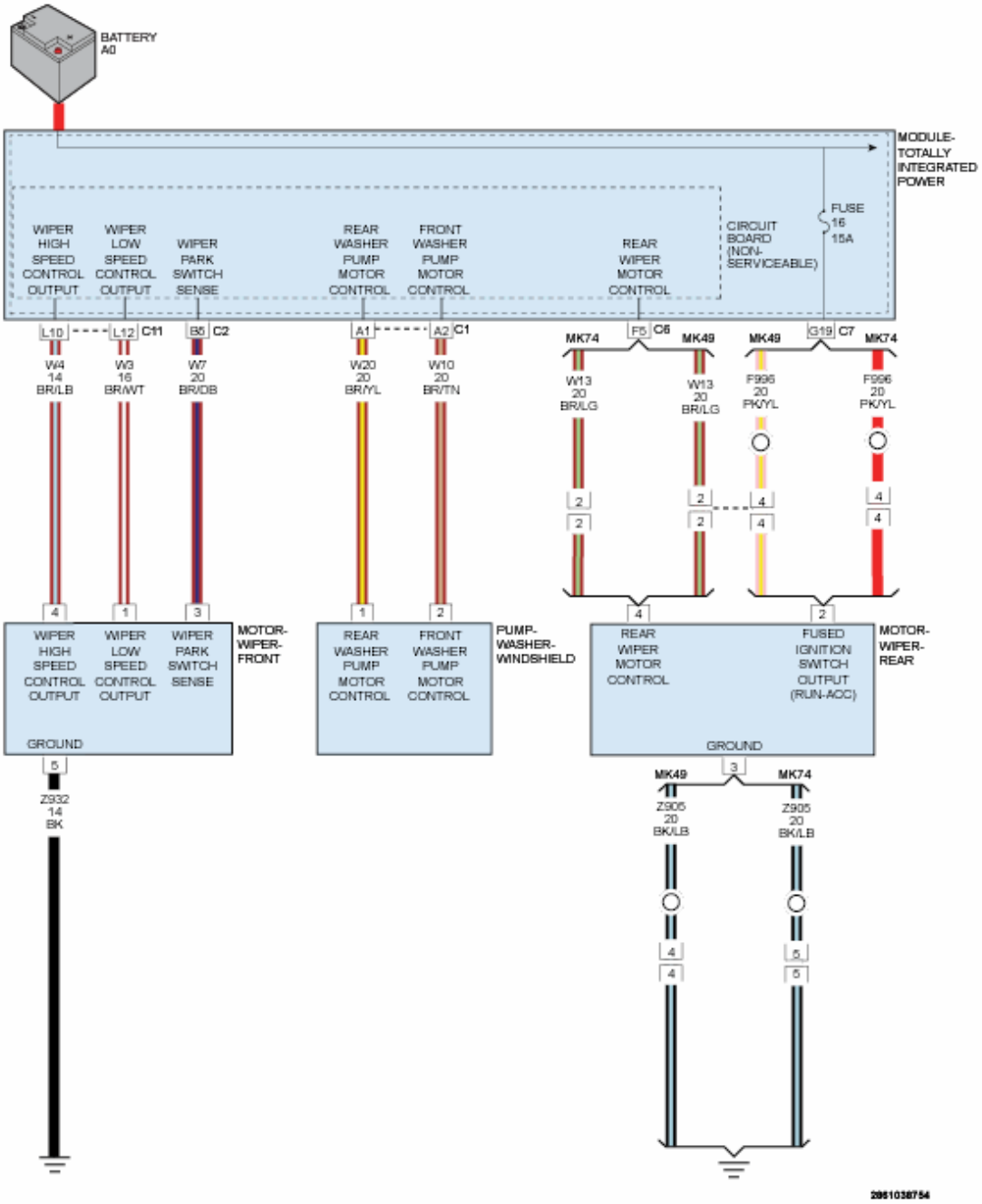

Fig. 6: Wiper System Control - Circuit Diagram
Courtesy of CHRYSLER GROUP, LLC

WHEN MONITORED

With the ignition on.

SET CONDITION

When the TIPM detects a short/low condition on the Wiper Motor Control circuit.

POSSIBLE CAUSES

Possible Causes
(W13) REAR WIPER MOTOR CONTROL CIRCUIT
REAR WIPER MOTOR
TOTALLY INTEGRATED POWER MODULE

DIAGNOSTIC TEST

1. **INTERMITTENT CONDITION**
    1. Turn the ignition on.
    2. With the scan tool, clear all TIPM DTCs.
    3. Turn the Washers on.
    4. With the scan tool, read the Wiper/Washers DTCs.

    Does the scan tool read: B231B-REAR WIPER MOTOR CONTROL CIRCUIT LOW?

    Yes

    - Go To 2

    No

    - The condition that caused the symptom is currently not present. Inspect the related wiring for a possible intermittent condition. Look for any chafed, pierced, pinched, or partially broken wires.
    - Perform the BODY VERIFICATION TEST. Refer to **STANDARD PROCEDURE** .
2. **REAR WIPER MOTOR**
    1. Turn the ignition off.
    2. Disconnect the Rear Wiper Motor connector.
    3. Turn the ignition on.
    4. With the scan tool, read the DTCs.

    Does the scan tool read: B231B-REAR WIPER MOTOR CONTROL CIRCUIT LOW?

Yes

- Go To 3

No

- Replace the Rear Wiper Motor in accordance with the Service Information.
- Perform the BODY VERIFICATION TEST. Refer to **STANDARD PROCEDURE** .

3. **(W13) REAR WIPER MOTOR CONTROL CIRCUIT SHORT TO GROUND**

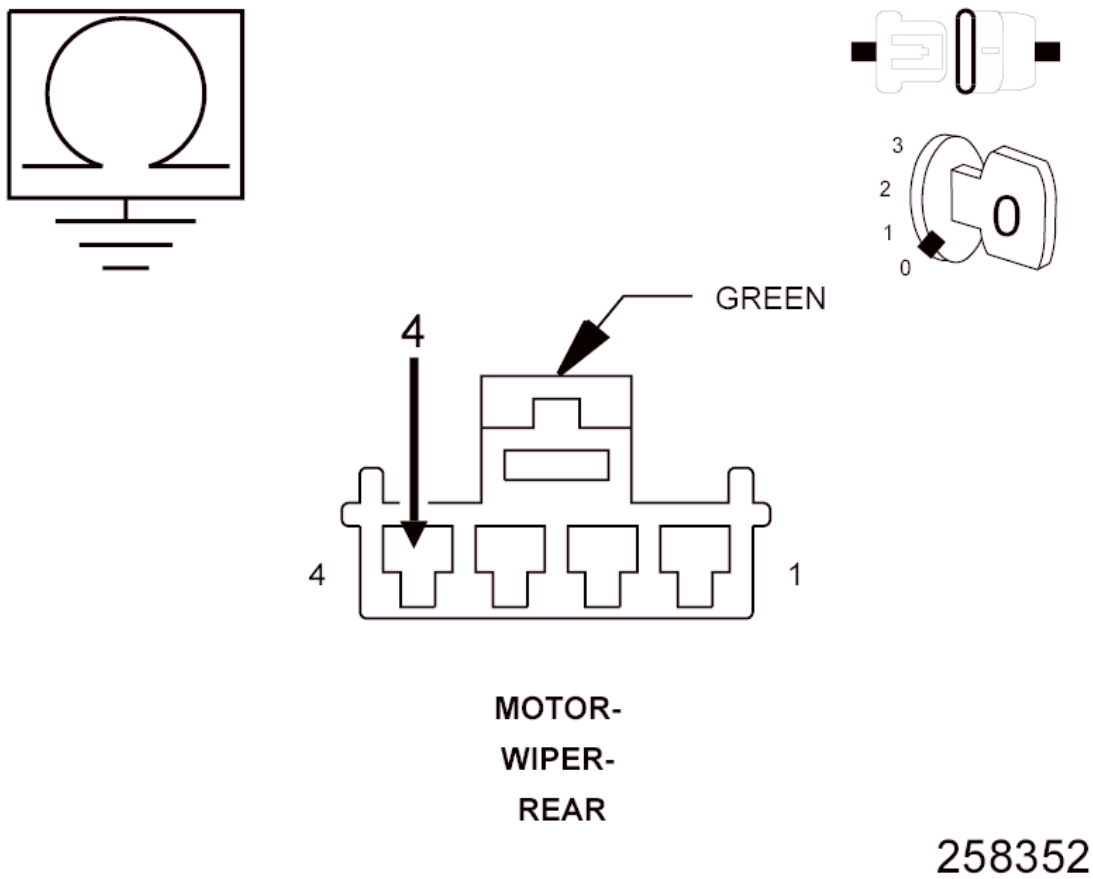

Fig. 7: Measuring Resistance Between Ground & Rear Wiper Motor Control Circuit
Courtesy of CHRYSLER GROUP, LLC

1. Measure the resistance between ground and the (W13) Rear Wiper Motor Control circuit.

Is the resistance below 5.0 Ohms?

Yes

- Repair the (W13) Rear Wiper Motor Control circuit for a short to ground.
- Perform the BODY VERIFICATION TEST. Refer to **STANDARD PROCEDURE** .

No

- Replace the Totally Integrated Power Module in accordance with the Service Information.
- Perform the BODY VERIFICATION TEST. Refer to **STANDARD PROCEDURE** .

B231C-REAR WIPER MOTOR CONTROL CIRCUIT HI

For a complete wiring diagram, **refer to appropriate SYSTEM WIRING DIAGRAMS article** .

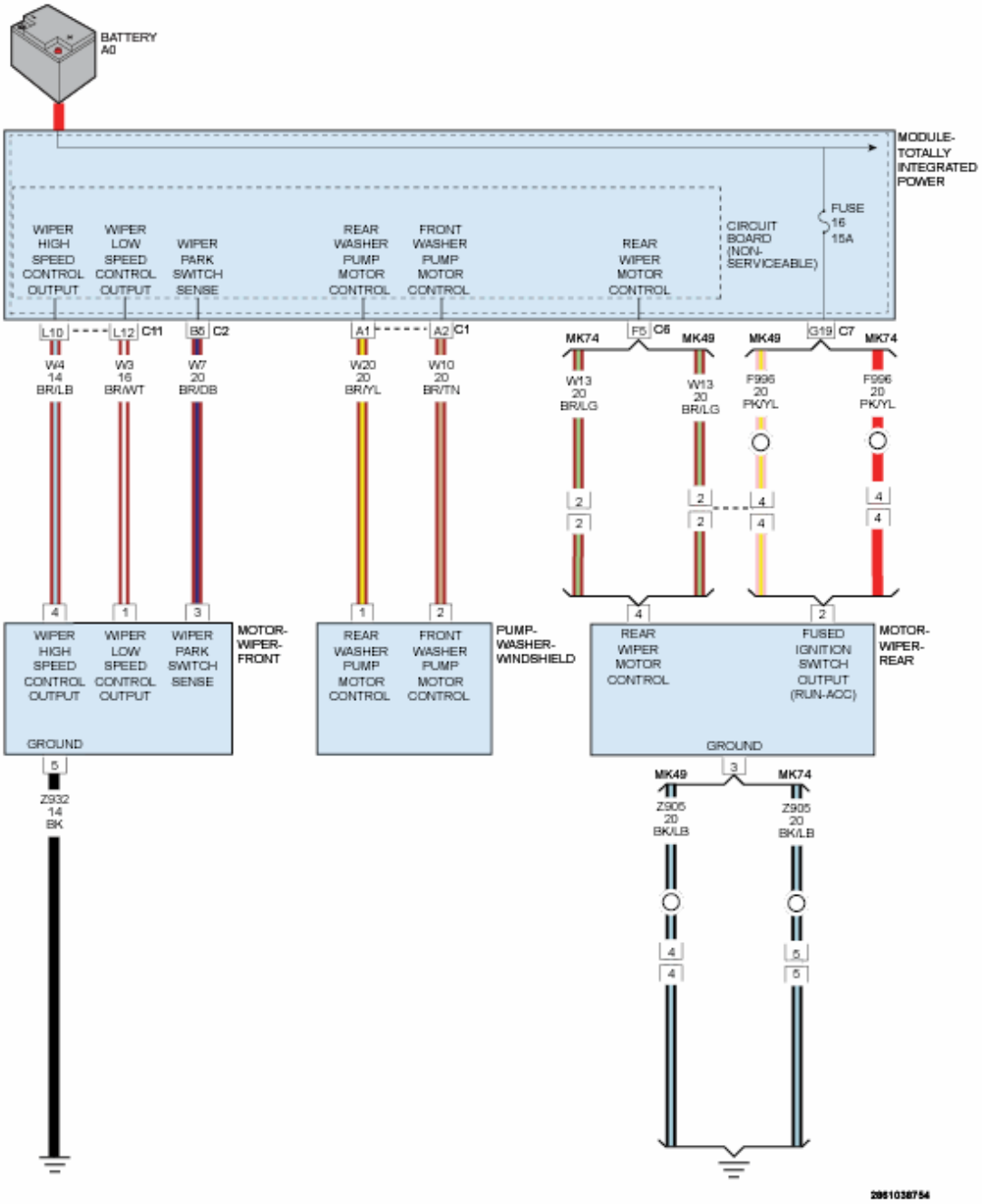

Fig. 8: Wiper System Control - Circuit Diagram
Courtesy of CHRYSLER GROUP, LLC

WHEN MONITORED

With the ignition on.

SET CONDITION

The TIPM detects an open condition.

POSSIBLE CAUSES

Possible Causes
(W13) REAR WIPER MOTOR CONTROL CIRCUIT SHORT TO VOLTAGE
TOTALLY INTEGRATED POWER MODULE

DIAGNOSTIC TEST

1. **INTERMITTENT CONDITION**
    1. Turn the ignition on.
    2. With the Scan Tool, clear all TIPM DTC's.
    3. Turn the Rear Wipers on.
    4. With the Scan Tool, read the Wiper/Washers DTC's.

    Does the Scan Tool read: B231C-REAR WIPER MOTOR CONTROL CIRCUIT HI?

    Yes

    - Go To 2

    No

    - The condition that caused the symptom is currently not present. Inspect the related wiring for a possible intermittent condition. Look for any chafed, pierced, pinched, or partially broken wires.
    - Perform the BODY VERIFICATION TEST. Refer to **STANDARD PROCEDURE** .
2. **(W13) REAR WIPER MOTOR CONTROL CIRCUIT SHORT TO VOLTAGE**

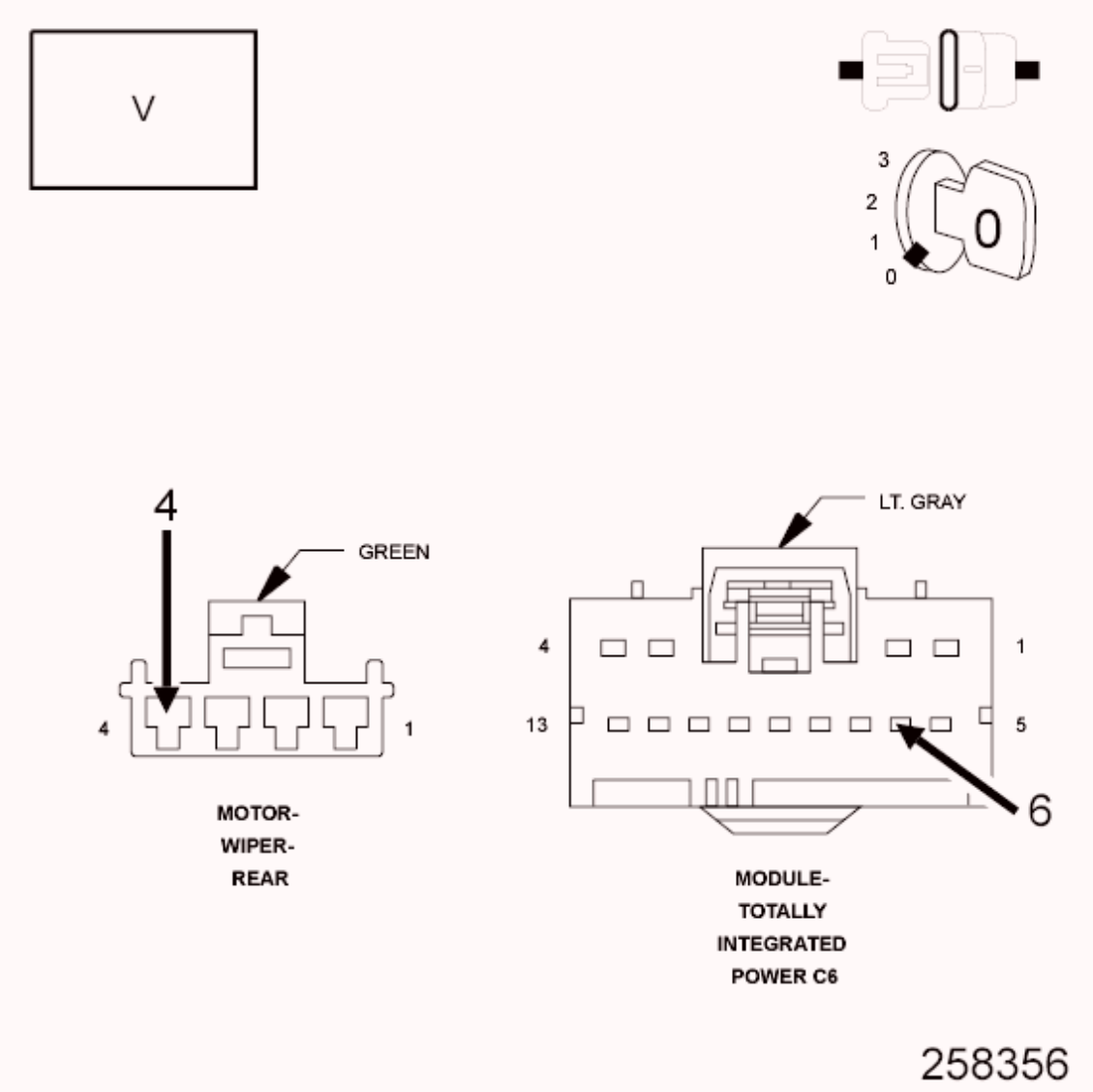

Fig. 9: Measuring Voltage Of Rear Wiper Motor Control Circuit
Courtesy of CHRYSLER GROUP, LLC

1. Turn the ignition off.
2. Disconnect the TIPM C6 harness connector.
3. Disconnect the Rear Wiper Motor harness connector.
4. Turn the ignition on.
5. Measure the voltage of the (W13) Rear Wiper Motor Control circuit.

   Is the voltage above 5.0 volts?

   Yes

   - Repair the (W13) Rear Wiper Motor Control circuit for a short to

voltage.

- Perform the BODY VERIFICATION TEST. Refer to **STANDARD PROCEDURE** .

No

- Replace the Totally Integrated Power Module in accordance with the Service Information.
- Perform the BODY VERIFICATION TEST. Refer to **STANDARD PROCEDURE** .

B231F-FRONT/REAR WASHER MOTOR CONTROL CIRCUIT LOW

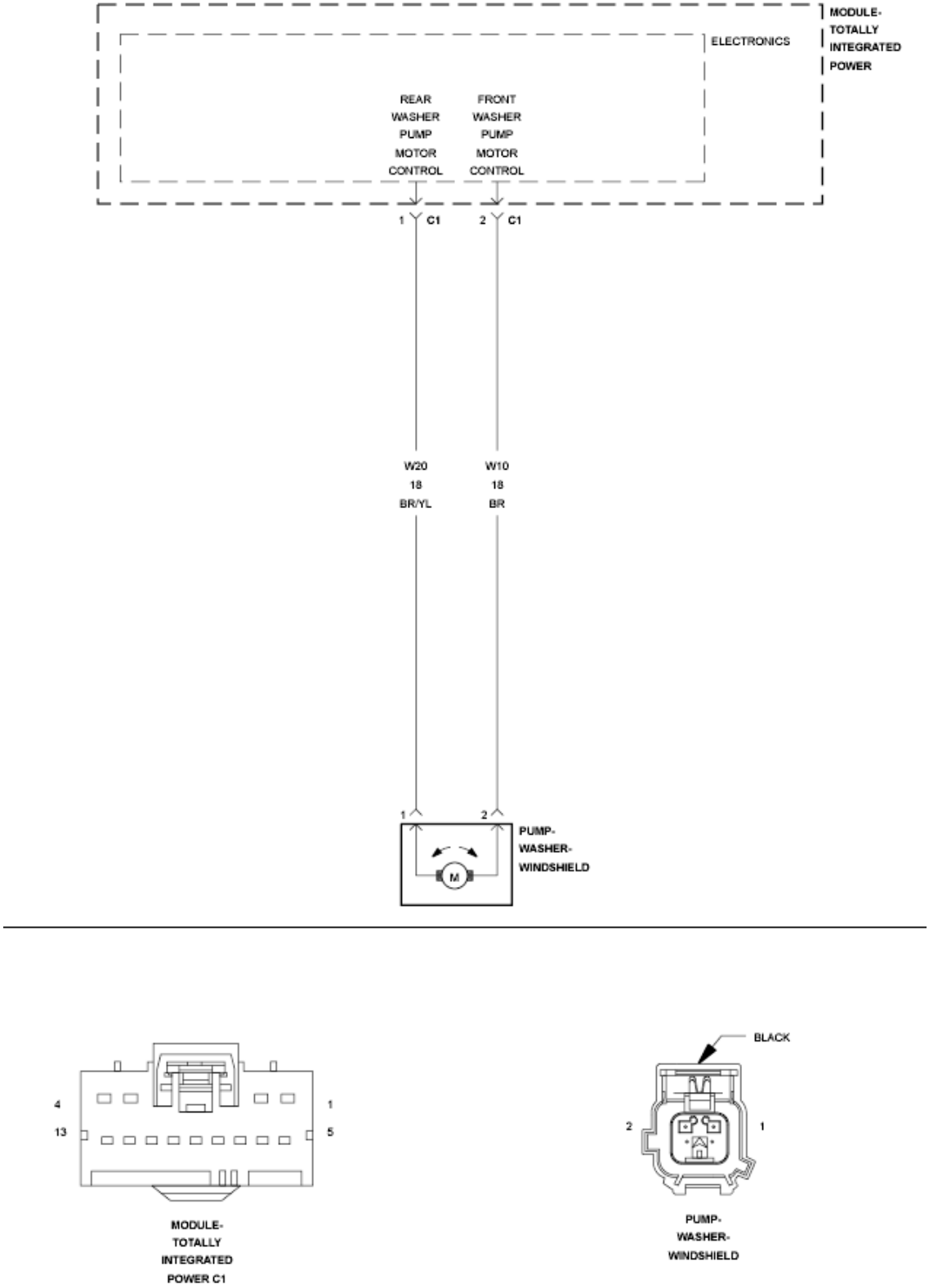

Fig. 10: Front/Rear Washer Motor Control Wiring Diagram
Courtesy of CHRYSLER GROUP, LLC

For a complete wiring diagram, **refer to appropriate SYSTEM WIRING DIAGRAMS article** .

WHEN MONITORED

With the ignition on.

SET CONDITION

When the TIPM detects a short/low condition on the washer Pump Motor Control circuit.

POSSIBLE CAUSES

Possible Causes
(W10)/(W20) WASHER PUMP MOTOR CONTROL CIRCUITS SHORTED TOGETHER
(W10) WASHER PUMP MOTOR CONTROL CIRCUIT SHORT TO GROUND
(W20) WASHER PUMP MOTOR CONTROL CIRCUIT SHORT TO GROUND
WIPER WASHER PUMP
TOTALLY INTEGRATED POWER MODULE

DIAGNOSTIC TEST

1. **INTERMITTENT CONDITION**
    1. Turn the ignition on.
    2. With the scan tool, clear all the TIPM DTCs.
    3. Turn the Washers on.
    4. With the scan tool, read the active Wiper/Washers DTCs.

    Does the scan tool read: B231F-FRONT/REAR WASHER MOTOR CONTROL CIRCUIT LOW?

    Yes

    - Go To 2

    No

- The condition that caused the symptom is currently not present. Inspect the related wiring for a possible intermittent condition. Look for any chafed, pierced, pinched, or partially broken wires.
- Perform the BODY VERIFICATION TEST. Refer to **STANDARD PROCEDURE** .

2. **WASHER PUMP MOTOR**

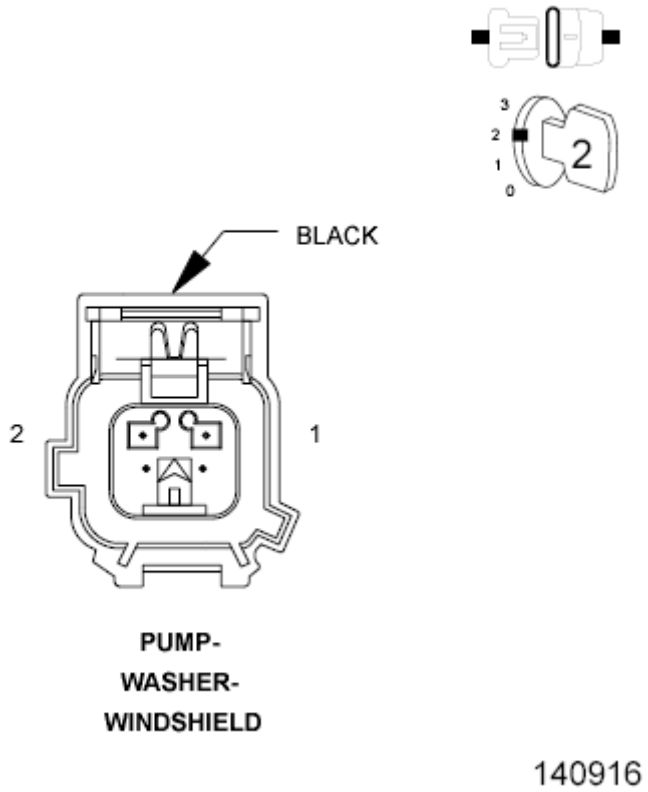

Fig. 11: Washer Pump Motor Connector End View
Courtesy of CHRYSLER GROUP, LLC

1. Turn the ignition off.
2. Disconnect the Washer Pump Motor connector.
3. Turn the ignition on.
4. With the scan tool, read the active DTCs.

   Does the scan tool read: B231F-FRONT/REAR WASHER MOTOR CONTROL CIRCUIT LOW?

   Yes

   - Go To 3

No

- Replace the Washer Pump Motor in accordance with the Service Information.
- Perform the BODY VERIFICATION TEST. Refer to **STANDARD PROCEDURE** .

3. **(W10)/(W20) WASHER PUMP MOTOR CONTROL CIRCUITS SHORT TOGETHER**

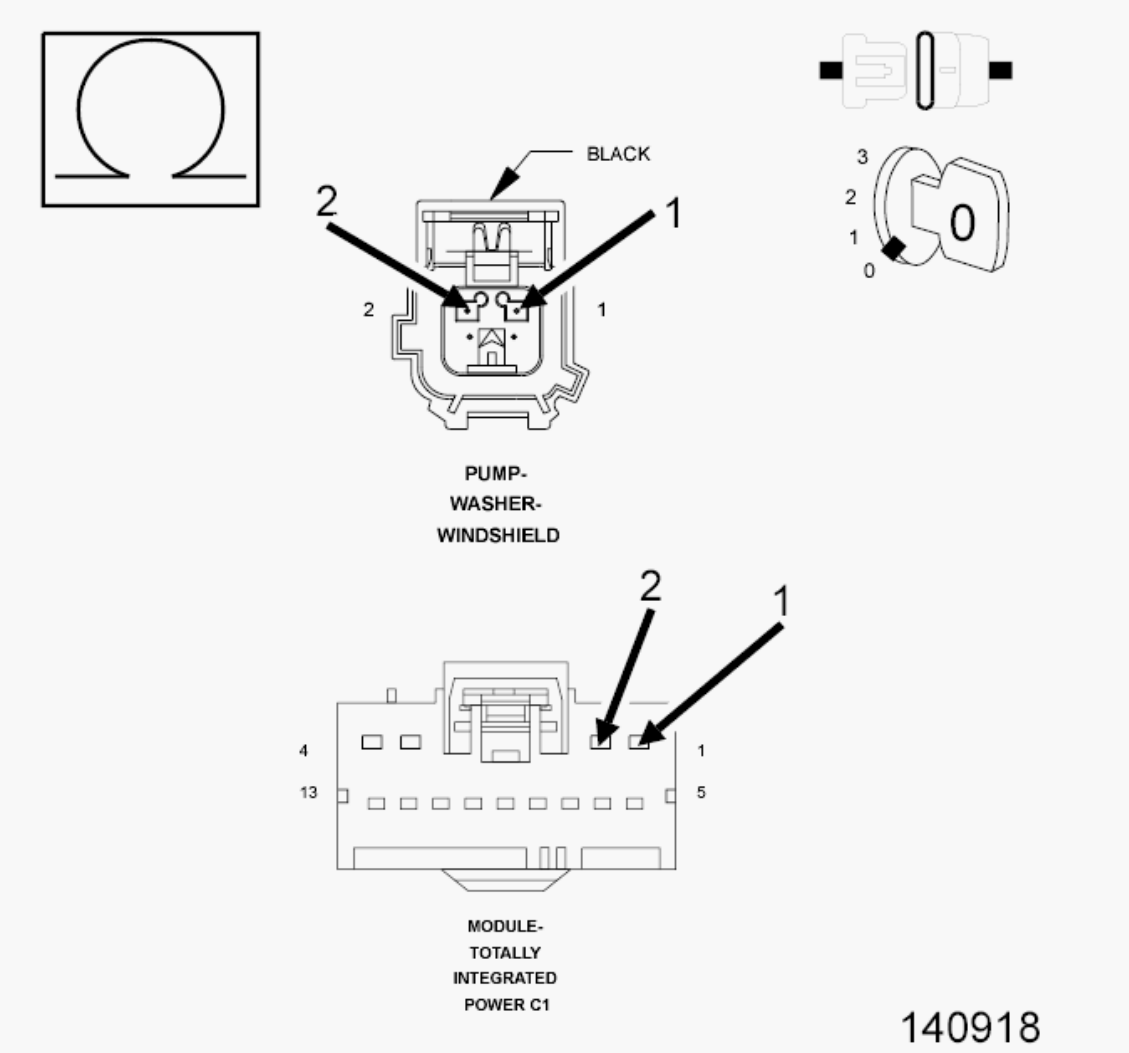

Fig. 12: Measuring Resistance Between Washer Pump Motor Control Circuits
Courtesy of CHRYSLER GROUP, LLC

1. Turn the ignition off.
2. Disconnect the TIPM C1 harness connector.
3. Measure the resistance between the (W10) and (W20) Washer Pump

Motor Control circuits.

Is the resistance below 10, 000 Ohms?

Yes

- Repair the (W10) and (W20) Washer Pump Motor Control circuits for a short together.
- Perform the BODY VERIFICATION TEST. Refer to **STANDARD PROCEDURE** .

No

- Go To 4

4. **(W10) WASHER PUMP MOTOR CONTROL CIRCUIT SHORT TO GROUND**

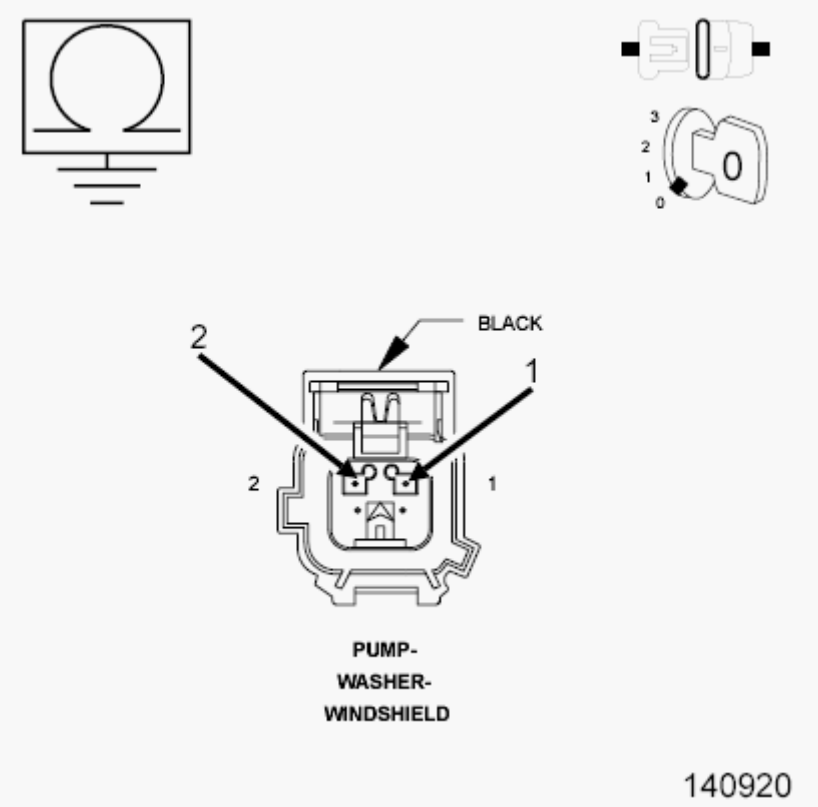

Fig. 13: Measuring Resistance Between Ground & Washer Pump Motor Control Circuit
Courtesy of CHRYSLER GROUP, LLC

1. Measure the resistance between ground and the (W10) Washer Pump

Motor Control circuit.

Is the resistance below 10, 000 Ohms?

Yes

- Repair the (W10) Washer Pump Motor Control circuit for a short to ground.
- Perform the BODY VERIFICATION TEST. Refer to **STANDARD PROCEDURE** .

No

- Go To 5

5. **(W20) WASHER PUMP MOTOR CONTROL CIRCUIT SHORT TO GROUND**

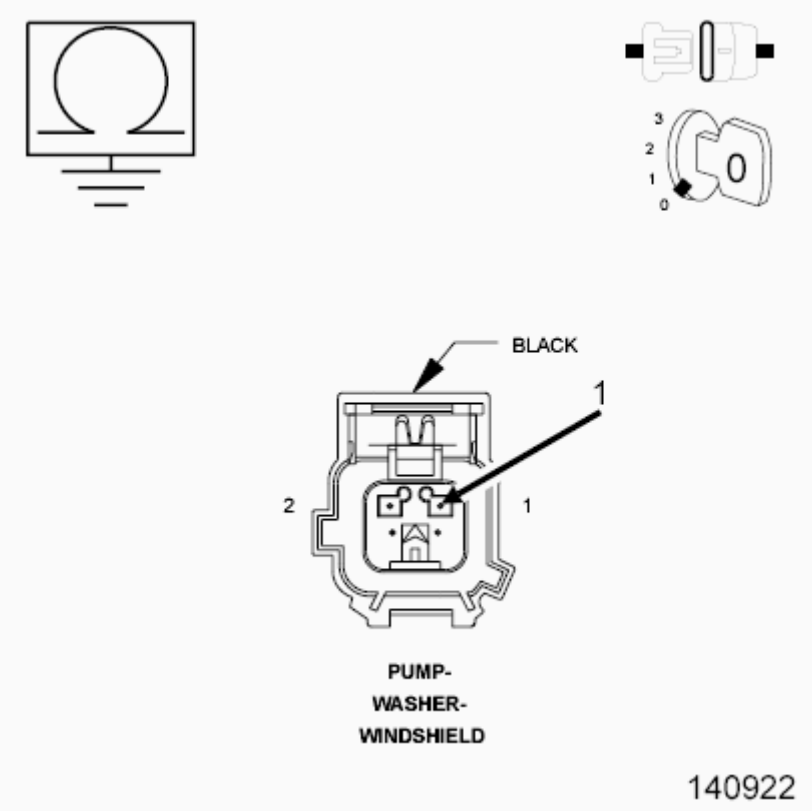

Fig. 14: Measuring Resistance Between Ground & Washer Pump Motor Control Circuit
Courtesy of CHRYSLER GROUP, LLC

1. Measure the resistance between ground and the (W20) Washer Pump

Motor Control circuit.

Is the resistance below 10, 000 Ohms?

Yes

- Repair the (W20) Washer Pump Motor Control circuit for a short to ground.
- Perform the BODY VERIFICATION TEST. Refer to **STANDARD PROCEDURE** .

No

- Replace the Totally Integrated Power Module in accordance with the Service Information.
- Perform the BODY VERIFICATION TEST. Refer to **STANDARD PROCEDURE** .

B2320-FRONT/REAR WASHER MOTOR CONTROL CIRCUIT HIGH

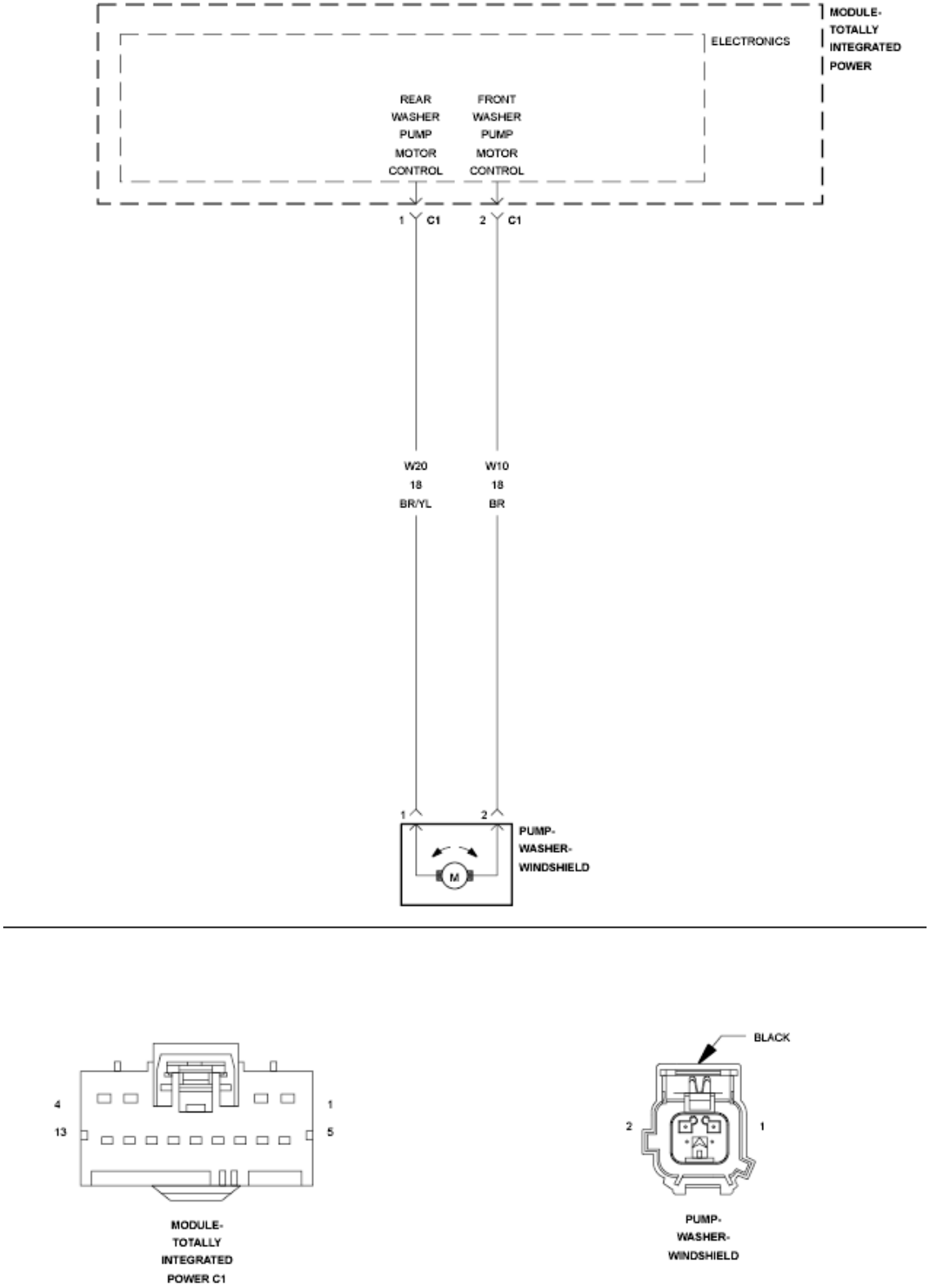

Fig. 15: Front/Rear Washer Motor Control Wiring Diagram
Courtesy of CHRYSLER GROUP, LLC

For a complete wiring diagram, **refer to appropriate SYSTEM WIRING DIAGRAMS article** .

WHEN MONITORED

With the ignition on.

SET CONDITION

The TIPM detects an open condition.

POSSIBLE CAUSES

Possible Causes
(W10) WASHER PUMP MOTOR CONTROL CIRCUIT SHORT TO VOLTAGE
(W20) WASHER PUMP MOTOR CONTROL CIRCUIT SHORT TO VOLTAGE
TOTALLY INTEGRATED POWER MODULE

DIAGNOSTIC TEST

1. **INTERMITTENT CONDITION**
    1. Turn the ignition on.
    2. With the Scan Tool, clear all TIPM DTC's.
    3. Turn the Washers on.
    4. With the Scan Tool, read the Wiper/Washers DTC's.

    Does the Scan Tool read: B2320-FRONT/REAR WASHER MOTOR CONTROL CIRCUIT HIGH?

    Yes

    - Go To 2

    No

    - The condition that caused the symptom is currently not present. Inspect the related wiring for a possible intermittent condition. Look for any chafed, pierced, pinched, or partially broken wires.
    - Perform the BODY VERIFICATION TEST. Refer to

STANDARD PROCEDURE .

2. **(W10) WASHER PUMP MOTOR CONTROL CIRCUIT SHORT TO VOLTAGE**

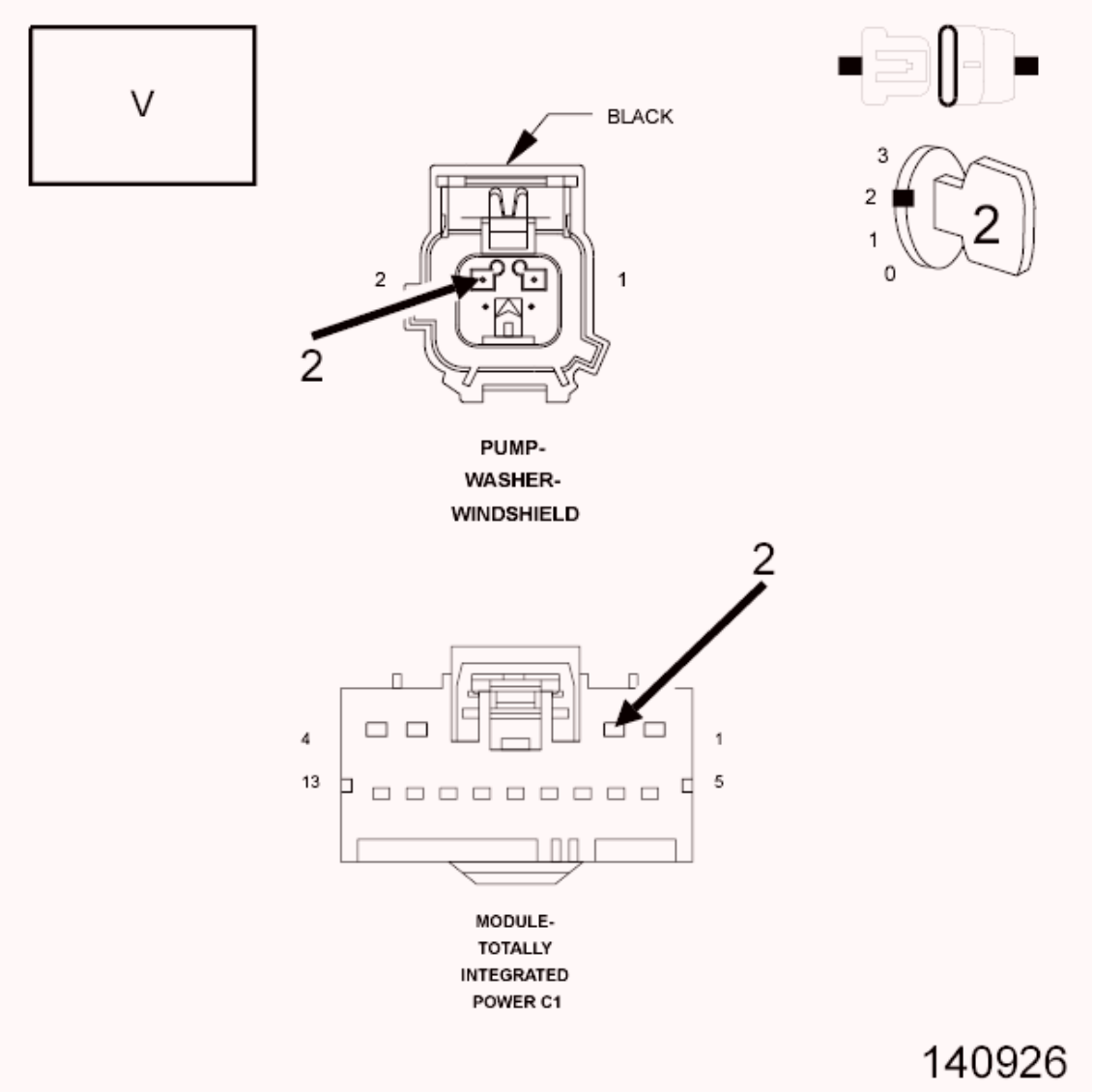

Fig. 16: Measuring Voltage Of Washer Pump Motor Control Circuit
Courtesy of CHRYSLER GROUP, LLC

1. Turn the ignition off.
2. Disconnect the TIPM C1 harness connector.
3. Disconnect the Washer Pump Motor harness connector.
4. Turn the ignition on.
5. Measure the voltage of the (W10) Washer Pump Motor Control circuit.

   Is the voltage above 5.0 volts?

Yes

- Repair the (W10) Washer Pump Motor Control circuit for a short to voltage.
- Perform the BODY VERIFICATION TEST. Refer to **STANDARD PROCEDURE** .

No

- Go To 3

3. **(W20) WASHER PUMP MOTOR CONTROL CIRCUIT SHORT TO VOLTAGE**

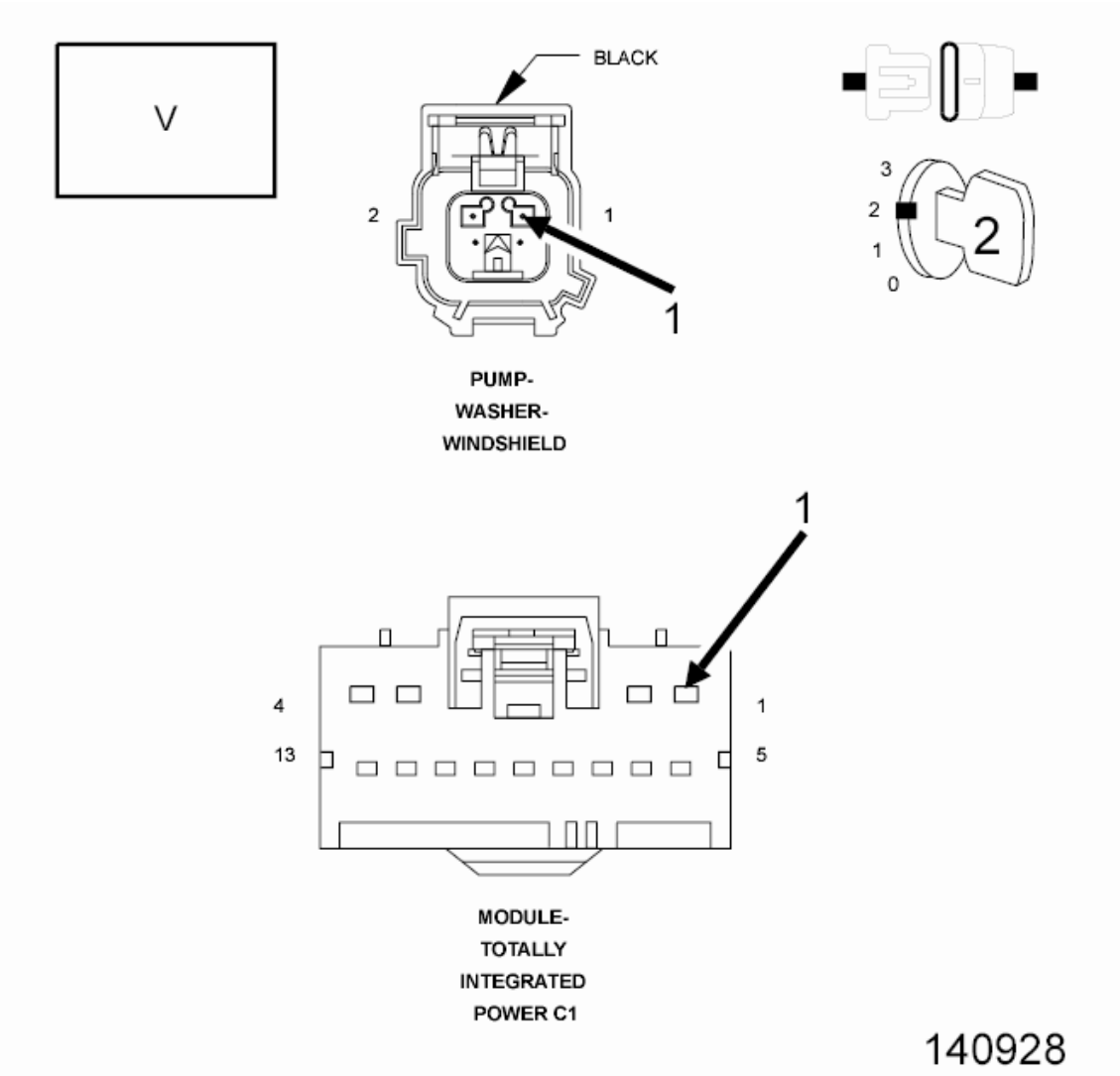

Fig. 17: Measuring Voltage Of Washer Pump Motor Control Circuit
Courtesy of CHRYSLER GROUP, LLC

1. Measure the Voltage of the (W20) Washer Pump Motor Control circuit.

   Is the voltage above 5.0 volts?

   Yes

   - Repair the (W20) Washer Pump Motor Control circuit for a short to voltage.
   - Perform the BODY VERIFICATION TEST. Refer to **STANDARD PROCEDURE** .

   No

   - Replace the Totally Integrated Power Module in accordance with the Service Information.
   - Perform the BODY VERIFICATION TEST. Refer to **STANDARD PROCEDURE** .

B2324-HEADLAMP WASHER MOTOR CONTROL CIRCUIT HIGH

For a complete wiring diagram, **refer to appropriate SYSTEM WIRING DIAGRAMS article** .

WHEN MONITORED

With the Headlamp Washers activated.

SET CONDITION

When the Totally Integrated Power Module (TIPM) detects an high condition.

POSSIBLE CAUSES

Possible Causes
(W24) HEADLAMP WASHER RELAY CONTROL CIRCUIT OPEN
(W24) HEADLAMP WASHER RELAY CONTROL CIRCUIT SHORTED TO VOLTAGE
(W23) HEADLAMP WASHER MOTOR CONTROL CIRCUIT OPEN
(W23) HEADLAMP WASHER MOTOR CONTROL CIRCUIT SHORTED TO VOLTAGE
HEADLAMP WASHER RELAY

TOTALLY INTEGRATED POWER MODULE (TIPM)

DIAGNOSTIC TEST

1. **INTERMITTENT CONDITION**
   1. Turn the ignition on.
   2. With the scan tool, clear all DTCs.
   3. Turn the Headlamp Washers on.
   4. With the scan tool, read DTCs.

   Does the scan tool display active: B2324-HEADLAMP WASHER MOTOR CONTROL CIRCUIT HIGH?

   Yes

   - Go To 2

   No

   - The condition that caused this symptom is currently not present. Check for an intermittent condition by inspecting the related wiring harness for chafed, pierced, pinched, and partially broken wires. Also, inspect the related connectors for broken, bent, pushed out, spread, corroded, or contaminated terminals. Repair as necessary.
   - Perform the BODY VERIFICATION TEST. Refer to **STANDARD PROCEDURE** .
2. **CHECK HEADLAMP WASHER RELAY**
   1. Turn the ignition off.
   2. Remove the Headlamp Washer relay.
   3. Turn the ignition on.
   4. Turn the Headlamp Washers on.
   5. With the scan tool, read DTCs.

   Does the scan tool display active: B2324-HEADLAMP WASHER MOTOR CONTROL CIRCUIT HIGH?

   Yes

- Go To 3

No

- Go To 5

3. **(W24) HEADLAMP WASHER RELAY CONTROL CIRCUIT OPEN**

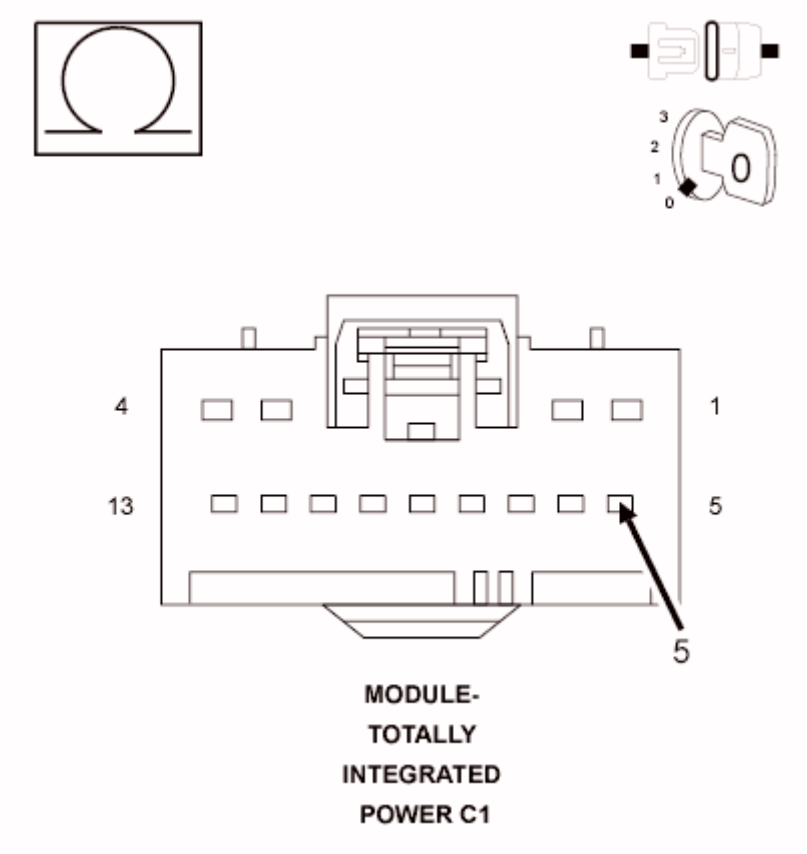

Fig. 18: Checking Headlamp Washer Relay Control Circuit For Open
Courtesy of CHRYSLER GROUP, LLC

1. Turn the ignition off.
2. Disconnect the TIPM C1 harness connector.
3. Measure the resistance of the (W24) Headlamp Washer Relay Control circuit between the Headlamp Washer Relay connector and the TIPM C1 harness connector.

   Is the resistance below 10.0 Ohms?

   Yes

   - Go To 4

No

- Repair the (W24) Headlamp Washer Relay Control circuit for an open.
- Perform the BODY VERIFICATION TEST. Refer to **STANDARD PROCEDURE** .

4. **(W24) HEADLAMP WASHER RELAY CONTROL CIRCUIT SHORTED TO VOLTAGE**

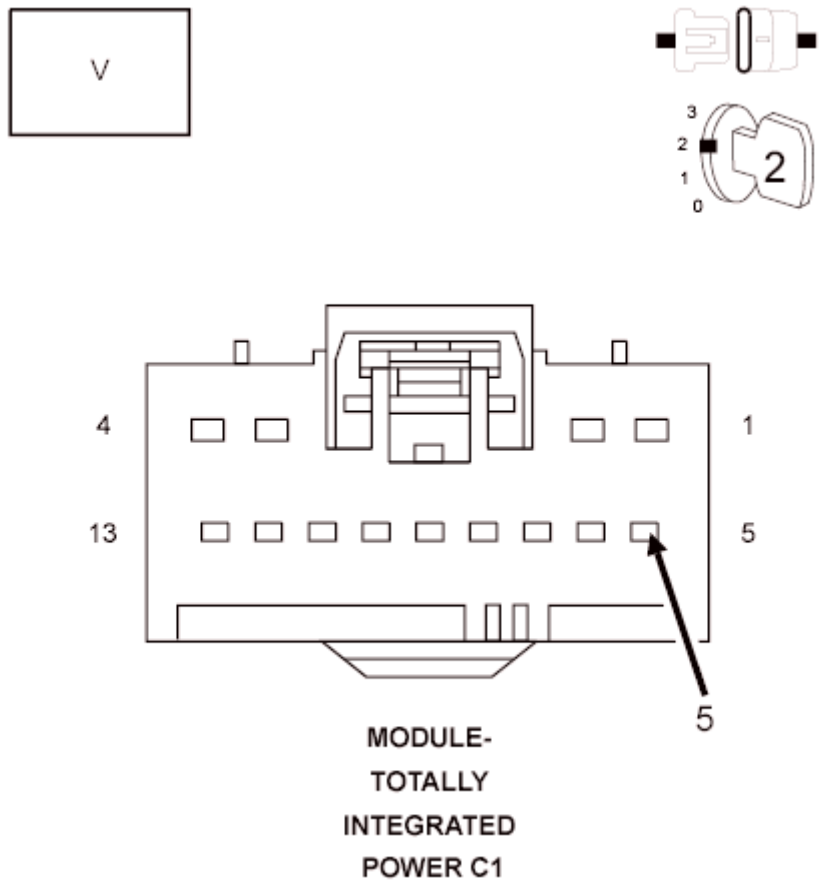

Fig. 19: Measuring Voltage On Headlamp Washer Relay Control Circuit
Courtesy of CHRYSLER GROUP, LLC

1. Turn the ignition on.
2. Measure for voltage on the (W24) Headlamp Washer Relay Control circuit.

   Is the voltage above 10.0 volts?

Yes

- Repair the (W24) Headlamp Washer Relay Control circuit for a short to voltage.
- Perform the BODY VERIFICATION TEST. Refer to **STANDARD PROCEDURE** .

No

- Replace the Totally Integrated Power Module (TIPM) in accordance with the Service Information.
- Perform the BODY VERIFICATION TEST. Refer to **STANDARD PROCEDURE** .

5. **HEADLAMP WASHER RELAY**
   1. Turn the ignition off.
   2. Replace the Headlamp Washer relay with a known good relay.
   3. Turn the ignition on.
   4. Turn the Headlamp Washers on.
   5. With the scan tool, read DTCs.

   Does the scan tool display active: B2324-HEADLAMP WASHER MOTOR CONTROL CIRCUIT HIGH?

   Yes

   - Go To 6

   No

   - Test Complete.
   - Perform the BODY VERIFICATION TEST. Refer to **STANDARD PROCEDURE** .

6. **(W23) HEADLAMP WASHER MOTOR CONTROL CIRCUIT OPEN**
   1. Turn the ignition off.
   2. Remove the Headlamp Washer relay.
   3. Disconnect the Headlamp Washer Motor harness connector.
   4. Measure the resistance of the (W23) Headlamp Washer Motor Control

circuit at the Headlamp Washer Motor harness connector and the Headlamp Washer Relay connector.

Is the resistance below 10.0 Ohms?

Yes

- Go To 7

No

- Repair the (W23) Headlamp Washer Motor Control circuit for an open.
- Perform the BODY VERIFICATION TEST. Refer to **STANDARD PROCEDURE** .

7. **(W23) HEADLAMP WASHER MOTOR CONTROL CIRCUIT SHORTED TO VOLTAGE**
   1. Turn the ignition on.
   2. Measure for voltage on the (W23) Headlamp Washer Motor Control circuit.

   Is the voltage above 10.0 volts?

   Yes

   - Repair the (W23) Headlamp Washer Motor Control circuit for a short to voltage.
   - Perform the BODY VERIFICATION TEST. Refer to **STANDARD PROCEDURE** .

   No

   - Replace the Headlamp Washer Motor in accordance with the Service Information.
   - Perform the BODY VERIFICATION TEST. Refer to **STANDARD PROCEDURE** .

B2325-HEADLAMP WASHER MOTOR CONTROL CIRCUIT OPEN

For a complete wiring diagram, **refer to appropriate SYSTEM WIRING**

DIAGRAMS article .

WHEN MONITORED

With the ignition on.

SET CONDITION

When the TIPM detects a short/high condition.

POSSIBLE CAUSES

Possible Causes
TOTALLY INTEGRATED POWER MODULE

DIAGNOSTIC TEST

TOTALLY INTEGRATED POWER MODULE

1. Turn the ignition off.
2. Replace the Wiper ON/OFF relay with and known good relay.
3. With the scan tool, clear all TIPM DTCs.
4. Turn the Wipers ON then OFF.
5. With the scan tool, read the Wiper DTCs.

   Does the scan tool read: B2325-HEADLAMP WASHER MOTOR CONTROL CIRCUIT OPEN?

   Yes

   - Replace the Integrated Power Module in accordance with the Service Information.
   - Perform the BODY VERIFICATION TEST. Refer to **STANDARD PROCEDURE** .

   No

   - Test complete.
   - Perform the BODY VERIFICATION TEST. Refer to **STANDARD PROCEDURE** .

B2336-HORN CONTROL CIRCUIT LOW

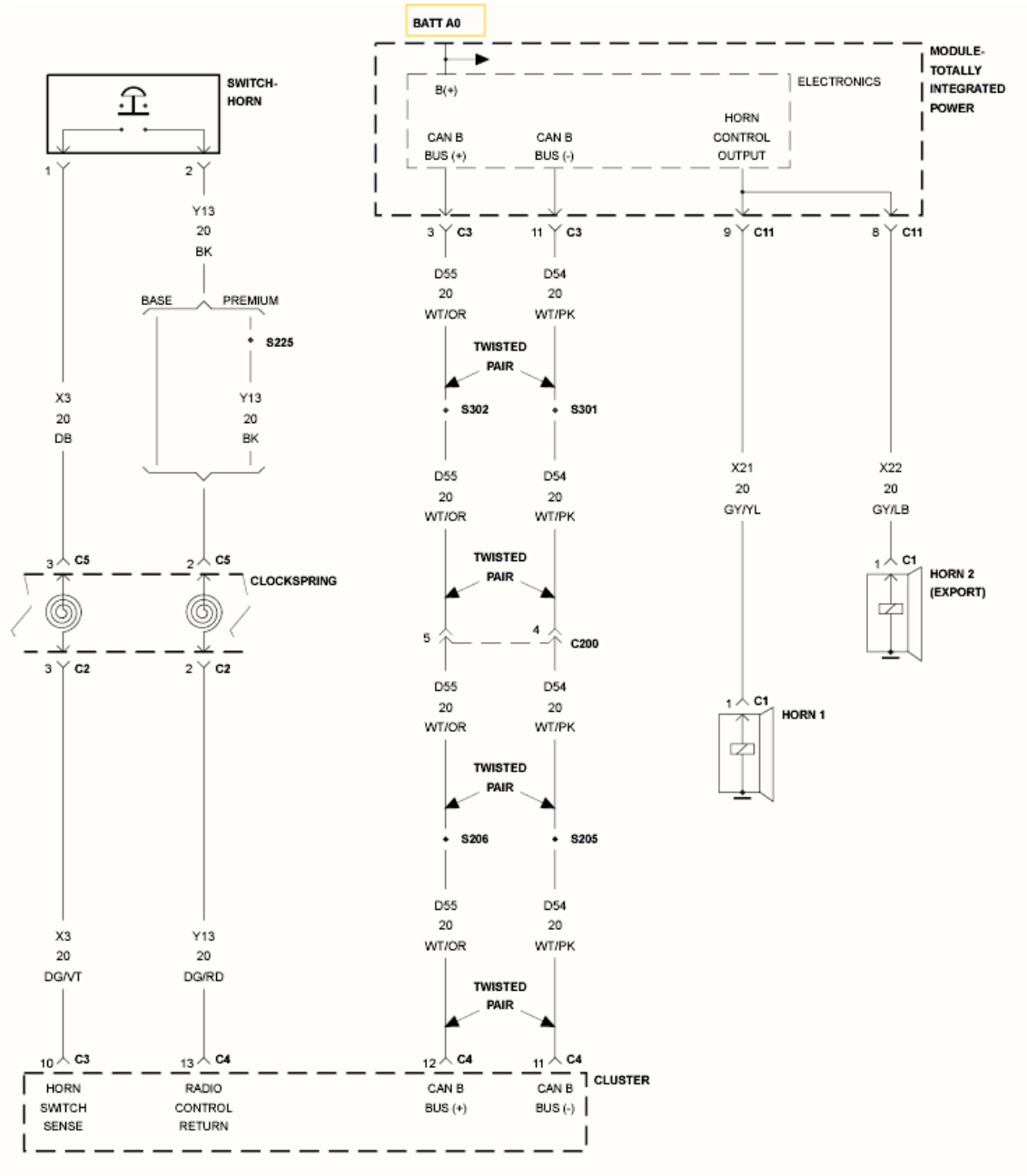

Fig. 20: Horn Control - Circuit Diagram
Courtesy of CHRYSLER GROUP, LLC

For a complete wiring diagram, **refer to appropriate SYSTEM WIRING DIAGRAMS article** .

WHEN MONITORED

With the ignition on.

Battery voltage greater than 10.4 volts.

SET CONDITION

A shorted low condition on the (X21)/(X22) Horn Control Output circuit.

POSSIBLE CAUSES

Possible Causes
(X21) HORN CONTROL OUTPUT CIRCUIT SHORTED TO GROUND (X22) HORN CONTROL OUTPUT CIRCUIT SHORTED TO GROUND (EXPORT) TOTALLY INTEGRATED POWER MODULE (TIPM)

DIAGNOSTIC TEST

1. **VERIFY DTC B2336-HORN CONTROL CIRCUIT LOW IS ACTIVE**
   1. With the scan tool, erase TIPM DTCs.
   2. Operate the Horn Switch several times.
   3. With the scan tool, read TIPM DTCs.

      Does the scan tool display active DTC B2336-HORN CONTROL CIRCUIT LOW?

      Yes

      - Go To 2

      No

      - Test complete, the condition or conditions that originally set this DTC are not present at this time. Using the wiring diagrams as a guide, check all related splices and connectors for signs of water intrusion, corrosion, pushed out or bent terminals, and correct pin tension.
      - Perform the BODY VERIFICATION TEST. Refer to **STANDARD PROCEDURE** .
2. **(X21)/(X22) HORN CONTROL OUTPUT CIRCUIT SHORTED TO GROUND**

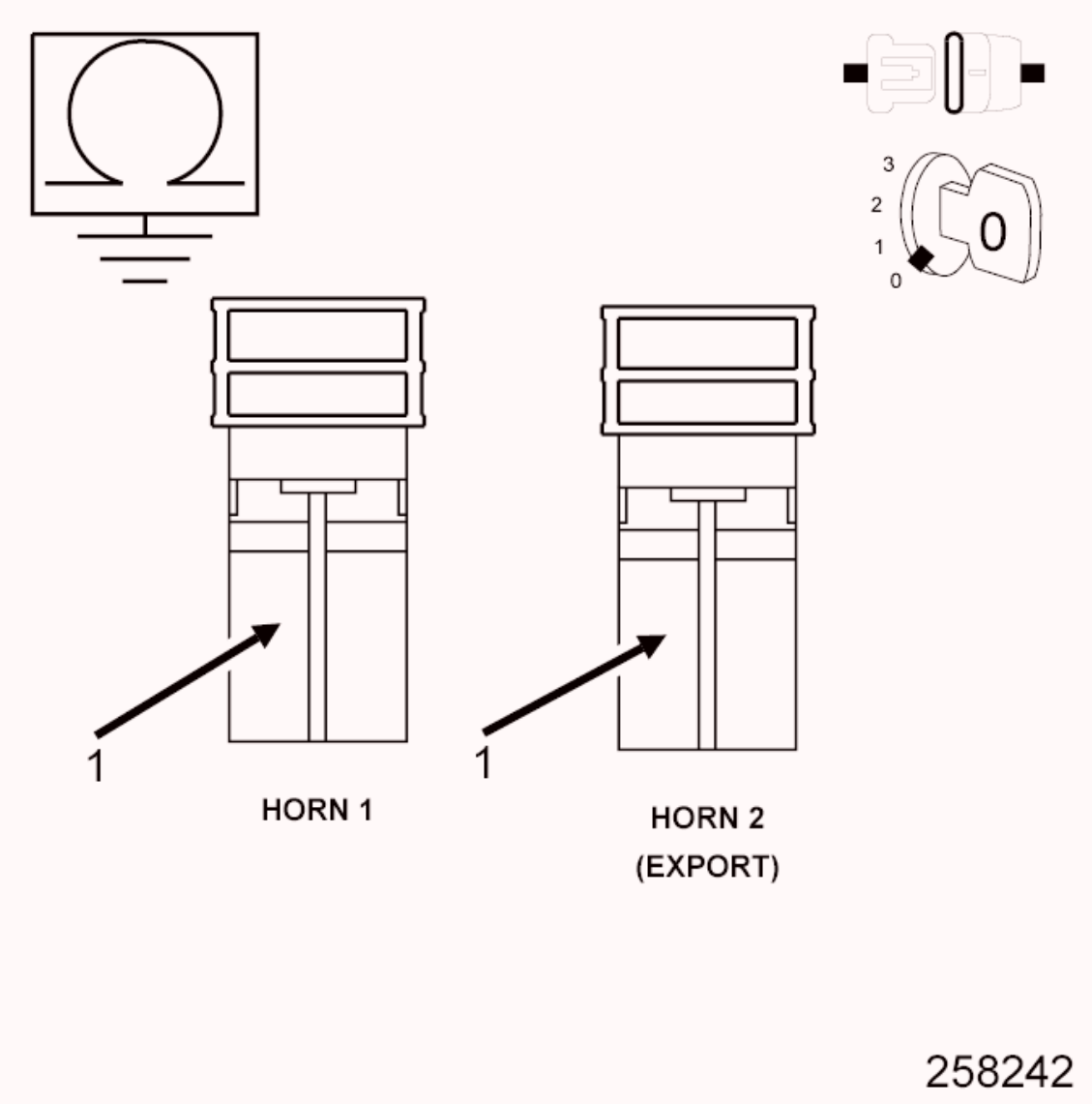

Fig. 21: Checking Horn Control Output Circuit For Short To Ground
Courtesy of CHRYSLER GROUP, LLC

1. Turn the ignition off.
2. Disconnect the horn connector(s).
3. Disconnect the TIPM C11 harness connector.
4. Measure the resistance between ground and the Horn Control Output circuit(s) at the horn connector(s).

   Is the resistance below 100 Ohms?

   Yes

   - Repair the short to ground in the (X21)/(X22) Horn Control Output

circuit.

- Perform the BODY VERIFICATION TEST. Refer to **STANDARD PROCEDURE** .

No

- Go To 3

3. **HORN**

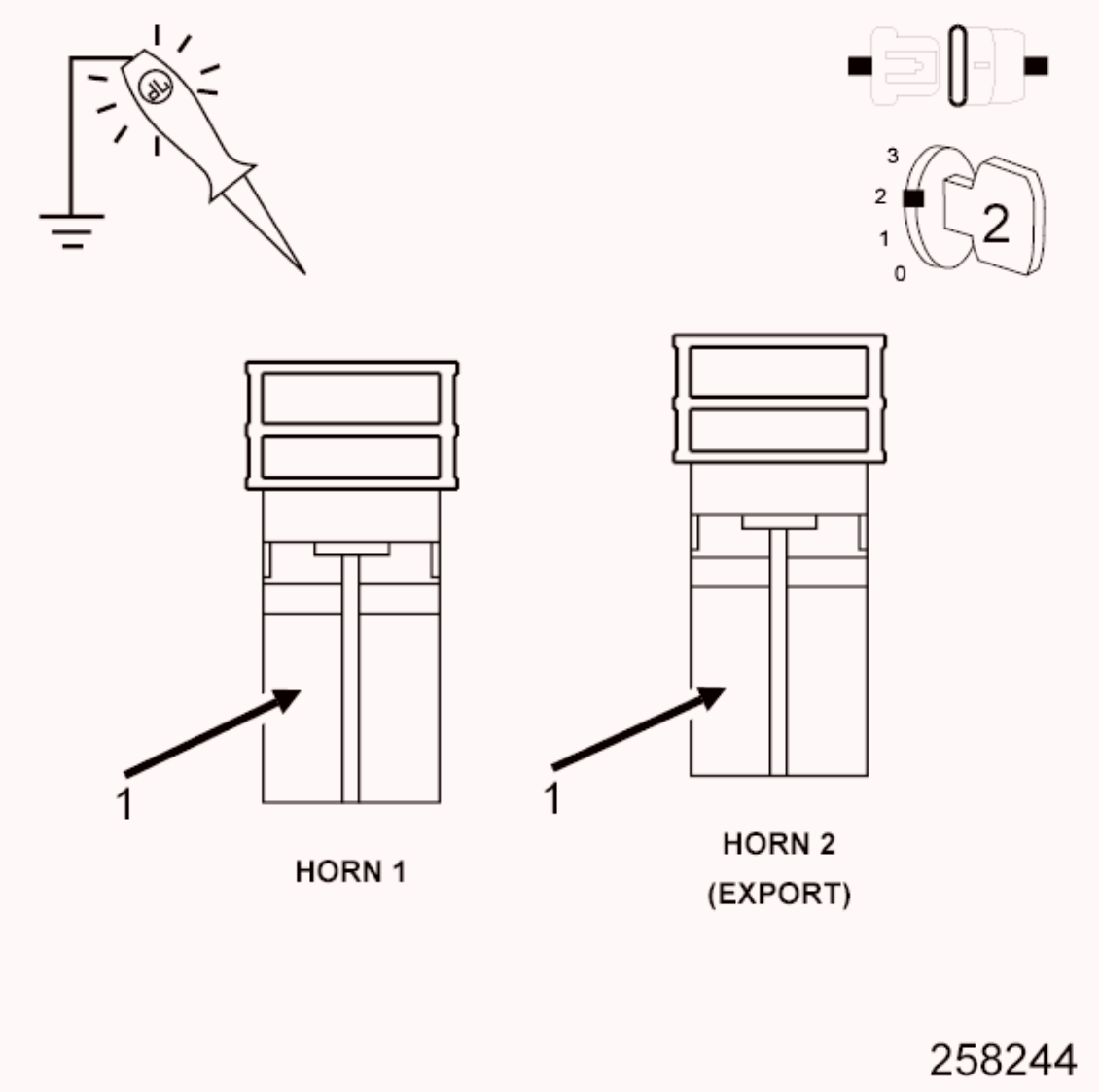

Fig. 22: Checking Horn Operation
Courtesy of CHRYSLER GROUP, LLC

1. Connect the TIPM C11 harness connector.
2. Turn the ignition on, engine not running.

3. With the scan tool under the TIPM Actuators, actuate the Horn.
4. Using a 12-volt test light connected to ground, check the Horn Control Output circuit at the Horn connector(s).

   Does the test light illuminate brightly and flash on and off?

   Yes

   - Replace the Horn(s) as necessary in accordance with the Service Information.
   - Perform the BODY VERIFICATION TEST. Refer to **STANDARD PROCEDURE** .

   No

   - Go To 4

4. **TOTALLY INTEGRATED POWER MODULE (TIPM)**

   NOTE: Before continuing, check the TIPM harness connector terminals for corrosion, damage, or terminal push out. Repair as necessary.

   1. Using the schematics as a guide, inspect the wire harness and connectors.
   2. Pay particular attention to all Power and Ground circuits.

   Were any problems found?

   Yes

   - Repair as necessary.
   - Perform the BODY VERIFICATION TEST. Refer to **STANDARD PROCEDURE** .

   No

   - Replace the Totally Integrated Power Module in accordance with the Service Information.
   - Perform the BODY VERIFICATION TEST. Refer to

STANDARD PROCEDURE .

B2337-HORN CONTROL CIRCUIT HIGH

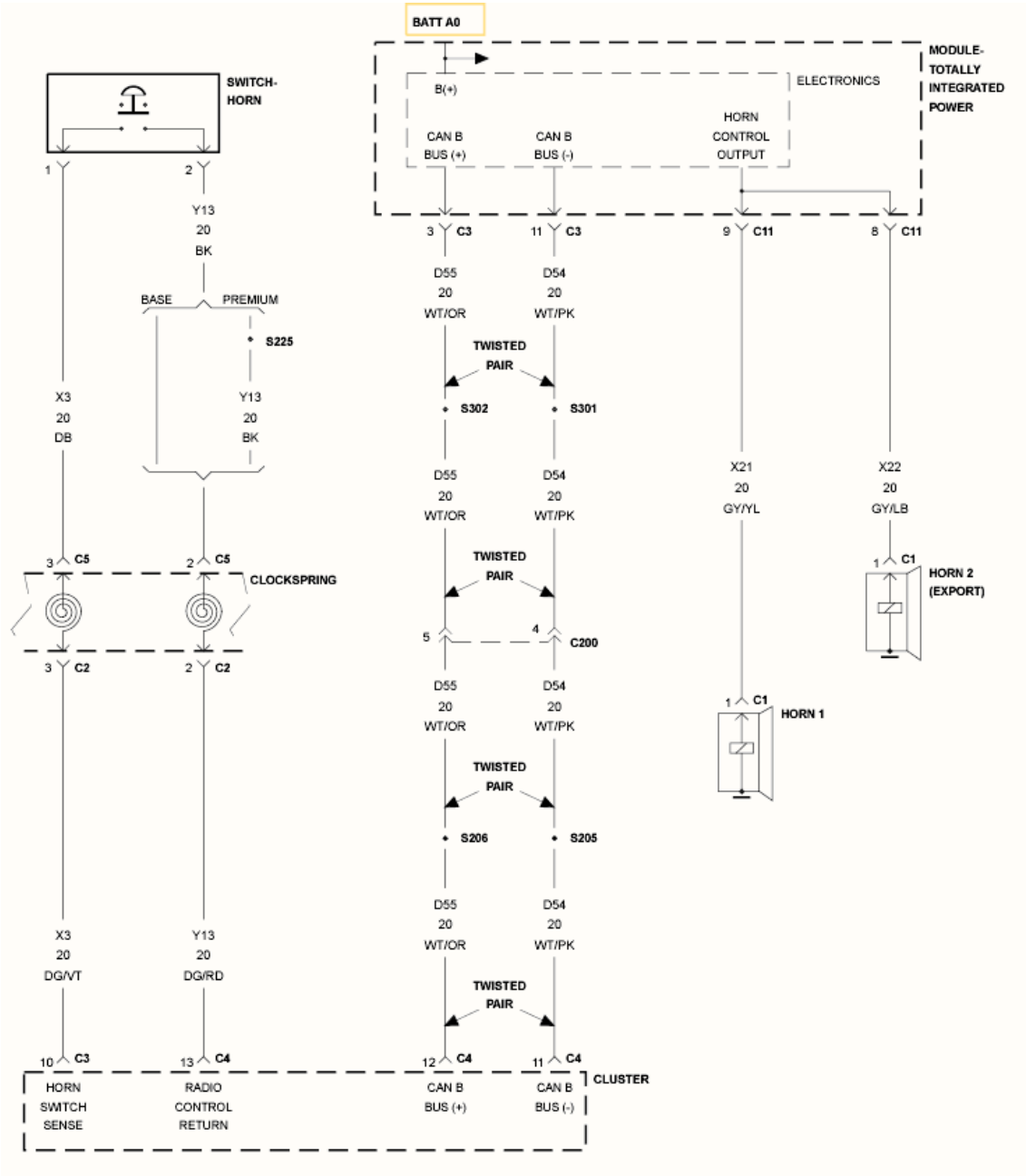

Fig. 23: Horn Control - Circuit Diagram
Courtesy of CHRYSLER GROUP, LLC

For a complete wiring diagram, **refer to appropriate SYSTEM WIRING DIAGRAMS article** .

WHEN MONITORED

With the ignition on.

Battery voltage greater than 10.4 volts.

SET CONDITION

A shorted high condition in the (X21)/(X22) Horn Control Output circuit.

POSSIBLE CAUSES

Possible Causes
(X21) HORN CONTROL OUTPUT CIRCUIT SHORTED TO BATTERY VOLTAGE
(X22) HORN CONTROL OUTPUT CIRCUIT SHORTED TO BATTERY VOLTAGE (EXPORT)
EXCESSIVE RESISTANCE IN THE HORN OR CASE GROUND
TOTALLY INTEGRATED POWER MODULE (TIPM)

DIAGNOSTIC TEST

1. **CHECK FOR ACTIVE DTC B2337-HORN CONTROL CIRCUIT HIGH IN THE TIPM**
   1. Turn the ignition on.
   2. With the scan tool, record and erase DTCs.
   3. Operate the Horn Switch several times.
   4. With the scan tool, read DTCs.

   Does the scan tool display active DTC B2337-HORN CONTROL CIRCUIT HIGH?

   Yes

   - Go To 2

   No

   - Test complete, the condition or conditions that originally set this DTC are not present at this time. Using the wiring diagrams as a guide, check all related splices and connectors for signs of water intrusion, corrosion, pushed out or bent terminals, and correct pin tension.
   - Perform the BODY VERIFICATION TEST. Refer to

STANDARD PROCEDURE .

2. **CHECK THE HORN(S)**
   1. Turn the ignition off.
   2. Disconnect the Horn(s) connector(s).
   3. Momentarily jumper 12-volts to the horn(s).

   Did the horn(s) operate properly?

   Yes

   - Go To 4

   No

   - Go To 3
3. **CASE GROUND CIRCUIT OPEN**
   1. Using a 12-volt test light connected to 12-volts, check the case ground at the horn(s) case.

   Does the test light illuminate brightly?

   Yes

   - Replace the Horn(s) as necessary.
   - Perform the BODY VERIFICATION TEST. Refer to **STANDARD PROCEDURE** .

   No

   - Repair the open or excessive resistance at the horn(s) case ground.
   - Perform the BODY VERIFICATION TEST. Refer to **STANDARD PROCEDURE** .
4. **(X21)/(X22) HORN CONTROL OUTPUT CIRCUIT SHORTED TO BATTERY VOLTAGE**

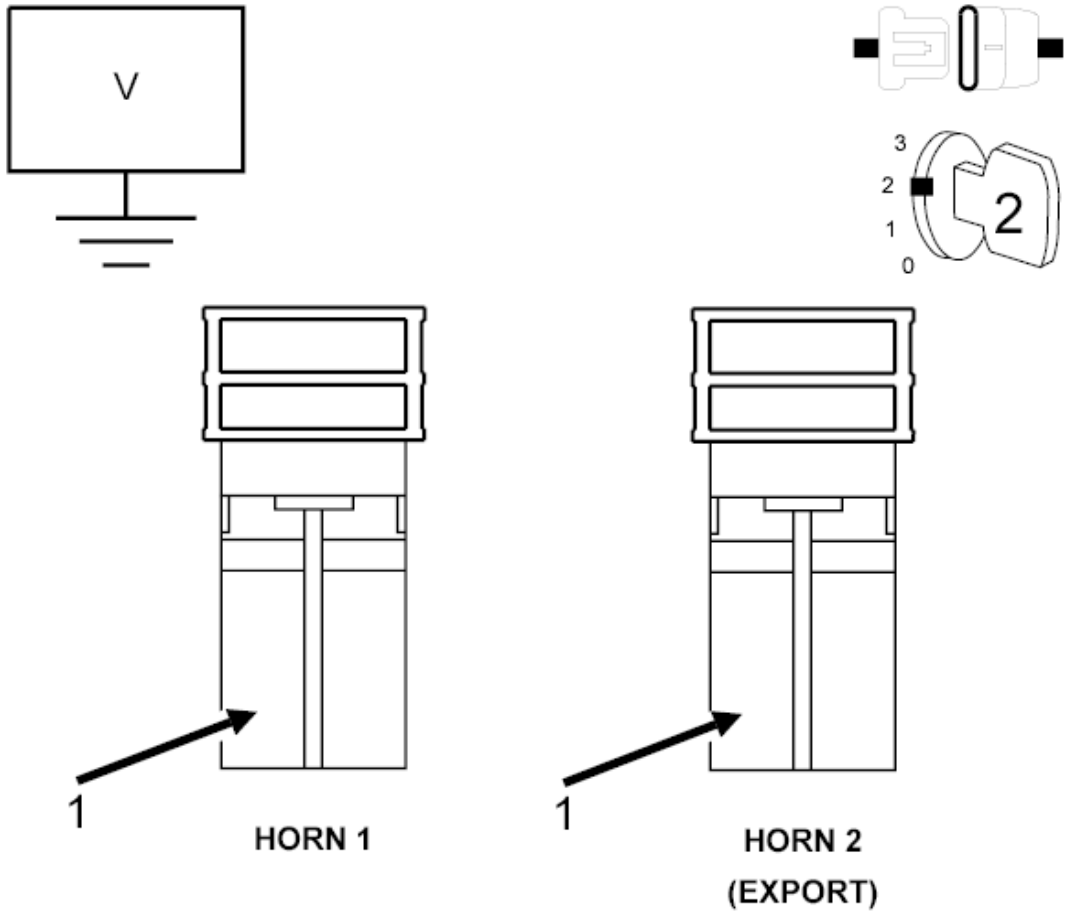

Fig. 24: Checking Horn Control Output Circuit For Short To Battery Voltage
Courtesy of CHRYSLER GROUP, LLC

1. Turn the ignition off.
2. Disconnect the TIPM C11 harness connector.
3. Ignition on, engine not running.
4. Measure the voltage between ground and (X21)/(X22) Horn Control Output circuit(s) at the horn connector(s).

   Is there any voltage present?

   Yes

   - Repair the short to battery voltage in the (X21)/(X22) Horn Control Output circuit.

- Perform the BODY VERIFICATION TEST. Refer to **STANDARD PROCEDURE** .

No

- Go To 5

5. **TOTALLY INTEGRATED POWER MODULE (TIPM)**

NOTE: Before continuing, check the TIPM harness connector terminals for corrosion, damage, or terminal push out. Repair as necessary.

1. Using the schematics as a guide, inspect the wire harness and connectors.
2. Pay particular attention to all Power and Ground circuits.

Were any problems found?

Yes

- Repair as necessary.
- Perform the BODY VERIFICATION TEST. Refer to **STANDARD PROCEDURE** .

No

- Replace the Totally Integrated Power Module in accordance with the Service Information.
- Perform the BODY VERIFICATION TEST. Refer to **STANDARD PROCEDURE** .

B2338-HORN CONTROL CIRCUIT OPEN

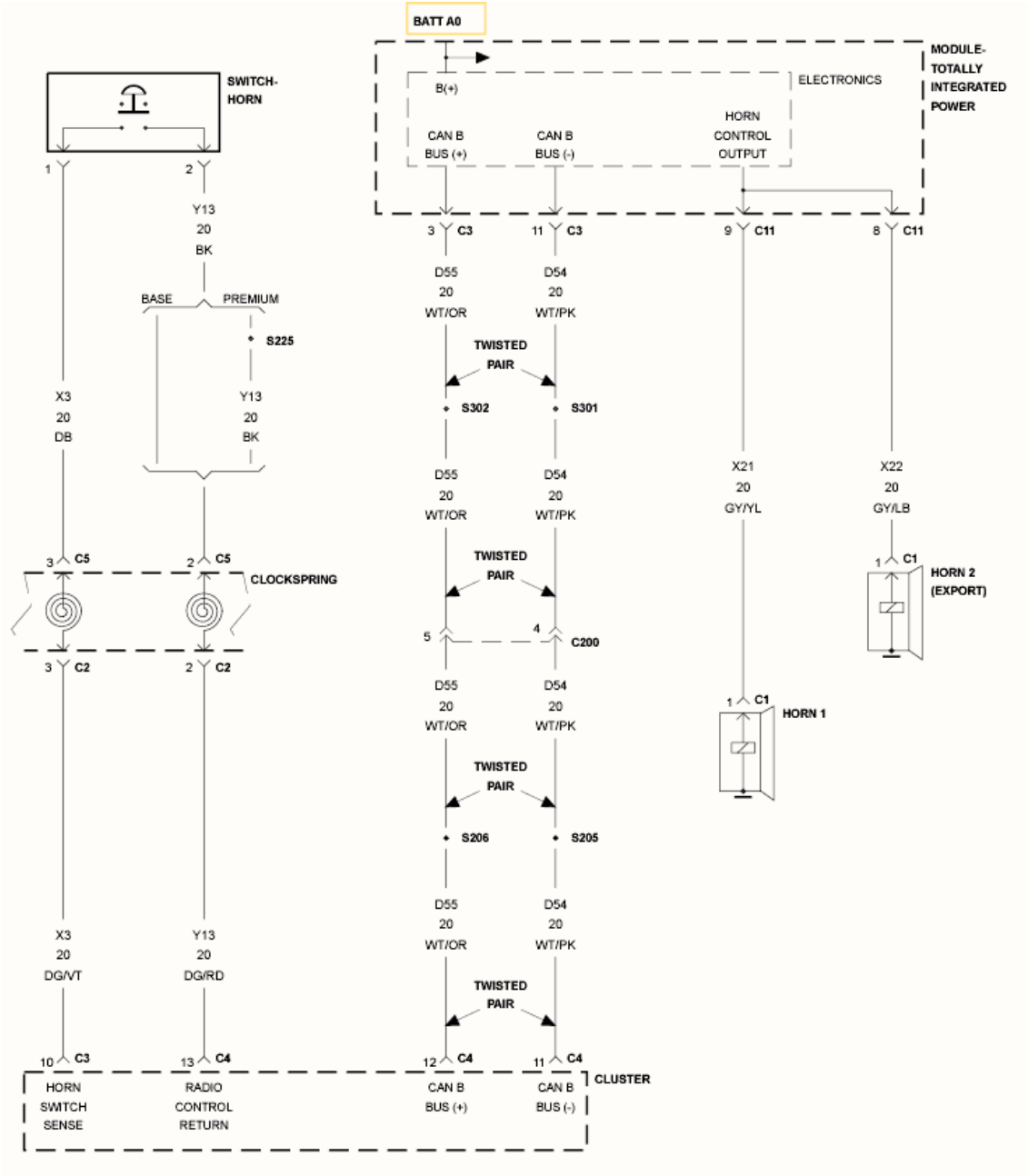

Fig. 25: Horn Control - Circuit Diagram
Courtesy of CHRYSLER GROUP, LLC

For a complete wiring diagram, **refer to appropriate SYSTEM WIRING DIAGRAMS article** .

WHEN MONITORED

With the ignition on.

Battery voltage greater than 10.4 volts.

SET CONDITION

An open condition on the (X21)/(X22) Horn Control Output circuit.

POSSIBLE CAUSES

Possible Causes
TERMINAL DAMAGE OR CORROSION
(X21) HORN CONTROL OUTPUT CIRCUIT OPEN
(X22) HORN CONTROL OUTPUT CIRCUIT OPEN (EXPORT)
HORN CASE GROUND
HORN
TOTALLY INTEGRATED POWER MODULE (TIPM)

DIAGNOSTIC TEST

1. **CHECK FOR ACTIVE DTC B2338-HORN CONTROL CIRCUIT OPEN**
   1. Turn the ignition on.
   2. With the scan tool, record and erase DTCs.
   3. Operate the horn switch several times.
   4. With the scan tool, read DTCs.

   Does the scan tool display active DTC B2338-HORN CONTROL CIRCUIT OPEN?

   Yes

   - Go To 2

   No

   - Test complete, the condition or conditions that originally set this DTC are not present at this time. Using the wiring diagrams as a guide, check all related splices and connectors for signs of water intrusion, corrosion, pushed out or bent terminals, and correct pin tension.
   - Perform the BODY VERIFICATION TEST. Refer to **STANDARD PROCEDURE** .
2. **VISUAL AND PHYSICAL CONNECTOR AND TERMINAL INSPECTION**

1. Turn the ignition off.
2. Inspect the following connector terminal condition. Check for signs of corrosion build up or damage that would compromise the terminal to controller pin connector.

   NOTE: Make sure that all in-line connectors are inspected for corrosion and/or damage.

3. Disconnect the horn connectors.
4. Disconnect the TIPM C11 harness connector.
5. Visually inspect the wiring harness. Look for any chafed, pierced, pinched or partially broken wires hidden in the wire insulation.

   Were any of the above conditions found?

   Yes

   - Repair or replace as necessary.
   - Perform the BODY VERIFICATION TEST. Refer to **STANDARD PROCEDURE** .

   No

   - Go To 3

3. **(X21)/(X22) HORN CONTROL OUTPUT CIRCUIT OPEN**

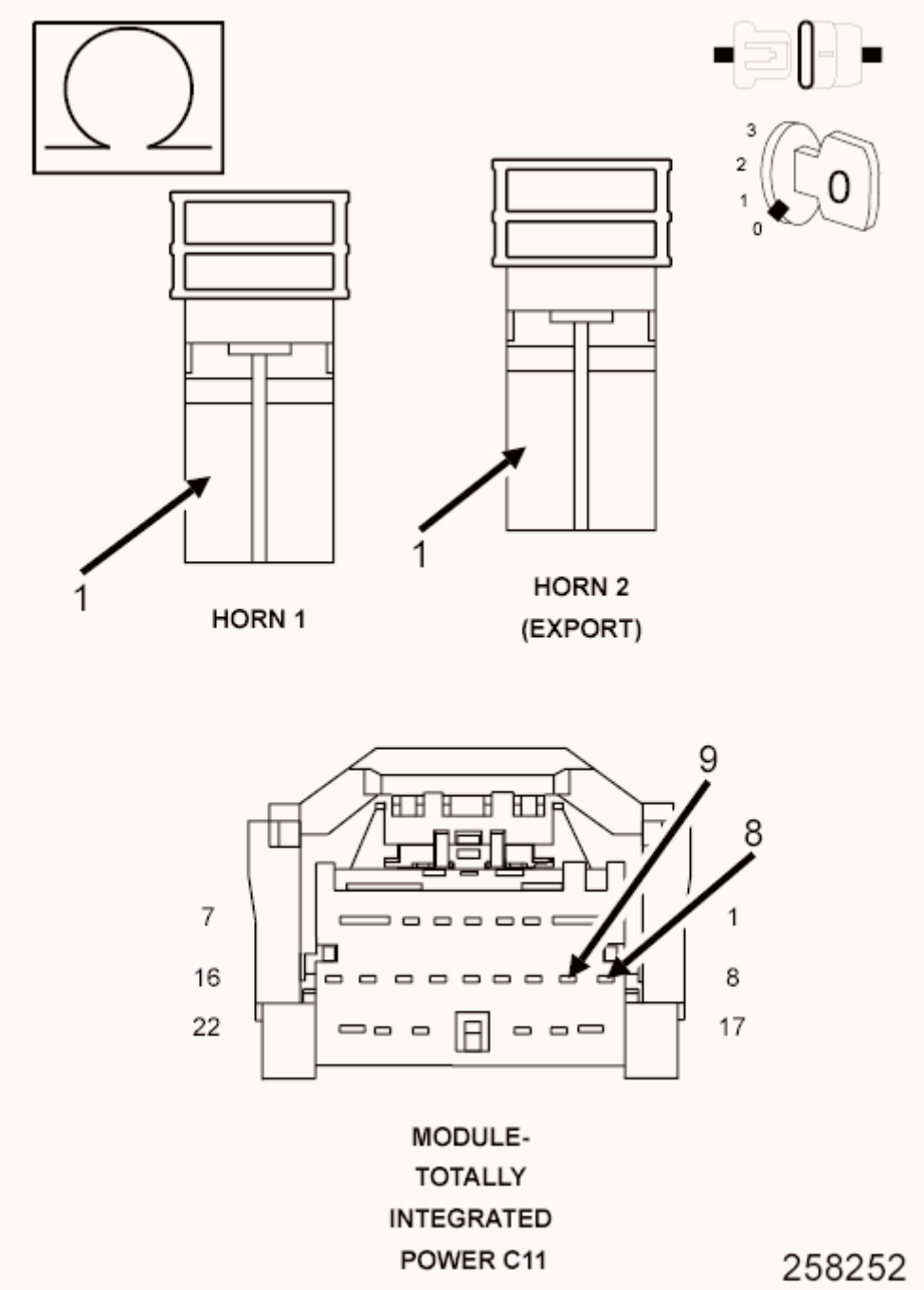

Fig. 26: Checking Horn Control Output Circuit For Open
Courtesy of CHRYSLER GROUP, LLC

NOTE: Cavity 8 at the TIPM C11 harness connector is for export vehicles only.

1. Turn the ignition off.
2. Measure the resistance of the (X21)/(X22) Horn Control Output circuit between the TIPM C11 harness connector and the Horn connector(s).

Is the resistance below 5.0 Ohms?

Yes

- Go To 4

No

- Repair the open in the (X21)/(X22) Horn Control Output circuit.
- Perform the BODY VERIFICATION TEST. Refer to **STANDARD PROCEDURE** .

4. **CHECK HORN OPERATION**
   1. Turn the ignition off.
   2. Disconnect the horn(s) connector(s) if not disconnected.
   3. Momentarily jumper 12-volts to the horn(s).

   Did the horn(s) operate properly?

   Yes

   - Go To 6

   No

   - Go To 5

5. **CASE GROUND CIRCUIT OPEN**
   1. Using a 12-volt test light connected to 12-volts, check the case ground at the horn(s) case.

   Does the test light illuminate brightly?

   Yes

   - Replace the Horn(s) as necessary.
   - Perform the BODY VERIFICATION TEST. Refer to **STANDARD PROCEDURE** .

   No

   - Repair the open or excessive resistance at the horn(s) case ground.

- Perform the BODY VERIFICATION TEST. Refer to **STANDARD PROCEDURE** .

6. **TOTALLY INTEGRATED POWER MODULE**

NOTE: Before continuing, check the TIPM harness connector terminals for corrosion, damage, or terminal push out. Repair as necessary.

1. Using the schematics as a guide, inspect the wire harness and connectors.
2. Pay particular attention to all Power and Ground circuits.

Were any problems found?

Yes

- Repair as necessary.
- Perform the BODY VERIFICATION TEST. Refer to **STANDARD PROCEDURE** .

No

- Replace the Totally Integrated Power Module in accordance with the Service Information.
- Perform the BODY VERIFICATION TEST. Refer to **STANDARD PROCEDURE** .

B2346-WIPER MOTOR LOW SPEED CONTROL CIRCUIT LOW

For a complete wiring diagram, **refer to appropriate SYSTEM WIRING DIAGRAMS article** .

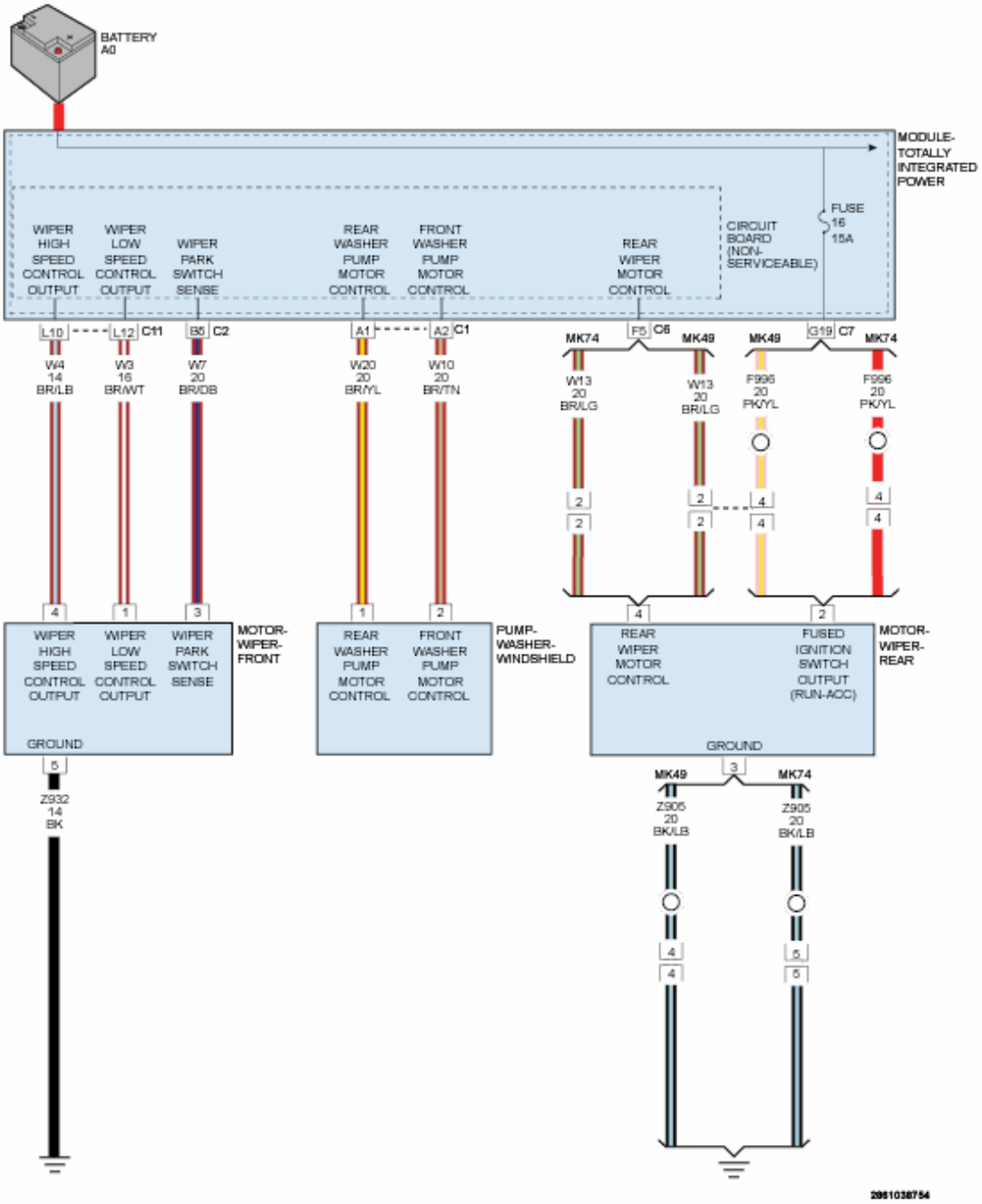

Fig. 27: Wiper System Control - Circuit Diagram
Courtesy of CHRYSLER GROUP, LLC

WHEN MONITORED

With the Windshield Wipers activated.

SET CONDITION

When the TIPM detects a low condition.

POSSIBLE CAUSES

Possible Causes
(W3) WIPER LOW SPEED CONTROL OUTPUT CIRCUIT SHORTED TO GROUND
WINDSHIELD WIPER MOTOR
TOTALLY INTEGRATED POWER MODULE

DIAGNOSTIC TEST

1. **INTERMITTENT CONDITION**
    1. Turn the ignition on.
    2. With the scan tool, clear all TIPM DTCs.
    3. Turn the Windshield Wipers on.
    4. With the scan tool read the DTC information.

    Does the scan tool read: B2346-WIPER MOTOR LOW SPEED CONTROL CIRCUIT LOW?

    Yes

    - Go To 2

    No

    - The condition that caused the symptom is currently not present. Inspect the related wiring for a possible intermittent condition. Look for any chafed, pierced, pinched, or partially broken wires.
    - Perform the BODY VERIFICATION TEST. Refer to **STANDARD PROCEDURE** .
2. **(W3) WIPER LOW SPEED CONTROL OUTPUT CONTROL CIRCUIT SHORTED TO GROUND**

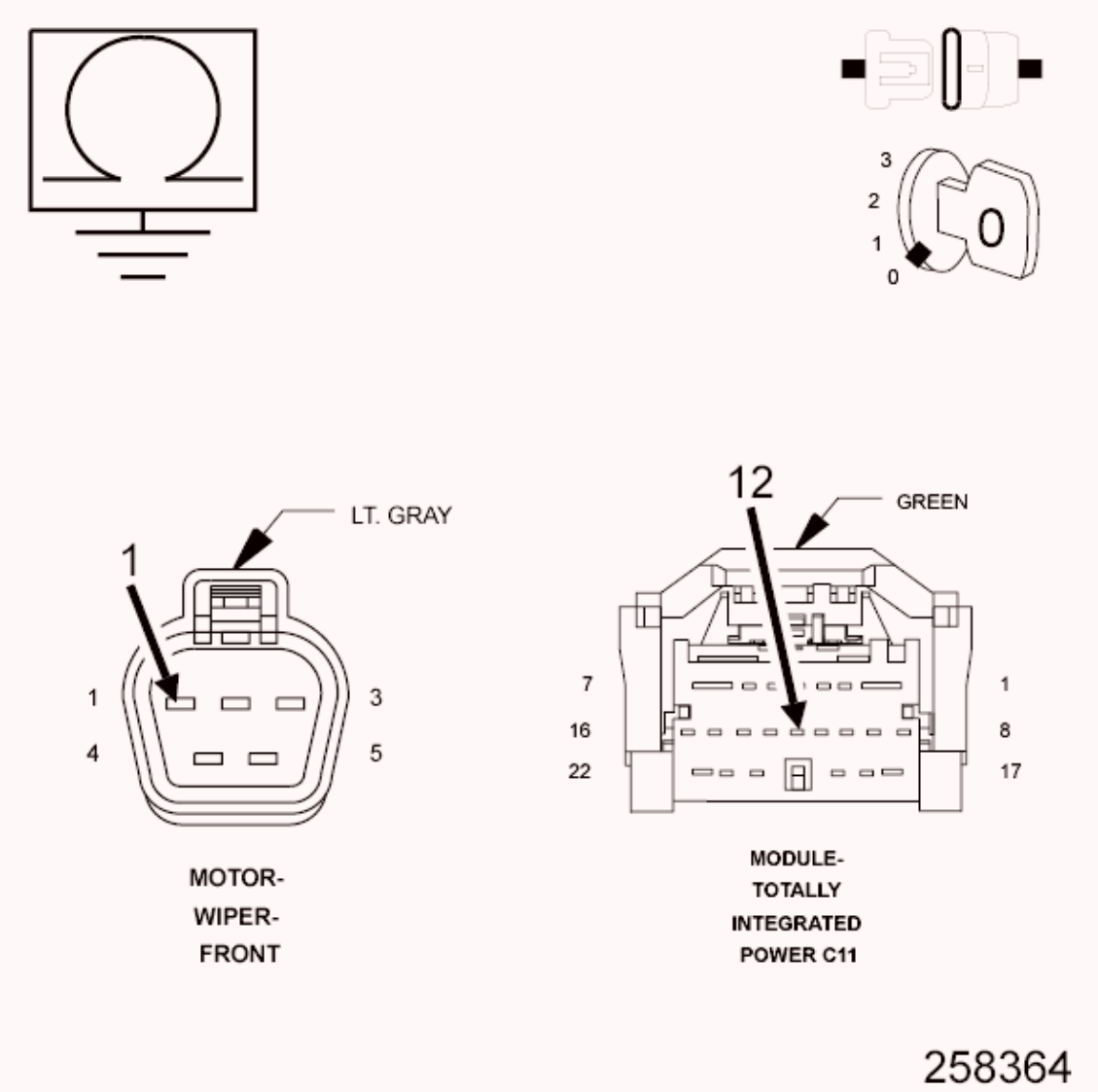

Fig. 28: Measuring Resistance Between Ground & Wiper Low Speed Control Output Circuit
Courtesy of CHRYSLER GROUP, LLC

1. Turn the ignition off.
2. Disconnect the TIPM C11 harness connector.
3. Disconnect the Windshield Wiper Motor harness connector.
4. Measure the resistance between ground and the (W3) Wiper Low Speed Control Output circuit.

   Is the resistance below 5.0 Ohms?

   Yes

   - Repair the (W3) Wiper Low Speed Control Output circuit for a

short to ground.

- Perform the BODY VERIFICATION TEST. Refer to **STANDARD PROCEDURE** .

No

- Go To 3

3. **WIPER MOTOR**
   1. Reconnect the TIPM C11 harness connector.
   2. Turn the ignition on.
   3. With the scan tool, clear all TIPM DTCs.
   4. Turn the Front Wipers on.
   5. With the scan tool read the DTC information.

   Does the scan tool read: B2346-WIPER MOTOR LOW SPEED CONTROL CIRCUIT LOW?

   Yes

   - Replace the Totally Integrated Power Module (TIPM) in accordance with the Service Information.
   - Perform the BODY VERIFICATION TEST. Refer to **STANDARD PROCEDURE** .

   No

   - Replace the Windshield Wiper Motor in accordance with the Service Information.
   - Perform the BODY VERIFICATION TEST. Refer to **STANDARD PROCEDURE** .

B2347-WIPER MOTOR LOW SPEED CONTROL CIRCUIT HIGH

For a complete wiring diagram, **refer to appropriate SYSTEM WIRING DIAGRAMS article** .

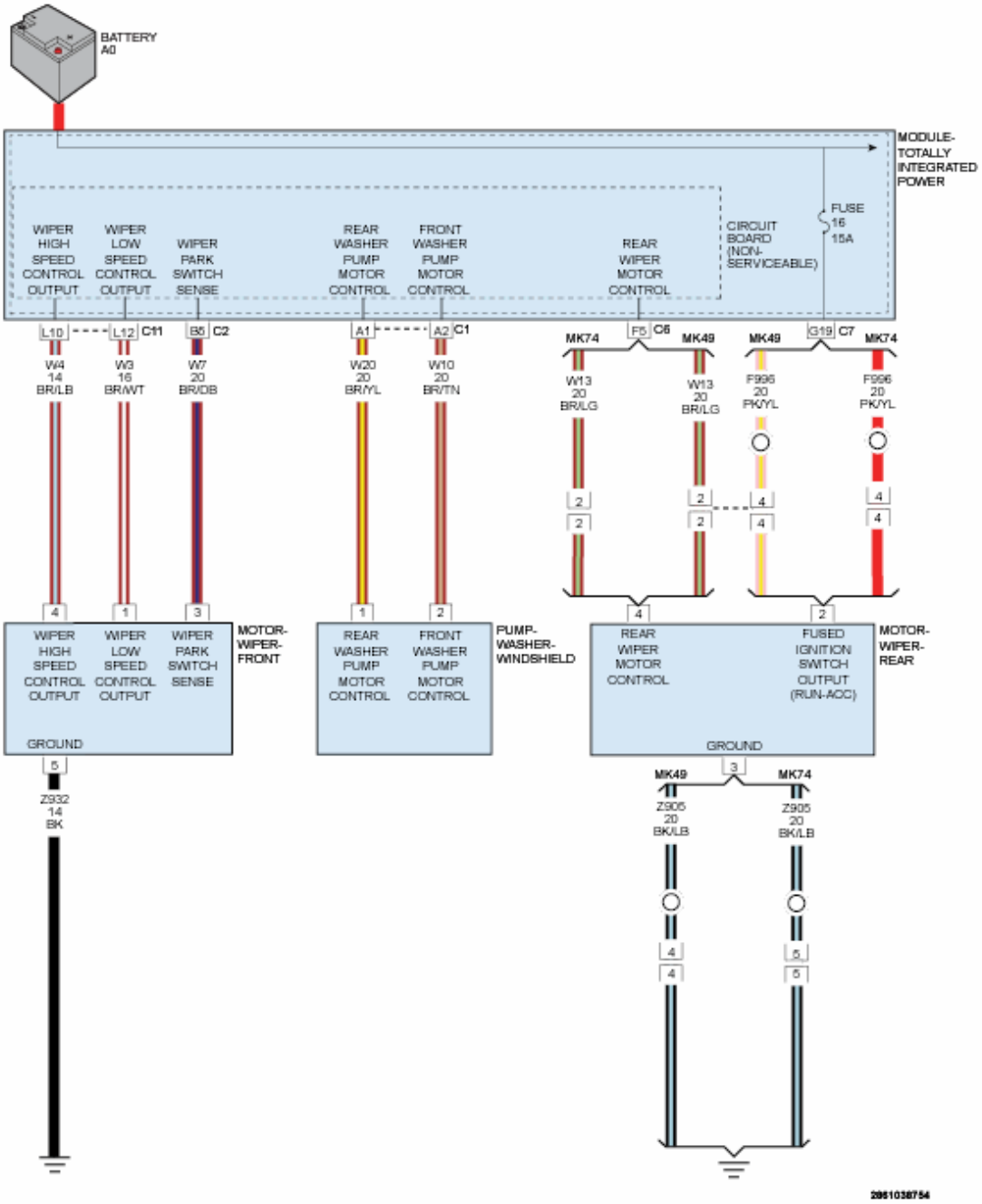

Fig. 29: Wiper System Control - Circuit Diagram
Courtesy of CHRYSLER GROUP, LLC

WHEN MONITORED

With the Windshield Wipers are turned on.

SET CONDITION

When the TIPM detects a high condition.

POSSIBLE CAUSES

Possible Causes
(W3) WIPER LOW SPEED CONTROL OUTPUT CIRCUIT OPEN
(W3) WIPER LOW SPEED CONTROL OUTPUT CIRCUIT SHORTED TO VOLTAGE
TOTALLY INTEGRATED POWER MODULE

DIAGNOSTIC TEST

1. **INTERMITTENT CONDITION**
    1. Turn the ignition on.
    2. With the scan tool, clear all TIPM DTCs.
    3. Turn the Windshield Wipers on.
    4. With the scan tool read the DTC information.

    Does the scan tool read: B2347-WIPER MOTOR LOW SPEED CONTROL CIRCUIT HIGH?

    Yes

    - Go To 2

    No

    - The condition that caused the symptom is currently not present. Inspect the related wiring for a possible intermittent condition. Look for any chafed, pierced, pinched, or partially broken wires.
    - Perform the BODY VERIFICATION TEST. Refer to **STANDARD PROCEDURE** .
2. **(W3) WIPER LOW SPEED CONTROL OUTPUT CIRCUIT OPEN**

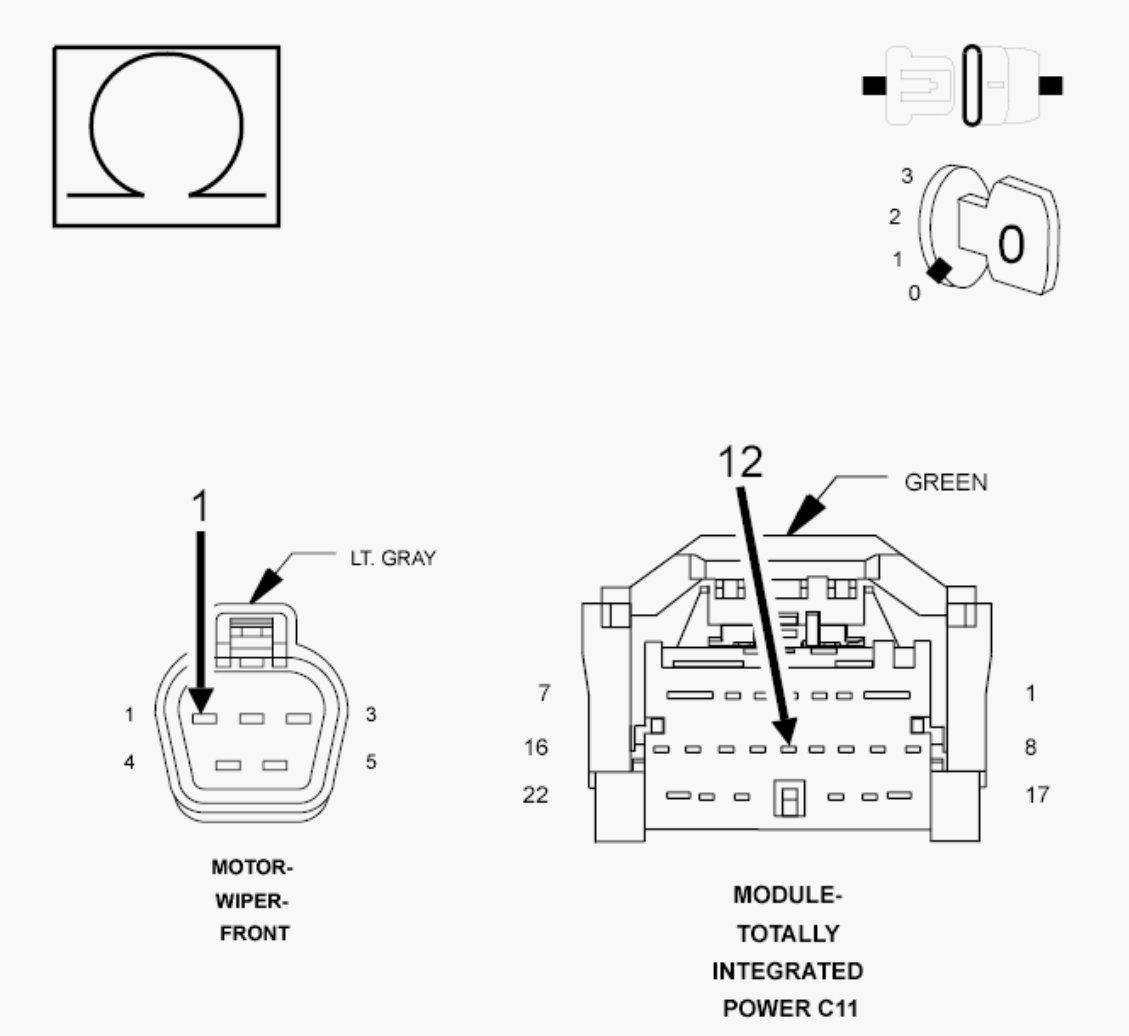

Fig. 30: Measuring Resistance Of Wiper Low Speed Control Output Circuit
Courtesy of CHRYSLER GROUP, LLC

1. Turn the ignition off.
2. Disconnect the TIPM C11 harness connector.
3. Disconnect the Windshield Wiper harness connector.
4. Measure the resistance of the (W3) Wiper Low Speed Control Output circuit.

   Is the resistance above 5.0 Ohms?

   Yes

   - Repair the (W3) Wiper Low Speed Control Output circuit for an open condition.

- Perform the BODY VERIFICATION TEST. Refer to **STANDARD PROCEDURE** .

No

- Go To 3

3. **(W3) WIPER LOW SPEED CONTROL OUTPUT CIRCUIT SHORTED TO VOLTAGE**

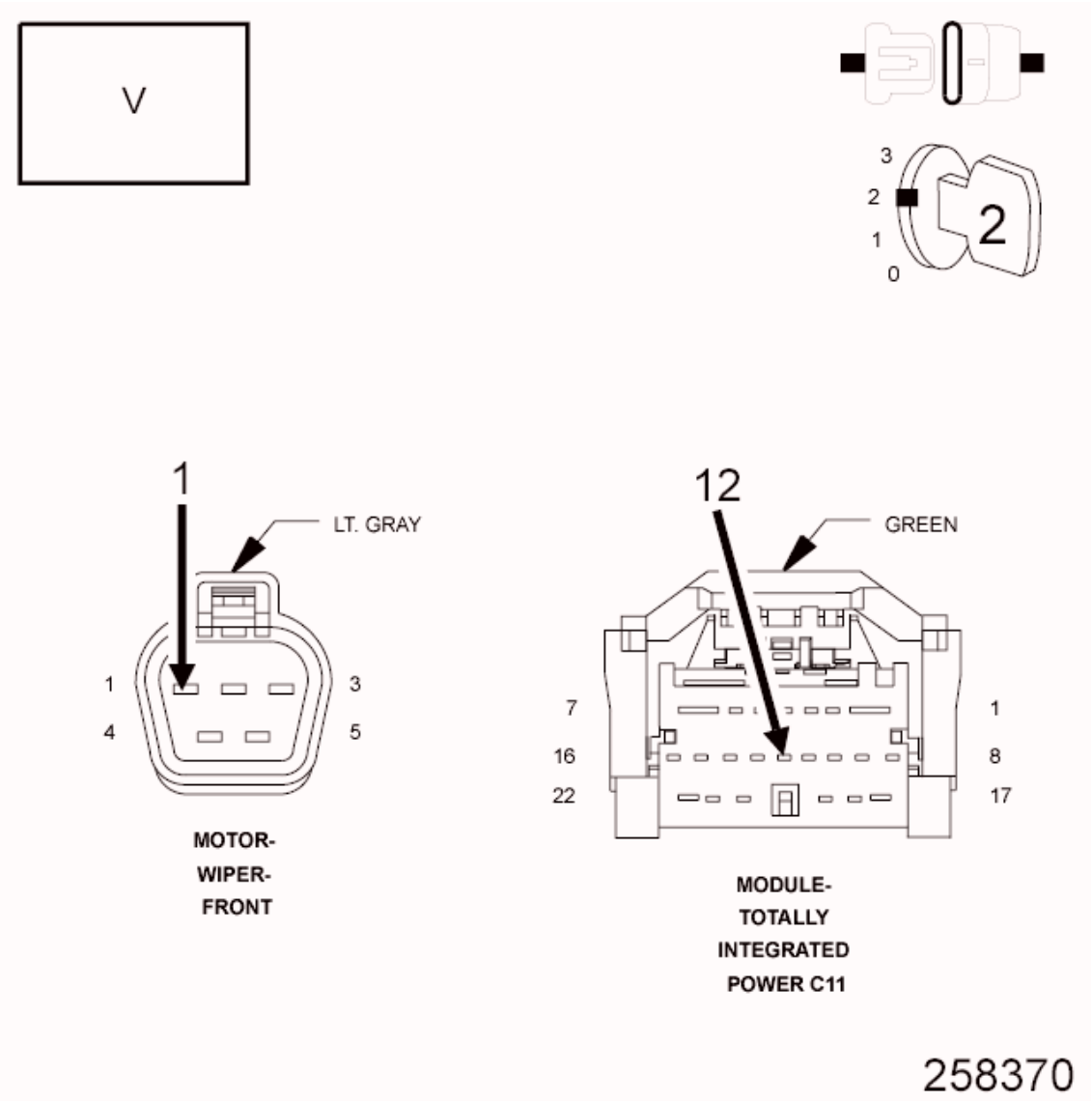

Fig. 31: Checking Wiper Low Speed Control Output Circuit For Short To Voltage
Courtesy of CHRYSLER GROUP, LLC

1. Turn the ignition off.

2. Disconnect the TIPM C11 harness connector.
3. Disconnect the Windshield Wiper harness connector.
4. Turn the ignition on.
5. Measure for voltage on the (W3) Wiper Low Speed Control Output circuit.

   Is the voltage above 10.0 volts?

   Yes

   - Repair the (W3) Wiper Low Speed Output circuit for a short to voltage condition.
   - Perform the BODY VERIFICATION TEST. Refer to **STANDARD PROCEDURE** .

   No

   - Replace the Totally Integrated Power Module (TIPM) in accordance with the Service Information.
   - Perform the BODY VERIFICATION TEST. Refer to **STANDARD PROCEDURE** .

B2348 WIPER MOTOR LOW SPEED CONTROL CIRCUIT OPEN

For a complete wiring diagram, **refer to appropriate SYSTEM WIRING DIAGRAMS article** .

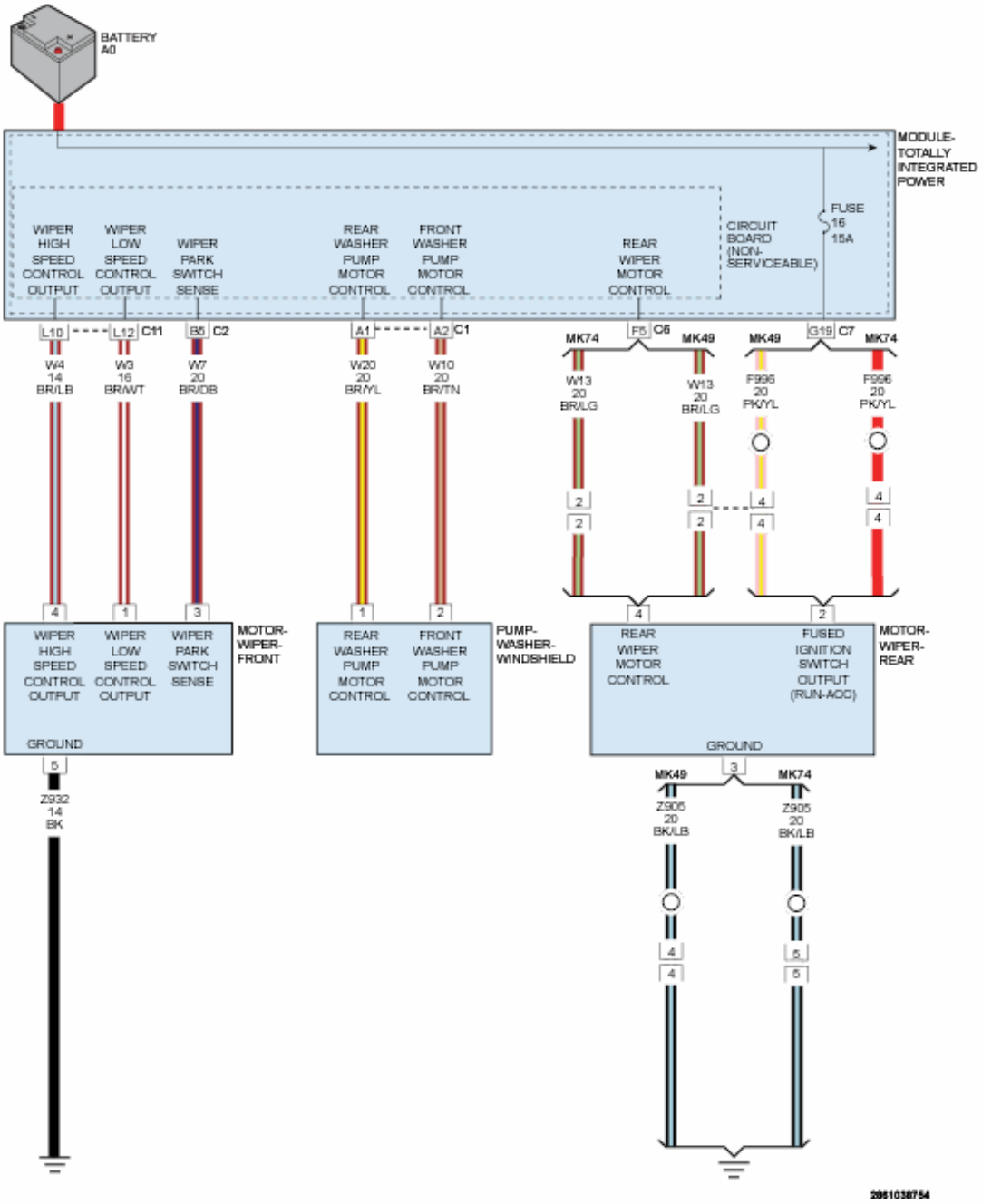

Fig. 32: Wiper System Control - Circuit Diagram
Courtesy of CHRYSLER GROUP, LLC

WHEN MONITORED

Whenever the module is awake.

SET CONDITION

When the Totally Integrated Power Module (TIPM) senses an open in the (W3) Front wiper low speed control circuit.

POSSIBLE CAUSES

Possible Causes
FUSED ACCESSORY RELAY OUTPUT CIRCUIT
(W3) FRONT WIPER LOW SPEED CONTROL OUTPUT CIRCUIT OPEN
(W3) FRONT WIPER LOW SPEED CONTROL OUTPUT CIRCUIT SHORTED TO VOLTAGE
FRONT WIPER MOTOR
TOTALLY INTEGRATED POWER MODULE (TIPM)
WIRING AND CONNECTORS

DIAGNOSTIC TEST

1. **CONDITION PRESENT**
    1. Ignition on, engine off.
    2. Turn the front wipers on.

    Does the Front Washer Motor Function?

    Yes

    - Go To 2

    No

    - Go To 3
2. **INTERMITTENT WIRING AND CONNECTORS**
    1. Turn the ignition on.
    2. With the scan tool, erase all TIPM DTCs.
    3. Turn the ignition off.
    4. The conditions necessary to set this DTC are not present at this time.
    5. Using the schematics as a guide, inspect the wiring and connectors specific to this circuit.
    6. Wiggle the wiring while checking for shorts and open circuits.

    Were there any problems found?

Yes

- Repair as necessary.
- Perform BODY VERIFICATION TEST. Refer to **STANDARD PROCEDURE** .

No

- Test Complete.

3. **FUSED ACCESSORY RELAY OUTPUT CIRCUIT**
   1. Turn the ignition off to the lock position.
   2. Disconnect the Front Wiper Motor harness connector.

   NOTE: Check connectors - Clean/repair as necessary.

   3. Ignition on, engine off.
   4. Using a 12-volt test light connected to ground, check the Fused Accessory Relay Output circuit in the Front Wiper Motor harness connector.

   Does the test light illuminate brightly?

   Yes

   - Go To 4

   No

   - Repair the Fused Accessory Relay Output circuit for an open.
   - Perform BODY VERIFICATION TEST. Refer to **STANDARD PROCEDURE** .

4. **FRONT WIPER MOTOR**
   1. Turn the ignition off to the lock position.
   2. Disconnect the Front Wiper Motor harness connector.
   3. Ignition on, engine off.
   4. Using a 12-volt test light connected to 12 Volts, check the (W3) Front Wiper Low Speed Control Output circuit in the Front Wiper Motor harness connector while turning on the Front Wipers.

Does the test light illuminate brightly?

Yes

- Replace the Front Wiper Motor in accordance with the Service Information.
- Perform BODY VERIFICATION TEST. Refer to **STANDARD PROCEDURE** .

No

- Go To 5

5. **(W3) FRONT WIPER LOW SPEED CONTROL OUTPUT CIRCUIT OPEN**

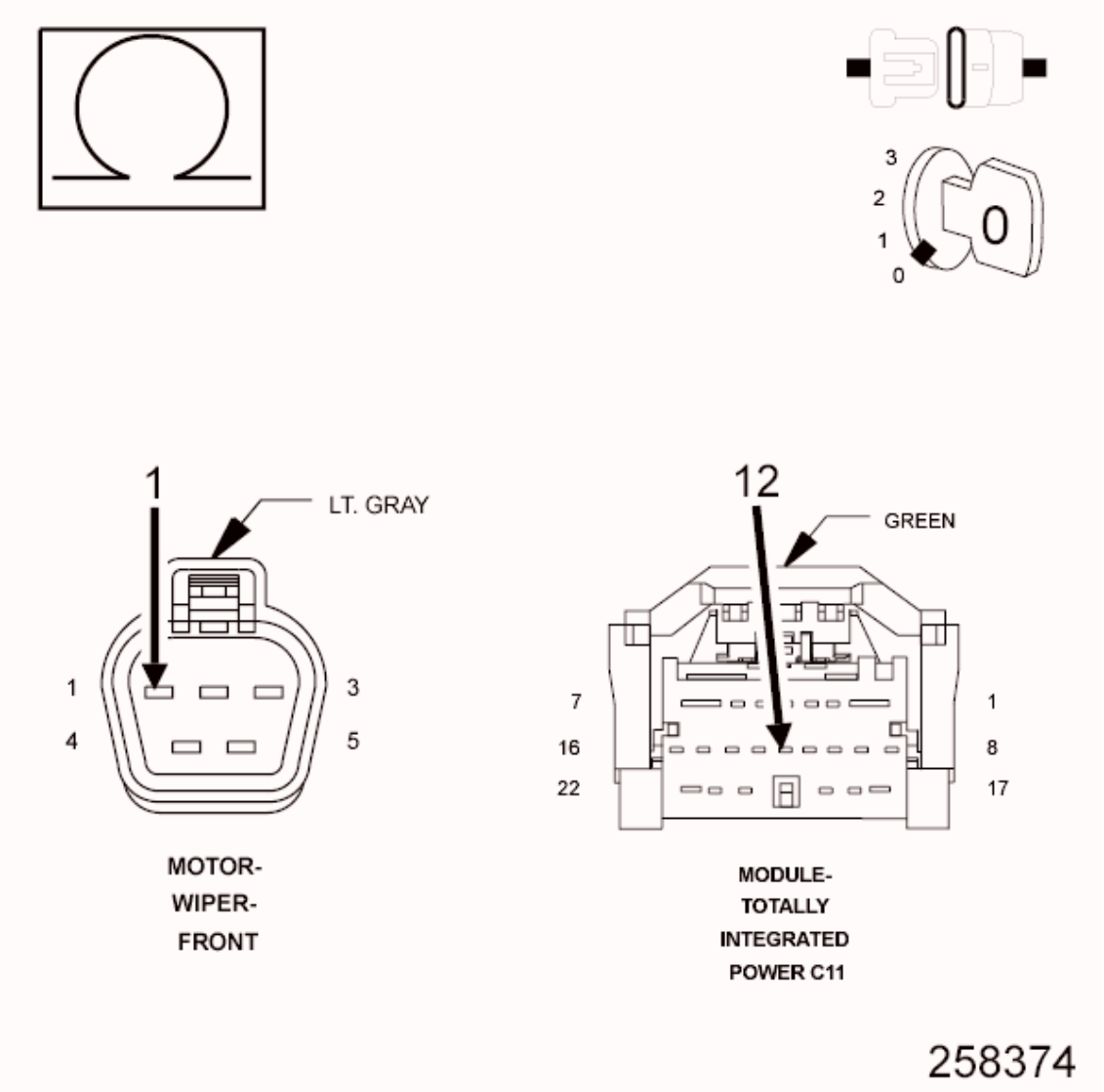

Fig. 33: Checking Front Wiper Low Speed Control Circuit For Open
Courtesy of CHRYSLER GROUP, LLC

1. Turn the ignition off to the lock position.
2. Disconnect the TIPM C11 harness connector.
3. Disconnect the Front Wiper Motor harness connector.

NOTE: Check connectors - Clean/repair as necessary.

4. Measure the resistance of the (W3) Front Wiper Low Speed Control circuit from the TIPM C1 connector to the Front Wiper Motor harness connector.

   Is the resistance above 5.0 ohms?

   Yes

   - Repair the (W3) Front Wiper Low Speed Control circuit for an open.
   - Perform BODY VERIFICATION TEST. Refer to **STANDARD PROCEDURE** .

   No

   - Go To 6

6. **(W3) FRONT WIPER LOW SPEED CONTROL OUTPUT CIRCUIT SHORT TO VOLTAGE**

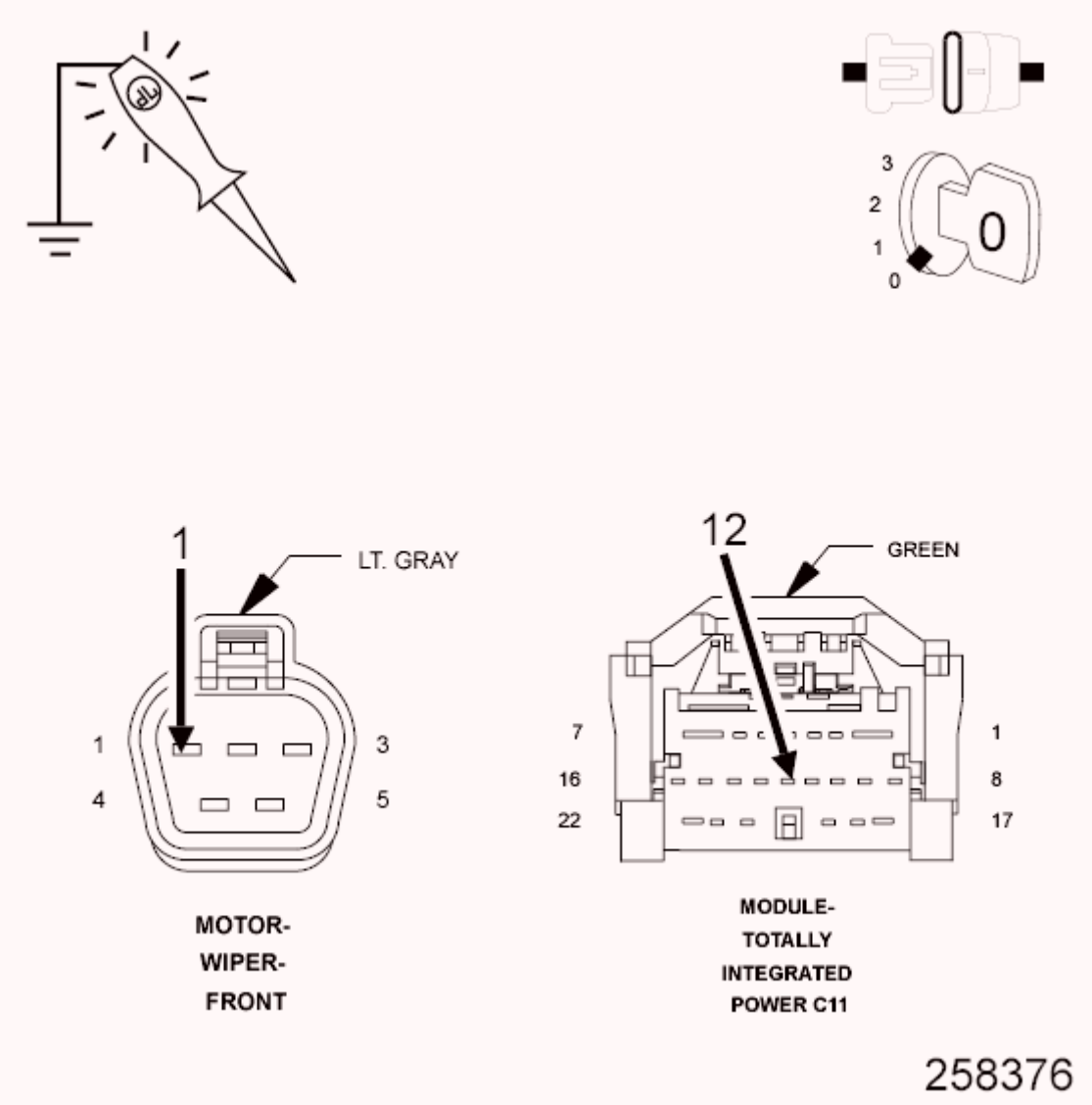

Fig. 34: Checking Front Wiper Low Speed Control Output Circuit For Short To Voltage
Courtesy of CHRYSLER GROUP, LLC

1. Turn the ignition off to the lock position.
2. Disconnect the TIPM C11 harness connector.
3. Disconnect the Front Wiper Motor harness connector.

NOTE: Check connectors - Clean/repair as necessary.

4. Turn the ignition on.
5. Using a 12-volt test light connected to ground, check the (W3) Front Wiper Low Speed Control Output circuit.

Does the test light illuminate brightly?

Yes

- Repair the (W3) Front Wiper Low Speed Control Output circuit for a short to voltage.
- Perform BODY VERIFICATION TEST. Refer to **STANDARD PROCEDURE** .

No

- Replace the Totally Integrated Power Module (TIPM) in accordance with the Service Information.
- Perform BODY VERIFICATION TEST. Refer to **STANDARD PROCEDURE** .

B234A-WIPER MOTOR HIGH SPEED CONTROL CIRCUIT LOW

For a complete wiring diagram, **refer to appropriate SYSTEM WIRING DIAGRAMS article** .

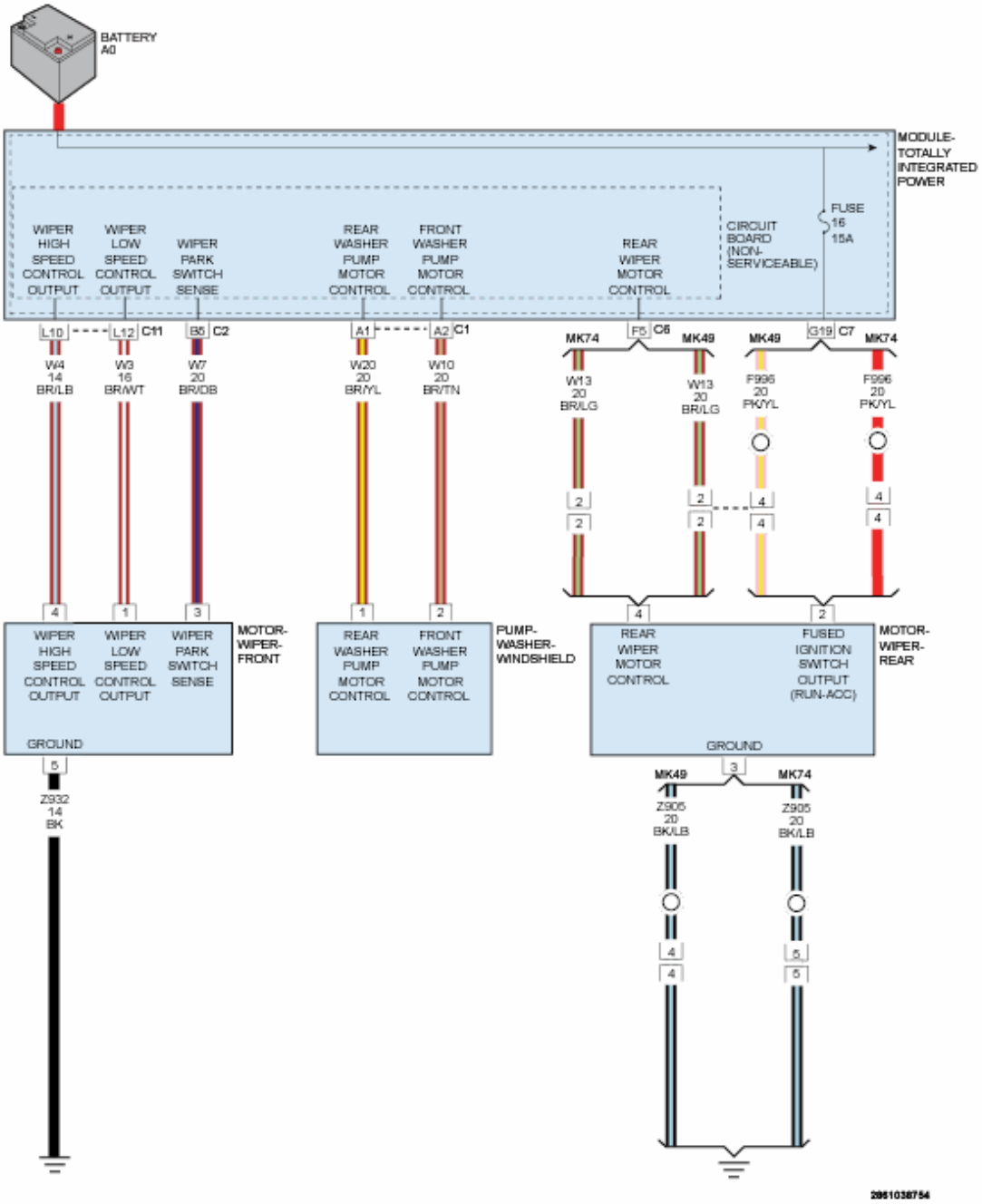

Fig. 35: Wiper System Control - Circuit Diagram
Courtesy of CHRYSLER GROUP, LLC

WHEN MONITORED

With the Windshield Wipers on.

SET CONDITION

When the TIPM detects a low condition.

POSSIBLE CAUSES

Possible Causes
(W4) WIPER MOTOR HIGH SPEED CONTROL CIRCUIT SHORTED TO GROUND
WIPER MOTOR
TOTALLY INTEGRATED POWER MODULE

DIAGNOSTIC TEST

1. **INTERMITTENT CONDITION**
    1. Turn the ignition on.
    2. With the scan tool, clear all TIPM DTCs.
    3. Turn the Windshield Wipers on.
    4. With the scan tool read the DTC information.

    Does the scan tool read: B234A-WIPER MOTOR HIGH SPEED CONTROL CIRCUIT LOW?

    Yes

    - Go To 2

    No

    - The condition that caused the symptom is currently not present. Inspect the related wiring for a possible intermittent condition. Look for any chafed, pierced, pinched, or partially broken wires.
    - Perform the BODY VERIFICATION TEST. Refer to **STANDARD PROCEDURE** .
2. **(W4) WIPER MOTOR HIGH SPEED CONTROL CIRCUIT SHORTED TO GROUND**

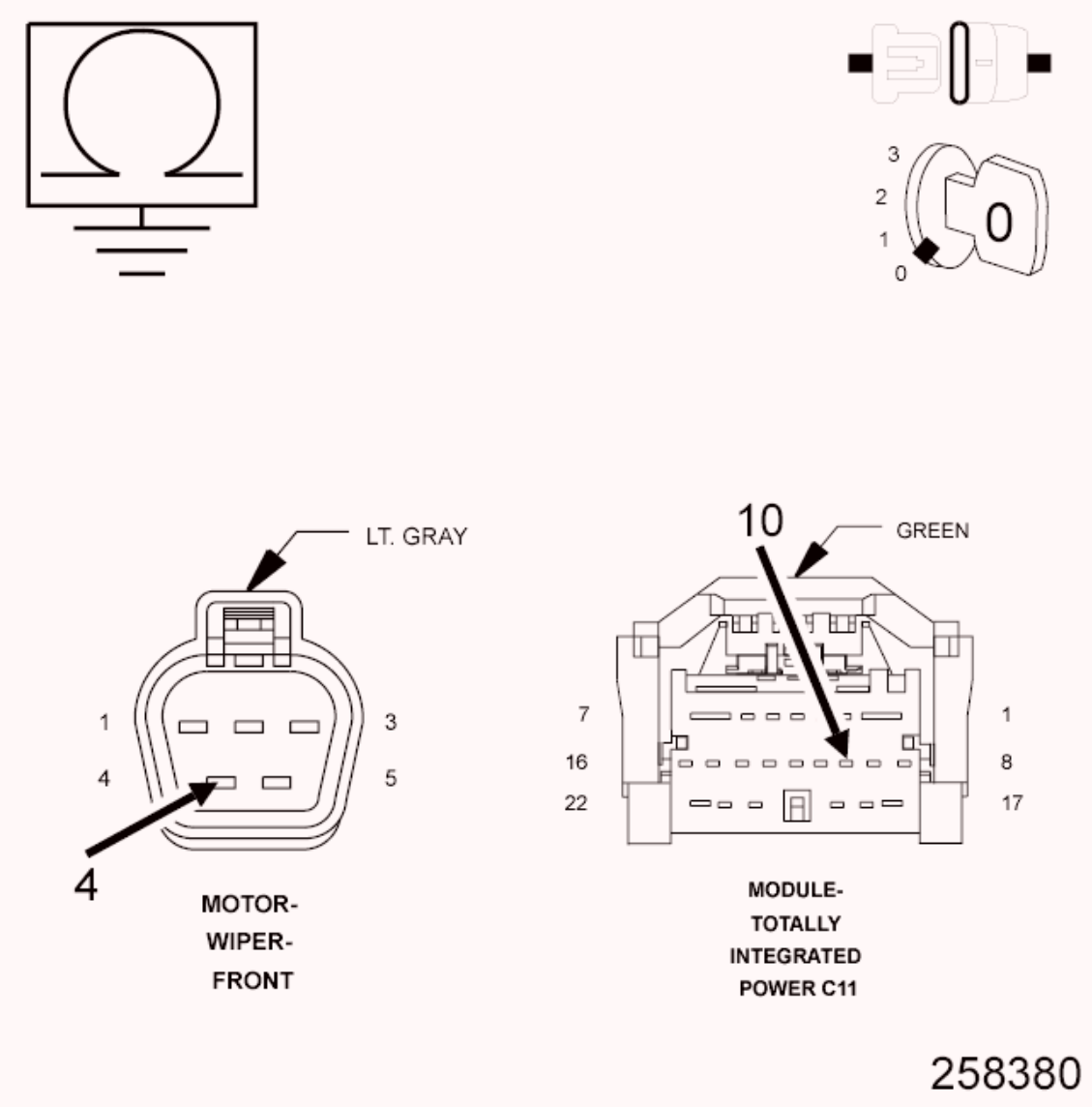

Fig. 36: Checking Wiper Motor High Speed Control Circuit For Short To Ground
Courtesy of CHRYSLER GROUP, LLC

1. Turn the ignition off.
2. Disconnect the TIPM C11 harness connector.
3. Disconnect the Windshield Wiper Motor harness connector.
4. Measure the resistance between ground and the (W4) Wiper Motor High Speed Control circuit.

   Is the resistance below 5.0 Ohms?

   Yes

- Repair the (W4) Wiper Motor High Speed Control circuit for a short to ground.
- Perform the BODY VERIFICATION TEST. Refer to **STANDARD PROCEDURE** .

No

- Go To 3

3. **WIPER MOTOR**
   1. Reconnect the TIPM C11 harness connector.
   2. Turn the ignition on.
   3. With the scan tool, clear all TIPM DTCs.
   4. Turn the Windshield Wipers on.
   5. With the scan tool read the DTC information.

   Does the scan tool read: B234A-WIPER MOTOR HIGH SPEED CONTROL CIRCUIT LOW?

   Yes

   - Replace the Totally Integrated Power Module (TIPM) in accordance with the Service Information.
   - Perform the BODY VERIFICATION TEST. Refer to **STANDARD PROCEDURE** .

   No

   - Replace the Windshield Wiper Motor in accordance with the Service Information.
   - Perform the BODY VERIFICATION TEST. Refer to **STANDARD PROCEDURE** .

B234B-WIPER MOTOR HIGH SPEED CONTROL CIRCUIT HIGH

For a complete wiring diagram, **refer to appropriate SYSTEM WIRING DIAGRAMS article** .

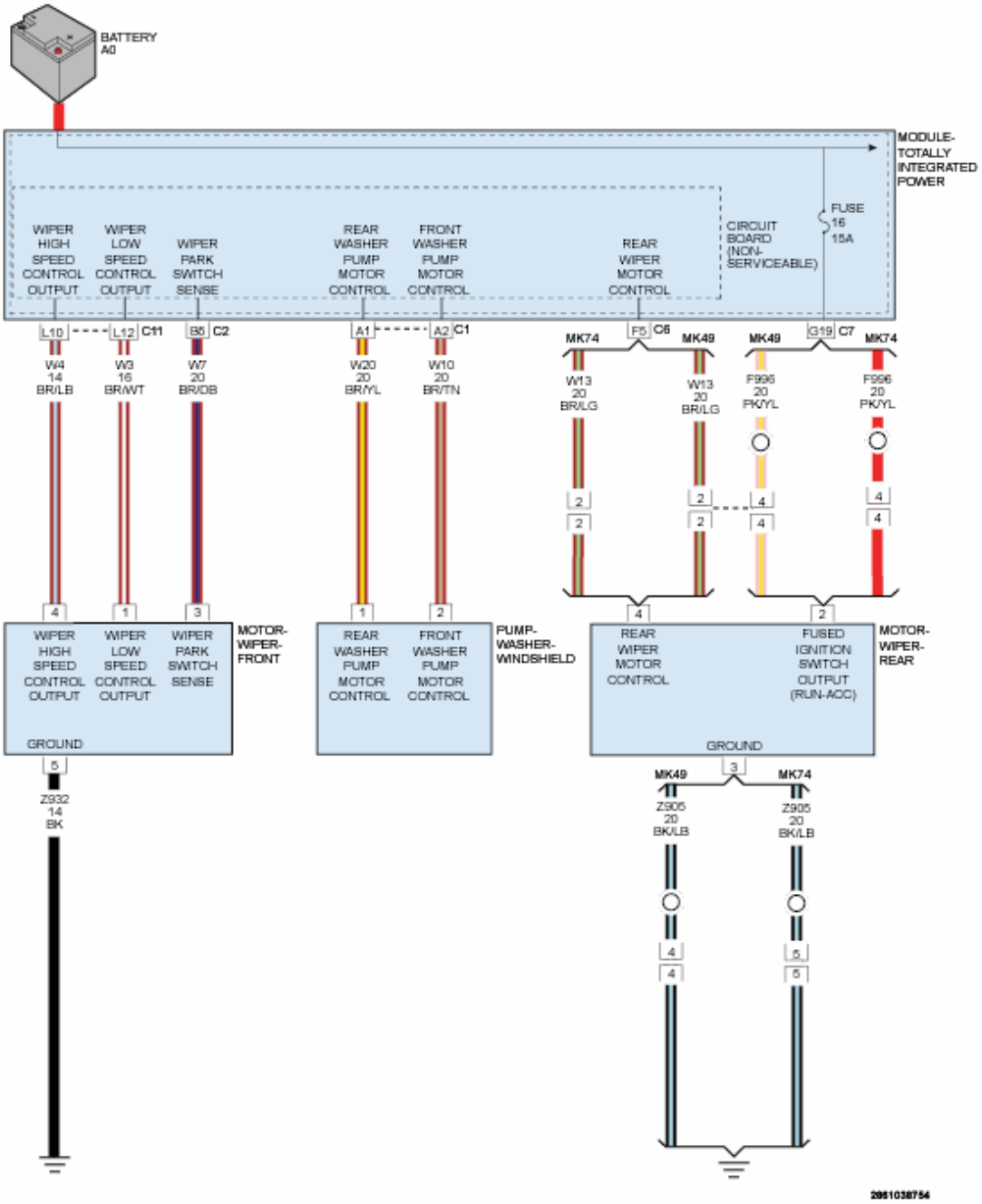

Fig. 37: Wiper System Control - Circuit Diagram
Courtesy of CHRYSLER GROUP, LLC

WHEN MONITORED

With the Windshield Wipers on.

SET CONDITION

When the TIPM detects a high condition.

POSSIBLE CAUSES

Possible Causes
(W4) WIPER MOTOR HIGH SPEED CONTROL CIRCUIT OPEN
(W4) WIPER MOTOR HIGH SPEED CONTROL CIRCUIT SHORTED TO VOLTAGE
TOTALLY INTEGRATED POWER MODULE

DIAGNOSTIC TEST

1. **INTERMITTENT CONDITION**
    1. Turn the ignition on.
    2. With the scan tool, clear all TIPM DTCs.
    3. Turn the Windshield Wipers on.
    4. With the scan tool read the DTC information.

    Does the scan tool read: B234B-WIPER MOTOR HIGH SPEED CONTROL CIRCUIT HIGH?

    Yes

    - Go To 2

    No

    - The condition that caused the symptom is currently not present. Inspect the related wiring for a possible intermittent condition. Look for any chafed, pierced, pinched, or partially broken wires.
    - Perform the BODY VERIFICATION TEST. Refer to **STANDARD PROCEDURE** .
2. **(W4) WIPER MOTOR HIGH SPEED CONTROL CIRCUIT OPEN**

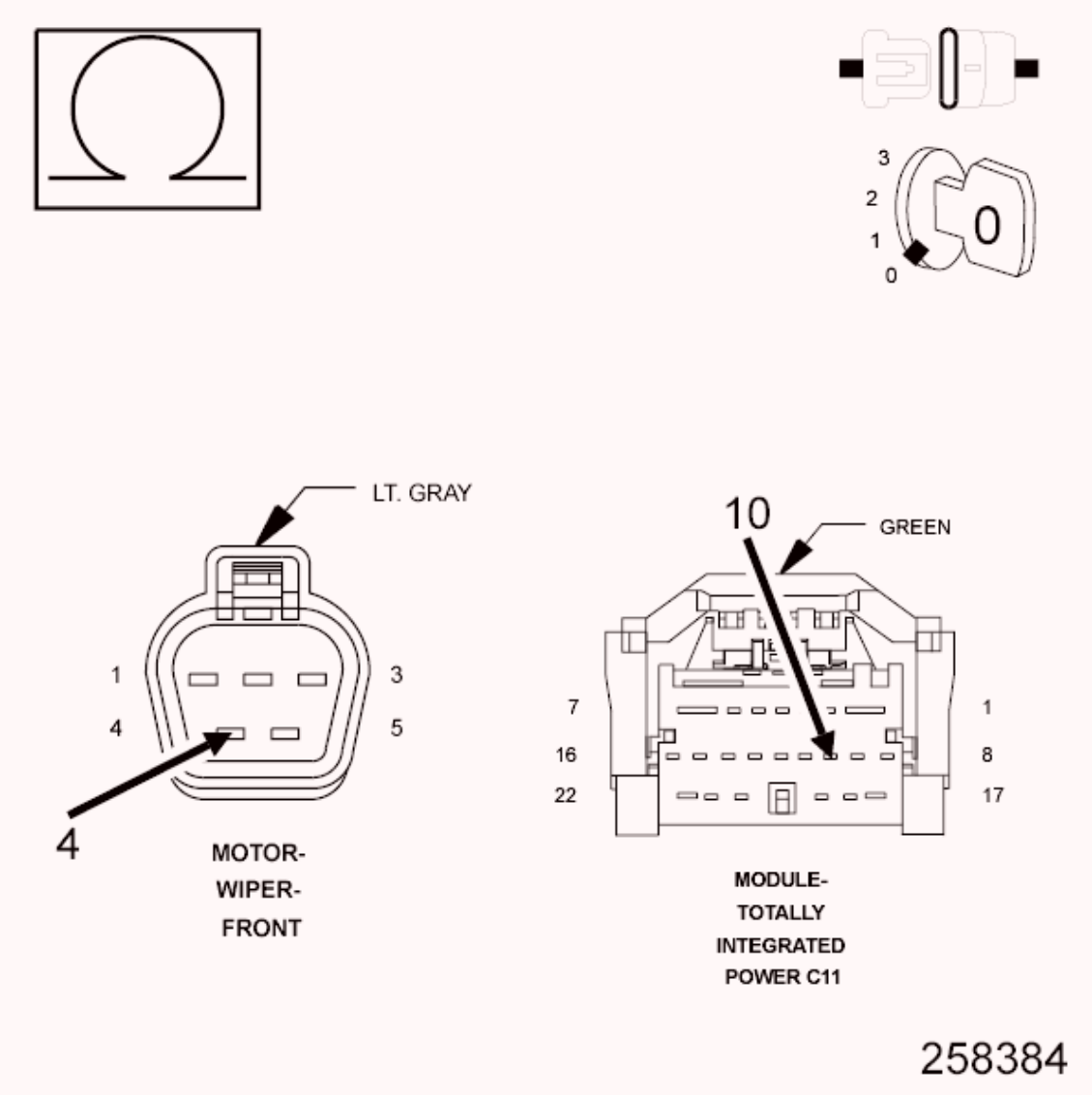

Fig. 38: Measuring Resistance Of Wiper Motor High Speed Control Circuit
Courtesy of CHRYSLER GROUP, LLC

1. Turn the ignition off.
2. Disconnect the TIPM C11 harness connector.
3. Disconnect the Windshield Wiper Motor harness connector.
4. Measure the resistance of the (W4) Wiper Motor High Speed Control circuit.

   Is the resistance above 5.0 Ohms?

   Yes

   - Repair the (W4) Wiper Motor High Speed Control circuit for an

open condition.

- Perform the BODY VERIFICATION TEST. Refer to **STANDARD PROCEDURE** .

No

- Go To 3

3. **(W4) WIPER MOTOR HIGH SPEED FEED CIRCUIT SHORTED TO VOLTAGE**

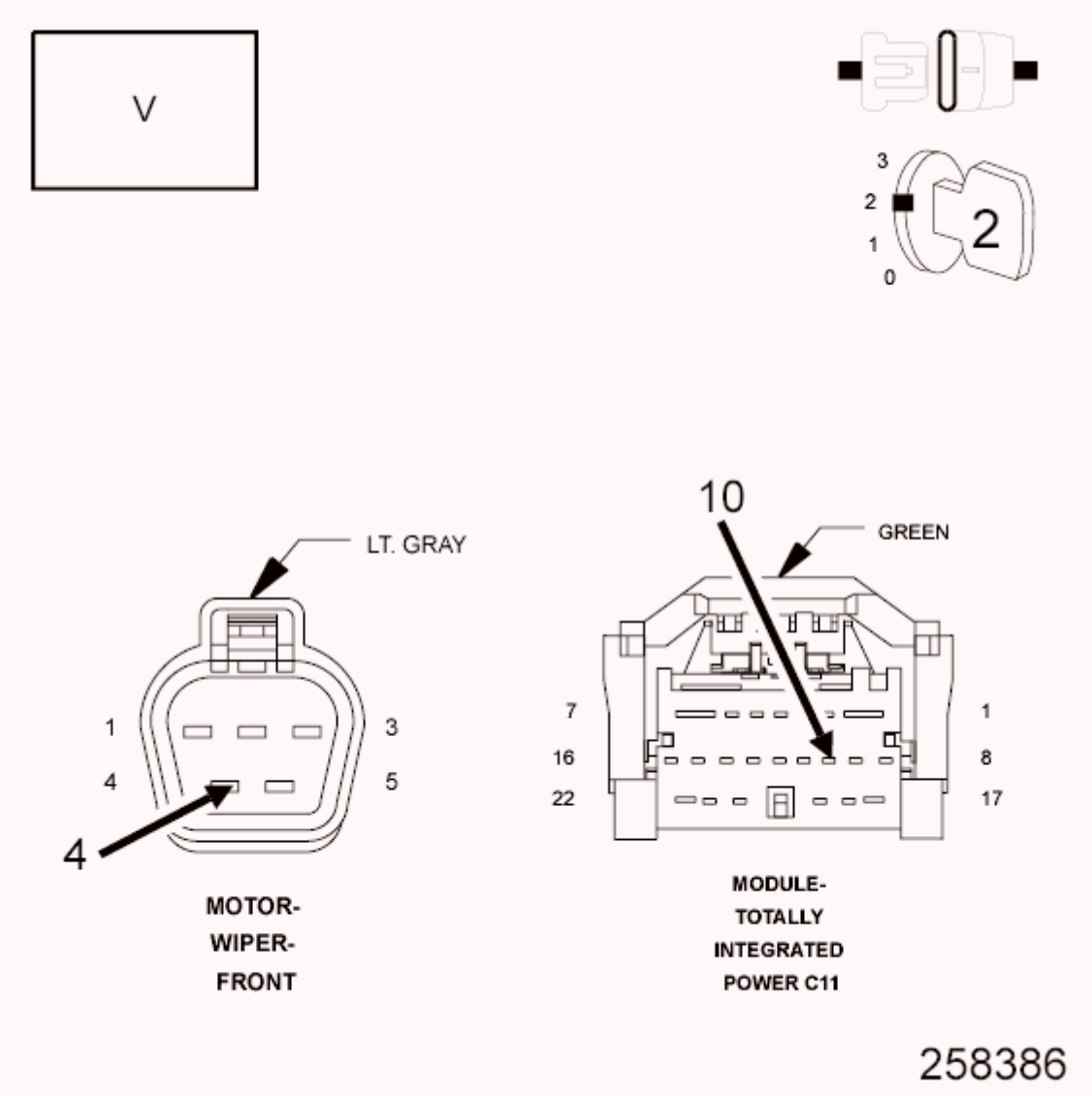

Fig. 39: Measuring For Voltage On Wiper Motor High Speed Control Circuit
Courtesy of CHRYSLER GROUP, LLC

1. Turn the ignition off.

2. Disconnect the TIPM C11 harness connector.
3. Disconnect the Windshield Wiper Motor harness connector.
4. Turn the ignition on.
5. Measure for voltage on the (W4) Wiper Motor High Speed Control circuit.

   Is the voltage above 10.0 volts?

   Yes

   - Repair the (W4) Wiper Motor High Speed Control circuit for a short to voltage condition.
   - Perform the BODY VERIFICATION TEST. Refer to **STANDARD PROCEDURE** .

   No

   - Replace the Totally Integrated Power Module (TIPM) in accordance with the Service Information.
   - Perform the BODY VERIFICATION TEST. Refer to **STANDARD PROCEDURE** .

B234C-WIPER MOTOR HI SPEED CONTROL CIRCUIT OPEN

For a complete wiring diagram, **refer to appropriate SYSTEM WIRING DIAGRAMS article** .

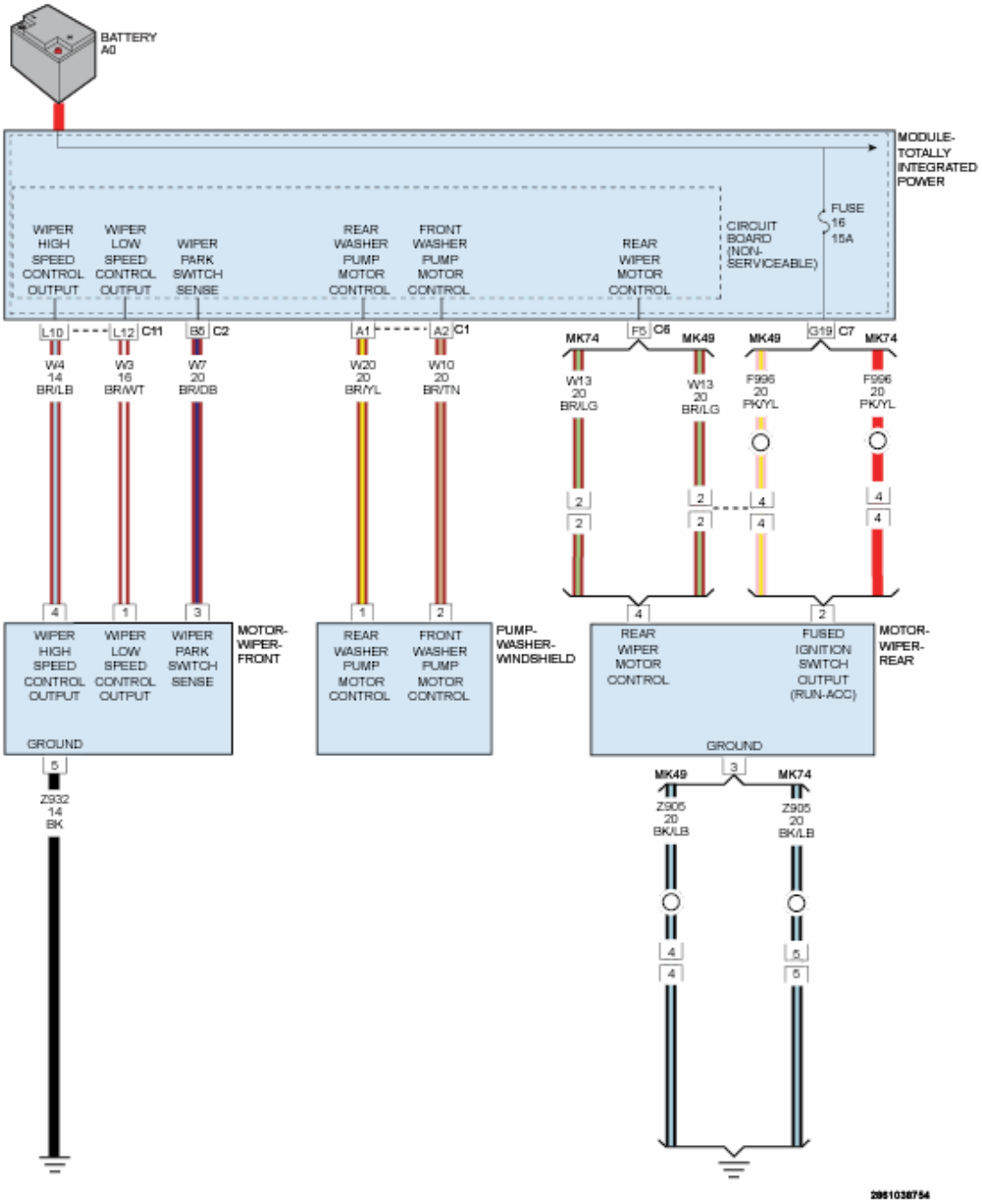

Fig. 40: Wiper System Control - Circuit Diagram
Courtesy of CHRYSLER GROUP, LLC

POSSIBLE CAUSES

- **When Monitored:**

  Continuously with the ignition on and wipers on high speed.

- **Set Condition:**

The code will set if the Totally Integrated Power Module detects an open in the front wiper high speed control circuit.

Possible Causes
FUSED ACCESSORY RELAY OUTPUT CIRCUIT
(W4) FRONT WIPER HIGH SPEED CONTROL CIRCUIT OPEN
(W4) FRONT WIPER HIGH SPEED CONTROL CIRCUIT SHORT TO VOLTAGE
FRONT WIPER MOTOR
TOTALLY INTEGRATED POWER MODULE (TIPM)
WIRING AND CONNECTORS

DIAGNOSTIC TEST

1. **CONDITION PRESENT**
    1. Ignition on, engine off.
    2. Turn the front wipers on.

    Does the Front Wiper Motor Function?

    Yes

    - Go To 2

    No

    - Go To 3
2. **INTERMITTENT WIRING AND CONNECTORS**
    1. Turn the ignition on.
    2. With the scan tool, erase all TIPM DTCs.
    3. Turn the ignition off.
    4. The conditions necessary to set this DTC are not present at this time.
    5. Using the schematics as a guide, inspect the wiring and connectors specific to this circuit.
    6. Wiggle the wiring while checking for shorts and open circuits.

    Were there any problems found?

Yes

- Repair as necessary.
- Perform the BODY VERIFICATION TEST. Refer to **STANDARD PROCEDURE** .

No

- Test Complete.

3. **FUSED ACCESSORY RELAY OUTPUT CIRCUIT**
   1. Turn the ignition off to the lock position.
   2. Disconnect the Front Wiper Motor harness connector.

NOTE: Check connectors - Clean/repair as necessary.

   3. Ignition on, engine off.
   4. Using a 12-volt test light connected to ground, check the Fused Accessory Relay Output circuit in the Front Wiper Motor harness connector.

   Does the test light illuminate brightly?

   Yes

   - Go To 4

   No

   - Repair the Fused Accessory Relay Output circuit for an open.
   - Perform the BODY VERIFICATION TEST. Refer to **STANDARD PROCEDURE** .

4. **FRONT WIPER MOTOR**
   1. Turn the ignition off to the lock position.
   2. Disconnect the Front Wiper Motor harness connector.
   3. Ignition on, engine off.
   4. Using a 12-volt test light connected to 12 Volts, check the (W4) Front Wiper High Speed Control circuit in the Front Wiper Motor harness connector while pressing the Front Washer Switch.

Does the test light illuminate brightly?

Yes

- Replace the Front Wiper Motor in accordance with the Service Information.
- Perform the BODY VERIFICATION TEST. Refer to **STANDARD PROCEDURE** .

No

- Go To 5

5. **(W4) FRONT WIPER HIGH SPEED CONTROL CIRCUIT OPEN**

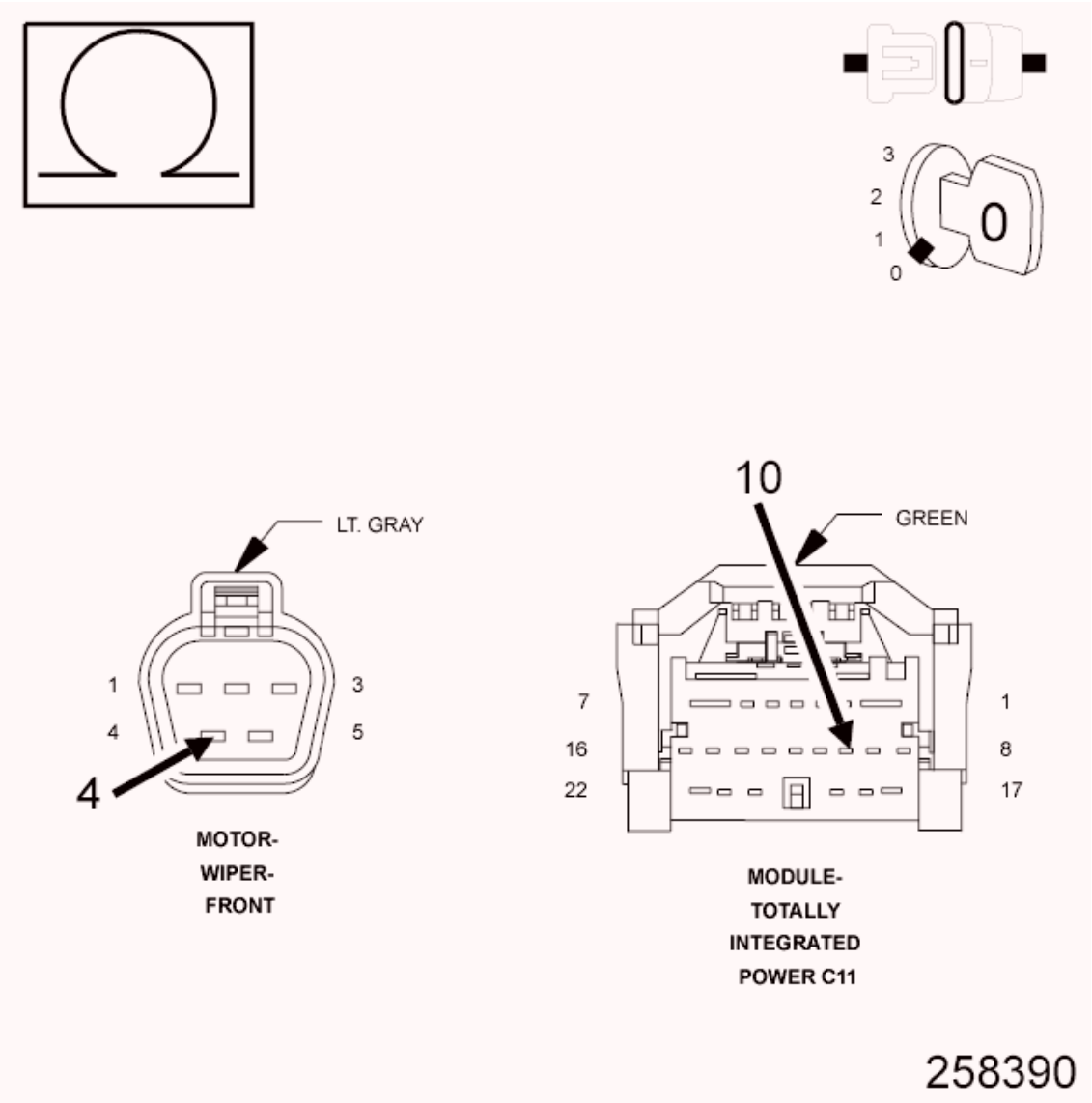

Fig. 41: Measuring Resistance Of Front Wiper High Speed Control

Circuit
Courtesy of CHRYSLER GROUP, LLC

1. Turn the ignition off to the lock position.
2. Disconnect the TIPM C11 harness connector.
3. Disconnect the Front Wiper Motor harness connector.

NOTE: Check connectors - Clean/repair as necessary.

4. Measure the resistance of the (W4) Front Wiper High Speed Control Circuit from the TIPM C11 connector to the Front Wiper Motor harness connector.

   Is the resistance above 5.0 Ohms?

   Yes

   - Repair the (W4) Front Wiper High Speed Control Circuit for an open.
   - Perform the BODY VERIFICATION TEST. Refer to **STANDARD PROCEDURE** .

   No

   - Go To6

6. **(W4) FRONT WIPER HIGH SPEED CONTROL CIRCUIT SHORT TO VOLTAGE**

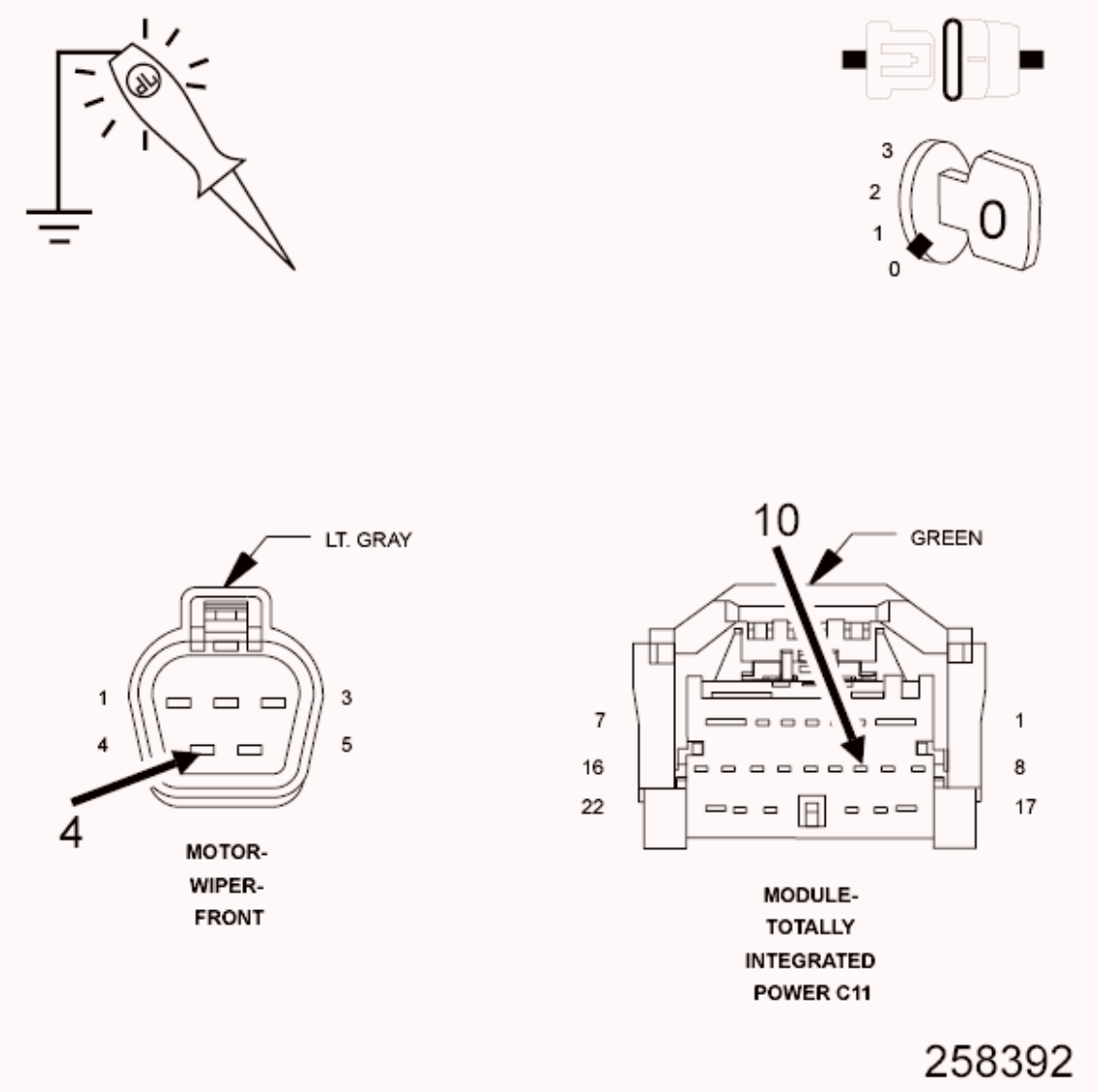

Fig. 42: Checking Front Wiper High Speed Control Circuit For Short To Voltage
Courtesy of CHRYSLER GROUP, LLC

1. Turn the ignition off to the lock position.
2. Disconnect the TIPM C11 harness connector.
3. Disconnect the Front Wiper Motor harness connector.

NOTE: Check connectors - Clean/repair as necessary.

4. Turn the ignition on.
5. Using a 12-volt test light connected to ground, check the (W4) Front Wiper High Speed Control circuit.

Does the test light illuminate brightly?

Yes

- Repair the (W4) Front Wiper High Speed Control Circuit for a short to voltage.
- Perform the BODY VERIFICATION TEST. Refer to **STANDARD PROCEDURE** .

No

- Replace the Totally Integrated Power Module (TIPM) in accordance with the Service Information.
- Perform the BODY VERIFICATION TEST. Refer to **STANDARD PROCEDURE** .

B2367-WINDOW WASHER MOTOR 1 CONTROL CIRCUIT

For a complete wiring diagram, **refer to appropriate SYSTEM WIRING DIAGRAMS article** .

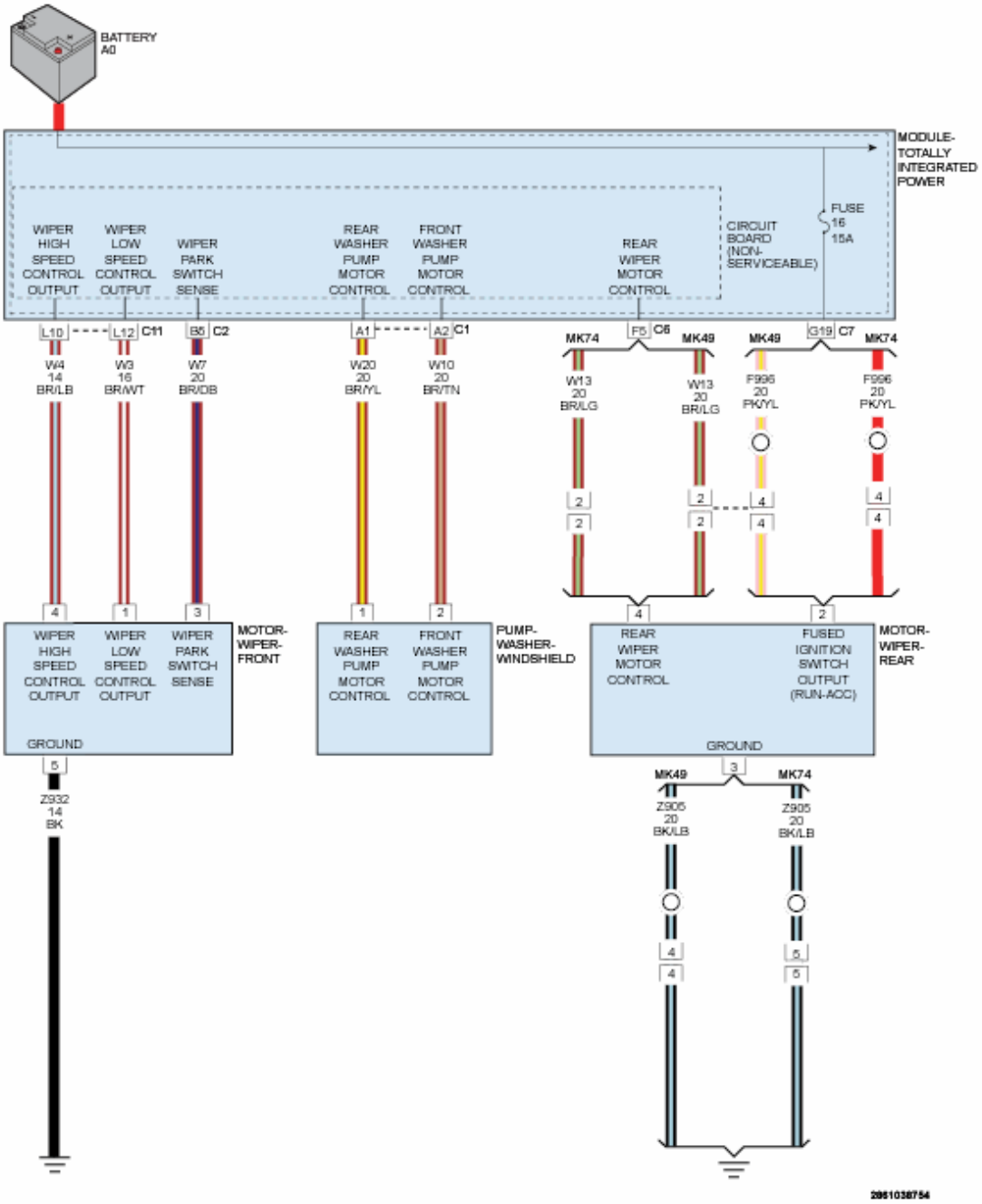

Fig. 43: Wiper System Control - Circuit Diagram
Courtesy of CHRYSLER GROUP, LLC

WHEN MONITORED

With the ignition on.

SET CONDITION

The TIPM detects an open condition.

POSSIBLE CAUSES

Possible Causes
(W10) FRONT WASHER PUMP MOTOR CONTROL CIRCUIT SHORT TO VOLTAGE TOTALLY INTEGRATED POWER MODULE

DIAGNOSTIC TEST

1. **INTERMITTENT CONDITION**
    1. Turn the ignition on.
    2. With the scan tool, clear all TIPM DTCs.
    3. Turn the Front Wipers on.
    4. With the scan tool, read the active Front Wiper DTCs.

    Does the scan tool read: B2367-WINDOW WASHER MOTOR 1 CONTROL CIRCUIT?

    Yes

    - Go To 2

    No

    - Test complete, the condition or conditions that originally set this DTC are not present at this time. Using the wiring diagrams as a guide, check all related splices and connectors for signs of water intrusion, corrosion, pushed out or bent terminals and correct pin tension.
    - Perform the BODY VERIFICATION TEST. Refer to **STANDARD PROCEDURE** .
2. **(W10) FRONT WASHER PUMP MOTOR CONTROL CIRCUIT SHORT TO VOLTAGE**

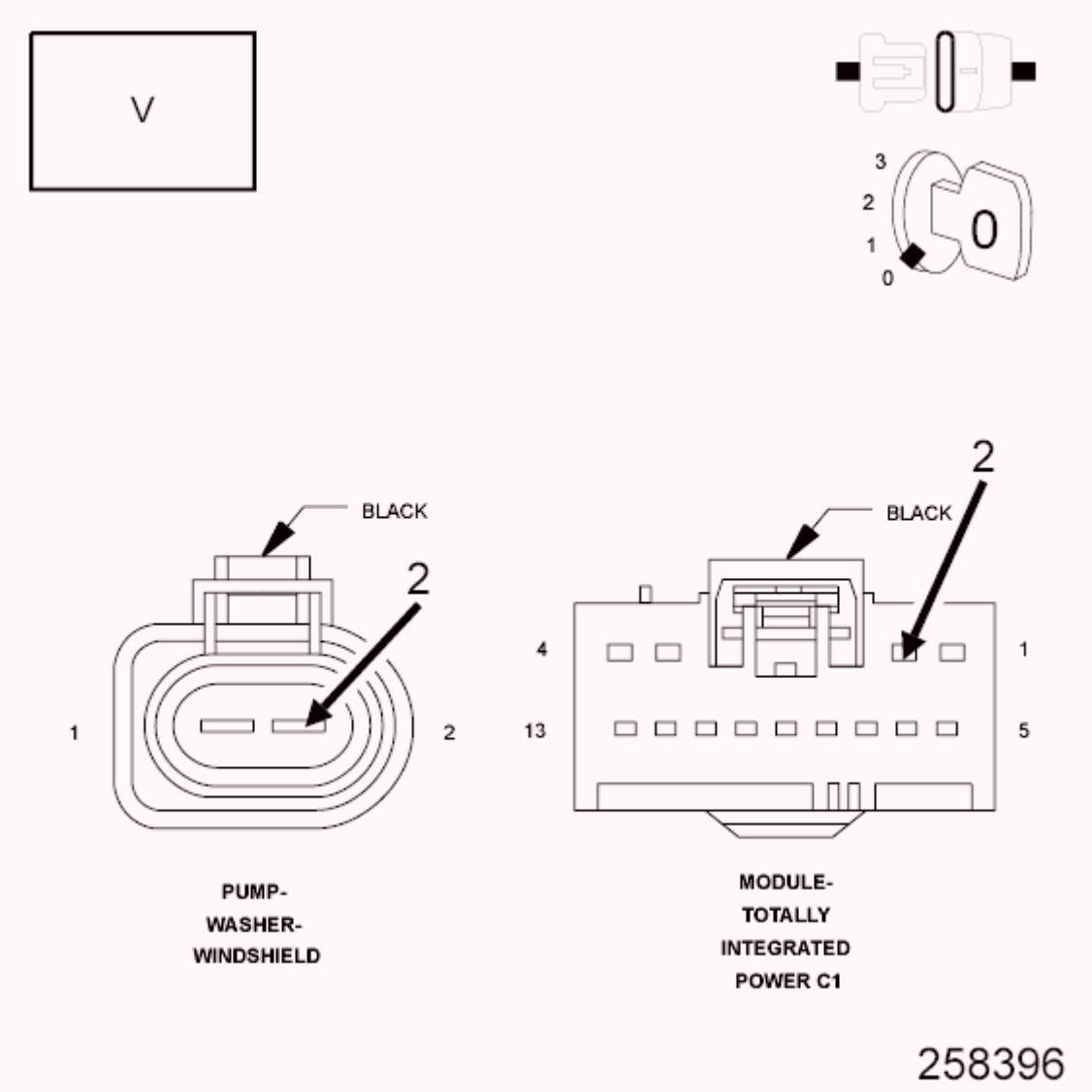

Fig. 44: Checking Front Washer Pump Motor Control Circuit For Short To Voltage
Courtesy of CHRYSLER GROUP, LLC

1. Turn the ignition off.
2. Disconnect the Front Washer Pump Motor harness connector.
3. Disconnect the TIPM C1 harness connector.
4. Measure the voltage on the (W10) Front Washer Pump Motor Control circuit.

   Is the voltage above 5.0 volts?

   Yes

   - Repair the (W10) Front Washer Pump Motor Control circuit for a

short to voltage.

- Perform the BODY VERIFICATION TEST. Refer to **STANDARD PROCEDURE** .

No

- Replace the Totally Integrated Power Module in accordance with the Service Information.
- Perform the BODY VERIFICATION TEST. Refer to **STANDARD PROCEDURE** .

B2368-WINDOW WASHER MOTOR 1 CONTROL CIRCUIT LOW

For a complete wiring diagram, **refer to appropriate SYSTEM WIRING DIAGRAMS article** .

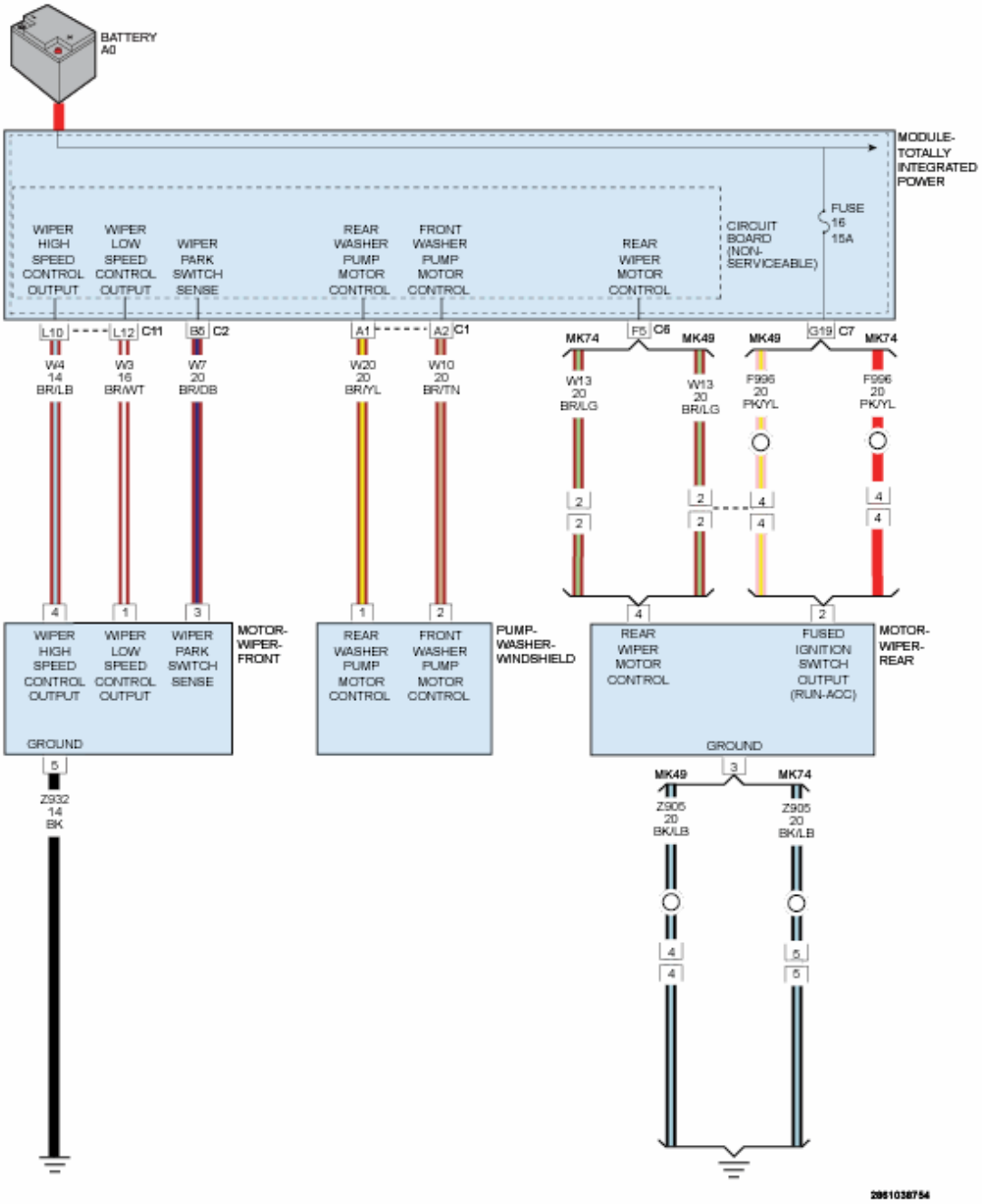

Fig. 45: Wiper System Control - Circuit Diagram
Courtesy of CHRYSLER GROUP, LLC

WHEN MONITORED

With the Window Washers activated.

SET CONDITION

When the TIPM detects a low condition.

POSSIBLE CAUSES

Possible Causes
(W10) WASHER PUMP MOTOR CONTROL CIRCUIT SHORTED TO GROUND
WASHER PUMP MOTOR
TOTALLY INTEGRATED POWER MODULE

DIAGNOSTIC TEST

1. **INTERMITTENT CONDITION**
    1. Turn the ignition on.
    2. With the scan tool, clear all TIPM DTCs.
    3. Turn the Washer Pump Motor on.
    4. With the scan tool read the active DTCs.

    Does the scan tool read: B2368-WINDOW WASHER MOTOR 1 CONTROL CIRCUIT LOW?

    Yes

    - Go To 2

    No

    - Test complete, the condition or conditions that originally set this DTC are not present at this time. Using the wiring diagrams as a guide, check all related splices and connectors for signs of water intrusion, corrosion, pushed out or bent terminals and correct pin tension.
    - Perform the BODY VERIFICATION TEST. Refer to **STANDARD PROCEDURE** .
2. **(W10) WASHER PUMP MOTOR CONTROL CIRCUIT SHORTED TO GROUND**

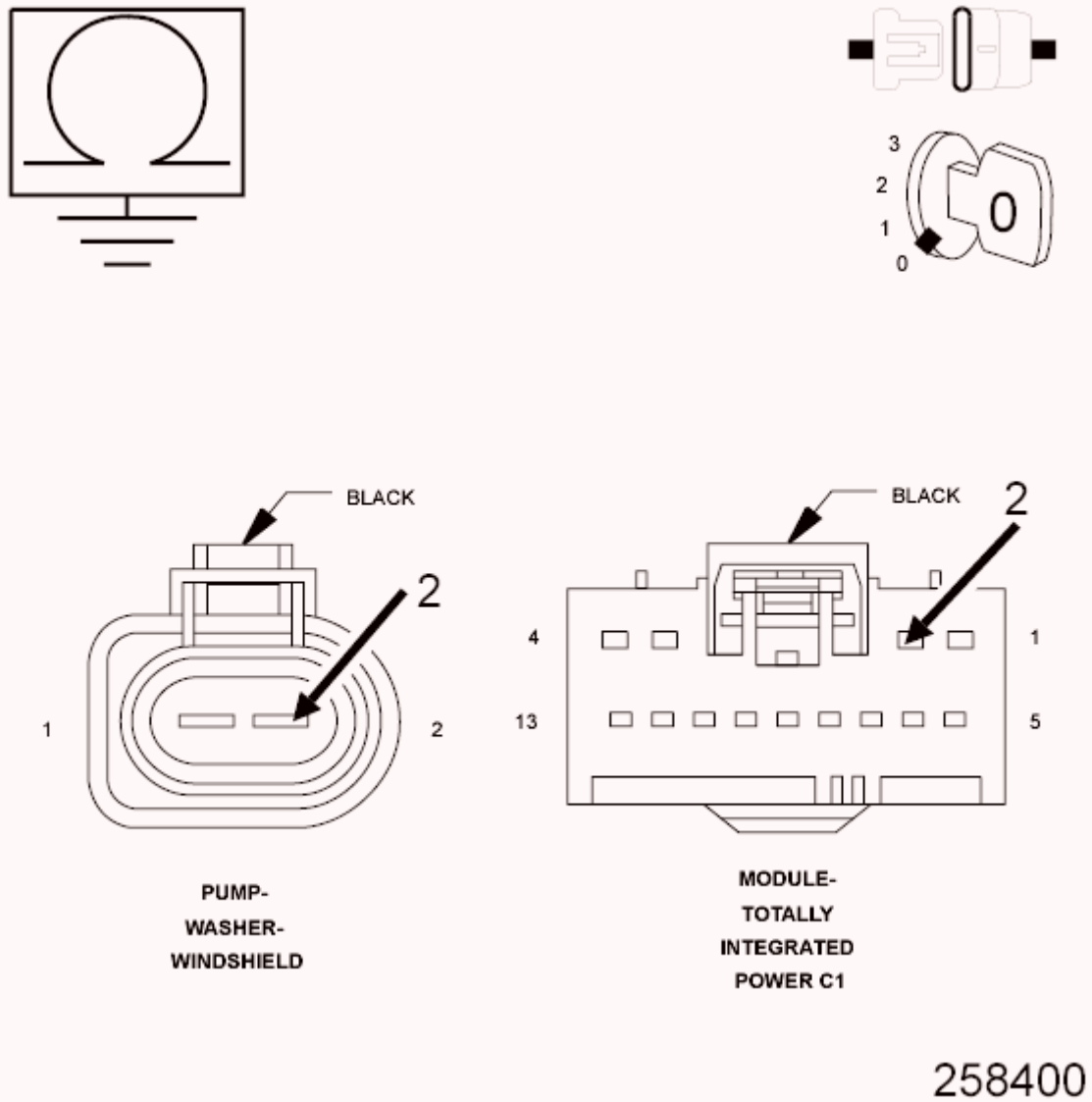

Fig. 46: Checking Washer Pump Motor Control Output Circuit For A Short To Ground
Courtesy of CHRYSLER GROUP, LLC

1. Turn the ignition off.
2. Disconnect the TIPM C1 harness connector.
3. Disconnect the Washer Pump Motor harness connector.
4. Measure the resistance between ground and the (W10) Washer Pump Motor Control circuit.

   Is the resistance below 10, 000 Ohms?

   Yes

   - Repair the (W10) Washer Pump Motor Control Output circuit for a

short to ground.

- Perform the BODY VERIFICATION TEST. Refer to **STANDARD PROCEDURE** .

No

- Go To 3

3. **WASHER PUMP MOTOR**
   1. Reconnect the TIPM C1 harness connector.
   2. Turn the ignition on.
   3. With the scan tool, clear all TIPM DTCs.
   4. Turn the Washer Pump Motor on.
   5. With the scan tool read the active DTCs.

   Does the scan tool read: B2368-WINDOW WASHER MOTOR 1 CONTROL CIRCUIT LOW?

   Yes

   - Replace the Totally Integrated Power Module (TIPM) in accordance with the Service Information.
   - Perform the BODY VERIFICATION TEST. Refer to **STANDARD PROCEDURE** .

   No

   - Replace the Washer Pump Motor in accordance with the Service Information.
   - Perform the BODY VERIFICATION TEST. Refer to **STANDARD PROCEDURE** .

B2369-WINDOW WASHER MOTOR 1 CONTROL CIRCUIT HIGH

For a complete wiring diagram, **refer to appropriate SYSTEM WIRING DIAGRAMS article** .

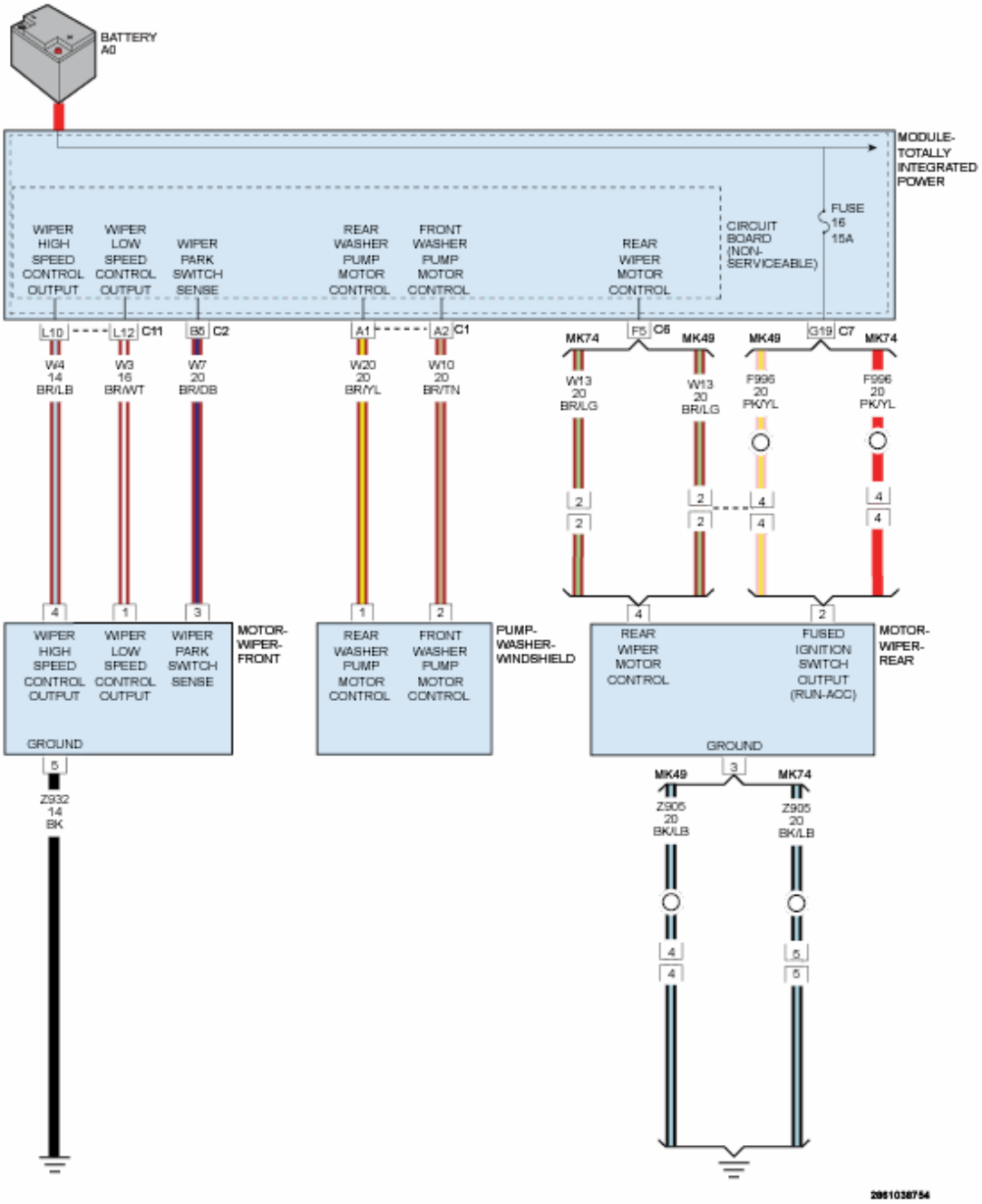

Fig. 47: Wiper System Control - Circuit Diagram
Courtesy of CHRYSLER GROUP, LLC

WHEN MONITORED

With the Washer Pump Motor turned on.

SET CONDITION

When the TIPM detects a high condition.

POSSIBLE CAUSES

Possible Causes
(W10) WASHER PUMP MOTOR CONTROL CIRCUIT OPEN
(W10) WASHER PUMP MOTOR CONTROL CIRCUIT SHORTED TO VOLTAGE
TOTALLY INTEGRATED POWER MODULE

DIAGNOSTIC TEST

1. **INTERMITTENT CONDITION**
    1. Turn the ignition on.
    2. With the scan tool, clear all TIPM DTCs.
    3. Turn the Wiper Pump Motor on.
    4. With the scan tool read the active DTCs.

    Does the scan tool read: B2369-WINDOW WASHER MOTOR 1 CONTROL CIRCUIT HIGH?

    Yes

    - Go To 2

    No

    - Test complete, the condition or conditions that originally set this DTC are not present at this time. Using the wiring diagrams as a guide, check all related splices and connectors for signs of water intrusion, corrosion, pushed out or bent terminals and correct pin tension.
    - Perform the BODY VERIFICATION TEST. Refer to **STANDARD PROCEDURE** .
2. **(W10) WASHER PUMP MOTOR CONTROL CIRCUIT OPEN**

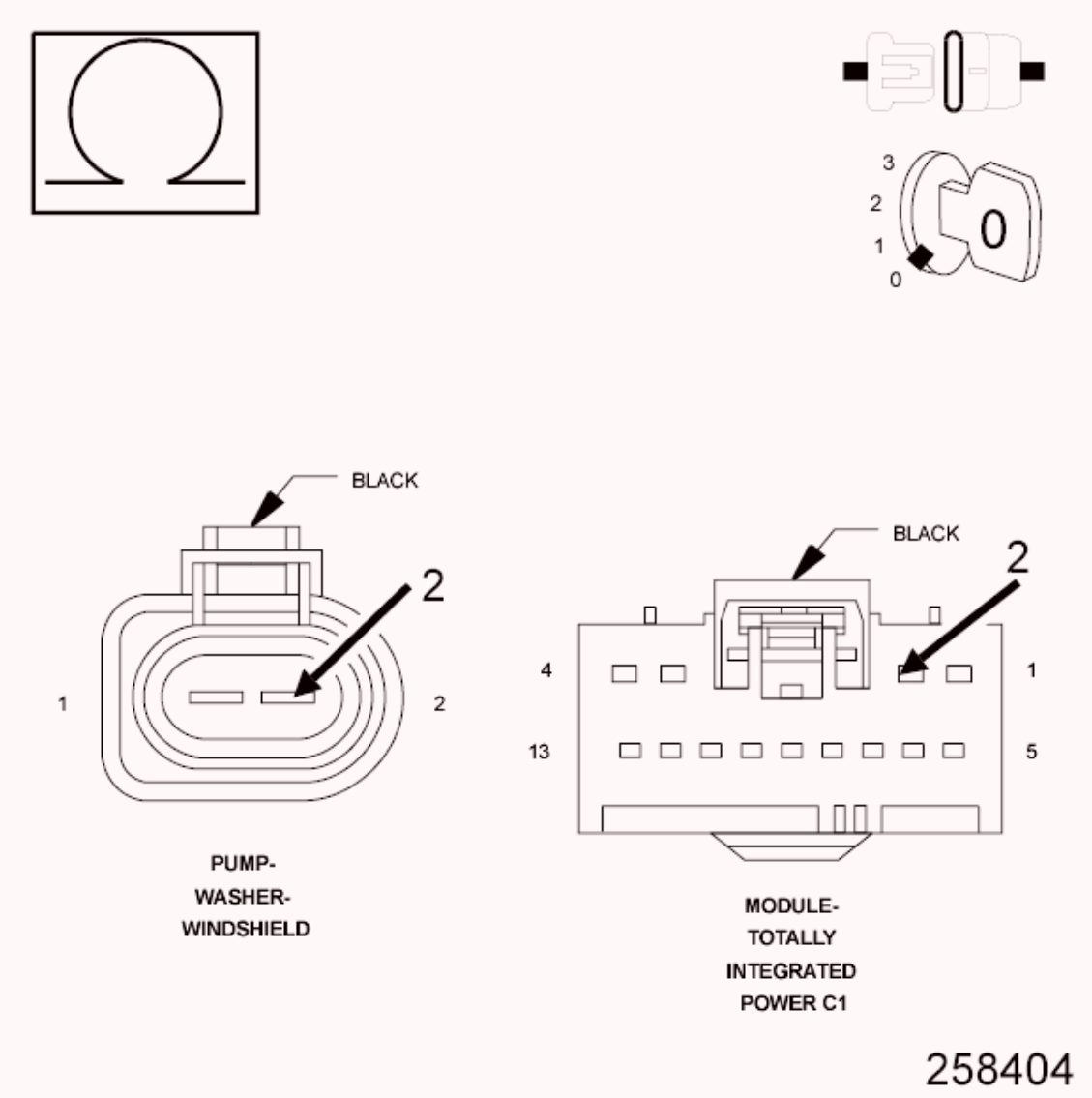

Fig. 48: Checking Washer Pump Motor Control Circuit For Open
Courtesy of CHRYSLER GROUP, LLC

1. Turn the ignition off.
2. Disconnect the TIPM C1 harness connector.
3. Disconnect the Washer Pump Motor harness connector.
4. Measure the resistance of the (W10) Washer Pump Motor Control circuit.

   Is the resistance above 5.0 Ohms?

   Yes

   - Repair the (W10) Washer Pump Motor Control circuit for an open

condition.

- Perform the BODY VERIFICATION TEST. Refer to **STANDARD PROCEDURE** .

No

- Go To 3

3. **(W10) WASHER PUMP MOTOR CONTROL CIRCUIT SHORTED TO VOLTAGE**
   1. Turn the ignition on.
   2. Measure the voltage between ground and the (W10) Washer Pump Motor Control circuit.

   Is there any voltage present?

   Yes

   - Repair the (W10) Washer Pump Motor Control circuit for a short to voltage.
   - Perform the BODY VERIFICATION TEST. Refer to **STANDARD PROCEDURE** .

   No

   - Replace the Totally Integrated Power Module (TIPM) in accordance with the Service Information.
   - Perform the BODY VERIFICATION TEST. Refer to **STANDARD PROCEDURE** .

B236A-WINDOW WASHER MOTOR 1 CONTROL CIRCUIT OPEN

For a complete wiring diagram, **refer to appropriate SYSTEM WIRING DIAGRAMS article** .

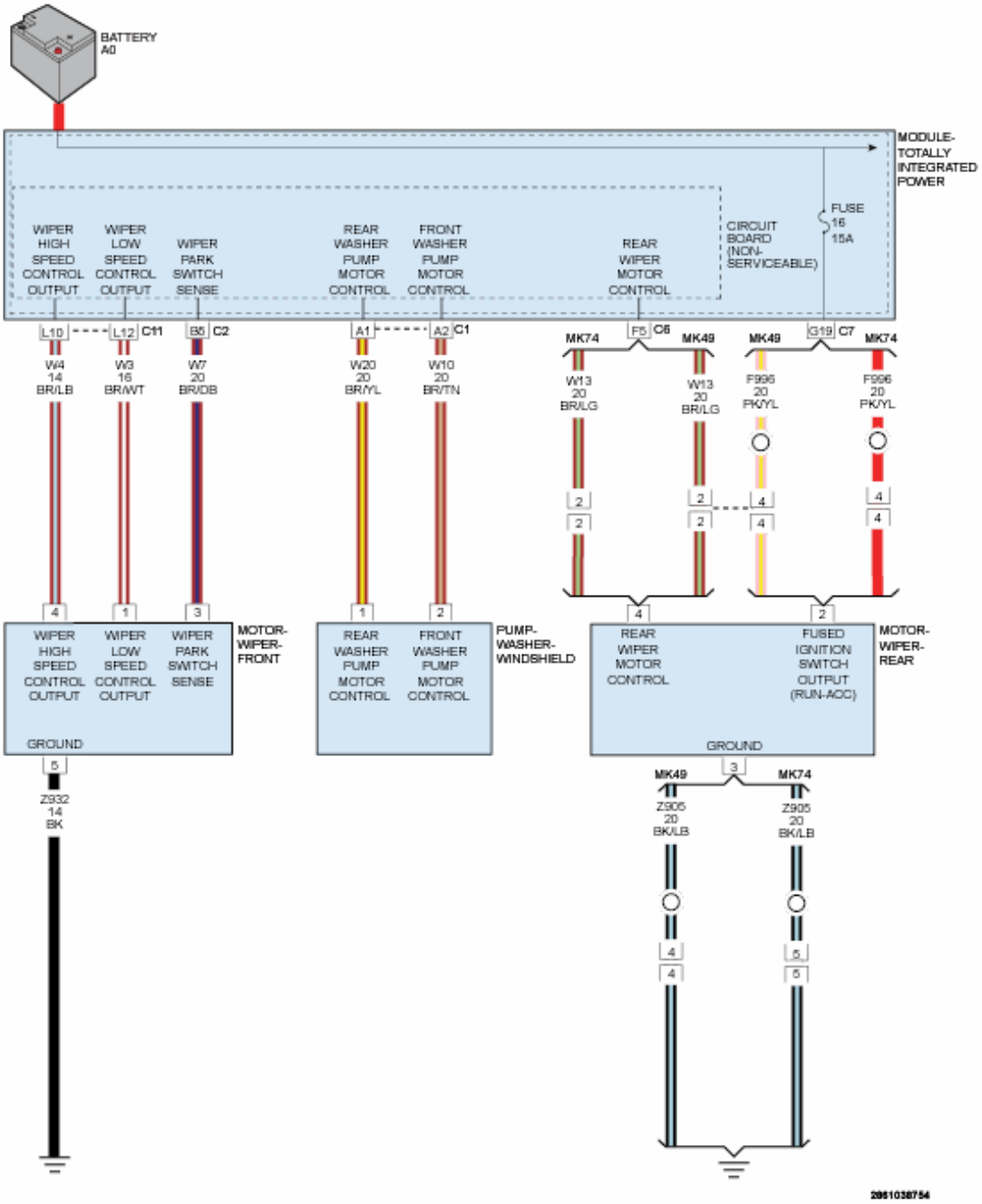

Fig. 49: Wiper System Control - Circuit Diagram
Courtesy of CHRYSLER GROUP, LLC

WHEN MONITORED

Whenever the module is awake.

SET CONDITION

When the Totally Integrated Power Module (TIPM) senses an open in the (W10) Front washer pump motor control circuit.

POSSIBLE CAUSES

Possible Causes
FUSED ACCESSORY RELAY OUTPUT CIRCUIT
(W10) FRONT WASHER PUMP MOTOR CONTROL CIRCUIT OPEN
(W10) FRONT WASHER PUMP MOTOR CONTROL CIRCUIT SHORTED TO VOLTAGE
FRONT WASHER PUMP MOTOR
TOTALLY INTEGRATED POWER MODULE (TIPM)
WIRING AND CONNECTORS

DIAGNOSTIC TEST

1. **CONDITION PRESENT**
    1. Ignition on, engine off.
    2. Press the Front Washer Switch.

    Does the Front Washer Motor Function?

    Yes

    - Go To 2

    No

    - Go To 3
2. **INTERMITTENT WIRING AND CONNECTORS**
    1. Turn the ignition on.
    2. With the scan tool, erase all TIPM DTCs.
    3. Turn the ignition off.
    4. The conditions necessary to set this DTC are not present at this time.
    5. Using the schematics as a guide, inspect the wiring and connectors specific to this circuit.
    6. Wiggle the wiring while checking for shorts and open circuits.

    Were there any problems found?

    Yes

- Repair as necessary.
- Perform the BODY VERIFICATION TEST. Refer to **STANDARD PROCEDURE** .

No

- Test Complete.

3. **FUSED ACCESSORY RELAY OUTPUT CIRCUIT**
   1. Turn the ignition off to the lock position.
   2. Disconnect the Front Washer Pump Motor harness connector.

      NOTE: Check connectors - Clean/repair as necessary.

   3. Ignition on, engine off.
   4. Using a 12-volt test light connected to ground, check the Fused Accessory Relay Output circuit in the Front Washer Pump Motor harness connector.

      Does the test light illuminate brightly?

      Yes

      - Go To 4

      No

      - Repair the Fused Accessory Relay Output circuit for an open.
      - Perform the BODY VERIFICATION TEST. Refer to **STANDARD PROCEDURE** .

4. **(W10) FRONT WASHER PUMP MOTOR CONTROL**

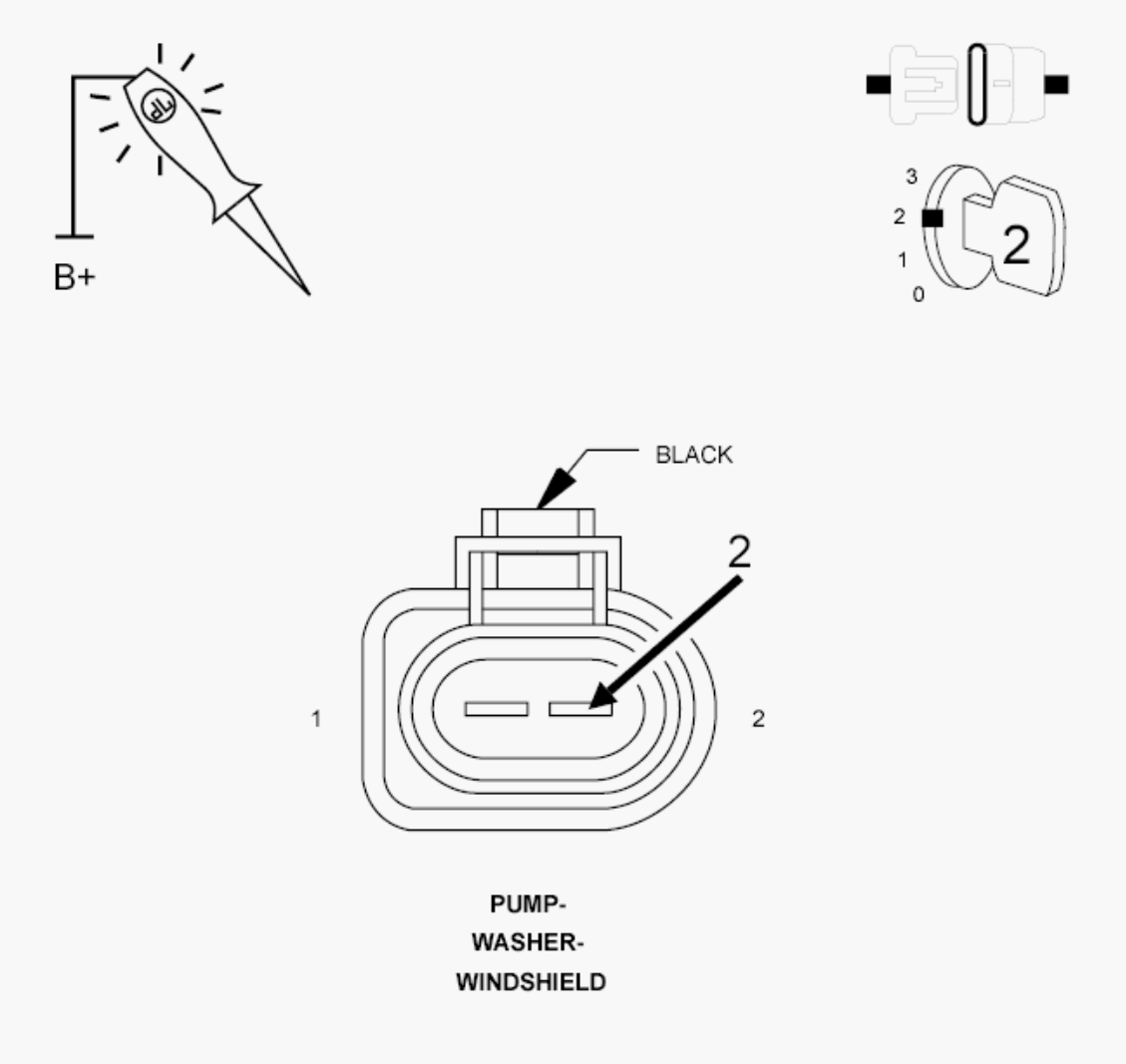

Fig. 50: Checking Washer Pump Motor Control Circuit
Courtesy of CHRYSLER GROUP, LLC

1. Turn the ignition off to the lock position.
2. Disconnect the Front Washer Pump Motor harness connector.
3. Ignition on, engine off.
4. Using a 12-volt test light connected to 12 Volts, check the (W10) Front Washer Pump Motor Control circuit in the Front Washer Pump Motor harness connector while pressing the Front Washer Switch.

   Does the test light illuminate brightly?

   Yes

   - Replace the Front Washer Pump Motor in accordance with the Service Information.

- Perform the BODY VERIFICATION TEST. Refer to **STANDARD PROCEDURE** .

No

- Go To 5

5. **(W10) FRONT WASHER PUMP MOTOR CONTROL CIRCUIT OPEN**

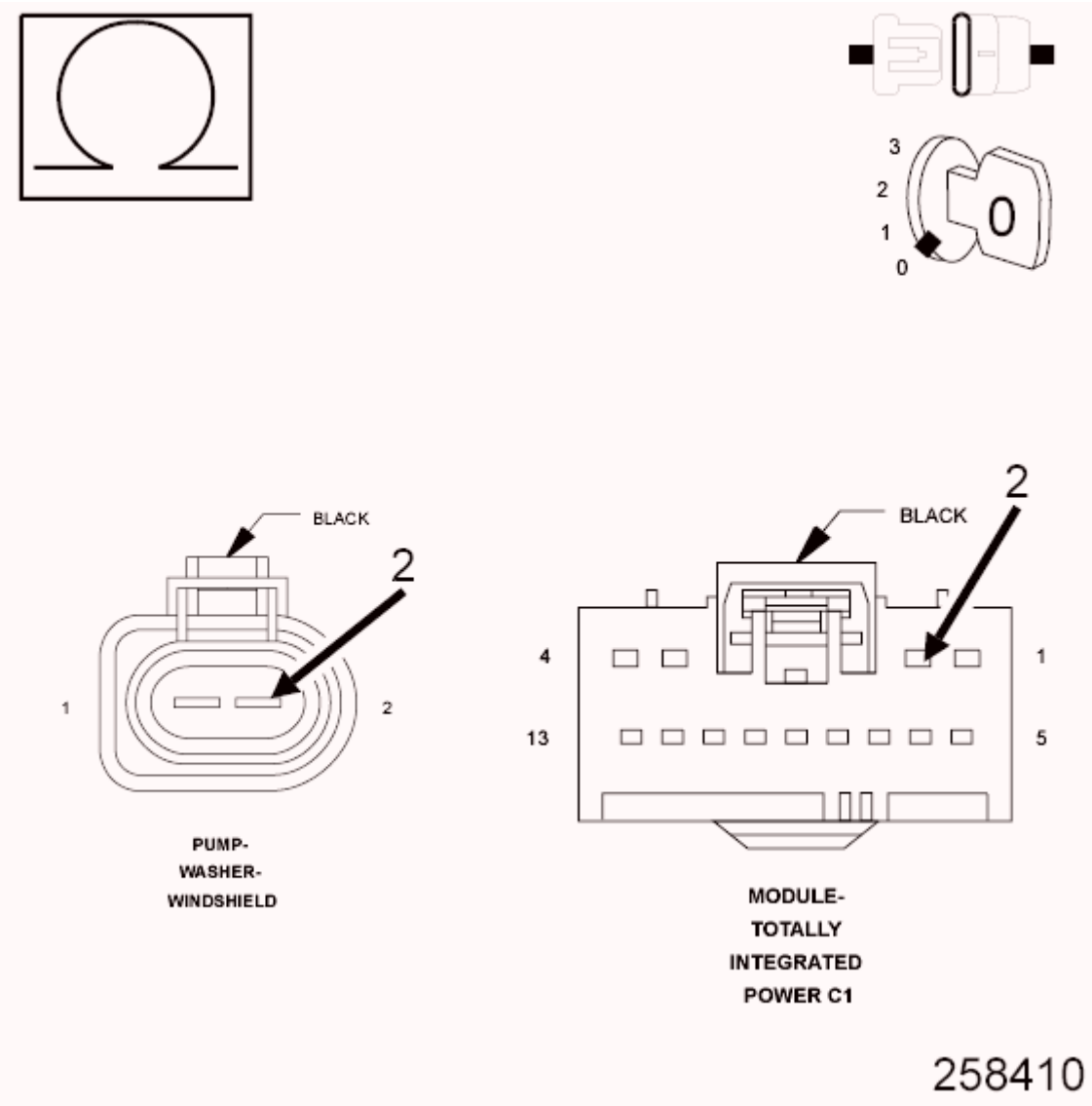

Fig. 51: Checking Washer Pump Motor Control Circuit For Open
Courtesy of CHRYSLER GROUP, LLC

1. Turn the ignition off to the lock position.
2. Disconnect the TIPM C1 harness connector.

3. Disconnect the Front Washer Pump Motor harness connector.

NOTE: Check connectors - Clean/repair as necessary.

4. Measure the resistance of the (W10) Front Washer Pump Motor Control Circuit from the TIPM C1 connector to the Front Washer Pump Motor harness connector.

   Is the resistance above 5.0 Ohms?

   Yes

   - Repair the (W10) Front Washer Pump Motor Control Circuit for an open.
   - Perform the BODY VERIFICATION TEST. Refer to **STANDARD PROCEDURE** .

   No

   - Go To 6

6. **(W10) FRONT WASHER PUMP MOTOR CONTROL CIRCUIT SHORTED TO VOLTAGE**

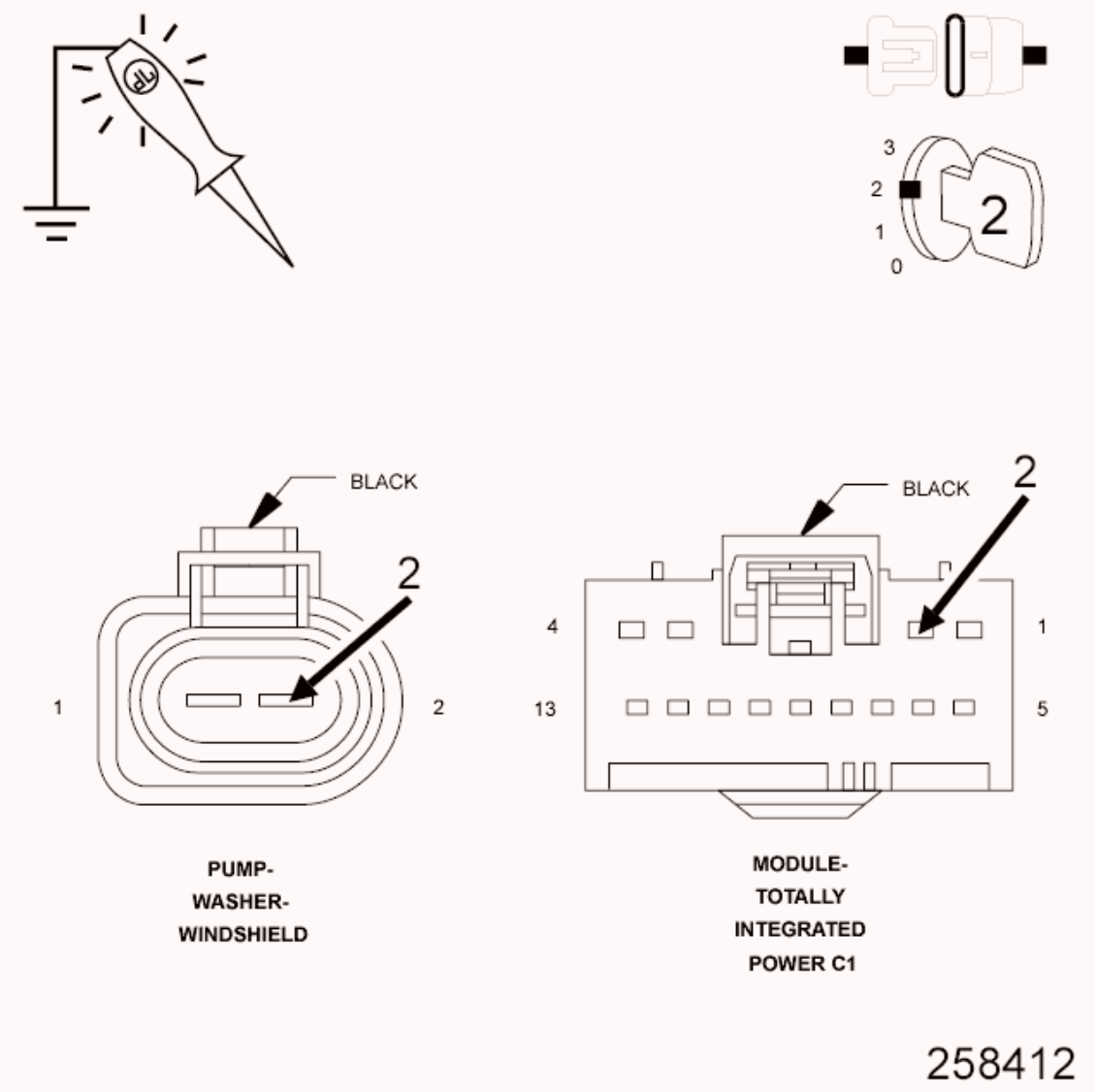

Fig. 52: Checking Washer Pump Motor Control Circuit For Short To Voltage
Courtesy of CHRYSLER GROUP, LLC

1. Turn the ignition off to the lock position.
2. Disconnect the TIPM C1 harness connector.
3. Disconnect the Front Washer Pump Motor harness connector.

NOTE: Check connectors - Clean/repair as necessary.

4. Turn the ignition on.
5. Using a 12-volt test light connected to ground, check the (W10) Front Washer Pump Motor Control circuit.

Does the test light illuminate brightly?

Yes

- Repair the (W10) Front Washer Pump Motor Control Circuit for a short to voltage.
- Perform the BODY VERIFICATION TEST. Refer to **STANDARD PROCEDURE** .

No

- Replace the Totally Integrated Power Module (TIPM) in accordance with the Service Information.
- Perform the BODY VERIFICATION TEST. Refer to **STANDARD PROCEDURE** .

B236F-WIPER MOTOR LOW SPEED CONTROL CIRCUIT OVERCURRENT

For a complete wiring diagram, **refer to appropriate SYSTEM WIRING DIAGRAMS article** .

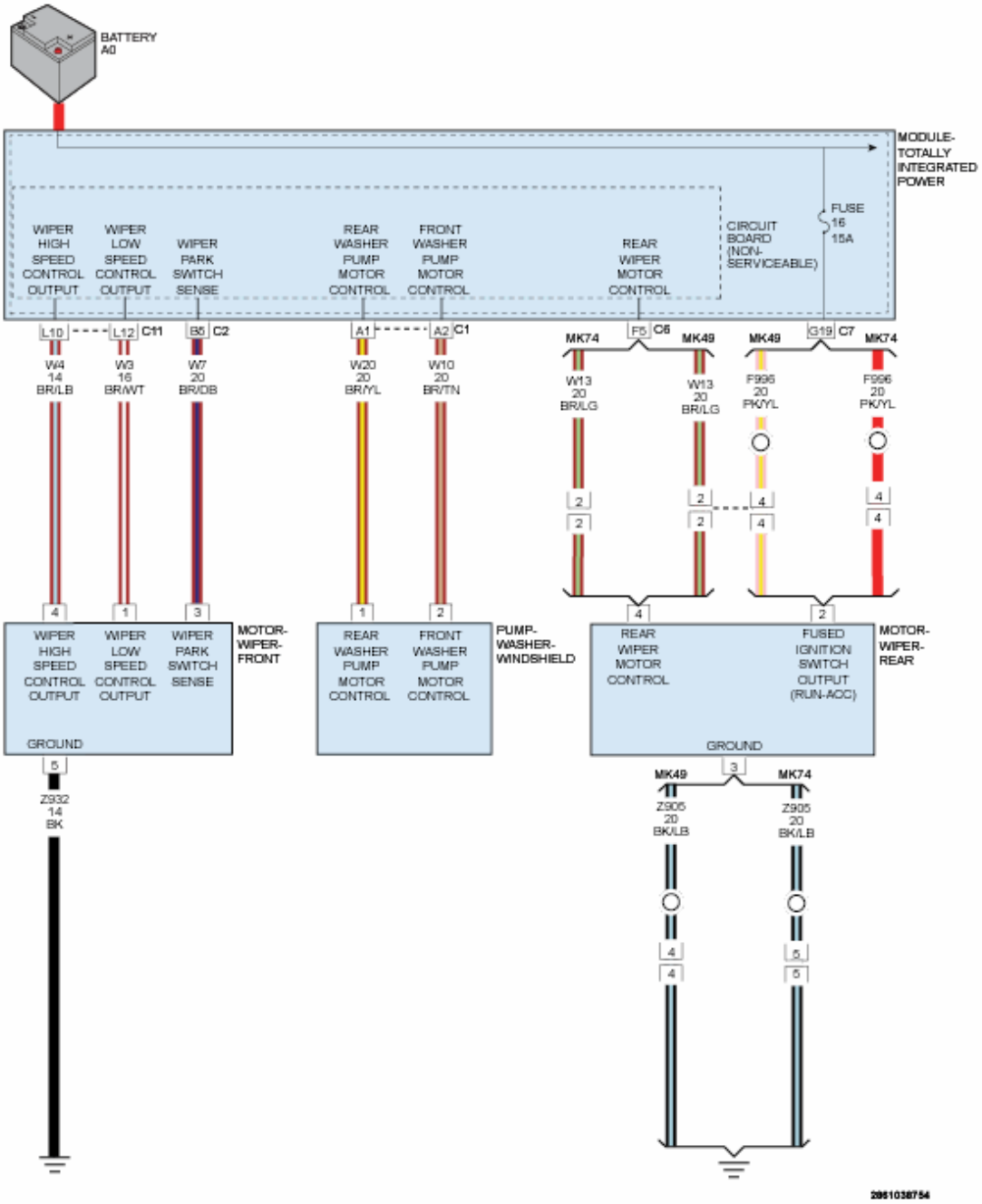

Fig. 53: Wiper System Control - Circuit Diagram
Courtesy of CHRYSLER GROUP, LLC

WHEN MONITORED

With the ignition on. Battery voltage greater than 12.0 volts.

SET CONDITION

An over current condition in the Front Wiper Low Speed Control Output Circuit.

POSSIBLE CAUSES

Possible Causes
TERMINAL DAMAGE OR CORROSION
(W3) FRONT WIPER LOW SPEED CONTROL CIRCUIT HIGH RESISTANCE
(Z971) WIPER MOTOR GROUND
WIPER MOTOR
TOTALLY INTEGRATED POWER MODULE (TIPM)

DIAGNOSTIC TEST

1. **CHECK FOR ACTIVE DTC B236F WIPER MOTOR LOW SPEED CONTROL CIRCUIT OVERCURRENT**
   1. Turn the ignition on.
   2. With the scan tool, record and erase DTCs.
   3. Operate the Front Wipers.
   4. With the scan tool, read DTCs.

   Does the scan tool display active DTC B236F WIPER MOTOR LOW SPEED CONTROL CIRCUIT OVERCURRENT?

   Yes

   - Go To 2

   No

   - The conditions that caused this code to set are not present at this time. Using the wiring diagram/schematic as a guide, inspect the wiring and connectors.
   - Perform the BODY VERIFICATION TEST. Refer to **STANDARD PROCEDURE** .
2. **VISUAL AND PHYSICAL CONNECTOR AND TERMINAL INSPECTION**
   1. Turn the ignition off.
   2. Inspect the following connector terminal condition. Check for signs of corrosion build up or damage that would compromise the terminal to controller pin connector.

NOTE: Make sure that all in-line connectors are inspected for corrosion and/or damage.

3. Disconnect the Wiper connector.
4. Disconnect the C11 TIPM harness connector.
5. Visually inspect the wiring harness. Look for any chafed, pierced, pinched or partially broken wires hidden in the wire insulation.

   Were any of the above conditions found?

   Yes

   - Repair or replace as necessary.

   No

   - Go To 3

3. **(W3) FRONT WIPER LOW SPEED CONTROL OUTPUT CIRCUIT HIGH RESISTANCE**

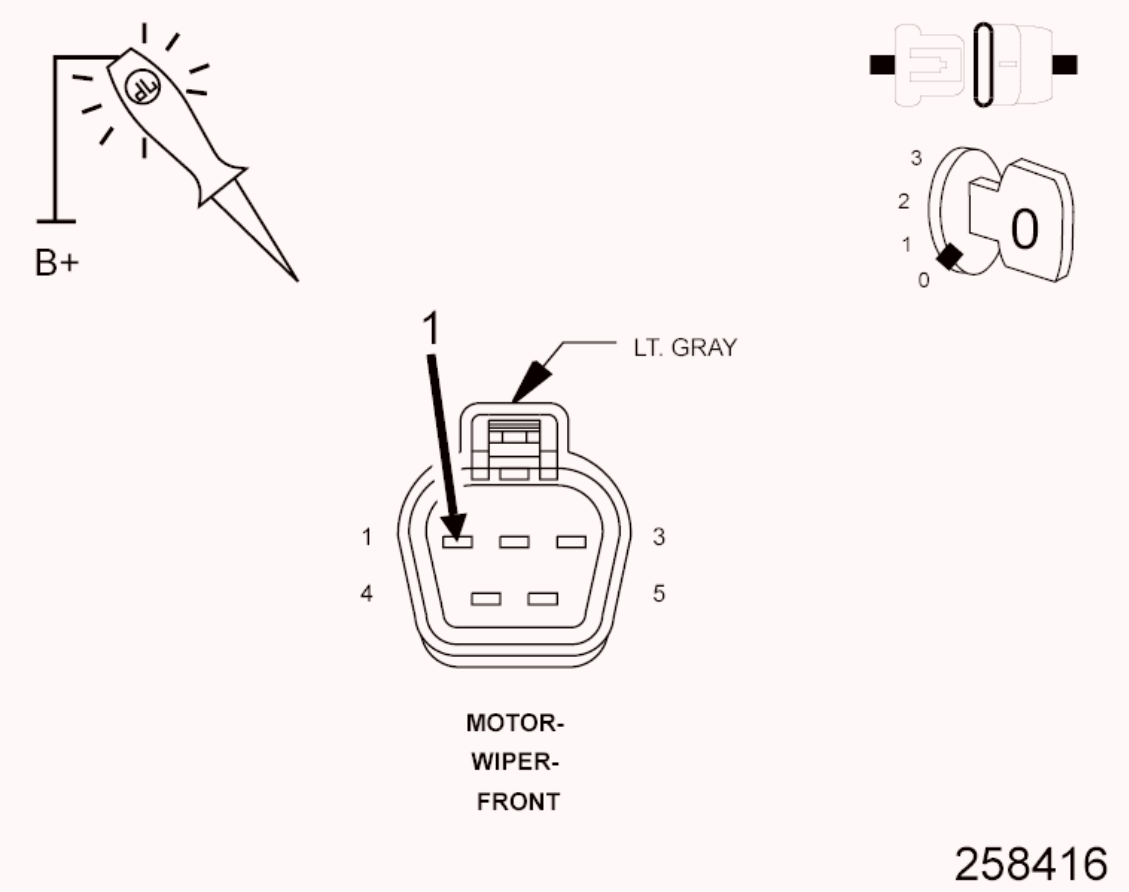

Fig. 54: Checking Front Wiper Low Speed Control Output Circuit For High Resistance
Courtesy of CHRYSLER GROUP, LLC

1. With a jumper wire, connect one end to the (W3) Wiper Low Speed Motor Control Output circuit at the Wiper connector and the other to a clean chassis ground.
2. Using a 12-volt test light to battery voltage, probe the (W3) Wiper Low Speed Control Output circuit in the C11 TIPM harness connector.

NOTE: The test light should be illuminated and bright. Compare the brightness to that of a direct connection to the battery.

Does the test light illuminate brightly?

Yes

- Go To 4

No

- Repair the excessive resistance in the (W3) Front Wiper Low Speed Control Output circuit.
- Perform the BODY VERIFICATION TEST. Refer to **STANDARD PROCEDURE** .

4. **CHECKING WIPER OPERATION**
   1. Turn the ignition off.
   2. Disconnect the Wiper Motor harness connector.
   3. Momentarily jumper 12-volts to the Wiper Motor.

   Did the Wiper Motor operate properly?

   Yes

   - Go To 6

   No

- Go To 5

5. **GROUND CIRCUIT OPEN**
   1. Using a 12-volt test light connected to 12-volts, check for a good case ground at the Wiper Motor.

      Does the test light illuminate brightly?

      Yes

      - Replace the Wiper Motor in accordance with the Service Information.
      - Perform the BODY VERIFICATION TEST. Refer to **STANDARD PROCEDURE** .

      No

      - Repair the open or excessive resistance in the (Z971) Ground circuit.
      - Perform the BODY VERIFICATION TEST. Refer to **STANDARD PROCEDURE** .

6. **TOTALLY INTEGRATED POWER MODULE**

   NOTE: Before continuing, check the TIPM harness connector terminals for corrosion, damage, or terminal push out. Repair as necessary.

   1. Using the schematics as a guide, inspect the wire harness and connectors.
   2. Pay particular attention to all Power and Ground circuits.

      Were any problems found?

      Yes

      - Repair as necessary.
      - Perform the BODY VERIFICATION TEST. Refer to **STANDARD PROCEDURE** .

      No

- Replace the Totally Integrated Power Module (TIPM) in accordance with the service information.
- Perform the BODY VERIFICATION TEST. Refer to **STANDARD PROCEDURE** .

B2370-WIPER MOTOR HIGH SPEED CONTROL CIRCUIT OVERCURRENT

For a complete wiring diagram, **refer to appropriate SYSTEM WIRING DIAGRAMS article** .

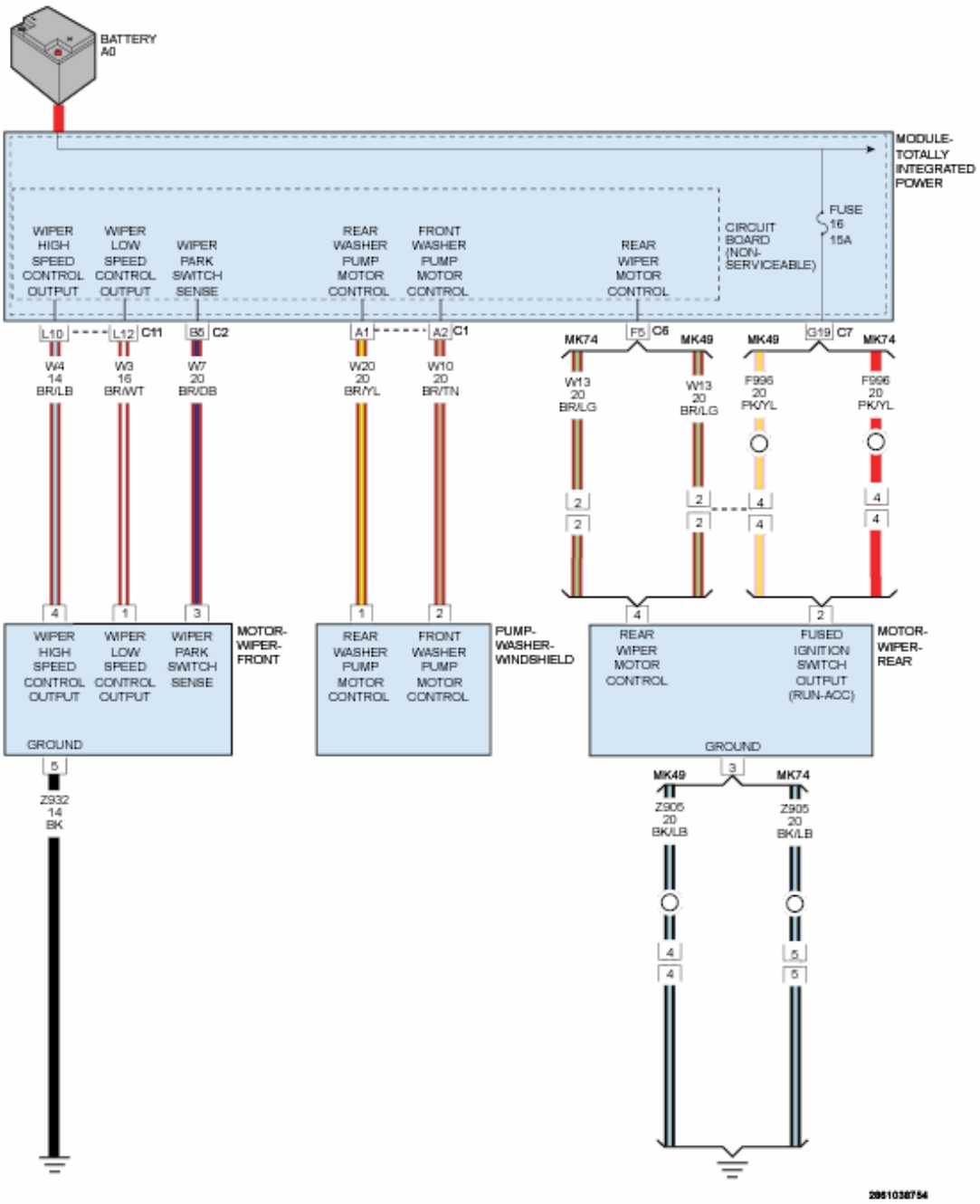

Fig. 55: Wiper System Control - Circuit Diagram
Courtesy of CHRYSLER GROUP, LLC

WHEN MONITORED

With the ignition on. Battery voltage greater than 12.0 volts.

SET CONDITION

An over current condition in the Front Wiper High Speed Control Output Circuit.

POSSIBLE CAUSES

Possible Causes
TERMINAL DAMAGE OR CORROSION
(W4) FRONT WIPER HIGH SPEED CONTROL CIRCUIT HIGH RESISTANCE
(Z971) WIPER MOTOR GROUND
WIPER MOTOR
TOTALLY INTEGRATED POWER MODULE (TIPM)

DIAGNOSTIC TEST

1. **CHECK FOR ACTIVE DTC B2370 WIPER MOTOR HIGH SPEED CONTROL CIRCUIT OVERCURRENT**
    1. Turn the ignition on.
    2. With the scan tool, record and erase DTCs.
    3. Operate the Front Wipers.
    4. With the scan tool, read DTCs.

    Does the scan tool display active DTC B2370 WIPER MOTOR HIGH SPEED CONTROL CIRCUIT OVERCURRENT?

    Yes

    - Go To2

    No

    - The conditions that caused this code to set are not present at this time. Using the wiring diagram/schematic as a guide, inspect the

wiring and connectors.

- Perform the BODY VERIFICATION TEST. Refer to **STANDARD PROCEDURE** .

2. **VISUAL AND PHYSICAL CONNECTOR AND TERMINAL INSPECTION**
   1. Turn the ignition off.
   2. Inspect the following connector terminal condition. Check for signs of corrosion build up or damage that would compromise the terminal to controller pin connector.

      NOTE: Make sure that all in-line connectors are inspected for corrosion and/or damage.

   3. Disconnect the Wiper connector.
   4. Disconnect the C11 TIPM harness connector.
   5. Visually inspect the wiring harness. Look for any chafed, pierced, pinched or partially broken wires hidden in the wire insulation.

      Were any of the above conditions found?

      Yes

      - Repair or replace as necessary.

      No

      - Go To 3

3. **(W4) FRONT WIPER HIGH SPEED CONTROL OUTPUT CIRCUIT HIGH RESISTANCE**

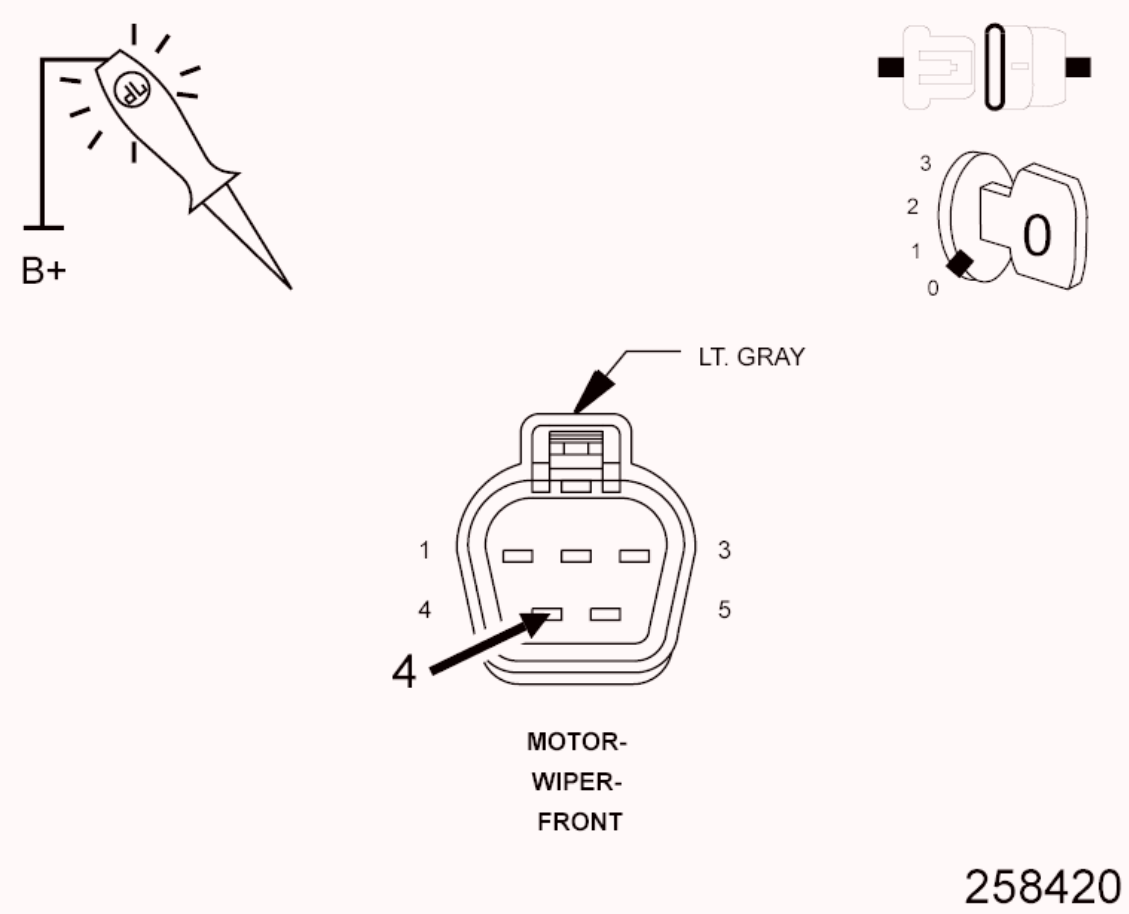

Fig. 56: Checking Front Wiper High Speed Control Output Circuit For High Resistance
Courtesy of CHRYSLER GROUP, LLC

1. With a jumper wire, connect one end to the (W4) Wiper High Speed Motor Control Output circuit at the Wiper connector and the other to a clean chassis ground.
2. Using a 12-volt test light to battery voltage, probe the (W4) Wiper High Speed Control Output circuit in the C11 TIPM harness connector.

NOTE: The test light should be illuminated and bright. Compare the brightness to that of a direct connection to the battery.

Does the test light illuminate brightly?

Yes

- Go To 4

No

- Repair the excessive resistance in the (W4) Front Wiper High Speed Control Output circuit.
- Perform the BODY VERIFICATION TEST. Refer to **STANDARD PROCEDURE** .

4. **CHECKING WIPER OPERATION**
   1. Turn the ignition off.
   2. Disconnect the Wiper Motor harness connector.
   3. Momentarily jumper 12-volts to the Wiper Motor.

   Did the Wiper Motor operate properly?

   Yes

   - Go To 6

   No

   - Go To 5

5. **GROUND CIRCUIT OPEN**
   1. Using a 12-volt test light connected to 12-volts, check for a good case ground at the Wiper Motor.

   Does the test light illuminate brightly?

   Yes

   - Replace the Wiper Motor in accordance with the Service Information.
   - Perform the BODY VERIFICATION TEST. Refer to **STANDARD PROCEDURE** .

   No

   - Repair the open or excessive resistance in the (Z971) Ground circuit.
   - Perform the BODY VERIFICATION TEST. Refer to **STANDARD PROCEDURE** .

6. TOTALLY INTEGRATED POWER MODULE

NOTE: Before continuing, check the TIPM harness connector terminals for corrosion, damage, or terminal push out. Repair as necessary.

1. Using the schematics as a guide, inspect the wire harness and connectors.
2. Pay particular attention to all Power and Ground circuits.

Were any problems found?

Yes

- Repair as necessary.
- Perform the BODY VERIFICATION TEST. Refer to **STANDARD PROCEDURE** .

No

- Replace the Totally Integrated Power Module in accordance with the service information.
- Perform the BODY VERIFICATION TEST. Refer to **STANDARD PROCEDURE** .

B2371-HORN CONTROL CIRCUIT OVERCURRENT

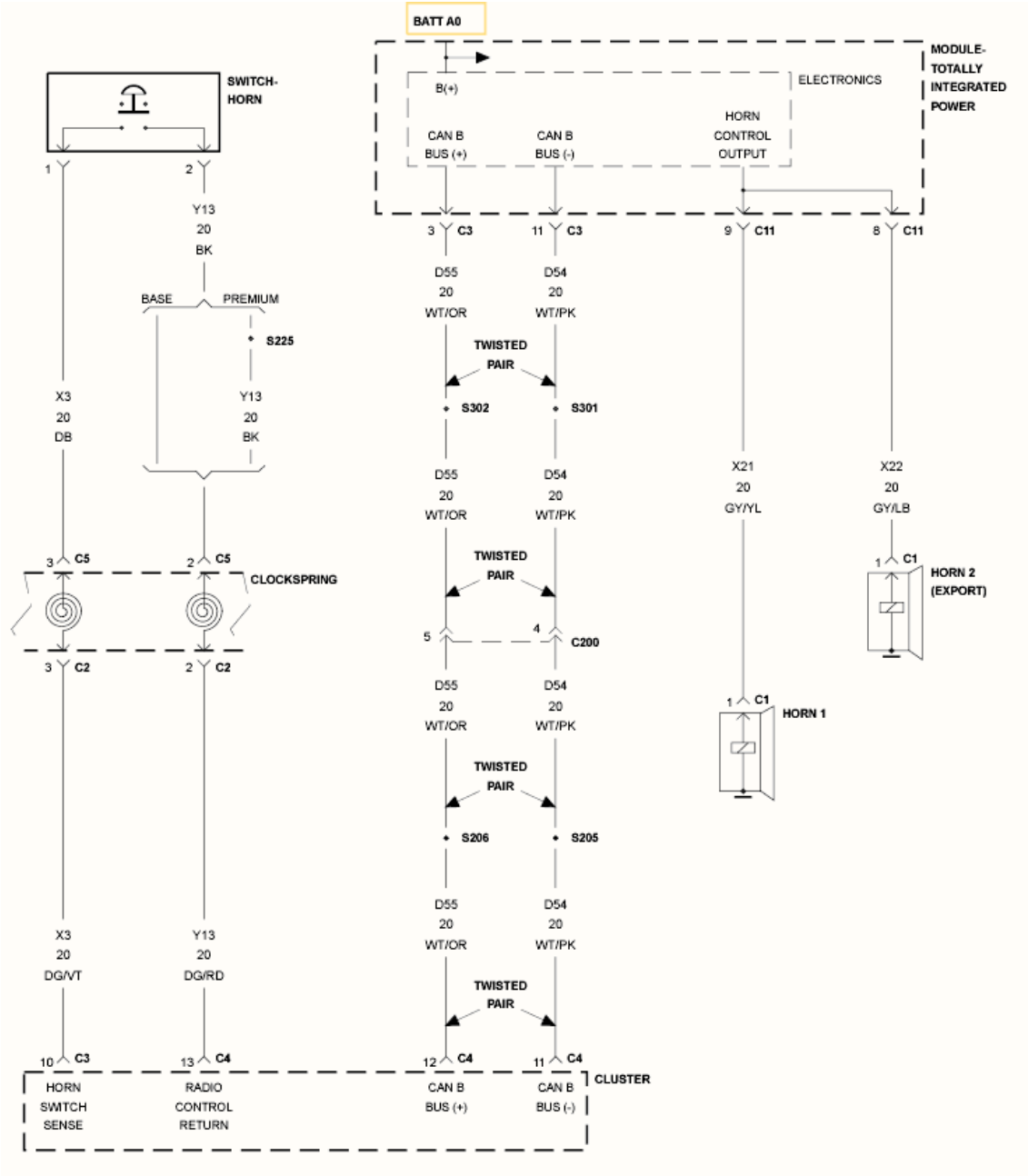

Fig. 57: Horn Control - Circuit Diagram
Courtesy of CHRYSLER GROUP, LLC

For a complete wiring diagram, **refer to appropriate SYSTEM WIRING DIAGRAMS article** .

WHEN MONITORED

With the ignition on.

Battery voltage greater than 10.4 volts.

SET CONDITION

An overcurrent condition in the (X21)/(X22) Horn Control Output circuit.

POSSIBLE CAUSES

Possible Causes
TERMINAL DAMAGE OR CORROSION
(X21) HORN CONTROL OUTPUT CIRCUIT HIGH RESISTANCE
(X22) HORN CONTROL OUTPUT CIRCUIT HIGH RESISTANCE (EXPORT)
HORN CASE GROUND
TOTALLY INTEGRATED POWER MODULE (TIPM)

DIAGNOSTIC TEST

1. **CHECK FOR ACTIVE DTC B2371-HORN CONTROL CIRCUIT OVERCURRENT**
   1. Turn the ignition on.
   2. With the scan tool, record and erase DTCs.
   3. Operate the Horn Switch several times.
   4. With the scan tool, read DTCs.

   Does the scan tool display active DTC B2371-HORN CONTROL CIRCUIT OVERCURRENT?

   Yes

   - Go To 2

   No

   - Test complete, the condition or conditions that originally set this DTC are not present at this time. Using the wiring diagrams as a guide, check all related splices and connectors for signs of water intrusion, corrosion, pushed out or bent terminals, and correct pin tension.
   - Perform the BODY VERIFICATION TEST. Refer to **STANDARD PROCEDURE** .
2. **VISUAL AND PHYSICAL CONNECTOR AND TERMINAL INSPECTION**

1. Turn the ignition off.
2. Inspect the following connector terminal condition. Check for signs of corrosion build up or damage that would compromise the terminal to controller pin connector.

   NOTE: Make sure that all in-line connectors are inspected for corrosion and/or damage.

3. Disconnect the Horn connectors.
4. Disconnect the TIPM C11 harness connector.
5. Visually inspect the wiring harness. Look for any chafed, pierced, pinched or partially broken wires hidden in the wire insulation.

   Were any of the above conditions found?

   Yes

   - Repair or replace as necessary.
   - Perform the BODY VERIFICATION TEST. Refer to **STANDARD PROCEDURE** .

   No

   - Go To 3

3. **(X21)/(X22) HORN CONTROL OUTPUT CIRCUIT HIGH RESISTANCE**

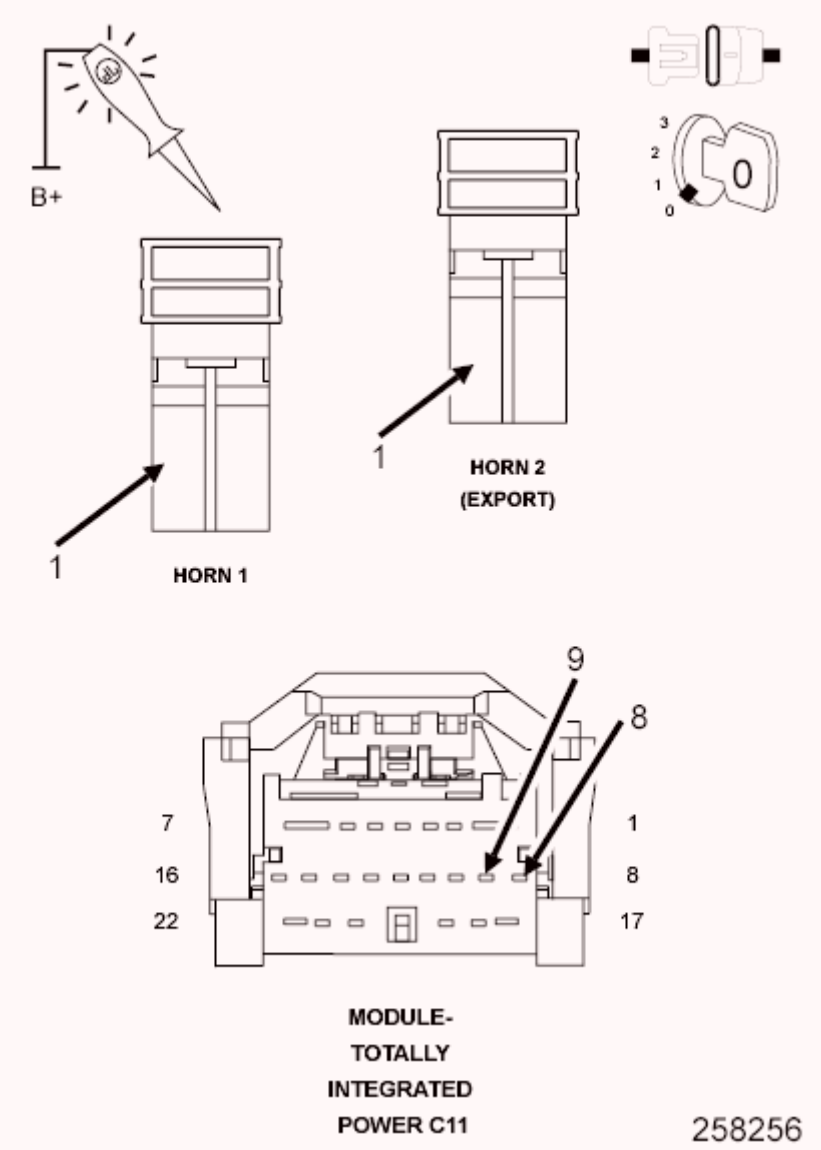

Fig. 58: Checking Horn Control Output Circuit For High Resistance
Courtesy of CHRYSLER GROUP, LLC

1. With a jumper wire, connect one end to the (X21) Horn Control Output circuit at the Horn connector and the other to a clean chassis ground.
2. Using a 12-volt test light to battery voltage, check the (X21) Control Output circuit in the TIPM C11 harness connector.

NOTE: Cavity 8 at the C11 TIPM harness connector is for export vehicles only.

NOTE: If this is an export vehicle, follow the previous steps for the (X22) Horn Control Circuit also.

NOTE: The test light should be illuminated and bright. Compare the brightness to that of a direct connection to the battery.

Does the test light illuminate brightly?

Yes

- Go To 4

No

- Repair the excessive resistance in the Horn Control Output circuit.
- Perform the BODY VERIFICATION TEST. Refer to **STANDARD PROCEDURE** .

4. **CHECKING HORN OPERATION**
   1. Turn the ignition off.
   2. Disconnect the horn(s) connector(s) if not disconnected.
   3. Momentarily jumper 12-volts to the horn(s).

   Did the horn(s) operate properly?

   Yes

   - Go To 6

   No

   - Go To 5

5. **CASE GROUND CIRCUIT OPEN**
   1. Using a 12-volt test light connected to 12-volts, check the case ground at the horn(s) case.

   Does the test light illuminate brightly?

   Yes

   - Replace the Horn(s) as necessary.
   - Perform the BODY VERIFICATION TEST. Refer to

STANDARD PROCEDURE .

No

- Repair the open or excessive resistance at the horn(s) case ground.
- Perform the BODY VERIFICATION TEST. Refer to **STANDARD PROCEDURE** .

6. **TOTALLY INTEGRATED POWER MODULE (TIPM)**

NOTE: Before continuing, check the TIPM harness connector terminals for corrosion, damage, or terminal push out. Repair as necessary.

1. Using the schematics as a guide, inspect the wire harness and connectors.
2. Pay particular attention to all Power and Ground circuits.

Were any problems found?

Yes

- Repair as necessary.
- Perform the BODY VERIFICATION TEST. Refer to **STANDARD PROCEDURE** .

No

- Replace the Totally Integrated Power Module in accordance with the Service Information.
- Perform the BODY VERIFICATION TEST. Refer to **STANDARD PROCEDURE** .

C1000-BRAKE PEDAL SWITCH 1 CIRCUIT - PERFORMANCE

For a complete wiring diagram, **refer to appropriate SYSTEM WIRING DIAGRAMS article** .

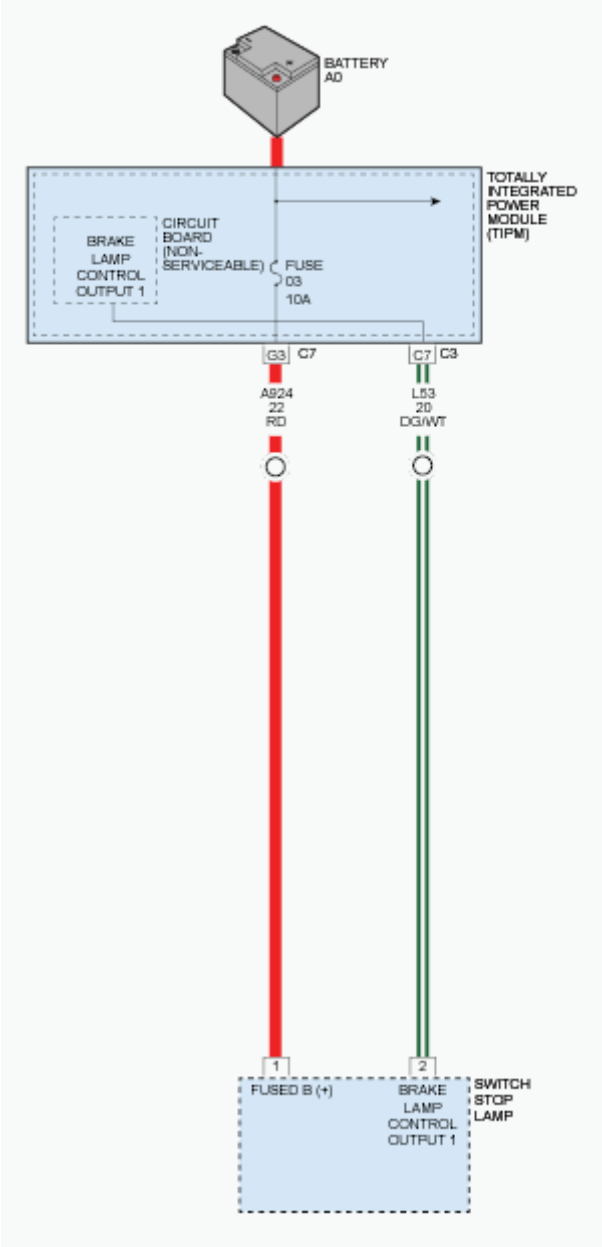

Fig. 59: Brake Pedal Switch 1 - Circuit Diagram
Courtesy of CHRYSLER GROUP, LLC

WHEN MONITORED

With the ignition on.

SET CONDITION

This DTC will set if the hard wired input from the Stop Lamp Switch does not match the Stop Lamp Switch CAN Bus input from the Powertrain Control Module (PCM).

POSSIBLE CAUSES

Possible Causes
BRAKE LAMP CONTROL OUTPUT CIRCUIT OPEN FUSED B (+) CIRCUIT OPEN OR SHORTED TO GROUND STOP LAMP SWITCH TOTALLY INTEGRATED POWER MODULE (TIPM)

DIAGNOSTIC TEST

1. **CHECK FOR AN ACTIVE DTC**

   NOTE: If any Brake Switch DTCs are present in the PCM, diagnose those DTCs before continuing.

   NOTE: Verify the Stop Lamp Switch is properly adjusted before continuing.

   1. Turn the ignition on.
   2. With the scan tool, read DTCs.

   Does the scan tool display this DTC as active?

   Yes

   - Go To 2

   No

   - Test complete. The condition or conditions that originally set this DTC are not present at this time. Using the wiring diagrams as a guide, check all related splices and connectors for signs of water intrusion, corrosion, pushed out or bent terminals and correct pin tension.
   - Perform the BODY VERIFICATION TEST. Refer to **STANDARD PROCEDURE** .

2. **CHECK CENTER HIGH MOUNTED STOP LAMP (CHMSL) OPERATION**
   1. Turn the ignition on.
   2. Press the brake pedal.

Does the CHMSL illuminate?

Yes

- Go To 5

No

- Go To 3

3. **CHECK THE (A924) FUSED B (+) CIRCUIT FOR AN OPEN OR SHORT TO GROUND**
   1. Back probe and measure the voltage of the (A924) Fused B (+) circuit at the Stop Lamp Switch harness connector.

      Is the voltage above 10.0 volts?

      Yes

      - Go To 4

      No

      - Repair the (A924) Fused B (+) circuit for an open or short to ground.
      - Perform the BODY VERIFICATION TEST. Refer to **STANDARD PROCEDURE** .

4. **CHECK THE OPERATION OF THE STOP LAMP SWITCH**
   1. With the Brake Pedal pressed, back probe and measure the voltage of the (L53) Brake Lamp Control Output circuit at the Stop Lamp Switch harness connector.

      Is the voltage above 10.0 volts?

      Yes

      - Go To 5

      No

      - Replace the Stop Lamp Switch in accordance with the Service

Information.

- Perform the BODY VERIFICATION TEST. Refer to **STANDARD PROCEDURE** .

5. **CHECK THE (L53) BRAKE LAMP CONTROL OUTPUT CIRCUIT FOR VOLTAGE WITH THE STOP LAMP SWITCH DEPRESSED**
   1. Disconnect the TIPM C3 harness connector.
   2. With the brake pedal pressed, check the voltage of the (L53) Brake Lamp Control Output circuit at the TIPM C3 harness connector.

   Is the voltage above 10.0 volts?

   Yes

   - Replace the Totally Integrated Power Module (TIPM) in accordance with the Service Information.
   - Perform the BODY VERIFICATION TEST. Refer to **STANDARD PROCEDURE** .

   No

   - Repair the (L53) Brake Lamp Control Output circuit for an open.
   - Perform the BODY VERIFICATION TEST. Refer to **STANDARD PROCEDURE** .

C1002-BRAKE SWITCH STUCK HIGH

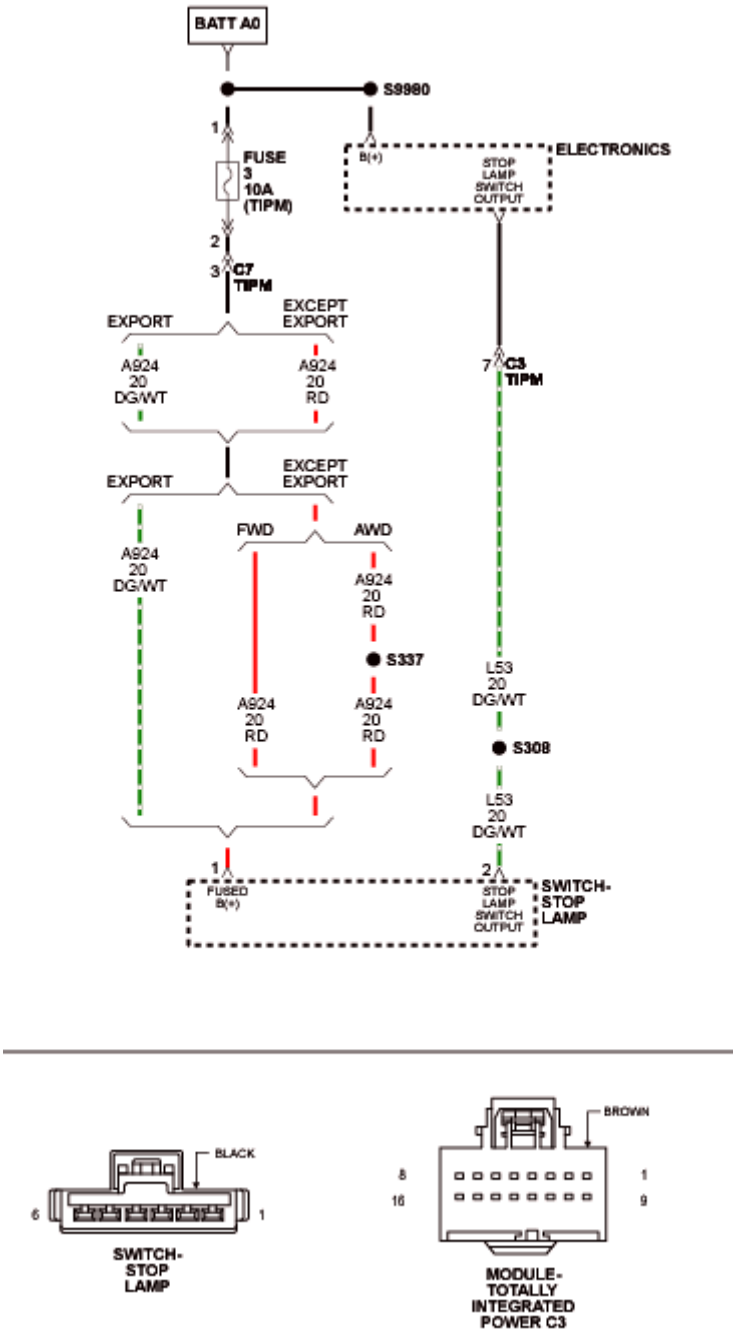

Fig. 60: Stop Lamp Switch Wiring Diagram
Courtesy of CHRYSLER GROUP, LLC

For a complete wiring diagram, **refer to appropriate SYSTEM WIRING DIAGRAMS article** .

WHEN MONITORED

Ignition off and all doors closed.

SET CONDITION

CAN Bus ready to go to sleep and brake input active for more than three minutes.

POSSIBLE CAUSES

Possible Causes
(L53) STOP LAMP SWITCH OUTPUT SHORTED TO VOLTAGE
STOP LAMP SWITCH
TOTALLY INTEGRATED POWER MODULE (TIPM)

DIAGNOSTIC TEST

1. **ACTIVE DTC**

   NOTE: If any Powertrain Brake DTCs are present they must be repaired before continuing.

   NOTE: Make sure the Stop Lamp Switch is properly adjusted before continuing.

   1. Ignition on, engine not running.
   2. With a scan tool, select View DTCs.

   Is the DTC Active at this time?

   Yes

   - Go To 2

   No

   - The conditions that caused this code to set are not present at this time. Using the wiring diagram/schematic as a guide, inspect the wiring and connectors. Repair as necessary.
   - Perform the Body Verification Test. Refer to **STANDARD PROCEDURE** .

2. **STOP LAMP SWITCH**

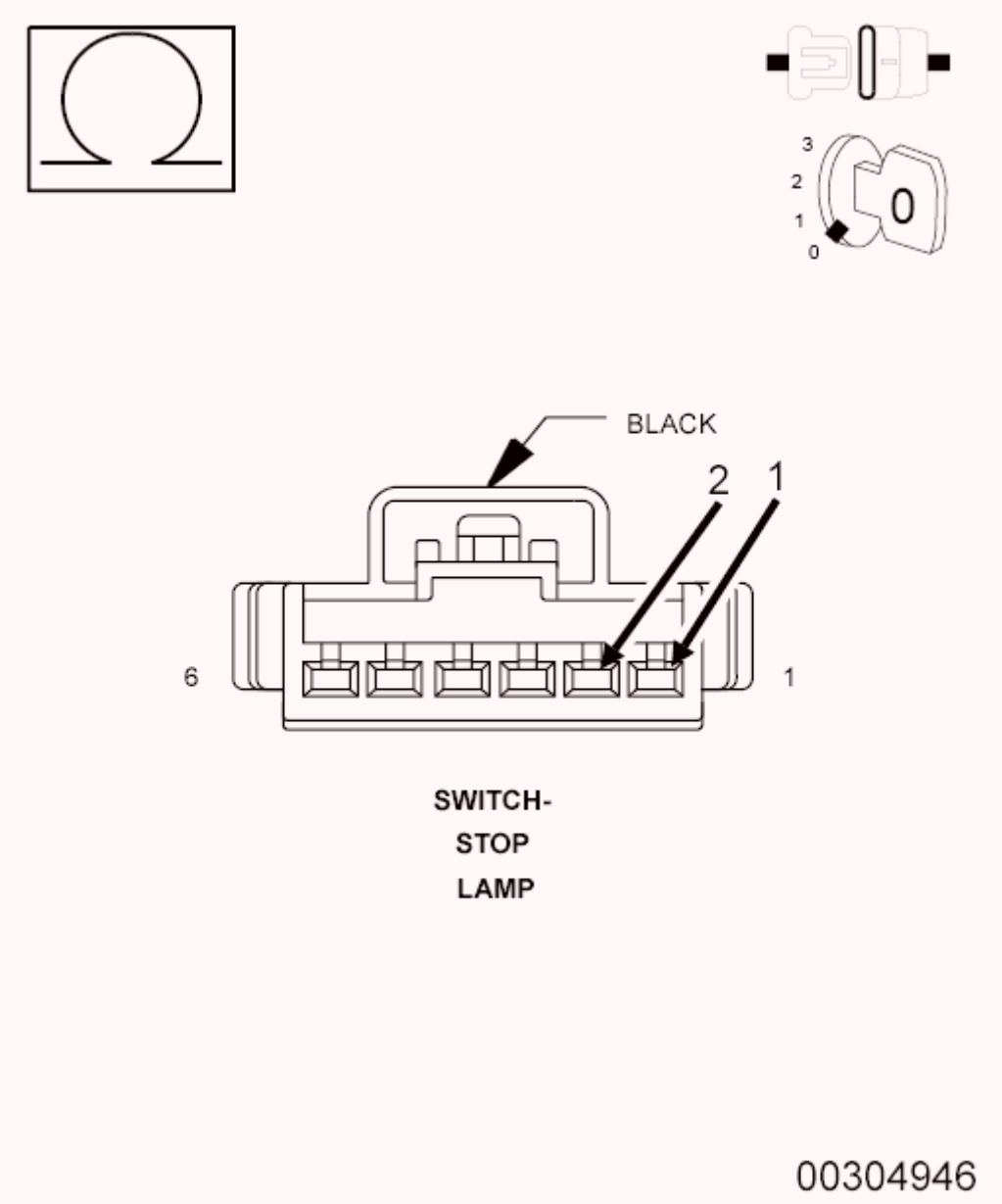

Fig. 61: Checking Stop Lamp Switch Circuit
Courtesy of CHRYSLER GROUP, LLC

1. Turn the ignition off.
2. Disconnect the Stop Lamp Switch.
3. Measure the resistance between the (A924) Fused B+ terminal and the (L53) Stop Lamp Switch Output terminal in the Stop Lamp Switch.
4. Apply and release the brake pedal while monitoring the ohmmeter.

   Does the resistance change from below 5.0 Ohms to an open circuit?

   Yes

- Go To 3

No

- Replace the Stop Lamp Switch.
- Perform the Body Verification Test. Refer to **STANDARD PROCEDURE** .

3. **(L53) STOP LAMP SWITCH OUTPUT CIRCUIT**

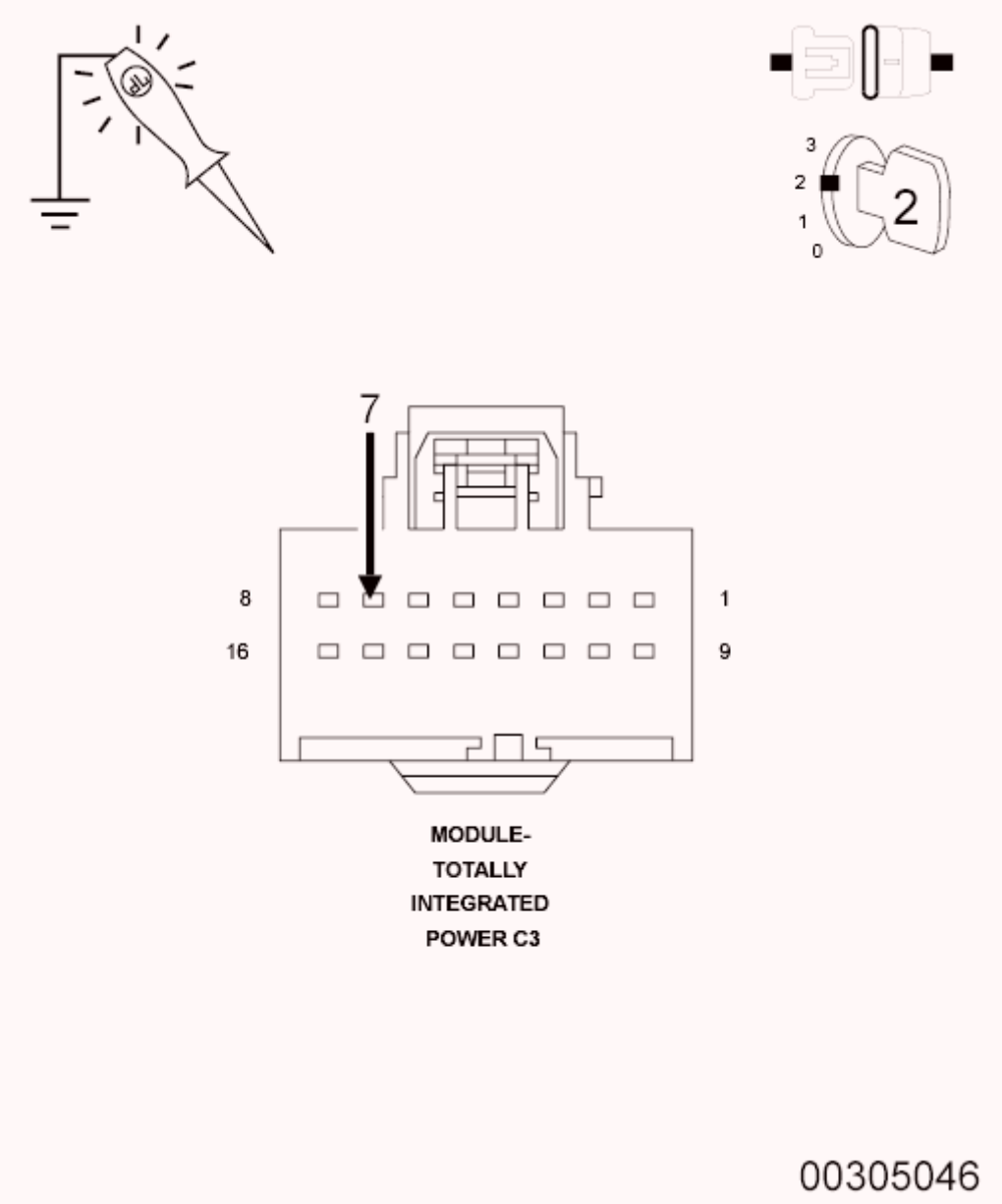

Fig. 62: Checking Stop Lamp Switch Output Circuit
Courtesy of CHRYSLER GROUP, LLC

1. Reconnect the Stop Lamp Switch.

2. Disconnect the Totally Integrated Power Module (TIPM) C3 harness connector.
3. Turn the ignition on.
4. Using a 12-volt test light connected to ground, check the (L53) Stop Lamp Switch Output circuit in the Totally Integrated Power Module (TIPM) C3 harness connector while pressing and releasing the brake pedal several times.

   Does the test light change from illuminated when the pedal is pressed to not illuminated when the pedal is released?

   Yes

   - Replace and program the Totally Integrated Power Module (TIPM) in accordance with the Service Information.
   - Perform the Body Verification Test. Refer to **STANDARD PROCEDURE** .

   No

   - Repair the (L53) Stop Lamp Switch Output circuit for a short to voltage.
   - Perform the Body Verification Test. Refer to **STANDARD PROCEDURE** .

C1008-BRAKE FLUID LEVEL CIRCUIT HIGH

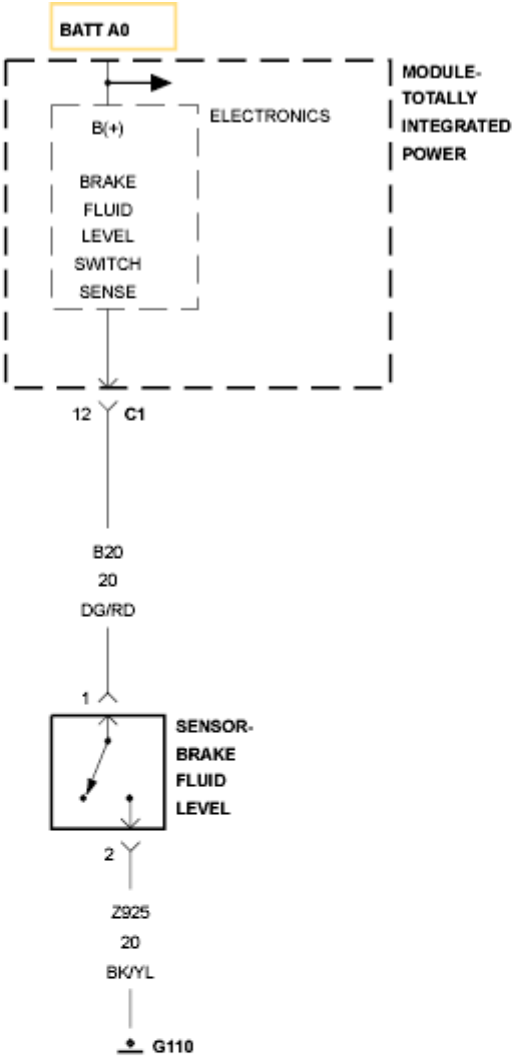
BATT A0
MODULE-
TOTALLY
INTEGRATED
POWER
ELECTRONICS
B(+)
BRAKE
FLUID
LEVEL
SWITCH
SENSE
12
C1
B20
20
DG/RD
1
SENSOR-
BRAKE
FLUID
LEVEL
2
Z925
20
BK/YL
G110

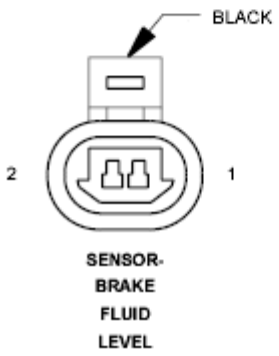
BLACK
2
1
SENSOR-
BRAKE
FLUID
LEVEL

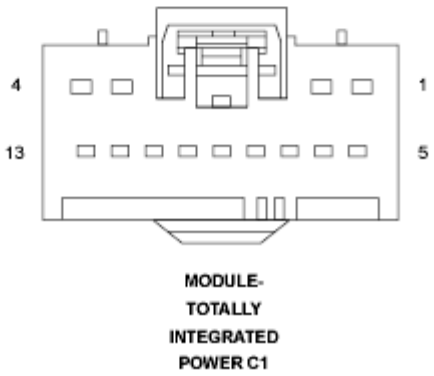
4
1
13
5
MODULE-
TOTALLY
INTEGRATED
POWER C1

Fig. 63: Brake Fluid Level Wiring Diagram
Courtesy of CHRYSLER GROUP, LLC

For a complete wiring diagram, **refer to appropriate SYSTEM WIRING DIAGRAMS article** .

WHEN MONITORED

With the ignition on.

SET CONDITION

When the Totally Integrated Power Module indicates that the Brake Fluid Level Circuit is greater than 4.9 volts for more than 5 seconds.

POSSIBLE CAUSES

Possible Causes
(B20) BRAKE FLUID LEVEL SWITCH SIGNAL CIRCUIT OPEN
(B20) BRAKE FLUID LEVEL SWITCH SIGNAL CIRCUIT SHORTED TO BATTERY VOLTAGE
BRAKE FLUID LEVEL SWITCH INTERNAL FAILURE
(Z925) SENSOR GROUND CIRCUIT OPEN
TOTALLY INTEGRATED POWER MODULE

DIAGNOSTIC TEST

1. **BRAKE FLUID LEVEL SWITCH SIGNAL VOLTAGE ABOVE 4.9 VOLTS**

   NOTE: This DTC must be active for the results of this test to be valid.

   1. Turn the ignition on.
   2. With the scan tool, read Fuel Level Switch Signal voltage.

      Is the voltage above 4.9 volts?

      Yes

      - Go To 2

No

- Perform the ABS-INTERMITTENT CONDITION TEST. Refer to **STANDARD PROCEDURE** .

2. **(B20) BRAKE FLUID LEVEL SWITCH SIGNAL CIRCUIT FOR SHORT TO BATTERY VOLTAGE**

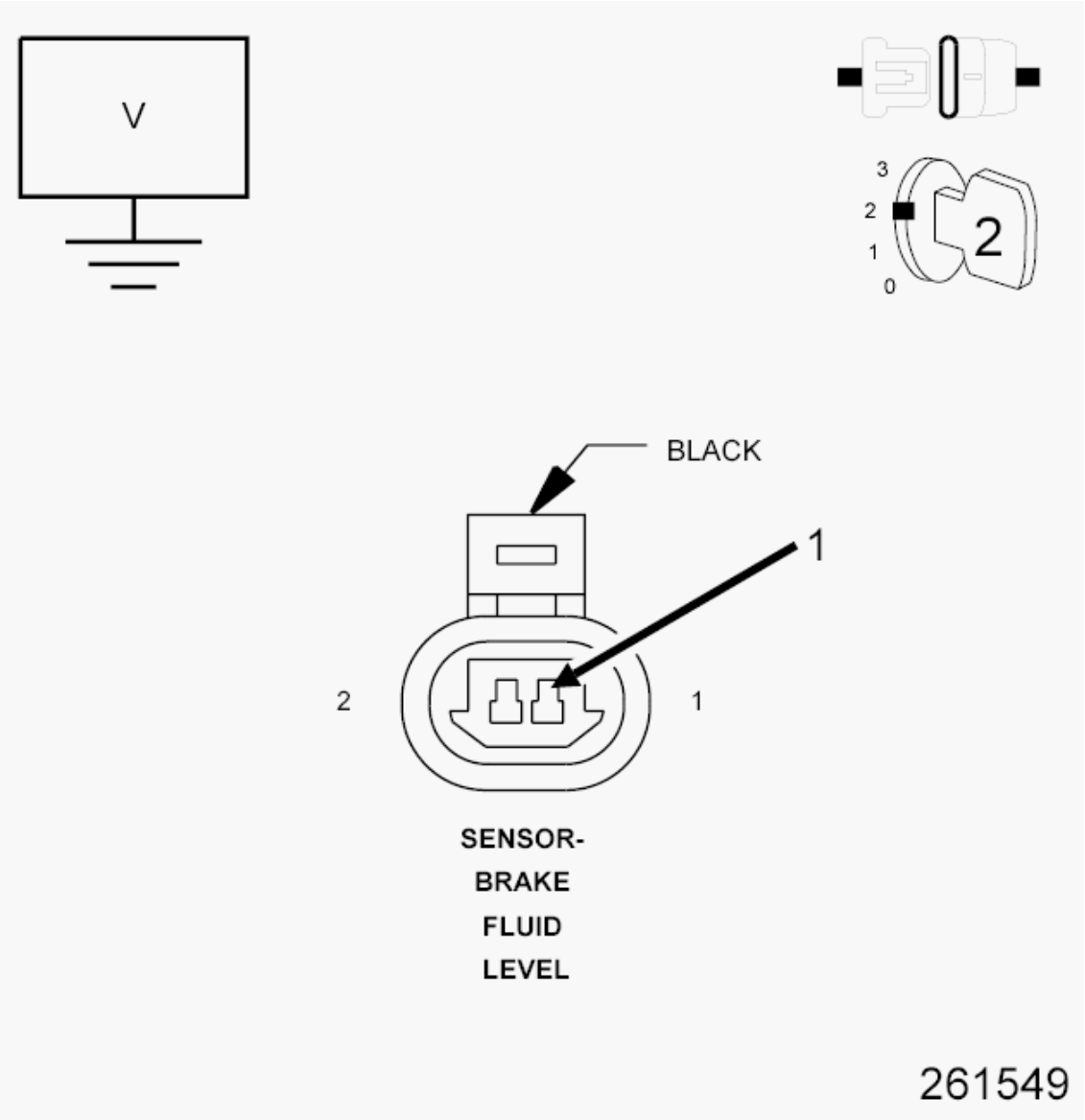

Fig. 64: Checking Brake Fluid Level Switch Signal Circuit For Short To Battery Voltage
Courtesy of CHRYSLER GROUP, LLC

1. Turn the ignition off.
2. Disconnect the Brake Fluid Level Switch harness connector.
3. Turn the ignition on.

4. Measure the voltage of the (B20) Brake Fluid Level signal circuit in the Brake Fluid Level Switch harness connector to ground.

   Is the voltage above 5.2 volts?

   Yes

   - Repair the (B20) Brake Fluid Level signal circuit for a short to voltage.
   - Perform the ABS VERIFICATION TEST. Refer to **STANDARD PROCEDURE** .

   No

   - Go To 3

3. **BRAKE FLUID LEVEL SWITCH INTERNAL FAILURE**

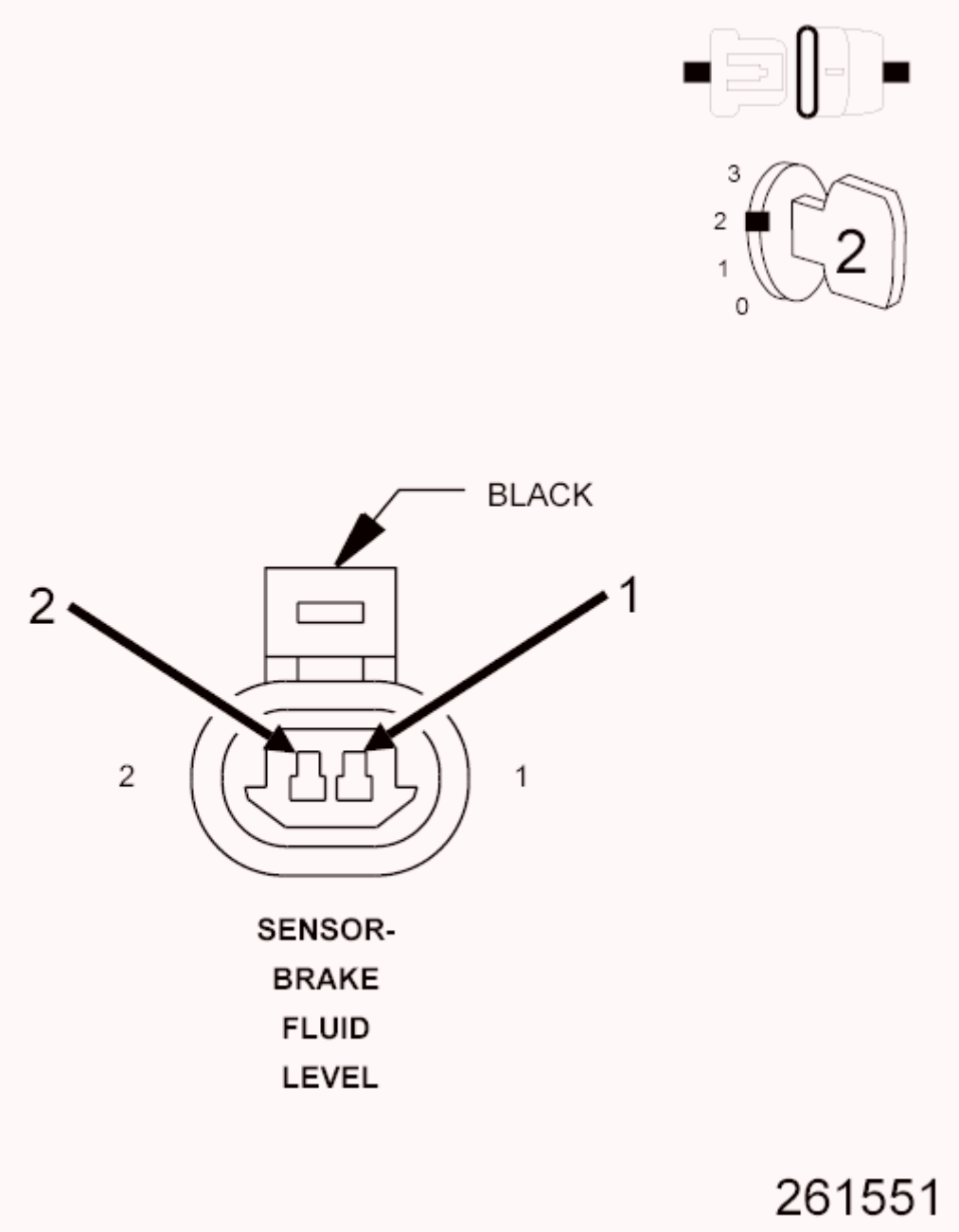

Fig. 65: Checking Brake Fluid Level Signal Circuit
Courtesy of CHRYSLER GROUP, LLC

1. Turn the ignition off.
2. Connect a jumper wire between the (B20) Brake Fluid Level signal circuit and the (Z925) Brake Fluid Level ground circuit in the Brake Fluid Level Switch harness connector
3. Turn the ignition on.
4. With the scan tool, read the Brake Fluid Level Switch voltage.

   Is the voltage below 1.0 volt?

Yes

- Replace the Brake Fluid Level Switch in accordance with the Service Information.
- Perform the ABS VERIFICATION TEST. Refer to **STANDARD PROCEDURE** .

No

- Go To 4

4. **(B20) BRAKE FLUID LEVEL SWITCH CIRCUIT OPEN**

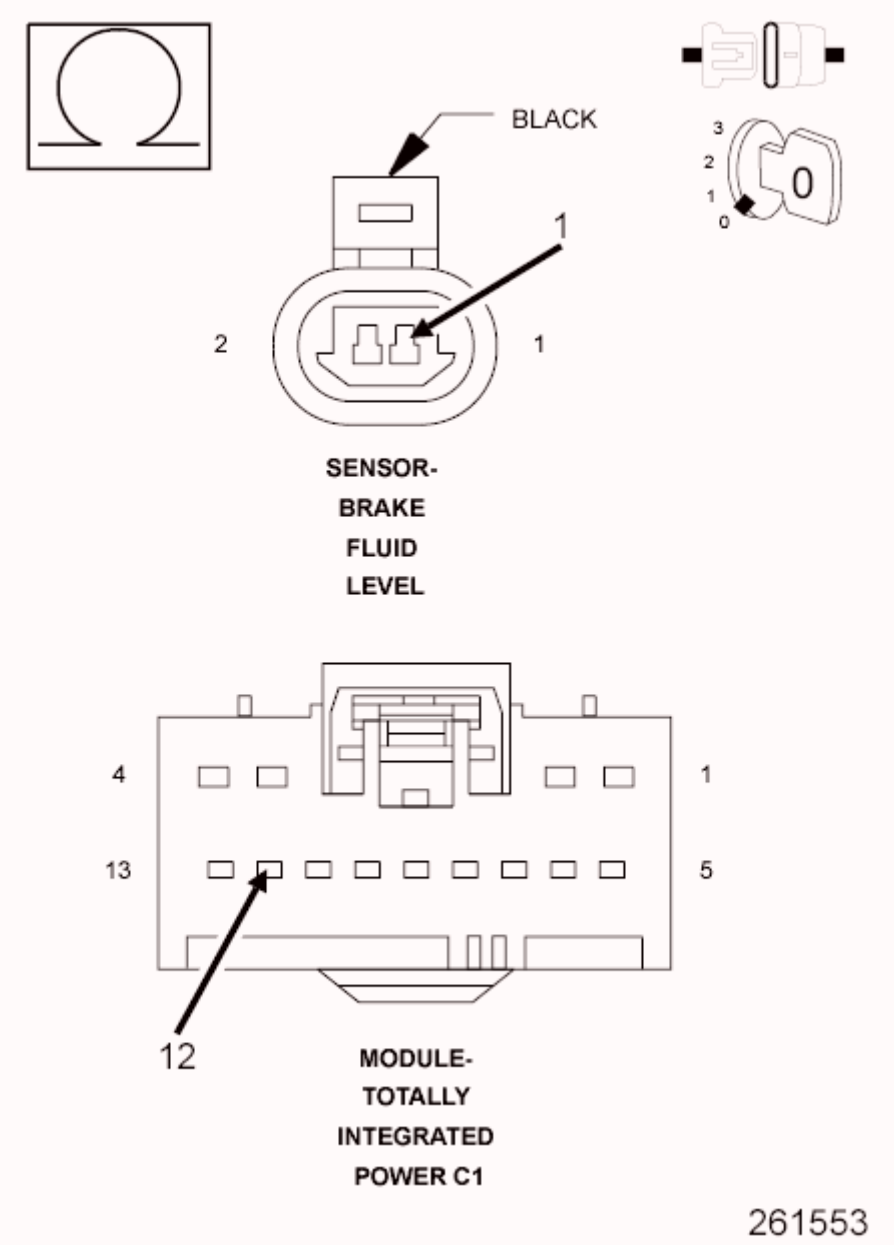

Fig. 66: Checking Brake Fluid Level Switch Circuit For Open
Courtesy of CHRYSLER GROUP, LLC

1. Turn the ignition off.
2. Disconnect the Brake Fluid Level Switch.
3. Disconnect the TIPM harness connector.
4. Measure the resistance of the (B20) Brake Fluid Level signal circuit between the Brake Fluid Level Switch harness connector and the TIPM harness connector.

   Is the resistance below 5 Ohms?

   Yes

   - Go To 5

   No

   - Repair the open in the (B20) Brake Fluid Level Switch signal circuit.
   - Perform the ABS VERIFICATION TEST. Refer to **STANDARD PROCEDURE** .

5. **(Z925) SENSOR GROUND CIRCUIT OPEN**

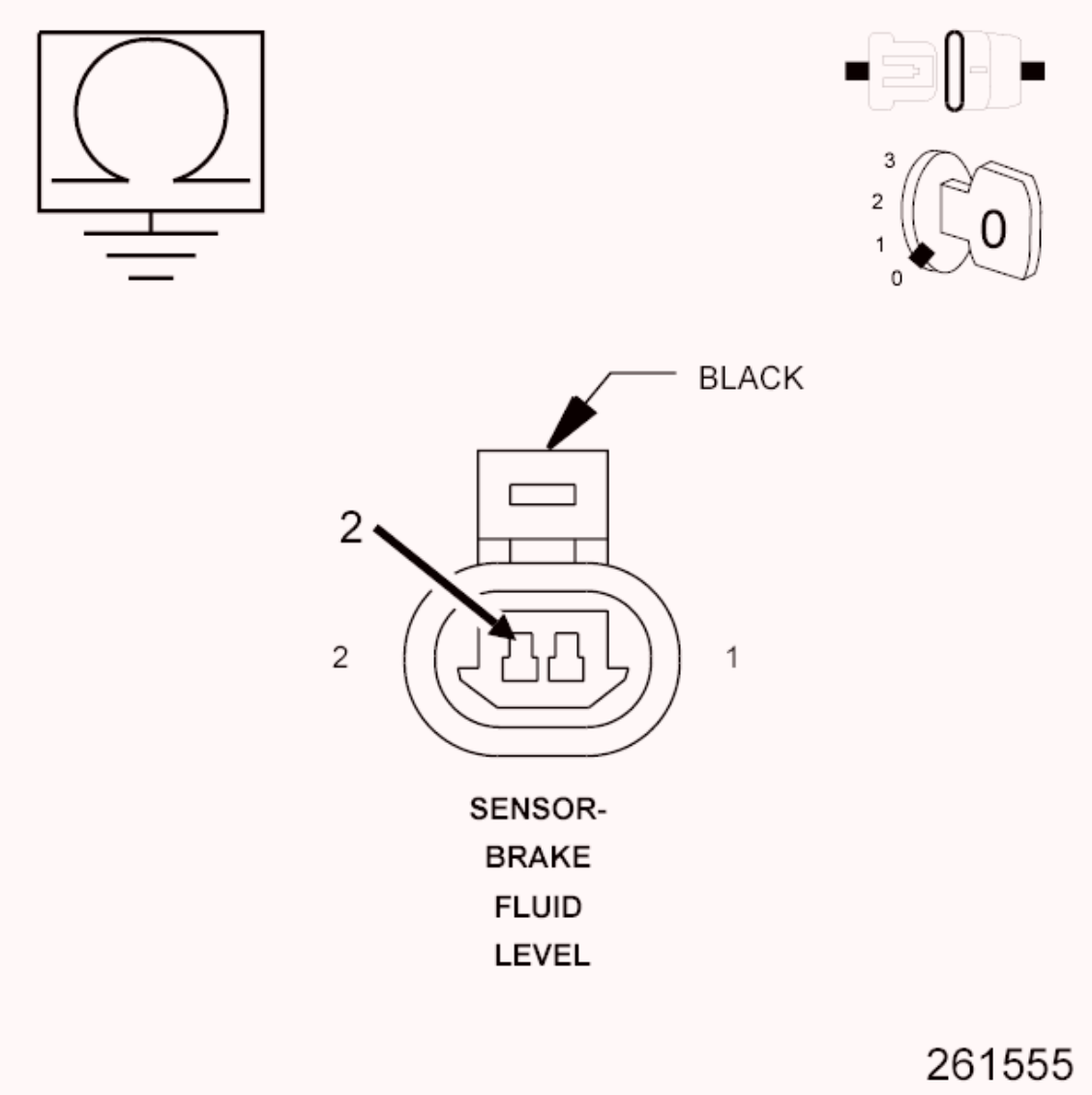

Fig. 67: Checking Brake Fluid Level Sensor Ground Circuit For Open
Courtesy of CHRYSLER GROUP, LLC

1. Turn the ignition off.
2. Disconnect the Brake Fluid Level Switch harness connector.
3. Reconnect the TIPM harness connector.
4. Measure the resistance of the (Z925) Brake Fluid Level Switch ground circuit between the Brake Fluid Level Switch harness connector and ground.

   Is the resistance below 5.0 Ohms?

   Yes

   - Replace and program the Totally Integrated Power Module in

accordance with the Service Information.

- Perform the ABS VERIFICATION TEST. Refer to **STANDARD PROCEDURE** .

No

- Repair the open in the (Z925) Sensor ground circuit.
- Perform the ABS VERIFICATION TEST. Refer to **STANDARD PROCEDURE** .

P0072-AMBIENT AIR TEMPERATURE SENSOR CIRCUIT - LOW

For a complete wiring diagram, **refer to appropriate SYSTEM WIRING DIAGRAMS article** .

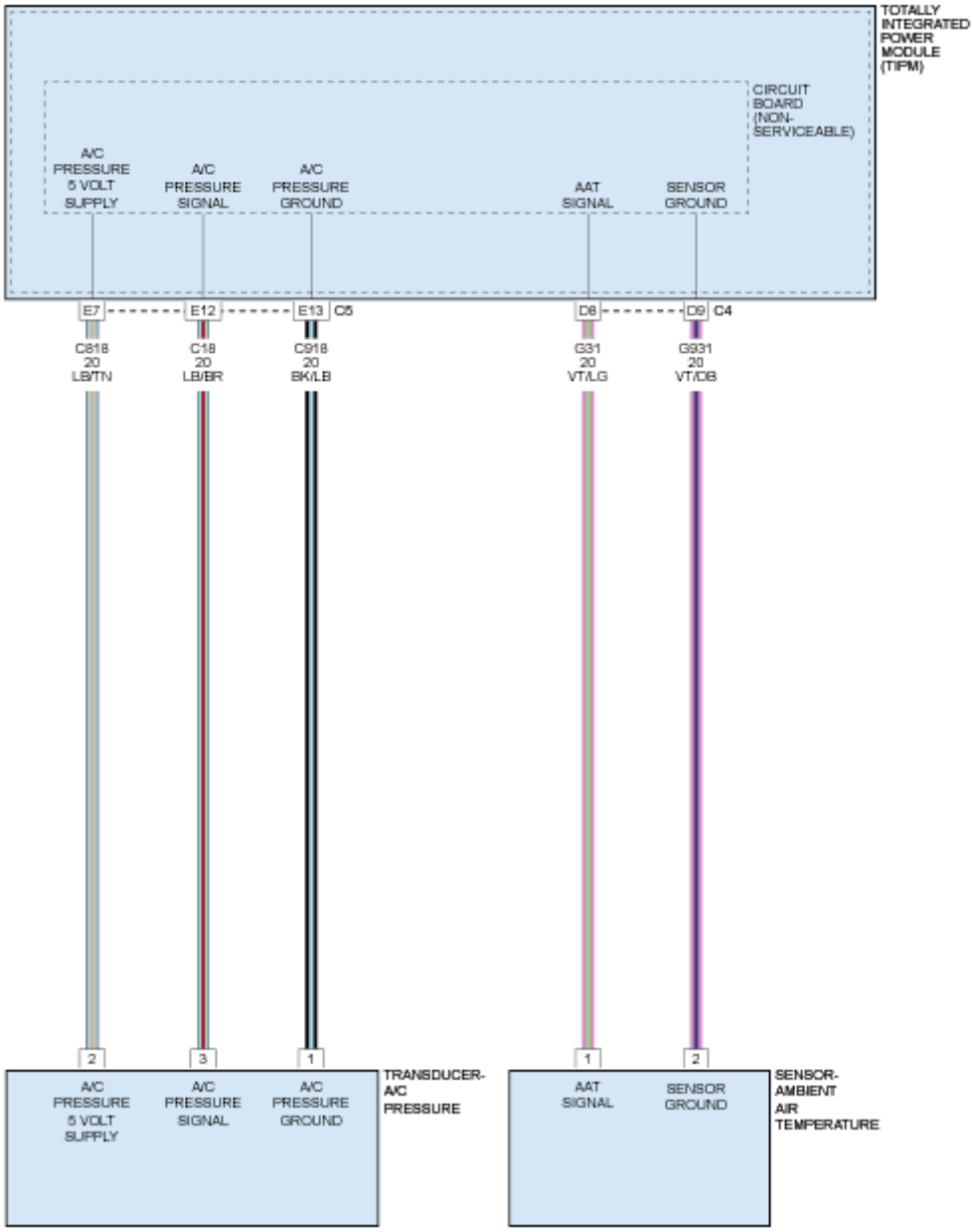

Fig. 68: Ambient Air Temperature Sensor - Circuit Diagram
Courtesy of CHRYSLER GROUP, LLC

WHEN MONITORED

With the ignition on.

Battery voltage greater than 10.4 volts.

SET CONDITION

The Totally Integrated Power Module (TIPM) detects the Ambient Air

Temperature Sensor input voltage is below the minimum acceptable value.

POSSIBLE CAUSES

Possible Causes
(G31) AAT SENSOR SIGNAL CIRCUIT SHORTED TO GROUND
(G31) AAT SENSOR SIGNAL CIRCUIT SHORTED TO THE (G931) SENSOR RETURN CIRCUIT
AMBIENT AIR TEMPERATURE (AAT) SENSOR
TOTALLY INTEGRATED POWER MODULE (TIPM)

DIAGNOSTIC TEST

1. **VERIFY THE DTC IS ACTIVE**

NOTE: Diagnose and repair any system voltage DTCs before continuing with this test.

1. Start the engine and allow it to reach normal operating temperature.

WARNING: When the engine is operating, do not stand in direct line with the fan. Do not put your hands near the pulleys, belts or fan. Do not wear loose clothing. Failure to follow these instructions may result in possible serious or fatal injury.

2. With the scan tool, read DTCs.

   Is the DTC Active at this time?

   Yes

   - Go To 2

   No

   - Test complete, the condition or conditions that originally set this DTC are not present at this time. Using the wiring diagrams as a guide, check all related splices and connectors for signs of water

intrusion, corrosion, pushed out or bent terminals, and correct pin tension.

- Perform the BODY VERIFICATION TEST. Refer to **STANDARD PROCEDURE** .

2. **CHECK THE AMBIENT AIR TEMPERATURE SENSOR**
   1. Turn the ignition off.
   2. Disconnect the Ambient Air Temperature Sensor harness connector.
   3. Turn the ignition on.
   4. With the scan tool, read the Ambient Air Temperature Sensor signal voltage.

   Is the voltage above 4.5 volts with the Ambient Air Temperature Sensor harness disconnected?

   Yes

   - Verify there is good pin to terminal contact in the AAT Sensor and TIPM harness connectors. Replace the Ambient Temperature Sensor if no problems were found with the connectors in accordance with the Service Information.
   - Perform the BODY VERIFICATION TEST. Refer to **STANDARD PROCEDURE** .

   No

   - Go To 3

3. **CHECK THE (G31) AAT SENSOR SIGNAL CIRCUIT FOR A SHORT TO GROUND**
   1. Turn the ignition off.
   2. Disconnect the TIPM C4 harness connector.
   3. Measure the resistance between ground and the (G31) AAT Sensor Signal circuit in the Ambient Air Temperature Sensor harness connector.

   Is the resistance above 10k Ohms?

   Yes

- Go To 4

No

- Repair the short to ground in the (G31) AAT Sensor Signal circuit.
- Perform the BODY VERIFICATION TEST. Refer to **STANDARD PROCEDURE** .

4. **CHECK THE (G31) AAT SENSOR SIGNAL CIRCUIT FOR A SHORT TO THE (G931) SENSOR RETURN CIRCUIT**
   1. Measure the resistance between the (G31) AAT Sensor Signal circuit and the (G931) Sensor Return circuit in the Ambient Air Temperature Sensor harness connector.

      Is the resistance above 10k Ohms?

      Yes

      - Go To 5

      No

      - Repair the short between the (G31) AAT Sensor Signal circuit and the (G931) Sensor Return circuit.
      - Perform the BODY VERIFICATION TEST. Refer to **STANDARD PROCEDURE** .
5. **TOTALLY INTEGRATED POWER MODULE (TIPM)**
   1. Using the wiring diagram/schematic as a guide, inspect the wiring and connectors between the Ambient Air Temperature Sensor and the Totally Integrated Power Module (TIPM).
   2. Look for any chafed, pierced, pinched, or partially broken wires.
   3. Look for broken, bent, pushed out or corroded terminals.
   4. Verify that there is good pin to terminal contact in the AAT Sensor and TIPM connectors.
   5. Monitor the scan tool data relative to this circuit and wiggle test the wiring and connectors.
   6. Look for the data to change or for the DTC to reset during the wiggle test.

7. Perform any Technical Service Bulletins (TSB)s that may apply.

   Were any problems found?

   Yes

   - Repair as necessary.
   - Perform the BODY VERIFICATION TEST. Refer to **STANDARD PROCEDURE** .

   No

   - Replace the TIPM in accordance with the Service Information.
   - Perform the BODY VERIFICATION TEST. Refer to **STANDARD PROCEDURE** .

P0073-AMBIENT AIR TEMPERATURE SENSOR CIRCUIT - HIGH

For a complete wiring diagram, **refer to appropriate SYSTEM WIRING DIAGRAMS article** .

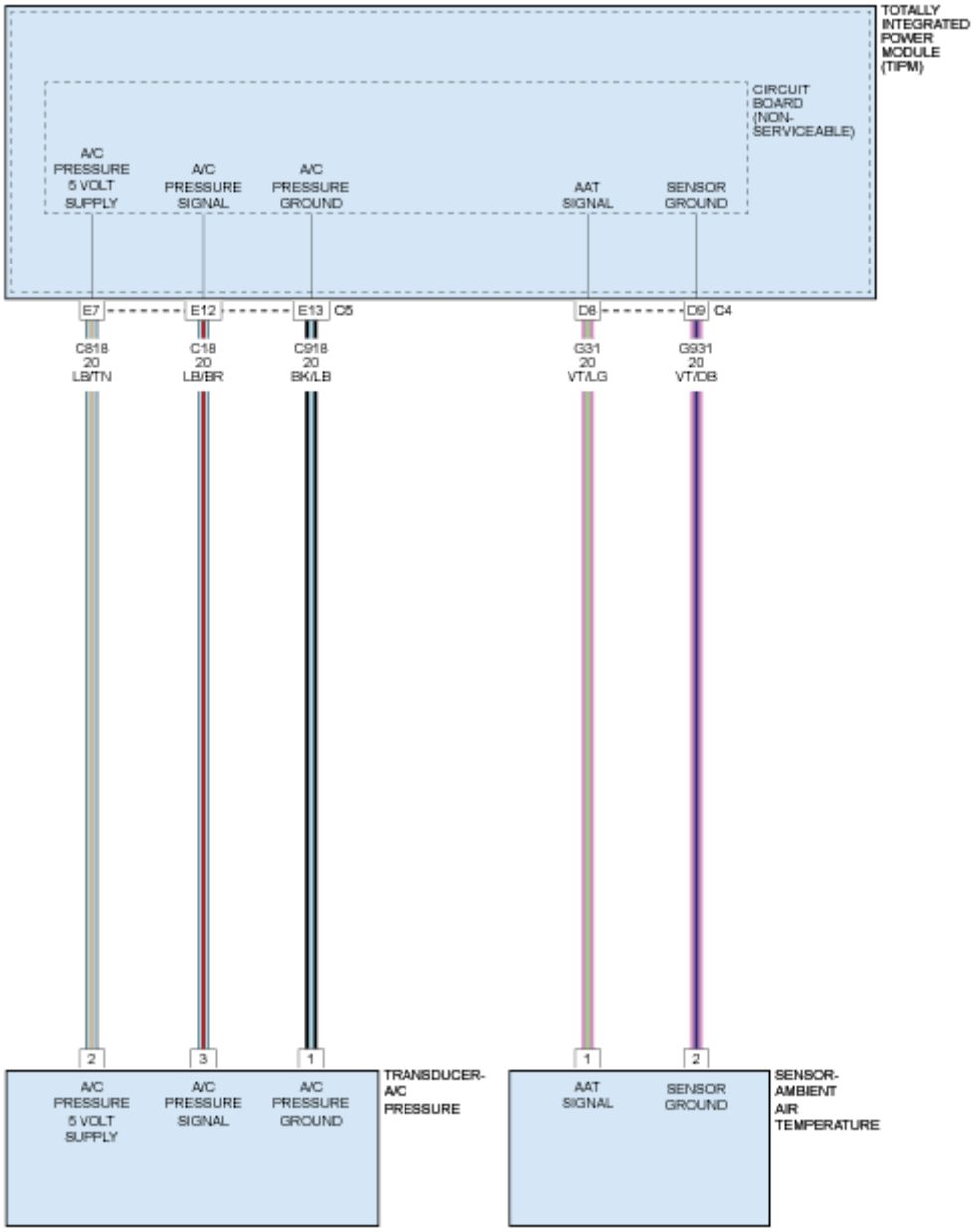

Fig. 69: Ambient Air Temperature Sensor - Circuit Diagram
Courtesy of CHRYSLER GROUP, LLC

WHEN MONITORED

With the ignition on.

Battery voltage greater than 10.4 volts.

SET CONDITION

The Totally Integrated Power Module (TIPM) detects that the Ambient Air

Temperature Sensor input voltage is above the maximum acceptable value.

POSSIBLE CAUSES

Possible Causes
(G31) AAT SENSOR SIGNAL CIRCUIT SHORTED TO VOLTAGE
(G31) AAT SENSOR SIGNAL CIRCUIT OPEN
(G931) SENSOR RETURN CIRCUIT OPEN
AMBIENT AIR TEMPERATURE (AAT) SENSOR
TOTALLY INTEGRATED POWER MODULE (TIPM)

DIAGNOSTIC TEST

1. **VERIFY THE DTC IS ACTIVE**

NOTE: Diagnose and repair any system voltage DTCs before continuing with this test.

1. Start the engine and allow it to reach normal operating temperature.

WARNING: When the engine is operating, do not stand in direct line with the fan. Do not put your hands near the pulleys, belts or fan. Do not wear loose clothing. Failure to follow these instructions may result in possible serious or fatal injury.

2. With the scan tool, read DTCs.

   Is the DTC Active at this time?

   Yes

   - Go To 2

   No

   - Test complete. The condition or conditions that originally set this DTC are not present at this time. Using the wiring diagrams as a guide, check all related splices and connectors for signs of water

intrusion, corrosion, pushed out or bent terminals and correct pin tension.

- Perform the BODY VERIFICATION TEST. Refer to **STANDARD PROCEDURE** .

2. **CHECK THE (G31) AAT SENSOR SIGNAL CIRCUIT FOR A SHORT TO VOLTAGE**
   1. Turn the ignition off.
   2. Disconnect the Ambient Air Temperature Sensor harness connector.
   3. Disconnect the TIPM C4 harness connector.
   4. Turn the ignition on.
   5. Measure the voltage of the (G31) AAT Sensor Signal circuit in the Ambient Air Temperature Sensor harness connector.

   Is there any voltage present?

   Yes

   - Repair the short to voltage in the (G31) AAT Sensor Signal circuit.
   - Perform the BODY VERIFICATION TEST. Refer to **STANDARD PROCEDURE** .

   No

   - Go To 3

3. **CHECK THE AMBIENT AIR TEMPERATURE SENSOR**
   1. Turn the ignition off.
   2. Reconnect the TIPM C4 harness connector.
   3. Connect a jumper wire between the (G31) AAT Sensor Signal circuit and the (G931) Sensor Return in the Ambient Air Temperature Sensor harness connector.
   4. Turn the ignition on.
   5. With the scan tool, read the Ambient Air Temperature Sensor signal voltage.

   Is the voltage below 1.0 volt with the jumper wire in place?

   Yes

- Verify there is good pin to terminal contact in the AAT Sensor and TIPM harness connectors. Replace the Ambient Temperature Sensor if no problems were found with the connectors in accordance with the Service Information.
- Perform the BODY VERIFICATION TEST. Refer to **STANDARD PROCEDURE** .

No

- Go To 4

4. **CHECK THE (G31) AAT SENSOR SIGNAL CIRCUIT FOR AN OPEN**
   1. Turn the ignition off.
   2. Disconnect the TIPM C4 harness connector.
   3. Measure the resistance of the (G31) AAT Sensor Signal circuit between the Ambient Air Temperature Sensor harness connector and the TIPM C4 harness connector.

   Is the resistance below 5.0 Ohms?

   Yes

   - Go To 5

   No

   - Repair the open in the (G31) AAT Sensor Signal circuit.
   - Perform the BODY VERIFICATION TEST. Refer to **STANDARD PROCEDURE** .

5. **CHECK THE (G931) SENSOR RETURN CIRCUIT FOR AN OPEN**
   1. Measure the resistance of the (G931) Sensor Return circuit between the Ambient Air Temperature Sensor harness connector and the TIPM C4 harness connector.

   Is the resistance below 5.0 Ohms?

   Yes

   - Go To 6

No

- Repair the open in the (G931) Sensor Return circuit.
- Perform the BODY VERIFICATION TEST. Refer to **STANDARD PROCEDURE** .

6. **TOTALLY INTEGRATED POWER MODULE (TIPM)**
   1. Using the wiring diagram/schematic as a guide, inspect the wiring and connectors between the Ambient Air Temperature Sensor and the Totally Integrated Power Module (TIPM).
   2. Look for any chafed, pierced, pinched, or partially broken wires.
   3. Look for broken, bent, pushed out or corroded terminals.
   4. Verify that there is good pin to terminal contact in the AAT Sensor and Totally Integrated Power Module connectors.
   5. Monitor the scan tool data relative to this circuit and wiggle test the wiring and connectors.
   6. Look for the data to change or for the DTC to reset during the wiggle test.
   7. Perform any Technical Service Bulletins (TSB)s that may apply.

   Were any problems found?

   Yes

   - Repair as necessary.
   - Perform the BODY VERIFICATION TEST. Refer to **STANDARD PROCEDURE** .

   No

   - Replace the TIPM in accordance with the Service Information.
   - Perform the BODY VERIFICATION TEST. Refer to **STANDARD PROCEDURE** .

P0533-A/C PRESSURE SENSOR CIRCUIT - HIGH

For a complete wiring diagram, **refer to appropriate SYSTEM WIRING DIAGRAMS article** .

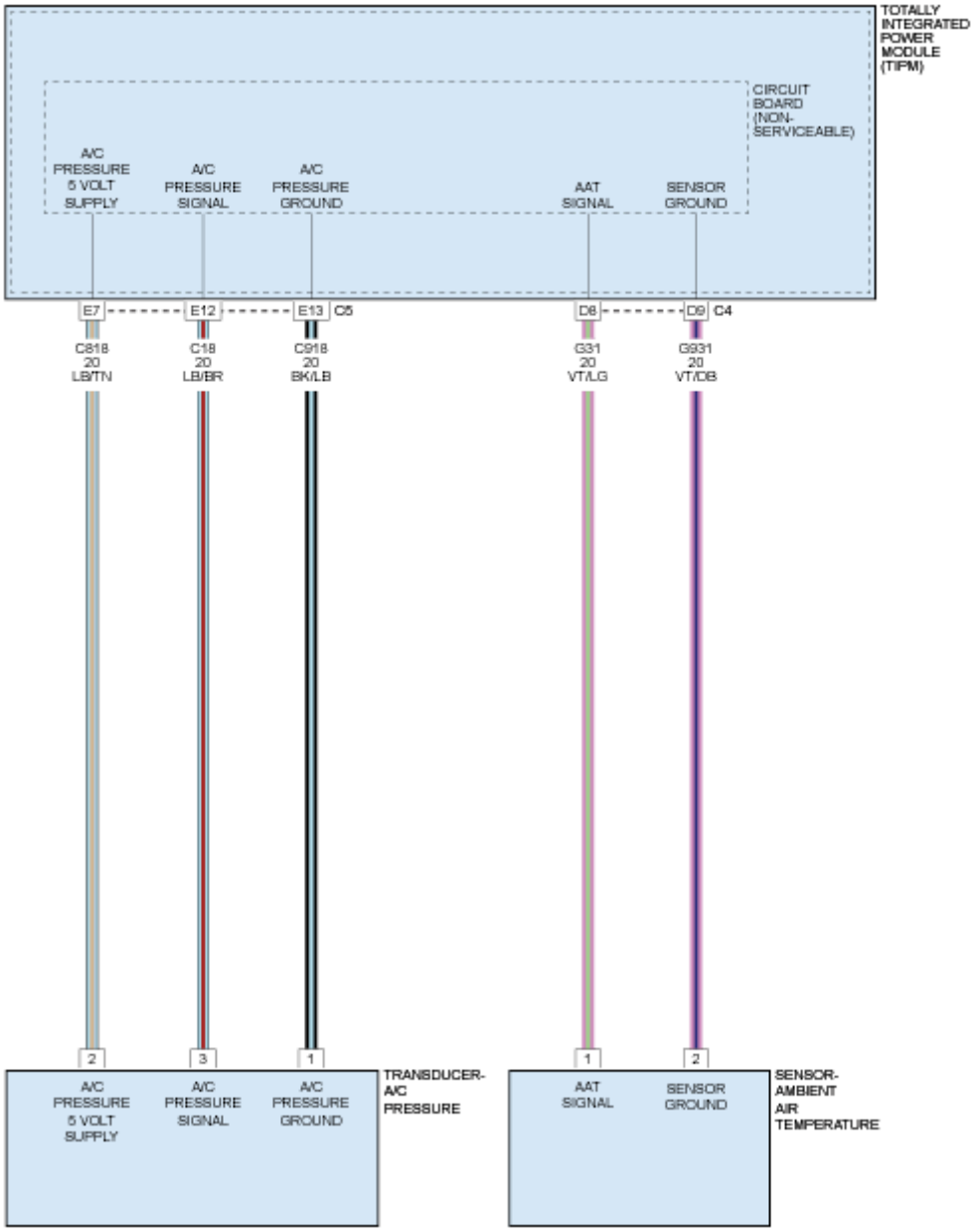

Fig. 70: A/C Pressure Sensor Circuit Diagram
Courtesy of CHRYSLER GROUP, LLC

THEORY OF OPERATION

The A/C pressure transducer monitors the pressures in the high side of the A/C refrigerant system through its connection to a fitting on the A/C discharge line and its internal resistance changes in response to the pressures it monitors. The Totally Integrated Power Module (TIPM) provides a five Volt reference signal and a sensor ground to the A/C pressure transducer, then monitors the output voltage of the transducer on a sensor return circuit to determine refrigerant

pressure the TIPM busses the reads to PCM. The PCM is programmed to respond to this and other sensor inputs by controlling the operation of the A/C clutch and the radiator cooling fan to help optimize A/C system performance and to protect the A/C system components from damage. The PCM will request disengagement of the A/C clutch when high side pressure rises above 3219 kPa (476 psi) and re-engage the clutch when high side pressure drops below 2937 kPa (426 psi). The PCM will also disengage the A/C clutch if the high side pressure drops below 110 kPa (16 psi) and will re-engage the clutch when the high side pressure rises above 220 kPa (32 psi). When the refrigerant pressure rises above 1655 kPa (240 psi), the PCM will actuate the cooling fan.

WHEN MONITORED

Engine running and the A/C Clutch Relay energized.

SET CONDITION

The TIPM detects the A/C pressure transducer signal is above the maximum acceptable value. One trip Fault. Three good trips to turn off the MIL.

POSSIBLE CAUSES

Possible Causes
(C818) A/C PRESSURE SENSOR SUPPLY CIRCUIT SHORTED TO VOLTAGE
(C18) A/C PRESSURE SENSOR SIGNAL CIRCUIT SHORTED TO VOLTAGE
(C18) A/C PRESSURE SENSOR SIGNAL CIRCUIT SHORTED TO THE (C818) A/C PRESSURE SENSOR SUPPLY CIRCUIT
(C18) A/C PRESSURE SENSOR SIGNAL CIRCUIT OPEN OR HIGH RESISTANCE
(C918) A/C PRESSURE SENSOR GROUND CIRCUIT OPEN OR HIGH RESISTANCE
A/C PRESSURE TRANSDUCER
TOTALLY INTEGRATED POWER MODULE (TIPM)

DIAGNOSTIC TEST

1. **ACTIVE DTC**

NOTE: Diagnose and repair any system voltage or sensor supply voltage DTCs before continuing with this test.

NOTE: Make sure the A/C refrigerant System is properly charged in accordance with the Service Information.

1. Start the engine and allow it to reach normal operating temperature.

   WARNING: When the engine is operating, do not stand in direct line with the fan. Do not put your hands near the pulleys, belts, or fan. Do not wear loose clothing. Failure to follow these instructions can result in possible serious or fatal injury.

2. With the scan tool, select View DTCs.

   Is the DTC Active at this time?

   Yes

   - Go To 2

   No

   - Test complete. The condition or conditions that originally set this DTC are not present at this time. Using the wiring diagrams as a guide, check all related splices and connectors for signs of water intrusion, corrosion, pushed out or bent terminals and correct pin tension.
   - Perform the BODY VERIFICATION TEST. Refer to **STANDARD PROCEDURE** .

2. **(C818) A/C PRESSURE SENSOR SUPPLY CIRCUIT SHORTED TO VOLTAGE**

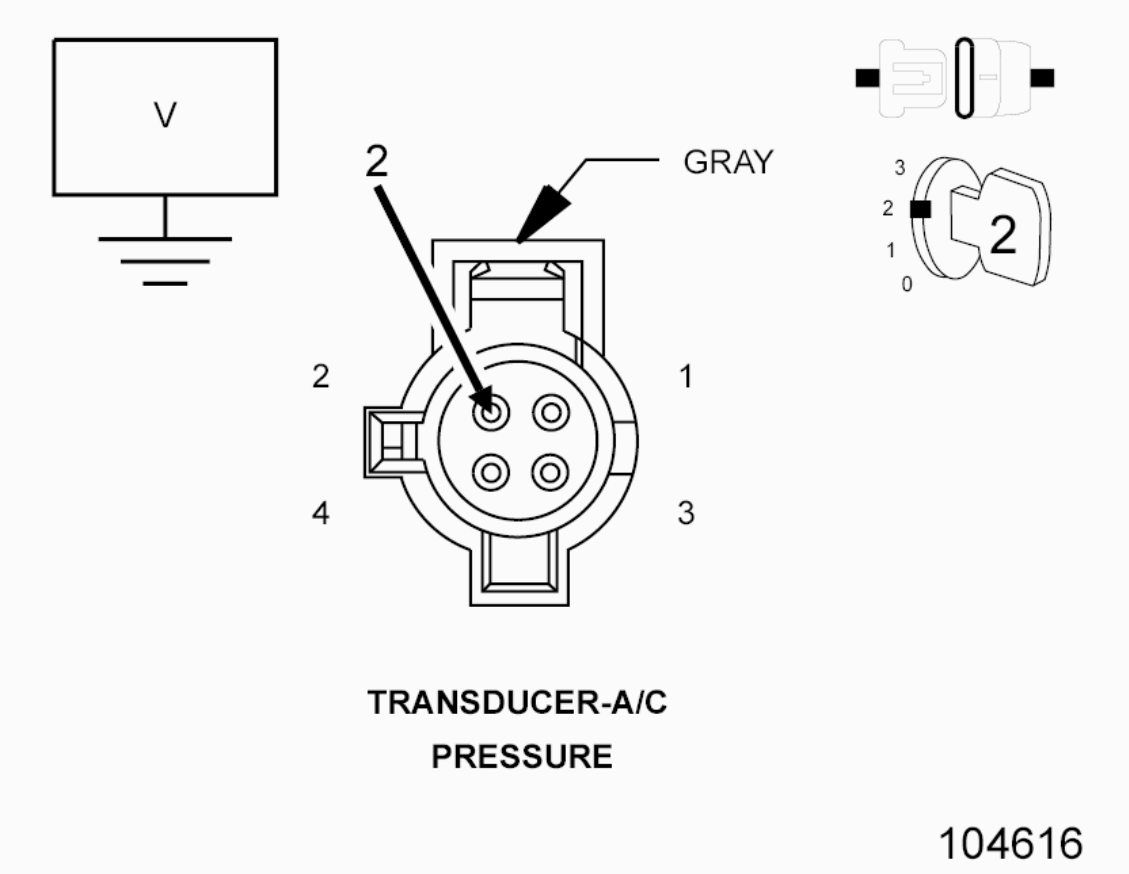

Fig. 71: Checking A/C Pressure Sensor Circuit For Short To Voltage
Courtesy of CHRYSLER GROUP, LLC

1. Turn the ignition off.
2. Disconnect the A/C Pressure Transducer connector.
3. Disconnect the Totally Integrated Power Module (TIPM) C5 harness connector.
4. Turn the ignition on.
5. Measure the voltage of the (C818) A/C Pressure Sensor Supply circuit in the A/C Pressure Transducer harness connector.

   Is there any voltage present?

   Yes

   - Repair the (C818) A/C Pressure Sensor Supply circuit for a short to voltage.
   - Perform the BODY VERIFICATION TEST. Refer to **STANDARD PROCEDURE** .

No

- Go To 3

3. **(C18) A/C PRESSURE SENSOR SIGNAL CIRCUIT SHORTED TO VOLTAGE**

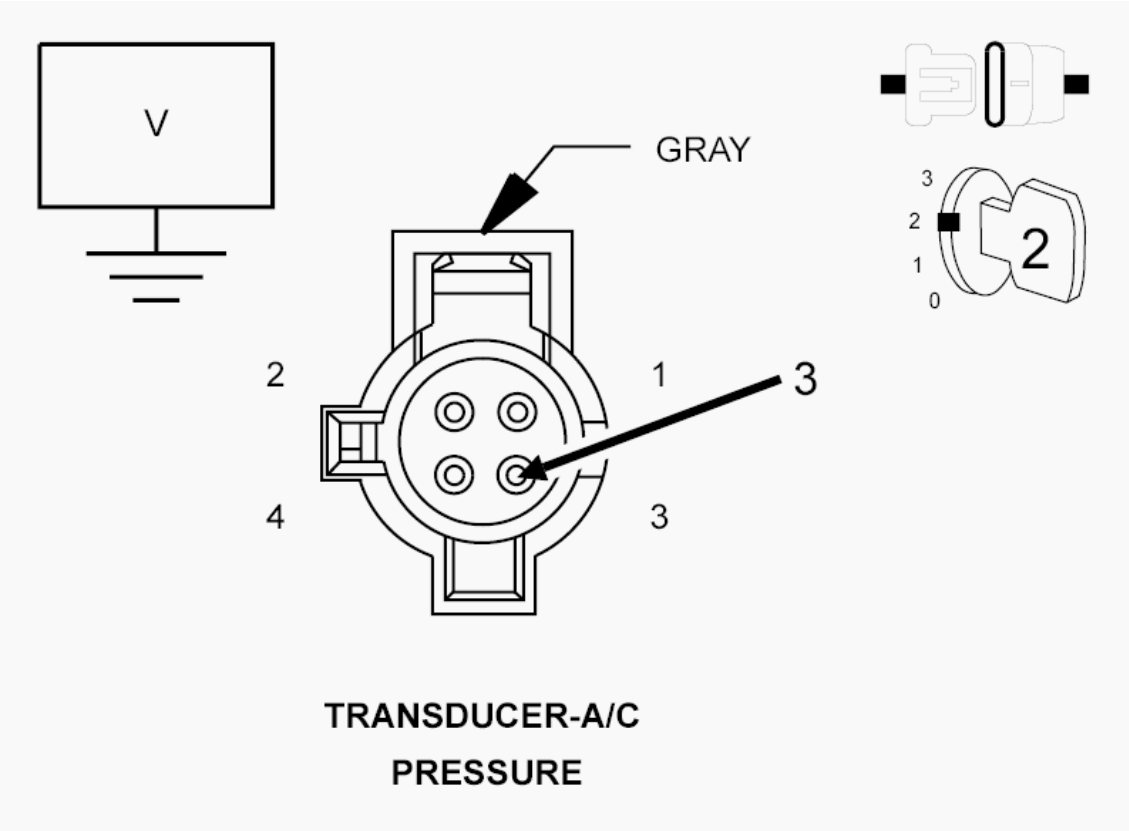

Fig. 72: Checking A/C Pressure Sensor Signal Circuit For Short To Voltage
Courtesy of CHRYSLER GROUP, LLC

1. Measure the voltage of the (C18) A/C Pressure Sensor Signal circuit in the A/C Pressure Transducer harness connector.

   Is there any voltage present?

   Yes

   - Repair the (C18) A/C Pressure Sensor Signal circuit for a short to voltage.
   - Perform the BODY VERIFICATION TEST. Refer to **STANDARD PROCEDURE** .

No

- Go To 4

4. **(C18) A/C PRESSURE SENSOR SIGNAL CIRCUIT SHORTED TO THE (C818) A/C PRESSURE SENSOR SUPPLY CIRCUIT**

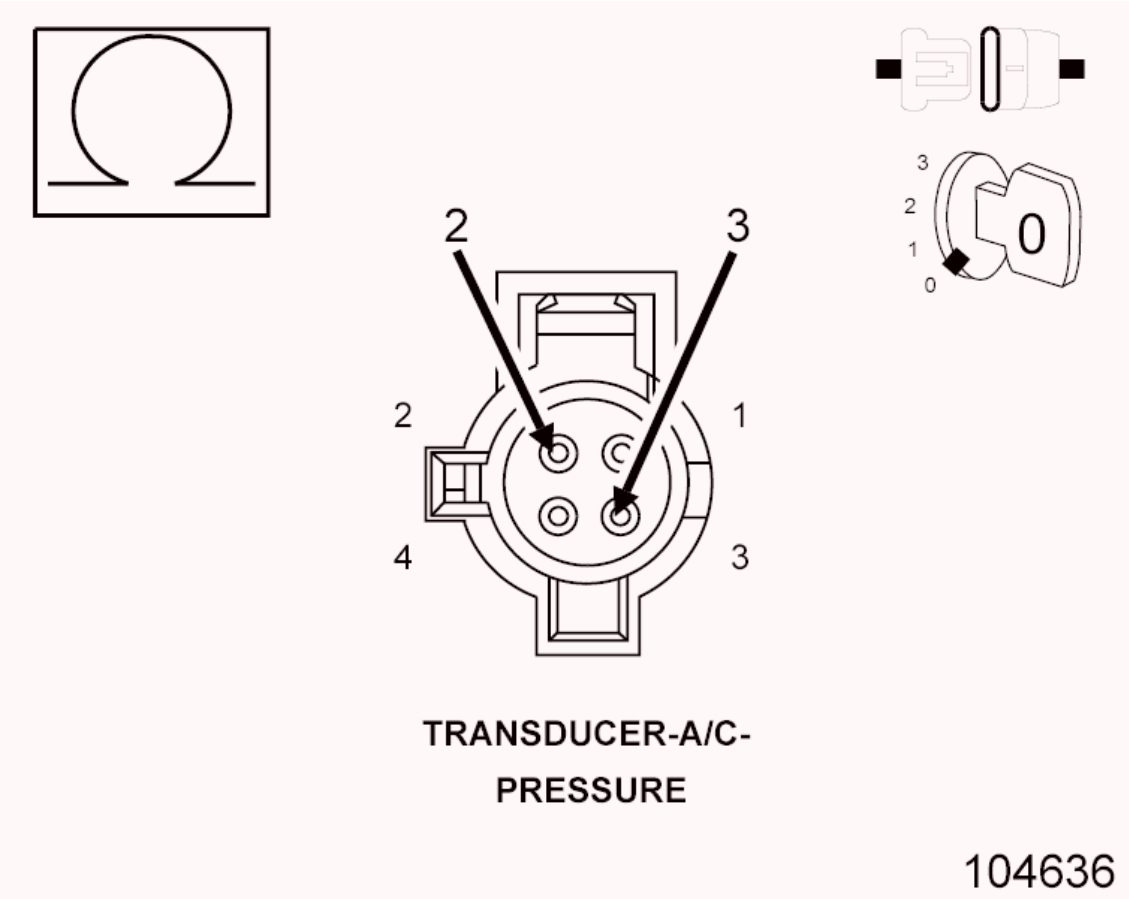

Fig. 73: Checking A/C Pressure Sensor Signal Circuit For Short To A/C Pressure Sensor Supply Circuit
Courtesy of CHRYSLER GROUP, LLC

1. Measure the resistance between the (C18) A/C Pressure Sensor Signal circuit and the (C818) A/C Pressure Sensor Supply circuit in the A/C Pressure Transducer harness connector.

   Is the resistance below 100 Ohms?

   Yes

   - Repair the (C18) A/C Pressure Sensor Signal circuit for a short to the (C818) A/C Pressure Sensor Supply circuit.

- Perform the BODY VERIFICATION TEST. Refer to **STANDARD PROCEDURE** .

No

- Go To 5

5. **(C18) A/C PRESSURE SENSOR SIGNAL CIRCUIT OPEN OR HIGH RESISTANCE**

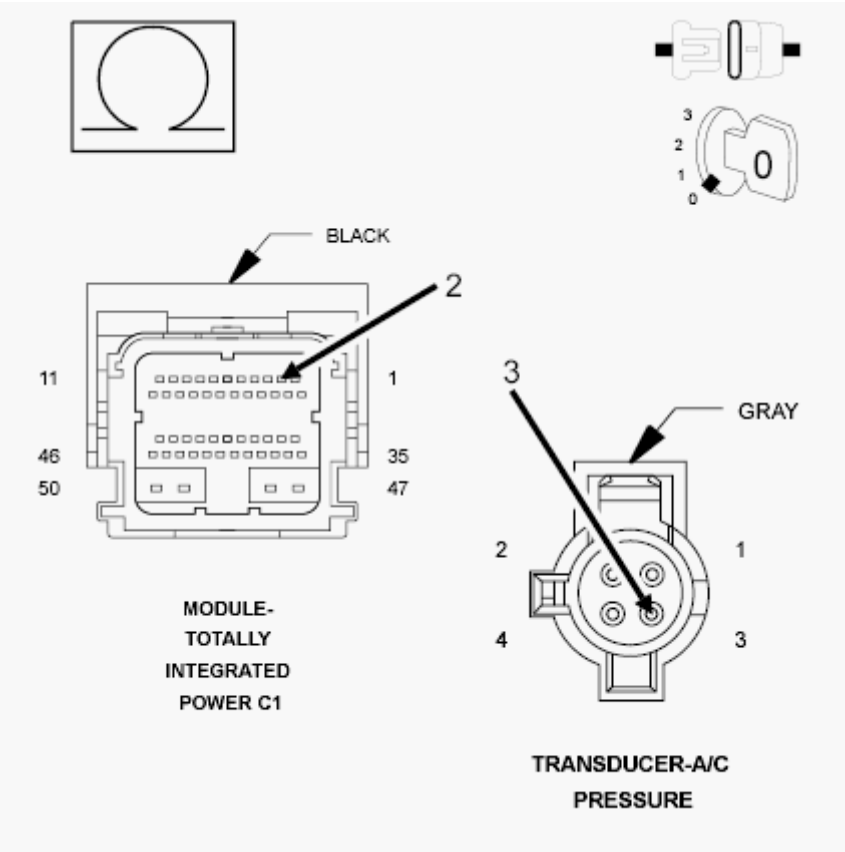

Fig. 74: Checking A/C Pressure Sensor Signal Circuit For Open Or High Resistance
Courtesy of CHRYSLER GROUP, LLC

1. Turn the ignition off.
2. Measure the resistance of the (C18) A/C Pressure Sensor Signal circuit between the A/C Pressure Transducer harness connector and the Totally Integrated Power Module (TIPM) C5 harness connector.

   Is the resistance below 5.0 Ohms?

   Yes

- Go To 6

No

- Repair the (C18) A/C Pressure Sensor Signal circuit for an open circuit or high resistance.
- Perform the BODY VERIFICATION TEST. Refer to **STANDARD PROCEDURE** .

6. **(C918) A/C PRESSURE SENSOR GROUND CIRCUIT OPEN OR HIGH RESISTANCE**

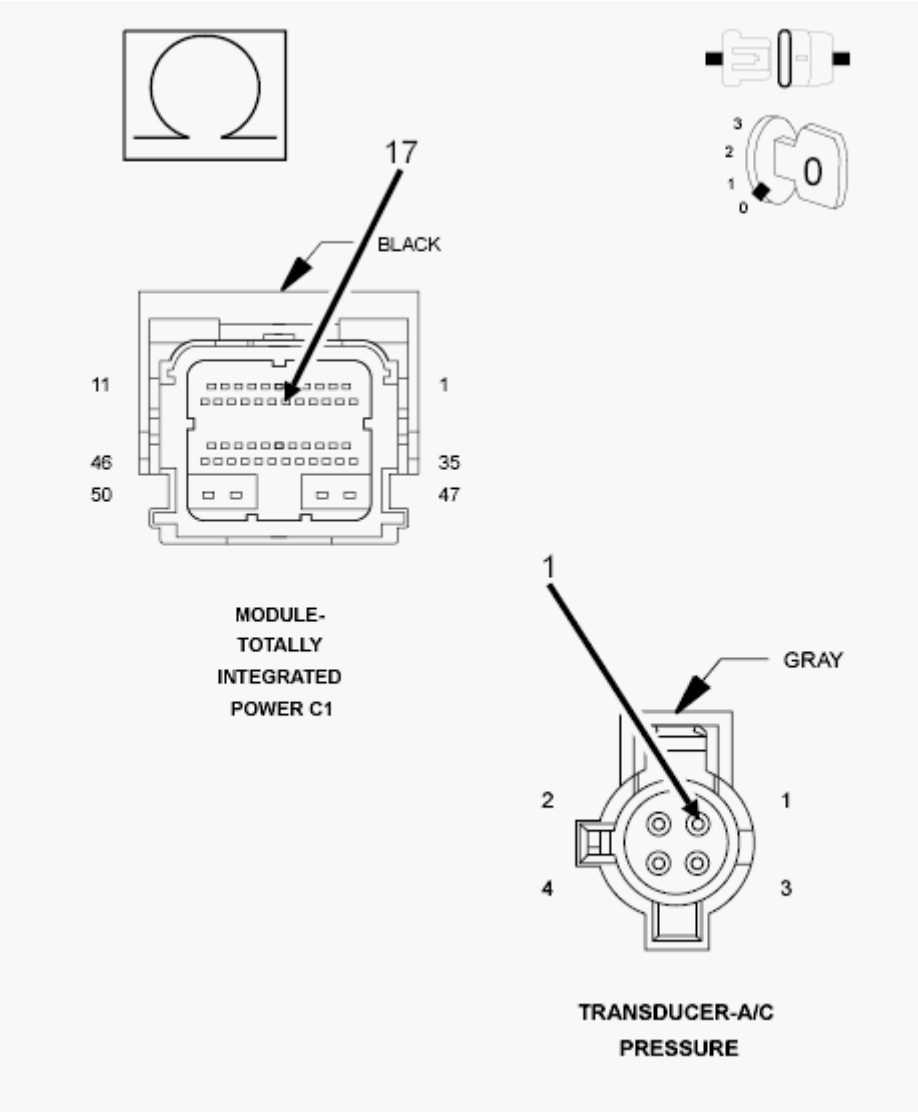

Fig. 75: Checking A/C Pressure Sensor Ground Circuit For Open Or High Resistance
Courtesy of CHRYSLER GROUP, LLC

1. Measure the resistance of the (C918) A/C Pressure Sensor Ground circuit between the A/C Pressure Transducer harness connector and the Totally Integrated Power Module (TIPM) C5 harness connector.

   Is the resistance below 5.0 Ohms?

   Yes

   - Go To 7

   No

   - Repair the (C918) A/C Pressure Sensor Ground circuit for an open circuit or high resistance.
   - Perform the BODY VERIFICATION TEST. Refer to **STANDARD PROCEDURE** .

7. **A/C PRESSURE TRANSDUCER**

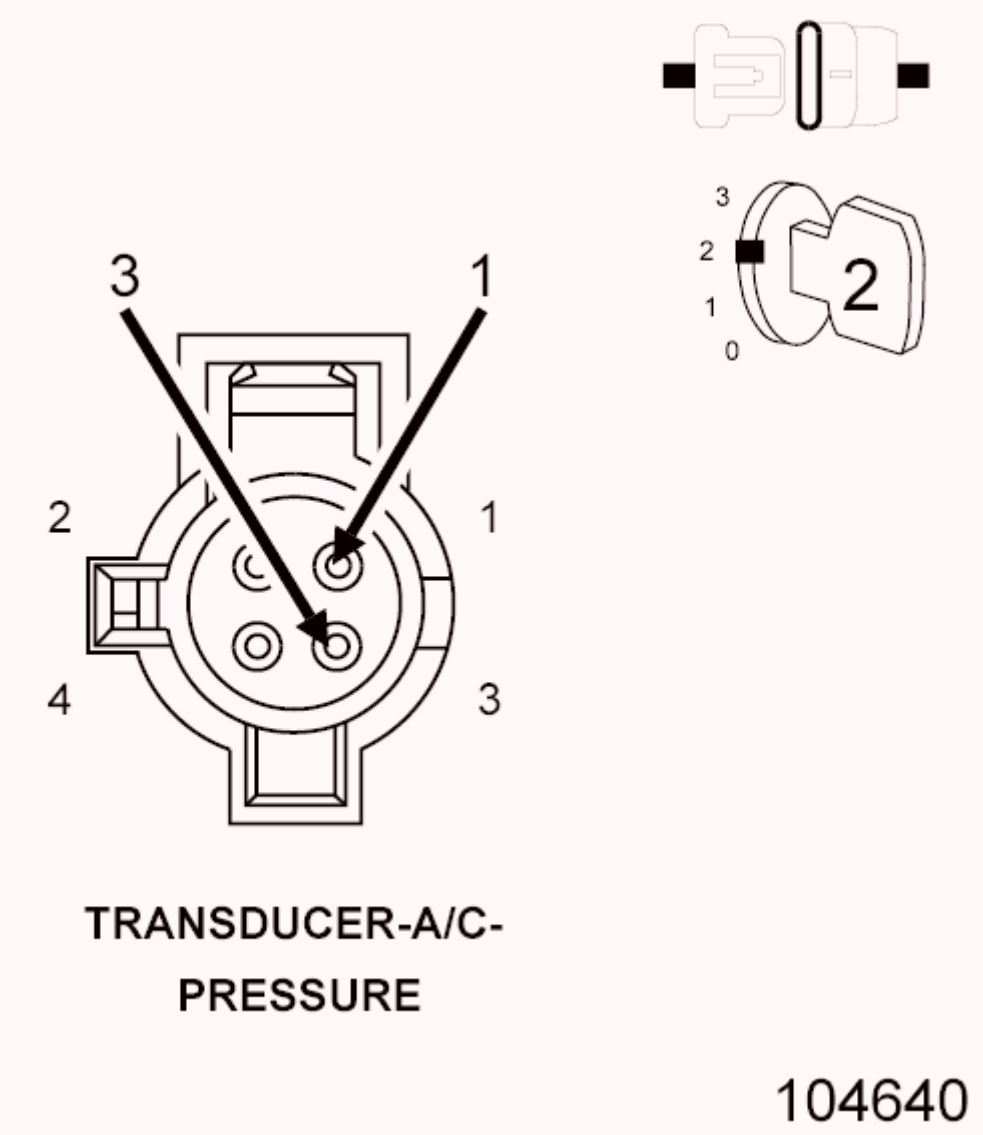

Fig. 76: Checking A/C Pressure Transducer
Courtesy of CHRYSLER GROUP, LLC

1. Turn the ignition off.
2. Connect the Totally Integrated Power Module (TIPM) C5 harness connector.
3. Connect a jumper wire between the (C918) A/C Pressure Sensor Ground circuit and the (C18) A/C Pressure Sensor Signal circuit in the A/C Pressure Transducer harness connector.
4. Turn the ignition on.
5. With the scan tool, read the A/C Pressure Transducer signal voltage.

   Is the voltage below 1.0 Volt with the jumper wire in place?

Yes

- Replace the A/C Pressure Transducer in accordance with the Service Information.
- Perform the BODY VERIFICATION TEST. Refer to **STANDARD PROCEDURE** .

No

- Go To 8

8. **TOTALLY INTEGRATED POWER MODULE (TIPM)**
   1. Using the wiring diagram/schematic as a guide, inspect the wiring and connectors between the A/C Pressure Transducer and the Totally Integrated Power Module (TIPM).
   2. Look for any chafed, pierced, pinched or partially broken wires.
   3. Look for broken, bent, pushed out or corroded terminals.
   4. Perform any Technical Service Bulletins that may apply.

   Were any problems found?

   Yes

   - Repair as necessary.
   - Perform the BODY VERIFICATION TEST. Refer to **STANDARD PROCEDURE** .

   No

   - Replace and program the Totally Integrated Power Module (TIPM) in accordance with the Service Information.
   - Perform the BODY VERIFICATION TEST. Refer to **STANDARD PROCEDURE** .

P0691-COOLING FAN 1 CONTROL CIRCUIT LOW

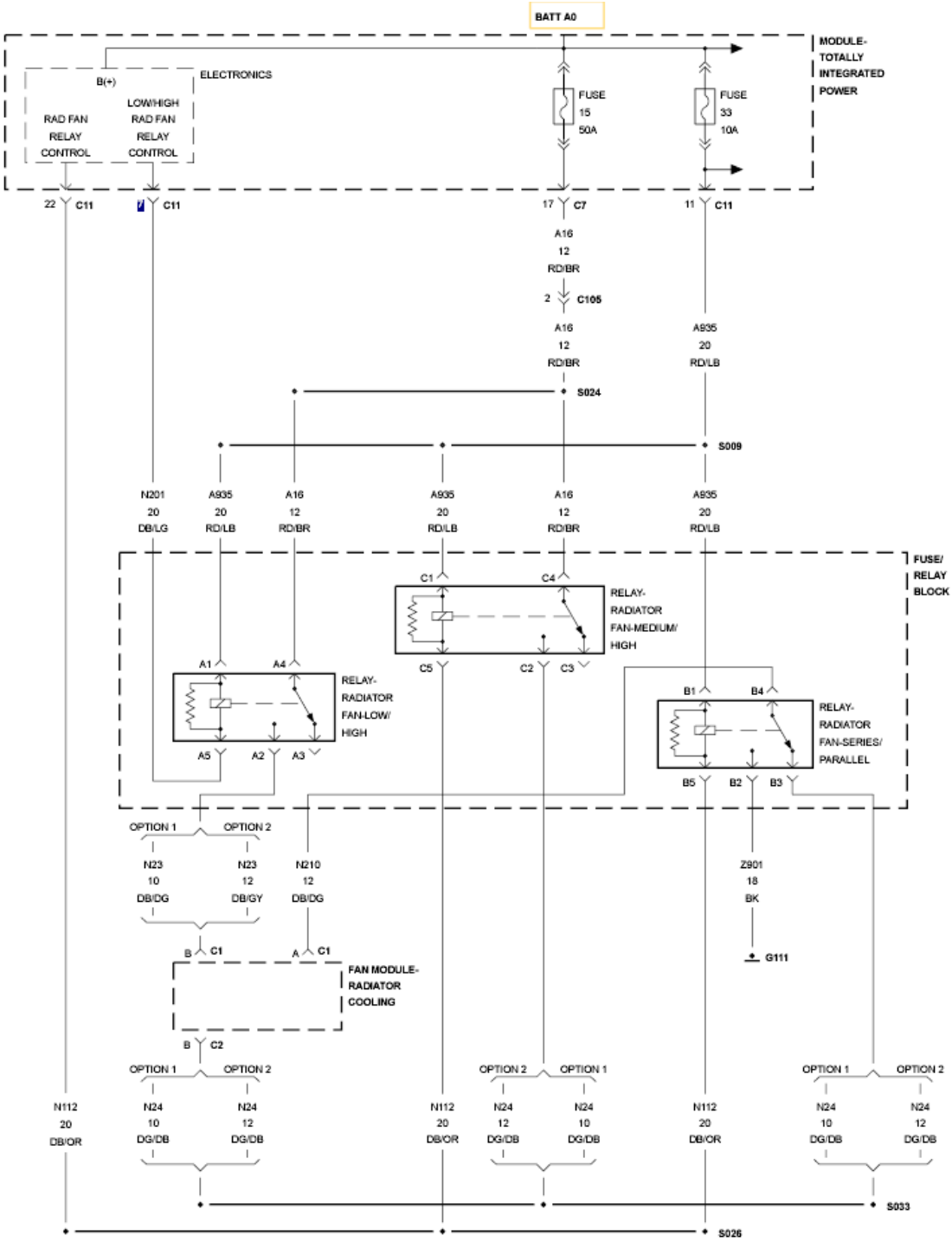

Fig. 77: Cooling Fan Control - Circuit Diagram
Courtesy of CHRYSLER GROUP, LLC

For a complete wiring diagram, **refer to appropriate SYSTEM WIRING DIAGRAMS article** .

WHEN MONITORED

With the ignition on. Battery voltage greater than 10 volts.

SET CONDITION

The Powertrain Control Module (PCM) is requesting the Totally Integrated Power Module (TIPM) to turn on the Cooling Fan On low speed and it is not operating. The TIPM detects an open in the Low/High Rad Fan Relay Control circuit. One Trip Fault. Three good trips to turn off the MIL.

POSSIBLE CAUSES

Possible Causes
(N201) LOW/HIGH RAD FAN RELAY CONTROL CIRCUIT OPEN OR HIGH RESISTANCE
(N201) LOW/HIGH RAD FAN RELAY CONTROL CIRCUIT SHORT TO GROUND
(A935) FUSED B+ CIRCUIT OPEN
(A935) FUSED B+ CIRCUIT SHORT TO GROUND
LOW/HIGH RAD FAN CONTROL RELAY
TOTALLY INTEGRATED POWER MODULE (TIPM)

Always perform the Pre-Diagnostic Troubleshooting procedure before proceeding. Refer to appropriate Diagnostic Information .

DIAGNOSTIC TEST

1. **ACTIVE DTC**
   1. Start the engine and allow it to reach normal operating temperature.

      WARNING: **When the engine is operating, do not stand in direct line with the fan. Do not put your hands near the pulleys, belts or fan. Do not wear loose clothing. Failure to follow these instructions may result in possible serious or fatal injury.**

      NOTE: It may be necessary to test drive the vehicle in order for this DTC to set.

   2. With a scan tool, select View DTCs.

      Is the DTC Active at this time?

Yes

- Go To 2

No

- Perform the CHECKING FOR AN INTERMITTENT DTC diagnostic procedure. Refer to appropriate Diagnostic Information .

2. **LOW/HIGH RAD FAN CONTROL RELAY**
   1. Turn the ignition off.
   2. Verify the Low/High Rad Fan Control Relay is installed properly and that the terminals are making a tight fit.
   3. Remove the Low/High Rad Fan Control Relay and substitute it with a known good Relay.
   4. Ignition on, engine not running.
   5. With a scan tool, actuate the Radiator Fan 1 Control.

   Are the Cooling Fans operating?

   Yes

   - Replace the Low/High Rad Fan Control Relay.
   - Perform the BODY VERIFICATION TEST. Refer to **STANDARD PROCEDURE** .

   No

   - Go To 3

3. **(A935) FUSED B+ CIRCUIT SHORT TO GROUND**
   1. Turn the ignition off.
   2. Inspect the related (A935) Fused B+ circuit fuse.

   Is the fuse open?

   Yes

   - Test the (A935) Fused B+ circuit for a short to ground. Repair as necessary. If a short to ground is not found, Go To 7.

- Perform the BODY VERIFICATION TEST. Refer to **STANDARD PROCEDURE** .

No

- Go To 4

4. **(A935) FUSED B+ CIRCUIT OPEN**
   1. Remove the Low/High Rad Fan Control Relay from the Power Distribution Center (PDC).
   2. Using a 12-volt test light connected to ground, probe the (A935) Fused B+ circuit in the Low/High Rad Fan Control Relay connector.

      Does the test light illuminate brightly?

      Yes

      - Go To 5

      No

      - Repair the (A935) Fused B+ circuit for an open.
      - Perform the BODY VERIFICATION TEST. Refer to **STANDARD PROCEDURE** .
5. **(N201) LOW/HIGH RAD FAN RELAY CONTROL CIRCUIT SHORT TO GROUND**

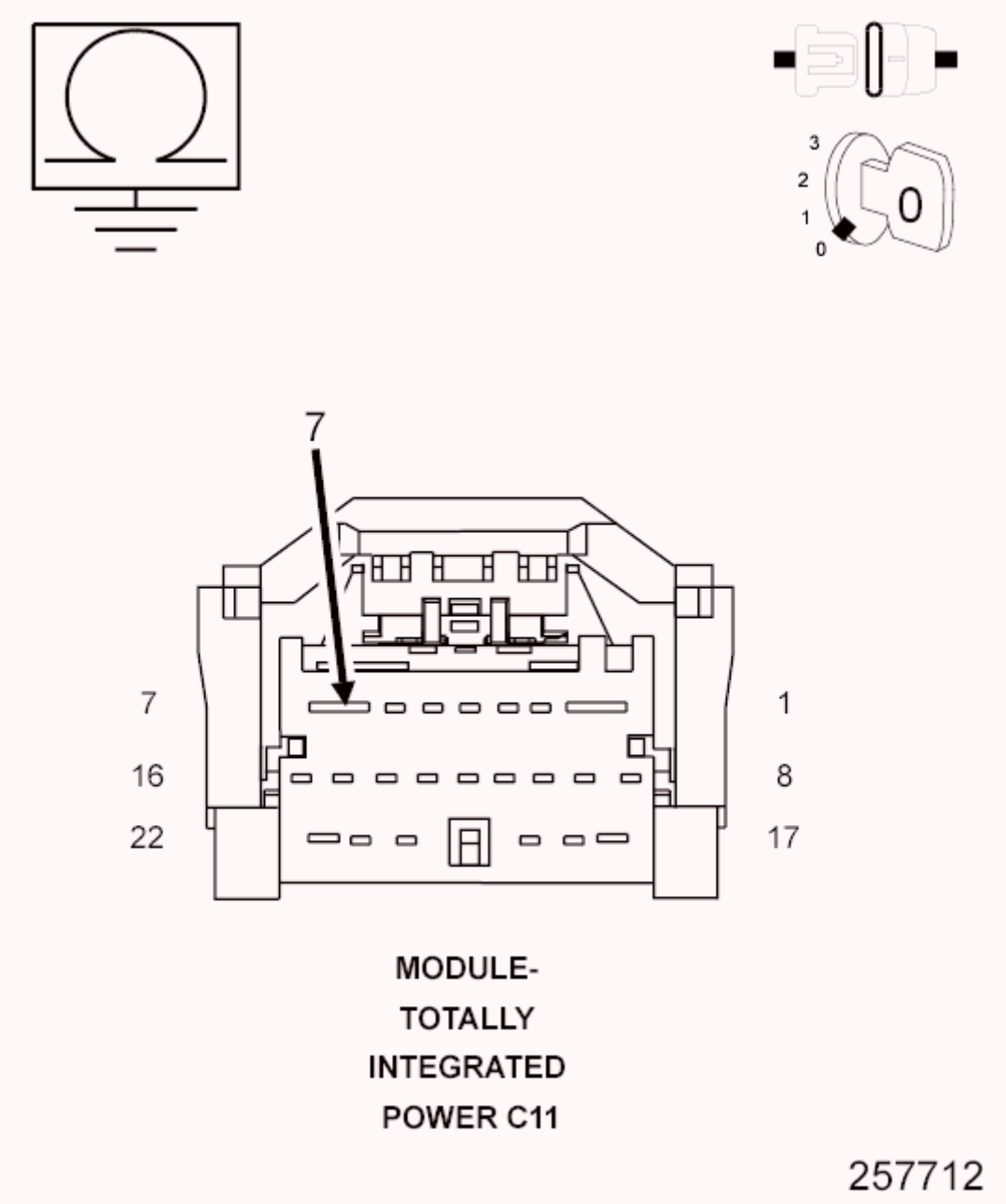

Fig. 78: Checking Low/High Rad Fan Relay Control Circuit For Short To Ground
Courtesy of CHRYSLER GROUP, LLC

1. Disconnect the TIPM C11 harness connector.
2. Measure the resistance between ground and the (N201) Low/High Rad Fan Control circuit in the TIPM C11 harness connector.

   Is the resistance below 100 Ohms?

   Yes

- Repair the short to ground in the (N201) Low/High Rad Fan Control circuit.
- Perform the BODY VERIFICATION TEST. Refer to **STANDARD PROCEDURE** .

No

- Go To 6

6. **(N201) LOW/HIGH RAD FAN RELAY CONTROL CIRCUIT OPEN OR HIGH RESISTANCE**

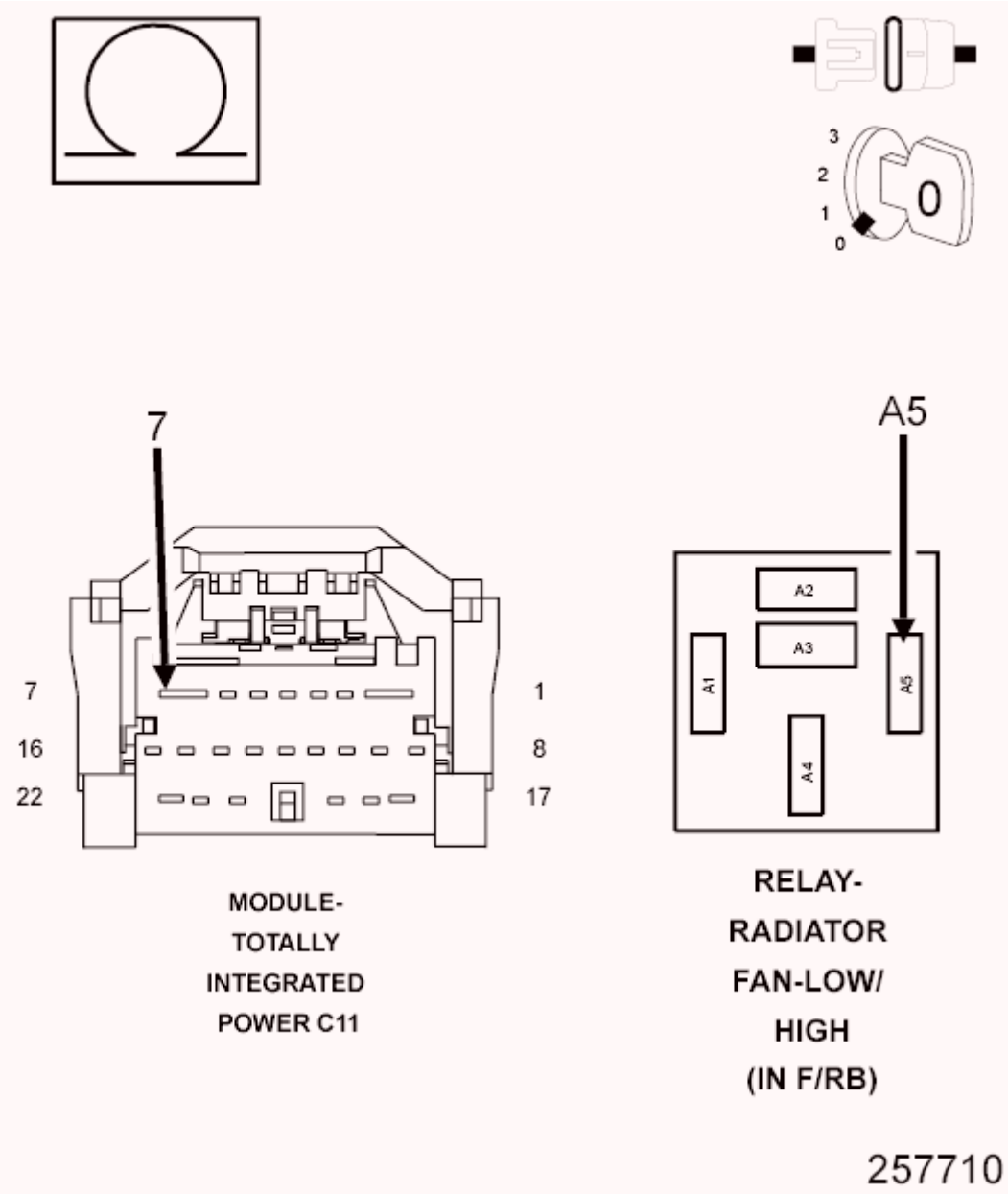

Fig. 79: Checking Low/High Rad Fan Control Circuit For Open Or

High Resistance
Courtesy of CHRYSLER GROUP, LLC

1. Measure the resistance of the (N201) Low/High Rad Fan Control circuit from the Low/High Rad Relay harness connector to the TIPM C11 harness connector.

   Is the resistance below 5.0 Ohms?

   Yes

   - Repair the short to ground in the (N201) Low/High Rad Fan Control circuit.
   - Perform the BODY VERIFICATION TEST. Refer to **STANDARD PROCEDURE** .

   No

   - Go To 7

7. **TOTALLY INTEGRATED POWER MODULE (TIPM)**
   1. Using the wiring diagram/schematic as a guide, inspect the wiring and connectors between the Cooling Fan Module, TIPM, and the Powertrain Control Module (PCM).
   2. Look for any chafed, pierced, pinched, or partially broken wires.
   3. Look for broken, bent, pushed out or corroded terminals. Verify that there is good pin to terminal contact in the Cooling Fan Module, TIPM, and Powertrain Control Module connectors.
   4. Perform any Technical Service Bulletins (TSBs) that may apply.

      Were there any problems found?

      Yes

      - Repair as necessary.
      - Perform the BODY VERIFICATION TEST. Refer to **STANDARD PROCEDURE** .

      No

- Replace the Totally Integrated Power Module in accordance with the Service Information.
- Perform the BODY VERIFICATION TEST. Refer to **STANDARD PROCEDURE** .

P0692-COOLING FAN 1 CONTROL CIRCUIT HIGH

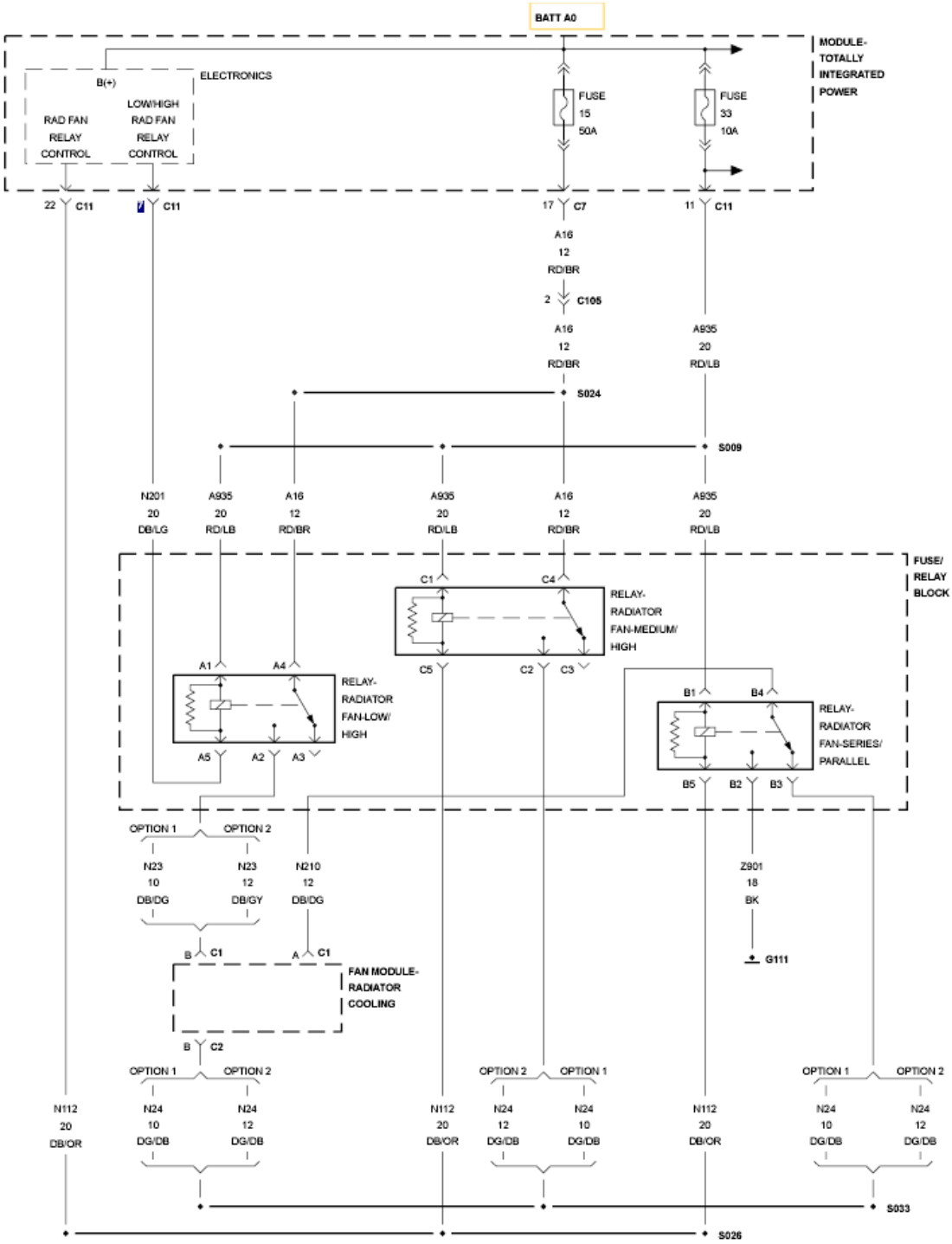

Fig. 80: Cooling Fan Control - Circuit Diagram

Courtesy of CHRYSLER GROUP, LLC

For a complete wiring diagram, **refer to appropriate SYSTEM WIRING DIAGRAMS article** .

WHEN MONITORED

With the ignition on. Battery voltage greater than 10 volts.

SET CONDITION

The Powertrain Control Module (PCM) is requesting the Totally Integrated Power Module (TIPM) to turn on the Cooling Fan On low speed and it is not operating. The TIPM detects a shorted condition in the Low/High Rad Fan Relay Control circuit. One Trip Fault. Three good trips to turn off the MIL.

POSSIBLE CAUSES

Possible Causes
(N201) LOW/HIGH/HIGH RAD FAN CONTROL CIRCUIT SHORTED TO BATTERY VOLTAGE
(N201) LOW/HIGH RAD FAN CONTROL CIRCUIT OPEN OR HIGH RESISTANCE
LOW/HIGH RAD FAN CONTROL RELAY
TOTALLY INTEGRATED POWER MODULE (TIPM)

Always perform the Pre-Diagnostic Troubleshooting procedure before proceeding. Refer to appropriate Diagnostic Information .

DIAGNOSTIC TEST

1. **ACTIVE DTC**
    1. Start the engine and allow it to reach normal operating temperature.

WARNING: **When the engine is operating, do not stand in direct line with the fan. Do not put your hands near the pulleys, belts or fan. Do not wear loose clothing. Failure to follow these instructions may result in possible serious or fatal injury.**

NOTE: It may be necessary to test drive the vehicle in order for this DTC to set.

2. With a scan tool, select View DTCs.

   Is the DTC Active at this time?

   Yes

   - Go To 2

   No

   - Perform the CHECKING FOR AN INTERMITTENT DTC diagnostic procedure. Refer to appropriate Diagnostic Information .

2. **LOW/HIGH RAD FAN CONTROL RELAY**
   1. Turn the ignition off.
   2. Verify the Low/High Rad Fan Control Relay is installed properly and that the terminals are making a tight fit.
   3. Remove the Low/High Rad Fan Control Relay and substitute it with a known good Relay.
   4. Ignition on, engine not running.
   5. With a scan tool, actuate the Radiator Fan 1 Control.

   Is the Cooling Fan operating?

   Yes

   - Replace the Low/High Rad Fan Control Relay.
   - Perform the BODY VERIFICATION TEST. Refer to **STANDARD PROCEDURE** .

   No

   - Go To 3

3. **(N201) LOW/HIGH RAD FAN CONTROL CIRCUIT SHORTED TO BATTERY VOLTAGE**

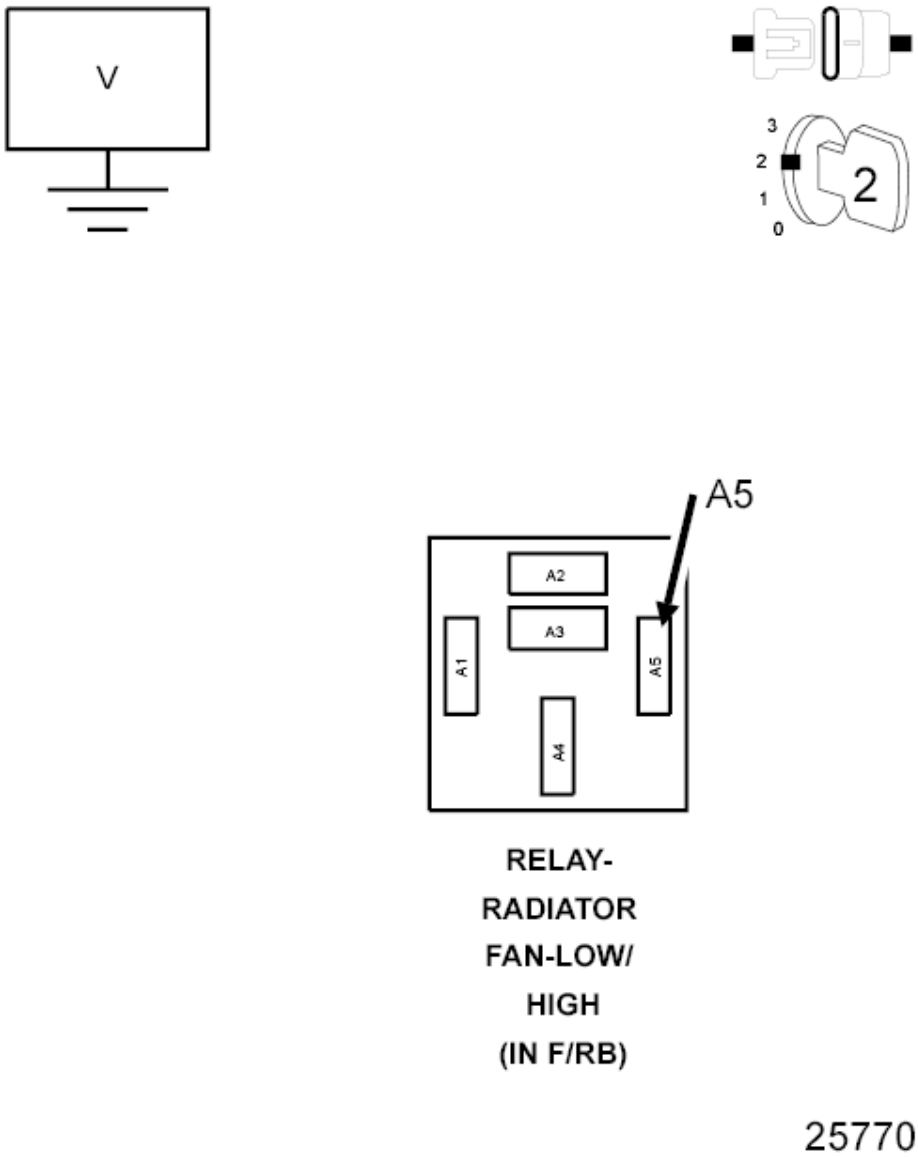

Fig. 81: Checking Low/High Rad Fan Control Circuit For Short To Battery
Courtesy of CHRYSLER GROUP, LLC

1. Turn off the ignition.
2. Disconnect the TIPM C11 harness connector.
3. Ignition on, engine not running.
4. Using a voltmeter, measure the voltage of the (N201) Low/High Rad Fan Control circuit in the Low/High Rad Relay harness connector.

   Is there voltage present?

   Yes

- Repair the short to voltage in the (N201) Low/High Rad Fan Control circuit
- Perform the BODY VERIFICATION TEST. Refer to **STANDARD PROCEDURE** .

No

- Go To 4

4. **(N201) LOW/HIGH RAD FAN RELAY CONTROL CIRCUIT OPEN OR HIGH RESISTANCE**

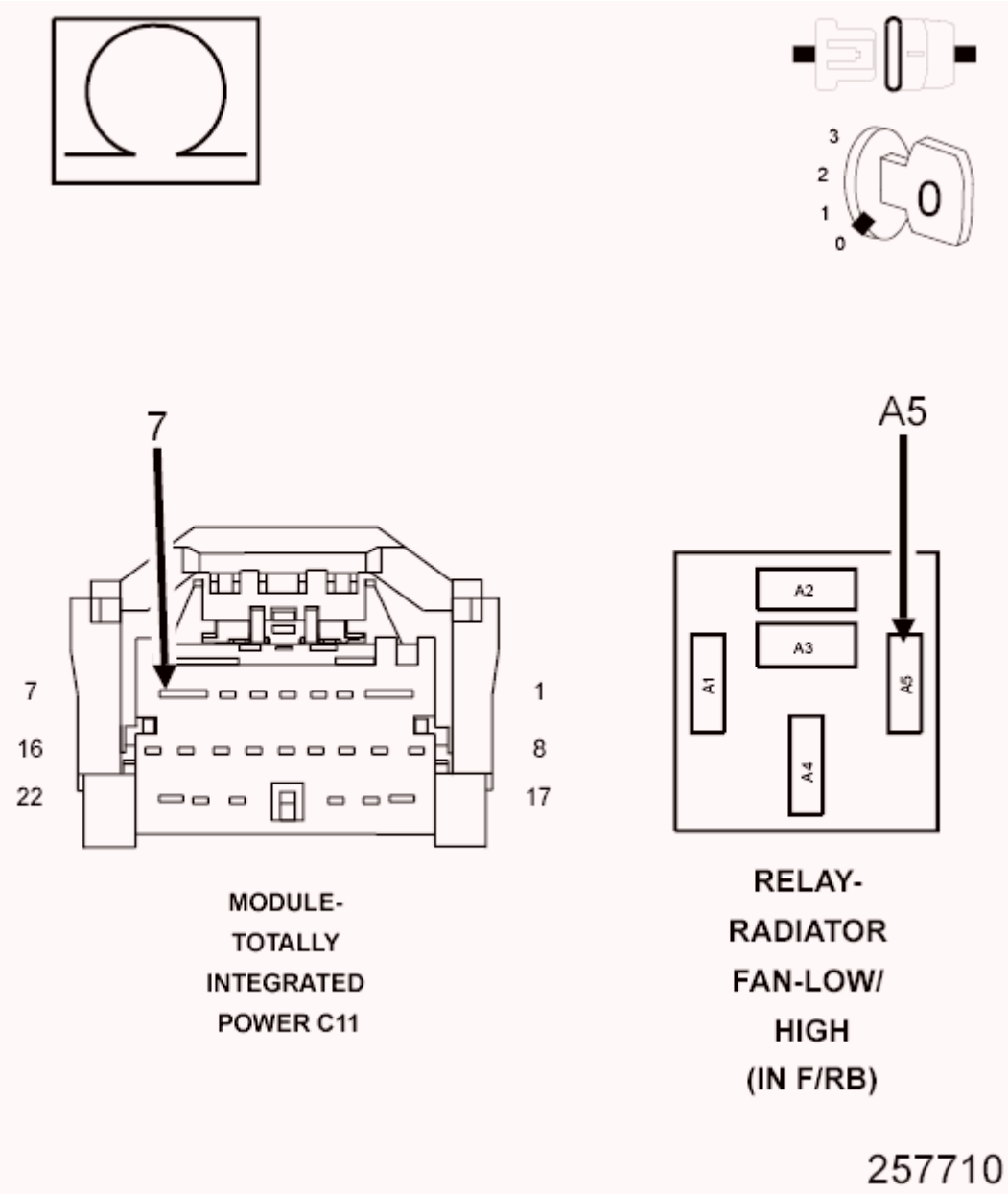

Fig. 82: Checking Low/High Rad Fan Control Circuit For Open Or

High Resistance
Courtesy of CHRYSLER GROUP, LLC

1. Turn off the ignition.
2. Measure the resistance of the (N201) Low/High Rad Fan Control circuit from the Low/High Rad Relay harness connector to the TIPM C11 harness connector.

   Is the resistance below 5.0 Ohms?

   Yes

   - Repair the short to ground in the (N201) Low/High Rad Fan Control circuit.
   - Perform the BODY VERIFICATION TEST. Refer to **STANDARD PROCEDURE** .

   No

   - Go To 5

5. **TOTALLY INTEGRATED POWER MODULE (TIPM)**
   1. Using the wiring diagram/schematic as a guide, inspect the wiring and connectors between the Cooling Fan Module, TIPM, and the Powertrain Control Module (PCM).
   2. Look for any chafed, pierced, pinched, or partially broken wires.
   3. Look for broken, bent, pushed out or corroded terminals. Verify that there is good pin to terminal contact in the Cooling Fan Module, TIPM, and PCM connectors.
   4. Perform any Technical Service Bulletins (TSBs) that may apply.

      Were there any problems found?

      Yes

      - Repair as necessary.
      - Perform the BODY VERIFICATION TEST. Refer to **STANDARD PROCEDURE** .

      No

- Replace the Totally Integrated Power Module in accordance with the Service Information.
- Perform the BODY VERIFICATION TEST. Refer to **STANDARD PROCEDURE** .

P0693-COOLING FAN 2 CONTROL CIRCUIT LOW

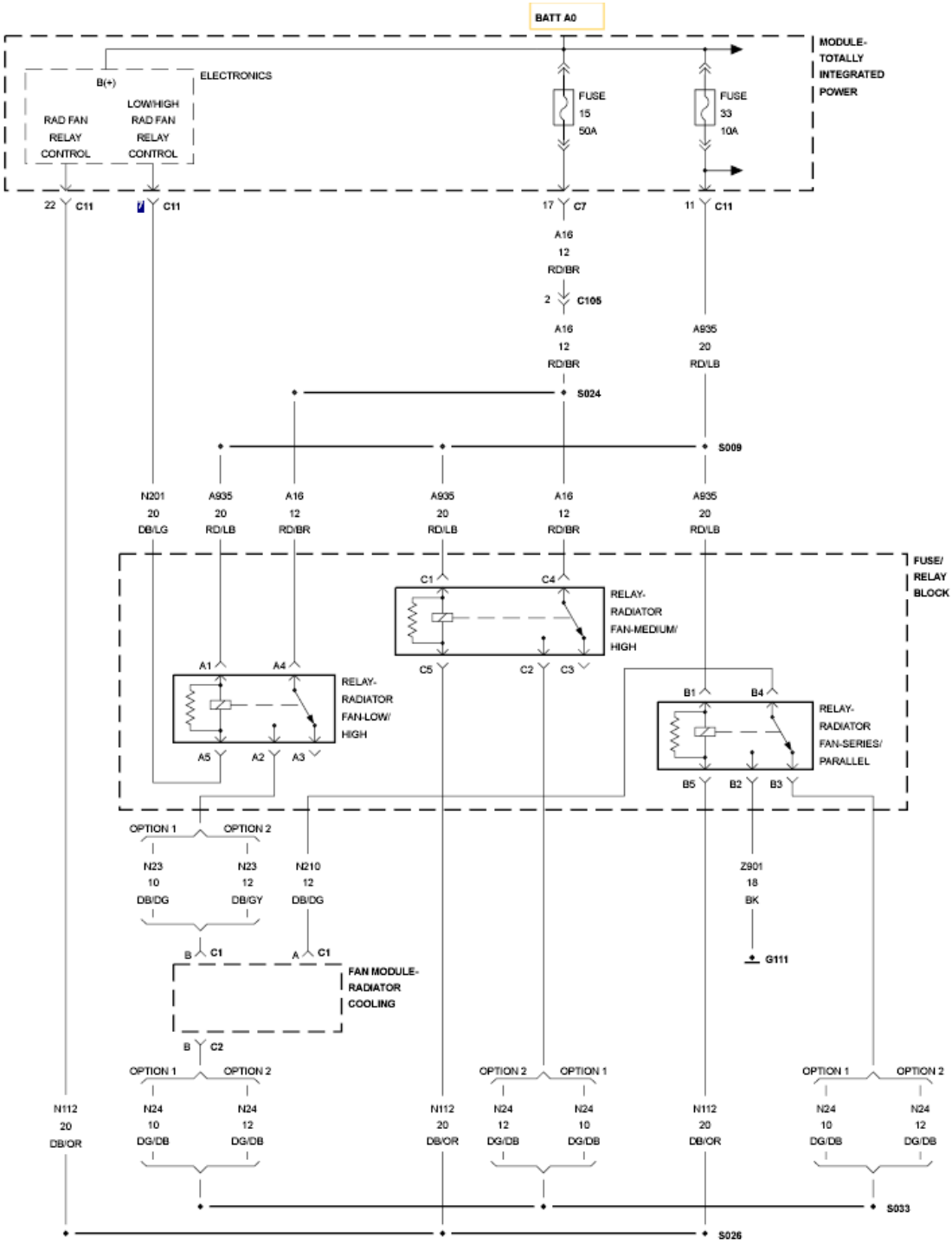

Fig. 83: Cooling Fan Control - Circuit Diagram

Courtesy of CHRYSLER GROUP, LLC

For a complete wiring diagram, **refer to appropriate SYSTEM WIRING DIAGRAMS article** .

WHEN MONITORED

With the ignition on. Battery voltage greater than 10 volts.

SET CONDITION

The Powertrain Control Module (PCM) is requesting the Totally Integrated Power Module (TIPM) to turn on the Cooling Fan On high speed and it is not operating. The TIPM detects an open or short to ground in the Radiator Fan Relay Control circuit. One Trip Fault. Three good trips to turn off the MIL.

POSSIBLE CAUSES

Possible Causes
(N112) RAD FAN RELAY CONTROL CIRCUIT OPEN OR HIGH RESISTANCE
(N112) RAD FAN RELAY CONTROL CIRCUIT SHORTED TO GROUND
(A935) FUSED B+ CIRCUIT OPEN OR HIGH RESISTANCE
(A935) FUSED B+ CIRCUIT SHORT TO GROUND
MED/HIGH RAD FAN RELAY
SERIES/PARALLEL RAD FAN RELAY
TOTALLY INTEGRATED POWER MODULE (TIPM)

Always perform the Pre-Diagnostic Troubleshooting procedure before proceeding. Refer to appropriate Diagnostic Information .

DIAGNOSTIC TEST

1. **ACTIVE DTC**
    1. Start the engine and allow it to reach normal operating temperature.

WARNING: **When the engine is operating, do not stand in direct line with the fan. Do not put your hands near the pulleys, belts or fan.**

Do not wear loose clothing. Failure to follow these instructions may result in possible serious or fatal injury.

NOTE: It may be necessary to test drive the vehicle in order for this DTC to set.

2. With a scan tool, select View DTCs.

   Is the DTC Active at this time?

   Yes

   - Go To 2

   No

   - Perform the CHECKING FOR AN INTERMITTENT DTC diagnostic procedure. Refer to appropriate Diagnostic Information .

2. **MED/HIGH RAD FAN RELAY**
   1. Turn the ignition off.
   2. Verify the Med/High Rad Fan Relay is installed properly and that the terminals are making a tight fit.
   3. Remove the Med/High Rad Fan Relay and substitute it with a known good relay.
   4. Ignition on, engine not running.
   5. With a scan tool, actuate the Radiator Fan 2 Control.

   Is the Cooling Fan operating?

   Yes

   - Replace the Med/High Rad Fan Relay.
   - Perform the BODY VERIFICATION TEST. Refer to **STANDARD PROCEDURE** .

   No

   - Go To 3

3. **(A935) FUSED B+ CIRCUIT SHORT TO GROUND**
   1. Turn the ignition off.
   2. Inspect the related (A935) Fused B+ circuit fuse.

      Is the fuse open?

      Yes

      - Test the (A935) Fused B+ circuit for a short to ground. Repair as necessary. If a short to ground is not found, Go To 9.
      - Perform the BODY VERIFICATION TEST. Refer to **STANDARD PROCEDURE** .

      No

      - Go To 4
4. **(A935) FUSED B+ CIRCUIT OPEN**
   1. Remove the Med/High Rad Fan Relay and the Series/Parallel Rad Fan Relay from the Power Distribution Center (PDC).
   2. Using a 12-volt test light connected to ground, probe the (A935) Fused B+ circuit in the Med/High Rad Fan Relay connector.
   3. Using a 12-volt test light connected to ground, probe the (A935) Fused B+ circuit in the Series/Parallel Rad Fan Relay connector.

      Does the test light illuminate brightly for both circuits?

      Yes

      - Go To 5

      No

      - Repair the (A935) Fused B+ circuit for an open.
      - Perform the BODY VERIFICATION TEST. Refer to **STANDARD PROCEDURE** .
5. **MED/HIGH RAD FAN RELAY**

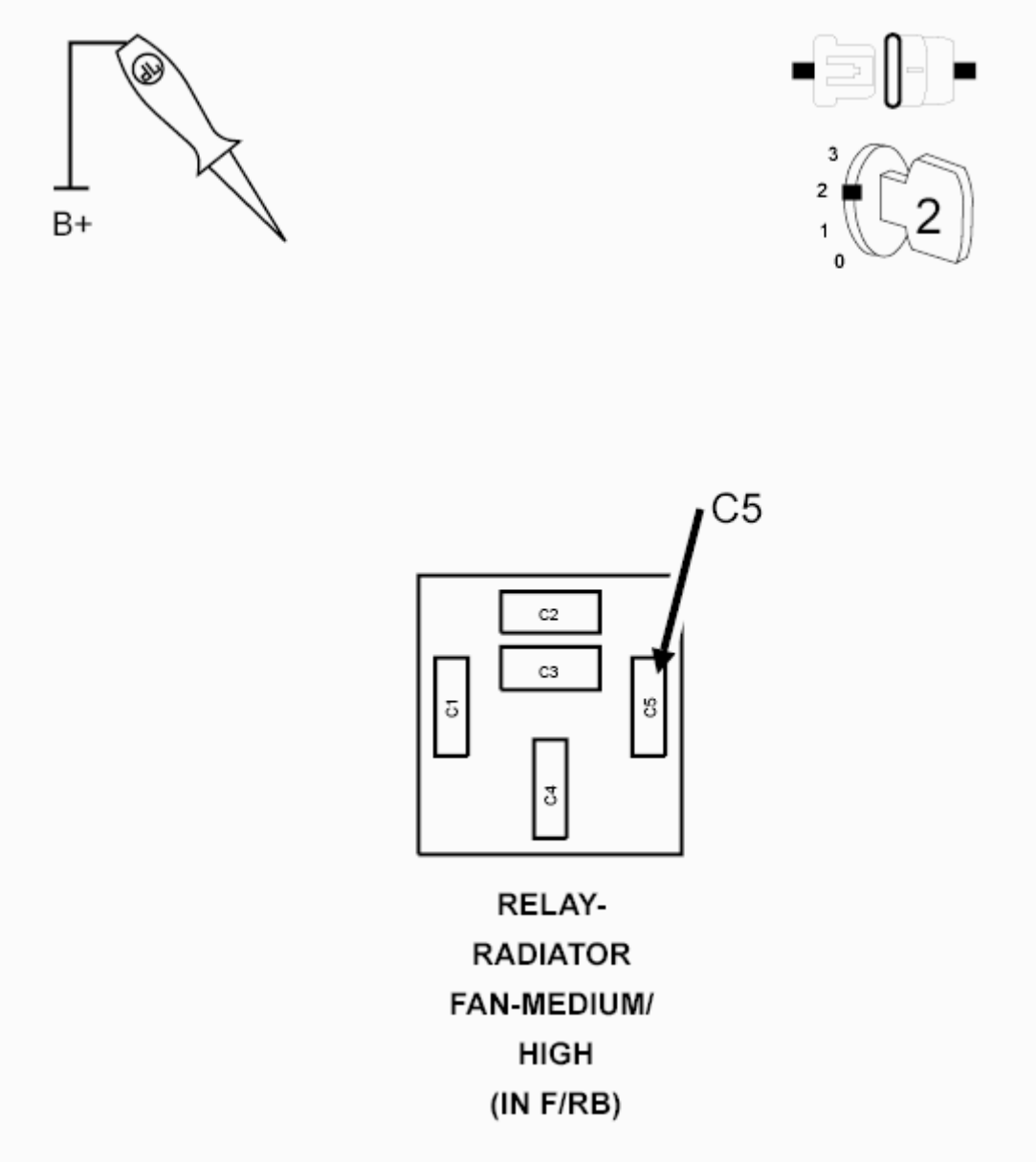

Fig. 84: Checking Med/High Rad Fan Control Circuit
Courtesy of CHRYSLER GROUP, LLC

1. Install the Series/Parallel Rad Fan Relay.
2. Turn the ignition on, engine not running.
3. With a scan tool, select Radiator Fan 2 Control State, Toggle, to actuate the Cooling Fan (Med/High Rad Fan Relay).
4. Using a 12-volt test light connected to battery voltage, probe the (N112) Rad Fan Relay Control circuit at the Med/High Rad Fan Relay.

   Does the test light illuminate brightly and flash on and off?

   Yes

- Replace the Med/High Rad Fan Relay.
- Perform the BODY VERIFICATION TEST. Refer to **STANDARD PROCEDURE** .

No

- Go To 6

6. **SERIES/PARALLEL RAD FAN RELAY**

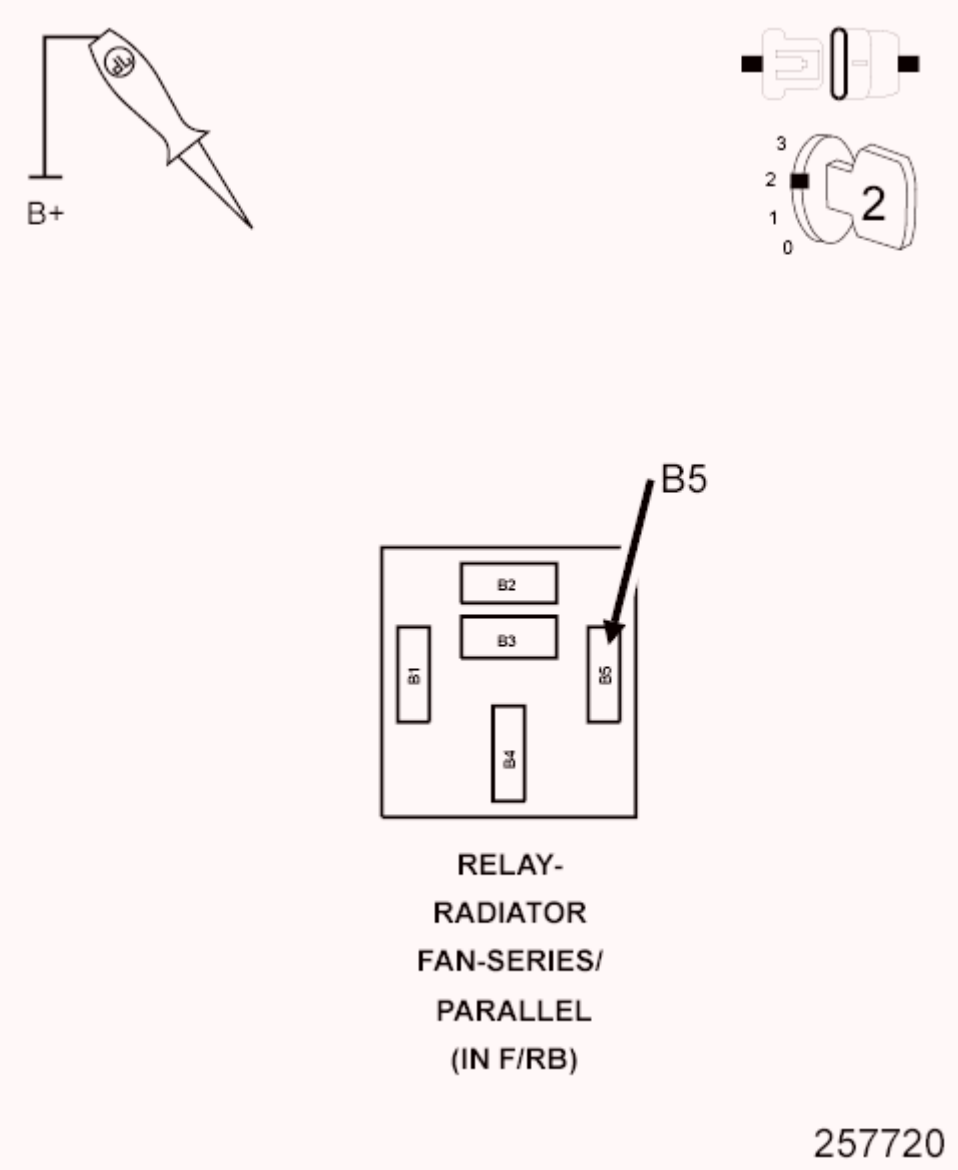

Fig. 85: Checking Series/Parallel Rad Fan Relay
Courtesy of CHRYSLER GROUP, LLC

1. Remove the Series/Parallel Rad Fan Relay.

2. Install the Med/High Rad Fan Relay.
3. Turn the ignition on, engine not running.
4. With a scan tool, select Radiator Fan 2 Control State, Toggle, to actuate the Cooling Fan (Series/Parallel Rad Fan Relay).
5. Using a 12-volt test light connected to battery voltage, probe the (N112) Rad Fan Relay Control circuit at the Series/Parallel Rad Fan Relay.

   Does the test light illuminate brightly and flash on and off?

   Yes

   - Replace the Series/Parallel Rad Fan Relay.
   - Perform the BODY VERIFICATION TEST. Refer to **STANDARD PROCEDURE** .

   No

   - Go To 7

7. **(N112) RAD FAN RELAY CONTROL CIRCUIT SHORTED TO GROUND**

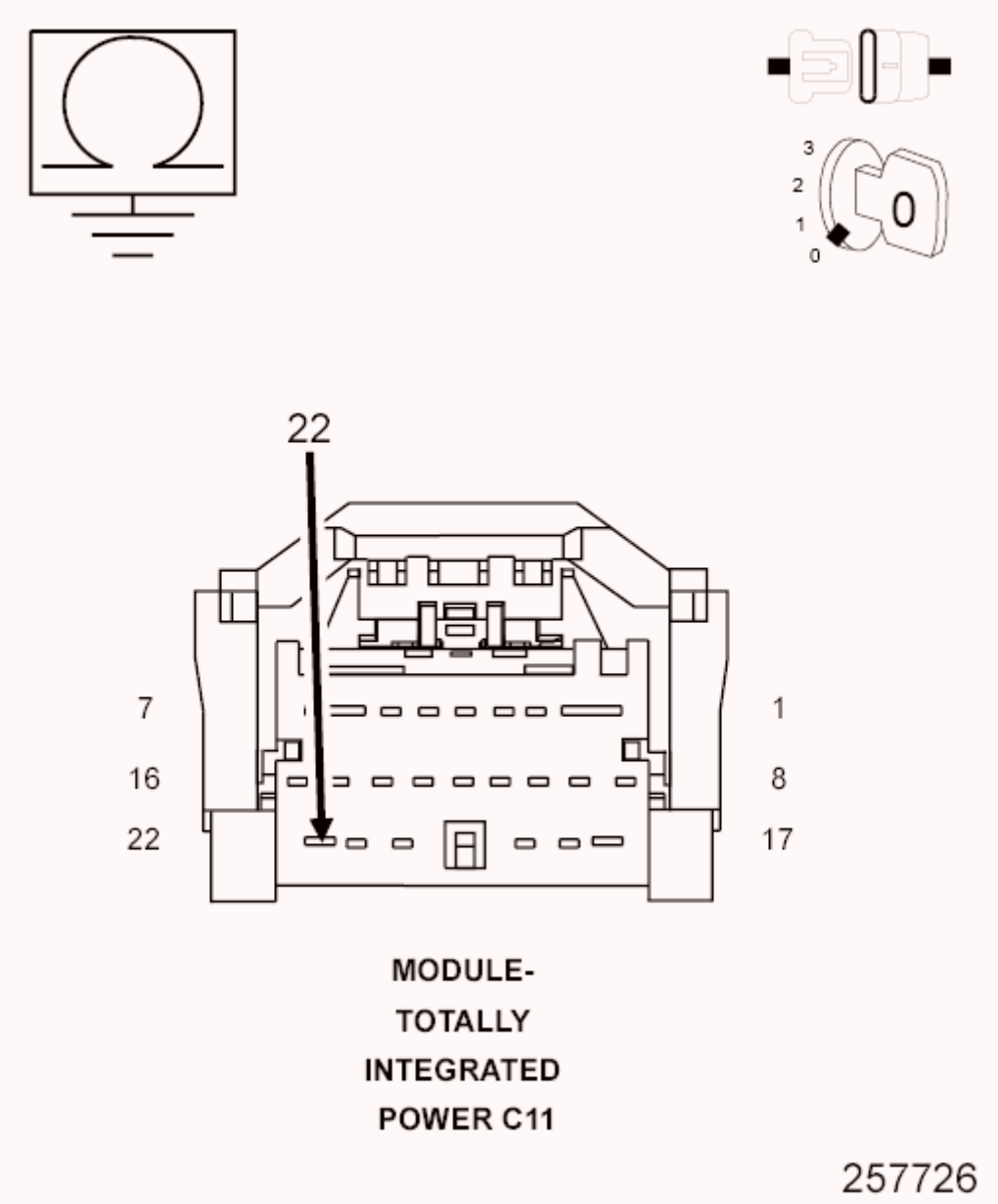

Fig. 86: Checking Rad Fan Relay Control Circuit For Short To Ground
Courtesy of CHRYSLER GROUP, LLC

1. Measure the resistance between ground and the (N112) Rad Fan Relay Control circuit in the TIPM C11 harness connector.

   Is the resistance below 100 Ohms?

   Yes

   - Repair the short to ground in the (N112) Rad Fan Relay Control circuit.
   - Perform the BODY VERIFICATION TEST. Refer to

STANDARD PROCEDURE .

No

- Go To 8

8. **(N112) RAD FAN RELAY CONTROL CIRCUIT OPEN OR HIGH RESISTANCE**
   1. Measure the resistance of the (N112) Rad Fan Relay Control circuit from the Med/High Rad Fan Relay harness connector to the TIPM C11 harness connector.
   2. Measure the resistance of the (N112) Rad Fan Relay Control circuit from the Series/Parallel Rad Fan Relay harness connector to the TIPM C11 harness connector.

   Is the resistance below 5.0 Ohms?

   Yes

   - Go To 9

   No

   - Repair the open or high resistance in the (N112) Rad Fan Relay Control circuit.
   - Perform the BODY VERIFICATION TEST. Refer to **STANDARD PROCEDURE** .

9. **TOTALLY INTEGRATED POWER MODULE (TIPM)**
   1. Using the wiring diagram/schematic as a guide, inspect the wiring and connectors between the Cooling Fan Module, TIPM, and the Powertrain Control Module (PCM).
   2. Look for any chafed, pierced, pinched, or partially broken wires.
   3. Look for broken, bent, pushed out or corroded terminals. Verify that there is good pin to terminal contact in the Cooling Fan Module, TIPM, and PCM connectors.
   4. Perform any Technical Service Bulletins (TSBs) that may apply.

   Were there any problems found?

Yes

- Repair as necessary.
- Perform the BODY VERIFICATION TEST. Refer to **STANDARD PROCEDURE** .

No

- Replace the Totally Integrated Power Module in accordance with the Service Information.
- Perform the BODY VERIFICATION TEST. Refer to **STANDARD PROCEDURE** .

P0694-COOLING FAN 2 CONTROL CIRCUIT HIGH

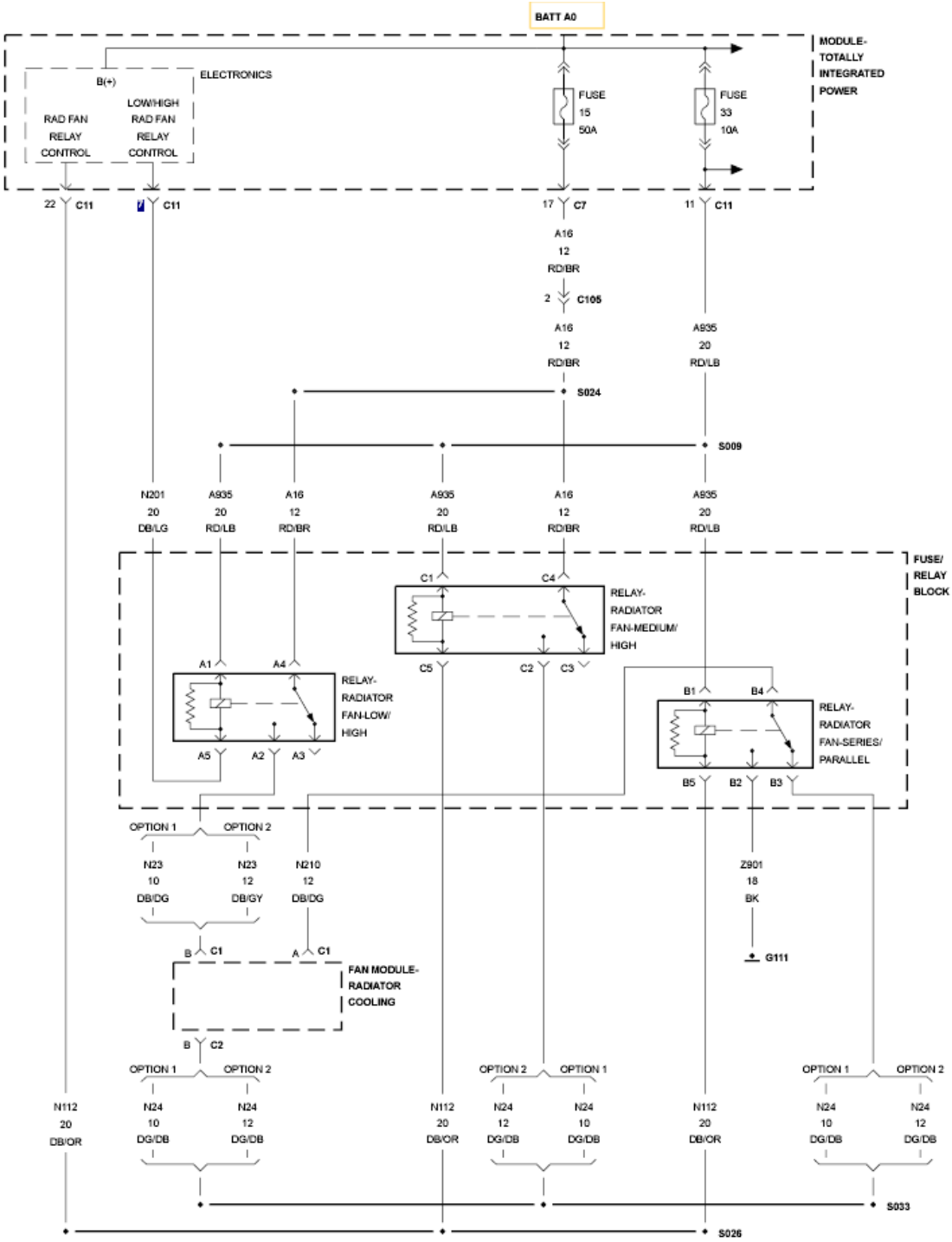

Fig. 87: Cooling Fan Control - Circuit Diagram
Courtesy of CHRYSLER GROUP, LLC

For a complete wiring diagram, **refer to appropriate SYSTEM WIRING DIAGRAMS article** .

WHEN MONITORED

With the ignition on. Battery voltage greater than 10 volts.

SET CONDITION

The Powertrain Control Module (PCM) is requesting the Totally Integrated Power Module (TIPM) to turn on the Cooling Fan On high speed and it is not operating. The TIPM detects a short to voltage in the Radiator Fan Relay Control circuit. One Trip Fault. Three good trips to turn off the MIL.

POSSIBLE CAUSES

Possible Causes
(N112) RAD FAN RELAY CONTROL CIRCUIT SHORTED TO BATTERY VOLTAGE
(N112) RAD FAN RELAY CONTROL CIRCUIT OPEN OR HIGH RESISTANCE
MED/HIGH RAD FAN RELAY
SERIES/PARALLEL RAD FAN RELAY
TOTALLY INTEGRATED POWER MODULE (TIPM)

Always perform the Pre-Diagnostic Troubleshooting procedure before proceeding. Refer to appropriate Diagnostic Information .

DIAGNOSTIC TEST

1. **ACTIVE DTC**
    1. Start the engine and allow it to reach normal operating temperature.

        WARNING: When the engine is operating, do not stand in direct line with the fan. Do not put your hands near the pulleys, belts or fan. Do not wear loose clothing. Failure to follow these instructions may result in possible serious or fatal injury.

        NOTE: It may be necessary to test drive the vehicle in order for this DTC to set.

    2. With a scan tool, select View DTCs.

        Is the DTC Active at this time?

Yes

- Go To 2

No

- Perform the CHECKING FOR AN INTERMITTENT DTC diagnostic procedure. Refer to appropriate Diagnostic Information .

2. **MED/HIGH RAD FAN RELAY**
   1. Turn the ignition off.
   2. Verify the Med/High Rad Fan Relay is installed properly and that the terminals are making a tight fit.
   3. Remove the Med/High Rad Fan Relay and substitute it with a known good Relay.
   4. Ignition on, engine not running.
   5. With a scan tool, actuate the Radiator Fan 2 Control.

   Is the Cooling Fan operating?

   Yes

   - Replace the Med/High Rad Fan Relay.
   - Perform the BODY VERIFICATION TEST. Refer to **STANDARD PROCEDURE** .

   No

   - Go To 3
3. **MED/HIGH RAD FAN RELAY**

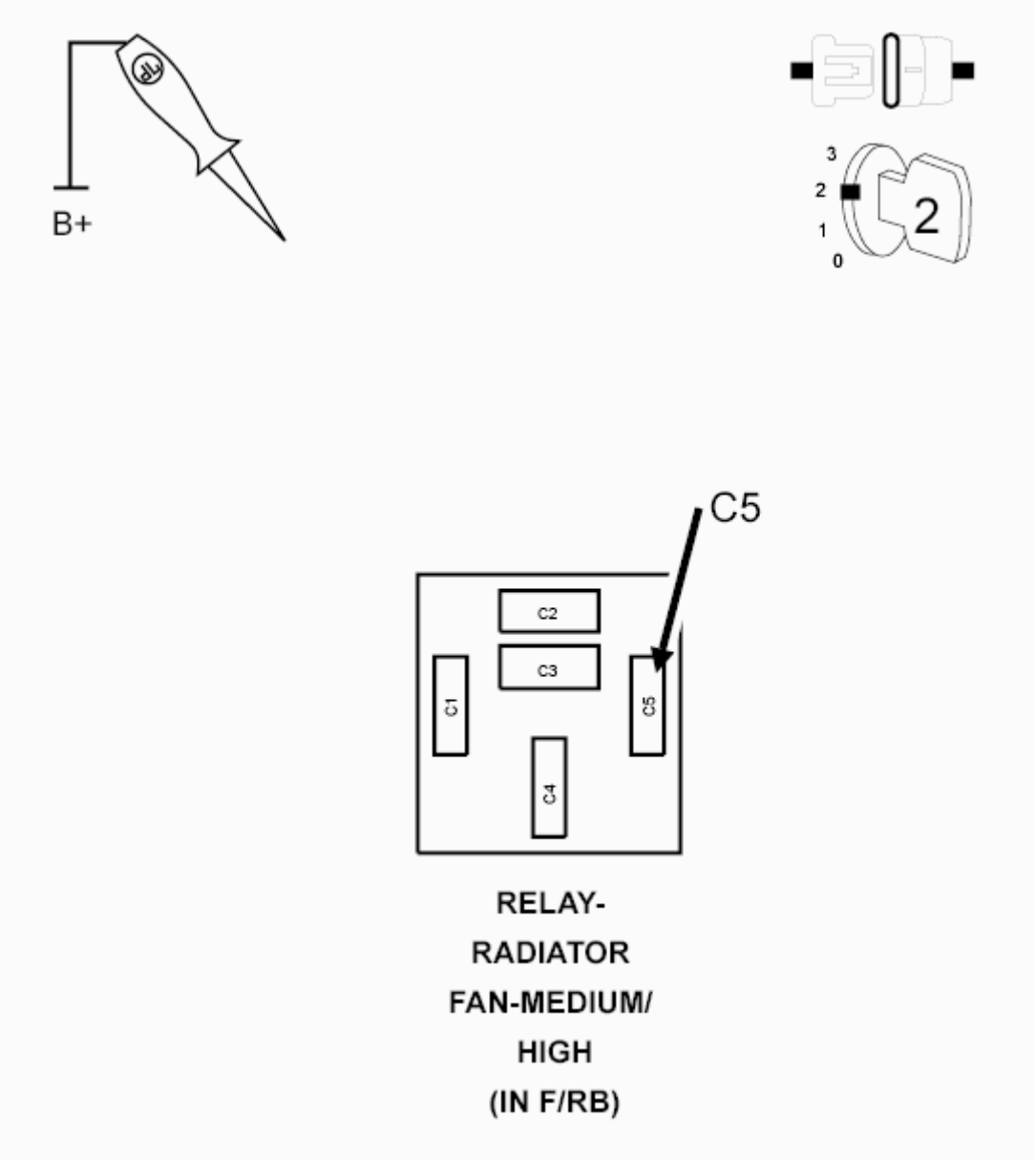

Fig. 88: Checking Med/High Rad Fan Control Circuit
Courtesy of CHRYSLER GROUP, LLC

1. Turn the ignition on, engine not running.
2. With a scan tool, select Radiator Fan 2 Control State, Toggle, to actuate the Cooling Fan (Med/High Rad Fan Relay).
3. Using a 12-volt test light connected to battery voltage, probe the (N112) Rad Fan Relay Control circuit at the Med/High Rad Fan Relay.

   Does the test light illuminate brightly and flash on and off?

   Yes

- Replace the Med/High Rad Fan Relay.
- Perform the BODY VERIFICATION TEST. Refer to **STANDARD PROCEDURE** .

No

- Go To 4

4. **SERIES/PARALLEL RAD FAN RELAY**

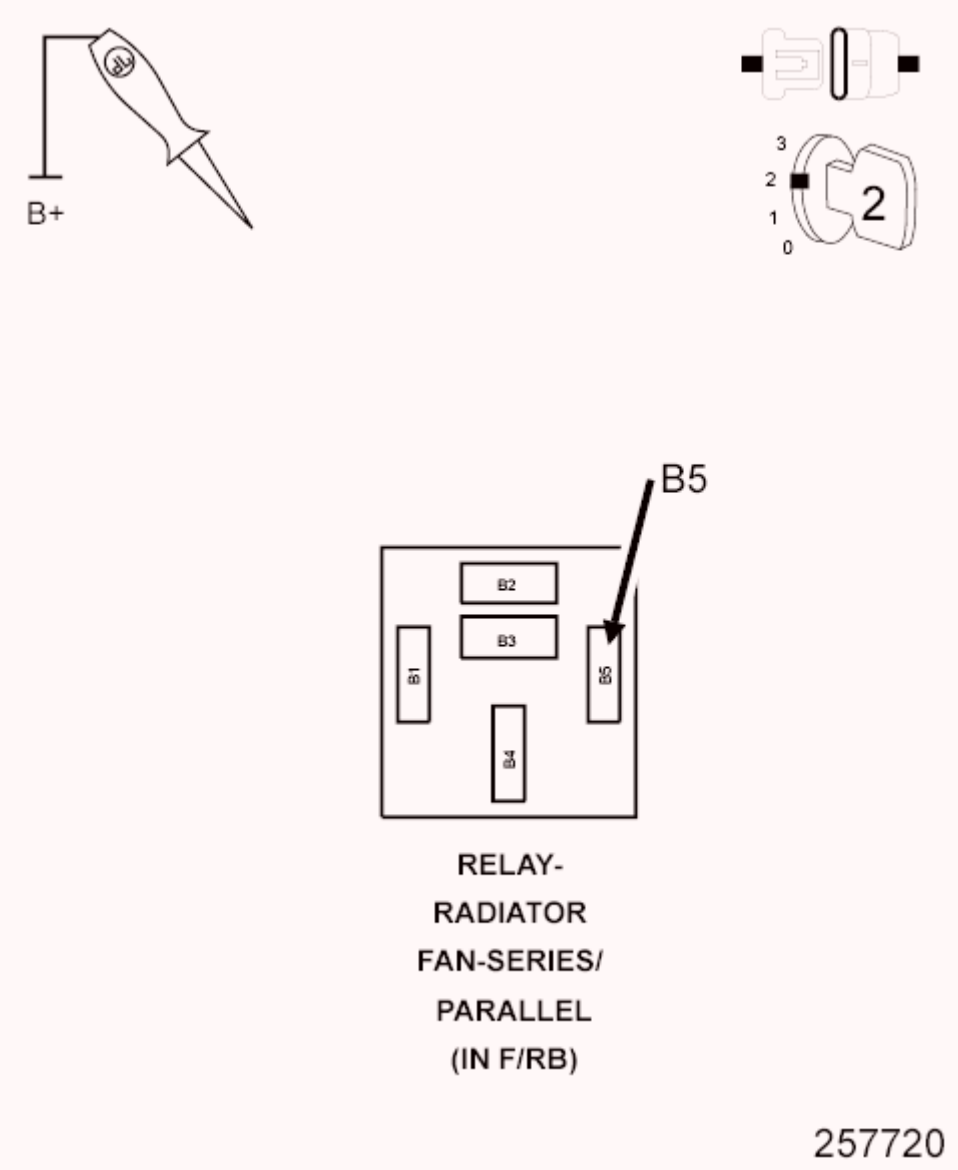

Fig. 89: Checking Series/Parallel Rad Fan Relay
Courtesy of CHRYSLER GROUP, LLC

1. Turn the ignition off.

2. Remove the Series/Parallel Rad Fan Relay.
3. Install the Med/High Rad Fan Relay.
4. Turn the ignition on, engine not running.
5. With a scan tool, select Radiator Fan 2 Control State, Toggle, to actuate the Cooling Fan (Series/Parallel Rad Fan Relay).
6. Using a 12-volt test light connected to battery voltage, probe the (N112) Rad Fan Relay Control circuit at the Series/Parallel Rad Fan Relay.

   Does the test light illuminate brightly and flash on and off?

   Yes

   - Replace the Series/Parallel Rad Fan Relay.
   - Perform the BODY VERIFICATION TEST. Refer to **STANDARD PROCEDURE** .

   No

   - Go To 5

5. **(N112) RAD FAN RELAY CONTROL CIRCUIT SHORTED TO BATTERY VOLTAGE**

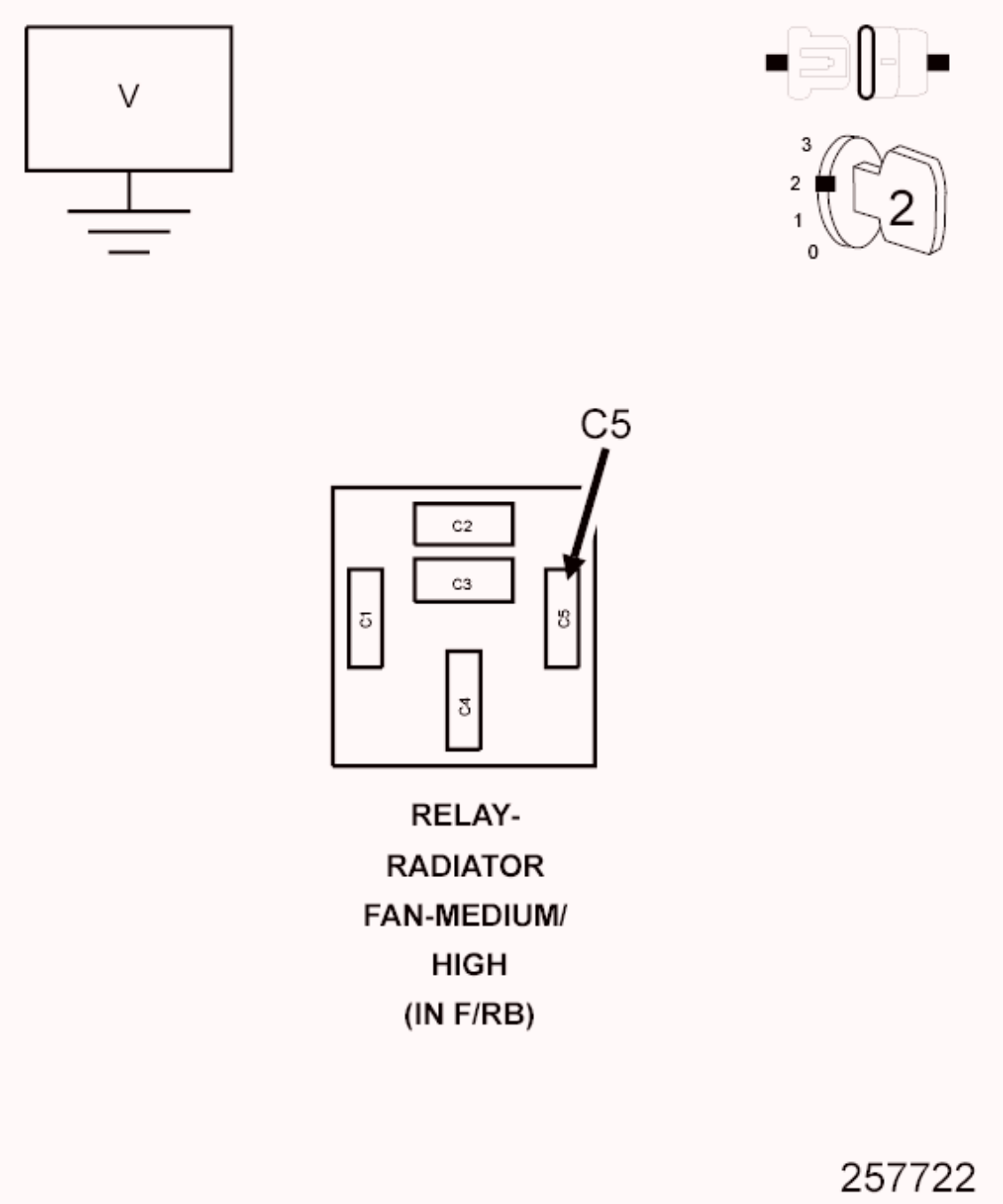

Fig. 90: Checking Radiator Fan Relay Control Circuit For Short To Battery
Courtesy of CHRYSLER GROUP, LLC

1. Turn the ignition off.
2. Disconnect the TIPM C11 harness connector.
3. Turn the ignition on, engine not running.
4. Using a voltmeter, measure the voltage of the (N112) Rad Fan Relay Control circuit in the Med/High Rad Fan Relay harness connector.

Is there voltage present?

Yes

- Repair the short to voltage in the (N112) Rad Fan Relay Control circuit.
- Perform the BODY VERIFICATION TEST. Refer to **STANDARD PROCEDURE** .

No

- Go To 6

6. **(N112) RAD FAN RELAY CONTROL CIRCUIT OPEN OR HIGH RESISTANCE**
   1. Turn the ignition off.
   2. Measure the resistance of the (N112) Rad Fan Relay Control circuit from the Med/High Rad Fan Relay harness connector to the TIPM C11 harness connector.
   3. Measure the resistance of the (N112) Rad Fan Relay Control circuit from the Series/Parallel Rad Fan Relay harness connector to the TIPM C11 harness connector.

   Is the resistance below 5.0 Ohms?

   Yes

   - Go To 7

   No

   - Repair the open or high resistance in the (N112) Rad Fan Relay Control circuit.
   - Perform the BODY VERIFICATION TEST. Refer to **STANDARD PROCEDURE** .

7. **TOTALLY INTEGRATED POWER MODULE (TIPM)**
   1. Using the wiring diagram/schematic as a guide, inspect the wiring and connectors between the Cooling Fan Module, TIPM, and the Powertrain Control Module (PCM).

2. Look for any chafed, pierced, pinched, or partially broken wires.
3. Look for broken, bent, pushed out or corroded terminals. Verify that there is good pin to terminal contact in the Cooling Fan Module, TIPM, and Powertrain Control Module connectors.
4. Perform any Technical Service Bulletins that may apply.

Were there any problems found?

Yes

- Repair as necessary.
- Perform the BODY VERIFICATION TEST. Refer to **STANDARD PROCEDURE** .

No

- Replace the Totally Integrated Power Module in accordance with the Service Information.
- Perform the BODY VERIFICATION TEST. Refer to **STANDARD PROCEDURE** .

P1277-STARTER CONTROL CIRCUIT 2 LOW

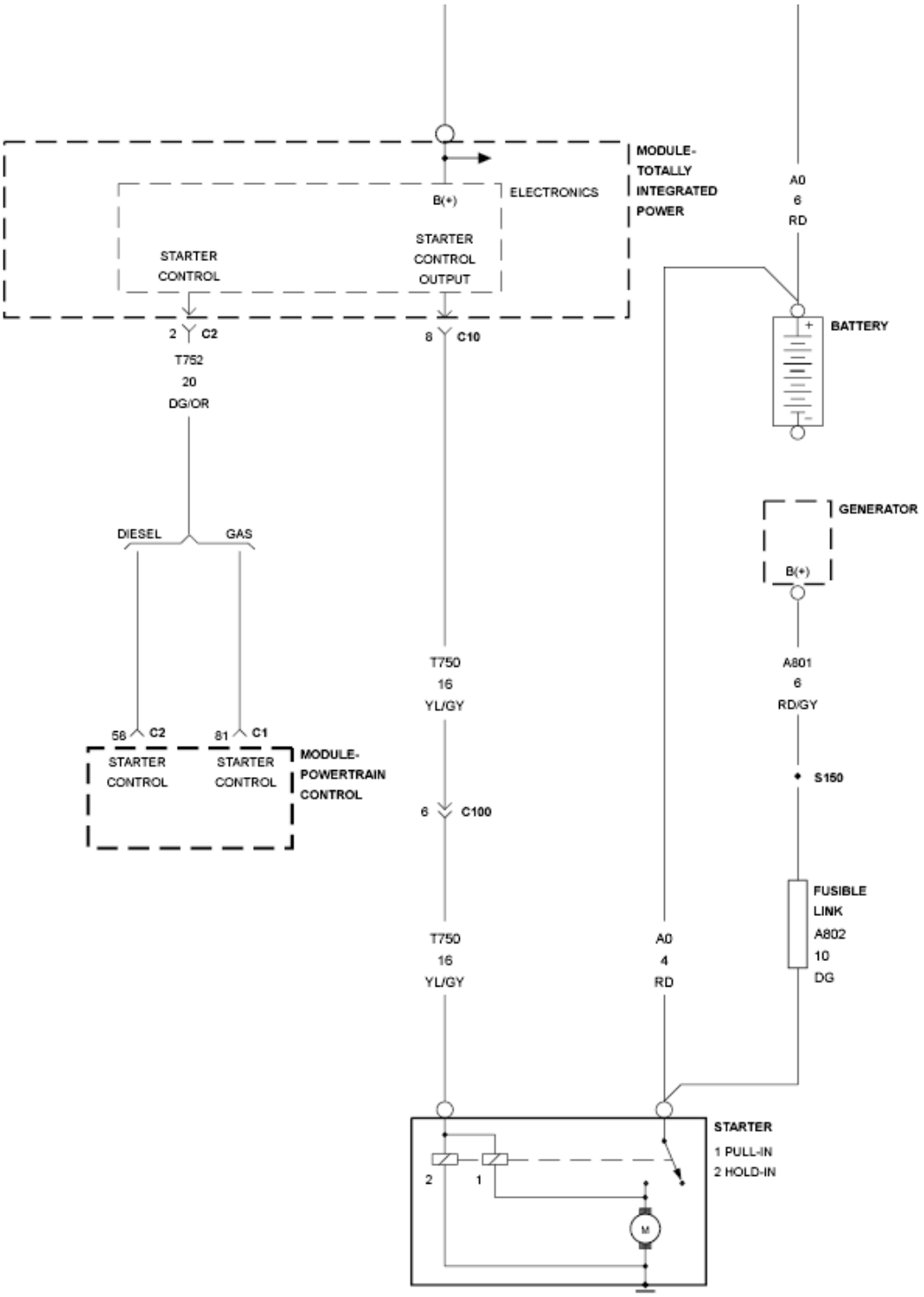

Fig. 91: Starter Control Circuit 2 Wiring Diagram
Courtesy of CHRYSLER GROUP, LLC

For a complete wiring diagram, **refer to appropriate SYSTEM WIRING DIAGRAMS article** .

WHEN MONITORED

With the ignition on.

Battery voltage greater than 10.4 volts and Main Relay is on.

Totally Integrated Power Module (TIPM) requesting Starter operation.

SET CONDITION

Actual Starter state is not equal to desired state. One Trip Fault. Three good trips to turn off the Malfunction Indicator Lamp (MIL).

POSSIBLE CAUSES

Possible Causes
(T750) STARTER CONTROL OUTPUT CIRCUIT SHORTED TO GROUND
STARTER
TOTALLY INTEGRATED POWER MODULE (TIPM)

Always perform the Pre-Diagnostic Troubleshooting procedure before proceeding. Refer to appropriate Diagnostic Information .

DIAGNOSTIC TEST

1. **DIAGNOSTIC TROUBLE CODE (DTC) IS ACTIVE**

   NOTE: If P0615, P0616 or P0617 has set along with this DTC, diagnose those DTCs first before continuing.

   1. Turn the Ignition on, engine not running.
   2. Using the scan tool, select View DTCs.

      Is the status Active for this DTC?

      Yes

      - Go To 2

      No

- Refer to appropriate Diagnostic Information and perform the CHECKING FOR AN INTERMITTENT DTC diagnostic procedure.

2. **STARTER CONTROL OUTPUT OPERATION**

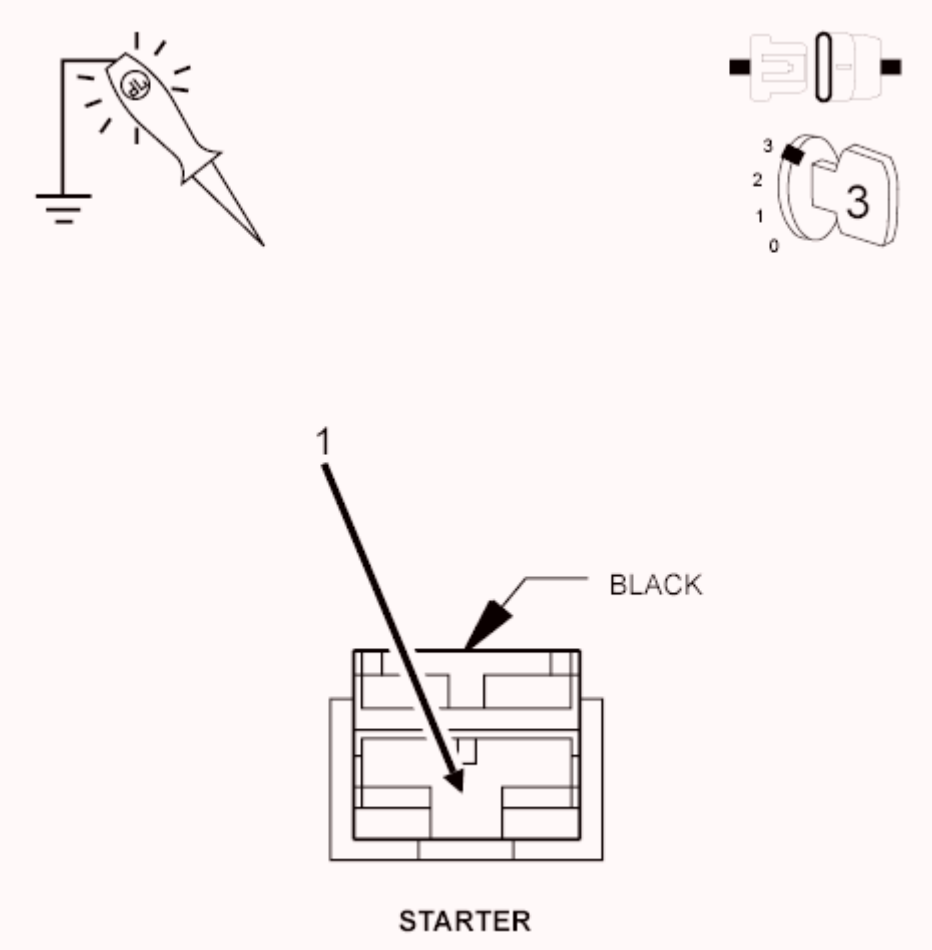

Fig. 92: Checking Starter Control Output Circuit
Courtesy of CHRYSLER GROUP, LLC

1. Turn the ignition off.
2. Disconnect the Starter (1-way) harness connector.
3. Using a 12-volt test light connected to ground, check the (T750) Starter Control Output circuit in the Starter (1-way) harness connector.

WARNING: **When the engine is operating, do not stand in direct line with the fan. Do not put your hands near the pulleys, belts or fan. Do not wear loose clothing. Failure to follow these instructions may result in**

possible serious or fatal injury.

4. Crank the engine and monitor the test light.

NOTE: The test light should be illuminated and bright. Compare the brightness to that of a direct connection to the battery.

Does the test light illuminate brightly?

Yes

- Replace the Starter in accordance with the Service Information.
- Perform the POWERTRAIN VERIFICATION TEST. Refer to appropriate Diagnostic Information .

No

- Go To 3

3. **(T750) STARTER CONTROL OUTPUT CIRCUIT SHORTED TO GROUND**

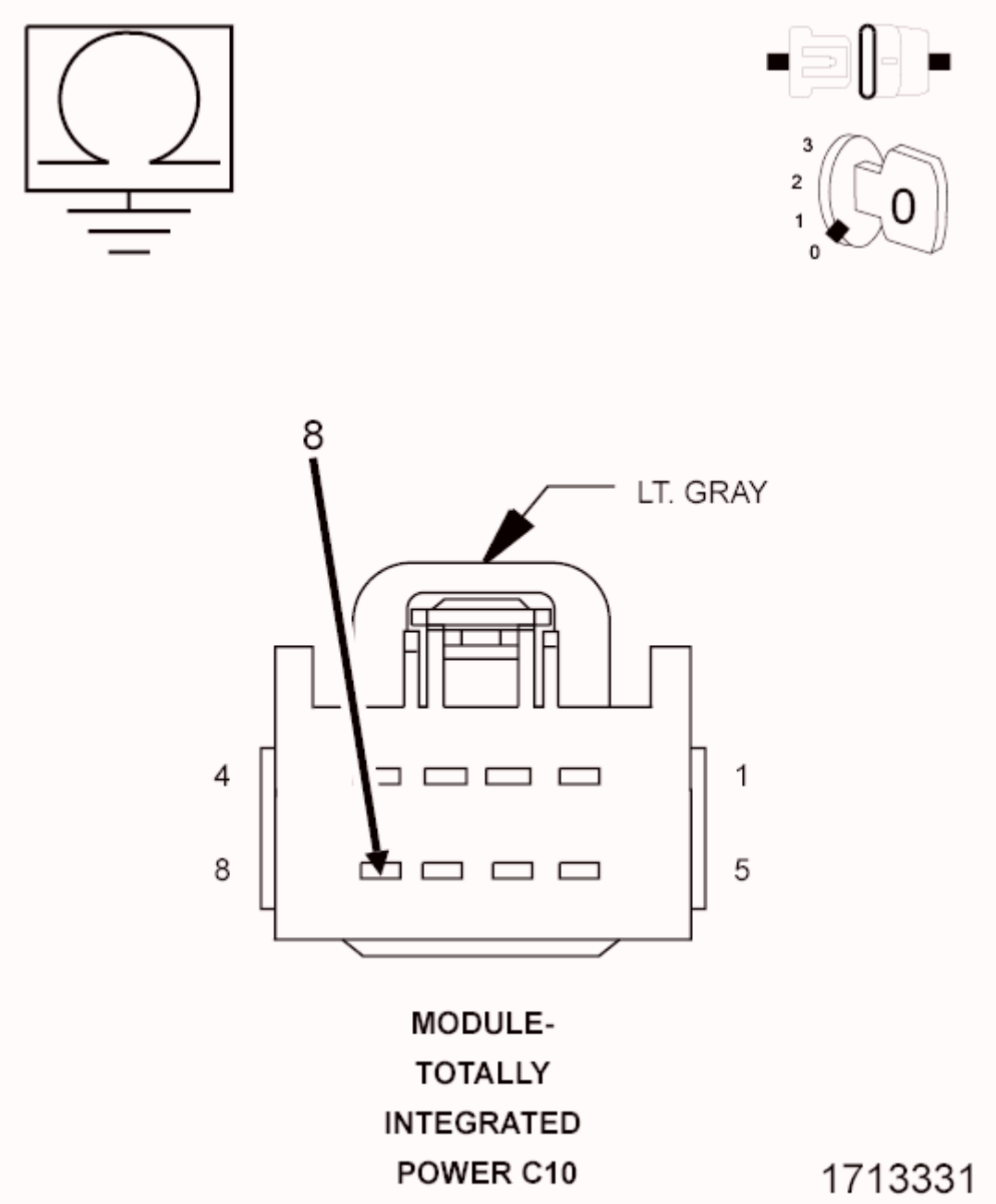

Fig. 93: Checking Starter Control Output Circuit For Short To Ground
Courtesy of CHRYSLER GROUP, LLC

1. Turn the ignition off.
2. Disconnect the TIPM C10 harness connector.
3. Measure the resistance between ground and the (T750) Starter Control Output circuit at the TIPM C10 harness connector.

   Is the resistance below 100 Ohms?

   Yes

- Repair the short to ground in the (T750) Starter Control Output circuit.
- Perform the POWERTRAIN VERIFICATION TEST. Refer to appropriate Diagnostic Information .

No

- Go To 4

4. **TOTALLY INTEGRATED POWER MODULE**

NOTE: Before continuing, check the TIPM harness connector terminals for corrosion, damage or terminal push out. Repair as necessary.

1. Using the schematics as a guide, inspect the wire harness and connectors.
2. Pay particular attention to all Power and Ground circuits.

Were any problems found?

Yes

- Repair as necessary.
- Perform the POWERTRAIN VERIFICATION TEST. Refer to appropriate Diagnostic Information .

No

- Replace the Totally Integrated Power Module in accordance with the Service Information.
- Perform the BODY VERIFICATION TEST. Refer to **STANDARD PROCEDURE** .

P1278-STARTER CONTROL CIRCUIT 2 HIGH

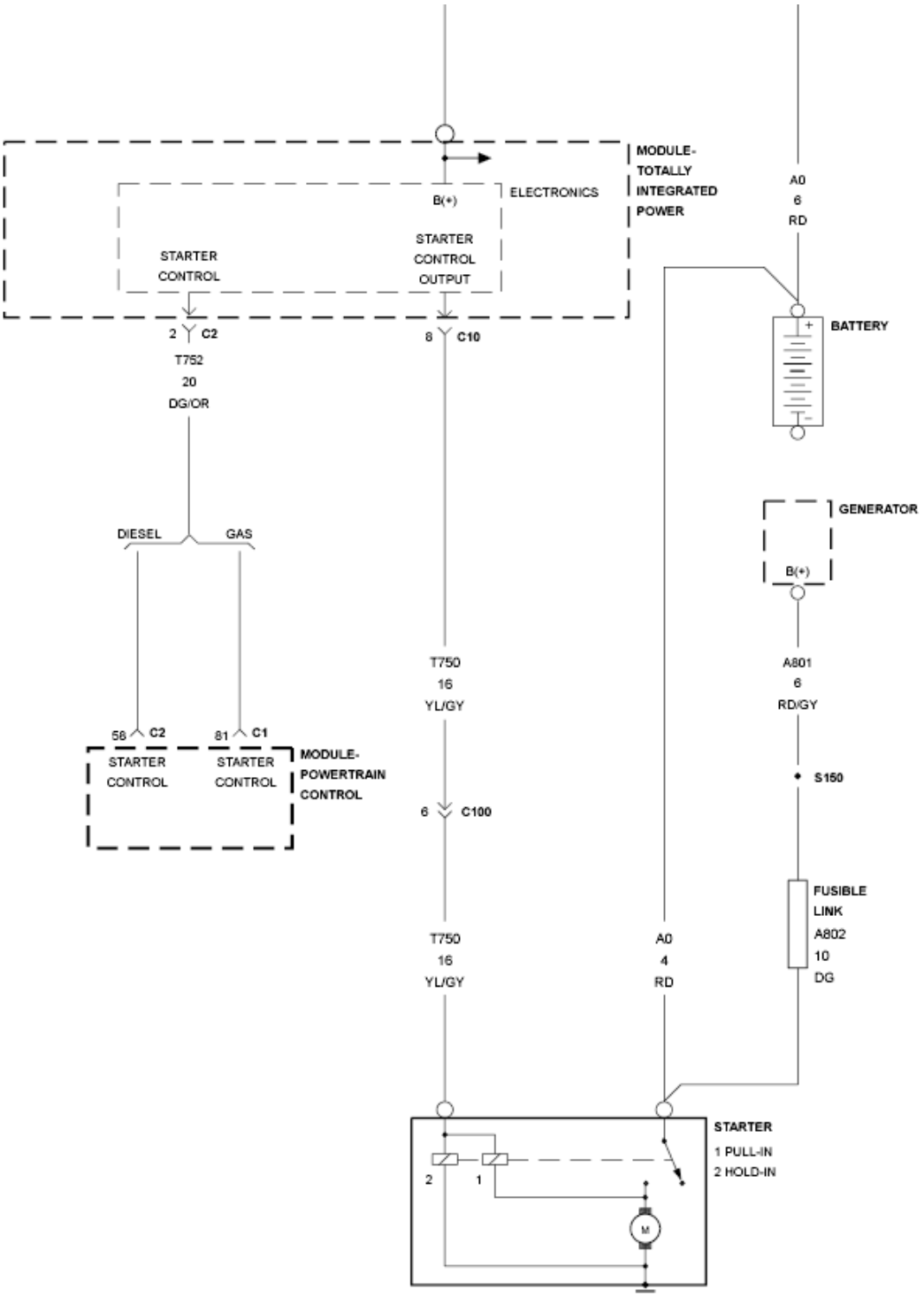

Fig. 94: Starter Control Circuit 2 Wiring Diagram
Courtesy of CHRYSLER GROUP, LLC

For a complete wiring diagram, **refer to appropriate SYSTEM WIRING DIAGRAMS article** .

WHEN MONITORED

With the ignition on.

Battery voltage greater than 10.4 volts and Main Relay is on.

Totally Integrated Power Module (TIPM) requesting Starter operation.

SET CONDITION

Actual Starter state is not equal to desired state. One Trip Fault. Three good trips to turn off the MIL.

POSSIBLE CAUSES

Possible Causes
(T750) STARTER CONTROL OUTPUT CIRCUIT SHORTED TO BATTERY VOLTAGE STARTER MOTOR TOTALLY INTEGRATED POWER MODULE (TIPM)

Always perform the Pre-Diagnostic Troubleshooting procedure before proceeding. Refer to appropriate Diagnostic Information .

DIAGNOSTIC TEST

1. **DIAGNOSTIC TROUBLE CODE (DTC) IS ACTIVE**

   NOTE: If P0615, P0616 or P0617 has set along with this DTC, diagnose those DTCs first before continuing.

   1. Turn the Ignition on, engine not running.
   2. Using the scan tool, select View DTCs.

      Is the status Active for this DTC?

      Yes

      - Go To 2

      No

- Perform the CHECKING FOR AN INTERMITTENT DTC diagnostic procedure. Refer to appropriate Diagnostic Information .

2. **STARTER CONTROL OUTPUT VERIFICATION**

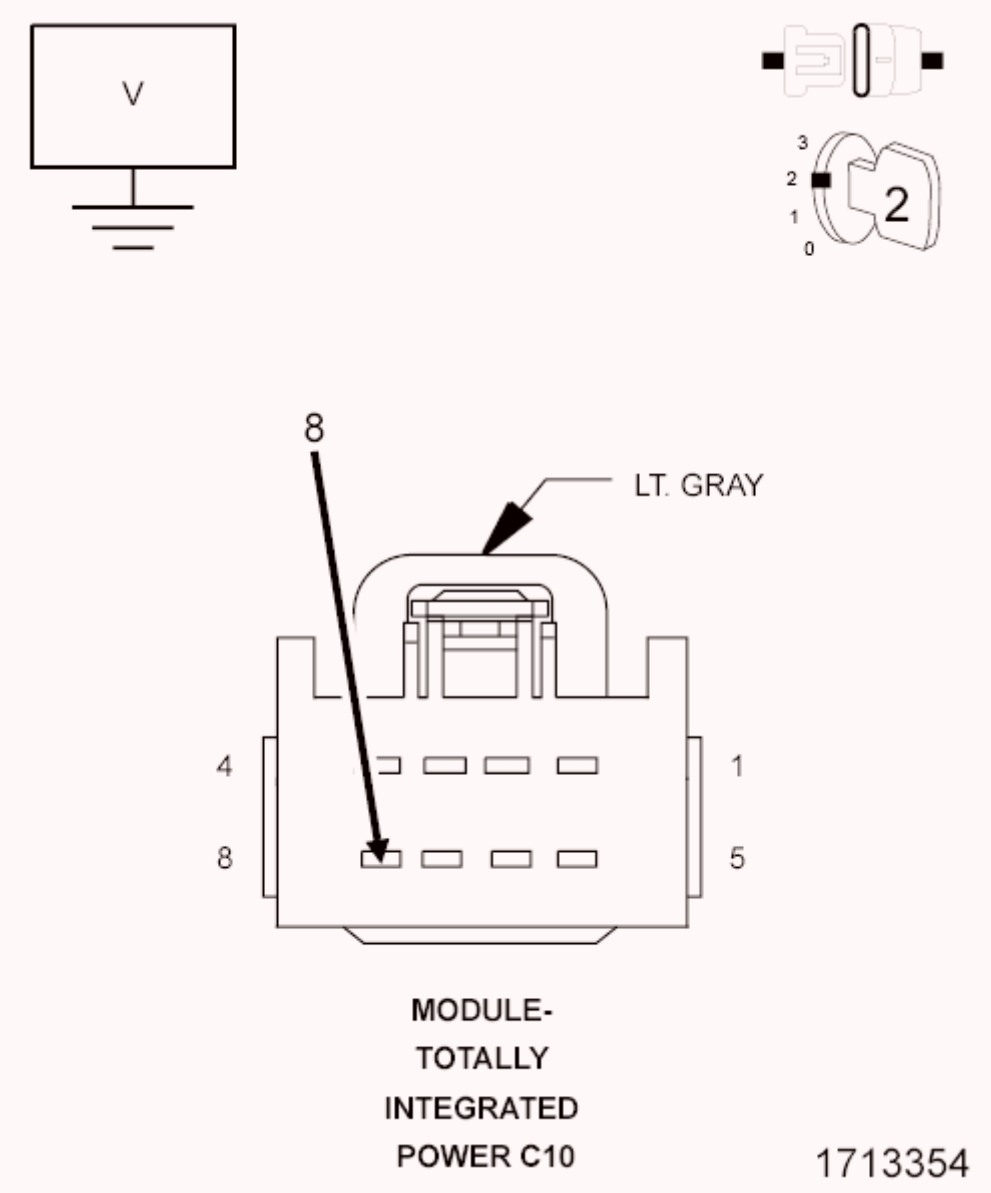

Fig. 95: Checking Starter Control Output Circuit
Courtesy of CHRYSLER GROUP, LLC

1. Turn the ignition off.
2. Disconnect TIPM C10 harness connector.
3. Turn the ignition on.
4. Measure the voltage of the (T750) Starter Control Output circuit in the TIPM C10 harness connector.

Is there any voltage present?

Yes

- Go To 3

No

- Go To 4

3. **(T750) STARTER CONTROL OUTPUT CIRCUIT SHORTED TO BATTERY VOLTAGE**

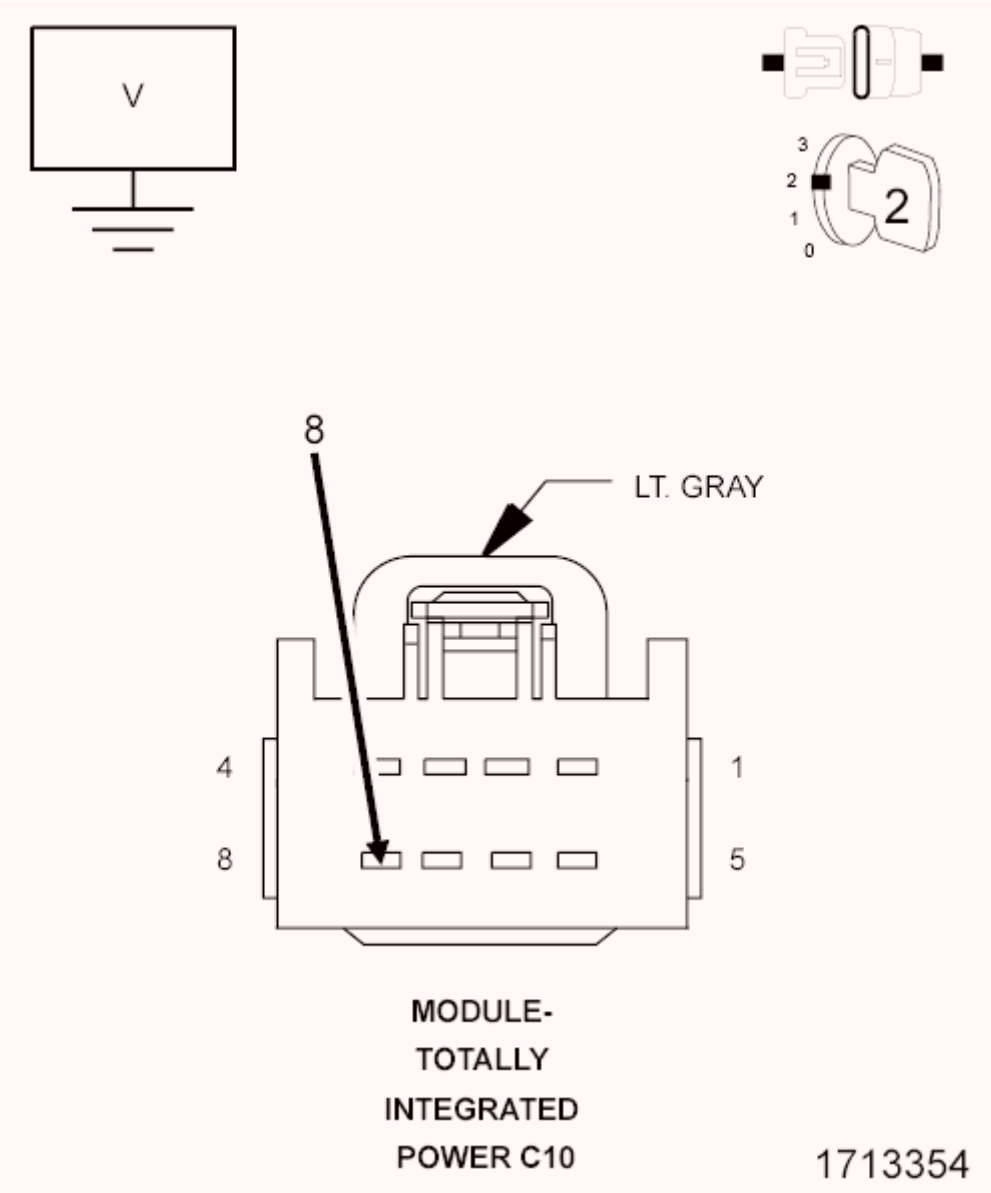

Fig. 96: Checking Starter Control Output Circuit
Courtesy of CHRYSLER GROUP, LLC

1. Turn the ignition off
2. Disconnect the Starter (1-way) harness connector.
3. Turn the ignition on.
4. Measure the voltage between ground and the (T750) Starter Control Output circuit in the TIPM C10 harness connector.

   Is there any voltage present?

   Yes

   - Repair the short to voltage in the (T750) Starter Control Output circuit.
   - Perform the POWERTRAIN VERIFICATION TEST. Refer to appropriate Diagnostic Information .

   No

   - Replace the Starter in accordance with the Service information.
   - Perform the POWERTRAIN VERIFICATION TEST. Refer to appropriate Diagnostic Information .

4. **TOTALLY INTEGRATED POWER MODULE**

NOTE: Before continuing, check the TIPM harness connector terminals for corrosion, damage or terminal push out. Repair as necessary.

1. Using the schematics as a guide, inspect the wire harness and connectors.
2. Pay particular attention to all Power and Ground circuits.

   Were any problems found?

   Yes

   - Repair as necessary.
   - Perform the POWERTRAIN VERIFICATION TEST. Refer to appropriate Diagnostic Information .

No

- Replace the Totally Integrated Power Module in accordance with the Service Information.
- Perform the BODY VERIFICATION TEST. Refer to **STANDARD PROCEDURE** .

P1279-STARTER CONTROL CIRCUIT 2 OPEN

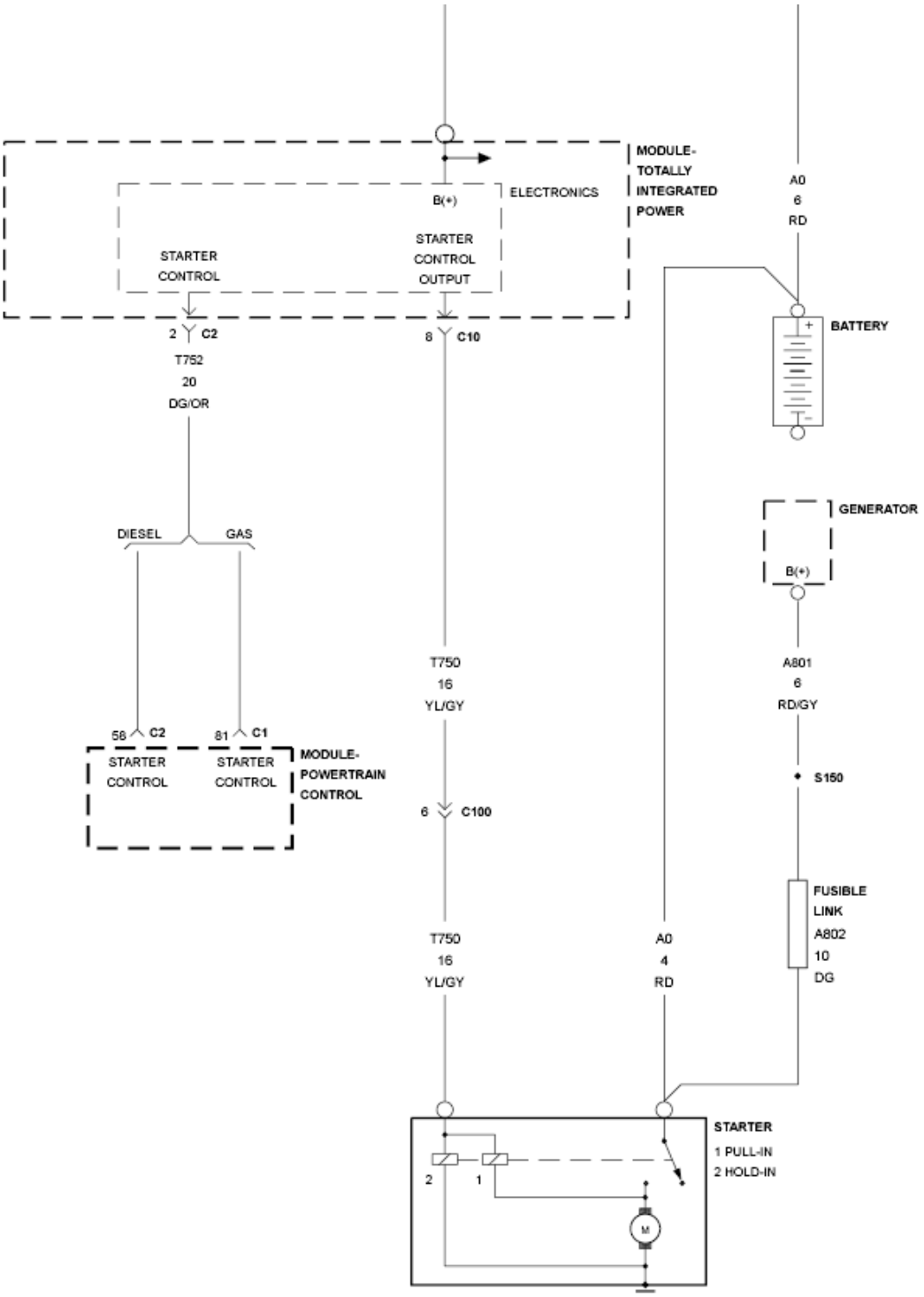

Fig. 97: Starter Control Circuit 2 Wiring Diagram
Courtesy of CHRYSLER GROUP, LLC

For a complete wiring diagram, **refer to appropriate SYSTEM WIRING DIAGRAMS article** .

WHEN MONITORED

With the ignition on.

Battery voltage greater than 10.4 volts and Main Relay is on.

Totally Integrated Power Module (TIPM) requesting Starter operation.

SET CONDITION

Actual Starter state is not equal to desired state. One Trip Fault. Three good trips to turn off the MIL.

POSSIBLE CAUSES

Possible Causes
(T750) STARTER CONTROL OUTPUT CIRCUIT OPEN
STARTER
TOTALLY INTEGRATED POWER MODULE (TIPM)

Always perform the Pre-Diagnostic Troubleshooting procedure before proceeding. Refer to appropriate Diagnostic Information .

DIAGNOSTIC TEST

1. **DTC IS ACTIVE**

   NOTE: If P0615, P0616 or P0617 has set along with this DTC, diagnose those DTCs first before continuing.

   1. Ignition on, engine not running.
   2. With the scan tool, select View DTCs.

      Is the status Active for this DTC?

      Yes

      - Go To 2

      No

      - Perform the CHECKING FOR AN INTERMITTENT DTC

diagnostic procedure. Refer to appropriate Diagnostic Information .

2. **STARTER CONTROL OUTPUT OPERATION**

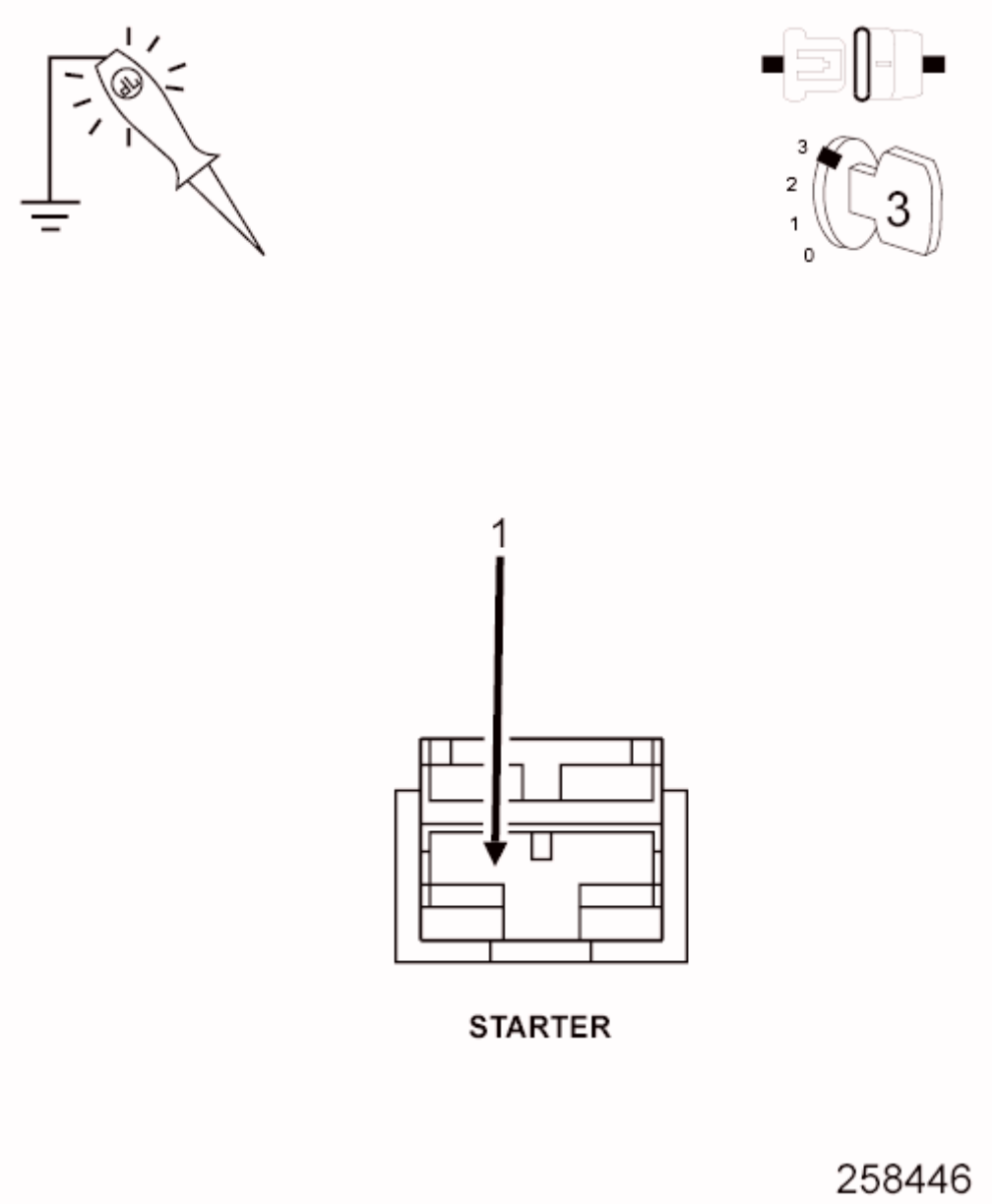

Fig. 98: Checking Starter Control Output Circuit
Courtesy of CHRYSLER GROUP, LLC

1. Turn the ignition off.
2. Disconnect the Starter (1-way) harness connector.
3. Using a 12-volt test light connected to ground, check the (T750) Starter Control Output circuit in the Starter (1-way) harness connector.

WARNING: When the engine is operating, do not

stand in direct line with the fan. Do not put your hands near the pulleys, belts or fan. Do not wear loose clothing. Failure to follow these instructions may result in possible serious or fatal injury.

4. Crank the engine and monitor the test light.

NOTE: The test light should be illuminated and bright. Compare the brightness to that of a direct connection to the battery.

Does the test light illuminate brightly?

Yes

- Replace the Starter in accordance with the Service Information.
- Perform the POWERTRAIN VERIFICATION TEST. Refer to appropriate Diagnostic Information .

No

- Go To 3

3. **(T750) STARTER CONTROL OUTPUT CIRCUIT OPEN**

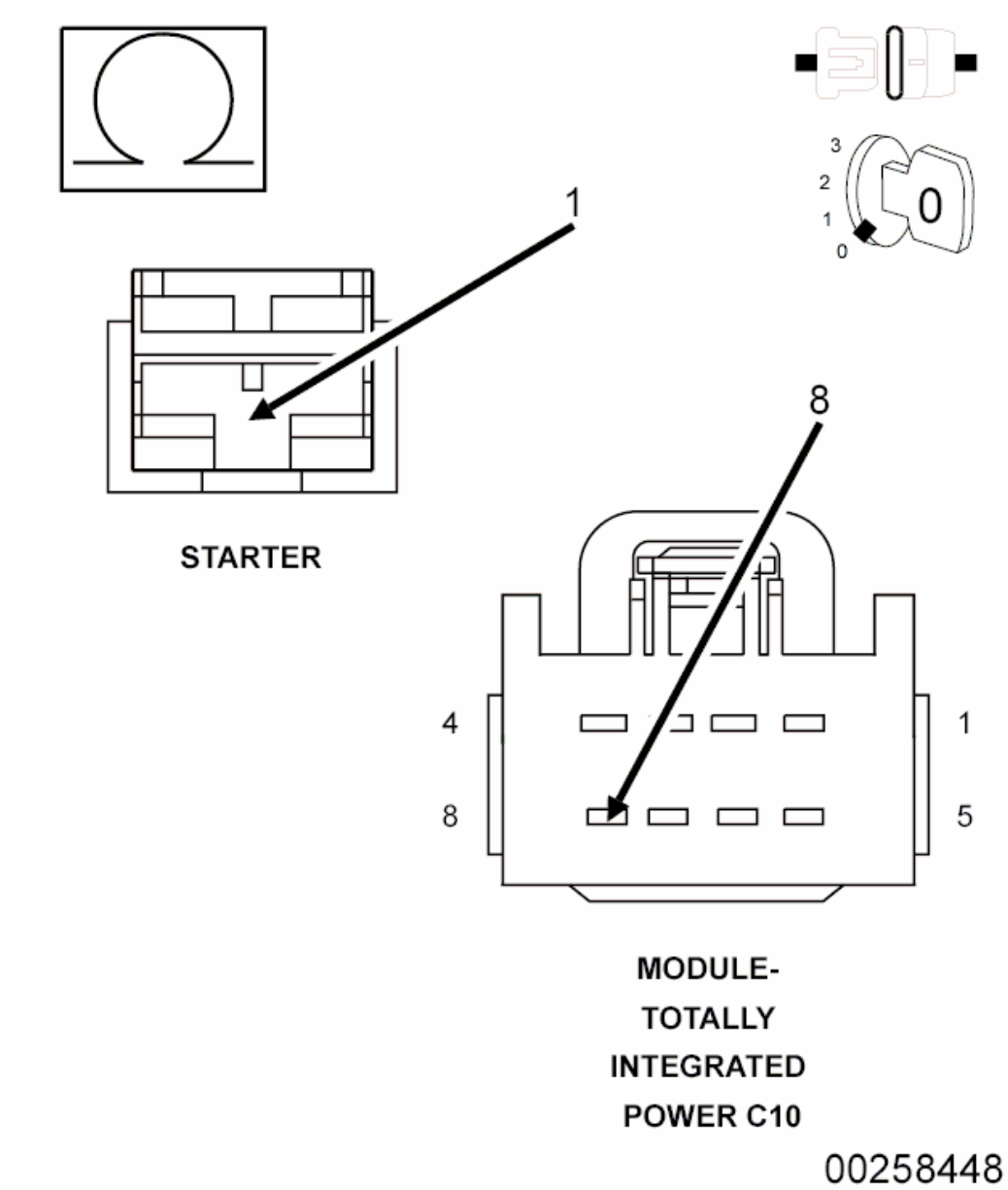

Fig. 99: Checking Starter Control Output Circuit For Open
Courtesy of CHRYSLER GROUP, LLC

1. Turn the ignition off
2. Disconnect the TIPM 10 harness connector.
3. Measure the resistance of the (T750) Starter Control Output circuit between the TIPM C10 harness connector and the Starter harness connector.

   Is the resistance below 5.0 Ohms?

   Yes

- Go To 4

No

- Repair the open in the (T750) Starter Control Output circuit.
- Perform the POWERTRAIN VERIFICATION TEST. Refer to appropriate Diagnostic Information .

4. **TOTALLY INTEGRATED POWER MODULE**

NOTE: Before continuing, check the TIPM harness connector terminals for corrosion, damage, or terminal push out. Repair as necessary.

1. Using the schematics as a guide, inspect the wire harness and connectors.
2. Pay particular attention to all Power and Ground circuits.

Were any problems found?

Yes

- Repair as necessary.
- Perform the POWERTRAIN VERIFICATION TEST. Refer to appropriate Diagnostic Information .

No

- Replace the Totally Integrated Power Module in accordance with the Service Information.
- Perform the BODY VERIFICATION TEST. Refer to **STANDARD PROCEDURE** .

P127A-STARTER CONTROL CIRCUIT 2 OVERCURRENT

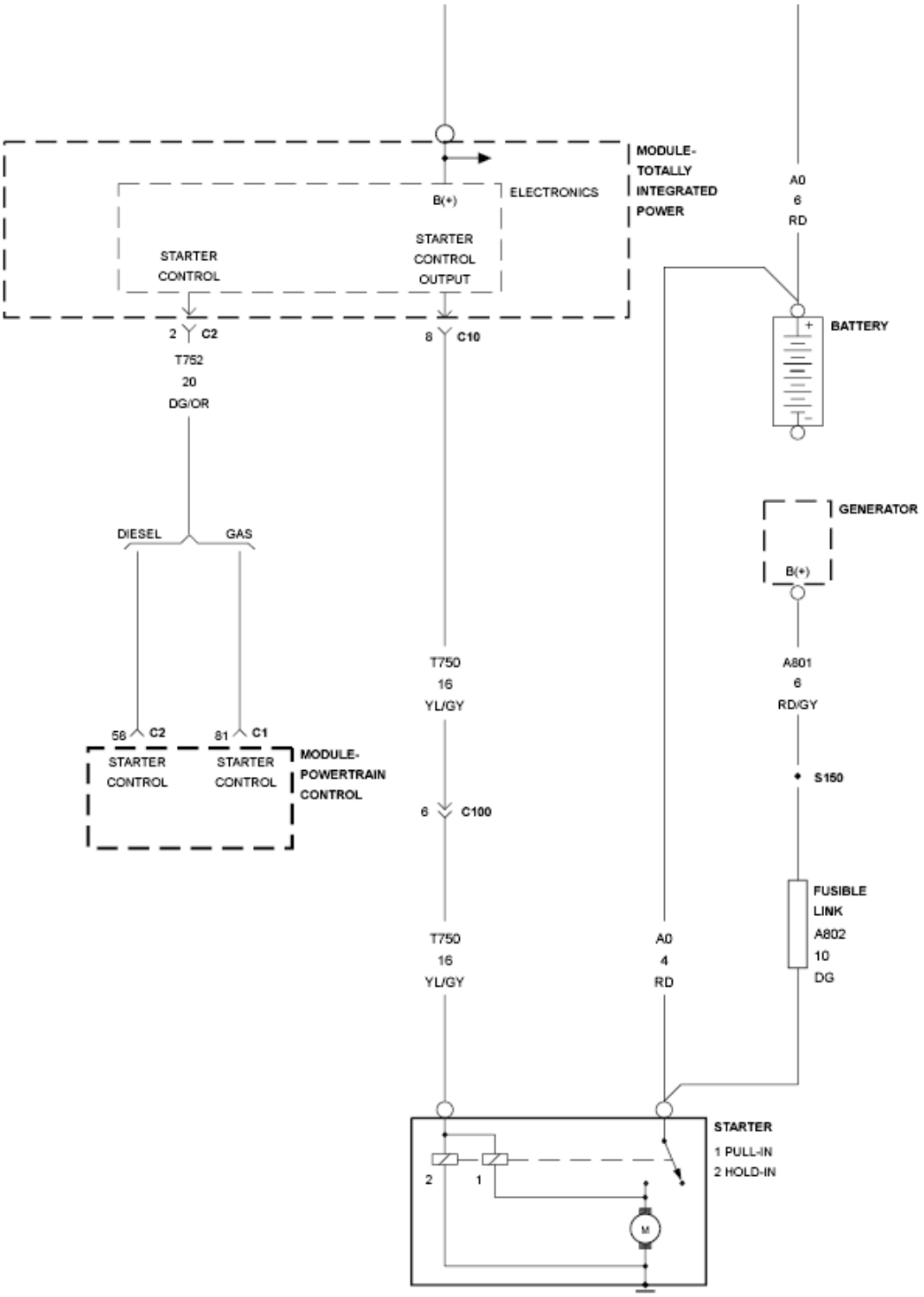

Fig. 100: Starter Control Circuit 2 Wiring Diagram
Courtesy of CHRYSLER GROUP, LLC

For a complete wiring diagram, **refer to appropriate SYSTEM WIRING DIAGRAMS article** .

WHEN MONITORED

With the ignition on.

Battery voltage greater than 10.4 volts and Main Relay is on.

Totally Integrated Power Module (TIPM) requesting Starter operation.

SET CONDITION

An overcurrent condition is detected in the Starter control output circuit. One Trip Fault. Three good trips to turn off the MIL.

POSSIBLE CAUSES

Possible Causes
TERMINAL DAMAGE OR CORROSION
(T750) STARTER CONTROL OUTPUT CIRCUIT HIGH RESISTANCE
STARTER
TOTALLY INTEGRATED POWER MODULE (TIPM)

Always perform the Pre-Diagnostic Troubleshooting procedure before proceeding. Refer to appropriate Diagnostic Information .

DIAGNOSTIC TEST

1. **DTC IS ACTIVE**

   NOTE: If P0615, P0616 or P0617 has set along with this DTC, diagnose those DTCs first before continuing.

   1. Ignition on, engine not running.
   2. With the scan tool, select View DTCs.

      Is the status Active for this DTC?

      Yes

      - Go To 2

      No

- Perform the CHECKING FOR AN INTERMITTENT DTC diagnostic procedure. Refer to appropriate Diagnostic Information .

2. **VISUAL AND PHYSICAL CONNECTOR AND TERMINAL INSPECTION**

NOTE: Make sure the Starter is bolted securely and is properly mounted.

1. Turn the ignition off.
2. Disconnect the TIPM C10 harness connector.
3. Disconnect the Starter (1-way) harness connector.
4. Inspect the terminal and connector condition. Check for signs of corrosion build up or damage that would compromise the terminal to controller pin connector.

NOTE: Make sure that all in-line connectors are inspected for corrosion and/or damage.

5. Visually inspect the wiring harness. Look for any chafed, pierced, pinched or partially broken wires hidden in the wire insulation.

Were any of the above conditions found?

Yes

- Repair or replace as necessary.
- Perform the POWERTRAIN VERIFICATION TEST. Refer to appropriate Diagnostic Information .

No

- Go To 3

3. **STARTER CONTROL OUTPUT OPERATION**

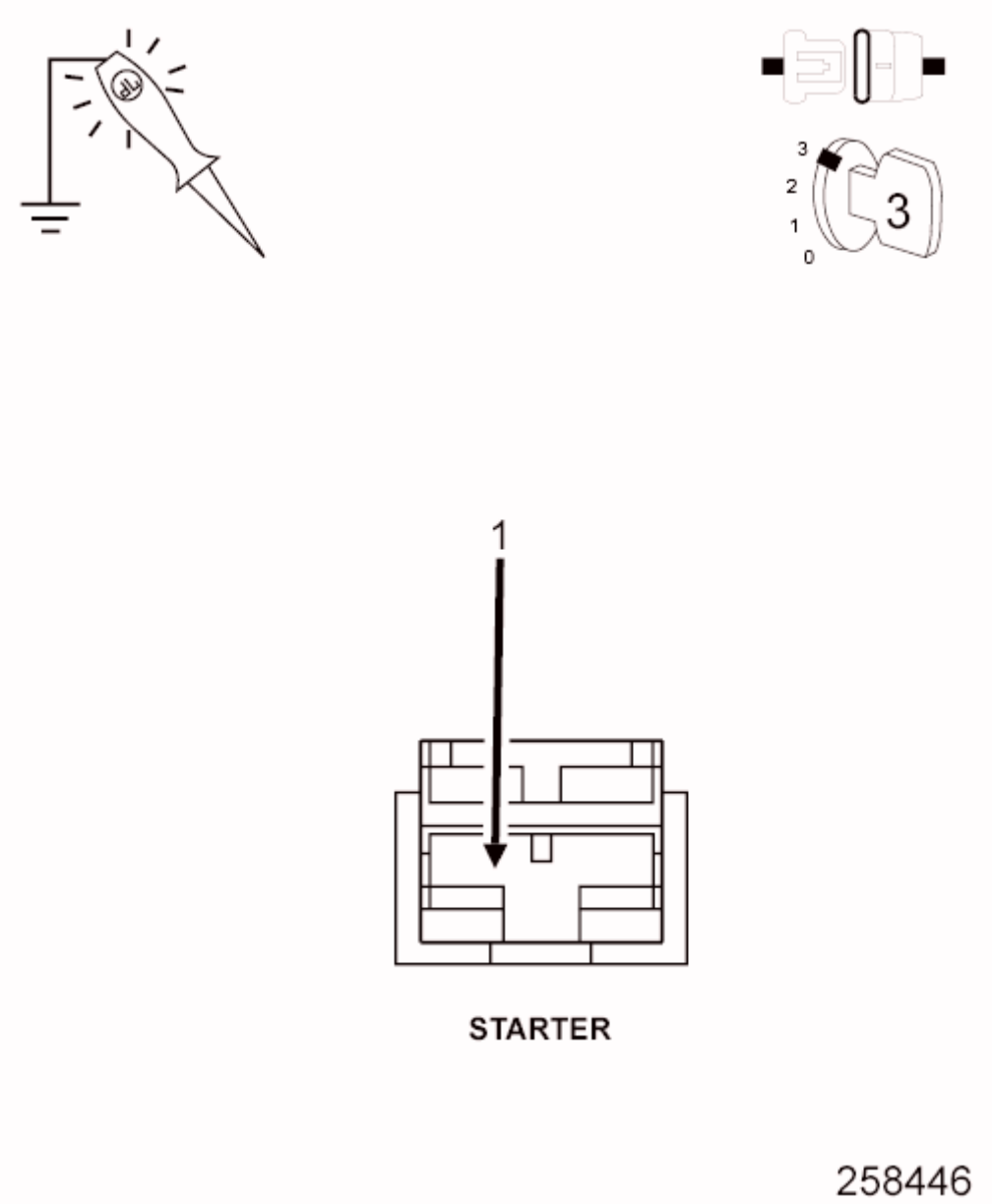

Fig. 101: Checking Starter Control Output Circuit
Courtesy of CHRYSLER GROUP, LLC

1. Turn the ignition off.
2. Reconnect the TIPM C10 harness connector.
3. Using a 12-volt test light connected to ground, check the (T750) Starter Control Output circuit in the Starter (1-way) harness connector.

WARNING: **When the engine is operating, do not stand in direct line with the fan. Do not put your hands near the pulleys, belts or fan. Do not wear loose clothing. Failure to**

follow these instructions may result in possible serious or fatal injury.

4. Crank the engine and monitor the test light.

NOTE: The test light should be illuminated only when cranking the engine. Compare the brightness to that of a direct connection to the battery.

Does the test light illuminate brightly when cranking the engine and then turn off when it is not being cranked?

Yes

- Replace the Starter in accordance with the Service Information.
- Perform the POWERTRAIN VERIFICATION TEST. Refer to appropriate Diagnostic Information .

No

- Go To 4

4. **(T750) STARTER CONTROL OUTPUT CIRCUIT HIGH RESISTANCE**

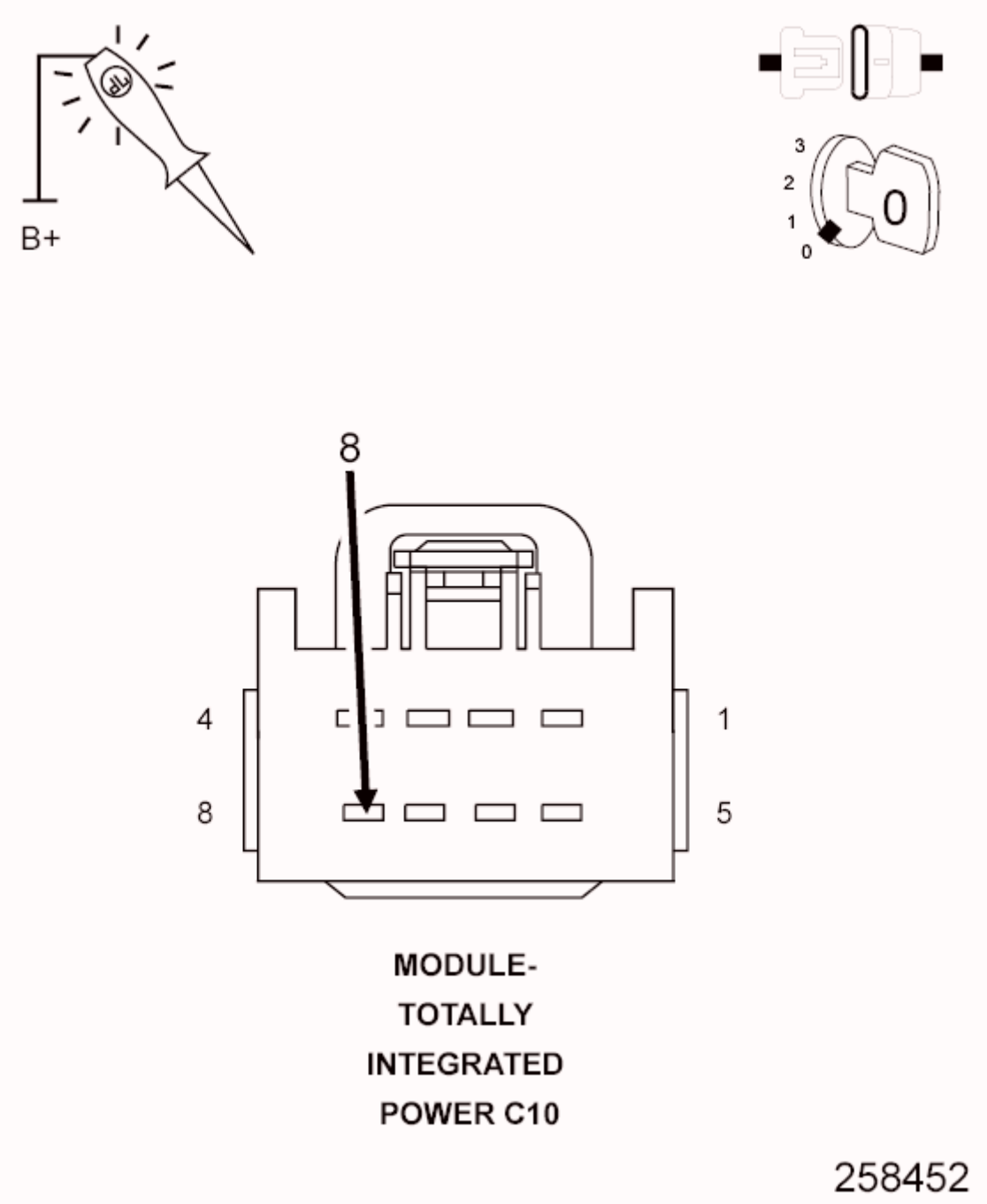

Fig. 102: Checking Starter Control Output Circuit For High Resistance
Courtesy of CHRYSLER GROUP, LLC

1. Turn the ignition off.
2. Disconnect the TIPM C10 harness connector.
3. Connect a jumper wire between the (T750) Starter Control Output circuit in the Starter harness connector and a clean chassis ground.
4. Using a 12-volt test light connected to 12-volts, check the (T750) Starter Control Output circuit in the TIPM C10 harness connector.

NOTE: The test light should be illuminated and bright. Compared the brightness to that of a direct connection to the battery.

Does the test light illuminate brightly.

Yes

- Go To 5

No

- Repair the high resistance in the (T750) Starter Control Output circuit.
- Perform the POWERTRAIN VERIFICATION TEST. Refer to appropriate Diagnostic Information .

5. **TOTALLY INTEGRATED POWER MODULE**

NOTE: Before continuing, check the TIPM harness connector terminals for corrosion, damage, or terminal push out. Repair as necessary.

1. Using the schematics as a guide, inspect the wire harness and connectors.
2. Pay particular attention to all Power and Ground circuits.

Were any problems found?

Yes

- Repair as necessary.
- Perform the POWERTRAIN VERIFICATION TEST. Refer to appropriate Diagnostic Information .

No

- Replace the Totally Integrated Power Module in accordance with the Service Information.
- Perform the BODY VERIFICATION TEST. Refer to

STANDARD PROCEDURE .

P127C-FUEL PUMP CONTROL CIRCUIT 2 LOW

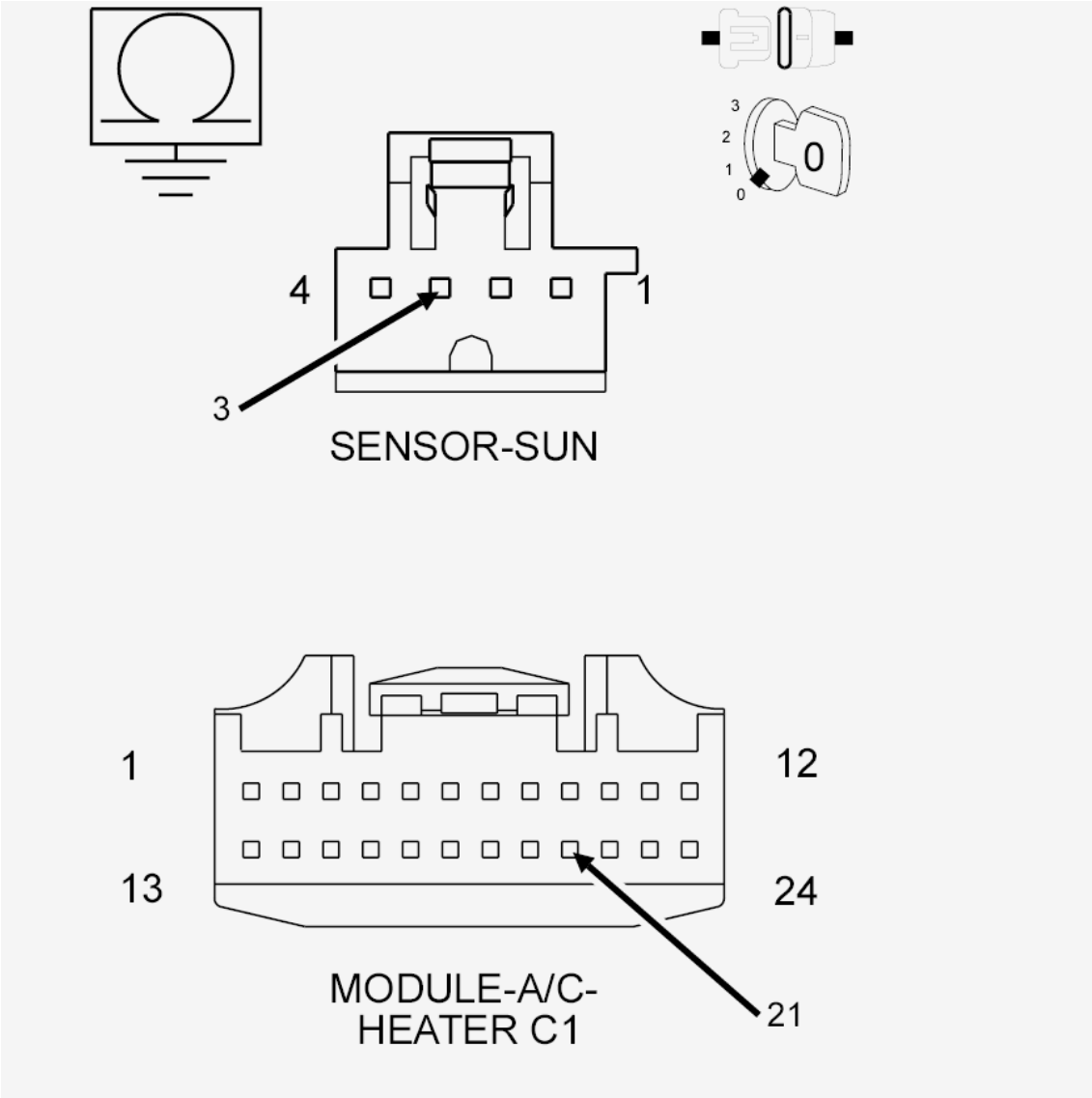

Fig. 103: Fuel Pump Control Circuit 2 Wiring Diagram
Courtesy of CHRYSLER GROUP, LLC

For a complete wiring diagram, **refer to appropriate SYSTEM WIRING DIAGRAMS article** .

WHEN MONITORED

With the ignition on.

Battery voltage greater than 10.4 volts and the Main Relay on.

Totally Integrated Power Module (TIPM) requesting Fuel Pump operation.

SET CONDITION

Actual Fuel Pump state is not equal to desired state. One Trip Fault. Three good trips to turn off the MIL.

POSSIBLE CAUSES

Possible Causes
(N1) FUEL PUMP CONTROL OUTPUT CIRCUIT SHORTED TO GROUND
FUEL PUMP
TOTALLY INTEGRATED POWER MODULE (TIPM)

Always perform the Pre-Diagnostic Troubleshooting procedure before proceeding. Refer to appropriate Diagnostic Information .

DIAGNOSTIC TEST

1. **DTC IS ACTIVE**

   NOTE: If P0627, P0628 or P0629 has set along with this DTC, diagnose those DTCs first before continuing.

   1. Ignition on, engine not running.
   2. With the scan tool, select View DTCs.

      Is the status Active for this DTC?

      Yes

      - Go To 2

      No

      - Perform the CHECKING FOR AN INTERMITTENT DTC diagnostic procedure. Refer to appropriate Diagnostic Information .
2. **FUEL PUMP MODULE**

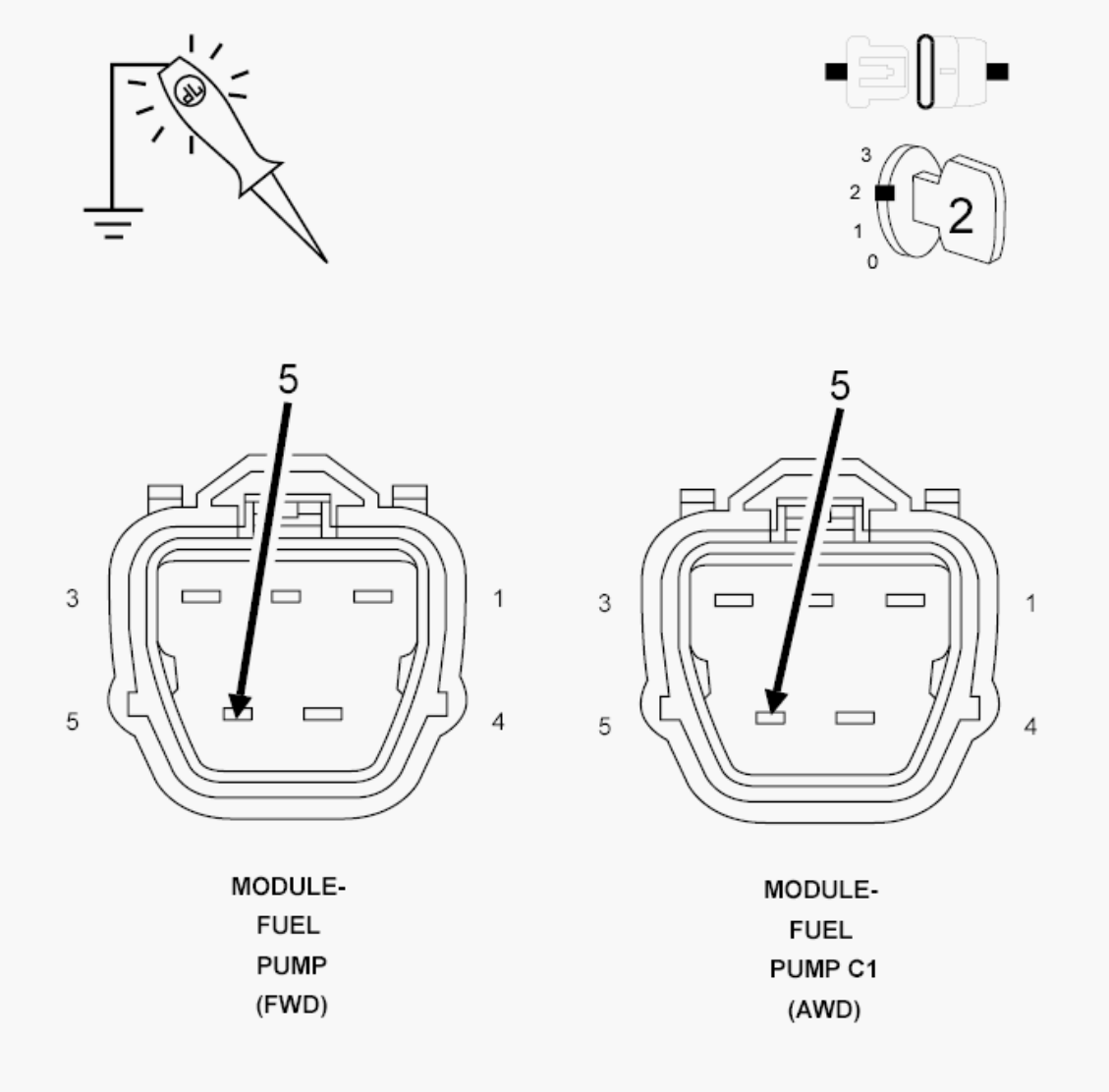

Fig. 104: Checking Fuel Pump Control Output Circuit
Courtesy of CHRYSLER GROUP, LLC

1. Turn the ignition off.
2. Disconnect the Fuel Pump Module harness connector.
3. Ignition on, engine not running.
4. With the scan tool, actuate the Fuel Pump.
5. Using a 12-volt test light connected to ground, check the (N1) Fuel Pump Control Output circuit at the Fuel Pump Module harness connector.

NOTE: The test light should be illuminated and bright. Compare the brightness to that of a direct connection to the battery.

Does the test light illuminate brightly and flash on and off?

Yes

- Replace the Fuel Pump Module in accordance with the Service Information.
- Perform the BODY VERIFICATION TEST. Refer to **STANDARD PROCEDURE** .

No

- Go To 3

3. **(N1) FUEL PUMP CONTROL OUTPUT CIRCUIT SHORTED TO GROUND**

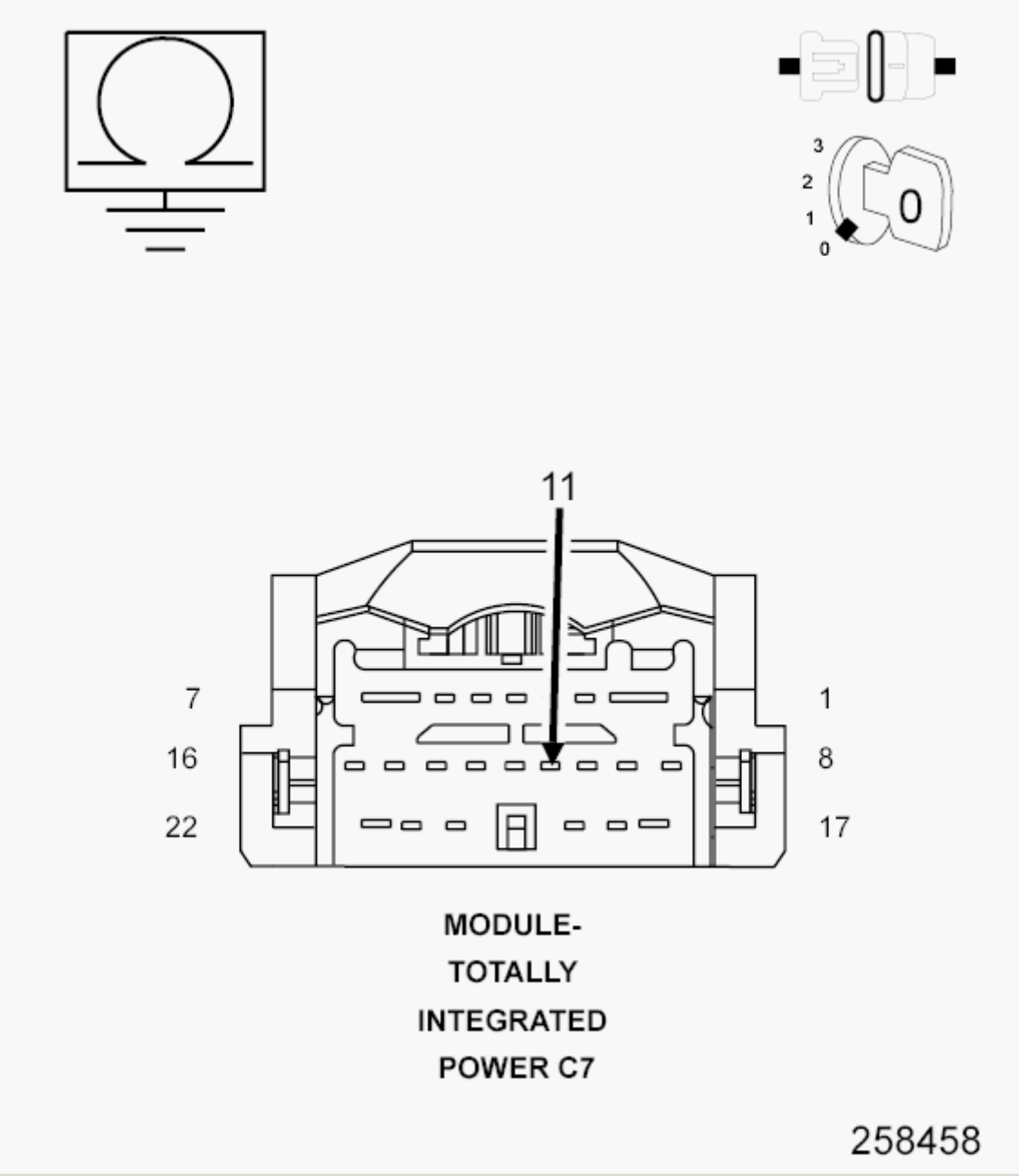

Fig. 105: Checking Fuel Pump Control Output Circuit For Short To Ground
Courtesy of CHRYSLER GROUP, LLC

1. Turn the ignition off
2. Disconnect the TIPM C7 harness connector.
3. Measure the resistance between ground and the (N1) Fuel Pump Control Output circuit at the TIPM C7 harness connector.

   Is the resistance below 100 Ohms?

Yes

- Repair the short to ground in the (N1) Fuel Pump Control Output circuit.
- Perform the BODY VERIFICATION TEST. Refer to **STANDARD PROCEDURE** .

No

- Go To 4

4. **TOTALLY INTEGRATED POWER MODULE (TIPM)**

NOTE: Before continuing, check the TIPM harness connector terminals for corrosion, damage or terminal push out. Repair as necessary.

1. Using the schematics as a guide, inspect the wire harness and connectors.
2. Pay particular attention to all Power and Ground circuits.

Were any problems found?

Yes

- Repair as necessary.
- Perform the BODY VERIFICATION TEST. Refer to **STANDARD PROCEDURE** .

No

- Replace the Totally Integrated Power Module (TIPM) in accordance with the Service Information.
- Perform the BODY VERIFICATION TEST. Refer to **STANDARD PROCEDURE** .

P127D-FUEL PUMP CONTROL CIRCUIT 2 HIGH

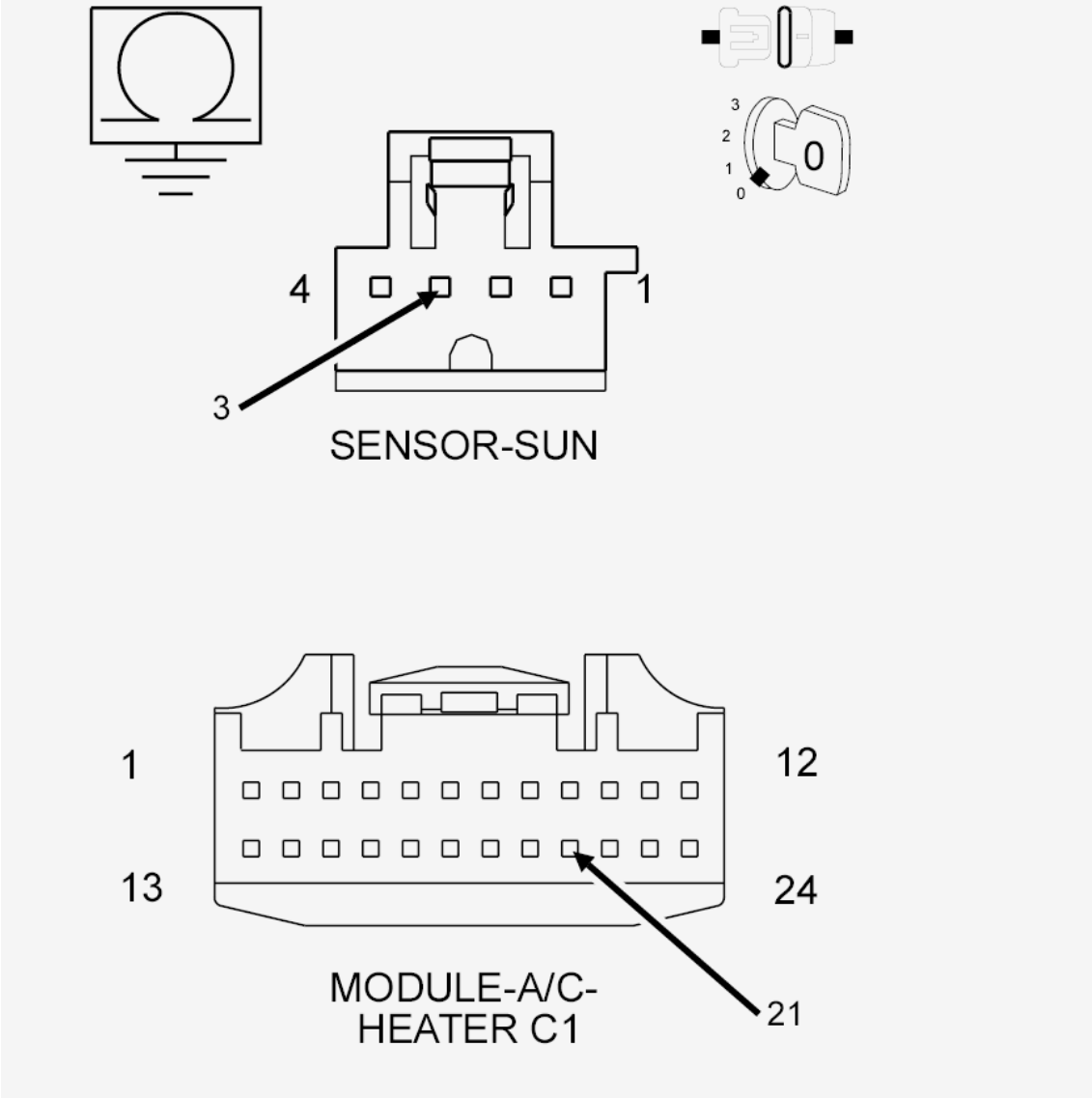

Fig. 106: Fuel Pump Control Circuit 2 Wiring Diagram
Courtesy of CHRYSLER GROUP, LLC

For a complete wiring diagram, **refer to appropriate SYSTEM WIRING DIAGRAMS article** .

WHEN MONITORED

With the ignition on.

Battery voltage greater than 10.4 volts and the Main Relay on.

Totally Integrated Power Module (TIPM) requesting Fuel Pump operation.

SET CONDITION

Actual Fuel Pump state is not equal to desired state. One Trip Fault. Three good trips to turn off the MIL.

POSSIBLE CAUSES

Possible Causes
(N1) FUEL PUMP CONTROL OUTPUT CIRCUIT SHORTED TO BATTERY VOLTAGE
(Z906) GROUND CIRCUIT
FUEL PUMP MOTOR
TOTALLY INTEGRATED POWER MODULE (TIPM)

Always perform the Pre-Diagnostic Troubleshooting procedure before proceeding. Refer to appropriate Diagnostic Information .

DIAGNOSTIC TEST

1. **DTC IS ACTIVE**

   NOTE: If P0627, P0628 or P0629 has set along with this DTC, diagnose those DTCs first before continuing.

   1. Ignition on, engine not running.
   2. With the scan tool, select View DTCs.

      Is the status Active for this DTC?

      Yes

      - Go To 2

      No

      - Perform the CHECKING FOR AN INTERMITTENT DTC diagnostic procedure. Refer to appropriate Diagnostic Information .

2. **(N1) FUEL PUMP CONTROL OUTPUT CIRCUIT SHORTED TO BATTERY VOLTAGE**

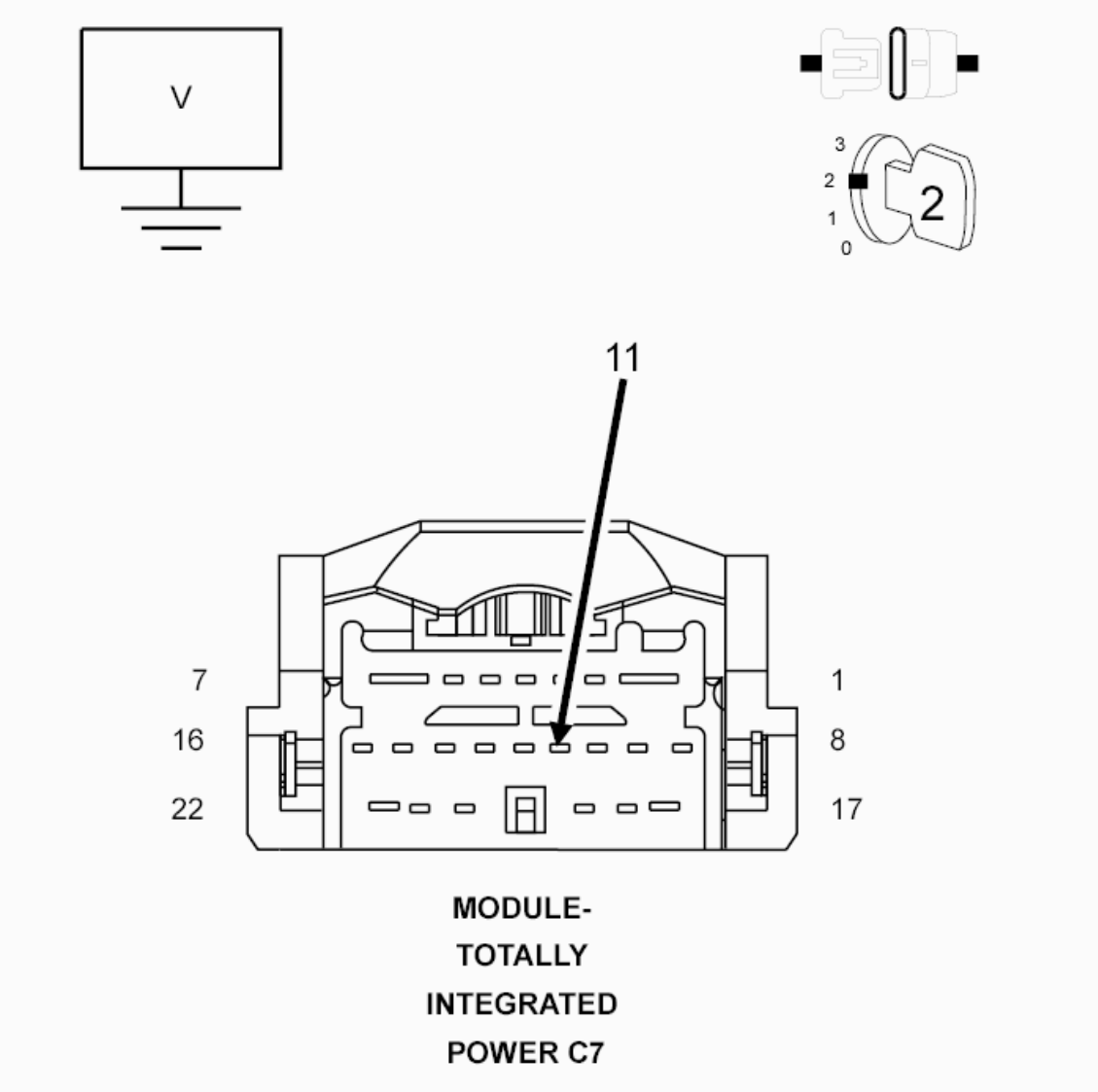

Fig. 107: Checking Fuel Pump Control Output Circuit
Courtesy of CHRYSLER GROUP, LLC

1. Turn the ignition off
2. Disconnect the C7 TIPM harness connector.
3. Turn the ignition on.
4. Measure the voltage between ground and the (N1) Fuel Pump Control Output circuit in the TIPM C7 harness connector.

   Is there any voltage present?

   Yes

   - Repair the short to voltage in the (N1) Fuel Pump Control Output circuit.

- Perform the BODY VERIFICATION TEST. Refer to **STANDARD PROCEDURE** .

No

- Go To 3

3. **(Z906) FUEL PUMP MOTOR GROUND CIRCUIT**

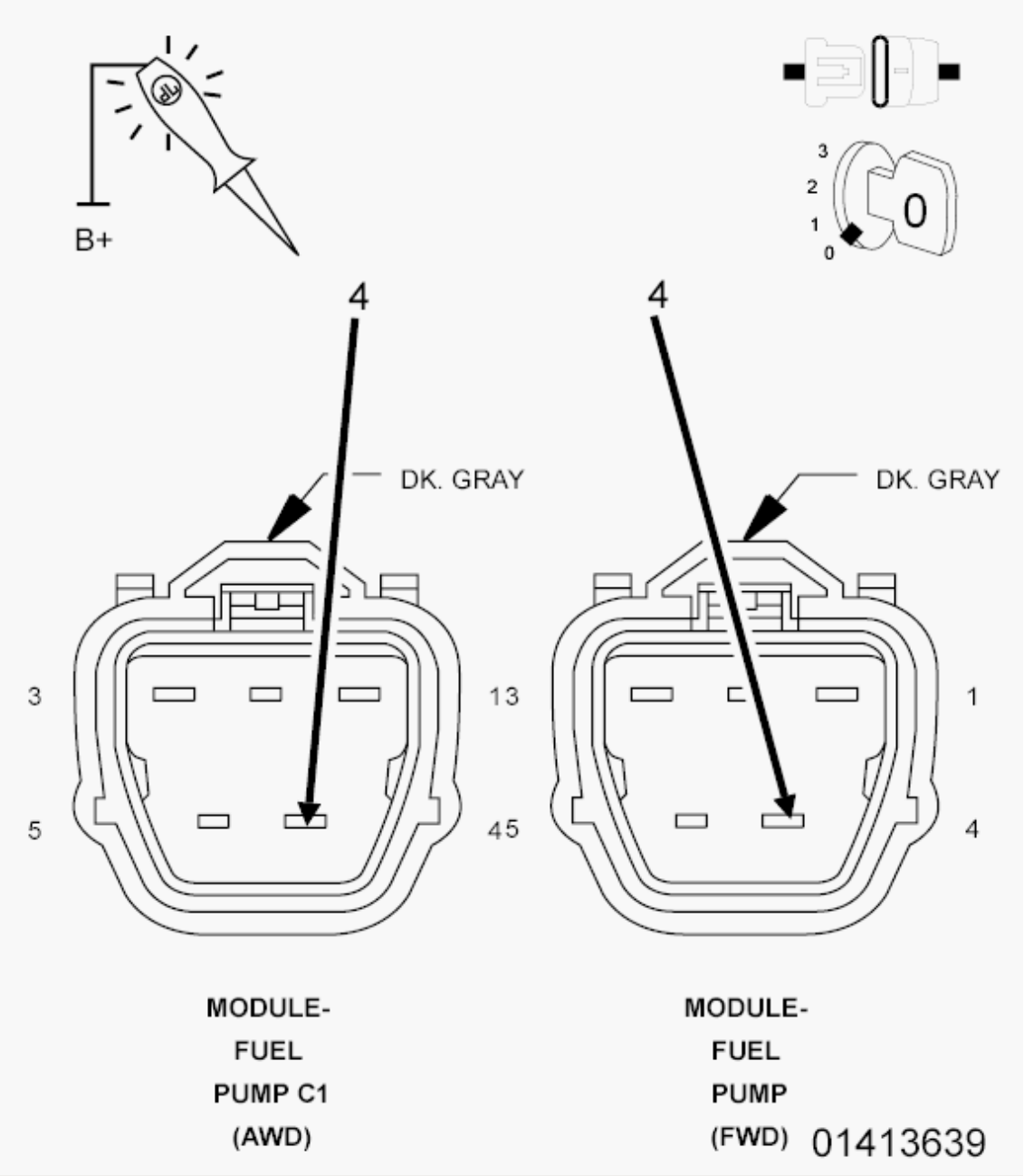

Fig. 108: Checking Fuel Pump Motor Ground Circuit
Courtesy of CHRYSLER GROUP, LLC

1. Turn the ignition off.
2. Disconnect the Fuel Pump Module harness connector.
3. Using a 12-volt test light to 12-volts, check the (Z906) Ground circuit in the Fuel Pump Module harness connector.

NOTE: The test light should be illuminated and bright. Compare the brightness to that of a direct connection to the battery.

Does the test light illuminate brightly?

Yes

- Go To 4

No

- Repair the (Z906) Ground circuit.
- Perform the BODY VERIFICATION TEST. Refer to **STANDARD PROCEDURE** .

4. **FUEL PUMP MODULE**

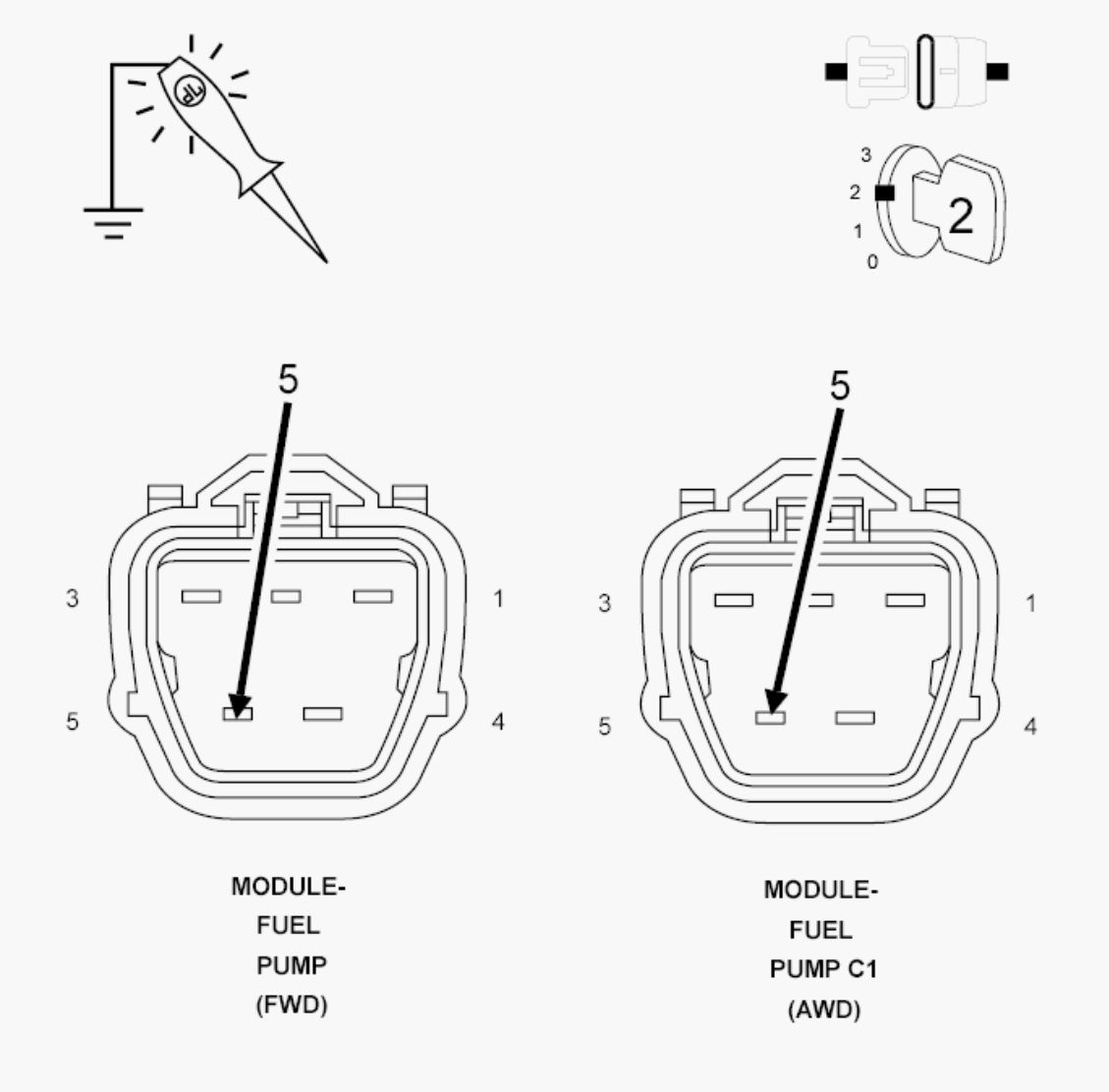

Fig. 109: Checking Fuel Pump Control Output Circuit
Courtesy of CHRYSLER GROUP, LLC

1. Connect the TIPM C7 harness connector.
2. Ignition on, engine not running.
3. With the scan tool, actuate the Fuel Pump.
4. Using a 12-volt test light connected to ground, check the (N1) Fuel Pump Control Output circuit at the Fuel Pump Module harness connector.

   Does the test light illuminate brightly and flash on and off?

   Yes

   - Replace the Fuel Pump Module in accordance with the Service

Information.

- Perform the BODY VERIFICATION TEST. Refer to **STANDARD PROCEDURE** .

No

- Go To 5

5. **TOTALLY INTEGRATED POWER MODULE (TIPM)**

NOTE: Before continuing, check the TIPM harness connector terminals for corrosion, damage or terminal push out. Repair as necessary.

1. Using the schematics as a guide, inspect the wire harness and connectors.
2. Pay particular attention to all Power and Ground circuits.

Were any problems found?

Yes

- Repair as necessary.
- Perform the BODY VERIFICATION TEST. Refer to **STANDARD PROCEDURE** .

No

- Replace the Totally Integrated Power Module (TIPM) in accordance with the Service Information.
- Perform the BODY VERIFICATION TEST. Refer to **STANDARD PROCEDURE** .

P127E-FUEL PUMP CONTROL CIRCUIT 2 OPEN

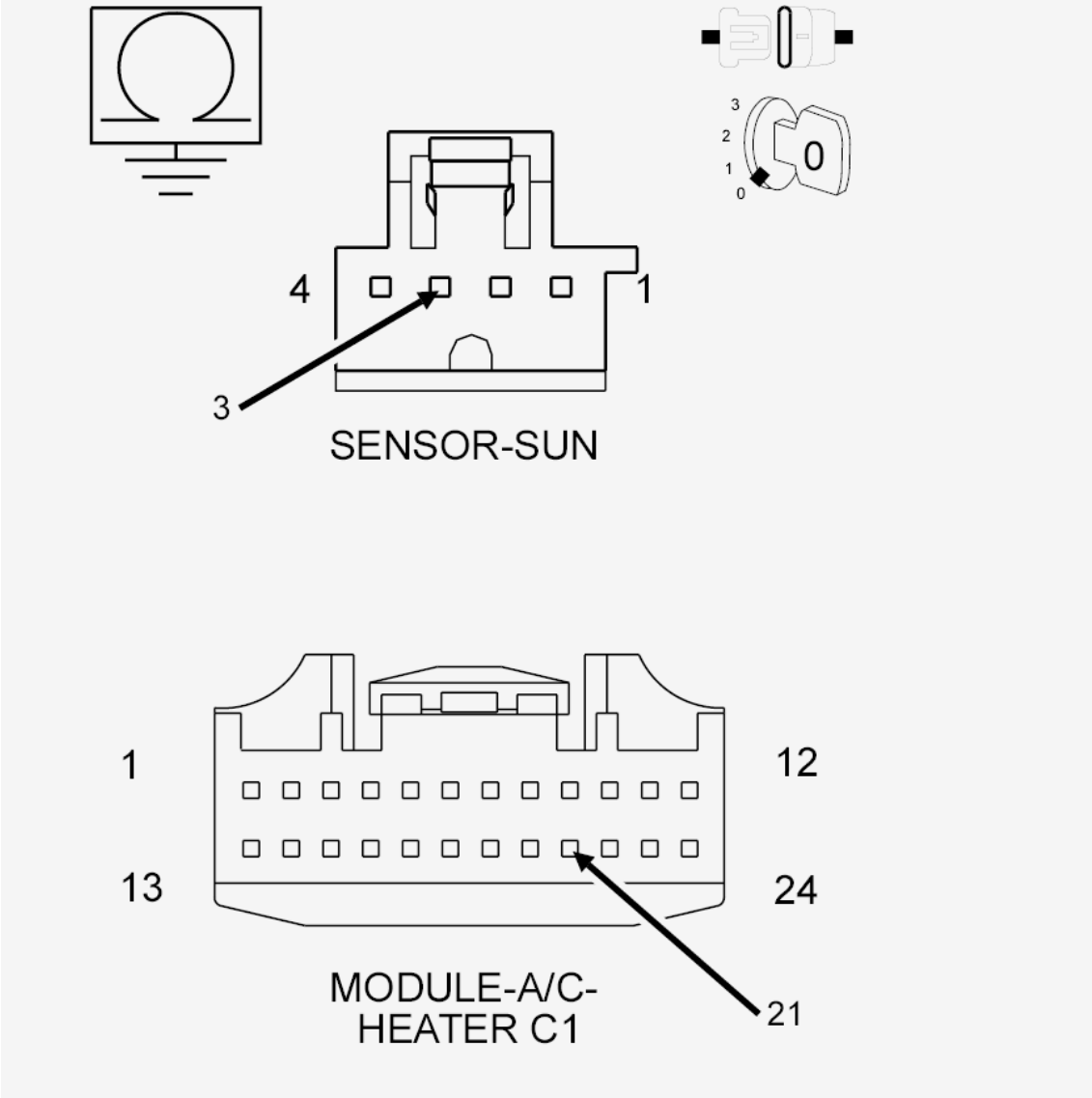

Fig. 110: Fuel Pump Control Circuit 2 Wiring Diagram
Courtesy of CHRYSLER GROUP, LLC

For a complete wiring diagram, **refer to appropriate SYSTEM WIRING DIAGRAMS article** .

WHEN MONITORED

With the ignition on.

Battery voltage greater than 10.4 volts and the Main Relay on.

Totally Integrated Power Module (TIPM) requesting Fuel Pump operation.

SET CONDITION

Actual Fuel Pump state is not equal to desired state. One Trip Fault. Three good trips to turn off the MIL.

POSSIBLE CAUSES

Possible Causes
(N1) FUEL PUMP CONTROL OUTPUT CIRCUIT OPEN
FUEL PUMP
TOTALLY INTEGRATED POWER MODULE (TIPM)

Always perform the Pre-Diagnostic Troubleshooting procedure before proceeding. Refer to appropriate Diagnostic Information .

DIAGNOSTIC TEST

1. **DTC IS ACTIVE**

   NOTE: If P0627, P0628 or P0629 has set along with this DTC, diagnose those DTCs first before continuing.

   1. Ignition on, engine not running.
   2. With the scan tool, select View DTCs.

      Is the status Active for this DTC?

      Yes

      - Go To 2

      No

      - Perform the CHECKING FOR AN INTERMITTENT DTC diagnostic procedure. Refer to appropriate Diagnostic Information .

2. **FUEL PUMP MODULE**

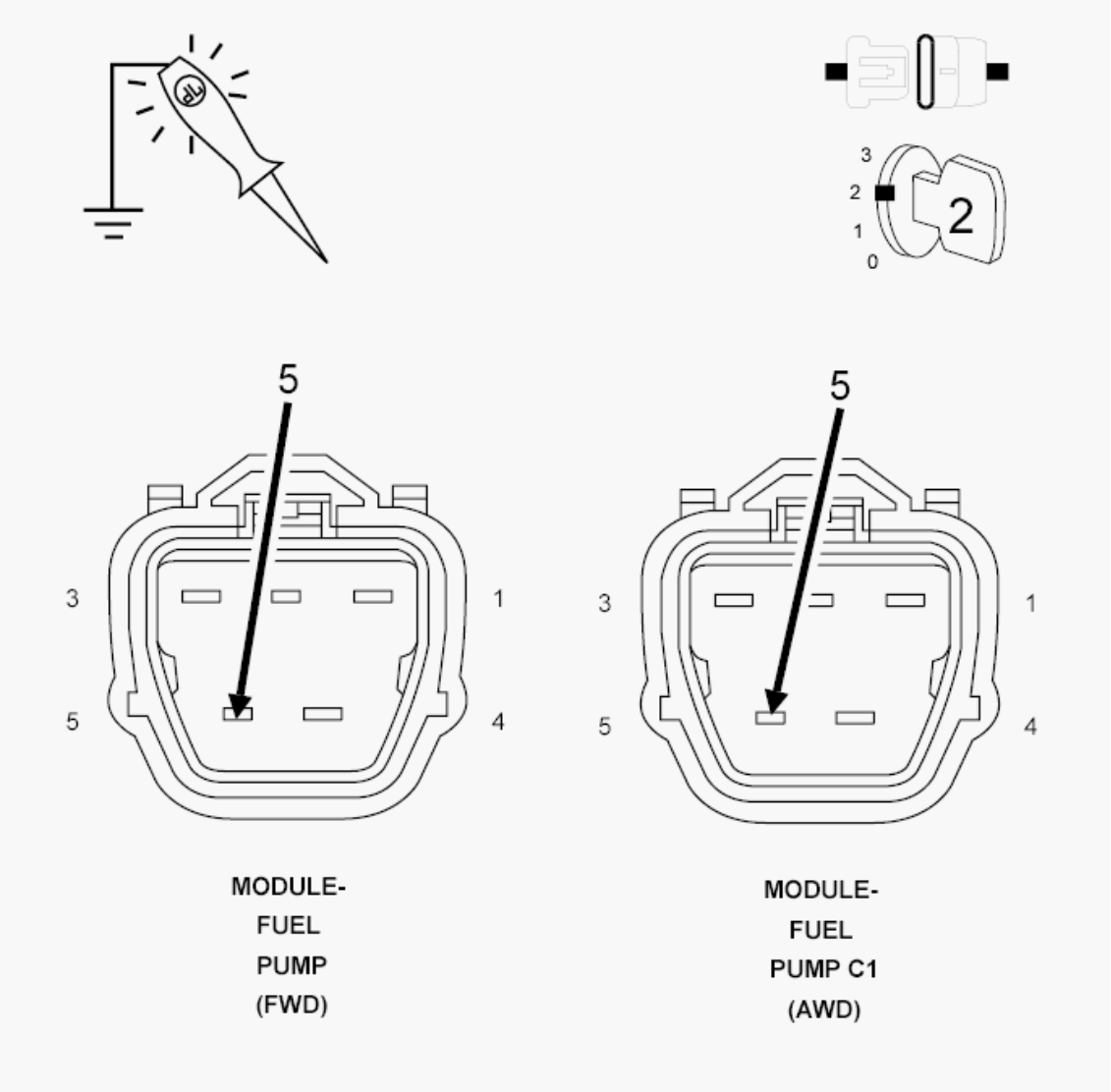

Fig. 111: Checking Fuel Pump Control Output Circuit
Courtesy of CHRYSLER GROUP, LLC

1. Disconnect the Fuel Pump Module harness connector.
2. Ignition on, engine not running.
3. With the scan tool, actuate the Fuel Pump.
4. Using a 12-volt test light connected to ground, check the (N1) Fuel Pump Control Output circuit at the Fuel Pump Module harness connector.

   Does the test light illuminate brightly and flash on and off?

   Yes

   - Replace the Fuel Pump Module in accordance with the Service

Information.

- Perform the BODY VERIFICATION TEST. Refer to **STANDARD PROCEDURE** .

No

- Go To 3

3. **(N1) FUEL PUMP CONTROL OUTPUT CIRCUIT OPEN**

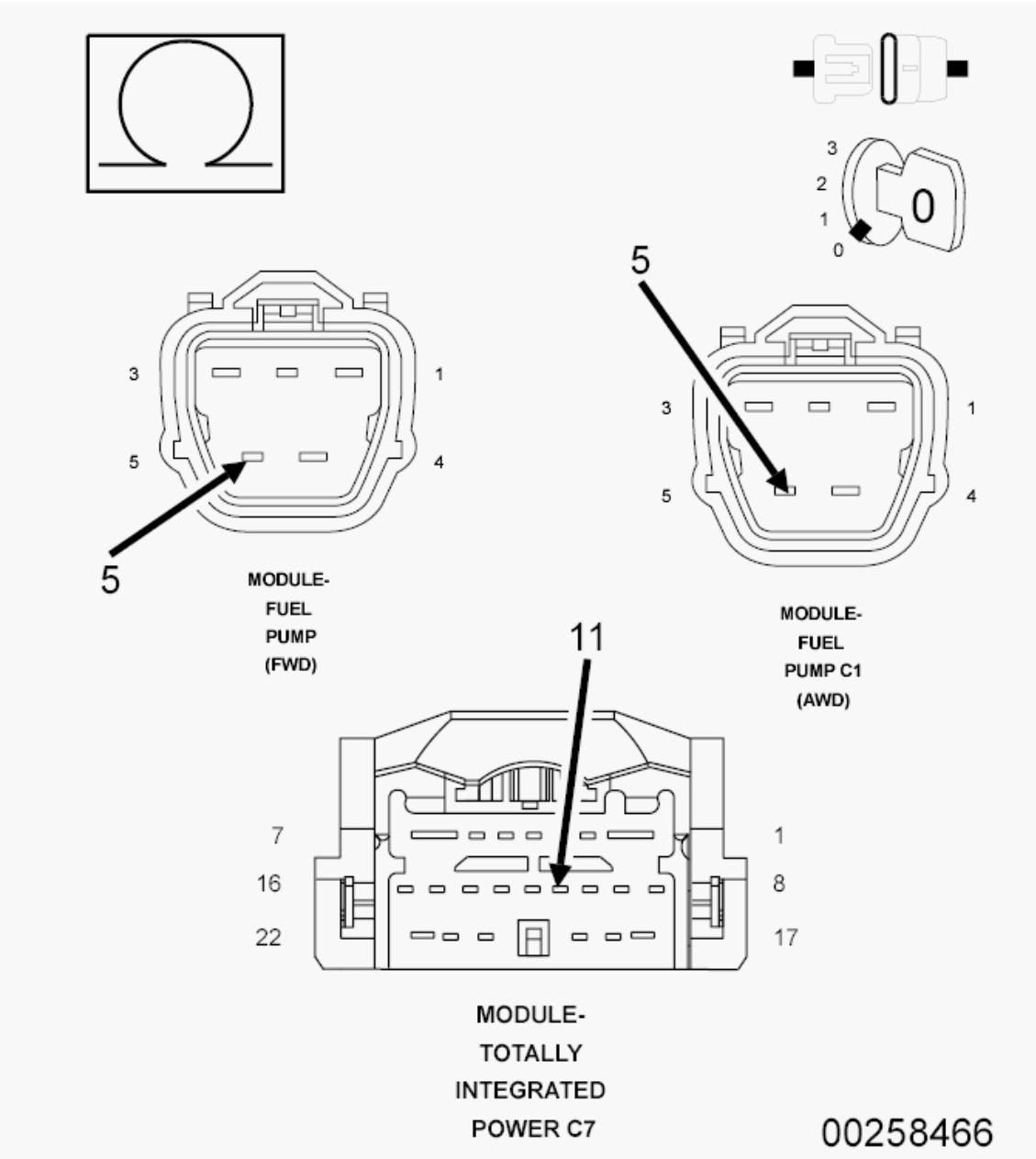

Fig. 112: Checking Fuel Pump Control Output Circuit
Courtesy of CHRYSLER GROUP, LLC

1. Turn the ignition off
2. Disconnect the TIPM C7 harness connector.
3. Measure the resistance of the (N1) Fuel Pump Control Output circuit between the TIPM C7 harness connector and the Fuel Pump Module harness connector.

   Is the resistance below 5.0 Ohms?

   Yes

   - Go To 4

   No

   - Repair the open in the (N1) Fuel Pump Control Output circuit.
   - Perform the BODY VERIFICATION TEST. Refer to **STANDARD PROCEDURE** .

4. **TOTALLY INTEGRATED POWER MODULE (TIPM)**

   NOTE: Before continuing, check the TIPM harness connector terminals for corrosion, damage or terminal push out. Repair as necessary.

   1. Using the schematics as a guide, inspect the wire harness and connectors.
   2. Pay particular attention to all power and ground circuits.

   Were any problems found?

   Yes

   - Repair as necessary.
   - Perform the BODY VERIFICATION TEST. Refer to **STANDARD PROCEDURE** .

   No

   - Replace the Totally Integrated Power Module (TIPM) in accordance with the Service Information.

- Perform the BODY VERIFICATION TEST. Refer to **STANDARD PROCEDURE** .

P127F-FUEL PUMP CONTROL CIRCUIT 2 OVERCURRENT

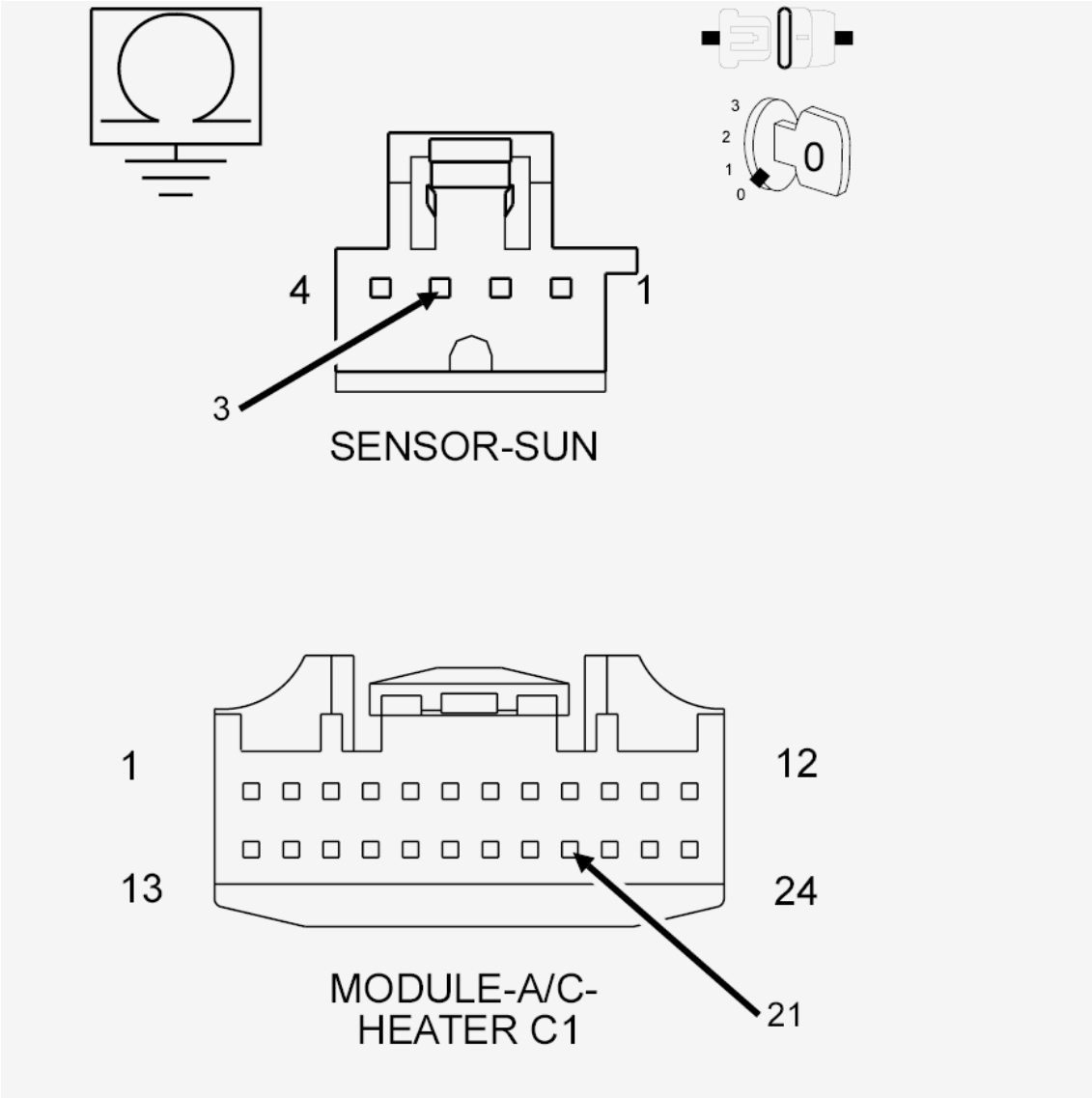

Fig. 113: Fuel Pump Control Circuit 2 Wiring Diagram
Courtesy of CHRYSLER GROUP, LLC

For a complete wiring diagram, **refer to appropriate SYSTEM WIRING DIAGRAMS article** .

WHEN MONITORED

With the ignition on.

Battery voltage greater than 10.4 volts.

Totally Integrated Power Module (TIPM) requesting fuel pump operation.

SET CONDITION

An overcurrent condition is detected in the Fuel Pump control output circuit. One Trip Fault. Three good trips to turn off the MIL.

POSSIBLE CAUSES

Possible Causes
TERMINAL DAMAGE OR CORROSION
(Z906) FUEL PUMP GROUND HIGH RESISTANCE
(N1) FUEL PUMP CONTROL OUTPUT CIRCUIT HIGH RESISTANCE
FUEL PUMP
TOTALLY INTEGRATED POWER MODULE (TIPM)

Always perform the Pre-Diagnostic Troubleshooting procedure before proceeding. Refer to appropriate Diagnostic Information .

DIAGNOSTIC TEST

1. **DTC IS ACTIVE**

   NOTE: If P0627, P0628 or P0629 has set along with this DTC, diagnose those DTCs first before continuing.

   1. Ignition on, engine not running.
   2. With the scan tool, select View DTCs.

      Is the status Active for this DTC?

      Yes

      - Go To 2

      No

      - Perform the CHECKING FOR AN INTERMITTENT DTC diagnostic procedure. Refer to appropriate Diagnostic Information .

2. **VISUAL AND PHYSICAL CONNECTOR AND TERMINAL INSPECTION**

1. Turn the ignition off.
2. Disconnect the TIPM C7 harness connector.
3. Disconnect the Fuel Pump harness connector.
4. Inspect the terminal and connector condition. Check for signs of corrosion build up or damage the would compromise the terminal to controller pin connector.

NOTE: Make sure that all in-line connectors are inspected for corrosion and/or damage.

5. Visually inspect the wiring harness. Look for any chafed, pierced, pinched or partially broken wires hidden in the wire insulation.
6. Were any of the above conditions found?

Yes

- Repair or replace as necessary.
- Perform the BODY VERIFICATION TEST. Refer to **STANDARD PROCEDURE** .

No

- Go To 3

3. **(N1) FUEL PUMP CONTROL OUTPUT CIRCUIT HIGH RESISTANCE**

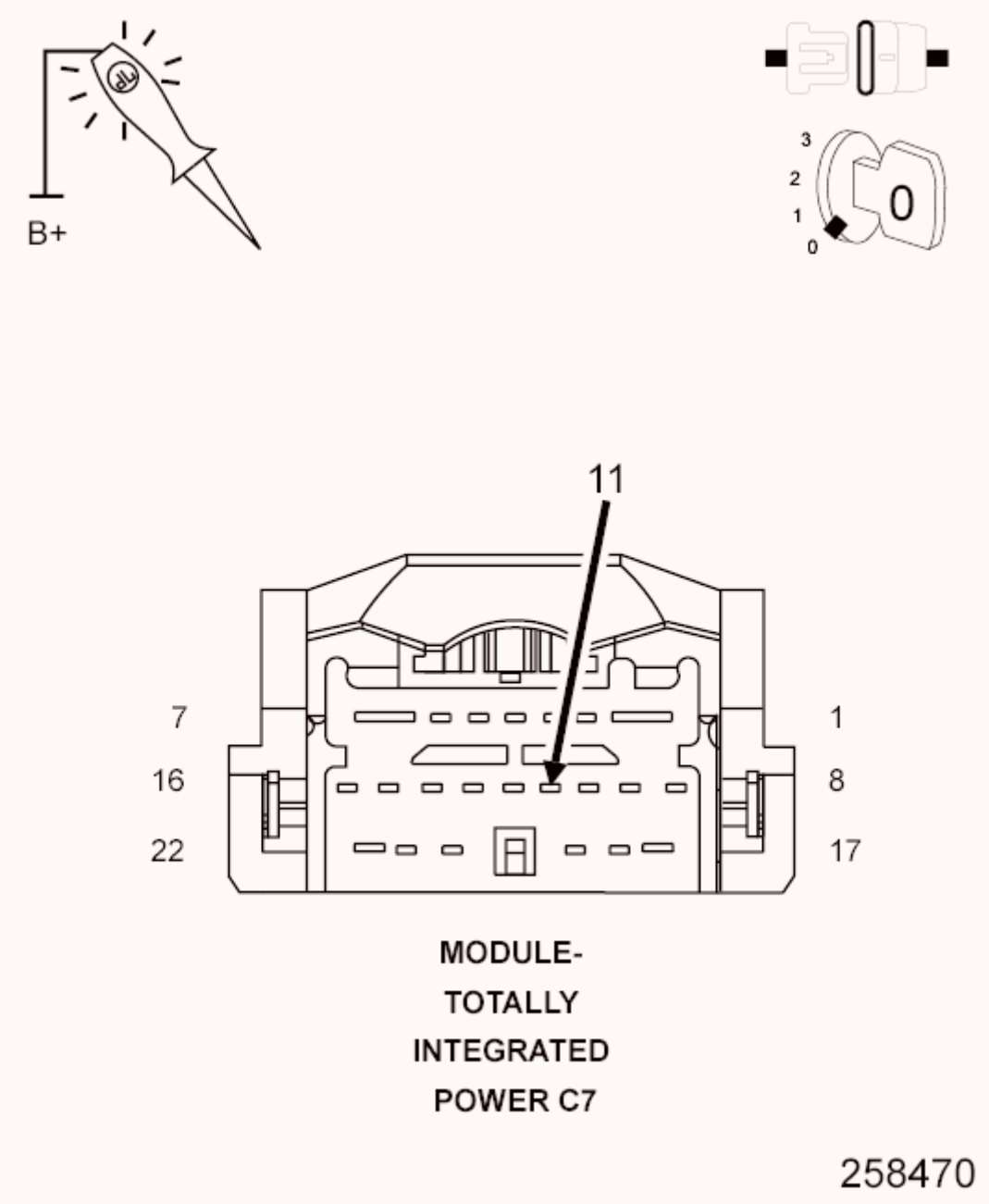

Fig. 114: Checking Fuel Pump Control Output Circuit For High Resistance
Courtesy of CHRYSLER GROUP, LLC

1. Connect a jumper wire between the (N1) Fuel Pump Control Output circuit in the Fuel Pump harness connector and a clean chassis ground.
2. Using a 12-volt test light connected to 12-volts, check the (N1) Fuel Pump Control Output circuit in the TIPM C7 harness connector.

NOTE: The test light should be illuminated and bright. Compare the brightness to that of a direct

connection to the battery.

Does the test light illuminate brightly?

Yes

- Go To 4

No

- Repair the high resistance in the (N1) Fuel Pump Control Output circuit.
- Perform the BODY VERIFICATION TEST. Refer to **STANDARD PROCEDURE** .

4. **(Z906) FUEL PUMP GROUND CIRCUIT**

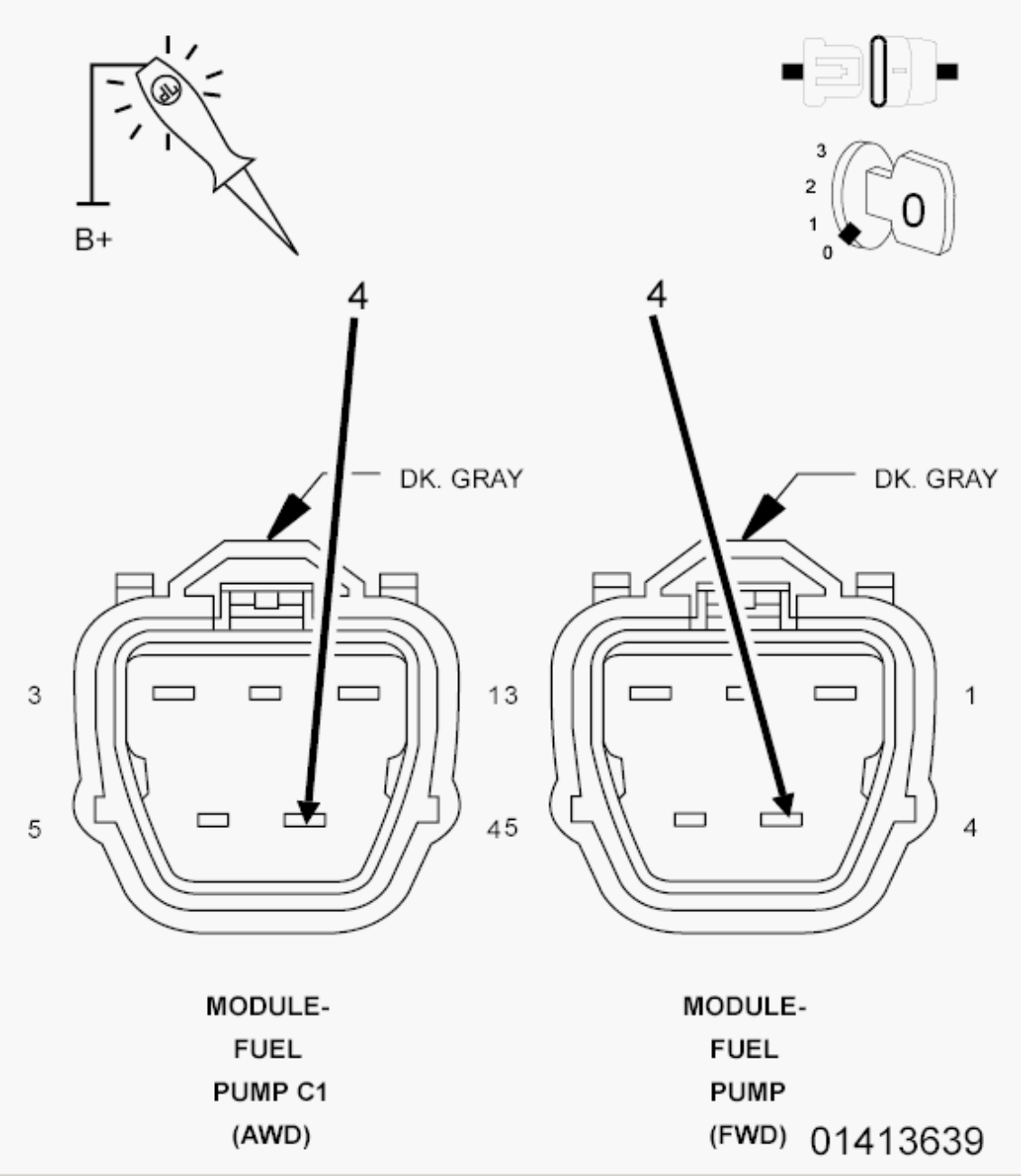

Fig. 115: Checking Fuel Pump Motor Ground Circuit
Courtesy of CHRYSLER GROUP, LLC

1. Using a 12-volt test light connected to 12-volts, check the (Z906) Fuel Pump Ground circuit in the Fuel Pump harness connector.

NOTE: The test light should be illuminated and bright. Compare the brightness to that of a direct connection to the battery.

Does the test light illuminate brightly?

Yes

- Go To 5

No

- Repair the excessive resistance in the (Z906) Fuel Pump Ground circuit.
- Perform the BODY VERIFICATION TEST. Refer to **STANDARD PROCEDURE** .

5. **(N1) FUEL PUMP CONTROL OUTPUT CIRCUIT**

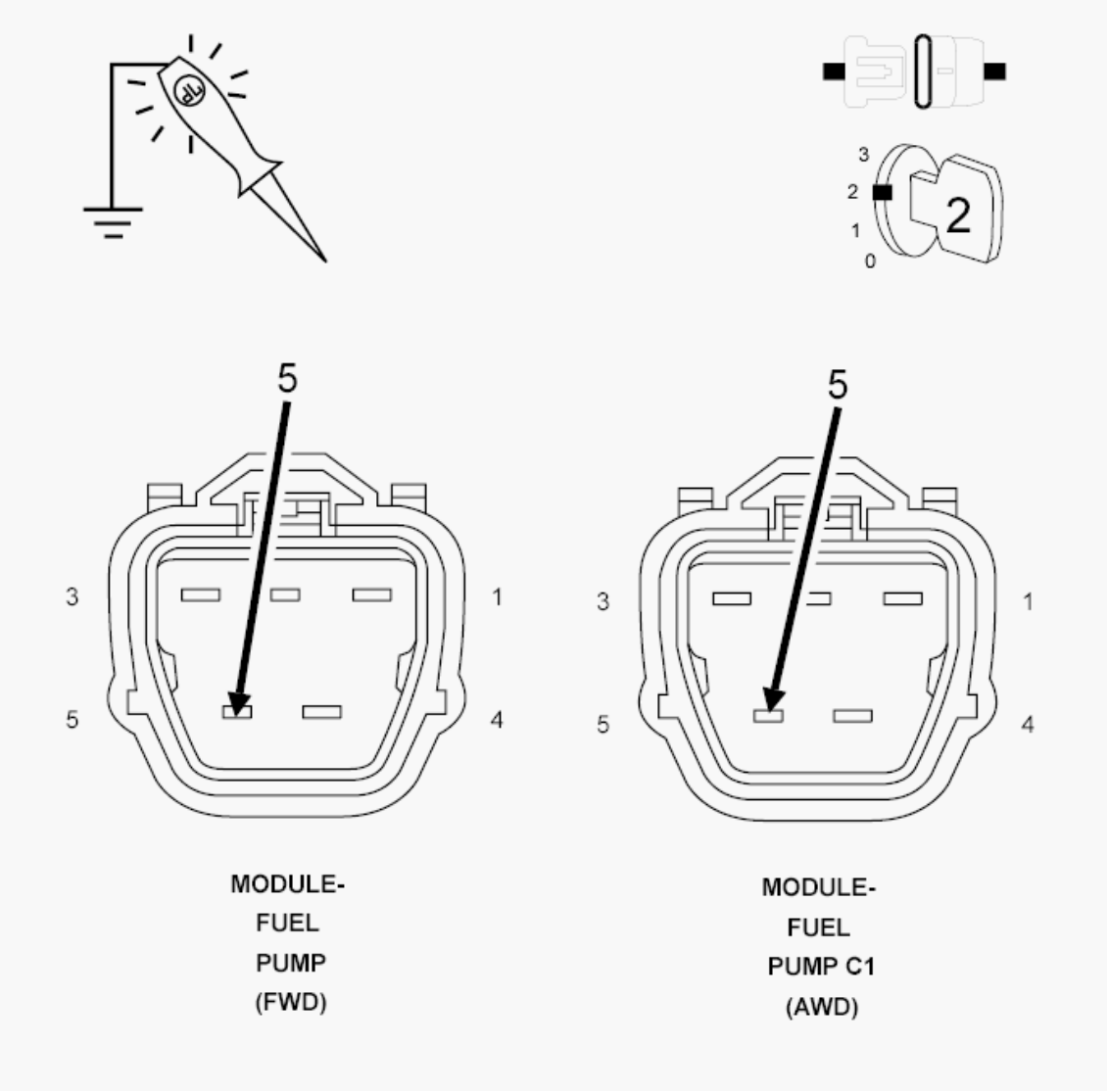

Fig. 116: Checking Fuel Pump Control Output Circuit
Courtesy of CHRYSLER GROUP, LLC

1. Reconnect the TIPM C7 harness connector.
2. Ignition on, engine not running.
3. With the scan tool, actuate the Fuel Pump.
4. Using the 12-volt test light connected to ground, check the (N1) Fuel Pump Control Output circuit in the Fuel Pump harness connector.

   Does the test light illuminate brightly?

   Yes

   - Replace the Fuel Pump in accordance with the Service Information.
   - Perform the BODY VERIFICATION TEST. Refer to **STANDARD PROCEDURE** .

   No

   - Replace the Totally Integrated Power Module (TIPM) in accordance with the Service Information.
   - Perform the BODY VERIFICATION TEST. Refer to **STANDARD PROCEDURE** .

P128B-TCM POWER CONTROL CIRCUIT 2 LOW

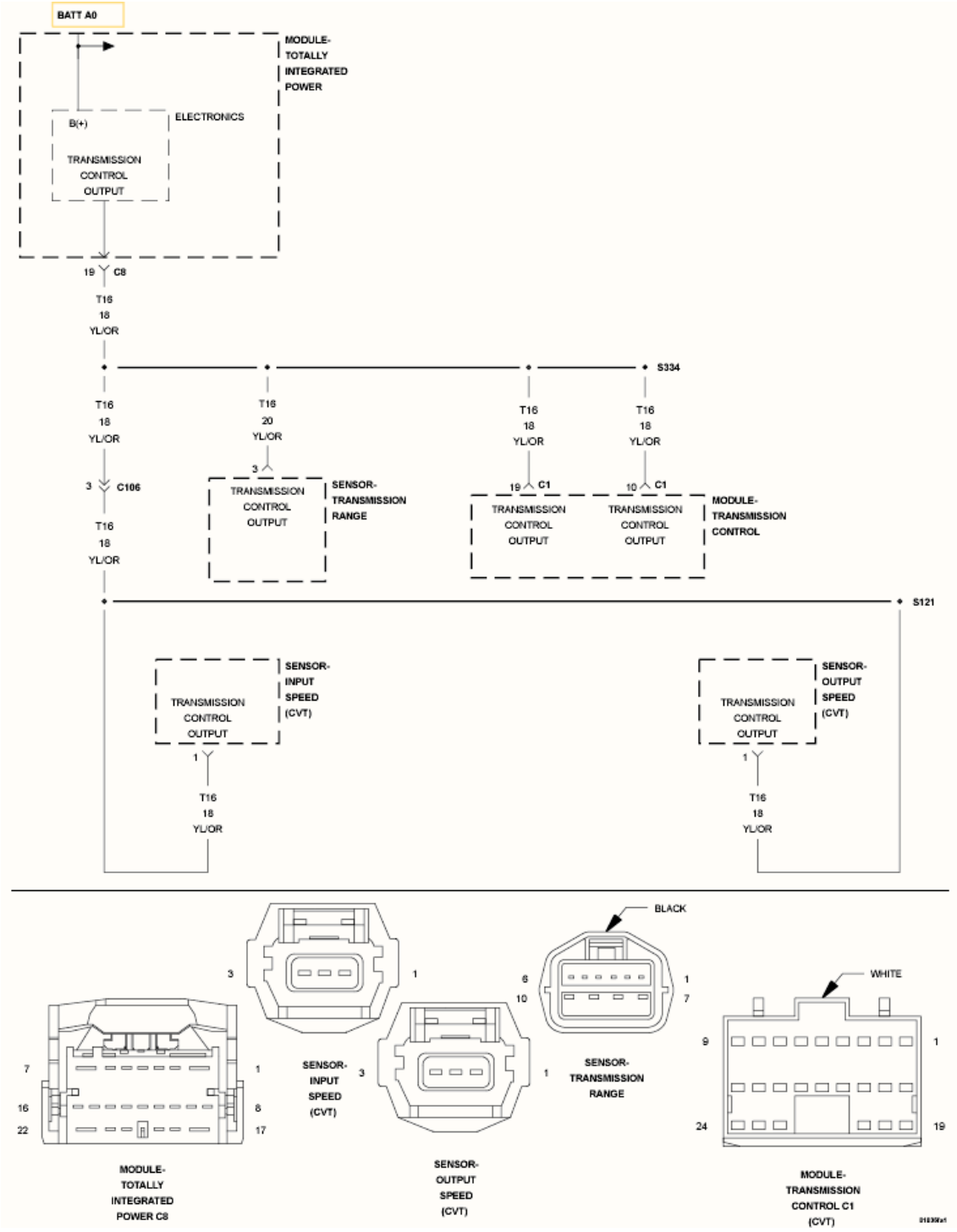

Fig. 117: TCM Power Control Wiring Diagram
Courtesy of CHRYSLER GROUP, LLC

For a complete wiring diagram, **refer to appropriate SYSTEM WIRING DIAGRAMS article** .

WHEN MONITORED

With the ignition on. Battery voltage greater than 10.0 volts.

SET CONDITION

A shorted condition is detected in the Transmission Control Output circuit.

POSSIBLE CAUSES

Possible Causes
(T16) TRANSMISSION CONTROL OUTPUT CIRCUIT SHORT TO GROUND (T16) TRANSMISSION CONTROL OUTPUT CIRCUIT FOR AN OPEN TOTALLY INTEGRATED POWER MODULE (TIPM)

Always perform the CVT Pre-Diagnostic Troubleshooting procedure before proceeding. Refer to STANDARD PROCEDURE .

DIAGNOSTIC TEST

1. **CHECK IF THE DTC IS ACTIVE**
   1. Ignition on, engine not running.
   2. With the scan tool, check Transmission DTCs.

      Are there any Speed Sensor or Transmission Range Sensor DTCs present?

      Yes

      - Refer to **DTC INDEX** and perform the appropriate diagnostic procedure.

      No

      - Go To 2
2. **CHECK IF THE DTC IS ACTIVE**
   1. Ignition on, engine not running.
   2. With the scan tool, check TIPM DTCs.

      Is the status Active for this DTC?

      Yes

      - Go To 3

No

- Go To 6

3. **CHECK THE (T16) TRANSMISSION CONTROL OUTPUT CIRCUIT SHORT TO GROUND**
   1. Turn the ignition off.
   2. Disconnect the TIPM C8 harness connector.
   3. Disconnect the TCM C1 harness connector.
   4. Measure the resistance between ground and the (T16) Transmission Control Output circuit.

   Is the resistance below 5.0 Ohms?

   Yes

   - Repair the (T16) Transmission Control Output circuit for a short to ground.
   - Perform the CVT VERIFICATION TEST. Refer to **STANDARD PROCEDURE** .

   No

   - Go To 4

4. **CHECK THE (T16) TRANSMISSION CONTROL OUTPUT CIRCUIT FOR AN OPEN**
   1. Turn the ignition off to the lock position.
   2. Reconnect the TIPM C8 harness connector.
   3. Ignition on, engine not running.
   4. Using the scan tool under the TIPM Actuators, actuate the Transmission.
   5. Using a 12-volt test light connected to ground, check the (T16) Transmission Control Output circuits.

   NOTE: The test light must illuminate brightly. Compare the brightness to that of a direct connection to the battery.

Does the test light illuminate brightly at all the (T16) Transmission Control Output circuits?

Yes

- Go To 5

No

- Repair the (T16) Transmission Control Output circuit for an open.
- Perform the CVT VERIFICATION TEST. Refer to **STANDARD PROCEDURE** .

5. **TOTALLY INTEGRATED POWER MODULE**
   1. Using the schematics as a guide, inspect the wire harness and connectors.
   2. Check the TIPM harness connector terminals for corrosion, damage, or terminal push out.
   3. Pay particular attention to all power and ground circuits.

   Were any problems found?

   Yes

   - Repair as necessary.
   - Perform the CVT VERIFICATION TEST. Refer to **STANDARD PROCEDURE** .

   No

   - Replace and program the TIPM in accordance with the Service Information.
   - Perform the BODY VERIFICATION TEST. Refer to **STANDARD PROCEDURE** .
6. **CHECK THE WIRING AND CONNECTORS**
   1. The conditions necessary to set this DTC are not present at this time.
   2. Using the wiring diagram/schematic as a guide, inspect the wiring and connectors.
   3. While monitoring the scan tool data relative to this circuit, wiggle test

the wiring and connectors.

4. Look for the data to change or for the DTC to reset during the wiggle test.

Were any problems found?

Yes

- Repair as necessary.
- Perform CVT VERIFICATION TEST. Refer to **STANDARD PROCEDURE** .

No

- Test complete.

P128C-TCM POWER CONTROL CIRCUIT 2 HIGH

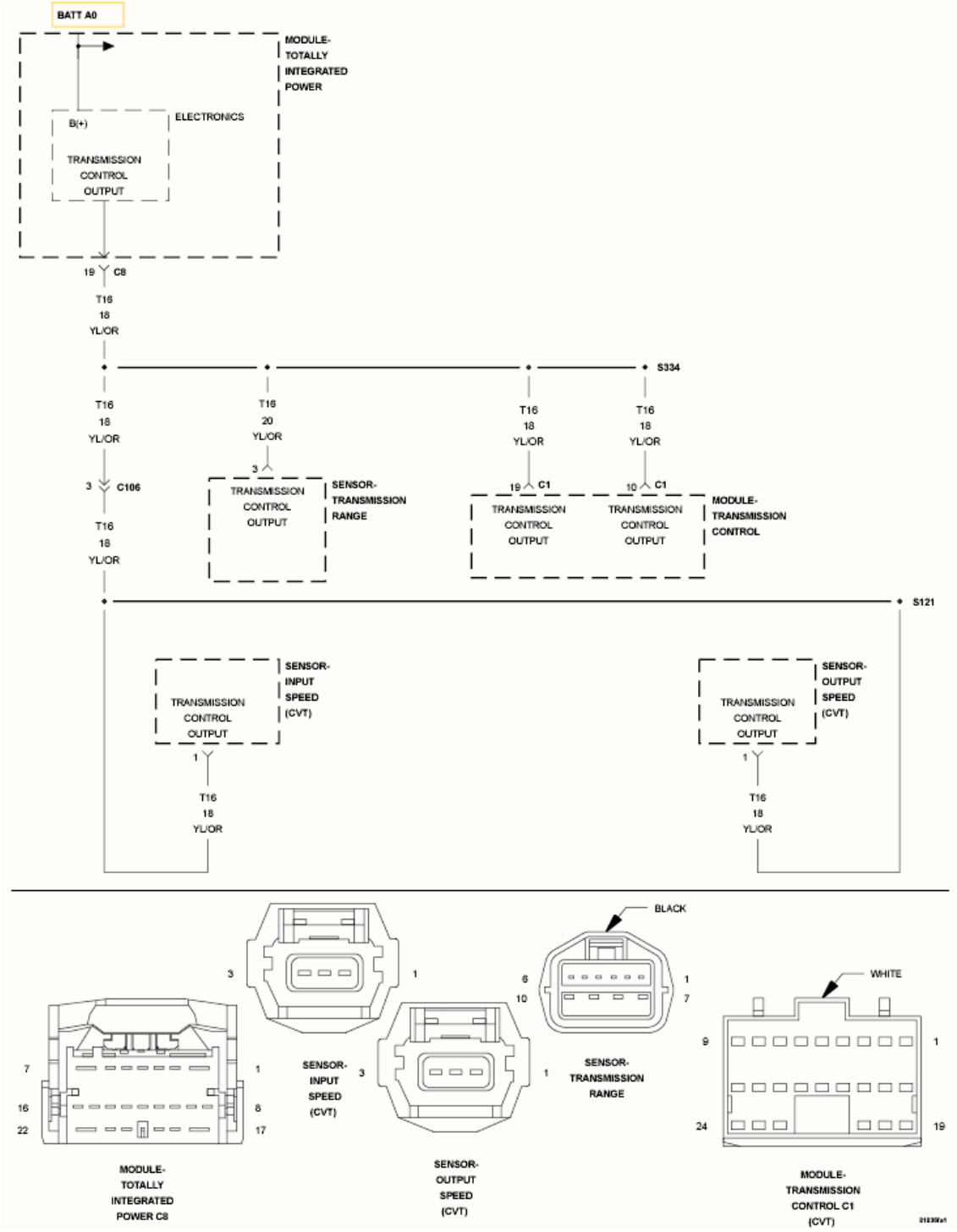

Fig. 118: TCM Power Control Wiring Diagram
Courtesy of CHRYSLER GROUP, LLC

For a complete wiring diagram, **refer to appropriate SYSTEM WIRING DIAGRAMS article** .

WHEN MONITORED

With the ignition on. Battery voltage greater than 10 volts.

SET CONDITION

A shorted condition is detected in the TIPM Transmission Control Output circuit.

POSSIBLE CAUSES

Possible Causes
(T16) TRANSMISSION CONTROL OUTPUT CIRCUIT SHORT TO VOLTAGE TOTALLY INTEGRATED POWER MODULE (TIPM)

Always perform the CVT Pre-Diagnostic Troubleshooting procedure before proceeding. Refer to STANDARD PROCEDURE .

DIAGNOSTIC TEST

1. **CHECK IF THE DTC IS ACTIVE**
   1. Ignition on, engine not running.
   2. With the scan tool, read TIPM DTCs.

      Is the status Active for this DTC?

      Yes

      - Go To 2

      No

      - Go To 4
2. **(T16) TRANSMISSION CONTROL OUTPUT CIRCUIT SHORT TO VOLTAGE**
   1. Turn the ignition off to the lock position.
   2. Disconnect the TIPM C10 harness connector.
   3. Disconnect the TCM C1 harness connector.
   4. Ignition on, engine not running.
   5. Measure the voltage of the (T16) Transmission Control Output circuit.

      Is the voltage above 10.0 volts?

      Yes

- Repair the (T16) Transmission Control Output circuit for a short to voltage.
- Perform the CVT VERIFICATION TEST. Refer to **STANDARD PROCEDURE** .

No

- Go To 3

3. **TOTALLY INTEGRATED POWER MODULE**
   1. Using the schematics as a guide, inspect the wire harness and connectors.
   2. Check the TIPM harness connector terminals for corrosion, damage, or terminal push out.
   3. Pay particular attention to all power and ground circuits.

   Were there any problems found?

   Yes

   - Repair as necessary.
   - Perform the CVT VERIFICATION TEST. Refer to **STANDARD PROCEDURE** .

   No

   - Replace the Totally Integrated Power Module per Service Information.
   - Perform the BODY VERIFICATION TEST. Refer to **STANDARD PROCEDURE** .
4. **CHECK THE WIRING AND CONNECTORS**
   1. The conditions necessary to set this DTC are not present at this time.
   2. Using the wiring diagram/schematic as a guide, inspect the wiring and connectors.
   3. While monitoring the scan tool data relative to this circuit, wiggle test the wiring and connectors.
   4. Look for the data to change or for the DTC to reset during the wiggle test.

Were any problems found?

Yes

- Repair as necessary.
- Perform the CVT VERIFICATION TEST. Refer to **STANDARD PROCEDURE** .

No

- Test complete.

P128D-TCM POWER CONTROL CIRCUIT 2 OPEN

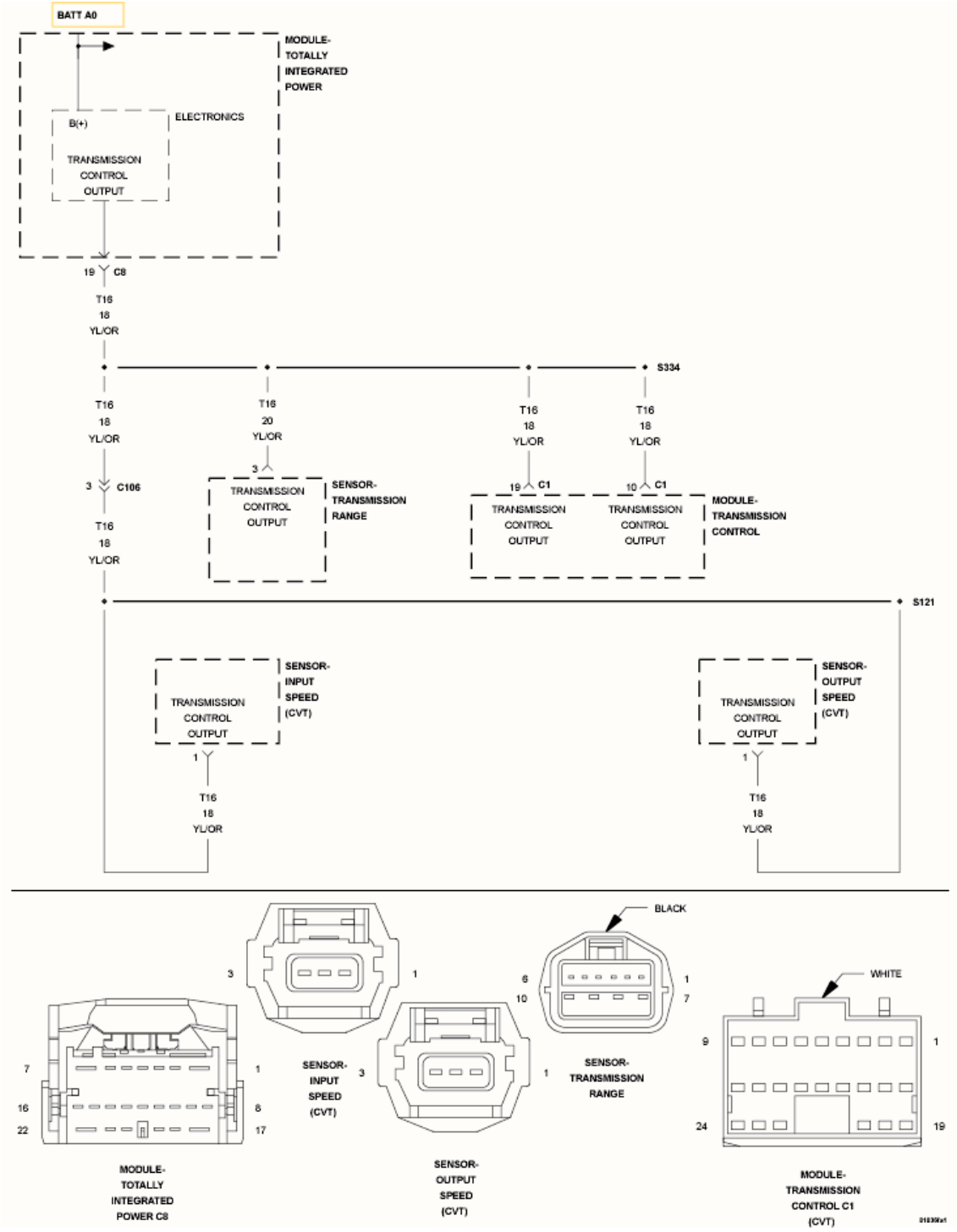

Fig. 119: TCM Power Control Wiring Diagram
Courtesy of CHRYSLER GROUP, LLC

For a complete wiring diagram, **refer to appropriate SYSTEM WIRING DIAGRAMS article** .

WHEN MONITORED

With the ignition on. Battery voltage greater than 10 volts.

SET CONDITION

An open condition of the Transmission Control Output circuit is detected by the Totally Integrated Power Module (TIPM).

POSSIBLE CAUSES

Possible Causes
(T16) TRANSMISSION CONTROL OUTPUT CIRCUIT OPEN TOTALLY INTEGRATED POWER MODULE (TIPM)

Always perform the CVT Pre-Diagnostic Troubleshooting procedure before proceeding. Refer to STANDARD PROCEDURE .

DIAGNOSTIC TEST

1. **CHECK IF THE DTC IS ACTIVE**
   1. Ignition on, engine not running.
   2. With the scan tool, select View DTCs.

      Is the status Active for this DTC?

      Yes

      - Go To 2

      No

      - Go To 4
2. **CHECK THE (T16) TRANSMISSION CONTROL OUTPUT CIRCUIT FOR AN OPEN**
   1. Turn the ignition off to the lock position.
   2. Disconnect the TCM C1 harness connector.
   3. Ignition on, engine not running.
   4. Using the scan tool under the TIPM Actuators, actuate the Transmission.
   5. Using a 12-volt test light connected to ground, check the (T16) Transmission Control Output circuits.

NOTE: The test light must illuminate brightly. Compare the brightness to that of a direct connection to the battery.

Does the test light illuminate brightly?

Yes

- Go To 3

No

- Repair the (T16) Transmission Control Output circuit for an open.
- Perform the CVT VERIFICATION TEST. Refer to **STANDARD PROCEDURE** .

3. **TOTALLY INTEGRATED POWER MODULE**
   1. Using the schematics as a guide, inspect the wire harness and connectors.
   2. Check the TIPM harness connector terminals for corrosion, damage, or terminal push out.
   3. Pay particular attention to all power and ground circuits.

   Were any problems found?

   Yes

   - Repair as necessary.
   - Perform the CVT VERIFICATION TEST. Refer to **STANDARD PROCEDURE** .

   No

   - Replace and program the TIPM per Service Information.
   - Perform the BODY VERIFICATION TEST. Refer to **STANDARD PROCEDURE** .
4. **CHECK THE WIRING AND CONNECTORS**
   1. The conditions necessary to set this DTC are not present at this time.
   2. Using the wiring diagram/schematic as a guide, inspect the wiring and

connectors.

3. While monitoring the scan tool data relative to this circuit, wiggle test the wiring and connectors.
4. Look for the data to change or for the DTC to reset during the wiggle test.

Were any problems found?

Yes

- Repair as necessary.
- Perform the CVT VERIFICATION TEST. Refer to **STANDARD PROCEDURE** .

No

- Test complete.

P128E-TCM POWER CONTROL CIRCUIT 2 OVERCURRENT

For a complete wiring diagram, **refer to appropriate SYSTEM WIRING DIAGRAMS article** .

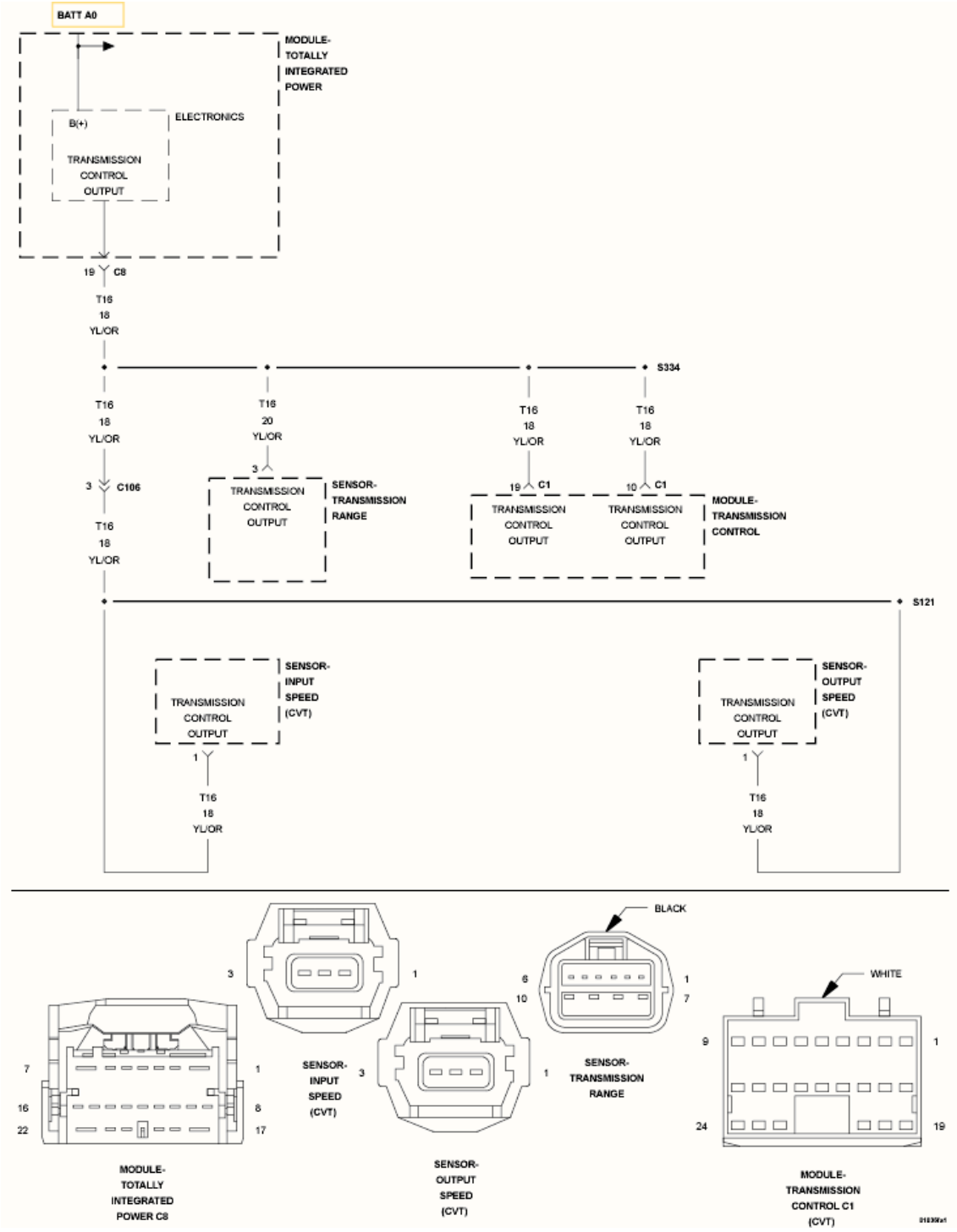

Fig. 120: TCM Power Control Wiring Diagram
Courtesy of CHRYSLER GROUP, LLC

WHEN MONITORED

With the ignition on. Battery voltage greater than 10 volts.

SET CONDITION

An overcurrent condition is detected in the TCM Power Control circuit. One Trip Fault. Three good trips to turn off the MIL.

POSSIBLE CAUSES

Possible Causes
INPUT OR OUTPUT SPEED SENSOR TRANSMISSION RANGE SENSOR TRANSMISSION CONTROL MODULE TOTALLY INTEGRATED POWER MODULE (TIPM)

Always perform the CVT Pre-Diagnostic Troubleshooting procedure before proceeding. Refer to STANDARD PROCEDURE .

DIAGNOSTIC TEST

1. **CHECK IF THE DTC IS ACTIVE**
    1. Ignition on, engine not running.
    2. With a scan tool, read TIPM DTCs.

    Is the DTC active at this time?

    Yes

    - Go To 2

    No

    - Go To 4
2. **CHECK IF THE DTC IS ACTIVE**
    1. Ignition on, engine not running.
    2. With a scan tool, read Transmission DTCs.

    Are there any Input or Output Speed Sensor or Transmission Range Sensor (TRS) DTCs present?

    Yes

    - Refer to **DTC INDEX** and perform the appropriate diagnostic procedure.

- Perform the CVT VERIFICATION TEST. Refer to **STANDARD PROCEDURE** .

No

- Go To 3

3. **CHECK THE TCM**
   1. Disconnect the amp meter from the TIPM C10 harness connector and battery positive.
   2. Disconnect the TCM C1 harness connector.
   3. Connect the positive probe of an ammeter to battery positive and connect the negative probe to the (T16) Transmission Control Output circuit in the TIPM C10 harness connector.
   4. Read the amperage on the ammeter.

   Does the amperage read below 2.0 amps?

   Yes

   - Using the schematics as a guide, check the Transmission Control Module (TCM) terminals for corrosion, damage, or terminal push out. Pay particular attention to all power and ground circuits. If no problems are found, replace the TCM in accordance with the Service Information.
   - Perform the CVT VERIFICATION TEST. Refer to **STANDARD PROCEDURE** .

   No

   - Replace the Totally Integrated Power Module in accordance with the Service Information.
   - Perform the BODY VERIFICATION TEST. Refer to **STANDARD PROCEDURE** .

4. **CHECK THE WIRING AND CONNECTORS**
   1. The conditions necessary to set this DTC are not present at this time.
   2. Using the schematics as a guide, inspect the wiring and connectors specific to this circuit.

3. Wiggle the wires while checking for shorted and open circuits.

   Were there any problems found?

   Yes

   - Repair as necessary.
   - Perform the CVT VERIFICATION TEST. Refer to **STANDARD PROCEDURE** .

   No

   - Test Complete.

U0001-CAN C BUS CIRCUIT

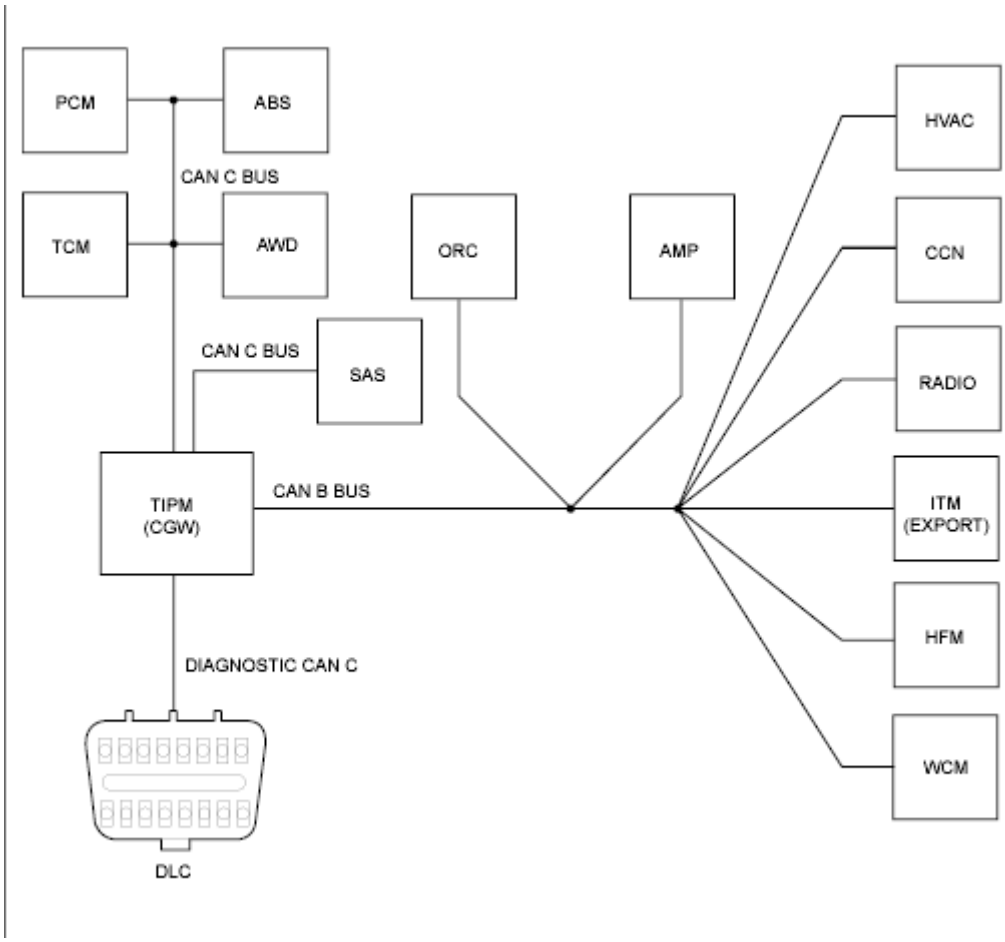

Fig. 121: Totally Integrated Power Module Diagram
Courtesy of CHRYSLER GROUP, LLC

For a complete wiring diagram, **refer to appropriate SYSTEM WIRING**

DIAGRAMS article .

WHEN MONITORED

With the ignition on.

SET CONDITION

The Totally Integrated Power Module (TIPM) detects a short in either CAN C Bus circuit.

POSSIBLE CAUSES

Possible Causes
(D65) CAN C BUS (+) CIRCUIT SHORTED TO GROUND
(D64) CAN C BUS (-) CIRCUIT SHORTED TO GROUND
(D65) CAN C BUS (+) CIRCUIT SHORTED TO VOLTAGE
(D64) CAN C BUS (-) CIRCUIT SHORTED TO VOLTAGE
(D65) CAN C BUS (+) CIRCUIT SHORTED TO (D64) CAN C BUS (-) CIRCUIT
ANTILOCK BRAKE SYSTEM (ABS) MODULE
POWERTRAIN CONTROL MODULE
TRANSMISSION CONTROL MODULE (CVT)
CLOCKSPRING (SAS)
ALL WHEEL DRIVE CONTROL MODULE
TOTALLY INTEGRATED POWER MODULE (TIPM)

DIAGNOSTIC TEST

1. **TEST FOR INTERMITTENT CONDITION**

NOTE: Check for any TSB(s) related to the condition. If a TSB applies, perform the procedure outlined in the TSB before continuing.

1. Turn the ignition on.
2. With the scan tool, record and erase TIPM DTCs.
3. Cycle the ignition from on to off three times.
4. Turn the ignition on.

5. With the scan tool, read active TIPM DTCs.

   Does the scan tool display this DTC as active?

   Yes

   - Go To 2

   No

   - The conditions that caused this code to set are not present at this time. Using the wiring diagram/schematic as a guide, inspect the wiring and connectors.

2. **ANTILOCK BRAKE SYSTEM (ABS) MODULE - INTERNAL SHORT**
   1. Turn the ignition off.
   2. Disconnect the ABS Module harness connector.
   3. Turn the ignition on.
   4. With the scan tool, record and erase TIPM DTCs.
   5. Cycle the ignition from on to off three times.
   6. Turn the ignition on.
   7. With the scan tool, read active TIPM DTCs.

      Does the scan tool display this DTC as active?

      Yes

      - Go To 3

      No

      - Inspect the wiring and connectors for damage or shorted circuits. If OK, replace the Antilock Brake Module in accordance with the Service Information.
      - Perform the ABS VERIFICATION TEST. Refer to **STANDARD PROCEDURE** .

3. **POWERTRAIN CONTROL MODULE- INTERNAL SHORT**
   1. Turn the ignition off.

NOTE: If vehicle is not equipped with this module, answer yes to the question.

2. Disconnect the Powertrain Control Module C1 harness connector.
3. Turn the ignition on.
4. With the scan tool, record and erase TIPM DTCs.
5. Cycle the ignition from on to off three times.
6. Turn the ignition on.
7. With the scan tool, read active TIPM DTCs.

Does the scan tool display this DTC as active?

Yes

- Go To 4

No

- Inspect the wiring and connectors for damage or shorted circuits. If OK, replace and program the Powertrain Control Module in accordance with the Service Information.
- Perform the POWERTRAIN VERIFICATION TEST. Refer to appropriate Diagnostic Information .

4. **TRANSMISSION CONTROL MODULE (CVT) - INTERNAL SHORT**
   1. Turn the ignition off.

NOTE: If vehicle is not equipped with this module, answer yes to the question.

2. Disconnect the Transmission Control Module C1 harness connector.
3. Turn the ignition on.
4. With the scan tool, record and erase TIPM DTCs.
5. Cycle the ignition from on to off three times.
6. Turn the ignition on.
7. With the scan tool, read active TIPM DTCs.

Does the scan tool display this DTC as active?

Yes

- Go To 5

No

- Inspect the wiring and connectors for damage or shorted circuits. If OK, replace the Transmission Control Module in accordance with the Service Information.
- Perform the CVT VERIFICATION TEST. Refer to **STANDARD PROCEDURE** .

5. **STEERING ANGLE SENSOR- INTERNAL SHORT**
   1. Turn the ignition off.

      NOTE: If vehicle is not equipped with this sensor, answer yes to the question.

   2. Disconnect the Clockspring C3 (SAS) harness connector.
   3. Turn the ignition on.
   4. With the scan tool, record and erase TIPM DTCs.
   5. Cycle the ignition from on to off three times.
   6. Turn the ignition on.
   7. With the scan tool, read active TIPM DTCs.

   Does the scan tool display this DTC as active?

   Yes

   - Go To 6

   No

   - Inspect the wiring and connectors for damage or shorted circuits. If OK, replace and program the Clockspring (SAS) in accordance with the Service Information.
   - Perform the BODY VERIFICATION TEST. Refer to **STANDARD PROCEDURE** .

6. **ALL WHEEL DRIVE CONTROL (AWD) MODULE - INTERNAL**

SHORT

1. Turn the ignition off.

NOTE: If vehicle is not equipped with this module, answer yes to the question.

2. Disconnect the AWD Module harness connector.
3. Turn the ignition on.
4. With the scan tool, record and erase TIPM DTCs.
5. Cycle the ignition from on to off three times.
6. Turn the ignition on.
7. With the scan tool, read active TIPM DTCs.

Does the scan tool display this DTC as active?

Yes

- Go To 7

No

- Inspect the wiring and connectors for damage or shorted circuits. If OK, replace and program the All Wheel Drive Control (AWD) Module in accordance with the Service Information.
- Perform the AWD CONTROL MODULE VERIFICATION TEST. Refer to **STANDARD PROCEDURE** .

7. **(D65) CAN C BUS (+) CIRCUIT SHORTED TO VOLTAGE**

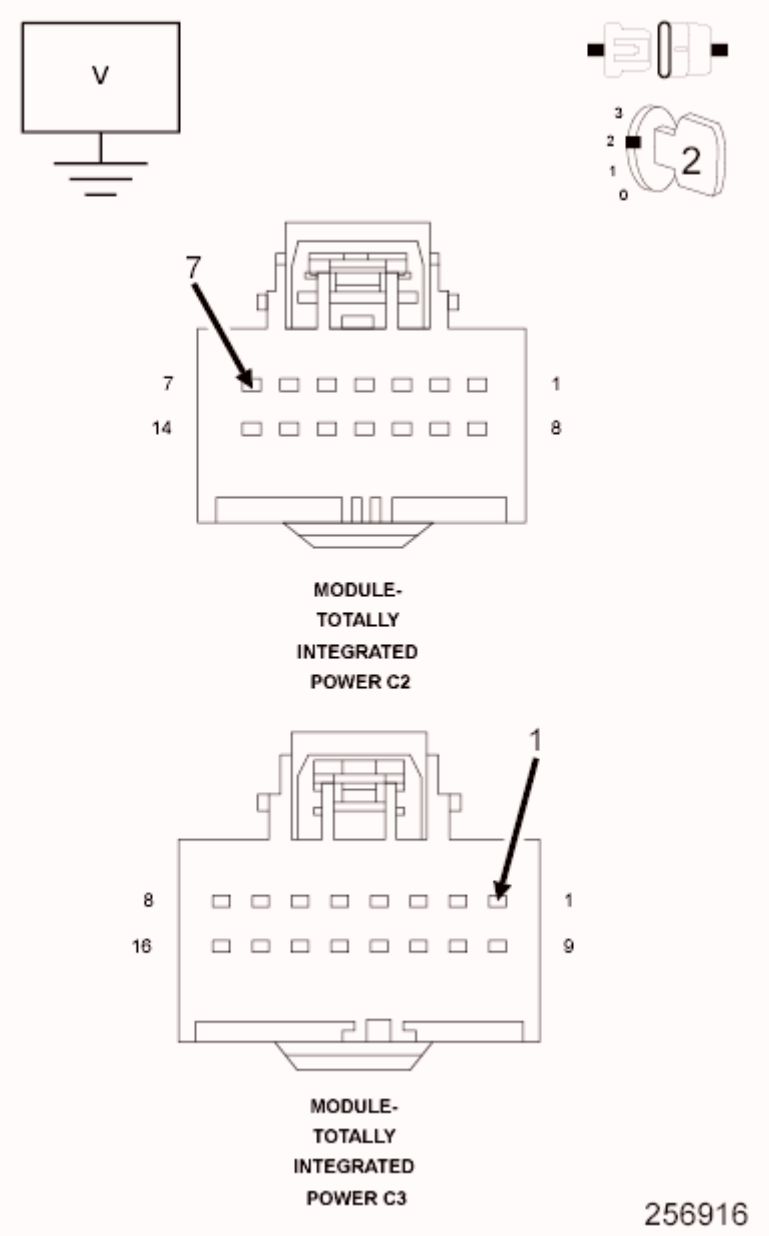

Fig. 122: Checking CAN C BUS (+) Circuit For Short To Voltage
Courtesy of CHRYSLER GROUP, LLC

1. Turn the ignition off.
2. Disconnect the Totally Integrated Power Module C2 and C3 harness connectors.
3. Turn the ignition on.
4. Measure the voltage between the (D65) CAN C Bus (+) circuit and ground on both connectors.

   Is there any voltage present?

Yes

- Repair the (D65) CAN C Bus (+) circuit for a short to voltage.
- Perform the BODY VERIFICATION TEST. Refer to **STANDARD PROCEDURE** .

No

- Go To 8

8. **(D64) CAN C BUS (-) CIRCUIT SHORTED TO VOLTAGE**

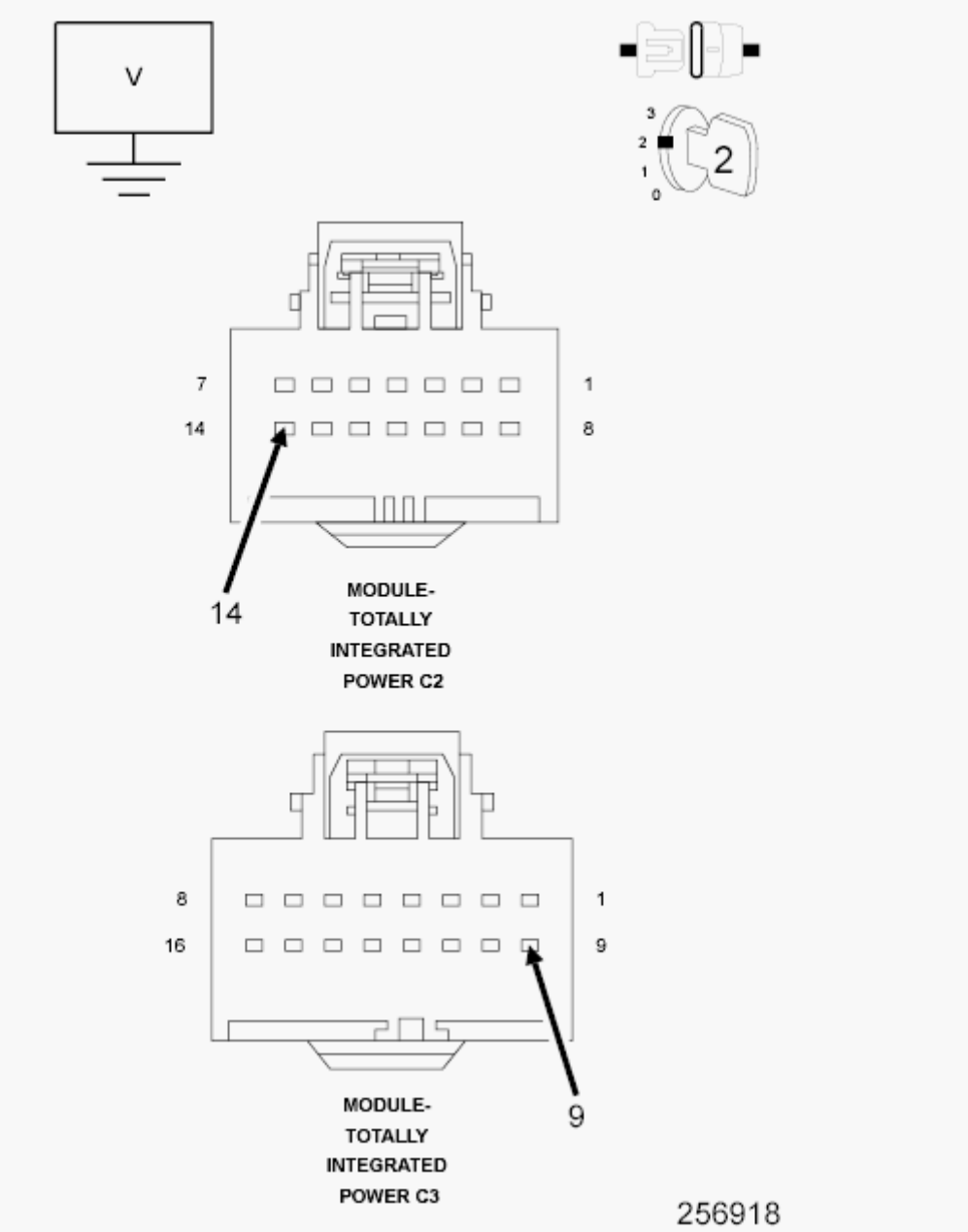

Fig. 123: Checking CAN C Bus (-) Circuit For Short To Voltage

Courtesy of CHRYSLER GROUP, LLC

1. Measure the voltage between the (D64) CAN C Bus (-) circuit and ground.

   Is there any voltage present?

   Yes

   - Repair the (D64) CAN C Bus (-) circuit for a short to voltage.
   - Perform the BODY VERIFICATION TEST. Refer to **STANDARD PROCEDURE** .

   No

   - Go To 9

9. **(D65) CAN C BUS (+) CIRCUIT SHORTED TO GROUND**

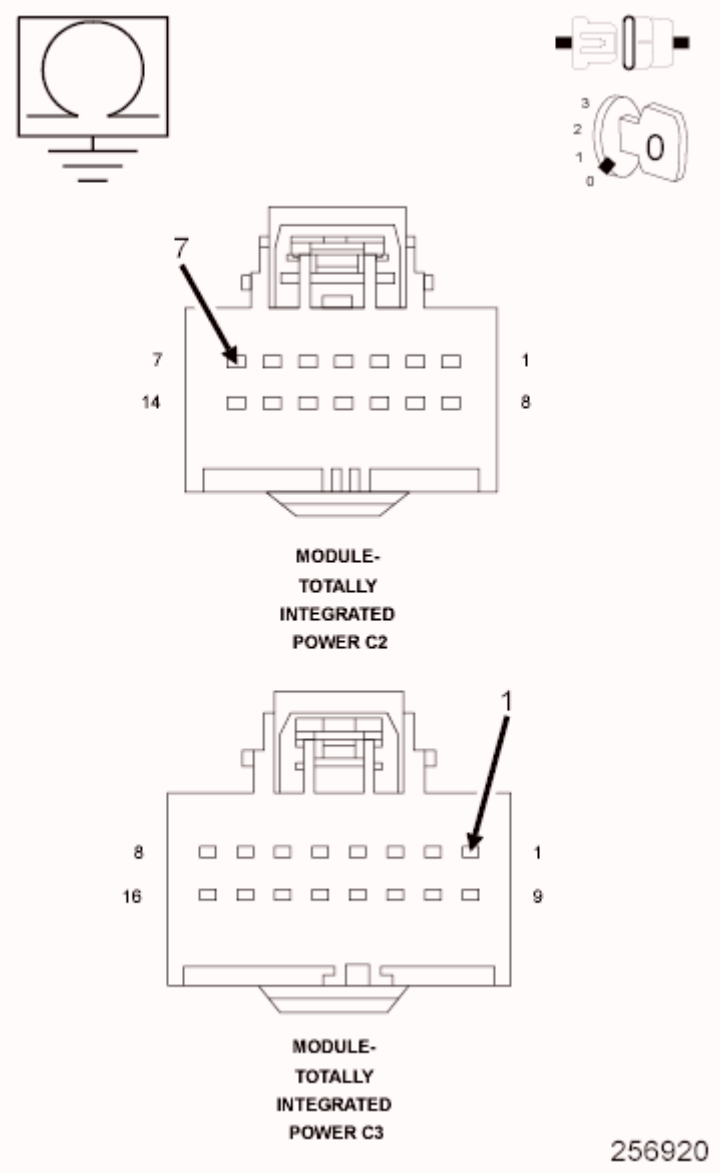

Fig. 124: Checking CAN C Bus (+) Circuit For Short To Ground
Courtesy of CHRYSLER GROUP, LLC

1. Turn the ignition off.
2. Measure the resistance between ground and the (D65) CAN C Bus (+) circuit.

   Is any resistance present?

   Yes

   - Repair the (D65) CAN C Bus (+) circuit for a short to ground.
   - Perform the BODY VERIFICATION TEST. Refer to **STANDARD PROCEDURE** .

No

- Go To 10

10. **(D64) CAN C BUS (-) CIRCUIT SHORTED TO GROUND**

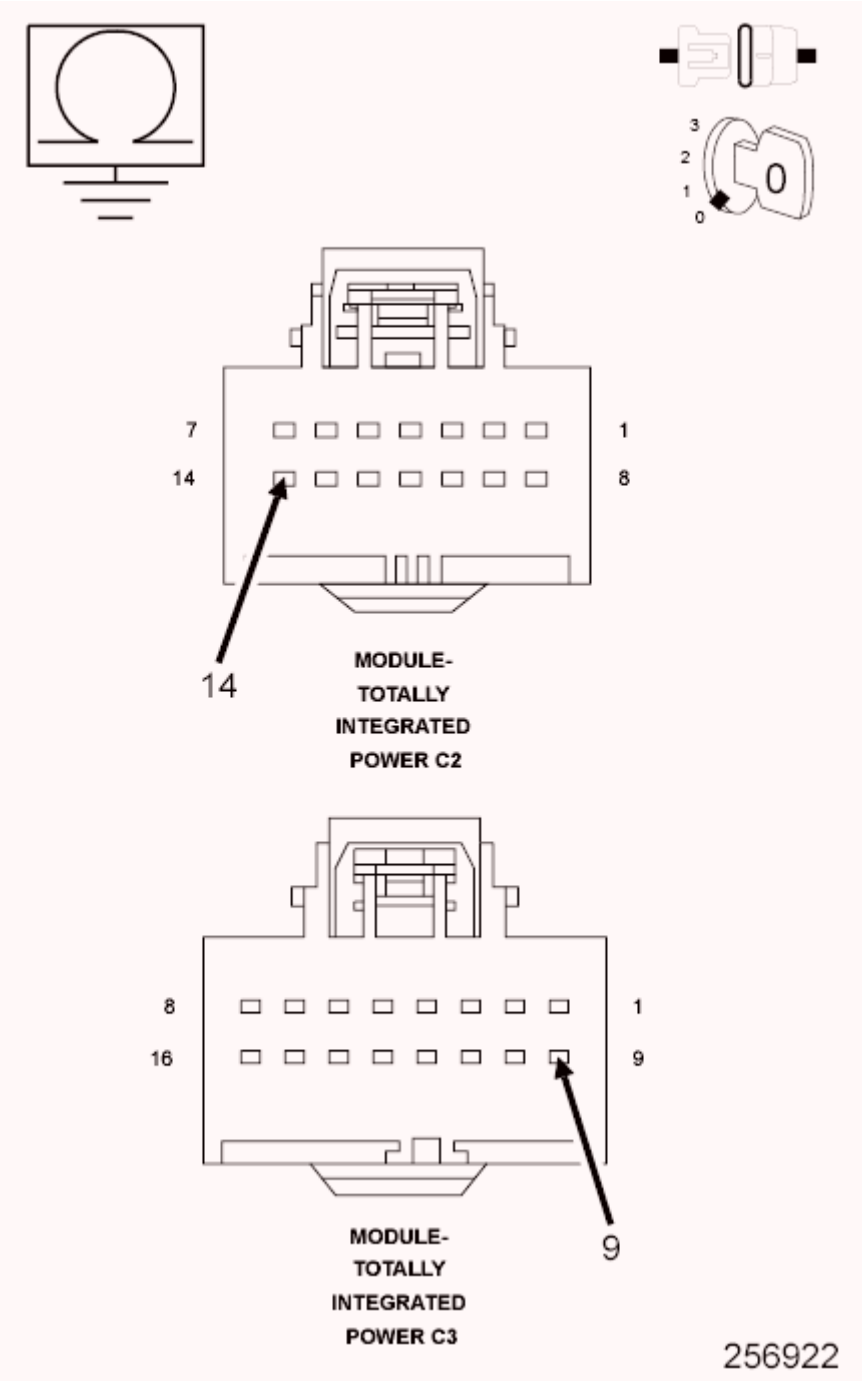

Fig. 125: Checking CAN C Bus (-) Circuit For Short To Ground
Courtesy of CHRYSLER GROUP, LLC

1. Measure the resistance between ground and the (D64) CAN C Bus (-)

circuit.

Is any resistance present?

Yes

- Repair the (D64) CAN C Bus (-) circuit for a short to ground.
- Perform the BODY VERIFICATION TEST. Refer to **STANDARD PROCEDURE** .

No

- Go To 11

11. **(D65) CAN C BUS (+) CIRCUIT SHORTED TO THE (D64) CAN C BUS (-) CIRCUIT**

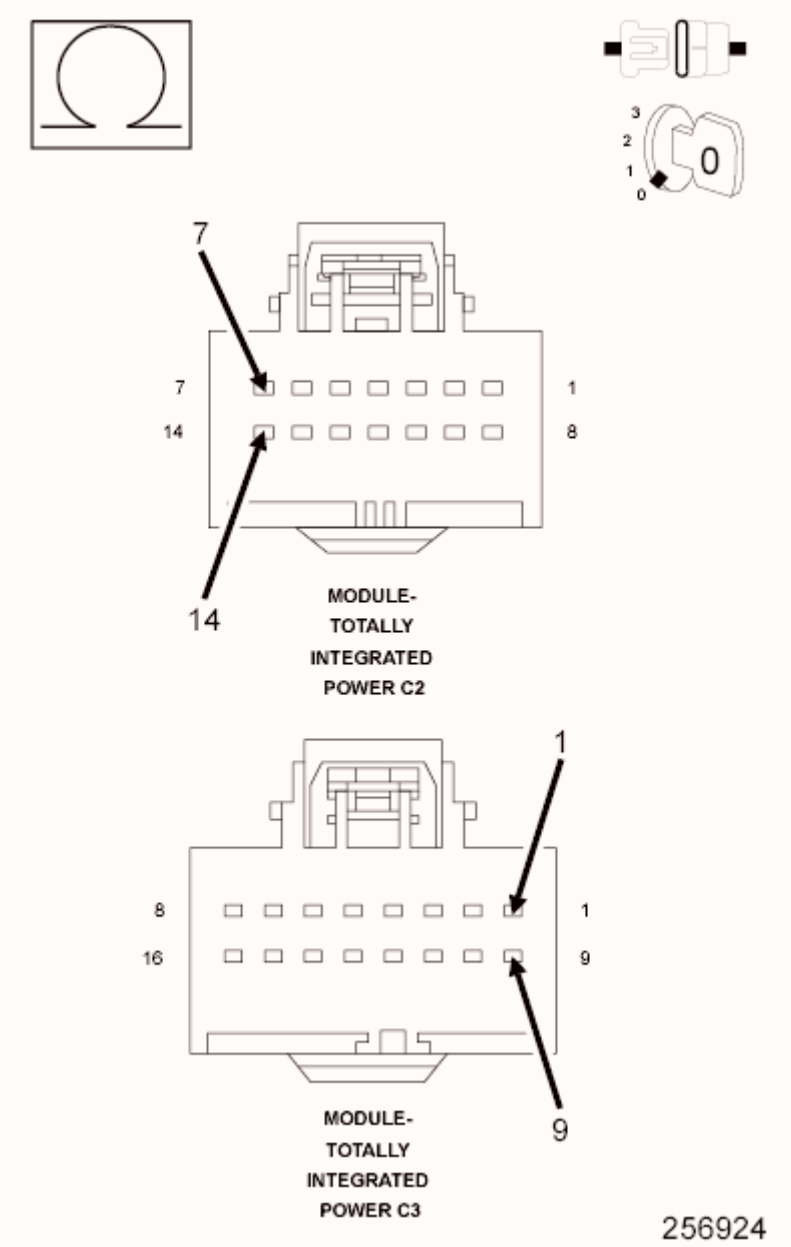

Fig. 126: Measuring Resistance Between CAN C Bus (+) Circuit & CAN C Bus (-) Circuit
Courtesy of CHRYSLER GROUP, LLC

1. Measure the resistance between the (D65) CAN C Bus (+) circuit and the (D64) CAN C Bus (-) circuit.

   Is any resistance present?

   Yes

   - Repair the (D65) CAN C Bus (+) circuit for a short to the (D64) CAN C Bus (-) circuit.

- Perform the BODY VERIFICATION TEST. Refer to **STANDARD PROCEDURE** .

No

- Inspect the wiring and connectors for damage or shorted circuits. If OK, replace and program the Totally Integrated Power Module in accordance with the Service Information.
- Perform the BODY VERIFICATION TEST. Refer to **STANDARD PROCEDURE** .

U0019-CAN B BUS

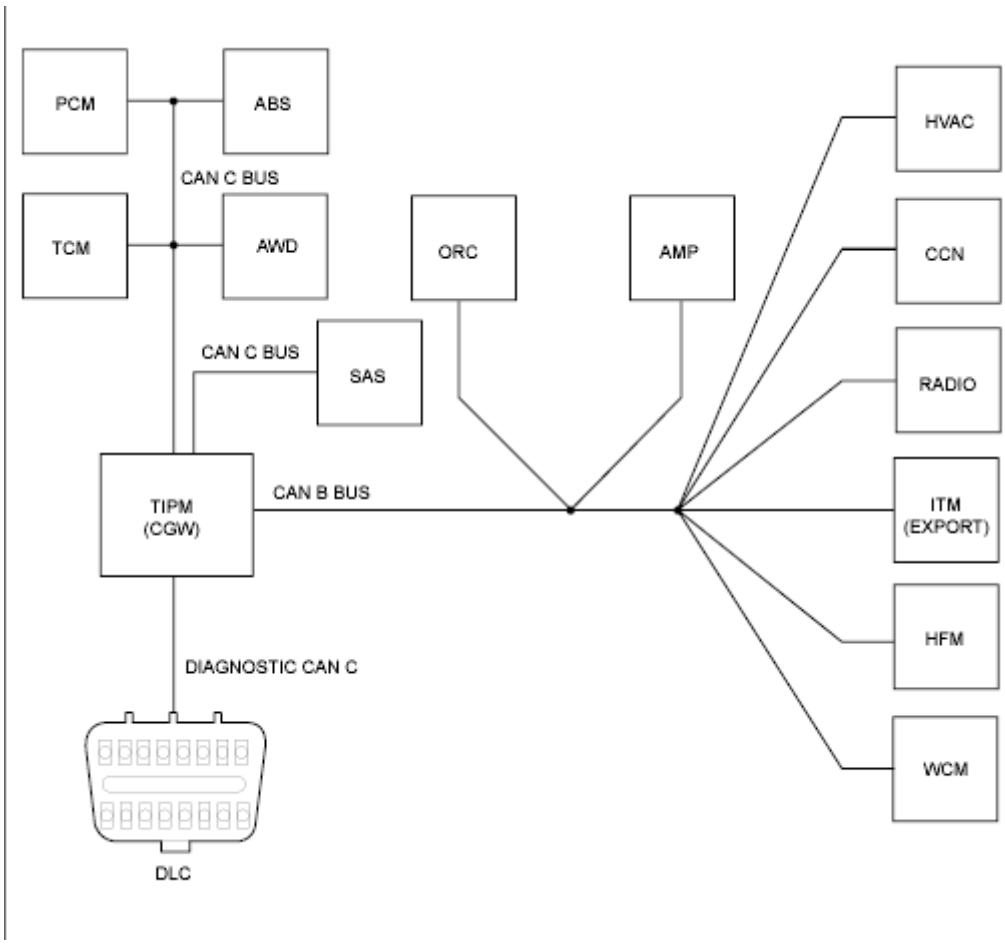

Fig. 127: Totally Integrated Power Module Diagram
Courtesy of CHRYSLER GROUP, LLC

For a complete wiring diagram, **refer to appropriate SYSTEM WIRING DIAGRAMS article** .

WHEN MONITORED

With the ignition on.

SET CONDITION

The Totally Integrated Power Module (TIPM) detects an open, a short high, a short low or a short together in either of the CAN B Bus circuits.

POSSIBLE CAUSES

Possible Causes
(D55) CAN B BUS (+) CIRCUIT OPEN
(D54) CAN B BUS (-) CIRCUIT OPEN
(D55) CAN B BUS (+) CIRCUIT SHORTED TO VOLTAGE
(D54) CAN B BUS (-) CIRCUIT SHORTED TO VOLTAGE
(D55) CAN B BUS (+) CIRCUIT SHORTED TO GROUND
(D54) CAN B BUS (-) CIRCUIT SHORTED TO GROUND
(D55) CAN B BUS (+) CIRCUIT SHORTED TO THE (D54) CAN B BUS (-) CIRCUIT
ANY CAN B BUS MODULE

DIAGNOSTIC TEST

1. **TEST FOR INTERMITTENT CONDITION**

   NOTE: Check for any TSB(s) related to the condition. If a TSB applies, perform the procedure outlined in the TSB before continuing.

   1. Turn the ignition on.
   2. With the scan tool, record and erase TIPM DTCs.
   3. Cycle the ignition from on to off 3 times.
   4. Turn the ignition on.
   5. With the scan tool, read active TIPM DTCs.

   Does the scan tool display this DTC as active?

   Yes

   - Go To 2

No

- The conditions that caused this code to set are not present at this time. Using the wiring diagram/schematic as a guide, inspect the wiring and connectors.

2. **MEASURE VOLTAGE AT TIPM**
   1. Gain access to the Totally Integrated Power Module C3 harness connector, but do not disconnect.
   2. Backprobe and measure the voltage on both the (D55) CAN B Bus (+) and the (D54) CAN B (-) circuits.

      Does the voltage read approximately 4.65 - 4.98 volts on the (D54) CAN B Bus (-) and 0.39 - 0.46 of a volt on the (D55) CAN B (+) circuits?

      Yes

      - Go To 3

      No - Voltage Between 0.3 - 0.7 of a Volt on Both Circuits

      - Go To 9

      No - Voltage Reads 0 Volts on Either Circuit

      - Go To 7

      No - Voltage Above 10 Volts on Either Circuit

      - Go To 5

3. **(D55) CAN B BUS (+) CIRCUIT OPEN**

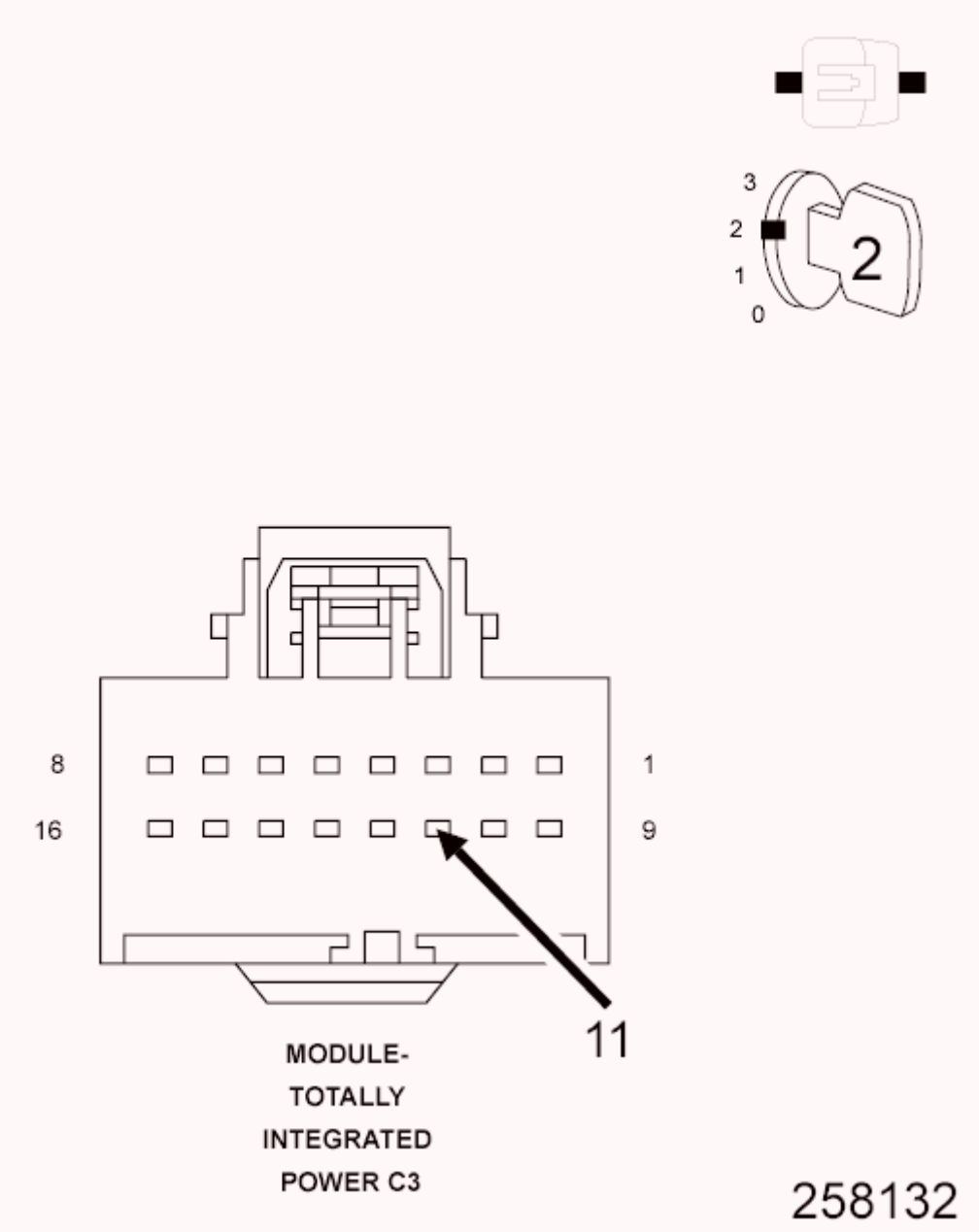

Fig. 128: Checking CAN B Bus (+) Circuit For Open
Courtesy of CHRYSLER GROUP, LLC

1. Turn the ignition on.
2. With the scan tool select ECU View.
3. Using a fused jumper wire, connect one end to ground and with the other end backprobe the (D54) CAN B Bus (-) circuit at the TIPM C3 harness connector.

NOTE: A red "X" will appear next to modules that can no longer communicate on the Bus.

Did a red "X" appear next to any modules on the scan tool?

Yes

- Using the Wiring Diagrams to further isolate the open in the circuit, repair the (D55) CAN B Bus (+) circuit for an open.
- Perform the BODY VERIFICATION TEST. Refer to **STANDARD PROCEDURE** .

No

- Go To 4

4. **(D54) CAN B BUS (-) CIRCUIT OPEN**

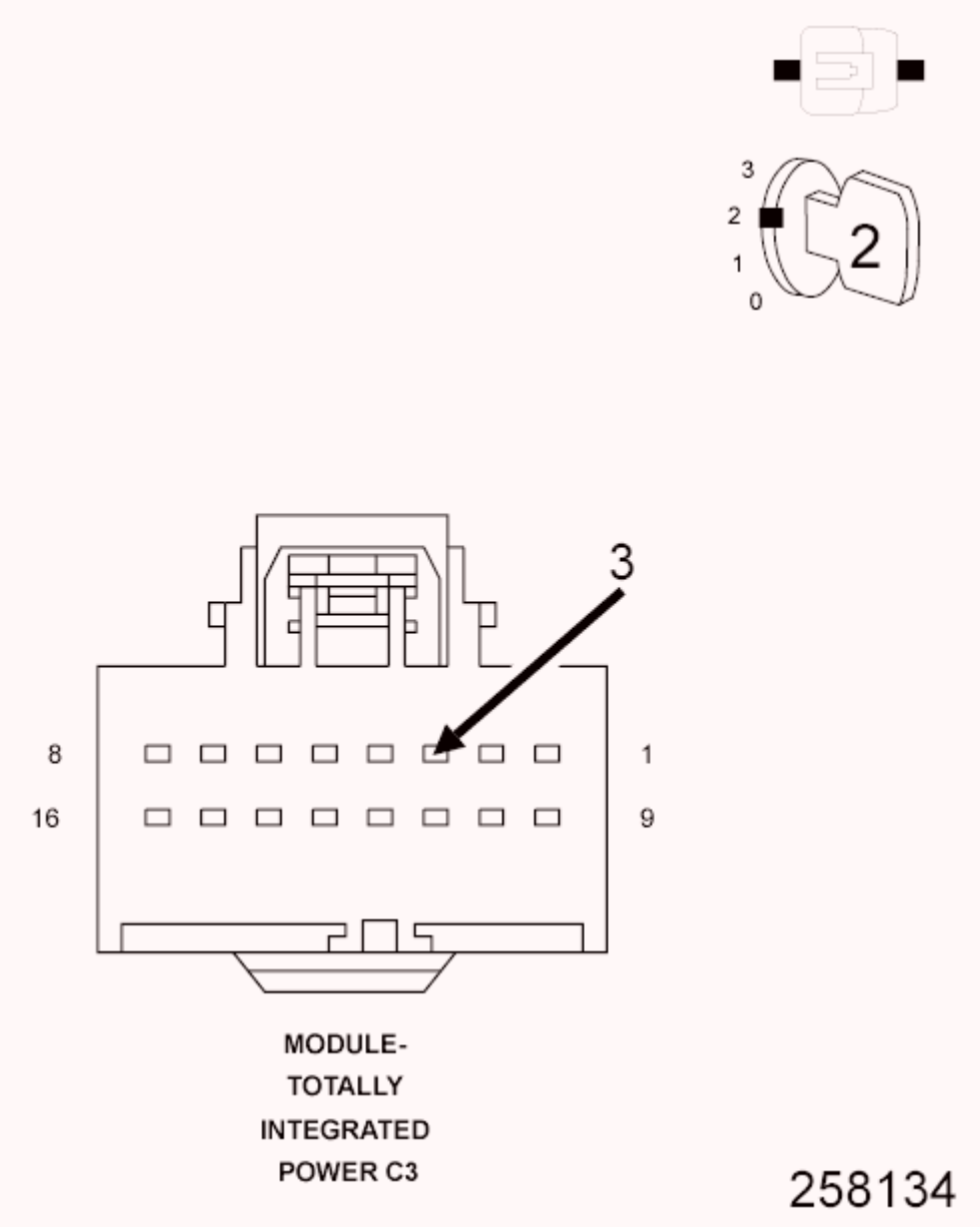

Fig. 129: Checking CAN B Bus (-) Circuit For Open
Courtesy of CHRYSLER GROUP, LLC

1. With the scan tool select ECU View.
2. Using a fused jumper wire, connect one end to ground and with the other end backprobe the (D55) CAN B Bus (+) circuit at the TIPM C3 harness connector.

NOTE: A red "X" will appear next to modules that can no longer communicate on the Bus.

Did a red "X" appear next to any modules on the scan tool?

Yes

- Using the Wiring Diagrams to further isolate the open in the circuit, repair the (D54) CAN B Bus (-) circuit for an open.
- Perform the BODY VERIFICATION TEST. Refer to **STANDARD PROCEDURE** .

No

- Inspect the wiring and connectors for damage. If OK, replace and program the Totally Integrated Power Module in accordance with the Service Information.
- Perform the BODY VERIFICATION TEST. Refer to **STANDARD PROCEDURE** .

5. **(D55) CAN B BUS (+) CIRCUIT SHORTED TO VOLTAGE**

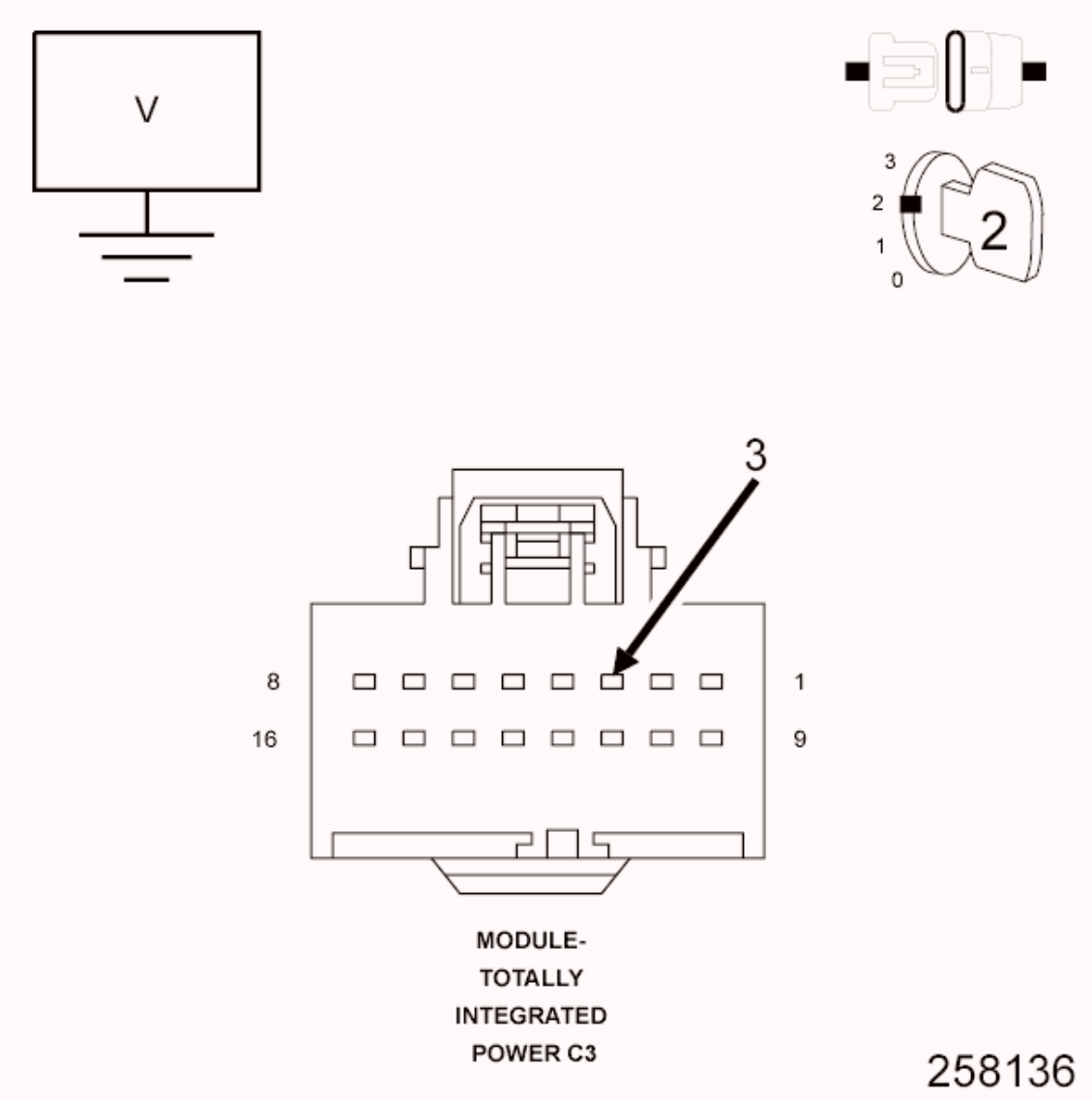

Fig. 130: Measuring Voltage Between CAN B Bus (+) Circuit & Ground
Courtesy of CHRYSLER GROUP, LLC

1. Turn the ignition off.
2. Disconnect the TIPM C3 harness connector.
3. Turn the ignition on.
4. Measure the voltage between the (D55) CAN B Bus (+) circuit and ground.

   Is the voltage above 10.0 volts?

   Yes

   - Disconnect each CAN B Bus module one at a time while observing

the voltage to determine if the short is caused by an internal short within a module. Replace the module, in accordance with the Service Information, that when disconnected eliminates the short to voltage. If the short condition is still present with all CAN B Bus modules disconnected use the Wiring Diagrams to help isolate and repair the (D55) CAN B Bus (+) circuit for a short to voltage.

- Perform the BODY VERIFICATION TEST. Refer to **STANDARD PROCEDURE** .

No

- Go To 6

6. **(D54) CAN B BUS (-) CIRCUIT FOR A SHORTED TO VOLTAGE**

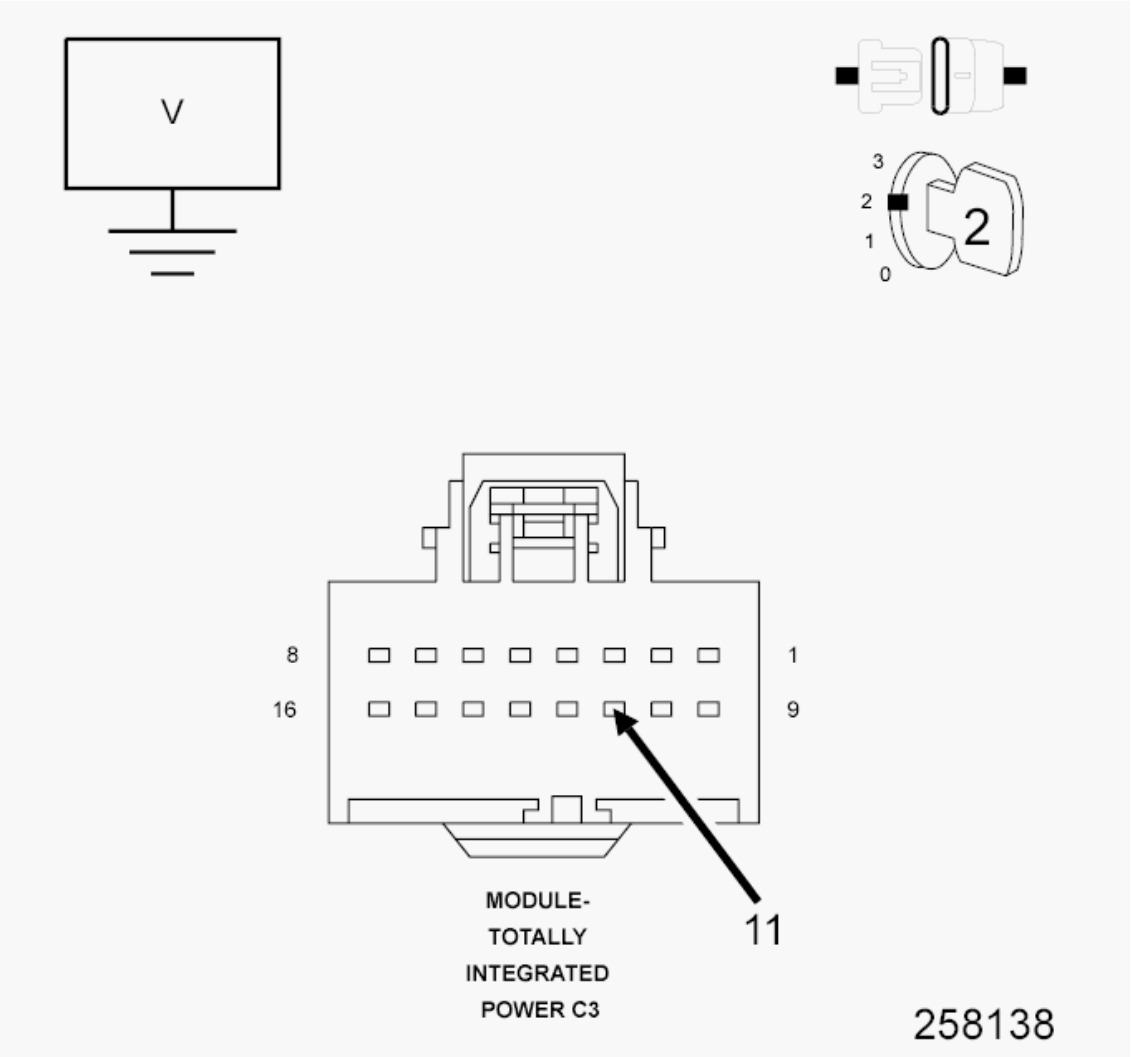

Fig. 131: Measuring Voltage Between CAN B Bus (-) Circuit & Ground
Courtesy of CHRYSLER GROUP, LLC

1. Measure the voltage between the (D54) CAN B Bus (-) circuit and ground.

   Is the voltage above 10.0 volts?

   Yes

   - Disconnect each CAN B Bus module one at a time while observing the voltage to determine if the short is caused by an internal short within a module. Replace the module, in accordance with the Service Information, that when disconnected eliminates the short to voltage. If the short condition is still present with all CAN B Bus modules disconnected use the Wiring Diagrams to help isolate and repair the (D54) CAN B Bus (-) circuit for a short to voltage.
   - Perform the BODY VERIFICATION TEST. Refer to **STANDARD PROCEDURE** .

   No

   - Inspect the wiring and connectors for damage. If OK, replace and program the Totally Integrated Power Module in accordance with the Service Information. Perform the BODY VERIFICATION TEST. Refer to **STANDARD PROCEDURE** .

7. **(D55) CAN B BUS (+) CIRCUIT SHORTED TO GROUND**

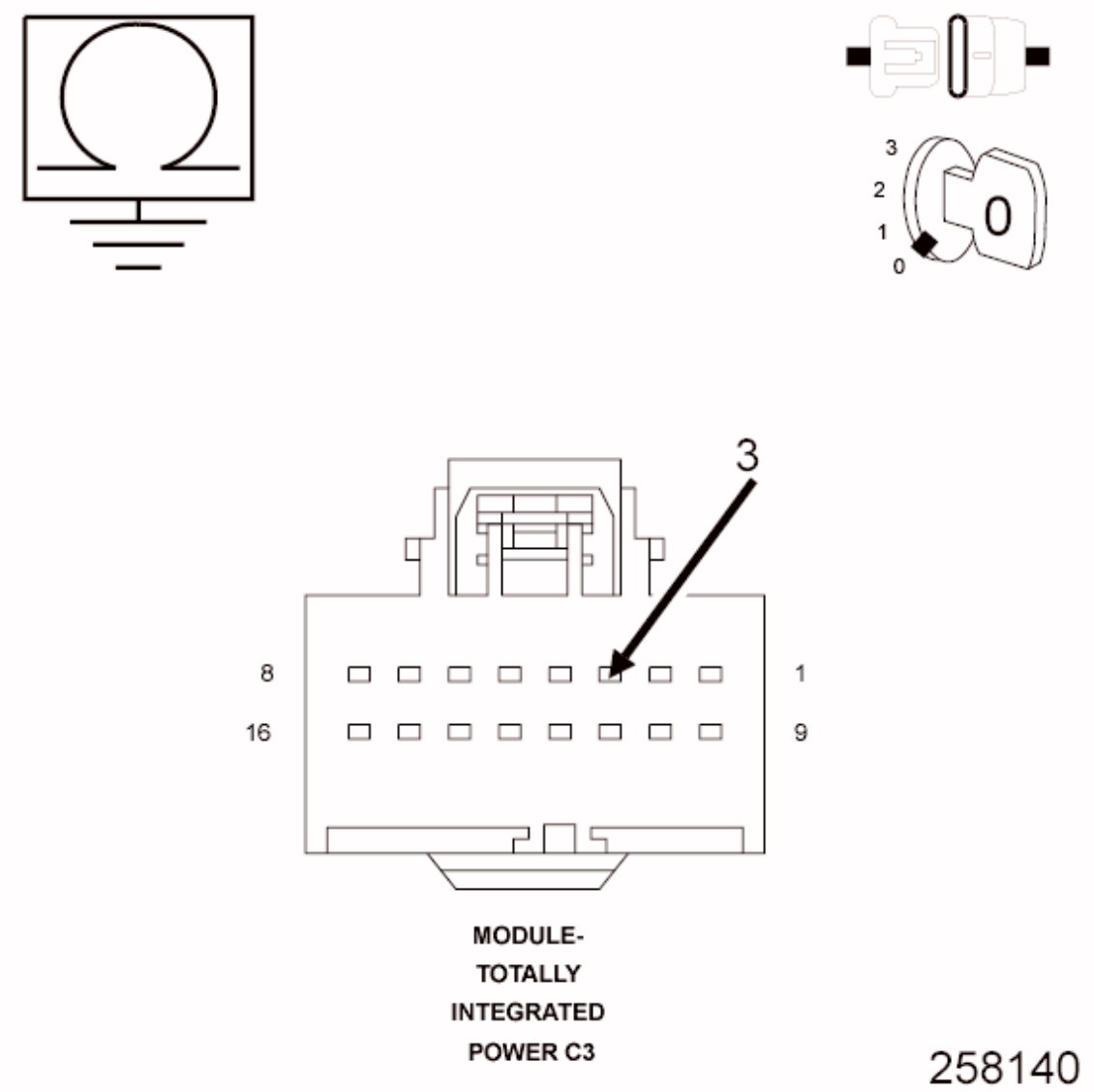

Fig. 132: Measuring Resistance Between Ground & CAN B Bus (+) Circuit
Courtesy of CHRYSLER GROUP, LLC

1. Turn the ignition off.
2. Disconnect the TIPM C3 harness connector.
3. Measure the resistance between ground and the (D55) CAN B Bus (+) circuit.

   Is the resistance above 1000.0 Ohms?

   Yes

   - Go To 8

No

- Disconnect each CAN B Bus module one at a time while observing the resistance to determine if the short is caused by an internal short within a module. Replace the module, in accordance with the Service Information, that when disconnected eliminates the short to ground. If the short condition is still present with all CAN B Bus modules disconnected use the Wiring Diagrams to help isolate and repair the (D55) CAN B Bus (+) circuit for a short to ground.
- Perform the BODY VERIFICATION TEST. Refer to **STANDARD PROCEDURE** .

8. **(D54) CAN B BUS (-) CIRCUIT SHORTED TO GROUND**

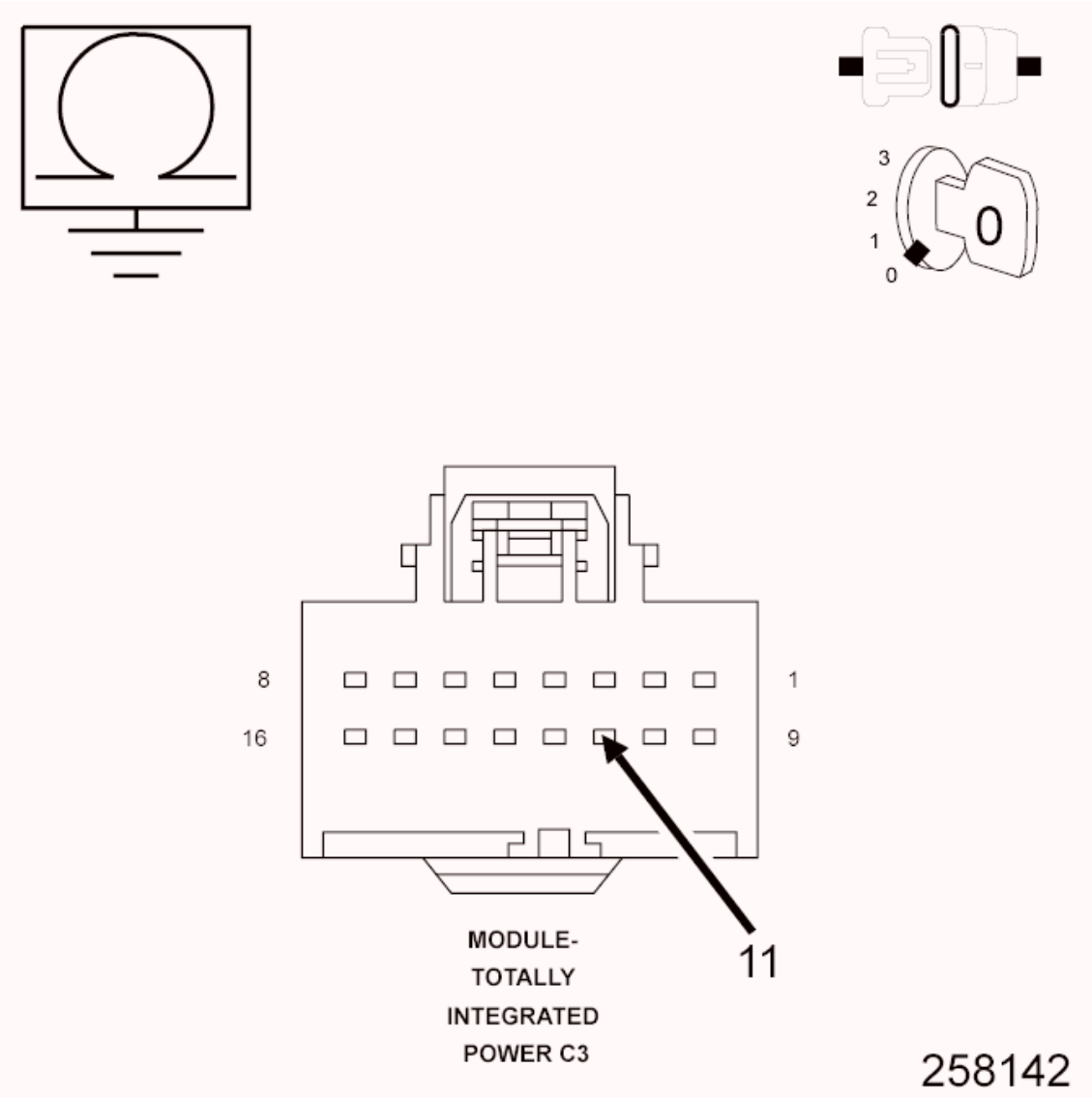

Fig. 133: Measuring Resistance Between Ground & CAN B Bus (-)

Circuit
Courtesy of CHRYSLER GROUP, LLC

1. Measure the resistance between ground and the (D54) CAN B Bus (-) circuit.

   Is the resistance above 1000.0 Ohms?

   Yes

   - Inspect the wiring and connectors for damage. If OK, replace and program the Totally Integrated Power Module in accordance with the Service Information.
   - Perform the BODY VERIFICATION TEST. Refer to **STANDARD PROCEDURE** .

   No

   - Disconnect each CAN B Bus module one at a time while observing the resistance to determine if the short is caused by an internal short within a module. Replace the module, in accordance with the Service Information, that when disconnected eliminates the short to ground. If the short condition is still present with all CAN B Bus modules disconnected use the Wiring Diagrams to help isolate and repair the (D54) CAN B Bus (-) circuit for a short to ground.
   - Perform the BODY VERIFICATION TEST. Refer to **STANDARD PROCEDURE** .

9. **(D55) CAN B BUS (+) CIRCUIT SHORTED TO THE (D54) CAN B BUS (-) CIRCUIT**

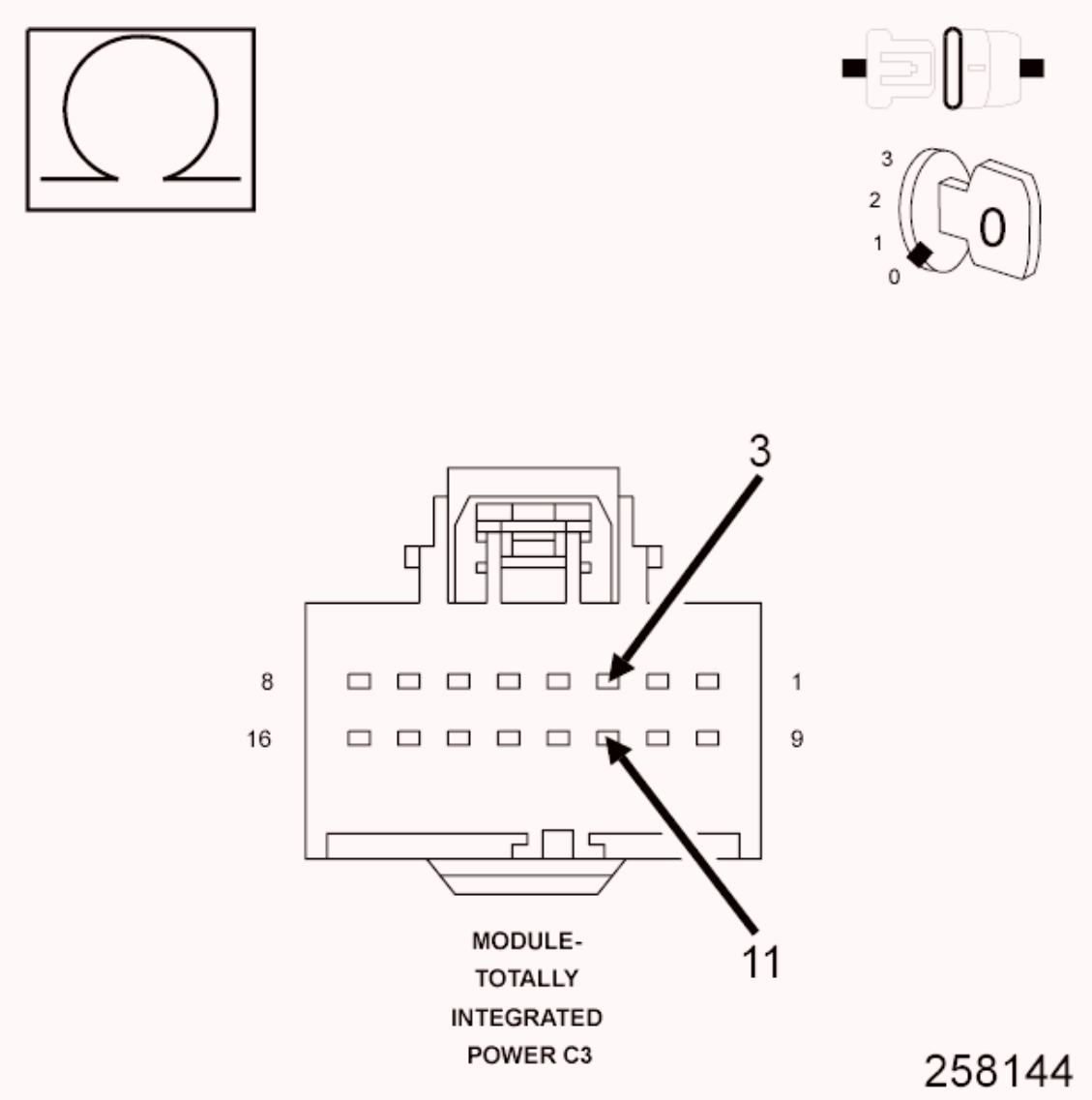

Fig. 134: Measuring Resistance Between CAN B Bus (+) Circuit & CAN B Bus (-) Circuit
Courtesy of CHRYSLER GROUP, LLC

1. Turn the ignition off.
2. Disconnect the TIPM C3 harness connector.
3. Measure the resistance between the (D55) CAN B Bus (+) circuit and (D54) CAN B Bus (-) circuit.

   Is any resistance present?

   Yes

   - Disconnect each CAN B Bus module one at a time while observing the resistance to determine if the short is caused by an internal

short within a module. Replace the module, in accordance with the Service Information, that when disconnected eliminates the short between the two circuits. If the short condition is still present with all CAN B Bus modules disconnected use the Wiring Diagrams to help isolate and repair the (D55) CAN B Bus (+) circuit for a short to the (D54) CAN B Bus (-) circuit.

- Perform the BODY VERIFICATION TEST. Refer to **STANDARD PROCEDURE** .

No

- Inspect the wiring and connectors for damage. If OK, replace and program the Totally Integrated Power Module in accordance with the Service Information.
- Perform the BODY VERIFICATION TEST. Refer to **STANDARD PROCEDURE** .

U0021-CAN B BUS (+) CIRCUIT OPEN

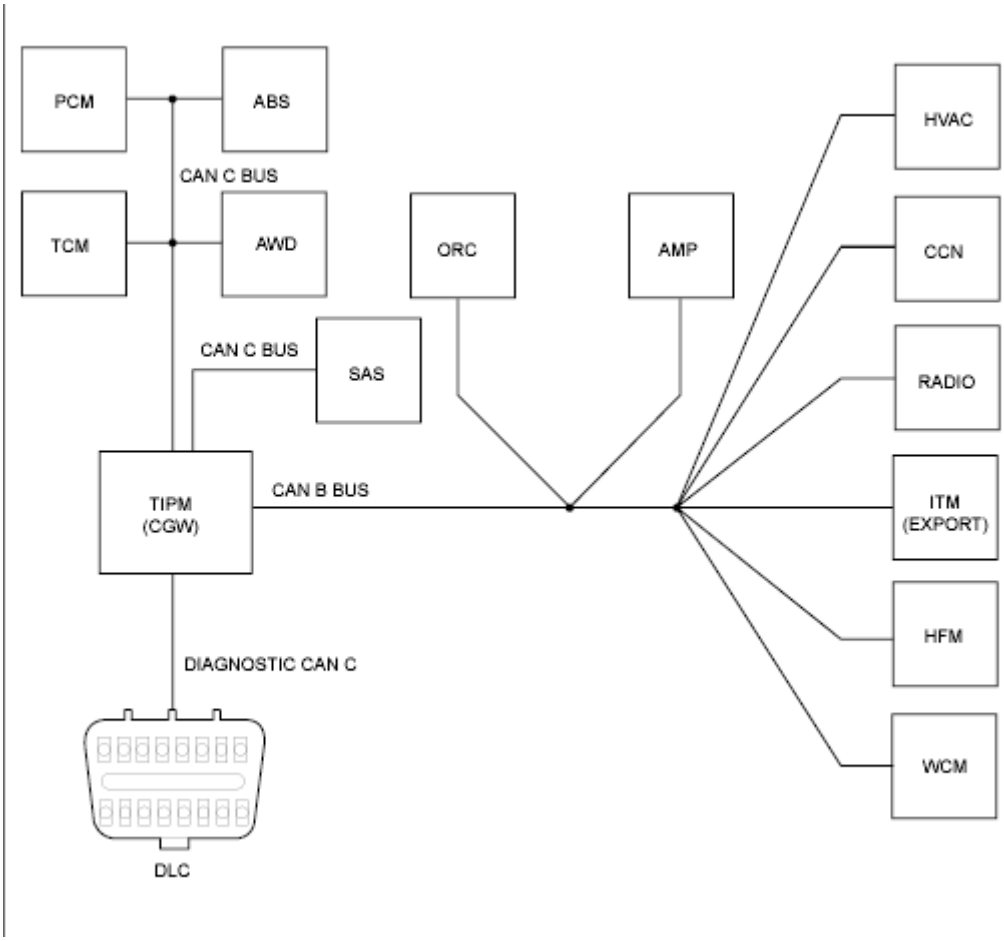

Fig. 135: Totally Integrated Power Module Diagram
Courtesy of CHRYSLER GROUP, LLC

For a complete wiring diagram, **refer to appropriate SYSTEM WIRING DIAGRAMS article** .

WHEN MONITORED

With the ignition on and battery voltage between 10 and 16 volts.

SET CONDITION

The Totally Integrated Power Module (TIPM) detects the (D55) CAN B Bus (+) circuit is open.

POSSIBLE CAUSES

Possible Causes
CAN B BUS TERMINAL PUSH OUT
SPREAD CAN B BUS TERMINAL
(D55) CAN B BUS (+) CIRCUIT OPEN
INTERNAL OPEN IN A CAN B BUS MODULE

DIAGNOSTIC TEST

1. **TEST FOR INTERMITTENT CONDITION**

NOTE: Check for any TSB(s) related to the condition. If a TSB applies, perform the procedure outlined in the TSB before continuing.

1. Turn the ignition on.
2. With the scan tool, record and erase TIPM DTCs.
3. Cycle the ignition from on to off three times.
4. Turn the ignition on.
5. With the scan tool, read active TIPM DTCs.

Does the scan tool display this DTC as active?

Yes

- Go To 2

No

- The conditions that caused this code to set are not present at this time. Using the wiring diagram/schematic as a guide, inspect the wiring and connectors.

2. **ATTEMPT TO ISOLATE THE OPEN CONDITION**

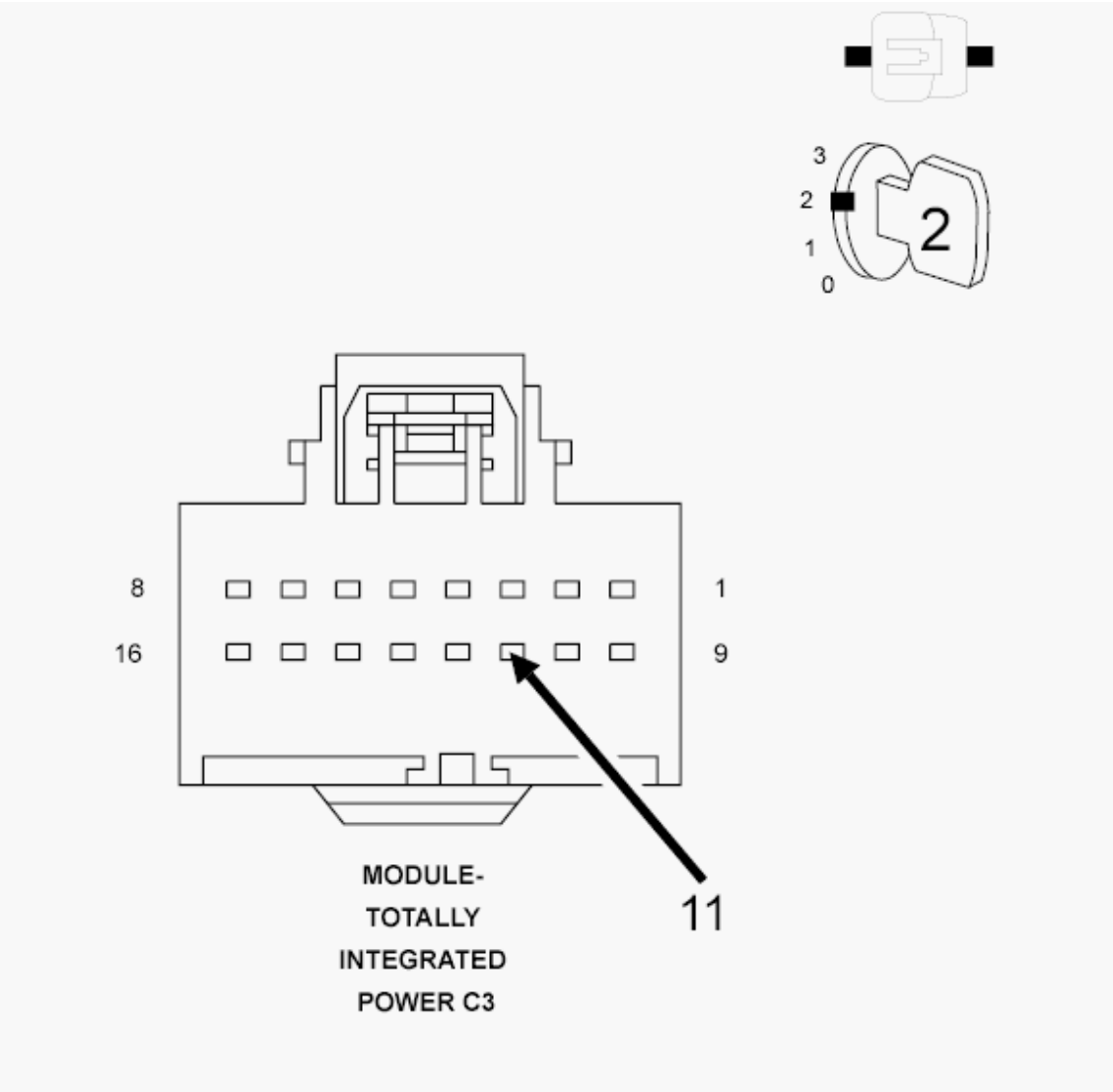

Fig. 136: Backprobing CAN B Bus (-) Circuit At TIPM C3 Harness Connector
Courtesy of CHRYSLER GROUP, LLC

1. Turn the ignition on.
2. With the scan tool select ECU View.

3. Verify that all CAN B Bus modules are communicating with the scan tool.

NOTE: A red "X" will be next to a module that is not communicating, indicating that the module is not active on the Bus network. A green check indicates that the module is active on the Bus network.

NOTE: If any module is not communicating, perform the appropriate no response test procedure before proceeding.

4. Turn the ignition off.
5. Gain access to the Totally Integrated Power Module C3 harness connector, but do not disconnect.
6. Using a fused jumper wire, connect one end to ground and with the other end backprobe the CAN B Bus (-) circuit at the TIPM C3 harness connector.
7. Turn the ignition on.
8. With the scan tool monitor the ECU View screen and document all modules that display a red "X".

   Are there any red "X's" displayed next to any CAN B Bus modules?

   Yes

   - Go To 3

   No

   - Check backprobe connection to ground, make sure it is proper. The CAN B Bus open DTC may no longer be active, it may be stored. Check all module connections.
   - Perform the BODY VERIFICATION TEST. Refer to **STANDARD PROCEDURE** .

3. **ATTEMPT TO ISOLATE THE OPEN CONDITION - MULTIPLE RED X'S**

1. With the scan tool continue monitoring the ECU View screen.

   Are there multiple red "X's" displayed next to CAN B Bus modules?

   Yes

   - The most likely cause of this condition is an open CAN B Bus (+) circuit between a common CAN B Bus splice and the modules that display the red "X" next to them. Use the wiring diagrams to help you determine where the open condition exists.
   - Perform the BODY VERIFICATION TEST. Refer to **STANDARD PROCEDURE** .

   No

   - Go To 4

4. **(D55) CAN B BUS (+) CIRCUIT OPEN - SINGLE RED X**
   1. Turn the ignition off.
   2. Disconnect the module that has the red "X" displayed next to it.
   3. Turn the ignition on.
   4. Measure the voltage between the (D55) CAN B Bus (+) circuit and ground.

      Is there any voltage present?

      Yes

      - Inspect the connector and terminal for damage, inspect for spread terminals, or pushed out terminals. If OK, replace the module that displayed the red "X" next to it in accordance with the Service Information.
      - Perform the BODY VERIFICATION TEST. Refer to **STANDARD PROCEDURE** .

      No

      - Repair the (D55) CAN B Bus (+) circuit for an open between the next common splice and the module that has the red "X" displayed next to it. Use the wiring diagrams to help you determine where the

open condition exists.

- Perform the BODY VERIFICATION TEST. Refer to **STANDARD PROCEDURE** .

U0022-CAN B BUS (+) CIRCUIT LOW

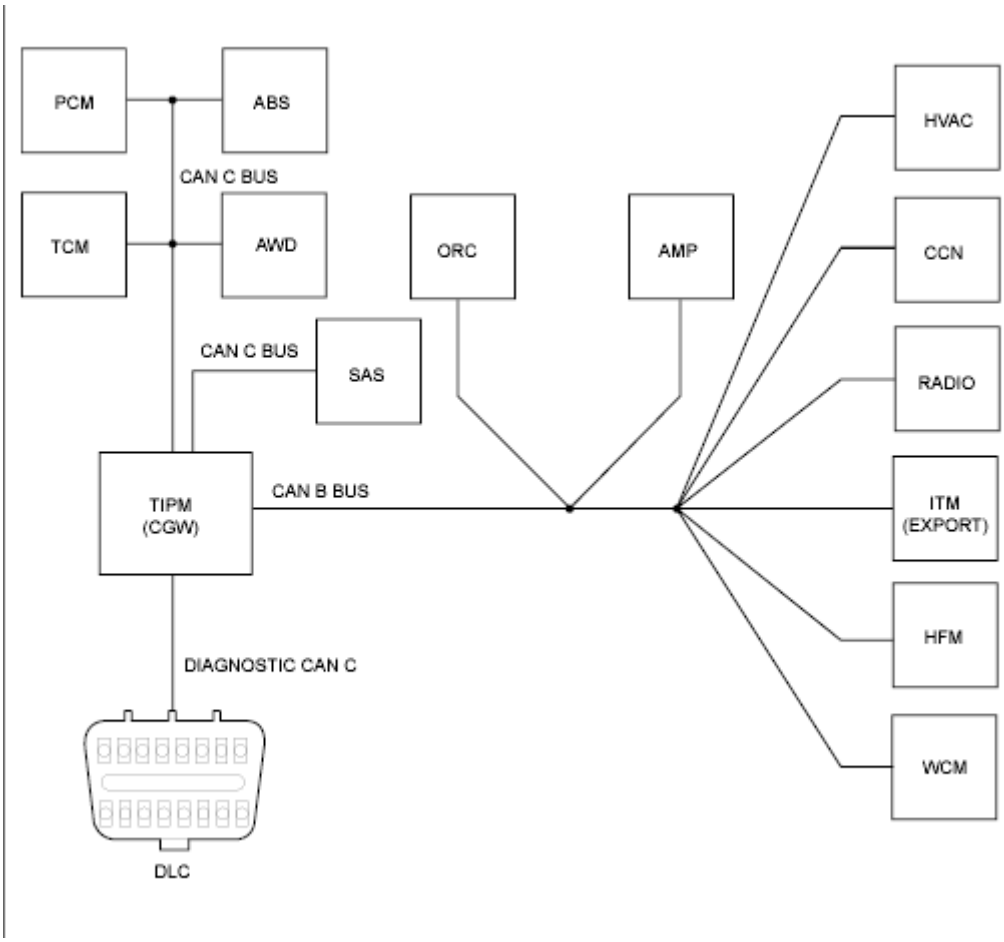

Fig. 137: Totally Integrated Power Module Diagram
Courtesy of CHRYSLER GROUP, LLC

For a complete wiring diagram, **refer to appropriate SYSTEM WIRING DIAGRAMS article** .

WHEN MONITORED

Continuously.

SET CONDITION

The Totally Integrated Power Module (TIPM) detects the (D55) CAN B Bus (+) circuit is shorted to ground.

POSSIBLE CAUSES

Possible Causes
(D55) CAN B BUS (+) CIRCUIT SHORTED TO GROUND
ANY CAN B BUS MODULE
TOTALLY INTEGRATED POWER MODULE (TIPM)

DIAGNOSTIC TEST

1. **TEST FOR INTERMITTENT CONDITION**

   NOTE: Check for any TSB(s) related to the condition. If a TSB applies, perform the procedure outlined in the TSB before continuing.

   1. Turn the ignition on.
   2. With the scan tool, record and erase TIPM DTCs.
   3. Cycle the ignition from on to off three times.
   4. Turn the ignition on.
   5. With the scan tool, read active TIPM DTCs.

   Does the scan tool display this DTC as active?

   Yes

   - Go To 2

   No

   - The conditions that caused this code to set are not present at this time. Using the wiring diagram/schematic as a guide, inspect the wiring and connectors.

2. **CHECK THE (D55) CAN B BUS (+) CIRCUIT FOR A SHORT TO GROUND**

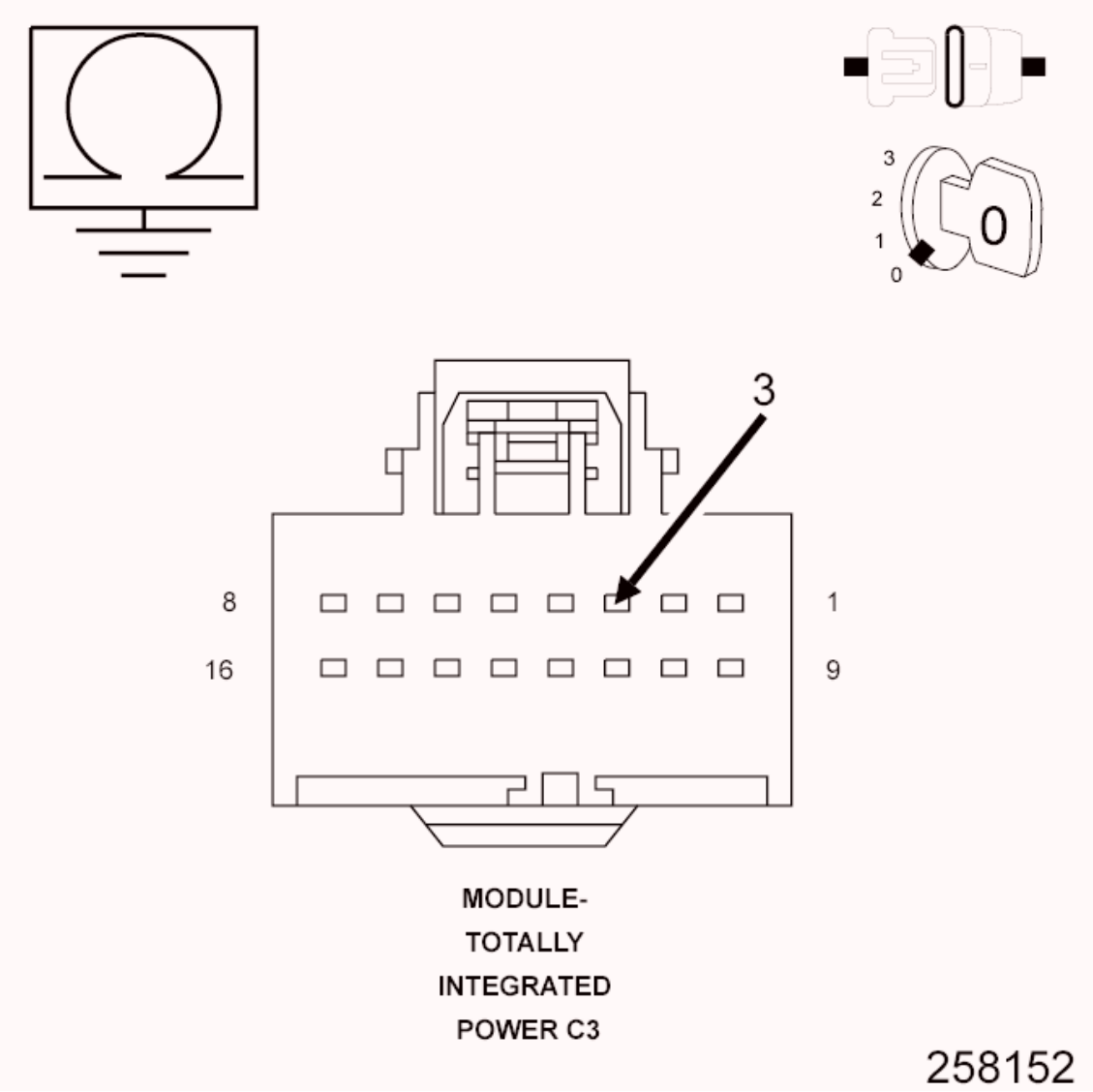

Fig. 138: Measuring Resistance Between Ground & CAN B Bus (+) Circuit
Courtesy of CHRYSLER GROUP, LLC

1. Turn the ignition off.
2. Disconnect the Totally Integrated Power Module C3 harness connector.
3. Measure the resistance between ground and the (D55) CAN B Bus (+) circuit.

   Is resistance below 1000.0 Ohms?

   Yes

   - Go To 3

No

- Inspect the wiring and connectors for damage or shorted circuits. If OK, replace the Totally Integrated Power Module in accordance with the Service Information.
- Perform the BODY VERIFICATION TEST. Refer to **STANDARD PROCEDURE** .

3. **(D55) CAN B BUS (+) CIRCUIT SHORTED TO GROUND**

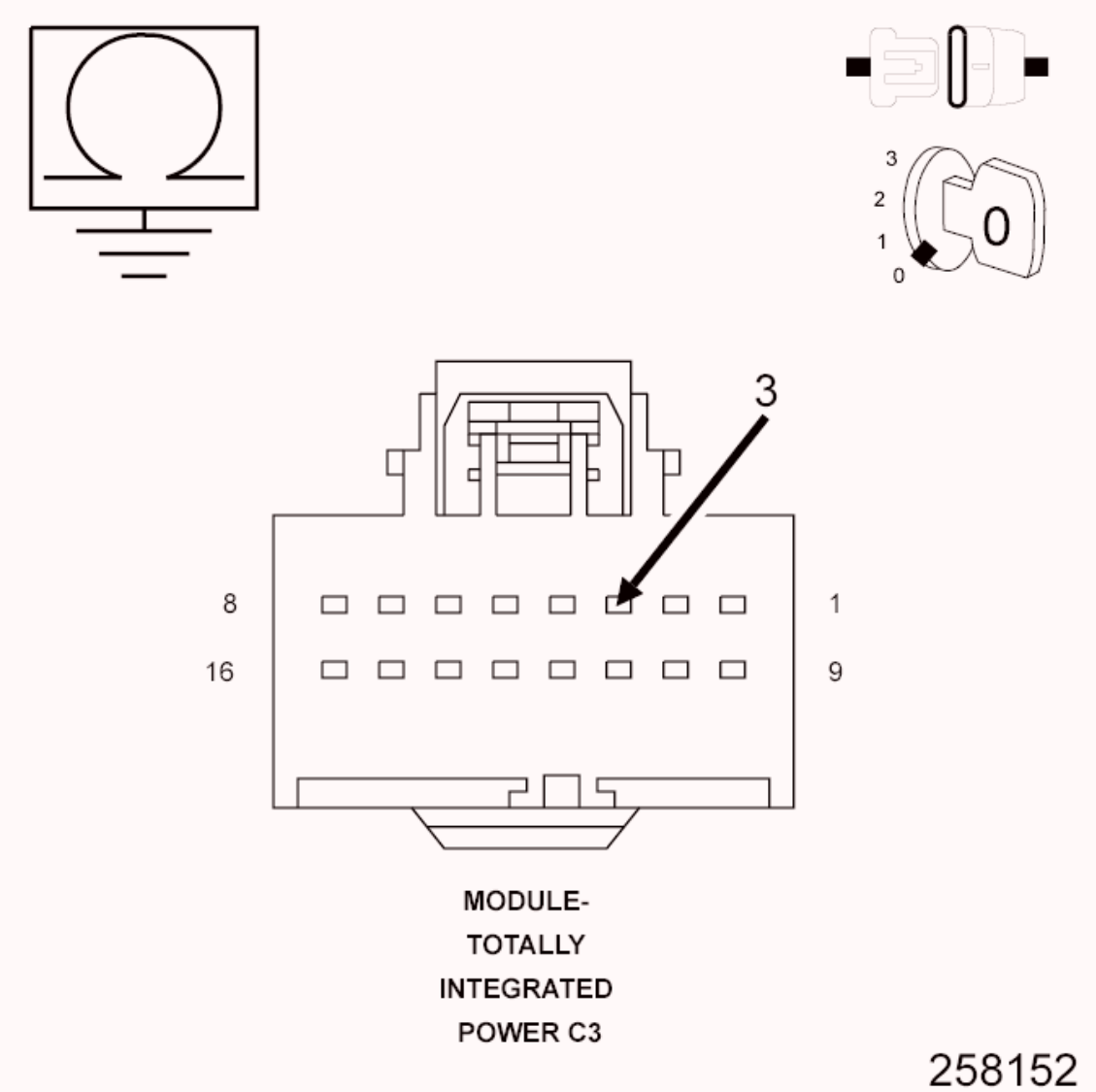

Fig. 139: Measuring Resistance Between Ground & CAN B Bus (+) Circuit
Courtesy of CHRYSLER GROUP, LLC

1. Measure the resistance between ground and the (D55) CAN B Bus (+) circuit.

2. While monitoring the Ohmmeter, disconnect each CAN B Bus module one at a time.

NOTE: This is to determine if the circuit is shorted to ground internally within a module or if the circuit is shorted in the harness.

NOTE: Disconnecting an in-line connector can eliminate a module or group of modules from the list of possible causes for this fault. Refer to SYSTEM WIRING DIAGRAMS to assist in diagnosis.

Is resistance below 1000.0 Ohms with all the CAN B Bus modules disconnected?

Yes

- Repair the (D55) CAN B Bus (+) circuit for a short to ground.
- Perform the BODY VERIFICATION TEST. Refer to **STANDARD PROCEDURE** .

No

- Replace the module that when disconnected eliminated the short to ground in accordance with the Service Information.
- Perform the BODY VERIFICATION TEST. Refer to **STANDARD PROCEDURE** .

U0023-CAN B BUS (+) CIRCUIT HIGH

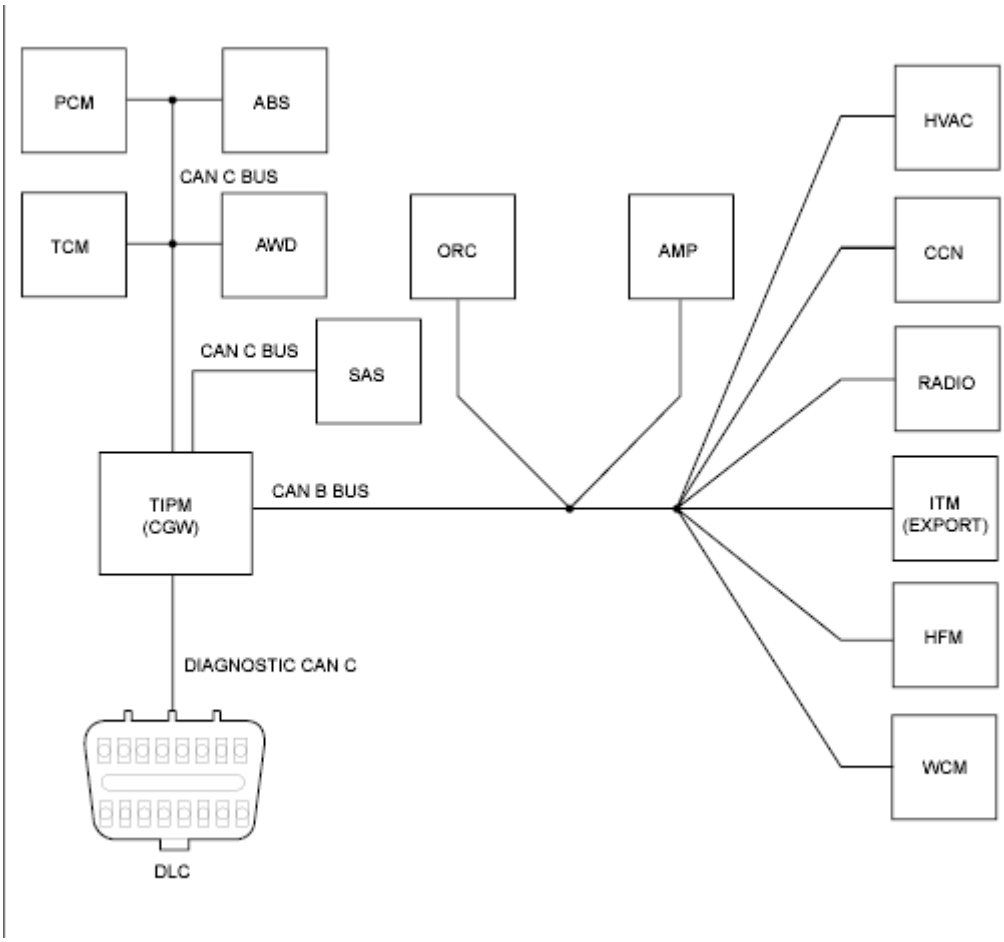

Fig. 140: Totally Integrated Power Module Diagram
Courtesy of CHRYSLER GROUP, LLC

For a complete wiring diagram, **refer to appropriate SYSTEM WIRING DIAGRAMS article** .

WHEN MONITORED

Continuously.

SET CONDITION

The Totally Integrated Power Module (TIPM) detects the (D55) CAN B Bus (+) circuit is shorted to voltage.

POSSIBLE CAUSES

Possible Causes
(D55) CAN B BUS (+) CIRCUIT SHORTED TO VOLTAGE
ANY CAN B BUS MODULE

TOTALLY INTEGRATED POWER MODULE (TIPM)

DIAGNOSTIC TEST

1. **TEST FOR INTERMITTENT CONDITION**

   NOTE: Check for any TSB(s) related to the condition. If a TSB applies, perform the procedure outlined in the TSB before continuing.

   1. Turn the ignition on.
   2. With the scan tool, record and erase TIPM DTCs.
   3. Cycle the ignition from on to off 3 times.
   4. Turn the ignition on.
   5. With the scan tool, read active TIPM DTCs.

   Does the scan tool display this DTC as active?

   Yes

   - Go To 2

   No

   - The conditions that caused this code to set are not present at this time. Using the wiring diagram/schematic as a guide, inspect the wiring and connectors.

2. **CHECK THE (D55) CAN B BUS (+) CIRCUIT FOR A SHORT TO VOLTAGE**

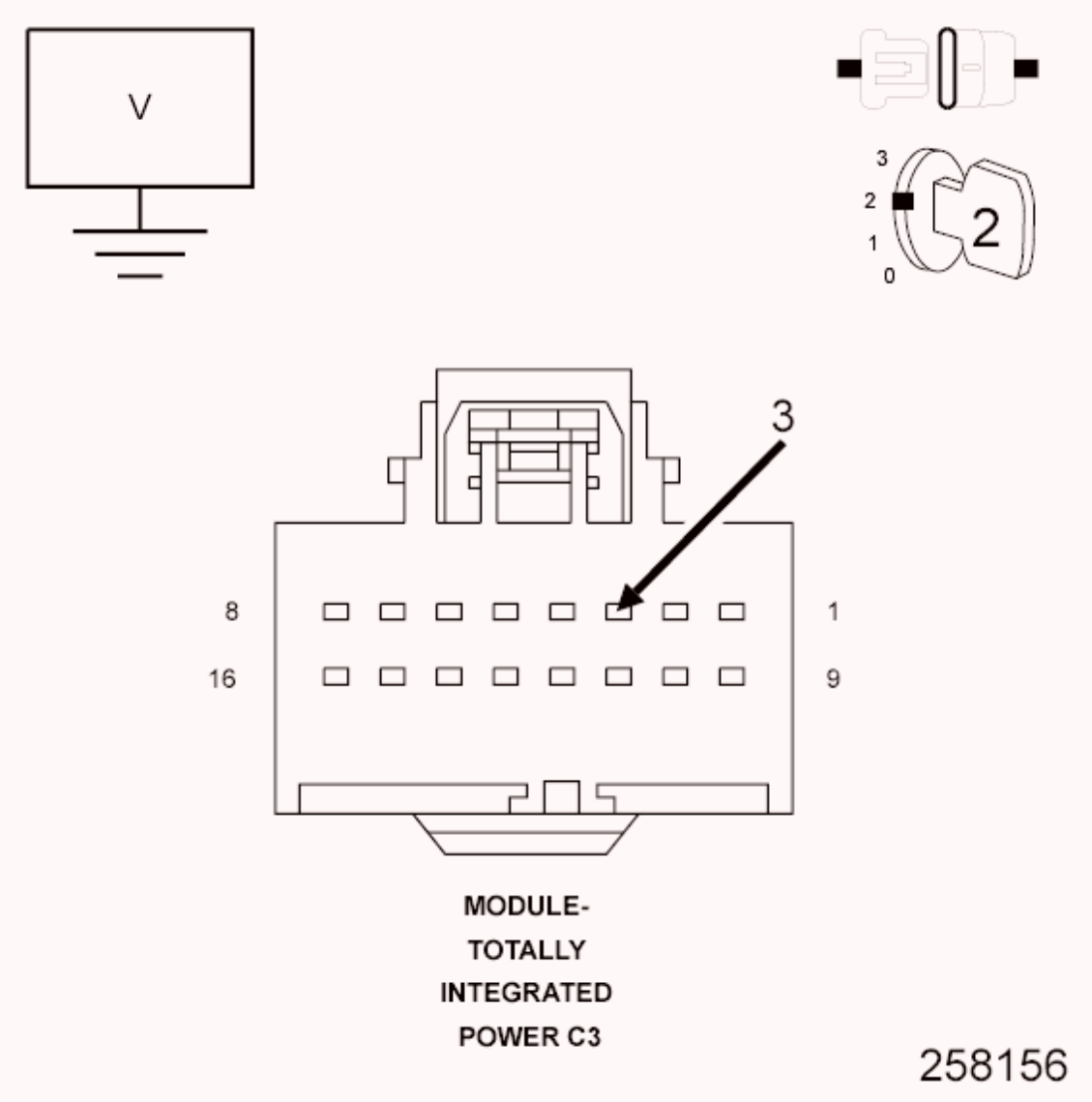

Fig. 141: Checking CAN B Bus (+) Circuit For Short To Voltage
Courtesy of CHRYSLER GROUP, LLC

1. Turn the ignition off.
2. Disconnect the Totally Integrated Power Module C3 harness connector.
3. Turn the ignition on.
4. Measure the voltage between the (D55) CAN B Bus (+) circuit and ground.

   Is voltage above 10.0 volts?

   Yes

   - Go To 3

No

- Inspect the wiring and connectors for damage or shorted circuits. If OK, replace the Totally Integrated Power Module in accordance with the Service Information.
- Perform the BODY VERIFICATION TEST. Refer to **STANDARD PROCEDURE** .

3. **(D55) CAN B BUS (+) CIRCUIT SHORTED TO VOLTAGE**

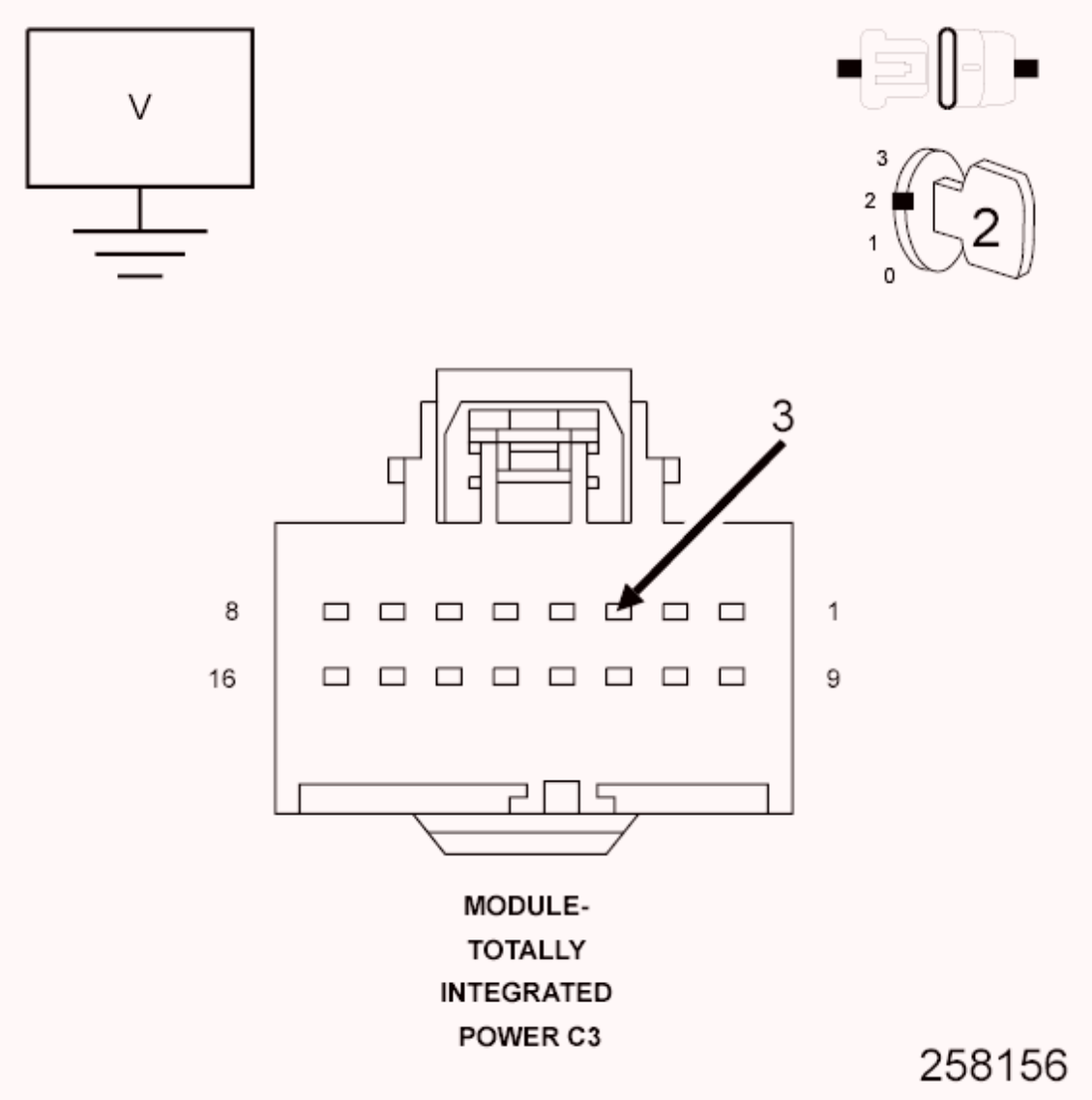

Fig. 142: Checking CAN B Bus (+) Circuit For Short To Voltage
Courtesy of CHRYSLER GROUP, LLC

1. Measure the voltage between the (D55) CAN B Bus (+) circuit and ground.

2. While monitoring the voltmeter, disconnect each CAN B Bus module one at a time.

NOTE: When performing the above step, turn the ignition off (wait one minute) before disconnecting any module. When the module is disconnected turn the ignition on to check for a short to voltage.

NOTE: This is to determine if the circuit is shorted to voltage internally within a module or if the circuit is shorted to voltage in the harness.

NOTE: Disconnecting an in-line connector can eliminate a module or group of modules from the list of possible causes for this fault. Refer to SYSTEM WIRING DIAGRAMS to assist in diagnosis.

Is the voltage above 10.0 volts with all the CAN B Bus modules disconnected?

Yes

- Repair the (D55) CAN B Bus (+) circuit for a short to voltage.
- Perform the BODY VERIFICATION TEST. Refer to **STANDARD PROCEDURE** .

No

- Replace the module that when disconnected eliminated the short to voltage in accordance with the Service Information.
- Perform the BODY VERIFICATION TEST. Refer to **STANDARD PROCEDURE** .

U0024-CAN B BUS (-) CIRCUIT OPEN

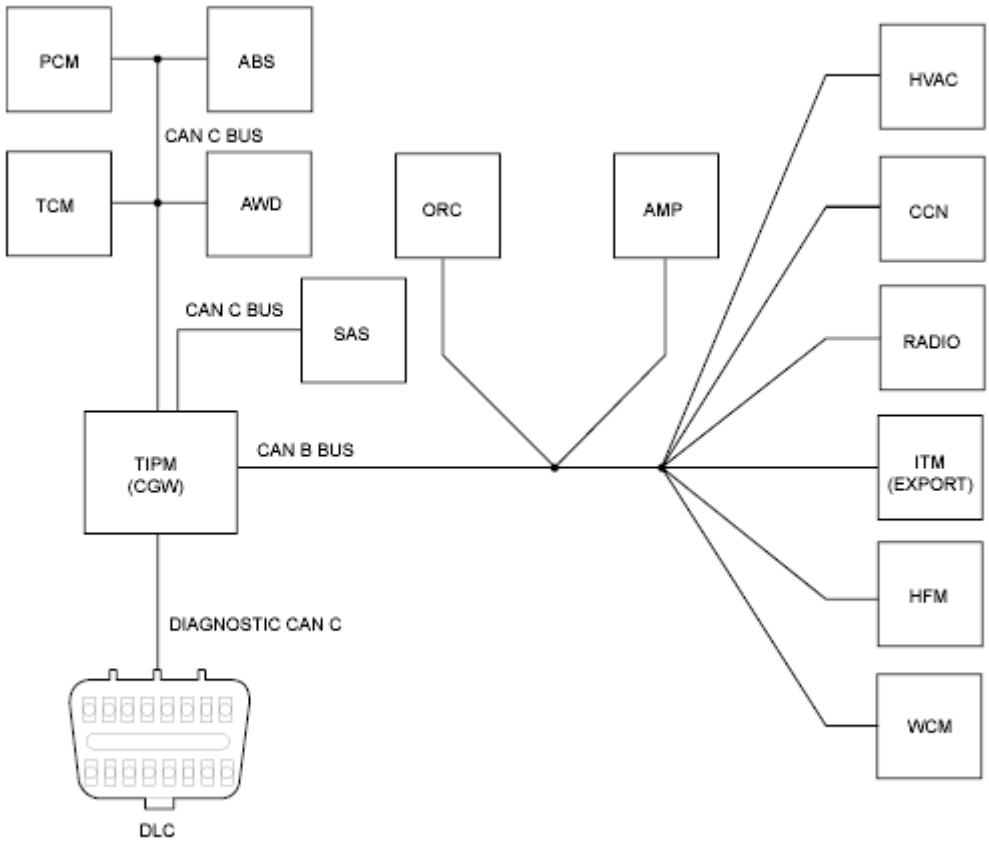

Fig. 143: Totally Integrated Power Module Diagram
Courtesy of CHRYSLER GROUP, LLC

For a complete wiring diagram, **refer to appropriate SYSTEM WIRING DIAGRAMS article** .

WHEN MONITORED

With the ignition on and battery voltage between 10 and 16 volts.

SET CONDITION

The Totally Integrated Power Module (TIPM) detects the (D54) CAN B Bus (-) circuit is open.

POSSIBLE CAUSES

Possible Causes
CAN B BUS TERMINAL PUSH OUT
SPREAD CAN B BUS TERMINAL

(D54) CAN B BUS (-) CIRCUIT OPEN
INTERNAL OPEN IN A CAN B BUS MODULE

DIAGNOSTIC TEST

1. **TEST FOR INTERMITTENT CONDITION**

   NOTE: Check for any TSB(s) related to the condition. If a TSB applies, perform the procedure outlined in the TSB before continuing.

   1. Turn the ignition on.
   2. With the scan tool, record and erase TIPM DTCs
   3. Cycle the ignition from on to off three times.
   4. Turn the ignition on.
   5. With the scan tool, read active TIPM DTCs.

   Does the scan tool display this DTC as active?

   Yes

   - Go To 2

   No

   - The conditions that caused this code to set are not present at this time. Using the wiring diagram/schematic as a guide, inspect the wiring and connectors.

2. **ATTEMPT TO ISOLATE THE OPEN CONDITION**

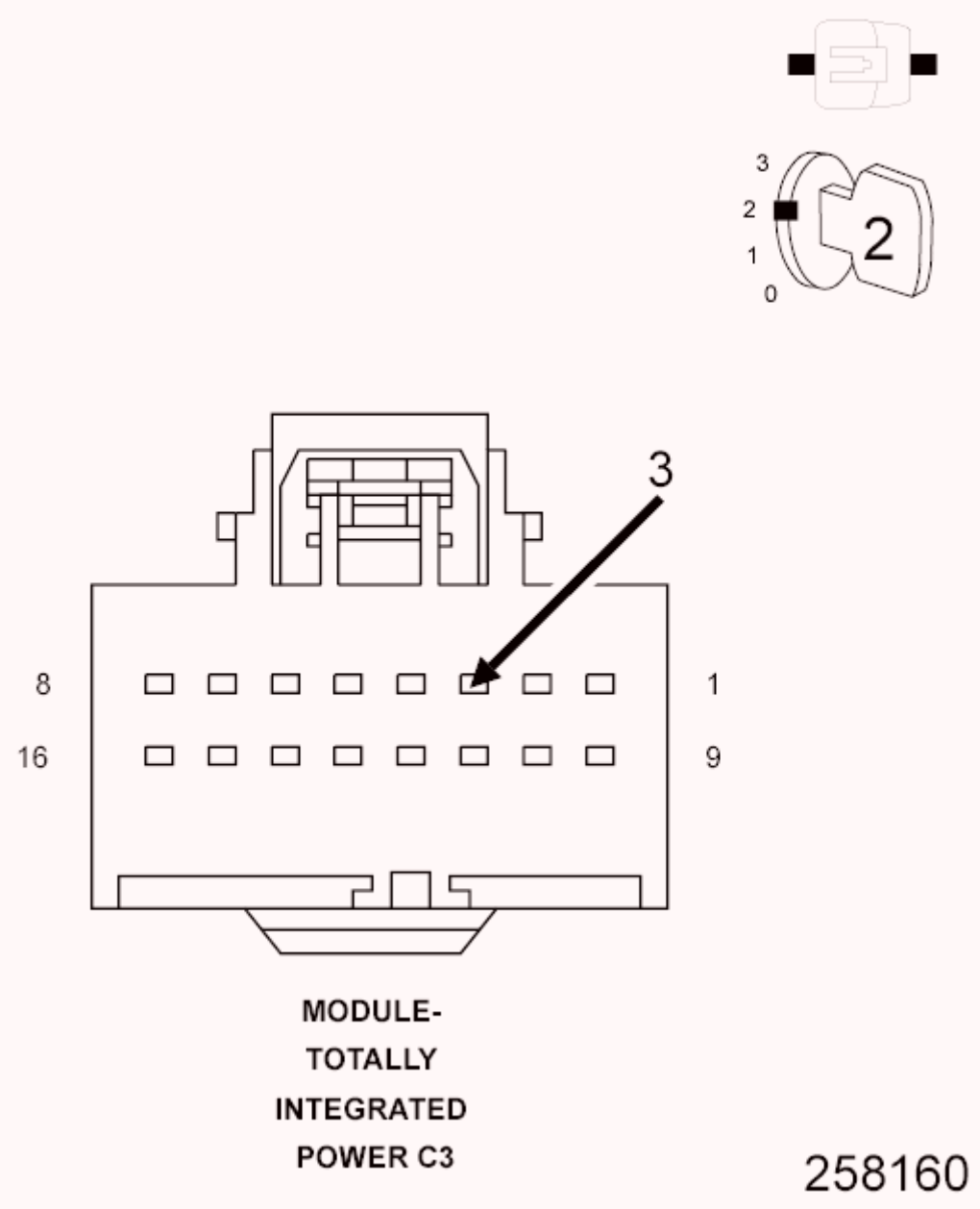

Fig. 144: Backprobing CAN B Bus (+) Circuit At TIPM C3 Harness Connector
Courtesy of CHRYSLER GROUP, LLC

1. Turn the ignition on.
2. With the scan tool select ECU View.
3. Verify that all CAN B Bus modules are communicating with the scan tool.

NOTE: A red "X" will be next to a module that is not communicating, indicating that the module is not

active on the Bus network. A green check indicates that the module is active on the Bus network.

NOTE: If any module is not communicating, perform the appropriate no response test procedure before proceeding.

4. Turn the ignition off.
5. Gain access to the Totally Integrated Power Module C3 harness connector, but do not disconnect.
6. Using a fused jumper wire, connect one end to ground and with the other end backprobe the CAN B Bus (+) circuit at the TIPM C3 harness connector.
7. Turn the ignition on.
8. With the scan tool monitor the ECU View screen and document all modules that display a red "X".

   Are there any red X's displayed next to any CAN B Bus modules?

   Yes

   - Go To 3

   No

   - Check backprobe connection to ground, make sure it is proper. The CAN B Bus open DTC may no longer be active, it may be stored. Check all module connections.
   - Perform the BODY VERIFICATION TEST. Refer to **STANDARD PROCEDURE** .

3. **ATTEMPT TO ISOLATE THE OPEN CONDITION - MULTIPLE RED X'S**
   1. With the scan tool continue monitoring the ECU View screen.

      Are there multiple red X's displayed next to CAN B Bus modules?

      Yes

- The most likely cause of this condition is an open CAN B Bus (-) circuit between a common CAN B Bus splice and the modules that display the red "X" next to them. Use the wiring diagrams to help you determine where the open condition exists.
- Perform the BODY VERIFICATION TEST. Refer to **STANDARD PROCEDURE** .

No

- Go To 4

4. **(D54) CAN B BUS (-) CIRCUIT OPEN - SINGLE RED X**
   1. Turn the ignition off.
   2. Disconnect the module that has the red "X" displayed next to it.
   3. Turn the ignition on.
   4. Measure the voltage between the (D54) CAN B Bus (-) circuit and ground.

   Is there any voltage present?

   Yes

   - Inspect the connector and terminal for damage, inspect for spread terminals, or pushed out terminals. If OK, replace the module that displayed the red "X" next to it in accordance with the Service Information.
   - Perform the BODY VERIFICATION TEST. Refer to **STANDARD PROCEDURE** .

   No

   - Repair the (D54) CAN B Bus (-) circuit for an open between the next common splice and the module that has the red "X" displayed next to it. Use the wiring diagrams to help you determine where the open condition exists.
   - Perform the BODY VERIFICATION TEST. Refer to **STANDARD PROCEDURE** .

U0025-CAN B BUS (-) CIRCUIT LOW

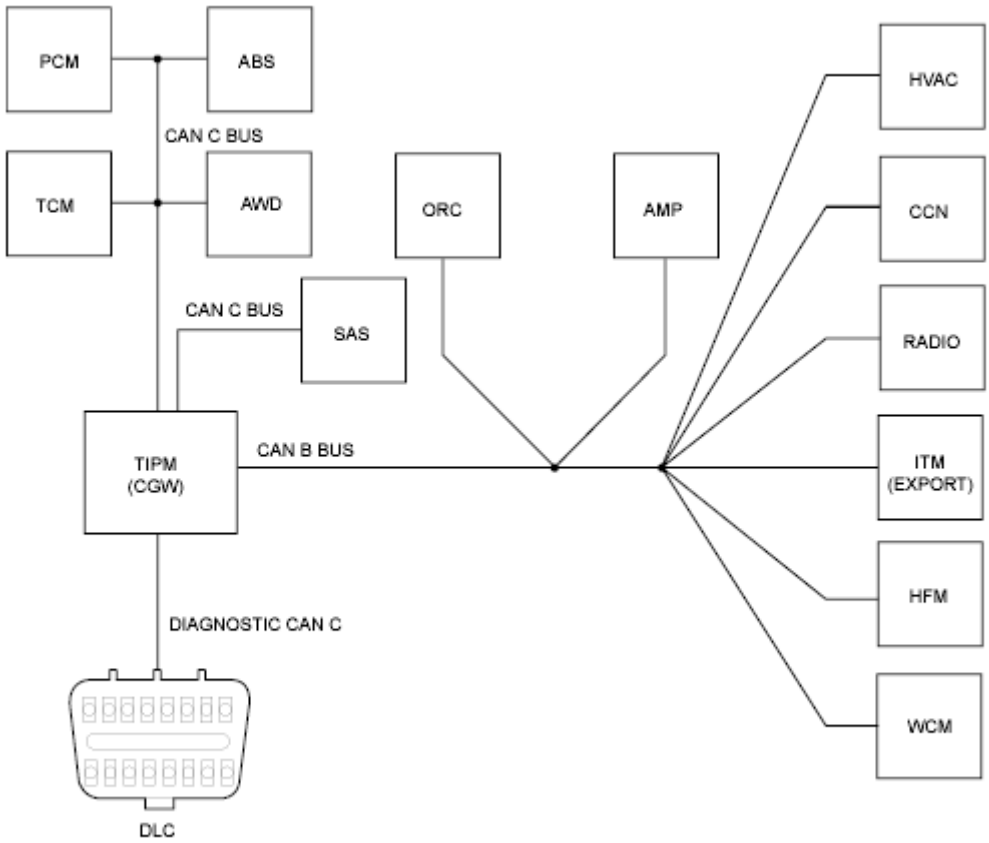

Fig. 145: Totally Integrated Power Module Diagram
Courtesy of CHRYSLER GROUP, LLC

For a complete wiring diagram, **refer to appropriate SYSTEM WIRING DIAGRAMS article** .

WHEN MONITORED

Continuously.

SET CONDITION

The Totally Integrated Power Module (TIPM) detects the (D54) CAN B Bus (-) circuit is shorted to ground.

POSSIBLE CAUSES

Possible Causes
(D54) CAN B BUS (-) CIRCUIT SHORTED TO GROUND OR TO (D55) CAN B BUS (+) CIRCUIT

ANY CAN B BUS MODULE
TOTALLY INTEGRATED POWER MODULE (TIPM)

DIAGNOSTIC TEST

1. **TEST FOR INTERMITTENT CONDITION**

   NOTE: Check for any TSB(s) related to the condition. If a TSB applies, perform the procedure outlined in the TSB before continuing.

   1. Turn the ignition on.
   2. With the scan tool, record and erase TIPM DTCs.
   3. Cycle the ignition from on to off three times.
   4. Turn the ignition on.
   5. With the scan tool, read active TIPM DTCs.

   Does the scan tool display this DTC as active?

   Yes

   - Go To 2

   No

   - The conditions that caused this code to set are not present at this time. Using the wiring diagram/schematic as a guide, inspect the wiring and connectors.

2. **CHECK THE (D54) CAN B BUS (-) CIRCUIT FOR A SHORT TO GROUND**

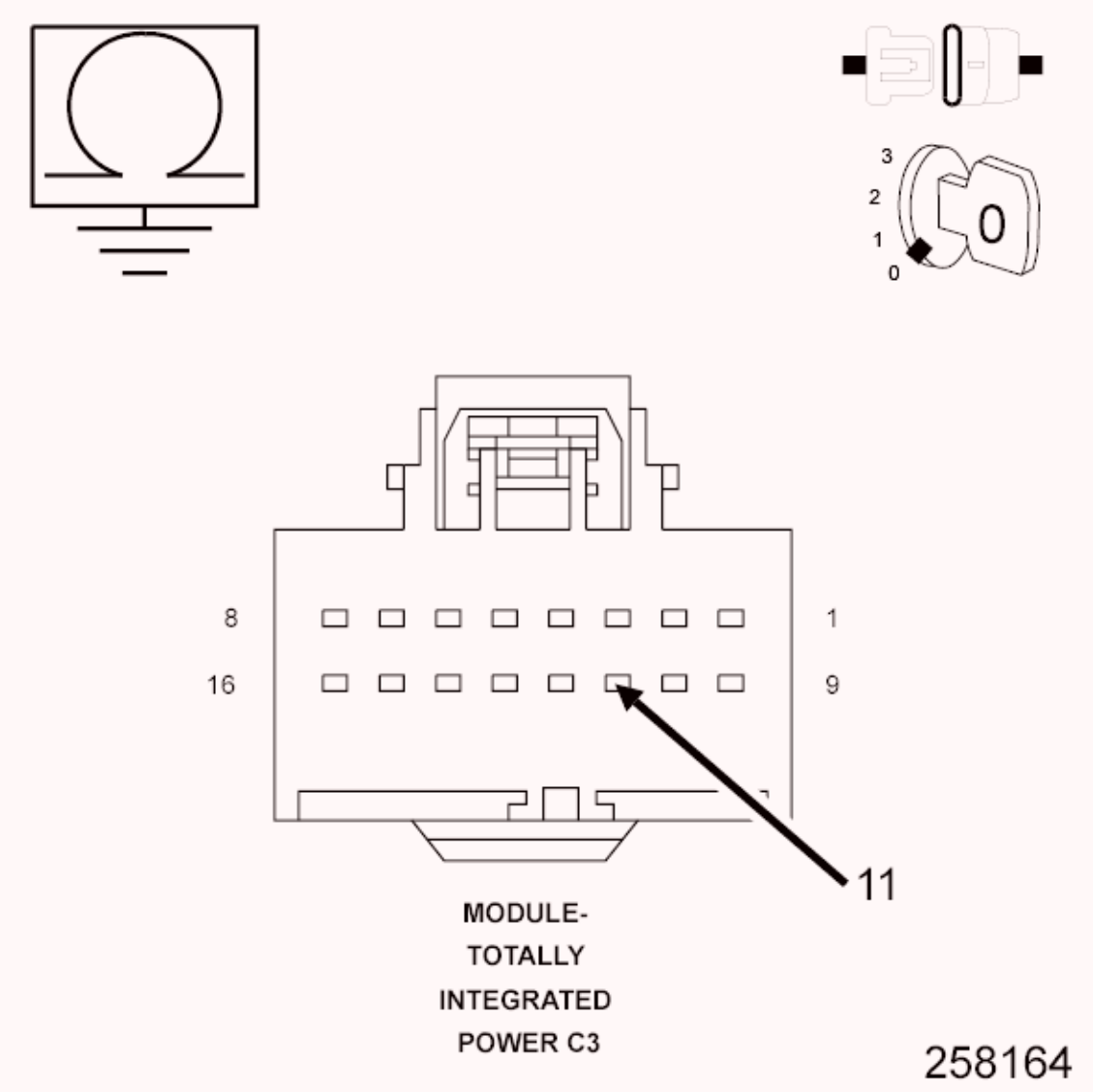

Fig. 146: Measuring Resistance Between Ground & CAN B Bus (-) Circuit
Courtesy of CHRYSLER GROUP, LLC

1. Turn the ignition off.
2. Disconnect the Totally Integrated Power Module C3 harness connector.
3. Measure the resistance between ground and the (D54) CAN B Bus (-) circuit.

   Is resistance below 1000.0 Ohms?

   Yes

   - Go To 3

No

- Go To 4

3. **(D54) CAN B BUS (-) CIRCUIT SHORTED TO GROUND**

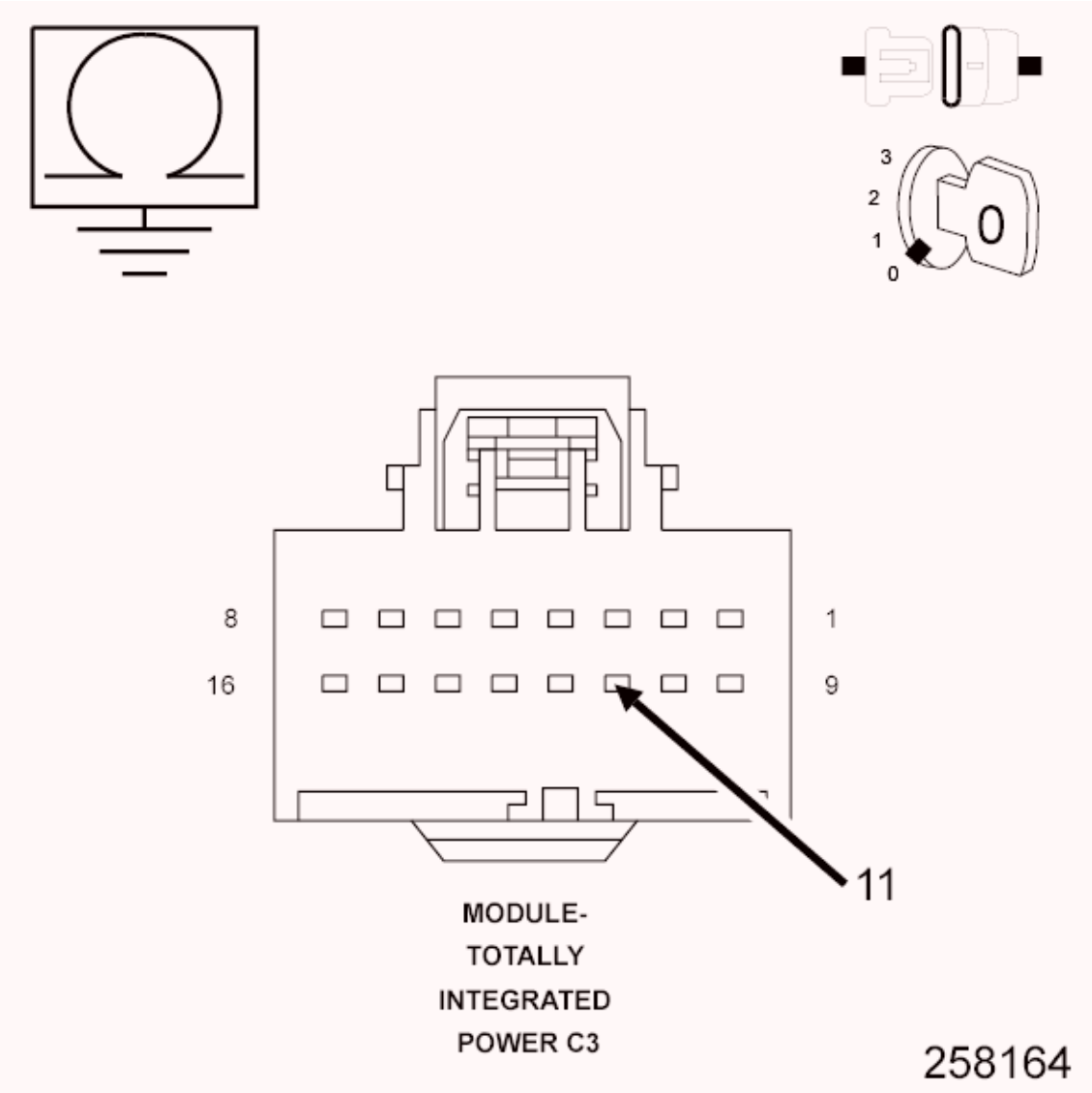

Fig. 147: Measuring Resistance Between Ground & CAN B Bus (-) Circuit
Courtesy of CHRYSLER GROUP, LLC

1. Measure the resistance between ground and the (D54) CAN B Bus (-) circuit.
2. While monitoring the Ohmmeter, disconnect each CAN B Bus module one at a time.

NOTE: This is to determine if the circuit is shorted to

ground internally within a module or if the circuit is shorted to ground in the harness.

NOTE: Disconnecting an in-line connector can eliminate a module or group of modules from the list of possible causes for this fault. Refer to SYSTEM WIRING DIAGRAMS to assist in diagnosis.

Is resistance below 1000.0 Ohms with all the CAN B Bus modules disconnected?

Yes

- Repair the (D54) CAN B Bus (-) circuit for a short to ground.
- Perform the BODY VERIFICATION TEST. Refer to **STANDARD PROCEDURE** .

No

- Replace the module that when disconnected eliminated the short to ground in accordance with the Service Information.
- Perform the BODY VERIFICATION TEST. Refer to **STANDARD PROCEDURE** .

4. **CHECK THE (D55) CAN B BUS (+) CIRCUIT FOR A SHORT TO THE (D54) CAN B BUS (-) CIRCUIT**

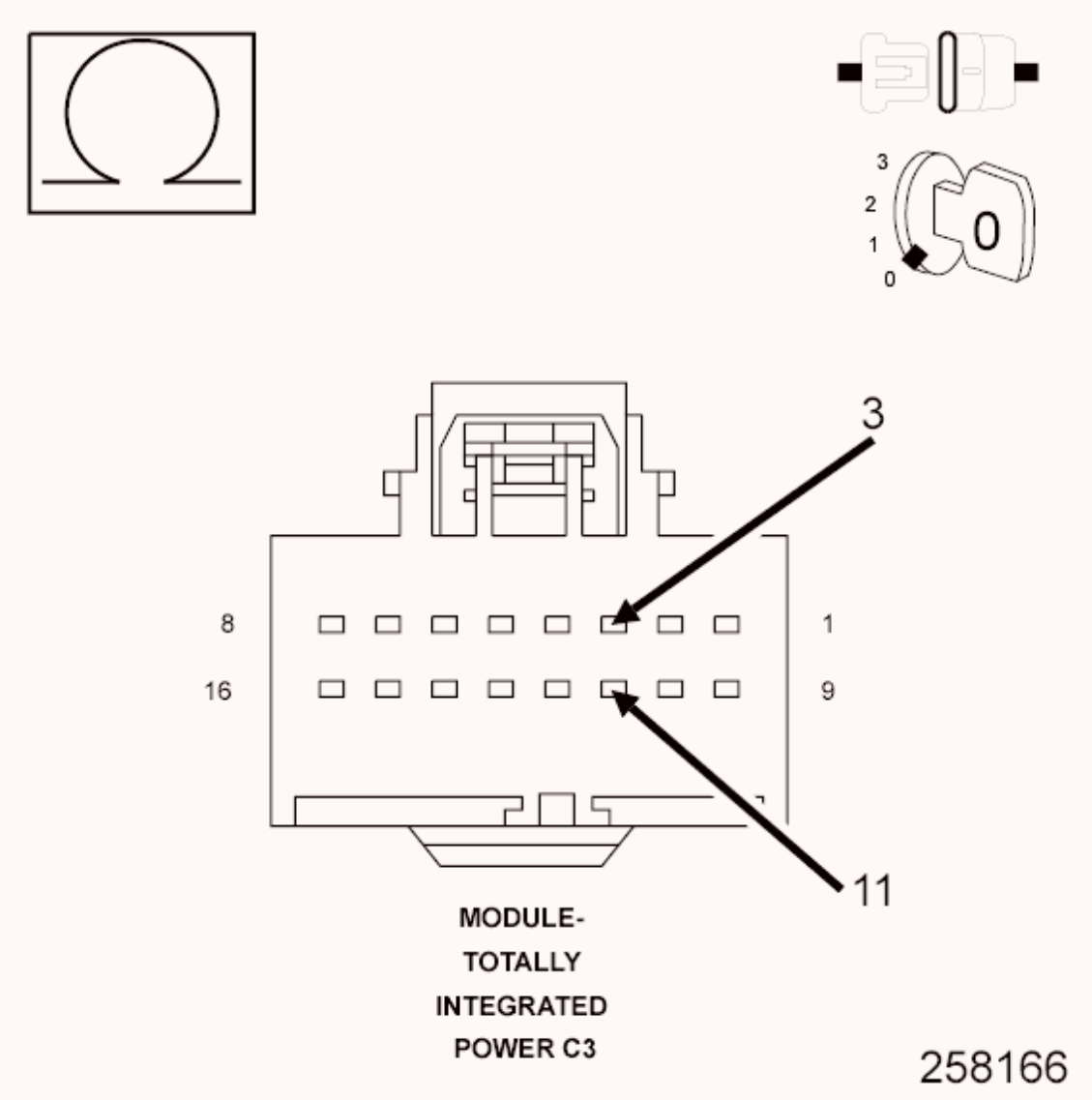

Fig. 148: Measuring Resistance Between CAN B Bus (+) Circuit & CAN B Bus (-) Circuit
Courtesy of CHRYSLER GROUP, LLC

1. Measure the resistance between the (D55) CAN B Bus (+) circuit and (D54) CAN B Bus (-) circuit.

   Is resistance below 1000.0 Ohms?

   Yes

   - Go To 5

   No

- Inspect the wiring and connectors for damage or shorted circuits. If OK, replace the Totally Integrated Power Module in accordance with the Service Information.
- Perform the BODY VERIFICATION TEST. Refer to **STANDARD PROCEDURE** .

5. **(D55) CAN B BUS (+) CIRCUIT SHORTED TO THE (D54) CAN B BUS (-) CIRCUIT**

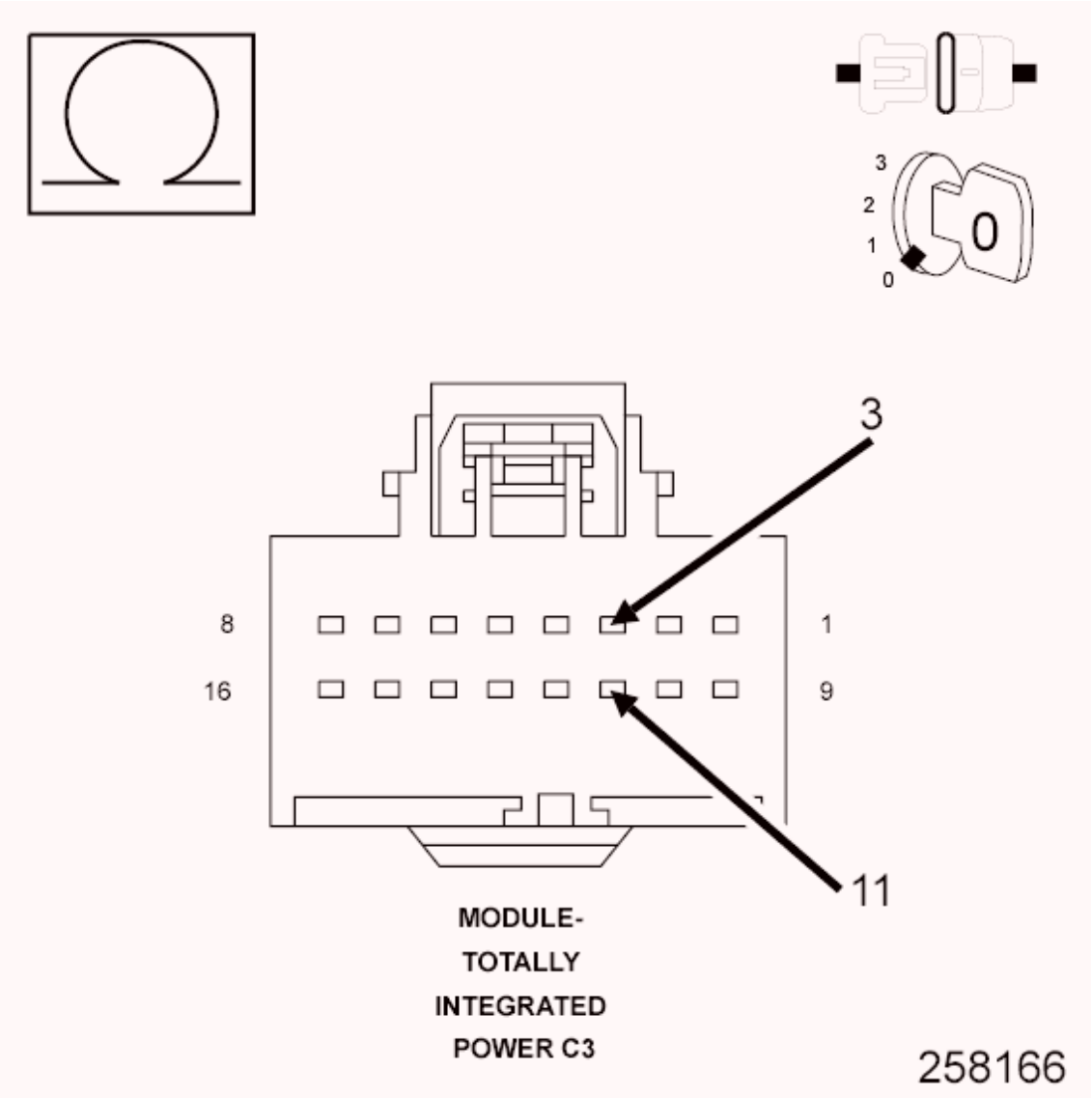

Fig. 149: Measuring Resistance Between CAN B Bus (+) Circuit & CAN B Bus (-) Circuit
Courtesy of CHRYSLER GROUP, LLC

1. Measure the resistance between the (D55) CAN B Bus (+) circuit and (D54) CAN B Bus (-) circuit.

2. While monitoring the Ohmmeter, disconnect each CAN B Bus module one at a time.

NOTE: This is to determine if the short together is internal within a module or if the circuits are shorted together.

NOTE: Disconnecting an in-line connector can eliminate a module or group of modules from the list of possible causes for this fault. Refer to SYSTEM WIRING DIAGRAMS to assist in diagnosis.

Is resistance below 1000.0 Ohms with all the CAN B Bus modules disconnected?

Yes

- Repair the (D55) CAN B Bus (+) circuit for a short to the (D54) CAN B Bus (-) circuit.
- Perform the BODY VERIFICATION TEST. Refer to **STANDARD PROCEDURE** .

No

- Replace the module that when disconnected the short together was eliminated, in accordance with the Service Information.
- Perform the BODY VERIFICATION TEST. Refer to **STANDARD PROCEDURE** .

U0026-CAN B BUS (-) CIRCUIT HIGH

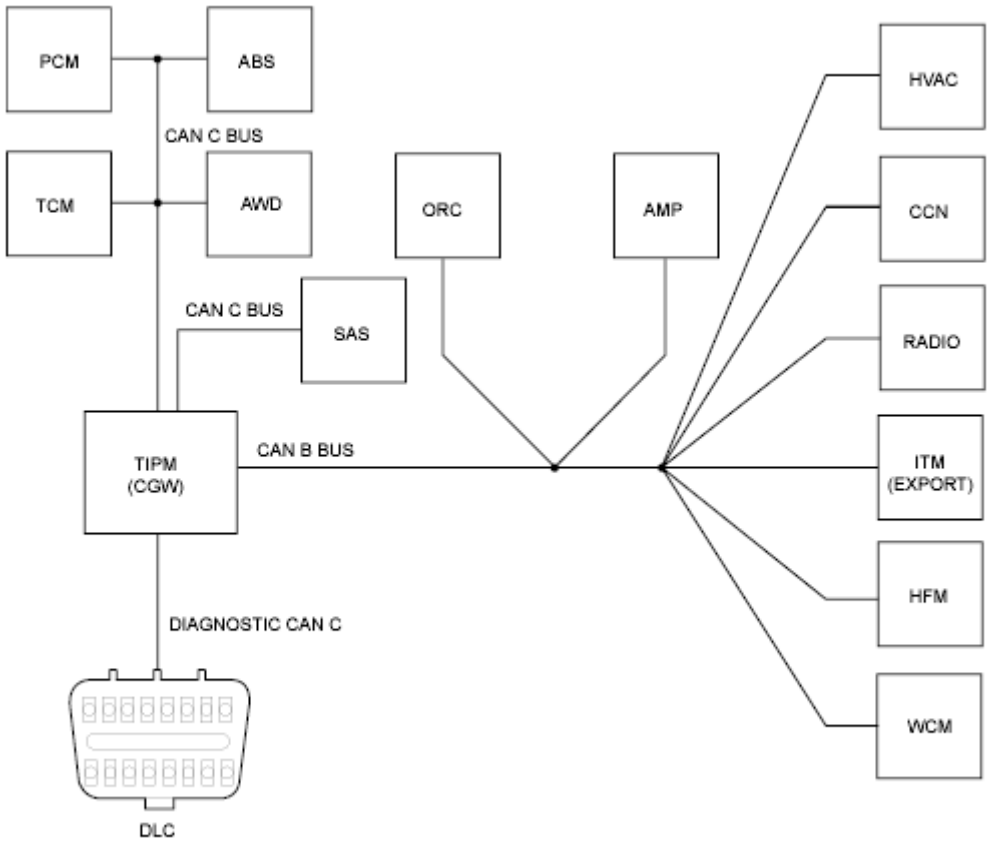

Fig. 150: Totally Integrated Power Module Diagram
Courtesy of CHRYSLER GROUP, LLC

For a complete wiring diagram, **refer to appropriate SYSTEM WIRING DIAGRAMS article** .

WHEN MONITORED

Continuously.

SET CONDITION

The Totally Integrated Power Module (TIPM) detects the (D54) CAN B Bus (-) circuit is shorted to voltage.

POSSIBLE CAUSES

Possible Causes
(D54) CAN B BUS (-) CIRCUIT SHORTED TO VOLTAGE
ANY CAN B BUS MODULE

TOTALLY INTEGRATED POWER MODULE (TIPM)

DIAGNOSTIC TEST

1. **TEST FOR INTERMITTENT CONDITION**

   NOTE: Check for any TSB(s) related to the condition. If a TSB applies, perform the procedure outlined in the TSB before continuing.

   1. Turn the ignition on.
   2. With the scan tool, record and erase TIPM DTCs.
   3. Cycle the ignition from on to off three times.
   4. Turn the ignition on.
   5. With the scan tool, read active TIPM DTCs.

   Does the scan tool display this DTC as active?

   Yes

   - Go To 2

   No

   - The conditions that caused this code to set are not present at this time. Using the wiring diagram/schematic as a guide, inspect the wiring and connectors.

2. **CHECK THE (D54) CAN B BUS (-) CIRCUIT FOR A SHORT TO VOLTAGE**

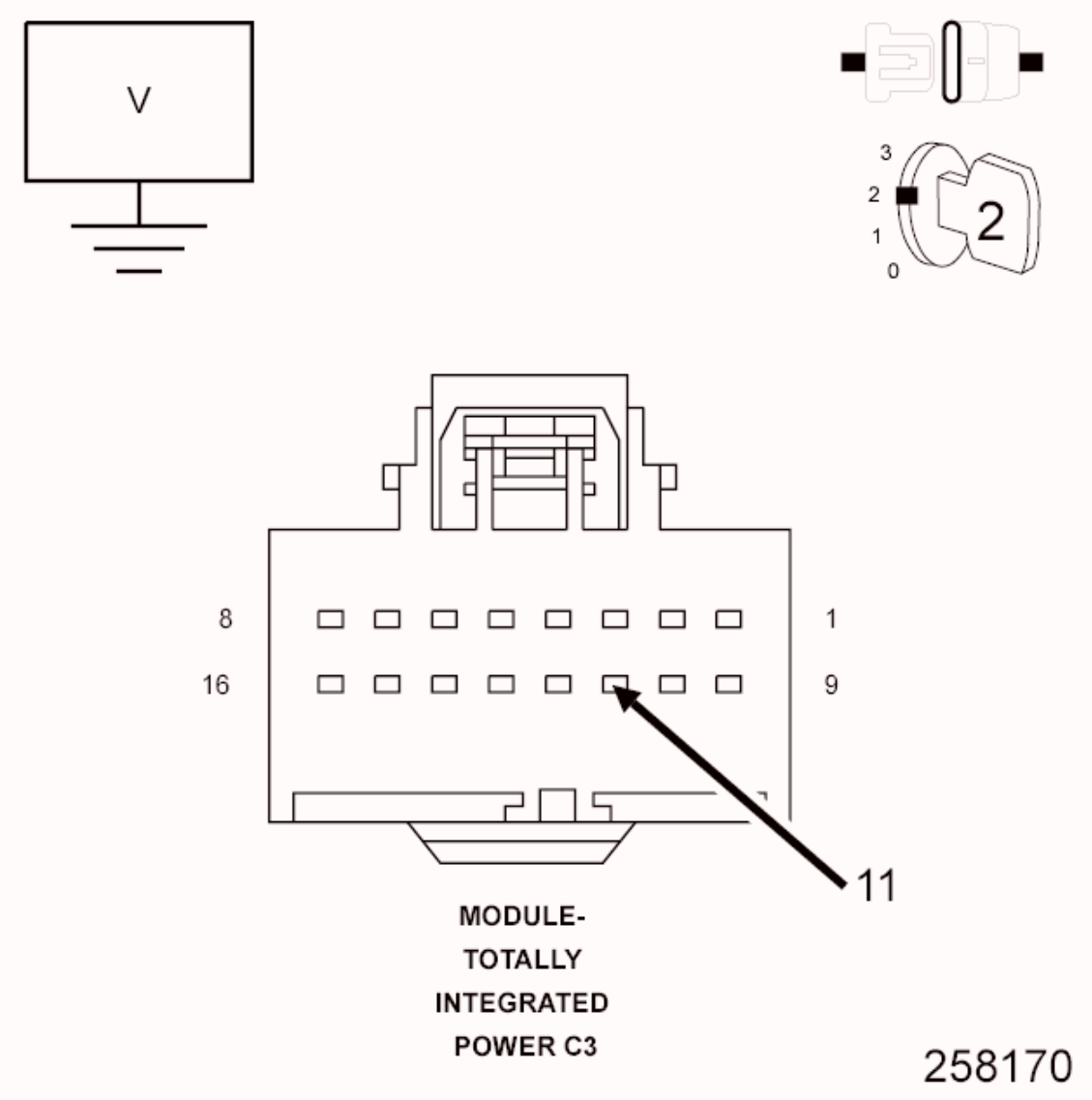

Fig. 151: Checking CAN B Bus (-) Circuit For Short To Voltage
Courtesy of CHRYSLER GROUP, LLC

1. Turn the ignition off.
2. Disconnect the Totally Integrated Power Module C3 harness connector.
3. Turn the ignition on.
4. Measure the voltage between the (D54) CAN B Bus (-) circuit and ground.

   Is voltage above 10.0 volts?

   Yes

   - Go To 3

No

- Inspect the wiring and connectors for damage or shorted circuits. If OK, replace the Totally Integrated Power Module in accordance with the Service Information.
- Perform the BODY VERIFICATION TEST. Refer to **STANDARD PROCEDURE** .

3. **(D54) CAN B BUS (-) CIRCUIT SHORTED TO VOLTAGE**

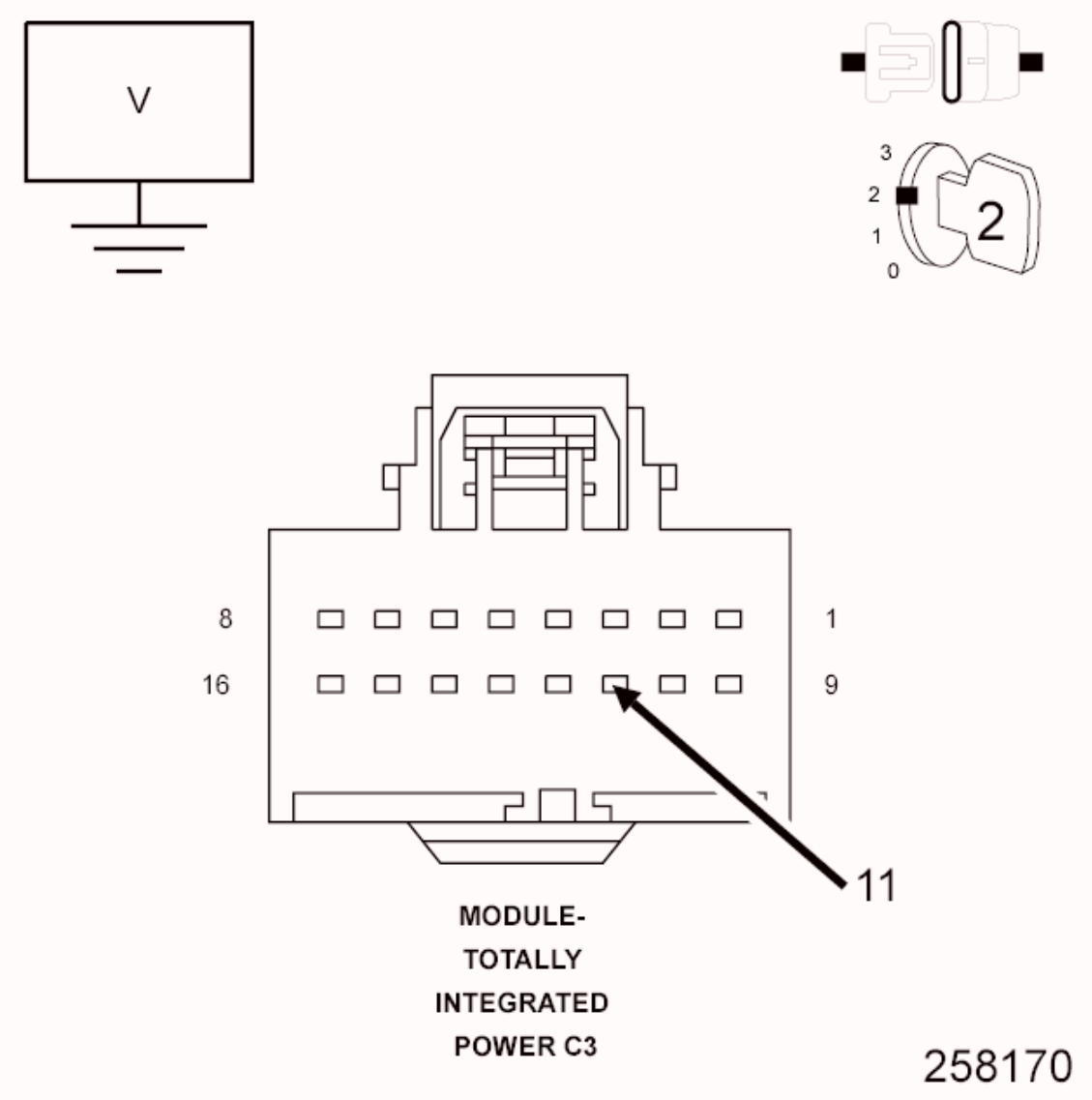

Fig. 152: Checking CAN B Bus (-) Circuit For Short To Voltage
Courtesy of CHRYSLER GROUP, LLC

1. Measure the voltage between the (D54) CAN B Bus (-) circuit and ground.

2. While monitoring the voltmeter, disconnect each CAN B Bus module one at a time.

NOTE: When performing the above step, turn the ignition off (wait one minute) before disconnecting any module. When the module is disconnected turn the ignition on to check for a short to voltage.

NOTE: This is to determine if the circuit is shorted to voltage internally within a module or if the circuit is shorted to voltage in the harness.

NOTE: Disconnecting an in-line connector can eliminate a module or group of modules from the list of possible causes for this fault. Refer to SYSTEM WIRING DIAGRAMS to assist in diagnosis.

Is the voltage above 10.0 volts with all the CAN B Bus modules disconnected?

Yes

- Repair the (D54) CAN B Bus (-) circuit for a short to voltage.
- Perform the BODY VERIFICATION TEST. Refer to **STANDARD PROCEDURE** .

No

- Replace the module, in accordance with the Service Information, that when disconnected eliminated the short to voltage.
- Perform the BODY VERIFICATION TEST. Refer to **STANDARD PROCEDURE** .

U0027-CAN B BUS (-) SHORTED TO BUS (+)

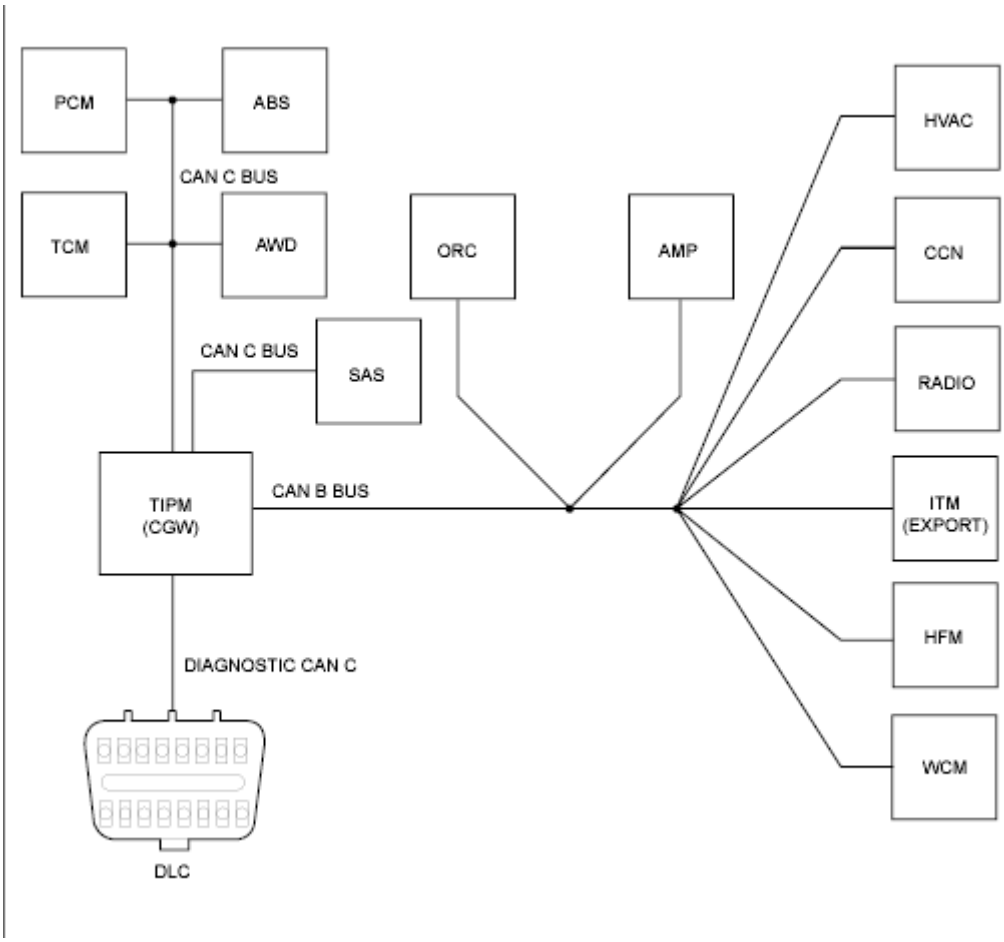

Fig. 153: Totally Integrated Power Module Diagram
Courtesy of CHRYSLER GROUP, LLC

For a complete wiring diagram, **refer to appropriate SYSTEM WIRING DIAGRAMS article** .

WHEN MONITORED

Continuously.

SET CONDITION

The Totally Integrated Power Module (TIPM) detects the (D55) CAN B Bus (+) circuit is shorted to the (D54) CAN B Bus (-) circuit.

POSSIBLE CAUSES

Possible Causes
(D55) CAN B BUS (+) CIRCUIT SHORTED TO THE (D54) CAN B BUS (-) CIRCUIT

ANY CAN B BUS MODULE
TOTALLY INTEGRATED POWER MODULE (TIPM)

DIAGNOSTIC TEST

1. **TEST FOR INTERMITTENT CONDITION**

   NOTE: Check for any TSB(s) related to the condition. If a TSB applies, perform the procedure outlined in the TSB before continuing.

   1. Turn the ignition on.
   2. With the scan tool, record and erase TIPM DTCs.
   3. Cycle the ignition from on to off 3 times.
   4. Turn the ignition on.
   5. With the scan tool, read active TIPM DTCs.

   Does the scan tool display this DTC as active?

   Yes

   - Go To 2

   No

   - The conditions that caused this code to set are not present at this time. Using the wiring diagram/schematic as a guide, inspect the wiring and connectors.

2. **CHECK THE (D55) CAN B BUS (+) CIRCUIT FOR A SHORT TO THE (D54) CAN B BUS (-) CIRCUIT**

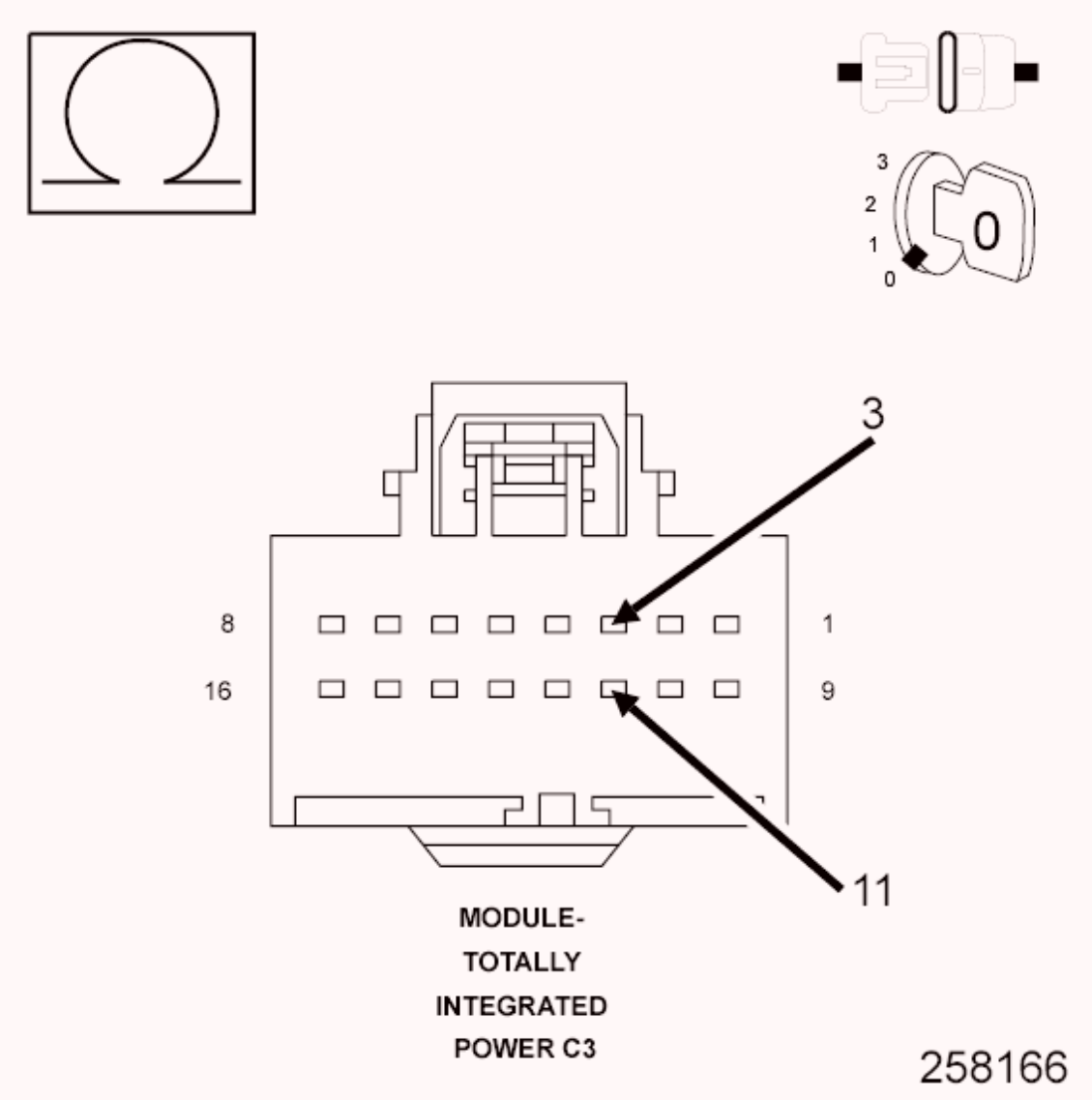

Fig. 154: Measuring Resistance Between CAN B Bus (+) Circuit & CAN B Bus (-) Circuit
Courtesy of CHRYSLER GROUP, LLC

1. Turn the ignition off.
2. Disconnect the Totally Integrated Power Module C3 harness connector.
3. Measure the resistance between the (D55) CAN B Bus (+) circuit and (D54) CAN B Bus (-) circuit.

   Is resistance below 1000.0 Ohms?

   Yes

   - Go To 3

No

- Inspect the wiring and connectors for damage or shorted circuits. If OK, replace the Totally Integrated Power Module in accordance with the Service Information.
- Perform the BODY VERIFICATION TEST. Refer to **STANDARD PROCEDURE** .

3. **(D55) CAN B BUS (+) CIRCUIT SHORTED TO THE (D54) CAN B BUS (-) CIRCUIT**

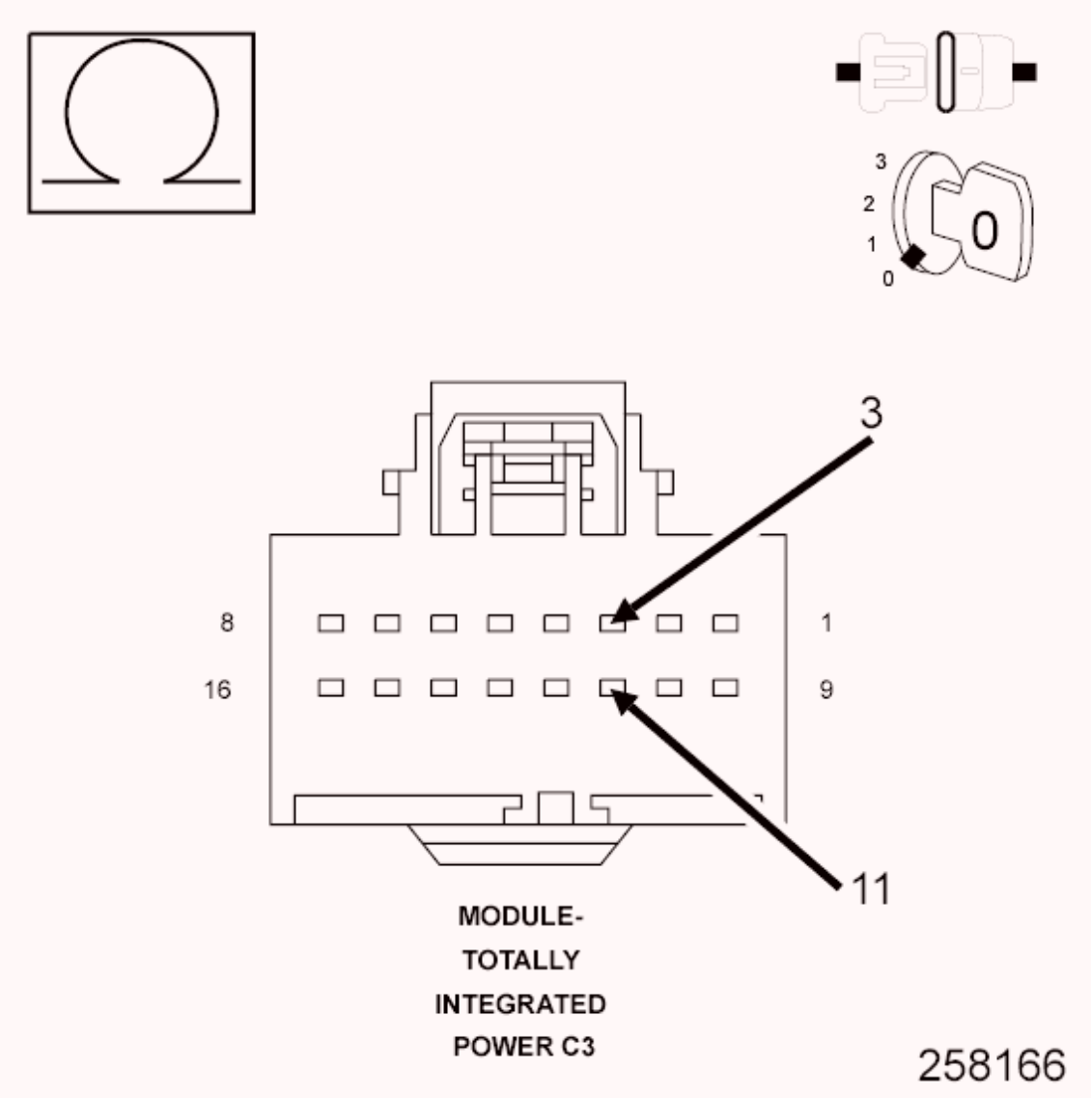

Fig. 155: Measuring Resistance Between CAN B Bus (+) Circuit & CAN B Bus (-) Circuit
Courtesy of CHRYSLER GROUP, LLC

1. Measure the resistance between the (D55) CAN B Bus (+) circuit and (D54) CAN B Bus (-) circuit.
2. While monitoring the Ohmmeter, disconnect each CAN B Bus module one at a time.

NOTE: This is to determine if the circuits are shorted together internally within a module or if the circuits are shorted together in the harness.

NOTE: Disconnecting an in-line connector can eliminate a module or group of modules from the list of possible causes for this fault. Refer to SYSTEM WIRING DIAGRAMS to assist in diagnosis.

Is resistance below 1000.0 Ohms with all the CAN B Bus modules disconnected?

Yes

- Repair the (D55) CAN B Bus (+) circuit for a short to the (D54) CAN B Bus (-) circuit.
- Perform the BODY VERIFICATION TEST. Refer to **STANDARD PROCEDURE** .

No

- Replace the module, in accordance with the Service Information, that when disconnected eliminated the shorted together circuits.
- Perform the BODY VERIFICATION TEST. Refer to **STANDARD PROCEDURE** .

U0100-LOST COMMUNICATION WITH PCM

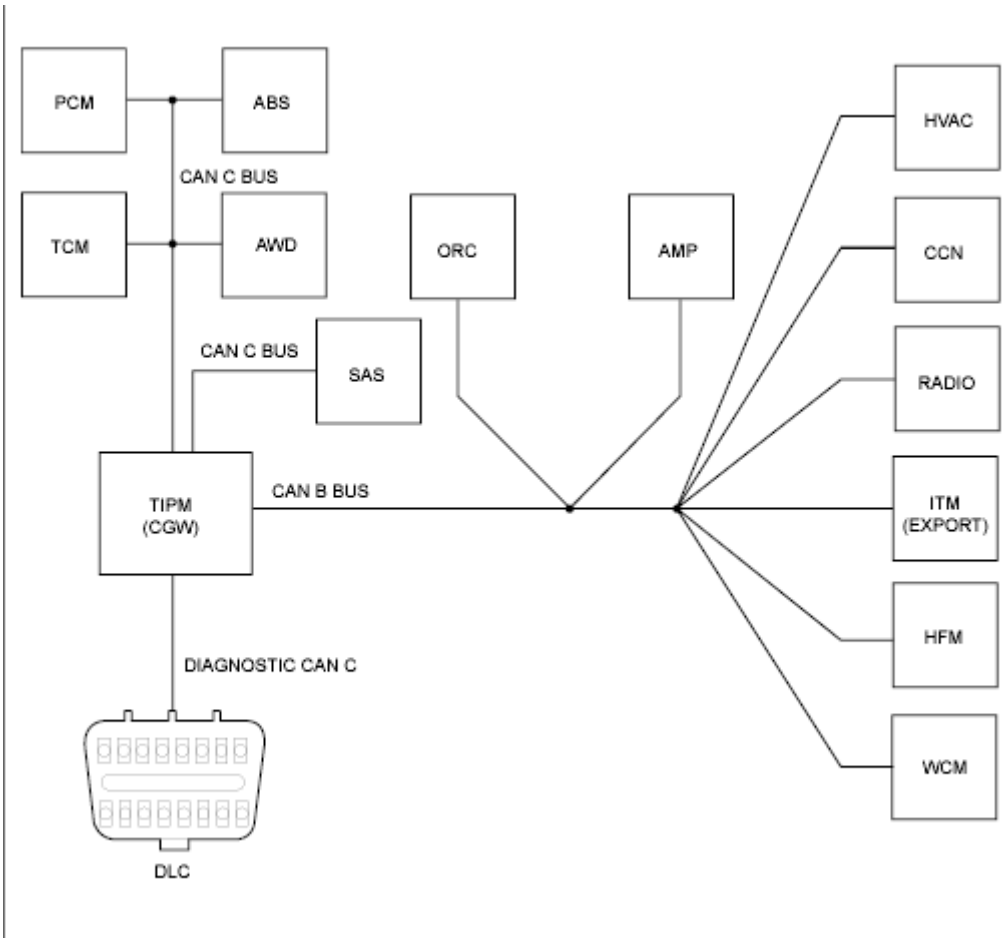

Fig. 156: Totally Integrated Power Module Diagram
Courtesy of CHRYSLER GROUP, LLC

For a complete wiring diagram, **refer to appropriate SYSTEM WIRING DIAGRAMS article** .

WHEN MONITORED

With the ignition on.

Battery voltage between 10 and 16 volts.

Ignition Off Draw (IOD) fuse installed.

Totally Integrated Power Module (TIPM) is configured correctly.

SET CONDITION

Bus messages not received from the Powertrain Control Module (PCM) for approximately 500ms.

POSSIBLE CAUSES

Possible Causes
CAN B OR CAN C BUS CIRCUITS OPEN OR SHORTED
DTCS RELATED TO BATTERY VOLTAGE, IGNITION, OR VIN MESSAGES
POWERTRAIN CONTROL MODULE (PCM)
PCM POWER AND GROUND
MODULE THAT SET THIS DTC

DIAGNOSTIC TEST

1. **VERIFY THE DIAGNOSTIC TROUBLE CODE (DTC) IS ACTIVE**

   NOTE: Make sure the IOD fuse is installed and battery voltage is between 10 and 16 volts before proceeding.

   NOTE: Check for any TSB(s) related to the condition. If a TSB applies, perform the procedure outlined in the TSB before continuing.

   1. Using the scan tool, read active DTCs.

      Is this DTC active?

      Yes

      - Go To 2

      No

      - Refer to **DIAGNOSIS AND TESTING** and perform the Stored Lost Communication DTCs diagnostic procedure.

2. **CHECK FOR ANY OF THE FOLLOWING ACTIVE DTC'S**
   1. Using the scan tool, read all active DTCs from all modules.

      NOTE: Check for TIPM configuration, CAN B or C hardware electrical, VIN Missing/Mismatch, battery or ignition related DTCs.

Does the scan tool display any active DTCs to the conditions listed above?

Yes

- Refer to **DTC INDEX** and perform the appropriate diagnostic procedure.

No

- Go To 3

3. **VERIFY THAT THE ECM/PCM IS ACTIVE ON THE BUS**
   1. Turn the ignition on.
   2. Using the scan tool, select ECU View.
   3. Verify that the PCM is active on the bus.

   Is the PCM active on the bus?

   Yes

   - Go To 4

   No

   - Refer to **DIAGNOSIS AND TESTING** and perform the No Response from PCM diagnostic procedure.

4. **CHECK FOR ADDITIONAL COMMUNICATION RELATED DTCs**
   1. Using the scan tool, select Network View and select Advanced.

   Is there more than one module with active DTCs "Logged Against" the PCM?

   Yes

   - Replace/update the PCM in accordance with the Service Information.
   - Perform the POWERTRAIN VERIFICATION TEST. Refer to appropriate Diagnostic Information .

   No

- Replace/update the module that set this DTC in accordance with the Service Information.
- Perform the BODY VERIFICATION TEST. Refer to **STANDARD PROCEDURE** .

U0101-LOST COMMUNICATION WITH TCM

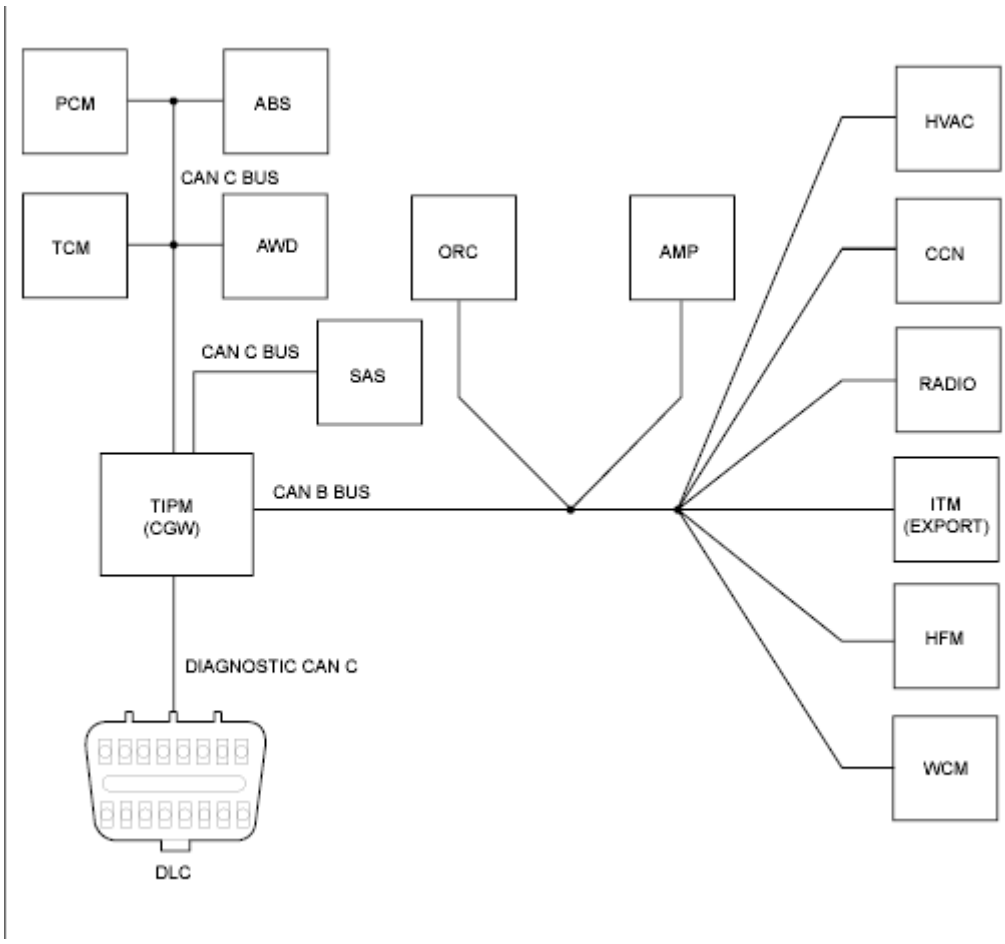

Fig. 157: Totally Integrated Power Module Diagram
Courtesy of CHRYSLER GROUP, LLC

For a complete wiring diagram, **refer to appropriate SYSTEM WIRING DIAGRAMS article** .

WHEN MONITORED

With the ignition on.

Battery voltage between 10 and 16 volts.

Ignition Off Draw (IOD) fuse installed.

Totally Integrated Power Module (TIPM) is configured correctly.

SET CONDITION

Bus messages not received from the Transmission Control Module (TCM) for approximately 500ms.

POSSIBLE CAUSES

Possible Causes
CAN B OR CAN C BUS CIRCUITS OPEN OR SHORTED
DTCs RELATED TO BATTERY VOLTAGE, IGNITION, OR VIN MESSAGES
TIPM NOT CONFIGURED CORRECTLY
TRANSMISSION CONTROL MODULE (TCM)
TCM POWER AND GROUND
MODULE THAT SET THIS DTC

DIAGNOSTIC TEST

1. **VERIFY THE DIAGNOSTIC TROUBLE CODE (DTC) IS ACTIVE**

NOTE: Make sure the IOD fuse is installed and battery voltage is between 10 and 16 volts before proceeding.

NOTE: Check for any TSB(s) related to the condition. If a TSB applies, perform the procedure outlined in the TSB before continuing.

1. Using the scan tool, read active DTCs.

   Is this DTC active?

   Yes

   - Go To 2

   No

   - Refer to **DIAGNOSIS AND TESTING** and perform the Stored Lost Communication DTCs diagnostic procedure.

2. **CHECK FOR ANY OF THE FOLLOWING ACTIVE DTCS**
   1. Using the scan tool, read all active DTCs from all modules.

      NOTE: Check for TIPM configuration, CAN B or C hardware electrical, VIN Missing/Mismatch, battery or ignition related DTCs.

      Does the scan tool display any active DTCs to the conditions listed above?

      Yes

      - Refer to **DIAGNOSTIC CODE INDEX** and perform the appropriate diagnostic procedure.

      No

      - Go To 3
3. **VERIFY THAT THE TCM IS ACTIVE ON THE BUS**
   1. Turn the ignition on.
   2. Using the scan tool, select ECU View.
   3. Verify that the TCM is active on the bus.

      Is the TCM active on the bus?

      Yes

      - Go To 4

      No

      - Refer to **DIAGNOSIS AND TESTING** and perform the No Response from TCM diagnostic procedure.
4. **CHECK FOR ADDITIONAL COMMUNICATION RELATED DTCS**
   1. Using the scan tool, select Network View and select Advanced.

      Is there more than one module with active DTCs "Logged Against" the TCM?

Yes

- Replace/update the Transmission Control Module in accordance with the Service Information.
- Perform the CVT-VERIFICATION TEST. Refer to **STANDARD PROCEDURE** .

No

- Replace/update the module that set this DTC in accordance with the Service Information.
- Perform the BODY VERIFICATION TEST. Refer to **STANDARD PROCEDURE** .

U0114-LOST COMMUNICATION WITH FINAL DRIVE CONTROL MODULE (ALL WHEEL DRIVE CONTROL MODULE) (AWD)

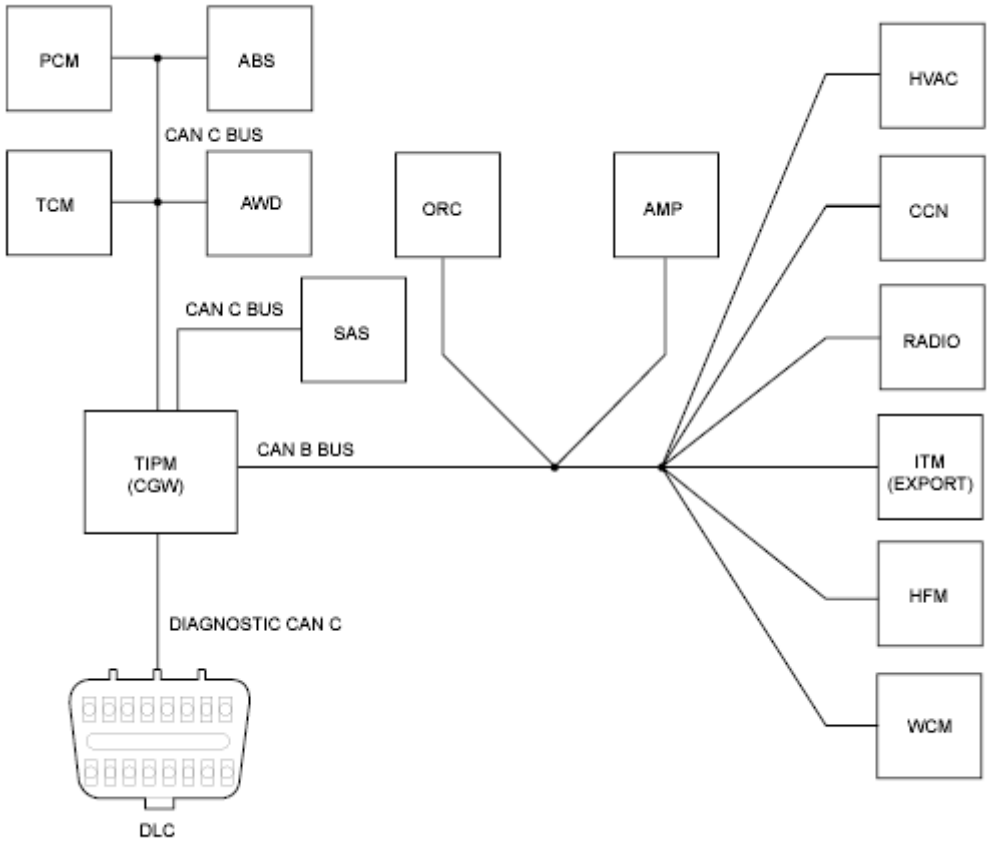

Fig. 158: Totally Integrated Power Module Diagram
Courtesy of CHRYSLER GROUP, LLC

For a complete wiring diagram, **refer to appropriate SYSTEM WIRING DIAGRAMS article** .

WHEN MONITORED

With the ignition on.

Battery voltage between 10 and 16 volts.

Ignition Off Draw (IOD) fuse installed.

Totally Integrated Power Module (TIPM) is configured correctly.

SET CONDITION

Bus messages not received from the All Wheel Drive Control (AWD) Module for approximately 500ms.

POSSIBLE CAUSES

Possible Causes
CAN B OR CAN C BUS CIRCUITS OPEN OR SHORTED
DTCs RELATED TO BATTERY VOLTAGE, IGNITION, OR VIN MESSAGES
TIPM NOT CONFIGURED CORRECTLY
ALL WHEEL DRIVE CONTROL (AWD) MODULE POWER AND GROUND
ALL WHEEL DRIVE CONTROL (AWD) MODULE
MODULE THAT SET THIS DTC

DIAGNOSTIC TEST

1. **VERIFY THE DIAGNOSTIC TROUBLE CODE (DTC) IS ACTIVE**

NOTE: Make sure the IOD fuse is installed and battery voltage is between 10 and 16 volts before proceeding.

NOTE: Check for any TSB(s) related to the condition. If a TSB applies, perform the procedure outlined in the TSB before continuing.

1. Using the scan tool, read active DTCs.

   Is this DTC active?

   Yes

   - Go To 2

   No

   - Refer to **DIAGNOSIS AND TESTING** and perform the Stored Lost Communication DTCs diagnostic procedure.

2. **CHECK FOR ANY OF THE FOLLOWING ACTIVE DTCS**
   1. Using the scan tool, read all active DTCs from all modules.

      NOTE: Check for TIPM configuration, CAN B or C hardware electrical, VIN Missing/Mismatch, battery or ignition related DTCs.

      Does the scan tool display any active DTCs to the conditions listed above?

      Yes

      - Refer to **DIAGNOSTIC CODE INDEX** and perform the appropriate diagnostic procedure.

      No

      - Go To 3

3. **VERIFY THAT THE AWD IS ACTIVE ON THE BUS**
   1. Turn the ignition on.
   2. Using the scan tool, select ECU View.
   3. Verify that the AWD is active on the bus.

      Is the AWD active on the bus?

      Yes

- Go To 4

No

- Refer to **DIAGNOSIS AND TESTING** and perform the No Response from AWD diagnostic procedure.

4. **CHECK FOR ADDITIONAL COMMUNICATION RELATED DTCS**
   1. Using the scan tool, select Network View and select Advanced.

      Is there more than one module with active DTCs "Logged Against" the AWD?

      Yes

      - Replace/update the All Wheel Drive Control (AWD) Module in accordance with the Service Information.
      - Perform the AWD-CONTROL MODULE VERIFICATION TEST. Refer to **STANDARD PROCEDURE** .

      No

      - Replace/update the module that set this DTC in accordance with the Service Information
      - Perform the BODY VERIFICATION TEST. Refer to **STANDARD PROCEDURE** .

U0121-LOST COMMUNICATION WITH ANTILOCK BRAKE MODULE

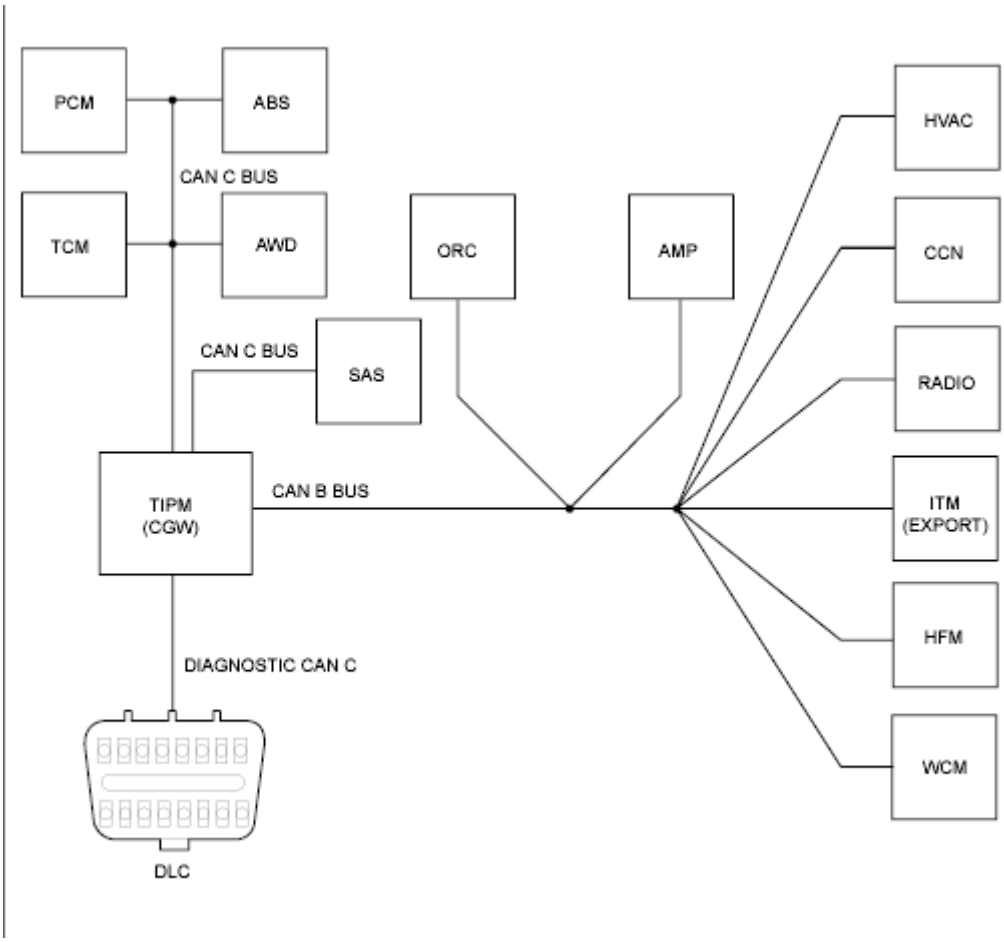

Fig. 159: Totally Integrated Power Module Diagram
Courtesy of CHRYSLER GROUP, LLC

For a complete wiring diagram, **refer to appropriate SYSTEM WIRING DIAGRAMS article** .

WHEN MONITORED

With the ignition on.

Battery voltage between 10 and 16 volts.

Ignition Off Draw (IOD) fuse installed.

Totally Integrated Power Module (TIPM) is configured correctly.

SET CONDITION

Bus messages not received from the Antilock Brake Module (ABS) for approximately 500ms.

POSSIBLE CAUSES

Possible Causes
CAN B OR CAN C BUS CIRCUITS OPEN OR SHORTED
DTCs RELATED TO BATTERY VOLTAGE, IGNITION, OR VIN MESSAGES
TIPM NOT CONFIGURED CORRECTLY
ANTILOCK BRAKE MODULE POWER AND GROUND
ANTILOCK BRAKE MODULE
MODULE THAT SET THIS DTC

DIAGNOSTIC TEST

1. **VERIFY THE DIAGNOSTIC TROUBLE CODE (DTC) IS ACTIVE**

   NOTE: Make sure the IOD fuse is installed and battery voltage is between 10 and 16 volts before proceeding.

   NOTE: Check for any TSB(s) related to the condition. If a TSB applies, perform the procedure outlined in the TSB before continuing.

   1. Using the scan tool, read active DTCs.

      Is this DTC active?

      Yes

      - Go To 2

      No

      - Refer to **DIAGNOSIS AND TESTING** and perform the Stored Lost Communication DTCs diagnostic procedure.

2. **CHECK FOR ANY OF THE FOLLOWING ACTIVE DTCS**
   1. Using the scan tool, read all active DTCs from all modules.

      NOTE: Check for TIPM configuration, CAN B or C hardware electrical, VIN Missing/Mismatch,

battery or ignition related DTCs.

Does the scan tool display any active DTCs to the conditions listed above?

Yes

- Refer to **DIAGNOSTIC CODE INDEX** and perform the appropriate diagnostic procedure.

No

- Go To 3

3. **VERIFY THAT THE ABS IS ACTIVE ON THE BUS**
   1. Turn the ignition on.
   2. Using the scan tool, select ECU View.
   3. Verify that the ABS is active on the bus.

   Is the ABS active on the bus?

   Yes

   - Go To 4

   No

   - Refer to **DIAGNOSIS AND TESTING** and perform the No Response from ABS diagnostic procedure.

4. **CHECK FOR ADDITIONAL COMMUNICATION RELATED DTC'S**
   1. Using the scan tool, select Network View and select Advanced.

   Is there more than one module with active DTCs "Logged Against" the ABS?

   Yes

   - Replace/update the Antilock Brake Module in accordance with the Service Information.
   - Perform the ABS VERIFICATION TEST. Refer to **STANDARD**

PROCEDURE .

No

- Replace/update the module that set this DTC in accordance with the Service Information
- Perform the BODY VERIFICATION TEST. Refer to **STANDARD PROCEDURE** .

U0126-LOST COMMUNICATION WITH STEERING ANGLE SENSOR

For a complete wiring diagram, **refer to appropriate SYSTEM WIRING DIAGRAMS article** .

WHEN MONITORED

With the ignition on.

Battery voltage between 10 and 16 volts.

Ignition Off Draw (IOD) fuse installed.

SET CONDITION

When the Totally Integrated Power Module (TIPM) fails to receive bus messages from the Steering Angle Sensor.

POSSIBLE CAUSES

Possible Causes
DTCs RELATED TO BATTERY VOLTAGE, IGNITION, OR VIN MESSAGES
CAN C BUS CIRCUITS OPEN OR SHORTED
STEERING ANGLE SENSOR POWER AND GROUND
STEERING ANGLE SENSOR (SAS)

DIAGNOSTIC TEST

1. **VERIFY DTC IS ACTIVE**

NOTE: Make sure the IOD fuse is installed and battery voltage is between 10 and 16 volts before proceeding.

1. Turn the ignition on.
2. With the scan tool, read and record the TIPM DTCs.
3. With the scan tool, read and record Environmental Data to help identify the conditions in which the DTC was set.
4. With the scan tool, erase the TIPM DTCs.
5. Cycle the ignition switch.
6. With the scan tool, read the TIPM DTCs.

Does this DTC reset?

Yes

- Go To 2

No

- Test complete. The condition that caused the symptom is currently not present. Inspect the related wiring for a possible intermittent condition. Look for any chafed, pierced, pinched, or partially broken wires.
- Perform the BODY VERIFICATION TEST. Refer to **STANDARD PROCEDURE** .

2. **CHECK FOR ANY OF THE FOLLOWING ACTIVE DTCs**

NOTE: Check for CAN C hardware electrical, VIN Missing/Mismatch, battery or ignition related DTCs.

1. With the scan tool, read all active DTCs from all CAN C Bus modules.

Does the scan tool display any active DTCs related to the conditions listed above?

Yes

- Diagnose and repair the DTC(s). Refer to **DTC INDEX** .

No

- Go To 3

3. **CHECK THE VOLTAGE ON THE (A952) IGNITION SWITCH OUTPUT CIRCUIT**
   1. Turn the ignition off.
   2. Disconnect the Clockspring (SAS) harness connector.
   3. Turn the ignition on.
   4. Measure the voltage of the (A952) Ignition Switch Output circuit.

   Is the voltage above 10 volts?

   Yes

   - Go To 4

   No

   - Repair the (A952) Ignition Switch Output circuit for an open.
   - Perform the BODY VERIFICATION TEST. Refer to **STANDARD PROCEDURE** .
4. **CHECK THE RESISTANCE OF THE (Z903) GROUND CIRCUIT**
   1. Turn the ignition off.
   2. Measure the resistance between the (Z903) Ground circuit and ground.

   Is the resistance below 5.0 Ohms?

   Yes

   - Go To 5

   No

   - Repair the (Z903) Ground circuit for an open.
   - Perform the BODY VERIFICATION TEST. Refer to **STANDARD PROCEDURE** .
5. **VERIFY THAT THE STEERING ANGLE SENSOR IS ACTIVE ON THE BUS**
   1. With the scan tool, select ECU View.
   2. Verify that the Steering Angle Sensor is active on the bus.

Is the Steering Angle Sensor active on the bus?

Yes

- Replace the Steering Angle Sensor in accordance with the service information.
- Perform the BODY VERIFICATION TEST. Refer to **STANDARD PROCEDURE** .

No

- Refer to **DIAGNOSIS AND TESTING** and perform the Stored Lost Communication DTC diagnostic procedure.

U0141-LOST COMMUNICATION WITH IPM (FCM/TIPM)

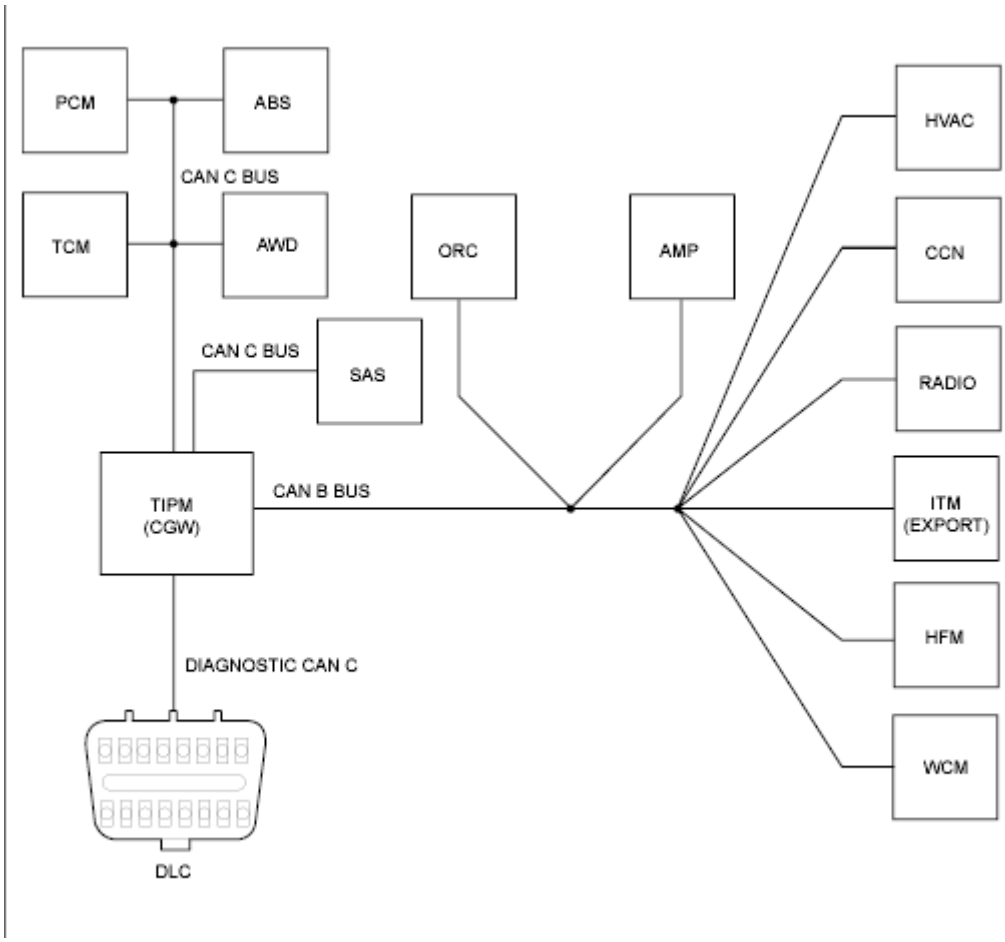

Fig. 160: Totally Integrated Power Module Diagram
Courtesy of CHRYSLER GROUP, LLC

For a complete wiring diagram, **refer to appropriate SYSTEM WIRING**

DIAGRAMS article .

WHEN MONITORED

With the ignition on.

Battery voltage between 10 and 16 volts.

Ignition Off Draw (IOD) fuse installed.

Totally Integrated Power Module (TIPM) is configured correctly.

SET CONDITION

Bus messages not received from the Totally Integrated Power Module (TIPM) for approximately two to five seconds.

POSSIBLE CAUSES

Possible Causes
CAN B BUS CIRCUITS OPEN OR SHORTED
DTCs RELATED TO BATTERY VOLTAGE, IGNITION, OR VIN MESSAGES
TIPM NOT CONFIGURED CORRECTLY
TOTALLY INTEGRATED POWER MODULE POWER AND GROUND
TOTALLY INTEGRATED POWER MODULE (TIPM)
MODULE THAT SET THIS DTC

DIAGNOSTIC TEST

1. **VERIFY THE DIAGNOSTIC TROUBLE CODE (DTC) IS ACTIVE**

NOTE: Make sure the IOD fuse is installed and battery voltage is between 10 and 16 volts before proceeding.

NOTE: Check for any TSB(s) related to the condition. If a TSB applies, perform the procedure outlined in the TSB before continuing.

1. Using the scan tool, read active DTCs.

Is this DTC active?

Yes

- Go To 2

No

- Refer to **DIAGNOSIS AND TESTING** and perform the Stored Lost Communication DTCs diagnostic procedure.

2. **CHECK FOR ANY OF THE FOLLOWING ACTIVE DTCS**
   1. Using the scan tool, read all active DTCs from all modules.

NOTE: Check for TIPM configuration, CAN B or C hardware electrical, VIN Missing/Mismatch, battery or ignition related DTCs.

Does the scan tool display any active DTCs to the conditions listed above?

Yes

- Refer to **DIAGNOSTIC CODE INDEX** and perform the appropriate diagnostic procedure.

No

- Go To 3

3. **VERIFY THAT THE TIPM IS ACTIVE ON THE BUS**
   1. Turn the ignition on.
   2. Using the scan tool, select ECU View.
   3. Verify that the TIPM is active on the bus.

Is the TIPM active on the bus?

Yes

- Go To 4

No

- Refer to **DIAGNOSIS AND TESTING** and perform the appropriate No Response from TIPM diagnostic procedure.

4. **CHECK FOR ADDITIONAL COMMUNICATION RELATED DTC'S**
   1. Using the scan tool, select Network Diagnostics and select Advanced.

      Is there more than one module with active DTCs "Logged Against" the TIPM?

      Yes

      - Replace/update the Totally Integrated Power Module in accordance with the Service Information.
      - Perform the BODY VERIFICATION TEST. Refer to **STANDARD PROCEDURE** .

      No

      - Replace/update the module that set this DTC in accordance with the Service Information
      - Perform the appropriate VERIFICATION TEST.

U0151-LOST COMMUNICATION WITH OCCUPANT RESTRAINT CONTROLLER (ORC)

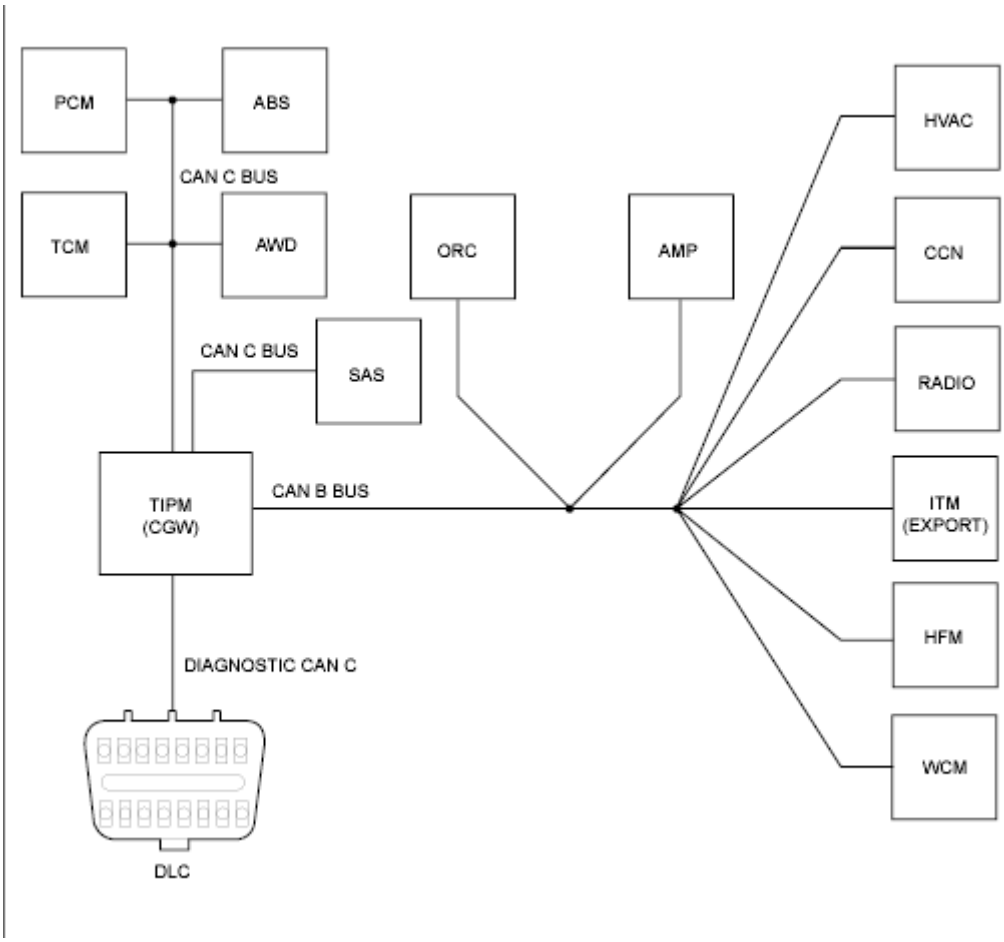

Fig. 161: Totally Integrated Power Module Diagram
Courtesy of CHRYSLER GROUP, LLC

For a complete wiring diagram, **refer to appropriate SYSTEM WIRING DIAGRAMS article** .

WHEN MONITORED

With the ignition on.

Battery voltage between 10 and 16 volts.

Airbag fuse installed.

Totally Integrated Power Module (TIPM) is configured correctly.

SET CONDITION

Bus messages not received from the Occupant Restraint Controller (ORC) for approximately two to five seconds.

POSSIBLE CAUSES

Possible Causes
CAN B BUS CIRCUITS OPEN OR SHORTED
DTC'S RELATED TO BATTERY VOLTAGE, IGNITION, OR VIN MESSAGES
TIPM NOT CONFIGURED CORRECTLY
AIRBAG FUSE NOT INSTALLED
OCCUPANT RESTRAINT CONTROLLER POWER AND GROUND
OCCUPANT RESTRAINT CONTROLLER (ORC)
MODULE THAT SET THIS DTC

DIAGNOSTIC TEST

1. **VERIFY THE DIAGNOSTIC TROUBLE CODE (DTC) IS ACTIVE**

   NOTE: Make sure the IOD fuse is installed and battery voltage is between 10 and 16 volts before proceeding.

   NOTE: Check for any TSB(s) related to the condition. If a TSB applies, perform the procedure outlined in the TSB before continuing.

   1. Using the scan tool, read active DTCs.

      Is this DTC active?

      Yes

      - Go To 2

      No

      - Refer to **DIAGNOSIS AND TESTING** and perform the Stored Lost Communication DTCs diagnostic procedure.

2. **CHECK FOR ANY OF THE FOLLOWING ACTIVE DTCS**
   1. Using the scan tool, read all active DTCs from all modules.

      NOTE: Check for TIPM configuration, CAN B or C

hardware electrical, VIN Missing/Mismatch, battery or ignition related DTCs.

Does the scan tool display any active DTCs to the conditions listed above?

Yes

- Refer to **DIAGNOSTIC CODE INDEX** and perform the appropriate diagnostic procedure.

No

- Go To 3

3. **VERIFY THAT THE ORC IS ACTIVE ON THE BUS**
   1. Turn the ignition on.
   2. Using the scan tool, select ECU View.
   3. Verify that the ORC is active on the bus.

   Is the ORC active on the bus?

   Yes

   - Go To 4

   No

   - Refer to **DIAGNOSIS AND TESTING** and perform the No Response from ORC diagnostic procedure.

4. **CHECK FOR ADDITIONAL COMMUNICATION RELATED DTC'S**
   1. Using the scan tool, select Network View and select Advanced.

   Is there more than one module with active DTCs "Logged Against" the ORC?

   Yes

   - Replace/update the Occupant Restraint Controller in accordance with the Service Information.

- Perform the AIRBAG SYSTEM VERIFICATION TEST. Refer to **STANDARD PROCEDURE** .

No

- Replace/update the module that set this DTC in accordance with the Service Information
- Perform the appropriate VERIFICATION TEST.

U0155-LOST COMMUNICATION WITH CLUSTER/CCN

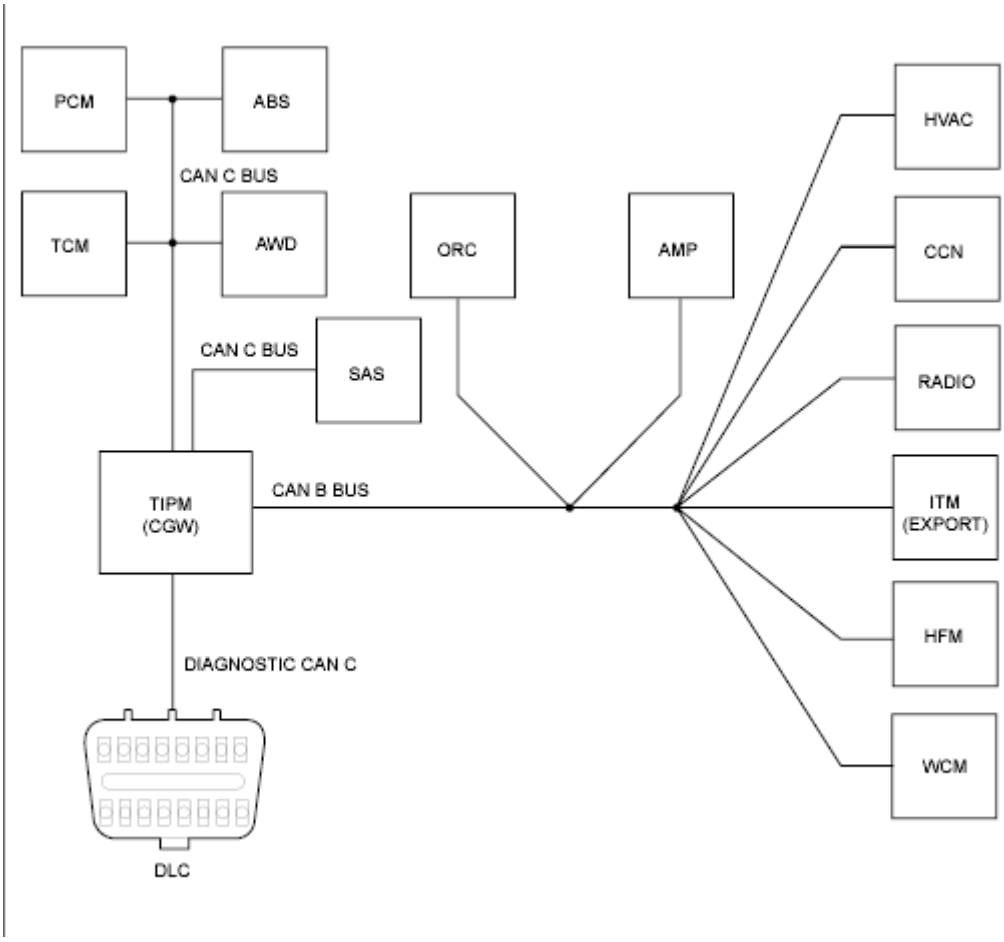

Fig. 162: Totally Integrated Power Module Diagram
Courtesy of CHRYSLER GROUP, LLC

For a complete wiring diagram, **refer to appropriate SYSTEM WIRING DIAGRAMS article** .

WHEN MONITORED

With the ignition on.

Battery voltage between 10 and 16 volts.

Airbag fuse installed.

Totally Integrated Power Module (TIPM) is configured correctly.

SET CONDITION

Bus messages not received from the Cluster (CCN) for approximately two to five seconds.

POSSIBLE CAUSES

Possible Causes
CAN B BUS CIRCUITS OPEN OR SHORTED
DTC'S RELATED TO BATTERY VOLTAGE, IGNITION, OR VIN MESSAGES
CLUSTER/CCN
CLUSTER/CCN POWER AND GROUND
MODULE THAT SET THE DTC

DIAGNOSTIC TEST

1. **VERIFY THE DIAGNOSTIC TROUBLE CODE (DTC) IS ACTIVE**

NOTE: Make sure the IOD fuse is installed and battery voltage is between 10 and 16 volts before proceeding.

NOTE: Check for any TSB(s) related to the condition. If a TSB applies, perform the procedure outlined in the TSB before continuing.

1. Using the scan tool, read active DTCs.

   Is this DTC active?

   Yes

   - Go To 2

   No

- Refer to **DIAGNOSIS AND TESTING** and perform the Stored Lost Communication DTCs diagnostic procedure.

2. **CHECK FOR ANY OF THE FOLLOWING ACTIVE DTCS**
   1. Using the scan tool, read active DTCs from all modules.

      NOTE: Check for TIPM configuration, CAN B or C hardware electrical, VIN Missing/Mismatch, battery or ignition related DTCs.

      Does the scan tool display any active DTCs to the conditions listed above?

      Yes

      - Refer to **DIAGNOSTIC CODE INDEX** and perform the appropriate diagnostic procedure.

      No

      - Go To 3

3. **VERIFY THAT THE CCN IS ACTIVE ON THE BUS**
   1. Turn the ignition on.
   2. Using the scan tool, select ECU View.
   3. Verify that the CCN is active on the bus.

      Is the CCN active on the bus?

      Yes

      - Go To 4

      No

      - Refer to **DIAGNOSIS AND TESTING** and perform the No Response from Cluster/CCN diagnostic procedure.

4. **CHECK FOR ADDITIONAL COMMUNICATION RELATED DTCS**
   1. Using the scan tool, select Network View and select Advanced.

      Is there more than one module with active DTCs "Logged Against" the

CCN?

Yes

- Replace/update the Cluster (CCN) in accordance with the Service Information.
- Perform the BODY VERIFICATION TEST. Refer to **STANDARD PROCEDURE** .

No

- Replace/update the module that set this DTC in accordance with the Service Information.
- Perform the BODY VERIFICATION TEST. Refer to **STANDARD PROCEDURE** .

U0164-LOST COMMUNICATION WITH HVAC CONTROL MODULE

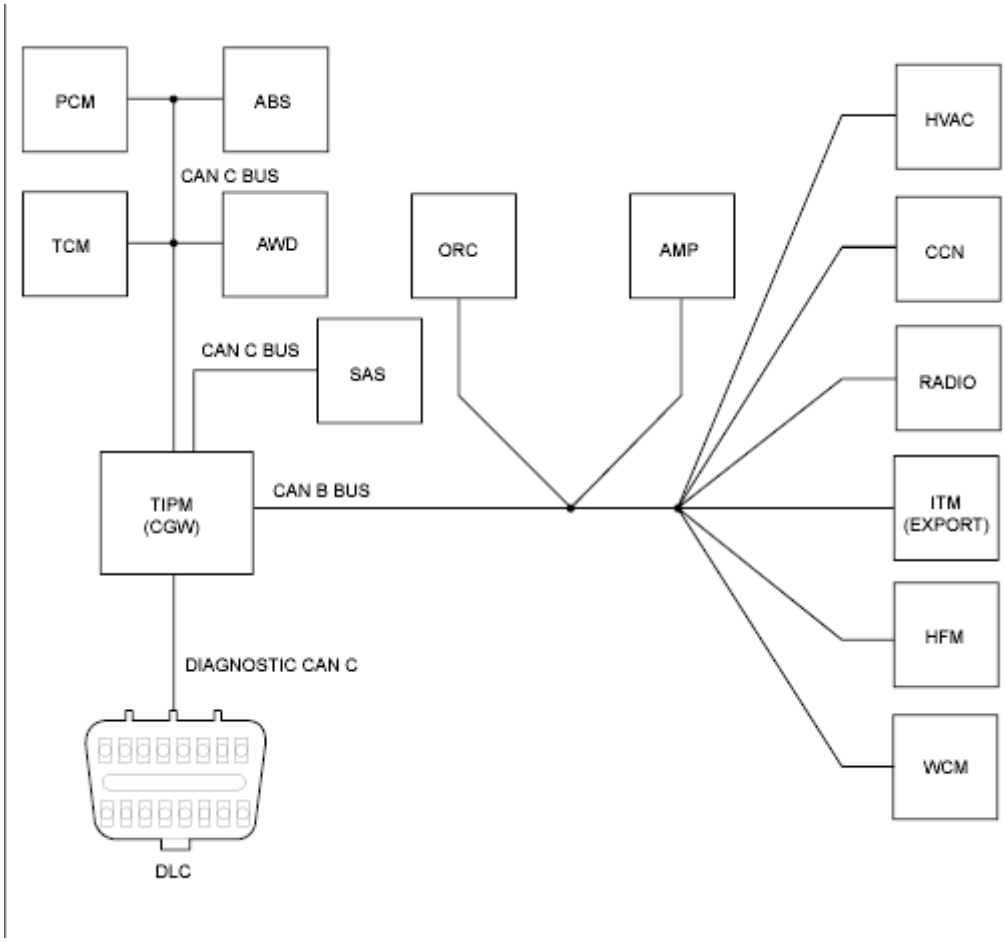

Fig. 163: Totally Integrated Power Module Diagram
Courtesy of CHRYSLER GROUP, LLC

For a complete wiring diagram, **refer to appropriate SYSTEM WIRING DIAGRAMS article** .

WHEN MONITORED

With the ignition on.

Battery voltage between 10 and 16 volts.

Ignition Off Draw (IOD) fuse installed.

Totally Integrated Power Module (TIPM) is configured correctly.

SET CONDITION

Bus messages not received from the A/C Heater Control (HVAC) for approximately two to five seconds.

POSSIBLE CAUSES

Possible Causes
CAN B BUS CIRCUITS OPEN OR SHORTED
DTCS RELATED TO BATTERY VOLTAGE, IGNITION, OR VIN MESSAGES
TIPM NOT CONFIGURED CORRECTLY
A/C HEATER CONTROL
A/C HEATER CONTROL POWER AND GROUND
MODULE THAT SET THIS DTC

DIAGNOSTIC TEST

1. **VERIFY THE DIAGNOSTIC TROUBLE CODE (DTC) IS ACTIVE**

NOTE: Make sure the IOD fuse is installed and battery voltage is between 10 and 16 volts before proceeding.

1. Using the scan tool, read active DTCs.

   Is this DTC active?

   Yes

- Go To 2

No

- Refer to **DIAGNOSIS AND TESTING** and perform the Stored Lost Communication DTCs diagnostic procedure.

2. **CHECK FOR ANY OF THE FOLLOWING ACTIVE DTCS**
   1. Using the scan tool, read active DTCs from all modules.

      NOTE: Check for TIPM configuration, CAN B or C hardware electrical, VIN Missing/Mismatch, battery or ignition related DTCs.

      Does the scan tool display any active DTCs to the conditions listed above?

      Yes

      - Refer to **DIAGNOSTIC CODE INDEX** and perform the appropriate diagnostic procedure.

      No

      - Go To 3

3. **VERIFY THAT THE HVAC IS ACTIVE ON THE BUS**
   1. Turn the ignition on.
   2. Using the scan tool, select ECU View.
   3. Verify that the HVAC is active on the bus.

      Is the HVAC active on the bus?

      Yes

      - Go To 4

      No

      - Refer to **DIAGNOSIS AND TESTING** and perform the No Response from HVAC diagnostic procedure.

4. **CHECK FOR ADDITIONAL COMMUNICATION RELATED DTCS**
   1. Using the scan tool, select Network View and select Advanced.

      Is there more than one module with active DTCs "Logged Against" the HVAC?

      Yes

      - Replace/update the A/C Heater Control in accordance with the Service Information.
      - Perform the BODY VERIFICATION TEST. Refer to **STANDARD PROCEDURE** .

      No

      - Replace/update the module that set the DTC in accordance with the Service Information
      - Perform the appropriate verification test for the module being replaced. If there is no verification test for the associated module perform the BODY VERIFICATION TEST. Refer to **STANDARD PROCEDURE** .

U0167-LOST COMMUNICATION WITH INTRUSION TRANSCEIVER CONTROL MODULE (ITM)

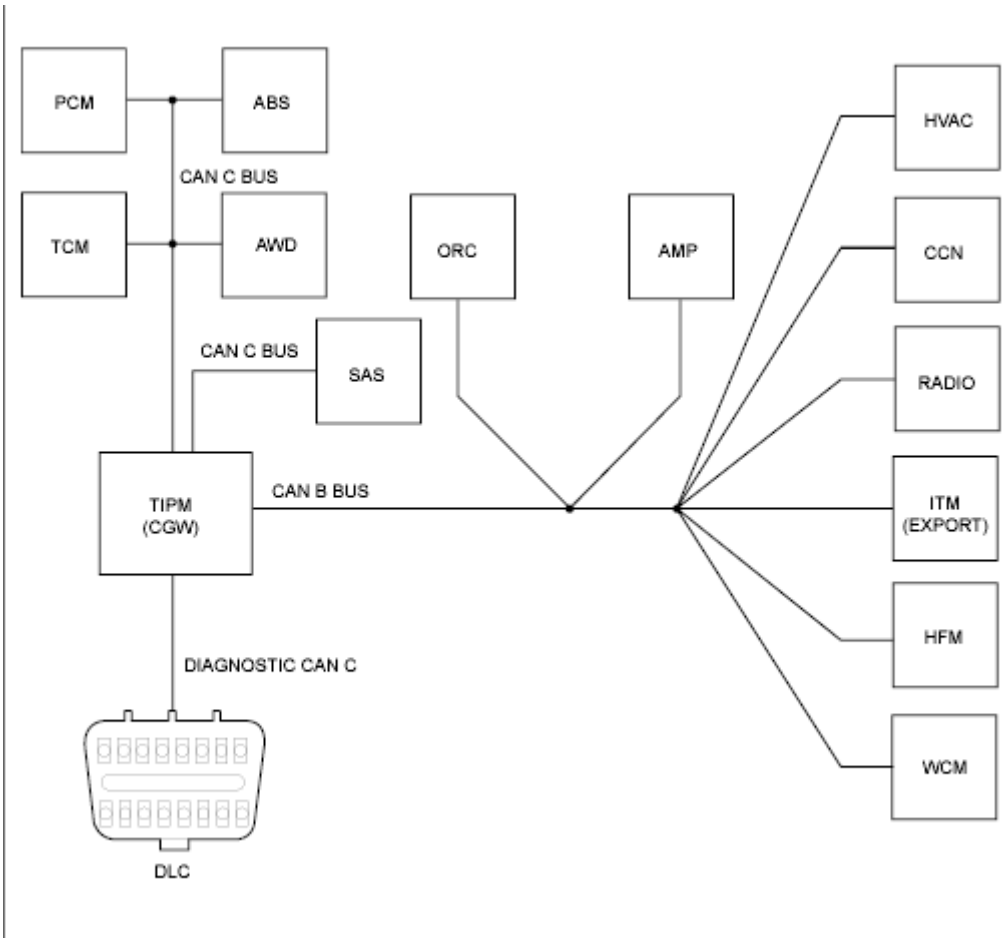

Fig. 164: Totally Integrated Power Module Diagram
Courtesy of CHRYSLER GROUP, LLC

For a complete wiring diagram, **refer to appropriate SYSTEM WIRING DIAGRAMS article** .

WHEN MONITORED

With the ignition on.

Battery voltage between 10 and 16 volts.

Ignition Off Draw (IOD) fuse installed.

Totally Integrated Power Module (TIPM) is configured correctly.

SET CONDITION

Bus messages not received from the Intrusion Transceiver Control Module (ITM) for approximately two to five seconds.

POSSIBLE CAUSES

Possible Causes
CAN B BUS CIRCUITS OPEN OR SHORTED
DTCs RELATED TO BATTERY VOLTAGE, IGNITION, OR VIN MESSAGES
TIPM NOT CONFIGURED CORRECTLY
IOD FUSE NOT INSTALLED
INTRUSION TRANSCEIVER CONTROL MODULE POWER AND GROUND
INTRUSION TRANSCEIVER CONTROL MODULE (ITM)
MODULE THAT SET THIS DTC

DIAGNOSTIC TEST

1. **VERIFY THE DIAGNOSTIC TROUBLE CODE (DTC) IS ACTIVE**

   NOTE: Make sure the IOD fuse is installed and battery voltage is between 10 and 16 volts before proceeding.

   NOTE: Check for any TSB(s) related to the condition. If a TSB applies, perform the procedure outlined in the TSB before continuing.

   1. Using the scan tool, read active DTCs.

      Is this DTC active?

      Yes

      - Go To 2

      No

      - Refer to **DIAGNOSIS AND TESTING** and perform the Stored Lost Communication DTCs diagnostic procedure.

2. **CHECK FOR ANY OF THE FOLLOWING ACTIVE DTCS**
   1. Using the scan tool, read active DTCs from all modules.

NOTE: Check for TIPM configuration, CAN B or C hardware electrical, VIN Missing/Mismatch, battery or ignition related DTCs.

Does the scan tool display any active DTCs to the conditions listed above?

Yes

- Refer to **DIAGNOSTIC CODE INDEX** and perform the appropriate diagnostic procedure.

No

- Go To 3

3. **VERIFY THAT THE ITM IS ACTIVE ON THE BUS**
   1. Turn the ignition on.
   2. Using the scan tool, select ECU View.
   3. Verify that the ITM is active on the bus.

   Is the ITM active on the bus?

   Yes

   - Go To 4

   No

   - Refer to **DIAGNOSIS AND TESTING** and perform the No Response from ITM diagnostic procedure.

4. **CHECK FOR ADDITIONAL COMMUNICATION RELATED DTCs**
   1. Using the scan tool, select Network View and select Advanced.

   Is there more than one module with active DTCs "Logged Against" the ITM?

   Yes

   - Replace/update the Intrusion Transceiver Control Module in

accordance with the Service Information.

- Perform the BODY VERIFICATION TEST. Refer to **STANDARD PROCEDURE** .

No

- Replace/update the module that set the DTC in accordance with the Service Information
- Perform the appropriate VERIFICATION TEST.

U0168-LOST COMMUNICATION WITH VEHICLE SECURITY CONTROL MODULE (WCM)

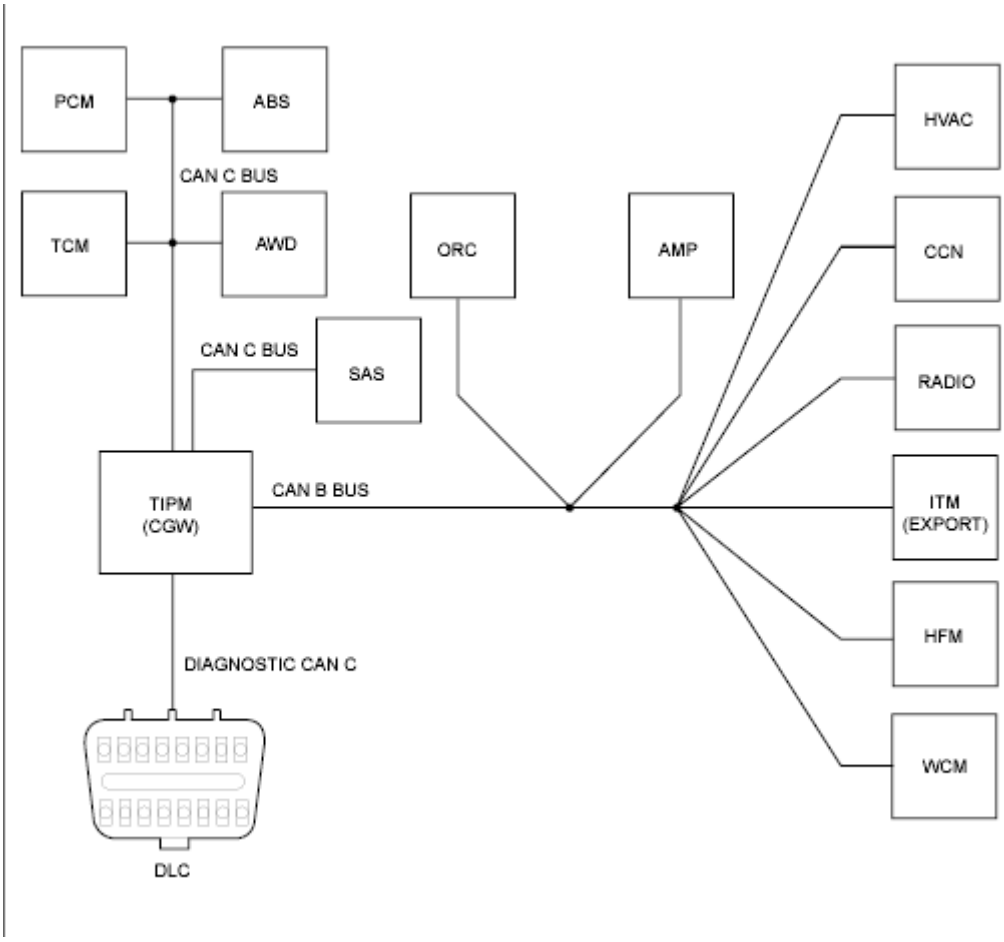

Fig. 165: Totally Integrated Power Module Diagram
Courtesy of CHRYSLER GROUP, LLC

For a complete wiring diagram, **refer to appropriate SYSTEM WIRING DIAGRAMS article** .

WHEN MONITORED

With the ignition on.

Battery voltage between 10 and 16 volts.

Airbag fuse installed.

Totally Integrated Power Module (TIPM) is configured correctly.

SET CONDITION

Bus messages not received from the Wireless Control Module (WCM) for approximately two to five seconds.

POSSIBLE CAUSES

Possible Causes
CAN B BUS CIRCUITS OPEN OR SHORTED
DTCs RELATED TO BATTERY VOLTAGE, IGNITION, OR VIN MESSAGES
TIPM NOT CONFIGURED CORRECTLY
WIRELESS CONTROL MODULE POWER AND GROUND
WIRELESS CONTROL MODULE (WCM)
MODULE THAT SET THIS DTC

DIAGNOSTIC TEST

1. **VERIFY THE DIAGNOSTIC TROUBLE CODE (DTC) IS ACTIVE**

NOTE: Make sure the IOD fuse is installed and battery voltage is between 10 and 16 volts before proceeding.

NOTE: Check for any TSB(s) related to the condition. If a TSB applies, perform the procedure outlined in the TSB before continuing.

1. With the scan tool, read active DTCs.

   Is this DTC active?

   Yes

- Go To 2

No

- Refer to **DIAGNOSIS AND TESTING** and perform the Stored Lost Communication DTCs diagnostic procedure.

2. **CHECK FOR ANY OF THE FOLLOWING ACTIVE DTCS**
   1. With the scan tool, read active DTCs from all modules.

      NOTE: Check for CAN B or C hardware electrical, VIN Missing/Mismatch, battery or ignition related DTCs.

      Does the scan tool display any active DTCs to the conditions listed above?

      Yes

      - Refer to **DIAGNOSTIC CODE INDEX** and perform the appropriate diagnostic procedure.

      No

      - Go To 3

3. **VERIFY THAT THE WCM IS ACTIVE ON THE BUS**
   1. Turn the ignition on.
   2. With the scan tool, select ECU View.
   3. Verify that the WCM is active on the bus.

      Is the WCM active on the bus?

      Yes

      - Go To 4

      No

      - Refer to **DIAGNOSIS AND TESTING** and perform the No Response from WCM diagnostic procedure.

4. **CHECK FOR ADDITIONAL COMMUNICATION RELATED DTCS**
   1. With the scan tool, select Network View and select Advanced.

      Is there more than one module with active DTCs "Logged Against" the WCM?

      Yes

      - Replace/update the Wireless Control Module in accordance with the Service Information.
      - Perform the WCM VERIFICATION TEST. Refer to **STANDARD PROCEDURE** .

      No

      - Replace/update the module that set this DTC in accordance with the Service Information.
      - Perform the appropriate VERIFICATION TEST.

U0184-LOST COMMUNICATION WITH RADIO

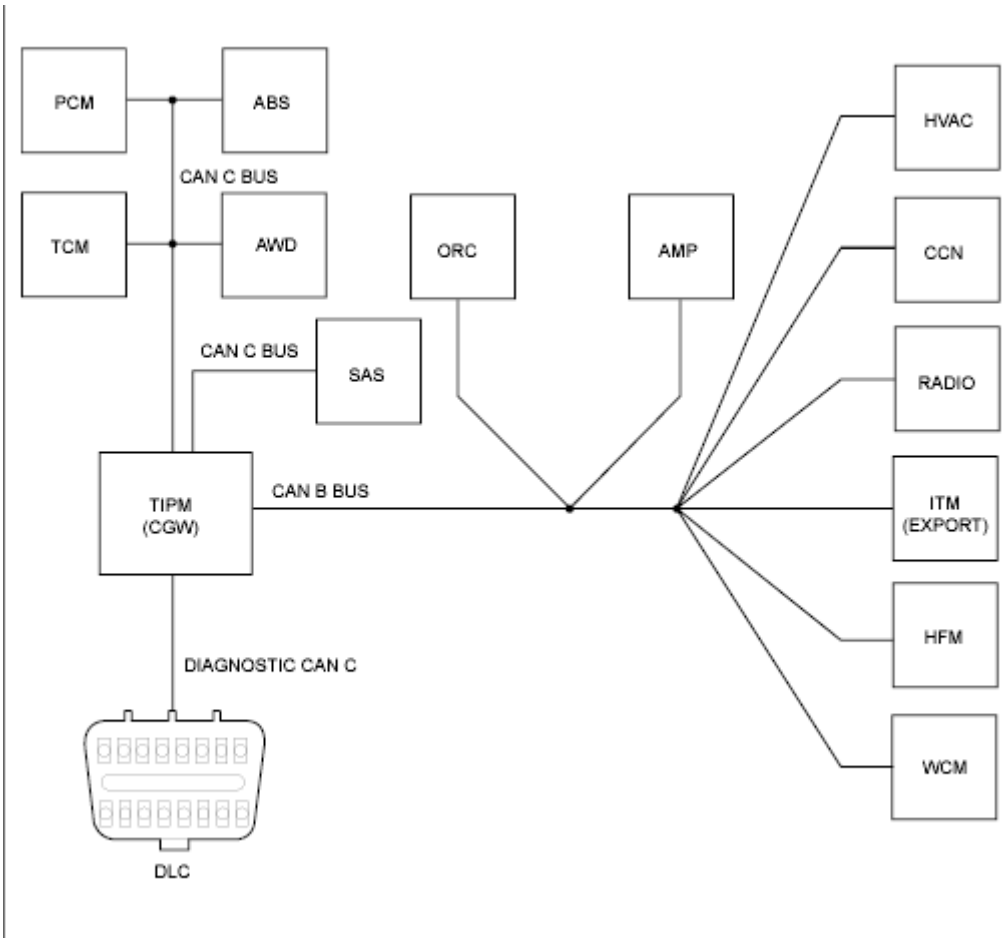

Fig. 166: Totally Integrated Power Module Diagram
Courtesy of CHRYSLER GROUP, LLC

For a complete wiring diagram, **refer to appropriate SYSTEM WIRING DIAGRAMS article** .

WHEN MONITORED

With the ignition on.

Battery voltage between 10 and 16 volts.

Ignition Off Draw (IOD) fuse installed.

Totally Integrated Power Module (TIPM) is configured correctly.

SET CONDITION

Bus messages not received from the Radio for approximately two to five seconds.

POSSIBLE CAUSES

Possible Causes
CAN B BUS CIRCUITS OPEN OR SHORTED
DTCs RELATED TO BATTERY VOLTAGE, IGNITION, OR VIN MESSAGES
TIPM NOT CONFIGURED CORRECTLY
RADIO POWER AND GROUND
RADIO
MODULE THAT SET THIS DTC

DIAGNOSTIC TEST

1. **VERIFY THE DIAGNOSTIC TROUBLE CODE (DTC) IS ACTIVE**

   NOTE: Make sure the IOD fuse is installed and battery voltage is between 10 and 16 volts before proceeding.

   NOTE: Check for any TSB(s) related to the condition. If a TSB applies, perform the procedure outlined in the TSB before continuing.

   1. Using the scan tool, read active DTCs.

      Is this DTC active?

      Yes

      - Go To 2

      No

      - Refer to **DIAGNOSIS AND TESTING** and perform the Stored Lost Communication DTCs diagnostic procedure.

2. **CHECK FOR ANY OF THE FOLLOWING ACTIVE DTCS**
   1. Using the scan tool, read active DTCs from all modules.

      NOTE: Check for TIPM configuration, CAN B or C hardware electrical, VIN Missing/Mismatch,

battery or ignition related DTCs.

Does the scan tool display any active DTCs to the conditions listed above?

Yes

- Refer to **DIAGNOSTIC CODE INDEX** and perform the appropriate diagnostic procedure.

No

- Go To 3

3. **VERIFY THAT THE RADIO IS ACTIVE ON THE BUS**
   1. Turn the ignition on.
   2. Using the scan tool, select ECU View.
   3. Verify that the Radio is active on the bus.

   Is the Radio active on the bus?

   Yes

   - Go To 4

   No

   - Refer to **DIAGNOSIS AND TESTING** and perform the No Response from Radio diagnostic procedure.

4. **CHECK FOR ADDITIONAL COMMUNICATION RELATED DTCS**
   1. Using the scan tool, select Network View and select Advanced.

   Is there more than one module with active DTCs "Logged Against" the Radio?

   Yes

   - Replace/update the Radio in accordance with the Service Information.
   - Perform the BODY VERIFICATION TEST. Refer to

STANDARD PROCEDURE .

No

- Replace/update the module that set this DTC in accordance with the Service Information.
- Perform the appropriate VERIFICATION TEST.

U0186-LOST COMMUNICATION WITH AUDIO AMPLIFIER (AMP)

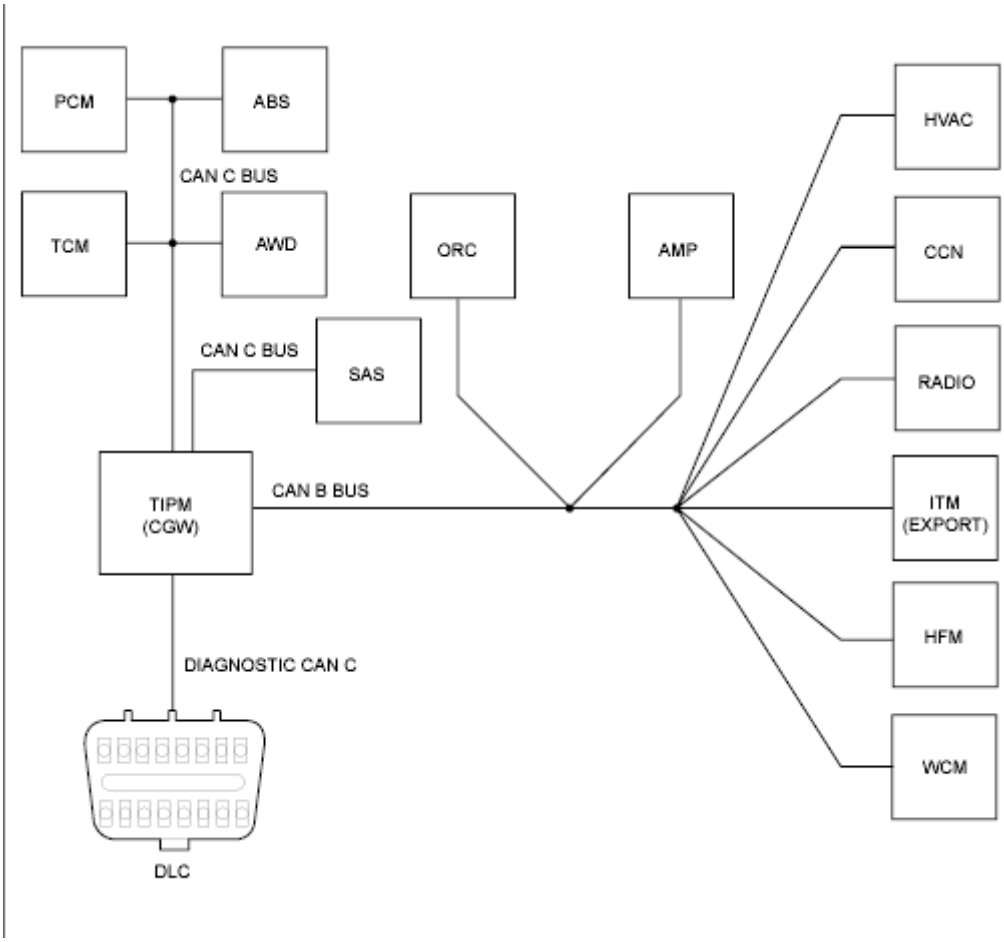

Fig. 167: Totally Integrated Power Module Diagram
Courtesy of CHRYSLER GROUP, LLC

For a complete wiring diagram, **refer to appropriate SYSTEM WIRING DIAGRAMS article** .

WHEN MONITORED

With the ignition on.

Battery voltage between 10 and 16 volts.

Ignition Off Draw (IOD) fuse installed.

Totally Integrated Power Module (TIPM) is configured correctly.

SET CONDITION

Bus messages not received from the Amplifier for approximately two to five seconds.

POSSIBLE CAUSES

Possible Causes
CAN B BUS CIRCUITS OPEN OR SHORTED
DTCs RELATED TO BATTERY VOLTAGE, IGNITION, OR VIN MESSAGES
TIPM NOT CONFIGURED CORRECTLY
AMPLIFIER POWER AND GROUND
AMPLIFIER
MODULE THAT SET THIS DTC

DIAGNOSTIC TEST

1. **VERIFY THE DIAGNOSTIC TROUBLE CODE (DTC) IS ACTIVE**

   NOTE: Make sure the IOD fuse is installed and battery voltage is between 10 and 16 volts before proceeding.

   NOTE: Check for any TSB(s) related to the condition. If a TSB applies, perform the procedure outlined in the TSB before continuing.

   1. Using the scan tool, read active DTCs.

      Is this DTC active?

      Yes

      - Go To 2

      No

- Refer to **DIAGNOSIS AND TESTING** and perform the Stored Lost Communication DTCs diagnostic procedure.

2. **CHECK FOR ANY OF THE FOLLOWING ACTIVE DTC'S**
   1. Using the scan tool, read active DTCs from all modules.

      NOTE: Check for TIPM configuration, CAN B or C hardware electrical, VIN Missing/Mismatch, battery or ignition related DTCs.

      Does the scan tool display any active DTCs to the conditions listed above?

      Yes

      - Refer to **DIAGNOSTIC CODE INDEX** and perform the appropriate diagnostic procedure.

      No

      - Go To 3

3. **VERIFY THAT THE AMPLIFIER IS ACTIVE ON THE BUS**
   1. Turn the ignition on.
   2. Using the scan tool, select ECU View.
   3. Verify that the Amplifier is active on the bus.

      Is the Amplifier active on the bus?

      Yes

      - Go To 4

      No

      - Refer to **DIAGNOSIS AND TESTING** and perform the No Response from AMP diagnostic procedure.

4. **CHECK FOR ADDITIONAL COMMUNICATION RELATED DTC'S**
   1. Using the scan tool, select Network View and select Advanced.

      Is there more than one module with active DTCs "Logged Against" the

Amplifier?

Yes

- Replace/update the Amplifier in accordance with the Service Information.
- Perform the BODY VERIFICATION TEST. Refer to **STANDARD PROCEDURE** .

No

- Replace/update the module that set this DTC in accordance with the Service Information.
- Perform the appropriate VERIFICATION TEST.

U0197-LOST COMMUNICATION WITH HANDS FREE PHONE MODULE (HFM)

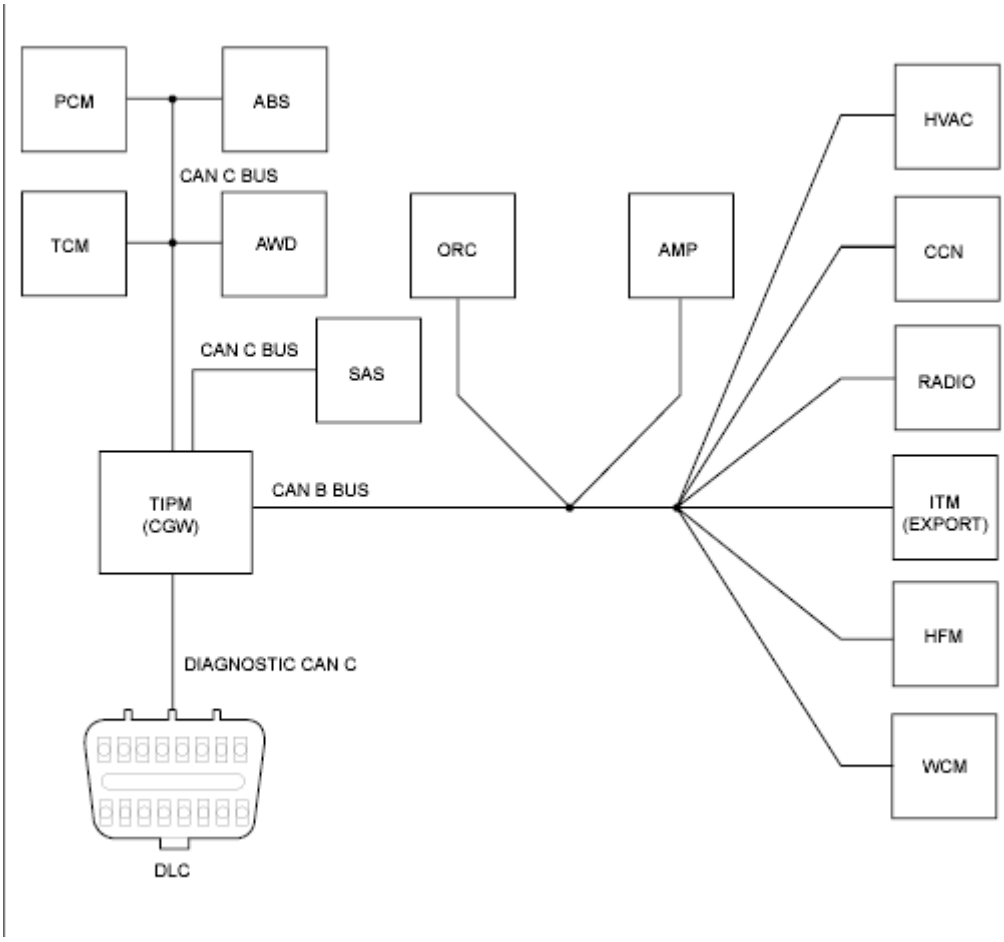

Fig. 168: Totally Integrated Power Module Diagram
Courtesy of CHRYSLER GROUP, LLC

For a complete wiring diagram, **refer to appropriate SYSTEM WIRING DIAGRAMS article** .

WHEN MONITORED

With the ignition on.

Battery voltage between 10 and 16 volts.

Ignition Off Draw (IOD) fuse installed.

Totally Integrated Power Module (TIPM) is configured correctly.

SET CONDITION

Bus messages not received from the Hands Free Module (HFM) for approximately two to five seconds.

POSSIBLE CAUSES

Possible Causes
CAN B BUS CIRCUITS OPEN OR SHORTED
DTCs RELATED TO BATTERY VOLTAGE, IGNITION, OR VIN MESSAGES
TIPM NOT CONFIGURED CORRECTLY
HANDS FREE MODULE POWER AND GROUND
HANDS FREE MODULE
MODULE THAT SET THIS DTC

DIAGNOSTIC TEST

1. **VERIFY THE DIAGNOSTIC TROUBLE CODE (DTC) IS ACTIVE**

NOTE: Make sure the IOD fuse is installed and battery voltage is between 10 and 16 volts before proceeding.

NOTE: Check for any TSB(s) related to the condition. If a TSB applies, perform the procedure outlined in the TSB before continuing.

1. Using the scan tool, read active DTCs.

Is this DTC active?

Yes

- Go To 2

No

- Refer to **DIAGNOSIS AND TESTING** and perform the Stored Lost Communication DTCs diagnostic procedure.

2. **CHECK FOR ANY OF THE FOLLOWING ACTIVE DTC'S**
   1. Using the scan tool, read active DTCs from all modules.

NOTE: Check for TIPM configuration, CAN B or C hardware electrical, VIN Missing/Mismatch, battery or ignition related DTCs.

Does the scan tool display any active DTCs to the conditions listed above?

Yes

- Refer to **DIAGNOSTIC CODE INDEX** and perform the appropriate diagnostic procedure.

No

- Go To 3

3. **VERIFY THAT THE HFM IS ACTIVE ON THE BUS**
   1. Turn the ignition on.
   2. Using the scan tool, select ECU View.
   3. Verify that the HFM is active on the bus.

Is the HFM active on the bus?

Yes

- Go To 4

No

- Refer to **DIAGNOSIS AND TESTING** and perform the No Response from HFM diagnostic procedure.

4. **CHECK FOR ADDITIONAL COMMUNICATION RELATED DTC'S**
   1. Using the scan tool, select Network View and select Advanced.

      Is there more than one module with active DTCs "Logged Against" the HFM?

      Yes

      - Replace/update the Hands Free Module in accordance with the Service Information.
      - Perform the BODY VERIFICATION TEST. Refer to **STANDARD PROCEDURE** .

      No

      - Replace/update the module that set this DTC in accordance with the Service Information.
      - Perform the appropriate VERIFICATION TEST.

U1105-CAN B SIGNAL MISSING

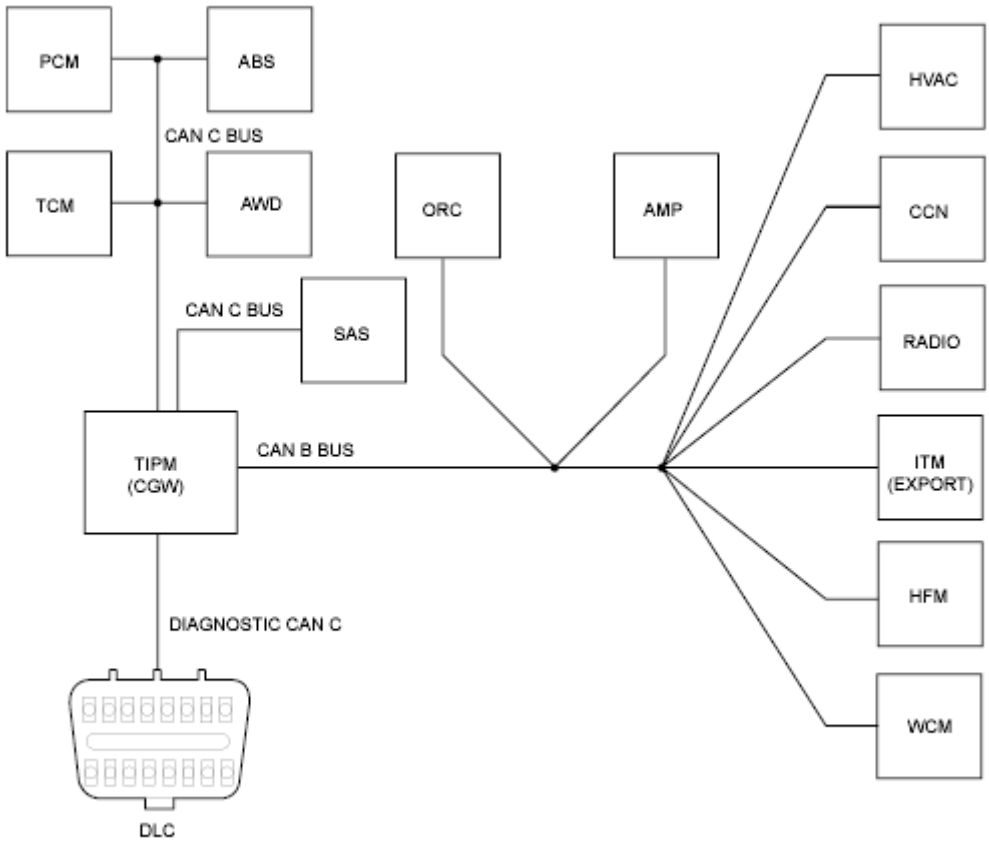

Fig. 169: Totally Integrated Power Module Diagram
Courtesy of CHRYSLER GROUP, LLC

For a complete wiring diagram, **refer to appropriate SYSTEM WIRING DIAGRAMS article** .

WHEN MONITORED

Continuously

SET CONDITION

When the CAN B Bus messages are not received within two seconds.

POSSIBLE CAUSES

Possible Causes
OTHER CAN B BUS DTCs SET IN TIPM
(D55) CAN B BUS (+) CIRCUIT OPEN
(D54) CAN B BUS (-) CIRCUIT OPEN

TOTALLY INTEGRATED POWER MODULE (TIPM)

DIAGNOSTIC TEST

1. **CHECK FOR ACTIVE DIAGNOSTIC TROUBLE CODE (DTC)S**

   NOTE: Check for any Technical Service Bulletins (TSBs) related to the condition. If a TSB applies, perform the procedure outlined in the TSB before continuing.

   1. Using the scan tool, read the active DTCs.
   2. Cycle the ignition switch from off to on at least five times, leaving the ignition on for a minimum of 90 seconds each cycle.
   3. Using the scan tool, read the active DTCs.

   Does the scan tool display this DTC as active?

   Yes

   - Go To 2

   No

   - If the DTC is stored, check for an intermittent condition. Visually inspect the related wiring harness connectors. Look for broken, bent, pushed out or corroded terminals.

2. **CHECK TIPM FOR U0019 DTC**
   1. Using the scan tool, read TIPM active DTCs

   Does the scan tool display U0019 CAN B BUS - ACTIVE?

   Yes

   - Refer to **U0019-CAN B BUS** and perform the diagnostic procedure.

   No

   - Go To 3

3. **(D55) CAN B BUS (+) CIRCUIT OPEN**

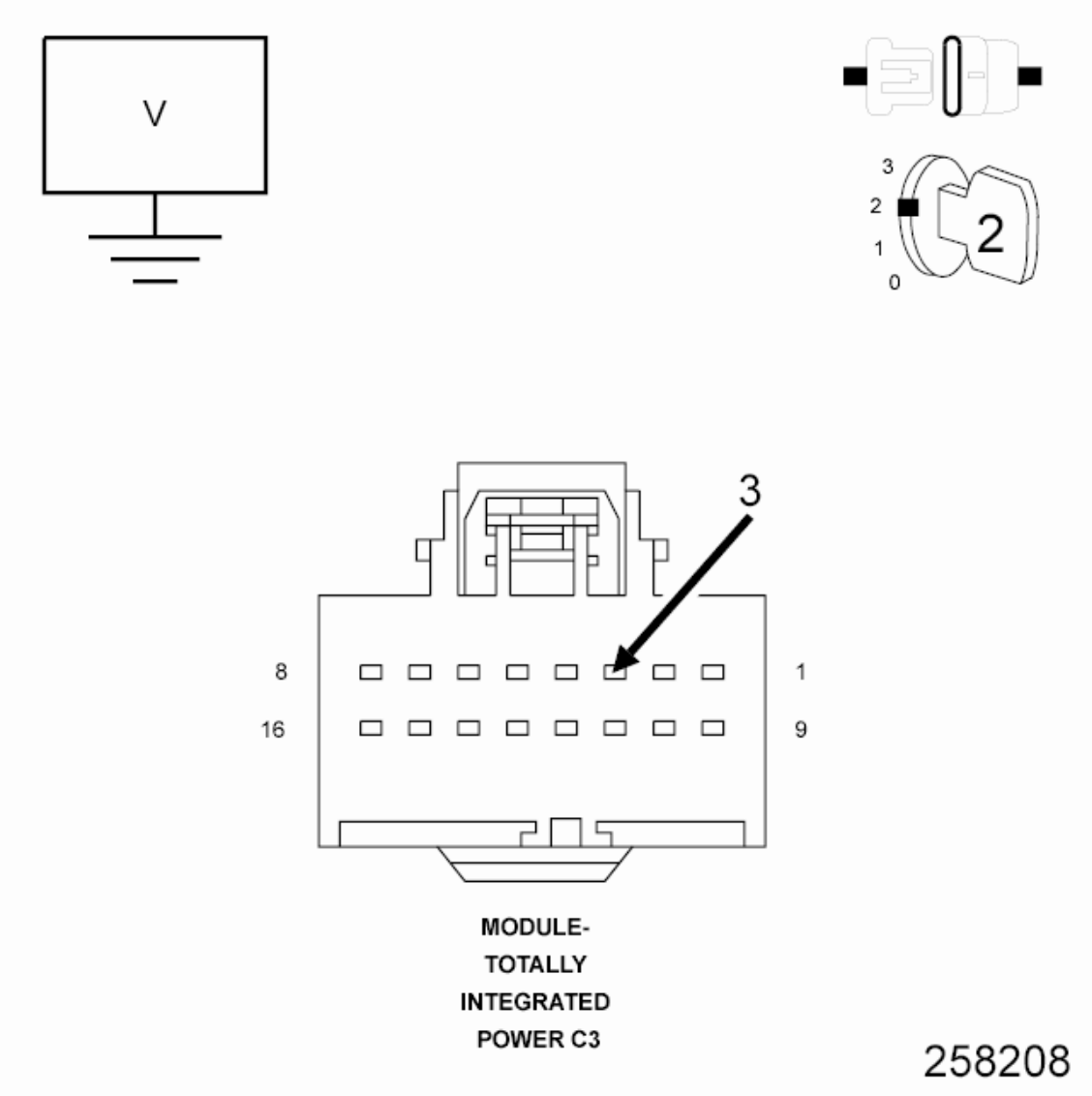

Fig. 170: Measuring Voltage Of CAN B Bus (+) Circuit
Courtesy of CHRYSLER GROUP, LLC

1. Turn the ignition off.
2. Disconnect the TIPM C3 harness connector.
3. Turn the ignition on.
4. Measure the voltage of the (D55) CAN B Bus (+) circuit.

   Is any voltage present on this circuit?

   Yes

   - Go To 4

   No

- Repair the (D55) CAN B Bus (+) circuit for an open.
- Perform the BODY VERIFICATION TEST. Refer to **STANDARD PROCEDURE** .

4. **(D54) CAN B BUS (-) CIRCUIT OPEN**

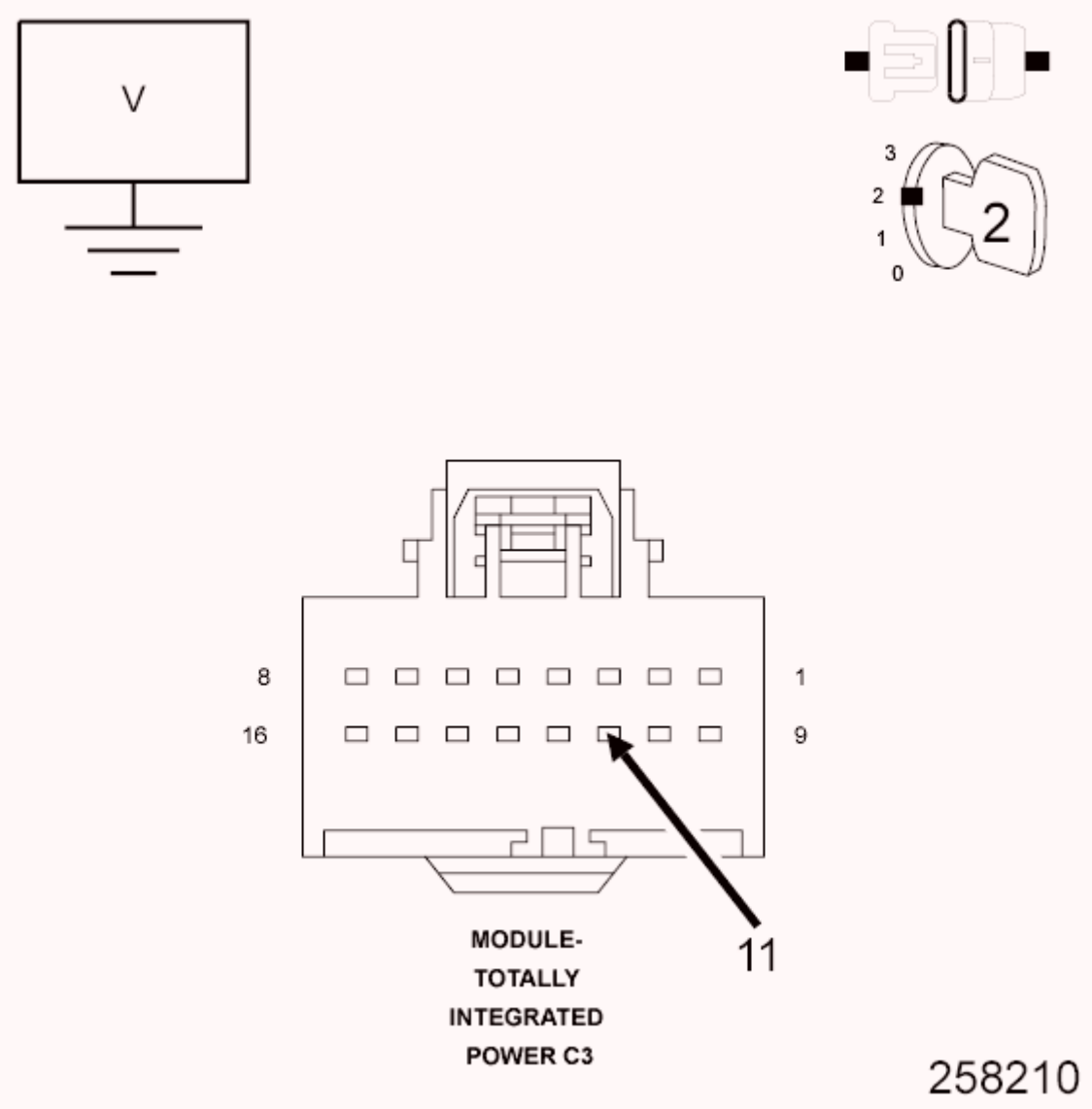

Fig. 171: Measuring Voltage Of CAN B Bus (-) Circuit
Courtesy of CHRYSLER GROUP, LLC

1. Measure the voltage of the (D54) CAN B Bus (-) circuit.

   Is any voltage present on this circuit?

   Yes

- Replace the Totally Integrated Power Module in accordance with the Service Information.
- Perform the BODY VERIFICATION TEST. Refer to **STANDARD PROCEDURE** .

No

- Repair the (D54) CAN B Bus (-) circuit for an open.
- Perform the BODY VERIFICATION TEST. Refer to **STANDARD PROCEDURE** .

U1106-CAN C SIGNAL MISSING

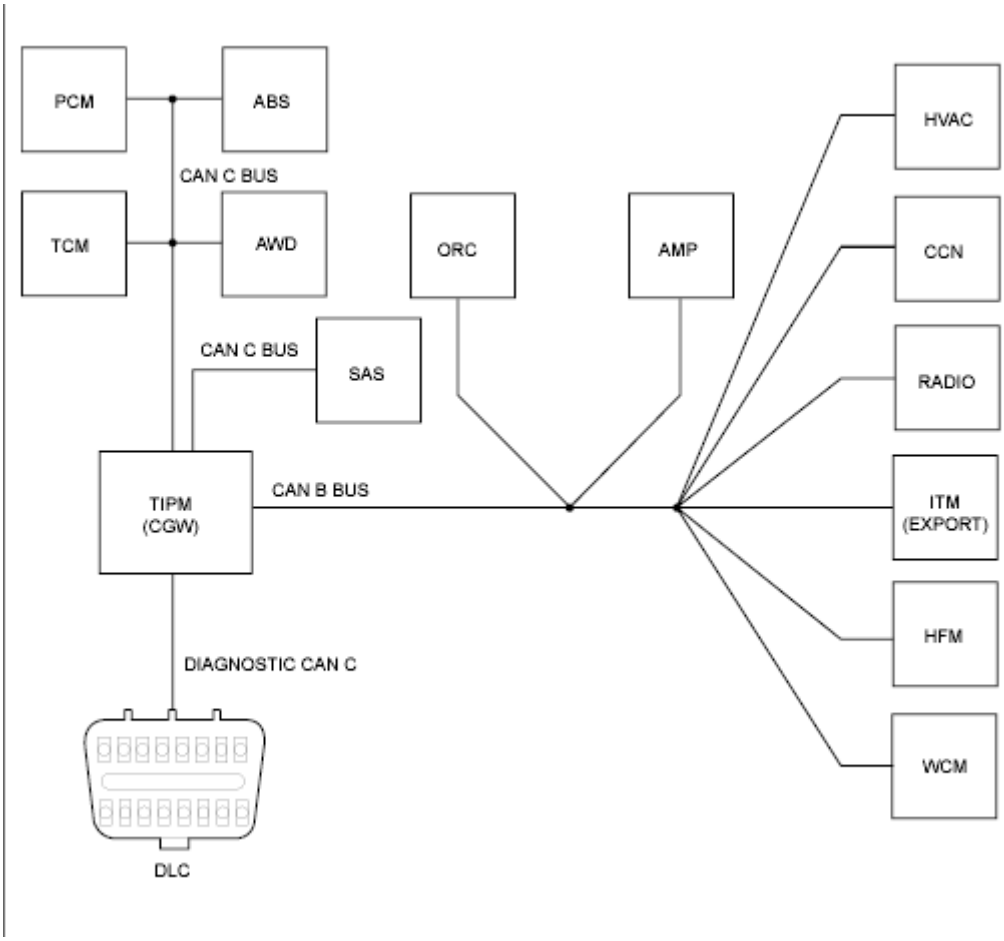

Fig. 172: Totally Integrated Power Module Diagram
Courtesy of CHRYSLER GROUP, LLC

For a complete wiring diagram, **refer to appropriate SYSTEM WIRING DIAGRAMS article** .

WHEN MONITORED

With the ignition on.

SET CONDITION

The Totally Integrated Power Module (TIPM) detects a short in either CAN C Bus circuit.

POSSIBLE CAUSES

Possible Causes
(D65) CAN C BUS (+) CIRCUIT SHORTED TO GROUND
(D64) CAN C BUS (-) CIRCUIT SHORTED TO GROUND
(D65) CAN C BUS (+) CIRCUIT SHORTED TO VOLTAGE
(D64) CAN C BUS (-) CIRCUIT SHORTED TO VOLTAGE
(D65) CAN C BUS (+) CIRCUIT SHORTED TO (D64) CAN C BUS (-) CIRCUIT
ANTILOCK BRAKE MODULE
POWERTRAIN CONTROL MODULE (PCM)
TRANSMISSION CONTROL MODULE (TCM)
ALL WHEEL DRIVE CONTROL (AWD) MODULE
STEERING ANGLE SENSOR (SAS)
TOTALLY INTEGRATED POWER MODULE (TIPM)

DIAGNOSTIC TEST

1. **TEST FOR INTERMITTENT CONDITION**

NOTE: Check for any TSB(s) related to the condition. If a TSB applies, perform the procedure outlined in the TSB before continuing.

1. Turn the ignition on.
2. With the scan tool, record and erase Totally Integrated Power Module (TIPM) DTCs.
3. Cycle the ignition from on to off three times.
4. Turn the ignition on.
5. With the scan tool, read active TIPM DTCs.

Does the scan tool display this DTC as active?

Yes

- Go To 2

No

- The conditions that caused this code to set are not present at this time. Using the wiring diagram/schematic as a guide, inspect the wiring and connectors.

2. **ANTILOCK BRAKE MODULE - INTERNAL SHORT**
   1. Turn the ignition off.
   2. Disconnect the Antilock Brake Module harness connector.
   3. Turn the ignition on.
   4. With the scan tool, record and erase TIPM DTCs.
   5. Cycle the ignition from on to off three times.
   6. Turn the ignition on.
   7. With the scan tool, read active TIPM DTCs.

   Does the scan tool display this DTC as active?

   Yes

   - Go To 3

   No

   - Inspect the wiring and connectors for damage or shorted circuits. If OK, replace the Antilock Brake Module in accordance with the Service Information.
   - Perform the ABS VERIFICATION TEST. Refer to **STANDARD PROCEDURE** .

3. **POWERTRAIN CONTROL MODULE (PCM) - INTERNAL SHORT**
   1. Turn the ignition off.
   2. Disconnect the Powertrain Control Module (PCM) C1 harness connector.

3. Turn the ignition on.
4. With the scan tool, record and erase TIPM DTCs.
5. Cycle the ignition from on to off three times.
6. Turn the ignition on.
7. With the scan tool, read active TIPM DTCs.

   Does the scan tool display this DTC as active?

   Yes

   - Go To 4

   No

   - Inspect the wiring and connectors for damage or shorted circuits. If OK, replace and program the Powertrain Control Module (PCM) or Engine Control Module (ECM) in accordance with the Service Information.
   - Perform the POWERTRAIN VERIFICATION TEST. Refer to appropriate Diagnostic Information .

4. **TRANSMISSION CONTROL MODULE (TCM) - INTERNAL SHORT**
   1. Turn the ignition off.
   2. Disconnect the Transmission Control Module C1 harness connector.
   3. Turn the ignition on.
   4. With the scan tool, record and erase TIPM DTCs.
   5. Cycle the ignition from on to off three times.
   6. Turn the ignition on.
   7. With the scan tool, read active TIPM DTCs.

   Does the scan tool display this DTC as active?

   Yes

   - Go To 5

   No

- Inspect the wiring and connectors for damage or shorted circuits. If OK, replace and program the Transmission Control Module (TCM) in accordance with the Service Information.
- Perform the CVT VERIFICATION TEST. Refer to **STANDARD PROCEDURE** .

5. **ALL WHEEL DRIVE CONTROL (AWD) MODULE - INTERNAL SHORT**
   1. Turn the ignition off.
   2. Disconnect the AWD Module harness connector.
   3. Turn the ignition on.
   4. With the scan tool, record and erase TIPM DTCs.
   5. Cycle the ignition from on to off three times.
   6. Turn the ignition on.
   7. With the scan tool, read active TIPM DTCs.

   Does the scan tool display U0001-CAN C BUS as active?

   Yes

   - Go To 6

   No

   - Inspect the wiring and connectors for damage or shorted circuits. If OK, replace and program the All Wheel Drive Control (AWD) Module in accordance with the Service Information.
   - Perform the AWD CONTROL MODULE VERIFICATION TEST. Refer to **STANDARD PROCEDURE** .

6. **STEERING CONTROL MODULE (SAS) - INTERNAL SHORT**
   1. Turn the ignition off.
   2. Disconnect the Clockspring C3 (SAS) harness connector.
   3. Turn the ignition on.
   4. With the scan tool, record and erase TIPM DTCs.
   5. Cycle the ignition from on to off three times.
   6. Turn the ignition on.

7. With the scan tool, read active TIPM DTCs.

   Does the scan tool display this DTC as active?

   Yes

   - Go To 7

   No

   - Inspect the wiring and connectors for damage or shorted circuits. If OK, replace and program the Clockspring (SAS) in accordance with the Service Information.
   - Perform the BODY VERIFICATION TEST. Refer to **STANDARD PROCEDURE** .

7. **(D65) CAN C BUS (+) CIRCUIT SHORTED TO VOLTAGE**

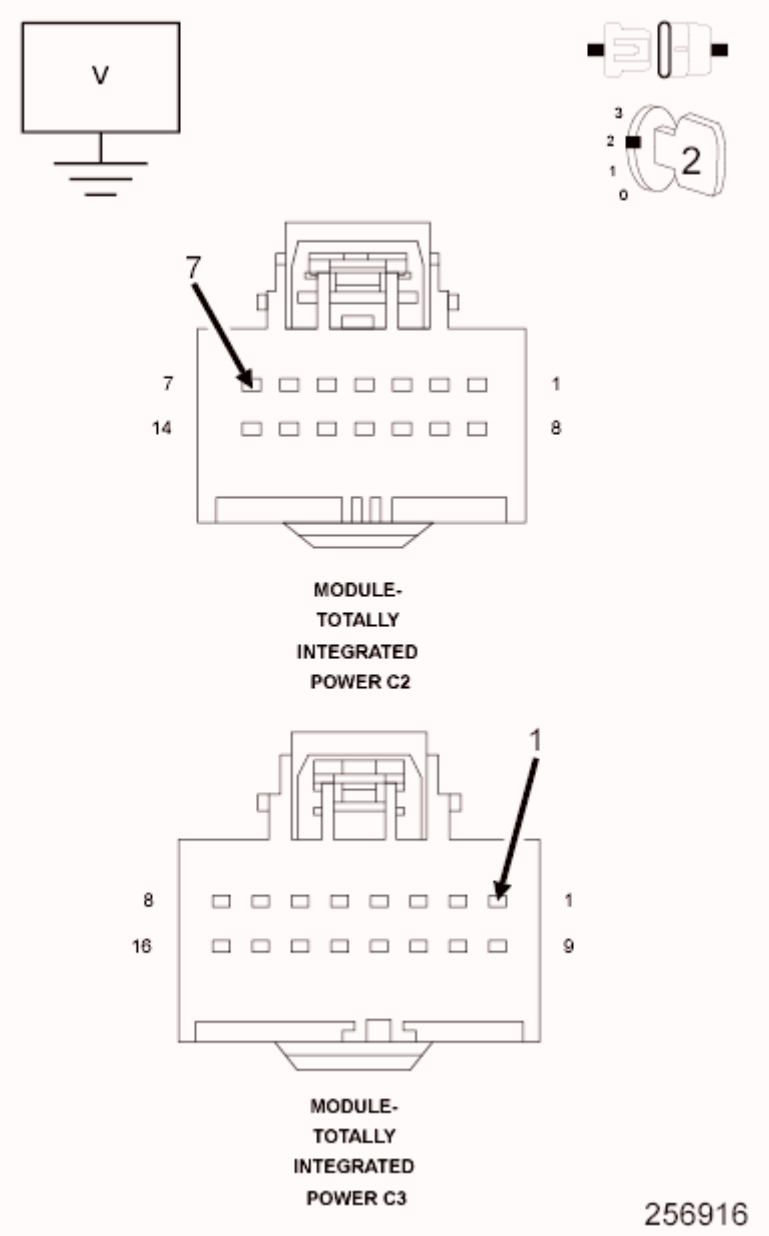

Fig. 173: Checking CAN C BUS (+) Circuit For Short To Voltage
Courtesy of CHRYSLER GROUP, LLC

1. Turn the ignition off.
2. Disconnect the TIPM C3 harness connector.
3. Turn the ignition on.
4. Measure the voltage between the (D65) CAN C Bus (+) circuit and ground.

   Is there any voltage present?

   Yes

- Repair the (D65) CAN C Bus (+) circuit for a short to voltage.
- Perform the BODY VERIFICATION TEST. Refer to **STANDARD PROCEDURE** .

No

- Go To 8

8. **(D64) CAN C BUS (-) CIRCUIT SHORTED TO VOLTAGE**

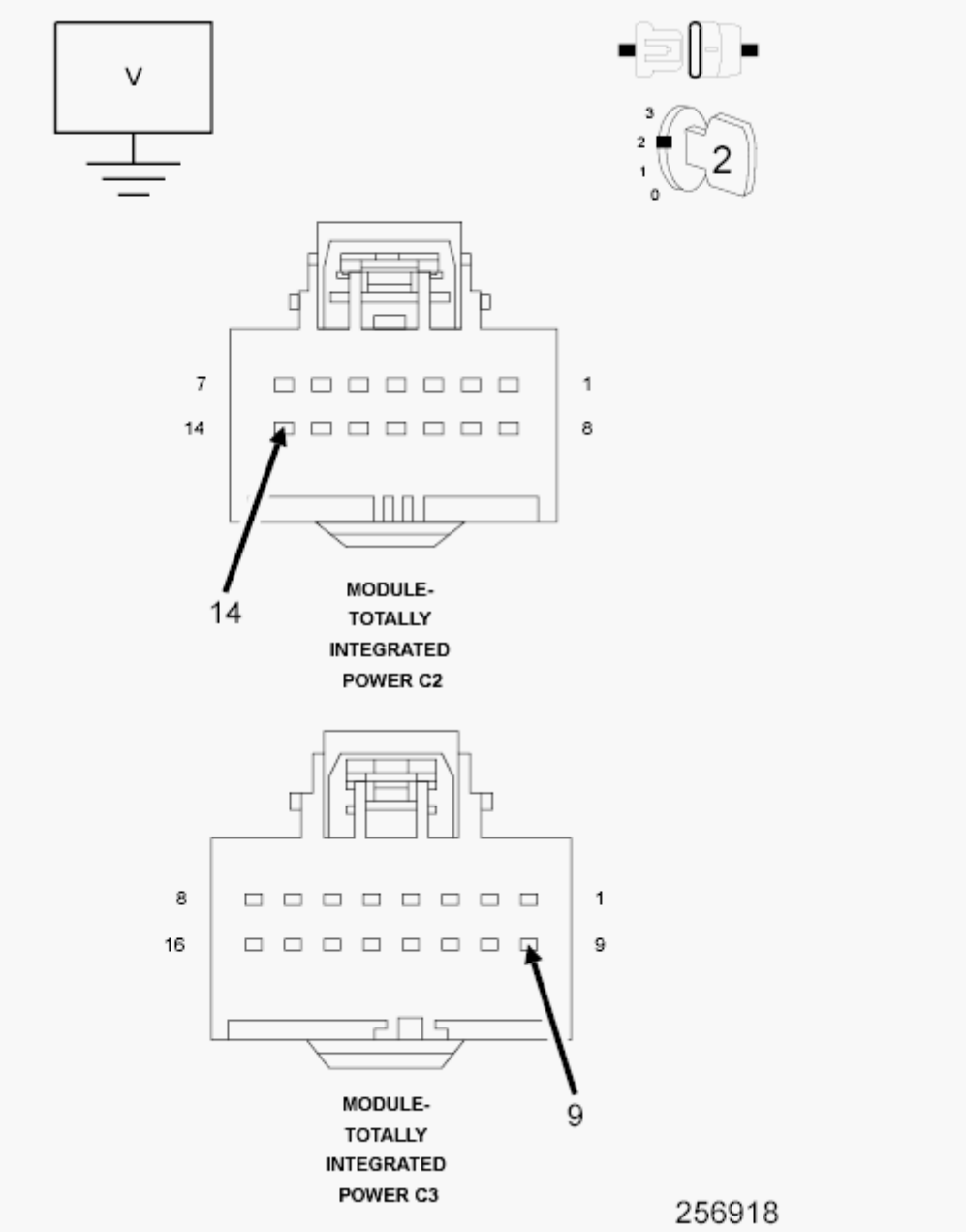

Fig. 174: Checking CAN C Bus (-) Circuit For Short To Voltage
Courtesy of CHRYSLER GROUP, LLC

1. Measure the voltage between the (D64) CAN C Bus (-) circuit and ground.

   Is there any voltage present?

   Yes

   - Repair the (D64) CAN C Bus (-) circuit for a short to voltage.
   - Perform the BODY VERIFICATION TEST. Refer to **STANDARD PROCEDURE** .

   No

   - Go To 9

9. **(D65) CAN C BUS (+) CIRCUIT SHORTED TO GROUND**

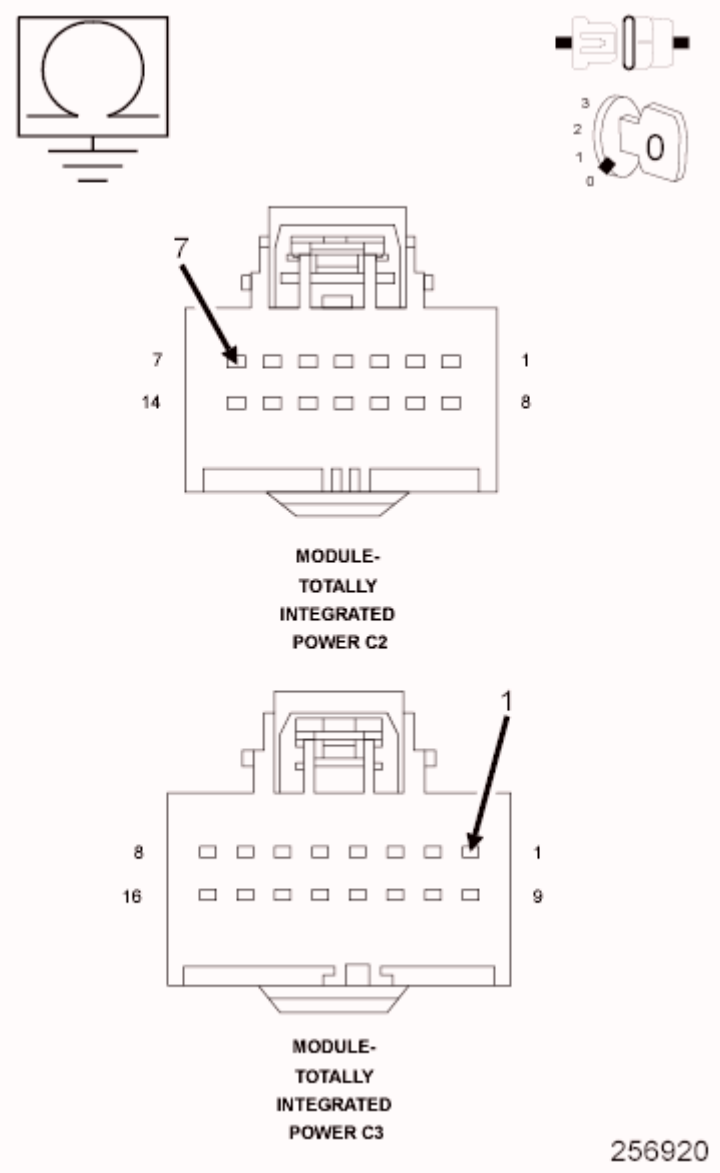

Fig. 175: Checking CAN C Bus (+) Circuit For Short To Ground
Courtesy of CHRYSLER GROUP, LLC

1. Turn the ignition off.
2. Measure the resistance between ground and the (D65) CAN C Bus (+) circuit.

   Is any resistance present?

   Yes

   - Repair the (D65) CAN C Bus (+) circuit for a short to ground.
   - Perform the BODY VERIFICATION TEST. Refer to **STANDARD PROCEDURE** .

No

- Go To 10

10. **(D64) CAN C BUS (-) CIRCUIT SHORTED TO GROUND**

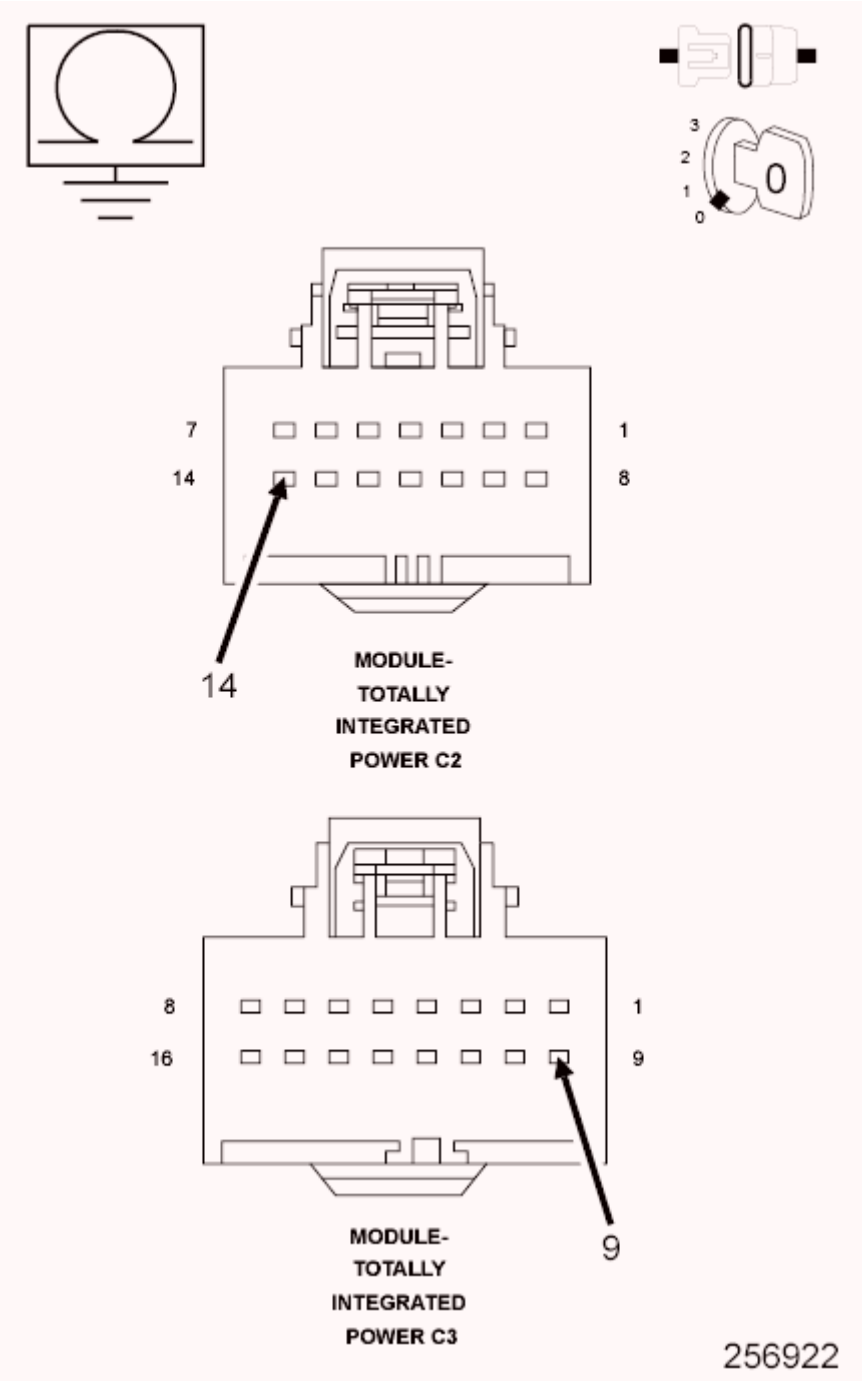

Fig. 176: Checking CAN C Bus (-) Circuit For Short To Ground
Courtesy of CHRYSLER GROUP, LLC

1. Measure the resistance between ground and the (D64) CAN C Bus (-)

circuit.

Is any resistance present?

Yes

- Repair the (D64) CAN C Bus (-) circuit for a short to ground.
- Perform the BODY VERIFICATION TEST. Refer to **STANDARD PROCEDURE** .

No

- Go To 11

11. **(D65) CAN C BUS (+) CIRCUIT SHORTED TO (D64) CAN C BUS (-) CIRCUIT**

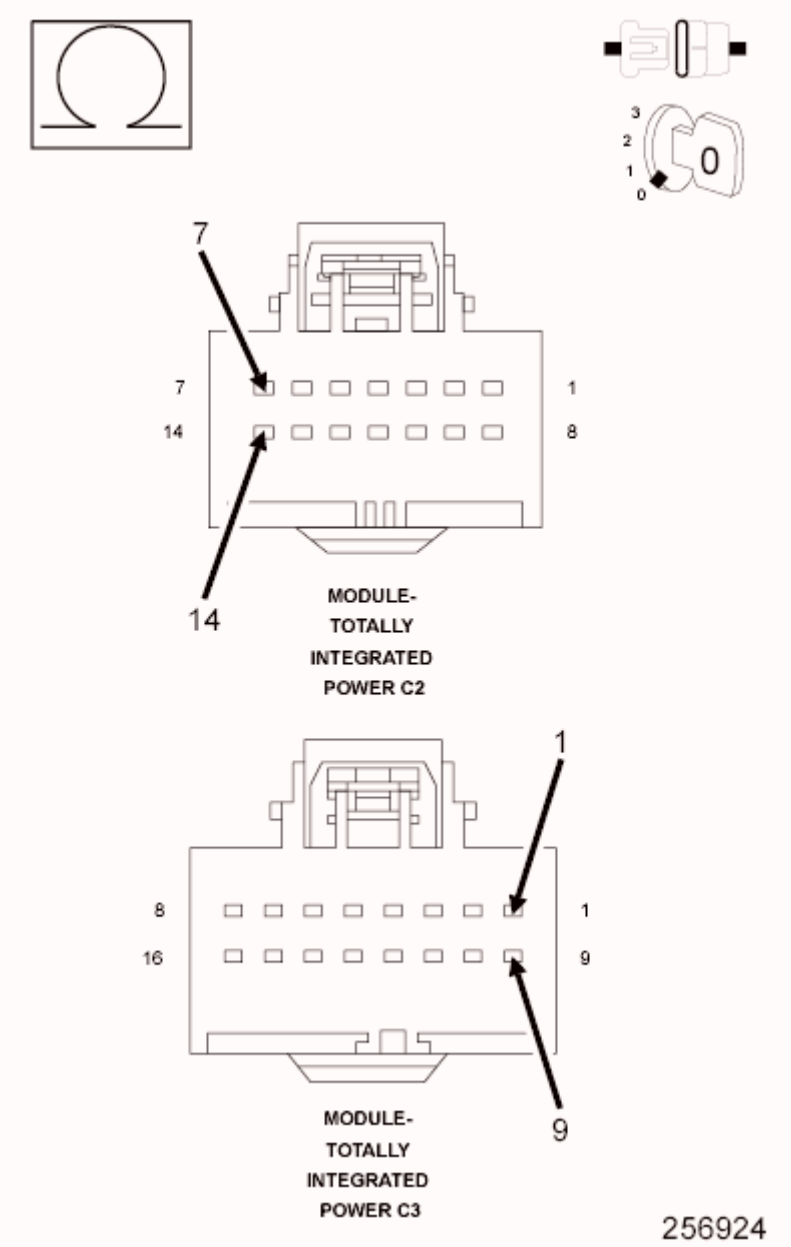

Fig. 177: Measuring Resistance Between CAN C Bus (+) Circuit & CAN C Bus (-) Circuit
Courtesy of CHRYSLER GROUP, LLC

1. Measure the resistance between the (D65) CAN C Bus (+) circuit and the (D64) CAN C Bus (-) circuit.

   Is any resistance present?

   Yes

   - Repair the (D65) CAN C Bus (+) circuit for a short to the (D64) CAN C Bus (-) circuit.

- Perform the BODY VERIFICATION TEST. Refer to **STANDARD PROCEDURE** .

No

- Inspect the wiring and connectors for damage or shorted circuits. If OK, replace and program the Totally Integrated Power Module in accordance with the Service Information.
- Perform the BODY VERIFICATION TEST. Refer to **STANDARD PROCEDURE** .

U1107-ECU IN SINGLE-WIRE MODE

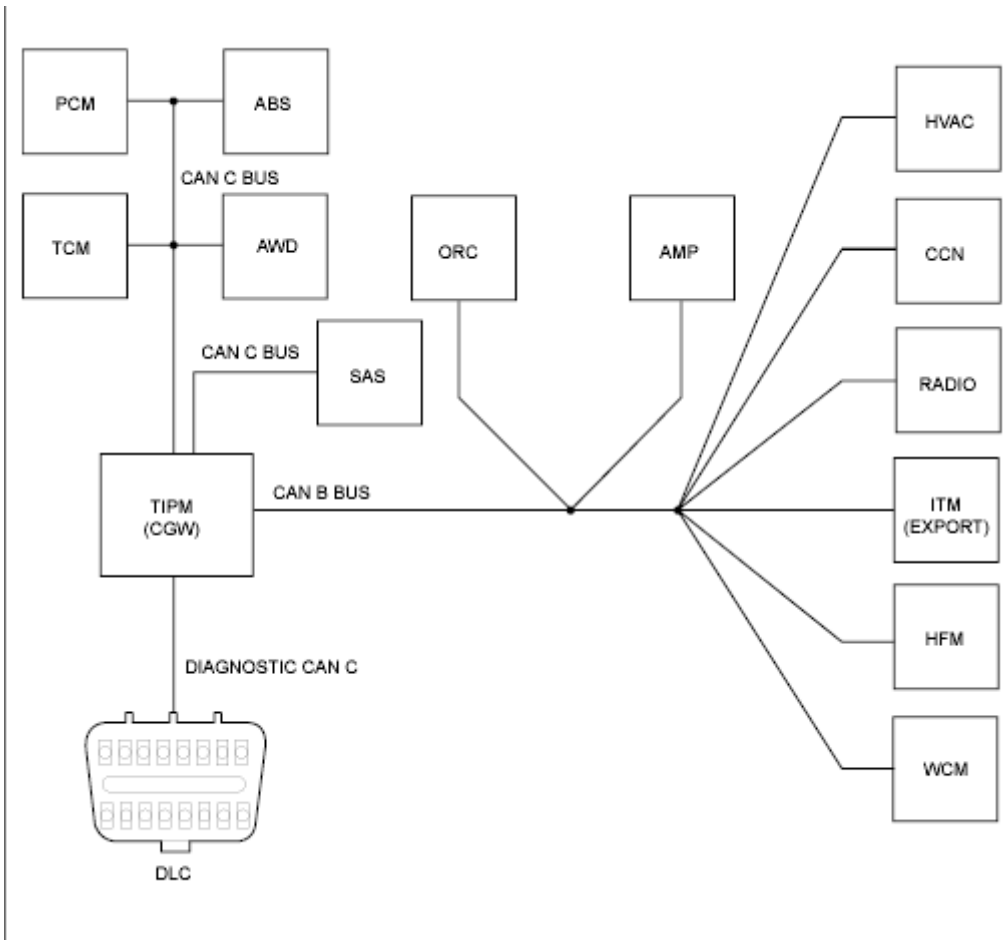

Fig. 178: Totally Integrated Power Module Diagram
Courtesy of CHRYSLER GROUP, LLC

For a complete wiring diagram, **refer to appropriate SYSTEM WIRING DIAGRAMS article** .

WHEN MONITORED

With the ignition on.

SET CONDITION

The Totally Integrated Power Module (TIPM) detects an open, a short high, a short low or a short together in either of the CAN B Bus circuits.

POSSIBLE CAUSES

Possible Causes
(D55) CAN B BUS (+) CIRCUIT SHORTED TO GROUND
(D54) CAN B BUS (-) CIRCUIT SHORTED TO GROUND
(D55) CAN B BUS (+) CIRCUIT SHORTED TO VOLTAGE
(D54) CAN B BUS (-) CIRCUIT SHORTED TO VOLTAGE
(D55) CAN B BUS (+) CIRCUIT SHORTED TO THE (D54) CAN B BUS (-) CIRCUIT
(D55) CAN B BUS (+) CIRCUIT OPEN
(D54) CAN B BUS (-) CIRCUIT OPEN
ANY CAN B BUS MODULE

DIAGNOSTIC TEST

1. **TEST FOR INTERMITTENT CONDITION**

   NOTE: Check for any TSB(s) related to the condition. If a TSB applies, perform the procedure outlined in the TSB before continuing.

   1. Turn the ignition on.
   2. Using the scan tool, record and erase TIPM DTCs.
   3. Cycle the ignition from on to off three times.
   4. Turn the ignition on.
   5. Using the scan tool, read active TIPM DTCs.

   Does the scan tool display this DTC as active?

   Yes

   - Go To 2

No

- The conditions that caused this code to set are not present at this time. Using the wiring diagram/schematic as a guide, inspect the wiring and connectors.

2. **ANY CAN B BUS MODULE - INTERNAL FAULT**
   1. Turn the ignition off.
   2. Using the scan tool, monitor the active TIPM DTCs.
   3. While monitoring the scan tool, disconnect each CAN B Bus module one at a time.

      NOTE: When performing the above step, turn the ignition off (wait one minute) before disconnecting any module. When the module is disconnected turn the ignition on.

      NOTE: This is to determine if the fault is internal within a module.

   4. Check for this DTC to become active after disconnecting each CAN B Bus module the vehicle is equipped with.

      NOTE: If the DTC becomes stored when a particular CAN B Bus module is disconnected, that module is causing the DTC to set.

      With all the CAN B Bus modules disconnected did the TIPM still set this DTC as active?

      Yes

      - Go To 3

      No

      - Replace the module that when disconnected the DTC became stored.
      - Perform the BODY VERIFICATION TEST. Refer to **STANDARD PROCEDURE** .

3. **(D55) CAN B BUS (+) CIRCUIT FOR A SHORT TO VOLTAGE**

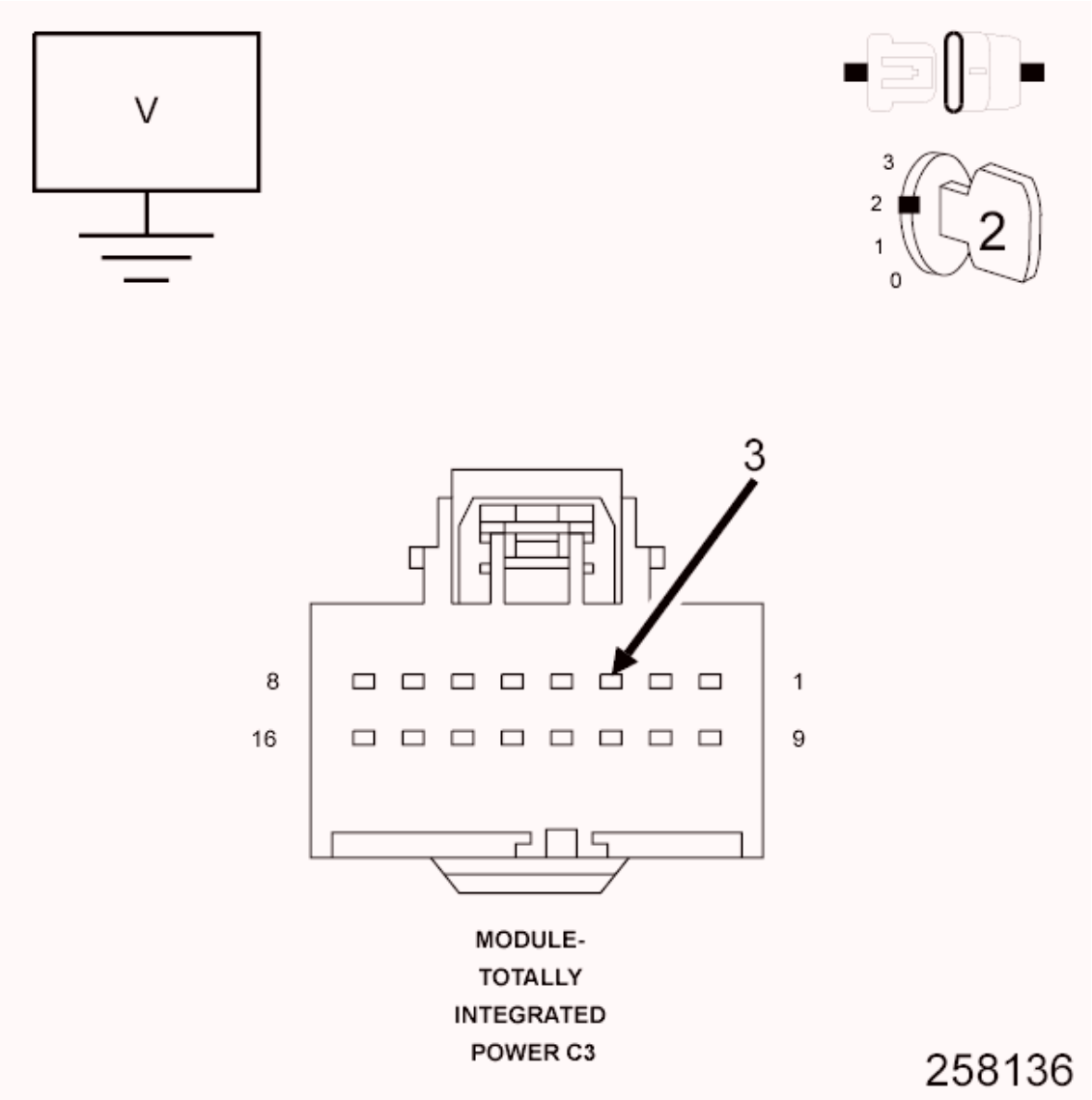

Fig. 179: Measuring Voltage Between CAN B Bus (+) Circuit & Ground
Courtesy of CHRYSLER GROUP, LLC

1. Turn the ignition off.
2. Disconnect the TIPM C3 harness connector.

NOTE: Make sure each CAN B Bus module is disconnected at this time.

3. Turn the ignition on.
4. Measure the voltage between the (D55) CAN B Bus (+) circuit and ground.

Is the voltage above 10.0 volts?

Yes

- Repair the (D55) CAN B Bus (+) circuit for a short to voltage.
- Perform the BODY VERIFICATION TEST. Refer to **STANDARD PROCEDURE** .

No

- Go To 4

4. **(D54) CAN B BUS (-) CIRCUIT FOR A SHORT TO VOLTAGE**

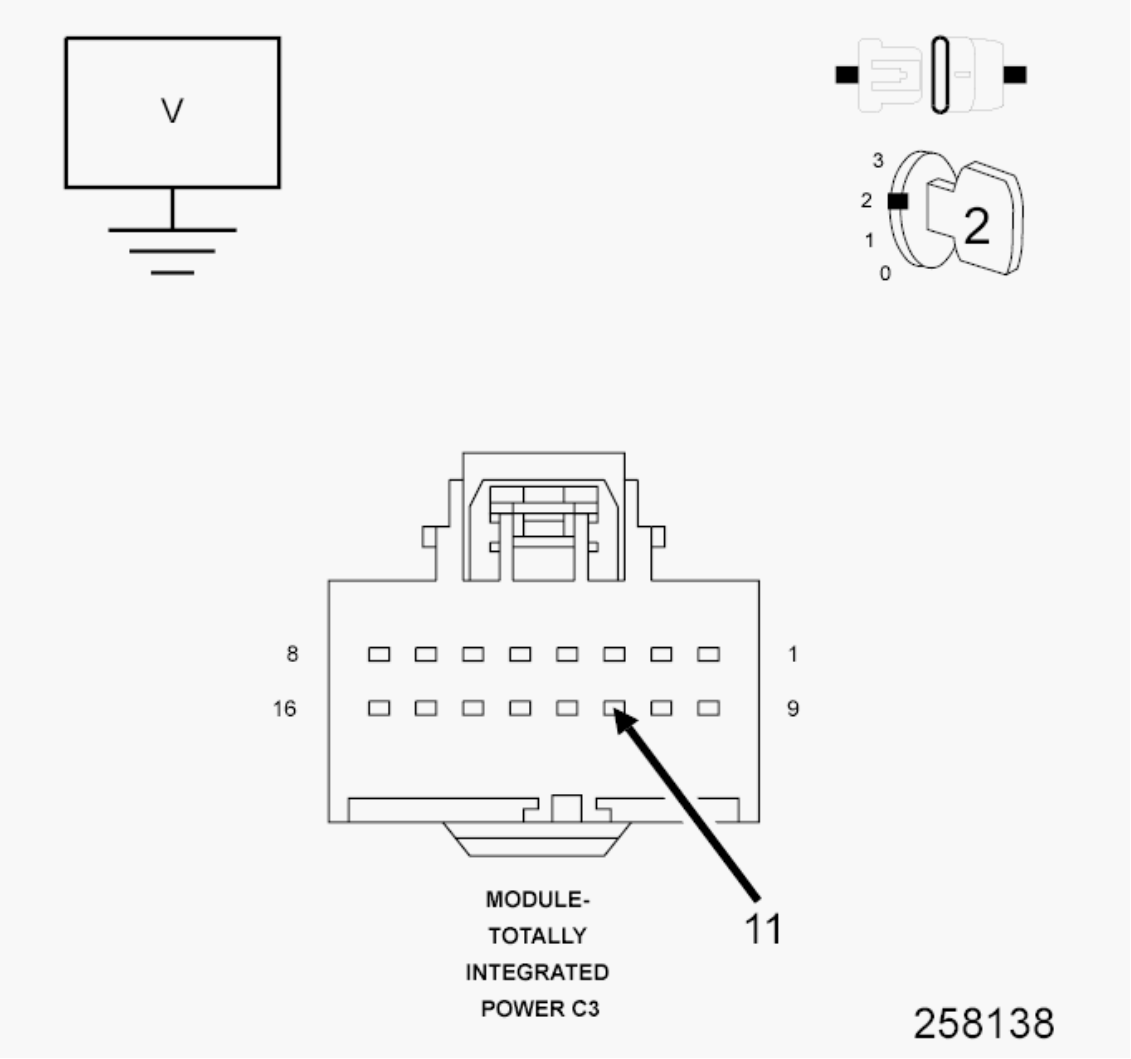

Fig. 180: Measuring Voltage Between CAN B Bus (-) Circuit & Ground
Courtesy of CHRYSLER GROUP, LLC

NOTE: Make sure each CAN B Bus module is disconnected at this time.

1. Measure the voltage between the (D54) CAN B Bus (-) circuit and ground.

   Is the voltage above 10.0 volts?

   Yes

   - Repair the (D54) CAN B Bus (-) circuit for a short to voltage.
   - Perform the BODY VERIFICATION TEST. Refer to **STANDARD PROCEDURE** .

   No

   - Go To 5

5. **(D55) CAN B BUS (+) CIRCUIT FOR A SHORT TO GROUND**

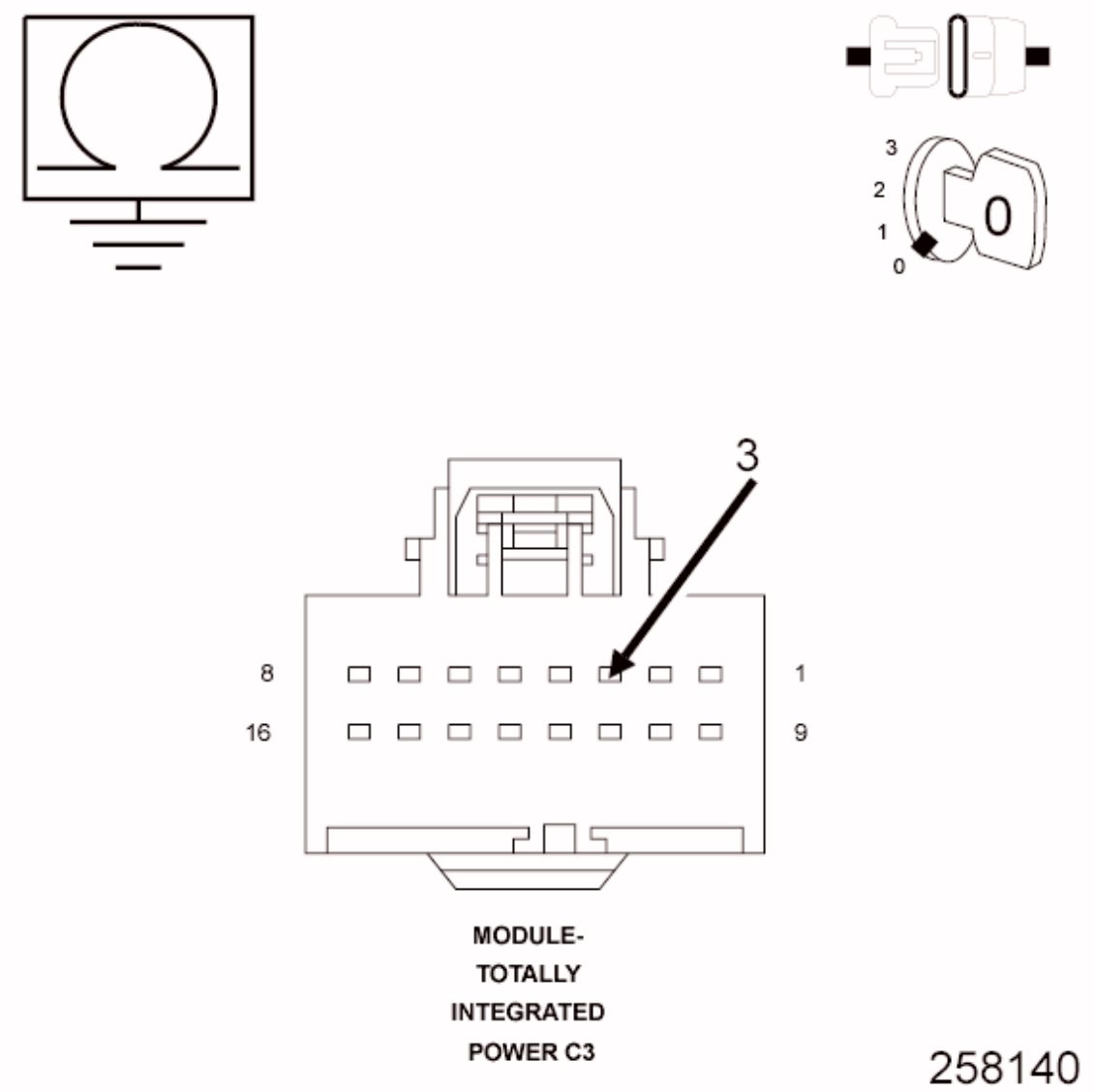

Fig. 181: Measuring Resistance Between Ground & CAN B Bus (+) Circuit
Courtesy of CHRYSLER GROUP, LLC

1. Turn the ignition off.

   NOTE: Make sure each CAN B Bus module is disconnected at this time.

2. Measure the resistance between ground and the (D55) CAN B Bus (+) circuit.

   Is the resistance above 1000.0 Ohms?

   Yes

- Go To 6

No

- Repair the (D55) CAN B Bus (+) circuit for a short to ground.
- Perform the BODY VERIFICATION TEST. Refer to **STANDARD PROCEDURE** .

6. **(D54) CAN B BUS (-) CIRCUIT FOR A SHORT TO GROUND**

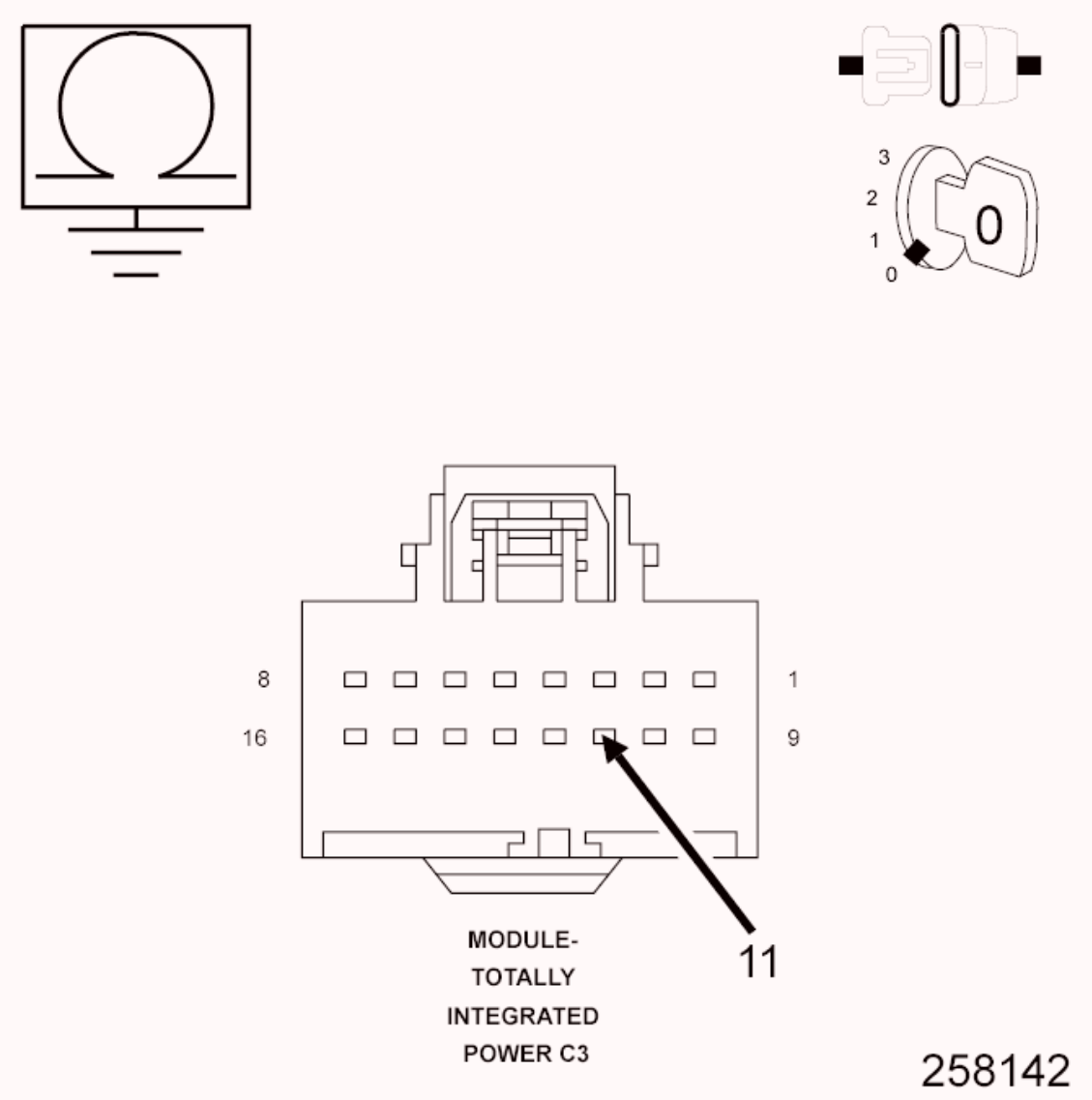

Fig. 182: Measuring Resistance Between Ground & CAN B Bus (-) Circuit
Courtesy of CHRYSLER GROUP, LLC

NOTE: Make sure each CAN B Bus module is disconnected

at this time.

1. Measure the resistance between ground and the (D54) CAN B Bus (-) circuit.

   Is the resistance above 1000.0 Ohms?

   Yes

   - Go To 7

   No

   - Repair the (D54) CAN B Bus (-) circuit for a short to ground.
   - Perform the BODY VERIFICATION TEST. Refer to **STANDARD PROCEDURE** .

7. **(D55) CAN B BUS (+) CIRCUIT SHORTED TO THE (D54) CAN B BUS (-) CIRCUIT**

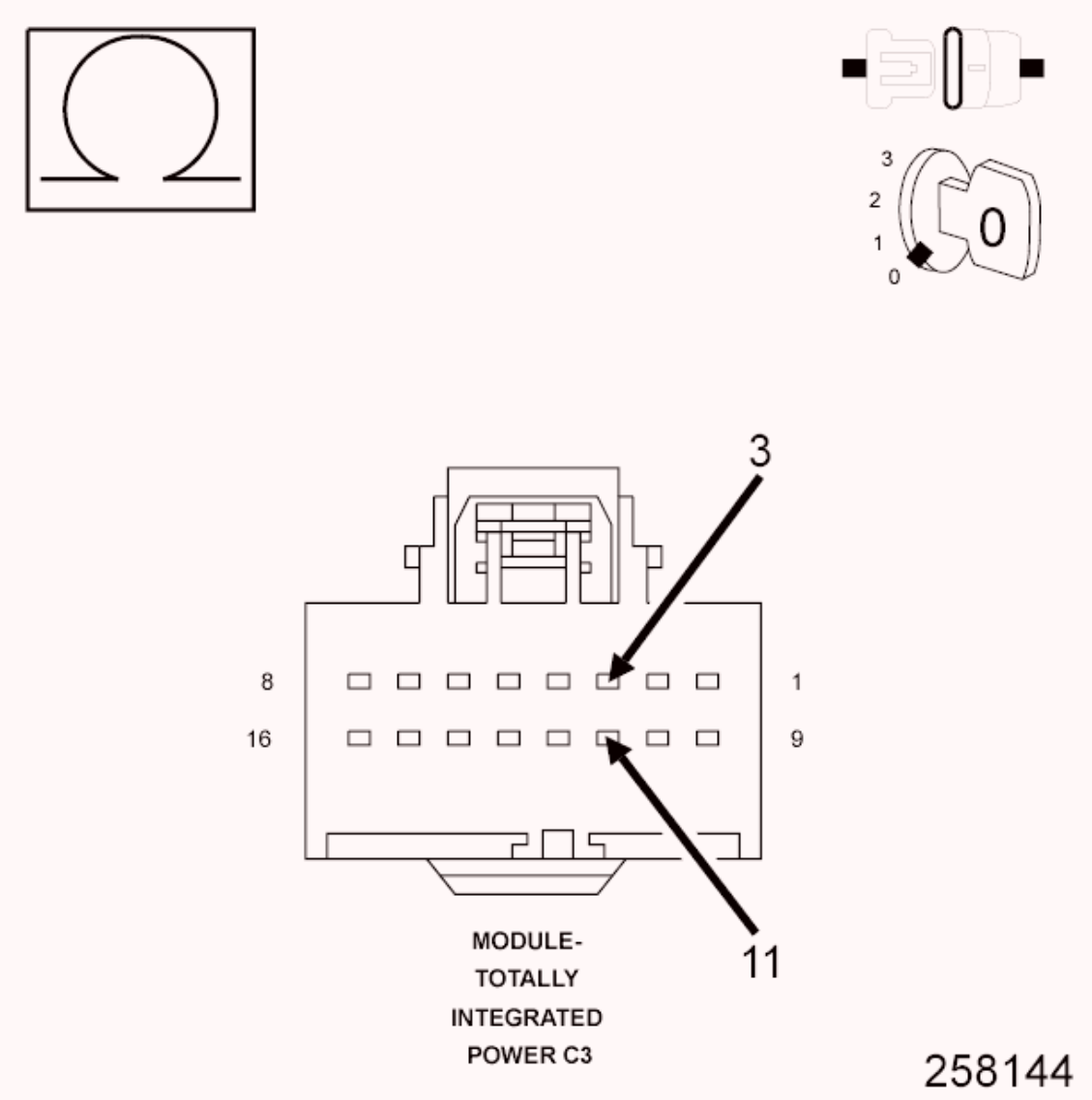

Fig. 183: Measuring Resistance Between CAN B Bus (+) Circuit & CAN B Bus (-) Circuit
Courtesy of CHRYSLER GROUP, LLC

1. Measure the resistance between the (D55) CAN B Bus (+) circuit and (D54) CAN B Bus (-) circuit.

   NOTE: Make sure each CAN B Bus module is disconnected at this time.

   Is any resistance present?

   Yes

   - Repair the (D55) CAN B Bus (+) circuit for a short to the (D54)

CAN B Bus (-) circuit.

- Perform the BODY VERIFICATION TEST. Refer to **STANDARD PROCEDURE** .

No

- Go To 8

8. **(D55) CAN B BUS (+) CIRCUIT OPEN**

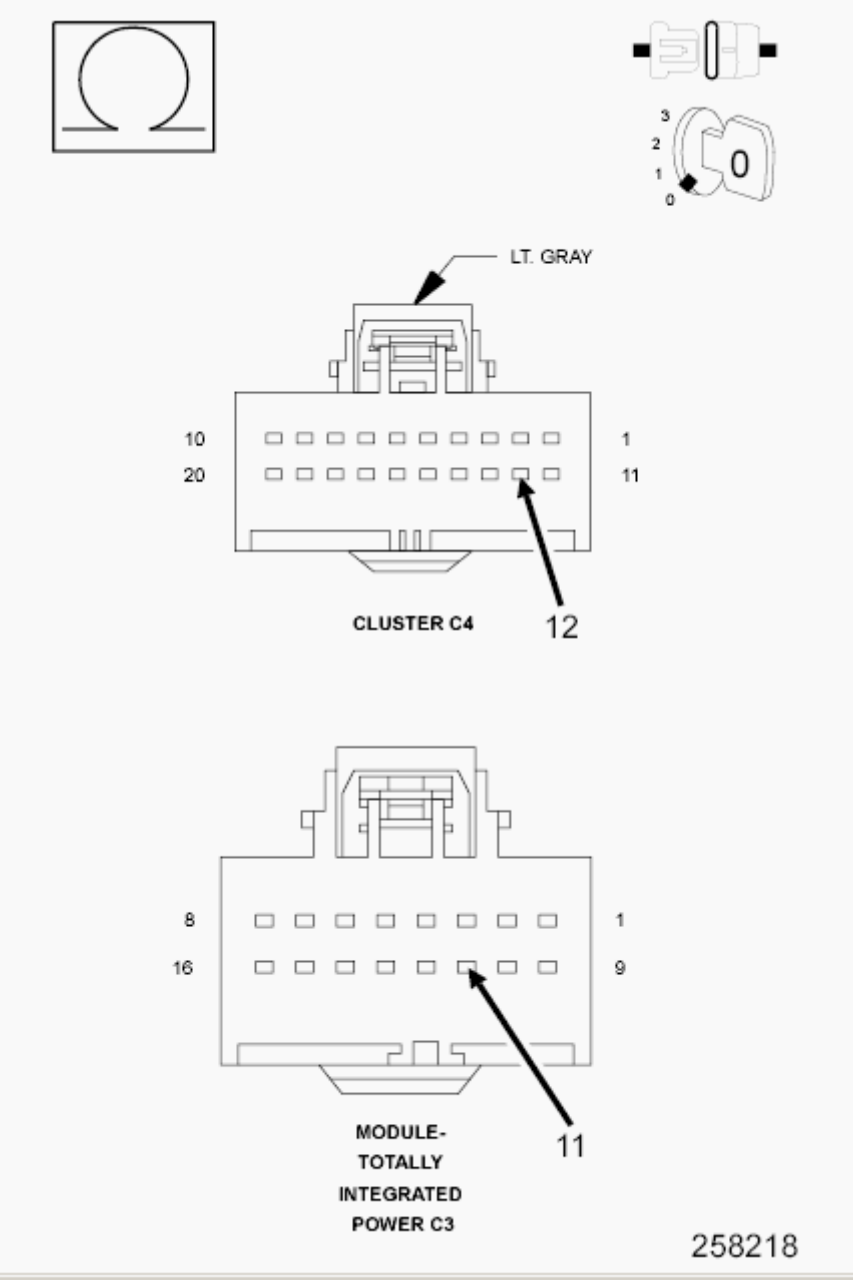

Fig. 184: Checking CAN B BUS (+) Circuit For Open
Courtesy of CHRYSLER GROUP, LLC

1. Measure the resistance of the (D55) CAN B Bus (+) circuit between the TIPM C3 harness connector and the Cluster C4 harness connector.

   Is the resistance above 10.0 Ohms?

   Yes

   - Repair the (D55) CAN B Bus (+) circuit for an open or high resistance.
   - Perform the BODY VERIFICATION TEST. Refer to **STANDARD PROCEDURE** .

   No

   - Go To 9

9. **(D54) CAN B BUS (-) CIRCUIT OPEN**

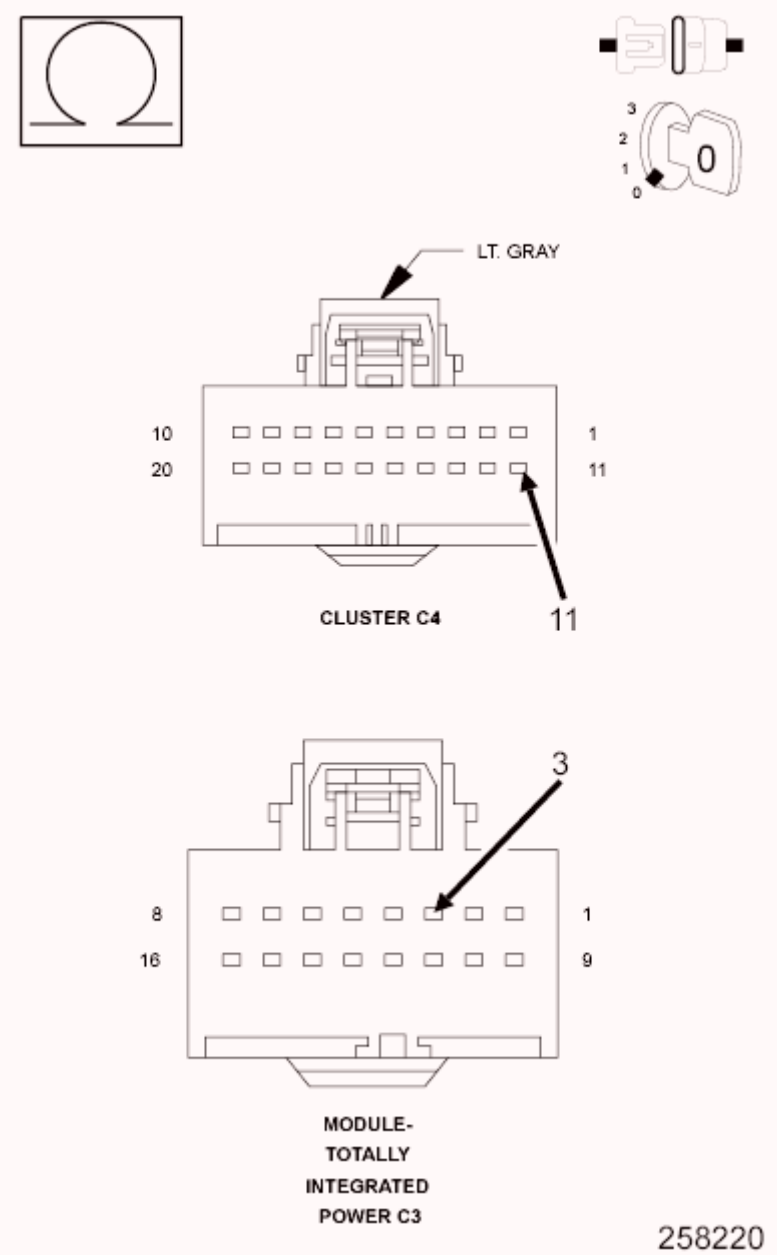

Fig. 185: Checking CAN B BUS (-) Circuit For Open
Courtesy of CHRYSLER GROUP, LLC

1. Measure the resistance of the (D54) CAN B Bus (-) circuit between the TIPM C3 harness connector and the Cluster C4 harness connector.

   Is the resistance above 10.0 Ohms?

   Yes

   - Repair the (D54) CAN B Bus (-) circuit for an open or high resistance.

- Perform the BODY VERIFICATION TEST. Refer to **STANDARD PROCEDURE** .

No

- Replace and program the Totally Integrated Power Module (TIPM) in accordance with the Service Information.
- Perform the BODY VERIFICATION TEST. Refer to **STANDARD PROCEDURE** .

U1108-ADDITIONAL CAN B ECU DETECTED

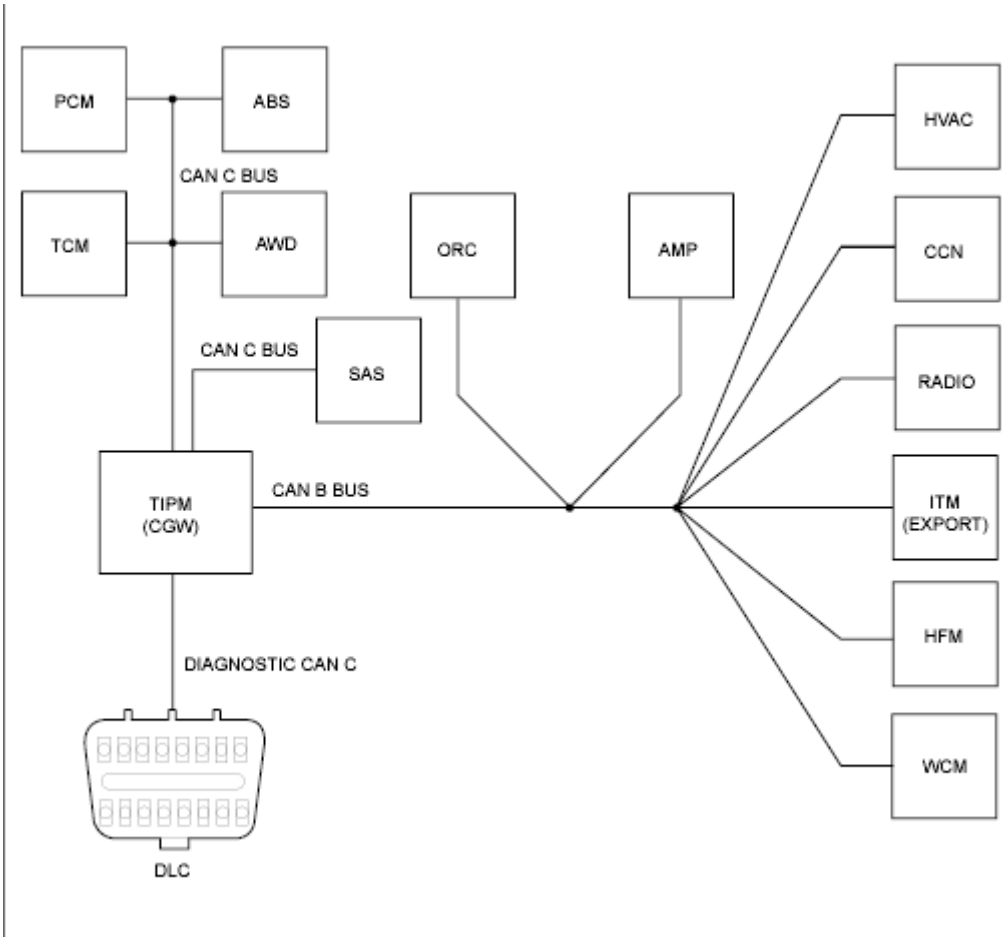

Fig. 186: Totally Integrated Power Module Diagram
Courtesy of CHRYSLER GROUP, LLC

For a complete wiring diagram, **refer to appropriate SYSTEM WIRING DIAGRAMS article** .

WHEN MONITORED

Continuously.

SET CONDITION

The Totally Integrated Power Module (TIPM) detects an additional CAN B module and requires a reconfiguration.

POSSIBLE CAUSES

Possible Causes
ADDITIONAL MODULE ADDED/REMOVED FROM THE CAN B BUS NETWORK

DIAGNOSTIC TEST

RECONFIGURE THE TOTALLY INTEGRATED POWER MODULE

NOTE: Check for any TSB(s) related to the condition. If a TSB applies, perform the procedure outlined in the TSB before continuing.

1. Turn the ignition on.
2. Using the scan tool, select network view and press the gateway button. This will list the CAN modules on the vehicle. Read and record the listed modules.
3. Using the scan tool, select TIPM, miscellaneous functions then add/remove ECUs.
4. Using the scan tool, add or remove the module that was not configured in the TIPM.
5. Using the scan tool, erase DTCs.
6. Cycle the ignition from on to off three times and read the active TIPM DTCs.

   Does the scan tool display this DTC as active?

   Yes

   - Retest the system and attempt to reconfigure the Totally Integrated Power Module.
   - Perform the BODY VERIFICATION TEST. Refer to **STANDARD**

PROCEDURE .

No

- Repair is complete.
- Perform the BODY VERIFICATION TEST. Refer to **STANDARD PROCEDURE** .

2014 ACCESSORIES AND EQUIPMENT

Totally Integrated Power Module (TIPM) - Electrical Diagnostics - Compass & Patriot

DIAGNOSTIC CODE INDEX

DIAGNOSTIC CODE INDEX

DTC	Description
B106B	REAR DEFROST CONTROL CIRCUIT LOW
B106C	REAR DEFROST CONTROL CIRCUIT HIGH
B106D	REAR DEFROST CONTROL CIRCUIT OPEN
B10B4	CABIN HEATER 1 CONTROL CIRCUIT LOW
B10B5	CABIN HEATER 1 CONTROL CIRCUIT HIGH
B10B6	CABIN HEATER 1 CONTROL CIRCUIT OPEN
B10B8	CABIN HEATER 2 CONTROL CIRCUIT LOW
B10B9	CABIN HEATER 2 CONTROL CIRCUIT HIGH
B10BA	CABIN HEATER 2 CONTROL CIRCUIT OPEN
B10BE	CONDENSER FAN CONTROL CIRCUIT LOW
B10BF	CONDENSER FAN CONTROL CIRCUIT HIGH
B10C0	CONDENSER FAN CONTROL CIRCUIT OPEN
B10E9	BLOWER MOTOR CONTROL CIRCUIT LOW
B10EA	BLOWER MOTOR CONTROL CIRCUIT HIGH
B10EC	BLOWER MOTOR CONTROL CIRCUIT OVERCURRENT
B10ED	REAR DEFROST CONTROL CIRCUIT OVERCURRENT
B10EE	CONDENSOR FAN CONTROL CIRCUIT OVERCURRENT
B162B	LEFT LOW BEAM CONTROL CIRCUIT LOW
B162C	LEFT LOW BEAM CONTROL CIRCUIT HIGH
B162F	RIGHT LOW BEAM CONTROL CIRCUIT LOW
B1630	RIGHT LOW BEAM CONTROL CIRCUIT HIGH
B1633	LEFT HI BEAM CONTROL CIRCUIT LOW
B1634	LEFT HI BEAM CONTROL CIRCUIT HIGH
B1637	RIGHT HIGH BEAM CONTROL CIRCUIT LOW
B1638	RIGHT HI BEAM CONTROL CIRCUIT HIGH
B163B	FRONT LEFT TURN CONTROL CIRCUIT LOW

B163C	FRONT LEFT TURN CONTROL CIRCUIT HIGH
B163F	FRONT RIGHT TURN CONTROL CIRCUIT LOW
B1640	FRONT RIGHT TURN CONTROL CIRCUIT HIGH
B1643	REAR LEFT TURN CONTROL CIRCUIT LOW
B1644	REAR LEFT TURN CONTROL CIRCUIT HIGH
B1647	REAR RIGHT TURN CONTROL CIRCUIT LOW
B1648	REAR RIGHT TURN CONTROL CIRCUIT HIGH
B1659	FRONT FOG LAMP CONTROL CIRCUIT LOW
B1659	FRONT FOG LAMP CONTROL CIRCUIT LOW - MK49
B165C	PARK LAMP CONTROL CIRCUIT LOW
B165D	LEFT PARK LAMP CONTROL CIRCUIT HIGH
B165E	PARK LAMP CONTROL CIRCUIT OPEN
B1660	FRONT FOG LAMP CONTROL CIRCUIT HIGH
B1660	FRONT FOG LAMP CONTROL CIRCUIT HIGH - MK49
B1661	FRONT FOG LAMP CONTROL CIRCUIT OPEN
B1661	FRONT FOG LAMP CONTROL CIRCUIT OPEN - MK49
B1663	REAR FOG LAMP CONTROL CIRCUIT LOW
B1664	REAR FOG LAMP CONTROL CIRCUIT HIGH
B1667	REVERSE LAMP CONTROL CIRCUIT-LOW
B1668	REVERSE LAMP CONTROL CIRCUIT-HIGH
B1669	REVERSE LAMP CONTROL CIRCUIT-OPEN
B16D0	LEFT DRL LAMP CONTROL CIRCUIT LOW
B16D1	LEFT DRL LAMP CONTROL CIRCUIT HIGH
B16D4	RIGHT DRL LAMP CONTROL CIRCUIT LOW
B16D5	RIGHT DRL LAMP CONTROL CIRCUIT HIGH
B1784	STOP LAMP CONTROL CIRCUIT LOW
B1785	STOP LAMP CONTROL CIRCUIT HIGH
B1786	STOP LAMP CONTROL CIRCUIT OPEN
B178B	REVERSE LAMP CONTROL CIRCUIT - OVERCURRENT
B178D	FRONT FOG LAMP CONTROL CIRCUIT - OVERCURRENT
B181E	HOOD AJAR INPUT CIRCUIT-PERFORMANCE
B181F	HOOD AJAR INPUT CIRCUIT - LOW

B1820	HOOD AJAR INPUT CIRCUIT - HIGH
B18BB	WINDOW CONTROL CIRCUIT LOW
B191D	WINDOW CONTROL CIRCUIT OVERCURRENT
B2104	IGNITION RUN/START CONTROL CIRCUIT LOW
B2105	IGNITION RUN/START 1 CONTROL CIRCUIT - HIGH
B2106	IGNITION RUN/START 1 CONTROL CIRCUIT - OPEN
B210D	BATTERY VOLTAGE - LOW
B210E	BATTERY VOLTAGE - HIGH
B2112	5-VOLT SUPPLY CIRCUIT LOW
B2113	5-VOLT SUPPLY CIRCUIT HIGH
B2122	IGNITION RUN CONTROL 1 CIRCUIT LOW
B212F	IGNITION RUN/ACC CONTROL CIRCUIT LOW
B2148	IGNITION RUN CONTROL 2 CIRCUIT LOW
B2184	IGNITION UNLOCK RUN/START CONTROL CIRCUIT LOW
B2188	IGNITION START CONTROL CIRCUIT LOW
B218B	IGNITION RUN/START 1 CONTROL CIRCUIT OVERCURRENT
B2206	CURRENT VIN MISSING - MISMATCH
B2215	FRONT CONTROL MODULE INTERNAL (TIPM)
B222C	VEHICLE CONFIGURATION - NOT PROGRAMMED
B2304	WIPER PARK SWITCH INPUT CIRCUIT LOW
B2305	WIPER PARK SWITCH INPUT CIRCUIT HIGH
B231B	REAR WIPER MOTOR CONTROL CIRCUIT LOW
B231C	REAR WIPER MOTOR CONTROL CIRCUIT HI
B231F	FRONT/REAR WASHER MOTOR CONTROL CIRCUIT LOW
B2320	FRONT/REAR WASHER MOTOR CONTROL CIRCUIT HIGH
B2324	HEADLAMP WASHER MOTOR CONTROL CIRCUIT HIGH
B2325	HEADLAMP WASHER MOTOR CONTROL CIRCUIT OPEN
B2336	HORN CONTROL CIRCUIT LOW
B2337	HORN CONTROL CIRCUIT HIGH

B2338	HORN CONTROL CIRCUIT OPEN
B2346	WIPER MOTOR LOW SPEED CONTROL CIRCUIT LOW
B2347	WIPER MOTOR LOW SPEED CONTROL CIRCUIT HIGH
B2348	B2348 WIPER MOTOR LOW SPEED CONTROL CIRCUIT OPEN
B234A	WIPER MOTOR HIGH SPEED CONTROL CIRCUIT LOW
B234B	WIPER MOTOR HIGH SPEED CONTROL CIRCUIT HIGH
B234C	WIPER MOTOR HI SPEED CONTROL CIRCUIT OPEN
B2367	WINDOW WASHER MOTOR 1 CONTROL CIRCUIT
B2368	WINDOW WASHER MOTOR 1 CONTROL CIRCUIT LOW
B2369	WINDOW WASHER MOTOR 1 CONTROL CIRCUIT HIGH
B236A	WINDOW WASHER MOTOR 1 CONTROL CIRCUIT OPEN
B236F	WIPER MOTOR LOW SPEED CONTROL CIRCUIT OVERCURRENT
B2370	WIPER MOTOR HIGH SPEED CONTROL CIRCUIT OVERCURRENT
B2371	HORN CONTROL CIRCUIT OVERCURRENT
C1000	BRAKE PEDAL SWITCH 1 CIRCUIT - PERFORMANCE
C1002	BRAKE SWITCH STUCK HIGH
C1008	BRAKE FLUID LEVEL CIRCUIT HIGH
P0072	AMBIENT AIR TEMPERATURE SENSOR CIRCUIT - LOW
P0073	AMBIENT AIR TEMPERATURE SENSOR CIRCUIT - HIGH
P0533	A/C PRESSURE SENSOR CIRCUIT - HIGH
P0691	COOLING FAN 1 CONTROL CIRCUIT LOW
P0692	COOLING FAN 1 CONTROL CIRCUIT HIGH
P0693	COOLING FAN 2 CONTROL CIRCUIT LOW

P0694	COOLING FAN 2 CONTROL CIRCUIT HIGH
P1277	STARTER CONTROL CIRCUIT 2 LOW
P1278	STARTER CONTROL CIRCUIT 2 HIGH
P1279	STARTER CONTROL CIRCUIT 2 OPEN
P127A	STARTER CONTROL CIRCUIT 2 OVERCURRENT
P127C	FUEL PUMP CONTROL CIRCUIT 2 LOW
P127D	FUEL PUMP CONTROL CIRCUIT 2 HIGH
P127E	FUEL PUMP CONTROL CIRCUIT 2 OPEN
P127F	FUEL PUMP CONTROL CIRCUIT 2 OVERCURRENT
P128B	TCM POWER CONTROL CIRCUIT 2 LOW
P128C	TCM POWER CONTROL CIRCUIT 2 HIGH
P128D	TCM POWER CONTROL CIRCUIT 2 OPEN
P128E	TCM POWER CONTROL CIRCUIT 2 OVERCURRENT
U0001	CAN C BUS CIRCUIT
U0019	CAN B BUS
U0021	CAN B BUS (+) CIRCUIT OPEN
U0022	CAN B BUS (+) CIRCUIT LOW
U0023	CAN B BUS (+) CIRCUIT HIGH
U0024	CAN B BUS (-) CIRCUIT OPEN
U0025	CAN B BUS (-) CIRCUIT LOW
U0026	CAN B BUS (-) CIRCUIT HIGH
U0027	CAN B BUS (-) SHORTED TO BUS (+)
U0100	LOST COMMUNICATION WITH PCM
U0101	LOST COMMUNICATION WITH TCM
U0114	LOST COMMUNICATION WITH FINAL DRIVE CONTROL MODULE (ALL WHEEL DRIVE CONTROL MODULE) (AWD)
U0121	LOST COMMUNICATION WITH ANTILOCK BRAKE MODULE
U0126	LOST COMMUNICATION WITH STEERING ANGLE SENSOR
U0141	LOST COMMUNICATION WITH IPM (FCM/TIPM)
U0151	LOST COMMUNICATION WITH OCCUPANT RESTRAINT CONTROLLER (ORC)
U0155	LOST COMMUNICATION WITH CLUSTER/CCN

U0164	LOST COMMUNICATION WITH HVAC CONTROL MODULE
U0167	LOST COMMUNICATION WITH INTRUSION TRANSCEIVER CONTROL MODULE (ITM)
U0168	LOST COMMUNICATION WITH VEHICLE SECURITY CONTROL MODULE (WCM)
U0184	LOST COMMUNICATION WITH RADIO
U0186	LOST COMMUNICATION WITH AUDIO AMPLIFIER (AMP)
U0197	LOST COMMUNICATION WITH HANDS FREE PHONE MODULE (HFM)
U1105	CAN B SIGNAL MISSING
U1106	CAN C SIGNAL MISSING
U1107	ECU IN SINGLE-WIRE MODE
U1108	ADDITIONAL CAN B ECU DETECTED

2014 ACCESSORIES AND EQUIPMENT

Universal Transmitter - Compass & Patriot

DESCRIPTION

DESCRIPTION

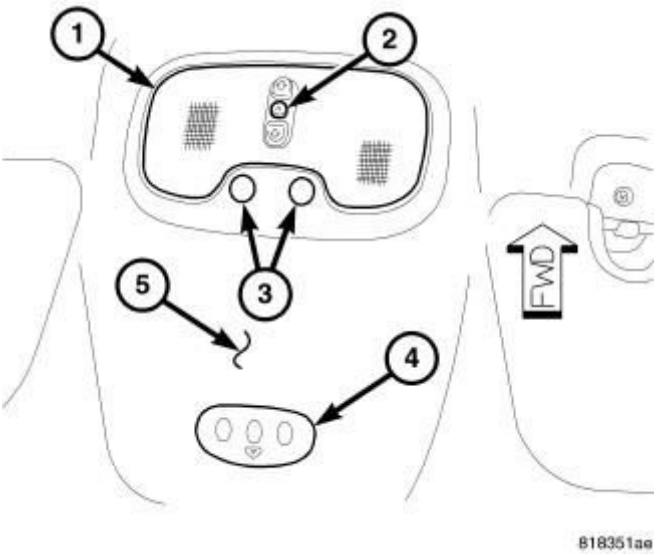

Fig. 1: Sunroof Switch
Courtesy of CHRYSLER GROUP, LLC

Some vehicles are equipped with a Universal Transmitter transceiver (4). The universal transmitter transceiver (4) is located in the headliner (5) just to the rear of the courtesy/reading lamps (1). The only visible component of the universal transmitter are the three transmitter push buttons. The three universal transmitter push buttons are identified with raised buttons and contain a transmit indicator that lights during operation and programming functions.

Each of the three universal transmitter push buttons controls an independent radio transmitter channel. Each of these three channels can be trained to transmit a different radio frequency signal for the remote operation of garage door openers, motorized gate openers, home or office lighting, security systems or just about any other device that can be equipped with a radio receiver in the 280 to 435 MegaHertz (MHz) frequency range for remote operation. The universal transmitter is capable of operating systems using either rolling code or non-rolling code technology. The system will not transmit operating signals if the Vehicle Theft Security System is armed.

The universal transmitter cannot be repaired, and if inoperative or damaged, the

complete module assembly must be replaced.

OPERATION

OPERATION

The HomeLink® transceiver operates on a non-switched source of battery current so the unit will remain functional, regardless of the ignition switch position. For more information on the features, programming procedures and operation of the HomeLink® transceiver, see the owner's manual in the vehicle glove box.

DIAGNOSIS AND TESTING

DIAGNOSIS AND TESTING - UNIVERSAL TRANSMITTER

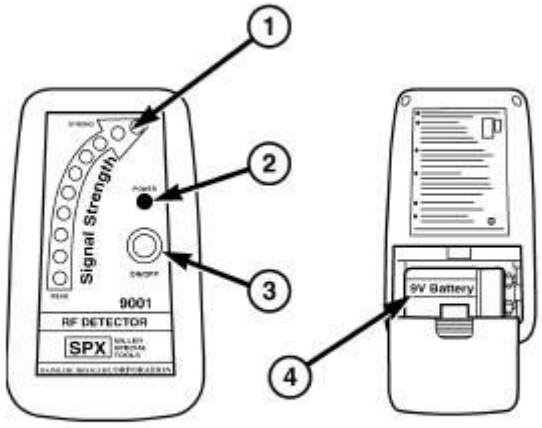

Fig. 2: Radio Frequency Detector
Courtesy of CHRYSLER GROUP, LLC

If the universal transmitter is inoperative, retrain the universal transmitter with a known good transmitter. Be certain that the transmitter battery is okay. Refer to **STANDARD PROCEDURE**. Test the universal transmitter operation again. If the unit is still inoperative, test the universal transmitter with the Radio Frequency Detector special tool as described below:

1. Turn the Radio Frequency (RF) Detector ON (3). An audible chirp will

sound and the green power Light Emitting Diode (LED) unit (2) will light. If the green LED unit does not light, replace the battery (4).

2. Hold the RF detector within 2.5 cm (1 inch) of the TRAINED universal transmitter and press any one of the transmitter buttons.
3. The red signal detection LED units (1) will light and the tool will beep if a radio signal is detected. Repeat this test for all three transmitter buttons. If the tool does not detect a radio signal for any of the three buttons, replace the inoperative universal transmitter assembly. Refer to **REMOVAL**.

STANDARD PROCEDURE

ERASING TRANSMITTER CODES

NOTE: Individual channels (buttons) cannot be erased. Erasing the transmitter codes will erase ALL programmed codes.

To erase programming from the three transmitter buttons:

1. Press and hold the two outer HomeLink® buttons until the indicator light begins to flash (about 20 seconds). Do not hold the buttons for longer that 30 seconds.
2. Release both buttons.
3. HomeLink® is now in the train (or learning) mode and can be programmed at any time using the Programming standard procedure. Refer to **STANDARD PROCEDURE**.

PROGRAMMING HOMELINK® TRANSCEIVER CODES

PROGRAMMING COMMON HOMELINK® TRANSMITTER CODES

WARNING: Vehicle exhaust contains carbon monoxide, a dangerous gas. Do not run the engine while training the universal transmitter. Failure to follow these instructions may result in possible serious or fatal injury.

WARNING: Your motorized door or gate may open and close while you are training the HomeLink® Transceiver if the vehicle is in range of the motorized device.

Do not train the HomeLink® transceiver if people or pets are in the path of the door or gate. Failure to follow these instructions may result in possible serious or fatal injury.

NOTE: When programming a garage door opener, it is advised to park outside the garage. It is also recommended that a new battery be placed in the hand-held transmitter of the device being programmed to HomeLink® for quicker training and accurate transmission of the radio-frequency signal.

NOTE: If programing the HomeLink® transceiver is unsuccessful using the following procedure, refer to the Owner's Manual for the current customer assistance phone number.

1. Press and hold the two outer HomeLink® buttons, and release only when the indicator light begins to flash (after 20 seconds). **Do not** hold the buttons for longer than 30 seconds and **do not** repeat step one to program a second and/or third hand-held transmitter to the remaining two HomeLink® buttons.
2. Position the end of your hand-held transmitter 3-8 cm (1-3 inches) away from the HomeLink® buttons while keeping the indicator light in view.
3. Simultaneously press and hold both the HomeLink® buttons that you want to train and the hand-held transmitter button. **Do not release the buttons until step 4 has been completed.**

NOTE: Some gate operators and garage door openers may require you to replace this Programming Step 3 with procedures noted in the "Gate Operator/Canadian Programming" section.

4. The HomeLink® indicator light will flash slowly and then rapidly after HomeLink® successfully receives the frequency signal from the hand-held transmitter. Release both buttons after the indicator light changes from the slow to the rapid flash.
5. Press and hold the just trained HomeLink® button and observe the indicator

light. If the indicator light **stays on constantly, programming is complete** and your device should activate when the HomeLink® button is pressed and released.

NOTE: To program the remaining two HomeLink® buttons, begin with "Programming" step 2. Do not repeat step 1.

If the indicator light blinks rapidly for two seconds and then turns to a constant light, continue with "Programming" steps 6-8 to complete the programming of a rolling code equipped device (most commonly a garage door opener).

6. At the garage door opener receiver (motor-head unit) in the garage, locate the "learn" or "smart" button. This can usually be found where the hanging antenna wire is attached to the motor-head unit.
7. Firmly press and release the "learn" or "smart" button. (The name and color of the button may vary by manufacturer.)

NOTE: There are 30 seconds in which to initiate step 8.

8. Return to the vehicle and firmly **press, hold for two seconds and release** the programmed HomeLink® button. Repeat the **"press/hold/release"** sequence a second time, and, depending on the brand of the garage door opener (or other rolling code equipped device), repeat this sequence a third time to complete the programming.

   HomeLink® should now activate your rolling code equipped device.

NOTE: To program the remaining two HomeLink® buttons, begin with "Programming" step 2. Do not repeat step 1.

CANADIAN PROGRAMMING/GATE PROGRAMMING

Canadian radio-frequency laws require transmitter signals to "time-out" (or quit) after several seconds of transmission which may not be long enough for HomeLink® to pick up the signal during programming. Similar to this Canadian law, some U.S. gate operators are designed to "time-out" in the same manner.

If you live in Canada or you are having difficulties programming a gate operator by using the "Programming" procedures (regardless of where you live), **replace "Programming HomeLink®" step 3** with the following:

NOTE: When programming a garage door opener or gate operator, it is advised to unplug the device or move the vehicle out of range during the "cycling" process to prevent possible overheating.

Continue to press and hold the HomeLink® button while you **press and release every two seconds** ("cycle") your hand-held transmitter until the frequency signal has successfully been accepted by HomeLink®. (The indicator light will flash slowly and then rapidly.) Proceed with "Programming" step 4 to complete.

REPROGRAMMING HOMELINK® TRANSMITTER CODES

REPROGRAMMING BASIC HOMELINK® TRANSMITTER CODES

WARNING: Vehicle exhaust contains carbon monoxide, a dangerous gas. Do not run the engine while training the universal transmitter. Failure to follow these instructions may result in possible serious or fatal injury.

WARNING: Your motorized door or gate may open and close while you are training the HomeLink® Transceiver if the vehicle is in range of the motorized device. Do not train the HomeLink® transceiver if people or pets are in the path of the door or gate. Failure to follow these instructions may result in possible serious or fatal injury.

NOTE: If programing the HomeLink® transceiver is unsuccessful using the following procedure, refer to the Owner's Manual for the current customer assistance phone number.

To program a device to the HomeLink® transceiver using a button previously

trained, follow these steps:

1. Press and hold the desired HomeLink® transceiver button. **DO NOT** release the button. The indicator light will begin to flash after 20 seconds. Without releasing the HomeLink® transceiver button, proceed to step 2.
2. Position the end of your hand-held transmitter 3-8 cm (1-3 inches) away from the HomeLink® transceiver button while keeping the indicator light in view.
3. Simultaneously press and hold both the HomeLink® transceiver button that you want to train and the hand-held transmitter buttons. **Do not release the buttons until step 4 has been completed.**

   NOTE: Some gate operators and garage door openers may require you to replace this Reprogramming Step 3 with procedures noted in the "Gate Operator/Canadian Programming" section.

4. The HomeLink® transceiver indicator light will flash slowly and then rapidly after it successfully receives the frequency signal from the hand-held transmitter. Release both buttons after the indicator light changes from the slow to the rapid flash.
5. Press and hold the just trained HomeLink® transceiver button and observe the indicator light. If the indicator light **stays on constantly, reprogramming is complete** and your device should activate when the button is pressed and released.

   NOTE: If the indicator light blinks rapidly for two seconds and then turns to a constant light, continue with "Reprogramming" steps 6-8 to complete the programming of a rolling code equipped device (most commonly a garage door opener).

6. At the garage door opener receiver (motor-head unit) in the garage, locate the "learn" or "smart" button. This can usually be found where the hanging antenna wire is attached to the motor-head unit.
7. Firmly press and release the "learn" or "smart" button. (The name and color of the button may vary by manufacturer.)

NOTE: There are 30 seconds in which to initiate step 8.

8. Return to the vehicle and firmly **press, hold for two seconds and release** the reprogrammed HomeLink® transceiver button. Repeat the **"press/hold/release"** sequence a second time, and, depending on the brand of the garage door opener (or other rolling code equipped device), repeat this sequence a third time to complete the reprogramming.

   The HomeLink® transceiver should now activate your rolling code equipped device.

CANADIAN PROGRAMMING/GATE PROGRAMMING

Canadian radio-frequency laws require transmitter signals to "time-out" (or quit) after several seconds of transmission which may not be long enough for HomeLink® to pick up the signal during programming. Similar to this Canadian law, some U.S. gate operators are designed to "time-out" in the same manner.

If you live in Canada or you are having difficulties programming a gate operator by using the "Programming" procedures (regardless of where you live), **replace "Programming HomeLink®" step 3** with the following:

NOTE: When programming a garage door opener or gate operator, it is advised to unplug the device or move the vehicle out of range during the "cycling" process to prevent possible overheating.

Continue to press and hold the HomeLink® button while you **press and release every two seconds** ("cycle") your hand-held transmitter until the frequency signal has successfully been accepted by HomeLink®. (The indicator light will flash slowly and then rapidly.) Proceed with "Programming" step 4 to complete.

REMOVAL

REMOVAL

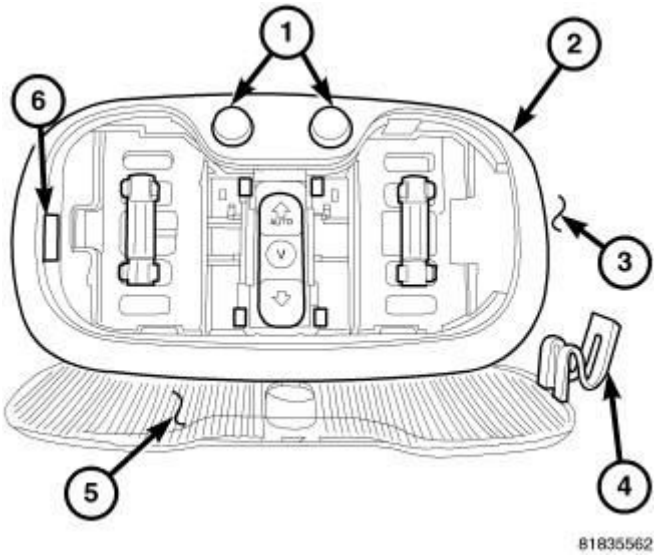

Fig. 3: Message Center Components
Courtesy of CHRYSLER GROUP, LLC

1. Disconnect and isolate the battery negative cable.
2. Remove the courtesy/reading lamp lens (5). Insert a suitable flat bladed tool into the slot (6) in the courtesy/reading lamp assembly (2). Pivot the lens down and to the left to release the holding tab (4). Remove the lamp assembly from the headliner (3).

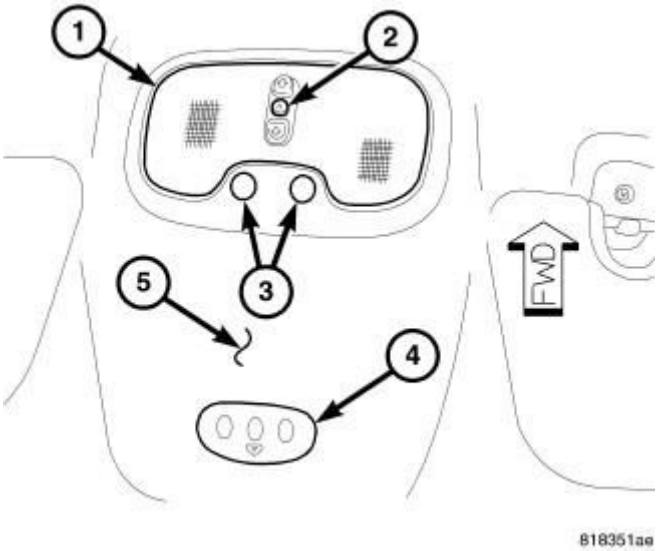

Fig. 4: Sunroof Switch
Courtesy of CHRYSLER GROUP, LLC

3. Using an appropriate flat bladed tool, remove the universal transmitter button trim bezel (4).

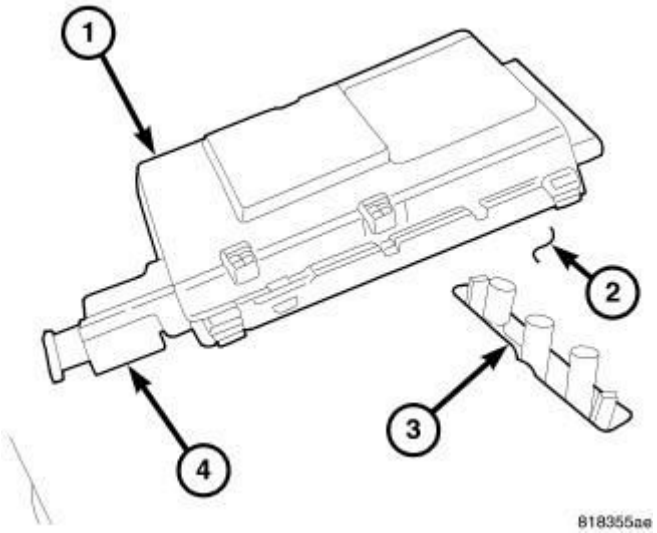

Fig. 5: Universal Transmitter Module
Courtesy of CHRYSLER GROUP, LLC

4. Working through the courtesy/reading lamp hole in the headliner, pull the universal transmitter module (1) forward and down through the headliner (2).
5. Disconnect the electrical connector.
6. Remove the universal transmitter module from the vehicle.

INSTALLATION

INSTALLATION

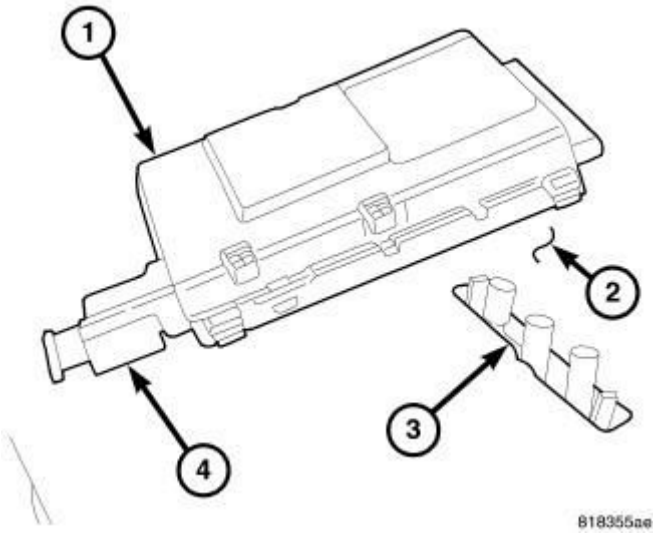

Fig. 6: Universal Transmitter Module
Courtesy of CHRYSLER GROUP, LLC

1. Position the universal transmitter module (1) into the vehicle.
2. Connect the electrical connector (4).
3. Working through the courtesy/reading lamp hole in the headliner (2), insert the universal transmitter module up into place over the cut out for the button bezel (3).

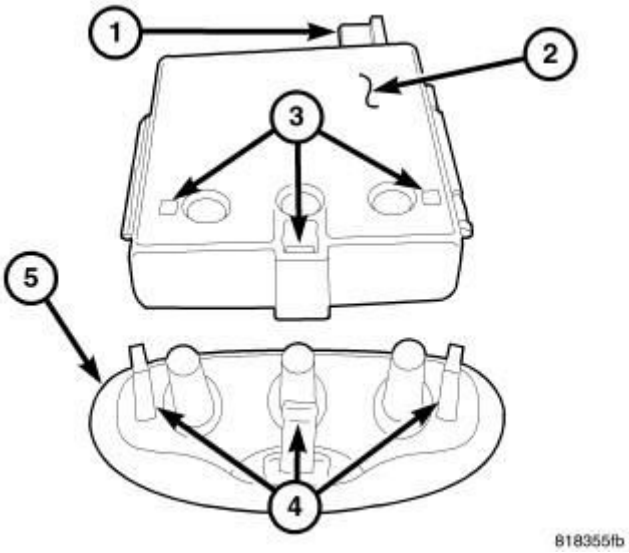

Fig. 7: Aligning Tabs With Module Slots
Courtesy of CHRYSLER GROUP, LLC

4. Position the universal transmitter module (2) so that the mounting tabs (4) on the button bezel (5) are aligned with the module slots.
5. Holding the module in place push the universal transmitter button bezel through the headliner until the mounting tabs are securely engaged with the module.

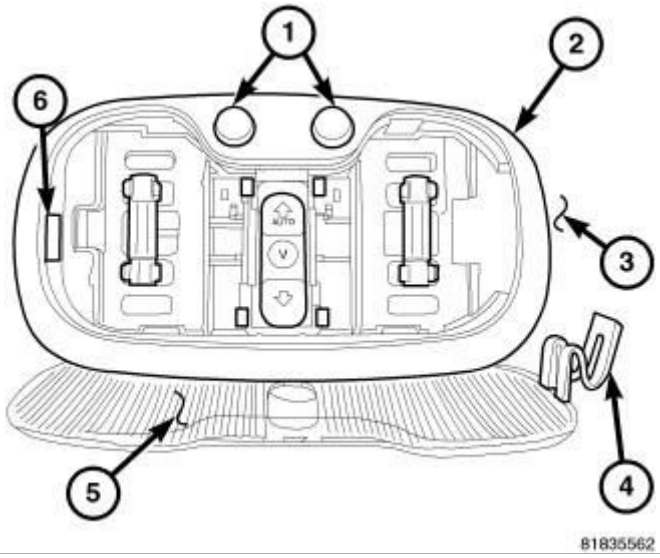

Fig. 8: Message Center Components
Courtesy of CHRYSLER GROUP, LLC

6. Position the courtesy/reading lamp assembly (2) into the headliner (3).
7. Insert the mounting tab (4) on the lamp lens (5) into the right side of the lamp assembly and pivot the lens up until it snaps securely in place.
8. Connect the battery negative cable.

2014 ACCESSORIES AND EQUIPMENT

Vehicle Theft Security - Service Information - Compass & Patriot

DESCRIPTION

DESCRIPTION

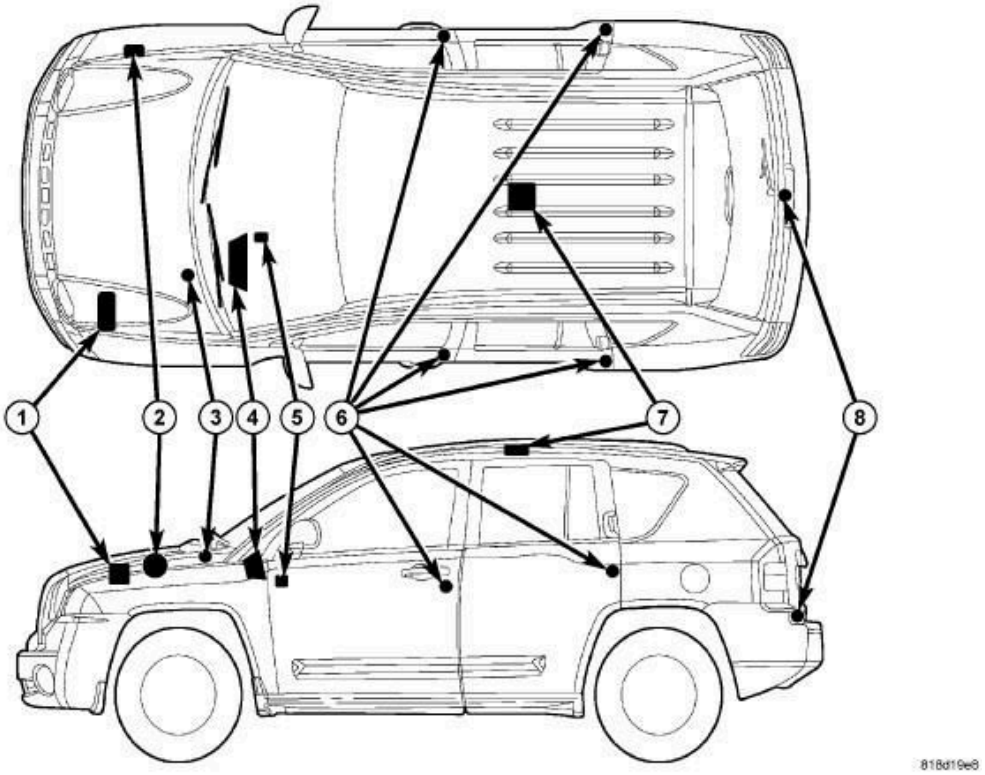

Fig. 1: Identifying Vehicle Theft Security System Components
Courtesy of CHRYSLER GROUP, LLC

The Vehicle Theft Security System (VTSS) is an available factory-installed feature on this vehicle. The VTSS is comprised of two primary subsystems: the optional Vehicle Theft Alarm (VTA) and the standard Sentry Key Immobilizer System (SKIS). The VTA is an active system that provides visual and audible responses as deterrents to and warnings of unauthorized vehicle tampering. The SKIS is a passive system that effectively immobilizes the vehicle against unauthorized operation. Following are paragraphs which describe these subsystems of the VTSS.

Certain functions and features of the VTSS rely upon resources shared with or controlled by other electronic modules in the vehicle over the Controller Area Network (CAN) data bus. Other modules that may affect VTSS operation are:

- **ElectroMechanical Instrument Cluster (4)** - The ElectroMechanical Instrument Cluster (EMIC) (also known as the Cab Compartment Node/CCN) in this vehicle. The EMIC/CCN is located in the instrument panel above the steering column opening, directly in front of the driver. The EMIC provides the VTA system logic and security indicator control. Refer to **DESCRIPTION** .
- **Powertrain Control Module** - The Powertrain Control Module (PCM) provides the SKIS engine control logic. Refer to **MODULE, POWERTRAIN CONTROL, DESCRIPTION** .
- **Totally Integrated Power Module (2)** - The Totally Integrated Power Module (TIPM) is located in the engine compartment, near the battery. Refer to **MODULE, TOTALLY INTEGRATED POWER (TIPM), DESCRIPTION** .

Except for the Sentry Key transponders, which rely upon Radio Frequency (RF) communication, hard wired circuitry connects the VTA and SKIS components to the electrical system of the vehicle. These hard wired circuits are integral to several wire harnesses, which are routed throughout the vehicle and retained by many different methods. These circuits may be connected to each other, to the vehicle electrical system and to the SKIS components through the use of a combination of soldered splices, splice block connectors, and many different types of wire harness terminal connectors and insulators. Refer to the appropriate wiring information. The wiring information includes wiring diagrams, proper wire and connector repair procedures, further details on wire harness routing and retention, as well as pin out and location views for the various wire harness connectors, splices and grounds.

SENTRY KEY IMMOBILIZER SYSTEM

The Sentry Key Immobilizer System (SKIS) is standard factory-installed equipment on this vehicle. The SKIS provides passive vehicle protection by preventing the engine from operating unless a valid electronically encoded key is detected in the ignition lock cylinder.

The SKIS includes the following major components, which are described in further detail elsewhere in this service information:

- **Security Indicator** - A security indicator is integral to the ElectroMechanical Instrument Cluster (EMIC) (also known as the Cab

Compartment Node/CCN). Refer to **DESCRIPTION** .

- **Sentry Key Remote Entry Module (5)** - The Sentry Key REmote Entry Module (SKREEM) (also known as the Wireless Control Module/WCM) is located on the right side of the steering column near the ignition lock cylinder housing and an integral molded plastic antenna ring circles the ignition lock cylinder like a halo. The SKREEM and its antenna are concealed beneath the shrouds on the steering column. Refer to **MODULE, SENTRY KEY IMMOBILIZER (SKREEM), DESCRIPTION**.
- **Sentry Key Transponder** - The Sentry Key transponder is contained within the Remote Keyless Entry (RKE) transmitter integral to the head of the ignition key. Refer to **KEY, TRANSPONDER, DESCRIPTION**.

VEHICLE THEFT ALARM

The VTA is available in two different configurations for this vehicle: One configuration is designed for vehicles manufactured for sale in North America; while, the other configuration is designed for vehicles manufactured for sale in markets outside of North America, also referred to as export markets within the context of this service information. In addition, the VTA for export is available in two versions: base and premium. All vehicles equipped with VTA are also equipped with the Remote Keyless Entry (RKE) system and the Sentry Key Immobilizer System (SKIS), regardless of their market destination.

The North American and export base version of the VTA system provide perimeter vehicle protection by monitoring the vehicle doors, the ignition switch, the liftgate and, for vehicles built for certain markets where it is required equipment, the hood. If unauthorized vehicle use or tampering is detected, these systems respond by pulsing the vehicle horn as an audible deterrent and flashing certain exterior lamps as a visual deterrent.

The export premium version of the VTA system is only available in vehicles manufactured for sale in certain markets where it is required equipment. The export premium version of the VTA provides the same perimeter protection features as the base version, but adds interior vehicle intrusion protection. The export premium VTA also replaces the pulsing horn feature of the base version with an alarm siren as the audible deterrent, while retaining the flashing exterior lamps as the visual deterrent.

The VTA includes the following major components, which are described in

further detail elsewhere in this service information:

- **Door Ajar Switches (6)** - A door ajar switch is integral to the door latch mechanism of each front and rear door. Refer to **LATCH, REMOVAL** .
- **Hood Ajar Switch (3)** - A hood ajar switch is located in a bracket on the left side of the cowl plenum panel within the engine compartment of vehicles built for sale in certain export markets where it is required equipment.
- **Intrusion Transceiver Module (7)** - An intrusion transceiver module is integral to the dome lamp located in the center of the headliner over the rear seating area in the passenger compartment of vehicles built for sale in certain export markets where it is required equipment.
- **Liftgate Ajar Switch (8)** - A liftgate ajar switch is integral to the latch for the liftgate in the vehicle. Refer to **LATCH, REMOVAL** .
- **Security Indicator** - A security indicator is integral to the ElectroMechanical Instrument Cluster (EMIC) (also known as the Cab Compartment Node/CCN). Refer to **DESCRIPTION** .
- **Siren (2)** - An alarm siren is located on the outboard side of the right front fender load path beam above the wheel house splash shield of vehicles built for sale in certain export markets where it is required equipment.

OPERATION

OPERATION

The Vehicle Theft Security System (VTSS) is divided into two basic subsystems: Vehicle Theft Alarm (VTA) and Sentry Key Immobilizer System (SKIS). Following are paragraphs that briefly describe the operation of each of these two subsystems.

SENTRY KEY IMMOBILIZER SYSTEM

The Sentry Key Immobilizer System (SKIS) is designed to provide passive protection against unauthorized vehicle use by disabling the engine after about two seconds of running whenever any method other than a valid Sentry Key is used to start the vehicle. The SKIS is considered a passive protection system because it is always active when the ignition system is energized and does not require any customer intervention. The SKIS uses Radio Frequency (RF) communication to obtain confirmation that the key in the ignition switch is a

valid key for operating the vehicle. The microprocessor-based SKIS hardware and software also uses electronic messages to communicate with other electronic modules in the vehicle over the Controller Area Network (CAN) data bus. Refer to **COMMUNICATION, OPERATION** .

Pre-programmed Sentry Key transponders are provided with the vehicle from the factory. Each Sentry Key REmote Entry Module (SKREEM) (also known as the Wireless Control Module/WCM) will recognize a maximum of eight Sentry Keys. If the customer would like additional keys other than those provided with the vehicle, they may be purchased from any authorized dealer. These additional keys must be programmed to the SKREEM in the vehicle in order for the system to recognize them as valid keys. This can be done by the dealer using a diagnostic scan tool or, if Customer Learn programming is an available SKIS feature in the market where the vehicle was purchased, the customer can program the additional keys, as long as at least two valid Sentry Keys are already available. Refer to **STANDARD PROCEDURE**.

The SKREEM performs a self-test of the SKIS each time the ignition switch is turned to the ON position, and will store fault information in the form of a Diagnostic Trouble Code (DTC) if a system malfunction is detected. The SKREEM will also send an electronic message to the instrument cluster if a fault is detected, and the ElectroMechanical Instrument Cluster (EMIC) (also known as the Cab Compartment Node/CCN) illuminates the security indicator as appropriate.

The hard wired circuits between components related to the SKIS may be diagnosed using conventional diagnostic tools and procedures. Refer to the appropriate wiring information. The wiring information includes wiring diagrams, proper wire and connector repair procedures, details of wire harness routing and retention, connector pin out information and location views for the various wire harness connectors, splices and grounds.

However, conventional diagnostic methods will not prove conclusive in the diagnosis of the SKIS or the electronic controls and communication between other modules and devices that provide some features of the SKIS. The most reliable, efficient and accurate means to diagnose the SKIS or the electronic controls and communication related to SKIS operation requires the use of a diagnostic scan tool. Refer to the appropriate diagnostic information.

VEHICLE THEFT ALARM

The ElectroMechanical Instrument Cluster (EMIC) (also known as the Cab Compartment Node/CCN) is used on this vehicle to control and integrate many of the functions and features included in the Vehicle Theft Alarm (VTA). In the VTA system, the EMIC receives inputs indicating the status of the door ajar switches, the ignition switch, the liftgate ajar switch and the power lock switches. In vehicles built for certain export markets where it is required, the hood ajar switch provides a hard wired input to the Totally Integrated Power Module (TIPM) and both the TIPM and the Intrusion Transceiver Module (ITM) provide electronic message inputs to the EMIC over the Controller Area Network (CAN) data bus. The EMIC will process the information from all of these inputs, internally controls the security indicator as appropriate, and sends electronic messages to the TIPM over the CAN data bus. The TIPM internally controls the output to the hazard warning lamps and sends a control output to energize or de-energize the horn relay as appropriate. On vehicles with an ITM, the horn output of the TIPM is replaced by an output of the siren module that is controlled by the ITM.

The hard wired circuits between components related to the VTA system may be diagnosed using conventional diagnostic tools and procedures. Refer to the appropriate wiring information. The wiring information includes wiring diagrams, proper wire and connector repair procedures, details of wire harness routing and retention, connector pin out information and location views for the various wire harness connectors, splices and grounds.

However, conventional diagnostic methods will not prove conclusive in the diagnosis of the VTA system or the electronic controls and communication between modules and devices that provide some features of the VTA system. The most reliable, efficient and accurate means to diagnose the VTA system or the electronic controls and communication related to VTA system operation requires the use of a diagnostic scan tool. See the **Vehicle Theft Security System** menu item on the scan tool. Refer to the appropriate diagnostic information.

Following are paragraphs that briefly describe the operation of each of the VTA features.

OPERATING MODES

Following are paragraphs that briefly describe the operation of each of the Vehicle Theft Alarm (VTA) operating modes.

- **Enabling** - The TIPM must have the VTA function electronically enabled in order for the VTA to perform as designed. The logic in the TIPM keeps its VTA function dormant until it is enabled using a diagnostic scan tool. The VTA function of the TIPM is enabled on vehicles equipped with the VTA option at the factory, but a service replacement TIPM must be VTA-enabled by the dealer using a diagnostic scan tool. Refer to the appropriate diagnostic information.
- **Arming** - Passive arming of the VTA occurs when the vehicle is exited with the key removed from the ignition switch, the headlamps are turned Off, and the doors are locked while they are open using the power lock switch. Active arming occurs when the Lock button on the Remote Keyless Entry (RKE) transmitter is depressed to lock the vehicle. For active arming to occur, the doors and the liftgate must be closed and the ignition switch must be in the OFF position when the RKE transmitter Lock button is depressed. The power lock switch will not function if the key is in the ignition switch or the headlamps are turned On with the driver side front door open.

  Pre-arming of the VTA is initiated when a door or the liftgate is open when the vehicle is locked using a power door lock switch or when the RKE transmitter Lock button is depressed. Pre-arming will not occur if the key is in the ignition switch or the headlamps are turned On with the driver side front door open. When the VTA is pre-armed, the arming sequence is delayed until all of the doors and the liftgate have been closed. The VTA will remain in pre-armed mode for up to 16 seconds after all doors and the liftgate have been closed.

  Once the VTA begins the passive or active arming sequence, the security indicator in the instrument cluster will flash rapidly for about 16 seconds. This indicates that VTA arming is in progress. If the ignition switch is turned to the On position, if a door or the liftgate is unlocked or opened by any means, or if the RKE Panic button (if equipped) is depressed during the 16 second arming process, the security indicator will stop flashing and the arming process will abort. Once the arming sequence is successfully completed, the security indicator will flash at a slower rate, indicating that the VTA is armed.

  On vehicles equipped with the hood ajar switch, the VTA arming sequence will occur regardless of whether the hood is open or closed, but the security indicator will illuminate solid and the under hood area will not be protected

unless the hood is closed when the VTA arming sequence begins. Also, if the status of the hood ajar switch changes from open to closed during the 16 second arming process, the security indicator will switch from solid to flashing and the VTA arming sequence will abort. Once the arming process is successfully completed, the security indicator will flash at a slower rate, indicating that the VTA is armed.

- **Disarming** - For vehicles built for the North American market, passive disarming of the VTA occurs by inserting a valid Sentry Key Immobilizer System (SKIS) key into the ignition lock cylinder or by turning the ignition switch to the On position. Active disarming of the VTA for all markets occurs when the vehicle is unlocked by depressing the Unlock button of the RKE transmitter. Once the alarm has been activated, either disarming method will also deactivate the alarm. Depressing the Panic button (if equipped) on the RKE transmitter will **not** disarm the VTA.
- **Alarm** - The VTA alarm output varies by the version of the VTA with which the vehicle is equipped. In all cases, the alarm provides both visual and audible outputs; however, the time intervals of these outputs vary by the requirements of the market for which the vehicle is manufactured. In all cases, the visual output will be a flashing On and Off of the exterior lamps. For vehicles equipped with the North American or the export base version of the VTA, the audible output will be a pulsing of the horn. For vehicles with the export premium version of the VTA, the audible output will be a cycling of the alarm siren. The inputs that will trigger the alarm include the ignition switch, the door ajar switches, the liftgate ajar switch and, in vehicles built for certain markets where they are required, the hood ajar switch and the ITM.
- **Power-Up Mode** - When the armed VTA senses that the battery has been disconnected and reconnected, it enters its power-up mode. In the power-up mode the alarm system remains armed following a battery failure or disconnect. If the VTA was armed prior to a battery disconnect or failure, the technician or vehicle operator will have to actively or passively disarm the alarm system after the battery is reconnected. The power-up mode will also apply if the battery goes dead while the system is armed, and battery jump-starting is attempted. The VTA will be armed until the technician or vehicle operator has actively or passively disarmed the alarm system. If the VTA is in the disarmed mode prior to a battery disconnect or failure, it will remain disarmed after the battery is reconnected or replaced, or if jump-

starting is attempted.

- **Tamper Alert** - The VTA tamper alert feature will pulse the horn three times upon VTA disarming if the alarm was triggered and has since timed out, or if the battery has been disconnected and reconnected. This feature alerts the vehicle operator that the VTA alarm was activated while the vehicle was unattended.
- **Intrusion Alarm** - The intrusion alarm is an exclusive feature of the export premium version of the VTA, which is only available in certain markets where it is required. When the VTA is armed, the ITM uses an ultrasonic transmitter and receiver which allows the module to monitor the interior of the vehicle for movement. If motion is detected, the ITM sends an electronic message to the TIPM over the CAN data bus to invoke the visual alarm features, and sends an electronic message to the alarm siren in the engine compartment over a dedicated serial bus to invoke the audible alarm feature.

  The motion detect feature of the intrusion alarm can be disabled by depressing the Lock button on the RKE transmitter 3 times within 15 seconds during VTA arming, while the security indicator is still flashing rapidly. The VTA provides a single short siren chirp as an audible confirmation that the motion detect disable request has been received.

  The ITM must be electronically enabled in order for the intrusion alarm to perform as designed. The intrusion alarm function of the ITM is enabled on vehicles equipped with this option at the factory, but a service replacement ITM must be configured and enabled by the dealer using a diagnostic scan tool. Refer to the appropriate diagnostic information. The ITM monitors the conditions of the ultrasonic transmitter and receiver as well as the siren, and will store fault information in the form of a Diagnostic Trouble Code (DTC) if a system malfunction is detected. The ITM may be diagnosed, and any stored DTC can be retrieved using a diagnostic scan tool. Refer to the appropriate diagnostic information.

DIAGNOSIS AND TESTING

DIAGNOSIS AND TESTING - VEHICLE THEFT SECURITY SYSTEM

The Vehicle Theft Security System (VTSS) is divided into two basic subsystems: Sentry Key Immobilizer System (SKIS) and Vehicle Theft Alarm (VTA). The recommended procedures for diagnosis and testing of each of these two VTSS

subsystems can be found elsewhere within this service information.

DIAGNOSIS AND TESTING - SENTRY KEY IMMOBILIZER SYSTEM

WARNING: To avoid serious or fatal injury on vehicles equipped with airbags, disable the Supplemental Restraint System (SRS) before attempting any steering wheel, steering column, airbag, seat belt tensioner, impact sensor or instrument panel component diagnosis or service. Disconnect and isolate the battery negative (ground) cable, then wait two minutes for the system capacitor to discharge before performing further diagnosis or service. This is the only sure way to disable the SRS. Failure to take the proper precautions could result in accidental airbag deployment.

The hard wired circuits between components related to the SKIS may be diagnosed using conventional diagnostic tools and procedures. Refer to the appropriate wiring information. The wiring information includes wiring diagrams, proper wire and connector repair procedures, details of wire harness routing and retention, connector pin out information and location views for the various wire harness connectors, splices and grounds.

However, conventional diagnostic methods will not prove conclusive in the diagnosis of the SKIS or the electronic controls and communication between other modules and devices that provide some features of the SKIS. The most reliable, efficient and accurate means to diagnose the SKIS or the electronic controls and communication related to SKIS operation requires the use of a diagnostic scan tool. Refer to the appropriate diagnostic information.

SENTRY KEY IMMOBILIZER SYSTEM DIAGNOSIS		
CONDITION	POSSIBLE CAUSES	CORRECTION
SECURITY INDICATOR FAILS TO LIGHT DURING BULB TEST	1. Ineffective Light-Emitting Diode (LED).	1. Use a diagnostic scan tool to perform the instrument cluster actuator test. Refer to the appropriate diagnostic information.
	2. Ineffective fuse.	2. Check the SKREEM/WCM

		fused B(+) fuse and the fused ignition switch output (run-start) fuse in the Totally Integrated Power Module (TIPM). Replace the fuses, if required.
	3. Ineffective ground circuit.	3. Test and repair the open ground circuit at the connector for the SKREEM, if required.
	4. Ineffective battery feed circuit.	4. Test and repair the open battery feed circuit at the connector for the SKREEM, if required.
	5. Ineffective ignition feed circuit.	5. Test and repair the open ignition feed circuit at the connector for the SKREEM, if required.
SECURITY INDICATOR FLASHES FOLLOWING BULB TEST	1. Invalid key in ignition switch lock cylinder.	1. Replace the key with a known valid key.
	2. Key-related fault.	2. Use a diagnostic scan tool and the appropriate diagnostic information for further diagnosis.
SECURITY INDICATOR LIGHTS SOLID FOLLOWING BULB TEST	1. SKIS system malfunction/fault detected.	1. Use a diagnostic scan tool and the appropriate diagnostic information for further diagnosis.
	2. SKIS system ineffective.	2. Use a diagnostic scan tool and the appropriate diagnostic information for further diagnosis.

DIAGNOSIS AND TESTING - VEHICLE THEFT ALARM

WARNING: To avoid serious or fatal injury on vehicles equipped with airbags, disable the Supplemental

Restraint System (SRS) before attempting any steering wheel, steering column, airbag, seat belt tensioner, impact sensor or instrument panel component diagnosis or service. Disconnect and isolate the battery negative (ground) cable, then wait two minutes for the system capacitor to discharge before performing further diagnosis or service. This is the only sure way to disable the SRS. Failure to take the proper precautions could result in accidental airbag deployment.

The hard wired circuits between components related to the VTA system may be diagnosed using conventional diagnostic tools and procedures. Refer to the appropriate wiring information. The wiring information includes wiring diagrams, proper wire and connector repair procedures, details of wire harness routing and retention, connector pin out information and location views for the various wire harness connectors, splices and grounds.

However, conventional diagnostic methods will not prove conclusive in the diagnosis of the VTA system or the electronic controls and communication between other modules and devices that provide some features of the VTA system. The most reliable, efficient and accurate means to diagnose the VTA system or the electronic controls and communication related to VTA system operation requires the use of a diagnostic scan tool. See the **Vehicle Theft Security System** menu item on the scan tool. Refer to the appropriate diagnostic information.

STANDARD PROCEDURE

SENTRY KEY IMMOBILIZER SYSTEM INITIALIZATION

The Sentry Key Immobilizer System (SKIS) must be initialized following a Sentry Key REmote Entry Module (SKREEM) (also known as the Sentry Key Immobilizer Module/SKIM or the Wireless Control Module/WCM) replacement. SKIS initialization requires the use of a diagnostic scan tool. Initialization will also require that you have access to the unique four-digit PIN code that was assigned to the original SKREEM. The PIN code **must** be used to enter the Secured Access Mode in the SKREEM. This PIN number may be obtained from the vehicle owner, from the original vehicle invoice, or from the Chrysler

Customer Center. Refer to **STANDARD PROCEDURE** .

NOTE: If a Powertrain Control Module (PCM) is replaced on a vehicle equipped with the Sentry Key Immobilizer System (SKIS), the unique Secret Key data must be transferred from the Sentry Key REmote Entry Module (SKREEM) (also known as the Sentry Key Immobilizer Module/SKIM or the Wireless Control Module/WCM) to the new PCM using the appropriate programming procedure. This procedure also requires the use of a diagnostic scan tool and the unique four-digit PIN code to enter the Secured Access Mode in the SKREEM. Refer to the appropriate service and diagnostic information for the proper PCM replacement procedure.

SENTRY KEY TRANSPONDER PROGRAMMING

All Sentry Keys included with the vehicle are pre-programmed to work with the Sentry Key Immobilizer System (SKIS) when it is shipped from the factory. The Sentry Key REmote Entry Module (SKREEM) (also known as the Sentry Key Immobilizer Module/SKIM or the Wireless Control Module/WCM) may be programmed to recognize up to a total of eight Sentry Keys. When programming a blank Sentry Key transponder, the key must first be cut to match the ignition switch lock cylinder in the vehicle for which it will be used. Once the additional or new key has been cut, the SKREEM must be programmed to recognize it as a valid key. There are two possible methods to program the SKREEM to recognize a new or additional valid key, the Secured Access Method and the Customer Learn Method. Following are the details of these two programming methods.

CUSTOMER LEARN METHOD

NOTE: The Customer Learn feature is only available on domestic vehicles, or those vehicles which have a U.S. country code designator. This programming method also requires access to at least two valid Sentry Keys. If two valid Sentry Keys are not available, or if the vehicle does not have a U.S. country code designator, the Secured Access Method MUST be used to program new or additional valid keys to the SKREEM.

The Customer Learn programming method procedures are as follows:

1. Obtain the blank Sentry Key(s) that are to be programmed as valid keys for the vehicle. Cut the blank key(s) to match the ignition switch lock cylinder mechanical key codes.
2. Insert one of the two valid Sentry Keys into the ignition switch and turn the ignition switch to the ON position.
3. After the ignition switch has been in the ON position for longer than 3 seconds, but no more than 15 seconds, cycle the ignition switch back to the OFF position. Replace the first valid Sentry Key in the ignition switch lock cylinder with the second valid Sentry Key and turn the ignition switch back to the ON position. The second valid Sentry Key must be inserted in the lock cylinder within 15 seconds of removing the first valid key.
4. About 10 seconds after the completion of, the security indicator in the instrument cluster will start to flash and a single audible chime will sound to indicate that the system has entered the Customer Learn programming mode. Go to 3.
5. Within 60 seconds of entering the Customer Learn programming mode, turn the ignition switch to the OFF position, replace the valid Sentry Key with a blank Sentry Key transponder, and turn the ignition switch back to the ON position.
6. About 10 seconds after the completion of, a single audible chime will sound and the security indicator will stop flashing, stay ON solid for 3 seconds, then turn OFF to indicate that the blank Sentry Key has been successfully programmed. Go to 5. The SKIS will immediately exit the Customer Learn programming mode. After the ignition is cycled the vehicle may be started using the newly programmed valid Sentry Key.

Each of these steps must be repeated and completed in their entirety for each additional Sentry Key that is to be programmed. If the above steps are not completed in the given sequence, or within the allotted time, the SKIS will exit the Customer Learn programming mode and the programming will be unsuccessful. The SKREEM will also automatically exit the Customer Learn programming mode if it sees a non-blank Sentry Key transponder when it should see a blank, if it has already programmed 8 valid Sentry Keys, or if the ignition switch is turned to the OFF position for more than about 50 seconds.

NOTE: If an attempt is made to start the vehicle while in the

Customer Learn mode (security indicator flashing), the SKIS will respond as though the vehicle were being started with an invalid key. In other words, the engine will stall after about two seconds of operation. No faults will be set.

NOTE: Once a Sentry Key has been programmed as a valid key to a vehicle, it cannot be programmed as a valid key for use on any other vehicle.

SECURED ACCESS METHOD

The Secured Access method applies to all vehicles. This method requires the use of a diagnostic scan tool. This method will also require that you have access to the unique four-digit PIN code that was assigned to the original SKREEM. The PIN code **must** be used to enter the Secured Access Mode in the SKREEM. This PIN number may be obtained from the vehicle owner, from the original vehicle invoice, or from the Chrysler Customer Center. Refer to **STANDARD PROCEDURE** .

SPECIFICATIONS

SPECIFICATIONS

SPECIFICATIONS

TORQUE SPECIFICATIONS			
DESCRIPTION	N.m	Ft. Lbs.	In. Lbs.
Hood Ajar Switch Bracket Screws	4	-	35
SKREEM Mounting Screw	2	-	20
Siren Mounting Screws	5	-	40

KEY, TRANSPONDER

DESCRIPTION

DESCRIPTION

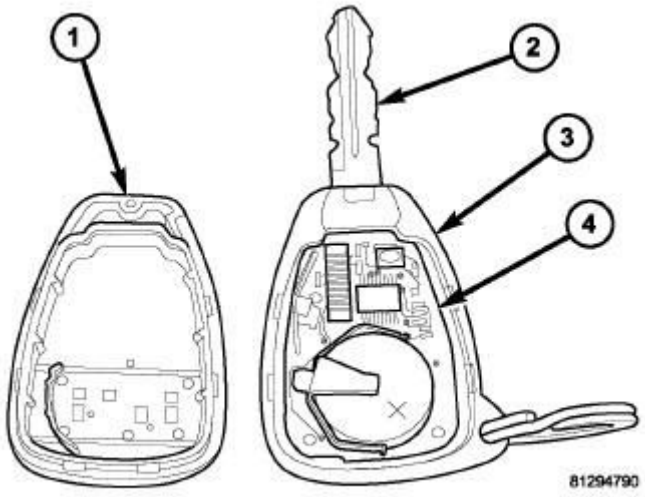

Fig. 2: Identifying Ignition Key SKIS Components
Courtesy of CHRYSLER GROUP, LLC

Each ignition key (2) used in the Sentry Key Immobilizer System (SKIS) has a transponder chip included on the circuit board (4) beneath the cover (1) of the integral Remote Keyless Entry (RKE) transmitter (3). In addition to having to be cut to match the mechanical coding of the ignition lock cylinder and programmed for operation of the RKE system, each new Sentry Key has a unique transponder identification code that is permanently programmed into it by the manufacturer, and which must be programmed into the Sentry Key REmote Entry Module (SKREEM) (also known as the Wireless Control Module/WCM) to be recognized by the SKIS as a valid key.

The Sentry Key transponder cannot be adjusted or repaired. If ineffective or damaged, the entire key and RKE transmitter unit must be replaced.

OPERATION

OPERATION

When the ignition switch is turned to the ON position, the Sentry Key REmote Entry Module (SKREEM) (also known as the Wireless Control Module/WCM) communicates through its antenna with the Sentry Key transponder using a Radio Frequency (RF) signal. The SKREEM then listens for a RF response from the transponder through the same antenna. The Sentry Key transponder chip is within the range of the SKREEM transceiver antenna ring when it is inserted into the ignition lock cylinder. The SKREEM determines whether a valid key is

present in the ignition lock cylinder based upon the response from the transponder. If a valid key is detected, that fact is communicated by the SKREEM to the Powertrain Control Module (PCM) over the Controller Area Network (CAN) data bus, and the PCM allows the engine to continue running. If the PCM receives an **invalid key** message, or receives no message from the SKREEM over the CAN data bus, the engine will be disabled after about two seconds of operation. The ElectroMechanical Instrument Cluster (EMIC) (also known as the Cab Compartment Node/CCN) will also respond to the **invalid key** message on the CAN data bus by flashing the security indicator ON and OFF.

Each Sentry Key has a unique transponder identification code permanently programmed into it by the manufacturer. Likewise, the SKREEM has a unique Secret Key code programmed into it by the manufacturer. When a Sentry Key is programmed into the memory of the SKREEM, the SKREEM stores the transponder identification code from the Sentry Key, and the Sentry Key learns the Secret Key code from the SKREEM. Once the Sentry Key learns the Secret Key code of the SKREEM, it is permanently stored in the memory of the transponder. Therefore, once a Sentry Key has been programmed to a particular vehicle, it cannot be used on any other vehicle. Refer to **STANDARD PROCEDURE**.

The Sentry Key Immobilizer System (SKIS) performs a self-test each time the ignition switch is turned to the ON position, and will store key-related fault information in the form of a Diagnostic Trouble Code (DTC) in SKREEM memory if a Sentry Key transponder problem is detected. The Sentry Key transponder chip can be diagnosed, and any stored DTC can be retrieved using a diagnostic scan tool. Refer to the appropriate diagnostic information.

MODULE, INTRUSION

DESCRIPTION

DESCRIPTION

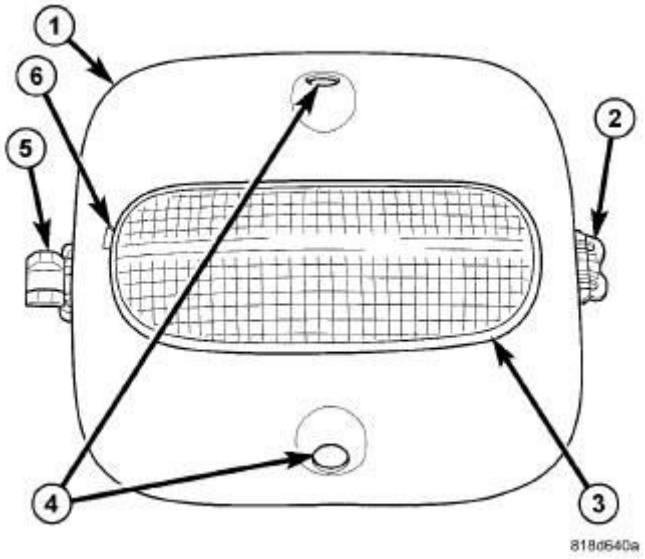

Fig. 3: Intrusion Transceiver Module
Courtesy of CHRYSLER GROUP, LLC

An Intrusion Transceiver Module (ITM) is part of the export premium version of the Vehicle Theft Alarm (VTA) in the Vehicle Theft Security System (VTSS). The export premium version of the VTA is only available in vehicles built for certain markets, where the additional features offered by this system are required. The ITM is integral to the rear dome lamp housing (1) located in the passenger compartment, on the lower surface of the headliner near the center of the vehicle. The ITM is designed to provide interior motion detection, and serve as an interface between the ElectroMechanical Instrument Cluster (EMIC) (also known as the Cab Compartment Node/CCN) and the alarm siren module.

The ITM is concealed within the dome lamp housing. Only the black grilled openings (4) for the ITM ultrasonic transmitter and receiver are visible on the outside of the housing, one each ahead and behind the dome lamp lens (3). The entire module is secured to the headliner by a fixed retainer (5) integral to the left side of the housing and a hinged retainer (2) on the right side that is integral to the dome lamp lens. A notch (6) in the housing at the left edge of the lens affords access for service removal.

Concealed within the housing is the electronic circuitry of the ITM which includes a microprocessor, and the ultrasonic transmit and receive transducers. A molded plastic connector receptacle on the circuit board is connected to the vehicle electrical system by a dedicated take out and connector of the headliner wire harness that is integral to the headliner.

The ITM unit cannot be adjusted or repaired and, if ineffective or damaged, it must be replaced. The dome lamp lens and bulb are available for separate service replacement.

OPERATION

OPERATION

The microprocessor in the Intrusion Transceiver Module (ITM) contains the motion sensor logic circuits and controls all of the features of the export premium version of the Vehicle Theft Alarm (VTA). The ITM uses On-Board Diagnostics (OBD) and can communicate with other electronic modules in the vehicle as well as with a diagnostic scan tool using the Controller Area Network (CAN) data bus. This method of communication is used by the ITM to communicate with the ElectroMechanical Instrument Cluster (EMIC) (also known as the Cab Compartment Node/CCN) and for diagnosis and testing through the 16-way data link connector located on the driver side lower edge of the instrument panel. The ITM also communicates with the alarm siren module over a dedicated serial bus circuit.

The ITM microprocessor continuously monitors inputs from its on-board motion sensor circuitry as well as inputs from the EMIC and the alarm siren module. The on-board ITM motion sensor circuitry transmits ultrasonic signals into the vehicle cabin through a transmit transducer, then listens to the returning signals through a receive transducer as they bounce off of objects in the vehicle interior. If an object is moving in the interior, a detection circuit in the ITM senses this movement through the modulation of the returning ultrasonic signals that occurs due to the Doppler effect. The motion detect function of the ITM can be disabled by depressing the LOCK button on the Remote Keyless Entry (RKE) transmitter three times within 15 seconds while the VTA is arming (security indicator is flashing rapidly). The ITM will signal the alarm siren module to provide a single siren chirp as an audible confirmation that the motion sensor function has been disabled.

If movement is detected while the VTA is armed, the ITM sends an electronic status message to the EMIC over the CAN data bus and sends an electronic message to the alarm siren module over a dedicated serial bus line to sound the siren. Then the EMIC relays an electronic request message to the Totally Integrated Power Module (TIPM) to flash the exterior lighting. When the EMIC detects a breach in the perimeter protection through a hard wired door or liftgate

ajar switch input or receives a hood ajar switch input from the TIPM, it sends an electronic message to the ITM and the ITM sends an electronic message to the alarm siren module over a dedicated serial bus line to sound the siren.

The ITM also monitors inputs from the alarm siren module for siren battery or siren input/output circuit tamper alerts, and for siren battery condition alerts, then sets active and stored Diagnostic Trouble Codes (DTC) for any monitored system faults it detects. An active fault only remains for the current ignition switch cycle, while a stored fault causes a DTC to be stored in memory by the ITM. If a fault does not recur for 50 ignition cycles, the ITM will automatically erase the stored DTC.

The ITM is connected to the vehicle electrical system through the headliner wire harness. The ITM receives battery current through a fuse in the TIPM, and receives ground through the body wire harness. These connections allow the ITM to remain operational, regardless of the ignition switch position.

The hard wired circuits of the ITM may be diagnosed using conventional diagnostic tools and procedures. Refer to the appropriate wiring information. However, conventional diagnostic methods will not prove conclusive in the diagnosis of the ITM or the electronic controls and communication between modules and other devices that provide some features of the VTA. The most reliable, efficient and accurate means to diagnose the ITM or the electronic controls and communication related to ITM operation requires the use of a diagnostic scan tool. Refer to the appropriate diagnostic information.

REMOVAL

REMOVAL

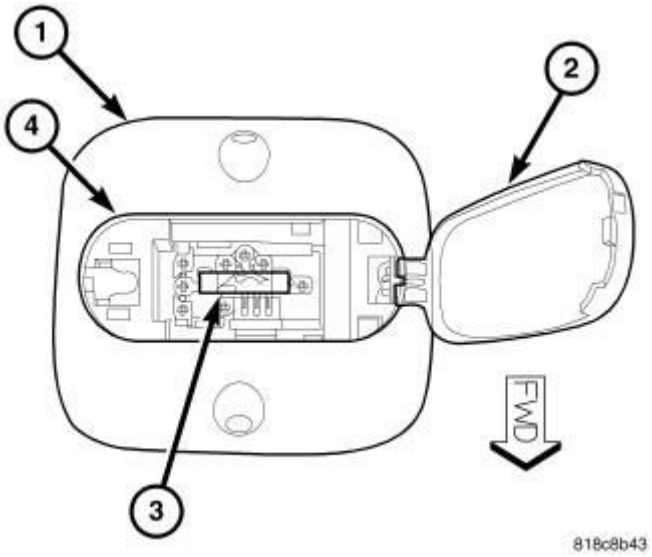

Fig. 4: Identifying Rear Dome Lamp Components
Courtesy of CHRYSLER GROUP, LLC

1. Disconnect and isolate the negative cable from the battery.
2. Insert the tip of a small flat bladed screwdriver into the notch (4) between the rear dome lamp lens (2) and the housing (1) on the left end of the lens.
3. Gently pry the end of the lens outward until it unsnaps from the housing.
4. Swing the lens outward until it is perpendicular to the housing.
5. Pull the lens hinge/retainer end of the housing downward slightly from the headliner, then slide the exposed end of the housing away from the mounting hole far enough to disengage the fixed retainer on the notched end from the headliner.
6. Pull the lamp away from the headliner mounting hole far enough to access and disconnect the wire harness connections from the back of the lamp and from the Intrusion Transceiver Module (ITM).
7. Remove the ITM from the vehicle.

INSTALLATION

INSTALLATION

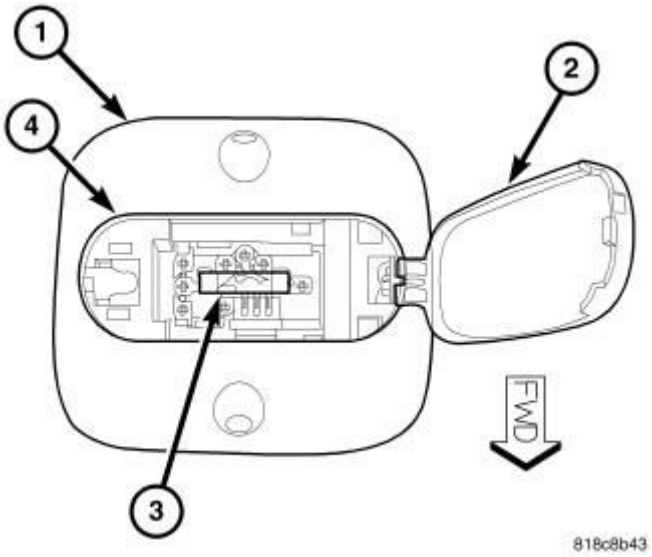

Fig. 5: Identifying Rear Dome Lamp Components
Courtesy of CHRYSLER GROUP, LLC

1. Position the Intrusion Transceiver Module (ITM) (1) to the mounting hole in the headliner.
2. Reconnect the wire harness connectors to the ITM and rear dome lamp connector receptacles on the back of the ITM.
3. Insert the fixed retainer on the left side of the ITM housing up into the left side of the mounting hole in the headliner.
4. Slide the notched end (4) of the housing into the mounting hole far enough to engage the rear dome lamp lens hinge/retainer into the opposite side of the hole in the headliner.
5. Gently and evenly press the lens hinge/retainer end of the lamp into the mounting hole until the bezel of the ITM housing is flush with the headliner.
6. Swing the notched end of the lamp lens (2) into position against the lamp housing, then press upward on the lens firmly and evenly until it snaps into the housing.
7. Reconnect the negative cable to the battery.

MODULE, SENTRY KEY IMMOBILIZER (SKREEM)

DESCRIPTION

DESCRIPTION

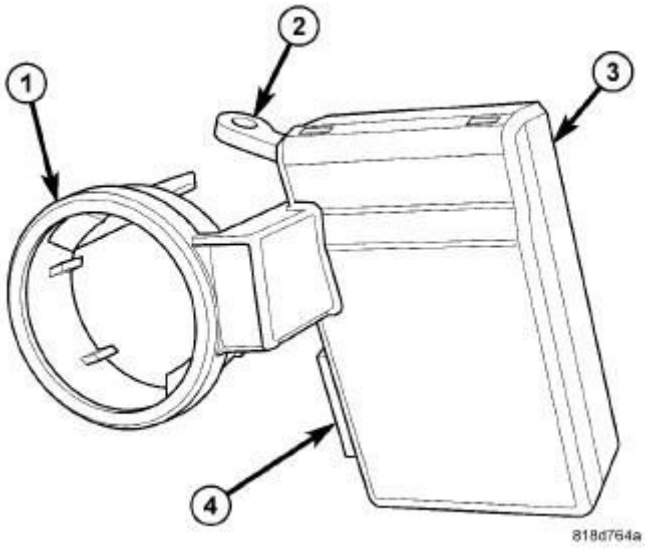

Fig. 6: Sentry Key Remote Entry Module
Courtesy of CHRYSLER GROUP, LLC

The Sentry Key REmote Entry Module (SKREEM) (3) (also known as the Sentry Key Immobilizer Module/SKIM or the Wireless Control Module/WCM) is the primary component of the Sentry Key Immobilizer System (SKIS). It is also the receiver for the Remote Keyless Entry (RKE) system and the Tire Pressure Monitor (TPM) system. The SKREEM is located on the right side of the steering column near the ignition lock cylinder housing and is concealed beneath the column shrouds. The molded black plastic housing for the SKREEM has an integral molded plastic halo-like antenna ring (1) that extends from one side. When the SKREEM is properly installed, the antenna ring is oriented around the circumference of the ignition lock cylinder housing.

A single integral connector receptacle (4) is located adjacent to the antenna ring on the SKREEM housing. An integral molded plastic mounting tab (2) on the SKREEM housing has a hole in the center through which a screw passes to secure the unit to the steering column lock housing. The SKREEM is connected to the vehicle electrical system through a single take out and connector of the instrument panel wire harness.

The SKREEM cannot be adjusted or repaired. If ineffective or damaged, the entire SKREEM unit must be replaced.

OPERATION

OPERATION

The Sentry Key REmote Entry Module (SKREEM) (also known as the Wireless Control Module/WCM) contains a Radio Frequency (RF) transceiver and a microprocessor. The SKREEM transmits RF signals to, and receives RF signals from the Sentry Key transponder through a tuned antenna enclosed within the molded plastic antenna ring integral to the SKREEM housing. If this antenna ring is not mounted properly around the ignition lock cylinder housing, communication problems between the SKREEM and the transponder may arise. These communication problems will result in Sentry Key transponder-related faults.

The SKREEM also serves as the Remote Keyless Entry (RKE) RF receiver and, if the vehicle is so equipped, the receiver for the Tire Pressure Monitoring (TPM) system. Refer to **DESCRIPTION** or **TIRE PRESSURE MONITORING, DESCRIPTION** . The SKREEM communicates over the Controller Area Network (CAN) data bus with the ElectroMechanical Instrument Cluster (EMIC) (also known as the Cab Compartment Node/CCN), the Powertrain Control Module (PCM) or the diagnostic scan tool.

The SKREEM and the PCM both use software that includes a rolling code algorithm strategy, which helps to reduce the possibility of unauthorized Sentry Key Immobilizer System (SKIS) disarming. The rolling code algorithm ensures security by preventing an override of the SKIS through the unauthorized substitution of the SKREEM or the PCM. However, the use of this strategy also means that replacement of either the SKREEM or the PCM units will require a system initialization procedure to restore system operation.

The SKREEM retains in memory the ID numbers of any Sentry Key transponder that is programmed into it. A maximum of eight Sentry Key transponders can be programmed into the SKREEM. For added system security, each SKREEM is programmed with a unique Secret Key code. This code is stored in memory, sent over the CAN data bus to the PCM, and is encoded to the transponder of every Sentry Key that is programmed into the SKREEM. Therefore, the Secret Key code is a common element that is found in every component of the SKIS.

Another security code, called a PIN, is used to gain access to the SKREEM Secured Access Mode. The Secured Access Mode is required during service to perform the SKIS initialization and Sentry Key transponder programming procedures. The SKREEM also stores the Vehicle Identification Number (VIN) in its memory, which it learns through a CAN data bus message from the PCM

during SKIS initialization.

In the event that a SKREEM replacement is required, the Secret Key code can be transferred to the new SKREEM from the PCM using the diagnostic scan tool and the SKIS initialization procedure. Proper completion of the SKIS initialization will allow the existing Sentry Keys to be programmed into the new SKREEM so that new keys will not be required. In the event that the original Secret Key code cannot be recovered, SKREEM replacement will also require new Sentry Keys. The diagnostic scan tool will alert the technician during the SKIS initialization procedure if new Sentry Keys are required.

When the key is inserted into the ignition switch and when the ignition switch is turned to the ON position, the SKREEM transmits an RF signal to excite the transponder in the ignition key. The SKREEM then waits for an RF signal response from the transponder. If the response received identifies the key as valid, the SKREEM sends an electronic **valid key** message over the CAN data bus. If the response received identifies the key as invalid or if no response is received from the key transponder, the SKREEM sends an **invalid key** message. The PCM will enable or disable engine operation based upon the status of the SKREEM messages. It is important to note that the default condition in the PCM is an **invalid key** ; therefore, if no message is received from the SKREEM by the PCM, the engine will be disabled and the vehicle immobilized after two seconds of running.

The SKREEM also sends electronic **security indicator** request messages to the EMIC over the CAN data bus to tell the EMIC how to operate the security indicator. The **security indicator** request message from the SKREEM tells the EMIC to turn the indicator ON for about three seconds each time the ignition switch is turned to the ON position as a bulb test. After completion of the bulb test, the SKREEM sends **security indicator** request messages to the EMIC to turn the indicator OFF, turn the indicator ON, or to flash the indicator ON and OFF. If the security indicator flashes or stays ON solid after the bulb test, it signifies a SKIS fault. If the SKREEM detects a system malfunction or the SKIS has become ineffective, the security indicator will stay ON solid. If the SKREEM detects an invalid key or if a key transponder-related fault exists, the security indicator will flash. If the vehicle is equipped with the Customer Learn transponder programming feature, the SKREEM will also send messages to the EMIC to flash the security indicator whenever the Customer Learn programming mode is being utilized. Refer to **STANDARD PROCEDURE**.

The SKIS performs a self-test each time the ignition switch is turned to the ON position, and will store fault information in the form of a Diagnostic Trouble Code (DTC) in SKREEM memory if a system malfunction is detected. The hard wired circuits of the SKREEM may be diagnosed using conventional diagnostic tools and procedures. Refer to the appropriate wiring information. However, conventional diagnostic methods will not prove conclusive in the diagnosis of the SKREEM or the electronic controls and communication between other modules and devices that provide some features of the SKIS. The most reliable, efficient and accurate means to diagnose the SKREEM or the electronic controls and communication related to SKREEM operation requires the use of a diagnostic scan tool. Refer to the appropriate diagnostic information.

REMOVAL

REMOVAL

WARNING: **To avoid serious or fatal injury on vehicles equipped with airbags, disable the Supplemental Restraint System (SRS) before attempting any steering wheel, steering column, airbag, seat belt tensioner, impact sensor or instrument panel component diagnosis or service. Disconnect and isolate the battery negative (ground) cable, then wait two minutes for the system capacitor to discharge before performing further diagnosis or service. This is the only sure way to disable the SRS. Failure to take the proper precautions could result in accidental airbag deployment.**

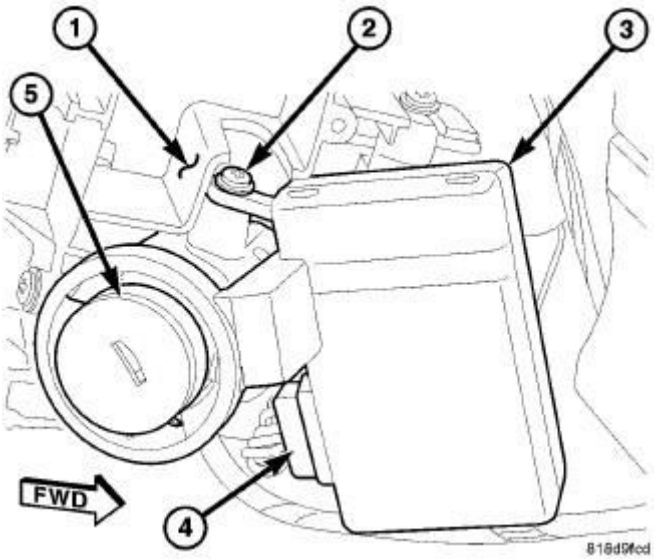

Fig. 7: Sentry Key Remote Entry Module
Courtesy of CHRYSLER GROUP, LLC

1. Disconnect and isolate the negative cable from the battery.
2. Remove but do not disconnect the right multifunction switch from the integral mounting bracket (1) on the right side of the clockspring and position it so that the Sentry Key REmote Entry Module (SKREEM) mounting screw (2) may be accessed. Refer to **SWITCH, MULTIFUNCTION, RIGHT, REMOVAL** .
3. Disconnect the instrument panel wire harness connector (4) from the SKREEM (3) connector receptacle.
4. Remove the screw that secures the SKREEM to the boss on the top of the ignition lock cylinder housing (5).
5. Disengage the SKREEM antenna ring from around the ignition lock housing and remove the SKREEM from the steering column.

INSTALLATION

INSTALLATION

WARNING: To avoid serious or fatal injury on vehicles equipped with airbags, disable the Supplemental Restraint System (SRS) before attempting any steering wheel, steering column, airbag, seat belt tensioner, impact sensor or instrument panel component diagnosis or service. Disconnect and

isolate the battery negative (ground) cable, then wait two minutes for the system capacitor to discharge before performing further diagnosis or service. This is the only sure way to disable the SRS. Failure to take the proper precautions could result in accidental airbag deployment.

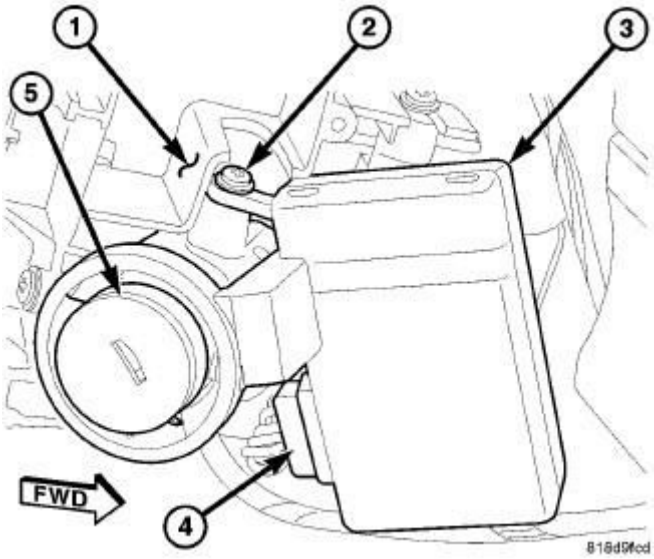

Fig. 8: Sentry Key Remote Entry Module
Courtesy of CHRYSLER GROUP, LLC

1. Position the Sentry Key REmote Entry Module (SKREEM) (3) onto the steering column ignition lock housing with the antenna ring oriented around the lock cylinder (5).
2. Install and tighten the screw (2) that secures the SKREEM mounting bracket to the boss on the top of the ignition lock housing. Tighten the screw to 2 N.m (20 in. lbs.).
3. Reconnect the instrument panel wire harness connector (4) to the SKREEM connector receptacle.
4. Reinstall the right multifunction switch onto the integral mounting bracket (1) on the right side of the clockspring. Refer to **SWITCH, MULTIFUNCTION, RIGHT, INSTALLATION** .
5. Reconnect the negative cable to the battery.

NOTE: On vehicles equipped with the optional Sentry Key Immobilizer System (SKIS), when the SKREEM is

replaced with a new unit, a diagnostic scan tool MUST be used to initialize the new SKREEM and to program at least two Sentry Key transponders before the vehicle can be operated. Refer to STANDARD PROCEDURE.

SIREN

DESCRIPTION

DESCRIPTION

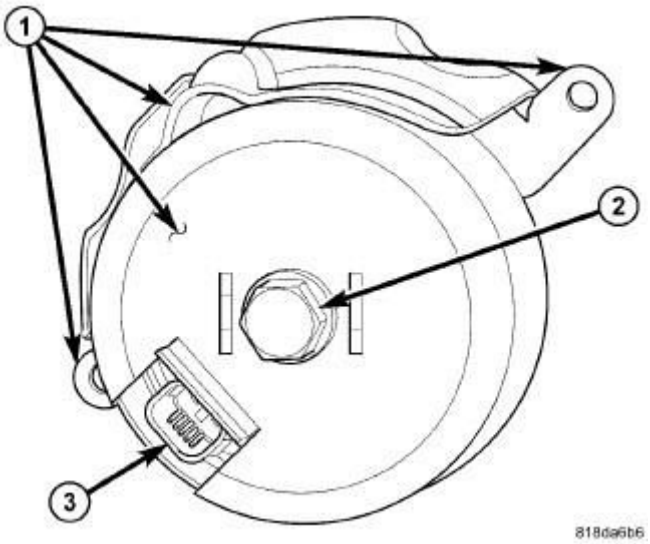

Fig. 9: Identifying Siren Components
Courtesy of CHRYSLER GROUP, LLC

An alarm siren module is part of the premium version of the Vehicle Theft Alarm (VTA) in the Vehicle Theft Security System (VTSS). The premium version of the VTA is only available in vehicles built for certain markets, where the additional features offered by this system are required. This unit is designed to provide the audible alert requirements for the premium VTA.

The alarm siren module consists of microprocessor-based electronic control circuitry, the siren, and a nickel metal hydride backup battery. All of the alarm module components are protected and sealed within a molded plastic housing. An integral connector receptacle (3) extends from the housing and connects the unit to the vehicle electrical system through a dedicated take out and connector of the engine compartment wire harness. The housing also has a threaded insert within a mounting hole through which a screw (2) secures it to a bell shaped

stamped metal mounting bracket (1). The siren and bracket unit are located on the outboard side of the right front fender load path beam where it is concealed by the right front fender above the wheel house splash shield. Two screws and U-nuts secure the mounting bracket to the vehicle.

The alarm siren module cannot be repaired or adjusted and, if ineffective or damaged, it must be replaced.

OPERATION

OPERATION

The microprocessor within the alarm siren module provides the siren unit features and functions based upon internal programming and electronic **arm** and **disarm** messages received from the Intrusion Transceiver Module (ITM) over a dedicated serial bus communication circuit. The siren module receives battery voltage on a fused B(+) circuit through a fuse in the Totally Integrated Power Module (TIPM), and receives a path to ground through a ground circuit in the engine compartment wire harness. These connections allow the siren to remain operational, regardless of the ignition switch position.

When the premium version of the Vehicle Theft Alarm (VTA) is armed, the siren module continuously monitors electronic message inputs from the ITM to sound its internal siren. While armed, the siren also enters its auto-detect mode. While in the auto-detect mode, if the siren module detects that its power supply or communication circuits are being tampered with or have been sabotaged, it will sound an audible alarm and continue to operate through an on-board backup battery. If the siren module is in its disarmed mode when its power supply or communication circuits are interrupted, the siren will not sound.

The state of charge of the siren module backup battery is automatically maintained. The battery is trickle charged approximately 2 minutes during every hour of operation through the battery voltage and ground circuits to the siren module.

The siren will self-detect problems with its internal and external power supply and communication circuits, then send electronic messages indicating the problem to the ITM upon receiving an **arm** or **disarm** request message. The ITM will store a Diagnostic Trouble Code (DTC) for any detected alarm siren module fault. The DTC can then be retrieved with a diagnostic scan tool through the 16-

way Data Link Connector (DLC) located under the driver side lower edge of the instrument panel over the Controller Area Network (CAN) data bus.

The hard wired inputs and outputs for the alarm siren module may be diagnosed using conventional diagnostic tools and procedures. Refer to the appropriate wiring information. However, conventional diagnostic methods will not prove conclusive in the diagnosis of the alarm siren module or the electronic controls and communication between other modules and devices that provide some features of the VTA system. The most reliable, efficient and accurate means to diagnose the alarm siren module or the electronic controls and communication related to alarm siren module operation requires the use of a diagnostic scan tool. Refer to the appropriate diagnostic information.

REMOVAL

REMOVAL

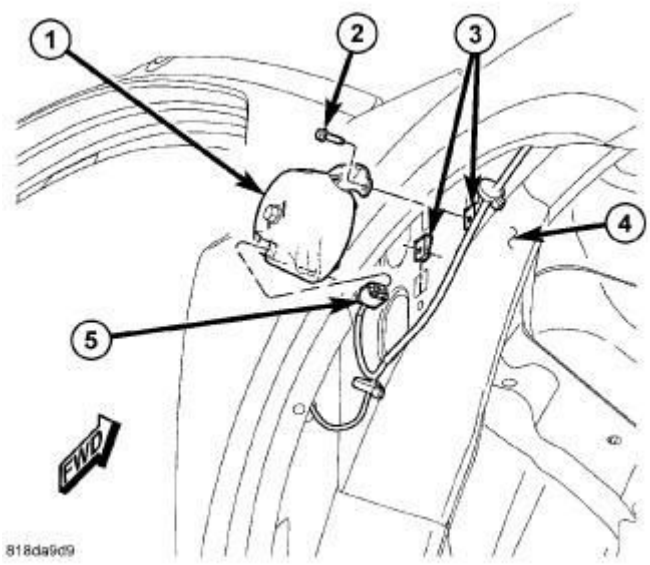

Fig. 10: Removing/Installing Siren
Courtesy of CHRYSLER GROUP, LLC

1. Disconnect and isolate the negative cable from the battery.
2. Remove the splash shield from the right front wheel house. Refer to **SHIELD, SPLASH, FRONT WHEELHOUSE, REMOVAL** .
3. Locate the alarm siren module (1) on the outboard side of the right front fender load path beam (4).
4. Disconnect the engine compartment wire harness connector (5) from the connector receptacle near the back of the siren.

5. Remove the two screws (2) that secure the siren mounting bracket to the load path beam.
6. Remove the siren and mounting bracket from the load path beam as a unit.

INSTALLATION

INSTALLATION

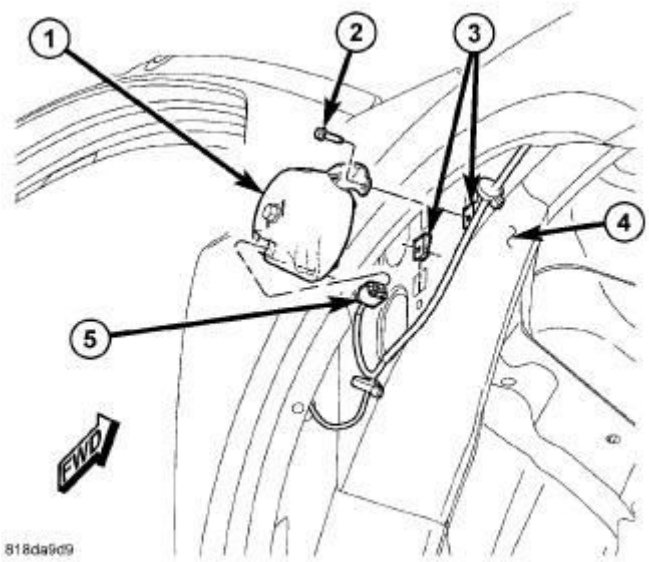

Fig. 11: Removing/Installing Siren
Courtesy of CHRYSLER GROUP, LLC

1. Check to be certain that the two U-nuts (3) are in good condition and properly installed in the outboard side of the right front fender load path beam.
2. Position the alarm siren module (1) to the load path beam as a unit.
3. Install and tighten the two screws (2) that secure the siren mounting bracket to the two U-nuts in the load path beam. Tighten the screws to 5 N.m (40 in. lbs.).
4. Reconnect the engine compartment wire harness connector (5) to the connector receptacle near the back of the siren.
5. Reinstall the splash shield into the right front wheel house. Refer to **SHIELD, SPLASH, FRONT WHEELHOUSE, INSTALLATION** .
6. Reconnect the negative cable to the battery.

NOTE: If the alarm siren module has been replaced with a new

unit, a diagnostic scan tool MUST be used to initialize and configure the new unit in the Intrusion Transceiver Module (ITM) before the Vehicle Theft Security System (VTSS) can operate as designed. Follow the programming steps outlined in the diagnostic scan tool for INITIALIZE SIREN under MISCELLANEOUS FUNCTIONS for the INTRUSION TRANSCEIVER MODULE/ITM menu item as appropriate.

SWITCH, HOOD AJAR

DESCRIPTION

DESCRIPTION

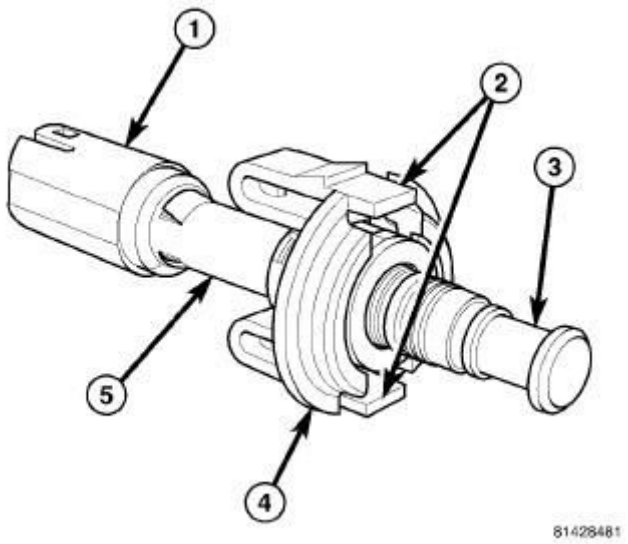

Fig. 12: Hood Ajar Switch
Courtesy of CHRYSLER GROUP, LLC

The hood ajar switch is a normally closed, single pole, spring-loaded plunger actuated switch. This switch has two unique versions that are used in two different applications. One switch is used only on vehicles equipped with the Vehicle Theft Alarm (VTA) system for sale in certain export markets where protection of the under hood area is required equipment. The second switch is used only on domestic vehicles equipped with an optional remote starter system.

The molded plastic switch body (5) has an integral molded connector receptacle (1) on the lower end containing two terminal pins. The switch is connected to the

vehicle electrical system through a dedicated take out of the engine compartment wire harness. Two integral latches (2) lock the switch into a keyed mounting hole in the stamped steel switch mounting bracket. The mounting bracket is secured with screws to the left side of the cowl plenum panel in the engine compartment. A molded plastic striker cap secured in the underside of the hood panel inner reinforcement actuates the switch plunger as the hood panel is closed.

The switch plunger (3) extends through a mounting collar (4) and a sleeve-like retainer ring on the upper end of the switch body. The retainer ring has a one time, self-adjustment feature that is activated after the switch is installed by closing the hood. The retainer ring is also color-coded to aid in identifying the switch application. A dark brown retainer ring identifies the under hood security switch application, while a white retainer ring identifies the remote starter system application.

An installed hood ajar switch cannot be readjusted or repaired. If the switch is damaged, ineffective, or requires readjustment, it must be replaced with a new unit. The hood ajar switch striker cap is not intended for reuse. If the striker is removed from the hood inner reinforcement for any reason, it must be replaced with a new unit.

OPERATION

OPERATION

The hood ajar switches are interchangeable physically, but not functionally. In each case, the hood ajar switch is a normally closed switch that is held open as the spring-loaded switch plunger is depressed by the striker cap on the inner hood panel reinforcement when the hood panel is closed and latched. When the hood is opened, the spring-loaded switch plunger extends from the switch body and the switch contacts are closed.

In the under hood security application (export vehicles only - dark brown retainer ring), the switch is connected in series between ground and the hood ajar switch sense input of the Totally Integrated Power Module (TIPM). The TIPM uses an internal resistor pull up to monitor the state of the hood ajar switch contacts.

In the remote starter system application (domestic vehicles only - white retainer ring) the switch has a 1 kilohm diagnostic resistor connected in parallel to the switch contacts between the two switch terminals. The switch is connected in

series between an output of the TIPM and the hood ajar switch sense input of the TIPM. The TIPM continually monitors this circuit and will store a Diagnostic Trouble Code (DTC) for any fault that it detects.

The components of the switch self-adjustment feature include an integral stop on the shaft of the plunger and a ribbed, sleeve-like retainer ring at the top of the switch body from which the plunger extends. With the switch mounting collar secured in its mounting bracket, the plunger is depressed by the striker cap on the hood inner reinforcement as the hood is closed. As the plunger is depressed, the plunger stop contacts the top of the retainer ring and it is driven downward and ratchets through the switch mounting collar until the hood is fully closed and latched. The ribs on the retainer ring are engaged within the mounting collar to maintain this adjusted position.

The hood ajar switch as well as the hard wired circuits between the switch and the TIPM may be diagnosed using conventional diagnostic tools and procedures. Refer to the appropriate wiring information. However, conventional diagnostic methods will not prove conclusive in the diagnosis of the electronic controls and communication between modules and other devices related to hood ajar switch operation that provide some features of the export vehicle theft or domestic remote starter systems. The most reliable, efficient and accurate means to diagnose the electronic controls and communication related to hood ajar switch operation requires the use of a diagnostic scan tool. Refer to the appropriate diagnostic information.

REMOVAL

BRACKET

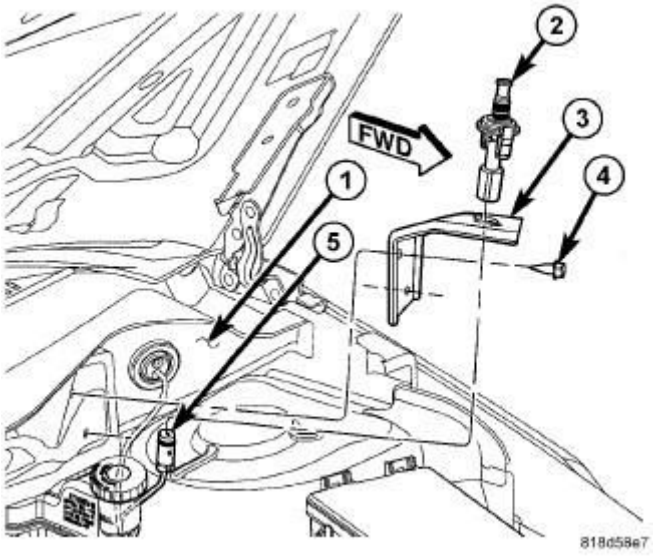

Fig. 13: Identifying Hood Ajar Switch Components
Courtesy of CHRYSLER GROUP, LLC

1. Remove the hood ajar switch (2) from the mounting bracket (3). Refer to **SWITCH, HOOD AJAR, REMOVAL**.
2. Remove the two screws (4) that secure the hood ajar switch bracket to the left side of the cowl plenum panel (1).
3. Remove the hood ajar switch bracket from the cowl plenum panel.

STRIKER CAP

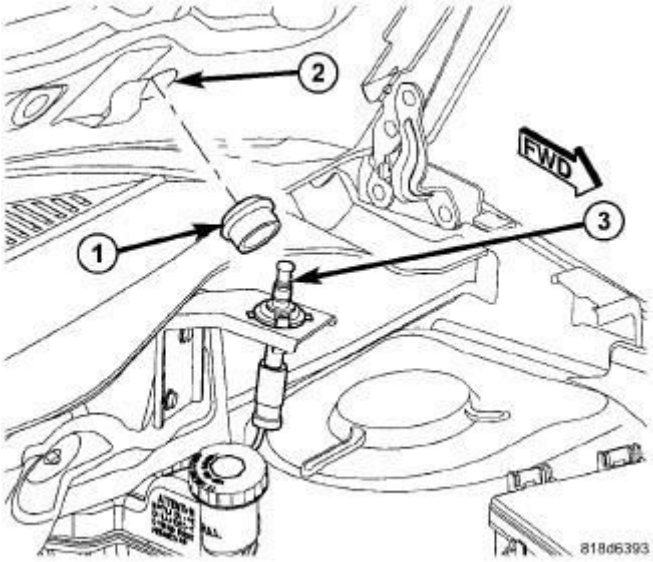

Fig. 14: Hood Ajar Switch Striker Cap
Courtesy of CHRYSLER GROUP, LLC

NOTE: The hood ajar switch striker cap is not intended for reuse. If the striker is removed from the hood inner reinforcement for any reason, it must be replaced.

1. Unlatch and open the hood.
2. Pry the hood ajar switch (3) striker cap (1) away from the mounting hole (2) in the inner hood panel reinforcement far enough to disengage the cap from its mounting hole.
3. Remove the striker cap from the inner hood panel reinforcement and discard.

SWITCH

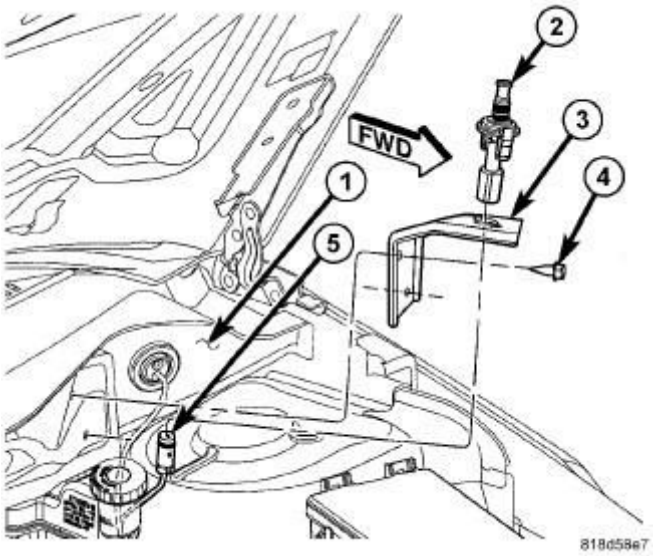

Fig. 15: Identifying Hood Ajar Switch Components
Courtesy of CHRYSLER GROUP, LLC

1. Unlatch and open the hood.
2. Disconnect and isolate the negative cable from the battery.
3. From the top of the mounting bracket (3) on the left side of the cowl plenum panel (1), squeeze the two hood ajar switch (2) latch tabs together and pull the switch upward.
4. Pull the hood ajar switch up through the hole in the mounting bracket far enough to access and disconnect the wire harness connector (5) from the switch connector receptacle.
5. Remove the hood ajar switch from the mounting bracket.

INSTALLATION

BRACKET

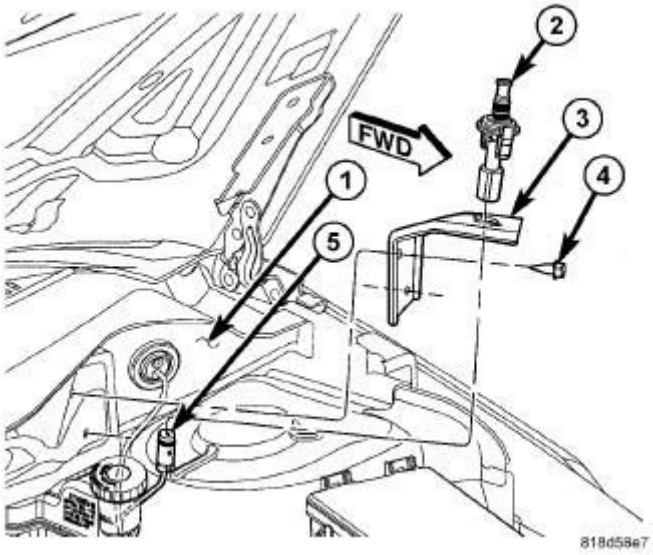

Fig. 16: Identifying Hood Ajar Switch Components
Courtesy of CHRYSLER GROUP, LLC

1. Position the hood ajar switch bracket (3) onto the left side of the cowl plenum panel (1).
2. Install and tighten the two screws (4) that secure the hood ajar switch bracket to the cowl plenum panel. Tighten the screws to 4 N.m (35 in. lbs.).
3. Reinstall the hood ajar switch (2) into the mounting bracket. Refer to **SWITCH, HOOD AJAR, INSTALLATION**.

STRIKER CAP

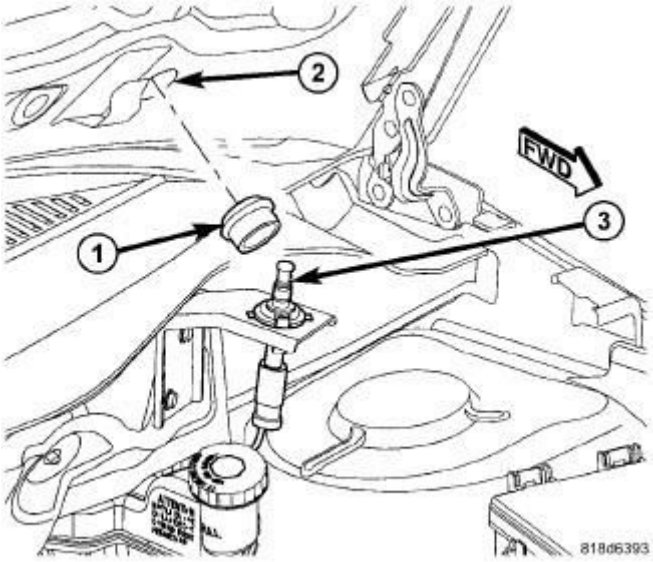

Fig. 17: Hood Ajar Switch Striker Cap
Courtesy of CHRYSLER GROUP, LLC

NOTE: The hood ajar switch striker cap is not intended for reuse. If the striker cap is removed from the hood inner reinforcement for any reason, it must be replaced.

1. Position the new hood ajar switch striker cap (1) to the mounting hole (2) in the inner hood panel reinforcement over the hood ajar switch (3).
2. Using hand pressure, press the hood ajar switch striker cap upward into the mounting hole in the inner hood panel reinforcement until it is fully engaged in the mounting hole.
3. Close and latch the hood.

SWITCH

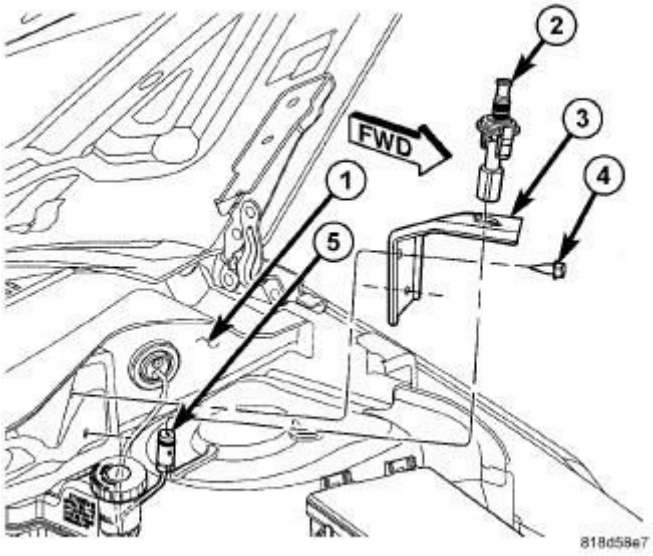

Fig. 18: Identifying Hood Ajar Switch Components
Courtesy of CHRYSLER GROUP, LLC

1. Position the hood ajar switch (2) near the hole in the mounting bracket (3) on the left side of the cowl plenum panel (1).
2. Route the wire harness connector (5) through the switch mounting bracket and reconnect it to the switch connector receptacle.
3. From the top of the mounting bracket, press the switch downward into the mounting hole until the integral switch latch tabs lock it into place.
4. Reconnect the negative cable to the battery.
5. Close and latch the hood.

2014 ACCESSORIES AND EQUIPMENT

Wiper System & Washer System - Service Information - Compass & Patriot

DESCRIPTION

FRONT

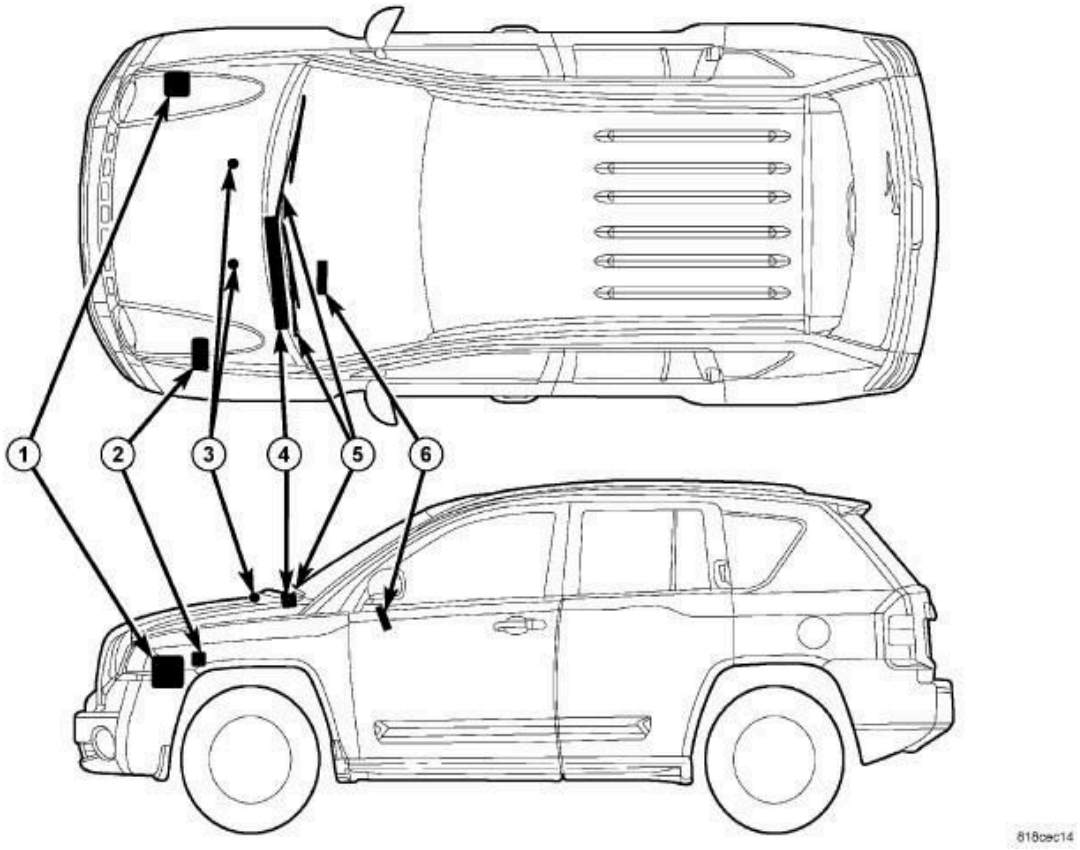

Fig. 1: Front Wiper And Washer System
Courtesy of CHRYSLER GROUP, LLC

An electrically operated intermittent front wiper and washer system is standard factory-installed safety equipment on this vehicle. The wiper and washer system includes the following major components, which are described in further detail elsewhere in this service information:

- **ElectroMechanical Instrument Cluster** - The ElectroMechanical Instrument Cluster (EMIC) (also known as the Cab Compartment Node/CCN) is located on the instrument panel directly in front of the driver. Refer to **DESCRIPTION** .
- **Front Washer Nozzle (3)** - Two fluidic front washer nozzles with integral check valves are secured by latch features to dedicated openings in the hood

panel near the base of the windshield.

- **Front Washer Plumbing** - The plumbing for the washer system consists of rubber hoses and molded rubber or plastic fittings. The plumbing is routed to the engine compartment from the washer reservoir. The front washer hose is routed along the right side of the engine compartment to the cowl plenum panel, then across the underside of the inner hood panel reinforcement to the washer nozzles.
- **Front Wiper Arms And Blades (5)** - The two front wiper arms are secured with nuts to the threaded ends of the two wiper pivot shafts, which extend through the cowl plenum cover/grille panel located near the base of the windshield. The two unequal length front wiper blades are each secured to their wiper arm with an integral latch, and are parked on the glass near the bottom of the windshield when the front wiper system is not in operation.
- **Front Wiper Module (4)** - The wiper pivot shafts are the only visible components of the front wiper module. The remainder of the module is concealed within the cowl plenum beneath the cowl plenum cover/grille panel. The wiper module includes the wiper module bracket, three rubber-isolated wiper module mounts, the wiper motor, the wiper motor crank arm, the two wiper drive links, the two wiper pivots and the two pivot water shields.
- **Right Multifunction Switch (6)** - The right (wiper) multifunction switch and the left (lighting) multifunction switch are secured to brackets integral to the clockspring housing on the top of the steering column just below the steering wheel. The right multifunction switch is connected by a short jumper harness to the Steering Control Module (SCM), which is internal to the left multifunction switch housing. Only the switch control stalk extending from the right side of the steering column is visible, while the remainder of the switch is concealed beneath the steering column shrouds. The right multifunction switch is dedicated to providing all of the driver controls for both the front and rear wiper and washer systems.
- **Steering Control Module** - The Steering Control Module (SCM) is internal to the left multifunction switch housing, which is secured to a bracket integral to the left side of the clockspring housing on the top of the steering column just below the steering wheel. Only the left switch control stalk extending from the left side of the steering column is visible, while the remainder of the switch housing containing the SCM is concealed beneath the steering column shrouds. Refer to **MODULE, STEERING COLUMN,**

DESCRIPTION .

- **Totally Integrated Power Module (2)** - The Totally Integrated Power Module (TIPM) is located in the engine compartment, near the battery. Refer to **MODULE, TOTALLY INTEGRATED POWER (TIPM), DESCRIPTION** .
- **Washer Pump/Motor** - The reversible electric washer pump/motor unit is located in a dedicated hole in a sump area on the lower, forward facing surface of the washer reservoir, ahead of the right front wheel house. This single reversible washer pump/motor provides washer fluid to either the front or rear washer system plumbing, depending upon the direction of the pump motor rotation.
- **Washer Reservoir (1)** - The washer reservoir is located in the engine compartment ahead of the right front strut tower and wheel house. The filler neck and cap are accessed from the right front corner of the engine compartment.

Hard wired circuitry connects the front wiper and washer system components to the electrical system of the vehicle. These hard wired circuits are integral to several wire harnesses, which are routed throughout the vehicle and retained by many different methods. These circuits may be connected to each other, to the vehicle electrical system and to the front wiper and washer system components through the use of a combination of soldered splices, splice block connectors, and many different types of wire harness terminal connectors and insulators. Refer to the appropriate wiring information. The wiring information includes wiring diagrams, proper wire and connector repair procedures, further details on wire harness routing and retention, as well as pin out and location views for the various wire harness connectors, splices and grounds.

REAR

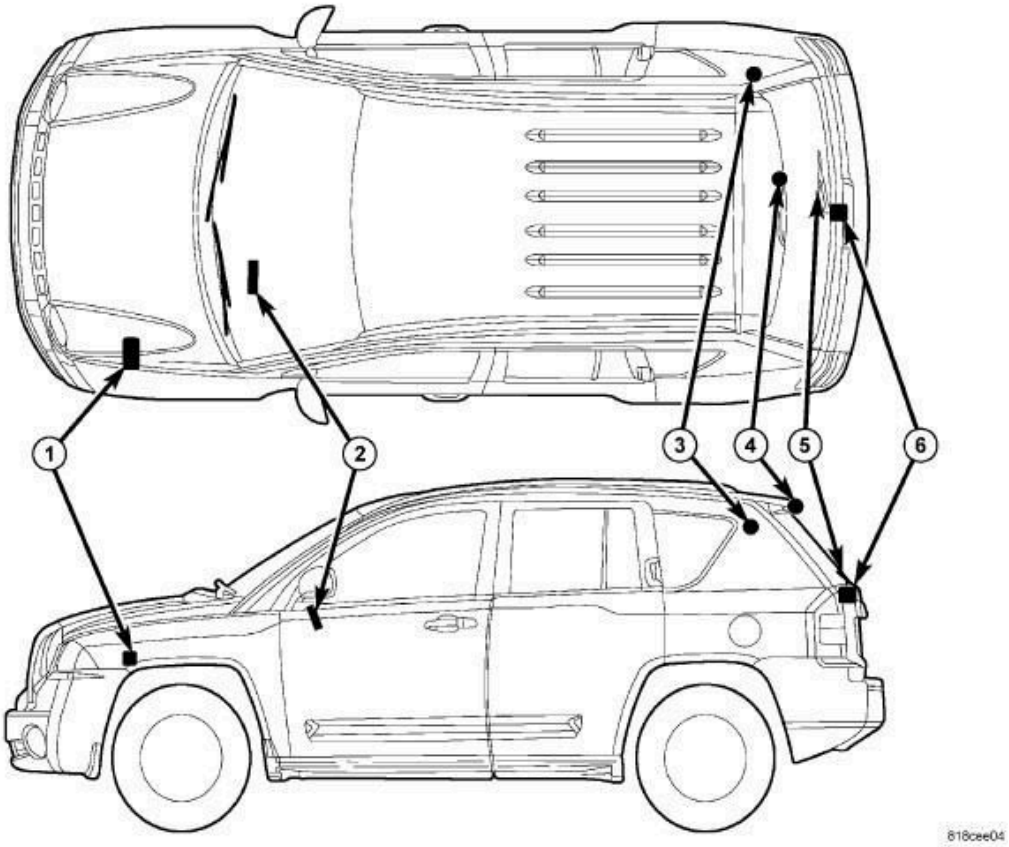

Fig. 2: Rear Wiper And Washer System
Courtesy of CHRYSLER GROUP, LLC

An electrically operated fixed interval intermittent rear wiper and washer system is standard factory-installed equipment on this vehicle. The rear wiper and washer system includes the following major components, which are described in further detail elsewhere in this service information:

- **ElectroMechanical Instrument Cluster** - The ElectroMechanical Instrument Cluster (EMIC) (also known as the Cab Compartment Node/CCN) is located on the instrument panel directly in front of the driver. Refer to **DESCRIPTION** .
- **Rear Washer Nozzle (4)** - The fluidic rear washer nozzle is integrated into the rear spoiler on the liftgate outer panel above the liftgate glass and is located to the right of the Center High-Mounted Stop Lamp (CHMSL).
- **Rear Washer Plumbing** - The plumbing for the rear washer system consists of rubber hoses, molded plastic fittings and a rear washer system check valve. The plumbing is routed along the right side of the engine compartment from the washer reservoir, through the dash into the passenger compartment, up the right cowl side and A-pillar to the headliner then

through the upper liftgate opening header and the upper liftgate to the rear washer nozzle on the upper liftgate spoiler. The rear washer system check valve (3) connects the headliner washer hose to the liftgate washer hose and is located near the upper liftgate opening header behind the right upper D-pillar trim.

- **Rear Wiper Arm And Blade (5)** - The single rear wiper arm is secured by a nut directly to the rear wiper motor output shaft, which extends through a rubber grommet inserted into a hole in the center at the base of the liftgate glass. The rear wiper blade is secured to the rear wiper arm with an integral latch, and is parked near the base of the glass when the rear wiper system is not in operation.
- **Rear Wiper Motor (6)** - The rear wiper motor includes the motor bracket and three rubber-isolated wiper motor mounts. The wiper motor output shaft is the only visible component of the rear wiper motor. The remainder of the motor is concealed by the inner liftgate trim on the inside of the liftgate beneath the liftgate glass opening.
- **Right Multifunction Switch (2)** - The right (wiper) multifunction switch and the left (lighting) multifunction switch are secured to brackets integral to the clockspring housing, on the top of the steering column just below the steering wheel. The right multifunction switch is connected by a short jumper harness to the Steering Control Module (SCM), which is internal to the left multifunction switch housing. Only the switch control stalk extending from the right side of the steering column is visible, while the remainder of the switch is concealed beneath the steering column shrouds. The right multifunction switch is dedicated to providing all of the driver controls for both the front and rear wiper and washer systems.
- **Steering Control Module** - The Steering Control Module (SCM) is internal to the left multifunction switch housing, which is secured to a bracket integral to the left side of the clockspring housing on the top of the steering column just below the steering wheel. Only the left switch control stalk extending from the left side of the steering column is visible, while the remainder of the switch housing containing the SCM is concealed beneath the steering column shrouds. Refer to **MODULE, STEERING COLUMN, DESCRIPTION** .
- **Totally Integrated Power Module (1)** - The Totally Integrated Power Module (TIPM) is located in the engine compartment, near the battery. Refer to **MODULE, TOTALLY INTEGRATED POWER (TIPM),**

DESCRIPTION .

- **Washer Reservoir** - The rear washer system shares a single reservoir and reversible pump with the front washer system, but has its own dedicated plumbing. The washer reservoir is located in the engine compartment ahead of the right front strut tower and wheel house. The filler neck and cap are accessed from the right front corner of the engine compartment.

Hard wired circuitry connects the rear wiper and washer system components to the electrical system of the vehicle. These hard wired circuits are integral to several wire harnesses, which are routed throughout the vehicle and retained by many different methods. These circuits may be connected to each other, to the vehicle electrical system and to the rear wiper and washer system components through the use of a combination of soldered splices, splice block connectors, and many different types of wire harness terminal connectors and insulators. Refer to the appropriate wiring information. The wiring information includes wiring diagrams, proper wire and connector repair procedures, further details on wire harness routing and retention, as well as pin out and location views for the various wire harness connectors, splices and grounds.

OPERATION

FRONT

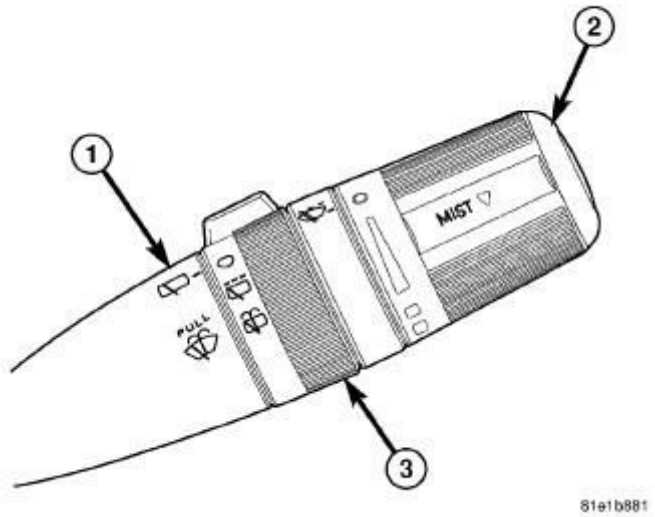

Fig. 3: Right (Wiper) Multi-Function Switch
Courtesy of CHRYSLER GROUP, LLC

The front wiper and washer system is designed to provide the vehicle operator

with a convenient, safe, and reliable means of maintaining visibility through the windshield glass. The various components of this system are designed to convert electrical energy produced by the vehicle electrical system into the mechanical action of the wiper blades to wipe the outside surface of the glass, as well as into the hydraulic action of the washer system to apply washer fluid stored in an on-board reservoir to the area of the glass to be wiped. When combined, these components provide the means to effectively maintain clear visibility for the vehicle operator by removing excess accumulations of rain, snow, bugs, mud, or other minor debris from the outer surface of the windshield glass that might be encountered while driving the vehicle under numerous types of inclement operating conditions.

The vehicle operator initiates all front and rear wiper and washer system functions with the control stalk of the right (wiper) multifunction switch (1) that extends from the right side of the steering column, just below the steering wheel. Rotating the control knob (2) on the end of the control stalk, selects the OFF, DELAY, LOW, or HIGH front wiper system operating modes. In the DELAY mode, the control knob also allows the vehicle operator to select from one of five intermittent wipe delay intervals.

Pulling the control stalk rearward actuates the momentary front washer system switch, which selects the WASH and WIPE-AFTER-WASH modes, depending upon when and how long the switch is held closed. Pushing the control stalk downward actuates a momentary switch and selects the MIST mode, which cycles the wiper blades for as long as the switch is held closed then completes the current cycle and parks the blades at the base of the windshield after the switch is released.

The right multifunction switch provides hard wired analog and resistor multiplexed inputs to the Steering Control Module (SCM) internal to the left (lighting) multifunction switch housing for all of the wiper and washer system functions. The SCM then sends electronic **wiper** and **washer switch** status messages to the ElectroMechanical Instrument Cluster (EMIC) (also known as the Cab Compartment Node/CCN), over a Local Interface Network (LIN) data bus. The EMIC responds to the SCM inputs by sending electronic **wiper** and **washer system** request messages to the Totally Integrated Power Module (TIPM) over the Controller Area Network (CAN) data bus requesting the appropriate wiper and washer system operating modes.

Front wiper and washer system operation is completely controlled by the SCM, EMIC and TIPM logic circuits, and that logic will only allow these systems to operate when the ignition switch is in the ACCESSORY or ON positions. The TIPM uses intelligent, high current, self-protected high side switches to control wiper system operation by energizing or de-energizing the wiper motor low and high speed brushes. The TIPM uses an H-bridge circuit to control the operation of the reversible washer pump/motor unit. The right multifunction switch circuitry receives battery current and a clean ground output from the SCM, then provides analog and multiplexed inputs to the SCM to indicate the selected front wiper and front washer system mode.

The hard wired circuits and components of the front wiper and washer system may be diagnosed using conventional diagnostic tools and procedures. Refer to the appropriate wiring information. However, conventional diagnostic methods will not prove conclusive in the diagnosis of the front wiper and washer system or the electronic controls and communication between other modules and devices that provide some features of the front wiper and washer system. The most reliable, efficient and accurate means to diagnose the front wiper and washer system or the electronic controls and communication related to front wiper and washer system operation requires the use of a diagnostic scan tool. Refer to the appropriate diagnostic information.

OPERATING MODES

Following are paragraphs that briefly describe the operation of each of the front wiper and washer system operating modes.

- **Continuous Wipe Mode** - When the LOW position of the control knob on the control stalk of the right (wiper) multifunction switch is selected the SCM sends an electronic **wiper switch low** status message to the EMIC over the LIN data bus, the EMIC relays an electronic **wiper switch low** request message to the TIPM over the CAN data bus, then the TIPM directs battery current to the low speed brush of the wiper motor, causing the wipers to cycle at low speed.

  When the HIGH position of the control knob is selected the SCM sends an electronic **wiper switch high** status message to the EMIC, the EMIC relays an electronic **wiper switch high** request message to the TIPM, then the TIPM directs battery current to the high speed brush of the wiper motor, causing the wipers to cycle at high speed.

When the OFF position of the multifunction switch control knob is selected, the SCM sends an electronic **wiper switch off** status message to the EMIC, the EMIC relays an electronic **wiper switch off** request message to the TIPM, then one of two events will occur. The event that occurs depends upon the position of the wiper blades on the windshield at the moment that the control knob OFF position is selected.

If the wiper blades are in the down position on the windshield when the OFF position is selected, the park switch that is integral to the wiper motor is closed to ground, which provides a hard wired park switch sense input to the TIPM. The TIPM then de-energizes the wiper motor and the wiper motor ceases to operate.

If the wiper blades are not in the down position on the windshield at the moment the OFF position is selected, the park switch is an open circuit and the TIPM continues running the wiper motor at low speed until the wiper blades are in the down position on the windshield and the park switch input to the TIPM is again closed to ground.

- **Intermittent Wipe Mode** - When the control knob on the control stalk of the right (wiper) multifunction switch is moved to one of the five DELAY interval positions the SCM sends an electronic **wiper switch delay interval** status message to the EMIC, the EMIC relays an electronic **wiper switch delay interval** request message to the TIPM, then the TIPM electronic intermittent wipe logic circuit responds by calculating the correct length of time between wiper sweeps based upon the selected delay interval input.

  The TIPM monitors the changing state of the wiper motor park switch through a hard wired park switch sense input. This input allows the TIPM to determine the proper intervals at which to energize and de-energize the wiper motor intermittently for one low speed cycle at a time.

  The TIPM logic is also programmed to provide vehicle speed sensitivity to the selected intermittent wipe delay intervals. In order to provide this feature the TIPM monitors electronic **vehicle speed** messages from the Controller Antilock Brake (CAB) or the Powertrain Control Module (PCM) and doubles the selected delay interval whenever the vehicle speed is about 16 kilometers-per-hour (10 miles-per-hour) or less.

- **Mist Wipe Mode** - When the control stalk of the right (wiper) multifunction

switch is moved downward to the momentary MIST position, the SCM sends an electronic **wiper mist mode** status message to the EMIC, the EMIC relays an electronic **wiper mist mode** request message to the TIPM, then the TIPM energizes the low speed brush of the wiper motor for as long as the switch is held closed, then de-energizes the motor when the state of the switch changes to open, parking the wiper blades near the base of the windshield. The TIPM can operate the front wiper motor in this mode for only one low speed cycle at a time, or for an indefinite number of sequential low speed cycles, depending upon how long the switch is held closed.

- **Wash Mode** - When the control stalk of the right (wiper) multifunction switch is pulled rearward to the front momentary WASH position for more than about one-half second with the wiper system operating, the SCM sends an electronic **washer switch** status message to the EMIC, the EMIC relays an electronic **washer switch** request message to the TIPM, then the TIPM directs battery current and ground to the washer pump/motor. This will cause the washer pump/motor to be energized in the front wash direction for as long as the switch is held closed (up to approximately 10 seconds) and to be de-energized when the control stalk is released.

  When the control stalk is pulled rearward to the front momentary WASH position while the front wiper system is operating in one of the DELAY interval positions, the washer pump/motor operation is the same. However, the TIPM also overrides the selected delay interval and operates the front wiper motor in a continuous low speed mode for as long as the control stalk is held in the front momentary WASH position, then reverts to the selected delay interval several wipe cycles after the control stalk is released. If the WASH switch is held closed for more than approximately 10 seconds, the TIPM will suspend washer pump/motor operation until the control stalk is released for about 2 seconds and then cycled back to the WASH position.

- **Wipe-After-Wash Mode** - When the control stalk of the right (wiper) multifunction switch is pulled rearward to the front momentary WASH position for more than about one-half second while the wiper system is not operating, the SCM sends an electronic **washer switch** status message to the EMIC, the EMIC relays an electronic **washer switch** request message to the TIPM, and the TIPM directs battery current and ground to the washer pump/motor and energizes the wiper motor in a continuous low speed mode for as long as the switch is held closed (up to approximately 10 seconds). When the control stalk is released, the TIPM de-energizes the washer

pump/motor immediately, but allows the wiper motor to operate for two or three additional wipe cycles before it de-energizes the wiper motor and parks the wiper blades near the base of the windshield.

If the control stalk is held rearward for more than about 10 seconds, the TIPM will suspend washer pump/motor operation until the stalk is released for about 2 seconds and then cycled back to the WASH position; however, the wipers will continue to operate for as long as the switch is held closed. The TIPM monitors the changing state of the wiper motor park switch through a hard wired wiper park switch sense circuit input. This input allows the TIPM to count the number of wipe cycles that occur after the control stalk is released, and to determine the proper interval at which to de-energize the wiper motor to complete the WIPE-AFTER-WASH mode cycle.

REAR

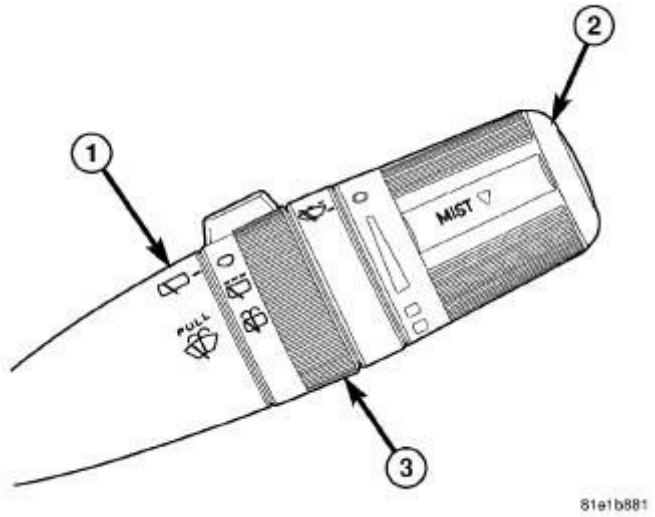

Fig. 4: Right (Wiper) Multi-Function Switch
Courtesy of CHRYSLER GROUP, LLC

The rear wiper and washer system is designed to provide the vehicle operator with a convenient, safe, and reliable means of maintaining visibility through the liftgate glass. The various components of this system are designed to convert electrical energy produced by the vehicle electrical system into the mechanical action of the wiper blade to wipe the outside surface of the glass, as well as into the hydraulic action of the washer system to apply washer fluid stored in an on-board reservoir to the area of the glass to be wiped. When combined, these components provide the means to effectively maintain clear visibility for the

vehicle operator by removing excess accumulations of rain, snow, bugs, mud, or other minor debris from the outer surface of the liftgate glass that might be encountered while driving the vehicle under numerous types of inclement operating conditions.

The vehicle operator initiates all front and rear wiper and washer system functions with the control stalk (1) of the right (wiper) multifunction switch that extends from the right side of the steering column, just below the steering wheel. Rotating the control sleeve (3) on the control stalk to the OFF or INTERMITTENT detent positions or the momentary WASH position selects the rear wiper and washer system operating modes.

The right multifunction switch provides hard wired analog and resistor multiplexed inputs to the Steering Control Module (SCM) integral to the left (lighting) multifunction switch for all of the wiper and washer system functions. The SCM then sends electronic **rear wiper/washer switch** status messages to the ElectroMechanical Instrument Cluster (EMIC) (also known as the Cab Compartment Node/CCN) over a Local Interface Network (LIN) data bus. The EMIC then sends electronic **rear wiper/washer switch** request messages to the Totally Integrated Power Module (TIPM) over the Controller Area Network (CAN) data bus requesting the appropriate rear wiper and washer system operating modes.

Rear wiper and washer system operation is completely controlled by the SCM, EMIC and TIPM logic circuits, and that logic will only allow these systems to operate when the ignition switch is in the ACCESSORY or ON positions. The TIPM uses intelligent, high current, self-protected high side switches to control wiper system operation by energizing or de-energizing the rear wiper motor. The TIPM uses an H-bridge circuit to control the operation of the reversible washer pump/motor unit. The right multifunction switch circuitry receives a clean ground output from the SCM on a multifunction switch return circuit, then provides analog and resistor multiplexed inputs to the SCM to indicate the selected rear wiper and rear washer system mode.

The hard wired circuits and components of the rear wiper and washer system may be diagnosed using conventional diagnostic tools and procedures. Refer to the appropriate wiring information. However, conventional diagnostic methods will not prove conclusive in the diagnosis of the rear wiper and washer system or the electronic controls and communication between other modules and devices

that provide some features of the rear wiper and washer system. The most reliable, efficient and accurate means to diagnose the rear wiper and washer system or the electronic controls and communication related to rear wiper and washer system operation requires the use of a diagnostic scan tool. Refer to the appropriate diagnostic information.

OPERATING MODES

Following are paragraphs that briefly describe the operation of each of the rear wiper and washer system operating modes.

- **Intermittent Wipe Mode** - When the INTERMITTENT WIPE position of the control sleeve on the control stalk of the right multifunction switch is selected, the SCM sends an electronic **rear wiper switch** status message to the EMIC over the LIN data bus, then the EMIC relays an electronic **rear wiper switch** request message to the TIPM over the CAN data bus, and the TIPM directs battery current to the rear wiper motor at fixed delay intervals to enable the rear wiper motor intermittent wipe mode.
- **Wash Mode** - When the control sleeve of the right multifunction switch is rotated counterclockwise past the INTERMITTENT detent position to the momentary rear WASH position, the SCM sends an electronic **rear washer switch** status message to the EMIC over the LIN data bus, then the EMIC relays an electronic **rear washer switch** request message to the TIPM over the CAN data bus, and the TIPM directs battery current to the rear wiper motor and directs battery current and ground to the washer pump/motor unit. These outputs will cause the washer pump motor and the rear wiper motor to operate continuously for as long as the switch is held closed up to approximately 10 seconds.

  The washer pump is de-energized as soon as the control sleeve is released, but the rear wiper motor continues to operate for two to three continuous cycles before reverting to the fixed delay interval operation. The TIPM uses a hard wired output from a park switch internal to the rear wiper motor as an additional logic input to monitor the position of the rear wiper blade on the glass and to control the number of continuous wiper sweeps following washer operation

DIAGNOSIS AND TESTING

DIAGNOSIS AND TESTING - FRONT WIPER AND WASHER SYSTEM

WARNING: To avoid serious or fatal injury on vehicles equipped with airbags, disable the Supplemental Restraint System (SRS) before attempting any steering wheel, steering column, airbag, seat belt tensioner, impact sensor or instrument panel component diagnosis or service. Disconnect and isolate the battery negative (ground) cable, then wait two minutes for the system capacitor to discharge before performing further diagnosis or service. This is the only sure way to disable the SRS. Failure to take the proper precautions could result in accidental airbag deployment.

If the front wiper motor operates, but the wipers do not move on the windshield, replace the ineffective front wiper module. If the washer pump/motor operates, but no washer fluid is dispensed on the glass; or, if the wipers operate, but chatter, lift, or do not clear the glass, clean and inspect the front wiper and washer system components as required. Refer to **CLEANING** and **INSPECTION**.

The hard wired front wiper and washer system circuits and components may be diagnosed using conventional diagnostic tools and procedures. Refer to the appropriate wiring information. The wiring information includes wiring diagrams, proper wire and connector repair procedures, details of wire harness routing and retention, connector pin out information and location views for the various wire harness connectors, splices and grounds.

However, conventional diagnostic methods will not prove conclusive in the diagnosis of the front wiper and washer system or the electronic controls and communication between other modules and devices that provide some features of the front wiper and washer system. The most reliable, efficient and accurate means to diagnose the front wiper and washer system or the electronic controls and communication related to front wiper and washer system operation requires the use of a diagnostic scan tool. Refer to the appropriate diagnostic information.

NOTE: The front wiper and washer switches are integral to the right multifunction switch. The right multifunction switch is hard wired to the left multifunction switch/Steering Control Module (SCM), which communicates with the

ElectroMechanical Instrument Cluster (EMIC) (also known as the Cab Compartment Node/CCN) over the Local Interface Network (LIN) data bus. Before performing any of the following tests, determine whether the other functions of the right and left multifunction switches and the SCM are operational. If only the right multifunction switch functions are inoperative, test and repair the right multifunction switch or the jumper harness between the right and left multifunction switches before attempting to repair the Front Wiper and Washer System. If both the right and left multifunction switches and the SCM functions are ineffective, diagnose and repair that problem before attempting to repair the Front Wiper and Washer System.

FRONT WIPER SYSTEM DIAGNOSIS		
CONDITION	POSSIBLE CAUSES	CORRECTION
WIPER MOTOR DOES NOT OPERATE IN ANY SWITCH POSITION	1. Ineffective motor ground circuit.	1. Test and repair open wiper motor ground circuit if required.
	2. Ineffective motor feed circuits.	2. Test and repair low speed and high speed feed circuits between TIPM and front wiper motor if required.
	3. Ineffective EMIC (CCN) inputs or outputs.	3. Use a diagnostic scan tool to test the EMIC (CCN) inputs and outputs. Refer to the appropriate diagnostic information.
	4. Ineffective TIPM inputs or outputs.	4. Use a diagnostic scan tool to test the TIPM inputs and outputs. Refer to the appropriate diagnostic information.
	5. Ineffective wiper motor.	5. Test and replace open or shorted wiper motor as

		required.
WIPER MOTOR OPERATES SLOWLY IN ALL SWITCH POSITIONS	1. Ineffective wiper motor.	1. Check amperage draw with linkage disconnected from wiper motor crank arm. Correct draw should be about 6 amperes. If incorrect, refer to the appropriate Possible Cause that follows:
	2. Amperage draw too low.	2. Test and repair shorted low and high speed feed circuits if required.
	3. Amperage draw too high.	3. With linkage disconnected from wiper motor crank arm check linkage and pivots for binding. If binding is detected, repair or replace front wiper module if required. If no linkage binding detected, replace the front wiper motor if required.
WIPERS RUN AT HIGH SPEED WITH SWITCH LOW SPEED SELECTED OR AT LOW SPEED WITH SWITCH HIGH SPEED SELECTED	1. Ineffective motor feed circuit wiring.	1. Test and repair low speed and high speed feed circuits between TIPM and front wiper motor if required.

DIAGNOSIS AND TESTING - REAR WIPER AND WASHER SYSTEM

WARNING: **To avoid serious or fatal injury on vehicles equipped with airbags, disable the Supplemental Restraint System (SRS) before attempting any steering wheel, steering column, airbag, seat belt tensioner, impact sensor or instrument panel component diagnosis or service. Disconnect and isolate the battery negative (ground) cable, then**

wait two minutes for the system capacitor to discharge before performing further diagnosis or service. This is the only sure way to disable the SRS. Failure to take the proper precautions could result in accidental airbag deployment.

If the rear wiper motor operates, but the wiper motor output shaft does not move, replace the ineffective rear wiper motor. If the washer pump motor operates, but no washer fluid is dispensed on the glass; or, if the wiper operates, but chatters, lifts, or does not clear the glass, clean and inspect the rear wiper and washer system components as required. Refer to **CLEANING** and **INSPECTION**.

The hard wired rear wiper and washer system circuits and components may be diagnosed using conventional diagnostic tools and procedures. Refer to the appropriate wiring information. The wiring information includes wiring diagrams, proper wire and connector repair procedures, details of wire harness routing and retention, connector pin out information and location views for the various wire harness connectors, splices and grounds.

However, conventional diagnostic methods will not prove conclusive in the diagnosis of the rear wiper and washer system or the electronic controls and communication between other modules and devices that provide some features of the rear wiper and washer system. The most reliable, efficient and accurate means to diagnose the rear wiper and washer system or the electronic controls and communication related to rear wiper and washer system operation requires the use of a diagnostic scan tool. Refer to the appropriate diagnostic information.

NOTE: The rear wiper and washer switches are integral to the right multifunction switch. The right multifunction switch is hard wired to the left multifunction switch/Steering Control Module (SCM), which communicates with the ElectroMechanical Instrument Cluster (EMIC) (also known as the Cab Compartment Node/CCN) over the Local Interface Network (LIN) data bus. Before performing any of the following tests, determine whether the other functions of the right and left multifunction switches and the SCM are operational. If only the right multifunction switch functions are inoperative, test and repair the right multifunction switch or the jumper harness between the

right and left multifunction switches before attempting to repair the Rear Wiper and Washer System. If both the right and left multifunction switch/SCM functions are ineffective, diagnose and repair that problem before attempting to repair the Rear Wiper and Washer System.

REAR WIPER SYSTEM DIAGNOSIS		
CONDITION	**POSSIBLE CAUSES**	**CORRECTION**
WIPER MOTOR DOES NOT OPERATE IN ANY SWITCH POSITION	1. Ineffective motor ground circuit.	1. Test and repair open wiper motor ground circuit if required.
	2. Ineffective motor feed circuits.	2. Test and repair motor feed circuit between TIPM and rear wiper motor if required.
	3. Ineffective EMIC (CCN) inputs or outputs.	3. Use a diagnostic scan tool to test the EMIC (CCN) inputs and outputs. Refer to the appropriate diagnostic information.
	4. Ineffective TIPM inputs or outputs.	4. Use a diagnostic scan tool to test the TIPM inputs and outputs. Refer to the appropriate diagnostic information.
	5. Ineffective wiper motor.	5. Test and replace open or shorted wiper motor if required.
WIPER MOTOR	1. Improper wiper motor amperage draw.	1. Check amperage draw with wiper arm disconnected from rear wiper motor output shaft. Correct draw should be about 6 amperes. If incorrect, refer to the appropriate Possible Cause that follows:
	2. Amperage draw too low.	2. Test and repair the shorted rear wiper motor signal and fused ignition switch output

OPERATES SLOWLY		(run - accessory) circuits if required.
	3. Amperage draw too high.	3. With wiper arm disconnected from wiper motor output shaft check for binding between output shaft and rubber grommet in liftgate glass. If binding is detected, lubricate or replace grommet if required. If no binding is detected, replace the wiper motor if required.

SPECIFICATIONS

SPECIFICATIONS

TORQUE SPECIFICATIONS			
DESCRIPTION	**N.m**	**Ft. Lbs.**	**In. Lbs.**
Right Multifunction Switch Mounting Screw	1	-	10
Washer Reservoir Mounting Screw	9	-	79
Front Wiper Arm Mounting Nut	26	19	-
Rear Wiper Arm Mounting Nut	9	7	-
Front Wiper Module Mounting Screws	8	-	73
Front Wiper Motor Mounting Screws	7.5	-	66
Rear Wiper Motor Mounting Screws	7	-	62

CLEANING

FRONT WASHER SYSTEM

CAUTION: Never introduce petroleum-based cleaners,

solvents, or contaminants into the washer system. These products can rapidly deteriorate the rubber seals and hoses of the washer system, as well as the rubber squeegees of the wiper blades.

CAUTION: Never use compressed air to flush the washer system plumbing. Compressed air pressures are too great for the washer system plumbing components and will result in further system damage. Never use sharp instruments to clear a plugged washer nozzle or damage to the nozzle orifice and improper nozzle spray patterns will result.

If the washer system is contaminated with foreign material, drain the washer reservoir by removing the washer pump/motor unit from the reservoir. Clean foreign material from the inside of the washer pump inlet filter screen and the washer reservoir using clean washer fluid, a mild detergent, or a non-abrasive cleaner. Flush foreign material from the washer system plumbing by first disconnecting the washer hoses from the washer nozzles, then running the washer pump/motor to run clean washer fluid or water through the system. Plugged or restricted front washer nozzles cannot be back-flushed due to the integral check valve mechanism. If the washer nozzle obstruction cannot be cleared, replace the washer nozzle.

FRONT WIPER SYSTEM

CAUTION: Protect the rubber squeegees of the wiper blades from any petroleum-based cleaners, solvents, or contaminants. These products can rapidly deteriorate the rubber squeegees.

The squeegees of wiper blades exposed to the elements for a long time tend to lose their wiping effectiveness. Periodic cleaning of the squeegees is suggested to remove any deposits of salt or road film. The wiper blades, arms, and windshield glass should only be cleaned using a sponge or soft cloth and windshield washer fluid, a mild detergent, or a non-abrasive cleaner. If the wiper blades continue to leave streaks, smears, hazing, or beading on the glass after thorough cleaning of the squeegees and the glass, the entire wiper blade assembly must be replaced.

REAR WASHER SYSTEM

CAUTION: Never introduce petroleum-based cleaners, solvents or contaminants into the washer system. These products can rapidly deteriorate the rubber seals and hoses of the washer system, as well as the rubber squeegee of the wiper blade.

CAUTION: Never use compressed air to flush the washer system plumbing. Compressed air pressures are too great for the washer system plumbing components and will result in further system damage. Never use sharp instruments to clear a plugged washer nozzle or damage to the nozzle orifice and improper nozzle spray patterns will result.

If the washer system is contaminated with foreign material, drain the washer reservoir by removing the washer pump/motor from the reservoir. Clean foreign material from the inside of the washer pump/motor inlet filter screen and the washer reservoir using clean washer fluid, a mild detergent, or a non-abrasive cleaner. Flush foreign material from the washer system plumbing by first disconnecting the washer hose from the washer nozzle, then running the washer pump/motor to run clean washer fluid or water through the system. A plugged or restricted rear washer nozzle cannot be back-flushed due to the integral check valve mechanism. If the washer nozzle obstruction cannot be cleared, replace the washer nozzle.

REAR WIPER SYSTEM

CAUTION: Protect the rubber squeegee of the wiper blade from any petroleum-based cleaners, solvents or contaminants. These products can rapidly deteriorate the rubber squeegee.

The squeegee of a wiper blade exposed to the elements for a long time tends to lose its wiping effectiveness. Periodic cleaning of the squeegee is suggested to remove any deposits of salt or road film. The wiper blade, arm, and liftgate glass should only be cleaned using a sponge or soft cloth and windshield washer fluid,

a mild detergent, or a non-abrasive cleaner. If the wiper blade continues to leave streaks, smears, hazing, or beading on the glass after thorough cleaning of the squeegees and the glass, the entire wiper blade assembly must be replaced.

INSPECTION

FRONT WASHER SYSTEM

The washer system components should be inspected periodically, not just when washer performance problems are experienced. This inspection should include the following points:

1. Check for ice or other foreign material in the washer reservoir. If contaminated, clean and flush the washer system. Refer to **CLEANING**.
2. Inspect the washer plumbing for pinched, leaking, deteriorated, or incorrectly routed hoses and damaged or disconnected hose fittings. Replace damaged or deteriorated hoses and hose fittings. Leaking washer hoses can sometimes be repaired by cutting the hose at the leak and splicing it back together using an in-line connector fitting. Similarly, sections of deteriorated hose can be cut out and replaced by splicing in new sections of hose using in-line connector fittings. Whenever routing a washer hose or a wire harness containing a washer hose, it must be routed away from hot, sharp, or moving parts. Also, sharp bends that might pinch the washer hose must be avoided.

FRONT WIPER SYSTEM

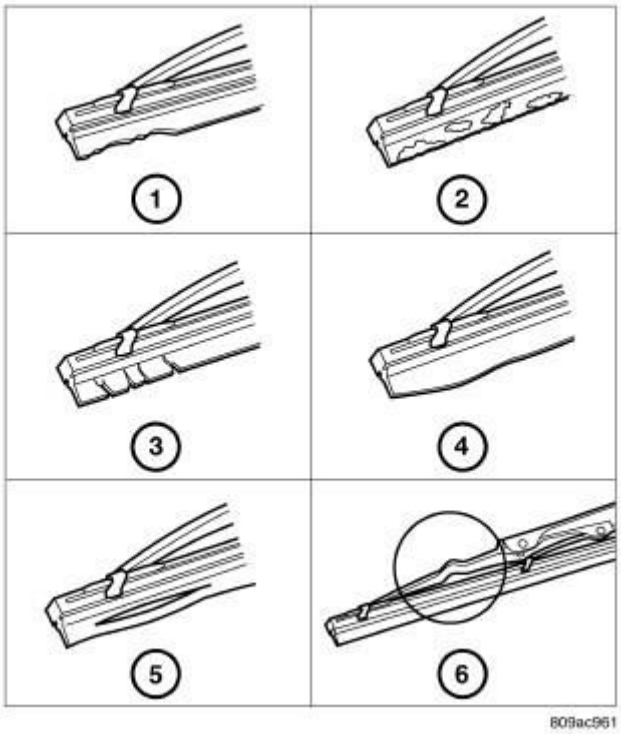

Fig. 5: Wiper Blades And Wiper Arms
Courtesy of CHRYSLER GROUP, LLC

The wiper blades and wiper arms should be inspected periodically, not just when wiper performance problems are experienced. This inspection should include the following points:

1. Carefully inspect the wiper blades for any indications of worn or uneven edges (1), foreign material deposits (2), hardening or cracking (3), deformation or fatigue (4), or splitting (5). Inspect the wiper blade support components and the wiper arms for damage (6) or corrosion. If the wiper arms and blades are contaminated with any foreign material, clean them and the glass as required. Refer to **CLEANING**. If a wiper blade or arm is damaged, or if corrosion is evident, replace the affected wiper arm or blade with a new unit. Do not attempt to repair a wiper arm or blade that is damaged or corroded.
2. Carefully lift the wiper blade off of the glass. Note the action of the wiper arm hinge. The wiper arm should pivot freely at the hinge, but with no lateral looseness evident. If there is any binding evident in the wiper arm hinge, or if there is evident lateral play in the wiper arm hinge, replace the wiper arm.

CAUTION: Do not allow the wiper arm to spring back against the glass without the wiper blade in place or the glass may be damaged.

3. Once proper hinge action of the wiper arm is confirmed, check the hinge for proper spring tension. Remove the wiper blade from the wiper arm. Either place a small postal scale between the blade end of the wiper arm and the glass, or carefully lift the blade end of the arm away from the glass using a small fish scale. On vehicles with unequal wiper arm lengths, be certain that measurements on both arms are taken at a point an equal distance from their wiper arm hinge pins. Compare the scale readings between the right and left wiper arms. Replace a wiper arm if it has comparatively lower spring tension, as evidenced by a lower scale reading.
4. After cleaning and inspecting the wiper components and the glass, if the wiper blade still fails to clear the glass without smearing, streaking, chattering, hazing, or beading, replace the wiper blade.

REAR WASHER SYSTEM

The washer system components should be inspected periodically, not just when washer performance problems are experienced. This inspection should include the following points:

1. Check for ice or other foreign material in the washer reservoir. If contaminated, clean and flush the washer system. Refer to **CLEANING**.
2. Inspect the washer plumbing for pinched, leaking, deteriorated, or incorrectly routed hoses and damaged or disconnected hose fittings. Replace damaged or deteriorated hoses and hose fittings. Leaking washer hoses can sometimes be repaired by cutting the hose at the leak and splicing it back together using an in-line connector fitting. Similarly, sections of deteriorated hose can be cut out and replaced by splicing in new sections of hose using in-line connector fittings. Whenever routing a washer hose or a wire harness containing a washer hose, it must be routed away from hot, sharp, or moving parts. Also, sharp bends that might pinch the washer hose must be avoided.

REAR WIPER SYSTEM

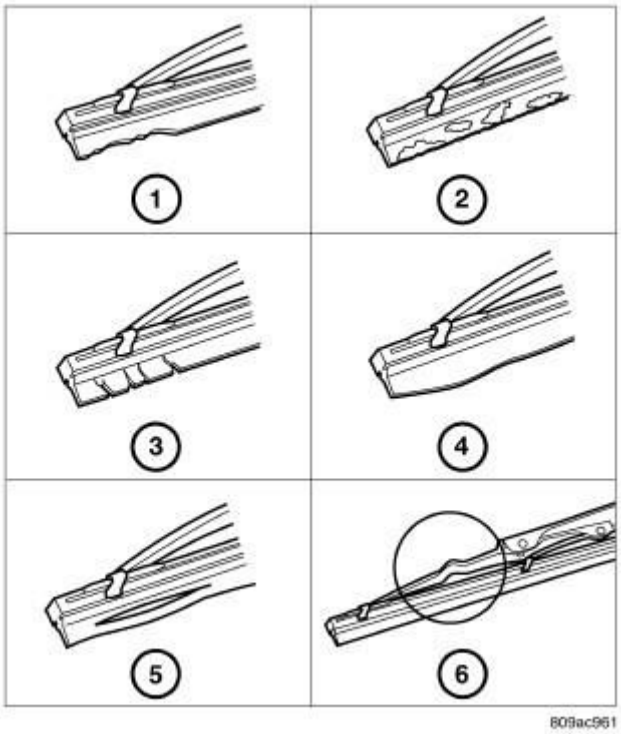

Fig. 6: Inspecting Wiper Blades
Courtesy of CHRYSLER GROUP, LLC

The rear wiper blade and wiper arm should be inspected periodically, not just when wiper performance problems are experienced. This inspection should include the following points:

1. Carefully inspect the wiper blade for any indications of worn or uneven edges (1), foreign material deposits (2), hardening or cracking (3), deformation or fatigue (4), or splitting (5). Inspect the wiper blade support components and the wiper arm for damage (6). If the wiper arm and blade are contaminated with any foreign material, clean them and the glass as required. Refer to **CLEANING**. If the wiper blade or arm is damaged, replace it with a new unit. Do not attempt to repair a wiper arm or blade that is damaged or corroded.
2. Carefully lift the wiper blade off of the glass. Note the action of the wiper arm hinge. The wiper arm should pivot freely at the hinge, but with no lateral looseness evident. If there is any binding evident in the wiper arm hinge, or there is evident lateral play in the wiper arm hinge, replace the wiper arm.

CAUTION: Do not allow the wiper arm to spring back against the glass without the wiper blade in place or the glass may be damaged.

3. Once proper hinge action of the wiper arm is confirmed, check the hinge for proper spring tension. The spring tension of the wiper arm should be sufficient to cause the rubber squeegee to conform to the curvature of the glass. Replace a wiper arm if it has insufficient spring tension to maintain contact between the squeegee and the glass.
4. After cleaning and inspecting the wiper components and the glass, if the wiper blade still fails to clear the glass without smearing, streaking, chattering, hazing, or beading, replace the wiper blade.

ARM, WIPER

DESCRIPTION

FRONT

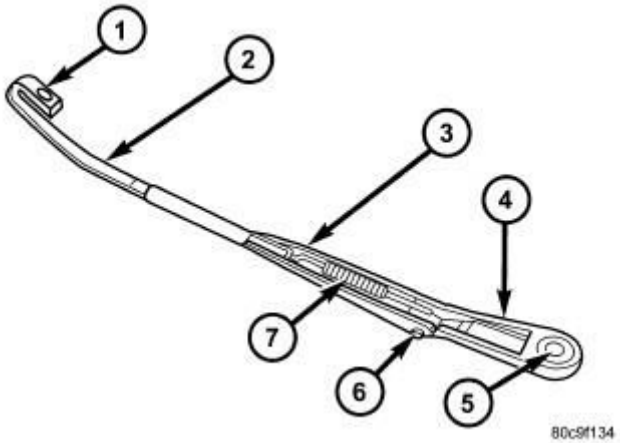

Fig. 7: Front Wiper Arm
Courtesy of CHRYSLER GROUP, LLC

The front wiper arms are the rigid members located between the wiper pivots that protrude from the cowl plenum cover/grille panel near the base of the windshield and the wiper blades on the windshield glass. These wiper arms feature an over-center hinge (6) that allows easy access to the windshield glass for cleaning. The wiper arm has a die cast metal pivot end (4) with a large tapered mounting hole (5) at one end. A molded black plastic cap fits over the wiper arm retaining nut to conceal the nut and this mounting hole following wiper arm installation.

The wide end of a tapered, stamped steel channel (3) hinges on and is secured with a hinge pin to the blade end of the wiper arm pivot end. One end of a long, rigid, stamped steel strap (2), with a small hole near the end closest to the pivot, is riveted and crimped within the narrow end of the stamped steel channel. The tip of the wiper blade end of this strap is bent back under itself to form a small hook (1). Concealed within the stamped steel channel is a long tension spring (7) which is engaged with a wire hook to the underside of the die cast pivot end and is hooked through a small hole in the steel strap. The entire wiper arm has a satin black finish applied to all of its visible surfaces.

There are unique wiper arms for right-hand-drive and left-hand-drive vehicles, as well as for the driver and passenger side which are **not** interchangeable. The arms have a letter **D** (driver) or **P** (passenger) cast into the lower surface of the pivot end to identify their proper locations. A wiper arm cannot be adjusted or repaired and, if ineffective or damaged, it must be replaced.

REAR

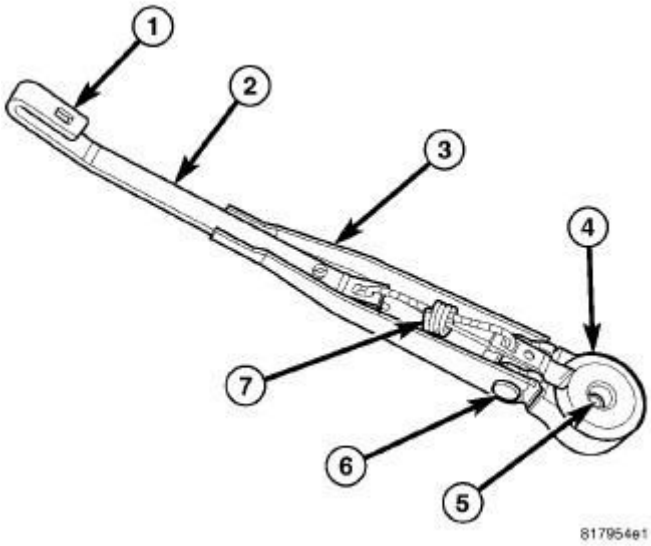

Fig. 8: Rear Wiper Arm
Courtesy of CHRYSLER GROUP, LLC

The rear wiper arm is the rigid member located between the rear wiper motor output shaft that protrudes through a rubber grommet near the base of the liftgate glass and the wiper blade on the outside of the glass. The wiper arm has a die cast metal pivot end (4) with a large tapered mounting hole (5) at one end. A molded black plastic cap fits over the wiper arm retaining nut to conceal the nut and this mounting hole following wiper arm installation.

The wide end of a tapered, stamped steel channel (3) hinges on and is secured with a hinge pin (6) to the blade end of the wiper arm pivot end. One end of a long, rigid, stamped steel strap (2), with a small hole near the end closest to the pivot, is riveted and crimped within the narrow end of the stamped steel channel. The tip of the wiper blade end of this strap is bent back under itself to form a small hook (1). Concealed within the stamped steel channel is a tension spring (7) which is engaged with a metal tab on the underside of the die cast pivot end and is hooked through a small hole in the steel strap. The entire wiper arm has a satin black finish applied to all of its visible surfaces.

A wiper arm cannot be adjusted or repaired and, if ineffective or damaged, it must be replaced.

OPERATION

FRONT

The front wiper arms are designed to mechanically transmit the motion from the wiper pivots to the wiper blades. The wiper arm must be properly indexed to the wiper pivot in order to maintain the proper wiper blade travel on the glass. The tapered mounting hole in the wiper arm pivot end interlocks with the serrations on the tapered outer circumference of the wiper pivot shaft, allowing positive engagement and finite adjustment of this connection.

The mounting nuts lock the wiper arms to the threaded studs of the wiper pivot shafts. The spring-loaded wiper arm hinge controls the down-force applied through the tip of the wiper arm to the wiper blade on the glass. The hook formation on the tip of the wiper arm provides a cradle for securing and latching the wiper blade pivot block to the wiper arm.

REAR

The rear wiper arm is designed to mechanically transmit the motion from the rear wiper motor output shaft to the rear wiper blade. The wiper arm must be properly indexed to the motor output shaft in order to maintain the proper wiper blade travel on the glass. The tapered hole in the wiper arm pivot end interlocks with the serrations on the outer circumference of the tapered motor output shaft, allowing positive engagement and finite adjustment of this connection.

A hex nut secures the wiper arm pivot end to the threads on the rear wiper motor output shaft and the plastic cap snaps over this connection for a neat appearance.

The spring-loaded wiper arm hinge controls the down-force applied through the tip of the wiper arm to the wiper blade on the glass. The hook formation on the tip of the wiper arm provides a cradle for securing and latching the wiper blade pivot block to the wiper arm.

REMOVAL

FRONT

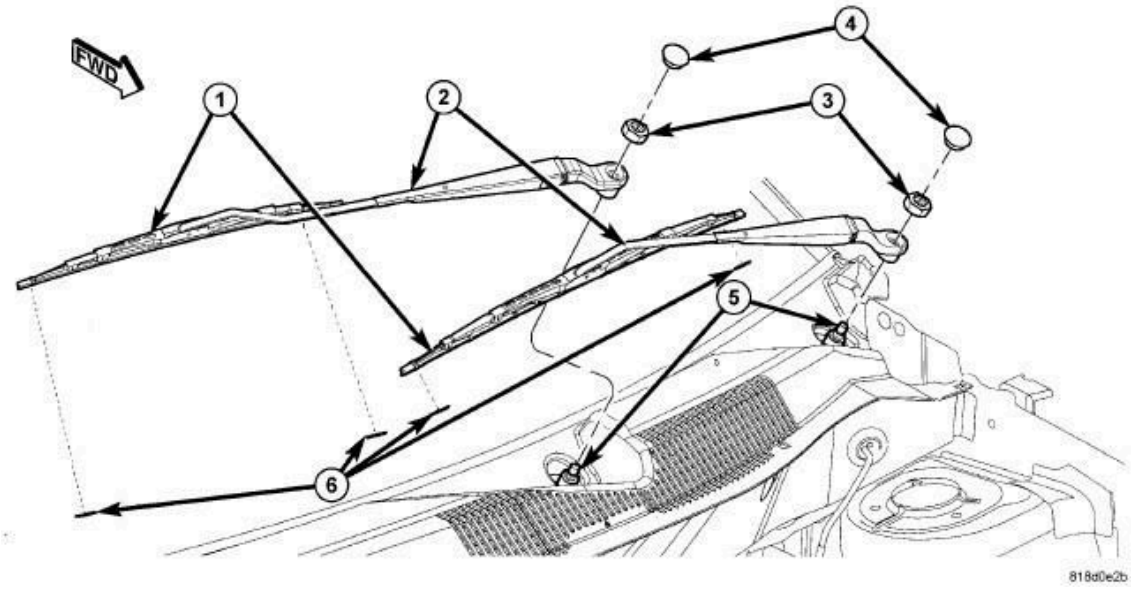

Fig. 9: Front Wiper Arm Replacement
Courtesy of CHRYSLER GROUP, LLC

1. Lift the front wiper arm (2) to its over-center position to hold the wiper blade (1) off of the glass and relieve the spring tension on the wiper arm to pivot shaft connection.
2. Carefully pry the plastic nut cap (4) off of the pivot end of the wiper arm.
3. Remove the nut (3) that secures the wiper arm to the wiper pivot shaft (5).

CAUTION: The use of a battery terminal puller when removing the front wiper arm is NOT recommended as this may damage the front wiper arm.

4. Use a slight rocking action to disengage the front wiper arm pivot end from the pivot shaft and remove the wiper arm.

REAR

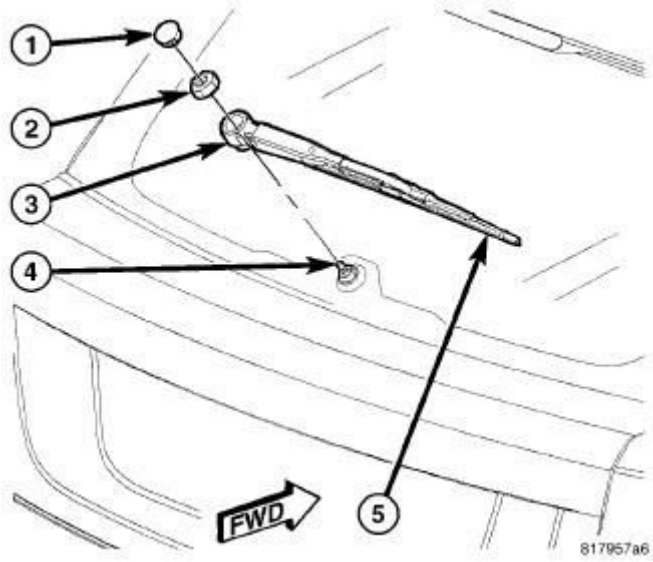

Fig. 10: Rear Wiper Arm Remove/Install
Courtesy of CHRYSLER GROUP, LLC

1. Lift the rear wiper arm (3) to hold the wiper blade (5) off of the glass and relieve the spring tension on the wiper arm to output shaft connection.
2. Carefully pry the plastic nut cap (1) off of the pivot end of the wiper arm.
3. Remove the nut (2) that secures the wiper arm to the rear wiper motor output shaft (4).

CAUTION: The use of a battery terminal puller when removing the rear wiper arm is NOT recommended as this may damage the rear wiper arm.

4. Use a slight rocking action to disengage the rear wiper arm pivot end from the output shaft and remove the wiper arm.

INSTALLATION

FRONT

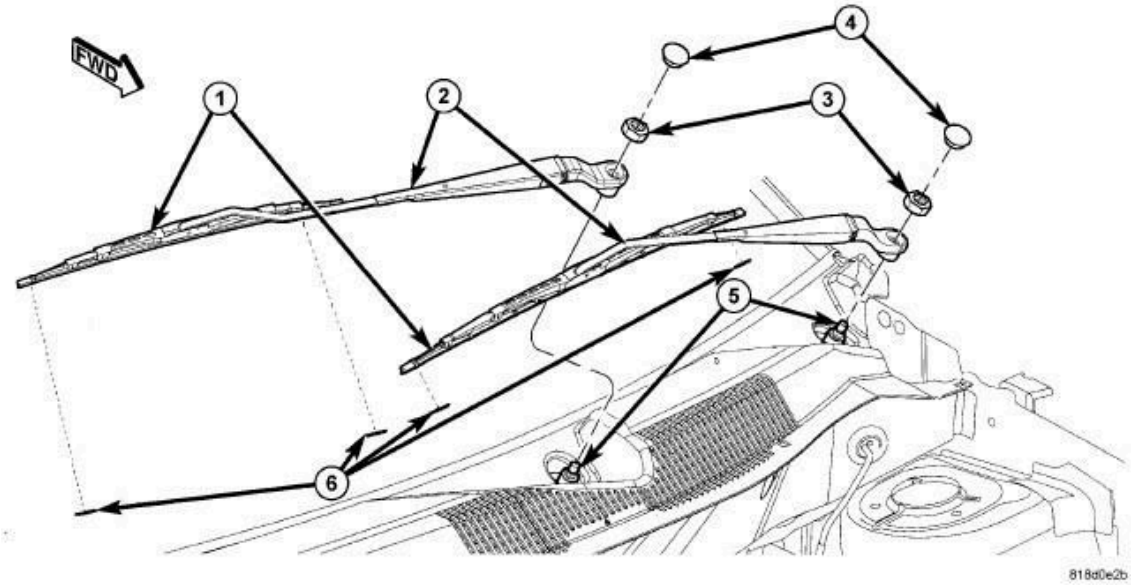

Fig. 11: Front Wiper Arm Replacement
Courtesy of CHRYSLER GROUP, LLC

NOTE: Be certain that the wiper motor is in the park position before attempting to install the front wiper arms. Turn the ignition switch to the ON position and move the right (wiper) multifunction switch control knob to its OFF position. If the wiper pivots move, wait until they stop moving, then turn the ignition switch back to the OFF position. The front wiper motor is now in its park position.

1. The front wiper arms (2) must be indexed to the pivot shafts (5) with the front wiper motor in the park position to be properly installed. Position the wiper arm pivot end onto the wiper pivot shaft so that the wiper blade (1) is aligned with the wiper alignment lines (6), which are horizontal marks concealed in the upper margin of the lower windshield blackout area.
2. Once the wiper blade is aligned, lift the wiper arm away from the windshield slightly to relieve the spring tension on the pivot end and push the pivot end of the wiper arm down firmly and evenly over the pivot shaft.
3. Install and tighten the nut (3) that secures the wiper arm to the pivot shaft. Tighten the nut to 26 N.m (19 ft. lbs.).
4. Wet the windshield glass, then operate the front wipers. Turn the wiper switch to the OFF position, then check for the correct wiper arm position and readjust as required.

5. Reinstall the plastic nut cap (4) onto the wiper arm pivot nut.

REAR

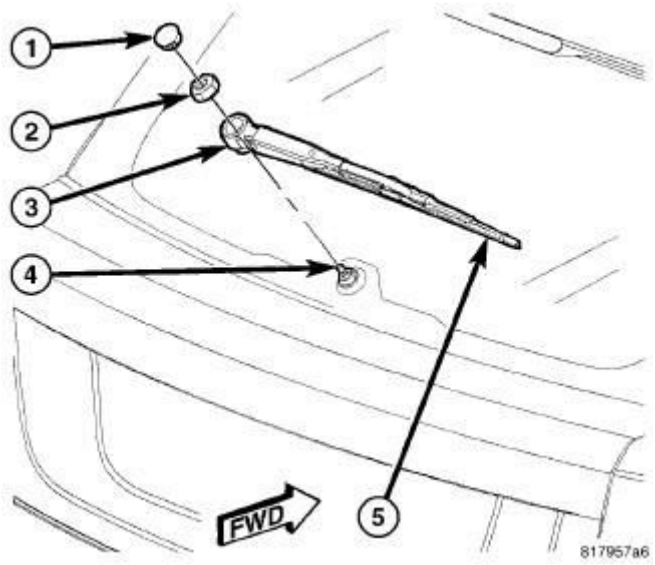

Fig. 12: Rear Wiper Arm Remove/Install
Courtesy of CHRYSLER GROUP, LLC

NOTE: Be certain that the rear wiper motor is in the park position before attempting to install the rear wiper arm. Turn the ignition switch to the ON position and move the rear wiper switch to its OFF position. If the wiper motor output shaft moves, wait until it stops moving, then turn the ignition switch back to the OFF position. The wiper motor is now in its park position.

1. The rear wiper arm (3) must be indexed to the motor output shaft (4) with the rear wiper motor in the park position to be properly installed. Position the wiper arm pivot end onto the output shaft so that the wiper blade (5) is aligned with the lowest horizontal line of the rear window defogger grid.
2. With the rear wiper arm properly indexed, push the tapered mounting hole on the pivot end of the wiper arm down over the output shaft.
3. Install and tighten the nut (2) that secures the rear wiper arm to the rear wiper motor output shaft. Tighten the nut to 9 N.m (7 ft. lbs.).
4. Wet the liftgate glass and operate the rear wiper. Turn the rear wiper switch to the OFF position, then check for correct wiper arm position and readjust as required.

5. Reinstall the plastic nut cap over the nut on the pivot end of the rear wiper arm.

BLADE, WIPER

DESCRIPTION

FRONT

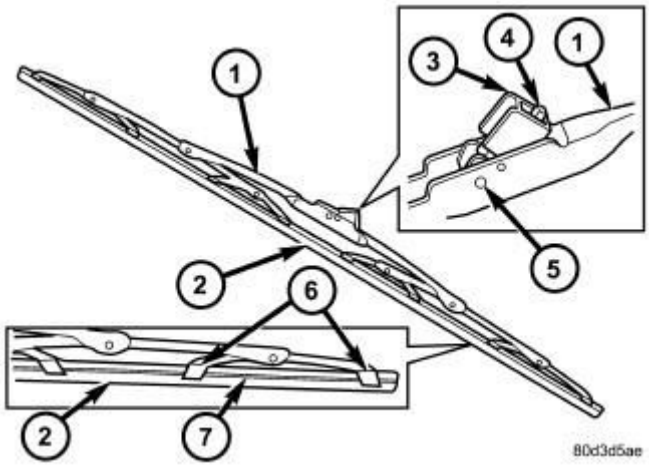

Fig. 13: Identifying Wiper Blade
Courtesy of CHRYSLER GROUP, LLC

Each front wiper blade is secured by an integral latching pivot block (3) to the hook formation on the tip of each wiper arm, and rests on the glass near the base of the windshield when the wipers are not in operation. The wiper blade consists of the following components:

- **Superstructure (1)** - The superstructure includes several stamped steel bridges and links with claw formations that grip the wiper blade element. Also included in this unit is the latching, molded plastic pivot block that secures the superstructure to the wiper arm. All of the metal components of the wiper blade have a satin black finish applied.
- **Element (2)** - The wiper element or squeegee is the resilient rubber member of the wiper blade that contacts the glass.
- **Flexor (7)** - The flexor is a rigid metal component running along the length of each side of the wiper element where it is gripped by the claws (6) of the superstructure.

All vehicles have non-interchangeable windshield wiper blades with non-

replaceable rubber elements (squeegees). The driver side blade is 60.00 centimeters (23.62 inches) long, while the passenger side blade is 42.50 centimeters (16.73 inches) long. The wiper blades cannot be adjusted or repaired and, if ineffective, worn, or damaged, the entire wiper blade unit must be replaced.

REAR

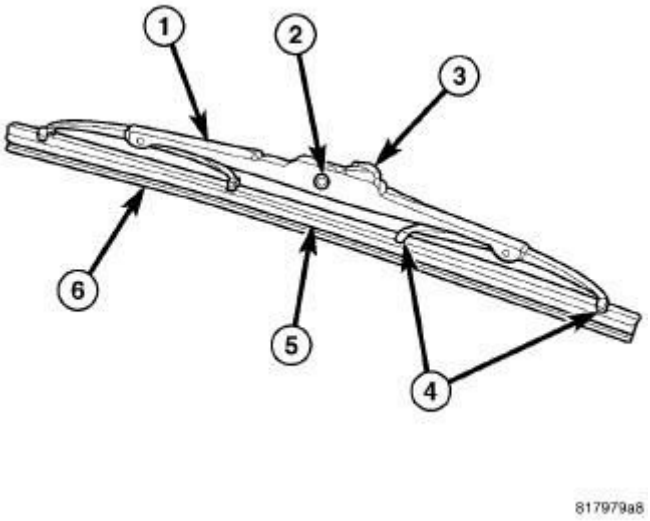

Fig. 14: Rear Wiper Blade
Courtesy of CHRYSLER GROUP, LLC

The rear wiper blade is secured by an integral latching pivot block to the hook formation on the tip of the rear wiper arm, and rests near the base of the liftgate glass when the rear wiper system is not in operation. The rear wiper blade consists of the following components:

- **Superstructure (1)** - The superstructure includes a stamped steel bridge and links with claw formations (4) that grip the wiper blade element. Also included in this unit is the latching, molded plastic pivot block (3) that secures the superstructure to the wiper arm. All of the metal components of the wiper blade have a satin black finish applied.
- **Element (6)** - The wiper element or squeegee is the resilient rubber member of the wiper blade that contacts the glass.
- **Flexor (5)** - The flexor is a rigid metal component running along the length of each side of the wiper element where it is gripped by the claws of the superstructure.

All vehicles have a single 27.90 centimeter (10.98 inch) long rear wiper blade with a non-replaceable rubber element (squeegee). The wiper blade cannot be adjusted or repaired. If ineffective, worn or damaged the entire wiper blade unit must be replaced.

OPERATION

FRONT

The wiper blades are moved back and forth across the glass by the wiper arms when the wipers are being operated. The wiper blade superstructure is the flexible frame that grips the wiper blade element and evenly distributes the force of the spring-loaded wiper arm along the length of the element. The combination of the wiper arm force and the flexibility of the superstructure makes the element conform to and maintain proper contact with the glass, even as the blade is moved over the varied curvature that may be encountered across the glass surface.

The wiper element flexor provides the claws of the blade superstructure with a rigid, yet flexible component on the element which can be gripped. The rubber element is designed to be stiff enough to maintain an even cleaning edge as it is drawn across the glass, yet resilient enough to conform to the glass surface and flip from one cleaning edge to the other each time the wiper blade changes directions.

REAR

The rear wiper blade is moved back and forth across the liftgate glass by the wiper arm when the rear wiper system is in operation. The wiper blade superstructure is the flexible frame that grips the wiper blade element and evenly distributes the force of the spring-loaded wiper arm along the length of the element. The combination of the wiper arm force and the flexibility of the superstructure makes the element conform to and maintain proper contact with the glass, even as the blade is moved over the varied curvature found across the glass surface.

The wiper element flexor provides the claws of the blade superstructure with a rigid, yet flexible component on the element which can be gripped. The rubber element is designed to be stiff enough to maintain an even cleaning edge as it is drawn across the glass, but resilient enough to conform to the glass surface and flip from one cleaning edge to the other each time the wiper blade changes

directions.

REMOVAL

FRONT

CAUTION: Do not allow the wiper arm to spring back against the glass without the wiper blade in place or the glass may be damaged.

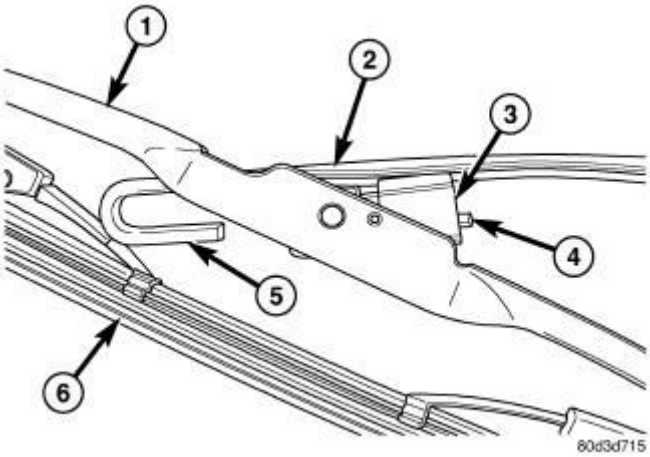

Fig. 15: Removing/Installing Wiper Blade
Courtesy of CHRYSLER GROUP, LLC

NOTE: The notched end of the wiper element flexor should always be oriented towards the end of the wiper blade that is nearest to the wiper pivot.

1. Lift the wiper arm (2) to raise the wiper blade and element (6) off of the glass, until the wiper arm hinge is in its over-center position.
2. To remove the blade from the arm, depress the latch release tab (4) on the pivot block (3) under the tip of the arm and slide the blade away from the tip towards the pivot end of the arm far enough to disengage the pivot block from the hook formation (5) on the end of the arm.
3. Extract the hook formation on the tip of the wiper arm through the opening in the wiper blade superstructure (1) just ahead of the pivot block.
4. Gently lower the tip of the wiper arm onto the glass.

REAR

CAUTION: Do not allow the wiper arm to spring back against the glass without the wiper blade in place or the glass may be damaged.

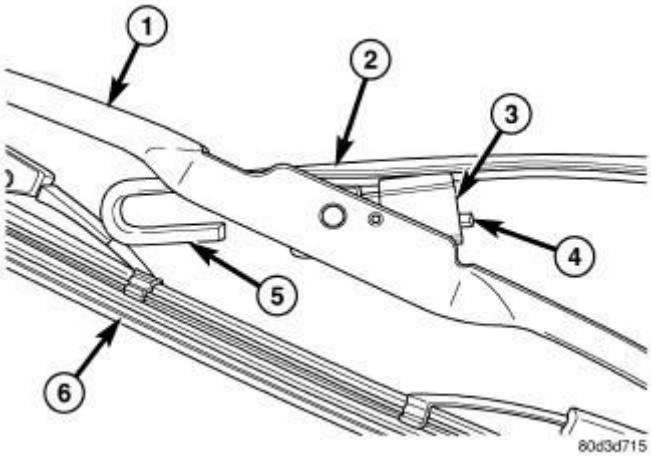

Fig. 16: Removing/Installing Wiper Blade
Courtesy of CHRYSLER GROUP, LLC

1. Lift the wiper arm (2) to raise the wiper blade and element (6) off of the glass.
2. To remove the blade from the arm, depress the latch release tab (4) on the pivot block (3) under the tip of the arm and slide the blade away from the tip towards the pivot end of the arm far enough to disengage the pivot block from the hook formation (5) on the end of the arm.
3. Extract the hook formation on the tip of the wiper arm through the opening in the wiper blade superstructure (1) just ahead of the pivot block.
4. Gently lower the tip of the wiper arm onto the glass.

INSTALLATION

FRONT

CAUTION: Do not allow the wiper arm to spring back against the glass without the wiper blade in place or the glass may be damaged.

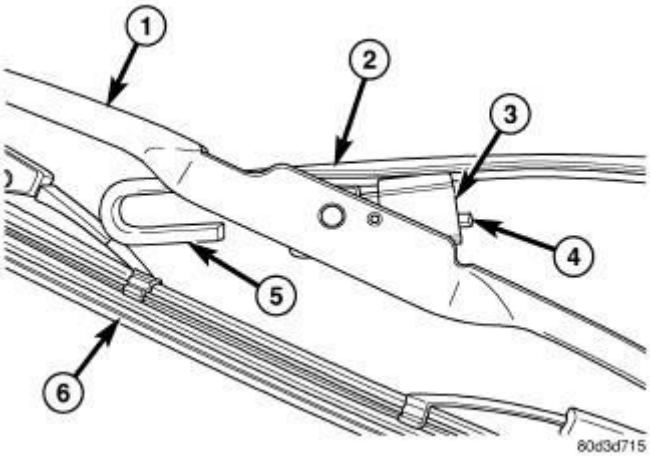

Fig. 17: Removing/Installing Wiper Blade
Courtesy of CHRYSLER GROUP, LLC

NOTE: The notched end of the wiper element flexor should always be oriented towards the end of the wiper blade that is nearest to the wiper pivot.

1. Lift the wiper arm (2) off of the windshield glass, until the wiper arm hinge is in its over-center position.
2. Position the wiper blade near the hook formation (5) on the tip of the arm with the notched end of the wiper element flexor oriented towards the end of the wiper arm that is nearest to the wiper pivot.
3. Insert the hook formation on the tip of the arm through the opening in the blade superstructure (1) ahead of the pivot block (3) far enough to engage the pivot block into the hook.
4. Slide the pivot block up into the hook formation on the tip of the wiper arm until the latch release tab (4) snaps into its locked position. Latch engagement will be accompanied by an audible click.
5. Gently lower the wiper blade and element (6) onto the glass.

REAR

CAUTION: Do not allow the wiper arm to spring back against the glass without the wiper blade in place or the glass may be damaged.

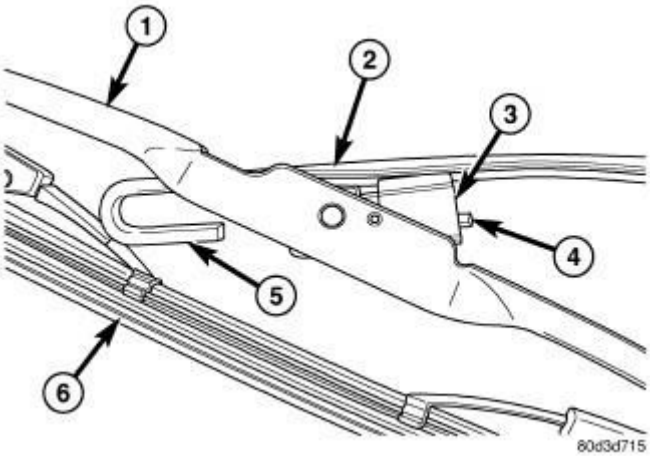

Fig. 18: Removing/Installing Wiper Blade
Courtesy of CHRYSLER GROUP, LLC

1. Lift the wiper arm (2) off of the liftgate glass.
2. Position the wiper blade near the hook formation (5) on the tip of the arm with the notched end of the wiper element flexor oriented towards the end of the wiper arm that is nearest to the wiper pivot.
3. Insert the hook formation on the tip of the arm through the opening in the blade superstructure (1) ahead of the pivot block (3) far enough to engage the pivot block into the hook.
4. Slide the pivot block up into the hook formation on the tip of the wiper arm until the latch release tab (4) snaps into its locked position. Latch engagement will be accompanied by an audible click.
5. Gently lower the wiper blade and element (6) onto the glass.

CHECK VALVE, WASHER

DESCRIPTION

DESCRIPTION

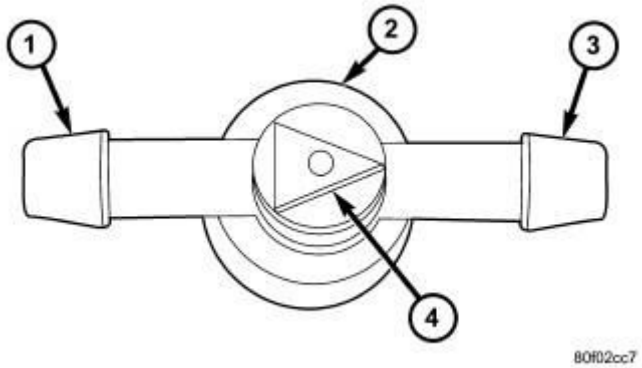

Fig. 19: Check Valve
Courtesy of CHRYSLER GROUP, LLC

The rear check valve (2) connects the liftgate washer hose to the headliner washer hose and is located near the upper liftgate opening header behind the right D-pillar trim panel within the passenger compartment. The check valve consists of a molded plastic valve body with a raised arrowhead (4) molded into its center section indicating the direction of the flow through the valve. A barbed hose nipple (1 and 3) is formed on each side of the raised center section of the valve body. Within the check valve body, a small diaphragm is held against the lip of an integral sump well by a small plastic piston and a coiled spring.

The rear check valve cannot be adjusted or repaired and, if ineffective or damaged, it must be replaced.

OPERATION

OPERATION

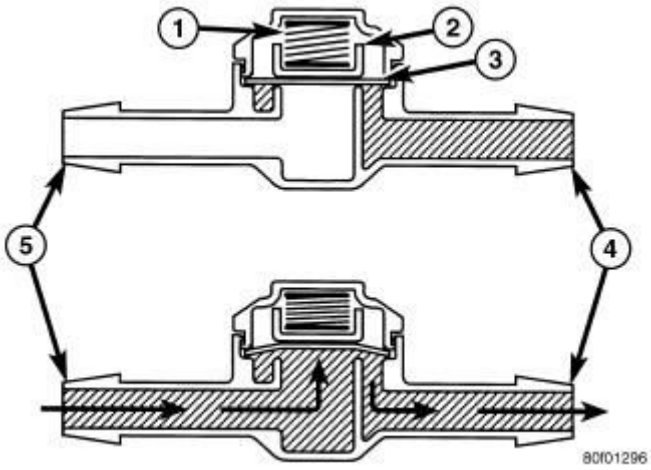

Fig. 20: Identifying Check Valve

Courtesy of CHRYSLER GROUP, LLC

The rear check valve provides more than one function in this application. It prevents washer fluid from draining out of the rear washer supply hoses back to the washer reservoir. This drain-back would result in a lengthy delay from when the rear washer switch is actuated until washer fluid was dispensed through the rear washer nozzle, because the washer pump would have to refill the rear washer plumbing from the reservoir to the nozzle. Such a drain-back condition could also result in water, dirt, or other outside contaminants being siphoned into the washer system through the washer nozzle orifice. This water could subsequently freeze and plug the nozzle, while other contaminants could interfere with proper nozzle operation and cause improper nozzle spray patterns. In addition, the rear check valve prevents washer fluid from siphoning out through the rear washer nozzle after the rear washer system is turned OFF.

When the washer pump pressurizes and pumps washer fluid from the reservoir through the rear washer plumbing (5), the fluid pressure unseats a diaphragm (3) from over a sump well within the valve by overriding the pressure applied to it by a piston (2) and coiled spring (1). With the diaphragm unseated, washer fluid is allowed to flow toward the rear washer nozzle (4). When the washer pump stops operating, the spring pressure on the piston seats the diaphragm over the sump well in the valve and fluid flow in either direction within the rear washer plumbing is prevented.

REMOVAL

REMOVAL

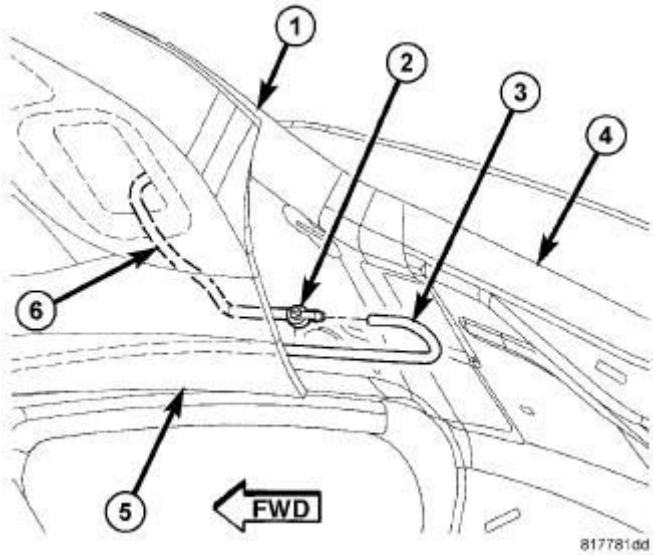

Fig. 21: Rear Check Valve Replacement
Courtesy of CHRYSLER GROUP, LLC

1. Disconnect and isolate the battery negative cable.
2. Partially remove the trim from the right upper D-pillar (4). Refer to **PANEL, D-PILLAR TRIM, REMOVAL** .
3. Pull the headliner (5) away from the upper liftgate opening header (1) far enough to access and disconnect the liftgate washer supply hose (6) and the headliner washer supply hose (3) from the barbed nipple on each side of the check valve (2).
4. Remove the check valve.

INSTALLATION

INSTALLATION

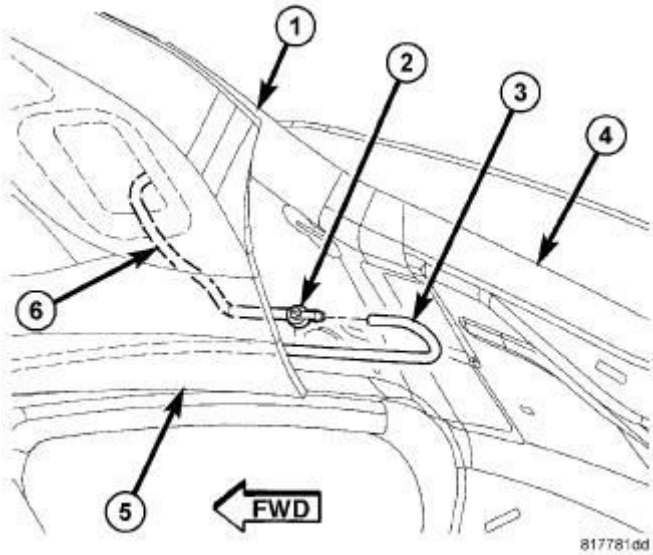

Fig. 22: Rear Check Valve Replacement
Courtesy of CHRYSLER GROUP, LLC

1. Position the rear check valve (2) between the upper liftgate opening header (1) and the headliner (5). Be certain that the raised arrow that indicates the flow direction on the center section of the valve is pointed toward the liftgate washer supply hose (6).
2. Reconnect the liftgate washer supply hose and the headliner washer supply hose (3) to the barbed nipples of the valve.
3. Reinstall the trim onto the right upper D-pillar (4). Refer to **PANEL, D-PILLAR TRIM, INSTALLATION** .
4. Reconnect the battery negative cable.

HOSES AND TUBES, WASHER

DESCRIPTION

FRONT

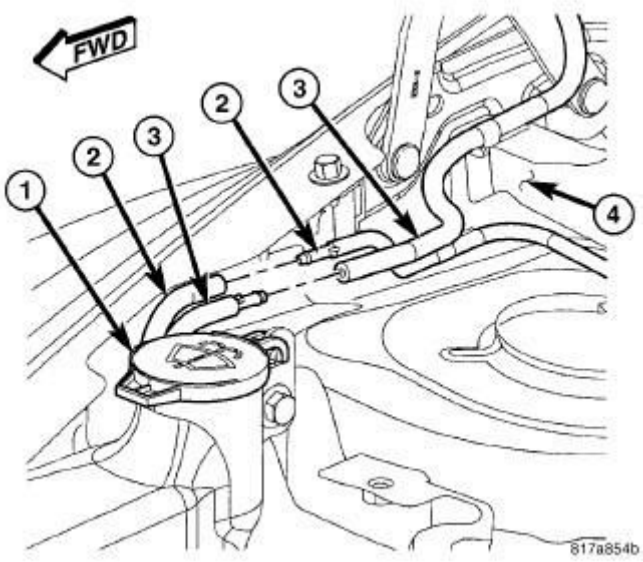

Fig. 23: Front Washer Plumbing Replacement
Courtesy of CHRYSLER GROUP, LLC

The front washer plumbing (3) consists of a small diameter rubber hose that is routed along with the rear washer plumbing (2) from the washer reservoir (1) located at the right front corner of the engine compartment. Both hoses are attached to their respective front or rear outlet nipple of the washer pump/motor unit near the bottom of the reservoir. The hoses are each then secured by a plastic push-in type retainer to the right side front end sheet metal within the engine compartment to the right side of the plenum panel (4). From the plenum panel, the two washer hoses are routed separately.

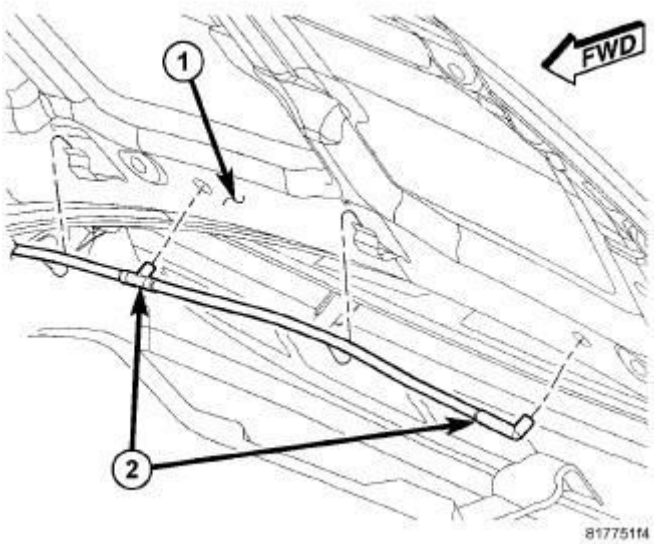

Fig. 24: Molded Rubber Tee & Molded Rubber Elbow

Courtesy of CHRYSLER GROUP, LLC

The front hose is routed up toward the inner hood panel reinforcement (1), while the rear hose or tube is routed through a rubber grommet and a hole in the dash panel into the passenger compartment. The front hose is secured to the right hood hinge and the right side of the inner hood panel reinforcement by plastic push-in type retainers, then is routed through the rear hood silencer brackets across the underside of the inner hood panel. Plastic in-line fittings, a molded rubber tee and a molded rubber elbow (2) provide the take outs for the two front washer nozzles.

Washer hose is available for service only as roll stock, which must then be cut to length. The molded plastic or rubber washer hose fittings cannot be repaired. If these fittings are ineffective or damaged, they must be replaced.

REAR

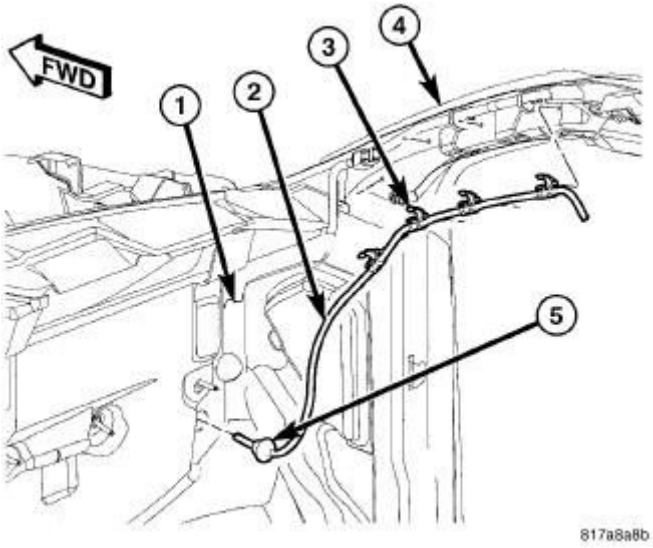

Fig. 25: Rear Washer Plumbing Replacement
Courtesy of CHRYSLER GROUP, LLC

The rear washer plumbing consists of a small diameter rubber hose that is routed along with the front washer plumbing from the washer reservoir located at the right front corner of the engine compartment. Both hoses are attached to their respective front or rear outlet nipple of the washer pump/motor unit near the bottom of the reservoir. The hoses are each then secured by a plastic push-in type retainer to the right side front end sheet metal within the engine compartment. Just forward of the plenum panel in the engine compartment, an in-line connector

with barbed nipples joins the rear washer reservoir hose to the headliner hose (2).

The headliner hose passes through a hole with a rubber grommet (5) in the dash panel (1) into the passenger compartment where it is attached to the A-pillar (4) with plastic retainers (3). The hose is routed up the right A-pillar to the headliner.

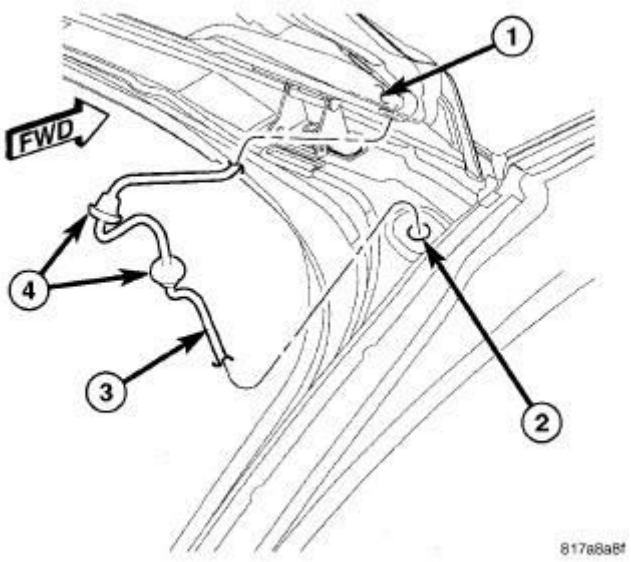

Fig. 26: Headliner Hose Replacement
Courtesy of CHRYSLER GROUP, LLC

The headliner hose (3) is routed above the headliner and along the right roof side rail toward the rear of the vehicle. At the rear of the vehicle, the headliner hose is connected to the liftgate hose by the rear check valve near the upper liftgate opening header panel (2) at the top of the right D-pillar. The liftgate hose is routed through a hole with a rubber grommet (4) in the upper liftgate opening header panel and passes through another hole with a rubber grommet in the upper liftgate panel (1) to the rear washer nozzle on the upper liftgate spoiler.

Washer hose is available for service only as roll stock, which must then be cut to length. The headliner washer hose is integral to the headliner and, if ineffective or damaged, the headliner unit must be replaced. The molded plastic washer hose fittings and routing clips cannot be repaired. If these fittings or clips are ineffective or damaged, they must be replaced.

OPERATION

FRONT

Washer fluid in the washer reservoir is pressurized and fed by the washer

pump/motor unit through the front washer system plumbing and fittings to the two front washer nozzles. Whenever routing the washer plumbing or a wire harness containing washer plumbing, it must be routed away from hot, sharp, or moving parts; and, sharp bends that might pinch the plumbing must be avoided.

REAR

Washer fluid in the washer reservoir is pressurized and fed by the washer pump/motor unit through the rear washer system plumbing and fittings to the rear washer nozzle. Whenever routing the washer plumbing or a wire harness containing washer plumbing, it must be routed away from hot, sharp or moving parts; and, any sharp bends that might pinch the plumbing must be avoided.

LINKAGE, WIPER ARM

DESCRIPTION

DESCRIPTION

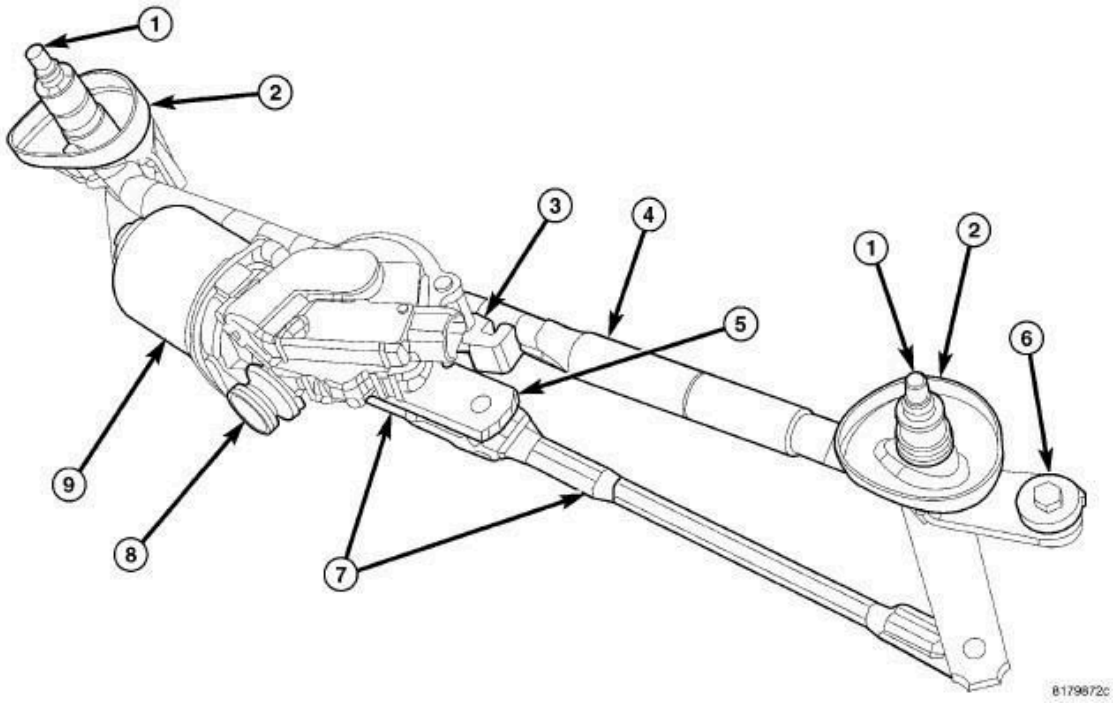

Fig. 27: Identifying Front Wiper Module
Courtesy of CHRYSLER GROUP, LLC

The front wiper module is secured to stamped brackets within the cowl plenum panel beneath the cowl plenum cover/grille panel. The ends of the wiper pivot shafts protrude through dedicated openings in the cowl plenum cover/grille panel to drive the wiper arms and blades and are the only visible components of the

front wiper module.

The front wiper module consists of the following major components:

- **Bracket** - The front wiper module bracket (4) consists of a long tubular steel main member that has a stamped pivot bracket formation near each end where the two wiper pivots are secured. The front wiper module bracket is secured within the cowl plenum by two screws through two rubber insulators (6).
- **Crank Arm** - The front wiper motor crank arm (5) is a stamped steel unit with a slotted hole on the driven end that is secured to the wiper motor output shaft with a nut, and a ball stud secured to the drive end.
- **Linkage** - Two stamped steel drive links (7) connect the wiper motor crank arm to the two wiper pivot lever arms. The passenger side link has a plastic socket-type bushing on each end, while the driver side link has a socket-type bushing on the pivot end and a sleeve-type bushing on the crank arm end. The bushing on the pivot end of each link is snap-fit over a ball stud on the pivot lever arm. The sleeve-type bushing on the driver side link is snap fit over the inner ball formation of a double ball stud on the crank arm, then the socket-type bushing of the passenger side drive link is snapped over the outer ball formation.
- **Motor** - The front wiper motor (9) is secured by a bracket (3) integral to the motor transmission housing with two screws and nuts near the center of the wiper module bracket. A knob-like rubber insulator (8) on a stud integral to the motor transmission housing is engaged in a slot in a stamped bracket on the forward wall of the cowl plenum. The two-speed permanent magnet wiper motor features an integral transmission, an internal park switch, and an internal automatic resetting circuit breaker.
- **Pivots** - The two front wiper pivots (1) are secured to the ends of the wiper module bracket. The lever arms that extend from the bottom of the pivot shafts each have ball studs that engage the bushings of the drive links. A molded plastic shield (2) is fit over the top of each pivot housing. The upper end of each pivot shaft where the wiper arms will be fastened each is tapered and serrated with a threaded stud formation at the tip.

The front wiper motor and crank arm unit is available for separate service replacement. Any other component of the front wiper module cannot be adjusted or repaired. If any component of the module other than the motor is ineffective or

damaged, the entire front wiper module unit must be replaced.

OPERATION

OPERATION

The front wiper module operation is controlled by the battery current inputs received by the wiper motor through the Totally Integrated Power Module (TIPM). The wiper motor speed is controlled by current flow to either the low speed or the high speed set of brushes. The park switch is a single pole, single throw, momentary switch within the wiper motor that is mechanically actuated by the wiper motor transmission components. The park switch alternately closes the wiper park switch sense circuit to ground or to battery current, depending upon the position of the wipers on the glass. This feature allows the motor to complete its current wipe cycle after the wiper system has been turned OFF, and to park the wiper blades in the lowest portion of the wipe pattern. The automatic resetting circuit breaker protects the motor from overloads.

The wiper motor crank arm, the two wiper linkage members and the two wiper pivots mechanically convert the rotary output of the wiper motor to the back and forth wiping motion of the wiper arms and blades on the glass.

The hard wired inputs and outputs of the front wiper motor may be diagnosed using conventional diagnostic tools and procedures. Refer to the appropriate wiring information. However, conventional diagnostic methods will not prove conclusive in the diagnosis of the front wiper motor or the electronic controls and communication between other modules and devices that provide some features of the front wiper and washer system. The most reliable, efficient and accurate means to diagnose the front wiper motor or the electronic controls and communication related to front wiper motor operation requires the use of a diagnostic scan tool. Refer to the appropriate diagnostic information.

REMOVAL

REMOVAL

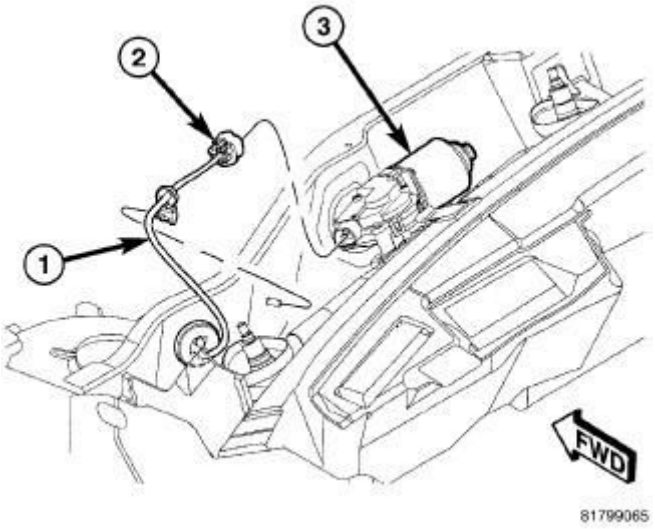

Fig. 28: Front Wiper Module
Courtesy of CHRYSLER GROUP, LLC

1. Disconnect and isolate the negative cable from the battery.
2. Remove both front wiper arms from the wiper pivots. Refer to **ARM, WIPER, REMOVAL**.
3. Remove the cowl plenum cover/grille panel from over the front wiper module. Refer to **COVER, COWL PANEL, REMOVAL** .
4. Disengage the routing clip from the stud in the cowl plenum and disconnect the wire harness (1) connector (2) from the connector receptacle for the front wiper motor (3).

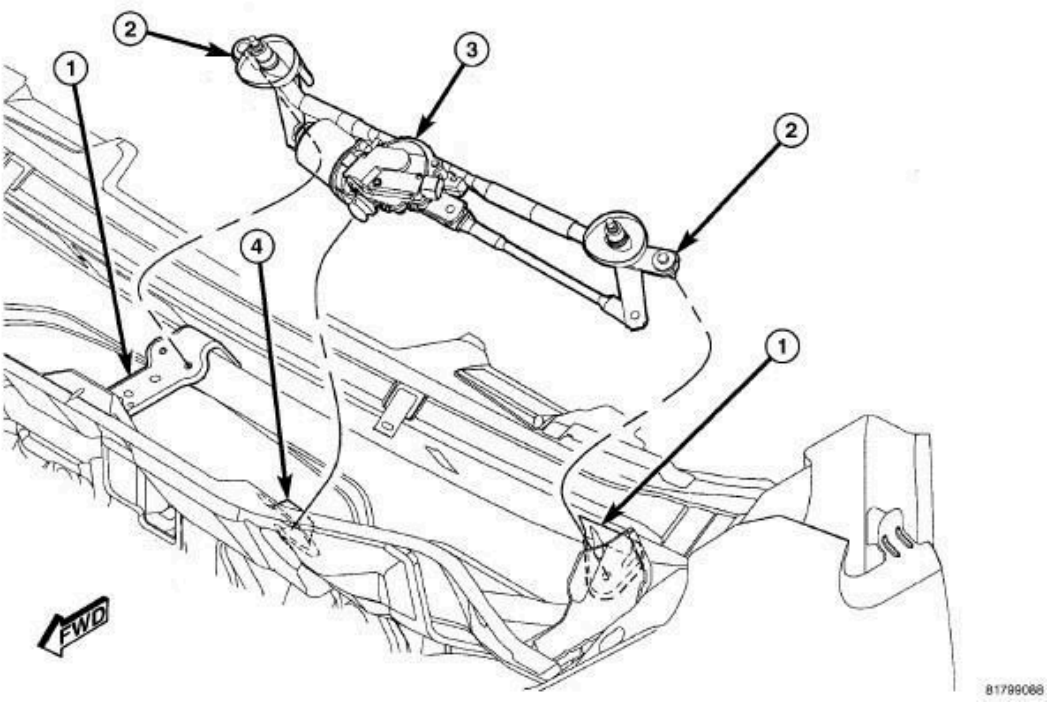

Fig. 29: Front Wiper Module
Courtesy of CHRYSLER GROUP, LLC

5. Remove the two screws (2) that secure the ends of the front wiper module bracket (3) to the stamped brackets (1) within the cowl plenum.
6. Pull the front wiper module inboard far enough to disengage the knob-like rubber isolator from the slotted bracket (4) on the forward wall of the cowl plenum.
7. Remove the front wiper module from the cowl plenum as a unit.

INSTALLATION

INSTALLATION

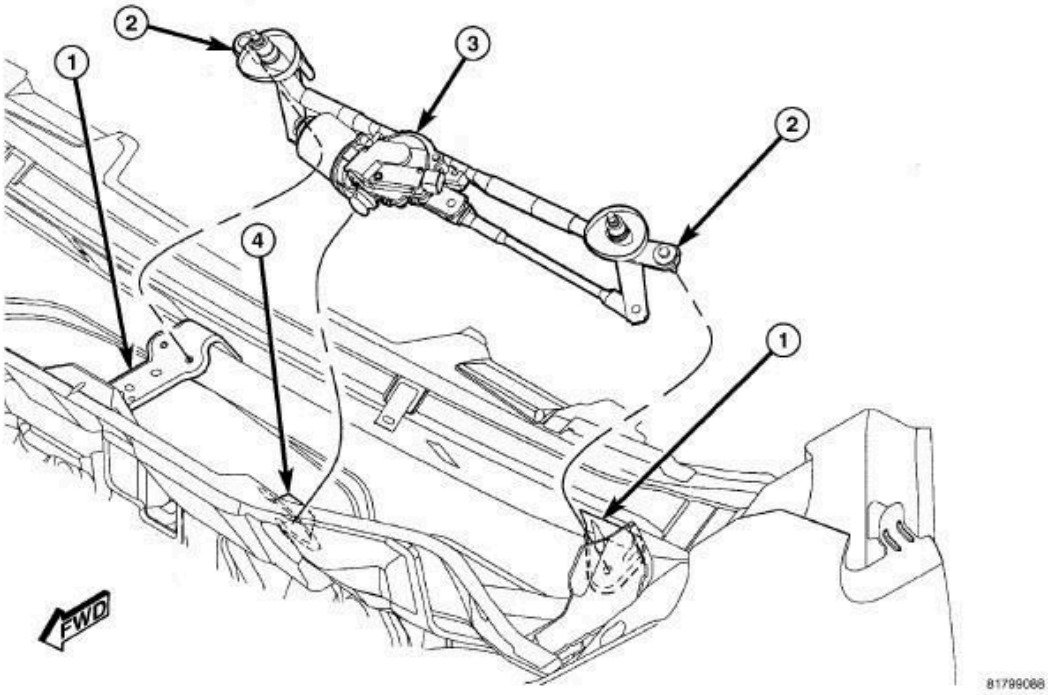

Fig. 30: Front Wiper Module
Courtesy of CHRYSLER GROUP, LLC

1. Position the front wiper module (3) into the cowl plenum as a unit.
2. Position the knob-like rubber isolator to the slotted bracket (4) on the forward wall of the cowl plenum and pull the module outboard far enough to seat the isolator in the bracket.
3. Loosely install the two screws (2) that secure the ends of the front wiper module bracket to the stamped brackets (1) within the cowl plenum.
4. Tighten the two screws, driver side followed by passenger side, to 8 N.m (73 in. lbs.).

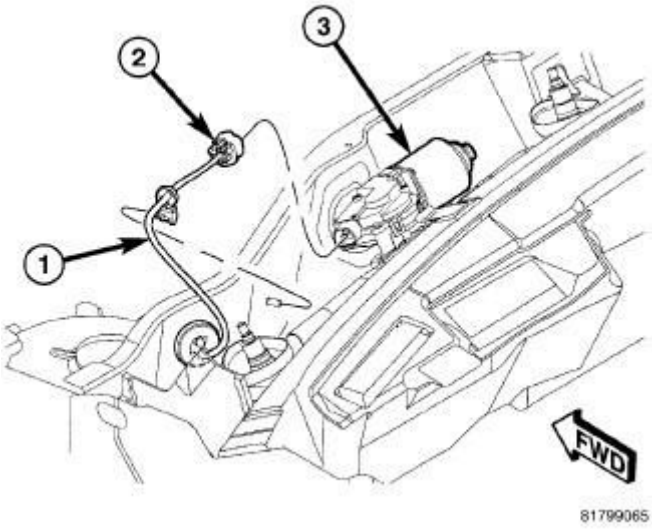

Fig. 31: Front Wiper Module
Courtesy of CHRYSLER GROUP, LLC

5. Reconnect the wire harness (1) connector (2) to the connector receptacle for the front wiper motor (3) and engage the routing clip onto the stud in the cowl plenum.
6. Reinstall the cowl plenum cover/grille panel over the front wiper module. Refer to **COVER, COWL PANEL, INSTALLATION** .

NOTE: Be certain to turn the ignition switch to the ON position, then turn the front wiper switch ON and OFF again to cycle the wiper motor and linkage to their natural park position before reinstalling the front wiper arms onto the wiper pivots.

7. Reinstall both front wiper arms onto the wiper pivots. Refer to **ARM, WIPER, INSTALLATION**.
8. Reconnect the negative cable to the battery.

MOTOR, WIPER

DESCRIPTION

DESCRIPTION

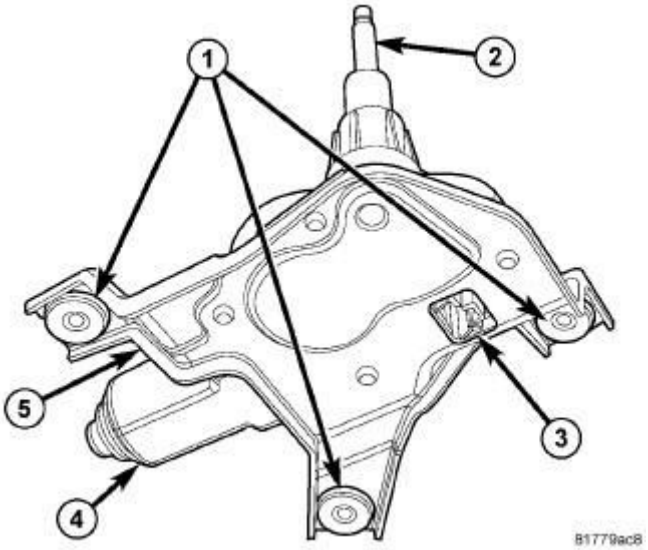

Fig. 32: Rear Wiper Motor
Courtesy of CHRYSLER GROUP, LLC

The rear wiper motor (4) is concealed within the liftgate, below the liftgate glass and behind the liftgate inner trim panel. The end of the motor output shaft (2) that extends through the lower edge of the liftgate glass to drive the rear wiper arm and blade is the only visible component of the rear wiper motor. A rubber grommet is engaged within the output shaft hole of the liftgate glass and seals the output shaft where it passes through the glass. An integral connector receptacle (3) connects the rear wiper motor to the vehicle electrical system through a dedicated take out and connector of the liftgate wire harness. The rear wiper motor consists of the following major components:

- **Bracket (5)** - The rear wiper motor bracket consists of a stamped metal mounting plate for the wiper motor that is secured to the wiper motor housing, and through three screws with rubber isolators (1) to the liftgate inner panel.
- **Motor** - The single-speed permanent magnet rear wiper motor is secured to the rear wiper motor bracket. The wiper motor includes an integral transmission, motor output shaft, automatic resetting circuit breaker and the rear wiper motor park switch.

The rear wiper motor cannot be adjusted or repaired. If any component of the motor is ineffective or damaged, the entire rear wiper motor unit must be replaced. The motor output shaft rubber grommet is available for individual service replacement.

OPERATION

OPERATION

The rear wiper motor operation is controlled by the Totally Integrated Power Module (TIPM), which uses intelligent, high current, self-protected high side switches to control rear wiper system operation for energizing or de-energizing the rear wiper motor. The TIPM uses internal programming and electronic messages received over the Controller Area Network (CAN) data bus from the ElectroMechanical Instrument Cluster (EMIC) (also known as the Cab Compartment Node/CCN) to provide the appropriate rear wiper and washer system operating modes. The EMIC uses electronic messages received from the Steering Control Module (SCM) over a Local Interconnect Network (LIN) data bus to determine when to send electronic rear wiper system requests to the TIPM.

The rear wiper motor park switch is a single pole, single throw, momentary switch within the wiper motor that is mechanically actuated by the wiper motor transmission components. The park switch alternately closes and opens a voltage signal for the rear wiper motor electronic control logic circuitry of the TIPM. The park switch is normally an open circuit when the rear wiper blade is in the parked position, and is connected to fused ignition output when the rear wiper blade is anywhere except parked.

This park switch input allows the electronic logic circuits of the TIPM to control all of the electronic features of rear wiper motor operation and to keep the motor energized long enough to complete its current wipe cycle and park the wiper blade at the base of the glass after the status of the rear wiper system or the ignition switch transitions to Off. The internal TIPM circuitry pulls the park switch sense input to ground when the switch is open so that the microcontroller sees a ground when the wiper blade is parked.

The rear wiper motor is grounded at all times through a take out with an eyelet terminal connector in the body wire harness that is secured to a ground location in the passenger compartment. The automatic resetting circuit breaker protects the motor from overloads. The rear wiper motor transmission converts the rotary output of the wiper motor to the back and forth wiping motion of the rear wiper arm and blade on the liftgate glass.

The hard wired inputs and outputs of the rear wiper motor may be diagnosed using conventional diagnostic tools and procedures. Refer to the appropriate

wiring information. However, conventional diagnostic methods will not prove conclusive in the diagnosis of the rear wiper motor or the electronic controls and communication between other modules and devices that provide some features of the rear wiper and washer system. The most reliable, efficient and accurate means to diagnose the rear wiper motor or the electronic controls and communication related to rear wiper motor operation requires the use of a diagnostic scan tool. Refer to the appropriate diagnostic information.

REMOVAL

FRONT

CAUTION: Do not apply pressure to, or pry on, the plastic drive link bushings. When removing the drive link from, or installing the drive link to the ball stud on the wiper motor crank arm, apply pressure to, or pry on, only the metal portions of the drive link around the bushing. If the bushing is damaged, the entire front wiper module MUST be replaced.

CAUTION: Do not remove the crank arm nut from the wiper motor output shaft. The crank arm is indexed to the output shaft with the motor in the park position during the manufacturing process, but there are no provisions made for correctly indexing this connection in the field. If the crank arm to output shaft indexing is incorrect, the entire front wiper module MUST be replaced.

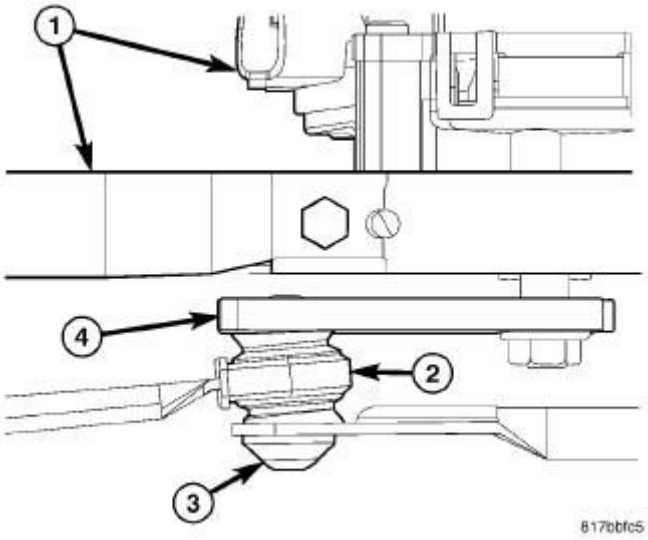

Fig. 33: Front Wiper Motor Module
Courtesy of CHRYSLER GROUP, LLC

1. Disconnect and isolate the negative cable from the battery.
2. Remove the front wiper module (1) from the vehicle. (Refer to **REMOVAL**).
3. Disengage the socket bushing (3) of the passenger side wiper drive link from the ball stud on the wiper motor crank arm (4) using two large screwdrivers, one on each side of the ball stud. Pry firmly and evenly between the crank arm and the metal portion of the drive link until the socket unsnaps from the ball.
4. Remove the sleeve bushing (2) of the driver side wiper drive link from the ball stud on the wiper motor crank arm.

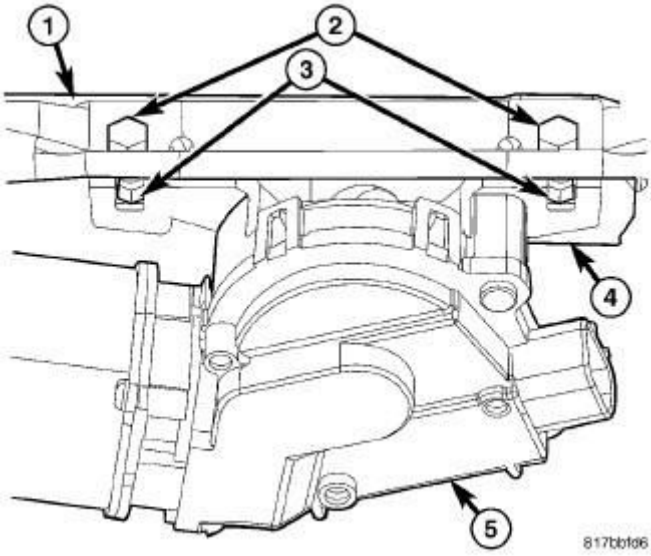

Fig. 34: Front Wiper Motor Module Replacement
Courtesy of CHRYSLER GROUP, LLC

5. Remove the two screws (2) that secure the motor bracket (4) to the module bracket (1).
6. Remove the wiper motor and crank arm unit (5) from the underside of the module bracket.

REAR

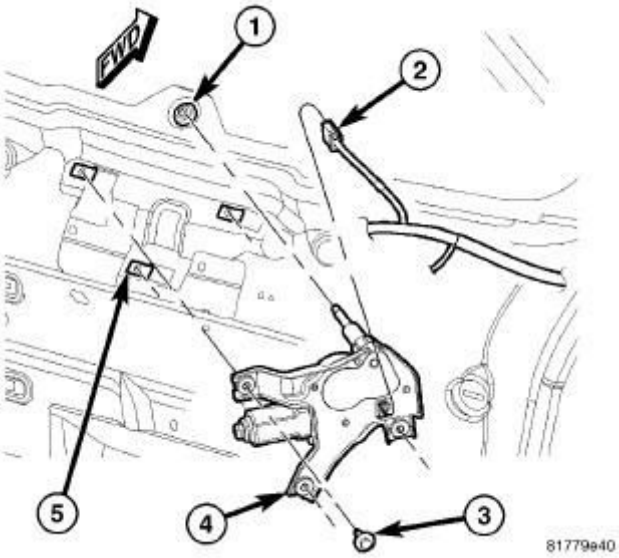

Fig. 35: Rear Wiper Motor Replacement
Courtesy of CHRYSLER GROUP, LLC

1. Disconnect and isolate the negative cable from the battery.

2. Remove the rear wiper arm from the rear wiper motor output shaft. Refer to **ARM, WIPER, REMOVAL**.
3. Remove the trim from the liftgate inner panel. Refer to **PANEL, TRIM, REMOVAL** .
4. Disconnect the liftgate wire harness connector (2) from the rear wiper motor (4).
5. Remove the three screws (3) that secure the motor mounting bracket to the U-nuts (5) on the liftgate inner panel.
6. Pull the wiper motor forward far enough to disengage the output shaft from the rubber grommet (1) in the liftgate glass.
7. Remove the motor from the liftgate.
8. Remove the rubber grommet from the output shaft clearance hole in the liftgate glass and discard.

INSTALLATION

FRONT

CAUTION: Do not apply pressure to, or pry on, the plastic drive link bushings. When removing the drive link from, or installing the drive link to the ball stud on the wiper motor crank arm, apply pressure to, or pry on, only the metal portions of the drive link around the bushing. If the bushing is damaged, the entire front wiper module MUST be replaced.

CAUTION: Do not remove the crank arm nut from the wiper motor output shaft. The crank arm is indexed to the output shaft with the motor in the park position during the manufacturing process, but there are no provisions made for correctly indexing this connection in the field. If the crank arm to output shaft indexing is incorrect, the entire front wiper module MUST be replaced.

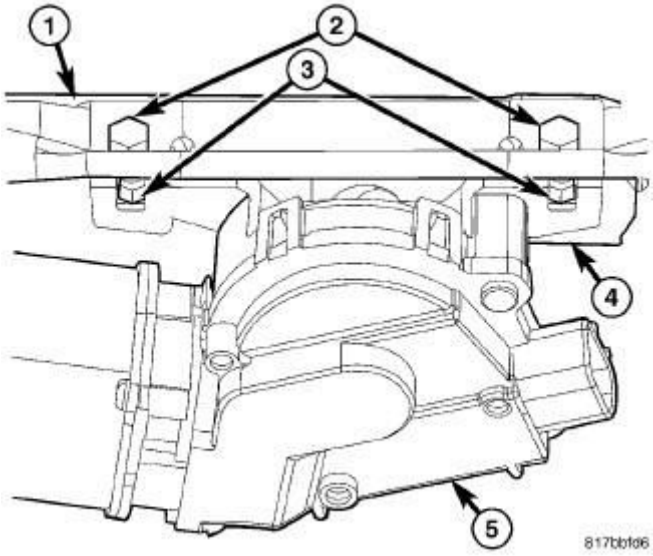

Fig. 36: Front Wiper Motor Module Replacement
Courtesy of CHRYSLER GROUP, LLC

1. Position the front wiper motor and crank arm unit (5) to the underside of the front wiper module bracket (1).
2. Install and tighten the two screws (2) into the two nuts (3) that secure the motor bracket (4) to the module bracket. Tighten the screws to 7.5 N.m (66 in. lbs.).

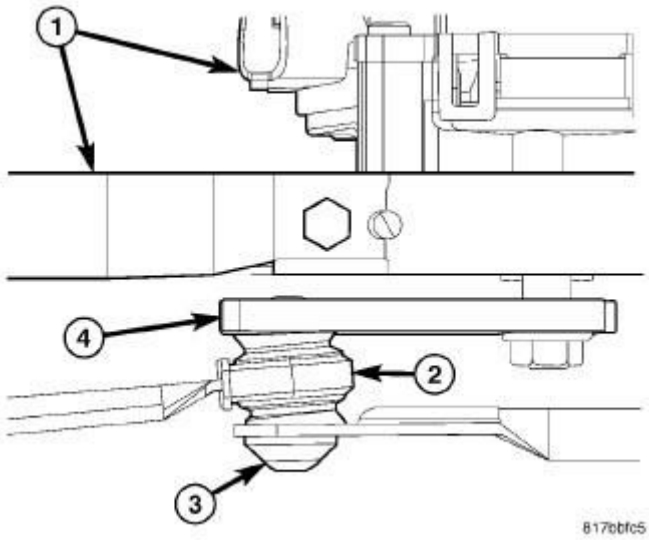

Fig. 37: Front Wiper Motor Module
Courtesy of CHRYSLER GROUP, LLC

3. Position the sleeve bushing (2) of the driver side wiper drive link onto the

ball stud on the end of the motor crank arm (4).

4. Position the socket bushing (3) of the passenger side wiper drive link over the ball stud on the crank arm.
5. Place a short 19 millimeter or 3/4 inch socket over the domed cap side of the socket bushing as an installation tool. Use large channel-lock pliers to firmly and evenly apply enough pressure to the underside of the crank arm and the top of the socket installation tool to snap the bushing onto the ball stud. **Do not apply pressure directly to the plastic bushings.**

NOTE: Be certain to turn the ignition switch to the ON position, then turn the front wiper switch ON and OFF again to cycle the wiper motor and linkage to their natural park position before reinstalling the front wiper arms onto the wiper pivots.

6. Reinstall the front wiper module (1) into the vehicle. (Refer to **INSTALLATION**).
7. Reconnect the negative cable to the battery.

REAR

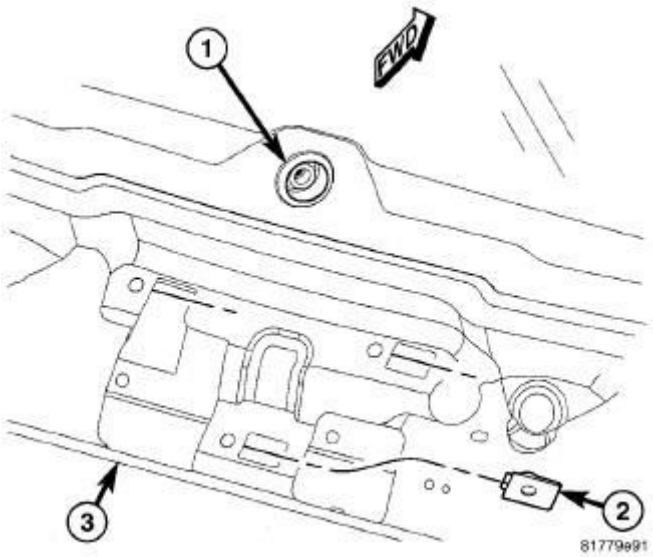

Fig. 38: Rubber Grommet
Courtesy of CHRYSLER GROUP, LLC

1. Install a new rubber grommet (1) into the rear wiper motor output shaft clearance hole located in the liftgate glass. Always use a new rubber

grommet in the glass.

2. Check to be certain that the three U-nuts (2) are properly installed and in good condition in the liftgate inner panel (3).

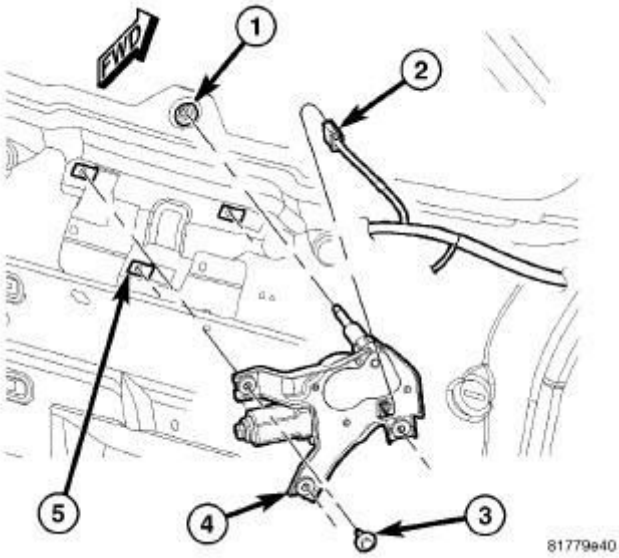

Fig. 39: Rear Wiper Motor Replacement
Courtesy of CHRYSLER GROUP, LLC

CAUTION: A new replacement rear wiper motor is shipped with a rubber lubricant applied to the motor output shaft where it contacts the rubber grommet in the liftgate glass. If a rear wiper motor is removed then reinstalled, an appropriate rubber lubricant (Mopar® Nye® Synthetic Lubricant - also known as Fluorocarbon Gel 880 Synthetic Lubricant) must be applied to the motor output shaft in the area just below the taper where the shaft will contact the grommet before the motor is reinstalled. Failure to comply with this caution can result in premature grommet failure, excessive motor loads and water leaks.

3. Insert the rear wiper motor (4) output shaft through the rubber grommet (1) in the liftgate glass.
4. Position the rear wiper motor and mounting bracket to the U-nuts (5) in the

liftgate inner panel as a unit.

5. Install and tighten the three screws (3) that secure the motor mounting bracket to the liftgate. Tighten the screws to 7 N.m (62 in. lbs.).
6. Reconnect the liftgate wire harness connector (2) to the wiper motor connector receptacle.
7. Reinstall the trim onto the liftgate inner panel. Refer to **PANEL, TRIM, INSTALLATION** .
8. Reinstall the rear wiper arm onto the output shaft. Refer to **ARM, WIPER, INSTALLATION**.
9. Reconnect the negative cable to the battery.

NOZZLE, WASHER

DESCRIPTION

FRONT

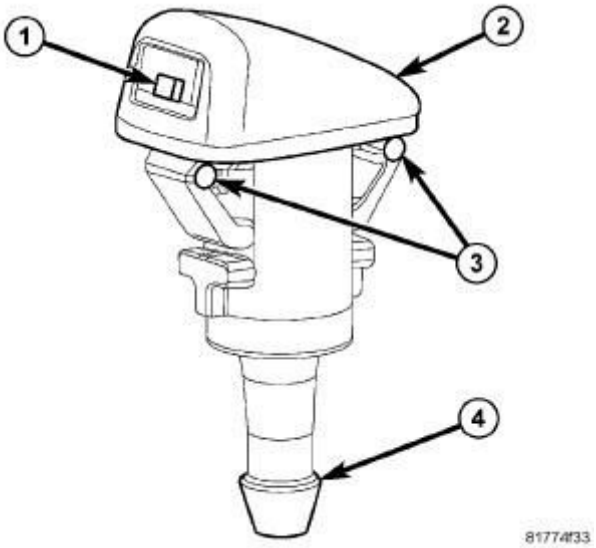

Fig. 40: Front Washer Nozzle
Courtesy of CHRYSLER GROUP, LLC

The fluidic front washer nozzles (2) are constructed of molded plastic and include an integral check valve. Each nozzle has two integral latches (3) that secure them in dedicated holes in the hood panel near the base of the windshield. The domed upper surface of the washer nozzle is visible on the outside of the hood panel, and the two nozzle orifices (1) are oriented towards the windshield glass.

An integral diaphragm type check valve is contained within the body of each nozzle. The washer plumbing fittings (4) for the washer nozzles extend below the hood panel and are accessible from the engine compartment.

The front washer nozzles cannot be adjusted or repaired and, if ineffective or damaged, they must be replaced.

REAR

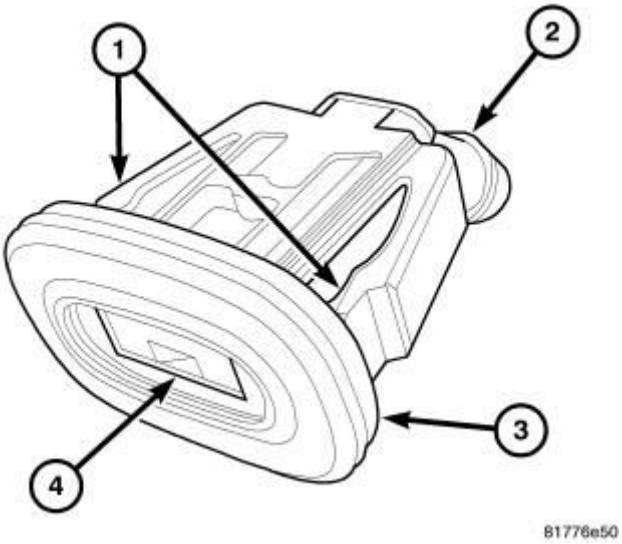

Fig. 41: Rear Washer Nozzle
Courtesy of CHRYSLER GROUP, LLC

The fluidic rear washer nozzle is constructed of molded plastic. The rear washer nozzle is secured by two integral latch features (1) within a mounting hole to the right of the Center High-Mounted Stop Lamp (CHMSL) in the lower surface of the rear spoiler above the liftgate glass opening on the outer liftgate panel.

The outer surface of the washer nozzle is visible on the lower exterior surface of the spoiler, and a rubber gasket (3) seals the nozzle to the spoiler mounting hole. The nozzle orifice (4) is oriented downward towards the liftgate glass. The washer plumbing fitting (2) is concealed between the spoiler and the liftgate outer panel.

The rear washer nozzle cannot be adjusted or repaired and, if ineffective or damaged, it must be replaced.

OPERATION

FRONT

The two front washer nozzles are designed to dispense washer fluid into the wiper pattern area on the outside of the windshield glass. Pressurized washer fluid is fed to each nozzle from the washer reservoir by the washer pump/motor unit through a single hose, which is attached to a barbed nipple on each washer nozzle below the inner hood panel. A fluidic matrix within the washer nozzle causes the pressurized washer fluid to be emitted from the nozzle orifice as an oscillating stream to more effectively cover a larger area of the glass to be cleaned.

The integral check valve in each nozzle prevents washer fluid from draining out of the washer supply hoses back to the washer reservoir. This drain-back would result in a lengthy delay after the washer switch is actuated until washer fluid was dispensed through the nozzles, because the washer pump would have to refill the washer plumbing from the reservoir to the nozzles. Such a drain-back condition could also result in water, dirt, or other outside contaminants being siphoned into the washer system through the washer nozzle orifice. This water could subsequently freeze and plug the nozzle, while other contaminants could interfere with proper nozzle operation and cause improper nozzle spray patterns. In addition, the check valve prevents washer fluid from siphoning through the washer nozzles after the washer system is turned OFF.

When the washer pump pressurizes and pumps washer fluid from the reservoir through the washer plumbing, the fluid pressure unseats a diaphragm from over a sump well within the nozzle by overriding the spring pressure applied to it by a piston. With the diaphragm unseated, washer fluid is allowed to flow toward the nozzle orifice. When the washer pump stops operating, the spring pressure on the piston seats the diaphragm over the sump well in the nozzle and fluid flow in either direction within the washer plumbing is prevented.

REAR

The rear washer nozzle is designed to dispense washer fluid into the wiper pattern area on the outside of the liftgate glass. Pressurized washer fluid is fed to the nozzle from the washer reservoir by the washer pump/motor through a single hose, which is attached to a barbed nipple on the back of the nozzle. A fluidic matrix within the nozzle causes the pressurized washer fluid to be emitted from the nozzle orifice as an oscillating stream to more effectively cover a larger area of the glass to be cleaned.

REMOVAL

FRONT

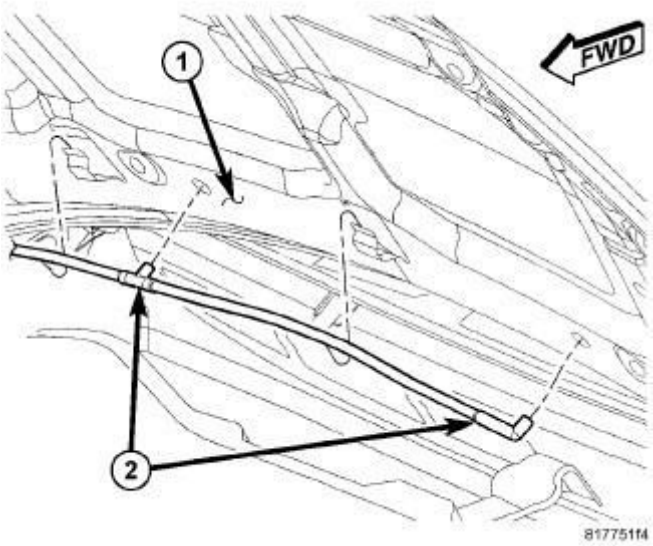

Fig. 42: Molded Rubber Tee & Molded Rubber Elbow
Courtesy of CHRYSLER GROUP, LLC

1. From the underside of the hood, disengage the rear edge of the silencer pad from the tabs that secure it to the inner hood reinforcement (1) as necessary to access the front washer nozzle hose connections (2).
2. Disconnect the hose connection from the barbed nipple of the front washer nozzle.

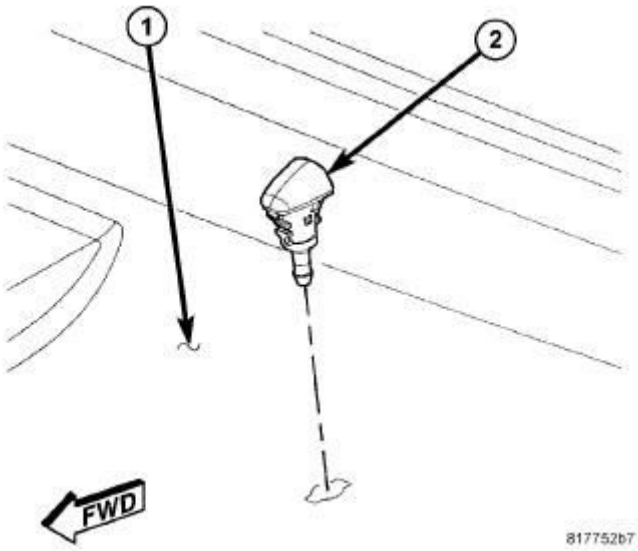

Fig. 43: Front Washer Nozzle Replacement
Courtesy of CHRYSLER GROUP, LLC

3. From the underside of the hood, release the integral latches of the front washer nozzle (2) and push the nozzle out through the mounting hole toward the top side of the hood (1).
4. Remove the nozzle from the top of the hood panel.

REAR

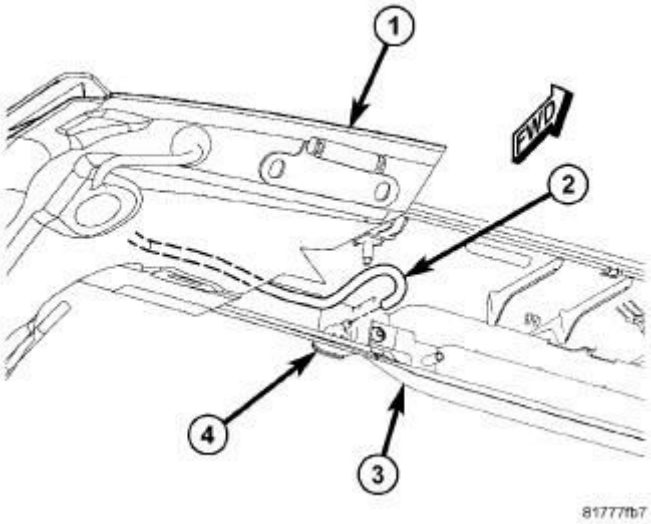

Fig. 44: Rear Washer Nozzle Replacement
Courtesy of CHRYSLER GROUP, LLC

1. Disconnect and isolate the battery negative cable.
2. Remove the fasteners that secure the spoiler (3) to the liftgate outer panel (1). Refer to **SPOILER, LIFTGATE, REMOVAL** .
3. Pull the spoiler away from the liftgate far enough to access and disconnect the liftgate washer supply hose (2) from the barbed nipple on the back of the rear washer nozzle (4).
4. From the back of the spoiler, depress the two integral latch features of the nozzle, while pulling the nozzle out through the face of the spoiler.

INSTALLATION

FRONT

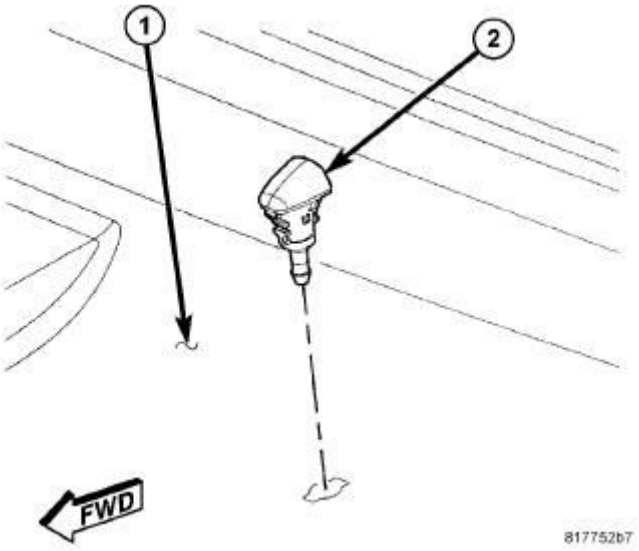

Fig. 45: Front Washer Nozzle Replacement
Courtesy of CHRYSLER GROUP, LLC

1. Position the front washer nozzle (2) to the mounting hole on the outside of the hood panel (1).
2. Align the anti-rotation tab of the nozzle with the anti-rotation notch in the mounting hole.
3. Using hand pressure, push firmly and evenly on the top of the nozzle until the integral latches lock into place on the underside of the hood.

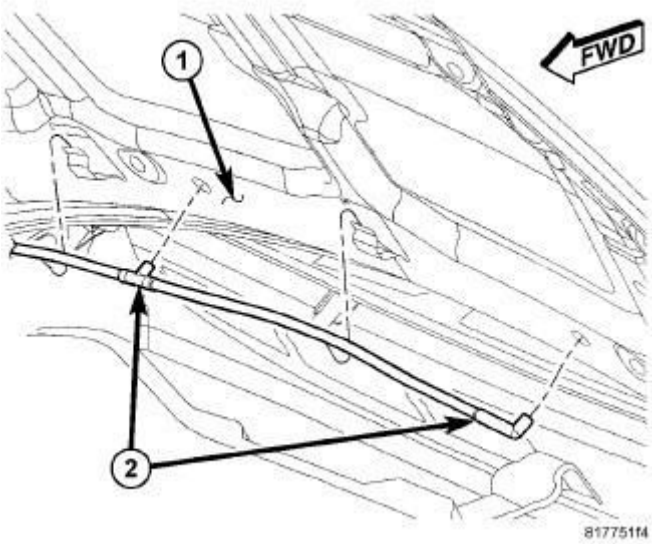

Fig. 46: Molded Rubber Tee & Molded Rubber Elbow
Courtesy of CHRYSLER GROUP, LLC

4. From the underside of the hood, reconnect the washer hose connector (2) to the barbed nipple of the nozzle.
5. Reinstall the rear edge of the hood silencer pad to the clips on the inner hood reinforcement (1).

REAR

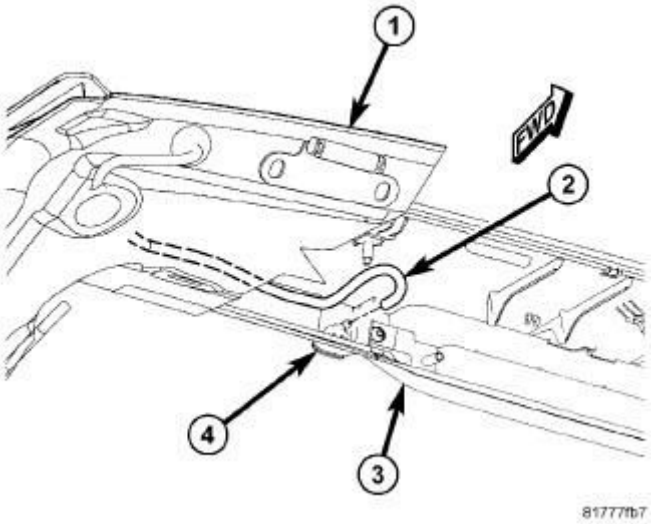

Fig. 47: Rear Washer Nozzle Replacement
Courtesy of CHRYSLER GROUP, LLC

1. Position the rear washer nozzle (4) through the mounting hole from the face of the liftgate spoiler (3).
2. Using hand pressure, press the nozzle firmly and evenly into the mounting hole until the two integral latch features are fully engaged on the back of the spoiler.
3. From the back of the spoiler, reconnect the liftgate washer supply hose (2) to the barbed nipple of the nozzle.
4. Reinstall the spoiler onto the liftgate outer panel (1). Refer to **SPOILER, LIFTGATE, INSTALLATION** .
5. Reconnect the battery negative cable.

PUMP, WINDSHIELD WASHER

DESCRIPTION

DESCRIPTION

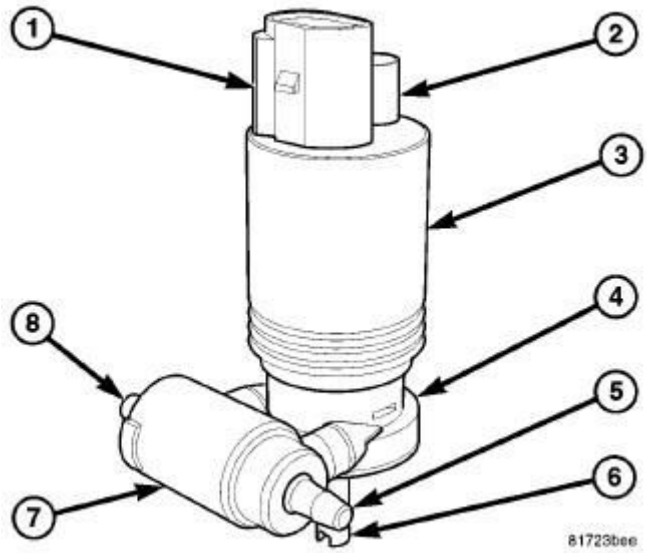

Fig. 48: Washer Pump/Motor
Courtesy of CHRYSLER GROUP, LLC

The washer pump/motor unit is located on the top of a sump area of the washer reservoir, on the forward side of the reservoir ahead of the right front strut tower in the engine compartment. A small permanently lubricated and sealed reversible electric motor (3) is coupled to the rotor-type washer pump (4). The use of an integral valve body (7) allows the washer pump/motor unit to provide washer fluid to either the front or the rear washer systems, depending upon the direction of the motor/pump impeller rotation.

An inlet nipple (6) on the pump housing passes through a rubber grommet seal/filter screen installed in a dedicated mounting hole of the washer reservoir sump. The filter screen prevents most debris from entering the pump housing. When the pump is installed in the reservoir the one barbed outlet nipple (5 and 8) on the pump valve body housing connects the unit to the front washer plumbing, and the other barbed outlet nipple connects the unit to the rear washer plumbing.

The washer pump/motor unit is retained on the reservoir by the interference fit between the pump inlet nipple and the grommet seal, which is a light press fit that allows for mounting of the washer pump without the use of fasteners. An integral connector receptacle (1) on the top of the motor housing connects the unit to the vehicle electrical system through a dedicated take out and connector of the engine compartment wire harness.

The washer pump/motor unit cannot be repaired. If ineffective or damaged, the

entire washer pump/motor unit must be replaced. The rubber grommet seal/filter screen is available for separate service replacement.

OPERATION

OPERATION

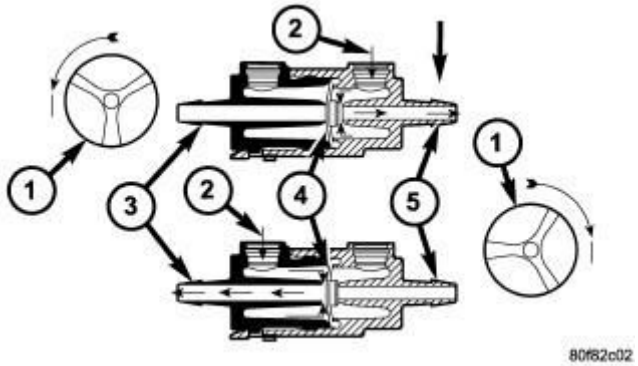

Fig. 49: Washer Pump/Motor Operation
Courtesy of CHRYSLER GROUP, LLC

The washer pump/motor unit features a reversible electric motor. The direction of the motor is controlled by hard wired outputs from the Totally Integrated Power Module (TIPM). When battery current and ground are applied to the two pump motor terminals, the motor rotates in one direction. When the polarity of these connections is reversed, the motor rotates in the opposite direction. When the pump motor is energized, the rotor-type pump pressurizes the washer fluid and forces it through one of the two pump outlet nipples, and into the front or rear washer plumbing.

The TIPM controls the hard wired outputs to the pump motor based upon electronic **washer request** messages received over the Controller Area Network (CAN) data bus from the ElectroMechanical Instrument Cluster (EMIC) (also known as the Cab Compartment Node/CCN). The EMIC receives electronic **washer switch** status messages over a Local Interface Network (LIN) bus connection from the Steering Control Module (SCM) within the left (lighting) multifunction switch housing. The SCM monitors hard wired analog and multiplex inputs from the washer switch circuitry contained within the right (wiper) multifunction switch to determine the proper electronic messages to send.

Washer fluid is drawn through the pump inlet nipple from the washer reservoir to the inlet port of the washer pump housing. An integral valve body is located in a

housing on the outlet port side (2) of the pump housing. A diaphragm (4) in this valve body controls which washer system plumbing receives the washer fluid being pressurized by the pump.

When the pump impeller (1) rotates in the counterclockwise direction (viewed from the bottom), the biased diaphragm is sealing off the rear washer system outlet and nipple so the pressurized washer fluid is pushed out through the pump front outlet port and the front washer outlet nipple (5). When the pump impeller rotates in the clockwise direction (viewed from the bottom), pressurized washer fluid is pushed out through the pump rear outlet port and moves the diaphragm to open the rear washer outlet nipple and seal off the front washer outlet nipple, then the pressurized washer fluid is pushed out through the rear washer outlet nipple (3).

The washer pump/motor unit and the hard wired motor control circuits from the TIPM may be diagnosed using conventional diagnostic tools and procedures. Refer to the appropriate wiring information. However, conventional diagnostic methods will not prove conclusive in the diagnosis of the washer pump/motor unit or the electronic controls and communication between other modules and devices that provide some features of the front and rear wiper and washer system. The most reliable, efficient and accurate means to diagnose the washer pump/motor unit or the electronic controls and communication related to washer pump/motor unit operation requires the use of a diagnostic scan tool. Refer to the appropriate diagnostic information.

REMOVAL

REMOVAL

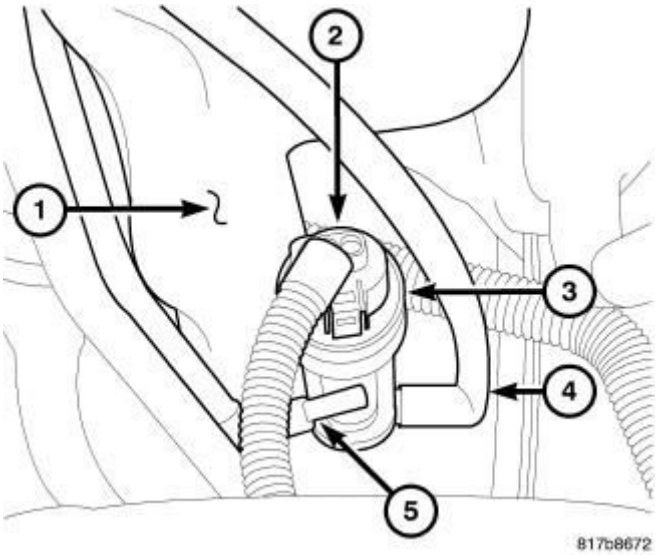

Fig. 50: Washer Pump/Motor Replacement
Courtesy of CHRYSLER GROUP, LLC

NOTE: The washer pump/motor can be removed from the washer reservoir without removing the reservoir from the vehicle.

1. Disconnect and isolate the negative cable from the battery.
2. Siphon the washer fluid from the washer reservoir (1) into a clean container for reuse.
3. Disconnect the engine compartment wire harness connector (2) from the washer pump/motor unit (3) connector receptacle on the top of the motor housing.
4. Disconnect the two washer hoses (4 and 5) from the two washer pump/motor unit outlet nipples.
5. Pull the washer pump/motor unit straight up and out of the washer reservoir far enough to disengage the inlet nipple from the rubber grommet seal/filter screen in the reservoir. Care must be taken not to damage the reservoir.
6. Remove the rubber grommet seal/filter screen for the washer pump from the pump mounting hole in the washer reservoir and discard.

INSTALLATION

INSTALLATION

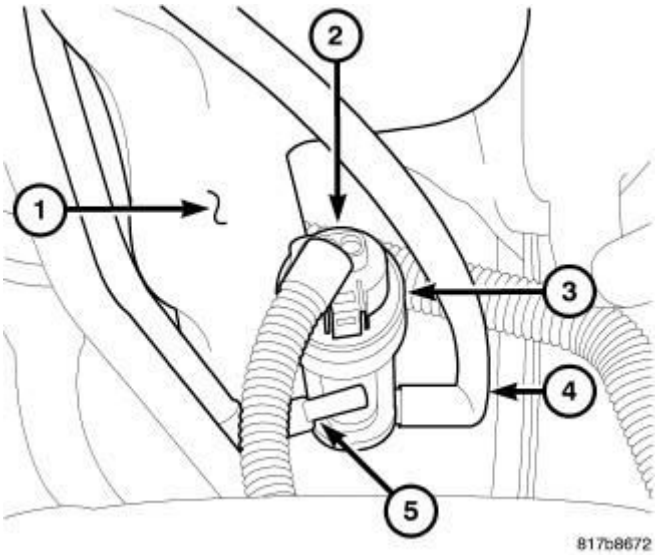

Fig. 51: Washer Pump/Motor Replacement
Courtesy of CHRYSLER GROUP, LLC

1. Install a new rubber grommet seal/filter screen unit into the washer pump mounting hole in the washer reservoir (1). Always use a new rubber grommet seal/filter screen on the reservoir.
2. Position the inlet nipple of the washer pump (3) to the rubber grommet seal/filter screen in the washer reservoir.
3. Using hand pressure, press firmly and evenly downward on the washer pump/motor unit until the inlet nipple is fully seated in the rubber grommet seal/filter screen in the pump mounting hole of the reservoir.
4. Reconnect the two washer hoses (4 and 5) to the two barbed pump outlet nipples. Be certain that the hose in the trough on the outboard side of the reservoir is connected to the rear (black) nipple, and the hose on the inboard side of the reservoir is connected to the front (white) nipple.
5. Reconnect the engine compartment wire harness connector (2) for the washer pump/motor unit to the connector receptacle on the top of the motor housing.
6. Reconnect the negative cable to the battery.
7. Refill the washer reservoir with the washer fluid siphoned from the reservoir during the removal procedure.

RESERVOIR, WINDSHIELD WASHER

DESCRIPTION

DESCRIPTION

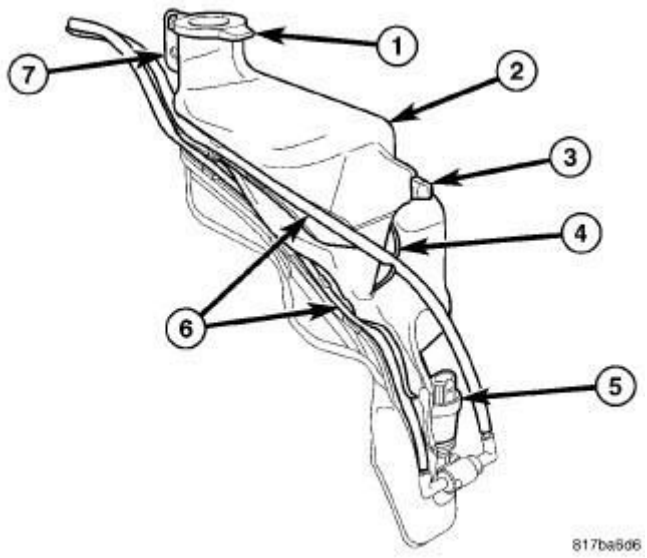

Fig. 52: Windshield Washer Reservoir
Courtesy of CHRYSLER GROUP, LLC

A single washer fluid reservoir (2) is used for both the front and rear washer systems. The molded plastic washer fluid reservoir is mounted on the forward side of the right front strut tower and wheel house in the engine compartment. The filler neck extends upward into the engine compartment and a single screw installed through a mounting tab (7) on the back of the filler neck secures the unit to a stamped metal bracket on the front of the strut tower. A bright yellow plastic filler cap (1) with an International Control and Display Symbol icon for **Windshield Washer** molded into it snaps over the open end of the filler neck. The cap hinges on and is secured to a molded-in hook formation on the top of the mounting tab on the filler neck.

There is a dedicated hole in the sump area at the lower front end of the reservoir provided for the washer pump/motor unit (5). The outboard side of the washer reservoir has an integral clip (4) and two integral troughs (6) through which the washer hoses are routed from the washer pump up into the engine compartment. An integral mounting post on the bottom of the reservoir is inserted into a hole in the horizontal front extension of the fender wheel house to locate and secure the lower end of the reservoir. An integral latch tab (3) on the upper outboard side of the reservoir engages a slot in the inboard side of the coolant reserve container (gasoline engine) or coolant pressure container (diesel engine) to aid in mounting that unit in the engine compartment. The coolant reserve container or coolant pressure container must be dismounted, but need not be removed to access the washer reservoir for service.

The washer reservoir cannot be repaired and, if ineffective or damaged, it must be replaced. The washer reservoir, rubber grommet seal/filter screen for the washer pump/motor unit and the filler cap are each available for individual service replacement.

OPERATION

OPERATION

The washer fluid reservoir provides a secure, on-vehicle storage location for a large reserve of washer fluid for operation of the front and rear washer systems. The washer reservoir filler cap provides a clearly marked and readily accessible point from which to add washer fluid to the reservoir. The washer pump/motor unit is located in a sump area near the lower forward side of the reservoir to be certain that washer fluid will be available to the pump as the fluid level in the reservoir becomes depleted. The washer pump/motor unit is mounted in the lowest position in the sump.

REMOVAL

REMOVAL

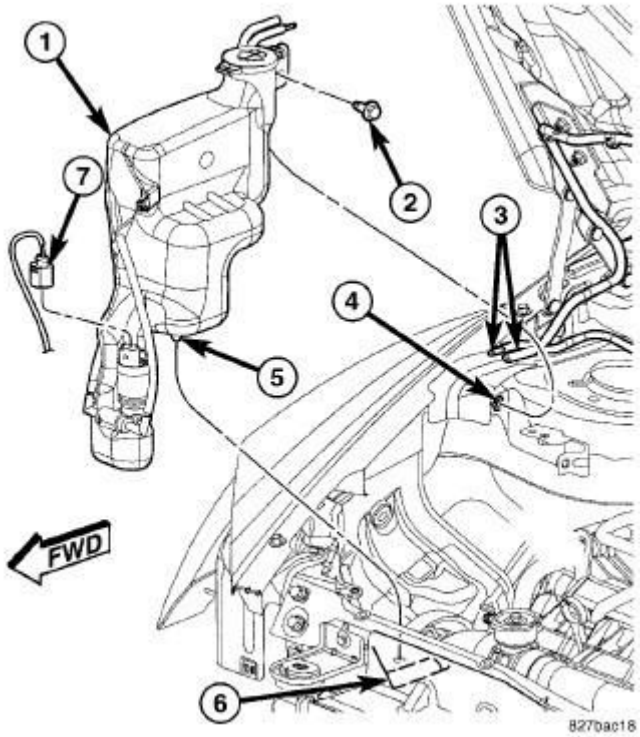

Fig. 53: Washer Reservoir Assembly Remove/Install
Courtesy of CHRYSLER GROUP, LLC

1. Disconnect and isolate the negative cable from the battery.
2. Remove or disengage each of the fasteners that secure the coolant reserve container (gasoline engine) or the coolant pressure container (diesel engine) to the inboard side of the washer reservoir and move the container aside as necessary to gain access to the washer reservoir for removal. Refer to **ENGINE COOLING SYSTEM** for the appropriate procedures for the engine and coolant container type as the vehicle is equipped.
3. Siphon the washer fluid from the washer reservoir (1) into a clean container for reuse.
4. Disconnect the engine compartment wire harness connector (7) from the washer pump/motor.

NOTE: To aid in reinstallation, note the installed position of the washer hoses prior to disconnecting them.

5. Disconnect the front and rear washer hoses (3) from the reservoir washer hoses near the top of the right front strut tower.
6. On vehicles equipped with a diesel engine, it may be necessary to remove the screw securing the differential pressure sensor to the bracket on the front of the strut tower and move the sensor aside for access to the washer reservoir filler neck screw. Refer to **REMOVAL** for the appropriate procedures.
7. Remove the screw (2) that secures the mounting tab on the back of the reservoir filler neck to the bracket (4) on the forward side of the right front strut tower.
8. On vehicles equipped with the headlamp leveling system, it may be necessary to dismount and pull the right headlamp unit forward far enough for the front of the washer reservoir to clear the headlamp leveling motor during reservoir removal. Refer to **UNIT, HEADLAMP, REMOVAL** .
9. Pull the washer reservoir upward far enough to disengage the post (5) on the underside of the reservoir from the hole in the horizontal extension of the right front wheel house (6).
10. Remove the washer reservoir from the engine compartment.

INSTALLATION

INSTALLATION

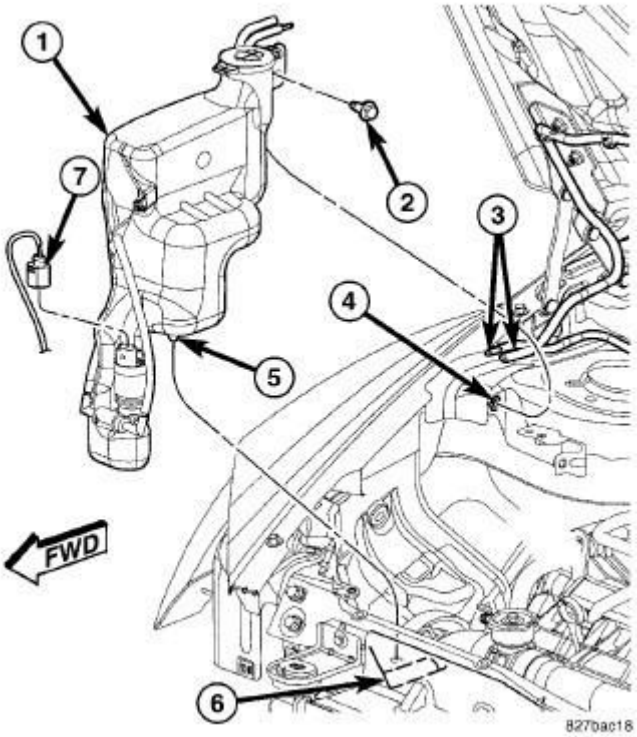

Fig. 54: Washer Reservoir Assembly Remove/Install
Courtesy of CHRYSLER GROUP, LLC

1. Position the washer reservoir (1) into the right front corner of the engine compartment.
2. Align and engage the post (5) on the underside of the reservoir into the hole in the horizontal extension of the right front wheel house (6).
3. Install and tighten the screw (2) that secures the mounting tab on the back of the reservoir filler neck to the bracket (4) on the forward side of the right front strut tower. Tighten the screw to 9 N.m (79 in. lbs.).

NOTE: Be certain to reconnect the front and rear washer hoses to the proper reservoir hoses from the washer pump. Failure to properly connect the hoses will cause the front and rear washer systems to operate incorrectly.

4. Reconnect the front and rear washer hoses (3) to the reservoir washer hoses near the top of the right front strut tower.
5. Reconnect the engine compartment wire harness connector (7) to the washer pump/motor unit.

6. On vehicles equipped with the headlamp leveling system, if it was necessary to relocate the right headlamp unit during reservoir removal, reinstall the lamp. Refer to **UNIT, HEADLAMP, INSTALLATION** .
7. On vehicles equipped with a diesel engine, if it was necessary to remove the screw securing the differential pressure sensor to the bracket on the front of the strut tower and move the sensor aside for access to the washer reservoir filler neck screw, reinstall the sensor. Refer to **REMOVAL** for the appropriate procedures.
8. Position the coolant reserve container (gasoline engine) or the coolant pressure container (diesel engine) to the inboard side of the washer reservoir and reinstall or engage each of the fasteners that secure the container. Refer to **ENGINE COOLING SYSTEM** for the appropriate procedures for the engine and coolant container type as the vehicle is equipped.
9. Refill the washer reservoir with the washer fluid drained during removal.
10. Reconnect the negative cable to the battery.

SWITCH, MULTIFUNCTION, RIGHT

DESCRIPTION

DESCRIPTION

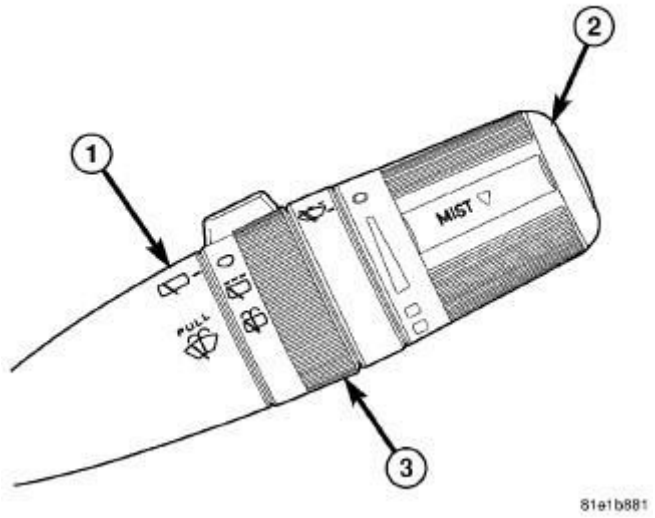

Fig. 55: Right (Wiper) Multi-Function Switch
Courtesy of CHRYSLER GROUP, LLC

The right (wiper) multifunction switch is located on the right side of the steering

column, just below the steering wheel. This switch is the primary control for the front and rear wiper and washer systems. The only visible components of the switch are the control stalk (1), control knob (2) and control sleeve (3) that extend through the steering column shrouds on the right side of the column. The remainder of the switch including its mounting provisions and electrical connection are concealed beneath the shrouds.

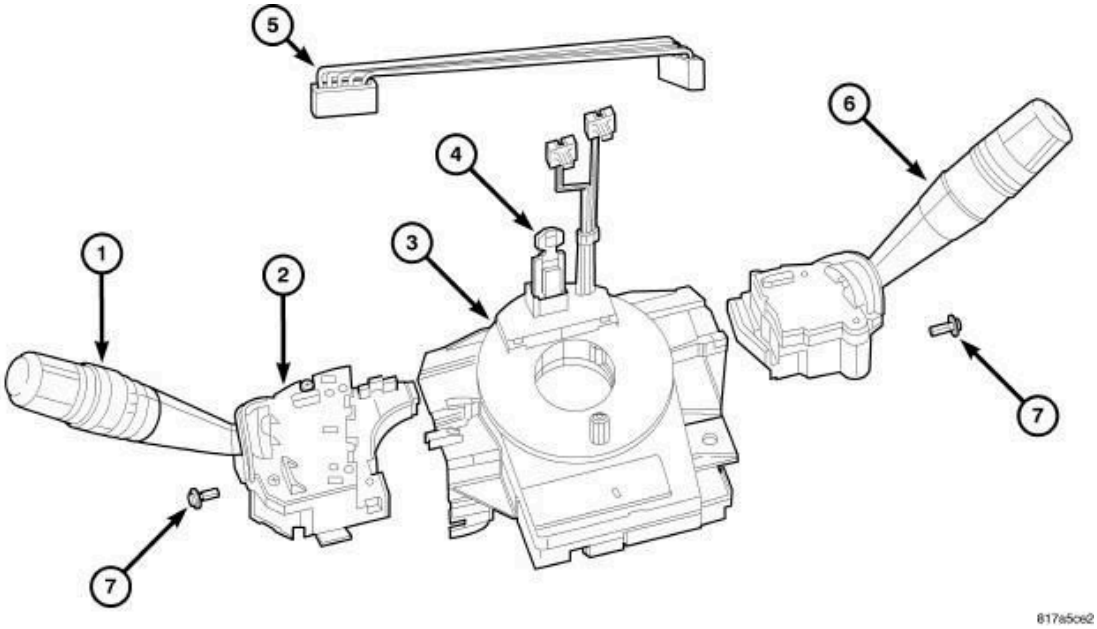

Fig. 56: Steering Control Module
Courtesy of CHRYSLER GROUP, LLC

The switch housing and controls (6) are constructed of molded black plastic. Each of the switch controls has white International Control and Display Symbol graphics applied to it, which clearly identify its many functions. A single screw (7) through a mounting tab integral to the back of the switch housing, and a slide tab integral to the bottom of the switch housing secure the switch to the mounting bracket integral to the clockspring (3). A single connector receptacle containing seven terminal pins is integral to the inboard end of the switch housing and is connected by a jumper wire harness (5) directly to the Steering Control Module (SCM), which is internal to the housing (2) of the left multifunction switch (1).

The right (wiper) multifunction switch provides the vehicle operator with a control interface for the following wiper and washer system functions:

- **Continuous Front Wipers** - The right multifunction switch control knob provides detent switching for two continuous front wipe modes, low speed or high speed.

- **Intermittent Front Wipers** - The right multifunction switch control knob provides detent switching for the intermittent front wipe mode with five minor detent delay interval positions.
- **Front Wiper Mist Mode** - The right multifunction switch control stalk includes momentary switching of the front wiper motor low speed circuit to provide a mist mode features (sometimes referred to as pulse wipe), which allows the vehicle operator to momentarily operate the front wipers for one or more complete cycles.
- **Front Washer Mode** - The right multifunction switch control stalk provides momentary switching for control of the front washer system operation.
- **Intermittent Rear Wipe Mode** - The right multifunction switch control sleeve provides detent switching for a single fixed interval intermittent rear wiper mode.
- **Rear Washer Mode** - The right multifunction switch control sleeve provides two momentary switch positions for control of rear washer system operation.

The right multifunction switch cannot be adjusted or repaired. If any function of the switch is ineffective, or if the switch is damaged, the entire switch unit must be replaced. The clockspring (with the multifunction switch mounting bracket), the left multifunction switch (with the SCM), the right multifunction switch and the jumper wire harness are each available for separate service replacement.

OPERATION

OPERATION

The right (wiper) multifunction switch uses a combination of resistor multiplexing and conventional analog switching to control the many functions and features it provides. The switch receives a clean ground from the Steering Control Module (SCM), then provides resistor multiplexed and conventional analog return outputs to the SCM to indicate the selected switch positions. The SCM then sends electronic **switch status** messages over a Local Interface Network (LIN) data bus to the ElectroMechanical Instrument Cluster (EMIC) (also known as the Cab Compartment Node/CCN), and the EMIC relays electronic **wiper** and **washer switch** request messages over the Controller Area Network (CAN) data bus to other electronic modules in the vehicle.

If the SCM detects no inputs from the right multifunction switch, it transmits an

electronic **Signal Not Available (SNA)** status message over the LIN data bus. The SNA status signals the EMIC to request other electronic modules to implement a fail-safe mode of operation for the front and rear wiper systems. The fail-safe mode will maintain the last selected front and rear wiper system operation for the remainder of the current ignition cycle, after which both wiper systems will default to OFF.

The right multifunction switch as well as the hard wired inputs and outputs of the switch may be diagnosed using conventional diagnostic tools and procedures. Refer to the appropriate wiring information. However, the most reliable, efficient and accurate means to diagnose this component requires the use of a diagnostic scan tool. Refer to the appropriate diagnostic information.

Following are descriptions of how the right multifunction switch is operated to control the many front and rear wiper and washer system functions and features it provides:

- **Front Wiper Control** - The control knob on the end of the right multifunction switch control stalk is rotated to one of the two continuous wiper detents, to one of five intermittent wiper detents, or to the OFF position to select the front wiper mode. The SCM reads the input from the right multifunction switch and sends electronic **wiper switch** status messages over the LIN data bus to the EMIC, which relays an electronic **wiper switch** request message over the CAN data bus to other electronic modules in the vehicle.
- **Front Wiper Mist Mode** - The front wiper mist mode is requested when the right multifunction switch control stalk is depressed downward towards the floor to a momentary MIST position. The front wiper motor will continue to operate, one complete cycle at a time, for as long as the control stalk is held in this position. The SCM reads the resistor multiplexed input from the right multifunction switch and sends an electronic **wiper switch** status message over the LIN data bus to the EMIC, which relays an electronic **wiper switch** request message over the CAN data bus to other electronic modules in the vehicle.
- **Front Washer Control** - The right multifunction switch control stalk is pulled rearward towards the steering wheel to a momentary WASH position to activate the washer pump/motor in the front washer mode. The washer pump/motor will continue to operate for as long as the control stalk is held in this position. The SCM reads the resistor multiplexed input from the right

multifunction switch and sends an electronic **washer switch** status message over the LIN data bus to the EMIC, which relays an electronic **washer switch** request message over the CAN data bus to other electronic modules in the vehicle.

- **Rear Wiper Control** - The rear wiper mode is selected when the right multifunction switch control sleeve is rotated to the fixed interval intermittent rear wipe detent position, or the OFF detent position. The SCM reads the input from the right multifunction switch and sends an electronic **wiper switch** status message over the LIN data bus to the EMIC, which relays an electronic **wiper switch** request message over the CAN data bus to other electronic modules in the vehicle.
- **Rear Washer Control** - The right multifunction switch control sleeve is rotated to one of two momentary WASH positions, either fully forward or fully rearward, to activate the washer pump/motor in the rear washer mode. The washer pump/motor will continue to operate in the rear washer mode until the control sleeve is released. The SCM reads the input from the right multifunction switch and sends an electronic **washer switch** status message over the LIN data bus to the EMIC, which relays an electronic **washer switch** request message over the CAN data bus to other electronic modules in the vehicle.

DIAGNOSIS AND TESTING

DIAGNOSIS AND TESTING - RIGHT MULTIFUNCTION SWITCH

WARNING: **To avoid serious or fatal injury on vehicles equipped with airbags, disable the Supplemental Restraint System (SRS) before attempting any steering wheel, steering column, airbag, seat belt tensioner, impact sensor or instrument panel component diagnosis or service. Disconnect and isolate the battery negative (ground) cable, then wait two minutes for the system capacitor to discharge before performing further diagnosis or service. This is the only sure way to disable the SRS. Failure to take the proper precautions could result in accidental airbag deployment.**

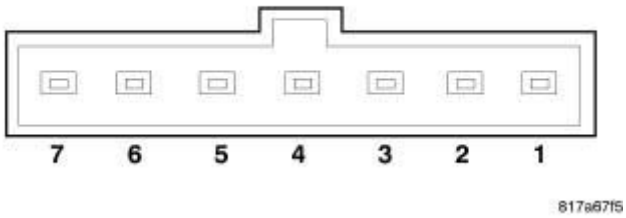

Fig. 57: Right Multi-Function Switch Connector
Courtesy of CHRYSLER GROUP, LLC

The right multifunction switch as well as the hard wired inputs and outputs of the switch may be diagnosed using conventional diagnostic tools and procedures. Refer to the appropriate wiring information.

However, conventional diagnostic methods will not prove conclusive in the diagnosis of the Steering Control Module (SCM) or the electronic controls and communication between other modules and devices that provide some features of the front and rear wiper and washer systems. The most reliable, efficient and accurate means to diagnose the SCM or the electronic controls and communication related to SCM operation requires the use of a diagnostic scan tool. Refer to the appropriate diagnostic information.

1. Remove the right multifunction switch from the integral mounting bracket on the right side of the clockspring. Refer to **SWITCH, MULTIFUNCTION, RIGHT, REMOVAL**.
2. Using an ohmmeter, test the resistance between the terminals of the switch as shown in the three Function Tests tables. For all functions except those of the control stalk the values should be either less than 100 ohms (switch CLOSED) or greater than 1 megohm (switch OPEN).

FUNCTION TESTS TABLE

CONTROL STALK FUNCTION TESTS			
FUNCTION	PINS		RESISTANCE
	1	7	
Front Wash	X	X	10000 Ohms
Front Mist	X	X	5490 Ohms

FUNCTION TESTS TABLE

CONTROL KNOB FUNCTION TESTS

FUNCTION	BETWEEN PIN 7 (GROUND) AND PINS		
	4	5	6
Off	CLOSED	CLOSED	OPEN
Front Delay 1	CLOSED	CLOSED	CLOSED
Front Delay 2	CLOSED	OPEN	CLOSED
Front Delay 3	OPEN	OPEN	CLOSED
Front Delay 4	OPEN	CLOSED	CLOSED
Front Delay 5	OPEN	CLOSED	OPEN
Front Wiper Low	OPEN	OPEN	OPEN
Front Wiper High	CLOSED	OPEN	OPEN

FUNCTION TESTS TABLE

CONTROL SLEEVE FUNCTION TESTS		
FUNCTION	BETWEEN PIN 7 (GROUND) AND PINS	
	2	3
Off	CLOSED	OPEN
Rear Wipe	CLOSED	CLOSED
Rear Wash	OPEN	CLOSED

3. If the switch fails any of the tests, replace the ineffective right multifunction switch as required. If the switch tests okay, but the switch input to the Steering Control Module (SCM) remains incorrect, be certain to check for a short or open in the jumper harness between the right multifunction switch and the SCM.

REMOVAL

REMOVAL

WARNING: **To avoid serious or fatal injury on vehicles equipped with airbags, disable the Supplemental Restraint System (SRS) before attempting any steering wheel, steering column, airbag, seat belt tensioner, impact sensor or instrument panel component diagnosis or service. Disconnect and isolate the battery negative (ground) cable, then**

wait two minutes for the system capacitor to discharge before performing further diagnosis or service. This is the only sure way to disable the SRS. Failure to take the proper precautions could result in accidental airbag deployment.

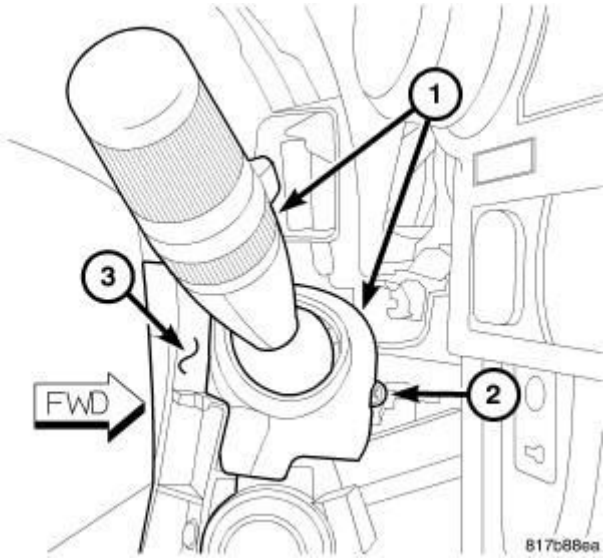

Fig. 58: Removing/Installing Right Multi-Function Switch
Courtesy of CHRYSLER GROUP, LLC

1. Disconnect and isolate the negative cable from the battery.
2. Remove both the upper and lower shrouds from the steering column. Refer to **SHROUD, STEERING COLUMN, LOWER, REMOVAL** and **SHROUD, STEERING COLUMN, UPPER, REMOVAL** .
3. Remove the screw (2) that secures the right multifunction switch (1) to the mounting bracket integral to the right side of the clockspring (3) on the steering column.
4. Slide the switch away from the clockspring far enough to disengage the slide tabs on the switch housing from the channel formations in the mounting bracket.

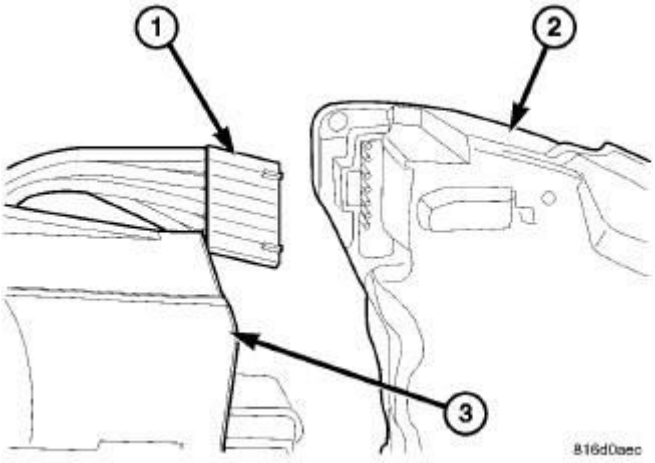

Fig. 59: Identifying Jumper Wire Harness Connector, Right Multi-Function Switch & Clockspring
Courtesy of CHRYSLER GROUP, LLC

5. Disconnect the jumper wire harness connector (1) from the connector receptacle on the inboard end of the right multifunction switch (2).
6. Remove the switch from the clockspring (3).

INSTALLATION

INSTALLATION

WARNING: **To avoid serious or fatal injury on vehicles equipped with airbags, disable the Supplemental Restraint System (SRS) before attempting any steering wheel, steering column, airbag, seat belt tensioner, impact sensor or instrument panel component diagnosis or service. Disconnect and isolate the battery negative (ground) cable, then wait two minutes for the system capacitor to discharge before performing further diagnosis or service. This is the only sure way to disable the SRS. Failure to take the proper precautions could result in accidental airbag deployment.**

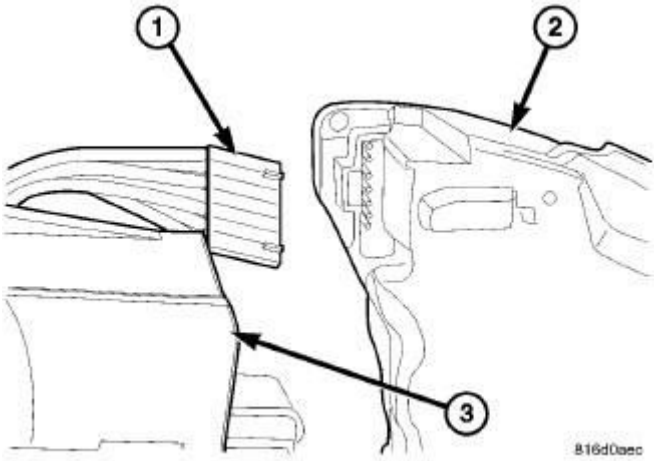

Fig. 60: Identifying Jumper Wire Harness Connector, Right Multi-Function Switch & Clockspring
Courtesy of CHRYSLER GROUP, LLC

1. Position the right multifunction switch (2) close enough to the mounting bracket (3) integral to the right side of the clockspring to reconnect the jumper wire harness connector (1) to the connector receptacle on the inboard side of the switch housing.
2. Align the slide tabs on the switch housing with the channel formations integral to the clockspring mounting bracket, then slide the switch into the bracket until it is firmly seated.

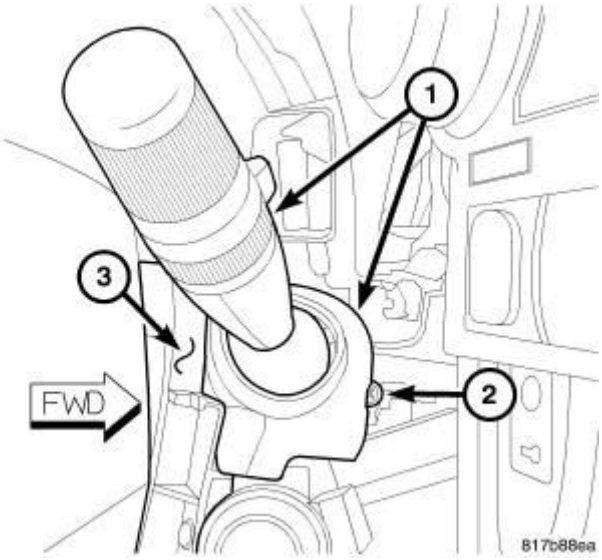

Fig. 61: Removing/Installing Right Multi-Function Switch
Courtesy of CHRYSLER GROUP, LLC

3. Install and tighten the screw (2) that secures the mounting tab on the back of

the right multifunction switch (1) to the mounting bracket on the clockspring (3). Tighten the screw to 1 N.m (10 in. lbs.).

4. Reinstall the upper and lower shrouds onto the steering column. Refer to **SHROUD, STEERING COLUMN, LOWER, INSTALLATION** and **SHROUD, STEERING COLUMN, UPPER, INSTALLATION** .
5. Reconnect the negative cable to the battery.

2014 ACCESSORIES AND EQUIPMENT

Wireless Control Module (WCM) - Electrical Diagnostics - Compass & Patriot

DIAGNOSTIC CODE INDEX

DIAGNOSTIC CODE INDEX

DTC	Description
B1A08	RKE FOB 1 PERFORMANCE
B1A09	RKE FOB 2 PERFORMANCE
B1A0A	RKE FOB 3 PERFORMANCE
B1A0B	RKE FOB 4 PERFORMANCE
B1A0C	RKE FOB 5 PERFORMANCE
B1A0D	RKE FOB 6 PERFORMANCE
B1A0E	RKE FOB 7 PERFORMANCE
B1A0F	RKE FOB 8 PERFORMANCE
B1A10	RKE FOB 1 BATTERY LOW
B1A11	RKE FOB 2 BATTERY LOW
B1A12	RKE FOB 3 BATTERY LOW
B1A13	RKE FOB 4 BATTERY LOW
B1A14	RKE FOB 5 BATTERY LOW
B1A15	RKE FOB 6 BATTERY LOW
B1A16	RKE FOB 7 BATTERY LOW
B1A17	RKE FOB 8 BATTERY LOW
B1A23	RKE RECEIVER PERFORMANCE
B1A24	KEY NOT PROGRAMMED
B1A25	INVALID KEY
B1A26	MAXIMUM NUMBER OF KEYS PROGRAMMED
B1A27	SKREEM PROGRAMMING PERFORMANCE
B1A28	ECM MISMATCH WITH SKIM
B1A29	SKIM BASE STATION MISMATCH
B1A2A	KEY 1 COMMUNICATION ERROR
B1A2B	KEY 2 COMMUNICATION ERROR
B1A2C	KEY 3 COMMUNICATION ERROR
B1A2D	KEY 4 COMMUNICATION ERROR
B1A2E	KEY 5 COMMUNICATION ERROR

B1A2F	KEY 6 COMMUNICATION ERROR
B1A30	KEY 7 COMMUNICATION ERROR
B1A31	KEY 8 COMMUNICATION ERROR
B1A35	UNIDENTIFIED KEY COMMUNICATION ERROR
B2101	IGNITION RUN/START INPUT LOW
B2102	IGNITION RUN/START INPUT HIGH
B210A	SYSTEM VOLTAGE LOW
B210B	SYSTEM VOLTAGE HIGH
B210D	BATTERY VOLTAGE LOW
B210E	BATTERY VOLTAGE HIGH
B2204	ECU CONFIGURATION MISMATCH
B2205	ORIGINAL VIN MISSING/MISMATCH
B2224	SKREEM INTERNAL
B2228	SKREEM INTERNAL - RKE RECEIVER
B2229	SKREEM INTERNAL - SKIM IMMOBILIZER
C0077	LOW TIRE PRESSURE
C1501	TIRE PRESSURE MONITORING (TPM) SENSOR 1 INTERNAL
C1502	TIRE PRESSURE SENSOR 2 INTERNAL
C1503	TIRE PRESSURE SENSOR 3 INTERNAL
C1504	TIRE PRESSURE SENSOR 4 INTERNAL
C1506	LEFT FRONT TIRE PRESSURE TRIGGER MODULE PERFORMANCE
C1508	LEFT REAR TIRE PRESSURE TRIGGER MODULE PERFORMANCE
C1509	RIGHT REAR TIRE PRESSURE TRIGGER MODULE PERFORMANCE
C150A	LEFT FRONT TIRE PRESSURE TRIGGER MODULE VOLTAGE HIGH
C150C	LEFT REAR TIRE PRESSURE TRIGGER MODULE VOLTAGE HIGH
C150D	RIGHT REAR TIRE PRESSURE TRIGGER MODULE VOLTAGE HIGH
C151C	TIRE PRESSURE MONITORING (TPM) SENSORS MISSING

C151D	TIRE PRESSURE SENSOR LOCATION UNDETERMINED
U0019	CAN B BUS
U0141	LOST COMMUNICATION WITH IPM (FCM/TIPM)
U0155	LOST COMMUNICATION WITH CLUSTER/CCN
U0184	LOST COMMUNICATION WITH RADIO
U1114	LOST COMMUNICATION WITH LEFT FRONT TIRE PRESSURE TRIGGER MODULE
U1116	LOST COMMUNICATION WITH LEFT REAR TIRE PRESSURE TRIGGER MODULE
U1117	LOST COMMUNICATION WITH RIGHT REAR TIRE PRESSURE TRIGGER MODULE

DIAGNOSIS AND TESTING

B1A08-RKE FOB 1 PERFORMANCE

For a complete wiring diagram, **refer to appropriate SYSTEM WIRING DIAGRAMS article** .

WHEN MONITORED

Continuously.

SET CONDITION

Scrambled messages to the Wireless Control Module from the transmitter.

NOTE: The most probable cause for this code to set is if the Wireless Control Module (WCM) senses over 150 presses from the RKE transmitter, when it is out of range.

POSSIBLE CAUSES

Possible Causes
EXCESSIVE PRESSES FROM TRANSMITTER WHEN OUT OF RANGE RKE TRANSMITTER

DIAGNOSTIC TEST

TEST FOR INTERMITTENT CONDITION

1. Put the key in the ignition and turn the ignition on.
2. With the scan tool, record and erase DTCs
3. Operate the RKE transmitter in all positions several times.
4. With the scan tool, read DTCs.

   Does the scan tool display this code as active?

   Yes

   - Replace the RKE transmitter and program in accordance with Service Information.
   - Perform the BODY VERIFICATION TEST. Refer to **STANDARD PROCEDURE** .

   No

   - The conditions that caused this code to set are not present at this time. Inform the owner of the most probable cause for this code to set and therefore cause the RKE system to be inoperative.
   - Perform the BODY VERIFICATION TEST. Refer to **STANDARD PROCEDURE** .

B1A09-RKE FOB 2 PERFORMANCE

For a complete wiring diagram, **refer to appropriate SYSTEM WIRING DIAGRAMS article** .

WHEN MONITORED

Continuously.

SET CONDITION

Scrambled messages to the Wireless Control Module from the transmitter.

NOTE: The most probable cause for this code to set is if the Wireless Control Module (WCM) senses over 150 presses from the RKE transmitter, when it is out of range.

POSSIBLE CAUSES

Possible Causes
EXCESSIVE PRESSES FROM TRANSMITTER WHEN OUT OF RANGE RKE TRANSMITTER

DIAGNOSTIC TEST

TEST FOR INTERMITTENT CONDITION

1. Put the key in the ignition and turn the ignition on.
2. With the scan tool, record and erase DTCs
3. Operate the RKE transmitter in all positions several times.
4. With the scan tool, read DTCs.

   Does the scan tool display this code as active?

   Yes

   - Replace the RKE transmitter and program in accordance with Service Information.
   - Perform the BODY VERIFICATION TEST. Refer to **STANDARD PROCEDURE** .

   No

   - The conditions that caused this code to set are not present at this time. Inform the owner of the most probable cause for this code to set and therefore cause the RKE system to be inoperative.
   - Perform the BODY VERIFICATION TEST. Refer to **STANDARD PROCEDURE** .

B1A0A-RKE FOB 3 PERFORMANCE

For a complete wiring diagram, **refer to appropriate SYSTEM WIRING DIAGRAMS article** .

WHEN MONITORED

Continuously.

SET CONDITION

Scrambled messages to the Wireless Control Module from the transmitter.

NOTE: The most probable cause for this code to set is if the Wireless Control Module (WCM) senses over 150 presses from the RKE transmitter, when it is out of range.

POSSIBLE CAUSES

Possible Causes
EXCESSIVE PRESSES FROM TRANSMITTER WHEN OUT OF RANGE RKE TRANSMITTER

DIAGNOSTIC TEST

TEST FOR INTERMITTENT CONDITION

1. Put the key in the ignition and turn the ignition on.
2. With the scan tool, record and erase DTCs
3. Operate the RKE transmitter in all positions several times.
4. With the scan tool, read DTCs.

   Does the scan tool display this code as active?

   Yes

   - Replace the RKE transmitter and program in accordance with Service Information.
   - Perform the BODY VERIFICATION TEST. Refer to **STANDARD PROCEDURE** .

   No

   - The conditions that caused this code to set are not present at this time. Inform the owner of the most probable cause for this code to set and therefore cause the RKE system to be inoperative.
   - Perform the BODY VERIFICATION TEST. Refer to **STANDARD PROCEDURE** .

B1A0B-RKE FOB 4 PERFORMANCE

For a complete wiring diagram, **refer to appropriate SYSTEM WIRING DIAGRAMS article** .

WHEN MONITORED

Continuously.

SET CONDITION

Scrambled messages to the Wireless Control Module from the transmitter.

NOTE: The most probable cause for this code to set is if the Wireless Control Module (WCM) senses over 150 presses from the RKE transmitter, when it is out of range.

POSSIBLE CAUSES

Possible Causes
EXCESSIVE PRESSES FROM TRANSMITTER WHEN OUT OF RANGE RKE TRANSMITTER

DIAGNOSTIC TEST

TEST FOR INTERMITTENT CONDITION

1. Put the key in the ignition and turn the ignition on.
2. With the scan tool, record and erase DTCs
3. Operate the RKE transmitter in all positions several times.
4. With the scan tool, read DTCs.

   Does the scan tool display this code as active?

   Yes

   - Replace the RKE transmitter and program in accordance with Service Information.
   - Perform the BODY VERIFICATION TEST. Refer to **STANDARD PROCEDURE** .

No

- The conditions that caused this code to set are not present at this time. Inform the owner of the most probable cause for this code to set and therefore cause the RKE system to be inoperative.
- Perform the BODY VERIFICATION TEST. Refer to **STANDARD PROCEDURE** .

B1A0C-RKE FOB 5 PERFORMANCE

For a complete wiring diagram, **refer to appropriate SYSTEM WIRING DIAGRAMS article** .

WHEN MONITORED

Continuously.

SET CONDITION

Scrambled messages to the Wireless Control Module from the transmitter.

NOTE: The most probable cause for this code to set is if the Wireless Control Module (WCM) senses over 150 presses from the RKE transmitter, when it is out of range.

POSSIBLE CAUSES

Possible Causes
EXCESSIVE PRESSES FROM TRANSMITTER WHEN OUT OF RANGE RKE TRANSMITTER

DIAGNOSTIC TEST

TEST FOR INTERMITTENT CONDITION

1. Put the key in the ignition and turn the ignition on.
2. With the scan tool, record and erase DTCs
3. Operate the RKE transmitter in all positions several times.
4. With the scan tool, read DTCs.

Does the scan tool display this code as active?

Yes

- Replace the RKE transmitter and program in accordance with Service Information.
- Perform the BODY VERIFICATION TEST. Refer to **STANDARD PROCEDURE** .

No

- The conditions that caused this code to set are not present at this time. Inform the owner of the most probable cause for this code to set and therefore cause the RKE system to be inoperative.
- Perform the BODY VERIFICATION TEST. Refer to **STANDARD PROCEDURE** .

B1A0D-RKE FOB 6 PERFORMANCE

For a complete wiring diagram, **refer to appropriate SYSTEM WIRING DIAGRAMS article** .

WHEN MONITORED

Continuously.

SET CONDITION

Scrambled messages to the Wireless Control Module from the transmitter.

NOTE: The most probable cause for this code to set is if the Wireless Control Module (WCM) senses over 150 presses from the RKE transmitter, when it is out of range.

POSSIBLE CAUSES

Possible Causes
EXCESSIVE PRESSES FROM TRANSMITTER WHEN OUT OF RANGE RKE TRANSMITTER

DIAGNOSTIC TEST

TEST FOR INTERMITTENT CONDITION

1. Put the key in the ignition and turn the ignition on.
2. With the scan tool, record and erase DTCs
3. Operate the RKE transmitter in all positions several times.
4. With the scan tool, read DTCs.

   Does the scan tool display this code as active?

   Yes

   - Replace the RKE transmitter and program in accordance with Service Information.
   - Perform the BODY VERIFICATION TEST. Refer to **STANDARD PROCEDURE** .

   No

   - The conditions that caused this code to set are not present at this time. Inform the owner of the most probable cause for this code to set and therefore cause the RKE system to be inoperative.
   - Perform the BODY VERIFICATION TEST. Refer to **STANDARD PROCEDURE** .

B1A0E-RKE FOB 7 PERFORMANCE

For a complete wiring diagram, **refer to appropriate SYSTEM WIRING DIAGRAMS article** .

WHEN MONITORED

Continuously.

SET CONDITION

Scrambled messages to the Wireless Control Module from the transmitter.

NOTE: The most probable cause for this code to set is if the Wireless Control Module (WCM) senses over 150 presses from the RKE transmitter, when it is out of range.

POSSIBLE CAUSES

Possible Causes
EXCESSIVE PRESSES FROM TRANSMITTER WHEN OUT OF RANGE RKE TRANSMITTER

DIAGNOSTIC TEST

TEST FOR INTERMITTENT CONDITION

1. Put the key in the ignition and turn the ignition on.
2. With the scan tool, record and erase DTCs
3. Operate the RKE transmitter in all positions several times.
4. With the scan tool, read DTCs.

   Does the scan tool display this code as active?

   Yes

   - Replace the RKE transmitter and program in accordance with Service Information.
   - Perform the BODY VERIFICATION TEST. Refer to **STANDARD PROCEDURE** .

   No

   - The conditions that caused this code to set are not present at this time. Inform the owner of the most probable cause for this code to set and therefore cause the RKE system to be inoperative.
   - Perform the BODY VERIFICATION TEST. Refer to **STANDARD PROCEDURE** .

B1A0F-RKE FOB 8 PERFORMANCE

For a complete wiring diagram, **refer to appropriate SYSTEM WIRING DIAGRAMS article** .

WHEN MONITORED

Continuously.

SET CONDITION

Scrambled messages to the Wireless Control Module from the transmitter.

NOTE: The most probable cause for this code to set is if the Wireless Control Module (WCM) senses over 150 presses from the RKE transmitter, when it is out of range.

POSSIBLE CAUSES

Possible Causes
EXCESSIVE PRESSES FROM TRANSMITTER WHEN OUT OF RANGE RKE TRANSMITTER

DIAGNOSTIC TEST

TEST FOR INTERMITTENT CONDITION

1. Put the key in the ignition and turn the ignition on.
2. With the scan tool, record and erase DTCs
3. Operate the RKE transmitter in all positions several times.
4. With the scan tool, read DTCs.

   Does the scan tool display this code as active?

   Yes

   - Replace the RKE transmitter and program in accordance with Service Information.
   - Perform the BODY VERIFICATION TEST. Refer to **STANDARD PROCEDURE** .

   No

   - The conditions that caused this code to set are not present at this time. Inform the owner of the most probable cause for this code to set and therefore cause the RKE system to be inoperative.
   - Perform the BODY VERIFICATION TEST. Refer to **STANDARD PROCEDURE** .

B1A10-RKE FOB 1 BATTERY LOW

For a complete wiring diagram, **refer to appropriate SYSTEM WIRING DIAGRAMS article** .

WHEN MONITORED

Continuously.

SET CONDITION

When the Wireless Control Module (WCM) senses that the RKE transmitter signal is not as strong as it ought to be, this code will set.

POSSIBLE CAUSES

Possible Causes
LOW BATTERY RKE TRANSMITTER

DIAGNOSTIC TEST

TEST FOR INTERMITTENT CONDITION

1. Turn the ignition on.
2. With the scan tool, record and erase DTCs
3. Operate the RKE transmitter in all positions several times.
4. With the scan tool, read DTCs.

   Does the scan tool display this DTC as active?

   Yes

   - Replace the RKE transmitter battery and retry the system. If the DTC returns, replace and program the RKE transmitter in accordance with Service Information.
   - Perform the BODY VERIFICATION TEST. Refer to **STANDARD PROCEDURE** .

   No

   - The conditions that caused this code to set are not present at this time.

- Perform the BODY VERIFICATION TEST. Refer to **STANDARD PROCEDURE** .

B1A11-RKE FOB 2 BATTERY LOW

For a complete wiring diagram, **refer to appropriate SYSTEM WIRING DIAGRAMS article** .

WHEN MONITORED

Continuously.

SET CONDITION

When the Wireless Control Module (WCM) senses that the RKE transmitter signal is not as strong as it ought to be, this code will set.

POSSIBLE CAUSES

Possible Causes
LOW BATTERY RKE TRANSMITTER

DIAGNOSTIC TEST

TEST FOR INTERMITTENT CONDITION

1. Turn the ignition on.
2. With the scan tool, record and erase DTCs
3. Operate the RKE transmitter in all positions several times.
4. With the scan tool, read DTCs.

   Does the scan tool display this DTC as active?

   Yes

   - Replace the RKE transmitter battery and retry the system. If the DTC returns, replace and program the RKE transmitter in accordance with Service Information.
   - Perform the BODY VERIFICATION TEST. Refer to **STANDARD PROCEDURE** .

No

- The conditions that caused this code to set are not present at this time.
- Perform the BODY VERIFICATION TEST. Refer to **STANDARD PROCEDURE** .

B1A12-RKE FOB 3 BATTERY LOW

For a complete wiring diagram, **refer to appropriate SYSTEM WIRING DIAGRAMS article** .

WHEN MONITORED

Continuously.

SET CONDITION

When the Wireless Control Module (WCM) senses that the RKE transmitter signal is not as strong as it ought to be, this code will set.

POSSIBLE CAUSES

Possible Causes
LOW BATTERY RKE TRANSMITTER

DIAGNOSTIC TEST

TEST FOR INTERMITTENT CONDITION

1. Turn the ignition on.
2. With the scan tool, record and erase DTCs
3. Operate the RKE transmitter in all positions several times.
4. With the scan tool, read DTCs.

   Does the scan tool display this DTC as active?

   Yes

   - Replace the RKE transmitter battery and retry the system. If the DTC returns, replace and program the RKE transmitter in accordance with Service Information.

- Perform the BODY VERIFICATION TEST. Refer to **STANDARD PROCEDURE** .

No

- The conditions that caused this code to set are not present at this time.
- Perform the BODY VERIFICATION TEST. Refer to **STANDARD PROCEDURE** .

B1A13-RKE FOB 4 BATTERY LOW

For a complete wiring diagram, **refer to appropriate SYSTEM WIRING DIAGRAMS article** .

WHEN MONITORED

Continuously.

SET CONDITION

When the Wireless Control Module (WCM) senses that the RKE transmitter signal is not as strong as it ought to be, this code will set.

POSSIBLE CAUSES

Possible Causes
LOW BATTERY RKE TRANSMITTER

DIAGNOSTIC TEST

TEST FOR INTERMITTENT CONDITION

1. Turn the ignition on.
2. With the scan tool, record and erase DTCs
3. Operate the RKE transmitter in all positions several times.
4. With the scan tool, read DTCs.

   Does the scan tool display this DTC as active?

   Yes

- Replace the RKE transmitter battery and retry the system. If the DTC returns, replace and program the RKE transmitter in accordance with Service Information.
- Perform the BODY VERIFICATION TEST. Refer to **STANDARD PROCEDURE** .

No

- The conditions that caused this code to set are not present at this time.
- Perform the BODY VERIFICATION TEST. Refer to **STANDARD PROCEDURE** .

B1A14-RKE FOB 5 BATTERY LOW

For a complete wiring diagram, **refer to appropriate SYSTEM WIRING DIAGRAMS article** .

WHEN MONITORED

Continuously.

SET CONDITION

When the Wireless Control Module (WCM) senses that the RKE transmitter signal is not as strong as it ought to be, this code will set.

POSSIBLE CAUSES

Possible Causes
LOW BATTERY RKE TRANSMITTER

DIAGNOSTIC TEST

TEST FOR INTERMITTENT CONDITION

1. Turn the ignition on.
2. With the scan tool, record and erase DTCs
3. Operate the RKE transmitter in all positions several times.
4. With the scan tool, read DTCs.

Does the scan tool display this DTC as active?

Yes

- Replace the RKE transmitter battery and retry the system. If the DTC returns, replace and program the RKE transmitter in accordance with Service Information.
- Perform the BODY VERIFICATION TEST. Refer to **STANDARD PROCEDURE** .

No

- The conditions that caused this code to set are not present at this time.
- Perform the BODY VERIFICATION TEST. Refer to **STANDARD PROCEDURE** .

B1A15-RKE FOB 6 BATTERY LOW

For a complete wiring diagram, **refer to appropriate SYSTEM WIRING DIAGRAMS article** .

WHEN MONITORED

Continuously.

SET CONDITION

When the Wireless Control Module (WCM) senses that the RKE transmitter signal is not as strong as it ought to be, this code will set.

POSSIBLE CAUSES

Possible Causes
LOW BATTERY RKE TRANSMITTER

DIAGNOSTIC TEST

TEST FOR INTERMITTENT CONDITION

1. Turn the ignition on.
2. With the scan tool, record and erase DTCs

3. Operate the RKE transmitter in all positions several times.
4. With the scan tool, read DTCs.

   Does the scan tool display this DTC as active?

   Yes

   - Replace the RKE transmitter battery and retry the system. If the DTC returns, replace and program the RKE transmitter in accordance with Service Information.
   - Perform the BODY VERIFICATION TEST. Refer to **STANDARD PROCEDURE** .

   No

   - The conditions that caused this code to set are not present at this time.
   - Perform the BODY VERIFICATION TEST. Refer to **STANDARD PROCEDURE** .

B1A16-RKE FOB 7 BATTERY LOW

For a complete wiring diagram, **refer to appropriate SYSTEM WIRING DIAGRAMS article** .

WHEN MONITORED

Continuously.

SET CONDITION

When the Wireless Control Module (WCM) senses that the RKE transmitter signal is not as strong as it ought to be, this code will set.

POSSIBLE CAUSES

Possible Causes
LOW BATTERY RKE TRANSMITTER

DIAGNOSTIC TEST

TEST FOR INTERMITTENT CONDITION

1. Turn the ignition on.
2. With the scan tool, record and erase DTCs
3. Operate the RKE transmitter in all positions several times.
4. With the scan tool, read DTCs.

   Does the scan tool display this DTC as active?

   Yes

   - Replace the RKE transmitter battery and retry the system. If the DTC returns, replace and program the RKE transmitter in accordance with Service Information.
   - Perform the BODY VERIFICATION TEST. Refer to **STANDARD PROCEDURE** .

   No

   - The conditions that caused this code to set are not present at this time.
   - Perform the BODY VERIFICATION TEST. Refer to **STANDARD PROCEDURE** .

B1A17-RKE FOB 8 BATTERY LOW

For a complete wiring diagram, **refer to appropriate SYSTEM WIRING DIAGRAMS article** .

WHEN MONITORED

Continuously.

SET CONDITION

When the Wireless Control Module (WCM) senses that the RKE transmitter signal is not as strong as it ought to be, this code will set.

POSSIBLE CAUSES

Possible Causes
LOW BATTERY RKE TRANSMITTER

DIAGNOSTIC TEST

TEST FOR INTERMITTENT CONDITION

1. Turn the ignition on.
2. With the scan tool, record and erase DTCs
3. Operate the RKE transmitter in all positions several times.
4. With the scan tool, read DTCs.

   Does the scan tool display this DTC as active?

   Yes

   - Replace the RKE transmitter battery and retry the system. If the DTC returns, replace and program the RKE transmitter in accordance with Service Information.
   - Perform the BODY VERIFICATION TEST. Refer to **STANDARD PROCEDURE** .

   No

   - The conditions that caused this code to set are not present at this time.
   - Perform the BODY VERIFICATION TEST. Refer to **STANDARD PROCEDURE** .

B1A23-RKE RECEIVER PERFORMANCE

For a complete wiring diagram, **refer to appropriate SYSTEM WIRING DIAGRAMS article** .

WHEN MONITORED

Continuously.

SET CONDITION

When the Wireless Control Module (WCM) senses that the RKE signal is jammed, this code will set.

POSSIBLE CAUSES

Possible Causes

EXTERNAL ENVIRONMENT

DIAGNOSTIC TEST

TEST FOR INTERMITTENT CONDITION

1. Turn the ignition on.
2. With the scan tool, record and erase DTCs
3. Turn the ignition off.
4. Operate the RKE transmitter in all positions several times.
5. Turn the ignition on.
6. With the scan tool, read DTCs.

   Are there any door lock related trouble codes present or is the RKE inoperative?

   Yes

   - Go to the **DTC INDEX** and perform the appropriate diagnostic procedure.

   No

   - The conditions that caused this code to set are not present at this time. This DTC is set when the vehicle is parked in a location that is affected by external environmental conditions. Suggest to the customer that they park in a slightly different location from where the RKE was inoperable.

B1A24-KEY NOT PROGRAMMED

For a complete wiring diagram, **refer to appropriate SYSTEM WIRING DIAGRAMS article** .

WHEN MONITORED

With the ignition on.

POSSIBLE CAUSES

Possible Causes

KEY NOT PROGRAMMED
WIRELESS CONTROL MODULE (WCM)/SENTRY KEY REMOTE ENTRY MODULE (SKREEM)

DIAGNOSTIC TEST

PROGRAM ALL OF THE IGNITION KEYS

1. Turn the ignition on.
2. With the scan tool, attempt to program the key(s) into the WCM/SKREEM.

   Was the programming of the key(s) successful?

   Yes

   - Perform the WCM VERIFICATION TEST. Refer to **STANDARD PROCEDURE**.

   No

   - Replace the ignition key and attempt to program it into the WCM/SKREEM. If the DTC resets, replace and program the Wireless Control Module (WCM/SKREEM) in accordance with the Service Information.

     NOTE: If this vehicle is equipped with a Steering Column Lock Module, it must be replaced along with the WCM.

   - Perform the WCM VERIFICATION TEST. Refer to **STANDARD PROCEDURE**.

B1A25-INVALID KEY

For a complete wiring diagram, **refer to appropriate SYSTEM WIRING DIAGRAMS article** .

WHEN MONITORED

At ignition on and during Key Programming Mode.

SET CONDITION

When the Sentry Key Remote Entry Module (SKREEM) also known as the Wireless Control Module (WCM) does not receive a transponder response after 8 consecutive transponder read attempts within 2.0 seconds. When the key that is being used is programmed for a different vehicle.

POSSIBLE CAUSES

Possible Causes
KEY THAT HAS BEEN PREVIOUSLY PROGRAMMED FOR ANOTHER VEHICLE
MULTIPLE KEY OPERATION
IGNITION KEY
WIRELESS CONTROL MODULE (WCM)/SENTRY KEY REMOTE ENTRY MODULE (SKREEM)
INTERMITTENT WIRING HARNESS PROBLEM

DIAGNOSTIC TEST

1. **DETERMINING IF DIAGNOSTIC TROUBLE CODE (DTC) IS CURRENT**

NOTE: **An external Radio-Frequency Identification (RFID) key (and/or pass/radio key), such as one used to gain access to a 24 hour gym, can cause this DTC to set and create a no start condition. Inspect the customer's key chain for any type of RFID key. If one is not found, question the customer to see if a spare key chain has this RFID key on it or if it was removed from the original key chain before the vehicle was released for service. If a RFID key is present, remove the ignition key from the vehicle and remove the RFID key from the key chain. For GPEC equipped vehicles, disconnect the battery and wait a minimum of 5 minutes, reconnect and attempt to start the vehicle. For NGC equipped vehicles, turn the ignition on a minimum for one hour, and then attempt to start the vehicle. If the vehicle does not start, continue with the diagnostic test.**

NOTE: Verify the key being used is the proper key for this vehicle and a blank key. If the key being programmed is not blank (one that has been programmed for another vehicle) this fault will set.

1. With the scan tool, read and record the WCM DTCs.
2. With the scan tool, erase the WCM DTCs.

NOTE: Perform the following test several times to make sure the DTC is current.

3. Turn the ignition off.
4. Wait 10 seconds.
5. Turn the ignition on.
6. With the scan tool, read the WCM DTCs.

Does the scan tool display the DTC that was previously erased?

Yes

- Go To 2

No

- Go To 6

2. **CHECKING FOR MULTIPLE KEYS**

Are there multiple vehicle ignition keys available?

Yes

- Go To 3

No

- Go To 4

3. **MULTIPLE KEY OPERATION**

NOTE: Perform the following steps using one of the vehicle

ignition keys. When finished, repeat the procedure using each of the other vehicle keys, one at a time.

1. With the scan tool, erase the WCM DTCs.
2. Turn the ignition off.
3. Wait 10 seconds.
4. Turn the ignition on.
5. With the scan tool, read the WCM DTCs.

Is the DTC present for all ignition keys?

Yes

- Replace and program the Wireless Control Module in accordance with the Service Information.
- Perform the WCM VERIFICATION TEST. Refer to **STANDARD PROCEDURE**.

No

- Replace the ignition key(s) that cause the SKIM DTC.
- Perform the WCM VERIFICATION TEST. Refer to **STANDARD PROCEDURE**.

4. **REPROGRAM KEY**
   1. With the scan tool, attempt to reprogram the ignition key to the WCM.
   2. With the scan tool, erase the WCM DTCs.
   3. Wait 10 seconds.
   4. Turn the ignition on.
   5. With the scan tool, read the WCM DTCs.

   Does the DTC set again?

   Yes

   - Go To 5

   No

- Test complete.

5. **PROGRAM NEW IGNITION KEY**
   1. Replace the ignition key with a new key.
   2. With the scan tool, program the new ignition key to the WCM.
   3. With the scan tool, erase the WCM DTCs.
   4. Turn the ignition off.
   5. Wait 10 seconds.
   6. Turn the ignition on.
   7. With the scan tool, read the WCM DTCs.

   Does the DTC set again?

   Yes

   - Replace and program the Sentry Key Remote Entry Module in accordance with the Service Information.
   - Perform the WCM VERIFICATION TEST. Refer to **STANDARD PROCEDURE**.

   No

   - Test complete.

6. **INTERMITTENT WIRING HARNESS PROBLEM**
   1. Turn the ignition off.

   NOTE: Check the following items:

   - **Visually inspect the related wiring harness. Look for any chafed, pierced, pinched, or partially broken wires.**
   - **Visually inspect the related wiring harness connectors. Look for broken, bent, pushed out, or corroded terminals.**
   - **Perform any Technical Service Bulletins (TSB) that may apply.**

   Were any problems found?

Yes

- Repair wiring harness/connectors as necessary.
- Perform the WCM VERIFICATION TEST. Refer to **STANDARD PROCEDURE**.

No

- Test Complete.

B1A26-MAXIMUM NUMBER OF KEYS PROGRAMMED

For a complete wiring diagram, **refer to appropriate SYSTEM WIRING DIAGRAMS article** .

WHEN MONITORED

With the ignition on.

SET CONDITION

When the maximum number of keys (8) have been programmed into the Wireless Control Module (WCM)/Sentry Key Remote Entry Module (SKREEM).

POSSIBLE CAUSES

Possible Causes
MAXIMUM AMOUNT OF KEY PROGRAMMED INTO WCM/SKREEM WIRELESS CONTROL MODULE (WCM)/SENTRY KEY REMOTE ENTRY MODULE (SKREEM)

DIAGNOSTIC TEST

REPROGRAM ALL IGNITION KEYS

NOTE: This procedure will clear all the key information from the WCM/SKREEM. It is important to obtain all of the customer's ignition keys so they may be reprogrammed into the module.

NOTE: If the total number of keys already programmed is equal to Eight and another Key is trying to be programmed, this fault is valid. Explain to the customer no more Keys are allowed to be programmed.

1. Turn the ignition on.
2. With the scan tool, clear all the key information in the WCM/SKREEM.
3. Program the all of the customer keys into the WCM/SKREEM (maximum eight).

   Did the "Maximum Number of Keys Programmed" display again?

   Yes

   - Replace and program the Sentry Key Remote Entry Module (WCM/SKREEM) in accordance with the Service Information.

     NOTE: If this vehicle is equipped with a Steering Column Lock Module it must be replaced along with the WCM/SKREEM.

   - Perform the WCM VERIFICATION TEST. Refer to **STANDARD PROCEDURE**.

   No

   - Programming of the keys was successful. Test complete.
   - Perform the WCM VERIFICATION TEST. Refer to **STANDARD PROCEDURE**.

B1A27-SKREEM PROGRAMMING PERFORMANCE

For a complete wiring diagram, **refer to appropriate SYSTEM WIRING DIAGRAMS article** .

WHEN MONITORED

With the ignition on.

POSSIBLE CAUSES

Possible Causes
WIRELESS CONTROL MODULE (WCM)/SENTRY KEY REMOTE ENTRY MODULE (SKREEM)

DIAGNOSTIC TEST

VERIFY THAT THE DTC IS ACTIVE

1. Turn the ignition on.

NOTE: Before continuing, review and check for the following:

- **Review the repair history of the vehicle.**
- **Ensure that the vehicle has the correct PCM and WCM/SKREEM installed by verifying the part numbers.**
- **With the scan tool, ensure that the PCM and WCM/SKREEM are programmed correctly. Compare the PCM VIN to the WCM/SKREEM VIN and ensure the two VINs match.**

NOTE: IF DTC B1A27 is presently set as an active fault; and was not active or stored before reprogramming one or more of the original Keys / FOBIKs, verify the following information.

Verify that the reprogramming was done to the original WIN or a new replacement WIN and all of the vehicle Keys / FOBIKs function correctly . Once all of this has been verified, and if the B1A27 DTC remains ACTIVE, the ACTIVE status is no longer valid .

NOTE: The DTC may be cleared by either an ECU reset, battery disconnect or by removing and replacing the WIN fuse. Clear the faults and verify the B1A27 fault then does not appear.

2. With the scan tool, clear DTCs.

3. Perform 5 ignition cycles, leaving the ignition switch on for a minimum of 90 seconds per cycle.
4. With the scan tool, read DTCs.

   Does the DTC reset?

   Yes

   - Replace and program the Wireless Control Module (WCM)/Sentry Key Remote Entry Module (SKREEM) in accordance with the Service Information.

     NOTE: If this vehicle is equipped with a Steering Column Lock Module, it must be replaced along with the WCM/SKREEM.

   - Perform the WCM VERIFICATION TEST. Refer to **STANDARD PROCEDURE**.

   No

   - The DTC is not active at this time. Test complete.

B1A28-ECM MISMATCH WITH SKIM

For a complete wiring diagram, **refer to appropriate SYSTEM WIRING DIAGRAMS article** .

WHEN MONITORED

At ignition on, after ignition on during any rolling code handshake that occurs with the PCM due to a SKIM or PCM reset.

SET CONDITION

When a PCM/ECM STATUS message with a Valid Key status is not received by the Wireless Control Module (WCM) within 3.5 seconds of transmitting the last Valid Key Code message to the PCM/ECM.

POSSIBLE CAUSES

Possible Causes

VERIFYING PCM VIN
INTERMITTENT WIRING HARNESS PROBLEM
POWERTRAIN CONTROL MODULE (PCM)

DIAGNOSTIC TEST

1. **DETERMINING IF DIAGNOSTIC TROUBLE CODE (DTC) IS CURRENT**

NOTE: An external Radio-Frequency Identification (RFID) key (and/or pass/radio key), such as one used to gain access to a 24 hour gym, can cause this DTC to set and create a no start condition. Inspect the customer's key chain for any type of RFID key. If one is not found, question the customer to see if a spare key chain has this RFID key on it or if it was removed from the original key chain before the vehicle was released for service. If a RFID key is present, remove the ignition key from the vehicle and remove the RFID key from the key chain. For GPEC equipped vehicles, disconnect the battery and wait a minimum of 5 minutes, reconnect and attempt to start the vehicle. For NGC equipped vehicles, turn the ignition on a minimum for one hour, and then attempt to start the vehicle. If the vehicle does not start, continue with the diagnostic test.

1. With the scan tool, erase the WCM DTCs.
2. Turn the ignition off.
3. Wait 10 seconds.
4. Turn the ignition on and wait two minutes.
5. With the scan tool, read the WCM DTCs.

Does the scan tool display the DTC that was previously erased?

Yes

- Go To 2

No

- Go To 4

2. **VERIFYING THE PCM VIN**
   1. Turn the ignition on.
   2. With the scan tool, select Engine system from the main menu.
   3. Display and record the Vehicle Identification Number.

   NOTE: Make sure that a VIN has been programmed into the PCM. If a VIN is not displayed, attempt to program the PCM with the correct VIN before continuing.

   Does the VIN recorded from the PCM match the VIN of the vehicle?

   Yes

   - Go To 3

   No

   - Using the scan tool, perform the PCM Replace procedure to update the VIN in the PCM.
   - Perform the WCM VERIFICATION TEST. Refer to **STANDARD PROCEDURE**.

3. **REPLACE WCM AND CHECK DTCS**
   1. Turn the ignition off.
   2. Replace and program the Wireless Control Module in accordance with the Service Information.
   3. Turn the ignition on.
   4. With the scan tool, display and clear all PCM and WCM DTCs.
   5. Perform five ignition key cycles leaving the ignition key on for 90 seconds per cycle.
   6. With the scan tool, check for WCM DTCs.

   Does the scan tool display the same DTC?

Yes

- Replace and program the Powertrain Control Module in accordance with the Service Information.
- Perform the WCM VERIFICATION TEST. Refer to **STANDARD PROCEDURE**.

No

- The repair is complete.
- Perform the WCM VERIFICATION TEST. Refer to **STANDARD PROCEDURE**.

4. **INTERMITTENT**
   1. Turn the ignition off.

NOTE: Check for the following conditions:

- **Visually inspect the related wiring harness. Look for any chafed, pierced, pinched, or partially broken wires.**
- **Visually inspect the related wiring harness connectors. Look for broken, bent, pushed out, or corroded terminals.**
- **Perform any Technical Service Bulletins (TSB) that may apply.**

Were any problems found?

Yes

- Repair wiring harness/connectors as necessary.
- Perform the WCM VERIFICATION TEST. Refer to **STANDARD PROCEDURE**.

No

- Test Complete.

B1A29-SKIM BASESTATION MISMATCH

For a complete wiring diagram, **refer to appropriate SYSTEM WIRING DIAGRAMS article** .

WHEN MONITORED

At ignition on, after ignition on during any rolling code handshake that occurs with the Powertrain Control Module (PCM) due to a Sentry Key remote Entry Module (SKREEM) also known as the Wireless Control Module (WCM) or PCM reset.

SET CONDITION

When a PCM STATUS message with a Valid Key status is not received by the WCM within 3.5 seconds of transmitting the last Valid Key Code message to the PCM.

POSSIBLE CAUSES

Possible Causes
VERIFYING PCM VIN INTERMITTENT WIRING HARNESS PROBLEM PCM

DIAGNOSTIC TEST

1. **DETERMINING IF DIAGNOSTIC TROUBLE CODE (DTC) IS CURRENT**
    1. With the scan tool, erase the WCM DTCs.
    2. Turn the ignition off.
    3. Wait 10 seconds.
    4. Turn the ignition on and wait 2 minutes.
    5. With the scan tool, read the WCM DTCs.

    Does the scan tool display the DTC that was previously erased?

    Yes

    - Go To 2

    No

- Go To 4

2. **VERIFYING THE PCM VIN**
   1. Turn the ignition on.
   2. With the scan tool, select Engine system from the main menu.
   3. Display and record the Vehicle Identification Number.

   NOTE: Ensure that a VIN has been programmed into the PCM. If a VIN is not displayed, attempt to program the PCM with the correct VIN before continuing.

   Does the VIN recorded from the PCM match the VIN of the vehicle?

   Yes

   - Go To 3

   No

   - Using the scan tool, perform the PCM Replace procedure to update the VIN in the PCM.
   - Perform the WCM VERIFICATION TEST. Refer to **STANDARD PROCEDURE**.

3. **REPLACE WCM AND CHECK DTCS**
   1. Turn the ignition off.
   2. Replace and program the Sentry Key Remote Entry Module in accordance with the Service Information.
   3. Turn the ignition on.
   4. With the scan tool, display and clear all PCM and WCM DTCs.
   5. Perform 5 ignition key cycles leaving the ignition key on for 90 seconds per cycle.
   6. With the scan tool, check for WCM DTCs.

   Does the scan tool display the same DTC?

   Yes

   - Using the scan tool perform, the PCM Replace procedure to update

the VIN in the PCM.

- Perform the WCM VERIFICATION TEST. Refer to **STANDARD PROCEDURE**.

No

- The repair is complete.
- Perform the WCM VERIFICATION TEST. Refer to **STANDARD PROCEDURE**.

4. **INTERMITTENT**
   1. Turn the ignition off.

NOTE: Check for the following conditions:

- **Visually inspect the related wiring harness. Look for any chafed, pierced, pinched, or partially broken wires.**
- **Visually inspect the related wiring harness connectors. Look for broken, bent, pushed out, or corroded terminals.**
- **Refer to any Technical Service Bulletins (TSB) that may apply.**

Were any problems found?

Yes

- Repair wiring harness/connectors as necessary.
- Perform the WCM VERIFICATION TEST. Refer to **STANDARD PROCEDURE**.

No

- Test Complete.

B1A2A-KEY 1 COMMUNICATION ERROR

For a complete wiring diagram, **refer to appropriate SYSTEM WIRING DIAGRAMS article** .

WHEN MONITORED

At ignition on and during Key Programming Mode.

SET CONDITION

When the Sentry Key remote Entry Module (SKREEM) also known as the Wireless Control Module (WCM) does not receive a transponder response after 8 consecutive transponder read attempts within 2.0 seconds.

POSSIBLE CAUSES

Possible Causes
MULTIPLE KEY OPERATION IGNITION KEY WIRELESS CONTROL MODULE (WCM)/SENTRY KEY REMOTE ENTRY MODULE (SKREEM) INTERMITTENT WIRING HARNESS PROBLEM

DIAGNOSTIC TEST

1. **DETERMINING IF DIAGNOSTIC TROUBLE CODE (DTC) IS CURRENT**
   1. With the scan tool, read and record the WCM DTCs.
   2. With the scan tool, erase the WCM DTCs.

      NOTE: Perform the following test several times to ensure the DTC is current.

   3. Turn the ignition off.
   4. Wait 10 seconds.
   5. Turn the ignition on.
   6. With the scan tool, read the WCM DTCs.

      Does the scan tool display the DTC that was previously erased?

      Yes

      - Go To 2

No

- Go To 6

2. **CHECKING FOR MULTIPLE KEYS**

Are there multiple vehicle ignition keys available?

Yes

- Go To 3

No

- Go To 4

3. **MULTIPLE KEY OPERATION**

NOTE: Perform the following steps using one of the vehicle ignition keys. When finished, repeat the procedure using each of the other vehicle keys, one at a time.

1. With the scan tool, erase the WCM DTCs.
2. Turn the ignition off.
3. Wait 10 seconds.
4. Turn the ignition on
5. With the scan tool, read the WCM DTCs.

Is the DTC present for all ignition keys?

Yes

- Replace and program the Wireless Control Module in accordance with the Service Information.
- Perform the WCM VERIFICATION TEST. Refer to **STANDARD PROCEDURE**.

No

- Replace the ignition key(s) that cause the WCM DTC.
- Perform the WCM VERIFICATION TEST. Refer to **STANDARD**

PROCEDURE.

4. **REPROGRAM KEY**
   1. With the scan tool, attempt to reprogram the ignition key to the WCM.
   2. With the scan tool, erase the WCM DTCs.
   3. Wait 10 seconds.
   4. Turn the ignition on.
   5. With the scan tool, read the WCM DTCs.

   Does the DTC set again?

   Yes

   - Go To 5

   No

   - Test complete.
5. **PROGRAM NEW IGNITION KEY**
   1. Replace the ignition key with a new key.
   2. With the scan tool, program the new ignition key to the WCM.
   3. With the scan tool, erase the WCM DTCs.
   4. Turn the ignition off.
   5. Wait 10 seconds.
   6. Turn the ignition on.
   7. With the scan tool, read the WCM DTCs.

   Does the DTC set again?

   Yes

   - Replace and program the Wireless Control Module in accordance with the Service Information.
   - Perform the WCM VERIFICATION TEST. Refer to **STANDARD PROCEDURE**.

   No

- Test complete.

6. **INTERMITTENT WIRING HARNESS PROBLEM**
   1. Turn the ignition off.

NOTE: Check the following items:

- **Visually inspect the related wiring harness. Look for any chafed, pierced, pinched, or partially broken wires.**
- **Visually inspect the related wiring harness connectors. Look for broken, bent, pushed out, or corroded terminals.**
- **Refer to any Technical Service Bulletins (TSB) that may apply.**

Were any problems found?

Yes

- Repair wiring harness/connectors as necessary.
- Perform the WCM VERIFICATION TEST. Refer to **STANDARD PROCEDURE**.

No

- Test Complete.

B1A2B-KEY 2 COMMUNICATION ERROR

For a complete wiring diagram, **refer to appropriate SYSTEM WIRING DIAGRAMS article** .

WHEN MONITORED

At ignition on and during Key Programming Mode.

SET CONDITION

When the Sentry Key remote Entry Module (SKREEM) also known as the Wireless Control Module (WCM) does not receive a transponder response after 8

consecutive transponder read attempts within 2.0 seconds.

POSSIBLE CAUSES

Possible Causes
MULTIPLE KEY OPERATION IGNITION KEY WIRELESS CONTROL MODULE (WCM)/SENTRY KEY REMOTE ENTRY MODULE (SKREEM) INTERMITTENT WIRING HARNESS PROBLEM

DIAGNOSTIC TEST

1. **DETERMINING IF DIAGNOSTIC TROUBLE CODE (DTC) IS CURRENT**
   1. With the scan tool, read and record the WCM DTCs.
   2. With the scan tool, erase the WCM DTCs.

      NOTE: Perform the following test several times to ensure the DTC is current.

   3. Turn the ignition off.
   4. Wait 10 seconds.
   5. Turn the ignition on.
   6. With the scan tool, read the WCM DTCs.

      Does the scan tool display the DTC that was previously erased?

      Yes

      - Go To 2

      No

      - Go To 6
2. **CHECKING FOR MULTIPLE KEYS**

   Are there multiple vehicle ignition keys available?

   Yes

- Go To 3

No

- Go To 4

3. **MULTIPLE KEY OPERATION**

NOTE: Perform the following steps using one of the vehicle ignition keys. When finished, repeat the procedure using each of the other vehicle keys, one at a time.

1. With the scan tool, erase the WCM DTCs.
2. Turn the ignition off.
3. Wait 10 seconds.
4. Turn the ignition on
5. With the scan tool, read the WCM DTCs.

Is the DTC present for all ignition keys?

Yes

- Replace and program the Wireless Control Module in accordance with the Service Information.
- Perform the WCM VERIFICATION TEST. Refer to **STANDARD PROCEDURE**.

No

- Replace the ignition key(s) that cause the WCM DTC.
- Perform the WCM VERIFICATION TEST. Refer to **STANDARD PROCEDURE**.

4. **REPROGRAM KEY**
   1. With the scan tool, attempt to reprogram the ignition key to the WCM.
   2. With the scan tool, erase the WCM DTCs.
   3. Wait 10 seconds.
   4. Turn the ignition on.
   5. With the scan tool, read the WCM DTCs.

Does the DTC set again?

Yes

- Go To 5

No

- Test complete.

5. **PROGRAM NEW IGNITION KEY**
   1. Replace the ignition key with a new key.
   2. With the scan tool, program the new ignition key to the WCM.
   3. With the scan tool, erase the WCM DTCs.
   4. Turn the ignition off.
   5. Wait 10 seconds.
   6. Turn the ignition on.
   7. With the scan tool, read the WCM DTCs.

   Does the DTC set again?

   Yes

   - Replace and program the Wireless Control Module in accordance with the Service Information.
   - Perform the WCM VERIFICATION TEST. Refer to **STANDARD PROCEDURE**.

   No

   - Test complete.

6. **INTERMITTENT WIRING HARNESS PROBLEM**
   1. Turn the ignition off.

   NOTE: Check the following items:

   - **Visually inspect the related wiring harness. Look for any chafed, pierced, pinched, or partially broken wires.**

- **Visually inspect the related wiring harness connectors. Look for broken, bent, pushed out, or corroded terminals.**
- **Refer to any Technical Service Bulletins (TSB) that may apply.**

Were any problems found?

Yes

- Repair wiring harness/connectors as necessary.
- Perform the WCM VERIFICATION TEST. Refer to **STANDARD PROCEDURE**.

No

- Test Complete.

B1A2C-KEY 3 COMMUNICATION ERROR

For a complete wiring diagram, **refer to appropriate SYSTEM WIRING DIAGRAMS article** .

WHEN MONITORED

At ignition on and during Key Programming Mode.

SET CONDITION

When the Sentry Key remote Entry Module (SKREEM) also known as the Wireless Control Module (WCM) does not receive a transponder response after 8 consecutive transponder read attempts within 2.0 seconds.

POSSIBLE CAUSES

Possible Causes
MULTIPLE KEY OPERATION IGNITION KEY WIRELESS CONTROL MODULE (WCM)/SENTRY KEY REMOTE ENTRY MODULE (SKREEM) INTERMITTENT WIRING HARNESS PROBLEM

DIAGNOSTIC TEST

1. **DETERMINING IF DIAGNOSTIC TROUBLE CODE (DTC) IS CURRENT**
   1. With the scan tool, read and record the WCM DTCs.
   2. With the scan tool, erase the WCM DTCs.

      NOTE: Perform the following test several times to ensure the DTC is current.

   3. Turn the ignition off.
   4. Wait 10 seconds.
   5. Turn the ignition on.
   6. With the scan tool, read the WCM DTCs.

      Does the scan tool display the DTC that was previously erased?

      Yes

      - Go To 2

      No

      - Go To 6
2. **CHECKING FOR MULTIPLE KEYS**

   Are there multiple vehicle ignition keys available?

   Yes

   - Go To 3

   No

   - Go To 4
3. **MULTIPLE KEY OPERATION**

   NOTE: Perform the following steps using one of the vehicle ignition keys. When finished, repeat the procedure using each of the other vehicle keys, one at a time.

1. With the scan tool, erase the WCM DTCs.
2. Turn the ignition off.
3. Wait 10 seconds.
4. Turn the ignition on
5. With the scan tool, read the WCM DTCs.

   Is the DTC present for all ignition keys?

   Yes

   - Replace and program the Wireless Control Module in accordance with the Service Information.
   - Perform the WCM VERIFICATION TEST. Refer to **STANDARD PROCEDURE**.

   No

   - Replace the ignition key(s) that cause the WCM DTC.
   - Perform the WCM VERIFICATION TEST. Refer to **STANDARD PROCEDURE**.

4. **REPROGRAM KEY**
   1. With the scan tool, attempt to reprogram the ignition key to the WCM.
   2. With the scan tool, erase the WCM DTCs.
   3. Wait 10 seconds.
   4. Turn the ignition on.
   5. With the scan tool, read the WCM DTCs.

      Does the DTC set again?

      Yes

      - Go To 5

      No

      - Test complete.

5. **PROGRAM NEW IGNITION KEY**

1. Replace the ignition key with a new key.
2. With the scan tool, program the new ignition key to the WCM.
3. With the scan tool, erase the WCM DTCs.
4. Turn the ignition off.
5. Wait 10 seconds.
6. Turn the ignition on.
7. With the scan tool, read the WCM DTCs.

Does the DTC set again?

Yes

- Replace and program the Wireless Control Module in accordance with the Service Information.
- Perform the WCM VERIFICATION TEST. Refer to **STANDARD PROCEDURE**.

No

- Test complete.

6. **INTERMITTENT WIRING HARNESS PROBLEM**
   1. Turn the ignition off.

NOTE: Check the following items:

- **Visually inspect the related wiring harness. Look for any chafed, pierced, pinched, or partially broken wires.**
- **Visually inspect the related wiring harness connectors. Look for broken, bent, pushed out, or corroded terminals.**
- **Refer to any Technical Service Bulletins (TSB) that may apply.**

Were any problems found?

Yes

- Repair wiring harness/connectors as necessary.
- Perform the WCM VERIFICATION TEST. Refer to **STANDARD PROCEDURE**.

No

- Test Complete.

B1A2D-KEY 4 COMMUNICATION ERROR

For a complete wiring diagram, **refer to appropriate SYSTEM WIRING DIAGRAMS article** .

WHEN MONITORED

At ignition on and during Key Programming Mode.

SET CONDITION

When the Sentry Key remote Entry Module (SKREEM) also known as the Wireless Control Module (WCM) does not receive a transponder response after 8 consecutive transponder read attempts within 2.0 seconds.

POSSIBLE CAUSES

Possible Causes
MULTIPLE KEY OPERATION IGNITION KEY WIRELESS CONTROL MODULE (WCM)/SENTRY KEY REMOTE ENTRY MODULE (SKREEM) INTERMITTENT WIRING HARNESS PROBLEM

DIAGNOSTIC TEST

1. **DETERMINING IF DIAGNOSTIC TROUBLE CODE (DTC) IS CURRENT**
   1. With the scan tool, read and record the WCM DTCs.
   2. With the scan tool, erase the WCM DTCs.

NOTE: Perform the following test several times to ensure the DTC is current.

3. Turn the ignition off.
4. Wait 10 seconds.
5. Turn the ignition on.
6. With the scan tool, read the WCM DTCs.

   Does the scan tool display the DTC that was previously erased?

   Yes

   - Go To 2

   No

   - Go To 6

2. **CHECKING FOR MULTIPLE KEYS**

   Are there multiple vehicle ignition keys available?

   Yes

   - Go To 3

   No

   - Go To 4

3. **MULTIPLE KEY OPERATION**

   NOTE: Perform the following steps using one of the vehicle ignition keys. When finished, repeat the procedure using each of the other vehicle keys, one at a time.

   1. With the scan tool, erase the WCM DTCs.
   2. Turn the ignition off.
   3. Wait 10 seconds.
   4. Turn the ignition on
   5. With the scan tool, read the WCM DTCs.

      Is the DTC present for all ignition keys?

Yes

- Replace and program the Wireless Control Module in accordance with the Service Information.
- Perform the WCM VERIFICATION TEST. Refer to **STANDARD PROCEDURE**.

No

- Replace the ignition key(s) that cause the WCM DTC.
- Perform the WCM VERIFICATION TEST. Refer to **STANDARD PROCEDURE**.

4. **REPROGRAM KEY**
   1. With the scan tool, attempt to reprogram the ignition key to the WCM.
   2. With the scan tool, erase the WCM DTCs.
   3. Wait 10 seconds.
   4. Turn the ignition on.
   5. With the scan tool, read the WCM DTCs.

   Does the DTC set again?

   Yes

   - Go To 5

   No

   - Test complete.

5. **PROGRAM NEW IGNITION KEY**
   1. Replace the ignition key with a new key.
   2. With the scan tool, program the new ignition key to the WCM.
   3. With the scan tool, erase the WCM DTCs.
   4. Turn the ignition off.
   5. Wait 10 seconds.
   6. Turn the ignition on.
   7. With the scan tool, read the WCM DTCs.

Does the DTC set again?

Yes

- Replace and program the Wireless Control Module in accordance with the Service Information.
- Perform the WCM VERIFICATION TEST. Refer to **STANDARD PROCEDURE**.

No

- Test complete.

6. **INTERMITTENT WIRING HARNESS PROBLEM**
   1. Turn the ignition off.

NOTE: Check the following items:

- **Visually inspect the related wiring harness. Look for any chafed, pierced, pinched, or partially broken wires.**
- **Visually inspect the related wiring harness connectors. Look for broken, bent, pushed out, or corroded terminals.**
- **Refer to any Technical Service Bulletins (TSB) that may apply.**

Were any problems found?

Yes

- Repair wiring harness/connectors as necessary.
- Perform the WCM VERIFICATION TEST. Refer to **STANDARD PROCEDURE**.

No

- Test Complete.

B1A2E-KEY 5 COMMUNICATION ERROR

For a complete wiring diagram, **refer to appropriate SYSTEM WIRING DIAGRAMS article** .

WHEN MONITORED

At ignition on and during Key Programming Mode.

SET CONDITION

When the Sentry Key remote Entry Module (SKREEM) also known as the Wireless Control Module (WCM) does not receive a transponder response after 8 consecutive transponder read attempts within 2.0 seconds.

POSSIBLE CAUSES

Possible Causes
MULTIPLE KEY OPERATION
IGNITION KEY
WIRELESS CONTROL MODULE (WCM)/SENTRY KEY REMOTE ENTRY MODULE (SKREEM)
INTERMITTENT WIRING HARNESS PROBLEM

DIAGNOSTIC TEST

1. **DETERMINING IF DIAGNOSTIC TROUBLE CODE (DTC) IS CURRENT**
   1. With the scan tool, read and record the WCM DTCs.
   2. With the scan tool, erase the WCM DTCs.

      NOTE: Perform the following test several times to ensure the DTC is current.

   3. Turn the ignition off.
   4. Wait 10 seconds.
   5. Turn the ignition on.
   6. With the scan tool, read the WCM DTCs.

      Does the scan tool display the DTC that was previously erased?

      Yes

- Go To 2

No

- Go To 6

2. **CHECKING FOR MULTIPLE KEYS**

Are there multiple vehicle ignition keys available?

Yes

- Go To 3

No

- Go To 4

3. **MULTIPLE KEY OPERATION**

NOTE: Perform the following steps using one of the vehicle ignition keys. When finished, repeat the procedure using each of the other vehicle keys, one at a time.

1. With the scan tool, erase the WCM DTCs.
2. Turn the ignition off.
3. Wait 10 seconds.
4. Turn the ignition on
5. With the scan tool, read the WCM DTCs.

Is the DTC present for all ignition keys?

Yes

- Replace and program the Wireless Control Module in accordance with the Service Information.
- Perform the WCM VERIFICATION TEST. Refer to **STANDARD PROCEDURE**.

No

- Replace the ignition key(s) that cause the WCM DTC.
- Perform the WCM VERIFICATION TEST. Refer to **STANDARD PROCEDURE**.

4. **REPROGRAM KEY**
   1. With the scan tool, attempt to reprogram the ignition key to the WCM.
   2. With the scan tool, erase the WCM DTCs.
   3. Wait 10 seconds.
   4. Turn the ignition on.
   5. With the scan tool, read the WCM DTCs.

   Does the DTC set again?

   Yes

   - Go To 5

   No

   - Test complete.

5. **PROGRAM NEW IGNITION KEY**
   1. Replace the ignition key with a new key.
   2. With the scan tool, program the new ignition key to the WCM.
   3. With the scan tool, erase the WCM DTCs.
   4. Turn the ignition off.
   5. Wait 10 seconds.
   6. Turn the ignition on.
   7. With the scan tool, read the WCM DTCs.

   Does the DTC set again?

   Yes

   - Replace and program the Wireless Control Module in accordance with the Service Information.
   - Perform the WCM VERIFICATION TEST. Refer to **STANDARD PROCEDURE**.

No

- Test complete.

6. **INTERMITTENT WIRING HARNESS PROBLEM**
   1. Turn the ignition off.

NOTE: Check the following items:

- **Visually inspect the related wiring harness. Look for any chafed, pierced, pinched, or partially broken wires.**
- **Visually inspect the related wiring harness connectors. Look for broken, bent, pushed out, or corroded terminals.**
- **Refer to any Technical Service Bulletins (TSB) that may apply.**

Were any problems found?

Yes

- Repair wiring harness/connectors as necessary.
- Perform the WCM VERIFICATION TEST. Refer to **STANDARD PROCEDURE**.

No

- Test Complete.

B1A2F-KEY 6 COMMUNICATION ERROR

For a complete wiring diagram, **refer to appropriate SYSTEM WIRING DIAGRAMS article** .

WHEN MONITORED

At ignition on and during Key Programming Mode.

SET CONDITION

When the Sentry Key remote Entry Module (SKREEM) also known as the

Wireless Control Module (WCM) does not receive a transponder response after 8 consecutive transponder read attempts within 2.0 seconds.

POSSIBLE CAUSES

Possible Causes
MULTIPLE KEY OPERATION IGNITION KEY WIRELESS CONTROL MODULE (WCM)/SENTRY KEY REMOTE ENTRY MODULE (SKREEM) INTERMITTENT WIRING HARNESS PROBLEM

DIAGNOSTIC TEST

1. **DETERMINING IF DIAGNOSTIC TROUBLE CODE (DTC) IS CURRENT**
   1. With the scan tool, read and record the WCM DTCs.
   2. With the scan tool, erase the WCM DTCs.

      NOTE: Perform the following test several times to ensure the DTC is current.

   3. Turn the ignition off.
   4. Wait 10 seconds.
   5. Turn the ignition on.
   6. With the scan tool, read the WCM DTCs.

      Does the scan tool display the DTC that was previously erased?

      Yes

      - Go To 2

      No

      - Go To 6
2. **CHECKING FOR MULTIPLE KEYS**

   Are there multiple vehicle ignition keys available?

Yes

- Go To 3

No

- Go To 4

3. **MULTIPLE KEY OPERATION**

NOTE: Perform the following steps using one of the vehicle ignition keys. When finished, repeat the procedure using each of the other vehicle keys, one at a time.

1. With the scan tool, erase the WCM DTCs.
2. Turn the ignition off.
3. Wait 10 seconds.
4. Turn the ignition on
5. With the scan tool, read the WCM DTCs.

Is the DTC present for all ignition keys?

Yes

- Replace and program the Wireless Control Module in accordance with the Service Information.
- Perform the WCM VERIFICATION TEST. Refer to **STANDARD PROCEDURE**.

No

- Replace the ignition key(s) that cause the WCM DTC.
- Perform the WCM VERIFICATION TEST. Refer to **STANDARD PROCEDURE**.

4. **REPROGRAM KEY**
   1. With the scan tool, attempt to reprogram the ignition key to the WCM.
   2. With the scan tool, erase the WCM DTCs.
   3. Wait 10 seconds.
   4. Turn the ignition on.

5. With the scan tool, read the WCM DTCs.

   Does the DTC set again?

   Yes

   - Go To 5

   No

   - Test complete.

5. **PROGRAM NEW IGNITION KEY**
   1. Replace the ignition key with a new key.
   2. With the scan tool, program the new ignition key to the WCM.
   3. With the scan tool, erase the WCM DTCs.
   4. Turn the ignition off.
   5. Wait 10 seconds.
   6. Turn the ignition on.
   7. With the scan tool, read the WCM DTCs.

   Does the DTC set again?

   Yes

   - Replace and program the Wireless Control Module in accordance with the Service Information.
   - Perform the WCM VERIFICATION TEST. Refer to **STANDARD PROCEDURE**.

   No

   - Test complete.

6. **INTERMITTENT WIRING HARNESS PROBLEM**
   1. Turn the ignition off.

   NOTE: Check the following items:

   - **Visually inspect the related wiring harness.**

Look for any chafed, pierced, pinched, or partially broken wires.

- **Visually inspect the related wiring harness connectors. Look for broken, bent, pushed out, or corroded terminals.**
- **Refer to any Technical Service Bulletins (TSB) that may apply.**

Were any problems found?

Yes

- Repair wiring harness/connectors as necessary.
- Perform the WCM VERIFICATION TEST. Refer to **STANDARD PROCEDURE**.

No

- Test Complete.

B1A30-KEY 7 COMMUNICATION ERROR

For a complete wiring diagram, **refer to appropriate SYSTEM WIRING DIAGRAMS article** .

WHEN MONITORED

At ignition on and during Key Programming Mode.

SET CONDITION

When the Sentry Key remote Entry Module (SKREEM) also known as the Wireless Control Module (WCM) does not receive a transponder response after 8 consecutive transponder read attempts within 2.0 seconds.

POSSIBLE CAUSES

Possible Causes
MULTIPLE KEY OPERATION IGNITION KEY WIRELESS CONTROL MODULE (WCM)/SENTRY KEY REMOTE

ENTRY MODULE (SKREEM)
INTERMITTENT WIRING HARNESS PROBLEM

DIAGNOSTIC TEST

1. **DETERMINING IF DIAGNOSTIC TROUBLE CODE (DTC) IS CURRENT**
   1. With the scan tool, read and record the WCM DTCs.
   2. With the scan tool, erase the WCM DTCs.

      NOTE: Perform the following test several times to ensure the DTC is current.

   3. Turn the ignition off.
   4. Wait 10 seconds.
   5. Turn the ignition on.
   6. With the scan tool, read the WCM DTCs.

      Does the scan tool display the DTC that was previously erased?

      Yes

      - Go To 2

      No

      - Go To 6
2. **CHECKING FOR MULTIPLE KEYS**

   Are there multiple vehicle ignition keys available?

   Yes

   - Go To 3

   No

   - Go To 4
3. **MULTIPLE KEY OPERATION**

NOTE: Perform the following steps using one of the vehicle ignition keys. When finished, repeat the procedure using each of the other vehicle keys, one at a time.

1. With the scan tool, erase the WCM DTCs.
2. Turn the ignition off.
3. Wait 10 seconds.
4. Turn the ignition on
5. With the scan tool, read the WCM DTCs.

Is the DTC present for all ignition keys?

Yes

- Replace and program the Wireless Control Module in accordance with the Service Information.
- Perform the WCM VERIFICATION TEST. Refer to **STANDARD PROCEDURE**.

No

- Replace the ignition key(s) that cause the WCM DTC.
- Perform the WCM VERIFICATION TEST. Refer to **STANDARD PROCEDURE**.

4. **REPROGRAM KEY**
   1. With the scan tool, attempt to reprogram the ignition key to the WCM.
   2. With the scan tool, erase the WCM DTCs.
   3. Wait 10 seconds.
   4. Turn the ignition on.
   5. With the scan tool, read the WCM DTCs.

   Does the DTC set again?

   Yes

   - Go To 5

   No

- Test complete.

5. **PROGRAM NEW IGNITION KEY**
   1. Replace the ignition key with a new key.
   2. With the scan tool, program the new ignition key to the WCM.
   3. With the scan tool, erase the WCM DTCs.
   4. Turn the ignition off.
   5. Wait 10 seconds.
   6. Turn the ignition on.
   7. With the scan tool, read the WCM DTCs.

   Does the DTC set again?

   Yes

   - Replace and program the Wireless Control Module in accordance with the Service Information.
   - Perform the WCM VERIFICATION TEST. Refer to **STANDARD PROCEDURE**.

   No

   - Test complete.

6. **INTERMITTENT WIRING HARNESS PROBLEM**
   1. Turn the ignition off.

   NOTE: Check the following items:

   - **Visually inspect the related wiring harness. Look for any chafed, pierced, pinched, or partially broken wires.**
   - **Visually inspect the related wiring harness connectors. Look for broken, bent, pushed out, or corroded terminals.**
   - **Refer to any Technical Service Bulletins (TSB) that may apply.**

   Were any problems found?

Yes

- Repair wiring harness/connectors as necessary.
- Perform the WCM VERIFICATION TEST. Refer to **STANDARD PROCEDURE**.

No

- Test Complete.

B1A31-KEY 8 COMMUNICATION ERROR

For a complete wiring diagram, **refer to appropriate SYSTEM WIRING DIAGRAMS article** .

WHEN MONITORED

At ignition on and during Key Programming Mode.

SET CONDITION

When the Sentry Key remote Entry Module (SKREEM) also known as the Wireless Control Module (WCM) does not receive a transponder response after 8 consecutive transponder read attempts within 2.0 seconds.

POSSIBLE CAUSES

Possible Causes
MULTIPLE KEY OPERATION
IGNITION KEY
WIRELESS CONTROL MODULE (WCM)/SENTRY KEY REMOTE ENTRY MODULE (SKREEM)
INTERMITTENT WIRING HARNESS PROBLEM

DIAGNOSTIC TEST

1. **DETERMINING IF DIAGNOSTIC TROUBLE CODE (DTC) IS CURRENT**
    1. With the scan tool, read and record the WCM DTCs.
    2. With the scan tool, erase the WCM DTCs.

NOTE: Perform the following test several times to ensure the DTC is current.

3. Turn the ignition off.
4. Wait 10 seconds.
5. Turn the ignition on.
6. With the scan tool, read the WCM DTCs.

   Does the scan tool display the DTC that was previously erased?

   Yes

   - Go To 2

   No

   - Go To 6

2. **CHECKING FOR MULTIPLE KEYS**

   Are there multiple vehicle ignition keys available?

   Yes

   - Go To 3

   No

   - Go To 4

3. **MULTIPLE KEY OPERATION**

   NOTE: Perform the following steps using one of the vehicle ignition keys. When finished, repeat the procedure using each of the other vehicle keys, one at a time.

   1. With the scan tool, erase the WCM DTCs.
   2. Turn the ignition off.
   3. Wait 10 seconds.
   4. Turn the ignition on
   5. With the scan tool, read the WCM DTCs.

Is the DTC present for all ignition keys?

Yes

- Replace and program the Wireless Control Module in accordance with the Service Information.
- Perform the WCM VERIFICATION TEST. Refer to **STANDARD PROCEDURE**.

No

- Replace the ignition key(s) that cause the WCM DTC.
- Perform the WCM VERIFICATION TEST. Refer to **STANDARD PROCEDURE**.

4. **REPROGRAM KEY**
   1. With the scan tool, attempt to reprogram the ignition key to the WCM.
   2. With the scan tool, erase the WCM DTCs.
   3. Wait 10 seconds.
   4. Turn the ignition on.
   5. With the scan tool, read the WCM DTCs.

   Does the DTC set again?

   Yes

   - Go To 5

   No

   - Test complete.

5. **PROGRAM NEW IGNITION KEY**
   1. Replace the ignition key with a new key.
   2. With the scan tool, program the new ignition key to the WCM.
   3. With the scan tool, erase the WCM DTCs.
   4. Turn the ignition off.
   5. Wait 10 seconds.
   6. Turn the ignition on.

7. With the scan tool, read the WCM DTCs.

   Does the DTC set again?

   Yes

   - Replace and program the Wireless Control Module in accordance with the Service Information.
   - Perform the WCM VERIFICATION TEST. Refer to **STANDARD PROCEDURE**.

   No

   - Test complete.

6. **INTERMITTENT WIRING HARNESS PROBLEM**
   1. Turn the ignition off.

      NOTE: Check the following items:

      - **Visually inspect the related wiring harness. Look for any chafed, pierced, pinched, or partially broken wires.**
      - **Visually inspect the related wiring harness connectors. Look for broken, bent, pushed out, or corroded terminals.**
      - **Refer to any Technical Service Bulletins (TSB) that may apply.**

      Were any problems found?

      Yes

      - Repair wiring harness/connectors as necessary.
      - Perform the WCM VERIFICATION TEST. Refer to **STANDARD PROCEDURE**.

      No

      - Test Complete.

B1A35-UNIDENTIFIED KEY COMMUNICATION ERROR

For a complete wiring diagram, **refer to appropriate SYSTEM WIRING DIAGRAMS article** .

WHEN MONITORED

At ignition on and during Key Programming Mode.

SET CONDITION

When the Sentry Key remote Entry Module (SKREEM) also known as the Wireless Control Module (WCM) does not receive a transponder response after 8 consecutive transponder read attempts within 2.0 seconds.

POSSIBLE CAUSES

Possible Causes
MULTIPLE KEY OPERATION IGNITION KEY WIRELESS CONTROL MODULE (WCM)/SENTRY KEY REMOTE ENTRY MODULE (SKREEM) INTERMITTENT WIRING HARNESS PROBLEM

DIAGNOSTIC TEST

1. **DETERMINING IF DIAGNOSTIC TROUBLE CODE (DTC) IS CURRENT**
    1. With the scan tool, read and record the WCM DTCs.
    2. With the scan tool, erase the WCM DTCs.

    NOTE: Perform the following test several times to ensure the DTC is current.

    3. Turn the ignition off.
    4. Wait 10 seconds.
    5. Turn the ignition on.
    6. With the scan tool, read the WCM DTCs.

    Does the scan tool display the DTC that was previously erased?

Yes

- Go To 2

No

- Go To 6

2. **CHECKING FOR MULTIPLE KEYS**

Are there multiple vehicle ignition keys available?

Yes

- Go To 3

No

- Go To 4

3. **MULTIPLE KEY OPERATION**

NOTE: Perform the following steps using one of the vehicle ignition keys. When finished, repeat the procedure using each of the other vehicle keys, one at a time.

1. With the scan tool, erase the WCM DTCs.
2. Turn the ignition off.
3. Wait 10 seconds.
4. Turn the ignition on
5. With the scan tool, read the WCM DTCs.

Is the DTC present for all ignition keys?

Yes

- Replace and program the Wireless Control Module in accordance with the Service Information.
- Perform the WCM VERIFICATION TEST. Refer to **STANDARD PROCEDURE**.

No

- Replace the ignition key(s) that cause the WCM DTC.
- Perform the WCM VERIFICATION TEST. Refer to **STANDARD PROCEDURE**.

4. **REPROGRAM KEY**
   1. With the scan tool, attempt to reprogram the ignition key to the WCM.
   2. With the scan tool, erase the WCM DTCs.
   3. Wait 10 seconds.
   4. Turn the ignition on.
   5. With the scan tool, read the WCM DTCs.

   Does the DTC set again?

   Yes

   - Go To 5

   No

   - Test complete.

5. **PROGRAM NEW IGNITION KEY**
   1. Replace the ignition key with a new key.
   2. With the scan tool, program the new ignition key to the WCM.
   3. With the scan tool, erase the WCM DTCs.
   4. Turn the ignition off.
   5. Wait 10 seconds.
   6. Turn the ignition on.
   7. With the scan tool, read the WCM DTCs.

   Does the DTC set again?

   Yes

   - Replace and program the Wireless Control Module in accordance with the Service Information.
   - Perform the WCM VERIFICATION TEST. Refer to **STANDARD**

PROCEDURE.

No

- Test complete.

6. **INTERMITTENT WIRING HARNESS PROBLEM**
   1. Turn the ignition off.

NOTE: Check the following items:

- **Visually inspect the related wiring harness. Look for any chafed, pierced, pinched, or partially broken wires.**
- **Visually inspect the related wiring harness connectors. Look for broken, bent, pushed out, or corroded terminals.**
- **Refer to any Technical Service Bulletins (TSB) that may apply.**

Were any problems found?

Yes

- Repair wiring harness/connectors as necessary.
- Perform the WCM VERIFICATION TEST. Refer to **STANDARD PROCEDURE**.

No

- Test Complete.

B2101-IGNITION RUN/START INPUT LOW

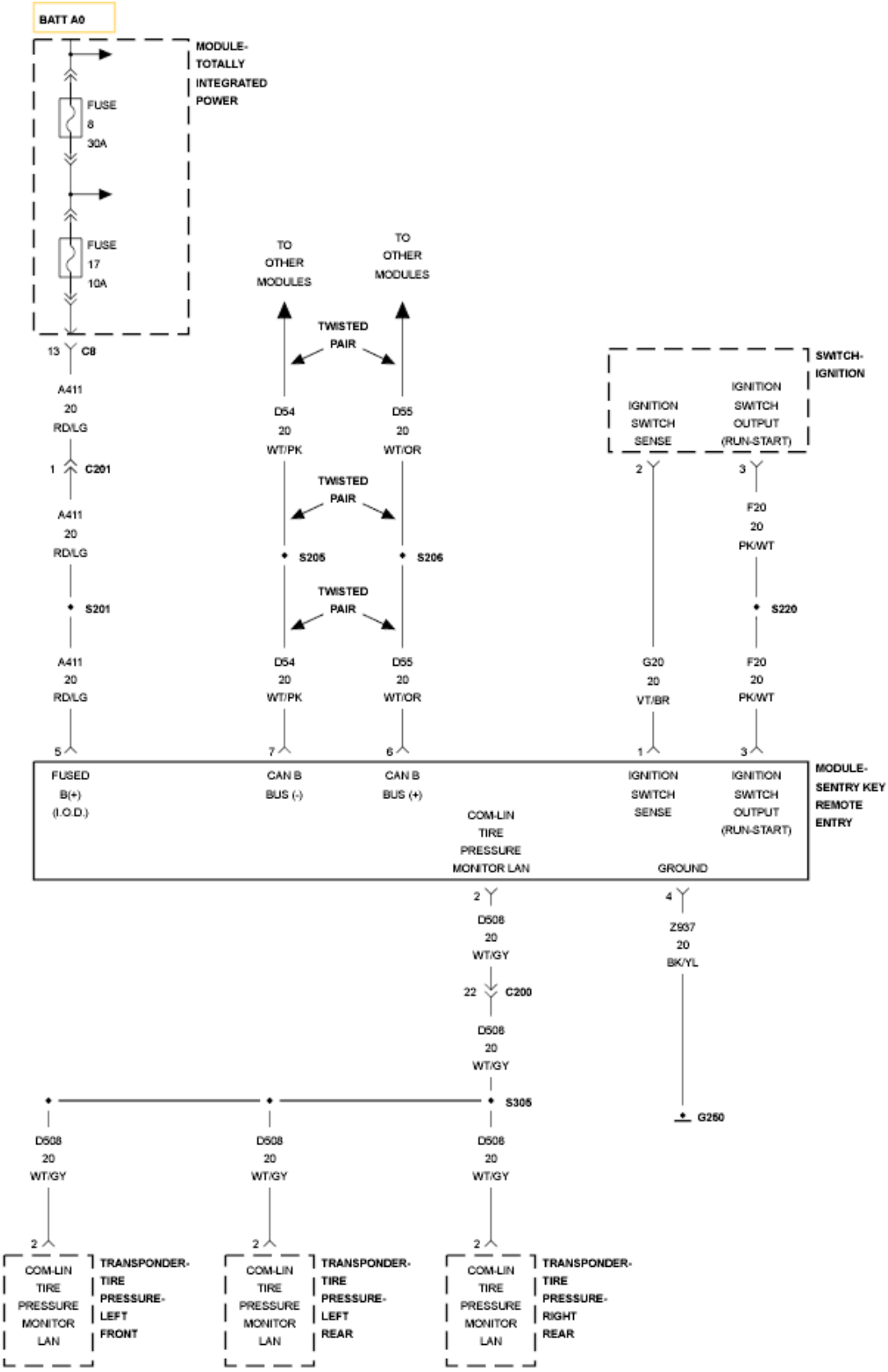

Fig. 1: Ignition Switch Circuit Schematic
Courtesy of CHRYSLER GROUP, LLC

For a complete wiring diagram, **refer to appropriate SYSTEM WIRING DIAGRAMS article** .

WHEN MONITORED

With the ignition switch on.

SET CONDITION

The SKREEM has detected the ignition switch input voltage below a calibrated value.

POSSIBLE CAUSES

Possible Causes
FUSED IGNITION SWITCH OUTPUT (RUN-START) CIRCUIT OPEN SKREEM

DIAGNOSTIC TEST

1. **DETERMINING IF DIAGNOSTIC TROUBLE CODE (DTC) IS CURRENT**

   NOTE: Diagnose any related Powertrain DTCs before continuing.

   1. With a scan tool, read and record DTCs.
   2. With the scan tool, clear DTCs.
   3. Perform 5 ignition cycles, leaving the ignition switch on for a minimum of 90 seconds per cycle.
   4. Using the scan tool, read DTCs.

   Does the DTC reset?

   Yes

   - Go To 3

   No

   - Go To 2

2. **INTERMITTENT CONDITION**

NOTE: Check for any of the follow conditions:

- **Poor wire to terminal connection**
- **Corroded terminals**
- **Backed out or loose terminals**
- **Broken wire internal to the insulation**
- **Dirty (partial) module ground**

1. With the ignition on, wiggle the related wires.
2. Using a scan tool, read DTCs.

   Does the DTC reset?

   Yes

   - Repair the wiring as necessary.
   - Perform the WCM VERIFICATION TEST. Refer to **STANDARD PROCEDURE**.

   No

   - DTC is not active at this time. Test complete.

3. **FUSED IGNITION SWITCH OUTPUT (RUN-START) CIRCUIT OPEN**

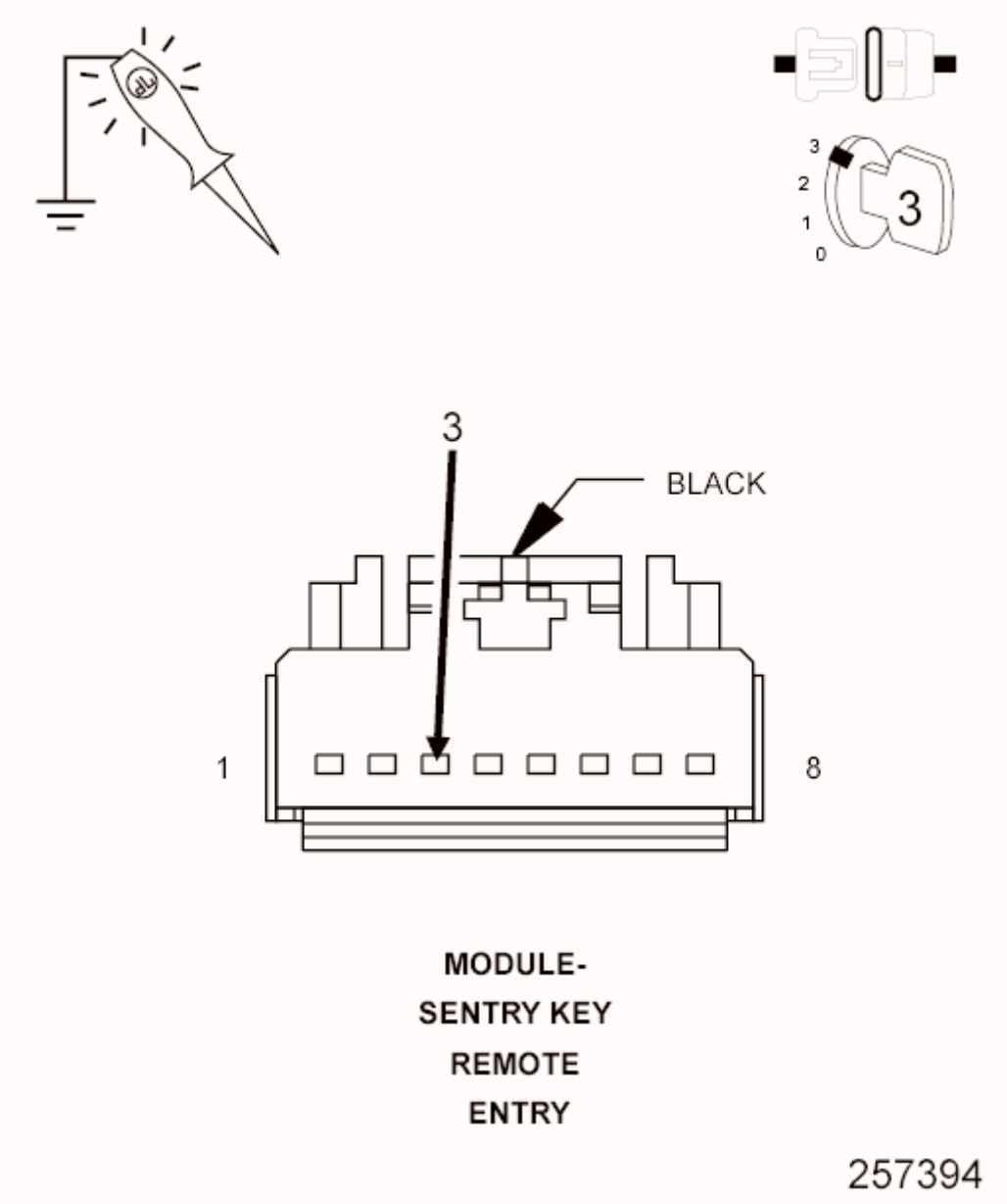

Fig. 2: Checking Fused Ignition Switch Output (Run-Start) Circuit For An Open
Courtesy of CHRYSLER GROUP, LLC

NOTE: Check the related fuses to the Fused Ignition Switch Output (Run-Start) circuit. If the fuse is found to be open, repair the circuit for a shorted condition.

1. Turn the ignition off.
2. Disconnect the WCM harness connector.
3. Turn the ignition on.
4. Using a 12 volt test light connected to ground, probe the Fused Ignition

Switch Output (Run-Start) circuit in the SKREEM harness connector.

Does the test light illuminate brightly?

Yes

- Go to 4

No

- Repair the Fused Ignition Switch Output (Run-Start) circuit for an open.
- Perform the WCM VERIFICATION TEST. Refer to **STANDARD PROCEDURE**.

4. **WCM**

NOTE: A dirty (partial) ground can cause abnormal conditions within a system. Ensure the module has a good ground before continuing.

1. Turn the ignition off.
2. Reconnect the WCM connector
3. Back probe the Fused Ignition Switch Output (Run-Start) circuit.
4. Start the engine.
5. Using the scan tool, view battery voltage under Data Display in the Engine category.
6. Compare the voltage on the scan tool to the voltage reading on the voltmeter.

Is the voltage on the scan tool equal to the voltmeter reading +/-.5 volt?

Yes

- Replace and program the Wireless Control Module in accordance with the Service Information.
- Perform the WCM VERIFICATION TEST. Refer to **STANDARD PROCEDURE**.

No

- Repair the Fused Ignition Switch Output (Run-Start) circuit for high resistance.
- Perform the WCM VERIFICATION TEST. Refer to **STANDARD PROCEDURE**.

B2102-IGNITION RUN/START INPUT HIGH

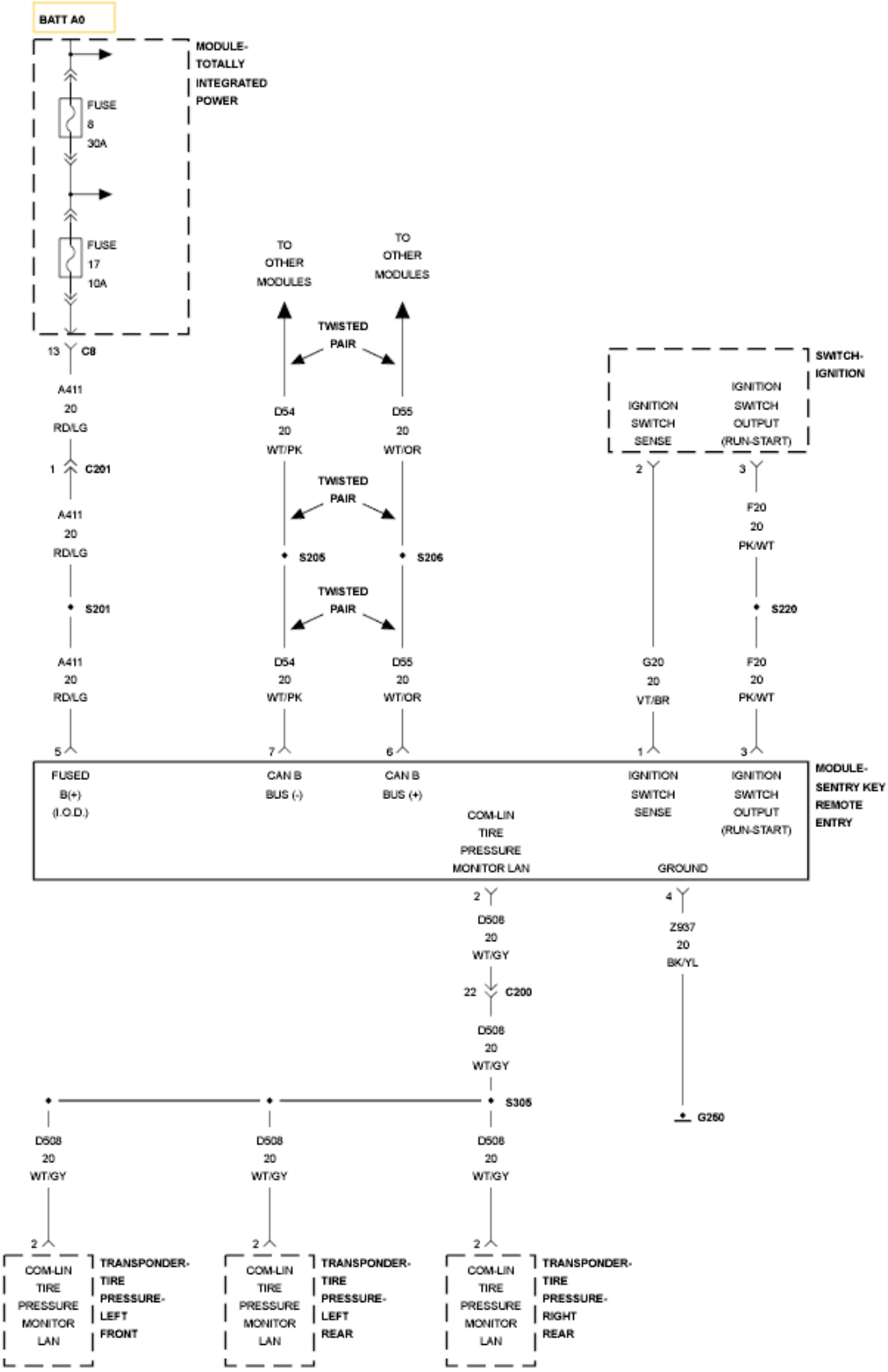

Fig. 3: Ignition Switch Circuit Schematic
Courtesy of CHRYSLER GROUP, LLC

For a complete wiring diagram, **refer to appropriate SYSTEM WIRING DIAGRAMS article** .

WHEN MONITORED

With the ignition switch on.

SET CONDITION

The Sentry Key remote Entry Module (SKREEM) also known as the Wireless Control Module (WCM) has detected the ignition switch input voltage above a calibrated value.

POSSIBLE CAUSES

Possible Causes
FUSED IGNITION SWITCH OUTPUT (RUN-START) CIRCUIT WIRELESS CONTROL MODULE (WCM)/SENTRY KEY REMOTE ENTRY MODULE (SKREEM)

DIAGNOSTIC TEST

1. **DETERMINING IF DIAGNOSTIC TROUBLE CODE (DTC) IS CURRENT**

   NOTE: Diagnose any related Powertrain DTCs before continuing.

   1. With a scan tool, read and record DTCs.
   2. With the scan tool, clear DTCs.
   3. Perform 5 ignition cycles, leaving the ignition switch on for a minimum of 90 seconds per cycle.
   4. Using the scan tool, read DTCs.

      Does the DTC reset?

      Yes

      - Go To 3

      No

- Go To 2

2. **INTERMITTENT CONDITION**

NOTE: Check for any of the follow conditions:

- **Poor wire to terminal connection**
- **Corroded terminals**
- **Backed out or loose terminals**
- **Broken wire internal to the insulation**
- **Dirty (partial) module ground**

1. With the ignition on, wiggle the related wires.
2. Using a scan tool, read DTCs.

Does the DTC reset?

Yes

- Repair the wiring as necessary.
- Perform the WCM VERIFICATION TEST. Refer to **STANDARD PROCEDURE**.

No

- DTC is not active at this time. Test complete.

3. **FUSED IGNITION SWITCH OUTPUT (RUN-START) CIRCUIT SHORTED TO BATTERY VOLTAGE**

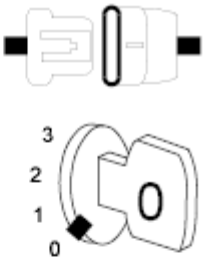

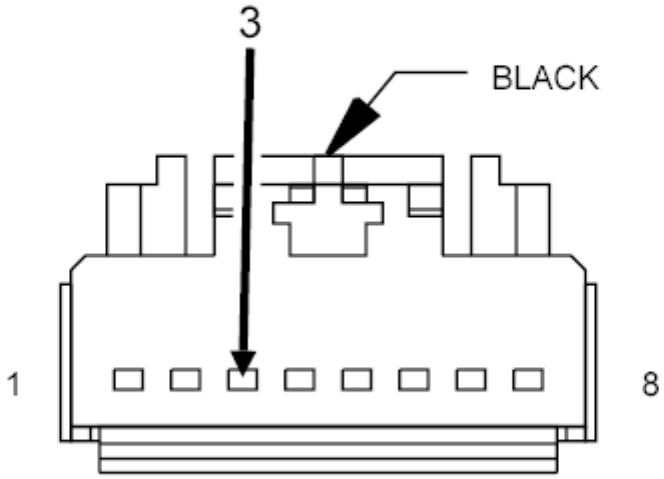

MODULE-
SENTRY KEY
REMOTE
ENTRY

Fig. 4: Checking Fused Ignition Switch Output (Run-Start) Circuit Shorted To Battery Voltage
Courtesy of CHRYSLER GROUP, LLC

NOTE: A dirty (partial) ground can cause abnormal conditions within a system. Ensure the module has a good ground before continuing.

1. Turn the ignition off.
2. Disconnect the WCM harness connector.
3. Using a 12 volt test light connected to ground, probe the Fused Ignition Switch Output (Run-Start) circuit in the WCM harness connector.

Does the test light illuminate brightly?

Yes

- Repair the Fused Ignition Switch Output (Run-Start) circuit for a short to voltage.
- Perform the WCM VERIFICATION TEST. Refer to **STANDARD PROCEDURE**.

No

- Replace and program the SKREEM in accordance with the Service Information.
- Perform the WCM VERIFICATION TEST. Refer to **STANDARD PROCEDURE**.

B210A-SYSTEM VOLTAGE LOW

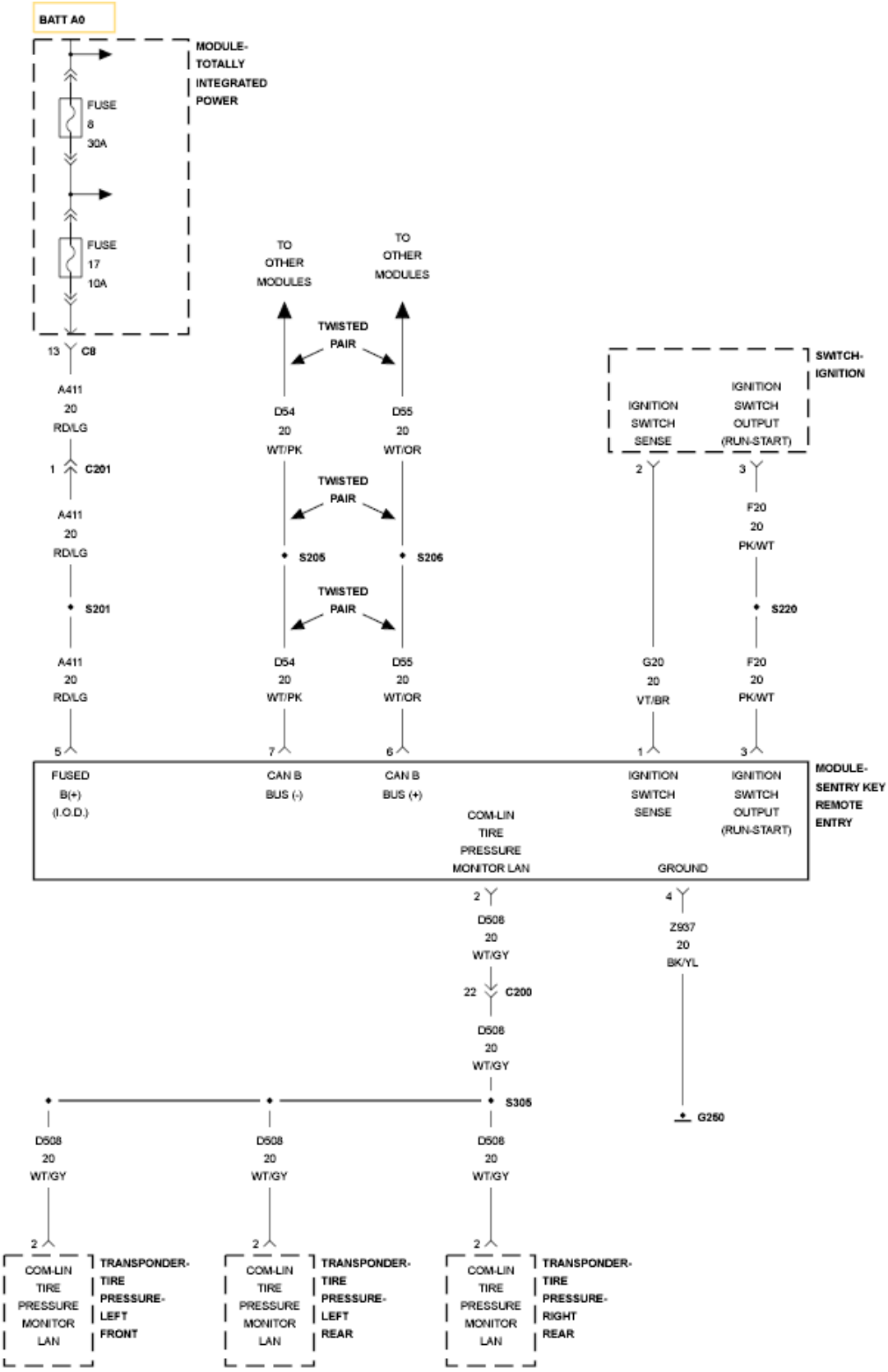

Fig. 5: Ignition Switch Circuit Schematic
Courtesy of CHRYSLER GROUP, LLC

For a complete wiring diagram, **refer to appropriate SYSTEM WIRING DIAGRAMS article** .

WHEN MONITORED

With the ignition switch on.

SET CONDITION

The Sentry Key remote Entry Module (SKREEM) also known as the Wireless Control Module (WCM) has detected the system voltage is below a calibrated value.

POSSIBLE CAUSES

Possible Causes
FUSED IGNITION SWITCH OUTPUT (RUN-START) CIRCUIT OPEN FUSED (B+) CIRCUIT OPEN WIRELESS CONTROL MODULE (WCM)/SENTRY KEY REMOTE ENTRY MODULE (SKREEM)

DIAGNOSTIC TEST

1. **DETERMINING IF DIAGNOSTIC TROUBLE CODE (DTC) IS CURRENT**

   NOTE: Diagnose any related Powertrain DTCs before continuing.

   1. With a scan tool, read and record DTCs.
   2. With the scan tool, clear DTCs.
   3. Perform 5 ignition cycles, leaving the ignition switch on for a minimum of 90 seconds per cycle.
   4. Using the scan tool, read DTCs.

      Does the DTC reset?

      Yes

      - Go To 3

No

- Go To 2

2. **INTERMITTENT CONDITION**

NOTE: Check for any of the follow conditions:

- **Poor wire to terminal connection**
- **Corroded terminals**
- **Backed out or loose terminals**
- **Broken wire internal to the insulation**
- **Dirty (partial) module ground**

1. With the ignition on, wiggle the related wires.
2. Using a scan tool, read DTCs.

Does the DTC reset?

Yes

- Repair the wiring as necessary.
- Perform the WCM VERIFICATION TEST. Refer to **STANDARD PROCEDURE**.

No

- DTC is not active at this time. Test complete.

3. **FUSED IGNITION SWITCH OUTPUT (RUN-START) CIRCUIT OPEN**

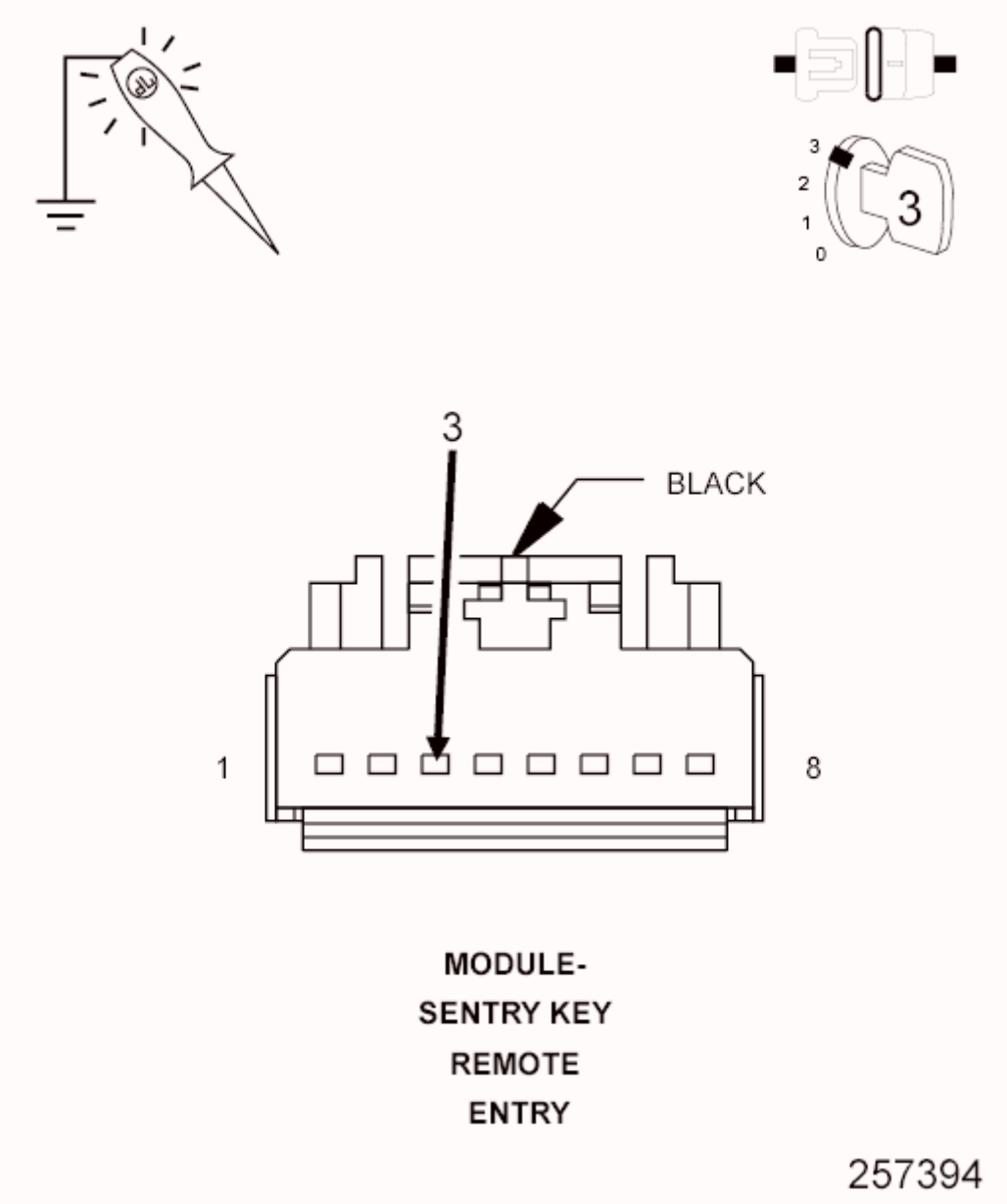

Fig. 6: Checking Fused Ignition Switch Output (Run-Start) Circuit For An Open
Courtesy of CHRYSLER GROUP, LLC

NOTE: Check the related fuses to the Fused Ignition Switch Output (Run-Start) circuit. If the fuse is found to be open repair the circuit for a shorted condition.

1. Turn the ignition off.
2. Disconnect the WCM harness connector.
3. Turn the ignition on.
4. Using a 12 volt test light connected to ground, probe the Fused Ignition

Switch Output (Run-Start) circuit in the WCM harness connector.

Does the test light illuminate brightly?

Yes

- Go to 4

No

- Repair the Fused Ignition Switch Output (Run-Start) circuit for an open.
- Perform the WCM VERIFICATION TEST. Refer to **STANDARD PROCEDURE**.

4. **FUSED (B+) CIRCUIT OPEN**

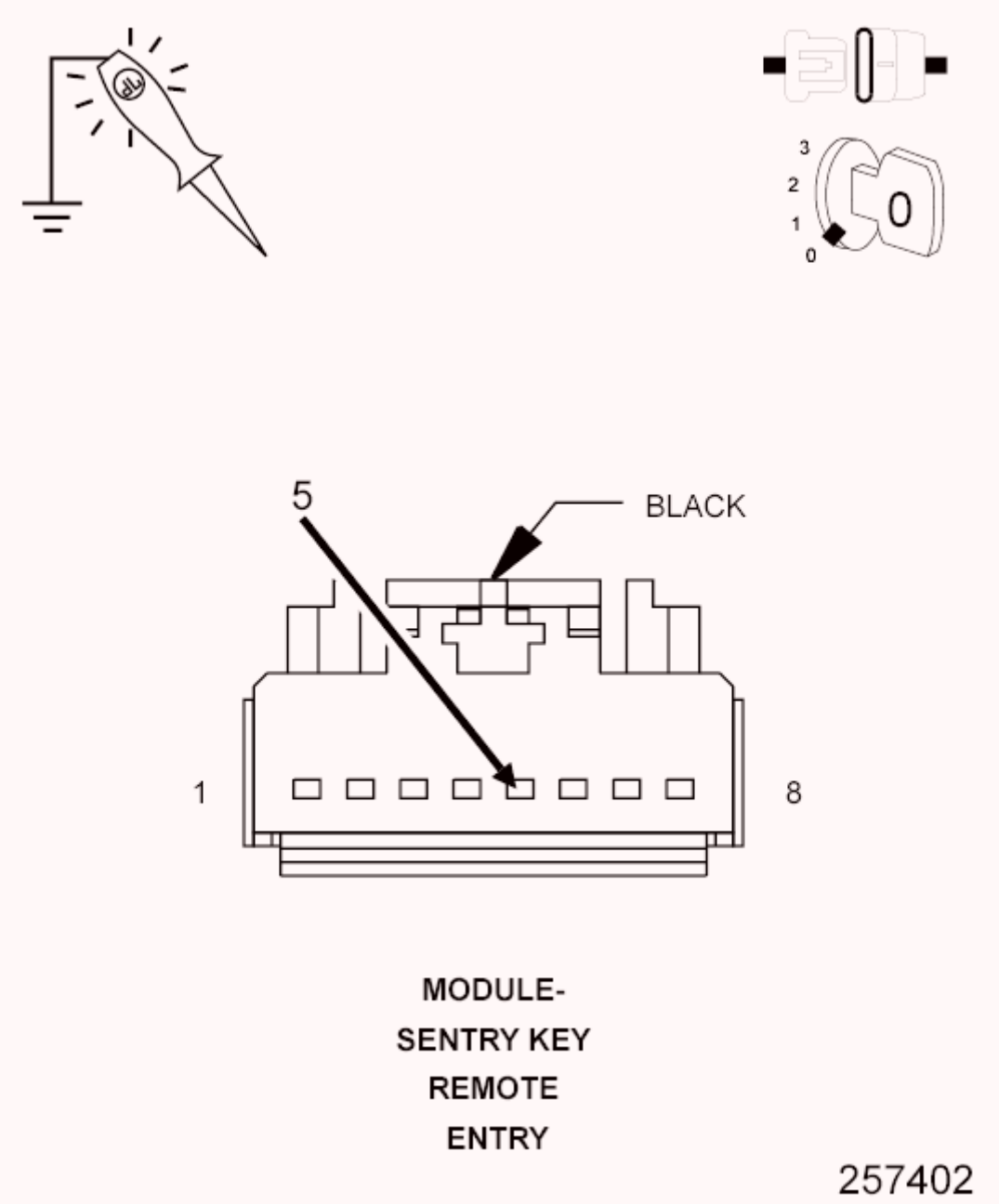

Fig. 7: Checking Fused (B+) Circuit For An Open
Courtesy of CHRYSLER GROUP, LLC

1. Turn the ignition off.
2. Using a 12 volt test light connected to ground, probe the Fused (B+) circuit in the WCM harness connector.

   Does the test light illuminate brightly?

   Yes

- Go to 5

No

- Repair the Fused (B+) circuit for an open.
- Perform the WCM VERIFICATION TEST. Refer to **STANDARD PROCEDURE**.

5. **SKREEM**

NOTE: Repeat the below procedure for both the Fused Ignition Switch Output (Run-Start) circuit and the Fused (B+) circuit.

NOTE: A dirty (partial) ground can cause abnormal conditions within a system. Ensure the module has a good ground before continuing.

1. Turn the ignition off.
2. Reconnect the WCM connector.
3. Back probe the Fused Ignition Switch Output (Run-Start) circuit and then the Fused (B+) circuit.
4. Start the engine.
5. Using the scan tool, view battery voltage under Data Display in the Engine category.
6. Compare the voltage on the scan tool to the voltage reading on the voltmeter.

Is the voltage on the scan tool equal to the voltmeter reading +/-.5 volt?

Yes

- Replace and program the Wireless Control Module in accordance with the Service Information.
- Perform the WCM VERIFICATION TEST. Refer to **STANDARD PROCEDURE**.

No

- Repair the circuit(s) that indicated the incorrect voltage.
- Perform the WCM VERIFICATION TEST. Refer to **STANDARD PROCEDURE**.

B210B-SYSTEM VOLTAGE HIGH

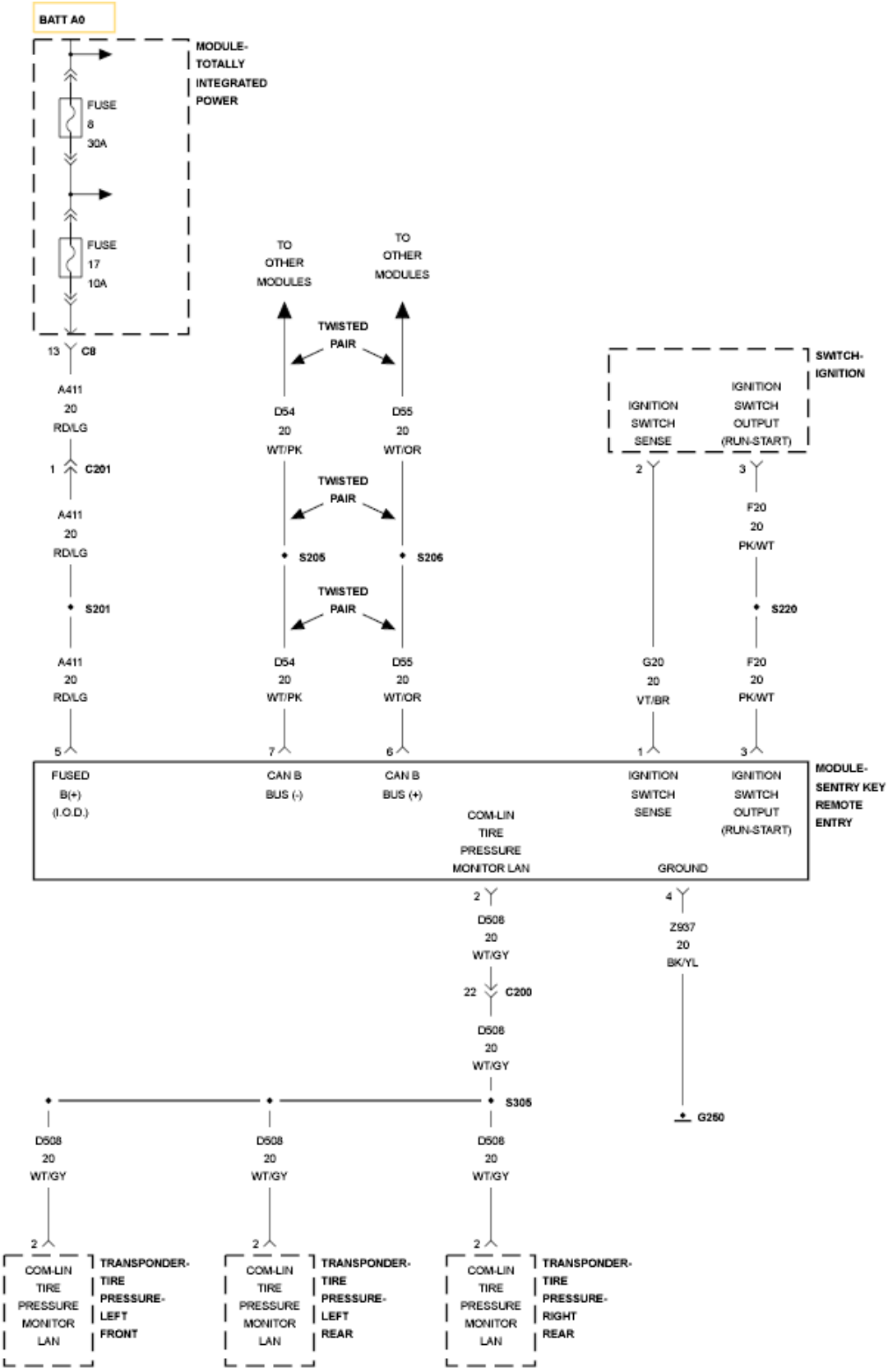

Fig. 8: Ignition Switch Circuit Schematic
Courtesy of CHRYSLER GROUP, LLC

For a complete wiring diagram, **refer to appropriate SYSTEM WIRING DIAGRAMS article** .

WHEN MONITORED

With the ignition switch on.

SET CONDITION

The Sentry Key remote Entry Module (SKREEM) also known as the Wireless Control Module (WCM) has detected the system voltage above a calibrated value.

POSSIBLE CAUSES

Possible Causes
FUSED IGNITION SWITCH OUTPUT (RUN-START) CIRCUIT WIRELESS CONTROL MODULE (WCM)/SENTRY KEY REMOTE ENTRY MODULE (SKREEM)

DIAGNOSTIC TEST

1. **DETERMINING IF DIAGNOSTIC TROUBLE CODE (DTC) IS CURRENT**

   NOTE: Diagnose any related Powertrain DTCs before continuing.

   1. With a scan tool, read and record DTCs.
   2. With the scan tool, clear DTCs.
   3. Perform 5 ignition cycles, leaving the ignition switch on for a minimum of 90 seconds per cycle.
   4. Using the scan tool, read DTCs.

   Does the DTC reset?

   Yes

   - Go To 3

   No

- Go To 2

2. **INTERMITTENT CONDITION**

NOTE: Check for any of the follow conditions:

- **Poor wire to terminal connection**
- **Corroded terminals**
- **Backed out or loose terminals**
- **Broken wire internal to the insulation**
- **Dirty (partial) module ground**

1. With the ignition on, wiggle the related wires.
2. Using a scan tool, read DTCs.

Does the DTC reset?

Yes

- Repair the wiring as necessary.
- Perform the WCM VERIFICATION TEST. Refer to **STANDARD PROCEDURE**.

No

- DTC is not active at this time. Test complete.

3. **FUSED IGNITION SWITCH OUTPUT (RUN-START) CIRCUIT SHORTED TO BATTERY VOLTAGE**

NOTE: A dirty (partial) ground can cause abnormal conditions within a system. Ensure the module has a good ground before continuing.

1. Turn the ignition off.
2. Disconnect the WCM harness connector.
3. Using a 12 volt test light connected to ground, probe the Fused Ignition Switch Output (Run-Start) circuit in the WCM harness connector.

Does the test light illuminate brightly?

Yes

- Repair the Fused Ignition Switch Output (Run-Start) circuit for a short to voltage.
- Perform the WCM VERIFICATION TEST. Refer to **STANDARD PROCEDURE**.

No

- Replace and reprogram the Wireless Control Module in accordance with the Service Information.
- Perform the WCM VERIFICATION TEST. Refer to **STANDARD PROCEDURE**.

B210D-BATTERY VOLTAGE LOW

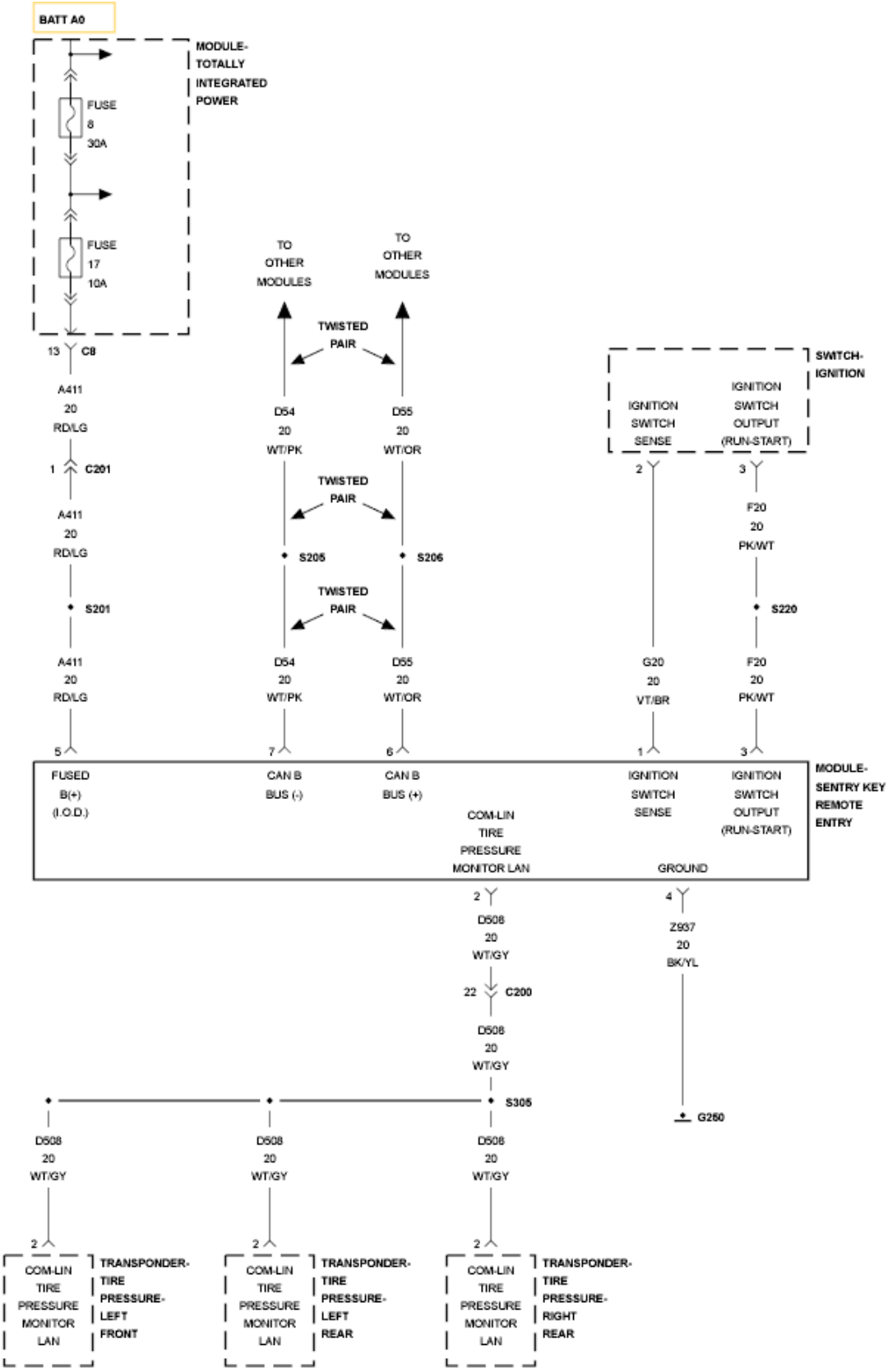

Fig. 9: Ignition Switch Circuit Schematic
Courtesy of CHRYSLER GROUP, LLC

For a complete wiring diagram, **refer to appropriate SYSTEM WIRING DIAGRAMS article** .

WHEN MONITORED

With the ignition switch on.

SET CONDITION

The Sentry Key remote Entry Module (SKREEM) also known as the Wireless Control Module (WCM) has detected the Fused (B+) input voltage below a calibrated value.

POSSIBLE CAUSES

Possible Causes
FUSED (B+) CIRCUIT OPEN WIRELESS CONTROL MODULE (WCM)/SENTRY KEY REMOTE ENTRY MODULE (SKREEM)

DIAGNOSTIC TEST

1. **DETERMINING IF DIAGNOSTIC TROUBLE CODE (DTC) IS CURRENT**

   NOTE: Diagnose any related Powertrain DTCs before continuing.

   1. With a scan tool, read and record DTCs.
   2. With the scan tool, clear DTCs.
   3. Perform 5 ignition cycles, leaving the ignition switch on for a minimum of 90 seconds per cycle.
   4. Using the scan tool, read DTCs.

      Does the DTC reset?

      Yes

      - Go To 3

      No

- Go To 2

2. **INTERMITTENT CONDITION**

NOTE: Check for any of the follow conditions:

- **Poor wire to terminal connection**
- **Corroded terminals**
- **Backed out or loose terminals**
- **Broken wire internal to the insulation**
- **Dirty (partial) module ground**

1. With the ignition on, wiggle the related wires.
2. Using a scan tool, read DTCs.

Does the DTC reset?

Yes

- Repair the wiring as necessary.
- Perform the WCM VERIFICATION TEST. Refer to **STANDARD PROCEDURE**.

No

- DTC is not active at this time. Test complete.

3. **FUSED (B+) CIRCUIT OPEN**

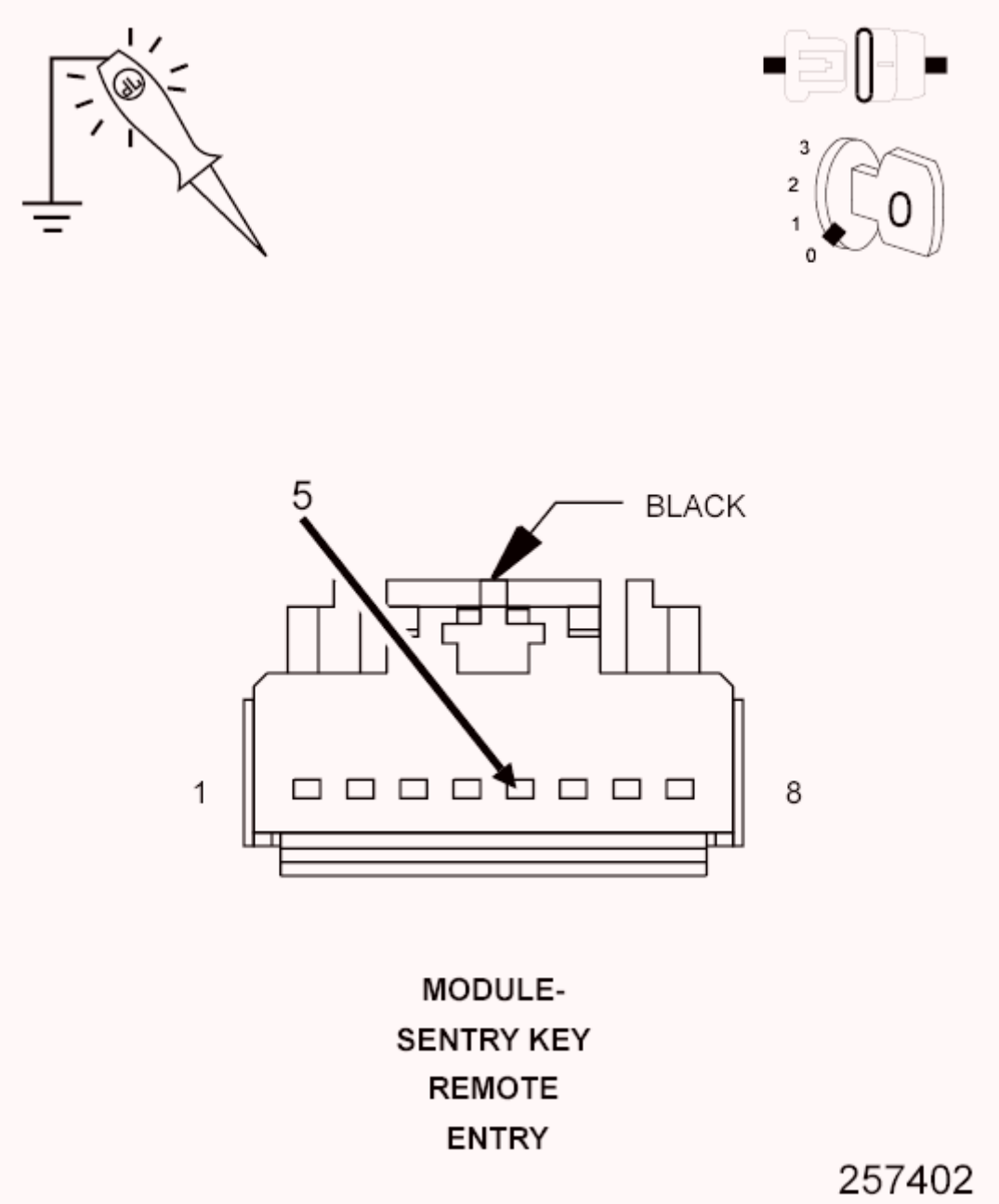

Fig. 10: Checking Fused (B+) Circuit For An Open
Courtesy of CHRYSLER GROUP, LLC

NOTE: Check the related fuses to the Fused (B+) circuit. If the fuse is found to be open repair the circuit for a shorted condition.

1. Turn the ignition off.
2. Disconnect the WCM harness connector.
3. Turn the ignition on.

4. Using a 12 volt test light connected to ground, probe the Fused (B+) circuit in the WCM harness connector.

   Does the test light illuminate brightly?

   Yes

   - Go To 4

   No

   - Repair the Fused (B+) circuit for an open.
   - Perform the WCM VERIFICATION TEST. Refer to **STANDARD PROCEDURE**.

4. **WCM**

NOTE: A dirty (partial) ground can cause abnormal conditions within a system. Ensure the module has a good ground before continuing.

1. Turn the ignition off.
2. Reconnect the WCM connector
3. Back probe the Fused (B+) circuit.
4. Start the engine.
5. Using the scan tool, view battery voltage under Data Display in the Engine category.
6. Compare the voltage on the scan tool to the voltage reading on the voltmeter.

   Is the voltage on the scan tool equal to the voltmeter reading +/-.5 volt?

   Yes

   - Replace and program the Wireless Control Module in accordance with the Service Information.
   - Perform the WCM VERIFICATION TEST. Refer to **STANDARD PROCEDURE**.

No

- Repair the Fused (B+) circuit for high resistances.
- Perform the WCM VERIFICATION TEST. Refer to **STANDARD PROCEDURE**.

B210E-BATTERY VOLTAGE HIGH

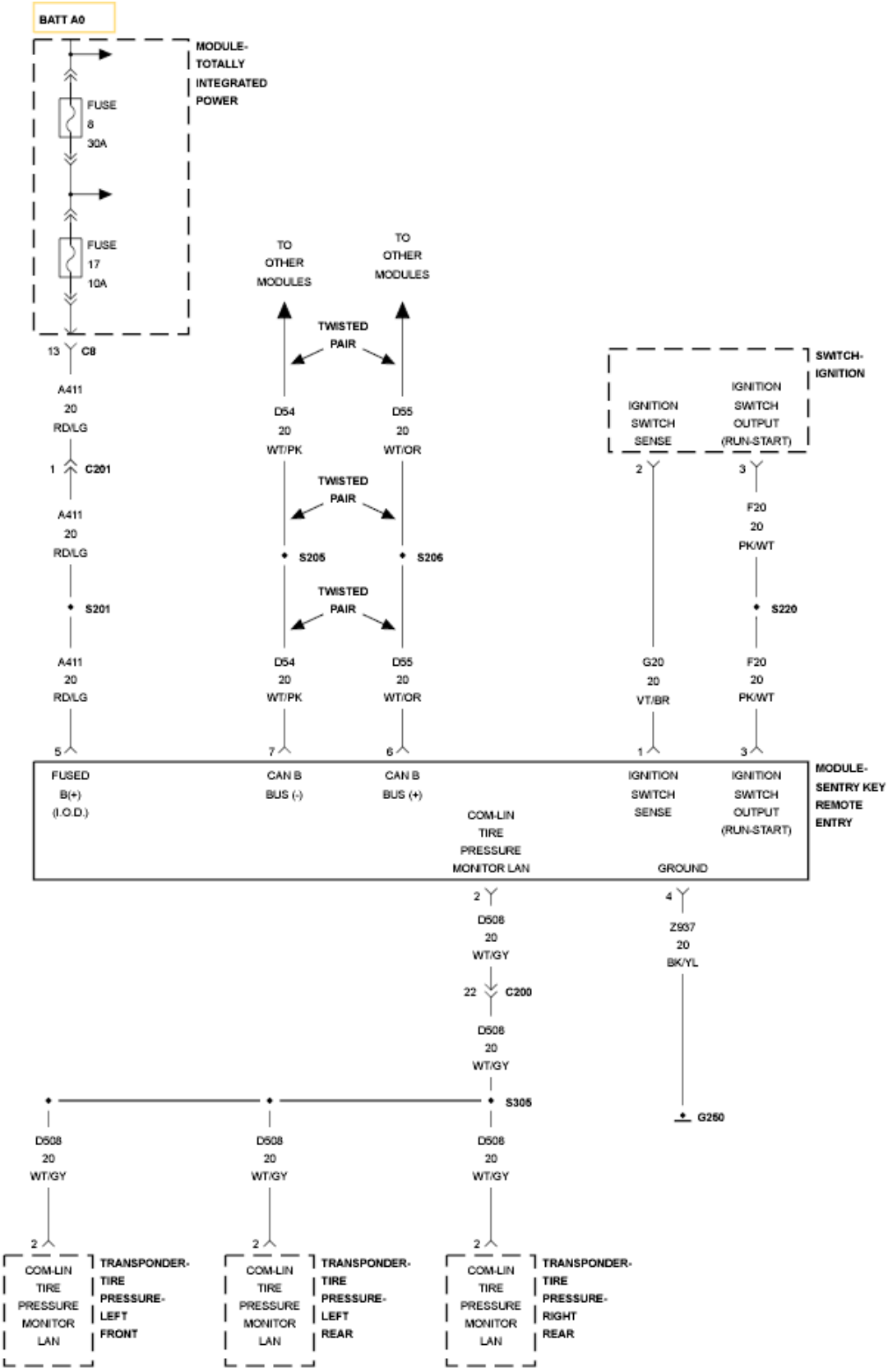

Fig. 11: Ignition Switch Circuit Schematic
Courtesy of CHRYSLER GROUP, LLC

For a complete wiring diagram, **refer to appropriate SYSTEM WIRING DIAGRAMS article** .

WHEN MONITORED

With the ignition switch on.

SET CONDITION

The Sentry Key remote Entry Module (SKREEM) also known as the Wireless Control Module (WCM) has detected the Fused (B+) input voltage above a calibrated value.

POSSIBLE CAUSES

Possible Causes
VEHICLE CHARGING SYSTEM WIRELESS CONTROL MODULE (WCM)/SENTRY KEY REMOTE ENTRY MODULE (SKREEM)

DIAGNOSTIC TEST

DETERMINING IF DIAGNOSTIC TROUBLE CODE (DTC) IS CURRENT

NOTE: Diagnose and repair all Powertrain DTCs before continuing.

1. Turn the ignition on.
2. With the scan tool, record and erase the WCM DTCs.
3. Perform 5 ignition cycles, leaving the ignition switch on for a minimum of 90 seconds per cycle.
4. Using the scan tool, read the WCM DTCs.

   Does the DTC reset?

   Yes

   - Replace and program the Wireless Control Module in accordance with the Service Information.
   - Perform the WCM VERIFICATION TEST. Refer to **STANDARD**

PROCEDURE.

No

- Perform the WCM VERIFICATION TEST. Refer to **STANDARD PROCEDURE**.

B2204-ECU CONFIGURATION MISMATCH

For a complete wiring diagram, **refer to appropriate SYSTEM WIRING DIAGRAMS article** .

WHEN MONITORED

With the ignition on.

SET CONDITION

The Wireless Control Module (WCM)/Sentry Key Remote Entry Module (SKREEM) receives different information than is configured within the module. Examples include Model Year, Country Code, Body Style, Platform, Remote Start, Sun Roof.

POSSIBLE CAUSES

Possible Causes
WIRELESS CONTROL MODULE (WCM)/SENTRY KEY REMOTE ENTRY MODULE (SKREEM)

DIAGNOSTIC TEST

VERIFY THAT THE DIAGNOSTIC TROUBLE CODE (DTC) IS ACTIVE

1. Turn the ignition on.

NOTE: Before continuing, review and check for the following:

- **Review the repair history of the vehicle.**
- **Ensure that the vehicle has the correct PCM and WCM/SKREEM installed by verifying the part numbers.**

- **With the scan tool, ensure that the PCM and WCM/SKREEM are programmed correctly. Compare the PCM VIN to the WCM/SKREEM VIN and ensure the two VINs match.**

2. With the scan tool, clear DTCs.
3. Perform 5 ignition cycles, leaving the ignition switch on for a minimum of 90 seconds per cycle.
4. With the scan tool, select View DTCs.

Does the DTC reset?

Yes

- Replace and program the Wireless Control Module/Sentry Key Remote Entry Module in accordance with the Service Information.

NOTE: If this vehicle is equipped with a Steering Column Lock Module, it must be replaced along with the WCM/SKREEM.

- Perform the WCM VERIFICATION TEST. Refer to **STANDARD PROCEDURE**.

No

- The DTC is not active at this time. Test complete.

B2205-ORIGINAL VIN MISSING/MISMATCH

For a complete wiring diagram, **refer to appropriate SYSTEM WIRING DIAGRAMS article** .

WHEN MONITORED

At ignition on, after ignition on during any rolling code handshake that occurs with the Powertrain Control Module (PCM) due to a Sentry Key remote Entry Module (SKREEM) also known as the Wireless Control Module (WCM) or PCM reset.

SET CONDITION

A valid key is recognized but the programmed VIN does not match between the WCM and PCM/ECM.

POSSIBLE CAUSES

Possible Causes
VERIFYING PCM VIN INTERMITTENT WIRING HARNESS PROBLEM PCM

DIAGNOSTIC TEST

1. **DETERMINING IF DIAGNOSTIC TROUBLE CODE (DTC) IS CURRENT**
    1. With the scan tool, erase the WCM DTCs.
    2. Turn the ignition off.
    3. Wait 10 seconds.
    4. Turn the ignition on and wait 2 minutes.
    5. With the scan tool, read the WCM DTCs.

    Does the scan tool display the DTC that was previously erased?

    Yes

    - Go To 2

    No

    - Go To 4
2. **VERIFYING THE PCM VIN**
    1. Turn the ignition on.
    2. With the scan tool, select Engine system from the main menu.
    3. Display and record the Vehicle Identification Number.

    NOTE: Ensure that a VIN has been programmed into the PCM. If a VIN is not displayed, attempt to program the PCM with the correct VIN before continuing.

    Does the VIN recorded from the PCM match the VIN of the vehicle?

Yes

- Go To 3

No

- Replace and program the Wireless Control Module in accordance with the Service Information.
- Perform the WCM VERIFICATION TEST. Refer to **STANDARD PROCEDURE**.

3. **REPLACE WCM AND CHECK DTC'S**
   1. Turn the ignition off.
   2. Replace and program the Sentry Key Remote Entry Module in accordance with the Service Information.
   3. Turn the ignition on.
   4. With the scan tool, display and clear all PCM and WCM DTCs.
   5. Perform 5 ignition key cycles leaving the ignition key on for 90 seconds per cycle.
   6. With the scan tool, check for WCM DTCs.

   Does the scan tool display the same DTC?

   Yes

   - Replace and program the Powertrain Control Module in accordance with the Service Information.
   - Perform the WCM VERIFICATION TEST. Refer to **STANDARD PROCEDURE**.

   No

   - The repair is complete.
   - Perform the WCM VERIFICATION TEST. Refer to **STANDARD PROCEDURE**.
4. **INTERMITTENT**
   1. Turn the ignition off.

NOTE: Check for the following conditions:

- **Visually inspect the related wiring harness. Look for any chafed, pierced, pinched, or partially broken wires.**
- **Visually inspect the related wiring harness connectors. Look for broken, bent, pushed out, or corroded terminals.**
- **Refer to any Technical Service Bulletins (TSB) that may apply.**

Were any problems found?

Yes

- Repair wiring harness/connectors as necessary.
- Perform the WCM VERIFICATION TEST. Refer to **STANDARD PROCEDURE**.

No

- Test Complete.

B2224-SKREEM INTERNAL

For a complete wiring diagram, **refer to appropriate SYSTEM WIRING DIAGRAMS article** .

WHEN MONITORED

With the ignition on.

SET CONDITION

Wireless Control Module (WCM)/Sentry Key Remote Entry Module (SKREEM) watchdog resets.

POSSIBLE CAUSES

Possible Causes
WIRELESS CONTROL MODULE (WCM)/SENTRY KEY REMOTE

ENTRY MODULE (SKREEM)

DIAGNOSTIC TEST

VERIFY THAT THE DIAGNOSTIC TROUBLE CODE (DTC) IS ACTIVE

1. Turn the ignition on.

   NOTE: Before continuing, review and check for the following:

   - **Review the repair history of the vehicle.**
   - **Ensure that the vehicle has the correct PCM and WCM/SKREEM installed by verifying the part numbers.**
   - **With the scan tool, ensure that the PCM and WCM/SKREEM are programmed correctly. Compare the PCM VIN to the WCM/SKREEM VIN and ensure the two VINs match.**

2. With the scan tool, clear DTCs.
3. Perform 5 ignition cycles, leaving the ignition switch on for a minimum of 90 seconds per cycle.
4. With the scan tool, read DTCs.

   Does the DTC reset?

   Yes

   - Replace and program the Wireless Control Module (WCM)/Sentry Key Remote Entry Module (SKREEM) in accordance with the Service Information.

     NOTE: If this vehicle is equipped with a Steering Column Lock Module, it must be replaced along with the WCM/SKREEM.

   - Perform the WCM VERIFICATION TEST. Refer to **STANDARD PROCEDURE**.

No

- The DTC is not active at this time. Test complete.

B2228-SKREEM INTERNAL - RKE RECEIVER

For a complete wiring diagram, **refer to appropriate SYSTEM WIRING DIAGRAMS article** .

WHEN MONITORED

With the ignition on.

POSSIBLE CAUSES

Possible Causes
WIRELESS CONTROL MODULE (WCM)/SENTRY KEY REMOTE ENTRY MODULE (SKREEM)

DIAGNOSTIC TEST

VERIFY THAT THE DIAGNOSTIC TROUBLE CODE (DTC) IS ACTIVE

1. Turn the ignition on.

NOTE: Before continuing, review and check for the following:

- **Review the repair history of the vehicle.**
- **Ensure that the vehicle has the correct PCM and WCM/SKREEM installed by verifying the part numbers.**
- **With the scan tool, ensure that the PCM and WCM/SKREEM are programmed correctly. Compare the PCM VIN to the WCM/SKREEM VIN and ensure the two VINs match.**

2. With the scan tool, clear DTCs.
3. Perform 5 ignition cycles, leaving the ignition switch on for a minimum of 90 seconds per cycle.
4. With the scan tool, read DTCs.

Does the DTC reset?

Yes

- Replace and program the Wireless Control Module (WCM)/Sentry Key Remote Entry Module (SKREEM) in accordance with the Service Information.

NOTE: If this vehicle is equipped with a Steering Column Lock Module, it must be replaced along with the WCM/SKREEM.

- Perform the WCM VERIFICATION TEST. Refer to **STANDARD PROCEDURE**.

No

- The DTC is not active at this time. Test complete.

B2229-SKREEM INTERNAL - SKIM IMMOBILIZER

For a complete wiring diagram, **refer to appropriate SYSTEM WIRING DIAGRAMS article** .

WHEN MONITORED

With the ignition on.

SET CONDITION

When the Antenna diagnostic test fails.

POSSIBLE CAUSES

Possible Causes
WIRELESS CONTROL MODULE (WCM)/SENTRY KEY REMOTE ENTRY MODULE (SKREEM)

DIAGNOSTIC TEST

VERIFY THAT THE DTC IS ACTIVE

1. Turn the ignition on.

NOTE: Before continuing, review and check for the following:

- **Review the repair history of the vehicle.**
- **Ensure that the vehicle has the correct PCM and WCM/SKREEM installed by verifying the part numbers.**
- **With the scan tool, ensure that the PCM and WCM/SKREEM are programmed correctly. Compare the PCM VIN to the WCM/SKREEM VIN and ensure the two VINs match.**

2. With the scan tool, clear DTCs.
3. Perform 5 ignition cycles, leaving the ignition switch on for a minimum of 90 seconds per cycle.
4. With the scan tool, read DTCs.

Does the DTC reset?

Yes

- Replace and program the Wireless Control Module (WCM)/Sentry Key Remote Entry Module (SKREEM) in accordance with the Service Information.

NOTE: If this vehicle is equipped with a Steering Column Lock Module, it must be replaced along with the WCM/SKREEM.

- Perform the WCM VERIFICATION TEST. Refer to **STANDARD PROCEDURE**.

No

- The DTC is not active at this time. Test complete.

C0077- LOW TIRE PRESSURE

For a complete wiring diagram, **refer to appropriate SYSTEM WIRING**

DIAGRAMS article .

WHEN MONITORED

Continuously.

SET CONDITION

A low pressure condition will exist when the tire pressure falls below or is equal to the low pressure threshold value as specified for the vehicle.

POSSIBLE CAUSES

Possible Causes
INTERMITTENT PERFORMANCE DTC
INCORRECT TIRE PRESSURE
TIRE PRESSURE MONITORING (TPM) SENSOR
WIRELESS CONTROL MODULE (WCM)

DIAGNOSTIC TEST

1. **DTC STATUS**

NOTE: **If the incorrect Placard Values were programmed into the WCM, a DTC could be set. Before continuing with any TPM diagnostic test, using the scan tool, check that the correct Placard Values have been programmed in to the module.**

NOTE: **If the following conditions are present:**

- **Low Tire Pressure DTC**
- **Tire Pressure Monitoring (TPM) Sensor Internal DTC**
- **Spare Tire is not equipped with a Tire Pressure Monitoring (TPM) Sensor**
- **Spare Tire is currently on the vehicle**

Repair the tire and place it back on the vehicle.

Test drive the vehicle.

If the DTCs reset continue with the diagnostic procedure.

1. Ignition on, engine not running.
2. With the scan tool, read DTCs.

   Is the DTC status at this time?

   Yes

   - Go To 2

   No

   - Go To 5

2. **LOW TIRE PRESSURE**

NOTE: **The DTC can be caused by many different factors and might not be a sensor/transmitter or a WCM) fault. Interference from other elements will over power the sensor/transmitter RF frequency making erratic operation to the TPM system. Check the vehicle for aftermarket accessories that could compromise the RF frequency signal before diagnosing the TPM system.**

NOTE: **Seasonal temperature changes will affect tire pressure, and may have caused the tire pressure to fall below the low pressure warning threshold. Tire pressure should always be set based on cold inflation tire pressure (placard). This is defined as the tire pressure after a vehicle has not been driven for more then 3 hours, and in outside ambient temperatures.**

1. Correct all tire pressure to the recommended specifications and wait 2 minutes.

2. With the scan tool, clear DTCs in the Wireless Control Module (WCM).
3. Test Drive the vehicle for a minimum of 10 minutes with vehicle speed greater than 15 m.p.h. (24 km/h).
4. Use a TPM-RKE Analyzer 9936 to scan each tire pressure sensor, and make sure the Sensor IDs matches what is programmed into the WCM. The Sensor Identifications are located under "Data Display" for the "WCM Wireless Control Module". If the sensor IDs does not match, following the programming steps outlined in the diagnostic scan tool for "Program Tire Sensor ID w/TPM Tool" under "Miscellaneous Functions" for the "WCM/Wireless Control Module" menu item.
5. With the scan tool, read DTCs.

NOTE: When scanning a sensor with a TPM-RKE Analyzer 9936, replace the TPM sensor if the results show a "Damaged Accel", "Damaged Temp", or "Damaged Press".

Does the DTC reset or is the status Active for this DTC?

Yes

- Go To 3

No

- Test Complete.

3. **TIRE PRESSURE MONITORING (TPM) SENSOR**

NOTE: Before continuing, ensure the tire is free from any leaks or damage that would cause a low tire pressure condition. If a problem is found, repair as necessary and retest.

1. With the scan tool, go under "Data Display" for the "WCM Wireless Control Module" and find the compensated tire pressure values. Located underneath each Sensor Identification locations. If any compensated tire pressure values are equal or lower then the Tire Low

Pressure Threshold. The corresponding TPM sensor needs to be located and replaced.

NOTE: The following tests are used to locate the Tire Pressure Monitoring (TPM) Sensor/Transmitter that is setting the low pressure fault. If the tires have been rotated, the Tire Pressure Monitoring (TPM) Sensor/Transmitter are no longer in sequence from the factory. Faults are linked to the sensor/transmitter IDs. You MUST locate the correct Tire Pressure Monitoring (TPM) Sensor/Transmitter that set the fault before continuing. Use one or more of the following methods below.

2. METHOD 1: Use a TPM-RKE Analyzer 9936 to scan each tire pressure sensor. If a suspected sensor has been located, lower the tire pressure to 20 PSI, wait for two minutes, and check the scan tool for changes to any compensated tire pressure values.
3. If there was a pressure change to any compensated tire pressure values, check to make sure that the TPM-RKE Analyzer is set correctly, and repeat the process on each wheel on the vehicle until the faulty Sensor/Transmitter has been identified.

NOTE: When scanning a sensor with a TPM-RKE Analyzer 9936, replace the TPM sensor if the results show a "Damaged Accel", "Damaged Temp", or "Damaged Press".

4. METHOD 2: Starting with the left front wheel, deflate the tire to 20 PSI, wait two minutes, and check the scan tool for changes to any compensated tire pressure values.
5. If there was a pressure change to any compensated tire pressure value, repeat this process on each wheel on the vehicle until the faulty Sensor/Transmitter has been identified.

Has the malfunctioning/faulty TPM sensor been located?

Yes

- Replace the Tire Pressure Monitoring (TPM) Sensor in accordance with the Service Information.
- Perform the TPM VERIFICATION TEST. Refer to **STANDARD PROCEDURE**.

No

- Go To 4

4. **WIRELESS CONTROL MODULE (WCM)**
   1. Replace the Wireless Control Module (WCM) in accordance with the Service Information. Perform the WCM VERIFICATION TEST. Refer to **STANDARD PROCEDURE**.
   2. With the scan tool, read DTCs.
   3. Drive the vehicle for a minimum of 10 minutes while maintaining a continuous speed above 24 km/h (15 mph). During this time the system will learn the sensor IDs.

   Are there any DTCs present?

   Yes

   - Repair not complete, perform the appropriate diagnostic procedure.
   - Perform the TPM VERIFICATION TEST. Refer to **STANDARD PROCEDURE**.

   No

   - Repair is complete.

5. **INTERMITTENT TIRE PRESSURE MONITORING (TPM) SENSOR DTC**
   1. The conditions necessary to set this DTC are not present at this time.
   2. Perform any Technical Service Bulletins that may apply to this condition.
   3. With the scan tool, erase DTCs in the Wireless Control Module (WCM).
   4. Test drive the vehicle for a minimum of 10 minutes with vehicle speed greater than 24 km/h (15 mph).

5. With the scan tool, read DTCs.

   Does the DTC reset or is the status Active for this DTC?

   Yes

   - Repair as necessary.
   - Perform the TPM VERIFICATION TEST. Refer to **STANDARD PROCEDURE**.

   No

   - Test complete.

C1501-TIRE PRESSURE MONITORING (TPM) SENSOR 1 INTERNAL

For a complete wiring diagram, **refer to appropriate SYSTEM WIRING DIAGRAMS article** .

THEORY OF OPERATION

The tire pressure sensor actively monitors the air pressure and air temperature inside the tire, the sensor internal battery status, and the radial acceleration of the wheel. Each sensor has a unique ID code. The sensor transmits the data at regular intervals via an encoded signal to a receiver circuit located in the Wireless Control Module (WCM).

WHEN MONITORED

With vehicle speed greater than 24 km/h (15 mph).

SET CONDITION

The Wireless Control Module (WCM) will monitor the signals from the four active Tire Pressure Monitoring (TPM) Sensors. A loss of signal error is detected if data are not received or cannot be accurately decoded over 16 consecutive blocks or minimum of 10 minutes when the vehicle speed is above 24 km/h (15 mph). An internal TPM Sensor hardware error condition will be set when an error in the accelerometer, pressure sensor, or temperature sensor is detected. The Tire Pressure Monitoring (TPM) Telltale Lamp will flash on and off for 75 seconds then remain on solid when a system fault is detected.

POSSIBLE CAUSES

Possible Causes
AFTERMARKET TIRES/WHEELS
PRESENCE OF AFTERMARKET COMPONENTS THAT INTERFERE WITH RF RECEPTION
OUTSIDE INTERFERENCE
REMOTE START ANTENNA
INTERMITTENT TIRE PRESSURE MONITORING (TPM) SENSOR INTERNAL DTC
TIRE PRESSURE MONITORING (TPM) SENSOR
TIRE PRESSURE MONITORING (TPM) TRANSPONDER
WIRELESS CONTROL MODULE (WCM)

NOTE: A system fault can occur by many scenarios, including the following:

- **Signal interference due to electronic devices or driving next to facilities emitting the same Radio Frequencies as the TPM sensors.**
- **Installing aftermarket window tinting that affects radio wave signals.**
- **Accumulation of snow or ice around the wheels or wheel housings.**
- **Using tire chains on the vehicle.**
- **Using wheels/tires not equipped with TPM Sensors.**

DIAGNOSTIC TEST

1. **DTC STATUS IS ACTIVE**

NOTE: Before beginning diagnostic procedure, verify that the tire pressures are correct.

NOTE: This DTC can be caused by many different factors and might not be a TPM Sensor or a WCM fault. Interference from other elements will over power the sensor RF frequency making erratic operation to the

TPM system. Check the vehicle for aftermarket accessories that could compromise the RF frequency signal before diagnosing the TPM system.

1. Ignition on, engine not running.
2. With the scan tool, record and erase DTCs.
3. Test drive the vehicle at a speed greater than 24 km/h (15 mph) for a minimum of 10 minutes in order to receive TPM Sensor data and allow for the system to update.
4. With the scan tool, read DTCs.

   Is the DTC status Active at this time?

   Yes

   - Go To 2

   No

   - Go To 11

2. **TIRE PRESSURE MONITORING (TPM) SENSOR INTERNAL FAULT ACTIVE**
   1. Ignition on, engine not running.
   2. With the scan tool, select Data Display for the WCM and locate the following:
      - Tire 1 Pressure Sensor HW Fault
      - Tire 1 Pressure Sensors Missing ID
      - Tire 1 Temperature Sensor HW Fault
      - Tire 1 Temperature Sensor SW O/U
      - Tire 1 Acceleration Sensor HW Fault
      - Tire 1 Loss of Signal from Pressure Sensor

      Do any of the above faults read "Set"?

      Yes

      - Go To 3

No

- Go To 10

3. **TPM-RKE ANALYZER 9936**

   Is there a TPM-RKE Analyzer available?

   Yes

   - Go To 4

   No

   - Go To 10

4. **TIRE PRESSURE MONITORING (TPM) SENSOR INTERNAL DTC**

   NOTE: This fault can be set if the incorrect or no TPM Sensor is installed on the vehicle. If the spare tire is currently installed on the vehicle, and it is not equipped with a TPM Sensor, this DTC can be set. Replace the spare with a TPM Sensor equipped wheel and tire assembly. Test drive the vehicle. If the DTC resets, continue with the diagnostic procedure.

   1. Perform a visual inspection to verify that all road wheels are equipped with TPM Sensors.
   2. With the TPM-RKE Analyzer 9936 verify the correct TPM Sensors are on the vehicle.

      Are the correct TPM Sensors installed on the vehicle?

      Yes

      - Go To 5

      No

      - Replace the Tire Pressure Monitoring (TPM) Sensor in accordance with the Service Information.
      - Perform the TPM VERIFICATION TEST. Refer to **STANDARD**

PROCEDURE.

5. **TIRE PRESSURE MONITORING (TPM) SENSOR INTERNAL FAULT SET**

NOTE: If the tires have been rotated, the TPM Sensor is no longer in sequence from the factory. Faults are linked to the TPM Sensor IDs. You MUST locate the correct TPM Sensor that set the fault before continuing. Use the following method below at every tire location.

NOTE: If you receive no response from any of the tire pressure sensors, verify that the TPM-RKE Analyzer 9936 is set correctly, and repeat the process on each non-responsive wheel.

1. With the TPM-RKE Analyzer 9936, scan each TPM Sensor for a response and store in the proper location of the TPM-RKE Analyzer 9936.

   Were the TPM Sensor IDs able to be stored in the proper locations?

   Yes

   - Go To 7

   No

   - Go To 6

6. **TIRE PRESSURE MONITORING (TPM) SENSOR NON-RESPONSIVE**
   1. With the TPM-RKE Analyzer 9936, check to see if the any of the TPM Sensors do not respond after repeated attempts or display the following:
      - "Damaged Accel"
      - "Damaged Press"
      - "Damaged Temp"

      Are any of the TPM Sensors not responding or displaying the information listed above?

Yes

- Replace the Tire Pressure Monitoring (TPM) Sensor in accordance with the Service Information.
- Perform the TPM VERIFICATION TEST. Refer to **STANDARD PROCEDURE**.

No

- Go To 7

7. **TIRE PRESSURE MONITORING (TPM) SENSOR INTERNAL FAULT - MISMATCHED ID**

NOTE: If the TPM Sensor IDs do not match, it may be necessary to move the vehicle to a location away from other TPM Sensors and repeat this step.

1. With the TPM-RKE Analyzer 9936, verify the Sensor IDs match what is programmed in the WCM.
2. With the scan tool, select Data Display for the WCM.

Do the TPM Sensor IDs match what is stored in the WCM

Yes

- Go To 8

No

- With the scan tool, perform the appropriate procedure for uploading the correct IDs in the (WCM).
- Perform the TPM VERIFICATION TEST. Refer to **STANDARD PROCEDURE**.

8. **TIRE PRESSURE MONITORING (TPM) SENSOR INTERNAL FAULT - REMOTE START ANTENNA**

1. If the vehicle is equipped with factory installed remote start feature, check to make sure the antenna connector is properly connected to the WCM.

Is the Remote Start Antenna properly connected to the WCM?

Yes

- Go To 9

No

- Repair as necessary.
- Perform the TPM VERIFICATION TEST. Refer to **STANDARD PROCEDURE**.

9. **TIRE PRESSURE MONITORING (TPM) SENSOR INTERNAL FAULT - INTERFERENCE FROM EXTERNAL COMPONENTS**

NOTE: The DTC can be caused by many different factors and might not be a sensor or a WCM fault. Interference from other elements will over power the sensor RF frequency making erratic operation to the TPM system. Check the vehicle for aftermarket accessories that could compromise the RF frequency signal before diagnosing the TPM system.

NOTE: A system fault can occur by many scenarios, including the following:

- **Signal interference due to electronic devices or driving next to facilities emitting the same Radio Frequencies as the TPM sensors.**
- **Installing aftermarket window tinting that affects radio wave signals.**
- **Accumulation of snow or ice around the wheels or wheel housings.**
- **Using tire chains on the vehicle.**
- **Using wheels/tires not equipped with TPM Sensors.**
- **Loss of communication with the TPM Transponders or TPM Sensors.**

1. Attempt to isolate the external component responsible for the RF interference.

   Has an interfering external component been isolated?

   Yes

   - Repair as necessary.
   - Perform the TPM VERIFICATION TEST. Refer to **STANDARD PROCEDURE**.

   No

   - Replace the Wireless Control Module (WCM) in accordance with the Service Information.
   - Perform the WCM VERIFICATION TEST. Refer to **STANDARD PROCEDURE**.

10. **TIRE PRESSURE MONITORING (TPM) SENSOR INTERNAL FAULT SET**

    NOTE: Some vehicles will not receive TPM Sensor data when the vehicle is stationary. The vehicle may need to be driven at speeds greater than 24 km/h (15 mph) for about a minute in order to receive TPM Sensor data.

    1. Starting with the left front wheel, deflate the tire to 20 PSI, wait Two minutes, and check the scan tool for changes to any compensated tire pressure values
    2. Look for a tire location whose sensor ID that is not responding.
    3. Repeat this test on each wheel on the vehicle until the sensor in question has been identified

    Has the Tire Pressure Monitoring (TPM) Sensor been located?

    Yes

    - Replace the Tire Pressure Monitoring (TPM) Sensor in accordance with the Service Information.
    - Perform the TPM VERIFICATION TEST. Refer to **STANDARD**

PROCEDURE.

No

- Replace the Wireless Control Module (WCM) in accordance with the Service Information.
- Perform the WCM VERIFICATION TEST. Refer to **STANDARD PROCEDURE**.

11. **INTERMITTENT TIRE PRESSURE MONITORING (TPM) SENSOR DTC**
    1. The conditions that caused this code to set are not present at this time.
    2. Using the wiring diagram/schematic as a guide, inspect the wiring harness and connectors.
    3. Perform any Technical Service Bulletins that may apply to this condition.
    4. With the scan tool, erase DTCs.
    5. Test drive the vehicle for a minimum of 10 minutes with vehicle speed greater than 24 km/h (15 mph).

    Does the DTC reset or is the status Active for this DTC?

    Yes

    - Return to the beginning of this test and perform the appropriate diagnostic procedure as necessary.

    No

    - Test Complete.

C1502-TIRE PRESSURE SENSOR 2 INTERNAL

For a complete wiring diagram, **refer to appropriate SYSTEM WIRING DIAGRAMS article** .

THEORY OF OPERATION

The tire pressure sensor actively monitors the air pressure and air temperature inside the tire, the sensor internal battery status, and the radial acceleration of the wheel. Each sensor has a unique ID code. The sensor transmits the data at regular

intervals via an encoded signal to a receiver circuit located in the Wireless Control Module (WCM).

WHEN MONITORED

With vehicle speed greater than 24 km/h (15 mph).

SET CONDITION

The Wireless Control Module (WCM) will monitor the signals from the four active Tire Pressure Monitoring (TPM) Sensors. A loss of signal error is detected if data are not received or cannot be accurately decoded over 16 consecutive blocks or minimum of 10 minutes when the vehicle speed is above 24 km/h (15 mph). An internal TPM Sensor hardware error condition will be set when an error in the accelerometer, pressure sensor, or temperature sensor is detected. The Tire Pressure Monitoring (TPM) Telltale Lamp will flash on and off for 75 seconds then remain on solid when a system fault is detected.

POSSIBLE CAUSES

Possible Causes
AFTERMARKET TIRES/WHEELS
PRESENCE OF AFTERMARKET COMPONENTS THAT INTERFERE WITH RF RECEPTION
OUTSIDE INTERFERENCE
REMOTE START ANTENNA
INTERMITTENT TIRE PRESSURE MONITORING (TPM) SENSOR INTERNAL DTC
TIRE PRESSURE MONITORING (TPM) SENSOR
TIRE PRESSURE MONITORING (TPM) TRANSPONDER
WIRELESS CONTROL MODULE (WCM)

NOTE: A system fault can occur by many scenarios, including the following:

- **Signal interference due to electronic devices or driving next to facilities emitting the same Radio Frequencies as the TPM sensors.**
- **Installing aftermarket window tinting that affects radio wave signals.**

- **Accumulation of snow or ice around the wheels or wheel housings.**
- **Using tire chains on the vehicle.**
- **Using wheels/tires not equipped with TPM Sensors.**

DIAGNOSTIC TEST

1. **DTC STATUS IS ACTIVE**

NOTE: Before beginning diagnostic procedure, verify that the tire pressures are correct.

NOTE: This DTC can be caused by many different factors and might not be a TPM Sensor or a WCM fault. Interference from other elements will over power the sensor RF frequency making erratic operation to the TPM system. Check the vehicle for aftermarket accessories that could compromise the RF frequency signal before diagnosing the TPM system.

1. Ignition on, engine not running.
2. With the scan tool, record and erase DTCs.
3. Test drive the vehicle at a speed greater than 24 km/h (15 mph) for a minimum of 10 minutes in order to receive TPM Sensor data and allow for the system to update.
4. With the scan tool, select View DTCs.

   Is the DTC status Active at this time?

   Yes

   - Go To 2

   No

   - Go To 11

2. **TIRE PRESSURE MONITORING (TPM) SENSOR INTERNAL FAULT ACTIVE**

1. Ignition on, engine not running.
2. With the scan tool, select Data Display for the WCM and locate the following:
   - Tire 2 Pressure Sensor HW Fault
   - Tire 2 Pressure Sensors Missing ID
   - Tire 2 Temperature Sensor HW Fault
   - Tire 2 Temperature Sensor SW O/U
   - Tire 2 Acceleration Sensor HW Fault
   - Tire 2 Loss of Signal from Pressure Sensor

   Do any of the above faults read "Set"?

   Yes

   - Go To 3

   No

   - Go To 10

3. **TPM-RKE ANALYZER 9936**

   Is there a TPM-RKE Analyzer 9936 available?

   Yes

   - Go To 4

   No

   - Go To 10

4. **TIRE PRESSURE MONITORING (TPM) SENSOR INTERNAL DTC**

   NOTE: This fault can be set if the incorrect or no TPM Sensor is installed on the vehicle. If the spare tire is currently installed on the vehicle, and it is not equipped with a TPM Sensor, this DTC can be set. Replace the spare with a TPM Sensor equipped wheel and tire assembly. Test drive the vehicle. If the DTC

resets, continue with the diagnostic procedure.

1. Perform a visual inspection to verify that all road wheels are equipped with TPM Sensors.
2. With the TPM-RKE Analyzer 9936 verify the correct TPM Sensors are on the vehicle.

   Are the correct TPM Sensors installed on the vehicle?

   Yes

   - Go To 5

   No

   - Replace the Tire Pressure Monitoring (TPM) Sensor in accordance with the Service Information.
   - Perform the TPM VERIFICATION TEST. Refer to **STANDARD PROCEDURE**.

5. **TIRE PRESSURE MONITORING (TPM) SENSOR INTERNAL FAULT SET**

NOTE: **If the tires have been rotated, the TPM Sensor is no longer in sequence from the factory. Faults are linked to the TPM Sensor IDs. You MUST locate the correct TPM Sensor that set the fault before continuing. Use the following method below at every tire location.**

NOTE: **If you receive no response from any of the tire pressure sensors, verify that the TPM-RKE Analyzer 9936 is set correctly, and repeat the process on each non-responsive wheel.**

1. With the TPM-RKE Analyzer 9936, scan each TPM Sensor for a response and store in the proper location of the TPM-RKE Analyzer 9936.

   Were the TPM Sensor IDs able to be stored in the proper locations?

Yes

- Go To 7

No

- Go To 6

6. **TIRE PRESSURE MONITORING (TPM) SENSOR NON-RESPONSIVE**
   1. With the TPM-RKE Analyzer 9936, check to see if the any of the TPM Sensors do not respond after repeated attempts or display the following:
      - "Damaged Accel"
      - "Damaged Press"
      - "Damaged Temp"

      Are any of the TPM Sensors not responding or displaying the information listed above?

      Yes

      - Replace the Tire Pressure Monitoring (TPM) Sensor in accordance with the Service Information.
      - Perform the TPM VERIFICATION TEST. Refer to **STANDARD PROCEDURE**.

      No

      - Go To 7
7. **TIRE PRESSURE MONITORING (TPM) SENSOR INTERNAL FAULT - MISMATCHED ID**

   NOTE: If the TPM Sensor IDs do not match, it may be necessary to move the vehicle to a location away from other TPM Sensors and repeat this step.

   1. With the TPM-RKE Analyzer 9936, verify the Sensor IDs match what is programmed in the WCM.
   2. With the scan tool, select Data Display for the WCM.

Do the TPM Sensor IDs match what is stored in the WCM

Yes

- Go To 8

No

- With the scan tool, perform the appropriate procedure for uploading the correct IDs in the (WCM).
- Perform the TPM VERIFICATION TEST. Refer to **STANDARD PROCEDURE**.

8. **TIRE PRESSURE MONITORING (TPM) SENSOR INTERNAL FAULT - REMOTE START ANTENNA**
   1. If the vehicle is equipped with factory installed remote start feature, check to make sure the antenna connector is properly connected to the WCM.

      Is the Remote Start Antenna properly connected to the WCM?

      Yes

      - Go To 9

      No

      - Repair as necessary.
      - Perform the TPM VERIFICATION TEST. Refer to **STANDARD PROCEDURE**.
9. **TIRE PRESSURE MONITORING (TPM) SENSOR INTERNAL FAULT - INTERFERENCE FROM EXTERNAL COMPONENTS**

NOTE: **The DTC can be caused by many different factors and might not be a sensor or a WCM fault. Interference from other elements will over power the sensor RF frequency making erratic operation to the TPM system. Check the vehicle for aftermarket accessories that could compromise the RF frequency signal before diagnosing the TPM system.**

NOTE: A system fault can occur by many scenarios, including the following:

- **Signal interference due to electronic devices or driving next to facilities emitting the same Radio Frequencies as the TPM sensors.**
- **Installing aftermarket window tinting that affects radio wave signals.**
- **Accumulation of snow or ice around the wheels or wheel housings.**
- **Using tire chains on the vehicle.**
- **Using wheels/tires not equipped with TPM Sensors.**
- **Loss of communication with the TPM Transponders or TPM Sensors.**

1. Attempt to isolate the external component responsible for the RF interference.

   Has an interfering external component been isolated?

   Yes

   - Repair as necessary.
   - Perform the TPM VERIFICATION TEST. Refer to **STANDARD PROCEDURE**.

   No

   - Replace the Wireless Control Module (WCM) in accordance with the Service Information.
   - Perform the TPM VERIFICATION TEST. Refer to **STANDARD PROCEDURE**.

10. **TIRE PRESSURE MONITORING (TPM) SENSOR INTERNAL FAULT SET**

NOTE: Some vehicles will not receive TPM Sensor data when the vehicle is stationary. The vehicle may need to be

driven at speeds greater than 24 km/h (15 mph) for about a minute in order to receive TPM Sensor data.

1. Starting with the left front wheel, deflate the tire to 20 PSI, wait Two minutes, and check the scan tool for changes to any compensated tire pressure values
2. Look for a tire location whose sensor ID that is not responding.
3. Repeat this test on each wheel on the vehicle until the sensor in question has been identified

Has the Tire Pressure Monitoring (TPM) Sensor been located?

Yes

- Replace the Tire Pressure Monitoring (TPM) Sensor in accordance with the Service Information.
- Perform the TPM VERIFICATION TEST. Refer to **STANDARD PROCEDURE**.

No

- Replace the Wireless Control Module (WCM) in accordance with the Service Information.
- Perform the WCM VERIFICATION TEST. Refer to **STANDARD PROCEDURE**.

11. **INTERMITTENT TIRE PRESSURE MONITORING (TPM) SENSOR DTC**
    1. The conditions that caused this code to set are not present at this time.
    2. Using the wiring diagram/schematic as a guide, inspect the wiring harness and connectors.
    3. Perform any Technical Service Bulletins that may apply to this condition.
    4. With the scan tool, erase DTCs.
    5. Test drive the vehicle for a minimum of 10 minutes with vehicle speed greater than 24 km/h (15 mph).

    Does the DTC reset or is the status Active for this DTC?

Yes

- Return to the beginning of this test and perform the appropriate diagnostic procedure as necessary.

No

- Test Complete.

C1503-TIRE PRESSURE SENSOR 3 INTERNAL

For a complete wiring diagram, **refer to appropriate SYSTEM WIRING DIAGRAMS article** .

THEORY OF OPERATION

The tire pressure sensor actively monitors the air pressure and air temperature inside the tire, the sensor internal battery status, and the radial acceleration of the wheel. Each sensor has a unique ID code. The sensor transmits the data at regular intervals via an encoded signal to a receiver circuit located in the Wireless Control Module (WCM).

WHEN MONITORED

With vehicle speed greater than 24 km/h (15 mph).

SET CONDITION

The Wireless Control Module (WCM) will monitor the signals from the four active Tire Pressure Monitoring (TPM) Sensors. A loss of signal error is detected if data are not received or cannot be accurately decoded over 16 consecutive blocks or minimum of 10 minutes when the vehicle speed is above 24 km/h (15 mph). An internal TPM Sensor hardware error condition will be set when an error in the accelerometer, pressure sensor, or temperature sensor is detected. The Tire Pressure Monitoring (TPM) Telltale Lamp will flash on and off for 75 seconds then remain on solid when a system fault is detected.

POSSIBLE CAUSES

Possible Causes
AFTERMARKET TIRES/WHEELS PRESENCE OF AFTERMARKET COMPONENTS THAT INTERFERE

WITH RF RECEPTION
OUTSIDE INTERFERENCE
REMOTE START ANTENNA
INTERMITTENT TIRE PRESSURE MONITORING (TPM) SENSOR
INTERNAL DTC
TIRE PRESSURE MONITORING (TPM) SENSOR
TIRE PRESSURE MONITORING (TPM) TRANSPONDER
WIRELESS CONTROL MODULE (WCM)

NOTE: A system fault can occur by many scenarios, including the following:

- **Signal interference due to electronic devices or driving next to facilities emitting the same Radio Frequencies as the TPM sensors.**
- **Installing aftermarket window tinting that affects radio wave signals.**
- **Accumulation of snow or ice around the wheels or wheel housings.**
- **Using tire chains on the vehicle.**
- **Using wheels/tires not equipped with TPM Sensors.**

DIAGNOSTIC TEST

1. **DTC STATUS IS ACTIVE**

NOTE: Before beginning diagnostic procedure, verify that the tire pressures are correct.

NOTE: This DTC can be caused by many different factors and might not be a TPM Sensor or a WCM fault. Interference from other elements will over power the sensor RF frequency making erratic operation to the TPM system. Check the vehicle for aftermarket accessories that could compromise the RF frequency signal before diagnosing the TPM system.

1. Ignition on, engine not running.

2. With the scan tool, record and erase DTCs.
3. Test drive the vehicle at a speed greater than 24 km/h (15 mph) for a minimum of 10 minutes in order to receive TPM Sensor data and allow for the system to update.
4. With the scan tool, select View DTCs.

   Is the DTC status Active at this time?

   Yes

   - Go To 2

   No

   - Go To 11

2. **TIRE PRESSURE MONITORING (TPM) SENSOR INTERNAL FAULT ACTIVE**
   1. Ignition on, engine not running.
   2. With the scan tool, select Data Display for the WCM and locate the following:
      - Tire 3 Pressure Sensor HW Fault
      - Tire 3 Pressure Sensors Missing ID
      - Tire 3 Temperature Sensor HW Fault
      - Tire 3 Temperature Sensor SW O/U
      - Tire 3 Acceleration Sensor HW Fault
      - Tire 3 Loss of Signal from Pressure Sensor

      Do any of the above faults read "Set"?

      Yes

      - Go To 3

      No

      - Go To 10

3. **TPM-RKE ANALYZER 9936**

Is there a TPM-RKE Analyzer 9936 available?

Yes

- Go To 4

No

- Go To 10

4. **TIRE PRESSURE MONITORING (TPM) SENSOR INTERNAL DTC**

NOTE: This fault can be set if the incorrect or no TPM Sensor is installed on the vehicle. If the spare tire is currently installed on the vehicle, and it is not equipped with a TPM Sensor, this DTC can be set. Replace the spare with a TPM Sensor equipped wheel and tire assembly. Test drive the vehicle. If the DTC resets, continue with the diagnostic procedure.

1. Perform a visual inspection to verify that all road wheels are equipped with TPM Sensors.
2. With the TPM-RKE Analyzer 9936 verify the correct TPM Sensors are on the vehicle.

   Are the correct TPM Sensors installed on the vehicle?

   Yes

   - Go To 5

   No

   - Replace the Tire Pressure Monitoring (TPM) Sensor in accordance with the Service Information.
   - Perform the TPM VERIFICATION TEST. Refer to **STANDARD PROCEDURE**.

5. **TIRE PRESSURE MONITORING (TPM) SENSOR INTERNAL FAULT SET**

NOTE: If the tires have been rotated, the TPM Sensor is no longer in sequence from the factory. Faults are linked to the TPM Sensor IDs. You MUST locate the correct TPM Sensor that set the fault before continuing. Use the following method below at every tire location.

NOTE: If you receive no response from any of the TPM Sensors, verify that the TPM-RKE Analyzer 9936 is set correctly, and repeat the process on each non-responsive wheel.

1. With the TPM-RKE Analyzer 9936, scan each TPM Sensor for a response and store in the proper location of the TPM-RKE Analyzer 9936.

   Were the TPM Sensor IDs able to be stored in the proper locations?

   Yes

   - Go To 7

   No

   - Go To 6

6. **TIRE PRESSURE MONITORING (TPM) SENSOR NON-RESPONSIVE**
   1. With the TPM-RKE Analyzer 9936, check to see if the any of the TPM Sensors do not respond after repeated attempts or display the following:
      - "Damaged Accel"
      - "Damaged Press"
      - "Damaged Temp"

      Are any of the TPM Sensors not responding or displaying the information listed above?

      Yes

      - Replace the Tire Pressure Monitoring (TPM) Sensor in accordance with the Service Information.

- Perform the TPM VERIFICATION TEST. Refer to **STANDARD PROCEDURE**.

No

- Go To 7

7. **TIRE PRESSURE MONITORING (TPM) SENSOR INTERNAL FAULT - MISMATCHED ID**

NOTE: If the TPM Sensor IDs do not match, it may be necessary to move the vehicle to a location away from other TPM Sensors and repeat this step.

1. With the TPM-RKE Analyzer 9936, verify the Sensor IDs match what is programmed in the WCM.
2. With the scan tool, select Data Display for the WCM.

Do the TPM Sensor IDs match what is stored in the WCM

Yes

- Go To 8

No

- With the scan tool, perform the appropriate procedure for uploading the correct IDs in the (WCM).
- Perform the TPM VERIFICATION TEST. Refer to **STANDARD PROCEDURE**.

8. **TIRE PRESSURE MONITORING (TPM) SENSOR INTERNAL FAULT - REMOTE START ANTENNA**

1. If the vehicle is equipped with factory installed remote start feature, check to make sure the antenna connector is properly connected to the WCM.

Is the Remote Start Antenna properly connected to the WCM?

Yes

- Go To 9

No

- Repair as necessary.
- Perform the TPM VERIFICATION TEST. Refer to **STANDARD PROCEDURE**.

9. **TIRE PRESSURE MONITORING (TPM) SENSOR INTERNAL FAULT - INTERFERENCE FROM EXTERNAL COMPONENTS**

NOTE: The DTC can be caused by many different factors and might not be a sensor or a WCM fault. Interference from other elements will over power the sensor RF frequency making erratic operation to the TPM system. Check the vehicle for aftermarket accessories that could compromise the RF frequency signal before diagnosing the TPM system.

NOTE: A system fault can occur by many scenarios, including the following:

- **Signal interference due to electronic devices or driving next to facilities emitting the same Radio Frequencies as the TPM sensors.**
- **Installing aftermarket window tinting that affects radio wave signals.**
- **Accumulation of snow or ice around the wheels or wheel housings.**
- **Using tire chains on the vehicle.**
- **Using wheels/tires not equipped with TPM Sensors.**
- **Loss of communication with the TPM Transponders or TPM Sensors.**

1. Attempt to isolate the external component responsible for the RF interference.

Has an interfering external component been isolated?

Yes

- Repair as necessary.
- Perform the TPM VERIFICATION TEST. Refer to **STANDARD PROCEDURE**.

No

- Replace the Wireless Control Module (WCM) in accordance with the Service Information.
- Perform the TPM VERIFICATION TEST. Refer to **STANDARD PROCEDURE**.

10. **TIRE PRESSURE MONITORING (TPM) SENSOR INTERNAL FAULT SET**

NOTE: Some vehicles will not receive TPM Sensor data when the vehicle is stationary. The vehicle may need to be driven at speeds greater than 24 km/h (15 mph) for about a minute in order to receive TPM Sensor data.

1. Starting with the left front wheel, deflate the tire to 20 PSI, wait Two minutes, and check the scan tool for changes to any compensated tire pressure values
2. Look for a tire location whose sensor ID that is not responding.
3. Repeat this test on each wheel on the vehicle until the sensor in question has been identified

Has the Tire Pressure Monitoring (TPM) Sensor been located?

Yes

- Replace the Tire Pressure Monitoring (TPM) Sensor in accordance with the Service Information.
- Perform the TPM VERIFICATION TEST. Refer to **STANDARD PROCEDURE**.

No

- Replace the Wireless Control Module (WCM) in accordance with the Service Information.
- Perform the WCM VERIFICATION TEST. Refer to **STANDARD PROCEDURE**.

11. **INTERMITTENT TIRE PRESSURE MONITORING (TPM) SENSOR DTC**
    1. The conditions that caused this code to set are not present at this time.
    2. Using the wiring diagram/schematic as a guide, inspect the wiring harness and connectors.
    3. Perform any Technical Service Bulletins that may apply to this condition.
    4. With the scan tool, erase DTCs.
    5. Test drive the vehicle for a minimum of 10 minutes with vehicle speed greater than 24 km/h (15 mph).

    Does the DTC reset or is the status Active for this DTC?

    Yes

    - Return to the beginning of this test and perform the appropriate diagnostic procedure as necessary.

    No

    - Test Complete.

C1504-TIRE PRESSURE SENSOR 4 INTERNAL

For a complete wiring diagram, **refer to appropriate SYSTEM WIRING DIAGRAMS article** .

THEORY OF OPERATION

The tire pressure sensor actively monitors the air pressure and air temperature inside the tire, the sensor internal battery status, and the radial acceleration of the wheel. Each sensor has a unique ID code. The sensor transmits the data at regular intervals via an encoded signal to a receiver circuit located in the Wireless Control Module (WCM).

WHEN MONITORED

With vehicle speed greater than 24 km/h (15 mph).

SET CONDITION

The Wireless Control Module (WCM) will monitor the signals from the four active Tire Pressure Monitoring (TPM) Sensors. A loss of signal error is detected if data are not received or cannot be accurately decoded over 16 consecutive blocks or minimum of 10 minutes when the vehicle speed is above 24 km/h (15 mph). An internal TPM Sensor hardware error condition will be set when an error in the accelerometer, pressure sensor, or temperature sensor is detected. The Tire Pressure Monitoring (TPM) Telltale Lamp will flash on and off for 75 seconds then remain on solid when a system fault is detected.

POSSIBLE CAUSES

Possible Causes
AFTERMARKET TIRES/WHEELS
PRESENCE OF AFTERMARKET COMPONENTS THAT INTERFERE WITH RF RECEPTION
OUTSIDE INTERFERENCE
REMOTE START ANTENNA
INTERMITTENT TIRE PRESSURE MONITORING (TPM) SENSOR INTERNAL DTC
TIRE PRESSURE MONITORING (TPM) SENSOR
TIRE PRESSURE MONITORING (TPM) TRANSPONDER
WIRELESS CONTROL MODULE (WCM)

NOTE: A system fault can occur by many scenarios, including the following:

- **Signal interference due to electronic devices or driving next to facilities emitting the same Radio Frequencies as the TPM sensors.**
- **Installing aftermarket window tinting that affects radio wave signals.**
- **Accumulation of snow or ice around the wheels or wheel housings.**
- **Using tire chains on the vehicle.**

- **Using wheels/tires not equipped with TPM Sensors.**

DIAGNOSTIC TEST

1. **DTC STATUS IS ACTIVE**

NOTE: Before beginning diagnostic procedure, verify that the tire pressures are correct.

NOTE: This DTC can be caused by many different factors and might not be a TPM Sensor or a WCM fault. Interference from other elements will over power the sensor RF frequency making erratic operation to the TPM system. Check the vehicle for aftermarket accessories that could compromise the RF frequency signal before diagnosing the TPM system.

1. Ignition on, engine not running.
2. With the scan tool, record and erase DTCs.
3. Test drive the vehicle at a speed greater than 24 km/h (15 mph) for a minimum of 10 minutes in order to receive TPM Sensor data and allow for the system to update.
4. With the scan tool, select View DTCs.

   Is the DTC status Active at this time?

   Yes

   - Go To 2

   No

   - Go To 11

2. **TIRE PRESSURE MONITORING (TPM) SENSOR INTERNAL FAULT ACTIVE**
   1. Ignition on, engine not running.
   2. With the scan tool, select Data Display for the WCM and locate the following:

- Tire 4 Pressure Sensor HW Fault
- Tire 4 Pressure Sensors Missing ID
- Tire 4 Temperature Sensor HW Fault
- Tire 4 Temperature Sensor SW O/U
- Tire 4 Acceleration Sensor HW Fault
- Tire 4 Loss of Signal from Pressure Sensor

Do any of the above faults read "Set"?

Yes

- Go To 3

No

- Go To 10

3. **TPM-RKE ANALYZER 9936**

Is there a TPM-RKE Analyzer 9936 available?

Yes

- Go To 4

No

- Go To 10

4. **TIRE PRESSURE MONITORING (TPM) SENSOR INTERNAL DTC**

NOTE: This fault can be set if the incorrect or no TPM Sensor is installed on the vehicle. If the spare tire is currently installed on the vehicle, and it is not equipped with a TPM Sensor, this DTC can be set. Replace the spare with a TPM Sensor equipped wheel and tire assembly. Test drive the vehicle. If the DTC resets, continue with the diagnostic procedure.

1. Perform a visual inspection to verify that all road wheels are equipped with TPM Sensors.

2. With the TPM-RKE Analyzer 9936 verify the correct TPM Sensors are on the vehicle.

   Are the correct TPM Sensors installed on the vehicle?

   Yes

   - Go To 5

   No

   - Replace the Tire Pressure Monitoring (TPM) Sensor in accordance with the Service Information.
   - Perform the TPM VERIFICATION TEST. Refer to **STANDARD PROCEDURE**.

5. **TIRE PRESSURE MONITORING (TPM) SENSOR INTERNAL FAULT SET**

   NOTE: If the tires have been rotated, the TPM Sensor is no longer in sequence from the factory. Faults are linked to the TPM Sensor IDs. You MUST locate the correct TPM Sensor that set the fault before continuing. Use the following method below at every tire location.

   NOTE: If you receive no response from any of the tire pressure sensors, verify that the TPM-RKE Analyzer 9936 is set correctly, and repeat the process on each non-responsive wheel.

   1. With the TPM-RKE Analyzer 9936, scan each TPM Sensor for a response and store in the proper location of the TPM-RKE Analyzer 9936.

      Were the TPM Sensor IDs able to be stored in the proper locations?

      Yes

      - Go To 7

      No

- Go To 6

6. **TIRE PRESSURE MONITORING (TPM) SENSOR NON-RESPONSIVE**
   1. With the TPM-RKE Analyzer 9936, check to see if the any of the TPM Sensors do not respond after repeated attempts or display the following:
      - "Damaged Accel"
      - "Damaged Press"
      - "Damaged Temp"

      Are any of the TPM Sensors not responding or displaying the information listed above?

      Yes

      - Replace the Tire Pressure Monitoring (TPM) Sensor in accordance with the Service Information.
      - Perform the TPM VERIFICATION TEST. Refer to **STANDARD PROCEDURE**.

      No

      - Go To 7

7. **TIRE PRESSURE MONITORING (TPM) SENSOR INTERNAL FAULT - MISMATCHED ID**

   NOTE: If the TPM Sensor IDs do not match, it may be necessary to move the vehicle to a location away from other TPM Sensors and repeat this step.

   1. With the TPM-RKE Analyzer 9936, verify the Sensor IDs match what is programmed in the WCM.
   2. With the scan tool, select Data Display for the WCM.

      Do the TPM Sensor IDs match what is stored in the WCM

      Yes

      - Go To 8

No

- With the scan tool, perform the appropriate procedure for uploading the correct IDs in the (WCM).
- Perform the TPM VERIFICATION TEST. Refer to **STANDARD PROCEDURE**.

8. **TIRE PRESSURE MONITORING (TPM) SENSOR INTERNAL FAULT - REMOTE START ANTENNA**
   1. If the vehicle is equipped with factory installed remote start feature, check to make sure the antenna connector is properly connected to the WCM.

      Is the Remote Start Antenna properly connected to the WCM?

      Yes

      - Go To 9

      No

      - Repair as necessary.
      - Perform the TPM VERIFICATION TEST. Refer to **STANDARD PROCEDURE**.

9. **TIRE PRESSURE MONITORING (TPM) SENSOR INTERNAL FAULT - INTERFERENCE FROM EXTERNAL COMPONENTS**

NOTE: The DTC can be caused by many different factors and might not be a sensor or a WCM fault. Interference from other elements will over power the sensor RF frequency making erratic operation to the TPM system. Check the vehicle for aftermarket accessories that could compromise the RF frequency signal before diagnosing the TPM system.

NOTE: A system fault can occur by many scenarios, including the following:

- **Signal interference due to electronic devices or driving next to facilities emitting the same Radio**

Frequencies as the TPM sensors.

- **Installing aftermarket window tinting that affects radio wave signals.**
- **Accumulation of snow or ice around the wheels or wheel housings.**
- **Using tire chains on the vehicle.**
- **Using wheels/tires not equipped with TPM Sensors.**
- **Loss of communication with the TPM Transponders or TPM Sensors.**

1. Attempt to isolate the external component responsible for the RF interference.

   Has an interfering external component been isolated?

   Yes

   - Repair as necessary.
   - Perform the TPM VERIFICATION TEST. Refer to **STANDARD PROCEDURE**.

   No

   - Replace the Wireless Control Module (WCM) in accordance with the Service Information.
   - Perform the WCM VERIFICATION TEST. Refer to **STANDARD PROCEDURE**.

10. **TIRE PRESSURE MONITORING (TPM) SENSOR INTERNAL FAULT SET**

NOTE: Some vehicles will not receive TPM Sensor data when the vehicle is stationary. The vehicle may need to be driven at speeds greater than 24 km/h (15 mph) for about a minute in order to receive TPM Sensor data.

1. Starting with the left front wheel, deflate the tire to 20 PSI, wait Two minutes, and check the scan tool for changes to any compensated tire

pressure values

2. Look for a tire location whose sensor ID that is not responding.
3. Repeat this test on each wheel on the vehicle until the sensor in question has been identified

Has the Tire Pressure Monitoring (TPM) Sensor been located?

Yes

- Replace the Tire Pressure Monitoring (TPM) Sensor in accordance with the Service Information.
- Perform the TPM VERIFICATION TEST. Refer to **STANDARD PROCEDURE**.

No

- Replace the Wireless Control Module (WCM) in accordance with the Service Information.
- Perform the WCM VERIFICATION TEST. Refer to **STANDARD PROCEDURE**.

11. **INTERMITTENT TIRE PRESSURE MONITORING (TPM) SENSOR DTC**
    1. The conditions that caused this code to set are not present at this time.
    2. Using the wiring diagram/schematic as a guide, inspect the wiring harness and connectors.
    3. Perform any Technical Service Bulletins that may apply to this condition.
    4. With the scan tool, erase DTCs.
    5. Test drive the vehicle for a minimum of 10 minutes with vehicle speed greater than 24 km/h (15 mph).

    Does the DTC reset or is the status Active for this DTC?

    Yes

    - Return to the beginning of this test and perform the appropriate diagnostic procedure as necessary.

No

- Test Complete.

C1506-LEFT FRONT TIRE PRESSURE TRIGGER MODULE PERFORMANCE

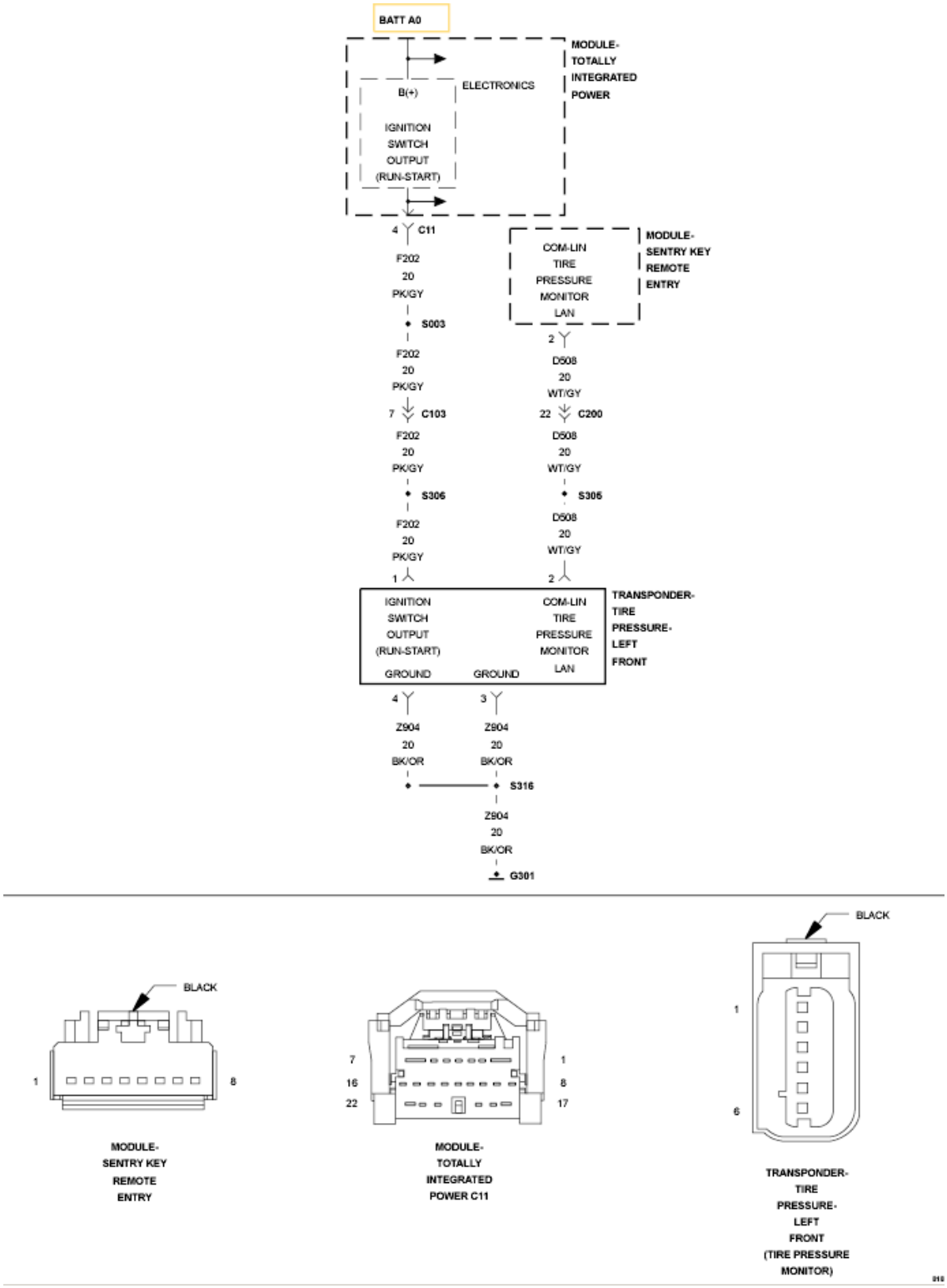

Fig. 12: Left Front Tire Pressure Trigger Module Circuit Schematic

Courtesy of CHRYSLER GROUP, LLC

For a complete wiring diagram, **refer to appropriate SYSTEM WIRING DIAGRAMS article**

THEORY OF OPERATION

The Tire Pressure Trigger Module is used to automatically learn the location of each wheel sensor on the vehicle. The module is controlled and activated in sequence by the Wireless Control Module (WCM) over a LIN bus. When activated, the module will generate a 125 KHz signal of sufficient field strength to trigger the tire pressure sensor and force a RF transmission from the sensor.

WHEN MONITORED

Continuously.

SET CONDITION

The WCM (TPM) will monitor the messages from each Tire Pressure Trigger Module over the LIN bus. If any of the messages are not received, or are received other than as expected, a DTC will set. When the condition is corrected, or is no longer detected, as acknowledged via a LIN bus message, the WCM will reset the appropriate trigger module fault status.

POSSIBLE CAUSES

Possible Causes
INTERMITTENT TIRE PRESSURE TRIGGER MODULE PERFORMANCE DTC
TIRE PRESSURE TRIGGER MODULE
WIRELESS CONTROL MODULE (WCM)

DIAGNOSTIC TEST

1. **DTC STATUS IS ACTIVE**
    1. Ignition on, engine not running.
    2. With the scan tool, select View DTCs in the Wireless Control Module (WCM).

    Is the DTC status Active at this time?

Yes

- Go To 2

No

- Go To 4

2. **TIRE PRESSURE TRIGGER MODULE**
   1. Turn the ignition off.
   2. Replace the appropriate Tire Pressure Trigger Module in accordance with the Service Information.
   3. With the scan tool, clear DTCs in the Wireless Control Module (WCM).
   4. Test Drive the vehicle for a minimum of 10 minutes with vehicle speed greater than 15 mph (24 km/h).
   5. With the scan tool, select View DTCs in the Wireless Control Module (WCM).

   Does the DTC reset or is the status Active for this DTC?

   Yes

   - Go To 3

   No

   - Test Complete.
   - Perform TPM VERIFICATION TEST. Refer to **STANDARD PROCEDURE**.

3. **WIRELESS CONTROL MODULE (WCM)**
   1. View repair.

   Repair

   - Replace the Wireless Control Module (WCM) in accordance with the Service Information.
   - Perform TPM VERIFICATION TEST. Refer to **STANDARD PROCEDURE**.

4. **INTERMITTENT TIRE PRESSURE TRIGGER MODULE DTC**
    1. The conditions necessary to set this DTC are not present at this time.
    2. Using the wiring schematic as a guide, inspect the wiring and connectors relative to this circuit.
    3. Refer to any Technical Service Bulletins that may apply to this condition.
    4. With the scan tool, clear DTCs in the Wireless Control Module (WCM).
    5. Test Drive the vehicle for a minimum of 10 minutes with vehicle speed greater than 15 mph (24 km/h).
    6. With the scan tool, select View DTCs in the Wireless Control Module (WCM).

    Does the DTC reset or is the status Active for this DTC?

    Yes

    - Return to the first step of this test and perform the diagnostic procedure.

    No

    - Test complete.
    - Perform TPM VERIFICATION TEST. Refer to **STANDARD PROCEDURE**.

C1508-LEFT REAR TIRE PRESSURE TRIGGER MODULE PERFORMANCE

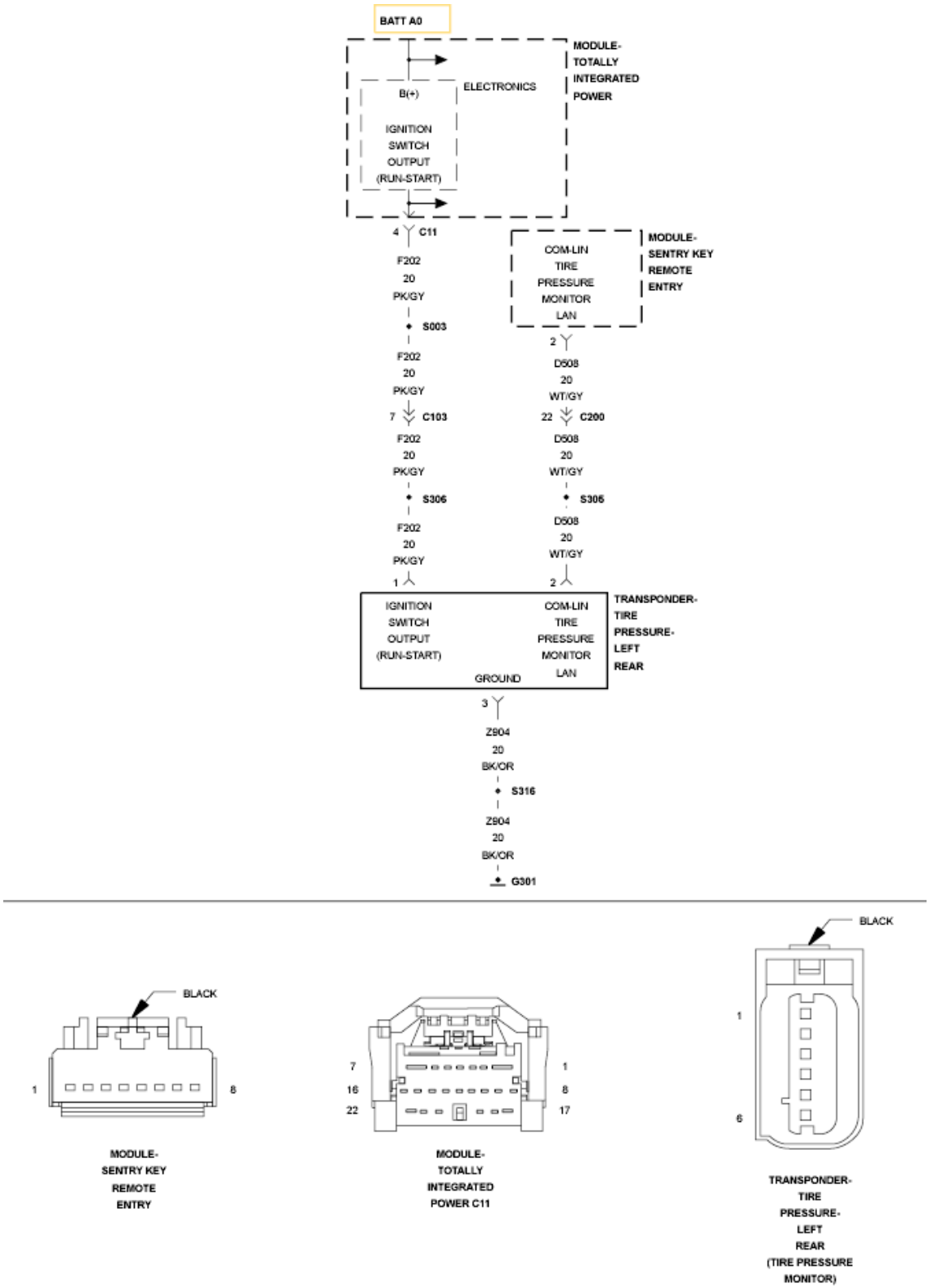

Fig. 13: Left Rear Tire Pressure Trigger Module Circuit Schematic
Courtesy of CHRYSLER GROUP, LLC

For a complete wiring diagram **refer to appropriate SYSTEM WIRING DIAGRAMS article**

THEORY OF OPERATION

The Tire Pressure Trigger Module is used to automatically learn the location of each wheel sensor on the vehicle. The module is controlled and activated in sequence by the Wireless Control Module (WCM) over a LIN bus. When activated, the module will generate a 125 KHz signal of sufficient field strength to trigger the tire pressure sensor and force a RF transmission from the sensor.

WHEN MONITORED

Continuously.

SET CONDITION

The Wireless Control Module (WCM) will monitor the messages from each Tire Pressure Trigger Module over the LIN bus. If any of the messages are not received, or are received other than as expected, a DTC will set. When the condition is corrected, or is no longer detected, as acknowledged via a LIN bus message, the WCM will reset the appropriate trigger module fault status.

POSSIBLE CAUSES

Possible Causes
INTERMITTENT TIRE PRESSURE TRIGGER MODULE PERFORMANCE DTC
TIRE PRESSURE TRIGGER MODULE
WIRELESS CONTROL MODULE (WCM)

DIAGNOSTIC TEST

1. **DTC STATUS IS ACTIVE**
    1. Turn the ignition on.
    2. With the scan tool, select View DTCs in the Wireless Control Module (WCM).

    Is the DTC status Active at this time?

    Yes

    - Go to 2

    No

- Go to 4

2. **TIRE PRESSURE TRIGGER MODULE**
   1. Turn the ignition off.
   2. Replace the appropriate Tire Pressure Trigger Module in accordance with the Service Information.
   3. With the scan tool, clear DTCs in the Wireless Control Module (WCM).
   4. Test Drive the vehicle for a minimum of 10 minutes with vehicle speed greater than 15 MPH (24 km/h).
   5. With the scan tool, select View DTCs in the Wireless Control Module (WCM).

      Does the DTC reset or is the status Active for this DTC?

      Yes

      - Go to 3

      No

      - Test Complete.
      - Perform TPM VERIFICATION TEST. Refer to **STANDARD PROCEDURE**.
3. **WIRELESS CONTROL MODULE (WCM)**
   1. View repair.

      Repair

      - Replace the Wireless Control Module (WCM) in accordance with the Service Information.
      - Perform TPM VERIFICATION TEST. Refer to **STANDARD PROCEDURE**.
4. **INTERMITTENT TIRE PRESSURE TRIGGER MODULE DTC**
   1. The conditions necessary to set this DTC are not present at this time.
   2. Using the wiring schematic as a guide, inspect the wiring and connectors relative to this circuit.
   3. Refer to any Technical Service Bulletins that may apply to this

condition.

4. With the scan tool, clear DTCs in the Wireless Control Module (WCM).
5. Test Drive the vehicle for a minimum of 10 minutes with vehicle speed greater than 15 MPH (24 km/h).
6. With the scan tool, select View DTCs in the Wireless Control Module (WCM).

Does the DTC reset or is the status Active for this DTC?

Yes

- Return to the first step of this test and perform the diagnostic procedure.

No

- Test complete.
- Perform TPM VERIFICATION TEST. Refer to **STANDARD PROCEDURE**.

C1509-RIGHT REAR TIRE PRESSURE TRIGGER MODULE PERFORMANCE

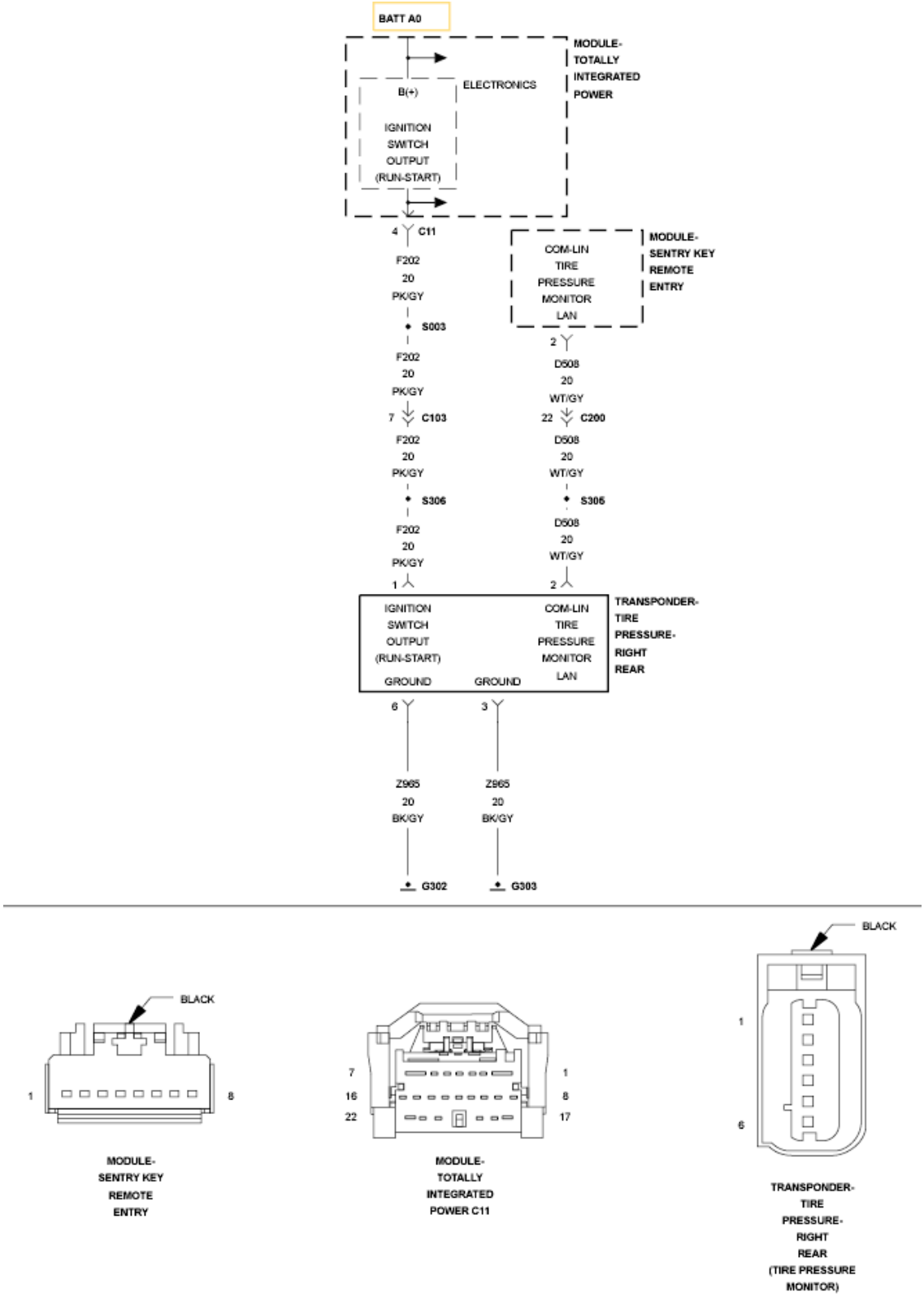

Fig. 14: Right Rear Tire Pressure Trigger Module Circuit Schematic
Courtesy of CHRYSLER GROUP, LLC

For a complete wiring diagram, **refer to appropriate SYSTEM WIRING DIAGRAMS article**

THEORY OF OPERATION

The Tire Pressure Trigger Module is used to automatically learn the location of each wheel sensor on the vehicle. The module is controlled and activated in sequence by the Wireless Control Module (WCM) over a LIN bus. When activated, the module will generate a 125 KHz signal of sufficient field strength to trigger the tire pressure sensor and force a RF transmission from the sensor.

WHEN MONITORED

Continuously.

SET CONDITION

The Wireless Control Module (WCM) will monitor the messages from each Tire Pressure Trigger Module over the LIN bus. If any of the messages are not received, or are received other than as expected, a DTC will set. When the condition is corrected, or is no longer detected, as acknowledged via a LIN bus message, the WCM will reset the appropriate trigger module fault status.

POSSIBLE CAUSES

Possible Causes
INTERMITTENT TIRE PRESSURE TRIGGER MODULE PERFORMANCE DTC
TIRE PRESSURE TRIGGER MODULE
WIRELESS CONTROL MODULE (WCM)

DIAGNOSTIC TEST

1. **DTC STATUS IS ACTIVE**
    1. Ignition on, engine not running.
    2. With the scan tool, select View DTCs in the Wireless Control Module (WCM).

    Is the DTC status Active at this time?

    Yes

    - Go To 2

    No

- Go To 4

2. **TIRE PRESSURE TRIGGER MODULE**
   1. Turn the ignition off.
   2. Replace the appropriate Tire Pressure Trigger Module in accordance with the Service Information.
   3. With the scan tool, clear DTCs in the Wireless Control Module (WCM).
   4. Test Drive the vehicle for a minimum of 10 minutes with vehicle speed greater than 15 mph (24 km/h).
   5. With the scan tool, select View DTCs in the Wireless Control Module (WCM).

      Does the DTC reset or is the status Active for this DTC?

      Yes

      - Go To 3

      No

      - Test Complete.
      - Perform TPM VERIFICATION TEST. Refer to **STANDARD PROCEDURE**.
3. **WIRELESS CONTROL MODULE (WCM)**
   1. View repair.

      Repair

      - Replace the Wireless Control Module (WCM) in accordance with the Service Information.
      - Perform TPM VERIFICATION TEST. Refer to **STANDARD PROCEDURE**.
4. **INTERMITTENT TIRE PRESSURE TRIGGER MODULE DTC**
   1. The conditions necessary to set this DTC are not present at this time.
   2. Using the wiring schematic as a guide, inspect the wiring and connectors relative to this circuit.
   3. Refer to any Technical Service Bulletins that may apply to this

condition.

4. With the scan tool, clear DTCs in the Wireless Control Module (WCM).
5. Test Drive the vehicle for a minimum of 10 minutes with vehicle speed greater than 15 mph (24 km/h).
6. With the scan tool, select View DTCs in the Wireless Control Module (WCM).

Does the DTC reset or is the status Active for this DTC?

Yes

- Return to the first step of this test and perform the diagnostic procedure.

No

- Test complete.
- Perform TPM VERIFICATION TEST. Refer to **STANDARD PROCEDURE**.

C150A-LEFT FRONT TIRE PRESSURE TRIGGER MODULE VOLTAGE HIGH

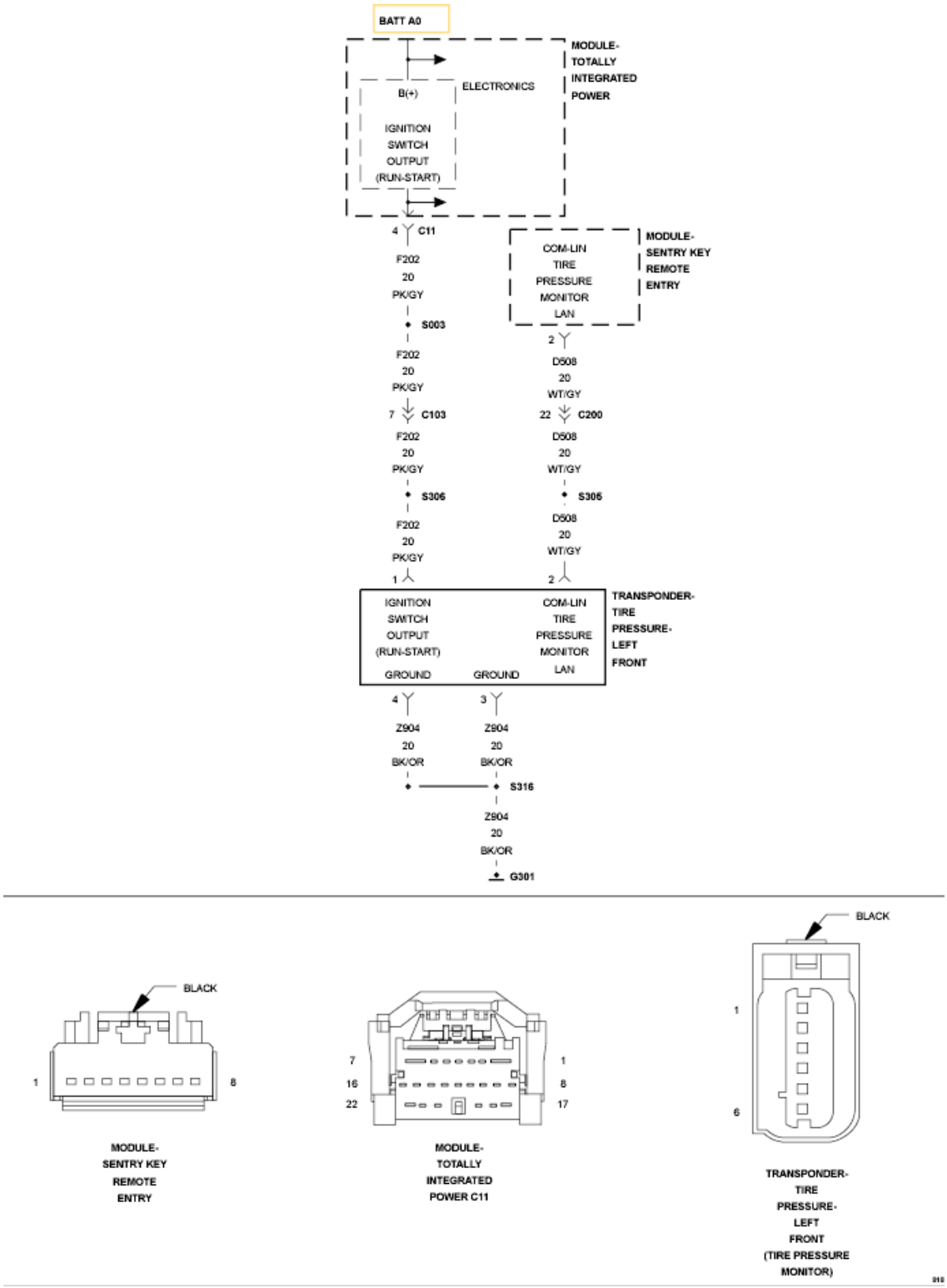

Fig. 15: Left Front Tire Pressure Trigger Module Circuit Schematic
Courtesy of CHRYSLER GROUP, LLC

For a complete wiring diagram, **refer to appropriate SYSTEM WIRING DIAGRAMS article**

THEORY OF OPERATION

The Tire Pressure Trigger Module is used to automatically learn the location of each wheel sensor on the vehicle. The module is controlled and activated in sequence by the Wireless Control Module (WCM) over a LIN bus. When activated, the module will generate a 125 KHz signal of sufficient field strength to trigger the tire pressure sensor and force a RF transmission from the sensor.

WHEN MONITORED

Continuously.

SET CONDITION

The Wireless Control Module (WCM) receives a message from the Tire Pressure Trigger Module indicating that an over voltage condition has been detected.

POSSIBLE CAUSES

Possible Causes
INTERMITTENT TIRE PRESSURE TRIGGER MODULE PERFORMANCE DTC
(F202) FUSED IGNITION SWITCH OUTPUT (RUN) CIRCUIT OPEN OR HIGH RESISTANCE
(Z904) GROUND CIRCUIT(S) OPEN OR HIGH RESISTANCE
TIRE PRESSURE TRIGGER MODULE
WIRELESS CONTROL MODULE (WCM)

DIAGNOSTIC TEST

1. **DTC STATUS IS ACTIVE**
    1. Ignition on, engine not running.

    NOTE: If a system or battery voltage high DTC is set in the Wireless Control Module (WCM) or in the PCM, repair the voltage DTC before continuing with this test.

    2. With the scan tool, select View DTCs in the Wireless Control Module (WCM).

Is the DTC status Active at this time?

Yes

- Go To 2

No

- Go To 6

2. **(F202) FUSED IGNITION SWITCH OUTPUT (RUN) CIRCUIT OPEN OR HIGH RESISTANCE**

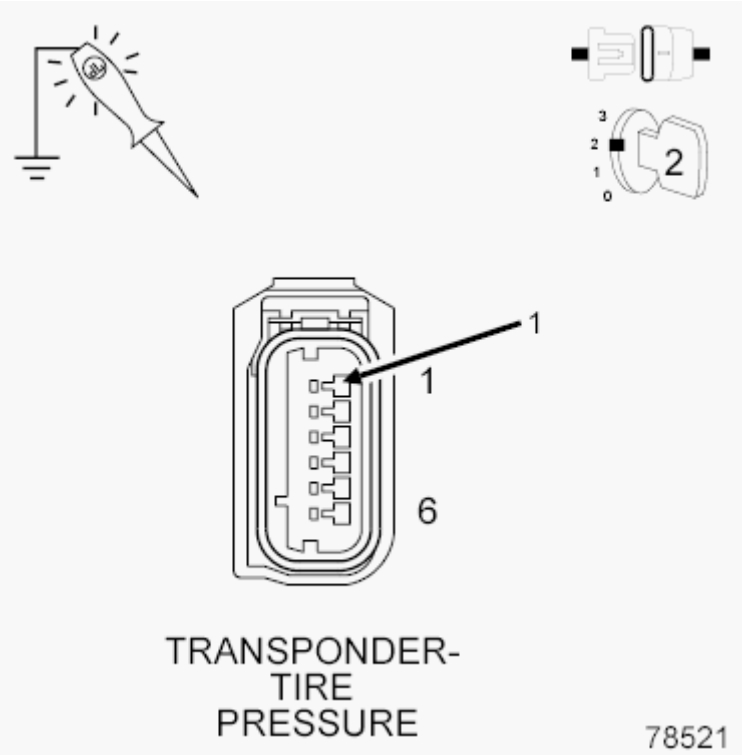

Fig. 16: Checking Fused Ignition Switch Output (Run) Circuit For An Open Or High Resistance
Courtesy of CHRYSLER GROUP, LLC

1. Ignition on, engine not running.
2. Using a 12-volt test light connect to ground, check the (F202) Fused Ignition Switch Output (Run) circuit.

NOTE: The test light should be illuminated and bright. Compare the brightness to that of a direct connection to the battery.

Is the test light illuminated and bright?

Yes

- Go To 3

No

- Repair the (F202) Fused Ignition Switch Output (Run) circuit for an open circuit or high resistance.
- Perform TPM VERIFICATION TEST. Refer to **STANDARD PROCEDURE**.

3. **(Z904) GROUND CIRCUIT(S) OPEN OR HIGH RESISTANCE**

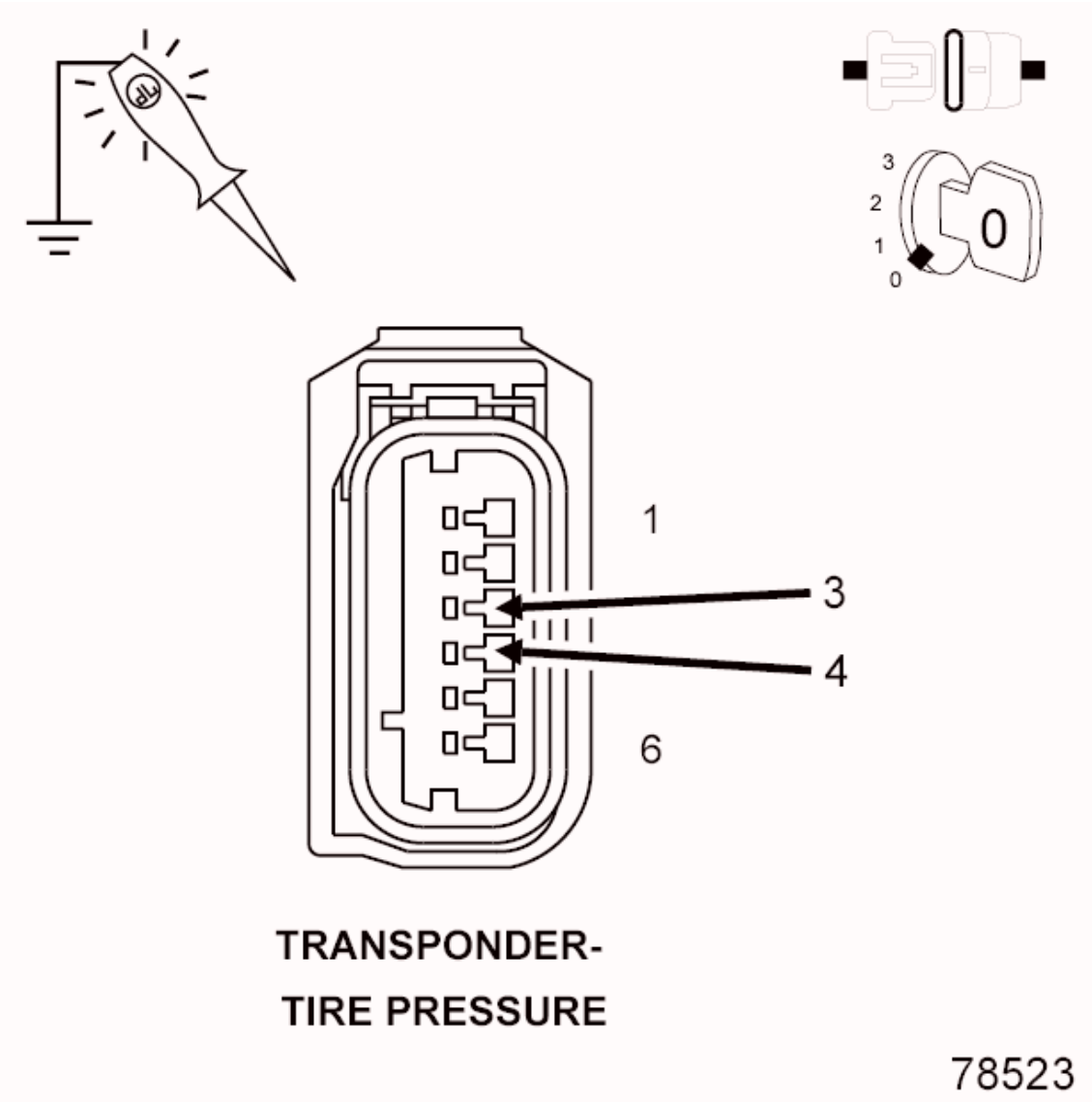

Fig. 17: Checking Ground Circuit(s) For Open Or High Resistance

Courtesy of CHRYSLER GROUP, LLC

1. Using a 12-volt test light connect to 12 volts, check each of the (Z904) Ground circuit(s).

   NOTE: The test light should be illuminated and bright. Compare the brightness to that of a direct connection to the battery.

   Is the test light illuminated and bright?

   Yes

   - Go To 4

   No

   - Repair the (Z904) Ground circuit(s) for an open circuit or high resistance.
   - Perform TPM VERIFICATION TEST. Refer to **STANDARD PROCEDURE**.

4. **TIRE PRESSURE TRIGGER MODULE**
   1. Turn the ignition off.
   2. Replace the appropriate Tire Pressure Trigger Module in accordance with the Service Information.
   3. With the scan tool, clear DTCs in the Wireless Control Module (WCM).
   4. Test Drive the vehicle for a minimum of 10 minutes with vehicle speed greater than 15 mph (24 km/h).
   5. With the scan tool, select View DTCs in the Wireless Control Module (WCM).

   Does the DTC reset or is the status Active for this DTC?

   Yes

   - Go To 5

   No

- Test Complete.
- Perform TPM VERIFICATION TEST. Refer to **STANDARD PROCEDURE**.

5. **WIRELESS CONTROL MODULE (WCM)**
   1. View repair.

      Repair

      - Replace the Wireless Control Module (WCM) in accordance with the Service Information.
      - Perform TPM VERIFICATION TEST. Refer to **STANDARD PROCEDURE**.

6. **INTERMITTENT TIRE PRESSURE TRIGGER MODULE DTC**
   1. The conditions necessary to set this DTC are not present at this time.
   2. Refer to any Technical Service Bulletins that may apply to this condition.
   3. With the scan tool, clear DTCs in the Wireless Control Module (WCM).
   4. Test Drive the vehicle for a minimum of 10 minutes with vehicle speed greater than 15 mph (24 km/h).
   5. With the scan tool, select View DTCs in the Wireless Control Module (WCM).

      Does the DTC reset or is the status Active for this DTC?

      Yes

      - Return to the first step of this test and perform the diagnostic procedure.

      No

      - Test complete.
      - Perform TPM VERIFICATION TEST. Refer to **STANDARD PROCEDURE**.

C150C-LEFT REAR TIRE PRESSURE TRIGGER MODULE VOLTAGE HIGH

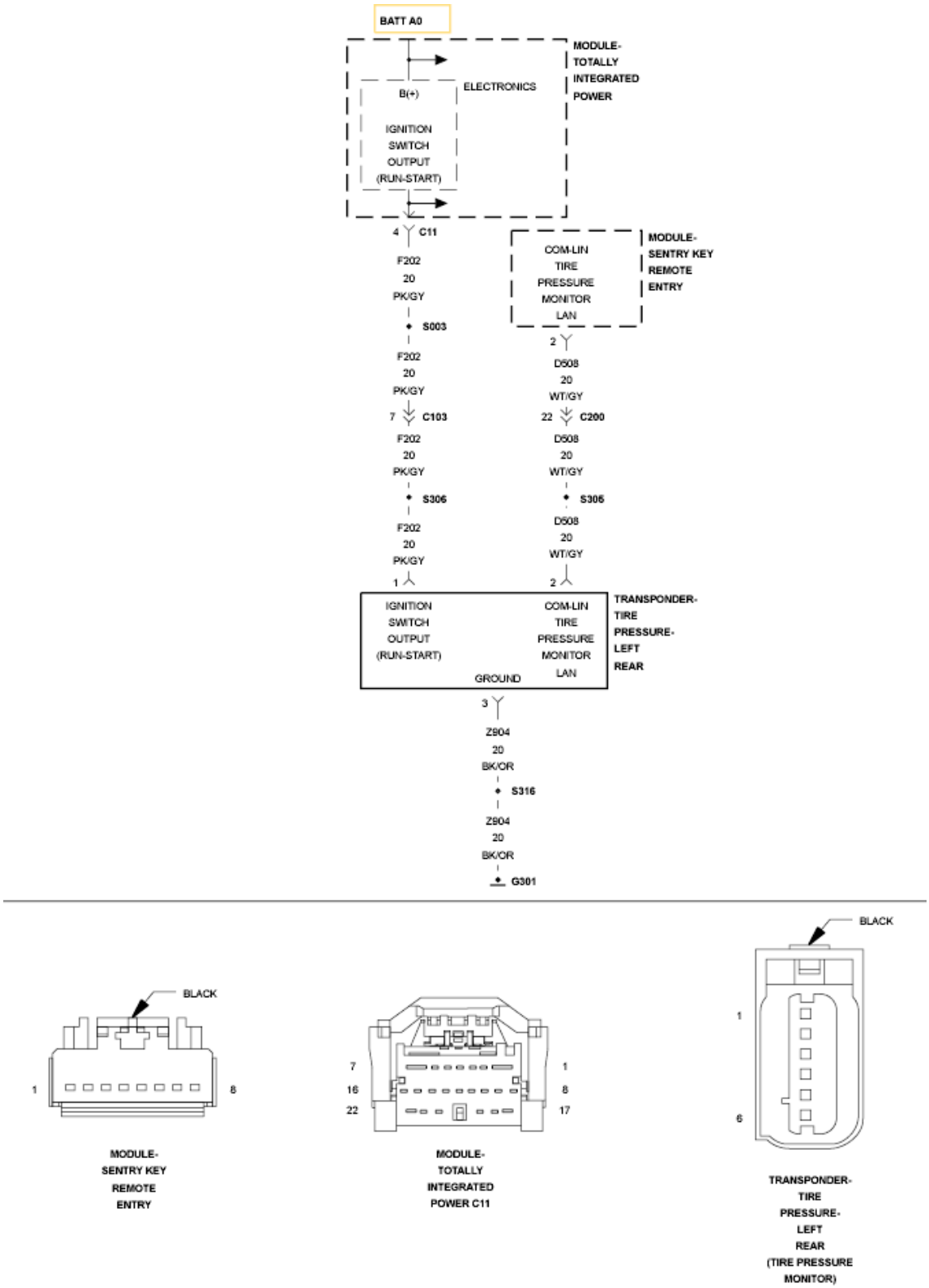

Fig. 18: Left Rear Tire Pressure Trigger Module Circuit Schematic
Courtesy of CHRYSLER GROUP, LLC

For a complete wiring diagram, **refer to appropriate SYSTEM WIRING DIAGRAMS article**

THEORY OF OPERATION

The Tire Pressure Trigger Module is used to automatically learn the location of each wheel sensor on the vehicle. The module is controlled and activated in sequence by the Wireless Control Module (WCM) over a LIN bus. When activated, the module will generate a 125 KHz signal of sufficient field strength to trigger the tire pressure sensor and force a RF transmission from the sensor.

WHEN MONITORED

Continuously.

SET CONDITION

The Wireless Control Module (WCM) receives a message from the Tire Pressure Trigger Module indicating that an over voltage condition has been detected.

POSSIBLE CAUSES

Possible Causes
INTERMITTENT TIRE PRESSURE TRIGGER MODULE PERFORMANCE DTC
(F202) FUSED IGNITION SWITCH OUTPUT (RUN) CIRCUIT OPEN OR HIGH RESISTANCE
(Z904) GROUND CIRCUIT(S) OPEN OR HIGH RESISTANCE
TIRE PRESSURE TRIGGER MODULE
WIRELESS CONTROL MODULE (WCM)

DIAGNOSTIC TEST

1. **DTC STATUS IS ACTIVE**
    1. Ignition on, engine not running.

    NOTE: If a system or battery voltage high DTC is set in the Wireless Control Module (WCM) or in the PCM, repair the voltage DTC before continuing with this test.

    2. With the scan tool, select View DTCs in the Wireless Control Module (WCM).

Is the DTC status Active at this time?

Yes

- Go To 2

No

- Go To 6

2. **(F202) FUSED IGNITION SWITCH OUTPUT (RUN) CIRCUIT OPEN OR HIGH RESISTANCE**

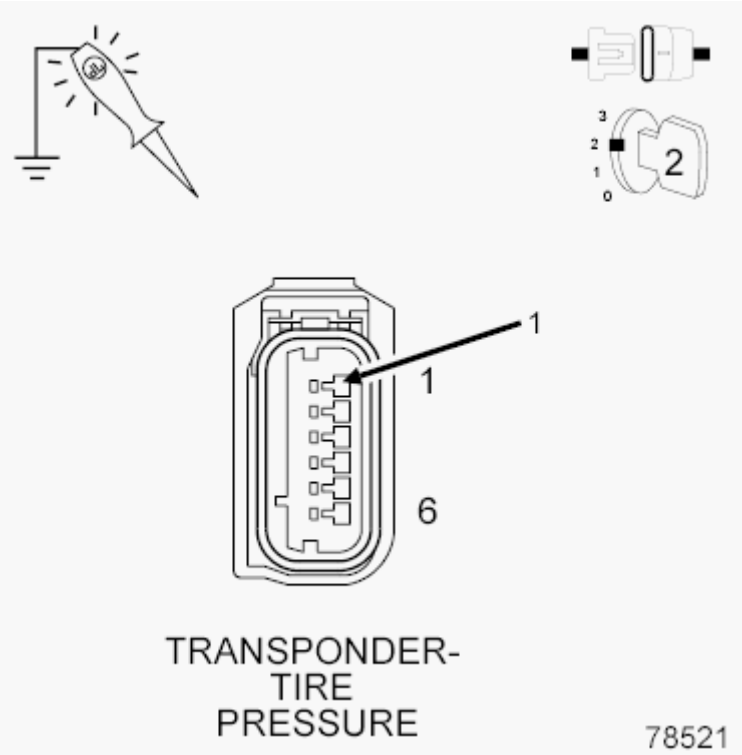

Fig. 19: Checking Fused Ignition Switch Output (Run) Circuit For Open Or High Resistance
Courtesy of CHRYSLER GROUP, LLC

1. Ignition on, engine not running.
2. Using a 12-volt test light connect to ground, check the (F202) Fused Ignition Switch Output (Run) circuit.

NOTE: The test light should be illuminated and bright. Compare the brightness to that of a direct connection to the battery.

Is the test light illuminated and bright?

Yes

- Go To 3

No

- Repair the (F202) Fused Ignition Switch Output (Run) circuit for an open circuit or high resistance.
- Perform TPM VERIFICATION TEST. Refer to **STANDARD PROCEDURE**.

3. **(Z904) GROUND CIRCUIT(S) OPEN OR HIGH RESISTANCE**

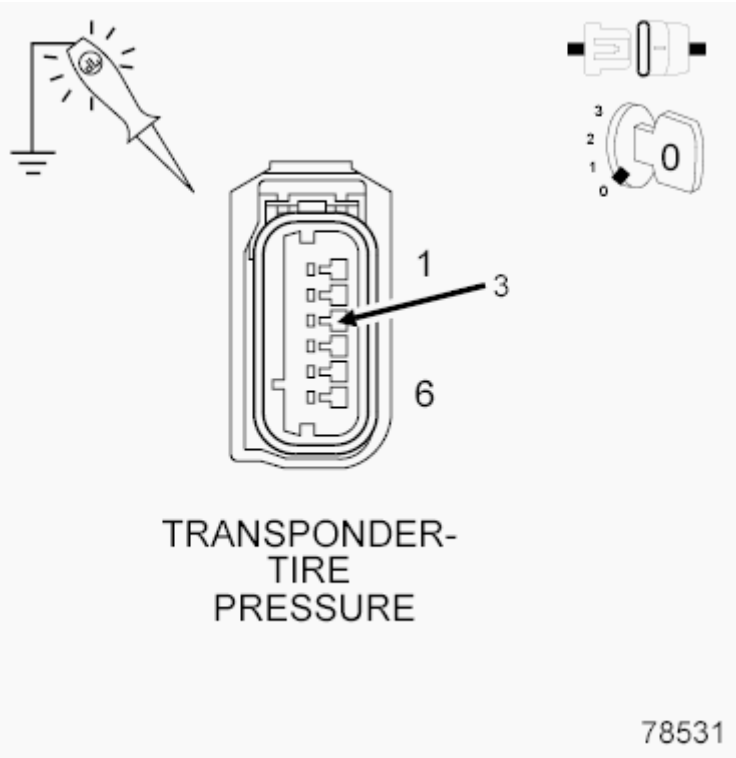

Fig. 20: Checking Ground Circuit(s) Open Or High Resistance
Courtesy of CHRYSLER GROUP, LLC

1. Using a 12-volt test light connect to 12 volts, check each of the (Z904) Ground circuit(s).

NOTE: The test light should be illuminated and bright. Compare the brightness to that of a direct connection to the battery.

Is the test light illuminated and bright?

Yes

- Go To 4

No

- Repair the (Z904) Ground circuit(s) for an open circuit or high resistance.
- Perform TPM VERIFICATION TEST. Refer to **STANDARD PROCEDURE**.

4. **TIRE PRESSURE TRIGGER MODULE**
   1. Turn the ignition off.
   2. Replace the appropriate Tire Pressure Trigger Module in accordance with the Service Information.
   3. With the scan tool, clear DTCs in the Wireless Control Module (WCM).
   4. Test Drive the vehicle for a minimum of 10 minutes with vehicle speed greater than 15 mph (24 km/h).
   5. With the scan tool, select View DTCs in the Wireless Control Module (WCM).

   Does the DTC reset or is the status Active for this DTC?

   Yes

   - Go To 5

   No

   - Test Complete.
   - Perform TPM VERIFICATION TEST. Refer to **STANDARD PROCEDURE**.

5. **WIRELESS CONTROL MODULE (WCM)**
   1. View repair.

   Repair

- Replace the Wireless Control Module (WCM) in accordance with the Service Information.
- Perform TPM VERIFICATION TEST. Refer to **STANDARD PROCEDURE**.

6. **INTERMITTENT TIRE PRESSURE TRIGGER MODULE DTC**
   1. The conditions necessary to set this DTC are not present at this time.
   2. Refer to any Technical Service Bulletins that may apply to this condition.
   3. With the scan tool, clear DTCs in the Wireless Control Module (WCM).
   4. Test Drive the vehicle for a minimum of 10 minutes with vehicle speed greater than 15 mph (24 km/h).
   5. With the scan tool, select View DTCs in the Wireless Control Module (WCM).

      Does the DTC reset or is the status Active for this DTC?

      Yes

      - Return to the first step of this test and perform the diagnostic procedure.

      No

      - Test complete.
      - Perform TPM VERIFICATION TEST. Refer to **STANDARD PROCEDURE**.

C150D-RIGHT REAR TIRE PRESSURE TRIGGER MODULE VOLTAGE HIGH

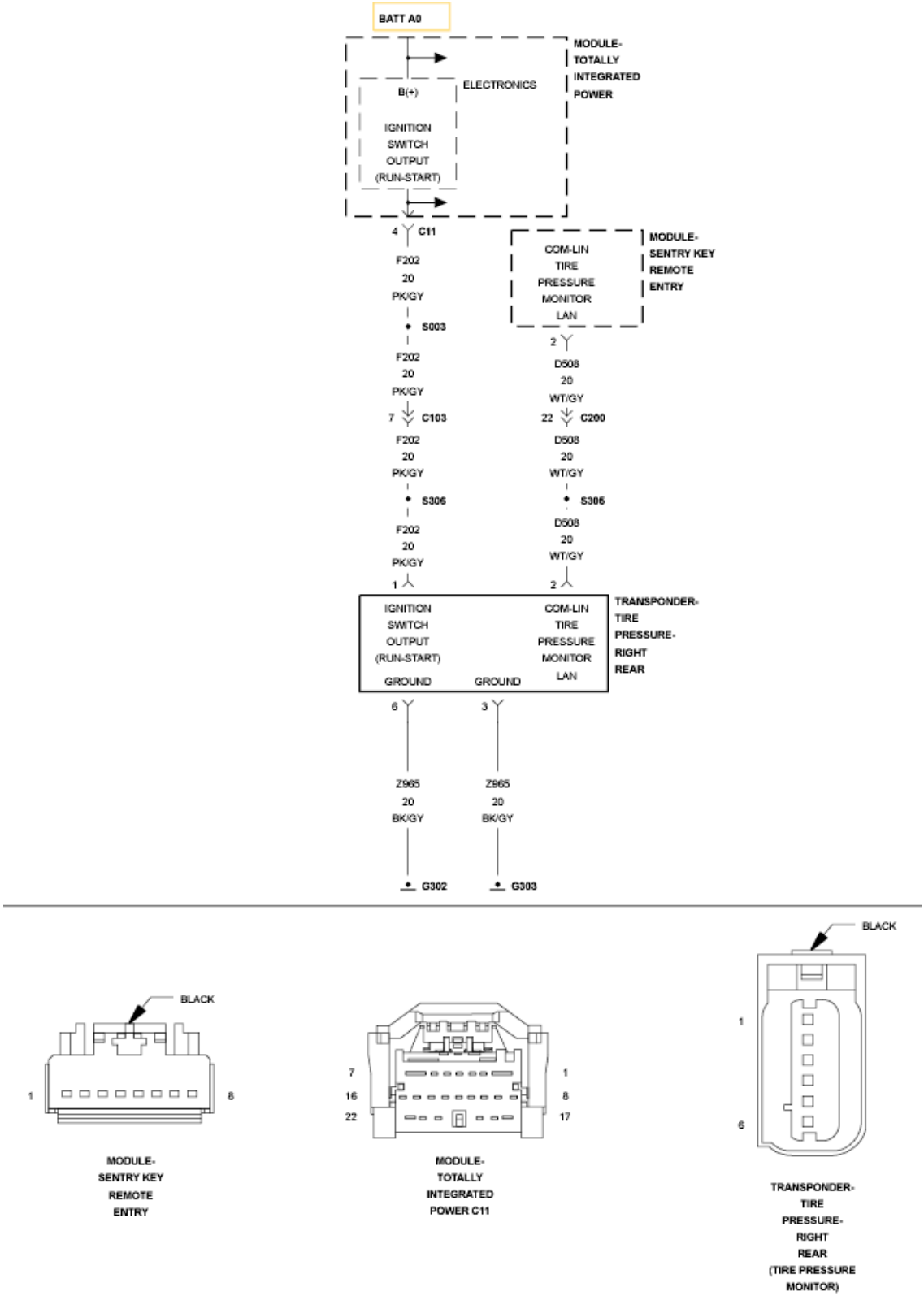

Fig. 21: Right Rear Tire Pressure Trigger Module Circuit Schematic
Courtesy of CHRYSLER GROUP, LLC

For a complete wiring diagram, **refer to appropriate SYSTEM WIRING DIAGRAMS article**

THEORY OF OPERATION

The Tire Pressure Trigger Module is used to automatically learn the location of each wheel sensor on the vehicle. The module is controlled and activated in sequence by the Wireless Control Module (WCM) over a LIN bus. When activated, the module will generate a 125 KHz signal of sufficient field strength to trigger the tire pressure sensor and force a RF transmission from the sensor.

WHEN MONITORED

Continuously.

SET CONDITION

The Wireless Control Module (WCM) receives a message from the Tire Pressure Trigger Module indicating that an over voltage condition has been detected.

POSSIBLE CAUSES

Possible Causes
INTERMITTENT TIRE PRESSURE TRIGGER MODULE PERFORMANCE DTC
(F202) FUSED IGNITION SWITCH OUTPUT (RUN) CIRCUIT OPEN OR HIGH RESISTANCE
(Z965) GROUND CIRCUIT(S) OPEN OR HIGH RESISTANCE
TIRE PRESSURE TRIGGER MODULE
WIRELESS CONTROL MODULE (WCM)

DIAGNOSTIC TEST

1. **DTC STATUS IS ACTIVE**
    1. Ignition on, engine not running.

    NOTE: If a system or battery voltage high DTC is set in the Wireless Control Module (WCM) or in the PCM, repair the voltage DTC before continuing with this test.

    2. With the scan tool, select View DTCs in the Wireless Control Module (WCM).

Is the DTC status Active at this time?

Yes

- Go To 2

No

- Go To 6

2. **(F202) FUSED IGNITION SWITCH OUTPUT (RUN) CIRCUIT OPEN OR HIGH RESISTANCE**

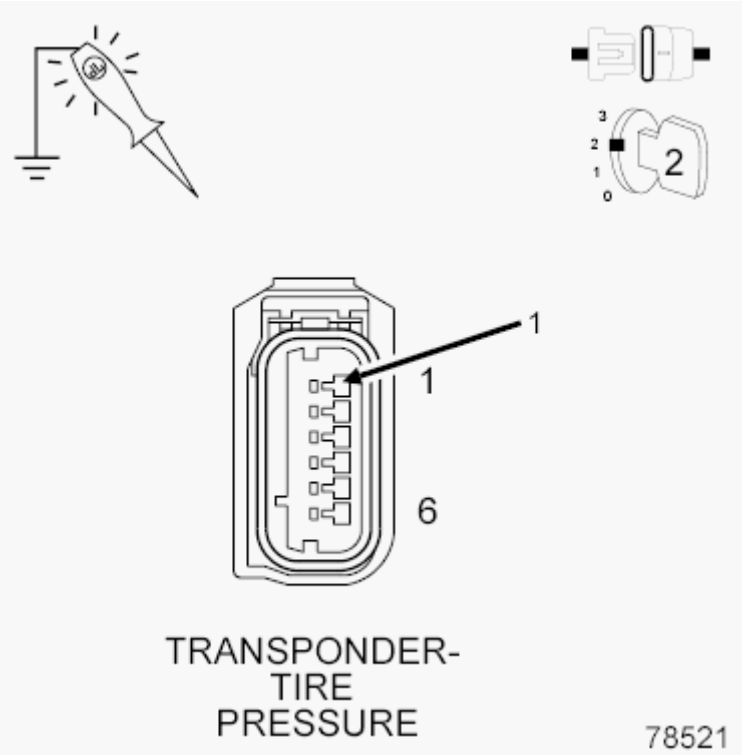

Fig. 22: Checking Fused Ignition Switch Output (Run) Circuit For An Open Or High Resistance
Courtesy of CHRYSLER GROUP, LLC

1. Ignition on, engine not running.
2. Using a 12-volt test light connect to ground, check the (F202) Fused Ignition Switch Output (Run) circuit.

NOTE: The test light should be illuminated and bright. Compare the brightness to that of a direct connection to the battery.

Is the test light illuminated and bright?

Yes

- Go To 3

No

- Repair the (F202) Fused Ignition Switch Output (Run) circuit for an open circuit or high resistance.
- Perform TPM VERIFICATION TEST. Refer to **STANDARD PROCEDURE**.

3. **(Z965) GROUND CIRCUIT(S) OPEN OR HIGH RESISTANCE**

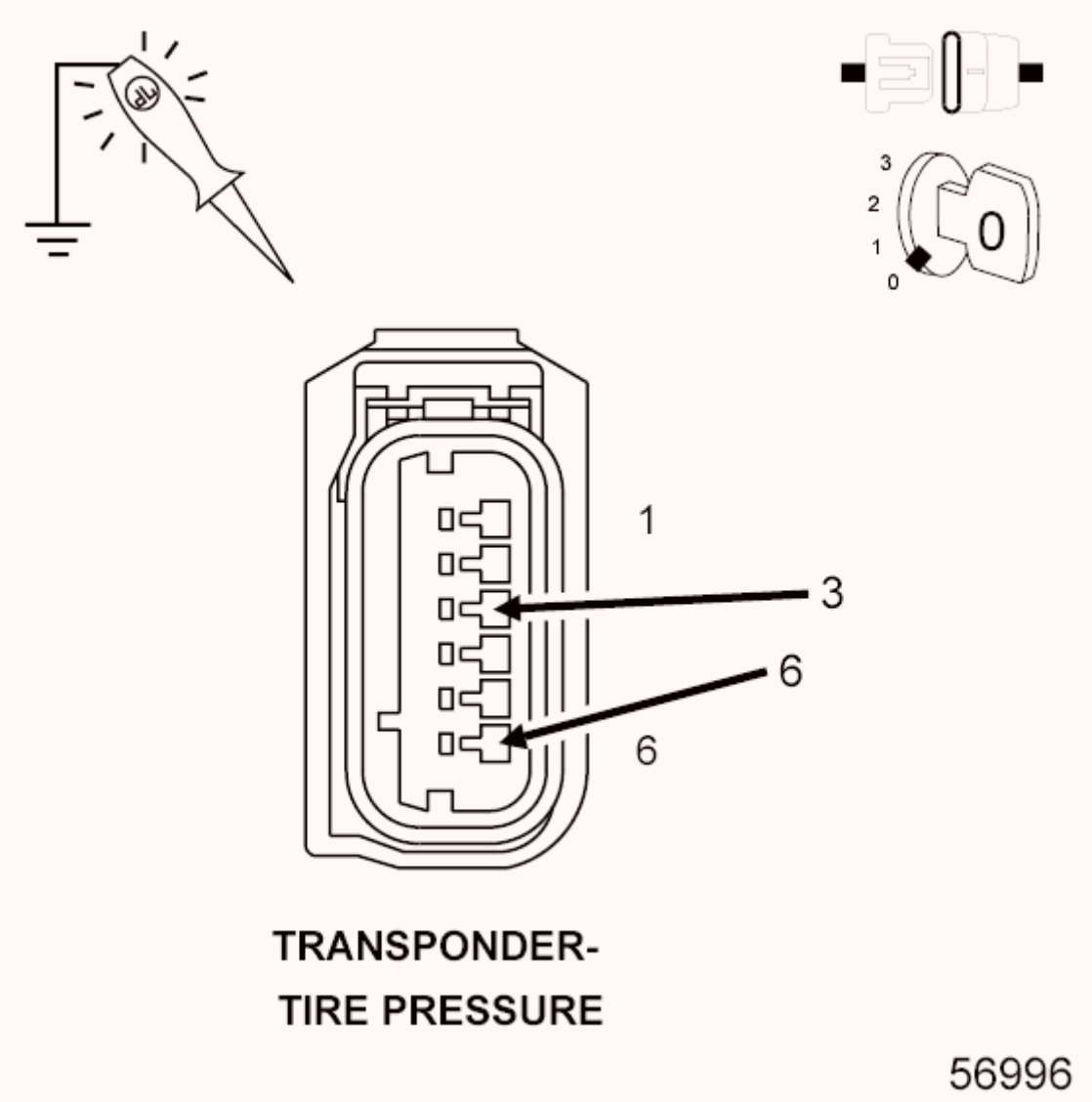

Fig. 23: Checking Ground Circuit(s) Open Or High Resistance

Courtesy of CHRYSLER GROUP, LLC

1. Using a 12-volt test light connect to 12 volts, check each of the (Z965) Ground circuit(s).

   NOTE: The test light should be illuminated and bright. Compare the brightness to that of a direct connection to the battery.

   Is the test light illuminated and bright?

   Yes

   - Go To 4

   No

   - Repair the (Z965) Ground circuit(s) for an open circuit or high resistance.
   - Perform TPM VERIFICATION TEST. Refer to **STANDARD PROCEDURE**.

4. **TIRE PRESSURE TRIGGER MODULE**
   1. Turn the ignition off.
   2. Replace the appropriate Tire Pressure Trigger Module in accordance with the Service Information.
   3. With the scan tool, clear DTCs in the Wireless Control Module (WCM).
   4. Test Drive the vehicle for a minimum of 10 minutes with vehicle speed greater than 15 mph (24 km/h).
   5. With the scan tool, select View DTCs in the Wireless Control Module (WCM).

      Does the DTC reset or is the status Active for this DTC?

      Yes

      - Go To 5

      No

- Test Complete.
- Perform TPM VERIFICATION TEST. Refer to **STANDARD PROCEDURE**.

5. **WIRELESS CONTROL MODULE (WCM)**
   1. View repair.

      Repair

      - Replace the Wireless Control Module (WCM) in accordance with the Service Information.
      - Perform TPM VERIFICATION TEST. Refer to **STANDARD PROCEDURE**.

6. **INTERMITTENT TIRE PRESSURE TRIGGER MODULE DTC**
   1. The conditions necessary to set this DTC are not present at this time.
   2. Refer to any Technical Service Bulletins that may apply to this condition.
   3. With the scan tool, clear DTCs in the Wireless Control Module (WCM).
   4. Test Drive the vehicle for a minimum of 10 minutes with vehicle speed greater than 15 mph (24 km/h).
   5. With the scan tool, select View DTCs in the Wireless Control Module (WCM).

      Does the DTC reset or is the status Active for this DTC?

      Yes

      - Return to the first step of this test and perform the diagnostic procedure.

      No

      - Test complete.
      - Perform TPM VERIFICATION TEST. Refer to **STANDARD PROCEDURE**.

C151C-TIRE PRESSURE MONITORING (TPM) SENSORS MISSING

For a complete wiring diagram, **refer to appropriate SYSTEM WIRING DIAGRAMS article**

THEORY OF OPERATION

The tire pressure sensor actively monitors the air pressure and air temperature inside the tire, the sensor internal battery status, and the radial acceleration of the wheel. Each sensor has a unique ID code. The sensor transmits the data at regular intervals via an encoded signal to a receiver circuit located in the Wireless Control Module (WCM).

WHEN MONITORED

With vehicle speed greater than 15 m.p.h. (24 km/h).

SET CONDITION

The Wireless Control Module (WCM) will monitor the signals from the four active road tire sensors. A loss of signal error is detected when eight consecutive blocks of data are not received or cannot be accurately decoded. An internal sensor hardware error condition will be set when an error in the accelerometer, pressure sensor, or temperature sensor is detected.

POSSIBLE CAUSES

Possible Causes
INTERMITTENT TIRE PRESSURE MONITORING (TPM) SENSOR INTERNAL DTC
WRONG SENSORS
TIRE PRESSURE MONITORING (TPM) SENSOR
WIRELESS CONTROL MODULE (WCM)
REMOTE START ANTENNA

DIAGNOSTIC TEST

1. **DTC STATUS**

NOTE: This fault can be set if the wrong TPM sensor was installed on the vehicle, or that the wheel has a rubber valve stem. Check to make sure the vehicle is equipped with the correct sensors.

NOTE: If the vehicle is equipped with the remote start feature, check to make sure the antenna connector is properly connected to the WCM.

NOTE: If the following conditions are present:

- **Low Tire Pressure DTC.**
- **Tire Pressure Monitoring (TPM) Sensor Internal DTC.**
- **Spare Tire is not equipped with a Tire Pressure Monitoring (TPM) Sensor and is currently on the vehicle. Repair or replace the original tire and place it back on the vehicle.**

Test drive the vehicle.

If the DTCs reset continue with the diagnostic procedure.

1. Test drive the vehicle.
2. If the DTCs reset continue with the diagnostic procedure.
3. Ignition on, engine not running.
4. With the scan tool, select View DTCs in the Wireless Control Module (WCM).

   Is the DTC status Active at this time?

   Yes

   - Go To 2

   No

   - Go To 4

2. **TIRE PRESSURE MONITORING (TPM) SENSOR**

NOTE: The following tests are used to locate the Tire Pressure Monitoring (TPM) Sensor/Transmitter that is

setting the sensor internal fault. If the tires have been rotated, the Tire Pressure Monitoring (TPM) Sensor/Transmitter are no longer in sequence from the factory. Faults are linked to the sensor/transmitter IDs. You MUST locate the correct Tire Pressure Monitoring (TPM) Sensor/Transmitter that set the fault before continuing. Use one or more of the following methods below.

1. METHOD 1: Use a TPM-RKE Analyzer tool to scan each tire pressure sensor. If a suspected sensor has been located, lower the tire pressure to 20 PSI, wait for 2 minutes, and check the scan tool for changes to any compensated tire pressure values.
2. If there was a pressure change to any compensated tire pressure values, check to make sure that the TPM-RKE Analyzer is set correctly, and repeat the process on each wheel on the vehicle until the faulty Sensor/Transmitter has been identified.
3. On base systems starting with the left front wheel, deflate the tire to 20 PSI, wait 2 minutes, and check the scan tool for changes to any compensated tire pressure values or TPM lamp turning on. Look for NO pressure change to any compensated tire pressure value, or a pressure change corresponding to "Sensor 1 Identification".

NOTE: Compensated tire pressure values are only available on the premium TPM system. For a base TPM system lowering the tire pressure to 20 PSI will set DTC C0077 and turn on the TPM lamp.

NOTE: When scanning a sensor with a TPM-RKE Analyzer, replace the TPM sensor if the results show a "Damaged Accel", "Damaged Temp", or "Damaged Press".

Has the malfunctioning/faulty TPM sensor been located?

Yes

- Replace the Tire Pressure Monitoring (TPM) Sensor

- Perform TPM VERIFICATION TEST. Refer to **STANDARD PROCEDURE**.

No

- Go To 3

3. **WIRELESS CONTROL MODULE (WCM)**
   1. Replace the Wireless Control Module (WCM) in accordance with the service information. Perform TPM VERIFICATION TEST. Refer to **STANDARD PROCEDURE**.
   2. Drive the vehicle for a minimum of 10 minutes while maintaining a continuous speed above 15 mph (24 km/h). During this time the system will learn the sensor IDs.
   3. With the scan tool, read DTCs.

   Are there any DTCs present?

   Yes

   - Perform the appropriate diagnostic procedure. Refer to **DIAGNOSIS AND TESTING**.

   No

   - Repair complete.
   - Perform TPM VERIFICATION TEST. Refer to **STANDARD PROCEDURE**.

4. **INTERMITTENT TIRE PRESSURE MONITORING (TPM) SENSOR DTC**

NOTE: The DTC can be caused by many different factors and might not be a sensor/transmitter or a WCM (WCM) fault. Interference from other elements will over power the sensor/transmitter RF frequency making erratic operation to the TPM system. Check the vehicle for aftermarket accessories that could compromise the RF frequency signal before diagnosing the TPM system.

1. The conditions necessary to set this DTC are not present at this time.
2. Refer to any Technical Service Bulletins that may apply to this condition.
3. With the scan tool, clear DTCs in the Wireless Control Module (WCM).
4. Test Drive the vehicle for a minimum of 10 minutes with vehicle speed greater than 15 m.p.h.
5. With the scan tool, select View DTCs in the Wireless Control Module (WCM).

   Does the DTC reset or is the status Active for this DTC?

   Yes

   - Return to the beginning of this test and perform the diagnostic procedure as necessary.

   No

   - Test complete.

C151D-TIRE PRESSURE SENSOR LOCATION UNDETERMINED

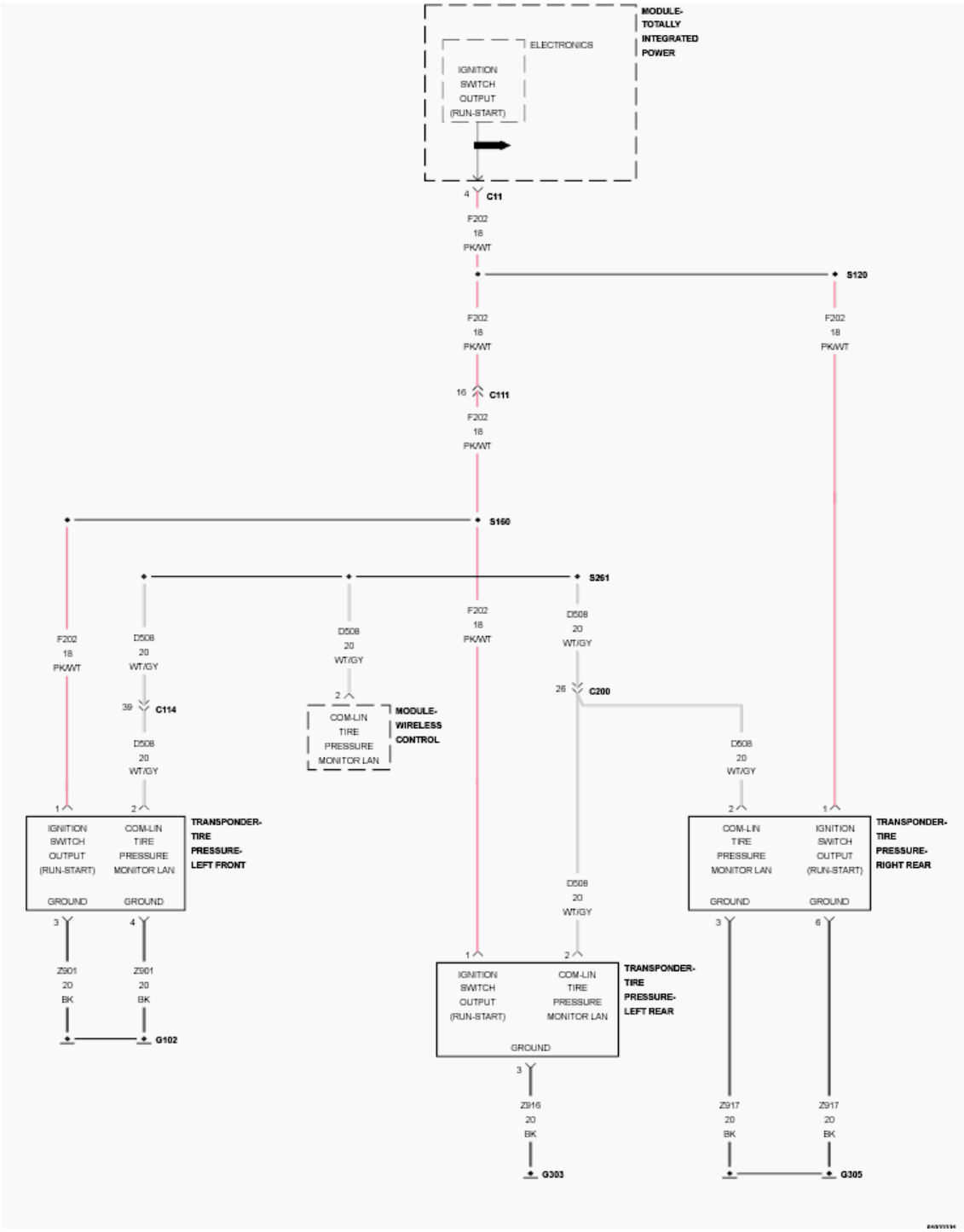

Fig. 24: Tire Pressure Sensor Circuit Schematic
Courtesy of CHRYSLER GROUP, LLC

For a complete wiring diagram, **refer to appropriate SYSTEM WIRING DIAGRAMS article** .

THEORY OF OPERATION

The vehicle Tire Pressure Monitoring (TPM) Sensor locate process occurs after

the vehicle sits stationary for more than 20 minutes. The TPM System determines the TPM Sensor positions while driving for minimum of 20 minutes at speeds above 24 km/h (15 mph). This process can take up to 10 minutes to determine TPM Sensor positions.

WHEN MONITORED

During vehicle TPM Sensor locate process.

SET CONDITION

The vehicle TPM Sensor locate process must fail three consecutive times.

POSSIBLE CAUSES

Possible Causes
DAMAGED TIRE PRESSURE MONITORING (TPM) TRANSPONDER HARNESS
DAMAGED WIRELESS CONTROL MODULE (WCM) HARNESS
(F202) FUSED IGNITION SWITCH OUTPUT (RUN) CIRCUIT OPEN OR HIGH RESISTANCE
GROUND CIRCUIT(S) OPEN OR HIGH RESISTANCE
(D508) COM - LIN TIRE PRESSURE MONITOR LAN CIRCUIT SHORT TO VOLTAGE
(D508) COM - LIN TIRE PRESSURE MONITOR LAN CIRCUIT SHORT TO GROUND
(D508) COM - LIN TIRE PRESSURE MONITOR LAN CIRCUIT OPEN OR HIGH RESISTANCE
(D508) COM-LIN TIRE PRESSURE MONITOR LAN CIRCUIT OPEN
TIRE PRESSURE MONITORING (TPM) TRANSPONDER
WIRELESS CONTROL MODULE (WCM)

DIAGNOSTIC TEST

1. **VERIFY DTC IS ACTIVE**

NOTE: Before continuing with this diagnostic procedure, perform the appropriate diagnostic procedure for all other DTCs first.

NOTE: Before continuing with this diagnostic procedure, verify the harness is not damaged to the WCM and or the TPM Transponders.

1. Ignition on, engine not running.
2. With the scan tool, read and record DTCs.
3. With the scan tool, erase DTCs.
4. Cycle the ignition switch.
5. With the scan tool, read DTCs.

   Is the DTC status Active at this time?

   Yes

   - Go To 2

   No

   - Go To 9

2. **TIRE PRESSURE MONITORING (TPM) TRANSPONDERS**

NOTE: For the proper locations of the TPM Transponders, refer to the appropriate service information.

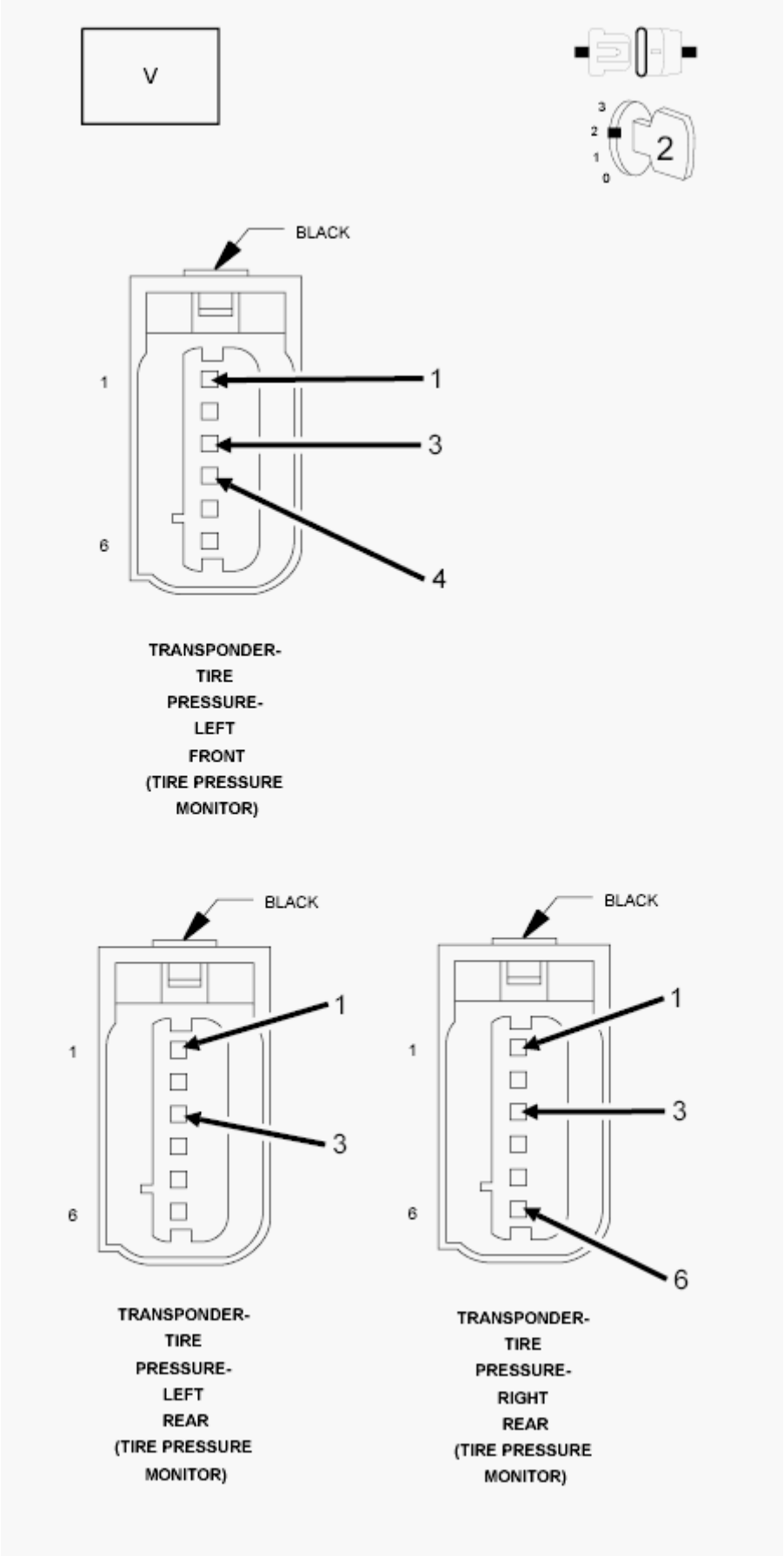
V
3
2
1
0
2
BLACK
1
6
1
3
4
TRANSPONDER-
TIRE
PRESSURE-
LEFT
FRONT
(TIRE PRESSURE
MONITOR)
BLACK
1
6
1
3
TRANSPONDER-
TIRE
PRESSURE-
LEFT
REAR
(TIRE PRESSURE
MONITOR)
BLACK
1
6
1
3
6
TRANSPONDER-
TIRE
PRESSURE-
RIGHT
REAR
(TIRE PRESSURE
MONITOR)

Fig. 25: Measuring Voltage Between Fused Ignition Switch Output (Run) Circuit & Ground Circuit(s)
Courtesy of CHRYSLER GROUP, LLC

1. Turn the ignition off.
2. Disconnect the three TPM Transponder harness connectors.
3. Ignition on, engine not running.
4. With a voltmeter, measure the voltage between the (F202) Fused Ignition Switch Output (Run) circuit and the ground circuit(s) at each of the three TPM Transponder harness connectors.

   Was the voltage within battery voltage (±1 Volt) at each of the TPM Transponders?

   Yes

   - Go To 8

   No

   - Perform the following diagnostic procedure on each of the failed TPM Transponders.
   - Go To 3

3. **(F202) FUSED IGNITION SWITCH OUTPUT (RUN) CIRCUIT OPEN OR HIGH RESISTANCE**

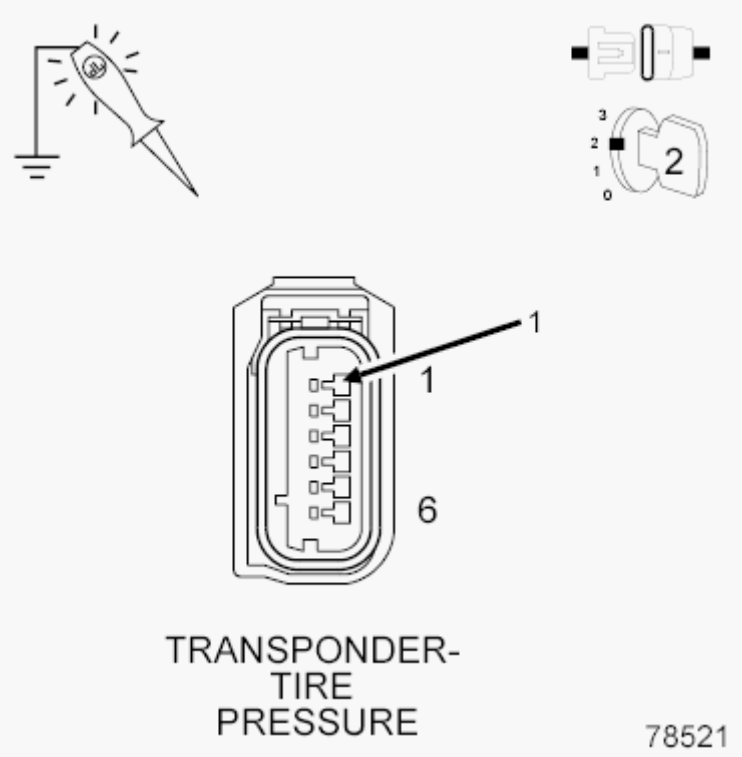

Fig. 26: Checking Fused Ignition Switch Output (Run) Circuit For Open Or High Resistance
Courtesy of CHRYSLER GROUP, LLC

1. Using a 12-volt test light connect to ground, check the (F202) Fused Ignition Switch Output (Run) circuit at the TPM Transponder harness connector.

   NOTE: The test light should be illuminated and bright. Compare the brightness to that of a direct connection to the battery.

   Is the test light illuminated and bright?

   Yes

   - Go To 4

   No

   - Repair the (F202) Fused Ignition Switch Output (Run) circuit for an open circuit or high resistance.
   - Perform the TPM VERIFICATION TEST. Refer to **STANDARD**

PROCEDURE.

4. **GROUND CIRCUIT(S) OPEN OR HIGH RESISTANCE**

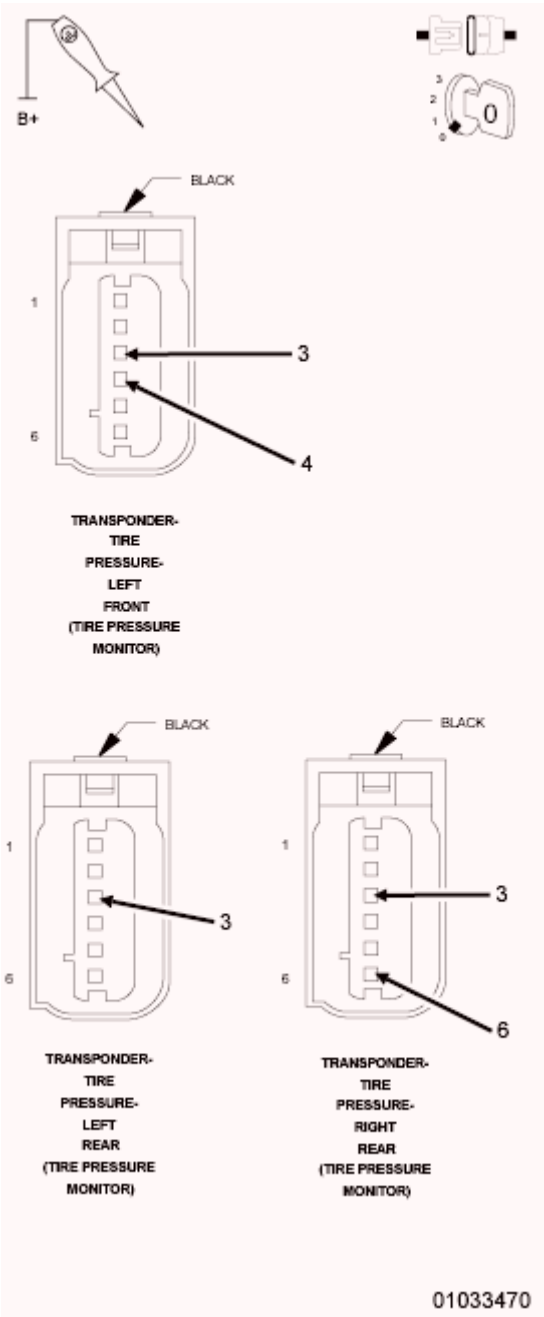

Fig. 27: Checking Ground Circuit(s) For Open Or High Resistance
Courtesy of CHRYSLER GROUP, LLC

1. Turn the ignition off.
2. Using a 12-volt test light connect to battery voltage, check the Ground circuit(s) at the TPM Transponder harness connector.

NOTE: The test light should be illuminated and bright. Compare the brightness to that of a direct connection to the battery.

Does the test light illuminate brightly?

Yes

- Go To 5

No

- Repair the Ground circuit(s) for an open circuit or high resistance.
- Perform the TPM VERIFICATION TEST. Refer to **STANDARD PROCEDURE**.

5. **(D508) COM - LIN TIRE PRESSURE MONITOR LAN CIRCUIT SHORT TO VOLTAGE**

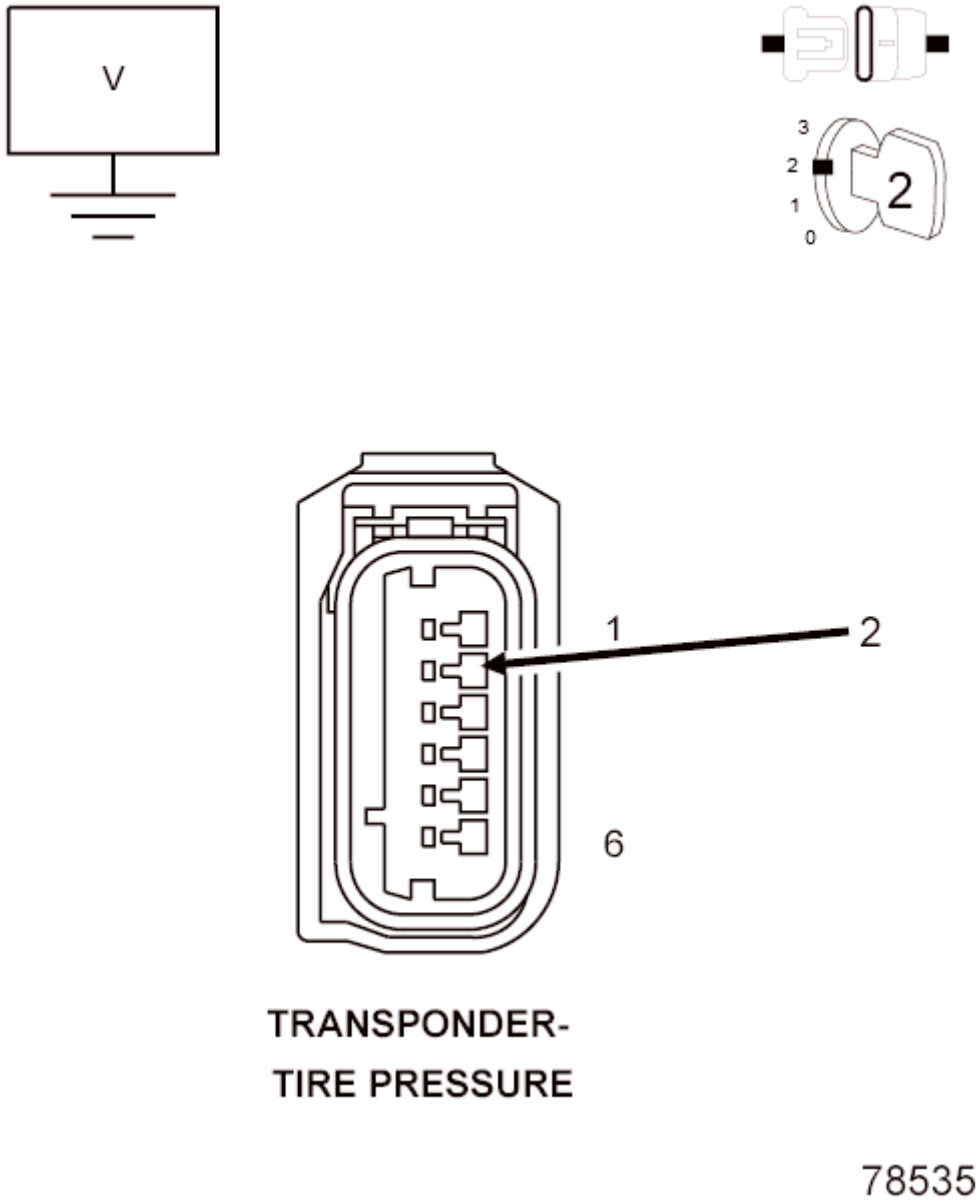

Fig. 28: Checking COM-LIN Tire Pressure Monitor LAN Circuit For Short To Voltage
Courtesy of CHRYSLER GROUP, LLC

1. Turn the ignition off.
2. Disconnect the WCM harness connector.
3. Ignition on, engine not running.
4. Measure the voltage of the (D508) COM - LIN Tire Pressure Monitor LAN circuit at the TPM Transponder harness connector.

   Is there any voltage present?

Yes

- Repair the (D508) COM - LIN Tire Pressure Monitor LAN circuit for a short to voltage.
- Perform the TPM VERIFICATION TEST. Refer to **STANDARD PROCEDURE**.

No

- Go To 6

6. **(D508) COM - LIN TIRE PRESSURE MONITOR LAN CIRCUIT SHORT TO GROUND**

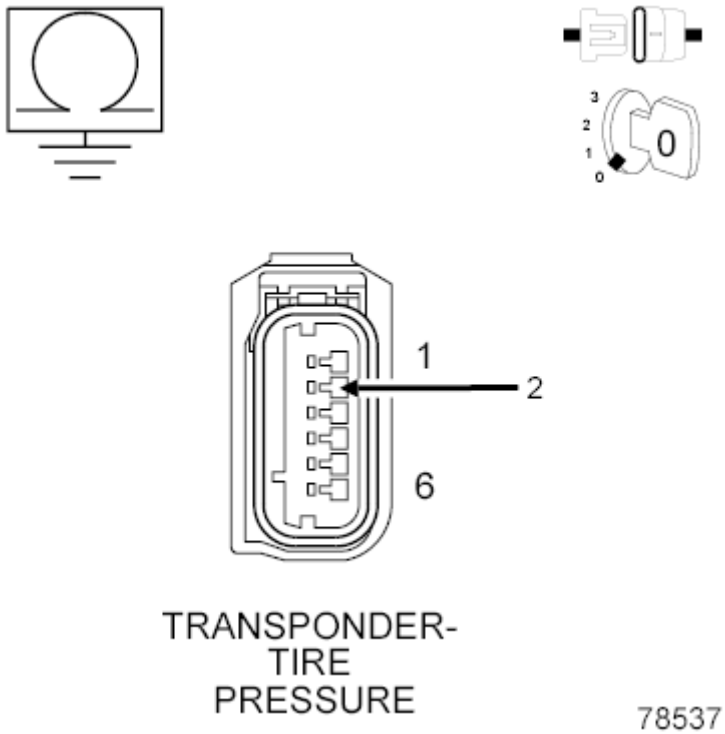

Fig. 29: Measuring Resistance Between Ground & COM-LIN Tire Pressure Monitor LAN Circuit
Courtesy of CHRYSLER GROUP, LLC

1. Turn the ignition off.
2. Measure the resistance between ground and the (D508) COM - LIN Tire Pressure Monitor LAN circuit at the TPM Transponder harness connector.

   Is the resistance below 5 Ohms?

Yes

- Repair the (D508) COM - LIN Tire Pressure Monitor LAN circuit for a short to ground.
- Perform the TPM VERIFICATION TEST. Refer to **STANDARD PROCEDURE**.

No

- Go To 7

7. **(D508) COM - LIN TIRE PRESSURE MONITOR LAN CIRCUIT OPEN OR HIGH RESISTANCE**

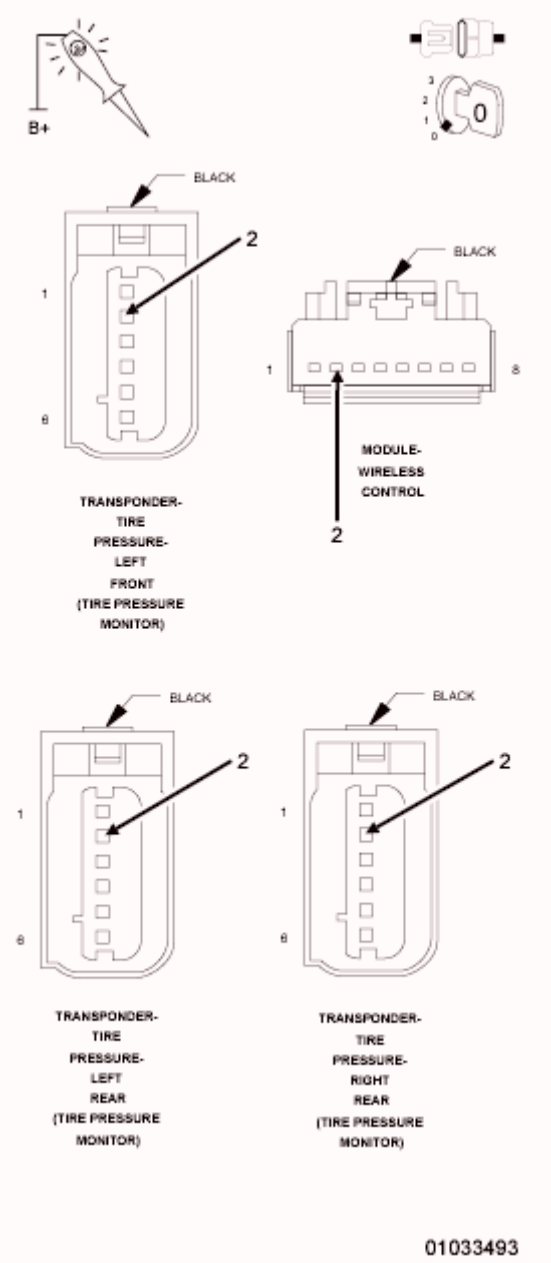

Fig. 30: Checking COM - LIN Tire Pressure Monitor LAN Circuit For Open Or High Resistance
Courtesy of CHRYSLER GROUP, LLC

1. Use a jumper wire with one end connected to ground and the other to the (D508) COM - LIN Tire Pressure Monitor LAN circuit at the WCM harness connector.
2. Using a 12-Volt test light connected to battery voltage, check the (D508) COM - LIN Tire Pressure Monitor LAN circuit at the TPM Transponder harness connector.

NOTE: The test light should be illuminated and bright. Compared the brightness to that of a direct connection to the battery.

Does the test light illuminate brightly?

Yes

- Go To 8

No

- Repair the (D508) COM - LIN Tire Pressure Monitor LAN circuit for an open.
- Perform the TPM VERIFICATION TEST. Refer to **STANDARD PROCEDURE**.

8. **CHECK FOR ADDITIONAL TIRE PRESSURE MONITORING (TPM) TRANSPONDER COMMUNICATION RELATED DTCs**
   1. With the scan tool, select Network View and select Advanced.

   Is there more than one module with active DTCs Logged Against the WCM?

   Yes

   - Replace the Wireless Control Module (WCM) in accordance with the Service Information.
   - Perform the TPM VERIFICATION TEST. Refer to **STANDARD PROCEDURE**.

   No

   - Replace the Tire Pressure Monitoring (TPM) Transponder in accordance with the service information.
   - Perform the TPM VERIFICATION TEST. Refer to **STANDARD PROCEDURE**.

9. **INTERMITTENT TIRE PRESSURE MONITORING (TPM) TRANSPONDER DTC**

NOTE: The conditions that set the DTC are not present at this time. The following list may help in identifying the intermittent condition.

1. Perform any Technical Service Bulletins (TSBs) that may apply.
2. Review the scan tool Environmental Data (EV Data). If possible, try to duplicate the conditions under which the DTC set.
3. While monitoring the scan tool data relative to this circuit, wiggle test the wiring and connectors.
4. If numerous trouble codes were set, use a wire schematic and look for any common ground or supply circuits
5. Turn the ignition off.
6. Using the wiring schematic as a guide, inspect the related wire harness. Disconnect all the related harness connectors. Look for any chafed, pierced, pinched, partially broken wires and broken, bent, pushed out, or corroded terminals.

   Were any problems found?

   Yes

   - Perform the necessary repairs.
   - Perform the TPM VERIFICATION TEST. Refer to **STANDARD PROCEDURE**.

   No

   - Test complete.
   - Perform the TPM VERIFICATION TEST. Refer to **STANDARD PROCEDURE**.

U0019-CAN B BUS

For a complete wiring diagram, **refer to appropriate SYSTEM WIRING DIAGRAMS article** .

WHEN MONITORED

Continuously

SET CONDITION

Whenever the CAN B Bus (+) or CAN Bus (-) circuit is open, shorted to voltage or shorted to ground.

POSSIBLE CAUSES

Possible Causes
CAN B BUS DTCs IN TIPM
(D55) CAN B BUS (+) CIRCUIT OPEN
(D54) CAN B BUS (-) CIRCUIT OPEN
WIRELESS CONTROL MODULE (WCM) (SKREEM)

DIAGNOSTIC TEST

1. **CHECK FOR ACTIVE DIAGNOSTIC TROUBLE CODE (DTC)s**
    1. With the scan tool, read the active DTCs.
    2. Cycle the ignition switch from off to on at least five times, leaving the ignition on for a minimum of 90 seconds per cycle.
    3. With the scan tool, read the active DTCs.

    Does the scan tool display: U0019-CAN B BUS as active?

    Yes

    - Go To 2

    No

    - Test complete, the condition or conditions that originally set this DTC are not present at this time. Using the wiring diagrams as a guide, check all related splices and connectors for signs of water intrusion, corrosion, pushed out or bent terminals and poor pin fit.
2. **CHECK TIPM DTCs**
    1. With the scan tool, read the TIPM active DTCs.

    Does the scan tool display any CAN B BUS DTCs as Active?

    Yes

- Refer to **DIAGNOSIS AND TESTING** and perform the appropriate diagnostic procedure.

No

- Go To 3

3. **(D55) CAN B BUS (+) CIRCUIT OPEN**

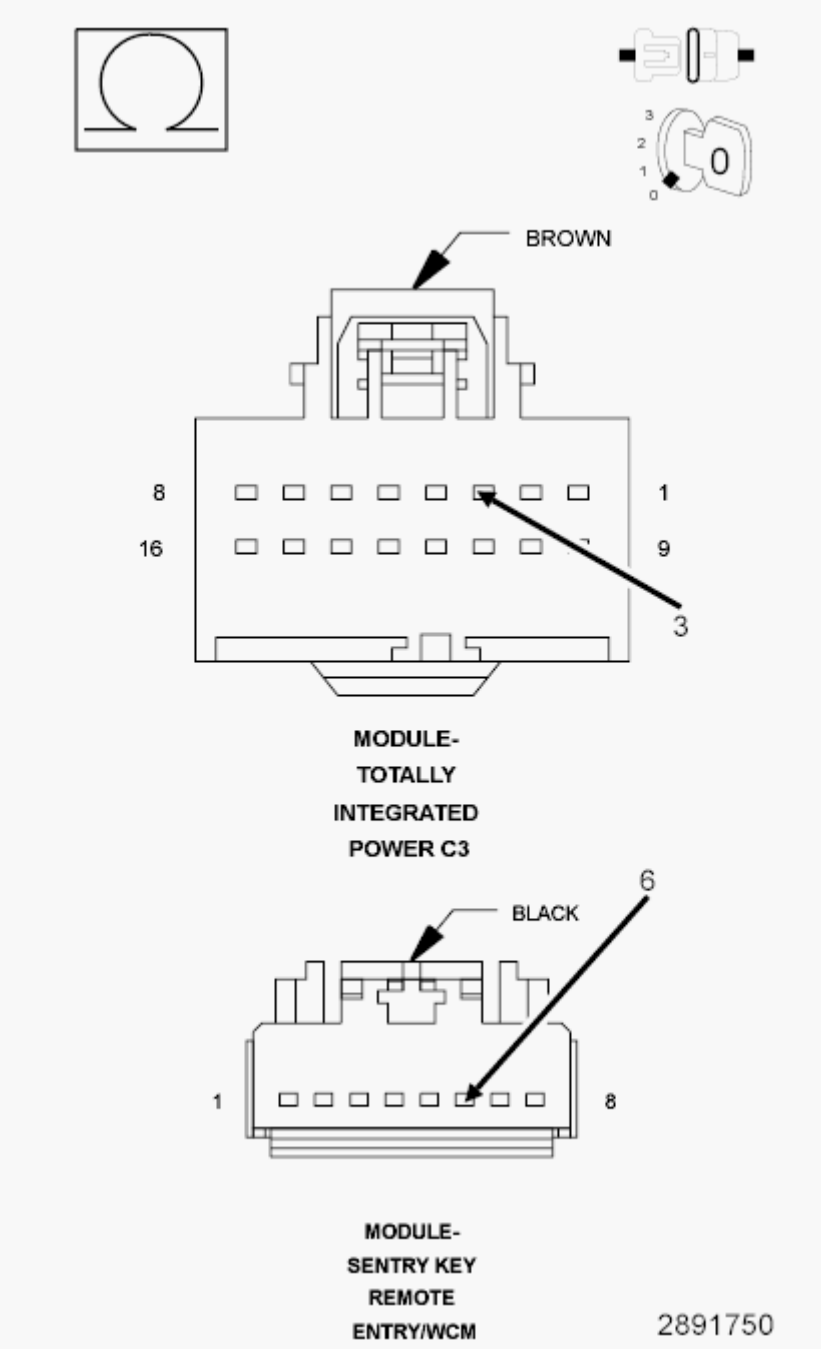

Fig. 31: Measuring Resistance Of CAN B Bus (+) Circuit Between TIPM Harness Connector & WCM Harness Connector

Courtesy of CHRYSLER GROUP, LLC

1. Turn the ignition off.
2. Disconnect the negative battery cable.
3. Disconnect the WCM (SKREEM) harness connector.
4. Disconnect the TIPM harness connector.
5. Measure the resistance of the (D55) CAN B Bus (+) circuit between the TIPM harness connector and the WCM harness connector.

   Is the resistance below 2.0 Ohms?

   Yes

   - Go To 4

   No

   - Repair the open in the (D55) CAN B Bus (+) circuit.
   - Perform the BODY VERIFICATION TEST. Refer to **STANDARD PROCEDURE** .

4. **(D54) CAN B BUS (-) CIRCUIT OPEN**

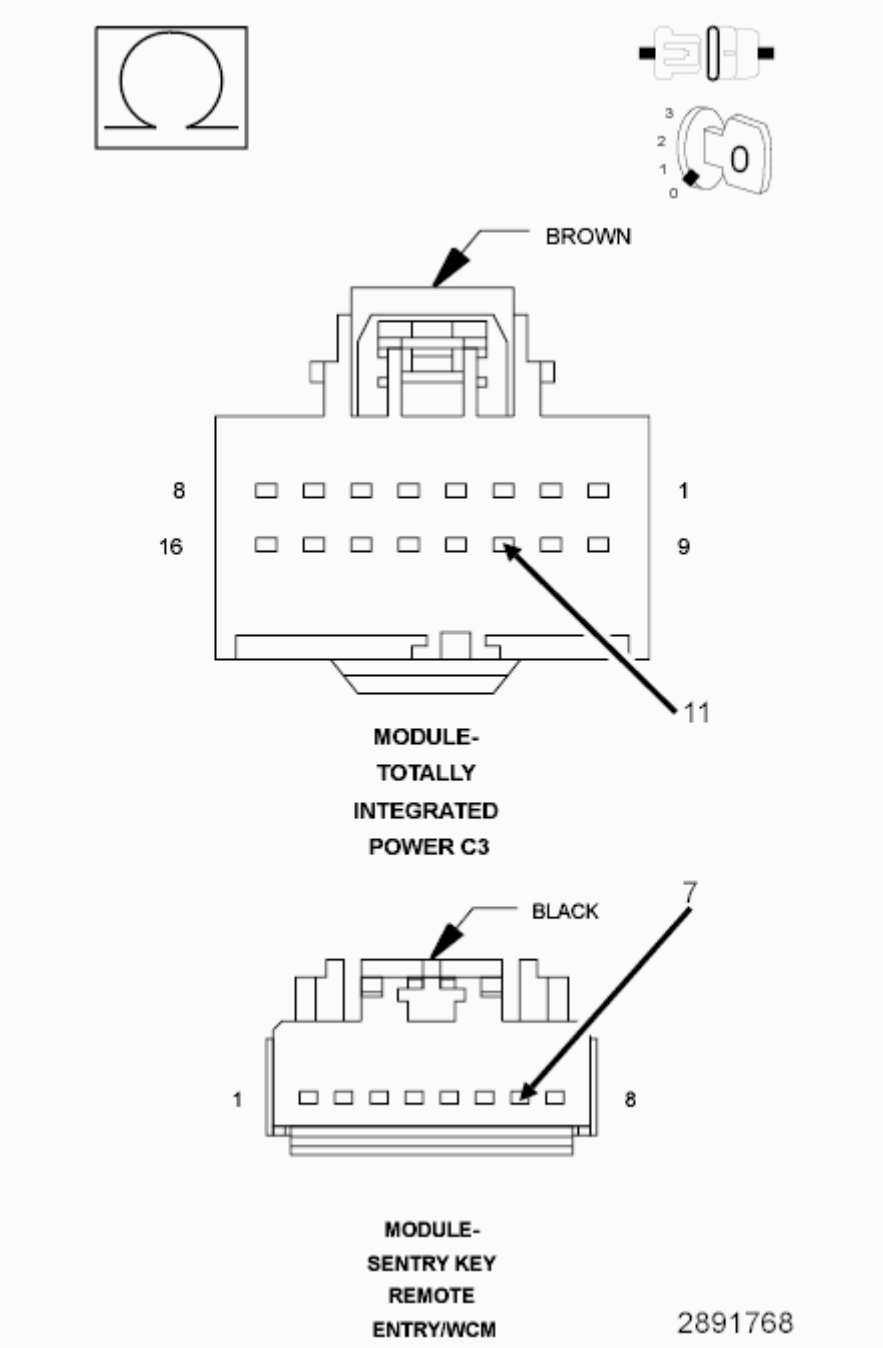

Fig. 32: Measuring Resistance Of CAN B Bus (-) Circuit Between TIPM Harness Connector & WCM Harness Connector
Courtesy of CHRYSLER GROUP, LLC

1. Measure the resistance of the (D54) CAN B Bus (-) circuit between the TIPM harness connector and the WCM harness connector.

   Is the resistance below 2.0 Ohms?

   Yes

- Replace the Wireless Control Module (WCM) (SKREEM) in accordance with the Service Information. Refer to **MODULE, SENTRY KEY IMMOBILIZER (SKREEM), REMOVAL** .
- Perform the SKIS IDENTIFICATION TEST. Refer to **STANDARD PROCEDURE** .

No

- Repair the open in the (D54) CAN B Bus (-) circuit.
- Perform the BODY VERIFICATION TEST. Refer to **STANDARD PROCEDURE** .

U0141-LOST COMMUNICATION WITH IPM (FCM/TIPM)

For a complete wiring diagram, **refer to appropriate SYSTEM WIRING DIAGRAMS article** .

WHEN MONITORED

Continuously when the ignition is on.

The battery voltage between 10.0 and 16.0 Volts.

Ignition Off Draw (IOD) fuse installed.

Totally Integrated Power Module (TIPM) is configured correctly.

SET CONDITION

Bus messages not received from the Totally Integrated Power Module (TIPM) for approximately two to five seconds.

POSSIBLE CAUSES

Possible Causes
CAN BUS CIRCUITS OPEN OR SHORTED DTCS RELATED TO BATTERY VOLTAGE, IGNITION, OR VIN MESSAGES TOTALLY INTEGRATED POWER MODULE POWER AND GROUND TIPM NOT CONFIGURED CORRECTLY TOTALLY INTEGRATED POWER MODULE (TIPM)

MODULE THAT SET THIS DTC

DIAGNOSTIC TEST

VERIFY DTC IS ACTIVE

NOTE: Make sure the IOD fuse is installed and the battery is fully charged before proceeding.

1. Turn the ignition on.
2. With the scan tool, read active DTCs.

   Is this DTC active?

   Yes

   - Refer to **DIAGNOSIS AND TESTING** and perform the U0141-LOST COMMUNICATION WITH IPM (FCM/TIPM) diagnostic procedure.

   No

   - Refer to **DIAGNOSIS AND TESTING** and perform the STORED LOST COMMUNICATION DTCs diagnostic procedure.

U0155-LOST COMMUNICATION WITH CLUSTER/CCN

For a complete wiring diagram, **refer to appropriate SYSTEM WIRING DIAGRAMS article** .

WHEN MONITORED

Continuously when the ignition is on.

The battery voltage is between 10 and 16 volts.

Ignition Off Draw (IOD) fuse installed.

Totally Integrated Power Module (TIPM) is configured correctly.

SET CONDITION

Bus messages not received from the Instrument Cluster (CCN) for approximately two to five seconds.

POSSIBLE CAUSES

Possible Causes
CAN BUS CIRCUITS OPEN OR SHORTED
DTCS RELATED TO BATTERY VOLTAGE, IGNITION, OR VIN MESSAGES
INSTRUMENT CLUSTER POWER AND GROUND
TIPM NOT CONFIGURED CORRECTLY
INSTRUMENT CLUSTER (CCN)
MODULE THAT SET THIS DTC

DIAGNOSTIC TEST

VERIFY THE DIAGNOSTIC TROUBLE CODE (DTC) IS ACTIVE

NOTE: Make sure the IOD fuse is installed and the battery is fully charged before proceeding.

1. Turn the ignition on.
2. With the scan tool, read active DTCs.

   Is this DTC active?

   Yes

   - Refer to **DIAGNOSIS AND TESTING** and perform the U0155-LOST COMMUNICATION WITH CLUSTER/CCN diagnostic procedure.

   No

   - Refer to **DIAGNOSIS AND TESTING** and perform the STORED LOST COMMUNICATION DTCs diagnostic procedure.

U0184-LOST COMMUNICATION WITH RADIO

For a complete wiring diagram, **refer to appropriate SYSTEM WIRING DIAGRAMS article** .

WHEN MONITORED

Continuously when the ignition is on.

Battery voltage between 10 and 16 volts.

Ignition Off Draw (IOD) fused installed.

Totally Integrated Power Module (TIPM) is configured correctly.

SET CONDITION

Bus messages not received from the Radio for approximately two to five seconds.

POSSIBLE CAUSES

Possible Causes
CAN BUS CIRCUITS OPEN OR SHORTED DTCS RELATED TO BATTERY VOLTAGE, IGNITION, OR VIN MESSAGES RADIO POWER AND GROUND TIPM NOT CONFIGURED CORRECTLY RADIO MODULE THAT SET THIS DTC

DIAGNOSTIC TEST

VERIFY THE DIAGNOSTIC TROUBLE CODE (DTC) IS ACTIVE

NOTE: Make sure the IOD fuse is installed and the battery is fully charged before proceeding.

1. Turn the ignition on.
2. With the scan tool, read the active DTCs.

   Is this DTC active?

   Yes

   - Refer to **DIAGNOSIS AND TESTING** and perform the U0184-87-LOST COMMUNICATION WITH RADIO - MISSING MESSAGE diagnostic procedure.

   No

- Refer to **DIAGNOSIS AND TESTING** and perform the STORED LOST COMMUNICATION DTCs diagnostic procedure.

U1114-LOST COMMUNICATION WITH LEFT FRONT TIRE PRESSURE TRIGGER MODULE

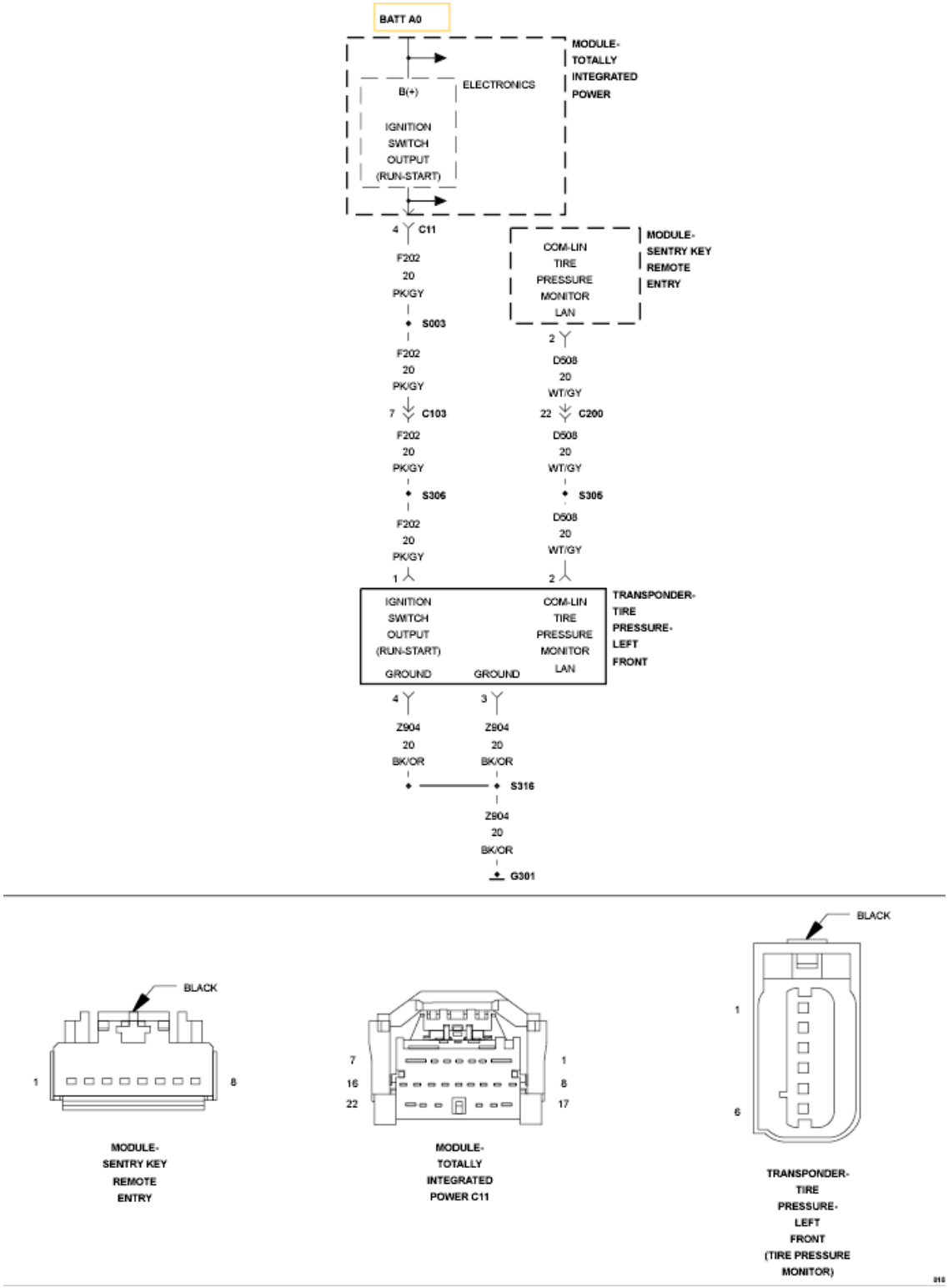

Fig. 33: Left Front Tire Pressure Trigger Module Circuit Schematic

Courtesy of CHRYSLER GROUP, LLC

For a complete wiring diagram, **refer to appropriate SYSTEM WIRING DIAGRAMS article** .

WHEN MONITORED

With the ignition on

Battery voltage between 10 and 16 volts

IOD fuse installed

SET CONDITION

If the Wireless Control Module (WCM) fails to receive bus messages from the Tire pressure trigger module for two consecutive counts of trigger module not responding to a communication check.

POSSIBLE CAUSES

Possible Causes
(D508) COM - LIN TIRE PRESSURE MONITOR LAN CIRCUIT SHORT TO VOLTAGE
(D508) COM - LIN TIRE PRESSURE MONITOR LAN CIRCUIT SHORT TO GROUND
(D508) COM - LIN TIRE PRESSURE MONITOR LAN CIRCUIT OPEN OR HIGH RESISTANCE
(F202) FUSED IGNITION SWITCH OUTPUT (RUN) CIRCUIT OPEN OR HIGH RESISTANCE
(Z904) GROUND CIRCUIT(S) OPEN OR HIGH RESISTANCE
(D508) COM-LIN TIRE PRESSURE MONITOR LAN CIRCUIT OPEN
TIRE PRESSURE TRIGGER MODULE POWER AND GROUND
WIRELESS CONTROL MODULE (WCM)

DIAGNOSTIC TEST

1. **DTC STATUS**
    1. Make sure every trigger module connector is connected and WCM connected.
    2. Ignition on, engine not running.

3. With the scan tool, run the "Trigger Module Test Routine" under "Miscellaneous Functions" for the "WCM" and follow the procedure.

NOTE: Three trigger modules are located in three of the four wheel wells on the vehicle to provide the WCM with the location of the tire pressure sensors on the vehicle. A fourth transponder is not necessary in the remaining wheel well due to the process-of-elimination theory. Once the system knows the location of the first three sensors it assumes the location of the fourth tire pressure sensor. The locations of the trigger modules can vary for each vehicle. Make sure the vehicle has trigger modules, and that are in the right locations. After every repair, the trigger module test routine must be rerun in order to verify the fix.

Did the Left Front Trigger Module have NO as a result?

Yes

- Go To 2

No

- Repair intermittent condition.
- Perform the TPM VERIFICATION TEST. Refer to **STANDARD PROCEDURE**.

2. **(D508) COM-LIN TIRE PRESSURE MONITOR LAN CIRCUIT OPEN**
   1. Turn the ignition off.
   2. Disconnect the Tire Pressure Trigger Module.
   3. Disconnect the WCM.
   4. With an Ohmmeter measure the resistance of the (D508) COM-LIN TIRE PRESSURE MONITOR LAN CIRCUIT.

   Is the resistance below 5 Ohms?

Yes

- Go To 3

No

- Repair or replace the open circuit.
- Perform the TPM VERIFICATION TEST. Refer to **STANDARD PROCEDURE**.

3. **(F202) FUSED IGNITION SWITCH OUTPUT (RUN) CIRCUIT OPEN OR HIGH RESISTANCE**

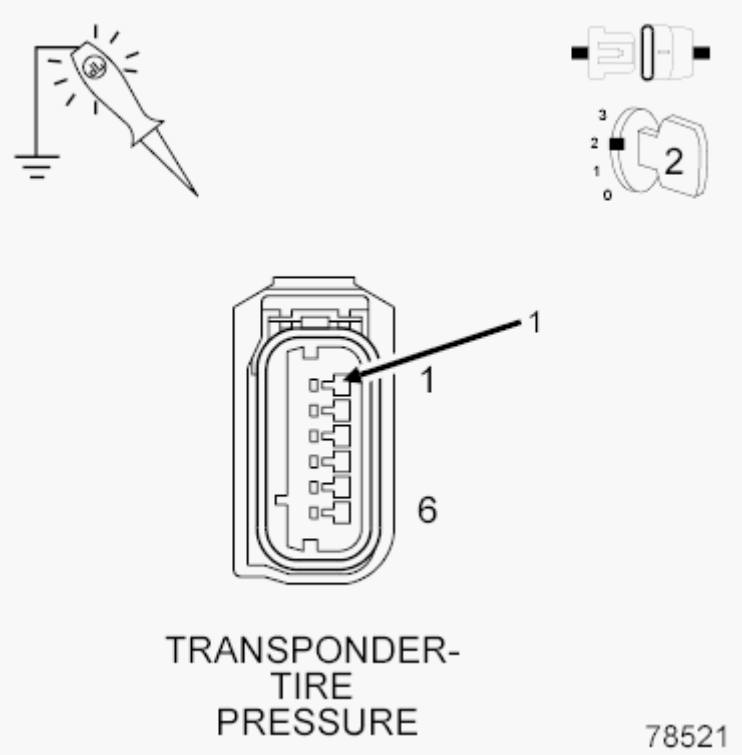

Fig. 34: Checking Fused Ignition Switch Output (Run) Circuit For Open Or High Resistance
Courtesy of CHRYSLER GROUP, LLC

1. Turn the ignition off.
2. Disconnect the Tire Pressure Transponder harness connector.
3. Ignition on, engine not running.
4. Using a 12-volt test light connect to ground, check the (F202) Fused Ignition Switch Output (Run) circuit.

NOTE: The test light should be illuminated and bright. Compare the brightness to that of a direct connection to the battery.

Is the test light illuminated and bright?

Yes

- Go To 4

No

- Repair the (F202) Fused Ignition Switch Output (Run) circuit for an open circuit or high resistance.
- Perform the TPM VERIFICATION TEST. Refer to **STANDARD PROCEDURE**.

4. **(Z904) GROUND CIRCUIT(S) OPEN OR HIGH RESISTANCE**

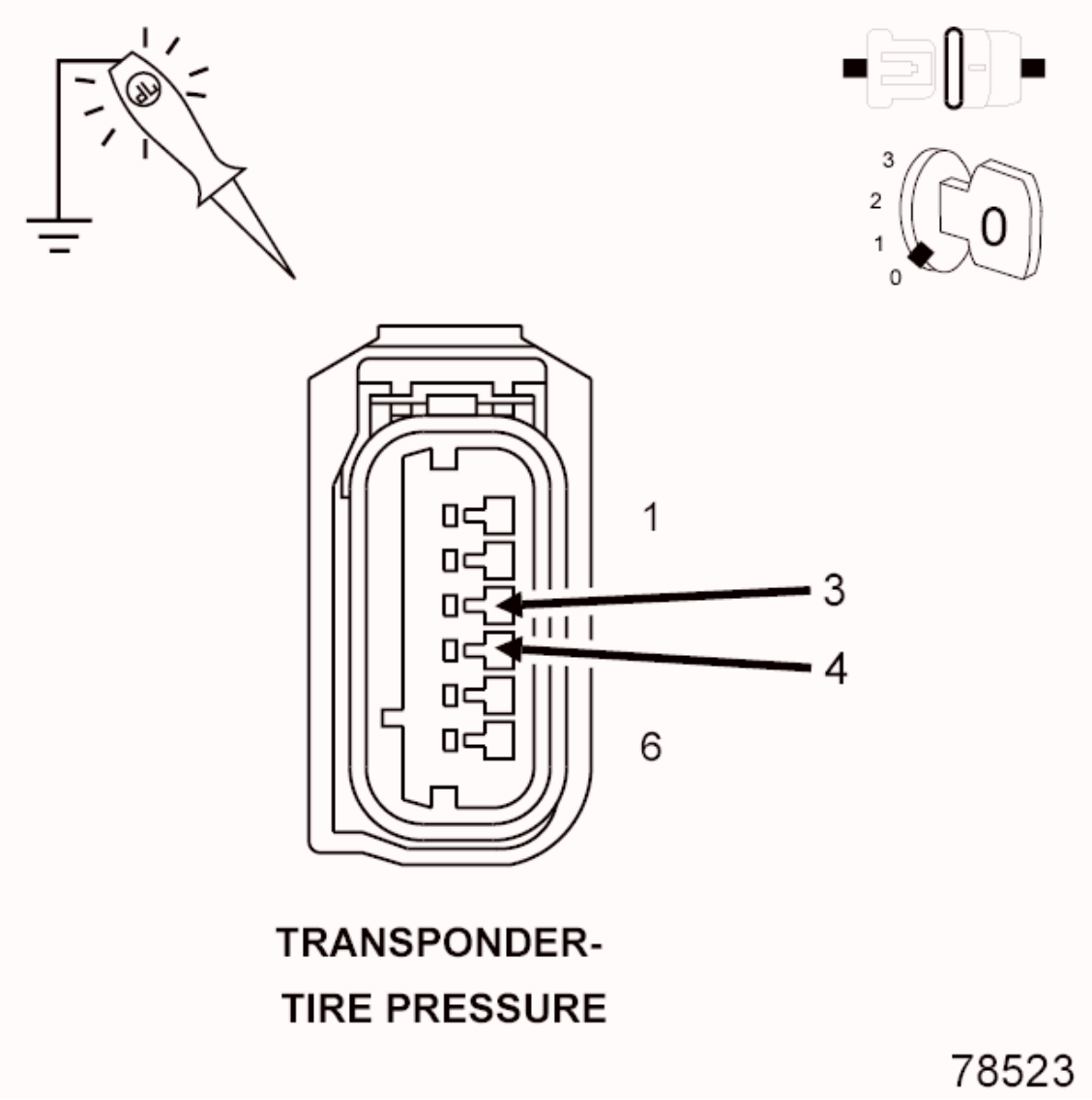

Fig. 35: Checking Ground Circuit(s) Open Or High Resistance
Courtesy of CHRYSLER GROUP, LLC

1. Using a 12-volt test light connect to battery voltage, probe each of the (Z904) Ground circuit(s).

NOTE: The test light should be illuminated and bright. Compare the brightness to that of a direct connection to the battery.

Does the test light illuminate brightly?

Yes

- Go To 5

No

- Repair the (Z904) Ground circuit(s) for an open circuit or high resistance.
- Perform the TPM VERIFICATION TEST. Refer to **STANDARD PROCEDURE**.

5. **(D508) COM - LIN TIRE PRESSURE MONITOR LAN CIRCUIT SHORT TO VOLTAGE**

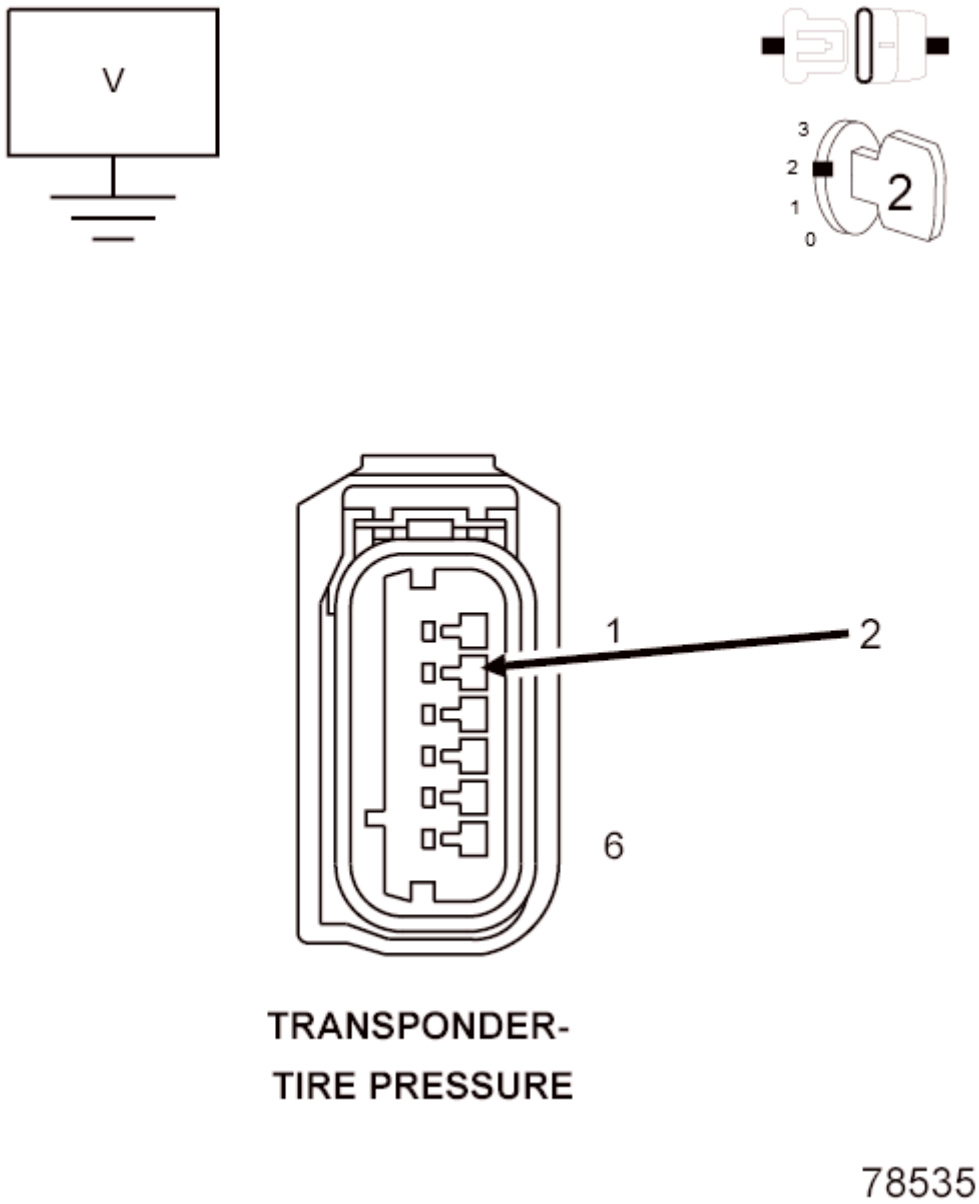

Fig. 36: Measuring Voltage Of COM-LIN Tire Pressure Monitor LAN Circuit
Courtesy of CHRYSLER GROUP, LLC

1. Turn the ignition off.
2. Disconnect all three tire pressure transponder harness connectors.
3. Ignition on, engine not running.
4. Measure the voltage of the (D508) COM - LIN Tire Pressure Monitor LAN circuit.

   Is there any voltage present?

   Yes

   - Repair the (D508) COM - LIN Tire Pressure Monitor LAN circuit for a short to voltage.
   - Perform the TPM VERIFICATION TEST. Refer to **STANDARD PROCEDURE**.

   No

   - Go To 6

6. **(D508) COM - LIN TIRE PRESSURE MONITOR LAN CIRCUIT SHORT TO GROUND**

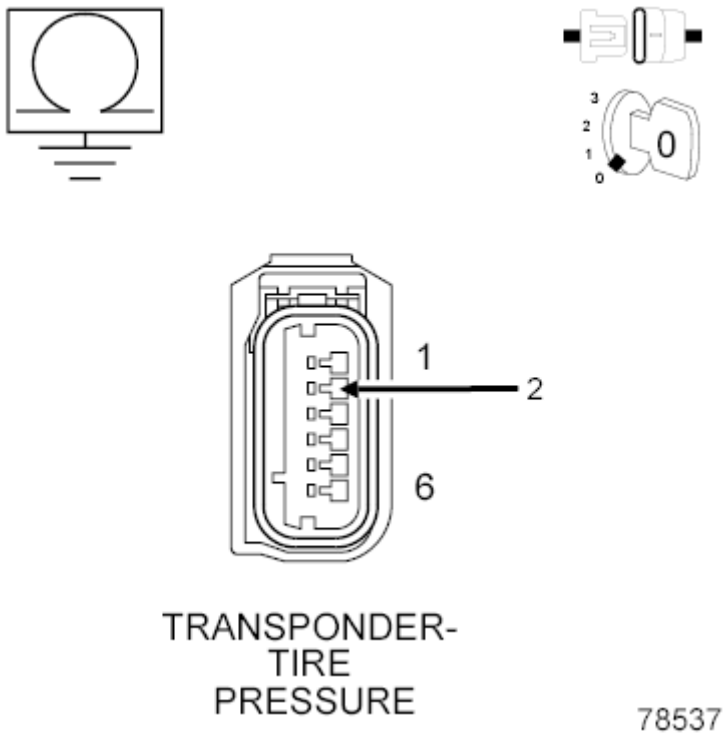

Fig. 37: Measuring Resistance Between Ground & COM-LIN Tire

Pressure Monitor LAN Circuit
Courtesy of CHRYSLER GROUP, LLC

1. Turn the ignition off.
2. Measure the resistance between ground and the (D508) COM - LIN Tire Pressure Monitor LAN circuit.

   Is the resistance below 5.0 Ohms?

   Yes

   - Repair the (D508) COM - LIN Tire Pressure Monitor LAN circuit for a short to ground.
   - Perform the TPM VERIFICATION TEST. Refer to **STANDARD PROCEDURE**.

   No

   - Go To 7

7. **(D508) COM - LIN TIRE PRESSURE MONITOR LAN CIRCUIT OPEN OR HIGH RESISTANCE**

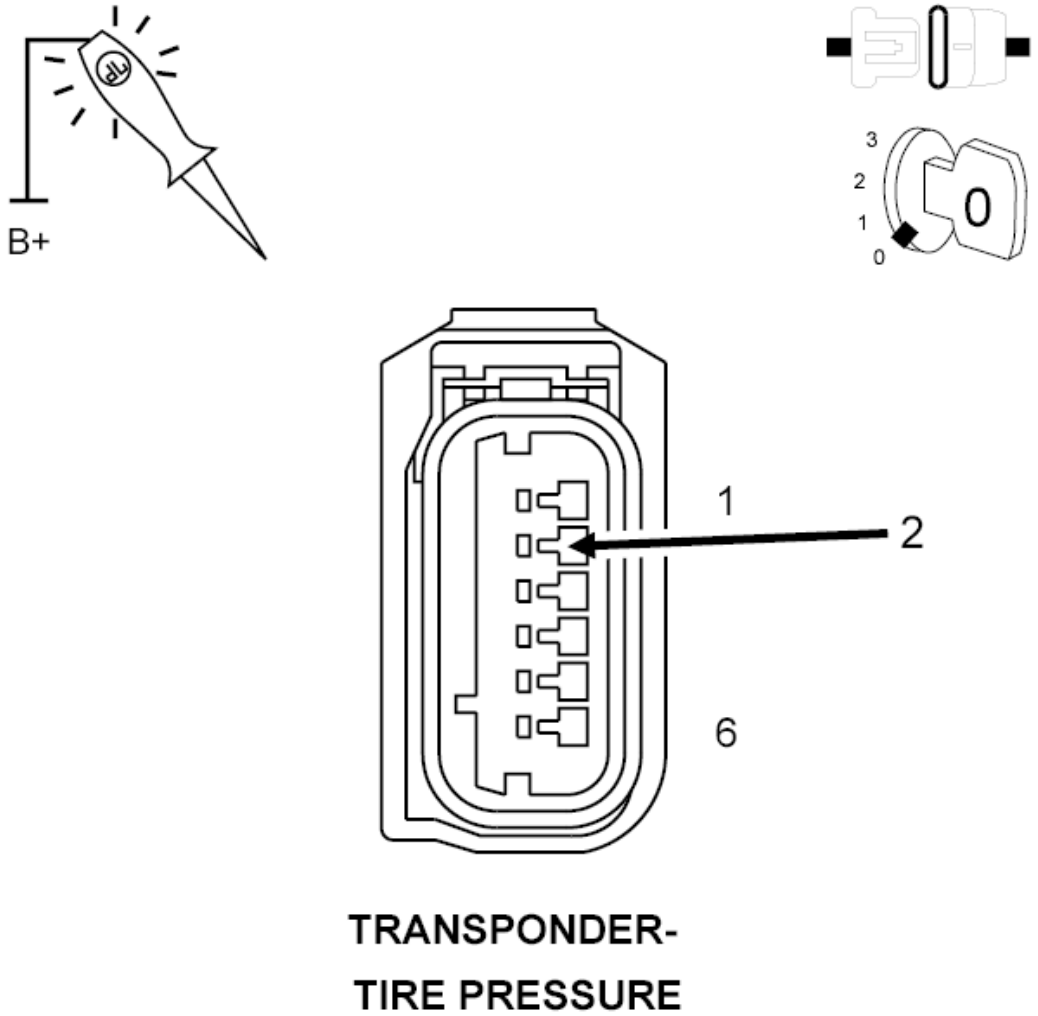

Fig. 38: Checking COM - LIN Tire Pressure Monitor LAN Circuit Open Or High Resistance
Courtesy of CHRYSLER GROUP, LLC

1. Use a jumper wire with one end connected to ground and the other to the (D508) COM - LIN Tire Pressure Monitor LAN circuit in the Front Left Pressure Tire Transponder harness connector.
2. Using a 12-Volt test light connected to battery voltage, probe the (D508) COM - LIN Tire Pressure Monitor LAN circuit in the TPM harness connector.

NOTE: The test light should be illuminated and bright. Compared the brightness to that of a direct connection to the battery.

Does the test light illuminate bright?

Yes

- Go To 8

No

- Repair the (D508) COM - LIN Tire Pressure Monitor LAN circuit for an open circuit or high resistance.
- Perform the TPM VERIFICATION TEST. Refer to **STANDARD PROCEDURE**.

8. **POWER AND GROUND CIRCUIT OPEN**
   1. Ignition on, engine not running.
   2. With a voltmeter measure the voltage between the power and ground circuit at the Trigger Module.

   Is the voltage at least the same as battery voltage?

   Yes

   - Go To 9

   No

   - Repair the open circuit.
   - Perform the TPM VERIFICATION TEST. Refer to **STANDARD PROCEDURE**.

9. **CHECK FOR ADDITIONAL TRIGGER MODULE COMMUNICATION RELATED DTCs**
   1. With the scan tool, select Network View and select Advanced.

   Is there more than one module with active DTCs "Logged Against" the WCM?

   Yes

   - Replace/update the WCM in accordance with the service information.
   - Perform the TPM VERIFICATION TEST. Refer to **STANDARD PROCEDURE**.

No

- Replace the Tire pressure trigger Module in accordance with the service information.
- Perform the TPM VERIFICATION TEST. Refer to **STANDARD PROCEDURE**.

U1116-LOST COMMUNICATION WITH LEFT REAR TIRE PRESSURE TRIGGER MODULE

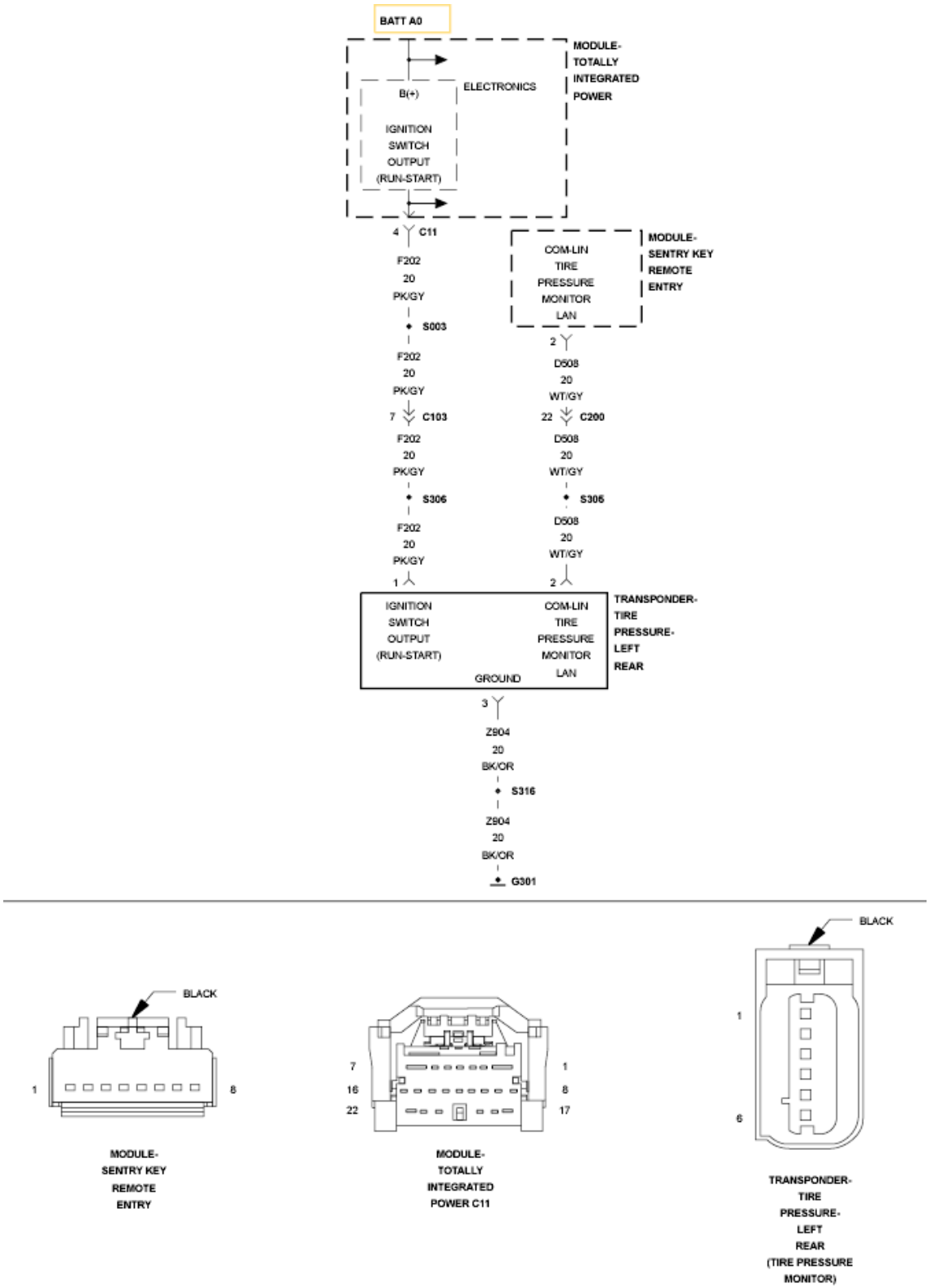

Fig. 39: Left Rear Tire Pressure Trigger Module Circuit Schematic
Courtesy of CHRYSLER GROUP, LLC

For a complete wiring diagram, **refer to appropriate SYSTEM WIRING DIAGRAMS article** .

WHEN MONITORED

- With the ignition on
- Battery voltage between 10 and 16 volts
- Ignition Off Draw (IOD) fuse installed

SET CONDITION

If the Wireless Control Module (WCM) fails to receive bus messages from the Tire pressure trigger module for two consecutive counts of trigger module not responding to a communication check.

POSSIBLE CAUSES

Possible Causes
(D508) COM - LIN TIRE PRESSURE MONITOR LAN CIRCUIT SHORT TO VOLTAGE
(D508) COM - LIN TIRE PRESSURE MONITOR LAN CIRCUIT SHORT TO GROUND
(D508) COM - LIN TIRE PRESSURE MONITOR LAN CIRCUIT OPEN OR HIGH RESISTANCE
(F202) FUSED IGNITION SWITCH OUTPUT (RUN) CIRCUIT OPEN OR HIGH RESISTANCE
(Z904) GROUND CIRCUIT(S) OPEN OR HIGH RESISTANCE
(D508) COM-LIN TIRE PRESSURE MONITOR LAN CIRCUIT OPEN
TIRE PRESSURE TRIGGER MODULE POWER AND GROUND
WIRELESS CONTROL MODULE (WCM)

DIAGNOSTIC TEST

1. **DTC STATUS**
    1. Make sure every trigger module connector is connected.
    2. Ignition on, engine not running.
    3. With the scan tool, run the "Trigger Module Test Routine" under "Miscellaneous Functions" for the "WCM" and follow the procedure.

NOTE: Three trigger modules are located in three of the four wheel wells on the vehicle to provide the WCM with the location of the tire pressure

sensors on the vehicle. A fourth transponder is not necessary in the remaining wheel well due to the process-of-elimination theory. Once the system knows the location of the first three sensors it assumes the location of the fourth tire pressure sensor. The locations of the trigger modules can vary for each vehicle. Make sure the vehicle has trigger modules, and that are in the right locations. After every repair, the trigger module test routine must be rerun in order to verify the fix.

Did the Left Front Trigger Module have NO as a result?

Yes

- Go To 2

No

- Perform the appropriate diagnostic procedure.

2. **(F202) FUSED IGNITION SWITCH OUTPUT (RUN) CIRCUIT OPEN OR HIGH RESISTANCE**

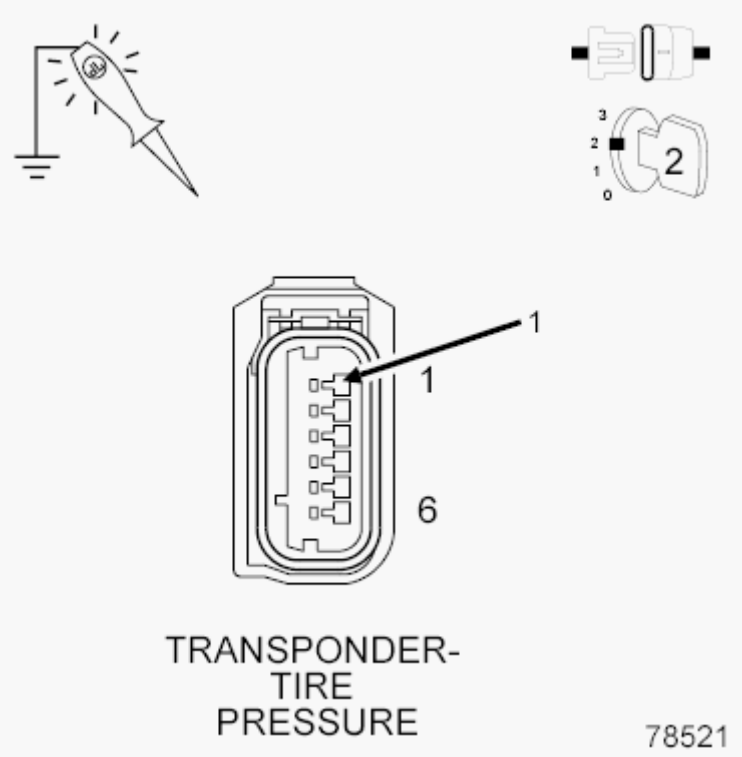

Fig. 40: Checking Fused Ignition Switch Output (Run) Circuit For Open Or High Resistance
Courtesy of CHRYSLER GROUP, LLC

1. Ignition on, engine not running.
2. Using a 12-volt test light connect to ground, check the (F202) Fused Ignition Switch Output (Run) circuit.

NOTE: The test light should be illuminated and bright. Compare the brightness to that of a direct connection to the battery.

Is the test light illuminated and bright?

Yes

- Go To 3

No

- Repair the (F202) Fused Ignition Switch Output (Run) circuit for an open circuit or high resistance.
- Perform the TPM VERIFICATION TEST. Refer to **STANDARD**

PROCEDURE.

3. **(Z904) GROUND CIRCUIT(S) OPEN OR HIGH RESISTANCE**

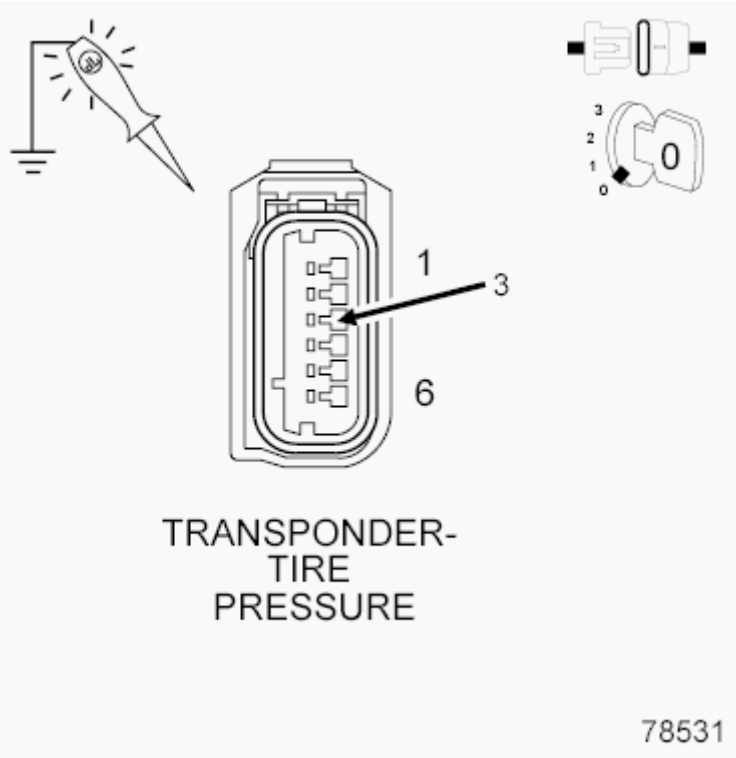

Fig. 41: Checking Ground Circuit(s) For An Open Or High Resistance
Courtesy of CHRYSLER GROUP, LLC

1. Using a 12-volt test light connect to 12 volts, check each of the (Z904) Ground circuit(s).

NOTE: The test light should be illuminated and bright. Compare the brightness to that of a direct connection to the battery.

Is the test light illuminated and bright?

Yes

- Go To 4

No

- Repair the (Z904) Ground circuit(s) for an open circuit or high resistance.

- Perform the TPM VERIFICATION TEST. Refer to **STANDARD PROCEDURE**.

4. **(D508) COM - LIN TIRE PRESSURE MONITOR LAN CIRCUIT SHORTED TO VOLTAGE**

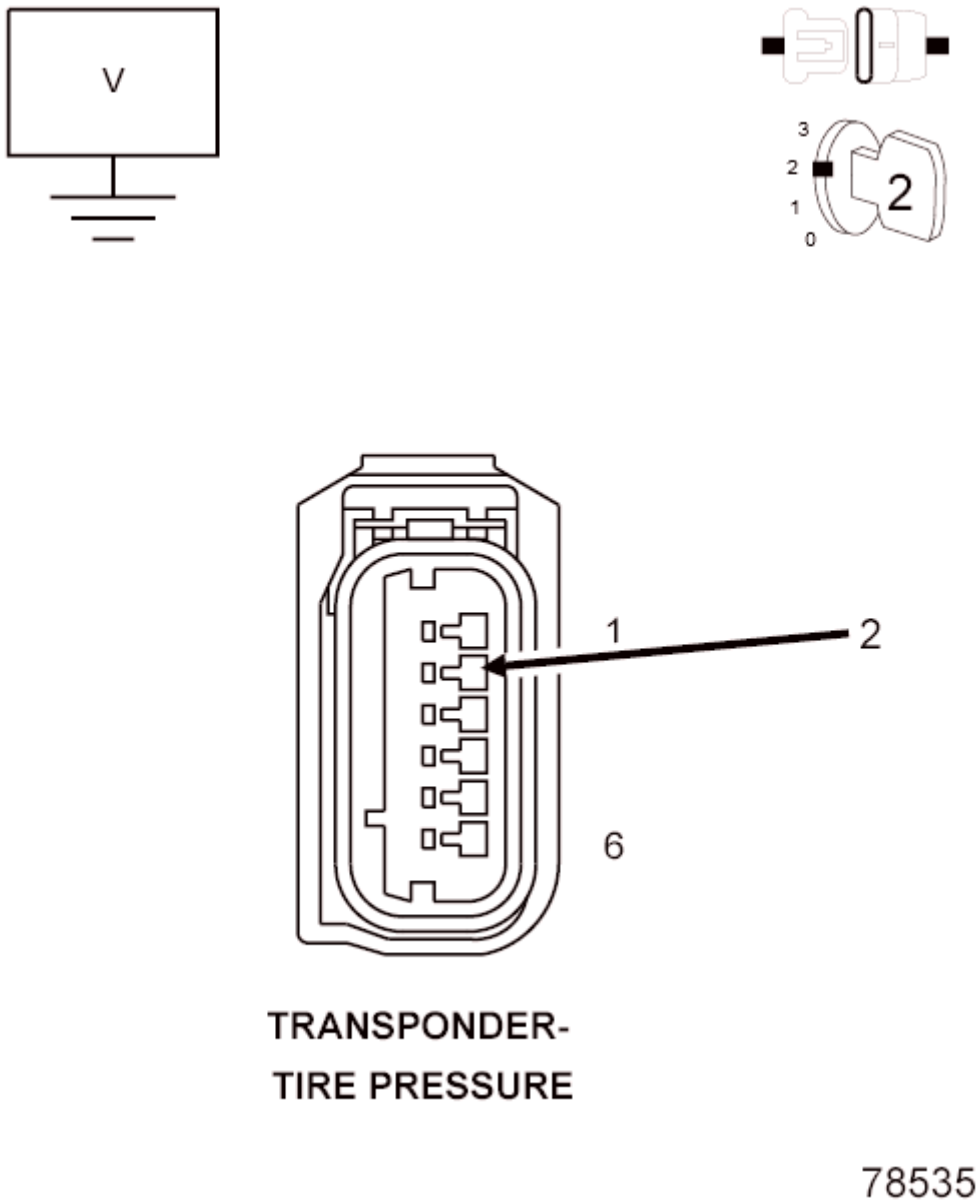

Fig. 42: Measuring Voltage Of COM-LIN Tire Pressure Monitor LAN Circuit
Courtesy of CHRYSLER GROUP, LLC

1. Turn the ignition off.
2. Disconnect all three tire pressure transponder harness connectors.
3. Disconnect the Sentry Key Remote Entry Module harness connector.

4. Ignition on, engine not running.
5. Measure the voltage of the (D508) COM - LIN Tire Pressure Monitor LAN circuit.

   Is there any voltage present?

   Yes

   - Repair the (D508) COM - LIN Tire Pressure Monitor LAN circuit for a short to voltage.
   - Perform the TPM VERIFICATION TEST. Refer to **STANDARD PROCEDURE**.

   No

   - Go To 5

5. **(D508) COM - LIN TIRE PRESSURE MONITOR LAN CIRCUIT SHORTED TO GROUND**

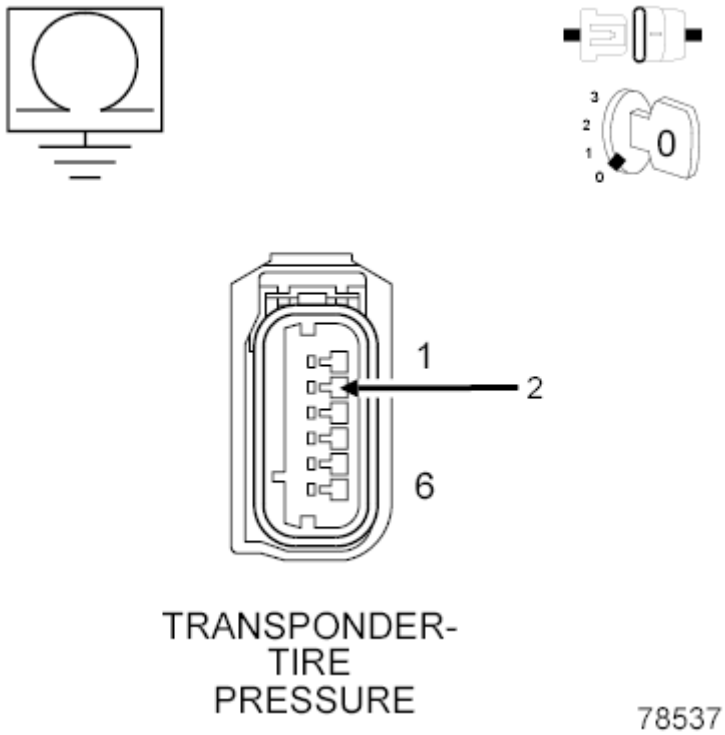

Fig. 43: Measuring Resistance Between Ground & COM-LIN Tire Pressure Monitor LAN Circuit
Courtesy of CHRYSLER GROUP, LLC

1. Turn the ignition off.
2. Measure the resistance between ground and the (D508) COM - LIN Tire Pressure Monitor LAN circuit.

   Is the resistance below 5.0 Ohms?

   Yes

   - Repair the (D508) COM - LIN Tire Pressure Monitor LAN circuit for a short to ground.
   - Perform the TPM VERIFICATION TEST. Refer to **STANDARD PROCEDURE**.

   No

   - Go To 6

6. **(D508) COM - LIN TIRE PRESSURE MONITOR LAN CIRCUIT OPEN OR HIGH RESISTANCE**
   1. Use a jumper wire with one end connected to ground and the other to the (D508) COM - LIN Tire Pressure Monitor LAN circuit in the Front Left Pressure Tire Transponder harness connector.
   2. Using a 12-Volt test light connected to battery voltage, probe the (D508) COM - LIN Tire Pressure Monitor LAN circuit in the WCM harness connector.

      NOTE: The test light should be illuminated and bright. Compared the brightness to that of a direct connection to the battery.

      Does the test light illuminate bright?

      Yes

      - Go To 7

      No

      - Repair the (D508) COM - LIN Tire Pressure Monitor LAN circuit for an open circuit or high resistance.

- Perform the TPM VERIFICATION TEST. Refer to **STANDARD PROCEDURE**.

7. **(D508) COM-LIN TIRE PRESSURE MONITOR LAN CIRCUIT OPEN**
   1. Turn the ignition off.
   2. Disconnect the Tire Pressure Trigger Module.
   3. Disconnect the WCM harness connector.
   4. With an Ohmmeter measure the resistance of the (D508) COM-LIN Tire Pressure Monitor LAN circuit.

      Is the resistance below 5 Ohms?

      Yes

      - Go To 8

      No

      - Repair or replace the open circuit.
      - Perform the TPM VERIFICATION TEST. Refer to **STANDARD PROCEDURE**.
8. **POWER AND GROUND CIRCUIT OPEN**
   1. Ignition on, engine not running.
   2. With a voltmeter measure the voltage between the power and ground circuit at the Trigger Module.

      Is the voltage at least the same as battery voltage?

      Yes

      - Go To 9

      No

      - Repair the open circuit.
      - Perform the TPM VERIFICATION TEST. Refer to **STANDARD PROCEDURE**.
9. **CHECK FOR ADDITIONAL TRIGGER MODULE**

COMMUNICATION RELATED DTCs

1. With the scan tool, select Network View and select Advanced.

   Is there more than one module with active DTCs "Logged Against" the WCM?

   Yes

   - Replace/update the WCM in accordance with the service information.
   - Perform the TPM VERIFICATION TEST. Refer to **STANDARD PROCEDURE**.

   No

   - Replace the Tire pressure trigger Module in accordance with the service information.
   - Perform the TPM VERIFICATION TEST. Refer to **STANDARD PROCEDURE**.

U1117-LOST COMMUNICATION WITH RIGHT REAR TIRE PRESSURE TRIGGER MODULE

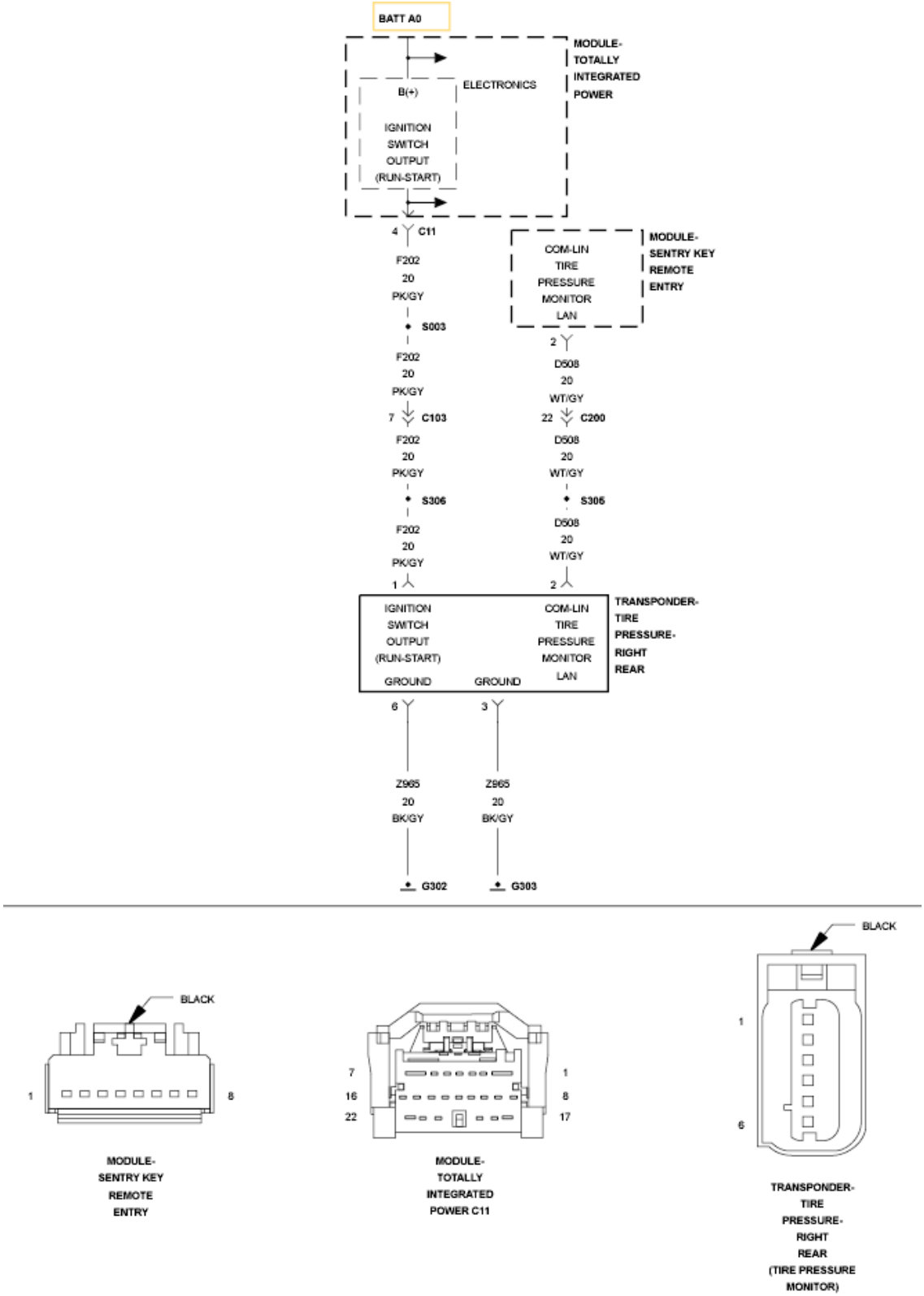

Fig. 44: Right Rear Tire Pressure Trigger Module Circuit Schematic
Courtesy of CHRYSLER GROUP, LLC

For a complete wiring diagram, **refer to appropriate SYSTEM WIRING DIAGRAMS article** .

WHEN MONITORED

With the ignition on

Battery voltage between 10 and 16 volts

IOD fuse installed

SET CONDITION

If the Wireless Control Module (WCM) fails to receive bus messages from the Tire pressure trigger module for two consecutive counts of trigger module not responding to a communication check.

POSSIBLE CAUSES

Possible Causes
(D508) COM - LIN TIRE PRESSURE MONITOR LAN CIRCUIT SHORT TO VOLTAGE
(D508) COM - LIN TIRE PRESSURE MONITOR LAN CIRCUIT SHORT TO GROUND
(D508) COM - LIN TIRE PRESSURE MONITOR LAN CIRCUIT OPEN OR HIGH RESISTANCE
(F202) FUSED IGNITION SWITCH OUTPUT (RUN) CIRCUIT OPEN OR HIGH RESISTANCE
(Z904) GROUND CIRCUIT(S) OPEN OR HIGH RESISTANCE
(D508) COM-LIN TIRE PRESSURE MONITOR LAN CIRCUIT OPEN
TIRE PRESSURE TRIGGER MODULE POWER AND GROUND
WIRELESS CONTROL MODULE (WCM)

DIAGNOSTIC TEST

1. **DTC STATUS**
    1. Make sure every trigger module connector is connected.
    2. Ignition on, engine not running.
    3. With the scan tool, run the "Trigger Module Test Routine" under "Miscellaneous Functions" for the "WCM" and follow the procedure.

NOTE: Three trigger modules are located in three of the four wheel wells on the vehicle to provide the

WCM with the location of the tire pressure sensors on the vehicle. A fourth transponder is not necessary in the remaining wheel well due to the process-of-elimination theory. Once the system knows the location of the first three sensors it assumes the location of the fourth tire pressure sensor. The locations of the trigger modules can vary for each vehicle. Make sure the vehicle has trigger modules, and that are in the right locations. After every repair, the trigger module test routine must be rerun in order to verify the fix.

Did the Left Front Trigger Module have NO as a result?

Yes

- Go To 2

No

- Repair intermittent condition.
- Perform the TPM VERIFICATION TEST. Refer to **STANDARD PROCEDURE**.

2. **(F202) FUSED IGNITION SWITCH OUTPUT (RUN) CIRCUIT OPEN OR HIGH RESISTANCE**

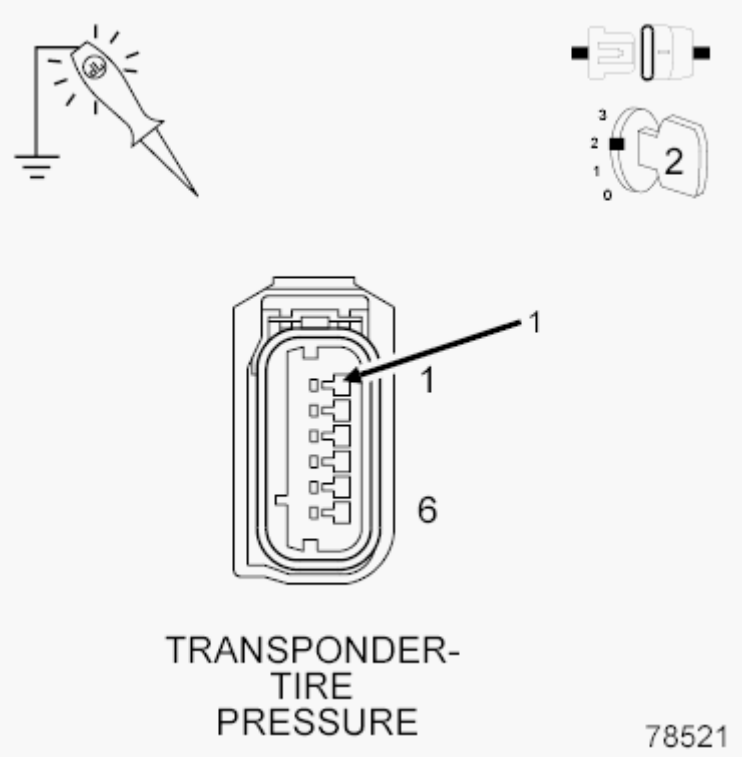

Fig. 45: Checking Fused Ignition Switch Output (Run) Circuit For Open Or High Resistance
Courtesy of CHRYSLER GROUP, LLC

1. Ignition on, engine not running.
2. Using a 12-volt test light connect to ground, check the (F202) Fused Ignition Switch Output (Run) circuit.

NOTE: The test light should be illuminated and bright. Compare the brightness to that of a direct connection to the battery.

Is the test light illuminated and bright?

Yes

- Go To 3

No

- Repair the (F202) Fused Ignition Switch Output (Run) circuit for an open circuit or high resistance.
- Perform the TPM VERIFICATION TEST. Refer to **STANDARD**

PROCEDURE.

3. **(Z904) GROUND CIRCUIT(S) OPEN OR HIGH RESISTANCE**

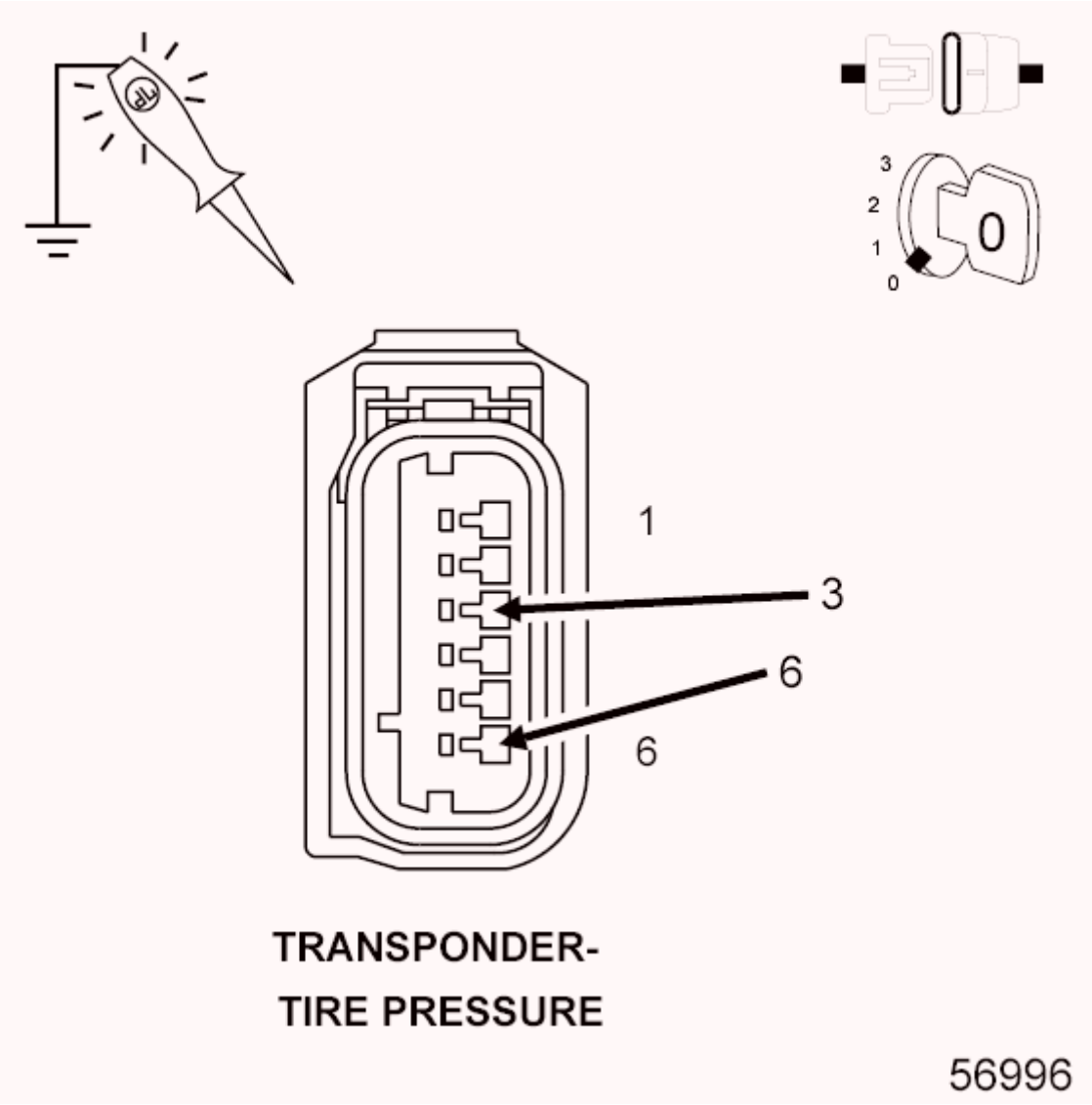

Fig. 46: Checking Ground Circuit(s) For Open Or High Resistance
Courtesy of CHRYSLER GROUP, LLC

1. Using a 12-volt test light connect to 12 volts, check each of the (Z904) Ground circuit(s).

NOTE: The test light should be illuminated and bright. Compare the brightness to that of a direct connection to the battery.

Is the test light illuminated and bright?

Yes

- Go To 4

No

- Repair the (Z904) Ground circuit(s) for an open circuit or high resistance.
- Perform the TPM VERIFICATION TEST. Refer to **STANDARD PROCEDURE**.

4. **(D508) COM - LIN TIRE PRESSURE MONITOR LAN CIRCUIT SHORT TO VOLTAGE**

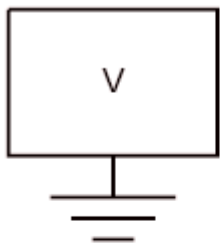

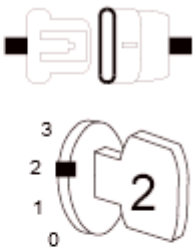

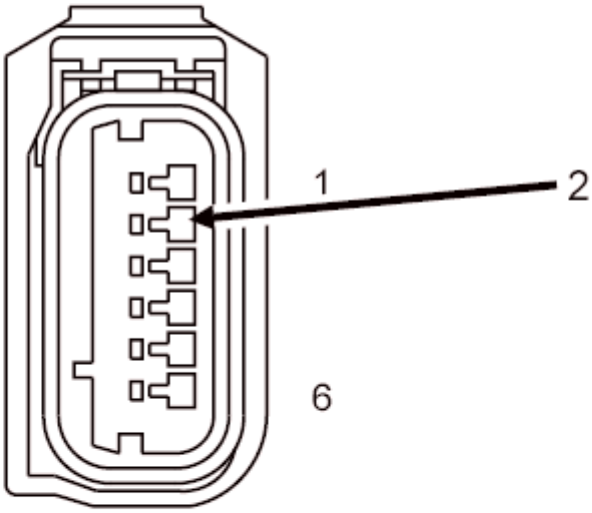

TRANSPONDER-
TIRE PRESSURE

78535

Fig. 47: Measuring Voltage Of COM-LIN Tire Pressure Monitor LAN Circuit
Courtesy of CHRYSLER GROUP, LLC

1. Turn the ignition off.
2. Disconnect all three tire pressure transponder harness connectors.
3. Ignition on, engine not running.
4. Measure the voltage of the (D508) COM - LIN Tire Pressure Monitor LAN circuit.

   Is there any voltage present?

   Yes

   - Repair the (D508) COM - LIN Tire Pressure Monitor LAN circuit for a short to voltage.
   - Perform the TPM VERIFICATION TEST. Refer to **STANDARD PROCEDURE**.

   No

   - Go To 5

5. **(D508) COM - LIN TIRE PRESSURE MONITOR LAN CIRCUIT SHORT TO GROUND**

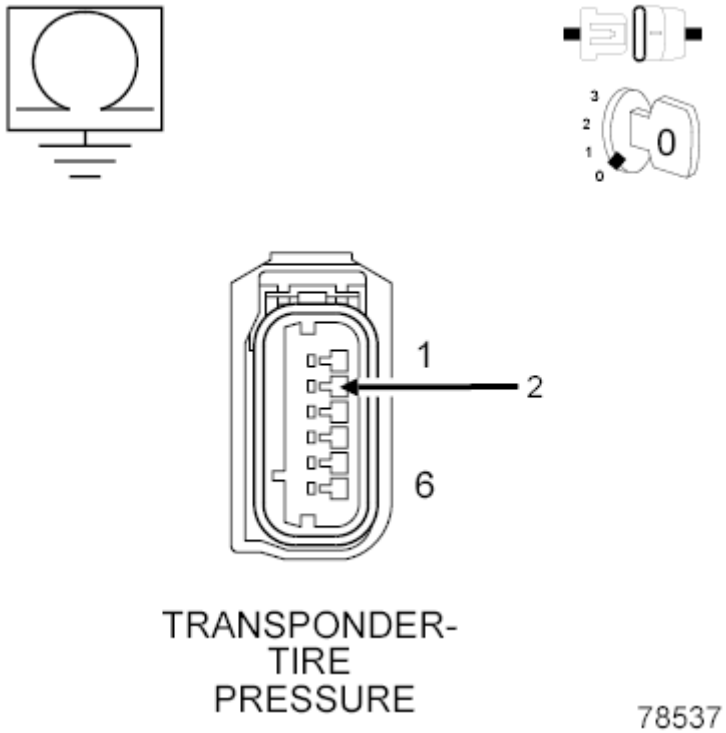

Fig. 48: Measuring Resistance Between Ground & COM-LIN Tire Pressure Monitor LAN Circuit
Courtesy of CHRYSLER GROUP, LLC

1. Turn the ignition off.
2. Measure the resistance between ground and the (D508) COM - LIN Tire Pressure Monitor LAN circuit.

   Is the resistance below 5.0 Ohms?

   Yes

   - Repair the (D508) COM - LIN Tire Pressure Monitor LAN circuit for a short to ground.
   - Perform the TPM VERIFICATION TEST. Refer to **STANDARD PROCEDURE**.

   No

   - Go To 6

6. **(D508) COM - LIN TIRE PRESSURE MONITOR LAN CIRCUIT OPEN OR HIGH RESISTANCE**
   1. Use a jumper wire with one end connected to ground and the other to

the (D508) COM - LIN Tire Pressure Monitor LAN circuit in the Front Left Pressure Tire Transponder harness connector.

2. Using a 12-Volt test light connected to battery voltage, probe the (D508) COM - LIN Tire Pressure Monitor LAN circuit in the WCM harness connector.

NOTE: The test light should be illuminated and bright. Compared the brightness to that of a direct connection to the battery.

Does the test light illuminate bright?

Yes

- Go To 7

No

- Repair the (D508) COM - LIN Tire Pressure Monitor LAN circuit for an open circuit or high resistance.
- Perform the TPM VERIFICATION TEST. Refer to **STANDARD PROCEDURE**.

7. **(D508) COM-LIN TIRE PRESSURE MONITOR LAN CIRCUIT OPEN**
   1. Turn the ignition off.
   2. Disconnect the Tire Pressure Trigger Module.
   3. Disconnect the WCM.
   4. With an Ohmmeter measure the resistance of the (D508) COM-LIN TIRE PRESSURE MONITOR LAN CIRCUIT.

   Is the resistance below 5 Ohms?

   Yes

   - Go To 8

   No

   - Repair or replace the open circuit.

- Perform the TPM VERIFICATION TEST. Refer to **STANDARD PROCEDURE**.

8. **POWER AND GROUND CIRCUIT OPEN**
   1. Ignition on, engine not running.
   2. With a voltmeter measure the voltage between the power and ground circuit at the Trigger Module.

      Is the voltage at least the same as battery voltage?

      Yes

      - Go To 9

      No

      - Repair the open circuit.
      - Perform the TPM VERIFICATION TEST. Refer to **STANDARD PROCEDURE**.

9. **CHECK FOR ADDITIONAL TRIGGER MODULE COMMUNICATION RELATED DTCs**
   1. With the scan tool, select Network View and select Advanced.

      Is there more than one module with active DTCs "Logged Against" the WCM?

      Yes

      - Replace/update the WCM in accordance with the service information.
      - Perform the TPM VERIFICATION TEST. Refer to **STANDARD PROCEDURE**.

      No

      - Replace the Tire pressure trigger Module in accordance with the service information.
      - Perform the TPM VERIFICATION TEST. Refer to **STANDARD PROCEDURE**.

STANDARD PROCEDURE

TPM VERIFICATION

For a complete wiring diagram, **refer to appropriate SYSTEM WIRING DIAGRAMS article** .

DIAGNOSTIC TEST

1. **TIRE PRESSURE MONITORING (TPM)**

   Was the Wireless Control Module (WCM) replaced during the test procedure?

   Yes

   - Go To 2

   No

   - Go To 3

2. **WIRELESS CONTROL MODULE (WCM)**

   NOTE: When entering the Personal Identification Number (PIN), care should be taken because the WCM will only allow three consecutive attempts to enter the correct PIN. If three consecutive incorrect PIN's are entered the WCM will Lock Out the scan tool. To exit Lock Mode, the ignition key must remain in the Run position for one hour. All accessories must be off. A battery charger connected to the battery during this time period is recommended.

   1. Connect the previously removed and/or disconnected components and harness connectors.
   2. Obtain the vehicle's unique Personal Identification Number (PIN) assigned to its original WCM. This number can be obtained from the vehicle invoice or from the Chrysler Customer Center (Phone 1-800-992-1997).
   3. With the scan tool, select Miscellaneous Functions, WCM. Then select

the desired procedure and follow the display on the scan tool.

4. If the WCM was replaced, all the customer's keys must be programmed to the new module. Use the scan tool and the Program Key procedure
5. With the scan tool, erase all DTCs. Perform five ignition key cycles, leaving the key on for at least 90 seconds per cycle.
6. Drive the vehicle for a minimum of 10 minutes while maintaining a continuous speed above 24 km/h (15 mph). During this time the system will learn the new sensor ID code and will clear any DTCs automatically.
7. With the scan tool, read DTCs.

Are there any DTCs present?

Yes

- Refer to **DIAGNOSIS AND TESTING** and perform the appropriate diagnostic procedure.

No

- Repair is complete.

3. **WIRE REPAIR**

Was there a wire repair?

Yes

- Go To 5

No

- Go To 4

4. **TIRE PRESSURE MONITORING (TPM) SENSOR/TIRE PRESSURE MONITORING (TPM) TRANSPONDER REPLACE**
   1. Connect the previously removed and/or disconnected components and harness connectors.
   2. Use a TPM-RKE Analyzer 9936 along with the Scan Tool to program the WCM with the correct TPM Sensor IDs and locations on the vehicle.

3. Drive the vehicle for a minimum of 10 minutes while maintaining a continuous speed above 24 km/h (15 mph). During this time the system will learn the new sensor IDs.
4. With the scan tool, read TPM DTCs.

Are there any DTCs present?

Yes

- Refer to **DIAGNOSIS AND TESTING** and perform the appropriate diagnostic procedure.

No

- Repair is complete.

5. **WIRE REPAIR**
   1. Make sure the WCM and all of the TPM Transponder harness connectors are connected.
   2. Ignition on, engine not running.
   3. With the scan tool, run the "Trigger Module Test Routine" under "Miscellaneous Functions" for the "WCM" and follow the procedure.

NOTE: The three TPM Transponder are located in three of the four wheel wells on the vehicle to provide the WCM with the location of the TPM Sensors on the vehicle. A fourth TPM Transponder is not necessary in the remaining wheel well due to the process-of-elimination theory. Once the system knows the location of the first three TPM Sensors it assumes the location of the fourth TPM Sensor. The locations of the TPM Transponder can vary for each vehicle. Make sure the vehicle has TPM Transponder, and that are in the right locations. After every repair, the TPM Transponder test routine must be rerun in order to verify the fix.

Did any of the three TPM Transponder have a NO result?

Yes

- Refer to **DIAGNOSIS AND TESTING** and perform the appropriate diagnostic procedure.

No

- Repair complete.

STANDARD PROCEDURE - WIRELESS CONTROL MODULE (WCM) VERIFICATION

WIRELESS CONTROL MODULE (WCM) VERIFICATION

For a complete wiring diagram, **refer to appropriate SYSTEM WIRING DIAGRAMS article** .

The Sentry Key remote Entry Module (SKREEM) is also known as the Wireless Control Module (WCM). Depending upon model and year of the vehicle being serviced it may be equipped with either a SKREEM or a WCM.

Perform the following after completion of a diagnostic repair:

NOTE: When entering the PIN, care should be taken because the WCM will only allow 3 consecutive attempts to enter the correct PIN. If 3 consecutive incorrect PIN's are entered the WCM will Lock Out the scan tool. To exit Lock Mode, the ignition key must remain in the Run position for one hour. All accessories must be off. A battery charger connected to the battery during this time period is recommended.

NOTE: On vehicles equipped with a premium Tire Pressure Monitoring (TPM) system, when the WCM and/or the spare tire pressure sensor is replaced with a new unit, a diagnostic scan tool MUST be used to run a routine that allows the WCM to be programmed with the ID number and location of the spare tire pressure sensor mounted in the wheel of the spare tire. Follow the programming steps outlined in the diagnostic scan tool for "Learn Spare Tire Sensor ID" under "Miscellaneous Functions" for the

"WCM/Wireless Control Module" menu item as appropriate. In addition, if the WCM is replaced, the spare tire must be dismounted from its wheel to access and note the ID number on the spare tire pressure sensor so that the ID code for that sensor can be programmed into the new WCM.

1. Reconnect the previously disconnected components and connectors.
2. Obtain the vehicle's unique Personal Identification Number (PIN) assigned to it's original WCM. This number can be obtained from the original vehicle invoice or from your Service Manager or Parts Manager.

PCM/WCM PROGRAMMING

NOTE: If the PCM and the WCM are replaced at the same time, program the PCM VIN into the PCM first.

NOTE: The PCM stores the secret key information. If the WCM ever needs to be replaced, the secret key information can be retrieved from the PCM and then transferred to the WCM for security use.

During PCM/ECM replacement, use the following steps to ensure transfer of the secret key information from the WCM to the new PCM:

1. First replace the PCM/ECM with the original WCM still connected to the vehicle.
2. Using the appropriate Service Information program the new PCM/ECM. (This will ensure the Secret Key Transfer from the original WCM into the new PCM/ECM).
3. Now replace and program the WCM (if necessary). This will retain the Secret Key from the PCM/ECM back into the new WCM.

NOTE: If this vehicle is equipped with a Steering Column Lock Module, it must be replaced along with the WCM.

4. With the scan tool, select Miscellaneous Functions, WCM/Wireless Control Module. Then select the desired procedure and follow the display on the

scan tool.

5. If the vehicle is equipped with Tire Pressure Monitoring System program the Placard Pressure Values into the WCM.
6. Ensure all the customer's keys have been programmed into the new module if necessary.
7. With the scan tool, erase all DTCs. Perform 5 ignition key cycles, leaving the key on for at least 90 seconds per cycle.
8. With the scan tool, read WCM DTCs.

DIAGNOSTIC TEST

Are there any WCM DTCs present?

Yes

- Repair not complete, go to the **DTC INDEX** and perform the appropriate diagnostic procedure.

No

- Repair is complete.

2014 AUTOMATIC TRANSMISSION

6F24 - Service Information - Compass & Patriot

DIAGNOSIS AND TESTING

AIR TEST

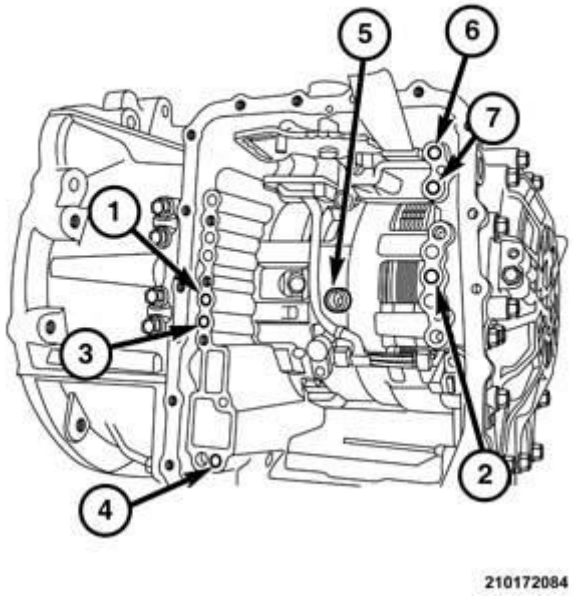

Fig. 1: Air Test Port Locations
Courtesy of CHRYSLER GROUP, LLC

1= 3-5-Reverse Clutch
2= Overdrive Clutch
3= 2-6 Brake
4= Underdrive Brake
5= Low-reverse Brake
6= To Cooler
7= From Cooler

Before the completion of the transaxle assembly procedure and before installing the valve body, an air test should be performed to determine the condition of the seals in the clutch and brake pistons. Using a rubber tip air nozzle, apply regulated 482 kPa (70 psi) shop air into the ports shown for each clutch or brake.

ROAD TEST

Prior to performing a road test, verify that the fluid level, fluid condition, and linkage adjustment have been verified.

During the road test, the transaxle should be operated in each position to check for slipping and any variation in shifting.

If the vehicle operates properly at highway speeds, but has poor acceleration, the converter stator overrunning clutch may be slipping. If acceleration is normal, but high throttle opening is needed to maintain highway speeds, the converter stator clutch may have seized. Both of these stator defects require replacement of the torque converter and thorough transaxle cleaning.

Slipping clutches can be isolated by comparing the "Elements in Use" chart with clutch operation encountered on a road test. This chart identifies which clutches are applied at each position of the selector lever.

A slipping clutch may also set a DTC and can be determined by operating the transaxle in all selector positions.

1.4 Liter And 2.0 Liter Engines							
		CLUTCH	CLUTCH	BRAKE	BRAKE	BRAKE	
		OD	35R	26	LR	UD	ON WA CL
GEAR	1				X	X	X
GEAR	2			X		X	
GEAR	3		X			X	
GEAR	4	X				X	
GEAR	5	X	X				
GEAR	6	X		X			
GEAR	NEUTRAL/PARK				X		
GEAR	R		X		X		

2.4 Liter Engine							
		CLUTCH	CLUTCH	BRAKE	BRAKE	BRAKE	
		OD	35R	26	LR	UD	ON WA CL

GEAR	**1**				**X**	**X**	**X**
GEAR	**2**			**X**		**X**	
GEAR	**3**		**X**			**X**	
GEAR	**4**	**X**				**X**	
GEAR	**5**	**X**	**X**				
GEAR	**6**	**X**		**X**			
GEAR	**NEUTRAL/PARK**				**X**		
GEAR	**R**		**X**		**X**		

6F24 POWER FLOW

Hydraulic power flow is controlled by the TCM and the solenoids attached to the valve body. The TCM toggles control voltage or ground on and off in a duty cycle to regulate the line pressure flowing through the valve body. The lower the duty cycle percentage is the higher the line pressure. The pressure can be measured with (special tool #10424, Adapter, Transmission Pressure) and (special tool #C-3293-SP, Gauge, Pressure 0-300 P.S.I.).

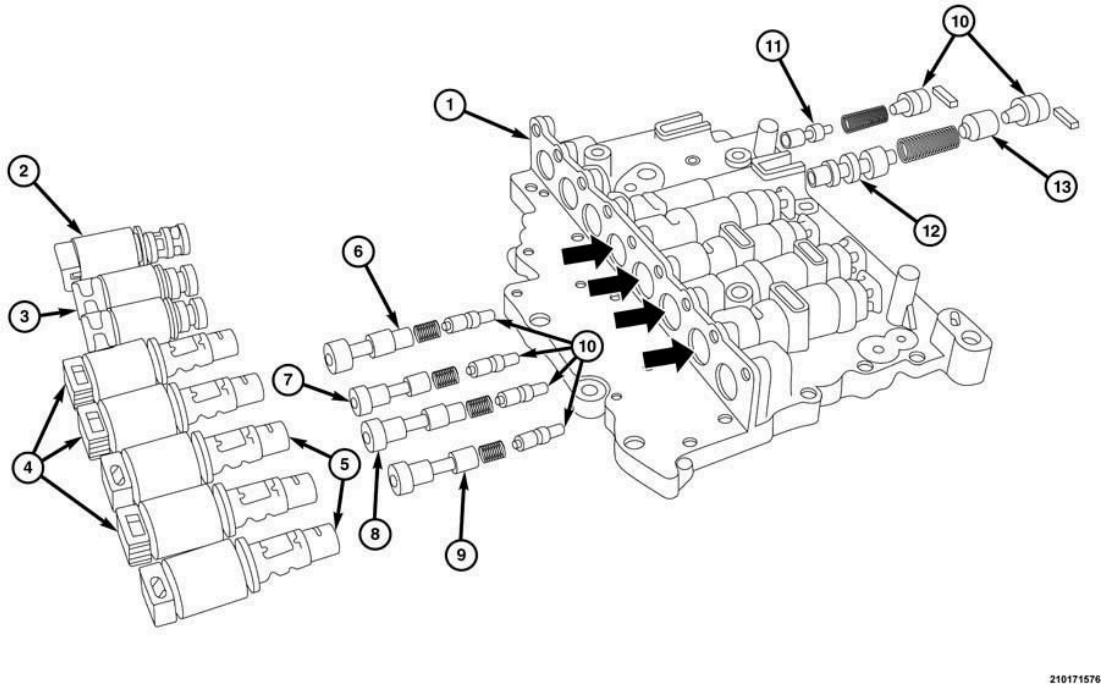

Fig. 2: Valve Body Solenoids
Courtesy of CHRYSLER GROUP, LLC

1= Outer Valve Body

2= VFS Solenoid Valve NH
3= On-Off Solenoid Valve
4= VFS Solenoid Valve NH
5= VFS Solenoid Valve NL
6= Over Drive Pressure Control Valve
7= Under Drive Pressure Control Valve
8= 2-6 Brake Pressure Control Valve
9= 3-5-R Pressure Control Valve
10= Adjust Screws
11= Reducing Valve
12= Regulator Valve
13= Regulator Sleeve

	Solenoid								**Clutch/**		
Gear	OD (LR with SS-A)	UD	2/6	3/5/R (with SS-B)	TCC	LPS	SS-A	SS-B	OD	3/5/R	2/
	Normal Open	Normal Open	Normal Closed	Normal Open	Normal Closed	Normal Open	Normal Closed	Normal Closed			
P	7%	42%	7%	41%	7%	45%	82%	OL (13.6V)			
R	7%	42%	7%	6.80%	7%	8%	82%	82% (3V)		230 psi	
N	7%	42%	7%	42%		45%	82%	OL			
D1	7%	7%	13%	42%		45% @ idle (min pres.) 8% @ max pres. 36% @ 90 psi	82%	OL			
AS1	40%	7%	13%	42%			82%	82%			

AS2	40%	7%	39%	42%			OL	OL			50 psi
AS3	40%	7%	7%	6.70%			OL	OL		50 psi	
AS4	7%	7%	7%	40%			OL	OL	51 psi		
AS5	7%	42%	7.60%	6.70%			OL	82%	51 psi	50 psi	
AS6	7%	42%	39%	41%			OL	OL	51 psi		50 psi

General Line Pressure Readings	
LPS Duty Cycle (%)	Pressure
8%	230 psi
34%	97 psi
36%	90 psi
45%	47-50 psi

Solenoid Reduced Circuit Feeds	
RED 1 (SS-A/SS-B)	73-75 psi max.
RED 2 (all other solenoids	79-81 psi max.

CLUTCHES/BRAKES

Gear Range	OWC	Holding Brake			Driving Clutch	
		Low/Rev	Underdrive	2/6	3/5/R	Overdrive
P/N		O				
1st	O	X	O			
2nd			O	O		
3rd			O		O	
4th			O			O
5th					O	O
6th				O		O
Low		O	O			
Rev		O			O	

	O = Applied	X = Applied under certain conditions

	ON/OFF		Variable Force Solenoids					
Gear	SS/A-NC	SS/B-NC	UD-NO	OD-NO	3/5/R-NO	2/6-NC	LPS-NO	TCC-NC
P/N	O		O		O		X	
1st	X			X	O		X	
2nd				O	O	O	X	X
3rd		O		O			X	X
4th					O		X	X
5th		O	O				X	X
6th			O		O	O	X	X
Low	O				O		X	X
Rev	O	O	O				X	X
	O = Electric signal applied				X = Electric signal may be applied for certain conditions			
	NO = Normally hydraulically open				NC = Normally hydraulically closed			

TRANS RANGE SENSOR (TRS)

The Trans Range Sensor (TRS) provides data to the Transmission Control Module (TCM) and other ECUs about the gear range that has been selected by the operator. The TRS also indicates from which direction the range selector was moved to obtain the current gear position. The accompanying table provides an overview of how the sensor sends Closed (1) or Open (0) signals to indicate the range the gear selector just left and the current position the gear selector is in. The TRS also functions as a neutral safety switch to inhibit the starter if the transaxle is not in Park or Neutral. The TRS also functions as a reverse lamp switch and will signal the Body Control Module (BCM) to turn on the back-up lamps when the transaxle is shifted into reverse.

	S4	S3	S2	S1
P	0	0	0	1
pr	0	0	1	1
R	0	0	1	0

rn	0	1	1	0
N	0	1	0	0
nd	1	1	0	0
D	1	0	0	0
d3	1	1	1	1

Continuity Test

Using a suitable continuity tester or OHM meter test for continuity from pin 3 to each of the signal Pins as the sensor is cycled to each shift position.

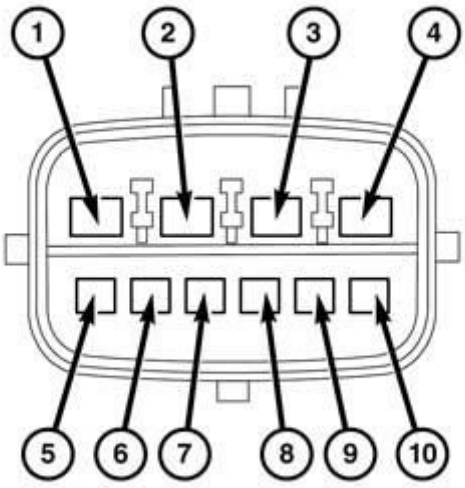

210173100

Fig. 3: Transmission Range Sensor Connector Terminal Identification
Courtesy of CHRYSLER GROUP, LLC

1 = S5 (Signal, Pst, Nst)
2 = Power (12v, Pst, Nst)
3 = Power (12v)
4= S2 (Signal R)
5 = NC
6 = NC
7 = S3 (Signal N)
8= S1 (Signal P)
9 = S4 (Signal D)

REMOVAL

FWD

1. Position vehicle on a suitable hoist with transaxle in neutral.
2. Release the hood latch and open the hood. Support the hood on the prop-rod
3. Release the fasteners holding the engine air-box to the front crossmember.
4. Separate the engine air-box from the vehicle.
5. Remove the battery form the vehicle. Refer to **BATTERY, REMOVAL** .
6. Remove the battery tray from the vehicle. Refer to **TRAY, BATTERY, REMOVAL** .
7. Remove the air box lid and position it out of the way.
8. Loosen the engine inlet air tube clamp.
9. Remove the lower air cleaner body. Refer to **2.0L BODY, AIR CLEANER, REMOVAL** , **2.2L BODY, AIR CLEANER, REMOVAL** or **2.4L BODY, AIR CLEANER, REMOVAL** .

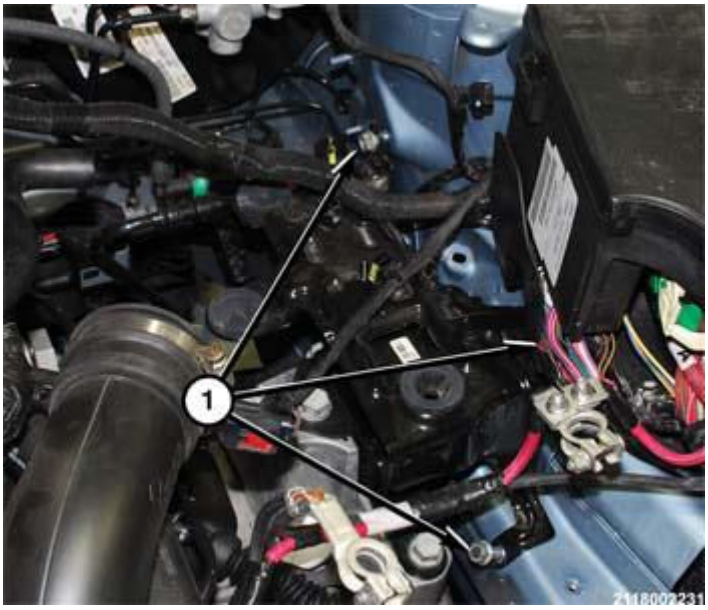

Fig. 4: Air Cleaner Bracket Nuts & Bolts
Courtesy of CHRYSLER GROUP, LLC

10. Remove bolts and nuts (1) holding the lower air cleaner bracket to the left frame rail.

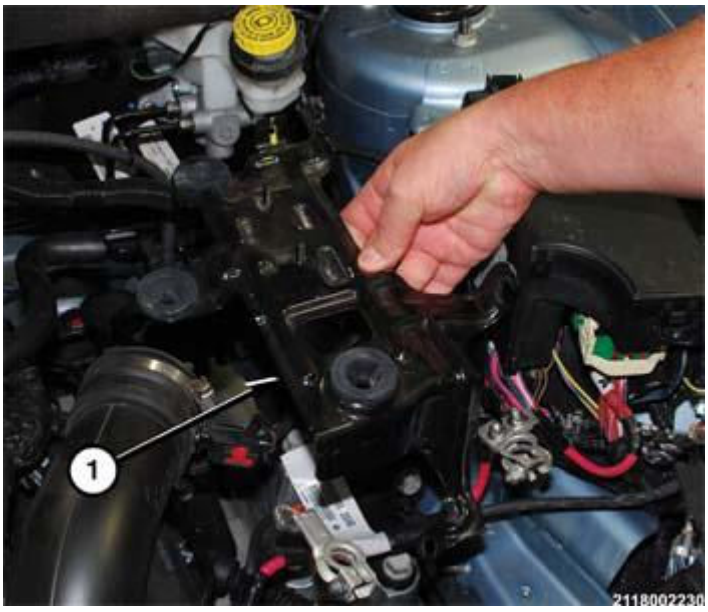

Fig. 5: Lower Air Cleaner Bracket
Courtesy of CHRYSLER GROUP, LLC

11. Separate the lower air cleaner bracket (1) from the vehicle.

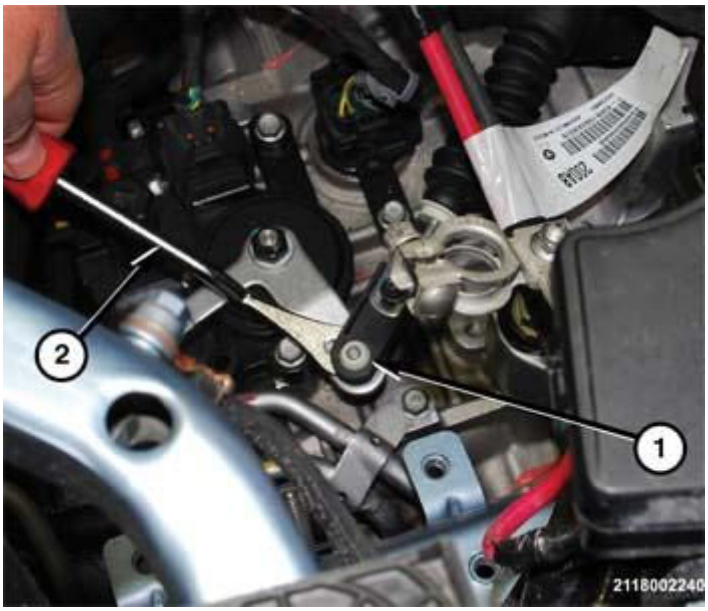

Fig. 6: Shift Cable End & Manual Lever
Courtesy of CHRYSLER GROUP, LLC

12. Using a suitable prying tool (2), lift upward on the shift cable end (1) at the transaxle manual lever.
13. Separate the shift cable (1) from the manual lever.
14. Release the clips holding the shift cable to the bracket on the top of the transaxle.

15. Position the shaft cable (1) out of the way.
16. Release the lock on the transaxle solenoid connector (1).

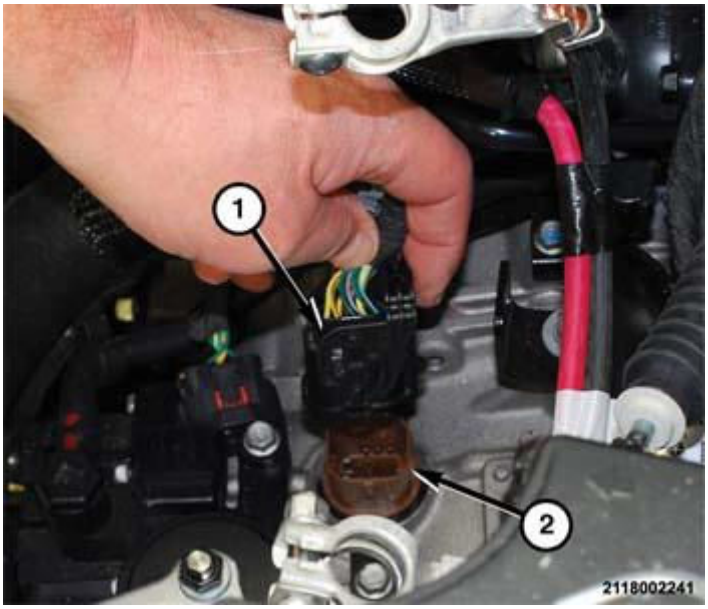

Fig. 7: Transaxle Wire Harness Connector
Courtesy of CHRYSLER GROUP, LLC

17. Separate the wire harness connector (1) from the transaxle.

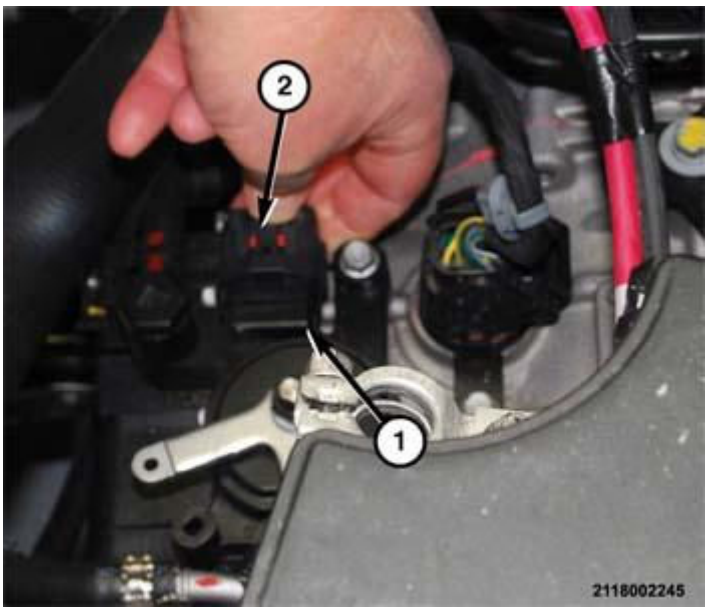

Fig. 8: Transaxle TRS Connector
Courtesy of CHRYSLER GROUP, LLC

18. Release the lock (2) on the transaxle TRS connector.
19. Separate the wire harness connector from the transaxle (1).

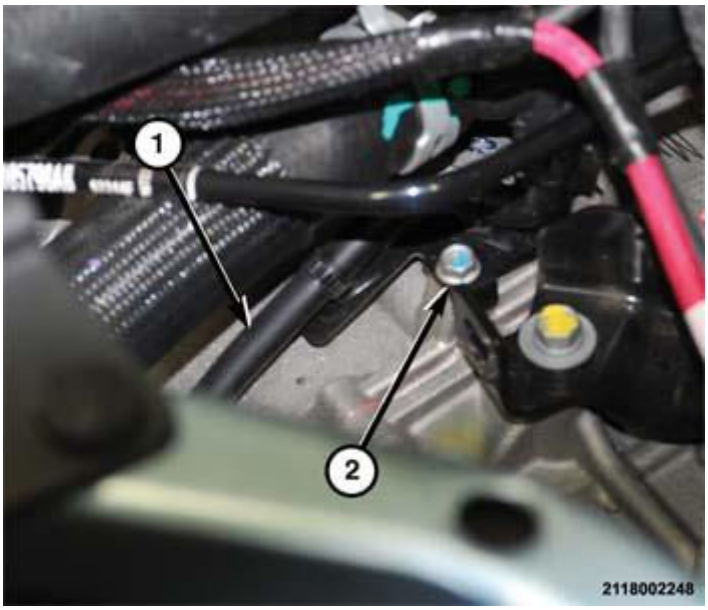

Fig. 9: Vent Tube & Bolt
Courtesy of CHRYSLER GROUP, LLC

20. Remove the bolt (2) holding the vent tube (1) to the transaxle.
21. Position the vent tube (1) out of the way.

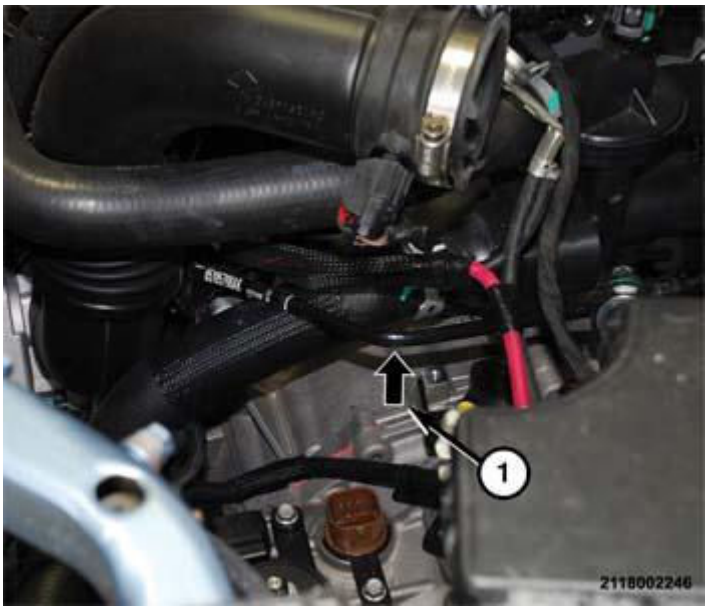

Fig. 10: Ground Cable & Transaxle Bellhousing Bolt
Courtesy of CHRYSLER GROUP, LLC

22. Remove the hidden bolt (1) holding the ground cable and transaxle bellhousing to the engine block from under the engine coolant tubes.

Fig. 11: Starter Motor Bolts
Courtesy of CHRYSLER GROUP, LLC

23. Remove the hidden bolts (1, 2) holding the starter motor to the engine block and bellhousing.

NOTE: The starter will stay in place after the transaxle is removed.

24. Position a suitable floor jack under the left (driver) side of the transaxle to add support.
25. Lift jack enough the support the transaxle but not raise it.

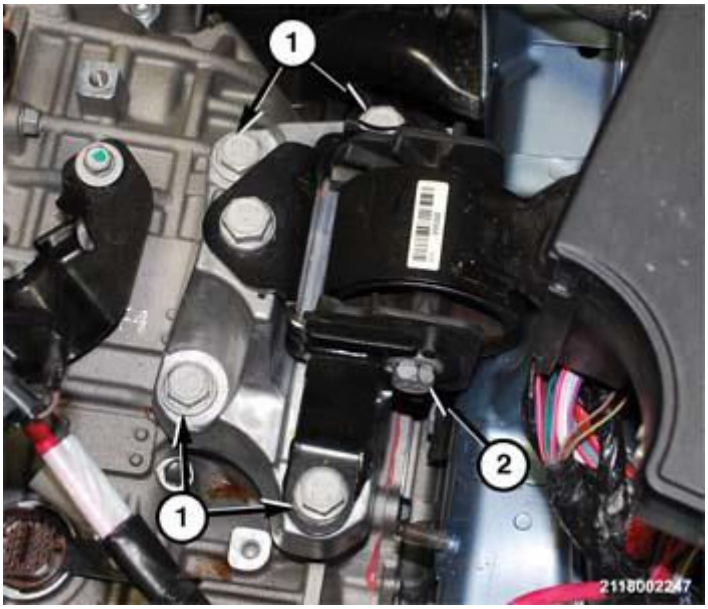

Fig. 12: Transaxle Mount Bolts
Courtesy of CHRYSLER GROUP, LLC

26. Remove the through bolt (2) holding the transaxle mount rubber isolator to the frame rail bracket.
27. Remove the bolts (1) holding the transaxle mount to the transaxle.
28. Lower the transaxle to gain clearance for the transaxle mount.
29. Separate the transaxle mount from the vehicle.

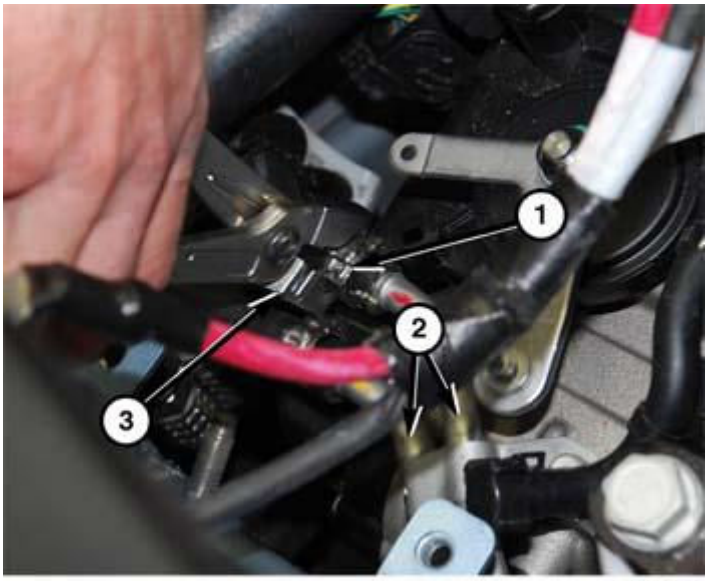

2118002233

Fig. 13: Transaxle Cooler Hose Clamps
Courtesy of CHRYSLER GROUP, LLC

30. Using a suitable clamp pliers (3), release the clamps (1) holding the transaxle cooler hoses to the tubes (2) on the transaxle.

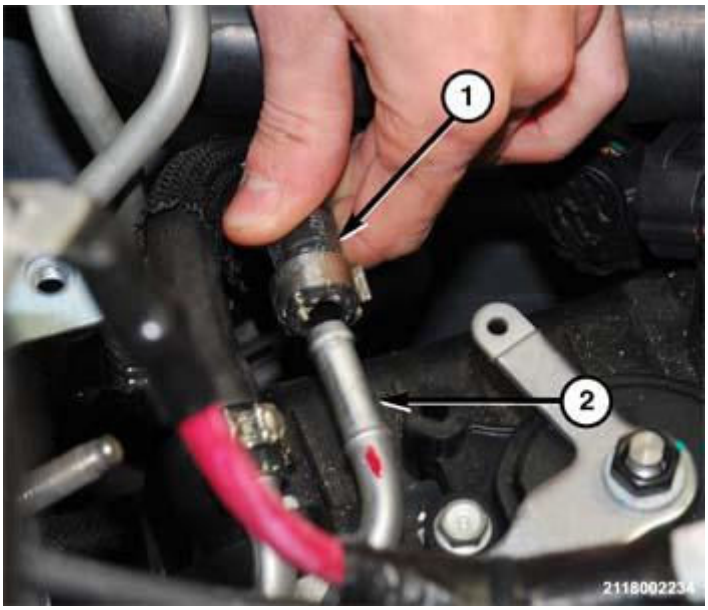

Fig. 14: Cooler Tubes & Hoses
Courtesy of CHRYSLER GROUP, LLC

CAUTION: Do not bend or crush the transaxle cooler tubes when removing the cooler hoses. If the tubes become damaged, they must be replaced.

31. Using suitable hose/spark plug wire pliers, separate the hoses (1) from the cooler tubes (2) on the transaxle.
32. Raise the vehicle.
33. Remove the belly pan. Refer to **BELLY PAN, REMOVAL** .
34. Place a suitable drain pan under the transaxle to catch fluid that may leak when the halfshafts are removed.
35. Remove the left and right halfshafts. Refer to **REMOVAL** .

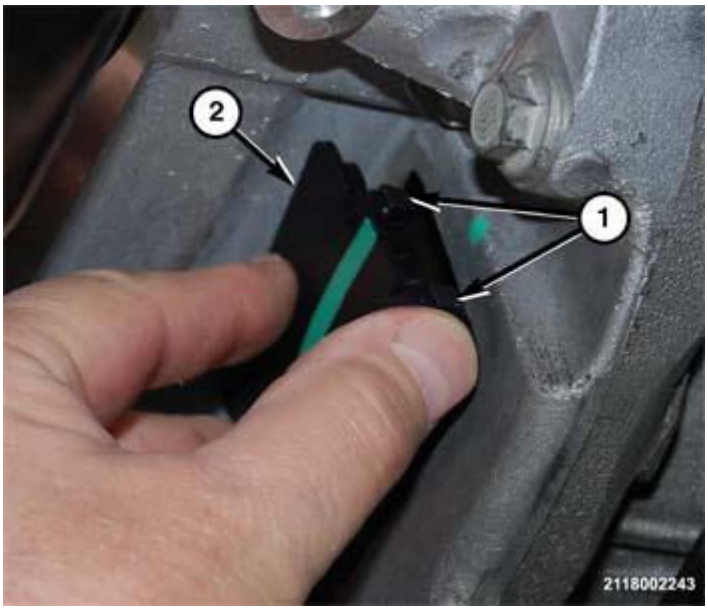

Fig. 15: Torque Converter Bolt Access Plug
Courtesy of CHRYSLER GROUP, LLC

36. Using a flat blade screw driver to release the locks (1), remove the torque converter bolt access plug (2) from the bellhousing cover.

Fig. 16: Torque Converter Bolt
Courtesy of CHRYSLER GROUP, LLC

37. Remove the bolts (2) holding the flex plate to the torque converter.

Fig. 17: Bellhousing Bolt
Courtesy of CHRYSLER GROUP, LLC

38. Remove the hidden bolt (2) holding the engine block to the bellhousing from behind the heat-shield (1) at the back of the engine.

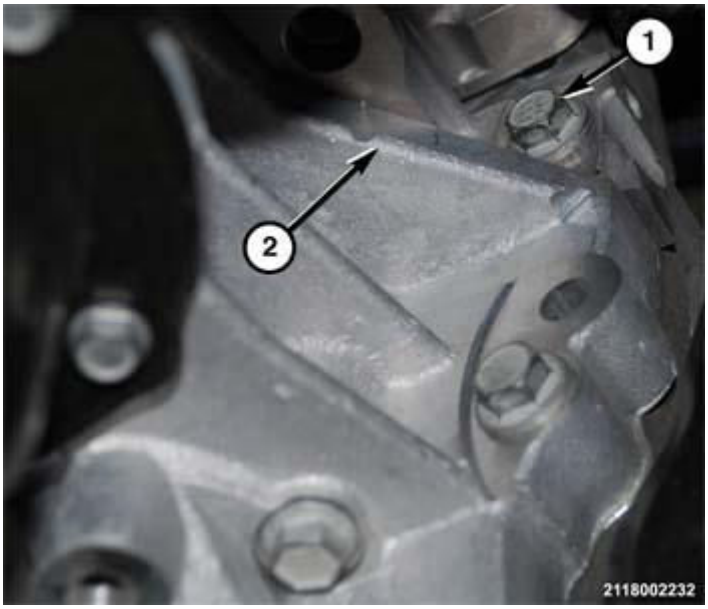

Fig. 18: Bellhousing Bolt
Courtesy of CHRYSLER GROUP, LLC

39. Remove the bolt (1) holding the engine block (2) to the bellhousing next to the starter motor.

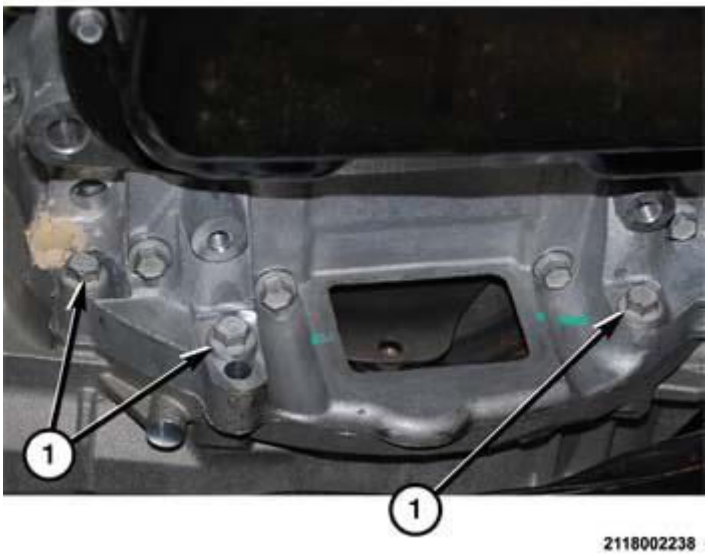

Fig. 19: Bellhousing Bolts
Courtesy of CHRYSLER GROUP, LLC

40. Remove the bolts (1) holding the lower engine adapter to the bellhousing.

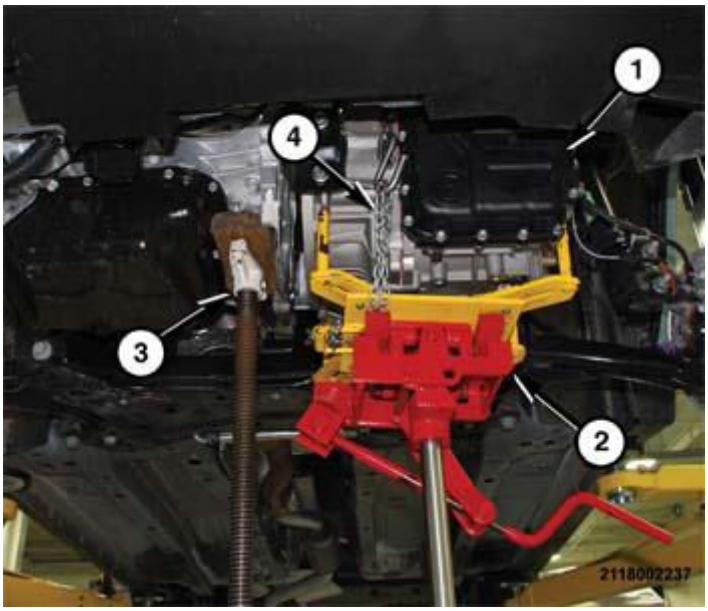

Fig. 20: Supporting Engine
Courtesy of CHRYSLER GROUP, LLC

41. Position a suitable high-stand (3) under the engine for support when the front-to-rear support member is removed.

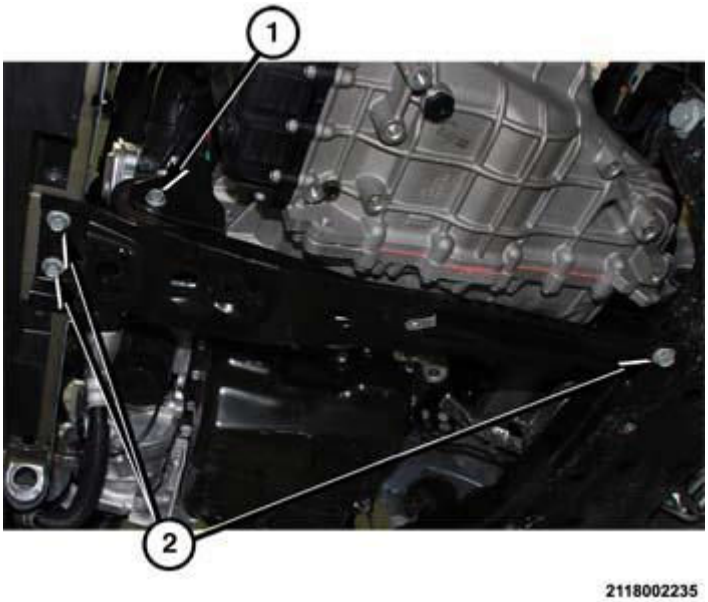

Fig. 21: Front-To-Rear Support
Courtesy of CHRYSLER GROUP, LLC

42. Remove the trough bolt (1) holding the front-to-rear support rubber isolator to the front crossmember.
43. Remove the bolts (2) holding the front-to-rear support to the front and rear crossmembers.
44. Separate the front-to-rear support from the vehicle.

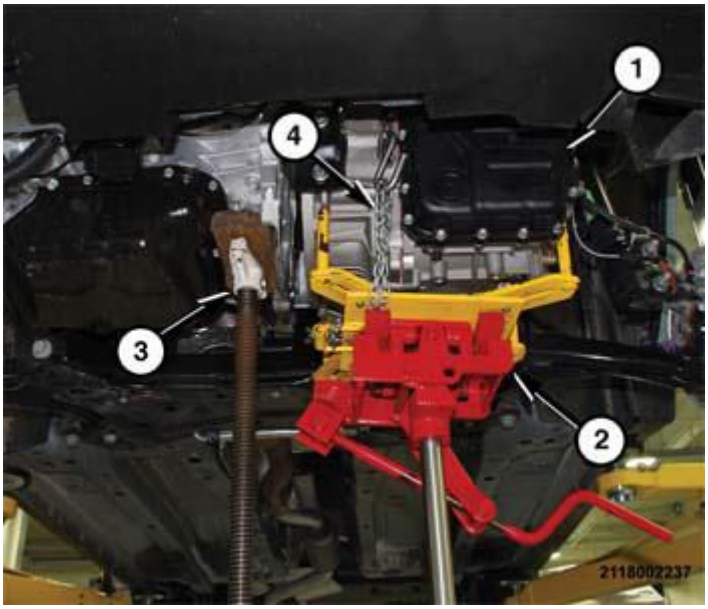

Fig. 22: Supporting Engine
Courtesy of CHRYSLER GROUP, LLC

45. Position a suitable transmission jack (2) under the transaxle so the weight is

evenly distributed across the jack cradle (2).

46. Install a safety chine (4) to hold the transaxle (1) to the jack cradle.
47. Lift the transaxle (1) so not all of the weight is bearing on the high-stand (3).

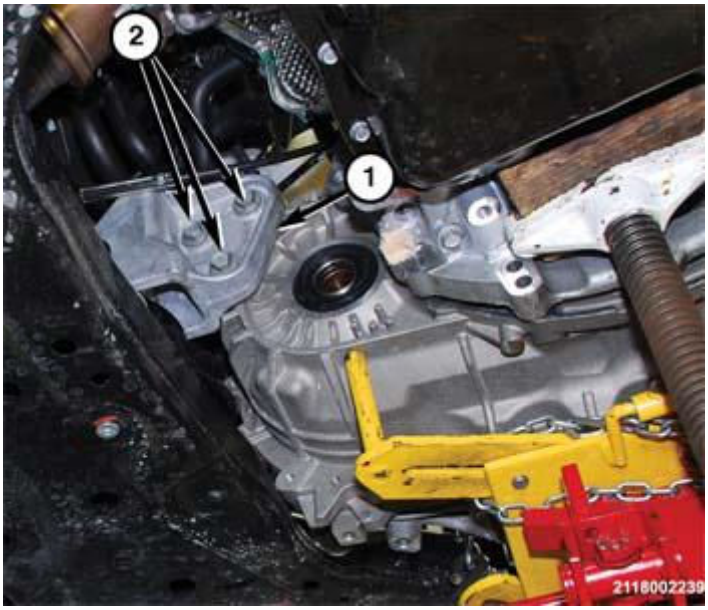

Fig. 23: Rear Transaxle Mount
Courtesy of CHRYSLER GROUP, LLC

48. Remove the bolts (2) holding the rear transaxle mount (1) to the back of the transaxle.

NOTE: The rear mount will flex out of the way during transaxle removal.

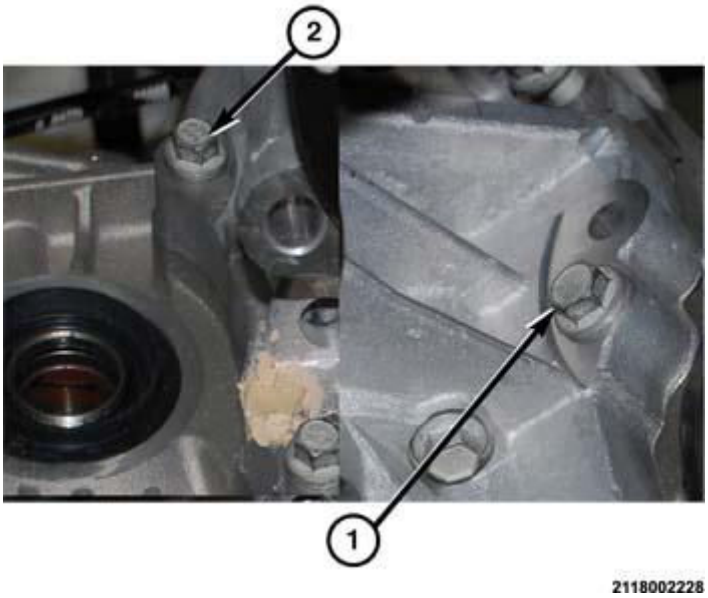

Fig. 24: Bellhousing Bolts
Courtesy of CHRYSLER GROUP, LLC

49. Remove the remaining bolts (1, 2) holding the engine block to the bellhousing.

Fig. 25: Bellhousing & Engine Block
Courtesy of CHRYSLER GROUP, LLC

Separate the bellhousing (1) from the engine block (2).

While guiding the transaxle past obstacles, lower the transaxle downward until the transaxle is clear of the vehicle.

AWD

1. Position vehicle on a suitable hoist with transaxle in neutral.
2. Release the hood latch and open the hood. Support the hood on the prop-rod
3. Remove the engine cover. Refer to **COVER, ENGINE, REMOVAL** .
4. Release the fasteners holding the engine air-box to the front crossmember.
5. Separate the engine air-box from the vehicle.
6. Remove the battery form the vehicle. Refer to **BATTERY, REMOVAL** .
7. Remove the battery tray from the vehicle. Refer to **TRAY, BATTERY, REMOVAL** .
8. Remove the air box lid and position it out of the way.

9. Loosen the engine inlet air tube clamp.
10. Remove the lower air cleaner body. Refer to **2.0L BODY, AIR CLEANER, REMOVAL** , **2.2L BODY, AIR CLEANER, REMOVAL** or **2.4L BODY, AIR CLEANER, REMOVAL** .

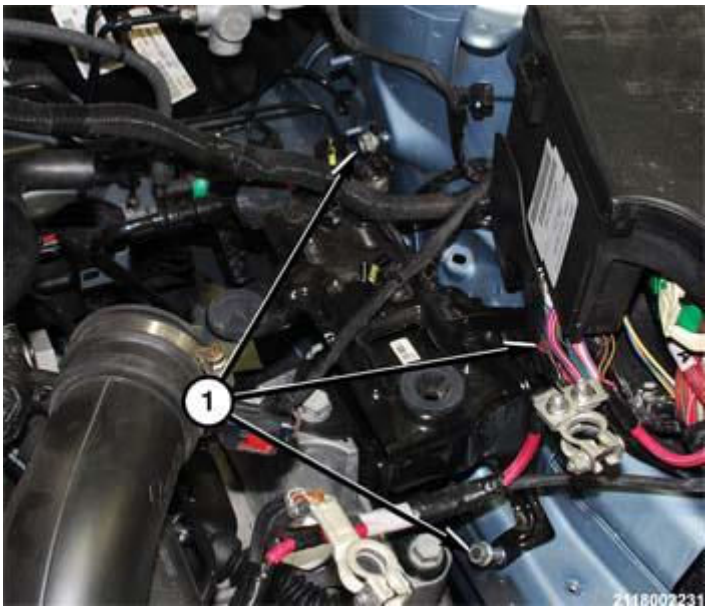

Fig. 26: Air Cleaner Bracket Nuts & Bolts
Courtesy of CHRYSLER GROUP, LLC

11. Remove bolts and nuts (1) holding the lower air cleaner bracket to the left frame rail.

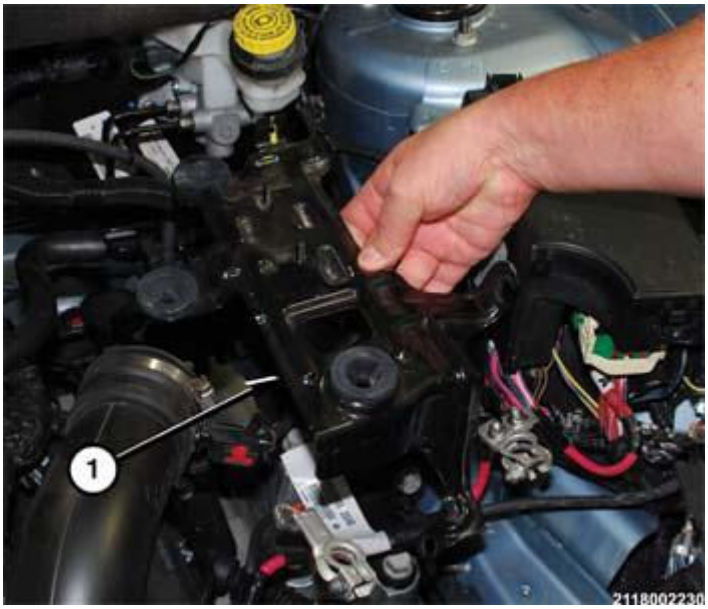

Fig. 27: Lower Air Cleaner Bracket
Courtesy of CHRYSLER GROUP, LLC

12. Separate the lower air cleaner bracket (1) from the vehicle.

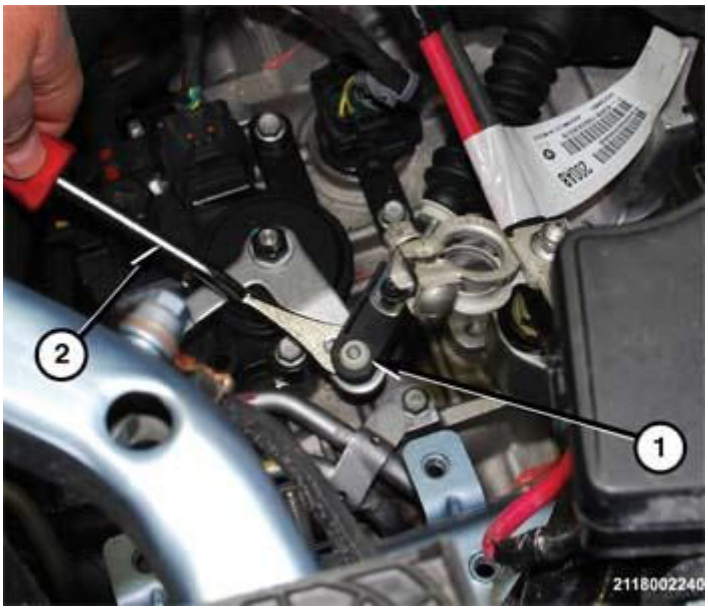

Fig. 28: Shift Cable End & Manual Lever
Courtesy of CHRYSLER GROUP, LLC

13. Using a suitable prying tool (2), lift upward on the shift cable end (1) at the transaxle manual lever.
14. Separate the shift cable (1) from the manual lever.
15. Release the clips holding the shift cable to the bracket on the top of the transaxle.
16. Position the shaft cable (1) out of the way.
17. Release the lock on the transaxle solenoid connector (1).

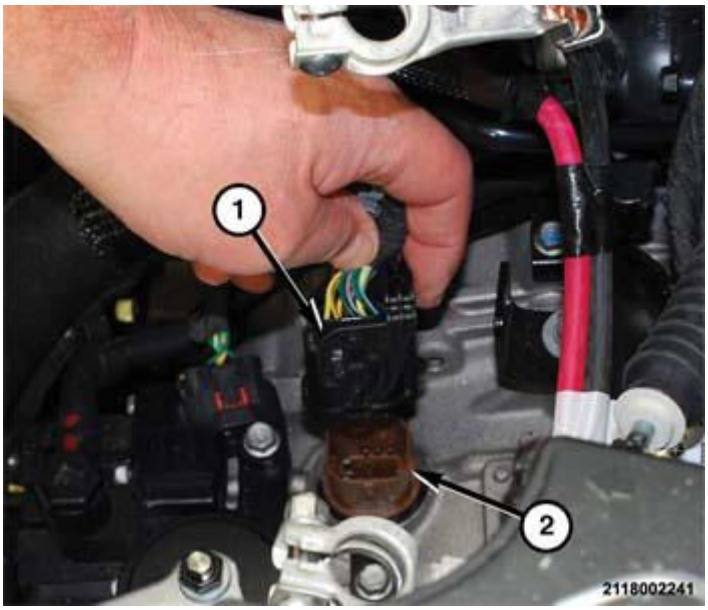

Fig. 29: Transaxle Wire Harness Connector
Courtesy of CHRYSLER GROUP, LLC

18. Separate the wire harness connector (1) from the transaxle.

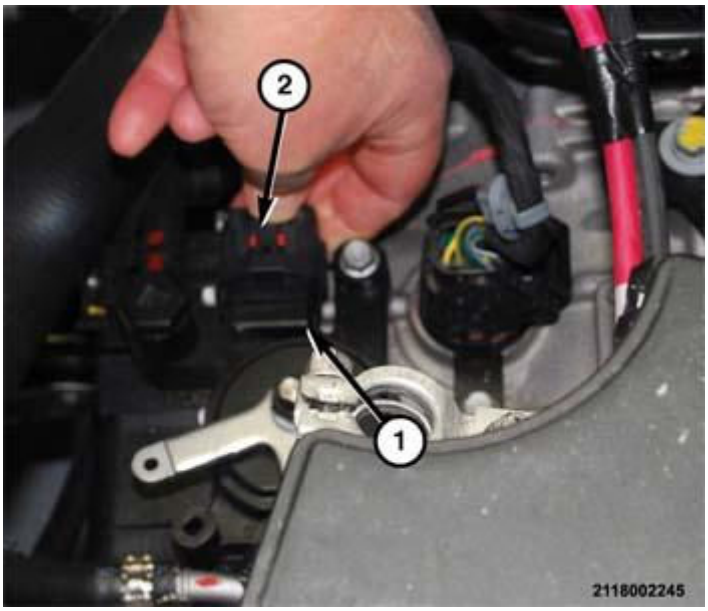

Fig. 30: Transaxle TRS Connector
Courtesy of CHRYSLER GROUP, LLC

19. Release the lock (2) on the transaxle TRS connector.
20. Separate the wire harness connector from the transaxle (1).

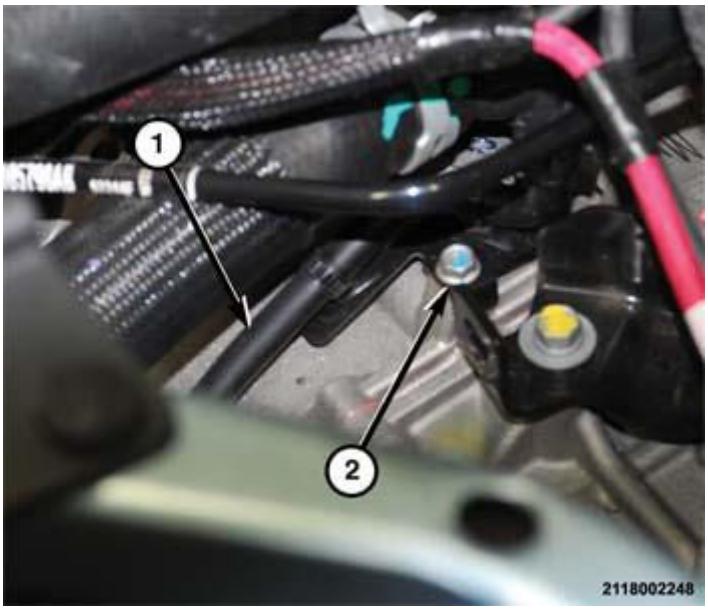

Fig. 31: Vent Tube & Bolt
Courtesy of CHRYSLER GROUP, LLC

21. Remove the bolt (2) holding the vent tube (1) to the transaxle.
22. Position the vent tube (1) out of the way.

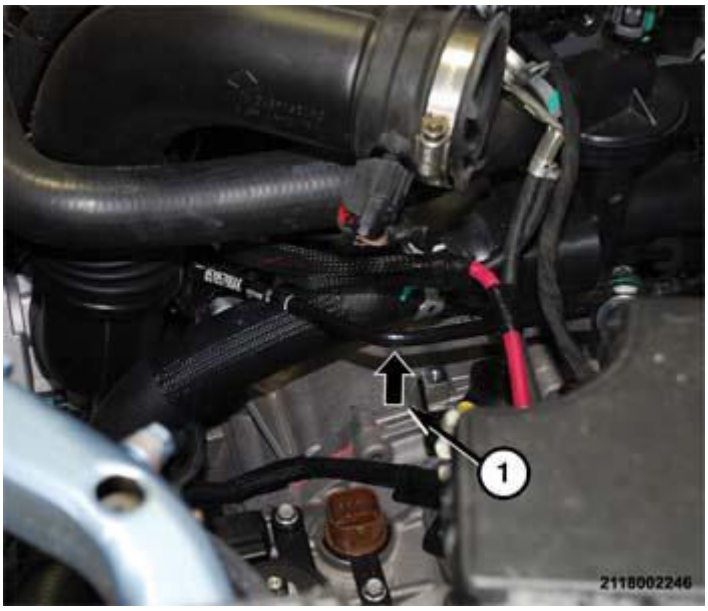

Fig. 32: Ground Cable & Transaxle Bellhousing Bolt
Courtesy of CHRYSLER GROUP, LLC

23. Remove the hidden bolt (1) holding the ground cable and transaxle bellhousing to the engine block from under the engine coolant tubes.

Fig. 33: Starter Motor Bolts
Courtesy of CHRYSLER GROUP, LLC

24. Remove the hidden bolts (1, 2) holding the starter motor to the engine block and bellhousing.

NOTE: The starter will stay in place after the transaxle is removed.

25. Remove the Maniverter. Refer to **2.0L MANIFOLD, EXHAUST, REMOVAL** , **2.2L MANIFOLD, EXHAUST, REMOVAL** or **2.4L MANIFOLD, EXHAUST, REMOVAL** .
26. Position a suitable floor jack under the left (driver) side of the transaxle to add support.
27. Lift jack enough the support the transaxle but not raise it.

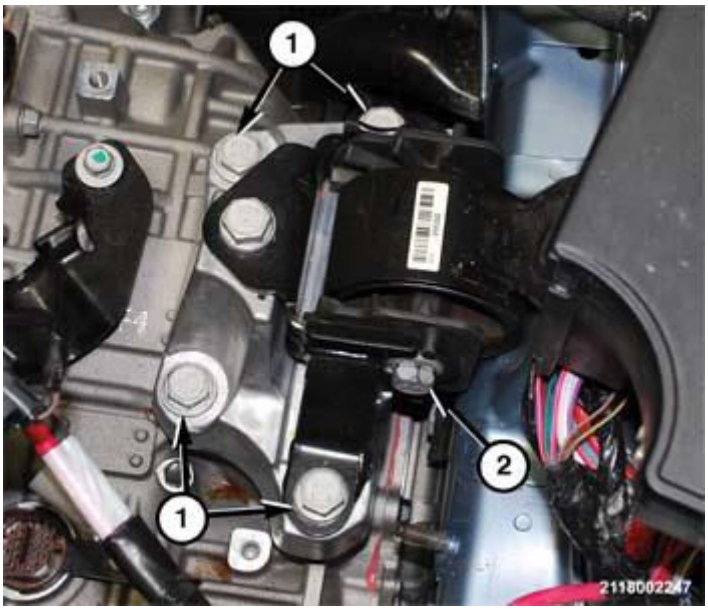

Fig. 34: Transaxle Mount Bolts
Courtesy of CHRYSLER GROUP, LLC

28. Remove the through bolt (2) holding the transaxle mount rubber isolator to the frame rail bracket.
29. Remove the bolts (1) holding the transaxle mount to the transaxle.
30. Lower the transaxle to gain clearance for the transaxle mount.
31. Separate the transaxle mount from the vehicle.

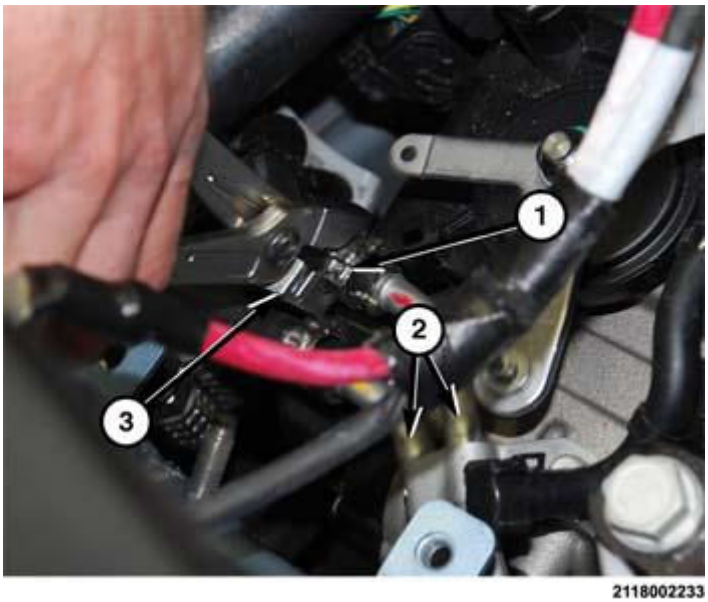

Fig. 35: Transaxle Cooler Hose Clamps
Courtesy of CHRYSLER GROUP, LLC

32. Using a suitable clamp pliers (3), release the clamps (1) holding the

transaxle cooler hoses to the tubes (2) on the transaxle.

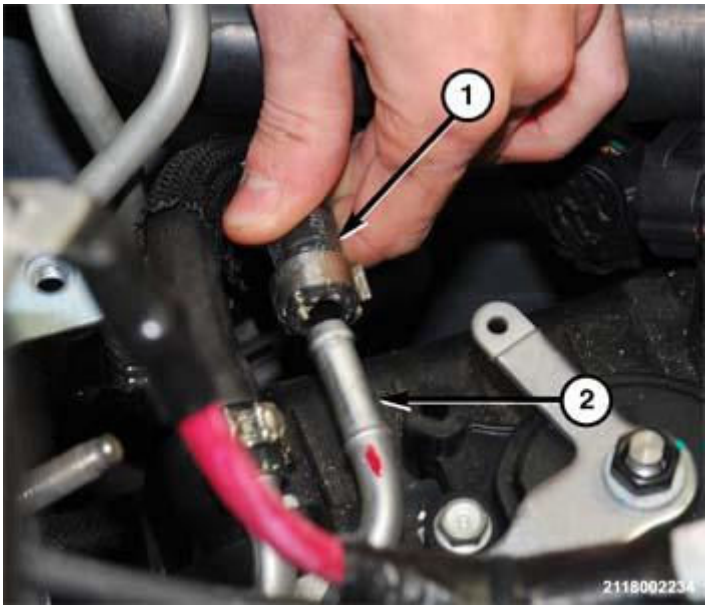

Fig. 36: Cooler Tubes & Hoses
Courtesy of CHRYSLER GROUP, LLC

CAUTION: Do not bend or crush the transaxle cooler tubes when removing the cooler hoses. If the tubes become damaged, they must be replaced.

33. Using suitable hose/spark plug wire pliers, separate the hoses (1) from the cooler tubes (2) on the transaxle.
34. Raise the vehicle.
35. Remove the belly pan. Refer to **BELLY PAN, REMOVAL** .
36. Place a suitable drain pan under the transaxle to catch fluid that may leak when the halfshafts are removed.
37. Remove the left and right halfshafts. Refer to **REMOVAL** .

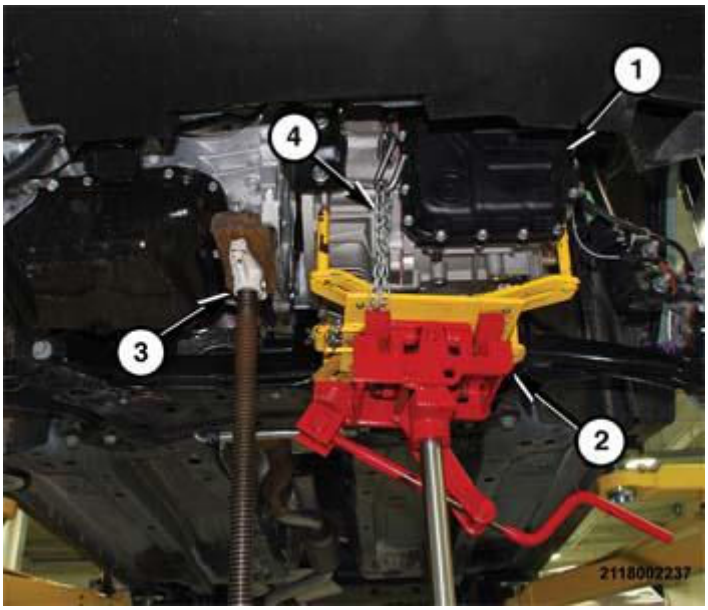

Fig. 37: Supporting Engine
Courtesy of CHRYSLER GROUP, LLC

38. Position a suitable high-stand (3) under the engine for support when the front-to-rear support member is removed.

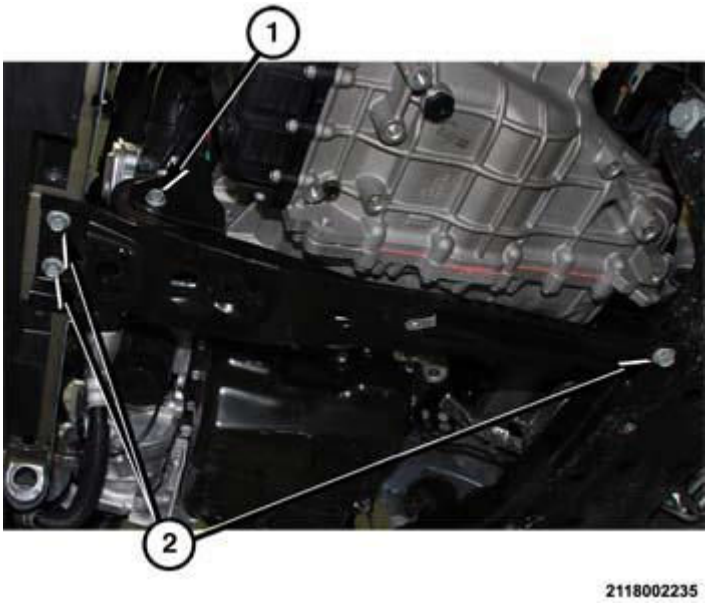

Fig. 38: Front-To-Rear Support
Courtesy of CHRYSLER GROUP, LLC

39. Remove the trough bolt (1) holding the front-to-rear support rubber isolator to the front crossmember.
40. Remove the bolts (2) holding the front-to-rear support to the front and rear crossmembers.

41. Separate the front-to-rear support from the vehicle.
42. Remove the power transfer unit (PTU). Refer to **REMOVAL** .

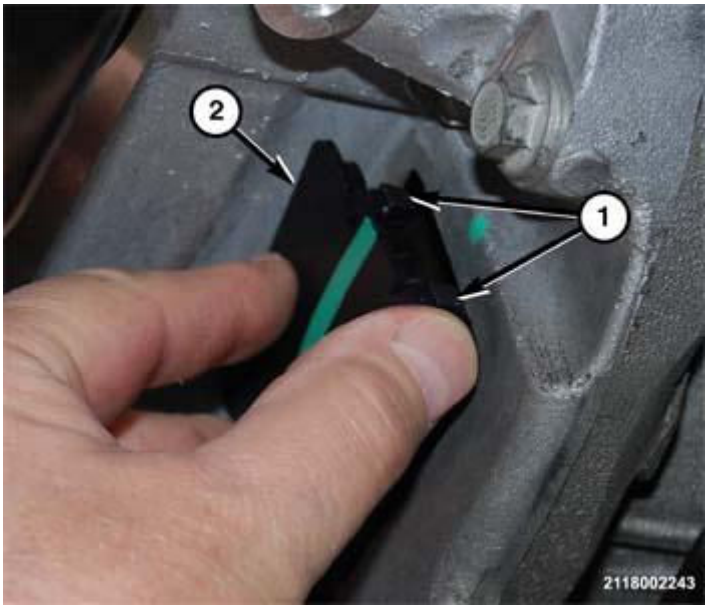

Fig. 39: Torque Converter Bolt Access Plug
Courtesy of CHRYSLER GROUP, LLC

43. Using a flat blade screw driver to release the locks (1), remove the torque converter bolt access plug (2) from the bellhousing cover.

Fig. 40: Torque Converter Bolt
Courtesy of CHRYSLER GROUP, LLC

44. Remove the bolts (2) holding the flex plate to the torque converter.

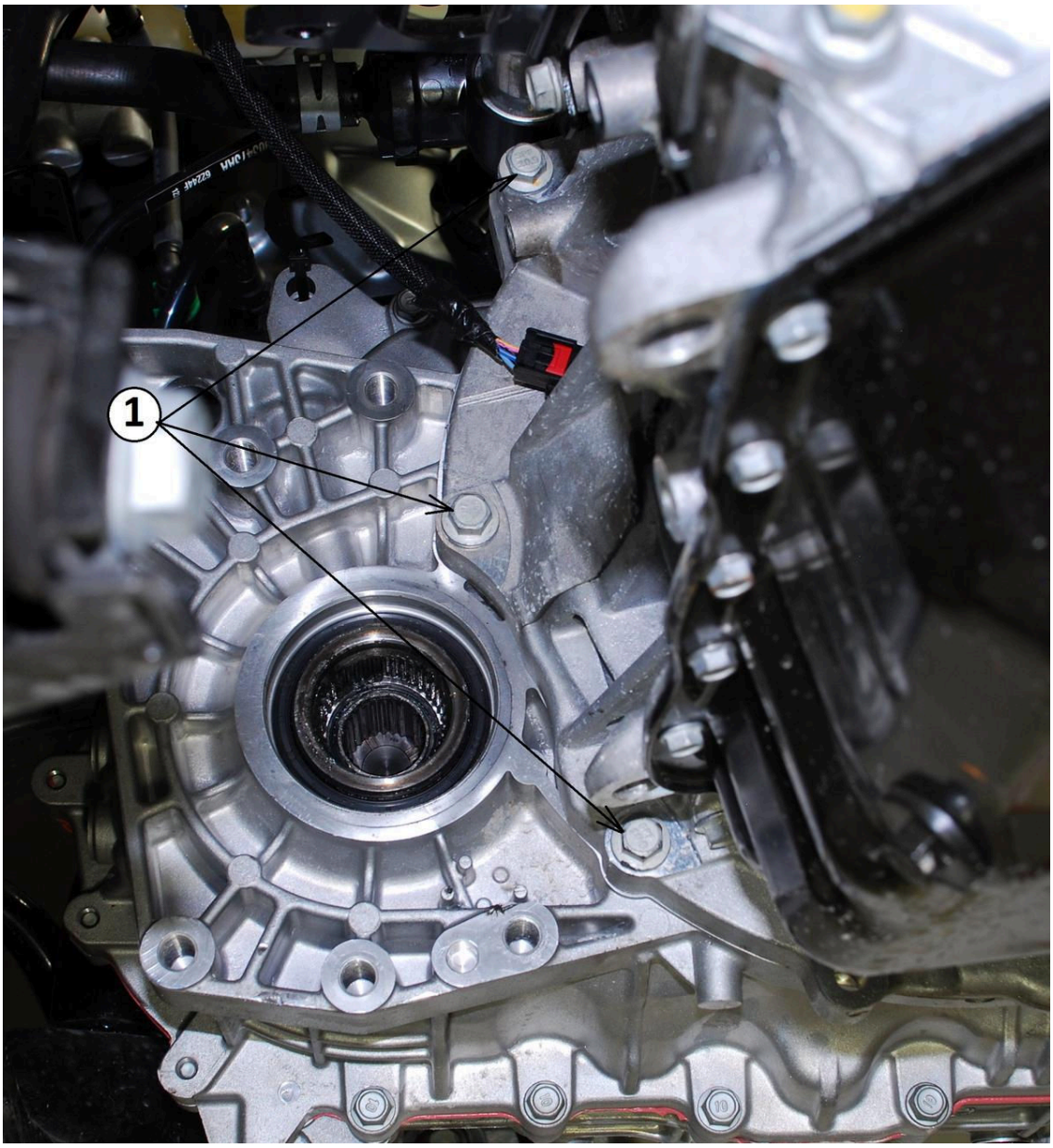

Fig. 41: Bellhousing Bolts
Courtesy of CHRYSLER GROUP, LLC

45. Remove the bolts (1) holding the engine block to the bellhousing at the back of the engine.

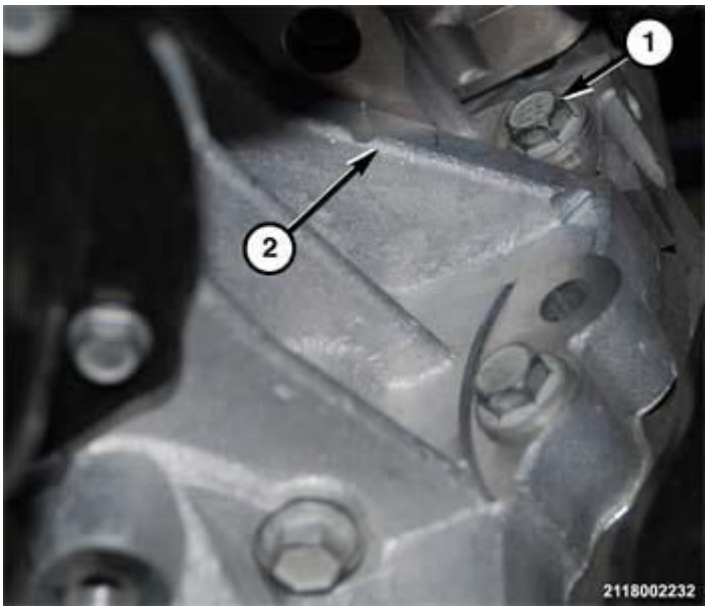

Fig. 42: Bellhousing Bolt
Courtesy of CHRYSLER GROUP, LLC

46. Remove the bolt (1) holding the engine block (2) to the bellhousing next to the starter motor.

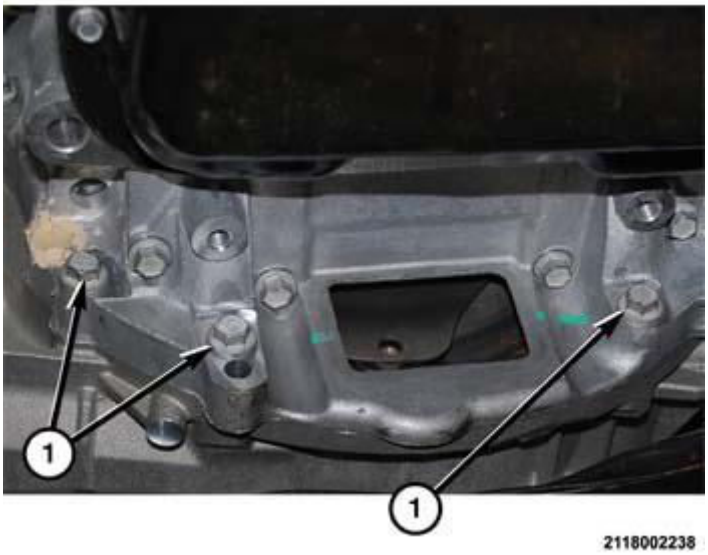

Fig. 43: Bellhousing Bolts
Courtesy of CHRYSLER GROUP, LLC

47. Remove the bolts (1) holding the lower engine adapter to the bellhousing.

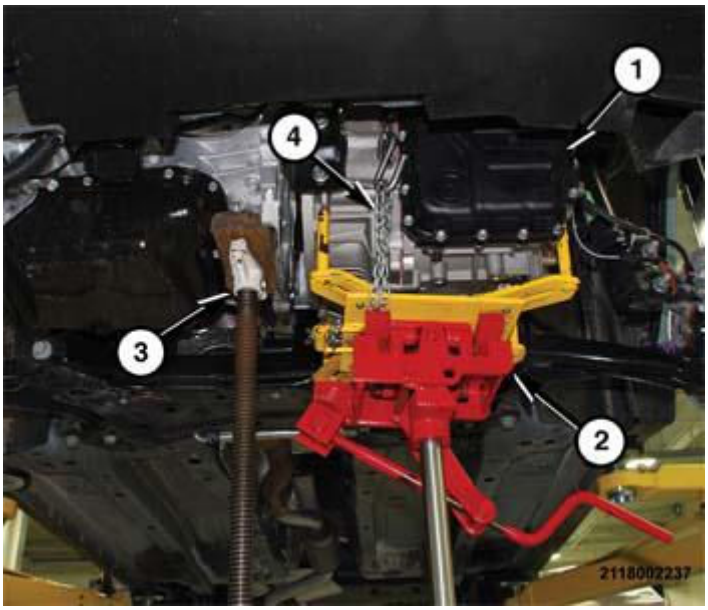

Fig. 44: Supporting Engine
Courtesy of CHRYSLER GROUP, LLC

48. Position a suitable transmission jack (2) under the transaxle so the weight is evenly distributed across the jack cradle (2).
49. Install a safety chine (4) to hold the transaxle (1) to the jack cradle.
50. Lift the transaxle (1) so not all of the weight is bearing on the high-stand (3).

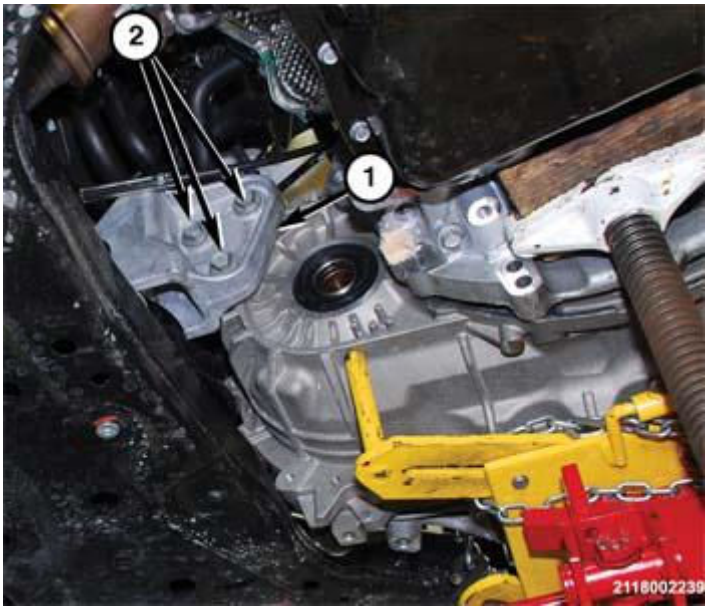

Fig. 45: Rear Transaxle Mount
Courtesy of CHRYSLER GROUP, LLC

51. Remove the bolts (2) holding the rear transaxle mount (1) to the back of the transaxle (typical).

52. Remove the remaining bolts (1) holding the engine block to the bellhousing.

Fig. 46: Bellhousing & Engine Block
Courtesy of CHRYSLER GROUP, LLC

53. Separate the bellhousing (1) from the engine block (2).
54. While guiding the transaxle past obstacles, lower the transaxle downward until the transaxle is clear of the vehicle.

DISASSEMBLY

FWD

NOTE: If the transaxle has not been drained before removal, fluid will spill from the valve body pan as it is removed.

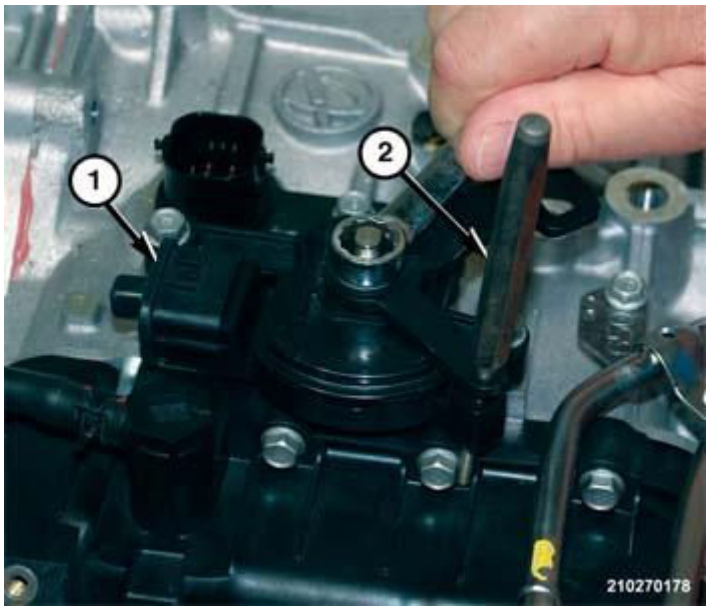

Fig. 47: Pin Punch, Manual Lever & Transmission Range Sensor
Courtesy of CHRYSLER GROUP, LLC

1. Insert a suitable pin punch (2) or equivalent through the manual lever into the TRS switch (1) to hold lever in place.
2. Remove nut holding the manual lever to the manual shaft.

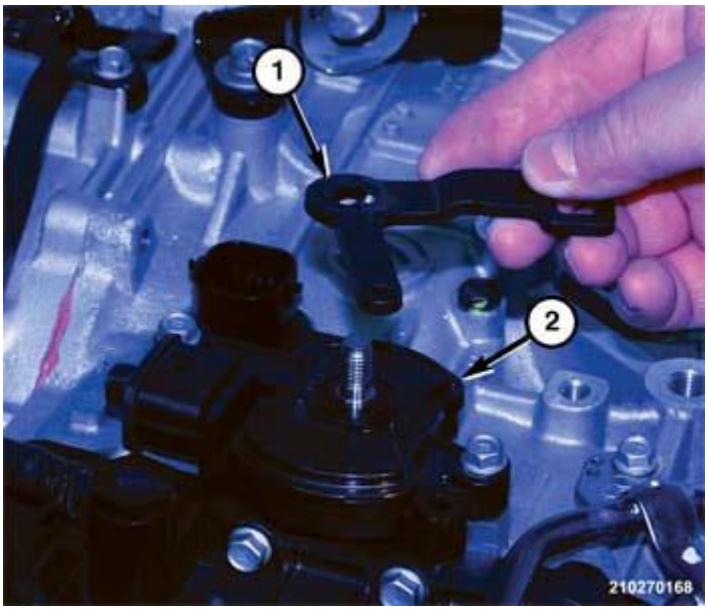

Fig. 48: Manual Lever & Manual Shaft
Courtesy of CHRYSLER GROUP, LLC

3. Separate the manual level (1) from the manual shaft.

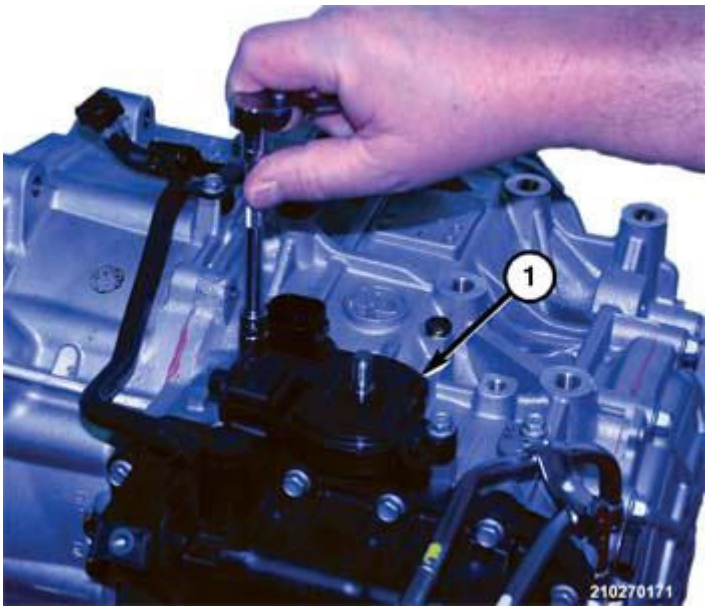

Fig. 49: Transmission Range Sensor
Courtesy of CHRYSLER GROUP, LLC

4. Remove bolts holding the TRS (1) to the transaxle housing.

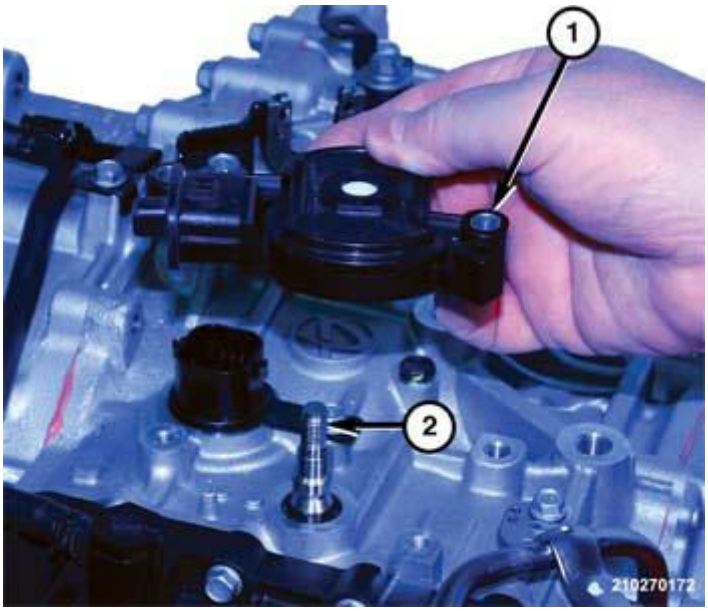

Fig. 50: Transmission Range Sensor Separated From Transaxle
Courtesy of CHRYSLER GROUP, LLC

5. Separate the TRS (1) from the transaxle.

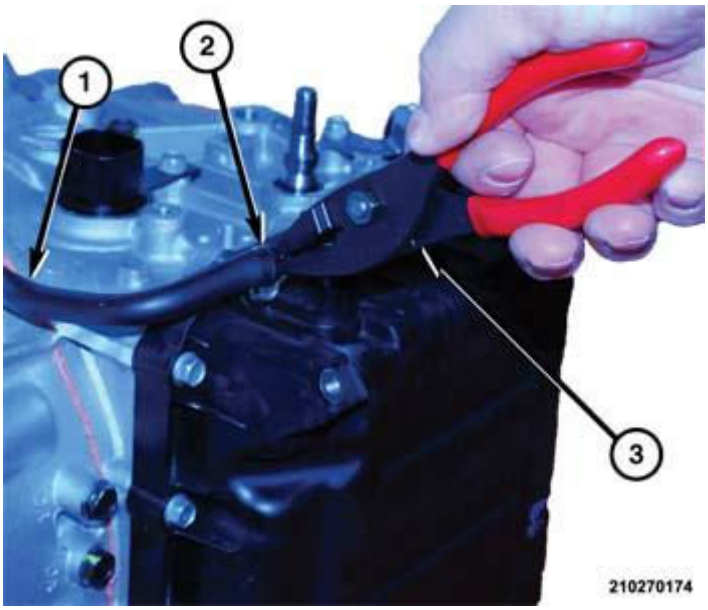

Fig. 51: Vent Hose, Spring Clamp & Pliers
Courtesy of CHRYSLER GROUP, LLC

6. Using common pliers (3), compress the hose spring clamp (2) and slide it down the vent hose (1) away from the nipple adaptor.

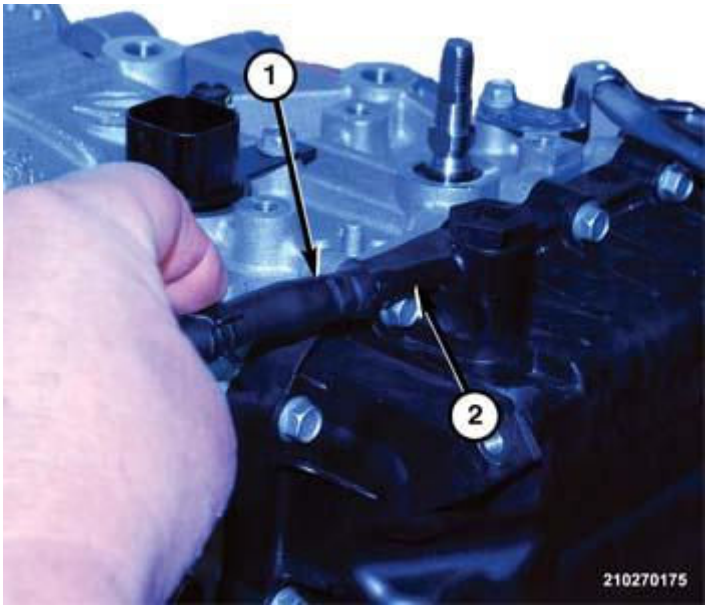

Fig. 52: Vent Hose End & Nipple Adapter
Courtesy of CHRYSLER GROUP, LLC

7. Pull the vent hose end (1) off of the nipple adaptor (2).

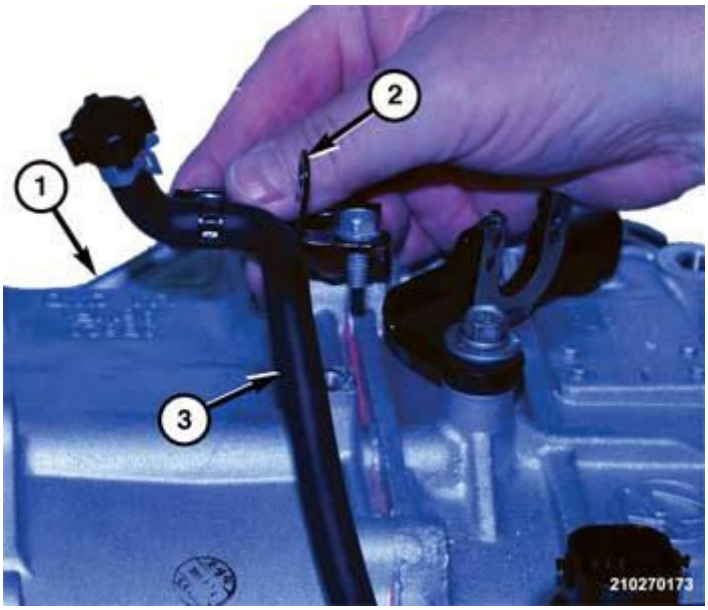

Fig. 53: Vent Tube Bracket & Bolt
Courtesy of CHRYSLER GROUP, LLC

8. Remove bolt holding the vent tube bracket (2) to the transaxle housing.
9. Separate the vent tube (3) from the transaxle (1).

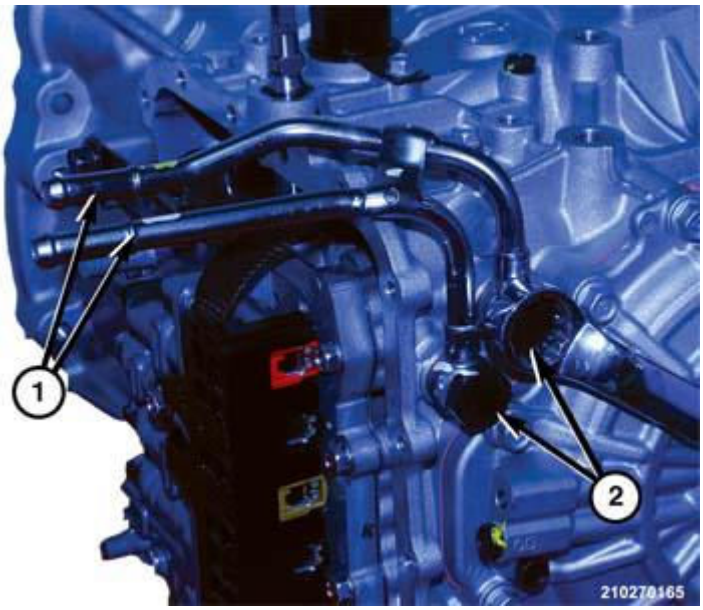

Fig. 54: Cooler Tubes & Banjo Bolts
Courtesy of CHRYSLER GROUP, LLC

10. Remove banjo bolts (2) holding the cooler tubes (1) to the transaxle.

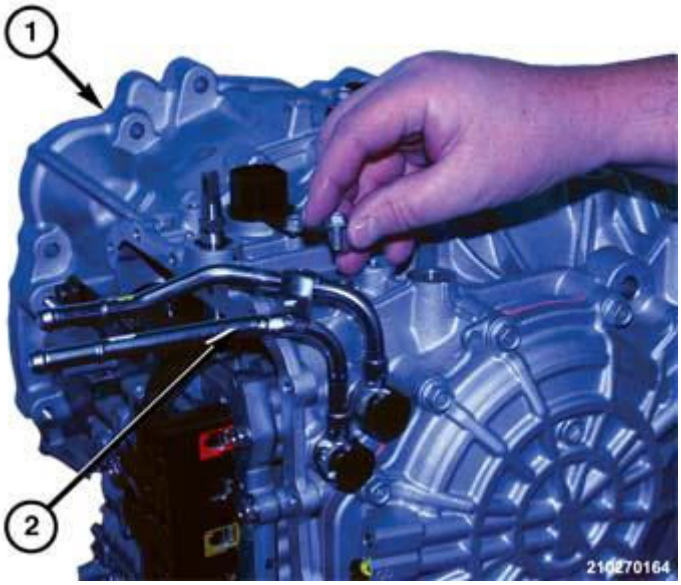

Fig. 55: Cooler Tubes & Transaxle
Courtesy of CHRYSLER GROUP, LLC

11. Remove bolt holding the cooler tube (2) bracket to the transaxle (1).
12. Separate the cooler tubes from the transaxle.

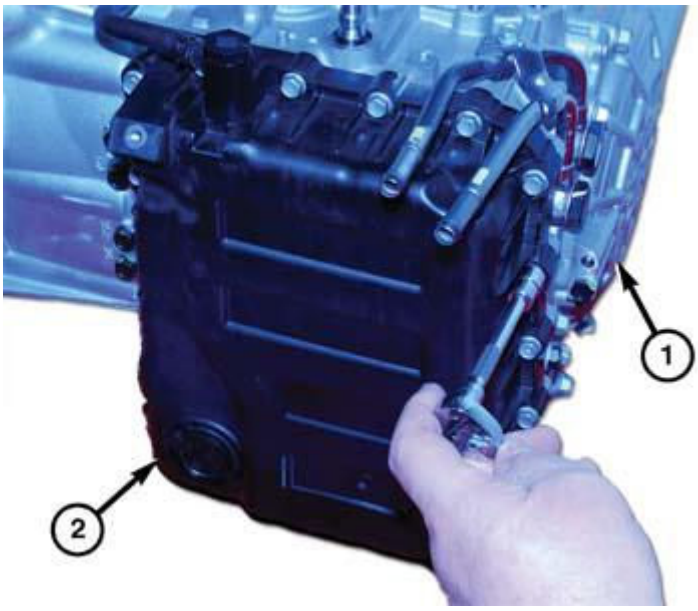

Fig. 56: Valve Body Cover
Courtesy of CHRYSLER GROUP, LLC

13. Position the transaxle over a suitable drain pan.
14. Remove bolts holding the valve body cover (2) to the transaxle (1).

Fig. 57: Valve Body Cover Separated From Transaxle
Courtesy of CHRYSLER GROUP, LLC

15. Separate the cover (1) from the transaxle (2).

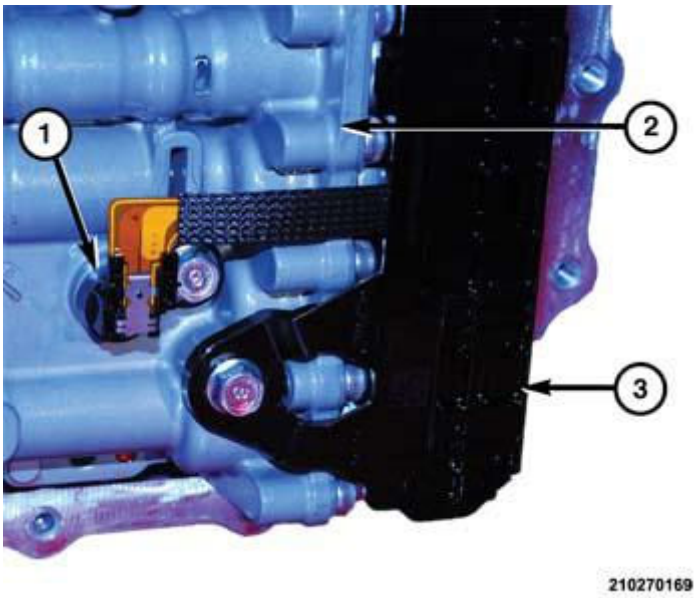

Fig. 58: Fluid Temperature Sensor, Valve Body & Bolt
Courtesy of CHRYSLER GROUP, LLC

16. Remove bolt holding fluid temperature sensor (1) to the valve body (2).
17. Pull temperature sensor (1) straight out of the port in the valve body (2).

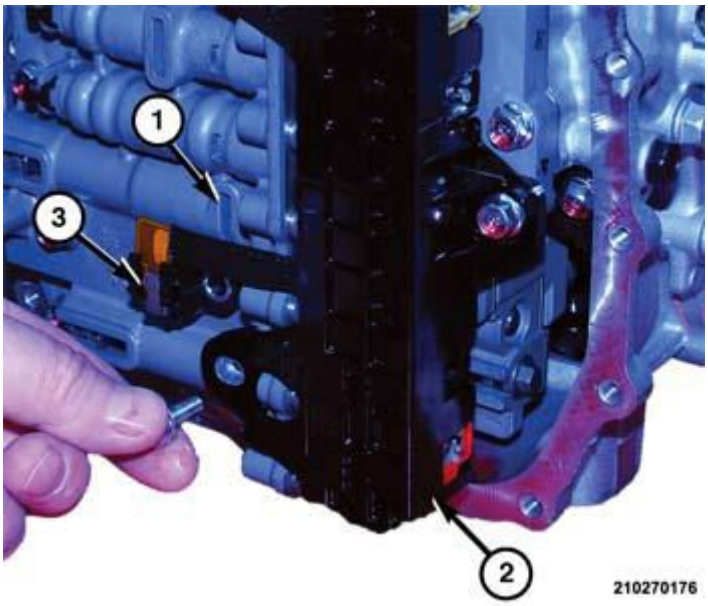

Fig. 59: Solenoid Valve Connector, Valve Body & Bolts
Courtesy of CHRYSLER GROUP, LLC

18. Remove bolts holding the solenoid valve connector (2) to the valve body (1).

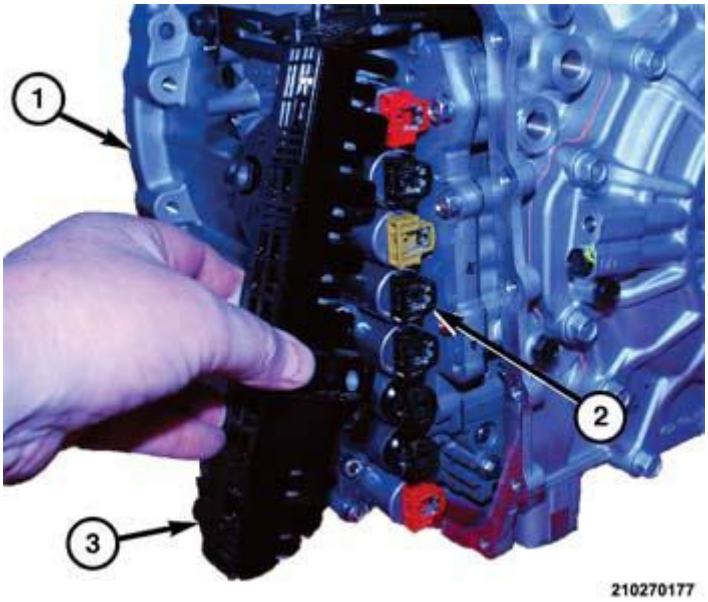

Fig. 60: Solenoids & Connector
Courtesy of CHRYSLER GROUP, LLC

19. Starting at the bottom solenoid valve, using a suitable prying tool, pry outward at each solenoid (2) until the connector (3) is disengaged.

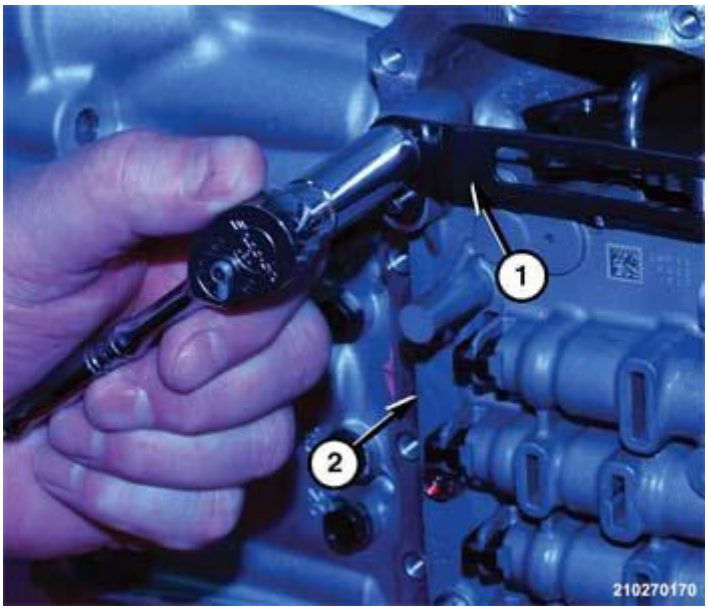

Fig. 61: Manual Shaft Detent Spring & Valve Body
Courtesy of CHRYSLER GROUP, LLC

20. Remove the screw holding the manual shaft detent spring (1) to the valve body (2).

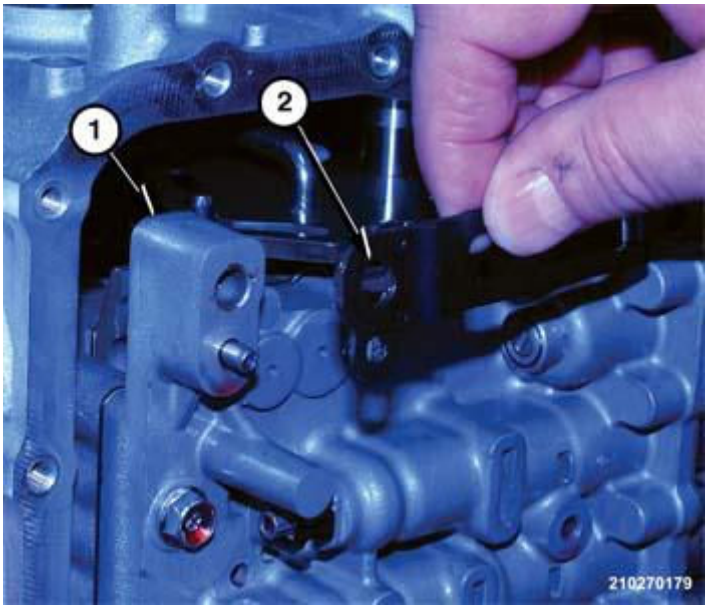

Fig. 62: Detent Spring Separated From Valve Body
Courtesy of CHRYSLER GROUP, LLC

21. Separate the detent spring (2) from the valve body (1).

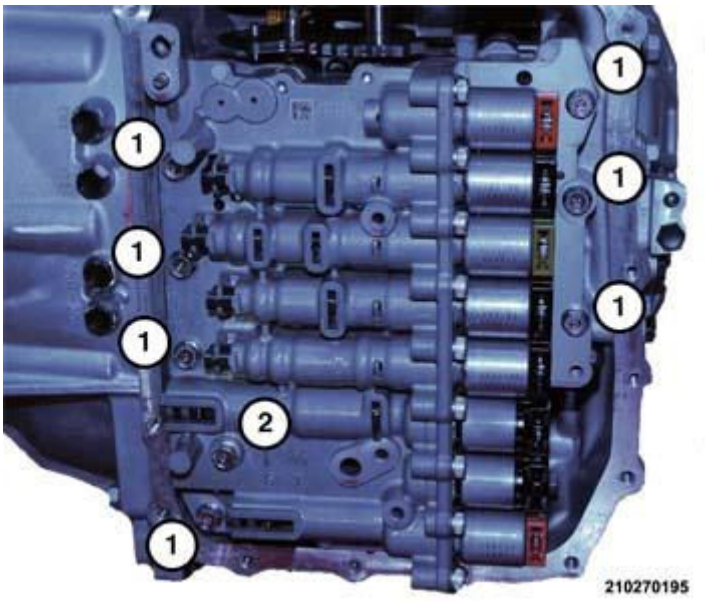

Fig. 63: Valve Body Bolts
Courtesy of CHRYSLER GROUP, LLC

22. Remove bolts, 7 short (1) and 1 long (2) bolts, holding the valve body to the transaxle.

The manual valve is loose after the valve body is removed and may fall out during removal.

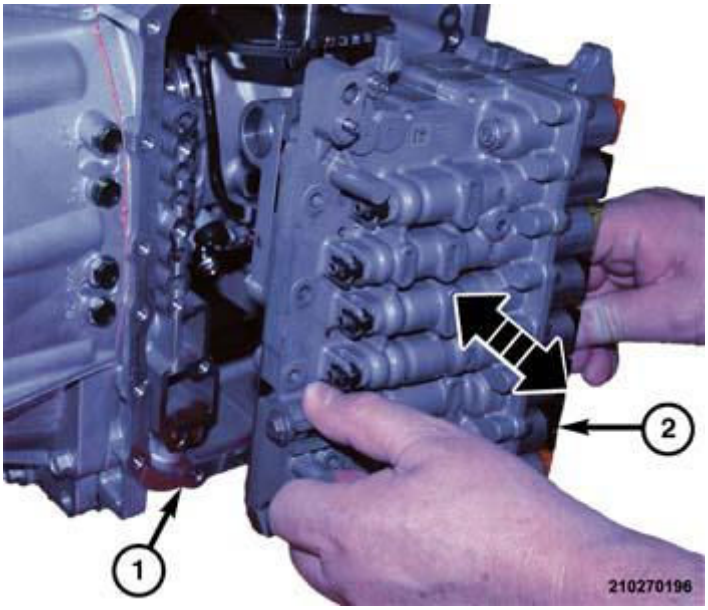

Fig. 64: Valve Body Separated From Transaxle
Courtesy of CHRYSLER GROUP, LLC

23. Separate the valve body (2) from the transaxle (1).

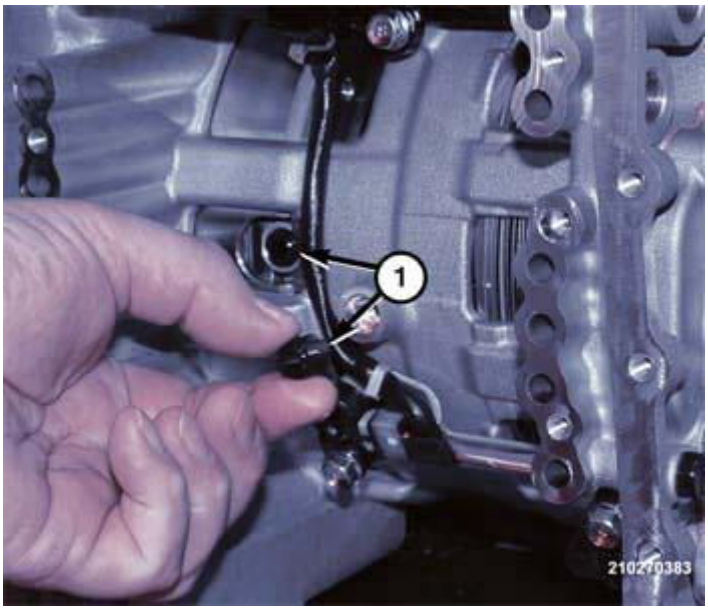

Fig. 65: Transfer Port Seals
Courtesy of CHRYSLER GROUP, LLC

24. Remove the two seals from the transfer ports in transaxle housing.

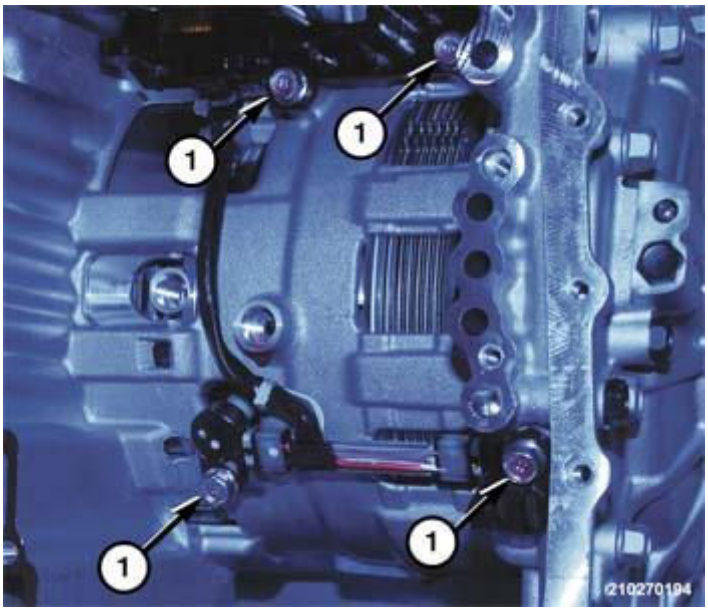

Fig. 66: Speed Sensors, Main Wire Harness & Bolts
Courtesy of CHRYSLER GROUP, LLC

25. Remove bolts (1) holding the speed sensors and main wire harness to transaxle.
26. Separate the speed sensors and main wire harness from the transaxle.

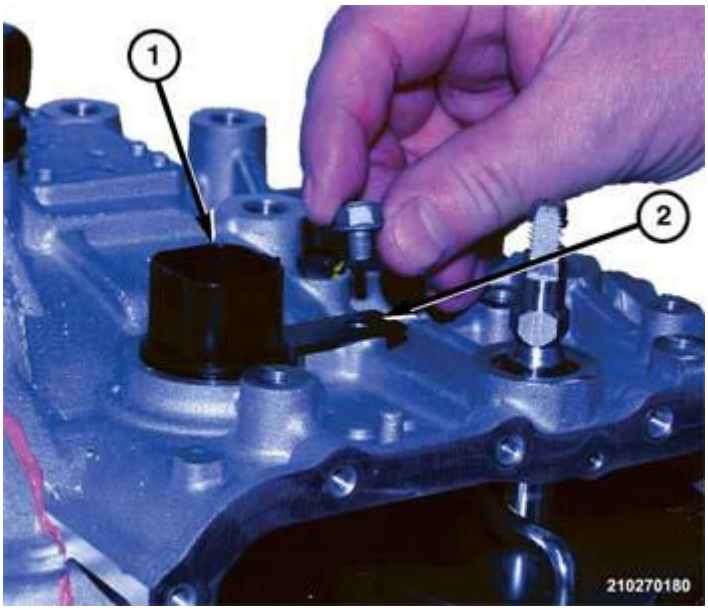

Fig. 67: Hold Down Bracket, Wire Connector & Bolts
Courtesy of CHRYSLER GROUP, LLC

27. Remove bolt holding the wire connector (1) hold down bracket (2) to the top of transaxle housing.

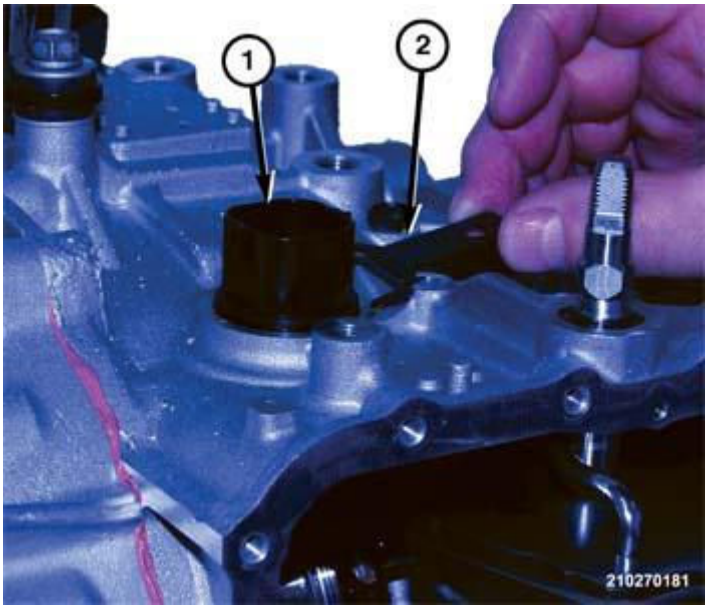

Fig. 68: Wire Connector & Hold Down Bracket Separated From Transaxle
Courtesy of CHRYSLER GROUP, LLC

28. Separate the wire connector (1) hold down bracket (2) from the transaxle.

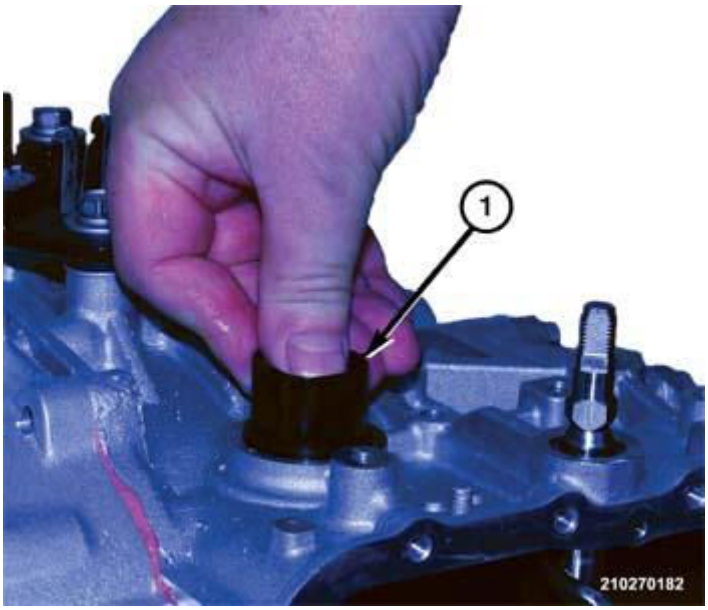

Fig. 69: Pushing Wire Connector Into Housing
Courtesy of CHRYSLER GROUP, LLC

29. Push the wire connector (1) inward to the inside of the transaxle housing.

Fig. 70: Main Wire Harness & Sensors
Courtesy of CHRYSLER GROUP, LLC

30. Separate the main wire harness and sensors (1) from the transaxle.

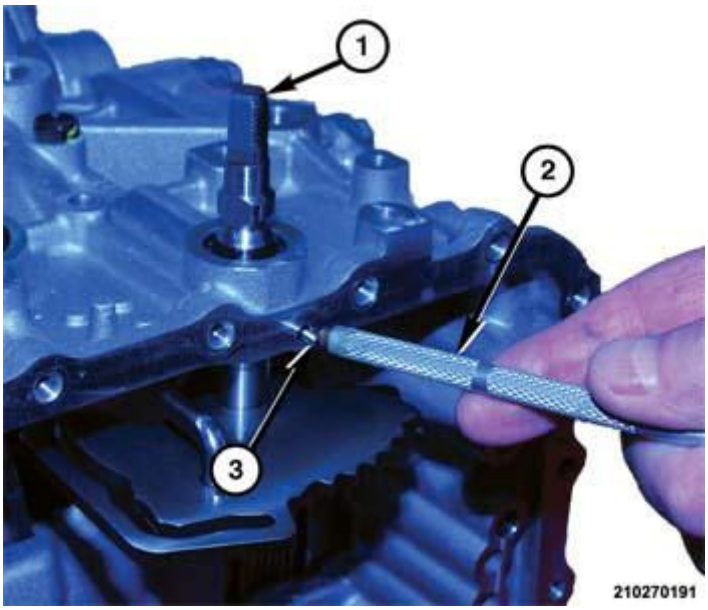

Fig. 71: Manual Shaft, Pin & Magnet
Courtesy of CHRYSLER GROUP, LLC

31. Using a suitable magnet (2), remove the pin (3) holding the manual shaft (1) in the transaxle from the hole in the pan gasket flange.

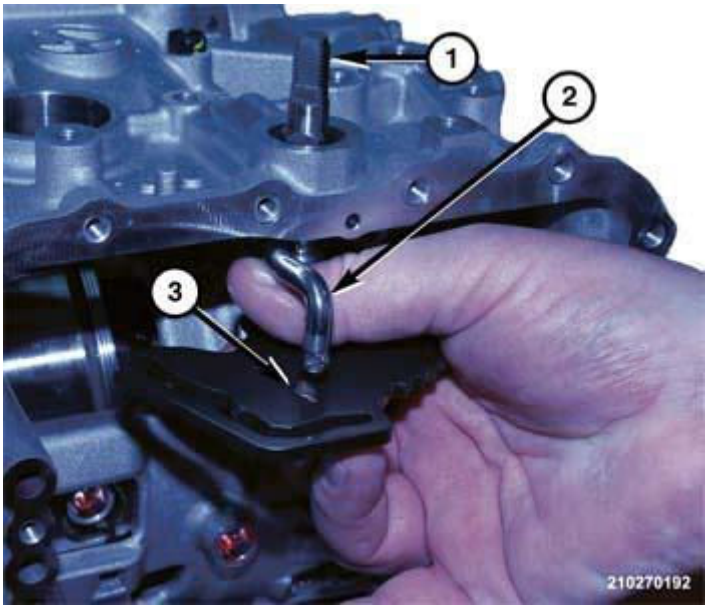

Fig. 72: Manual Shaft, Park Rod & Key Hole Slot
Courtesy of CHRYSLER GROUP, LLC

32. Rotate manual shaft (1) counterclockwise to align the staked nub on the park rod (2) with the key hole slot (3) in the manual shaft detent comb.
33. Push manual shaft (1) downward until park rod (2) disengages form the detent comb.

34. Push the manual shaft (1) inward to the inside of the transaxle.
35. Separate the manual shaft (1) from the transaxle.

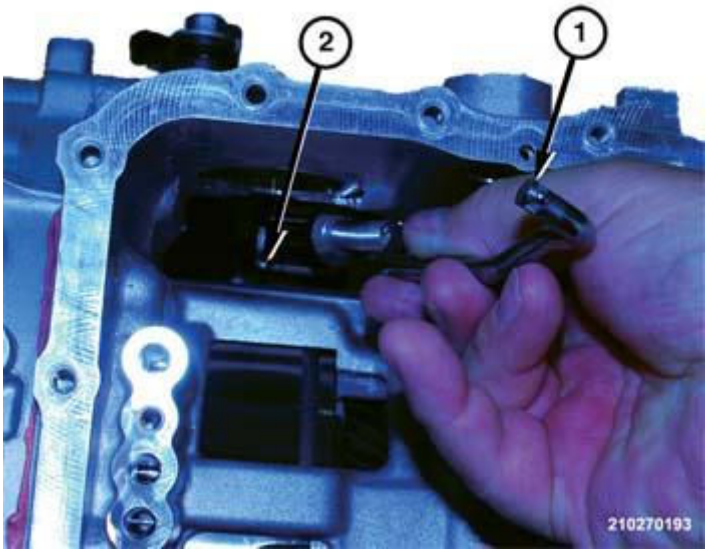

Fig. 73: Park Rod & Park Rod Guide
Courtesy of CHRYSLER GROUP, LLC

36. Disengage the park rod (1) from the park rod guide (2) in the transaxle housing.
37. Separate the park rod (1) from the transaxle.
38. Using a suitable tool, remove the lip seal from the manual shaft hole in the transaxle housing.

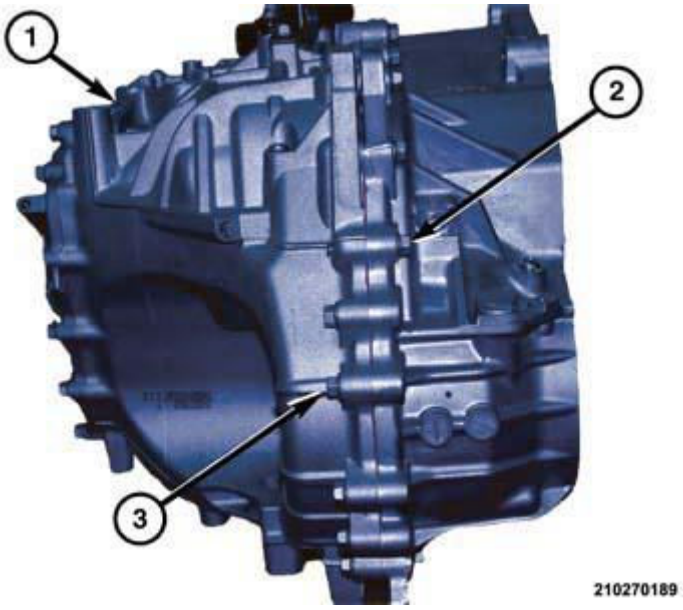

Fig. 74: Transaxle Housing & Bolts
Courtesy of CHRYSLER GROUP, LLC

39. Remove five bolts from the back (3) and five bolts from the top (2) of the transaxle housing (1).

Fig. 75: Transaxle Housing & Bottom Bolts
Courtesy of CHRYSLER GROUP, LLC

40. Remove six bolts from the bottom (2) of the transaxle housing (1).

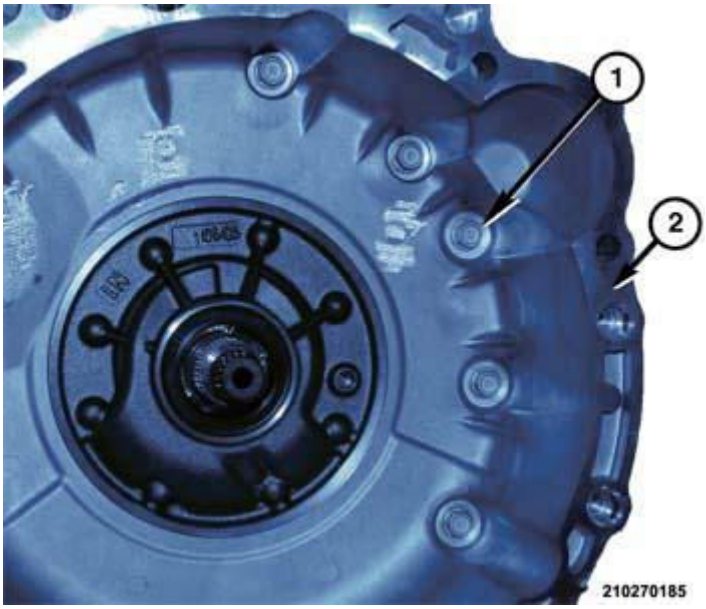

Fig. 76: Inside Bell Housing Bolts
Courtesy of CHRYSLER GROUP, LLC

41. Remove five bolts (1) from inside bell housing (2).

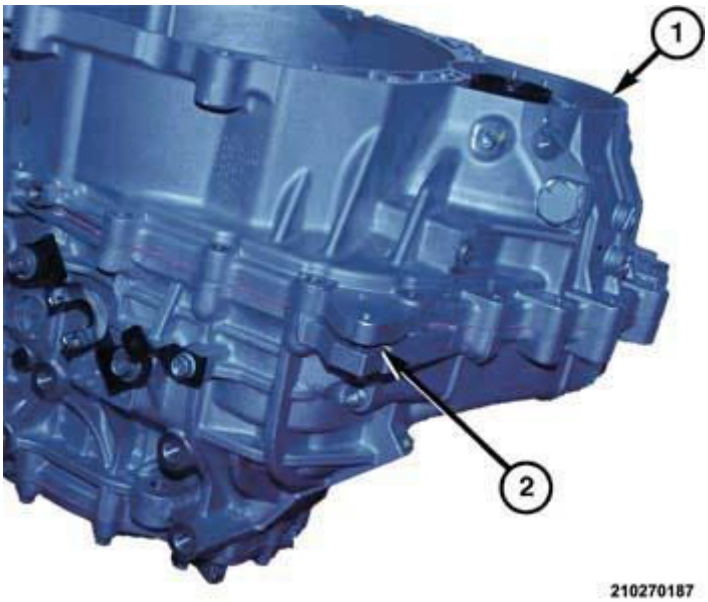

Fig. 77: Notch Locations At Top Of Case For Prying Case Halves Apart
Courtesy of CHRYSLER GROUP, LLC

42. Using a suitable pry bar, pay the case halves apart in notch (2) location on top of the housing (1).

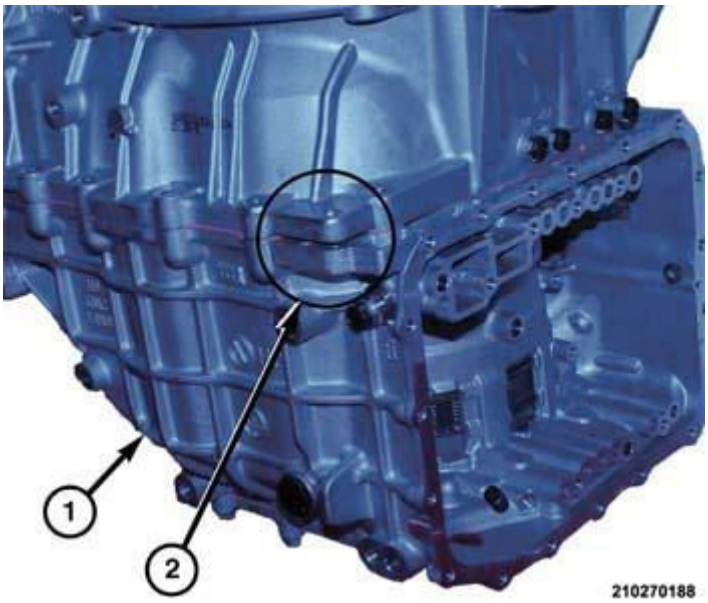

Fig. 78: Notch Locations At Bottom Of Case For Prying Case Halves Apart
Courtesy of CHRYSLER GROUP, LLC

43. Pry the case halves apart in notch location (2) on the bottom of the housing

(1).

Fig. 79: Bell Housing Separated From Transaxle
Courtesy of CHRYSLER GROUP, LLC

44. Separate the bell housing (1) from the transaxle (2).
45. Remove bolts holding the fluid guide to the transaxle housing.
46. Separate the fluid guide from the transaxle.
47. Remove bolts holding the lubrication tube to the transaxle.
48. Separate the lubrication tube from the transaxle.

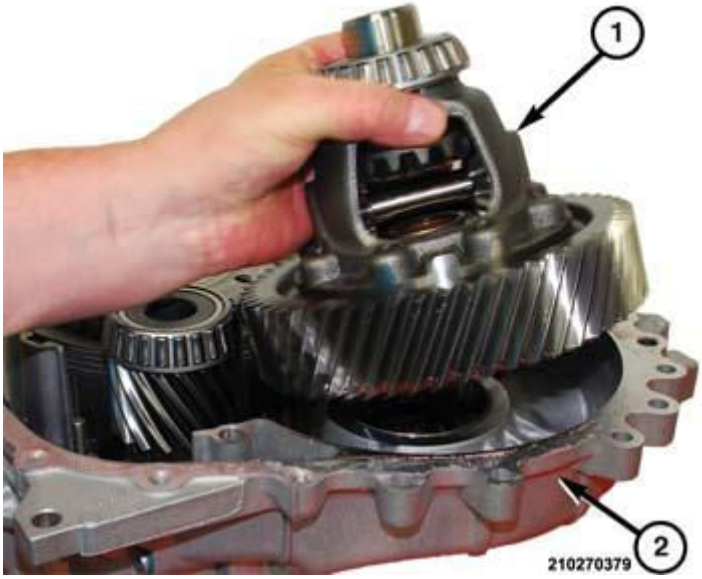

Fig. 80: Differential Assembly Separated From Transaxle Housing

Courtesy of CHRYSLER GROUP, LLC

49. Separate the differential assembly (1) from the transaxle housing (2).

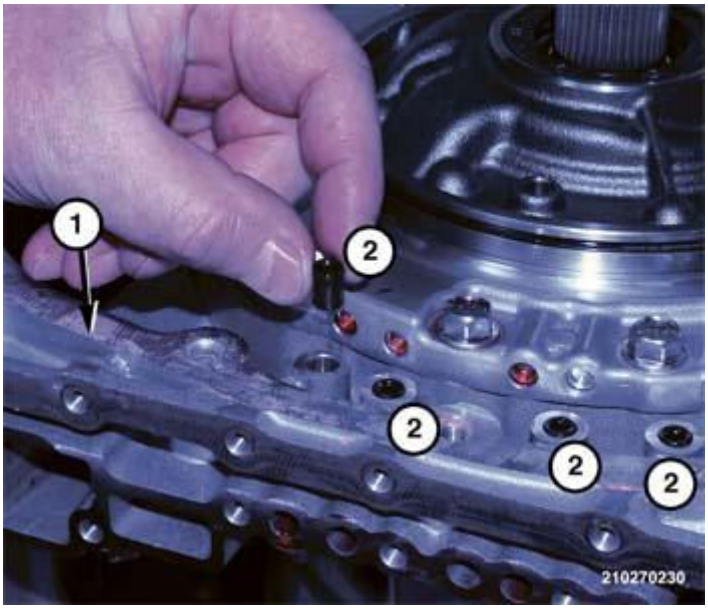

Fig. 81: Small Transfer Port Seals
Courtesy of CHRYSLER GROUP, LLC

50. Remove seals from four small transfer ports (2) in the transaxle housing (1).

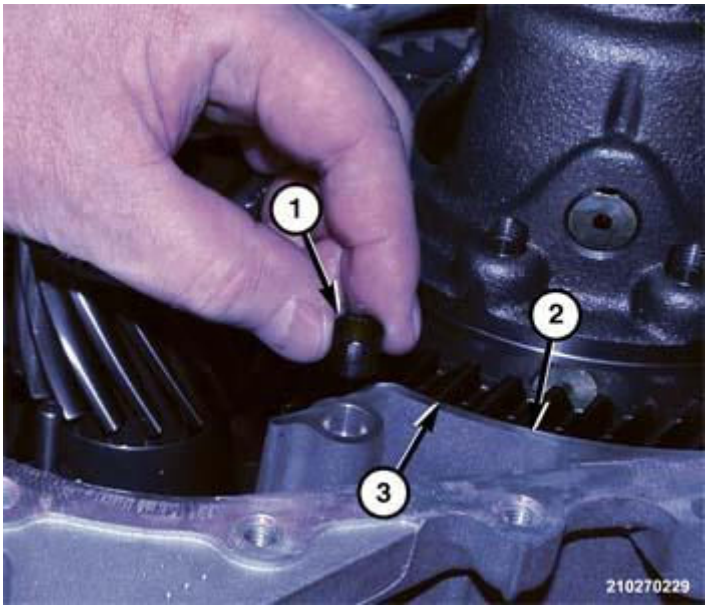

Fig. 82: Large Transfer Port Seal
Courtesy of CHRYSLER GROUP, LLC

51. Remove seal from the large transfer port (1) in the axle housing (2).

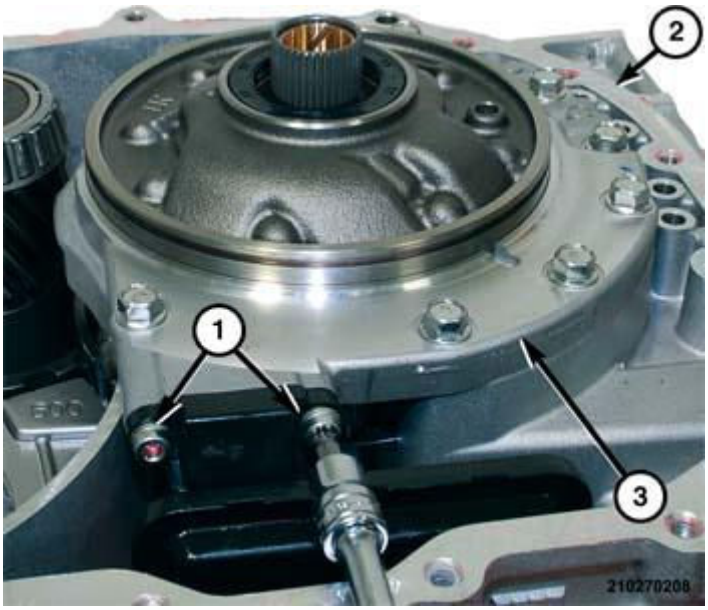

Fig. 83: Fluid Filter, Fluid Pump & Bolts
Courtesy of CHRYSLER GROUP, LLC

52. Remove bolts (1) holding the fluid filter to the fluid pump (3) housing.

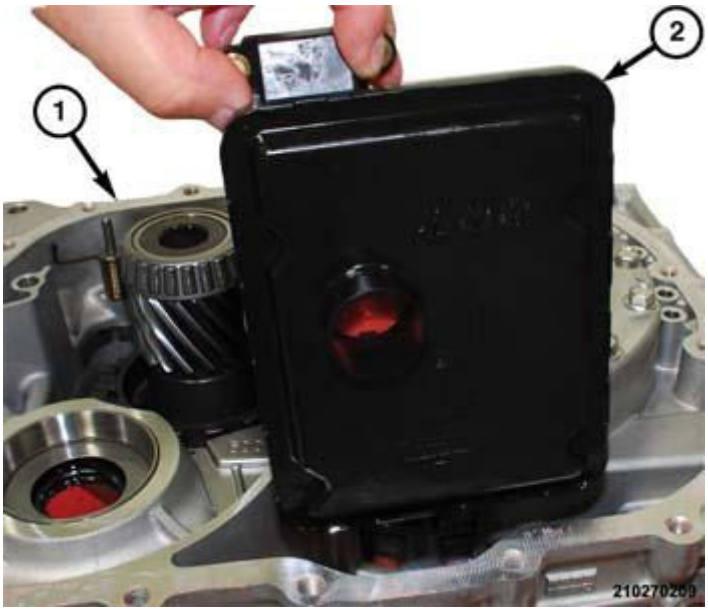

Fig. 84: Fluid Filter Separated From Transaxle Housing
Courtesy of CHRYSLER GROUP, LLC

53. Separate the fluid filter (2) from the transaxle housing (1).

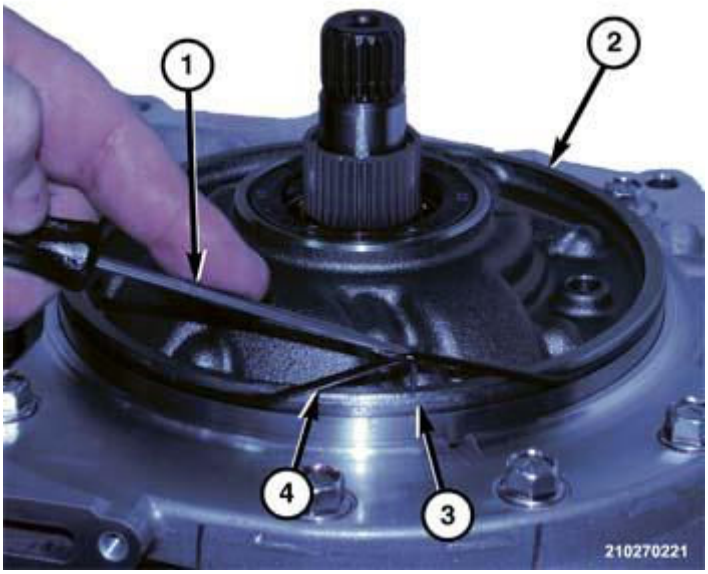

Fig. 85: Fluid Pump Housing O-Ring Seal & Hook Tool
Courtesy of CHRYSLER GROUP, LLC

54. Using a suitable hook tool (1), remove o-ring seal (4) from the groove (3) in the fluid pump housing (3).

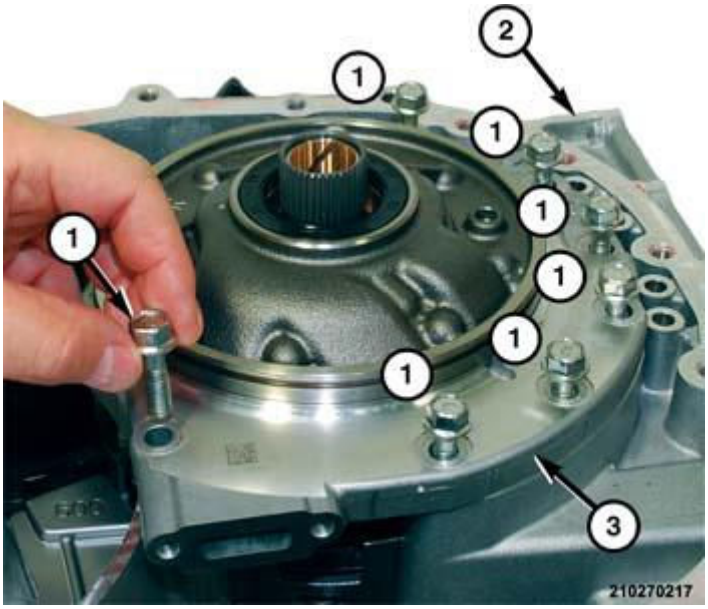

Fig. 86: Fluid Pump & Bolts
Courtesy of CHRYSLER GROUP, LLC

55. Remove bolts (1) holding fluid pump (3) to the trans axle housing (2).

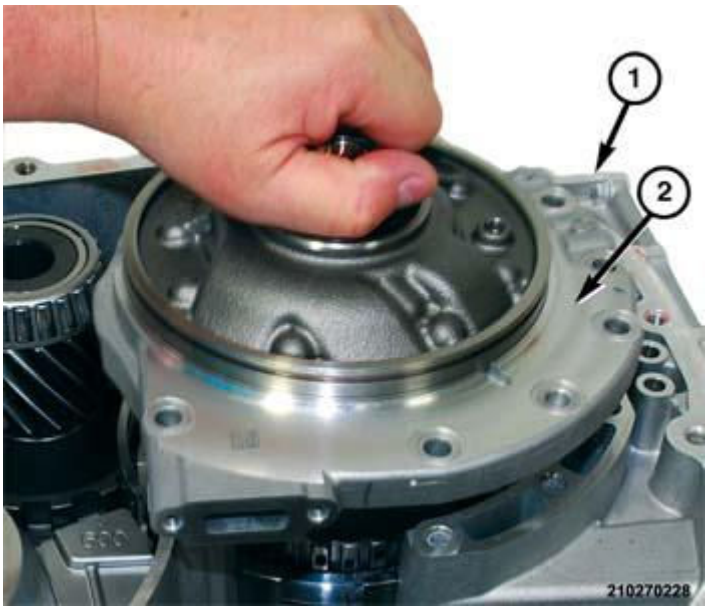

Fig. 87: Fluid Pump Separated From Transaxle Housing
Courtesy of CHRYSLER GROUP, LLC

56. Separate the fluid pump (2) from the transaxle housing (1).

Fig. 88: Thrust Washer & Fluid Pump
Courtesy of CHRYSLER GROUP, LLC

57. Remove the plastic thrust washer (2) from the underside of the fluid pump (1). There are three nubs that insert into holes in the fluid pump hub to prevent the thrust washer from rotating.

Fig. 89: Split Seal Rings & Fluid Pump Hub
Courtesy of CHRYSLER GROUP, LLC

58. Remove two split seal rings (3) from land-grooves (2) in fluid pump (1) hub.

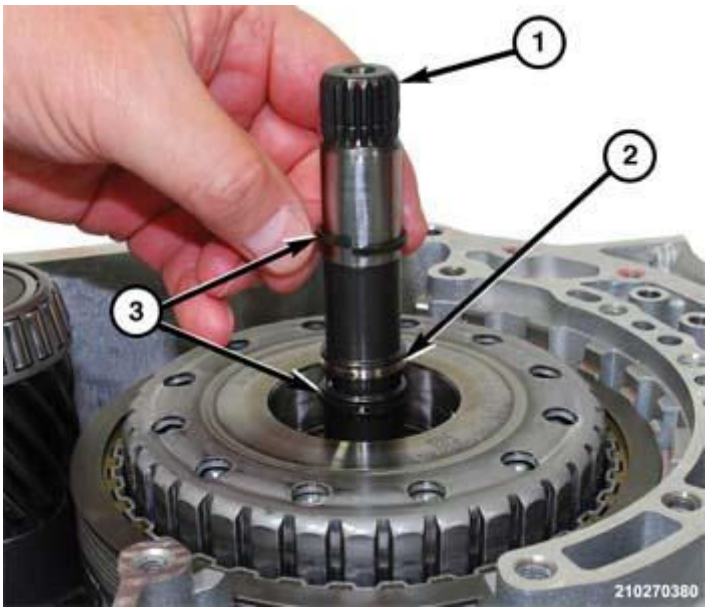

Fig. 90: Split Ring Seals & Input Shaft
Courtesy of CHRYSLER GROUP, LLC

59. Remove two split ring seals (2) from the input shaft (1).

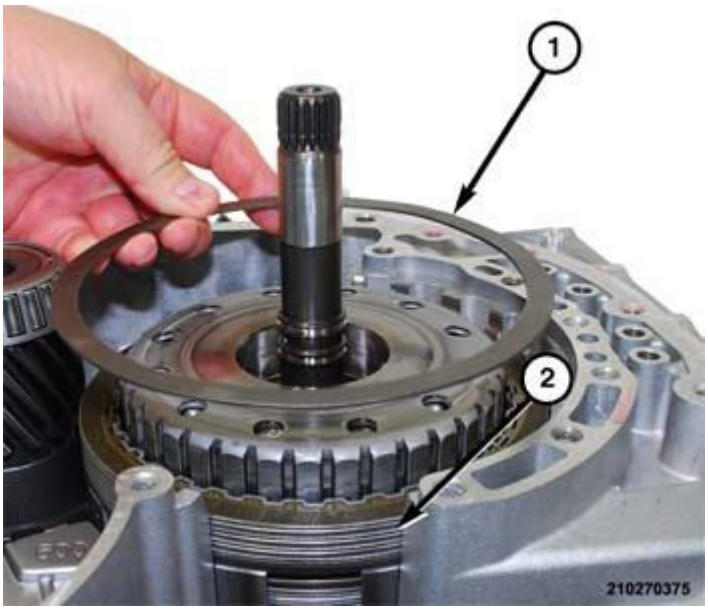

Fig. 91: 2/6 Brake Wave Plate & Hub
Courtesy of CHRYSLER GROUP, LLC

60. Remove 2/6 brake wave plate (1) from 2/6 brake hub.

Fig. 92: 2/6 Brake Plates, Discs & Hub
Courtesy of CHRYSLER GROUP, LLC

61. Remove the 2/6 brake (1) plates (3) and discs (2) from the 2/6 brake hub.

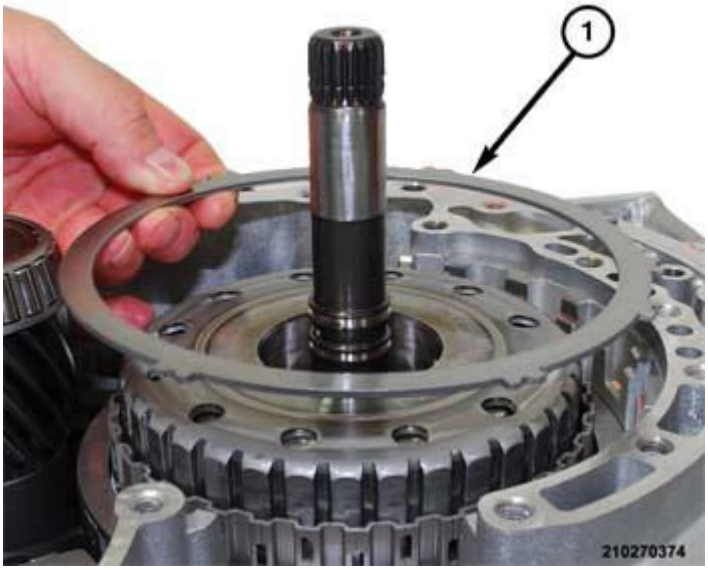

Fig. 93: 2/6 Brake Select Thickness Reaction Plate & Hub
Courtesy of CHRYSLER GROUP, LLC

62. Remove 2/6 brake select thickness reaction plate (1) from the 2/6 brake hub.

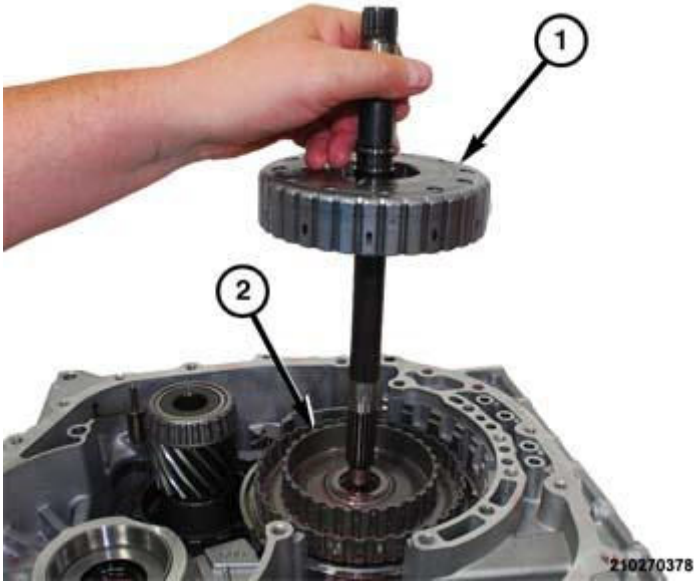

Fig. 94: 3/5/R Clutch Assembly, 3/5/R & 2/6 Brake Hub Assembly
Courtesy of CHRYSLER GROUP, LLC

63. Remove the 3/5/R clutch assembly (1) from the 3/5/R and 2/6 brake hub (2) assembly.

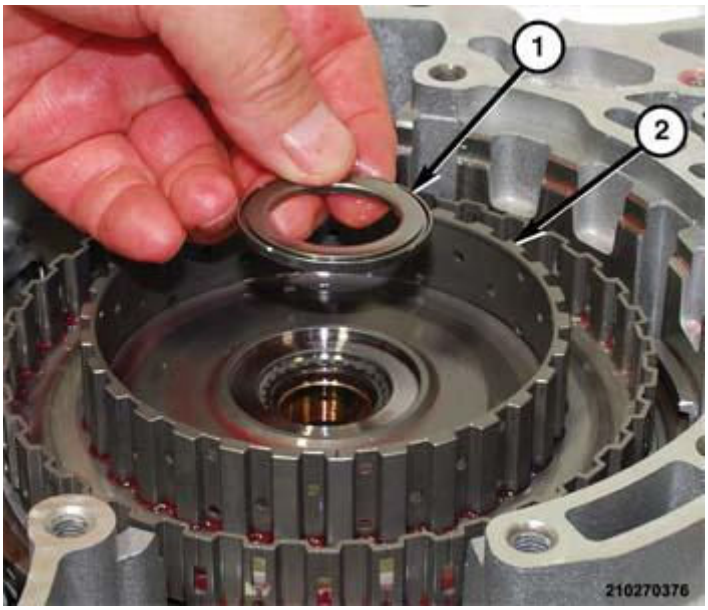

Fig. 95: 3/5/R Clutch & 2/6 Brake Hub, Thrust Bearing
Courtesy of CHRYSLER GROUP, LLC

64. Remove the thrust bearing (2) from the 3/5/R clutch and 2/6 brake hub. Mark the side toward 3/5/R clutch and 2/6 brake hub on bearing for installation orientation.

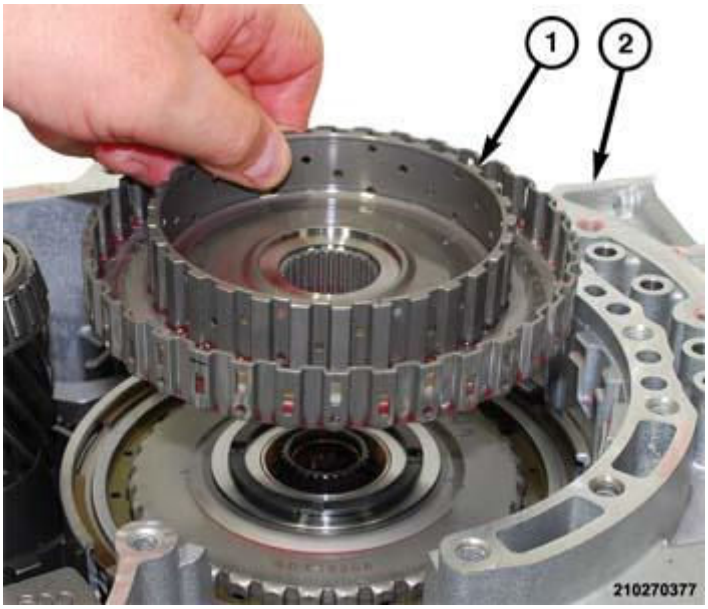

Fig. 96: 3/5/R Clutch & 2/6 Brake Hub Assembly
Courtesy of CHRYSLER GROUP, LLC

65. Remove the 3/5/R clutch and 2/6 brake hub (2) assembly from the underdrive brake.

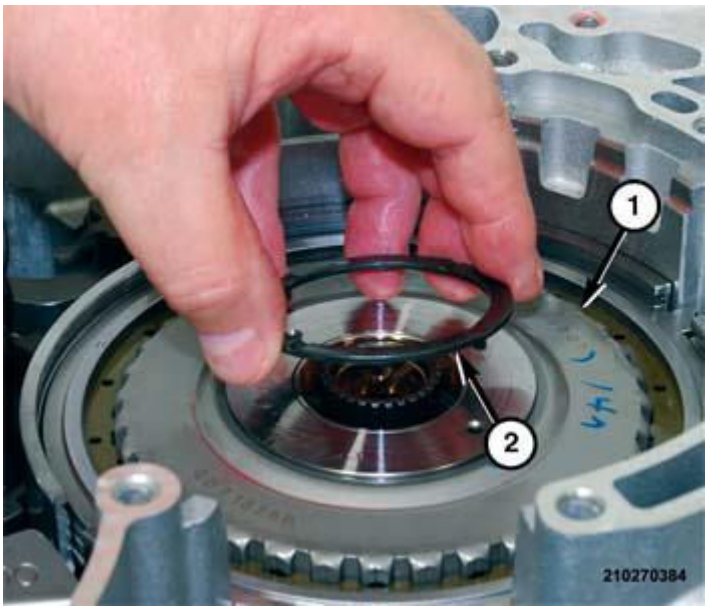

Fig. 97: Underdrive Brake Hub & Thrust Washer
Courtesy of CHRYSLER GROUP, LLC

66. Remove thrust washer (2) from underdrive brake hub.

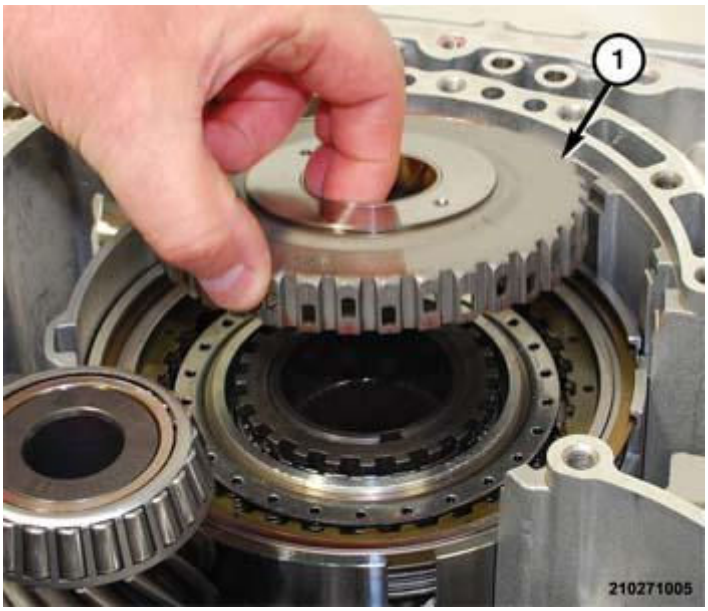

Fig. 98: Underdrive Brake Hub
Courtesy of CHRYSLER GROUP, LLC

67. Remove underdrive brake hub (1) assembly from transaxle.

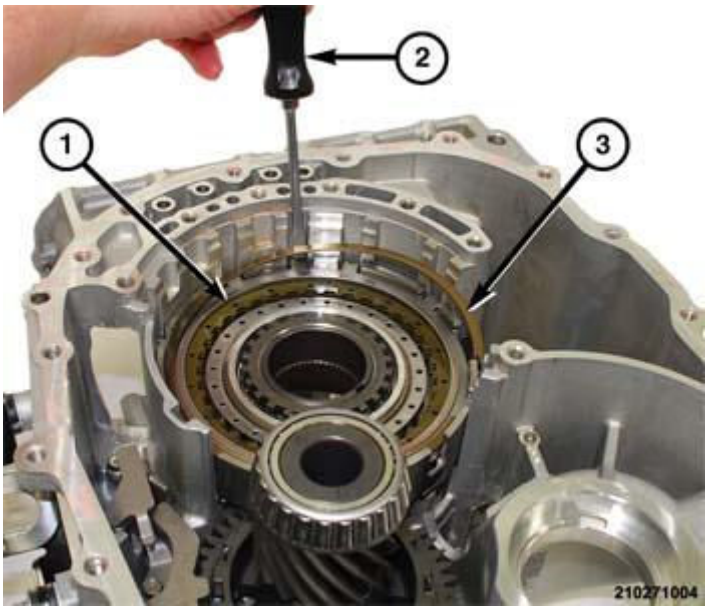

Fig. 99: Underdrive Brake, Underdrive Brake Drum, & Large Snap Ring
Courtesy of CHRYSLER GROUP, LLC

68. Remove large snap ring (3) holding underdrive brake (1) into underdrive brake drum.

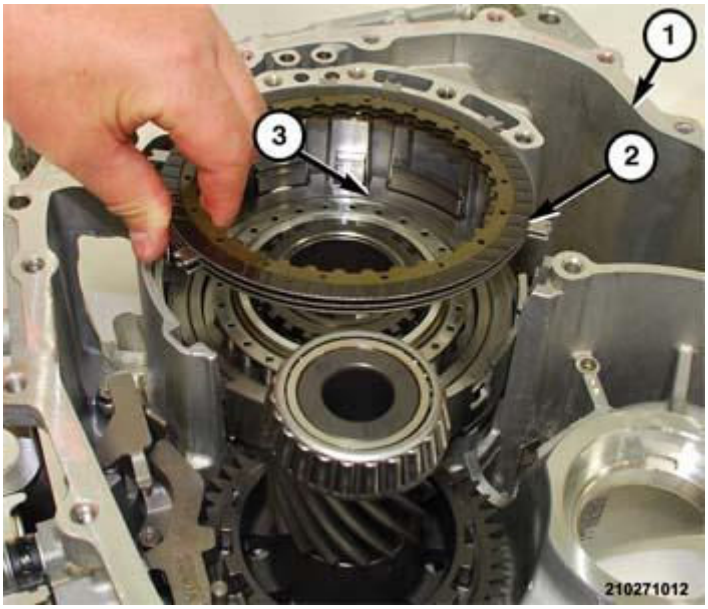

Fig. 100: Underdrive Brake Plates, Discs & Drum
Courtesy of CHRYSLER GROUP, LLC

69. Separate underdrive brake plates and discs from underdrive brake drum.
70. Turn the transaxle over to gain access to the rear cover.

Fig. 101: Transaxle Rear Cover & Bolts
Courtesy of CHRYSLER GROUP, LLC

71. Remove bolts holding the rear cover (1) to the transaxle.

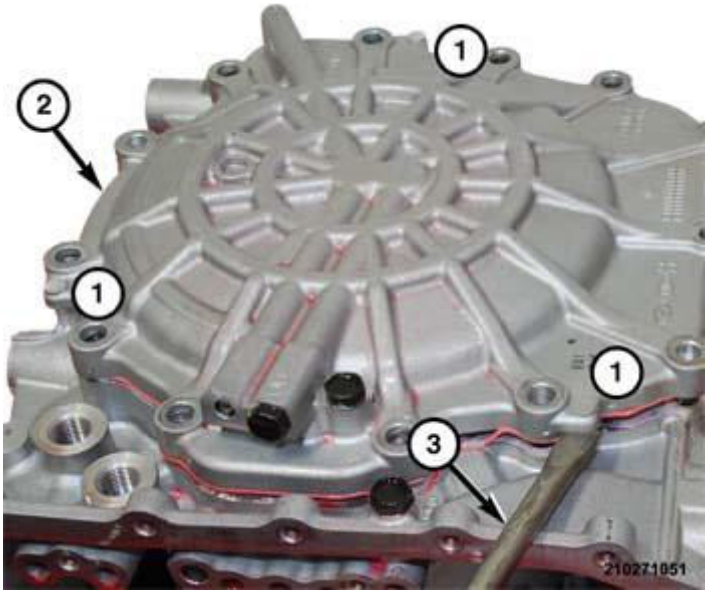

Fig. 102: Prying Locations At Rear Cover
Courtesy of CHRYSLER GROUP, LLC

72. In three locations (1) on the rear cover, pry upward using a suitable pry bar (3).

Fig. 103: Rear Cover Separated From Transaxle
Courtesy of CHRYSLER GROUP, LLC

73. Separate the rear cover (1) from the transaxle.

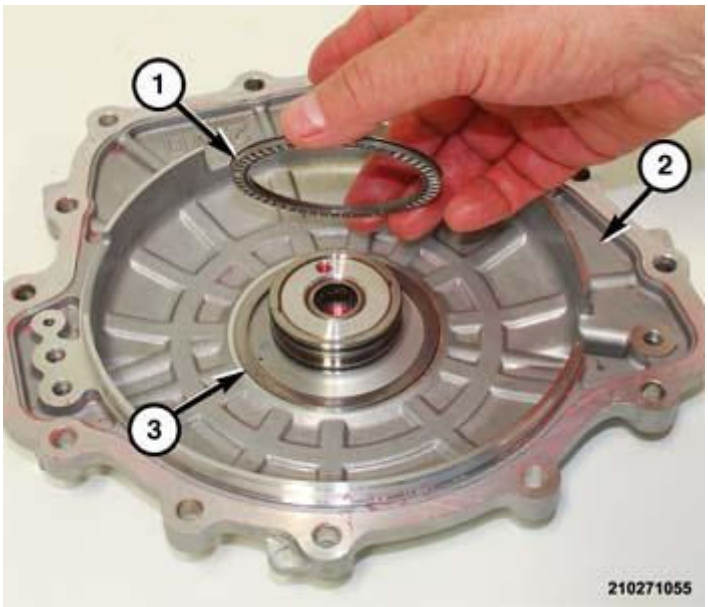

Fig. 104: Selective Spacer, Bearing & Rear Cover
Courtesy of CHRYSLER GROUP, LLC

74. Remove the selective spacer (3) and bearing (1) from under rear cover (2).

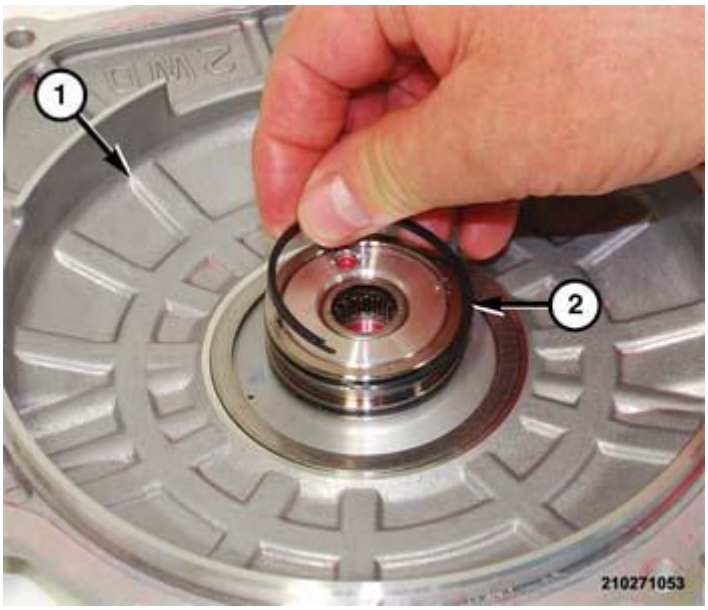

Fig. 105: Split Seal Rings & Rear Cover Hub
Courtesy of CHRYSLER GROUP, LLC

75. Remove the two split seal rings (2) from the lands in the rear cover (1) hub.

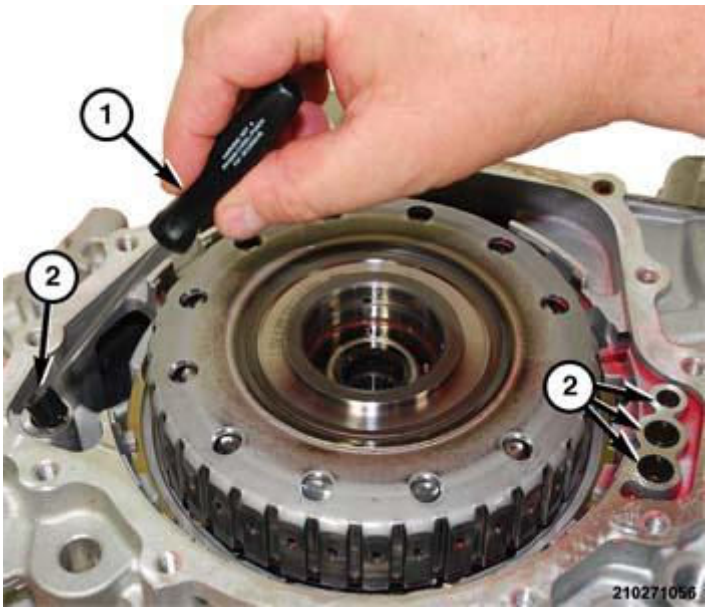

Fig. 106: Transfer Port Seals In Transaxle Housing
Courtesy of CHRYSLER GROUP, LLC

76. Using a suitable hook tool (1), Remove the four seals (2) from transfer ports in transaxle housing.

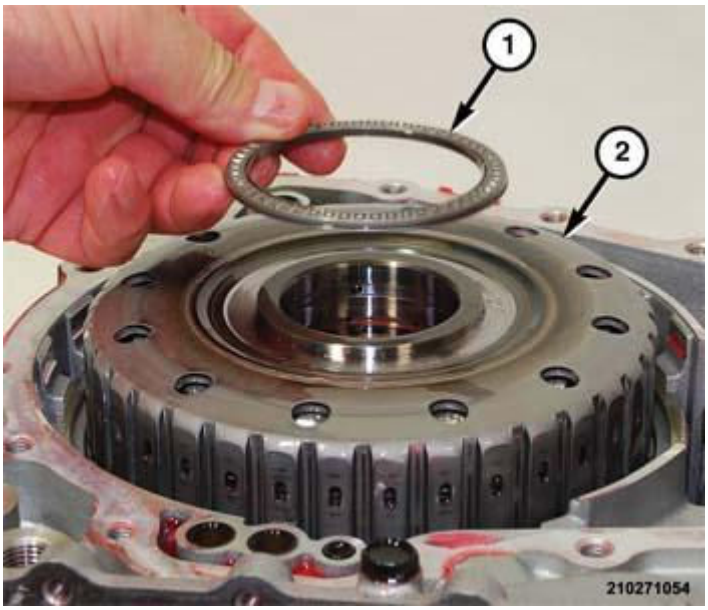

Fig. 107: Thrust Bearing & Overdrive Clutch Hub Assembly
Courtesy of CHRYSLER GROUP, LLC

77. Remove thrust bearing from the overdrive clutch hub assembly.

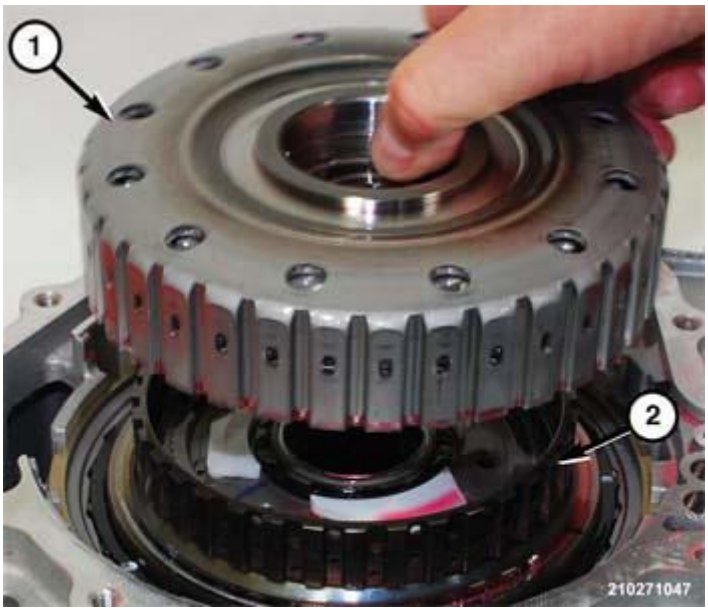

Fig. 108: Overdrive Clutch Assembly & One Way Clutch
Courtesy of CHRYSLER GROUP, LLC

78. Remove the overdrive clutch assembly (1) from the one way clutch (2).

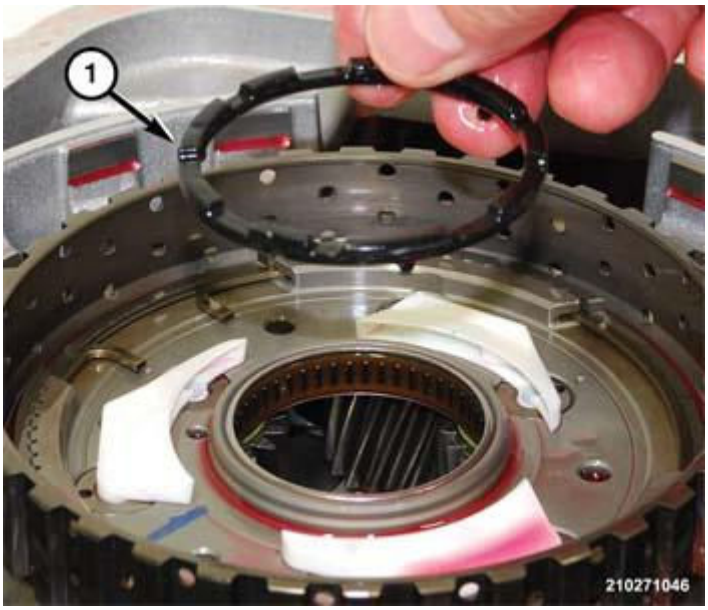

Fig. 109: Thrust Washer & Planetary Gear Assembly Hub
Courtesy of CHRYSLER GROUP, LLC

79. Remove the plastic thrust washer (1) from the planetary gear assembly hub.

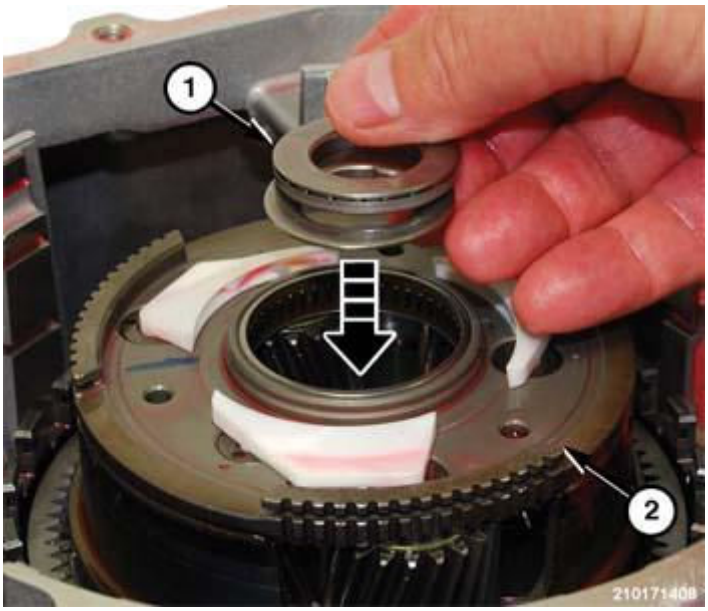

Fig. 110: Thrust Bearing, Race Set & Middle/Rear Planetary Gear Assembly
Courtesy of CHRYSLER GROUP, LLC

80. Using a suitable hook tool, lift the thrust bearing (1) and race set out of the center of the middle/rear planetary gear assembly (2).
81. Turn transaxle over to gain access to the underdrive springs.

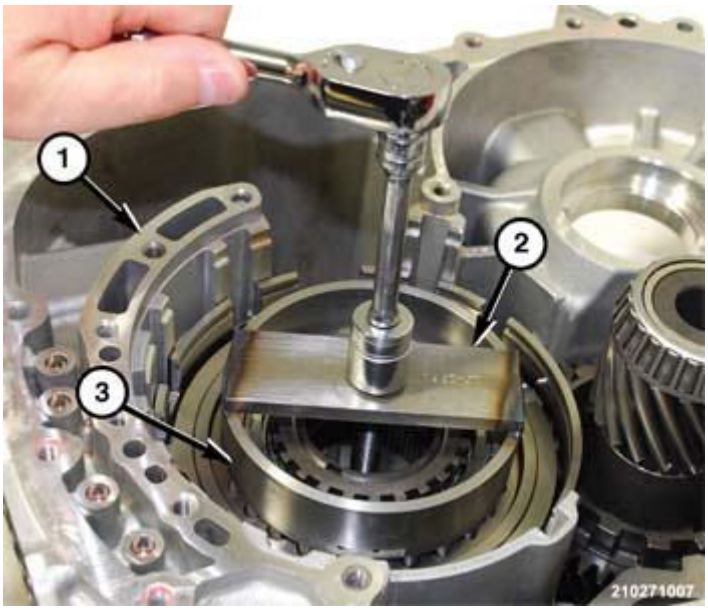

Fig. 111: Tool 5058A & Tool 10426
Courtesy of CHRYSLER GROUP, LLC

82. Insert the bolt for tool 5058A through tool 10426.

Fig. 112: Tool Bolt & Tool Cross Bar
Courtesy of CHRYSLER GROUP, LLC

83. Insert the tool bolt with the spring compressor through the center of the transaxle and out the back into the threaded center bore of the tool cross bar spanning the back of the transaxle.

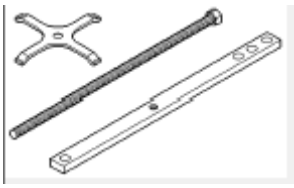

Fig. 113: Special Tool #5058A-3
Courtesy of CHRYSLER GROUP, LLC

(special tool #5058A-3, Screw, Forcing)

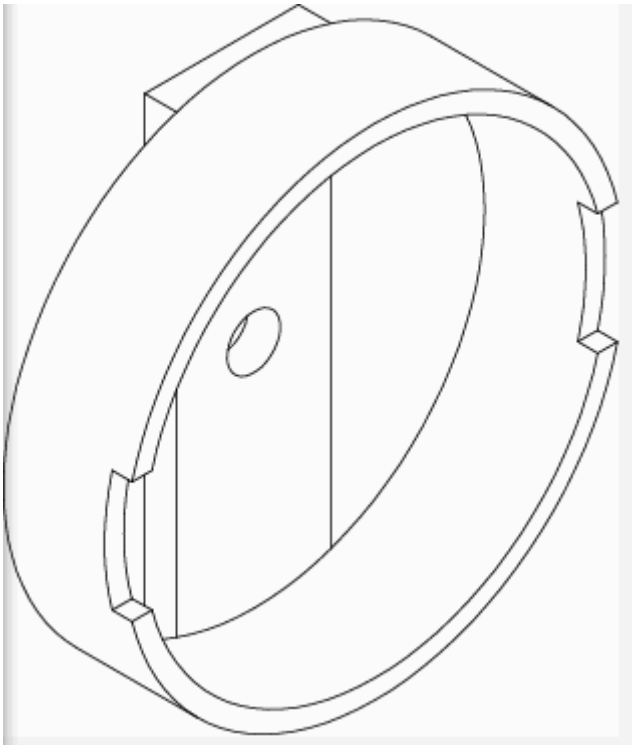

Fig. 114: Special Tool #10426
Courtesy of CHRYSLER GROUP, LLC

(special tool #10426, Compressor, Underdrive Spring)

Compress the underdrive springs (3) to gain access to the snap ring.

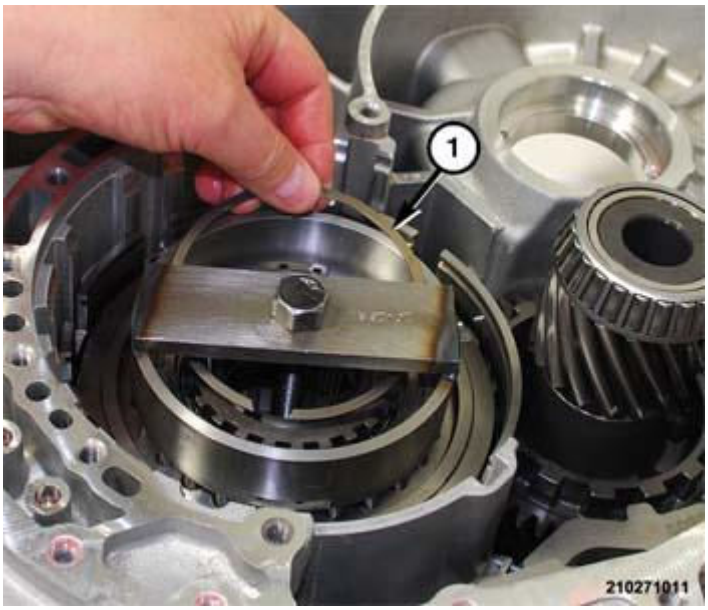

Fig. 115: Underdrive Spring Plate Snap Ring
Courtesy of CHRYSLER GROUP, LLC

84. Remove the snap ring holding the underdrive spring plate to the underdrive brake hub.

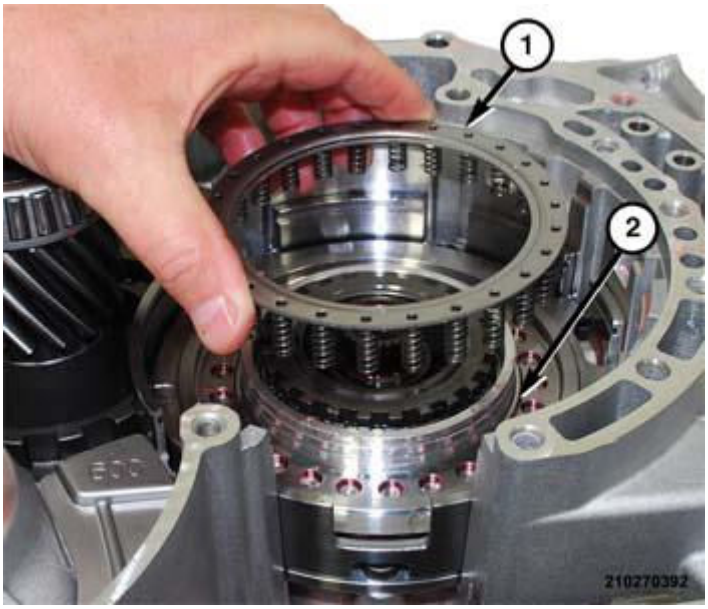

Fig. 116: Underdrive Spring Retainer & Underdrive Brake Piston
Courtesy of CHRYSLER GROUP, LLC

85. Remove the spring compressor tool from the transaxle.
86. Separate the underdrive spring retainer (1) from the underdrive brake piston (2).

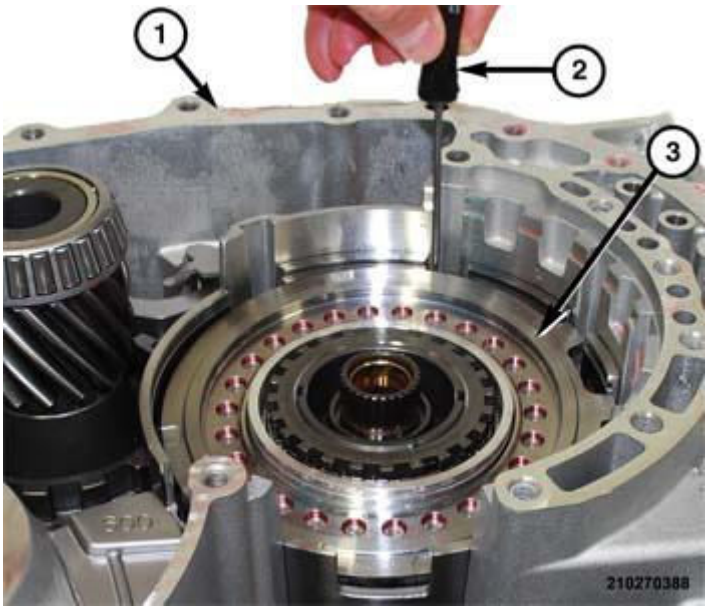

Fig. 117: Underdrive Brake Piston & Underdrive Brake Chamber
Courtesy of CHRYSLER GROUP, LLC

87. Using a suitable pick tool (2) lift the underdrive brake piston (3), in several locations, from the underdrive brake chamber.

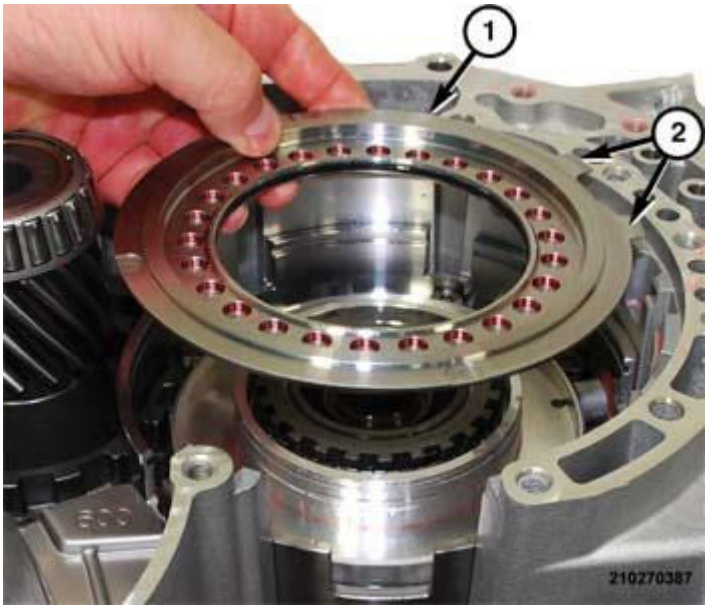

Fig. 118: Underdrive Brake Piston & Location Tabs
Courtesy of CHRYSLER GROUP, LLC

88. Remove the underdrive brake piston (1) from the underdrive brake piston chamber.

NOTE: The location tabs (2) on the underdrive brake piston

should be oriented toward the valve body opening in the transaxle.

89. Remove the D-ring outer seal and the O-ring inner seal from the underdrive piston.

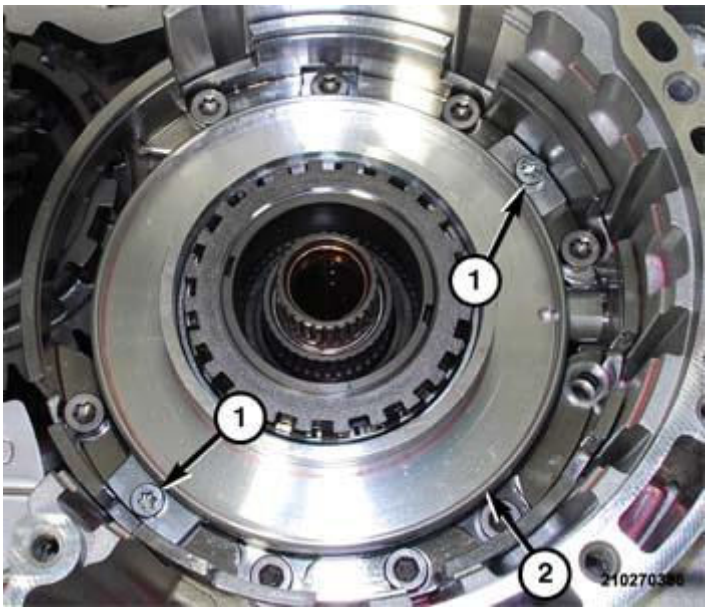

Fig. 119: Underdrive Brake Chamber & Bolts
Courtesy of CHRYSLER GROUP, LLC

90. Remove bolts (1) holding the underdrive brake chamber (2) to the transaxle housing.

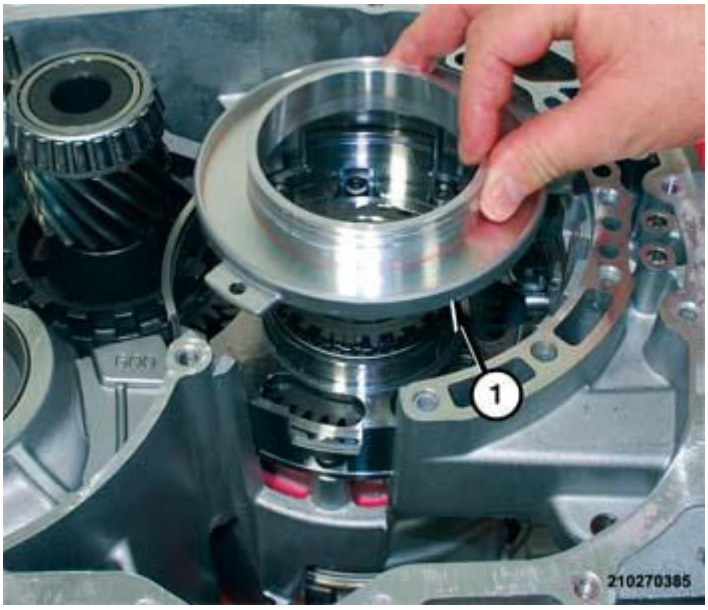

Fig. 120: Underdrive Brake Chamber & Transaxle Housing

Courtesy of CHRYSLER GROUP, LLC

91. Separate the underdrive brake chamber from the transaxle housing.

Fig. 121: Underdrive Brake Retainer & Bolts
Courtesy of CHRYSLER GROUP, LLC

92. Mark the location and direction of the underdrive brake retainer in relation to the bolt holes in the transaxle housing to ensure proper installation.
93. Using an impact driver (1), loosen the bolts holding the underdrive brake retainer (2) to the transaxle housing without damaging the Torx® drive heads.

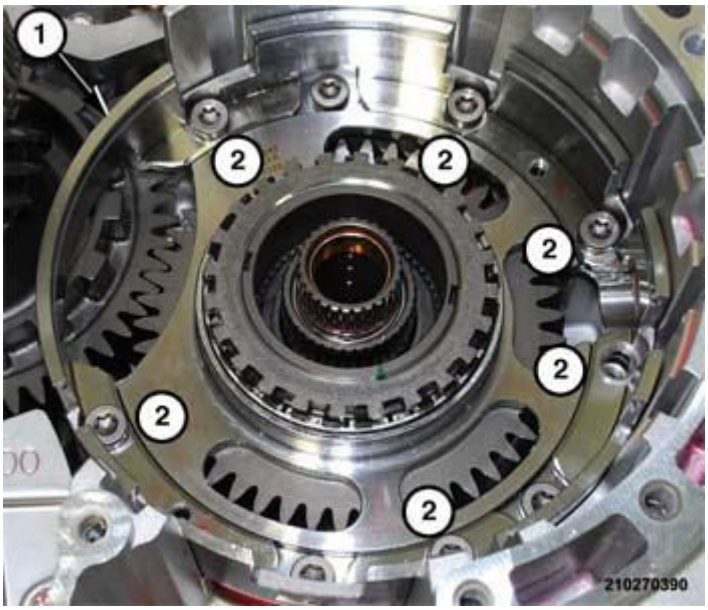

Fig. 122: Underdrive Brake Retainer & Bolts
Courtesy of CHRYSLER GROUP, LLC

94. Remove bolts (2) holding the underdrive brake retainer (1) to the transaxle housing.

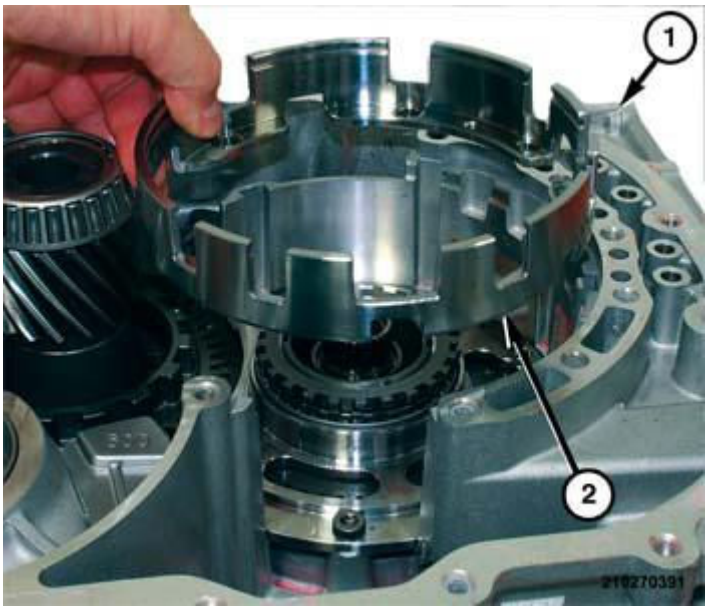

Fig. 123: Underdrive Brake Retainer & Transaxle Housing
Courtesy of CHRYSLER GROUP, LLC

95. Separate the underdrive brake retainer (2) from the transaxle housing (1).

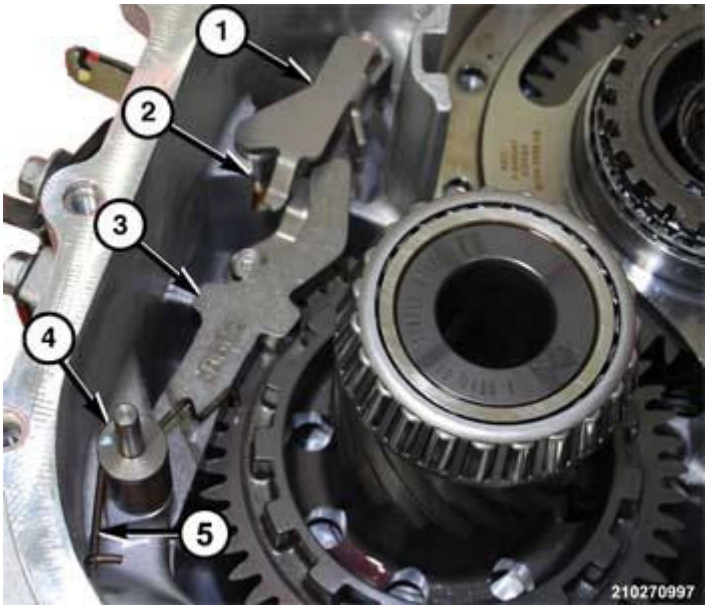

Fig. 124: Park Rod Guide & Bolts
Courtesy of CHRYSLER GROUP, LLC

96. Remove bolts holding the park rod guide (1) from the transaxle housing.

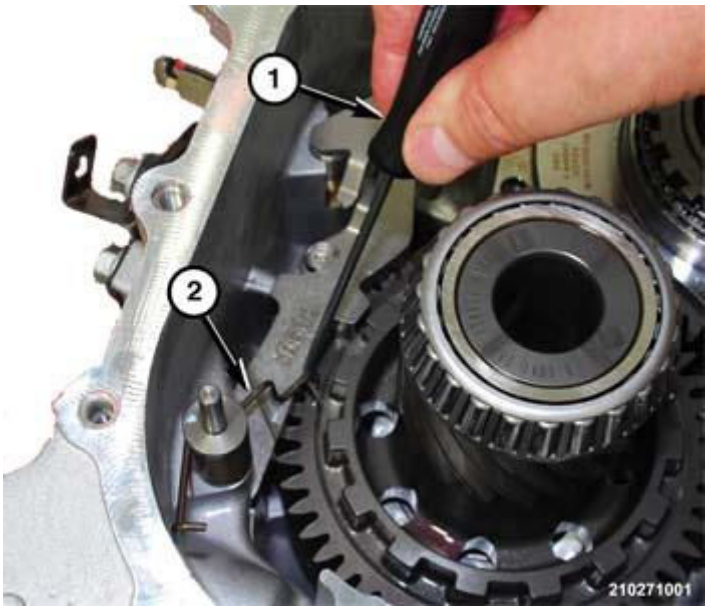

Fig. 125: Park Sprag Spring & Park Sprag
Courtesy of CHRYSLER GROUP, LLC

97. Using a suitable hook tool (1), lift the park sprag spring (2) off the park sprag.

Fig. 126: Park Sprag Spring, Shaft & Transaxle Housing
Courtesy of CHRYSLER GROUP, LLC

98. Remove the park sprag spring and shaft (1) from the transaxle housing.

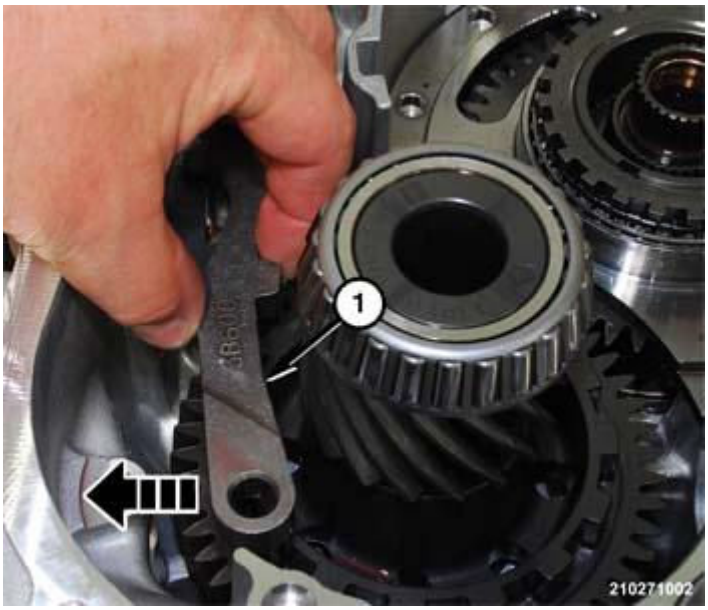

Fig. 127: Park Sprag & Transaxle Housing
Courtesy of CHRYSLER GROUP, LLC

99. Separate the park sprag (1) from the transaxle housing.

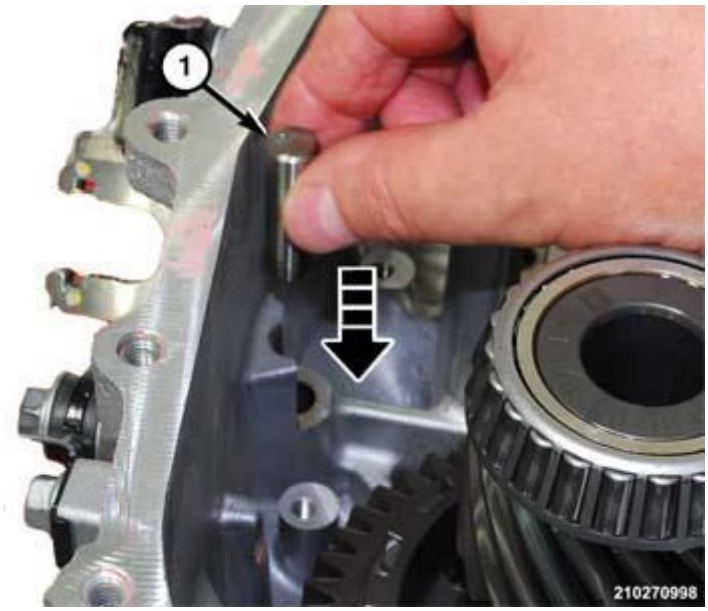

Fig. 128: Park Sprag Support Shaft & Transaxle Housing
Courtesy of CHRYSLER GROUP, LLC

00. Remove the park sprag support shaft (1) from the transaxle housing.

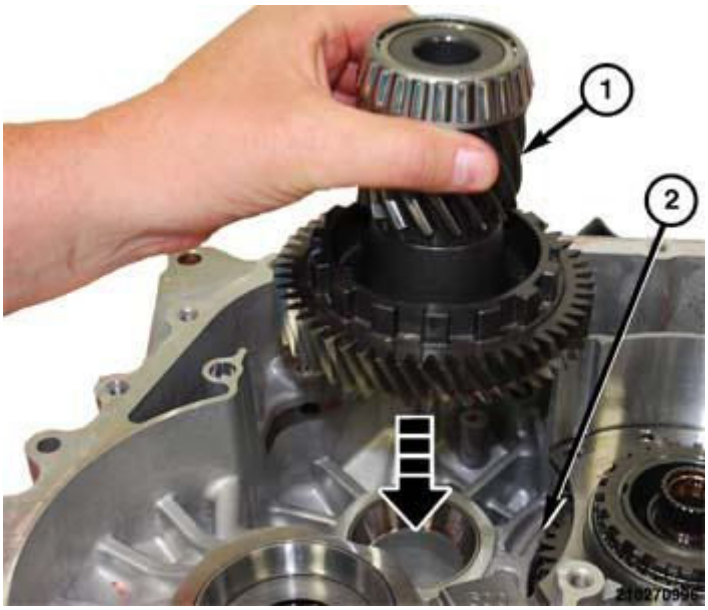

Fig. 129: Transfer Driven Gear Assembly & Transaxle
Courtesy of CHRYSLER GROUP, LLC

01. Remove the transfer driven gear (1) assembly from the transaxle (2).
02. Turn the transaxle over to gain access to the One-way-clutch.

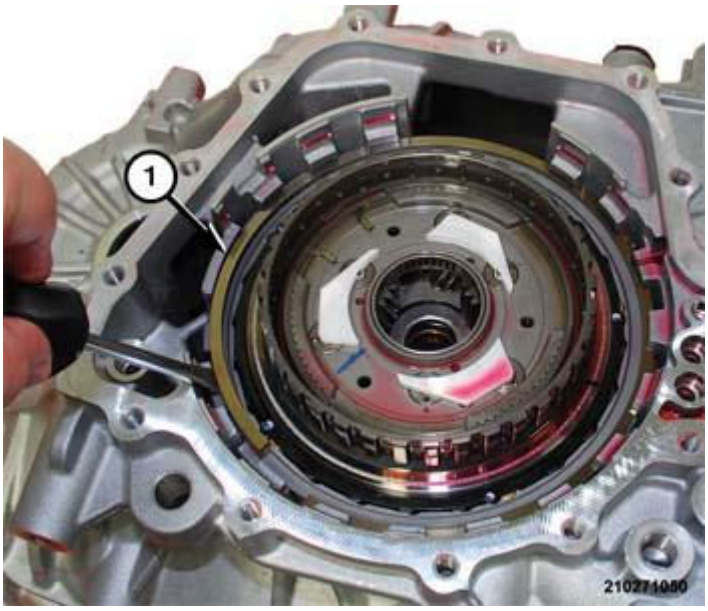

Fig. 130: One-Way-Clutch Snap Ring
Courtesy of CHRYSLER GROUP, LLC

03. Remove the snap ring (1) holding the OWC to the transaxle housing.

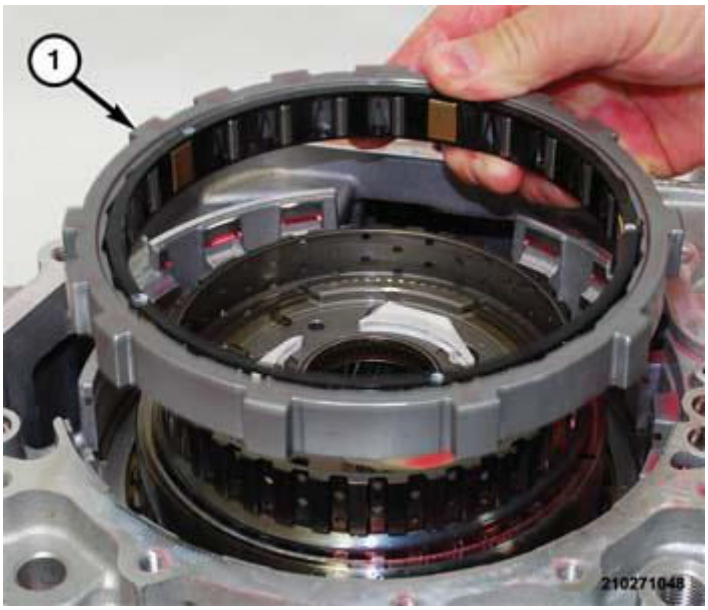

Fig. 131: One-Way-Clutch
Courtesy of CHRYSLER GROUP, LLC

04. Separate the OWC (1) from the transaxle. Mark the one way clutch to aid installation orientation.

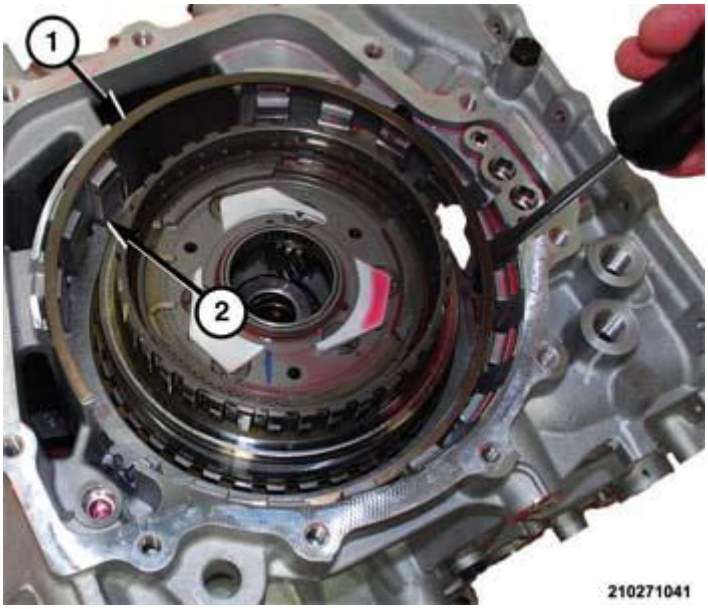

Fig. 132: Low/Reverse Brake & Snap Ring
Courtesy of CHRYSLER GROUP, LLC

05. Remove the snap ring (2) holding low/reverse brake into transaxle.

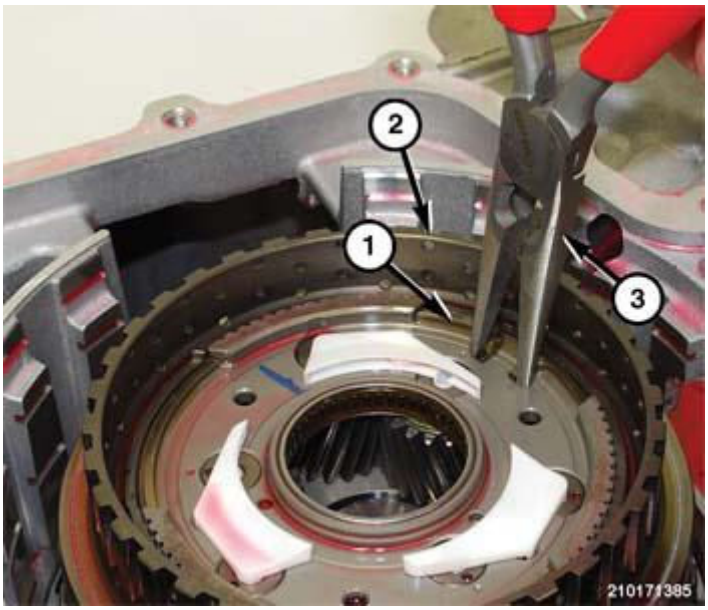

Fig. 133: One Way Clutch Race & Snap Ring
Courtesy of CHRYSLER GROUP, LLC

06. Separate the low & reverse brake pressure plate, cushion plate and discs and plates, in order, from transaxle.
07. Compress snap ring (1) holding one way clutch race (2) into transaxle.

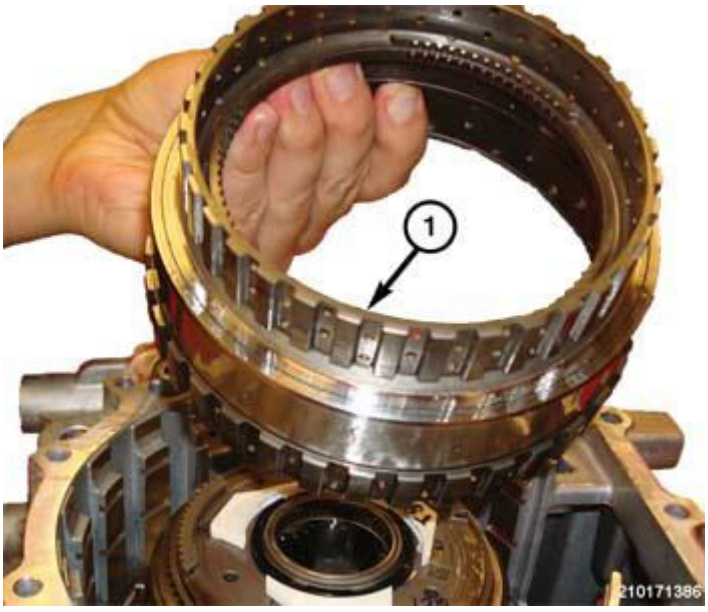

Fig. 134: One Way Clutch Inner Race
Courtesy of CHRYSLER GROUP, LLC

08. Separate the one way clutch inner race (1) from the transaxle.

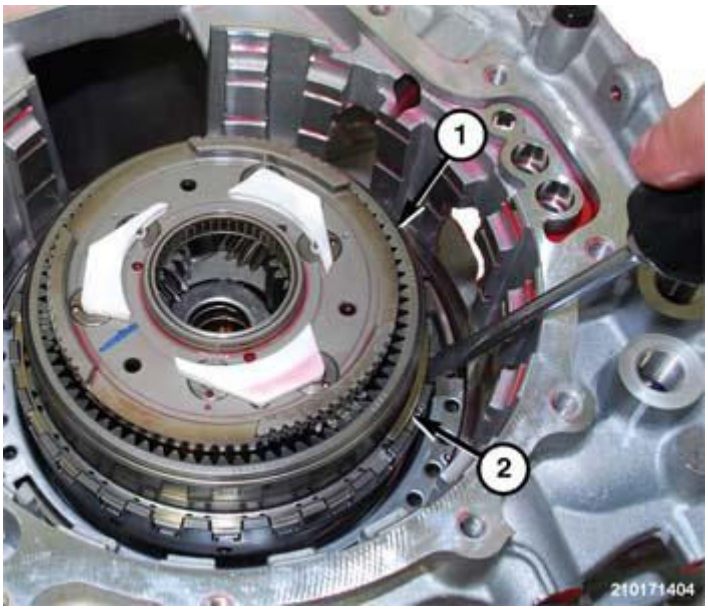

Fig. 135: Rear Annulus Gear & Snap Ring
Courtesy of CHRYSLER GROUP, LLC

09. Remove the snap ring (2) holding the rear annulus gear (1) into transaxle.

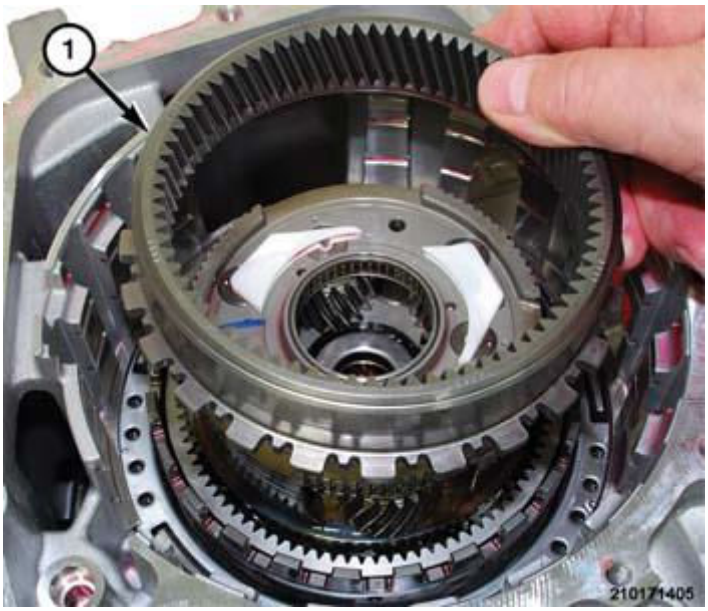

Fig. 136: Rear Annulus Gear
Courtesy of CHRYSLER GROUP, LLC

10. Separate the rear annulus gear (1) from the transaxle.

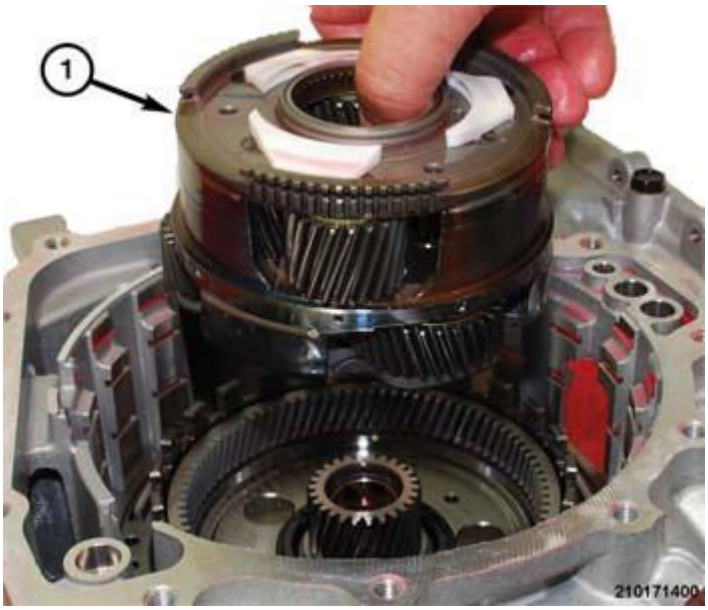

Fig. 137: Middle/Rear Planetary Gear Assembly
Courtesy of CHRYSLER GROUP, LLC

11. Separate the middle/rear planetary gear assembly (1) and from the planetary gear hub.

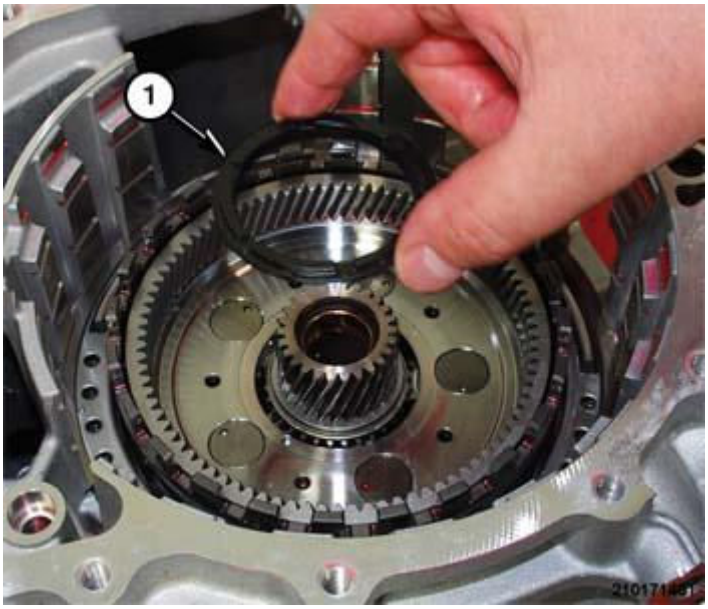

Fig. 138: Front Planetary Gear Hub Thrust Washer
Courtesy of CHRYSLER GROUP, LLC

12. Remove the thrust washer (1) from front planetary gear hub.

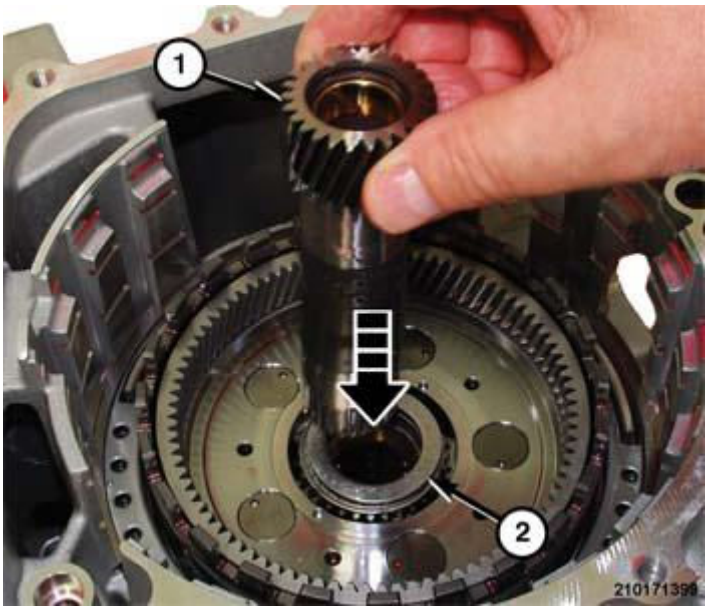

Fig. 139: Middle Sun Gear & Planetary Gear Hub
Courtesy of CHRYSLER GROUP, LLC

13. Separate the middle sun gear (1) from the planetary gear hub (2).

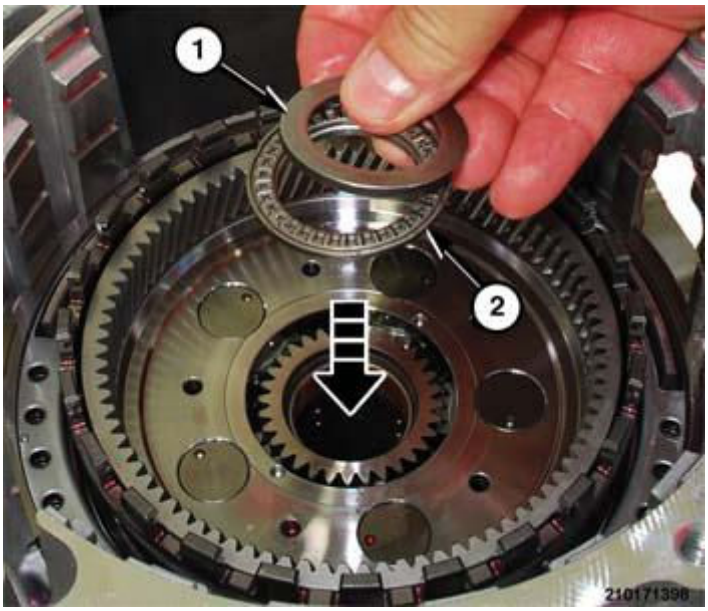

Fig. 140: Planetary Gear Hub Bearing And Race Set
Courtesy of CHRYSLER GROUP, LLC

14. Remove the bearing (2) and race (1) set from the planetary gear hub.

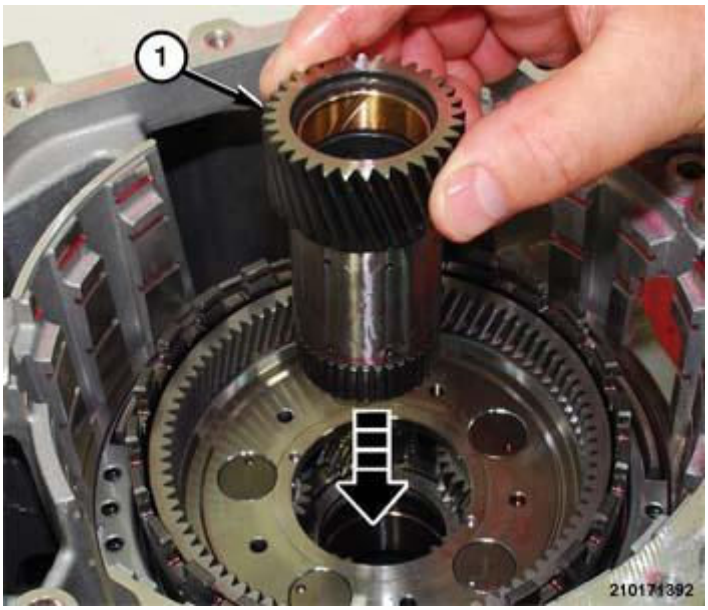

Fig. 141: Front Sun Gear
Courtesy of CHRYSLER GROUP, LLC

15. Separate the front sun gear (1) from front planetary gear assembly.

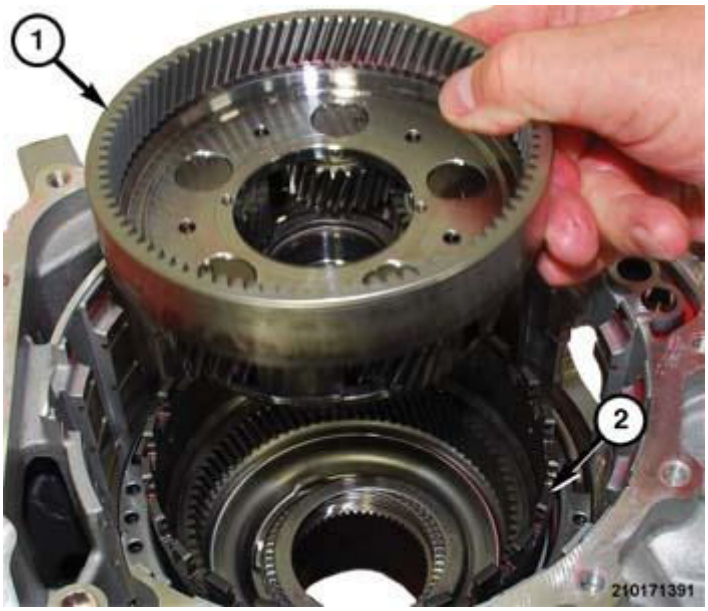

Fig. 142: Front Planetary Gear & Front Annulus Gear Assembly
Courtesy of CHRYSLER GROUP, LLC

16. Separate the front planetary gear (1) the front annulus gear assembly (2).

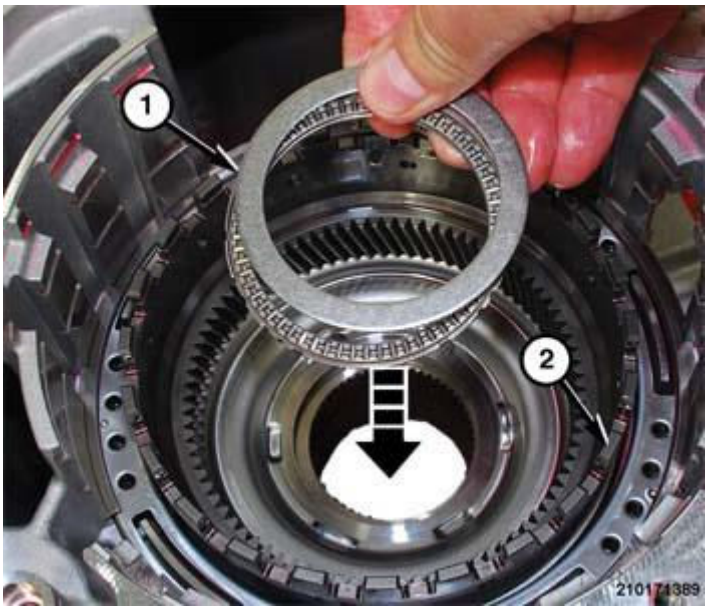

Fig. 143: Front Annulus Gear Thrust Bearing And Race
Courtesy of CHRYSLER GROUP, LLC

17. Separate the front annulus gear thrust bearing and race from the front annulus gear hub,

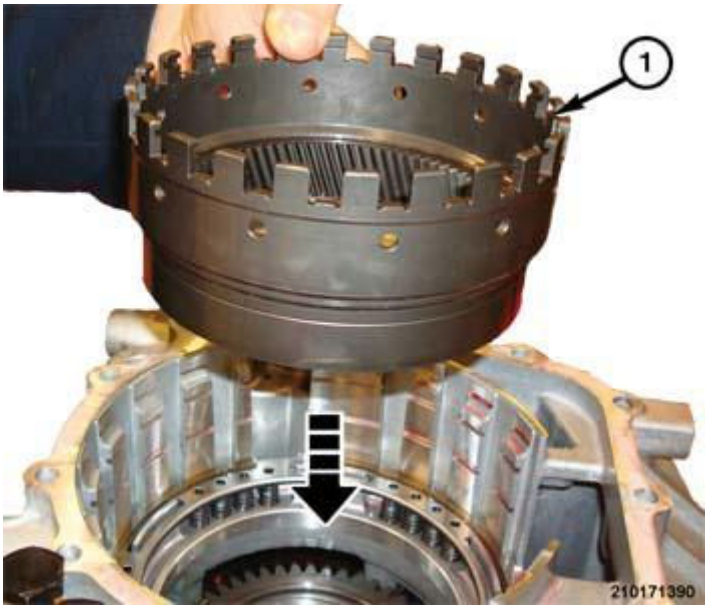

Fig. 144: Front Annulus Gear
Courtesy of CHRYSLER GROUP, LLC

18. Separate the front annulus gear (1) from the low/reverse brake assembly.

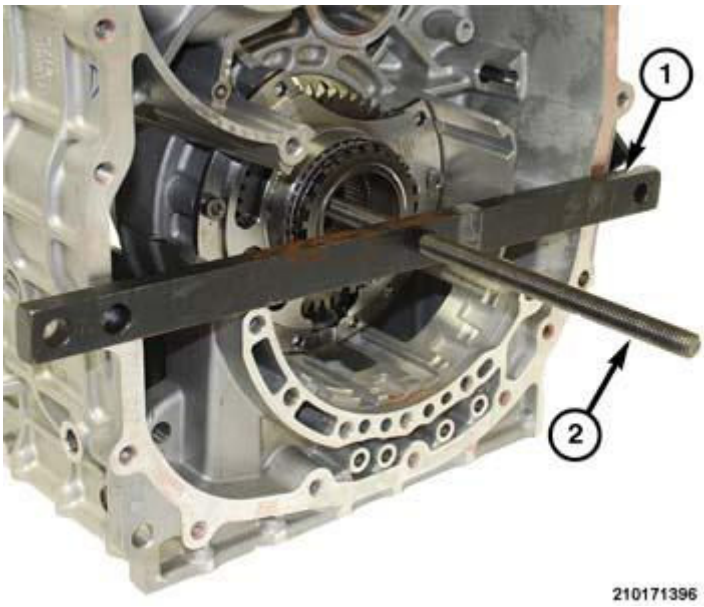

Fig. 145: Special Tool #5058A-3
Courtesy of CHRYSLER GROUP, LLC

19. Insert (special tool #5058A-3, Screw, Forcing) through center hole in (special tool #8621, Compressor, Spring).

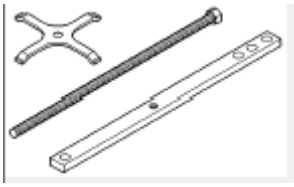

Fig. 146: Special Tool #5058A-3
Courtesy of CHRYSLER GROUP, LLC

Fig. 147: Special Tool #8621
Courtesy of CHRYSLER GROUP, LLC

Insert the screw through the transfer gear and into the threaded cross bar across the bell housing opening.

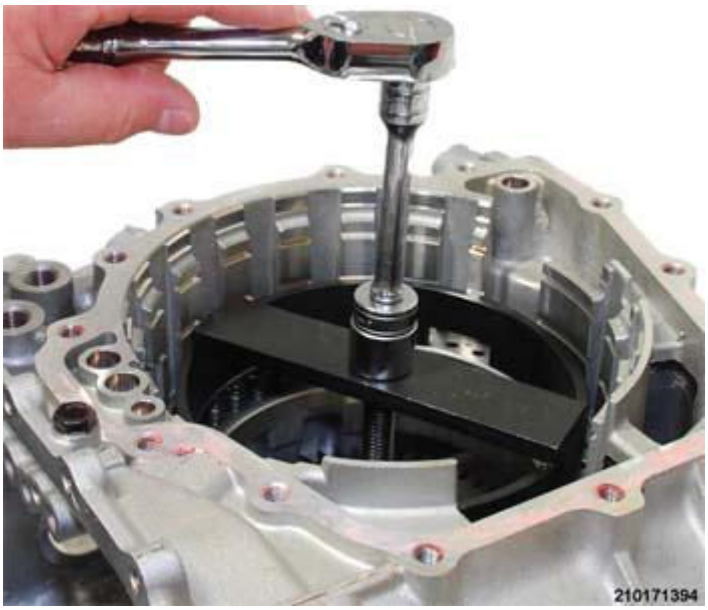

Fig. 148: Compressing Low/Reverse Spring Retainer
Courtesy of CHRYSLER GROUP, LLC

20. Compress the low/reverse spring retainer.

Fig. 149: Low/Reverse Brake Spring Retainer Snap Ring
Courtesy of CHRYSLER GROUP, LLC

21. Remove snap ring holding low/reverse brake spring retainer to the low/reverse brake piston.
22. Remove spring compressor tools from transaxle.

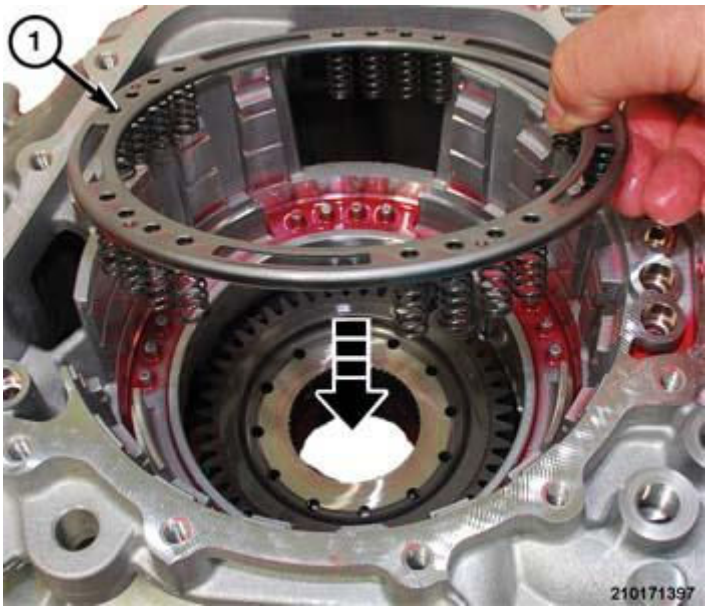

Fig. 150: Low/Reverse Brake Piston Spring Retainer
Courtesy of CHRYSLER GROUP, LLC

23. Remove low & reverse brake piston spring retainer.

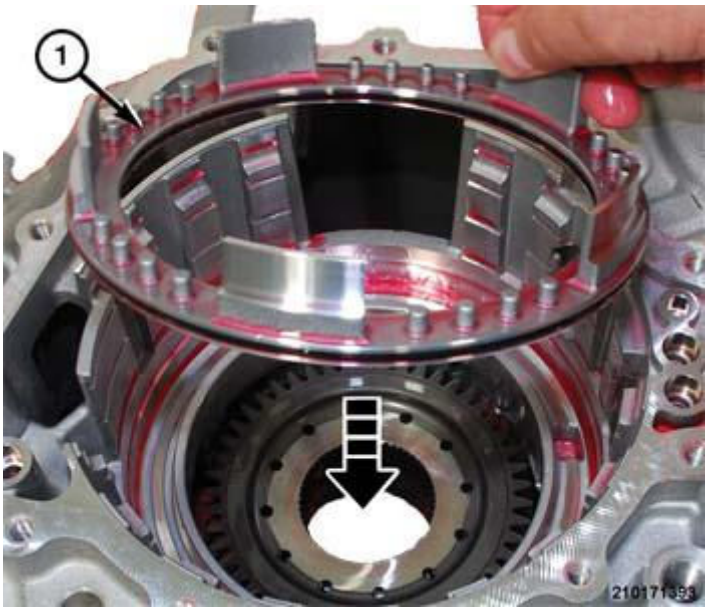

Fig. 151: Low/Reverse Brake Piston
Courtesy of CHRYSLER GROUP, LLC

24. Separate low & reverse brake piston (1) from the transaxle housing.
25. Remove inside and outside D-ring seals from the low & reverse brake piston (1).

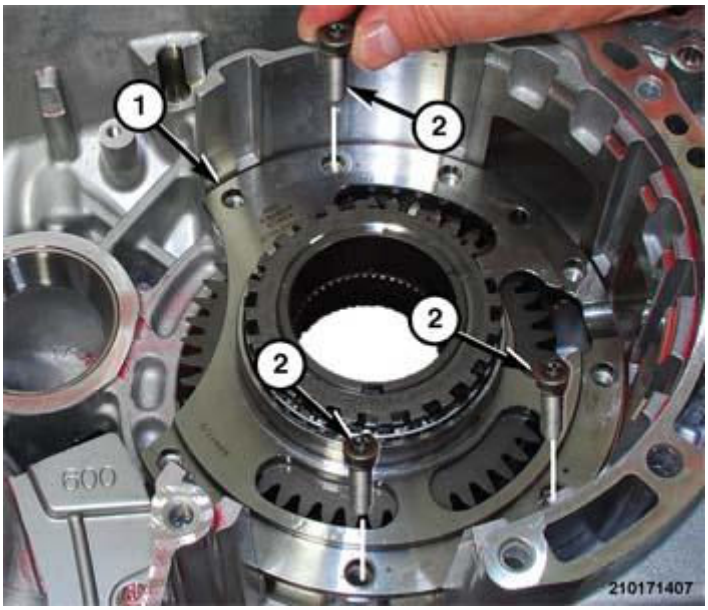

Fig. 152: Transfer Drive Assembly & Bolts
Courtesy of CHRYSLER GROUP, LLC

26. Remove bolts (2) holding transfer drive assembly (1) to the transaxle housing.

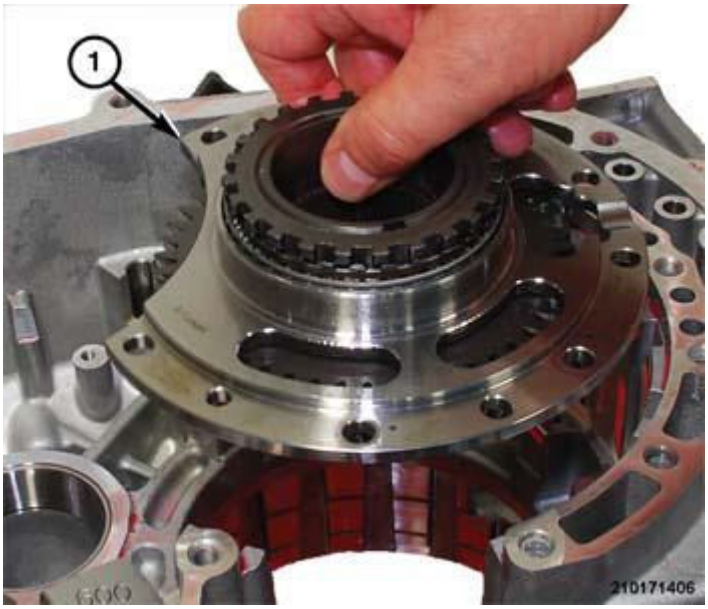

Fig. 153: Transfer Drive Assembly
Courtesy of CHRYSLER GROUP, LLC

27. Remove the transfer drive assembly (1) from the transaxle case

AWD

NOTE: If the transaxle has not been drained before removal, fluid

will spill from the valve body pan as it is removed.

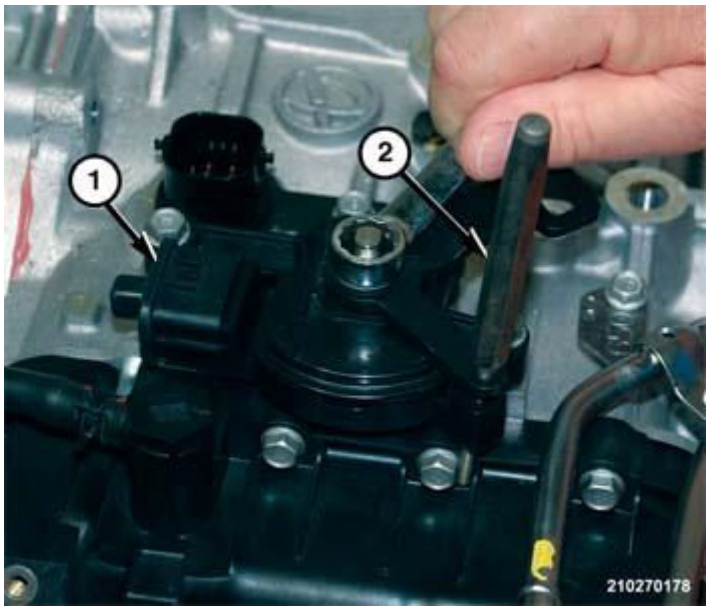

Fig. 154: Pin Punch, Manual Lever & Transmission Range Sensor
Courtesy of CHRYSLER GROUP, LLC

1. Insert a suitable pin punch (2) or equivalent through the manual lever into the TRS switch (1) to hold lever in place.
2. Remove nut holding the manual lever to the manual shaft.

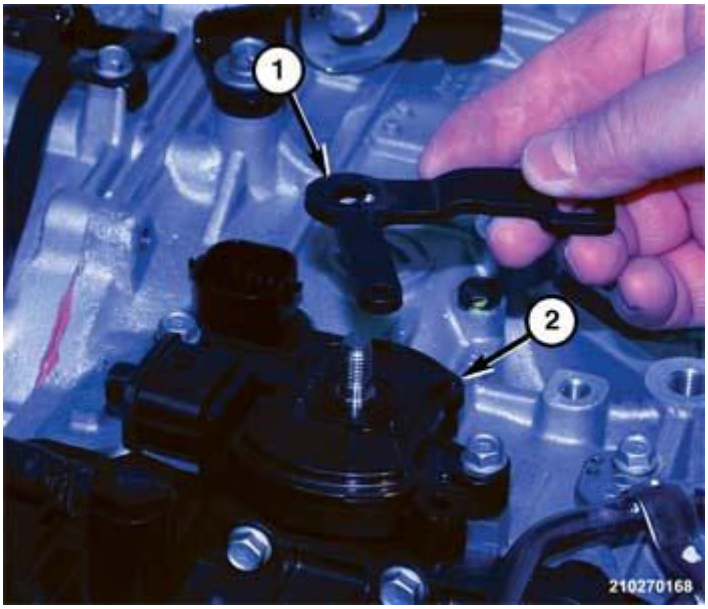

Fig. 155: Manual Lever & Manual Shaft
Courtesy of CHRYSLER GROUP, LLC

3. Separate the manual level (1) from the manual shaft.

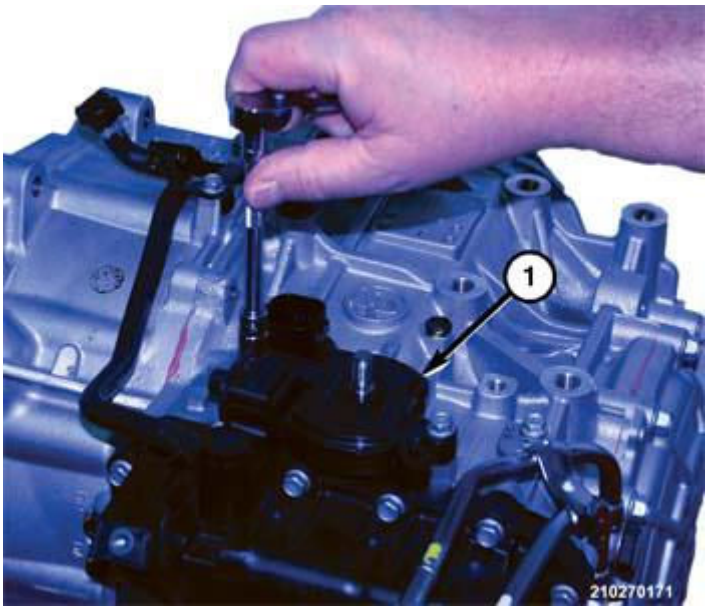

Fig. 156: Transmission Range Sensor
Courtesy of CHRYSLER GROUP, LLC

4. Remove bolts holding the TRS (1) to the transaxle housing.

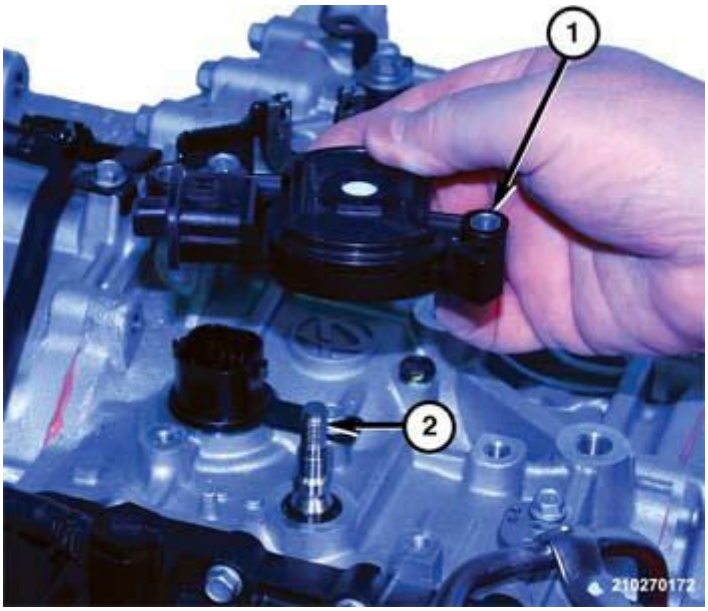

Fig. 157: Transmission Range Sensor Separated From Transaxle
Courtesy of CHRYSLER GROUP, LLC

5. Separate the TRS (1) from the transaxle.

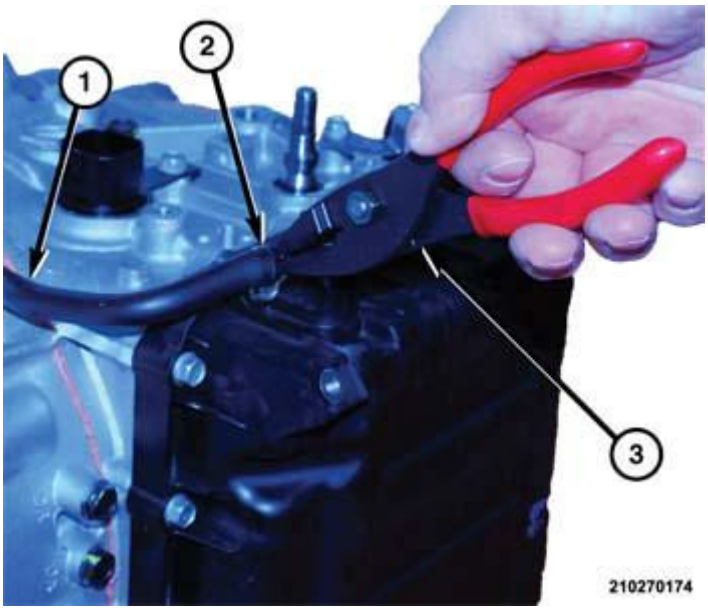

Fig. 158: Vent Hose, Spring Clamp & Pliers
Courtesy of CHRYSLER GROUP, LLC

6. Using common pliers (3), compress the hose spring clamp (2) and slide it down the vent hose (1) away from the nipple adaptor.

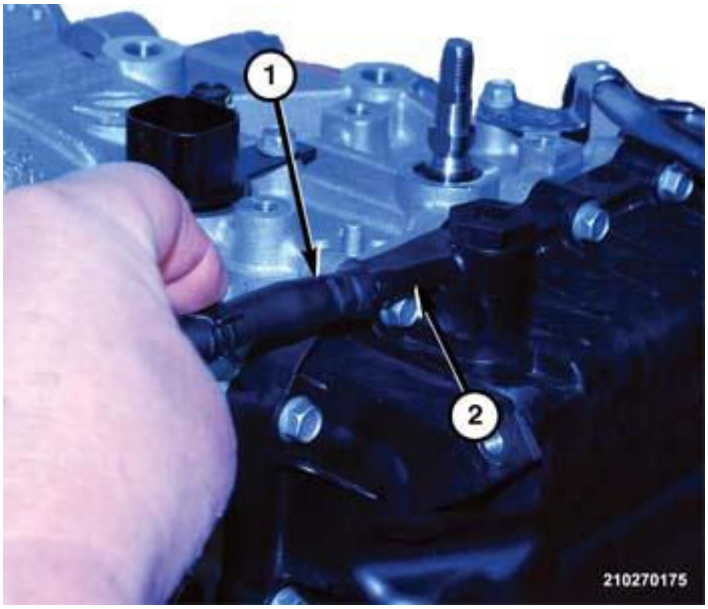

Fig. 159: Vent Hose End & Nipple Adapter
Courtesy of CHRYSLER GROUP, LLC

7. Pull the vent hose end (1) off of the nipple adaptor (2).

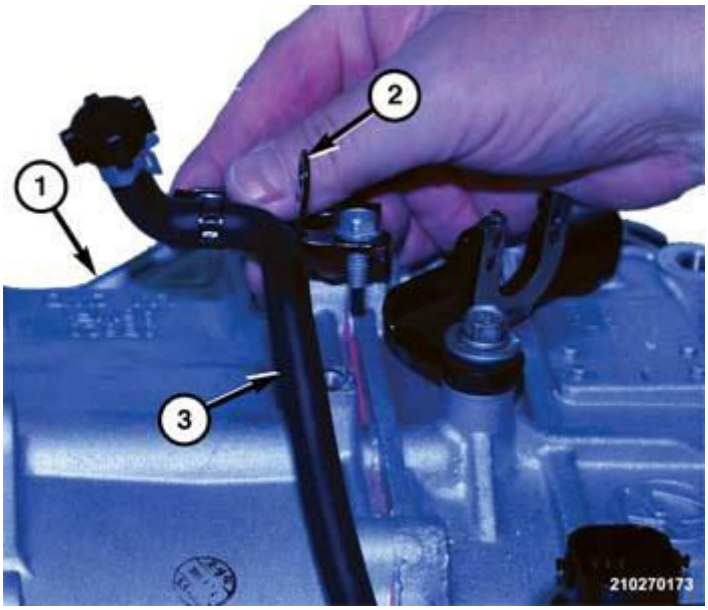

Fig. 160: Vent Tube Bracket & Bolt
Courtesy of CHRYSLER GROUP, LLC

8. Remove bolt holding the vent tube bracket (2) to the transaxle housing.
9. Separate the vent tube (3) from the transaxle (1).

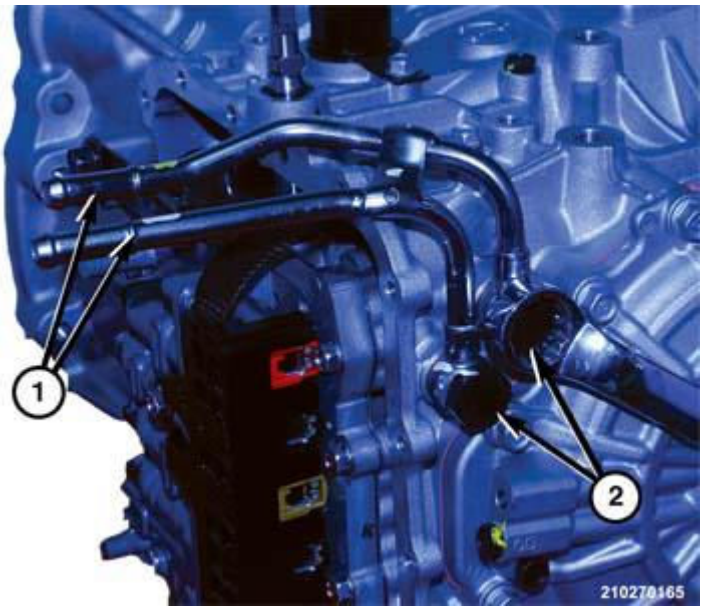

Fig. 161: Cooler Tubes & Banjo Bolts
Courtesy of CHRYSLER GROUP, LLC

10. Remove banjo bolts (2) holding the cooler tubes (1) to the transaxle.

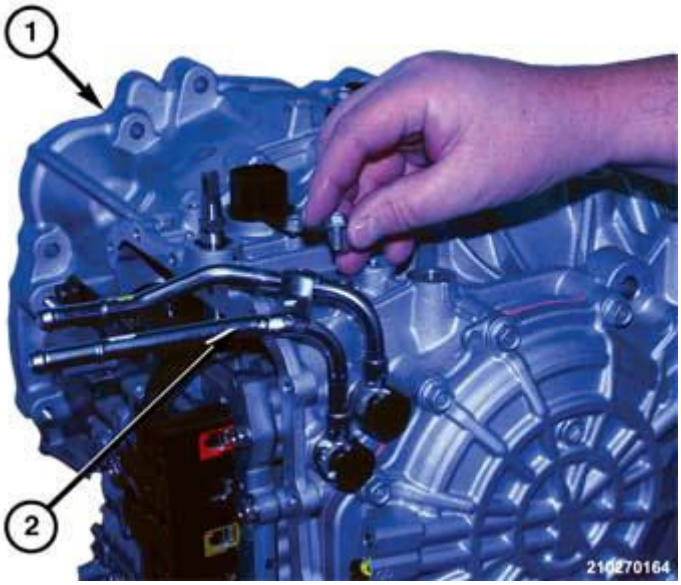

Fig. 162: Cooler Tubes & Transaxle
Courtesy of CHRYSLER GROUP, LLC

11. Remove bolt holding the cooler tube (2) bracket to the transaxle (1).
12. Separate the cooler tubes from the transaxle.

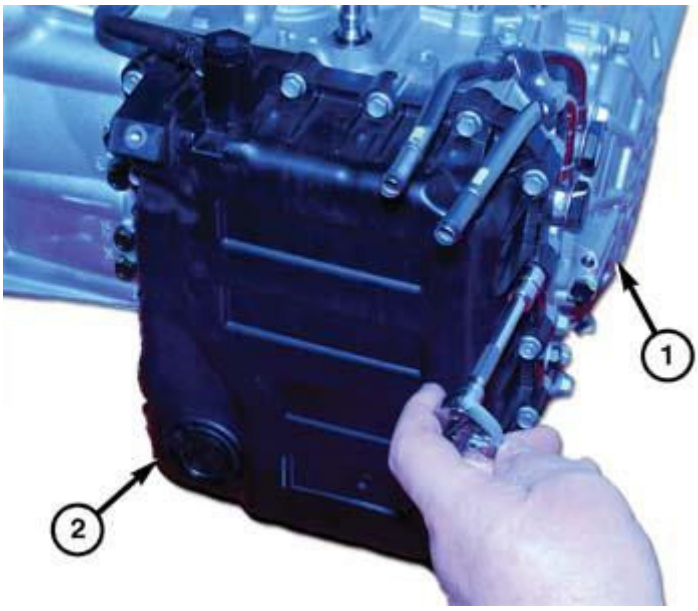

Fig. 163: Valve Body Cover
Courtesy of CHRYSLER GROUP, LLC

13. Position the transaxle over a suitable drain pan.
14. Remove bolts holding the valve body cover (2) to the transaxle (1).

Fig. 164: Valve Body Cover Separated From Transaxle
Courtesy of CHRYSLER GROUP, LLC

15. Separate the cover (1) from the transaxle (2).

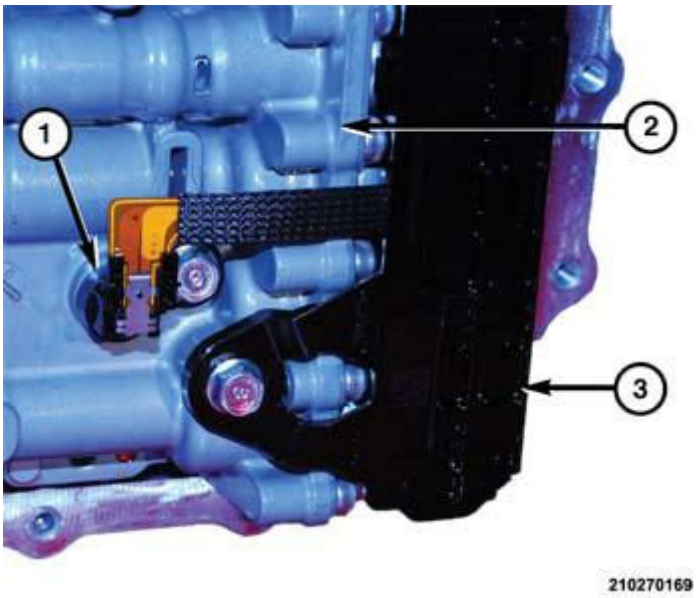

Fig. 165: Fluid Temperature Sensor, Valve Body & Bolt
Courtesy of CHRYSLER GROUP, LLC

16. Remove bolt holding fluid temperature sensor (1) to the valve body (2).
17. Pull temperature sensor (1) straight out of the port in the valve body (2).

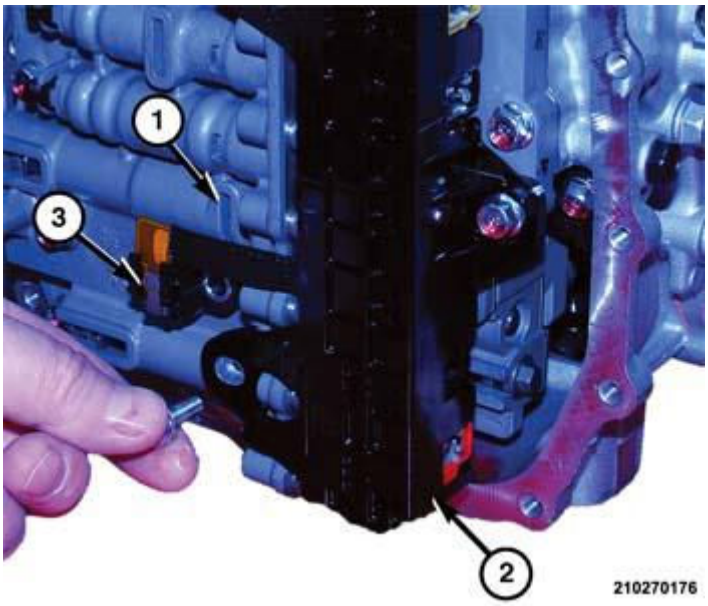

Fig. 166: Solenoid Valve Connector, Valve Body & Bolts
Courtesy of CHRYSLER GROUP, LLC

18. Remove bolts holding the solenoid valve connector (2) to the valve body (1).

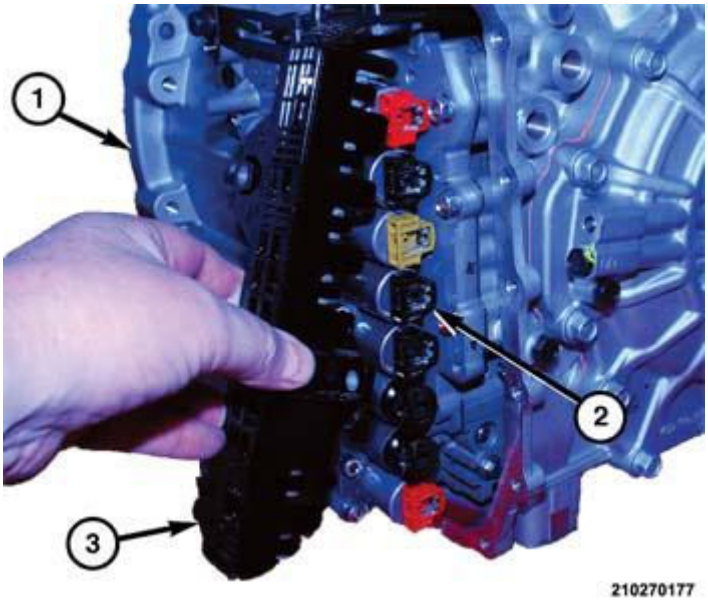

Fig. 167: Solenoids & Connector
Courtesy of CHRYSLER GROUP, LLC

19. Starting at the bottom solenoid valve, using a suitable prying tool, pry outward at each solenoid (2) until the connector (3) is disengaged.

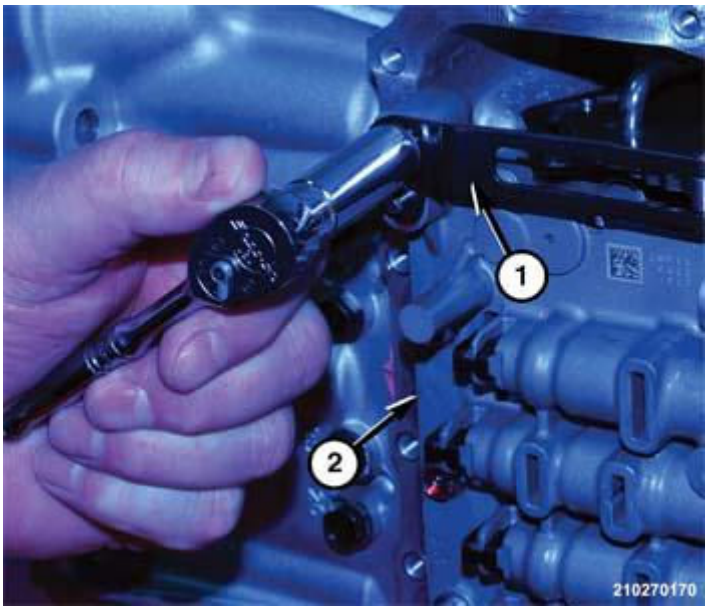

Fig. 168: Manual Shaft Detent Spring & Valve Body
Courtesy of CHRYSLER GROUP, LLC

20. Remove the screw holding the manual shaft detent spring (1) to the valve body (2).

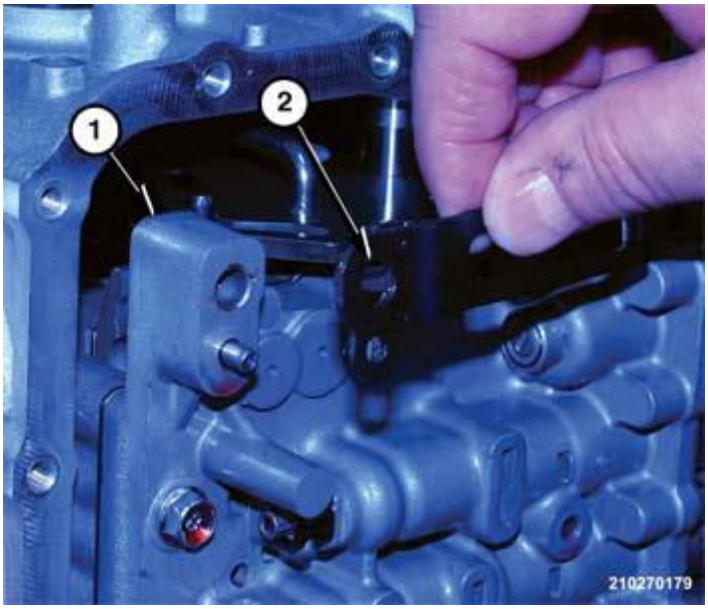

Fig. 169: Detent Spring Separated From Valve Body
Courtesy of CHRYSLER GROUP, LLC

21. Separate the detent spring (2) from the valve body (1).

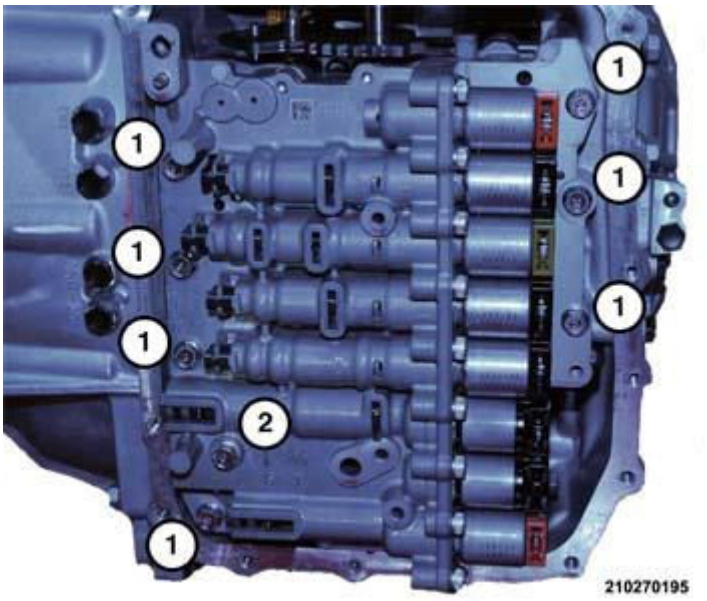

Fig. 170: Valve Body Bolts
Courtesy of CHRYSLER GROUP, LLC

22. Remove bolts, 7 short (1) and 1 long (2) bolts, holding the valve body to the transaxle.

The manual valve is loose after the valve body is removed and may fall out during removal.

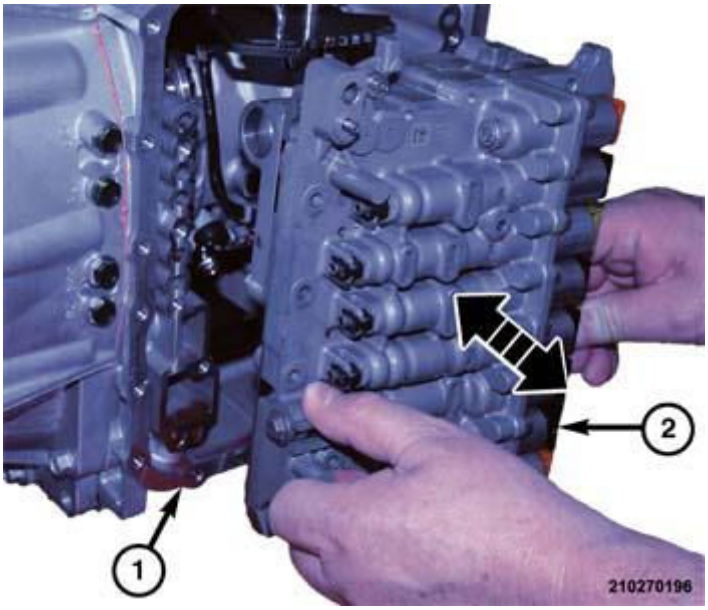

Fig. 171: Valve Body Separated From Transaxle
Courtesy of CHRYSLER GROUP, LLC

23. Separate the valve body (2) from the transaxle (1).

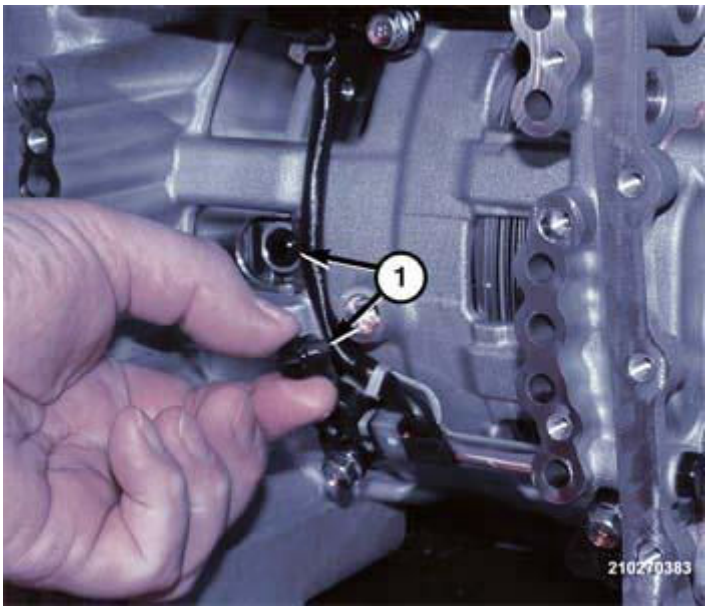

Fig. 172: Transfer Port Seals
Courtesy of CHRYSLER GROUP, LLC

24. Remove the two seals from the transfer ports in transaxle housing.

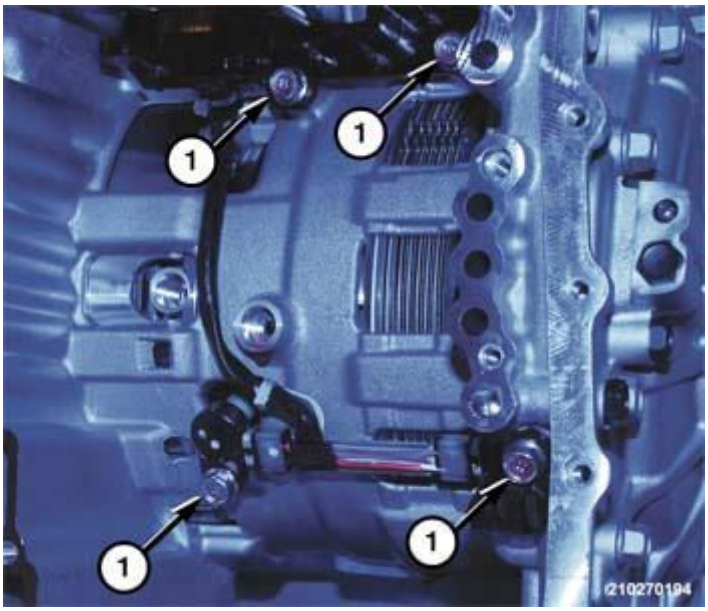

Fig. 173: Speed Sensors, Main Wire Harness & Bolts
Courtesy of CHRYSLER GROUP, LLC

25. Remove bolts (1) holding the speed sensors and main wire harness to transaxle.
26. Separate the speed sensors and main wire harness from the transaxle.

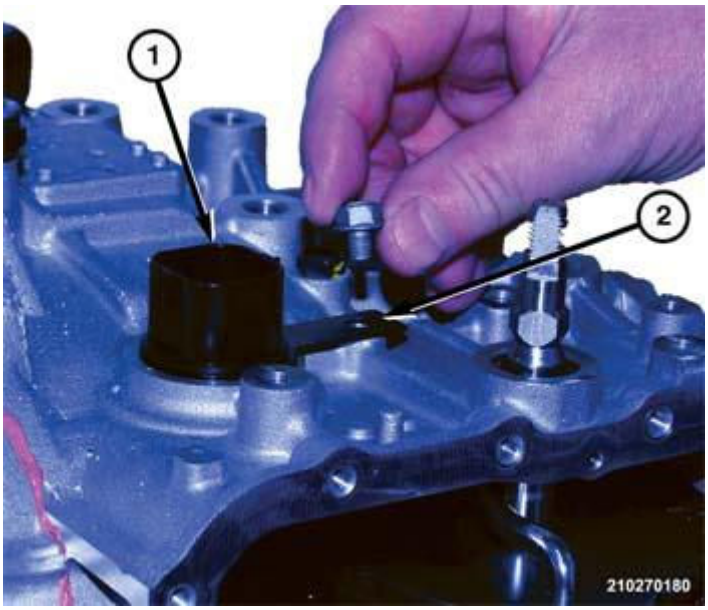

Fig. 174: Hold Down Bracket, Wire Connector & Bolts
Courtesy of CHRYSLER GROUP, LLC

27. Remove bolt holding the wire connector (1) hold down bracket (2) to the top of transaxle housing.

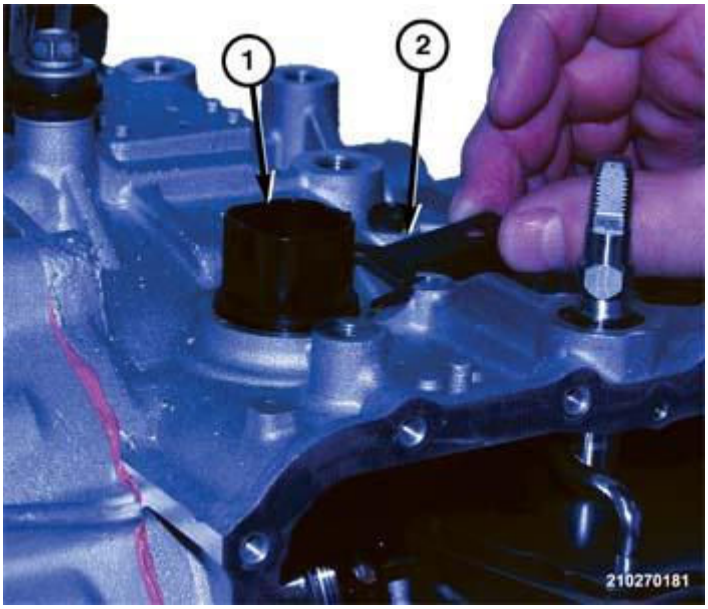

Fig. 175: Wire Connector & Hold Down Bracket Separated From Transaxle
Courtesy of CHRYSLER GROUP, LLC

28. Separate the wire connector (1) hold down bracket (2) from the transaxle.

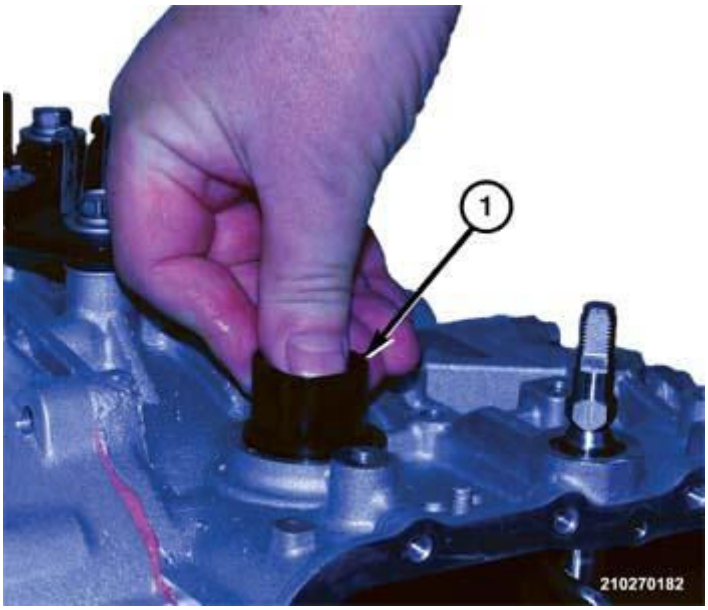

Fig. 176: Pushing Wire Connector Into Housing
Courtesy of CHRYSLER GROUP, LLC

29. Push the wire connector (1) inward to the inside of the transaxle housing.

Fig. 177: Main Wire Harness & Sensors
Courtesy of CHRYSLER GROUP, LLC

30. Separate the main wire harness and sensors (1) from the transaxle.

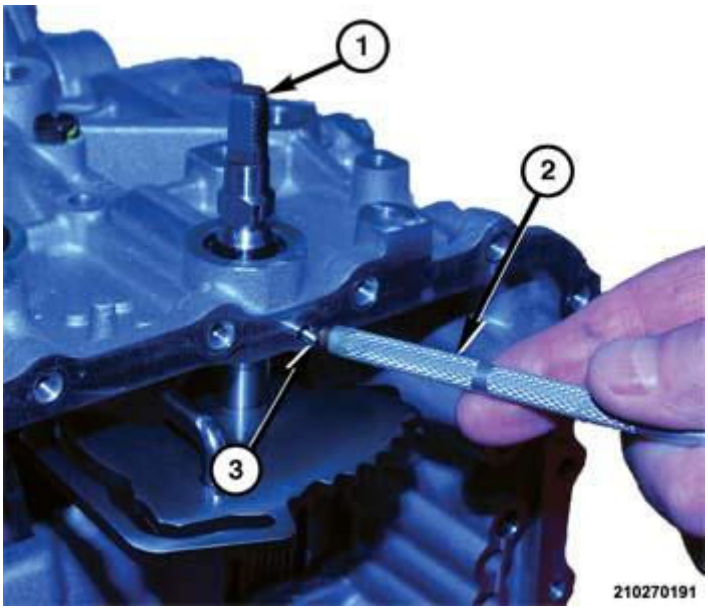

Fig. 178: Manual Shaft, Pin & Magnet
Courtesy of CHRYSLER GROUP, LLC

31. Using a suitable magnet (2), remove the pin (3) holding the manual shaft (1) in the transaxle from the hole in the pan gasket flange.

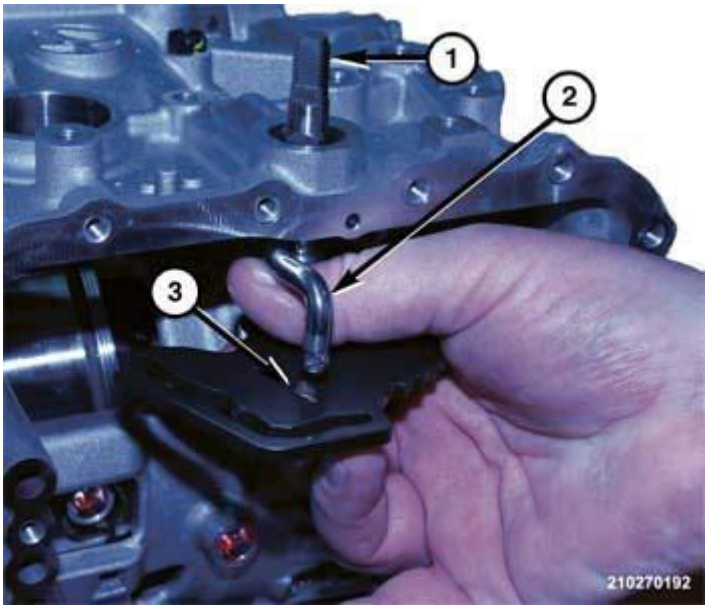

Fig. 179: Manual Shaft, Park Rod & Key Hole Slot
Courtesy of CHRYSLER GROUP, LLC

32. Rotate manual shaft (1) counterclockwise to align the staked nub on the park rod (2) with the key hole slot (3) in the manual shaft detent comb.
33. Push manual shaft (1) downward until park rod (2) disengages form the detent comb.

34. Push the manual shaft (1) inward to the inside of the transaxle.
35. Separate the manual shaft (1) from the transaxle.

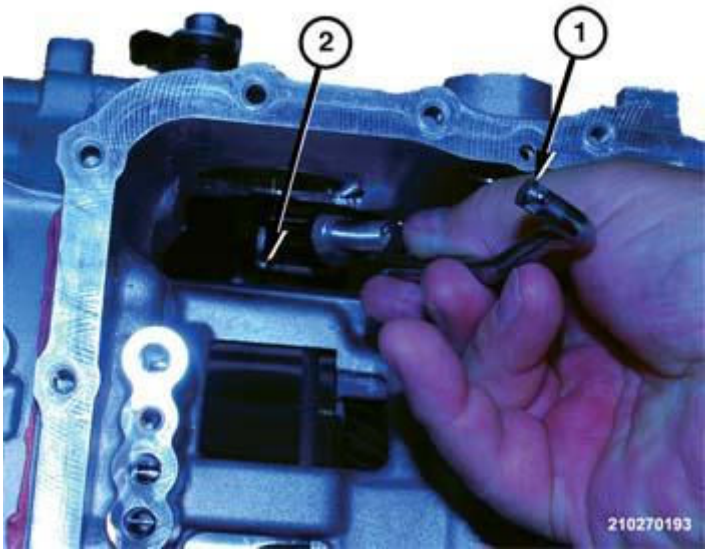

Fig. 180: Park Rod & Park Rod Guide
Courtesy of CHRYSLER GROUP, LLC

36. Disengage the park rod (1) from the park rod guide (2) in the transaxle housing.
37. Separate the park rod (1) from the transaxle.
38. Using a suitable tool, remove the lip seal from the manual shaft hole in the transaxle housing.

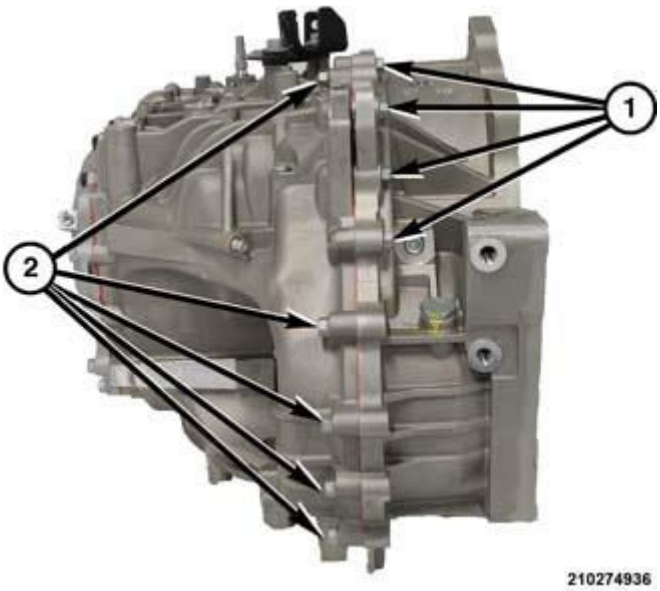

Fig. 181: Transaxle Housing Bolts
Courtesy of CHRYSLER GROUP, LLC

39. Remove five bolts from the back (2) and four bolts from the top (1) of the transaxle housing.

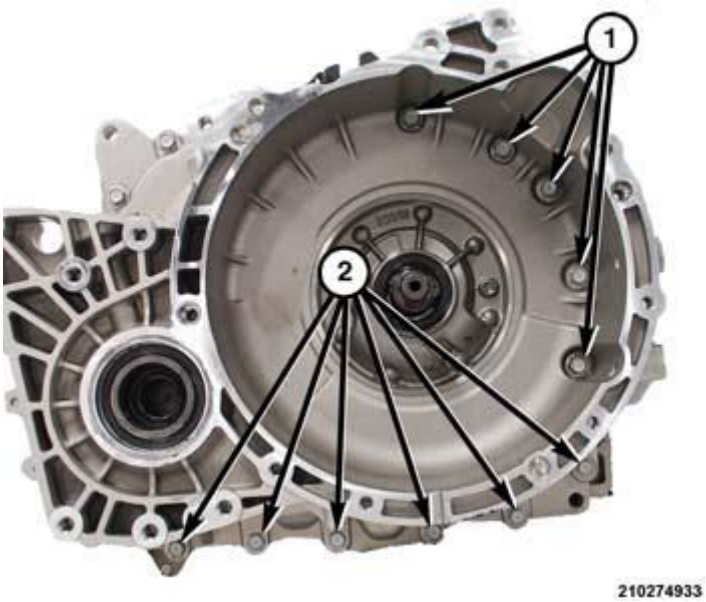

Fig. 182: Transaxle Housing Bolts
Courtesy of CHRYSLER GROUP, LLC

40. Remove six bolts from the bottom (2) of the transaxle housing.
41. Remove five bolts (1) from inside bell housing.
42. Using a suitable pry bar, pay the case halves apart in notch location on top of the housing.

Fig. 183: Transaxle Housing Notch Locations
Courtesy of CHRYSLER GROUP, LLC

43. Pry the case halves apart in notch location (2) on the bottom of the housing (1).

Fig. 184: Transaxle Housing Halves
Courtesy of CHRYSLER GROUP, LLC

44. Separate the bell housing (1) from the transaxle (2).
45. Remove bolts holding the fluid guide to the transaxle housing.
46. Separate the fluid guide from the transaxle.
47. Remove bolts holding the lubrication tube to the transaxle.

48. Separate the lubrication tube from the transaxle.

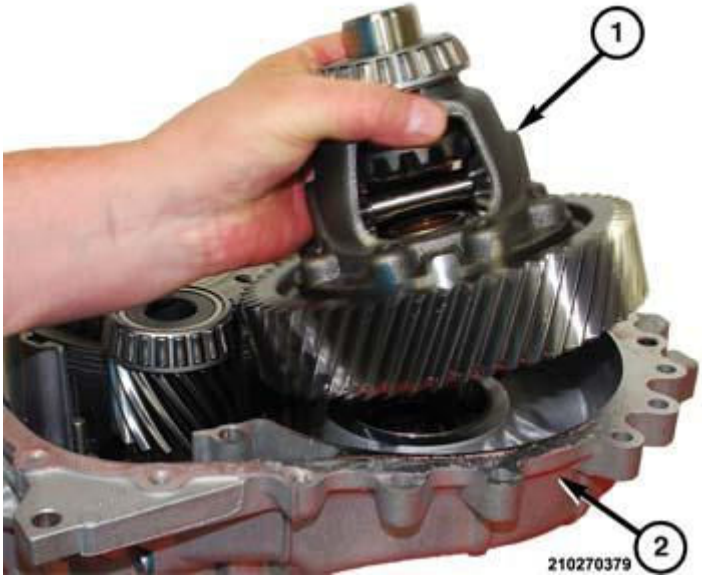

Fig. 185: Differential Assembly Separated From Transaxle Housing
Courtesy of CHRYSLER GROUP, LLC

49. Separate the differential assembly (1) from the transaxle housing (2).

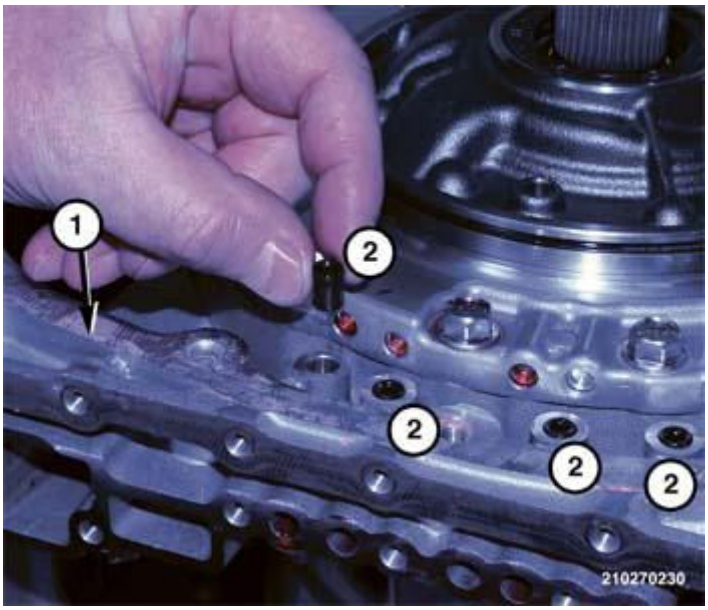

Fig. 186: Small Transfer Port Seals
Courtesy of CHRYSLER GROUP, LLC

50. Remove seals from four small transfer ports (2) in the transaxle housing (1).

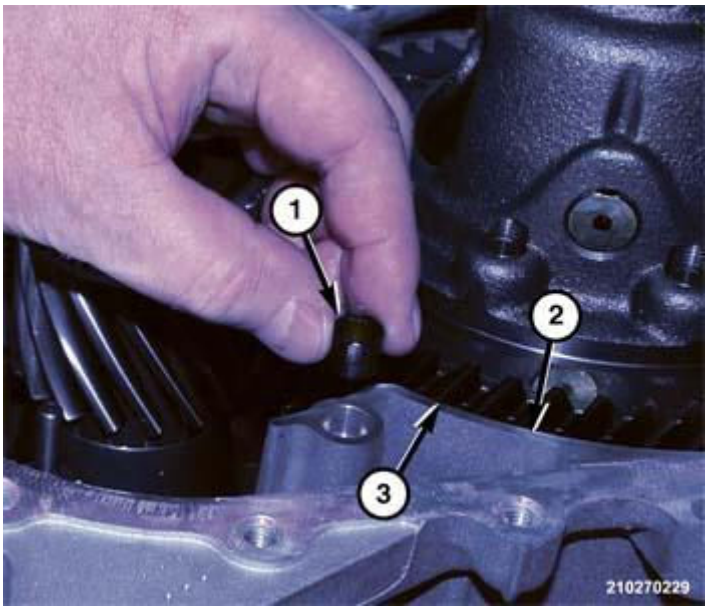

Fig. 187: Large Transfer Port Seal
Courtesy of CHRYSLER GROUP, LLC

51. Remove seal from the large transfer port (1) in the axle housing (2).

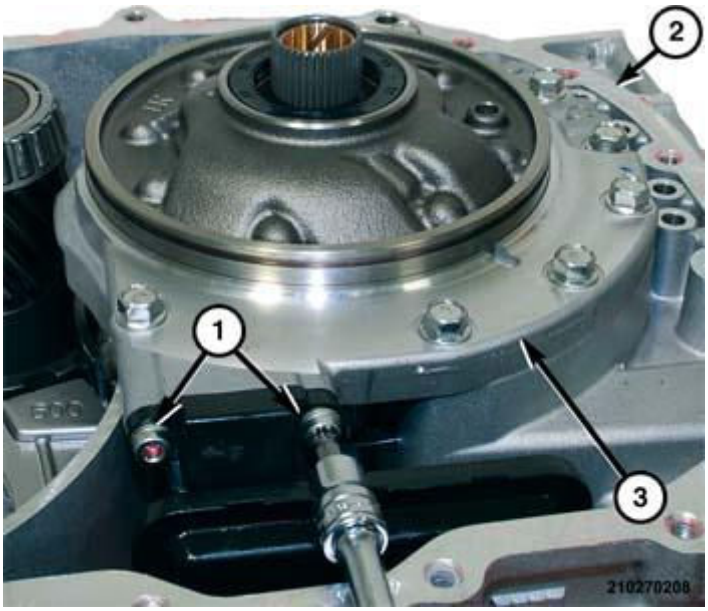

Fig. 188: Fluid Filter, Fluid Pump & Bolts
Courtesy of CHRYSLER GROUP, LLC

52. Remove bolts (1) holding the fluid filter to the fluid pump (3) housing.

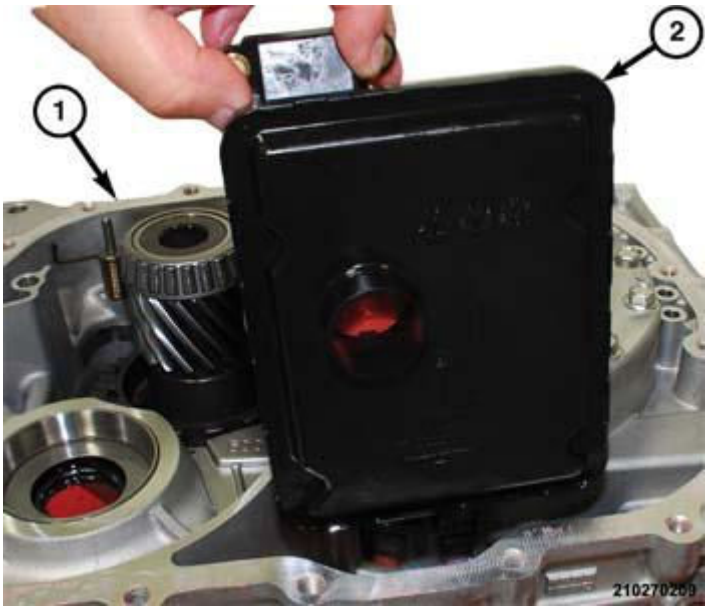

Fig. 189: Fluid Filter Separated From Transaxle Housing
Courtesy of CHRYSLER GROUP, LLC

53. Separate the fluid filter (2) from the transaxle housing (1).

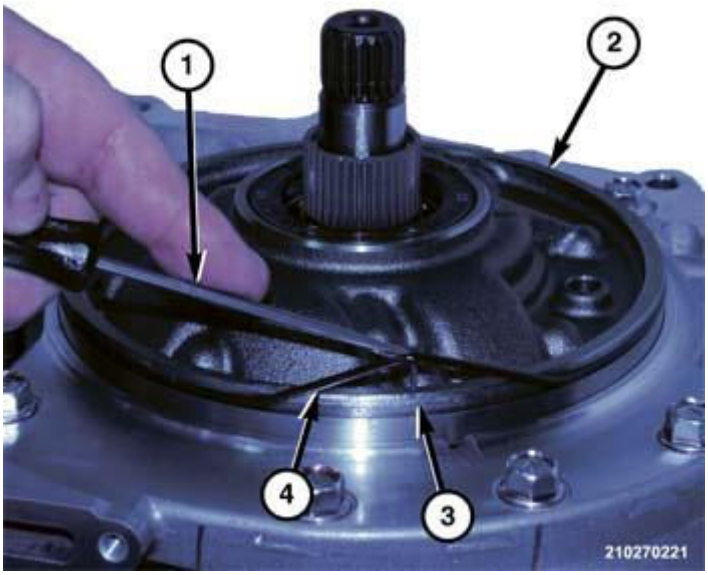

Fig. 190: Fluid Pump Housing O-Ring Seal & Hook Tool
Courtesy of CHRYSLER GROUP, LLC

54. Using a suitable hook tool (1), remove o-ring seal (4) from the groove (3) in the fluid pump housing (3).

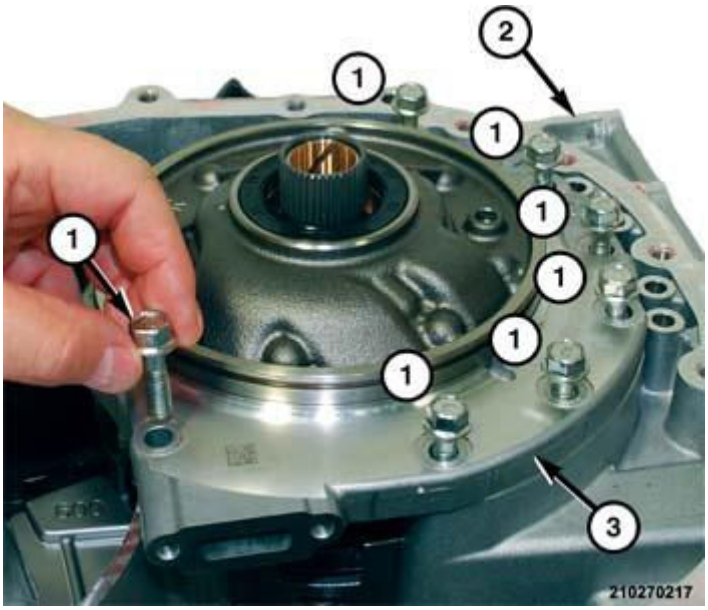

Fig. 191: Fluid Pump & Bolts
Courtesy of CHRYSLER GROUP, LLC

55. Remove bolts (1) holding fluid pump (3) to the trans axle housing (2).

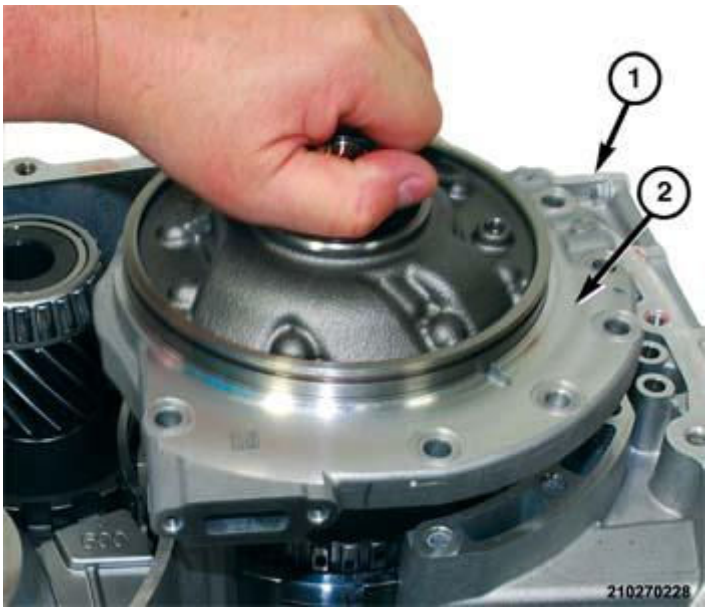

Fig. 192: Fluid Pump Separated From Transaxle Housing
Courtesy of CHRYSLER GROUP, LLC

56. Separate the fluid pump (2) from the transaxle housing (1).

Fig. 193: Thrust Washer & Fluid Pump
Courtesy of CHRYSLER GROUP, LLC

57. Remove the plastic thrust washer (2) from the underside of the fluid pump (1). There are three nubs that insert into holes in the fluid pump hub to prevent the thrust washer from rotating.

Fig. 194: Split Seal Rings & Fluid Pump Hub
Courtesy of CHRYSLER GROUP, LLC

58. Remove two split seal rings (3) from land-grooves (2) in fluid pump (1) hub.

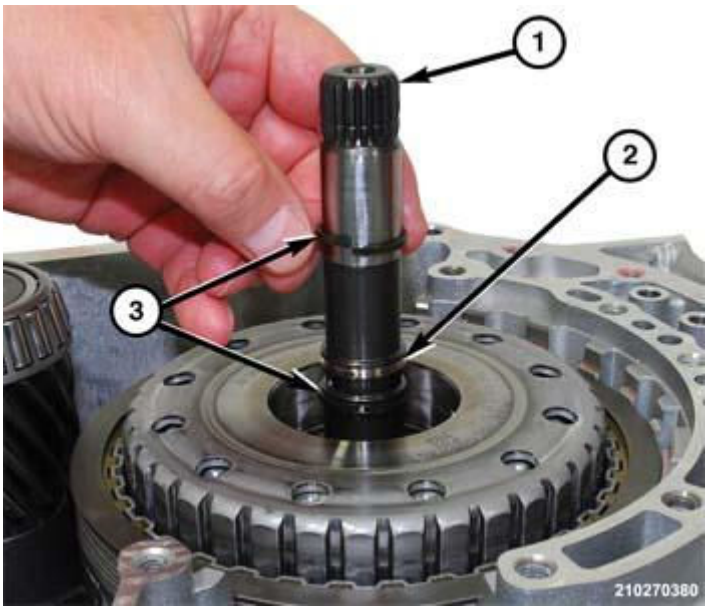

Fig. 195: Split Ring Seals & Input Shaft
Courtesy of CHRYSLER GROUP, LLC

59. Remove two split ring seals (2) from the input shaft (1).

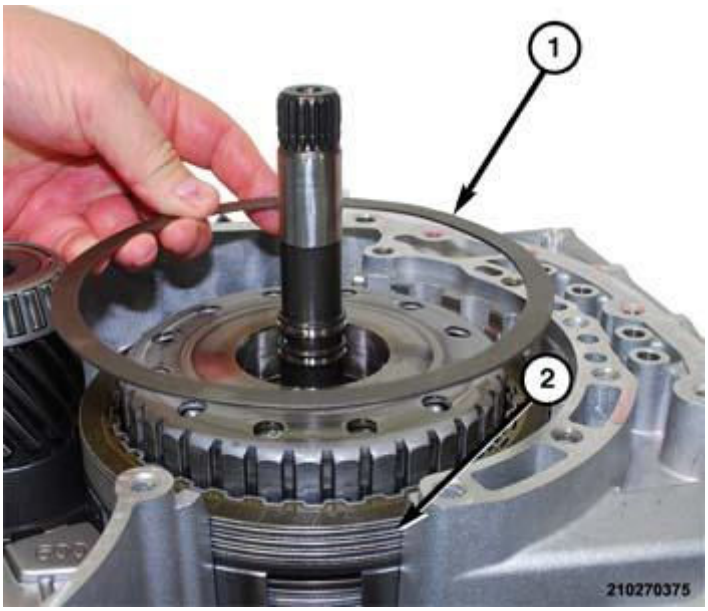

Fig. 196: 2/6 Brake Wave Plate & Hub
Courtesy of CHRYSLER GROUP, LLC

60. Remove 2/6 brake wave plate (1) from 2/6 brake hub.

Fig. 197: 2/6 Brake Plates, Discs & Hub
Courtesy of CHRYSLER GROUP, LLC

61. Remove the 2/6 brake (1) plates (3) and discs (2) from the 2/6 brake hub.

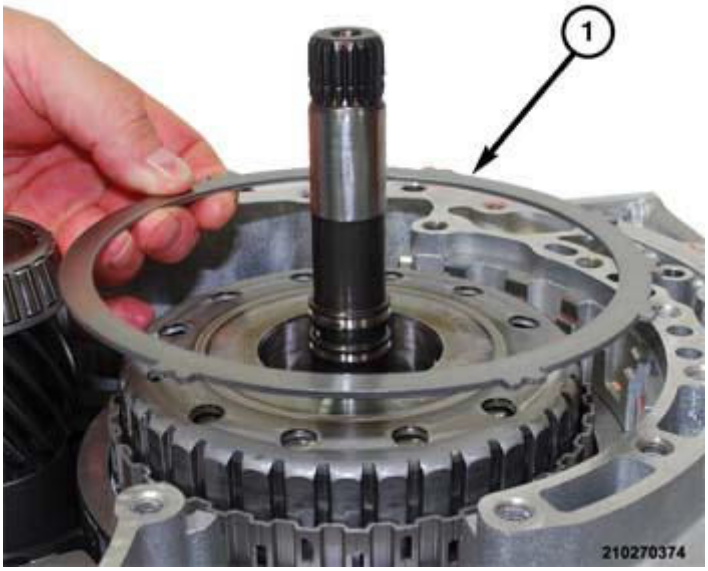

Fig. 198: 2/6 Brake Select Thickness Reaction Plate & Hub
Courtesy of CHRYSLER GROUP, LLC

62. Remove 2/6 brake select thickness reaction plate (1) from the 2/6 brake hub.

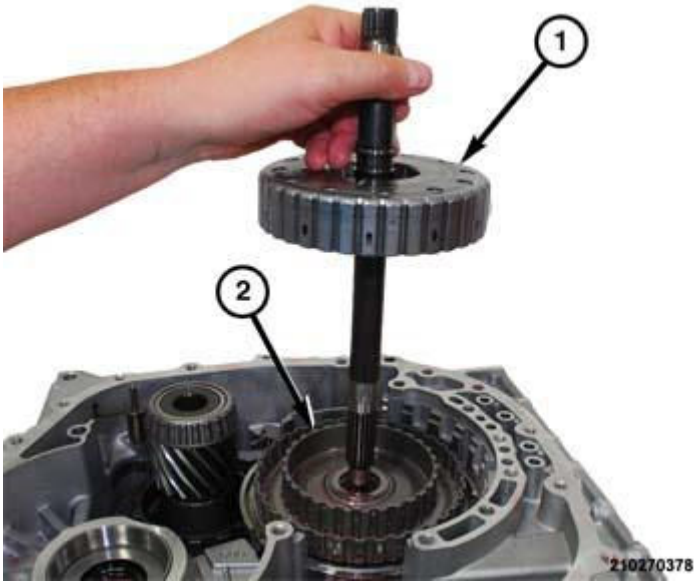

Fig. 199: 3/5/R Clutch Assembly, 3/5/R & 2/6 Brake Hub Assembly
Courtesy of CHRYSLER GROUP, LLC

63. Remove the 3/5/R clutch assembly (1) from the 3/5/R and 2/6 brake hub (2) assembly.

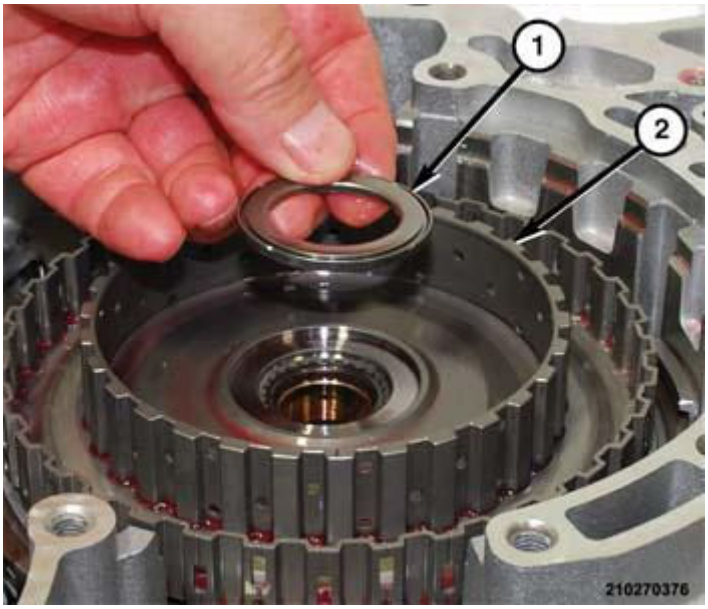

Fig. 200: 3/5/R Clutch & 2/6 Brake Hub, Thrust Bearing
Courtesy of CHRYSLER GROUP, LLC

64. Remove the thrust bearing (2) from the 3/5/R clutch and 2/6 brake hub. Mark the side toward 3/5/R clutch and 2/6 brake hub on bearing for installation orientation.

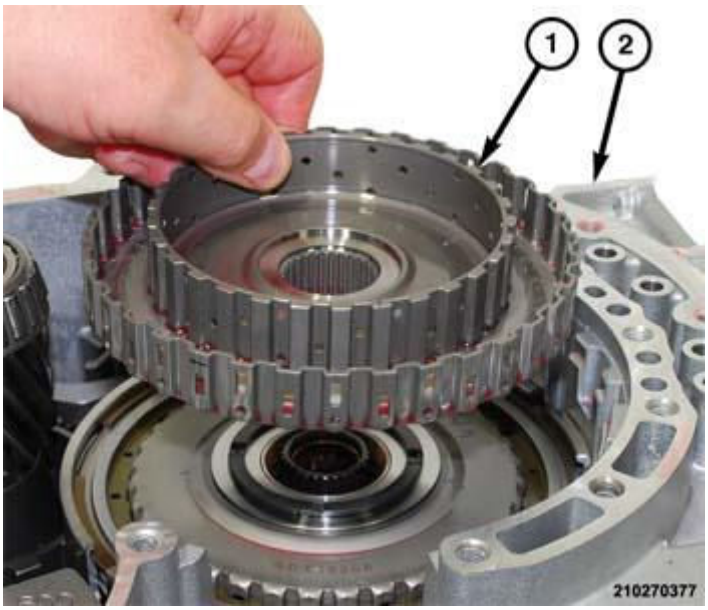

Fig. 201: 3/5/R Clutch & 2/6 Brake Hub Assembly
Courtesy of CHRYSLER GROUP, LLC

65. Remove the 3/5/R clutch and 2/6 brake hub (2) assembly from the underdrive brake.

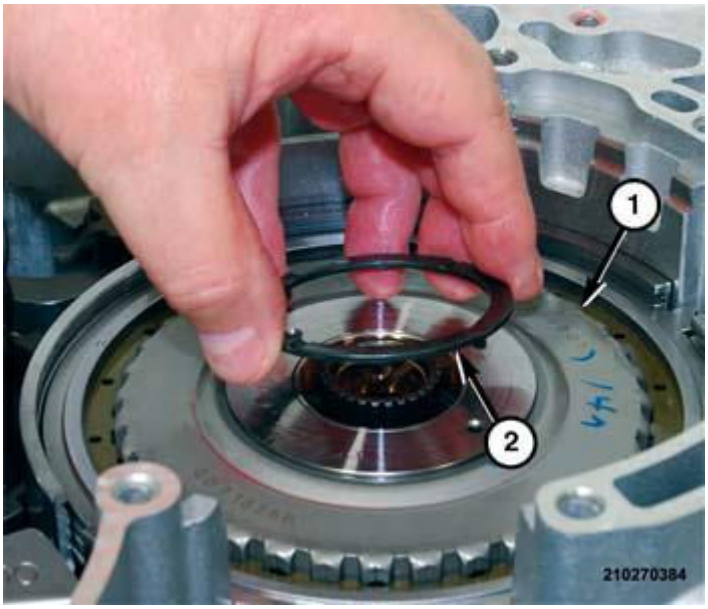

Fig. 202: Underdrive Brake Hub & Thrust Washer
Courtesy of CHRYSLER GROUP, LLC

66. Remove thrust washer (2) from underdrive brake hub.

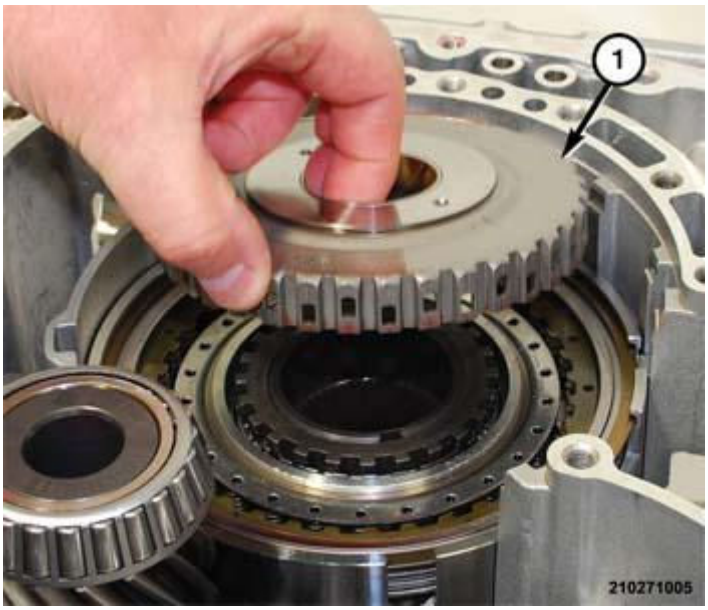

Fig. 203: Underdrive Brake Hub
Courtesy of CHRYSLER GROUP, LLC

67. Remove underdrive brake hub (1) assembly from transaxle.

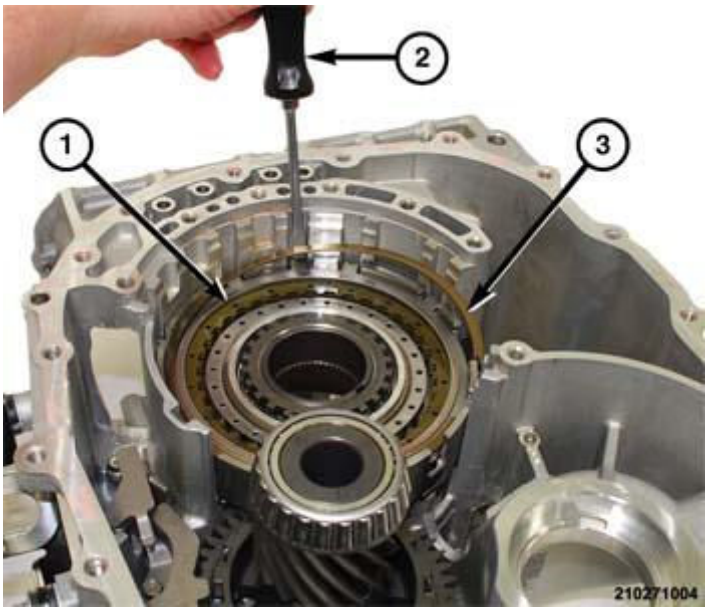

Fig. 204: Underdrive Brake, Underdrive Brake Drum, & Large Snap Ring
Courtesy of CHRYSLER GROUP, LLC

68. Remove large snap ring (3) holding underdrive brake (1) into underdrive brake drum.

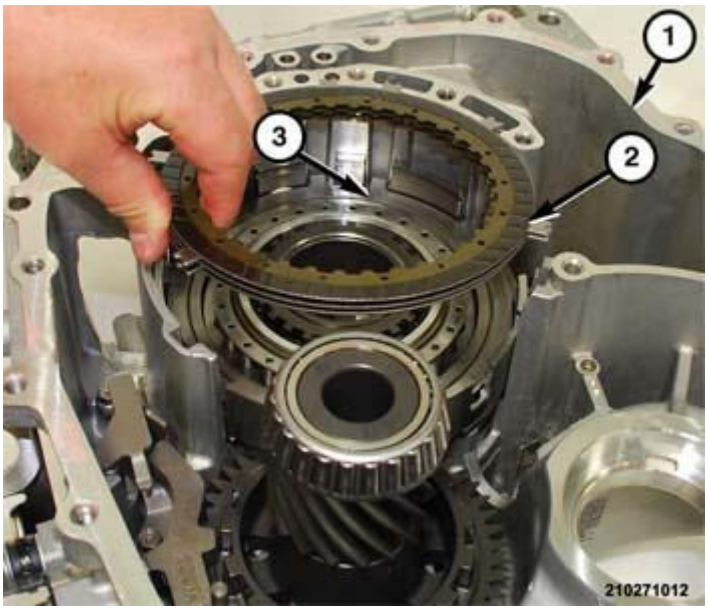

Fig. 205: Underdrive Brake Plates, Discs & Drum
Courtesy of CHRYSLER GROUP, LLC

69. Separate underdrive brake plates and discs from underdrive brake drum.
70. Turn the transaxle over to gain access to the rear cover.

Fig. 206: Transaxle Rear Cover & Bolts
Courtesy of CHRYSLER GROUP, LLC

71. Remove bolts holding the rear cover (1) to the transaxle.

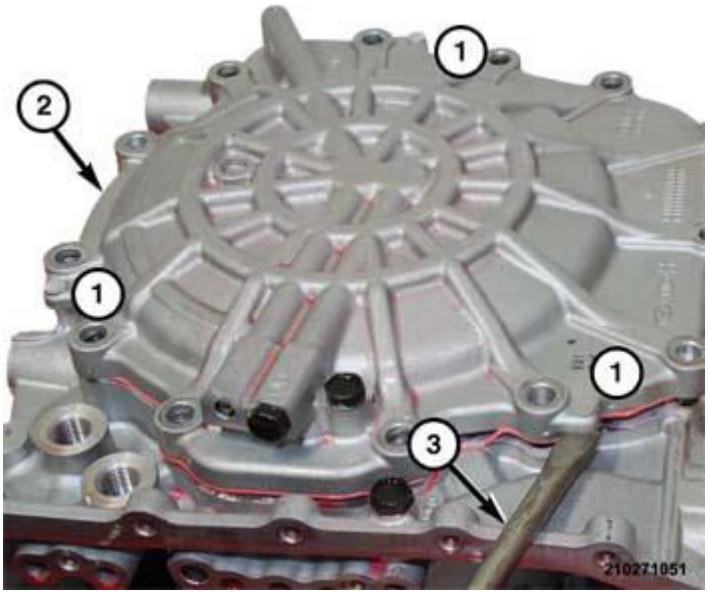

Fig. 207: Prying Locations At Rear Cover
Courtesy of CHRYSLER GROUP, LLC

72. In three locations (1) on the rear cover, pry upward using a suitable pry bar (3).

Fig. 208: Rear Cover Separated From Transaxle
Courtesy of CHRYSLER GROUP, LLC

73. Separate the rear cover (1) from the transaxle.

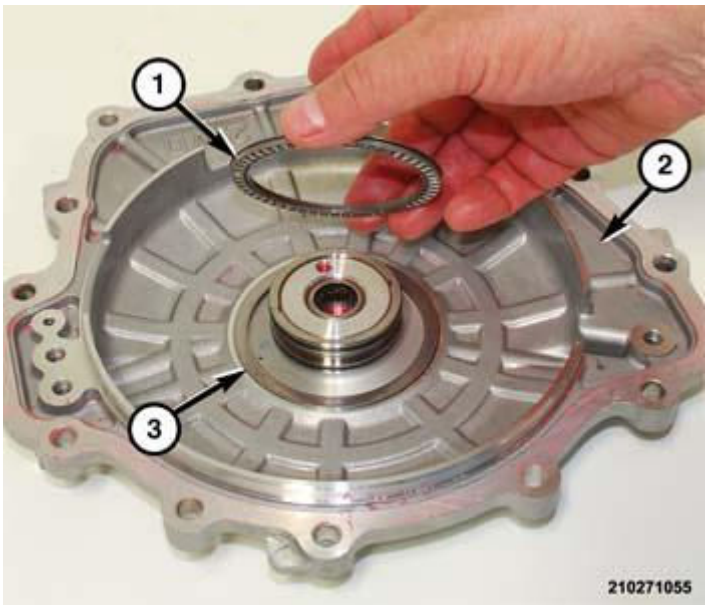

Fig. 209: Selective Spacer, Bearing & Rear Cover
Courtesy of CHRYSLER GROUP, LLC

74. Remove the selective spacer (3) and bearing (1) from under rear cover (2).

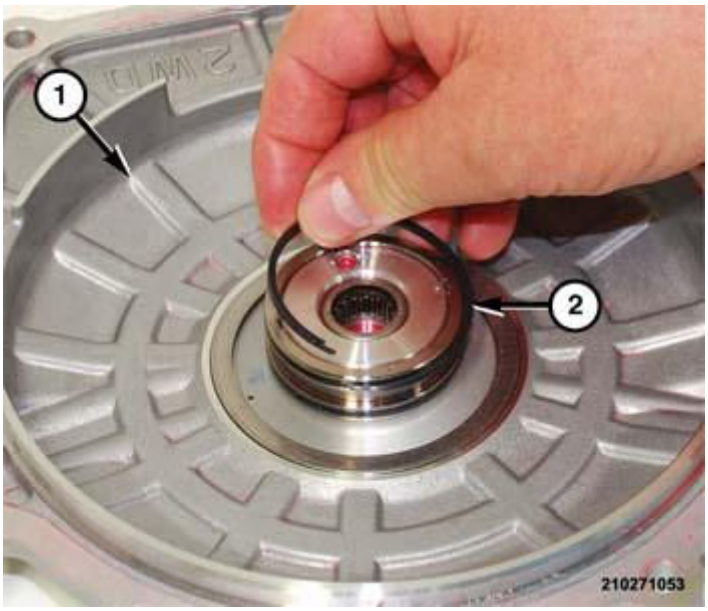

Fig. 210: Split Seal Rings & Rear Cover Hub
Courtesy of CHRYSLER GROUP, LLC

75. Remove the two split seal rings (2) from the lands in the rear cover (1) hub.

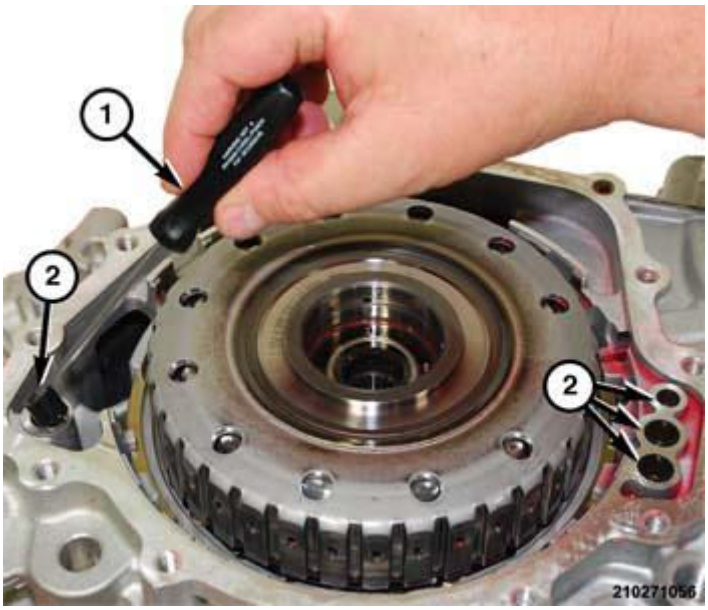

Fig. 211: Transfer Port Seals In Transaxle Housing
Courtesy of CHRYSLER GROUP, LLC

76. Using a suitable hook tool (1), Remove the four seals (2) from transfer ports in transaxle housing.

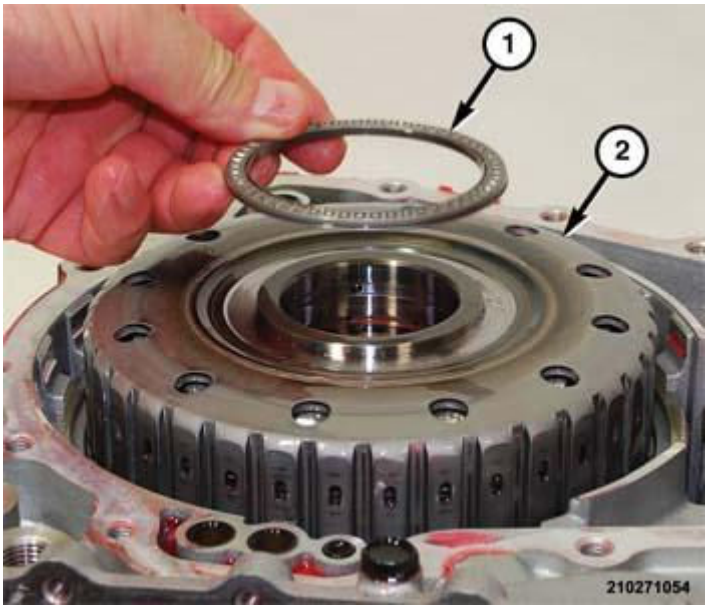

Fig. 212: Thrust Bearing & Overdrive Clutch Hub Assembly
Courtesy of CHRYSLER GROUP, LLC

77. Remove thrust bearing from the overdrive clutch hub assembly.

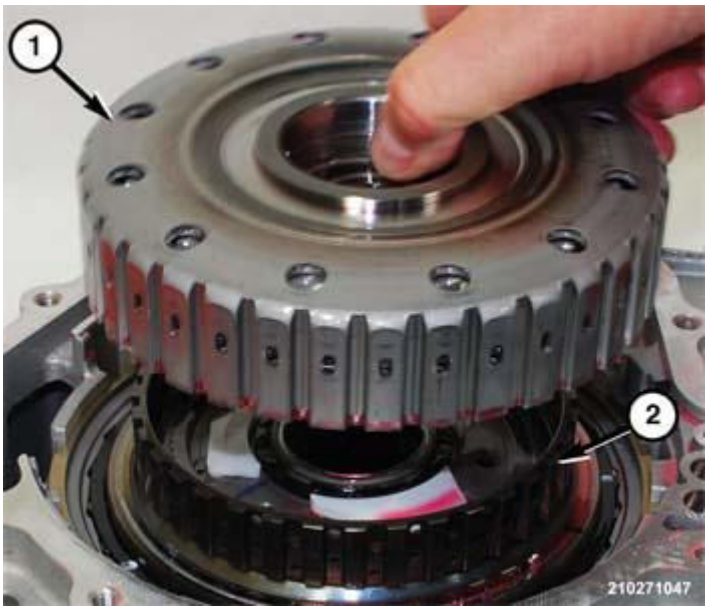

Fig. 213: Overdrive Clutch Assembly & One Way Clutch
Courtesy of CHRYSLER GROUP, LLC

78. Remove the overdrive clutch assembly (1) from the one way clutch (2).

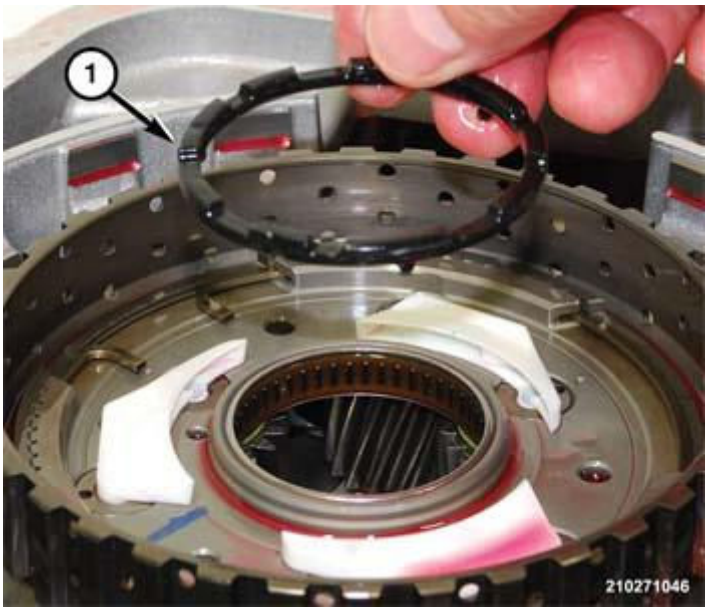

Fig. 214: Thrust Washer & Planetary Gear Assembly Hub
Courtesy of CHRYSLER GROUP, LLC

79. Remove the plastic thrust washer (1) from the planetary gear assembly hub.

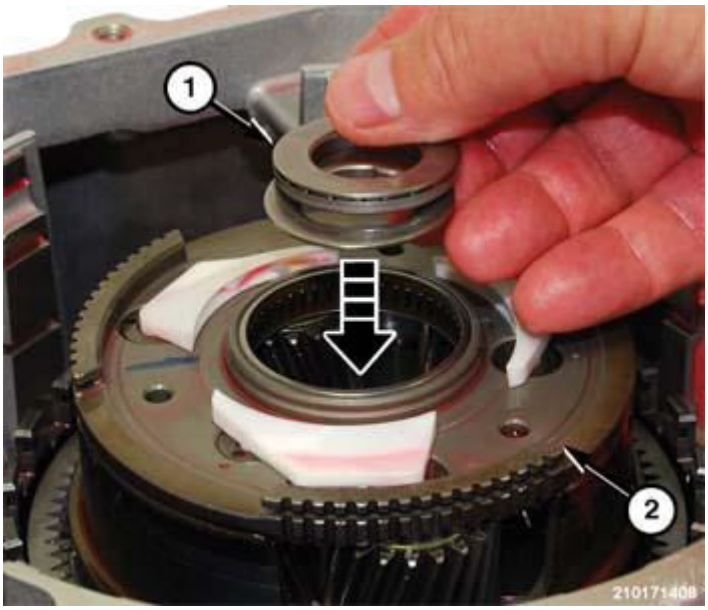

Fig. 215: Thrust Bearing, Race Set & Middle/Rear Planetary Gear Assembly
Courtesy of CHRYSLER GROUP, LLC

80. Using a suitable hook tool, lift the thrust bearing (1) and race set out of the center of the middle/rear planetary gear assembly (2).
81. Turn transaxle over to gain access to the underdrive springs.

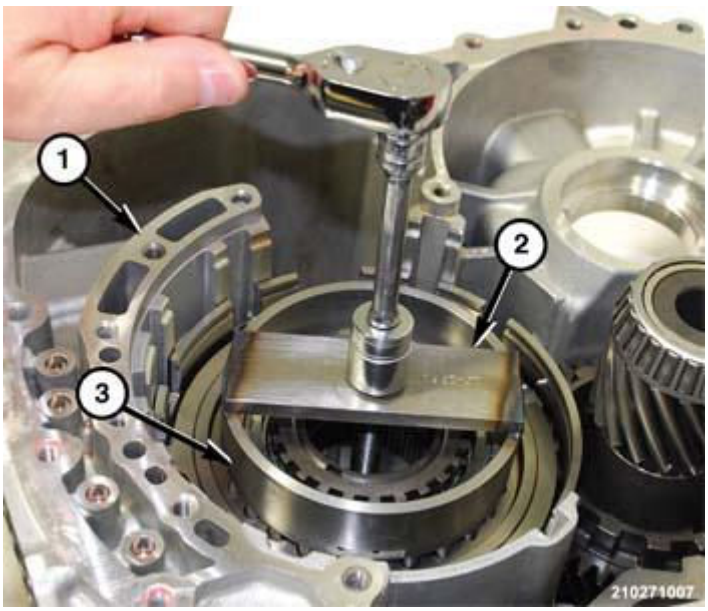

Fig. 216: Tool 5058A & Tool 10426
Courtesy of CHRYSLER GROUP, LLC

82. Insert the bolt for tool (special tool #5058A, Compressor, Spring) through tool (special tool #10426, Compressor, Underdrive Spring).

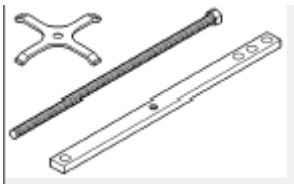

Fig. 217: Special Tool #5058A-3
Courtesy of CHRYSLER GROUP, LLC

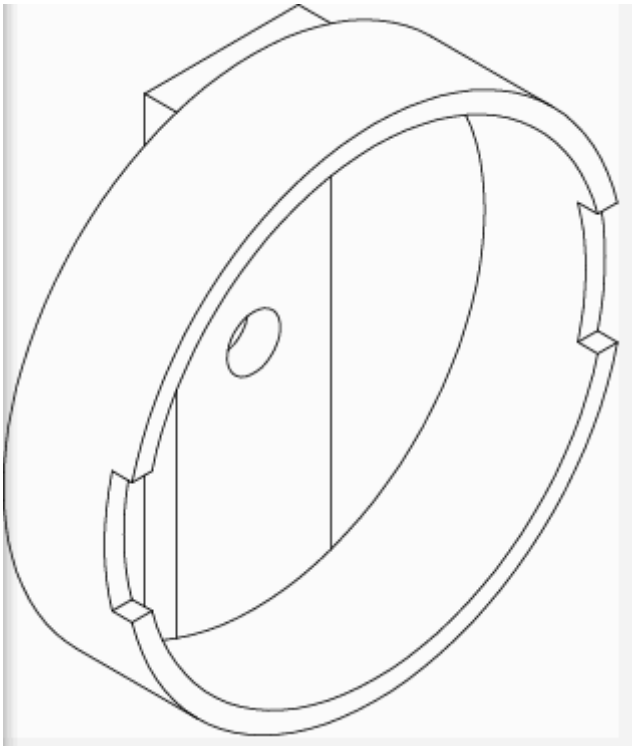

Fig. 218: Special Tool #10426
Courtesy of CHRYSLER GROUP, LLC

.

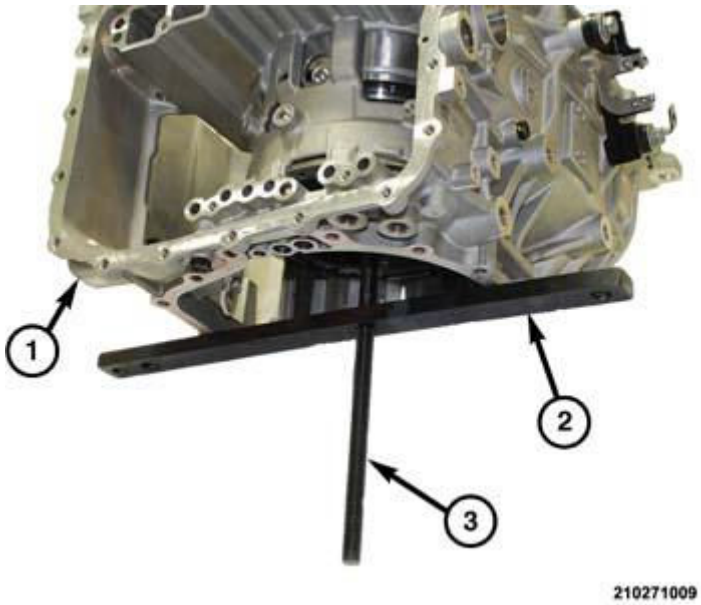

Fig. 219: Tool Bolt & Tool Cross Bar
Courtesy of CHRYSLER GROUP, LLC

83. Insert the tool bolt with the spring compressor (special tool #5058A, Compressor, Spring) through the center of the transaxle and out the back into the threaded center bore of the tool cross bar spanning the back of the transaxle. Compress the underdrive springs (3) to gain access to the snap ring.

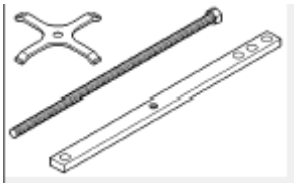

Fig. 220: Special Tool #5058A-3
Courtesy of CHRYSLER GROUP, LLC

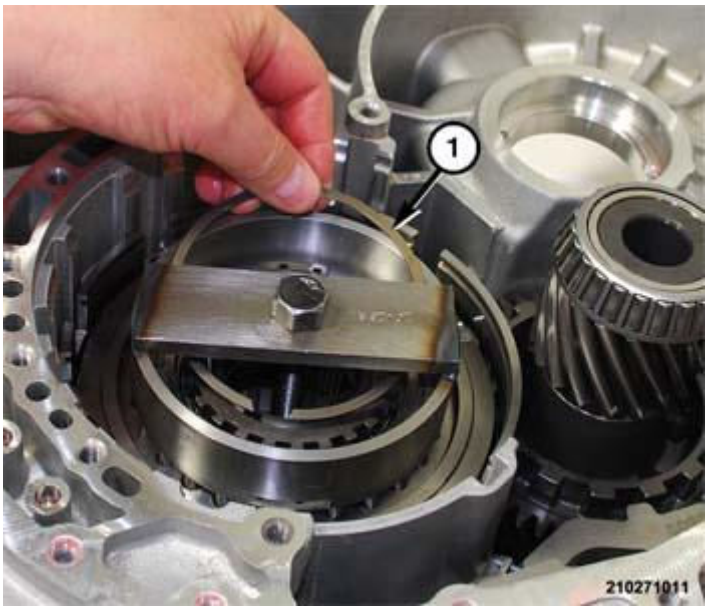

Fig. 221: Underdrive Spring Plate Snap Ring
Courtesy of CHRYSLER GROUP, LLC

84. Remove the snap ring holding the underdrive spring plate to the underdrive brake hub.

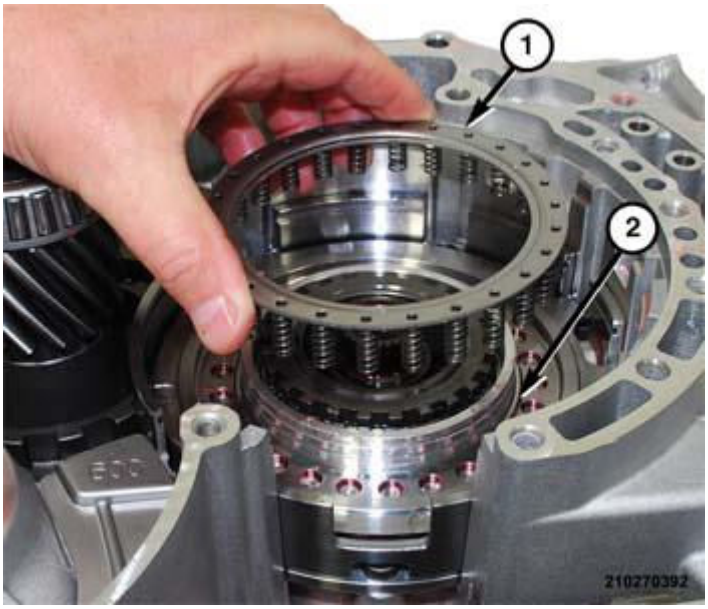

Fig. 222: Underdrive Spring Retainer & Underdrive Brake Piston
Courtesy of CHRYSLER GROUP, LLC

85. Remove the spring compressor tool from the transaxle.
86. Separate the underdrive spring retainer (1) from the underdrive brake piston (2).

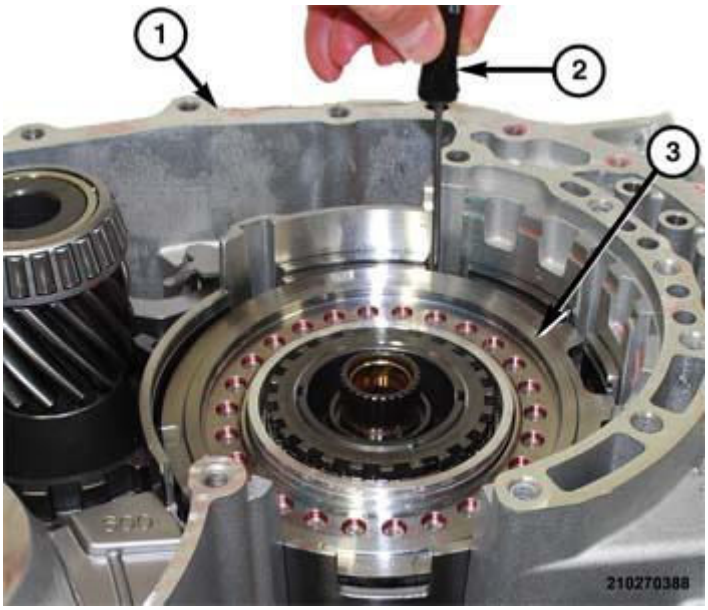

Fig. 223: Underdrive Brake Piston & Underdrive Brake Chamber
Courtesy of CHRYSLER GROUP, LLC

87. Using a suitable pick tool (2) lift the underdrive brake piston (3), in several locations, from the underdrive brake chamber.

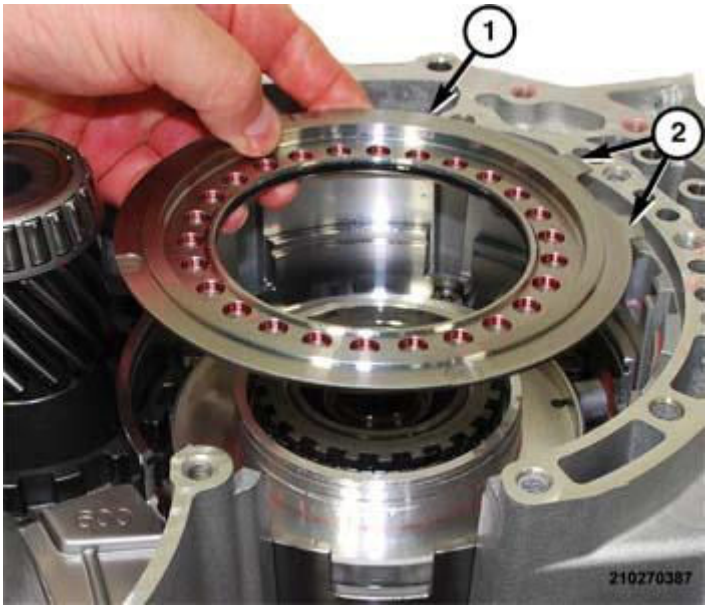

Fig. 224: Underdrive Brake Piston & Location Tabs
Courtesy of CHRYSLER GROUP, LLC

88. Remove the underdrive brake piston (1) from the underdrive brake piston chamber.

NOTE: The location tabs (2) on the underdrive brake piston

should be oriented toward the valve body opening in the transaxle.

89. Remove the D-ring outer seal and the O-ring inner seal from the underdrive piston.

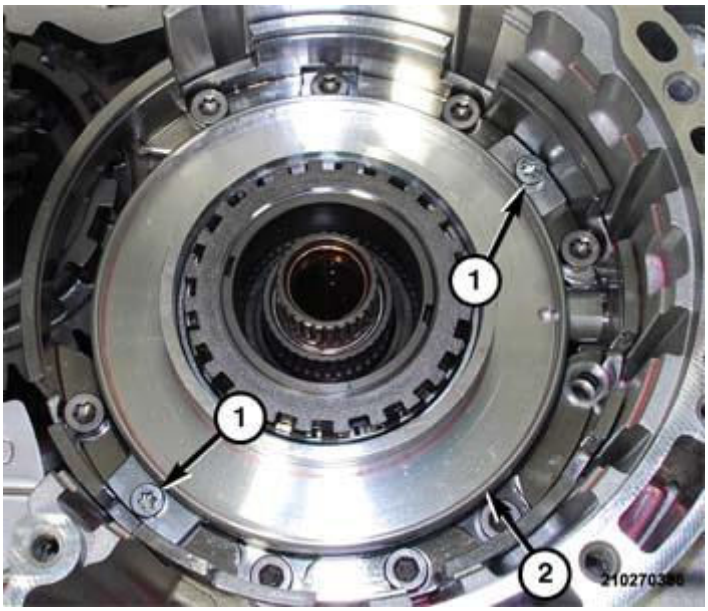

Fig. 225: Underdrive Brake Chamber & Bolts
Courtesy of CHRYSLER GROUP, LLC

90. Remove bolts (1) holding the underdrive brake chamber (2) to the transaxle housing.

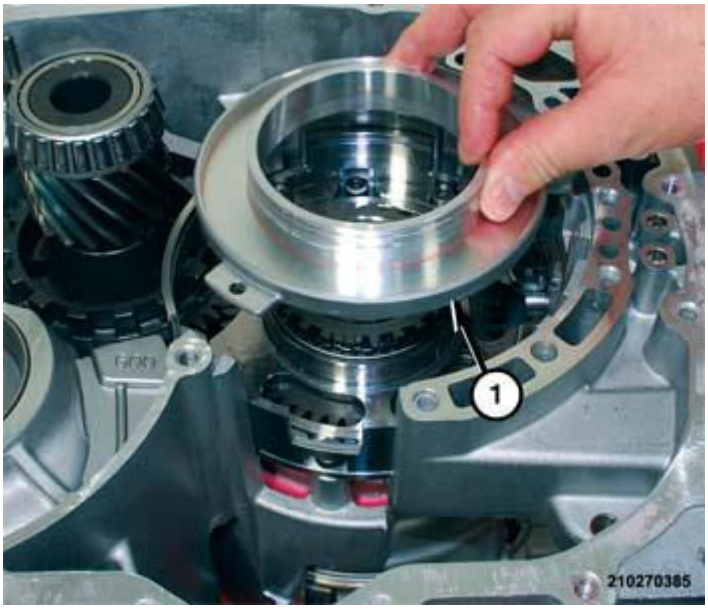

Fig. 226: Underdrive Brake Chamber & Transaxle Housing

Courtesy of CHRYSLER GROUP, LLC

91. Separate the underdrive brake chamber from the transaxle housing.

Fig. 227: Underdrive Brake Retainer & Bolts
Courtesy of CHRYSLER GROUP, LLC

92. Mark the location and direction of the underdrive brake retainer in relation to the bolt holes in the transaxle housing to ensure proper installation.
93. Using an impact driver (1), loosen the bolts holding the underdrive brake retainer (2) to the transaxle housing without damaging the Torx® drive heads.

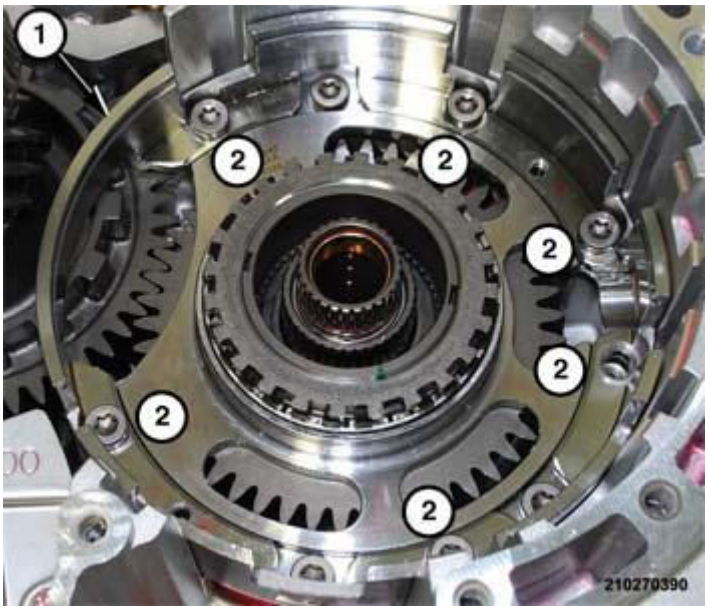

Fig. 228: Underdrive Brake Retainer & Bolts
Courtesy of CHRYSLER GROUP, LLC

94. Remove bolts (2) holding the underdrive brake retainer (1) to the transaxle housing.

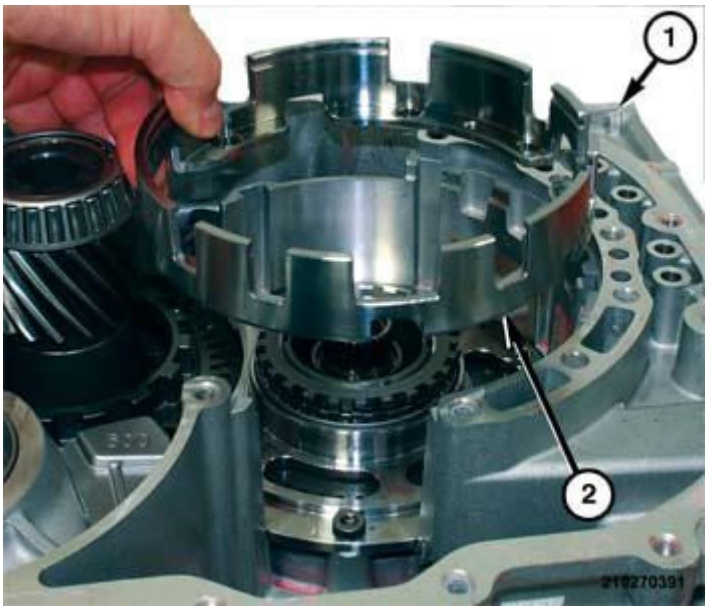

Fig. 229: Underdrive Brake Retainer & Transaxle Housing
Courtesy of CHRYSLER GROUP, LLC

95. Separate the underdrive brake retainer (2) from the transaxle housing (1).

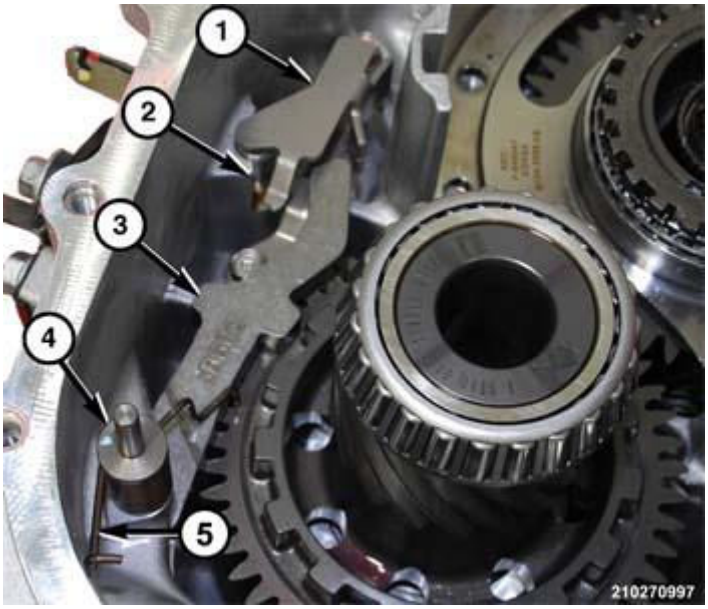

Fig. 230: Park Rod Guide & Bolts
Courtesy of CHRYSLER GROUP, LLC

96. Remove bolts holding the park rod guide (1) from the transaxle housing.

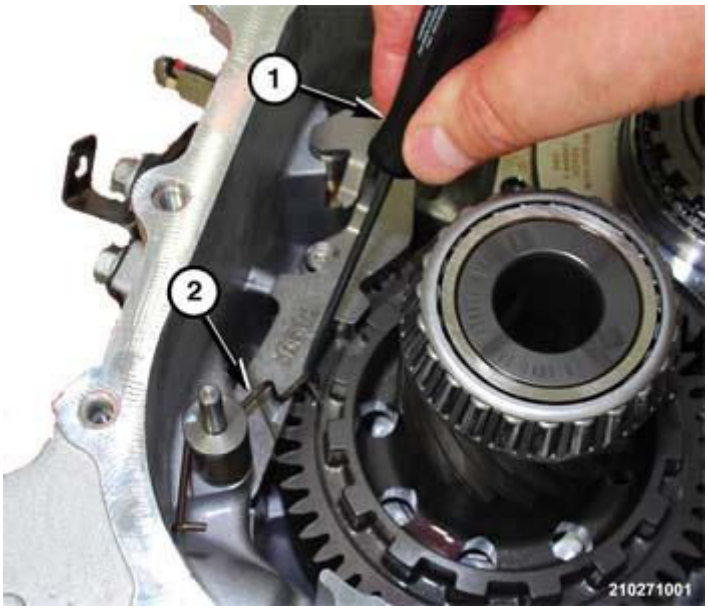

Fig. 231: Park Sprag Spring & Park Sprag
Courtesy of CHRYSLER GROUP, LLC

97. Using a suitable hook tool (1), lift the park sprag spring (2) off the park sprag.

Fig. 232: Park Sprag Spring, Shaft & Transaxle Housing
Courtesy of CHRYSLER GROUP, LLC

98. Remove the park sprag spring and shaft (1) from the transaxle housing.

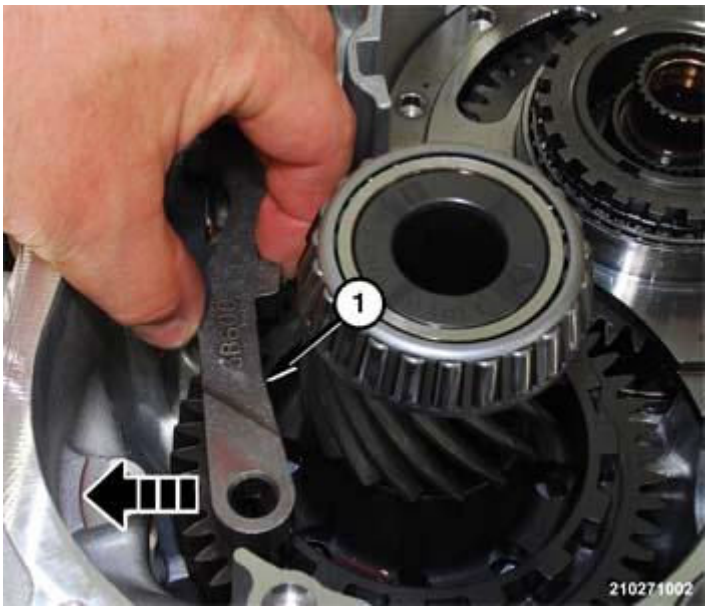

Fig. 233: Park Sprag & Transaxle Housing
Courtesy of CHRYSLER GROUP, LLC

99. Separate the park sprag (1) from the transaxle housing.

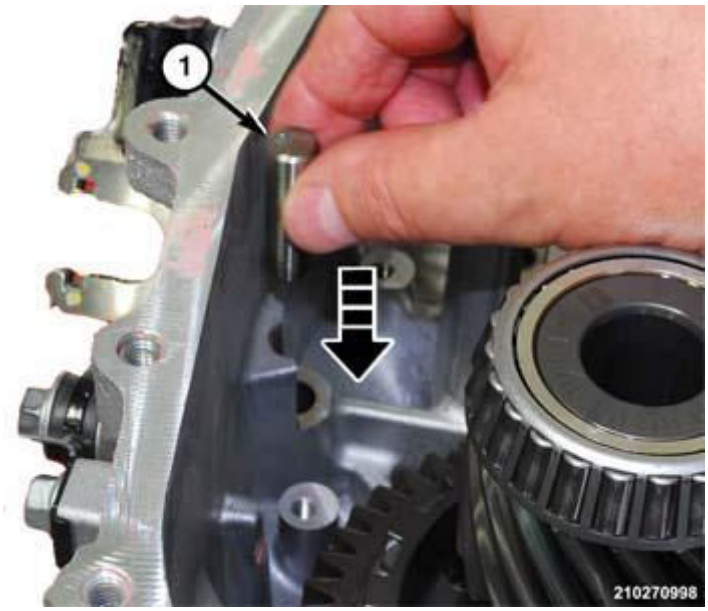

Fig. 234: Park Sprag Support Shaft & Transaxle Housing
Courtesy of CHRYSLER GROUP, LLC

00. Remove the park sprag support shaft (1) from the transaxle housing.

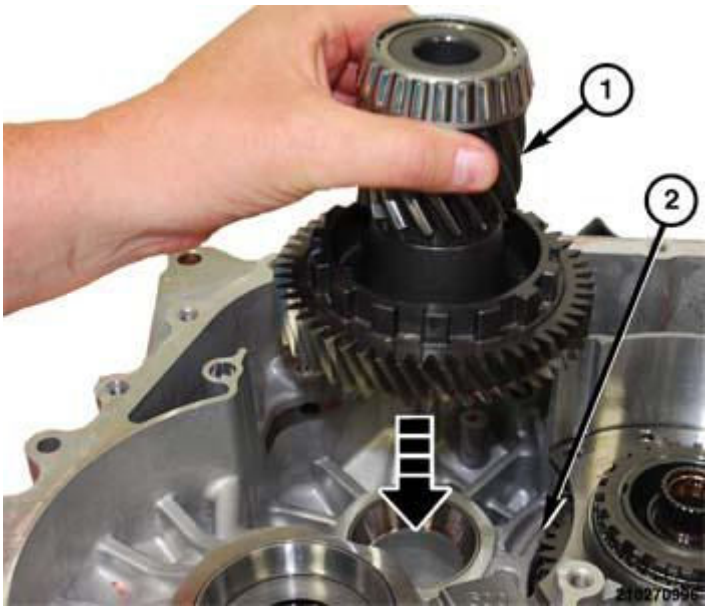

Fig. 235: Transfer Driven Gear Assembly & Transaxle
Courtesy of CHRYSLER GROUP, LLC

01. Remove the transfer driven gear (1) assembly from the transaxle (2).
02. Turn the transaxle over to gain access to the One-way-clutch.

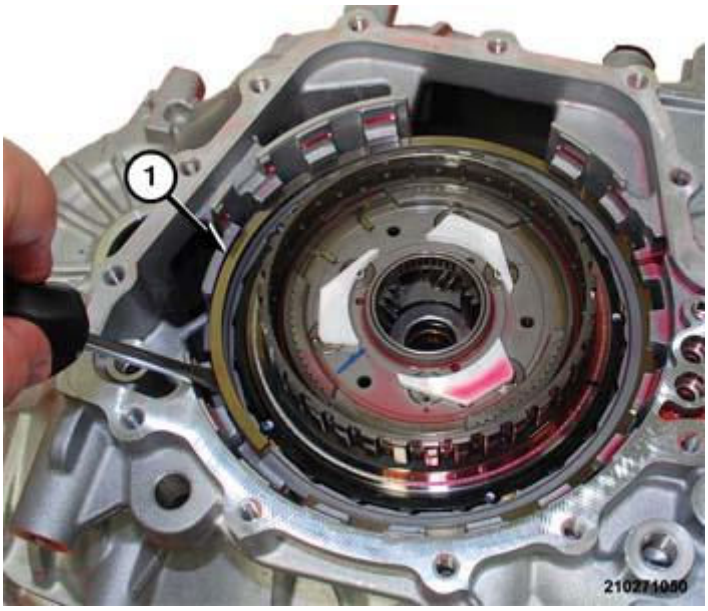

Fig. 236: One-Way-Clutch Snap Ring
Courtesy of CHRYSLER GROUP, LLC

03. Remove the snap ring (1) holding the OWC to the transaxle housing.

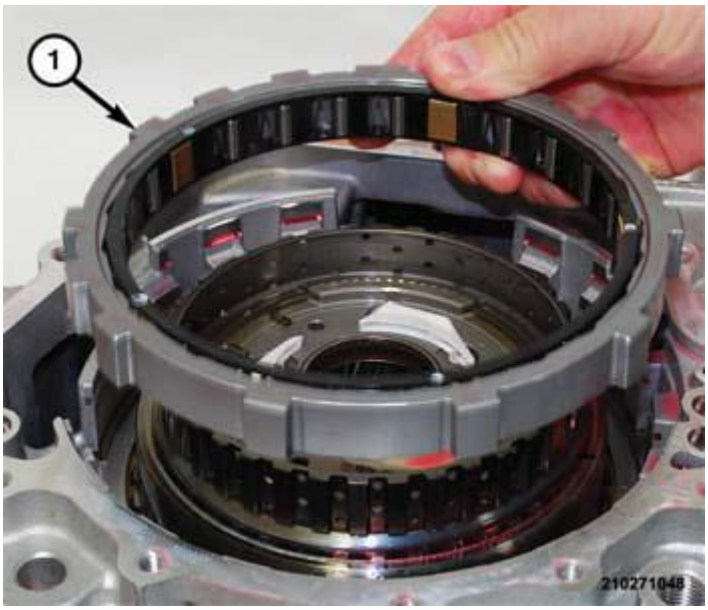

Fig. 237: One-Way-Clutch
Courtesy of CHRYSLER GROUP, LLC

04. Separate the OWC (1) from the transaxle. Mark the one way clutch to aid installation orientation.

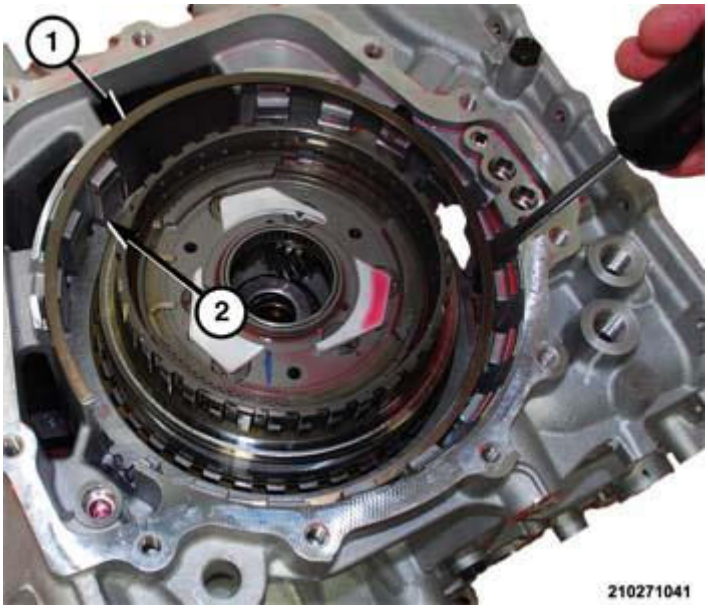

Fig. 238: Low/Reverse Brake & Snap Ring
Courtesy of CHRYSLER GROUP, LLC

05. Remove the snap ring (2) holding low/reverse brake into transaxle.

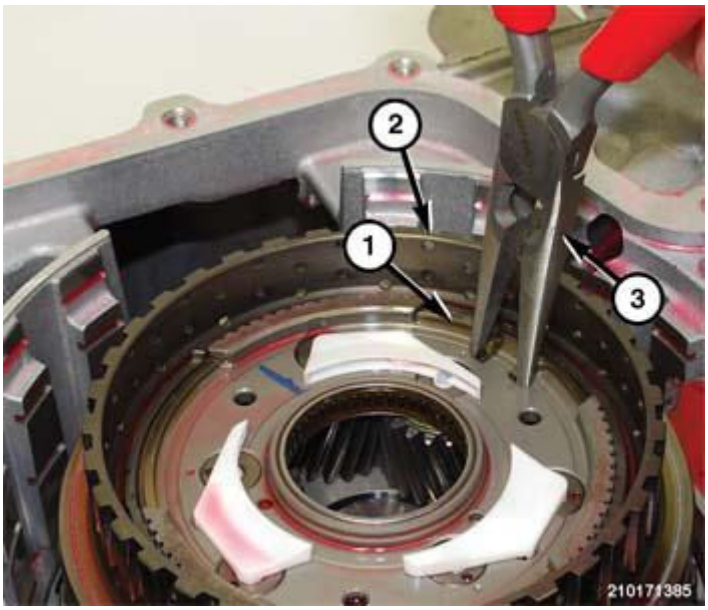

Fig. 239: One Way Clutch Race & Snap Ring
Courtesy of CHRYSLER GROUP, LLC

06. Separate the low & reverse brake pressure plate, cushion plate and discs and plates, in order, from transaxle.
07. Compress snap ring (1) holding one way clutch race (2) into transaxle.

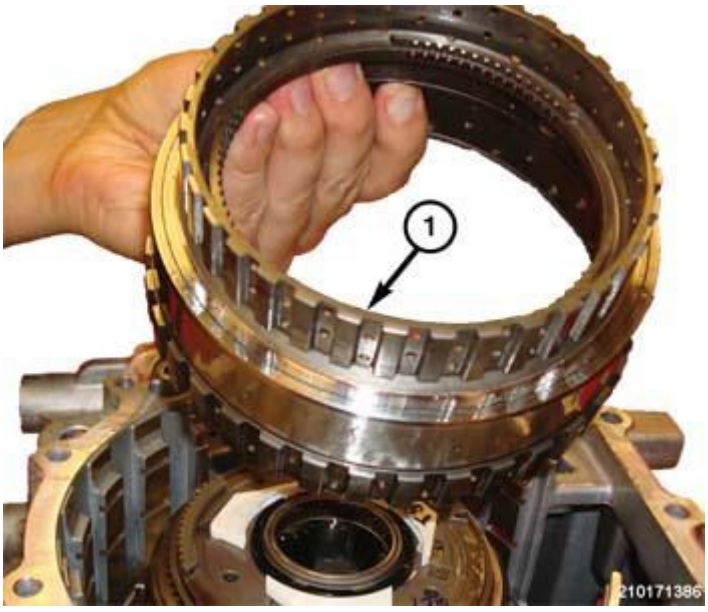

Fig. 240: One Way Clutch Inner Race
Courtesy of CHRYSLER GROUP, LLC

08. Separate the one way clutch inner race (1) from the transaxle.

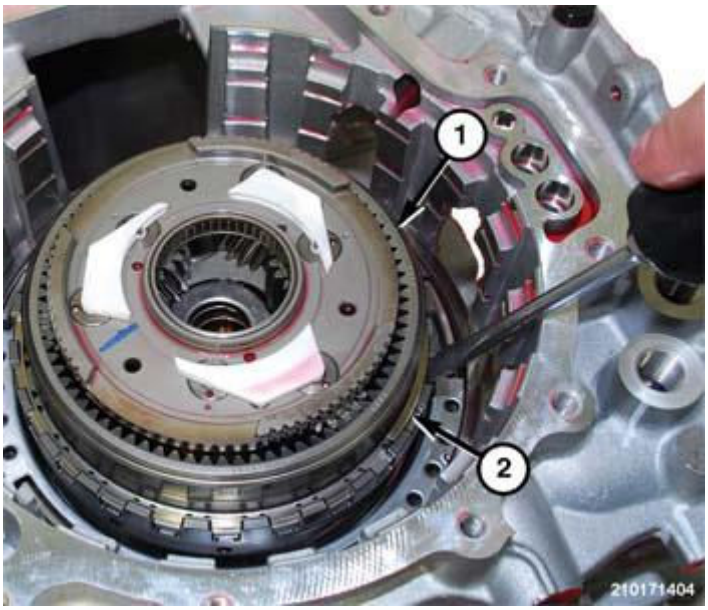

Fig. 241: Rear Annulus Gear & Snap Ring
Courtesy of CHRYSLER GROUP, LLC

09. Remove the snap ring (2) holding the rear annulus gear (1) into transaxle.

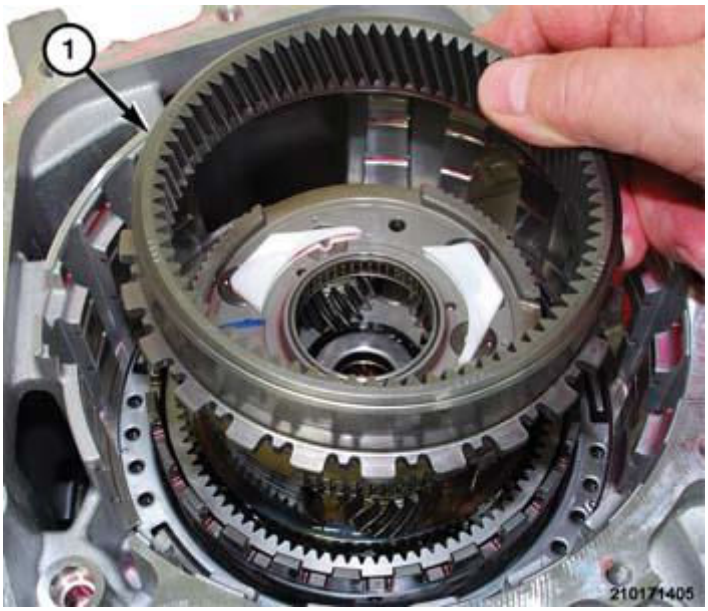

Fig. 242: Rear Annulus Gear
Courtesy of CHRYSLER GROUP, LLC

10. Separate the rear annulus gear (1) from the transaxle.

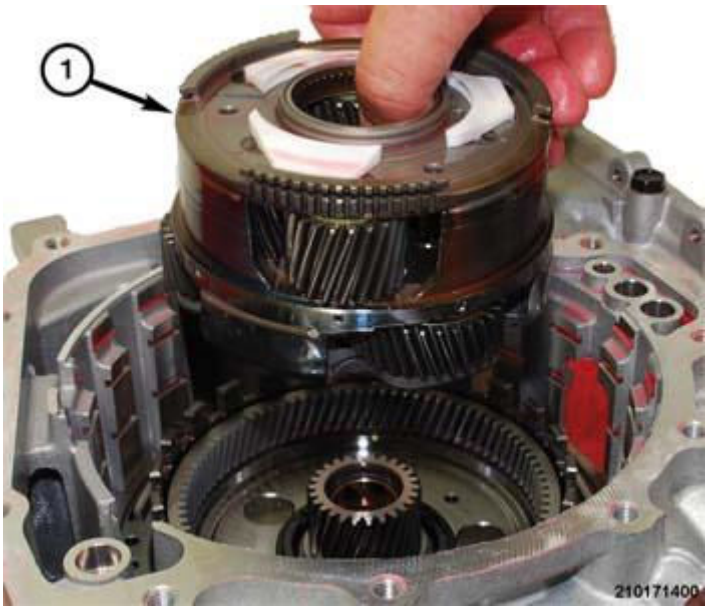

Fig. 243: Middle/Rear Planetary Gear Assembly
Courtesy of CHRYSLER GROUP, LLC

11. Separate the middle/rear planetary gear assembly (1) and from the planetary gear hub.

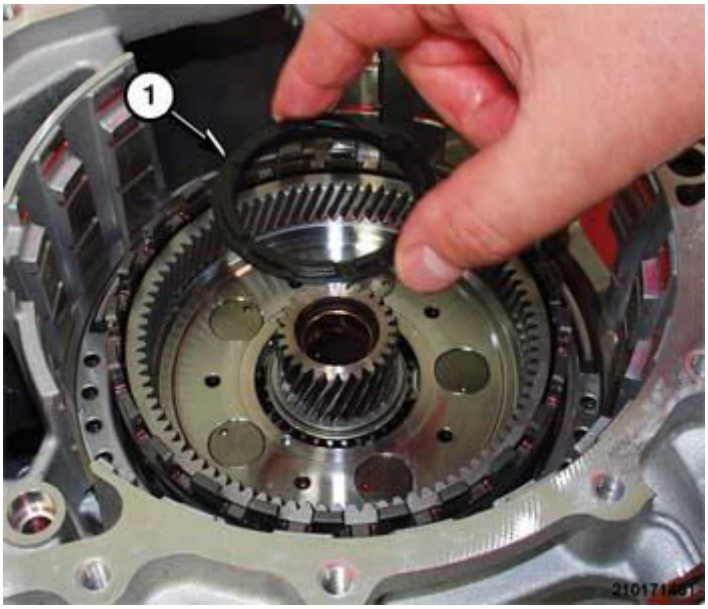

Fig. 244: Front Planetary Gear Hub Thrust Washer
Courtesy of CHRYSLER GROUP, LLC

12. Remove the thrust washer (1) from front planetary gear hub.

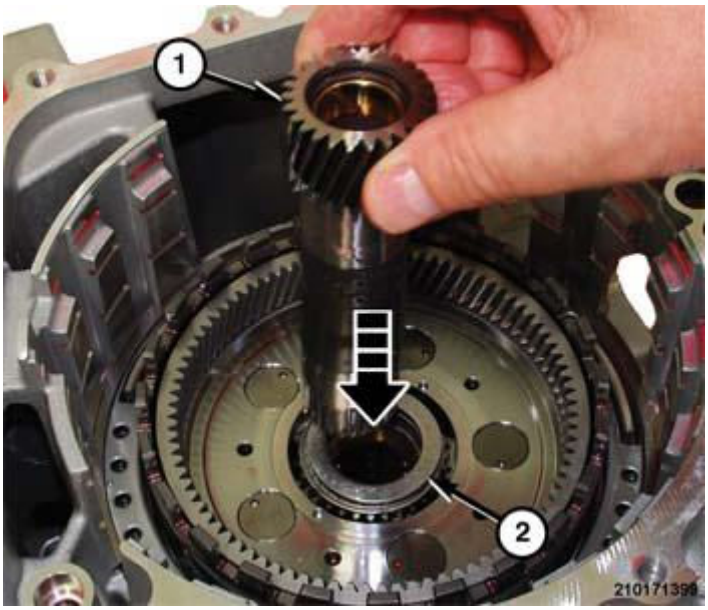

Fig. 245: Middle Sun Gear & Planetary Gear Hub
Courtesy of CHRYSLER GROUP, LLC

13. Separate the middle sun gear (1) from the planetary gear hub (2).

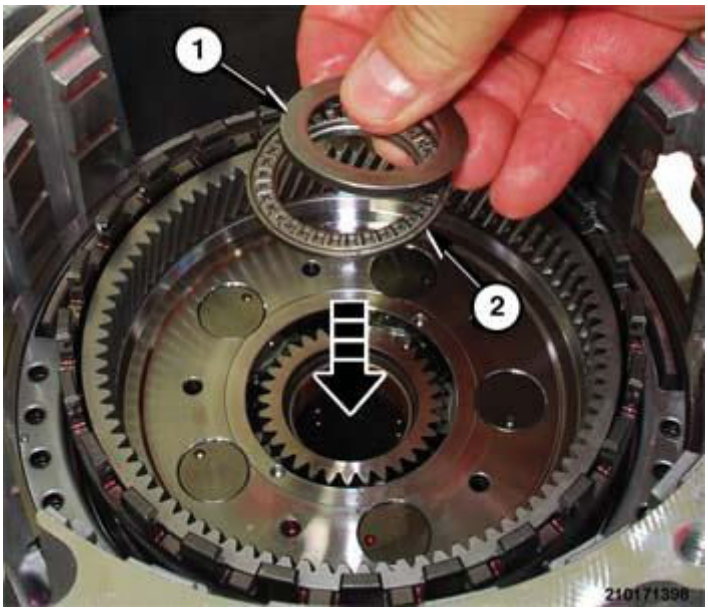

Fig. 246: Planetary Gear Hub Bearing And Race Set
Courtesy of CHRYSLER GROUP, LLC

14. Remove the bearing (2) and race (1) set from the planetary gear hub.

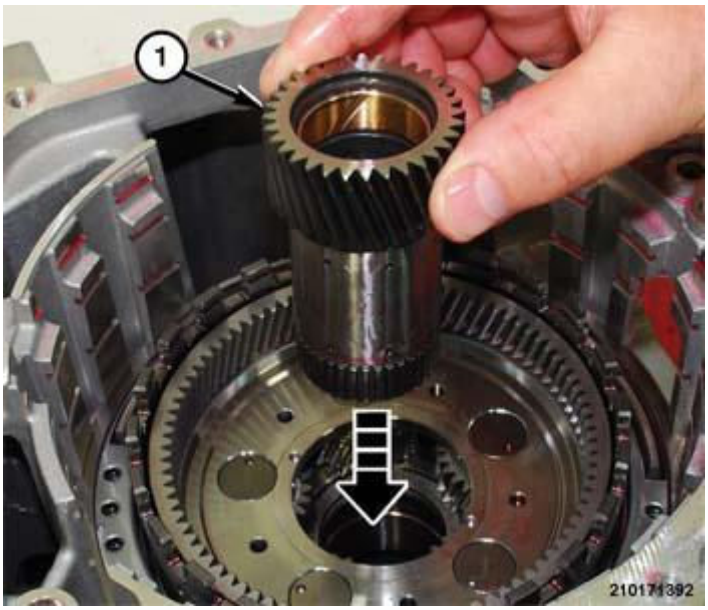

Fig. 247: Front Sun Gear
Courtesy of CHRYSLER GROUP, LLC

15. Separate the front sun gear (1) from front planetary gear assembly.

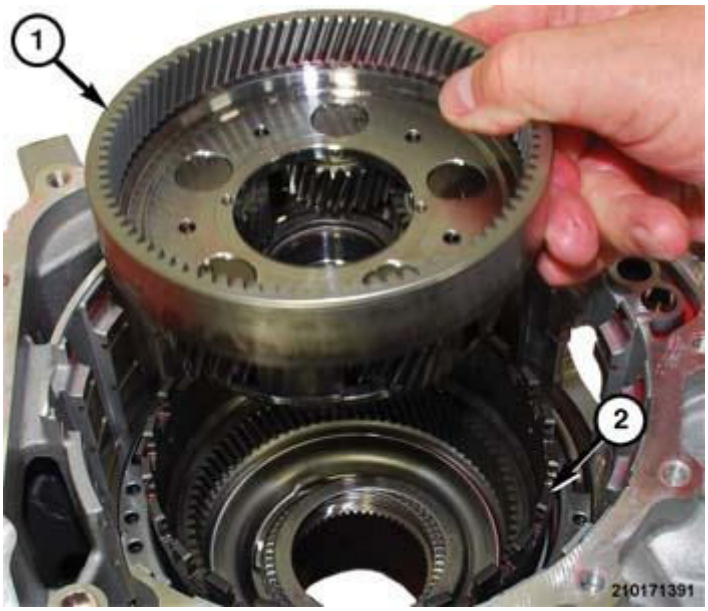

Fig. 248: Front Planetary Gear & Front Annulus Gear Assembly
Courtesy of CHRYSLER GROUP, LLC

16. Separate the front planetary gear (1) the front annulus gear assembly (2).

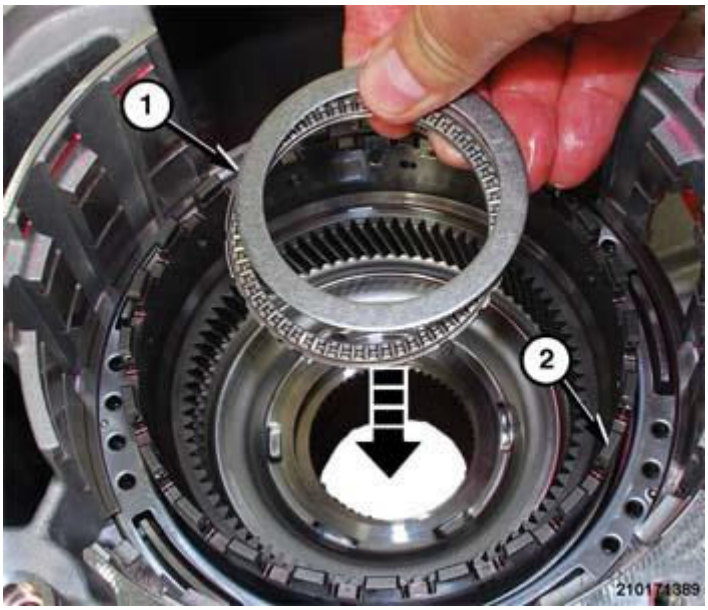

Fig. 249: Front Annulus Gear Thrust Bearing And Race
Courtesy of CHRYSLER GROUP, LLC

17. Separate the front annulus gear thrust bearing and race from the front annulus gear hub,

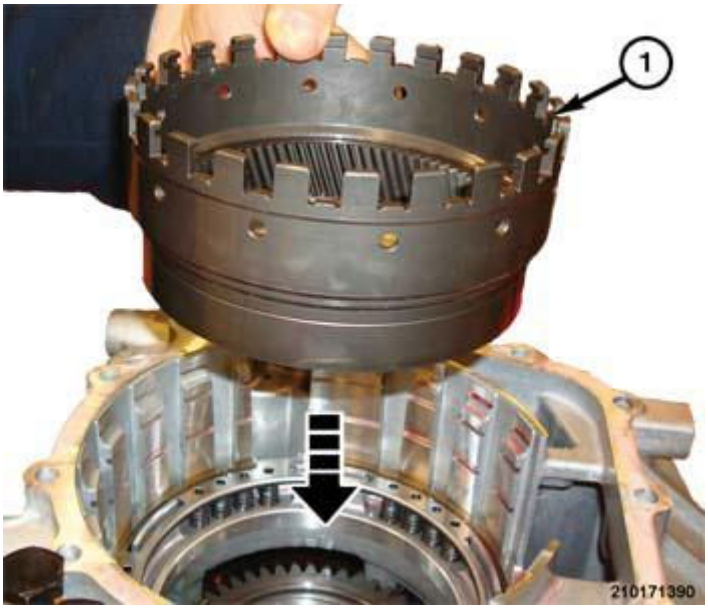

Fig. 250: Front Annulus Gear
Courtesy of CHRYSLER GROUP, LLC

18. Separate the front annulus gear (1) from the low/reverse brake assembly.

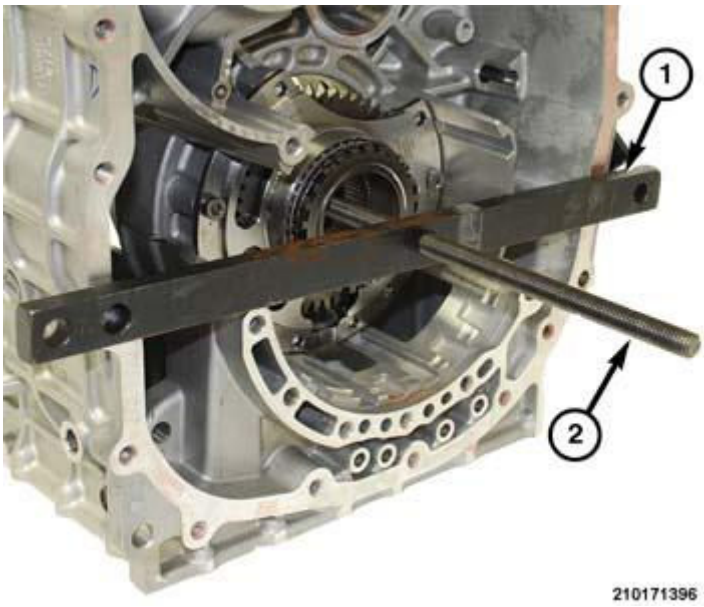

Fig. 251: Special Tool #5058A-3
Courtesy of CHRYSLER GROUP, LLC

19. Insert (special tool #5058A-3, Screw, Forcing) through center hole in (special tool #8621, Compressor, Spring)

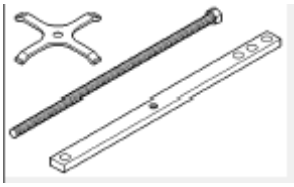

Fig. 252: Special Tool #5058A-3
Courtesy of CHRYSLER GROUP, LLC

Fig. 253: Special Tool #8621
Courtesy of CHRYSLER GROUP, LLC

Insert the screw through the transfer gear and into the threaded cross bar across the bell housing opening.

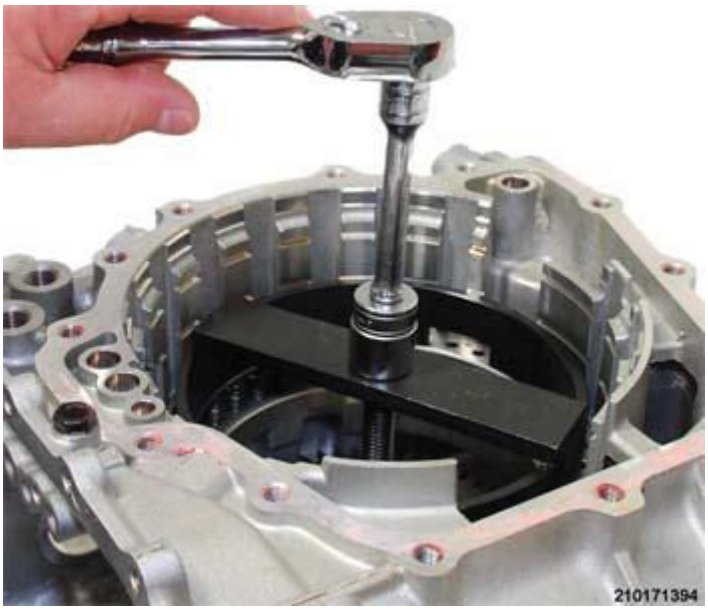

Fig. 254: Compressing Low/Reverse Spring Retainer
Courtesy of CHRYSLER GROUP, LLC

20. Compress the low/reverse spring retainer.

Fig. 255: Low/Reverse Brake Spring Retainer Snap Ring
Courtesy of CHRYSLER GROUP, LLC

21. Remove snap ring holding low/reverse brake spring retainer to the low/reverse brake piston.
22. Remove spring compressor tools from transaxle.

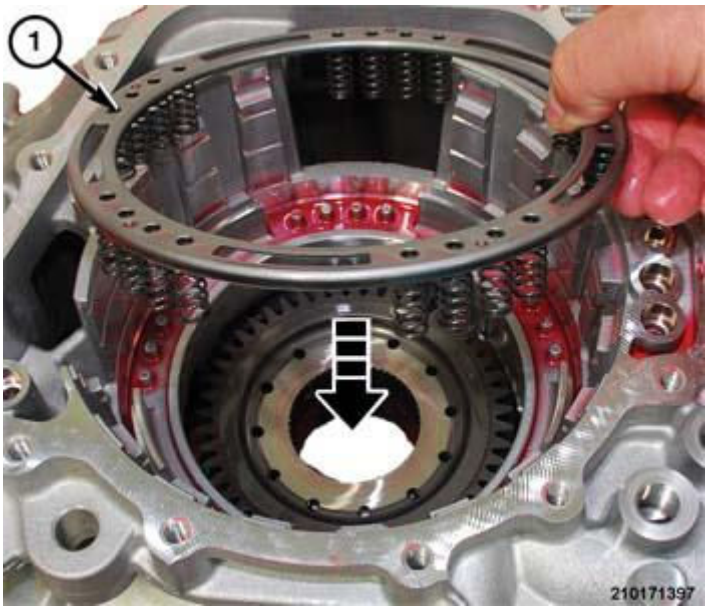

Fig. 256: Low/Reverse Brake Piston Spring Retainer
Courtesy of CHRYSLER GROUP, LLC

23. Remove low & reverse brake piston spring retainer.

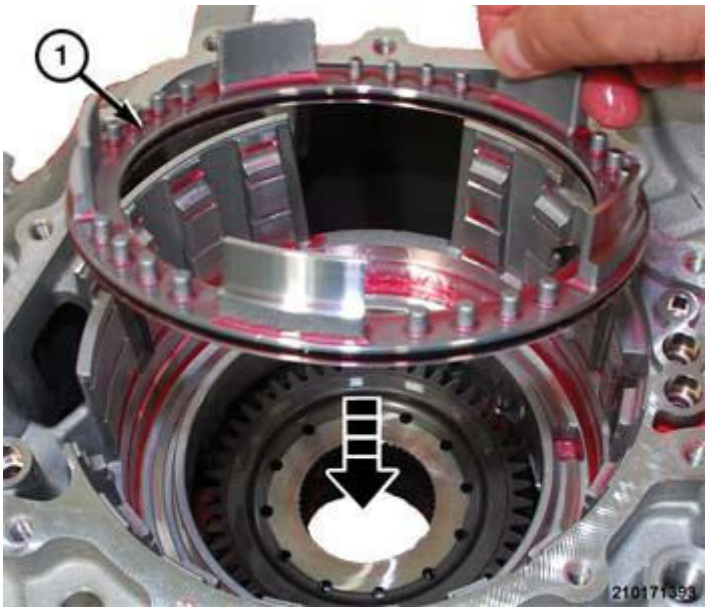

Fig. 257: Low/Reverse Brake Piston
Courtesy of CHRYSLER GROUP, LLC

24. Separate low & reverse brake piston (1) from the transaxle housing.
25. Remove inside and outside D-ring seals from the low & reverse brake piston (1).

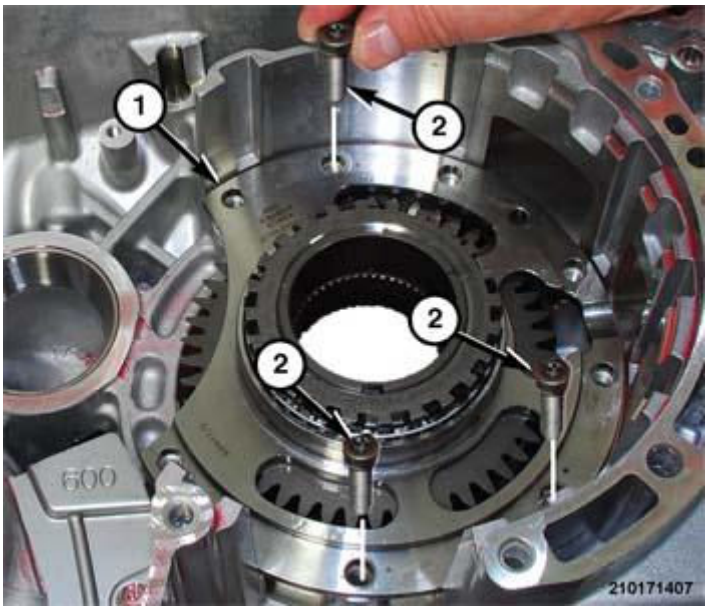

Fig. 258: Transfer Drive Assembly & Bolts
Courtesy of CHRYSLER GROUP, LLC

26. Remove bolts (2) holding transfer drive assembly (1) to the transaxle housing.

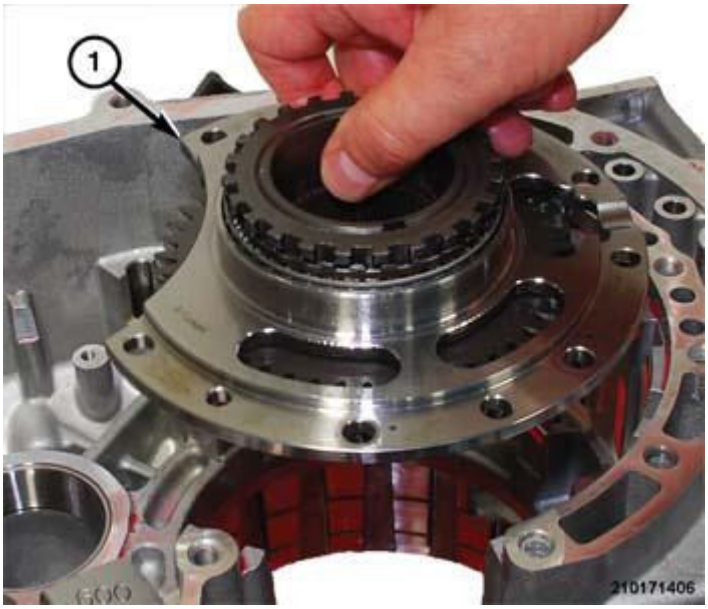

Fig. 259: Transfer Drive Assembly
Courtesy of CHRYSLER GROUP, LLC

27. Remove the transfer drive assembly (1) from the transaxle case

ASSEMBLY

FWD

NOTE: **Thoroughly clean all components to remove metallic and fibrous materials that may have contaminated the transaxle during a component failure.**

NOTE: **Inspect all components for excessive ware, spalled surfaces, or other obvious damage. Replace only damaged components that are serviceable with genuine Mopar Parts.**

NOTE: **Not before assembling the transaxle, measure the Low-Reverse Brake and adjust if necessary. If the housing, differential, or the driven transfer gear was replaced, it will necessary to the establish proper bearing turning torque. If just the bearings are replaced it is not necessary to measure turn to torque valves. Refer to STANDARD PROCEDURES.**

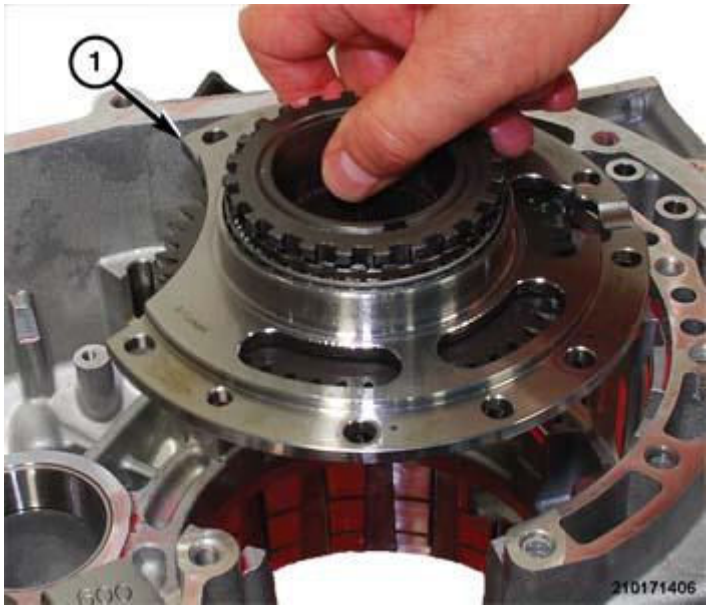

Fig. 260: Transfer Drive Assembly
Courtesy of CHRYSLER GROUP, LLC

1. Place the transfer drive assembly (1) into position in the transaxle case.

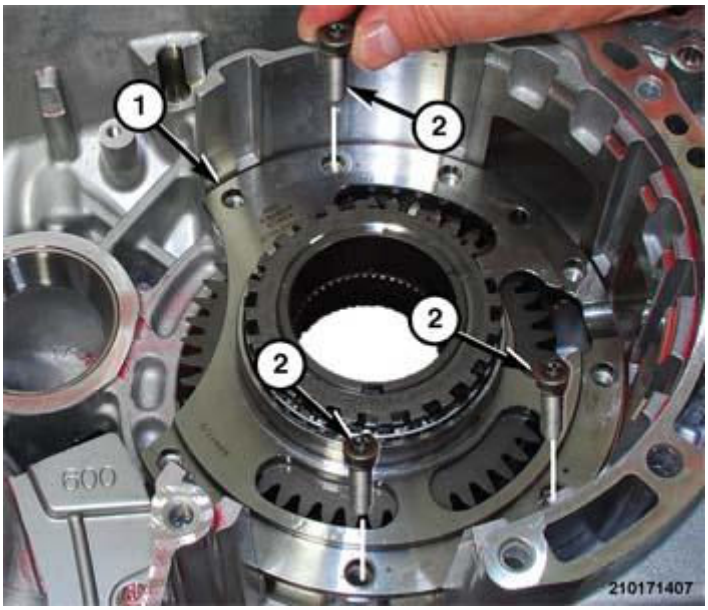

Fig. 261: Transfer Drive Assembly & Bolts
Courtesy of CHRYSLER GROUP, LLC

2. Install three bolts (2) to hold transfer drive assembly (1) to the transaxle housing. Refer to **SPECIFICATIONS**.
3. Install **NEW** inside and outside D-ring seals into the low & reverse brake piston (1).
4. Using specified transaxle fluid, lubricate the low & reverse brake piston (1) D-ring seals.

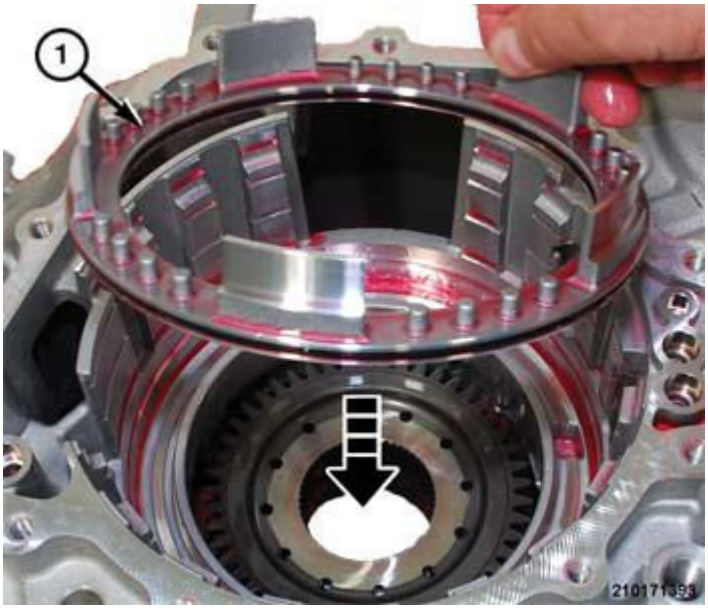

Fig. 262: Low/Reverse Brake Piston
Courtesy of CHRYSLER GROUP, LLC

5. Place low & reverse brake piston (1) in position in transaxle housing.
6. Push low & reverse brake piston downward into cylinder bore in the transaxle housing.

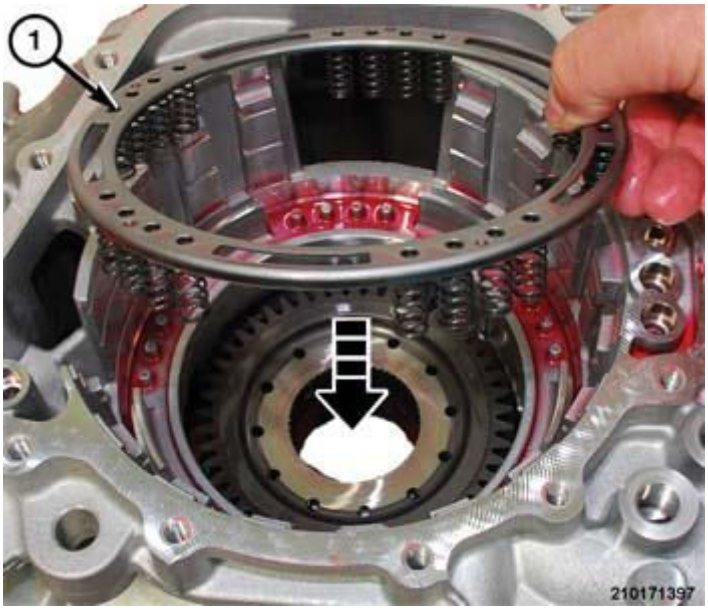

Fig. 263: Low/Reverse Brake Piston Spring Retainer
Courtesy of CHRYSLER GROUP, LLC

7. Place low & reverse brake piston spring retainer in position on the lo-reverse brake piston.

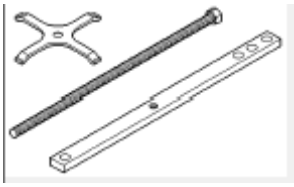

Fig. 264: Special Tool #5058A-3
Courtesy of CHRYSLER GROUP, LLC

(special tool #5058A-3, Screw, Forcing)

Fig. 265: Special Tool #8621
Courtesy of CHRYSLER GROUP, LLC

(special tool #8621, Compressor, Spring)

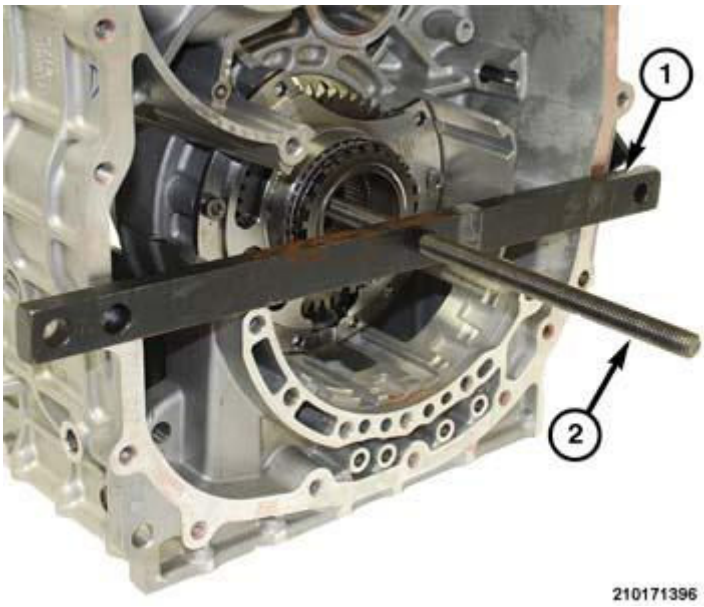

Fig. 266: Special Tool #5058A-3
Courtesy of CHRYSLER GROUP, LLC

8. Install spring compressor tools in position on transaxle.
9. Insert screw through center hole in spring compressor 8621. Insert the screw through the transfer gear and into the threaded cross bar across the bell housing opening.

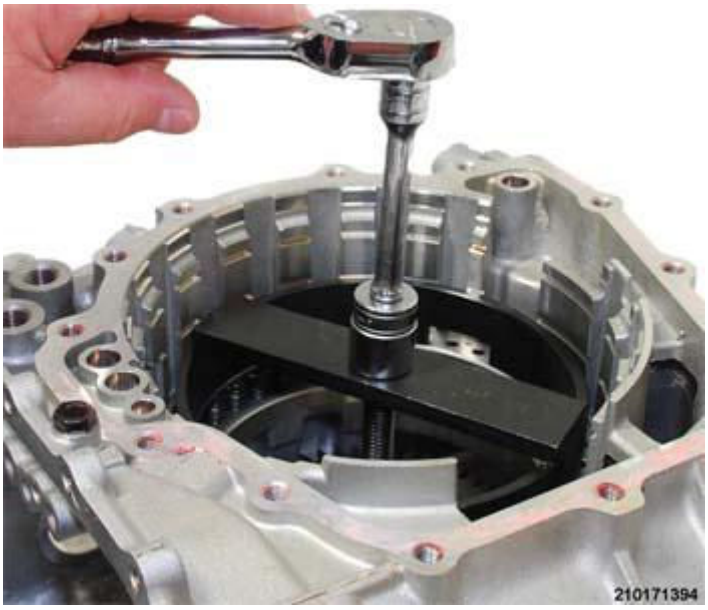

Fig. 267: Compressing Low/Reverse Spring Retainer
Courtesy of CHRYSLER GROUP, LLC

10. Compress the low/reverse spring retainer.

Fig. 268: Low/Reverse Brake Spring Retainer Snap Ring
Courtesy of CHRYSLER GROUP, LLC

11. Install the snap ring (1) to hold the low/reverse brake spring retainer to the low/reverse brake piston.

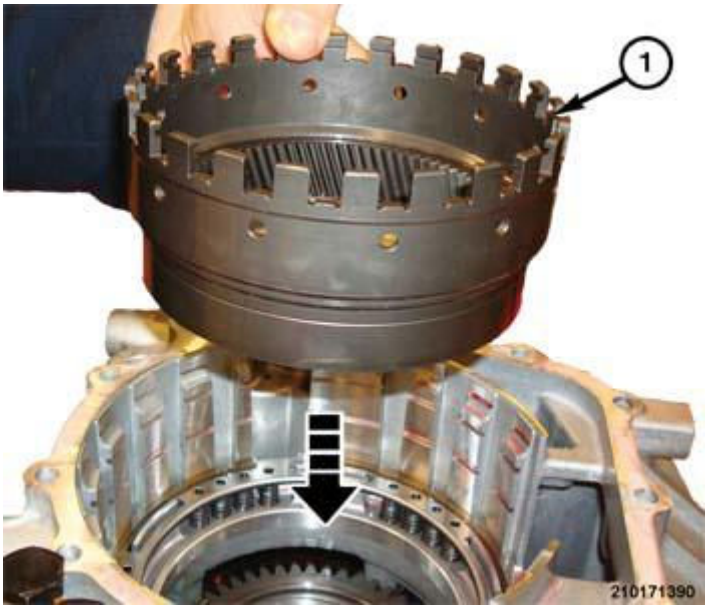

Fig. 269: Front Annulus Gear
Courtesy of CHRYSLER GROUP, LLC

12. Place the front annulus gear (1) in position in the low/reverse brake assembly.

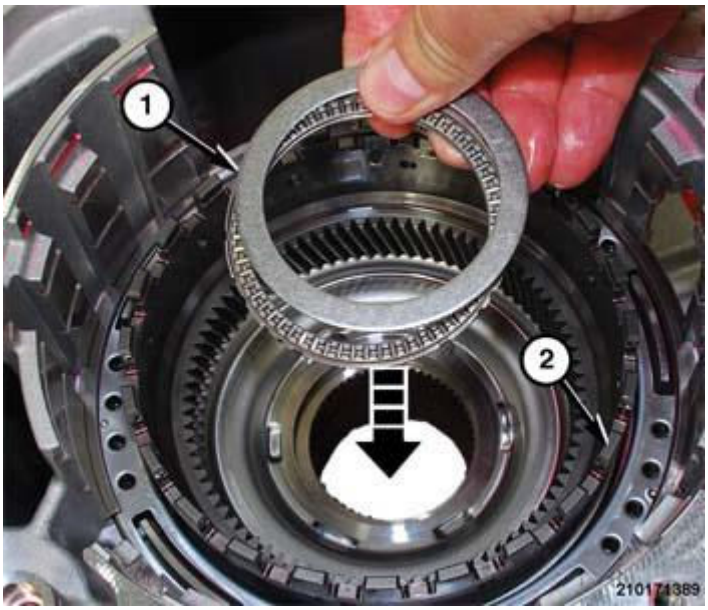

Fig. 270: Front Annulus Gear Thrust Bearing And Race
Courtesy of CHRYSLER GROUP, LLC

13. Place the front annulus gear thrust bearing and race (1) in position on the front annulus gear (2) hub.

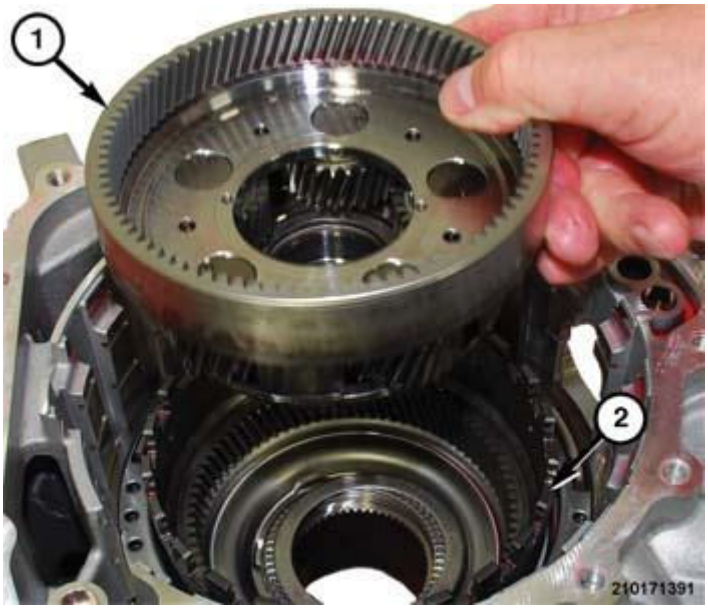

Fig. 271: Front Planetary Gear & Front Annulus Gear Assembly
Courtesy of CHRYSLER GROUP, LLC

14. Place the front planetary gear (1) in position on the front annulus gear assembly (2).

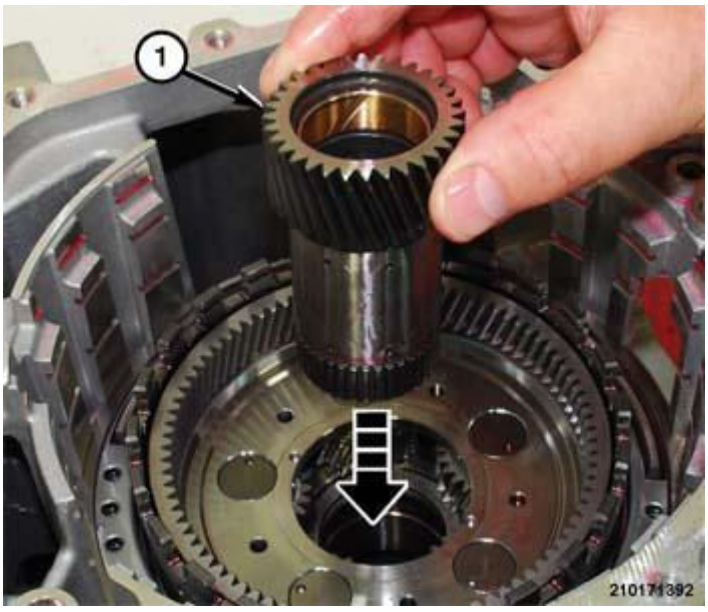

Fig. 272: Front Sun Gear
Courtesy of CHRYSLER GROUP, LLC

15. Insert the front sun gear (1) into front planetary gear assembly.

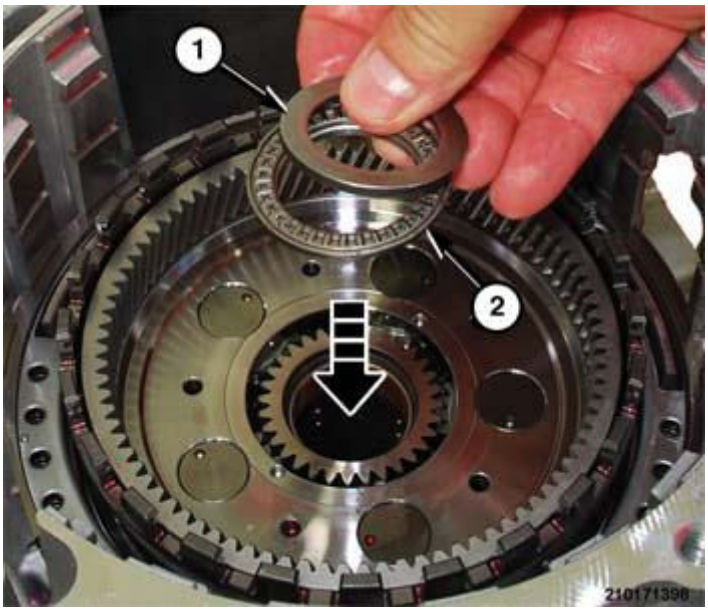

Fig. 273: Planetary Gear Hub Bearing And Race Set
Courtesy of CHRYSLER GROUP, LLC

16. Place the bearing (2) and race (1) set in position on the planetary gear hub.

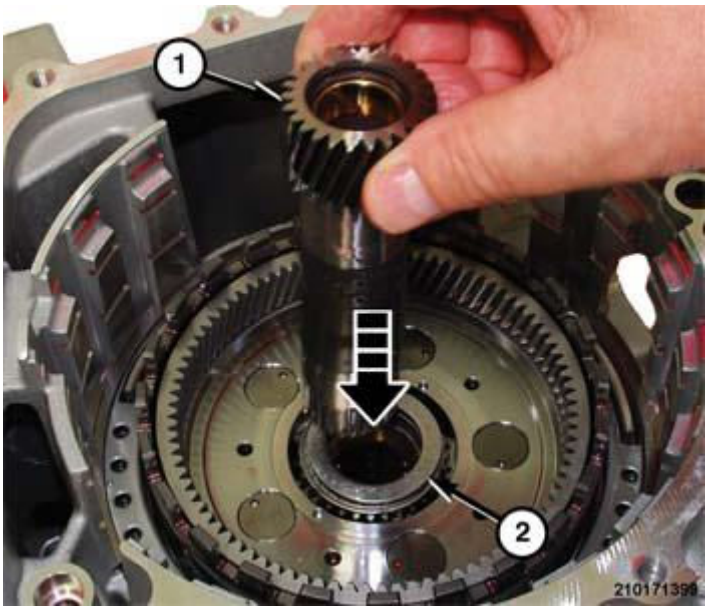

Fig. 274: Middle Sun Gear & Planetary Gear Hub
Courtesy of CHRYSLER GROUP, LLC

17. Insert the middle sun gear (1) in position in the in position on the front sun gear (2).

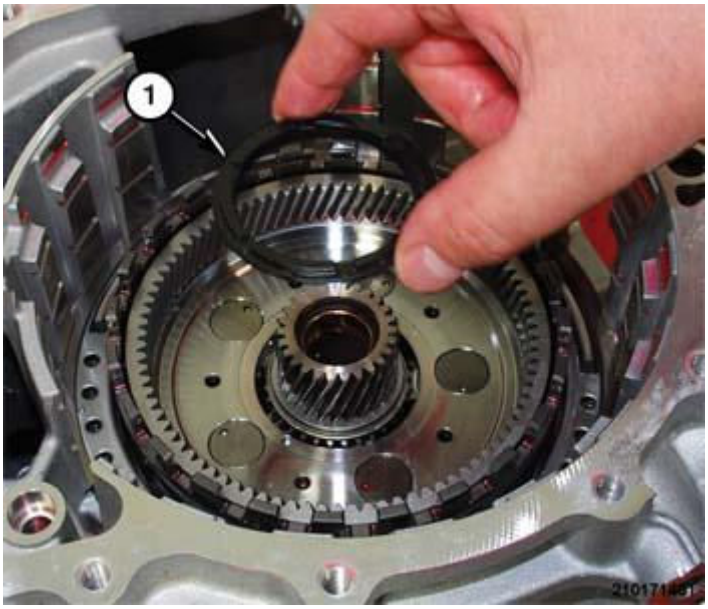

Fig. 275: Front Planetary Gear Hub Thrust Washer
Courtesy of CHRYSLER GROUP, LLC

18. Place the thrust washer (1) in position on the front planetary gear hub.

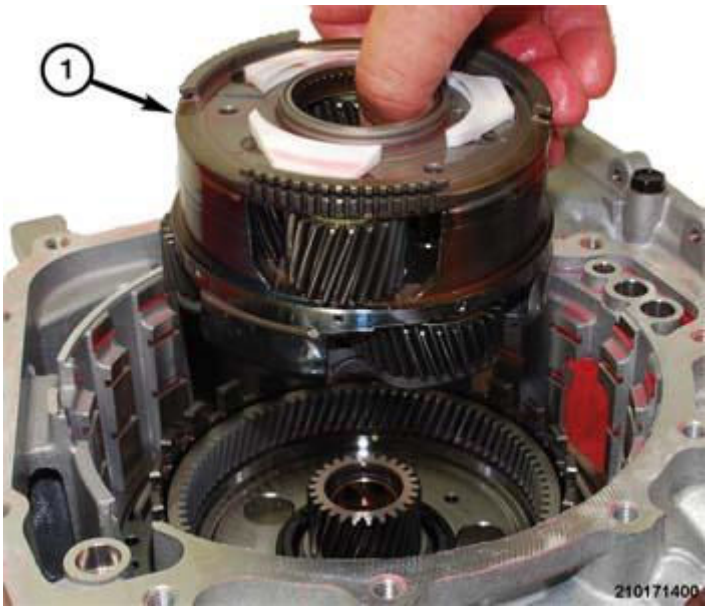

Fig. 276: Middle/Rear Planetary Gear Assembly
Courtesy of CHRYSLER GROUP, LLC

19. Place the middle/rear planetary gear assembly (1) in position in the planetary gear hub.

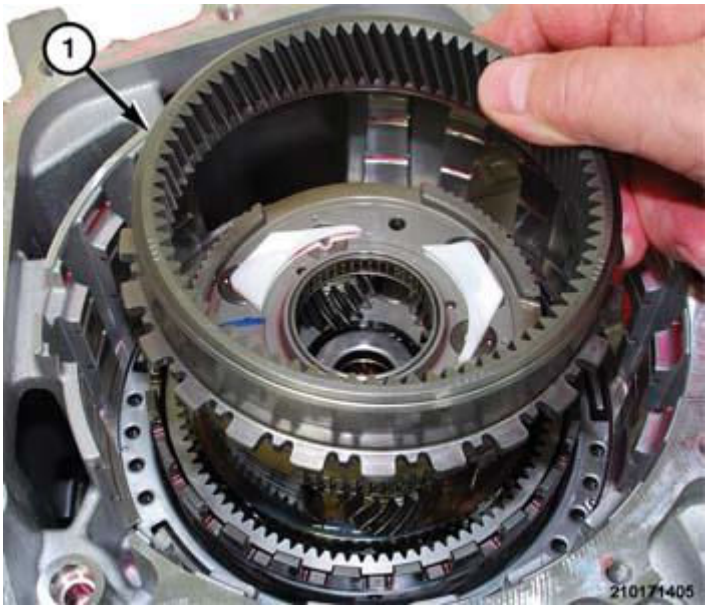

Fig. 277: Rear Annulus Gear
Courtesy of CHRYSLER GROUP, LLC

20.
21. Place the rear annulus gear (1) in position on the middle/rear planetary gear assembly.

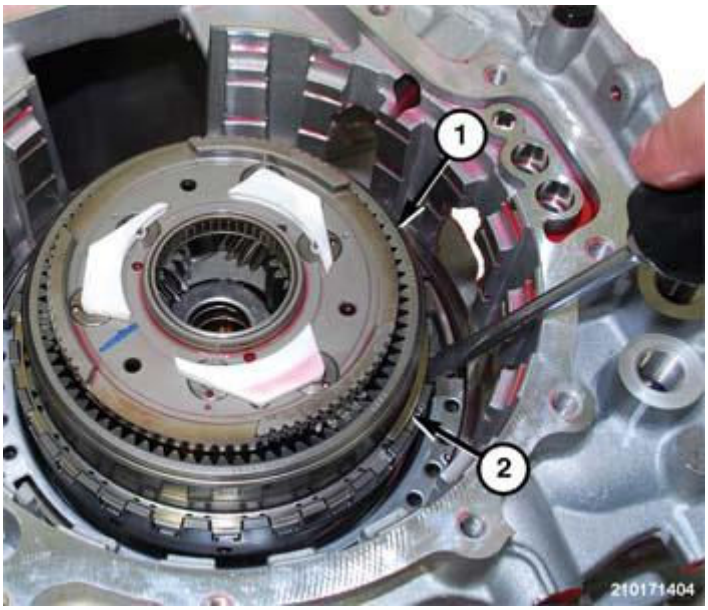

Fig. 278: Rear Annulus Gear & Snap Ring
Courtesy of CHRYSLER GROUP, LLC

22. Install the snap ring (2) to hold the rear annulus gear (1) into the front annulus gear hub.

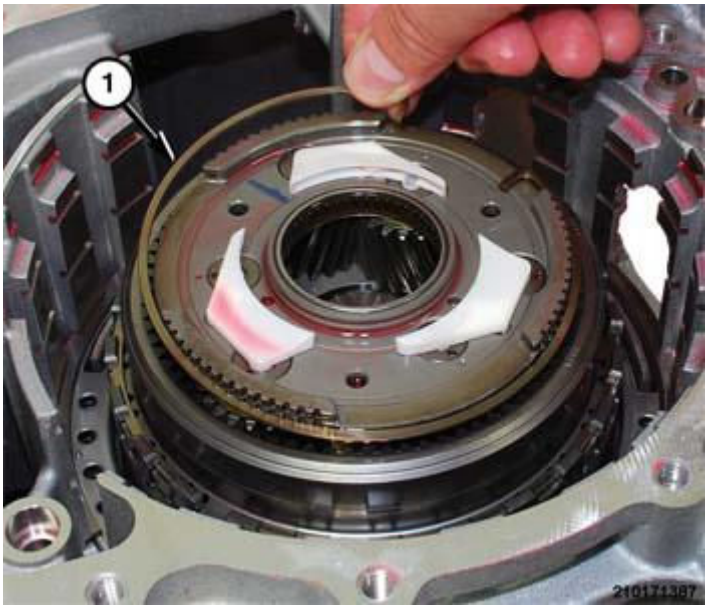

Fig. 279: Middle/Rear Planetary Gear Snap Ring
Courtesy of CHRYSLER GROUP, LLC

23. Insert the snap ring into the groove in the middle/rear planetary gear.

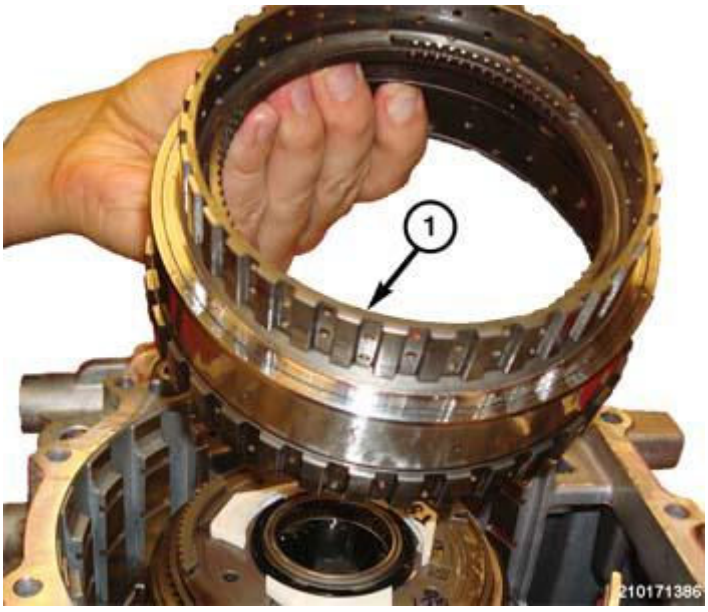

Fig. 280: One Way Clutch Inner Race
Courtesy of CHRYSLER GROUP, LLC

24. Place the one way clutch inner race (1) in position on the middle/rear planetary gear.

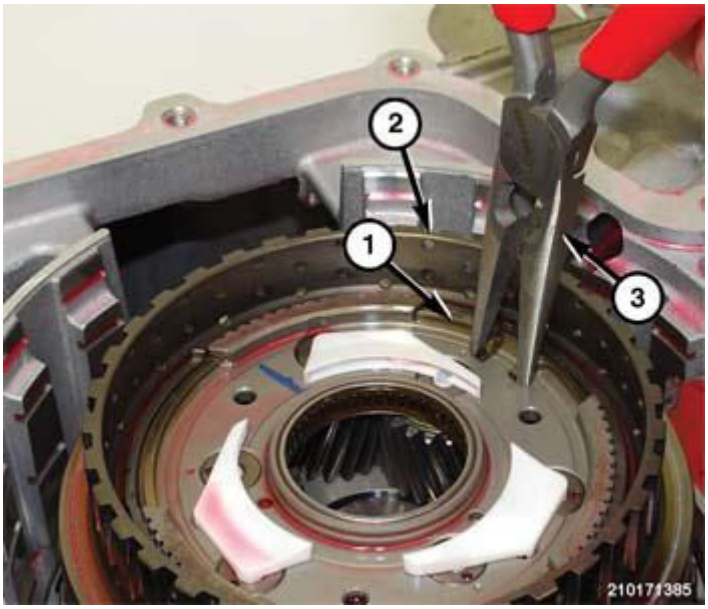

Fig. 281: One Way Clutch Race & Snap Ring
Courtesy of CHRYSLER GROUP, LLC

25. Using long nose pliers (3), compress snap ring (1) to hold the one way clutch race (2) to the middle/rear planetary gear.

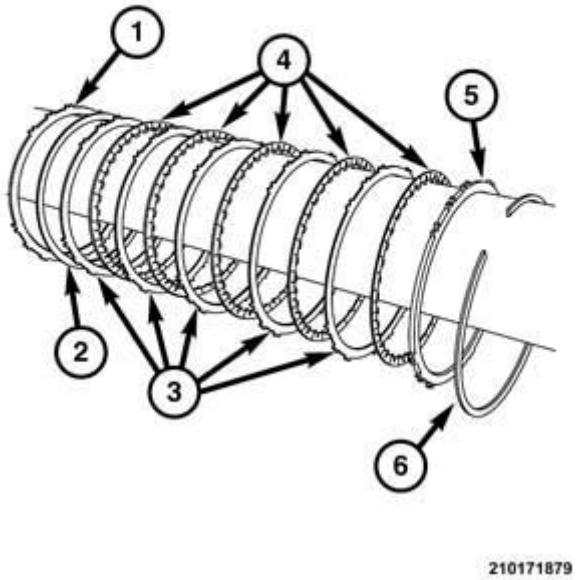

Fig. 282: Low & Reverse Brake Pressure Plate, Cushion Plate, Plates, Discs, & Reaction Plate
Courtesy of CHRYSLER GROUP, LLC

26. Install the low & reverse brake pressure plate (1), cushion plate (2), plates 3) discs (4), and the reaction plate (5), in order, into the transaxle.

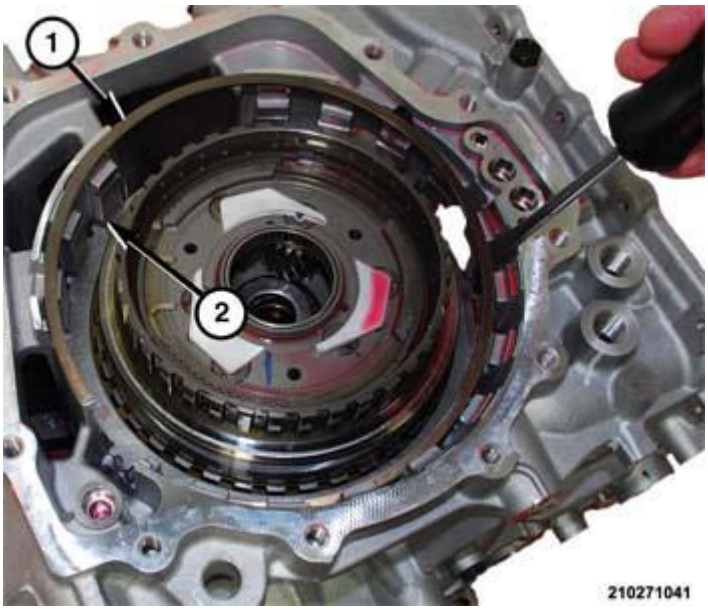

Fig. 283: Low/Reverse Brake & Snap Ring
Courtesy of CHRYSLER GROUP, LLC

27. Install the snap ring (1) to hold low/reverse brake into the lowest snap ring

land (2) in the transaxle.

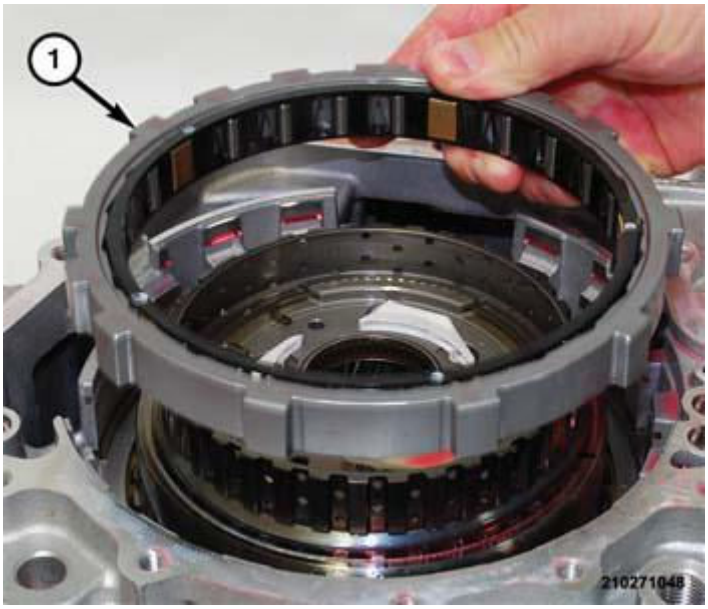

Fig. 284: One-Way-Clutch
Courtesy of CHRYSLER GROUP, LLC

28. Lining up the two narrow lugs on the OWC to the two narrow slots on the transaxle housing insert the OWC (1) into the transaxle. Press down until it is seated. The OWC should rotate in a counterclockwise direction only.

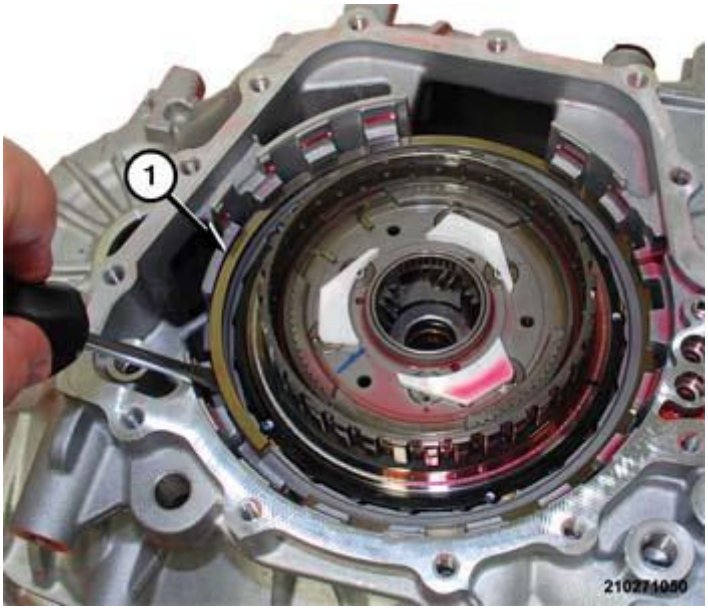

Fig. 285: One-Way-Clutch Snap Ring
Courtesy of CHRYSLER GROUP, LLC

29. Install the snap ring (1) to hold the OWC to the transaxle housing

30. Turn transaxle over to gain access to the front of the transaxle.

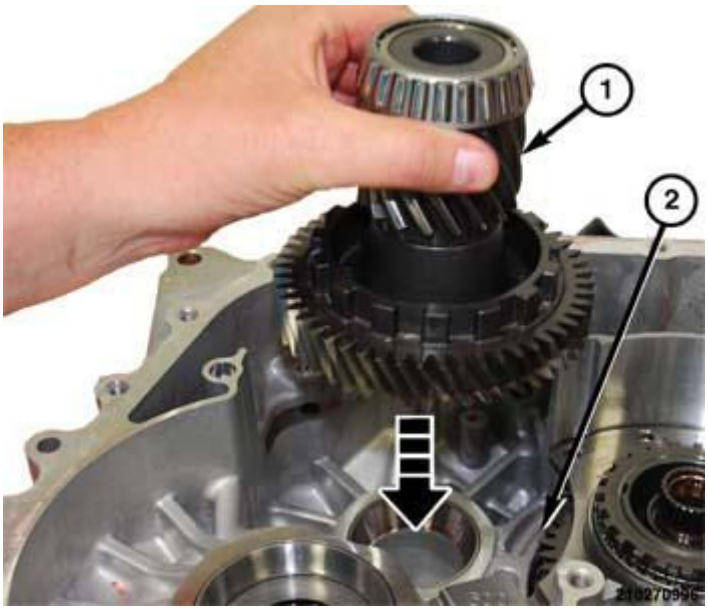

Fig. 286: Transfer Driven Gear Assembly & Transaxle
Courtesy of CHRYSLER GROUP, LLC

31. Install the transfer driven gear (1) assembly in position in the transaxle (2).

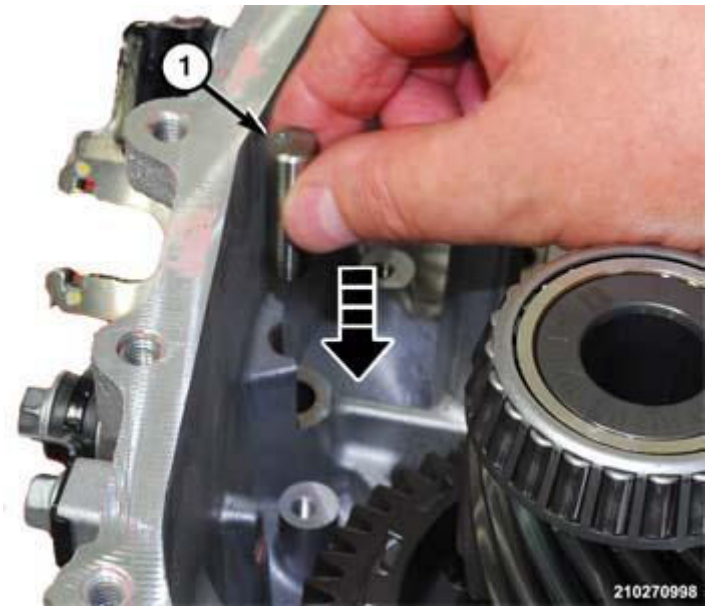

Fig. 287: Park Sprag Support Shaft & Transaxle Housing
Courtesy of CHRYSLER GROUP, LLC

32. Install the park sprag support shaft (1) in position in the transaxle housing.

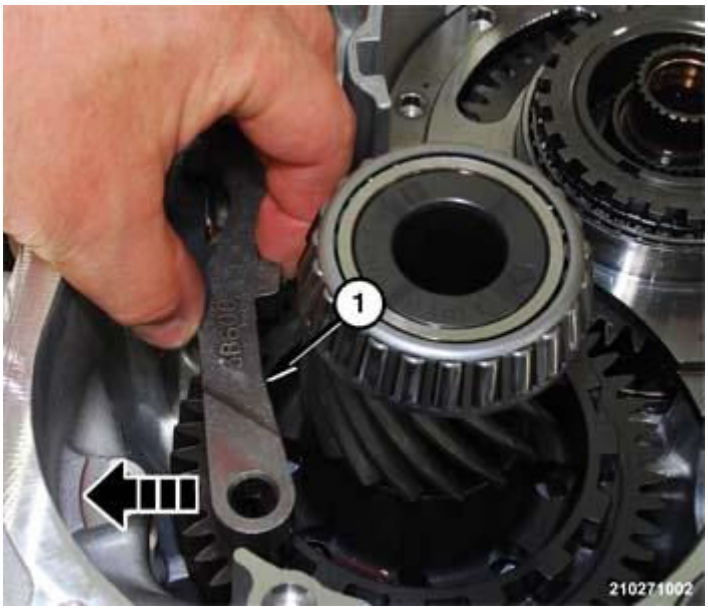

Fig. 288: Park Sprag & Transaxle Housing
Courtesy of CHRYSLER GROUP, LLC

33. Insert the park sprag (1) in position in the transaxle housing.

Fig. 289: Park Sprag Spring, Shaft & Transaxle Housing
Courtesy of CHRYSLER GROUP, LLC

34. Install the park sprag spring and shaft (1) in position in the transaxle housing.

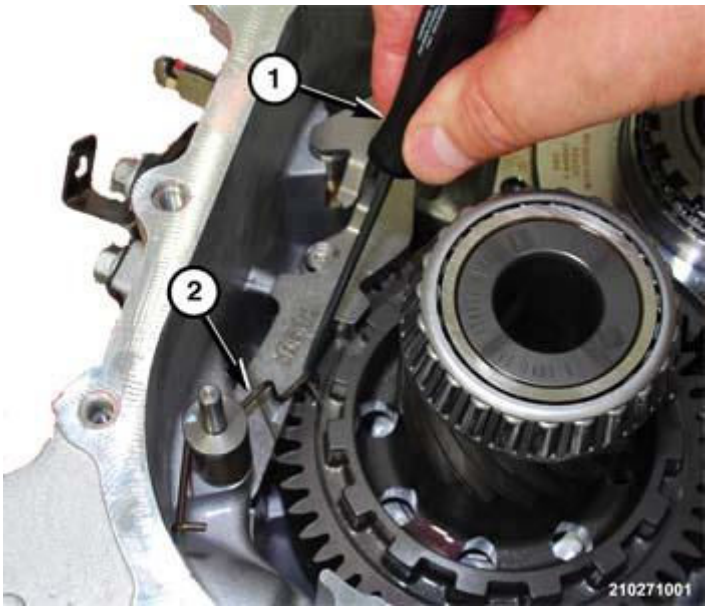

Fig. 290: Park Sprag Spring & Park Sprag
Courtesy of CHRYSLER GROUP, LLC

35. Using a suitable hook tool (1), lift the park sprag spring (2) onto the park sprag.

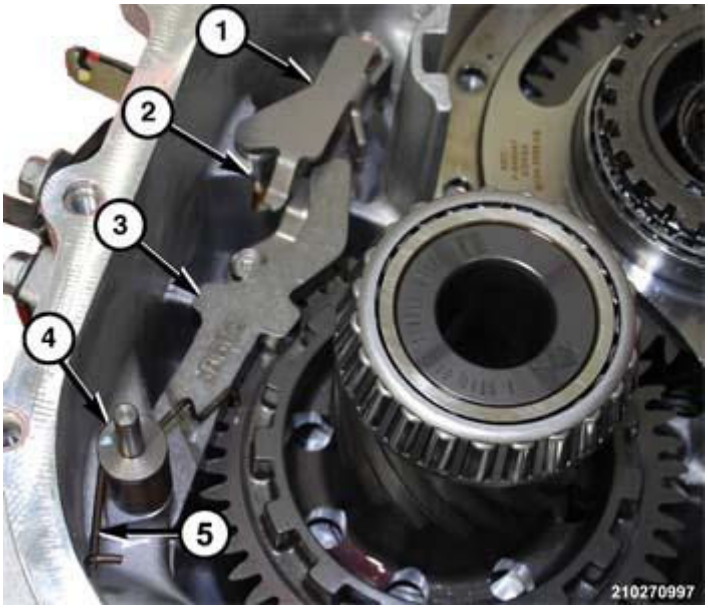

Fig. 291: Park Rod Guide & Bolts
Courtesy of CHRYSLER GROUP, LLC

36. Install bolts to hold the park rod guide (1) in position on the transaxle housing.

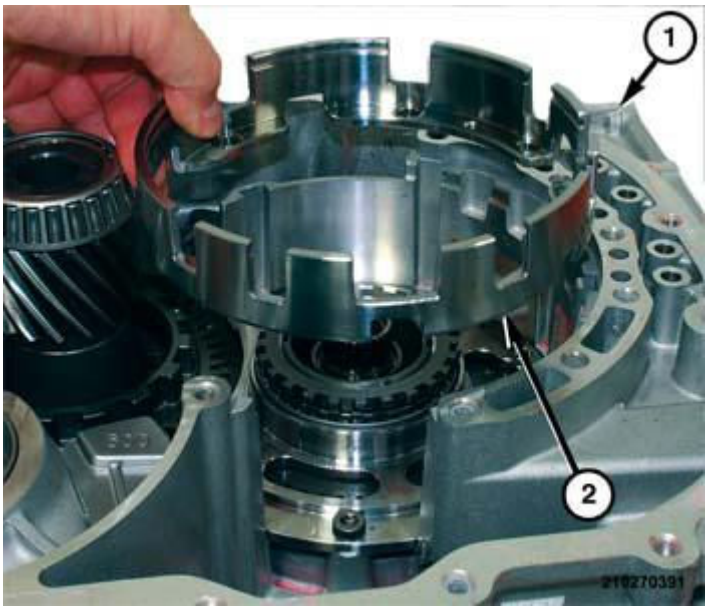

Fig. 292: Underdrive Brake Retainer & Transaxle Housing
Courtesy of CHRYSLER GROUP, LLC

37. Place the underdrive brake retainer (2) in position on the transaxle housing (1).

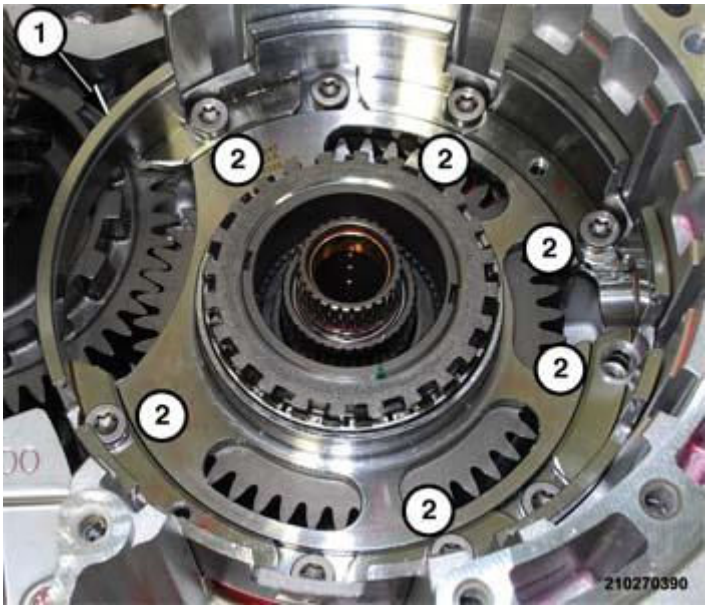

Fig. 293: Underdrive Brake Retainer & Bolts
Courtesy of CHRYSLER GROUP, LLC

38. Install bolts (2) to hold the underdrive brake retainer (1) to the transaxle housing. Refer to **SPECIFICATIONS**.

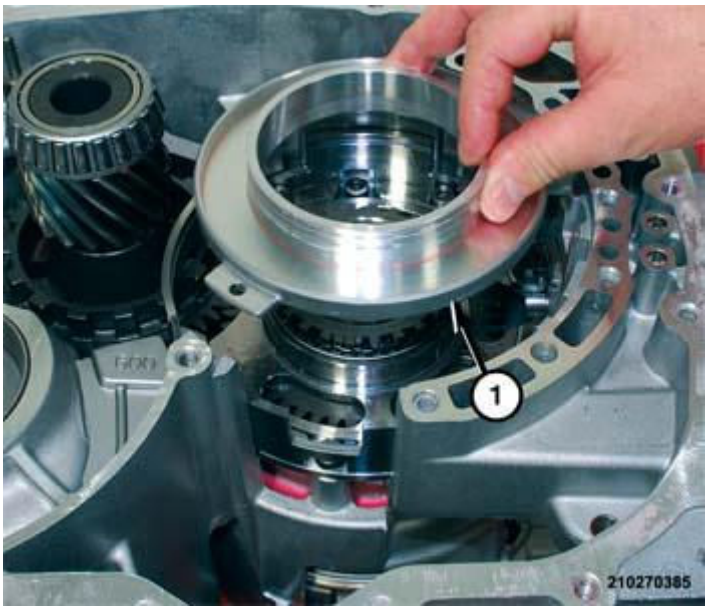

Fig. 294: Underdrive Brake Chamber & Transaxle Housing
Courtesy of CHRYSLER GROUP, LLC

39. Place the underdrive brake chamber in position on the transaxle housing.

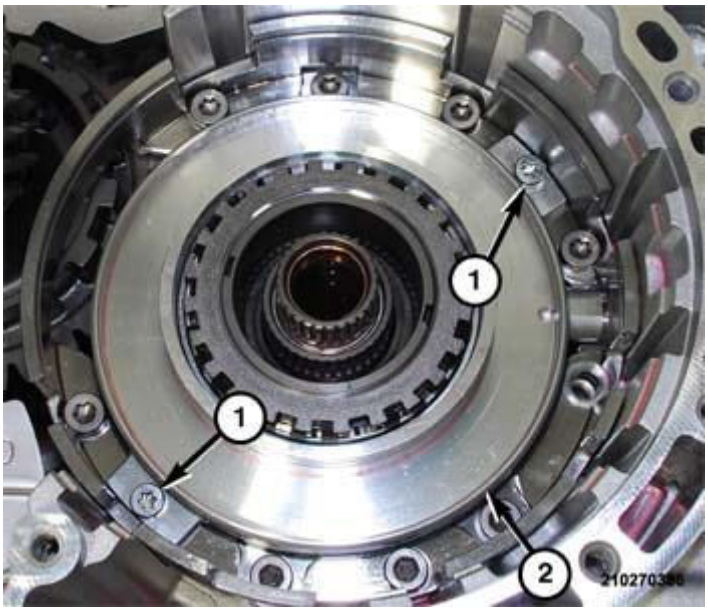

Fig. 295: Underdrive Brake Chamber & Bolts
Courtesy of CHRYSLER GROUP, LLC

40. Install bolts (1) to hold the underdrive brake chamber (2) to the transaxle housing. Refer to **SPECIFICATIONS**.

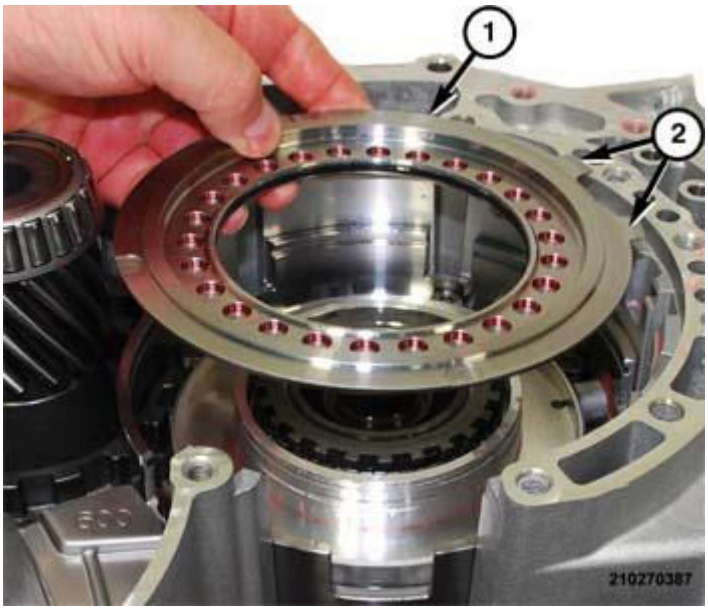

Fig. 296: Underdrive Brake Piston & Location Tabs
Courtesy of CHRYSLER GROUP, LLC

41. Install

    NEW

    D-ring outer seal and the O-ring inner seal in the lands on the underdrive piston.

42. Install the underdrive brake piston (1) in position on the underdrive brake piston chamber.

    NOTE: The location tabs (2) on the underdrive brake piston should be oriented toward the valve body opening in the transaxle.

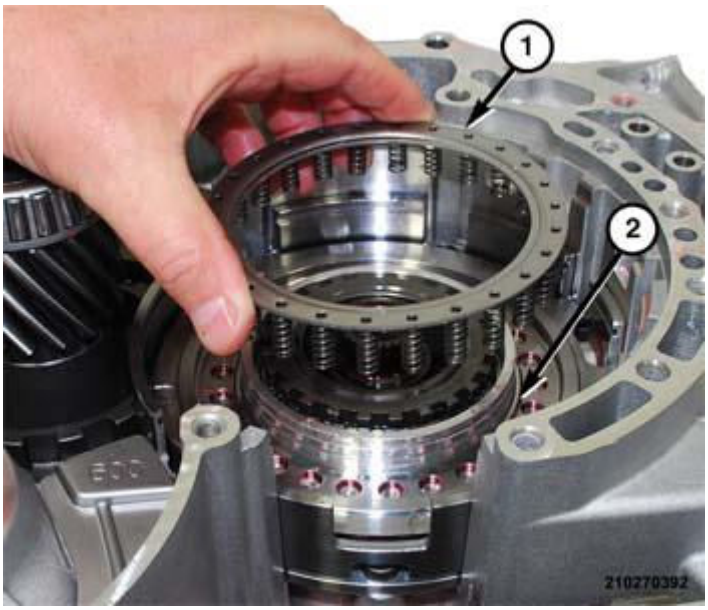

Fig. 297: Underdrive Spring Retainer & Underdrive Brake Piston
Courtesy of CHRYSLER GROUP, LLC

43. Push underdrive brake piston (3) downward until it seats in the underdrive brake chamber.
44. Place the underdrive spring retainer (1) in position on the underdrive brake piston (2).

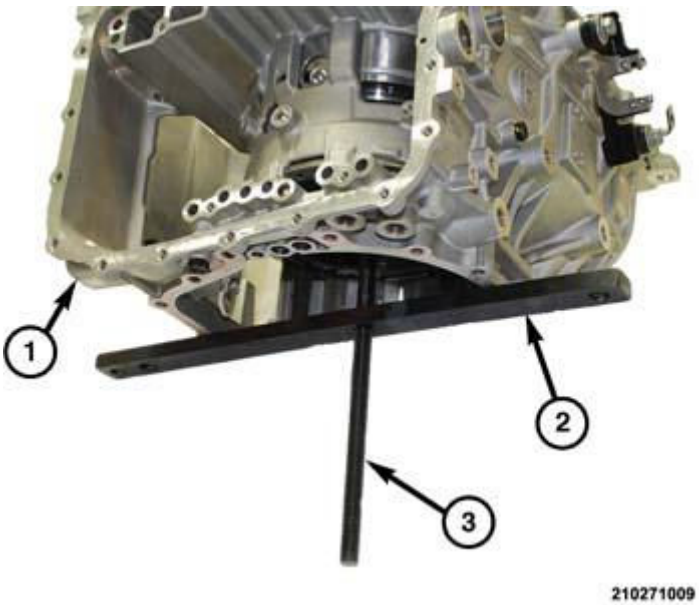

Fig. 298: Tool Bolt & Tool Cross Bar
Courtesy of CHRYSLER GROUP, LLC

45. Insert the bolt (3) for tool 5058A through tool 10426
46. Insert the tool bolt (3) with the spring compressor through the center of the

transaxle (1) and out the back into the threaded center bore of the tool cross bar (2) spanning the back of the transaxle.

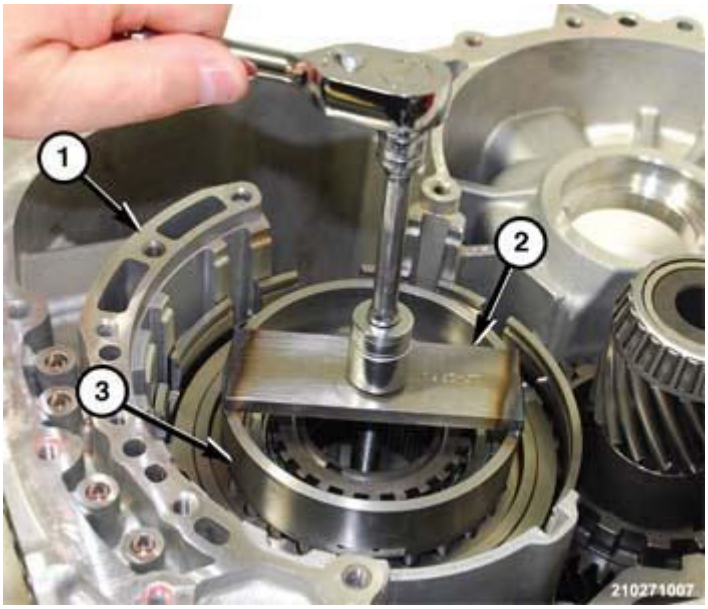

Fig. 299: Tool 5058A & Tool 10426
Courtesy of CHRYSLER GROUP, LLC

(special tool #5058A-3, Screw, Forcing)

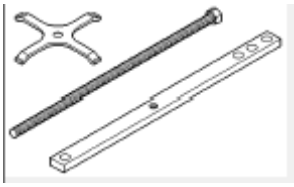

Fig. 300: Special Tool #5058A-3
Courtesy of CHRYSLER GROUP, LLC

(special tool #10426, Compressor, Underdrive Spring)

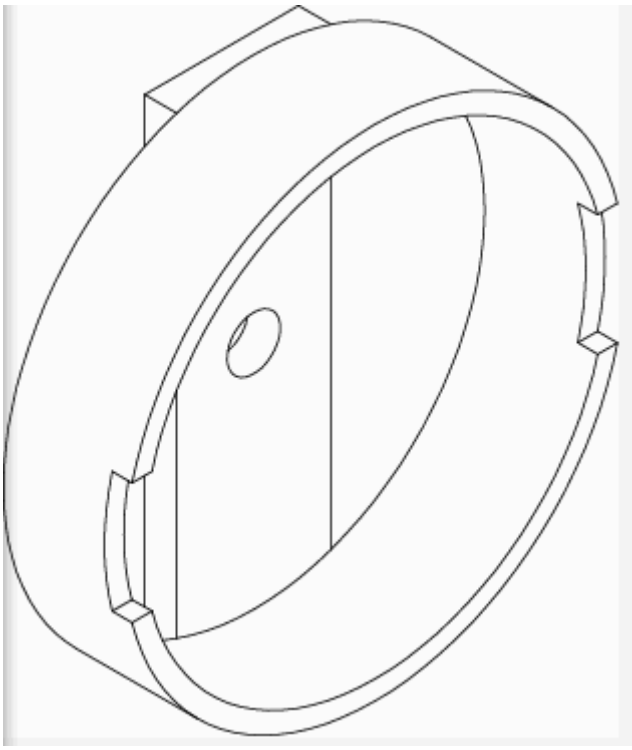

Fig. 301: Special Tool #10426
Courtesy of CHRYSLER GROUP, LLC

Compress the underdrive springs (3) to gain access to the snap ring land.

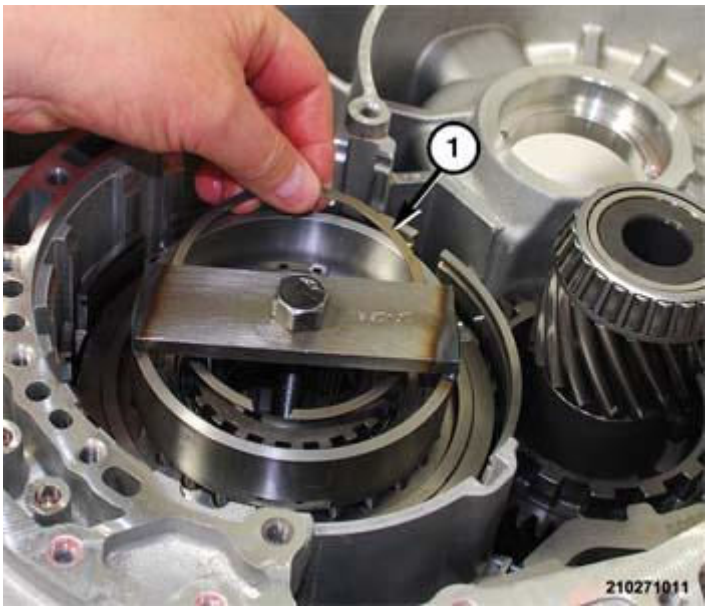

Fig. 302: Underdrive Spring Plate Snap Ring
Courtesy of CHRYSLER GROUP, LLC

47. Install the snap ring (1) to hold the underdrive spring plate to the underdrive brake hub.

48. Remove the spring compressor tool from the transaxle.
49. Turn the transaxle over to gain access to the rear cover.

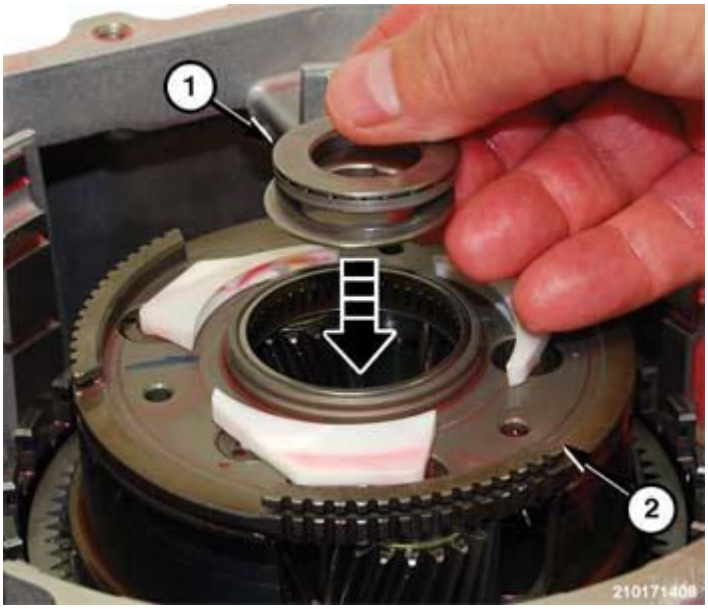

Fig. 303: Thrust Bearing, Race Set & Middle/Rear Planetary Gear Assembly
Courtesy of CHRYSLER GROUP, LLC

50. Place the thrust bearing (1) and race set into of the center of the middle/rear planetary gear assembly (2).

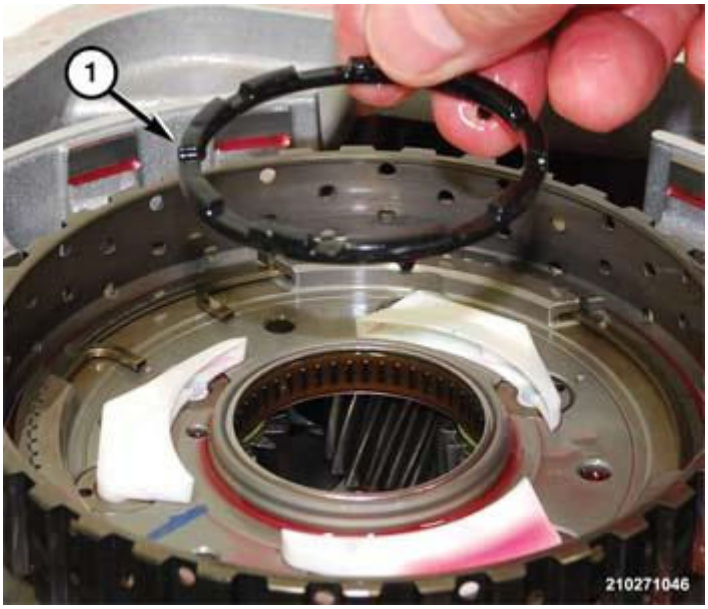

Fig. 304: Thrust Washer & Planetary Gear Assembly Hub
Courtesy of CHRYSLER GROUP, LLC

51. Place the thrust washer (1) in position on the middle/rear planetary gear.

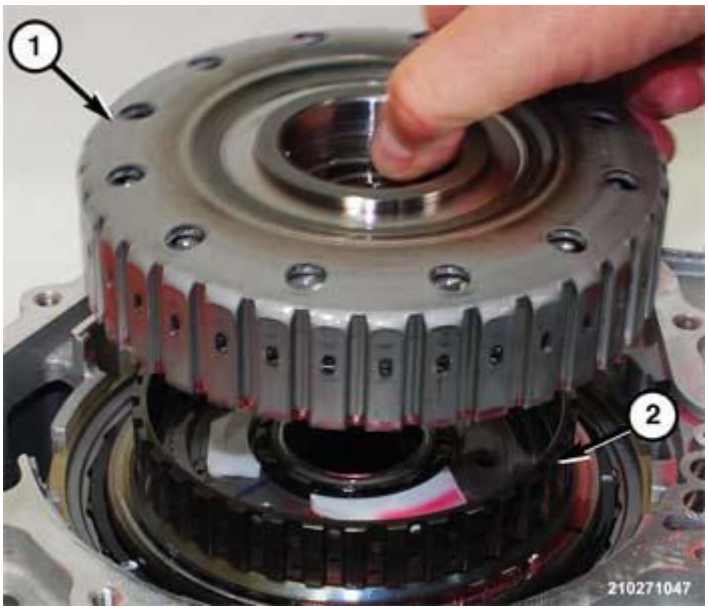

Fig. 305: Overdrive Clutch Assembly & One Way Clutch
Courtesy of CHRYSLER GROUP, LLC

52. Install the overdrive clutch assembly (1) onto the one way clutch race (2).

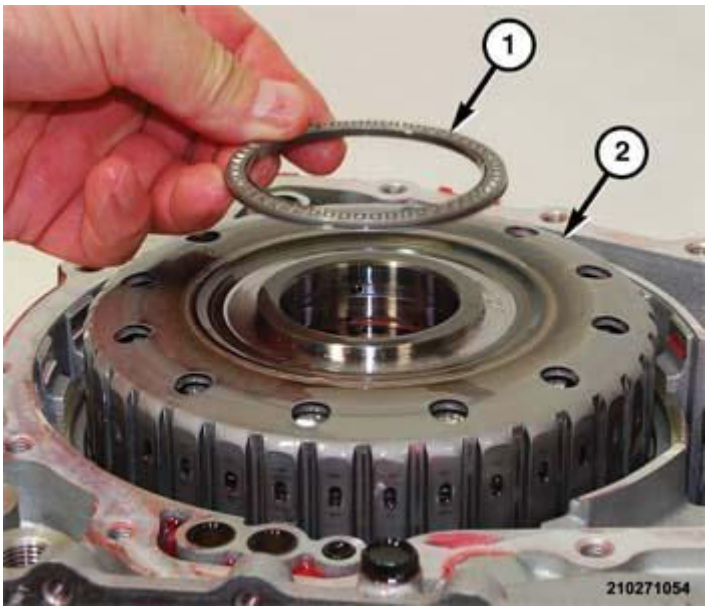

Fig. 306: Thrust Bearing & Overdrive Clutch Hub Assembly
Courtesy of CHRYSLER GROUP, LLC

53. Install thrust bearing (1) onto the overdrive clutch hub (2) assembly with the rollers facing upward.

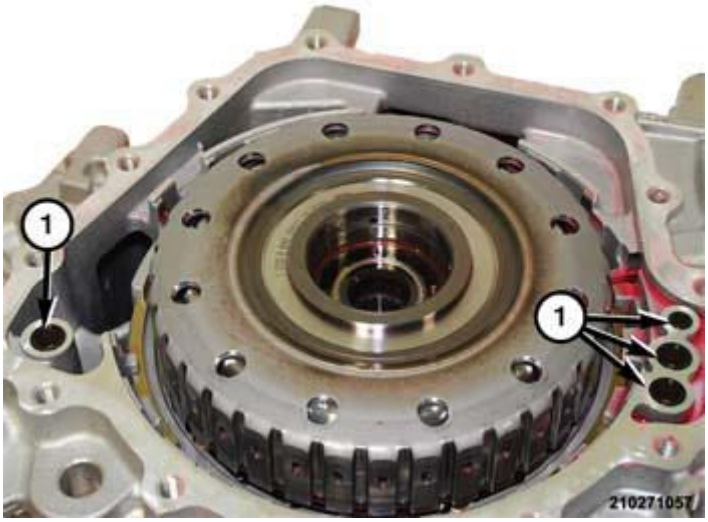

Fig. 307: Transfer Port Seals
Courtesy of CHRYSLER GROUP, LLC

54. Install the four seals (2) into transfer ports in transaxle housing.

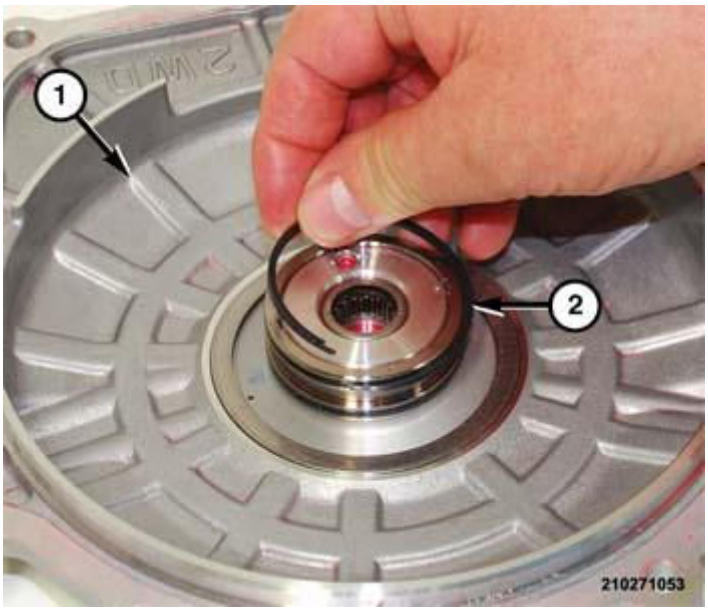

Fig. 308: Split Seal Rings & Rear Cover Hub
Courtesy of CHRYSLER GROUP, LLC

55. Install the two split seal ring seals (2) into the lands in the rear cover (1) hub.

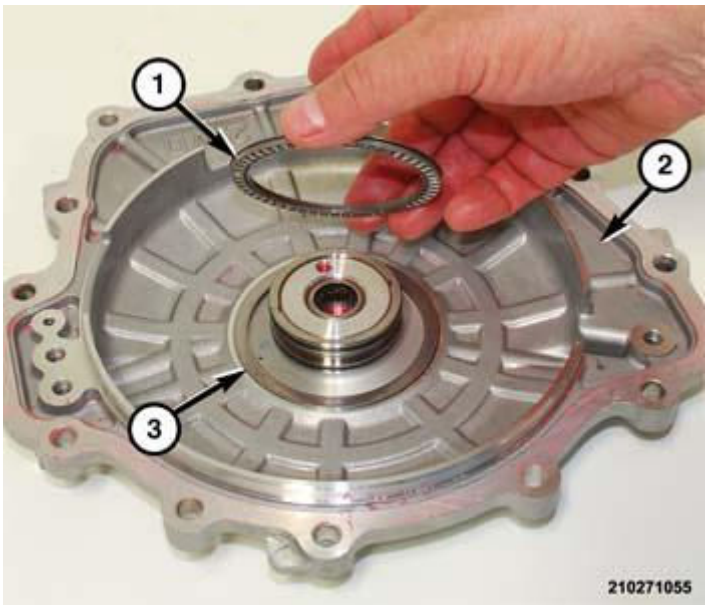

Fig. 309: Selective Spacer, Bearing & Rear Cover
Courtesy of CHRYSLER GROUP, LLC

56. Using assembly lube applied in the seat area of the rear cover (3), Install the selective spacer (1) onto the rear cover (2).
57. Apply a 3 mm (0.120 in.) bead of Dupont® Loctite™ 5460 Pink Flange Sealant or equivalent around the perimeter of the rear cover.

Fig. 310: Rear Cover Separated From Transaxle
Courtesy of CHRYSLER GROUP, LLC

58. Place the rear cover (1) in position on the transaxle.

Fig. 311: Transaxle Rear Cover & Bolts
Courtesy of CHRYSLER GROUP, LLC

59. Install bolts to hold the rear cover (1) to the transaxle. Refer to **SPECIFICATIONS**.
60. Turn transaxle over to gain access to the underdrive brake.

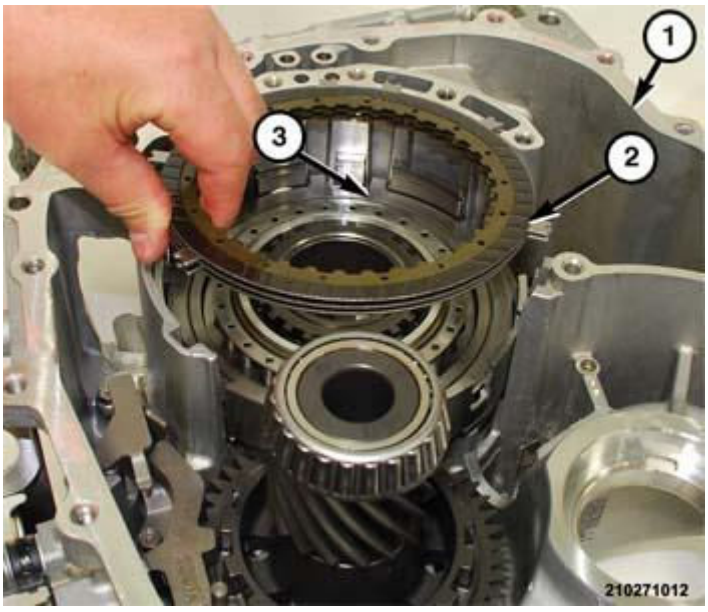

Fig. 312: Underdrive Brake Plates, Discs & Drum
Courtesy of CHRYSLER GROUP, LLC

61. Place underdrive brake plates and discs in position in underdrive brake drum.

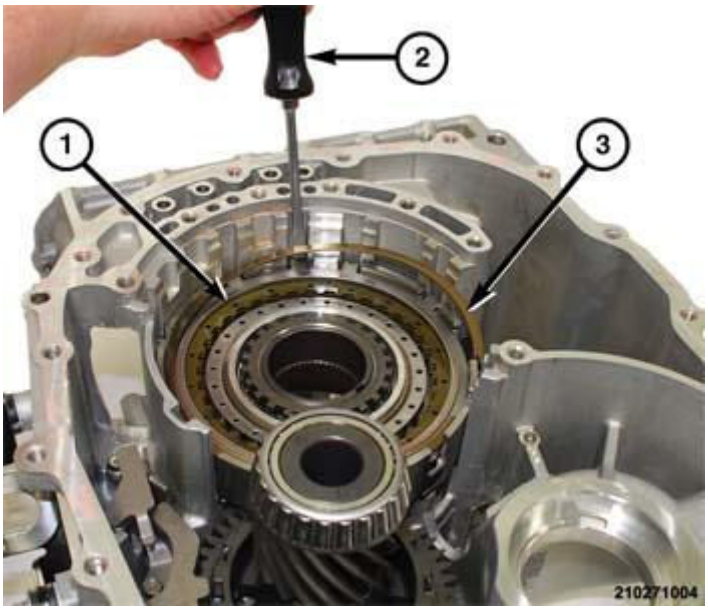

Fig. 313: Underdrive Brake, Underdrive Brake Drum, & Large Snap Ring
Courtesy of CHRYSLER GROUP, LLC

62. Install large snap ring (3) to hold underdrive brake (1) into the underdrive brake drum.

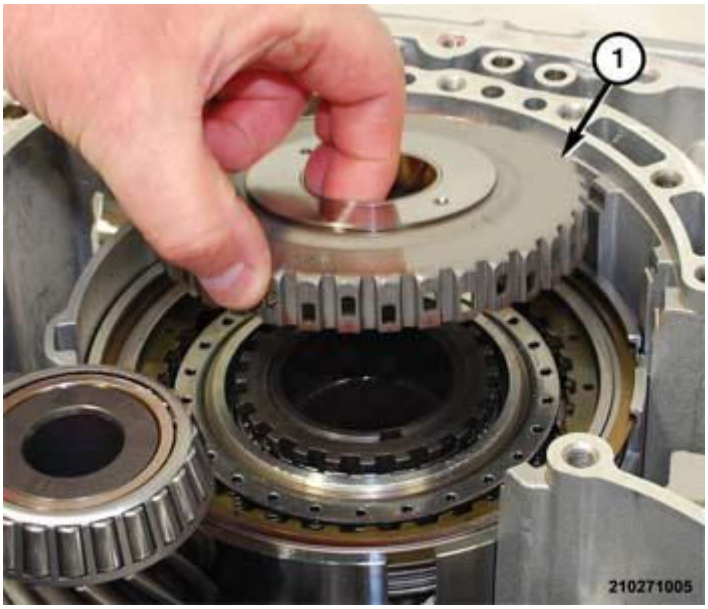

Fig. 314: Underdrive Brake Hub
Courtesy of CHRYSLER GROUP, LLC

63. Install underdrive brake hub (1) assembly in position on transaxle.

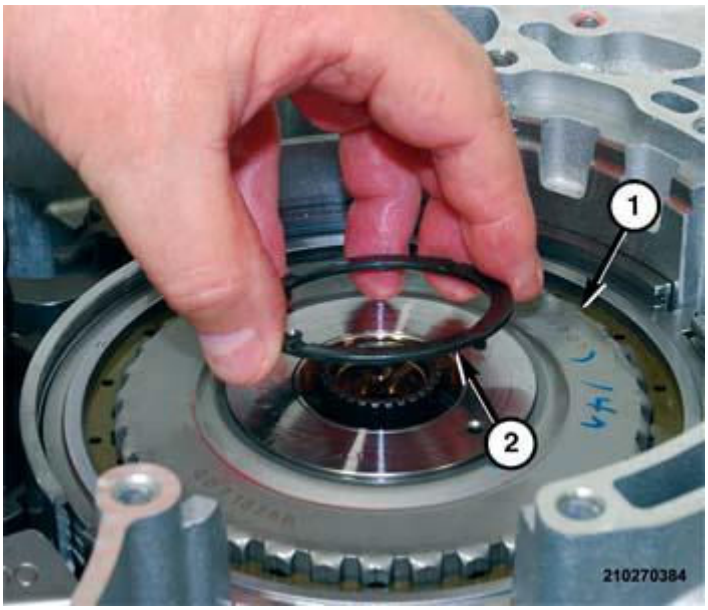

Fig. 315: Underdrive Brake Hub & Thrust Washer
Courtesy of CHRYSLER GROUP, LLC

64. Install thrust washer (2) in position on the underdrive brake hub.

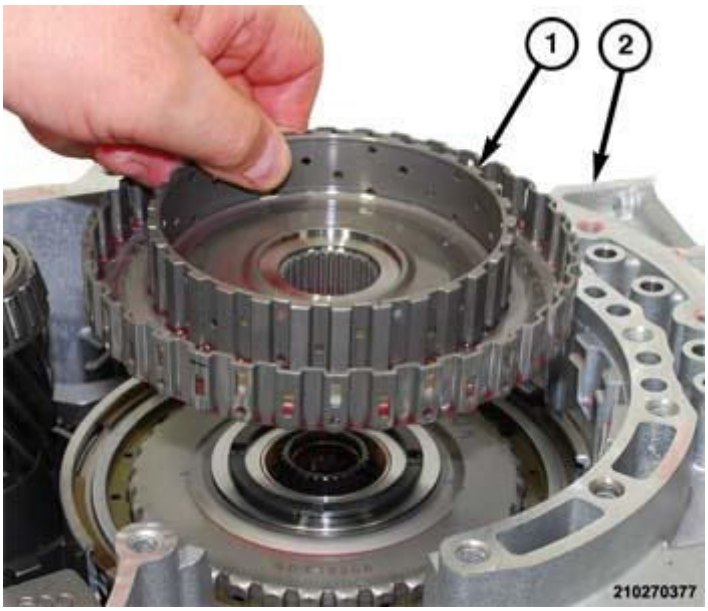

Fig. 316: 3/5/R Clutch & 2/6 Brake Hub Assembly
Courtesy of CHRYSLER GROUP, LLC

65. Install the 3/5/R clutch and 2/6 brake hub (1) assembly in position on the underdrive clutch.

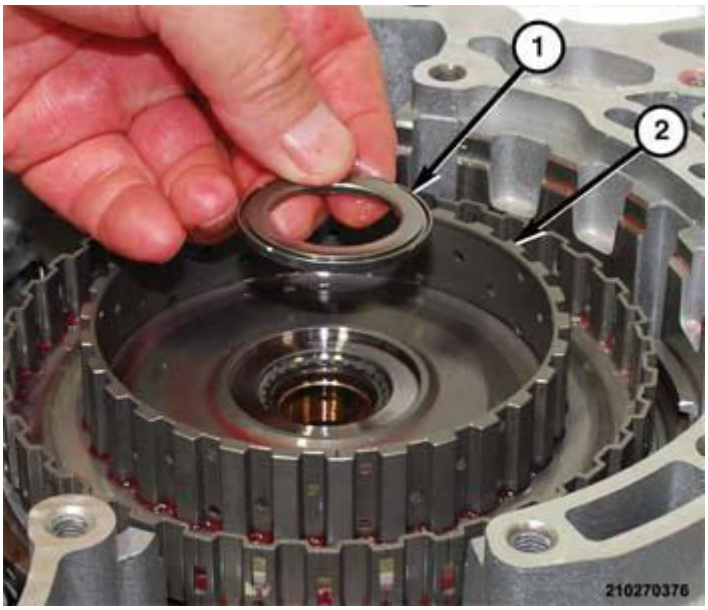

Fig. 317: 3/5/R Clutch & 2/6 Brake Hub, Thrust Bearing
Courtesy of CHRYSLER GROUP, LLC

66. Install the thrust bearing (2) in position on the 3/5/R clutch and 2/6 brake hub.

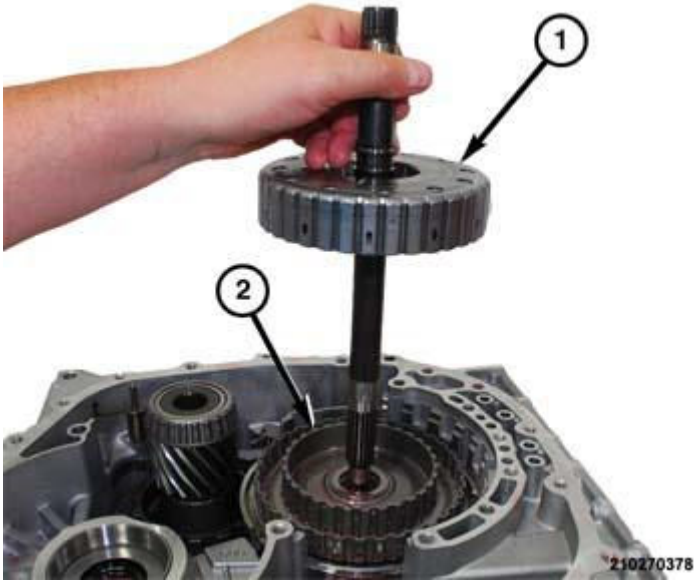

Fig. 318: 3/5/R Clutch Assembly, 3/5/R & 2/6 Brake Hub Assembly
Courtesy of CHRYSLER GROUP, LLC

67. Install the 3/5/R clutch assembly (1) in position in the 3/5/R and 2/6 brake hub (2) assembly.

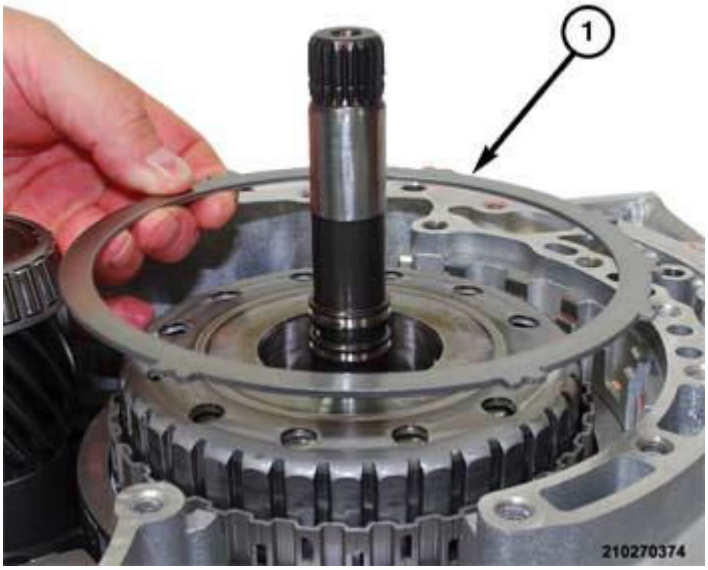

Fig. 319: 2/6 Brake Select Thickness Reaction Plate & Hub
Courtesy of CHRYSLER GROUP, LLC

68. Install 2/6 brake select thickness reaction plate (1) in position in the 2/6 brake hub.

Fig. 320: 2/6 Brake Plates, Discs & Hub
Courtesy of CHRYSLER GROUP, LLC

69. Install the 2/6 brake alternating the (1) plates (3) and discs (2) in position in the 2/6 brake hub.

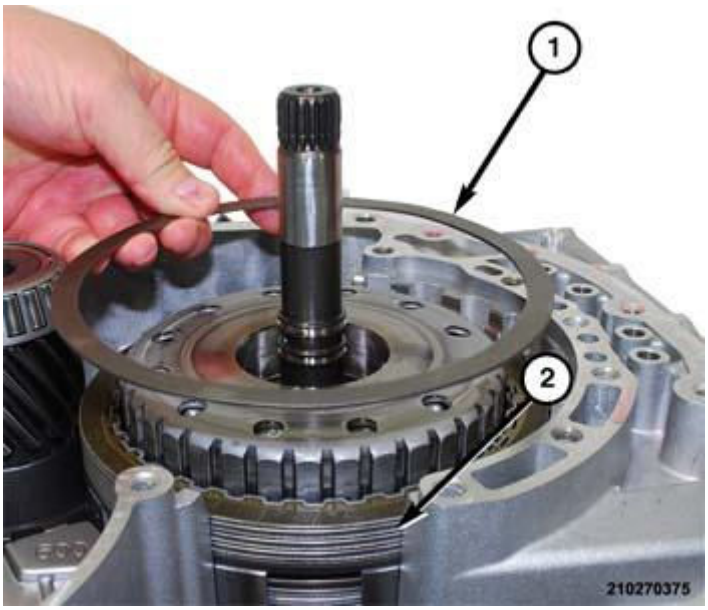

Fig. 321: 2/6 Brake Wave Plate & Hub
Courtesy of CHRYSLER GROUP, LLC

70. Install 2/6 brake wave plate (1) in position in the 2/6 brake hub.

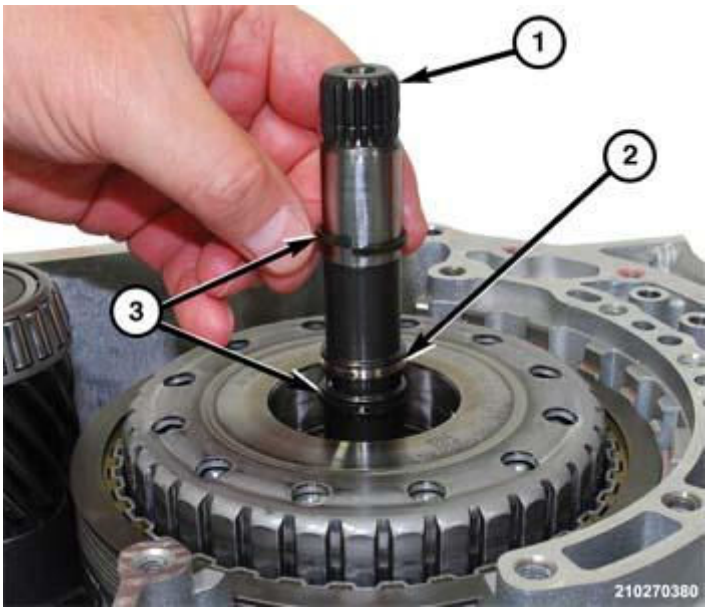

Fig. 322: Split Ring Seals & Input Shaft
Courtesy of CHRYSLER GROUP, LLC

71. Install two split ring seals (2) in the seal lands (2) in the input shaft (1).

Fig. 323: Split Seal Rings & Fluid Pump Hub
Courtesy of CHRYSLER GROUP, LLC

72. Install two split seal rings (3) in the lands (2) in fluid pump (1) hub.

Fig. 324: Thrust Washer & Fluid Pump
Courtesy of CHRYSLER GROUP, LLC

73. Apply a 3 mm (0.120 in.) bead of Dupont® Loctite™ 5460 Pink Flange Sealant or equivalent around the perimeter of the fluid pump sealing surface.
74. Using assembly lube, install the plastic thrust washer (2) in position on the underside of the fluid pump (1). There are three nubs that insert into holes in the fluid pump hub to prevent the thrust washer from rotating.

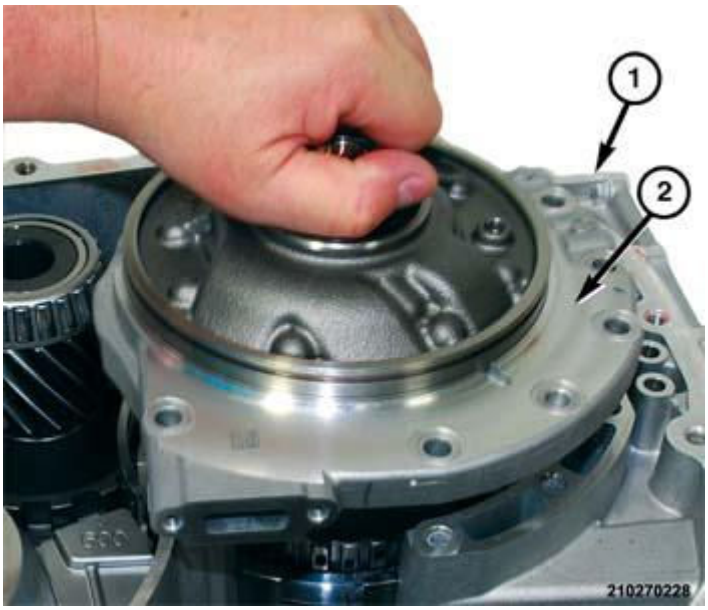

Fig. 325: Fluid Pump Separated From Transaxle Housing
Courtesy of CHRYSLER GROUP, LLC

75. Place the fluid pump (2) in position on the transaxle housing (1).

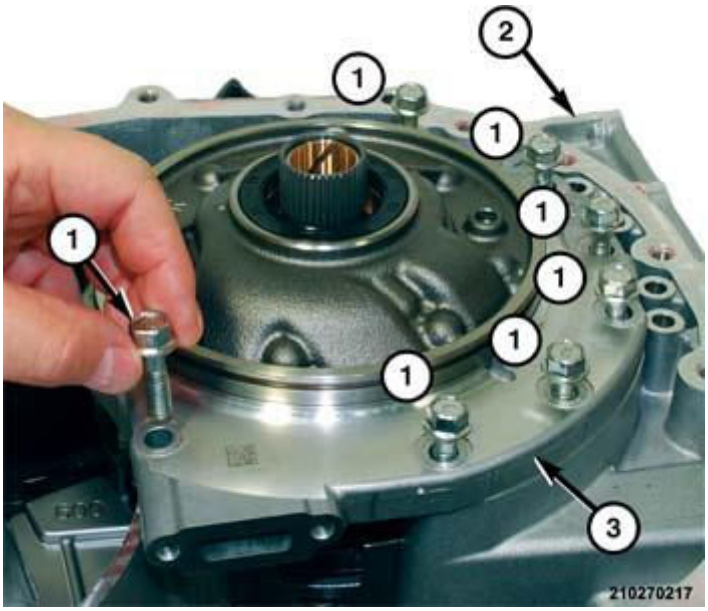

Fig. 326: Fluid Pump & Bolts
Courtesy of CHRYSLER GROUP, LLC

76. Install bolts (1) to hold fluid pump (3) to the trans axle housing (2). Refer to **SPECIFICATIONS**.
77. Install **NEW** o-ring seal in position in the groove in the fluid pump housing.

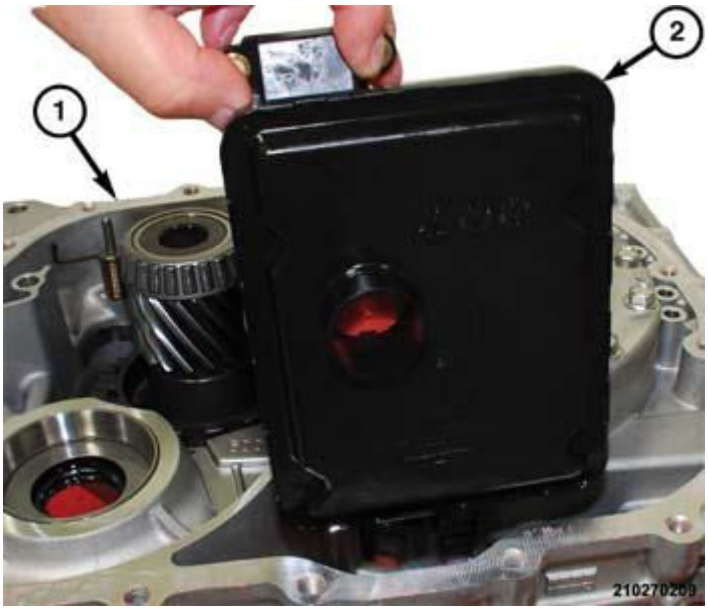

Fig. 327: Fluid Filter Separated From Transaxle Housing
Courtesy of CHRYSLER GROUP, LLC

78. Place the fluid filter (2) in position in the transaxle housing (1).

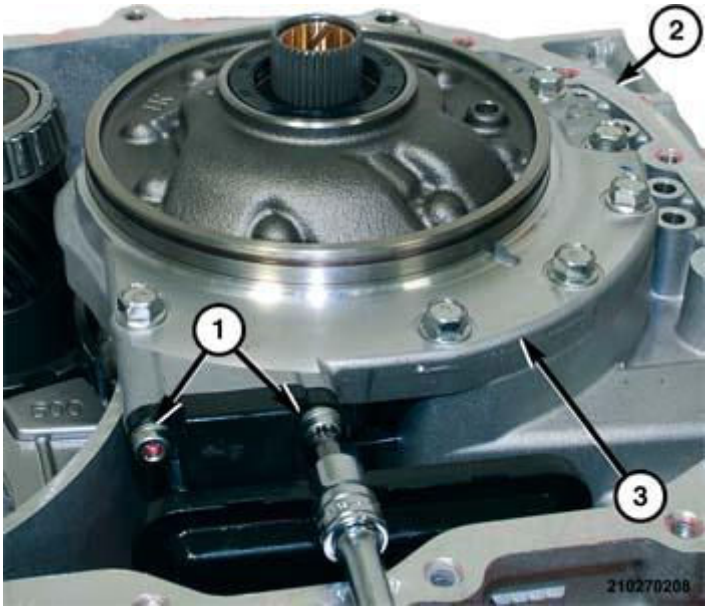

Fig. 328: Fluid Filter, Fluid Pump & Bolts
Courtesy of CHRYSLER GROUP, LLC

79. Install bolts (1) to hold the fluid filter to the fluid pump (3) housing. Refer to **SPECIFICATIONS**.

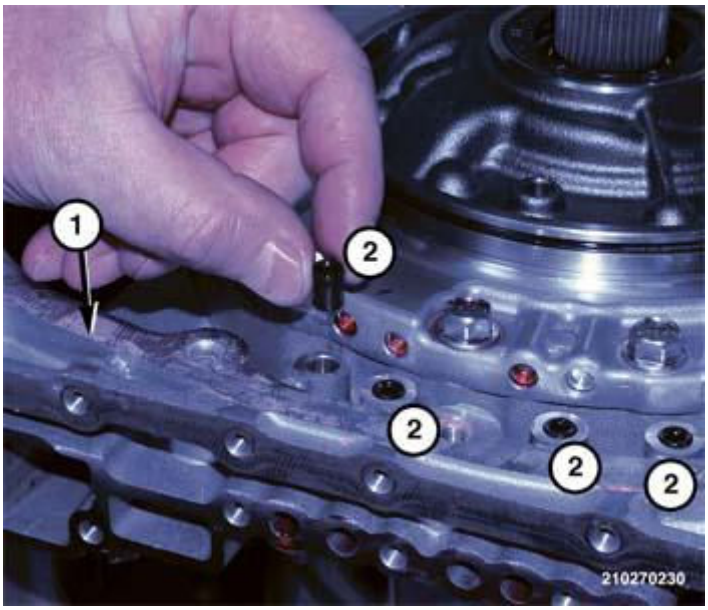

Fig. 329: Small Transfer Port Seals
Courtesy of CHRYSLER GROUP, LLC

80. Install seals in position in four small transfer ports (2) in the transaxle housing (1).

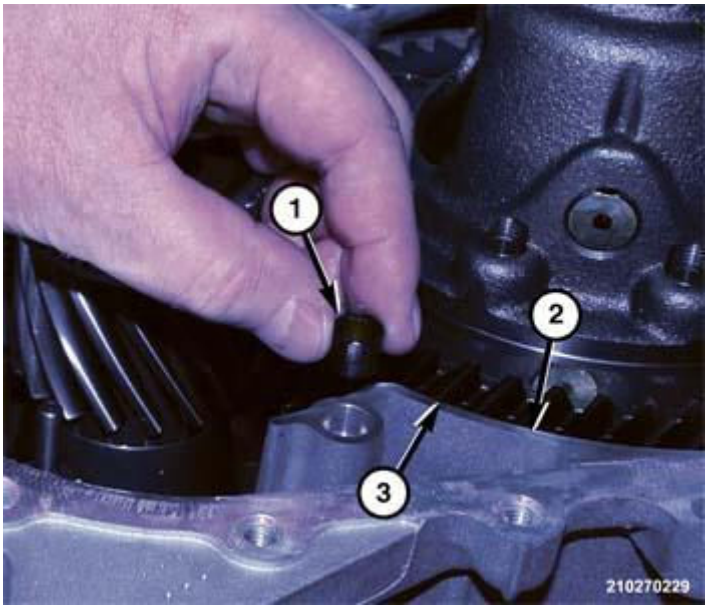

Fig. 330: Large Transfer Port Seal
Courtesy of CHRYSLER GROUP, LLC

81. Install seal in position in the large transfer port (1) in the axle housing (2).

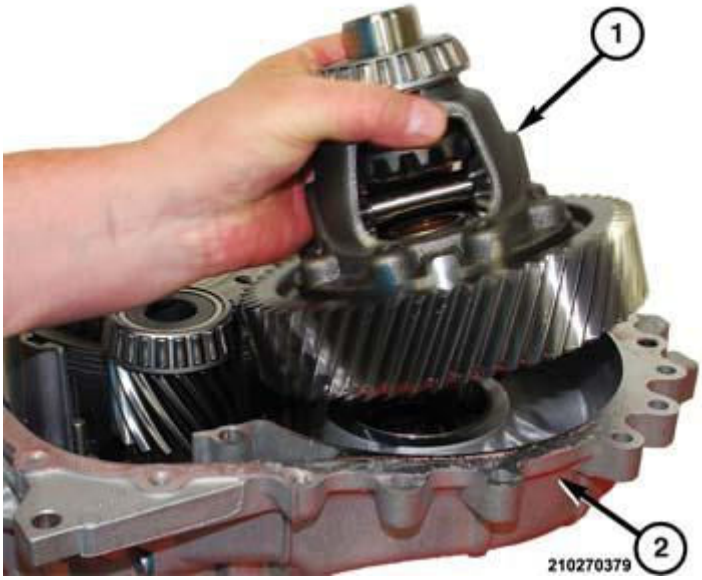

Fig. 331: Differential Assembly Separated From Transaxle Housing
Courtesy of CHRYSLER GROUP, LLC

82. Place the differential assembly in position in the transaxle housing.
83. Apply a 3 mm (0.120 in.) bead of Dupont® Loctite™ 5460 Pink Flange Sealant or equivalent around the perimeter of the transaxle housing.

Fig. 332: Bell Housing Separated From Transaxle
Courtesy of CHRYSLER GROUP, LLC

84. If fluid guides and tube were removed during cleaning, install related components in the transaxle housing. Refer to **SPECIFICATIONS**.
85. Place the bell housing (1) in position on the transaxle (2).

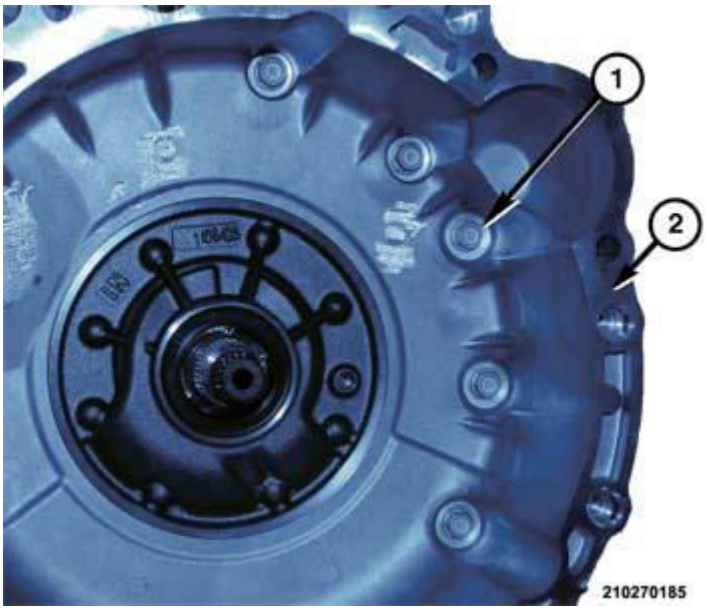

Fig. 333: Inside Bell Housing Bolts
Courtesy of CHRYSLER GROUP, LLC

86. Install five bolts (1) on inside of the bell housing (2). Refer to **SPECIFICATIONS**.

Fig. 334: Transaxle Housing & Bottom Bolts
Courtesy of CHRYSLER GROUP, LLC

87. Install six bolts in the bottom (2) of the transaxle housing (1). Refer to **SPECIFICATIONS**.

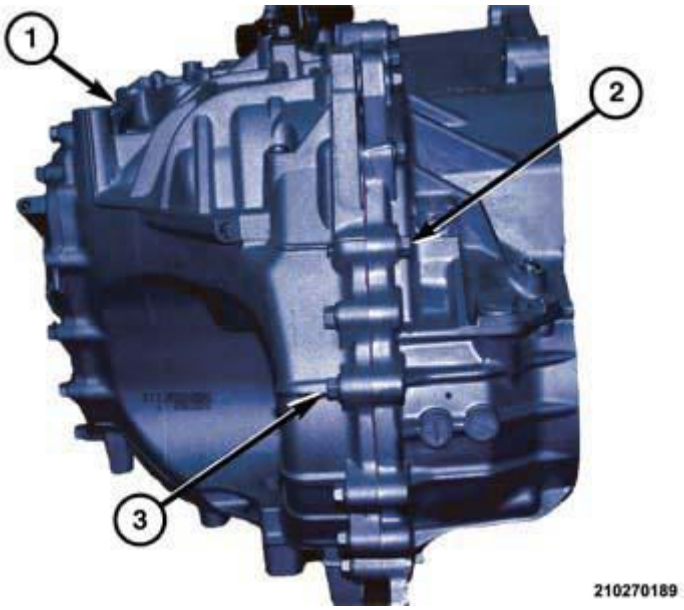

Fig. 335: Transaxle Housing & Bolts
Courtesy of CHRYSLER GROUP, LLC

88. Install five bolts in the back (3) and five bolts in the top (2) of the transaxle housing (1). Refer to **SPECIFICATIONS**.

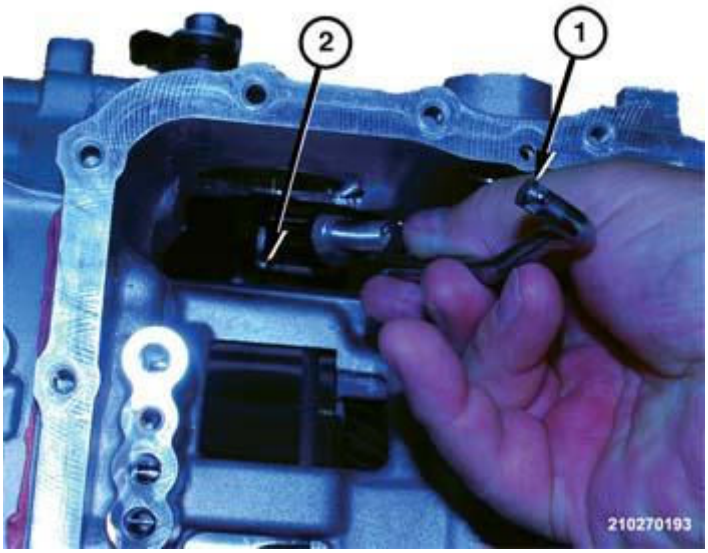

Fig. 336: Park Rod & Park Rod Guide
Courtesy of CHRYSLER GROUP, LLC

89. If seal required replacement, install the

    NEW

    lip seal in the manual shaft hole in the transaxle housing.

90. Insert the park rod (1) into the park rod guide.

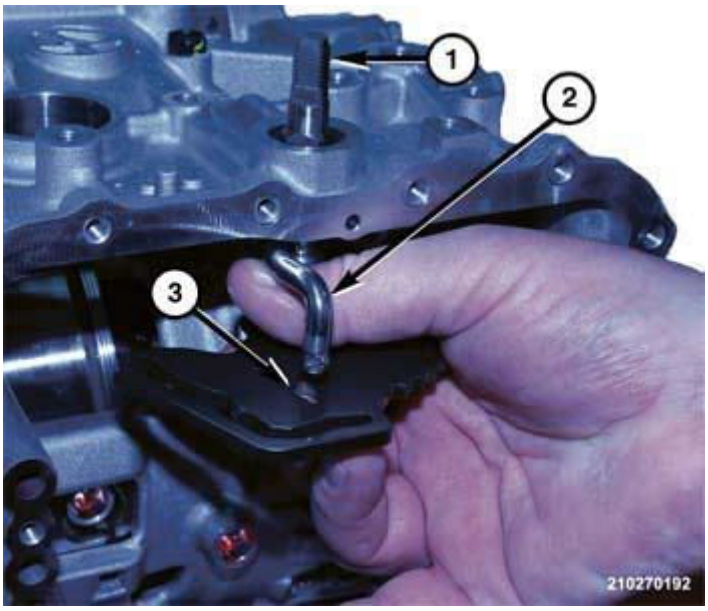

Fig. 337: Manual Shaft, Park Rod & Key Hole Slot
Courtesy of CHRYSLER GROUP, LLC

91. Insert the manual shaft (1) into the bearing in the transaxle.
92. Push manual shaft (1) upward until park rod (2) engages the detent comb.
93. Rotate manual shaft (1) clockwise to lock the staked nub on the park rod (2) in the key hole slot (3) in the manual shaft detent comb.

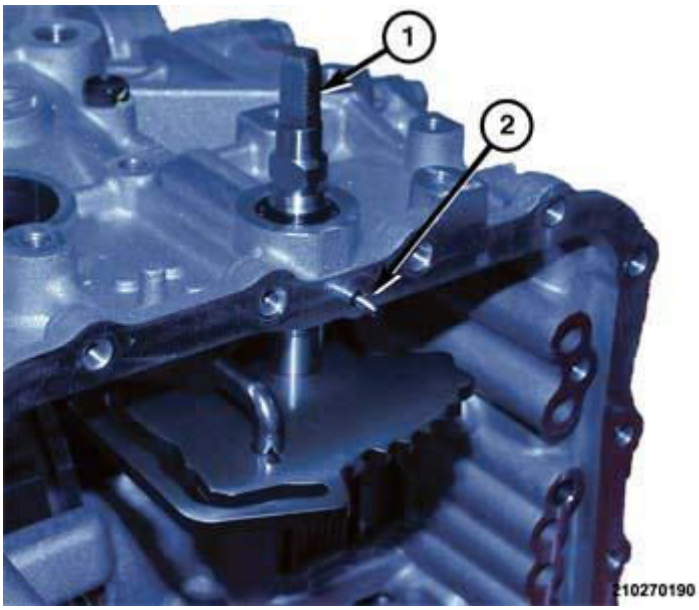

Fig. 338: Manual Shaft & Pin
Courtesy of CHRYSLER GROUP, LLC

94. Install the pin (2) to hold the manual shaft (1) in the transaxle into the hole in the pan gasket flange.

Fig. 339: Main Wire Harness & Sensors
Courtesy of CHRYSLER GROUP, LLC

95. Place the main wire harness and sensors (1) in position on the transaxle.
96. Push the wire connector outward through to hole in the transaxle housing.

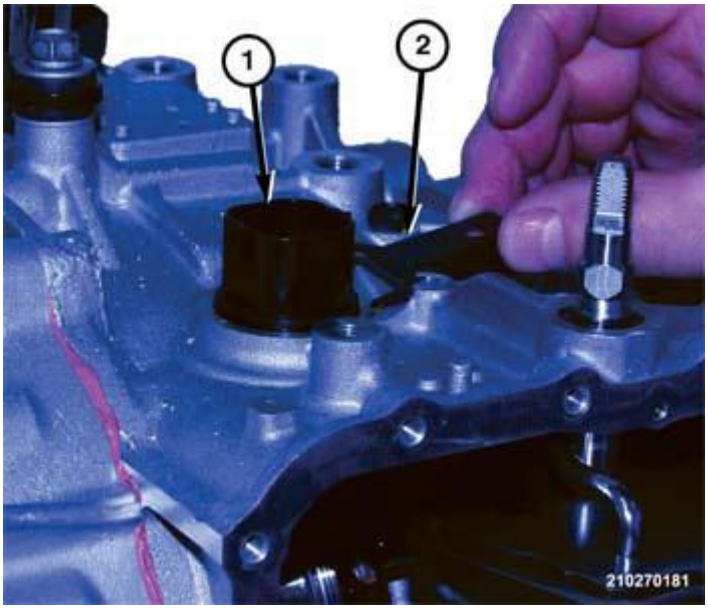

Fig. 340: Wire Connector & Hold Down Bracket Separated From Transaxle
Courtesy of CHRYSLER GROUP, LLC

97. Place the wire connector (1) hold down bracket (2) in position on the transaxle.

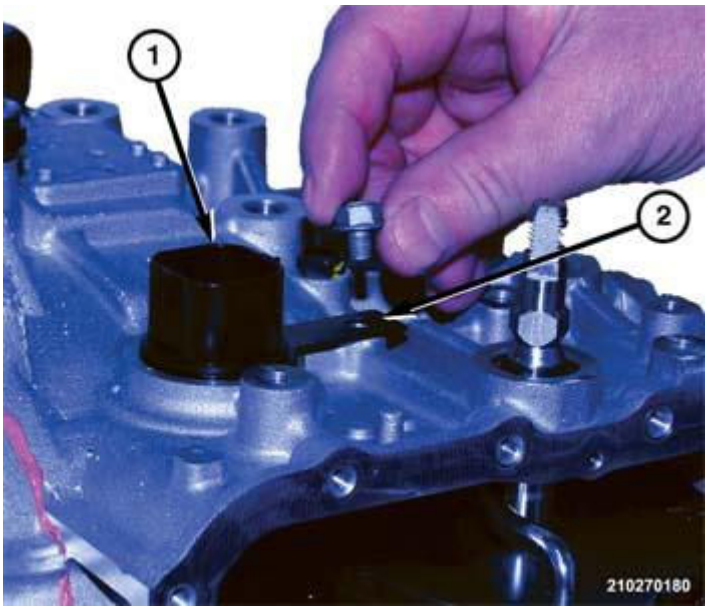

Fig. 341: Hold Down Bracket, Wire Connector & Bolts
Courtesy of CHRYSLER GROUP, LLC

98. Install bolt to hold the wire connector (1) hold down bracket (2) to the top of transaxle housing. Refer to **SPECIFICATIONS**.
99. Insert the speed sensors in position in the transaxle housing.

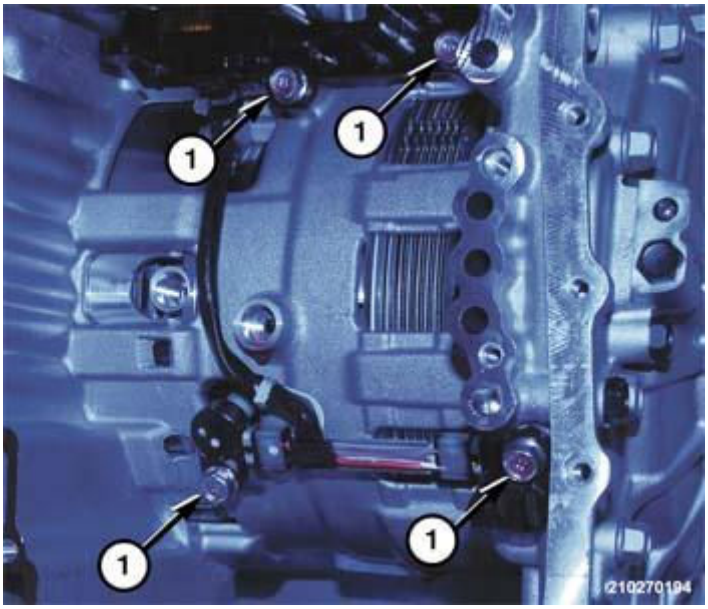

Fig. 342: Speed Sensors, Main Wire Harness & Bolts
Courtesy of CHRYSLER GROUP, LLC

00. Install bolts (1) to hold the speed sensors and main wire harness to transaxle. Refer to **SPECIFICATIONS**.

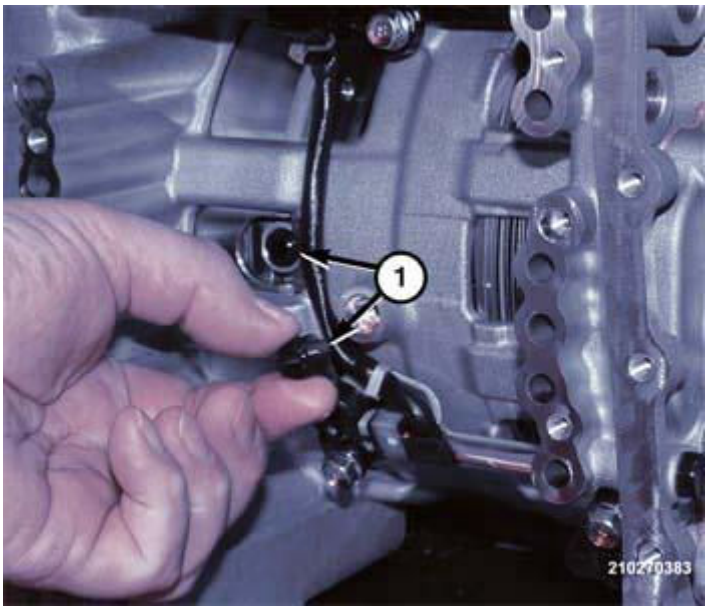

Fig. 343: Transfer Port Seals
Courtesy of CHRYSLER GROUP, LLC

01. Install the two seals into the transfer ports in transaxle housing.

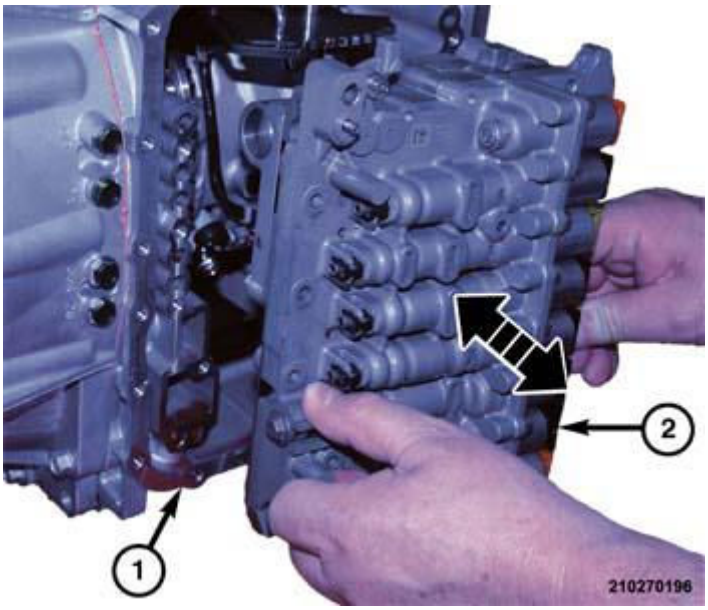

Fig. 344: Valve Body Separated From Transaxle
Courtesy of CHRYSLER GROUP, LLC

02. **The manual valve is loose after the valve body is removed and may fall out during installation.**

Place the valve body (2) in position on the transaxle (1). Guide the pin on the manual valve into the slot in the manual shaft detent comb.

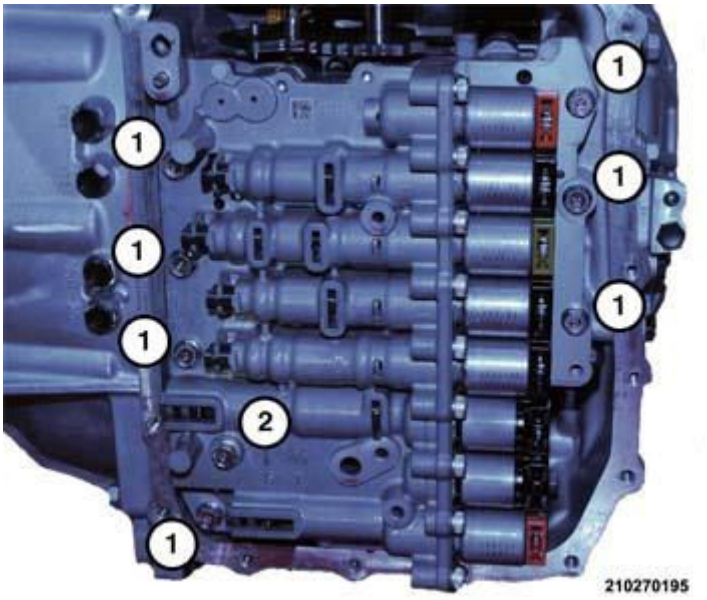

Fig. 345: Valve Body Bolts
Courtesy of CHRYSLER GROUP, LLC

03. Install bolts, 7 short (1) and 1 long (2) bolts, to hold the valve body to the transaxle. Refer to **SPECIFICATIONS**.

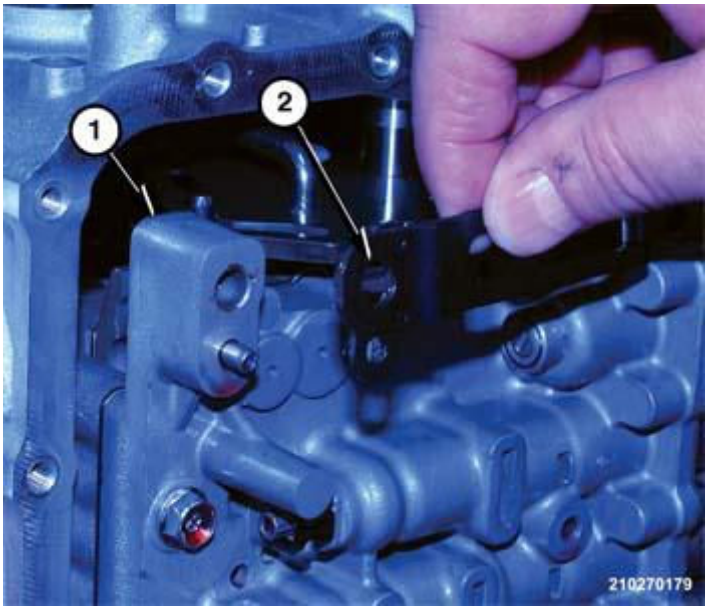

Fig. 346: Detent Spring Separated From Valve Body
Courtesy of CHRYSLER GROUP, LLC

04. Place the detent spring (2) in position on the valve body (1).

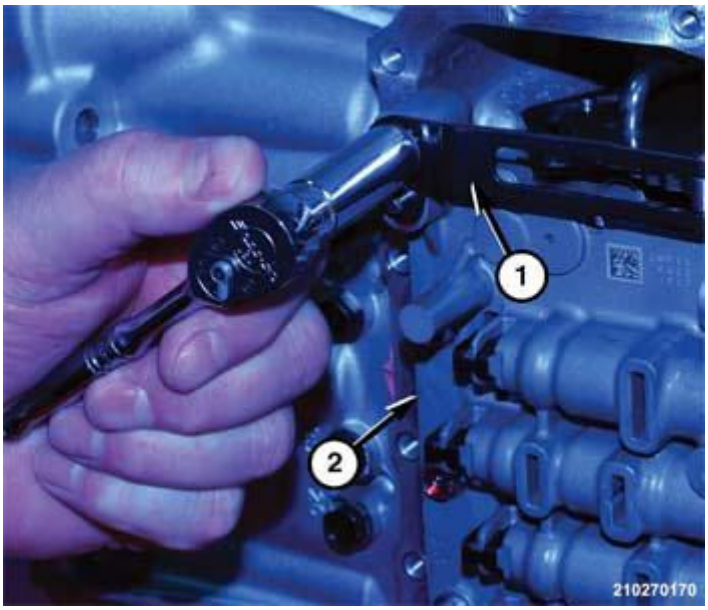

Fig. 347: Manual Shaft Detent Spring & Valve Body
Courtesy of CHRYSLER GROUP, LLC

05. Install the screw to hold the manual shaft detent spring (1) to the valve body (2). Refer to **SPECIFICATIONS**.

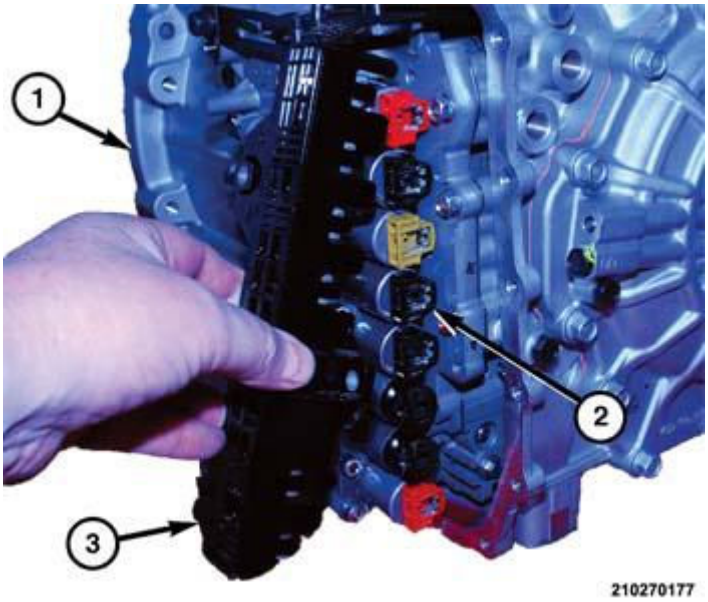

Fig. 348: Solenoids & Connector
Courtesy of CHRYSLER GROUP, LLC

06. Starting at the top solenoid valve, push inward at each solenoid (2) until the connector (3) is engaged.

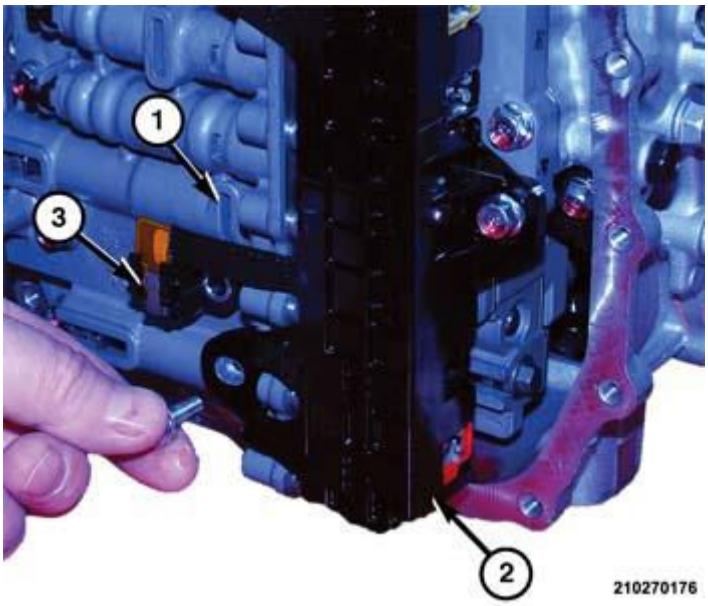

Fig. 349: Solenoid Valve Connector, Valve Body & Bolts
Courtesy of CHRYSLER GROUP, LLC

07. Install bolts to hold the solenoid valve connector (2) to the valve body (1). Refer to **SPECIFICATIONS**.

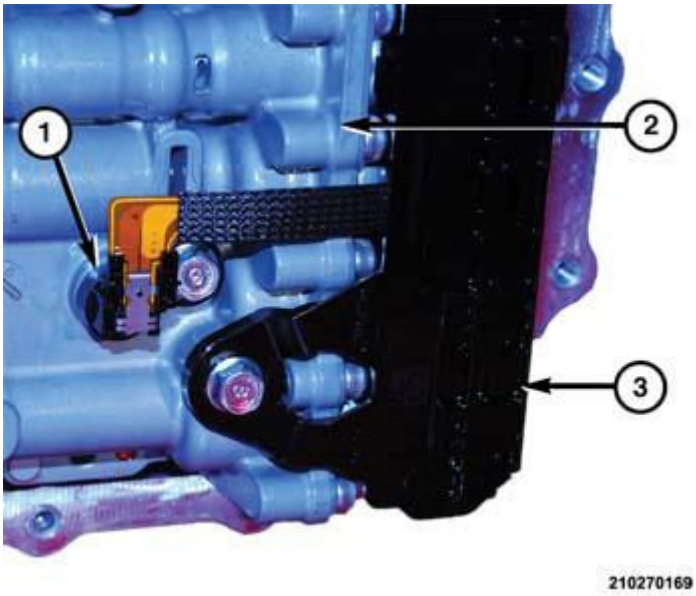

Fig. 350: Fluid Temperature Sensor, Valve Body & Bolt
Courtesy of CHRYSLER GROUP, LLC

08. Insert the temperature sensor (1) into port in the valve body (2).
09. Install bolt to hold fluid temperature sensor (1) to the valve body (2). Refer to **SPECIFICATIONS**.

Fig. 351: Valve Body Cover Separated From Transaxle
Courtesy of CHRYSLER GROUP, LLC

10. Install a **NEW** gasket on the pan and place the pan (1) in position on the transaxle (2).

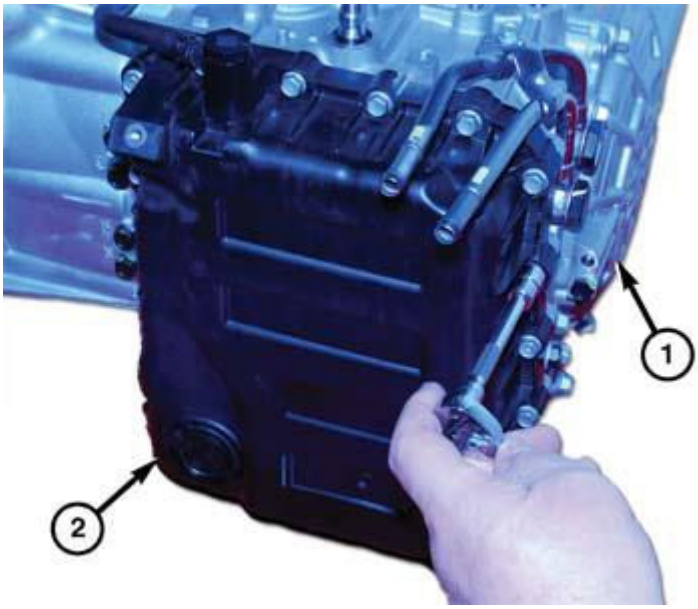

Fig. 352: Valve Body Cover
Courtesy of CHRYSLER GROUP, LLC

11. Install bolts to hold the valve body pan (2) to the transaxle (1). Refer to **SPECIFICATIONS**.

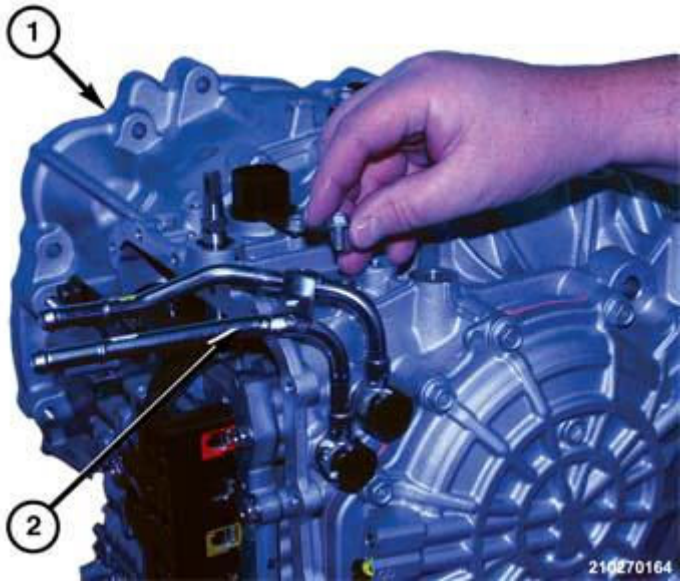

Fig. 353: Cooler Tubes & Transaxle
Courtesy of CHRYSLER GROUP, LLC

12. Place the cooler tubes (2) in position on the transaxle (1).
13. Install bolt to hold the cooler tube (2) bracket to the transaxle (1). Refer to **SPECIFICATIONS**.

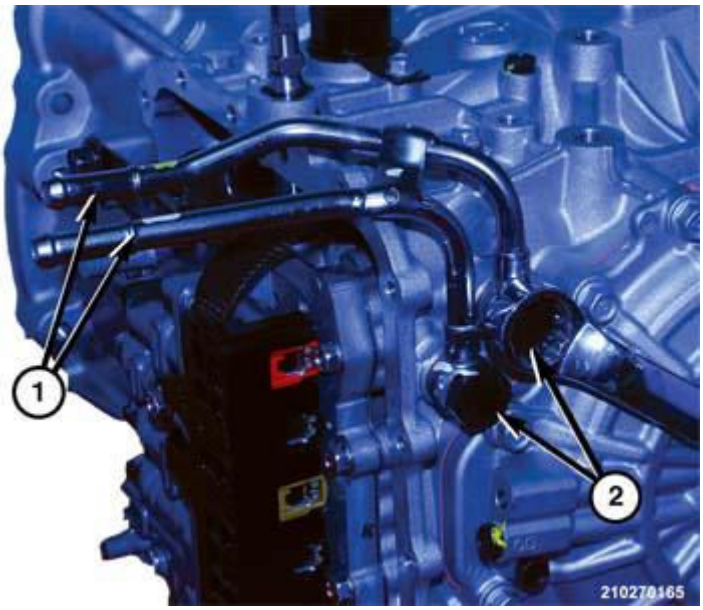

Fig. 354: Cooler Tubes & Banjo Bolts
Courtesy of CHRYSLER GROUP, LLC

14. Install banjo bolts (2) to hold the cooler tubes (1) to the transaxle. Refer to **SPECIFICATIONS**.

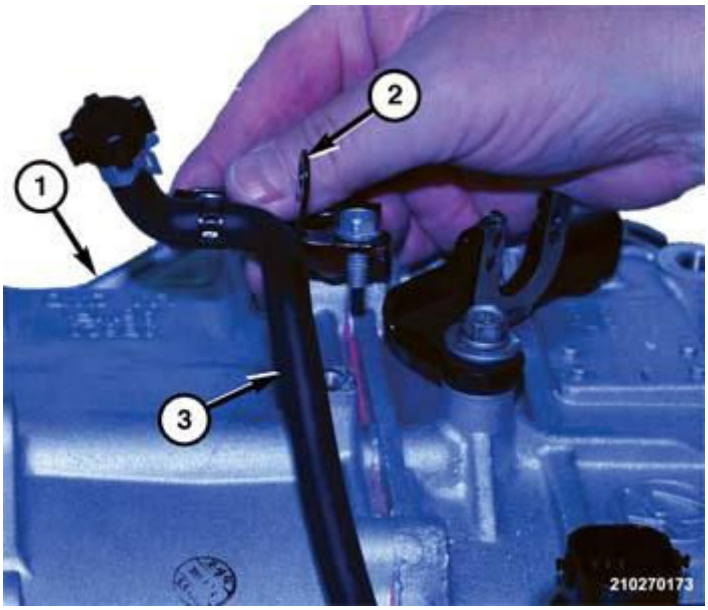

Fig. 355: Vent Tube Bracket & Bolt
Courtesy of CHRYSLER GROUP, LLC

15. Place the vent tube (3) in position on the transaxle (1).
16. Install bolt to hold the vent tube bracket (2) to the transaxle housing. Refer to **SPECIFICATIONS**.

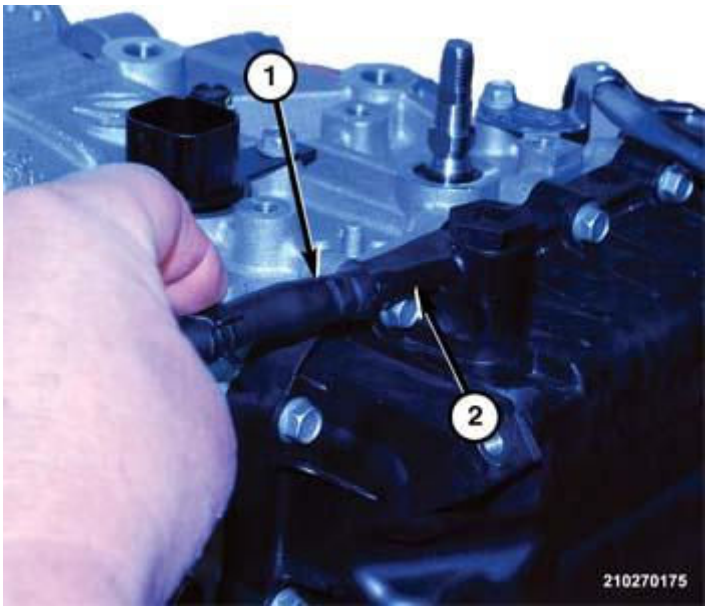

Fig. 356: Vent Hose End & Nipple Adapter
Courtesy of CHRYSLER GROUP, LLC

17. Push the vent hose end (1) onto of the nipple on the vent adaptor (2).

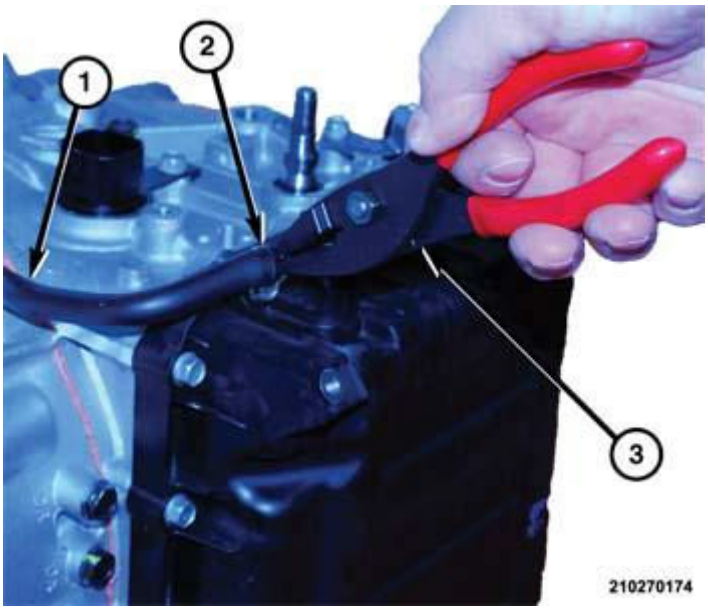

Fig. 357: Vent Hose, Spring Clamp & Pliers
Courtesy of CHRYSLER GROUP, LLC

18. Using common pliers (3), compress the hose spring clamp (2) and slide it up the vent hose (1) into position to hold the hose to the nipple.

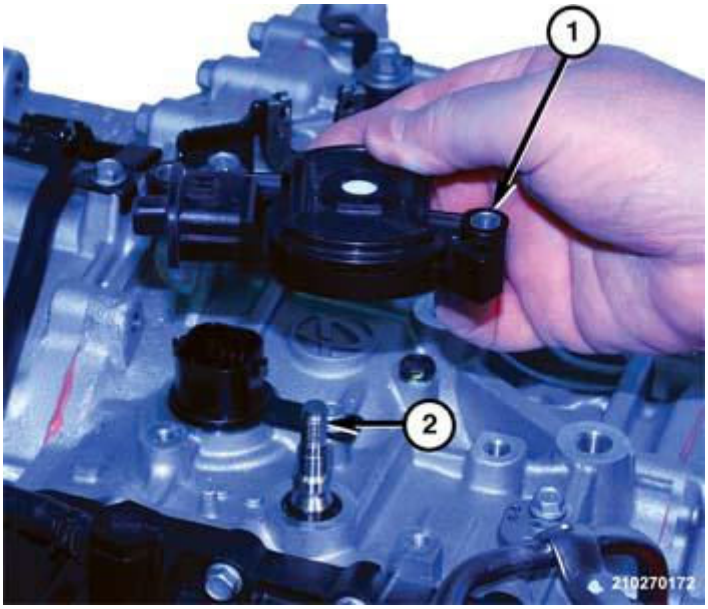

Fig. 358: Transmission Range Sensor Separated From Transaxle
Courtesy of CHRYSLER GROUP, LLC

19. Place the TRS (1) in position on the transaxle.

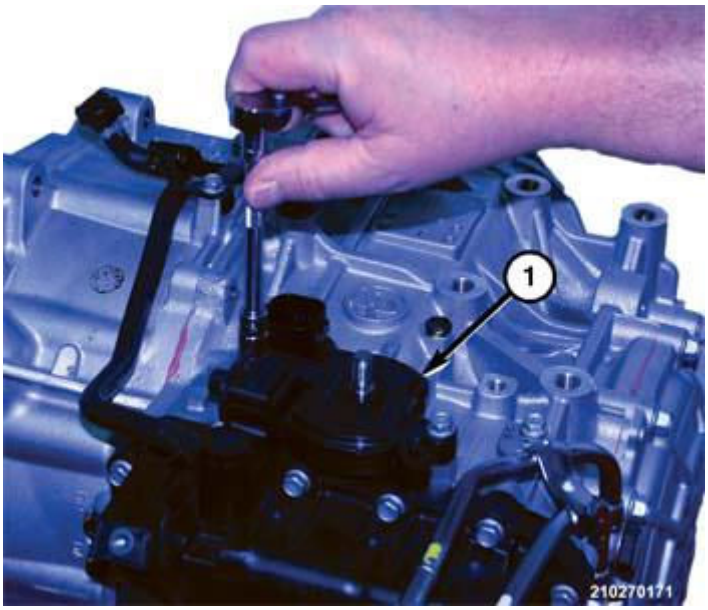

Fig. 359: Transmission Range Sensor
Courtesy of CHRYSLER GROUP, LLC

20. Install bolts to hold the TRS (1) to the transaxle housing. Refer to **SPECIFICATIONS**.

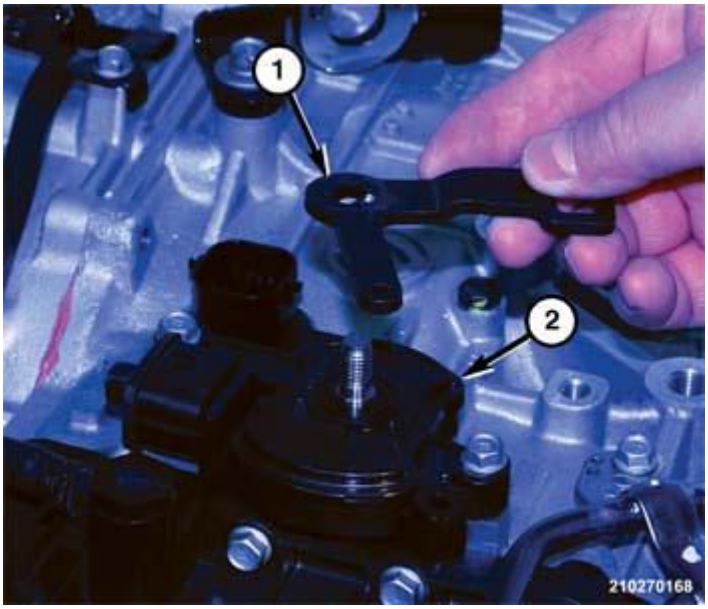

Fig. 360: Manual Lever & Manual Shaft
Courtesy of CHRYSLER GROUP, LLC

21. Place the manual level (1) in position on the manual shaft.

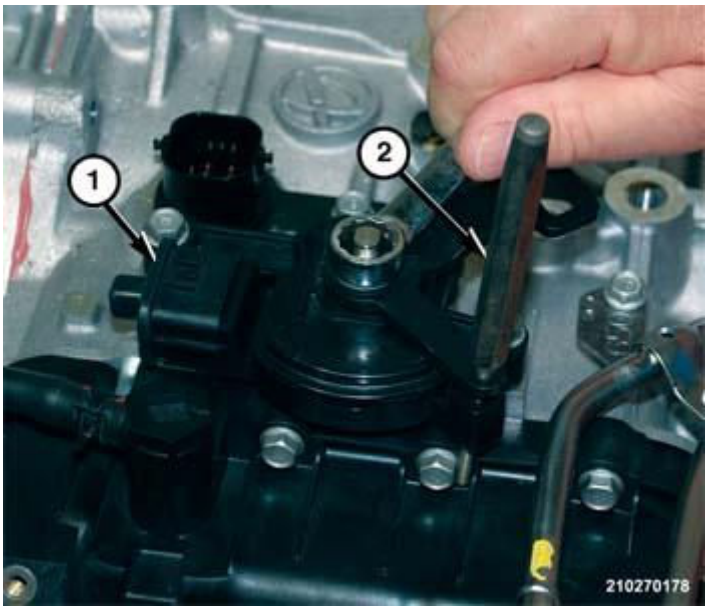

Fig. 361: Pin Punch, Manual Lever & Transmission Range Sensor
Courtesy of CHRYSLER GROUP, LLC

22. Insert a suitable pin punch (2) or equivalent through the manual lever into the TRS switch (1) to hold lever in place.
23. Install the nut to hold the manual lever to the manual shaft. Refer to **SPECIFICATIONS**.

NOTE: The transaxle can now be installed in a vehicle. Refer to INSTALLATION.

AWD

NOTE: Thoroughly clean all components to remove metallic and fibrous materials that may have contaminated the transaxle during a component failure.

NOTE: Inspect all components for excessive ware, spalled surfaces, or other obvious damage. Replace only damaged components that are serviceable with genuine Mopar Parts.

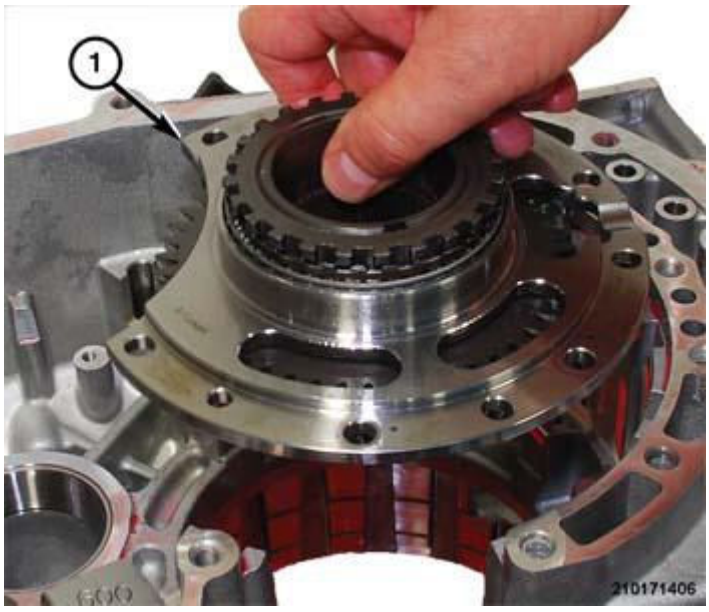

Fig. 362: Transfer Drive Assembly
Courtesy of CHRYSLER GROUP, LLC

1. Place the transfer drive assembly (1) into position in the transaxle case.

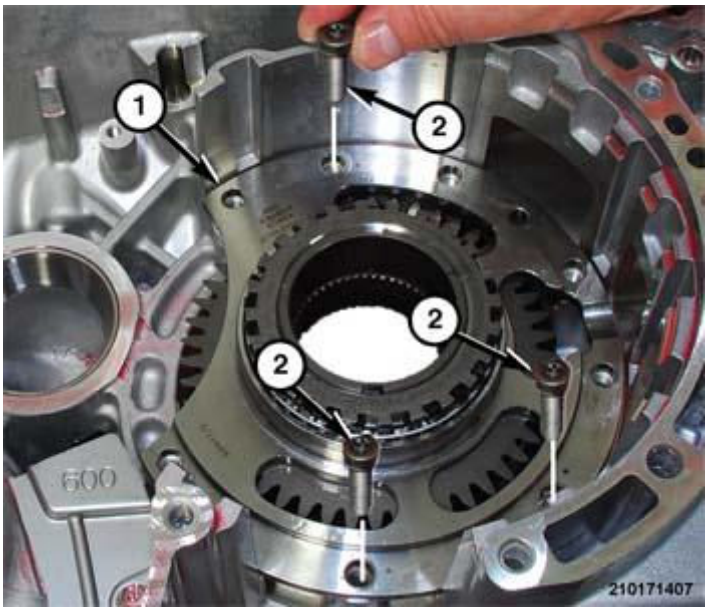

Fig. 363: Transfer Drive Assembly & Bolts
Courtesy of CHRYSLER GROUP, LLC

2. Install three bolts (2) to hold transfer drive assembly (1) to the transaxle housing. Refer to **SPECIFICATIONS**.
3. Install **NEW** inside and outside D-ring seals into the low & reverse brake piston (1).
4. Using specified transaxle fluid, lubricate the low & reverse brake piston (1)

D-ring seals.

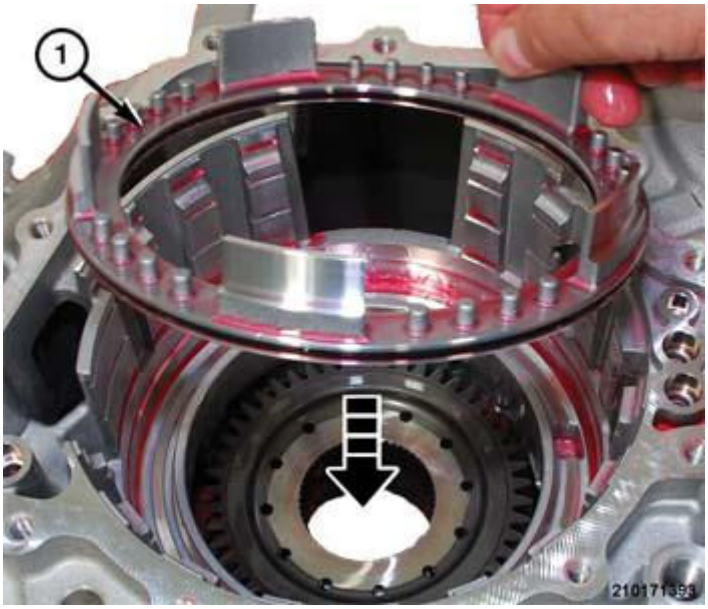

Fig. 364: Low/Reverse Brake Piston
Courtesy of CHRYSLER GROUP, LLC

5. Place low & reverse brake piston (1) in position in transaxle housing.
6. Push low & reverse brake piston downward into cylinder bore in the transaxle housing.

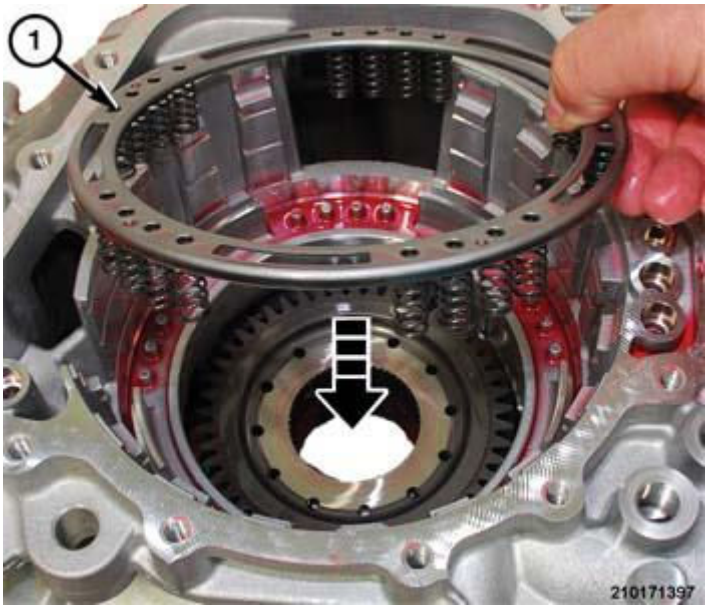

Fig. 365: Low/Reverse Brake Piston Spring Retainer
Courtesy of CHRYSLER GROUP, LLC

7. Place low & reverse brake piston spring retainer in position on the lo-reverse

brake piston.

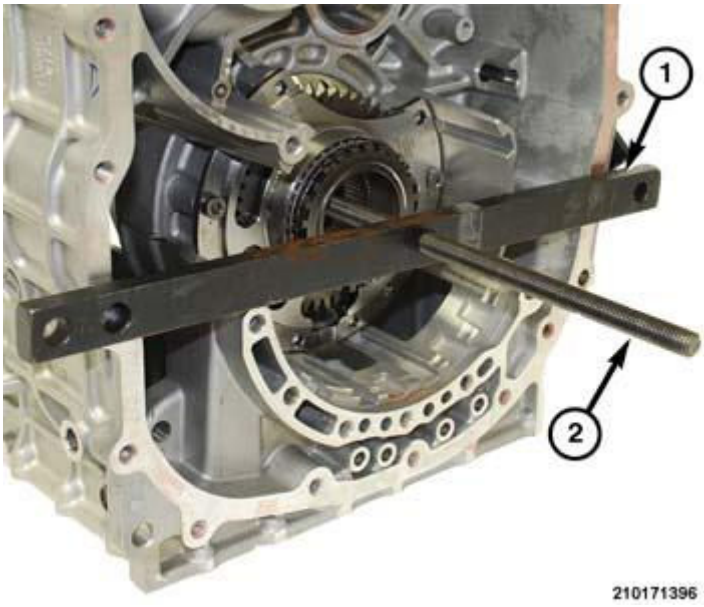

Fig. 366: Special Tool #5058A-3
Courtesy of CHRYSLER GROUP, LLC

8. Install spring compressor tools (special tool #5058A-3, Screw, Forcing) in position on transaxle.
9. Insert screw through center hole in spring compressor (special tool #8621, Compressor, Spring).

Fig. 367: Special Tool #8621
Courtesy of CHRYSLER GROUP, LLC

Insert the screw through the transfer gear and into the threaded cross bar across the bell housing opening.

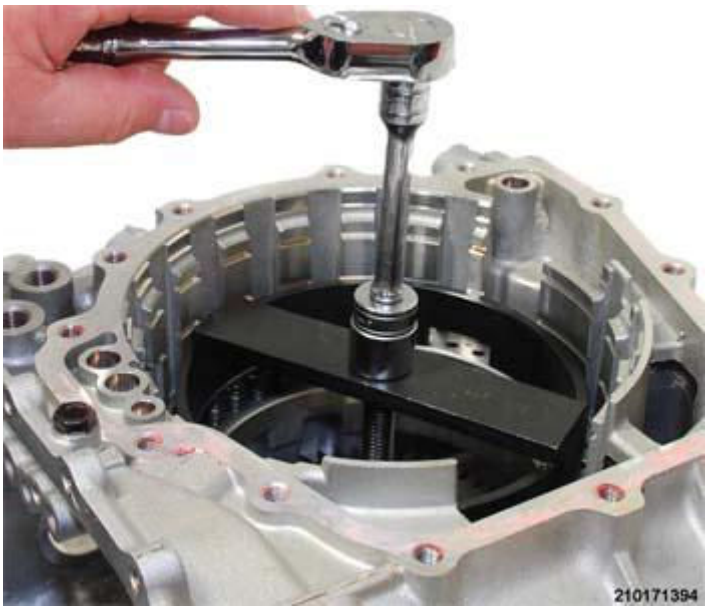

Fig. 368: Compressing Low/Reverse Spring Retainer
Courtesy of CHRYSLER GROUP, LLC

10. Compress the low/reverse spring retainer.

Fig. 369: Low/Reverse Brake Spring Retainer Snap Ring
Courtesy of CHRYSLER GROUP, LLC

11. Install the snap ring (1) to hold the low/reverse brake spring retainer to the low/reverse brake piston.

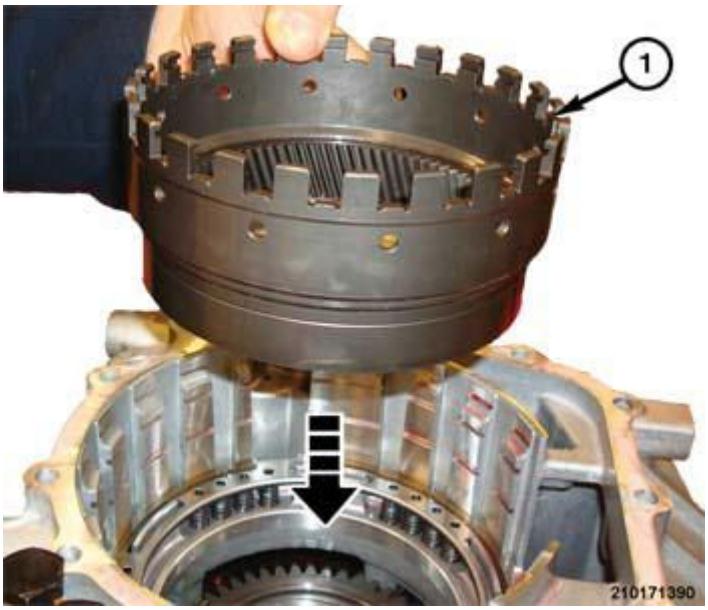

Fig. 370: Front Annulus Gear
Courtesy of CHRYSLER GROUP, LLC

12. Place the front annulus gear (1) in position in the low/reverse brake assembly.

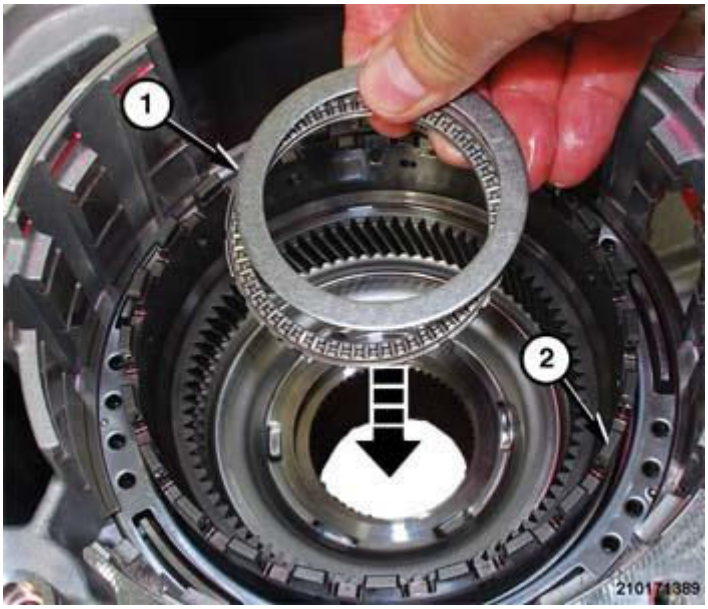

Fig. 371: Front Annulus Gear Thrust Bearing And Race
Courtesy of CHRYSLER GROUP, LLC

13. Place the front annulus gear thrust bearing and race (1) in position on the front annulus gear (2) hub.

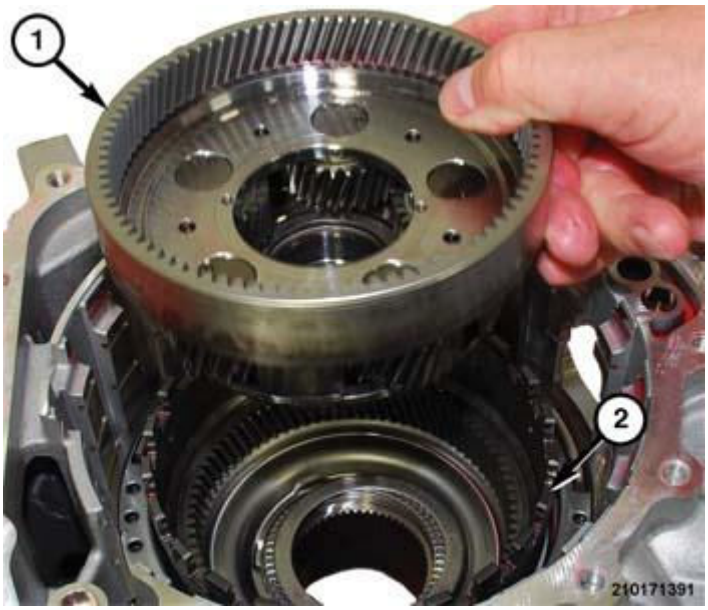

Fig. 372: Front Planetary Gear & Front Annulus Gear Assembly
Courtesy of CHRYSLER GROUP, LLC

14. Place the front planetary gear (1) in position on the front annulus gear assembly (2).

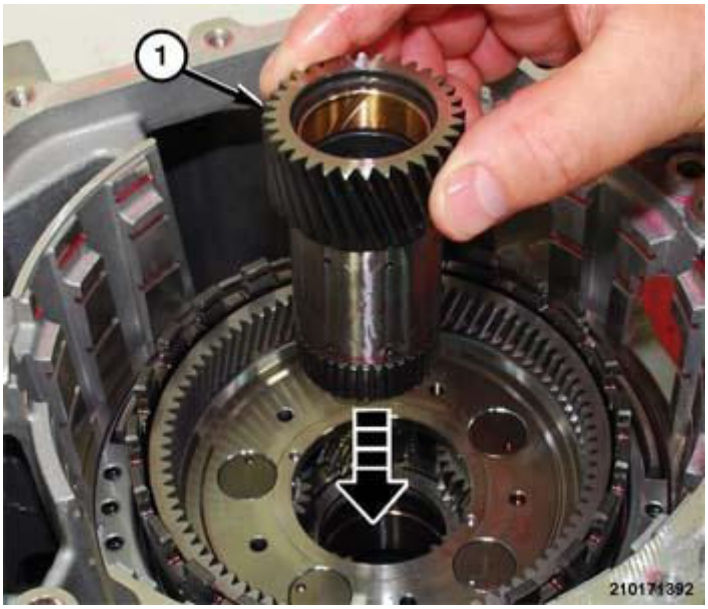

Fig. 373: Front Sun Gear
Courtesy of CHRYSLER GROUP, LLC

15. Insert the front sun gear (1) into front planetary gear assembly.

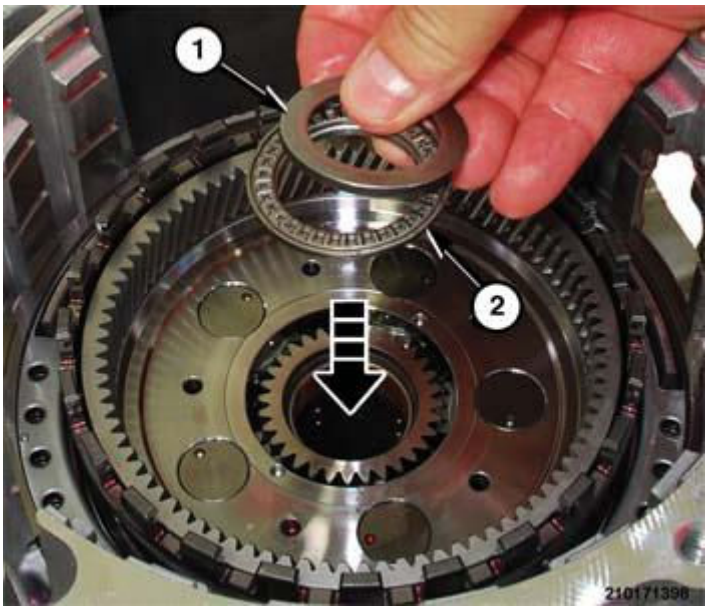

Fig. 374: Planetary Gear Hub Bearing And Race Set
Courtesy of CHRYSLER GROUP, LLC

16. Place the bearing (2) and race (1) set in position on the planetary gear hub.

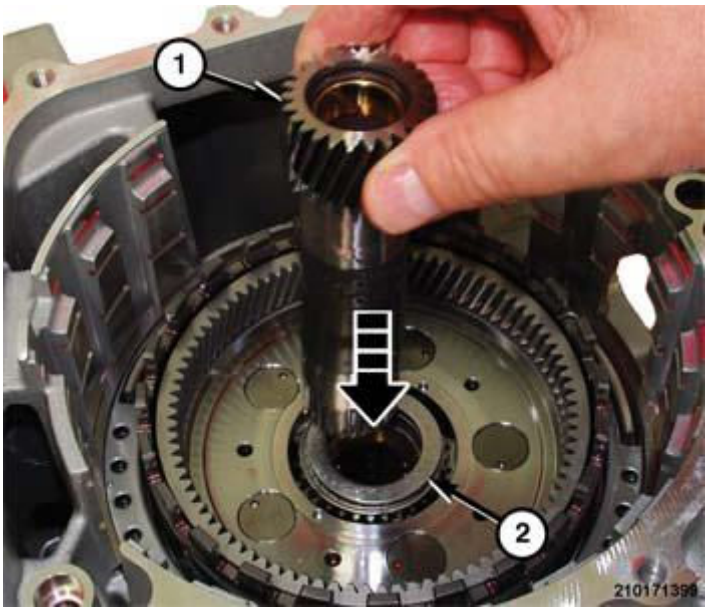

Fig. 375: Middle Sun Gear & Planetary Gear Hub
Courtesy of CHRYSLER GROUP, LLC

17. Insert the middle sun gear (1) in position in the in position on the front sun gear (2).

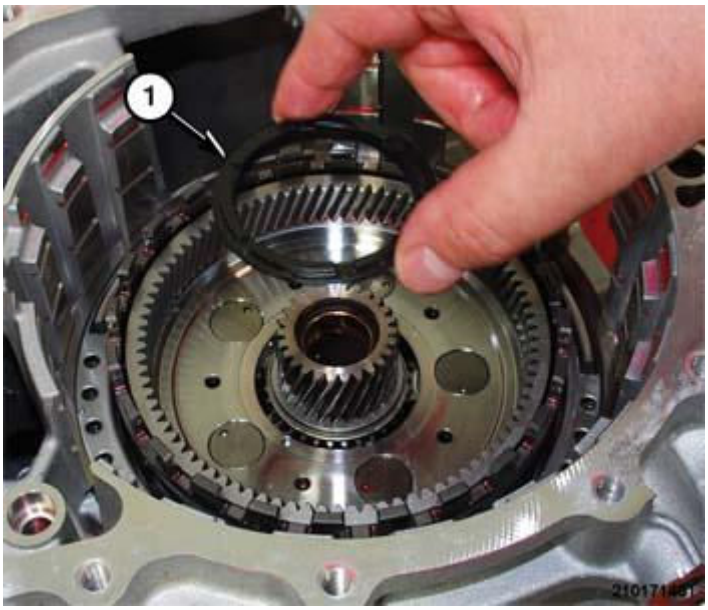

Fig. 376: Front Planetary Gear Hub Thrust Washer
Courtesy of CHRYSLER GROUP, LLC

18. Place the thrust washer (1) in position on the front planetary gear hub.

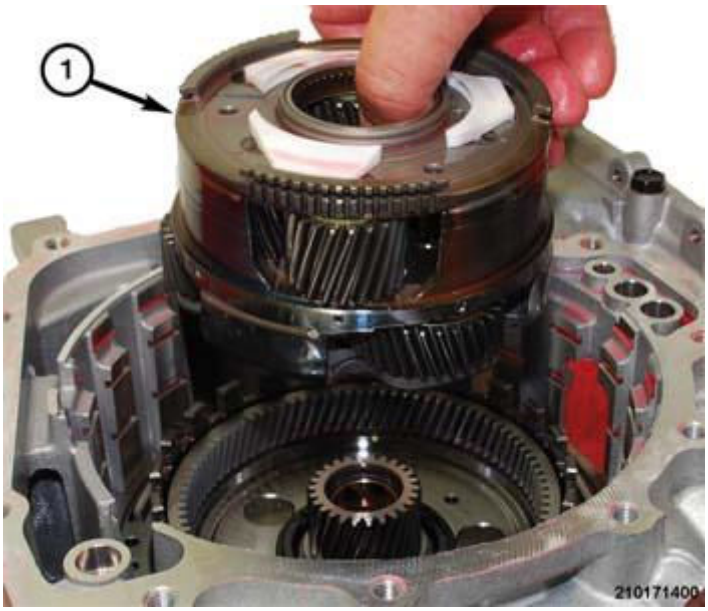

Fig. 377: Middle/Rear Planetary Gear Assembly
Courtesy of CHRYSLER GROUP, LLC

19. Place the middle/rear planetary gear assembly (1) in position in the planetary gear hub.

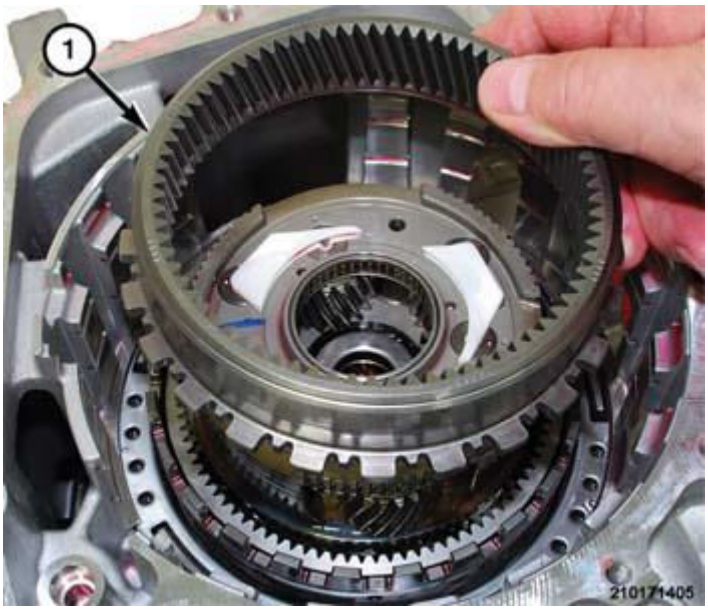

Fig. 378: Rear Annulus Gear
Courtesy of CHRYSLER GROUP, LLC

20.
21. Place the rear annulus gear (1) in position on the middle/rear planetary gear assembly.

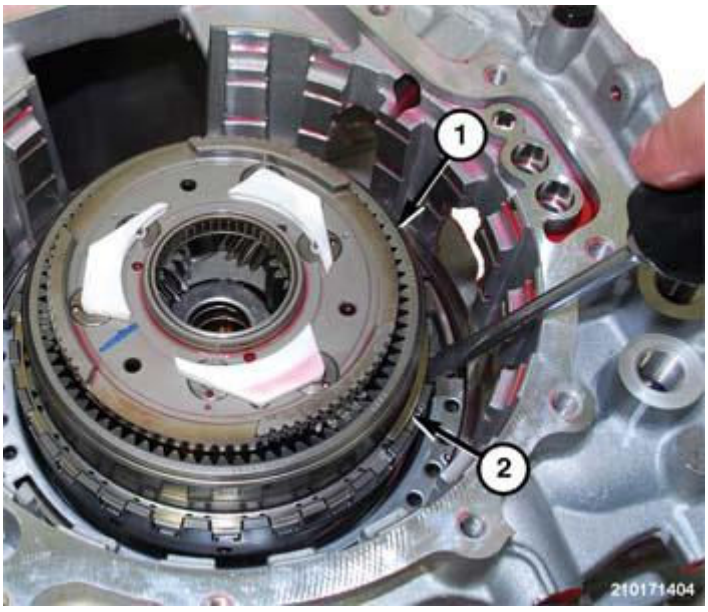

Fig. 379: Rear Annulus Gear & Snap Ring
Courtesy of CHRYSLER GROUP, LLC

22. Install the snap ring (2) to hold the rear annulus gear (1) into the front annulus gear hub.

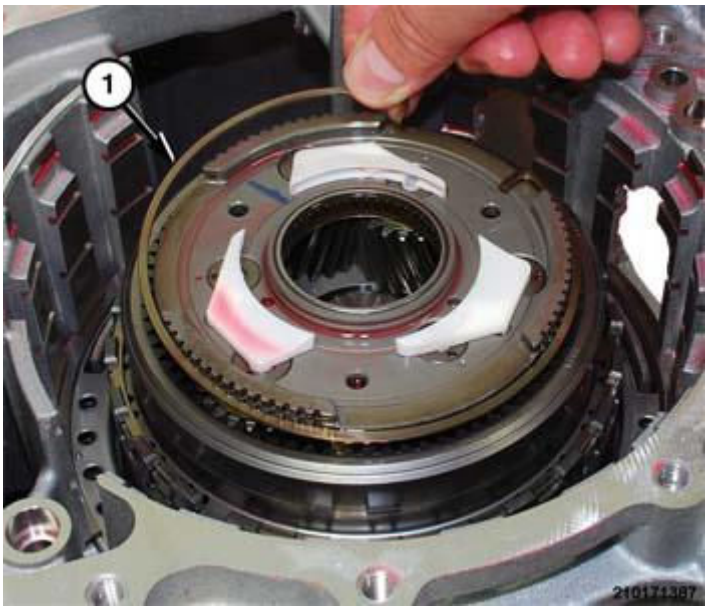

Fig. 380: Middle/Rear Planetary Gear Snap Ring
Courtesy of CHRYSLER GROUP, LLC

23. Insert the snap ring into the groove in the middle/rear planetary gear.

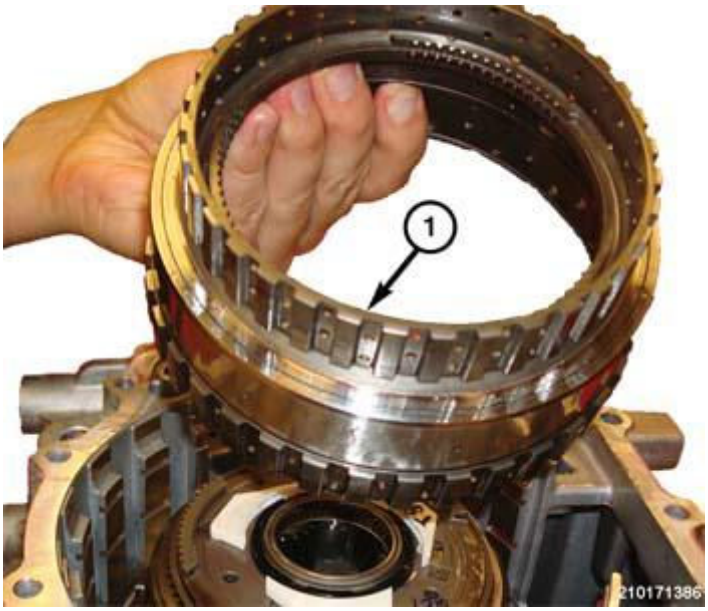

Fig. 381: One Way Clutch Inner Race
Courtesy of CHRYSLER GROUP, LLC

24. Place the one way clutch inner race (1) in position on the middle/rear planetary gear.

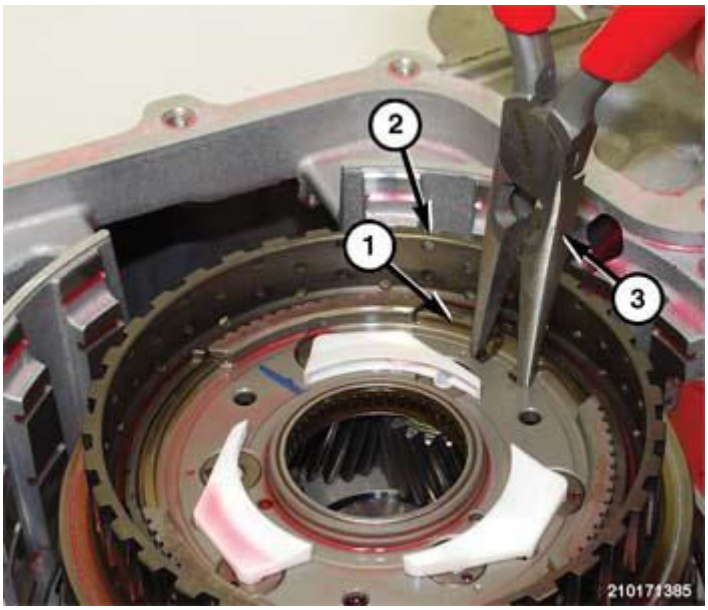

Fig. 382: One Way Clutch Race & Snap Ring
Courtesy of CHRYSLER GROUP, LLC

25. Using long nose pliers (3), compress snap ring (1) to hold the one way clutch race (2) to the middle/rear planetary gear.

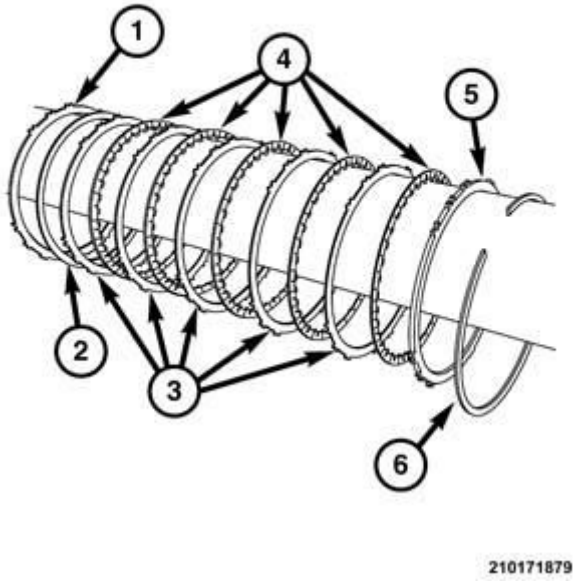

Fig. 383: Low & Reverse Brake Pressure Plate, Cushion Plate, Plates, Discs, & Reaction Plate
Courtesy of CHRYSLER GROUP, LLC

26. Install the low & reverse brake pressure plate (1), cushion plate (2), plates 3)

discs (4), and the reaction plate (5), in order, into the transaxle.

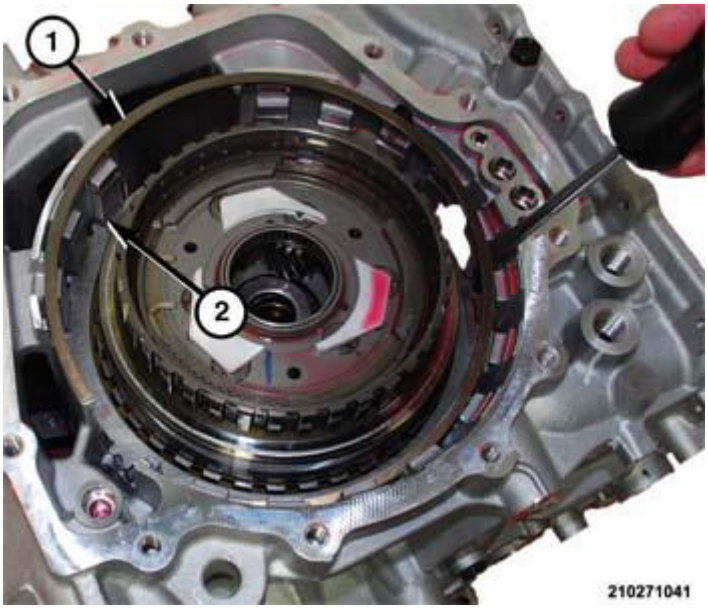

Fig. 384: Low/Reverse Brake & Snap Ring
Courtesy of CHRYSLER GROUP, LLC

27. Install the snap ring (1) to hold low/reverse brake into the lowest snap ring land (2) in the transaxle.

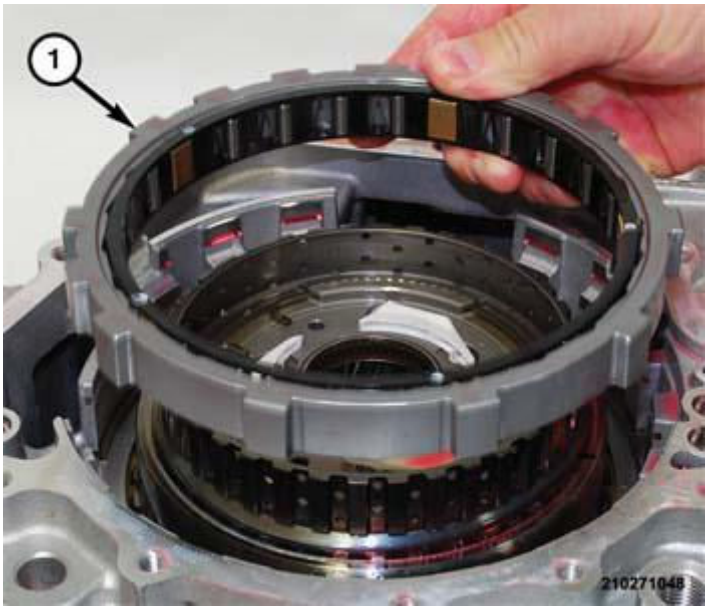

Fig. 385: One-Way-Clutch
Courtesy of CHRYSLER GROUP, LLC

28. Lining up the two narrow lugs on the OWC to the two narrow slots on the transaxle housing insert the OWC (1) into the transaxle. Press down until it is seated. The OWC should rotate in a counterclockwise direction only.

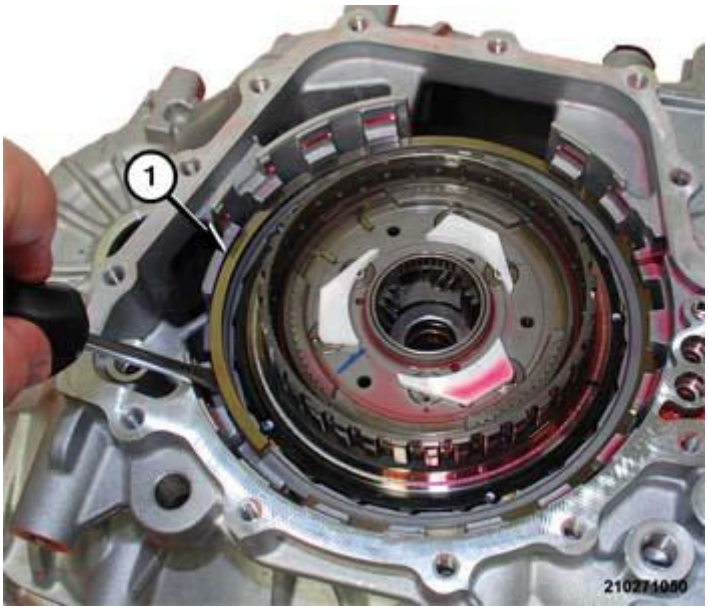

Fig. 386: One-Way-Clutch Snap Ring
Courtesy of CHRYSLER GROUP, LLC

29. Install the snap ring (1) to hold the OWC to the transaxle housing
30. Turn transaxle over to gain access to the front of the transaxle.

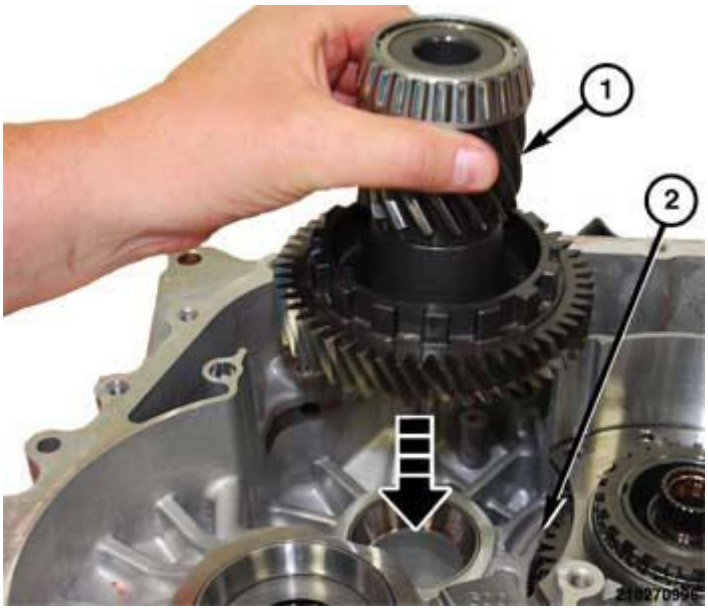

Fig. 387: Transfer Driven Gear Assembly & Transaxle
Courtesy of CHRYSLER GROUP, LLC

31. Install the transfer driven gear (1) assembly in position in the transaxle (2).

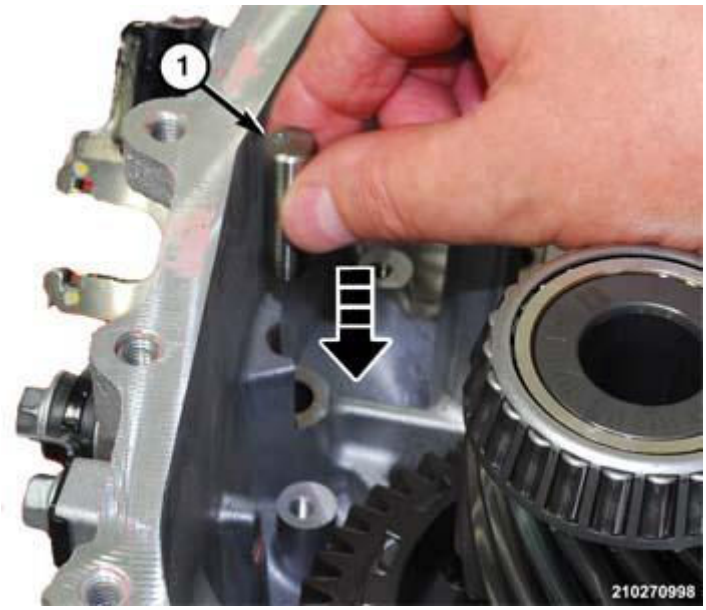

Fig. 388: Park Sprag Support Shaft & Transaxle Housing
Courtesy of CHRYSLER GROUP, LLC

32. Install the park sprag support shaft (1) in position in the transaxle housing.

Fig. 389: Park Sprag & Transaxle Housing
Courtesy of CHRYSLER GROUP, LLC

33. Insert the park sprag (1) in position in the transaxle housing.

Fig. 390: Park Sprag Spring, Shaft & Transaxle Housing
Courtesy of CHRYSLER GROUP, LLC

34. Install the park sprag spring and shaft (1) in position in the transaxle housing.

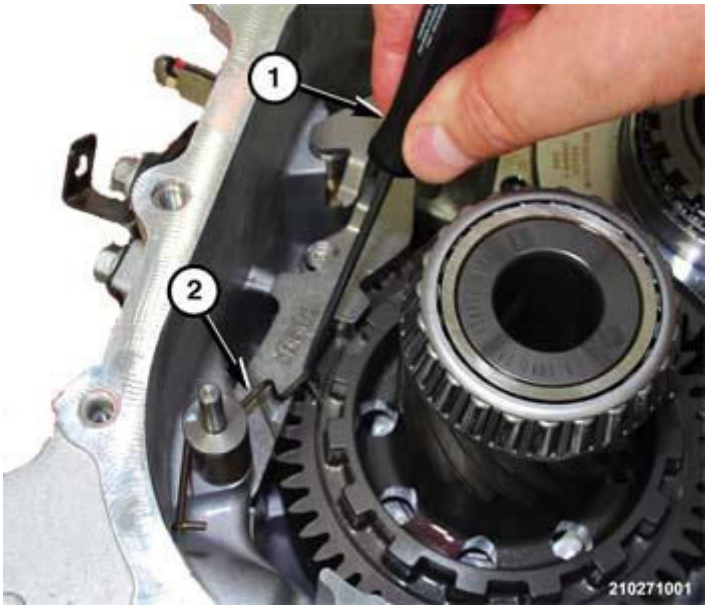

Fig. 391: Park Sprag Spring & Park Sprag
Courtesy of CHRYSLER GROUP, LLC

35. Using a suitable hook tool (1), lift the park sprag spring (2) onto the park sprag.

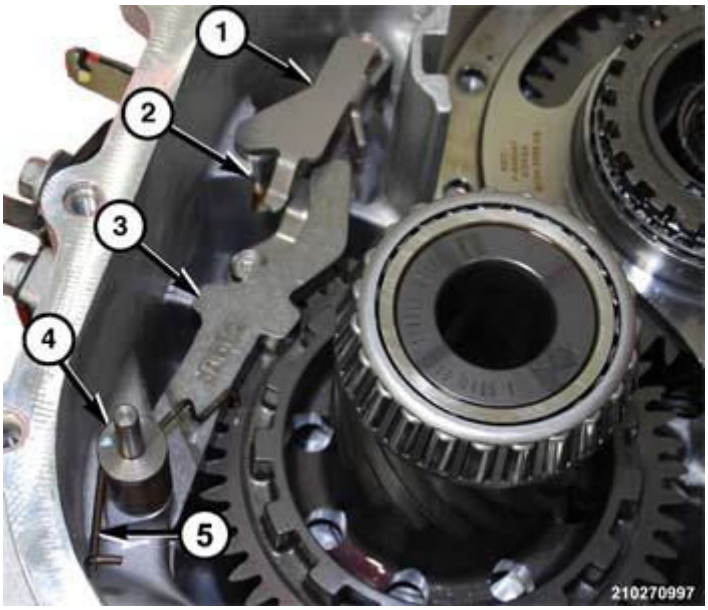

Fig. 392: Park Rod Guide & Bolts
Courtesy of CHRYSLER GROUP, LLC

36. Install bolts to hold the park rod guide (1) in position on the transaxle housing.

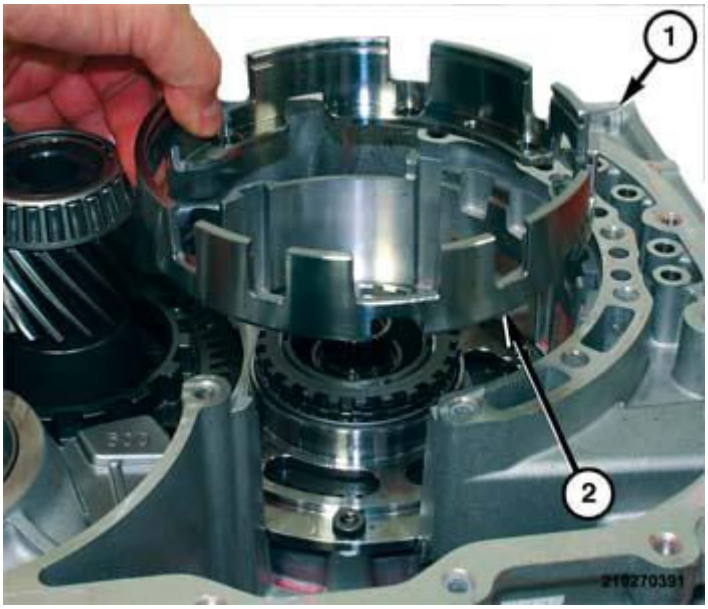

Fig. 393: Underdrive Brake Retainer & Transaxle Housing
Courtesy of CHRYSLER GROUP, LLC

37. Place the underdrive brake retainer (2) in position on the transaxle housing (1).

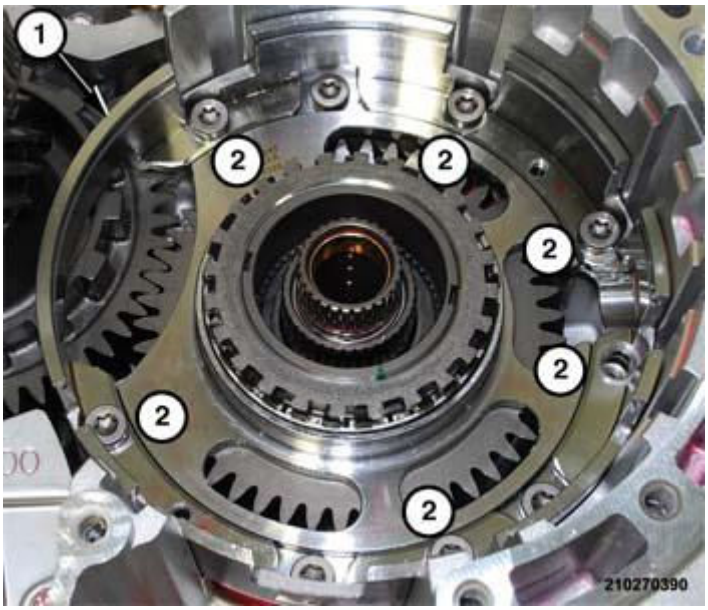

Fig. 394: Underdrive Brake Retainer & Bolts
Courtesy of CHRYSLER GROUP, LLC

38. Install bolts (2) to hold the underdrive brake retainer (1) to the transaxle housing. Refer to **SPECIFICATIONS**.

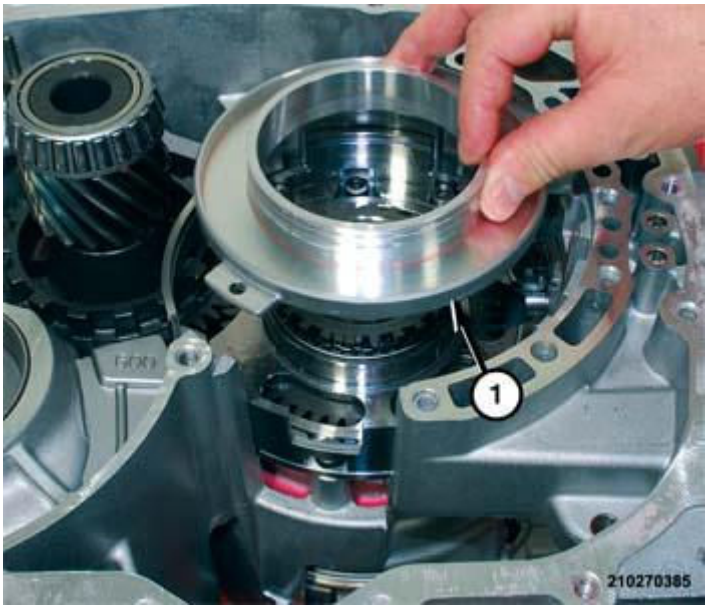

Fig. 395: Underdrive Brake Chamber & Transaxle Housing
Courtesy of CHRYSLER GROUP, LLC

39. Place the underdrive brake chamber in position on the transaxle housing.

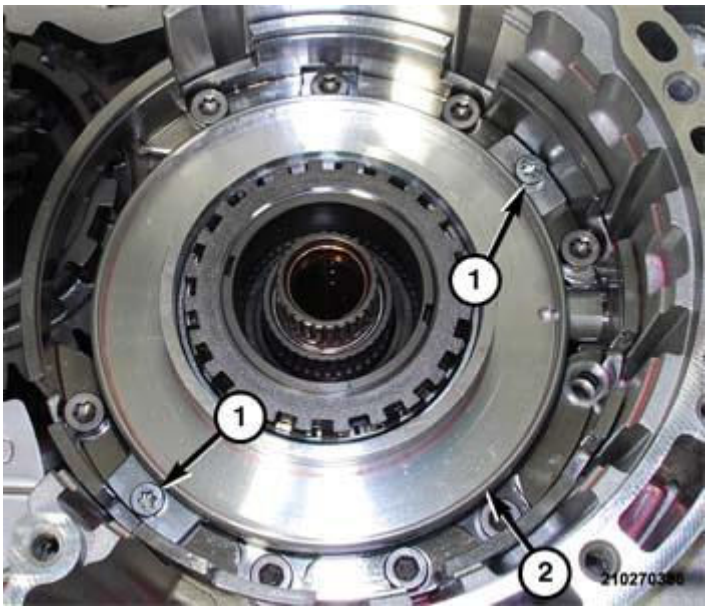

Fig. 396: Underdrive Brake Chamber & Bolts
Courtesy of CHRYSLER GROUP, LLC

40. Install bolts (1) to hold the underdrive brake chamber (2) to the transaxle housing. Refer to **SPECIFICATIONS**.

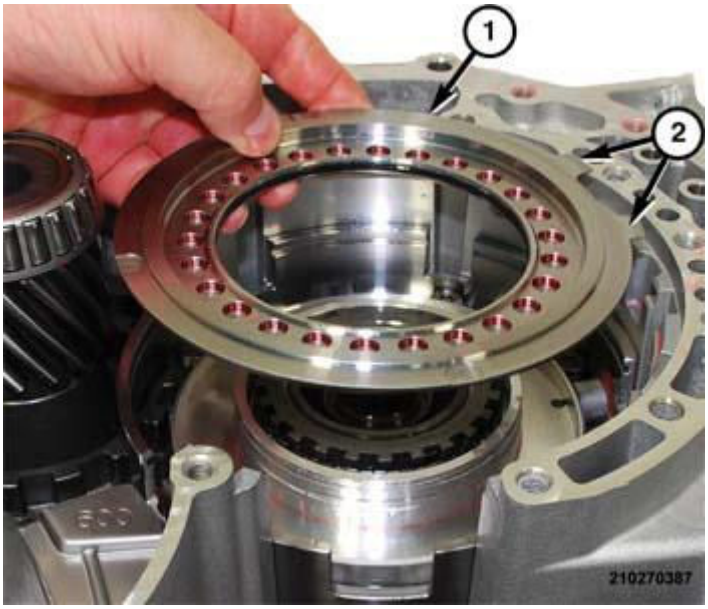

Fig. 397: Underdrive Brake Piston & Location Tabs
Courtesy of CHRYSLER GROUP, LLC

41. Install **NEW** D-ring outer seal and the O-ring inner seal in the lands on the underdrive piston.
42. Install the underdrive brake piston (1) in position on the underdrive brake piston chamber.

NOTE: The location tabs (2) on the underdrive brake piston should be oriented toward the valve body opening in the transaxle.

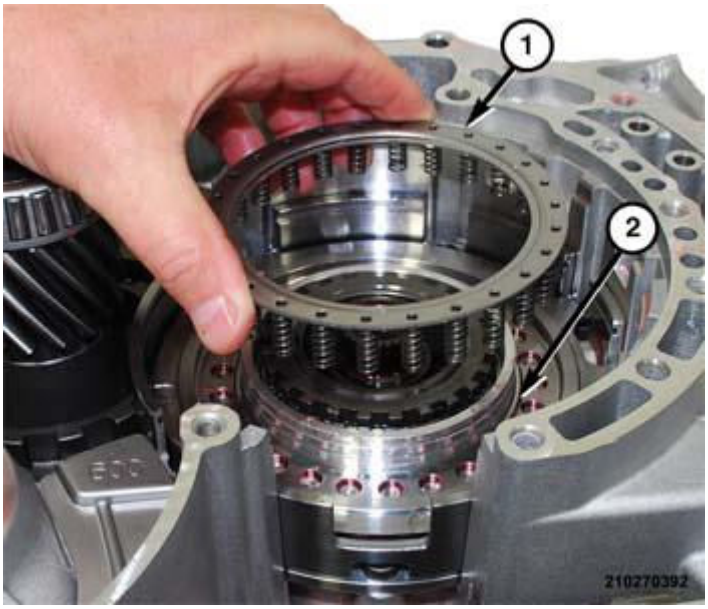

Fig. 398: Underdrive Spring Retainer & Underdrive Brake Piston
Courtesy of CHRYSLER GROUP, LLC

43. Push underdrive brake piston (3) downward until it seats in the underdrive brake chamber.
44. Place the underdrive spring retainer (1) in position on the underdrive brake piston (2).

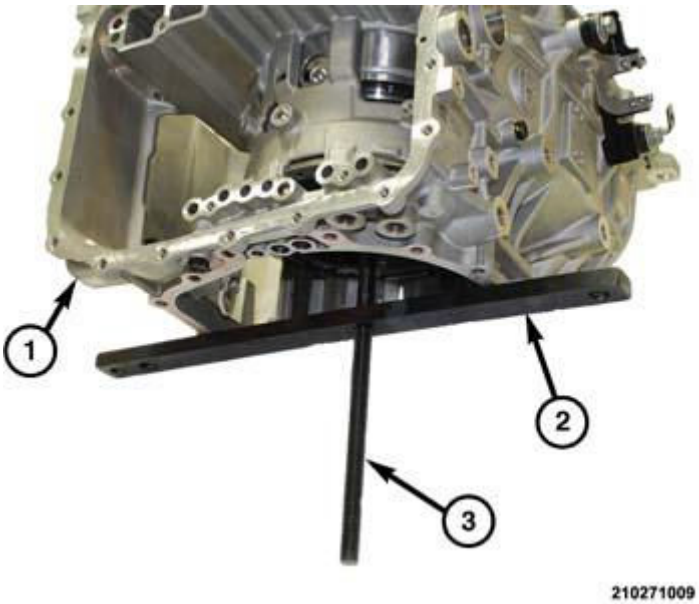

Fig. 399: Tool Bolt & Tool Cross Bar

Courtesy of CHRYSLER GROUP, LLC

45. Insert the bolt (3) for tool (special tool #5058A, Compressor, Spring) through tool (special tool #10426, Compressor, Underdrive Spring).
46. Insert the tool (special tool #5058A-3, Screw, Forcing) bolt (3) with the spring compressor through the center of the transaxle (1) and out the back into the threaded center bore of the tool cross bar (2) spanning the back of the transaxle.

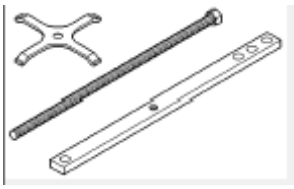

Fig. 400: Special Tool #5058A-3
Courtesy of CHRYSLER GROUP, LLC

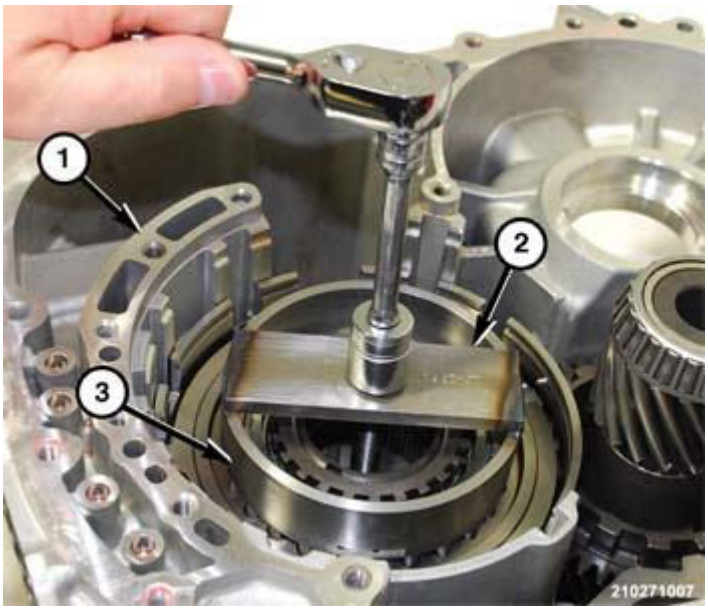

Fig. 401: Tool 5058A & Tool 10426
Courtesy of CHRYSLER GROUP, LLC

Compress the underdrive springs (3) to gain access to the snap ring land.

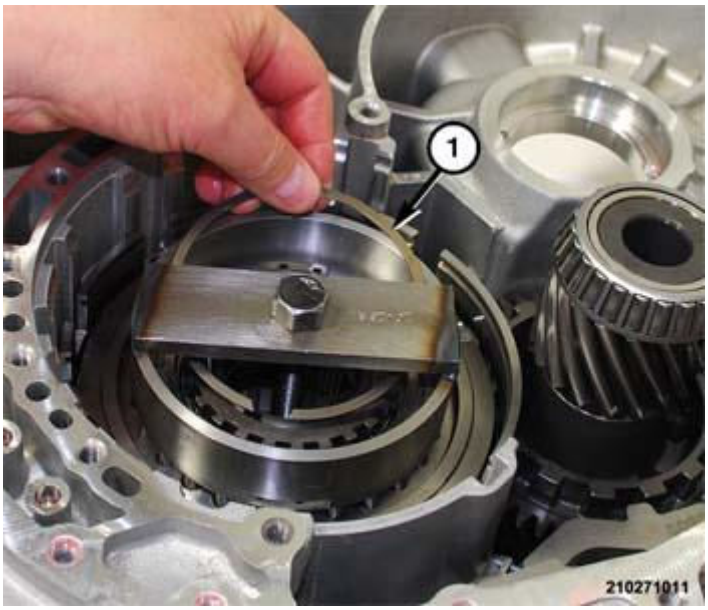

Fig. 402: Underdrive Spring Plate Snap Ring
Courtesy of CHRYSLER GROUP, LLC

47. Install the snap ring (1) to hold the underdrive spring plate to the underdrive brake hub.
48. Remove the spring compressor tool from the transaxle.
49. Turn the transaxle over to gain access to the rear cover.

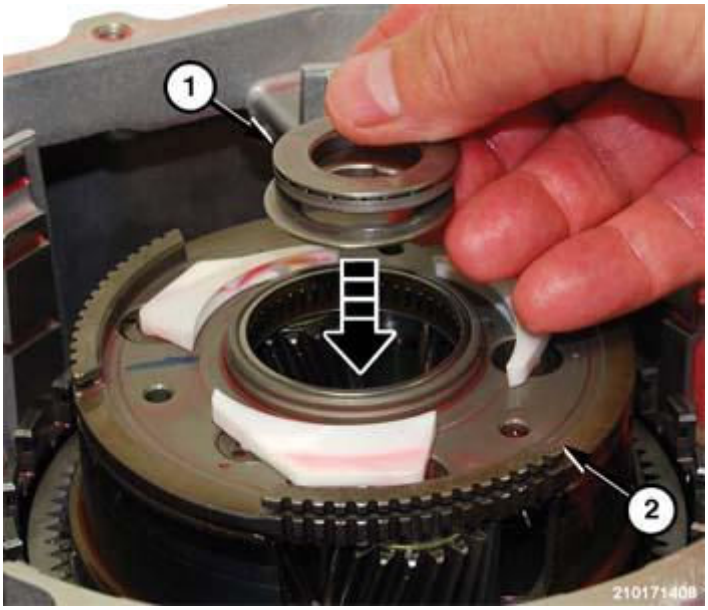

Fig. 403: Thrust Bearing, Race Set & Middle/Rear Planetary Gear Assembly
Courtesy of CHRYSLER GROUP, LLC

50. Place the thrust bearing (1) and race set into of the center of the middle/rear

planetary gear assembly (2).

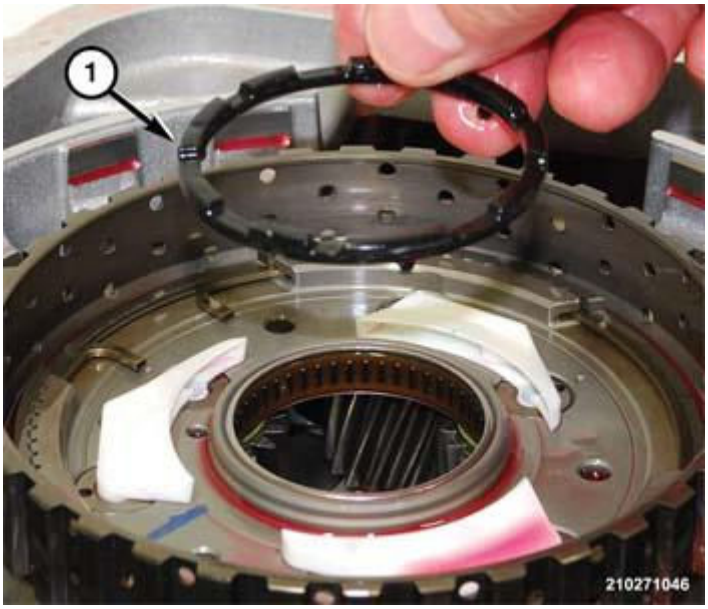

Fig. 404: Thrust Washer & Planetary Gear Assembly Hub
Courtesy of CHRYSLER GROUP, LLC

51. Place the thrust washer (1) in position on the middle/rear planetary gear.

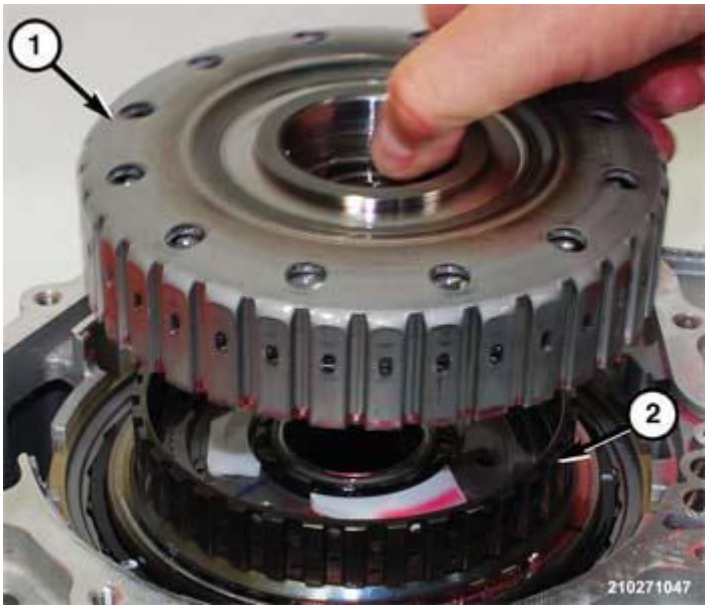

Fig. 405: Overdrive Clutch Assembly & One Way Clutch
Courtesy of CHRYSLER GROUP, LLC

52. Install the overdrive clutch assembly (1) onto the one way clutch race (2).

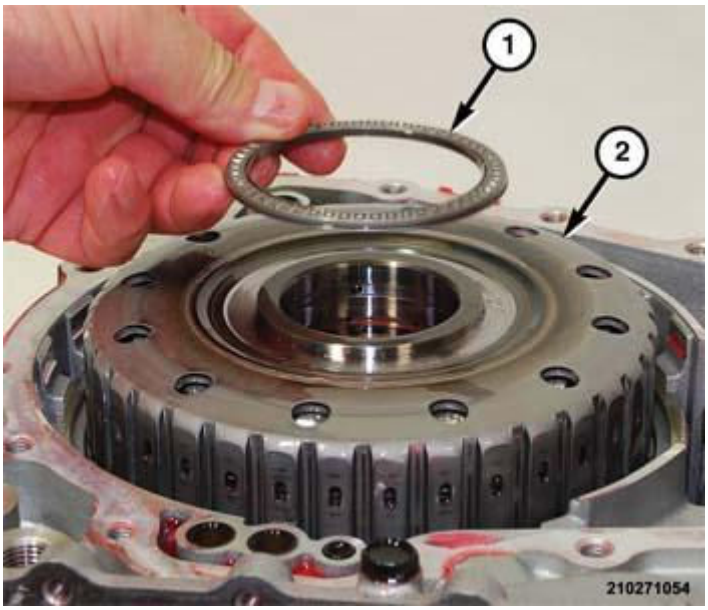

Fig. 406: Thrust Bearing & Overdrive Clutch Hub Assembly
Courtesy of CHRYSLER GROUP, LLC

53. Install thrust bearing (1) onto the overdrive clutch hub (2) assembly with the rollers facing upward.

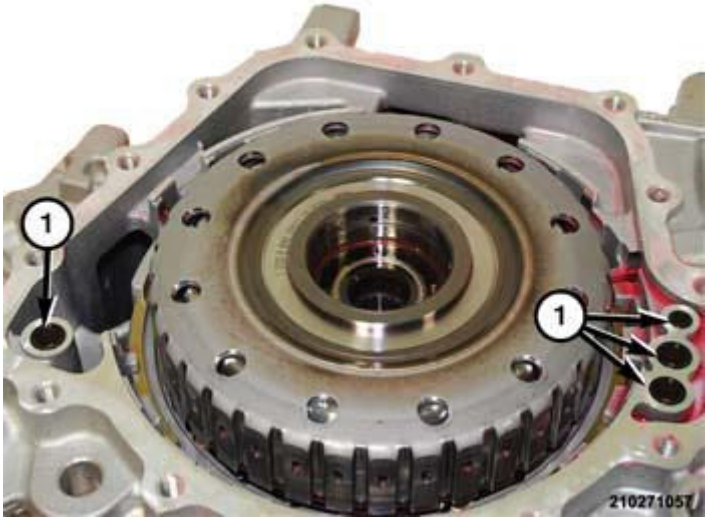

Fig. 407: Transfer Port Seals
Courtesy of CHRYSLER GROUP, LLC

54. Install the four seals (2) into transfer ports in transaxle housing.

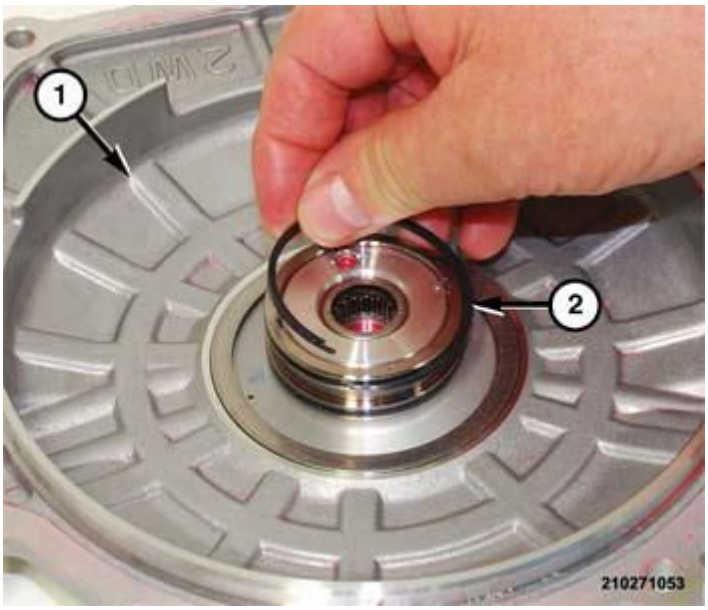

Fig. 408: Split Seal Rings & Rear Cover Hub
Courtesy of CHRYSLER GROUP, LLC

55. Install the two split seal ring seals (2) into the lands in the rear cover (1) hub.

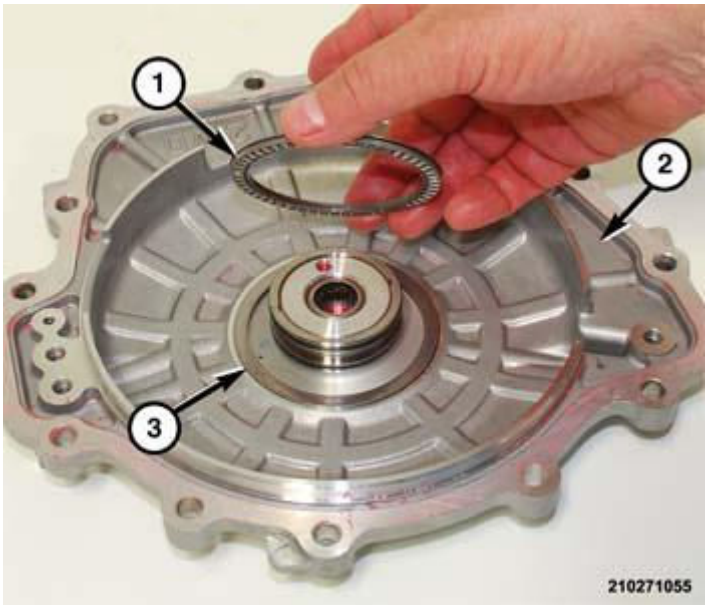

Fig. 409: Selective Spacer, Bearing & Rear Cover
Courtesy of CHRYSLER GROUP, LLC

56. Using assembly lube applied in the seat area of the rear cover (3), Install the selective spacer (1) onto the rear cover (2).
57. Apply a 3 mm (0.120 in.) bead of Dupont® Loctite™ 5460 Pink Flange Sealant or equivalent around the perimeter of the rear cover.

Fig. 410: Rear Cover Separated From Transaxle
Courtesy of CHRYSLER GROUP, LLC

58. Place the rear cover (1) in position on the transaxle.

Fig. 411: Transaxle Rear Cover & Bolts
Courtesy of CHRYSLER GROUP, LLC

59. Install bolts to hold the rear cover (1) to the transaxle. Refer to **SPECIFICATIONS**.
60. Turn transaxle over to gain access to the underdrive brake.

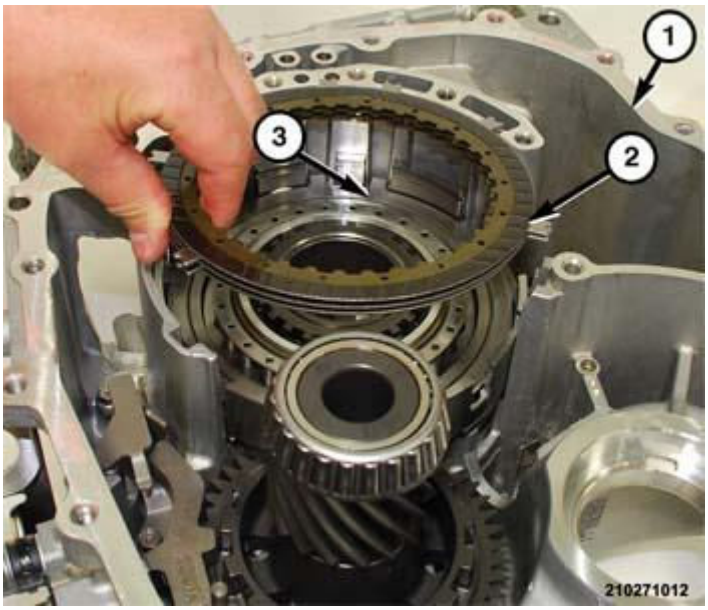

Fig. 412: Underdrive Brake Plates, Discs & Drum
Courtesy of CHRYSLER GROUP, LLC

61. Place underdrive brake plates and discs in position in underdrive brake drum.

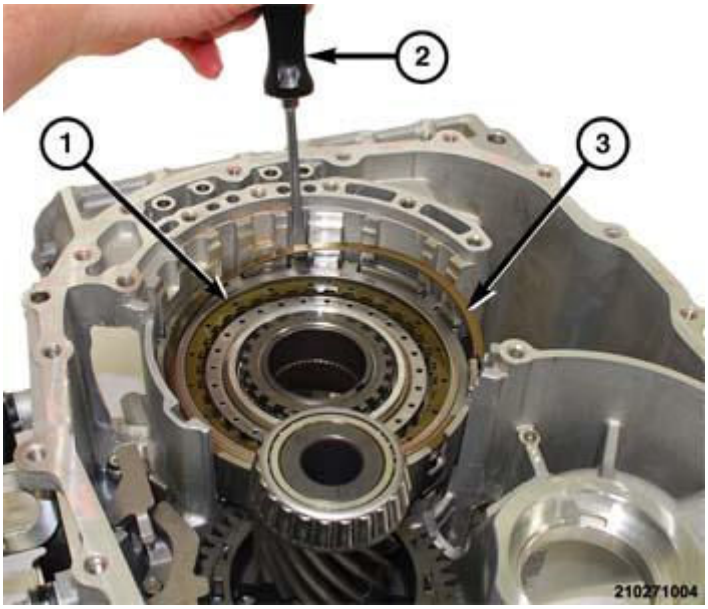

Fig. 413: Underdrive Brake, Underdrive Brake Drum, & Large Snap Ring
Courtesy of CHRYSLER GROUP, LLC

62. Install large snap ring (3) to hold underdrive brake (1) into the underdrive brake drum.

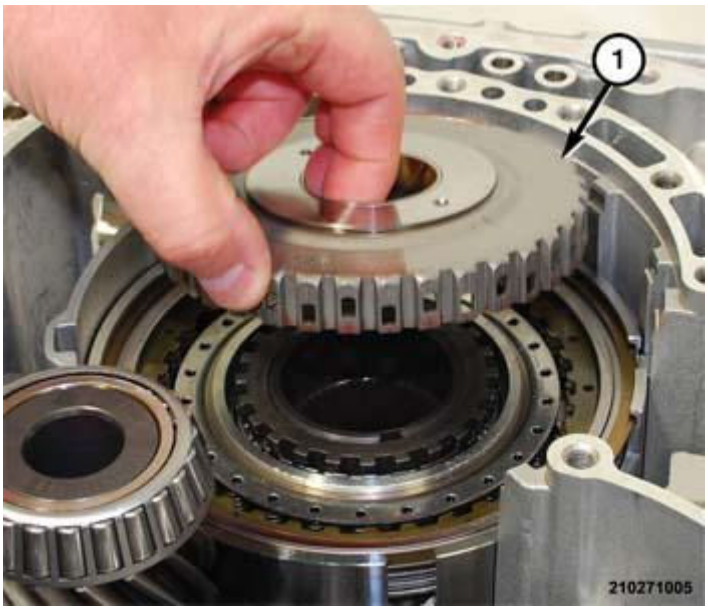

Fig. 414: Underdrive Brake Hub
Courtesy of CHRYSLER GROUP, LLC

63. Install underdrive brake hub (1) assembly in position on transaxle.

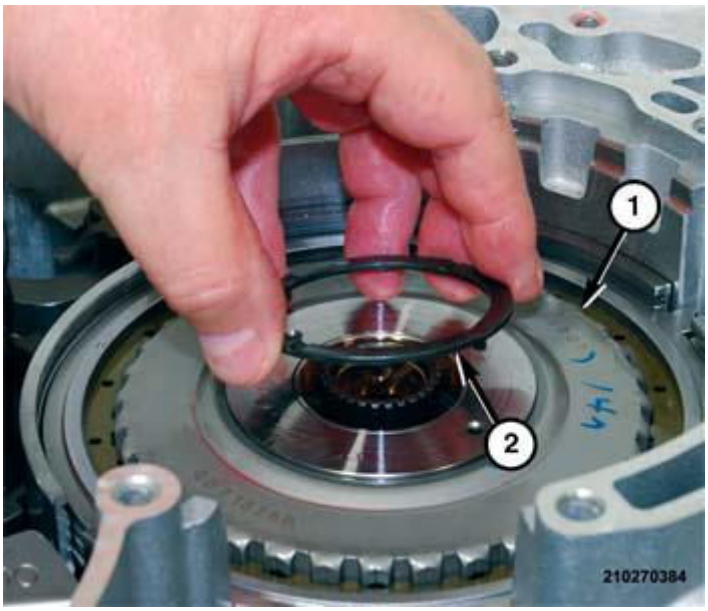

Fig. 415: Underdrive Brake Hub & Thrust Washer
Courtesy of CHRYSLER GROUP, LLC

64. Install thrust washer (2) in position on the underdrive brake hub.

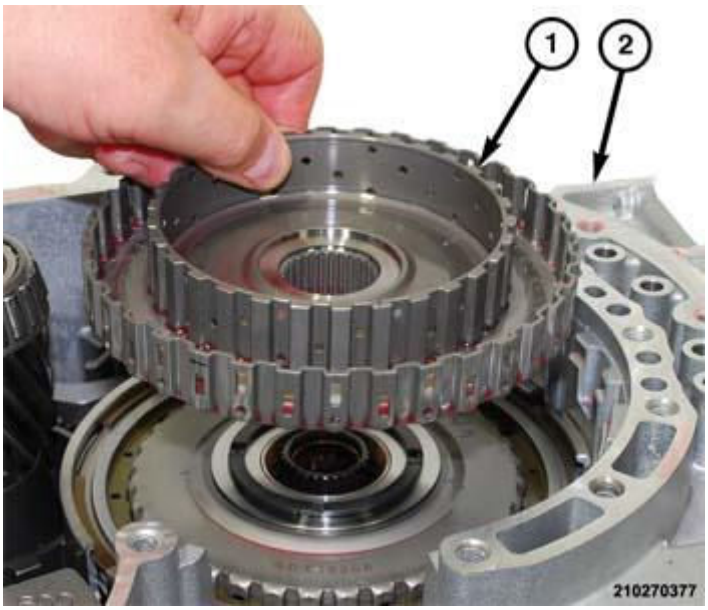

Fig. 416: 3/5/R Clutch & 2/6 Brake Hub Assembly
Courtesy of CHRYSLER GROUP, LLC

65. Install the 3/5/R clutch and 2/6 brake hub (1) assembly in position on the underdrive clutch.

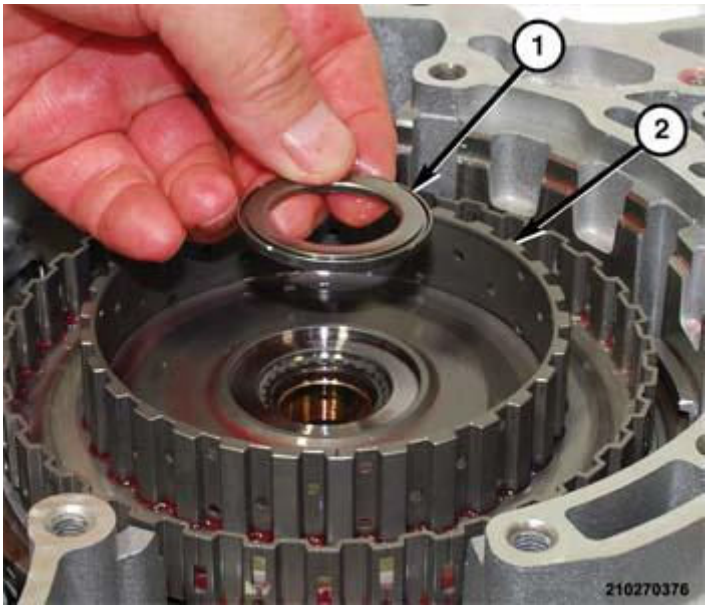

Fig. 417: 3/5/R Clutch & 2/6 Brake Hub, Thrust Bearing
Courtesy of CHRYSLER GROUP, LLC

66. Install the thrust bearing (2) in position on the 3/5/R clutch and 2/6 brake hub.

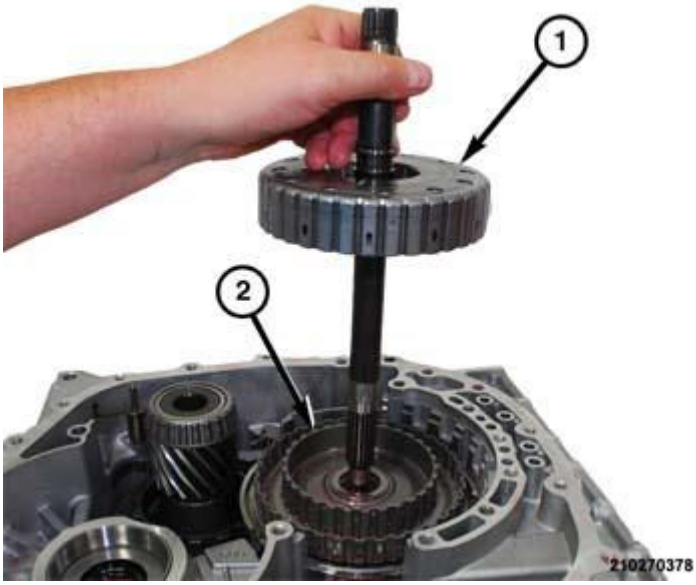

Fig. 418: 3/5/R Clutch Assembly, 3/5/R & 2/6 Brake Hub Assembly
Courtesy of CHRYSLER GROUP, LLC

67. Install the 3/5/R clutch assembly (1) in position in the 3/5/R and 2/6 brake hub (2) assembly.

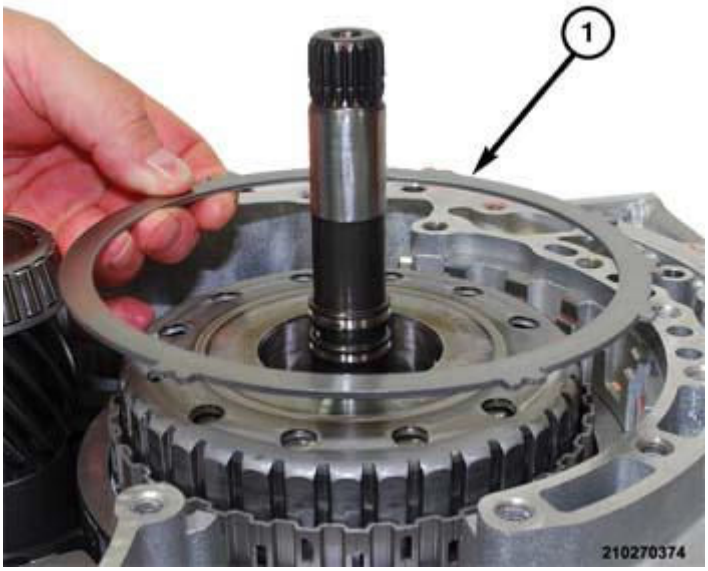

Fig. 419: 2/6 Brake Select Thickness Reaction Plate & Hub
Courtesy of CHRYSLER GROUP, LLC

68. Install 2/6 brake select thickness reaction plate (1) in position in the 2/6 brake hub.

Fig. 420: 2/6 Brake Plates, Discs & Hub
Courtesy of CHRYSLER GROUP, LLC

69. Install the 2/6 brake alternating the (1) plates (3) and discs (2) in position in the 2/6 brake hub.

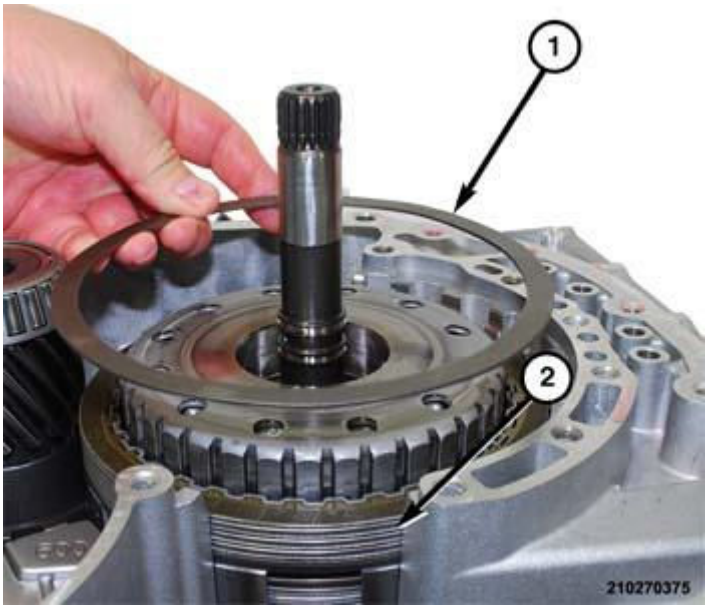

Fig. 421: 2/6 Brake Wave Plate & Hub
Courtesy of CHRYSLER GROUP, LLC

70. Install 2/6 brake wave plate (1) in position in the 2/6 brake hub.

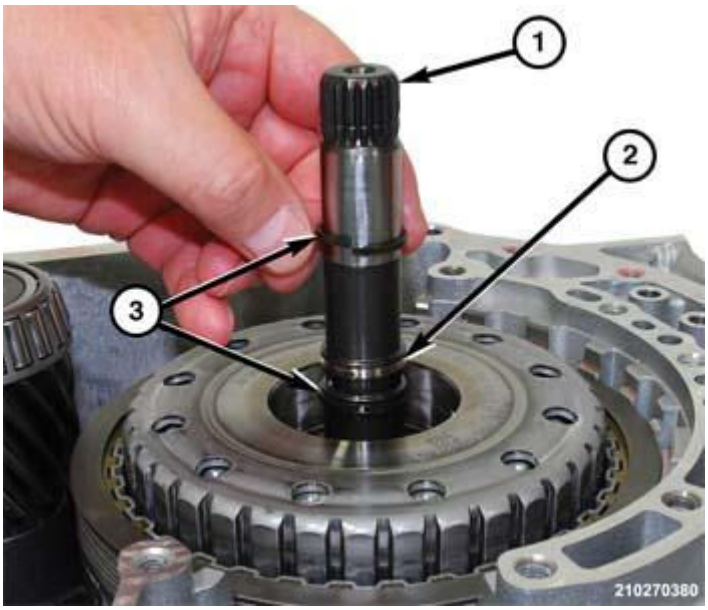

Fig. 422: Split Ring Seals & Input Shaft
Courtesy of CHRYSLER GROUP, LLC

71. Install two split ring seals (2) in the seal lands (2) in the input shaft (1).

Fig. 423: Split Seal Rings & Fluid Pump Hub
Courtesy of CHRYSLER GROUP, LLC

72. Install two split seal rings (3) in the lands (2) in fluid pump (1) hub.

Fig. 424: Thrust Washer & Fluid Pump
Courtesy of CHRYSLER GROUP, LLC

73. Apply a 3 mm (0.120 in.) bead of Dupont® Loctite™ 5460 Pink Flange Sealant or equivalent around the perimeter of the fluid pump sealing surface.
74. Using assembly lube, install the plastic thrust washer (2) in position on the underside of the fluid pump (1). There are three nubs that insert into holes in the fluid pump hub to prevent the thrust washer from rotating.

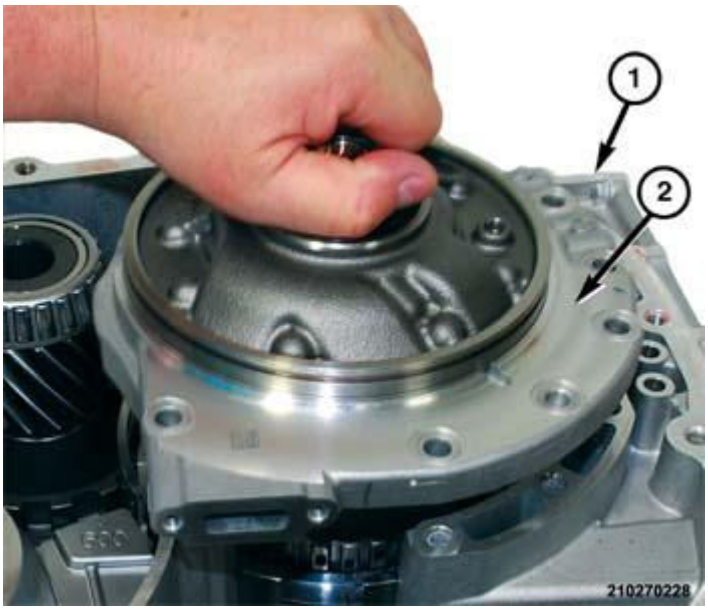

Fig. 425: Fluid Pump Separated From Transaxle Housing
Courtesy of CHRYSLER GROUP, LLC

75. Place the fluid pump (2) in position on the transaxle housing (1).

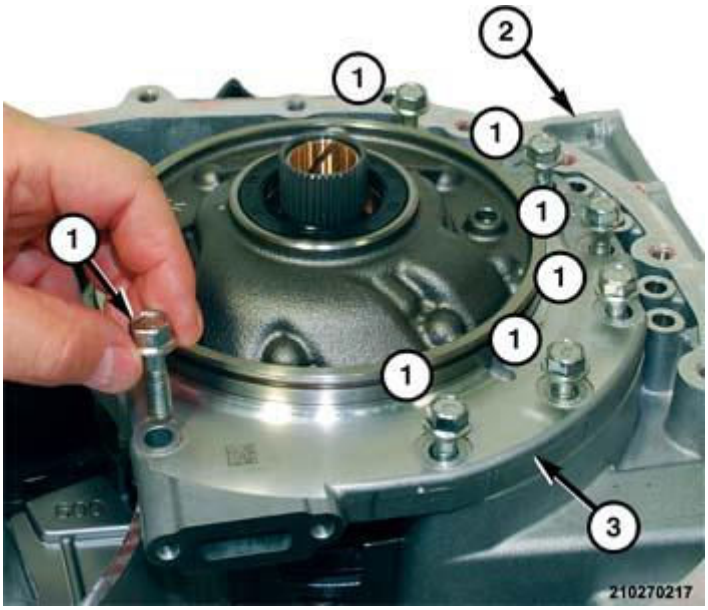

Fig. 426: Fluid Pump & Bolts
Courtesy of CHRYSLER GROUP, LLC

76. Install bolts (1) to hold fluid pump (3) to the trans axle housing (2). Refer to **SPECIFICATIONS**.
77. Install **NEW** o-ring seal in position in the groove in the fluid pump housing.

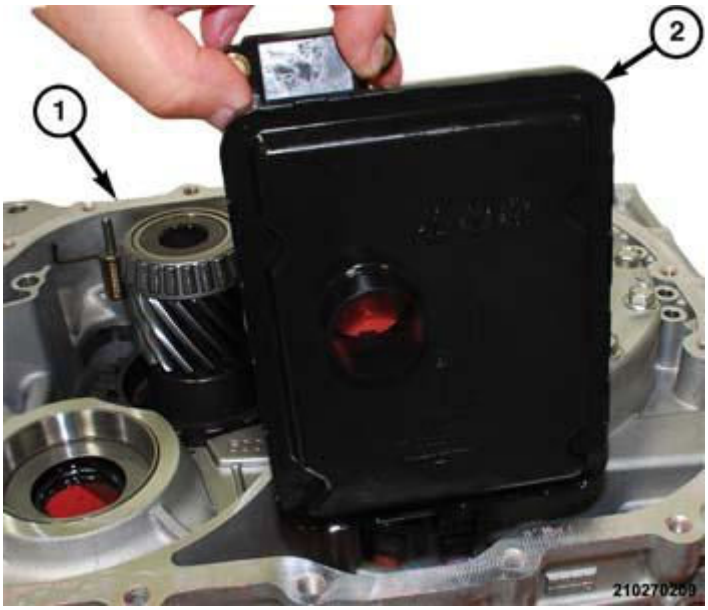

Fig. 427: Fluid Filter Separated From Transaxle Housing
Courtesy of CHRYSLER GROUP, LLC

78. Place the fluid filter (2) in position in the transaxle housing (1).

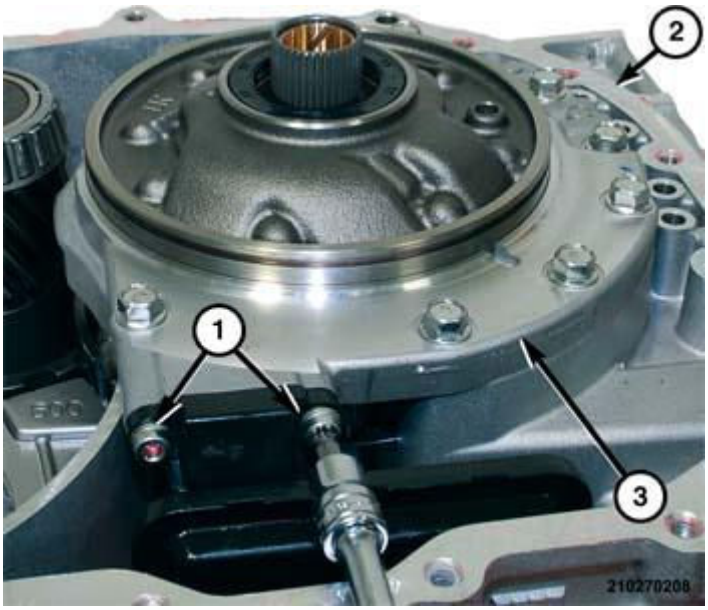

Fig. 428: Fluid Filter, Fluid Pump & Bolts
Courtesy of CHRYSLER GROUP, LLC

79. Install bolts (1) to hold the fluid filter to the fluid pump (3) housing. Refer to **SPECIFICATIONS**.

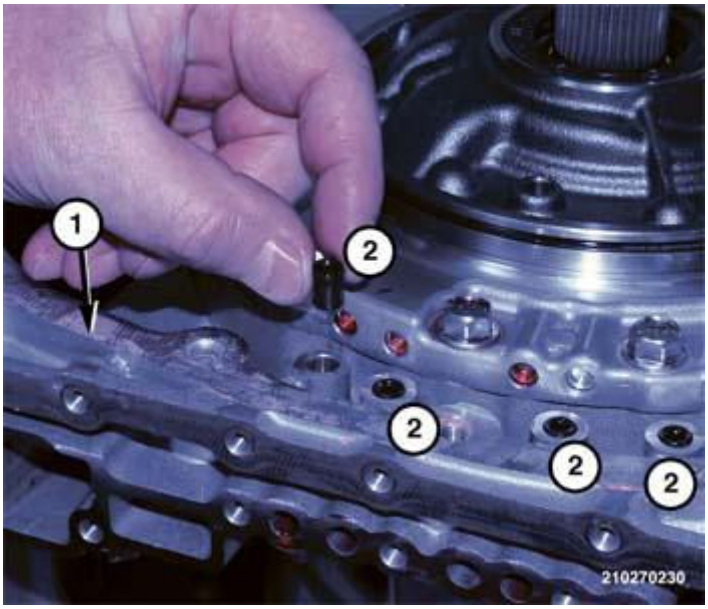

Fig. 429: Small Transfer Port Seals
Courtesy of CHRYSLER GROUP, LLC

80. Install seals in position in four small transfer ports (2) in the transaxle housing (1).

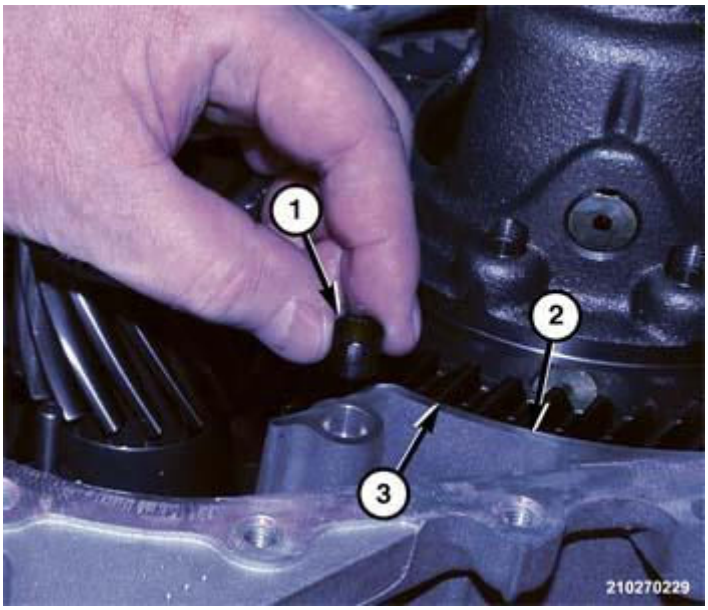

Fig. 430: Large Transfer Port Seal
Courtesy of CHRYSLER GROUP, LLC

81. Install seal in position in the large transfer port (1) in the axle housing (2).

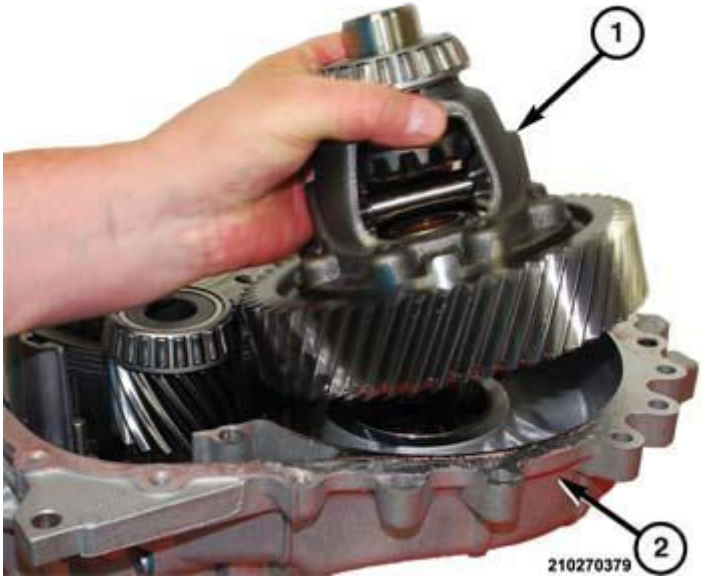

Fig. 431: Differential Assembly Separated From Transaxle Housing
Courtesy of CHRYSLER GROUP, LLC

82. Place the differential assembly in position in the transaxle housing.
83. Apply a 3 mm (0.120 in.) bead of Dupont® Loctite™ 5460 Pink Flange Sealant or equivalent around the perimeter of the transaxle housing.

Fig. 432: Transaxle Housing Halves
Courtesy of CHRYSLER GROUP, LLC

84. If fluid guides and tube were removed during cleaning, install related components in the transaxle housing. Refer to **SPECIFICATIONS**.

85. Place the bell housing (1) in position on the transaxle (2).

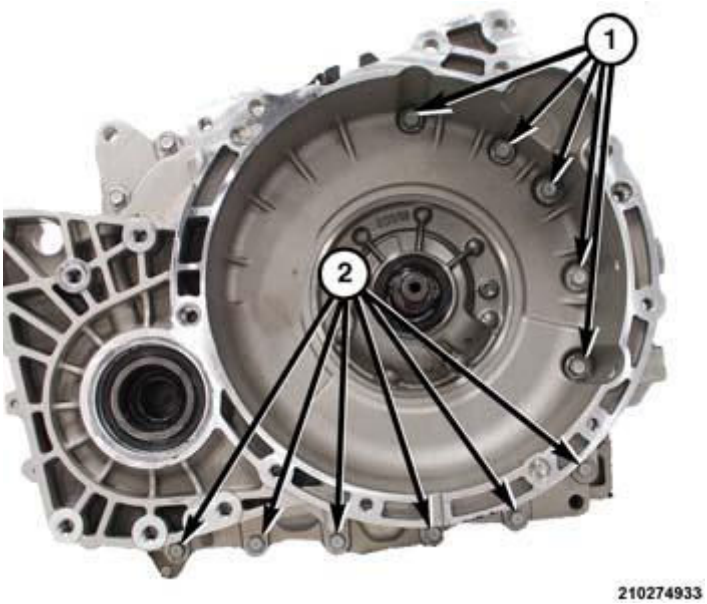

Fig. 433: Transaxle Housing Bolts
Courtesy of CHRYSLER GROUP, LLC

86. Install five bolts (1) on inside of the bell housing. Refer to **SPECIFICATIONS**.

87. Install six bolts (2) in the bottom of the transaxle housing. Refer to **SPECIFICATIONS**.

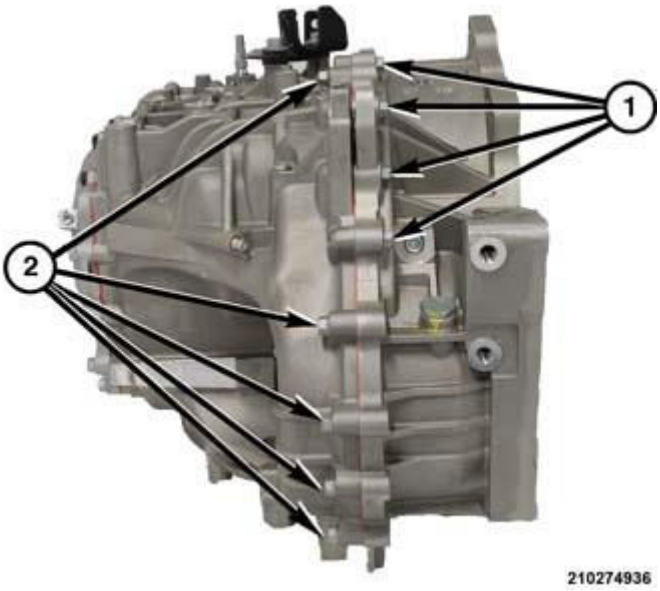

Fig. 434: Transaxle Housing Bolts
Courtesy of CHRYSLER GROUP, LLC

88. Install five bolts from the back (2) and four bolts from the top (1) of the transaxle housing. Refer to **SPECIFICATIONS**.

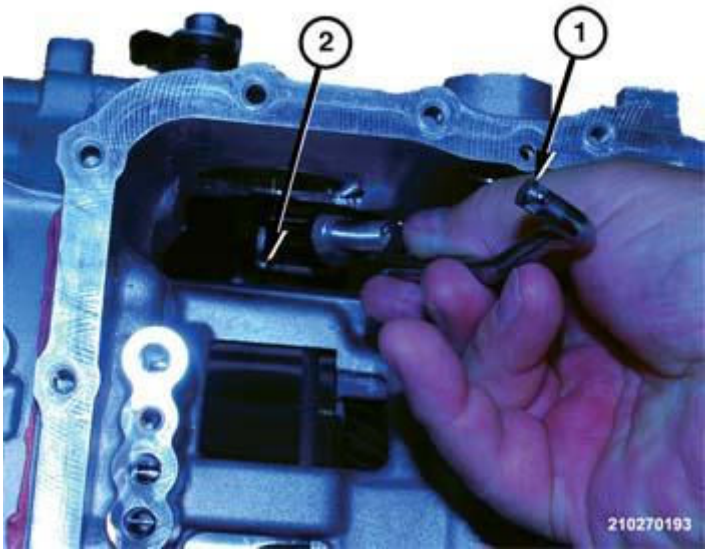

Fig. 435: Park Rod & Park Rod Guide
Courtesy of CHRYSLER GROUP, LLC

89. If seal required replacement, install the **NEW** lip seal in the manual shaft

hole in the transaxle housing.

90. Insert the park rod (1) into the park rod guide.

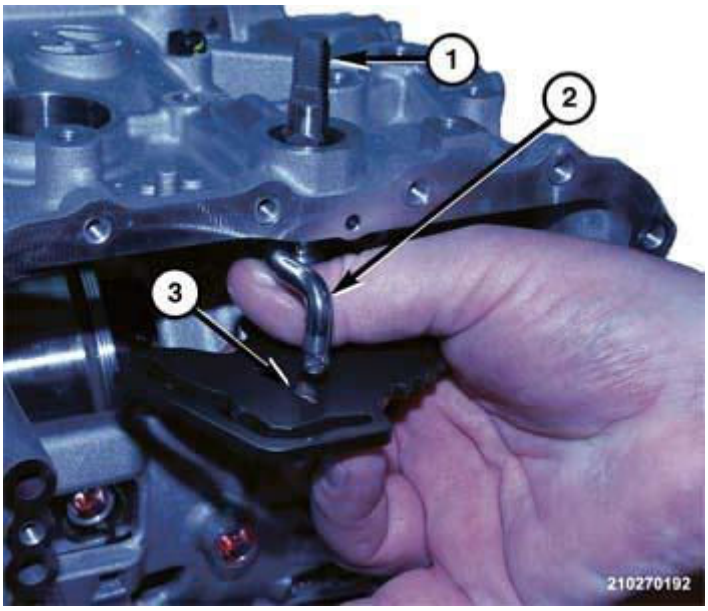

Fig. 436: Manual Shaft, Park Rod & Key Hole Slot
Courtesy of CHRYSLER GROUP, LLC

91. Insert the manual shaft (1) into the bearing in the transaxle.
92. Push manual shaft (1) upward until park rod (2) engages the detent comb.
93. Rotate manual shaft (1) clockwise to lock the staked nub on the park rod (2) in the key hole slot (3) in the manual shaft detent comb.

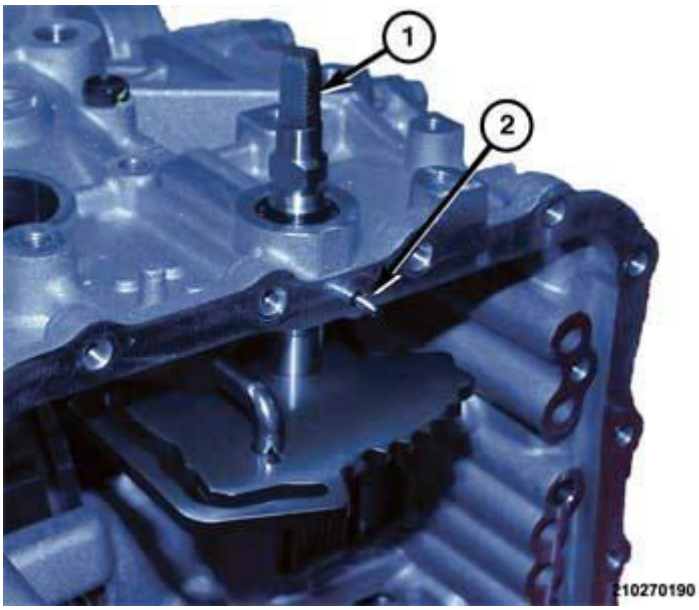

Fig. 437: Manual Shaft & Pin
Courtesy of CHRYSLER GROUP, LLC

94. Install the pin (2) to hold the manual shaft (1) in the transaxle into the hole in the pan gasket flange.

Fig. 438: Main Wire Harness & Sensors
Courtesy of CHRYSLER GROUP, LLC

95. Place the main wire harness and sensors (1) in position on the transaxle.
96. Push the wire connector outward through to hole in the transaxle housing.

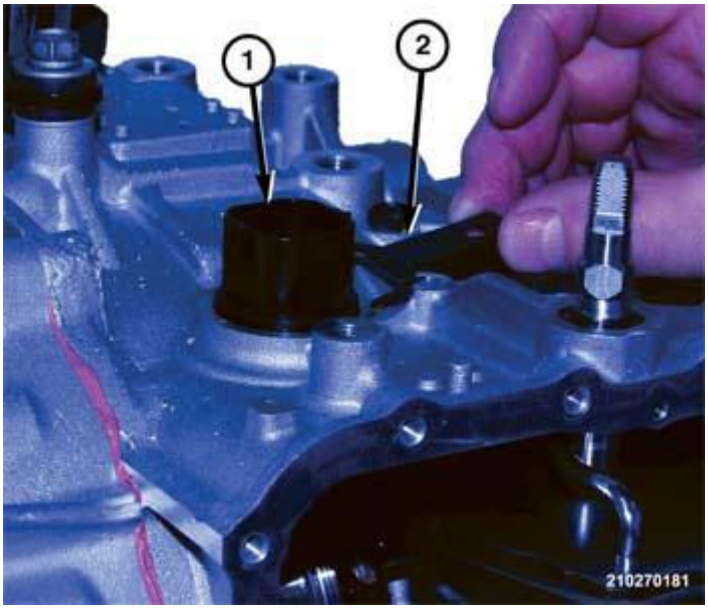

Fig. 439: Wire Connector & Hold Down Bracket Separated From Transaxle
Courtesy of CHRYSLER GROUP, LLC

97. Place the wire connector (1) hold down bracket (2) in position on the transaxle.

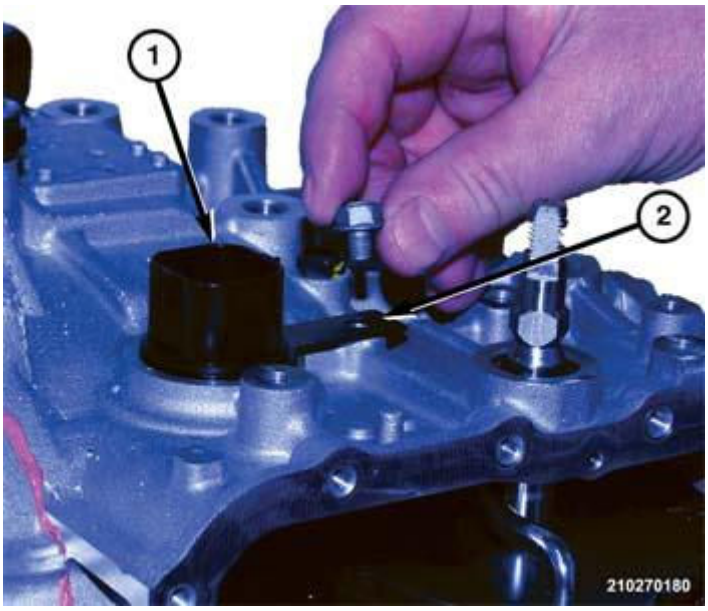

Fig. 440: Hold Down Bracket, Wire Connector & Bolts
Courtesy of CHRYSLER GROUP, LLC

98. Install bolt to hold the wire connector (1) hold down bracket (2) to the top of transaxle housing. Refer to **SPECIFICATIONS**.
99. Insert the speed sensors in position in the transaxle housing.

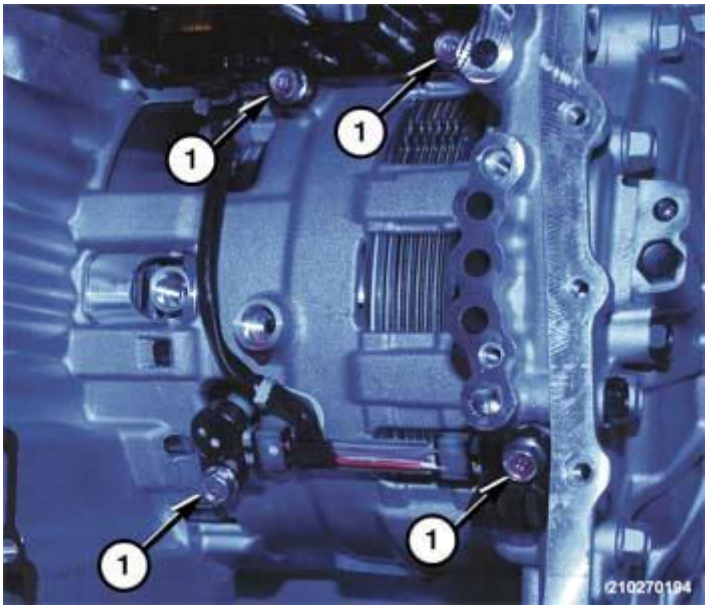

Fig. 441: Speed Sensors, Main Wire Harness & Bolts
Courtesy of CHRYSLER GROUP, LLC

00. Install bolts (1) to hold the speed sensors and main wire harness to transaxle. Refer to **SPECIFICATIONS**.

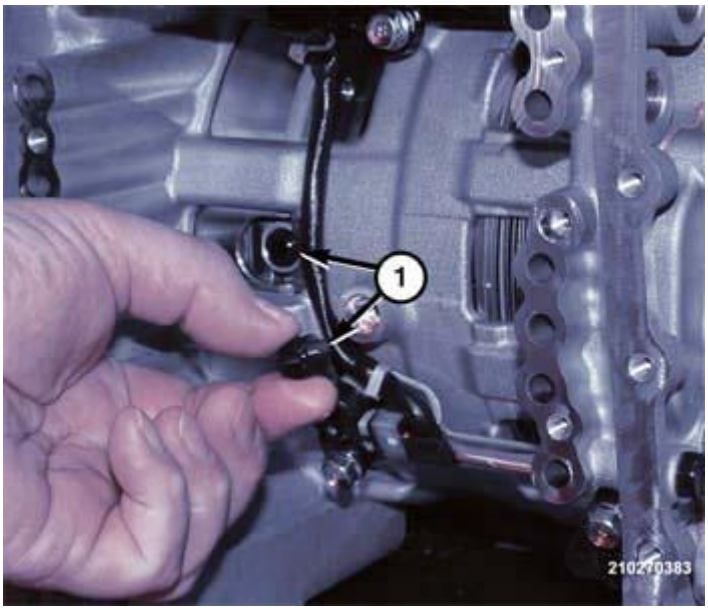

Fig. 442: Transfer Port Seals
Courtesy of CHRYSLER GROUP, LLC

01. Install the two seals into the transfer ports in transaxle housing.

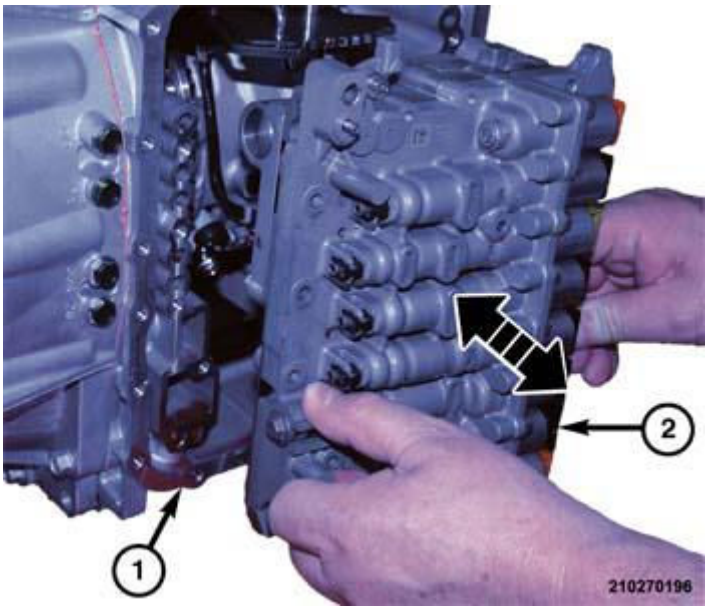

Fig. 443: Valve Body Separated From Transaxle
Courtesy of CHRYSLER GROUP, LLC

02. **The manual valve is loose after the valve body is removed and may fall out during installation.**

Place the valve body (2) in position on the transaxle (1). Guide the pin on the manual valve into the slot in the manual shaft detent comb.

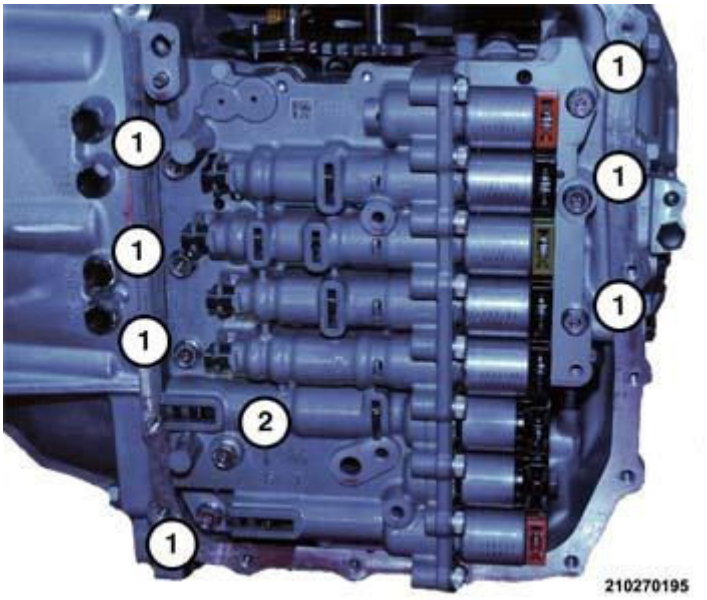

Fig. 444: Valve Body Bolts
Courtesy of CHRYSLER GROUP, LLC

03. Install bolts, 7 short (1) and 1 long (2) bolts, to hold the valve body to the transaxle. Refer to **SPECIFICATIONS**.

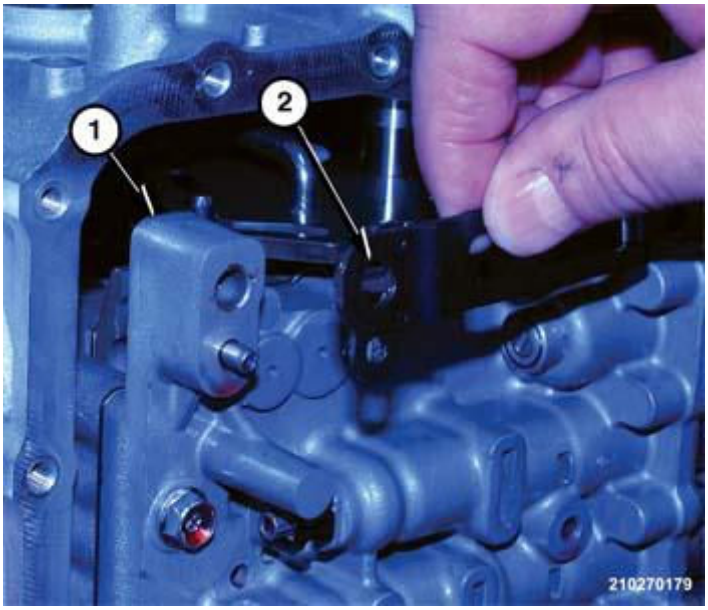

Fig. 445: Detent Spring Separated From Valve Body
Courtesy of CHRYSLER GROUP, LLC

04. Place the detent spring (2) in position on the valve body (1).

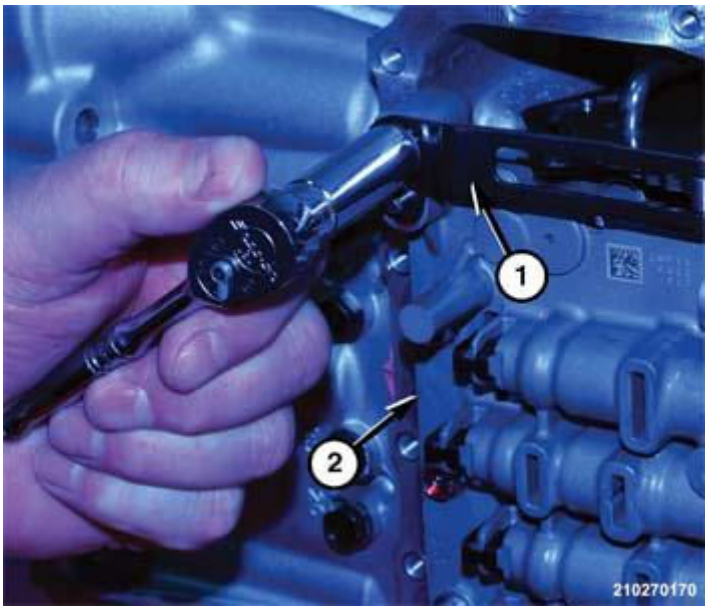

Fig. 446: Manual Shaft Detent Spring & Valve Body
Courtesy of CHRYSLER GROUP, LLC

05. Install the screw to hold the manual shaft detent spring (1) to the valve body (2). Refer to **SPECIFICATIONS**.

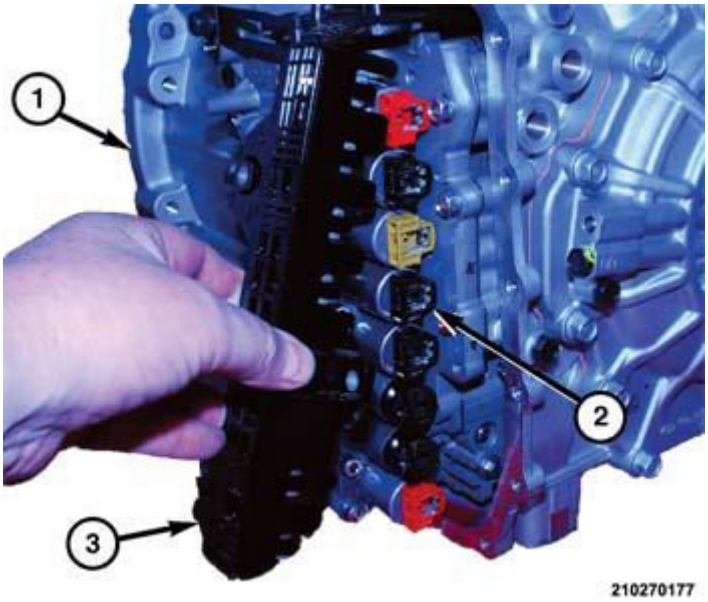

Fig. 447: Solenoids & Connector
Courtesy of CHRYSLER GROUP, LLC

06. Starting at the top solenoid valve, push inward at each solenoid (2) until the connector (3) is engaged.

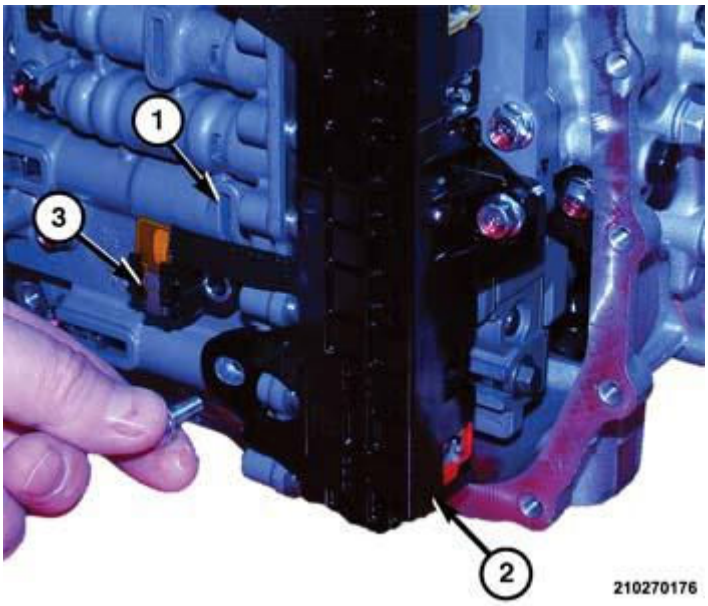

Fig. 448: Solenoid Valve Connector, Valve Body & Bolts
Courtesy of CHRYSLER GROUP, LLC

07. Install bolts to hold the solenoid valve connector (2) to the valve body (1). Refer to **SPECIFICATIONS**.

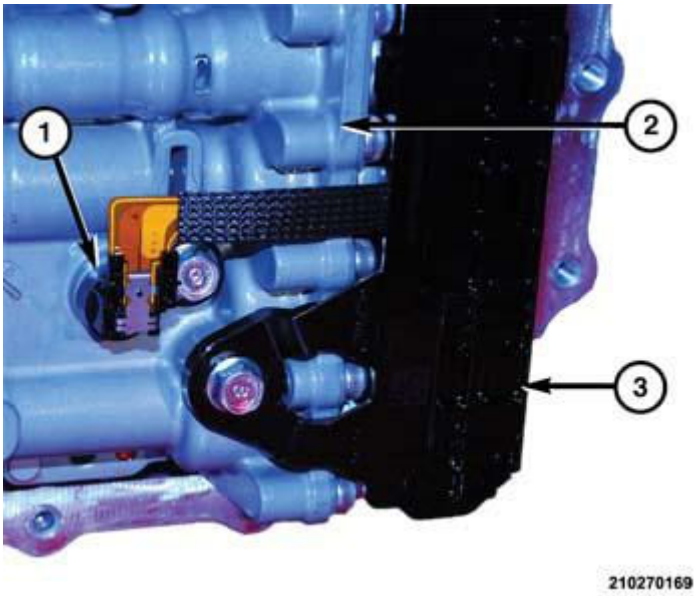

Fig. 449: Fluid Temperature Sensor, Valve Body & Bolt
Courtesy of CHRYSLER GROUP, LLC

08. Insert the temperature sensor (1) into port in the valve body (2).
09. Install bolt to hold fluid temperature sensor (1) to the valve body (2). Refer to **SPECIFICATIONS**.

Fig. 450: Valve Body Cover Separated From Transaxle
Courtesy of CHRYSLER GROUP, LLC

10. Install a **NEW** gasket on the pan and place the pan (1) in position on the transaxle (2).

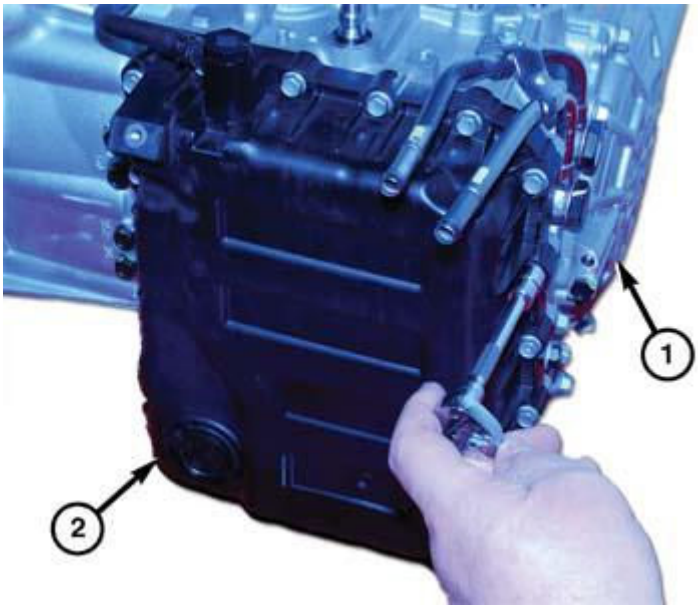

Fig. 451: Valve Body Cover
Courtesy of CHRYSLER GROUP, LLC

11. Install bolts to hold the valve body pan (2) to the transaxle (1). Refer to **SPECIFICATIONS**.

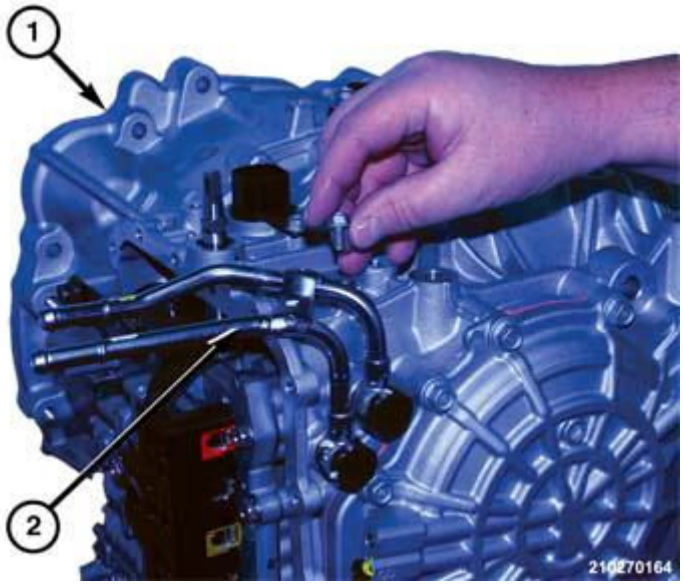

Fig. 452: Cooler Tubes & Transaxle
Courtesy of CHRYSLER GROUP, LLC

12. Place the cooler tubes (2) in position on the transaxle (1).
13. Install bolt to hold the cooler tube (2) bracket to the transaxle (1). Refer to **SPECIFICATIONS**.

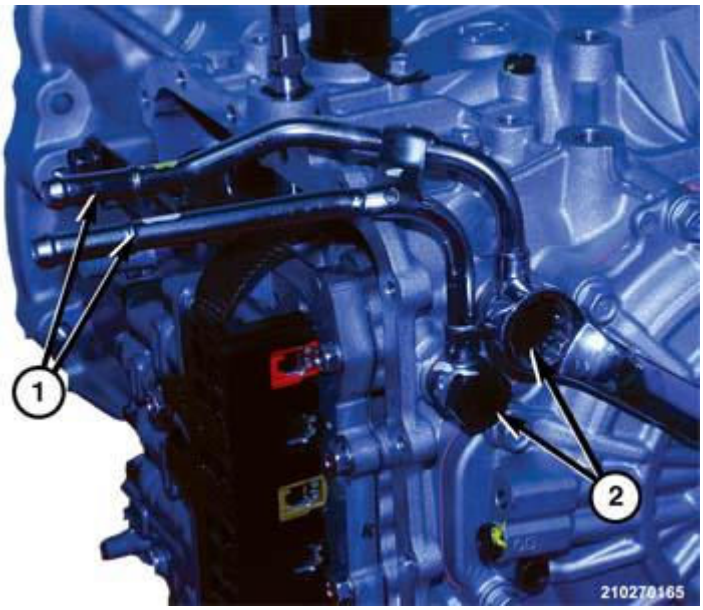

Fig. 453: Cooler Tubes & Banjo Bolts
Courtesy of CHRYSLER GROUP, LLC

14. Install banjo bolts (2) to hold the cooler tubes (1) to the transaxle. Refer to **SPECIFICATIONS**.

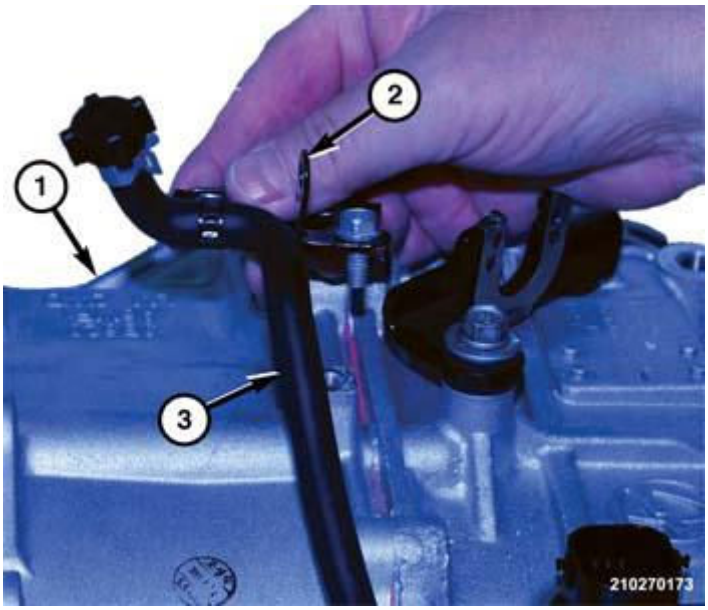

Fig. 454: Vent Tube Bracket & Bolt
Courtesy of CHRYSLER GROUP, LLC

15. Place the vent tube (3) in position on the transaxle (1).
16. Install bolt to hold the vent tube bracket (2) to the transaxle housing. Refer to **SPECIFICATIONS**.

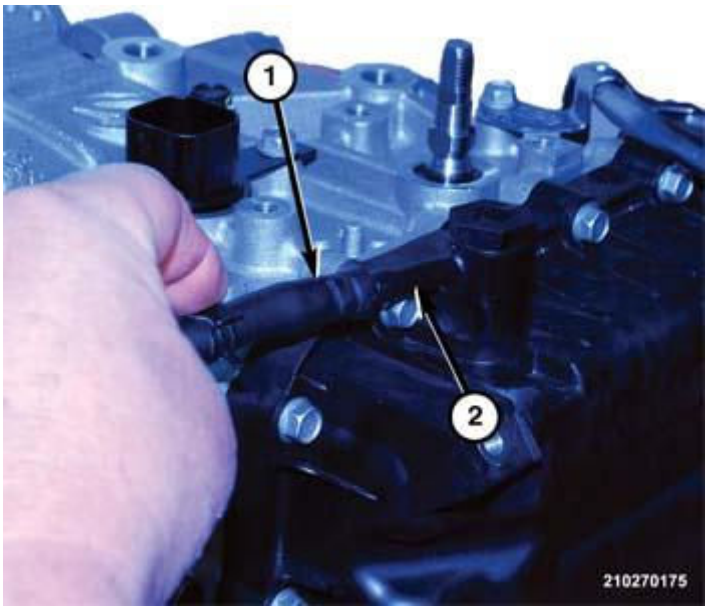

Fig. 455: Vent Hose End & Nipple Adapter
Courtesy of CHRYSLER GROUP, LLC

17. Push the vent hose end (1) onto of the nipple on the vent adaptor (2).

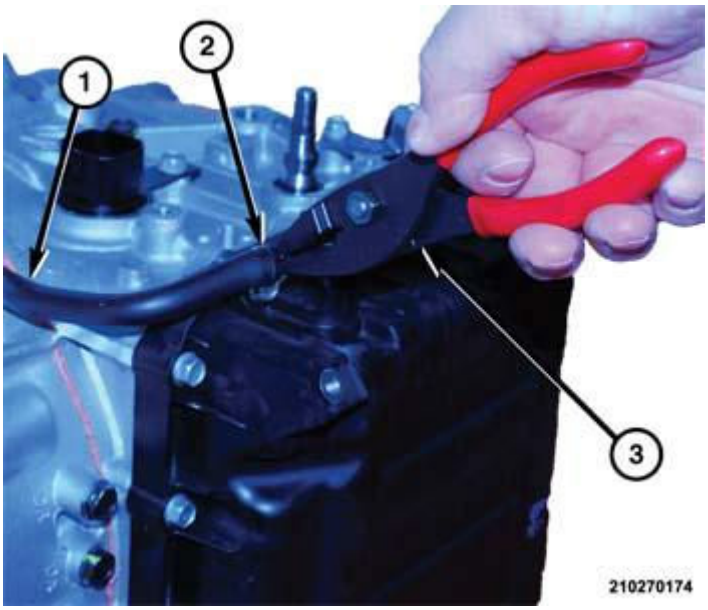

Fig. 456: Vent Hose, Spring Clamp & Pliers
Courtesy of CHRYSLER GROUP, LLC

18. Using common pliers (3), compress the hose spring clamp (2) and slide it up the vent hose (1) into position to hold the hose to the nipple.

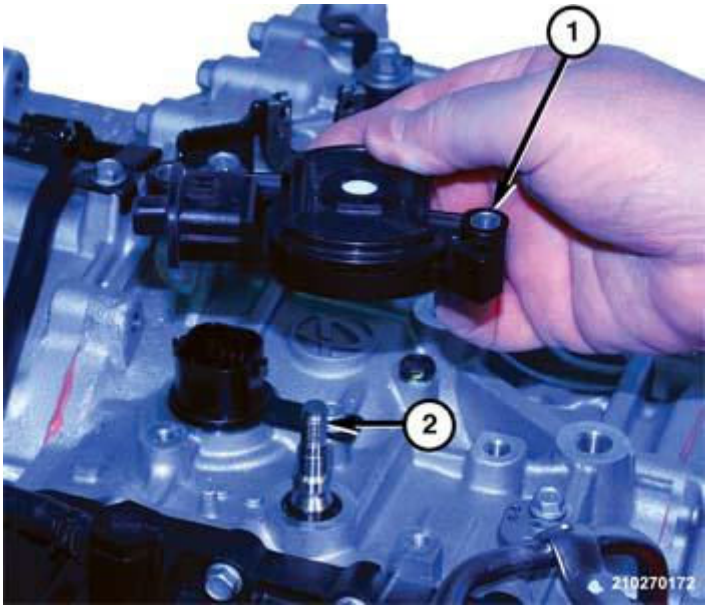

Fig. 457: Transmission Range Sensor Separated From Transaxle
Courtesy of CHRYSLER GROUP, LLC

19. Place the TRS (1) in position on the transaxle.

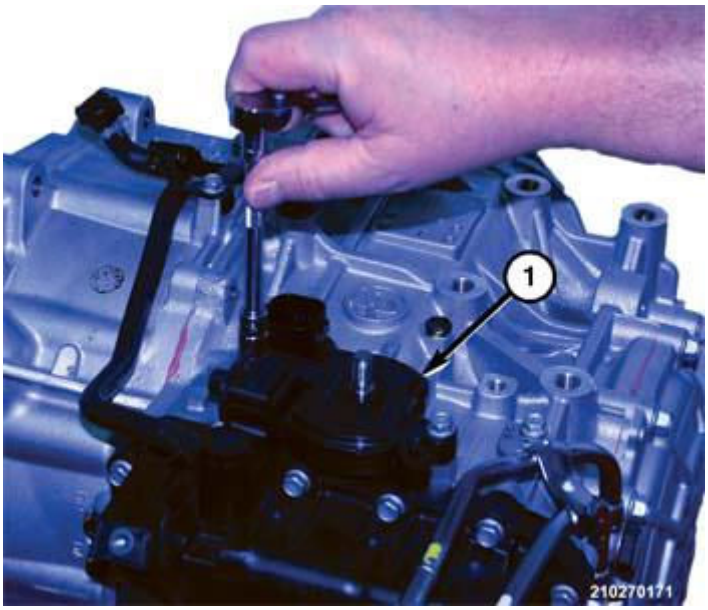

Fig. 458: Transmission Range Sensor
Courtesy of CHRYSLER GROUP, LLC

20. Install bolts to hold the TRS (1) to the transaxle housing. Refer to **SPECIFICATIONS**.

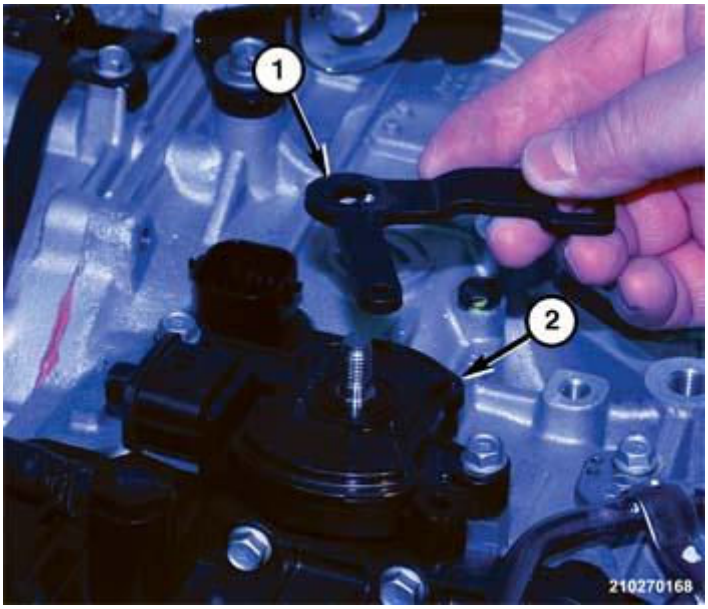

Fig. 459: Manual Lever & Manual Shaft
Courtesy of CHRYSLER GROUP, LLC

21. Place the manual level (1) in position on the manual shaft.

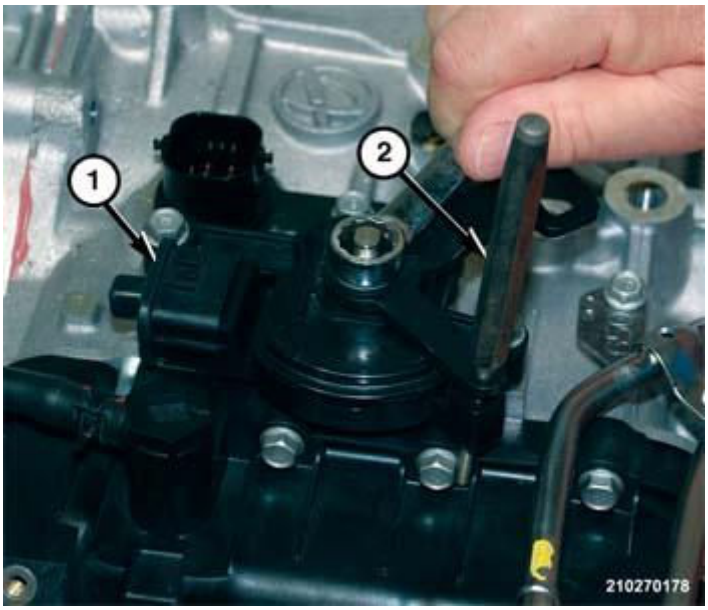

Fig. 460: Pin Punch, Manual Lever & Transmission Range Sensor
Courtesy of CHRYSLER GROUP, LLC

22. Insert a suitable pin punch (2) or equivalent through the manual lever into the TRS switch (1) to hold lever in place.
23. Install the nut to hold the manual lever to the manual shaft. Refer to **SPECIFICATIONS**.

NOTE: The transaxle can now be installed in a vehicle. Refer to INSTALLATION.

INSTALLATION

FWD

1. While guiding the transaxle past obstacles, raise the transaxle upward until the transaxle is in line with the engine.

Fig. 461: Bellhousing & Engine Block
Courtesy of CHRYSLER GROUP, LLC

2. Place the bellhousing (1) in position against the engine block (2).

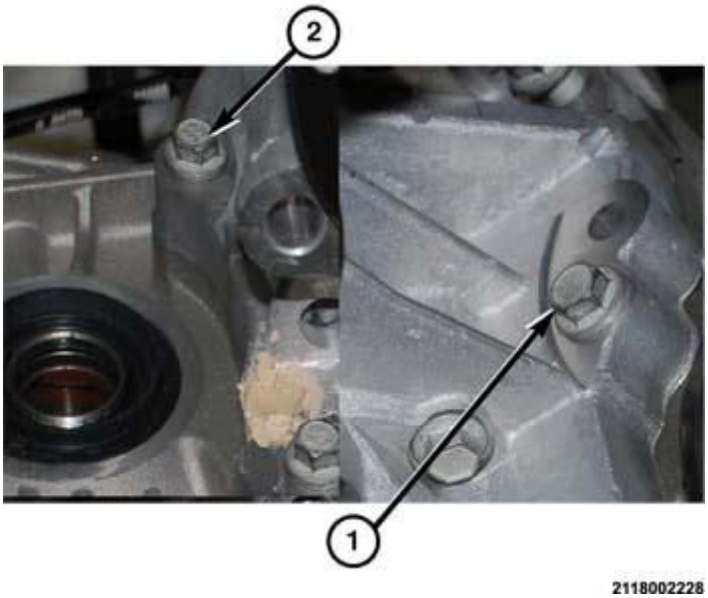

Fig. 462: Bellhousing Bolts
Courtesy of CHRYSLER GROUP, LLC

3. Install the bolts (1, 2) to hold the front (1) and rear (2) of the engine block to the bellhousing. Refer to **SPECIFICATIONS**.

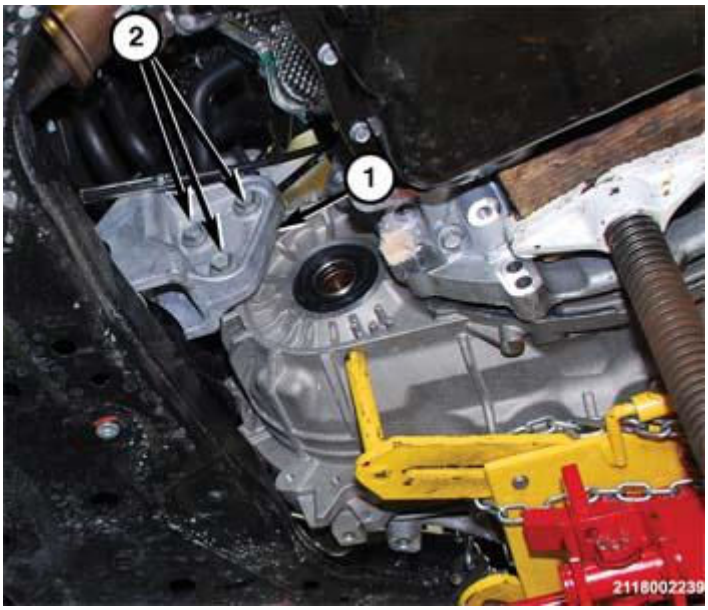

Fig. 463: Rear Transaxle Mount
Courtesy of CHRYSLER GROUP, LLC

4. Place the rear mount (1) in position and install the bolts (2) to hold the rear transaxle mount (1) to the back of the transaxle. Refer to **SPECIFICATIONS**.

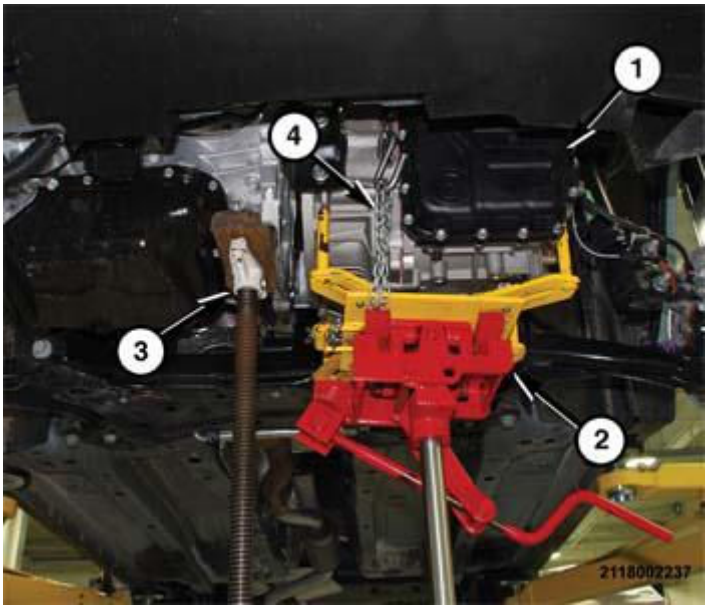

Fig. 464: Supporting Engine
Courtesy of CHRYSLER GROUP, LLC

5. Lower the transaxle (1) so all of the weight is bearing on the high-stand (3).
6. Remove the safety chine (4) holding the transaxle (1) to the jack cradle.
7. Lower and remove the transmission jack (2) from under the transaxle.

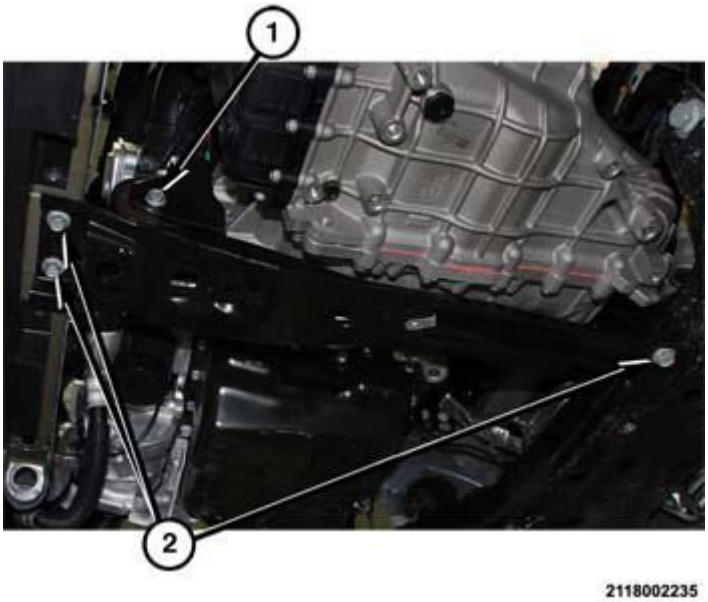

Fig. 465: Front-To-Rear Support
Courtesy of CHRYSLER GROUP, LLC

8. Place the front-to-rear support in position on the vehicle.
9. Install the bolts (2) to hold the front-to-rear support to the front and rear crossmembers. Refer to **SPECIFICATIONS**.
10. Install the trough bolt (1) to hold the front-to-rear support rubber isolator to the front crossmember. Refer to **SPECIFICATIONS**.
11. Remove the high-stand (3) from under the engine.

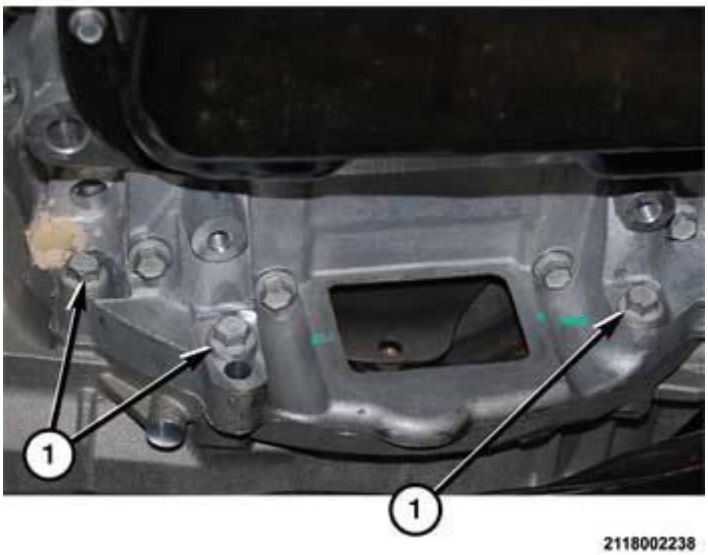

Fig. 466: Bellhousing Bolts
Courtesy of CHRYSLER GROUP, LLC

12. Install the bolts (1) to hold the lower engine adapter to the bellhousing. Refer to **SPECIFICATIONS**.

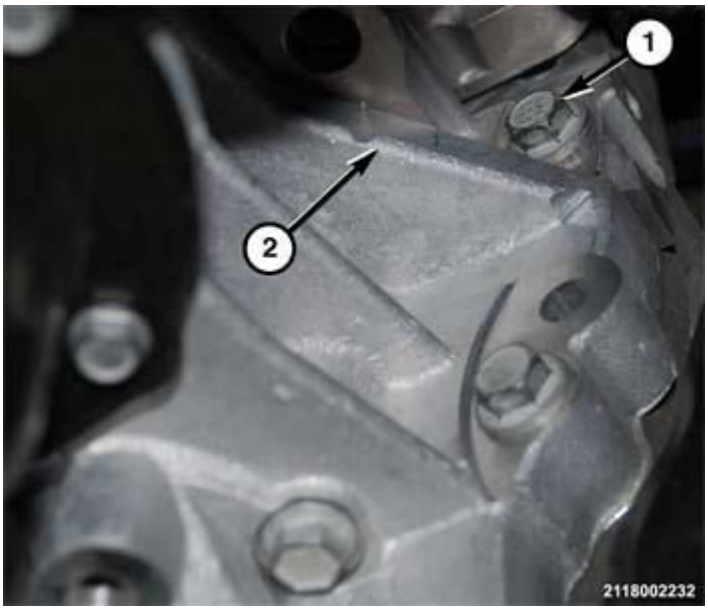

Fig. 467: Bellhousing Bolt
Courtesy of CHRYSLER GROUP, LLC

13. Install the bolt (1) to hold the engine block (2) to the bellhousing next to the starter motor. Refer to **SPECIFICATIONS**.

Fig. 468: Bellhousing Bolt
Courtesy of CHRYSLER GROUP, LLC

14. Install the hidden bolt (2) to hold the engine block to the bellhousing behind

the heat-shield (1) at the back of the engine. Refer to **SPECIFICATIONS**.

Fig. 469: Torque Converter Bolt
Courtesy of CHRYSLER GROUP, LLC

15. Install the bolts (2) to hold the flex plate to the torque converter. Refer to **SPECIFICATIONS**.

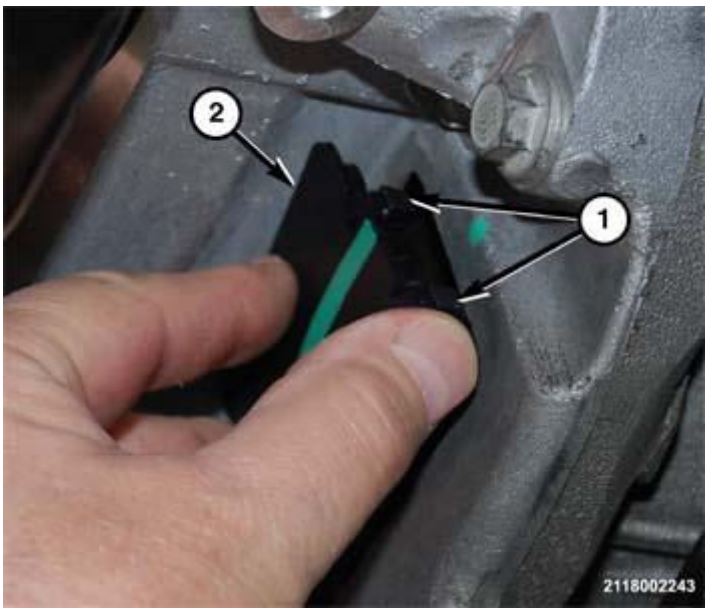

Fig. 470: Torque Converter Bolt Access Plug
Courtesy of CHRYSLER GROUP, LLC

16. Install the torque converter bolt access plug (2) into the bellhousing cover.
17. Install the left and right halfshafts. Refer to **INSTALLATION** .

18. Fill the transaxle to the proper level.
19. Install the belly pan. Refer to **BELLY PAN, INSTALLATION** .

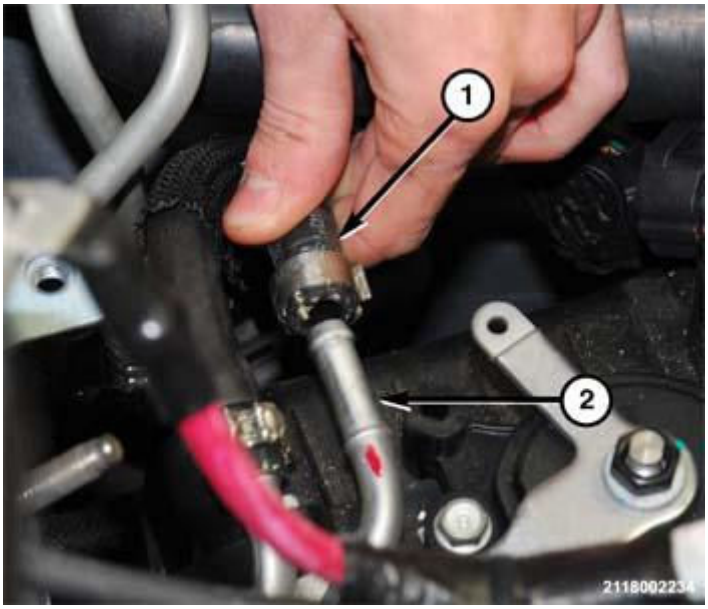

Fig. 471: Cooler Tubes & Hoses
Courtesy of CHRYSLER GROUP, LLC

20. Push the hoses (1) onto the cooler tubes (2) on the transaxle.

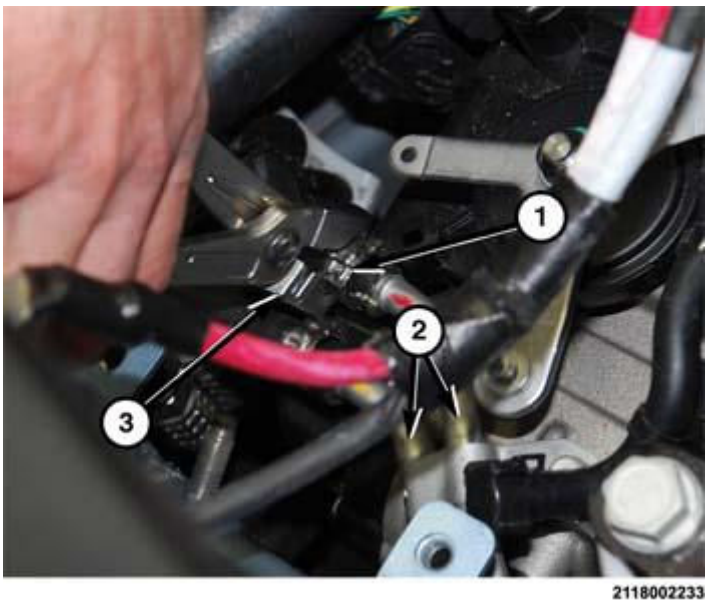

Fig. 472: Transaxle Cooler Hose Clamps
Courtesy of CHRYSLER GROUP, LLC

21. Using a suitable clamp pliers (3), crimp the clamps (1) to hold the transaxle cooler hoses to the tubes (2) on the transaxle.

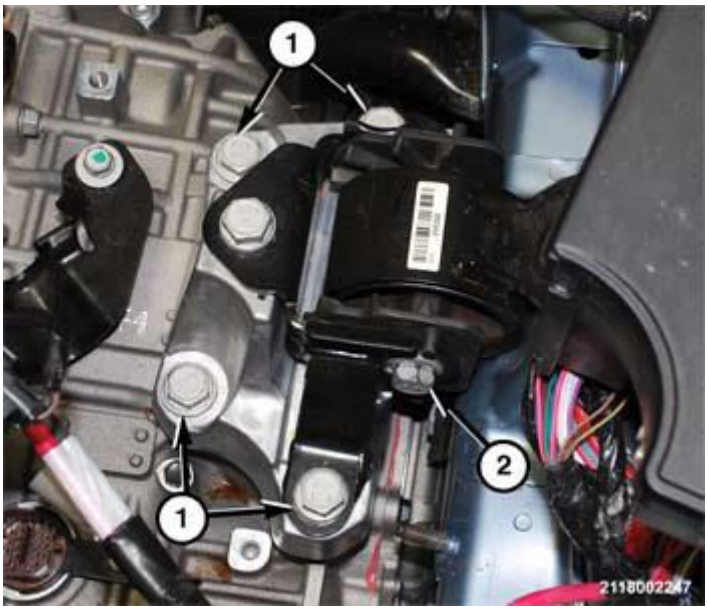

Fig. 473: Transaxle Mount Bolts
Courtesy of CHRYSLER GROUP, LLC

22. Place the transaxle mount in position on the vehicle.
23. Position a suitable floor jack under the left (driver) side of the transaxle to add support.
24. Raise the transaxle until the bolt holes for the transaxle mount line up.
25. Install the bolts (1) to hold the transaxle mount to the transaxle. Refer to **SPECIFICATIONS**.
26. Install the through bolt (2) to hold the transaxle mount rubber isolator to the frame rail bracket. Refer to **SPECIFICATIONS**.

Fig. 474: Starter Motor Bolts
Courtesy of CHRYSLER GROUP, LLC

27. Install the hidden bolts (1, 2) to hold the starter motor to the engine block and bellhousing. Refer to **SPECIFICATIONS**.

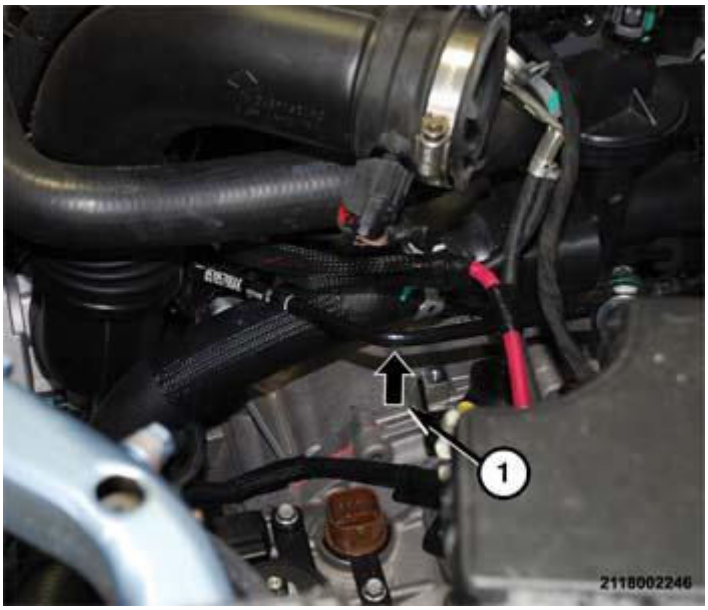

Fig. 475: Ground Cable & Transaxle Bellhousing Bolt
Courtesy of CHRYSLER GROUP, LLC

28. Install the hidden bolt (1) to hold the ground cable and transaxle bellhousing to the engine block under the engine coolant tubes. Refer to **SPECIFICATIONS**.

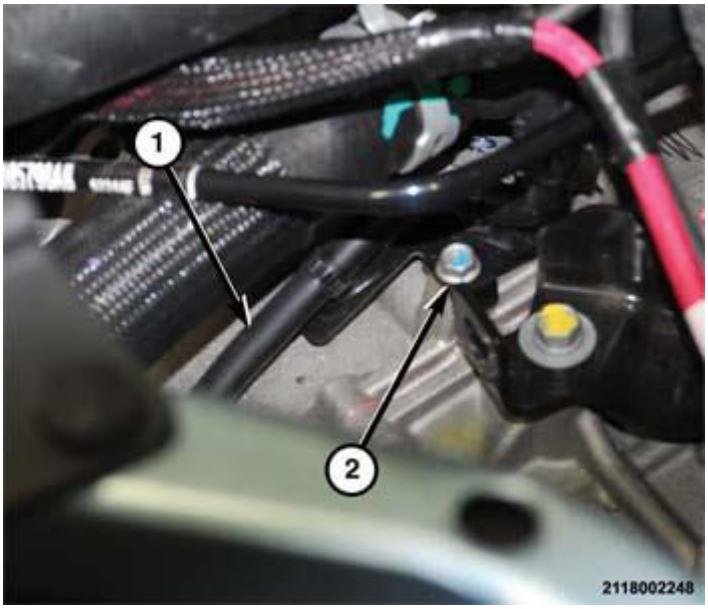

Fig. 476: Vent Tube & Bolt

Courtesy of CHRYSLER GROUP, LLC

29. Place the vent tube (1) in position on the transaxle.
30. Install the bolt (2) to hold the vent tube (1) to the transaxle. Refer to **SPECIFICATIONS**.

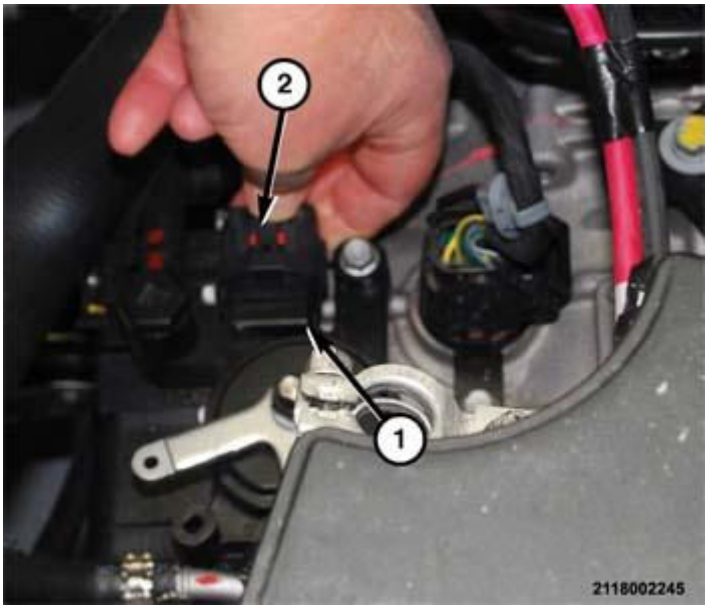

Fig. 477: Transaxle TRS Connector
Courtesy of CHRYSLER GROUP, LLC

31. Engage the wire harness connector into the TRS (1).
32. Push inward until the lock (2) clicks into position.

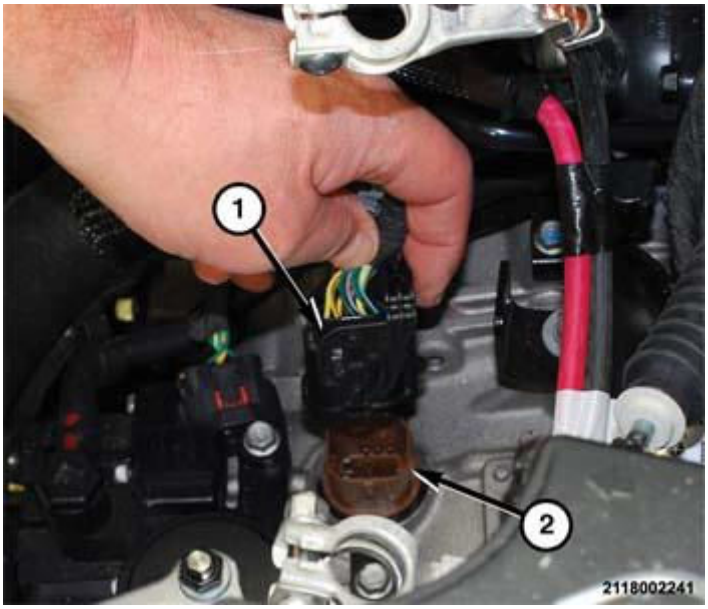

Fig. 478: Transaxle Wire Harness Connector

Courtesy of CHRYSLER GROUP, LLC

33. Engage the wire harness connector (1) into the solenoid connector on the transaxle.
34. Set the lock on the transaxle solenoid connector (1).
35. Insert the shift cable into the bracket on the top of the transaxle and engage the locking clips.
36. Place the shift cable (adjuster screw up) on the manual lever pin.
37. Push downward on the shift cable end until it locks on the manual lever pin.

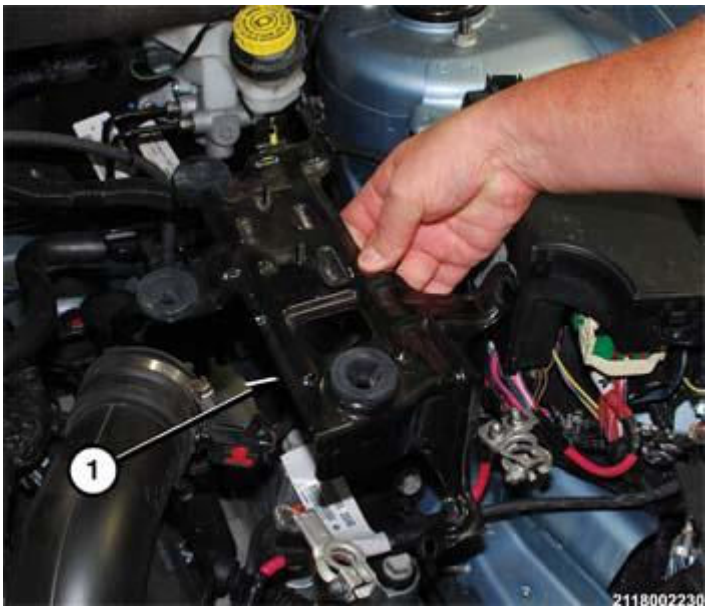

Fig. 479: Lower Air Cleaner Bracket
Courtesy of CHRYSLER GROUP, LLC

38. Place the lower air cleaner bracket (1) in position on the vehicle.

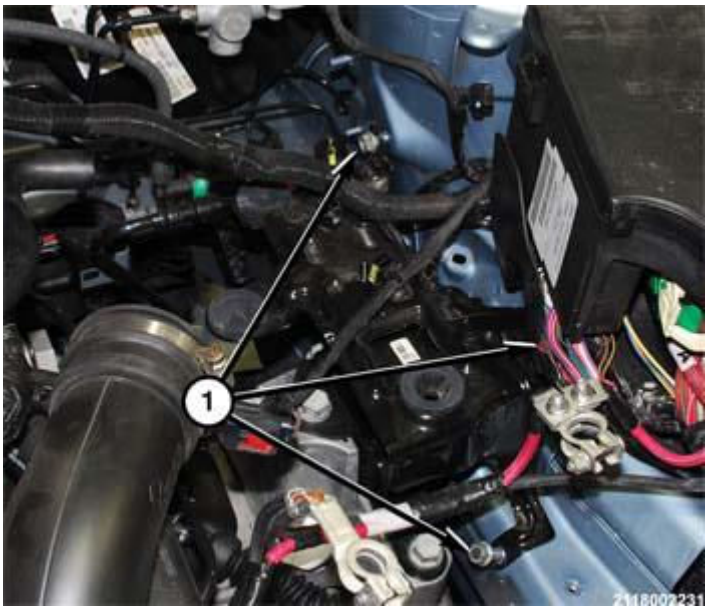

Fig. 480: Air Cleaner Bracket Nuts & Bolts
Courtesy of CHRYSLER GROUP, LLC

39. Install the bolts and nuts (1) to hold the lower air cleaner bracket to the left frame rail. Refer to **SPECIFICATIONS**.
40. Install the lower air cleaner body. Refer to **2.0L BODY, AIR CLEANER, INSTALLATION** , **2.2L BODY, AIR CLEANER, INSTALLATION** or **2.4L BODY, AIR CLEANER, INSTALLATION** .
41. Install the air box lid.
42. Install the battery tray in the vehicle. Refer to **TRAY, BATTERY, INSTALLATION** .
43. Install the battery in the vehicle. Refer to **BATTERY, INSTALLATION** .
44. Install the engine air-box in the vehicle.
45. Secure the fasteners to hold the engine air-box to the front crossmember.
46. Close the hood.
47. Road test the vehicle to verify the repair.

AWD

1. While guiding the transaxle past obstacles, raise the transaxle upward until the transaxle is in line with the engine.

Fig. 481: Bellhousing & Engine Block
Courtesy of CHRYSLER GROUP, LLC

2. Place the bellhousing (1) in position against the engine block (2).
3. Install the bolt (1) to hold the front of the engine block to the bellhousing. Refer to **SPECIFICATIONS**.

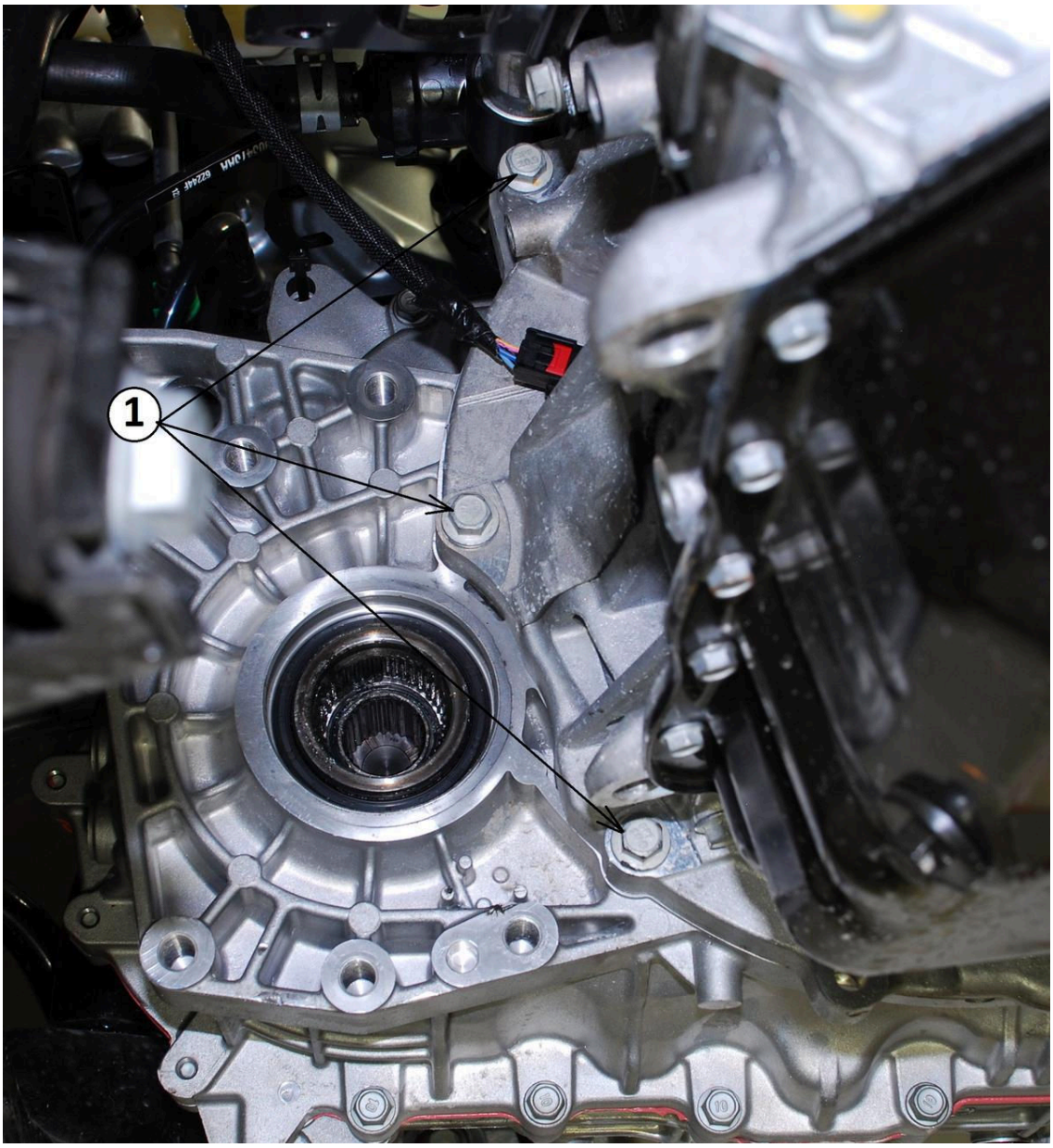

Fig. 482: Bellhousing Bolts
Courtesy of CHRYSLER GROUP, LLC

4. Install the bolts (1) to hold the rear of the engine block to the bellhousing. Refer to **SPECIFICATIONS**.

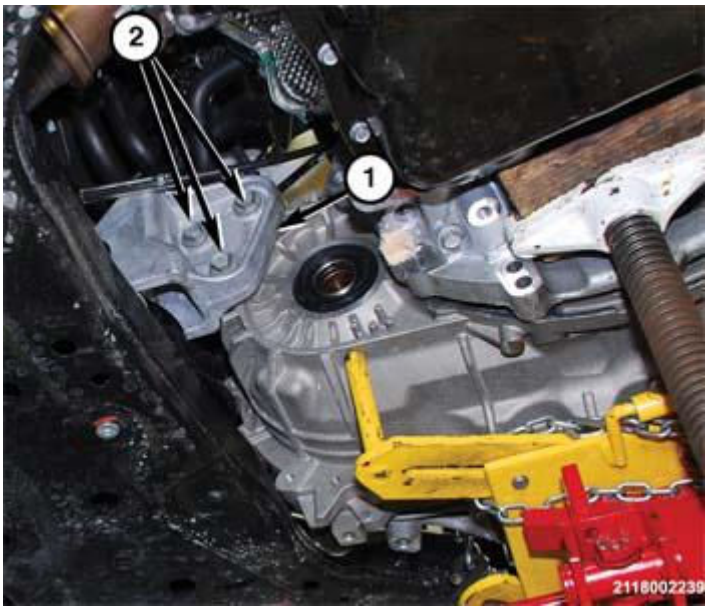

Fig. 483: Rear Transaxle Mount
Courtesy of CHRYSLER GROUP, LLC

5. Place the rear mount (1) in position (typical) and install the bolts (2) to hold the rear transaxle mount (1) to the back of the transaxle. Refer to **SPECIFICATIONS**.

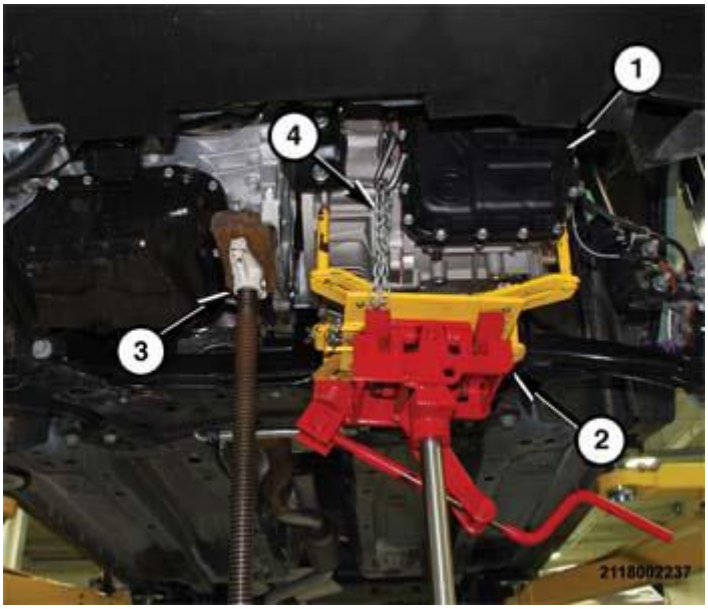

Fig. 484: Supporting Engine
Courtesy of CHRYSLER GROUP, LLC

6. Lower the transaxle (1) so all of the weight is bearing on the high-stand (3).
7. Remove the safety chine (4) holding the transaxle (1) to the jack cradle.
8. Lower and remove the transmission jack (2) from under the transaxle.

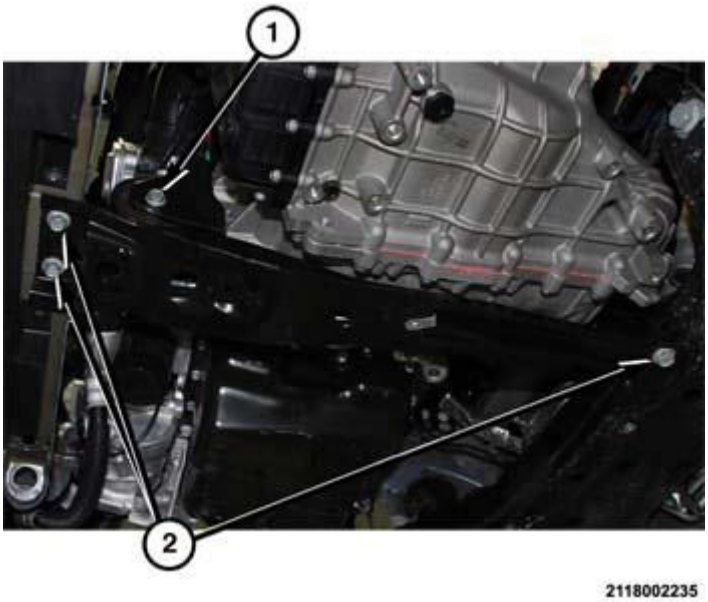

Fig. 485: Front-To-Rear Support
Courtesy of CHRYSLER GROUP, LLC

9. Place the front-to-rear support in position on the vehicle.
10. Install the bolts (2) to hold the front-to-rear support to the front and rear crossmembers. Refer to **SPECIFICATIONS**.
11. Install the trough bolt (1) to hold the front-to-rear support rubber isolator to the front crossmember. Refer to **SPECIFICATIONS**.
12. Remove the high-stand (3) from under the engine.

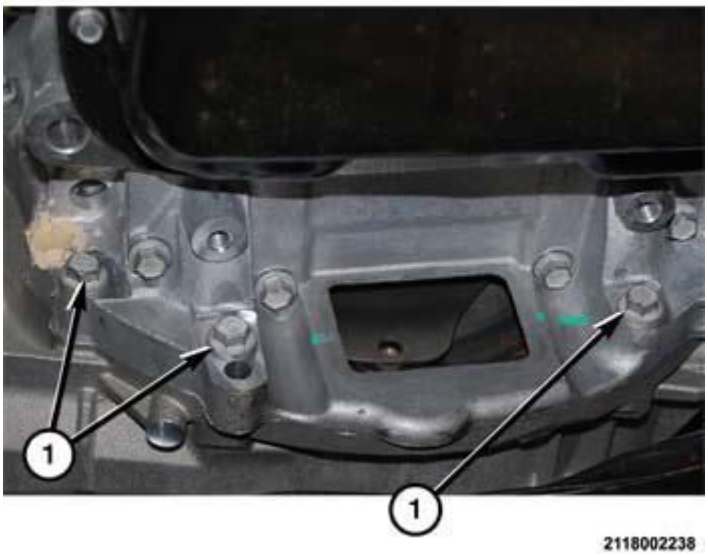

Fig. 486: Bellhousing Bolts
Courtesy of CHRYSLER GROUP, LLC

13. Install the bolts (1) to hold the lower engine adapter to the bellhousing. Refer to **SPECIFICATIONS**.

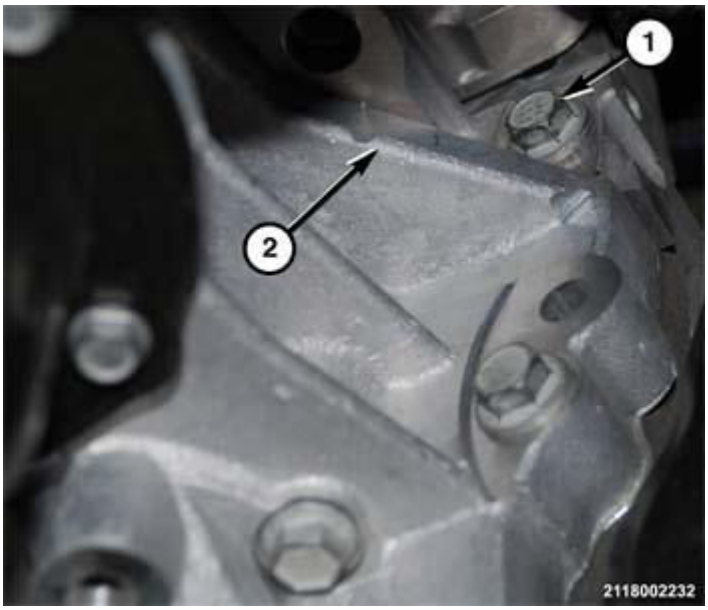

Fig. 487: Bellhousing Bolt
Courtesy of CHRYSLER GROUP, LLC

14. Install the bolt (1) to hold the engine block (2) to the bellhousing next to the starter motor. Refer to **SPECIFICATIONS**.

Fig. 488: Torque Converter Bolt
Courtesy of CHRYSLER GROUP, LLC

15. Install the bolts (2) to hold the flex plate to the torque converter. Refer to

SPECIFICATIONS.

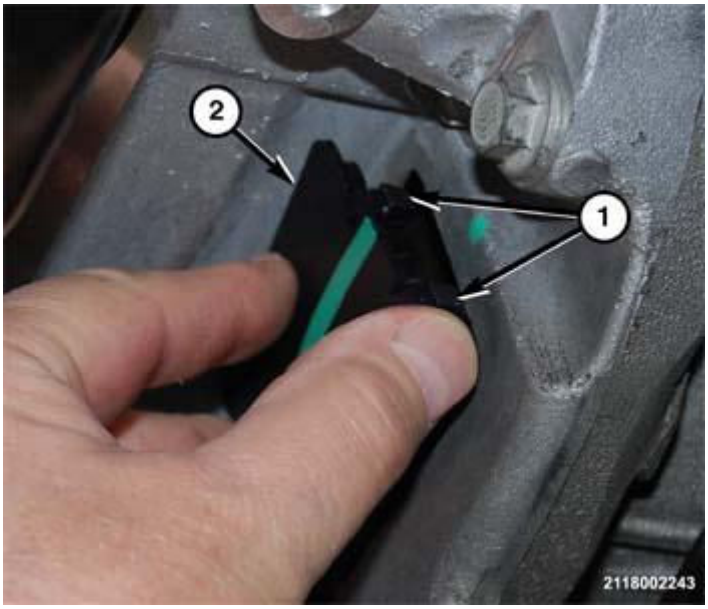

Fig. 489: Torque Converter Bolt Access Plug
Courtesy of CHRYSLER GROUP, LLC

16. Install the torque converter bolt access plug (2) into the bellhousing cover.
17. Install the power transfer unit (PTU). Refer to **INSTALLATION** .
18. Install the left and right halfshafts. Refer to **INSTALLATION** .
19. Fill the transaxle to the proper level.
20. Install the belly pan. Refer to **BELLY PAN, INSTALLATION** .
21. Lower the vehicle.

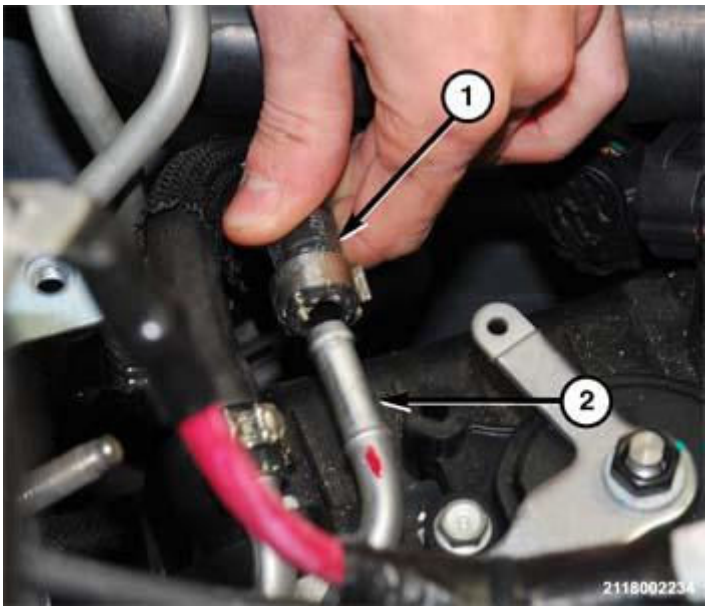

Fig. 490: Cooler Tubes & Hoses
Courtesy of CHRYSLER GROUP, LLC

22. Push the hoses (1) onto the cooler tubes (2) on the transaxle.

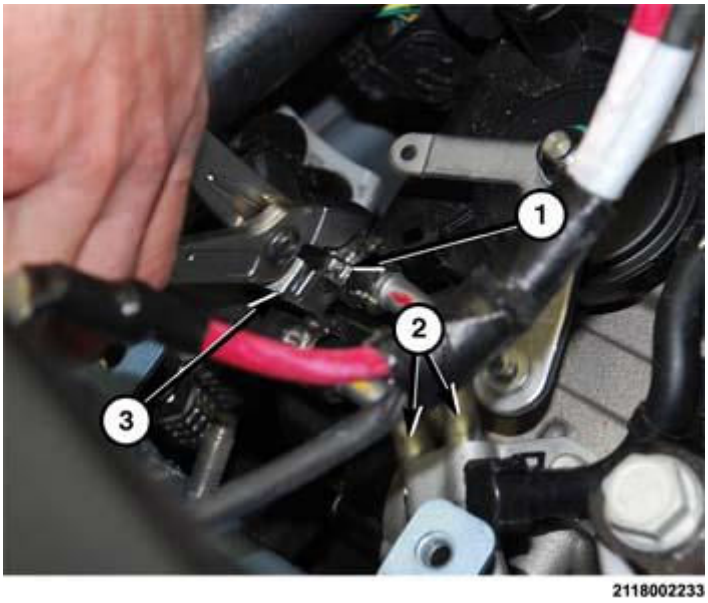

Fig. 491: Transaxle Cooler Hose Clamps
Courtesy of CHRYSLER GROUP, LLC

23. Using a suitable clamp pliers (3), crimp the clamps (1) to hold the transaxle cooler hoses to the tubes (2) on the transaxle.

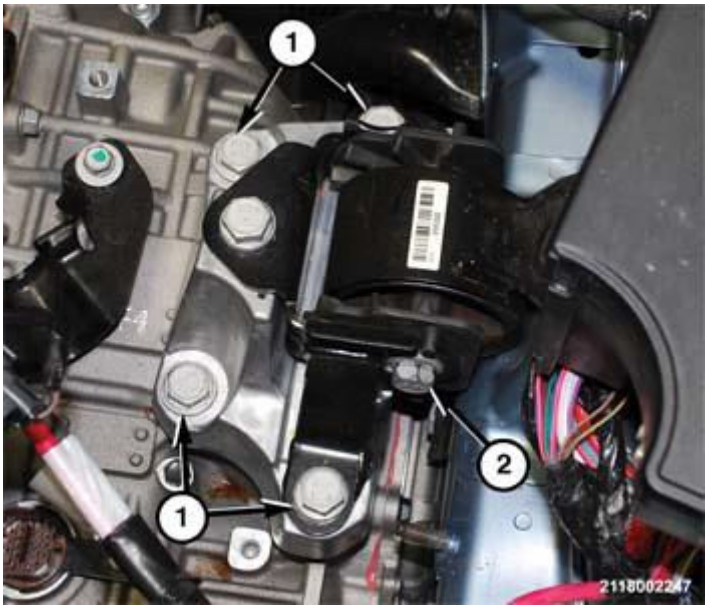

Fig. 492: Transaxle Mount Bolts
Courtesy of CHRYSLER GROUP, LLC

24. Place the transaxle mount in position on the vehicle.
25. Position a suitable floor jack under the left (driver) side of the transaxle to add support.
26. Raise the transaxle until the bolt holes for the transaxle mount line up.
27. Install the bolts (1) to hold the transaxle mount to the transaxle. Refer to **SPECIFICATIONS**.
28. Install the through bolt (2) to hold the transaxle mount rubber isolator to the frame rail bracket. Refer to **SPECIFICATIONS**.

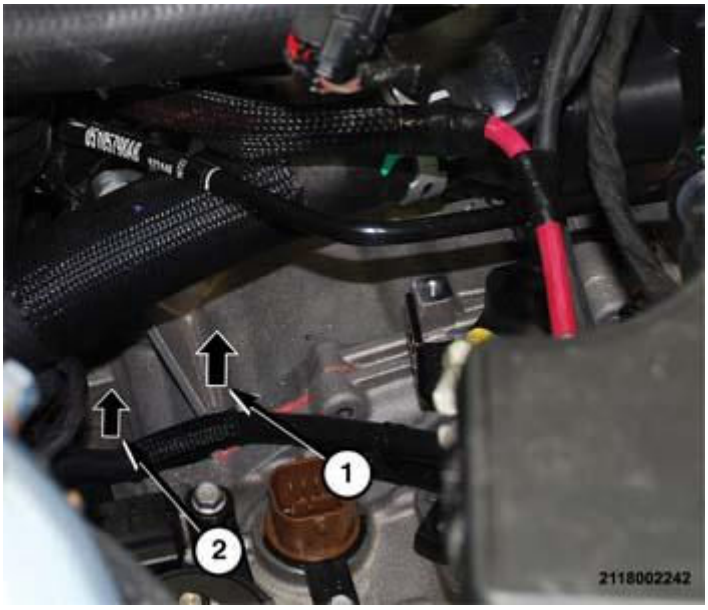

Fig. 493: Starter Motor Bolts
Courtesy of CHRYSLER GROUP, LLC

29. Install the hidden bolts (1, 2) to hold the starter motor to the engine block and bellhousing. Refer to **SPECIFICATIONS**.

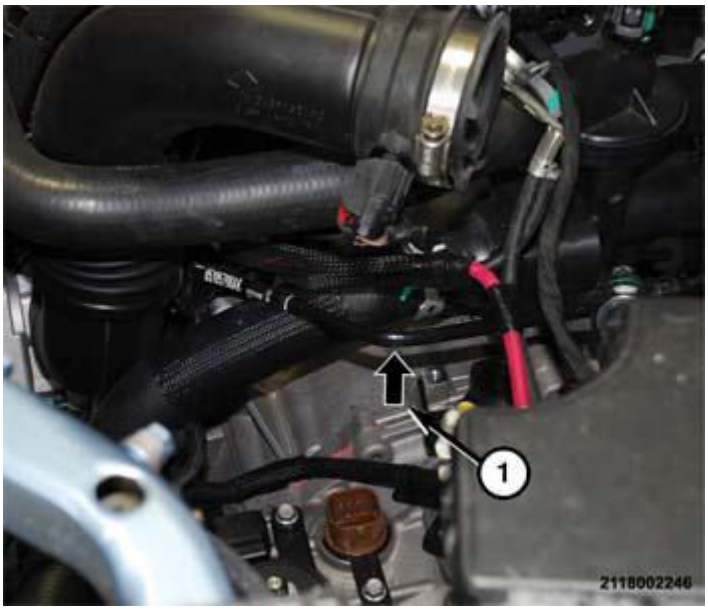

Fig. 494: Ground Cable & Transaxle Bellhousing Bolt
Courtesy of CHRYSLER GROUP, LLC

30. Install the hidden bolt (1) to hold the ground cable and transaxle bellhousing to the engine block under the engine coolant tubes. Refer to **SPECIFICATIONS**.

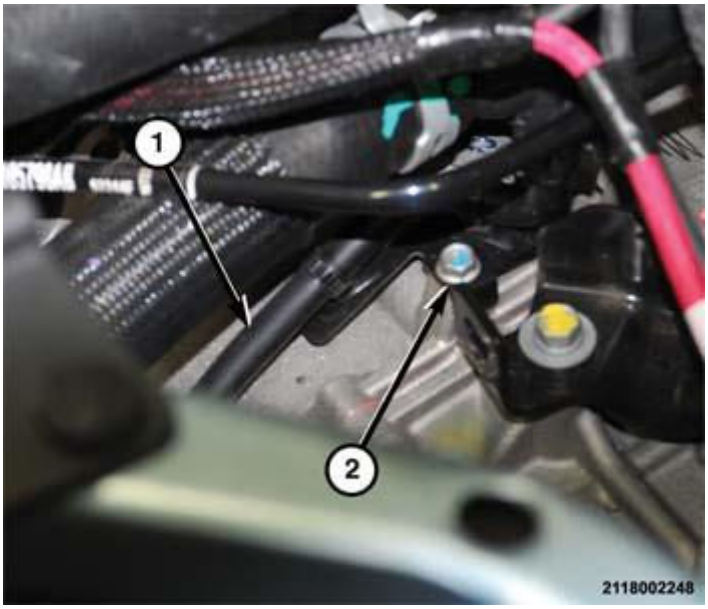

Fig. 495: Vent Tube & Bolt
Courtesy of CHRYSLER GROUP, LLC

31. Place the vent tube (1) in position on the transaxle.
32. Install the bolt (2) to hold the vent tube (1) to the transaxle. Refer to **SPECIFICATIONS**.

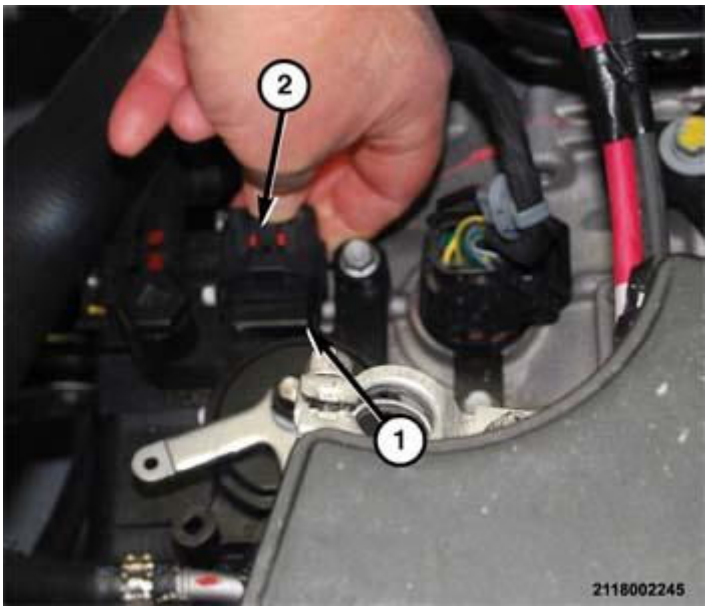

Fig. 496: Transaxle TRS Connector
Courtesy of CHRYSLER GROUP, LLC

33. Engage the wire harness connector into the TRS (1).
34. Push inward until the lock (2) clicks into position.

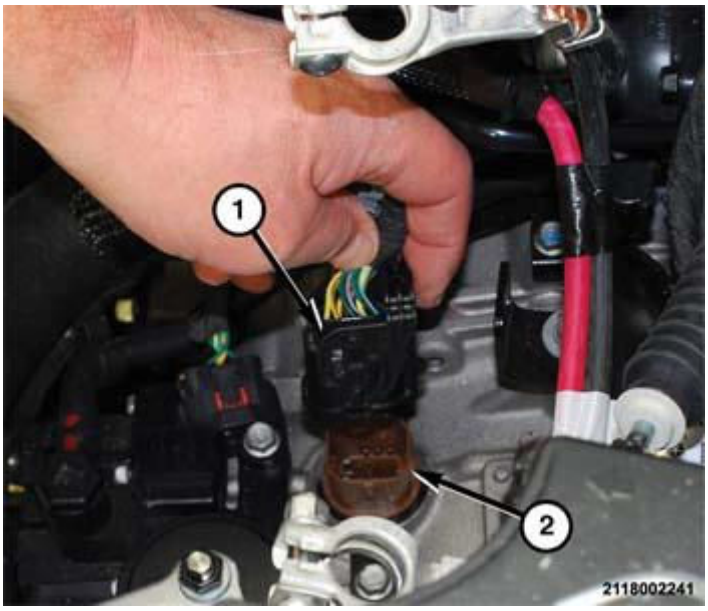

Fig. 497: Transaxle Wire Harness Connector
Courtesy of CHRYSLER GROUP, LLC

35. Engage the wire harness connector (1) into the solenoid connector on the transaxle.
36. Set the lock on the transaxle solenoid connector (1).
37. Insert the shift cable into the bracket on the top of the transaxle and engage

the locking clips.

38. Place the shift cable (adjuster screw up) on the manual lever pin.
39. Push downward on the shift cable end until it locks on the manual lever pin.

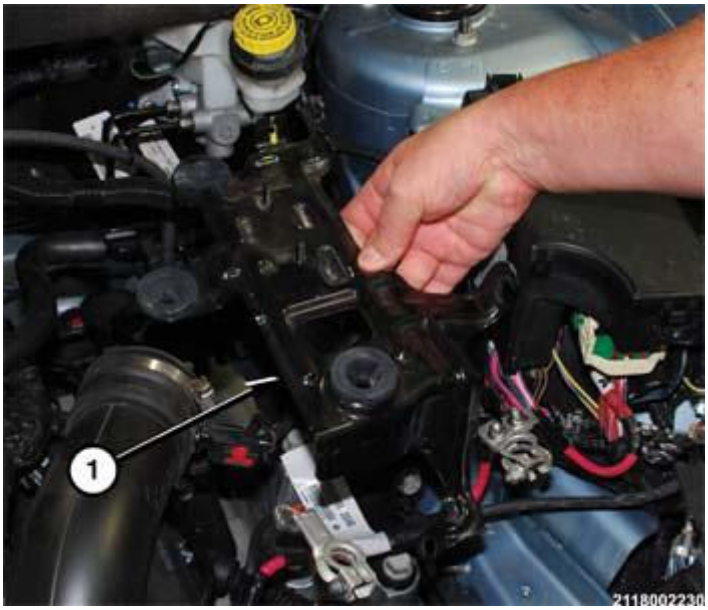

Fig. 498: Lower Air Cleaner Bracket
Courtesy of CHRYSLER GROUP, LLC

40. Place the lower air cleaner bracket (1) in position on the vehicle.

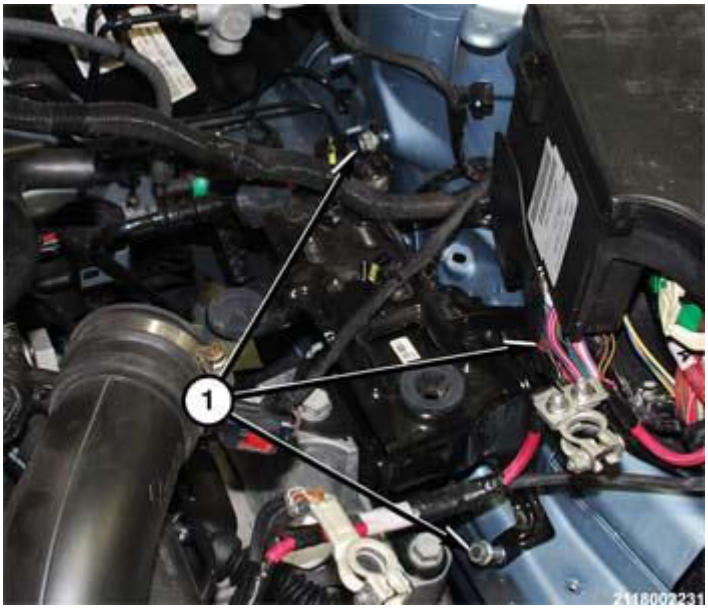

Fig. 499: Air Cleaner Bracket Nuts & Bolts
Courtesy of CHRYSLER GROUP, LLC

41. Install the bolts and nuts (1) to hold the lower air cleaner bracket to the left

frame rail. Refer to **SPECIFICATIONS**.

42. Install the lower air cleaner body. Refer to **2.0L BODY, AIR CLEANER, INSTALLATION** , **2.2L BODY, AIR CLEANER, INSTALLATION** or **2.4L BODY, AIR CLEANER, INSTALLATION** .
43. Install the air box lid.
44. Install the battery tray in the vehicle. Refer to **TRAY, BATTERY, INSTALLATION** .
45. Install the battery in the vehicle. Refer to **BATTERY, INSTALLATION** .
46. Install the engine air-box in the vehicle.
47. Secure the fasteners to hold the engine air-box to the front crossmember.
48. Close the hood.
49. Road test the vehicle to verify the repair.

STANDARD PROCEDURES

2-6 BRAKE MEASUREMENT

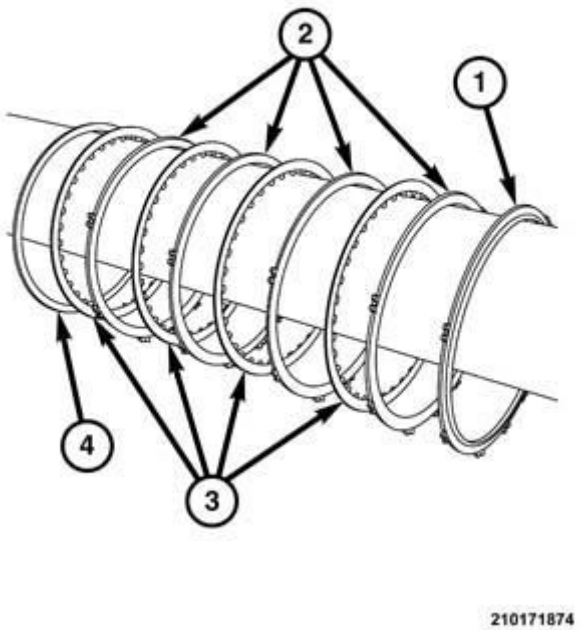

Fig. 500: 2-6 Brake Discs & Plates
Courtesy of CHRYSLER GROUP, LLC

When the 2-6 brake is replaced, the proper select pressure plate must be install to achieve specified clearance. Refer to **SPECIFICATIONS**.

Measurement (special tool #10427, Compressor, Return Spring) (special tool #10429, Gauge, Force)

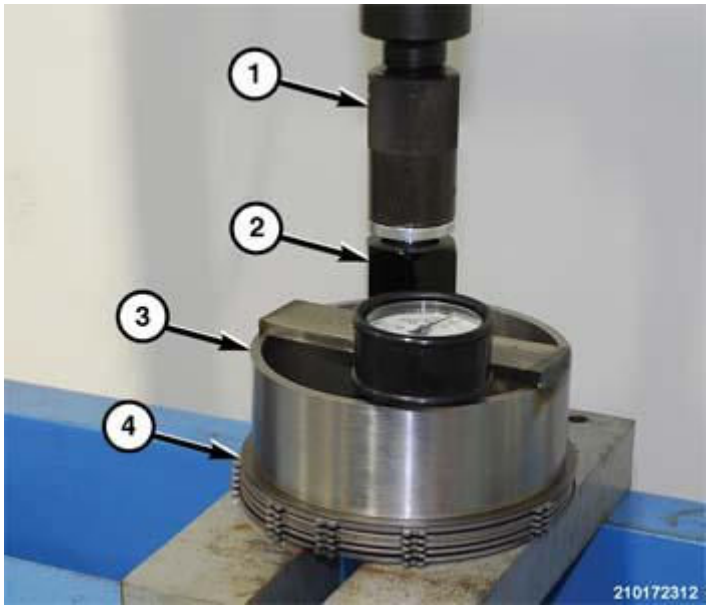

Fig. 501: 2-6 Brake Wave Plate, Arbor Press & Tools 10427 & 10429
Courtesy of CHRYSLER GROUP, LLC

1. Place the 2-6 brake, with the wave plate on top (4), on a suitable arbor press (1).
2. Position tools 10427 (3) and 10429 (2) on top of the 2-6 brake wave plate and under the press ram (1).

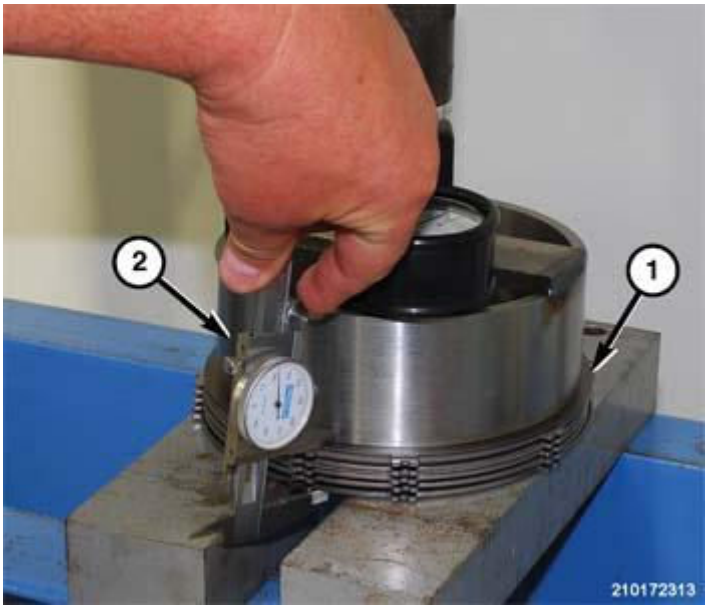

Fig. 502: 2-6 Brake & Linear Caliper
Courtesy of CHRYSLER GROUP, LLC

3. Apply 48.4 kg/cm^2 (688 lbf.) of downward force on the 2-6 brake to compress the wave plate.
4. Using a suitable linear caliper (2), measure the thickness of the compressed 2-6 brake (1) to calculate the 2-6 brake clearance in order to determine the correct select pressure plate (2) thickness.

   Record the measurement as (A)

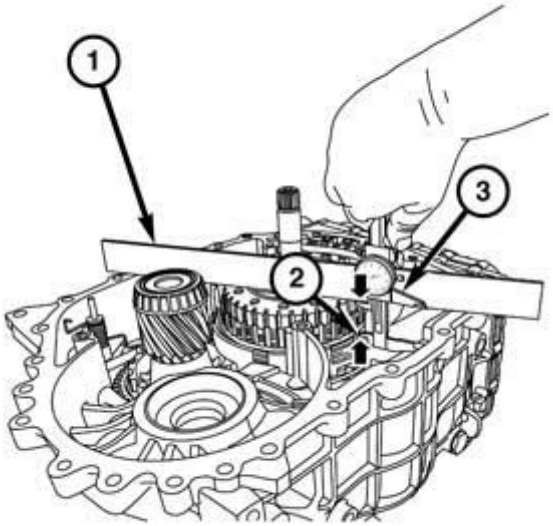

210171877

Fig. 503: Straight Edge & Underdrive Brake Retainer
Courtesy of CHRYSLER GROUP, LLC

5. Place a suitable straight edge (1) across the sealing surface of the transaxle housing.
6. Measure (3) the distance between the underdrive brake retainer (2) and the bottom of the straight edge (1) to calculate the 2-6 brake clearance in order to determine the correct select pressure plate thickness.

   Record the measurement as (B)

Fig. 504: Special Tool #8285
Courtesy of CHRYSLER GROUP, LLC

(special tool #8285, Compressor, Spring)

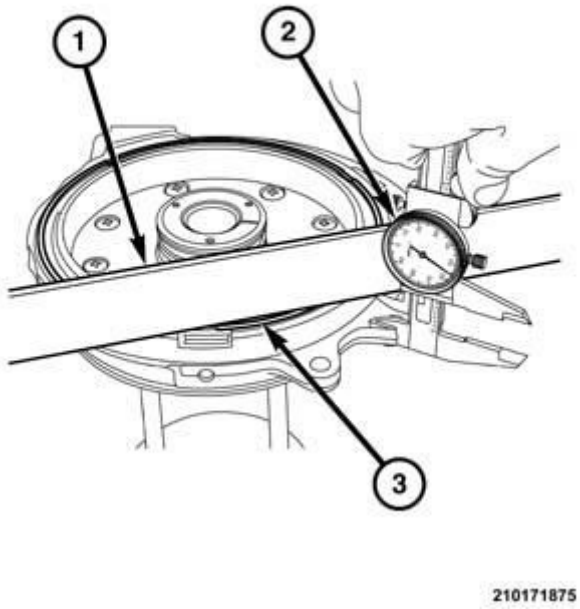

Fig. 505: 2-6 Brake Piston & Straight Edge
Courtesy of CHRYSLER GROUP, LLC

7. Positing the fluid pump on tool 8285 with the 2-6 brake piston (3) facing up.
8. Place a straight edge (1) across the 2-6 brake piston (3).
9. Measure (2) distance between the fluid pump sealing surface and the bottom of the straight edge to calculate the 2-6 brake clearance in order to determine the correct select pressure plate thickness.

Record the measurement as (C)

Calculation

Add measurement C to B and subtract A. The remainder is the clearance of the 2-6 brake. Refer to **SPECIFICATIONS**. If the clearance is not within specification, a thicker or thinner select pressure plate can be installed to achieve proper clearance.

LOW-REVERSE BRAKE MEASUREMENT

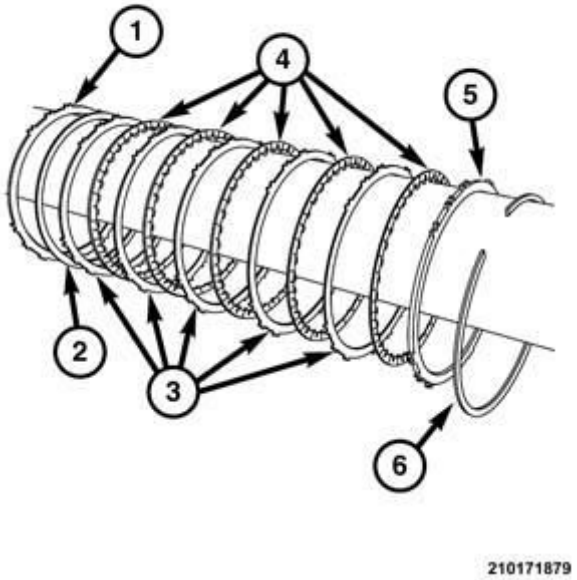

Fig. 506: Low & Reverse Brake Pressure Plate, Cushion Plate, Plates, Discs, & Reaction Plate
Courtesy of CHRYSLER GROUP, LLC

When the low-reverse brake is replaced, the proper select pressure plate (1) must be install to achieve specified end play Refer to **SPECIFICATIONS**.

1. Install the low-reverse brake pressure plate (1), wave plate (2), plates (3), discs (4), reaction plate (5) and snap-ring (6) in the transaxle housing.
2. Place transaxle housing on a suitable arbor press.

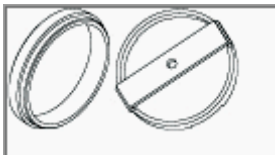

Fig. 507: Special Tool #10427

Courtesy of CHRYSLER GROUP, LLC

(special tool #10427, Compressor, Return Spring)

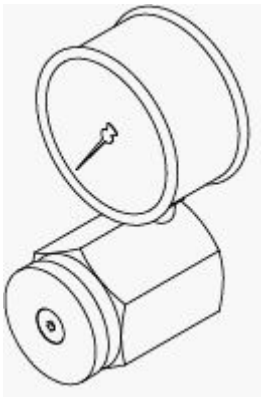

Fig. 508: Special Tool #10429
Courtesy of CHRYSLER GROUP, LLC

(special tool #10429, Gauge, Force)

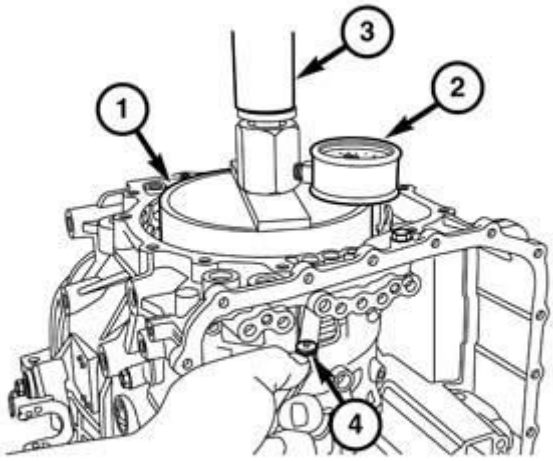

210171880

Fig. 509: Tool 10427 On The Low-Reverse Clutch, Tool 10429 On Compressor Tool
Courtesy of CHRYSLER GROUP, LLC

3. Place tool 10427 on the low-reverse clutch.
4. Place tool 10429 on compressor tool directly under the arbor press ram.

5. Apply 28 kg/cm^2 (400 lbf.) of force to compress the wave plate in the low-reverse brake.

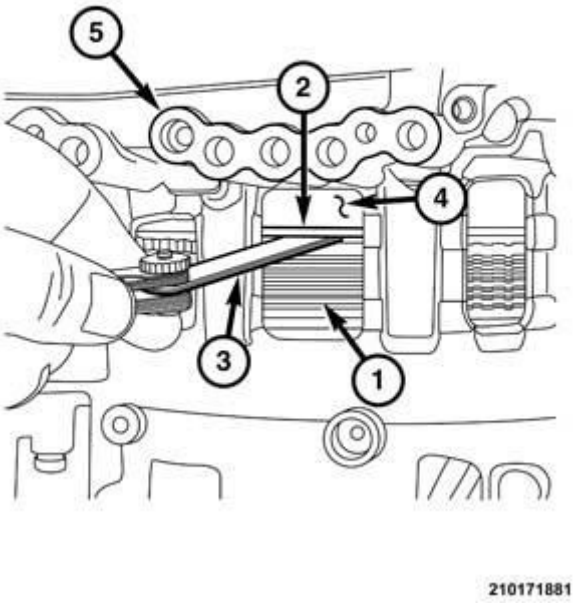

Fig. 510: Measuring Gap Between The Low-Reverse Reaction Plate & Snap Ring
Courtesy of CHRYSLER GROUP, LLC

6. Using a suitable feeler gauge set (3), measure the gap between the low-reverse reaction plate and the snap ring. Refer to **SPECIFICATIONS**.
7. If the clearance is not within specification, install a thicker or thinner select pressure plate to adjust the clearance.

REAR COVER BEARING SPACER MEASUREMENT

Refer to **MIDDLE-REAR PLANETARY THRUST WASHER MEASUREMENT** to determine the proper thickness for the rear cover spacer/race.

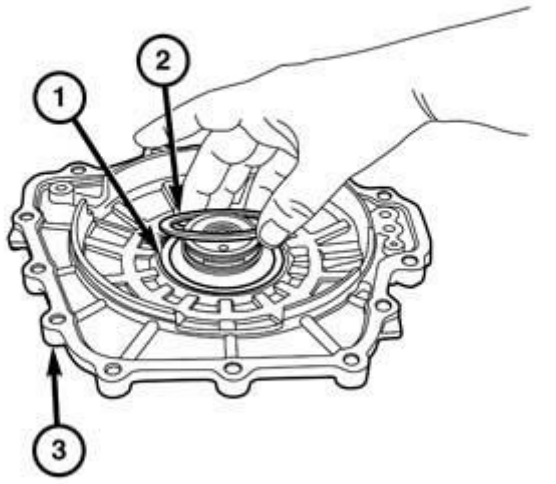

210171882

Fig. 511: Rear Cover Spacer/Race
Courtesy of CHRYSLER GROUP, LLC

UNDERDRIVE BRAKE MEASUREMENT

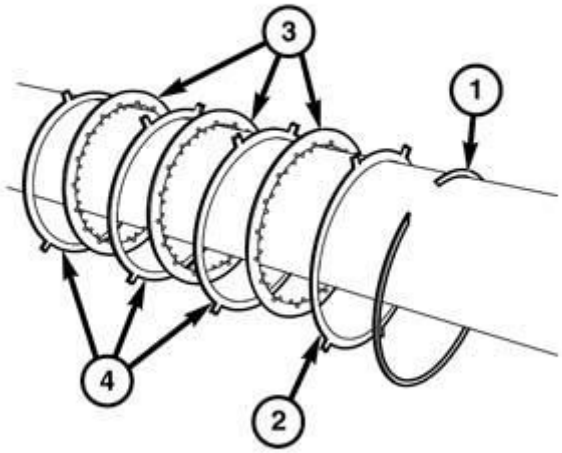

210171894

Fig. 512: Underdrive Brake Discs, Plates, Reaction Plate & Snap-Ring
Courtesy of CHRYSLER GROUP, LLC

When the underdrive brake is replaced, the proper select snap ring (1) must be

install to achieve specified end play Refer to **SPECIFICATIONS**.

1. Install the, discs (3), plates (4), reaction plate (2) and snap-ring (1) in the transaxle housing.
2. Place transaxle housing on a suitable arbor press.

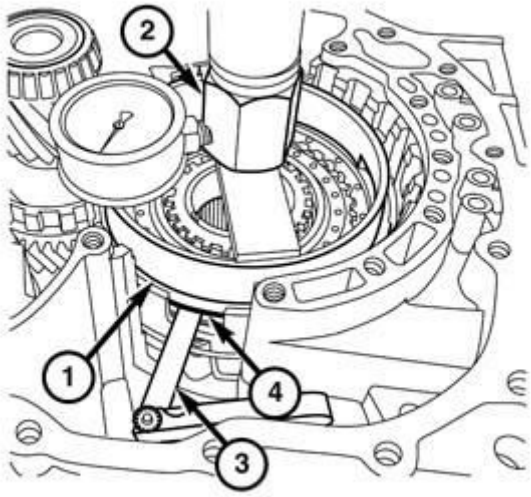

210171895

Fig. 513: Special Tool #8621, special tool #10429 & Press
Courtesy of CHRYSLER GROUP, LLC

3. Place tool (special tool #8621, Compressor, Spring) (1) on the underdrive clutch.
4. Place tool (special tool #10429, Gauge, Force) on compressor tool (2) directly under the arbor press ram.
5. Apply 2.8 kg/cm^2 (40 psi) of force to compress the underdrive brake.
6. Using a suitable feeler gauge set (3), measure the gap between the underdrive reaction plate and the snap ring (4). Refer to **SPECIFICATIONS**.
7. If the clearance is not within specification, install a thicker or thinner select snap-ring (4) to adjust the clearance.

OVERDRIVE CLUTCH MEASUREMENT

The overdrive clutch should be measured before and after it is disassembled or

assembled. The end play can be adjusted by installing a thicker or thinner snap ring holding the reaction plate into the overdrive clutch retainer.

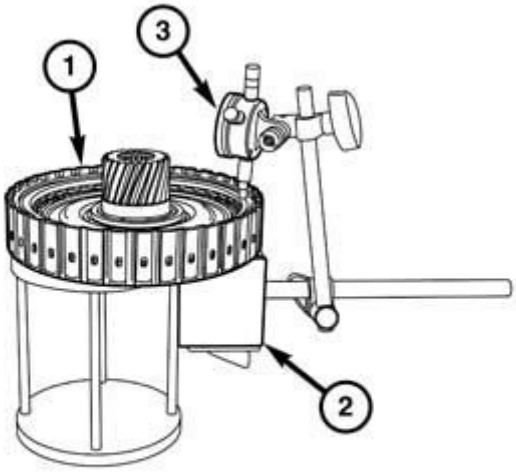

210171955

Fig. 514: Overdrive Clutch & Special Tool #8285
Courtesy of CHRYSLER GROUP, LLC

1. Place the overdrive clutch (1) on tool (special tool #8285, Compressor, Spring) 8285.
2. Attach a magnetic base dial indicator stand (special tool #C-3339A, Set, Dial Indicator) (2) to the overdrive clutch retainer (1).
3. Attach a (special tool #C-3339A, Set, Dial Indicator) dial indicator (3) to the stand (2) with the dial indicator plunger against the top of the overdrive clutch (1) reaction plate (1).

Fig. 515: Special Tool #C-3339A
Courtesy of CHRYSLER GROUP, LLC

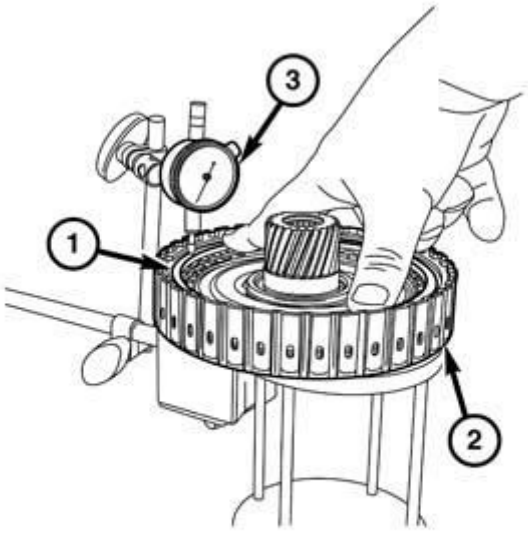

210171954

Fig. 516: Reaction Plate & Dial Indicator
Courtesy of CHRYSLER GROUP, LLC

4. Press downward on the reaction plate (1) and "zero" the dial indicator (3).

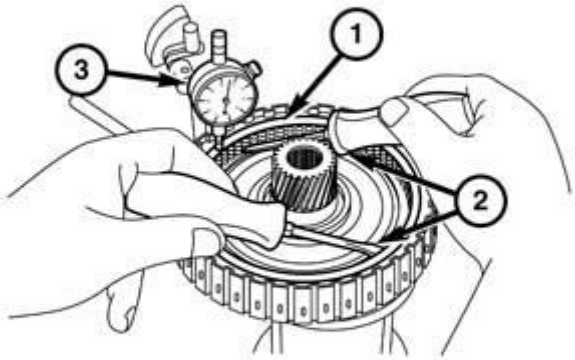

210171942

Fig. 517: Reaction Plate, Pair Of Screw Drivers & Dial Indicator
Courtesy of CHRYSLER GROUP, LLC

5. Lift upward on the reaction plate (1) with a pair of screw drivers (2).

6. Record the highest reading on the dial indicator (3). This is the amount of free travel within the overdrive clutch. Refer to **SPECIFICATIONS**.
7. If the overdrive clutch is not within specifications, install a thicker or thinner snap ring to hold the reaction plate in the clutch retainer.

MIDDLE-REAR PLANETARY THRUST WASHER MEASUREMENT

This procedure is used to determine the proper thickness for the thrust washer located between the middle-rear planetary assembly and the overdrive clutch assembly.

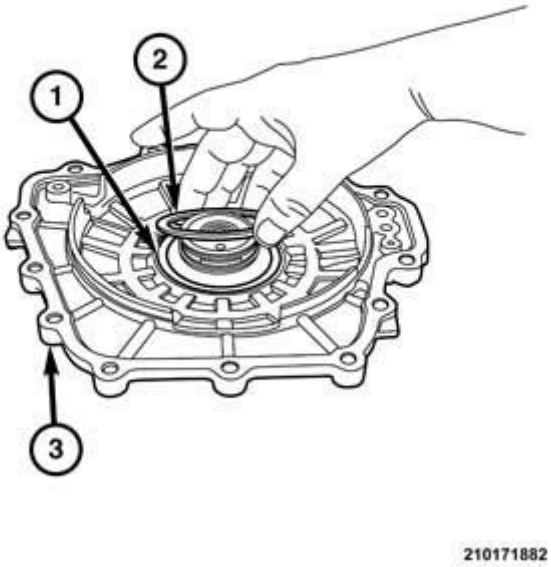

Fig. 518: Rear Cover Spacer/Race
Courtesy of CHRYSLER GROUP, LLC

1. Place the rear cover on a clean work surface, inside up.
2. Place the rear bearing spacer/race (1) and bearing (2) in position on rear cover (3).

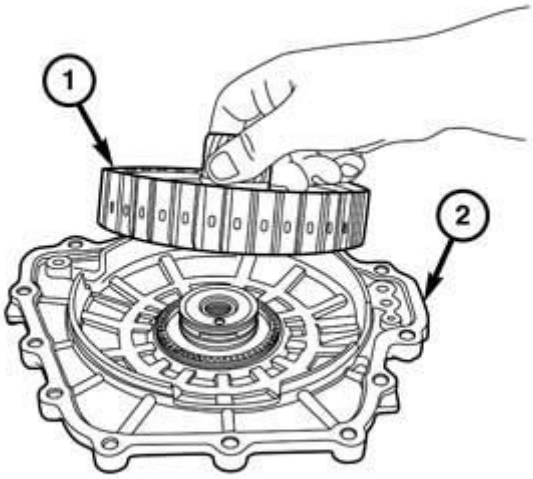

210171883

Fig. 519: Overdrive Clutch & Rear Cover
Courtesy of CHRYSLER GROUP, LLC

3. Place the overdrive clutch (1) in position on the rear cover (2).

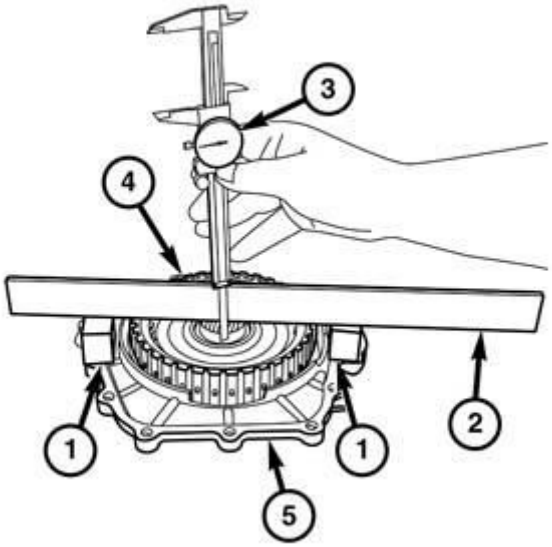

210172083

Fig. 520: Gauge Blocks, Straight Edge, Overdrive Clutch Hub & Rear Cover
Courtesy of CHRYSLER GROUP, LLC

4. Place two 25 mm (1 in) gauge blocks (1) on opposite sides of the rear cover (5) on the sealing surface.
5. Place a straight edge (2) across the gauge blocks (1).
6. Using a linear caliper, measure the distance from the top of the straight edge (2) to the top of the trust race on the overdrive clutch hub (4).
7. Subtract the thickness of the gauge blocks and straight edge from the overall measurement. This is the distance from the sealing surface to the thrust race of the overdrive clutch hub.

   Record this as measurement (A)

   .

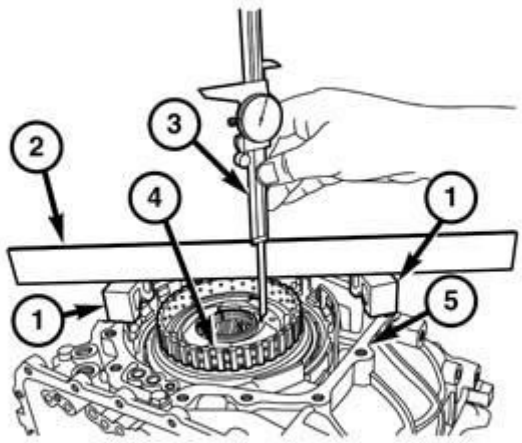

80000000

Fig. 521: Gauge Blocks, Straight Edge & Thrust Race
Courtesy of CHRYSLER GROUP, LLC

8. Place two 25 mm (1 in) gauge blocks (1) on opposite sides of the rear of the transaxle housing (5).
9. Place a straight edge (2) across the gauge blocks (1).
10. Measure (3) the distance from the top of the straight edge (2) to the top of the trust race (4) on the middle-rear planetary gear assembly.
11. Subtract the thickness of the gauge blocks (1) and straight edge (2) from the overall measurement. This is the distance from the sealing surface to the

thrust race of the middle-rear planetary gear assembly (4).

Record this as measurement (B)

.

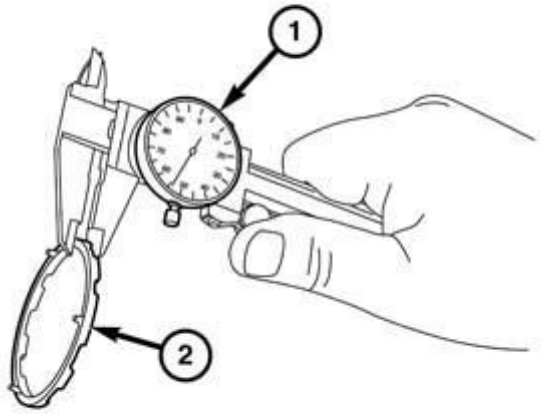

Fig. 522: Middle-Rear Planetary Gear Thrust Washer
Courtesy of CHRYSLER GROUP, LLC

12. Measure (1) the thickness of the middle-rear planetary gear thrust washer (2).

    Record this as measurement (C)

Calculation and Thrust Washer Selection

Subtract measurement A from B. Record the sum and subtract measurement C. The remaining sum is the clearance between the middle-rear planetary gear and the overdrive clutch. Refer to **SPECIFICATIONS**.

A thicker or thinner thrust washer can be install to achieve the specified end play. If the service kit does not contain a suitable replacement thrust washer, the rear cover thrust bearing spacer/race can be changed to a suitable thickness.

BEARING TURNING TORQUE MEASUREMENT

To determine proper select shim thickness for the Differential and driven transfer gear bearings, the turning torque must be measured.

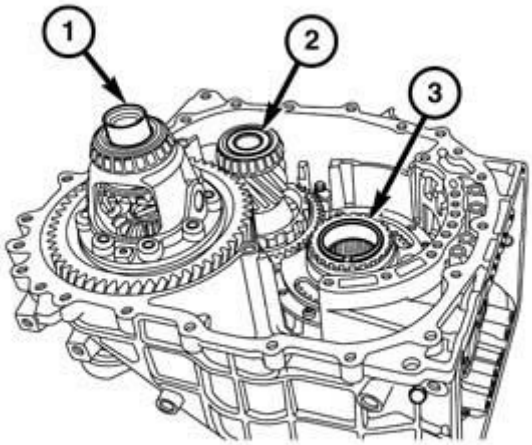

210171738

Fig. 523: Differential & Transfer Gear
Courtesy of CHRYSLER GROUP, LLC

If the bearings, differential, driven transfer gear or transaxle housings have been replaced turning torque of the differential (1) and then turning torque with the transfer gear (2) added must be performed. A good starting point to would be to use the factory installed select shims behind the bearing races in the transaxle housing and bell housing.

Verify that the bearings and races are **NEW** and properly installed on/in clean components with the factory installed select shims behind the bearing races. Lightly lubricate the bearings with transaxle fluid.

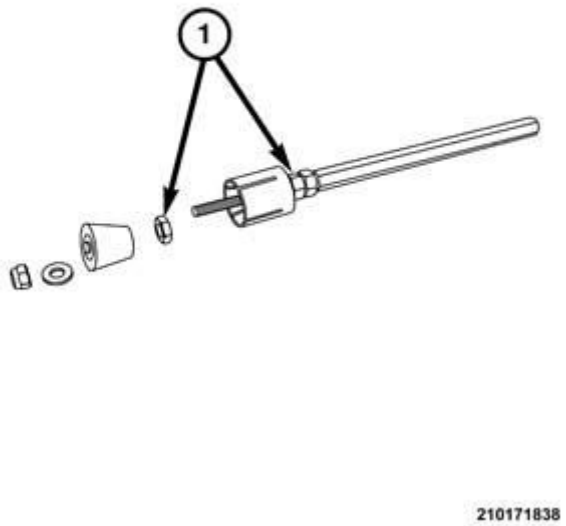

Fig. 524: Special Tool #C-4995A
Courtesy of CHRYSLER GROUP, LLC

Tool (special tool #C-4995A, Tool, Differential Bearing Torque) must be modified to be compatibly with the following operation. Two 3/8-24 nuts (1) must be added to keep the center shaft from rotating in the cone and sleeve.

1. Remove the nylok™ nut and expander cone from the center shaft.
2. Remove the sleeve from the center shaft.
3. Install a nut on the center shaft and tighten it against the existing nut. Install the sleeve.
4. Install the 2nd nut inside the sleeve just far enough to install the cone and nut.
5. Install the cone and nut tight enough to keep the center shaft from rotating inside the cone and sleeve.

MEASUREMENT PROCEDURE

1. Position the differential on a clean work surface.

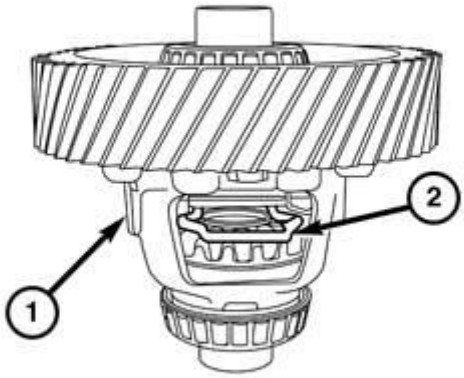

210171737

Fig. 525: Differential Pinion Gears & Lock Tool
Courtesy of CHRYSLER GROUP, LLC

2. Install the lock tool (special tool #10425, Tool, Pinion and Side Gear Locking) (2) between the differential (1) pinion gears next to the link pin to prevent the differential from rotating.
3. Position the transaxle and bell housings on a suitable clean work bench.
4. Install new bearing races with the original select shims.
5. Install the differential with new bearings lightly lubricated with transaxle fluid in the transaxle housing.
6. Install the bell housing.
7. Install the bolts to hold the bell housing to the transaxle housing. Tighten bolts to 50% on the specified torque value. Refer to **SPECIFICATIONS**.
8. Insert modified tool (special tool #C-4995A, Tool, Differential Bearing Torque) into the differential until the sleeve (C-4995-1) enters the halfshaft spline in the differential side gear.
9. Tighten the nut until the sleeve expands tightly in the side gear.
10. Tighten the jamb nut to prevent the center shaft from rotating in the sleeve.
11. Using a suitable wrench, rotate the differential 20 rotations clockwise and 20 rotations counterclockwise.

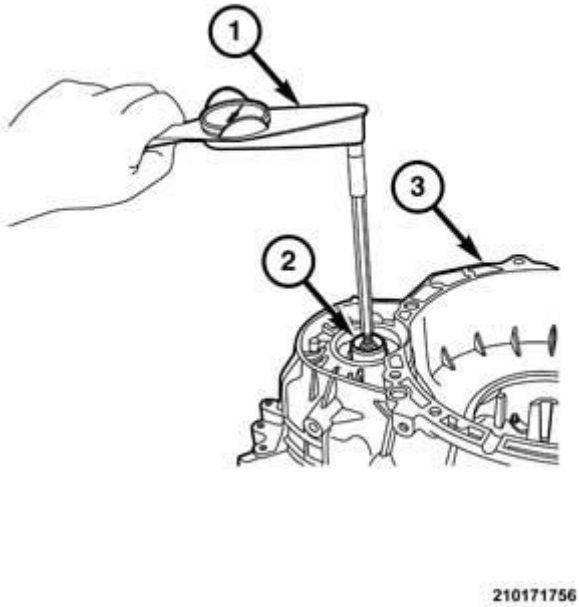

Fig. 526: Torque Wrench & Differential
Courtesy of CHRYSLER GROUP, LLC

12. Using a torque wrench (1), measure the turning resistance of the differential (2) after the initial break away. Refer to **SPECIFICATIONS**.
13. Adjust the turning torque by adding to or subtracting from the thickness of the select shims behind the differential bearing races.
14. After achieving proper differential turning torque, separate the bell housing from the transaxle housing.

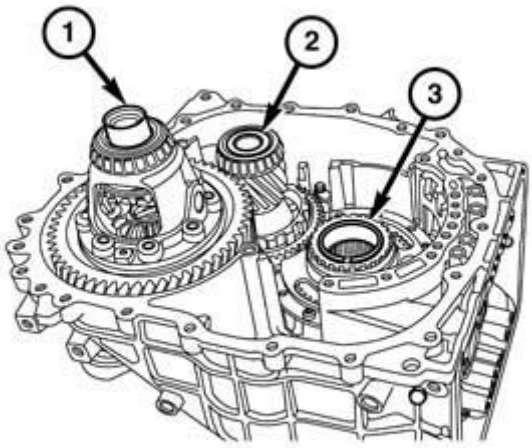

210171738

Fig. 527: Differential & Transfer Gear
Courtesy of CHRYSLER GROUP, LLC

15. Install the driven transfer gear (2) with new bearings into the transaxle housing.
16. Install the bell housing.
17. Install the bolts to hold the bell housing to the transaxle housing. Tighten bolts to 50% on the specified torque value. Refer to **SPECIFICATIONS**.

NOTE: The turning torque of the differential and the transfer gear will be about 4 times higher than the differential alone. The ring gear is driving a much smaller pinion gear on the transfer shaft.

18. Using a suitable wrench, rotate the differential 20 rotations clockwise and 20 rotations counterclockwise.
19. Using a torque wrench (1), measure the turning resistance of the differential (2) after the initial break away. Refer to **SPECIFICATIONS**.
20. Adjust the turning torque by adding to or subtracting from the thickness of the select shims behind the driven transfer shaft bearing races.
21. Remove tool C-4995 from the differential.
22. Separate the bell housing from the transaxle housing.

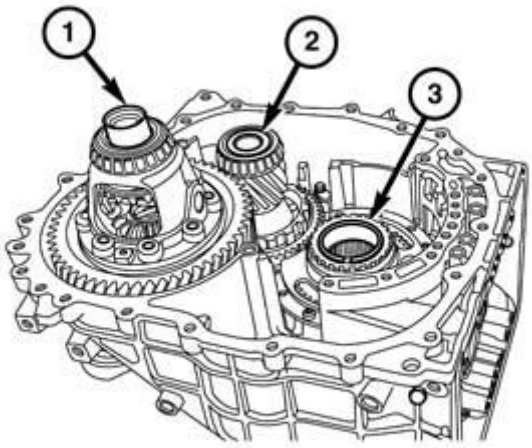

210171738

Fig. 528: Differential & Transfer Gear
Courtesy of CHRYSLER GROUP, LLC

23. Remove the differential (1) and driven transfer gear (2).

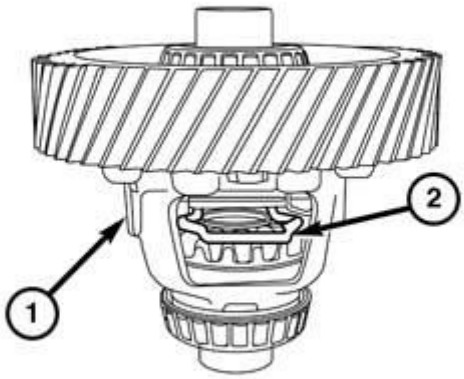

210171737

Fig. 529: Differential Pinion Gears & Lock Tool
Courtesy of CHRYSLER GROUP, LLC

24. Remove lock tool 10425 (2) from the differential (1).

25. Prepare transaxle components for final assembly.

3/5/REVERSE CLUTCH MEASUREMENT

The 3-5-Reverse (3-5-R) clutch should be measured before and after it is disassembled or assembled. The end play can be adjusted by installing a thicker or thinner snap ring holding the reaction plate into the 3-5-R clutch retainer.

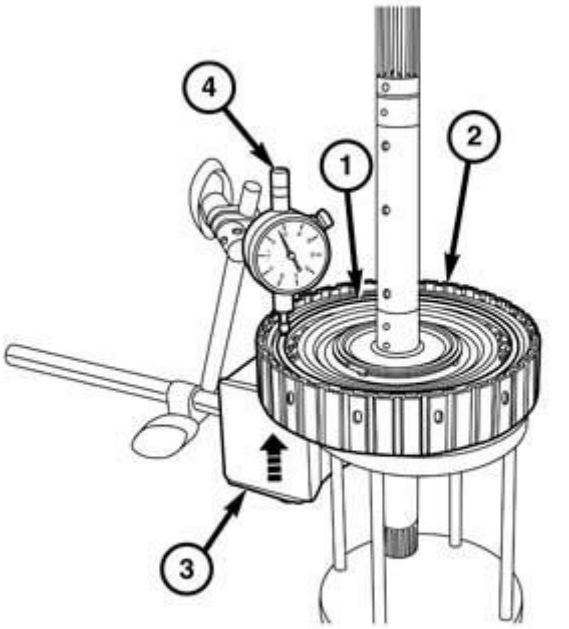

210171829

Fig. 530: 3-5-R Clutch Measurement Set-Up
Courtesy of CHRYSLER GROUP, LLC

1. Place the 3-5-R clutch (2) on tool (special tool #8285, Compressor, Spring).
2. Attach a magnetic base dial indicator stand (3) (special tool #C-3339A, Set, Dial Indicator) to the 3-5-R clutch retainer (2).
3. Attach a dial indicator (4) to the stand (3) with the dial indicator plunger against the top of the 3-5-R clutch (2) reaction place (1).

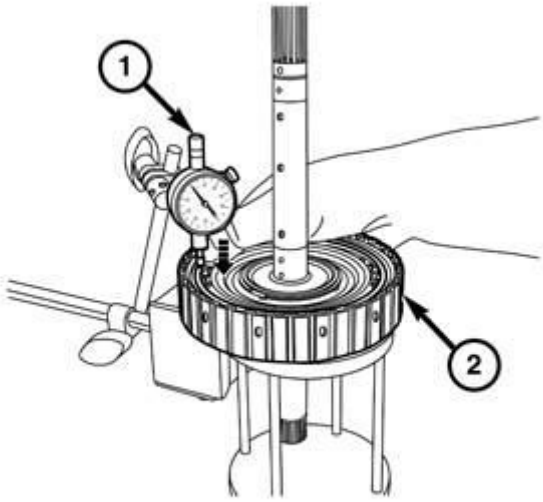

210171822

Fig. 531: Reaction Place & Dial Indicator
Courtesy of CHRYSLER GROUP, LLC

4. Press downward on the reaction plate and "zero" the dial indicator (1).

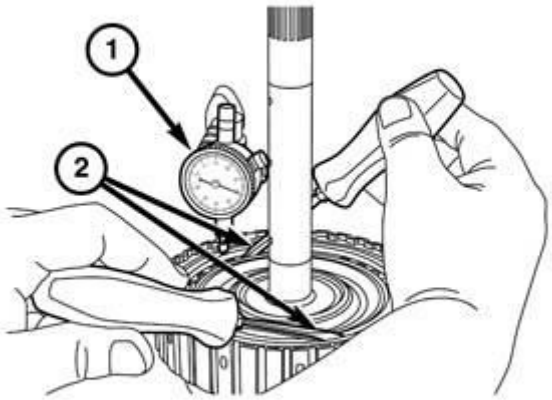

210171820

Fig. 532: Dial Indicator, Pair Of Screw Drivers & Reaction Plate
Courtesy of CHRYSLER GROUP, LLC

5. Lift upward on the reaction plate with a pair of screw drivers (2).

6. Record the highest reading on the dial indicator (1). This is the amount of free travel within the 3-5-R clutch. Refer to **SPECIFICATIONS**.
7. If the 3-5-R clutch is not within specifications, install a thicker or thinner snap ring to hold the reaction plate in the clutch retainer.

SPECIFICATIONS

SPECIFICATIONS

TIGHTENING SPECIFICATIONS

DESCRIPTION	N.m	Ft. Lb.	In. Lb.
Flexplate to Torque Converter	37	27	-
Flexplate to Crankshaft-M12X1.25X14.00 (Do Not Reuse Original Bolts)	95	70	-
Engine to Transaxle-M12X1.25X65.00	93	69	-
Engine to Transaxle-M10X1.25X45.00	50	37	-
Trans to Engine-M12X1.25X80.0	95	70	-
Transaxle to Engine-M12X1.25X50.0	93	69	-
Trans to Engine-M10X1.25X45.00	50	37	-
Bracket to Transaxle-M6X1.0X20.0	8	-	71
Dust Shield to Transaxle-M6X1X9.5	10	-	88
Lever to Transaxle Shaft-M8X1.25	19	14	-
ATX Cable Adjust-M5X0.8X14.00	8	-	71
Shifter to Floor Pan-M6X1.00	9	-	80
Bracket to Front Crossmember-M12X1.75X40.00	95	70	-
FEM to Lower Load Path-M10X1.25X83.0	45	33	-
FEM to Front Rail-M10X1.25X30.5	45	33	-
Isolator to Transaxle Bracket-M12X1.75X70.00	100	74	-
Isolator to Rail LT-M12X1.75X50.00	87	64	-

6F24 INTERNAL TIGHTENING SPECIFICATIONS

DESCRIPTION	N.m	Ft. Lb.	In. Lb.
Transfer Gear Driven	34	25	-
Transfer Gear Driven Spanner Nut	265	195	-

Rear Cover	30	22	-
Under Driver Brake Retainer With 40HP driver	33	24	-
Under Driver Brake Retainer With 45HP driver	39	28	-
Under Drive Brake Chamber	11	-	97
Differential Ring Gear Bolts	120	88	-
Differential Case Screws	11	-	97
Parking Rod Guide	11	-	97
Fluid Pump Pipe	11	-	97
Fluid Pump to Transaxle	22.5	17	-
Fluid Pump Cover	22.5	17	-
Fluid Filter	11	-	97
Bell Housing	32	23	-
Valve Body	11	-	97
Detent Spring	14	-	124
Valve Body Solenoid Retainer Screws	10	-	88
Valve Body Accumulator Plate Bolts	11	-	97
Valve Body Separator Plate Bolts	6	-	53
Valve Body Housing Bolts	15	-	97
Valve Body Cover Pan	13	-	132
Trans Range Sensor (Inhibitor Switch)	11	-	97
Wire Harness Retainer Screws	10	-	88
Wire Harness Connector Hold Down Bolt	10	-	88
Wire Harness Solenoid Connector Bolts	10	-	88
Vent Bracket Bolt	11	-	97
Cooler Line Bracket Bolt	11	-	97
Differential Fluid Shield Bolts	11	-	97

END PLAY TOLERANCE

ITEM	TOLERANCE
Input shaft end play (Rear)	0.25 - 0.45 mm (0.0098 - 0.0177 in.)
2/6 brake pressure plate end play	2.05 - 2.35 mm (0.0807 - 0.0925 in.)
Low & reverse brake pressure plate	2.25 - 2.55 mm (0.0886 - 0.1004 in.)

end play	
Under drive brake snap ring end play	0.65 - 0.95 mm (0.0255 - 0.0374 in.)
Over drive clutch snap ring end play	1.05 - 1.35 mm (0.0413 - 0.0531 in.)
3-5-R clutch snap ring end play	0.85 - 1.15 mm (0.0335 - 0.0453 in.)
Middle & rear planetary gear end play	0.1 - 0.4 mm (0.0039 - 0.0157 in.)
Input shaft end play (Front)	0.55 - 0.85 mm (0.0216 - 0.0334 in.)
Differential side gear & differential pinion gear backlash	0.025 - 0.150 mm (0.0009 - 0.0059 in.)

SHIM SELECTION-DIFFERENTIAL

The following list of shims are available in a complete kit supplied by Mopar®.

Spacer	1.10 mm	0.043 in.
Spacer	1.01 mm	0.040 in.
Spacer	1.04 mm	0.041 in.
Spacer	1.07 mm	0.042 in.
Spacer	1.13 mm	0.044 in.
Spacer	1.16 mm	0.045 in.
Spacer	1.19 mm	0.047 in.
Spacer	1.22 mm	0.048 in.
Spacer	1.25 mm	0.049 in.
Spacer	1.28 mm	0.050 in.
Spacer	1.31 mm	0.051 in.
Spacer	1.34 mm	0.052 in.
Spacer	1.37 mm	0.054 in.
Spacer	0.77 mm	0.030 in.
Spacer	0.80 mm	0.031 in.
Spacer	0.83 mm	0.033 in.
Spacer	0.86 mm	0.034 in.
Spacer	0.89 mm	0.035 in.
Spacer	0.92 mm	0.036 in.
Spacer	0.95 mm	0.037 in.
Spacer	0.98 mm	0.038 in.

SHIM SELECTION-DRIVEN TRANSFER GEAR

The following list of shims are available in a complete kit supplied by Mopar®.

Spacer Output	0.83 mm	0.033 in.
Spacer Output	0.86 mm	0.034 in.
Spacer Output	0.89 mm	0.035 in.
Spacer Output	0.92 mm	0.036 in.
Spacer Output	0.95 mm	0.037 in.
Spacer Output	0.98 mm	0.039 in.
Spacer Output	1.01 mm	0.040 in.
Spacer Output	1.04 mm	0.041 in.
Spacer Output	1.07 mm	0.042 in.
Spacer Output	1.10 mm	0.043 in.
Spacer Output	1.13 mm	0.044 in.
Spacer Output	1.16 mm	0.046 in.
Spacer Output	1.19 mm	0.047 in.
Spacer Output	1.22 mm	0.048 in.
Spacer Output	1.25 mm	0.049 in.
Spacer Output	1.28 mm	0.050 in.
Spacer Output	1.31 mm	0.051 in.
Spacer Output	1.34 mm	0.053 in.

THRUST RACE SELECTION

The following list of Thrust Races are a complete kit available from Mopar®.

Thrust Race (Input Shaft End Play-Rear)	1.4 mm	0.055 in.
Thrust Race (Input Shaft End Play-Rear)	1.5 mm	0.059 in.
Thrust Race (Input Shaft End Play-Rear)	1.6 mm	0.063 in.
Thrust Race (Input Shaft End Play-Rear)	1.7 mm	0.067 in.
Thrust Race (Input Shaft End Play-Rear)	1.8 mm	0.071 in.
Thrust Race (Input Shaft End Play-Rear)	1.9 mm	0.075 in.
Thrust Race (Input Shaft End Play-Rear)	2.0 mm	0.079 in.
Thrust Race (Input Shaft End Play-Rear)	2.1 mm	0.083 in.
Thrust Race (Input Shaft End Play-Rear)	2.2 mm	0.087 in.

Thrust Race (Input Shaft End Play-Rear)	2.3 mm	0.091 in.

BEARING TURNING TORQUE SPECIFICATION

Turning Torque Measurement must be performed with NEW bearings.

After the **NEW** bearings have been installed, they should be lightly lubricated with automatic transaxle fluid. The bearings must be lapped in by rotating the bearings 20 rotations clockwise and 20 rotations counterclockwise before measuring the turning torque. Due to the larger size of the differential ring gear over the smaller transfer gear the turning torque of the transfer gear is increased by about 3.45 times by the gear ratio.

BEARING SET	N.m	in. lb.
Differential Side Bearings	1.6 (+/-.22)	15 (+/- 2)
Transfer Gear (Driven)	6.77 (+/-.9	60 (+/- 8)
Transfer Gear (Output)	0.67 (+/- 0.22	6 (+/- 2)

CLUTCH, BRAKE, THRUST AND BEARING CLEARANCE

For transfer bearing and differential bearing shim selection refer to Bearing Turning Torque Measurement. Refer to **SPECIFICATIONS**.

Element	**mm**	**in.**
3-5-Reverse Clutch	0.85 to 1.15	0.033 to 0.045
Overdrive Clutch	1.25 to 1.55	0, 049 to 0.061
2-6 Brake	2.05 to 2.35	0.080 to 0.092
Underdrive Brake	0.65 to 0.95	0.025 to 0.037
Low-Reverse Brake	2.25 to 2.55	0.088 to 0.100
Middle-rear Planetary Thrust Washer	0.1 to 0.4	0.003 to 0.015
Rear Cover Bearing Spacer	0.25 to 0.45	0.009 to 0.017

SPECIAL TOOLS

SPECIAL TOOLS - FWD

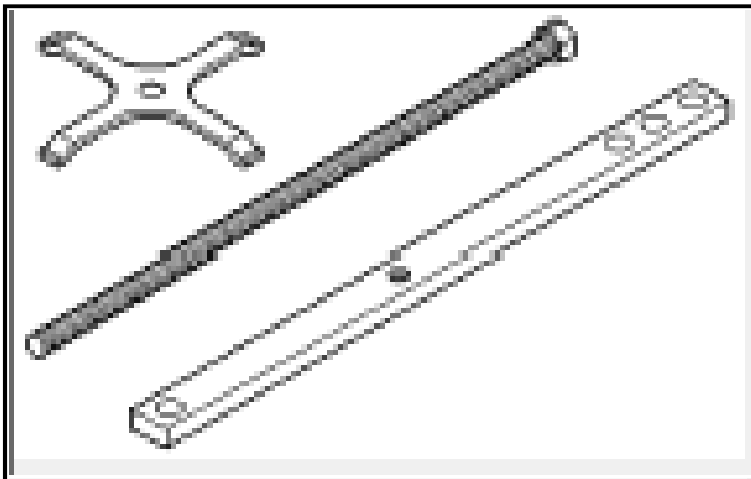	5058A-3 - Screw, Forcing (Originally Shipped In Kit Number(s) 8853.)
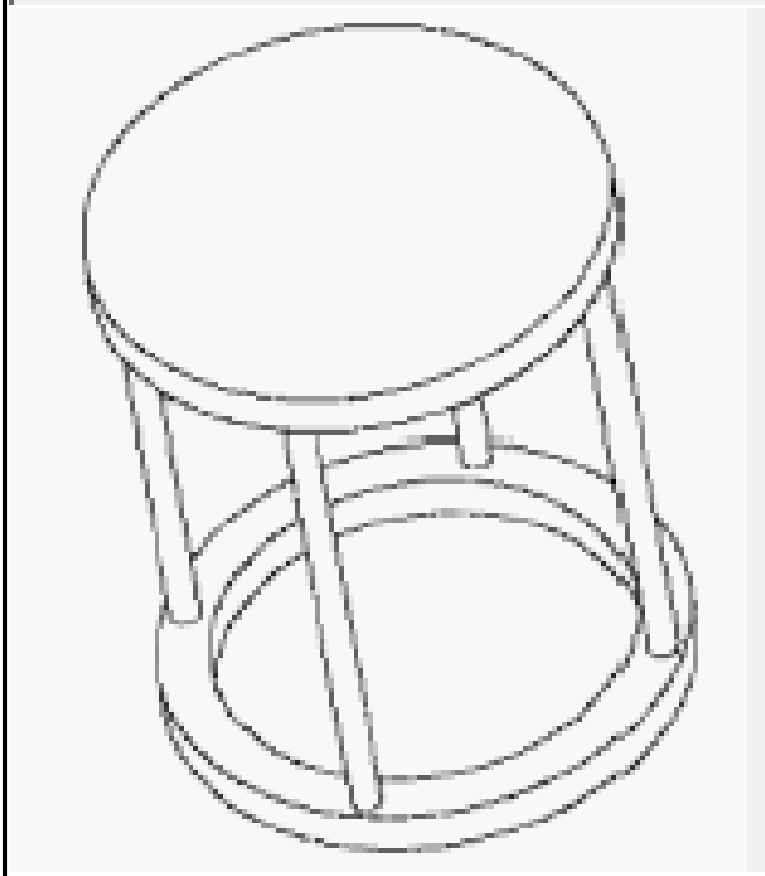	8285 - Compressor, Spring (Originally Shipped In Kit Number(s) 8283, 8283CC, 8527, 8527CC, 8575, 8575CC, 9975.)
	8621 - Compressor, Spring (Originally Shipped In Kit Number(s) 8705.)

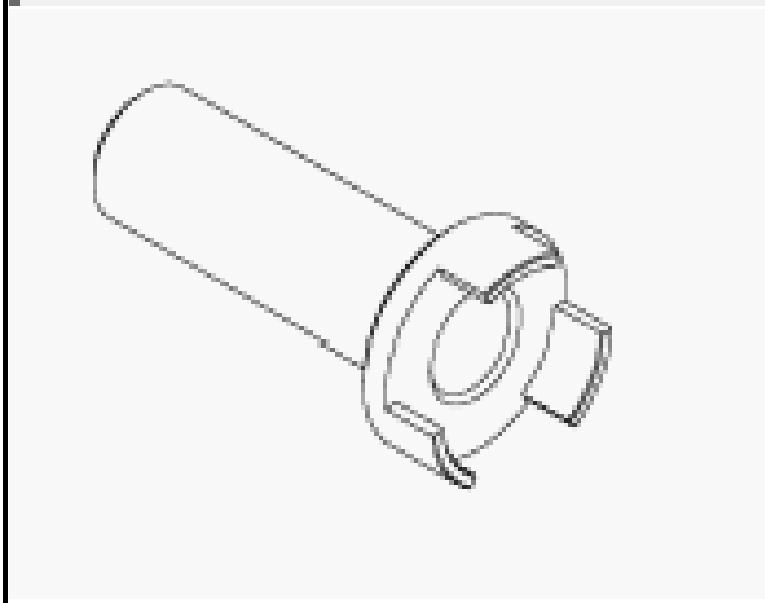	8680 - Installer, Damper (Originally Shipped In Kit Number(s).)
	8866 - Installer, Bearing Cup (Originally Shipped In Kit Number(s) 8998, 8998CC.)

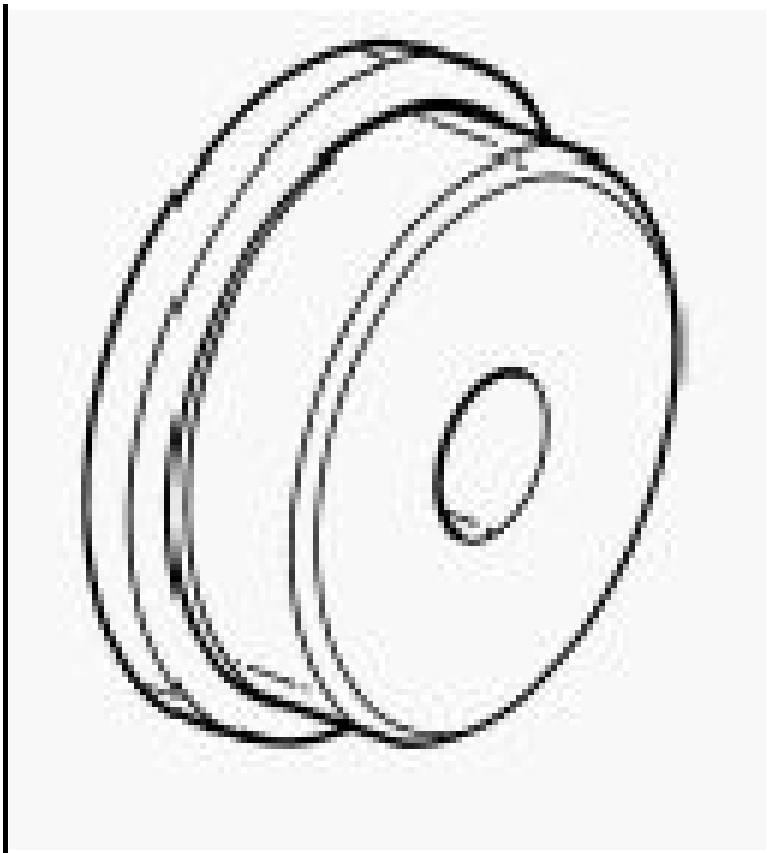	9664 - Remover, Bearing Cup (Originally Shipped In Kit Number(s) 9675, 9685, 9695.)
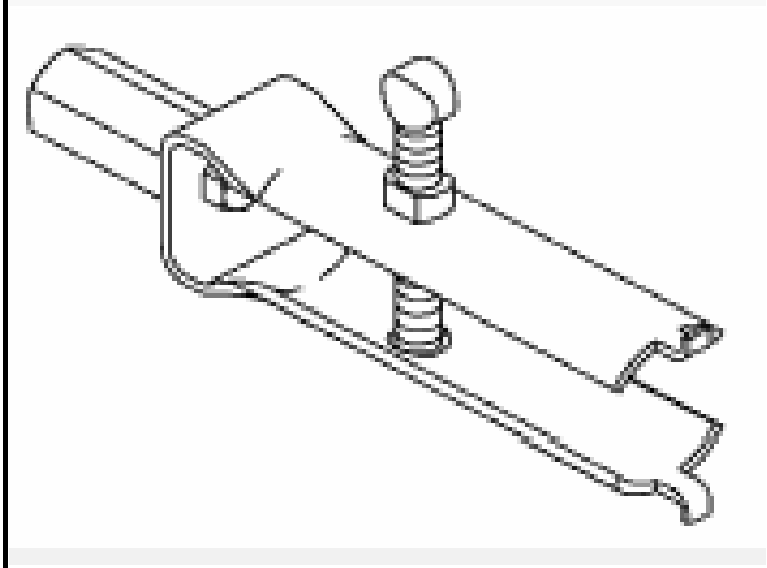	9668 - Remover/Installer, Bearing Cup (Originally Shipped In Kit Number(s) 9691.)

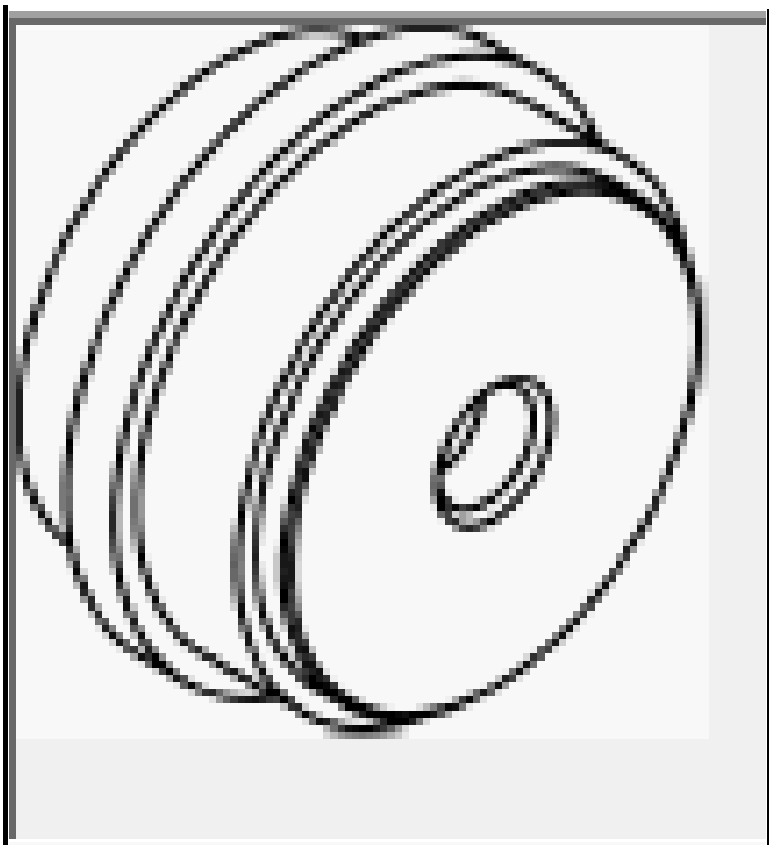

10117 - Installer, Seal
(Originally Shipped In Kit Number(s) 10075-CHRYSLER, 10075-DODGE.)

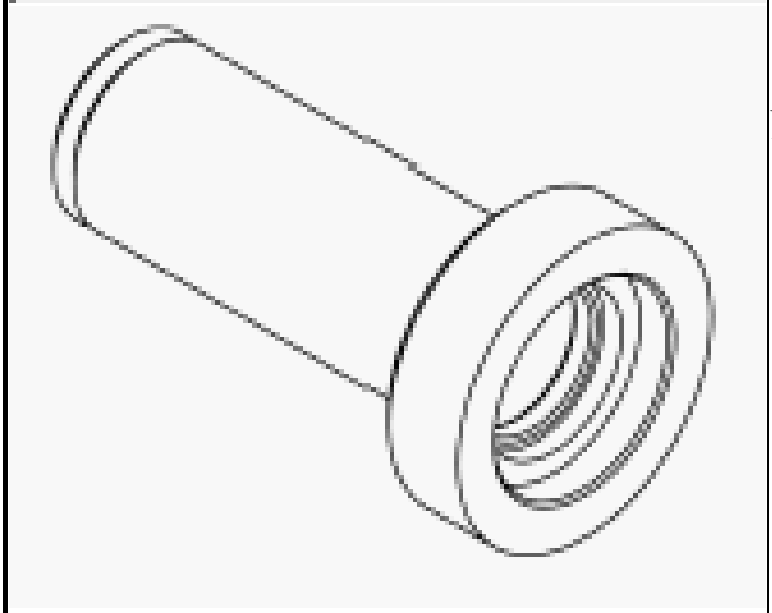

10304 - Installer, Input Shaft Seal
(Originally Shipped In Kit Number(s) 10366, 10366A.)

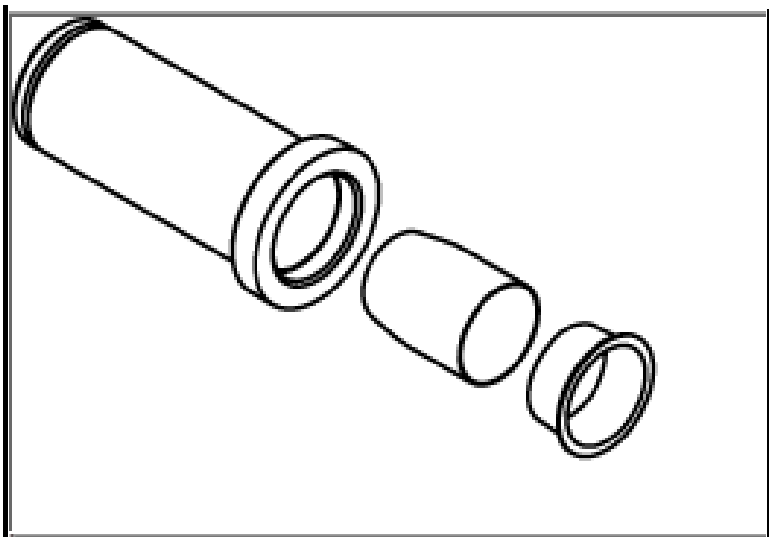

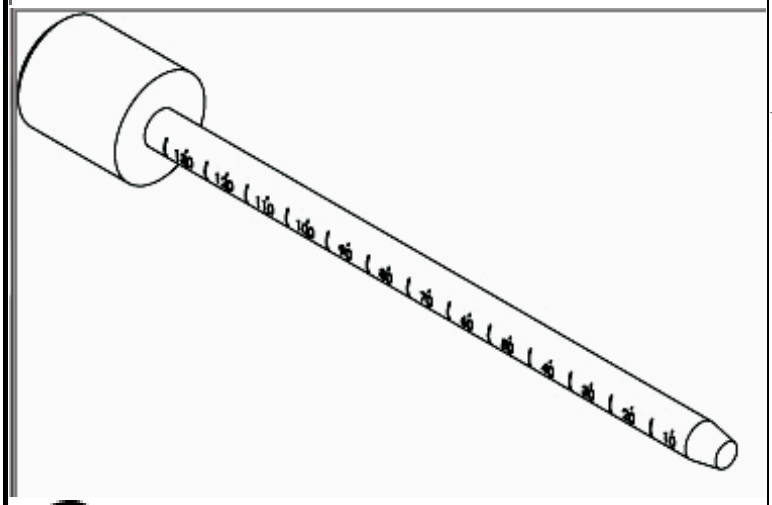

10323A - Dipstick
(Originally Shipped In Kit Number(s).)

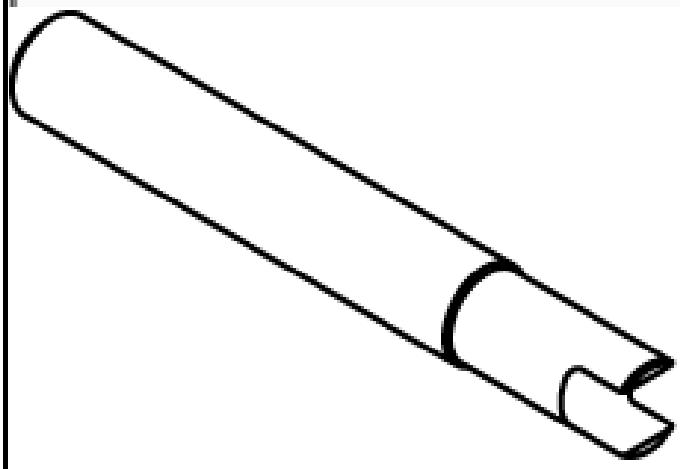

10371 - Tool, Turning Torque

10422 - Wrench, Spanner
(Originally Shipped In Kit Number(s) 10419.)

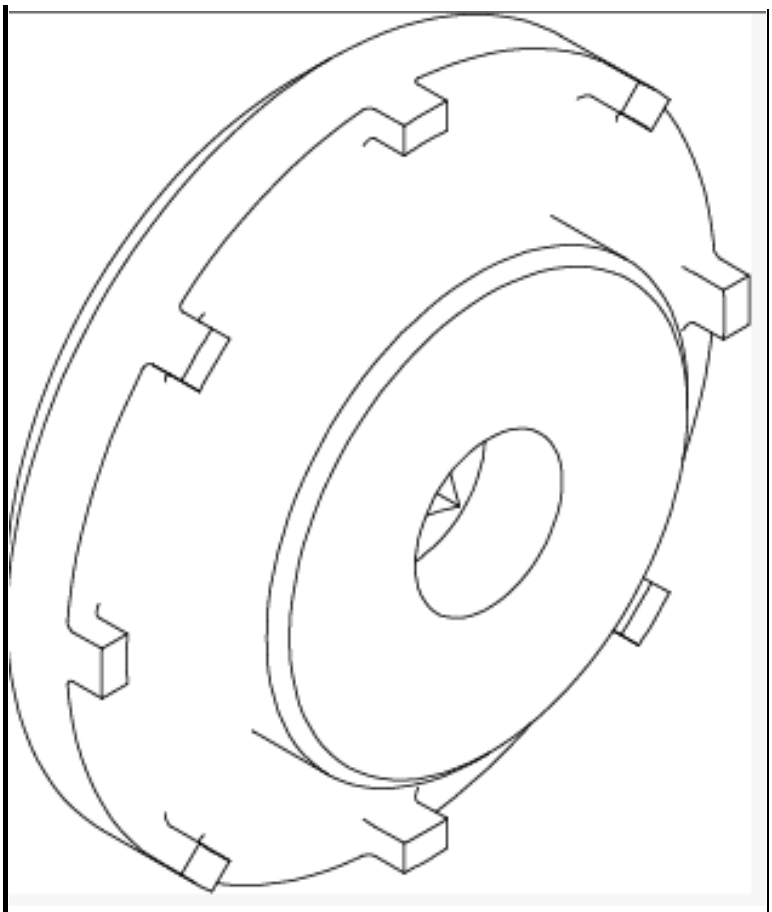

10423 - Fixture, Transfer Gear Holding
(Originally Shipped In Kit Number(s) 10419.)

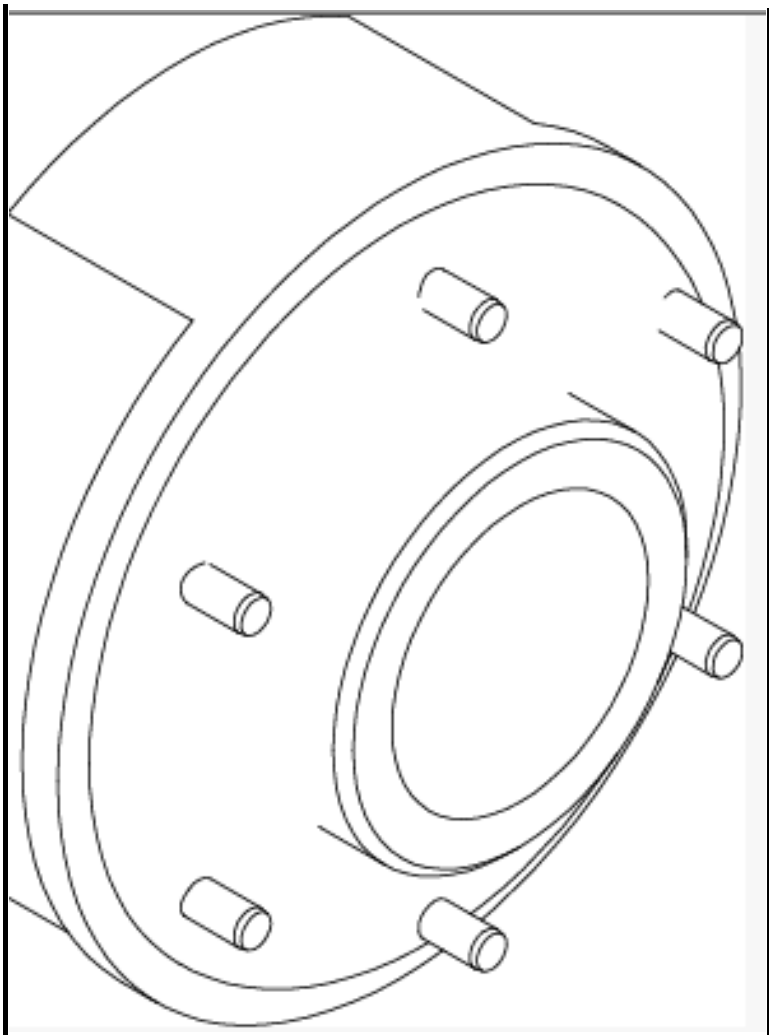

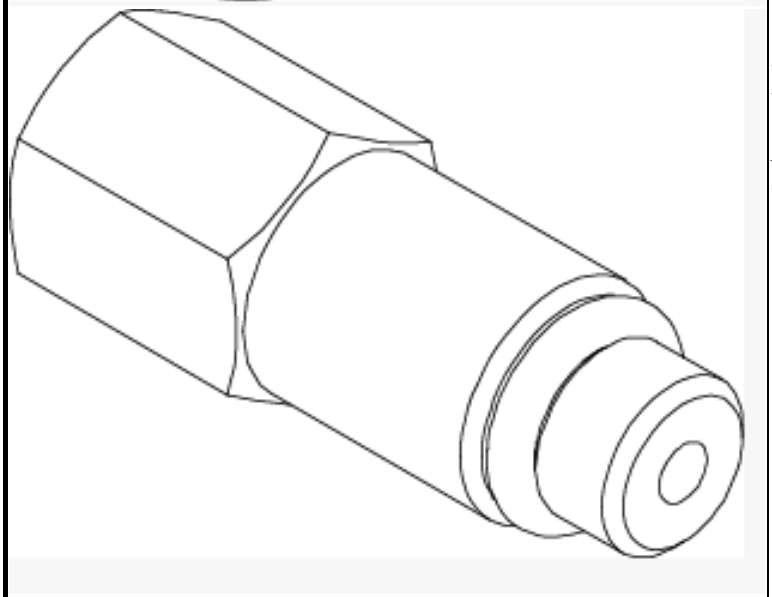

10424 - Adapter, Transmission Pressure
(Originally Shipped In Kit Number(s) 10419.)

10425 - Tool, Pinion and Side Gear Locking
(Originally Shipped In Kit Number(s) 10419.)

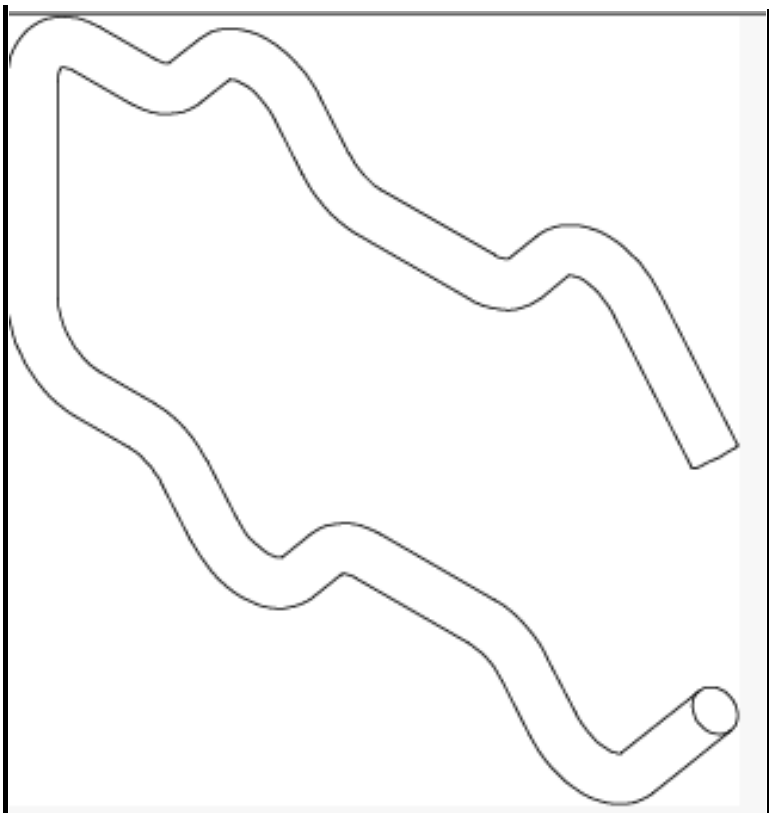

10426 - Compressor, Underdrive Spring (Originally Shipped In Kit Number(s) 10419.)

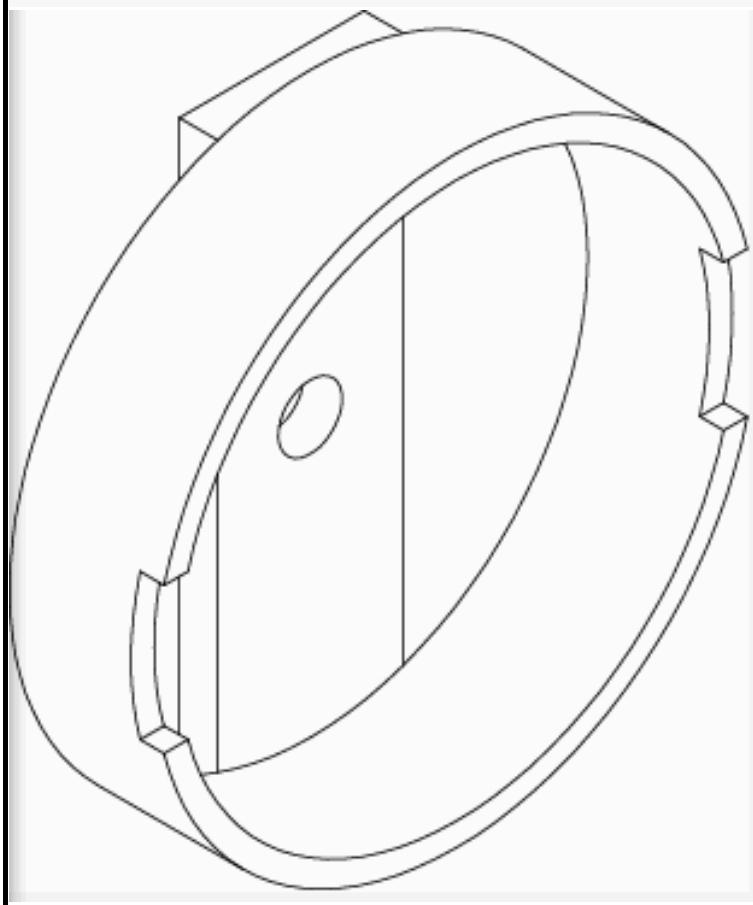

10427 - Compressor, Return Spring

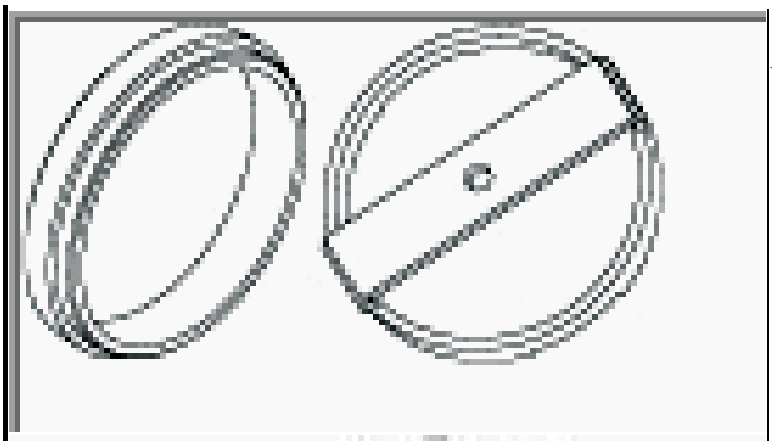	(Originally Shipped In Kit Number(s) 10419.)
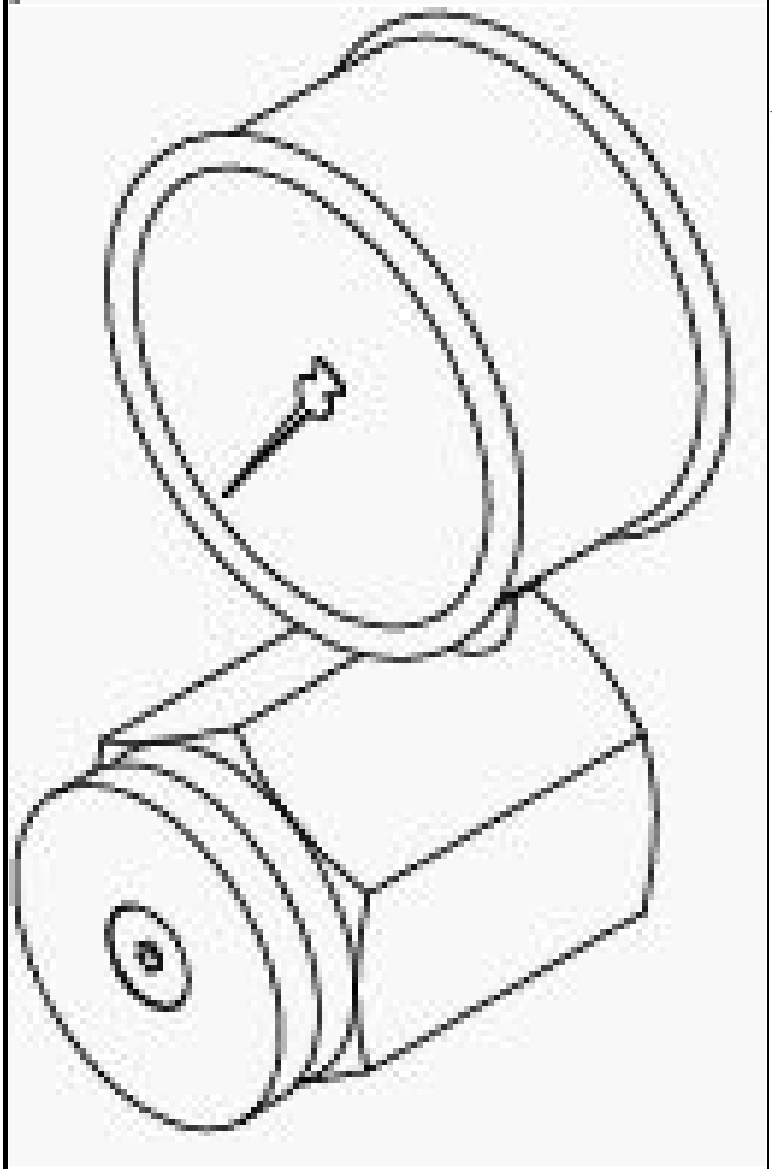	10429 - Gauge, Force (Originally Shipped In Kit Number(s) 10419.)
	C-293-PA - Puller, Press (Originally Shipped In Kit Number(s) 8418, 8837, C-293-M.)

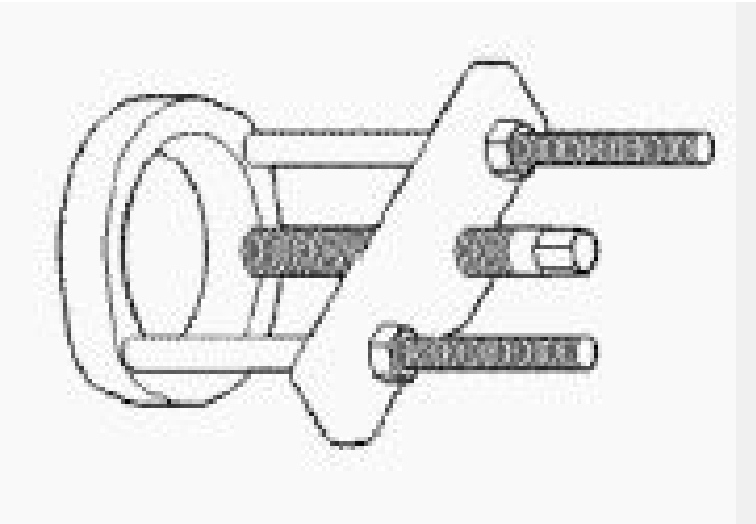	
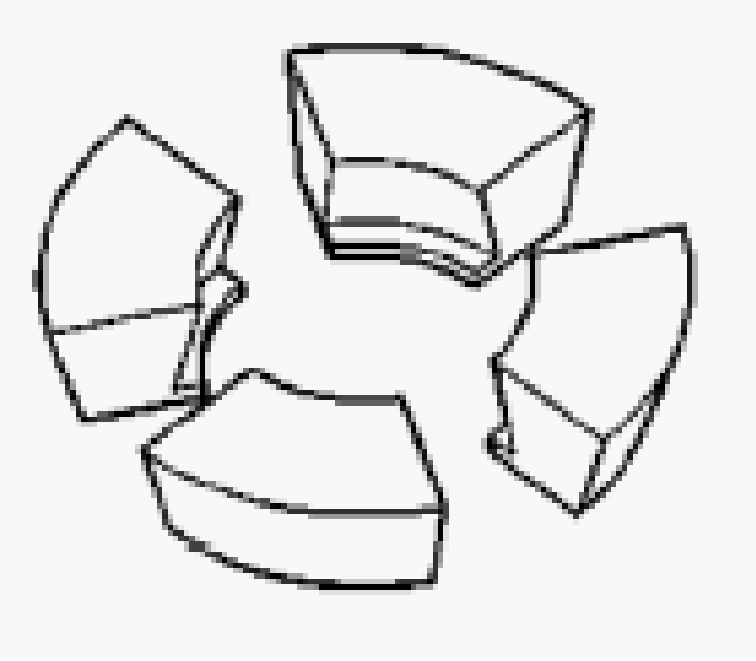	C-293-39 - Block Set, Puller (Originally Shipped In Kit Number(s) 8418, C-293-M, DD-914-CLT-L.)
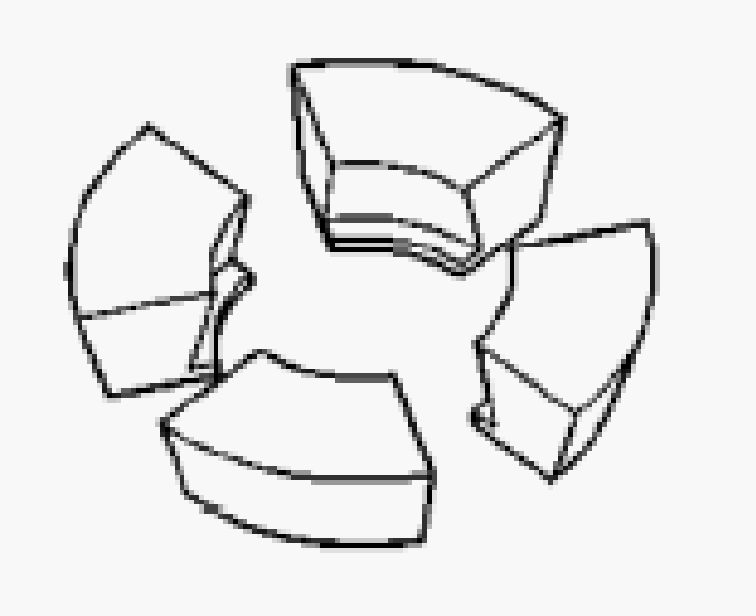	C-293-48 - Block Set, Puller (Originally Shipped In Kit Number(s) 8418, 8837, C-293-M, DD-914-CLT-L.)

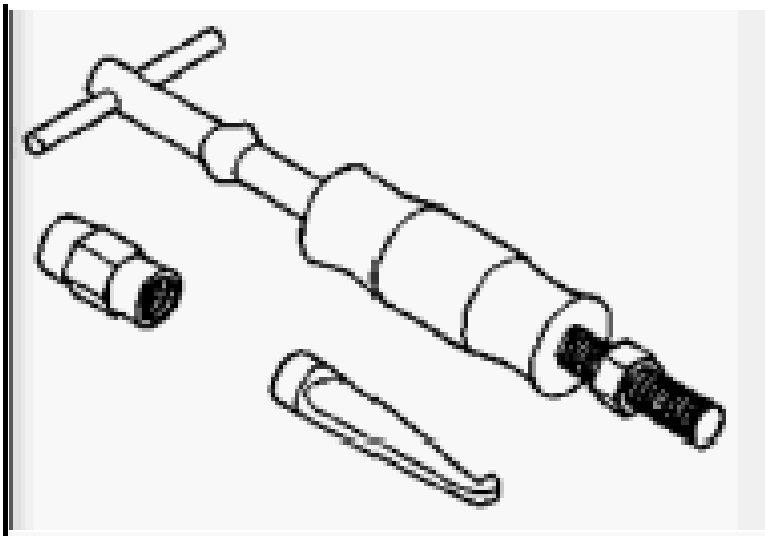	C-637 - Slide Hammer, Universal (Originally Shipped In Kit Number(s) 9202.)
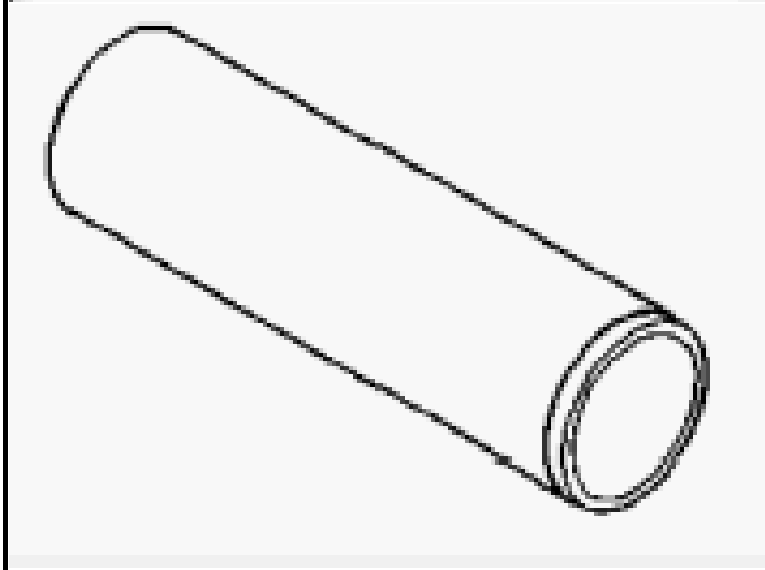	C-3095-A - Installer, Bearing
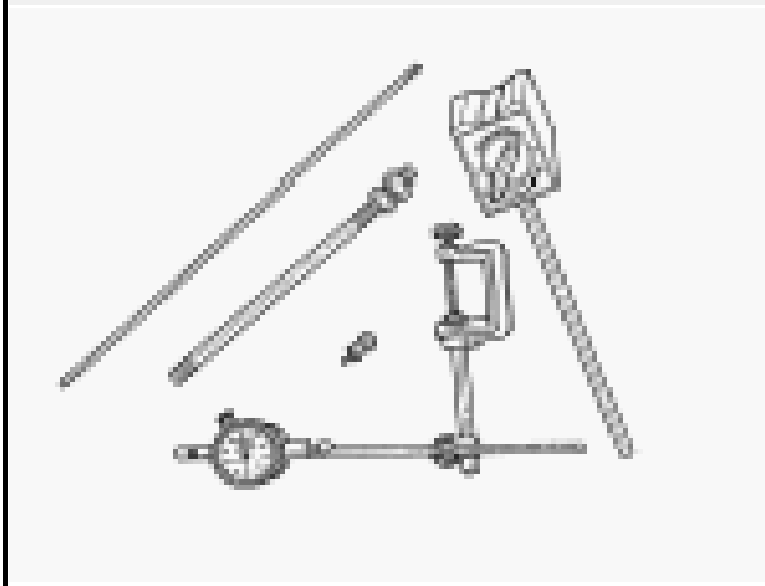	C-3339A - Set, Dial Indicator (Originally Shipped In Kit Number(s) 9202.)
	C-4171 - Driver Handle, Universal (Originally Shipped In Kit

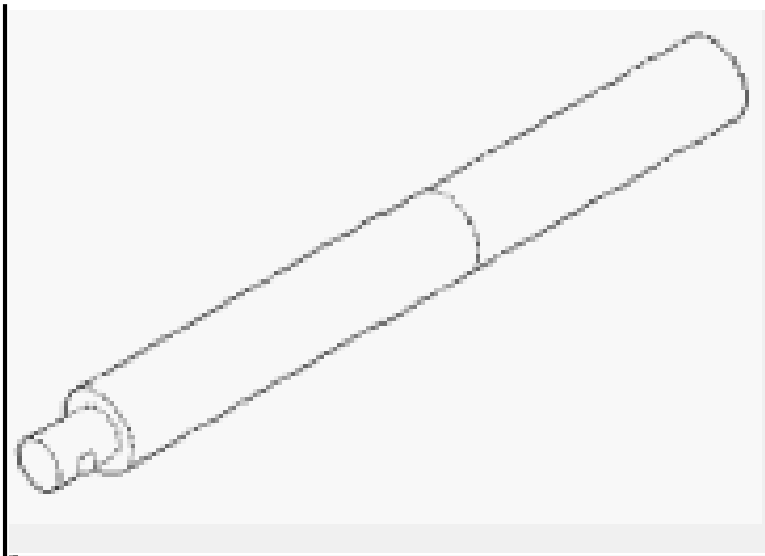	Number(s) 9202, 9202A-CAN, 9202CC, 9299, 9299CC, 9299CC, 9300A-CAN.)
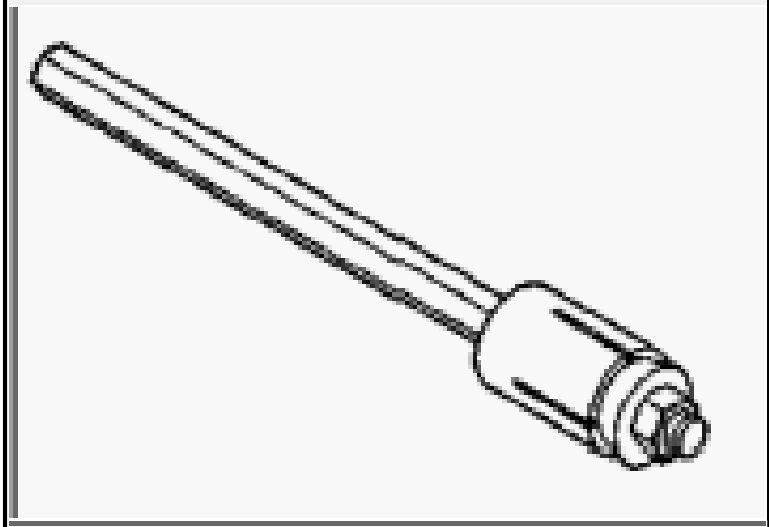	C-4995A - Tool, Differential Bearing Torque
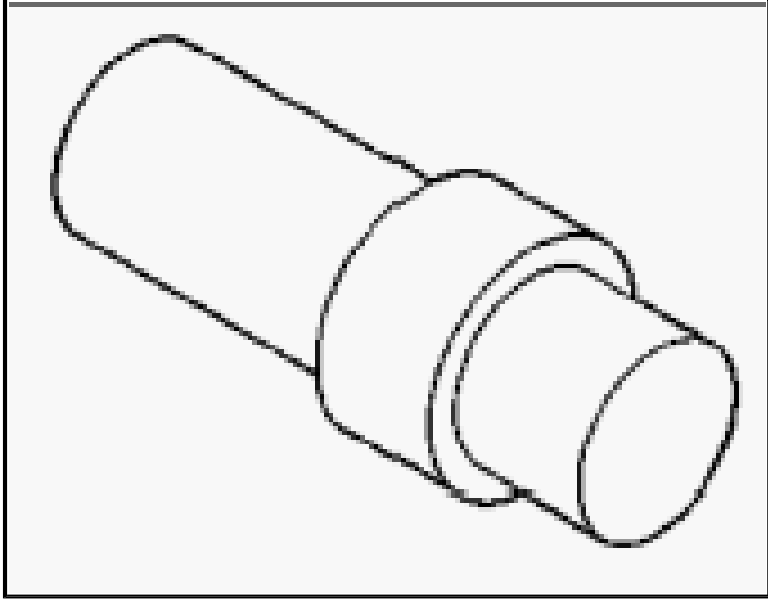	C-4996 - Adapter, Plug (Originally Shipped In Kit Number(s) 6672.)

SPECIAL TOOLS - AWD

	5058A-3 - Screw, Forcing

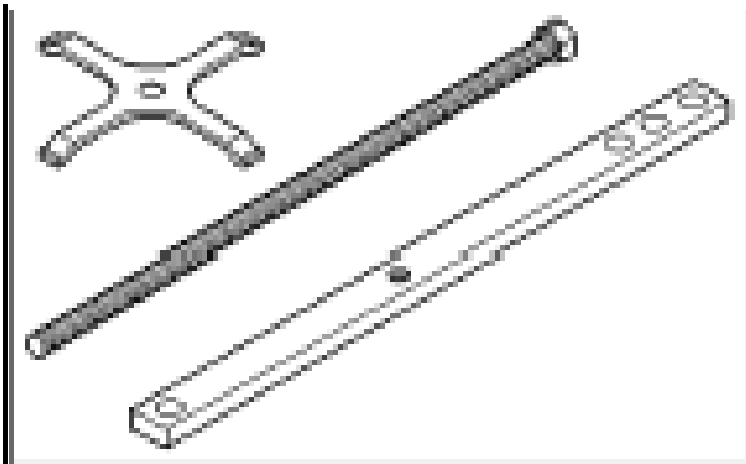	(Originally Shipped In Kit Number(s) 8853.)
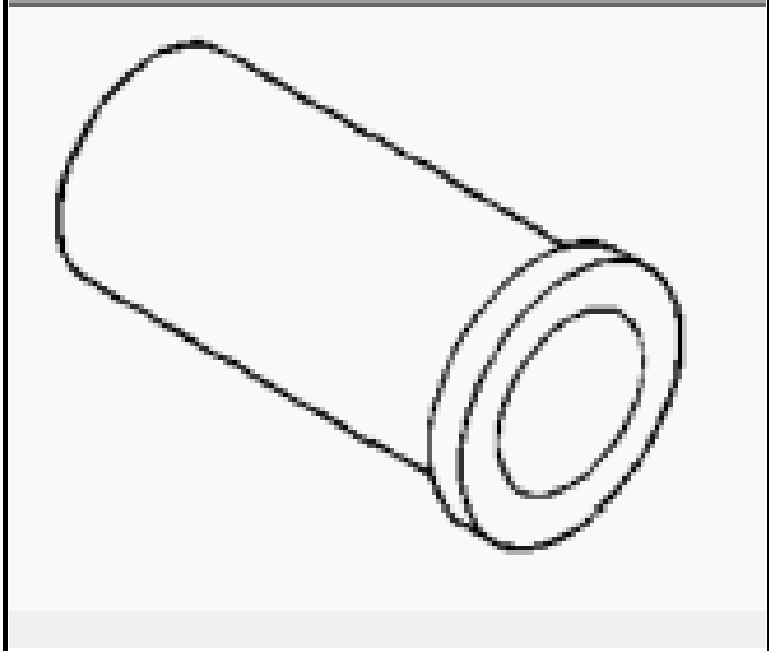	6342 - Installer, Seal (Originally Shipped In Kit Number(s) 6672.)
	8285 - Compressor, Spring (Originally Shipped In Kit Number(s) 8283, 8283CC, 8527, 8527CC, 8575, 8575CC, 9975.)

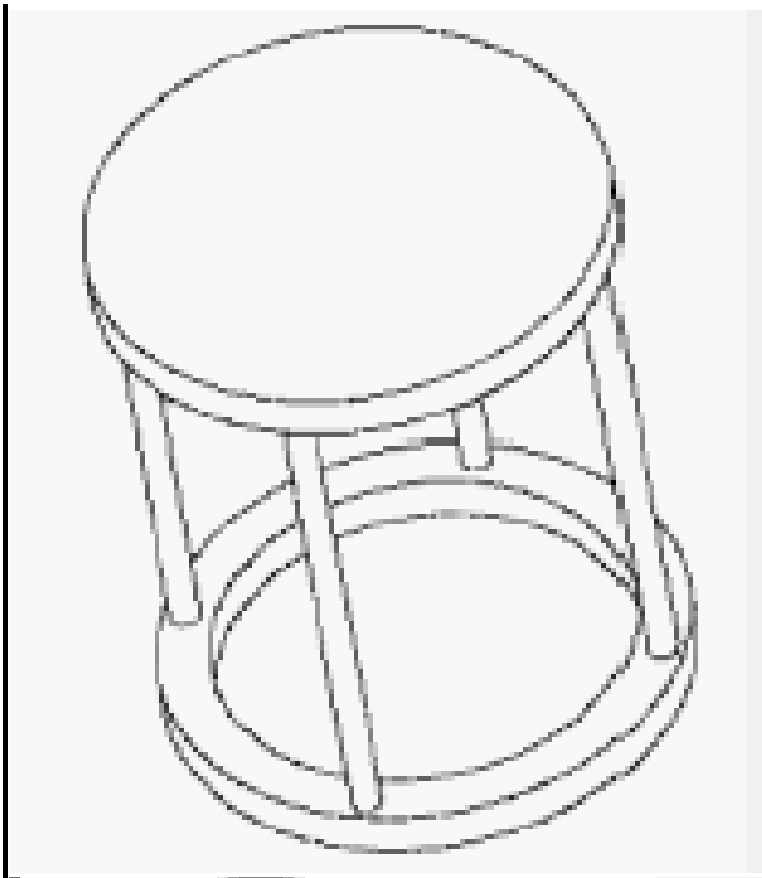	8621 - Compressor, Spring (Originally Shipped In Kit Number(s) 8705.)
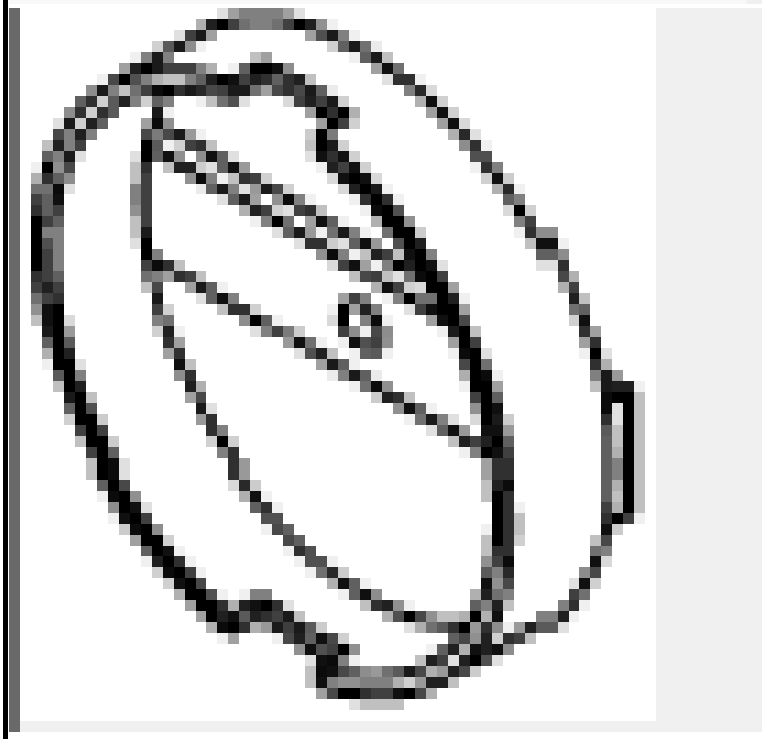	8680 - Installer, Damper (Originally Shipped In Kit Number(s).)

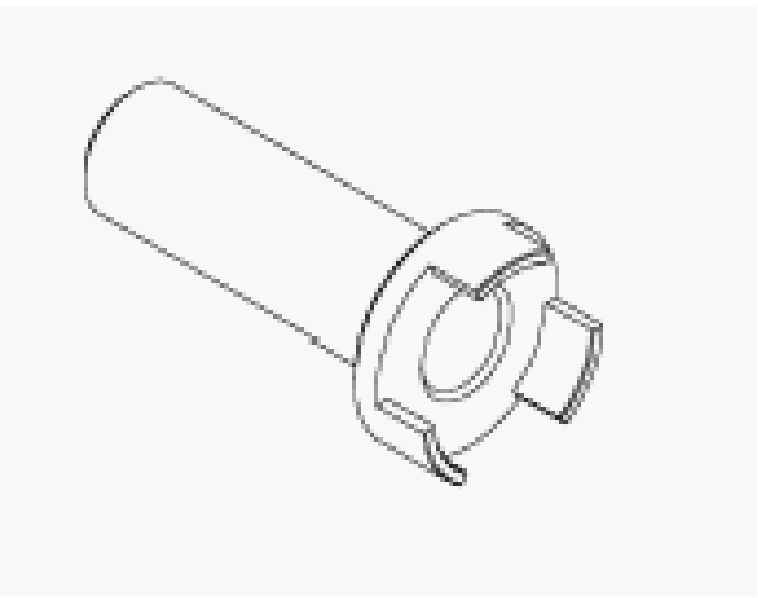

8866 - Installer, Bearing Cup (Originally Shipped In Kit Number(s) 8998, 8998CC.)

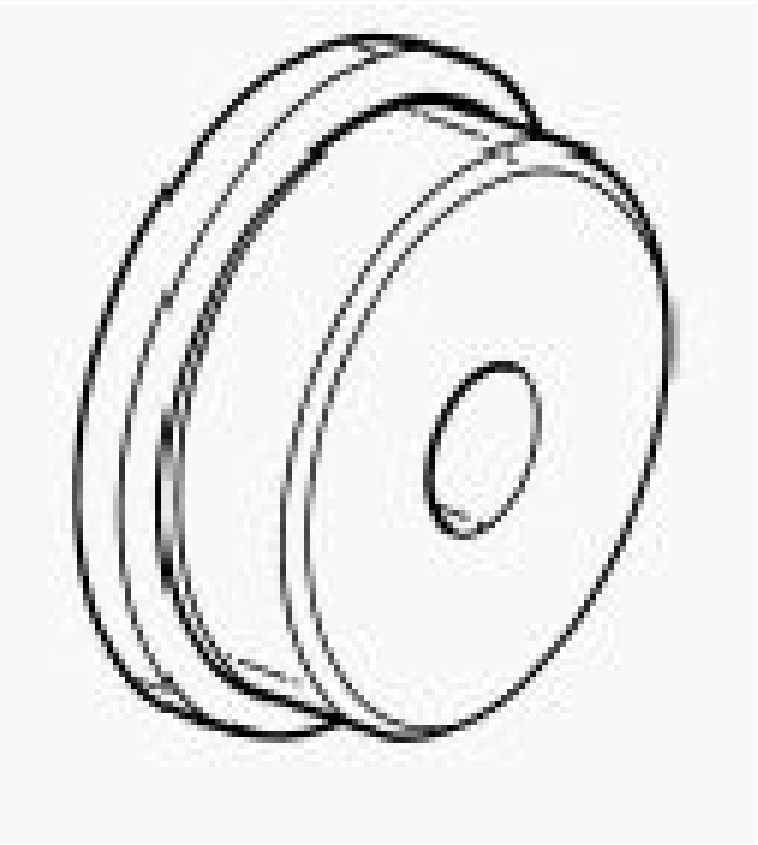

9664 - Remover, Bearing Cup (Originally Shipped In Kit Number(s) 9675, 9685, 9695.)

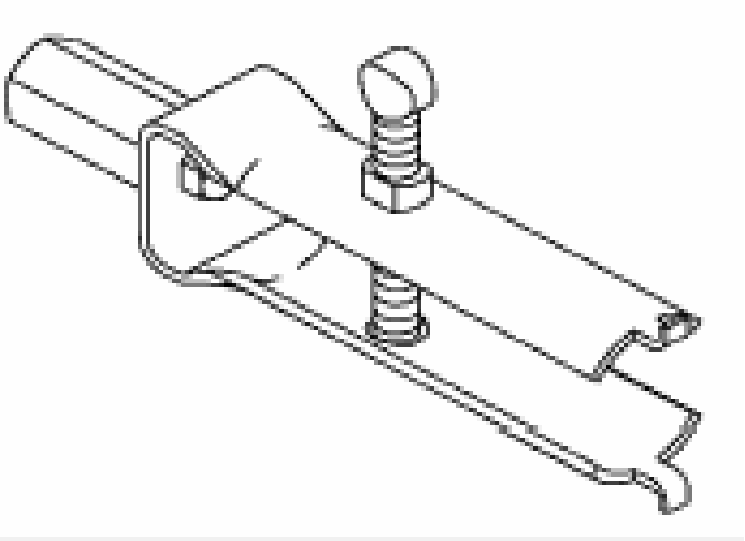

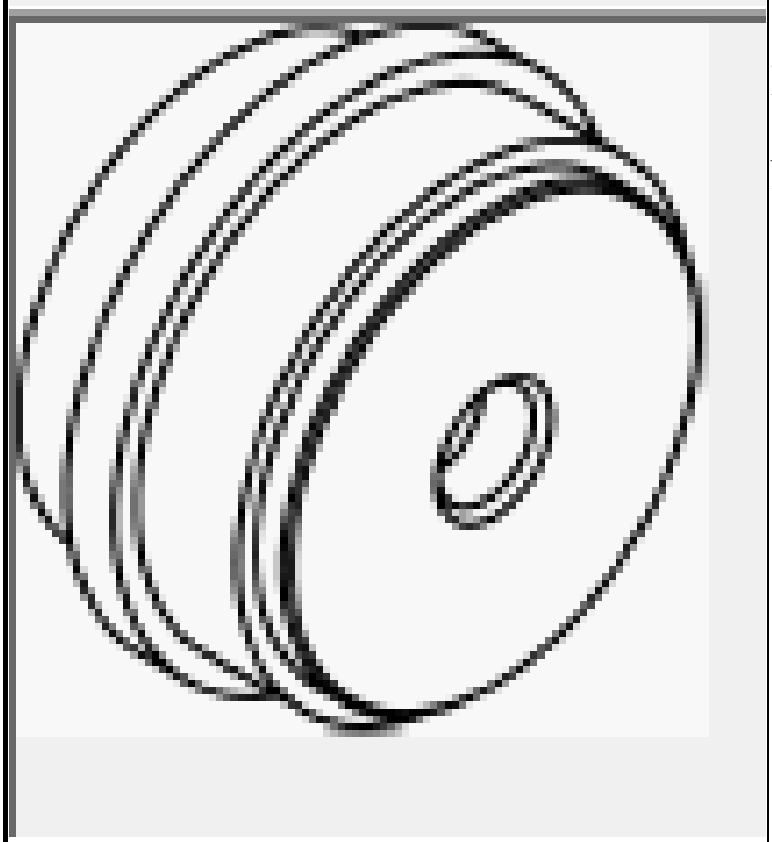

9668 - Remover/Installer, Bearing Cup
(Originally Shipped In Kit Number(s) 9691.)

9678 - Press Plug
(Originally Shipped In Kit Number(s) 9675, 9685, 9695.)

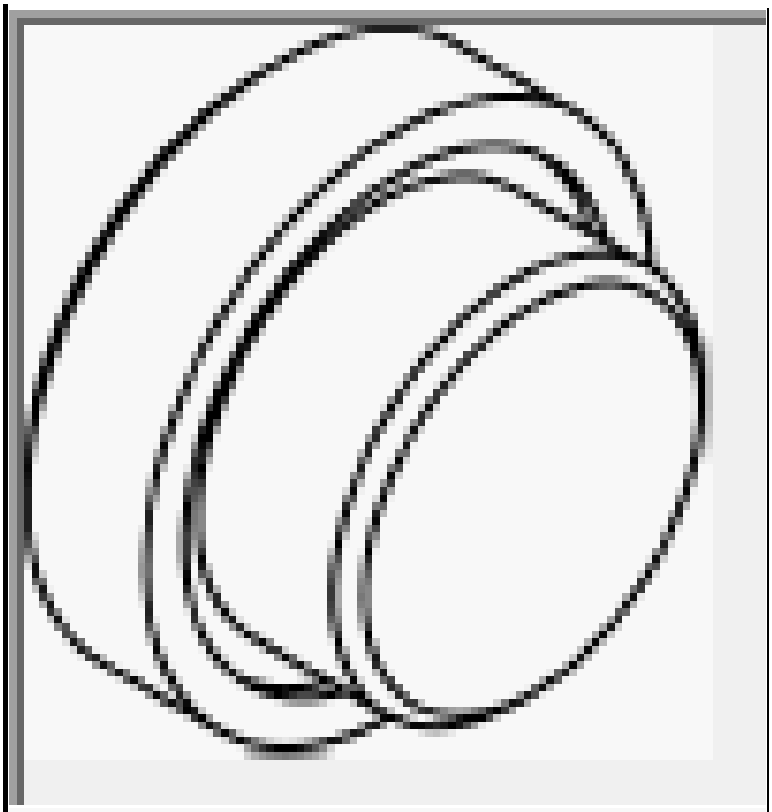

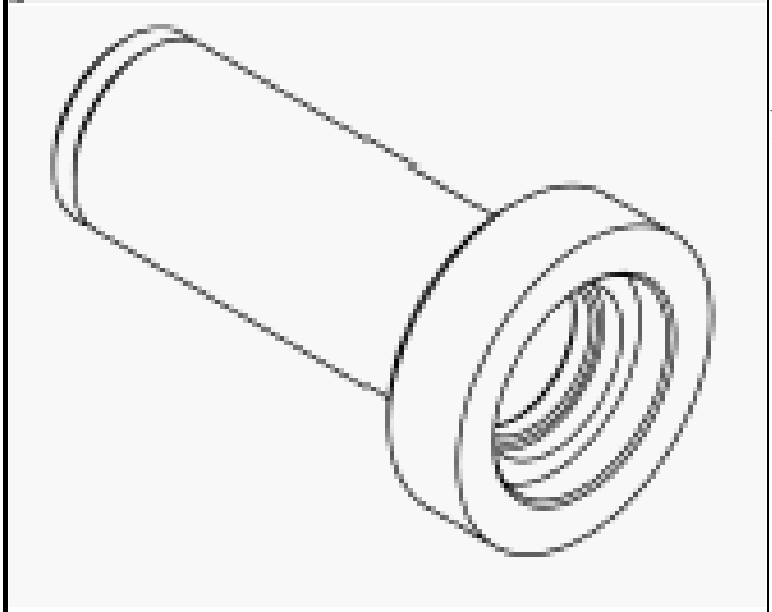

10117 - Installer, Seal
(Originally Shipped In Kit Number(s) 10075-CHRYSLER, 10075-DODGE.)

10304 - Installer, Input Shaft Seal
(Originally Shipped In Kit Number(s) 10366, 10366A.)

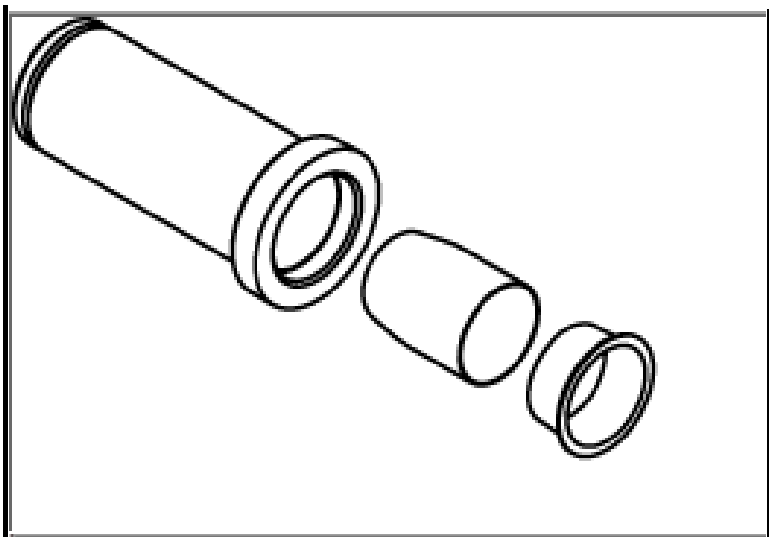

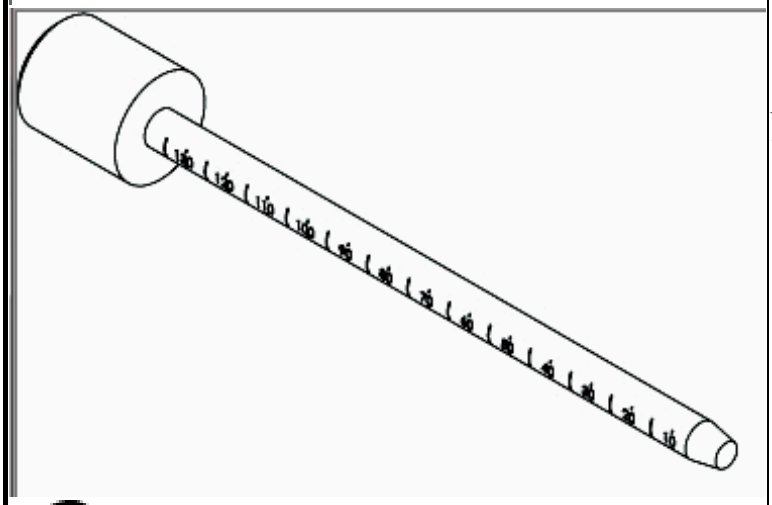

10323A - Dipstick
(Originally Shipped In Kit Number(s).)

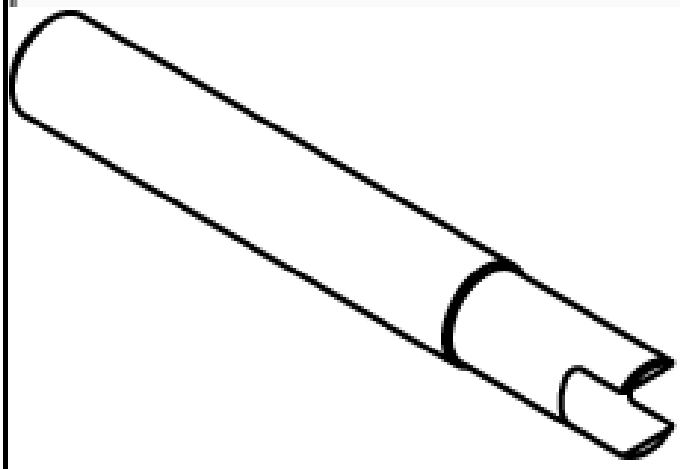

10371 - Tool, Turning Torque

10422 - Wrench, Spanner
(Originally Shipped In Kit Number(s) 10419.)

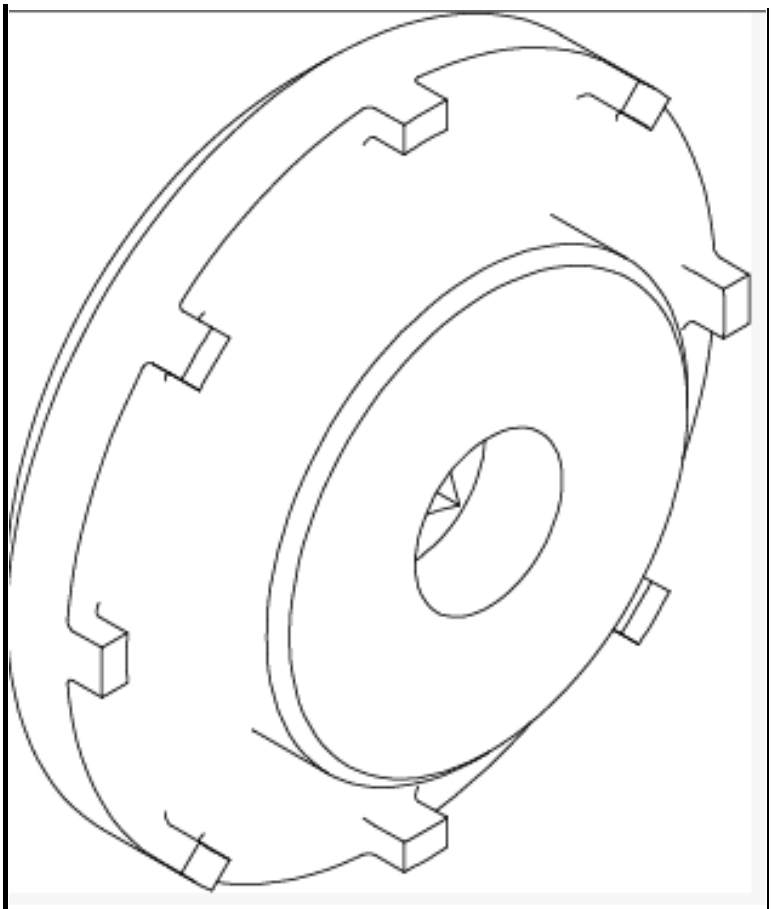

10423 - Fixture, Transfer Gear Holding
(Originally Shipped In Kit Number(s) 10419.)

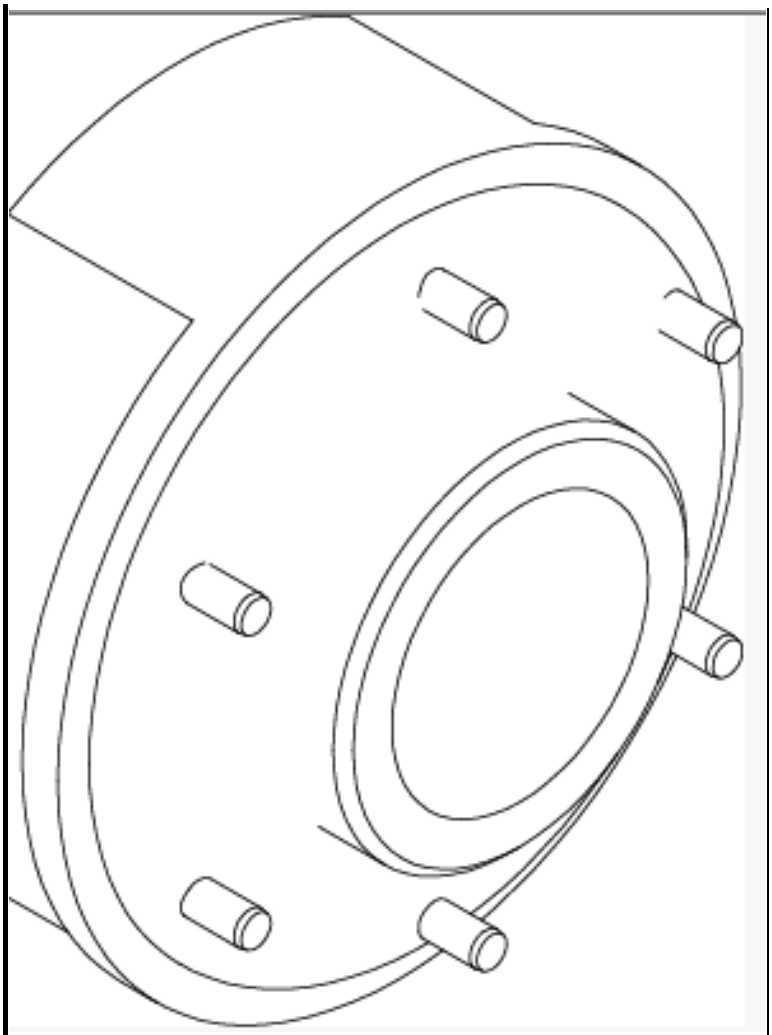

10424 - Adapter, Transmission Pressure
(Originally Shipped In Kit Number(s) 10419.)

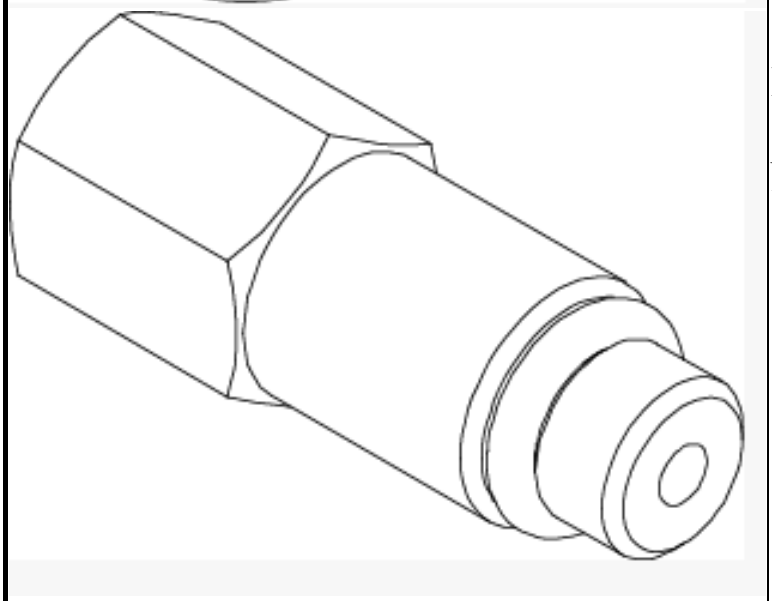

10425 - Tool, Pinion and Side Gear Locking
(Originally Shipped In Kit Number(s) 10419.)

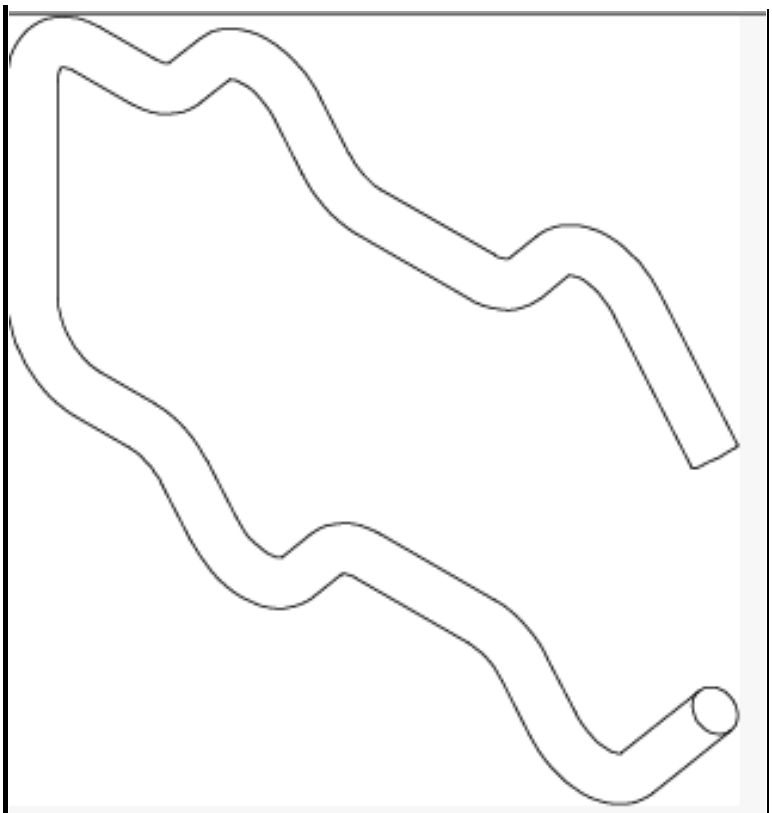

10426 - Compressor, Underdrive Spring (Originally Shipped In Kit Number(s) 10419.)

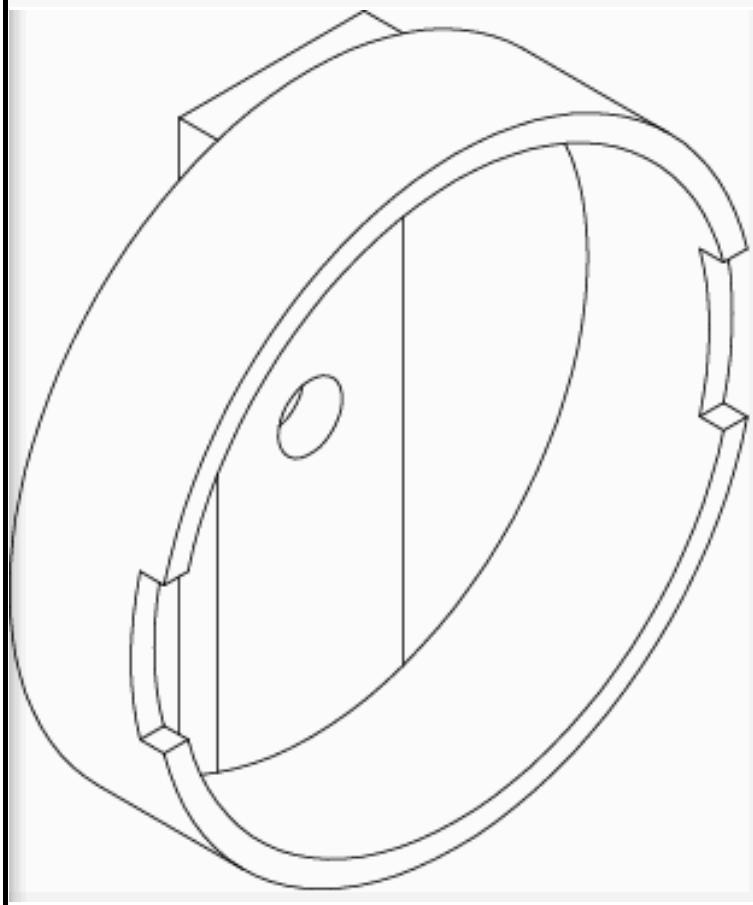

10427 - Compressor, Return Spring

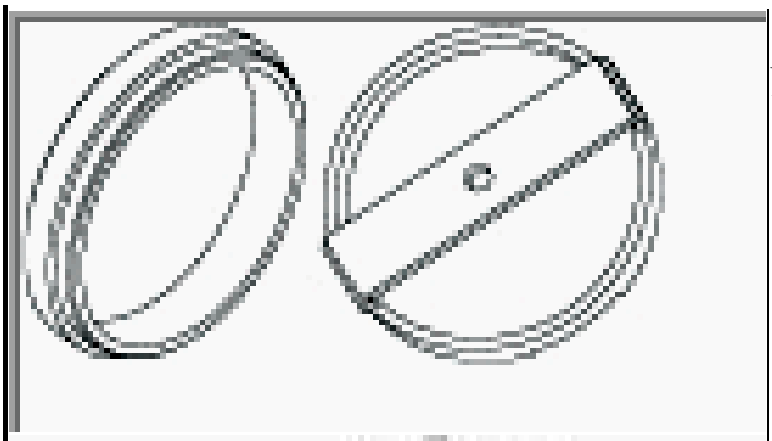	(Originally Shipped In Kit Number(s) 10419.)
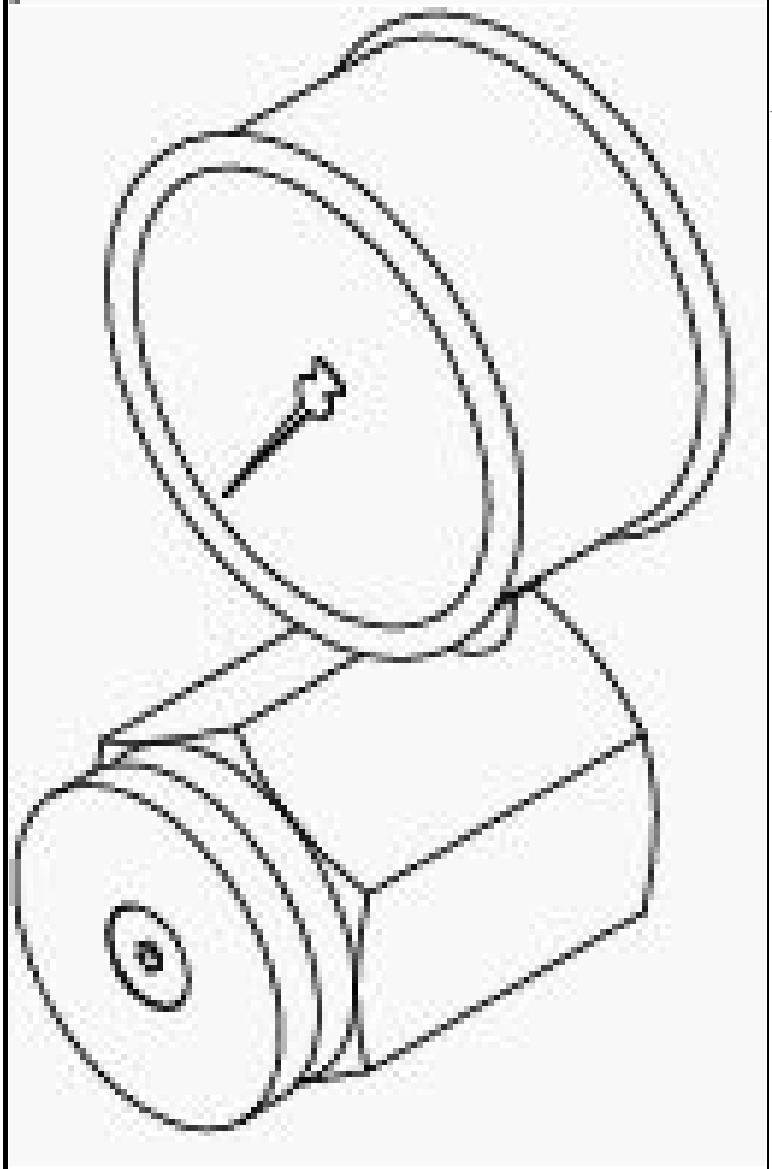	10429 - Gauge, Force (Originally Shipped In Kit Number(s) 10419.)
	C-293-PA - Puller, Press (Originally Shipped In Kit Number(s) 8418, 8837, C-293-M.)

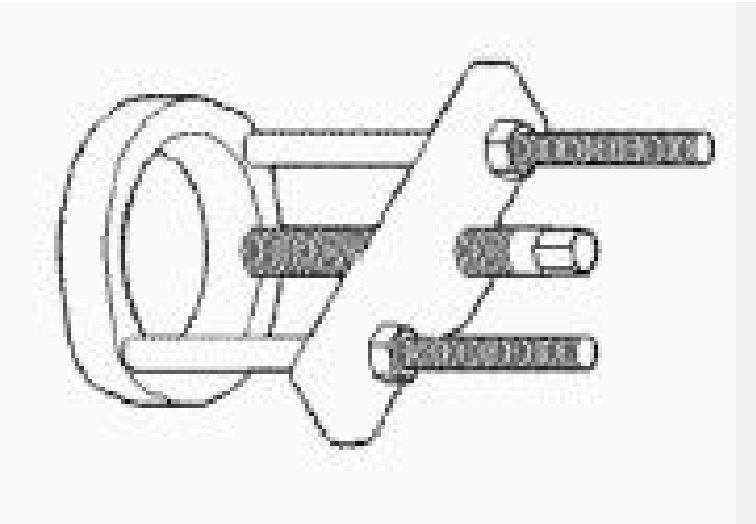	
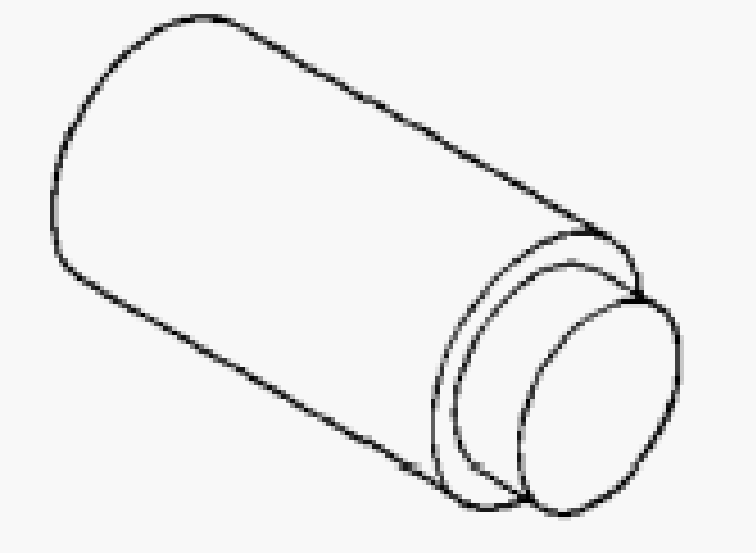	C-293-3 - Adapter, Bearing/Gear (Originally Shipped In Kit Number(s) 8418, 8837, C-293-M, C-4246-AL, DD-914-CLT-L.)
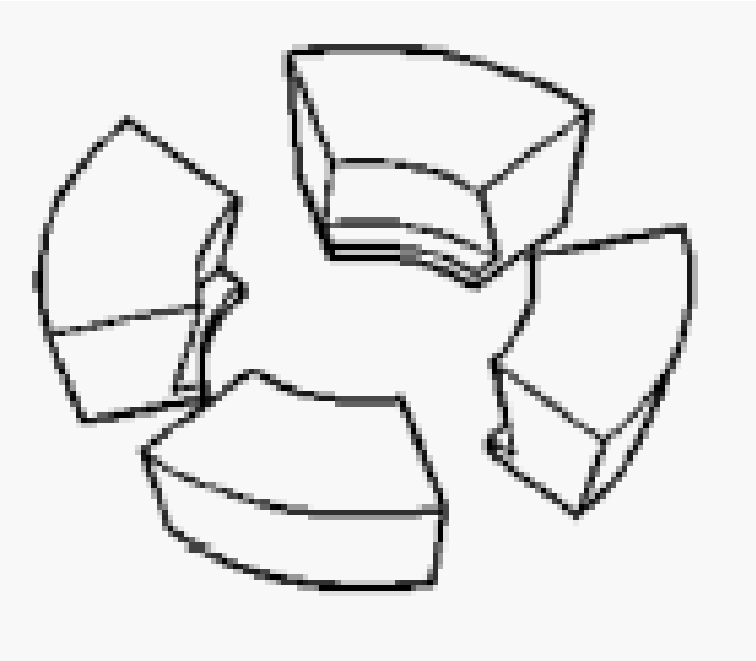	C-293-39 - Block Set, Puller (Originally Shipped In Kit Number(s) 8418, C-293-M, DD-914-CLT-L.)
	C-293-48 - Block Set, Puller

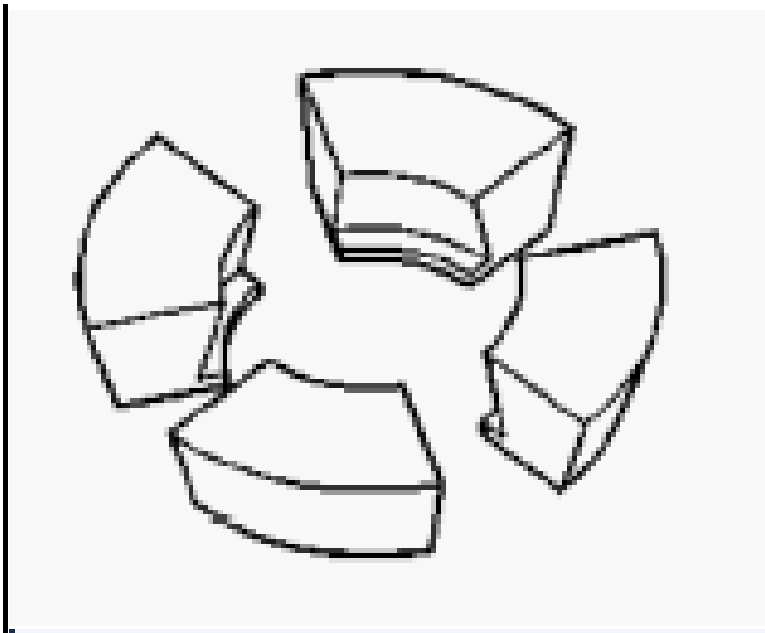	(Originally Shipped In Kit Number(s) 8418, 8837, C-293-M, DD-914-CLT-L.)
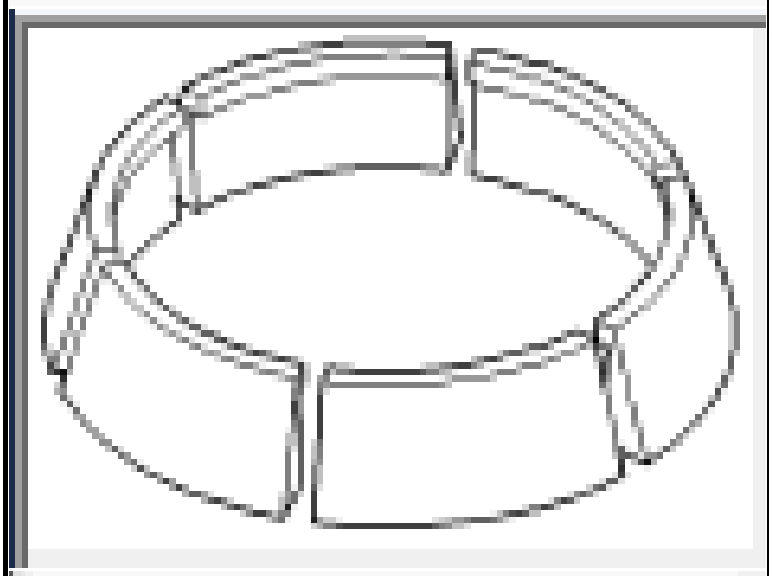	C-293-62 - Block Set, Puller
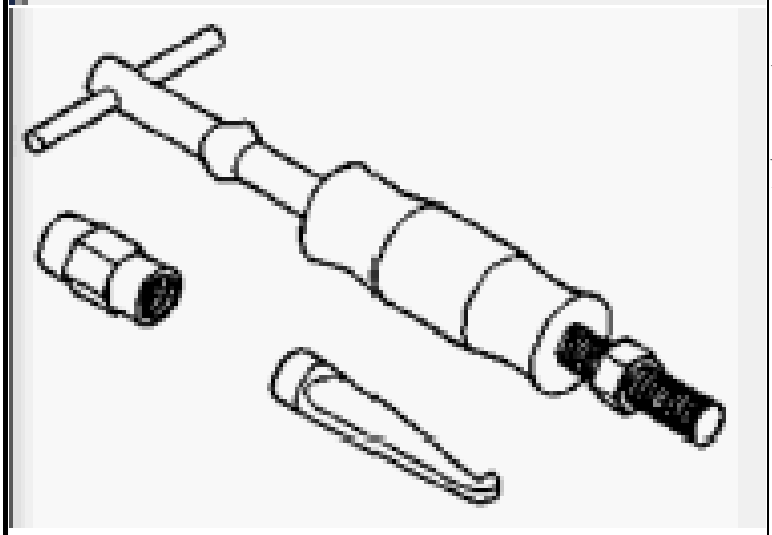	C-637 - Slide Hammer, Universal (Originally Shipped In Kit Number(s) 9202.)
	C-3095-A - Installer, Bearing

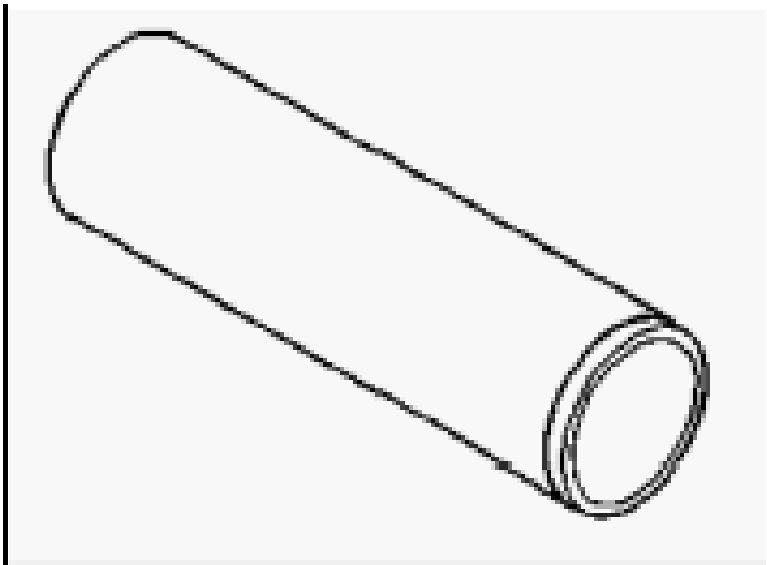	
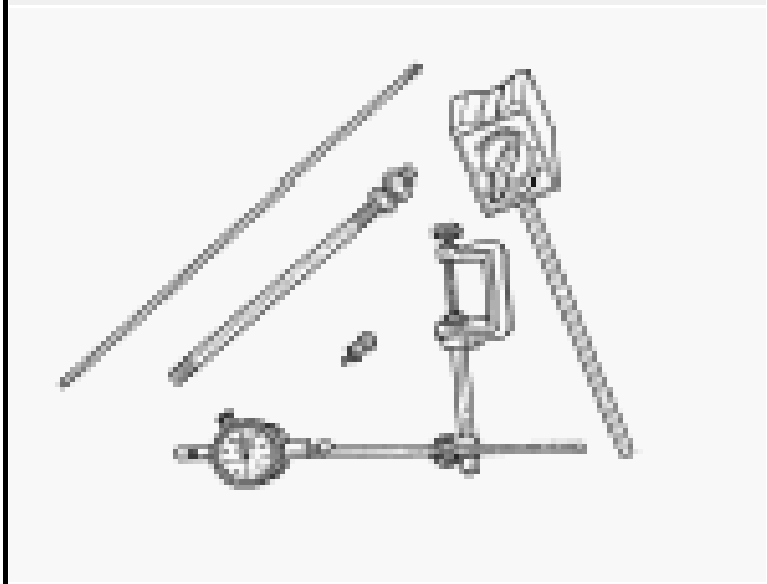	C-3339A - Set, Dial Indicator (Originally Shipped In Kit Number(s) 9202.)
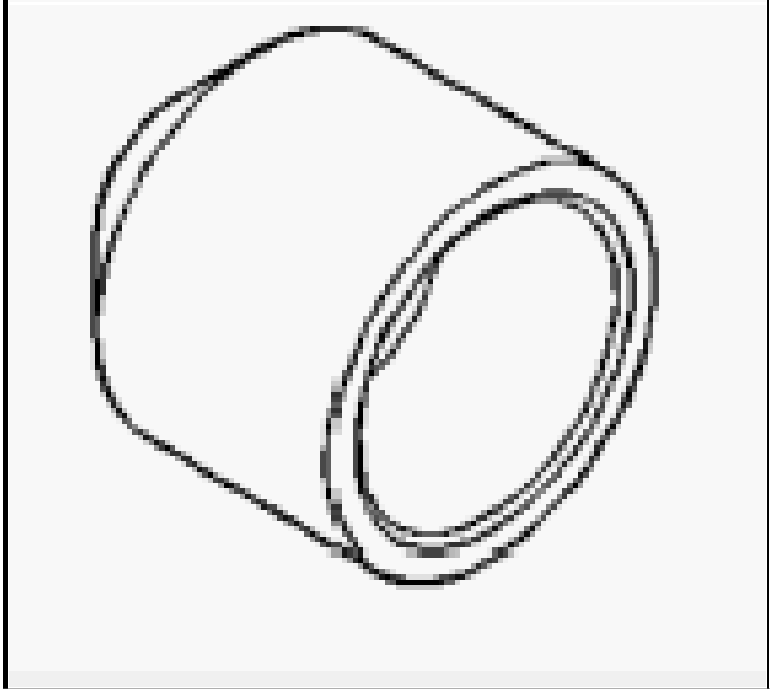	C-3972-A - Installer, Seal (Originally Shipped In Kit Number(s) 9975.)

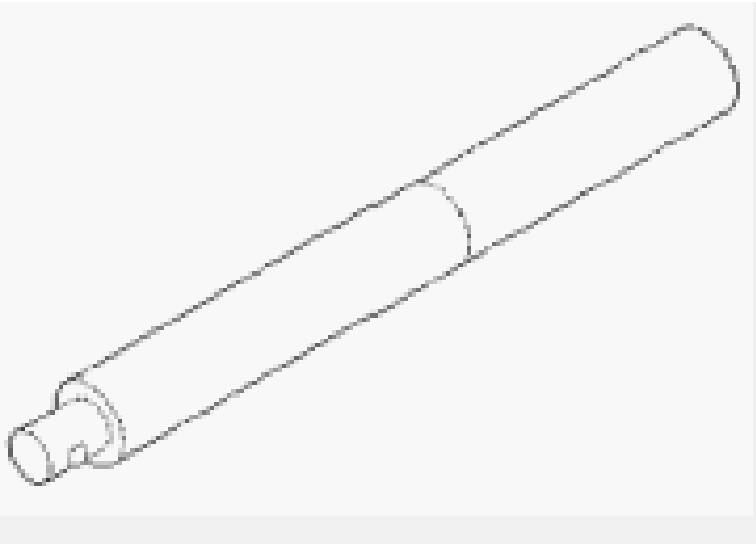	C-4171 - Driver Handle, Universal (Originally Shipped In Kit Number(s) 9202, 9202A-CAN, 9202CC, 9299, 9299CC, 9299CC, 9300A-CAN.)
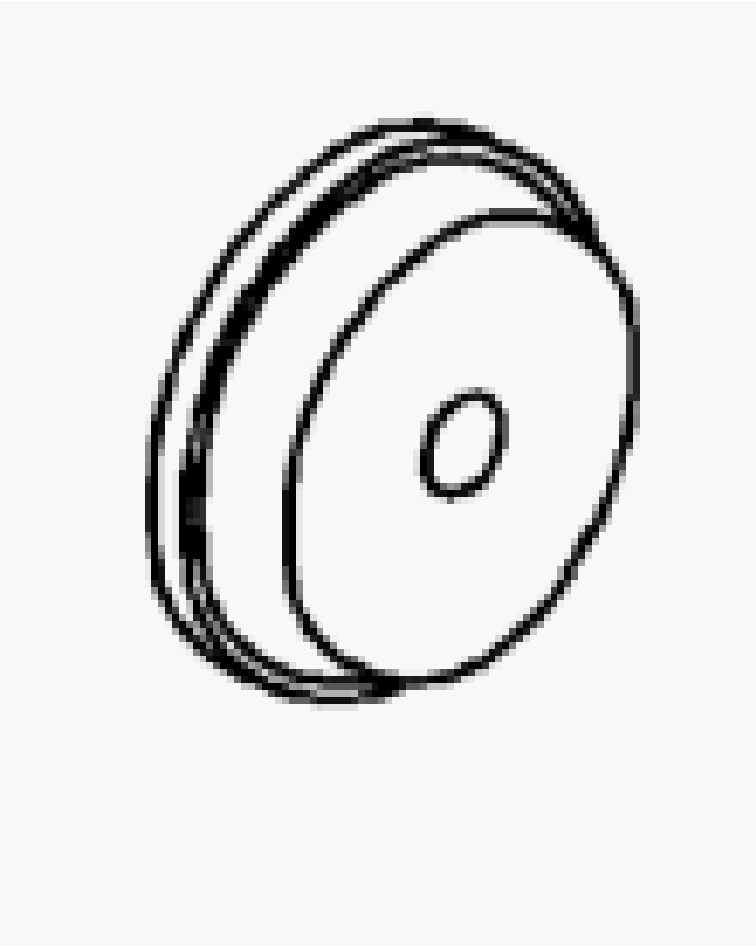	C-4310 - Installer, Bearing (Originally Shipped In Kit Number(s) C-4306.)
	C-4995A - Tool, Differential Bearing Torque

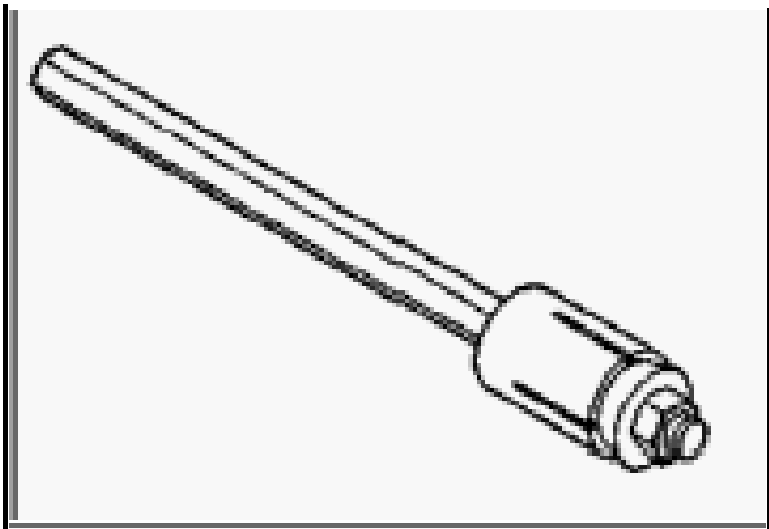	C-4996 - Adapter, Plug (Originally Shipped In Kit Number(s) 6672.)
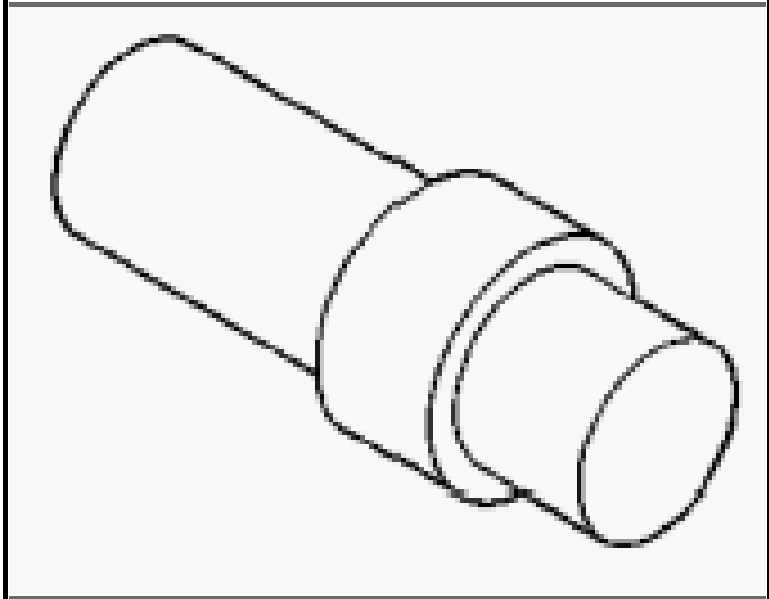	L-4454A - Remover, Bearing Cup (Originally Shipped In Kit Number(s) 9975.)
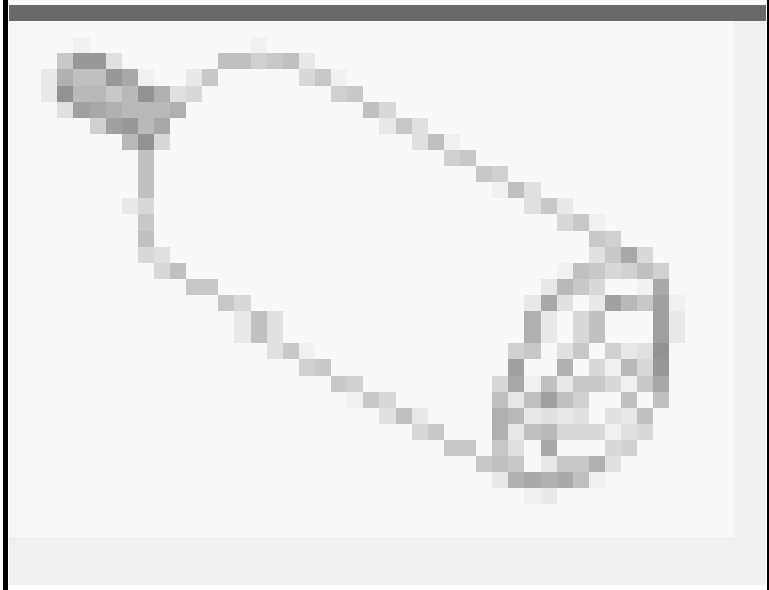	L-4518 - Remover, Bearing Cup

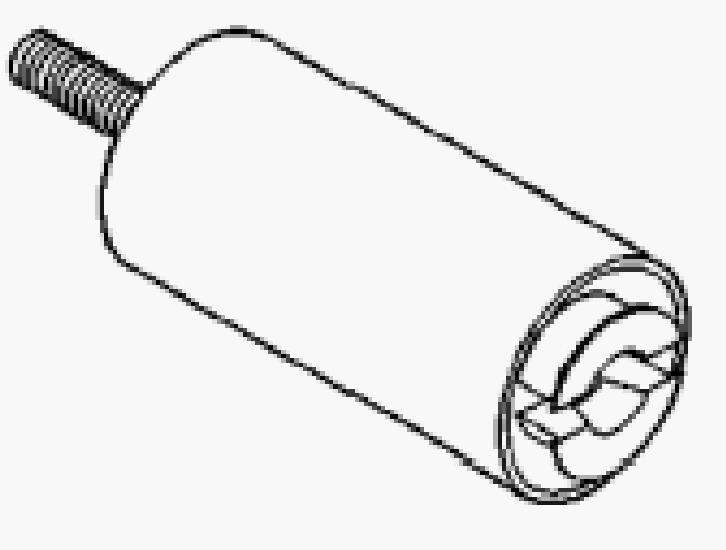	(Originally Shipped In Kit Number(s) 6822.)

FLUID

STANDARD PROCEDURES

FLUID

Fluid Type, Capacity and Service Interval

NOTE: There is no service interval recommended for the 6F24 Automatic Transaxle when operated under normal conditions.

The fluid used in the 6F24 Automatic Transaxle is clear liquid with red tint. It is formulated for use only in the 6F24 automatic transaxle. The Mopar Part Number (PN) is on **Star Parts** .

The factory fill fluid capacity of the 6F24 Automatic Transaxle is 7.1 L (7.5 qt.). Service fill with full torque converter and fluid cooler is 4.7 L (5 qt.)

FLUID DRAIN

1. Raise the vehicle on a suitable hoist that will keep the vehicle in a level position, front-to-rear and side-to-side. Refer to **HOISTING, STANDARD PROCEDURE** .

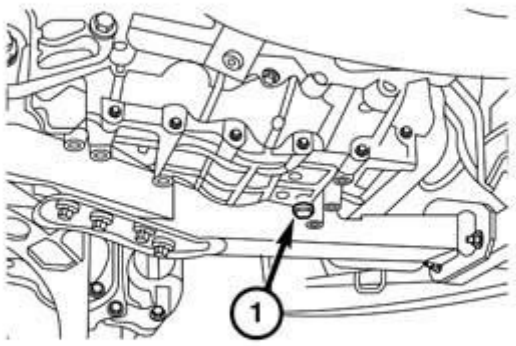

210271136

Fig. 533: Transaxle Fluid Drain Plug
Courtesy of CHRYSLER GROUP, LLC

2. Remove the belly pan to gain access to the transaxle fluid drain plug (1). Refer to **BELLY PAN, REMOVAL** .

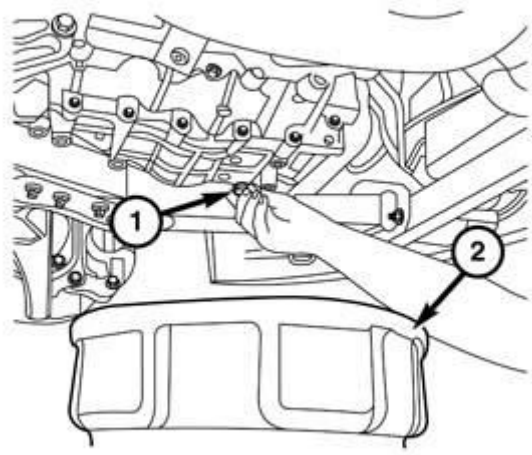

210271135

Fig. 534: Transaxle Fluid Drain Plug & Drain Pan
Courtesy of CHRYSLER GROUP, LLC

3. Position a suitable drain pan (2) under the vehicle to drain the transaxle fluid into.

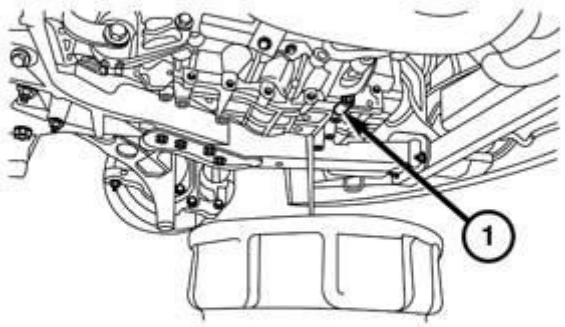

210271137

Fig. 535: Drain Fluid From Transaxle
Courtesy of CHRYSLER GROUP, LLC

4. Remove the drain plug from the transaxle (1) and allow fluid the drain into the drain pan.
5. After the fluid has ceased draining from the transaxle, Install the drain plug. Tighten to specifications.
6. Remove the drain pan.
7. Perform repair procedures as necessary or proceed to Fluid Fill Procedure.
8. Install the belly pan. Refer to **BELLY PAN, INSTALLATION** .

FLUID FILL

NOTE: It is necessary to vent the transaxle by removing the plug from the fluid level check port, located on top of the transaxle housing above the differential, before attempting to pour fluid into the transaxle.

The 6F24 Automatic Transaxle is filled through the vent pod located on top front surface of the valve body pan.

1. Raise the vehicle on a suitable hoist that will keep the vehicle in a level position, front-to-rear and side-to-side. Refer to **HOISTING, STANDARD PROCEDURE** .

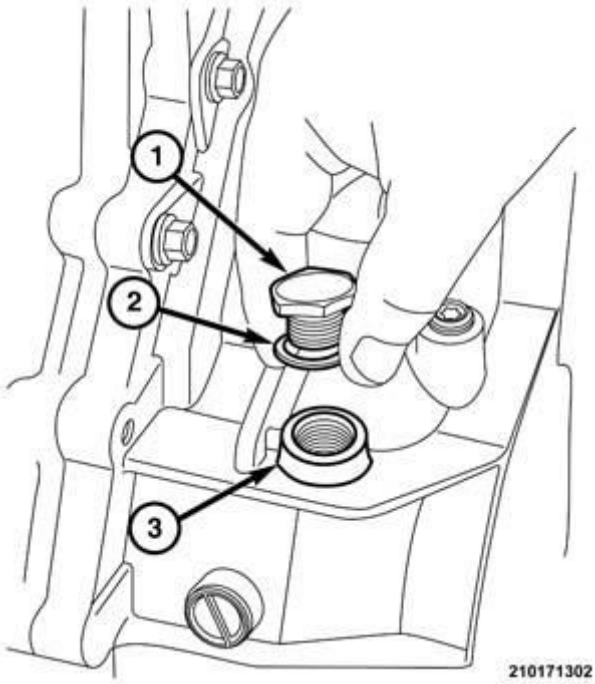

Fig. 536: Fluid Level Check Port
Courtesy of CHRYSLER GROUP, LLC

2. Remove the belly pan to gain access to the fluid level check port (3) located on top of the transaxle housing above the differential. Refer to **BELLY PAN, REMOVAL** .
3. Remove the plug (1) from the fluid level check port (3).
4. Lower the vehicle until the tires are 2 cm (8 in.) off the floor.

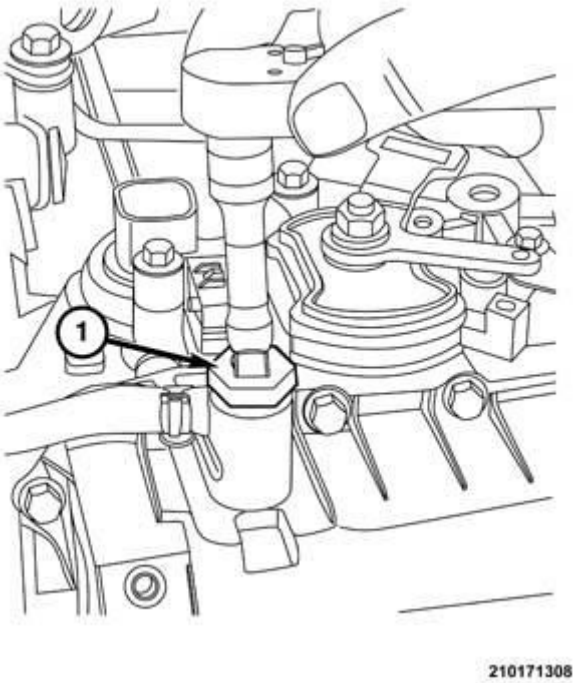

Fig. 537: Fluid Level Check Port Plug
Courtesy of CHRYSLER GROUP, LLC

5. Connect a Scan tool to the diagnostic connector under the instrument panel on the driver side.
6. Navigate the scan tool to a screen to display the transaxle temperature.
7. Remove the fill plug from the vent pod located on the front of the valve body pan.
8. Insert a suitable funnel into the vent pod on the front of the valve body pan.
9. Slowly pour 4 L (4.3 qt.) of specified fluid into the funnel while watching the fill hole for spill over.
10. Start the engine and allow it to idle in park.
11. Pour 1 L (1.05 qt.) into the transaxle and install the fill plug. Tighten to specification.
12. With engine still running in park, raise the vehicle and check the fluid level.
13. Add or siphon fluid to achieve the specified fluid level. Refer to **FLUID, STANDARD PROCEDURES**.
14. Install the fluid check plug in the transaxle. Tighten to specification
15. Install the belly pan. Refer to **BELLY PAN, INSTALLATION** .
16. Lower the vehicle and disconnect the scan tool.
17. Road test the vehicle to verify the repair.

FLUID FILTER

FLUID FILTER SERVICE

The fluid filter in the 6F24 automatic transaxle is not periodically serviced. To replace the fluid filter the transaxle must be removed and the bell housing separated from the transaxle housing. Refer to **DISASSEMBLY**.

FLUID LEVEL CHECK

NOTE: It is not necessary to check the fluid level in the 6F24 Automatic Transaxle unless there are shifting issues and/or has evidence of a transaxle fluid leak.

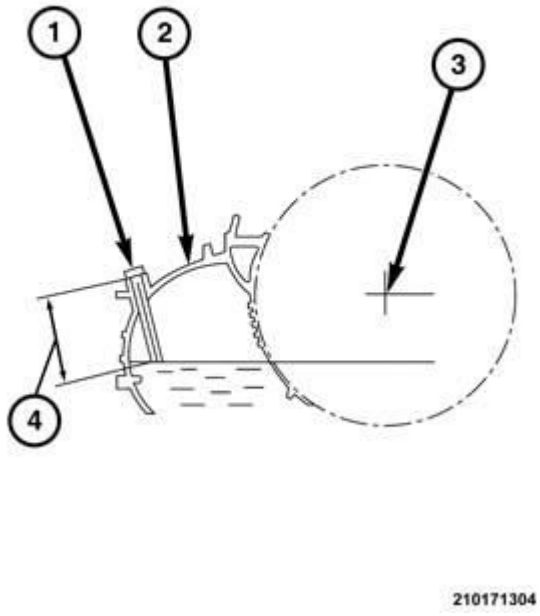

Fig. 538: Fluid Level Indicator, Transaxle & Fluid Level
Courtesy of CHRYSLER GROUP, LLC

NOTE: Special Tool (special tool #10323A, Dipstick) Fluid level Indicator (1) and a Scan-tool are required to accurately measure the fluid level (4) in the 6F24 Automatic Transaxle (2).

Checking the fluid level in the 6F24 Automatic Transaxle (2) is to measure the distance from the upper lip of the fluid level check port, located on top of the transaxle housing above the differential, down to the surface of the fluid (4).

Tool 10323A fluid level indicator is marked in 5 mm increments with the base of the handle at 140 mm and the lower tip at "0". The engine must be running at idle with the transaxle in park and the vehicle hoisted in a level position.

1. Connect a Scan Tool to the Diagnostic Connector under the instrument panel on the driver's side of the vehicle.
2. Navigate to a screen to display transaxle fluid temperature.
3. Start the engine and allow it to run at idle with the transaxle in Park.
4. Verify that the fluid temperature is above 50 °C.
5. Raise the vehicle on a suitable hoist that will keep the vehicle in a level position, front-to-rear and side-to-side. Refer to **HOISTING, STANDARD PROCEDURE** .

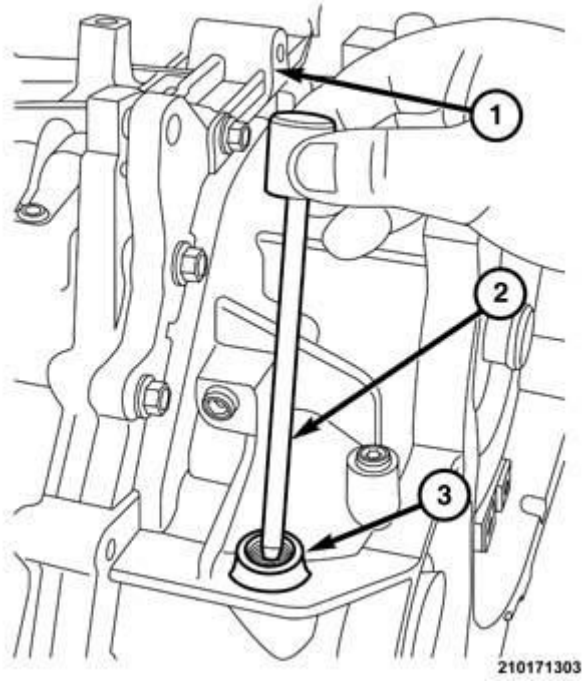

Fig. 539: Differential, Special Tool #10323A & Fluid Level Check Port
Courtesy of CHRYSLER GROUP, LLC

6. Remove the belly pan to gain access to the fluid level check port (3) located on top of the transaxle housing above the differential (1). Refer to **BELLY PAN, REMOVAL** .
7. Remove the plug from the fluid level check port.
8. Insert tool (special tool #10323A, Dipstick) (2) into the fluid level check port (3) and allow the handle of the tool to rest on the flat surface of the transaxle housing (1) around the check port.

9. Remove the tool from the check port, keeping the handle above the tip so the level reading remains accurate.
10. Note the increment on the shaft of the tool where the fluid left a witness mark.

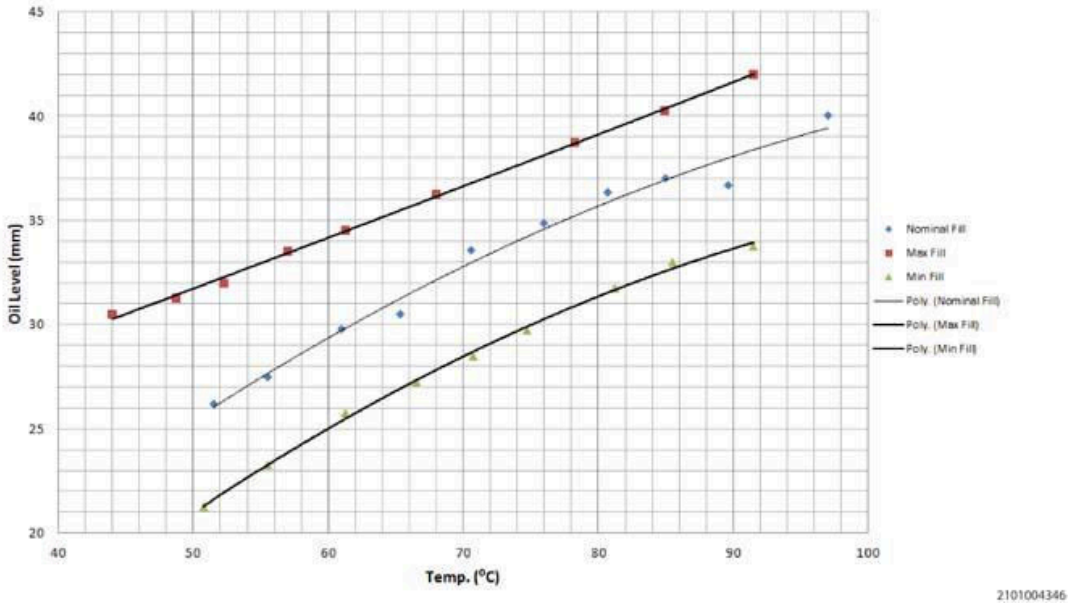

Fig. 540: Fluid Level & Temperature Chart
Courtesy of CHRYSLER GROUP, LLC

11. Based on the temperature of the fluid and the measurement on the tool, refer to the graph or the table to determine the proper level.
12. Install the plug into the fluid level check port. Tighten to specification.
13. Install the belly pan. Refer to **BELLY PAN, INSTALLATION** .
14. Lower vehicle.

6F24 AUTOMATIC TRANSAXLE FLUID LEVEL TABLE

TEMP in °C	MIN LEVEL (mm)	NOMINAL LEVEL (mm)	MAX LEVEL (mm)
50°	21 mm	26 mm	31.5 mm
55°	23 mm	27.5 mm	33 mm
60°	25 mm	30 mm	34 mm
65°	27 mm	31 mm	35.5 mm
70°	28.5 mm	33 mm	36.5 mm
75°	30 mm	35 mm	38 mm
80°	31.5 mm	36 mm	39 mm

85°	32.5 mm	37 mm	40 mm
90°	34 mm	38 mm	41.5 mm

FLUID LEAK DETECTION - AWD

The following procedure is for detecting transaxle fluid leaks from the area between the transaxle and the Power Transfer Unit (PTU). When transaxle fluid is leaking form the weep hole in the area of the PTU, the seals around the differential output shaft and the differential side gear is most likely faulty. The large seal around the differential output shaft is serviceable without removing the transaxle. The seal around the inner differential side gear is serviceable after the differential unit is removed from the transaxle. The following procedure is recommended to determine which seal is leaking.

1. Disconnect the transaxle vent tube from the adaptor nipple on the top of the valve body pan.
2. Adapt a compressed shop air coupling and a length neoprene hose onto the vent nipple.
3. Attach a 48 kPa (7 psi) regulated shop air source to the air coupling on the vent nipple.
4. Raise the vehicle on a suitable hoist.
5. Remove the PTU from the vehicle. Refer to **REMOVAL** .
6. Apply a soapy solution to the seals inside and around the differential output shaft.
7. Observe over several minutes to see if air bubbles form in the leak area.

Test Results

- If bubbles are emanating from the inner differential side gear seal, remove the differential unit and replace the inner seal.
- If bubbles are emanating from the outer output shaft seal, replace the seal.
- If bubbles are emanating from the transaxle housing casting, replace the porous component.

KNOB, GEARSHIFT

REMOVAL

REMOVAL

1. Pry PRND escutcheon upward and separate it from the shifter assembly.

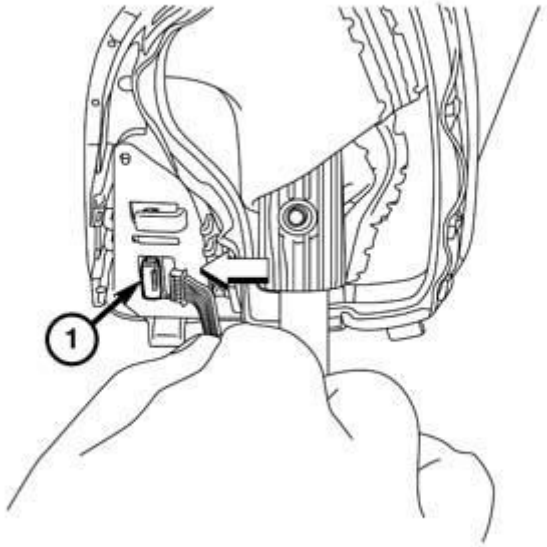

Fig. 541: Wire Connector At PRND Display
Courtesy of CHRYSLER GROUP, LLC

2. Disconnect the wire connector from the PRND display.
3. Pull shift boot upward to expose the shift knob set screw.

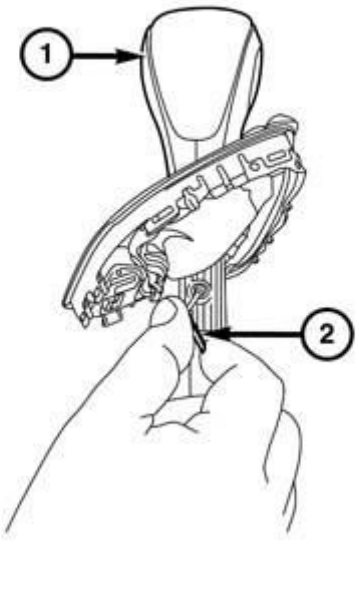

Fig. 542: Shift Knob & Set Screw At Shift Lever

Courtesy of CHRYSLER GROUP, LLC

4. Loosen the set screw holding the shift knob to the shift lever.
5. Depress and hold the lock button on the shift knob.

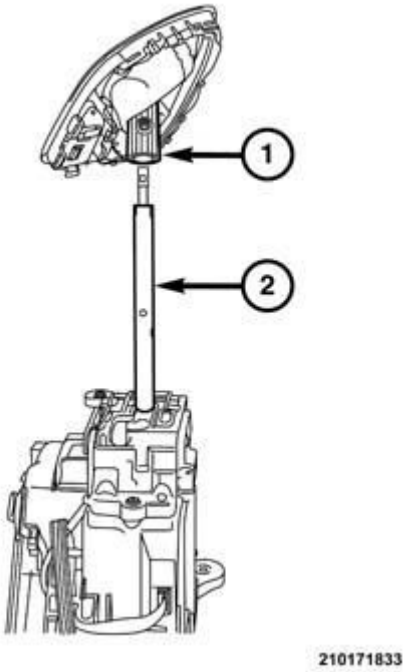

Fig. 543: Shift Knob And Shifter
Courtesy of CHRYSLER GROUP, LLC

6. Lift the shift knob upward and separate it from the shifter.

INSTALLATION

INSTALLATION

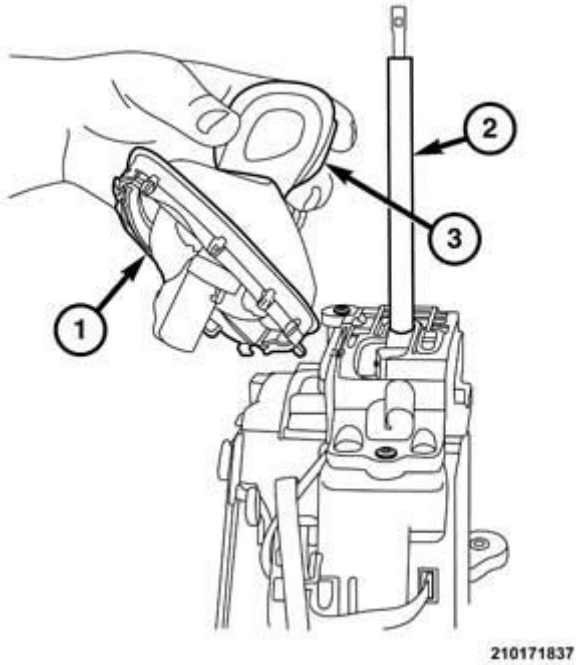

Fig. 544: Lock Button On The Shift Knob
Courtesy of CHRYSLER GROUP, LLC

1. Depress and hold the lock button (3) on the shift knob.

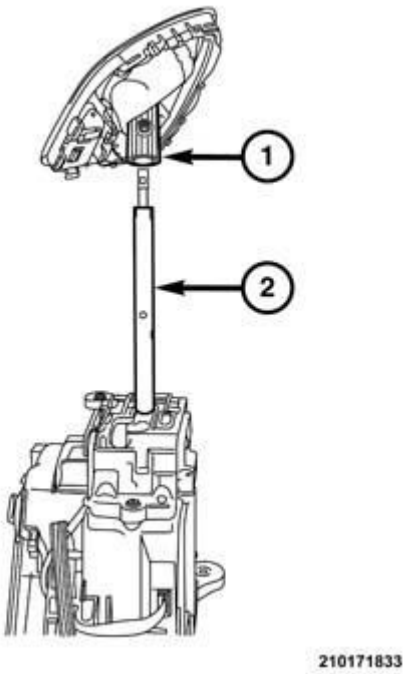

Fig. 545: Shift Knob And Shifter
Courtesy of CHRYSLER GROUP, LLC

2. With the lock button facing forward, guide the shift knob (1) downward and

onto the shifter (2) until it seats.

3. Release the lock button.

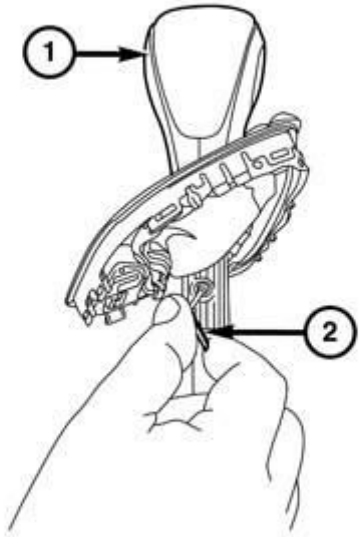

210171832

Fig. 546: Shift Knob & Set Screw At Shift Lever
Courtesy of CHRYSLER GROUP, LLC

4. Tighten the set screw to hold the shift knob to the shift lever.

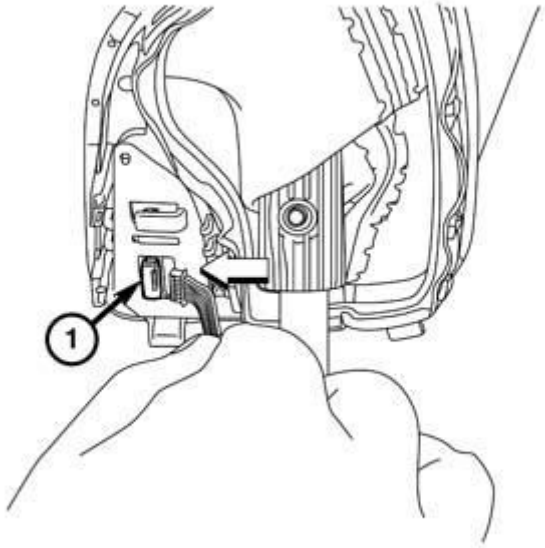

210171834

Fig. 547: Wire Connector At PRND Display

Courtesy of CHRYSLER GROUP, LLC

5. Connect the wire connector onto the PRND display.
6. Press PRND escutcheon downward until the clips engage the shifter assembly.

CABLE, SHIFT

REMOVAL

REMOVAL

1. Open hood and support it on the prop-rod.
2. Disconnect the battery negative cable.
3. Remove the center floor console from the vehicle. Refer to **CONSOLE, FLOOR, REMOVAL** .
4. Disconnect the shift cable from the shifter.

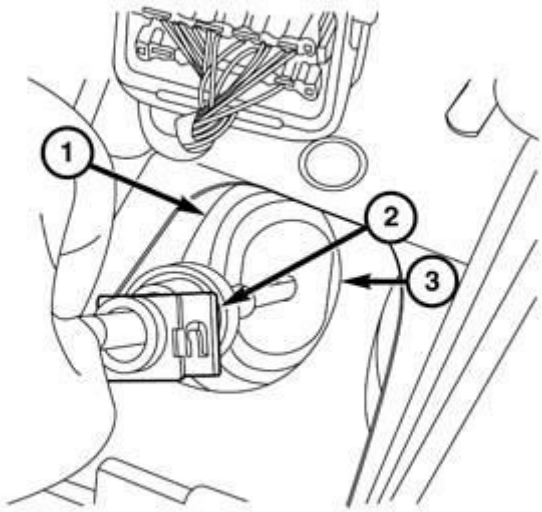

Fig. 548: Floor Grommet, Gear Shift Cable & Access Hole
Courtesy of CHRYSLER GROUP, LLC

5. Push gear shift cable (2) floor grommet (1) through the access hole (3) in the floor.
6. Remove air cleaner/engine cover. Refer to **2.0L BODY, AIR CLEANER,**

REMOVAL , **2.2L BODY, AIR CLEANER, REMOVAL** or **2.4L BODY, AIR CLEANER, REMOVAL** .

7. From under the battery tray, pry the shift cable end from the manual lever on the transaxle.

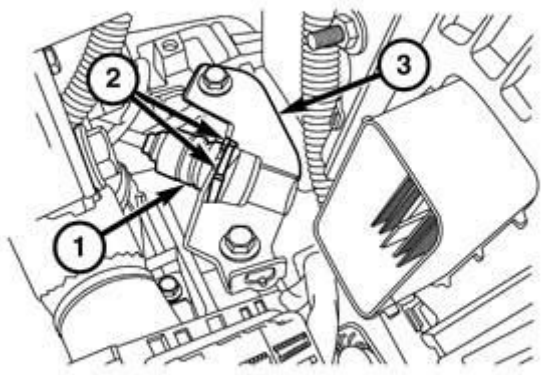

210171741

Fig. 549: Gear Shift Cable, Clips & Bracket
Courtesy of CHRYSLER GROUP, LLC

8. Release the clips (2) holding the gear shift cable (1) to the bracket (3) on the transaxle.
9. Lift vehicle on a suitable hoist. Refer to **HOISTING, STANDARD PROCEDURE** .
10. Remove the heat shield from above the steering rack to enable the cable removal.
11. Guide the shift cable rearward over the steering gear and toward passenger side of the vehicle.
12. Squeeze the cable housing lock hub through the widest point between the floor and the steering rack.
13. Separate the shift cable from the vehicle.

ADJUSTMENTS

GEAR SHIFT CABLE ADJUSTMENT

1. Remove the center floor console to gain access to the gear shift cable under the gear shift assembly. Refer to **CONSOLE, FLOOR, REMOVAL** .
2. Set the parking brake.
3. Place the Powertech transmission and the shifter lever into NEUTRAL. This can be done with the key in the "Run" position and viewing the PRND. (Engine should not be running.)

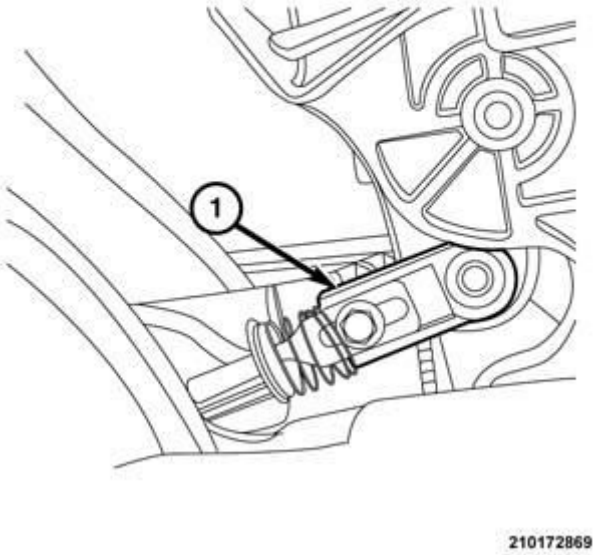

Fig. 550: Shift Cable Adjustment Screw
Courtesy of CHRYSLER GROUP, LLC

4. Loosen the cable adjustment screw, but don't remove it.
5. Push shift lever forward, without depressing the knob button, until it hits the gate stop to ensure shifter is in N position.
6. The cable will settle into its natural position which should be near the center of the adjustment slot.
7. Tighten the adjusting screw to 8 +/-1 N.m (70 in. lb.).
8. Verify the shift lever can place the transaxle into PARK and the other gears.
9. Install the floor console. Refer to **CONSOLE, FLOOR, INSTALLATION** .

INSTALLATION

INSTALLATION

1. Insert the shift cable end upward into hole through the floor pan.
2. With the shift cable coiled above the passenger side heat shield, squeeze the cable housing lock hub through the widest point between the floor and the steering rack.
3. Guide the shift cable forward over the steering gear and toward the transaxle.
4. Install the heat shield above the steering rack.
5. Lower vehicle to the floor.

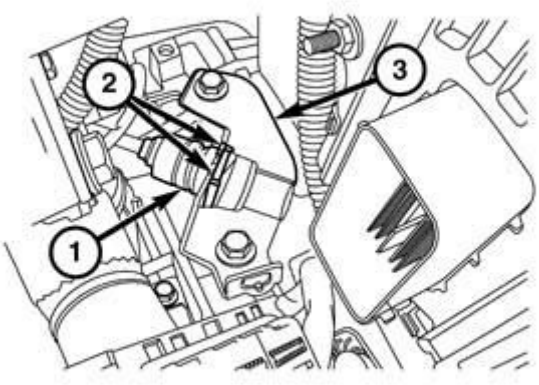

210171741

Fig. 551: Gear Shift Cable, Clips & Bracket
Courtesy of CHRYSLER GROUP, LLC

6. Engage the clips (2) to hold the gear shift cable (1) to the bracket (3) on the transaxle.
7. Under the battery tray, snap the shift cable end onto the manual lever on the transaxle.
8. Install the air cleaner/engine cover. Refer to **2.0L BODY, AIR CLEANER, INSTALLATION** , **2.2L BODY, AIR CLEANER, INSTALLATION** or **2.4L BODY, AIR CLEANER, INSTALLATION** .

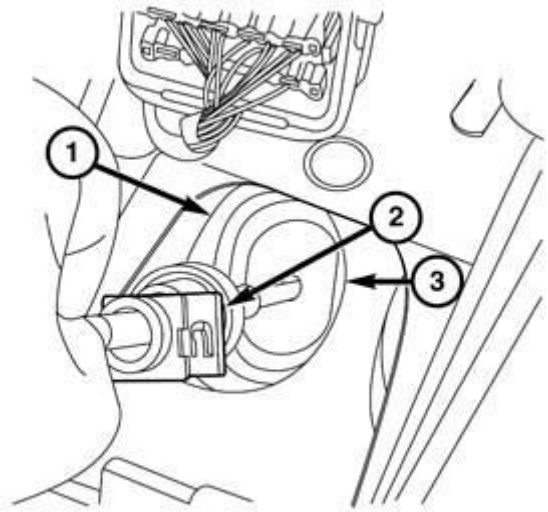

Fig. 552: Floor Grommet, Gear Shift Cable & Access Hole
Courtesy of CHRYSLER GROUP, LLC

9. Engage the gear shift cable (2) floor grommet (1) into the access hole (3) in the floor.
10. Connect the shift cable onto the shifter.
11. Install the center floor console onto the vehicle. Refer to **CONSOLE, FLOOR, INSTALLATION** .
12. Connect the battery negative cable.
13. Close the hood.

SEAL, DIFFERENTIAL

REMOVAL

FWD

1. Remove the halfshaft from the vehicle. Refer to **REMOVAL** .

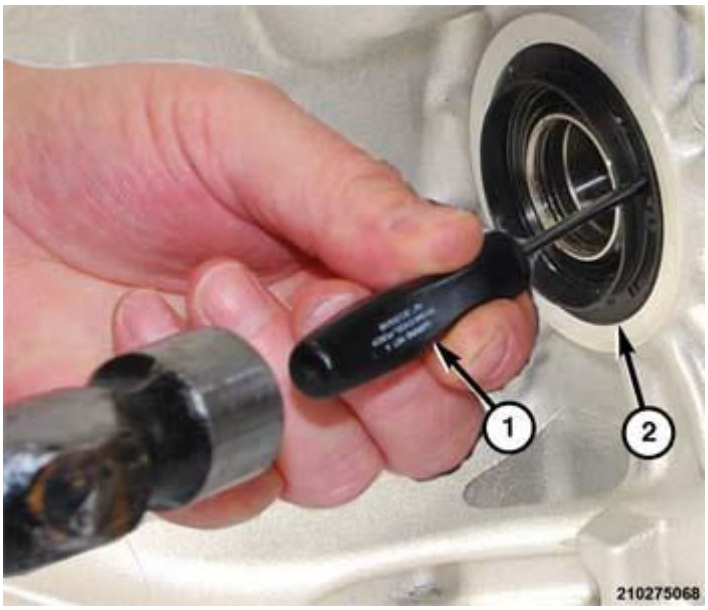

Fig. 553: Punching Hole In Differential Seal
Courtesy of CHRYSLER GROUP, LLC

NOTE: Keep the punch tool in the center of the seal to avoid damage to the transaxle housing.

2. Using a suitable slide awl tool and hammer, punch a hole in the metal armature inside the seal.

Fig. 554: Slide Hammer & Differential Seal
Courtesy of CHRYSLER GROUP, LLC

3. Use a suitable Slide Hammer Dent Puller, to remove the seal.

4. Thread the sheet metal screw of the dent puller into the punched hole in the seal.
5. Tap outward on the slide hammer until the seal comes out of the seal bore.

REMOVAL

1. Remove PTU unit from the vehicle. Refer to **REMOVAL** .

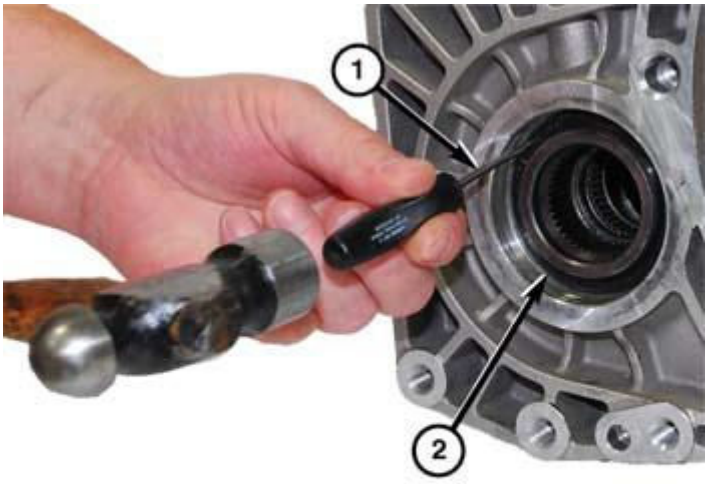

Fig. 555: Punching Hole In Differential Seal
Courtesy of CHRYSLER GROUP, LLC

NOTE: Keep the punch tool in the center of the seal to avoid damage to the transaxle housing.

2. Using a suitable slide awl tool and hammer, punch a hole in the metal armature inside the seal.

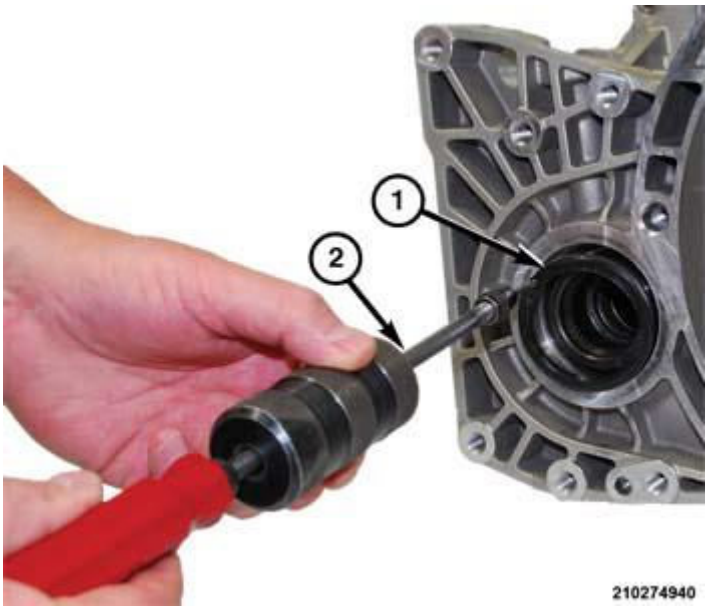

Fig. 556: Slide Hammer & Differential Seal
Courtesy of CHRYSLER GROUP, LLC

3. Use a suitable Slide Hammer Dent Puller, to remove the seal.
4. Thread the sheet metal screw of the dent puller into the punched hole in the seal.
5. Tap outward on the slide hammer until the seal comes out of the seal bore.

INSTALLATION

INSTALLATION

Verify that the seal bore is smooth and undamaged. Use a clean shop towel to wipe residue from the sealing surfaces.

1. Apply transmission assembly lube on the seal lip and inside the tension spring cavity on the inside of the seal.

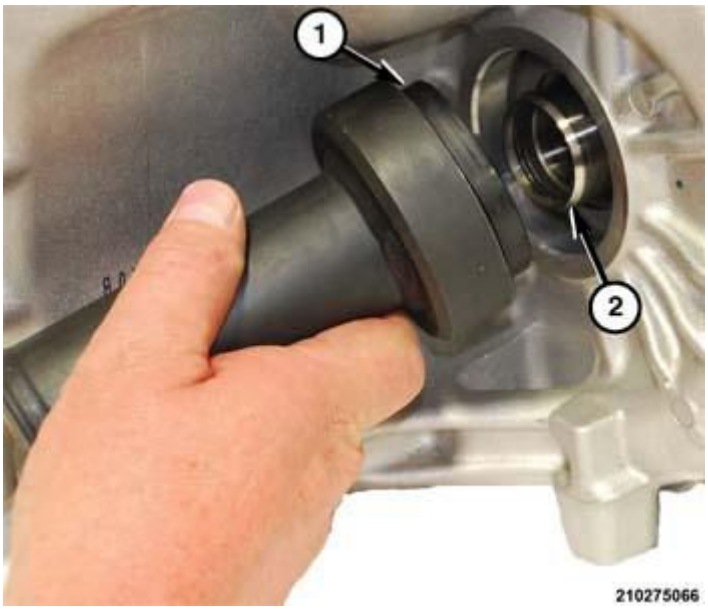

Fig. 557: Special Tool #10117 & Differential Seal
Courtesy of CHRYSLER GROUP, LLC

2. Attach the new seal onto the installer (1) (special tool #10117, Installer, Seal).
3. Insert the installer and seal (1) into the output shaft seal bore on the transaxle.

Fig. 558: Installing Differential Seal
Courtesy of CHRYSLER GROUP, LLC

4. Using a suitable hammer, drive the seal (1) into the seal bore until the installer seats on the transaxle housing.

5. Install the halfshaft. Refer to **INSTALLATION** .
6. Road test vehicle to verify the repair.

INSTALLATION

Clean the seal bore with suitable shop towel. Inspect the seal bore for scratches or other defects that may cause fluid leaks. If all sealing surfaces are smooth and defect free, install a NEW seal.

1. Apply transmission assembly lube on the seal lip and inside the tension spring cavity on the inside of the seal.
2. Insert the NEW seal into the into the bore in the transaxle housing around the output shaft.

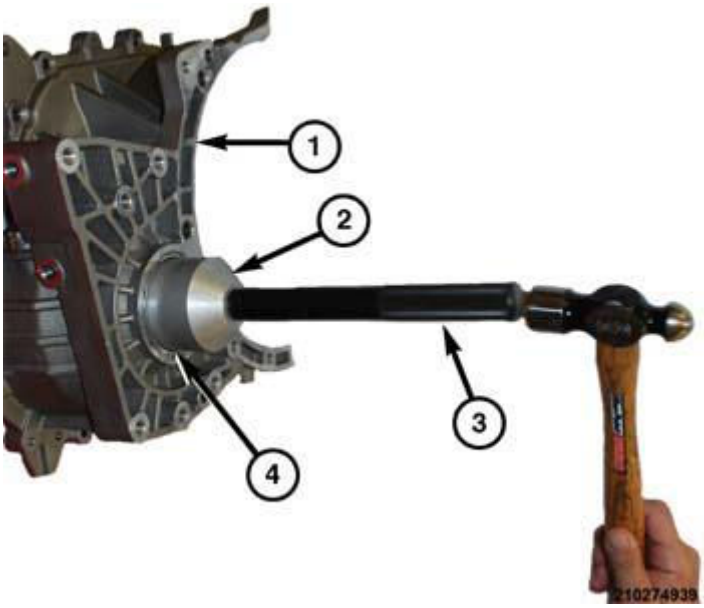

Fig. 559: Installing Differential Seal
Courtesy of CHRYSLER GROUP, LLC

3. Using tool (special tool #C-3972-A, Installer, Seal) and (special tool #C-4171, Driver Handle, Universal) drive the seal in the bore until it is fully seated.
4. Install the PTU unit.
5. Verify that the transaxle and PTU is properly filled with specified fluid.
6. Road test vehicle to verify the repair.

VALVE BODY

DESCRIPTION

DESCRIPTION AND INSPECTION

The valve body is the device that controls the hydraulic power flow to the clutches and brakes within the 6F24 Automatic Transaxle. The valve body is equipped with on-off and variable force solenoids the are electrically controlled by the PCM. If the transaxle passes an air pressure test and is relatively clean, the transaxle should be OK and the valve body is most likely at fault. All of the valve body internal components must be a able to travel freely within there bores and cylinders. Any dirt or debris within the valve body can cause a valve or piston to bind and fail to function. The valve body valves are somewhat self cleaning. The leading edges of the valve chambers are ground sharply to cut through soft debris and allows the valve to function. The strainers and screen in the valve body are designed to filter out dirt and debris as the fluid circulates through the hydraulic passages. If a valve or piston is deeply scratched and can be felt with a fingernail the valve body or transaxle must be replaced depending on parts availability.

REMOVAL

REMOVAL

1. Remove the engine cover/air cleaner from the vehicle. Refer to **2.0L AIR CLEANER, REMOVAL** , **2.2L AIR CLEANER, REMOVAL** or **AIR CLEANER, REMOVAL** .
2. Drain the fluid from the transaxle. Refer to **FLUID, STANDARD PROCEDURES**.

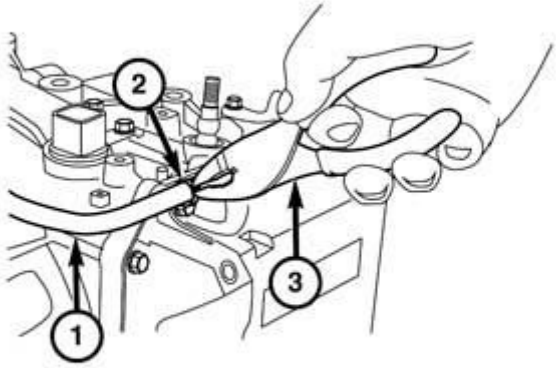

210270174

Fig. 560: Vent Hose, Spring Clamp & Pliers
Courtesy of CHRYSLER GROUP, LLC

3. Using common pliers (3), compress the hose spring clamp (2) and slide it down the vent hose (1) away from the nipple adaptor.

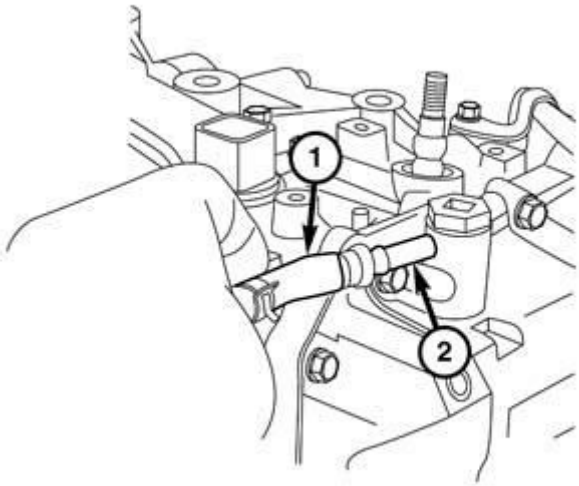

210270175

Fig. 561: Vent Hose End & Nipple Adaptor
Courtesy of CHRYSLER GROUP, LLC

4. Pull the vent hose end (1) off of the nipple adaptor (2).
5. Position suitable drain pan under the valve body cover to catch fluid that may spill as the cover is removed.

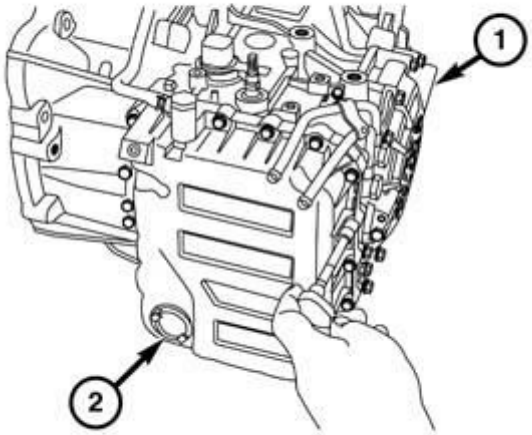

210270166

Fig. 562: Transaxle & Valve Body Cover
Courtesy of CHRYSLER GROUP, LLC

6. Remove bolts holding the valve body cover (2) to the transaxle (1).

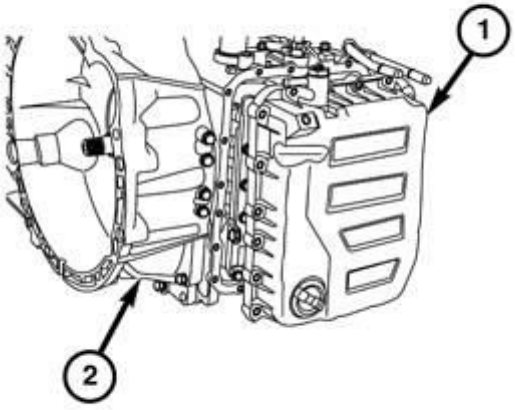

210270167

Fig. 563: Valve Body Cover Separated From Transaxle
Courtesy of CHRYSLER GROUP, LLC

7. Separate the valve body cover (1) from the transaxle (2).

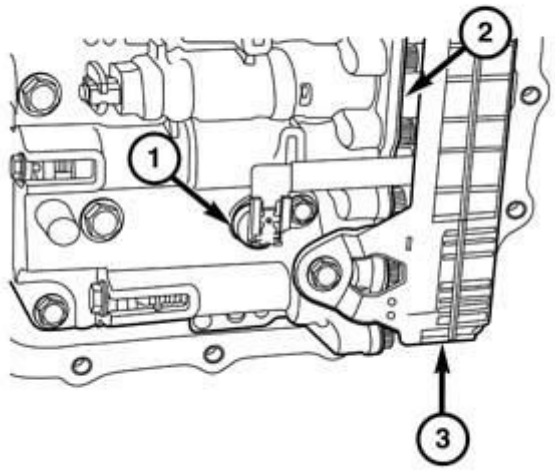

210270169

Fig. 564: Fluid Temperature Sensor & Valve Body
Courtesy of CHRYSLER GROUP, LLC

8. Remove bolt holding fluid temperature sensor (1) to the valve body (2).
9. Pull temperature sensor (1) straight out of the port in the valve body (2).

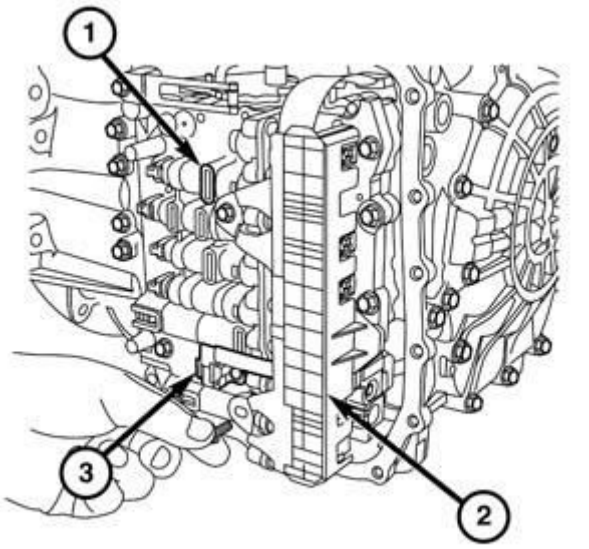

210270176

Fig. 565: Valve Body & Solenoid Valve Connector
Courtesy of CHRYSLER GROUP, LLC

10. Remove bolts holding the solenoid valve connector (2) to the valve body (1).

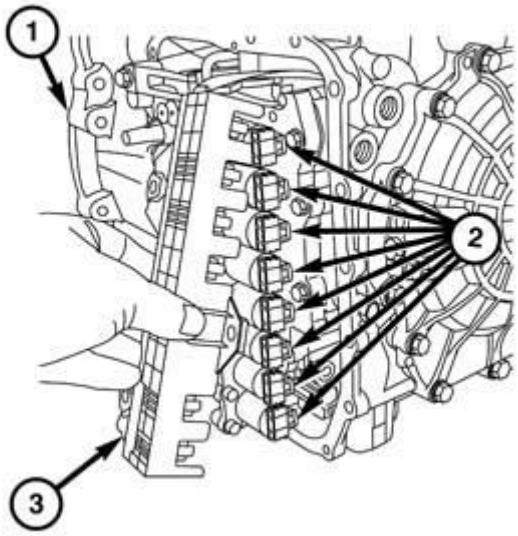

210270177

Fig. 566: Solenoids & Connector
Courtesy of CHRYSLER GROUP, LLC

11. Starting at the bottom solenoid valve, using a suitable prying tool, pry outward at each solenoid (2) until the connector (3) is disengaged.

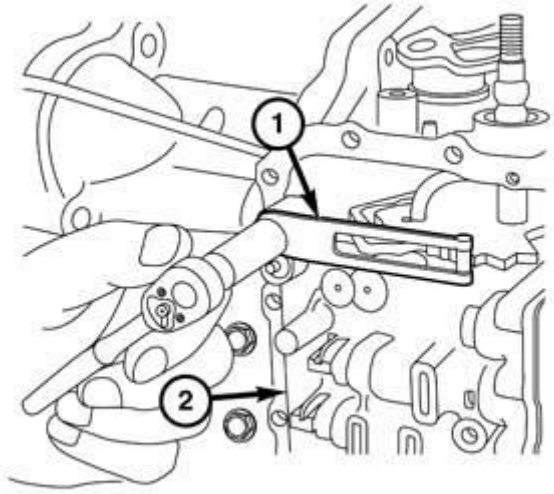

210270170

Fig. 567: Manual Shaft Detent Spring & Valve Body
Courtesy of CHRYSLER GROUP, LLC

12. Remove the screw holding the manual shaft detent spring (1) to the valve body (2).

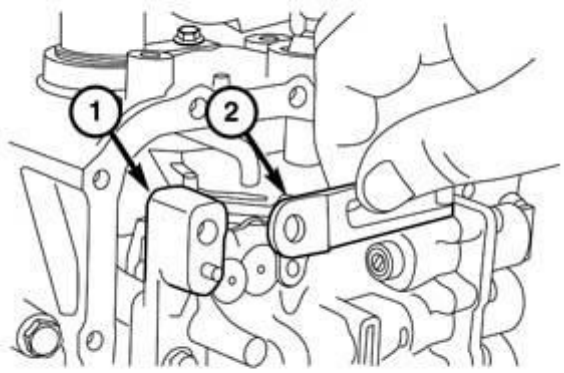

210270179

Fig. 568: Detent Spring Separated From Valve Body
Courtesy of CHRYSLER GROUP, LLC

13. Separate the detent spring (2) from the valve body (1).

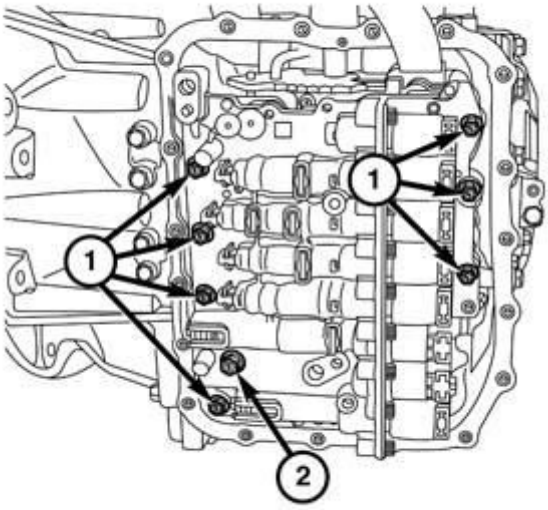

Fig. 569: Valve Body Bolts
Courtesy of CHRYSLER GROUP, LLC

14. Remove bolts, 7 short (1) and 1 long (2) bolts, holding the valve body to the transaxle.

The manual valve is loose after the valve body is removed and may fall out during removal.

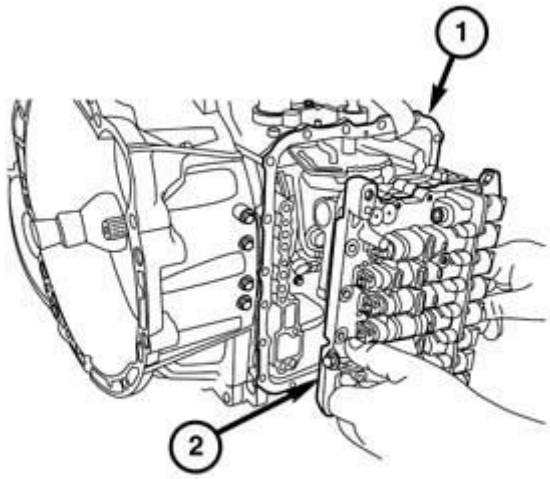

210270196

Fig. 570: Valve Body & Transaxle
Courtesy of CHRYSLER GROUP, LLC

15. Separate the valve body (2) from the transaxle (1).

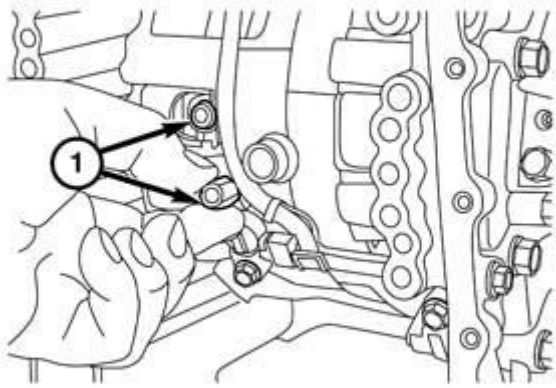

210270383

Fig. 571: Transfer Port Seals
Courtesy of CHRYSLER GROUP, LLC

16. Remove the two seals from the transfer ports in transaxle housing.

DISASSEMBLY

DISASSEMBLY

Prepare a work area that is clean and large enough to organize the valve body components as they are cleaned and inspected and set aside to be installed during the assembly of the valve body. Arrange the valve components and solenoids in the order and direction that they will be installed to assure proper function when the job is completed.

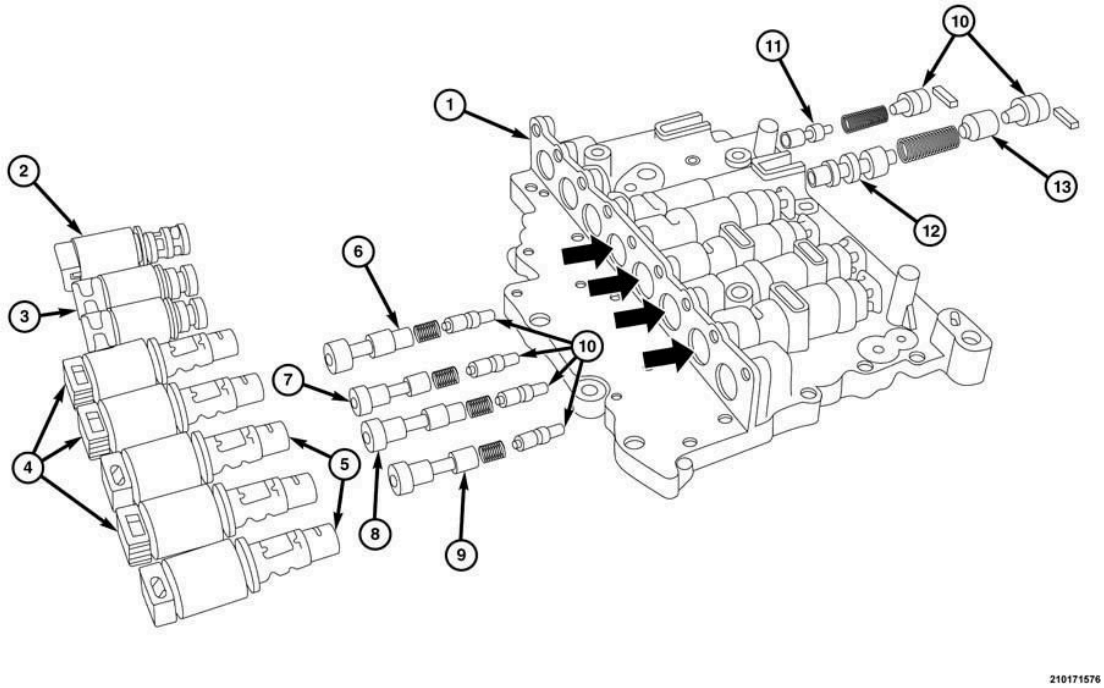

Fig. 572: Valve Body Solenoids
Courtesy of CHRYSLER GROUP, LLC

1= Outer Valve Body 2= VFS Solenoid Valve NH 3= On-Off Solenoid Valve 4= VFS Solenoid Valve NH 5= VFS Solenoid Valve NL 6= Over Drive Pressure Control Valve 7= Under Drive Pressure Control Valve 8= 2-6 Brake Pressure Control Valve 9= 3-5-R Pressure Control Valve 10= Adjust Screws

11= Reducing Valve
12= Regulator Valve
13= Regulator Sleeve

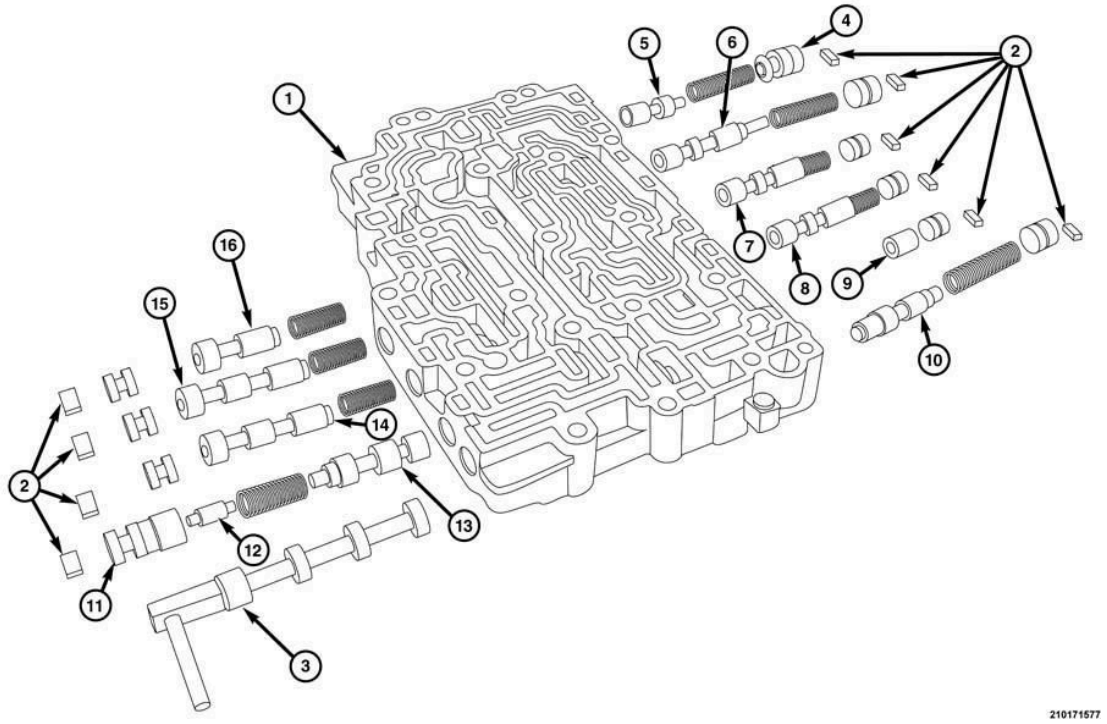

Fig. 573: Valve Body & Valves
Courtesy of CHRYSLER GROUP, LLC

1= Middle Valve Body
2= Stopper Plates
3= Manual Valve
4= Adjust Screw
5= Reducing Valve -2
6= Torque Converter Control Valve
7= Overdrive and Low-reverse Switch Valve
8= Over Drive Pressure Switch Valve
9= 3-5-R and 2-6 Brake Check Valve
10= Low-reverse Switch Valve
11= Torque Converter Pressure Control Sleeve
12= Torque Converter Control Plug
13= Torque Converter Pressure Control Valve
14= 3-5-R pressure Switch Valve

15= 2-6 Brake Pressure Switch Valve
16= Under Drive Pressure Switch Valve

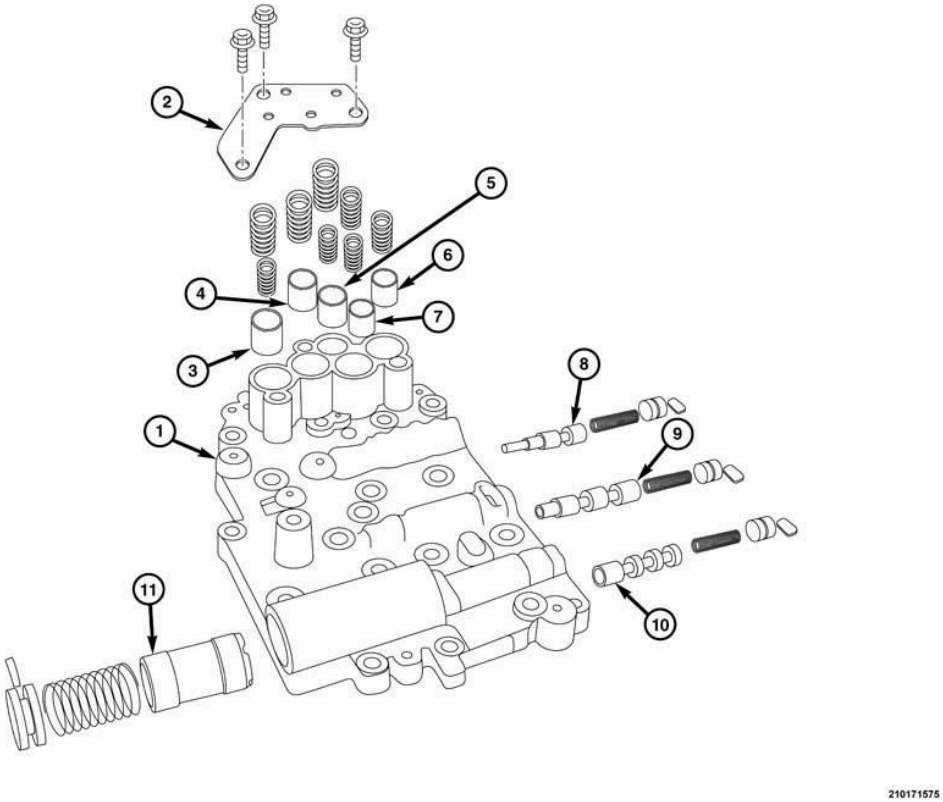

Fig. 574: Inner Valve Body & Accumulator
Courtesy of CHRYSLER GROUP, LLC

1= Inner Valve Body
2= Accumulator Plate
3= Accumulator 2
4= Accumulator 1
5= Damping Valve (Red 2)
6= Accumulator 3
7= Accumulator 4
8= OD Fail Safe Valve
9= 3-5-R Switch Valve
10= Lock-up Switch Valve
11= Accumulator Piston

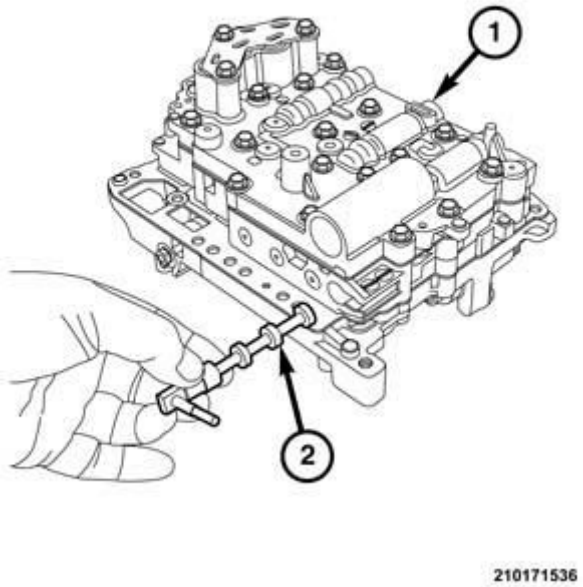

Fig. 575: Middle Valve Body & Manual Valve
Courtesy of CHRYSLER GROUP, LLC

1. Remove the manual valve (2) from the middle valve body.

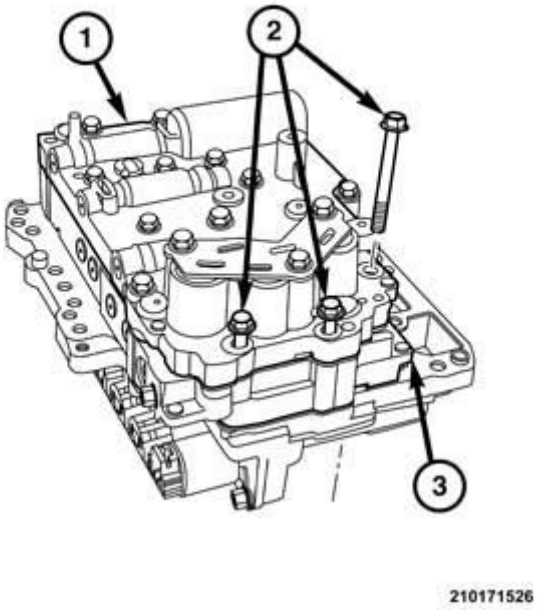

Fig. 576: Valve Body Sections & Bolts
Courtesy of CHRYSLER GROUP, LLC

2. Remove three long bolts (2) holding the outer (1) and middle (3) valve body

sections to the inner valve body from next to the accumulators.

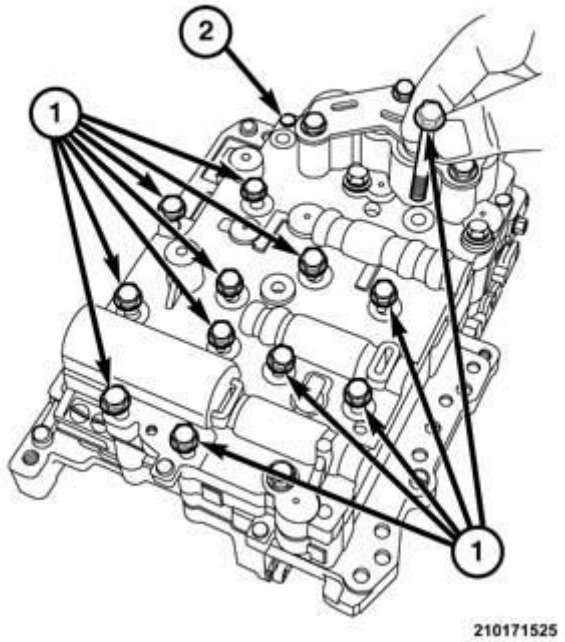

Fig. 577: Valve Body Sections & Bolts
Courtesy of CHRYSLER GROUP, LLC

3. Remove twelve bolts (1) holding the outer (2) and middle valve body sections to the inner valve body.

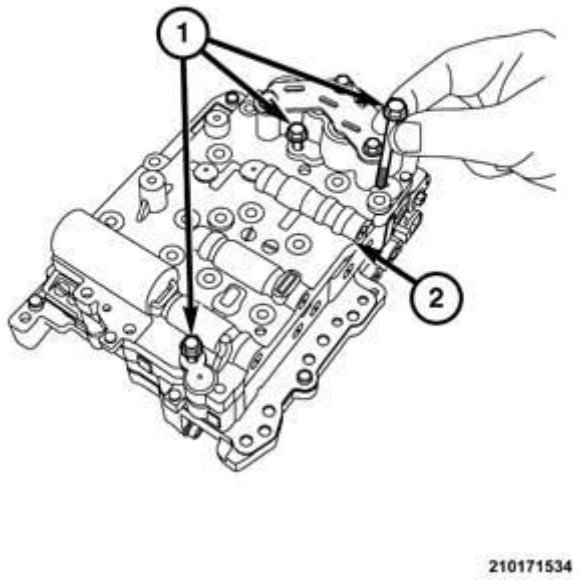

Fig. 578: Valve Body Sections & "black" Bolts

Courtesy of CHRYSLER GROUP, LLC

4. Remove three "black" bolts (1) holding the outer (2) and middle valve body sections to the inner valve body.

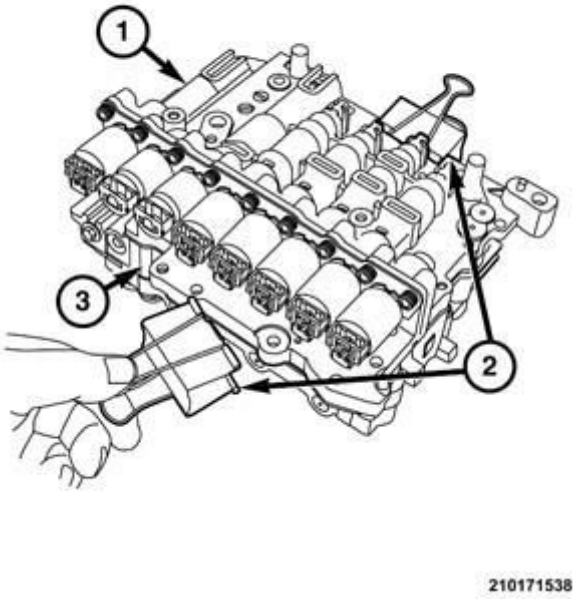

Fig. 579: Valve Body & Clamps
Courtesy of CHRYSLER GROUP, LLC

NOTE: There are check valves and damping valves that can fall out when the inner valve body is separated from the separator plate.

5. Optionally, suitable clamps (2) can be installed to keep the inner valve body and the separator plate from parting prematurely during the next set.

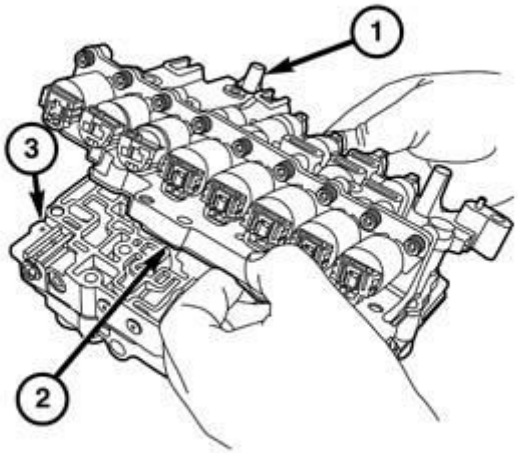

210171528

Fig. 580: Separator Plate, Outer & Middle Valve Body
Courtesy of CHRYSLER GROUP, LLC

6. If clamping option is not used, pinch the separator plate (2) to the outer valve body (1) and lift them away from the middle valve body (3).
7. Turn the outer valve body over and set it on a flat work surface.

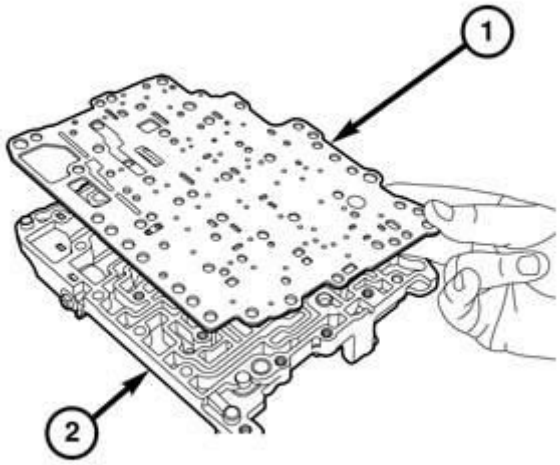

210171535

Fig. 581: Separator Plate & Outer Valve Body
Courtesy of CHRYSLER GROUP, LLC

8. Separate the separator plate (1) from the outer valve body (2).

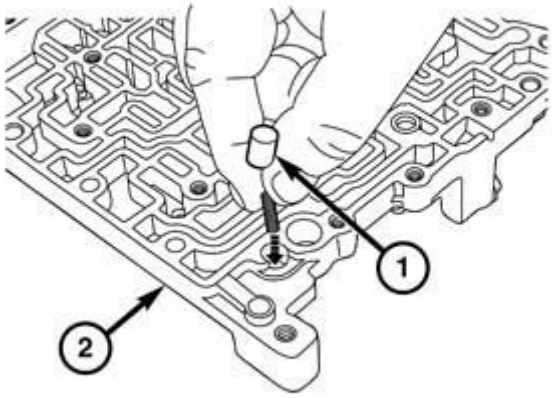

210171523

Fig. 582: Outer Valve Body, Damping Valve & Spring
Courtesy of CHRYSLER GROUP, LLC

9. Remove the damping valve and spring (1) from the outer valve body (2).

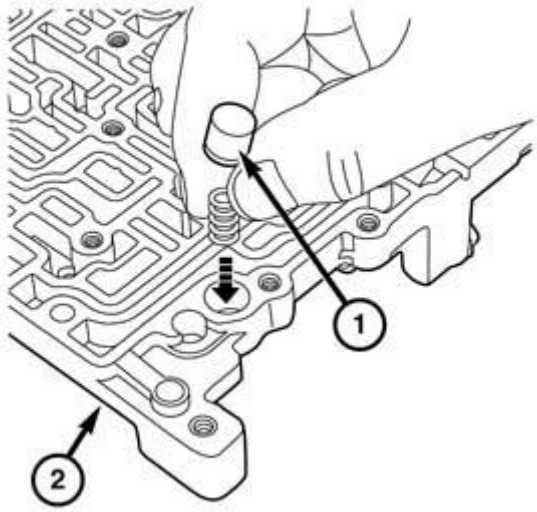

210171522

Fig. 583: Outer Valve Body, Check Valve & Spring
Courtesy of CHRYSLER GROUP, LLC

10. Remove the check valve (1) and spring from the outer valve body (2).

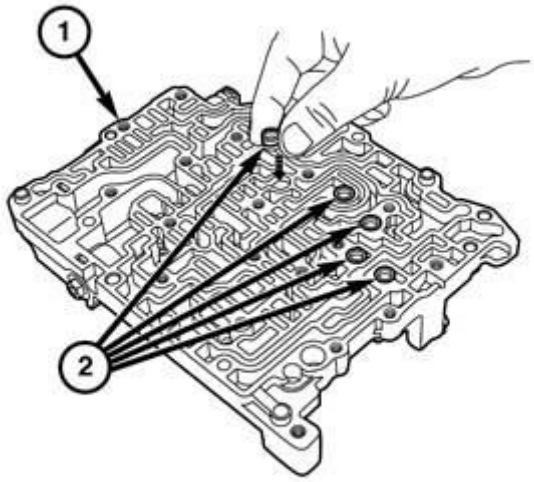

210171527

Fig. 584: Outer Valve Body & Five Strainers
Courtesy of CHRYSLER GROUP, LLC

11. Remove five strainers (2) from the outer valve body (1).
12. Turn the outer valve body over on the work surface.

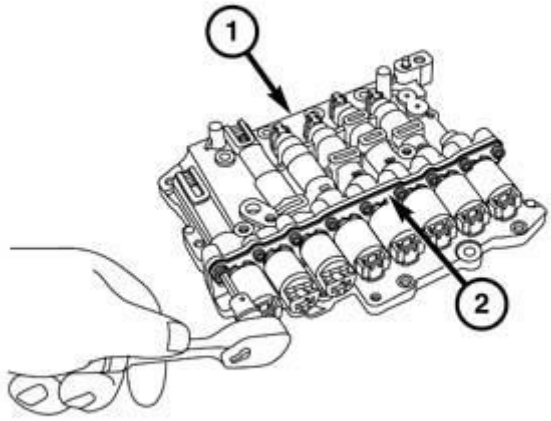

210171524

Fig. 585: Outer Valve Body & Solenoid Retainer

Courtesy of CHRYSLER GROUP, LLC

13. Remove screws holding the solenoid retainer (2) to the outer valve body (1).

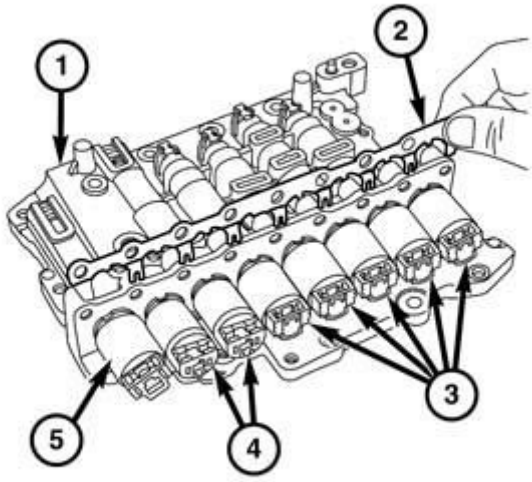

210171587

Fig. 586: Solenoid Retainer Separated From Outer Valve Body
Courtesy of CHRYSLER GROUP, LLC

14. Separate the solenoid retainer (2) from the outer valve body (1).

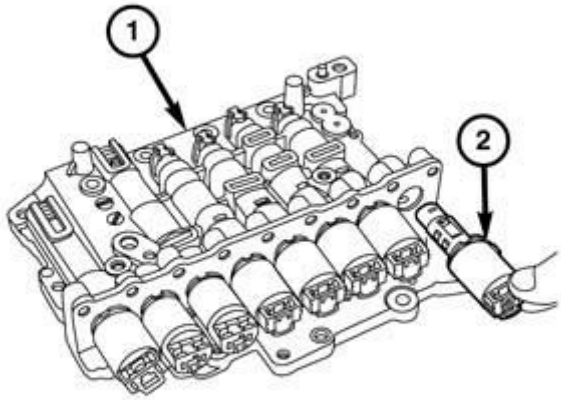

210171592

Fig. 587: Outer Valve Body & Solenoids
Courtesy of CHRYSLER GROUP, LLC

15. Pull the solenoids (2) from the outer valve body (1). The solenoids must be installed in the same locations that they are removed.

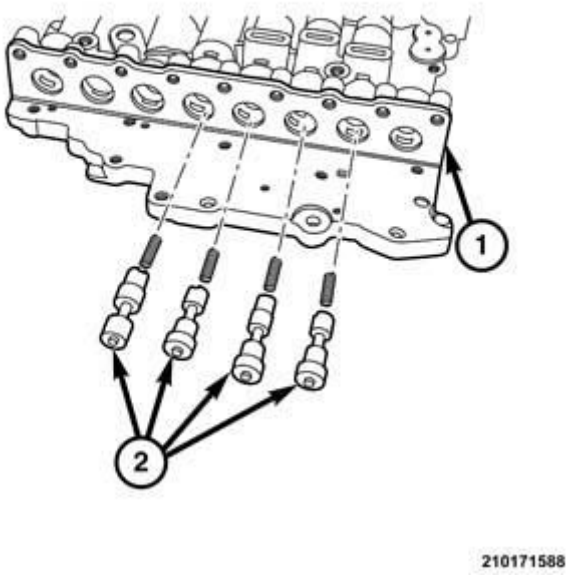

Fig. 588: Outer Valve Body, Pressure Control Valves & Springs
Courtesy of CHRYSLER GROUP, LLC

16. Remove the pressure control valves (2) and springs from the outer valve body (1).

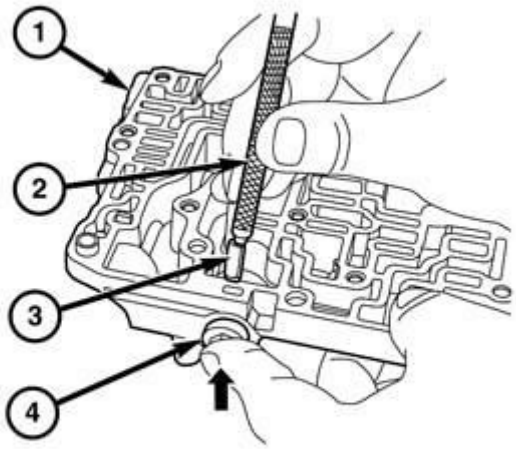

210171591

Fig. 589: Outer Valve Body, Stopper Plate & Regulator Valve Adjuster
Courtesy of CHRYSLER GROUP, LLC

17. Using a suitable magnet (2), remove the stopper plate (3) holding the regulator valve adjuster (4) into the outer valve body (1).

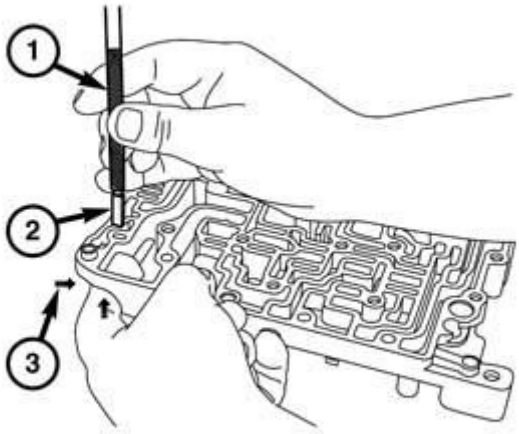

210171589

Fig. 590: Outer Valve Body, Stopper Plate & Reducing Valve Adjuster
Courtesy of CHRYSLER GROUP, LLC

18. Using a suitable magnet (1), remove the stopper plate (2) holding the reducing valve adjuster (3) into the outer valve body.

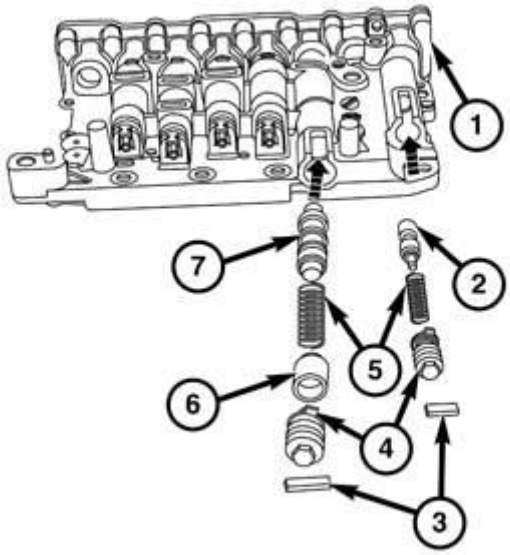

210171590

Fig. 591: Outer Valve Body, Regulator, Regulator Sleeve, Reducing Valve & Springs
Courtesy of CHRYSLER GROUP, LLC

19. Remove the regulator (7), regulator sleeve (6) and reducing valve (2) and springs (5) from the outer valve body (1).

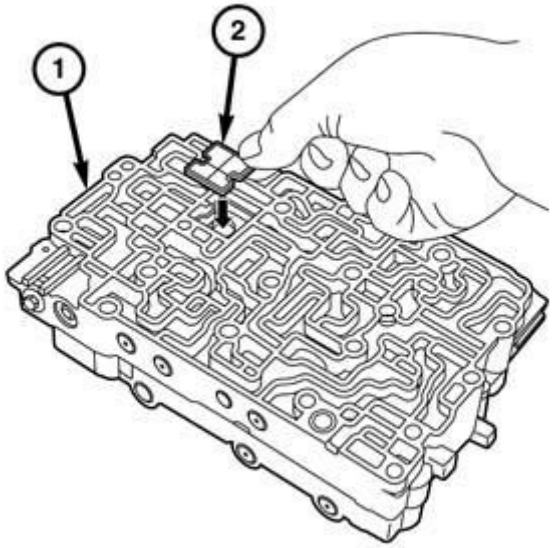

210171530

Fig. 592: Middle Valve Body & Fluid Strainer
Courtesy of CHRYSLER GROUP, LLC

20. Remove the fluid strainer (2) from the middle valve body (1).

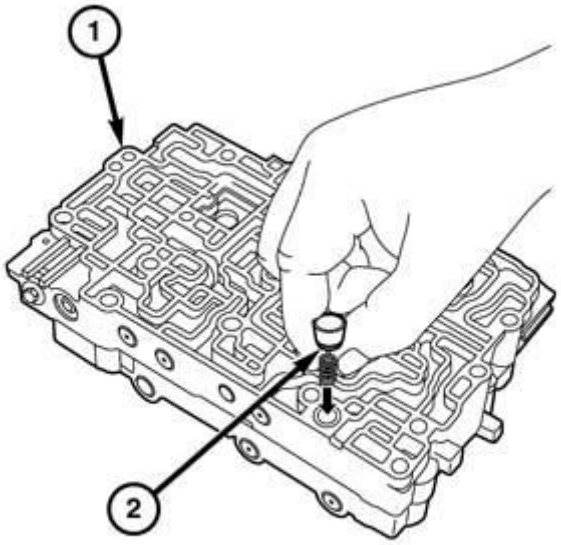

210171529

Fig. 593: Middle Valve Body & Damping Valve
Courtesy of CHRYSLER GROUP, LLC

21. Remove the damping valve (2) and coil spring from the middle valve body

(1).

NOTE: There a two check valves on the backside of the middle valve body that will fall out if the middle valve body is lifted away from the outer valve body.

22. While holding the middle valve body to the inner valve body, turn the two sections over so the middle valve body is on the work surface.
23. Separate the outer valve away from the middle valve body the gain access to the check valves and stopper plates.

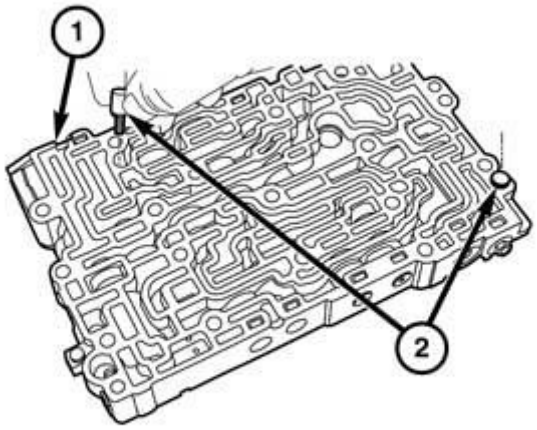

Fig. 594: Middle Valve Body, Check Valves & Springs
Courtesy of CHRYSLER GROUP, LLC

24. Remove the check valves and springs (2) from the middle valve body (1).

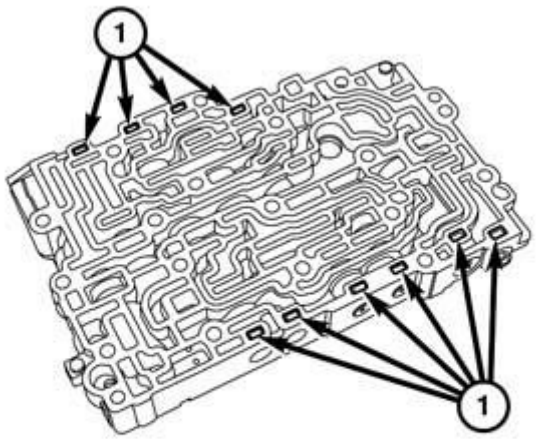

210171584

Fig. 595: Middle Valve Body, Stopper Plates, Valve Plugs & Adjusters
Courtesy of CHRYSLER GROUP, LLC

25. One valve at a time, remove the stopper plates (1) holding the valve plugs and adjusters into the middle valve body.

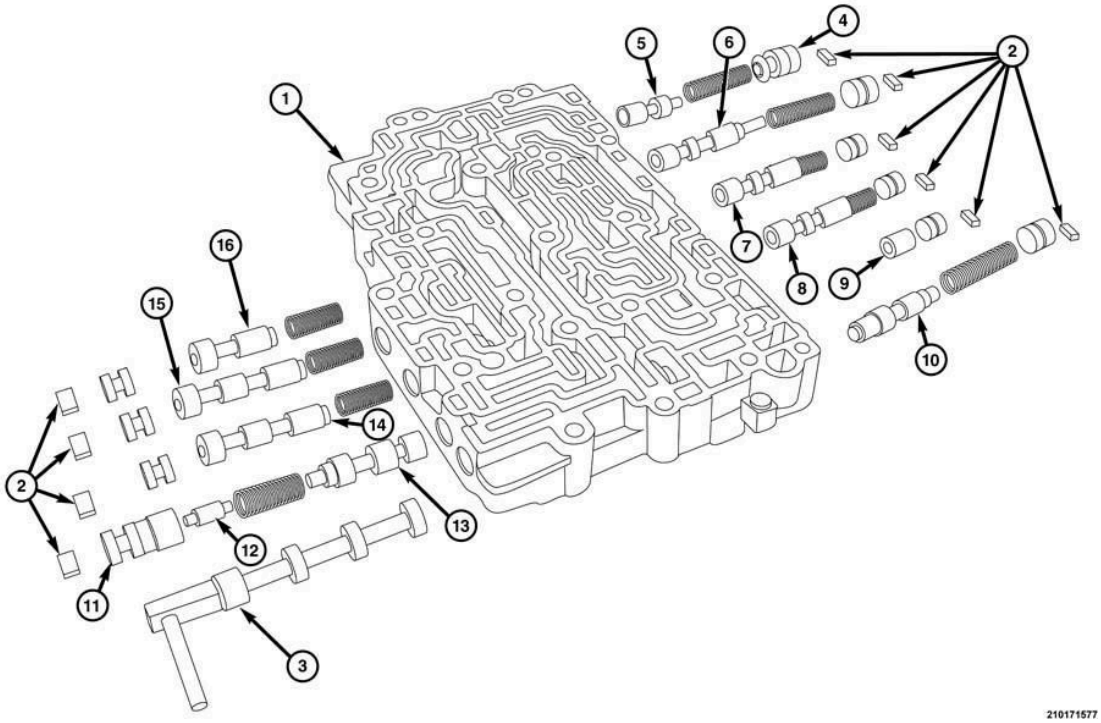

210171577

Fig. 596: Valve Body & Valves
Courtesy of CHRYSLER GROUP, LLC

1= Middle Valve Body 2= Stopper Plates 3= Manual Valve 4= Adjust Screw 5= Reducing Valve -2 6= Torque Converter Control Valve 7= Overdrive and Low-reverse Switch Valve 8= Over Drive Pressure Switch Valve 9= 3-5-R and 2-6 Brake Check Valve 10= Low-reverse Switch Valve 11= Torque Converter Pressure Control Sleeve 12= Torque Converter Control Plug 13= Torque Converter Pressure Control Valve 14= 3-5-R pressure Switch Valve 15= 2-6 Brake Pressure Switch Valve 16= Under Drive Pressure Switch Valve

26. Remove valve assemblies, one at a time, and place them on a clean surface oriented, and in order of, the way they were removed.

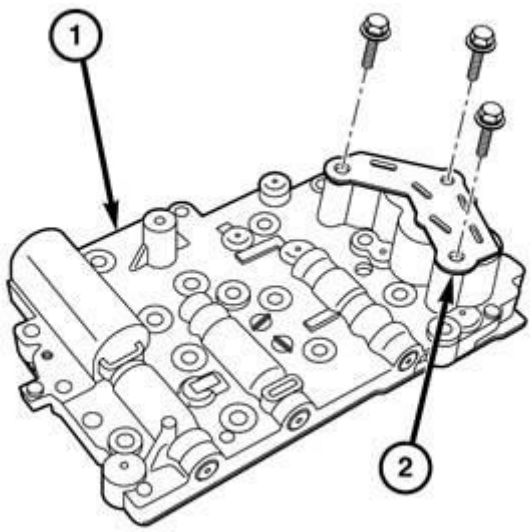

210171580

Fig. 597: Inner Valve Body, Accumulator Plate & Bolts
Courtesy of CHRYSLER GROUP, LLC

27. Remove bolts holding accumulator plate (2) to the inner valve body (1).

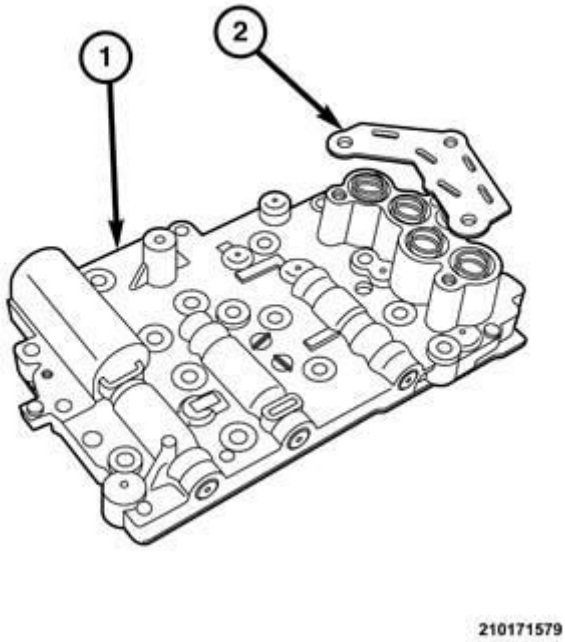

Fig. 598: Inner Valve Body & Accumulator Plate
Courtesy of CHRYSLER GROUP, LLC

28. Separate the accumulator plate (2) from the inner valve body (1).

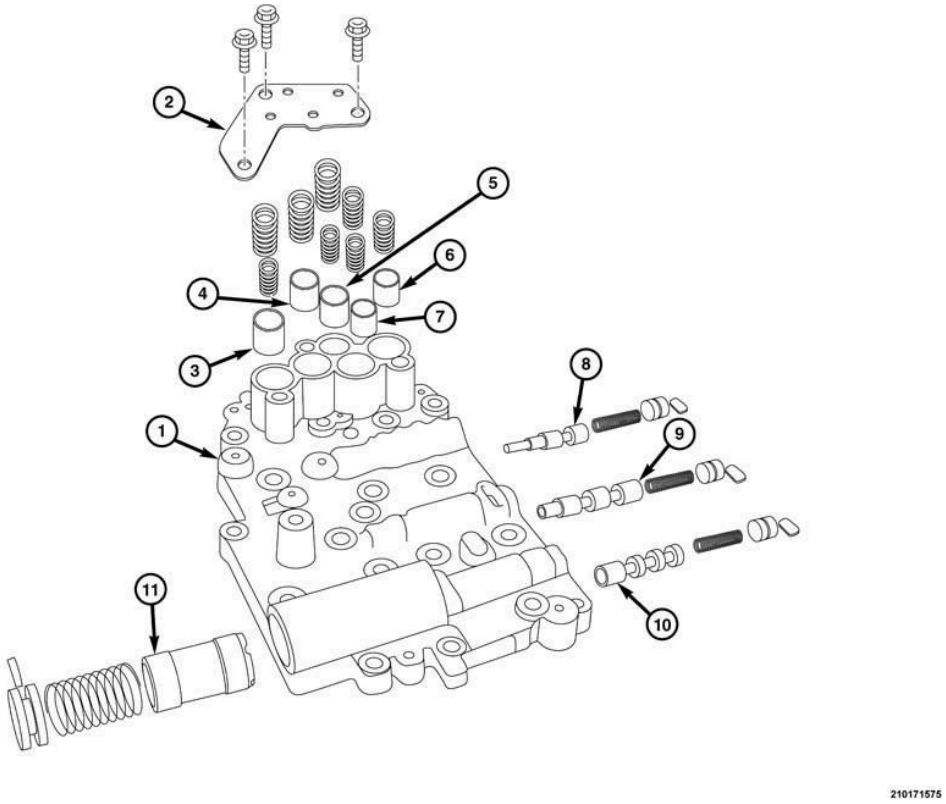

Fig. 599: Inner Valve Body & Accumulator
Courtesy of CHRYSLER GROUP, LLC

1= Inner Valve Body
2= Accumulator Plate
3= Accumulator 2 (Green and Yellow Springs)
4= Accumulator 1 (Pink Spring)
5= Damping Valve (White and White springs)
6= Accumulator 3 (Pink Spring)
7= Accumulator 4 (Yellow and Yellow Spring)
8= OD Fail Safe Valve
9= 3-5-R Switch Valve
10= Lock-up Switch Valve
11= Accumulator Piston

29. Remove accumulators and valves and place them on a clean surface oriented, and in order of, the way they were removed.

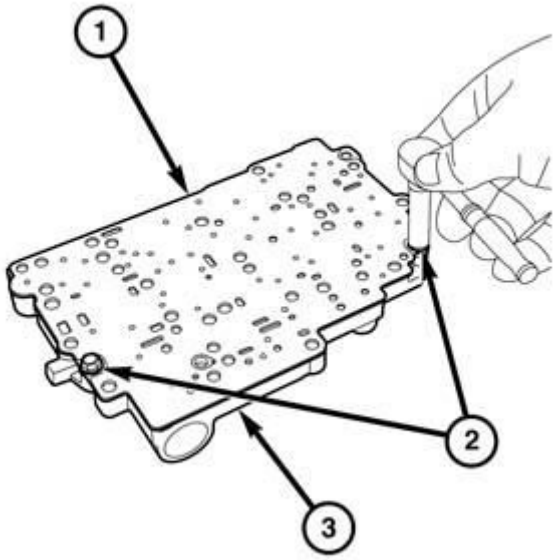

210171582

Fig. 600: Inner Valve Body, Separator Plate & Bolts
Courtesy of CHRYSLER GROUP, LLC

30. Remove bolts (2) holding the separator plate (1) to the inner valve body (3).

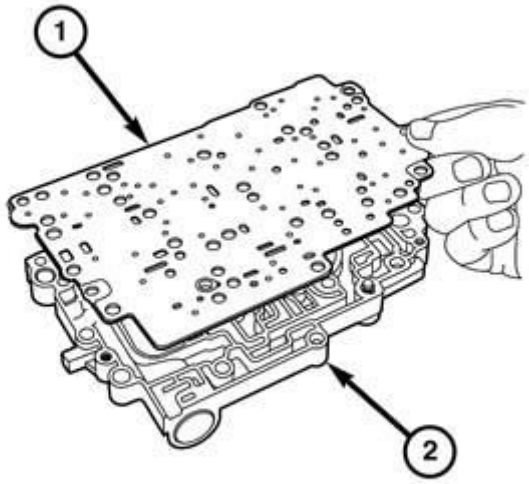

210171581

Fig. 601: Inner Valve Body & Separator Plate
Courtesy of CHRYSLER GROUP, LLC

31. Separate the separator plate (1) from the inner valve body (2).

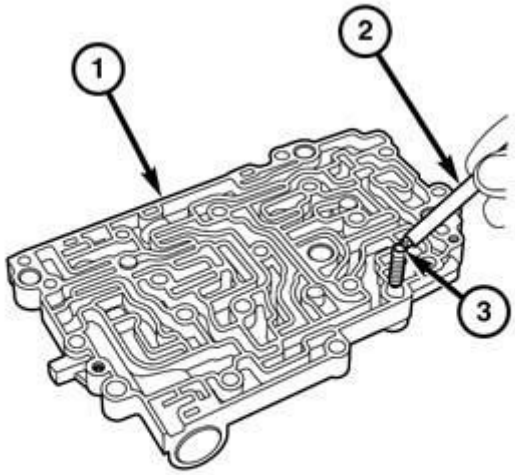

210171583

Fig. 602: Inner Valve Body, Steel Check Ball & Spring
Courtesy of CHRYSLER GROUP, LLC

32. Using a suitable magnet (2), remove steel check ball and spring (3) from inner valve body (1).

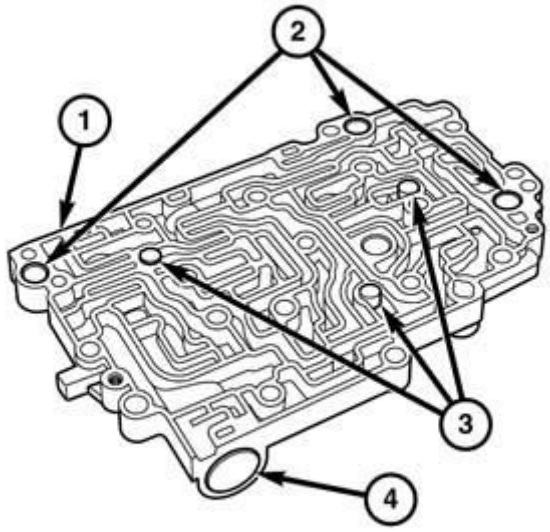

210171578

Fig. 603: Inner Valve Body, Damping Valves & Check Valves
Courtesy of CHRYSLER GROUP, LLC

33. Remove three damping valves (2) and three check valves (3) from inner valve body (1).

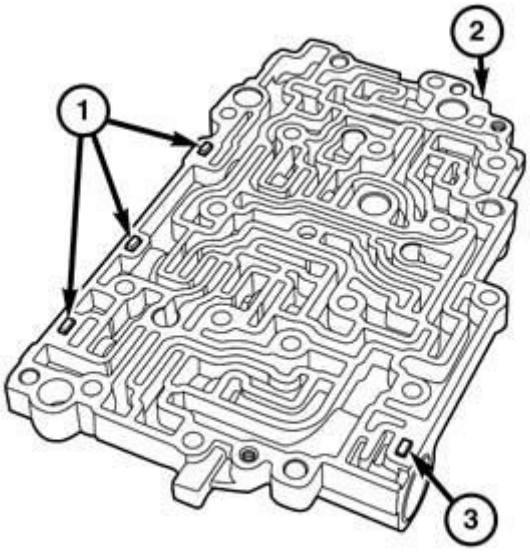

210171716

Fig. 604: Inner Valve Body, Stopper Plates & Accumulator
Courtesy of CHRYSLER GROUP, LLC

34. Remove stopper plates holding valves (1) and accumulator (3) in the inner valve body (2).

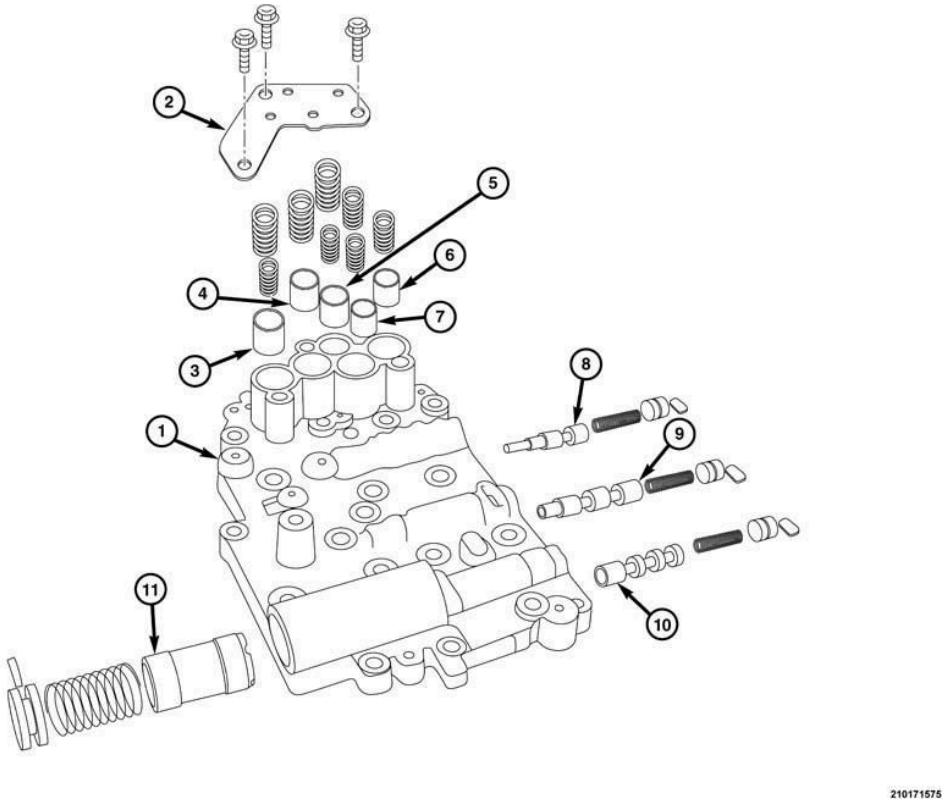

Fig. 605: Inner Valve Body & Accumulator
Courtesy of CHRYSLER GROUP, LLC

1= Inner Valve Body
2= Accumulator Plate
3= Accumulator 2 (Green and Yellow Springs)
4= Accumulator 1 (Pink Spring)
5= Damping Valve (White and White springs)
6= Accumulator 3 (Pink Spring)
7= Accumulator 4 (Yellow and Yellow Spring)
8= OD Fail Safe Valve
9= 3-5-R Switch Valve
10= Lock-up Switch Valve
11= Accumulator Piston

35. Remove the valves assemblies (8, 9 and 10) and accumulator piston (11) and place them on a clean surface oriented, and in order of, the way they were removed.

ASSEMBLY

ASSEMBLY

Clean all valve body components with a suitable solvent and blow them dry with regulated 345 kPa (50 psi) compressed shop air. Inspect all valves, pistons, accumulators, and there bores for damage. If any of the surfaces are scored or show evidence of damage, the valve body must be replaced. As the valve body is assembled, lubricate each component with specified transaxle fluid as they are installed. Refer to **SPECIFICATIONS**.

1= Inner Valve Body
2= Accumulator Plate
3= Accumulator 2 (Green and Yellow Springs)
4= Accumulator 1 (Pink Spring)
5= Damping Valve (White and White springs)
6= Accumulator 3 (Pink Spring)
7= Accumulator 4 (Yellow and Yellow Spring)
8= OD Fail Safe Valve
9= 3-5-R Switch Valve
10= Lock-up Switch Valve
11= Accumulator Piston

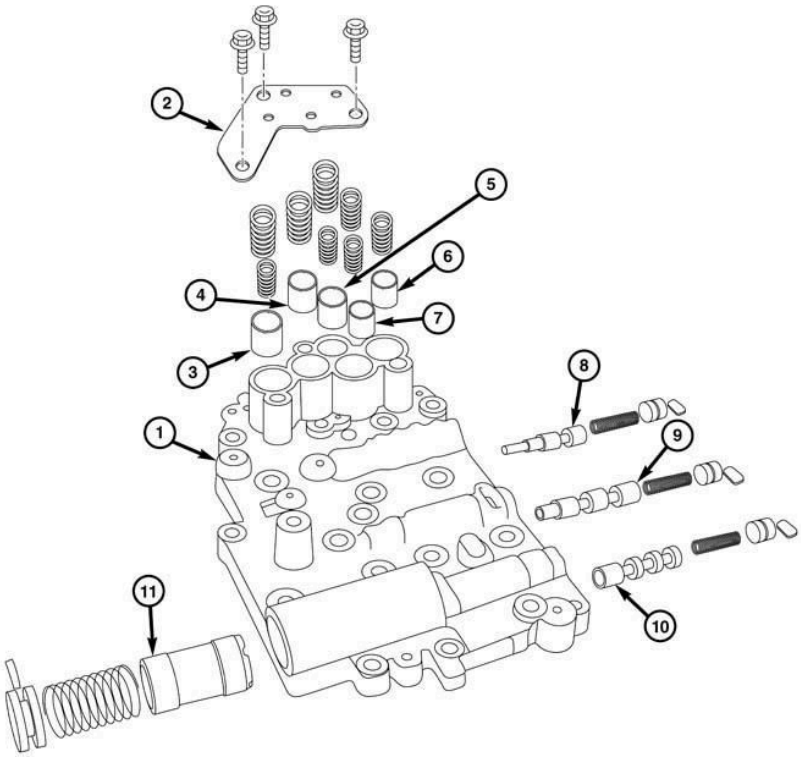

210171575

Fig. 606: Inner Valve Body & Accumulator
Courtesy of CHRYSLER GROUP, LLC

1. Install the valve assemblies (8, 9, and 10) and accumulator piston (11) in the inner valve body (1) removed.

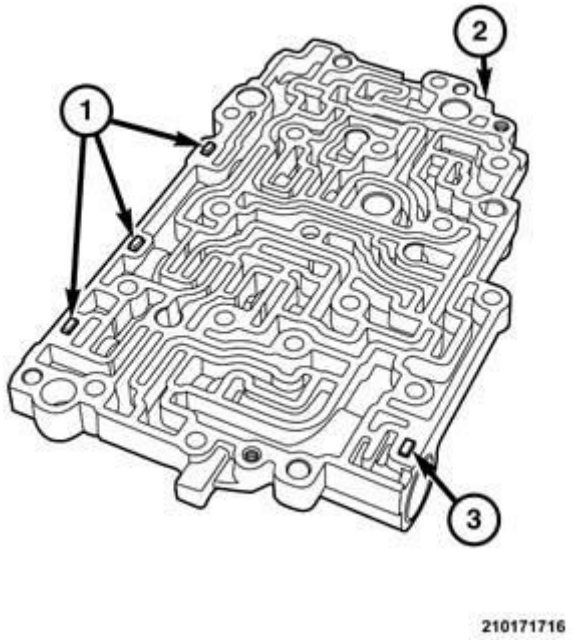

Fig. 607: Inner Valve Body, Stopper Plates & Accumulator
Courtesy of CHRYSLER GROUP, LLC

2. Install the stopper plates to hold the valve assemblies (1) and accumulator piston (3) in the inner valve body (2).

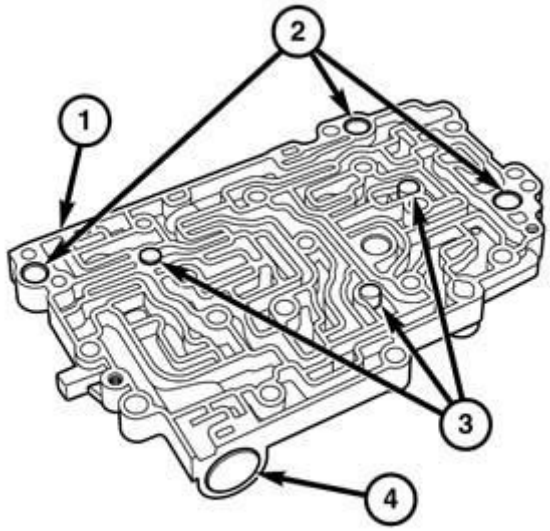

210171578

Fig. 608: Inner Valve Body, Damping Valves & Check Valves
Courtesy of CHRYSLER GROUP, LLC

3. Install three damping valves (2) and three check valves (3) in the inner valve body (1).

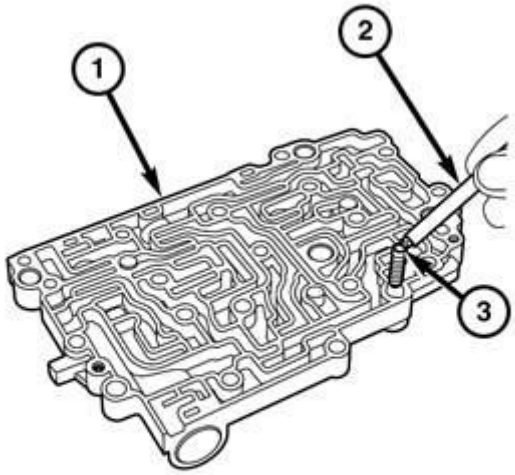

210171583

Fig. 609: Inner Valve Body, Steel Check Ball & Spring
Courtesy of CHRYSLER GROUP, LLC

4. Install the steel check ball and spring (3) into inner valve body (1).

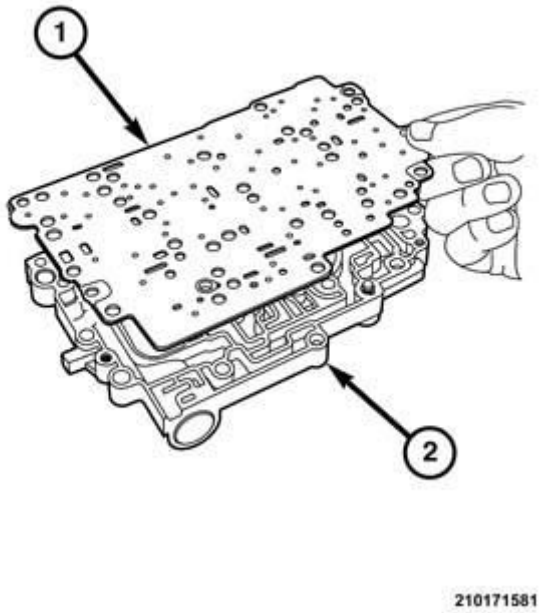

Fig. 610: Inner Valve Body & Separator Plate
Courtesy of CHRYSLER GROUP, LLC

5. Place the separator plate (1) in position on the inner valve body (2).

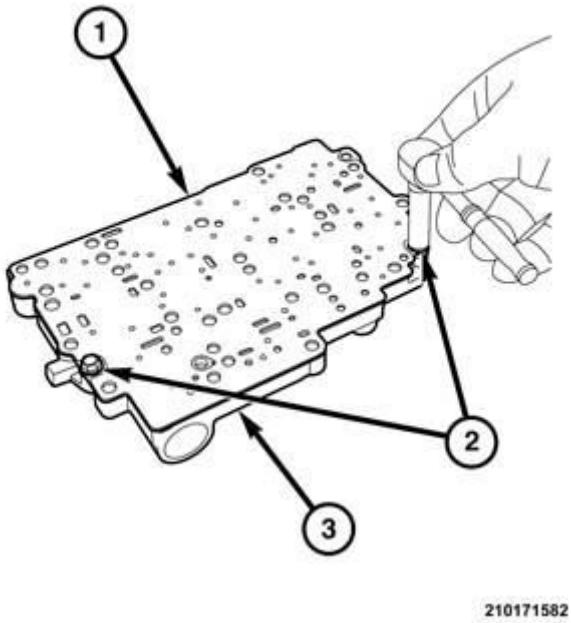

Fig. 611: Inner Valve Body, Separator Plate & Bolts
Courtesy of CHRYSLER GROUP, LLC

6. Install bolts (2) to hold the separator plate (1) to the inner valve body (3). Refer to **SPECIFICATIONS**.

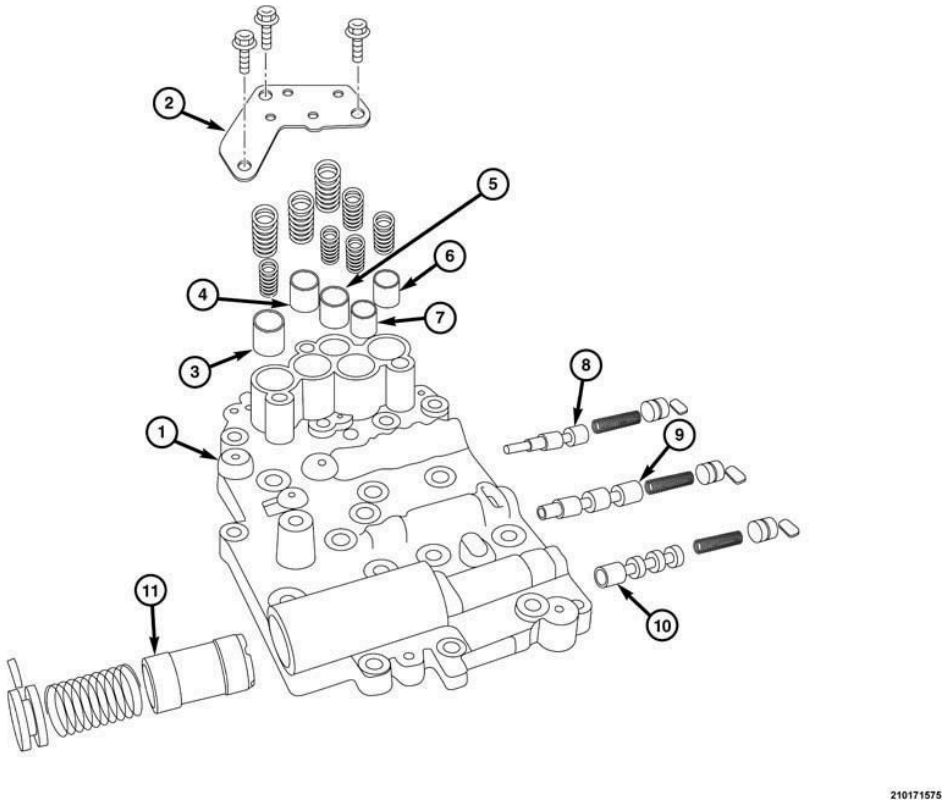

Fig. 612: Inner Valve Body & Accumulator
Courtesy of CHRYSLER GROUP, LLC

1= Inner Valve Body
2= Accumulator Plate
3= Accumulator 2 (Green and Yellow Springs)
4= Accumulator 1 (Pink Spring)
5= Damping Valve (White and White springs)
6= Accumulator 3 (Pink Spring)
7= Accumulator 4 (Yellow and Yellow Spring)
8= OD Fail Safe Valve
9= 3-5-R Switch Valve
10= Lock-up Switch Valve
11= Accumulator Piston

7. Install accumulators (2, 3, 4 and 6) and valves (5, 8, 9 and 10) in the inner valve body (1).

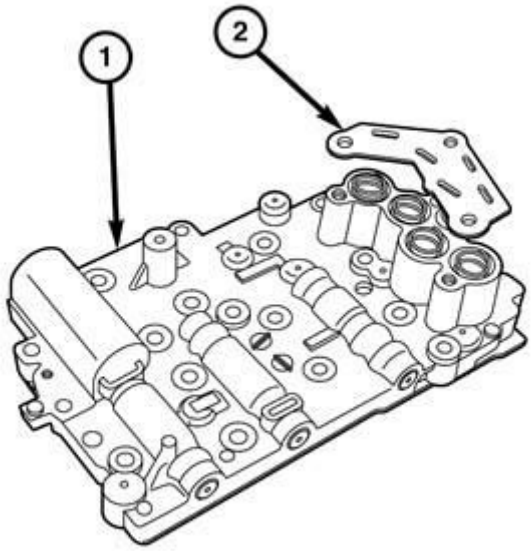

210171579

Fig. 613: Inner Valve Body & Accumulator Plate
Courtesy of CHRYSLER GROUP, LLC

8. Place the accumulator plate (2) in position on the inner valve body (1).

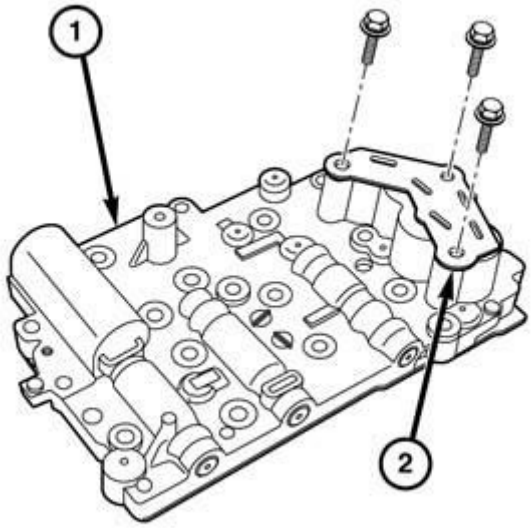

210171580

Fig. 614: Inner Valve Body, Accumulator Plate & Bolts
Courtesy of CHRYSLER GROUP, LLC

9. Install bolts to hold the accumulator plate (2) to the inner valve body (1).

Refer to **SPECIFICATIONS**.

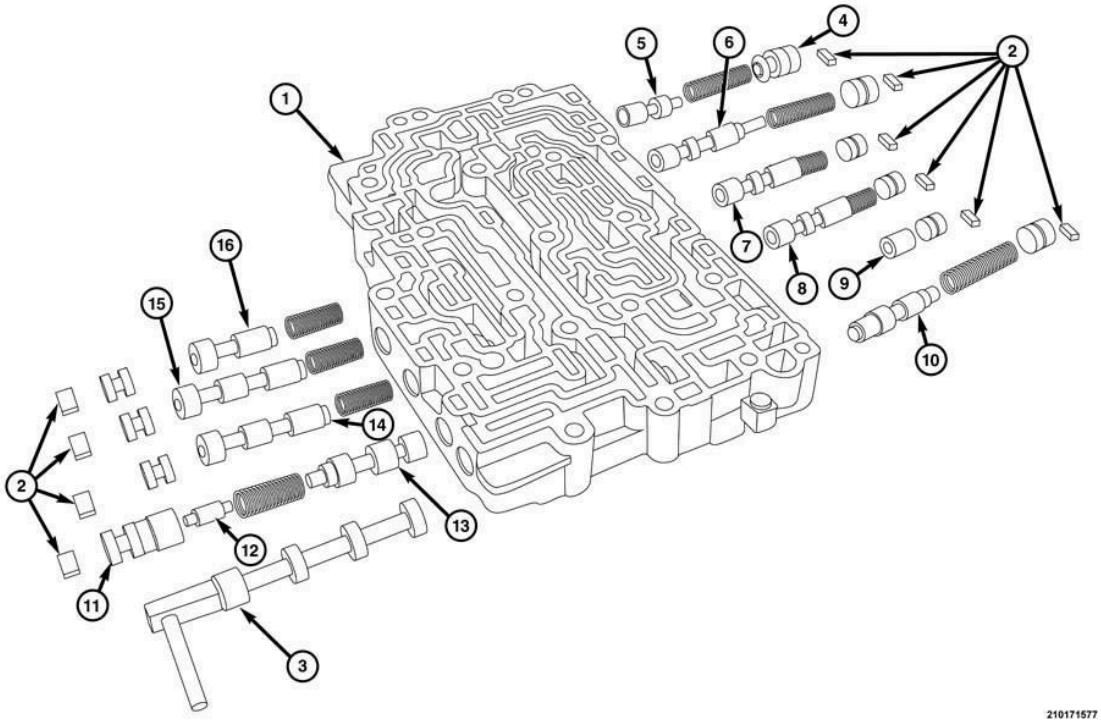

Fig. 615: Valve Body & Valves
Courtesy of CHRYSLER GROUP, LLC

1= Middle Valve Body
2= Stopper Plates
3= Manual Valve
4= Adjust Screw
5= Reducing Valve -2
6= Torque Converter Control Valve
7= Overdrive and Low-reverse Switch Valve
8= Over Drive Pressure Switch Valve
9= 3-5-R and 2-6 Brake Check Valve
10= Low-reverse Switch Valve
11= Torque Converter Pressure Control Sleeve
12= Torque Converter Control Plug
13= Torque Converter Pressure Control Valve
14= 3-5-R pressure Switch Valve
15= 2-6 Brake Pressure Switch Valve
16= Under Drive Pressure Switch Valve

10. Install valve assemblies (5 threw 16), one at a time, into the middle valve body (1).

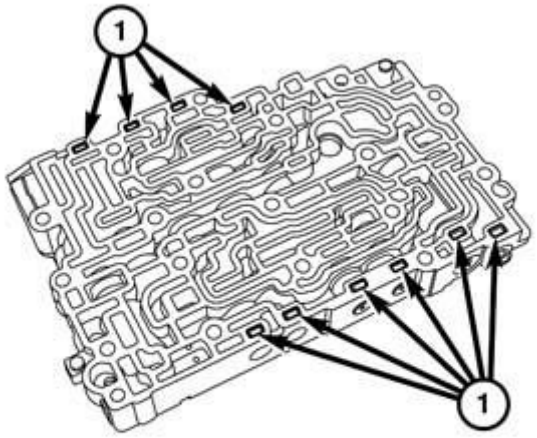

210171584

Fig. 616: Middle Valve Body, Stopper Plates, Valve Plugs & Adjusters
Courtesy of CHRYSLER GROUP, LLC

11. One valve at a time, install the stopper plates (1) to hold the valve plugs and adjusters into the middle valve body.

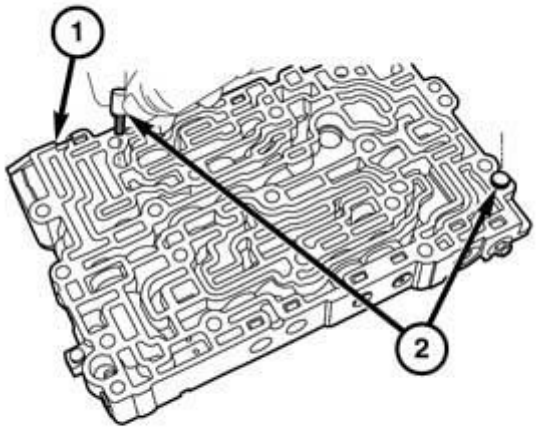

210171586

Fig. 617: Middle Valve Body, Check Valves & Springs
Courtesy of CHRYSLER GROUP, LLC

12. Install the check valves and springs (2) in the middle valve body (1).
13. Place the outer valve body on the middle valve body.
14. While holding the middle valve body to the inner valve body, turn the two sections over so the inner valve body is on the work surface.

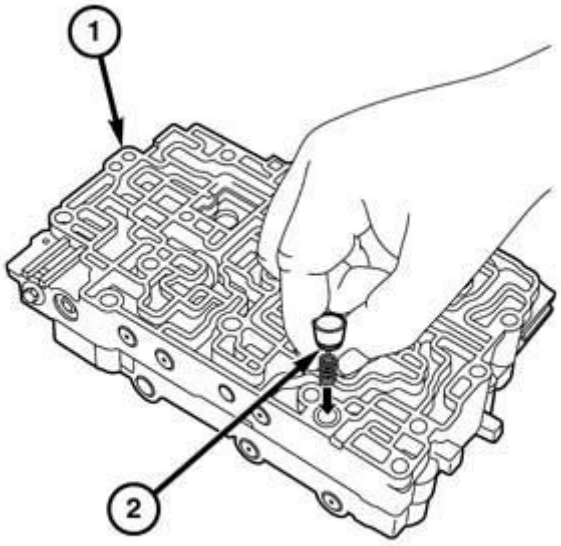

210171529

Fig. 618: Middle Valve Body & Damping Valve
Courtesy of CHRYSLER GROUP, LLC

15. Install the damping valve (2) and coil spring into the middle valve body (1).

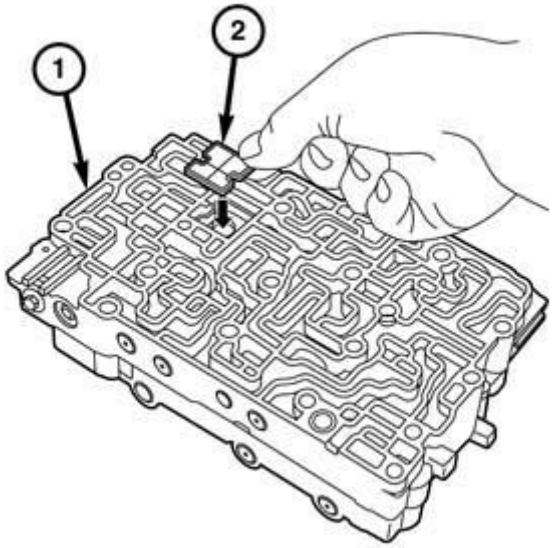

210171530

Fig. 619: Middle Valve Body & Fluid Strainer
Courtesy of CHRYSLER GROUP, LLC

16. Install the oil strainer (2) into the middle valve body (1).

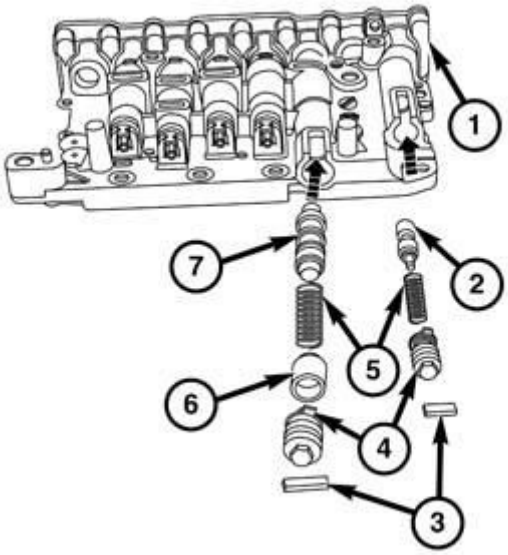

210171590

Fig. 620: Outer Valve Body, Regulator, Regulator Sleeve, Reducing Valve & Springs
Courtesy of CHRYSLER GROUP, LLC

17. Install the regulator (7), regulator sleeve (6) and reducing valve (2) and springs (5) into the outer valve body (1).

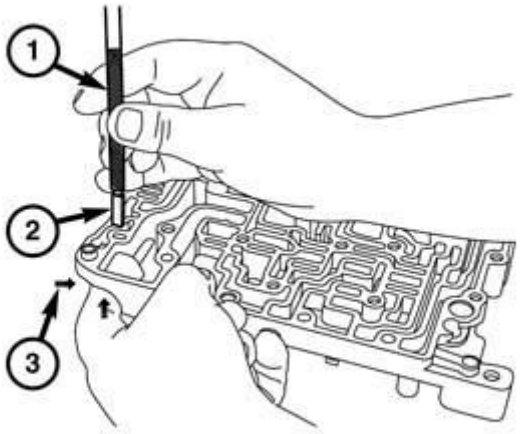

210171589

Fig. 621: Outer Valve Body, Stopper Plate & Reducing Valve Adjuster
Courtesy of CHRYSLER GROUP, LLC

18. Install the stopper plate (2) to hold the reducing valve adjuster (3) into the outer valve body.

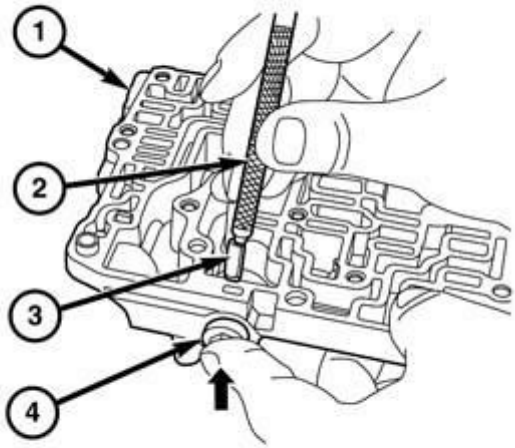

210171591

Fig. 622: Outer Valve Body, Stopper Plate & Regulator Valve Adjuster
Courtesy of CHRYSLER GROUP, LLC

19. Install the stopper plate (3) to hold the regulator valve adjuster (4) into the outer valve body (1).

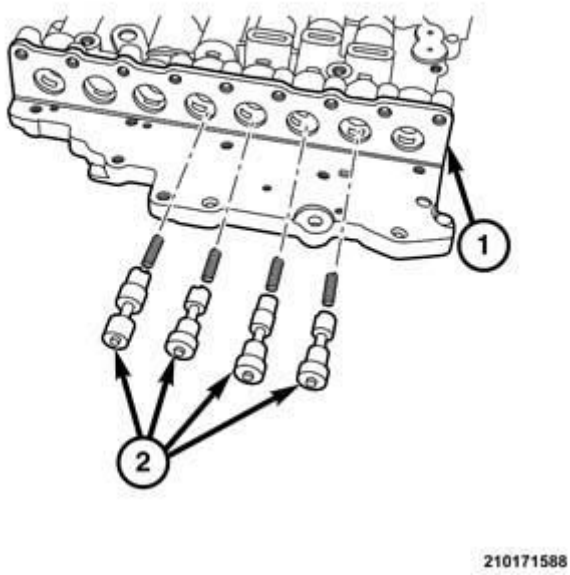

Fig. 623: Outer Valve Body, Pressure Control Valves & Springs
Courtesy of CHRYSLER GROUP, LLC

20. Install the pressure control valves (2) and springs into the outer valve body (1).

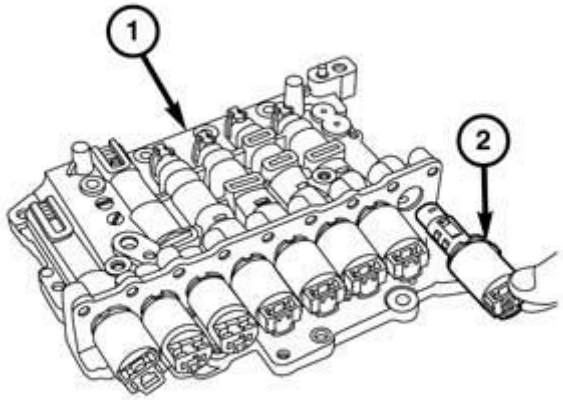

210171592

Fig. 624: Outer Valve Body & Solenoids
Courtesy of CHRYSLER GROUP, LLC

21. Insert the solenoids (2) into the outer valve body (1). The solenoids (1) must be installed in the same locations that they were removed from.

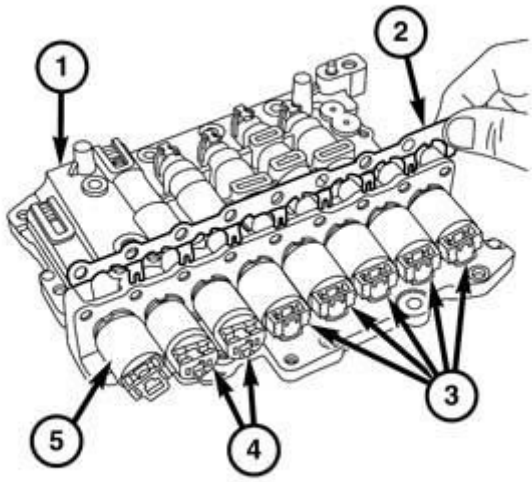

210171587

Fig. 625: Solenoid Retainer Separated From Outer Valve Body
Courtesy of CHRYSLER GROUP, LLC

22. Place the solenoid retainer (2) in position on outer valve body (1).

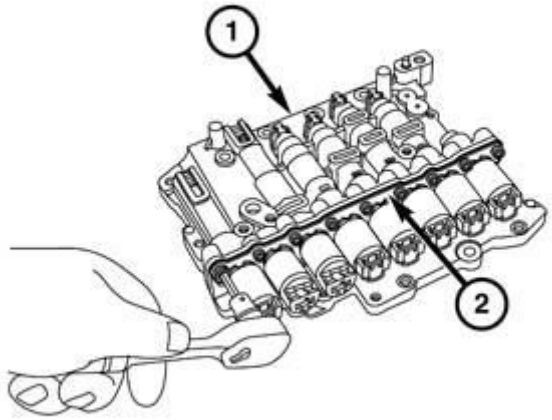

210171524

Fig. 626: Outer Valve Body & Solenoid Retainer
Courtesy of CHRYSLER GROUP, LLC

23. Install screws to hold the solenoid retainer (2) to the outer valve body (1). Refer to **SPECIFICATIONS**.
24. Turn the outer valve body over on the work surface.

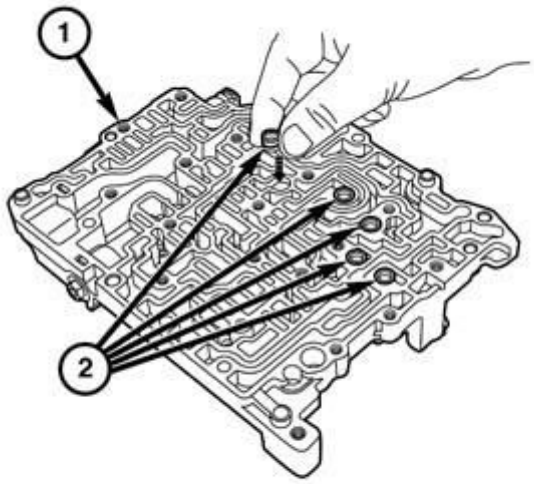

210171527

Fig. 627: Outer Valve Body & Five Strainers
Courtesy of CHRYSLER GROUP, LLC

25. Install five strainers (2) into the outer valve body (1).

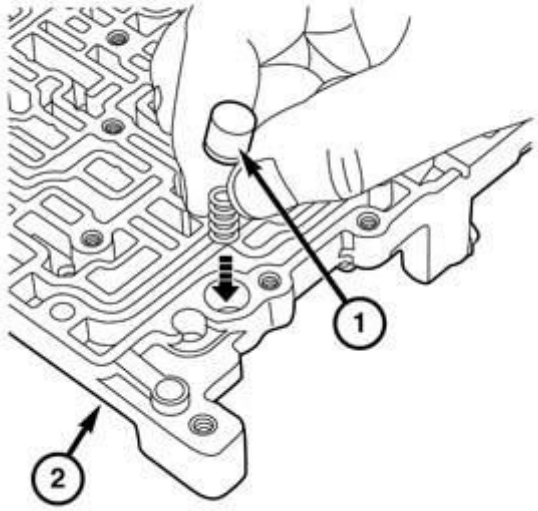

Fig. 628: Outer Valve Body, Check Valve & Spring
Courtesy of CHRYSLER GROUP, LLC

26. Install the check valve (1) and spring into the outer valve body (2).

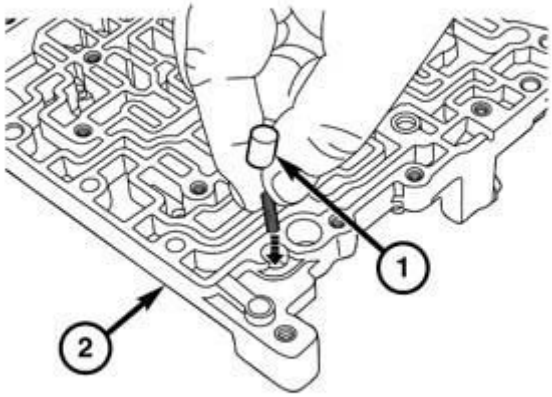

210171523

Fig. 629: Outer Valve Body, Damping Valve & Spring
Courtesy of CHRYSLER GROUP, LLC

27. Install the damping valve and spring (1) into the outer valve body (2).

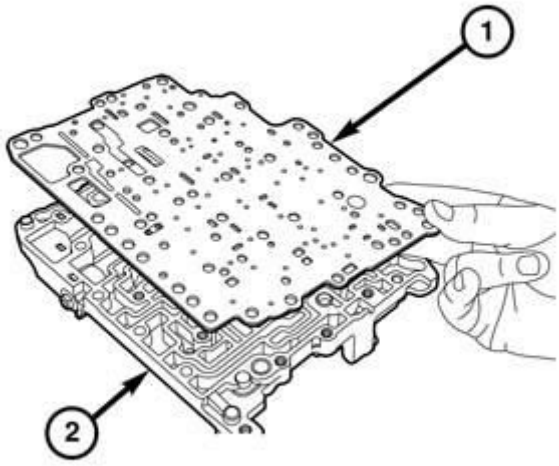

210171535

Fig. 630: Separator Plate & Outer Valve Body
Courtesy of CHRYSLER GROUP, LLC

28. Place the separator plate (1) onto the outer valve body (2).

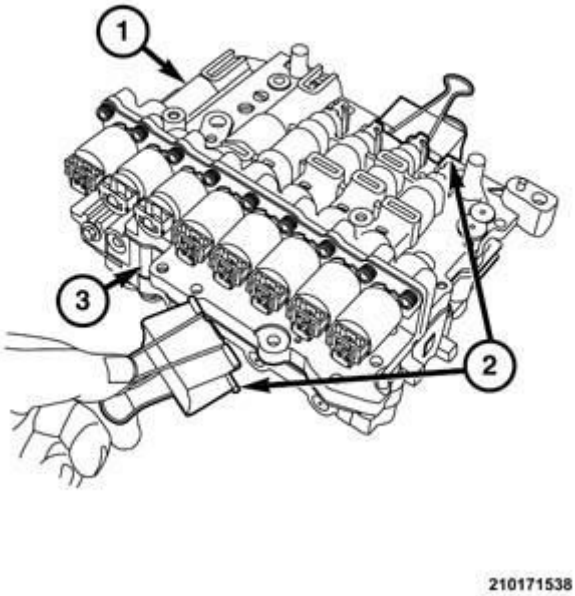

Fig. 631: Valve Body & Clamps
Courtesy of CHRYSLER GROUP, LLC

29. Optionally, suitable clamps (2) can be installed to keep the inner valve body and the separator plate from parting prematurely during the next set.

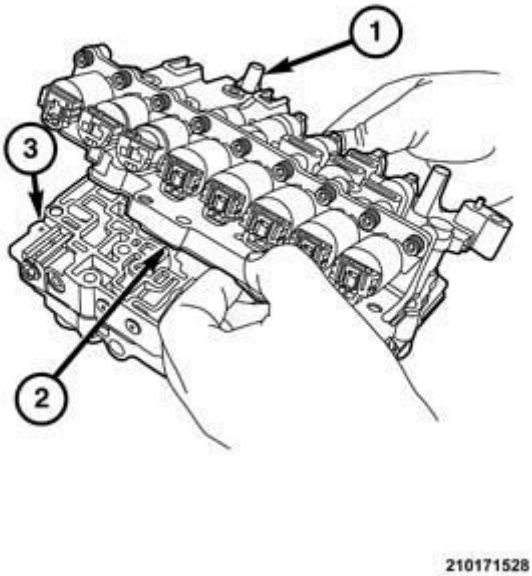

Fig. 632: Separator Plate, Outer & Middle Valve Body
Courtesy of CHRYSLER GROUP, LLC

30. If clamping option is not used, pinch the separator plate (2) to the outer valve body (1) and lower them onto the middle valve body (3).
31. Holding the Lower, middle, and inner valve body sections together, turn the valve body over, set it on a flat work surface.

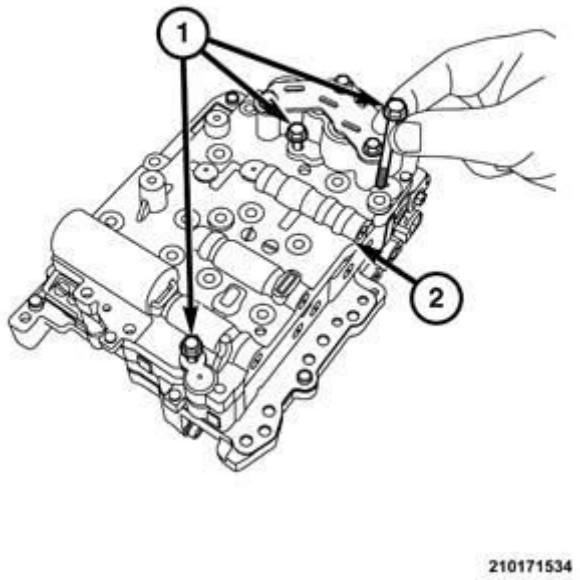

Fig. 633: Valve Body Sections & "black" Bolts
Courtesy of CHRYSLER GROUP, LLC

32. Install three "black" bolts (1) to hold the outer (2) and middle valve body sections to the inner valve body. Refer to **SPECIFICATIONS**.

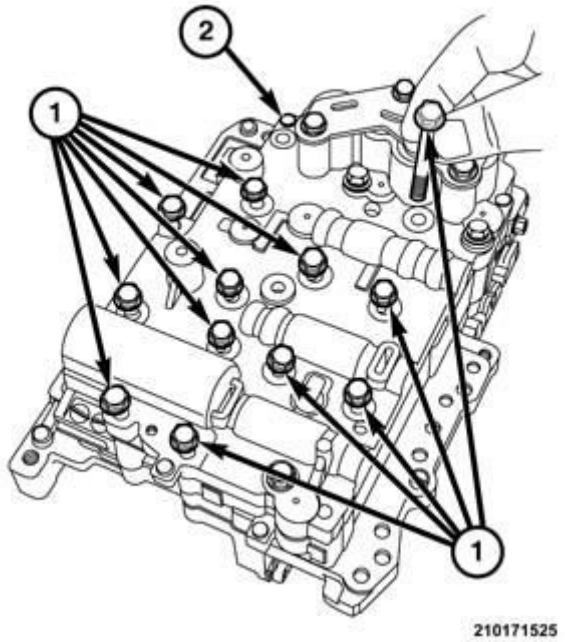

Fig. 634: Valve Body Sections & Bolts
Courtesy of CHRYSLER GROUP, LLC

33. Install twelve bolts (1) to hold the outer (2) and middle valve body sections to the inner valve body. Refer to **SPECIFICATIONS**.

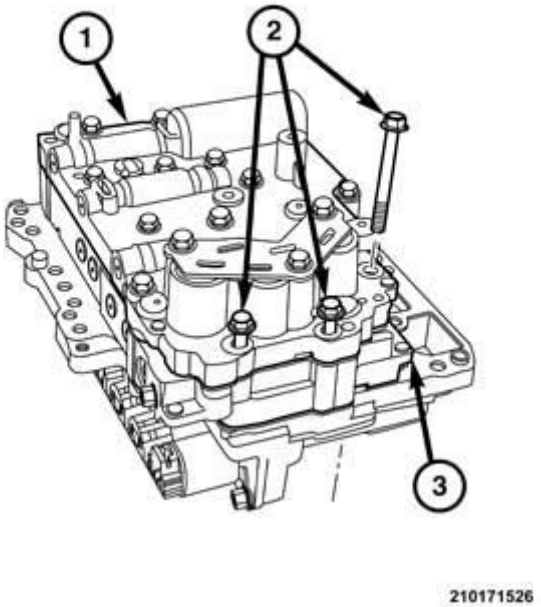

Fig. 635: Valve Body Sections & Bolts
Courtesy of CHRYSLER GROUP, LLC

34. Install three bolts (2) to hold the outer (1) and middle (3) valve body sections to the inner valve body next to the accumulators. Refer to **SPECIFICATIONS**.

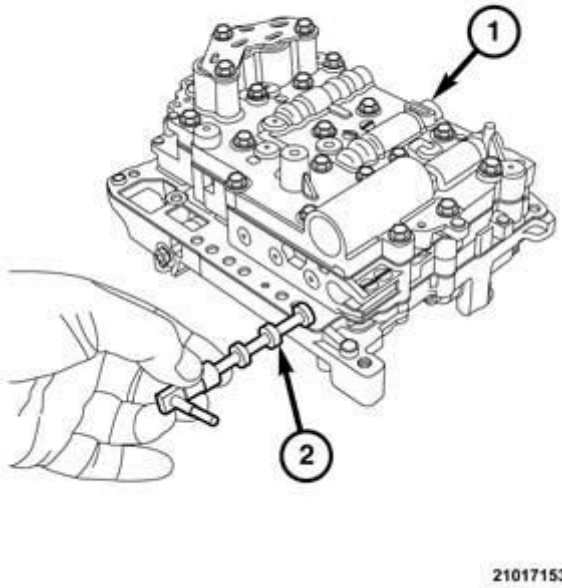

Fig. 636: Middle Valve Body & Manual Valve
Courtesy of CHRYSLER GROUP, LLC

35. Install the manual valve (2) into the middle valve body.
36. Install the valve body into the transaxle. Refer to **VALVE BODY, INSTALLATION**.

INSTALLATION

INSTALLATION

Verify that all of the valve body mating surfaces are clean and are undamaged on the transaxle housing and the valve body. If the surfaces are damaged the transaxle housing or valve body will require replacement.

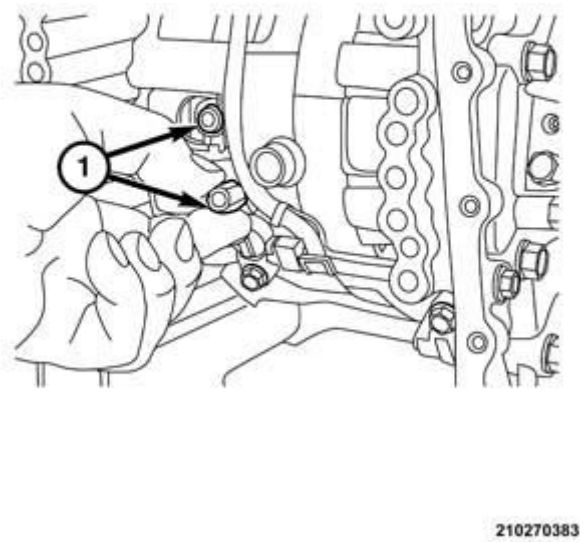

Fig. 637: Transfer Port Seals
Courtesy of CHRYSLER GROUP, LLC

1. Install the two seals into the transfer ports in transaxle housing.

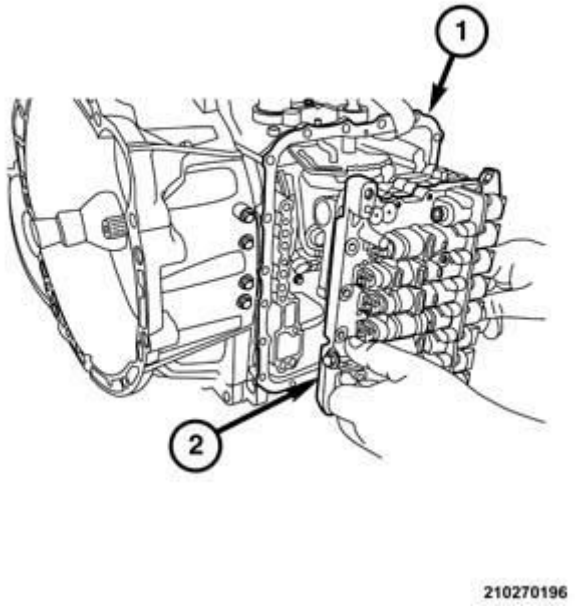

Fig. 638: Valve Body & Transaxle
Courtesy of CHRYSLER GROUP, LLC

NOTE: The manual valve is loose after the valve body is

installed and may fall out during removal.

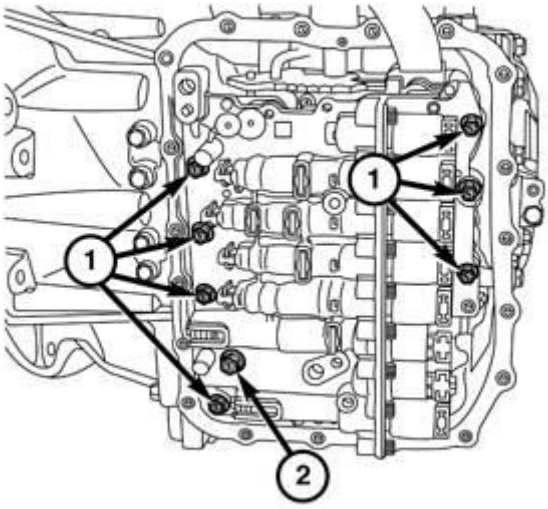

210270195

Fig. 639: Valve Body Bolts
Courtesy of CHRYSLER GROUP, LLC

2. Place the valve body (2) in position on the transaxle (1).
3. Install bolts, 7 short (1) and 1 long (2) bolts, to hold the valve body to the transaxle. Refer to **SPECIFICATIONS**.

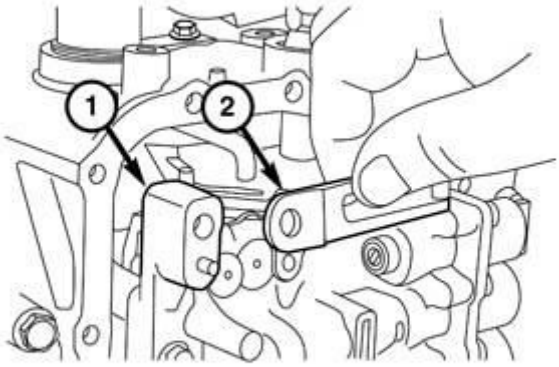

210270179

Fig. 640: Detent Spring Separated From Valve Body
Courtesy of CHRYSLER GROUP, LLC

4. Place the detent spring (2) in position on the valve body (1).

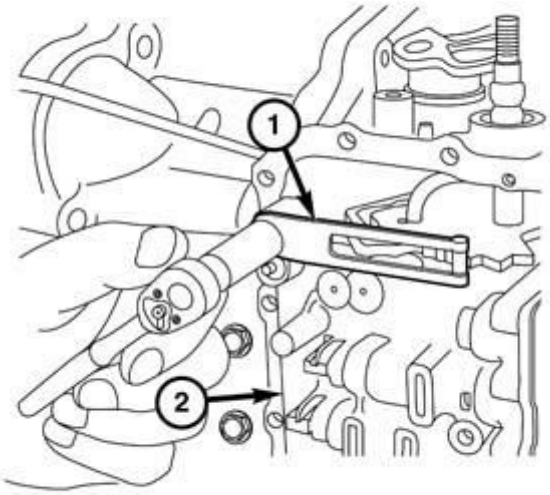

210270170

Fig. 641: Manual Shaft Detent Spring & Valve Body
Courtesy of CHRYSLER GROUP, LLC

5. Install the screw to hold the manual shaft detent spring (1) to the valve body (2). Refer to **SPECIFICATIONS**.

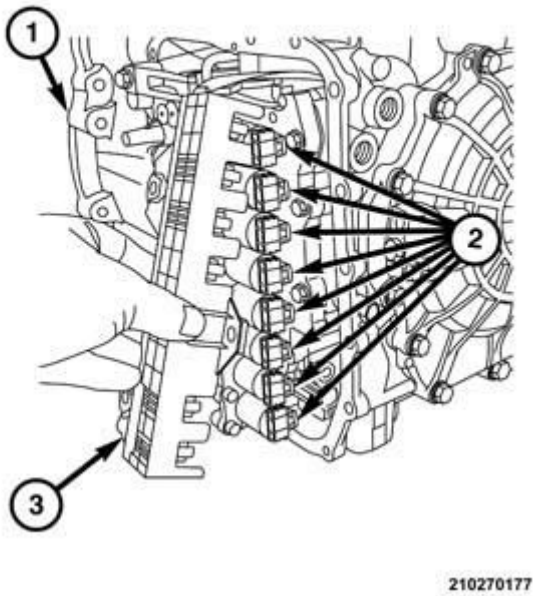

Fig. 642: Solenoids & Connector
Courtesy of CHRYSLER GROUP, LLC

6. Starting at the top solenoid valve, push the wire connector onto each solenoid (2) until the connector (3) is engaged.

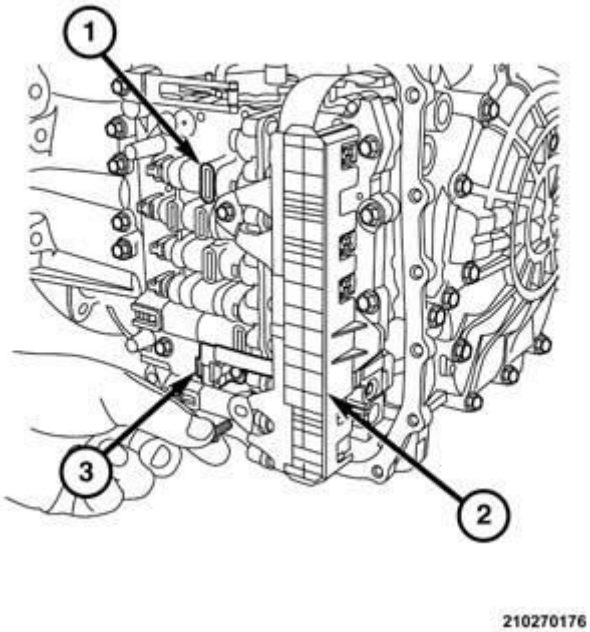

Fig. 643: Valve Body & Solenoid Valve Connector
Courtesy of CHRYSLER GROUP, LLC

7. Install bolts to hold the solenoid valve connector (2) to the valve body (1). Refer to **SPECIFICATIONS**.

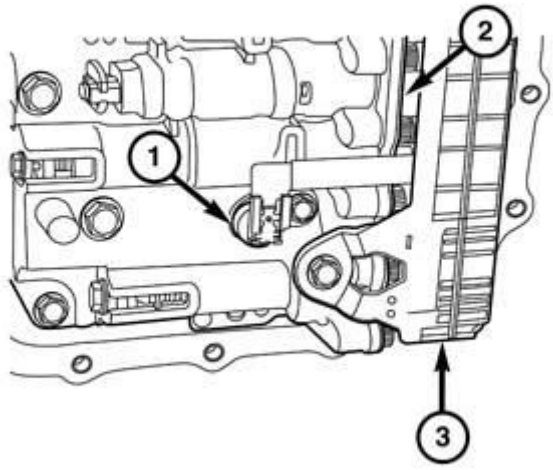

210270169

Fig. 644: Fluid Temperature Sensor & Valve Body
Courtesy of CHRYSLER GROUP, LLC

8. Push temperature sensor (1) straight into the port in the valve body (2).
9. Install bolt to hold fluid temperature sensor (1) to the valve body (2). Refer to **SPECIFICATIONS**.

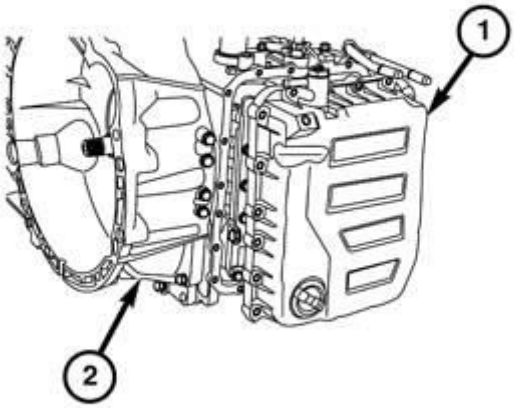

210270167

Fig. 645: Valve Body Cover Separated From Transaxle
Courtesy of CHRYSLER GROUP, LLC

10. Install a **NEW** gasket on the cover and place the valve body cover (1) in position on the transaxle (2).

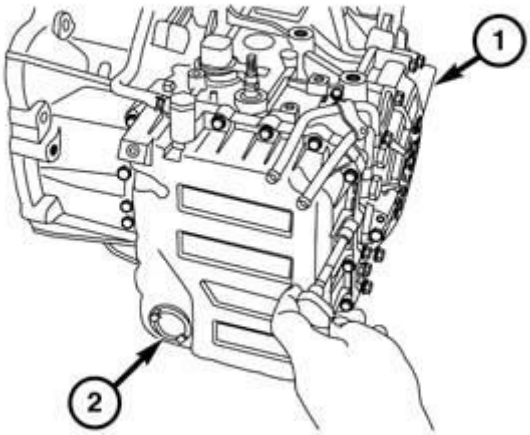

210270166

Fig. 646: Transaxle & Valve Body Cover
Courtesy of CHRYSLER GROUP, LLC

11. Install bolts to hold the valve body cover (2) to the transaxle (1). Refer to **SPECIFICATIONS**.
12. Remove the drain pan from under transaxle.

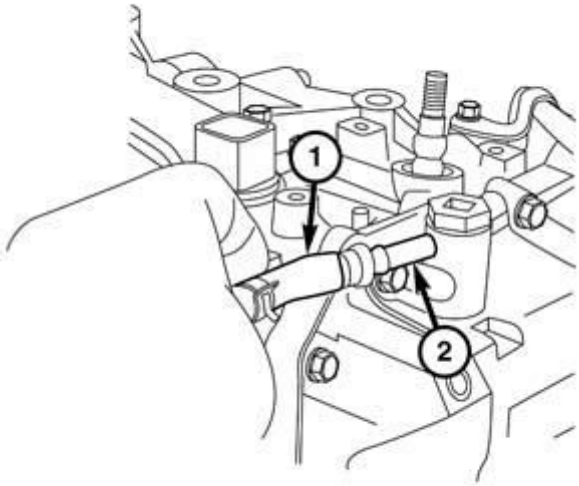

210270175

Fig. 647: Vent Hose End & Nipple Adaptor
Courtesy of CHRYSLER GROUP, LLC

13. Push the vent hose end (1) onto the nipple adaptor (2).

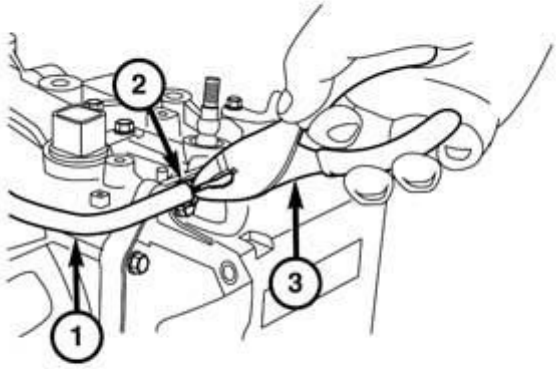

210270174

Fig. 648: Vent Hose, Spring Clamp & Pliers
Courtesy of CHRYSLER GROUP, LLC

14. Using common pliers (3), compress the hose spring clamp (2) and slide it up the vent hose (1) onto nipple adaptor.
15. Fill the transaxle with specified fluid. Refer to **FLUID, STANDARD PROCEDURES**.
16. Install the engine cover/air cleaner on the vehicle. Refer to **2.0L AIR CLEANER, INSTALLATION** , **2.2L AIR CLEANER, INSTALLATION** or **2.4L AIR CLEANER, INSTALLATION** .
17. Road test the vehicle to verify the repair.

BRAKE AND PISTON, 2-6

REMOVAL

REMOVAL

1. Remove the transaxle from the vehicle
2. Disassemble the transaxle to remove the bell housing portion of the transaxle housing.
3. Remove the fluid pump.

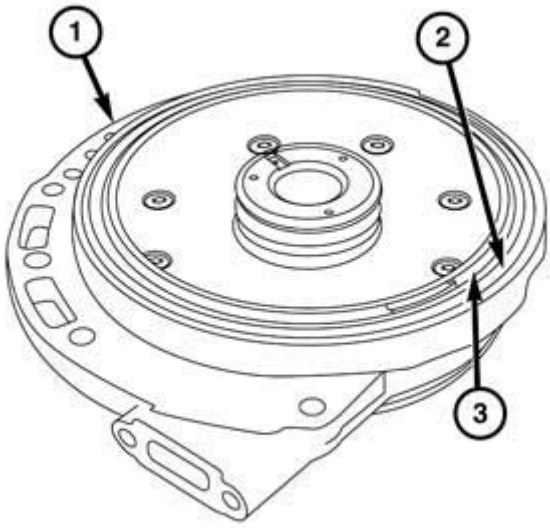

210270210

Fig. 649: Fluid Pump & 2-6 Brake Piston

Courtesy of CHRYSLER GROUP, LLC

4. Position the fluid pump on a clean work surface with the 2-6 brake piston facing upward.

NOTE: The 2-6 brake piston return spring and retainer will self-eject when the snap-ring is removed.

5. Place one hand over the 2-6 brake piston assembly to prevent the piston return spring and retainer from ejecting from the fluid pump housing when the snap-ring is released.

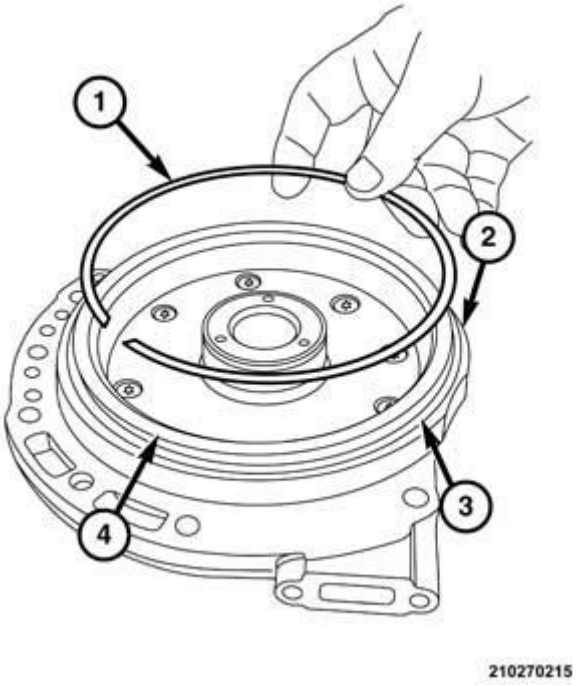

Fig. 650: Fluid Pump Housing, Snap-Ring & 2-6 Brake Piston Return Spring & Retainer
Courtesy of CHRYSLER GROUP, LLC

6. Using a suitable snap-ring pliers, remove the snap-ring holding the 2-6 brake piston return spring and retainer into the fluid pump housing.

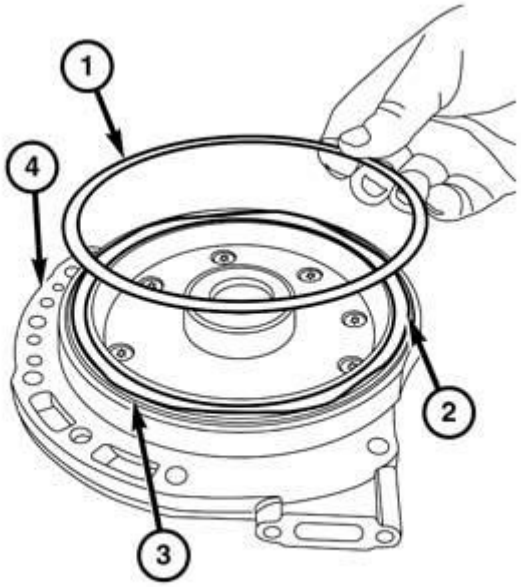

210270213

Fig. 651: Return Spring & Return Spring Retainer
Courtesy of CHRYSLER GROUP, LLC

7. Separate the return spring retainer from the return spring.

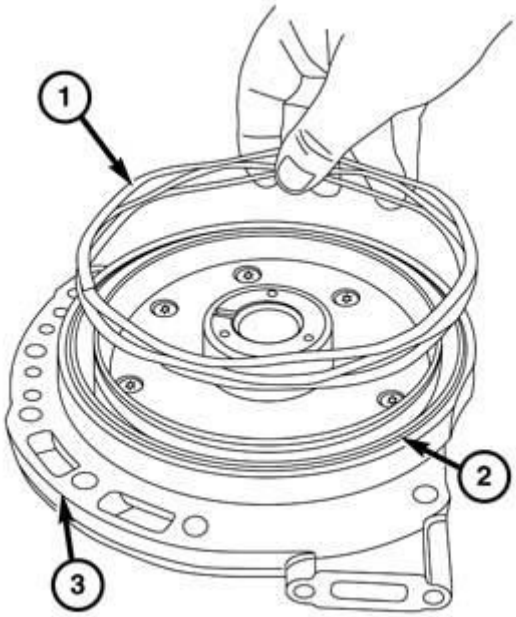

210270216

Fig. 652: Fluid Pump Housing & Return Spring
Courtesy of CHRYSLER GROUP, LLC

8. Separate the return spring from the fluid pump housing.

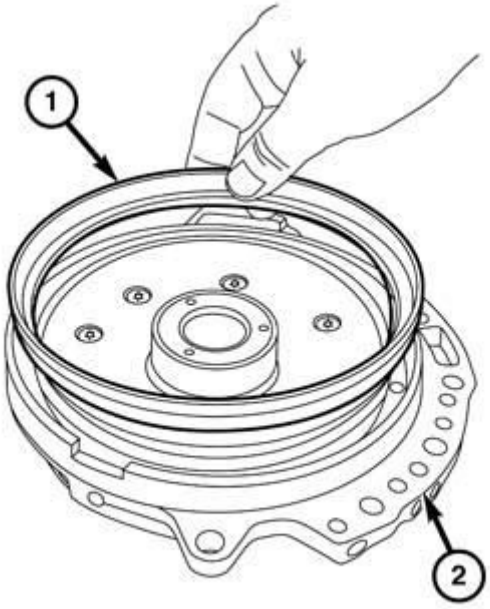

210270214

Fig. 653: Fluid Pump Housing Assembly & 2-6 Brake Piston
Courtesy of CHRYSLER GROUP, LLC

9. Using two small pocket screw driver pry and lift the 2-6 brake piston out of the groove in the fluid pump housing assembly.

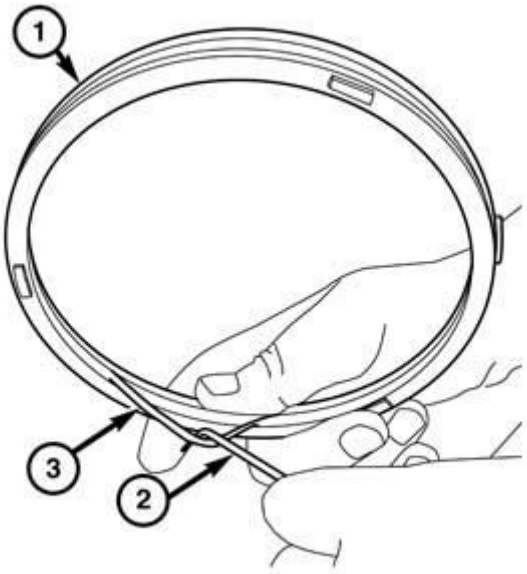

210270225

Fig. 654: Removing 2-6 Brake Piston & Inner O-Ring Seal
Courtesy of CHRYSLER GROUP, LLC

10. Using a suitable pick tool, remove the inner o-ring seal from the groove in he center of the 2-6 brake piston.

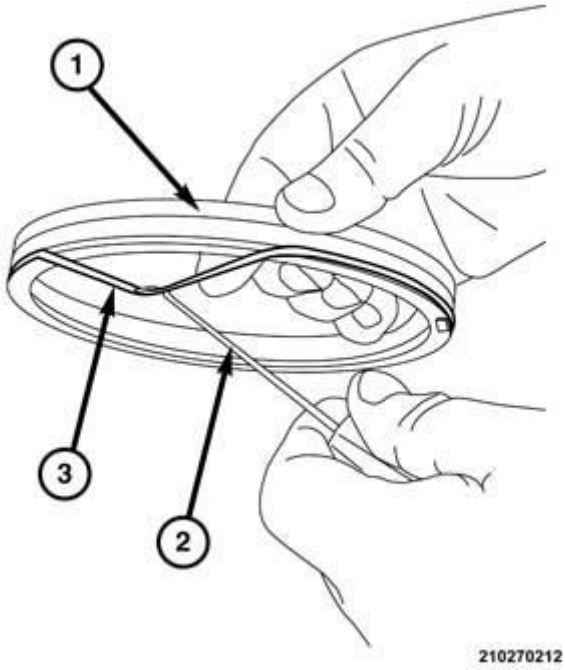

Fig. 655: Removing 2-6 Brake Piston & Outer O-Ring Seal
Courtesy of CHRYSLER GROUP, LLC

11. Using a suitable pick tool, remove the outer o-ring seal from the groove in the circumference of the 2-6 brake piston.

INSTALLATION

INSTALLATION

NOTE: Do not wash the fluid pump housing in solvent prior to assembling the 2-6 brake piston unless the fluid pump itself required an overhaul.

NOTE: Wash the 2-6 brake piston components in suitable solvent and dry them with regulated 344 kPa (50 psi) shop air.

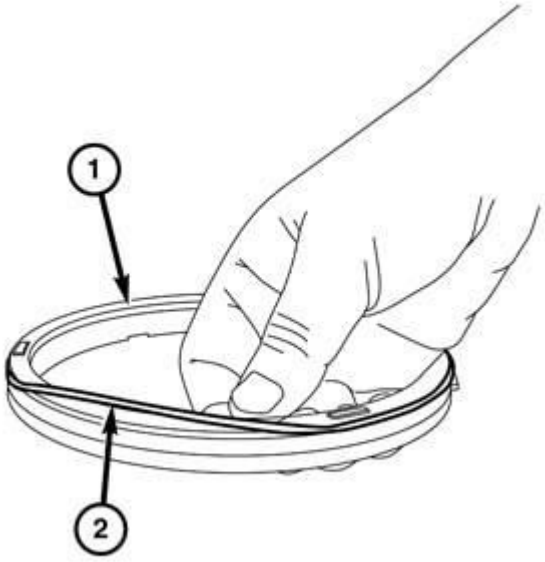

210270211

Fig. 656: Installing 2-6 Brake Piston & Outer O-Ring Seal
Courtesy of CHRYSLER GROUP, LLC

1. Install the outer o-ring seal into the groove in the circumference of the 2-6 brake piston.

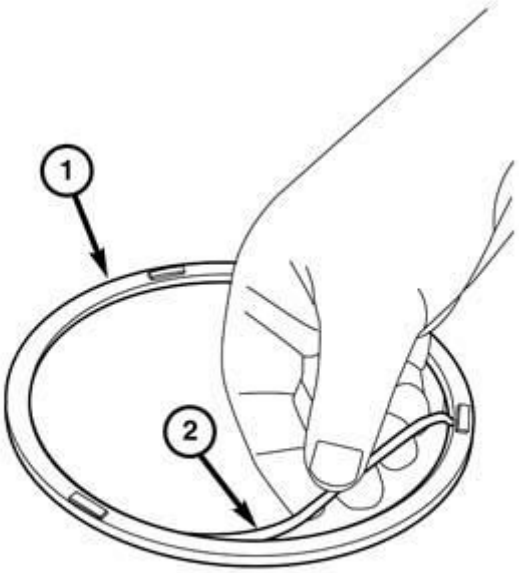

210270223

Fig. 657: Installing 2-6 Brake Piston & Inner O-Ring Seal
Courtesy of CHRYSLER GROUP, LLC

2. Install the inner o-ring seal into the groove in the center of the 2-6 brake piston.

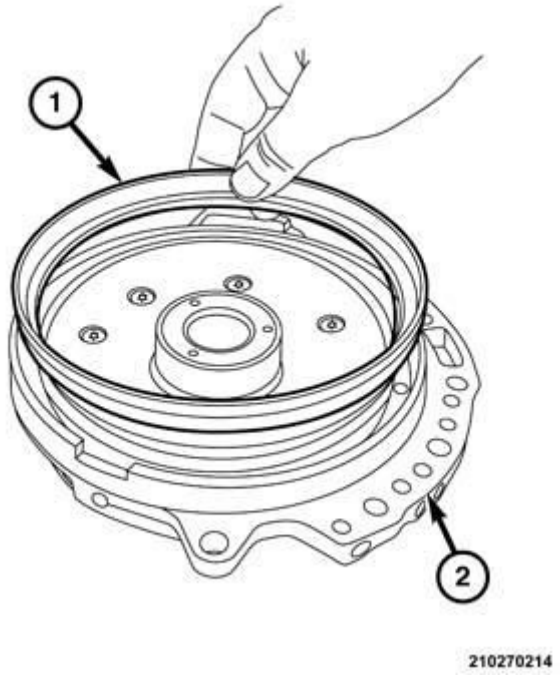

Fig. 658: Fluid Pump Housing Assembly & 2-6 Brake Piston
Courtesy of CHRYSLER GROUP, LLC

3. Coat the 2-5 brake piston and o-ring seals with Automatic Transmission Fluid (ATF) to ease installation.
4. Place the 2-6 brake piston in position in the groove in the fluid pump housing assembly.
5. Push the 2-6 brake piston downward until the piston reaches the bottom of the groove in the fluid pump assembly.

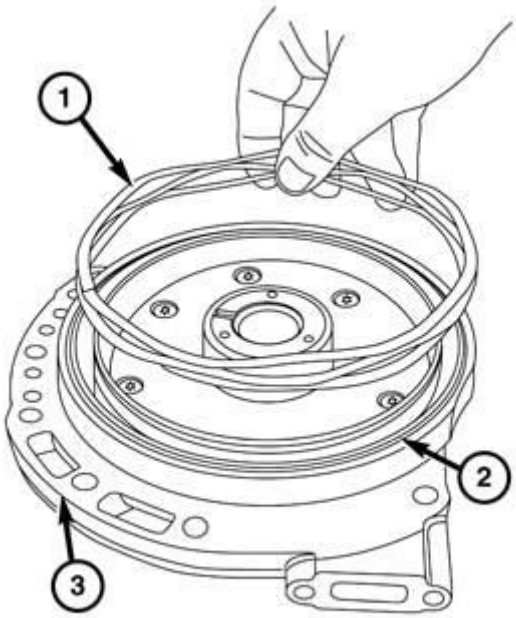

210270216

Fig. 659: Fluid Pump Housing & Return Spring
Courtesy of CHRYSLER GROUP, LLC

6. Place the return spring into the groove in the fluid pump housing.

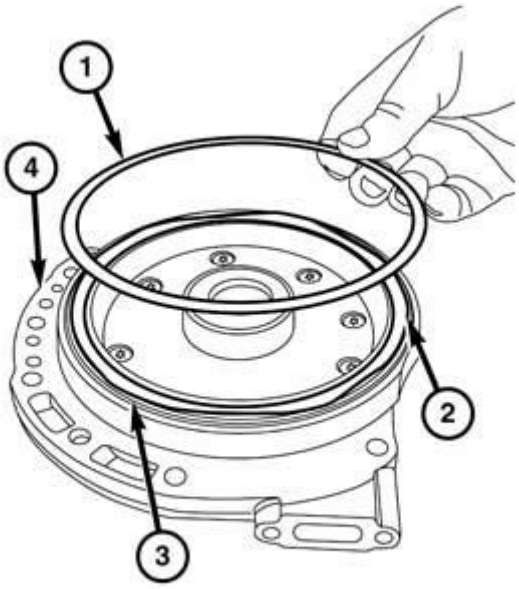

210270213

Fig. 660: Return Spring & Return Spring Retainer
Courtesy of CHRYSLER GROUP, LLC

7. Place the return spring retainer on the return spring.

8. Place Tool (special tool #10427, Compressor, Return Spring) over the 2-6 brake piston return spring retainer.

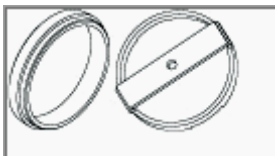

Fig. 661: Special Tool #10427
Courtesy of CHRYSLER GROUP, LLC

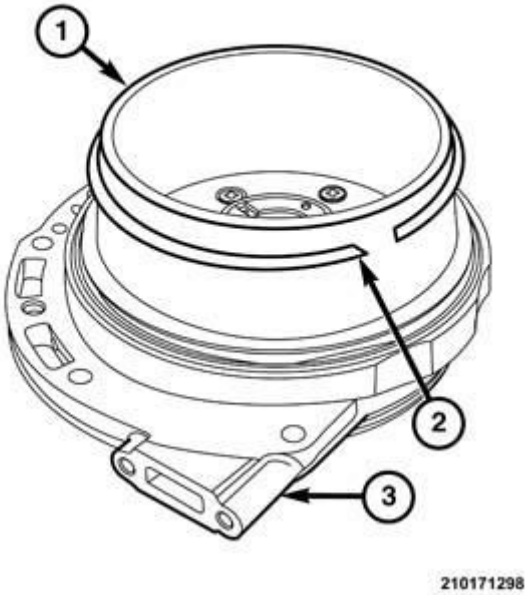

Fig. 662: Tool Guide & Snap-Ring
Courtesy of CHRYSLER GROUP, LLC

9. Position the snap-ring over the circumference of the Tool guide.

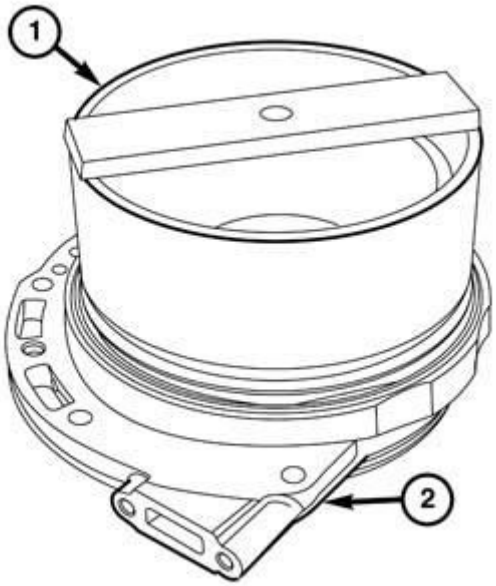

210171301

Fig. 663: Special Tool #10427 Installed Over Snap-Ring
Courtesy of CHRYSLER GROUP, LLC

10. Position Tool (special tool #10427, Compressor, Return Spring) Installer over the snap-ring.

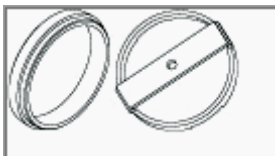

Fig. 664: Special Tool #10427
Courtesy of CHRYSLER GROUP, LLC

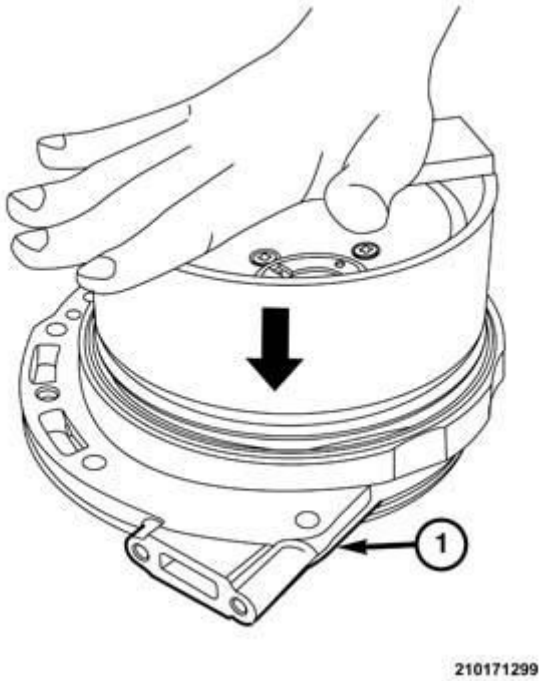

Fig. 665: Pushing Installer Downward
Courtesy of CHRYSLER GROUP, LLC

11. Push the installer downward until the snap-ring locks in the groove in the fluid pump hub.
12. Remove the tools from the fluid pump.
13. Install the fluid pump in the transaxle.
14. Assemble the transaxle to install the bell housing portion of the transaxle housing.
15. Install the transaxle into the vehicle
16. Road test the vehicle the validate the repair

CLUTCH, 3-5 REVERSE

DISASSEMBLY

DISASSEMBLY

The 3-5-Reverse (3-5-R) Clutch is located under the fluid pump, in the center of the input shaft, inside of the 2-6 brake discs and plates. The clutch includes a retainer and shaft, selective snap-ring, five discs, five plates, reaction plate, balance piston, bellville return spring, and a piston. The 3-5-R clutch balance piston is equipped with a integral seal that cannot be replaced. If the seal is faulty the balance piston must be replaced. The 3-5-R clutch piston is equipped with

and inner and outer D-ring seals. The 3-5-R clutch has a series of alternating steel plates separated by fiber discs. When applied it drives the 2-6 brake discs and the overdrive clutch hub. The free play of the 3-5-R clutch is controlled by a select snap-ring that the thickness can be changed to tighten or loosen the clutch. Refer to **SPECIFICATIONS**.

1. Remove the transaxle. Refer to **REMOVAL**.
2. Disassemble the transaxle to gain access to the 3-5-R clutch. Refer to **DISASSEMBLY**.
3. Remove the 3-5-R clutch from the transaxle.
4. Optionally, place the 3-5-R clutch on tool (special tool #8285, Compressor, Spring).

Fig. 666: Special Tool #8285
Courtesy of CHRYSLER GROUP, LLC

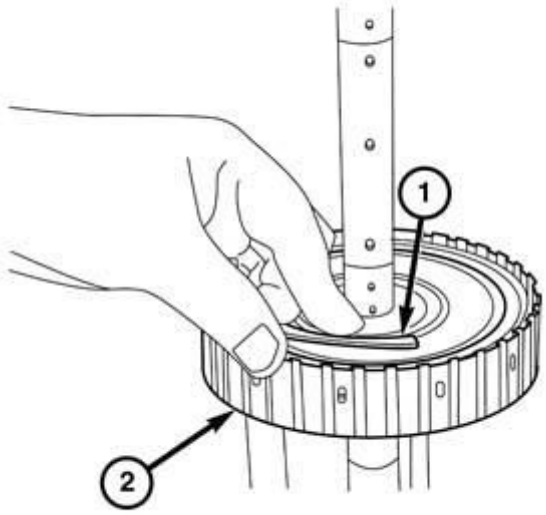

210171825

Fig. 667: 3-5-R Clutch Retainer & Snap-Ring
Courtesy of CHRYSLER GROUP, LLC

5. Using a suitable screw driver, pry the snap-ring out (1) of the 3-5-R clutch retainer (2).

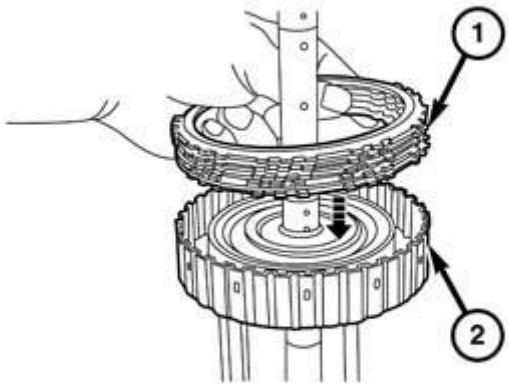

210171821

Fig. 668: 3-5-R Clutch Reaction Plate, Discs, Plates & Retainer
Courtesy of CHRYSLER GROUP, LLC

6. Remove the 3-5-R clutch reaction plate, discs, and plates (1) from the retainer (2).

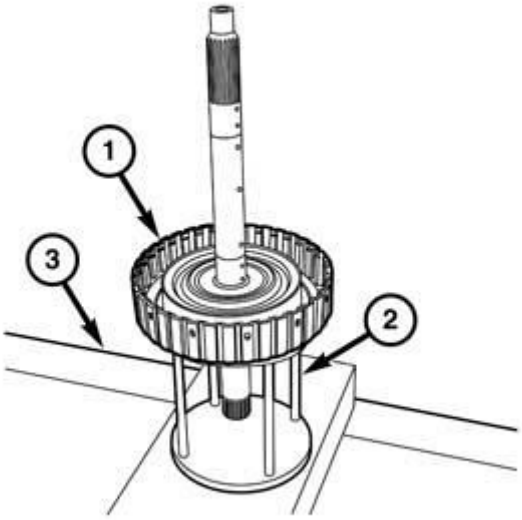

210171824

Fig. 669: 3-5-R Clutch, Tool & Arbor Press
Courtesy of CHRYSLER GROUP, LLC

7. Place 3-5-R clutch (1) and tool on a suitable arbor press (3).

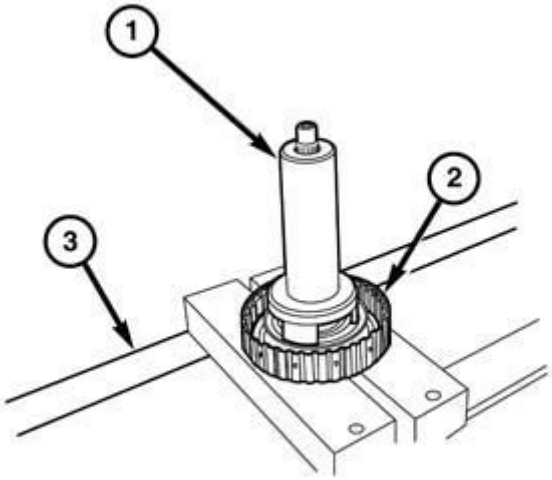

210171831

Fig. 670: 3-5-R Clutch, Special Tool #8680 & Arbor Press
Courtesy of CHRYSLER GROUP, LLC

8. Position tool (special tool #8680, Installer, Damper) over the shaft and onto

the 3-5-R clutch balance piston.

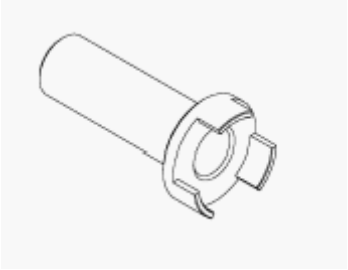

Fig. 671: special tool #8680
Courtesy of CHRYSLER GROUP, LLC

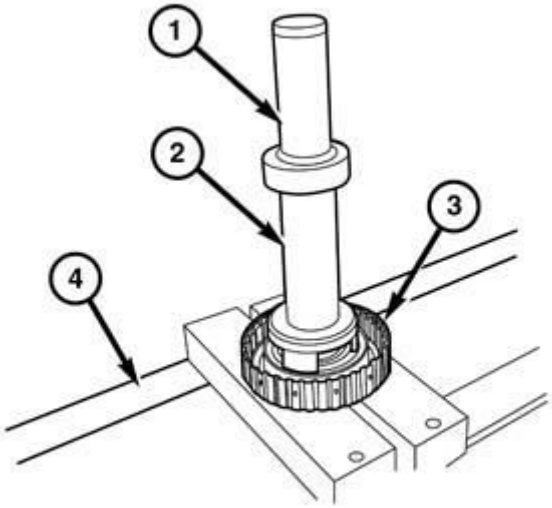

Fig. 672: 3-5-R Clutch Balance Piston & Special Tool #10117
Courtesy of CHRYSLER GROUP, LLC

9. Position tool (special tool #10117, Installer, Seal) over the shaft and onto the tool 8680.

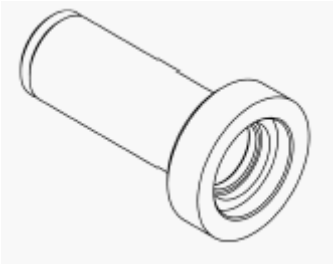

Fig. 673: Special Tool #10117
Courtesy of CHRYSLER GROUP, LLC

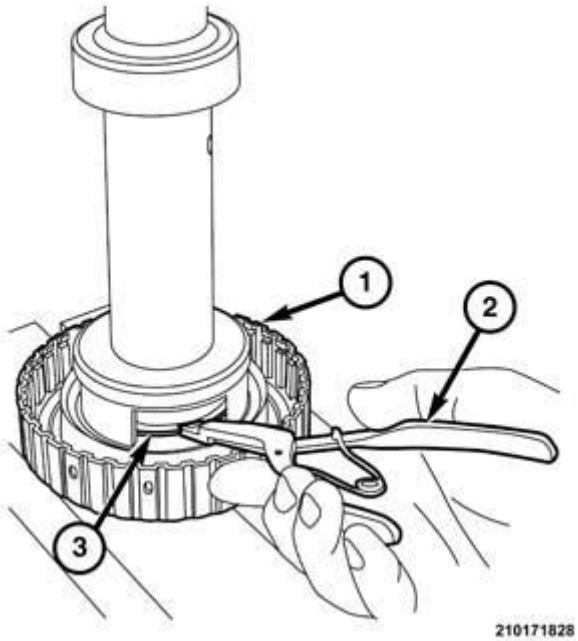

Fig. 674: 3-5-R Clutch, Balance Piston & Snap-Ring
Courtesy of CHRYSLER GROUP, LLC

10. Compress the 3-5-R clutch return spring until the snap-ring is free to be removed.
11. Using a suitable snap-ring pliers, remove the snap-ring holding the balance piston into the piston.
12. Remove the 3-5-R clutch from the arbor press.

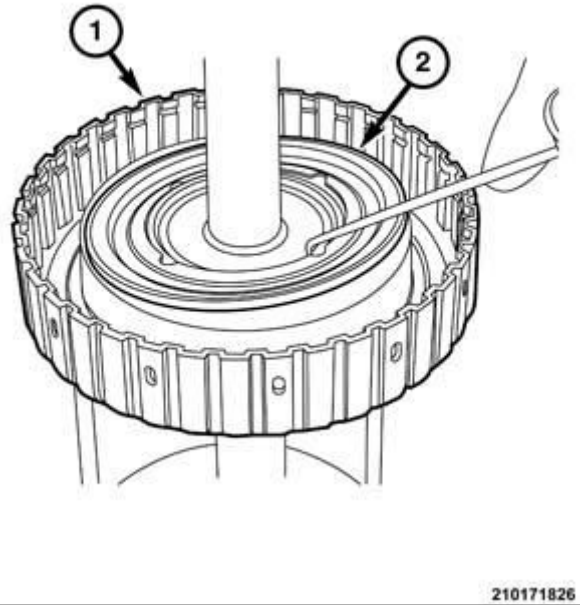

Fig. 675: 3-5-R Clutch Balance Piston & Piston
Courtesy of CHRYSLER GROUP, LLC

13. Using a suitable hook tool, remove the 3-5-R clutch balance piston (1) from the piston.

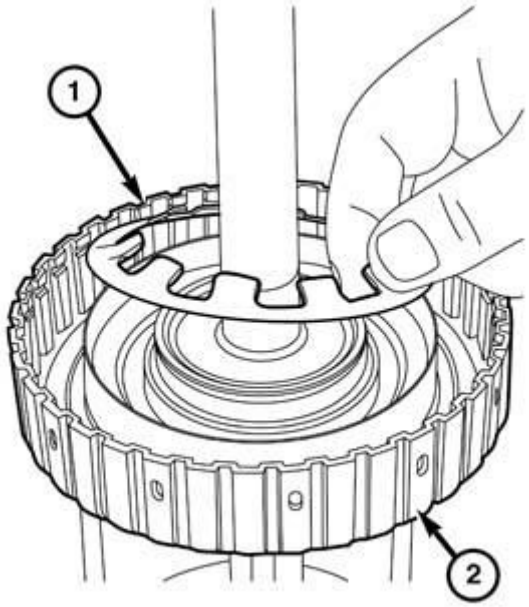

210171827

Fig. 676: 3-5-R Clutch Return Spring & Piston
Courtesy of CHRYSLER GROUP, LLC

14. Remove the 3-5-R clutch return spring (1) from the piston.

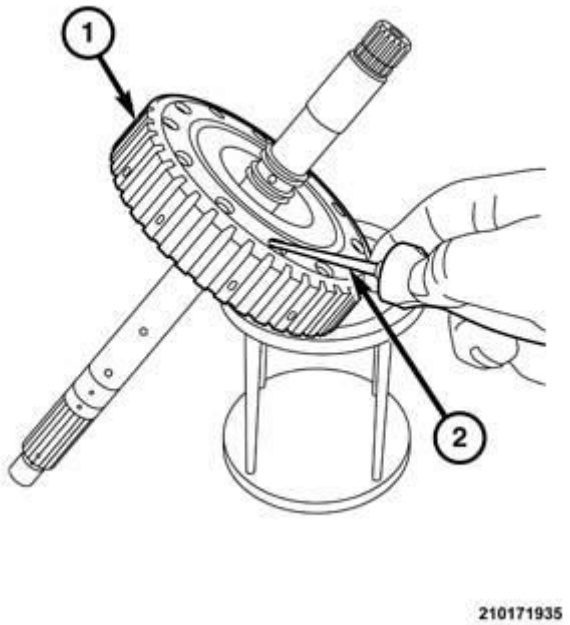

Fig. 677: 3-5-R Clutch Retainer & Piston
Courtesy of CHRYSLER GROUP, LLC

15. Through the holes in the back of the 3-5-R clutch retainer (1), Insert a screw driver (2) and push the piston out of the retainer.

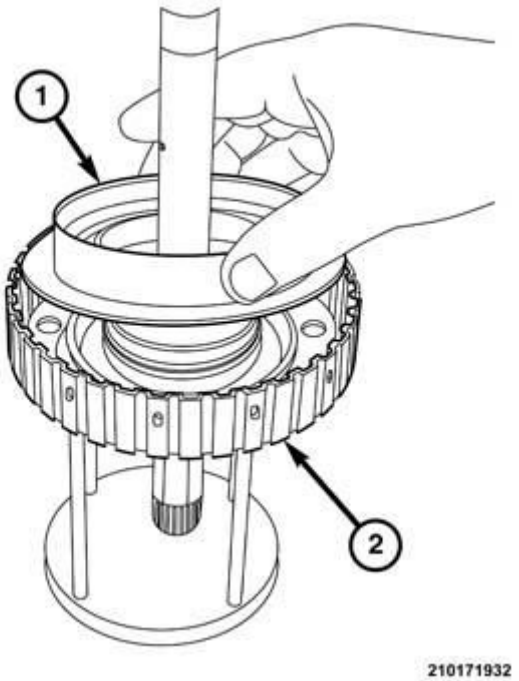

Fig. 678: 3-5-R Clutch Retainer & Piston
Courtesy of CHRYSLER GROUP, LLC

16. Remove the 3-5-R clutch piston (1) from the retainer (2).

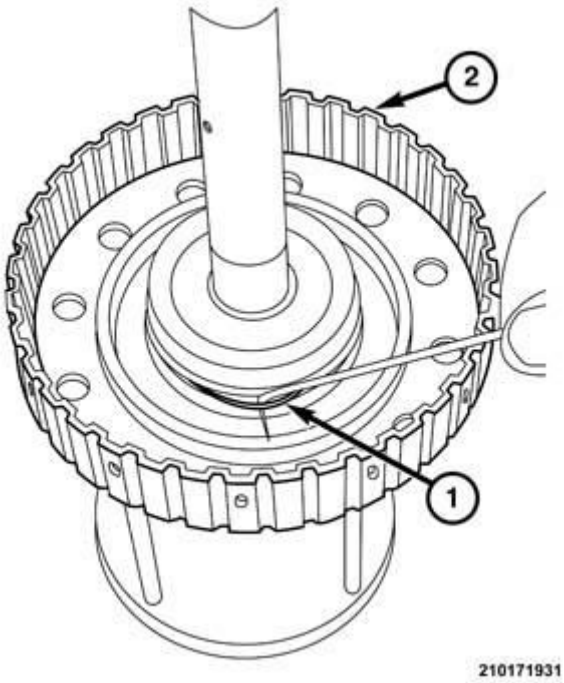

Fig. 679: Removing Inner D-Ring Seal
Courtesy of CHRYSLER GROUP, LLC

17. Using a suitable hook tool, remove the inner D-ring seal (1) from the groove in the 3-5-R clutch hub (2).

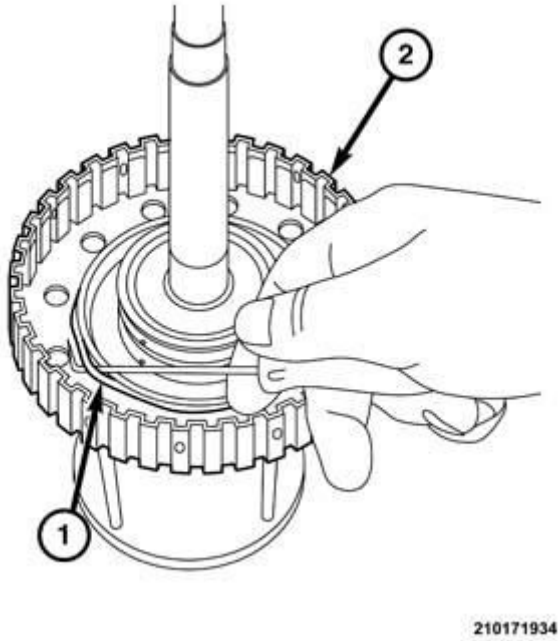

Fig. 680: Removing Outer D-Ring Seal

Courtesy of CHRYSLER GROUP, LLC

18. Using a suitable hook tool, remove the outer D-ring seal (1) from the groove in the 3-5-R clutch retainer (2).

ASSEMBLY

ASSEMBLY

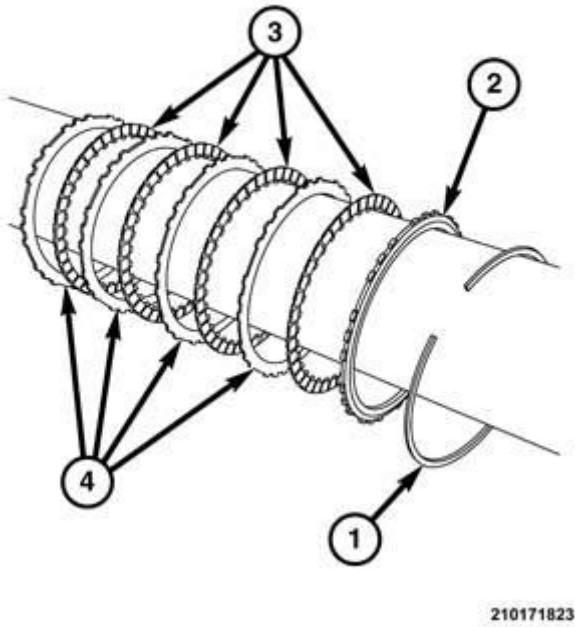

Fig. 681: 3-5-R Clutch Components
Courtesy of CHRYSLER GROUP, LLC

Wash the 3-5-Reverse (3-5-R) clutch components with suitable solvent and blow them dry with 344 kPa (50 psi) regulated shop air. Inspect the steel side of the plates for warping or excessive hot spots (blue) or other damage. Inspect the fiber side of the discs for excessive ware or warping. If damage is evident, the clutch assembly will require replacement.

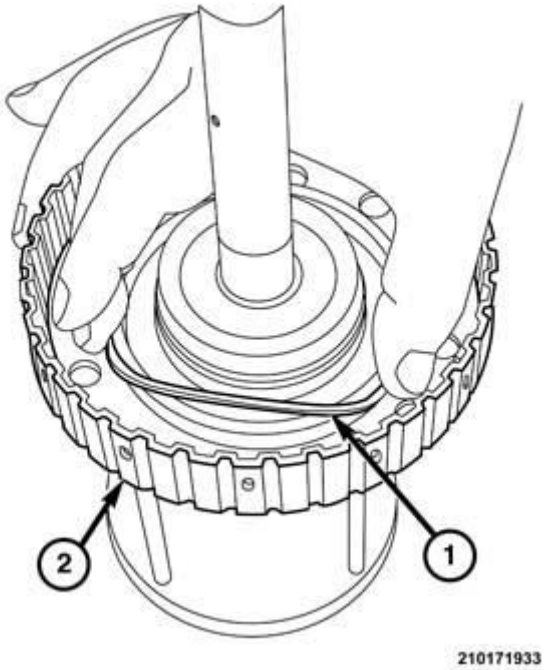

Fig. 682: Installing Outer D-Ring Seal
Courtesy of CHRYSLER GROUP, LLC

1. Install the outer D-ring seal (1) into the groove in the 3-5-R clutch retainer (2).

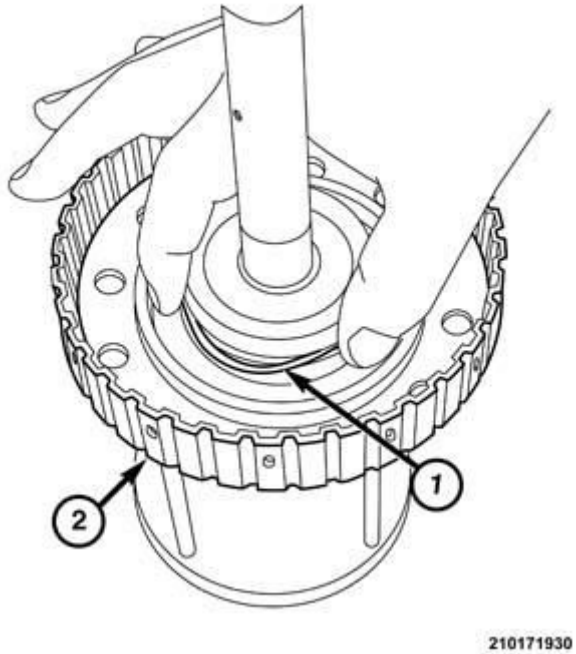

Fig. 683: Installing Inner D-Ring Seal
Courtesy of CHRYSLER GROUP, LLC

2. Install the D-ring seal (1) into the groove in the 3-5-R clutch hub (2).
3. Apply a light coat of transaxle fluid on the D-ring seals.

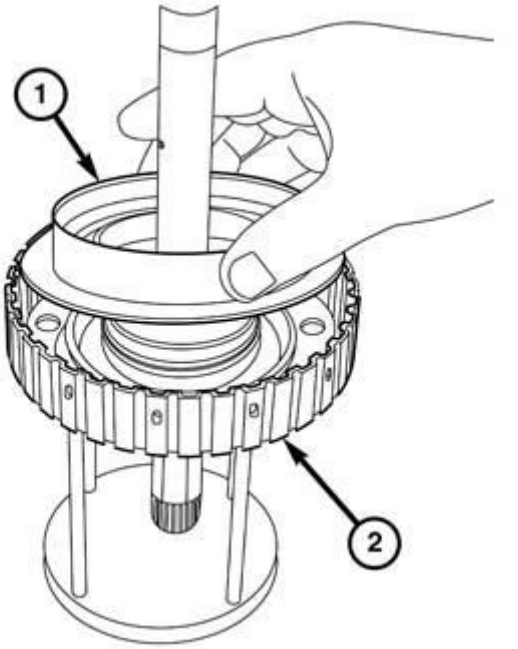

Fig. 684: 3-5-R Clutch Retainer & Piston
Courtesy of CHRYSLER GROUP, LLC

4. Install the 3-5-R clutch piston (1) into the retainer (2).

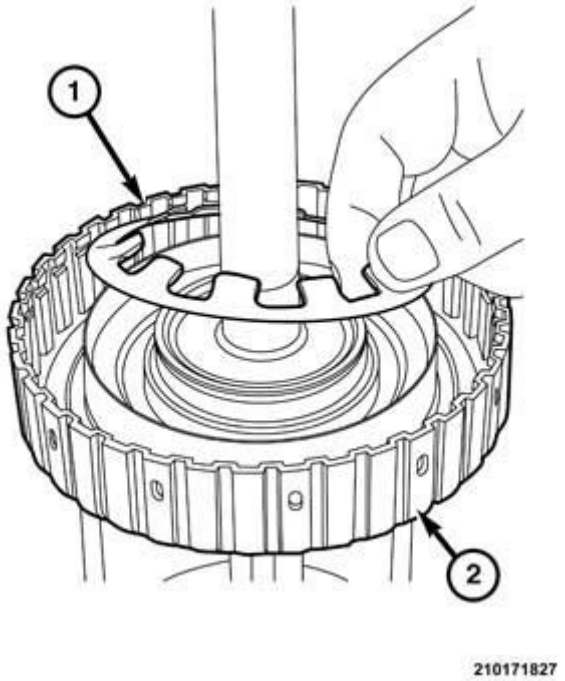

Fig. 685: 3-5-R Clutch Return Spring & Piston

Courtesy of CHRYSLER GROUP, LLC

5. Install the 3-5-R clutch return spring (1) into the piston.

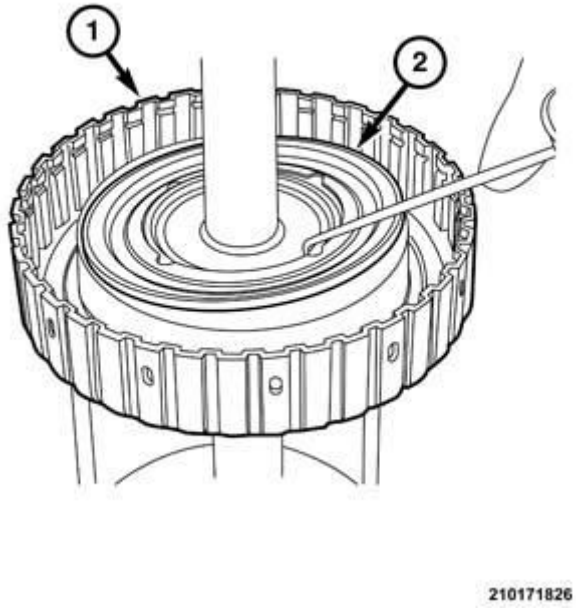

Fig. 686: 3-5-R Clutch Balance Piston & Piston
Courtesy of CHRYSLER GROUP, LLC

6. Install the 3-5-R clutch balance piston (1) into the piston.
7. Place the 3-5-R clutch on a suitable arbor press.

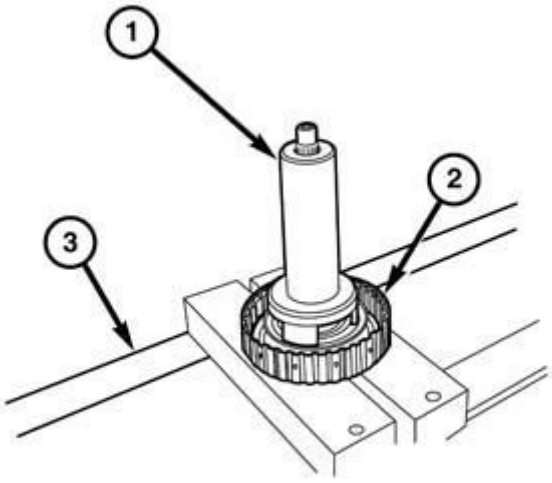

Fig. 687: 3-5-R Clutch, Special Tool #8680 & Arbor Press
Courtesy of CHRYSLER GROUP, LLC

8. Position tool (special tool #8680, Installer, Damper) over the shaft and onto the 3-5-R clutch balance piston.

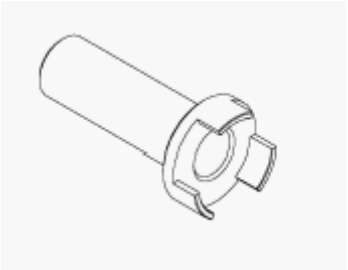

Fig. 688: special tool #8680
Courtesy of CHRYSLER GROUP, LLC

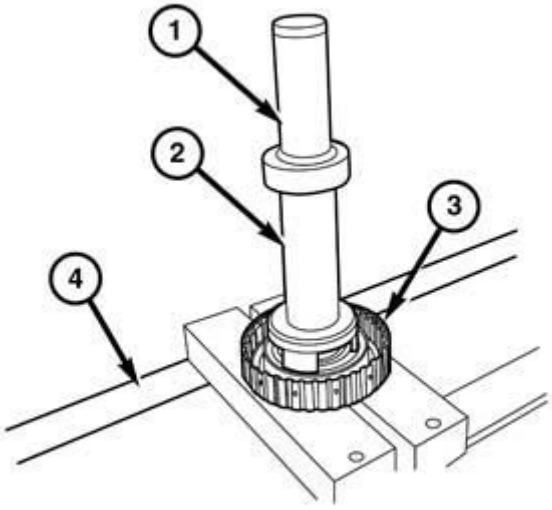

Fig. 689: 3-5-R Clutch Balance Piston & Special Tool #10117
Courtesy of CHRYSLER GROUP, LLC

9. Position tool (special tool #10117, Installer, Seal) over the shaft and onto the tool 8680.

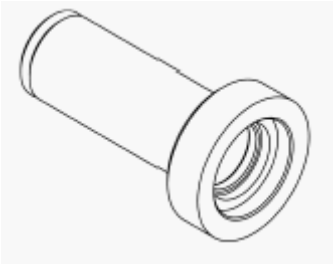

Fig. 690: Special Tool #10117
Courtesy of CHRYSLER GROUP, LLC

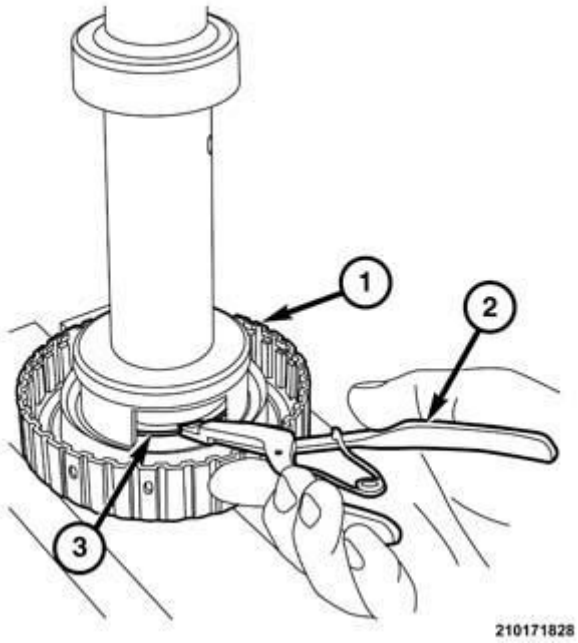

Fig. 691: 3-5-R Clutch, Balance Piston & Snap-Ring
Courtesy of CHRYSLER GROUP, LLC

10. Compress the 3-5-R clutch return spring until the snap-ring groove is open to receive the snap-ring.
11. Using a suitable snap-ring pliers, install the snap-ring to hold the balance piston into the piston.

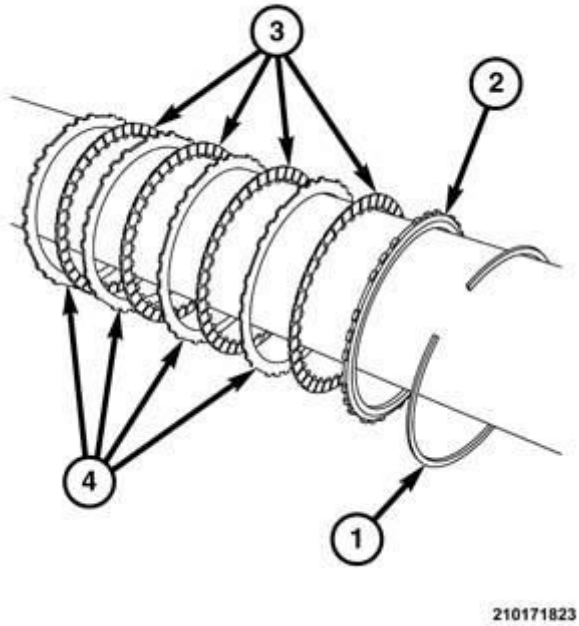

Fig. 692: 3-5-R Clutch Components

Courtesy of CHRYSLER GROUP, LLC

12. Starting with an outside lug disc, stack (in alternating order) four outside lug plates (4) and four inside lug discs (3). Place the reaction plate (2) on top of the stack, stepped side up.

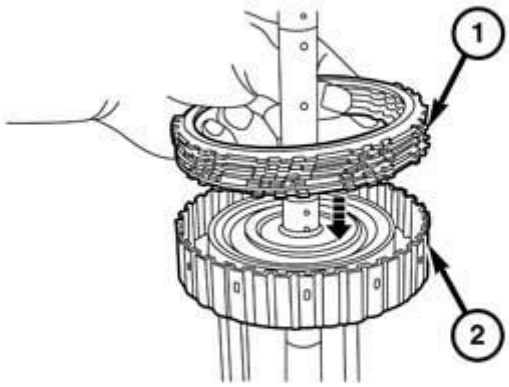

210171821

Fig. 693: 3-5-R Clutch Reaction Plate, Discs, Plates & Retainer
Courtesy of CHRYSLER GROUP, LLC

13. Install the 3-5-R clutch reaction plate, discs, and plates (1) into the retainer (2).

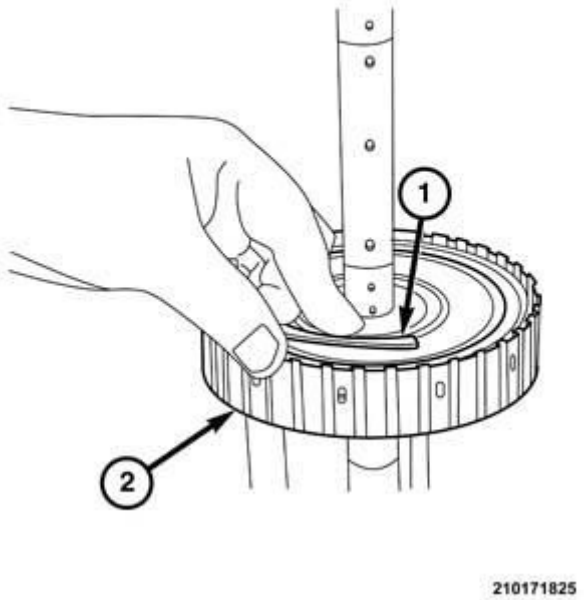

Fig. 694: 3-5-R Clutch Retainer & Snap-Ring
Courtesy of CHRYSLER GROUP, LLC

14. Install the snap-ring (1) to hold the reaction plate into 3-5-R clutch retainer (2).

NOTE: Verify that end play is within specifications. Refer to SPECIFICATIONS.

15. Install the 3-5-R clutch into the transaxle.

NOTE: Before installing the valve body, perform an air test to determine that the seals were installed properly. Refer to DIAGNOSIS AND TESTING.

16. Assemble the transaxle.
17. Install the transaxle in the vehicle.

CLUTCH, OVERDRIVE

DISASSEMBLY

DISASSEMBLY

The Overdrive Clutch is located under the rear cover, on top of the one way

clutch (OWC) race. The overdrive clutch includes a retainer, selective snap-ring, five discs, six plates, reaction plate, balance piston, helical return springs, and a piston. The overdrive clutch balance piston is equipped with a integral seal that cannot be replaced. If the seal is faulty the balance piston must be replaced. The overdrive clutch piston is equipped with and inner and outer D-ring seals. The overdrive clutch has a series of alternating steel plates separated by fiber discs. When applied it drives the 2-6 brake discs and the 3-5-Reverse clutch hub shaft. The free play of the overdrive clutch is controlled by a select snap-ring that the thickness can be changed to tighten or loosen the clutch. Refer to **SPECIFICATIONS**.

1. Remove the transaxle. Refer to **REMOVAL**.
2. Disassemble the transaxle to gain access to the overdrive clutch. Refer to **DISASSEMBLY**.
3. Remove the overdrive clutch from the transaxle.
4. Place the overdrive clutch on a clean work surface.

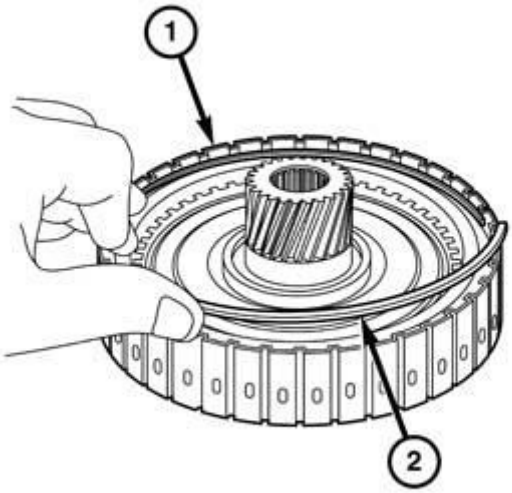

210171938

Fig. 695: Overdrive Clutch Retainer & Snap-Ring
Courtesy of CHRYSLER GROUP, LLC

5. Using a suitable screw driver, pry the snap-ring out (1) of the overdrive clutch retainer (2).

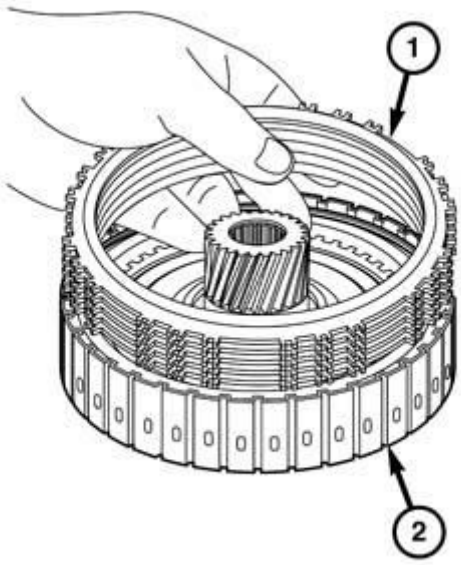

210171940

Fig. 696: Retainer, Overdrive Clutch Reaction Plate, Discs, & Plates
Courtesy of CHRYSLER GROUP, LLC

6. Remove the overdrive clutch reaction plate, discs, and plates (1) from the retainer (2).
7. Place the overdrive clutch, balance piston up, on a suitable arbor press. (1)

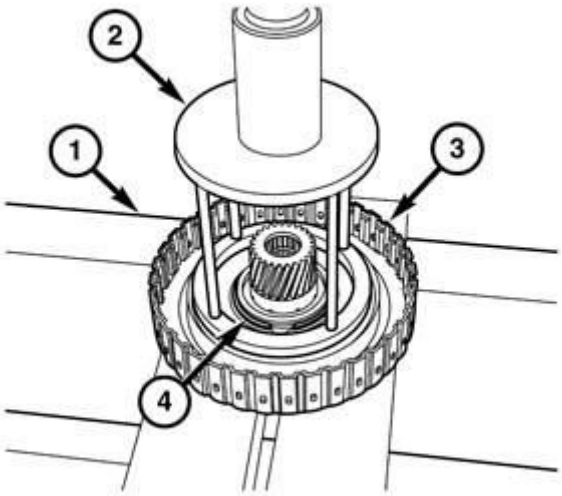

210171951

Fig. 697: Overdrive Clutch, Special Tool #8285 & Balance Piston
Courtesy of CHRYSLER GROUP, LLC

8. Position tool (special tool #8285, Compressor, Spring) (2) on the overdrive clutch balance piston.
9. Compress the overdrive clutch return spring until the snap-ring is free to be removed.

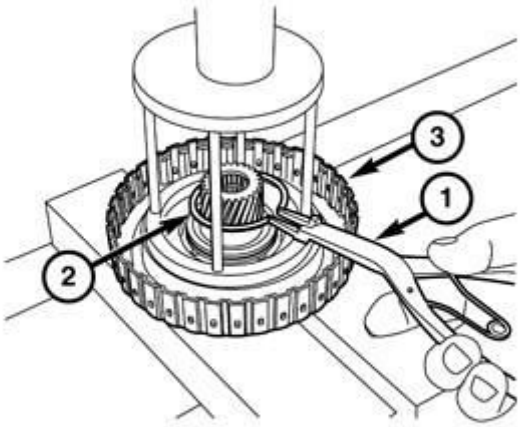

210171950

Fig. 698: Balance Piston, Piston & Snap-Ring
Courtesy of CHRYSLER GROUP, LLC

10. Using a suitable snap-ring pliers, remove the snap-ring (1) holding the balance piston into the piston.
11. Remove the overdrive clutch from the arbor press.

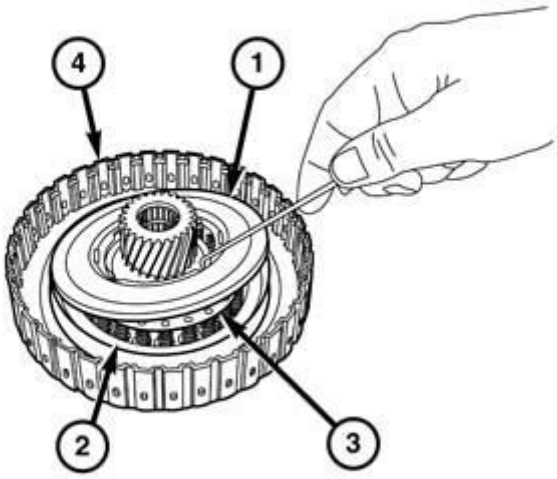

210171939

Fig. 699: Overdrive Clutch Balance Piston & Piston
Courtesy of CHRYSLER GROUP, LLC

12. Using a suitable hook tool, remove the overdrive clutch balance piston (1) from the piston (2).

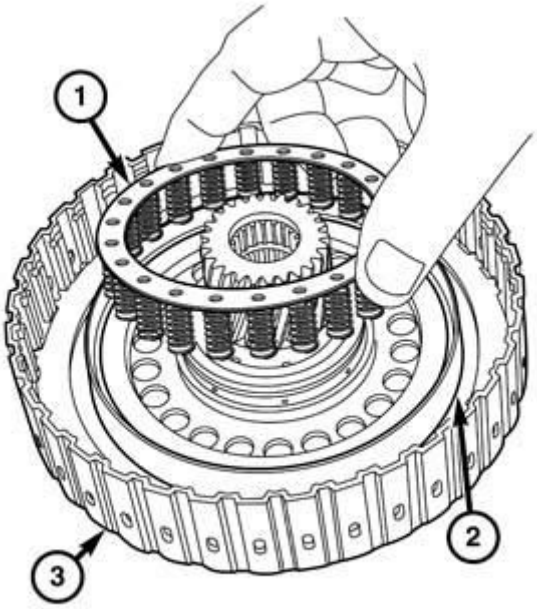

210171953

Fig. 700: Overdrive Clutch Return Spring & Piston
Courtesy of CHRYSLER GROUP, LLC

13. Remove the overdrive clutch return spring (1) from the piston (2).

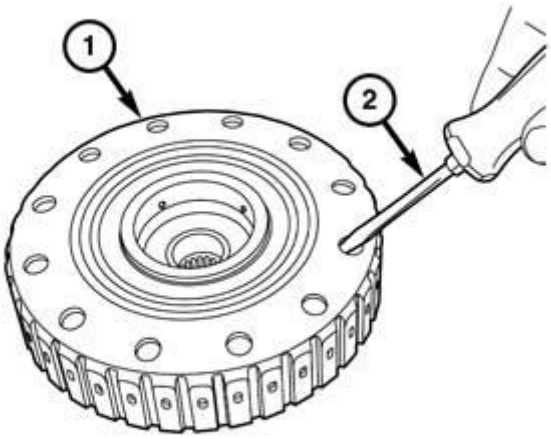

210171949

Fig. 701: Pushing Piston Out Of Retainer
Courtesy of CHRYSLER GROUP, LLC

14. Through the holes in the back of the overdrive clutch retainer (1), Insert a screw driver (2) and push the piston out of the retainer.

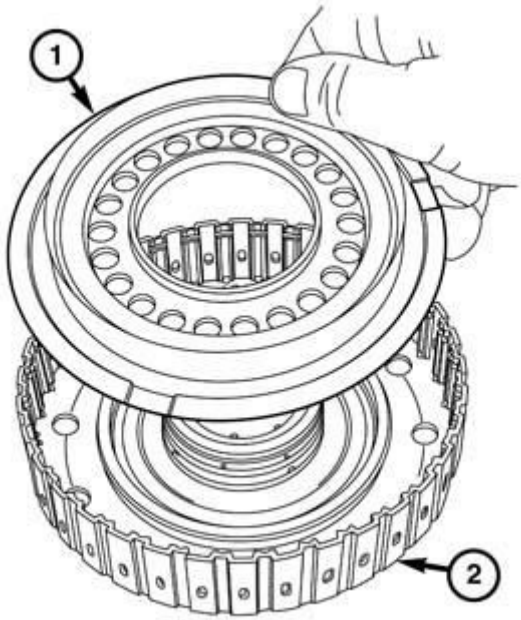

210171944

Fig. 702: Overdrive Clutch Retainer & Piston

Courtesy of CHRYSLER GROUP, LLC

15. Remove the overdrive clutch piston from the retainer.

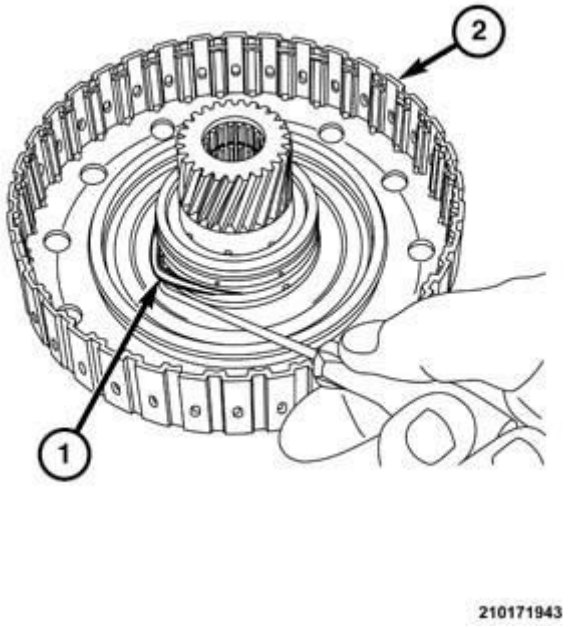

Fig. 703: Removing Inner D-Ring Seal
Courtesy of CHRYSLER GROUP, LLC

16. Using a suitable hook tool, remove the inner D-ring seal (1) from the groove in the overdrive clutch hub (2).

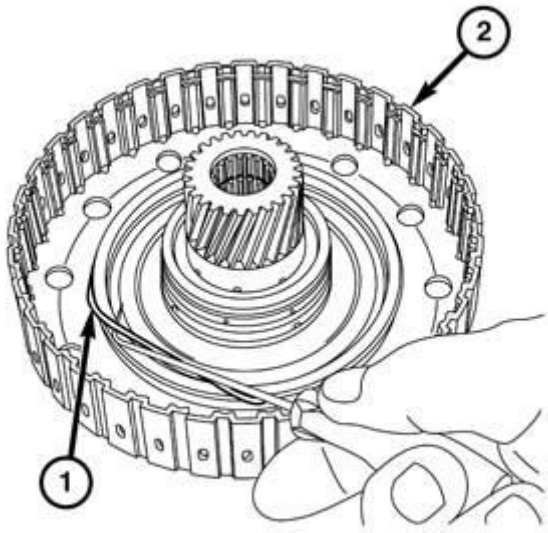

210171947

Fig. 704: Removing Outer D-Ring Seal
Courtesy of CHRYSLER GROUP, LLC

17. Using a suitable hook tool, remove the outer D-ring seal (1) from the groove in the overdrive clutch retainer (2).

ASSEMBLY

ASSEMBLY

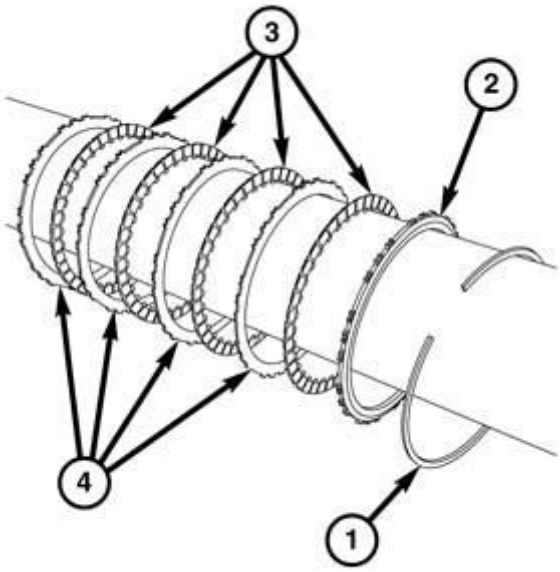

210171941

Fig. 705: Overdrive Clutch Components
Courtesy of CHRYSLER GROUP, LLC

Wash the Overdrive Clutch components with suitable solvent and blow them dry with 344 kPa (50 psi) regulated shop air. Inspect the steel plates (2 and 4) for warping or excessive hot spots (blue) or other damage. Inspect the fiber discs (3) for excessive ware or warping. If damage is evident, the clutch assembly will require replacement.

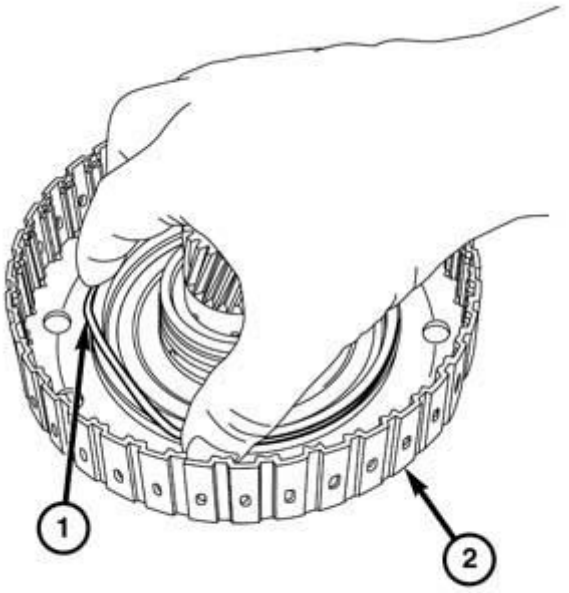

Fig. 706: Overdrive Clutch Retainer & Outer D-Ring Seal
Courtesy of CHRYSLER GROUP, LLC

1. Install the outer D-ring seal (1) into the groove in the overdrive clutch retainer (2).

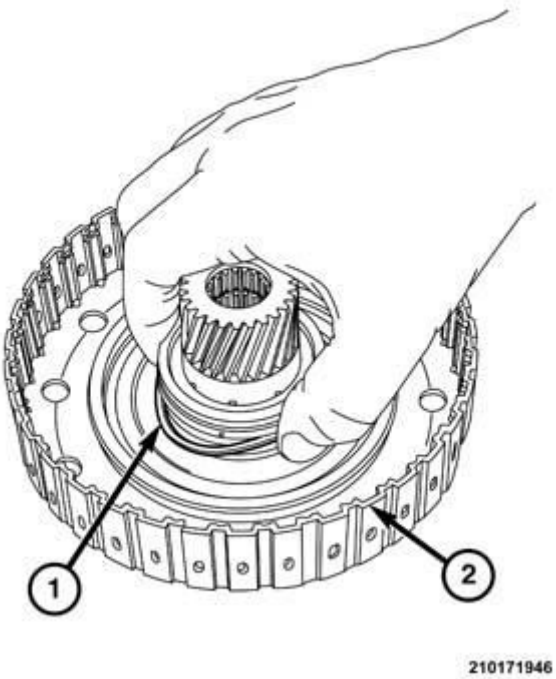

Fig. 707: Overdrive Clutch Hub & Inner D-Ring Seal
Courtesy of CHRYSLER GROUP, LLC

2. Install the D-ring seal (1) into the groove in the overdrive clutch hub (2).
3. Apply a light coat of transaxle fluid on the D-ring seals.

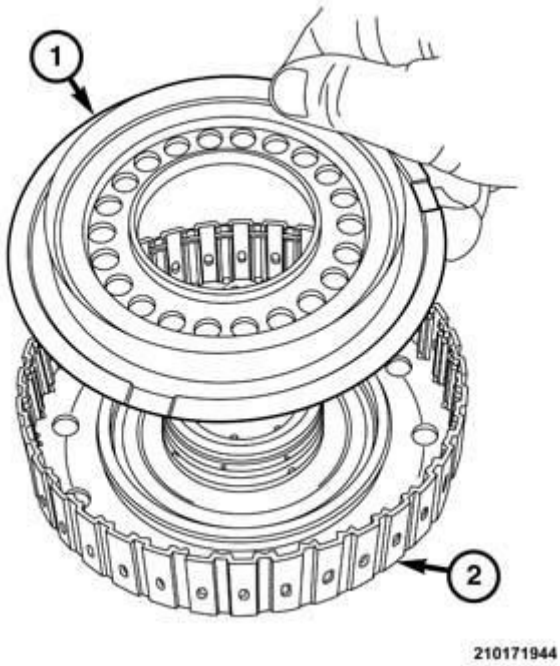

Fig. 708: Overdrive Clutch Retainer & Piston
Courtesy of CHRYSLER GROUP, LLC

4. Install the overdrive clutch piston (1) into the retainer (2).

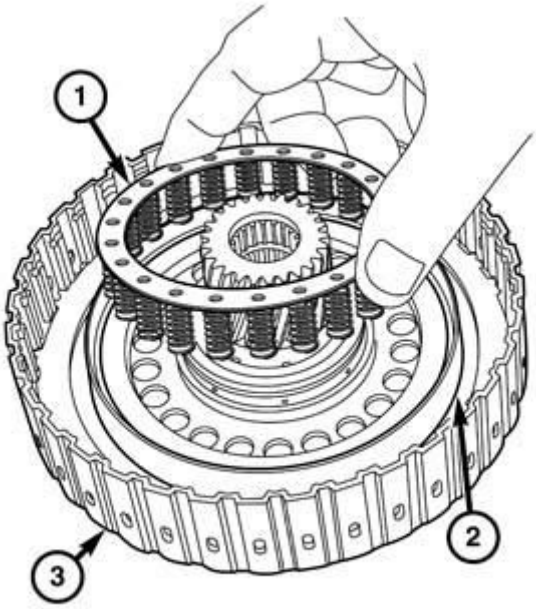

210171953

Fig. 709: Overdrive Clutch Return Spring & Piston
Courtesy of CHRYSLER GROUP, LLC

5. Install the overdrive clutch return spring (1) into the piston.

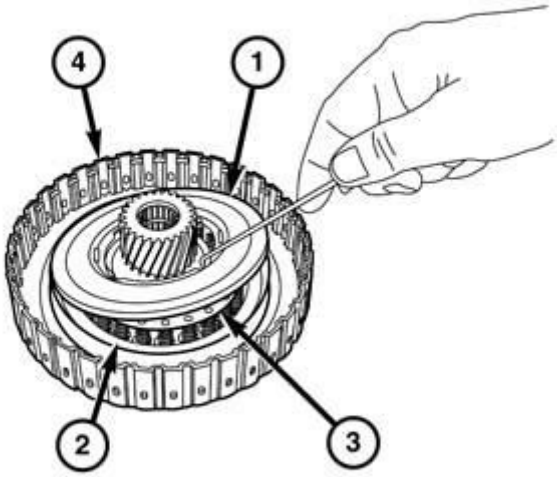

210171939

Fig. 710: Overdrive Clutch Balance Piston & Piston
Courtesy of CHRYSLER GROUP, LLC

6. Install the overdrive clutch balance piston (1) into the piston.
7. Place the overdrive clutch, balance piston up, on a suitable arbor press.

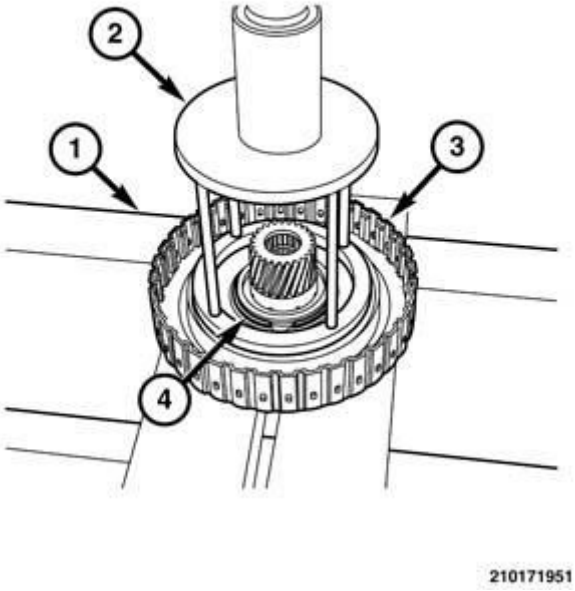

Fig. 711: Overdrive Clutch, Special Tool #8285 & Balance Piston
Courtesy of CHRYSLER GROUP, LLC

8. Position tool (special tool #8285, Compressor, Spring) (2) on the overdrive clutch balance piston.
9. Compress the overdrive clutch return spring until the snap-ring groove is open to receive the snap-ring.

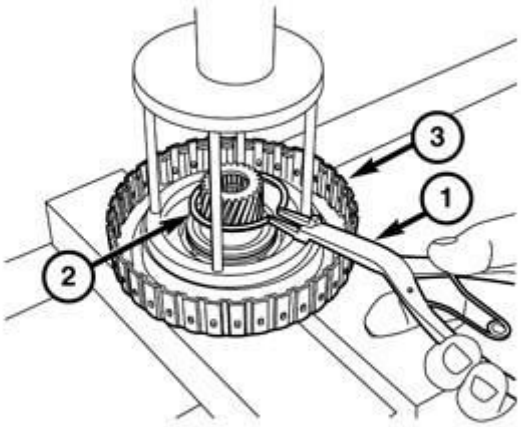

210171950

Fig. 712: Balance Piston, Piston & Snap-Ring
Courtesy of CHRYSLER GROUP, LLC

10. Using a suitable snap-ring pliers (1), install the snap-ring (2) to hold the balance piston into the piston.

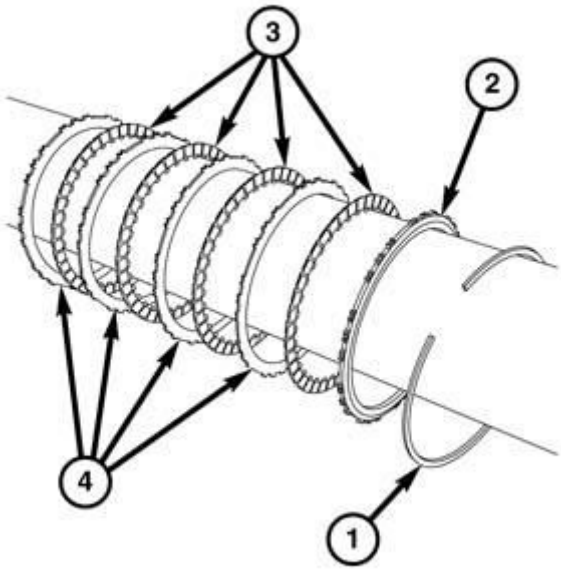

210171941

Fig. 713: Overdrive Clutch Components
Courtesy of CHRYSLER GROUP, LLC

11. Starting with a steel plate, stack (in alternating order) four steel plates (4) and four fiber discs (3). Place the reaction plate on top of the stack, stepped side up.

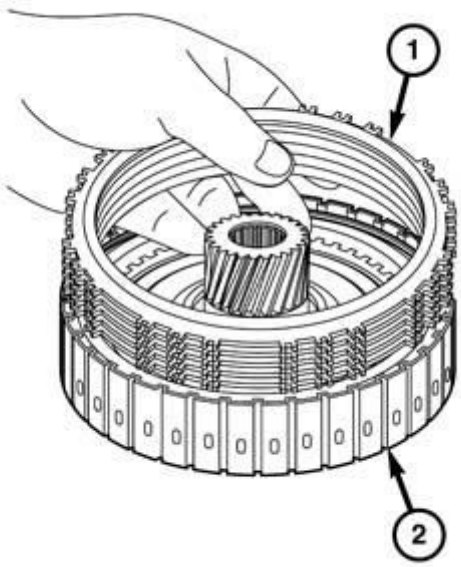

210171940

Fig. 714: Retainer, Overdrive Clutch Reaction Plate, Discs, & Plates
Courtesy of CHRYSLER GROUP, LLC

12. Install the overdrive clutch reaction plate, discs, and plates (1) from the retainer (2).

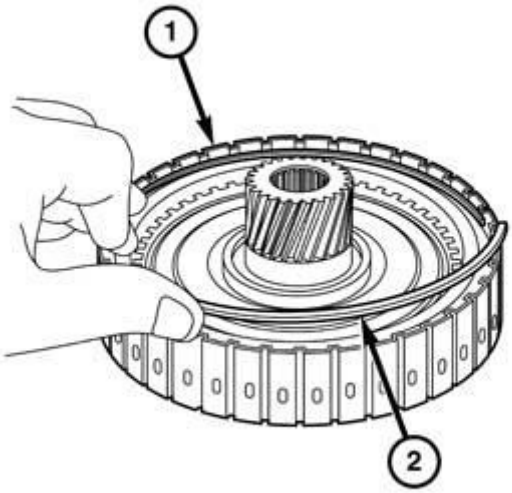

210171938

Fig. 715: Overdrive Clutch Retainer & Snap-Ring
Courtesy of CHRYSLER GROUP, LLC

13. Install the snap-ring (1) to hold the reaction plate into overdrive clutch retainer (2).

NOTE: Verify that end play is within specifications. Refer to SPECIFICATIONS.

14. Install the overdrive clutch into the transaxle.

NOTE: Before installing the valve body, perform an air test to determine that the seals were installed properly. Refer to DIAGNOSIS AND TESTING.

15. Assemble the transaxle.
16. Install the transaxle in the vehicle.

PUMP, FLUID

DISASSEMBLY

DISASSEMBLY

1. Drain the fluid from the transaxle. Refer to **FLUID, STANDARD**

PROCEDURES.

2. Remove the transaxle from the vehicle. Refer to **REMOVAL**.
3. Disassemble the transaxle to gain access to the fluid pump. Refer to **DISASSEMBLY**.
4. Remove the 2-6 brake piston from the fluid pump housing. Refer to **BRAKE AND PISTON, 2-6, REMOVAL**.

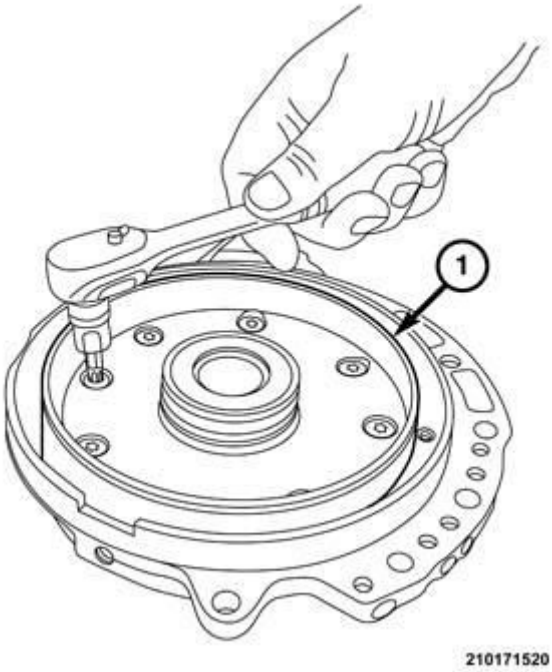

Fig. 716: Fluid Pump Cover
Courtesy of CHRYSLER GROUP, LLC

5. Remove screws holding fluid pump cover (1) to the fluid pump. It may be necessary to use an impact driver to loosen the screws to avoid damaging the Torx® head of the bolts.

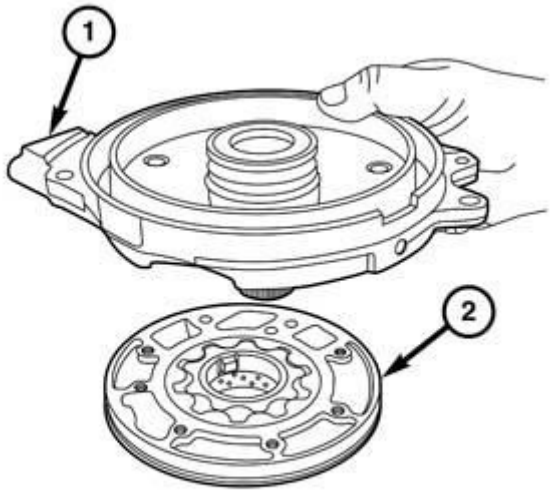

210171519

Fig. 717: Fluid Pump & Fluid Pump Cover
Courtesy of CHRYSLER GROUP, LLC

6. Separate the fluid pump cover (1) from the fluid pump (2).

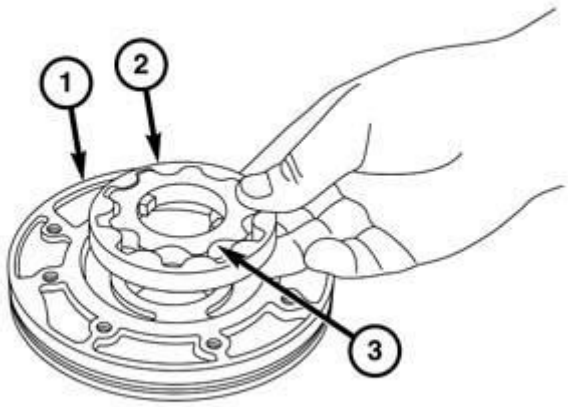

210171521

Fig. 718: Fluid Pump Housing & Rotor Assembly
Courtesy of CHRYSLER GROUP, LLC

7. Separate the gerotor assembly (2-3) from the fluid pump housing (1).

ASSEMBLY

ASSEMBLY

NOTE: The fluid pump components must be thoroughly cleaned before assembly.

NOTE: Inspect fluid pump components for damage or excessive wear before assembly. If damage is evident, replace the fluid pump.

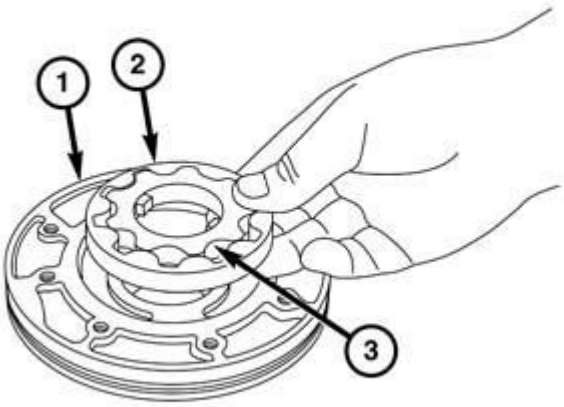

Fig. 719: Fluid Pump Housing & Rotor Assembly
Courtesy of CHRYSLER GROUP, LLC

1. Insert the gerotor assembly (2-3) into the fluid pump housing (1). Center the rotor to the center of the pump housing bushing.

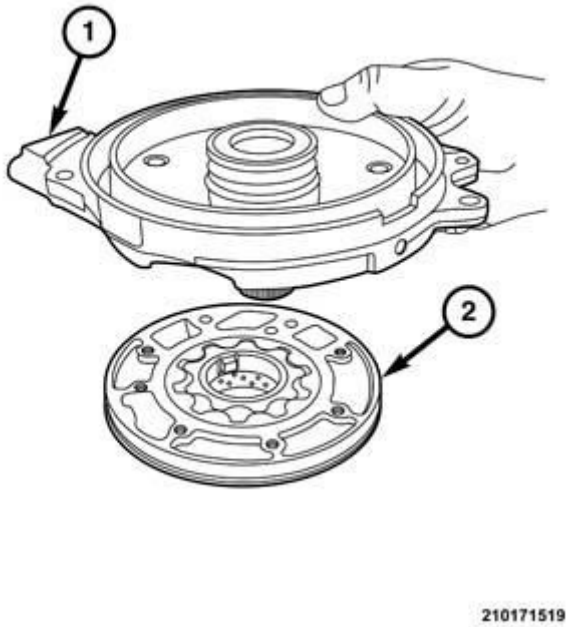

Fig. 720: Fluid Pump & Fluid Pump Cover
Courtesy of CHRYSLER GROUP, LLC

2. Place the fluid pump cover (1) over the fluid pump housing (2).

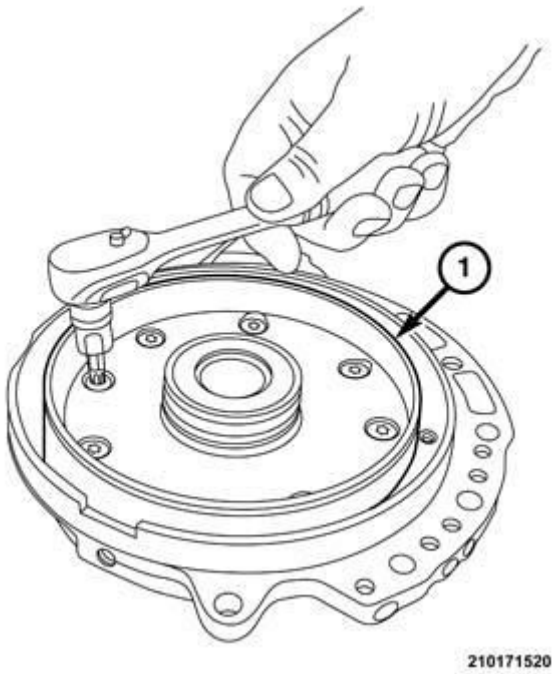

Fig. 721: Fluid Pump Cover
Courtesy of CHRYSLER GROUP, LLC

3. Install screws to hold fluid pump cover (1) to the fluid pump housing. Refer

to **SPECIFICATIONS**.

4. Install the 2-6 brake piston from the fluid pump housing. Refer to **BRAKE AND PISTON, 2-6, INSTALLATION**.
5. Assemble the transaxle. Refer to **DISASSEMBLY**.
6. Install the transaxle in the vehicle. Refer to **INSTALLATION**.
7. Fill the transaxle with specified fluid. Refer to **FLUID, STANDARD PROCEDURES**.

BEARINGS, DIFFERENTIAL

REMOVAL

DIFFERENTIAL BEARING

FWD

1. Remove the transaxle from the vehicle. Refer to **REMOVAL**.
2. Separate the Bell housing from the transaxle housing. Refer to **DISASSEMBLY**.

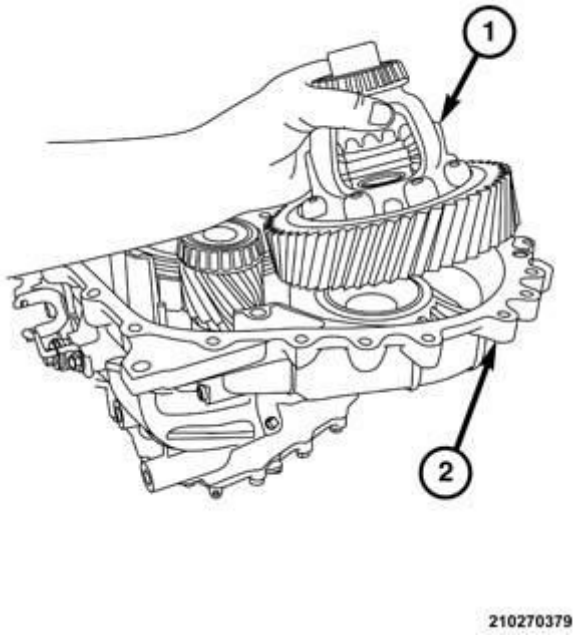

Fig. 722: Differential & Transaxle Housing
Courtesy of CHRYSLER GROUP, LLC

3. Separate the differential (1) from the transaxle housing (2). Refer to **DISASSEMBLY**.

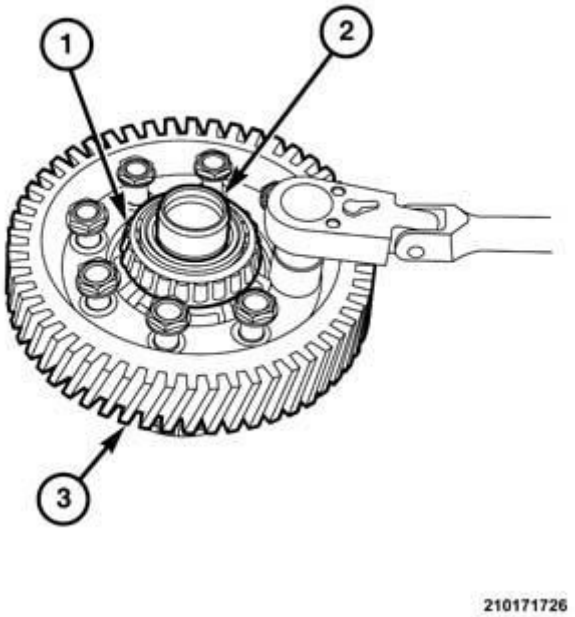

Fig. 723: Differential & Ring Gear
Courtesy of CHRYSLER GROUP, LLC

4. Remove bolts holding the ring gear (3) to the differential (2)

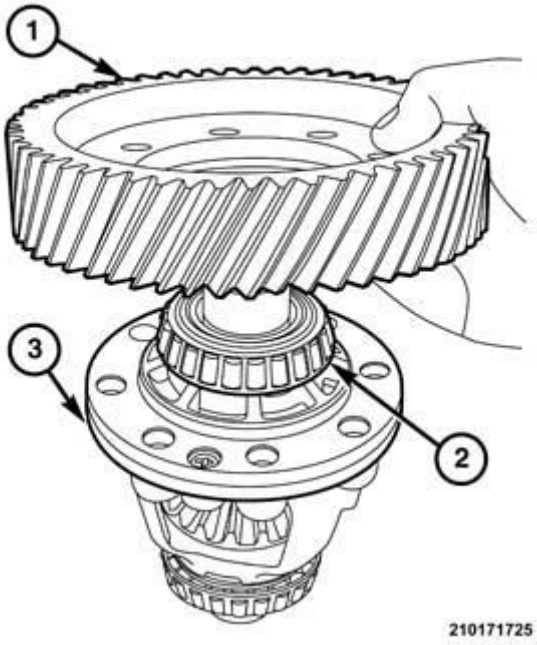

Fig. 724: Differential, Ring Gear & Bearing
Courtesy of CHRYSLER GROUP, LLC

5. Separate the ring gear (1) from the differential (3).

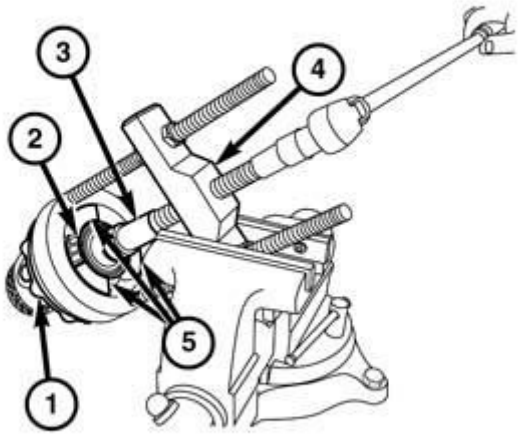

210171724

Fig. 725: Removing Bearing From Differential
Courtesy of CHRYSLER GROUP, LLC

6. Using tools (special tool #C-293-PA, Puller, Press) press (4), (special tool #C-293-48, Block Set, Puller) collets (5), and (special tool #C-4996, Adapter, Plug) plug (3), secured in a vise, remove the bearing (2) from the differential (1) (ring gear side shown in illustration above).

AWD

1. Remove the transaxle from the vehicle. Refer to **REMOVAL**.
2. Separate the Bell housing from the transaxle housing. Refer to **DISASSEMBLY**.

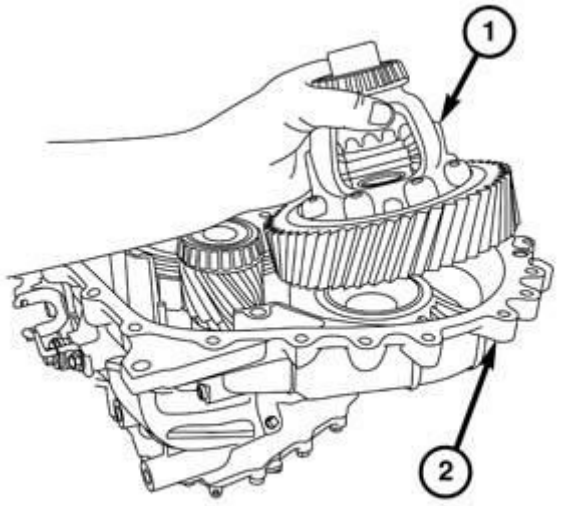

210270379

Fig. 726: Differential & Transaxle Housing
Courtesy of CHRYSLER GROUP, LLC

3. Separate the differential (1) from the transaxle housing (2). Refer to **DISASSEMBLY**.

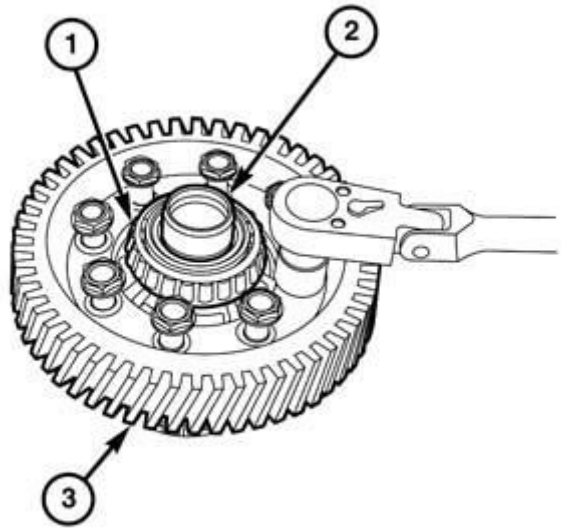

210171726

Fig. 727: Differential & Ring Gear
Courtesy of CHRYSLER GROUP, LLC

4. Remove bolts holding the ring gear (3) to the differential (2)

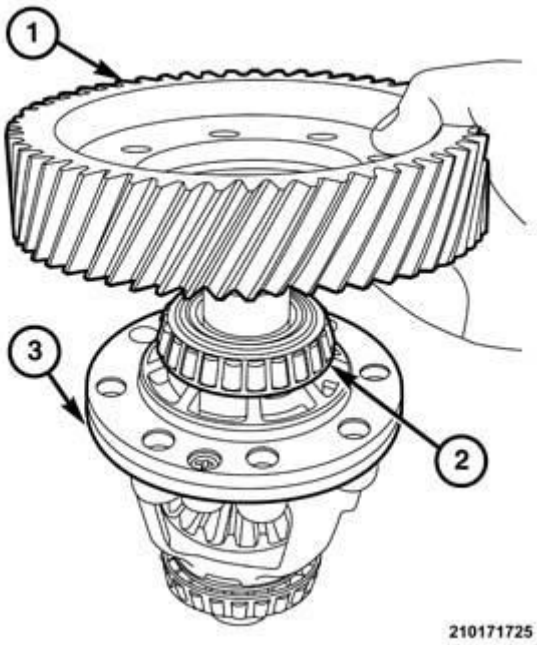

Fig. 728: Differential, Ring Gear & Bearing
Courtesy of CHRYSLER GROUP, LLC

5. Separate the ring gear (1) from the differential (3).

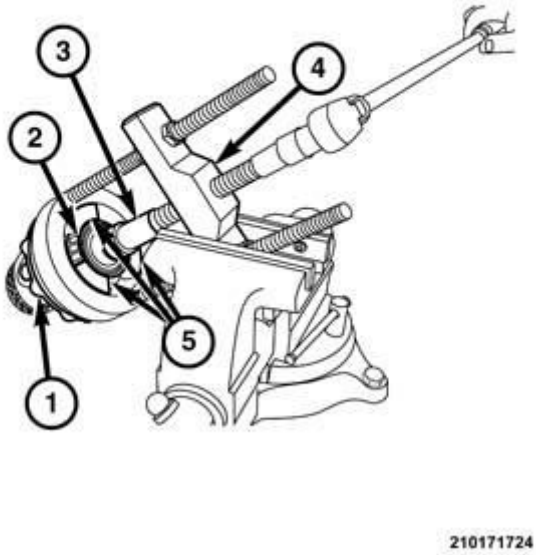

Fig. 729: Removing Bearing From Differential
Courtesy of CHRYSLER GROUP, LLC

6. Using tools press (special tool #C-293-PA, Puller, Press) (4), collets (special tool #C-293-62, Block Set, Puller) (5), and plug (special tool #9678, Press Plug) (3), secured in a vise, remove the bearing (2) from the differential (1) (PTU side shown in illustration above).

DIFFERENTIAL BEARING RACE

The transaxle housing and bell housing must be separated to gain access to the differential bearings.

1. Remove the transaxle from the vehicle. Refer to **REMOVAL**.
2. Separate the Bell housing from the transaxle housing. Refer to **DISASSEMBLY**.

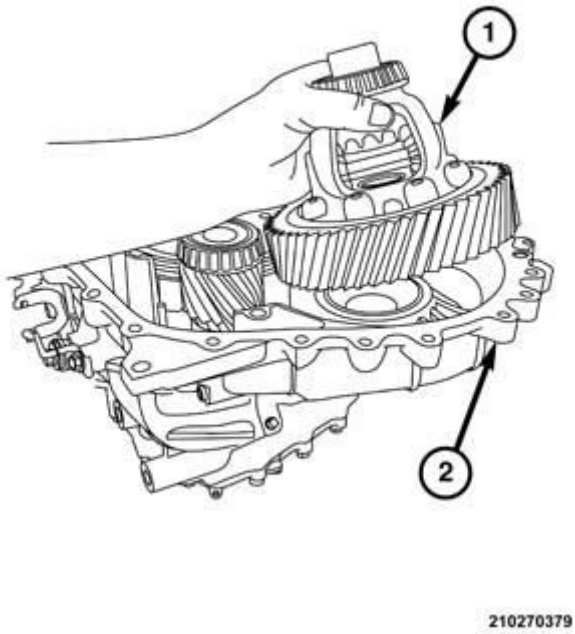

Fig. 730: Differential & Transaxle Housing
Courtesy of CHRYSLER GROUP, LLC

3. Separate the differential (1) from the transaxle housing (2). Refer to **DISASSEMBLY**.

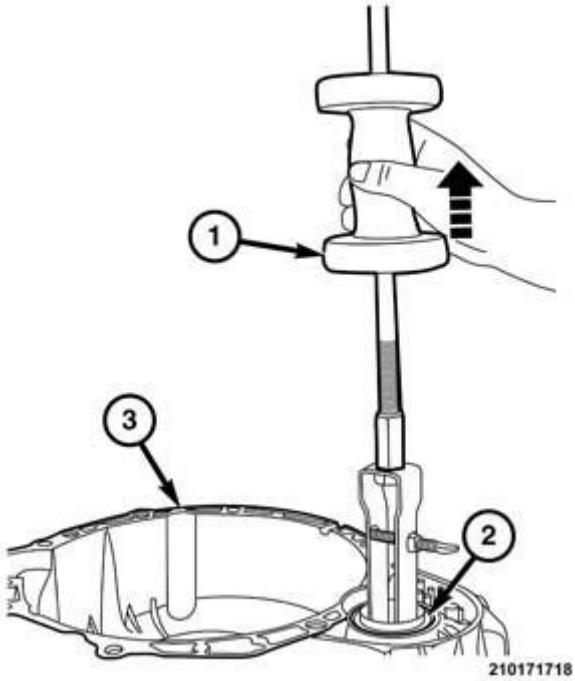

Fig. 731: Removing Halfshaft Axle Seal
Courtesy of CHRYSLER GROUP, LLC

4. Using tool (special tool #9664, Remover, Bearing Cup) and slide hammer (special tool #C-637, Slide Hammer, Universal), remove the halfshaft axle seal from the bell housing or transaxle housing (bell housing side shown in illustration above).

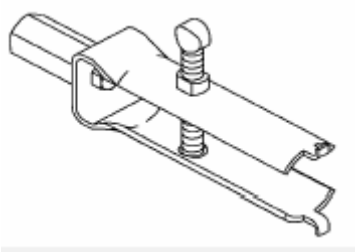

Fig. 732: Special Tool #9664
Courtesy of CHRYSLER GROUP, LLC

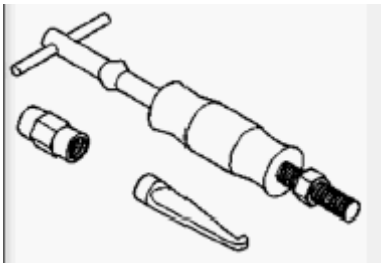

Fig. 733: Special Tool #C-637
Courtesy of CHRYSLER GROUP, LLC

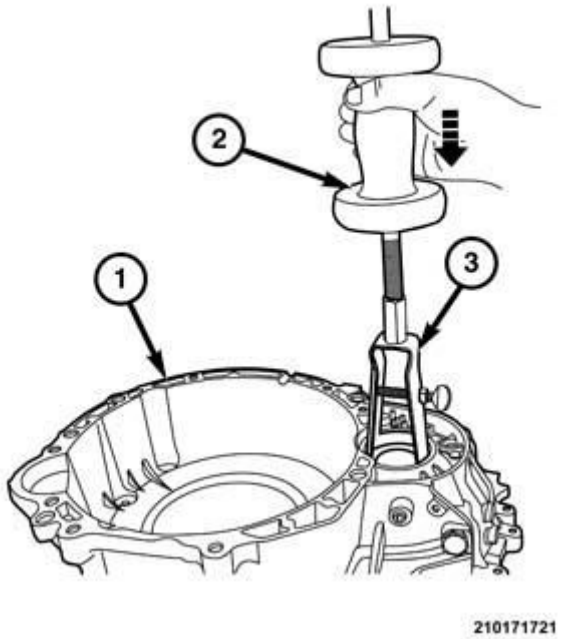

Fig. 734: Removing Differential Bearing Race
Courtesy of CHRYSLER GROUP, LLC

5. Using special tool (special tool #9664, Remover, Bearing Cup) (inserted into the relief slots outside the select spacer) and slide hammer (special tool #C-637, Slide Hammer, Universal) remove the differential bearing race from the back of the bell housing or transaxle housing (bell housing side shown in illustration above).

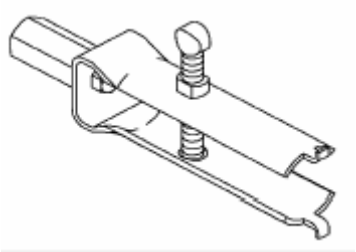

Fig. 735: Special Tool #9664
Courtesy of CHRYSLER GROUP, LLC

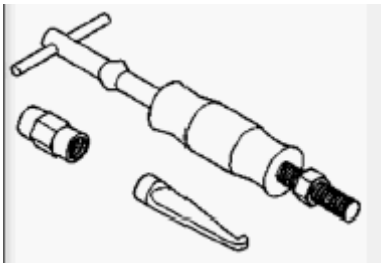

Fig. 736: Special Tool #C-637

Courtesy of CHRYSLER GROUP, LLC

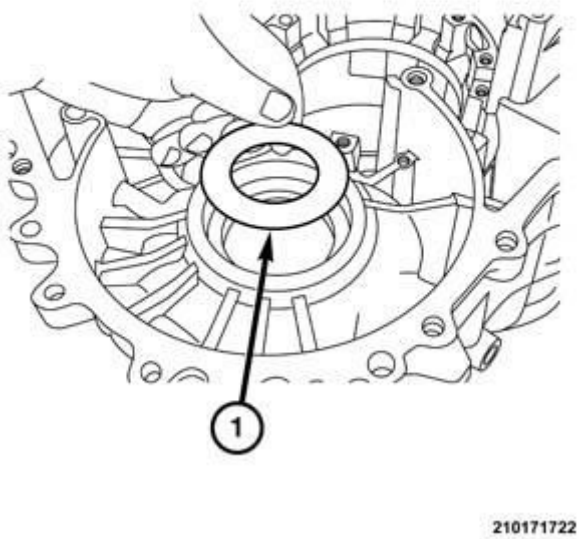

Fig. 737: Differential Bearing Race Select Shim
Courtesy of CHRYSLER GROUP, LLC

6. Remove select shim from bottom of differential bearing race bore.

INSTALLATION

DIFFERENTIAL BEARING

WARNING: Use welding gloves or tongs when handling heated components. Failure to follow these instructions will result in personal injury.

CAUTION: A bearing heater is used to assembly some components. Use only a bearing heater/hot plate and follow manufacture's instructions. Heat components to 100° - 150° Celsius (212° Min. - 300° Max Fahrenheit). Never use an open flame to heat components. Never leave components on heater for and extended amount of time. If component is discolored after heating, the component has been overheated and must not be used. Failure to follow these instructions will result in component

damage.

NOTE: If the bearings are being replaced along with the differential or a transaxle housing component, the select shim thickness will need to be established. If only the bearing and race are being replaced, the original shim can be reused.

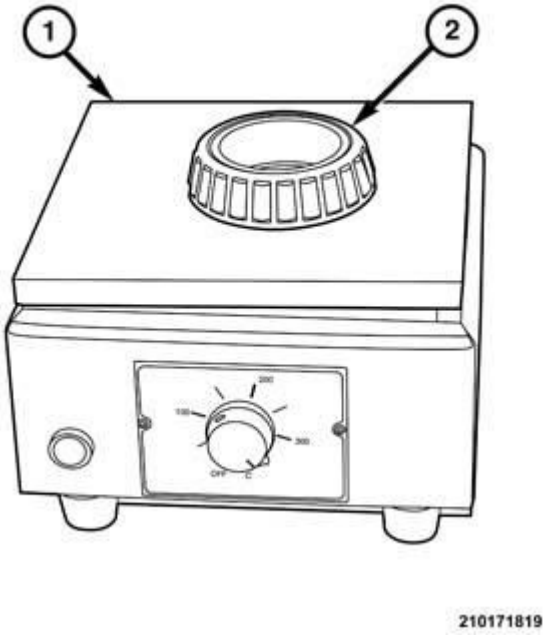

Fig. 738: Hot Plate & Bearing
Courtesy of CHRYSLER GROUP, LLC

1. Using a suitable HOT plate, heat the bearing to near 150° C (300° F). Light smoke may be produced as the bearing is heated. Do not allow the bearing to discolor.

NOTE: An infrared thermometer can be used to monitor the temperature of the bearing as it is heated.

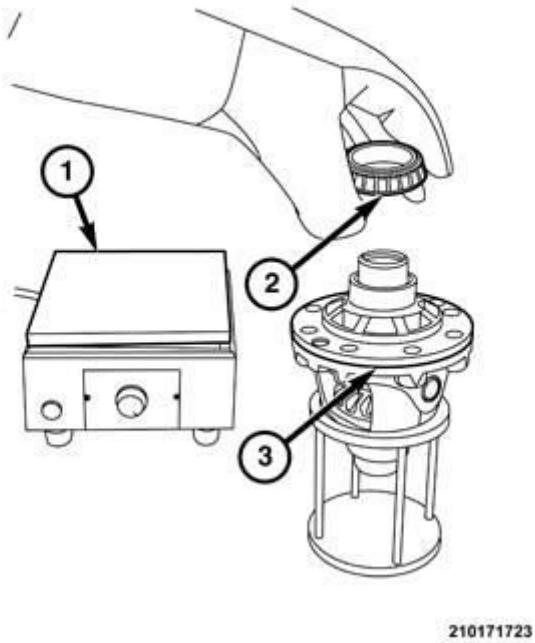

Fig. 739: Differential, Special Tool #8285 & Bearing
Courtesy of CHRYSLER GROUP, LLC

2. Place the differential (3) on (special tool #8285, Compressor, Spring).

Fig. 740: Special Tool #8285
Courtesy of CHRYSLER GROUP, LLC

While wearing welding gloves, Place heated bearing (2) onto the differential (3) and allow to cool (ring gear side shown in illustration above).

NOTE: If the bearing does not fall all the way onto the differential, it was not hot enough. Remove the bearing and repeat step 1 and 2.

DIFFERENTIAL BEARING RACE

FWD

NOTE: If the bearings are being replaced along with the differential or a transaxle housing component, the select shim thickness will need to be established. If only the bearing and race are being replaced, the original shim can be reused.

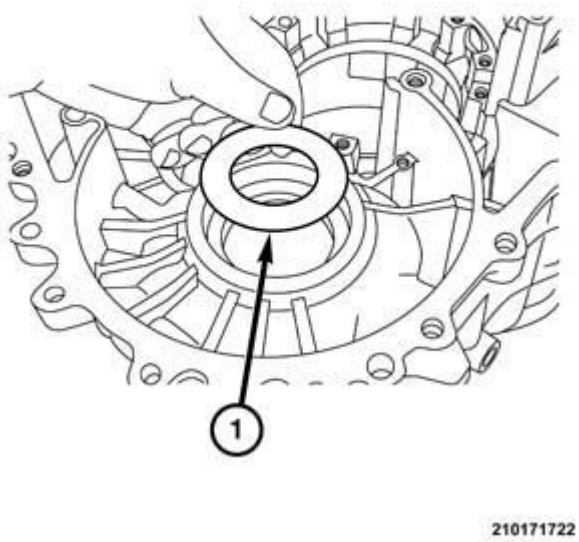

Fig. 741: Differential Bearing Race Select Shim
Courtesy of CHRYSLER GROUP, LLC

1. Install the select shim (1) into the bearing race bore in the housing.

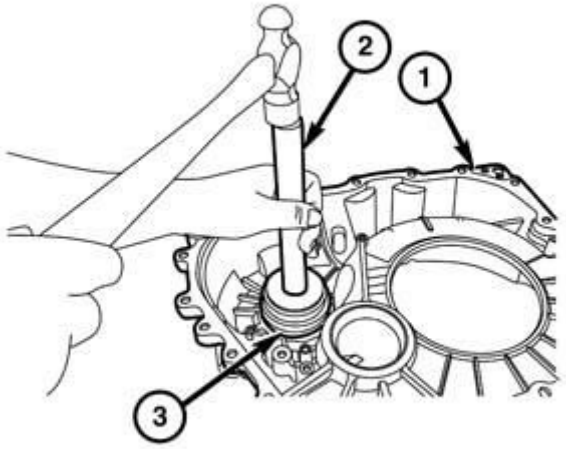

210171719

Fig. 742: Special Tool #9668 & Differential Bearing Race
Courtesy of CHRYSLER GROUP, LLC

NOTE: When installing the differential bearing race, do not allow the race to tip and bind as it is driven into the bore.

2. Using tools (special tool #9668, Remover/Installer, Bearing Cup) (3) and (special tool #C-4171, Driver Handle, Universal) (2), carefully drive the bearing race into the bore in the housing.
3. Prepare to reassemble the transaxle. If necessary, perform the Turning Torque Measurement procedure.

AWD

NOTE: If the bearings are being replaced along with the differential or a transaxle housing component, the select shim thickness will need to be established. If only the bearing and race are being replaced, the original shim can be reused.

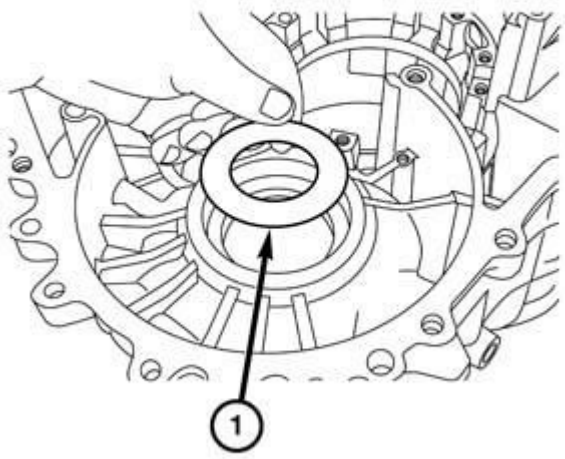

210171722

Fig. 743: Differential Bearing Race Select Shim
Courtesy of CHRYSLER GROUP, LLC

1. Install the select shim (1) into the bearing race bore in the housing.

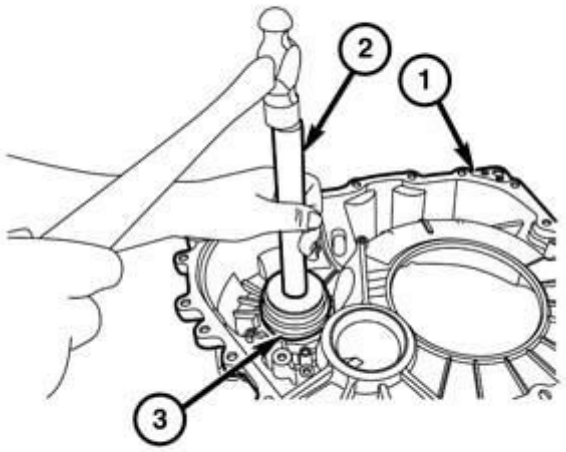

210171719

Fig. 744: Special Tool #9668 & Differential Bearing Race
Courtesy of CHRYSLER GROUP, LLC

NOTE: When installing the differential bearing race, do not

allow the race to tip and bind as it is driven into the bore.

2. Using tools (special tool #C-4310, Installer, Bearing) (3) and (special tool #C-4171, Driver Handle, Universal) (2), carefully drive the bearing race into the bore in the housing.
3. Prepare to reassemble the transaxle. If necessary, perform the Turning Torque Measurement procedure.

DIFFERENTIAL AND RING GEAR

DISASSEMBLY

FWD

1. Remove the transaxle from the vehicle. Refer to **REMOVAL**.
2. Disassemble the transaxle to gain access to the differential. Refer to **DISASSEMBLY**.
3. Separate the differential from the transaxle housing.

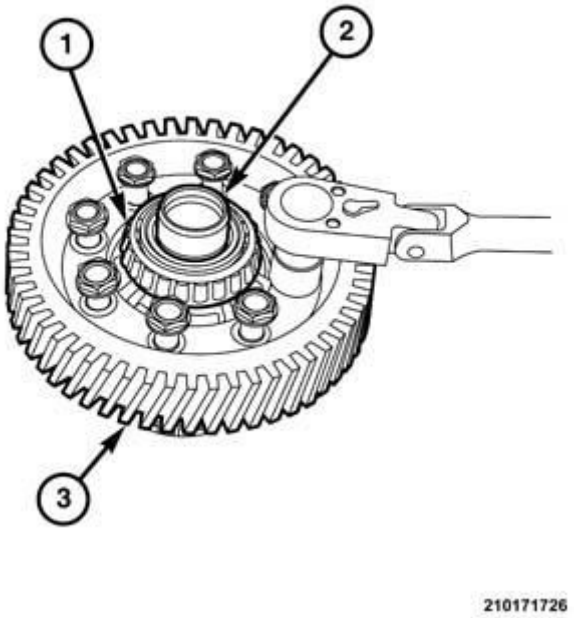

Fig. 745: Differential & Ring Gear
Courtesy of CHRYSLER GROUP, LLC

4. Remove the bolts (2) holding the ring gear (3) to the differential.

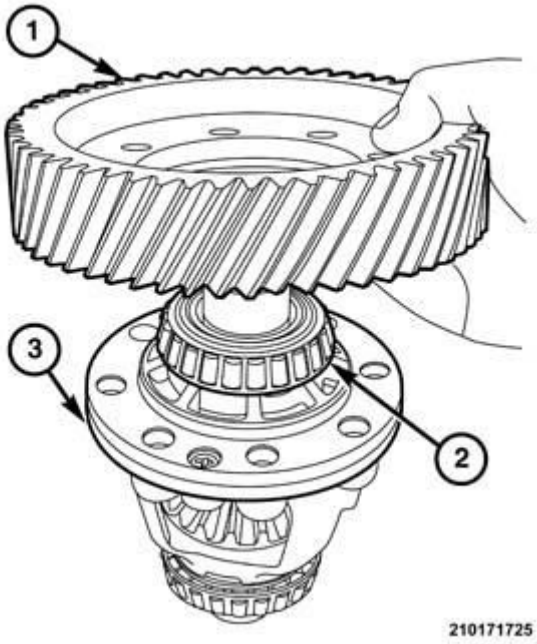

Fig. 746: Differential, Ring Gear & Bearing
Courtesy of CHRYSLER GROUP, LLC

5. Separate the ring gear (1) from the differential (3).

Fig. 747: Differential Case Halves & Screws
Courtesy of CHRYSLER GROUP, LLC

6. Remove the screws (1) holding the differential case halves (2) together.

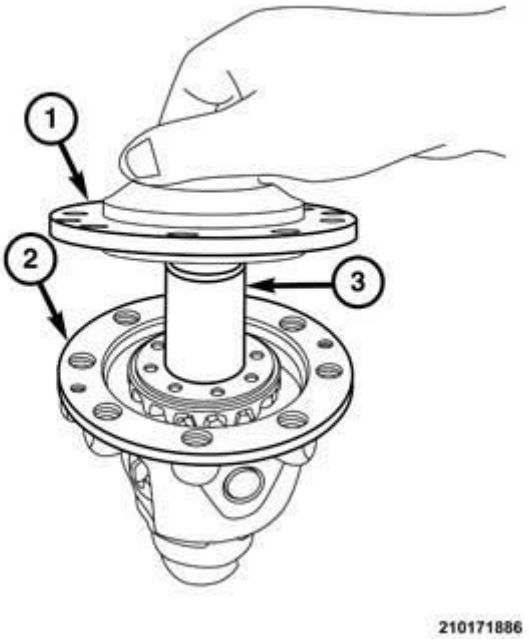

Fig. 748: Ring Gear Half & Differential
Courtesy of CHRYSLER GROUP, LLC

7. Separate the ring gear half (1) of the case from the differential (2).

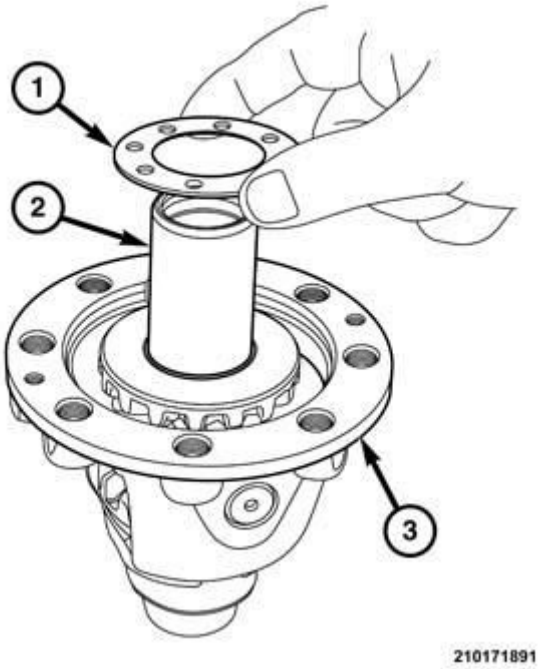

Fig. 749: Side Gear Thrust Washer, Side Gear & Differential
Courtesy of CHRYSLER GROUP, LLC

8. Separate the side gear thrust washer (1) from the side gear (2).

9. Separate the side gear (2) from the differential (3).

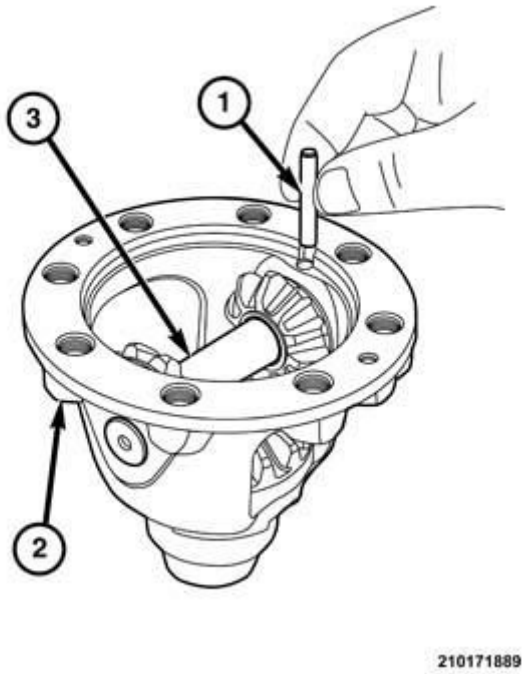

Fig. 750: Pin, Differential Case & Differential Link Shaft
Courtesy of CHRYSLER GROUP, LLC

10. Remove the pin (1) holding the differential link shaft (3) into the differential case (2).

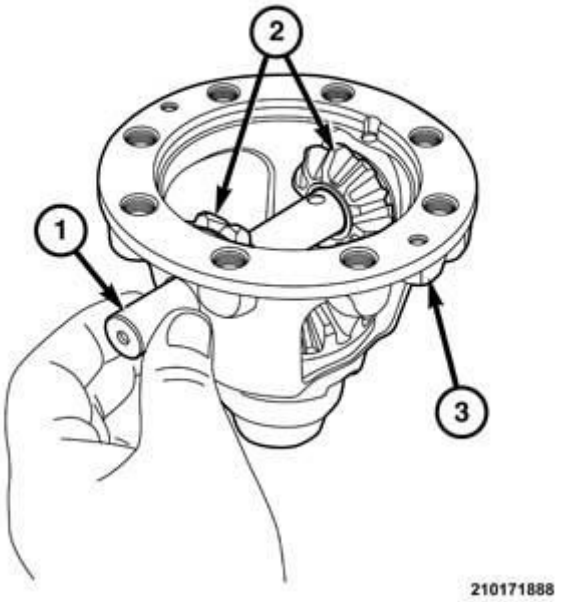

Fig. 751: Differential Case & Differential Link Shaft

Courtesy of CHRYSLER GROUP, LLC

11. Slide the differential link shaft (1) out of the differential case (3).

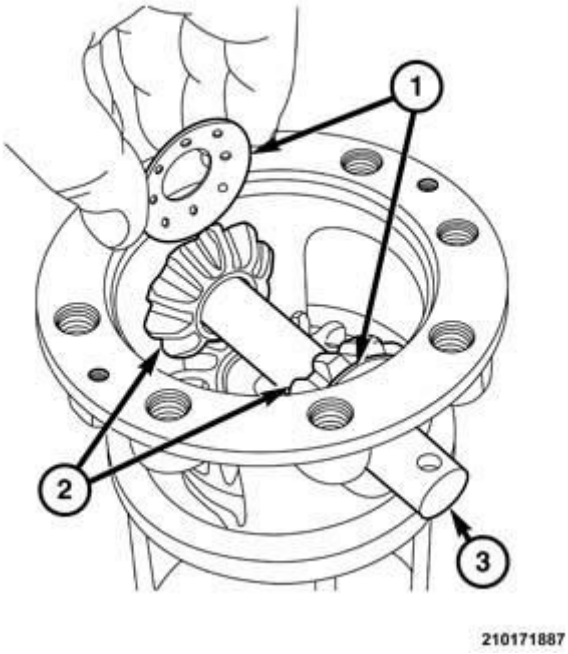

Fig. 752: Conical Washers & Pinion Gears
Courtesy of CHRYSLER GROUP, LLC

12. Remove the conical washers (1) and pinion gears (2) from the differential case.

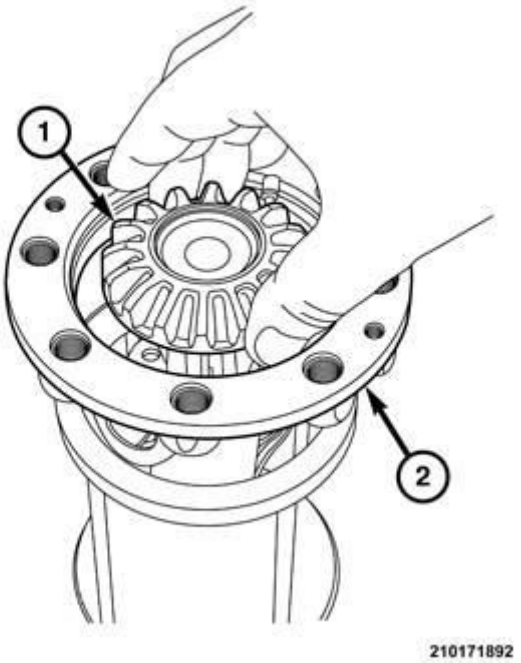

Fig. 753: Differential Case & Side Gear
Courtesy of CHRYSLER GROUP, LLC

13. Remove the side gear (1) form the differential case (2).

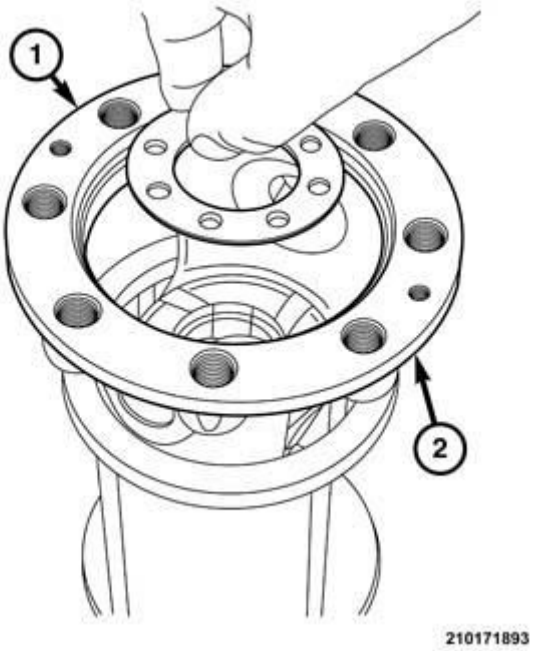

Fig. 754: Side Gear Thrush Washer & Differential
Courtesy of CHRYSLER GROUP, LLC

14. Remove the side gear thrush washer (1) from the differential (2).

AWD

1. Remove the transaxle from the vehicle. Refer to **REMOVAL**.
2. Disassemble the transaxle to gain access to the differential. Refer to **DISASSEMBLY**.
3. Separate the differential from the transaxle housing.

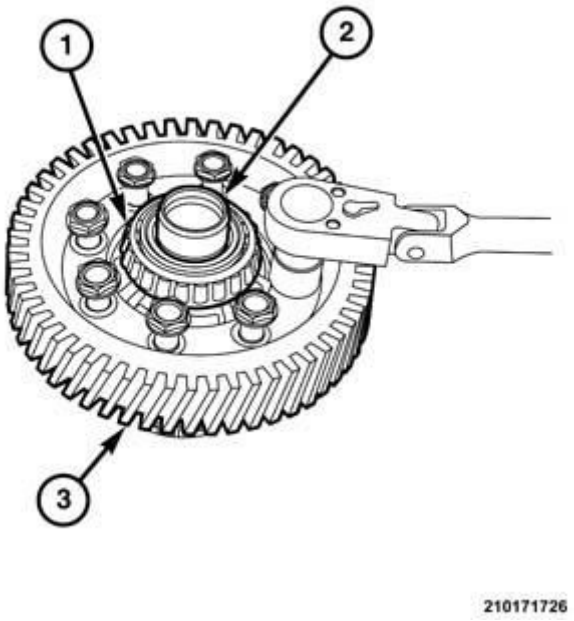

Fig. 755: Differential & Ring Gear
Courtesy of CHRYSLER GROUP, LLC

4. Remove the bolts (2) holding the ring gear (3) to the differential.

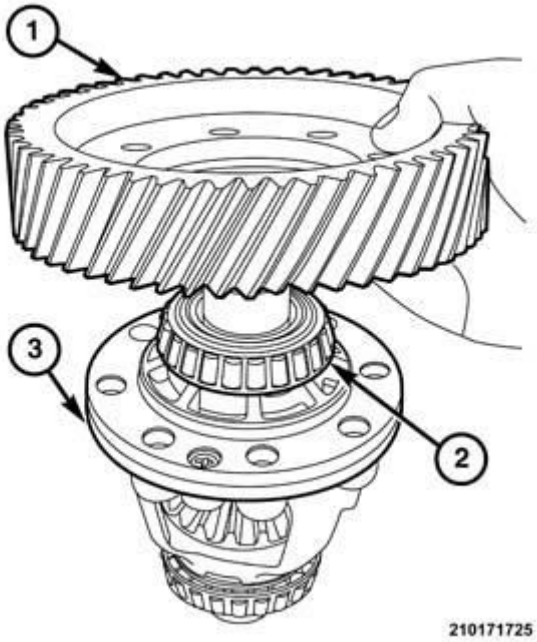

Fig. 756: Differential, Ring Gear & Bearing
Courtesy of CHRYSLER GROUP, LLC

5. Separate the ring gear (1) from the differential (3).

Fig. 757: Differential Case Halves & Screws
Courtesy of CHRYSLER GROUP, LLC

6. Remove the screws (1) holding the differential case halves (2) together.

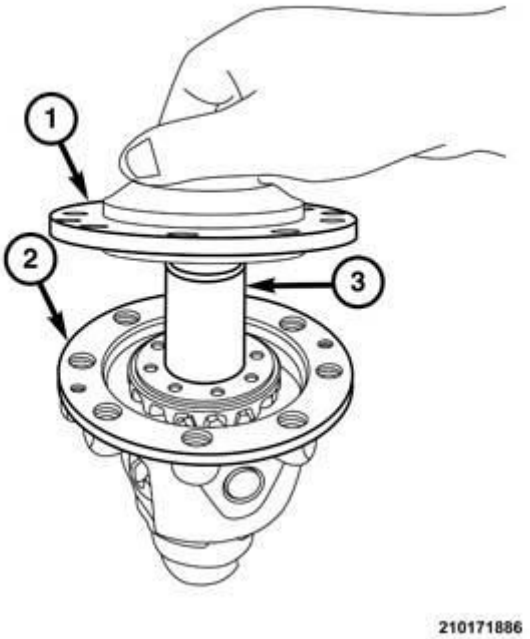

Fig. 758: Ring Gear Half & Differential
Courtesy of CHRYSLER GROUP, LLC

7. Separate the ring gear half (1) of the case from the differential (2).

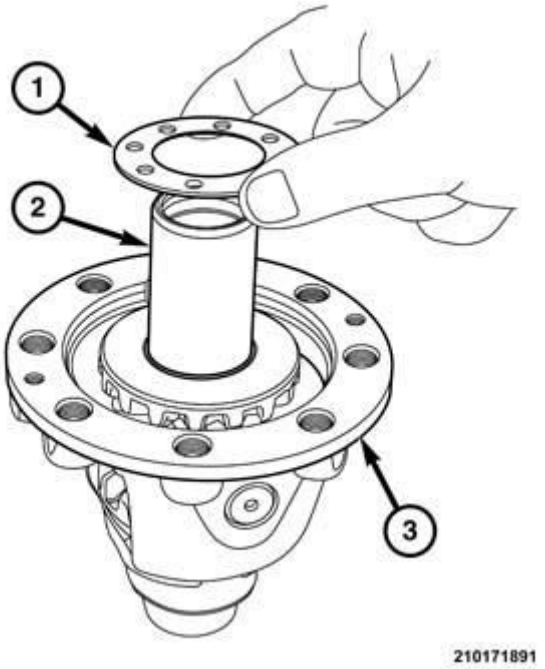

Fig. 759: Side Gear Thrust Washer, Side Gear & Differential
Courtesy of CHRYSLER GROUP, LLC

8. Separate the side gear thrust washer (1) from the side gear (2).

9. Separate the side gear (2) from the differential (3).

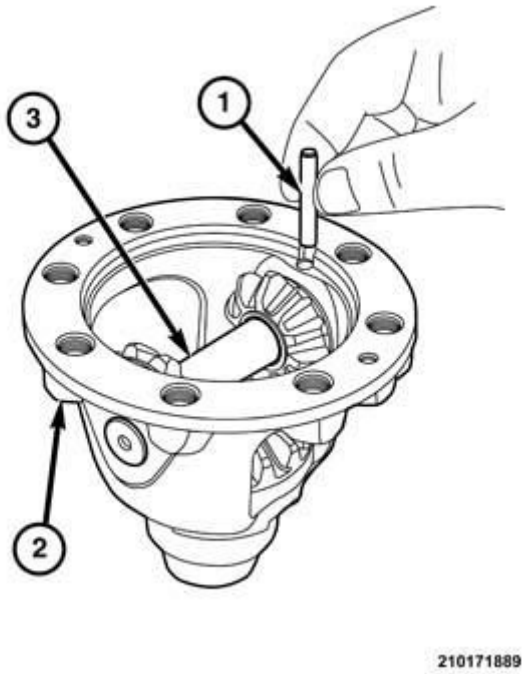

Fig. 760: Pin, Differential Case & Differential Link Shaft
Courtesy of CHRYSLER GROUP, LLC

10. Remove the pin (1) holding the differential link shaft (3) into the differential case (2).

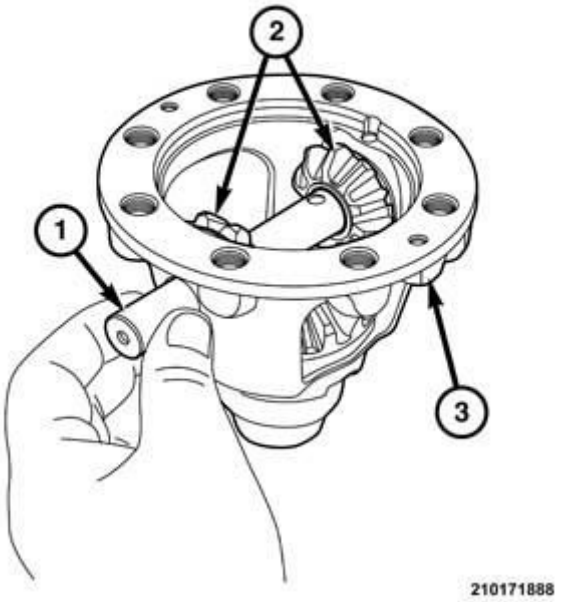

Fig. 761: Differential Case & Differential Link Shaft

Courtesy of CHRYSLER GROUP, LLC

11. Slide the differential link shaft (1) out of the differential case (3).

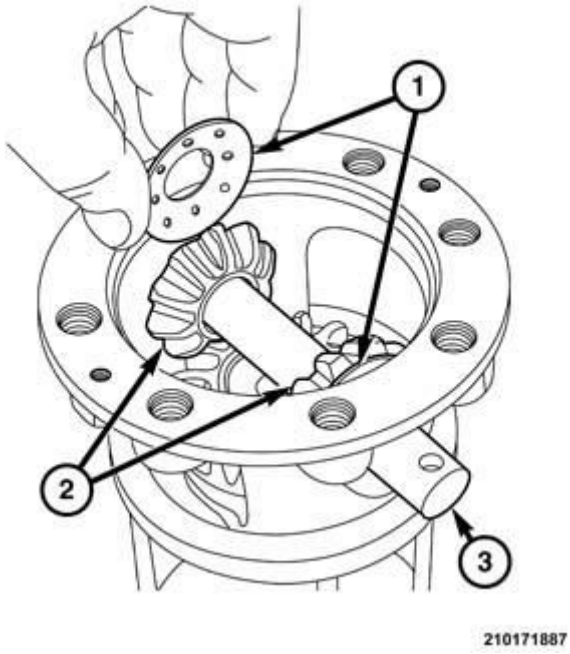

Fig. 762: Conical Washers & Pinion Gears
Courtesy of CHRYSLER GROUP, LLC

12. Remove the conical washers (1) and pinion gears (2) from the differential case.

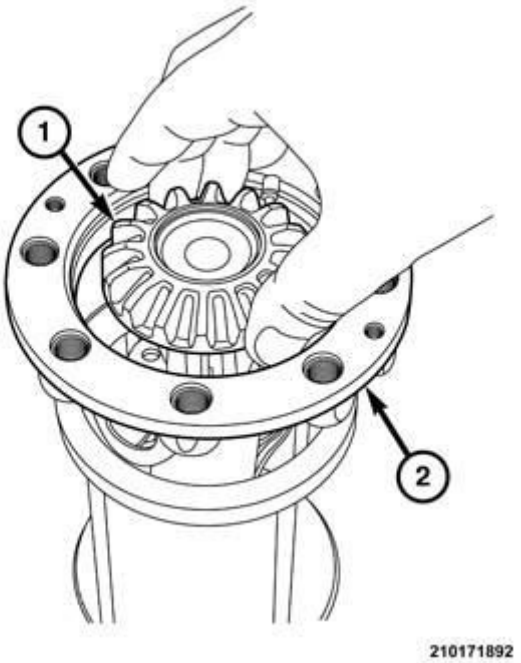

Fig. 763: Differential Case & Side Gear
Courtesy of CHRYSLER GROUP, LLC

13. Remove the side gear (1) form the differential case (2).

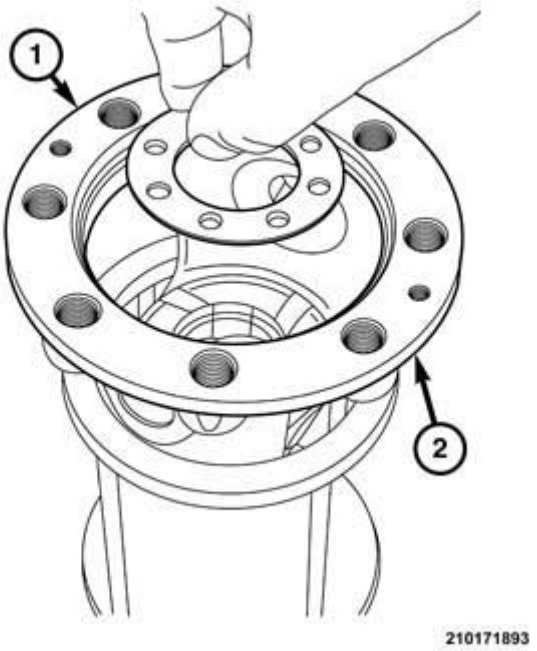

Fig. 764: Side Gear Thrush Washer & Differential
Courtesy of CHRYSLER GROUP, LLC

14. Remove the side gear thrush washer (1) from the differential (2).

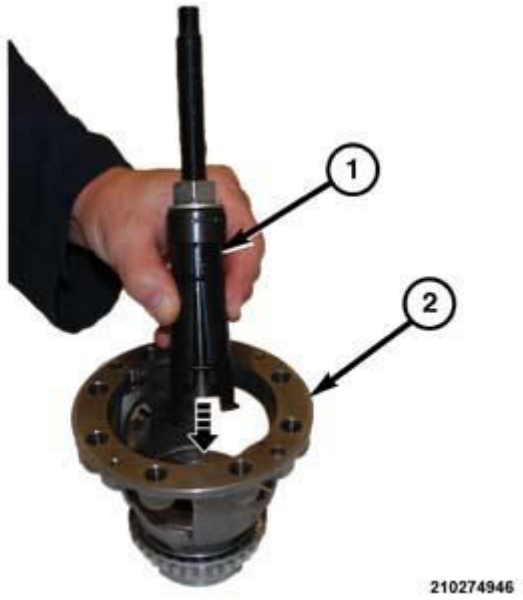

Fig. 765: Special Tool #L-4454-1 & Differential
Courtesy of CHRYSLER GROUP, LLC

15. Insert expanding end of collet tool L-4454-1, form tool kit (special tool #L-4454A, Remover, Bearing Cup) all-the-way into the needle bearing.
16. Tighten the nut until the collet tool is secure in the needle bearing.
17. Place tube receiver tool L-4518-1 from tool kit (special tool #L-4518, Remover, Bearing Cup) over the collet tool and install the bearing, washer and nut.

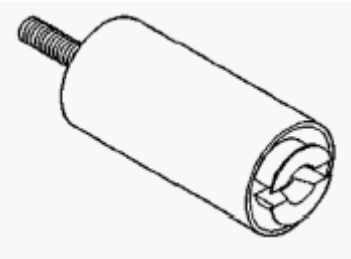

Fig. 766: special tool #L-4518
Courtesy of CHRYSLER GROUP, LLC

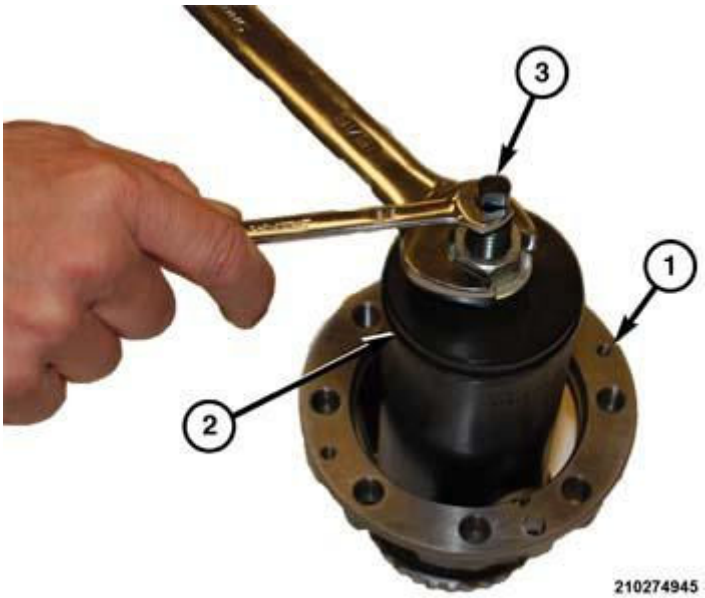

Fig. 767: Differential Housing & Needle Bearing
Courtesy of CHRYSLER GROUP, LLC

18. Tighten the nut to draw the needle bearing from the differential housing.
19. Using a common flat blade screw and hammer, tap the side gear seal from the differential housing bore.

ASSEMBLY

FWD

Clean the differential in suitable solvent and inspect components for damage or debris. Dry the components with regulated 344 kPa (50 psi) shop air. Do not free spin the bearings with shop air.

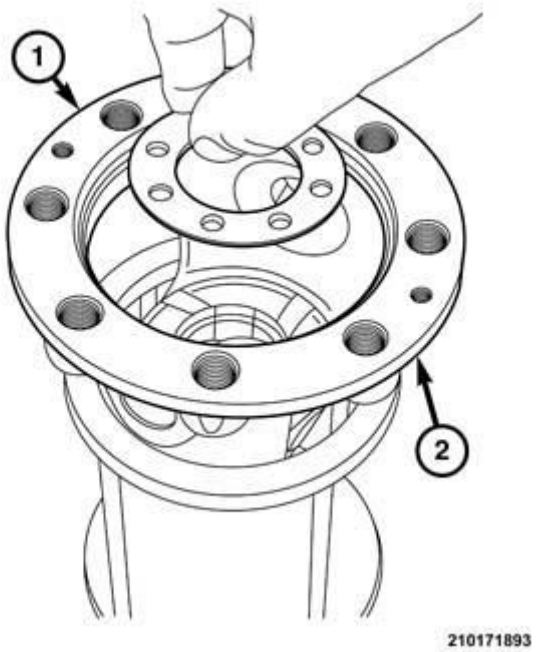

Fig. 768: Side Gear Thrush Washer & Differential
Courtesy of CHRYSLER GROUP, LLC

1. Install the side gear thrush washer (1) into the differential (2).

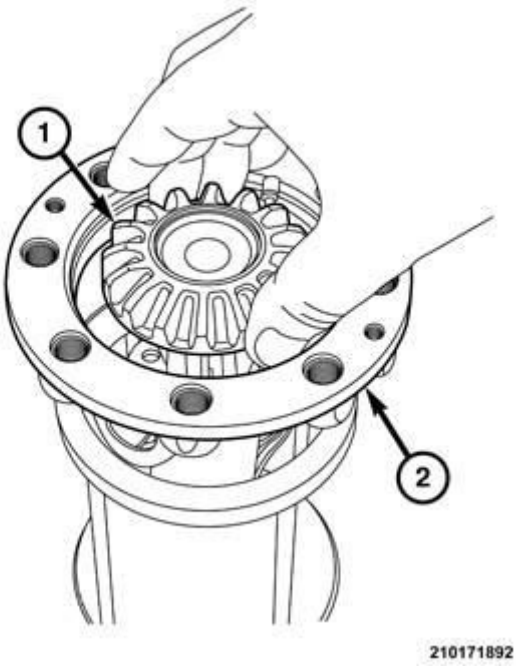

Fig. 769: Differential Case & Side Gear
Courtesy of CHRYSLER GROUP, LLC

2. Install the side gear (1) into the differential case (2).

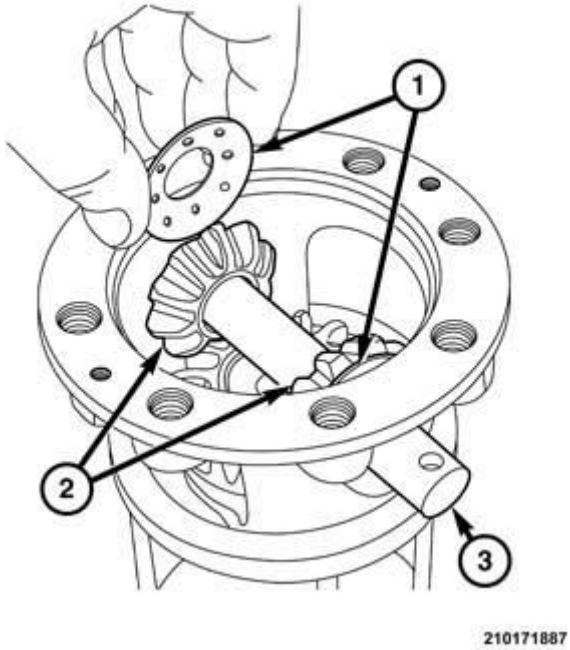

Fig. 770: Conical Washers & Pinion Gears
Courtesy of CHRYSLER GROUP, LLC

3. Install the conical washers (1) and pinion gears (2) into the differential case.

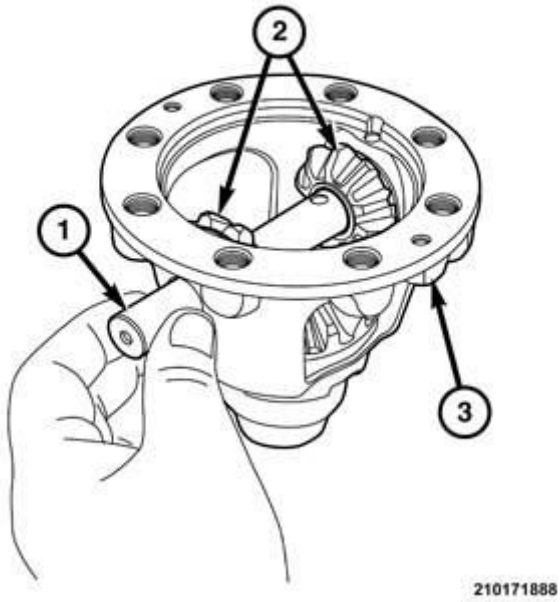

Fig. 771: Differential Case & Differential Link Shaft
Courtesy of CHRYSLER GROUP, LLC

4. Slide the differential link shaft (1) into the differential case (3)

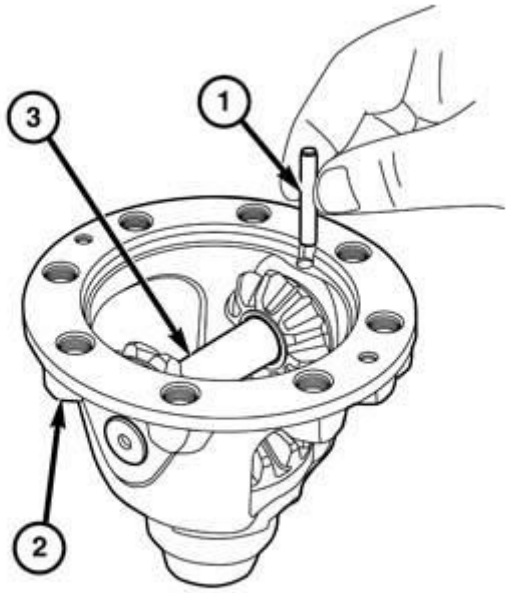

210171889

Fig. 772: Pin, Differential Case & Differential Link Shaft
Courtesy of CHRYSLER GROUP, LLC

5. Install the pin (1) to hold the differential link shaft (3) into the differential case (2).

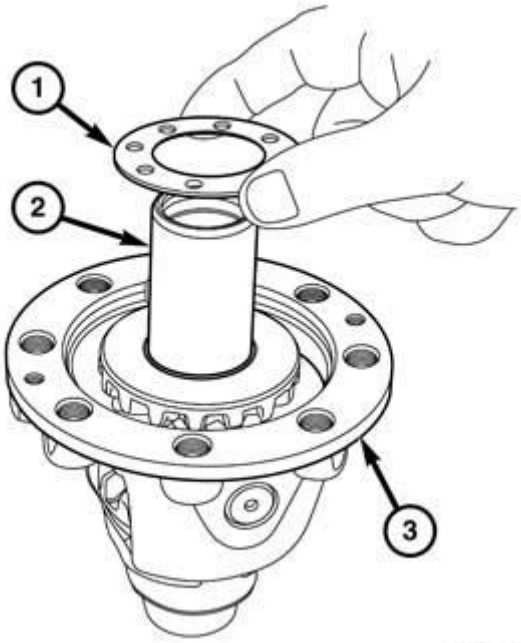

210171891

Fig. 773: Side Gear Thrust Washer, Side Gear & Differential
Courtesy of CHRYSLER GROUP, LLC

6. Place the side gear (2) into the differential (3).
7. Place the side gear thrust washer (1) onto the side gear (2).

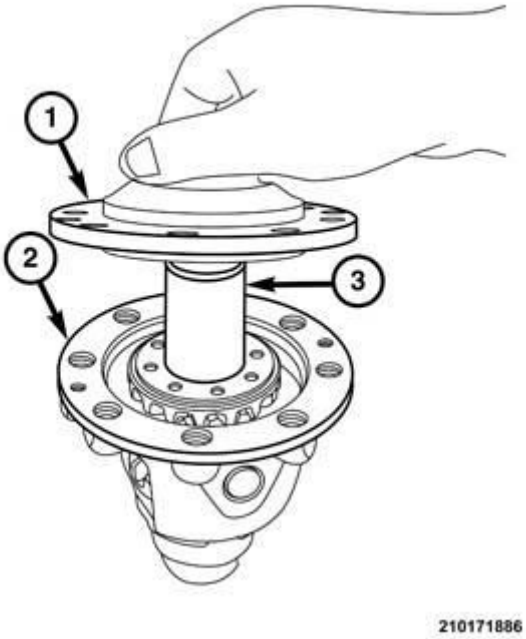

Fig. 774: Ring Gear Half & Differential
Courtesy of CHRYSLER GROUP, LLC

8. Place the ring gear half (1) of the case onto the differential (2).

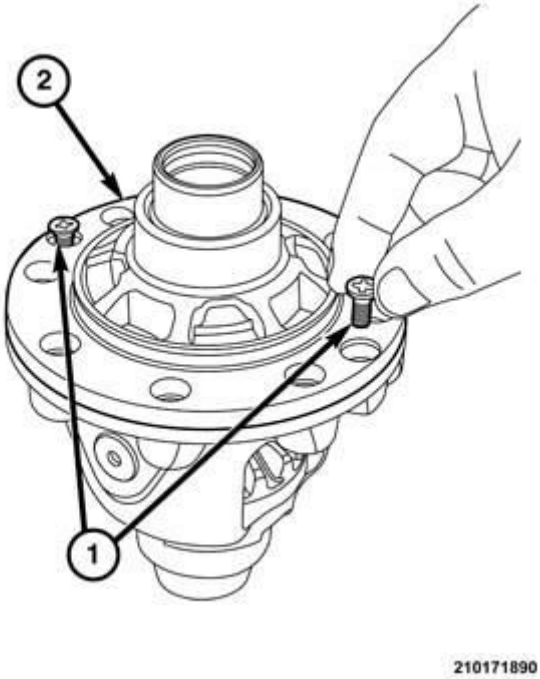

Fig. 775: Differential Case Halves & Screws

Courtesy of CHRYSLER GROUP, LLC

9. Install the screws (1) to hold the differential case halves (2) together. Refer to **SPECIFICATIONS**.

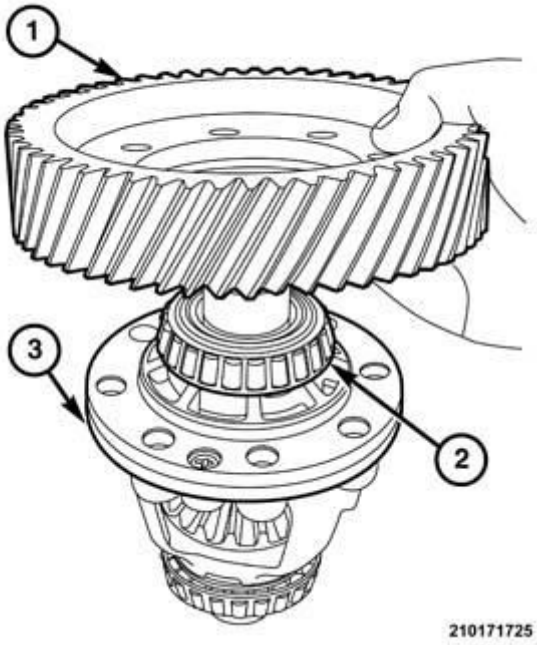

Fig. 776: Differential, Ring Gear & Bearing
Courtesy of CHRYSLER GROUP, LLC

10. Place the ring gear (1) in position on the differential (3).

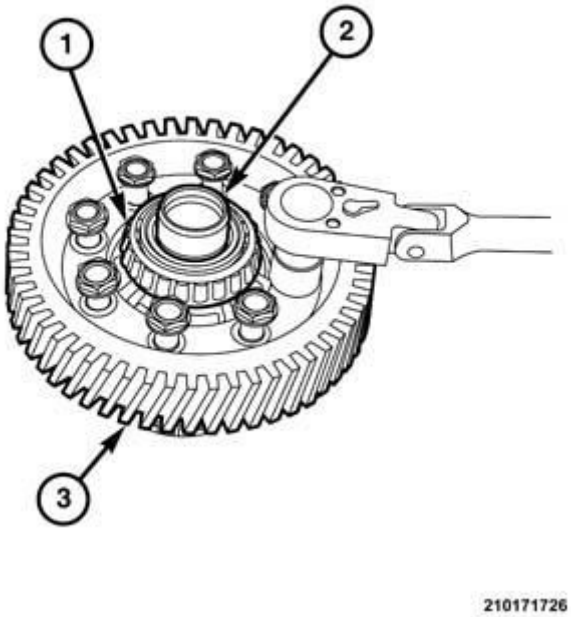

Fig. 777: Differential & Ring Gear
Courtesy of CHRYSLER GROUP, LLC

11. Install the bolts (2) to hold the ring gear (3) to the differential. Refer to **SPECIFICATIONS**.
12. Place the differential in position in the transaxle housing.
13. Assemble the transaxle. Refer to **ASSEMBLY**.
14. Install the transaxle in the vehicle. Refer to **INSTALLATION**.

AWD

Clean the differential in suitable solvent and inspect components for damage or debris. Dry the components with regulated 344 kPa (50 psi) shop air. Do not free spin the bearings with shop air.

1. Apply transmission assembly lube on the lip and tension spring cavity on the open side of the seal.

Fig. 778: Seal & Installer
Courtesy of CHRYSLER GROUP, LLC

2. Insert tool (special tool #C-293-3, Adapter, Bearing/Gear) into open side of the side gear lip seal.

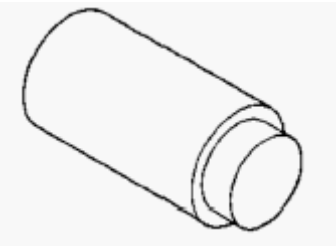

Fig. 779: Special Tool #C-293-3
Courtesy of CHRYSLER GROUP, LLC

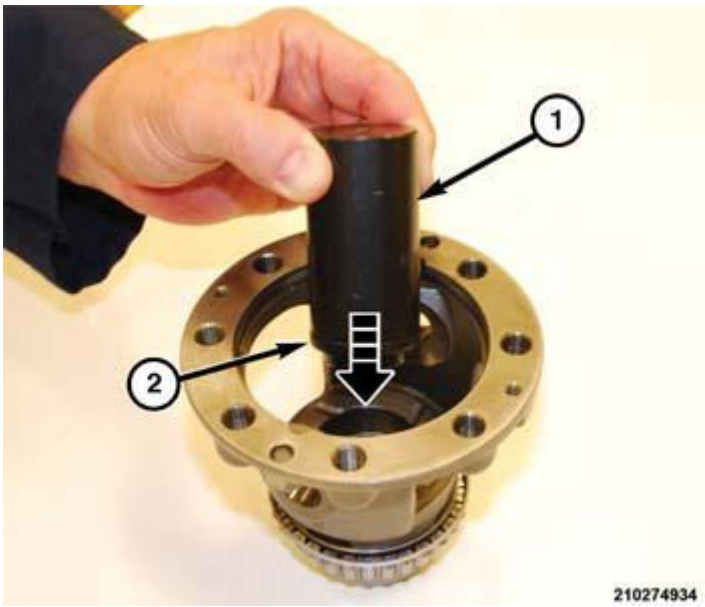

Fig. 780: Differential Housing, Seal & Tool
Courtesy of CHRYSLER GROUP, LLC

3. Insert the seal and tool into the bore in the differential housing.

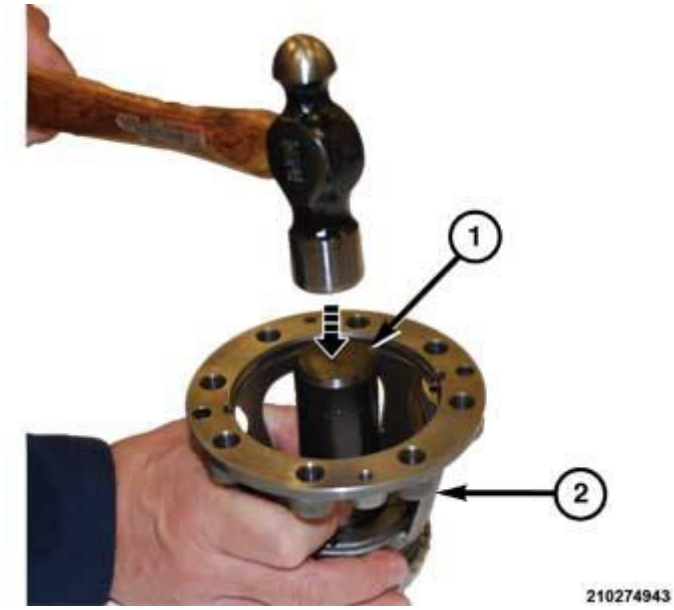

Fig. 781: Tapping Seal Into Housing
Courtesy of CHRYSLER GROUP, LLC

4. Using a suitable hammer, tap the seal into the differential housing bore until it seats against in inner lip.

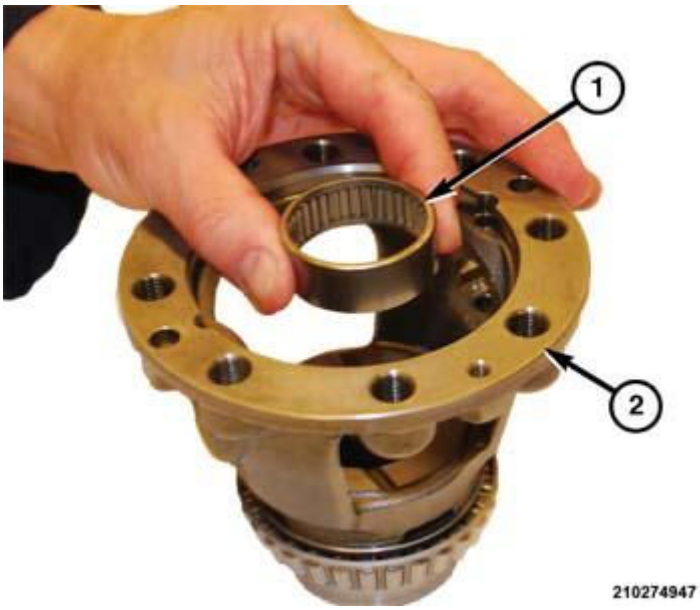

Fig. 782: Side Gear Needle Bearing & Differential Housing
Courtesy of CHRYSLER GROUP, LLC

5. Insert the side gear needle bearing into the bore in the differential housing.

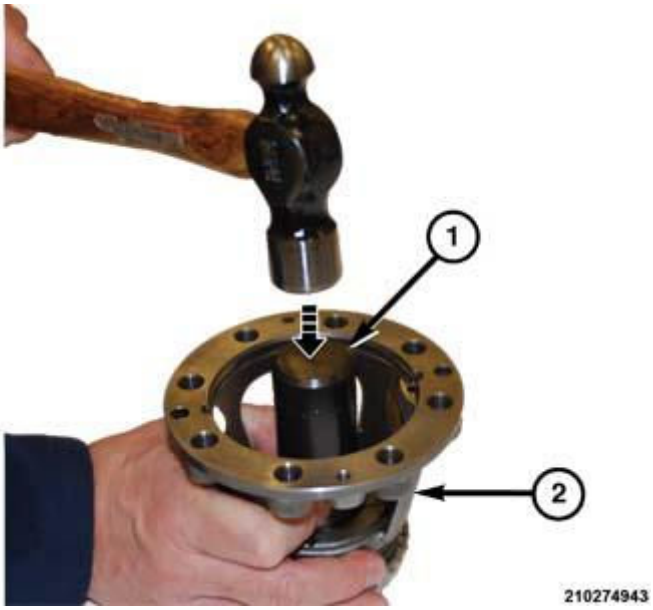

Fig. 783: Tapping Seal Into Housing
Courtesy of CHRYSLER GROUP, LLC

6. Using tool (special tool #6342, Installer, Seal) drive the needle bearing into the differential housing until it seats against the bottom of the bore.

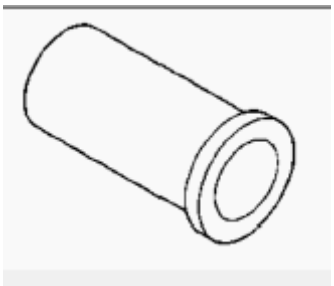

Fig. 784: Special Tool #6342
Courtesy of CHRYSLER GROUP, LLC

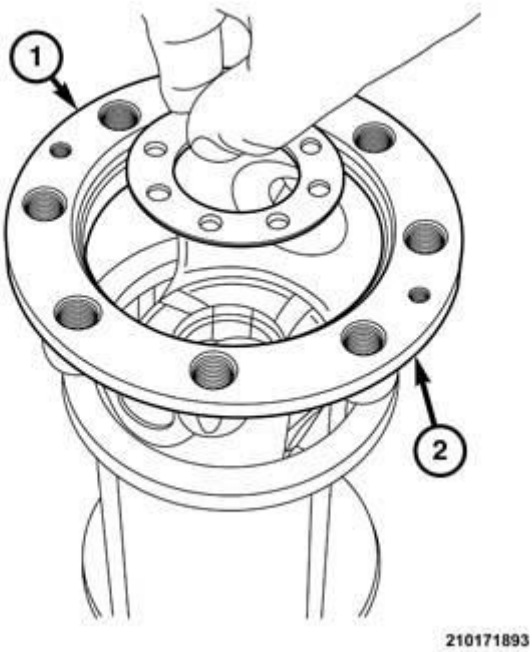

Fig. 785: Side Gear Thrush Washer & Differential
Courtesy of CHRYSLER GROUP, LLC

7. Install the side gear thrush washer (1) into the differential (2).

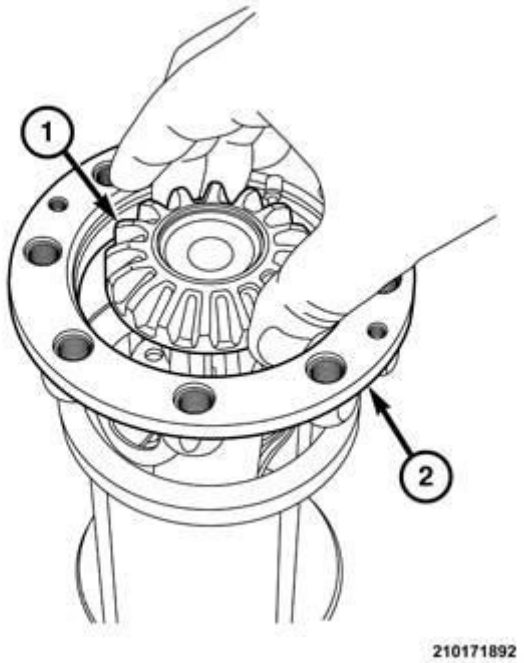

Fig. 786: Differential Case & Side Gear
Courtesy of CHRYSLER GROUP, LLC

8. Install the side gear (1) into the differential case (2).

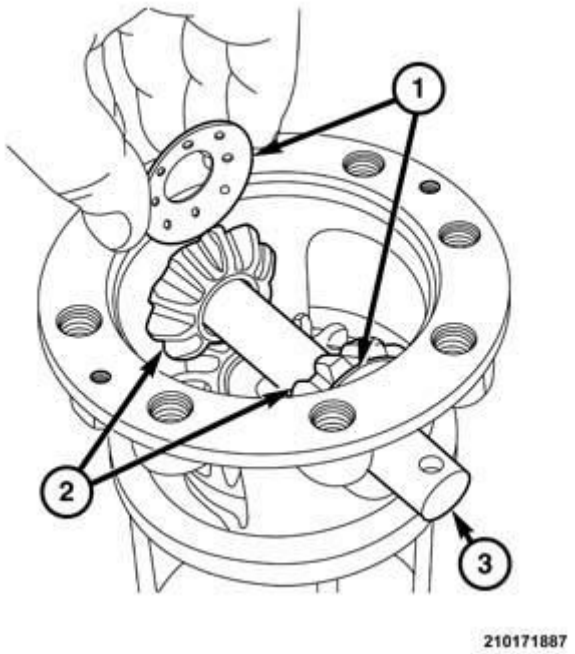

Fig. 787: Conical Washers & Pinion Gears
Courtesy of CHRYSLER GROUP, LLC

9. Install the conical washers (1) and pinion gears (2) into the differential case.

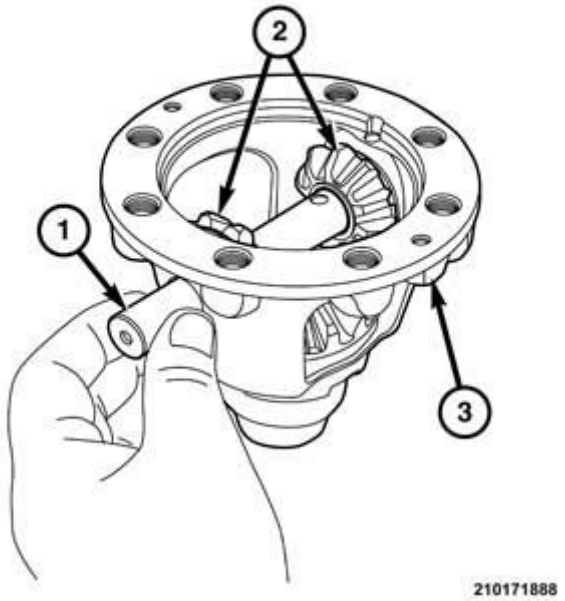

Fig. 788: Differential Case & Differential Link Shaft
Courtesy of CHRYSLER GROUP, LLC

10. Slide the differential link shaft (1) into the differential case (3)

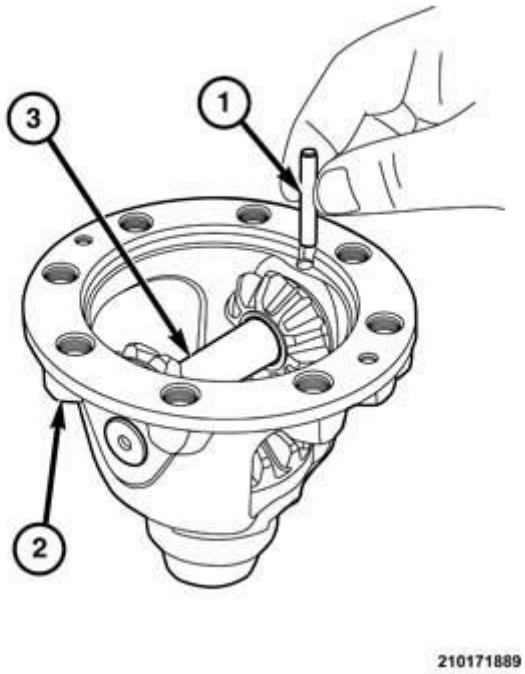

Fig. 789: Pin, Differential Case & Differential Link Shaft
Courtesy of CHRYSLER GROUP, LLC

11. Install the pin (1) to hold the differential link shaft (3) into the differential

case (2).

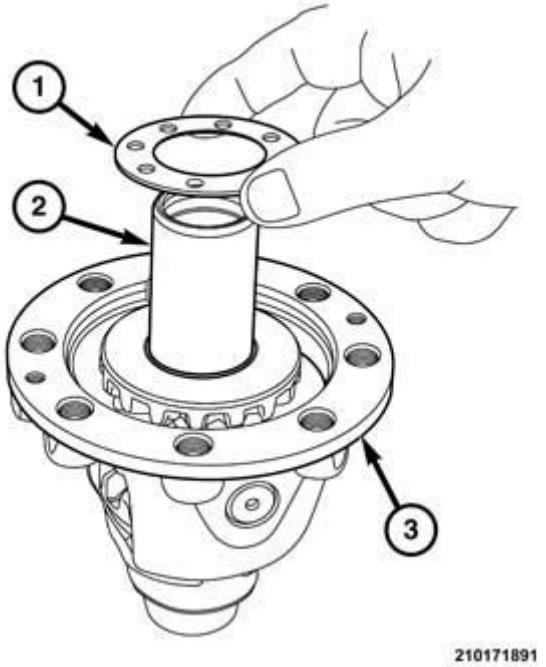

Fig. 790: Side Gear Thrust Washer, Side Gear & Differential
Courtesy of CHRYSLER GROUP, LLC

12. Place the side gear (2) into the differential (3).
13. Place the side gear thrust washer (1) onto the side gear (2).

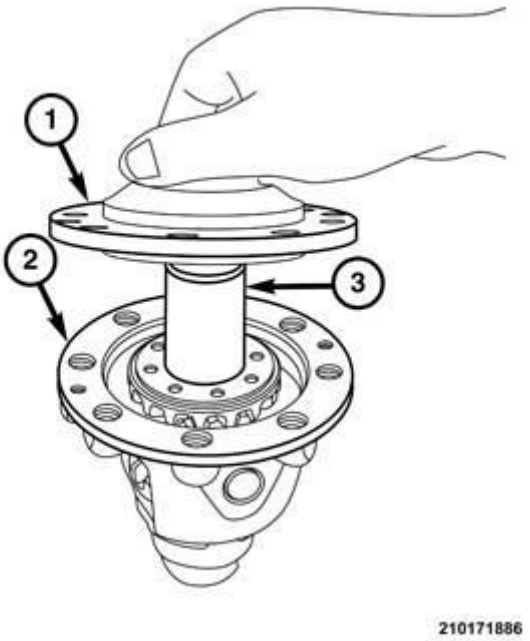

Fig. 791: Ring Gear Half & Differential

Courtesy of CHRYSLER GROUP, LLC

14. Place the ring gear half (1) of the case onto the differential (2).

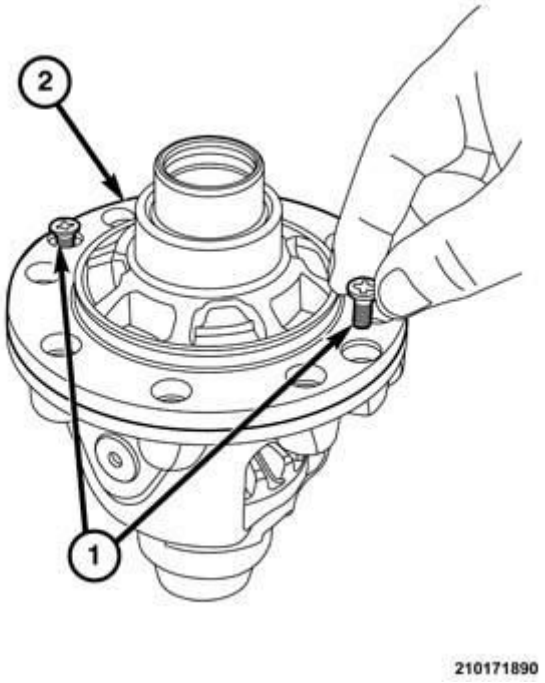

Fig. 792: Differential Case Halves & Screws
Courtesy of CHRYSLER GROUP, LLC

15. Install the screws (1) to hold the differential case halves (2) together. Refer to **SPECIFICATIONS**.

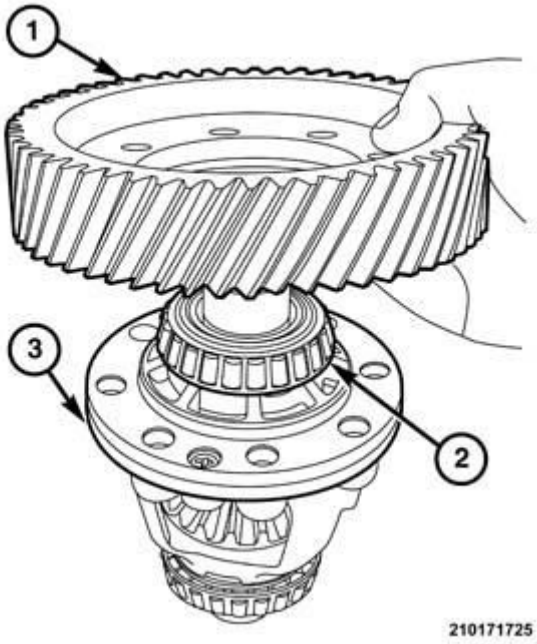

Fig. 793: Differential, Ring Gear & Bearing
Courtesy of CHRYSLER GROUP, LLC

16. Place the ring gear (1) in position on the differential (3).

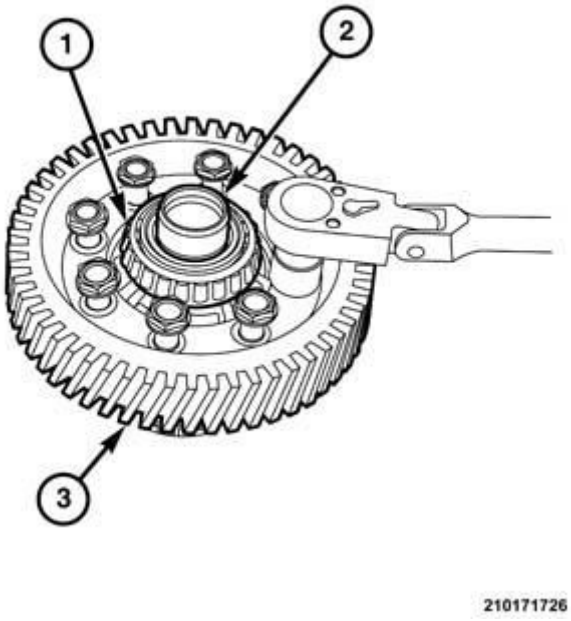

Fig. 794: Differential & Ring Gear
Courtesy of CHRYSLER GROUP, LLC

17. Install the bolts (2) to hold the ring gear (3) to the differential. Refer to

SPECIFICATIONS.

18. Place the differential in position in the transaxle housing.
19. Assemble the transaxle. Refer to **ASSEMBLY**.
20. Install the transaxle in the vehicle. Refer to **INSTALLATION**.

BEARINGS, TRANSFER GEAR DRIVEN

REMOVAL

TRANSFER GEAR (DRIVEN) BEARING

1. Remove the transaxle from the vehicle. Refer to **REMOVAL**.

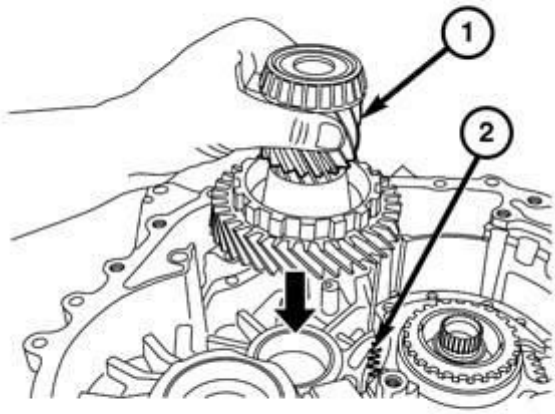

210270996

Fig. 795: Transaxle & Transfer Gear
Courtesy of CHRYSLER GROUP, LLC

2. Disassemble the transaxle to remove the transfer gear. Refer to **DISASSEMBLY**.

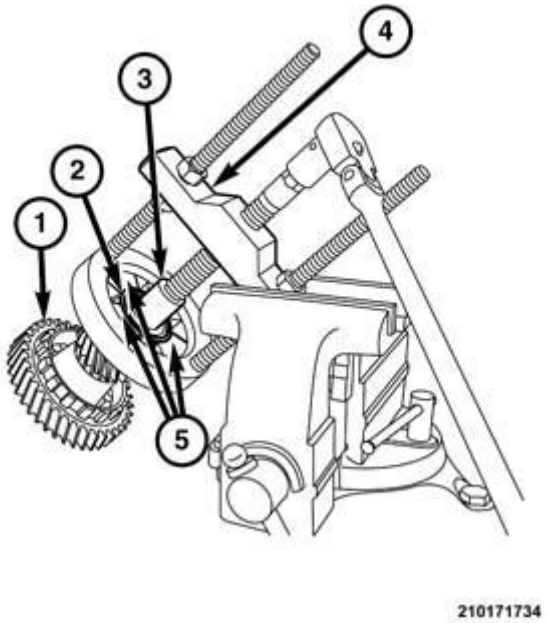

Fig. 796: Transfer Gear, Special Tools & Vice
Courtesy of CHRYSLER GROUP, LLC

3. Using tools (special tool #C-293-PA, Puller, Press) press (4), (special tool #C-293-48, Block Set, Puller) or (special tool #C-293-39, Block Set, Puller) collets (5), and (special tool #C-4996, Adapter, Plug) plug (3), secured in a vise, remove the bearing (2) from the transfer gear (1) (pinion side shown in illustration above).

TRANSFER GEAR (DRIVEN) BEARING RACE

1. Remove the transaxle from the vehicle. Refer to **REMOVAL**.
2. Disassemble the transaxle. Refer to **DISASSEMBLY**.

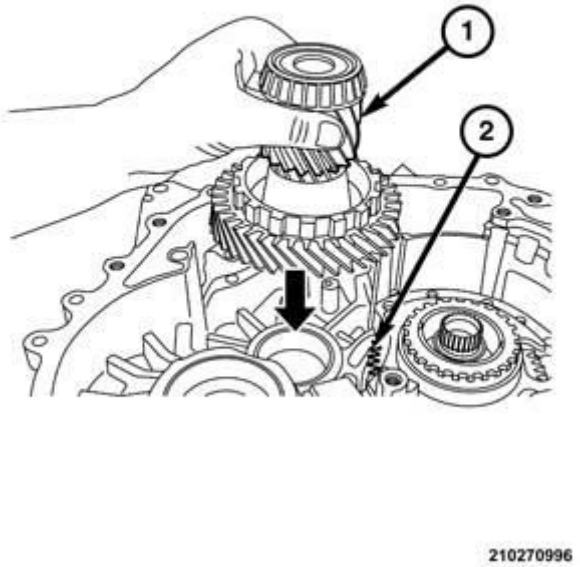

Fig. 797: Transaxle & Transfer Gear
Courtesy of CHRYSLER GROUP, LLC

3. Remove the transfer gear.

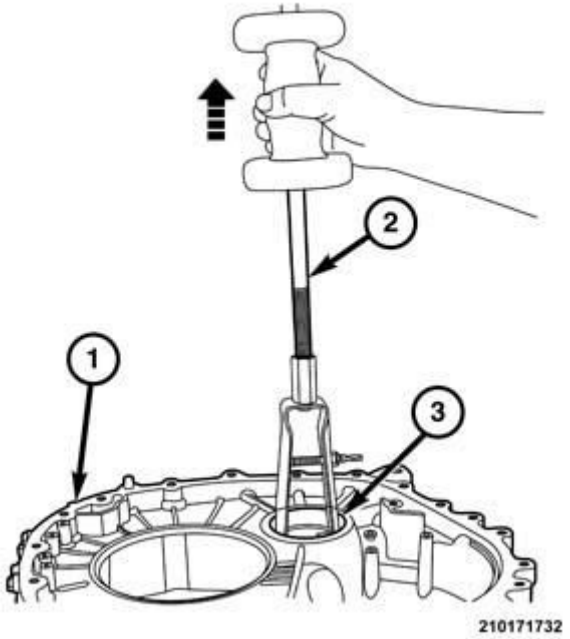

Fig. 798: Transfer Gear Bearing Race, Special Tool #9664 & Special Tool #C-637
Courtesy of CHRYSLER GROUP, LLC

4. Using tool (special tool #9664, Remover, Bearing Cup) and slide hammer (special tool #C-637, Slide Hammer, Universal) (2), remove the transfer gear bearing race (3) from the bell housing (1) and transaxle housing (bell housing shown in illustration above).

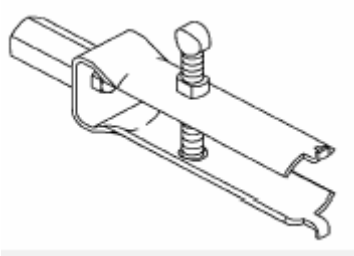

Fig. 799: Special Tool #9664
Courtesy of CHRYSLER GROUP, LLC

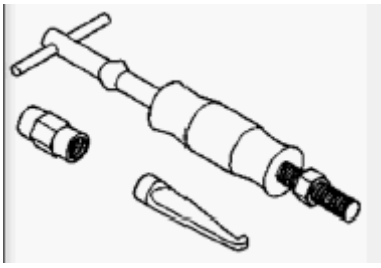

Fig. 800: Special Tool #C-637
Courtesy of CHRYSLER GROUP, LLC

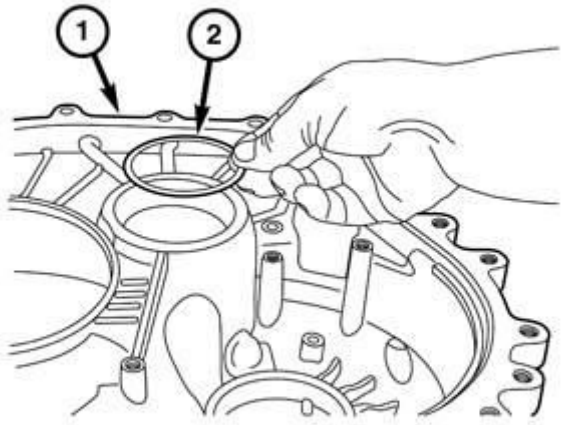

210171735

Fig. 801: Transfer Gear Bearing Select Shim
Courtesy of CHRYSLER GROUP, LLC

5. Remove select shim (2) from bottom of transfer gear bearing race bore (3). Mark the shim to aid installation (bell housing shown in illustration above).

INSTALLATION

TRANSFER GEAR (DRIVEN) BEARING

WARNING: Use welding gloves or tongs when handling heated components. Failure to follow these instructions will result in personal injury.

CAUTION: A bearing heater is used to assembly some components. Use only a bearing heater/hot plate and follow manufacture's instructions. Heat components to 100° - 150° Celsius (212° Min. - 300° Max Fahrenheit). Never use an open flame to heat components. Never leave components on heater for and extended amount of time. If component is discolored after heating, the component has been overheated and must not be used. Failure to follow these instructions will result in component damage.

NOTE: If the bearings are being replaced along with the transfer gear or a transaxle housing component, the select shim thickness will need to be established. If only the bearing and race are being replaced, the original shim can be reused.

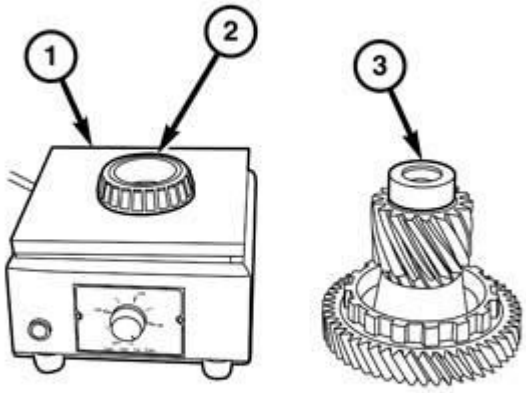

210171729

Fig. 802: Hot Plate & Bearing
Courtesy of CHRYSLER GROUP, LLC

1. Using a suitable HOT plate (1), heat the bearing (2) to near 150° C (300° F). Light smoke may be produced as the bearing is heated. Do not allow the bearing to discolor.

NOTE: An infrared thermometer can be used to monitor the temperature of the bearing as it is heated.

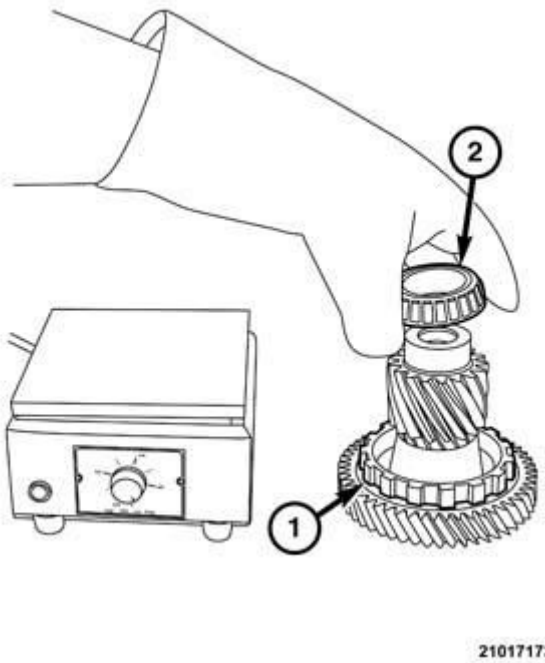

Fig. 803: Transfer Gear & Heated Bearing
Courtesy of CHRYSLER GROUP, LLC

2. While wearing welding gloves, Place heated bearing (2) onto the transfer gear (1) and allow to cool (pinion gear side shown in illustration above).

NOTE: If the bearing does not fall all the way onto the transfer gear, it was not hot enough. Remove the bearing and repeat step 1 and 2.

TRANSFER GEAR (DRIVEN) BEARING RACE

NOTE: If the bearings are being replaced along with the transfer gear or transaxle housing component, the select shim thickness will need to be established. If only the bearing and race are being replaced, the original shim can be reused.

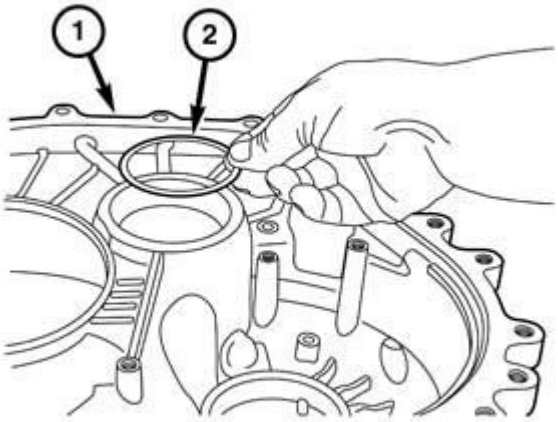

210171735

Fig. 804: Transfer Gear Bearing Select Shim
Courtesy of CHRYSLER GROUP, LLC

1. Install the select shim (1) into the bearing race bore in the housing.

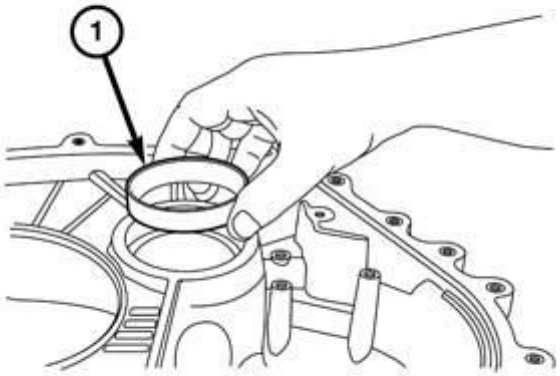

210171733

Fig. 805: Transfer Gear Bearing Race & Bore
Courtesy of CHRYSLER GROUP, LLC

2. Place the transfer gear bearing race (1) in the bore in the bell housing or

transaxle housing.

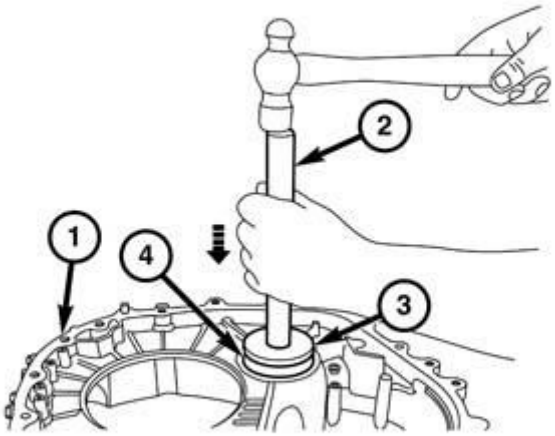

Fig. 806: Transfer Case Bearing Race, Special Tool #8866 & Special Tool #C-4171
Courtesy of CHRYSLER GROUP, LLC

NOTE: When installing the transfer case bearing race (4), do not allow the race to tip and bind as it is driven into the bore.

3. Using tools (special tool #8866, Installer, Bearing Cup) (3) and (special tool #C-4171, Driver Handle, Universal) (2), carefully drive the bearing race into the bore in the housing.
4. Prepare to reassemble the transaxle. If necessary, perform the Turning Torque Measurement procedure.

BEARINGS, TRANSFER GEAR DRIVE

REMOVAL

REMOVAL

NOTE: The transfer gear (output) support is also the bearing races for the inner and outer transfer gear bearings. If a bearing is faulty it is recommended that the entire

transfer gear assembly (with support) is replaced. The only reason to disassemble the transfer gear (output) is to inspect it for damage.

1. Remove the transaxle from the vehicle. Refer to **REMOVAL**.
2. Disassemble the transaxle. Refer to **DISASSEMBLY**.

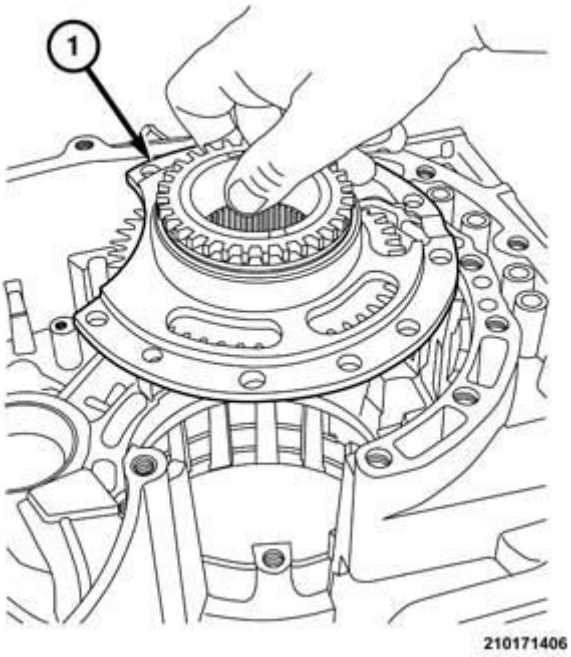

Fig. 807: Transfer Gear (Output)
Courtesy of CHRYSLER GROUP, LLC

3. Remove the transfer gear (output) from the transaxle case.

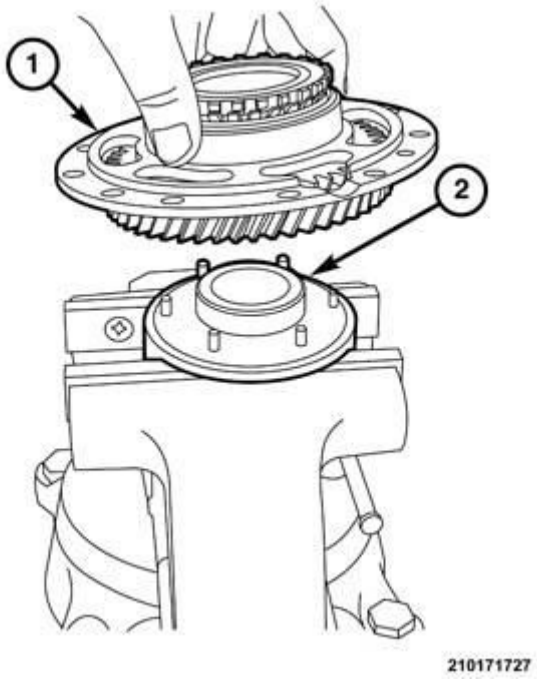

Fig. 808: Transfer Gear Assembly & Holding Fixture
Courtesy of CHRYSLER GROUP, LLC

4. Secure holding fixture (special tool #10423, Fixture, Transfer Gear Holding) (2) in a suitable vise
5. Place the transfer gear assembly (1) on the holding fixture (2).

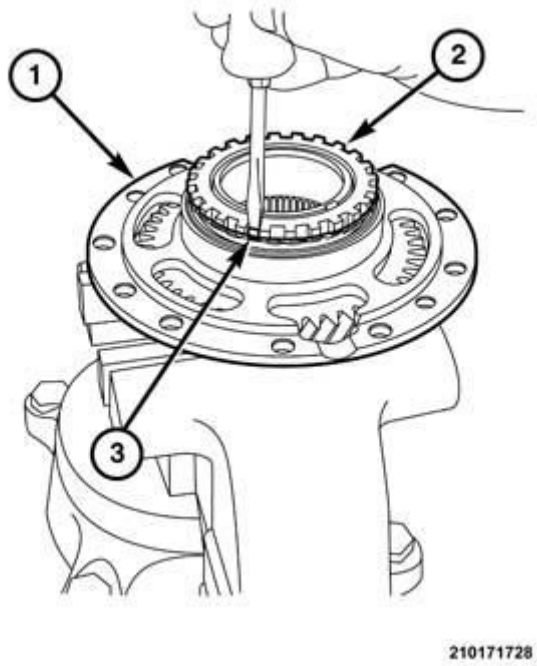

Fig. 809: Spanner Groove & Lock Tab
Courtesy of CHRYSLER GROUP, LLC

6. Using a suitable screw driver pry the lock tab out of the spanner groove.

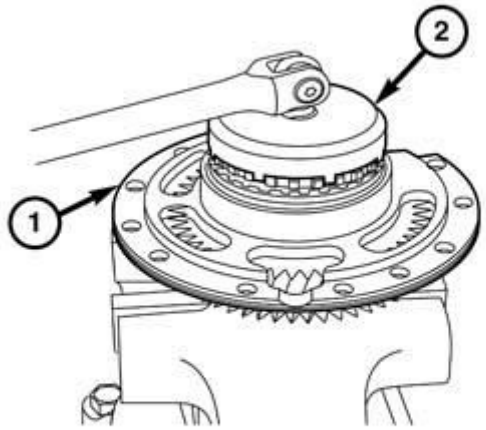

210171754

Fig. 810: Spanner Wrench & Bearing Support
Courtesy of CHRYSLER GROUP, LLC

7. Using spanner wrench (special tool #10422, Wrench, Spanner) (2), loosen the spanner nut holding the transfer gear to the bearing support (1).

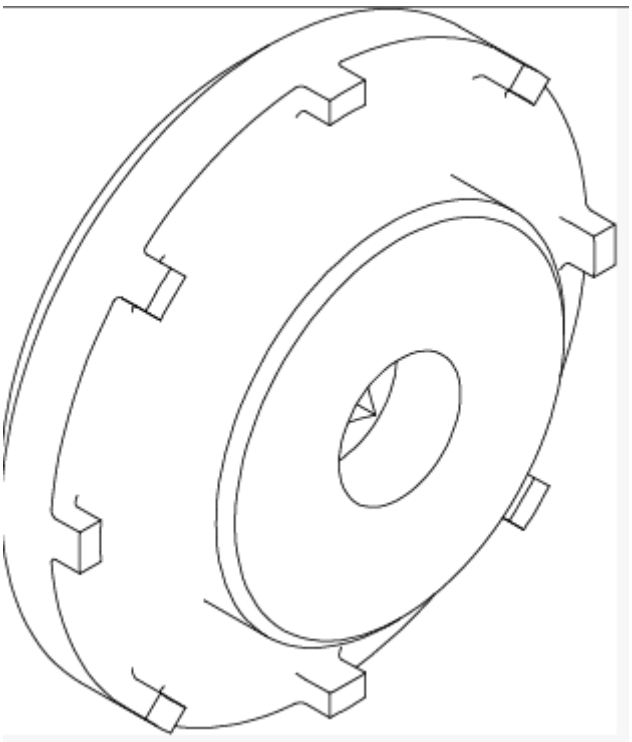

Fig. 811: Special Tool #10422
Courtesy of CHRYSLER GROUP, LLC

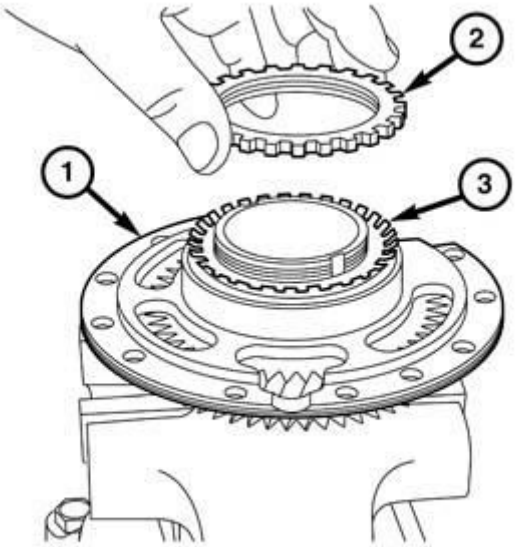

210171752

Fig. 812: Spanner Nut, Lock & Transfer Gear Assembly
Courtesy of CHRYSLER GROUP, LLC

8. Remove the spanner nut (2) and lock (3) from the transfer gear assembly.

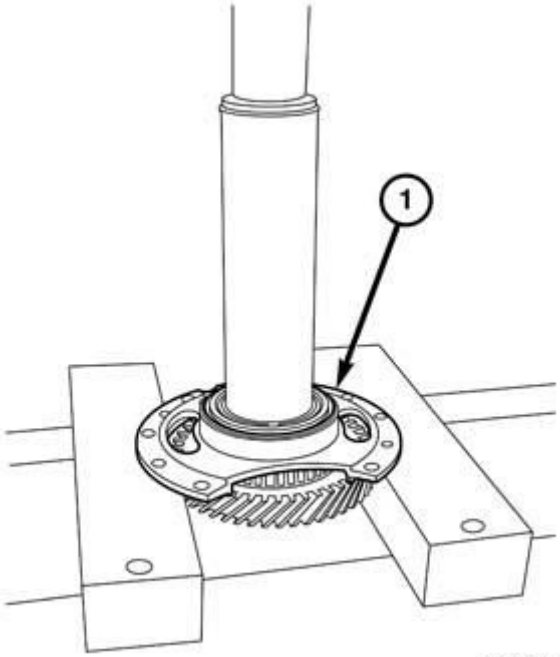

210171749

Fig. 813: Transfer Gear Assembly & Special Tool #C-3095-A

Courtesy of CHRYSLER GROUP, LLC

9. Using a suitable press and tool (special tool #C-3095-A, Installer, Bearing) or equivalent, press the transfer gear out of the inner bearing.

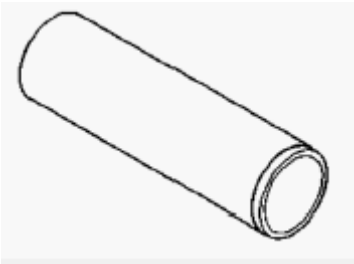

Fig. 814: Special Tool #C-3095-A
Courtesy of CHRYSLER GROUP, LLC

Fig. 815: Transfer Gear & Outer Bearing
Courtesy of CHRYSLER GROUP, LLC

10. Place the gear on the spanner wrench on a suitable work surface.
11. Using a suitable punch (2), drive the outer bearing from the transfer gear (1).

INSTALLATION

TRANSFER GEAR (OUTPUT) BEARING INSTALLATION

WARNING: Use welding gloves or tongs when handling

heated components. Failure to follow these instructions will result in personal injury.

CAUTION: A bearing heater is used to assembly some components. Use only a bearing heater/hot plate and follow manufacture's instructions. Heat components to 100° - 150° Celsius (212° Min. - 300° Max Fahrenheit). Never use an open flame to heat components. Never leave components on heater for and extended amount of time. If component is discolored after heating, the component has been overheated and must not be used. Failure to follow these instructions will result in component damage.

NOTE: If the original bearings or gears are damaged in any way the entire transfer gear output must be replaced.

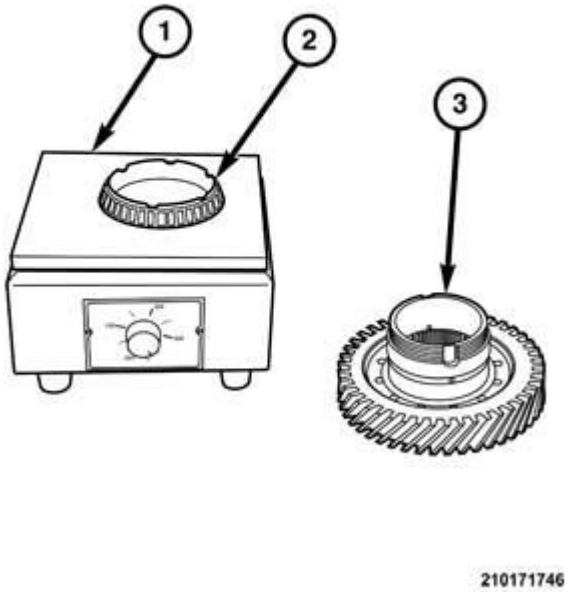

Fig. 816: Hot Plate & Bearing
Courtesy of CHRYSLER GROUP, LLC

1. Using a suitable HOT plate (1), heat the bearing (2) to near 150° C (300° F). Light smoke may be produced as the bearing is heated. Do not allow the

bearing to discolor.

NOTE: An infrared thermometer can be used to monitor the temperature of the bearing as it is heated.

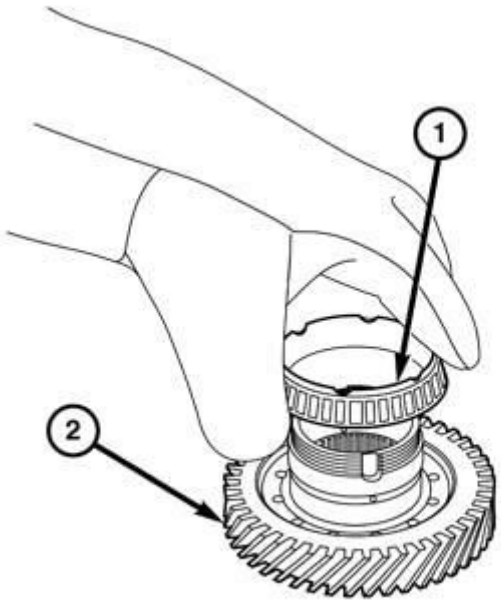

210171747

Fig. 817: Transfer Gear & Inner Bearing
Courtesy of CHRYSLER GROUP, LLC

2. While wearing welding gloves, Place heated inner bearing (1) onto the transfer gear (2) and allow to cool. If the bearing fails to fall all the way onto the transfer gear, it will need to be removed and reheated.

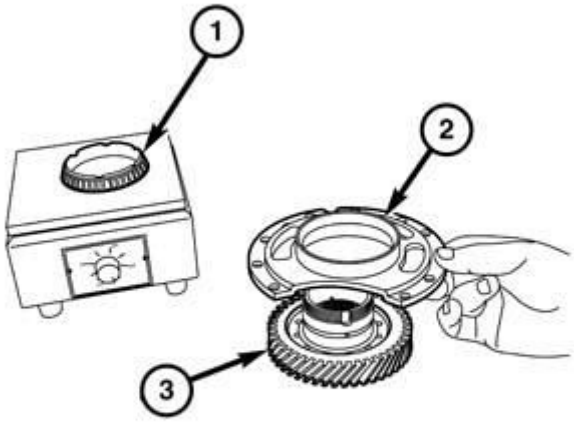

210171750

Fig. 818: Transfer Gear, Support/Race & Bearing
Courtesy of CHRYSLER GROUP, LLC

3. While heating the outer bearing (1), place the transfer gear support/race (2) in position on the transfer gear (3).

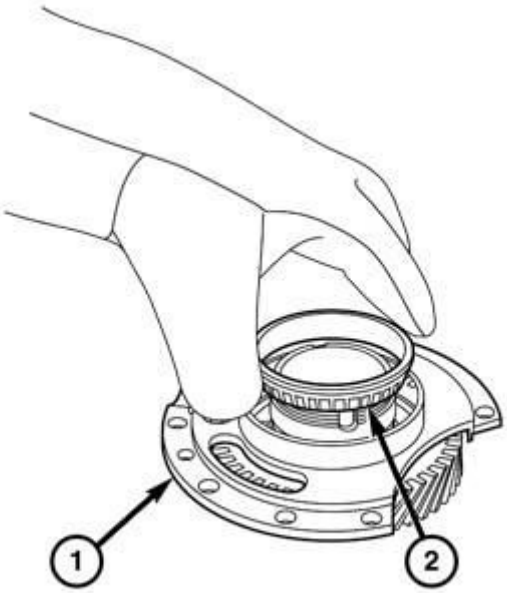

210171748

Fig. 819: Transfer Gear & Outer Bearing
Courtesy of CHRYSLER GROUP, LLC

4. While wearing welding gloves, Place heated outer bearing (2) onto the transfer gear and allow to cool. If the bearing fails to fall all the way onto the transfer gear, it will need to be removed and reheated.

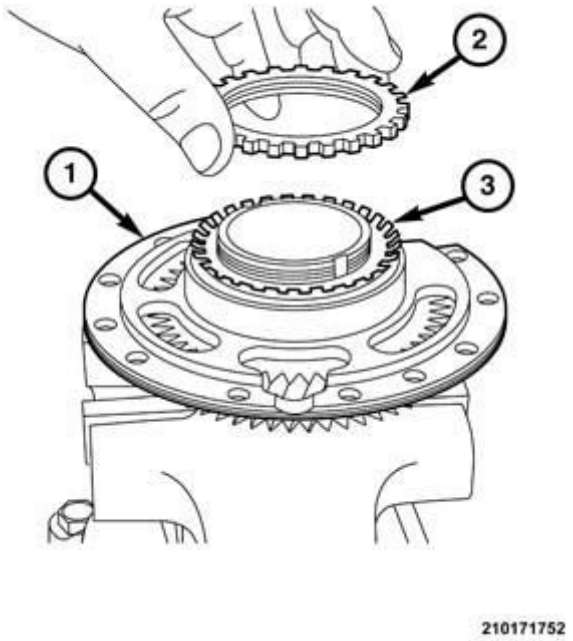

Fig. 820: Spanner Nut, Lock & Transfer Gear Assembly
Courtesy of CHRYSLER GROUP, LLC

5. Install the lock ring and the spanner nut on the transfer gear (output). (special tool #10423, Fixture, Transfer Gear Holding) (special tool #10422, Wrench, Spanner)
6. Tighten the spanner nut to specified torque. Refer to **SPECIFICATIONS**.

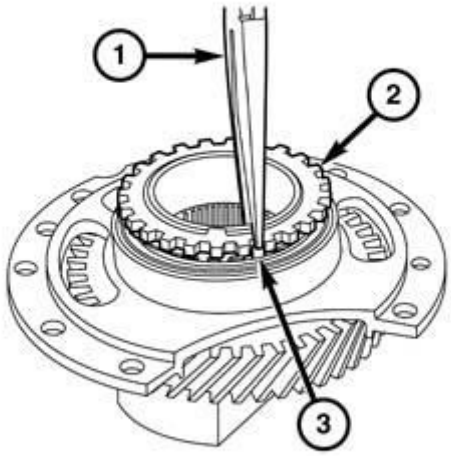

210171753

Fig. 821: Spanner Nut & Lock Tab
Courtesy of CHRYSLER GROUP, LLC

7. Using a suitable pliers (1), bend a lock tab into the spanner nut.
8. Verify that the bearing turning torque is no greater than 1.3 N.m (12 in. lb.) before installing the transfer gear in the transaxle.

SHIFTER, FLOOR CONSOLE

REMOVAL

REMOVAL

1. Disconnect the battery negative cable.
2. Remove the center floor console. Refer to **CONSOLE, FLOOR, REMOVAL** .

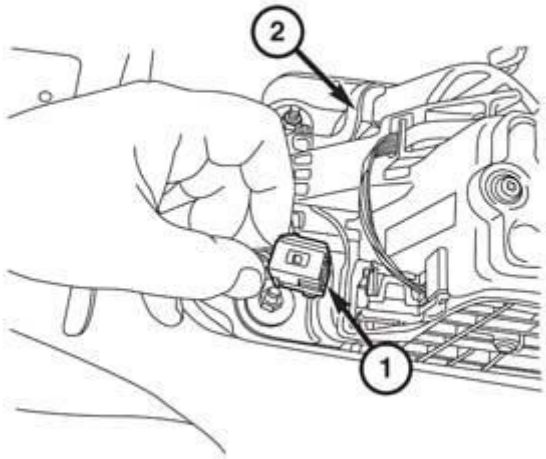

210171835

Fig. 822: PRND Wire Connector & Shifter Assembly
Courtesy of CHRYSLER GROUP, LLC

3. Release the wire connector lock and disconnect the PRND wire connector from the shifter assembly.

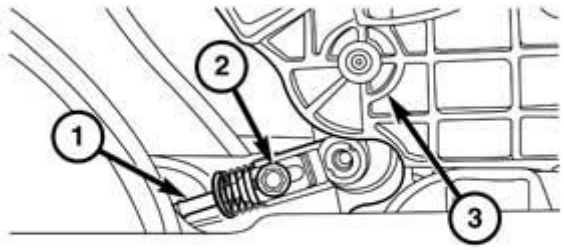

210171740

Fig. 823: Shifter Assembly & Gear Shift Cable End
Courtesy of CHRYSLER GROUP, LLC

4. Pry the gear shift cable end (2) from the pin under the shifter assembly (3).
5. Release the shift cable housing retainer and disengage the cable from the shifter assembly.

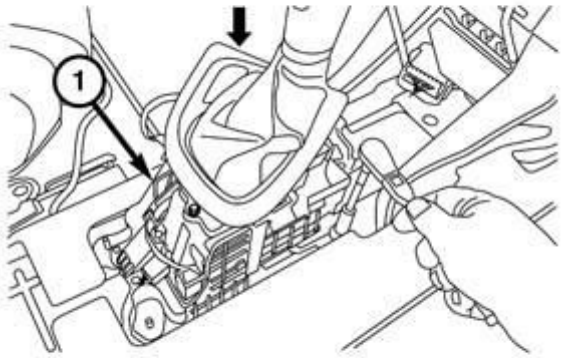

Fig. 824: Gear Shifter
Courtesy of CHRYSLER GROUP, LLC

6. Remove the nuts holding the gear shifter to the floor.
7. Separate the gear shifter from the vehicle.

INSTALLATION

INSTALLATION

1. Place the gear shifter in position on the floor pan.

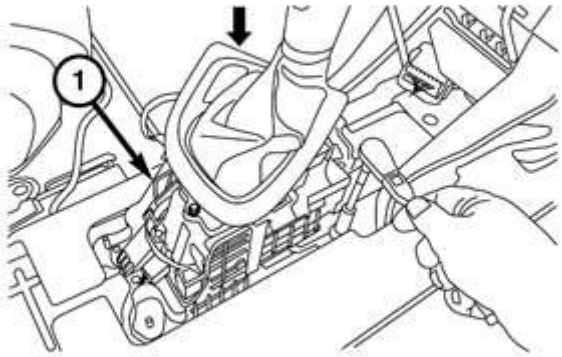

210171836

Fig. 825: Gear Shifter
Courtesy of CHRYSLER GROUP, LLC

2. Install nuts to hold the gear shifter assembly (1) to the floor pan.
3. Insert the shift cable into the access hole on the front of the shifter and lock the retainer into the shifter.

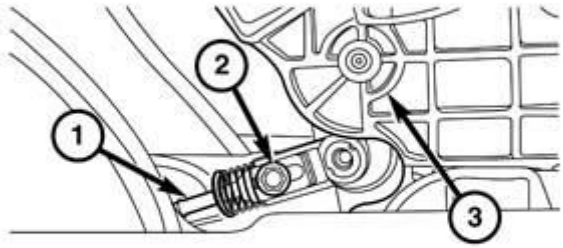

210171740

Fig. 826: Shifter Assembly & Gear Shift Cable End
Courtesy of CHRYSLER GROUP, LLC

4. Push the gear shift cable end (2) onto the pin under the shifter assembly (3).

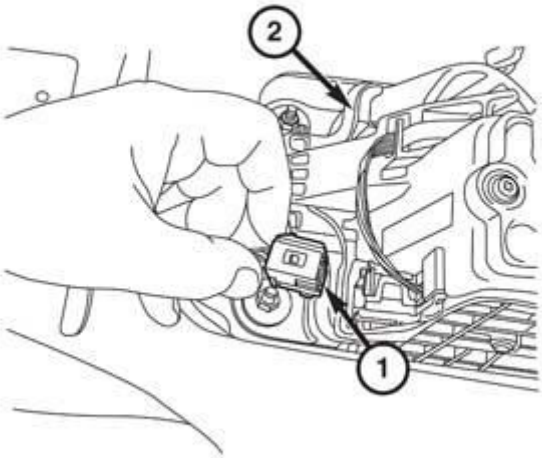

210171835

Fig. 827: PRND Wire Connector & Shifter Assembly
Courtesy of CHRYSLER GROUP, LLC

5. Connect the PRND wire connector into the shifter assembly connector.
6. Install the center floor console. Refer to **CONSOLE, FLOOR, INSTALLATION** .
7. Connect the battery negative cable.

2014 AUTOMATIC TRANSMISSION

CVT - Service Information - Compass & Patriot

DESCRIPTION

DESCRIPTION

The continuously variable transmission (CVT) has a torque converter and allows optimal driving force in response to the accelerator pedal operation, therefore giving us smooth driving without shift shock. The CVT also has a manual mode function for both smooth driving without shift shock, and enjoyable driving with manual ratio selection.

The CVT allows for maximum driving force and performance when compared to a conventional A/T. When the throttle is fully opened, driving force for the conventional automatic transmission changes unevenly because the ratio is shifted in steps. On the other hand, driving force for the CVT changes smoothly because it is possible for it to accelerate while keeping it in the peak power range of the engine. Therefore, CVT avoids the loss of driving force, and enables smooth and shock free driving.

Coordinated control of the engine and the multifaceted shift diagram have made it possible to realize both, smooth and powerful driving with a good ratio change response and an improvement in fuel consumption.

OPERATION

OPERATION

PARK POWERFLOW

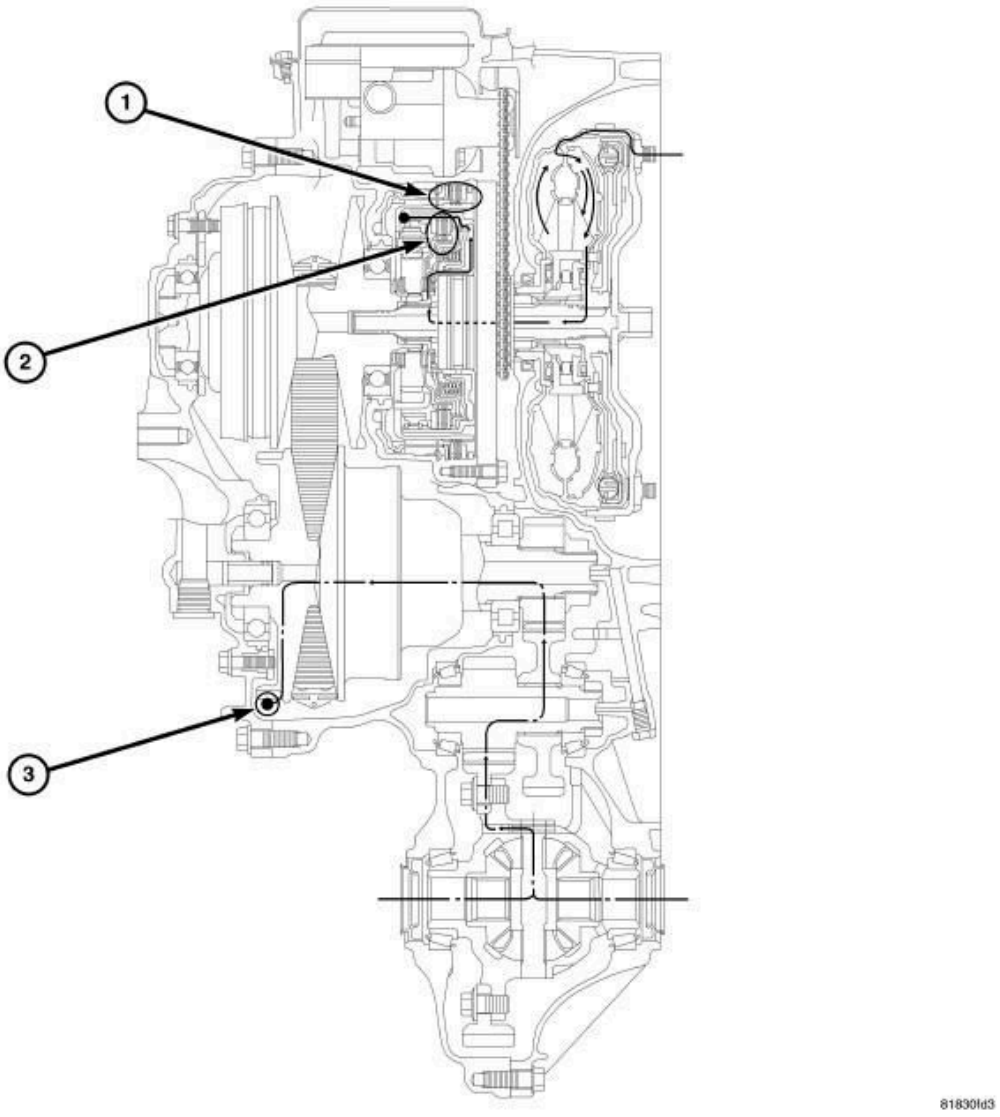

Fig. 1: Park Powerflow
Courtesy of CHRYSLER GROUP, LLC

1 - REVERSE BRAKE (RELEASED)
2 - FORWARD CLUTCH (RELEASED)
3- PARKING GEAR (FIXED)

When the forward clutch and the reverse brake are released, the driving force from the engine runs idly and power is not transmitted to the primary pulley.

When the parking gear is fixed, the torque load from the tires is not transmitted up to the primary pulley.

REVERSE POWERFLOW

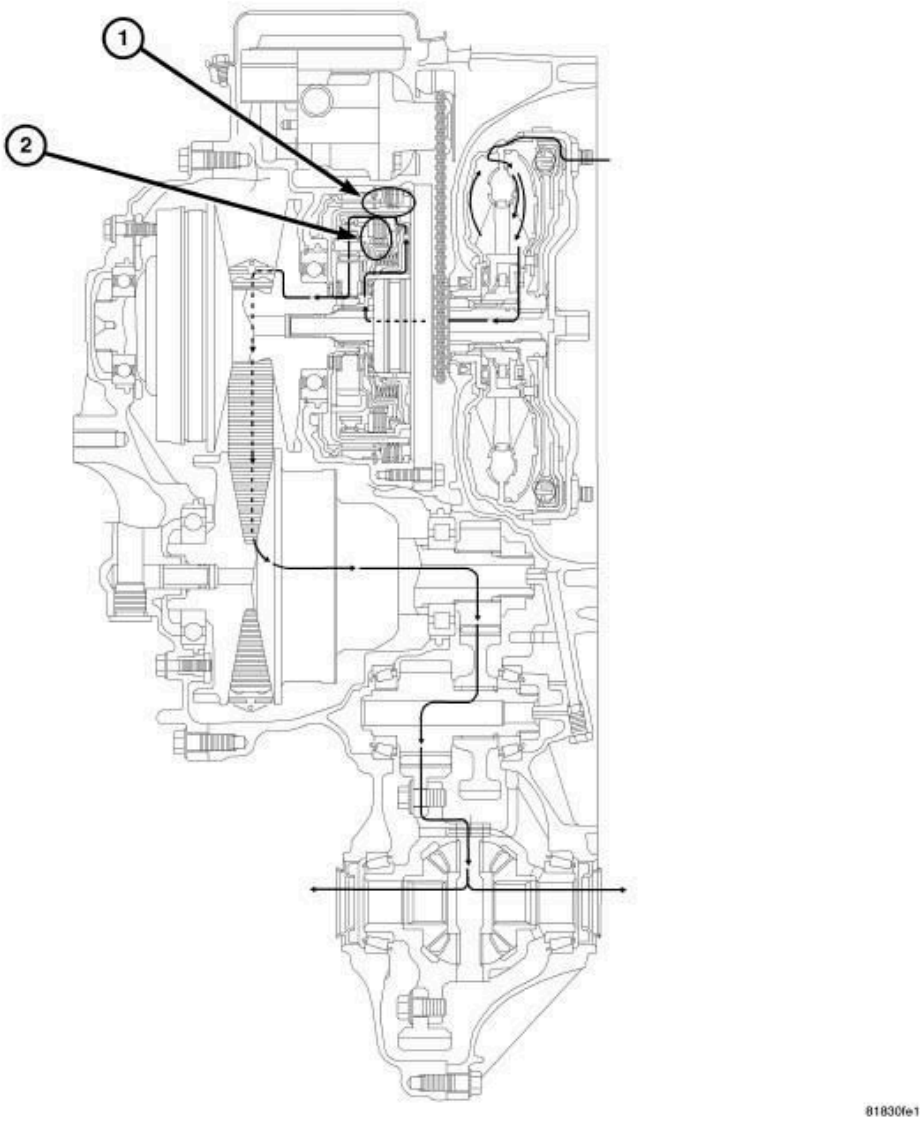

Fig. 2: Reverse Powerflow
Courtesy of CHRYSLER GROUP, LLC

1 - REVERSE BRAKE (ENGAGED)
2 - FORWARD CLUTCH (RELEASED)

When the reverse brake is engaged, the planetary carrier is fixed and the driving force from the engine rotates the sun gear reversely.

Therefore, the primary pulley is rotated reversely and the driving force is outputted in the reverse rotating direction.

NEUTRAL POWERFLOW

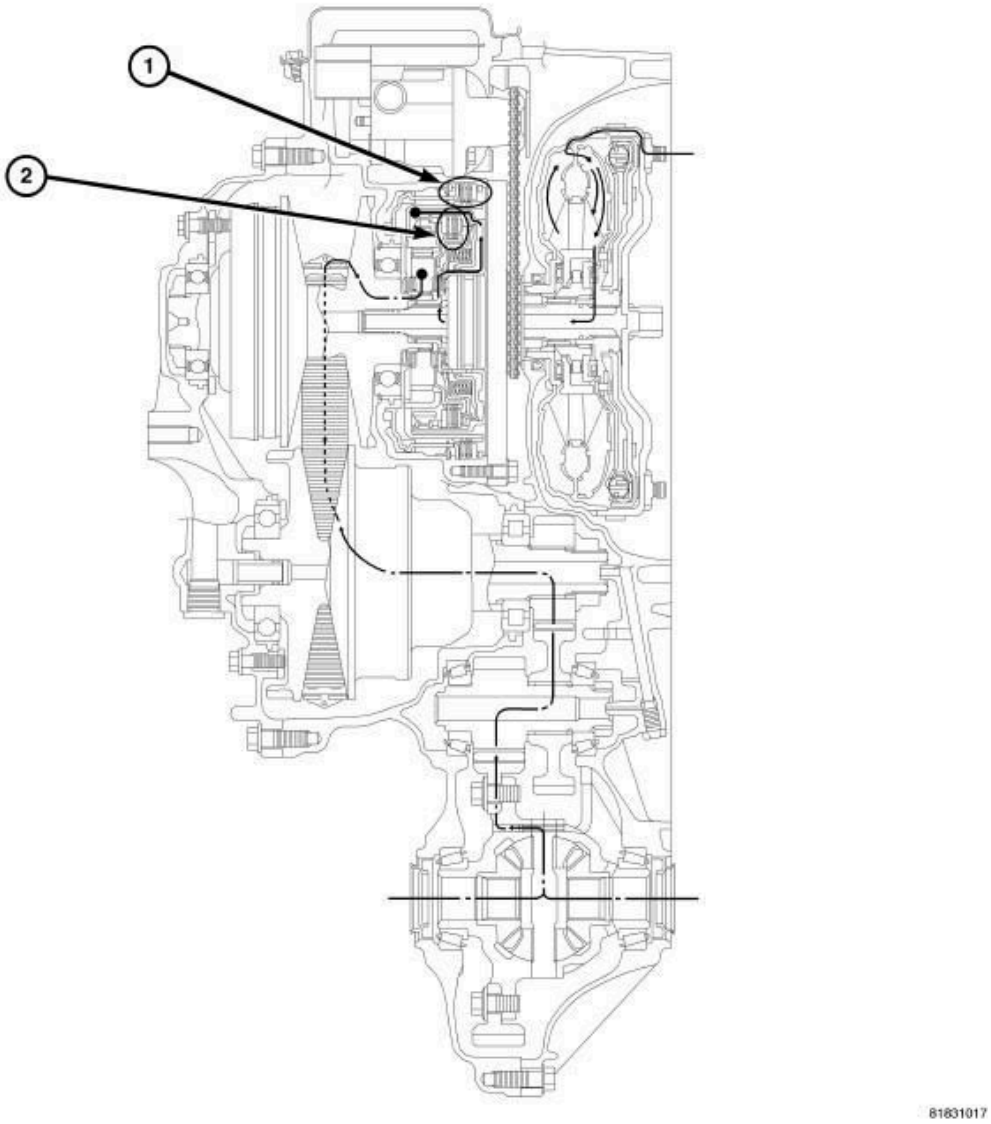

Fig. 3: Neutral Powerflow
Courtesy of CHRYSLER GROUP, LLC

1 - REVERSE BRAKE (RELEASED)
2 - FORWARD CLUTCH (RELEASED)

When the forward clutch and the reverse brake are released, the driving force from the engine runs idly and is not transmitted to the primary pulley.

When the forward clutch and the reverse brake are released, the planetary carrier runs idly and the torque from the tires are not transmitted.

DRIVE POWERFLOW

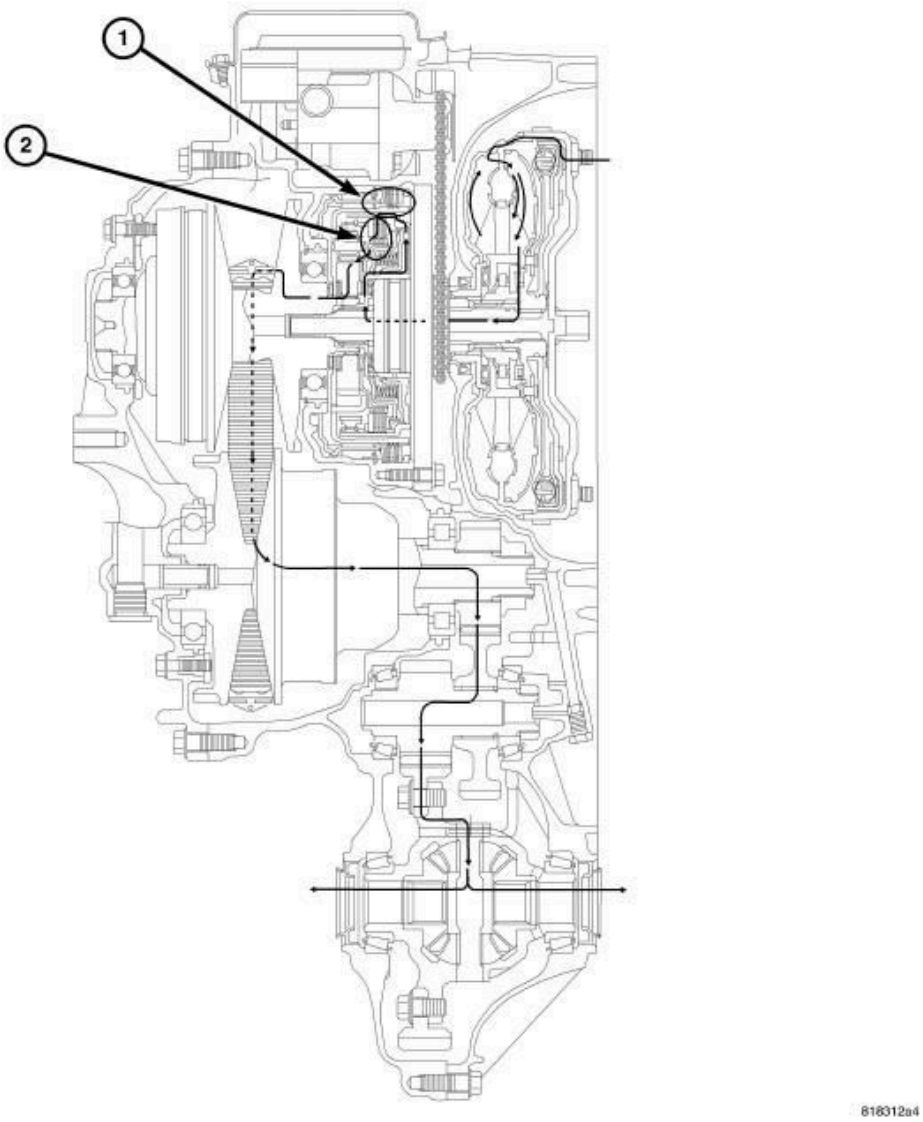

Fig. 4: Drive Powerflow
Courtesy of CHRYSLER GROUP, LLC

1 - REVERSE BRAKE (RELEASED)
2 - FORWARD CLUTCH (ENGAGED)

When the forward clutch is engaged, the driving force from the engine rotates the sun gear normally through the forward clutch.

Therefore, the primary pulley is rotated normally and the driving force is outputted in the normally rotated direction.

SHIFT LOW TO HIGH - PHASE 1

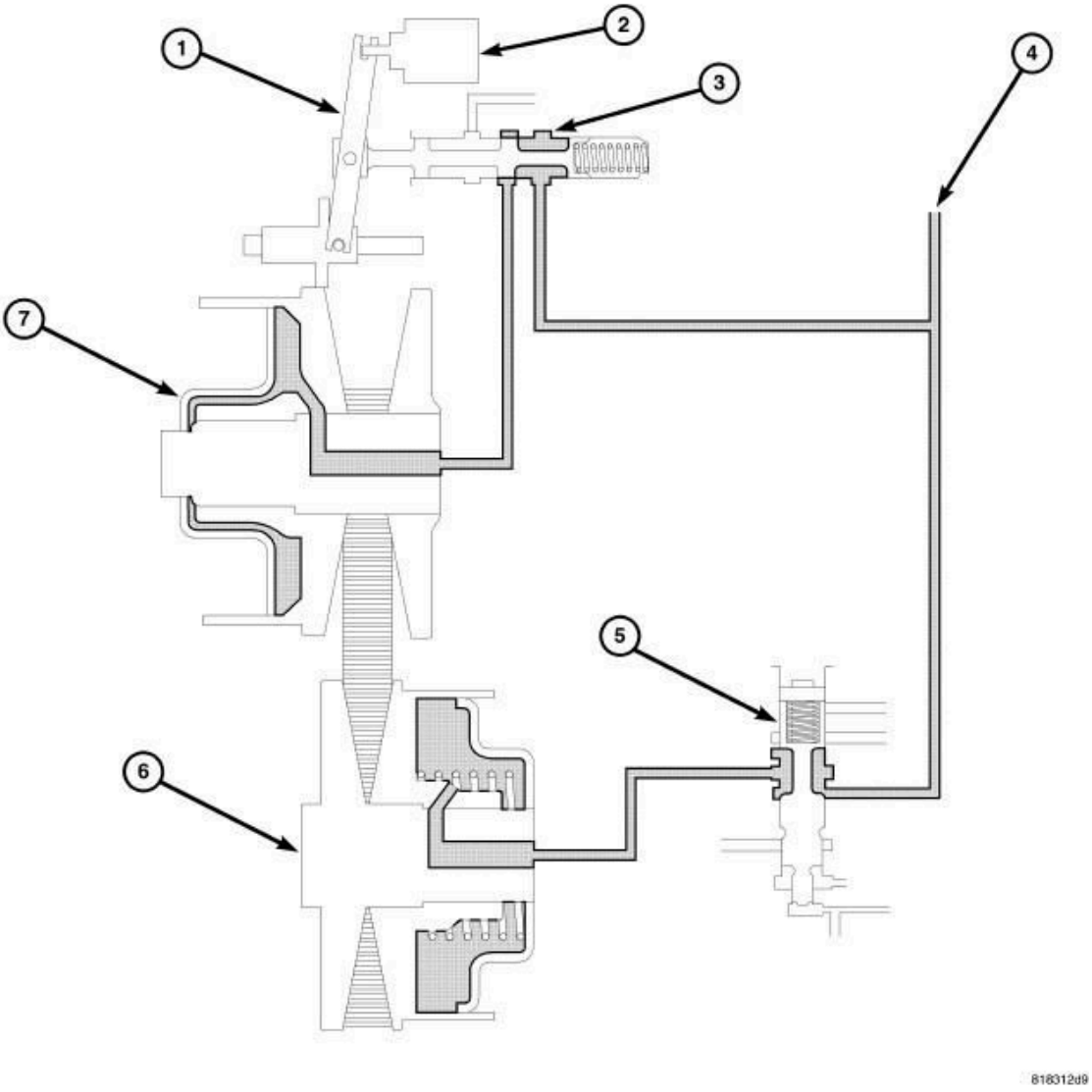

Fig. 5: Shift Low To High - Phase 1
Courtesy of CHRYSLER GROUP, LLC

1 - PULLEY RATIO LINKAGE
2 - STEPPER MOTOR
3 - RATIO CONTROL VALVE
4 - LINE PRESSURE
5 - SECONDARY VALVE
6 - SECONDARY PULLEY
7 - PRIMARY PULLEY

When the line pressure circuit is closed by the ratio control valve, the line pressure is not applied to the primary pulley.

When the secondary valve moves downwards, line pressure is applied to the secondary pulley.

SHIFT LOW TO HIGH - PHASE 2

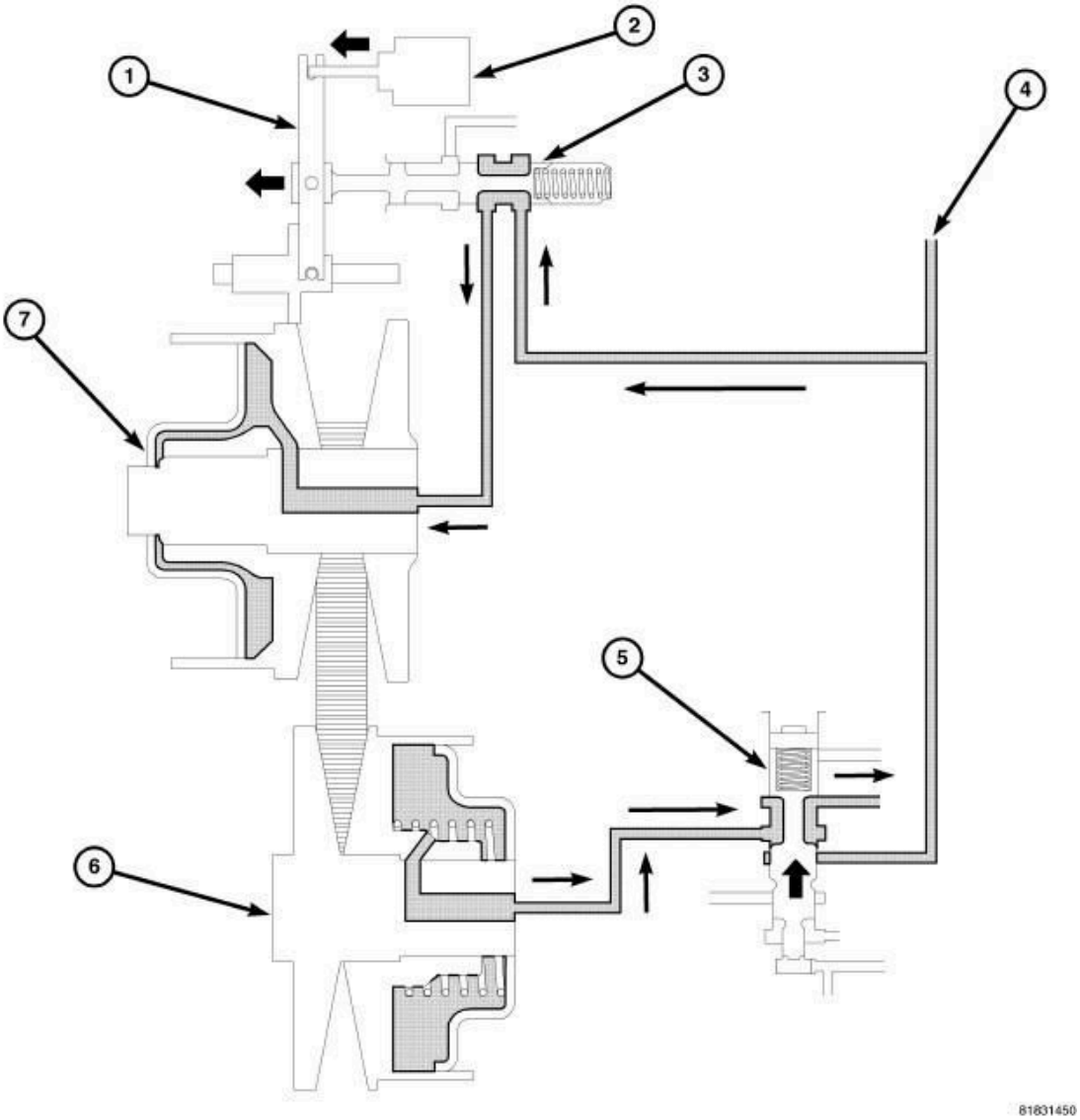

Fig. 6: Shift Low To High - Phase 2
Courtesy of CHRYSLER GROUP, LLC

1 - PULLEY RATIO LINKAGE
2 - STEPPER MOTOR
3 - RATIO CONTROL VALVE
4 - LINE PRESSURE
5 - SECONDARY VALVE
6 - SECONDARY PULLEY
7 - PRIMARY PULLEY

The pulley ratio linkage moves to the left direction of the stepper motor. The line pressure circuit opens due to the movement of the ratio control valve which links to the pulley linkage, and line pressure is applied to the primary pulley.

The secondary valve moves to open and fluid in the secondary pulley is drained while maintaining the pulley pressure.

SHIFT LOW TO HIGH - PHASE 3

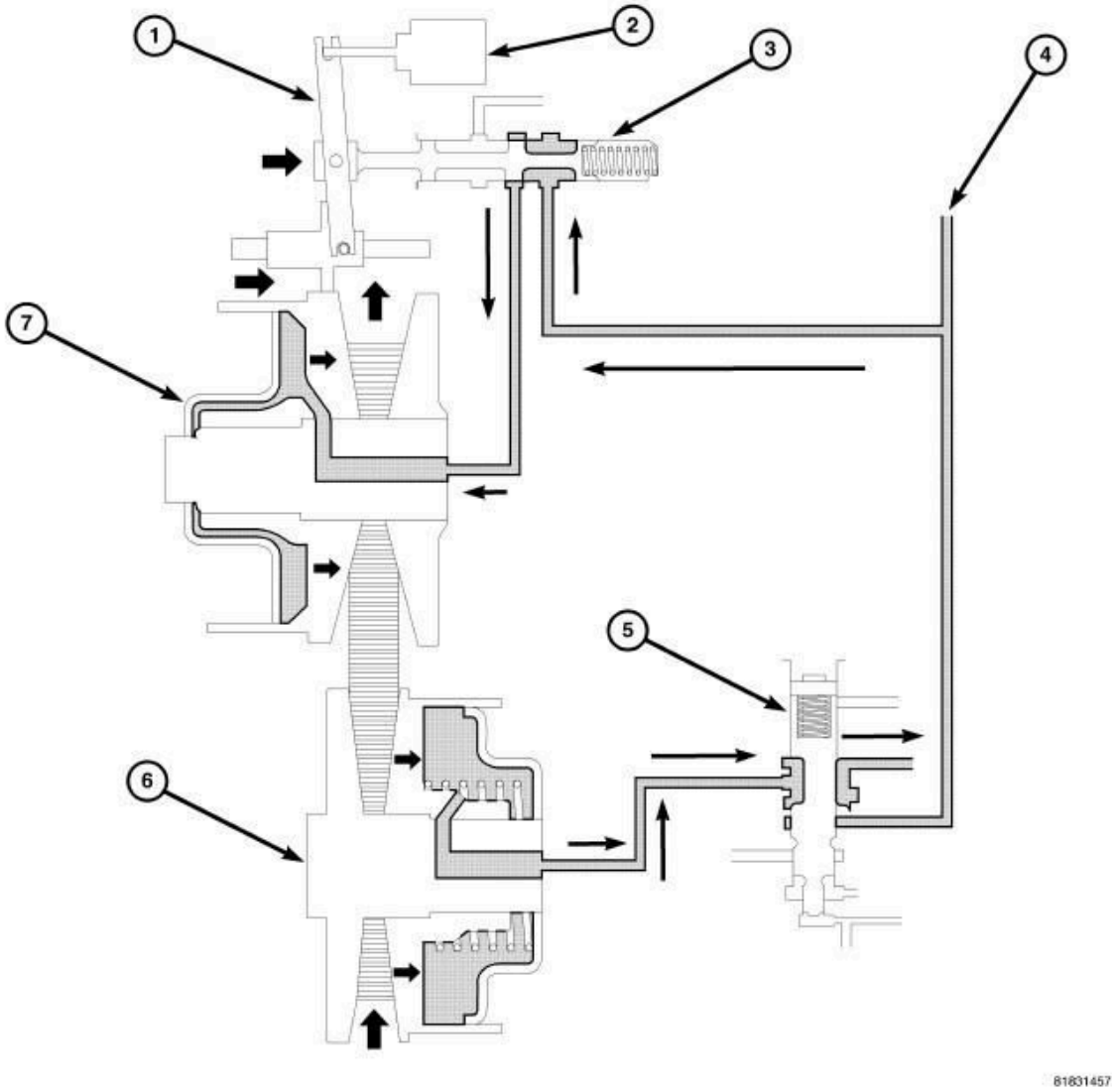

Fig. 7: Shift Low To High - Phase 3
Courtesy of CHRYSLER GROUP, LLC

1 - PULLEY RATIO LINKAGE
2 - STEPPER MOTOR
3 - RATIO CONTROL VALVE

4 - LINE PRESSURE
5 - SECONDARY VALVE
6 - SECONDARY PULLEY
7 - PRIMARY PULLEY

By applying line pressure to the primary pulley, the sliding element moves to the right direction and the steel belt is pushed outward on the primary pulley.

By actuating the "moving-pulley" of the primary pulley to the right direction, the ratio control valve starts to move to the right direction through the pulley ratio linkage which is driven by the sliding element.

By pulling the steel belt to the primary pulley side, the moving-pulley of the secondary pulley moves to the right side also.

SHIFT LOW TO HIGH - PHASE 4

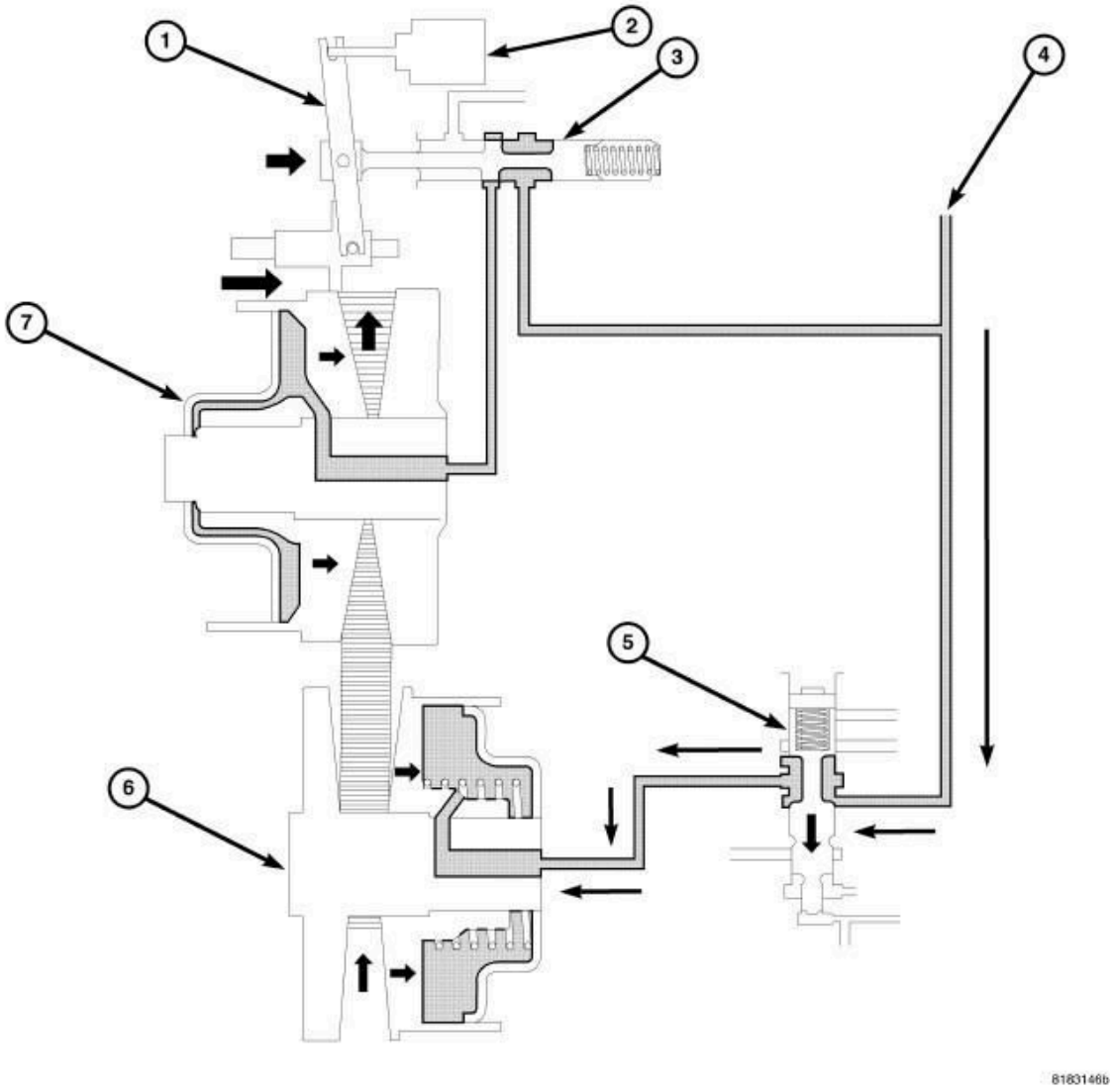

Fig. 8: Shift Low To High - Phase 4
Courtesy of CHRYSLER GROUP, LLC

1 - PULLEY RATIO LINKAGE
2 - STEPPER MOTOR
3 - RATIO CONTROL VALVE
4 - LINE PRESSURE
5 - SECONDARY VALVE
6 - SECONDARY PULLEY
7 - PRIMARY PULLEY

Additionally, the sliding element of the primary pulley moves to the right direction and the ratio control valve also moves to the right side and closes the line pressure circuit; this is a completion of the shift.

The secondary valve moves downwards to apply the line pressure to the secondary pulley in order to apply clamping force to the steel belt.

SHIFT HIGH TO LOW - PHASE 1

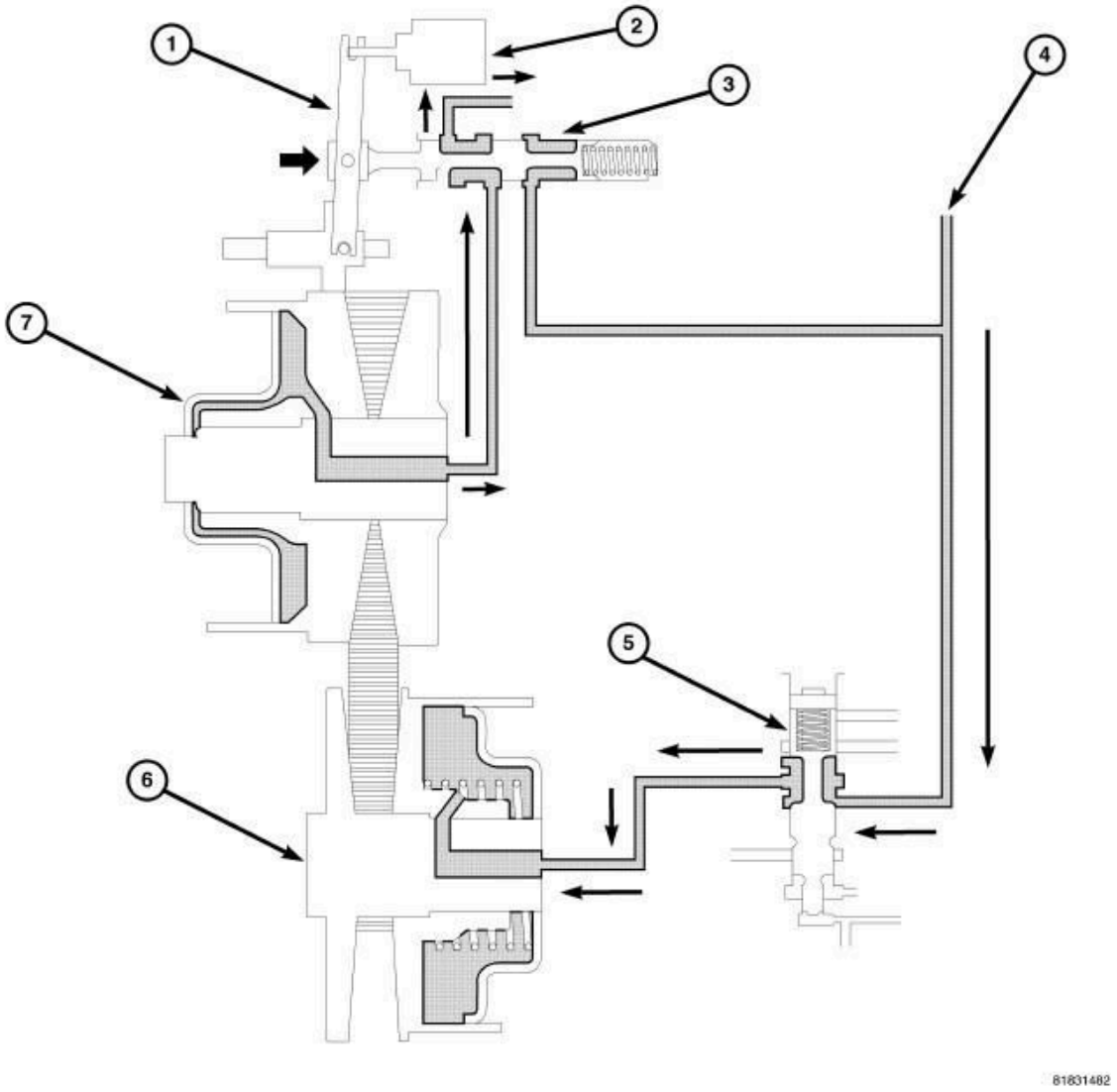

Fig. 9: Shifting High To Low - Phase 1
Courtesy of CHRYSLER GROUP, LLC

1 - PULLEY RATIO LINKAGE
2 - STEPPER MOTOR
3 - RATIO CONTROL VALVE
4 - LINE PRESSURE
5 - SECONDARY VALVE
6 - SECONDARY PULLEY
7 - PRIMARY PULLEY

The pulley ratio linkage moves to the right direction in the stepper motor. As the ratio control valve which links to the pulley ratio linkage, moves fluid and the primary pulley is drained.

Because the secondary valve is moving downwards, line pressure is maintained in the secondary pulley.

SHIFT HIGH TO LOW - PHASE 2

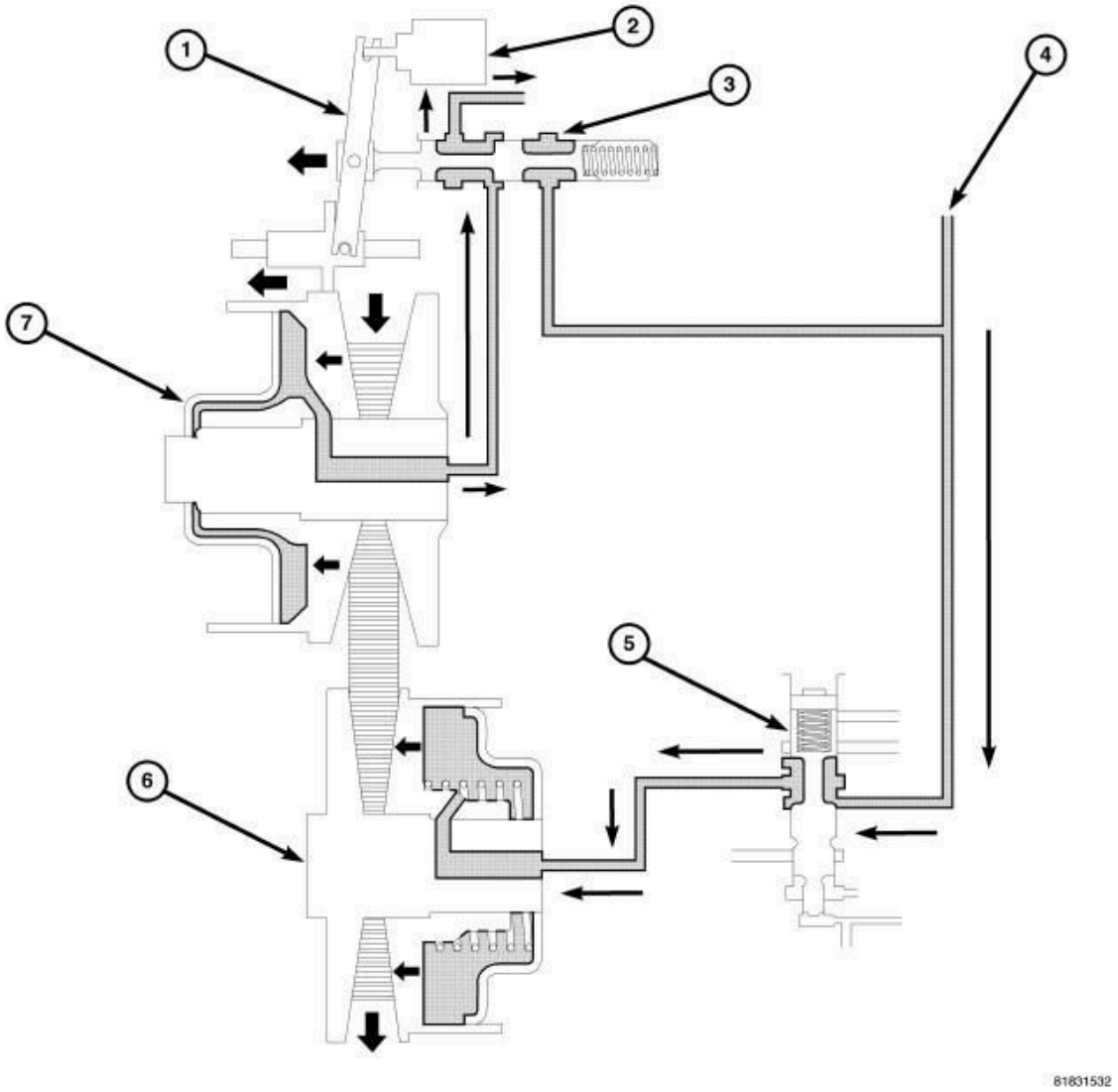

Fig. 10: Shifting High To Low - Phase 2
Courtesy of CHRYSLER GROUP, LLC

1 - PULLEY RATIO LINKAGE
2 - STEPPER MOTOR
3 - RATIO CONTROL VALVE

4 - LINE PRESSURE
5 - SECONDARY VALVE
6 - SECONDARY PULLEY
7 - PRIMARY PULLEY

The stepper motor (2) first moves to the right which causes the ratio valve (3) to vent oil from the primary movable pulley at a speed that allows some belt clamping to be maintained. As the oil is exhausted, the moveable side of the primary pulley moves to the left allowing the belt to be pulled down into the low ratio position by the constantly maintained line pressure in the secondary pulley. As the primary pulley moveable side moves to the left, the ratio valve is pulled to the left which closes off the oil venting from the primary pulley thereby stopping the ratio change. For each position of the stepper motor, there is a corresponding position of the primary moveable sheave therefore.

SHIFT HIGH TO LOW - PHASE 3

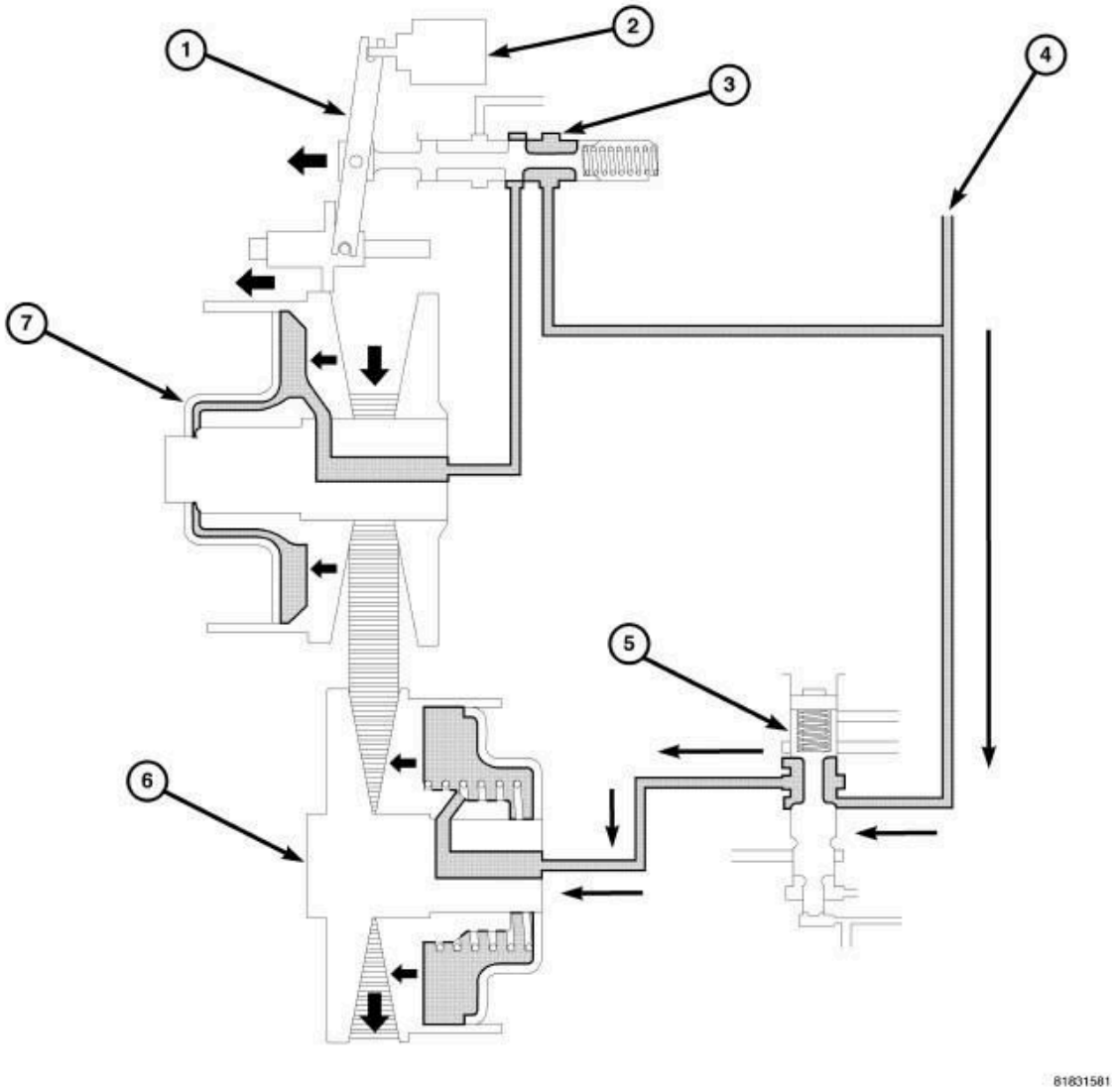

Fig. 11: Shifting High To Low - Phase 3
Courtesy of CHRYSLER GROUP, LLC

1 - PULLEY RATIO LINKAGE
2 - STEPPER MOTOR
3 - RATIO CONTROL VALVE
4 - LINE PRESSURE
5 - SECONDARY VALVE
6 - SECONDARY PULLEY
7 - PRIMARY PULLEY

Additionally, the moving-pulley of the secondary pulley moves to the left direction and the steel belt is pushed outside. In accordance with this, the sliding element of the primary pulley moves to the left side.

The moving-pulley of the primary pulley moves to the right direction, then the ratio control valve also moves to the left direction and closes the drain circuit; this is a completion of the shift.

DIAGNOSIS AND TESTING

DIAGNOSIS AND TESTING - TEST PORTS

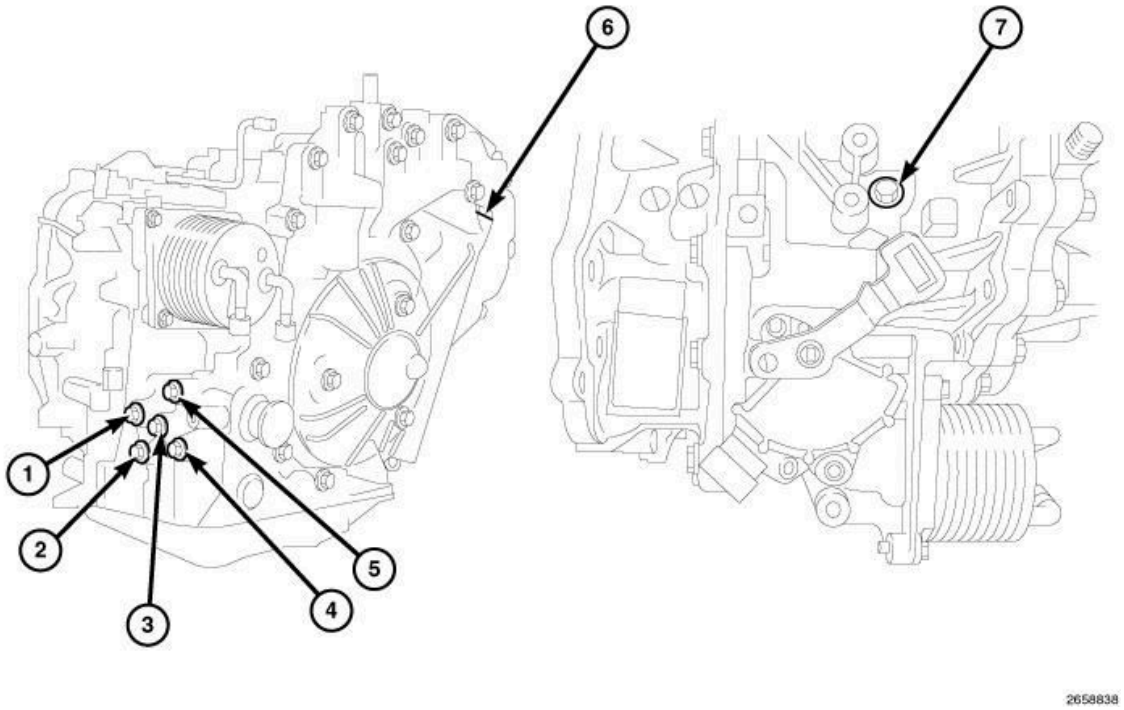

Fig. 12: Test Ports
Courtesy of CHRYSLER GROUP, LLC

1 - Line Pressure
2 - Forward Clutch Pressure
3 - Primary Pressure
4 - Torque Converter Apply Pressure
5 - Torque Converter Release Pressure
6 - Secondary Pressure
7 - Reverse Brake Pressure

NOTE: Use (special tool #9873, Gauge Kit, Pressure Test) when testing for the pressures below.

	Fluid Pressure (Minimum - Maximum)	Fluid Pressure (Measurement Reference Value)		Remarks
	Reference Value - Metric / Standard	Measurement Condition	Reference Value - Metric / Standard	
Line pressure	0.5 - 6.0 Mpa (5.1- 61.2 kg/cm2) / 73 - 870 psi	Idling	0.5 - 1.5 Mpa (5.1 - 15.3 kg/cm2) / 73 - 217 psi	
Forward clutch pressure	0.1 - 1.5 Mpa (1.0 - 15.3 kg/cm2) / 14 - 217 psi	Idling (D position)	0.5 - 1.0 Mpa (5.1 - 10.2 kg/cm2) / 73 - 145 psi	P, R and N positions: 0 Mpa (0 kg/cm2)
Primary pressure	0.1 - 6.0 Mpa (1.0 - 61.2 kg/cm2) / 14 - 870 psi	Idling	0.1 - 1.5 Mpa (1.0 - 15.3 kg/cm2) / 14 - 217 psi	
Torque converter apply pressure	0.0 - 1.0 Mpa (0.0 - 10.2 kg/cm2) / 0 - 145 psi	Lock-up ON:	0.0 - 0.2 Mpa (0.0 - 2.0 kg/cm2) / 0 - 29 psi	
Torque converter release pressure	0.0 - 1.0 Mpa (0.0 - 10.2 kg/cm2) / 0 - 145 psi	Lock-up OFF:	0.0 - 0.2 Mpa (0.0 - 2.0 kg/cm2) / 0 - 29 psi	
Secondary Pressure	0.1 - 6.0 Mpa (1.0 - 61.2 kg/cm2) / 14 - 870 psi	Idling	0.1 - 1.5 Mpa (1.0 -15.3 kg/cm2) / 14 - 217 psi	
Reverse brake pressure	0.1 - 1.5 Mpa (1.0 -15.3 kg/cm2) / 14 - 217 psi	Idling (R position)	.5 - 1.0 Mpa (5.1 - 10.2 kg/cm2) / 73 - 145 psi	Out of R position: 0 Mpa (0 kg/cm2)

SPECIFICATIONS

SPECIFICATIONS

CLEARANCES

DESCRIPTION	SPECIFICATION
Forward clutch	1.2-1.5 mm (0.047-0.059 in.)
Total end play	0.25 - 0.55 mm (0.010 - 0.022 in)
Required differential preload	0.17 to 0.29 mm (0.007 to 0.011 in)
Required preload, Reduction gear	0.13-0.19 mm (0.005-0.0075 in)
Reduction Assembly required select shim	Reduction assembly measurement, minus reduction assembly measurement, plus reduction assembly measurement, plus 0.16 mm (0.006 in).
Required clearance, Oil pump drive sprocket	0.10-0.23 mm (0.004-0.009 in.) The select shim is equal to the oil pump drive sprocket measurement one plus the oil pump drive sprocket measurement, two minus 0.16 mm (0.0065 in.).
Torque converter installed depth	at least 13 mm

TORQUE SPECIFICATIONS

TORQUE SPECIFICATIONS

DESCRIPTION	N-m	Ft. Lbs.	In. Lbs.
bolts, drive belt assembly - to - transaxle case	45	33	-
Bolt, Detent spring to case	7	-	61
Bolts, oil pump - to - transaxle case	19	14	168
Bolt, oil pump - to - transaxle case (outside)	28	20	247
Bolts, Valve body assembly - to - case	8	-	70
Nut, Valve body manual lever - to - manual shaft	22	16	194
Bolts, Oil strainer to valve	8	-	70

body			
Bolts, oil pan - to - transaxle case	8	-	70
Bolts, baffle plate	6	-	52
Bolts, oil pump cover	26	19	230
Bolts, Bracket oil pump cover - to oil pump	26	19	230
Bolts, Baffle plate	26	19	230
Bolts, Baffle plate at oil pump driven sprocket	6	-	52
Bolts, Converter housing - to - transaxle case	45	33	398
Bolts, TRS	6	-	49
Nut, Shift lever to manual shaft	17	13	150
Bolt, Speed input sensor - to - transaxle case	6	-	52
Bolt, Speed output sensor - to - transaxle case	6	-	52
Bolts, Fluid cooler - to - transaxle case	4	-	37
Bolts, transmission bell housing - to - engine	48	35	-
Bolts, Transmission crossmember	75	55	-
Nut, Rear mount through bolt	75	55	-
Bolts, Rear mount to transaxle	75	55	-
Bolts, Torque converter	48	35	-
Bolts, Upper transmission mount	75	55	-
Bolts, PTU support bracket	68	50	-
bolt, Catalytic Converter Support Bracket	28	-	250

Nut, Upper mount through bolt	75	55	-
Bolts, Throttle body support bracket	11	-	105
Nut, Shifter cable	11	-	105
Bolts, Transmission fill tube	9	-	79
Nut, Reduction gear	250	185	-
Bolts, Shifter - to - floor	6	-	53
Bolts, Bracket to Valve Body	8	70	-

REMOVAL

REMOVAL

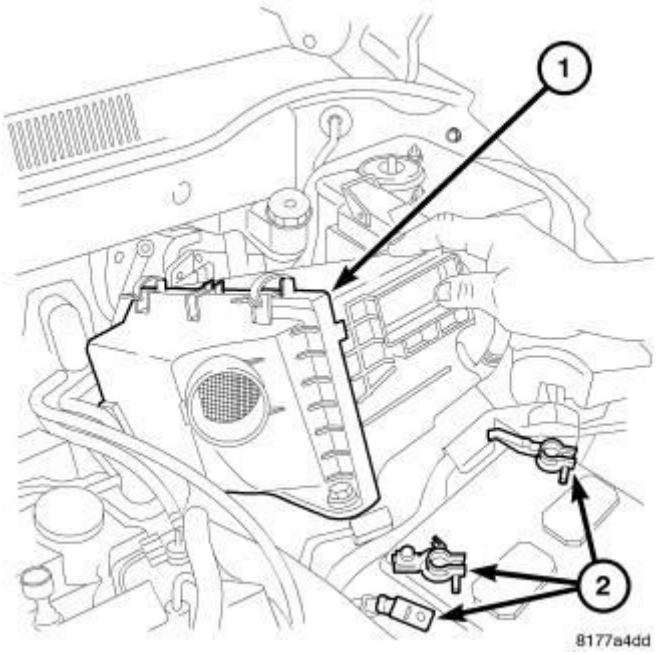

Fig. 13: Air Cleaner Assembly
Courtesy of CHRYSLER GROUP, LLC

1. Disconnect battery cables (2).
2. Remove air cleaner assembly (1).
3. Remove battery.

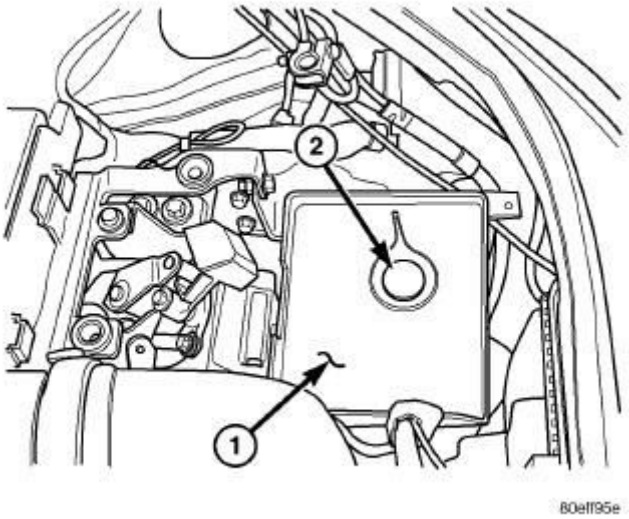

Fig. 14: Battery Tray Bottom And Sensor
Courtesy of CHRYSLER GROUP, LLC

4. Remove battery tray (1).
5. Drain coolant. Refer to **STANDARD PROCEDURE** .

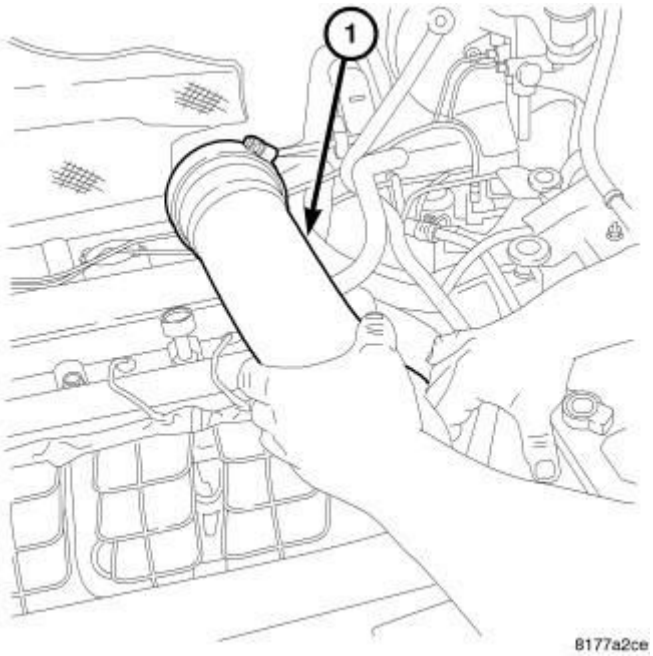

Fig. 15: Inlet Air Tube
Courtesy of CHRYSLER GROUP, LLC

6. Remove inlet air tube (1).
7. Remove vacuum supply lines.

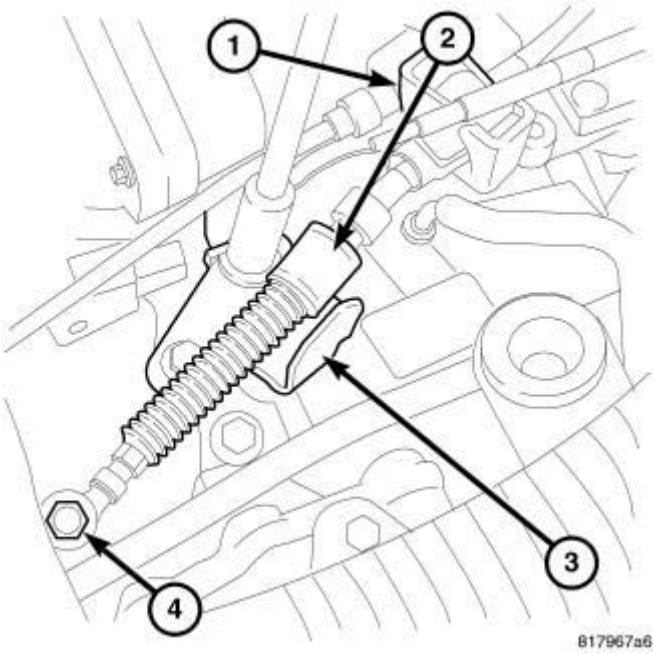

Fig. 16: Shifter Cable & Bracket
Courtesy of CHRYSLER GROUP, LLC

8. Remove the shifter cable (2) and bracket (3).

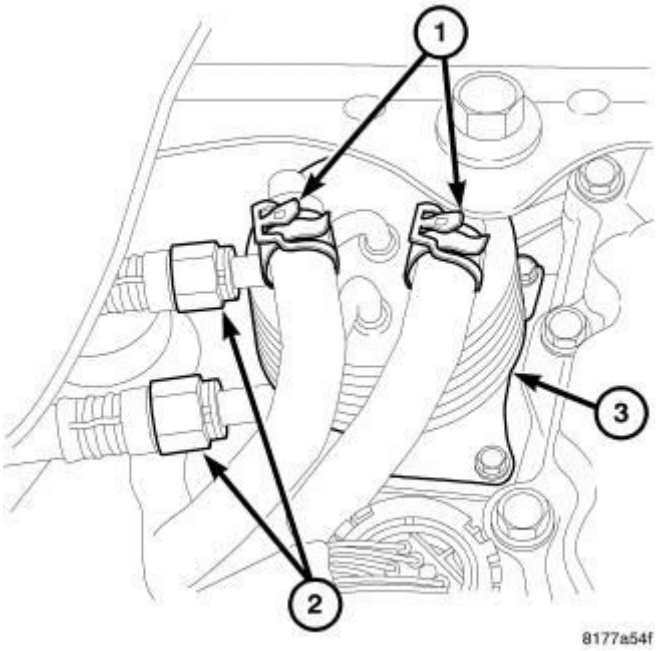

Fig. 17: Cooler/Transmission Lines At Cooler
Courtesy of CHRYSLER GROUP, LLC

9. **With fluid cooler** , disconnect the coolant hoses (1) and the transmission fluid lines (2). Refer to **TUBES AND HOSES, TRANSMISSION OIL COOLER, STANDARD PROCEDURE** .

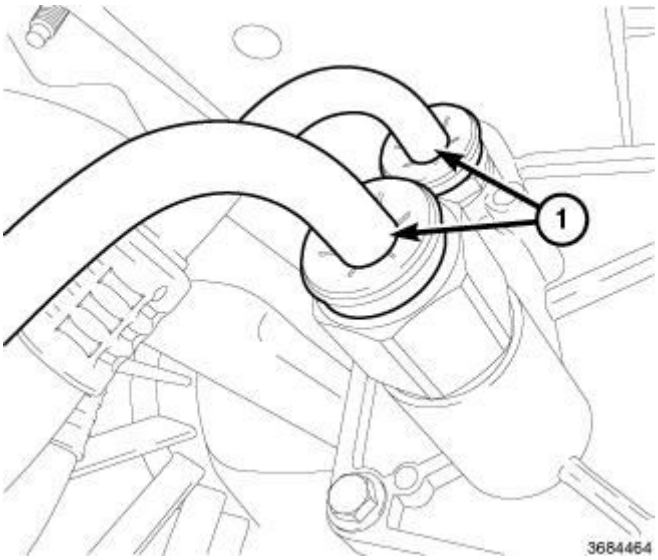

Fig. 18: Transmission Fluid Lines
Courtesy of CHRYSLER GROUP, LLC

10. **With bypass valve** , disconnect the transmission fluid lines (1). Refer to **TUBES AND HOSES, TRANSMISSION OIL COOLER, STANDARD PROCEDURE** .
11. Remove heater hose.

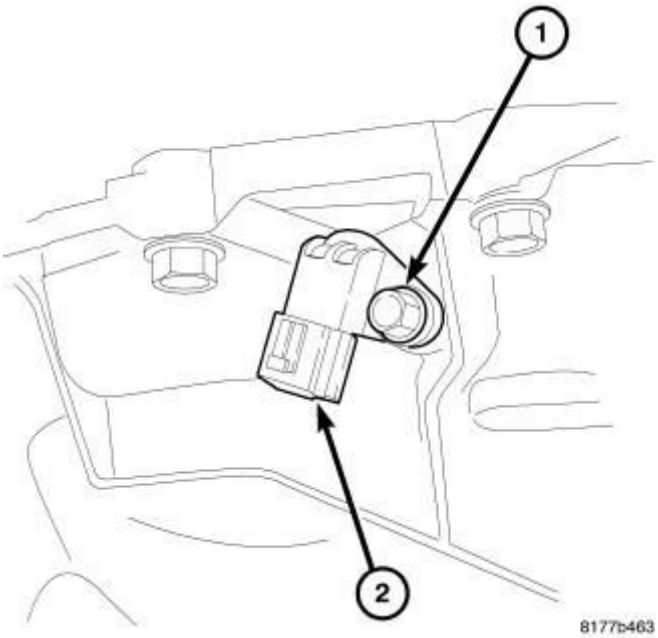

Fig. 19: Speed Sensor
Courtesy of CHRYSLER GROUP, LLC

12. Remove the speed sensor connector (1).

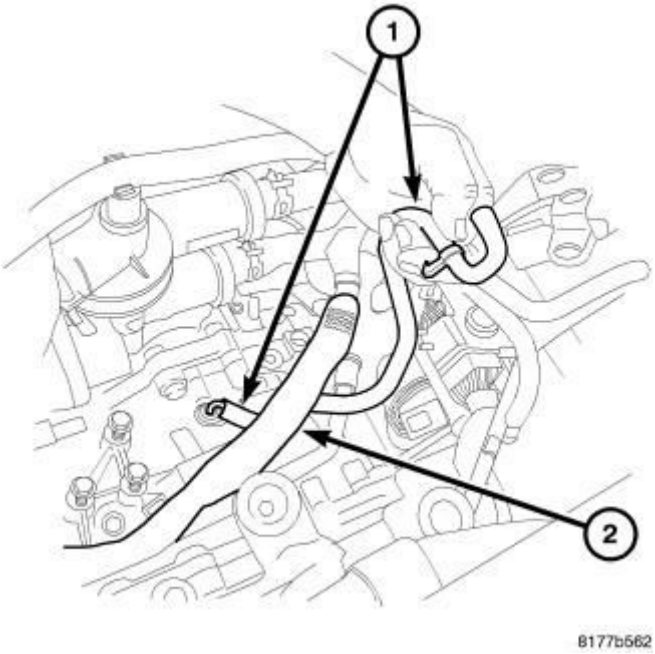

Fig. 20: Vent Tube
Courtesy of CHRYSLER GROUP, LLC

13. Remove the wiring harness from the top of the transmission (2).
14. Remove the transmission vent tube (1).

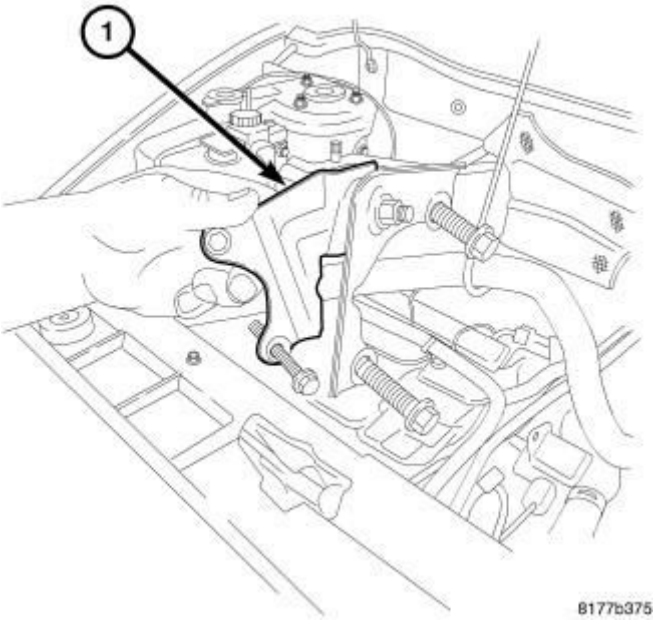

Fig. 21: Throttle Body Support Bracket
Courtesy of CHRYSLER GROUP, LLC

15. Remove the throttle body support bracket (1).

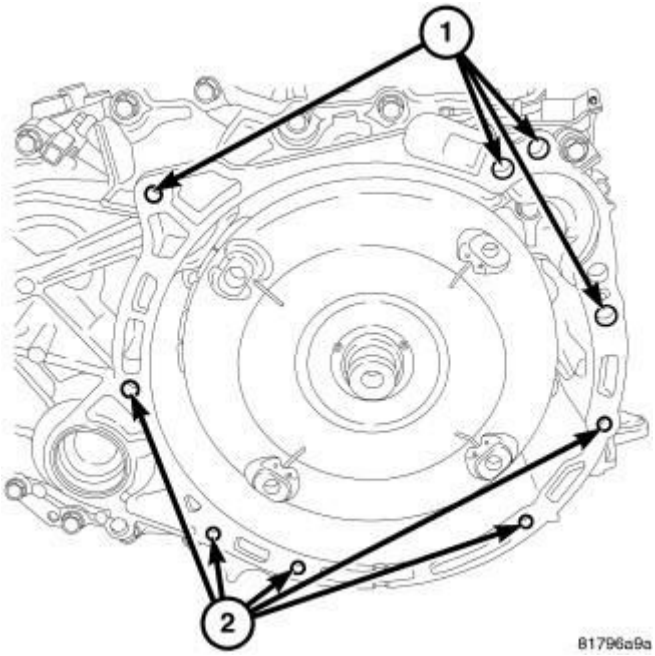

Fig. 22: Bell Housing Bolt Holes
Courtesy of CHRYSLER GROUP, LLC

16. Remove the upper bell housing bolts (1).

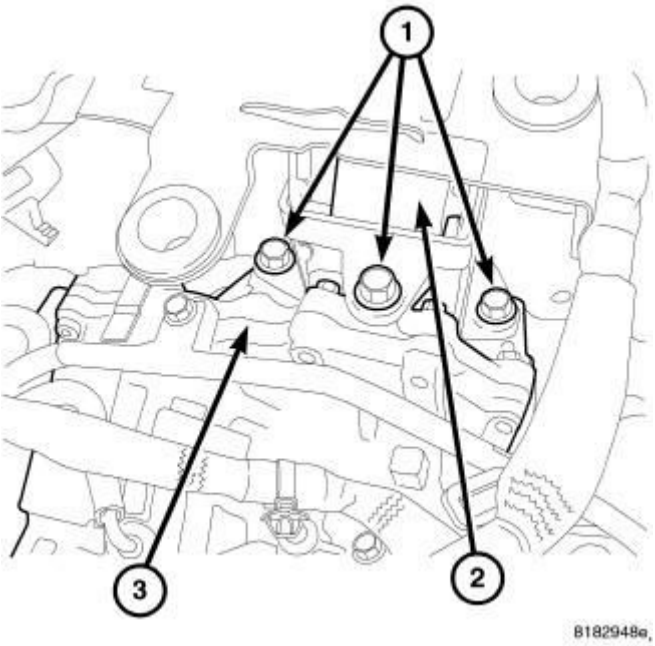

Fig. 23: Upper Transmission Mount Bolts & Upper Transmission Mount
Courtesy of CHRYSLER GROUP, LLC

17. Remove the upper transmission mount bolts (1).
18. Remove the upper transmission mount through bolt.

19. Remove the upper transmission mount (2).
20. Raise vehicle on a hoist.
21. Drain transmission fluid.
22. Remove the front skid plate, if equipped.
23. Remove the left and right front lower splash shields.

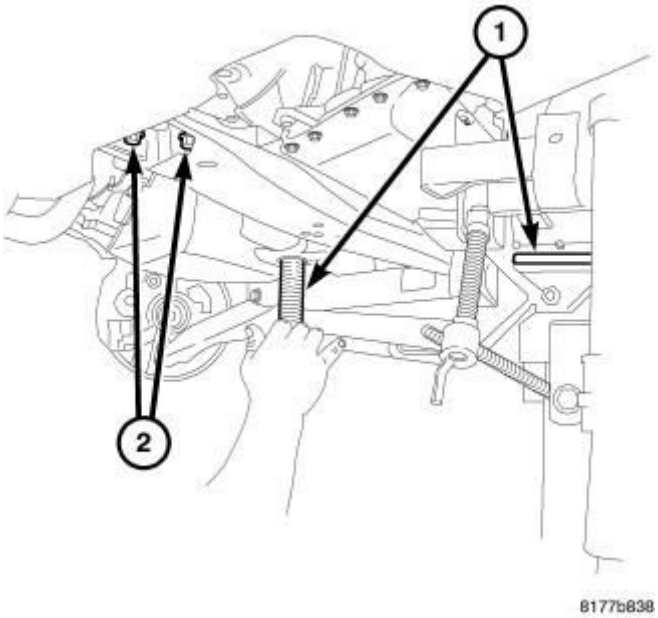

Fig. 24: Supporting Transmission With Jack
Courtesy of CHRYSLER GROUP, LLC

24. Support the transmission with a jack (1).
25. Remove the starter. Refer to **STARTER, REMOVAL** .

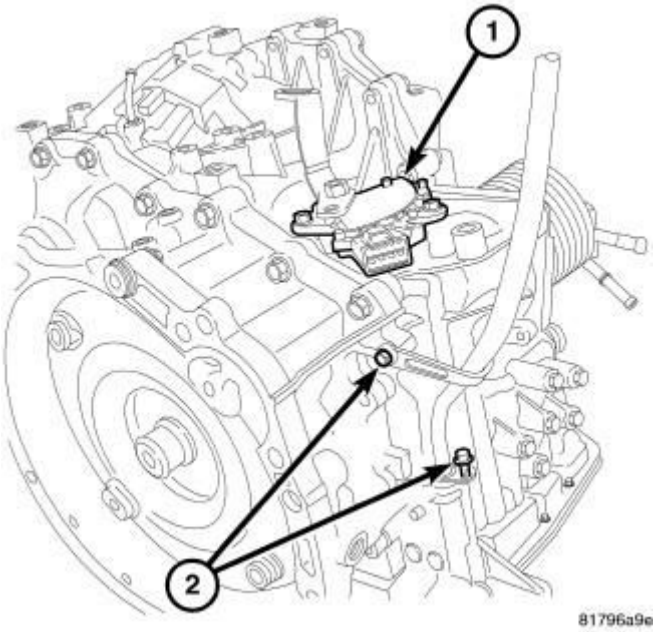

Fig. 25: Fill Tube Bolts
Courtesy of CHRYSLER GROUP, LLC

26. Remove the two transmission fill tube bolts (2) and remove the fill tube.
27. Drain the transmission fluid.
28. Remove both front wheels.
29. Remove the right and left halfshafts. Refer to **REMOVAL** .

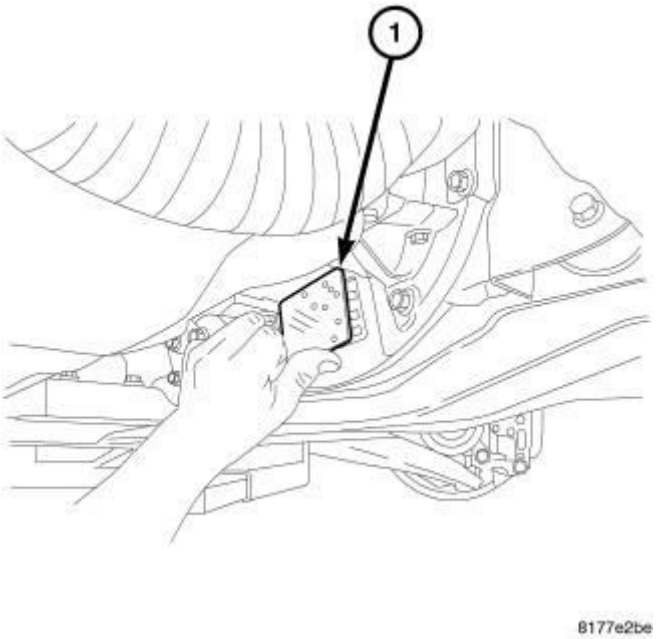

Fig. 26: Inspection Cover
Courtesy of CHRYSLER GROUP, LLC

30. Remove inspection cover (1).
31. Mark the torque converter to the flex plate for alignment upon installation.

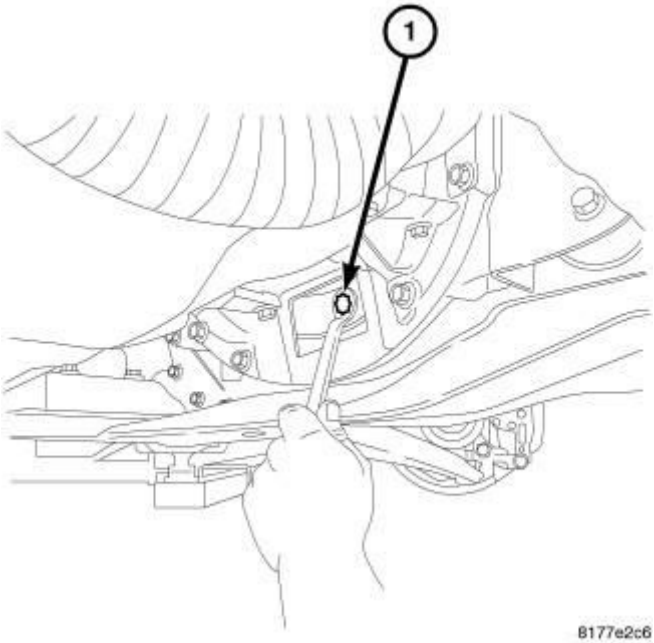

Fig. 27: Torque Converter Bolts
Courtesy of CHRYSLER GROUP, LLC

32. Remove torque converter bolts (1).

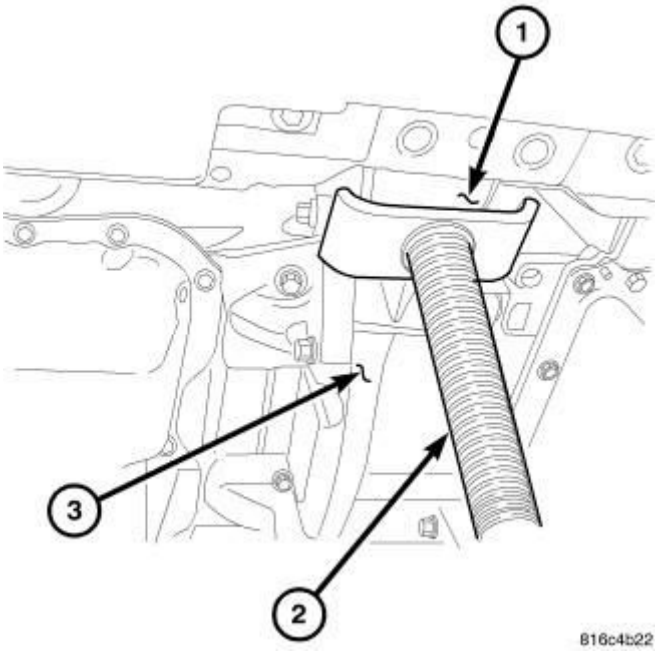

Fig. 28: Jack At Transmission Mount
Courtesy of CHRYSLER GROUP, LLC

33. Support the engine with a screw jack (2).

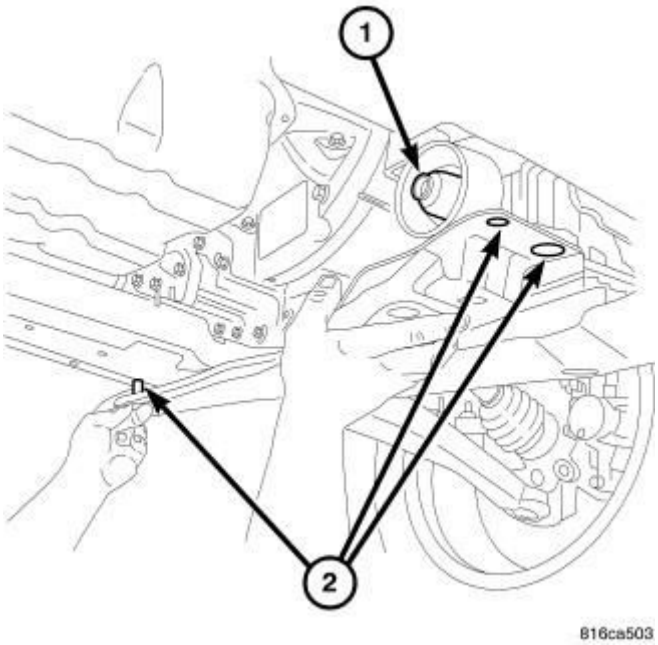

Fig. 29: Removing/Installing Through Bolt At Front Transmission Mount & Cross Member
Courtesy of CHRYSLER GROUP, LLC

34. Remove the through bolt (1) at the front transmission mount.
35. Remove bolts (2) at the transmission cross member.
36. Remove the transmission cross member.

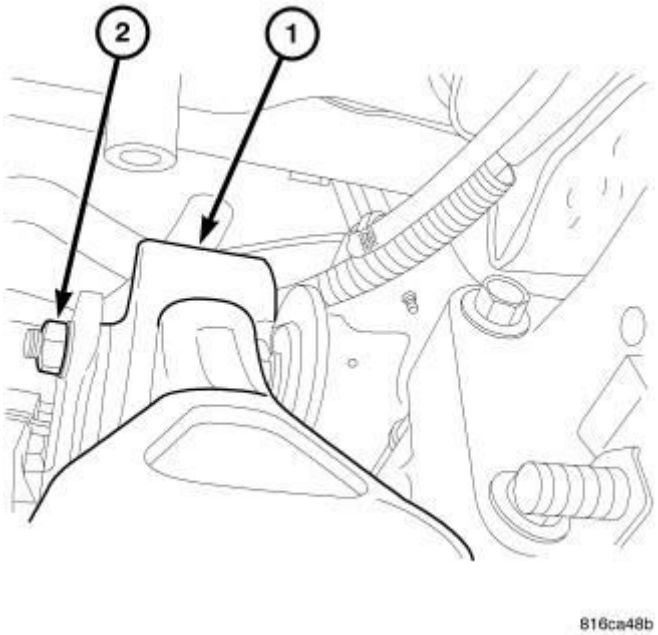

Fig. 30: Rear Engine Mount

Courtesy of CHRYSLER GROUP, LLC

37. Remove the transmission rear mount thorough bolt (2).

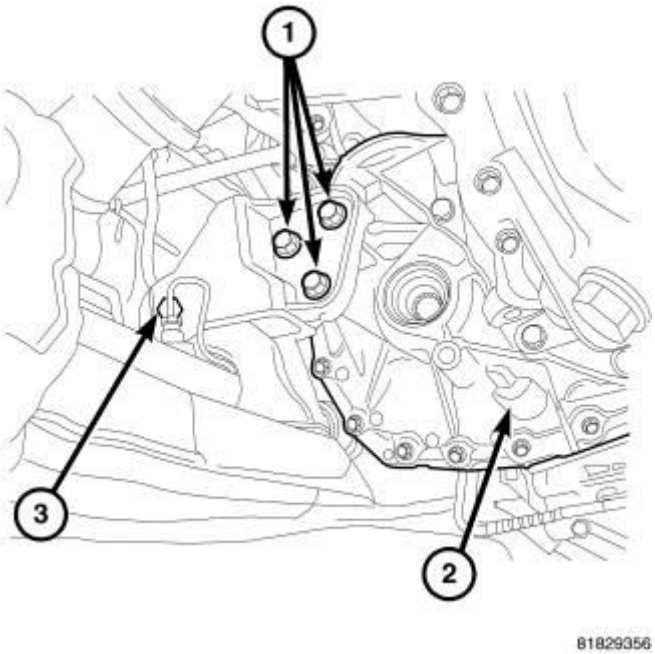

Fig. 31: Removing/Installing Rear Mount To Transaxle Bolts
Courtesy of CHRYSLER GROUP, LLC

38. Remove the rear mount to transaxle bolts (1).
39. Remove the Power Transfer Unit (PTU), if equipped. Refer to **REMOVAL** .

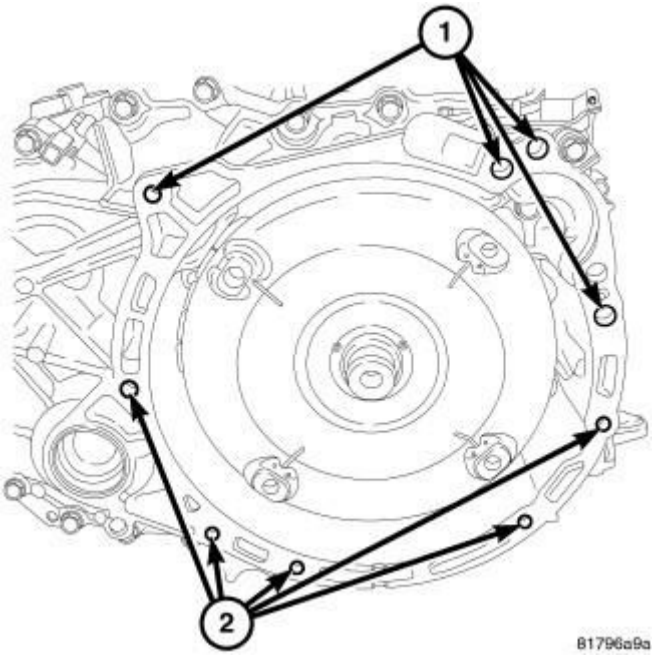

Fig. 32: Bell Housing Bolt Holes
Courtesy of CHRYSLER GROUP, LLC

40. Remove the lower transmission bell housing bolts (2).
41. Lower transmission.

DISASSEMBLY

DISASSEMBLY

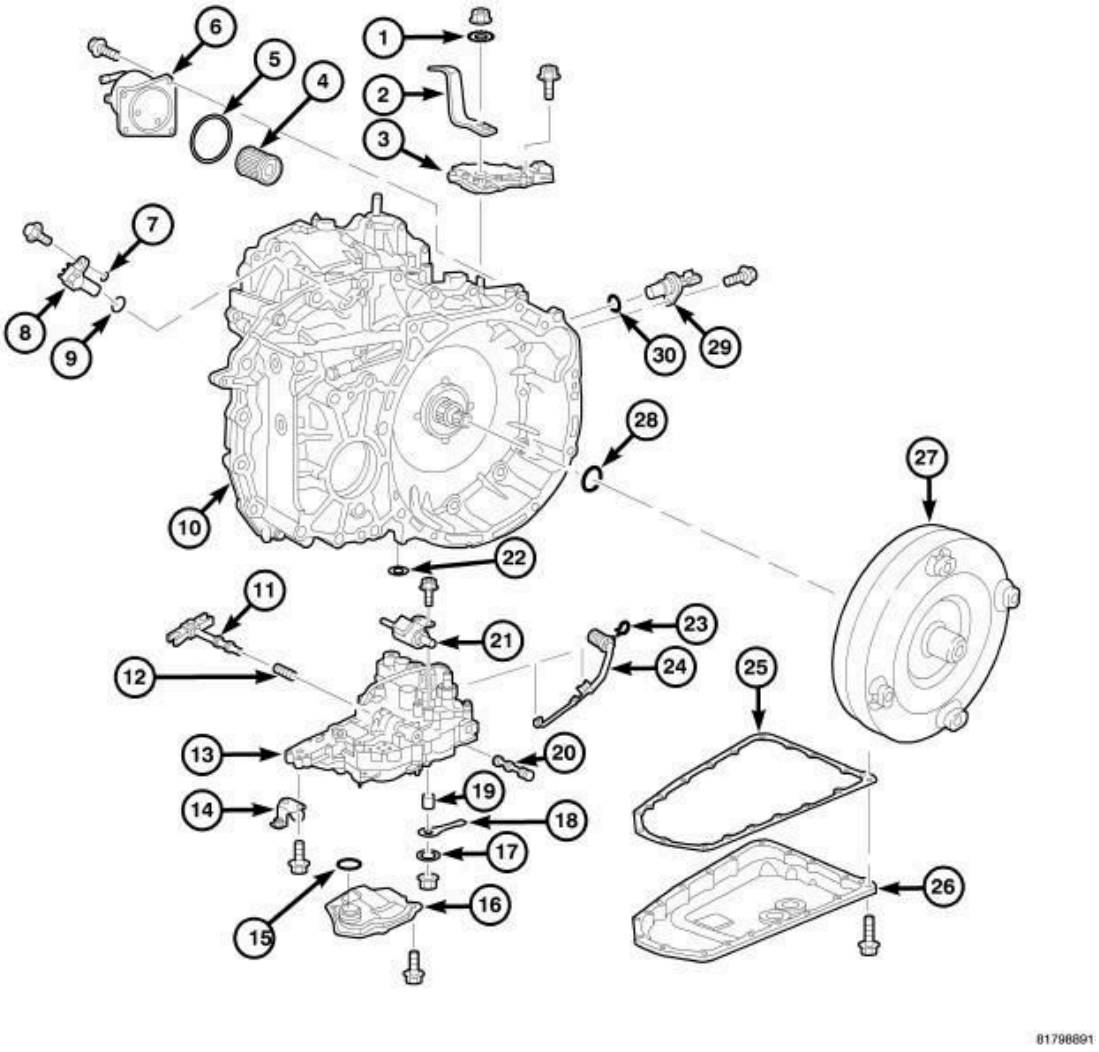

Fig. 33: CVT Transaxle Externals - Exploded View
Courtesy of CHRYSLER GROUP, LLC

1- WASHER 2 - SHIFT LEVER

3 - INHIBITOR SWITCH
4 - CVT FLUID FILTER (Certain Models)
5 - O-RING
6 - CVT FLUID COOLER
7 - SHIM
8 - OUTPUT SPEED SENSOR
9 - O-RING
10 - TRANSAXLE
11 - PULLEY RATIO LINKAGE
12 - SPRING
13 - CONTROL VALVE
14 - BRACKET
15 - O-RING
16 - OIL STRAINER
17 - PLAIN WASHER
18 - MANUAL LEVER
19 - BUSHING
20 - MANUAL VALVE
21 - STEPPER MOTOR
22 - LIP SEAL
23 - SNAP RING
24 - VALVE BODY HARNESS
25 - OIL PAN GASKET
26 - OIL PAN
27 - TORQUE CONVERTER
28 - O-RING
29 - INPUT SPEED SENSOR
30 - O-RING

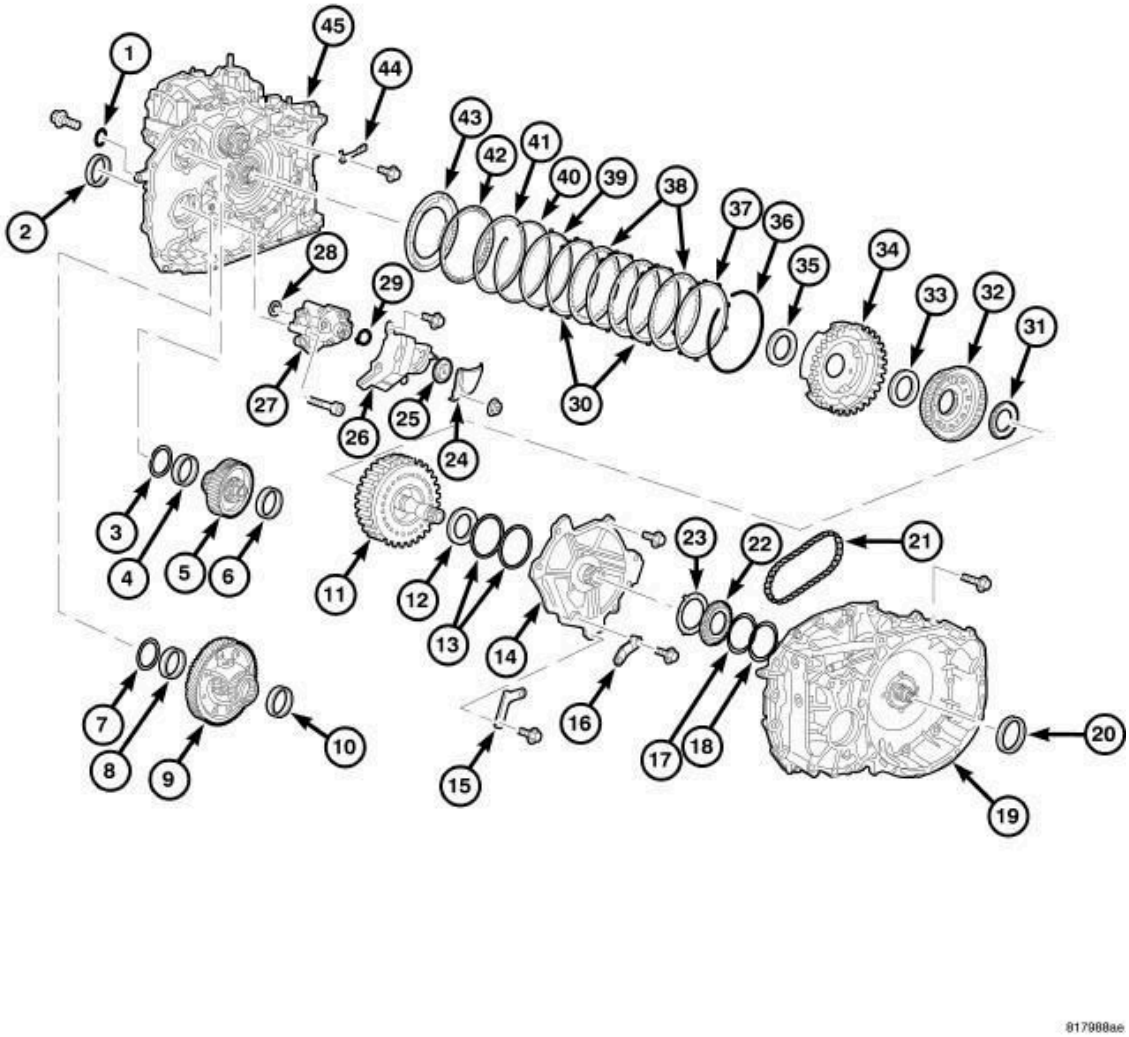

Fig. 34: CVT Transaxle Internals - Exploded View
Courtesy of CHRYSLER GROUP, LLC

1 - O-RING
2 - SIDE OIL SEAL
3 - ADJUSTABLE SHIM
4 - OUTER RACE
5 - REDUCTION GEAR ASSEMBLY
6 - OUTER RACE
7 - ADJUSTABLE SHIM
8 - OUTER RACE
9 - DIFFERENTIAL ASSEMBLY
10 - OUTER RACE
11 - FORWARD CLUTCH ASSEMBLY

12 - NEEDLE BEARING
13 - SEAL RING
14 - OIL PUMP COVER
15 - BAFFLE PLATE
16 - BRACKET
17 - ADJUSTABLE SHIM
18 - ADJUSTABLE SHIM
19 - CONVERTER HOUSING
20 - CONVERTER HOUSING OIL SEAL
21 - OIL PUMP CHAIN
22 - DRIVE SPROCKET
23 - THRUST WASHER
24 - BAFFLE PLATE
25 - DRIVEN SPROCKET (OIL PUMP)
26 - BAFFLE PLATE
27 - OIL PUMP
28 - LIP SEAL
29 - SNAP RING
30 - DRIVEN PLATES
31 - NEEDLE BEARING
32 - SUN GEAR
33 - NEEDLE BEARING
34 - PLANETARY CARRIER
35 - NEEDLE BEARING
36 - SNAP RING
37 - RETAINING PLATE
38 - DRIVEN PLATES
39 - DISH PLATE
40 - SNAP RING
41 - RETAINING PLATE
42 - SPRING RETAINER ASSEMBLY
43 - REVERSE PLATE PISTON
44 - DETENT SPRING
45 - TRANSAXLE CASE

1. Refer to the exploded views as necessary when performing the following

steps.

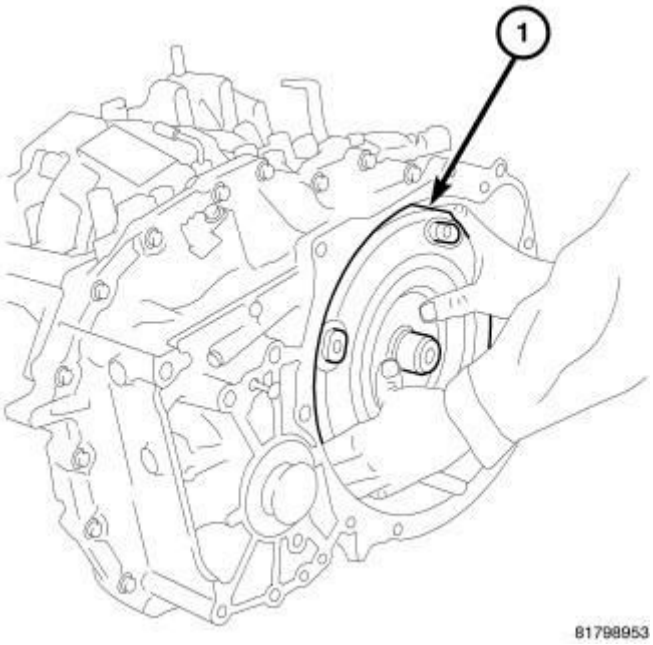

Fig. 35: Torque Converter
Courtesy of CHRYSLER GROUP, LLC

2. Drain the CVT fluid from the transaxle assembly.
3. Remove the power transfer unit assembly and o-ring (4WD only).
4. Remove the torque converter (1) from the transaxle.

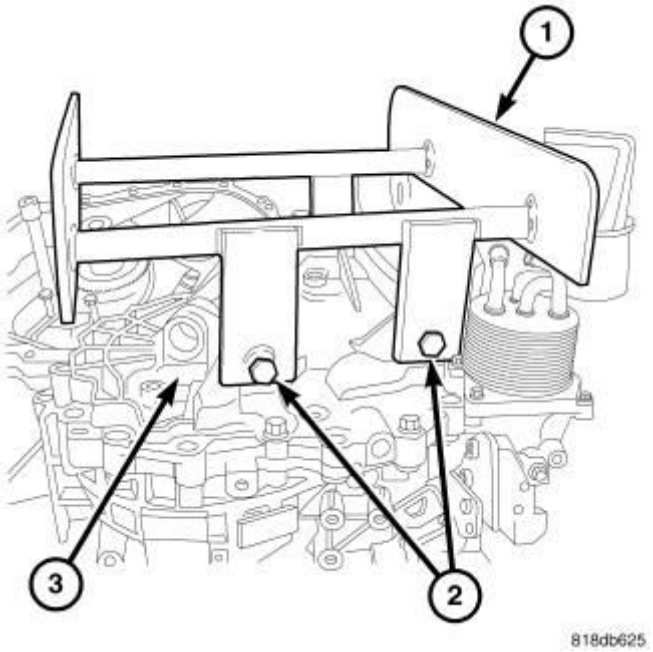

Fig. 36: Transmission Service Stand, Case & Mount Bolts
Courtesy of CHRYSLER GROUP, LLC

5. Install Transmission Service Stand (special tool #9878, Stand, Transmission Service) (1) to the belt side of the transmission case (3) using the upper transmission mount bolts (2).

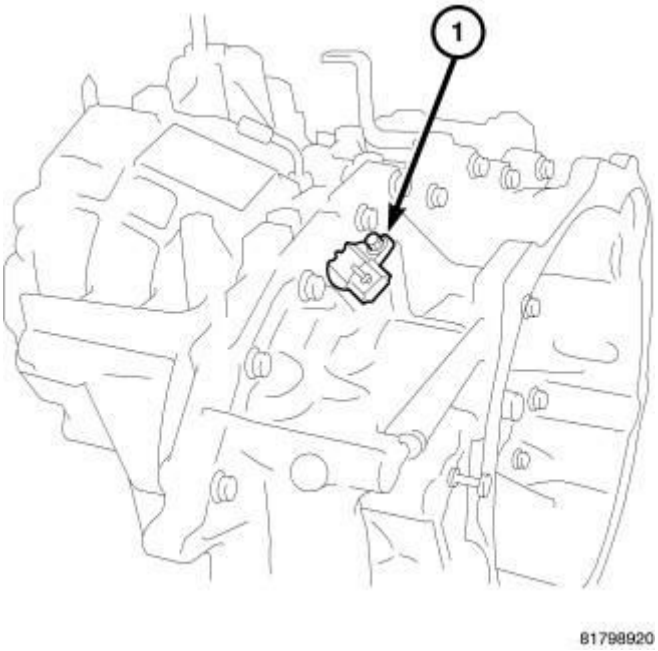

Fig. 37: Output Speed Sensor
Courtesy of CHRYSLER GROUP, LLC

6. Remove the output speed sensor (1) from the converter housing. Remove and discard the o-ring from the output speed sensor.

CAUTION: Set aside and reuse any adjusting shim found between the output speed sensor and the converter housing.

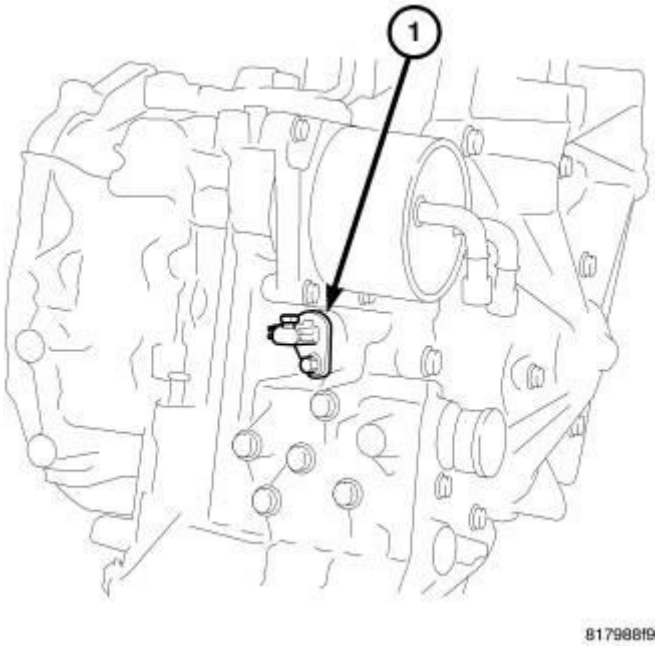

Fig. 38: Input Speed Sensor
Courtesy of CHRYSLER GROUP, LLC

7. Remove the input speed sensor (1) from the transaxle case. Remove and discard the o-ring from the input speed sensor.

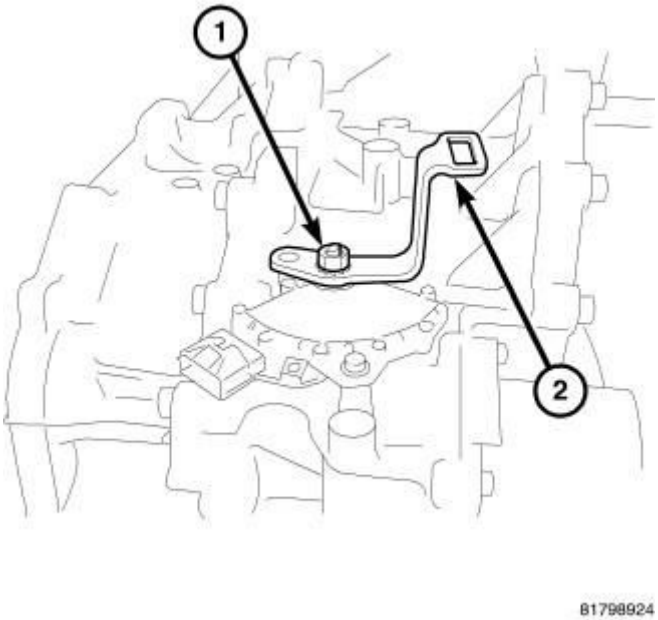

Fig. 39: Shift Lever
Courtesy of CHRYSLER GROUP, LLC

8. Remove the nut (1) holding the shift lever (2) to the manual shaft.
9. Remove the shift lever from the manual shaft.

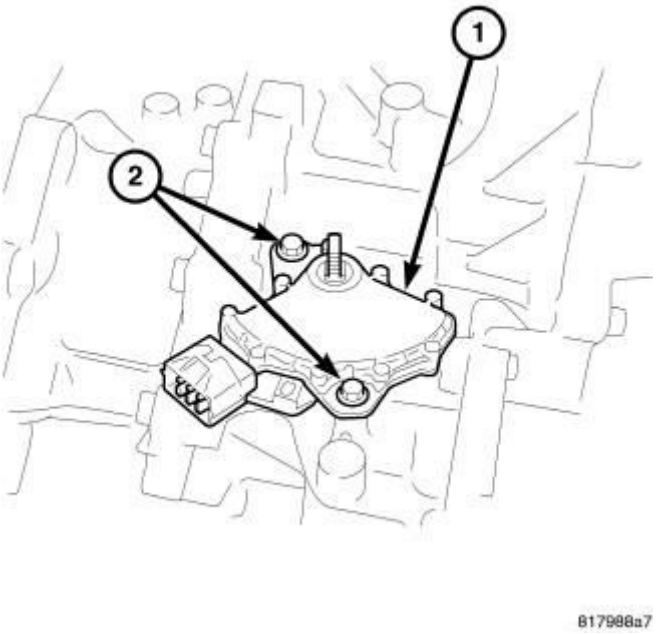

Fig. 40: Transmission Range Sensor
Courtesy of CHRYSLER GROUP, LLC

10. Remove the bolts (2) holding the transmission range sensor (TRS) (1) to the transaxle case.
11. Remove the (TRS) transmission range sensor (1) from the transaxle case and the manual shaft.

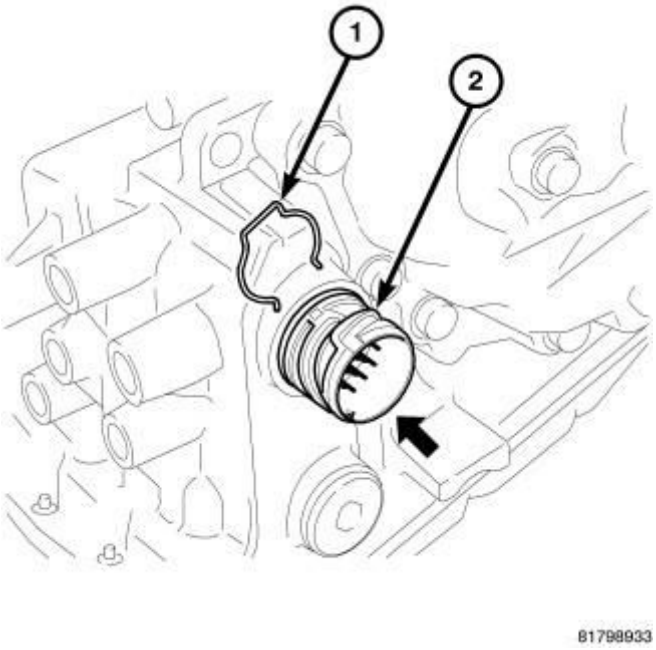

Fig. 41: Identifying Terminal Body & Snap Ring
Courtesy of CHRYSLER GROUP, LLC

12. Remove the snap ring (1) from the terminal body (2) and press the terminal body into the transaxle case.

CAUTION: Be careful not to cause damage to the terminal body.

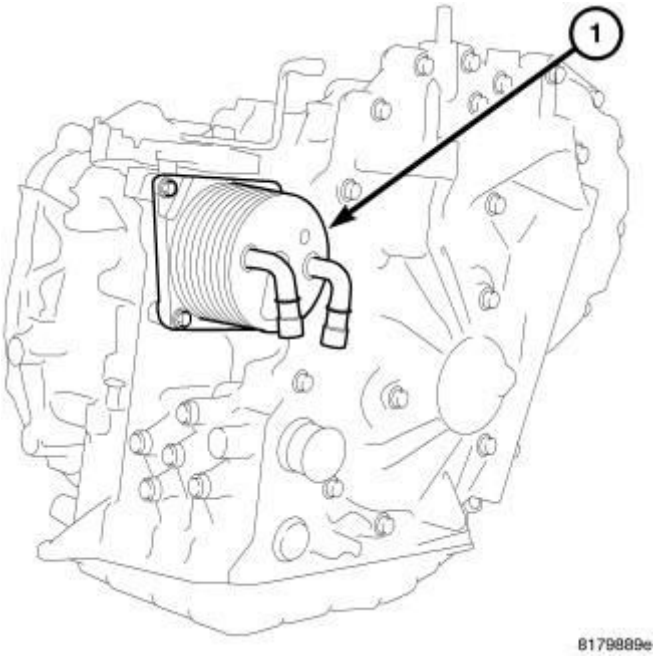

Fig. 42: Fluid Cooler
Courtesy of CHRYSLER GROUP, LLC

13. Remove CVT fluid cooler (1) from transaxle case. Remove and discard the CVT fluid cooler o-ring.

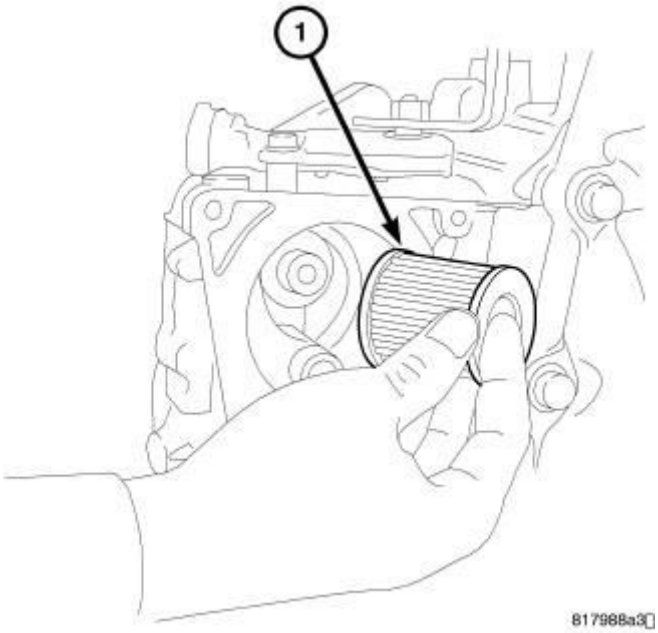

Fig. 43: Fluid Filter
Courtesy of CHRYSLER GROUP, LLC

14. Remove the bolts holding the CVT fluid filter to the transaxle case.
15. Remove the CVT fluid filter (1) from the transaxle case (certain models).

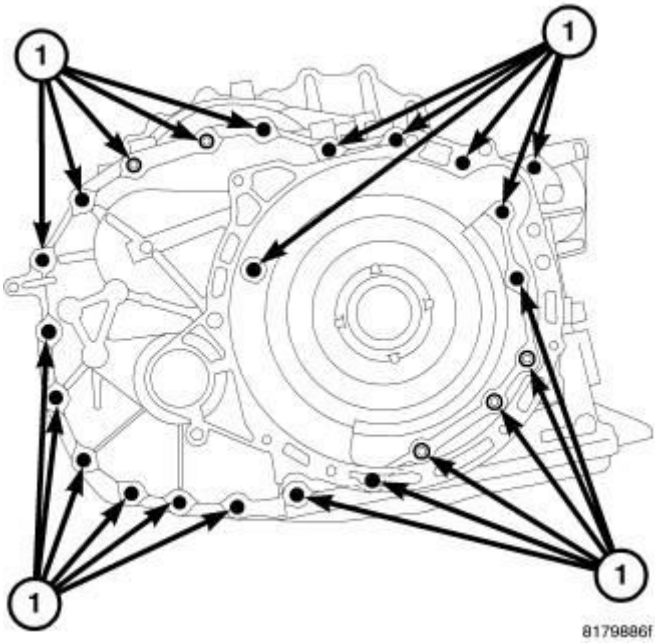

Fig. 44: Converter Housing Mounting Bolts
Courtesy of CHRYSLER GROUP, LLC

16. Remove the converter housing mounting bolts.

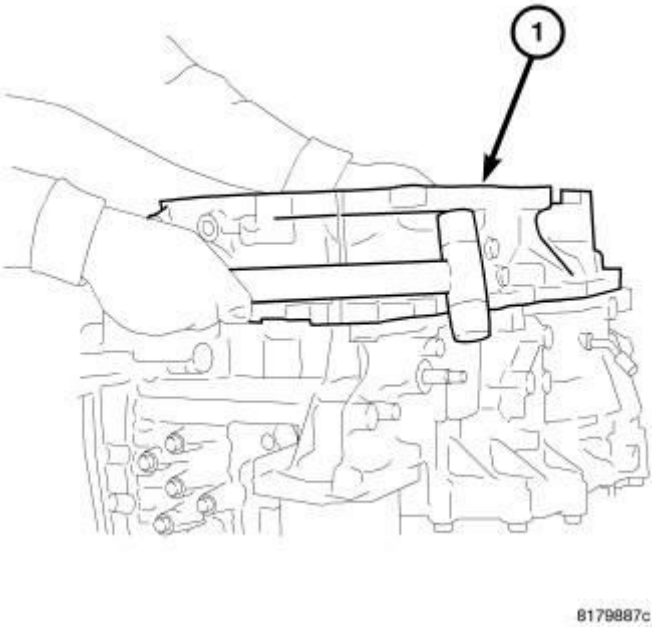

Fig. 45: Converter Housing
Courtesy of CHRYSLER GROUP, LLC

17. Remove the converter housing (1) by tapping with plastic hammer.

CAUTION: There is a possibility that the drive sprocket adjusting shim may be dislodged and fall out.

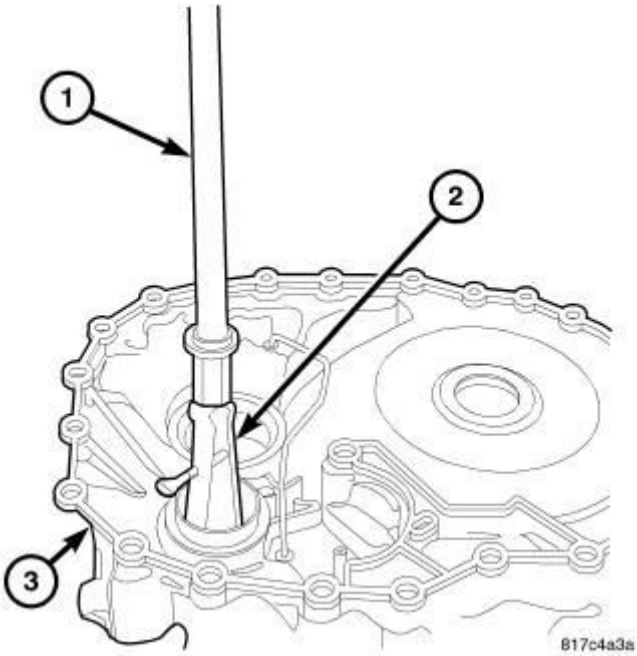

Fig. 46: Removing Outer Race Reduction Gear
Courtesy of CHRYSLER GROUP, LLC

18. Remove outer race of reduction gear bearing (1) from the converter housing using Puller (special tool #7794-A, Remover, Seal) and Puller (special tool #C-637, Slide Hammer, Universal).

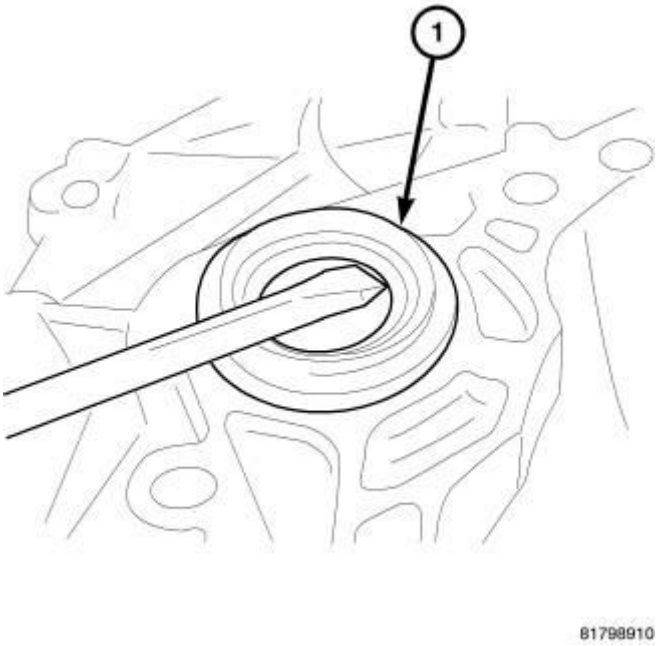

Fig. 47: Removing Differential Side Oil Seal
Courtesy of CHRYSLER GROUP, LLC

19. Remove differential side oil seal (1) from converter housing using a screwdriver. (2WD)

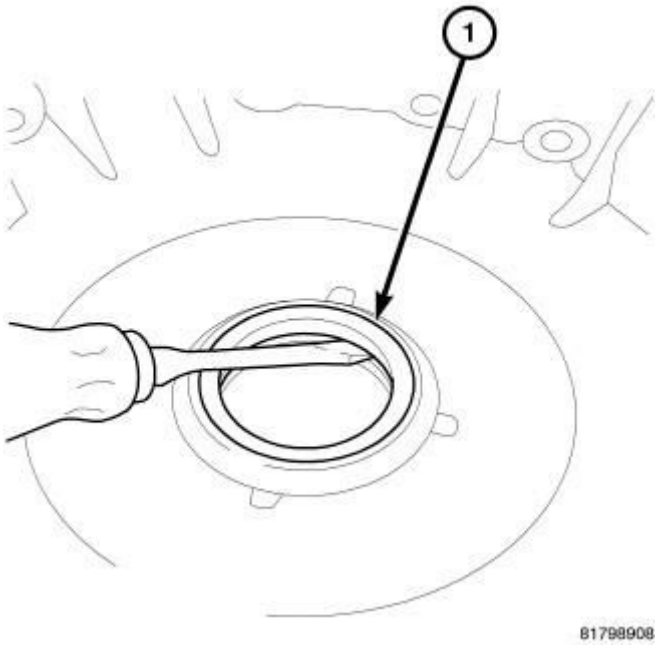

Fig. 48: Removing Converter Housing Oil Seal

Courtesy of CHRYSLER GROUP, LLC

20. Remove converter housing oil seal (1) from converter housing using a screwdriver.

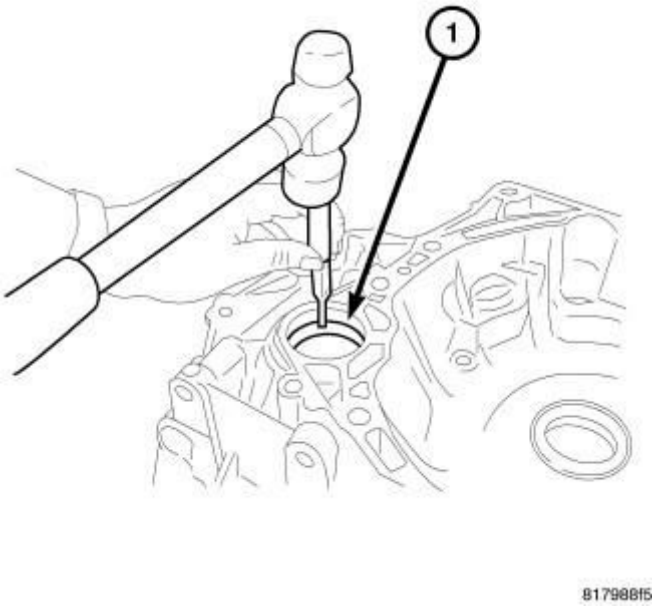

Fig. 49: Removing Outer Race Of Differential Side Bearing
Courtesy of CHRYSLER GROUP, LLC

21. Remove outer race (1) of differential side bearing from converter housing using a suitable punch.

CAUTION: When removing the outer race, tap the outer race on both sides evenly. When removing the outer race, do not damage the converter housing.

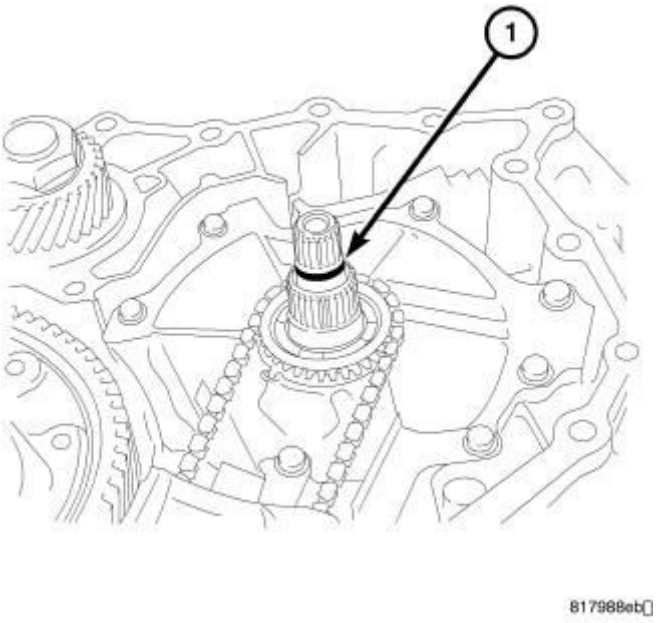

Fig. 50: Input Shaft O-Ring
Courtesy of CHRYSLER GROUP, LLC

22. Remove and discard the O-ring (1) from the input shaft.

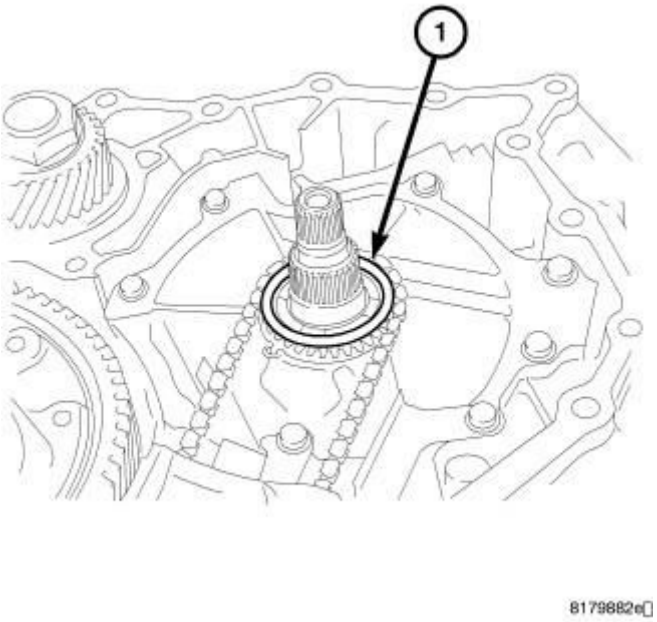

Fig. 51: Adjusting Shim At Drive Sprocket
Courtesy of CHRYSLER GROUP, LLC

23. Remove the adjusting shim (1) from the drive sprocket, if necessary.

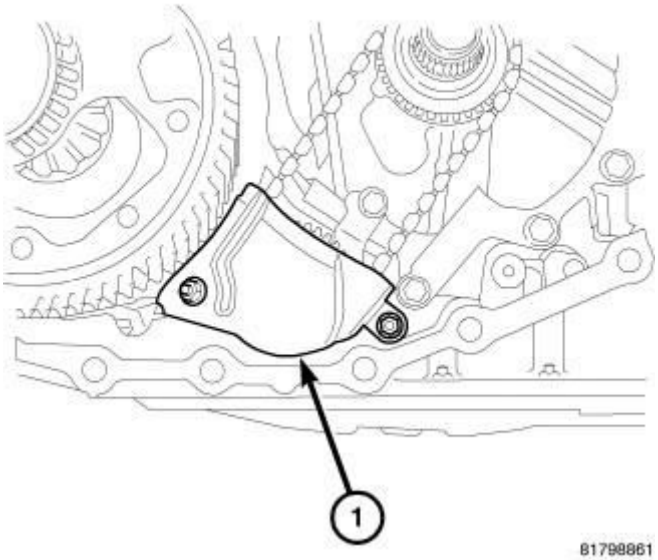

Fig. 52: Baffle Plate
Courtesy of CHRYSLER GROUP, LLC

24. Remove the nuts holding the baffle plate (1) to the transaxle.
25. Remove the baffle plate.

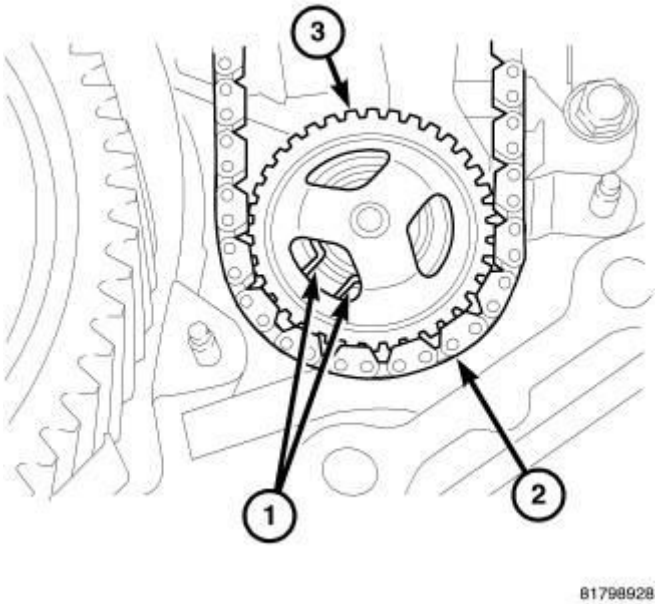

Fig. 53: Snap Ring At Driven Sprocket
Courtesy of CHRYSLER GROUP, LLC

26. Expand the snap ring (1) and remove the driven sprocket (3), the oil pump chain (2), and the drive sprocket.

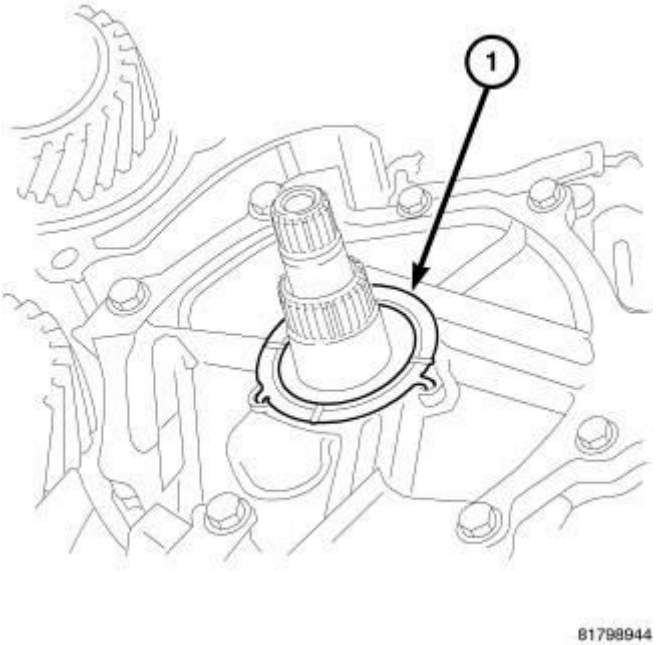

Fig. 54: Thrust Washer At Oil Pump Cover
Courtesy of CHRYSLER GROUP, LLC

27. Remove the thrust washer (1) from the oil pump cover.

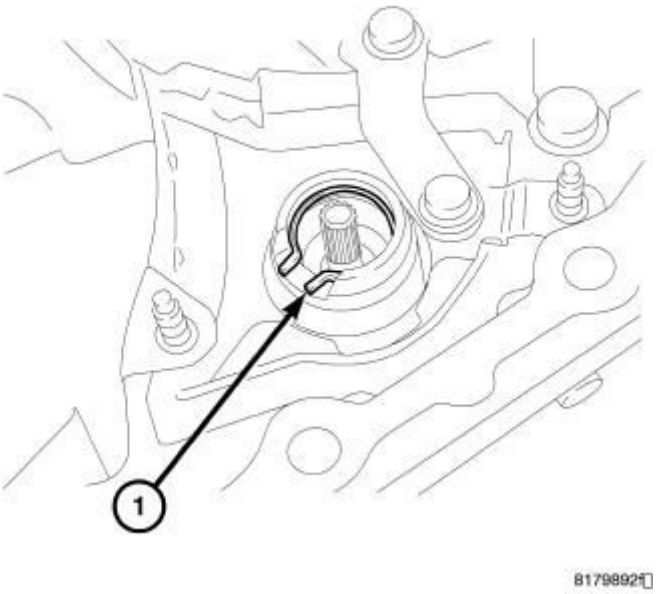

Fig. 55: Snap Ring At Oil Pump
Courtesy of CHRYSLER GROUP, LLC

28. Remove the snap ring (1) from the oil pump.

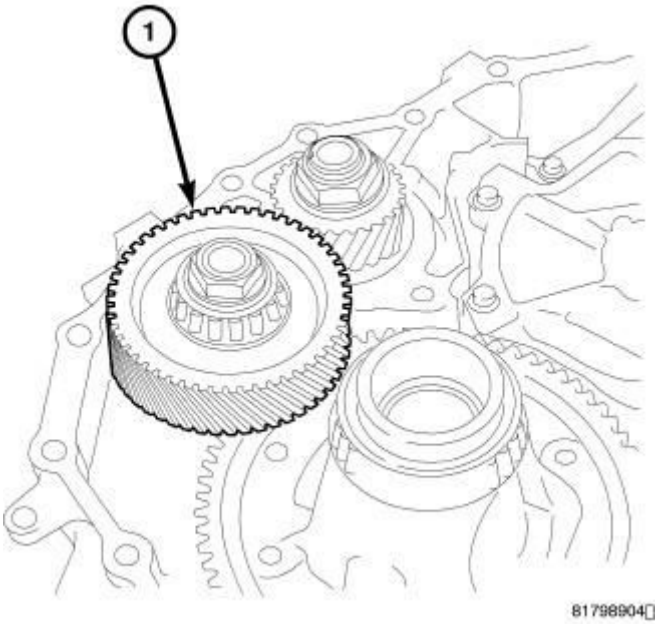

Fig. 56: Reduction Gear Assembly
Courtesy of CHRYSLER GROUP, LLC

29. Remove the reduction gear assembly (1) from the transaxle case.

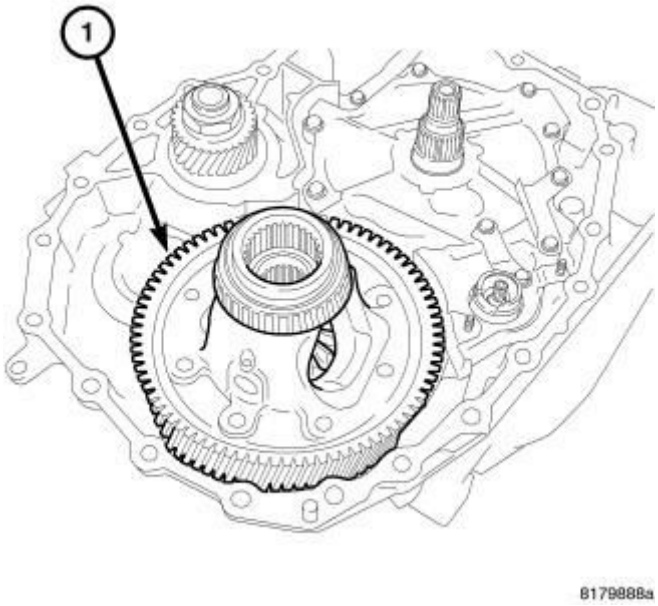

Fig. 57: Differential Assembly
Courtesy of CHRYSLER GROUP, LLC

30. Remove the differential assembly (1) from the transaxle case.

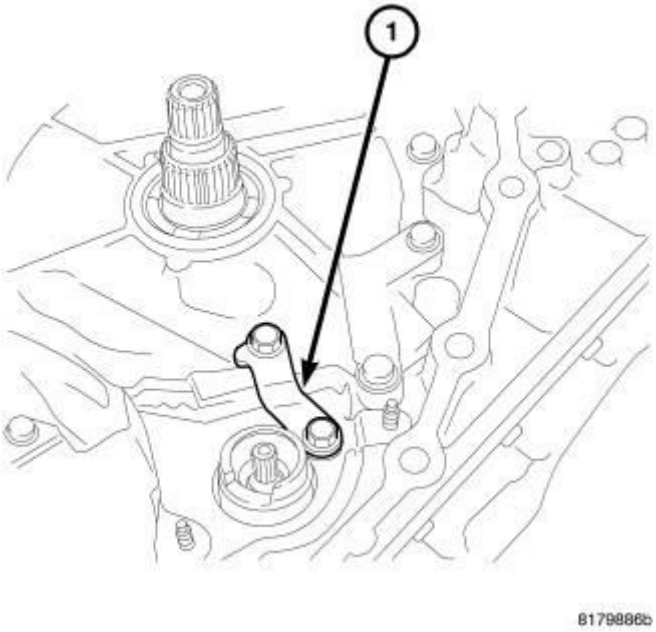

Fig. 58: Bracket
Courtesy of CHRYSLER GROUP, LLC

31. Remove the bolts holding the bracket (1) to the oil pump cover and the transaxle.
32. Remove the bracket (1).

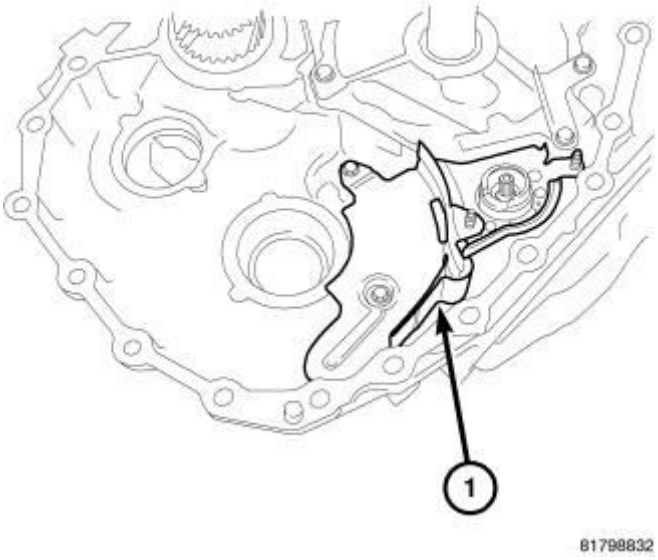

Fig. 59: Baffle Plate
Courtesy of CHRYSLER GROUP, LLC

33. Remove the bolts holding the baffle plate (1) to the transaxle.

34. Remove the baffle plate.

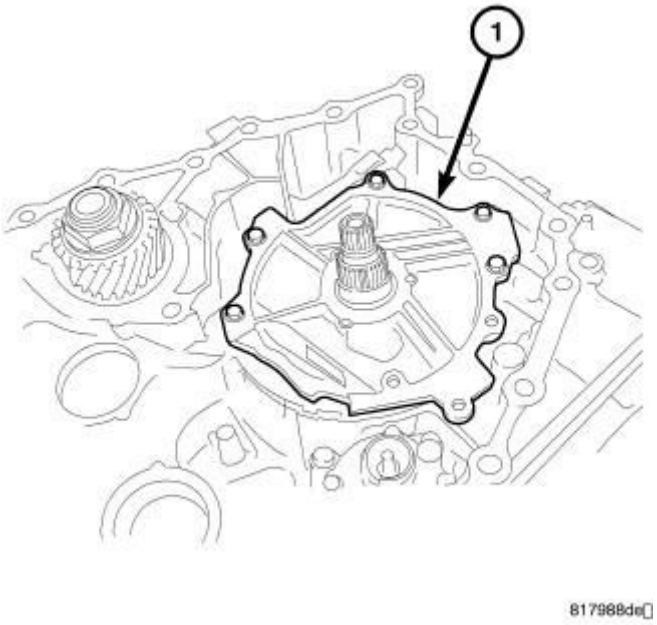

Fig. 60: Reaction Shaft Support
Courtesy of CHRYSLER GROUP, LLC

35. Remove the bolts holding the reaction shaft support (1) to the transaxle.
36. Remove the reaction shaft support from the transaxle case.

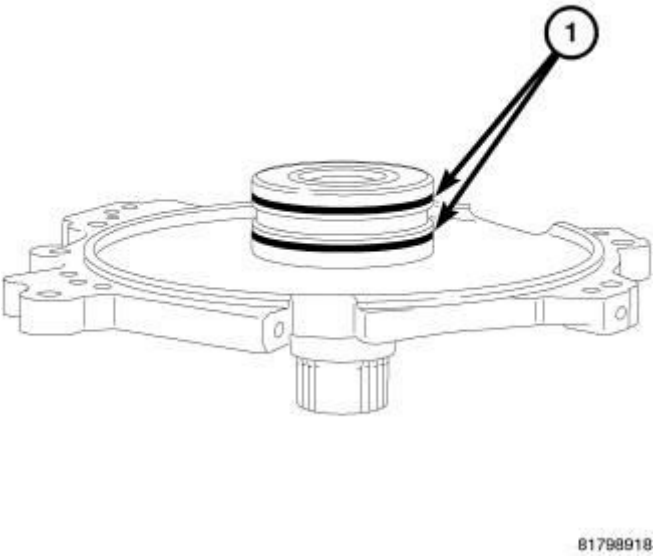

Fig. 61: Seal Rings
Courtesy of CHRYSLER GROUP, LLC

37. Remove and discard the seal rings (1) from the reaction shaft support.

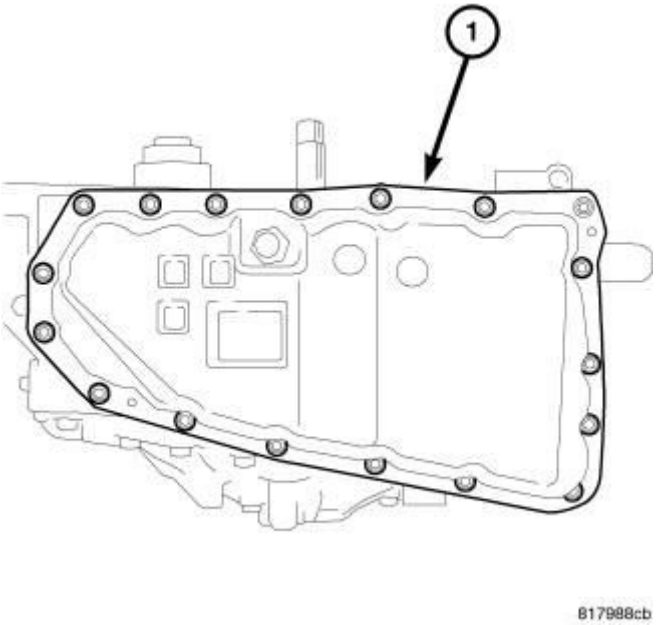

Fig. 62: Oil Pan
Courtesy of CHRYSLER GROUP, LLC

38. Remove the bolts holding the oil pan (1) to the transaxle case.
39. Remove the oil pan from the transaxle case.

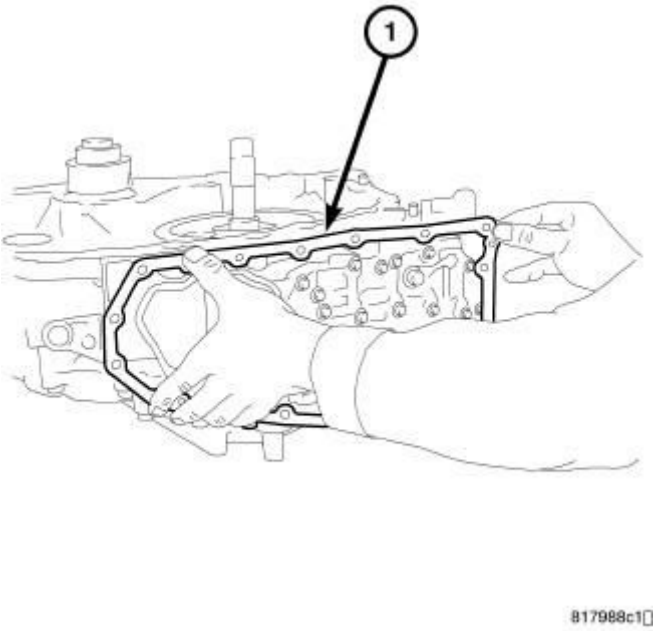

Fig. 63: Oil Pan Gasket
Courtesy of CHRYSLER GROUP, LLC

40. Remove the oil pan gasket (1) from the transaxle case.

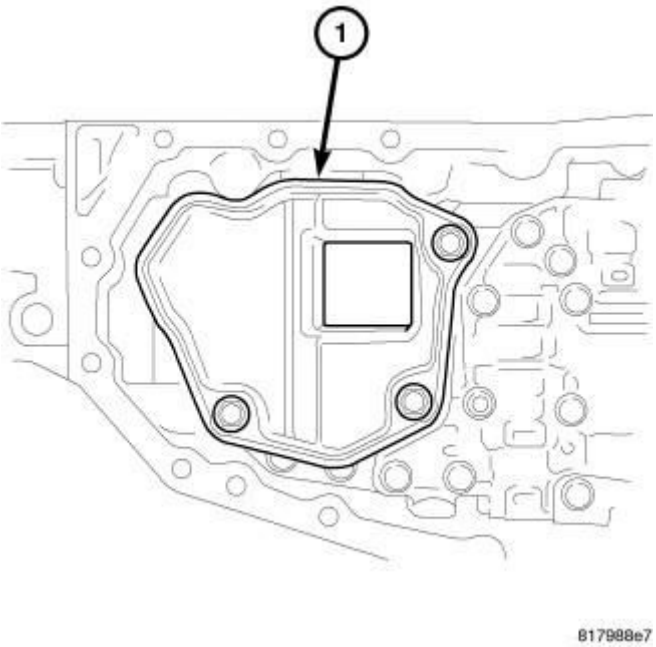

Fig. 64: Oil Strainer
Courtesy of CHRYSLER GROUP, LLC

41. Remove the bolts holding the oil strainer (1) to the valve body.
42. Remove the oil strainer.
43. Remove and discard the oil strainer o-ring.

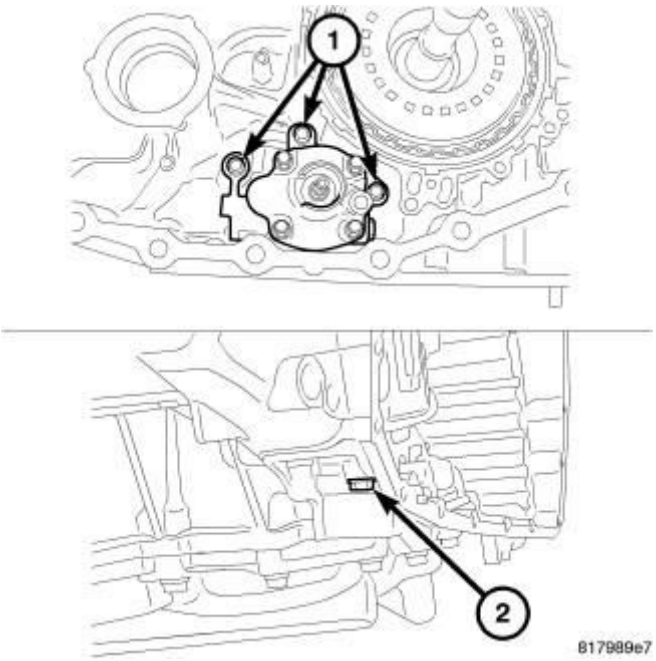

Fig. 65: Oil Pump Retaining Bolts

Courtesy of CHRYSLER GROUP, LLC

44. Remove the bolt (2) holding the oil pump to the transaxle case from the rear of the transaxle.
45. Remove the bolts (1) holding the oil pump to the transaxle case from inside the transaxle.
46. Remove the oil pump from the transaxle case.

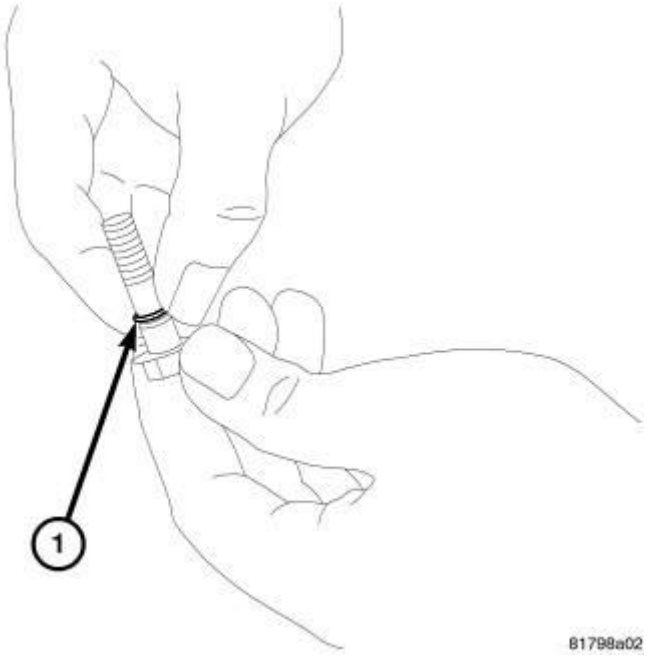

Fig. 66: Oil Pump Mounting Bolt O-Ring
Courtesy of CHRYSLER GROUP, LLC

NOTE: One of the oil pump retaining bolts is installed from the outside of the transaxle case into the rear part of the oil pump.

47. Remove and discard the o-ring (1) from the oil pump mounting bolt. (Only on bolt installed from the outside of the transaxle case).

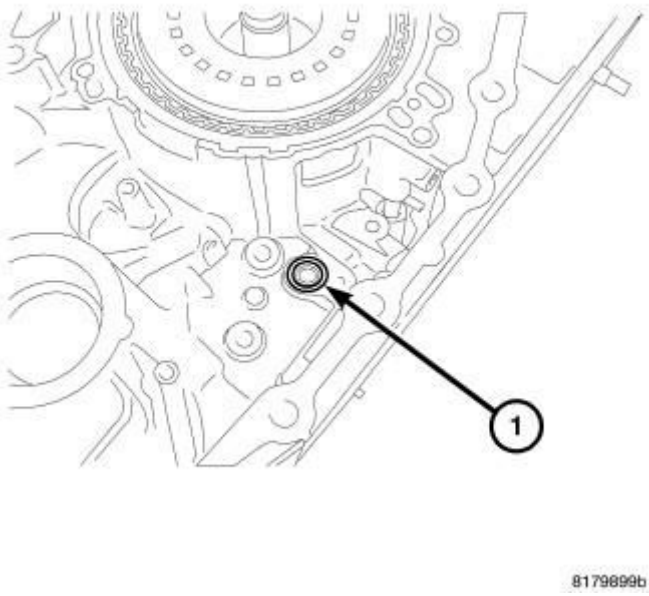

Fig. 67: Lip Seal At Transaxle Case
Courtesy of CHRYSLER GROUP, LLC

48. Remove and discard the lip seal (1) from the transaxle case.

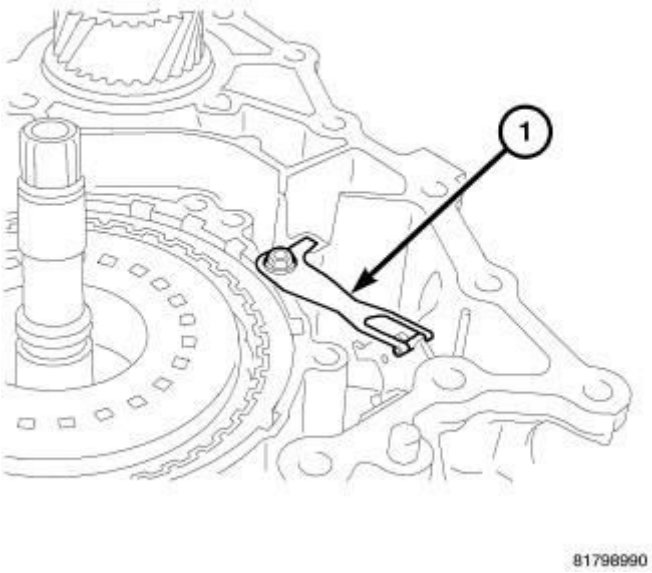

Fig. 68: Detent Spring
Courtesy of CHRYSLER GROUP, LLC

49. Remove the bolt holding the detent spring (1) to the transaxle case.
50. Remove the detente spring from the transaxle case.

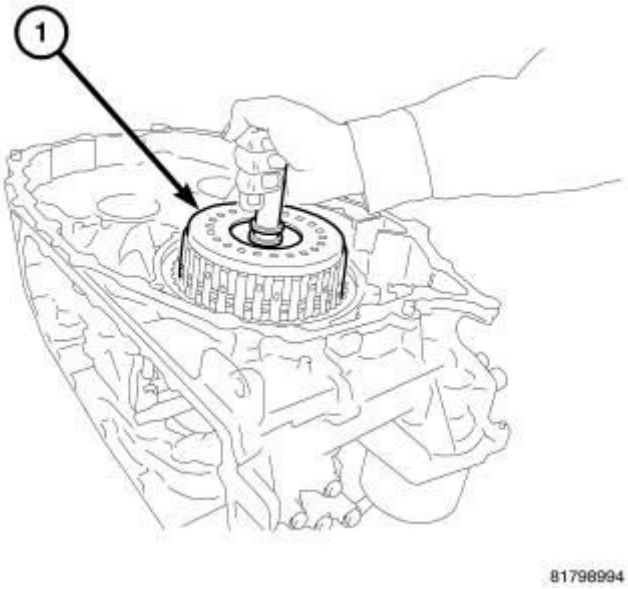

Fig. 69: Forward Clutch Assembly
Courtesy of CHRYSLER GROUP, LLC

51. Remove the forward clutch assembly (1) from the transaxle case.

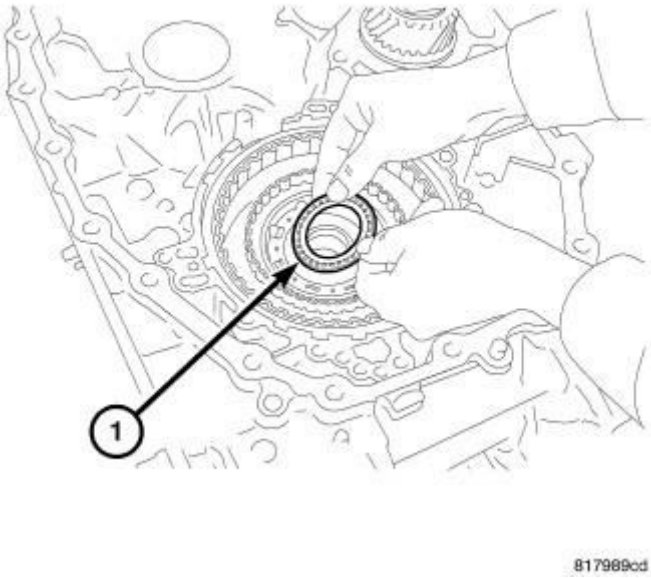

Fig. 70: Needle Bearing On Forward Clutch
Courtesy of CHRYSLER GROUP, LLC

52. Remove needle bearing (1) from forward clutch drum side of the sun gear.

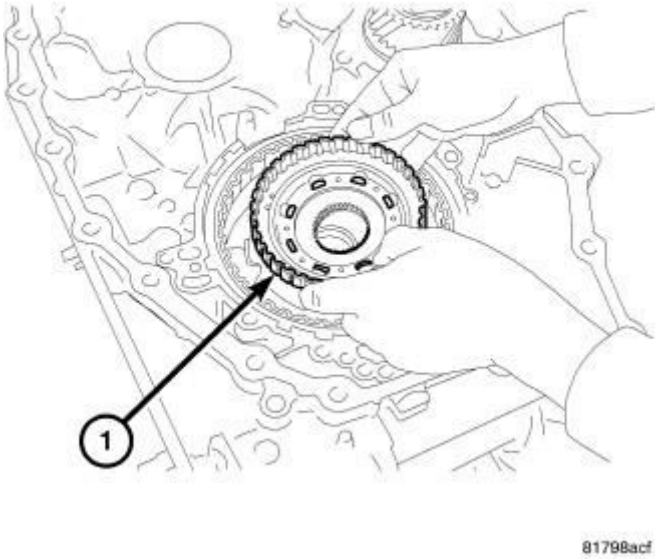

Fig. 71: Sun Gear At Planetary Carrier
Courtesy of CHRYSLER GROUP, LLC

53. Remove the sun gear (1) from the planetary carrier.

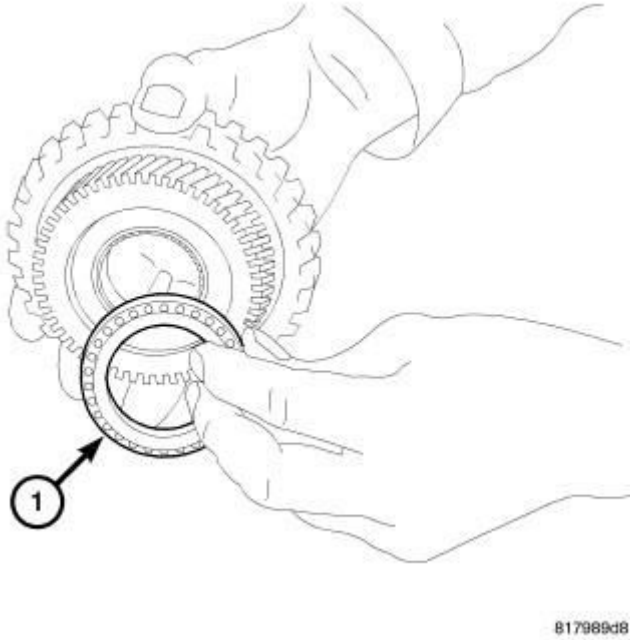

Fig. 72: Needle Bearing At Sun Gear
Courtesy of CHRYSLER GROUP, LLC

54. Remove the needle bearing (1) from the sun gear.

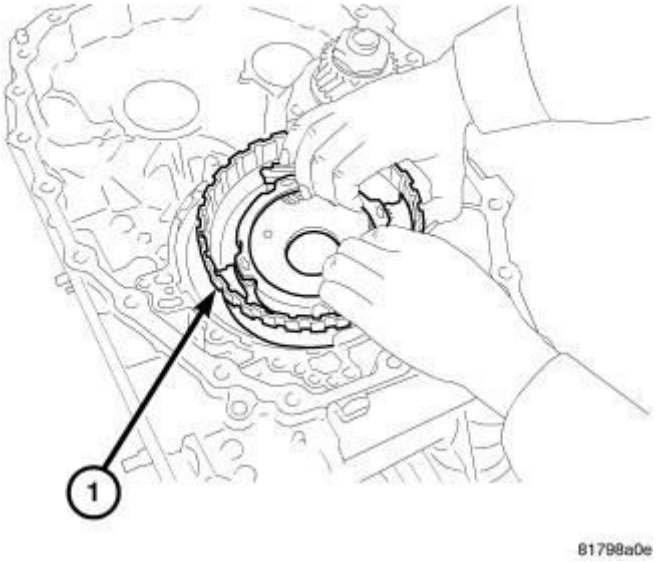

Fig. 73: Planetary Carrier Assembly
Courtesy of CHRYSLER GROUP, LLC

55. Remove the planetary carrier assembly (1) from the transaxle case.

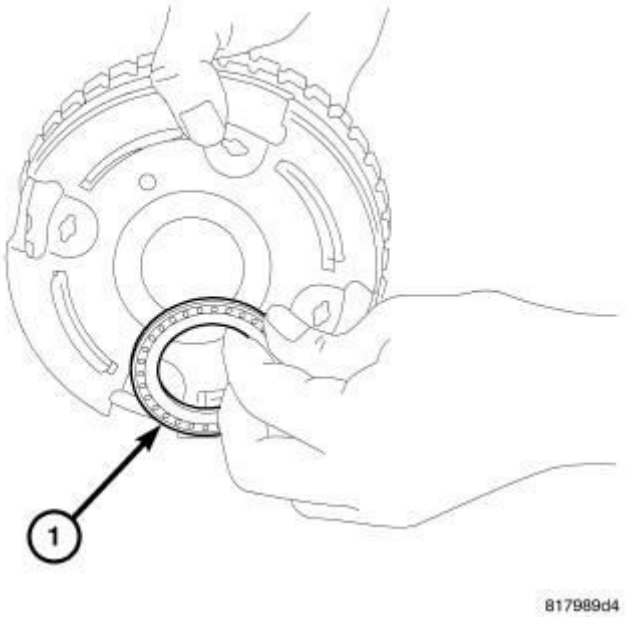

Fig. 74: Needle Bearing At Planetary Carrier
Courtesy of CHRYSLER GROUP, LLC

56. Remove the needle bearing (1) from the planetary carrier.

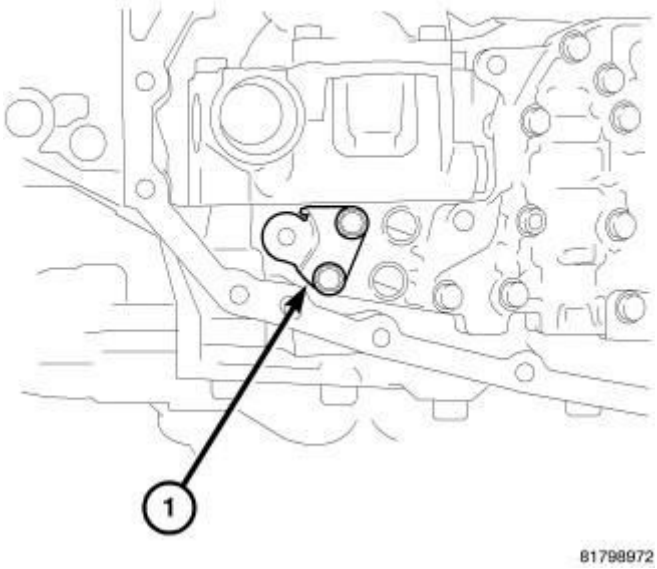

Fig. 75: Bracket At Valve Body Assembly
Courtesy of CHRYSLER GROUP, LLC

57. Remove the bolts holding the bracket (1) to the valve body assembly.
58. Remove the bracket from the valve body assembly.

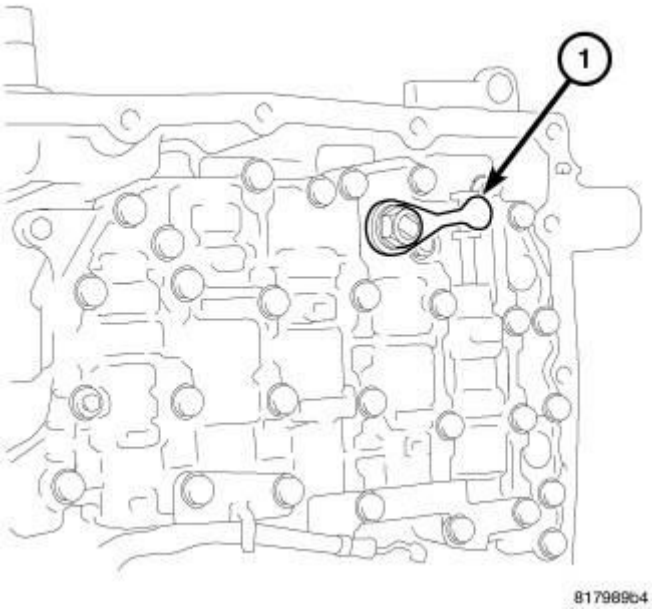

Fig. 76: Manual Lever
Courtesy of CHRYSLER GROUP, LLC

59. Remove the nut holding the manual lever (1) to the manual shaft.
60. Remove the manual lever.

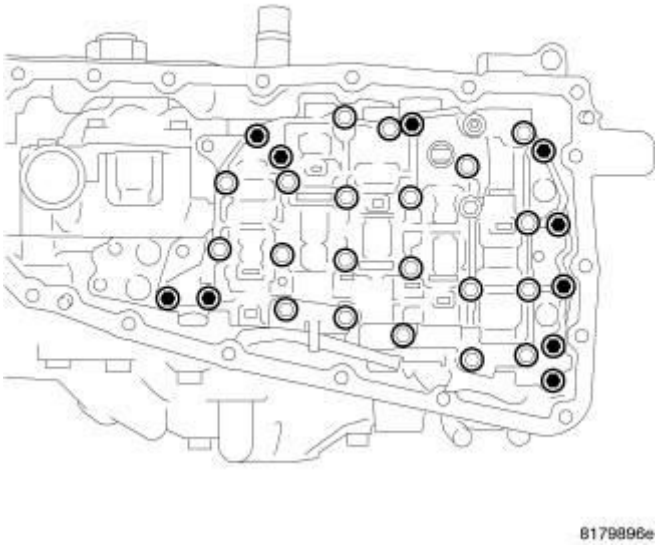

Fig. 77: Bolts For Valve Body Assembly
Courtesy of CHRYSLER GROUP, LLC

61. Use this illustration when removing valve body attaching bolts.

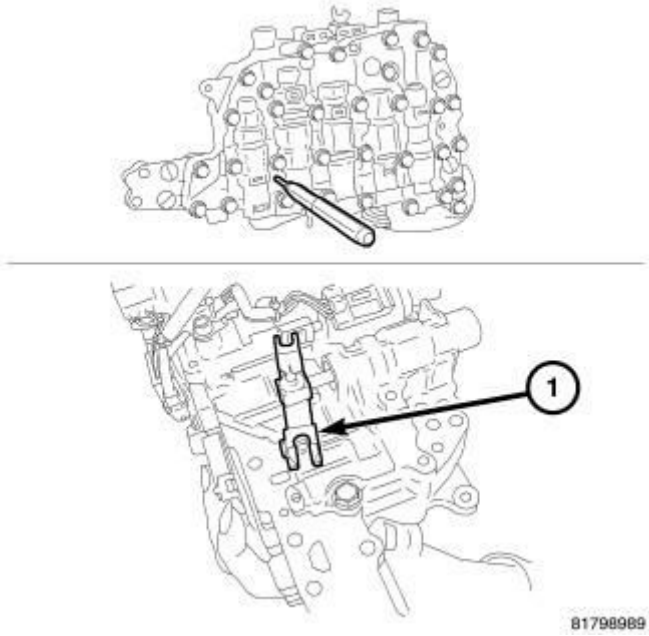

Fig. 78: Removing/Installing Valve Body Assembly
Courtesy of CHRYSLER GROUP, LLC

CAUTION: Tilt the valve body assembly away from the transaxle case on the manual shaft side to ease removal. Pay attention to completely

remove the terminal body from the transaxle case.

62. Remove the valve body assembly from the transaxle case as follows:
    a. Insert a 75 mm (3 in.) long 3 mm (0.118 in.) wide rod or wire into the linkage stopper hole of the valve body assembly to fix the pulley ratio linkage (1).
    b. Remove the bolts holding the valve body assembly to the transaxle case.
    c. Remove the valve body assembly from the transaxle case.

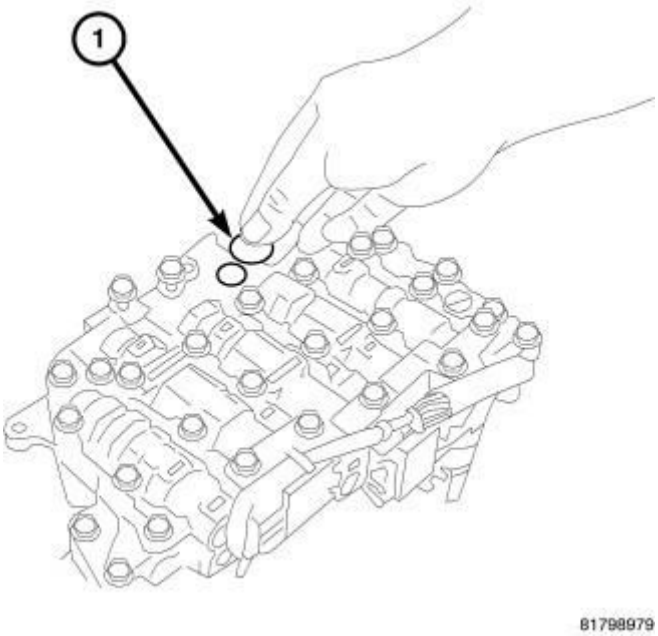

Fig. 79: Bushing At Control Valve
Courtesy of CHRYSLER GROUP, LLC

63. Remove and set aside the bushing (1) from the valve body.

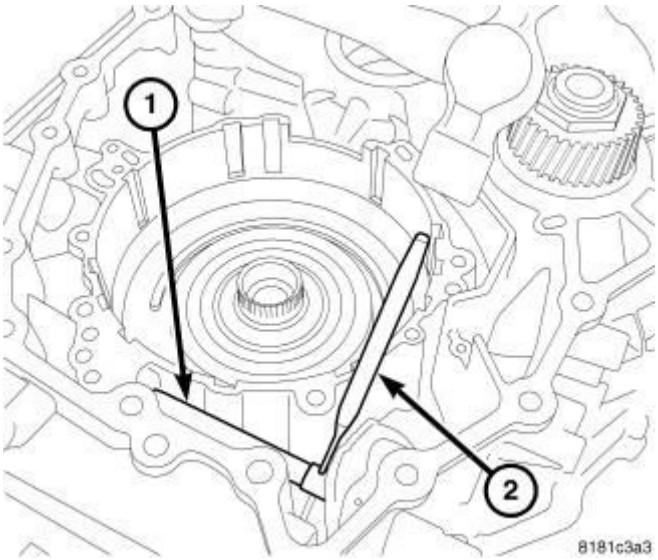

Fig. 80: Pin At Manual Shaft
Courtesy of CHRYSLER GROUP, LLC

64. Remove the pin at the manual shaft using a punch (2).
65. Remove the manual shaft from case.

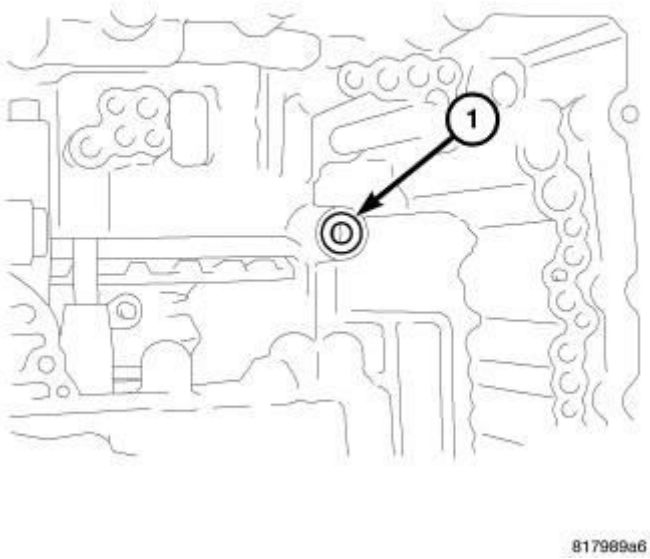

Fig. 81: Lip Seal At Transaxle Case
Courtesy of CHRYSLER GROUP, LLC

66. Remove and discard the lip seal (1) from the transaxle case.

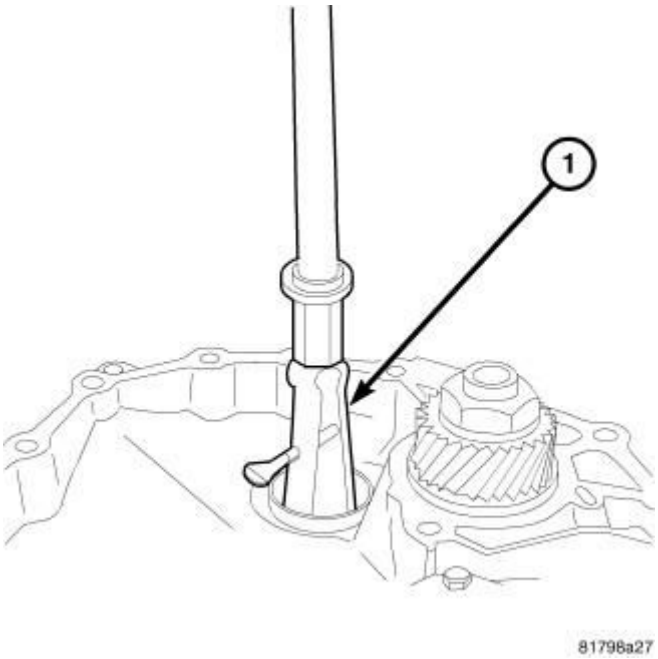

Fig. 82: Removing Outer Race Of Differential Side Bearing
Courtesy of CHRYSLER GROUP, LLC

67. Remove outer race (1) of differential side bearing from converter main housing using Puller (special tool #9664, Remover, Bearing Cup) and Puller (special tool #C-637, Slide Hammer, Universal).

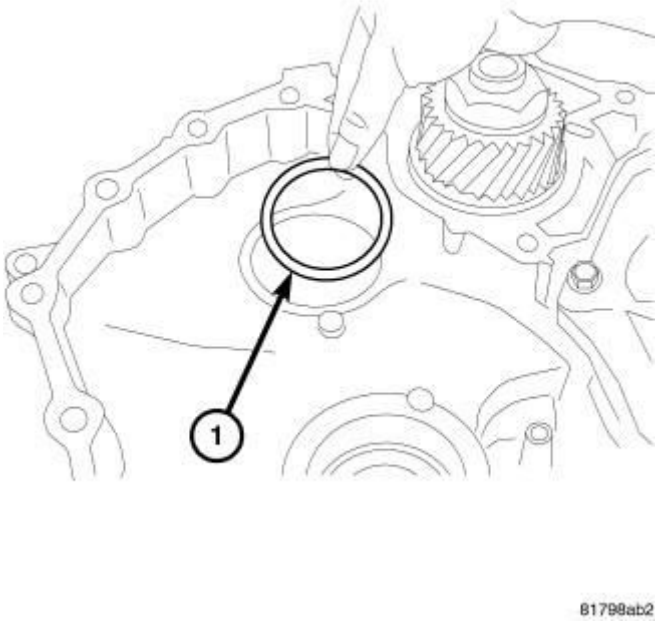

Fig. 83: Selective Shim At Transaxle Case
Courtesy of CHRYSLER GROUP, LLC

68. Remove the selective shim (1) from the transaxle case.

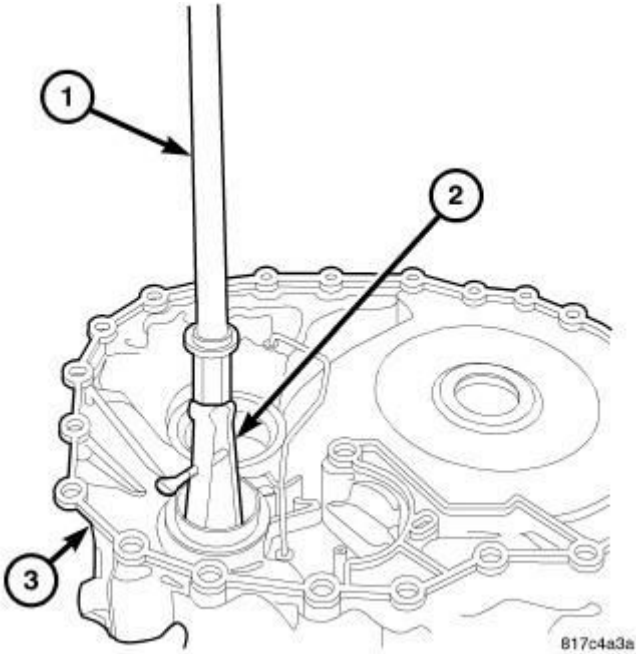

Fig. 84: Removing Outer Race Reduction Gear
Courtesy of CHRYSLER GROUP, LLC

69. Remove outer race of reduction gear bearing (1) from transaxle case using Puller (special tool #C-637, Slide Hammer, Universal) and Puller (special tool #7794-A, Remover, Seal).

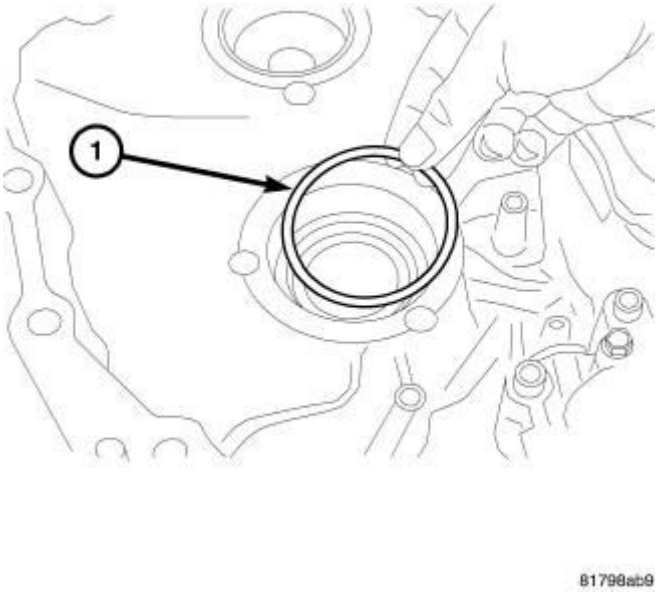

Fig. 85: Selective Shim At Transaxle Case
Courtesy of CHRYSLER GROUP, LLC

70. Remove the selective shim (1) from the transaxle case.

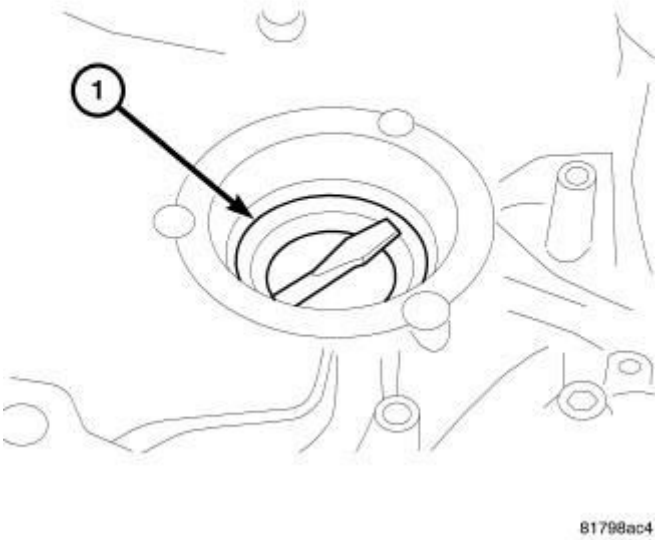

Fig. 86: Side Oil Seal At Transaxle Case
Courtesy of CHRYSLER GROUP, LLC

CAUTION: When removing the side oil seal, do not damage the transaxle case.

71. Remove side oil seal (1) from transaxle case using a screwdriver.

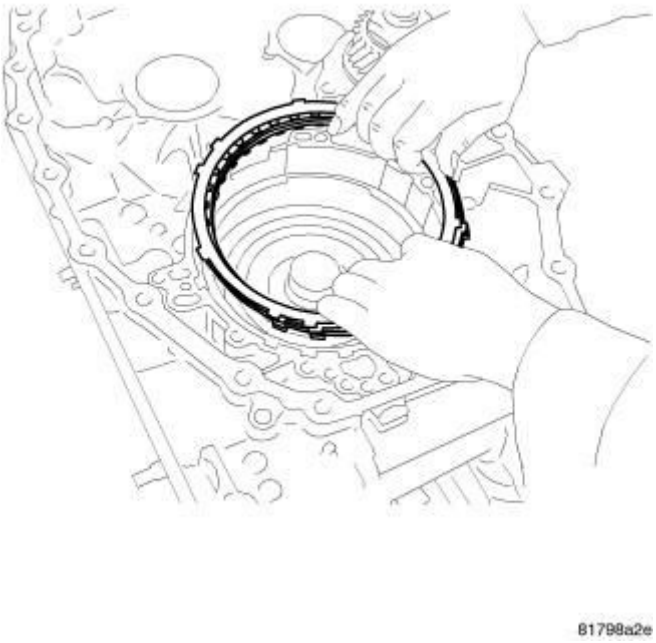

Fig. 87: Retaining Plate Of Reverse Brake
Courtesy of CHRYSLER GROUP, LLC

CAUTION: Check if there is damage, deformation, or burning on the surface of any of the drive or driven plates. Check for permanent fatigue of the dish plate, driven plates, retaining plate, snap ring, and the drive plates. Replace all reverse brake components if any of these conditions exist.

72. Remove the reverse brake snap ring using a screwdriver. Then remove the reverse brake retaining plate, the drive plates, the driven plates, and the dish plate from the transaxle case.

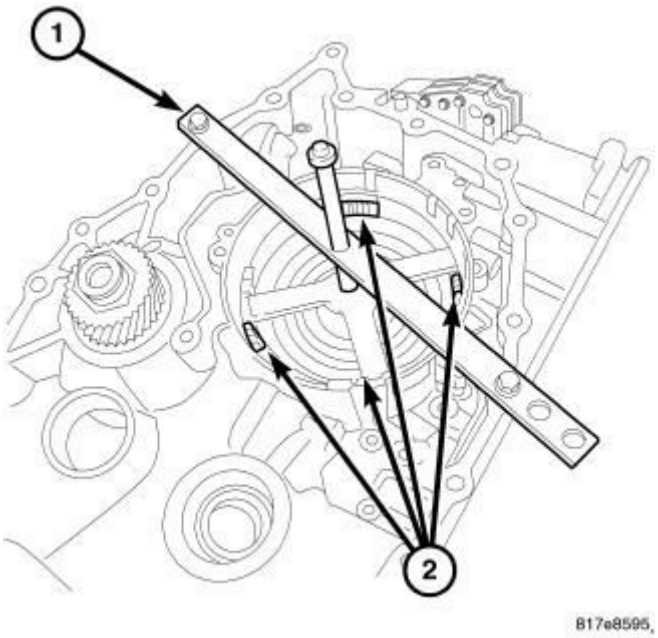

Fig. 88: Compress Clutches
Courtesy of CHRYSLER GROUP, LLC

CAUTION: Set the spring compressor right on top of the return spring of the spring retainer assembly. Do not remove the return springs from the spring retainer assembly.

73. Compress the reverse brake return spring using Compressor (special tool #5058A, Compressor, Spring) (1) and Compressor (special tool #9875, Compressor). Remove the snap ring (2) from the transaxle case.
74. Remove the retaining plate and the spring retainer assembly.

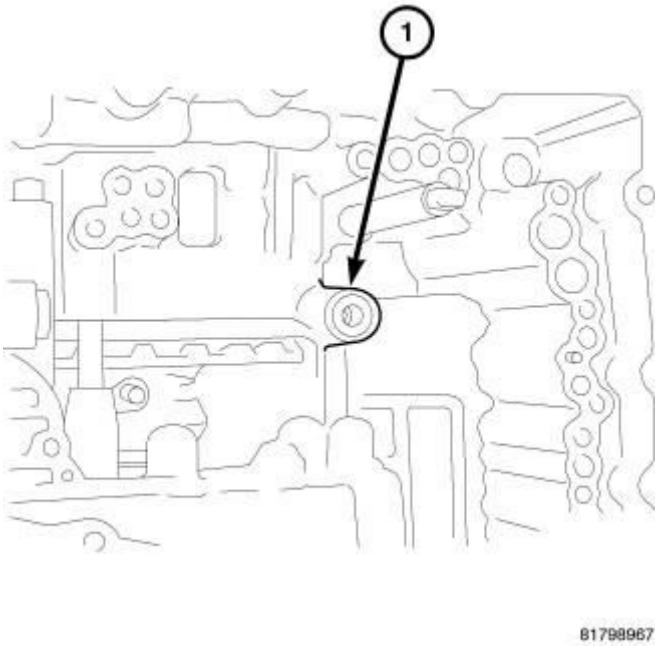

Fig. 89: Fluid Passage
Courtesy of CHRYSLER GROUP, LLC

CAUTION: There is a possibility that the reverse brake piston might be stuck if excessive pressure is required to remove.

75. Try removing the reverse brake piston from the transaxle case by hand if unable to remove by hand, apply compressed air to the fluid passage (1). and remove the reverse brake piston from the transaxle case.

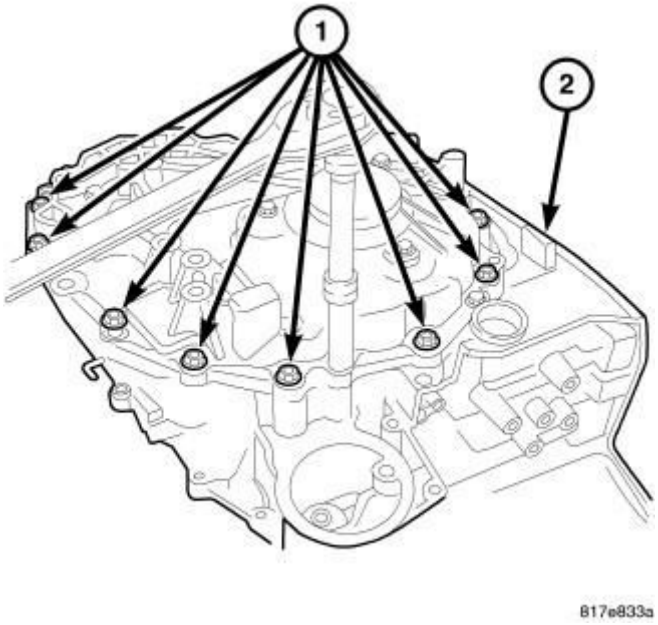

Fig. 90: Bolts At Drive Belt Assembly
Courtesy of CHRYSLER GROUP, LLC

76. Remove the case bolts (1) at the drive belt assembly (2).

NOTE: Pin at pulley sensor stays with drive belt assembly case.

77. Separate drive belt assembly case from main housing.

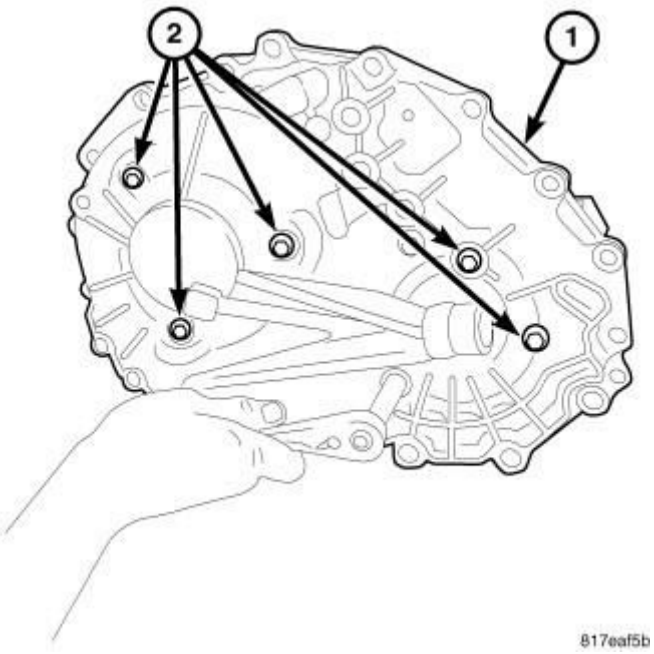

Fig. 91: Sheave Retaining Bolts
Courtesy of CHRYSLER GROUP, LLC

78. Remove the bolts (2) that hold both sheaves to the case (1).

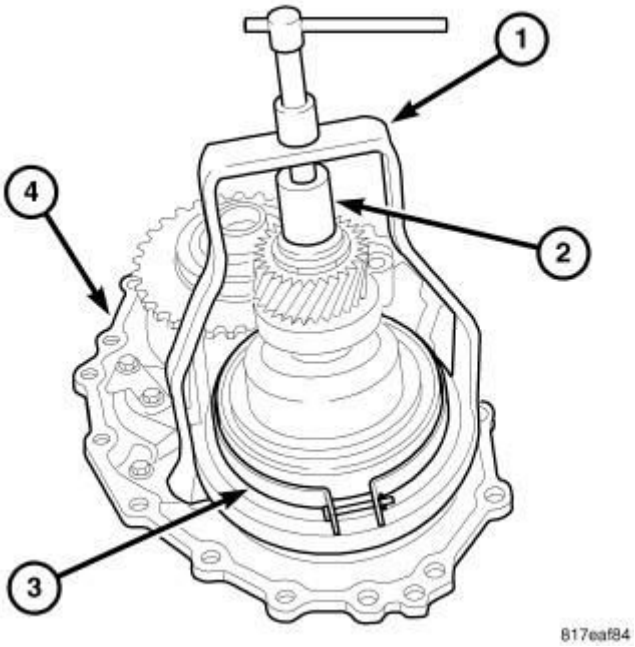

Fig. 92: Installing Puller Onto Secondary Sheave
Courtesy of CHRYSLER GROUP, LLC

CAUTION: Do not allow the Puller to come in contact with the belt at any time

79. Install the Puller (special tool #9874, Compressor, Pulley) (1) and Insert (special tool #8513A, Insert, Crankshaft) (2) onto the secondary sheave (3).

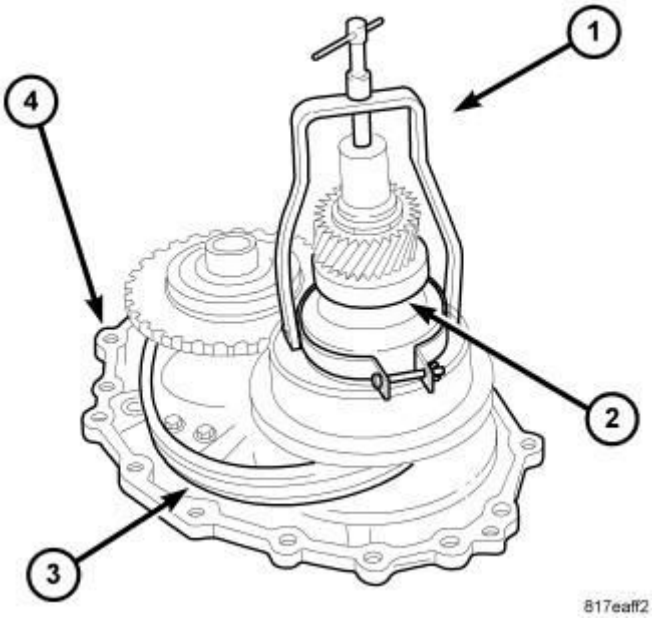

Fig. 93: Compressing Sheave Using Compressor Tool
Courtesy of CHRYSLER GROUP, LLC

CAUTION: Do not over tighten the compressor tool. Tighten to no more than 7 N.m (50 in. lbs.)

NOTE: The belt is directional, look for an arrow indicating the direction of the belt for installation

80. Compress sheave (2) to the stop.

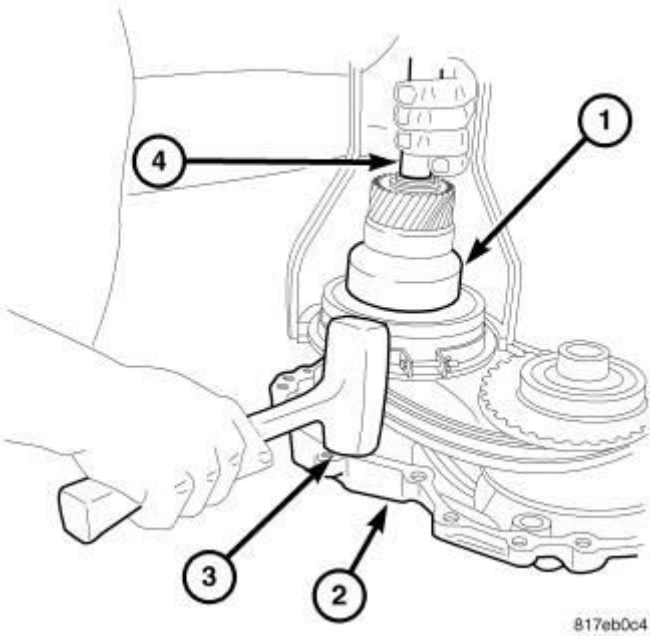

Fig. 94: Lifting/Moving Secondary Sheave
Courtesy of CHRYSLER GROUP, LLC

CAUTION: Do not allow the primary sheave to contact the drive surface of the secondary sheave.

NOTE: You may need to lightly tap case while holding secondary sheave.

81. Lift and move the secondary sheave (1) closer to the primary sheave.

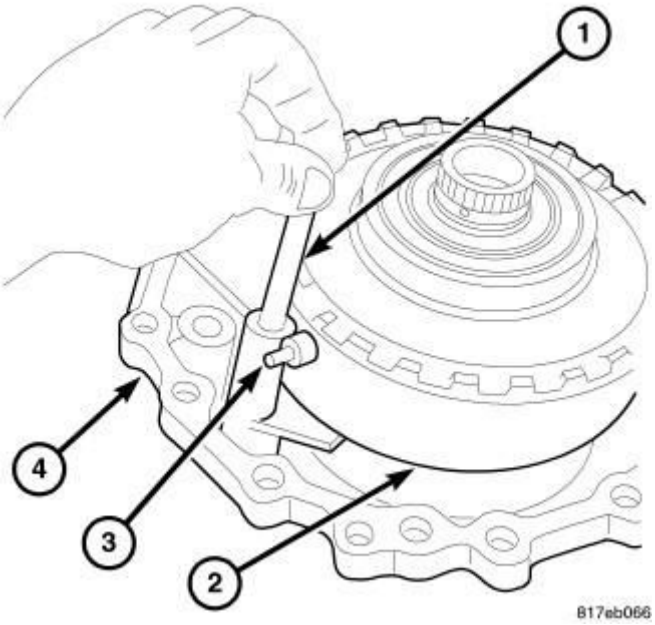

Fig. 95: Pin At Sheave Height Sensor
Courtesy of CHRYSLER GROUP, LLC

82. Remove the pin (1) from the sheave height sensor (3).

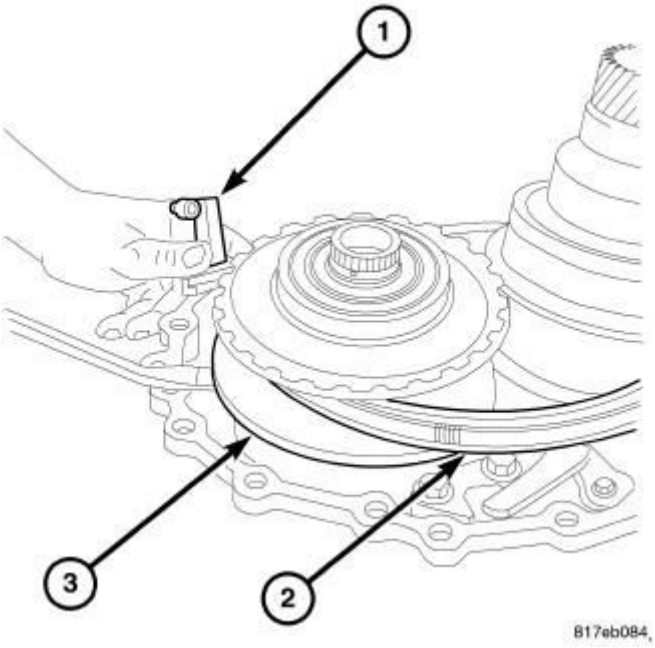

Fig. 96: Sheave Height Sensor
Courtesy of CHRYSLER GROUP, LLC

83. Lift the primary sheave (3) enough to remove the sheave height sensor (1).

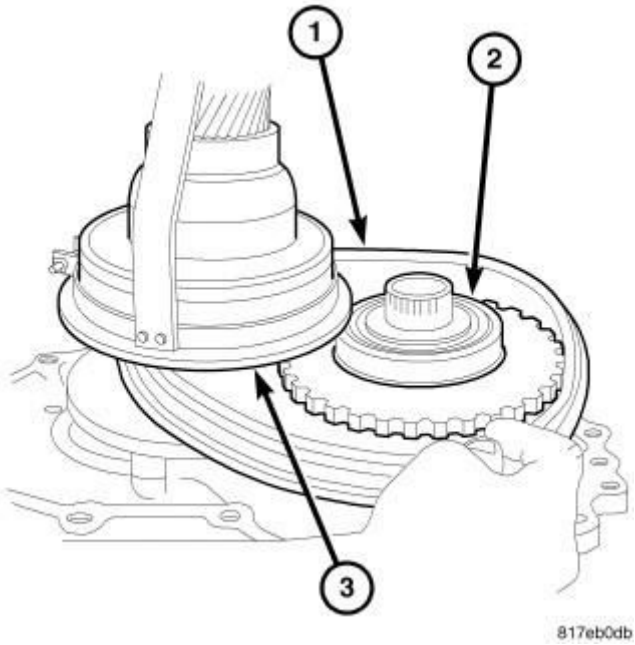

Fig. 97: Removing/Installing Drive Belt At Secondary & Primary Sheaves
Courtesy of CHRYSLER GROUP, LLC

84. Remove the drive belt (1) from both secondary (3) and primary sheaves (2).
85. Remove the secondary sheave.

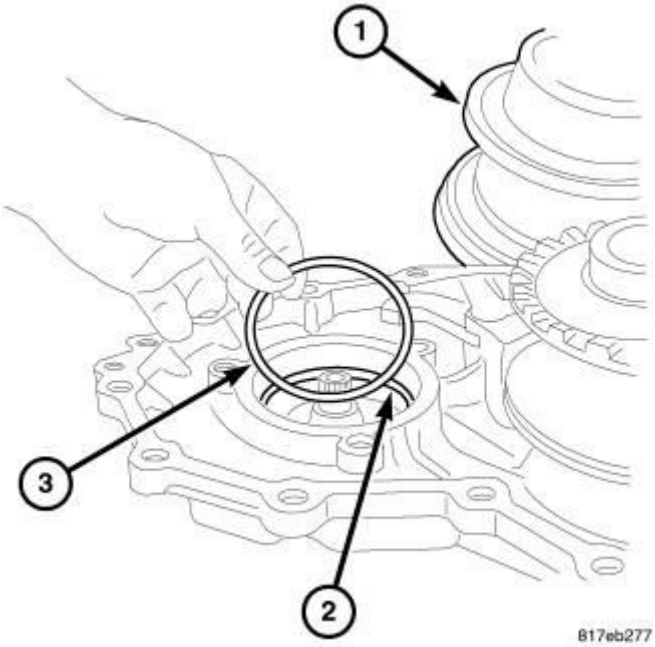

Fig. 98: Shim Under Sheave
Courtesy of CHRYSLER GROUP, LLC

86. Remove the shim (3) under the secondary sheave (1).

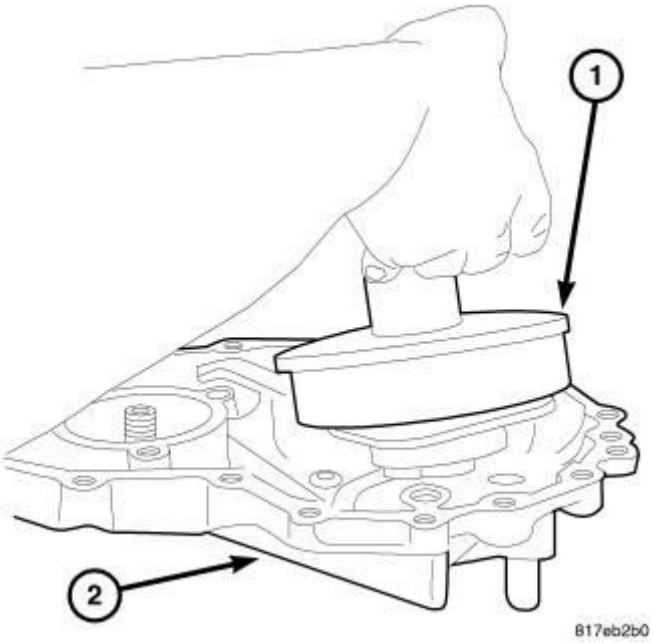

Fig. 99: Sheave
Courtesy of CHRYSLER GROUP, LLC

87. Remove the primary sheave.
88. Remove bolts at the park pawl.
89. Remove the park pawl.

ASSEMBLY

ASSEMBLY

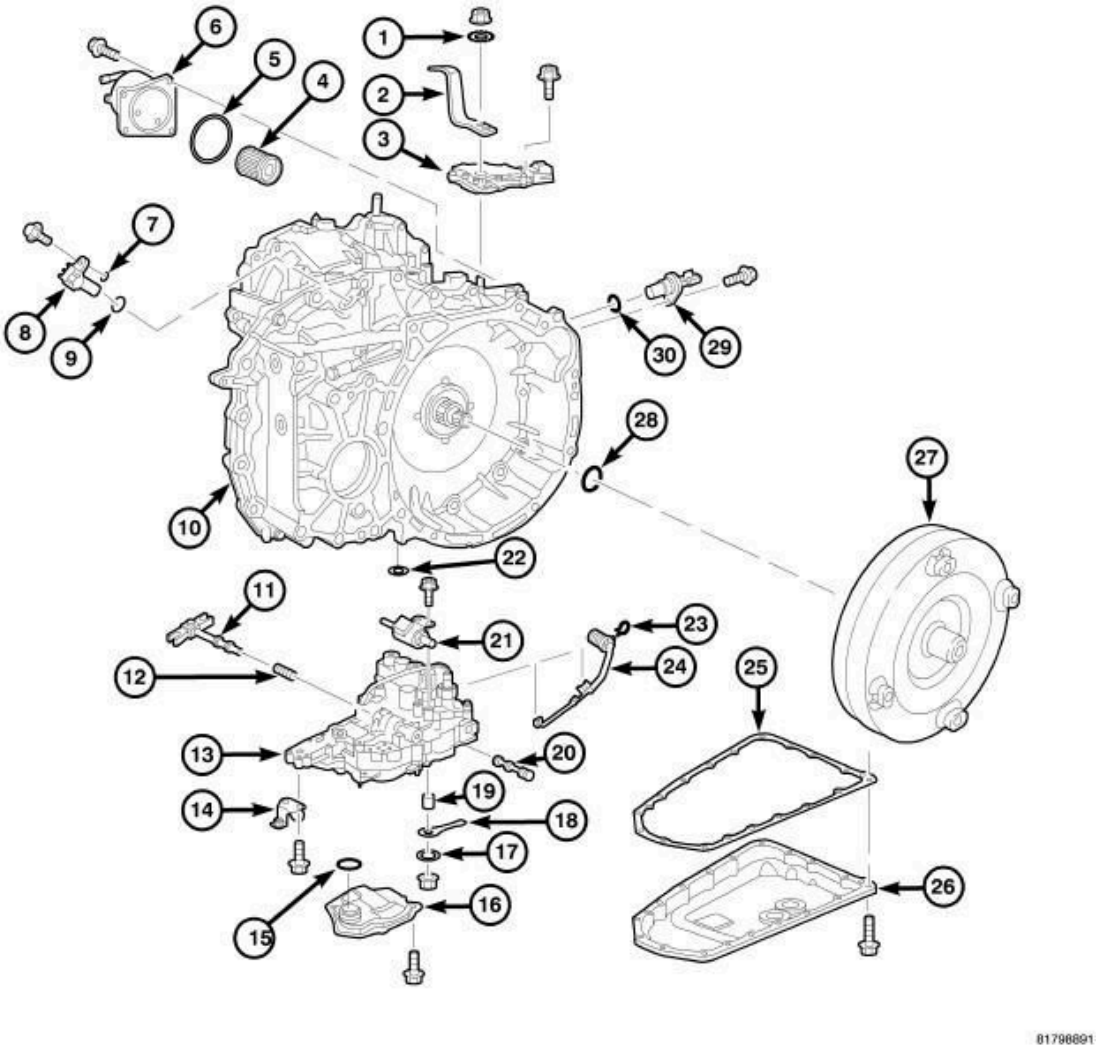

Fig. 100: CVT Transaxle Externals - Exploded View
Courtesy of CHRYSLER GROUP, LLC

1- WASHER
2 - SHIFT LEVER
3 - INHIBITOR SWITCH
4 - CVT FLUID FILTER (Certain Models)
5 - O-RING
6 - CVT FLUID COOLER
7 - SHIM
8 - OUTPUT SPEED SENSOR
9 - O-RING
10 - TRANSAXLE

11 - PULLEY RATIO LINKAGE
12 - SPRING
13 - CONTROL VALVE
14 - BRACKET
15 - O-RING
16 - OIL STRAINER
17 - PLAIN WASHER
18 - MANUAL LEVER
19 - BUSHING
20 - MANUAL VALVE
21 - STEPPER MOTOR
22 - LIP SEAL
23 - SNAP RING
24 - VALVE BODY HARNESS
25 - OIL PAN GASKET
26 - OIL PAN
27 - TORQUE CONVERTER
28 - O-RING
29 - INPUT SPEED SENSOR
30 - O-RING

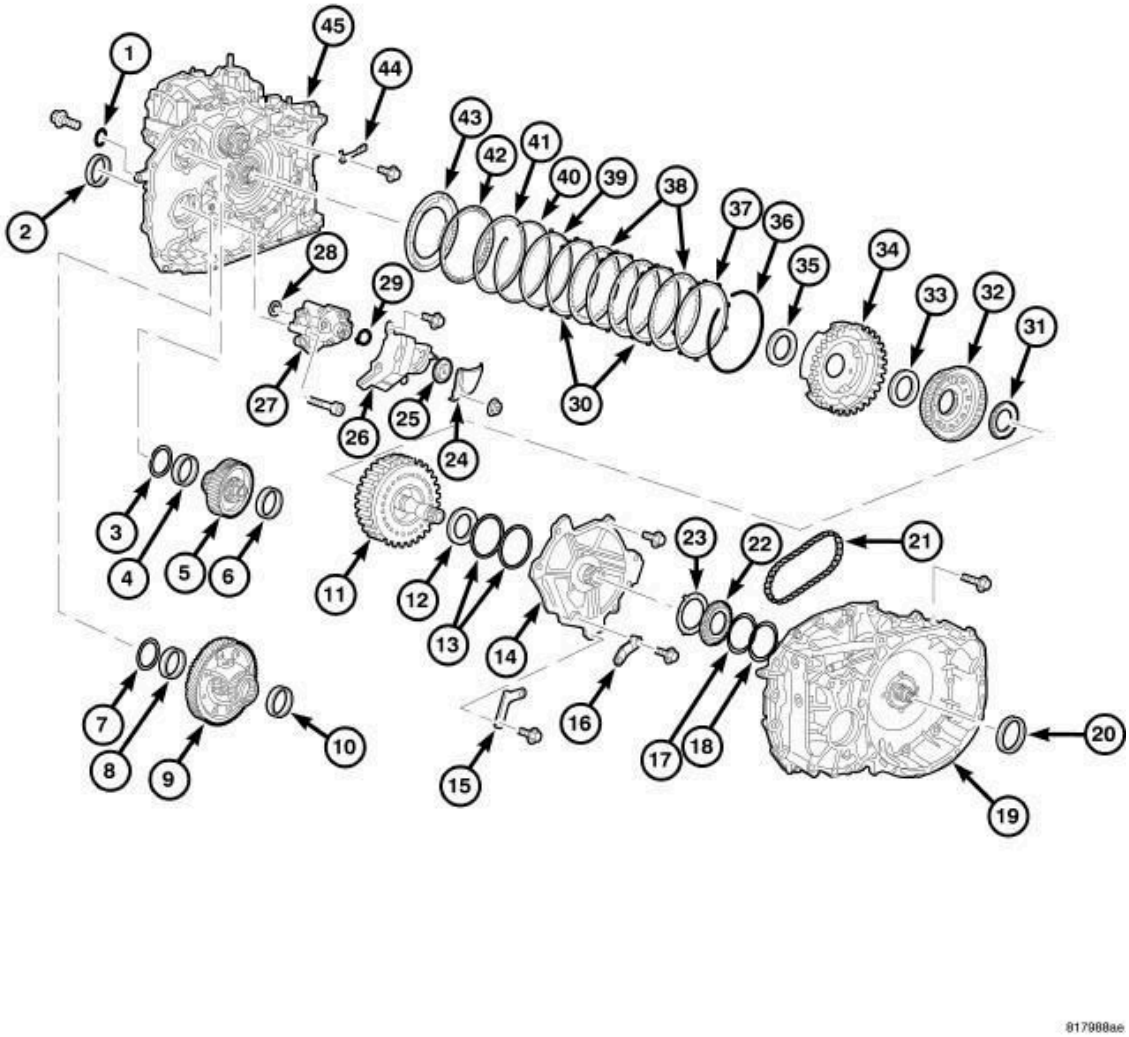

Fig. 101: CVT Transaxle Internals - Exploded View
Courtesy of CHRYSLER GROUP, LLC

1 - O-RING
2 - SIDE OIL SEAL
3 - ADJUSTABLE SHIM
4 - OUTER RACE
5 - REDUCTION GEAR ASSEMBLY
6 - OUTER RACE
7 - ADJUSTABLE SHIM
8 - OUTER RACE
9 - DIFFERENTIAL ASSEMBLY
10 - OUTER RACE
11 - FORWARD CLUTCH ASSEMBLY

12 - NEEDLE BEARING
13 - SEAL RING
14 - OIL PUMP COVER
15 - BAFFLE PLATE
16 - BRACKET
17 - ADJUSTABLE SHIM
18 - ADJUSTABLE SHIM
19 - CONVERTER HOUSING
20 - CONVERTER HOUSING OIL SEAL
21 - OIL PUMP CHAIN
22 - DRIVE SPROCKET
23 - THRUST WASHER
24 - BAFFLE PLATE
25 - DRIVEN SPROCKET (OIL PUMP)
26 - BAFFLE PLATE
27 - OIL PUMP
28 - LIP SEAL
29 - SNAP RING
30 - DRIVEN PLATES
31 - NEEDLE BEARING
32 - SUN GEAR
33 - NEEDLE BEARING
34 - PLANETARY CARRIER
35 - NEEDLE BEARING
36 - SNAP RING
37 - RETAINING PLATE
38 - DRIVEN PLATES
39 - DISH PLATE
40 - SNAP RING
41 - RETAINING PLATE
42 - SPRING RETAINER ASSEMBLY
43 - REVERSE PLATE PISTON
44 - DETENT SPRING
45 - TRANSAXLE CASE

1. Refer to the exploded views as necessary when performing the following

steps.

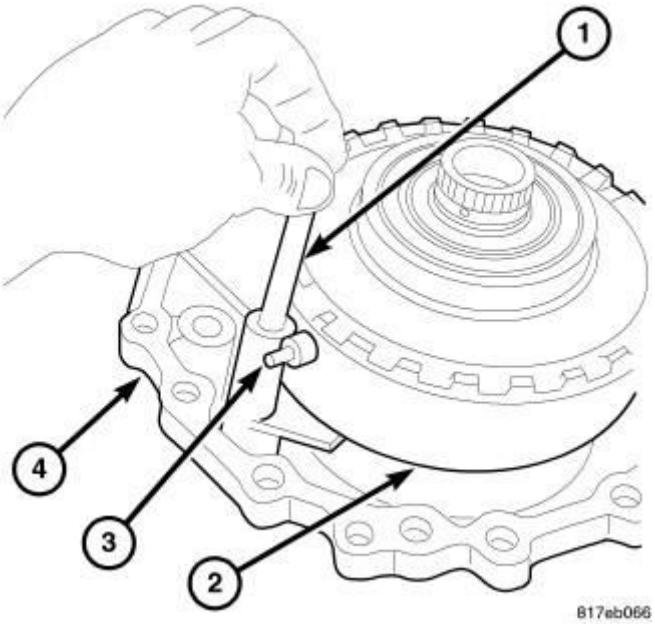

Fig. 102: Pin At Sheave Height Sensor
Courtesy of CHRYSLER GROUP, LLC

2. Install the primary sheave (2) with the sheave height sensor, (3) spring and pin (1) into the belt side case.

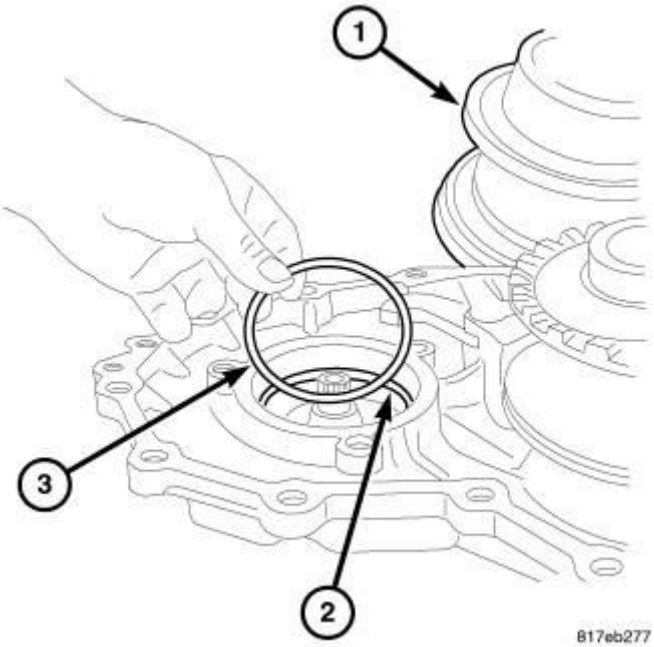

Fig. 103: Shim Under Sheave
Courtesy of CHRYSLER GROUP, LLC

3. Install the secondary sheave positioning shim (3) into the belt side cover.

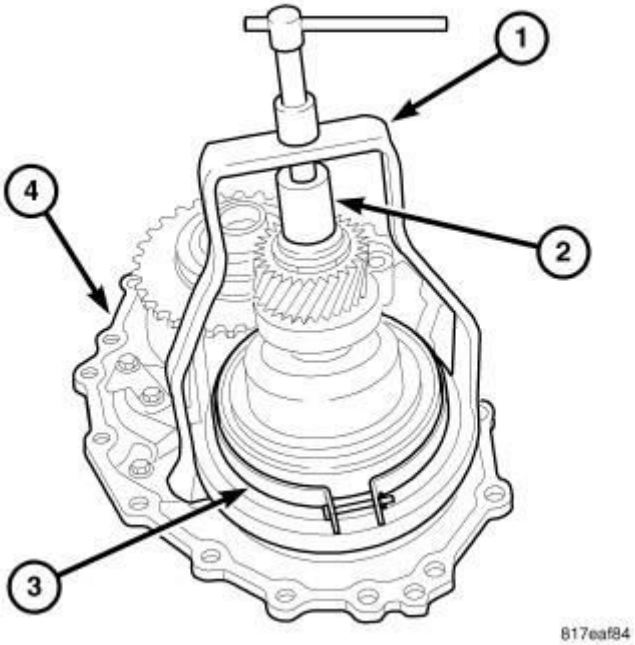

Fig. 104: Installing Puller Onto Secondary Sheave
Courtesy of CHRYSLER GROUP, LLC

4. Install Puller (special tool #9874, Compressor, Pulley) (1) and Insert (special tool #8513A, Insert, Crankshaft), (2) onto secondary sheave.

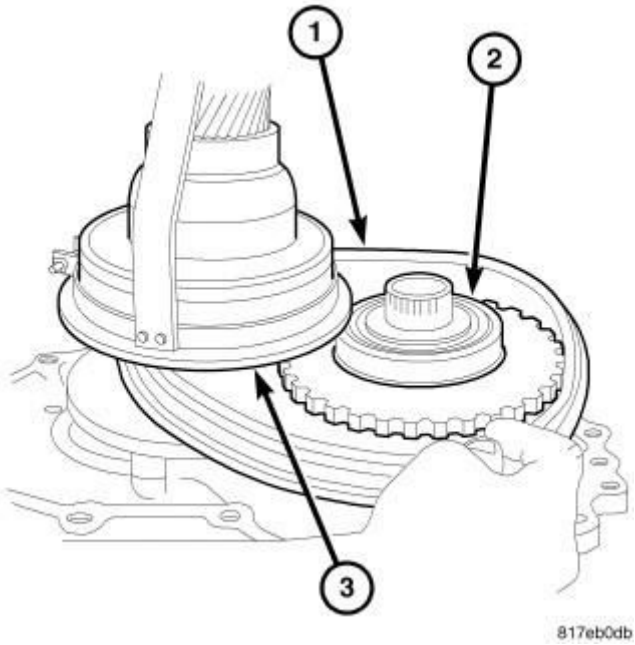

Fig. 105: Removing/Installing Drive Belt At Secondary & Primary Sheaves
Courtesy of CHRYSLER GROUP, LLC

5. Move the secondary sheave (3) close enough to the primary (2) sheave to allow the drive belt (1) to be put around both secondary and primary sheaves.

NOTE: The drive belt is directional and will need to be installed in the same direction as noted in disassembly. if installed incorrectly failure will occur.

6. Install the drive belt (1).

CAUTION: Do not over tighten the compressor tool. Tighten to no more than 7 N.m (50 in. lbs.).

7. Compress the secondary (3) sheave to the stop.
8. Install the drive belt (1) around both secondary (3) and primary (2) sheaves.
9. Install the primary sheave into place.
10. Remove Puller (special tool #9874, Compressor, Pulley) and Insert (special tool #8513A, Insert, Crankshaft) from the primary sheave.

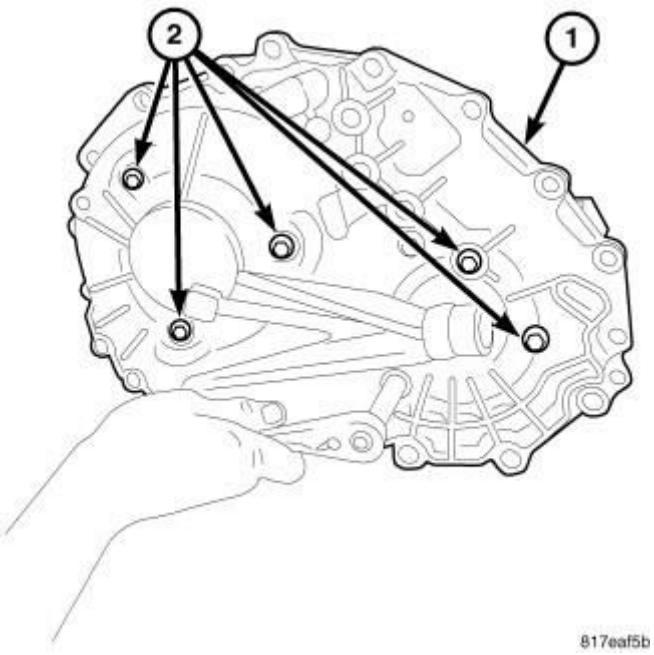

Fig. 106: Sheave Retaining Bolts
Courtesy of CHRYSLER GROUP, LLC

11. Install the bolts (2) that hold both sheaves to the case (1).

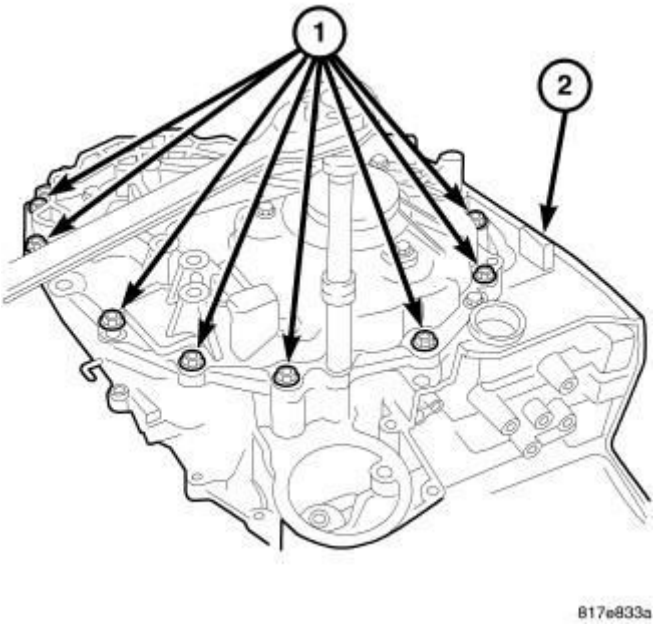

Fig. 107: Bolts At Drive Belt Assembly
Courtesy of CHRYSLER GROUP, LLC

CAUTION: Remove moisture, oil, and used sealant from the sealant application surface. Make sure that the starting point and the ending point are between two bolt holes.

12. Apply Loctite 509 sealer onto the belt side of the transaxle case.
13. Install the belt side assembly to the transaxle case.
14. Install the case bolts (1) to hold the drive belt assembly (2) to the transaxle. tighten to 45 N.m (33 ft. lbs.).

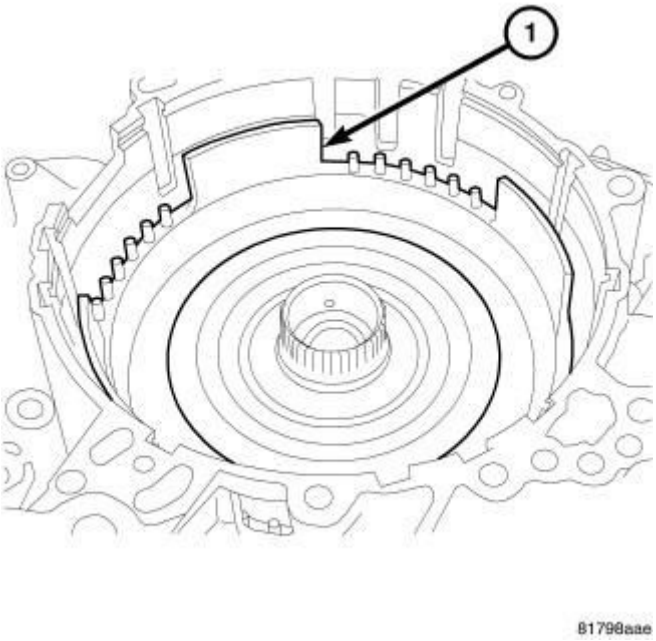

Fig. 108: Reverse Brake Piston
Courtesy of CHRYSLER GROUP, LLC

CAUTION: Inspect the reverse brake piston and, if damaged, replace it before installation. Apply CVT fluid to the seal when installing the reverse brake piston.

NOTE: Rotate reverse brake piston into place.

15. Rotate and install the reverse brake piston (1) into the transaxle case.

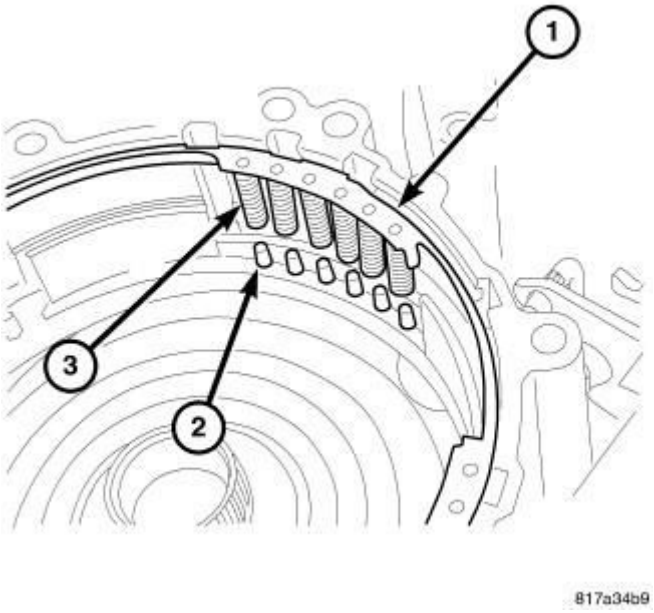

Fig. 109: Retainer Assembly Return Spring
Courtesy of CHRYSLER GROUP, LLC

16. Align the return springs (3) of the spring retainer assembly (1) to the locating posts (2) of the reverse clutch piston.

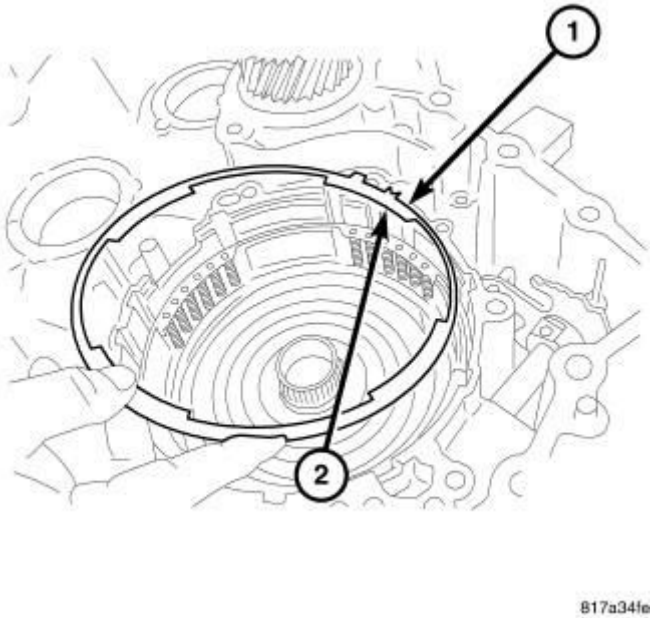

Fig. 110: Retaining Plate At Transaxle
Courtesy of CHRYSLER GROUP, LLC

NOTE: There is a notch in the retaining plate that points to the top of the case.

17. Install the retaining plate (1) into the transaxle case with the notch on the plate to the top (2).

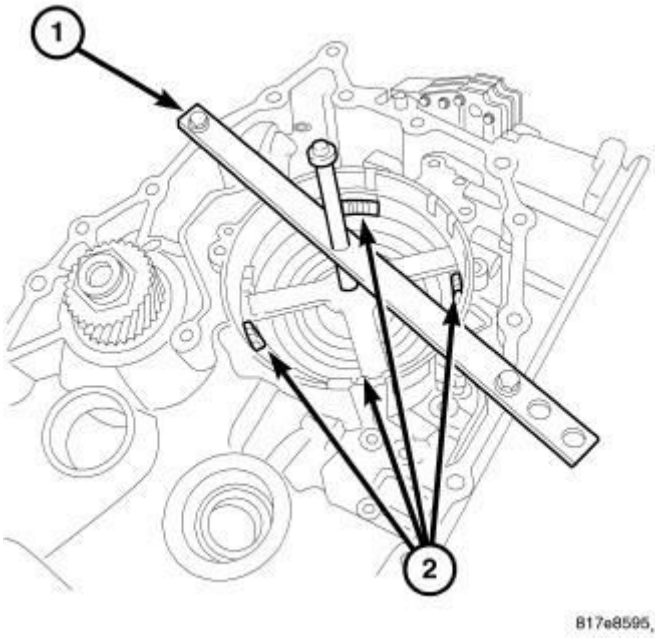

Fig. 111: Compress Clutches
Courtesy of CHRYSLER GROUP, LLC

CAUTION: Set the spring compressor on top of the spring retainer assembly.

18. Compress the reverse brake return spring using Compressor (special tool #5058A, Compressor, Spring) (1) and Compressor (special tool #9875, Compressor) and install the snap ring into the transaxle case using a screwdriver.

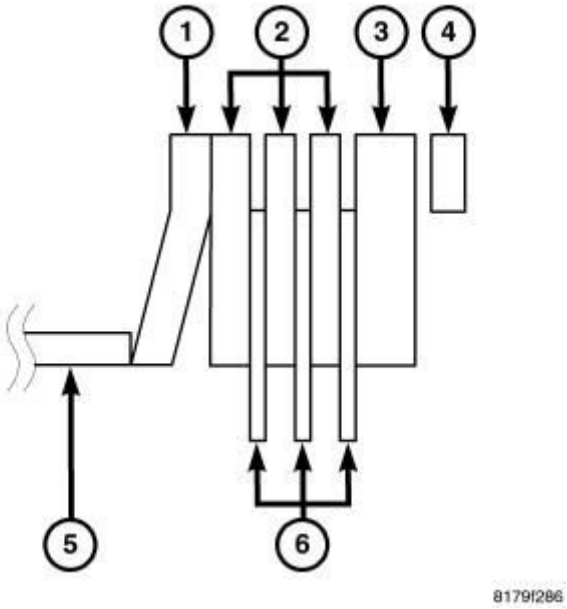

Fig. 112: Clutch Disc Stack Up
Courtesy of CHRYSLER GROUP, LLC

19. Install the dish plate (1) with the convex side down onto the reverse brake piston.
20. Install driven plate (2) and then a drive plate (6) until all the driven and drive plates are installed.
21. Install the retaining plate (3) into the reverse brake assembly.
22. Install the reverse brake snap ring (4) into the transaxle case.

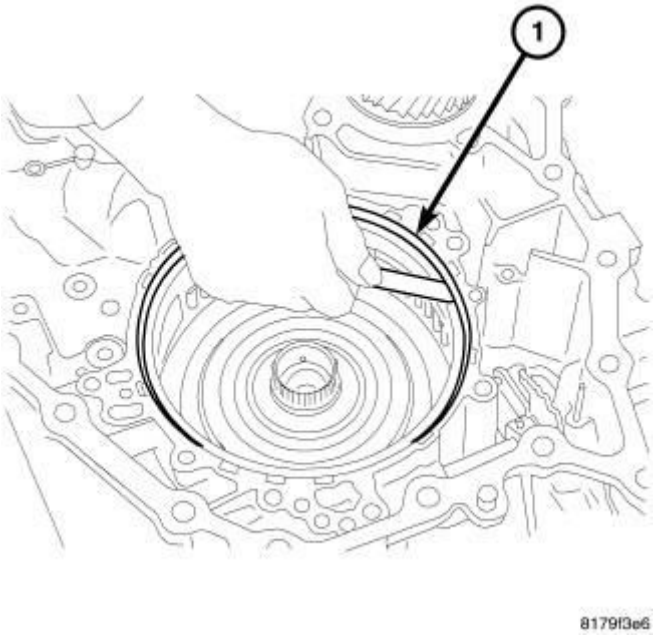

Fig. 113: Measuring Clearance Between Snap Ring & Retaining Plate
Courtesy of CHRYSLER GROUP, LLC

CAUTION: When conducting measurements, measure two or more places and calculate the average value.

23. Measure the clearance between the snap ring and the retaining plate (1). The correct clutch clearance is 1.2-1.5 mm (0.047-0.059 in.). If the clutch clearance is not within specifications, measure the existing retaining plate and select the correct retaining plate.

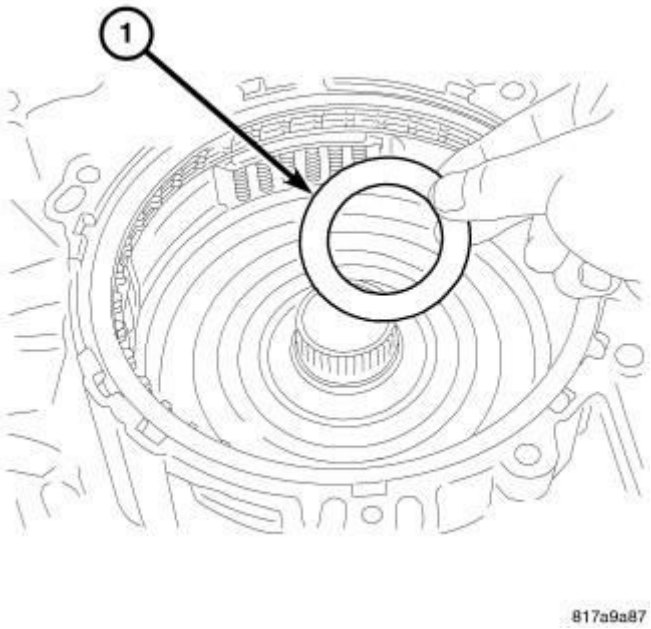

Fig. 114: Needle Bearing
Courtesy of CHRYSLER GROUP, LLC

CAUTION: Apply Vaseline or assembly lube when installing the needle bearing. Be careful to verify correct orientation of the needle bearing when installing it.

NOTE: The inner race will need to face down.

24. Install the needle bearing (1) onto the reverse brake piston. Check for the direction of the needle bearing while installing.

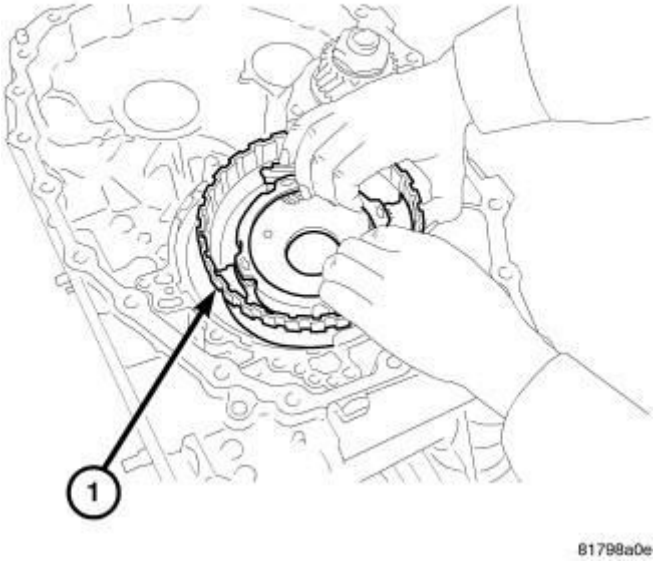

Fig. 115: Planetary Carrier Assembly
Courtesy of CHRYSLER GROUP, LLC

NOTE: The inner race will need to face down

25. Install the planetary carrier assembly (1) onto the reverse brake.

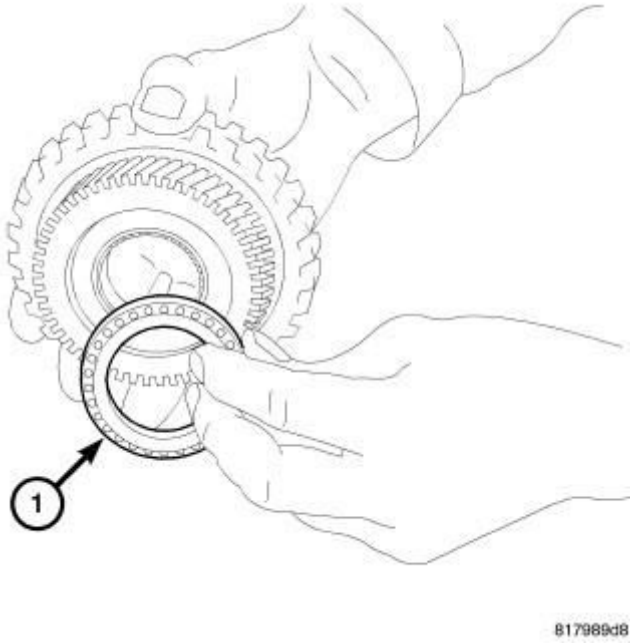

Fig. 116: Needle Bearing At Sun Gear
Courtesy of CHRYSLER GROUP, LLC

CAUTION: Apply Vaseline or assembly lube when

installing the needle bearing. Be careful to verify correct orientation of the needle bearing when installing it.

26. Install the needle bearing (1) onto the primary pulley side of the sun gear.

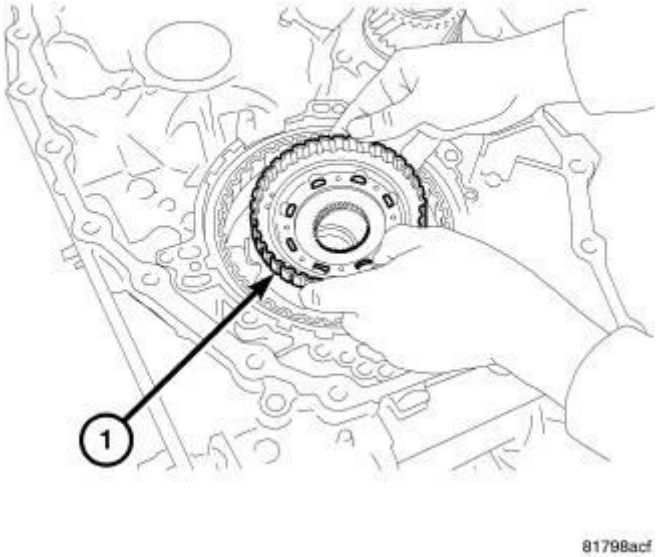

Fig. 117: Sun Gear At Planetary Carrier
Courtesy of CHRYSLER GROUP, LLC

27. Install the sun gear (1) onto the planetary carrier.

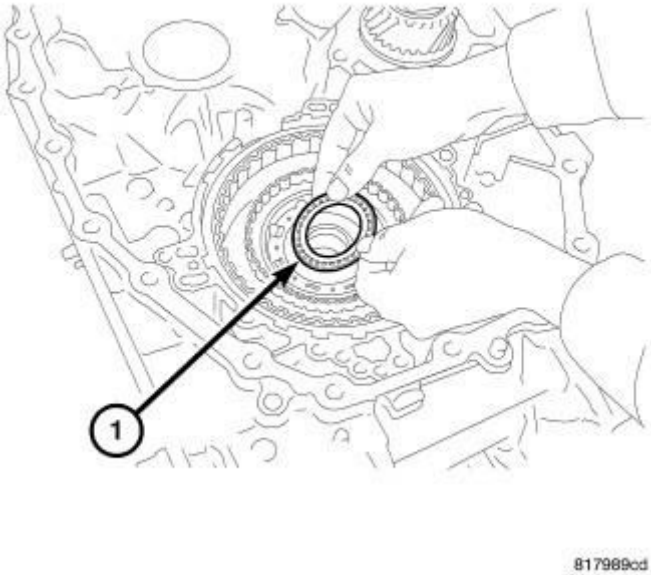

Fig. 118: Needle Bearing On Forward Clutch
Courtesy of CHRYSLER GROUP, LLC

CAUTION: Apply Vaseline or assembly lube when installing the needle bearing. Be careful to verify correct orientation of the needle bearing when installing it.

NOTE: The inner race will need to face up.

28. Install the needle bearing (1) on the forward clutch drum side of the sun gear.

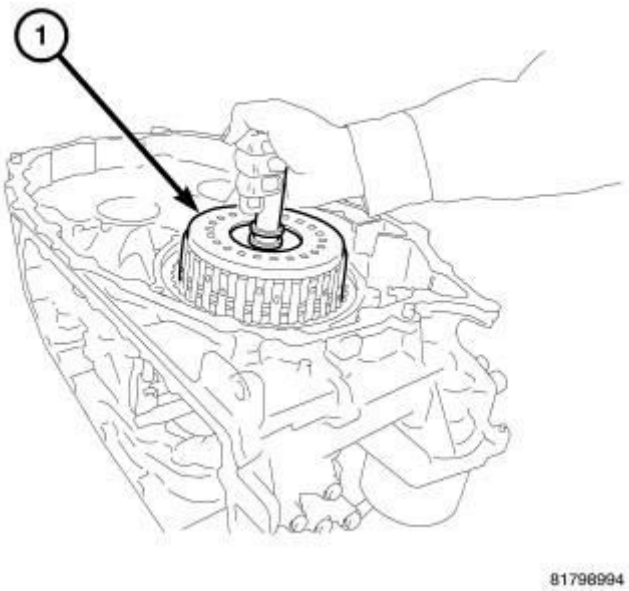

Fig. 119: Forward Clutch Assembly
Courtesy of CHRYSLER GROUP, LLC

29. Install the forward clutch assembly (1) into the transaxle case.

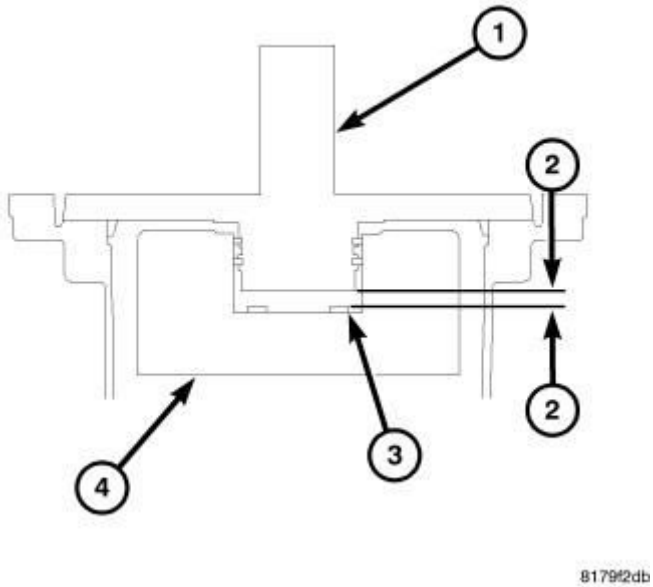

Fig. 120: Measuring Total End Play
Courtesy of CHRYSLER GROUP, LLC

30. Measure the total end play (2) in the following steps. Total end play should be 0.25 - 0.55 mm (0.010 - 0.022 in).

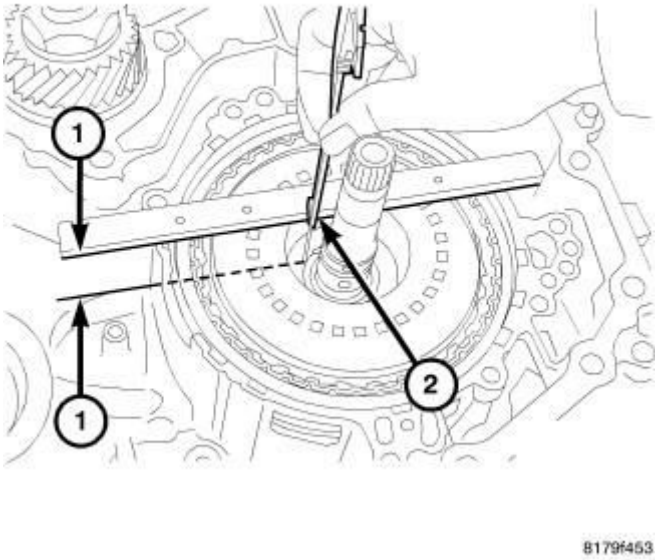

Fig. 121: Measurement One
Courtesy of CHRYSLER GROUP, LLC

NOTE: Gauge Bar (special tool #6311, Gauge Bar) can be used for doing the following measurement.

31. Measure the distance (1) from the oil pump cover installation surface of the transaxle case to the needle bearing installation surface of the forward clutch drum. Call this measurement one.

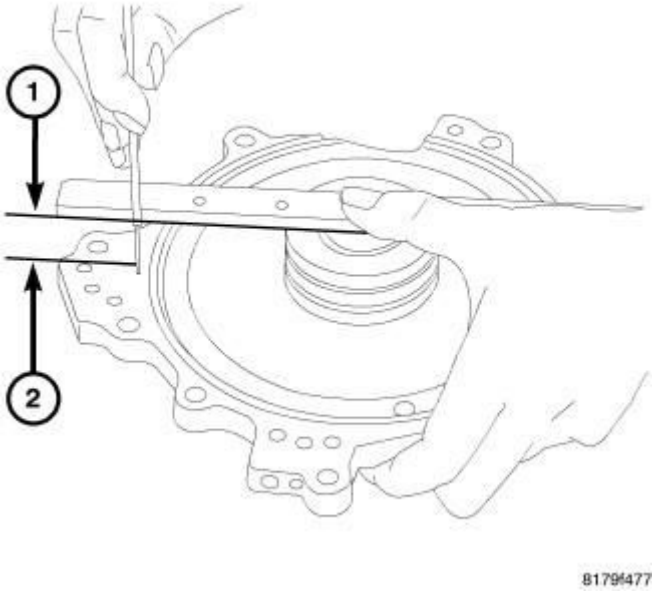

Fig. 122: Measurement Two
Courtesy of CHRYSLER GROUP, LLC

NOTE: Gauge Bar (special tool #6311, Gauge Bar) can be used for doing the following measurement.

32. Measure the distance (1 to 2) as shown in illustration. Call this measurement two.
33. Calculate the bearing thickness required to achieve the necessary end play with the following formula. The bearing thickness is equal to measurement one, minus measurement two minus, the nominal end play (0.40 mm or 0.016 "in).

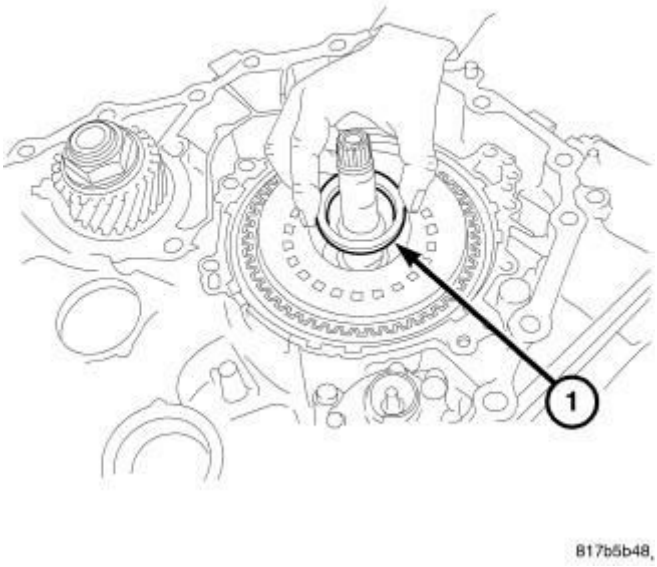

Fig. 123: Needle Bearing On The Forward Clutch Assembly
Courtesy of CHRYSLER GROUP, LLC

CAUTION: Apply Vaseline or assembly lube when installing the needle bearing. Be careful to verify correct orientation of the needle bearing when installing it.

34. Install the selected needle bearing (1) on the forward clutch assembly.

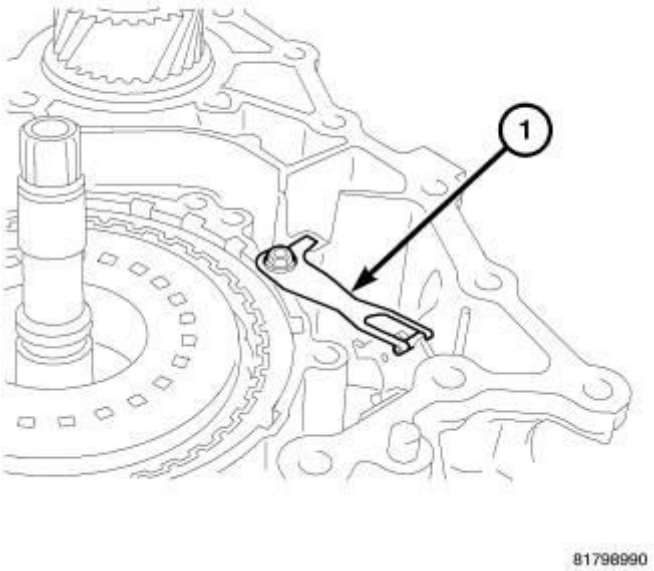

Fig. 124: Detent Spring

Courtesy of CHRYSLER GROUP, LLC

35. Install the detent spring (1) onto the transaxle case. Install the bolt to hold the detent spring to the transaxle case and tighten the mounting bolt to 7 N.m (61 in. lbs.).

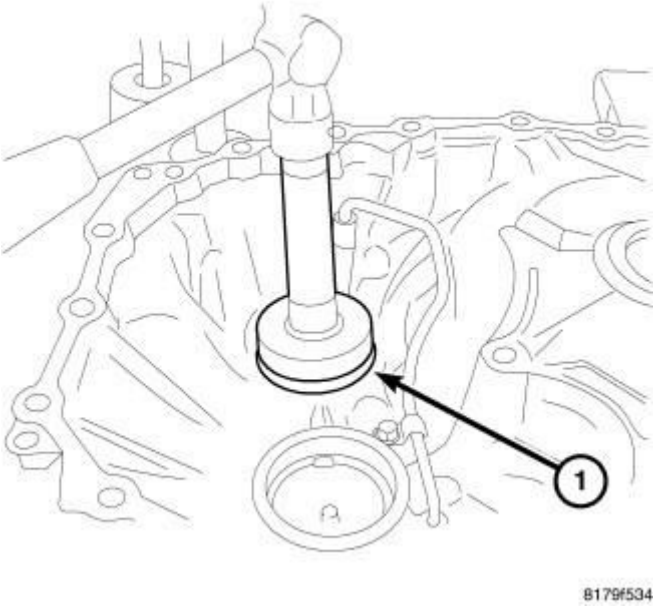

Fig. 125: Installing Outer Race Of Differential Bearing Into Converter Housing
Courtesy of CHRYSLER GROUP, LLC

36. Install the outer race of the differential bearing (1) into the converter housing using Installer (special tool #9668, Remover/Installer, Bearing Cup) and Installer (special tool #C-4628, Installer, Cup) on 4WD, use Installer (special tool #C-4628, Installer, Cup) on 2WD and Handle (special tool #C-4171, Driver Handle, Universal).

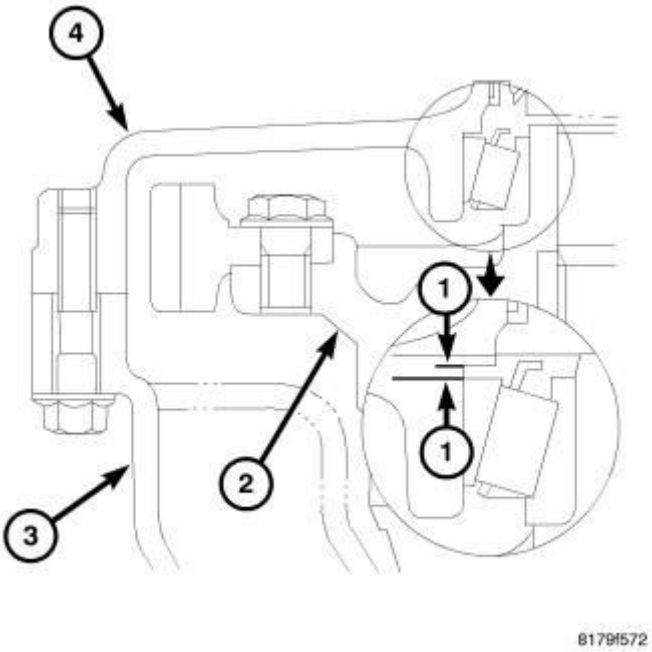

Fig. 126: Measuring For Differential Preload Shim
Courtesy of CHRYSLER GROUP, LLC

1 - PRELOAD SHIM
2 - DIFFERENTIAL ASSEMBLY
3 - TRANSAXLE CASE
4 - CONVERTER HOUSING

CAUTION: When adjusting the preload, apply CVT fluid on the bearing to make it roll smoothly. When conducting measurements, measure two or more places and calculate the average value.

37. Measure for the differential preload shim (1) in the following steps. Refer to the illustration as necessary when performing the steps.

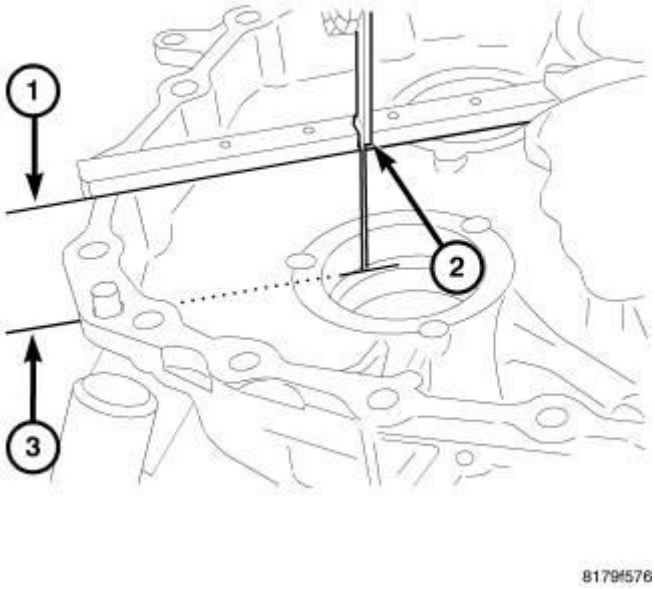

Fig. 127: Differential Measurement One
Courtesy of CHRYSLER GROUP, LLC

NOTE: Gauge Bar (special tool #6311, Gauge Bar) can be used for doing the following measurement.

38. The required differential preload is 0.17 to 0.29 mm (0.007 0.011 to in).
39. Measure the distance (1-3) from the edge of the transaxle case to the select shim installation surface. This is differential measurement one.

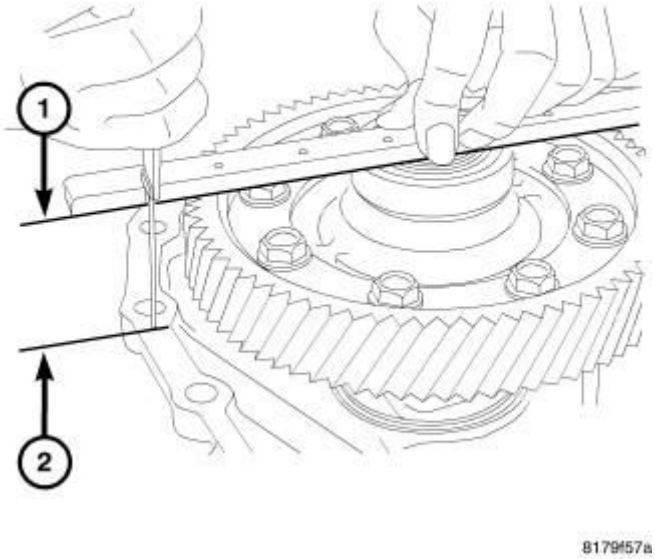

Fig. 128: Differential Measurement Two

Courtesy of CHRYSLER GROUP, LLC

NOTE: Gauge Bar (special tool #6311, Gauge Bar) can be used for doing the following measurement.

40. Install the differential assembly on the converter case and measure the distance (differential measurement two) (1-2) from the differential hub to the surface of the converter housing.

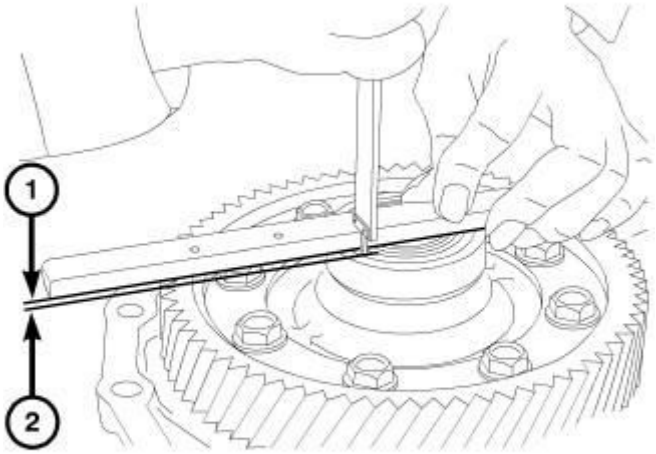

81794585

Fig. 129: Differential Measurement Three
Courtesy of CHRYSLER GROUP, LLC

NOTE: Gauge Bar (special tool #6311, Gauge Bar) can be used for doing the following measurement.

41. Install the outer race for the differential side bearing and measure the distance (differential measurement three) (1-2) from the differential case to the outer race of the differential side bearing.
42. The thickness of the required select shim is calculated as follows: differential measurement one, minus differential measurement two, plus differential measurement three, plus 0.23 mm (0.009 in).

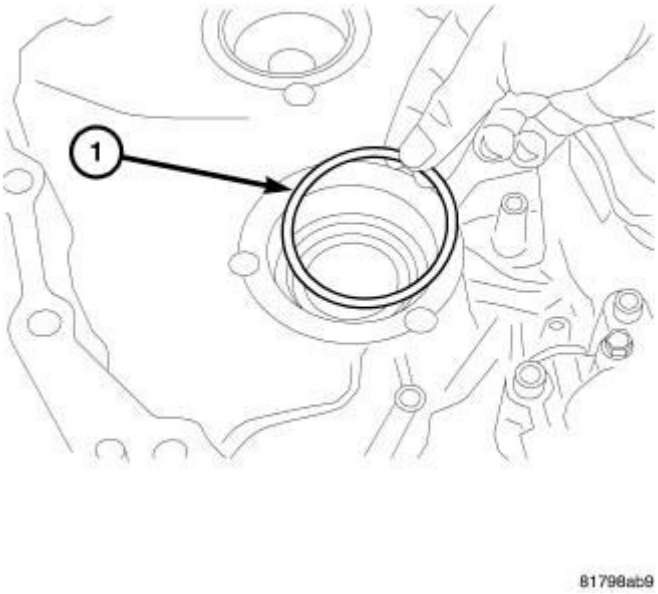

Fig. 130: Selective Shim At Transaxle Case
Courtesy of CHRYSLER GROUP, LLC

CAUTION: Do not re-use the select shim.

43. Install the chosen select shim (1) into the transaxle case.

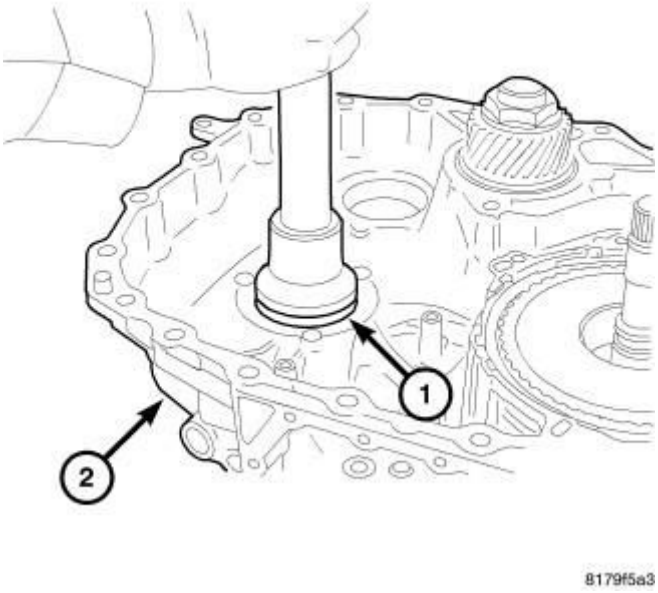

Fig. 131: Installing Outer Race On Transaxle Case
Courtesy of CHRYSLER GROUP, LLC

44. Install the outer race (1) of the differential bearing on the transaxle case using the Installer (special tool #D-129, Installer, Bearing Cup) and Handle (special tool #C-4171, Driver Handle, Universal).

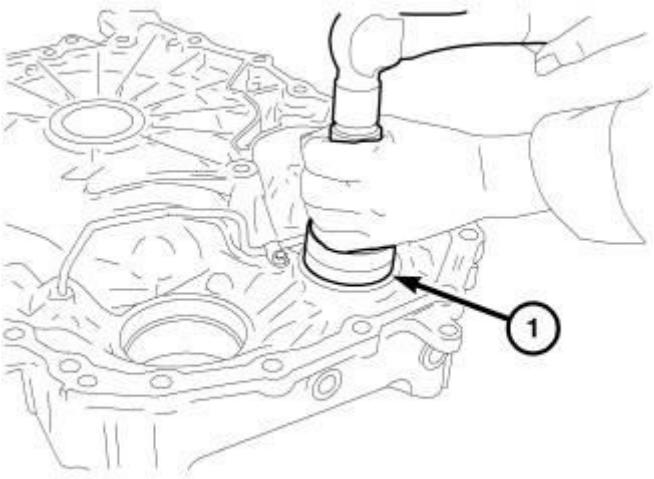

Fig. 132: Installing Outer Race Reduction Gear Into Converter Housing
Courtesy of CHRYSLER GROUP, LLC

45. Install the outer race (1) of the reduction gear bearing into the converter housing using Installer (special tool #C-4628, Installer, Cup) and Handle (special tool #C-4171, Driver Handle, Universal).

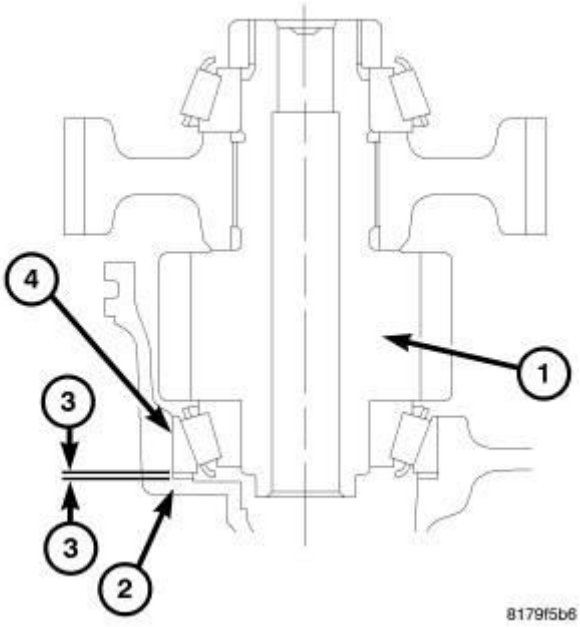

Fig. 133: Measuring For Reduction Gear Preload Shim
Courtesy of CHRYSLER GROUP, LLC

1 - REDUCTION GEAR
2 - TRANSAXLE CASE
3 - PRELOAD SHIM
4 - BEARING OUTER RACE

46. The required preload on the reduction gear assembly is 0.13-0.19 mm (0.005-0.0075 in). Measure for the required preload shim (3) as follows:

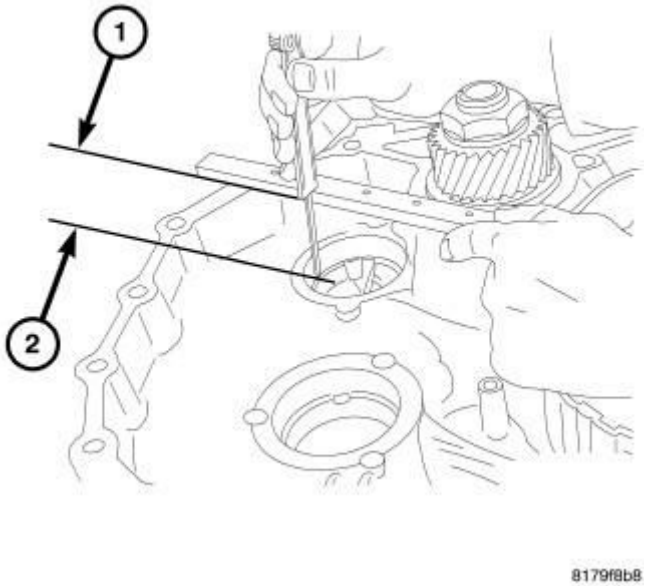

Fig. 134: Reduction Assembly Measurement One
Courtesy of CHRYSLER GROUP, LLC

NOTE: Gauge Bar (special tool #6311, Gauge Bar) can be used for doing the following measurement.

47. Measure the distance (reduction assembly measurement one) (1-2) from the edge of the transaxle case to the select shim installation surface.

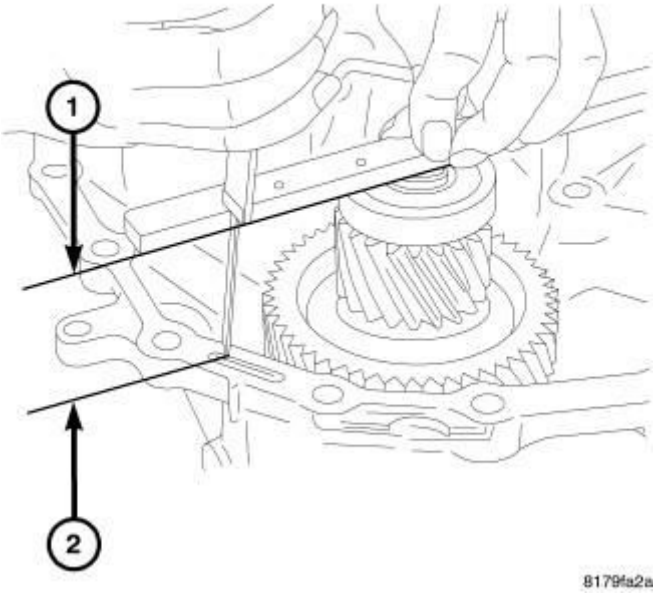

Fig. 135: Reduction Assembly Measurement Two
Courtesy of CHRYSLER GROUP, LLC

NOTE: Gauge Bar (special tool #6311, Gauge Bar) can be used for doing the following measurement.

48. Install the reduction gear assembly on the converter housing and measure the distance (reduction assembly measurement two) (1-2) from the top of the reduction gear assembly to the edge of the converter housing.

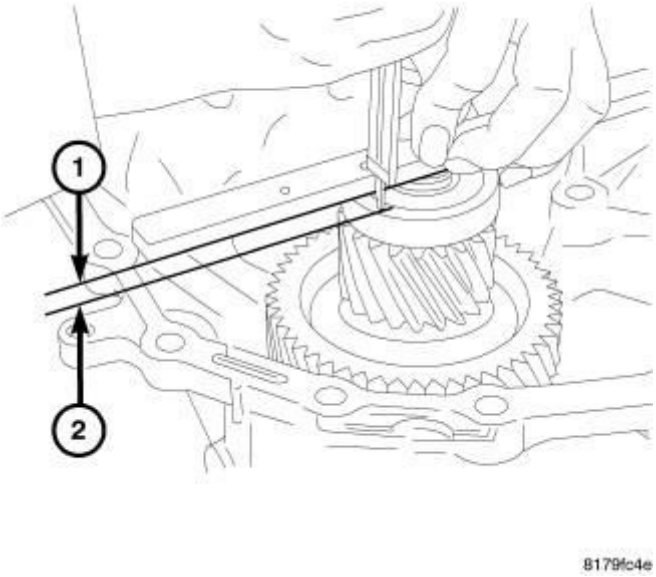

Fig. 136: Reduction Assembly Measurement Three

Courtesy of CHRYSLER GROUP, LLC

CAUTION: When adjusting the preload, apply CVT fluid on the bearing to make it roll smoothly. When conducting measurements, measure two or more places and calculate the average value.

NOTE: Gauge Bar (special tool #6311, Gauge Bar) can be used for doing the following measurement.

49. Install the outer race of the reduction gear bearing and measure the distance (reduction assembly measurement three) (1-2) from the top of the reduction gear assembly to the outer race of the reduction gear bearing.
50. The thickness of the required select shim is calculated as follows: reduction assembly measurement one, minus reduction assembly measurement two, plus reduction assembly measurement three, plus 0.16 mm (0.006 in).

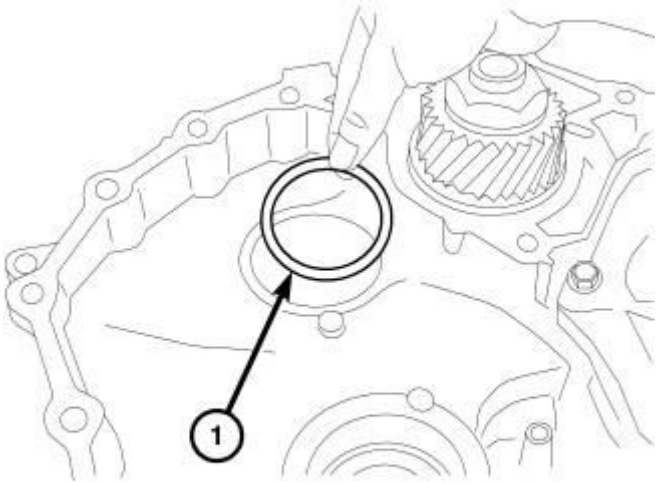

81798ab2

Fig. 137: Selective Shim At Transaxle Case
Courtesy of CHRYSLER GROUP, LLC

CAUTION: Do not re-use the select shim.

51. Install the chosen select shim (1) into the transaxle case.

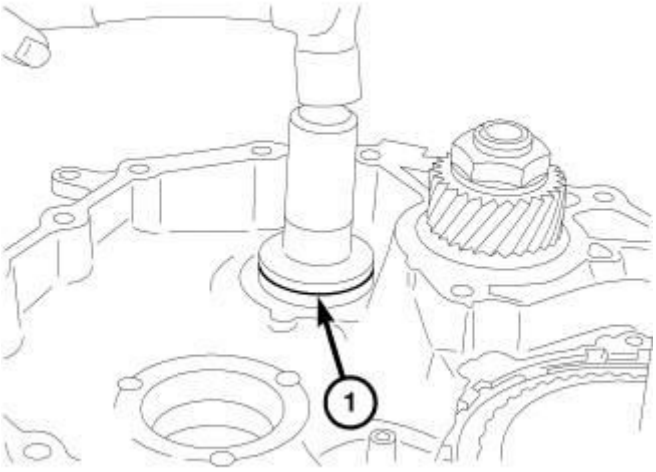

8179fd5b

Fig. 138: Installing Outer Race On Transaxle Case
Courtesy of CHRYSLER GROUP, LLC

52. Install the outer race (1) of the reduction gear bearing on the transaxle case using Installer (special tool #C-4628, Installer, Cup) and Handle (special tool #C-4171, Driver Handle, Universal).

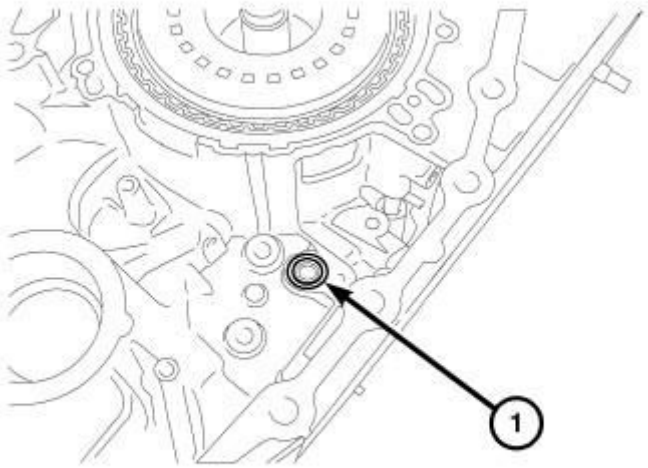

8179899b

Fig. 139: Lip Seal At Transaxle Case
Courtesy of CHRYSLER GROUP, LLC

CAUTION: Do not re-use the lip seal. Apply CVT fluid

when installing the lip seal.

53. Install the new lip seal (1) on the transaxle case.

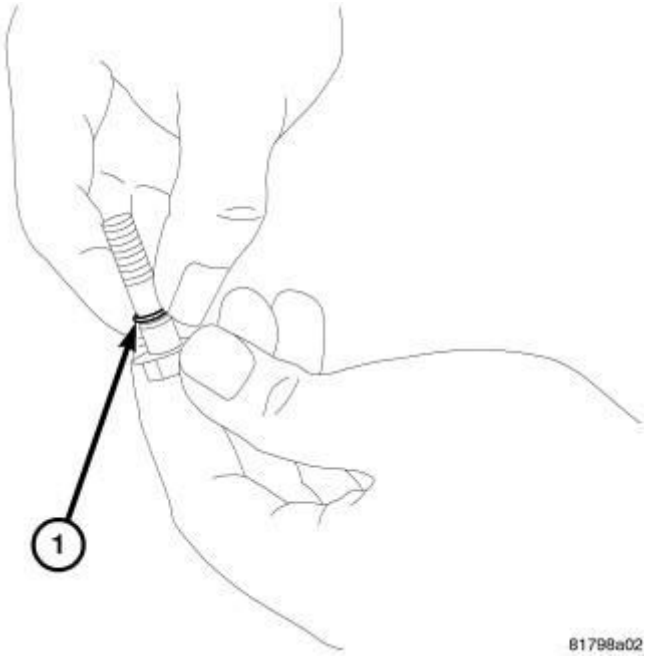

Fig. 140: Oil Pump Mounting Bolt O-Ring
Courtesy of CHRYSLER GROUP, LLC

CAUTION: Do not re-use the o-ring. Apply CVT fluid when installing the O-ring.

54. Install the new o-ring (1) onto the oil pump mounting bolts. (Only for bolts installed from the outside of the transaxle case).

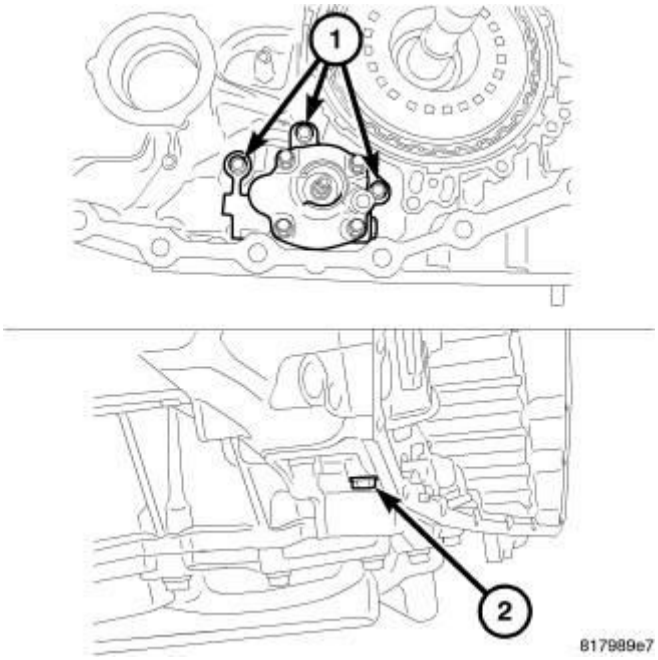

Fig. 141: Oil Pump Retaining Bolts
Courtesy of CHRYSLER GROUP, LLC

NOTE: One of the oil pump retaining bolts is installed from the outside of the transaxle case in the rear part of the oil pump.

55. Install the oil pump on the transaxle case. Install and tighten the mounting bolts (1) to 19 N.m (14 ft. lbs.) Install and tighten the mounting bolt (2) to 28 N.m (20 ft. lbs.).

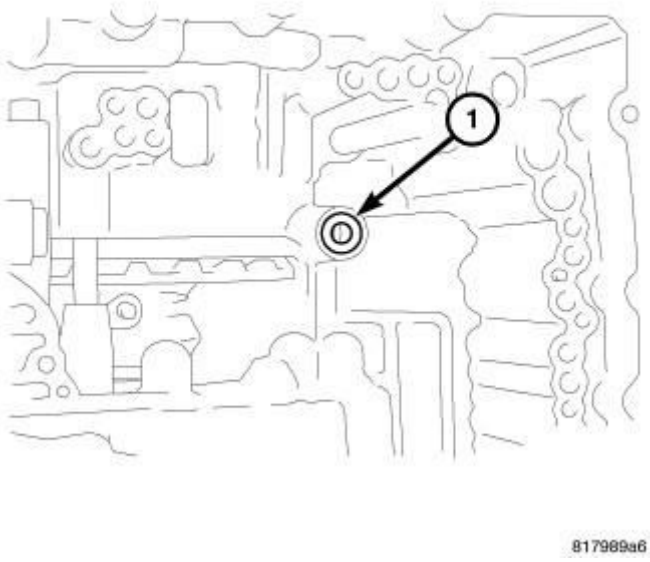

Fig. 142: Lip Seal At Transaxle Case
Courtesy of CHRYSLER GROUP, LLC

CAUTION: Do not re-use the lip seal. Apply CVT fluid when installing the lip seal.

56. Install the new lip seal (1) into the transaxle case.

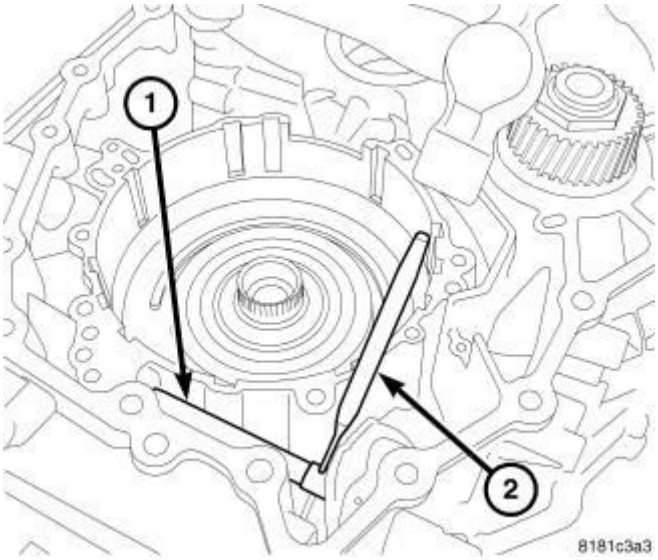

Fig. 143: Pin At Manual Shaft
Courtesy of CHRYSLER GROUP, LLC

57. Install the manual shaft (1) into the case.
58. Install the pin at the manual shaft using a punch (2).
59. To install the valve body assembly on to the transaxle case, insert a 75 mm (3 in.) long 3 mm (0.118 in.) wide rod or wire into the linkage stopper hole of the valve body assembly to set the pulley ratio linkage in position.

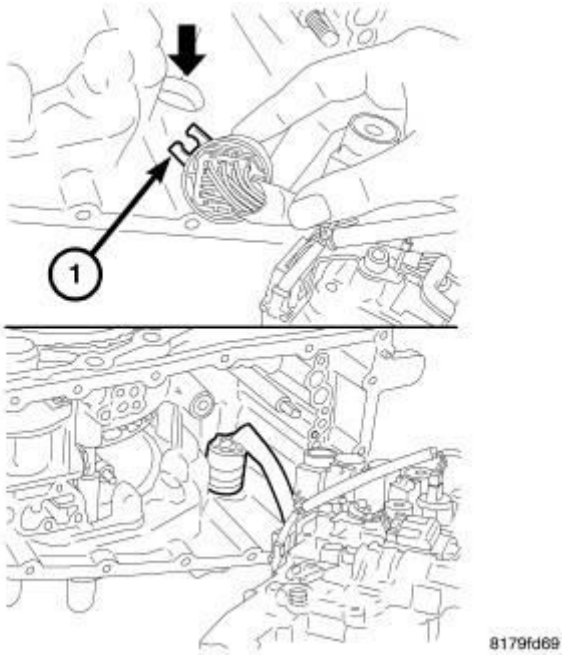

Fig. 144: Position Terminal Body
Courtesy of CHRYSLER GROUP, LLC

60. Position the locating tab (1) of the terminal body and install the terminal body into the transaxle case.

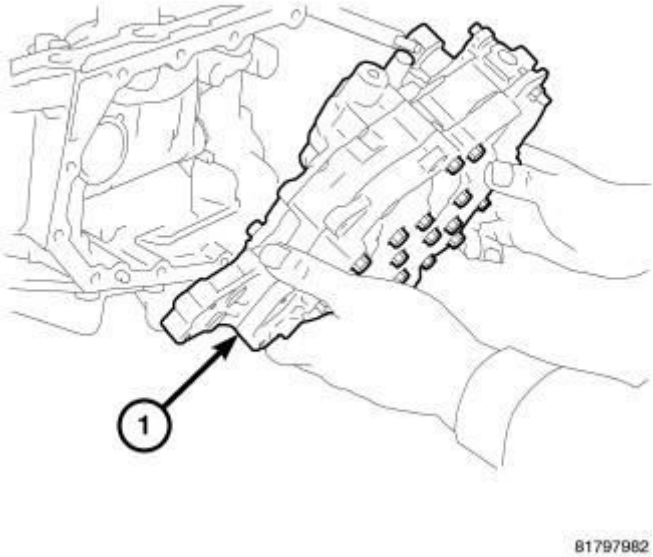

Fig. 145: Control Valve Assembly
Courtesy of CHRYSLER GROUP, LLC

61. Install the valve body assembly (1) up from the bottom side and install it into the transaxle case.

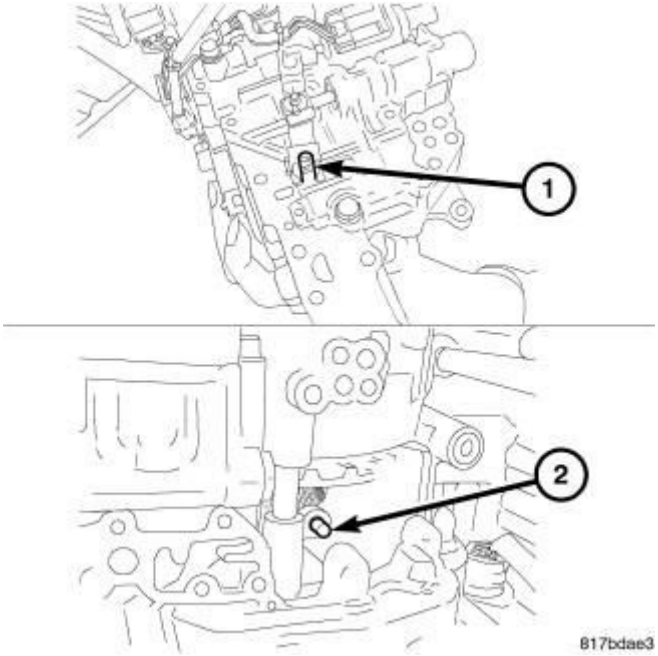

Fig. 146: Aligning Notch Of Pulley Ratio Linkage
Courtesy of CHRYSLER GROUP, LLC

62. Align the notch (1) of the pulley ratio linkage with the sheave position sensor (2).

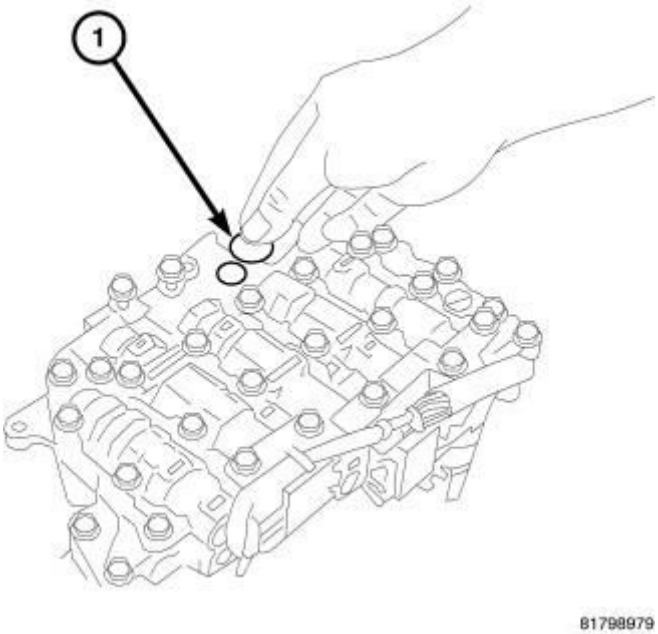

Fig. 147: Bushing At Control Valve
Courtesy of CHRYSLER GROUP, LLC

CAUTION: Apply CVT fluid when installing the bushing.

63. Install the bushing (1) into the valve body assembly.

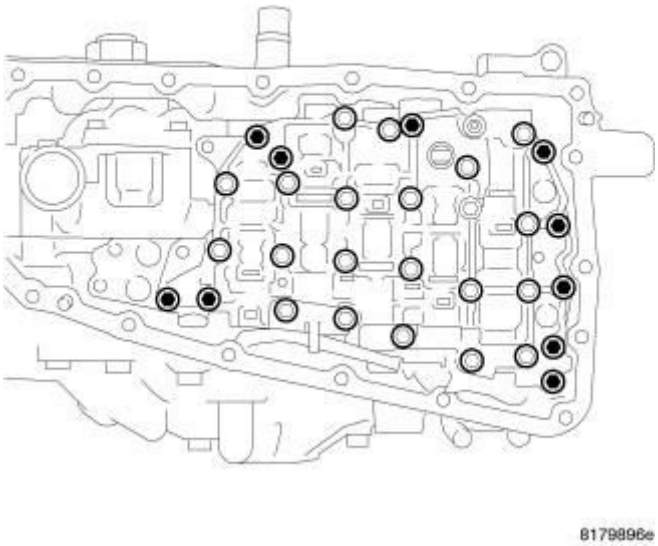

Fig. 148: Bolts For Valve Body Assembly
Courtesy of CHRYSLER GROUP, LLC

64. Tighten the mounting bolts of the valve body assembly to 8 N.m (70 in. lbs).

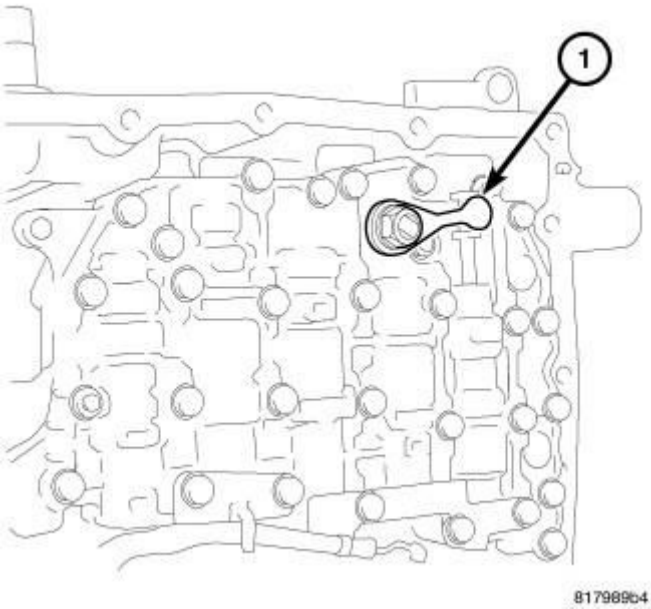

Fig. 149: Manual Lever
Courtesy of CHRYSLER GROUP, LLC

65. Install the manual lever (1) onto the manual shaft. Install and tighten the

mounting nut to 22 N.m 194 in. lb.

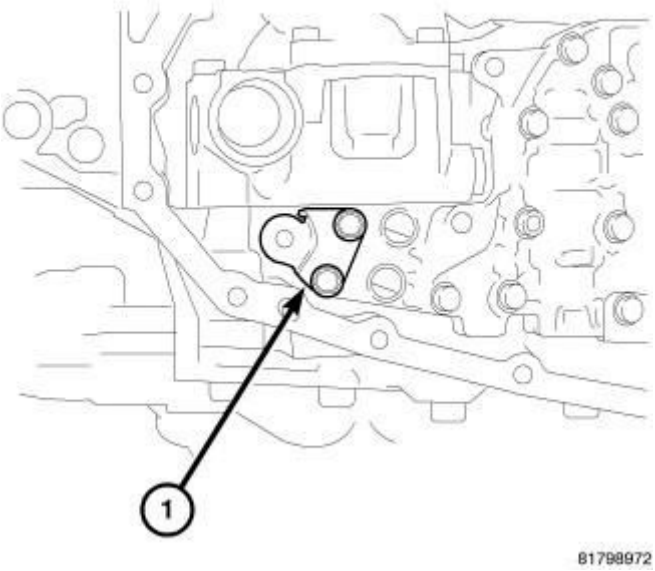

Fig. 150: Bracket At Valve Body Assembly
Courtesy of CHRYSLER GROUP, LLC

66. Install the bracket (1) onto the valve body assembly. Install and tighten the mounting bolts to 8 N.m (70 in. lbs.).

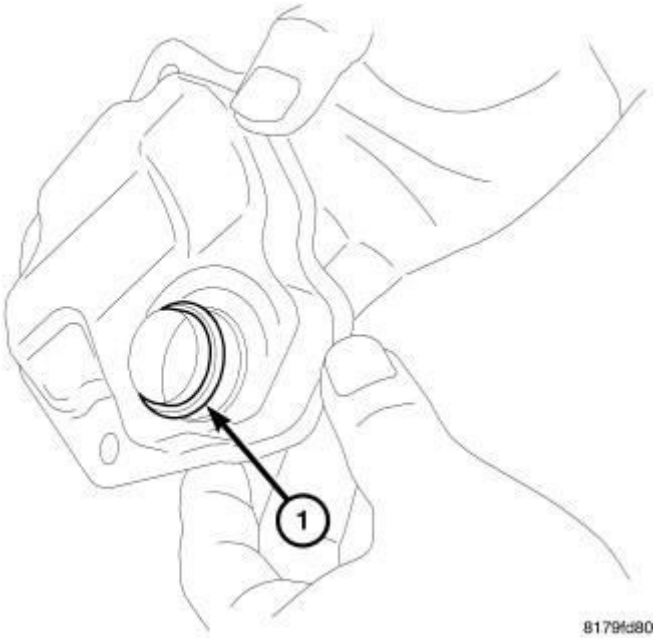

Fig. 151: Oil Strainer O-Ring
Courtesy of CHRYSLER GROUP, LLC

CAUTION: Do not re-use the o-ring. Apply CVT fluid when installing the O-ring.

67. Install the new o-ring (1) onto the new oil strainer.

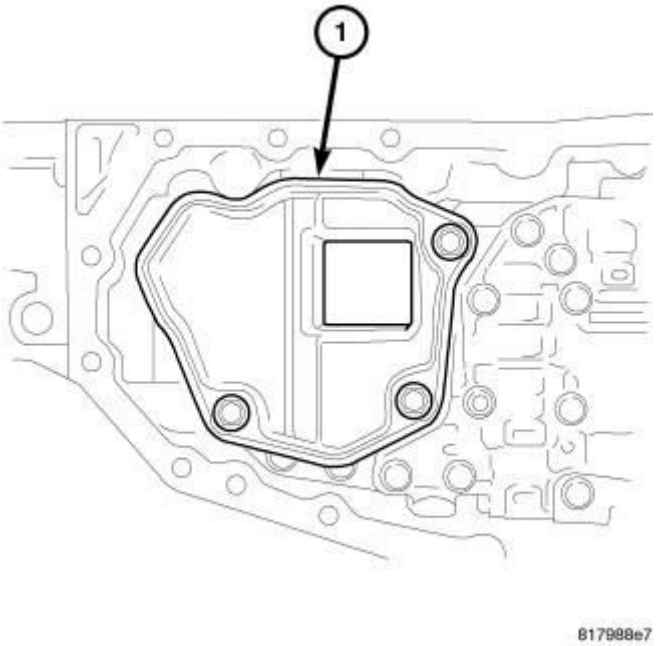

Fig. 152: Oil Strainer
Courtesy of CHRYSLER GROUP, LLC

68. Install the new oil strainer (1) onto the valve body assembly. Install and tighten the mounting bolts to 8 N.m (70 in. lbs.).

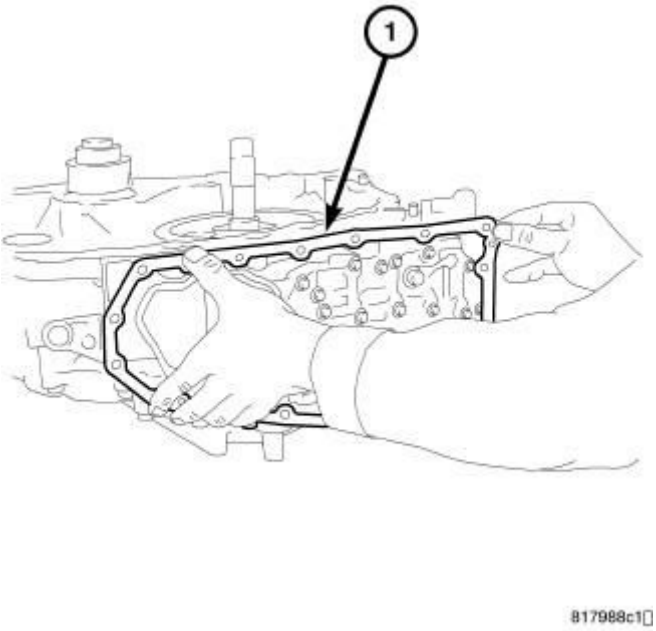

Fig. 153: Oil Pan Gasket
Courtesy of CHRYSLER GROUP, LLC

CAUTION: Do not re-use the oil pan gasket. Remove any moisture, oil, and used gasket material from the surface where the new gasket is to be installed. When installing the oil pan gasket, align the dowel pin with the dowel pin hole in the oil pan gasket.

69. Install the oil pan gasket (1) onto the transaxle case.

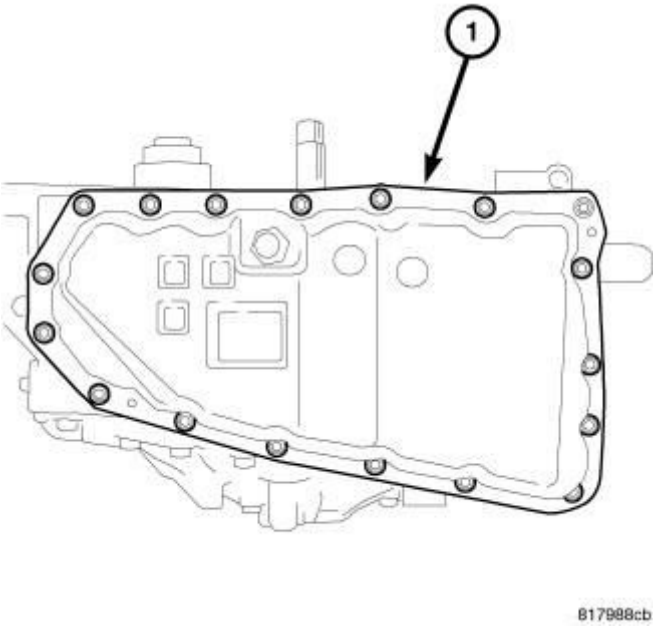

Fig. 154: Oil Pan
Courtesy of CHRYSLER GROUP, LLC

CAUTION: When installing the oil pan, align the dowel pin of the transaxle case with the dowel pin hole of the oil pan.

70. Install the oil pan on the transaxle case (1). Install and tighten the mounting bolts to 8 N.m (70 in. lbs.).

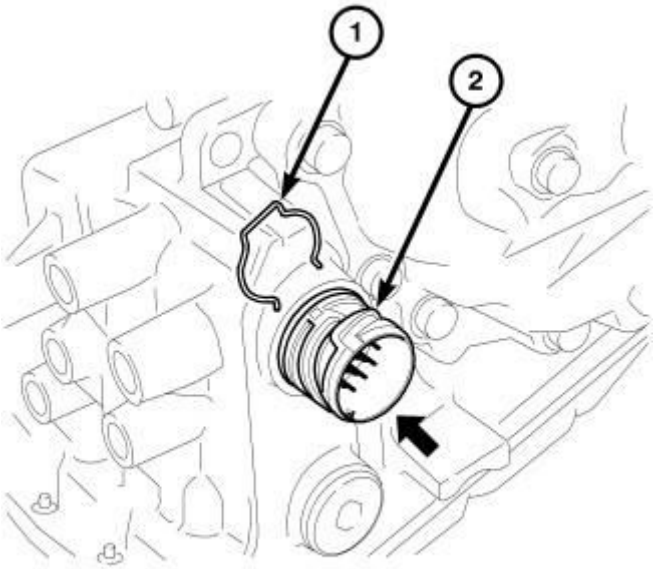

81798933

Fig. 155: Identifying Terminal Body & Snap Ring
Courtesy of CHRYSLER GROUP, LLC

71. Install the snap ring (1) onto the terminal body.

81798918

Fig. 156: Seal Rings
Courtesy of CHRYSLER GROUP, LLC

CAUTION: Do not re-use the seal rings. Apply Vaseline or assembly lube when installing the seal rings.

72. Install the new seal rings (1) onto the reaction shaft support.

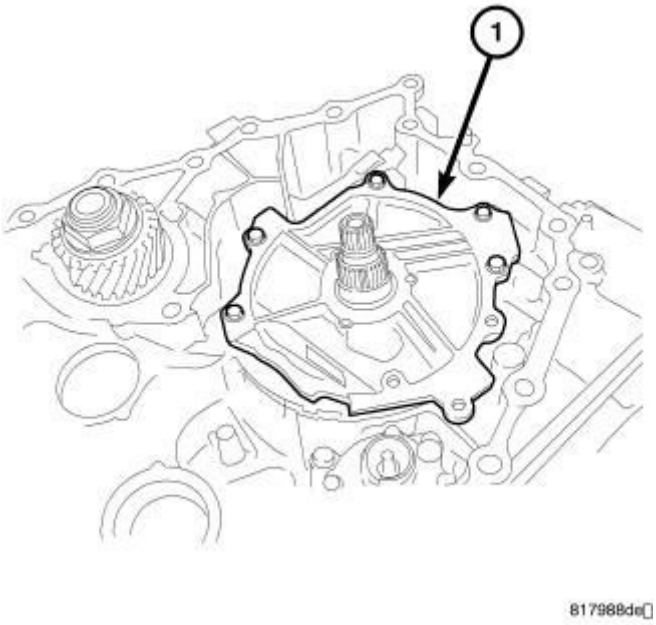

Fig. 157: Reaction Shaft Support
Courtesy of CHRYSLER GROUP, LLC

73. Install the reaction shaft support (1) onto the transaxle case temporarily with the mounting bolts.

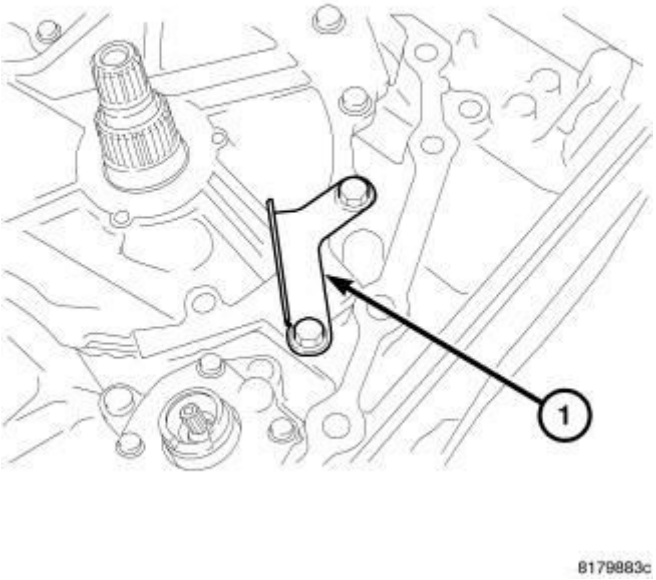

Fig. 158: Baffle Plate 3
Courtesy of CHRYSLER GROUP, LLC

74. Install the baffle plate (1) temporarily with the mounting bolts.

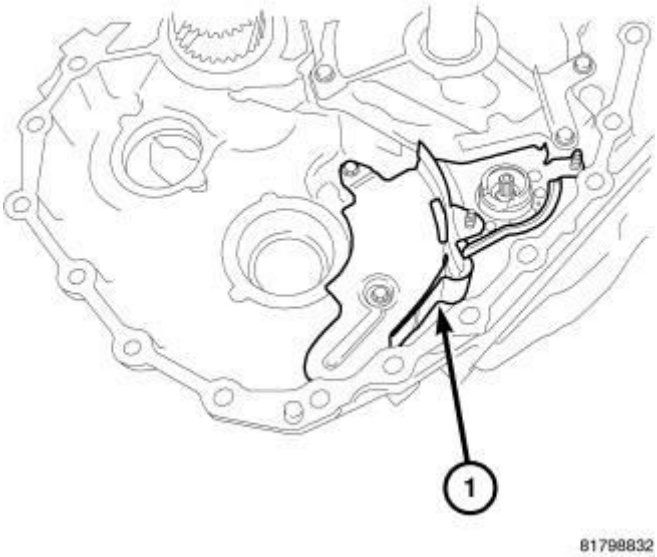

Fig. 159: Baffle Plate
Courtesy of CHRYSLER GROUP, LLC

75. Install the baffle plate (1). Install and tighten the mounting bolts to 6 N.m (52 in. lbs.).

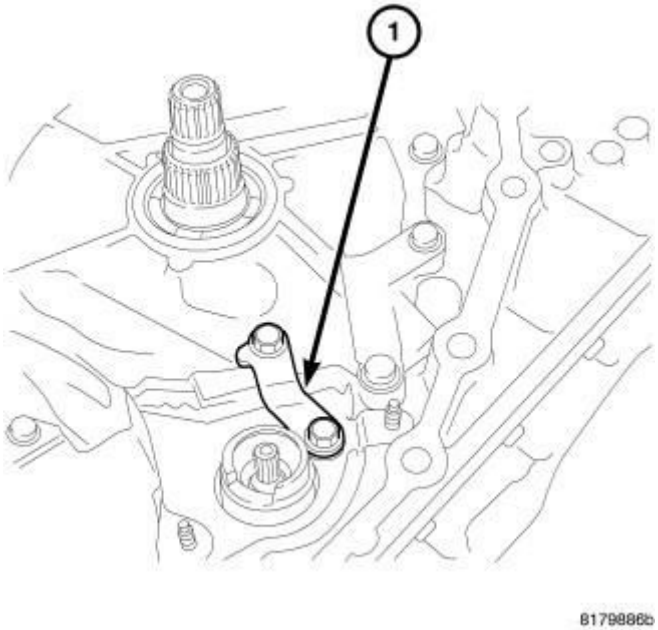

Fig. 160: Bracket
Courtesy of CHRYSLER GROUP, LLC

76. Install the bracket (1) as shown in illustration. Tighten the mounting bolts of the oil pump cover, baffle plate, and brackets to 26 N.m (19 in. lbs.).

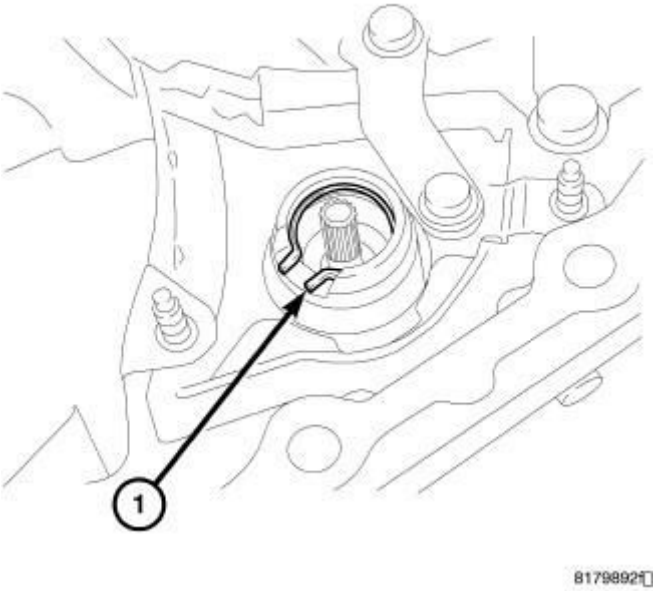

Fig. 161: Snap Ring At Oil Pump
Courtesy of CHRYSLER GROUP, LLC

77. Install the snap ring (1) into the oil pump.

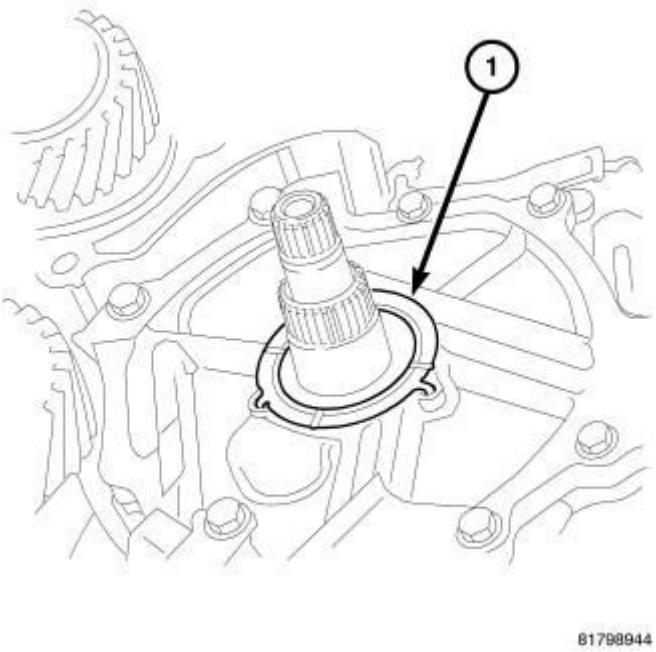

Fig. 162: Thrust Washer At Oil Pump Cover
Courtesy of CHRYSLER GROUP, LLC

CAUTION: Be sure to align the pawl of the thrust washer with the alignment hole of the oil pump cover. Apply Vaseline or assembly lube when installing the thrust washer.

78. Install the thrust washer (1) onto the oil pump cover.

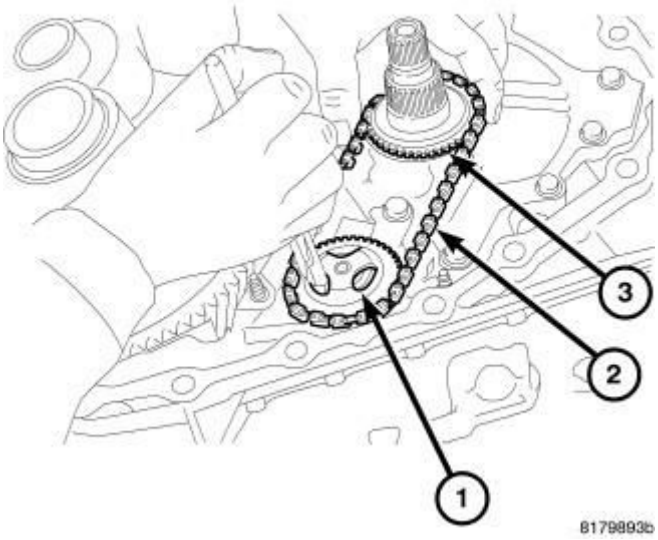

Fig. 163: Oil Pump Chain
Courtesy of CHRYSLER GROUP, LLC

CAUTION: When necessary to replace any of the driven sprocket, oil pump chain, or drive sprocket, replace all components as a matched set. Pull the driven sprocket up softly and check that the driven sprocket is securely installed.

79. Expand the snap ring (1).
80. Install the driven sprocket, oil pump chain (2) and drive sprocket (3).

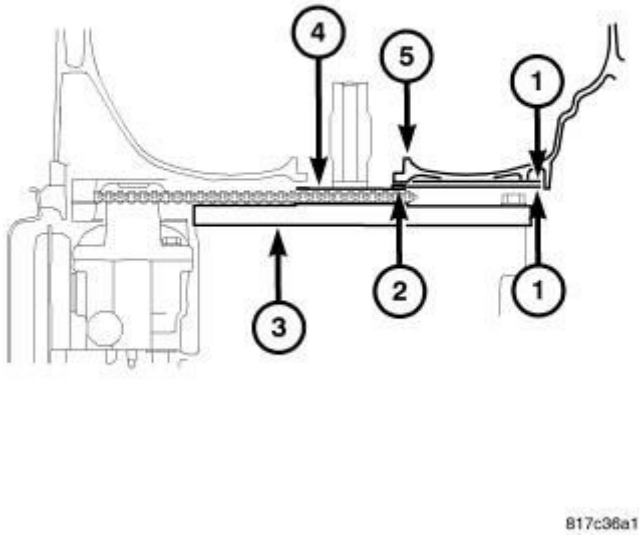

Fig. 164: Measuring Clearance Between Oil Pump Drive Sprocket & Converter Housing
Courtesy of CHRYSLER GROUP, LLC

81. The required clearance for the oil pump drive sprocket is 0.10-0.23 mm (0.004-0.009 in.). Measure the clearance (1) between the oil pump drive sprocket (4) and the converter housing (5) in the following procedure:

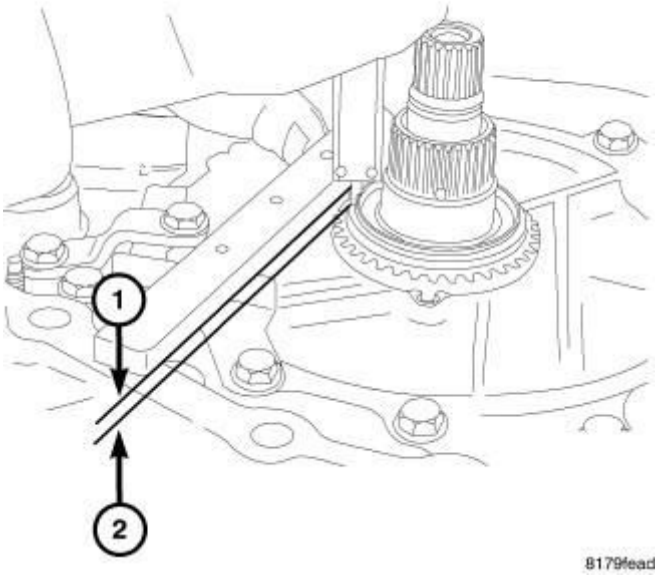

Fig. 165: Oil Pump Drive Sprocket Measurement One
Courtesy of CHRYSLER GROUP, LLC

NOTE: Gauge Bar (special tool #6311, Gauge Bar) can be used for doing the following measurement.

82. Measure the distance (1-2) from the edge of the transaxle case to the select shim installation surface of the drive sprocket. This is the oil pump drive sprocket measurement one.

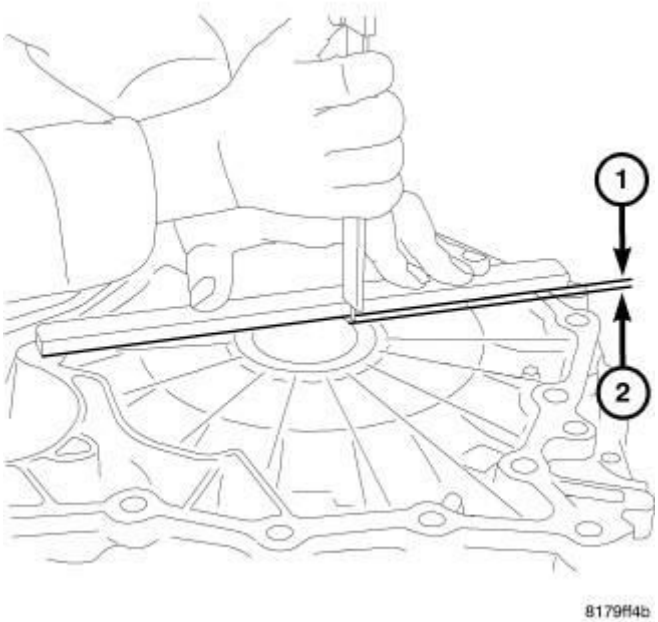

Fig. 166: Oil Pump Drive Sprocket Measurement Two
Courtesy of CHRYSLER GROUP, LLC

NOTE: Gauge Bar (special tool #6311, Gauge Bar) can be used for doing the following measurement.

83. Measure the distance (1-2) from the edge of the converter housing to the surface touching the select shim contact surface. This is the oil pump drive sprocket measurement two.
84. Calculate the thickness of the required select shim with the following formula: The select shim is equal to the oil pump drive sprocket measurement one, plus the oil pump drive sprocket measurement two, minus 0.16 mm (0.0065 in.).

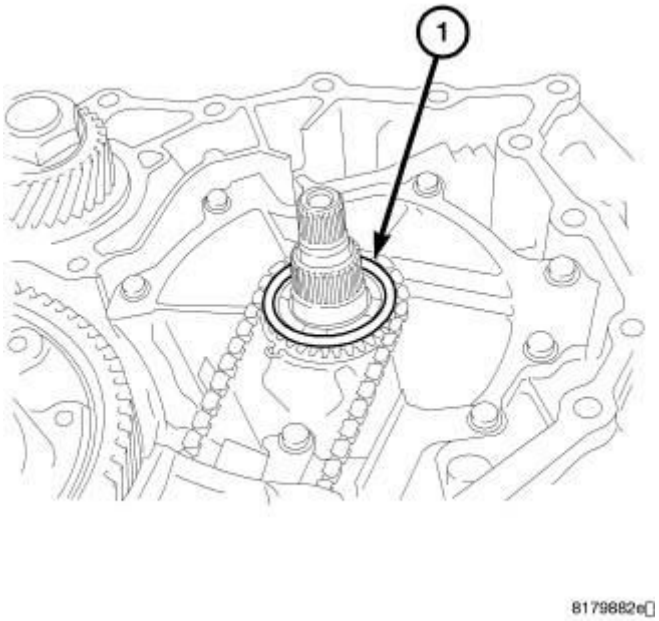

Fig. 167: Adjusting Shim At Drive Sprocket
Courtesy of CHRYSLER GROUP, LLC

85. Install the chosen select shim (1) onto the drive sprocket.

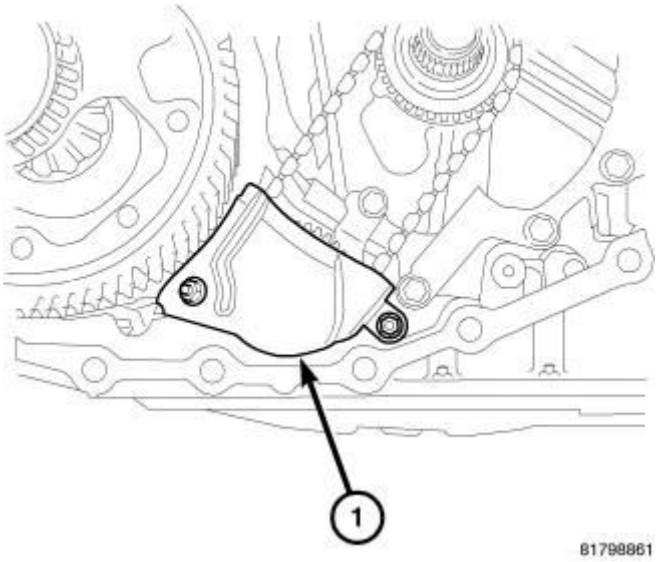

Fig. 168: Baffle Plate
Courtesy of CHRYSLER GROUP, LLC

86. Install the baffle plate (1) over the oil pump driven sprocket. Install and tighten the mounting nut to 6 N.m (52 in. lbs.).

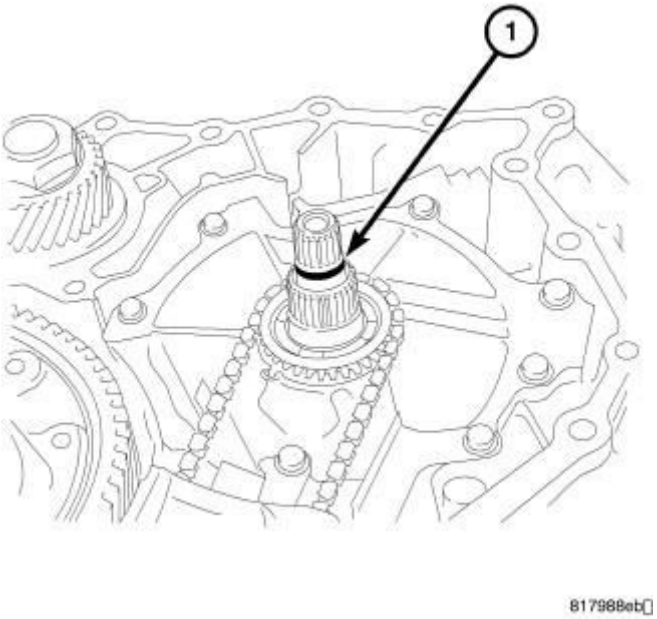

Fig. 169: Input Shaft O-Ring
Courtesy of CHRYSLER GROUP, LLC

CAUTION: Do not re-use the o-ring. Apply CVT fluid when installing the O-ring.

87. Install the new o-ring (1) onto the input shaft.

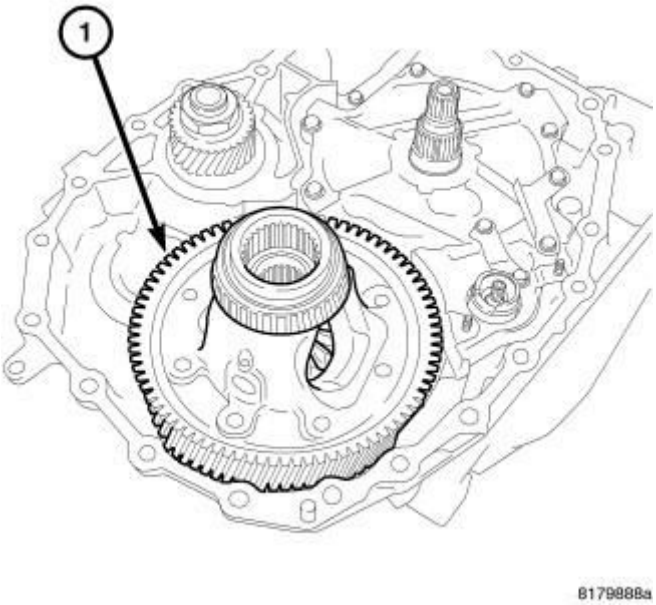

Fig. 170: Differential Assembly
Courtesy of CHRYSLER GROUP, LLC

88. Install the differential assembly (1) into the transaxle case.

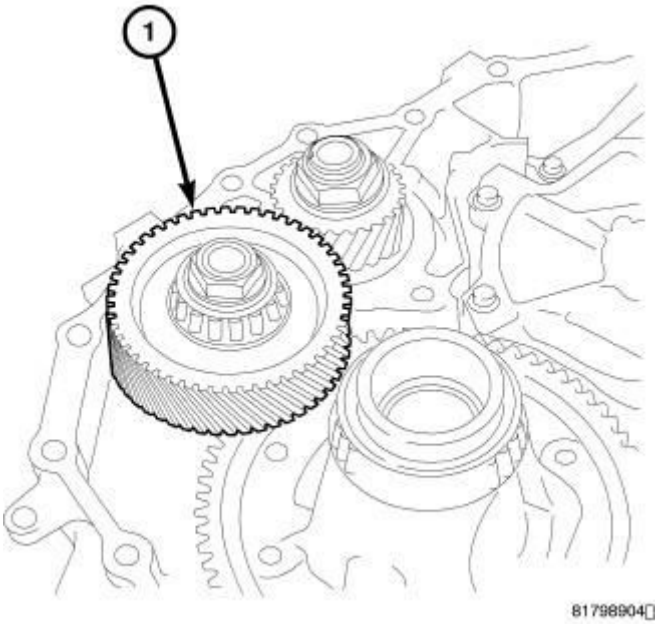

Fig. 171: Reduction Gear Assembly
Courtesy of CHRYSLER GROUP, LLC

89. Install the reduction gear assembly (1) into the transaxle case.

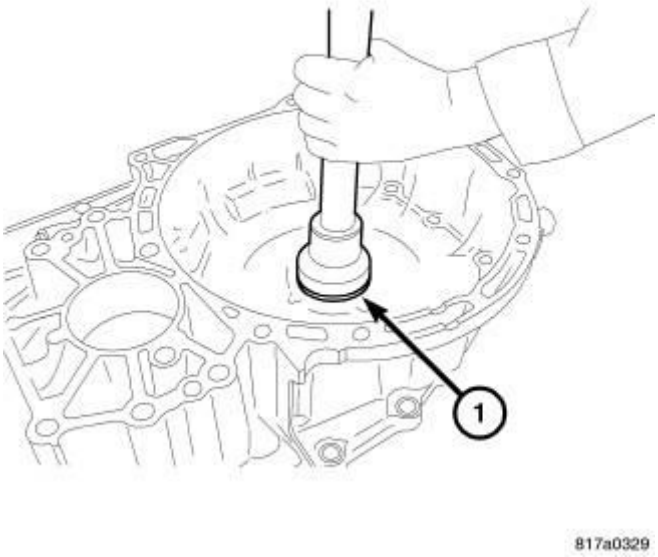

Fig. 172: Installing Converter Housing Oil Seal
Courtesy of CHRYSLER GROUP, LLC

CAUTION: Do not re-use the converter housing oil seal

(1). Apply CVT fluid when installing the converter housing oil seal (1).

90. Install the converter housing oil seal (1) into the converter housing with Installer (special tool #9858, Installer, Seal).

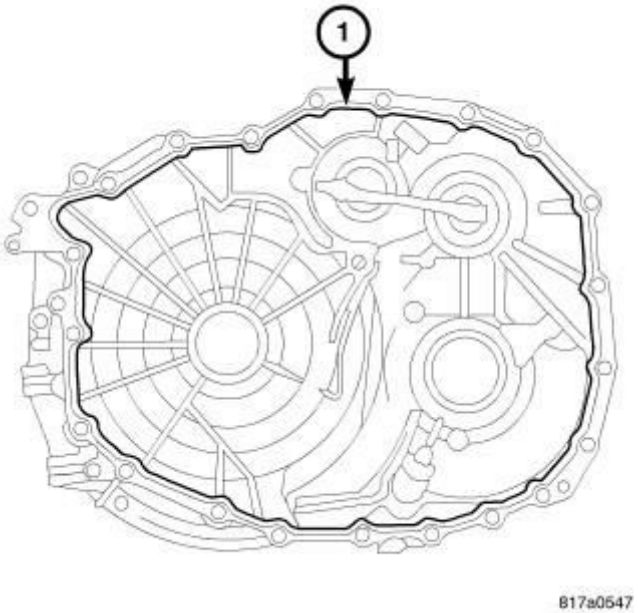

Fig. 173: Applying Mopar Gasket Sealer On Converter Housing Installation Surface Of Transaxle Case
Courtesy of CHRYSLER GROUP, LLC

91. Apply MOPAR gasket sealer (1) on the converter housing installation surface of the transaxle case.

CAUTION: Remove moisture, oil, and used sealant from the sealant application surface. Make sure that the starting point and the ending point are between two bolt holes.

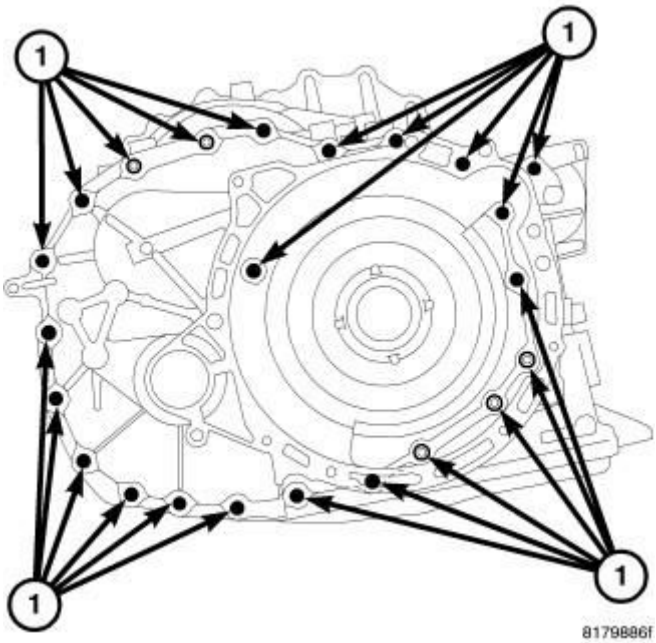

Fig. 174: Converter Housing Mounting Bolts
Courtesy of CHRYSLER GROUP, LLC

92. Install the converter housing on the transaxle case and tighten the bolts to 45 N.m (33 ft. lbs.).

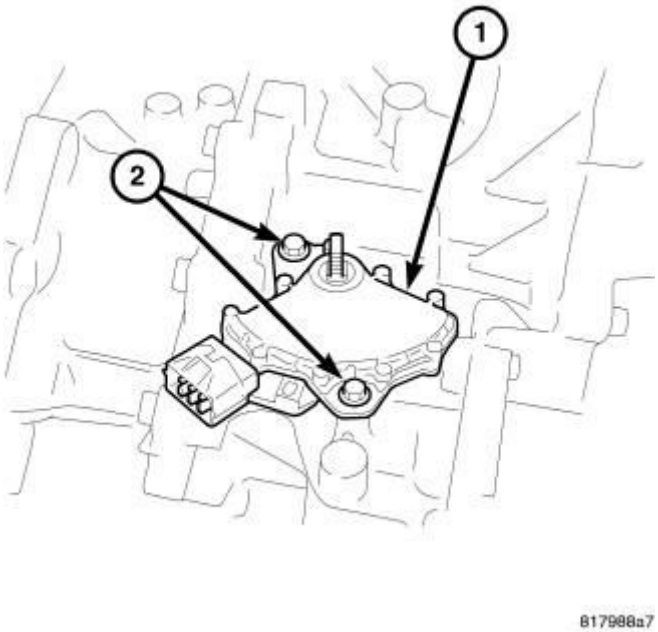

Fig. 175: Transmission Range Sensor
Courtesy of CHRYSLER GROUP, LLC

93. Install the transmission range sensor (TRS) (1) over the manual shaft and onto the transaxle case.

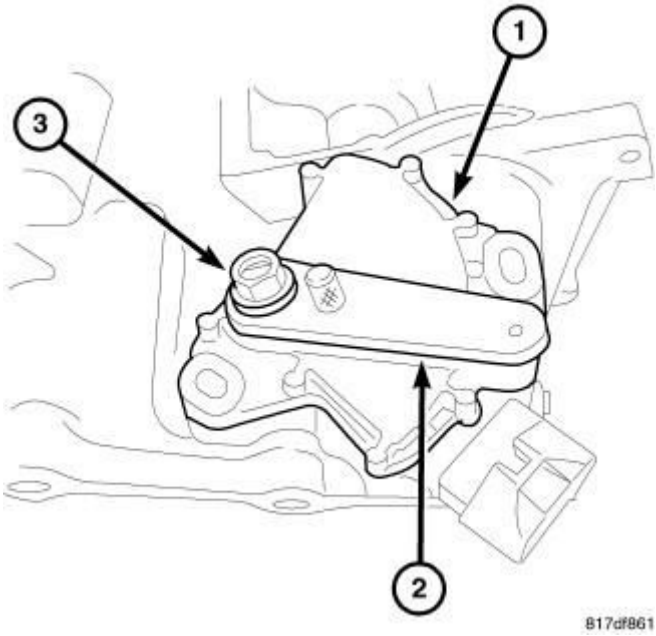

Fig. 176: TRS Adjustment Tool
Courtesy of CHRYSLER GROUP, LLC

CAUTION: Do not re-use the TRS transmission range sensor.

94. Put the manual shaft in the N position (3). Install Park Neutral Switch Adjustment Tool (special tool #9876, Adjustment Tool) (2) and adjust the position of the TRS (1).

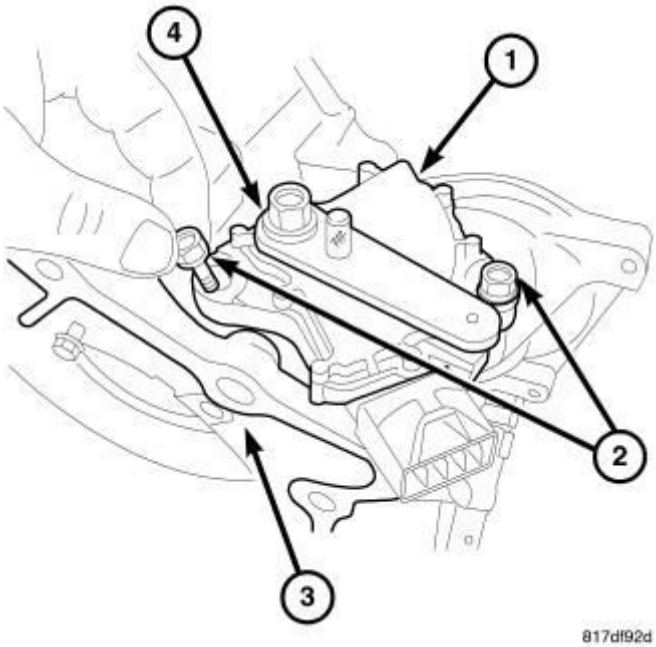

Fig. 177: Bolts & TRS

Courtesy of CHRYSLER GROUP, LLC

95. Install and tighten the mounting bolts of the TRS to 6 N.m (49 in. lbs.).
96. Remove the TRS alignment tool from the TRS.

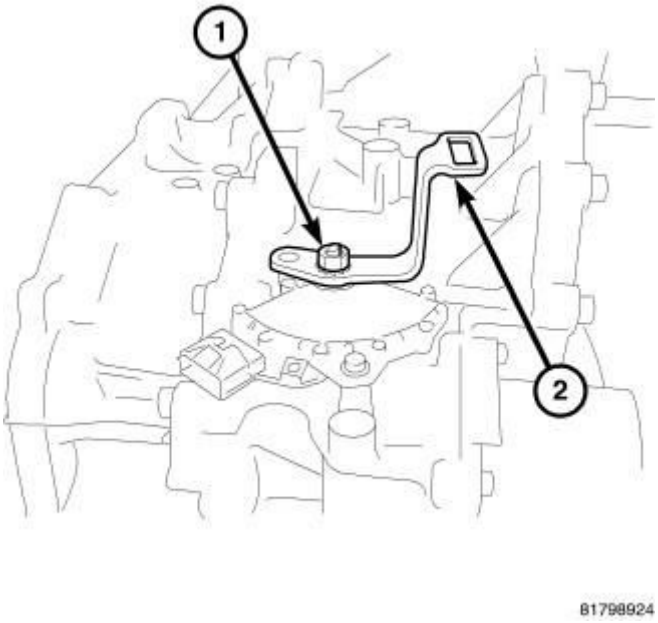

Fig. 178: Shift Lever
Courtesy of CHRYSLER GROUP, LLC

97. Install the shift lever (1) onto the manual shaft. Install and tighten the mounting nut to 17 N.m (150 in. lbs.).

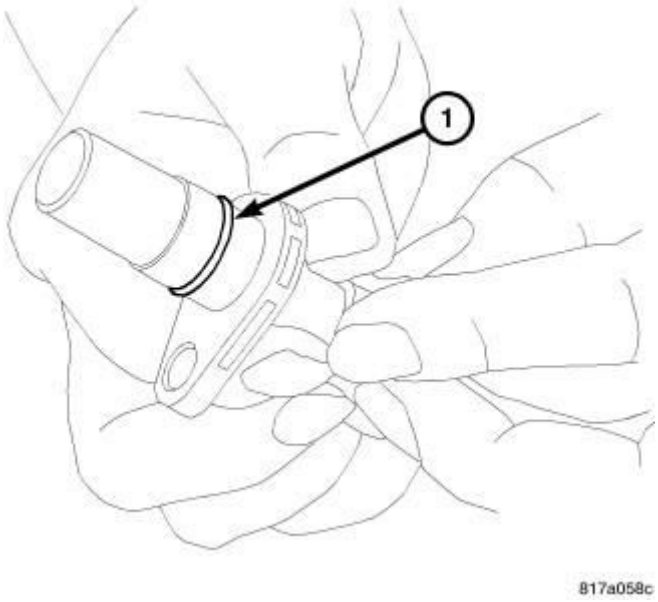

Fig. 179: Input Speed Sensor O-Ring
Courtesy of CHRYSLER GROUP, LLC

CAUTION: Do not re-use the o-ring. Apply CVT fluid when installing the O-ring.

98. Install the o-ring (1) onto the input speed sensor.

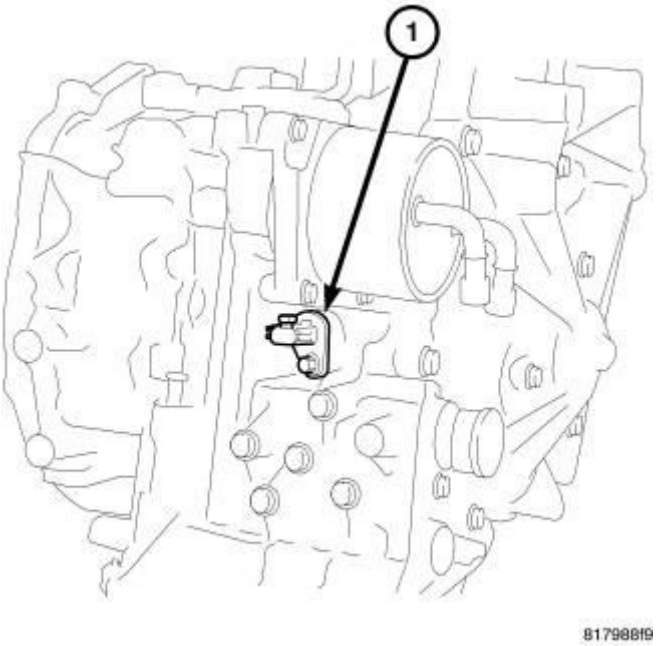

Fig. 180: Input Speed Sensor
Courtesy of CHRYSLER GROUP, LLC

99. Install the input speed sensor (1) into the transaxle case. Install and tighten the mounting bolt to 6 N.m (52 in. lbs.).

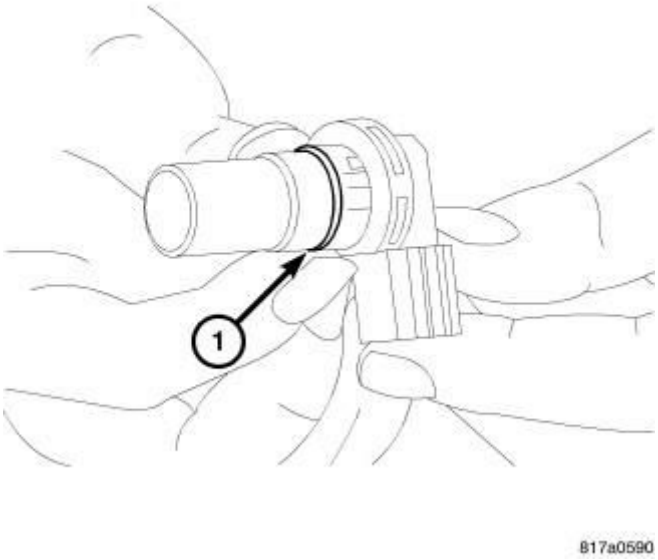

Fig. 181: Output Speed Sensor O-Ring
Courtesy of CHRYSLER GROUP, LLC

CAUTION: Do not re-use the o-ring. Apply CVT fluid when installing the O-ring.

00. Install the new o-ring (1) onto the output speed sensor.

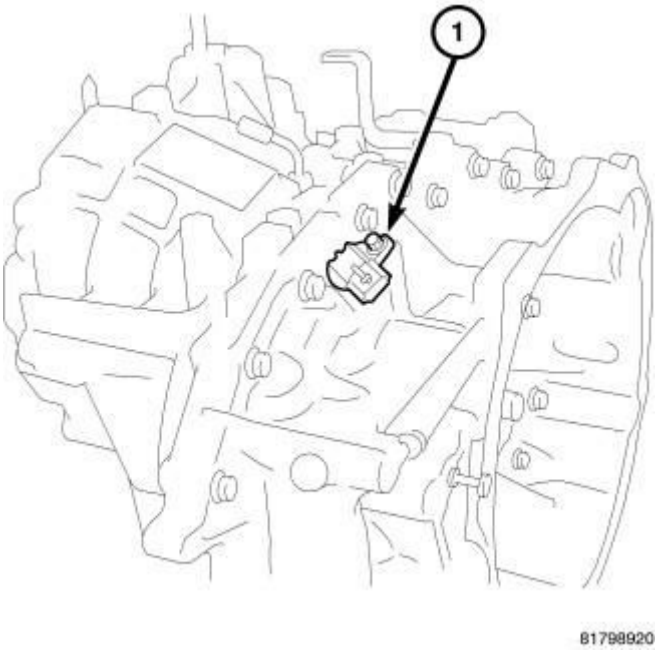

Fig. 182: Output Speed Sensor
Courtesy of CHRYSLER GROUP, LLC

CAUTION: Be sure to install the select shim between the secondary speed sensor and the converter housing before installing the secondary speed sensor.

01. Install the output speed sensor (1) into the converter housing. Install and tighten the mounting bolt to 6 N.m (52 in lbs.).

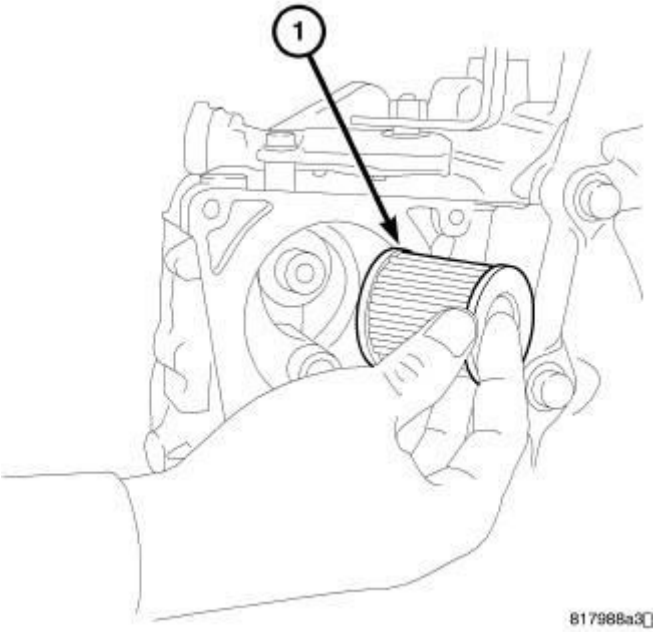

Fig. 183: Fluid Filter
Courtesy of CHRYSLER GROUP, LLC

CAUTION: Apply CVT fluid on the sealing area when installing the CVT fluid filter.

02. Install the CVT fluid filter (1) into the transaxle case (certain models).

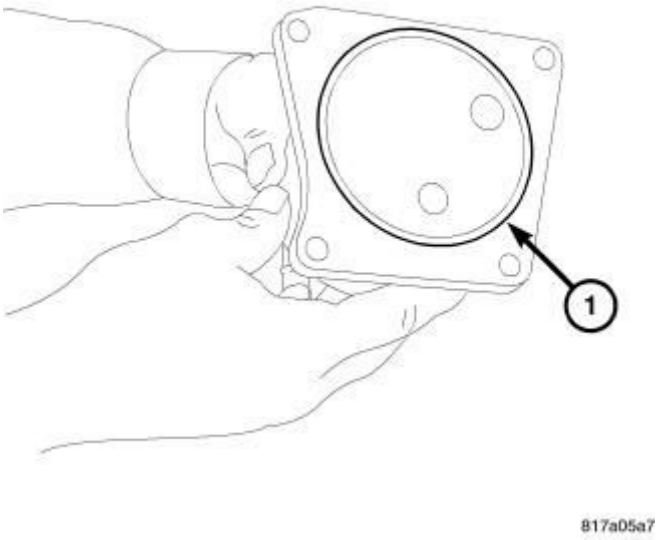

Fig. 184: CVT Fluid Filter O-Ring
Courtesy of CHRYSLER GROUP, LLC

CAUTION: Do not re-use the o-ring. Apply CVT fluid when installing the O-ring.

03. Install the new o-ring (1) onto the CVT fluid filter.

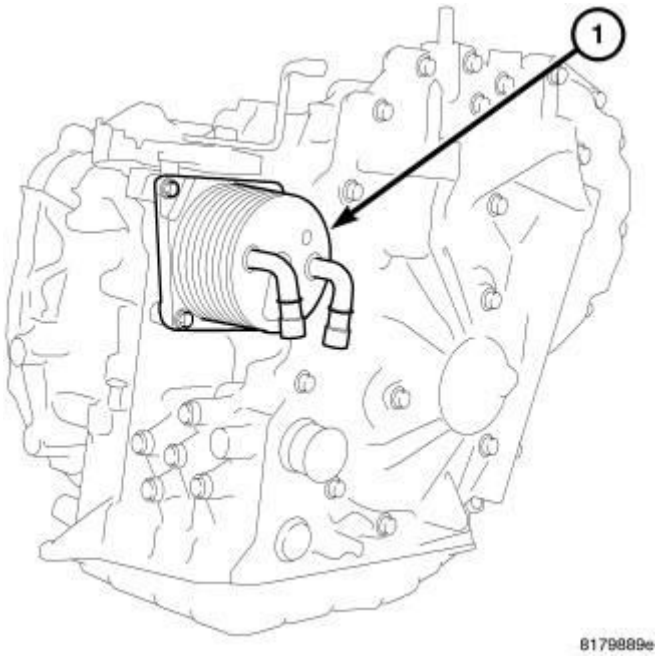

Fig. 185: Fluid Cooler
Courtesy of CHRYSLER GROUP, LLC

04. Install the CVT fluid cooler (1) onto the transaxle case. Install and tighten the mounting bolts to 4 N.m (37 in. lbs.).

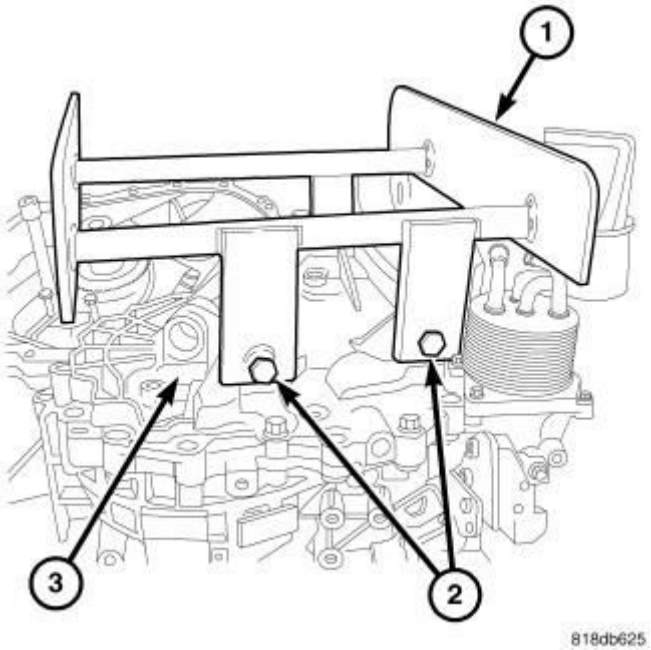

Fig. 186: Transmission Service Stand, Case & Mount Bolts
Courtesy of CHRYSLER GROUP, LLC

05. Remove the Transmission Service Stand (special tool #9878, Stand, Transmission Service) (1) from the Belt side of the transmission case.

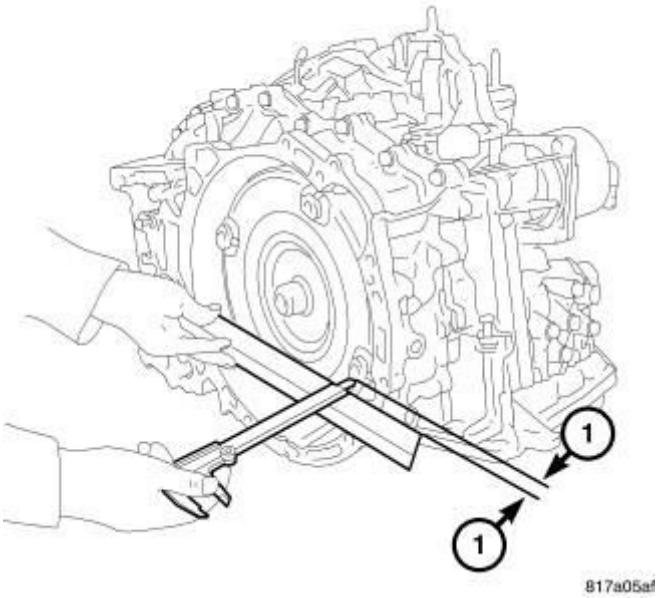

Fig. 187: Measuring Torque Converter To Transmission
Courtesy of CHRYSLER GROUP, LLC

NOTE: Gauge Bar (special tool #6311, Gauge Bar) can be used for doing the following measurement.

NOTE: When conducting measurements, measure two or more places and calculate the average value.

06. Install the torque converter on the transaxle and measure the dimension (1) to see if it is at least 13 mm. If the measurement is less than 13 mm, the torque converter is not fully installed.

NOTE: Use the designated brand of CVT fluid. Use of other brands of CVT fluid other than the designated brand will deteriorate the driveability and the durability of the CVT, and will cause damage to the CVT.

07. Fill the transaxle with CVT fluid. Refer to **FLUID, STANDARD PROCEDURE**.

INSTALLATION

INSTALLATION

NOTE: Refer to the following table when the Transmission Control Module (TCM) and/or transaxle has been replaced to determine if the TCM memory must be erased.

TCM	Transaxle	Erase Memory?
New Module	Not Replaced	Not Required
Not Replaced	Replaced	Relearn Required. Refer to **MODULE, TRANSMISSION CONTROL, STANDARD PROCEDURE** .
Replaced With Used Module	N/A	

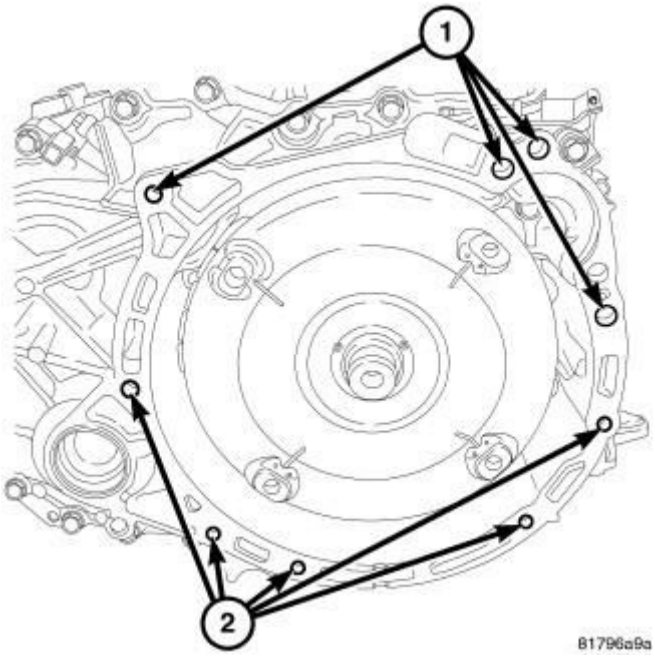

Fig. 188: Bell Housing Bolt Holes
Courtesy of CHRYSLER GROUP, LLC

NOTE: Verify that both dowel pins are present in the engine before installing the transmission.

1. Lift transmission into position.
2. Install the transmission cooler lines.
3. Install the lower transmission bell housing bolts (2) and tighten to 48 N.m (35 ft. lbs.).

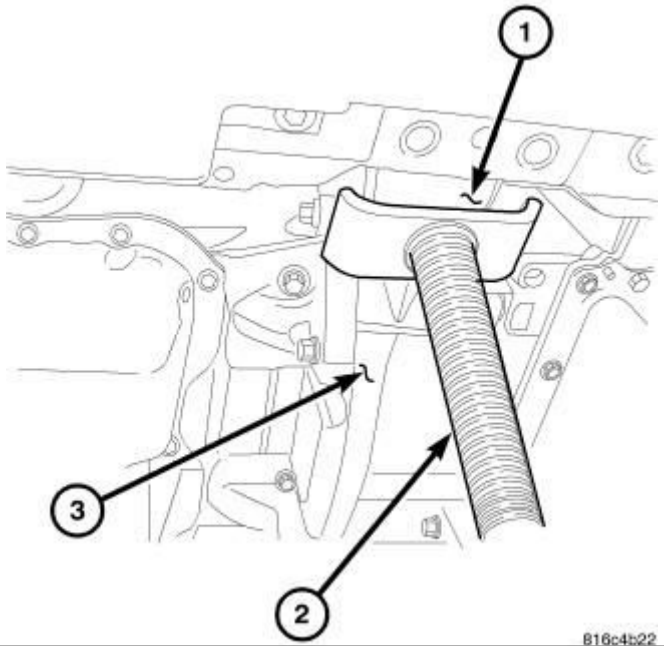

Fig. 189: Jack At Transmission Mount
Courtesy of CHRYSLER GROUP, LLC

4. Raise the transmission using a screw jack (2).

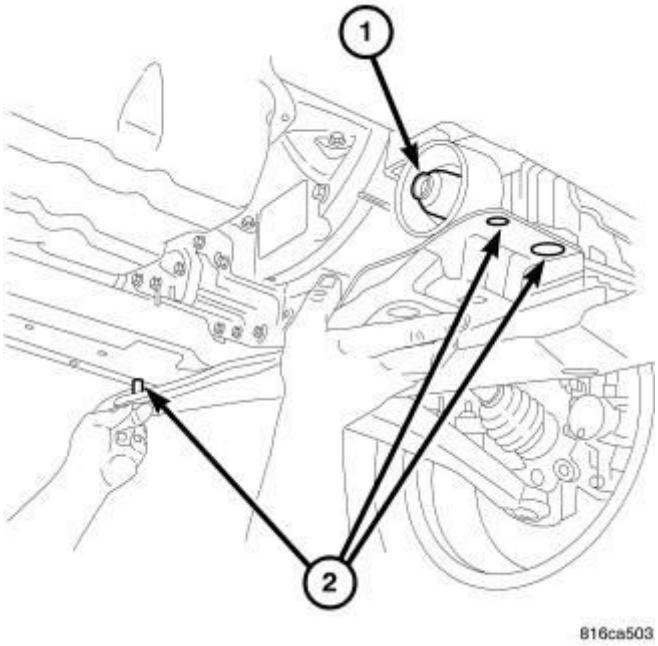

Fig. 190: Removing/Installing Through Bolt At Front Transmission Mount & Cross Member
Courtesy of CHRYSLER GROUP, LLC

5. Install the transmission crossmember and bolts (2) tighten to 75 N.m (55 ft lbs.).
6. Install the through bolt at the front transmission mount (1) and tighten to 75 N.m (55 ft lbs.).

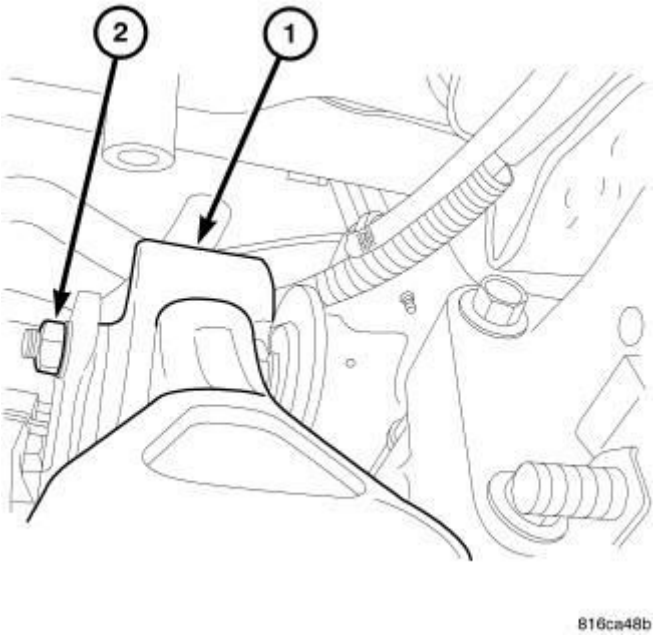

Fig. 191: Rear Engine Mount
Courtesy of CHRYSLER GROUP, LLC

7. Install rear mount through bolt (1) and tighten bolt to 75 N.m (55 ft lbs.).

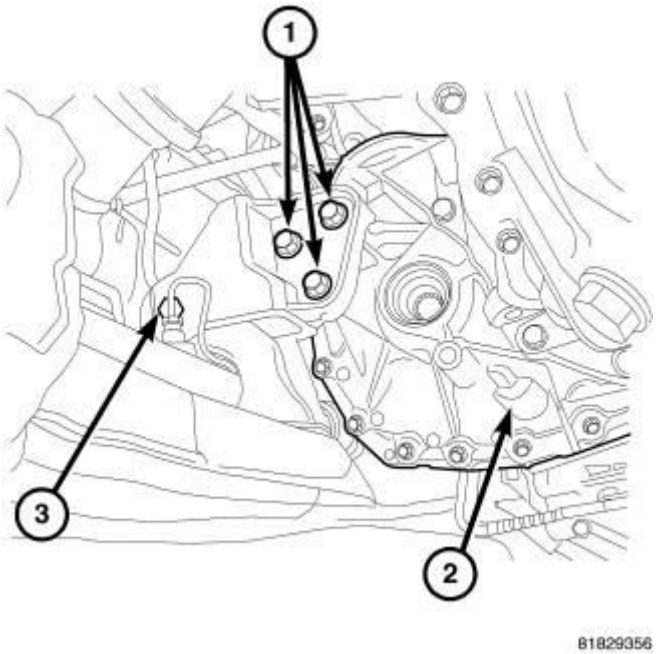

Fig. 192: Removing/Installing Rear Mount To Transaxle Bolts
Courtesy of CHRYSLER GROUP, LLC

8. Install rear mount to transaxle and tighten bolts (1) to 75 N.m (55 ft lbs.).

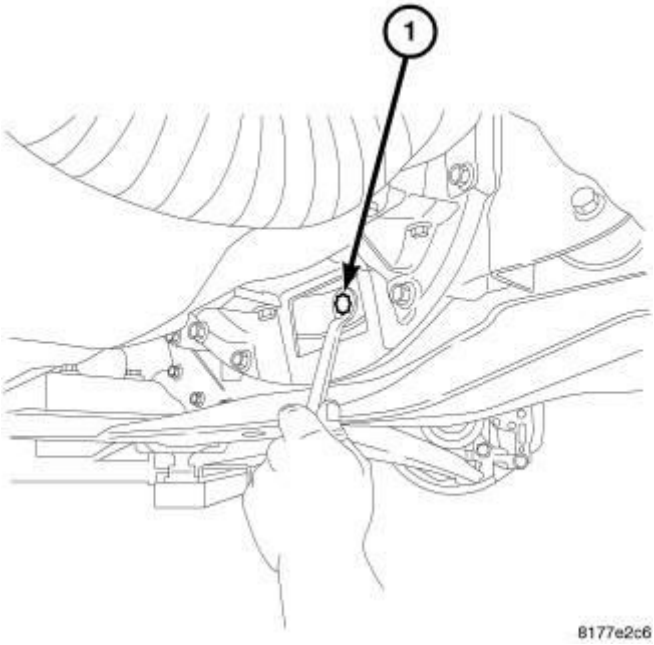

Fig. 193: Torque Converter Bolts
Courtesy of CHRYSLER GROUP, LLC

9. Install new converter bolts (1) and tighten to 48 N.m (35 ft. lbs.).

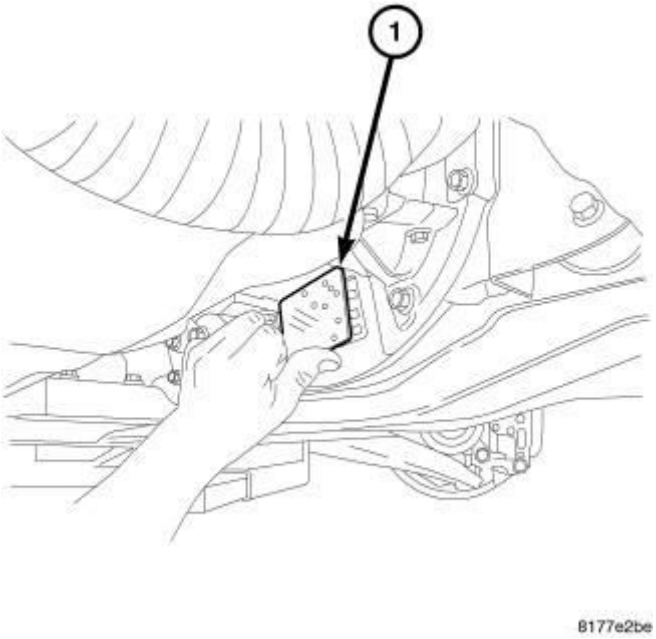

Fig. 194: Inspection Cover
Courtesy of CHRYSLER GROUP, LLC

10. Install cover at torque converter (1).
11. Install the Power Transfer Unit (PTU), if equipped. Refer to **INSTALLATION** .

12. Install the right and left front lower splash shields.
13. Install the front skid plate, if equipped.
14. Install left half and right half shafts to the transaxle. Refer to **INSTALLATION** .
15. Install both front wheels. Refer to **INSTALLATION** .

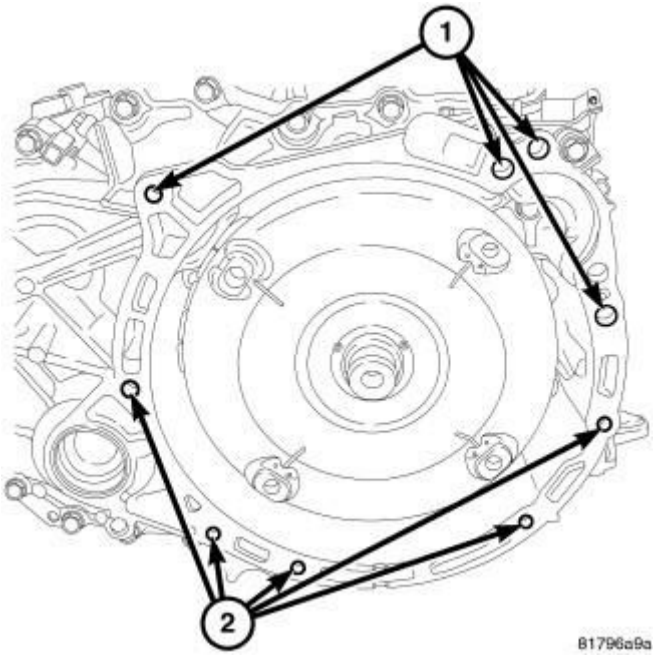

Fig. 195: Bell Housing Bolt Holes
Courtesy of CHRYSLER GROUP, LLC

16. Lower vehicle.
17. Install upper bell housing bolts (1) and tighten to 48 N.m (35 ft. lbs.).

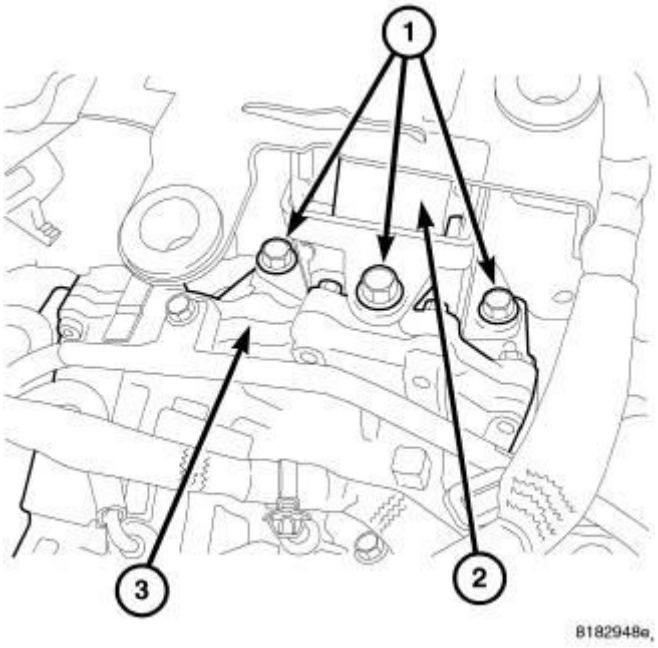

Fig. 196: Upper Transmission Mount Bolts & Upper Transmission Mount
Courtesy of CHRYSLER GROUP, LLC

18. Install the upper mount bolts and tighten to 75 N.m (55 ft lbs.).
19. Install the upper mount through bolt and tighten to 75 N.m (55 ft lbs.).

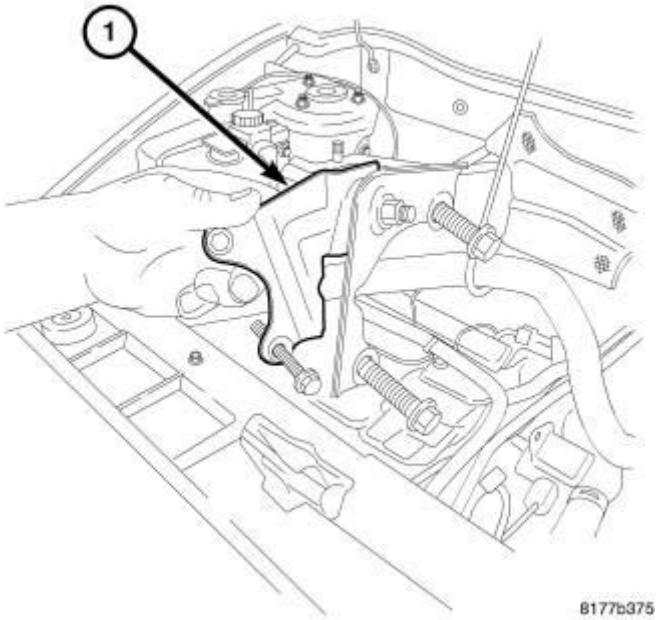

Fig. 197: Throttle Body Support Bracket
Courtesy of CHRYSLER GROUP, LLC

20. Install the throttle body support bracket (1) and tighten to 11 N.m (105 in.

lbs.).

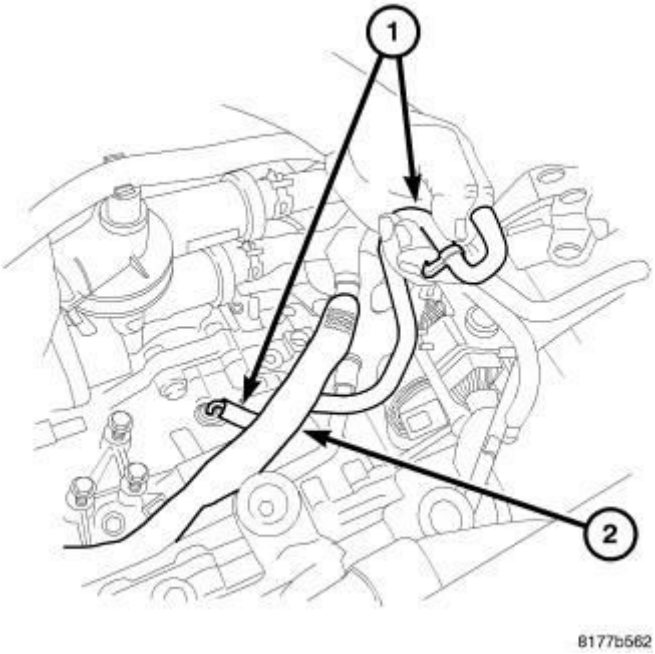

Fig. 198: Vent Tube
Courtesy of CHRYSLER GROUP, LLC

21. Connect the transmission vent tube (1).
22. Install the heater hose at transmission cooler tube (3).

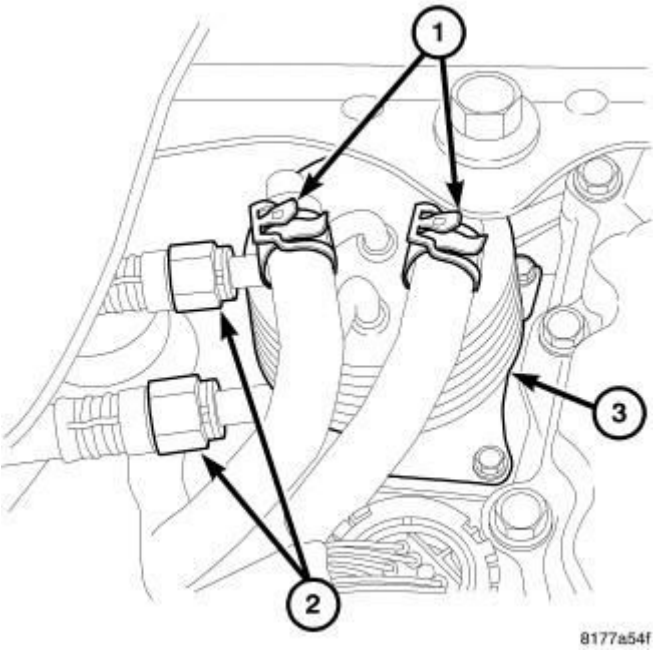

Fig. 199: Cooler/Transmission Lines At Cooler
Courtesy of CHRYSLER GROUP, LLC

23. **With fluid cooler** , connect the coolant hoses (1) and the transmission fluid lines (2) to the transmission cooler.

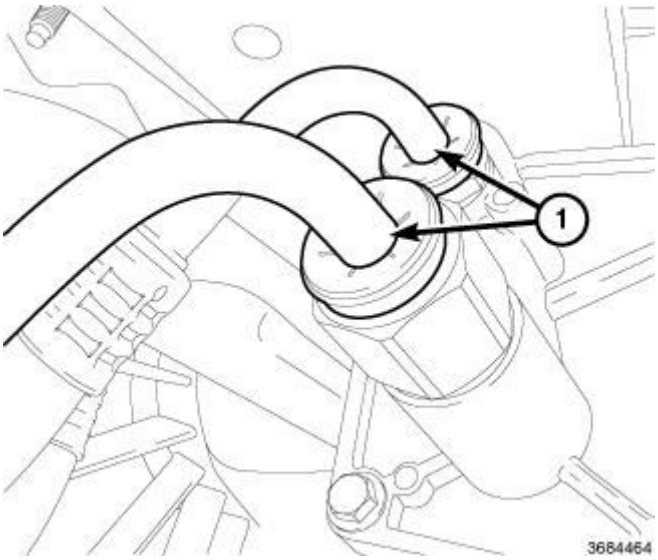

Fig. 200: Transmission Fluid Lines
Courtesy of CHRYSLER GROUP, LLC

24. **With bypass valve** , connect the transmission fluid lines (1) to the transmission fluid bypass valve plate.

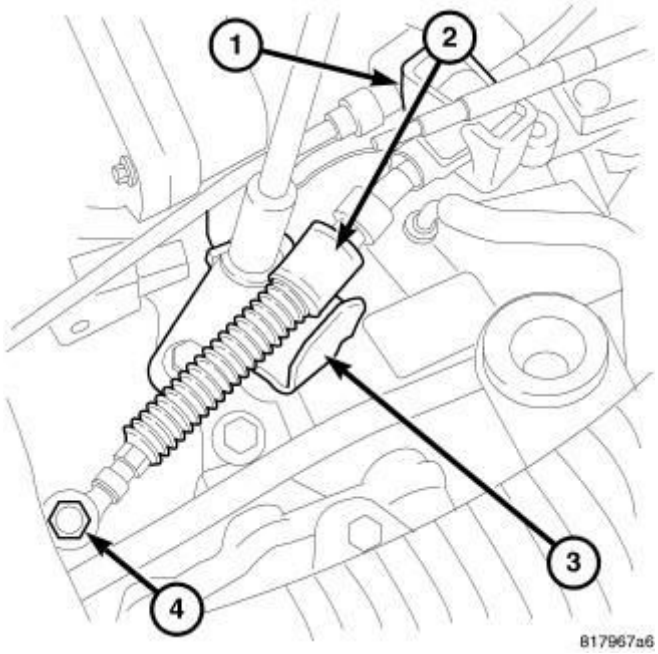

Fig. 201: Shifter Cable & Bracket
Courtesy of CHRYSLER GROUP, LLC

25. Install the shifter cable (1) and bracket (2), tighten nut to 11 N.m (105 in.

lbs.).

26. Install the vacuum supply lines.

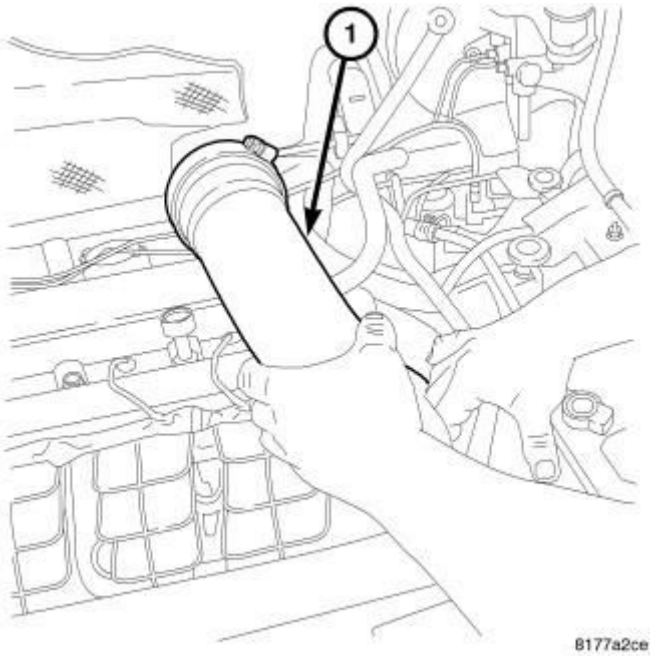

Fig. 202: Inlet Air Tube
Courtesy of CHRYSLER GROUP, LLC

27. Install intake air tube (1).
28. Fill engine coolant system. Refer to **STANDARD PROCEDURE** .

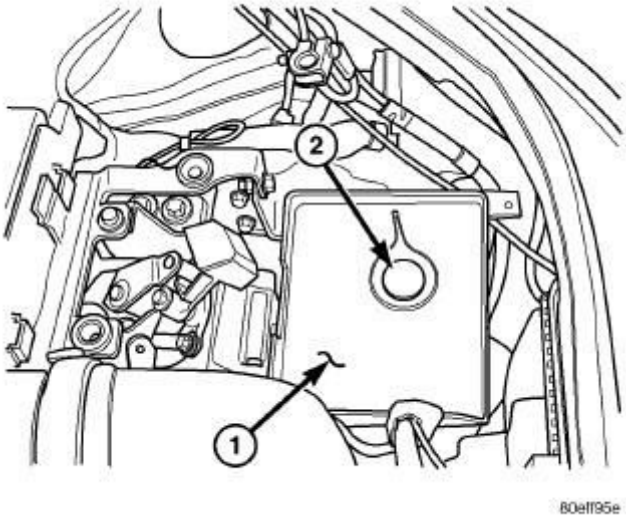

Fig. 203: Battery Tray Bottom And Sensor
Courtesy of CHRYSLER GROUP, LLC

29. Install the battery tray (1).
30. Install the battery.

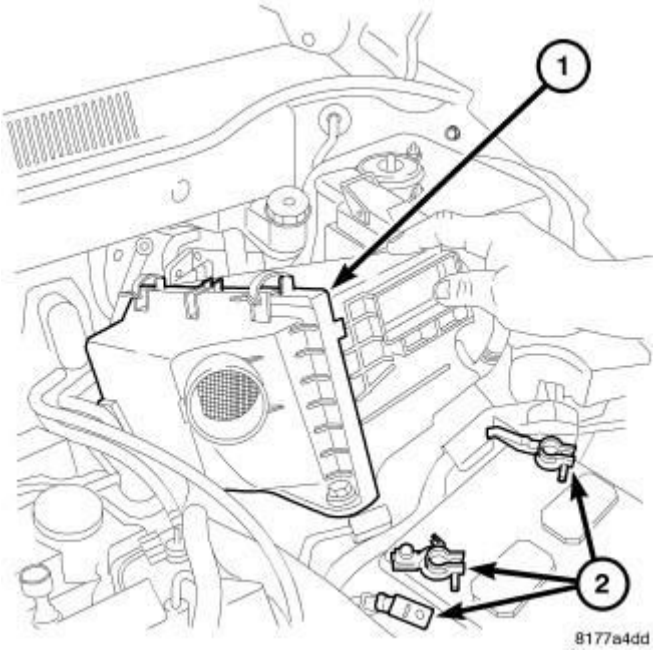

Fig. 204: Air Cleaner Assembly
Courtesy of CHRYSLER GROUP, LLC

31. Install the air cleaner assembly (1).
32. Connect battery cables (2).

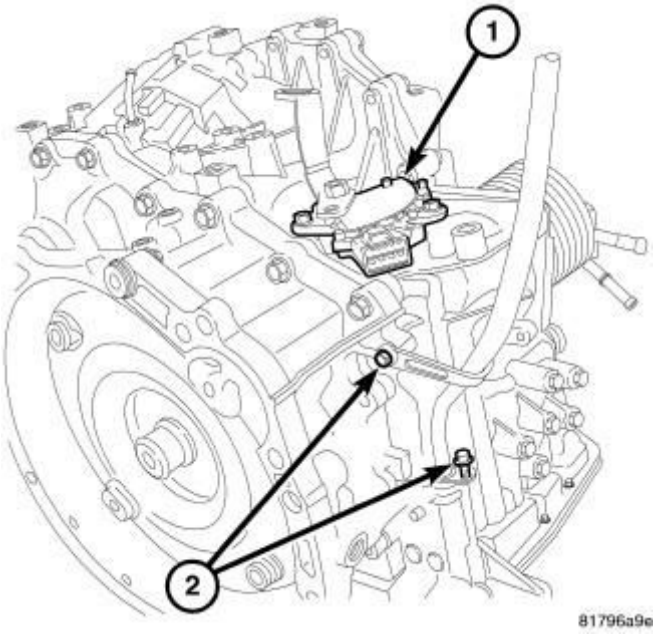

Fig. 205: Fill Tube Bolts

Courtesy of CHRYSLER GROUP, LLC

33. Install the transmission fill tube bolts (2) and tighten to 9 N.m (79 in. lbs.).
34. Fill the transmission with fluid to the correct level.

CAUTION: Use only MOPAR® CVTF +4. Use of any other type of automatic transmission fluid may cause damage to the transaxle.

35. Road test vehicle and inspect for leaks.

SPECIAL TOOLS

SPECIAL TOOLS

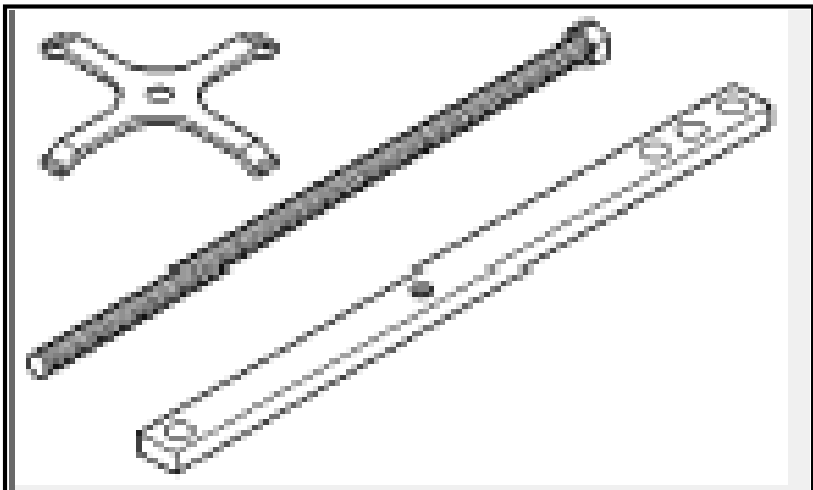	5058A - Compressor, Spring (Originally Shipped In Kit Number(s) 8853.)
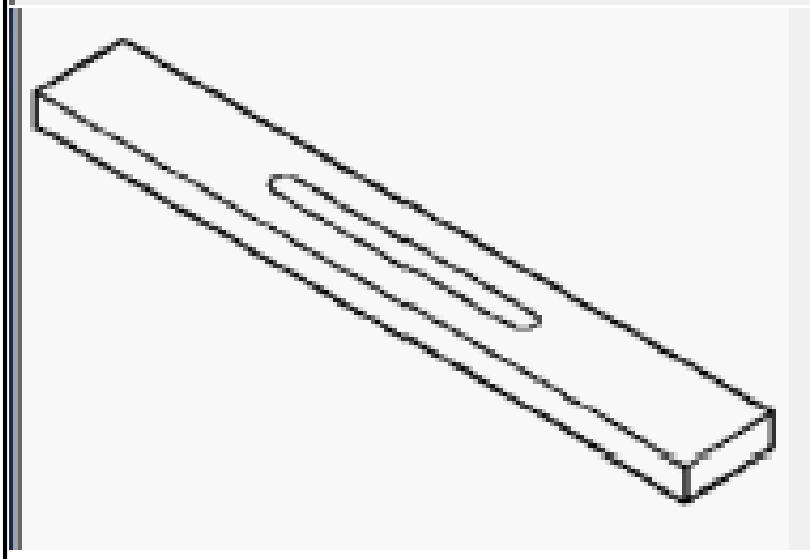	6311 - Gauge Bar (Originally Shipped In Kit Number(s) 6692, 9202, 9202A-CAN, 9202CC, 9299, 9299CC, 9299CC, 9300A-CAN.)

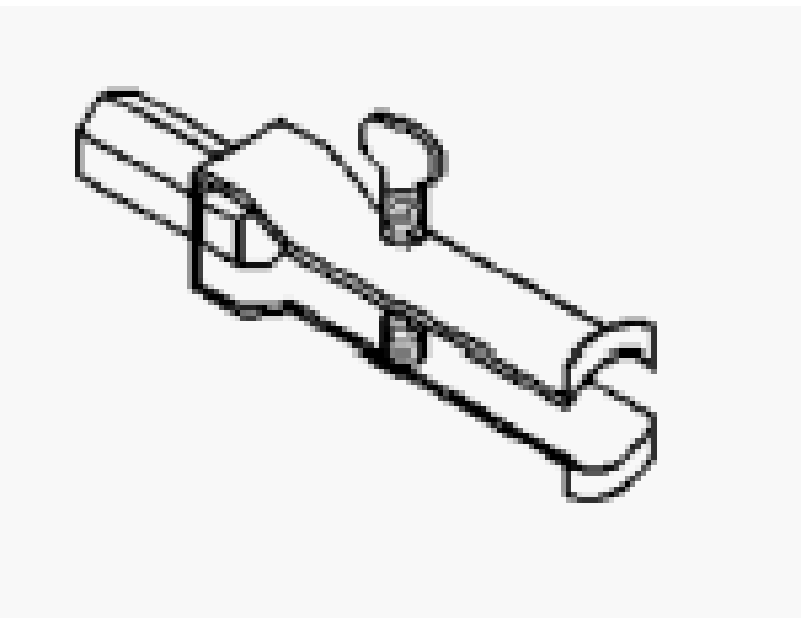

7794-A - Remover, Seal
(Originally Shipped In Kit Number(s) 6645.)

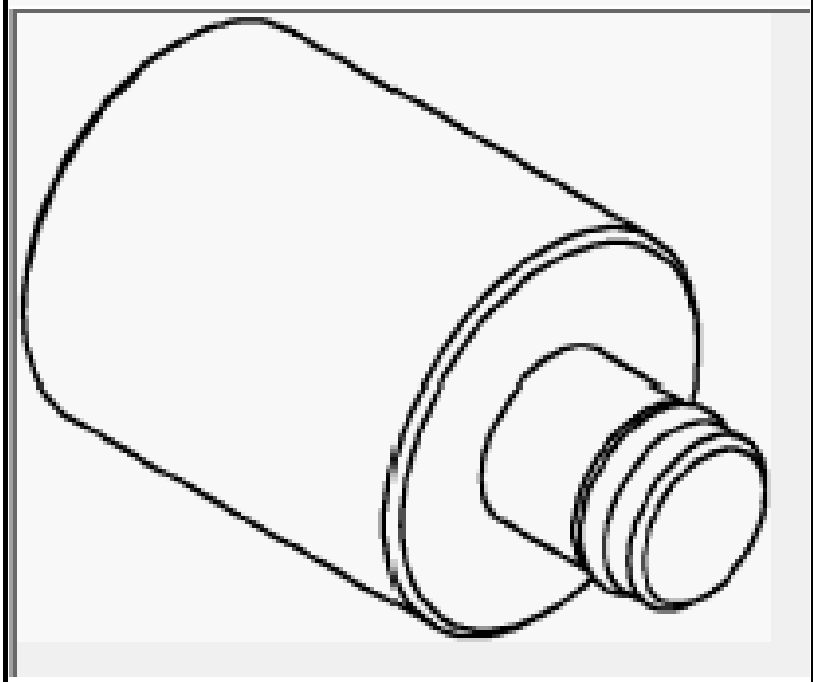

8513A - Insert, Crankshaft
(Originally Shipped In Kit Number(s) 8283, 8527, 8575, 8999, 8999CC.)

8888 - Plug, Differential Bearing
(Originally Shipped In Kit Number(s) 8887, 8887CC.)

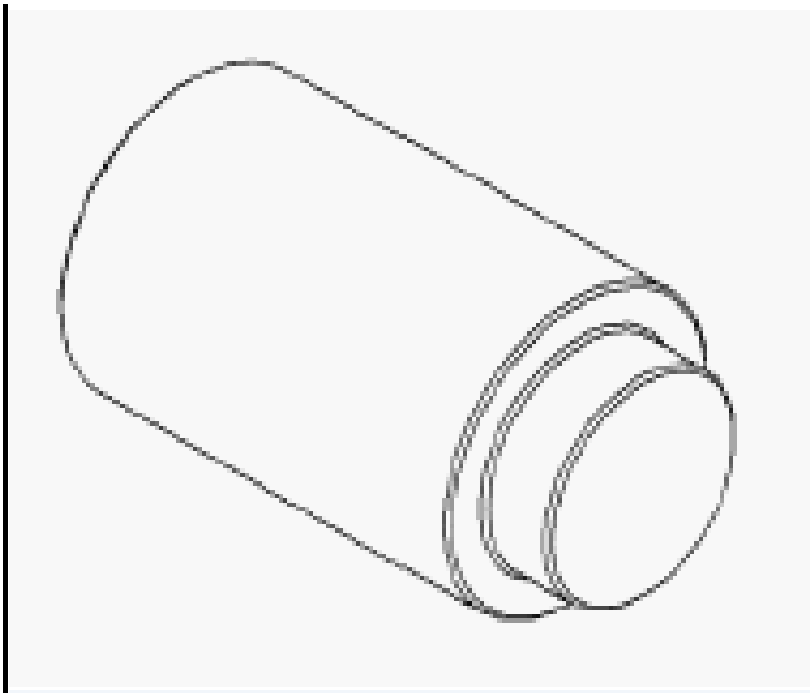

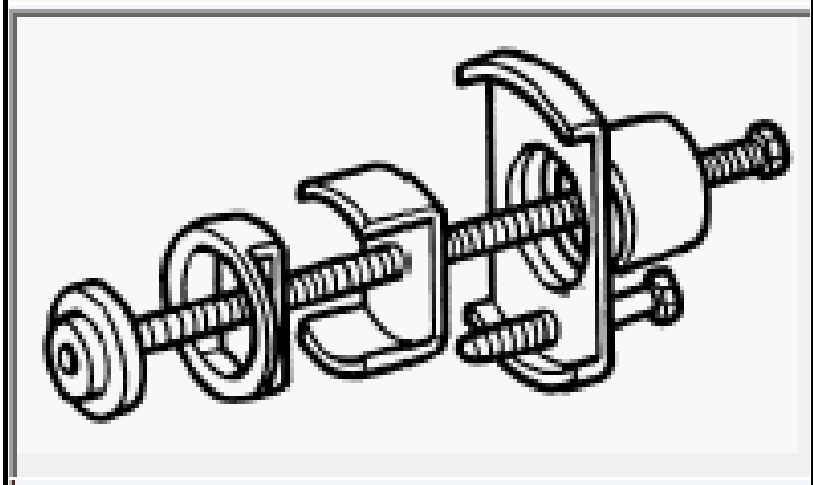

8900A - Multi Use Spring Compressor
(Originally Shipped In Kit Number(s) 9202, 9202CC, 9299, 9299CC, 9299CC, 9300A-CAN, 9329-SUP, 9516-SUP, 9518-SUP, 9540-SUP, 9785-SUP.)

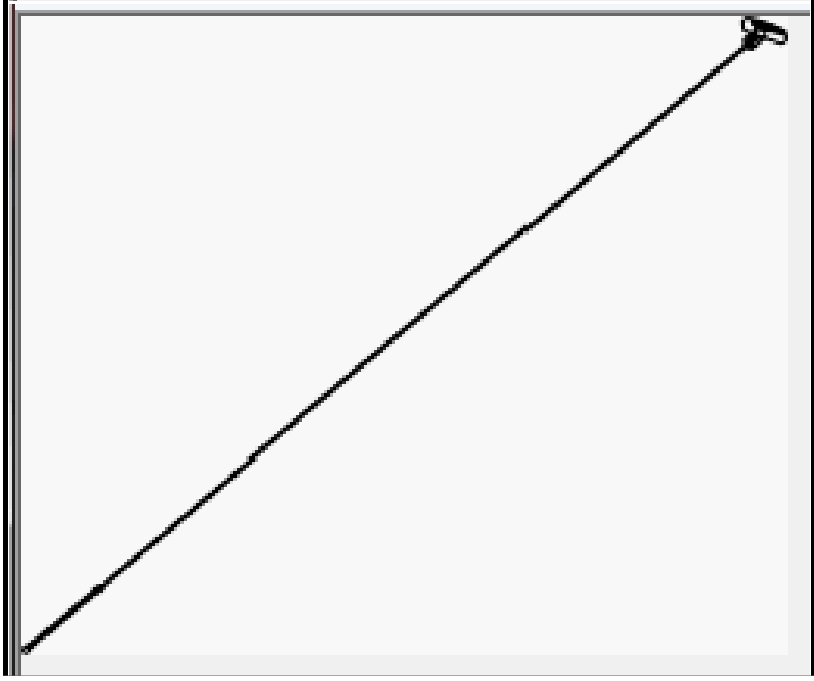

9336A - Dipstick
(Originally Shipped In Kit Number(s) 9336A, 9541.)

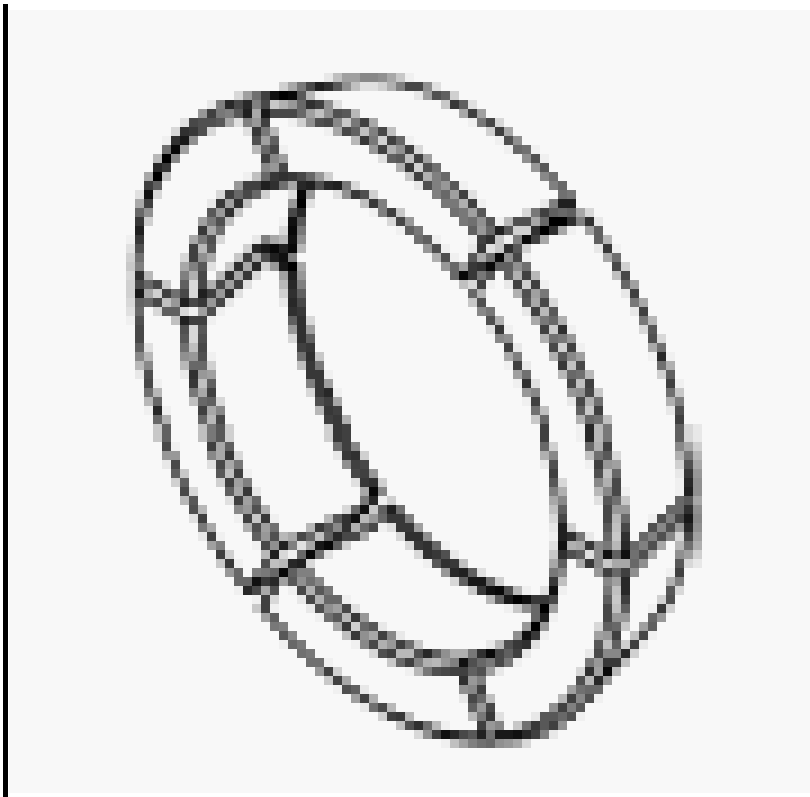	9613 - Adapters, Puller (Originally Shipped In Kit Number(s) 9690, 9720-SUP.)
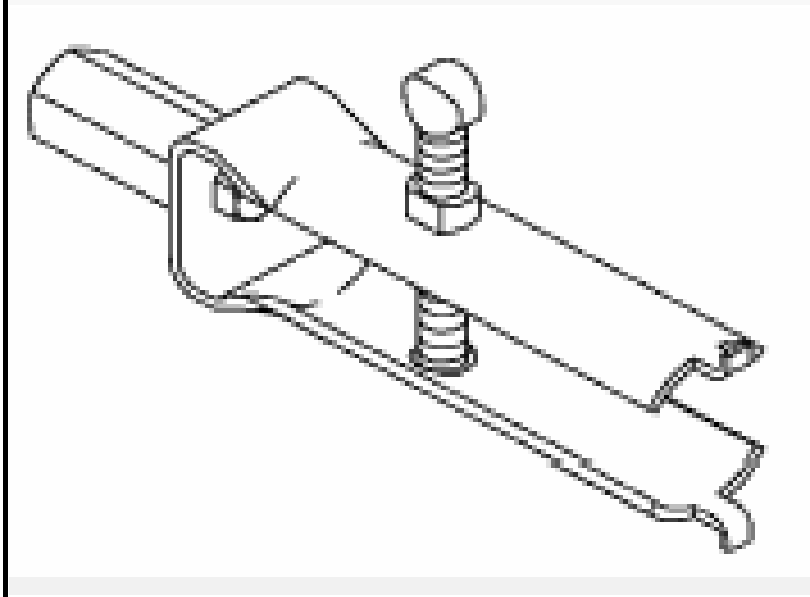	9664 - Remover, Bearing Cup (Originally Shipped In Kit Number(s) 9675, 9685, 9695.)

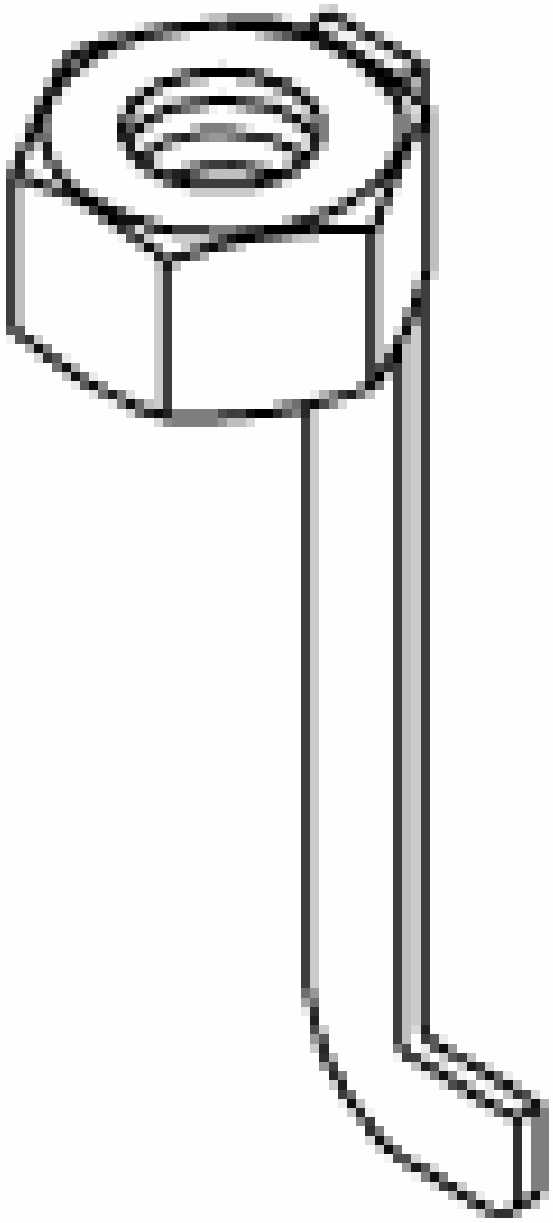

9667 - Remover, Seal (Originally Shipped In Kit Number(s) 9691.)

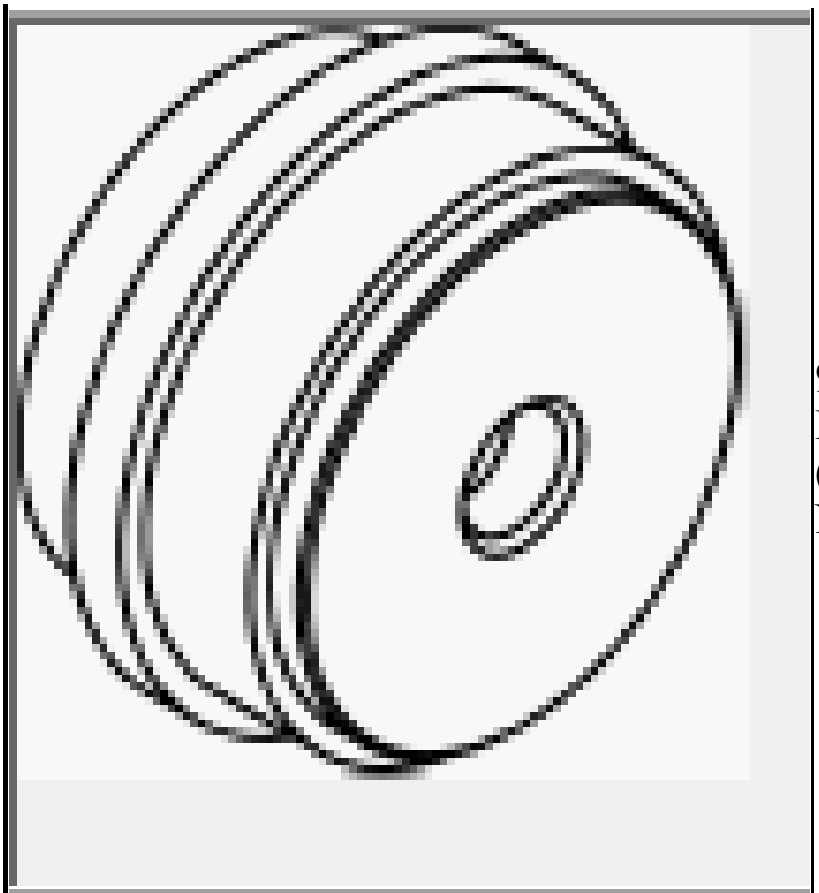

9668 - Remover/Installer, Bearing Cup
(Originally Shipped In Kit Number(s) 9691.)

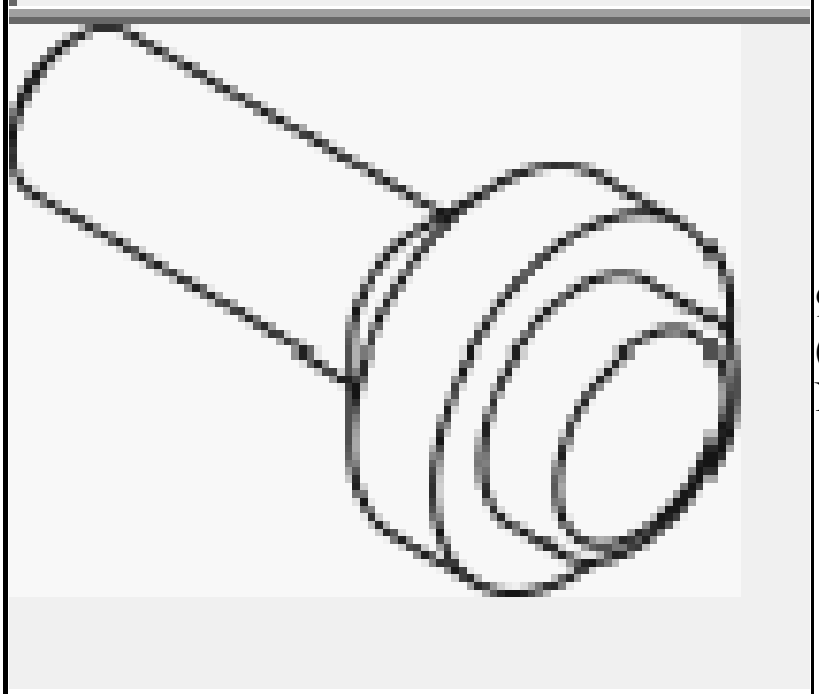

9858 - Installer, Seal
(Originally Shipped In Kit Number(s) 9870, 9971.)

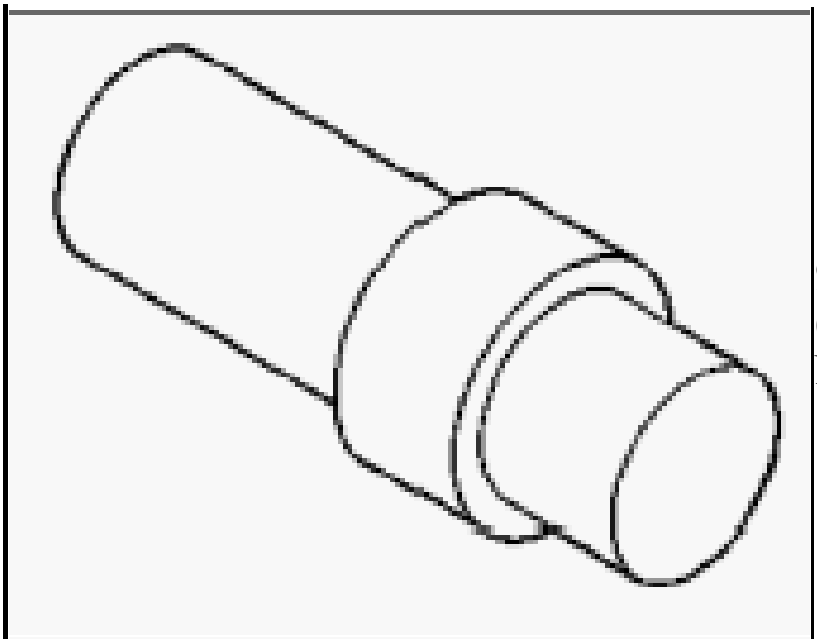	9871 - Installer, Seal (Originally Shipped In Kit Number(s) 9870, 9971.)
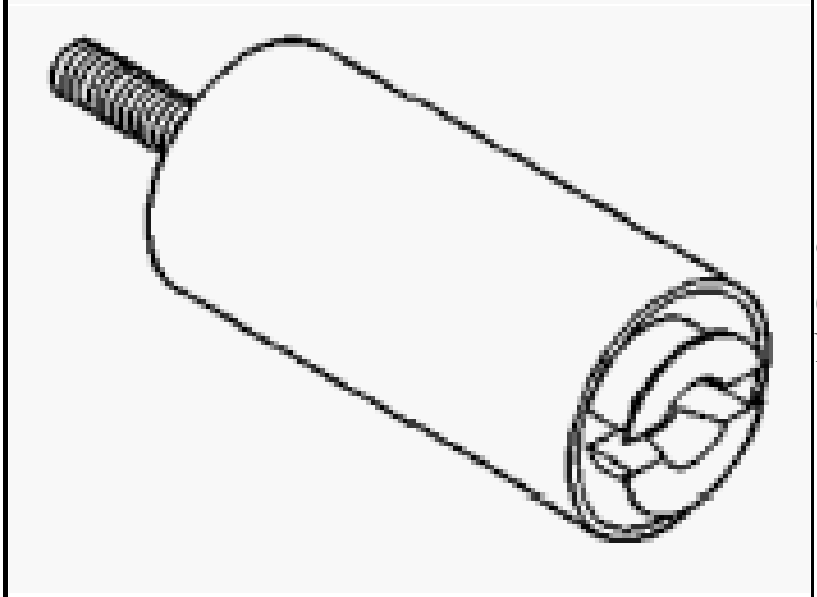	9874 - Compressor, Pulley (Originally Shipped In Kit Number(s) 9870-SUP, 9971.)
	9875 - Compressor (Originally Shipped In Kit Number(s) 9870, 9971.)

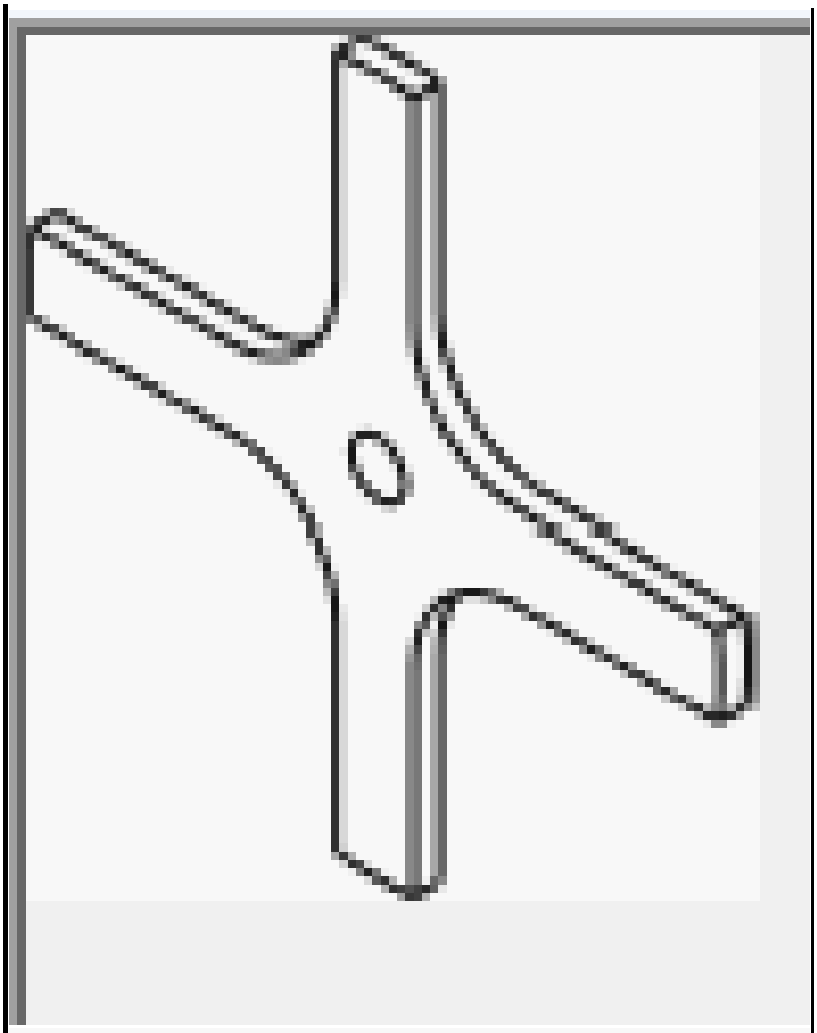	
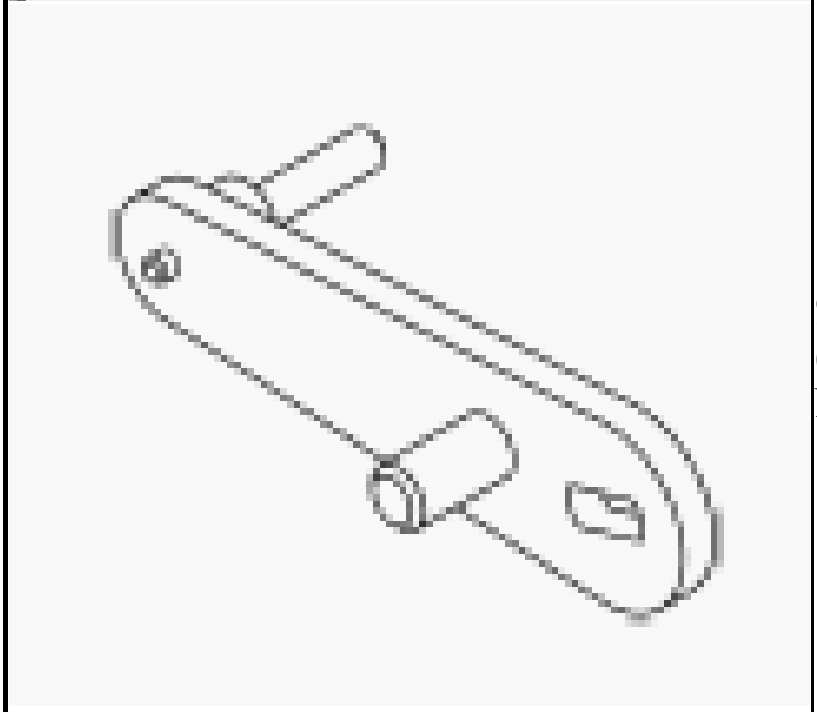	9876 - Adjustment Tool (Originally Shipped In Kit Number(s) 9870, 9971.)

	9877 - Installer, Seal (Originally Shipped In Kit Number(s) 9870, 9971.)
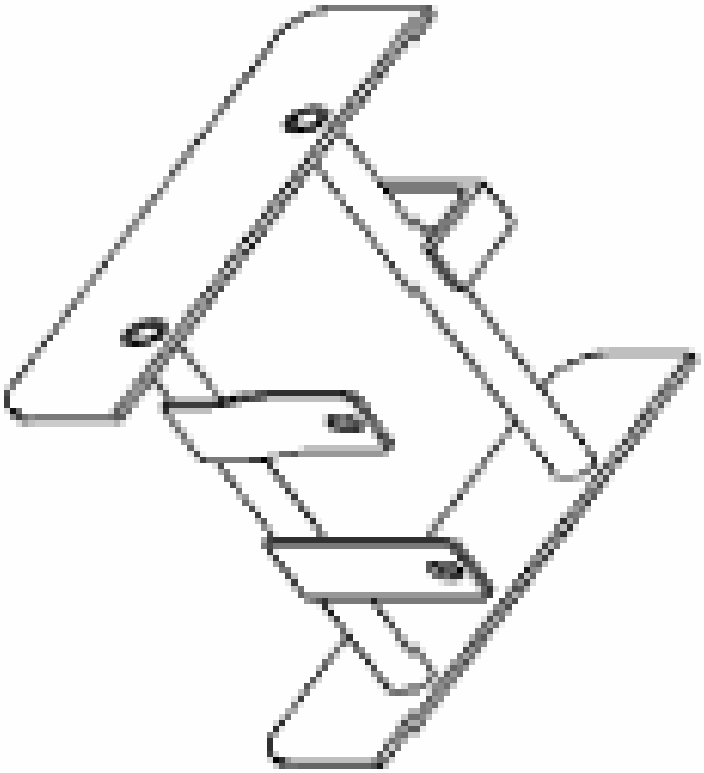	9878 - Stand, Transmission Service (Originally Shipped In Kit Number(s) 9870-SUP, 9971.)

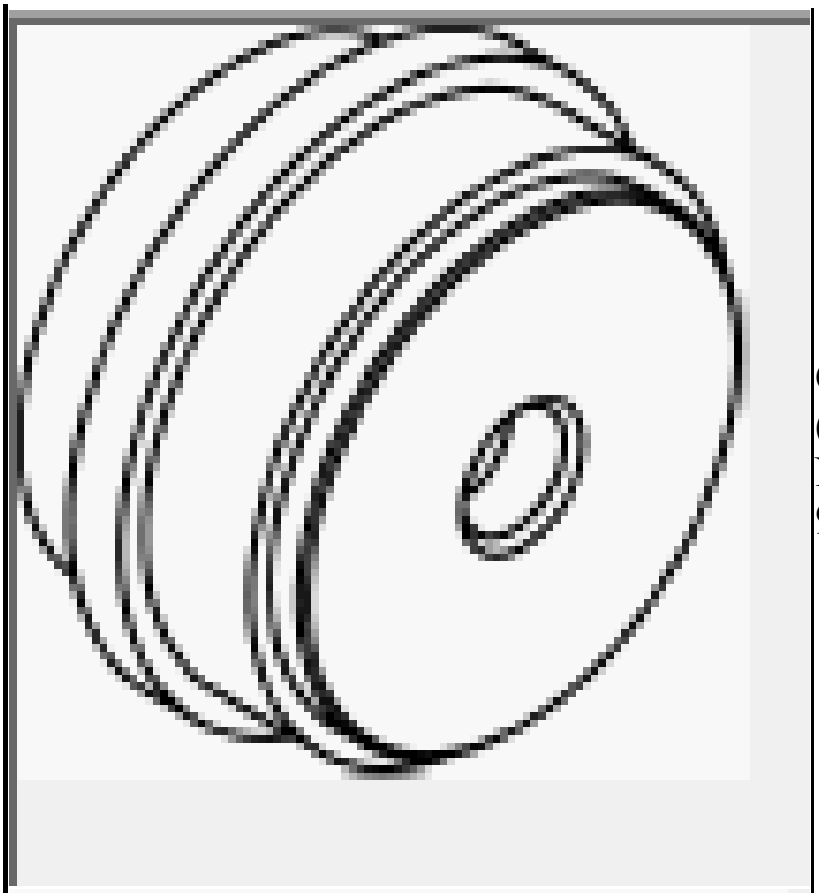

C-293-40 - Block Set, Puller (Originally Shipped In Kit Number(s) 9695, 9870, 9971.)

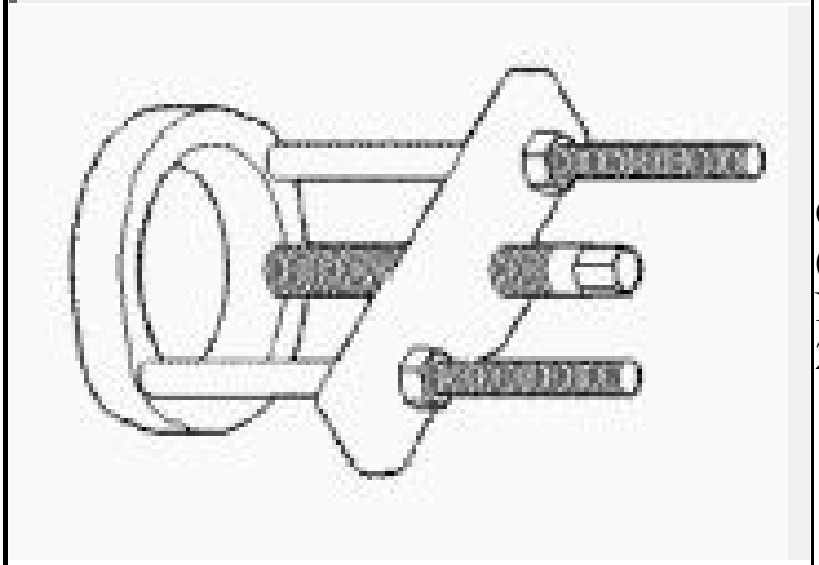

C-293-PA - Puller, Press (Originally Shipped In Kit Number(s) 8418, 8837, C-293-M.)

C-3752 - Slide Hammers (Originally Shipped In Kit Number(s) 9202, 9202A-CAN, 9202-CAN, 9202CC.)

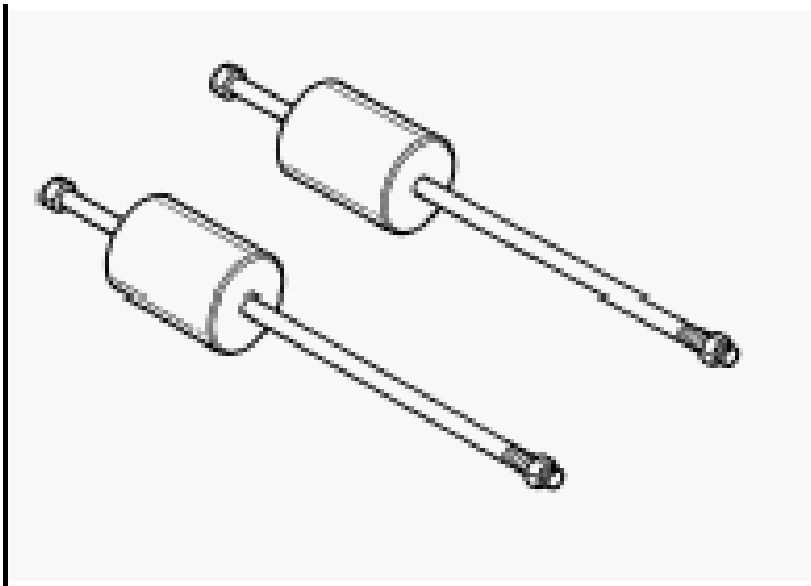	
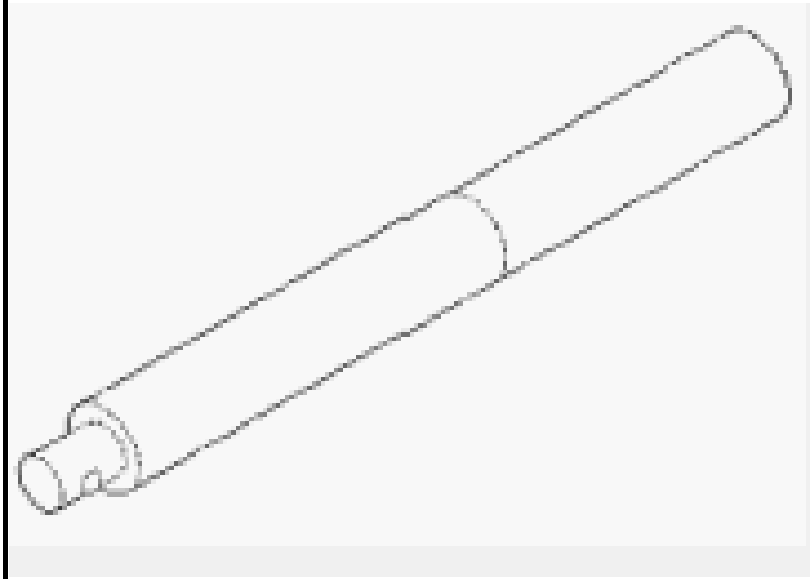	C-4171 - Driver Handle, Universal (Originally Shipped In Kit Number(s) 9202, 9202A-CAN, 9202CC, 9299, 9299CC, 9299CC, 9300A-CAN.)
	C-4628 - Installer, Cup

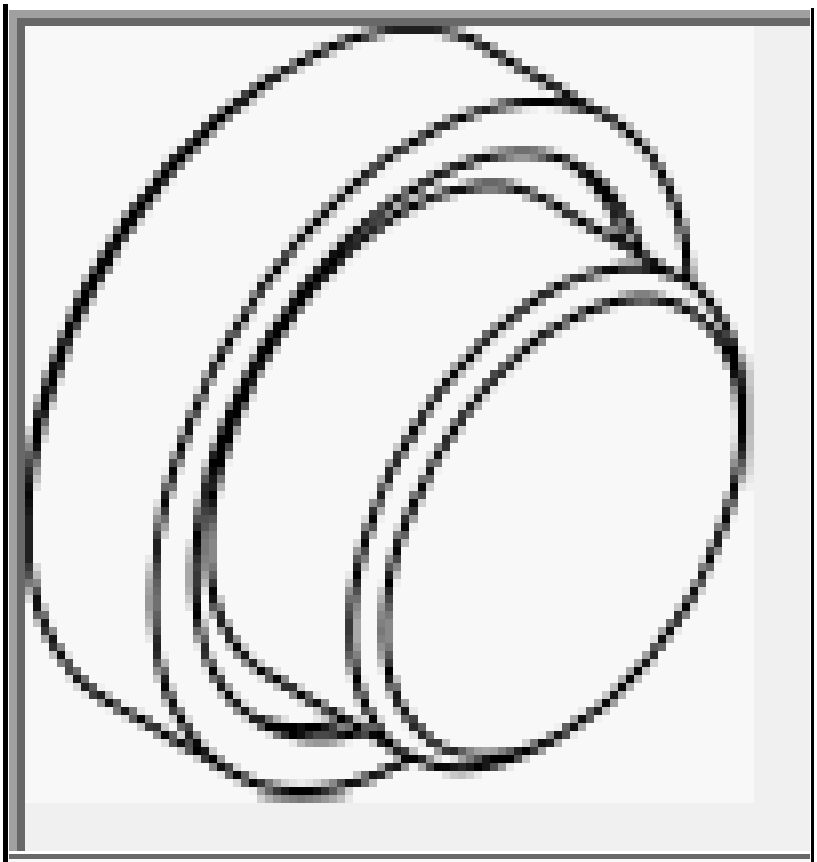

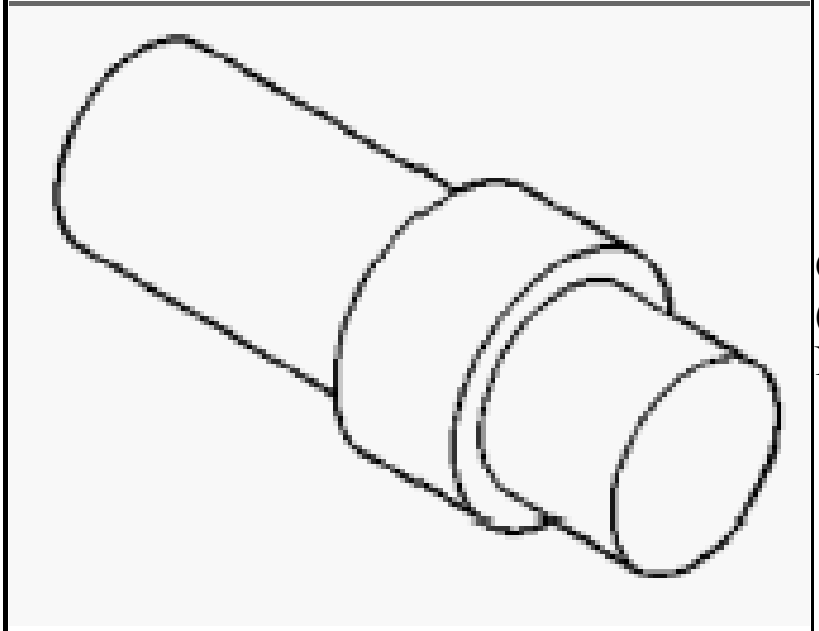

C-4996 - Adapter, Plug
(Originally Shipped In Kit Number(s) 6672.)

C-637 - Slide Hammer, Universal
(Originally Shipped In Kit

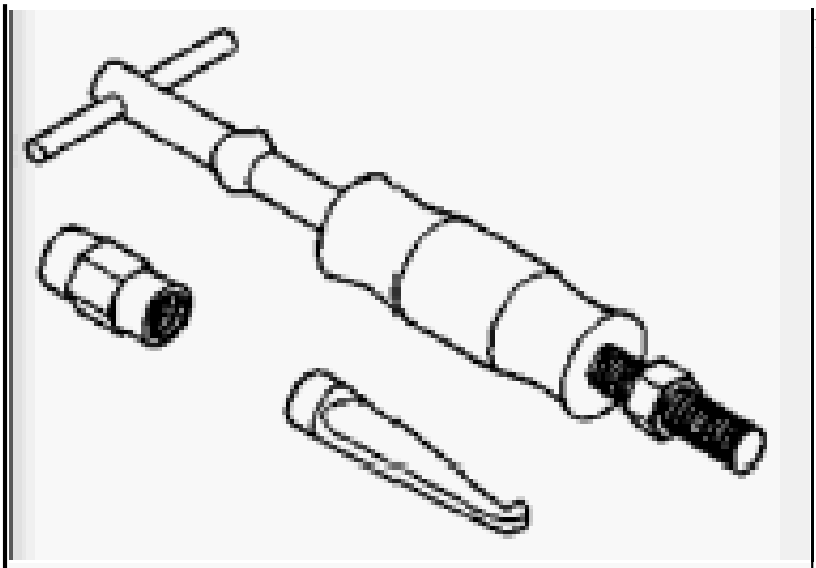	Number(s) 9202.)
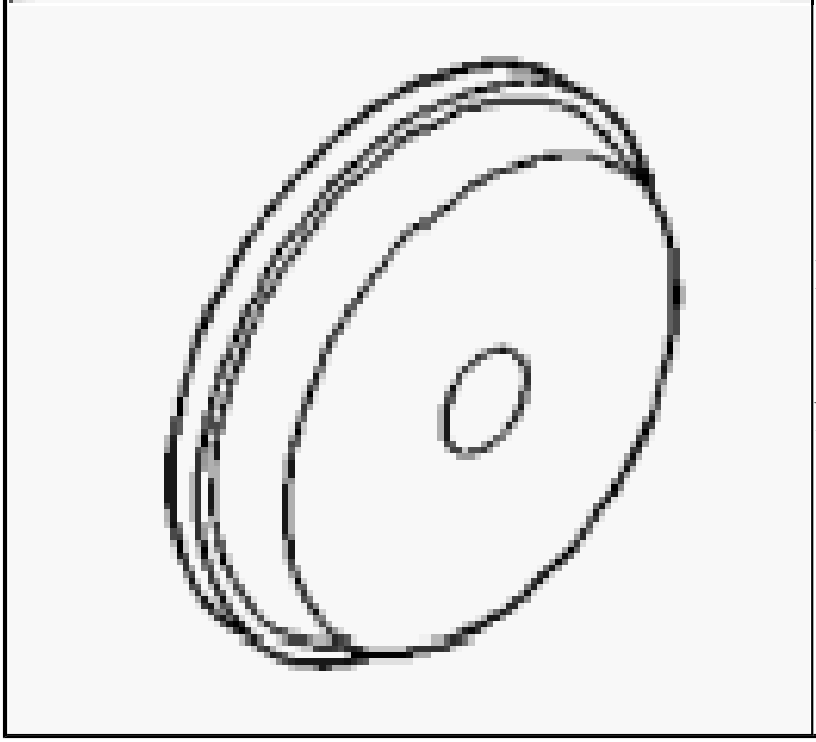	D-129 - Installer, Bearing Cup (Originally Shipped In Kit Number(s) 6947, 6949, 8667.)

CABLE, GEARSHIFT CONTROL

ADJUSTMENTS

ADJUSTMENTS

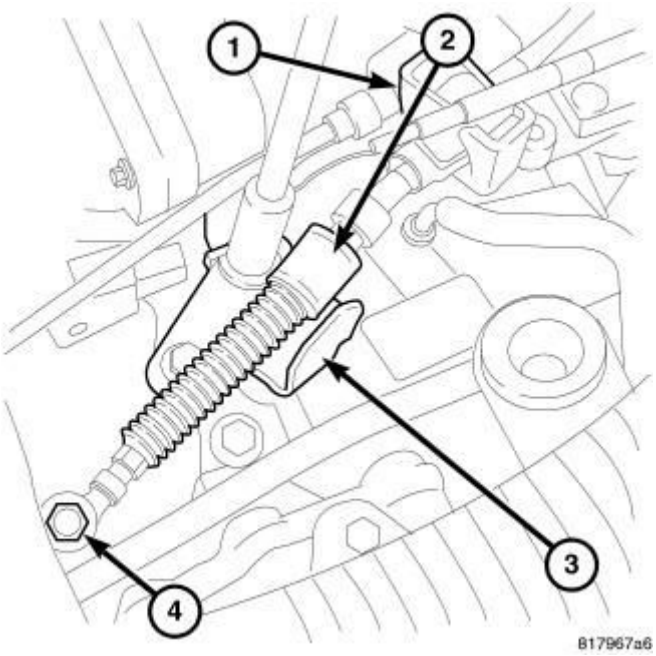

Fig. 206: Shifter Cable & Bracket
Courtesy of CHRYSLER GROUP, LLC

1. Place TRS switch and selector lever in the PARK position.
2. Loosen the nut (4) that holds the shifter cable to the manual lever.
3. While pressing the manual lever towards the front of the vehicle in the PARK position direction, tighten the nut to 13 N.m (10 ft. lbs.).
4. Make sure that the park system is engaged when lever is placed in the PARK position.
5. Place the selector lever in PARK position and turn the ignition switch to on position (engine not running).
6. Make sure that the selector lever can be shifted to a different position other than PARK when the brake pedal is depressed. Also make sure the lever can be shifted from PARK only when the brake pedal is depressed.
7. Move and check for excessive effort, sticking, noise or rattle.
8. Confirm that the selector lever stops at each position with the feel of engagement when it is moved through all the positions. Check whether or not the actual position the selector lever is in matches the position shown by the shift position indicator and the transaxle valve body.
9. Confirm that the backup lamps illuminate only when the lever is placed in the REVERSE position. Confirm the backup lamps do not illuminate when the lever is placed in the PARK or NEUTRAL positions with the lever pushed against the REVERSE position.

10. Confirm the engine will only start when the lever is placed in the PARK or NEUTRAL positions.

REMOVAL

REMOVAL

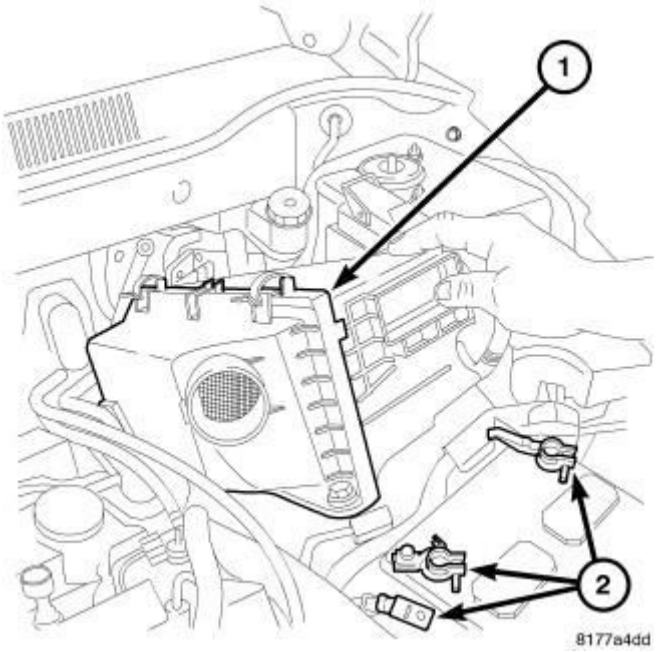

Fig. 207: Air Cleaner Assembly
Courtesy of CHRYSLER GROUP, LLC

1. Remove the air box (1).
2. Disconnect the negative battery cable (2).

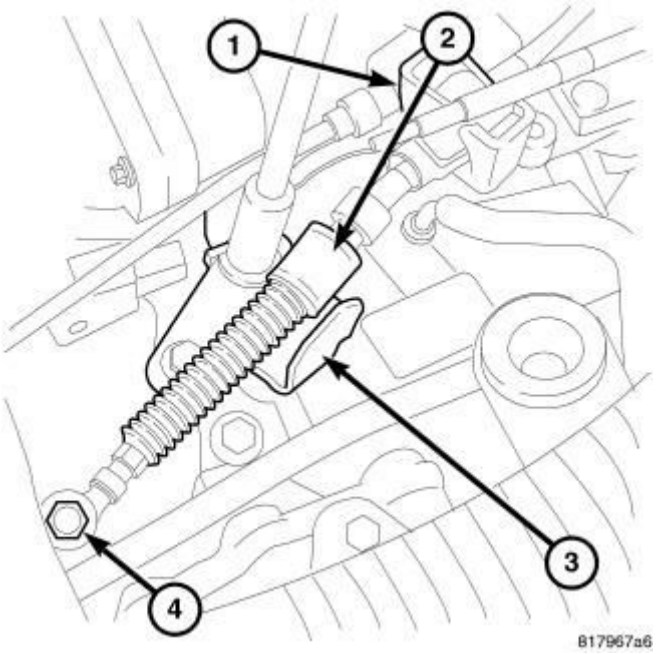

Fig. 208: Shifter Cable & Bracket
Courtesy of CHRYSLER GROUP, LLC

3. Remove shifter cable (2) at transmission bracket (3).
4. Remove the nut (4) on the shifter cable to shift lever.

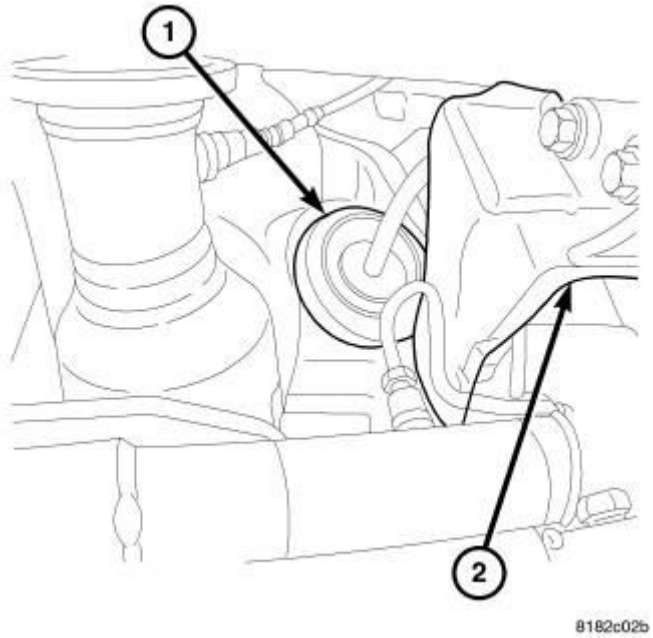

Fig. 209: Shifter Cable Grommet
Courtesy of CHRYSLER GROUP, LLC

5. Remove the grommet (1) at the bulkhead.
6. Remove the shifter. Refer to **SHIFTER, TRANSMISSION, REMOVAL**.

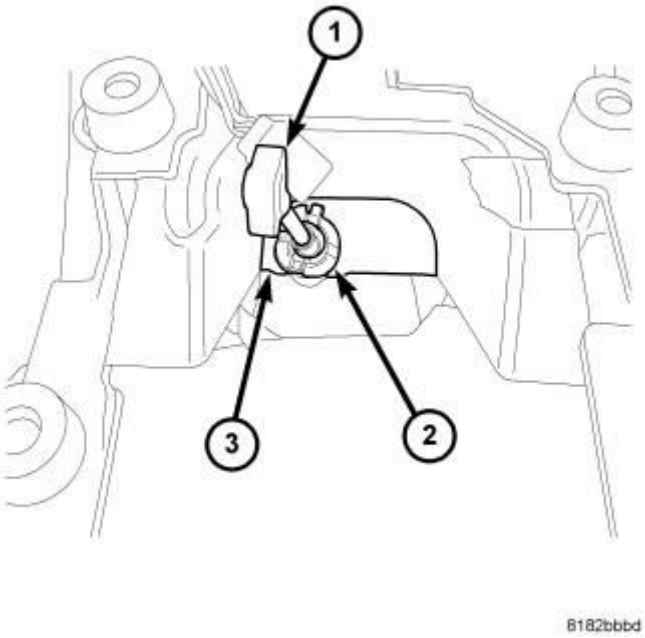

Fig. 210: Identifying Shifter Cable & Clip
Courtesy of CHRYSLER GROUP, LLC

7. Squeeze clip (2) at cable (1).

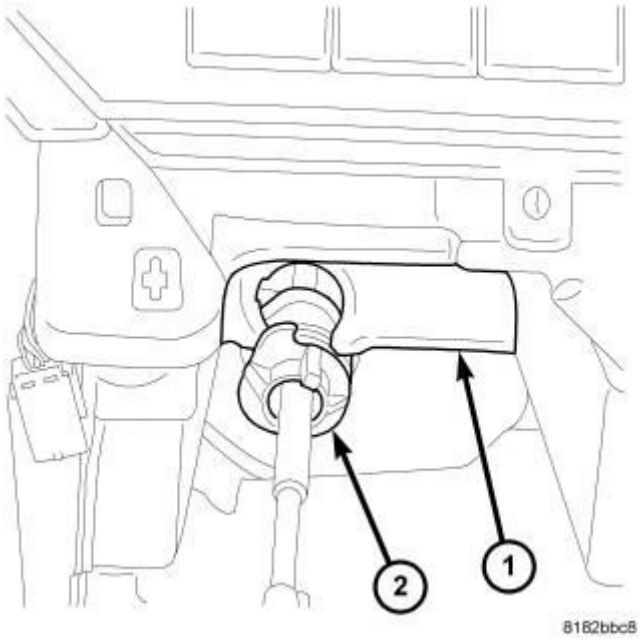

Fig. 211: Identifying Bulkhead & Bracket
Courtesy of CHRYSLER GROUP, LLC

8. Pull cable from bracket (2) at bulkhead (1).
9. Loosen the hold down bolts at the air bag module. Refer to **MODULE, OCCUPANT RESTRAINT CONTROLLER, REMOVAL** .

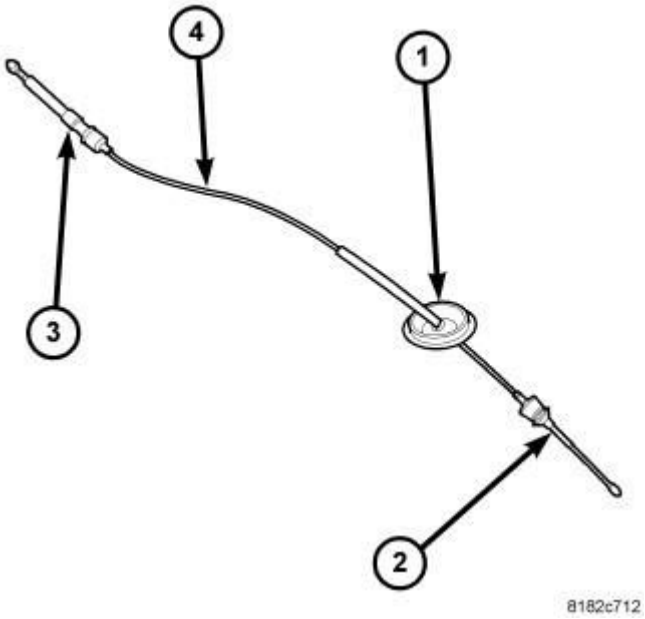

Fig. 212: Shifter Cable
Courtesy of CHRYSLER GROUP, LLC

10. Pull the cable (1, 2) through the bulkhead into the engine compartment.

INSTALLATION

INSTALLATION

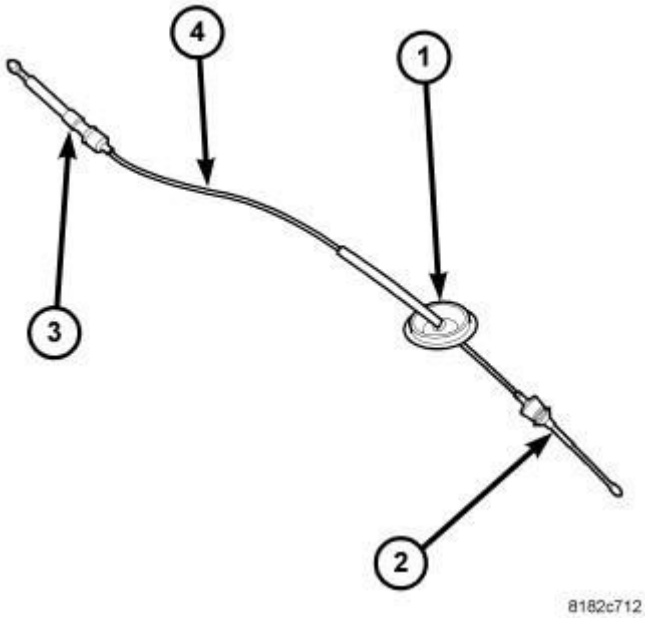

Fig. 213: Shifter Cable
Courtesy of CHRYSLER GROUP, LLC

1. Install the shifter cable (1, 2) through the bulkhead and into the passenger compartment.

Fig. 214: Identifying Bulkhead & Bracket
Courtesy of CHRYSLER GROUP, LLC

2. Install the cable into the bracket (2) at bulkhead (1).

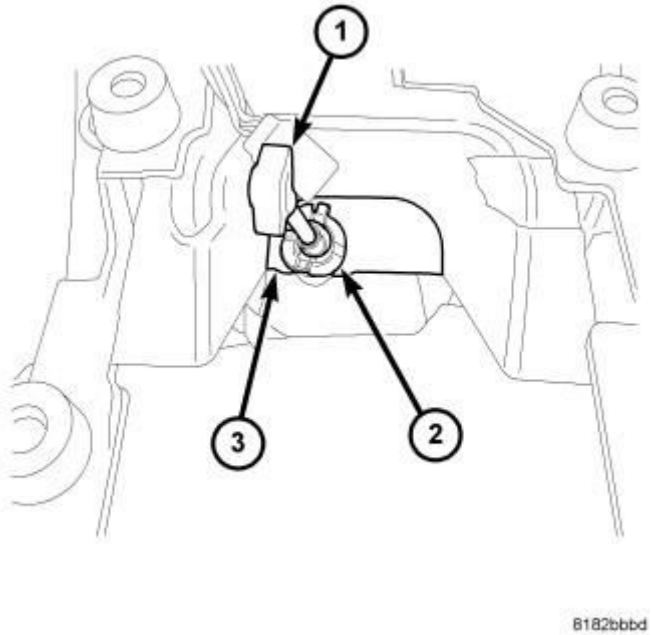

Fig. 215: Identifying Shifter Cable & Clip
Courtesy of CHRYSLER GROUP, LLC

3. Insure that the cable clips into place.
4. Tighten the hold down bolts at the air bag module. Refer to **MODULE, OCCUPANT RESTRAINT CONTROLLER, INSTALLATION** .
5. Install the shifter. Refer to **SHIFTER, TRANSMISSION, INSTALLATION**.

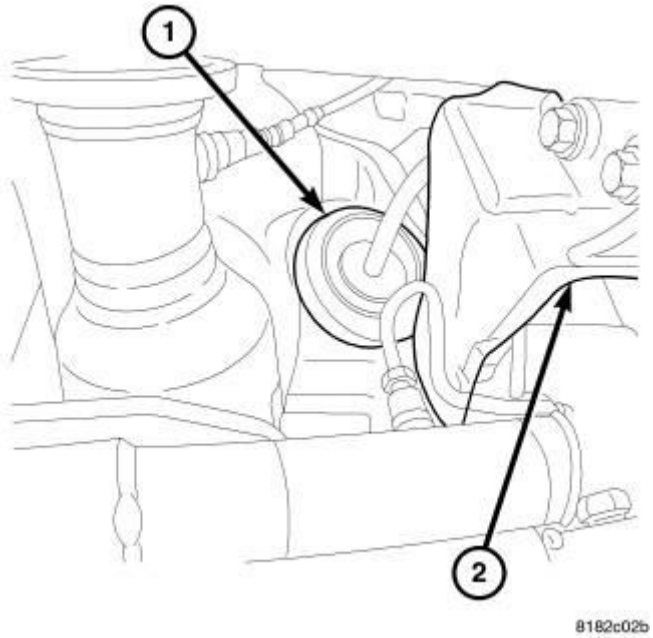

Fig. 216: Shifter Cable Grommet
Courtesy of CHRYSLER GROUP, LLC

6. Install the shifter cable grommet (1) at the bulkhead.

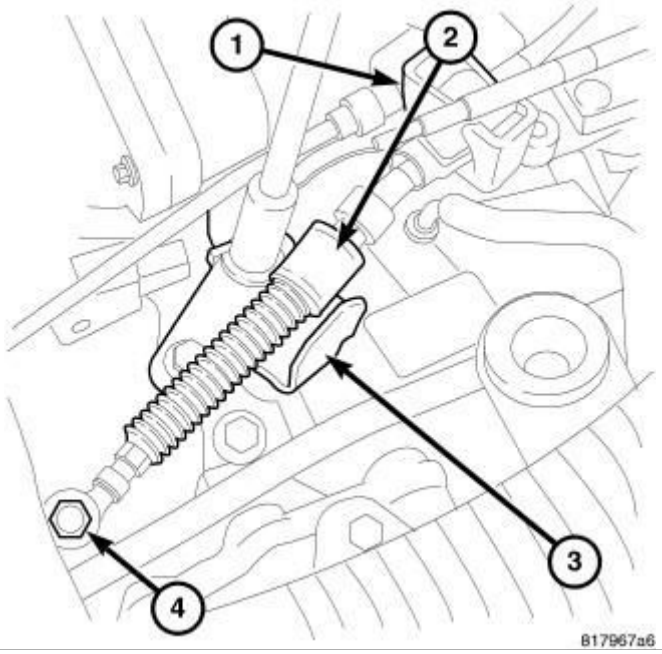

Fig. 217: Shifter Cable & Bracket
Courtesy of CHRYSLER GROUP, LLC

7. Clip the cable (2) into the bracket (1) install the nut (4) over the shifter cable at the transmission shift lever. Refer to **CABLE, GEARSHIFT CONTROL, ADJUSTMENTS**.

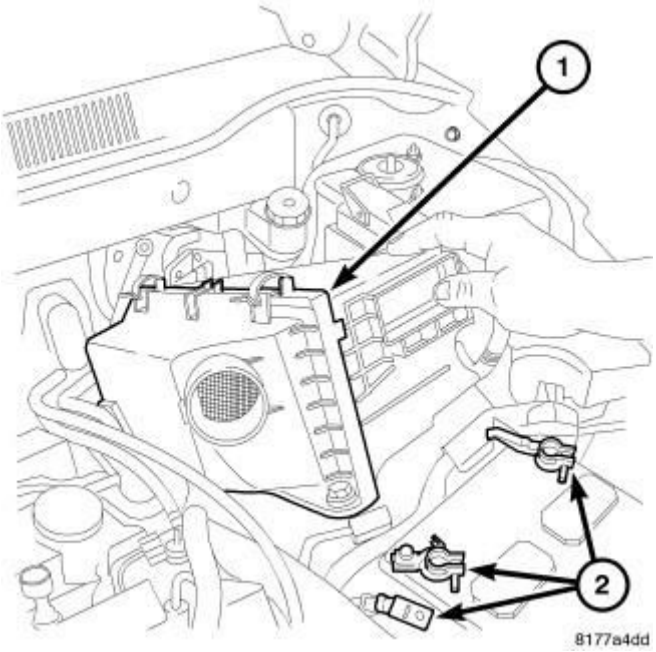

Fig. 218: Air Cleaner Assembly
Courtesy of CHRYSLER GROUP, LLC

8. Connect the negative battery cable (2).
9. Install the air box (1)

CABLE, SHIFT INTERLOCK

DIAGNOSIS AND TESTING

DIAGNOSIS AND TESTING - SHIFT INTERLOCK CABLE / BRAKE TRANSMISSION SHIFT INTERLOCK DIAGNOSIS

The Shift Interlock Cable is attached to a lever within the Shifter that prevents the Shift Lever from moving out of "Park" without the key. The Shift Interlock Cable adjustment is preset at the factory. When properly adjusted, the Shift Interlock System prevents the key being removed from the Key Cylinder when the Shift Lever is in a position other than "Park". The Brake Transmission Shift Interlock (BTSI) system prevents the shifter from being moved unless the brake pedal is applied.

NOTE: Investigate and resolve any DTCs prior to starting mechanical diagnosis.

NOTE: It is assumed that the brake pedal is depressed a minimum of 1/2 inch (12.5 mm) for all of the following symptoms.

SHIFT INTERLOCK CABLE DIAGNOSIS

Symptom	Possible Cause	Corrective Action
Key is trapped and cannot be removed from the ignition when the Shift Lever is in the Park position.	1. The Shift Interlock Cable is out of adjustment.	1. Inspect and adjust the Shift Interlock Cable. Refer to the adjustment procedure for the applicable transmission.
	2. The Shift Interlock Cable is not secured properly at the shifter housing.	2. Ensure that the Shift Interlock Cable is properly secured at the shifter housing.
	3. Shift Interlock Cable routing through the instrument panel area is causing increased friction within the Shift Interlock Cable Housing (bind/kink in Shift Interlock Cable).	3. Check the Shift Interlock Cable Housing routing. The Shift Interlock Cable has a clip that locates it to the Instrument Panel structure. The Shift Interlock Cable must be free to move through this clip. The clip is located behind the panel.
Key can be removed no matter what position the Shift Lever is in.	1. The Shift Interlock Cable is broken or not secured properly at the shifter housing.	1. Ensure that the Shift Interlock Cable is properly secured to the shifter housing or replace the cable if broken
	2. The Shift Interlock Cable is broken or not secured at the Lock	2. Ensure that the Shift Interlock Cable is properly secured to the

	Housing.	Lock Housing or replace the cable if broken.
Shift Lever will not move to the right so that it can be moved out of the Park position.	1. Shifter Interlock Mechanism is binding due to loose or damaged components.	1. Physically inspect the shifter and repair or replace any damaged or loose components.
Shift Lever will move to the right but will not move down toward the Reverse position	1. Shift Interlock Lever within the shifter is not releasing when the key is turned to the "On" or "Run" positions.	1. Check Shift Interlock Cable operation and cable adjustment.
	2. Shift Interlock Cable is severely kinked or routed improperly.	2. Check Shift Interlock Cable routing or replace the cable if severely kinked.
Shift Lever can be moved without turning the key on or the key removed.	1. Shift Interlock Cable Cartridge not properly installed into the Lock Housing.	1. Check for correct installation of the Shift Interlock Cable into the Lock Housing.

BTSI DIAGNOSIS

Symptom	Possible Cause	Corrective Action
Key in the On position, Shift Lever will not move to the right so that it can be moved out of the Park position.	1. Park Lock Lever on the right side of the shifter is not moving when the brake pedal is depressed.	1. Verify BTSI operation. Refer to **DIAGNOSIS AND TESTING** .
	1. Park Lock Lever is sluggish and scraping against the inside of the Shifter Housing.	1. Verify BTSI operation. Repair or replace any damaged or loose components. Refer to **DIAGNOSIS AND TESTING** .

Use the table below to verify the condition of the Shift Interlock System.

ACTION	EXPECTED RESPONSE

1. Turn key to the "ACC" position and depress brake pedal.	1. Shifter CAN be shifted out of park.
2. Turn key to the "ON" position, with foot off of brake pedal.	2. Shifter CANNOT be shifted out of park.
3. Turn key to the "ON" position and depress the brake pedal.	3. Shifter CAN be shifted out of park.
4. Leave shifter in any gear and try to return key to the "LOCK" position.	4. Key cannot be returned to the "LOCK" position.
5. Return shifter to "PARK" and try to remove the key.	5. Key can be removed after returning to "LOCK" position.
6. With the key removed, try to shift out of "PARK".	6. Shifter cannot be shifted out of "PARK".

CLUTCH

DISASSEMBLY

DISASSEMBLY

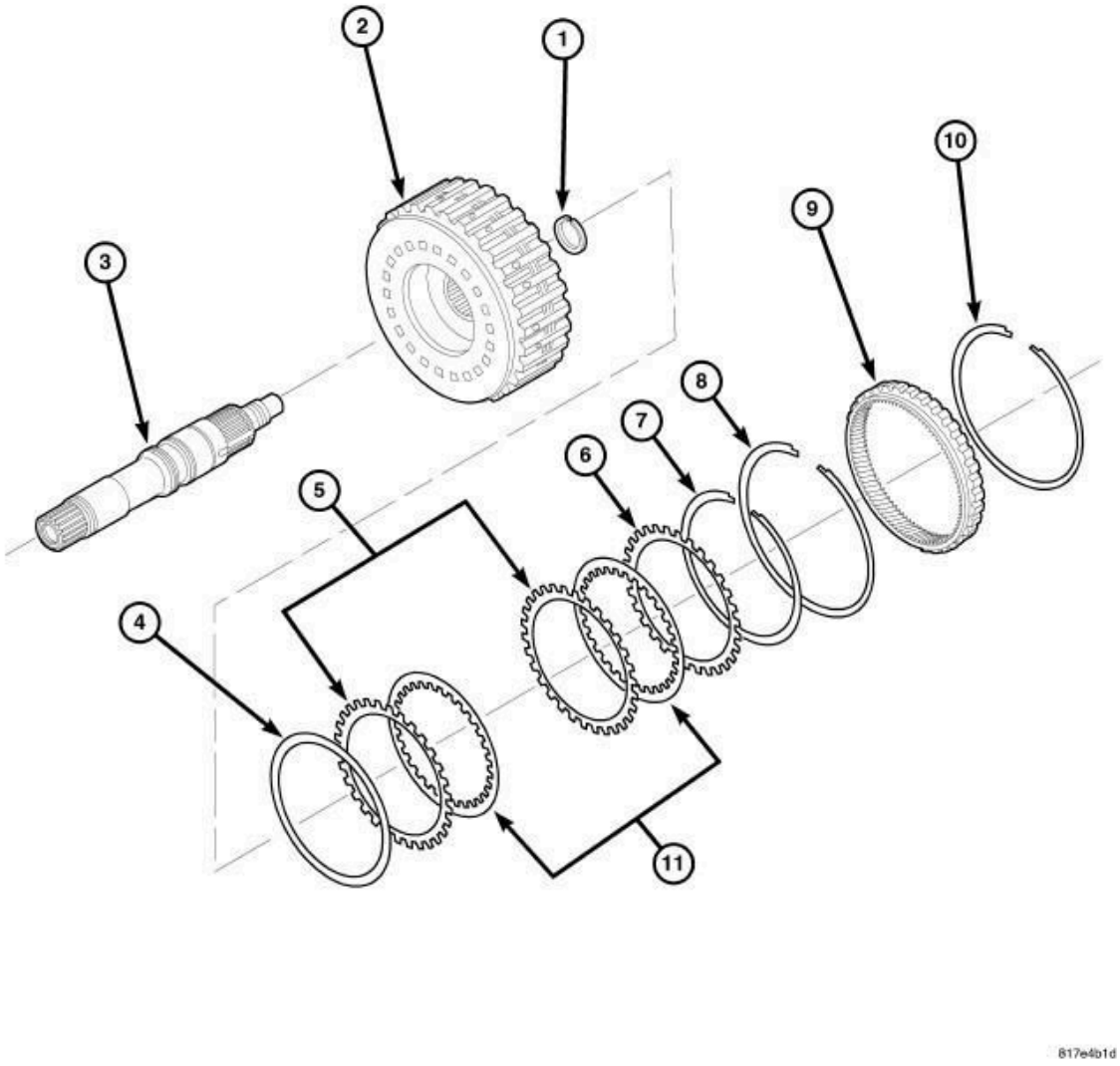

Fig. 219: Exploded View Of Forward Clutch
Courtesy of CHRYSLER GROUP, LLC

1 - Snap Ring
2 - Forward Clutch Drum
3 - Input Shaft
4 - Dish Plate
5 - Driven Plate
6 - Retaining Plate
7 - Snap Ring
8 - Snap Ring
9 - Internal Gear
10 - Snap Ring

11 - Drive Plate

NOTE: Refer to the exploded views as necessary when performing the following steps.

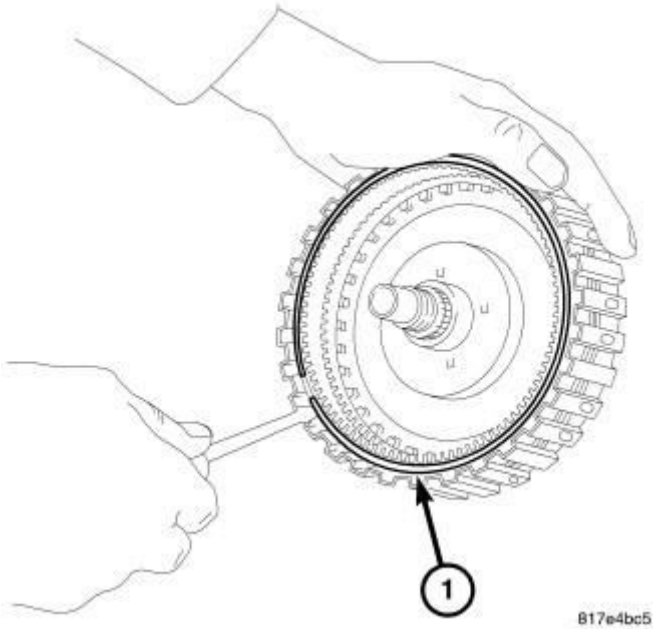

Fig. 220: Forward Clutch Snap Ring
Courtesy of CHRYSLER GROUP, LLC

1. Remove the snap ring (1) from the forward clutch drum using a flat head screwdriver.

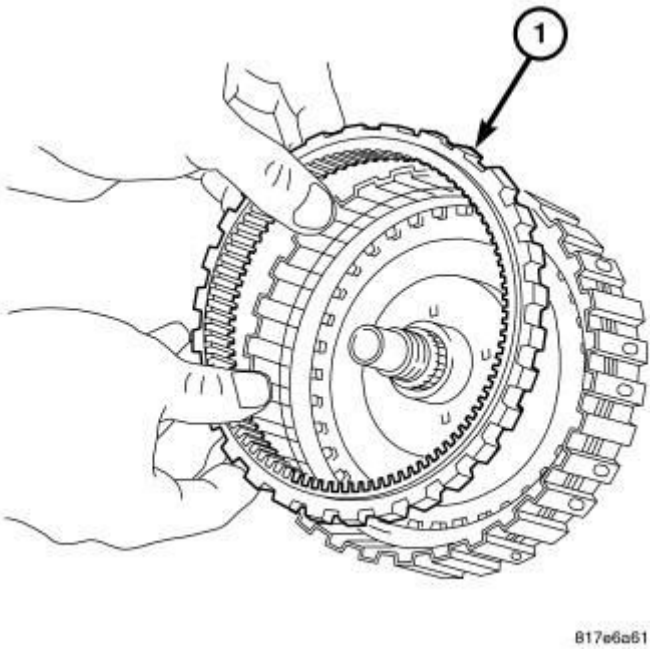

Fig. 221: Internal Gear At Forward Clutch
Courtesy of CHRYSLER GROUP, LLC

2. Remove the internal gear (1) from the forward clutch drum.

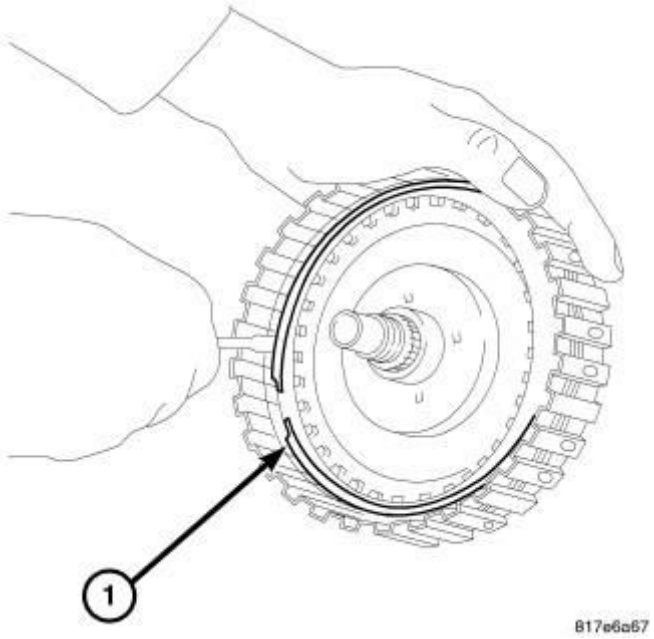

Fig. 222: Snap Rings At Forward Clutch Drum
Courtesy of CHRYSLER GROUP, LLC

3. Remove the snap rings (1) from the forward clutch drum using a flat head screwdriver.

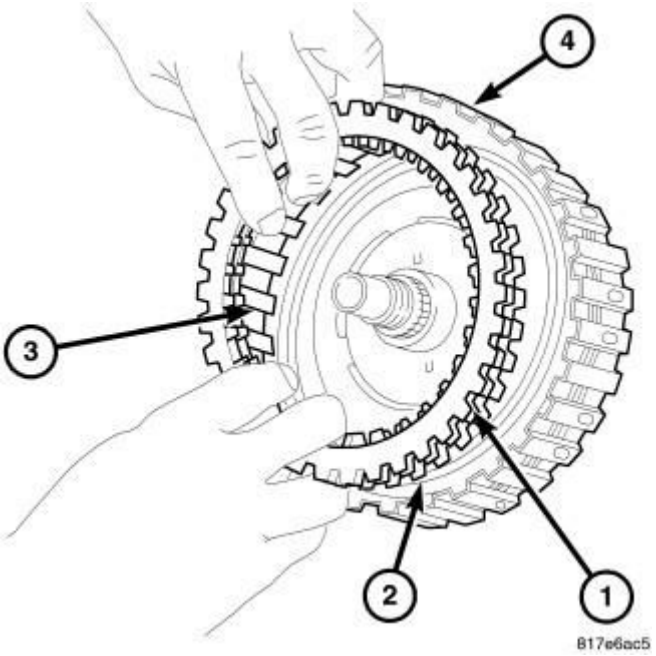

Fig. 223: Retaining Plate, Driven Plates, Dish Plate & Forward Clutch Drum
Courtesy of CHRYSLER GROUP, LLC

4. Remove the retaining plate (1), the drive and driven plates (3), and the dish plate (2) from the forward clutch drum (4).

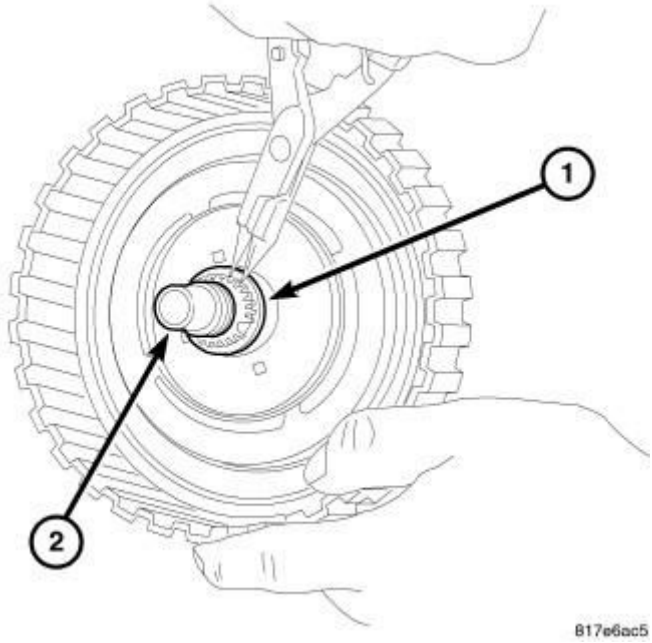

Fig. 224: Input Shaft Snap Ring
Courtesy of CHRYSLER GROUP, LLC

CAUTION: Do not expand the snap ring beyond necessity and do not deform it.

5. Remove the snap ring (1), and remove the input shaft (2) from the forward clutch drum.

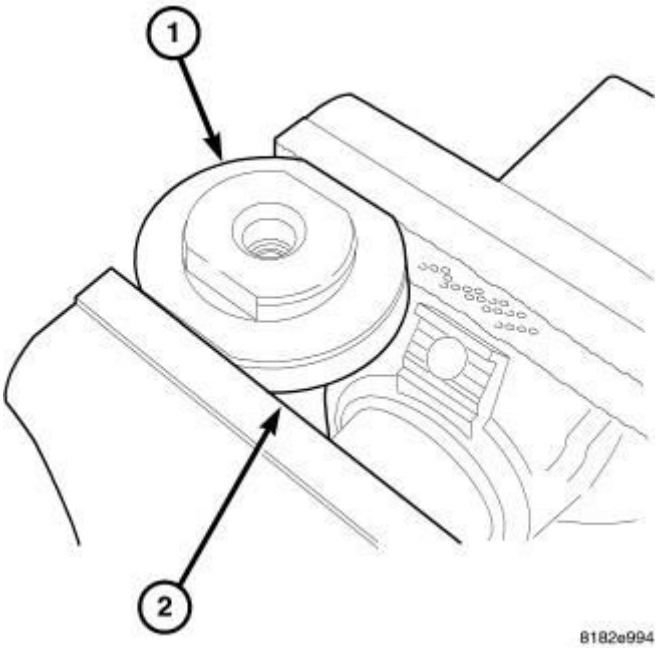

Fig. 225: Bottom Of Compressor
Courtesy of CHRYSLER GROUP, LLC

6. Place bottom of Compressor (special tool #8900A, Multi Use Spring Compressor) (1) in Vice (2).

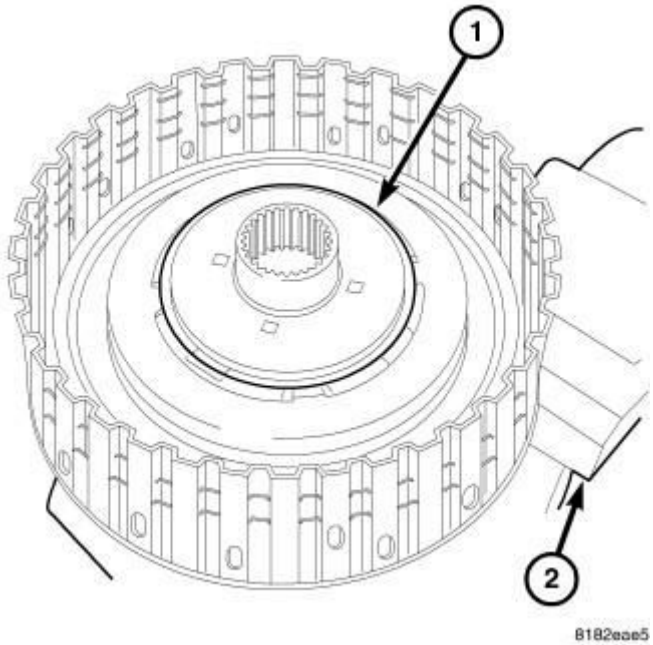

Fig. 226: Placing Drum Over Compressor Bottom 8900 In Vice
Courtesy of CHRYSLER GROUP, LLC

7. Place the drum (1) over Compressor bottom (special tool #8900A, Multi Use Spring Compressor) in Vice (2).

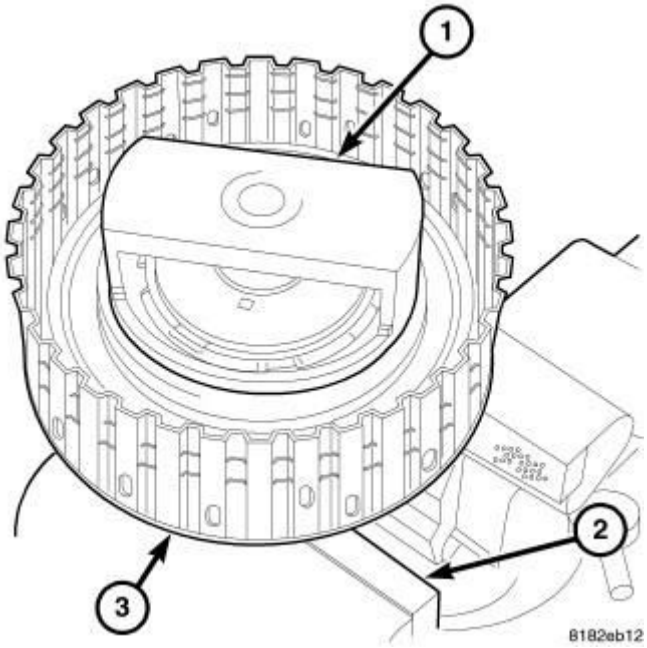

Fig. 227: Placing Correct Ring That Comes With Compressor 8900 In Drum
Courtesy of CHRYSLER GROUP, LLC

8. Place correct ring (1) that comes with Compressor (special tool #8900A, Multi Use Spring Compressor) in drum (3).

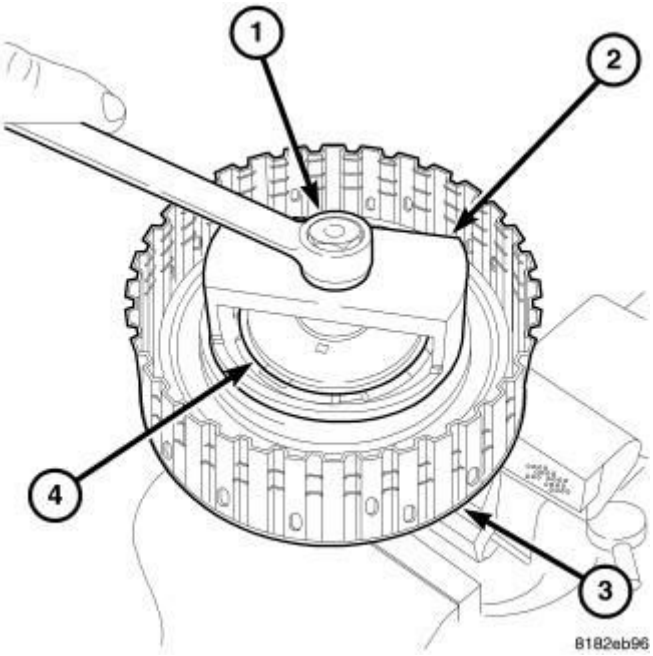

Fig. 228: Compress Drum
Courtesy of CHRYSLER GROUP, LLC

9. Install threaded rod (1) that comes with Compressor (special tool #8900A,

Multi Use Spring Compressor) (2) in drum (3).

10. Compress tool until the snap ring (4) can be removed.

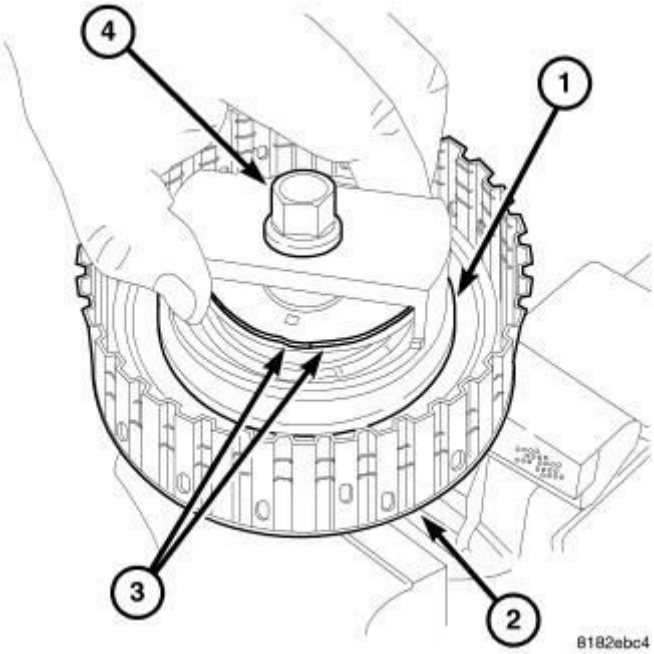

Fig. 229: Snap Ring & Piston
Courtesy of CHRYSLER GROUP, LLC

11. Use snap ring pliers or a small screw driver to remove the snap ring (3) from the piston (1).

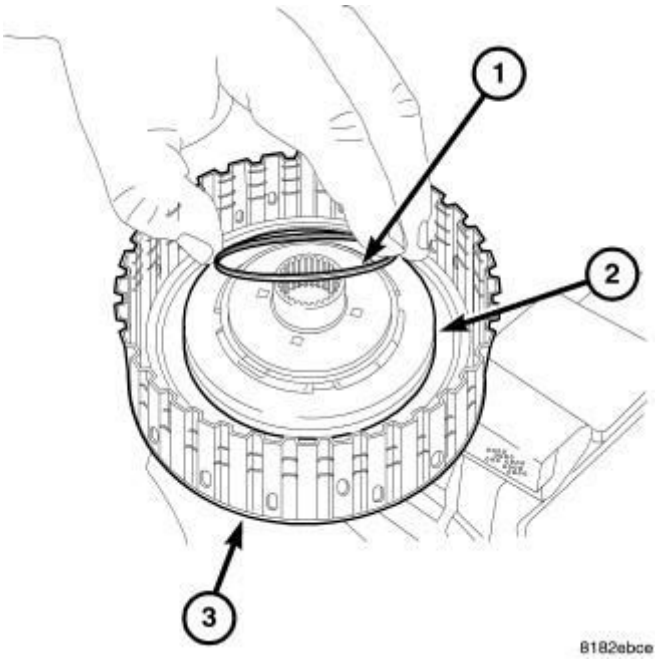

Fig. 230: Snap Ring
Courtesy of CHRYSLER GROUP, LLC

12. Remove snap ring.

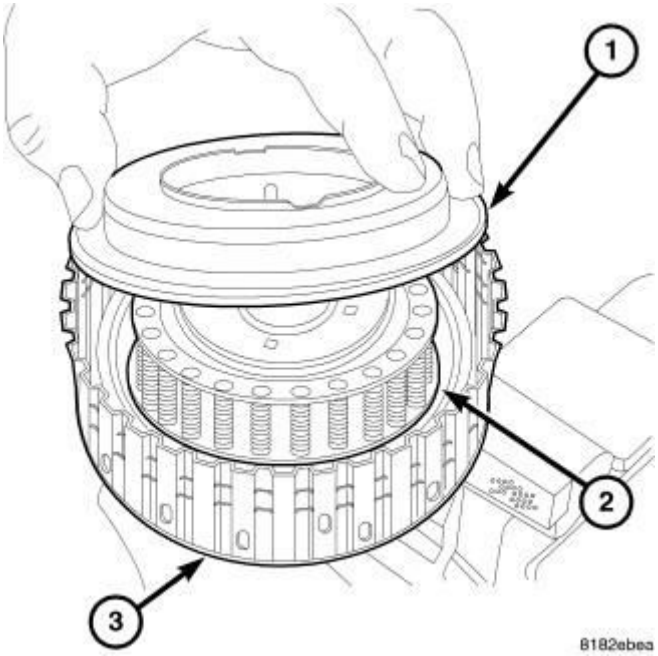

Fig. 231: Piston
Courtesy of CHRYSLER GROUP, LLC

13. Remove the piston (1) from the drum (3).
14. Remove the spring assembly (2) form the drum (3).

INSPECTION

INSPECTION

1. Check driven plate, drive plate, retaining plate and forward clutch drum for damage, distortion or burnt surfaces.
2. Check snap ring and dish plate for damage, distortion or permanent fatigue.
3. Check input shaft and internal gear for damage and distortion.

ASSEMBLY

ASSEMBLY

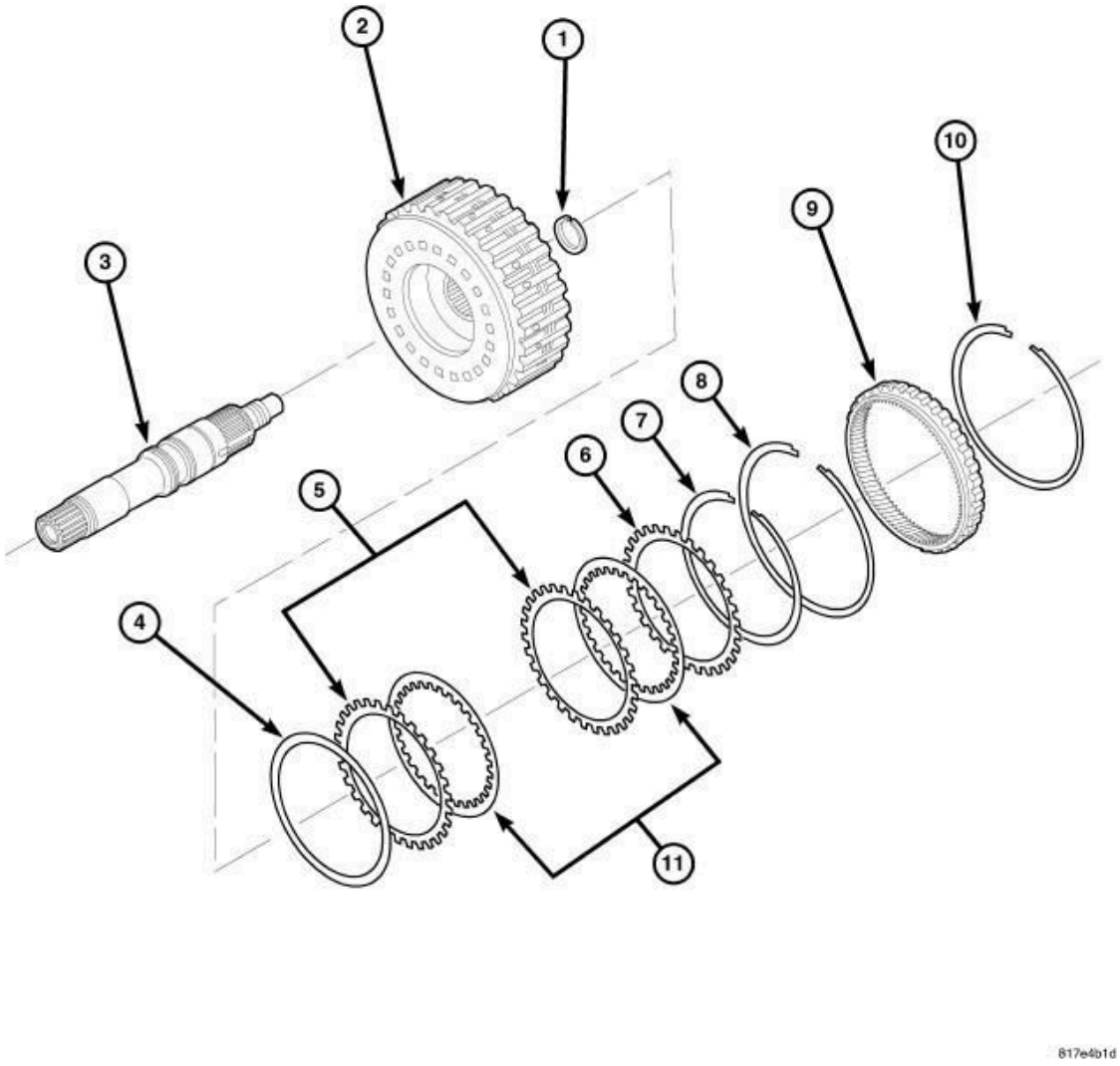

Fig. 232: Exploded View Of Forward Clutch
Courtesy of CHRYSLER GROUP, LLC

1 - Snap Ring
2 - Forward Clutch Drum
3 - Input Shaft
4 - Dish Plate
5 - Driven Plate
6 - Retaining Plate
7 - Snap Ring
8 - Snap Ring
9 - Internal Gear
10 - Snap Ring

11 - Drive Plate

1. Refer to the exploded views as necessary when performing the following steps.

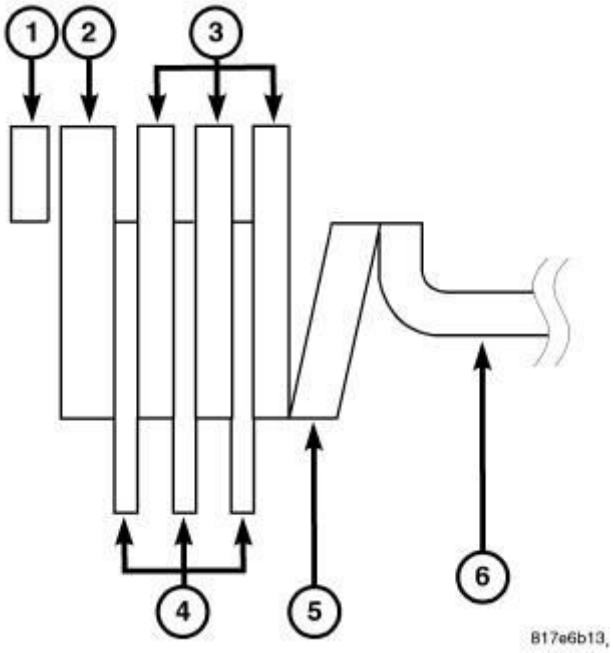

Fig. 233: Clutch Disc Stack Up
Courtesy of CHRYSLER GROUP, LLC

1 - SNAP RING
2 - RETAINING PLATE
3 - DRIVEN PLATE
4 - DRIVE PLATE
5 - DISH PLATE
6 - FORWARD CLUTCH PISTON

2. Refer to this view as necessary when performing the following steps.

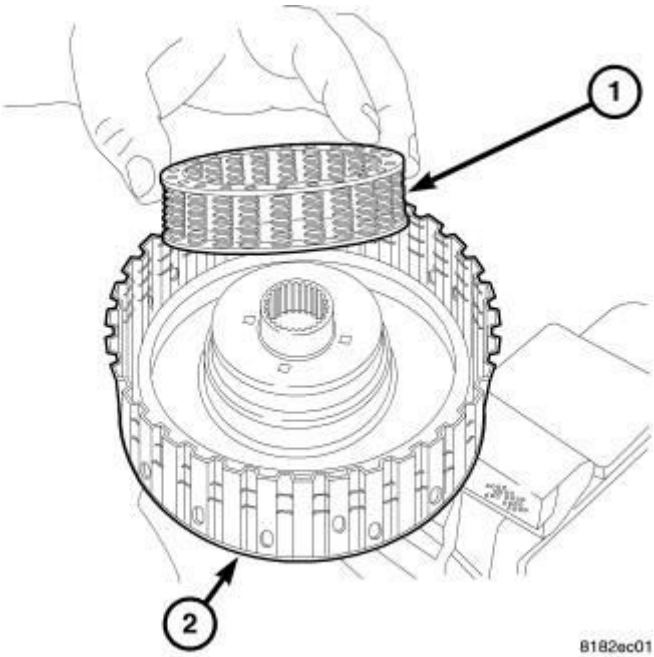

Fig. 234: Spring
Courtesy of CHRYSLER GROUP, LLC

3. Install the spring assembly (1) into the drum (2).

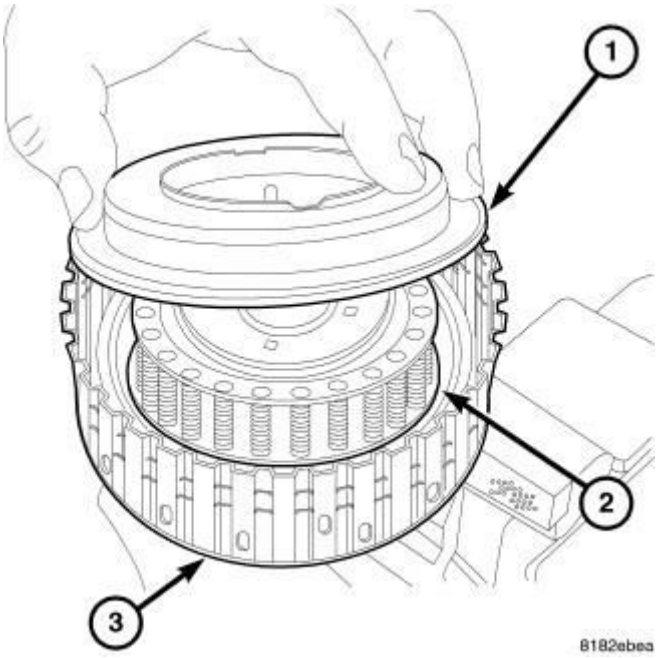

Fig. 235: Piston
Courtesy of CHRYSLER GROUP, LLC

4. Install the piston (1) into the drum (3).

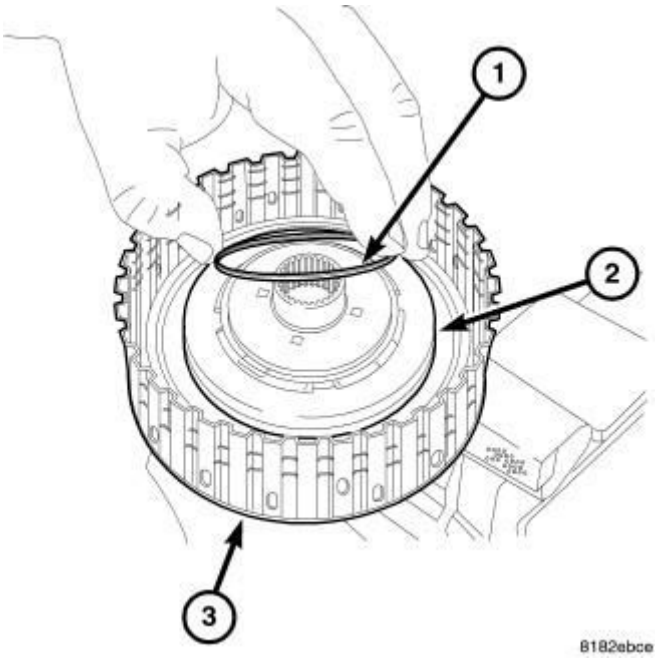

Fig. 236: Snap Ring
Courtesy of CHRYSLER GROUP, LLC

5. Lay the snap ring onto the piston.

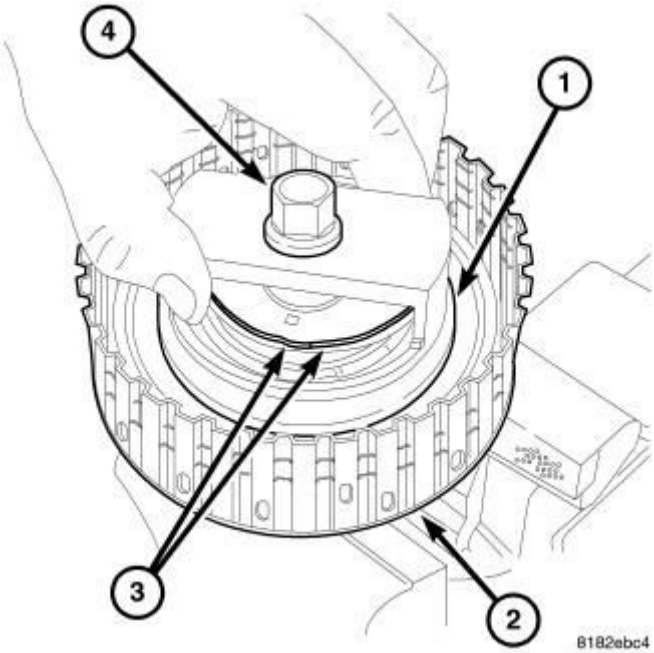

Fig. 237: Snap Ring & Piston
Courtesy of CHRYSLER GROUP, LLC

6. Install Compressor (special tool #8900A, Multi Use Spring Compressor).

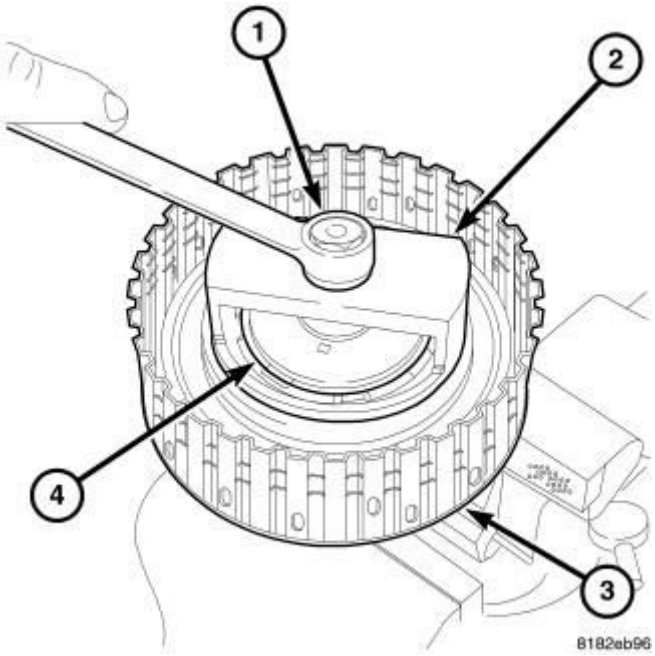

Fig. 238: Compress Drum
Courtesy of CHRYSLER GROUP, LLC

7. Compress the piston.

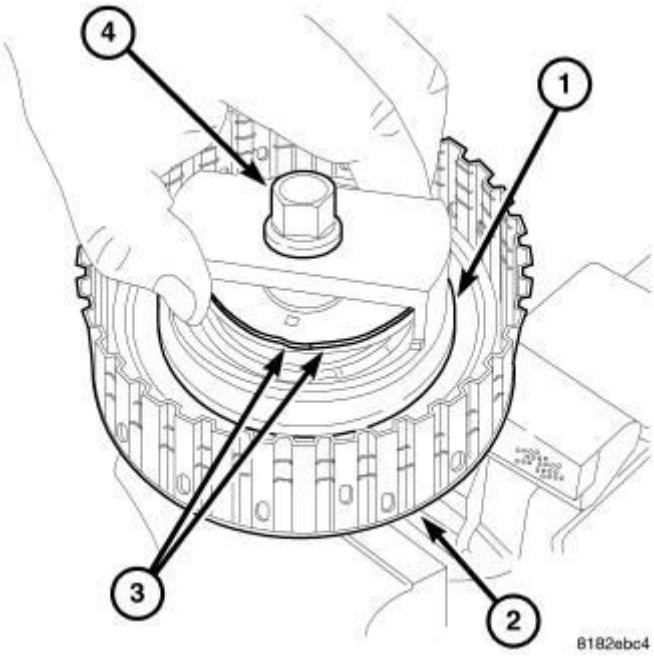

Fig. 239: Snap Ring & Piston
Courtesy of CHRYSLER GROUP, LLC

8. Use snap ring pliers or a small screw driver to install the snap ring (3) onto the piston (1).

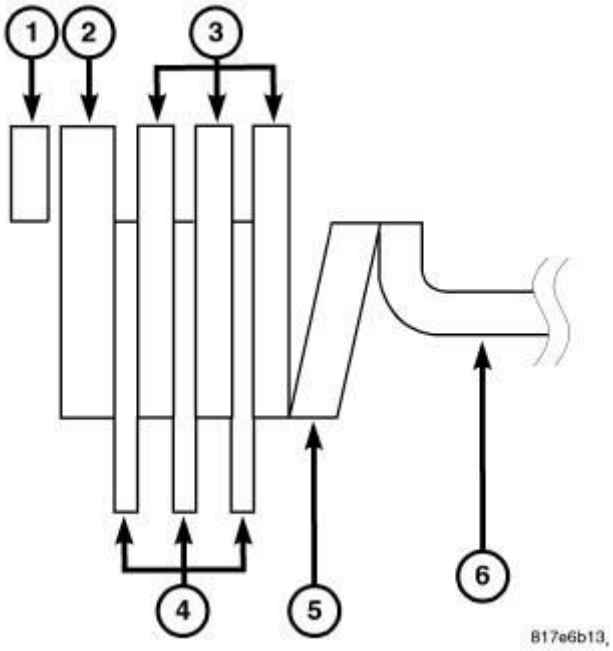

Fig. 240: Clutch Disc Stack Up
Courtesy of CHRYSLER GROUP, LLC

1 - SNAP RING
2 - RETAINING PLATE
3 - DRIVEN PLATE
4 - DRIVE PLATE
5 - DISH PLATE
6 - FORWARD CLUTCH PISTON

CAUTION: Install so that the installation order of each plate is correct.

9. Install the dish plate (5), the driven plate (3), the drive plate (4), the retaining plate (2) and one piece of the snap ring (1), in the forward clutch piston (6).

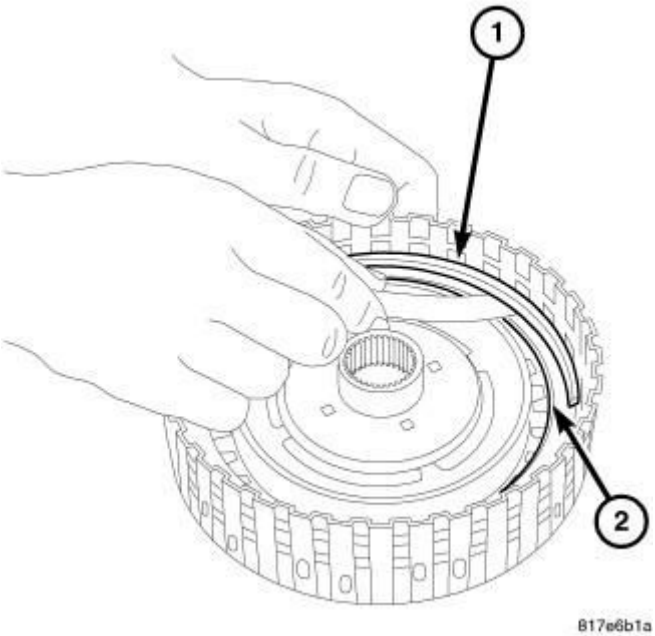

Fig. 241: Measuring Clearance Between Snap Ring & Retaining Plate
Courtesy of CHRYSLER GROUP, LLC

CAUTION: When conducting measurements, measure two or more places and calculate the average value. If clearance is beyond standard value, replace the forward clutch assembly.

10. Measure the clearance between the snap ring (1) and the retaining plate (2). the correct clutch clearance is 1.2-1.5 mm (0.047-0.059 in.).

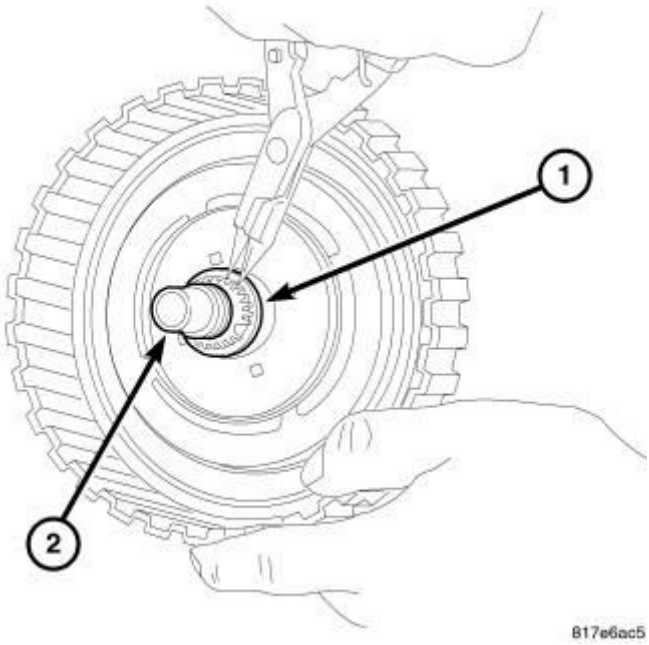

Fig. 242: Input Shaft Snap Ring
Courtesy of CHRYSLER GROUP, LLC

CAUTION: Do not expand the snap ring beyond level required to install and do not deform it.

11. Install the input shaft (2) in the forward clutch drum, and install the snap ring (1).

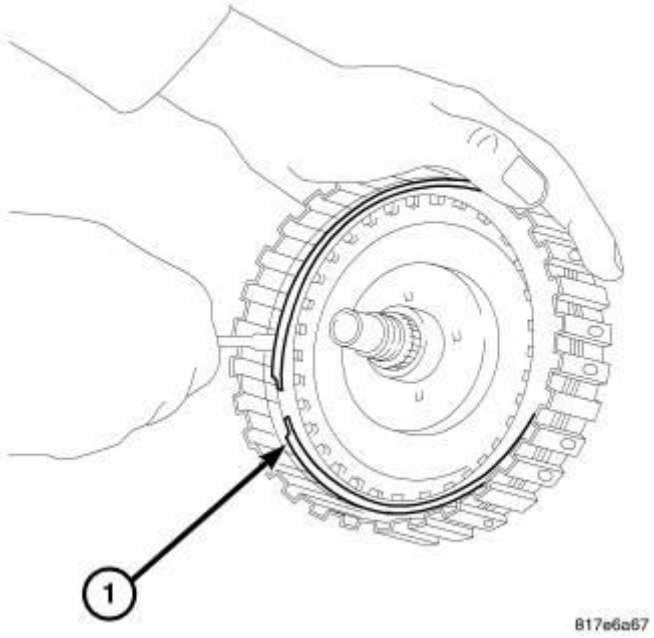

Fig. 243: Snap Rings At Forward Clutch Drum
Courtesy of CHRYSLER GROUP, LLC

12. Install one piece of the snap ring (1) into the forward clutch drum.

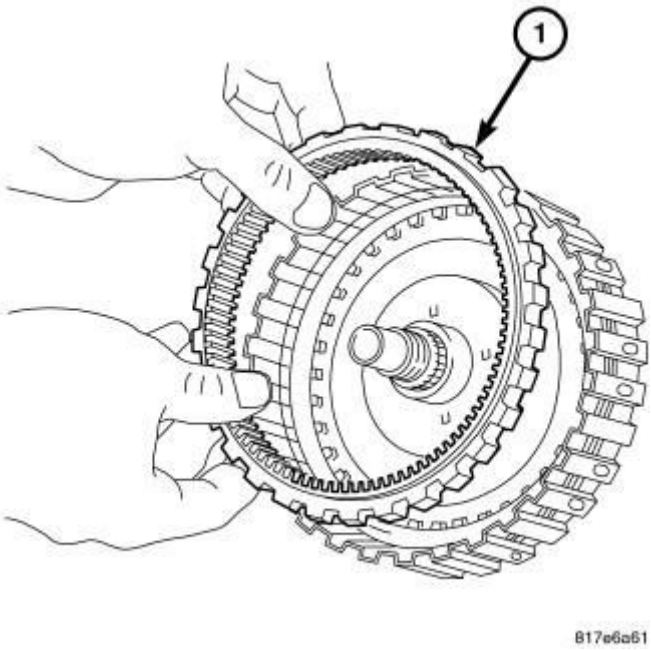

Fig. 244: Internal Gear At Forward Clutch
Courtesy of CHRYSLER GROUP, LLC

13. Install the internal gear (1) into the forward clutch drum.

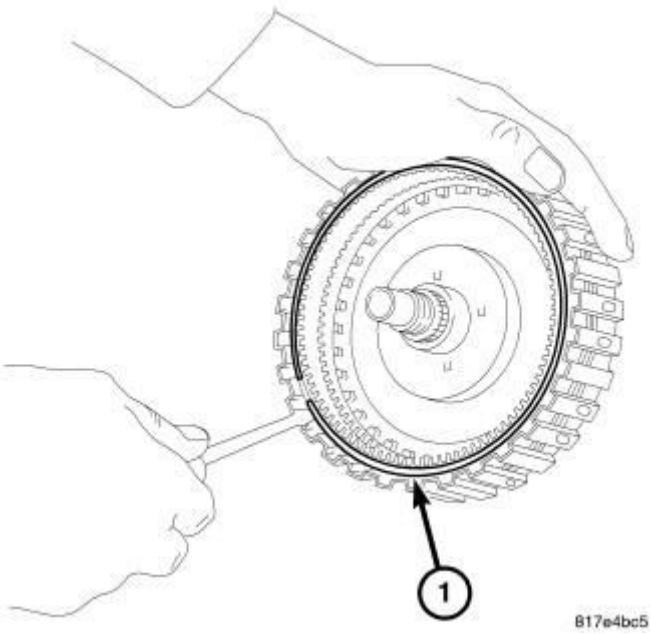

Fig. 245: Forward Clutch Snap Ring
Courtesy of CHRYSLER GROUP, LLC

14. Install the snap ring (1) in the forward clutch drum.

COOLER, TRANSMISSION OIL

DESCRIPTION

DESCRIPTION

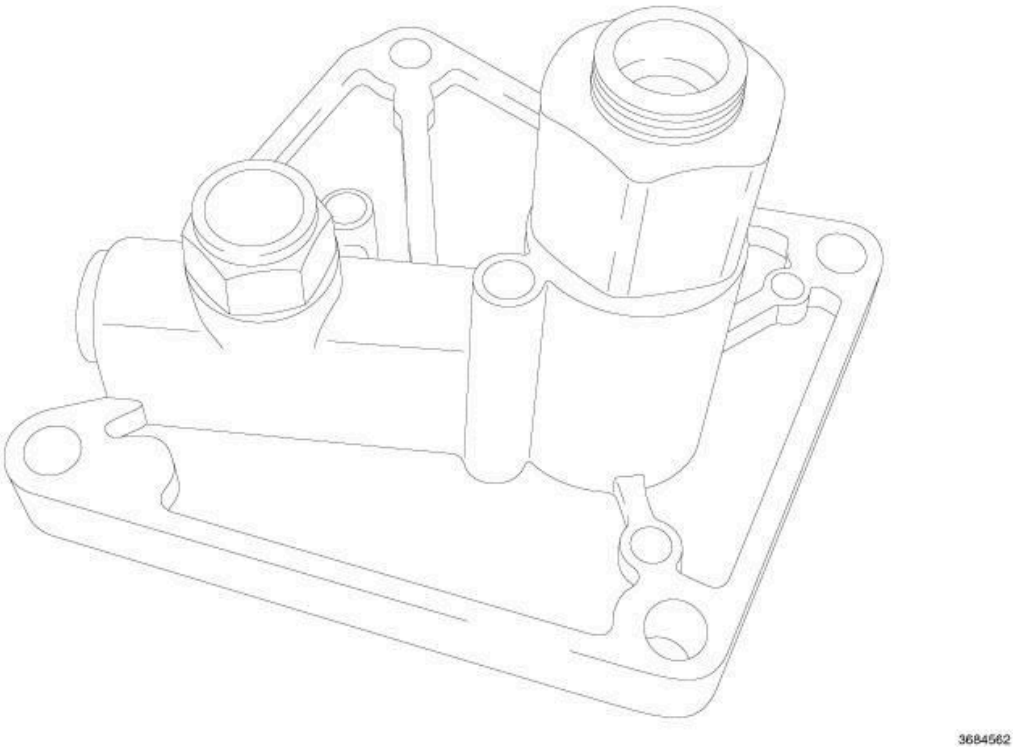

Fig. 246: Fluid Cooler Bypass Adapter
Courtesy of CHRYSLER GROUP, LLC

The Fluid Cooler Bypass Adapter is located on the left side of the transmission. It takes the place of the Fluid Cooler on some models. The adapter plate houses integral pressure and thermal bypass valves.

Some vehicles will come equipped with an external fluid cooler. This cooler is located in the same position as the Fluid Bypass Valve Adapter.

OPERATION

OPERATION

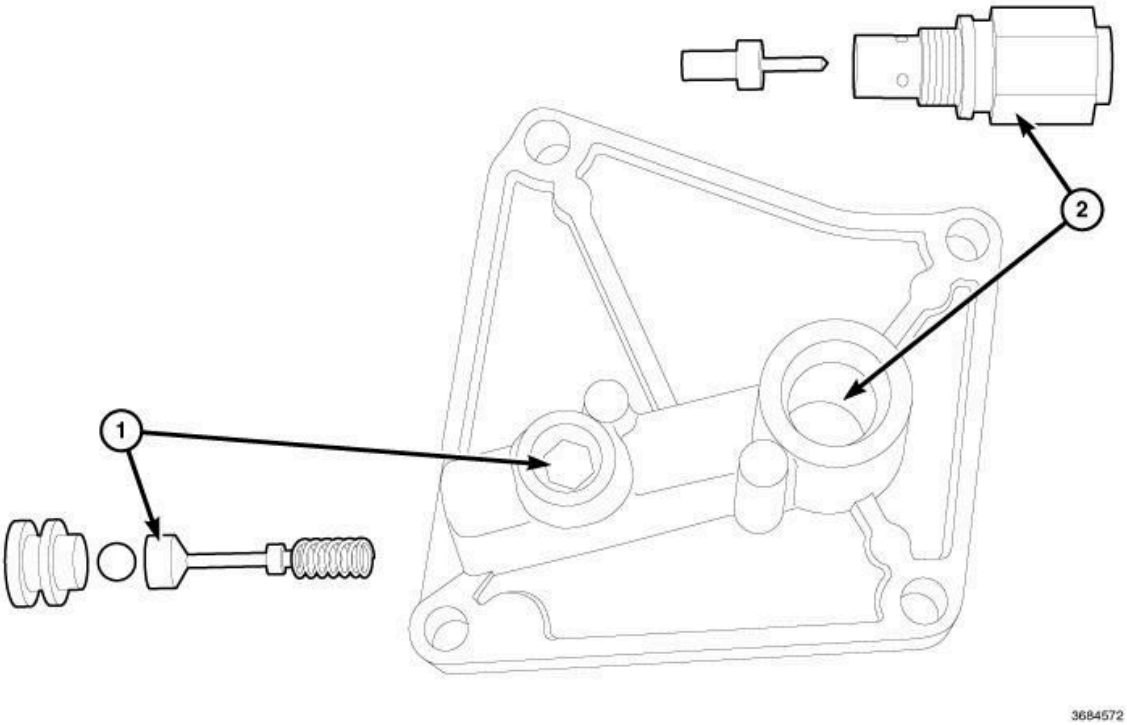

Fig. 247: Integral Pressure & Thermal Bypass Valves
Courtesy of CHRYSLER GROUP, LLC

1 - INTEGRAL PRESSURE BYPASS VALVE
2 - INTEGRAL THERMAL BYPASS VALVE

On certain model vehicles, the CVT transmission is equipped with a fluid bypass valve adapter which replaces the fluid cooler and external bypass valve. The pressure bypass (1) begins to actuate from 50-60 psi (3-4 bar). The thermal bypass valve begins to actuate at 160-170°F (71-77°C) and is fully open at 185°F (85°C). Approximate cooler flow with the bypass valve fully open is 1 quart (.95L) every seven seconds.

REMOVAL

FLUID COOLER

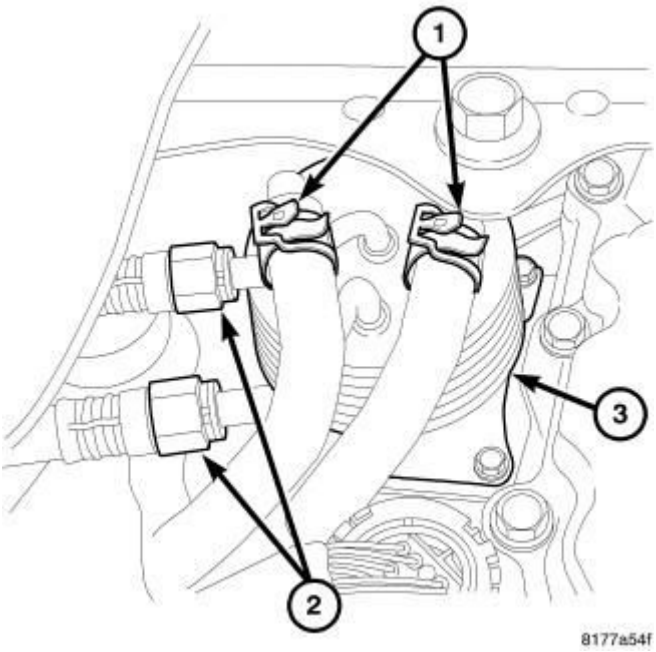

Fig. 248: Cooler/Transmission Lines At Cooler
Courtesy of CHRYSLER GROUP, LLC

1. Raise the vehicle on a hoist. Refer to **HOISTING, STANDARD PROCEDURE** .
2. Remove the left front tire.
3. Remove the left front splash shield.
4. Drain the coolant.
5. Remove the transmission lines (2) at the cooler (3).
6. Remove the coolant lines (1) at the cooler.
7. Remove the mounting bolts at the cooler.
8. Remove the cooler from the transmission. Remove and discard the O-ring seal.

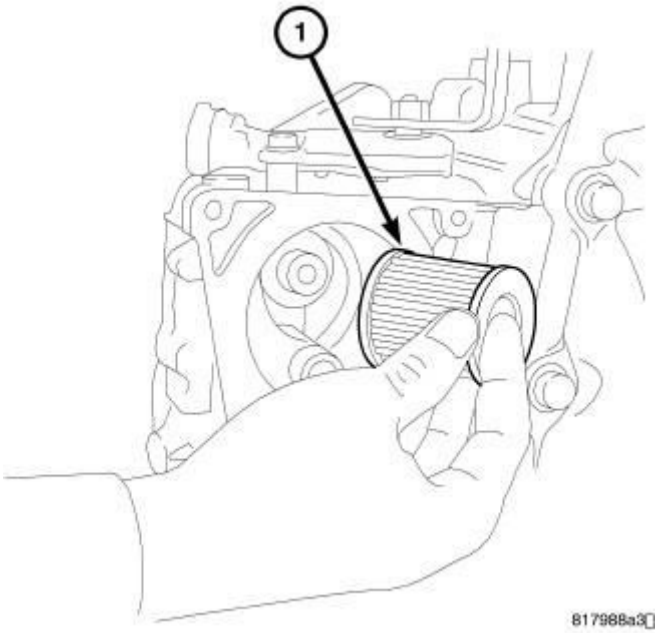

Fig. 249: Fluid Filter
Courtesy of CHRYSLER GROUP, LLC

9. Remove the fluid filter (1).

BYPASS VALVE

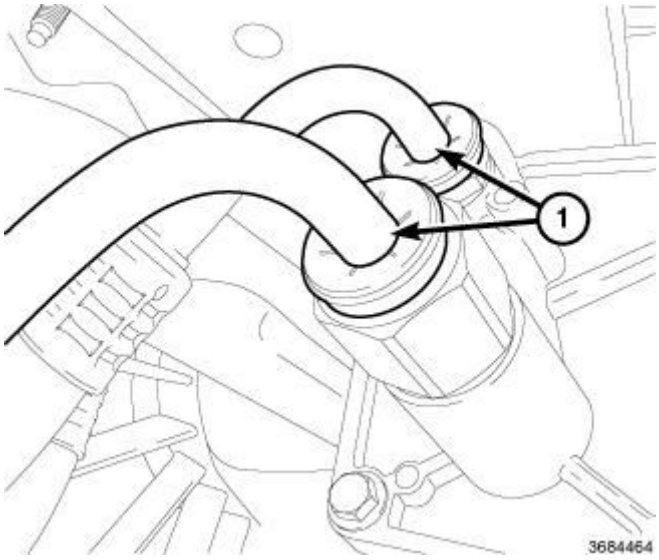

Fig. 250: Transmission Fluid Lines
Courtesy of CHRYSLER GROUP, LLC

1. Raise the vehicle. Refer to **HOISTING, STANDARD PROCEDURE** .
2. Remove the left front tire.
3. Remove the belly pan. Refer to **BELLY PAN, REMOVAL** .

4. Disconnect the transmission lines (1). Refer to **TUBES AND HOSES, TRANSMISSION OIL COOLER, STANDARD PROCEDURE** .

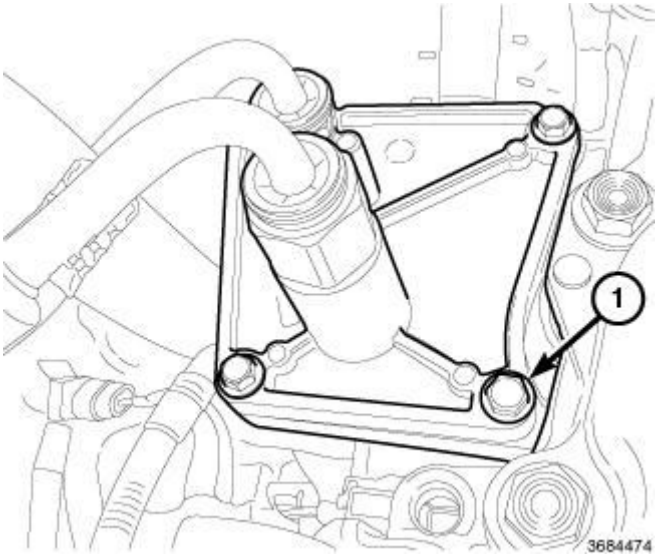

Fig. 251: Four Mounting Bolts
Courtesy of CHRYSLER GROUP, LLC

5. Remove the four mounting bolts (1).
6. Remove the bypass valve plate from the transmission.
7. Remove and discard the O-ring.

INSTALLATION

FLUID COOLER

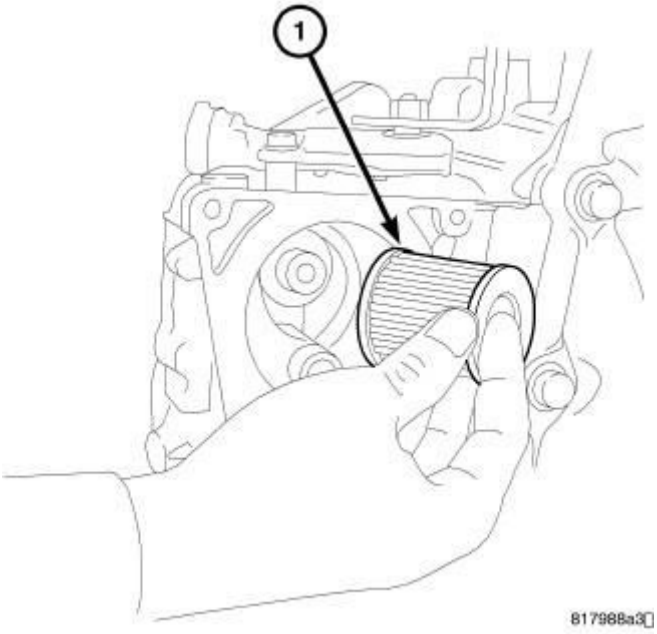

Fig. 252: Fluid Filter
Courtesy of CHRYSLER GROUP, LLC

CAUTION: Apply CVT fluid on the sealing area when installing the CVT fluid filter.

1. Install the CVT fluid filter (1) into the transaxle case (certain models).

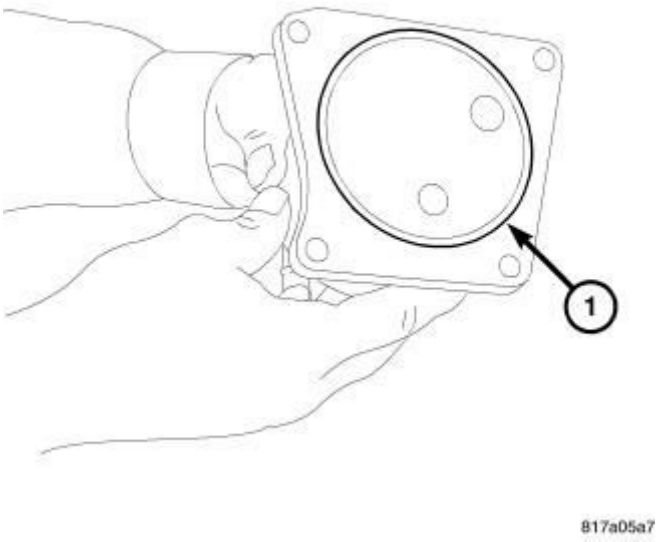

Fig. 253: CVT Fluid Filter O-Ring
Courtesy of CHRYSLER GROUP, LLC

CAUTION: Do not re-use the o-ring. Apply CVT fluid when installing the O-ring.

2. Install the new O-ring (1) onto the CVT fluid filter.

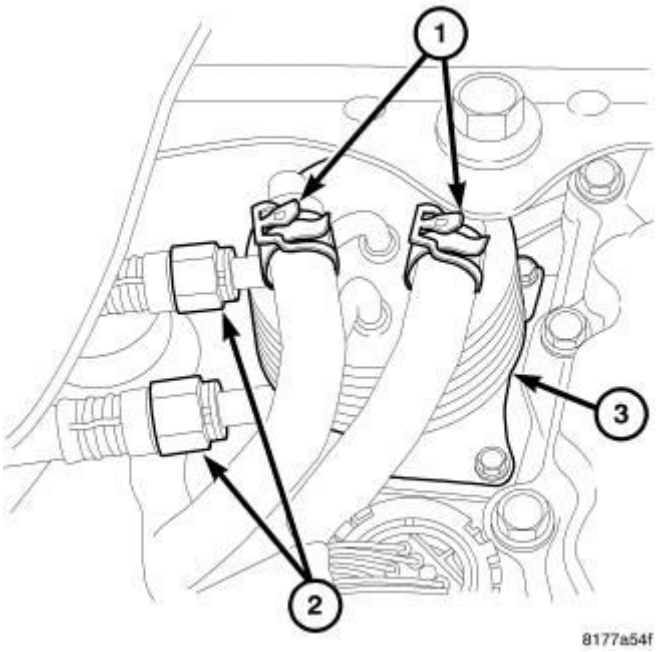

Fig. 254: Cooler/Transmission Lines At Cooler
Courtesy of CHRYSLER GROUP, LLC

3. Install the CVT fluid cooler onto the transaxle case.
4. Install and tighten the mounting bolts to 4 N.m (37 in. lbs.).
5. Install the coolant lines (1) at the cooler.
6. Install the transmission lines (2) at the cooler (3).
7. Install the left front splash shield.
8. Install the left front tire.
9. Lower the vehicle.
10. Inspect the coolant level. Refer to **STANDARD PROCEDURE** .
11. Inspect the transmission fluid level. Refer to **FLUID, STANDARD PROCEDURE**.

BYPASS VALVE

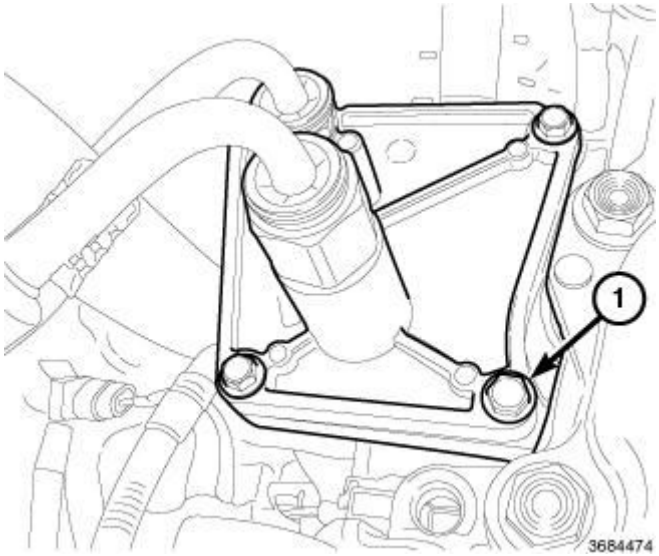

Fig. 255: Four Mounting Bolts
Courtesy of CHRYSLER GROUP, LLC

CAUTION: Do not re-use the o-ring. Apply CVT fluid when installing the O-ring.

1. Install the **new** O-ring to the bypass valve plate.
2. Install the bypass valve plate to the transmission.
3. Install the four mounting bolts (1) and tighten to 4 N.m (37 in. lbs.).

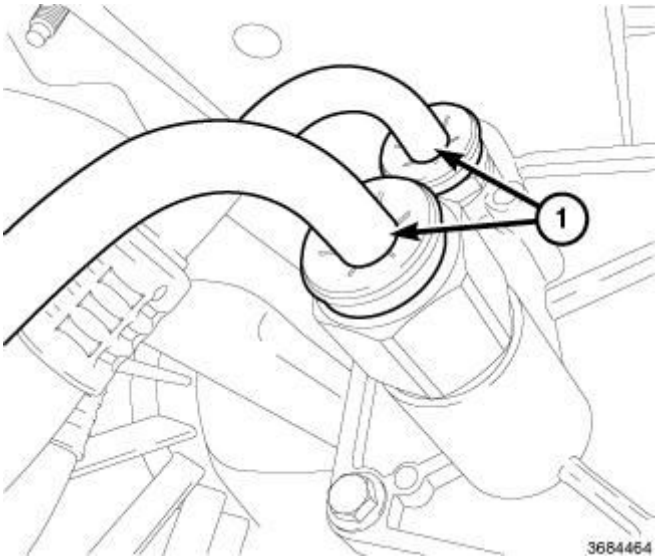

Fig. 256: Transmission Fluid Lines
Courtesy of CHRYSLER GROUP, LLC

4. Connect the transmission lines (1). Refer to **TUBES AND HOSES, TRANSMISSION OIL COOLER, STANDARD PROCEDURE** .

5. Install the belly pan. Refer to **BELLY PAN, REMOVAL** .
6. Install the left front tire. Refer to **INSTALLATION** .
7. Lower the vehicle. Refer to **HOISTING, STANDARD PROCEDURE** .
8. Inspect the transmission fluid level. Refer to **FLUID, STANDARD PROCEDURE**.

DIFFERENTIAL

DISASSEMBLY

DISASSEMBLY

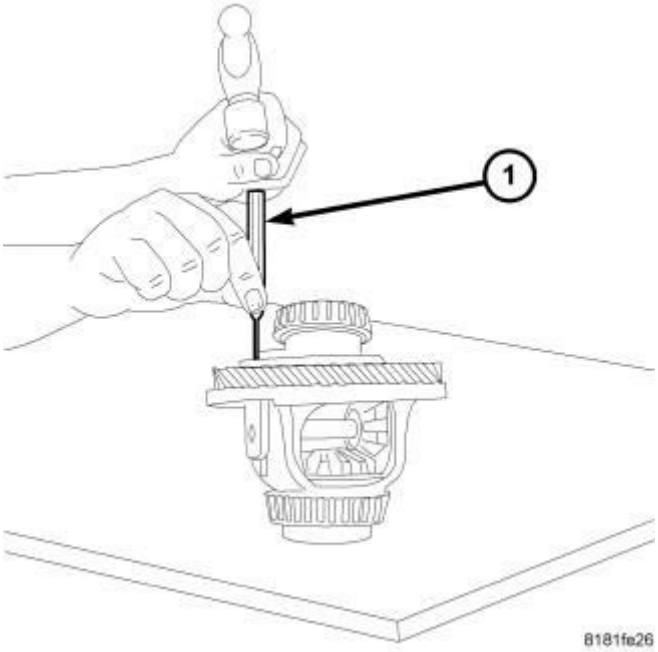

Fig. 257: Removing Roll Pin
Courtesy of CHRYSLER GROUP, LLC

1. Remove the roll pin using a pin punch (1).

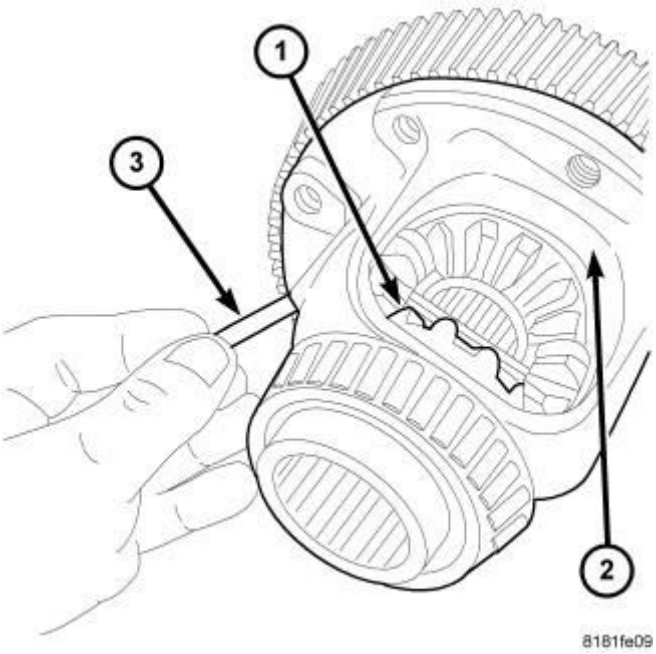

Fig. 258: Pinion Shaft Roll Pin
Courtesy of CHRYSLER GROUP, LLC

2. Discard the old roll pin (3).

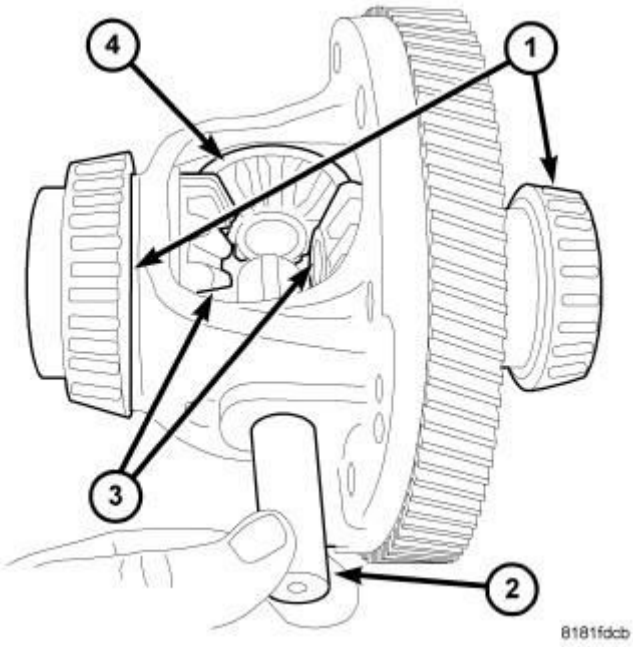

Fig. 259: Pinion Shaft
Courtesy of CHRYSLER GROUP, LLC

3. Remove the pinion shaft (2) and inspect for excessive ware.

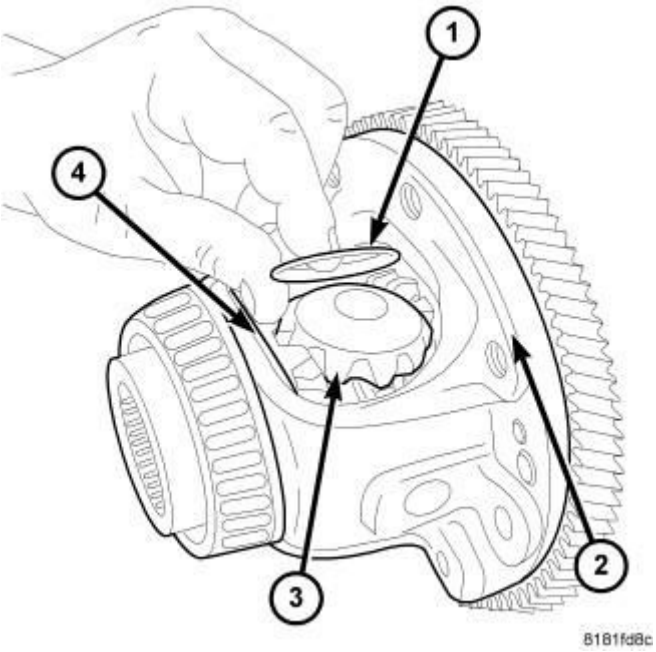

Fig. 260: Pinion Gear Shim
Courtesy of CHRYSLER GROUP, LLC

4. Roll the pinion gears (3) and shims (1) out of the carrier (2).
5. Remove the pinion gear shims (1) and mark for installation.

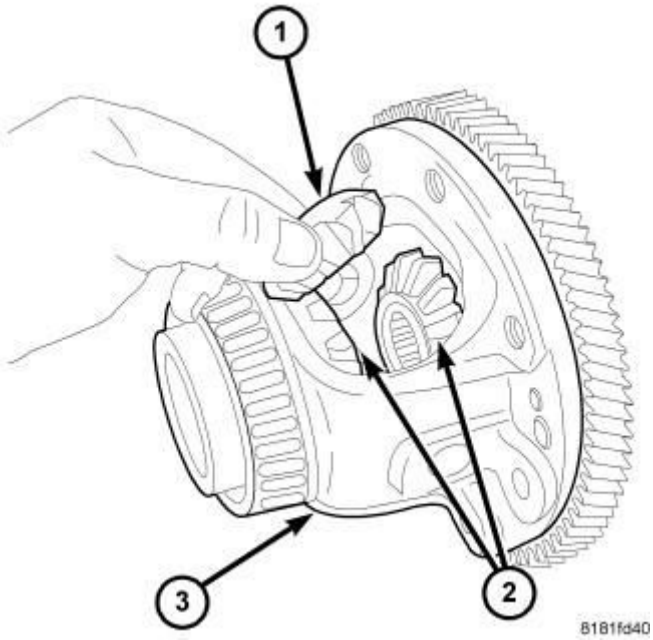

Fig. 261: Pinion Gears
Courtesy of CHRYSLER GROUP, LLC

6. Remove the pinion gears (1) from the carrier (3).

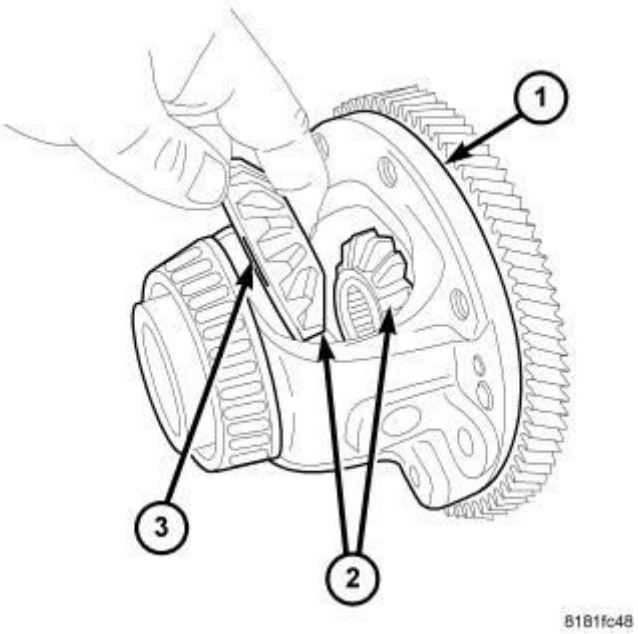

Fig. 262: Side Gears
Courtesy of CHRYSLER GROUP, LLC

7. Remove the side gears (2) and shims (3) from the carrier.

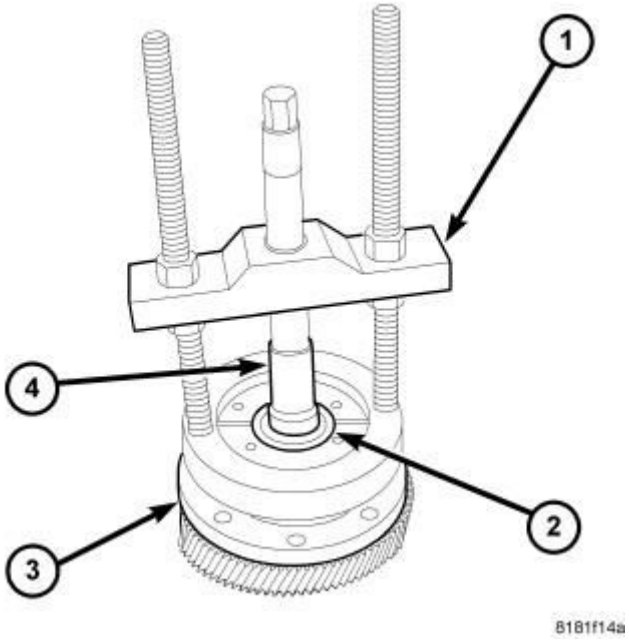

Fig. 263: Removing Small Bearing
Courtesy of CHRYSLER GROUP, LLC

8. If the vehicle is a two wheel drive remove the carrier bearings using Puller (special tool #C-293-PA, Puller, Press), six Inserts (special tool #C-293-40, Block Set, Puller) and Press Insert (special tool #C-4996, Adapter, Plug).

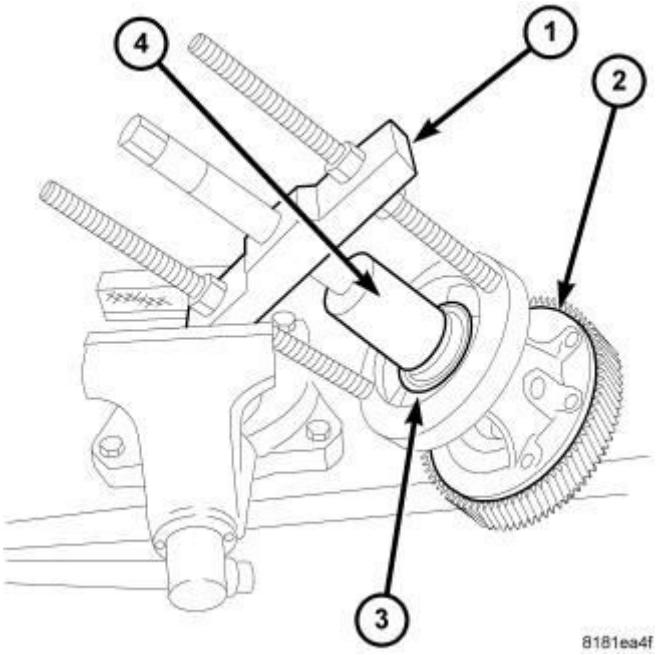

Fig. 264: Removing Large Bearing
Courtesy of CHRYSLER GROUP, LLC

9. If all wheel drive use Puller (special tool #C-293-PA, Puller, Press), six (special tool #9613, Adapters, Puller) Inserts and Insert (special tool #8888, Plug, Differential Bearing) to remove the carrier bearings.

ASSEMBLY

ASSEMBLY

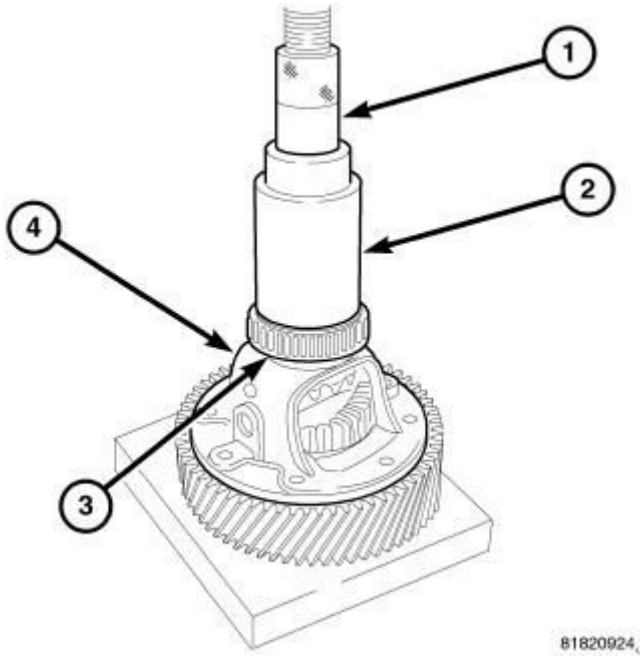

Fig. 265: Press Bearings To Carrier

Courtesy of CHRYSLER GROUP, LLC

1. Use Installer C-3716-A and Handle (special tool #C-4171, Driver Handle, Universal) to install the bearings onto the carrier (both sides).

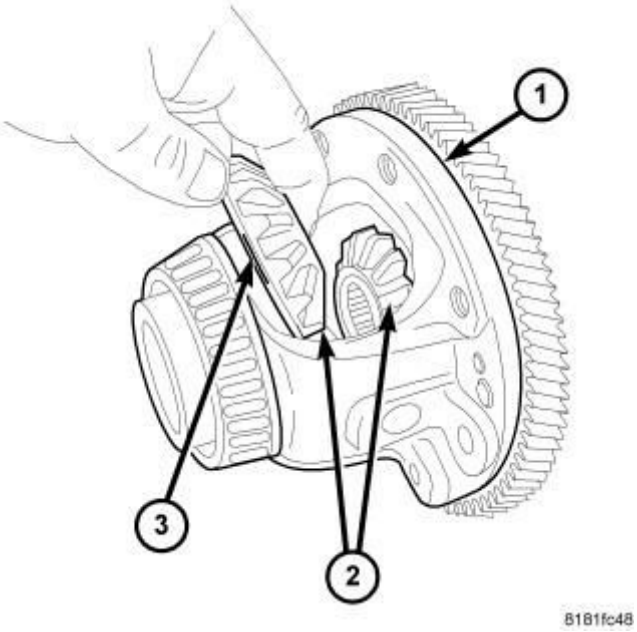

Fig. 266: Side Gears
Courtesy of CHRYSLER GROUP, LLC

2. Install the side gears (2) and shims (3) onto the carrier.

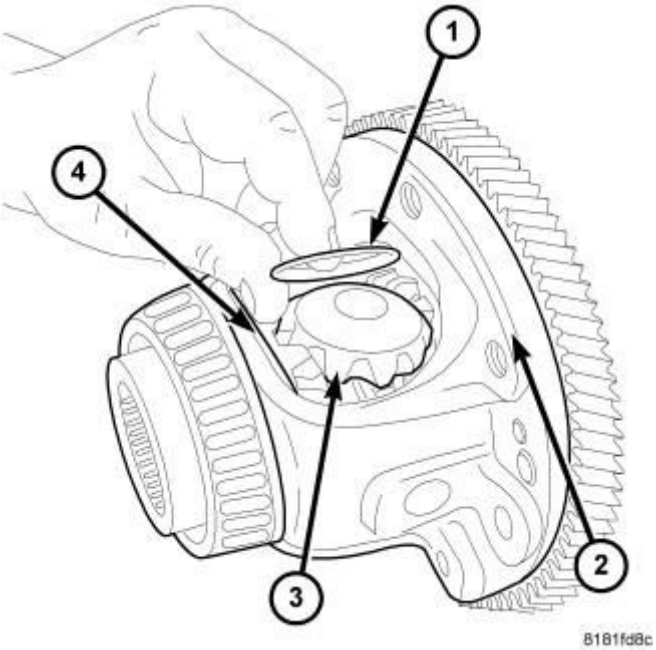

Fig. 267: Pinion Gear Shim

Courtesy of CHRYSLER GROUP, LLC

3. Place the pinion gears (3) onto the side gears with the correct shims (1).
4. Roll into place.

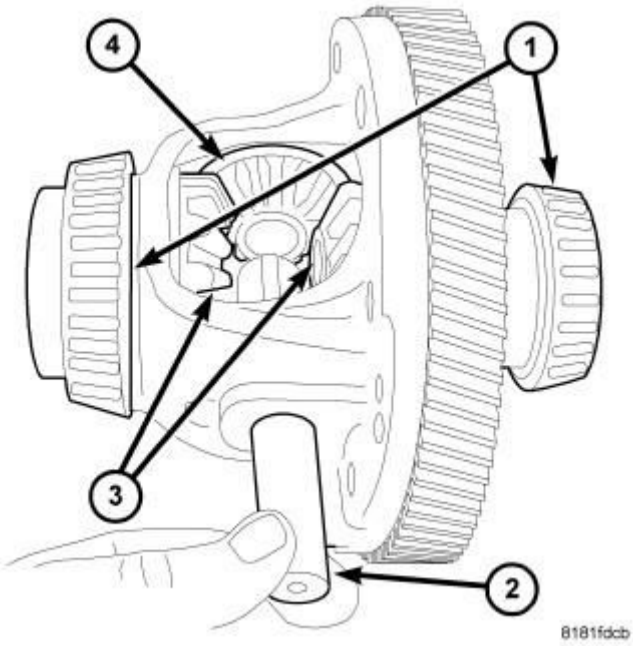

Fig. 268: Pinion Shaft
Courtesy of CHRYSLER GROUP, LLC

5. Install the pinion shaft (2).

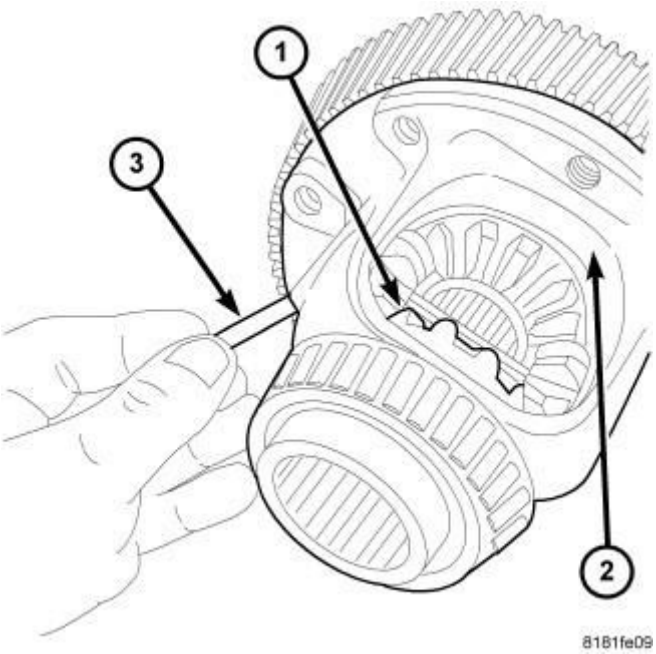

Fig. 269: Pinion Shaft Roll Pin

Courtesy of CHRYSLER GROUP, LLC

6. Use a new roll pin (3).

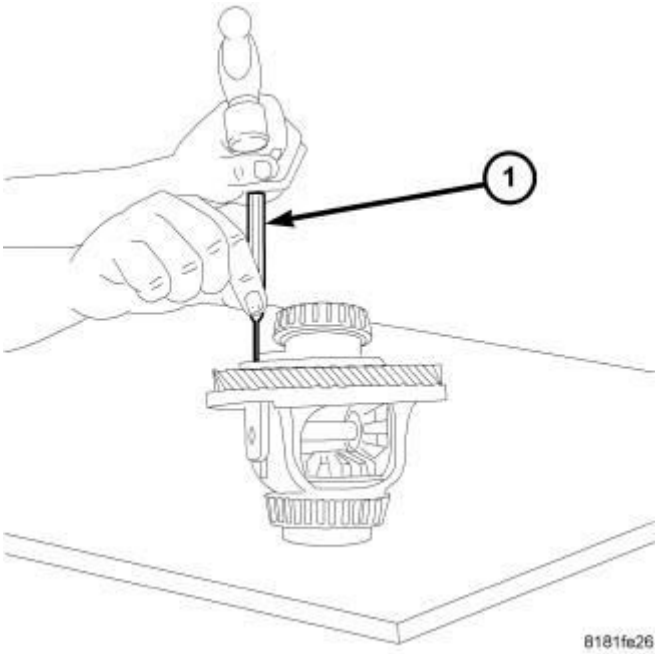

Fig. 270: Removing Roll Pin
Courtesy of CHRYSLER GROUP, LLC

7. Install the roll pin (3) using a pin punch (1).

FLUID

DIAGNOSIS AND TESTING

EFFECTS OF INCORRECT FLUID LEVEL

A low fluid level allows the pump to take in air along with the fluid. Air in the fluid will cause fluid pressures to be low and develop slower than normal. If the transmission is overfilled, the gears churn the fluid into foam. This aerates the fluid and causing the same conditions occurring with a low level. In either case, air bubbles cause fluid overheating, oxidation, and varnish buildup which interferes with valve and clutch operation. Foaming also causes fluid expansion which can result in fluid overflow from the transmission vent or fill tube. Fluid overflow can easily be mistaken for a leak if inspection is not careful.

CAUSES OF BURNT FLUID

Burnt, discolored fluid is a result of overheating which has three primary causes.

1. Internal clutch slippage, usually caused by low line pressure, inadequate clutch apply pressure, or clutch seal failure.
2. A result of restricted fluid flow through the main and/or auxiliary cooler. This condition is usually the result of a faulty or damaged oil cooler, or severe restrictions in the coolers and lines caused by debris or kinked lines.
3. Heavy duty operation with a vehicle not properly equipped for this type of operation. Trailer towing or similar high load operation will overheat the transmission fluid if the vehicle is improperly equipped. Such vehicles should have an auxiliary transmission fluid cooler, a heavy duty cooling system, and the engine/axle ratio combination needed to handle heavy loads.

FLUID CONTAMINATION

Transmission fluid contamination is generally a result of:

- adding incorrect fluid
- failure to clean dipstick and fill tube when checking level
- engine coolant entering the fluid
- internal failure that generates debris
- overheat that generates sludge (fluid breakdown)
- failure to replace contaminated converter after repair

The use of non-recommended fluids can result in transmission failure. The usual results are erratic shifts, slippage, abnormal wear and eventual failure due to fluid breakdown and sludge formation. Avoid this condition by using recommended fluids only.

The dipstick cap and fill tube should be wiped clean before checking fluid level. Dirt, grease and other foreign material on the cap and tube could fall into the tube if not removed beforehand. Take the time to wipe the cap and tube clean before withdrawing the dipstick.

Engine coolant in the transmission fluid is generally caused by a cooler malfunction. The only remedy is to replace the radiator as the cooler in the radiator is not a serviceable part. If coolant has circulated through the transmission, an overhaul is necessary.

The torque converter should be replaced whenever a failure generates sludge and

debris. This is necessary because normal converter flushing procedures will not remove all contaminants.

STANDARD PROCEDURE

CHECK OIL LEVEL

1. Verify that the vehicle is parked on a level surface.
2. Remove the dipstick tube cap.

WARNING: There is a risk of accident from vehicle moving when the engine is running. Secure vehicle to prevent it from moving. There is a risk of injury from contusions and burns if you insert your hands into the engine when it is running. Do not touch hot or rotating parts. Wear properly fitted work clothes.

3. Actuate the service brake. Start engine and let it run at idle speed in selector lever position "P".
4. Shift through the transmission modes several times with the vehicle stationary and the engine idling.
5. Warm up the transmission, wait at least 2 minutes and check the oil level with the engine running. Push the Oil Dipstick (special tool #9336A, Dipstick) into transmission fill tube until the dipstick tip contacts the oil pan and pull out again, read off oil level, repeat if necessary.

NOTE: The dipstick will protrude from the fill tube when installed.

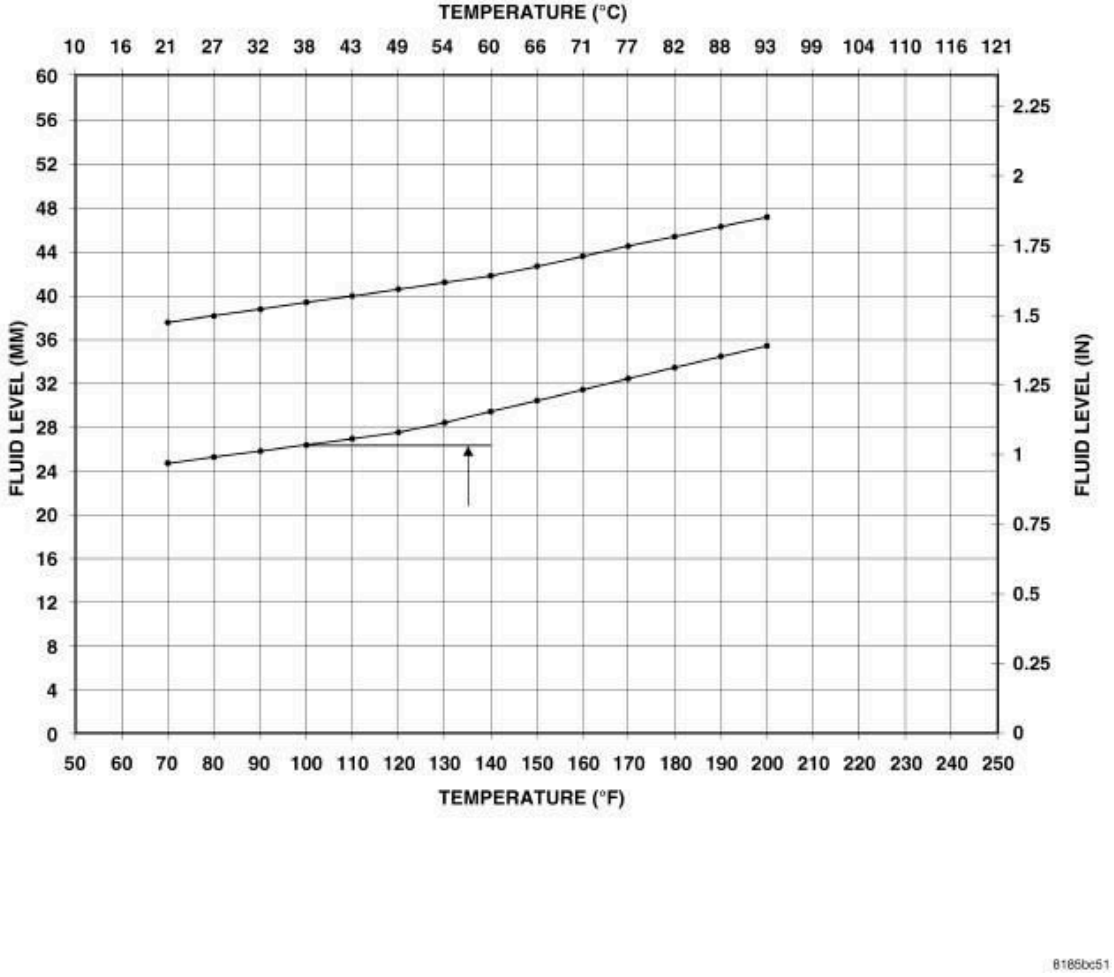

Fig. 271: CVT Transmission Fill Graph
Courtesy of CHRYSLER GROUP, LLC

6. Check transmission oil temperature using the appropriate scan tool.
7. The transmission Oil Dipstick (special tool #9336A, Dipstick) has indicator marks every 10 mm. Determine the height of the oil level on the dipstick and using the height, the transmission temperature, and the Transmission Fluid Graph, determine if the transmission oil level is correct.
8. Add or remove oil as necessary and recheck the oil level.
9. Once the oil level is correct, install the dipstick tube cap.

TRANSMISSION FILL

To avoid overfilling transmission after a fluid change or overhaul, perform the

following procedure:

1. Verify that the vehicle is parked on a level surface.
2. Remove the dipstick tube cap.
3. Add following initial quantity of MOPAR® CVTF+4, Automatic Transmission Fluid, to the transmission:
   a. If only fluid and filter were changed, add **7.0 L (14.8 pts.)** of transmission fluid to transmission.
   b. If the transmission was completely overhauled or the torque converter was replaced or drained, add **8.1 L (17.1 pts.)** of transmission fluid to transmission.
4. Check the transmission fluid and adjust as required. Refer to **FLUID, STANDARD PROCEDURE**.

FLUID AND STRAINER SERVICE

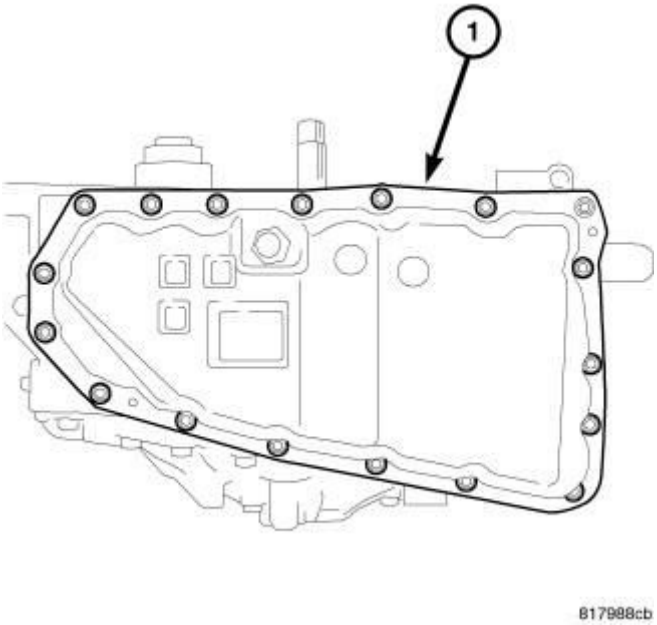

Fig. 272: Oil Pan
Courtesy of CHRYSLER GROUP, LLC

1. Remove the bolts holding the oil pan (1) to the transaxle case.
2. Remove the oil pan from the transaxle case.

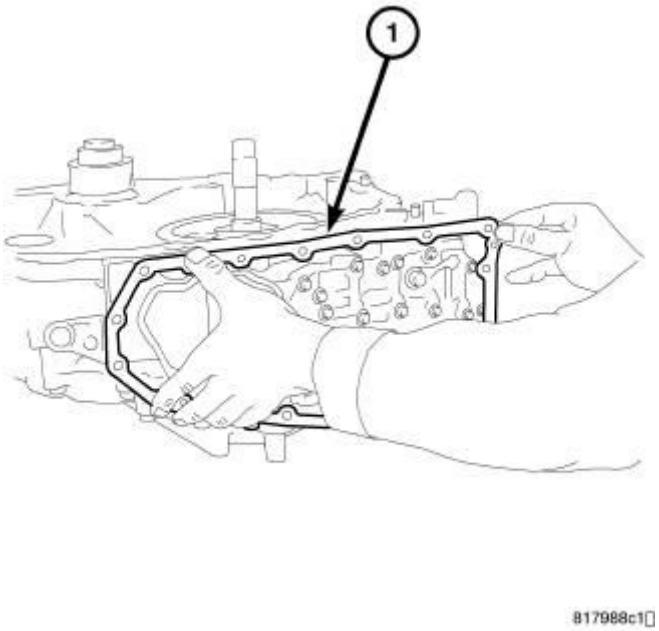

Fig. 273: Oil Pan Gasket
Courtesy of CHRYSLER GROUP, LLC

3. Remove the oil pan gasket (1) from the transaxle case.

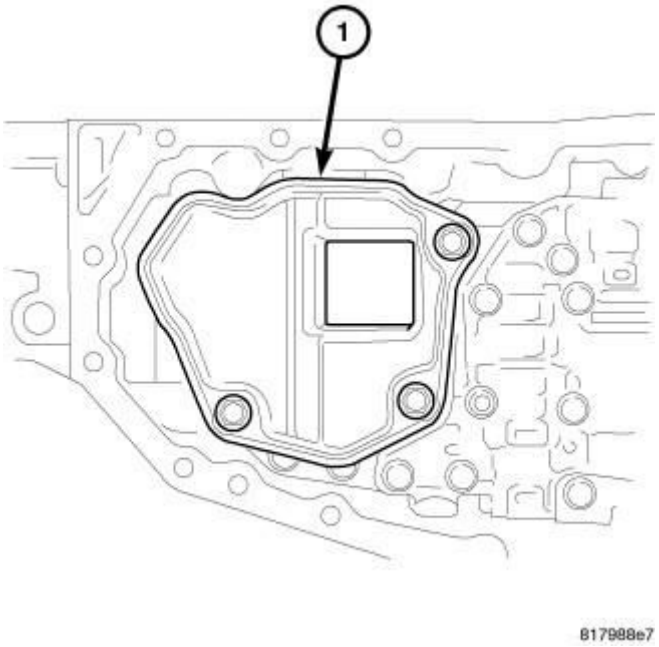

Fig. 274: Oil Strainer
Courtesy of CHRYSLER GROUP, LLC

4. Remove the bolts holding the oil strainer (1) to the valve body.
5. Remove the oil strainer.
6. Remove and discard the oil strainer o-ring.

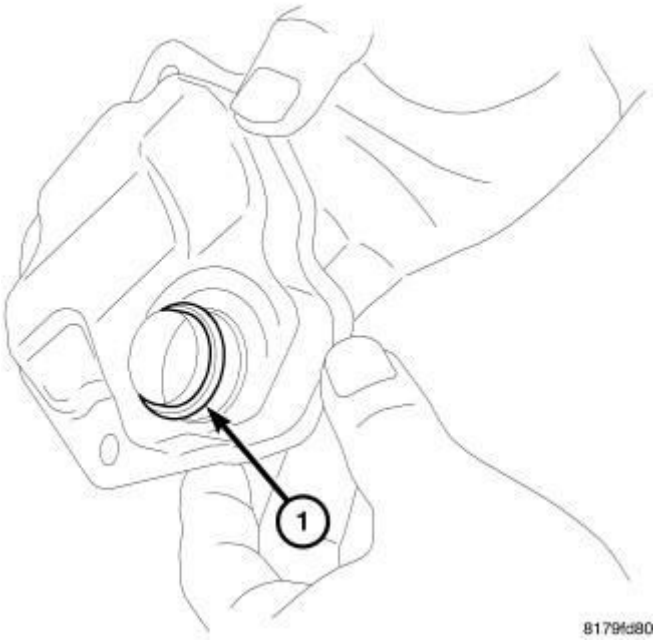

Fig. 275: Oil Strainer O-Ring
Courtesy of CHRYSLER GROUP, LLC

CAUTION: Do not re-use the o-ring. Apply CVT fluid when installing the O-ring.

7. Install the new o-ring (1) onto the new oil strainer.

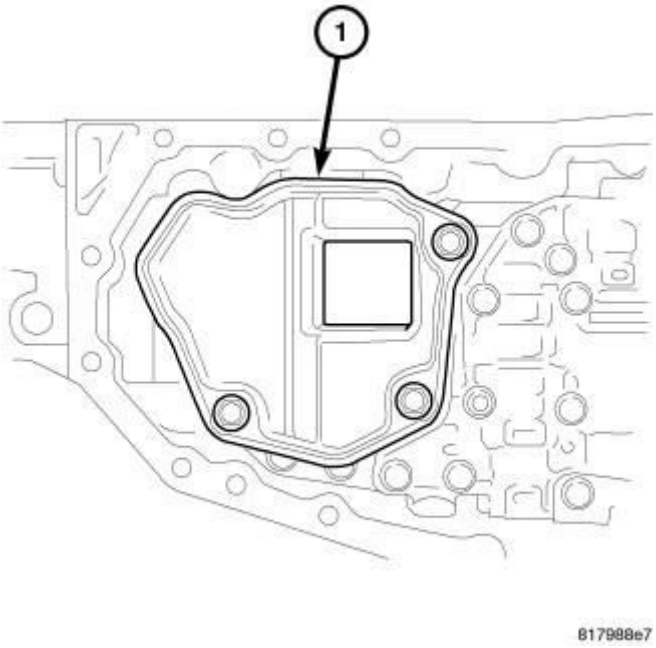

Fig. 276: Oil Strainer
Courtesy of CHRYSLER GROUP, LLC

8. Install the new oil strainer (1) onto the control valve assembly. Install and tighten the mounting bolts to 8 N.m (70 in. lbs.).

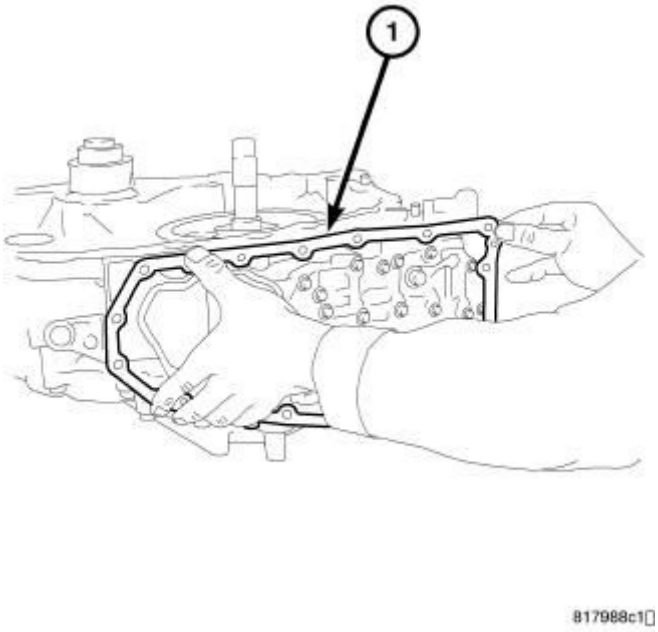

Fig. 277: Oil Pan Gasket
Courtesy of CHRYSLER GROUP, LLC

CAUTION: Do not re-use the oil pan gasket. Remove any moisture, oil, and used gasket material from the surface where the new gasket is to be installed. When installing the oil pan gasket, align the dowel pin with the dowel pin hole in the oil pan gasket.

9. Install the oil pan gasket (1) onto the transaxle case.

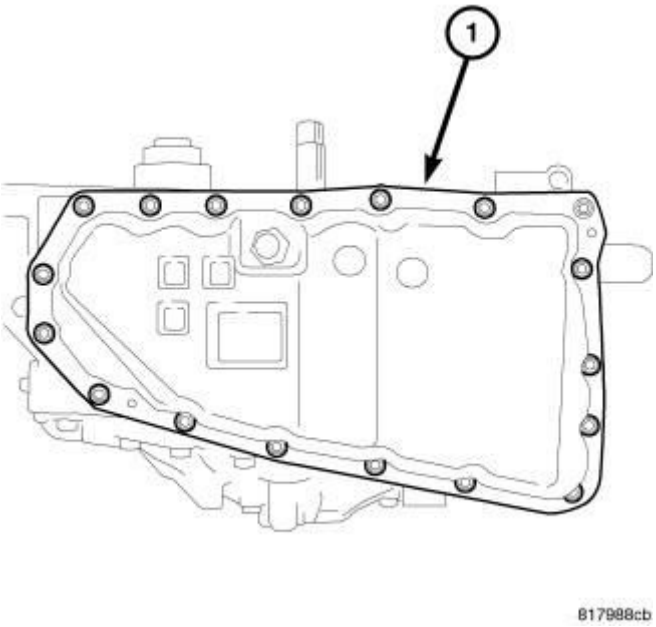

Fig. 278: Oil Pan
Courtesy of CHRYSLER GROUP, LLC

CAUTION: When installing the oil pan, align the dowel pin of the transaxle case with the dowel pin hole of the oil pan.

10. Install the oil pan on the transaxle case (1). Install and tighten the mounting bolts to 8 N.m (70 in. lbs.).

NOTE: Only transmission fluid of the type labeled Mopar® CVTF+4 (Automatic Transmission Fluid) should be used in this transaxle.

11. Check the oil level. Refer to **FLUID, STANDARD PROCEDURE**.

SEAL, AXLE DRIVE SHAFT, LEFT

REMOVAL

REMOVAL

1. Remove halfshaft. Refer to **REMOVAL** .

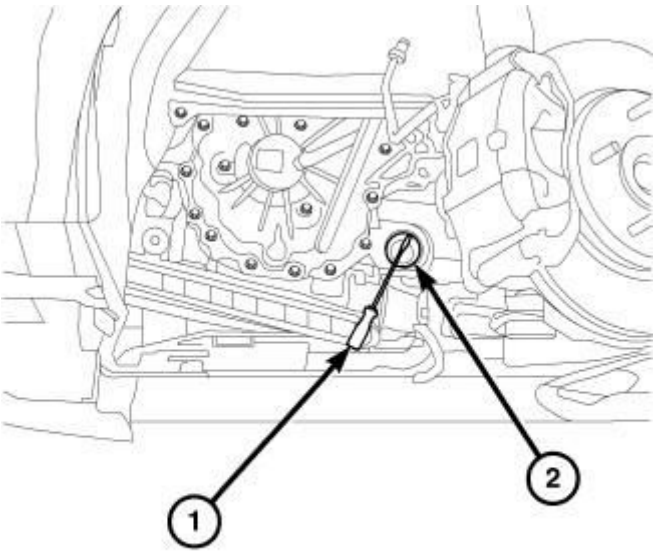

Fig. 279: Removing Left Side Differential Oil Seal
Courtesy of CHRYSLER GROUP, LLC

2. Remove left side differential oil seal.

INSTALLATION

INSTALLATION

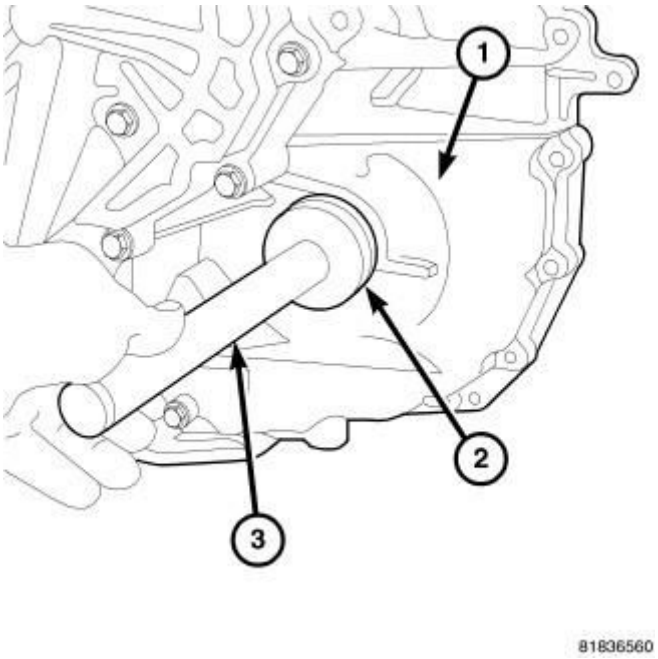

Fig. 280: Installing Left Side Differential Oil Seal
Courtesy of CHRYSLER GROUP, LLC

1. Install the left side differential oil seal using Installer (special tool #9871, Installer, Seal) (2) and Handle (special tool #C-4171, Driver Handle, Universal) (3).
2. Install halfshaft. Refer to **INSTALLATION** .
3. Road test vehicle and inspect for leaks.

SEAL, AXLE DRIVE SHAFT, RIGHT

REMOVAL

REMOVAL

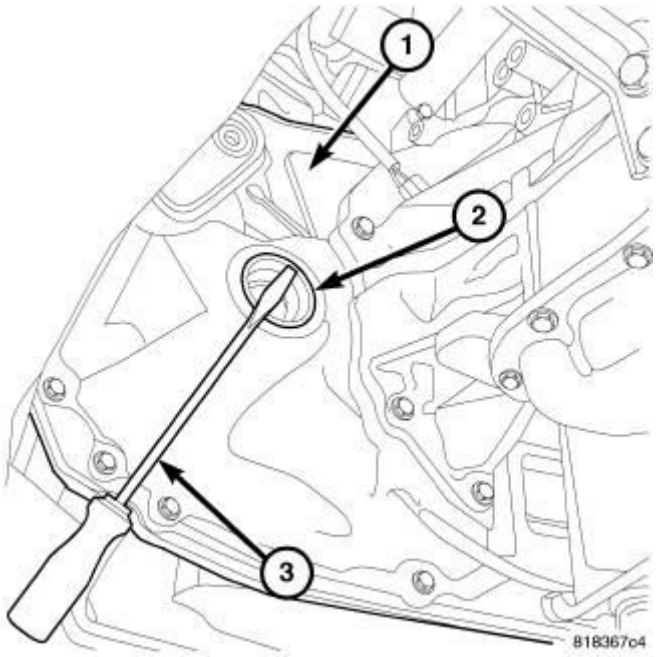

Fig. 281: Removing Right Side Differential Oil Seal
Courtesy of CHRYSLER GROUP, LLC

1. Remove halfshaft. Refer to **REMOVAL** .
2. If all wheel drive, remove the PTU. Refer to **REMOVAL** .
3. Remove the seal (2) from the transaxle using a screwdriver (3).

INSTALLATION

INSTALLATION

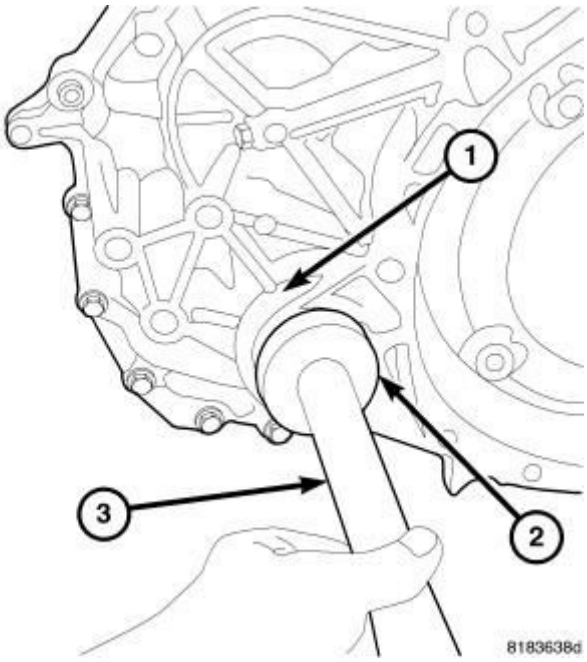

Fig. 282: Installing Right Side Differential Oil Seal
Courtesy of CHRYSLER GROUP, LLC

1. Install the seal using Installer (special tool #9877, Installer, Seal) (2) and Handle (special tool #C-4171, Driver Handle, Universal) (3).
2. If all wheel drive, install the PTU. Refer to **INSTALLATION** .
3. Install Halfshaft. Refer to **INSTALLATION** .
4. Road test vehicle and inspect for leaks.

SEAL, TORQUE CONVERTER HUB

REMOVAL

REMOVAL

1. Remove transmission. Refer to **REMOVAL**.

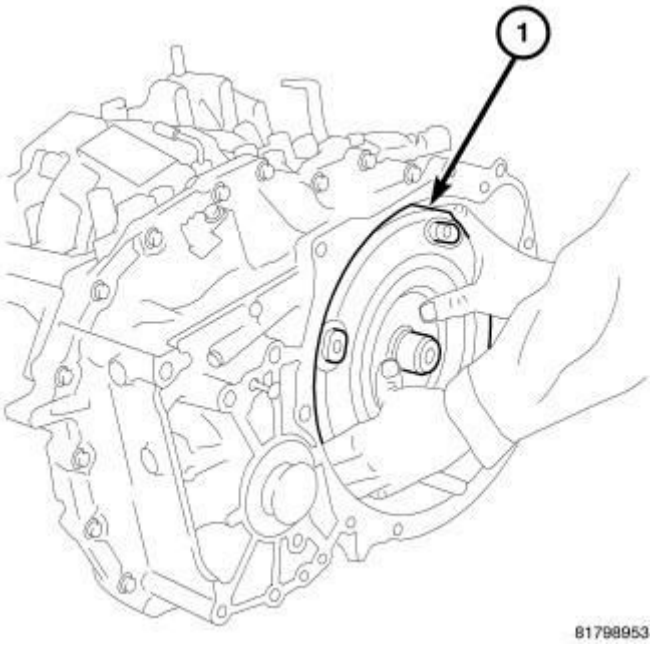

Fig. 283: Torque Converter
Courtesy of CHRYSLER GROUP, LLC

2. Remove torque converter.
3. Remove torque converter seal using Slide Hammer (special tool #C-3752, Slide Hammers) and oil Seal Remover (special tool #9667, Remover, Seal).

INSTALLATION

INSTALLATION

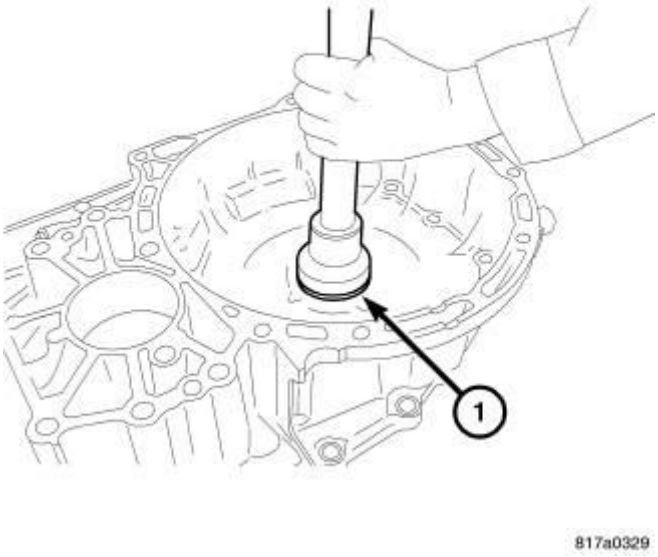

Fig. 284: Installing Converter Housing Oil Seal

Courtesy of CHRYSLER GROUP, LLC

1. Install torque converter seal using oil seal Installer (special tool #9858, Installer, Seal).

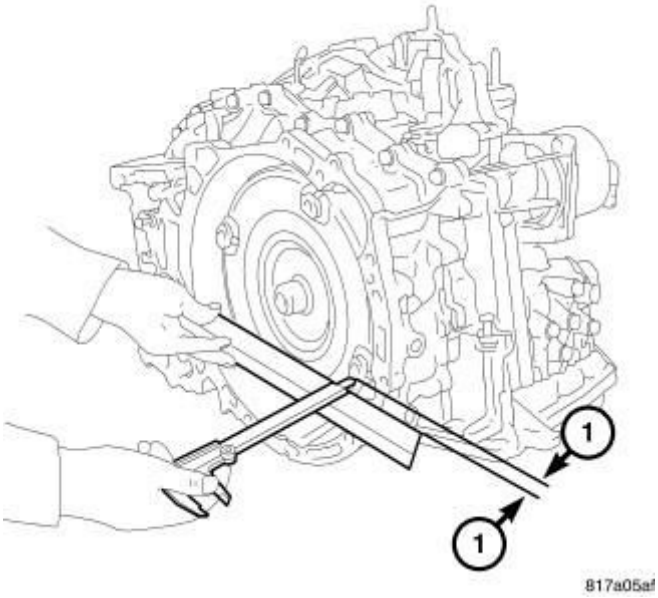

Fig. 285: Measuring Torque Converter To Transmission
Courtesy of CHRYSLER GROUP, LLC

NOTE: Gauge Bar (special tool #6311, Gauge Bar) can be used for doing the following measurement.

NOTE: When conducting measurements, measure two or more places and calculate the average value.

2. Install the torque converter on the transaxle and measure the dimension (1) to see if it is at least 13 mm. If the measurement is less than 13 mm, the torque converter is not fully installed.

NOTE: Use the designated brand of CVT fluid. Use of other brands of CVT fluid other than the designated brand will deteriorate the driveability and the durability of the CVT, and will cause damage to the CVT.

3. Install the transmission. Refer to **INSTALLATION**.

SENSOR, TRANSMISSION RANGE

REMOVAL

REMOVAL

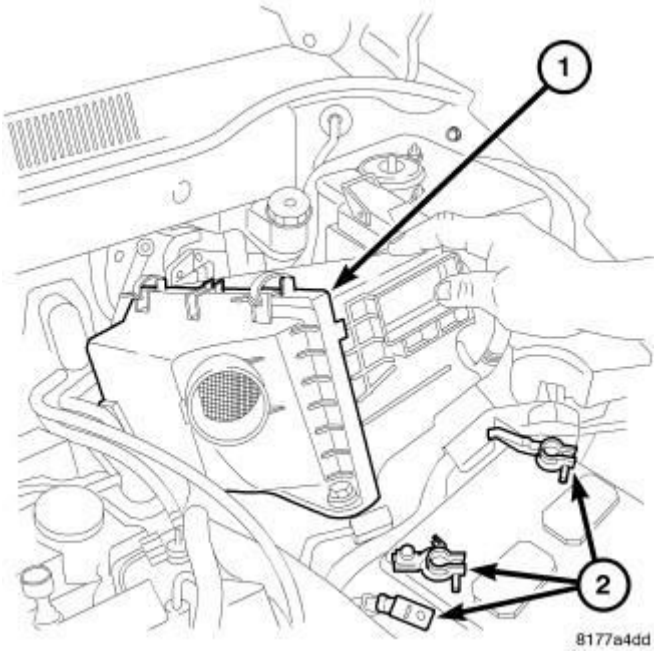

Fig. 286: Air Cleaner Assembly
Courtesy of CHRYSLER GROUP, LLC

1. Disconnect battery cables (2).
2. Remove air cleaner assembly (1).

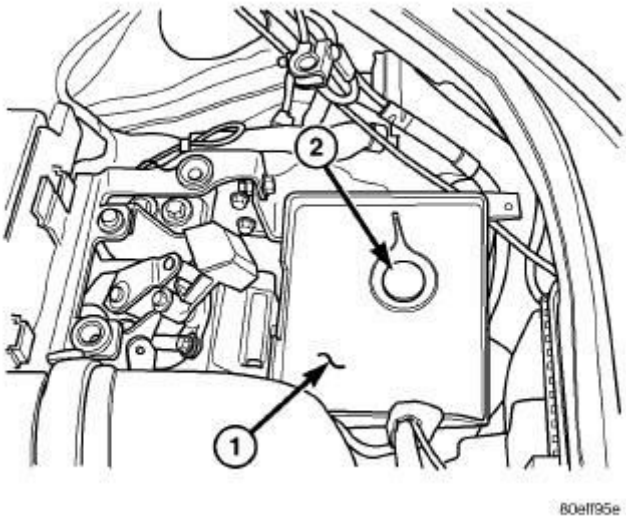

Fig. 287: Battery Tray Bottom And Sensor

Courtesy of CHRYSLER GROUP, LLC

3. Remove battery.
4. Remove battery tray (1).

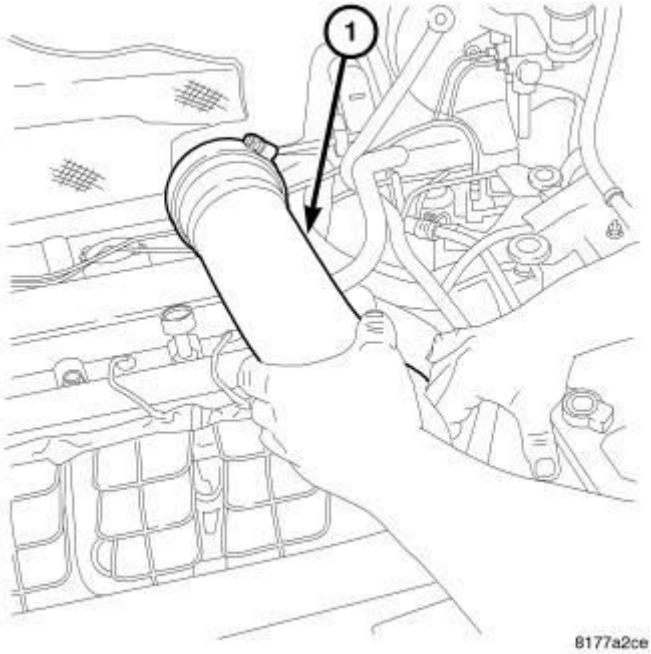

Fig. 288: Inlet Air Tube
Courtesy of CHRYSLER GROUP, LLC

5. Remove inlet air tube (1).

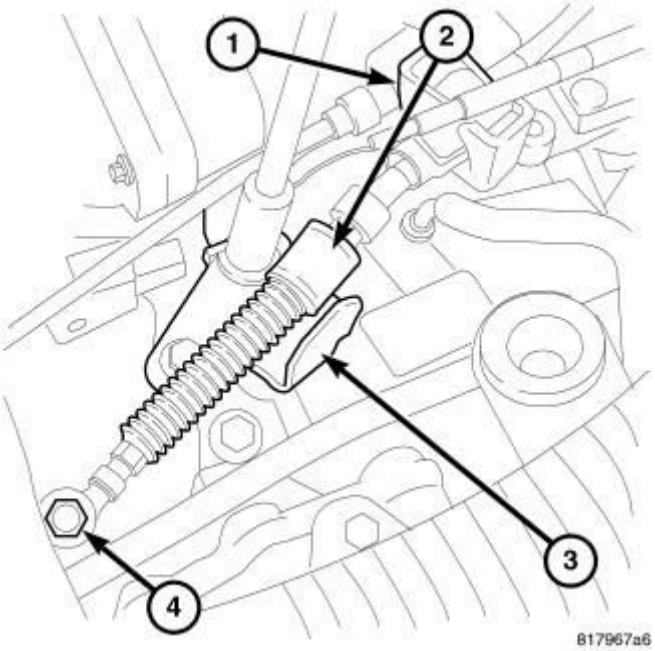

Fig. 289: Shifter Cable & Bracket

Courtesy of CHRYSLER GROUP, LLC

6. Remove the shifter cable (2).

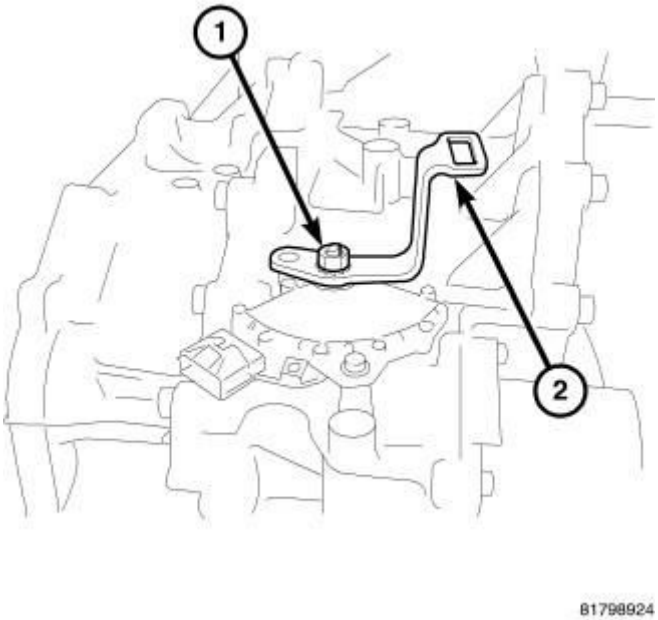

Fig. 290: Shift Lever
Courtesy of CHRYSLER GROUP, LLC

7. Remove nut (1) at shift lever.
8. Remove shift lever (2).

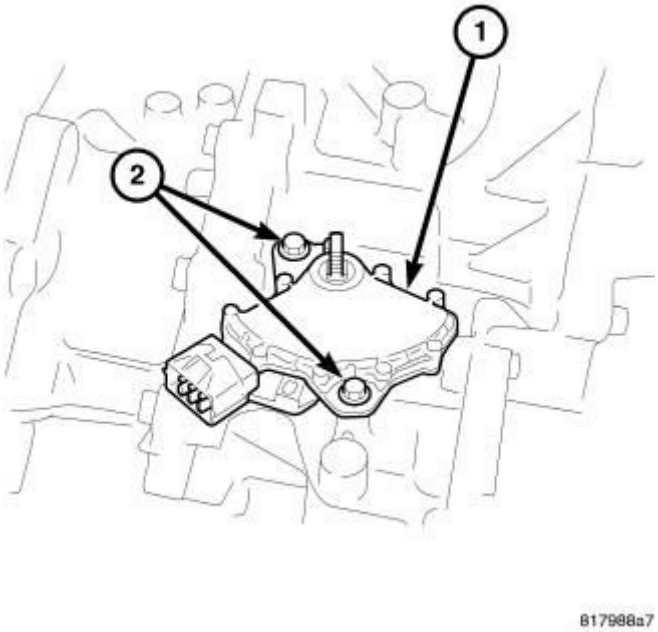

Fig. 291: Transmission Range Sensor

Courtesy of CHRYSLER GROUP, LLC

9. Remove bolts (2) at TRS.
10. Remove TRS (1).

INSTALLATION

INSTALLATION

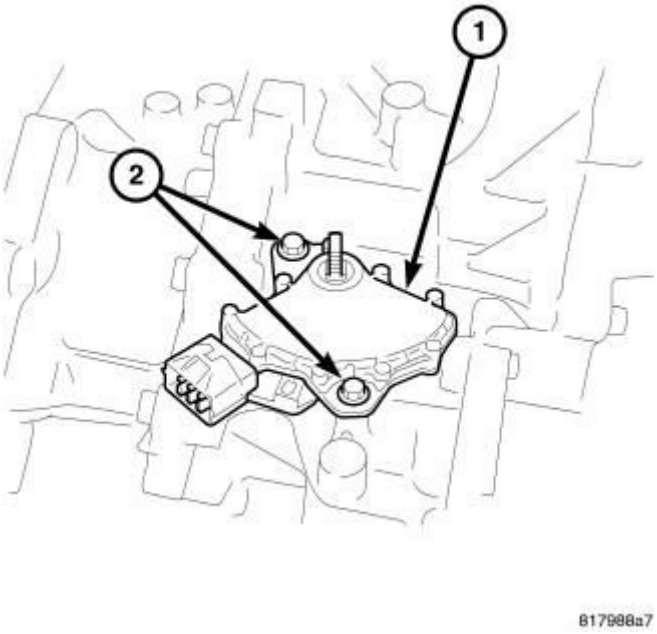

Fig. 292: Transmission Range Sensor
Courtesy of CHRYSLER GROUP, LLC

1. Install TRS into position (1).

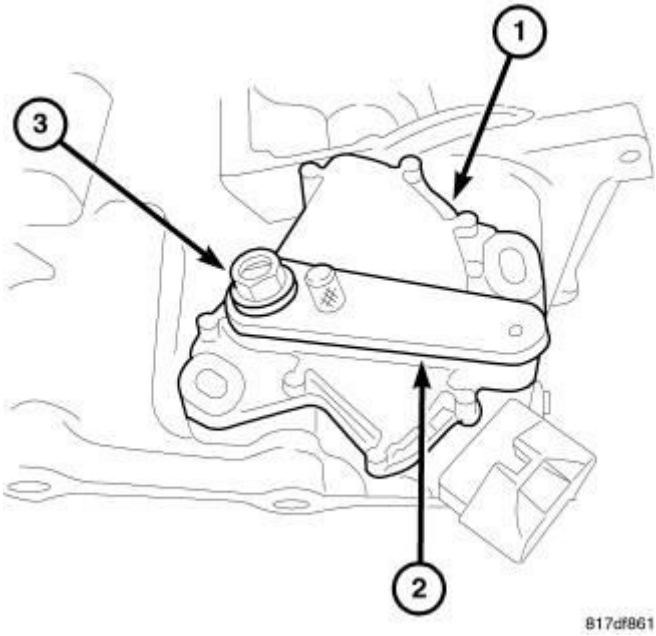

Fig. 293: TRS Adjustment Tool
Courtesy of CHRYSLER GROUP, LLC

2. Put the manual shaft in the N position (3).
3. Install Alignment Tool (special tool #9876, Adjustment Tool) (2) and adjust the position of the TRS (1).

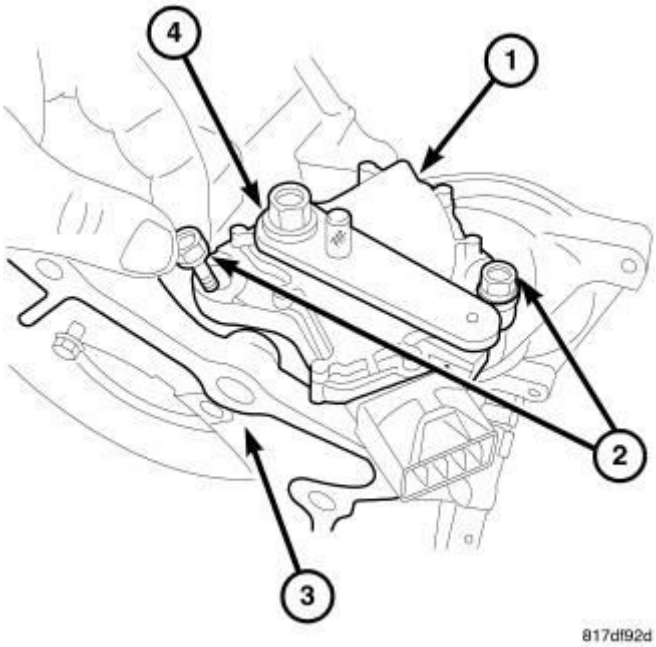

Fig. 294: Bolts & TRS
Courtesy of CHRYSLER GROUP, LLC

4. Install and tighten the mounting bolts of the TRS to 6 N.m (49 in. lbs.).

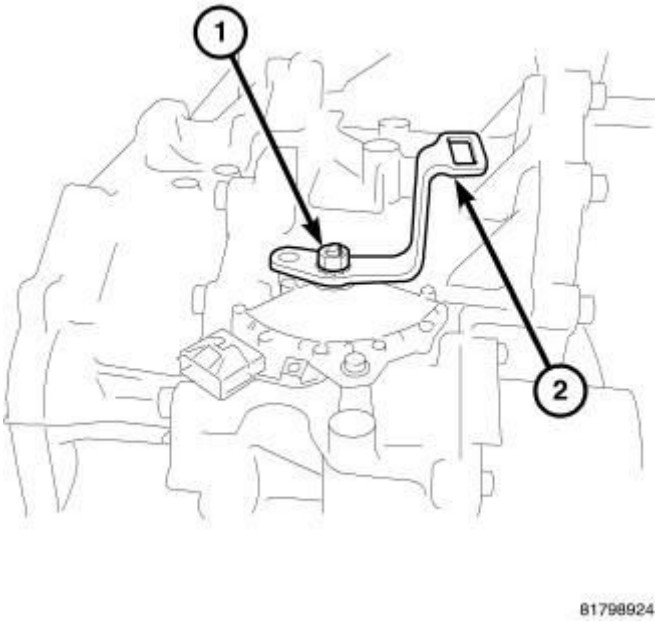

Fig. 295: Shift Lever
Courtesy of CHRYSLER GROUP, LLC

5. Remove Alignment Tool (special tool #9876, Adjustment Tool) and Install the shift lever (2) onto the manual shaft (1).
6. Install and tighten the mounting nut to 17 N.m (150 in. lbs.).

SHIFTER, TRANSMISSION

REMOVAL

REMOVAL

1. Remove the shifter housing. Refer to **HOUSING, SHIFTER, REMOVAL** .
2. Unplug the electrical connector at the shifter.
3. Detach interlock cable from shifter.

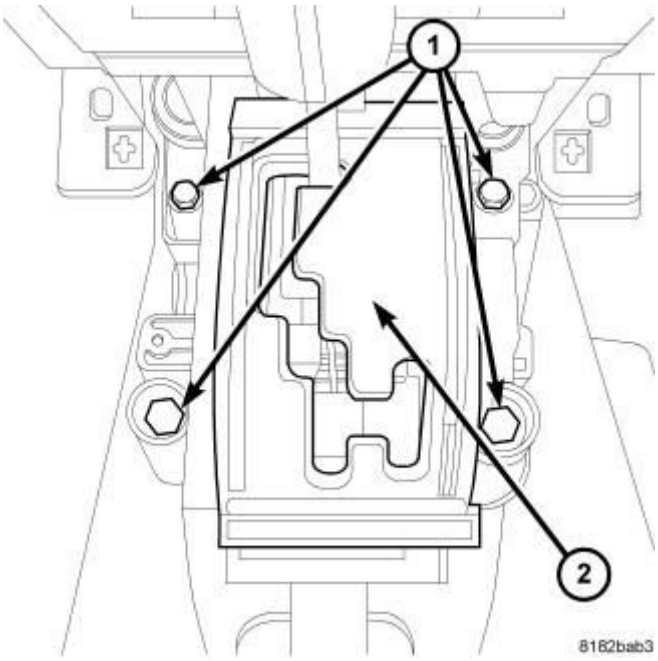

Fig. 296: Shifter Hold Down Bolts
Courtesy of CHRYSLER GROUP, LLC

4. Remove the bolts (1) at the shifter.
5. Separate the shift cable from the shifter.
6. Remove the shifter.

INSTALLATION

INSTALLATION

1. Install the shifter in place.
2. Clip the shift cable to the shifter.

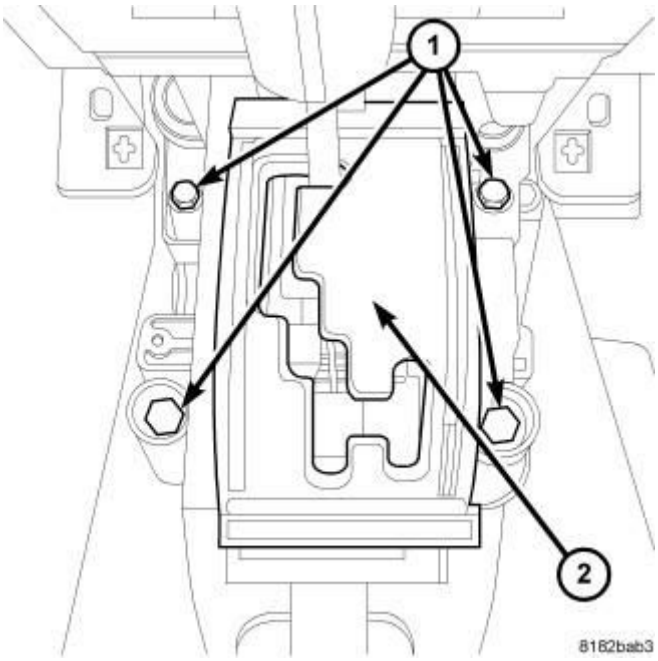

Fig. 297: Shifter Hold Down Bolts
Courtesy of CHRYSLER GROUP, LLC

3. Install the shifter bolts and tighten to 6 N.m (53 ft. in lbs.).
4. Attach interlock cable to shifter.
5. Connect the shifter harness connector.
6. Install shifter housing. Refer to **HOUSING, SHIFTER, INSTALLATION** .

VALVE BODY

OPERATION

OPERATION

OUTLINE OF THE FUNCTIONS OF THE MAIN COMPONENTS

Component	Function
Torque converter regulator valve	Optimizes the supply pressure for the torque converter depending on driving conditions.
Clutch regulator valve	Adjusts the clutch operating pressure depending on operating conditions.
Pressure regulator valve	Optimizes the discharge pressure (line pressure) from the oil pump depending on driving conditions.

Shift control valve	Controls flow-in/out of line pressure to/from the primary pulley depending on the stroke difference between the stepping motor and the primary pulley.
Lock-up/Select switch solenoid valve	Switches use of the lock-up solenoid control pressure between applying/releasing lock-up and engaging/releasing the forward/reverse clutch (the forward clutch and the reverse brake).
Select switch valve	Switches use of the lock-up solenoid control pressure between applying/releasing lock-up and engaging/releasing the forward/reverse clutch (the forward clutch and the reverse brake).
Line pressure solenoid valve	Controls the line pressure control valve.
Lock-up solenoid valve	Controls the lock-up control valve.
Lock-up/Select switch solenoid valve	Controls the select switching valve.
Stepping motor	Controls the pulley ratio.
Secondary valve	Reduces the line pressure and adjusts the secondary pressure.
Select control valve	Engages when making a selection. Adjusts the forward clutch pressure and the reverse brake pressure.
Lock-up control valve	Adjusts engaging/releasing pressure for the torque converter.
Secondary pressure solenoid valve	Controls flow-in/out of line pressure to/from the secondary pulley depending on driving conditions.

REMOVAL

REMOVAL

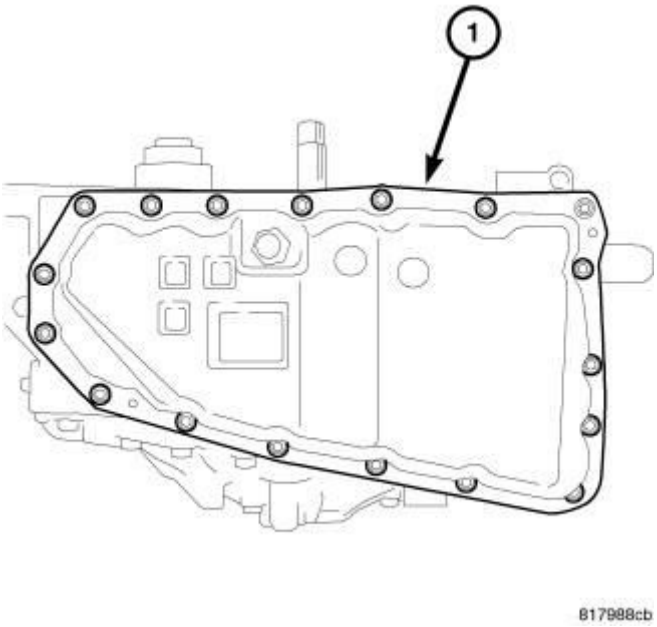

Fig. 298: Oil Pan
Courtesy of CHRYSLER GROUP, LLC

1. Remove the bolts holding the oil pan (1) to the transaxle case.
2. Remove the oil pan from the transaxle case.

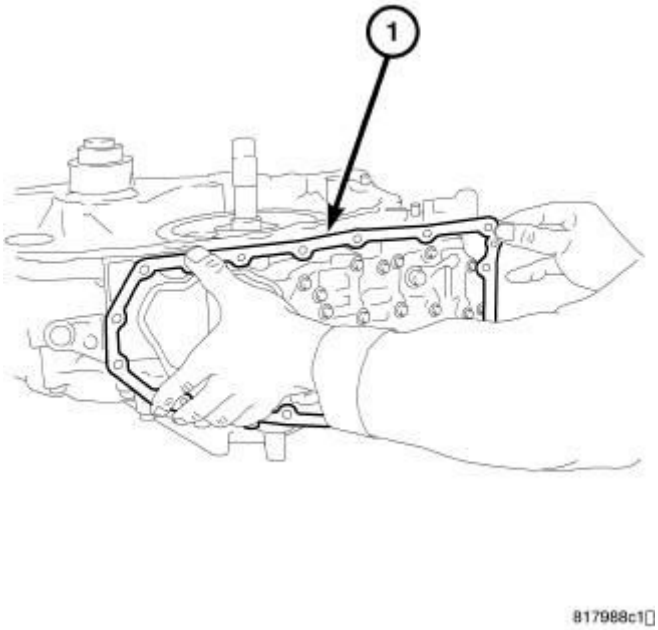

Fig. 299: Oil Pan Gasket
Courtesy of CHRYSLER GROUP, LLC

3. Remove the oil pan gasket (1) from the transaxle case.

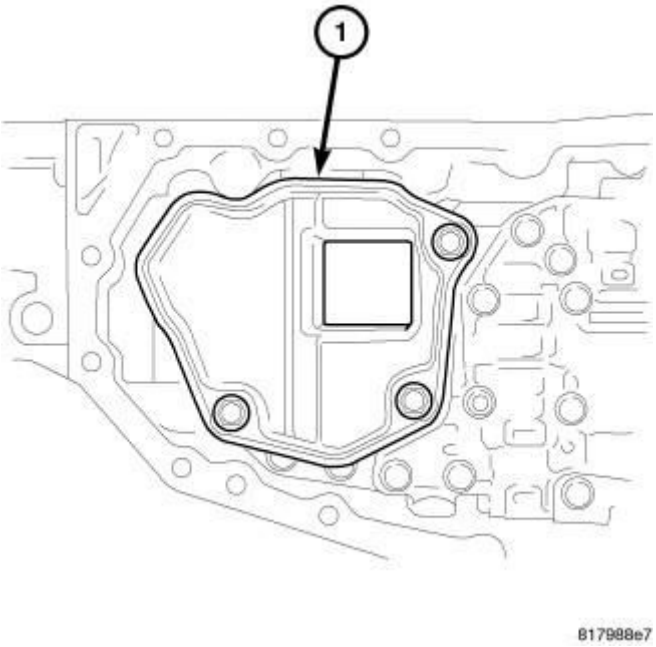

Fig. 300: Oil Strainer
Courtesy of CHRYSLER GROUP, LLC

4. Remove the bolts holding the oil strainer (1) to the valve body.
5. Remove the oil strainer.
6. Remove and discard the oil strainer o-ring.

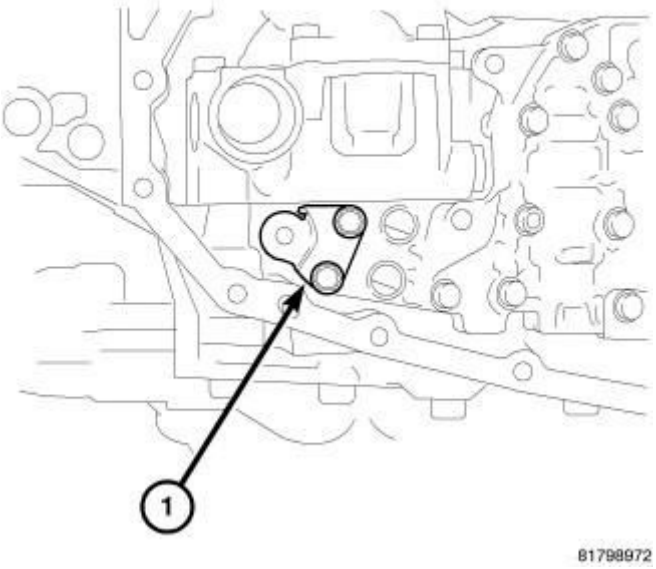

Fig. 301: Bracket At Valve Body Assembly
Courtesy of CHRYSLER GROUP, LLC

7. Remove the bolts holding the oil strainer bracket (1) to the valve body

assembly.

8. Remove the oil strainer bracket from the valve body assembly.

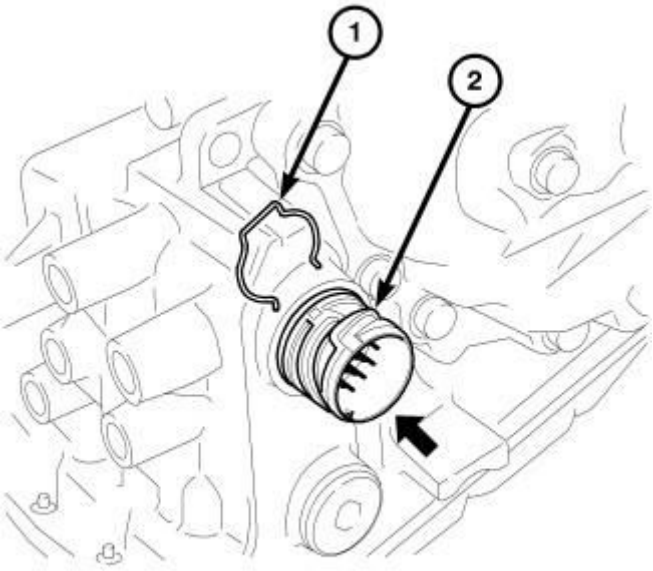

81798933

Fig. 302: Identifying Terminal Body & Snap Ring
Courtesy of CHRYSLER GROUP, LLC

9. Remove the snap ring (1) from the terminal body (2).

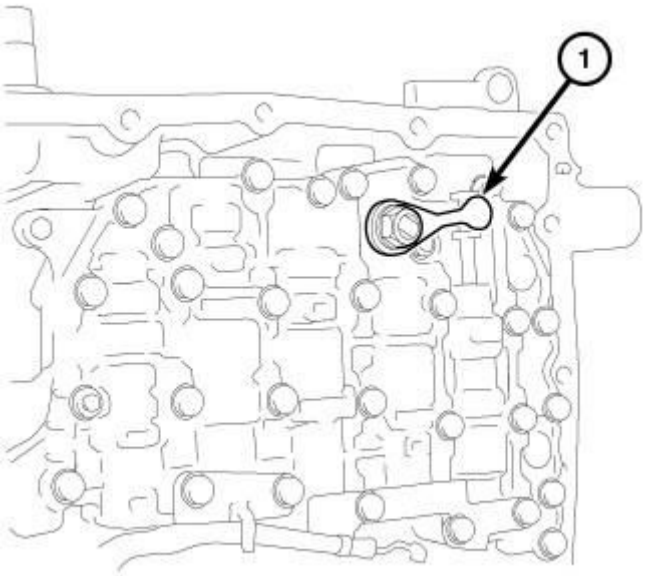

81798964

Fig. 303: Manual Lever
Courtesy of CHRYSLER GROUP, LLC

10. Remove the nut holding the manual lever (1) to the manual shaft.
11. Remove the manual lever from the manual shaft.

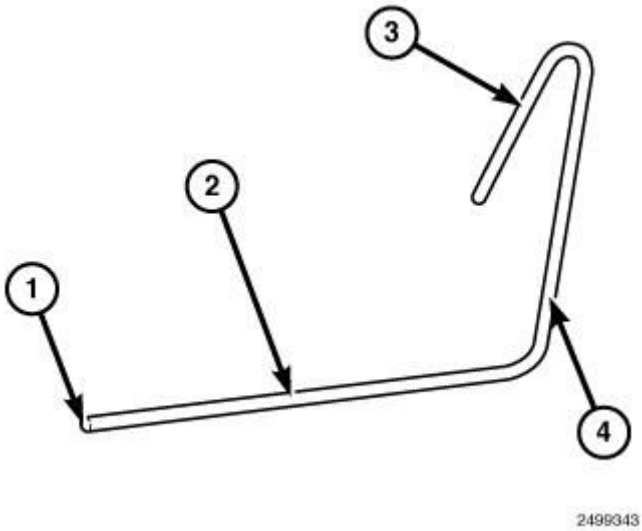

Fig. 304: Rod To Set The Pulley Ratio Linkage
Courtesy of CHRYSLER GROUP, LLC

12. To remove the control valve body assembly on to the transaxle case, fabricate a rod to set the pulley ratio linkage as shown in illustration. (1) 2 mm (0.08 in.) Diameter, (2) 80 mm (3 in.) long, (3) 30 mm (1 in.) long, (4) 50 mm (2 in.) long.

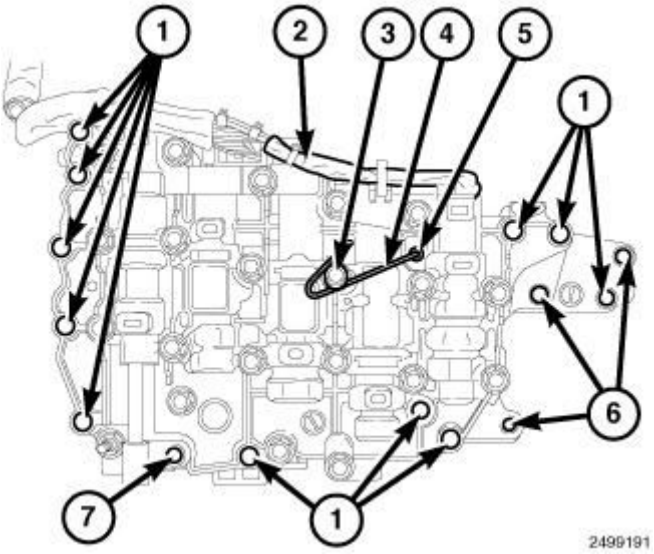

Fig. 305: Removing/Installing Rod Into Linkage Stopper Hole Of Control Valve Assembly
Courtesy of CHRYSLER GROUP, LLC

13. Install the rod into the linkage stopper hole (5) of the control valve assembly and secure under bolt head (3).

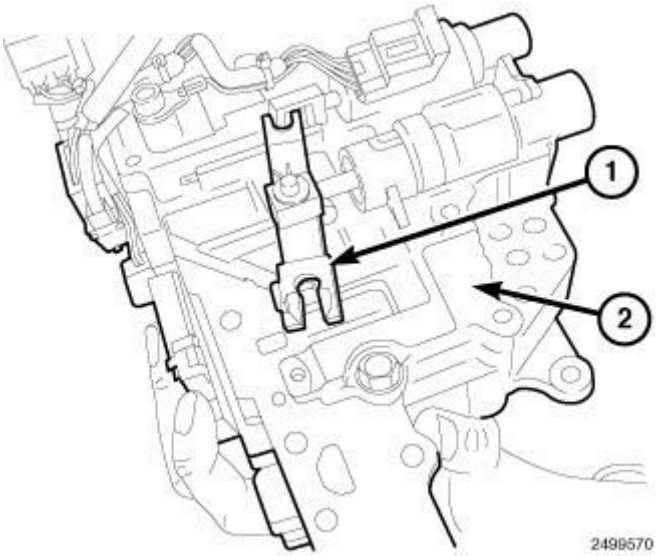

Fig. 306: Pulley Ratio Linkage
Courtesy of CHRYSLER GROUP, LLC

14. This sets the pulley ratio linkage (1) in position on the valve body (2).

CAUTION: Tilt the valve body assembly away from the transaxle case on the manual shaft side to ease removal. Pay attention to completely remove the terminal body from the transaxle case.

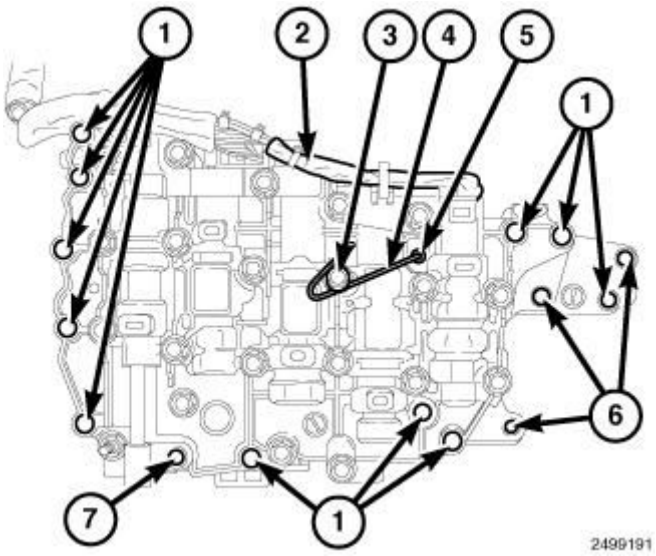

Fig. 307: Removing/Installing Rod Into Linkage Stopper Hole Of

Control Valve Assembly
Courtesy of CHRYSLER GROUP, LLC

NOTE: Mounting bolt (7) is shorter than bolts (1).

15. Remove the mounting bolts (1) and (7) of the control valve body assembly.
16. Remove the valve body assembly from the transaxle case.

DISASSEMBLY

DISASSEMBLY

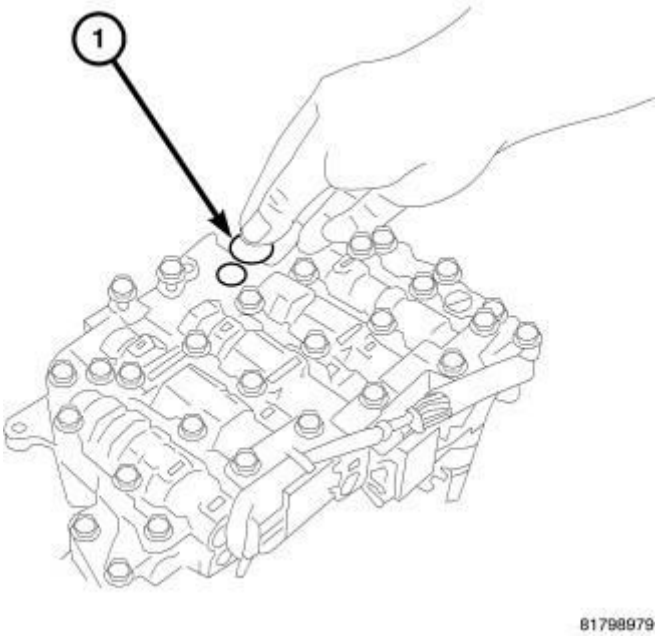

Fig. 308: Bushing At Control Valve
Courtesy of CHRYSLER GROUP, LLC

1. Remove and discard the bushing (1) from the valve body.

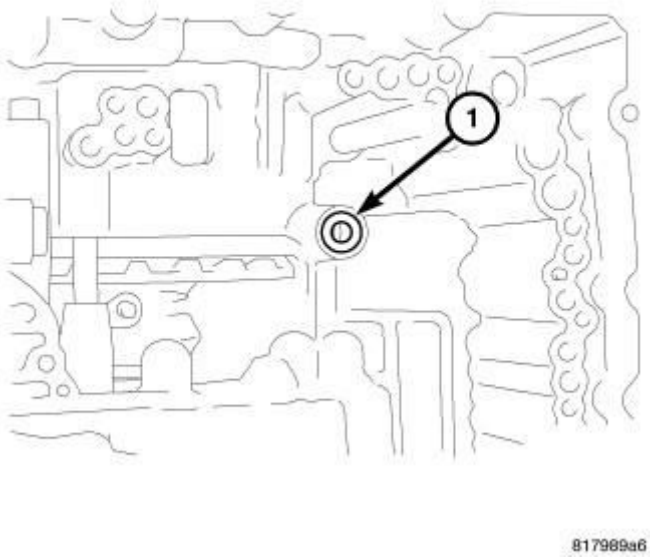

Fig. 309: Lip Seal At Transaxle Case
Courtesy of CHRYSLER GROUP, LLC

2. Remove and discard the lip seal (1) from the transaxle case.

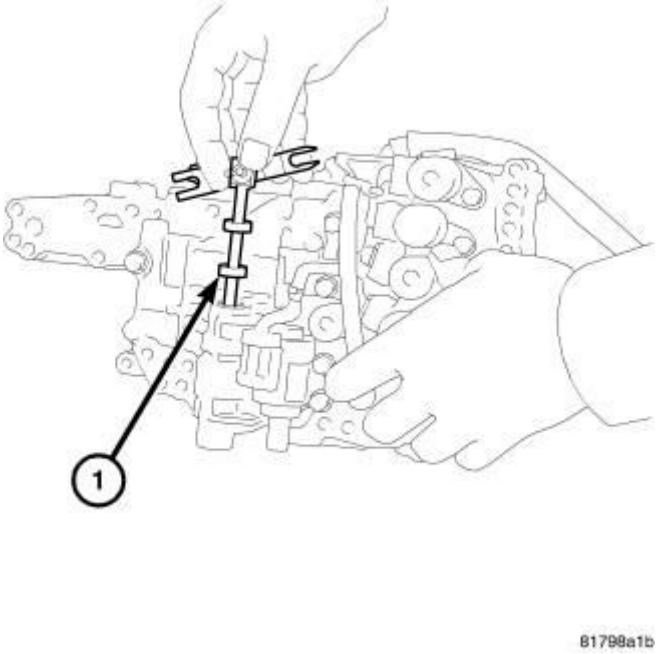

Fig. 310: Pulley Ratio Linkage
Courtesy of CHRYSLER GROUP, LLC

CAUTION: Do not drop the pulley ratio linkage.

3. Remove the pulley ratio linkage (1) from the valve body.

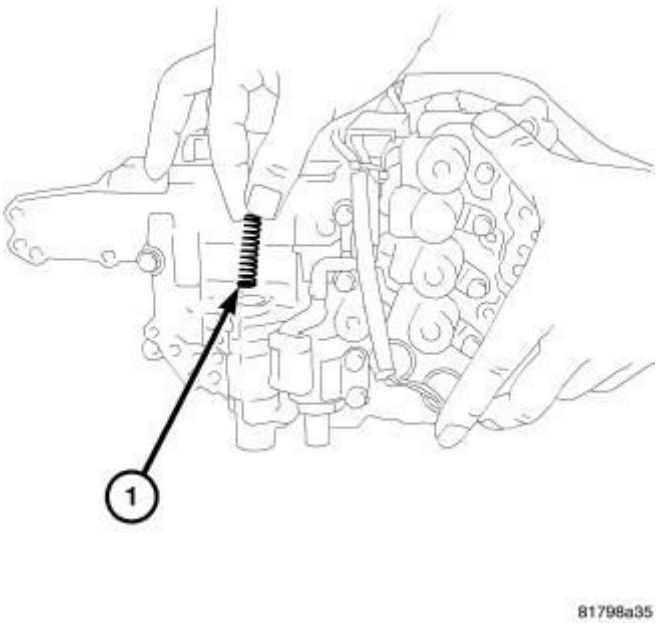

Fig. 311: Return Spring At Control Valve
Courtesy of CHRYSLER GROUP, LLC

4. Remove the return spring (1) from the valve body.

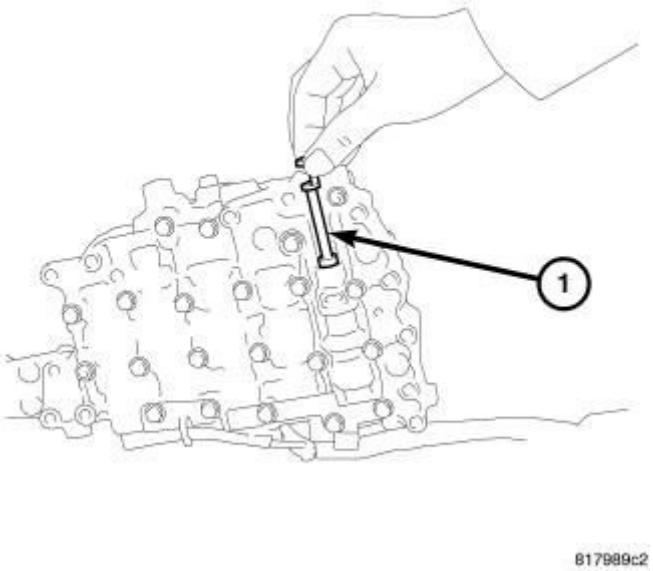

Fig. 312: Manual Valve
Courtesy of CHRYSLER GROUP, LLC

CAUTION: Do not drop the manual valve.

5. Remove the manual valve (1) from the valve body.

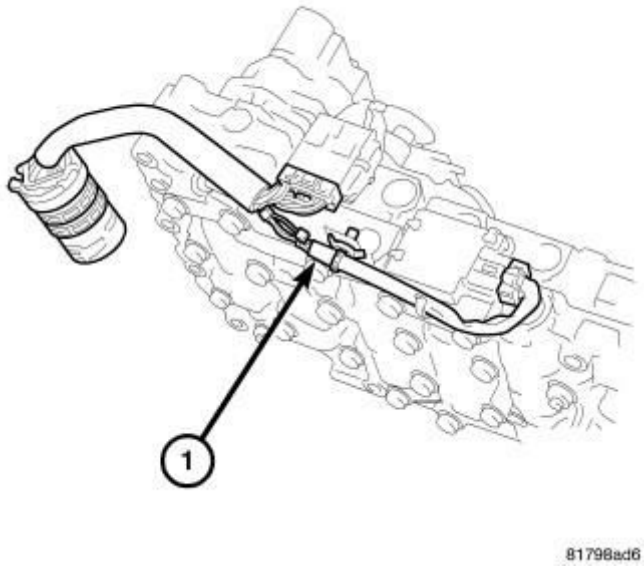

Fig. 313: Valve Body Harness
Courtesy of CHRYSLER GROUP, LLC

6. Remove the valve body harness (1) from the valve body.

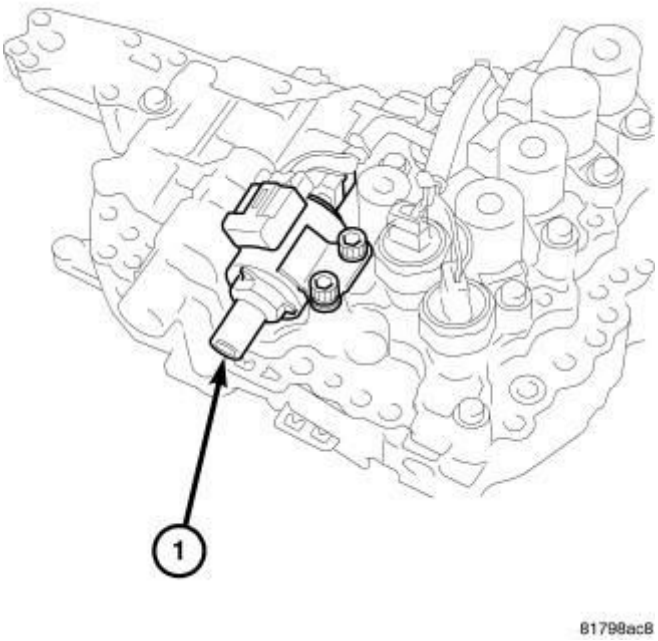

Fig. 314: Stepping Motor
Courtesy of CHRYSLER GROUP, LLC

7. Remove the stepping motor (1) from the valve body.

ASSEMBLY

ASSEMBLY

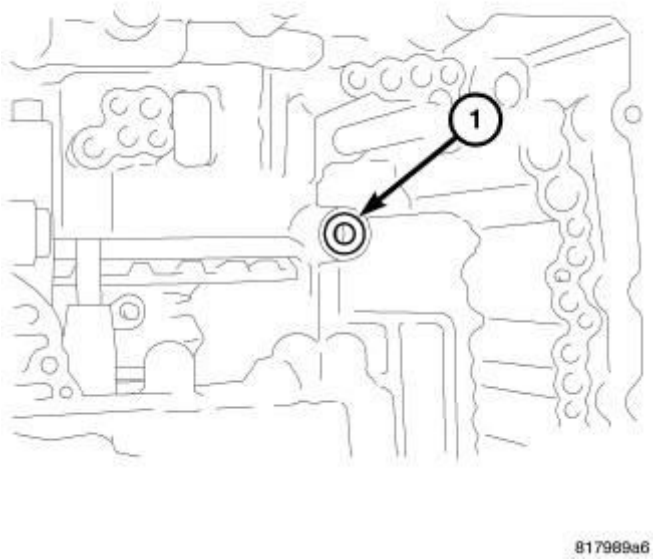

Fig. 315: Lip Seal At Transaxle Case
Courtesy of CHRYSLER GROUP, LLC

CAUTION: Do not re-use the lip seal. Apply CVT fluid when installing the lip seal.

1. Install the new lip seal (1) into the transaxle case.

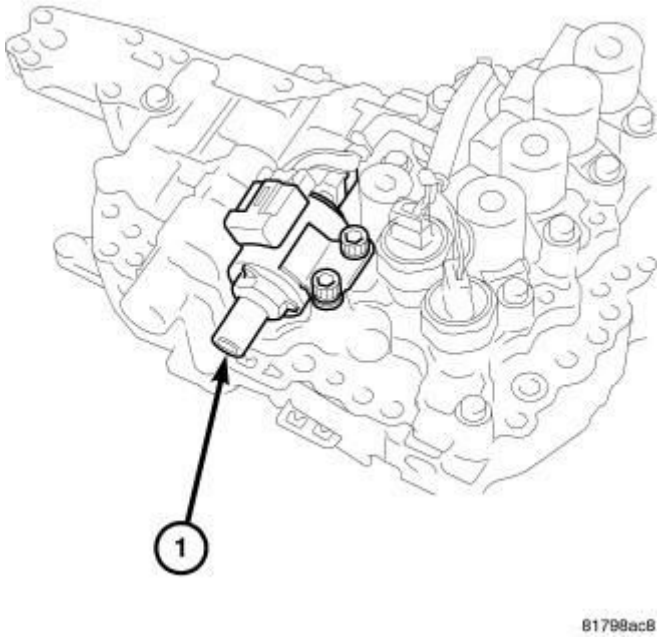

Fig. 316: Stepping Motor
Courtesy of CHRYSLER GROUP, LLC

2. Install the stepping motor (1) onto the control valve body. Install and tighten the mounting bolts to 8 N.m (70 in. lbs.).

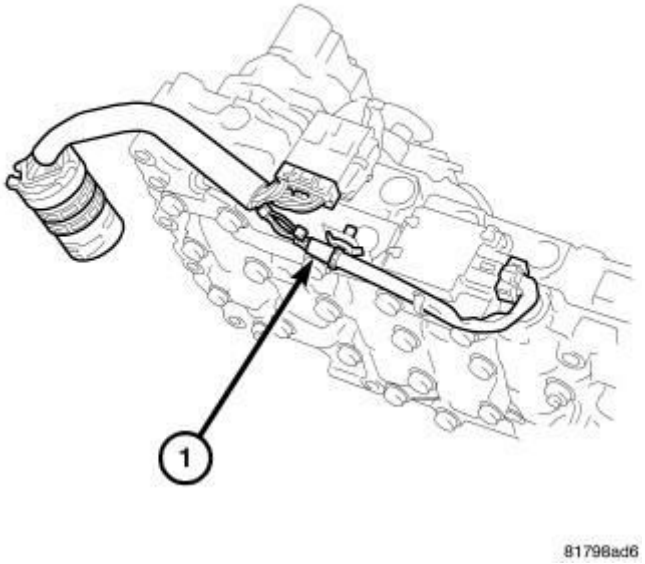

Fig. 317: Valve Body Harness
Courtesy of CHRYSLER GROUP, LLC

3. Install the valve body harness (1) onto the control valve body.

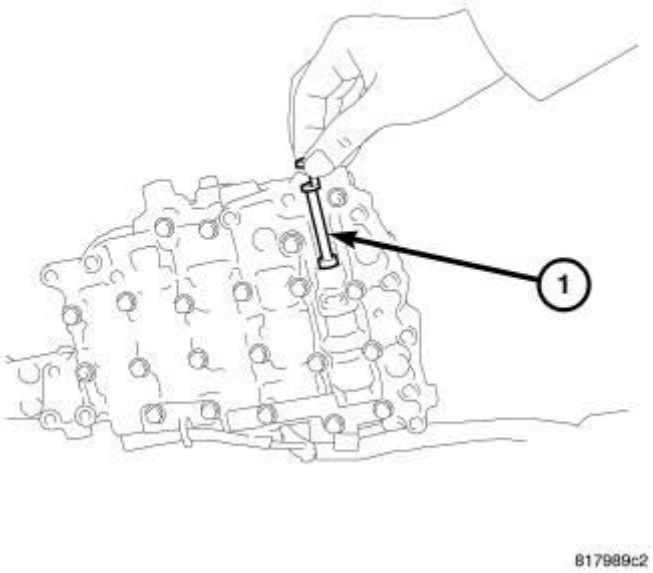

Fig. 318: Manual Valve
Courtesy of CHRYSLER GROUP, LLC

CAUTION: Ensure the manual valve is free of dirt, lint or other debris. Apply CVT fluid when installing the manual valve.

4. Install the manual valve (1) into the control valve body.

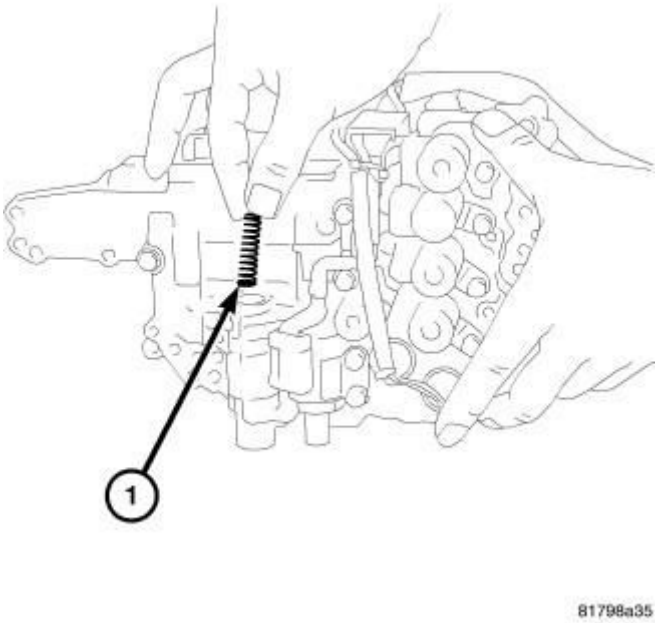

Fig. 319: Return Spring At Control Valve
Courtesy of CHRYSLER GROUP, LLC

5. Install the return spring (1) into the control valve body.

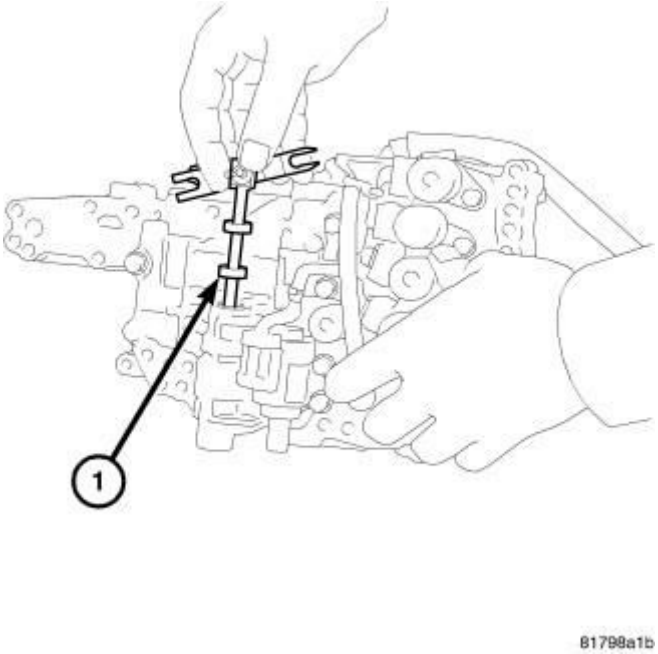

Fig. 320: Pulley Ratio Linkage
Courtesy of CHRYSLER GROUP, LLC

CAUTION: Apply CVT fluid when installing the pulley ratio linkage.

6. Hook the pawl of the pulley ratio linkage (1) onto the stepping motor and install it on the control valve.

INSTALLATION

INSTALLATION

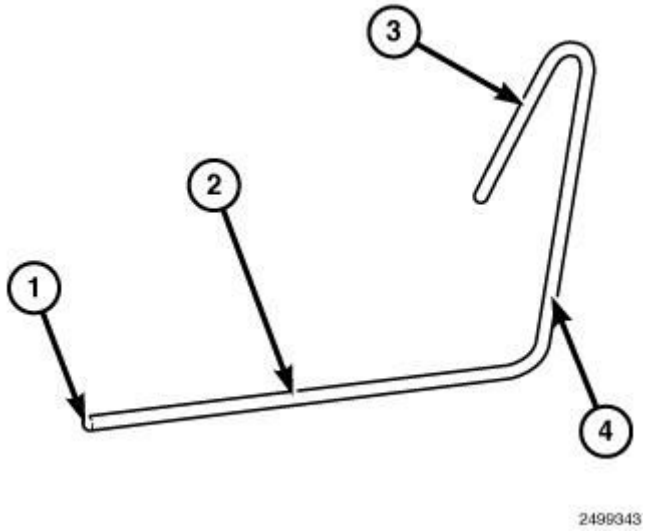

Fig. 321: Rod To Set The Pulley Ratio Linkage
Courtesy of CHRYSLER GROUP, LLC

1. To install the control valve body assembly on to the transaxle case, fabricate a rod to set the pulley ratio linkage as shown in illustration. (1) 2 mm (0.08 in.) Diameter, (2) 80 mm (3 in.) long, (3) 30 mm (1 in.) long, (4) 50 mm (2 in.) long.

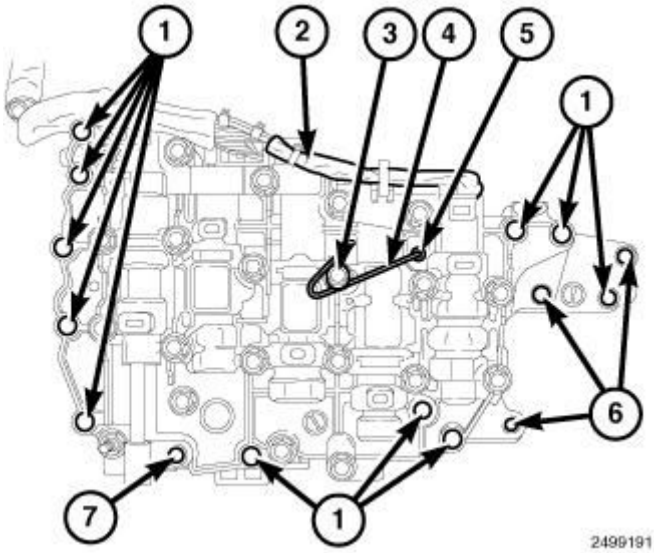

Fig. 322: Removing/Installing Rod Into Linkage Stopper Hole Of Control Valve Assembly
Courtesy of CHRYSLER GROUP, LLC

2. Install the rod into the linkage stopper hole (5) of the control valve assembly and secure under bolt head (3).

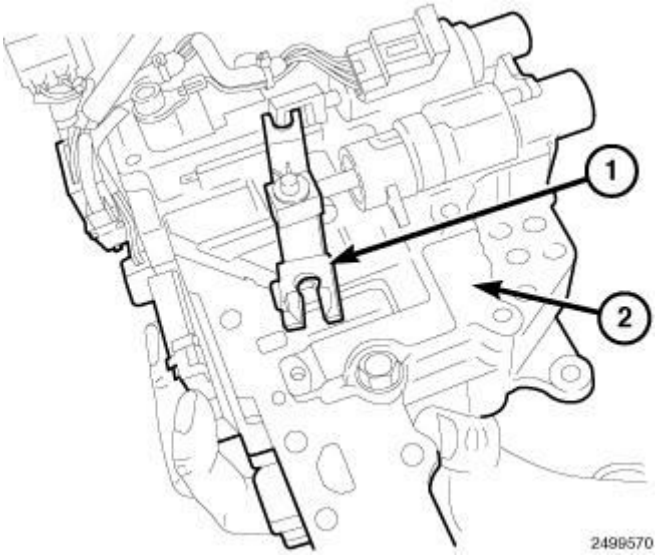

Fig. 323: Pulley Ratio Linkage
Courtesy of CHRYSLER GROUP, LLC

3. This sets the pulley ratio linkage (1) in position on the valve body (2).

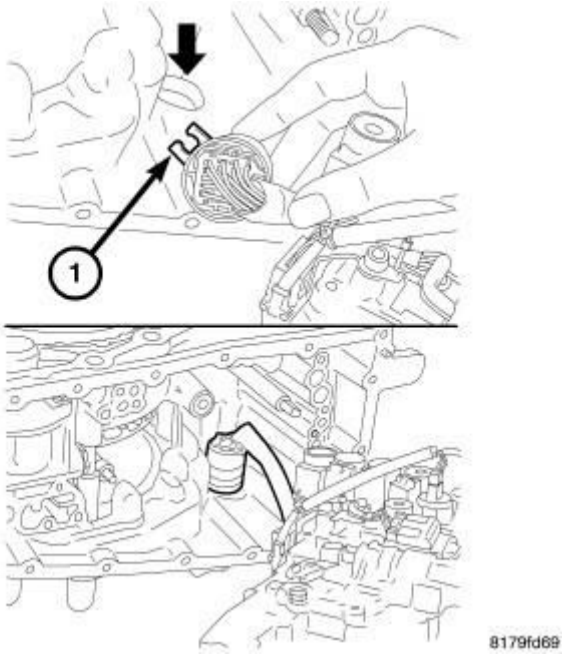

Fig. 324: Position Terminal Body
Courtesy of CHRYSLER GROUP, LLC

4. Position the locating tab (1) of the terminal body as shown in illustration and install the terminal body into the transaxle case.

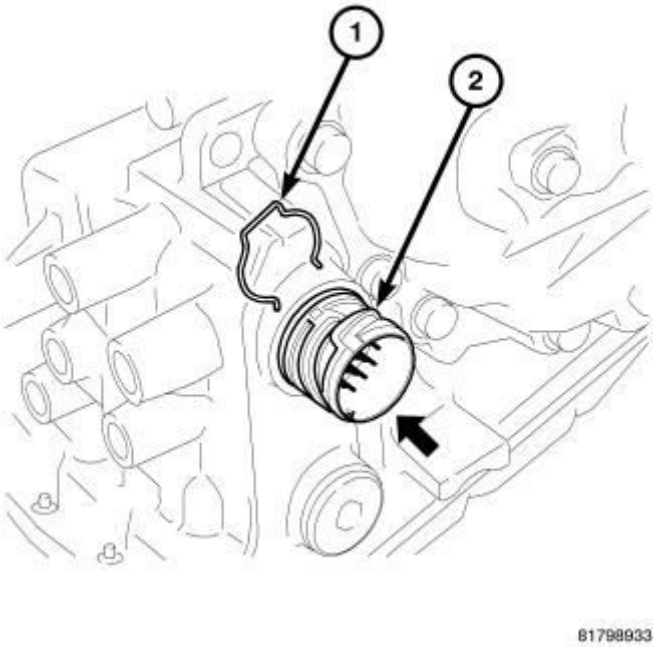

Fig. 325: Identifying Terminal Body & Snap Ring
Courtesy of CHRYSLER GROUP, LLC

5. Install the snap ring (1) onto the terminal body (2).

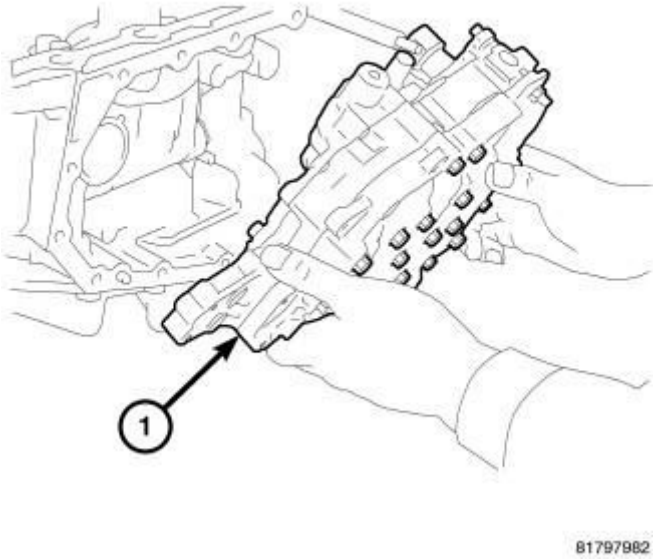

Fig. 326: Control Valve Assembly
Courtesy of CHRYSLER GROUP, LLC

6. Install the control valve assembly (1) up from the bottom side and install it into the transaxle case.

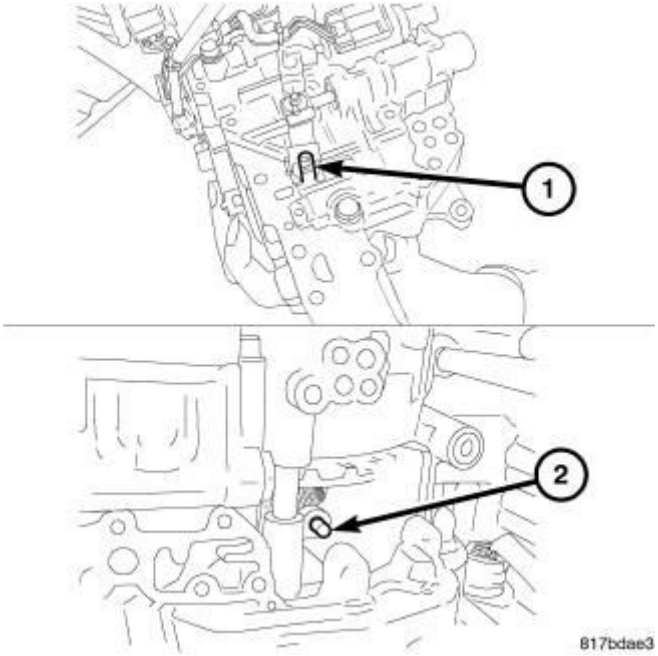

Fig. 327: Aligning Notch Of Pulley Ratio Linkage
Courtesy of CHRYSLER GROUP, LLC

7. Align the notch (1) of the pulley ratio linkage with the sheave position sensor (2).

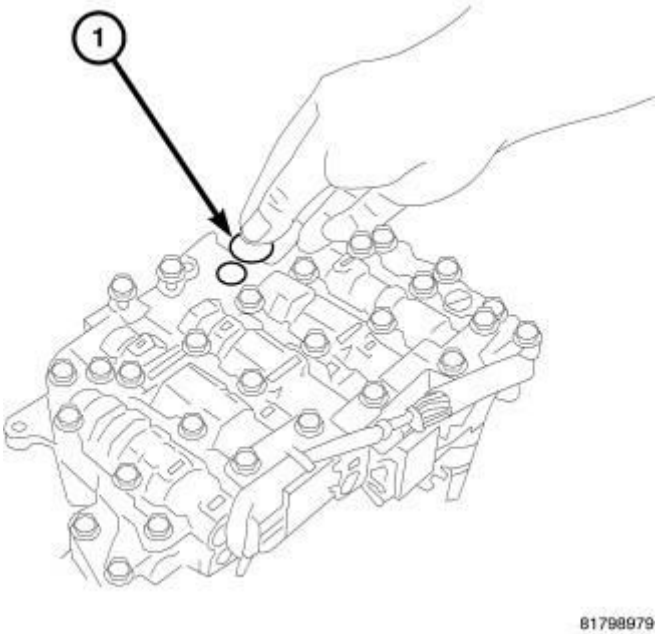

Fig. 328: Bushing At Control Valve
Courtesy of CHRYSLER GROUP, LLC

CAUTION: Apply CVT fluid when installing the bushing.

8. Install the bushing (1) into the control valve assembly.

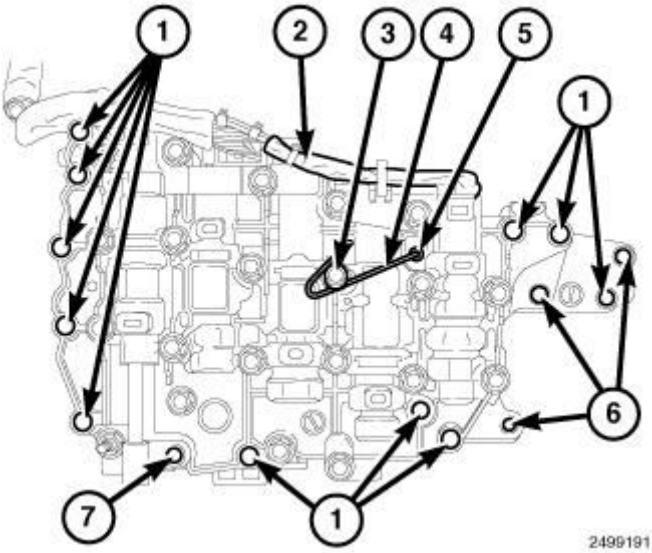

Fig. 329: Removing/Installing Rod Into Linkage Stopper Hole Of Control Valve Assembly
Courtesy of CHRYSLER GROUP, LLC

NOTE: Mounting bolt (7) is shorter than bolts (1).

9. Install and tighten the mounting bolts (1) and (7) of the control valve body assembly to 8 N.m (70 in. lbs).
10. Remove bolt (3) and remove the rod used to set the pulley ratio linkage (4).
11. Install bolt (3) and tighten to 8 N.m (70 in. lbs).

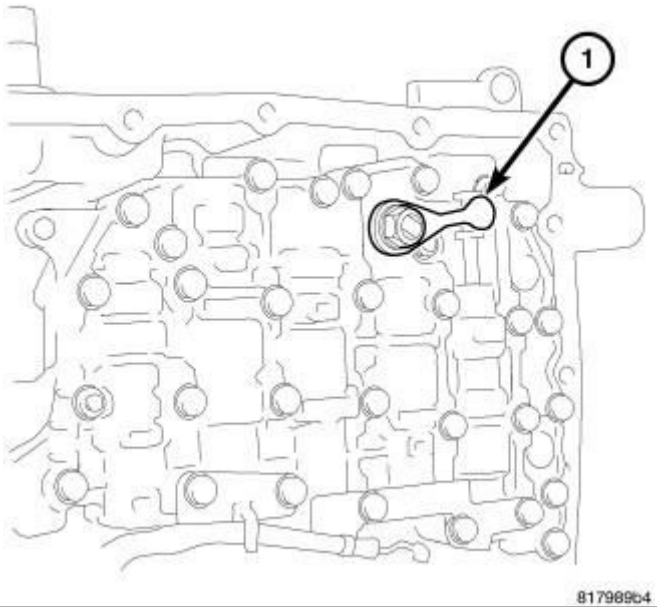

Fig. 330: Manual Lever
Courtesy of CHRYSLER GROUP, LLC

12. Install the manual lever (1) onto the manual shaft. Install and tighten the mounting nut to 22 N.m (16 in. lbs.).

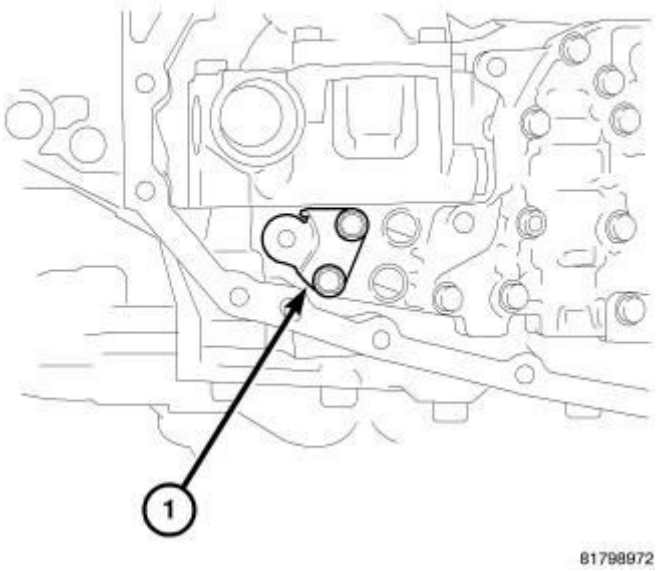

Fig. 331: Bracket At Valve Body Assembly
Courtesy of CHRYSLER GROUP, LLC

13. Install the oil strainer bracket (1) onto the control valve assembly. Install and tighten the mounting bolts to 8 N.m (70 in. lbs.) onto the control valve assembly. Install and tighten the mounting bolts to 8 N.m (70 in. lbs.).

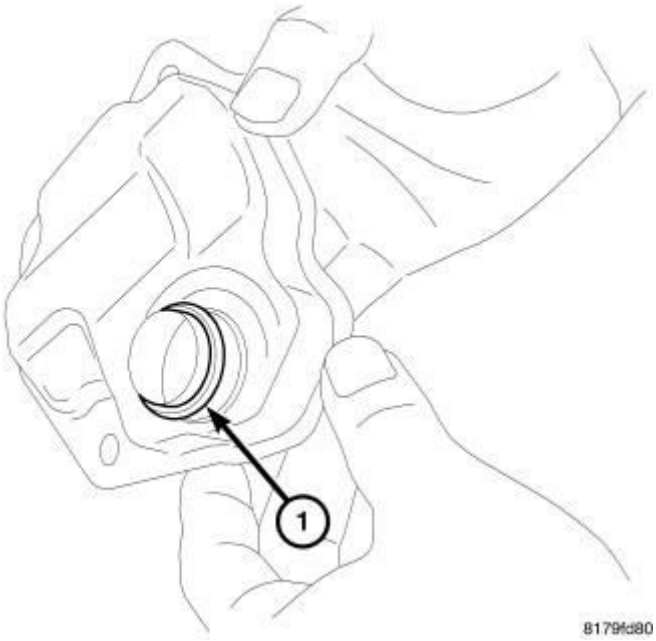

Fig. 332: Oil Strainer O-Ring
Courtesy of CHRYSLER GROUP, LLC

CAUTION: Do not re-use the o-ring. Apply CVT fluid when installing the O-ring.

14. Install the new o-ring (1) onto the new oil strainer.

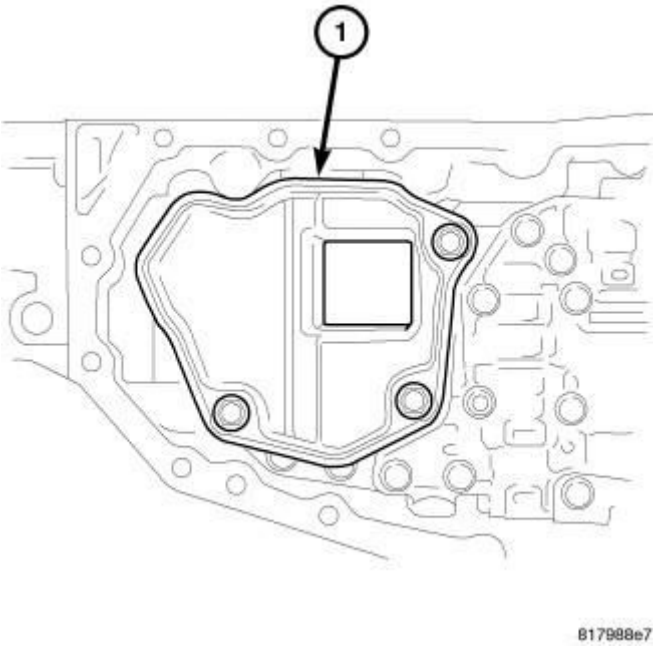

Fig. 333: Oil Strainer
Courtesy of CHRYSLER GROUP, LLC

15. Install the new oil strainer (1) onto the control valve assembly. Install and tighten the mounting bolts to 8 N.m (70 in. lbs.).

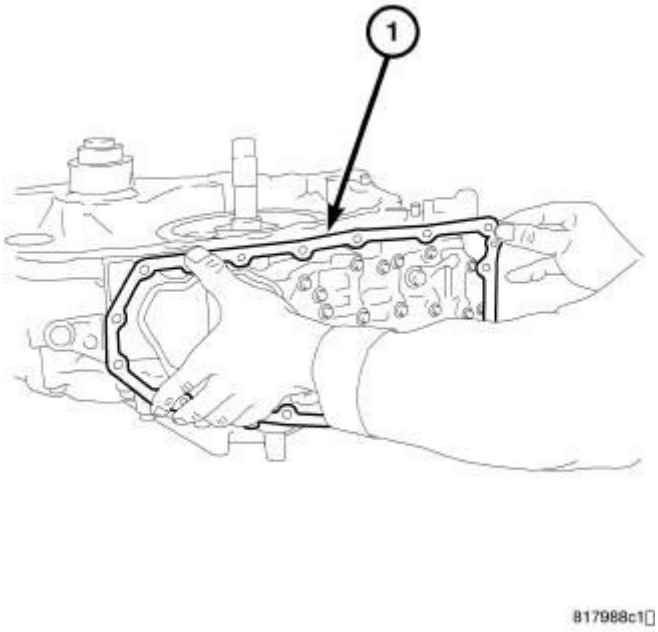

Fig. 334: Oil Pan Gasket
Courtesy of CHRYSLER GROUP, LLC

CAUTION: Do not re-use the oil pan gasket. Remove any moisture, oil, and used gasket material from the surface where the new gasket is to be installed. When installing the oil pan gasket, align the dowel pin with the dowel pin hole in the oil pan gasket.

16. Install the oil pan gasket (1) onto the transaxle case.

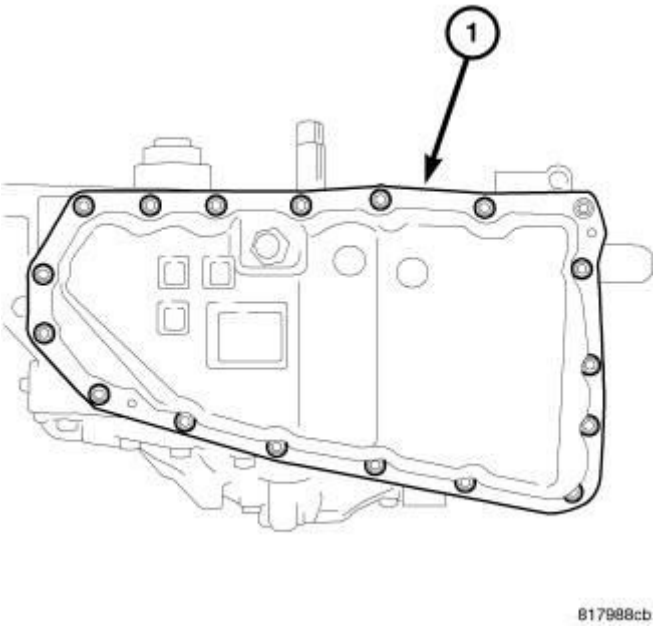

Fig. 335: Oil Pan
Courtesy of CHRYSLER GROUP, LLC

CAUTION: When installing the oil pan, align the dowel pin of the transaxle case with the dowel pin hole of the oil pan.

17. Install the oil pan on the transaxle case (1). Install and tighten the mounting bolts to 8 N.m (70 in. lbs.).
18. Fill transmission with the required fluid. Refer to **FLUID, STANDARD PROCEDURE**.

2014 AUTOMATIC TRANSMISSION

CVT - Transmission Control Module (TCM) - Electrical Diagnostics - Compass & Patriot

DIAGNOSTIC CODE INDEX

DIAGNOSTIC CODE INDEX

DTC	Description
P0219	ENGINE OVERSPEED
P0562	BATTERY/SYSTEM VOLTAGE LOW
P0563	BATTERY/SYSTEM VOLTAGE HIGH
P0571	BRAKE SWITCH 1 PERFORMANCE
P0602	CONTROL MODULE PROGRAMING ERROR/NOT PROGRAMMED
P0610	ECU VEHICLE OPTIONS MISMATCH
P0641	SENSOR REFERENCE VOLTAGE 1 CIRCUIT
P0707	TRANSMISSION RANGE SENSOR CIRCUIT LOW
P0708	TRANSMISSION RANGE SENSOR CIRCUIT HIGH
P0711	TRANSMISSION TEMPERATURE SENSOR PERFORMANCE
P0712	TRANSMISSION TEMPERATURE SENSOR LOW
P0713	TRANSMISSION TEMPERATURE SENSOR HIGH
P0716	INPUT SPEED SENSOR 1 CIRCUIT PERFORMANCE
P0717	INPUT SPEED SENSOR 1 CIRCUIT NO SIGNAL
P0721	OUTPUT SPEED SENSOR CIRCUIT PERFORMANCE
P0722	OUTPUT SPEED SENSOR CIRCUIT NO SIGNAL
P0730	INCORRECT GEAR RATIO
P0741	TORQUE CONVERTER CLUTCH CIRCUIT PERFORMANCE
P0746	LINE PRESSURE SOLENOID PERFORMANCE
P0776	SECONDARY PRESSURE SOLENOID STUCK OFF (HIGH PRESSURE)
P0777	SECONDARY PRESSURE SOLENOID STUCK ON (LOW PRESSURE)
P0826	UP/DOWN SHIFT SWITCH CIRCUIT
P0842	PRIMARY OIL PRESSURE SENSOR CIRCUIT LOW

P0843	PRIMARY OIL PRESSURE SENSOR CIRCUIT HIGH
P0847	SECONDARY OIL PRESSURE SENSOR CIRCUIT LOW
P0848	SECONDARY OIL PRESSURE SENSOR CIRCUIT HIGH
P0962	PRESSURE CONTROL SOLENOID A CONTROL CIRCUIT LOW
P0963	PRESSURE CONTROL SOLENOID A CONTROL CIRCUIT HIGH
P0966	PRESSURE CONTROL SOLENOID B CONTROL CIRCUIT LOW
P0967	PRESSURE CONTROL SOLENOID B CONTROL CIRCUIT HIGH
P161B	BATTERY DISCONNECT / TCM INTERNAL
P1661	SENSOR GROUND REFERENCE CIRCUIT
P1679	CALIBRATION NOT LEARNED
P167A	CALIBRATION MISMATCH
P1702	PRIMARY OIL PRESSURE SENSOR / SECONDARY OIL PRESSURE SENSOR CORRELATION
P1723	LOCK UP / SELECT CONTROL CIRCUIT
P1729	TRANSMISSION RATIO CONTROL CIRCUIT
P1744	TORQUE CONVERTER LOCK-UP CLUTCH HEAT CONTROL
P198A	AWD SYSTEM PERFORMANCE
P2769	TORQUE CONVERTER CLUTCH CIRCUIT LOW
P2770	TORQUE CONVERTER CLUTCH CIRCUIT HIGH
U0001	CAN C BUS
U0100	LOST COMMUNICATION WITH ECM/PCM
U0121	LOST COMMUNICATION WITH ANTILOCK BRAKE MODULE
U0141	LOST COMMUNICATION WITH IPM (FCM/TIPM)
U1146	LOST COMMUNICATION WITH EXTERNAL MEMORY
U1400	IMPLAUSIBLE TPS SIGNAL RECEIVED
U1401	IMPLAUSIBLE ENGINE SPEED SIGNAL RECEIVED
U1407	IMPLAUSIBLE ENGINE TORQUE REQUEST SIGNAL RECEIVED

U140F	IMPLAUSIBLE ENGINE VARIANT DATA
U1410	IMPLAUSIBLE FCM VARIANT DATA
U1412	IMPLAUSIBLE VEHICLE SPEED SIGNAL RECEIVED
U1424	IMPLAUSIBLE ENGINE TORQUE SIGNAL RECEIVED
U1425	IMPLAUSIBLE PEDAL POSITION SIGNAL RECEIVED
U1426	IMPLAUSIBLE TCC SLIP REQUEST SIGNAL RECEIVED
U1428	RECEIVED ENGINE TORQUE REQUEST SIGNAL STUCK
U1429	RECEIVED ENGINE TORQUE SIGNAL STUCK

DIAGNOSIS AND TESTING

P0219-ENGINE OVERSPEED

For a complete wiring diagram, **refer to appropriate SYSTEM WIRING DIAGRAMS article** .

THEORY OF OPERATION

The Transmission Control Module (TCM) receives a engine RPM over the CAN bus. If the engine RPM exceeds a predetermined value a DTC will set.

WHEN MONITORED

Ignition on, engine running with the transmission in a valid forward gear.

No active CAN Bus DTCs present.

SET CONDITION

Monitored engine speed over the CAN Bus is greater than 6800 RPM for the period of 100 msecs.

POSSIBLE CAUSES

Possible Causes
ENGINE MECHANICAL PROBLEM
TRANSMISSION MECHANICAL PROBLEM
POWERTRAIN CONTROL MODULE (PCM)
TRANSMISSION CONTROL MODULE (TCM)

Always perform the CVT Pre-Diagnostic Troubleshooting procedure before proceeding. Refer to CVT - PRE-DIAGNOSTIC TROUBLESHOOTING PROCEDURE .

DIAGNOSTIC TEST

1. **CHECK FOR OTHER TRANSMISSION DTCS**
   1. With the scan tool, check for other transmission DTCs.

      Are there any TCC, gear ratio and/or speed sensor DTCs present in addition to P0219?

      Yes

      - Perform the appropriate diagnostic procedure in this diagnostic information. If speed sensor DTCs are present, perform their respective tests first.

      No

      - Go To 2
2. **CHECK FOR ENGINE DTCS**
   1. With the scan tool, check for engine DTCs.

      Are there any engine DTCs present?

      Yes

      - Perform the appropriate diagnostic procedure. Refer to **DTC INDEX** .
      - Perform the CVT VERIFICATION TEST. Refer to **CVT VERIFICATION TEST** .

      No

      - Go To 3
3. **CHECK IF DTC RESETS**
   1. With the scan tool erase transmission DTCs.
   2. Test drive the vehicle and try to duplicate the setting conditions.

Pick the answer that best describes your findings:

DTC resets with a speed sensor DTC

- Perform the appropriate diagnostic procedure in this diagnostic information.

DTC resets without a speed sensor DTC

- Replace or repair the CV Transmission as necessary in accordance with the Service Information.
- Perform the CVT VERIFICATION TEST. Refer to **CVT VERIFICATION TEST** .

No DTC

- Go To 4

4. **CHECK THE WIRING AND CONNECTORS**
   1. The conditions necessary to set this DTC are not present at this time.
   2. Using the schematics as a guide, inspect the wiring and connectors specific to this circuit.
   3. Wiggle the wires while checking for shorted and open circuits.

   Were there any problems found?

   Yes

   - Repair as necessary.
   - Perform the CVT VERIFICATION TEST. Refer to **CVT VERIFICATION TEST** .

   No

   - Test complete, the condition or conditions that originally set this DTC are not present at this time.

P0562-BATTERY/SYSTEM VOLTAGE LOW

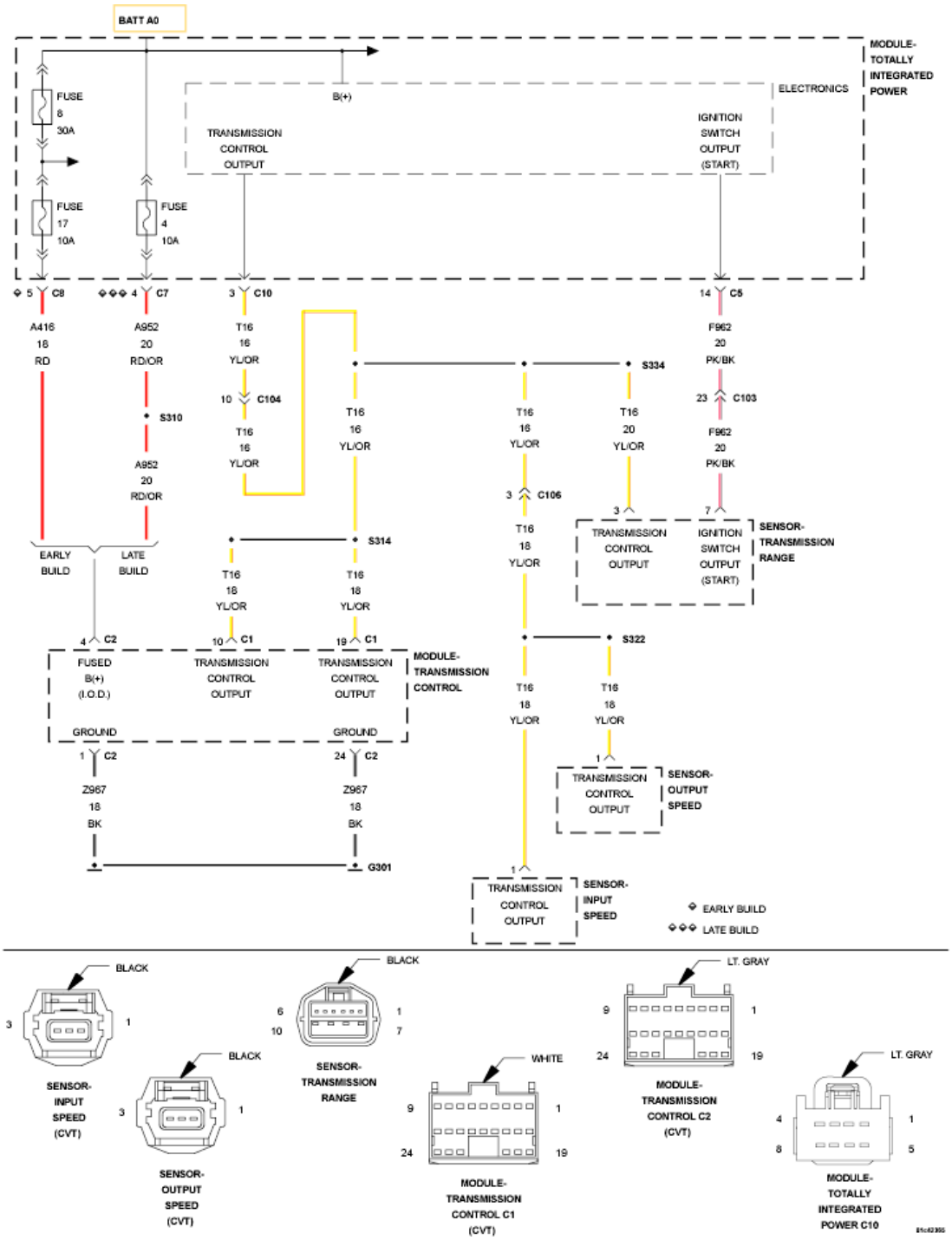

Fig. 1: Transmission Control Module Circuit Schematic
Courtesy of CHRYSLER GROUP, LLC

For a complete wiring diagram, **refer to appropriate SYSTEM WIRING DIAGRAMS article** .

THEORY OF OPERATION

The transmission Control Module monitors ignition voltage. If the Monitored

voltage drops below a predetermined voltage, this DTC will set.

WHEN MONITORED

Ignition on, engine RPM above 450.

Secondary pressure (monitored current) greater than 0.3 MPa.

No active Implausible Engine Speed Signal DTCs present.

SET CONDITION

The Transmission Control Module detects the system voltage below 9.0 volts for the period greater than 5.0 seconds. It takes two consecutive one trip faults for the DTC to mature and illuminate the MIL.

POSSIBLE CAUSES

Possible Causes
CHARGING SYSTEM DTCS PRESENT
TIPM POWER CONTROL CIRCUIT DTCS PRESENT
(Z967) GROUND CIRCUITS OPEN OR HIGH RESISTANCE
(T16) TRANSMISSION CONTROL OUTPUT CIRCUIT OPEN OR HIGH RESISTANCE
TRANSMISSION CONTROL MODULE

Always perform the CVT Pre-Diagnostic Troubleshooting procedure before proceeding. Refer to CVT - PRE-DIAGNOSTIC TROUBLESHOOTING PROCEDURE .

DIAGNOSTIC TEST

1. **CHECK FOR RELATED CHARGING SYSTEM DTCS**
    1. With the scan tool, read the Engine DTCs.

       Are there any Charging System related DTCs present?

       Yes

       - Refer to **DTC INDEX** and perform the appropriate diagnostic procedure. After repairing the Charging System DTCS, perform

the Transmission Verification test to verify the transmission and or controller was not damaged.

- Perform CVT VERIFICATION TEST. Refer to **CVT VERIFICATION TEST** .

No

- Go To 2

2. **CHECK FOR TIPM DTCS**

NOTE: Generator, battery, and charging system must be fully functional before performing this test.

1. With the scan tool, read TIPM DTCs.

   Are there any TIPM TCM Power Control Circuit DTCs present also?

   Yes

   - Refer to **DTC INDEX** and perform the appropriate diagnostic procedure.

   No

   - Go To 3

3. **CONDITION P0562 PRESENT**
   1. With the scan tool, read Transmission DTCs.

      Is the status active for this DTC?

      Yes

      - Go To 4

      No

      - Go To 6

4. **CHECK THE (Z967) GROUND CIRCUITS FOR AN OPEN**

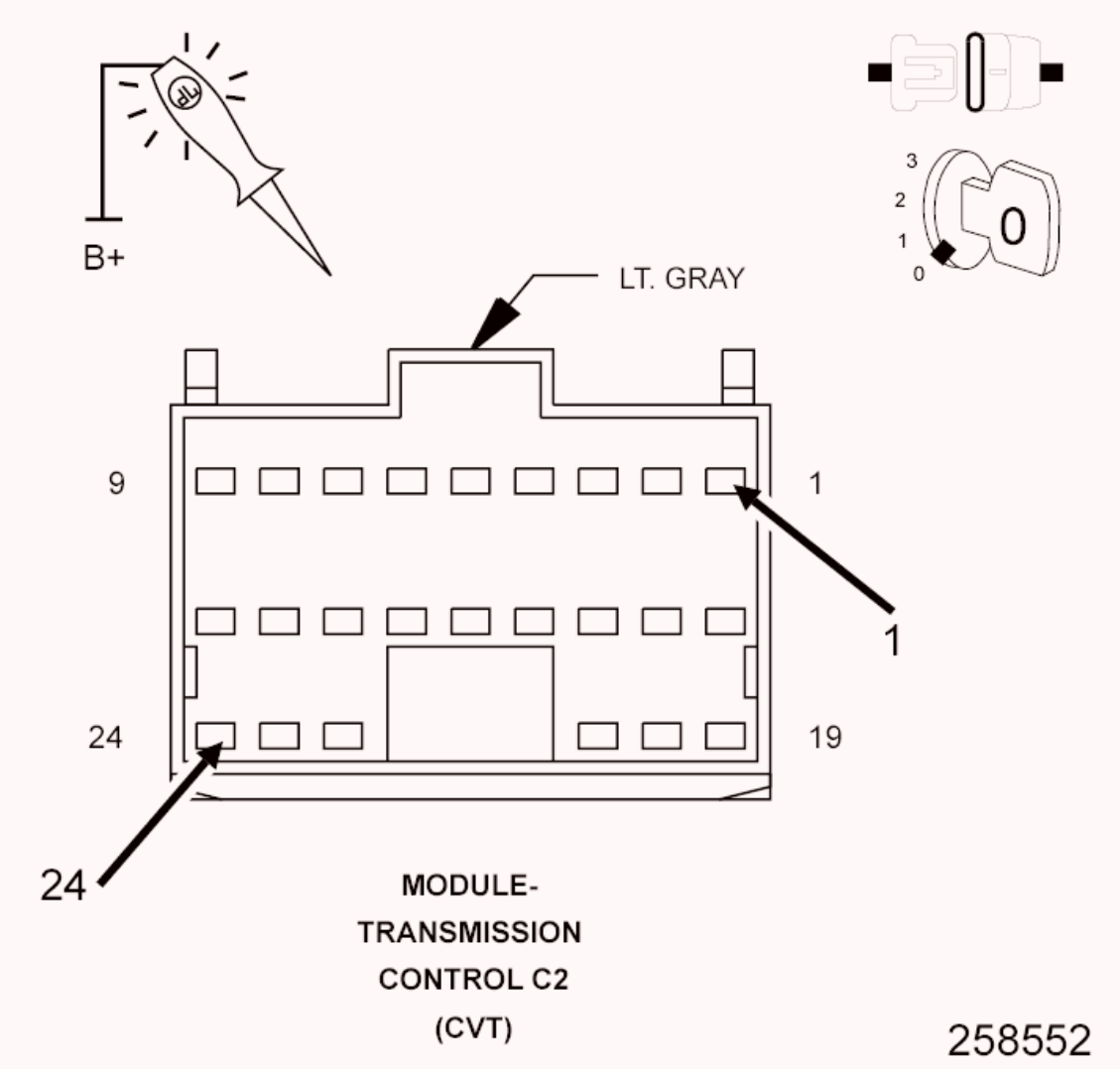

Fig. 2: Checking Ground Circuits For An Open
Courtesy of CHRYSLER GROUP, LLC

1. Turn the ignition off to the lock position.
2. Disconnect the TCM C2 harness connector.

NOTE: Check connectors - Clean/repair as necessary.

3. Using a 12-volt test light connected to 12-volts, check the (Z967) Ground circuits in the TCM C2 harness connector.

NOTE: The test light must illuminate brightly. Compare the brightness to that of a direct connection to the battery.

Does the test light illuminate brightly for all the (Z967) Ground

circuits?

Yes

- Go To 5

No

- Repair the (Z967) Ground circuit for an open circuit or high resistance.
- Perform CVT VERIFICATION TEST. Refer to **CVT VERIFICATION TEST** .

5. **CHECK THE (T16) TRANSMISSION CONTROL OUTPUT CIRCUIT FOR AN OPEN**

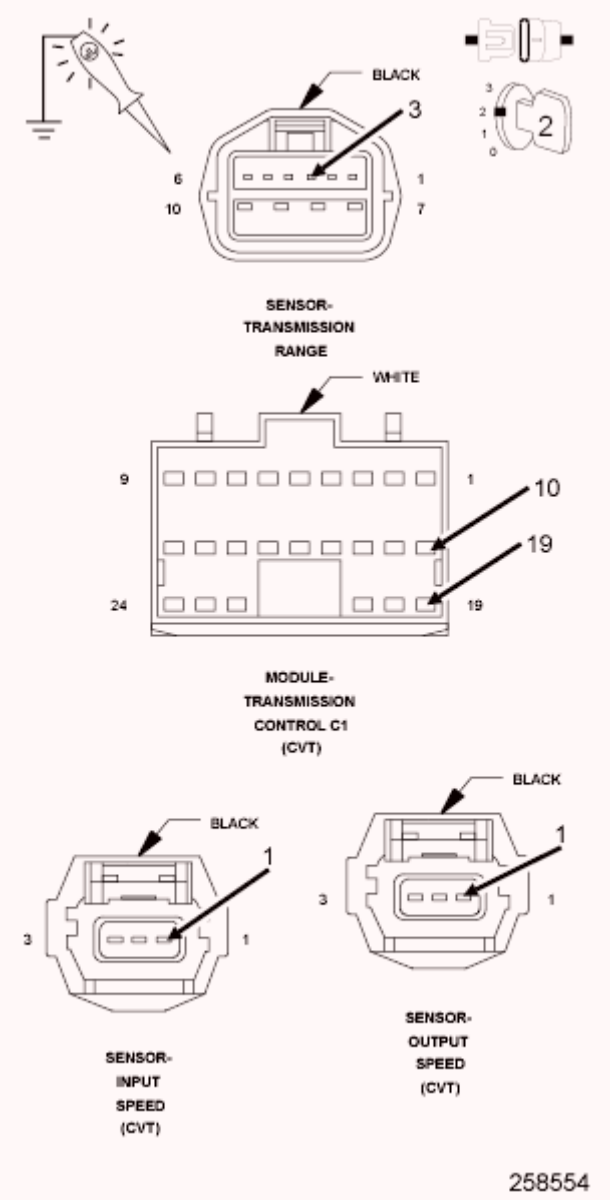

Fig. 3: Checking Transmission Control Output Circuit For An Open
Courtesy of CHRYSLER GROUP, LLC

1. Turn the ignition off to the lock position.
2. Disconnect the TCM C1 and C2 harness connectors.
3. Disconnect the Transmission Range Sensor (TRS) harness connector.
4. Disconnect the Input and Output Speed Sensor harness connectors.
5. Ignition on, engine not running.
6. With the scan tool under TIPM, actuate the Transmission.
7. Using a 12-volt test light connected to ground, check all (T16) Transmission Control Output circuits.

NOTE: The (T16) Transmission Control Output circuit branches off to the TRS, TCM and the Input and Output Speed Sensors.

Does the test light illuminate brightly while cycling on and off on all the (T16) Transmission Control Output circuits?

Yes

- Using the schematics as a guide, check the Transmission Control Module (TCM) terminals for corrosion, damage, or terminal push out. Pay particular attention to all power and ground circuits. If no problems are found, replace and program the TCM in accordance with the Service Information.
- Perform CVT VERIFICATION TEST. Refer to **CVT VERIFICATION TEST** .

No

- Repair the (T16) Transmission Control Relay Output circuit(s) for an open or high resistance.
- Perform CVT VERIFICATION TEST. Refer to **CVT VERIFICATION TEST** .

6. **CHECK THE WIRING AND CONNECTORS**
   1. The conditions necessary to set this DTC are not present at this time.
   2. Using the schematics as a guide, inspect the wiring and connectors specific to this circuit.
   3. Wiggle the wires while checking for shorted and open circuits.

   Were there any problems found?

   Yes

   - Repair as necessary.
   - Perform CVT VERIFICATION TEST. Refer to **CVT VERIFICATION TEST** .

   No

- Test Complete.

P0563-BATTERY/SYSTEM VOLTAGE HIGH

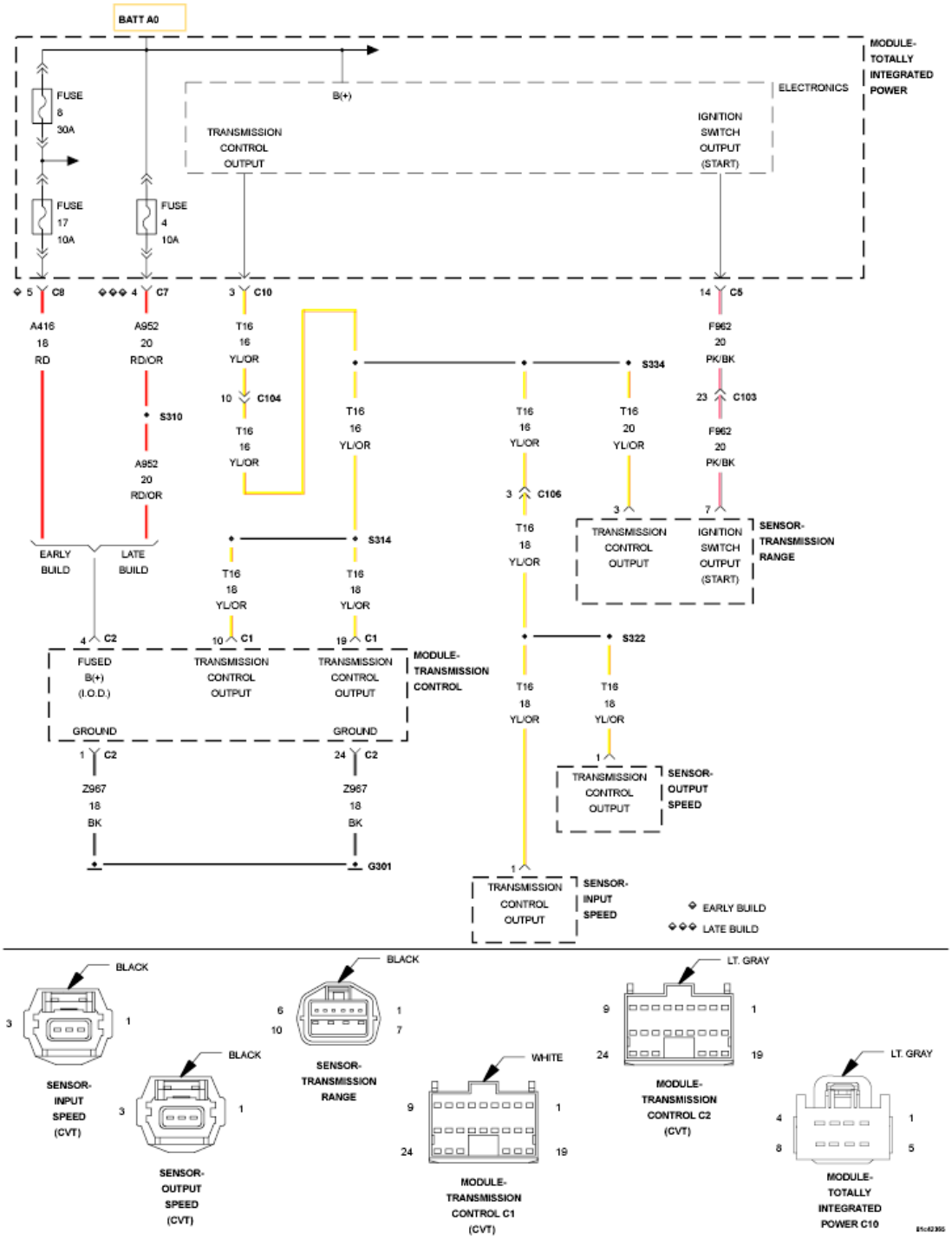

Fig. 4: Transmission Control Module Circuit Schematic
Courtesy of CHRYSLER GROUP, LLC

For a complete wiring diagram, **refer to appropriate SYSTEM WIRING DIAGRAMS article** .

THEORY OF OPERATION

The transmission Control Module monitors ignition voltage. If the monitored voltage rises above a predetermined voltage this DTC will set.

WHEN MONITORED

Ignition on, engine RPM above 450.

Secondary pressure (monitored current) greater than 0.3 MPa

Vehicle speed greater than 0 Km/h (0 mph)

No active DTCs from the following:

Implausible Engine Speed Signal

Secondary pulley (output) speed sensor

SET CONDITION

The Transmission Control Module detects the system voltage above 16.0 volts for a period greater than 5.0 seconds.

POSSIBLE CAUSES

Possible Causes
CHARGING SYSTEM DTCS PRESENT
TIPM POWER CONTROL CIRCUIT DTCS PRESENT
VEHICLE IMPROPERLY JUMP STARTED OR BY A 24 VOLT OR HIGHER SYSTEM
TRANSMISSION CONTROL MODULE

Always perform the CVT Pre-Diagnostic Troubleshooting procedure before proceeding. Refer to CVT - PRE-DIAGNOSTIC TROUBLESHOOTING PROCEDURE .

DIAGNOSTIC TEST

1. **CHECK FOR RELATED CHARGING SYSTEM DTCS**
    1. With the scan tool, read the Engine DTCs.

Are there any Charging System related DTCs present?

Yes

- Refer to **DTC INDEX** and perform the appropriate diagnostic procedure. After repairing the Charging System DTCs, perform the Transmission Verification test to verify the transmission and or controller was not damaged.
- Perform CVT VERIFICATION TEST. Refer to **CVT VERIFICATION TEST** .

No

- Go To 2

2. **CHECK FOR TIPM DTCS**

NOTE: Generator, battery, and charging system must be fully functional before performing this test.

1. With the scan tool, read TIPM DTCs.

   Are there any TIPM TCM Power Control Circuit DTCs present also?

   Yes

   - Refer to **DTC INDEX** and perform the appropriate diagnostic procedure.

   No

   - Go To 3

3. **CONDITION P0563 PRESENT**
   1. With the scan tool, read Transmission DTCs.

      Is the status active for this DTC?

      Yes

      - Go To 4

No

- Go To 5

4. **CHECK IF THE VEHICLE WAS JUMP-STARTED**

   Was the vehicle jump-started improperly (in series) or connected to a 24 volt or higher electrical system?

   Yes

   - Go To 5

   No

   - Using the schematics as a guide, check the Transmission Control Module (TCM) terminals for corrosion, damage, or terminal push out. Pay particular attention to all power and ground circuits. If no problems are found, replace and program the TCM in accordance with the Service Information.
   - Perform CVT VERIFICATION TEST. Refer to **CVT VERIFICATION TEST** .

5. **CHECK THE WIRING AND CONNECTORS**
   1. The conditions necessary to set this DTC are not present at this time.
   2. Using the schematics as a guide, inspect the wiring and connectors specific to this circuit.
   3. Wiggle the wires while checking for shorted and open circuits.

   Were there any problems found?

   Yes

   - Repair as necessary.
   - Perform CVT VERIFICATION TEST. Refer to **CVT VERIFICATION TEST** .

   No

   - Test Complete.

P0571-BRAKE SWITCH 1 PERFORMANCE

For a complete wiring diagram, **refer to appropriate SYSTEM WIRING DIAGRAMS article** .

THEORY OF OPERATION

The Transmission Control Module (TCM) monitors the brake switch 3 signal over the CAN Bus from the Totally Integrated Power Module (TIPM). If the Transmission is shifted into Drive position without confirming that the brake was depressed before the shift, a DTC will set.

WHEN MONITORED

After initial start and any time the shift lever is changed from park to drive.

System voltage between 9.0 and 16 volts.

No active CAN Bus DTCs present.

Vehicle speed is greater than 30 Km/h (18.5 mph) for at least 10 seconds.

SET CONDITION

The brake switch status does not change during a drive cycle with a vehicle speed greater than 30 Km/h (18.5 mph) for the period of 10 seconds.

It takes two consecutive problem identification trips to mature the fault. After two consecutive trips, the MIL is illuminated on the next key on cycle (start of a third trip).

POSSIBLE CAUSES

Possible Causes
OTHER BRAKE SWITCH DTCS PRESENT
(L53) STOP LAMP SWITCH OUTPUT CIRCUIT
BRAKE SWITCH
TOTALLY INTEGRATED POWER MODULE (TIPM)
TRANSMISSION CONTROL MODULE

Always perform the CVT Pre-Diagnostic Troubleshooting procedure before proceeding. Refer to CVT - PRE-DIAGNOSTIC TROUBLESHOOTING PROCEDURE .

DIAGNOSTIC TEST

1. **CHECK IF THE DTC IS ACTIVE**
   1. With the scan tool, read Transmission DTCs.

      Is the status Active or is the Starts Since Set counter 2 or less for this DTC?

      Yes

      - Go To 2

      No

      - Go To 6
2. **CHECK FOR ENGINE BRAKE SWITCH DTCS**
   1. With the scan tool, check for engine brake switch DTCs.
   2. With the scan tool, check if the brake switch changes when the brake pedal is pressed.

      Are there any engine brake switch DTCs present or is the brake switch not registering any change on the scan tool?

      Yes

      - Refer to **DTC INDEX** and perform the appropriate diagnostic procedure. If no DTCs are present and the brake switch does not seem to function, diagnose the brake switch as though a valid DTC is present.
      - Perform the CVT VERIFICATION TEST. Refer to **CVT VERIFICATION TEST** .

      No

      - Go To 3
3. **CHECK THE CENTER HIGH MOUNT STOP LAMP (CHMSL) OPERATION**
   1. While monitoring the CHMSL, depress the brake pedal.

      Does the CHMSL illuminate?

Yes

- Go To 4

No

- Refer to **DIAGNOSIS AND TESTING** and perform the appropriate diagnostic procedure.

4. **CHECK THE TCM BRAKE SWITCH INPUT OPERATION**
   1. With the scan tool in TCM, depress the brake pedal and monitor the Brake Switch status.

      Does the Brake Switch status change states when the brake pedal is depressed?

      Yes

      - Go To 6

      No

      - Go To 5

5. **CHECK THE TIPM BRAKE SWITCH INPUT OPERATION**
   1. With the scan tool in TIPM, depress the brake pedal and monitor the Brake Switch status.

      Does the Brake Switch status change states when the brake pedal is depressed?

      Yes

      - Using the schematics as a guide, check the Totally Integrated Power Module (TIPM) terminals for corrosion, damage, or terminal push out. Pay particular attention to all power and ground circuits. Check for any Service Bulletins for possible causes that may apply. If no problems are found, replace and program the TIPM in accordance with the Service Information.
      - Perform the CVT VERIFICATION TEST. Refer to **CVT VERIFICATION TEST** .

- If the DTC resets, Use the schematics as a guide and check the Transmission Control Module (TCM) terminals for corrosion, damage, or terminal push out. Pay particular attention to all power and ground circuits. Check for any Service Bulletins for possible causes that may apply. If no problems are found, replace and program the TCM in accordance with the Service Information.
- Perform the CVT VERIFICATION TEST. Refer to **CVT VERIFICATION TEST** .

No

- Check the (L53) Stop Lamp switch output circuit between the brake switch and the TIPM for an open or short to ground.
- Perform the CVT VERIFICATION TEST. Refer to **CVT VERIFICATION TEST** .

6. **CHECK THE WIRING AND CONNECTORS**
   1. Test complete, the condition or conditions that originally set this DTC are not present at this time.
   2. Using the wiring diagrams as a guide, check all related splices and connectors for signs of water intrusion, corrosion, pushed out or bent terminals and correct pin tension.
   3. Wiggle the wires while checking for shorted and open circuits.

   Were there any problems found?

   Yes

   - Repair as necessary.
   - Perform the CVT VERIFICATION TEST. Refer to **CVT VERIFICATION TEST** .

   No

   - Test Complete.

P0602-CONTROL MODULE PROGRAMING ERROR/NOT PROGRAMMED

For a complete wiring diagram, **refer to appropriate SYSTEM WIRING DIAGRAMS article** .

THEORY OF OPERATION

After initial vehicle start, the Transmission Control Module (TCM) looks for a message over the CAN BUS verifying vehicle information which is crucial for transmission configuration. After the information is received it is stored in the EEPROM of the TCM. If the TCM does not receive a valid configuration within a predetermined time, the DTC will set and the MIL will be illuminated.

WHEN MONITORED

After an initial vehicle start with a system voltage between 9.0 and 16.0 volts.

SET CONDITION

Transmission Control Module (TCM) does not receive valid vehicle information from the Front Control Module (FCM) for the period of 5 seconds.

POSSIBLE CAUSES

Possible Causes
CAN BUS DTCS PRESENT
TOTALLY INTEGRATED CONTROL MODULE (TIPM) NOT PROGRAMED
TRANSMISSION CONTROL MODULE (TCM)

Always perform the CVT Pre-Diagnostic Troubleshooting procedure before proceeding. Refer to CVT - PRE-DIAGNOSTIC TROUBLESHOOTING PROCEDURE .

DIAGNOSTIC TEST

1. **CHECK FOR CAN BUS DTCS**
    1. With the scan tool, check for CAN BUS DTCs.

       Are there any CAN BUS DTCs present?

       Yes

       - Refer to **DTC INDEX** and perform the appropriate diagnostic procedure.
       - Perform CVT VERIFICATION TEST. Refer to **CVT VERIFICATION TEST** .

No

- Go To 2

2. **CHECK IF CONTROLLER WAS REPLACED**

   Has the Transmission Control Module been recently replaced?

   Yes

   - Go To 3

   No

   - Go To 5

3. **CHECK IF CONTROLLER WAS PROGRAMED**

   Was the Transmission Control Module flashed?

   Yes

   - Go To 4

   No

   - Flash the control module with the proper part number for the vehicle.
   - Perform CVT VERIFICATION TEST. Refer to **CVT VERIFICATION TEST** .

4. **CHECK FOR OTHER DTCS**
   1. With the scan tool, check Transmission DTCs.

      Are the DTCs P0602 and U140F Active and P161B and P1729 Stored?

      Yes

      - Check the Controller part number coincides with the vehicle setup such as engine size or with or without All wheel Drive (AWD). This is an indication of an improper vehicle configuration. Verify all configurations to the Vehicle Identification Number (VIN) and reprogram as necessary.
      - Perform CVT VERIFICATION TEST. Refer to **CVT**

VERIFICATION TEST .

No

- Go To 5

5. **CHECK THE FCM FOR PROPER PROGRAMING OF TIRE SIZE**
   1. With the scan tool, check the TIPM/FCM for proper tire size programing.

      Is the tire size properly programed in the TIPM/FCM?

      Yes

      - Using the schematics as a guide, check the Transmission Control Module (TCM) terminals for corrosion, damage, or terminal push out. Pay particular attention to all power and ground circuits. Check for any Service Bulletins for possible causes that may apply. If no problems are found, replace the TCM in accordance with the Service Information.
      - Perform CVT VERIFICATION TEST. Refer to **CVT VERIFICATION TEST** .

      No

      - Program the TIPM/FCM with the proper tire size.
      - Perform CVT VERIFICATION TEST. Refer to **CVT VERIFICATION TEST** .

P0610-ECU VEHICLE OPTIONS MISMATCH

For a complete wiring diagram, **refer to appropriate SYSTEM WIRING DIAGRAMS article** .

THEORY OF OPERATION

The Transmission Control Module (TCM) stores in its EEPROM vehicle information data transmitted over the CAN Bus from the FCM/TIPM. If the stored information in the TCM does not match the information obtained over the CAN Bus, the DTC will set.

WHEN MONITORED

One time at initial ignition on with system voltage between 9.0 and 16.0 volts.

FCM/TIPM variant data received more than once over the CAN Bus.

FCM/TIPM variant data is in a valid range.

Vehicle Configuration Learn Routine not finished.

SET CONDITION

The vehicle option data received over the CAN Bus does not match the data stored in the EEPROM of the TCM. It takes one trip of problem identification to set the MIL.

POSSIBLE CAUSES

Possible Causes
USED CONTROLLER INSTALLED WITH WRONG CONFIGURATION
FCM/TIPM NOT PROPERLY PROGRAMED OR WAS REPLACED AND NOT PROGRAMED
NEW TCM INSTALLED
TRANSMISSION CONTROL MODULE

Always perform the CVT Pre-Diagnostic Troubleshooting procedure before proceeding. Refer to CVT - PRE-DIAGNOSTIC TROUBLESHOOTING PROCEDURE .

DIAGNOSTIC TEST

1. **CHECK IF THE DTC IS ACTIVE**
    1. With the scan tool, read Transmission DTCs.

       Is the status Active for this DTC?

       Yes

       - Go To 2

       No

       - Go To 4

2. **CHECK THE TIPM**

   Has the TIPM been reprogrammed (tire size) or replaced without being programed?

   Yes

   - Program the TIPM if not programed. If the tire size was changed, with the scan tool perform a Initialize CVT procedure.
   - Perform CVT VERIFICATION TEST. Refer to **CVT VERIFICATION TEST** .

   No

   - Go To 3
3. **CHECK THE TCM**

   Has the TCM been recently replaced with a new or used controller?

   Yes

   - With the scan tool perform a TCM relearn.
   - Perform CVT VERIFICATION TEST. Refer to **CVT VERIFICATION TEST** .

   No

   - Using the schematics as a guide, check the Transmission Control Module (TCM) terminals for corrosion, damage, or terminal push out. Pay particular attention to all power and ground circuits. Check for any Service Bulletins for possible causes that may apply. If no problems are found, replace the TCM in accordance with the Service Information.
   - Perform CVT VERIFICATION TEST. Refer to **CVT VERIFICATION TEST** .
4. **CHECK THE WIRING AND CONNECTORS**
   1. The conditions necessary to set this DTC are not present at this time.
   2. Using the schematics as a guide, inspect the wiring and connectors specific to this circuit.
   3. Wiggle the wires while checking for shorted and open circuits.

Were there any problems found?

Yes

- Repair as necessary.
- Perform CVT VERIFICATION TEST. Refer to **CVT VERIFICATION TEST** .

No

- Test Complete.

P0641-SENSOR REFERENCE VOLTAGE 1 CIRCUIT

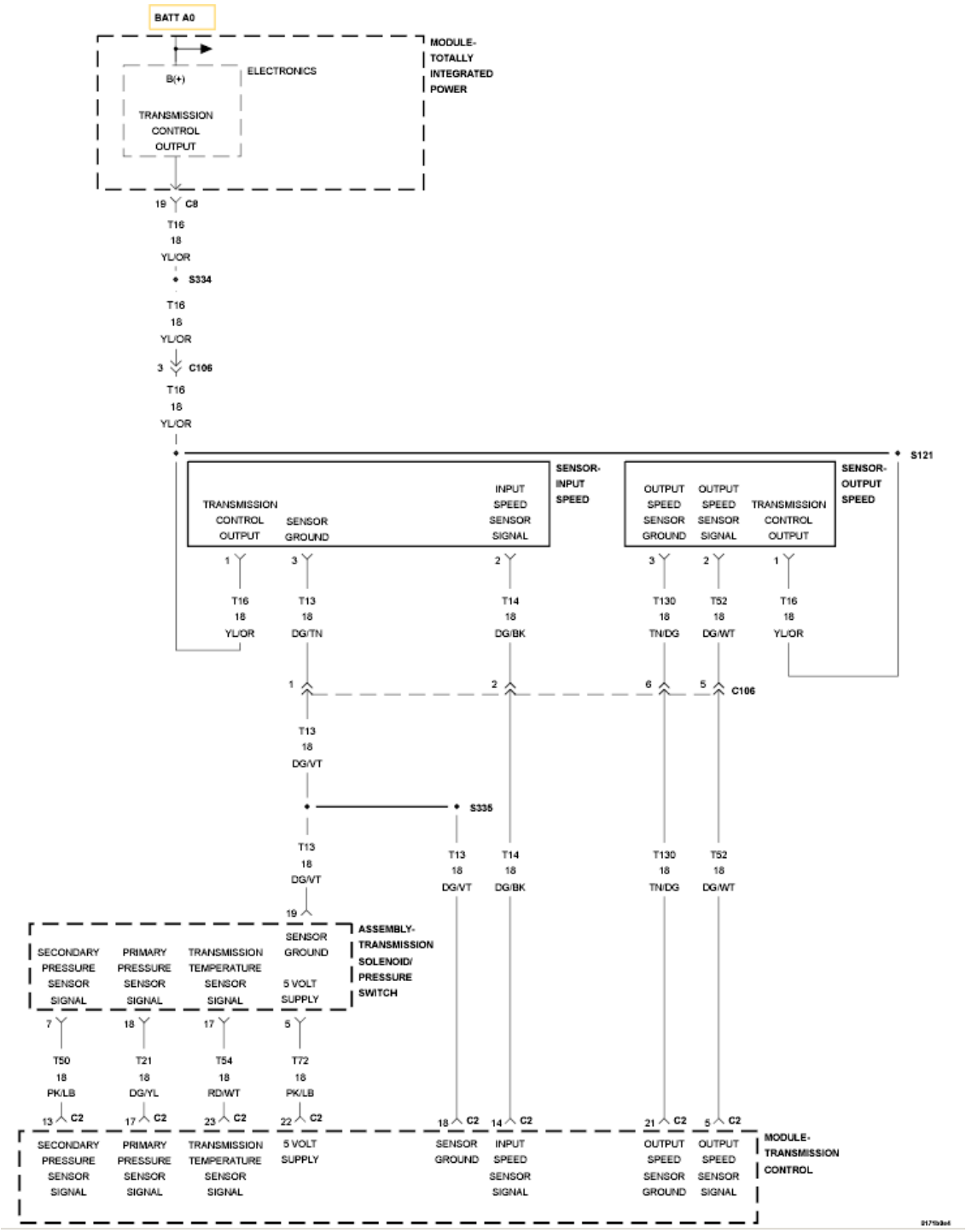

Fig. 5: Sensor Reference Voltage Wiring Diagram
Courtesy of CHRYSLER GROUP, LLC

For a complete wiring diagram, **refer to appropriate SYSTEM WIRING DIAGRAMS article** .

THEORY OF OPERATION

A common 5-volt power supply is used by both the primary and secondary

pressure sensors as well as an internal ROM Assembly. If the power supply does not maintain a predetermined voltage range to the pressure sensors after the period of 5.0 seconds, the Transmission Control Module (TCM) sets the DTC and illuminates the MIL.

WHEN MONITORED

Ignition on with system voltage between 9.0 and 16.0 volts.

SET CONDITION

When the monitored input voltage from primary pressure sensor and secondary pressure sensor is less than 0.005 volts for a continuous period of 5.0 seconds.

POSSIBLE CAUSES

Possible Causes
(T72) 5-VOLT SUPPLY CIRCUIT OPEN
(T72) 5-VOLT SUPPLY CIRCUIT SHORT TO GROUND
INTERNAL TRANSMISSION
TRANSMISSION CONTROL MODULE

Always perform the CVT Pre-Diagnostic Troubleshooting procedure before proceeding. Refer to CVT - PRE-DIAGNOSTIC TROUBLESHOOTING PROCEDURE .

DIAGNOSTIC TEST

1. **CHECK TO SEE IF THE DTC IS ACTIVE**
    1. With the scan tool, read Transmission DTCs.

       Is the status Active or is the Starts Since Set counter 2 or less for this DTC?

       Yes

       - Go To 2

       No

       - Go To 5

2. CHECK THE (T72) 5-VOLT SUPPLY CIRCUIT VOLTAGE

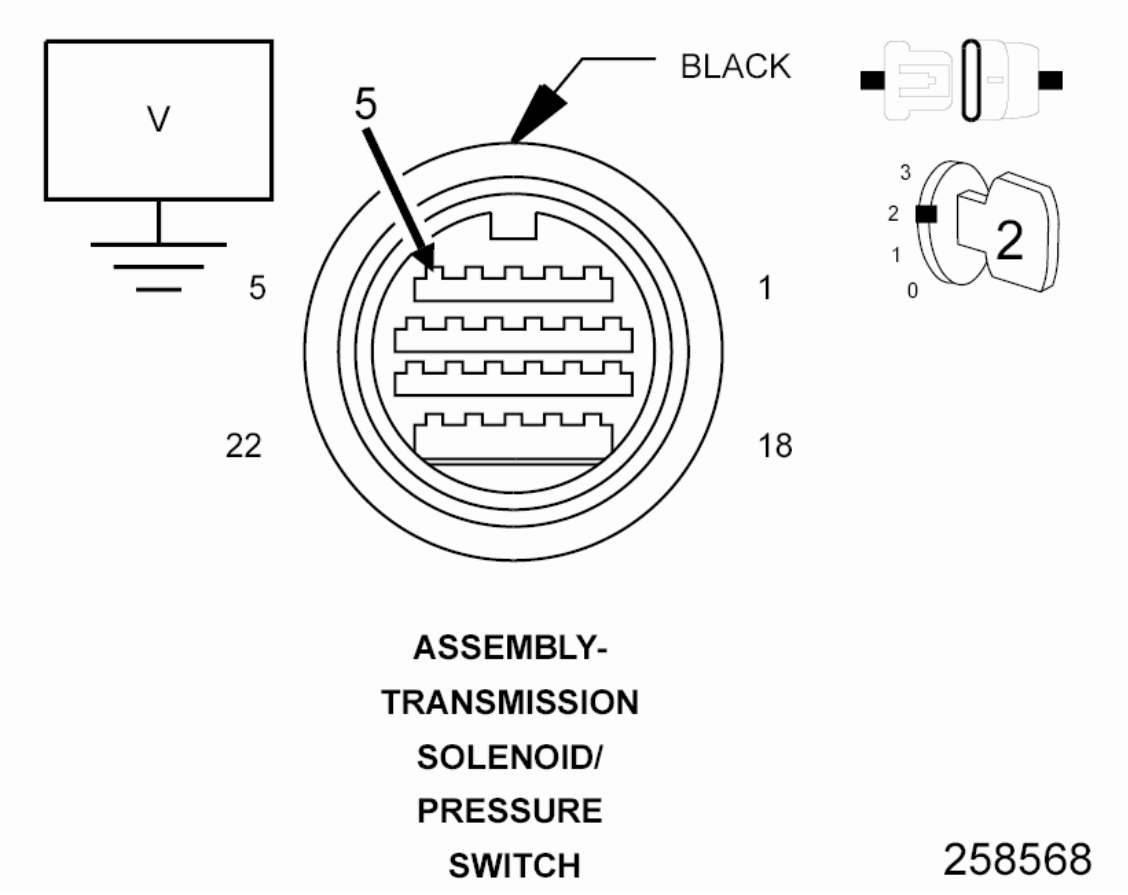

Fig. 6: Checking 5-Volt Supply Circuit Voltage
Courtesy of CHRYSLER GROUP, LLC

1. Turn the ignition off to the lock position.
2. Disconnect the Transmission Solenoid/Pressure Switch Assembly harness connector.
3. Ignition on, engine not running.
4. Measure the voltage of the (T72) 5-volt Supply circuit.

   Is the voltage 5.0 volts (± 0.5 volts)?

   Yes

   - Replace the CV Transmission or the Valve Body in accordance with the Service Information.
   - Perform CVT VERIFICATION TEST. Refer to **CVT VERIFICATION TEST** .

No

- Go To 3

3. **CHECK THE (T72) 5-VOLT SUPPLY CIRCUIT FOR AN OPEN**

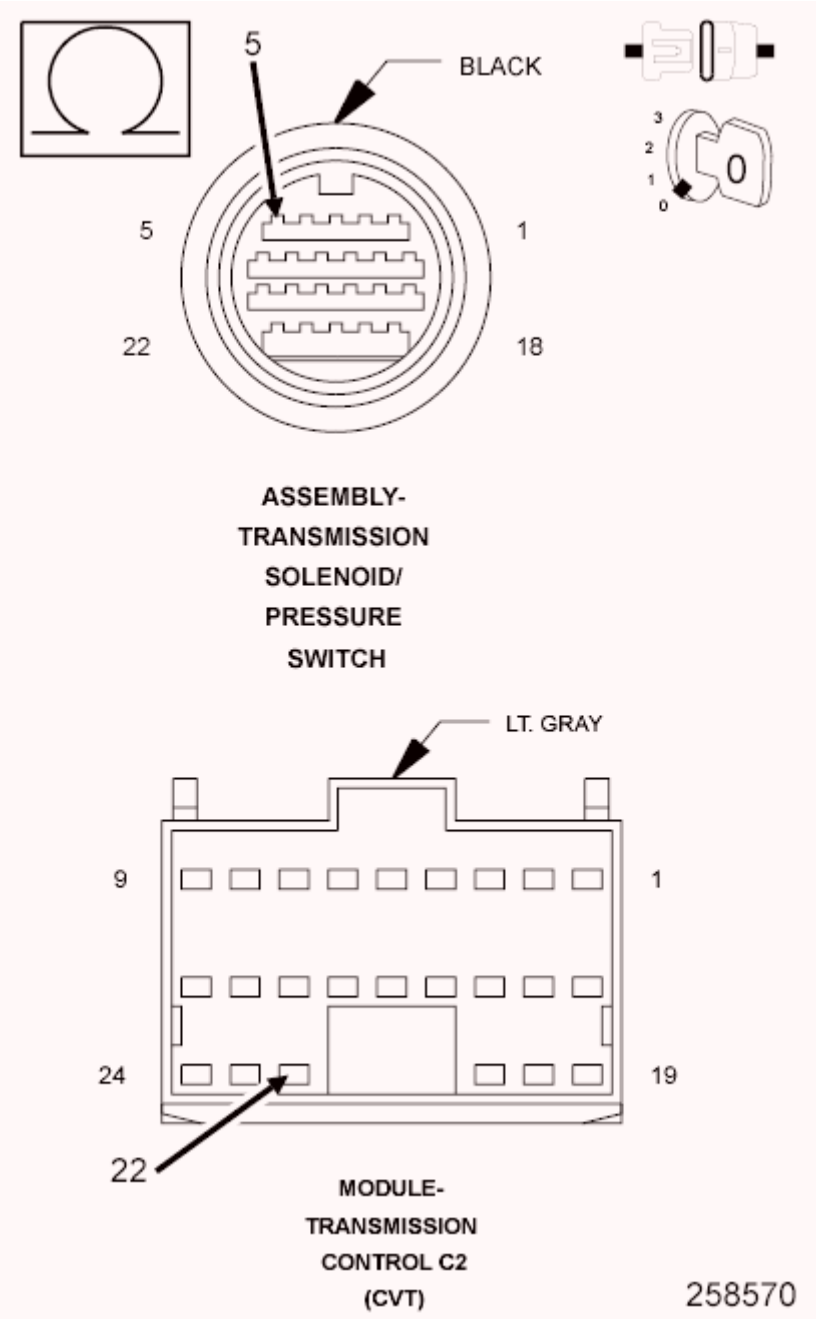

Fig. 7: Checking 5-Volt Supply Circuit For An Open
Courtesy of CHRYSLER GROUP, LLC

1. Turn the ignition off to the lock position.
2. Disconnect the TCM C2 harness connector.

3. Measure the resistance of the (T72) 5-volt Supply circuit between the TCM C2 harness connector and the Transmission Solenoid/Pressure Switch Assembly harness connector.

   Is the resistance above 5.0 ohms?

   Yes

   - Repair the (T72) 5-volt Supply circuit for an open.
   - Perform CVT VERIFICATION TEST. Refer to **CVT VERIFICATION TEST** .

   No

   - Go To 4

4. **CHECK THE (T72) 5-VOLT SUPPLY CIRCUIT FOR A SHORT TO GROUND**

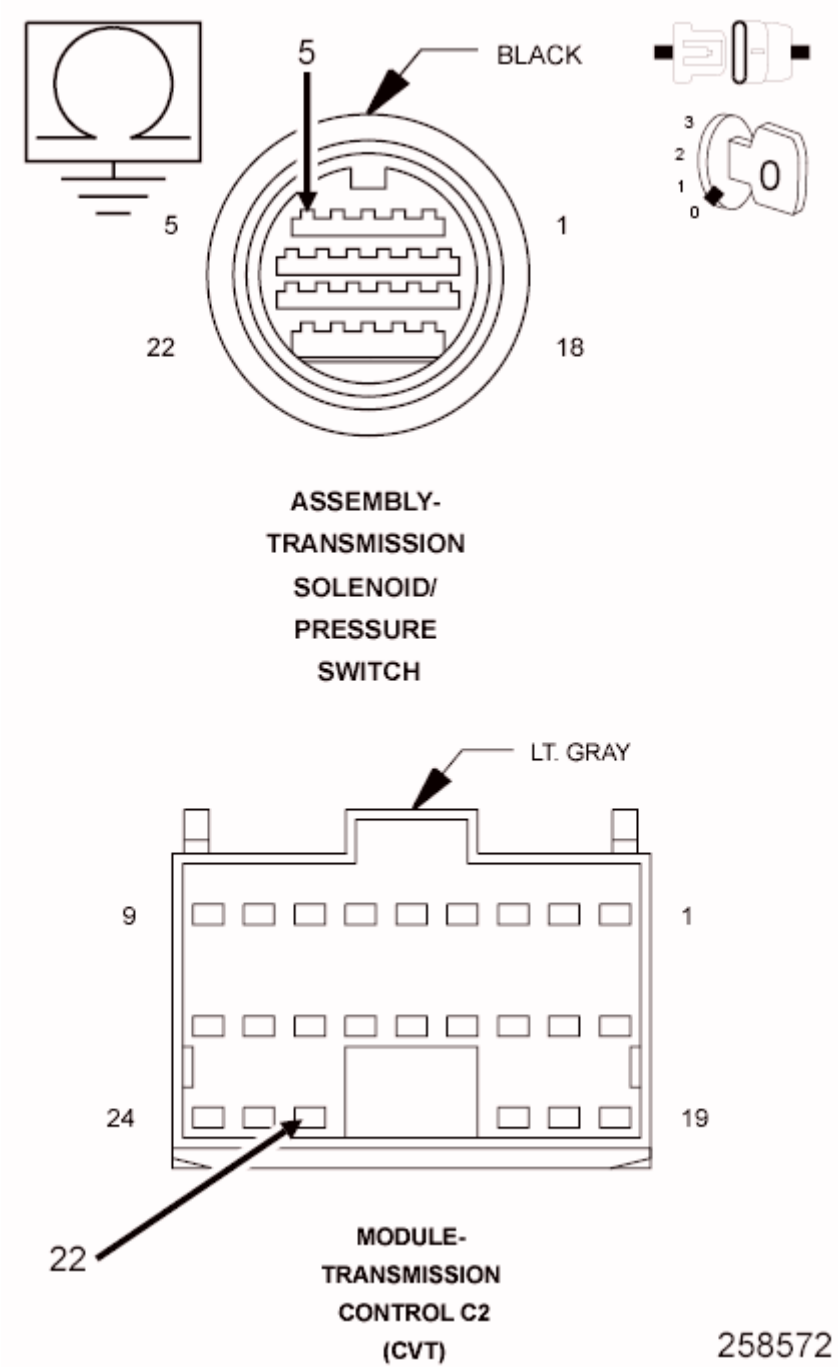

Fig. 8: Checking 5-Volt Supply Circuit For A Short To Ground
Courtesy of CHRYSLER GROUP, LLC

1. Measure the resistance between ground and the (T72) 5-volt Supply circuit.

   Is the resistance below 5.0 ohms?

   Yes

- Repair the (T72) 5-volt Supply circuit for a short to ground.
- Perform CVT VERIFICATION TEST. Refer to **CVT VERIFICATION TEST** .

No

- Using the schematics as a guide, check the Transmission Control Module (TCM) terminals for corrosion, damage, or terminal push out. Pay particular attention to all power and ground circuits. Check for any Service Bulletins for possible causes that may apply. If no problems are found, replace the TCM in accordance with the Service Information.
- Perform CVT VERIFICATION TEST. Refer to **CVT VERIFICATION TEST** .

5. **CHECK THE WIRING AND CONNECTORS**
   1. The conditions necessary to set this DTC are not present at this time.
   2. Using the schematics as a guide, inspect the wiring and connectors specific to this circuit.
   3. Wiggle the wires while checking for shorted and open circuits.

   Were there any problems found?

   Yes

   - Repair as necessary.
   - Perform CVT VERIFICATION TEST. Refer to **CVT VERIFICATION TEST** .

   No

   - Test Complete.

P0707-TRANSMISSION RANGE SENSOR CIRCUIT LOW

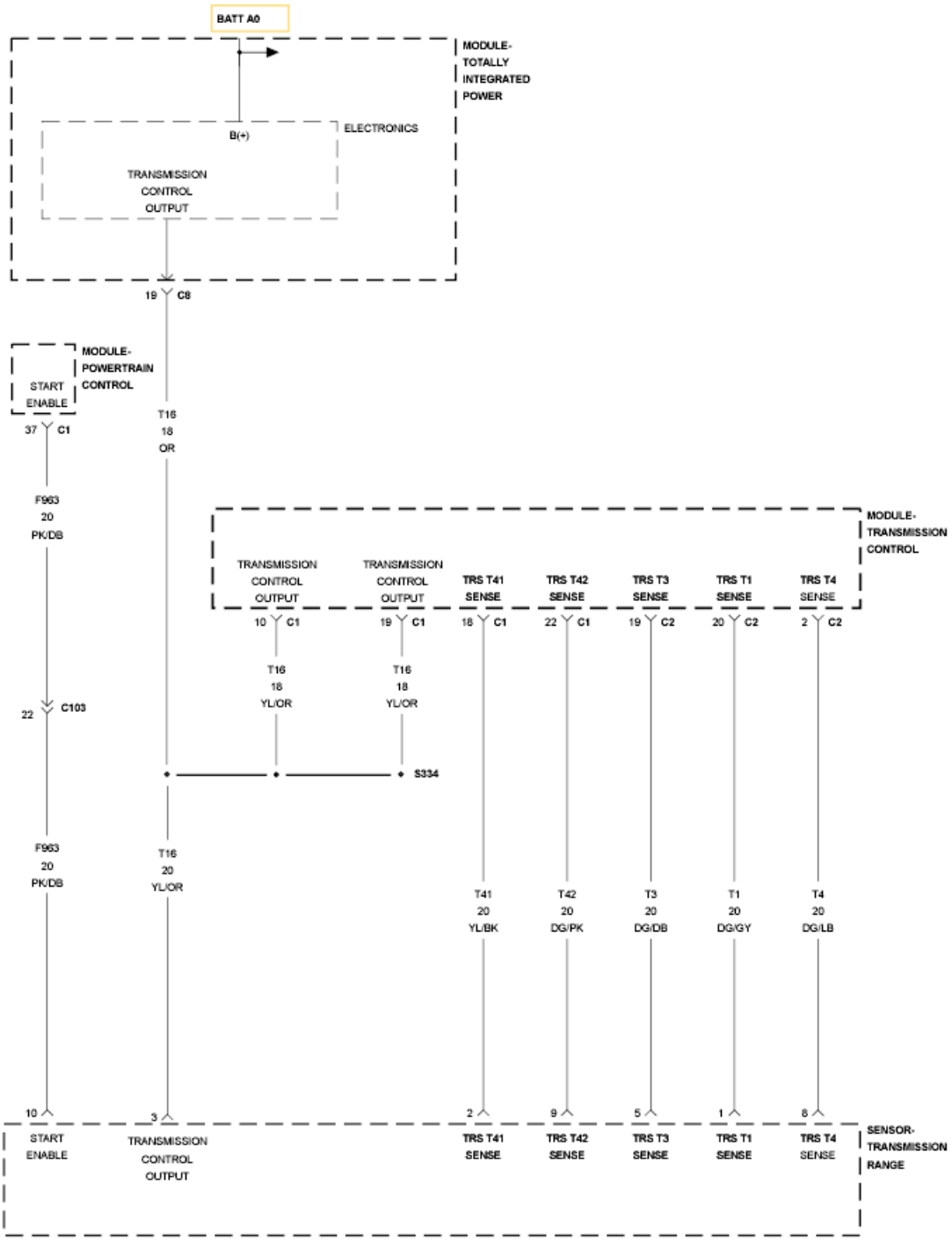

Fig. 9: Transmission Range Sensor Wiring Diagram
Courtesy of CHRYSLER GROUP, LLC

For a complete wiring diagram, **refer to appropriate SYSTEM WIRING DIAGRAMS article** .

THEORY OF OPERATION

The Transmission Range Sensor (TRS) has a contact point for each shift lever

position. The Transmission Control Module (TCM) monitors the signal from the TRS which specifies the shift lever position. The TCM also broadcast the shift lever position over the CAN BUS to other modules.

WHEN MONITORED

Ignition on with system voltage between 9.0 and 16.0 volts.

Vehicle speed above 10 Km/h (6 mph).

No other Transmission Range Sensor (TRS) DTCs present.

SET CONDITION

If a continuous input signal loss is read by the TCM from the TRS for the period of 5 seconds. It takes two consecutive one trips of problem identification to light the MIL.

POSSIBLE CAUSES

Possible Causes
TRANSMISSION RANGE SENSOR CONNECTOR UNPLUGGED OR DAMAGED
TRANSMISSION RANGE SENSOR IMPROPERLY INSTALLED OR OUT OF ADJUSTMENT
(T16) TRANSMISSION CONTROL OUTPUT CIRCUIT OPEN
TRS SENSE CIRCUIT OPEN
TRS SENSE CIRCUIT SHORTED TO GROUND
TRANSMISSION RANGE SENSOR (TRS)
TRANSMISSION CONTROL MODULE (TCM)

Always perform the CVT Pre-Diagnostic Troubleshooting procedure before proceeding. Refer to CVT - PRE-DIAGNOSTIC TROUBLESHOOTING PROCEDURE .

DIAGNOSTIC TEST

1. **CHECK TO SEE IF THE DTC IS ACTIVE**
    1. With the scan tool, read Transmission DTCs.

       Is the status Active or is the Starts Since Set counter 2 or less for this

DTC?

Yes

- Go To 2

No

- Go To 9

2. **CHECK THE TRS HARNESS CONNECTOR**
   1. Turn the ignition off to the lock position.
   2. Check if the TRS harness connector for terminal push out, corrosion or if it is properly plugged in.

NOTE: If the Transmission Range Sensor is unplugged the vehicle will not start.

Were there any problems found?

Yes

- Repair as necessary.
- Perform the CVT VERIFICATION TEST. Refer to **CVT VERIFICATION TEST** .

No

- Go To 3

3. **CHECK THE TRS INSTALLATION AND ADJUSTMENT**
   1. Turn the ignition off to the lock position.
   2. Check if the TRS is properly installed and adjusted in accordance with the Service Information.

Was the TRS properly installed and adjusted?

Yes

- Go To 4

No

- Properly install or adjust the TRS in accordance with the Service Information.
- Perform the CVT VERIFICATION TEST. Refer to **CVT VERIFICATION TEST** .

4. **CHECK THE TRS READINGS ON THE SCAN TOOL**

SHIFT LEVER POSITION TO TRS SWITCH STATE				
PARK	**REVERSE**	**NEUTRAL**	**DRIVE**	**LOW**
T41 CLOSED	T42 CLOSED	T4 CLOSED	T3 CLOSED	T1 CLOSED

1. Ignition on, engine not running.
2. With the scan tool, read the TRS states while moving the shift lever to all positions note any circuits that do not change.

NOTE: Vehicles equipped with the AutoStick feature will not have a low range shift position.

Pick which answer best describes your findings:

One TRS Sense circuit failed to change on the scan tool

- Go To 6

None of the TRS Sense circuits changed at all

- Go To 5

All TRS Sense circuits changed properly on the scan tool

- Check the Sift Lever Cable for proper adjustment and binding in accordance with the Service Information. If no problems are found, using the schematics as a guide, check the Transmission Control Module (TCM) terminals for corrosion, damage, or terminal push out. Pay particular attention to all power and ground circuits. Check for any Service Bulletins for possible causes that may apply. If again no problems are found, replace the TCM in accordance

with the Service Information

- Perform the CVT VERIFICATION TEST. Refer to **CVT VERIFICATION TEST** .

5. **CHECK THE (T16) TRANSMISSION CONTROL OUTPUT CIRCUIT FOR AN OPEN**

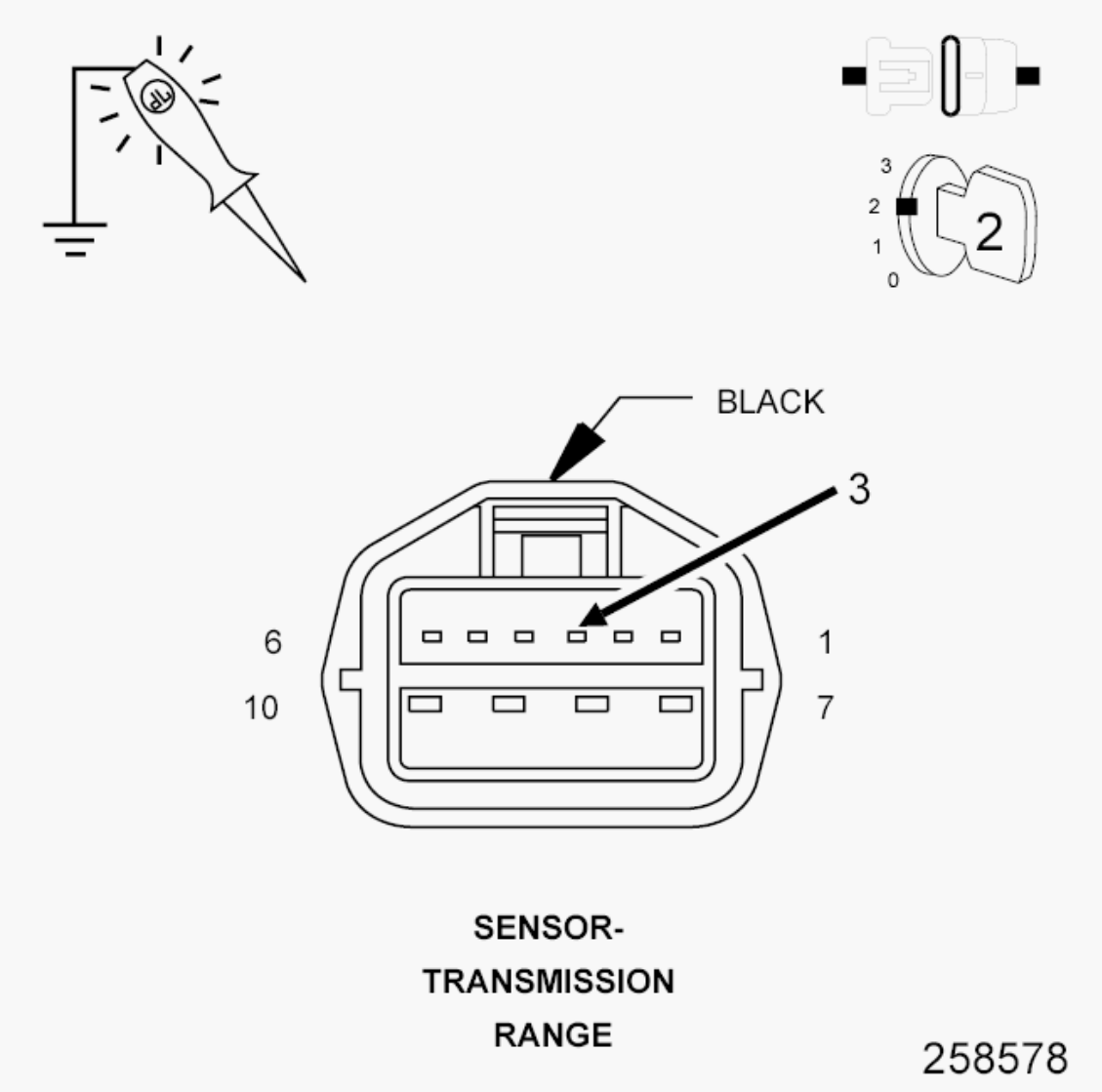

Fig. 10: Checking Transmission Control Output Circuit For An Open
Courtesy of CHRYSLER GROUP, LLC

1. Turn the ignition off to the lock position.
2. Disconnect the TRS harness connector.
3. Ignition on, engine not running.
4. Using the scan tool under TIPM, actuate the transmission relay.
5. Using a 12-volt test light connected to ground, check the (T16)

Transmission Control Output circuit in the TRS harness connector.

NOTE: The test light must illuminate brightly. Compare the brightness to that of a direct connection to the battery.

Does the test light illuminate brightly?

Yes

- Go To 8

No

- Repair the (T16) Transmission Control Output circuit for an open.
- Perform the CVT VERIFICATION TEST. Refer to **CVT VERIFICATION TEST** .

6. **CHECK THE TRS SENSE CIRCUIT FOR AN OPEN**

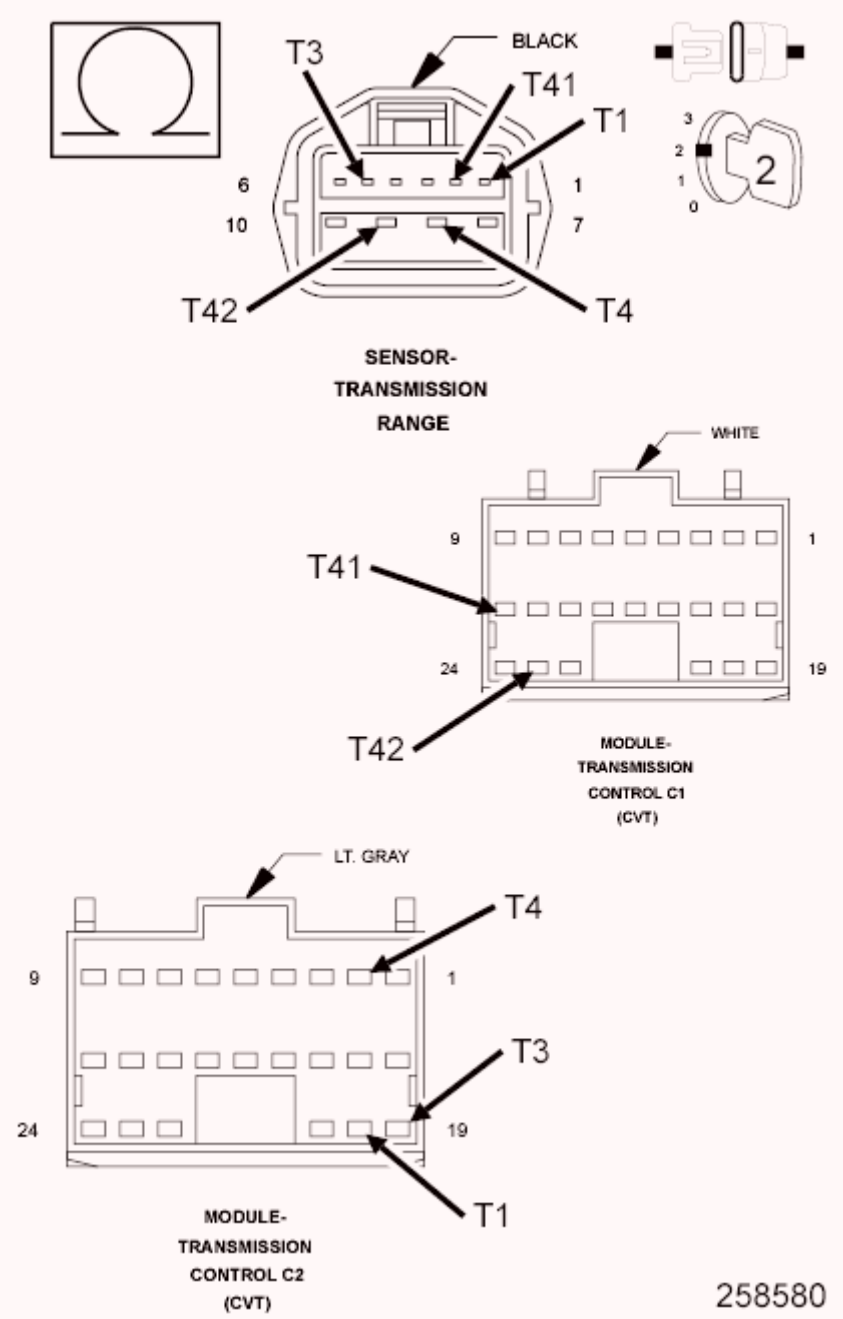

Fig. 11: Checking TRS Sense Circuit For An Open
Courtesy of CHRYSLER GROUP, LLC

1. Turn the ignition off to the lock position.
2. Disconnect the TRS harness connector.
3. Check the resistance of the previously identified TRS Sense circuit between the TRS harness connector and the TCM harness connector.

   Is the resistance above 5.0 Ohms?

   Yes

- Repair the identified TRS Sense circuit for an open
- Perform the CVT VERIFICATION TEST. Refer to **CVT VERIFICATION TEST** .

No

- Go To 7

7. **CHECK THE TRS SENSE CIRCUIT FOR A SHORT TO GROUND**

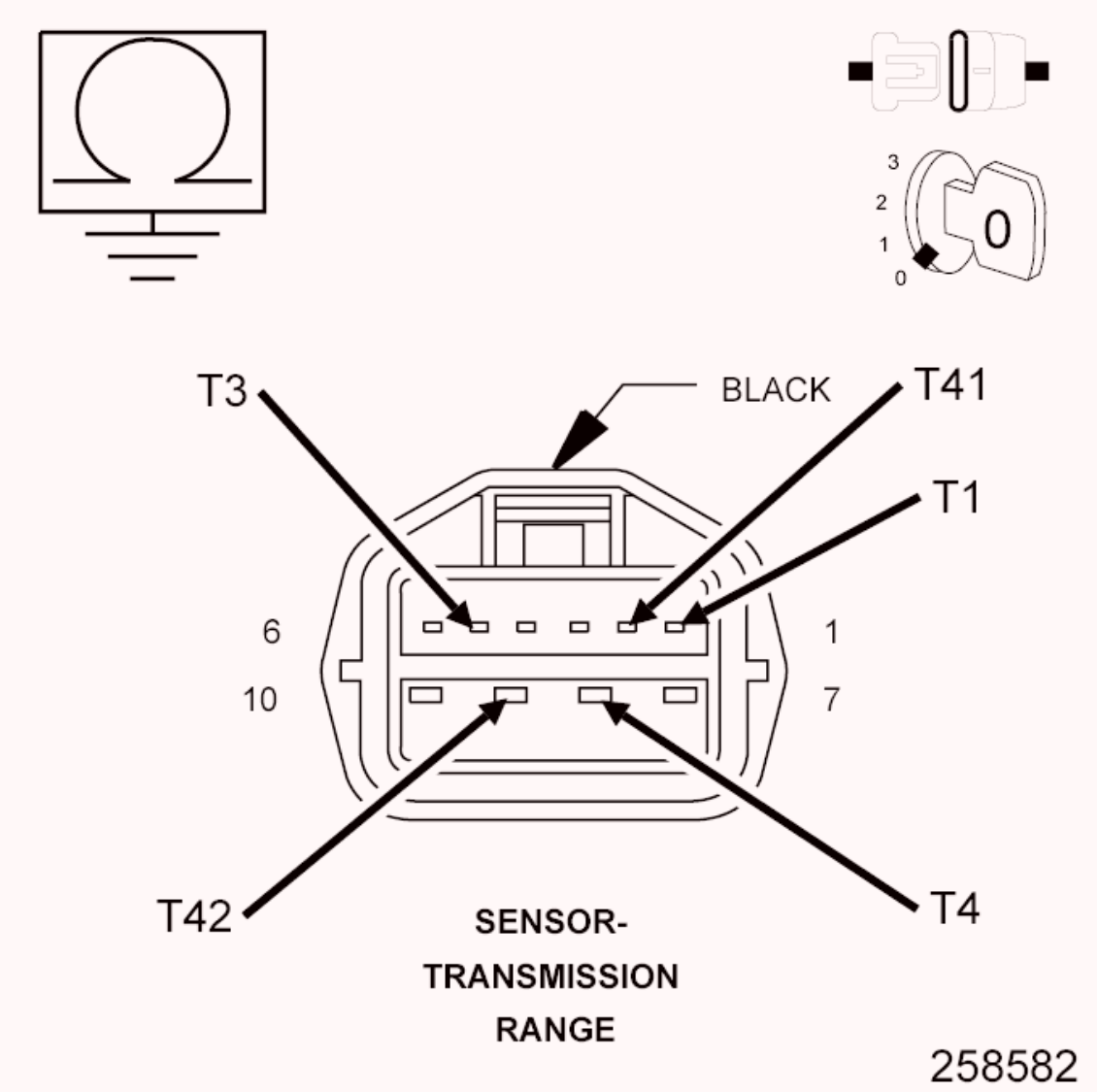

Fig. 12: Checking TRS Sense Circuit For A Short To Ground
Courtesy of CHRYSLER GROUP, LLC

1. Turn the ignition off to the lock position.
2. Disconnect the TRS harness connector.

3. Check the resistance between ground and the identified TRS Sense circuit in the previous test procedure.

   Is the resistance below 5.0 Ohms?

   Yes

   - Repair the identified TRS Sense circuit for a short to ground
   - Perform the CVT VERIFICATION TEST. Refer to **CVT VERIFICATION TEST** .

   No

   - Replace the Transmission Range Sensor (TRS) in accordance with the Service Information.
   - Perform the CVT VERIFICATION TEST. Refer to **CVT VERIFICATION TEST** .

8. **CHECK THE TRANSMISSION RANGE SENSOR**

SHIFT LEVER POSITION TO TRS SWITCH STATE				
PARK	**REVERSE**	**NEUTRAL**	**DRIVE**	**LOW**
T41 CLOSED	T42 CLOSED	T4 CLOSED	T3 CLOSED	T1 CLOSED

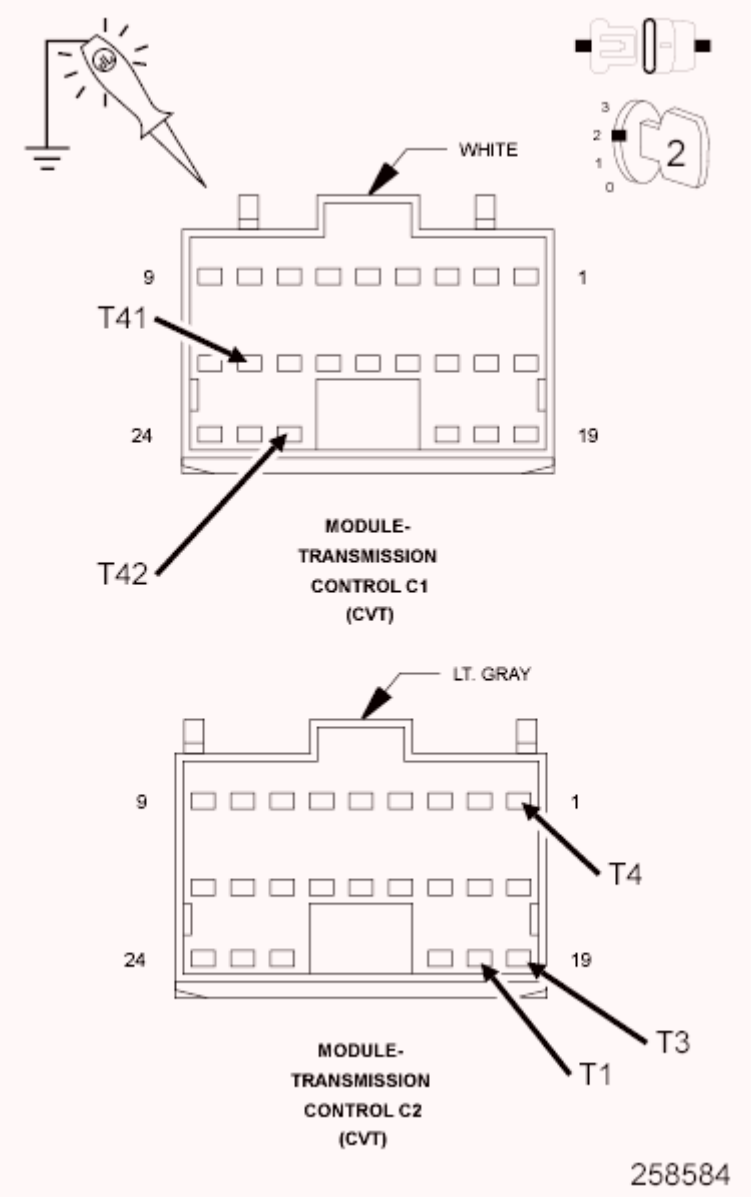

Fig. 13: Checking Transmission Range Sensor
Courtesy of CHRYSLER GROUP, LLC

1. Stop the scan tool transmission actuation and turn the ignition off to the lock position.
2. Reconnect the TRS harness connector.
3. Disconnect the TCM C1 and C2 harness connectors.
4. Ignition on, engine not running.
5. Using the scan tool under TIPM, actuate the transmission relay.
6. Using a 12-volt test light connected to ground, check each TRS Sense circuit (T41, T42, T4, T3, and T1) in the TCM C1 and C2 harness connectors while moving the shift lever to each desired position.

NOTE: Use the above chart to identify which sense circuit should be closed in each shift lever position.

Does the test light illuminate brightly on all the TRS Sense circuits?

Yes

- Using the schematics as a guide, check the Transmission Control Module (TCM) terminals for corrosion, damage, or terminal push out. Pay particular attention to all power and ground circuits. Check for any Service Bulletins for possible causes that may apply. If no problems are found, replace the TCM in accordance with the Service Information.
- Perform the CVT VERIFICATION TEST. Refer to **CVT VERIFICATION TEST** .

No

- Replace the Transmission Range Sensor in accordance with the Service Information.
- Perform the CVT VERIFICATION TEST. Refer to **CVT VERIFICATION TEST** .

9. **CHECK THE WIRING AND CONNECTORS**
   1. The conditions necessary to set this DTC are not present at this time.
   2. Using the schematics as a guide, inspect the wiring and connectors specific to this circuit.
   3. Wiggle the wires while checking for shorted and open circuits.

   Were there any problems found?

   Yes

   - Repair as necessary.
   - Perform the CVT VERIFICATION TEST. Refer to **CVT VERIFICATION TEST** .

   No

- Test Complete.

P0708-TRANSMISSION RANGE SENSOR CIRCUIT HIGH

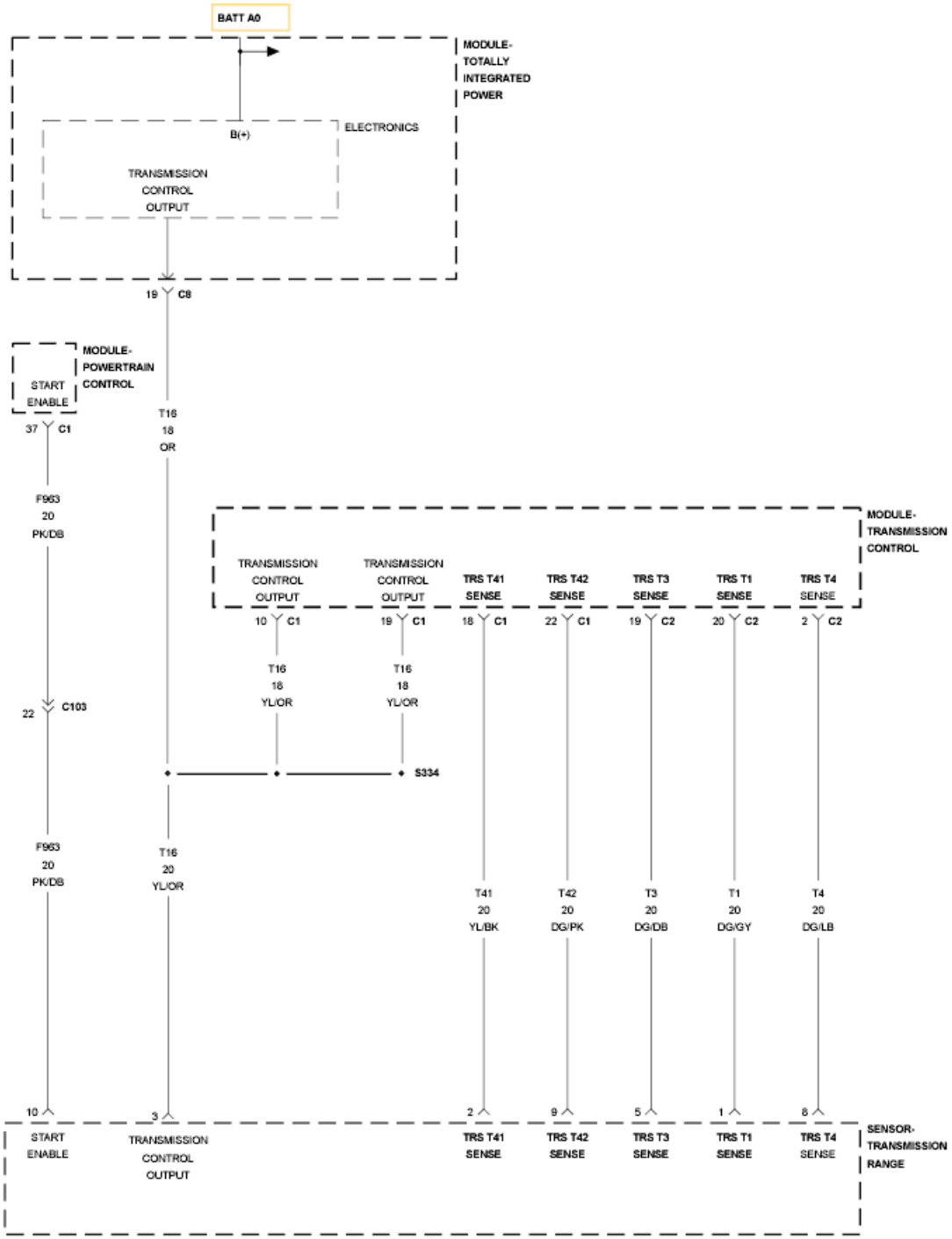

Fig. 14: Transmission Range Sensor Wiring Diagram
Courtesy of CHRYSLER GROUP, LLC

For a complete wiring diagram, **refer to appropriate SYSTEM WIRING DIAGRAMS article** .

THEORY OF OPERATION

The Transmission Range Sensor (TRS) has a contact point for each shift lever position. The Transmission Control Module (TCM) monitors the signal from the TRS which specifies the shift lever position. The TCM also broadcast the shift lever position over the CAN BUS to other modules.

WHEN MONITORED

Ignition on with system voltage between 9.0 and 16.0 volts.

No other Transmission Range Sensor (TRS) DTCs present.

SET CONDITION

When the Transmission Control Module (TCM) receives more than one Transmission Range Sensor (TRS) signal from the TRS continuously for the period of 2.0 seconds.

POSSIBLE CAUSES

Possible Causes
TRS SENSE CIRCUIT SHORT TO VOLTAGE
TWO TRS SENSE CIRCUITS SHORTED TOGETHER
TRANSMISSION RANGE SENSOR
TRANSMISSION CONTROL MODULE

Always perform the CVT Pre-Diagnostic Troubleshooting procedure before proceeding. Refer to CVT - PRE-DIAGNOSTIC TROUBLESHOOTING PROCEDURE .

DIAGNOSTIC TEST

1. **CHECK TO SEE IF THE DTC IS ACTIVE**
    1. With the scan tool, read Transmission DTCs.

       Is the status Active or is the Starts Since Set counter 2 or less for this DTC?

       Yes

       - Go To 2

No

- Go To 5

2. **CHECK THE TRS READINGS ON THE SCAN TOOL**

SHIFT LEVER POSITION TO TRS SWITCH STATE				
PARK	**REVERSE**	**NEUTRAL**	**DRIVE**	**LOW**
T41 CLOSED	T42 CLOSED	T4 CLOSED	T3 CLOSED	T1 CLOSED

1. Ignition on, engine not running.
2. With the scan tool, read the TRS states while moving the shift lever to all positions note any circuits may close at the same time.

NOTE: Vehicles equipped with the AutoStick feature will not have a low range shift position.

Did one or more than one TRS Sense circuit show being closed at the same time?

Yes

- Go To 3

No

- Check the Shift Lever Cable for proper adjustment and binding in accordance with the Service Information. If no problems are found, using the schematics as a guide, check the Transmission Control Module (TCM) terminals for corrosion, damage, or terminal push out. Pay particular attention to all power and ground circuits. Check for any Service Bulletins for possible causes that may apply. If again no problems are found, replace the TCM in accordance with the Service Information
- Perform CVT VERIFICATION TEST. Refer to **CVT VERIFICATION TEST** .

3. **CHECK THE TRS SENSE CIRCUIT FOR A SHORT TO VOLTAGE**
   1. Turn the ignition off to the lock position.

2. Disconnect the TRS harness connector.

NOTE: The possibility of erroneous DTCs may set due to disconnection of the TRS harness connector. Disregard any additional DTCs that may set.

3. Ignition on, engine not running.
4. Using the scan tool, read the TRS Sense circuit states.

Do any of the TRS Sense circuits read closed?

Yes

- Repair the identified TRS Sense circuit for a short to voltage.
- Perform CVT VERIFICATION TEST. Refer to **CVT VERIFICATION TEST** .

No

- Go To 4

4. **CHECK THE TRS SENSE CIRCUIT FOR A SHORT TO ANOTHER TRS SENSE CIRCUIT**
   1. Turn the ignition off to the lock position.
   2. Disconnect the TCM C1 and C2 harness connectors.
   3. Measure the resistance between the two identified TRS Sense circuits in the second step.

   Is the resistance below 5.0 ohms?

   Yes

   - Repair the identified TRS Sense circuits for a short to each other.
   - Perform CVT VERIFICATION TEST. Refer to **CVT VERIFICATION TEST** .

   No

   - Replace the TRS Assembly in accordance with the Service Information.

- Perform CVT VERIFICATION TEST. Refer to **CVT VERIFICATION TEST** .

5. **CHECK THE WIRING AND CONNECTORS**
   1. The conditions necessary to set this DTC are not present at this time.
   2. Using the schematics as a guide, inspect the wiring and connectors specific to this circuit.
   3. Wiggle the wires while checking for shorted and open circuits.

   Were there any problems found?

   Yes

   - Repair as necessary.
   - Perform CVT VERIFICATION TEST. Refer to **CVT VERIFICATION TEST** .

   No

   - Test Complete.

P0711-TRANSMISSION TEMPERATURE SENSOR PERFORMANCE

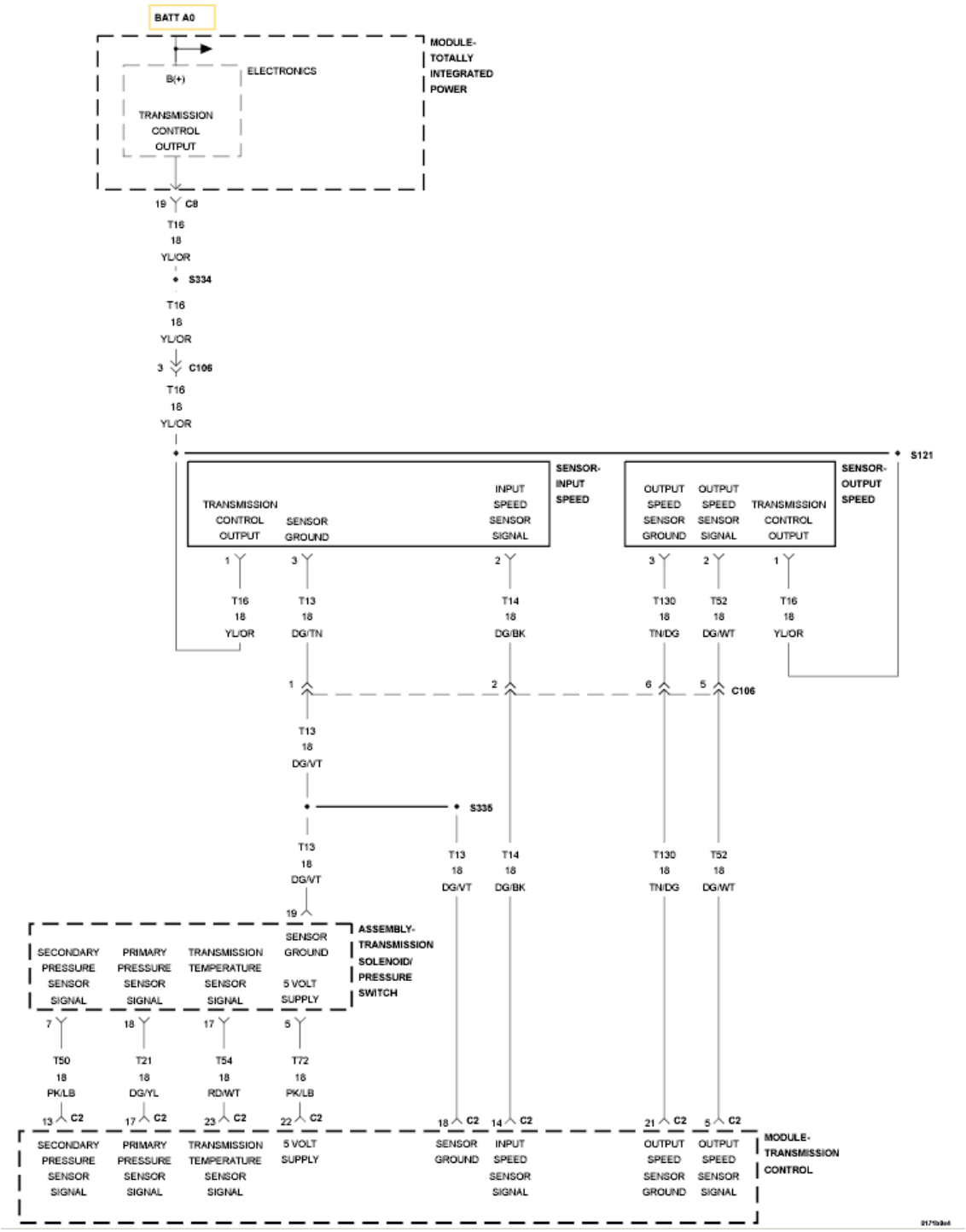

Fig. 15: Sensor Reference Voltage Wiring Diagram
Courtesy of CHRYSLER GROUP, LLC

For a complete wiring diagram, **refer to appropriate SYSTEM WIRING DIAGRAMS article** .

THEORY OF OPERATION

The Transmission Control Module (TCM) monitors the Transmission

Temperature Sensor Signal circuit for voltage changes within desired limits. The TCM calculates the transmission fluid temperature from the temperature sensor signal voltage. This value is used in conjunction with various other inputs to calibrate different operating modes such as Torque Converter lock-up and Torque reduction.

The Transmission Temperature Sensor is a thermistor that changes resistive value when subject to different temperatures. When the monitored voltage rises, the calculated temperature decreases.

WHEN MONITORED

Condition one : Transmission in a valid forward gear.

System voltage between 9.0 and 16.0 Volts.

Vehicle speed greater than 10 Km/h (6 mph).

Accelerator Pedal Position (APP) greater than 12.5%.

Engine RPM greater than 450 RPM.

Condition two: Ignition off for greater than 8 hours.

Difference between the engine coolant temperature and the intake temperature is less than 3° C (37° F).

No other temperature sensor or sensor ground DTCs present.

SET CONDITION

Condition one: No change in the Transmission oil temperature the period of 10 minutes.

Condition two: Transmission oil temperature is 40° C (104° F) different than the average temperature which consists of the combined average of the Engine Coolant temperature, Intake Temperature, Oil Temperature, and Ambient Temperature for the period of 5 seconds.

POSSIBLE CAUSES

Possible Causes

TRANSMISSION TEMPERATURE SENSOR
TRANSMISSION CONTROL MODULE

Always perform the CVT Pre-Diagnostic Troubleshooting procedure before proceeding. Refer to CVT - PRE-DIAGNOSTIC TROUBLESHOOTING PROCEDURE .

DIAGNOSTIC TEST

1. **CHECK FOR PCM DTCS**
   1. Using the scan tool, read PCM DTCs.

      Are there any Engine Temperature Sensor DTCs present?

      Yes

      - Refer to **DTC INDEX** and perform the appropriate diagnostic procedure.
      - Perform the CVT VERIFICATION TEST. Refer to **CVT VERIFICATION TEST** .

      No

      - Go To 2
2. **CHECK TO SEE IF THE DIAGNOSTIC TROUBLE CODE (DTC) IS ACTIVE**
   1. Using the scan tool, read Transmission DTCs.

      Is the status Active or is the Starts Since Set counter 2 or less for this DTC?

      Yes

      - Go To 3

      No

      - Go To 7
3. **IDENTIFY THE SETTING CONDITION**

NOTE: The vehicle must be completely cooled for a minimum period of 8 hours for the following test procedure.

1. With the scan tool monitor the Transmission Temperature while test driving the vehicle.

   NOTE: It may take up to 10 minutes of continuous driving to accurately test the Transmission Temperature Sensor.

   Did the Transmission Temperature stay the same or increase a very limited amount?

   Yes

   - Go To 6

   No

   - Go To 4

4. **CHECK THE TRANSMISSION TEMPERATURE SENSOR**

   Did the TCM set a one trip DTC during the previous test drive?

   Yes

   - Go To 5

   No

   - Go To 7

5. **COMPARE TRANSMISSION TEMPERATURE TO OTHER TEMPERATURES**
   1. With the scan tool compare the Transmission Temperature to other Temperature sensors such as Engine Coolant, Intake, Oil Temperature.

      Is the Transmission Temperature within 40° C (104° F) of the other temperatures?

Yes

- Using the schematics as a guide, check the Transmission Control Module (TCM) terminals for corrosion, damage, or terminal push out. Pay particular attention to all power and ground circuits. Check for any Service Bulletins for possible causes that may apply. If no problems are found, replace the TCM in accordance with the Service Information.
- Perform the CVT VERIFICATION TEST. Refer to **CVT VERIFICATION TEST** .

No

- Replace the Transmission Temperature Sensor (Valve Body) in accordance with the Service Information.
- Perform the CVT VERIFICATION TEST. Refer to **CVT VERIFICATION TEST** .

6. **CHECK THE (T54) TRANSMISSION TEMPERATURE SENSOR**

Temperature Sensor Resistive Values Chart	
Transmission Temperature	Resistive Value Compared to Temperature (± 10%)
20° C (68° F) 80° C (176° F)	2.5k to 6.5k Ohms 0.3k to 0.9k Ohms

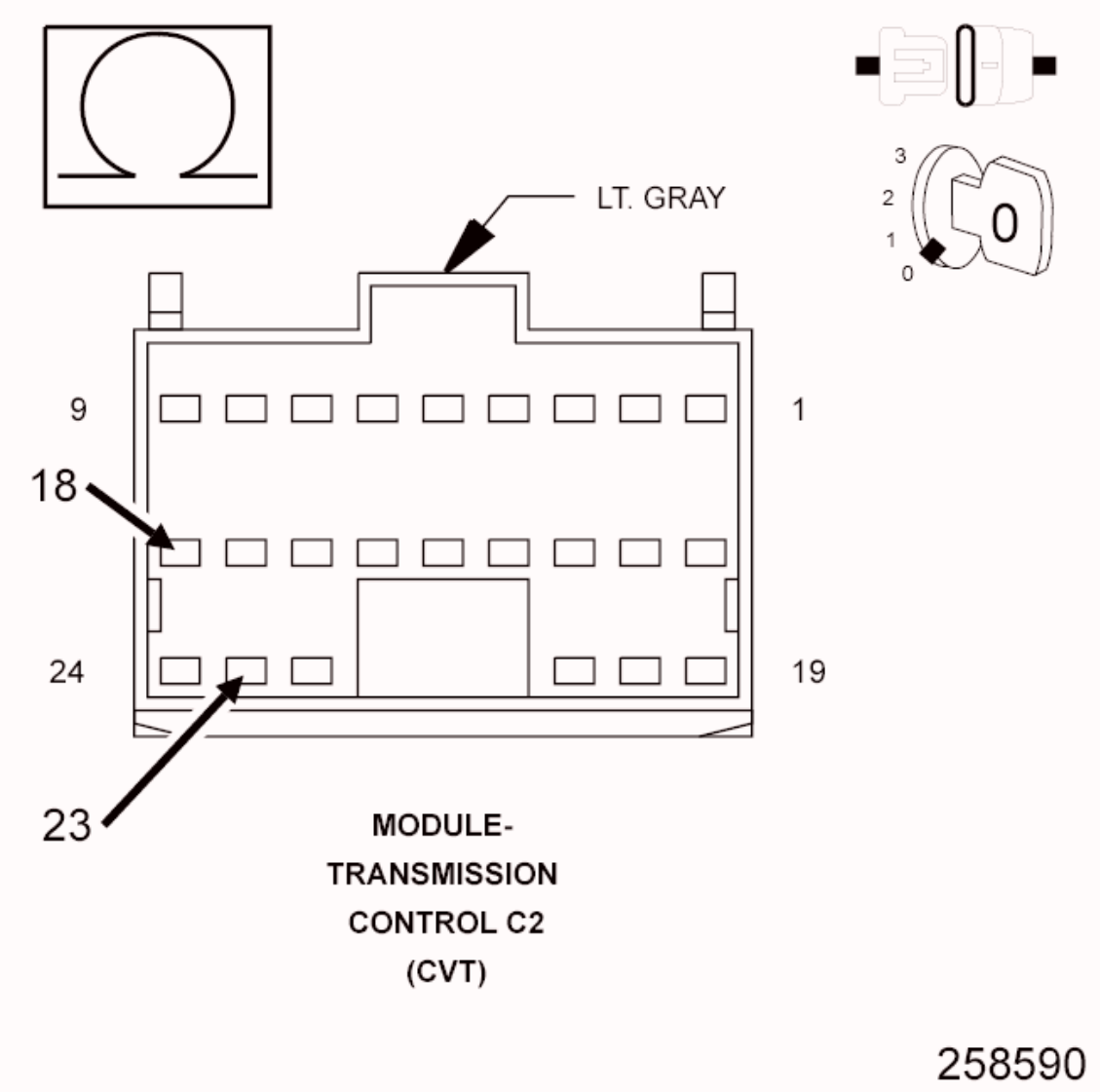

Fig. 16: Checking Transmission Temperature Sensor Signal Circuit
Courtesy of CHRYSLER GROUP, LLC

1. Start the engine and allow to obtain normal operating temperature (approximately 10 min. of engine run time).
2. Turn the ignition off to the lock position.
3. Disconnect the TCM C2 harness connector.
4. Measure the resistance between the (T54) Transmission Temperature Sensor Signal circuit and the (T13) Sensor Ground circuit in the TCM C2 harness connector.

   Is the resistance within the desired range listed on the above chart?

   Yes

- Using the schematics as a guide, check the Transmission Control Module (TCM) terminals for corrosion, damage, or terminal push out. Pay particular attention to all power and ground circuits. Check for any Service Bulletins for possible causes that may apply. If no problems are found, replace the TCM in accordance with the Service Information.
- Perform the CVT VERIFICATION TEST. Refer to **CVT VERIFICATION TEST** .

No

- Replace the Transmission Temperature Sensor (Valve Body) in accordance with the Service Information.
- Perform the CVT VERIFICATION TEST. Refer to **CVT VERIFICATION TEST** .

7. **CHECK THE WIRING AND CONNECTORS**
   1. The conditions necessary to set this DTC are not present at this time.
   2. Using the schematics as a guide, inspect the wiring and connectors specific to this circuit.
   3. Wiggle the wires while checking for shorted and open circuits.

   Were there any problems found?

   Yes

   - Repair as necessary.
   - Perform the CVT VERIFICATION TEST. Refer to **CVT VERIFICATION TEST** .

   No

   - Test Complete.

P0712-TRANSMISSION TEMPERATURE SENSOR LOW

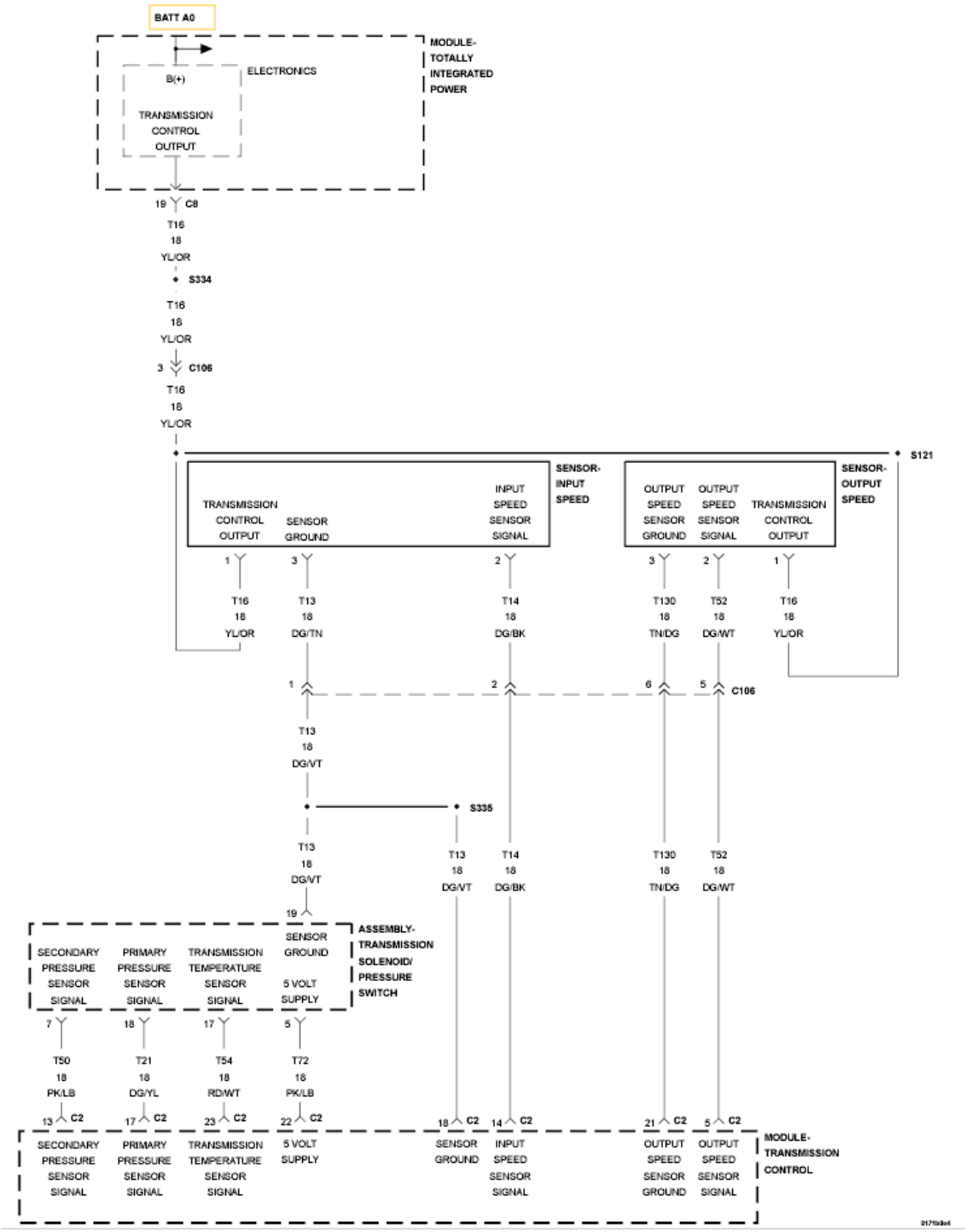

Fig. 17: Sensor Reference Voltage Wiring Diagram
Courtesy of CHRYSLER GROUP, LLC

For a complete wiring diagram, **refer to appropriate SYSTEM WIRING DIAGRAMS article** .

THEORY OF OPERATION

The Transmission Control Module (TCM) monitors the Transmission

Temperature Sensor Signal circuit for voltage changes within desired limits. The TCM calculates the transmission fluid temperature from the temperature sensor signal voltage. This value is used in conjunction with various other inputs to calibrate different operating modes such as Torque Converter lock-up and Torque reduction.

The Transmission Temperature Sensor is a thermistor that changes resistive value when subject to different temperatures. When the monitored voltage rises, the calculated temperature decreases.

WHEN MONITORED

Ignition on with battery voltage between 9.0 and 16.0 Volts.

Vehicle speed greater than 10 Km/h (6 mph).

No secondary speed sensor or sensor ground DTCs detected.

SET CONDITION

Indicated temperature is greater than 180° C (356° F) for the continuous period of five seconds.

POSSIBLE CAUSES

Possible Causes
VEHICLE SEVERELY OVERHEATED
(T54) TRANSMISSION TEMPERATURE SENSOR SIGNAL CIRCUIT SHORTED TO GROUND
TRANSMISSION TEMPERATURE SENSOR
TRANSMISSION CONTROL MODULE

Always perform the CVT Pre-Diagnostic Troubleshooting procedure before proceeding. Refer to CVT - PRE-DIAGNOSTIC TROUBLESHOOTING PROCEDURE .

DIAGNOSTIC TEST

1. **CHECK IF THE VEHICLE WAS SEVERELY OVERHEATED**
    1. Using the scan tool, view DTC event data.
    2. Using DTC event data, review engine temperature.

Does the engine temperature indicate the vehicle was overheated?

Yes

- The customer driving patterns may indicate the need for an additional transmission oil cooler.
- Verify proper Engine cooling system operation which would affect proper transmission operation.
- Verify proper torque converter clutch operation.
- With the scan tool, check the Event Data to help identify the conditions in which the DTC was set.
- Perform the CVT VERIFICATION TEST. Refer to **CVT VERIFICATION TEST** .

No

- Go To 2

2. **CHECK IF THE DIAGNOSTIC TROUBLE CODE (DTC) IS ACTIVE**
   1. Using the scan tool, read Transmission DTCs.

   Is the status Active or is the Starts Since Set counter 2 or less for this DTC?

   Yes

   - Go To 3

   No

   - Go To 5

3. **CHECK THE (T54) TRANSMISSION TEMPERATURE SENSOR SIGNAL CIRCUIT FOR A SHORT TO GROUND**

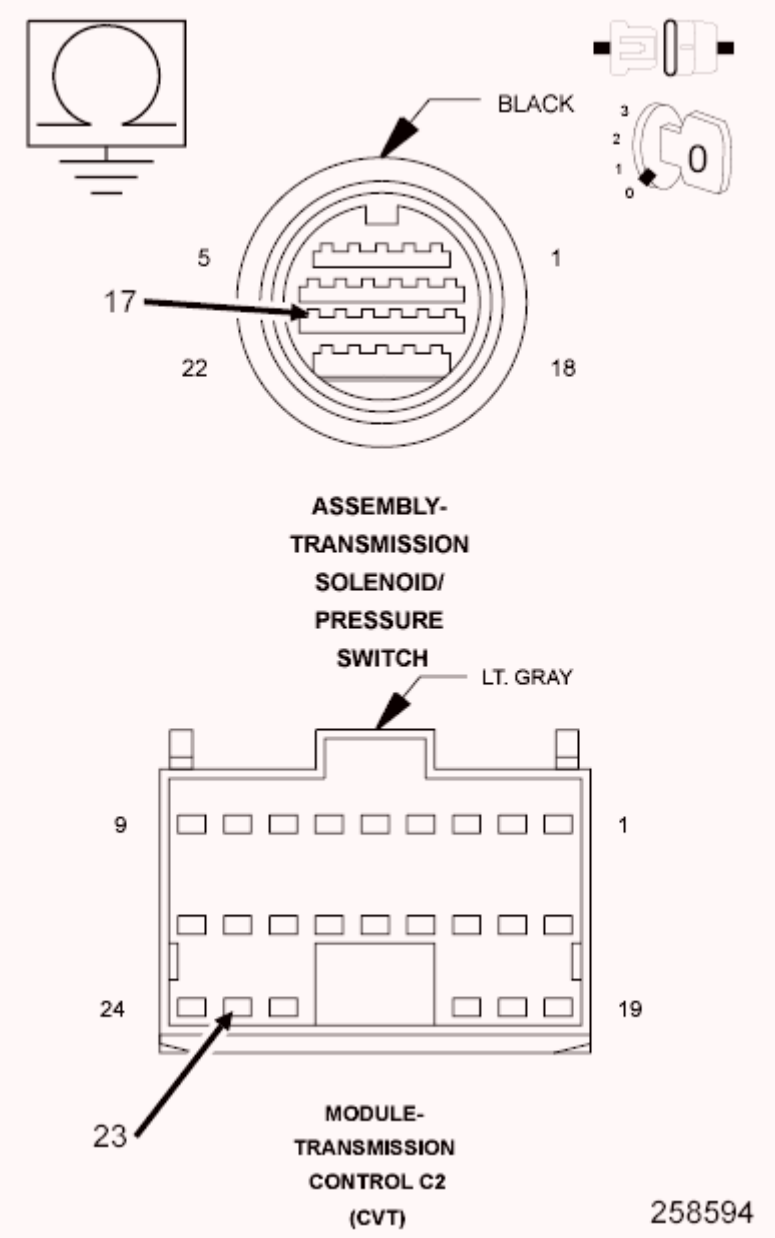

Fig. 18: Checking Transmission Temperature Sensor Signal Circuit For A Short To Ground
Courtesy of CHRYSLER GROUP, LLC

1. Turn the ignition off to the lock position.
2. Disconnect the TCM C2 harness connector.
3. Disconnect the Transmission Solenoid/Pressure Switch Assembly harness connector.
4. Measure the resistance between ground and the (T54) Transmission Temperature Sensor Signal circuit.

   Is the resistance below 5.0 Ohms?

Yes

- Repair the (T54) Transmission Temperature Sensor Signal circuit for a short to ground.
- Perform the CVT VERIFICATION TEST. Refer to **CVT VERIFICATION TEST** .

No

- Go To 4

4. **CHECK THE (T54) TRANSMISSION TEMPERATURE SENSOR**

Temperature Sensor Resistive Values Chart	
Transmission Temperature	Resistive Value Compared to Temperature (± 10%)
20° C (68° F) 80° C (176° F)	2.5k to 6.5k Ohms 0.3k to 0.9k Ohms

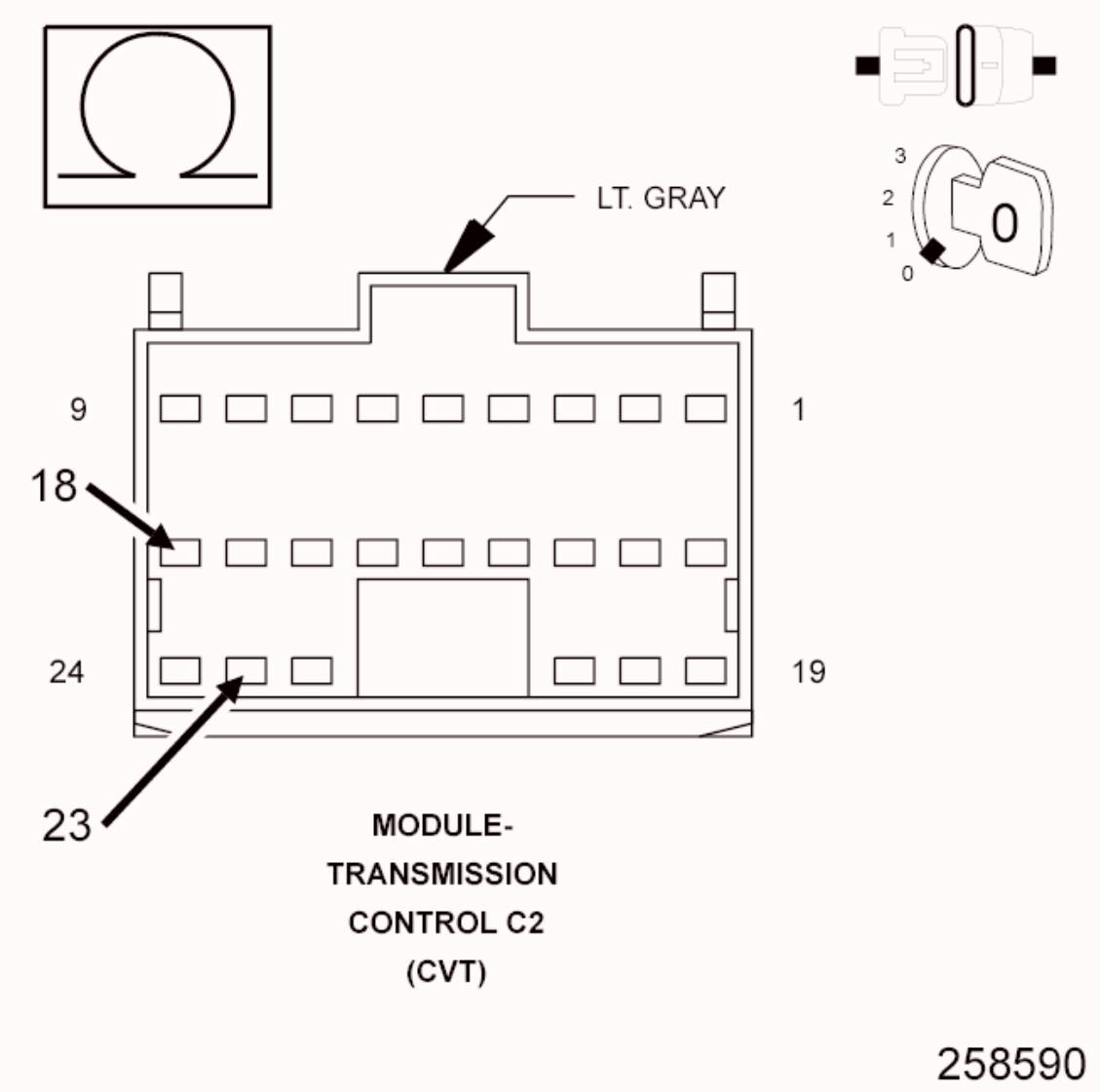

Fig. 19: Checking Transmission Temperature Sensor Signal Circuit
Courtesy of CHRYSLER GROUP, LLC

1. Reconnect all previously disconnected connectors.
2. Start the engine and allow to obtain normal operating temperature (approximately 10 min. of engine run time).
3. Turn the ignition off to the lock position.
4. Disconnect the TCM C2 harness connector.
5. Measure the resistance between the (T54) Transmission Temperature Sensor Signal circuit and the (T13) Sensor Ground circuit in the TCM C2 harness connector.

   Is the resistance within the desired range listed on the above chart?

Yes

- Using the schematics as a guide, check the Transmission Control Module (TCM) terminals for corrosion, damage, or terminal push out. Pay particular attention to all power and ground circuits. Check for any Service Bulletins for possible causes that may apply. If no problems are found, replace the TCM in accordance with the Service Information.
- Perform the CVT VERIFICATION TEST. Refer to **CVT VERIFICATION TEST** .

No

- Replace the Transmission Temperature Sensor (Valve Body) in accordance with the Service Information.
- Perform the CVT VERIFICATION TEST. Refer to **CVT VERIFICATION TEST** .

5. **INTERMITTENT WIRING AND CONNECTORS**
   1. The conditions necessary to set this DTC are not present at this time.
   2. Using the schematics as a guide, inspect the wiring and connectors specific to this circuit.
   3. Wiggle the wires while checking for shorted and open circuits.

   Were there any problems found?

   Yes

   - Repair as necessary.
   - Perform the CVT VERIFICATION TEST. Refer to **CVT VERIFICATION TEST** .

   No

   - Test Complete.

P0713-TRANSMISSION TEMPERATURE SENSOR HIGH

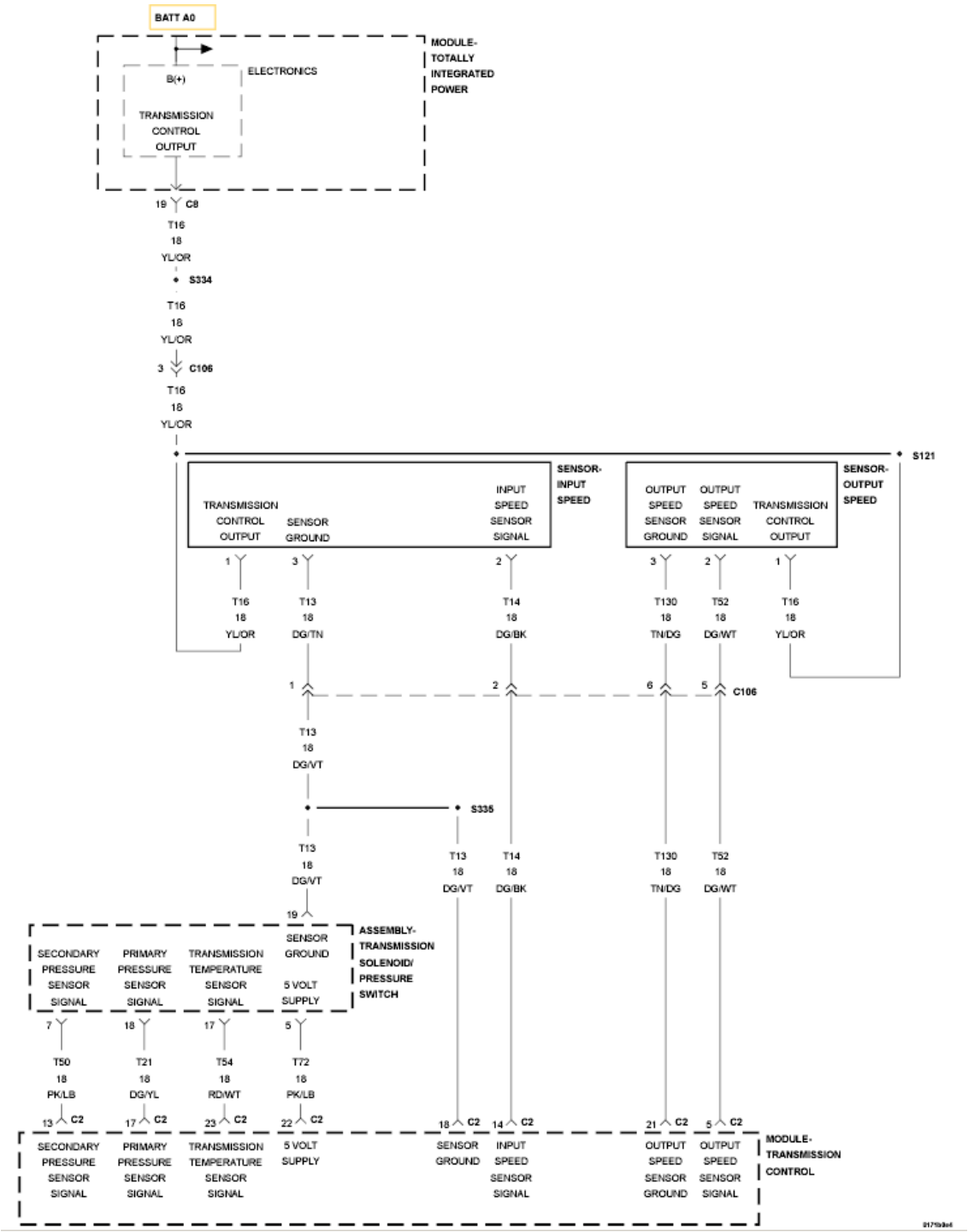

Fig. 20: Sensor Reference Voltage Wiring Diagram
Courtesy of CHRYSLER GROUP, LLC

For a complete wiring diagram, **refer to appropriate SYSTEM WIRING DIAGRAMS article** .

THEORY OF OPERATION

The Transmission Control Module (TCM) monitors the Transmission

Temperature Sensor Signal circuit for voltage changes within desired limits. The TCM calculates the transmission fluid temperature from the temperature sensor signal voltage. This value is used in conjunction with various other inputs to calibrate different operating modes such as Torque Converter lock-up and Torque reduction.

The Transmission Temperature Sensor is a thermistor that changes resistive value when subject to different temperatures. When the monitored voltage rises, the calculated temperature decreases.

WHEN MONITORED

Ignition on engine running with battery voltage between 9.0 and 16.0 Volts.

Vehicle speed greater than 10 Km/h (6 mph).

No secondary speed sensor or sensor ground DTCs present.

SET CONDITION

Indicated temperature drops below -40° C (-40° F) for the continuous period of five seconds.

POSSIBLE CAUSES

Possible Causes
(T54) TRANSMISSION TEMPERATURE SENSOR SIGNAL CIRCUIT SHORTED TO VOLTAGE
(T54) TRANSMISSION TEMPERATURE SENSOR SIGNAL CIRCUIT OPEN
TRANSMISSION TEMPERATURE SENSOR
TRANSMISSION CONTROL MODULE

Always perform the CVT Pre-Diagnostic Troubleshooting procedure before proceeding. Refer to CVT - PRE-DIAGNOSTIC TROUBLESHOOTING PROCEDURE .

DIAGNOSTIC TEST

1. **CHECK TO SEE IF THE DIAGNOSTIC TROUBLE CODE (DTC) IS ACTIVE**

1. Using the scan tool, read Transmission DTCs.

   Is the status Active or is the Starts Since Set counter 2 or less for this DTC?

   Yes

   - Go To 2

   No

   - Go To 6

2. **CHECK THE (T54) TRANSMISSION TEMPERATURE SENSOR**

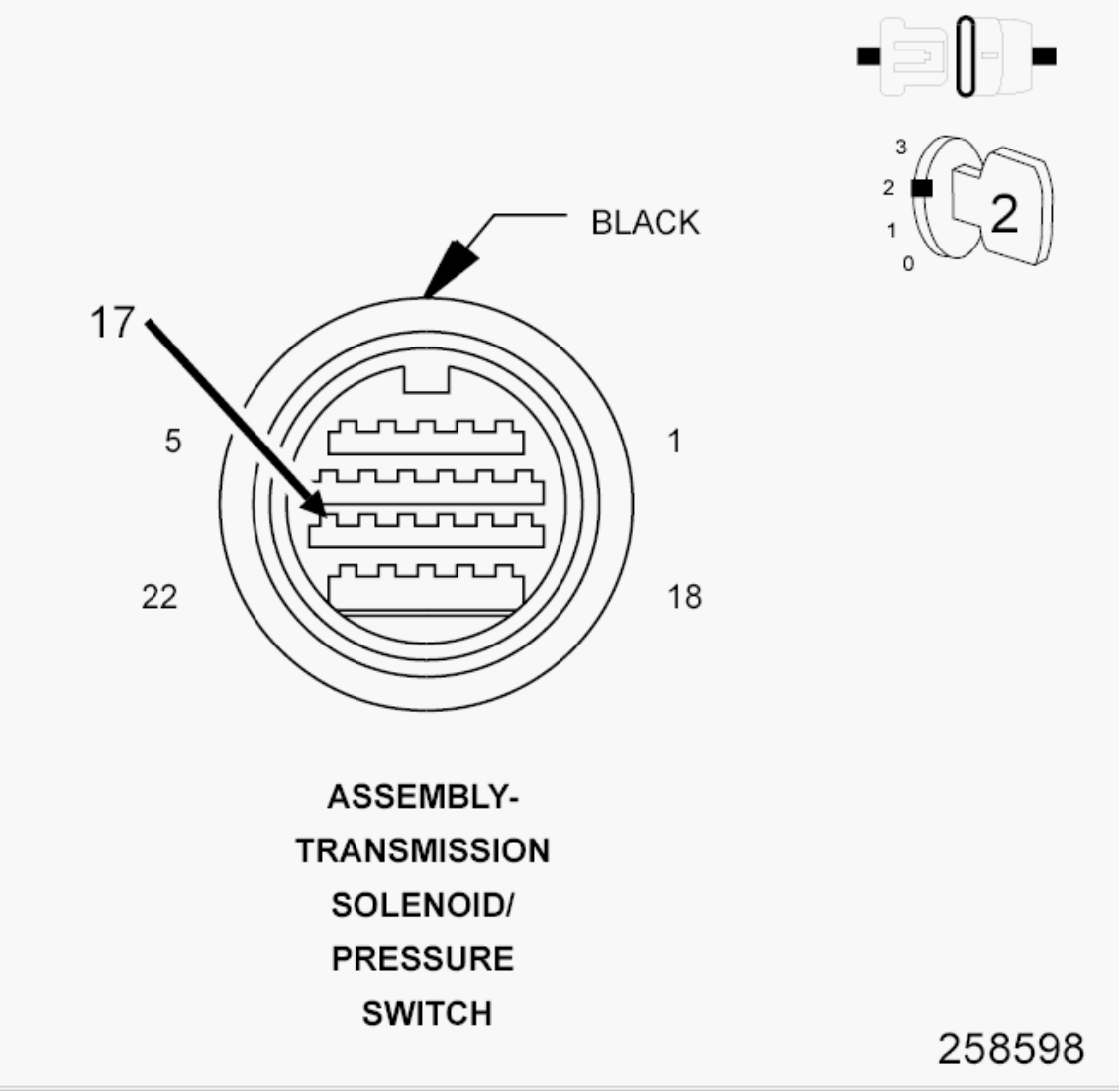

Fig. 21: Transmission Temperature Sensor Connector End View
Courtesy of CHRYSLER GROUP, LLC

1. Turn the ignition off to the lock position.
2. Disconnect the Transmission Solenoid/Pressure Switch Assembly harness connector.
3. Ignition on, engine not running.
4. In the following step using the scan tool, monitor the Transmission Temperature voltage.
5. Jump the (T54) Transmission Temperature Sensor Signal circuit in the Transmission Solenoid/Pressure Switch Assembly harness connector to ground.

   Did the Transmission Temperature voltage drop from approximately 2.5 Volts to 0.0 Volts?

   Yes

   - Replace the Transmission Temperature Sensor (Valve Body) in accordance with the Service Information.
   - Perform the CVT VERIFICATION TEST. Refer to **CVT VERIFICATION TEST** .

   No

   - Go To 3

3. **CHECK THE (T54) TRANSMISSION TEMPERATURE SENSOR SIGNAL CIRCUIT FOR A SHORT TO VOLTAGE**

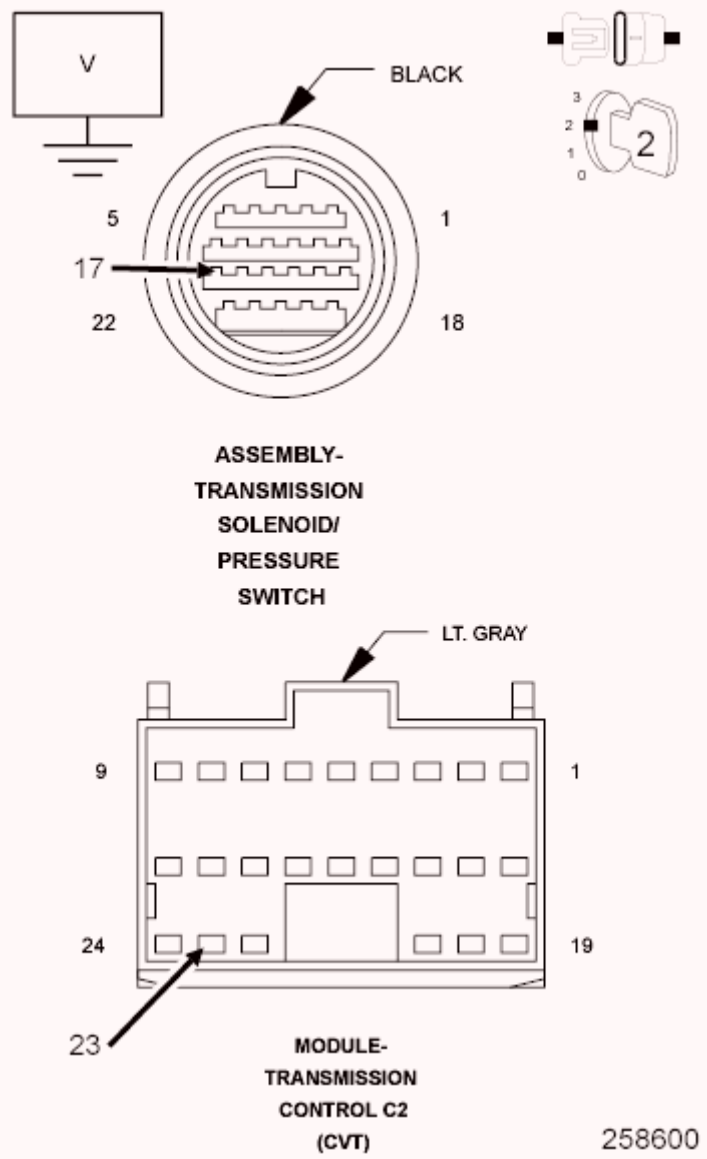

Fig. 22: Checking Transmission Temperature Sensor Signal Circuit For A Short To Voltage
Courtesy of CHRYSLER GROUP, LLC

1. Turn the ignition off to the lock position.
2. Disconnect the TCM C2 harness connector.
3. Ignition on, engine not running.
4. Measure the voltage of the (T54) Transmission Temperature Sensor Signal circuit.

   Is the voltage above 0.05 of a Volt?

   Yes

- Repair the (T54) Transmission Temperature Sensor Signal circuit for a short to voltage.
- Perform the CVT VERIFICATION TEST. Refer to **CVT VERIFICATION TEST** .

No

- Go To 4

4. **CHECK THE (T54) TRANSMISSION TEMPERATURE SENSOR SIGNAL CIRCUIT FOR AN OPEN**

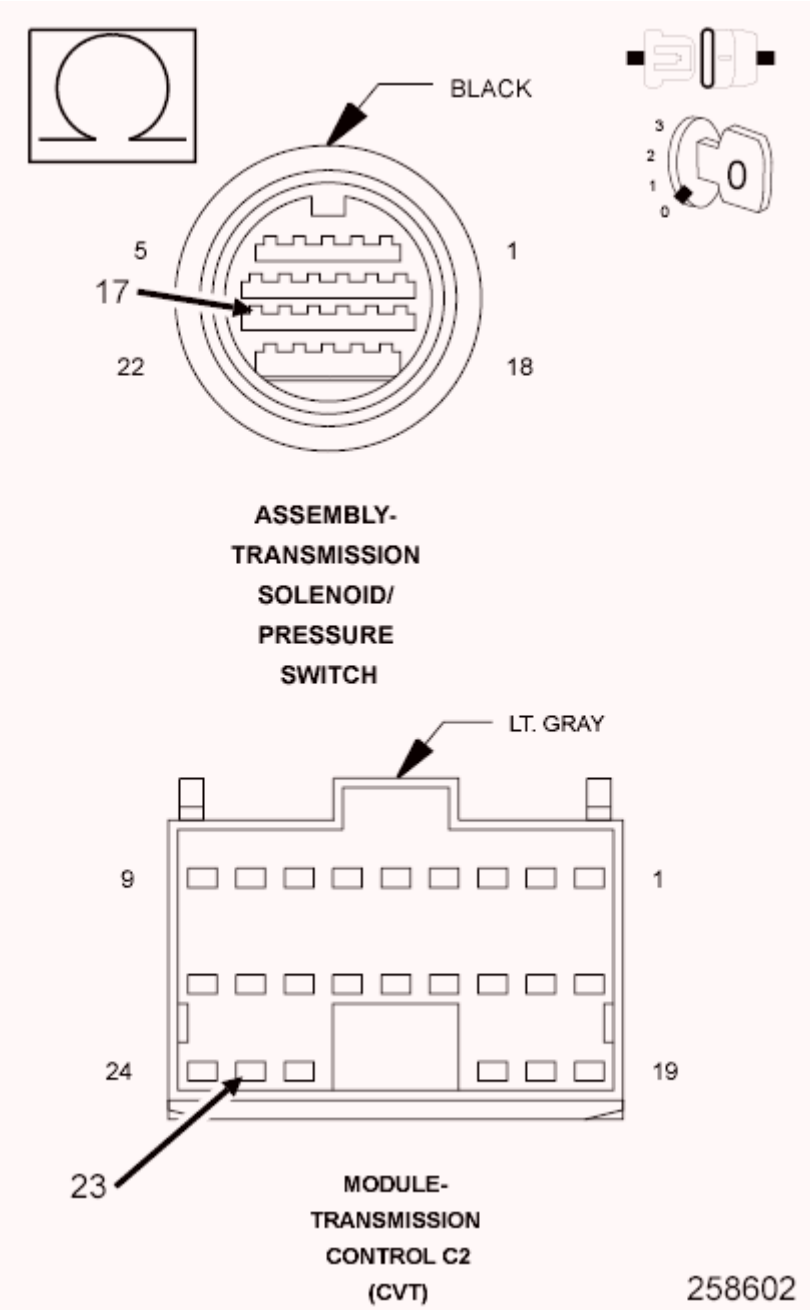

Fig. 23: Checking Transmission Temperature Sensor Signal Circuit For An Open
Courtesy of CHRYSLER GROUP, LLC

1. Turn the ignition off to the lock position.
2. Measure the resistance of the (T54) Transmission Temperature Sensor Signal circuit between the TCM C2 harness connector and the Transmission Solenoid/Pressure Switch Assembly harness connector.

   Is the resistance above 5.0 Ohms?

   Yes

   - Repair the (T54) Transmission Temperature Sensor Signal circuit for an open.
   - Perform the CVT VERIFICATION TEST. Refer to **CVT VERIFICATION TEST** .

   No

   - Go To 5

5. **CHECK THE (T54) TRANSMISSION TEMPERATURE SENSOR**

Temperature Sensor Resistive Values Chart	
Transmission Temperature	Resistive Value Compared to Temperature (± 10%)
20° C (68° F) 80° C (176° F)	2.5k to 6.5k Ohms 0.3k to 0.9k Ohms

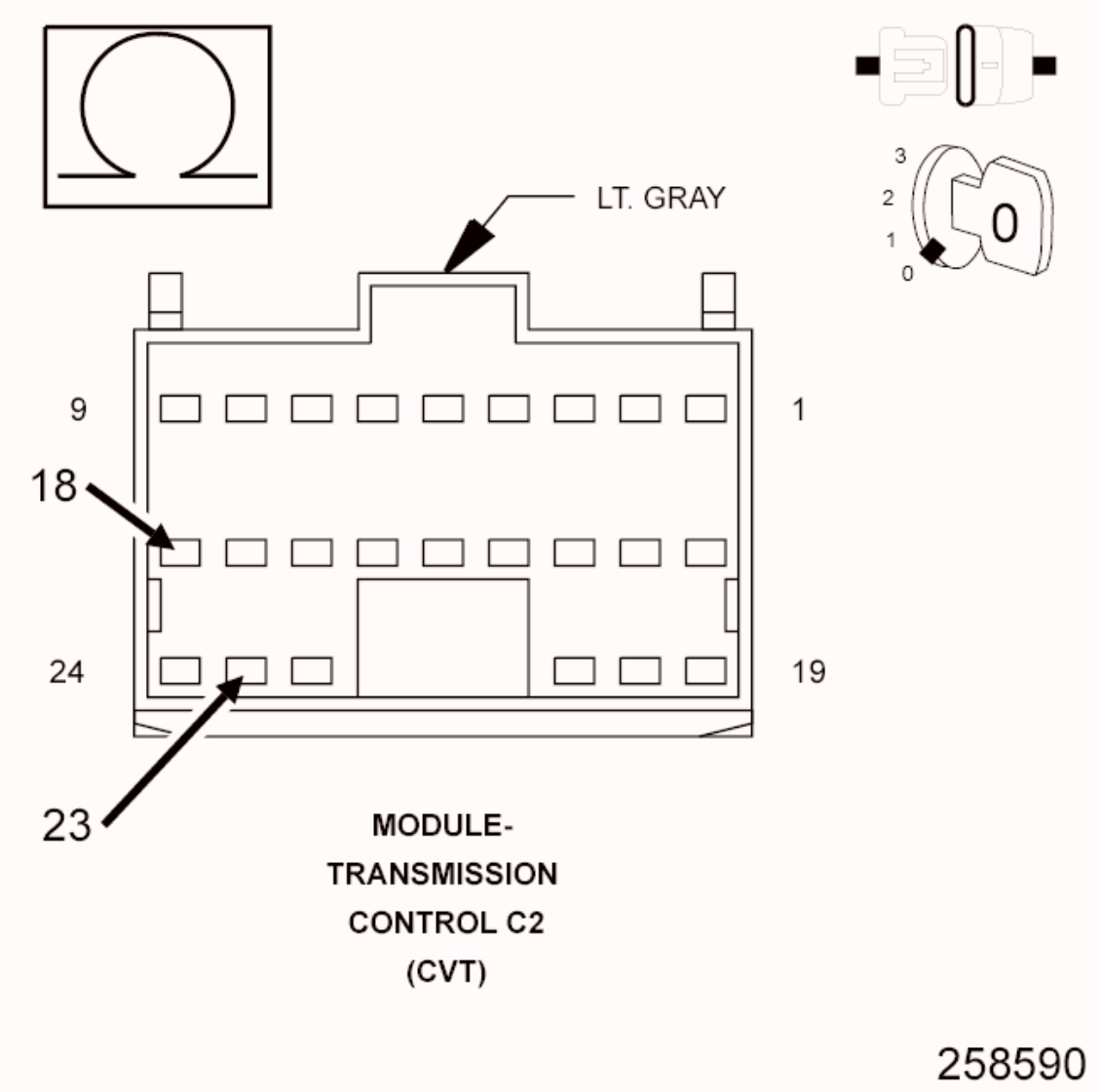

Fig. 24: Checking Transmission Temperature Sensor Signal Circuit
Courtesy of CHRYSLER GROUP, LLC

1. Reconnect all previously disconnected connectors.
2. Start the engine and allow to obtain normal operating temperature (approximately 10 min. of engine run time).
3. Turn the ignition off to the lock position.
4. Disconnect the TCM C2 harness connector.
5. Measure the resistance between the (T54) Transmission Temperature Sensor Signal circuit and the (T13) Sensor Ground circuit in the TCM C2 harness connector.

   Is the resistance within the desired range listed on the above chart?

Yes

- Using the schematics as a guide, check the Transmission Control Module (TCM) terminals for corrosion, damage, or terminal push out. Pay particular attention to all power and ground circuits. Check for any Service Bulletins for possible causes that may apply. If no problems are found, replace the TCM in accordance with the Service Information.
- Perform the CVT VERIFICATION TEST. Refer to **CVT VERIFICATION TEST** .

No

- Replace the Transmission Temperature Sensor (Valve Body) in accordance with the Service Information.
- Perform the CVT VERIFICATION TEST. Refer to **CVT VERIFICATION TEST** .

6. **CHECK THE WIRING AND CONNECTORS**
   1. The conditions necessary to set this DTC are not present at this time.
   2. Using the schematics as a guide, inspect the wiring and connectors specific to this circuit.
   3. Wiggle the wires while checking for shorted and open circuits.

   Were there any problems found?

   Yes

   - Repair as necessary.
   - Perform the CVT VERIFICATION TEST. Refer to **CVT VERIFICATION TEST** .

   No

   - Test Complete.

P0716-INPUT SPEED SENSOR 1 CIRCUIT PERFORMANCE

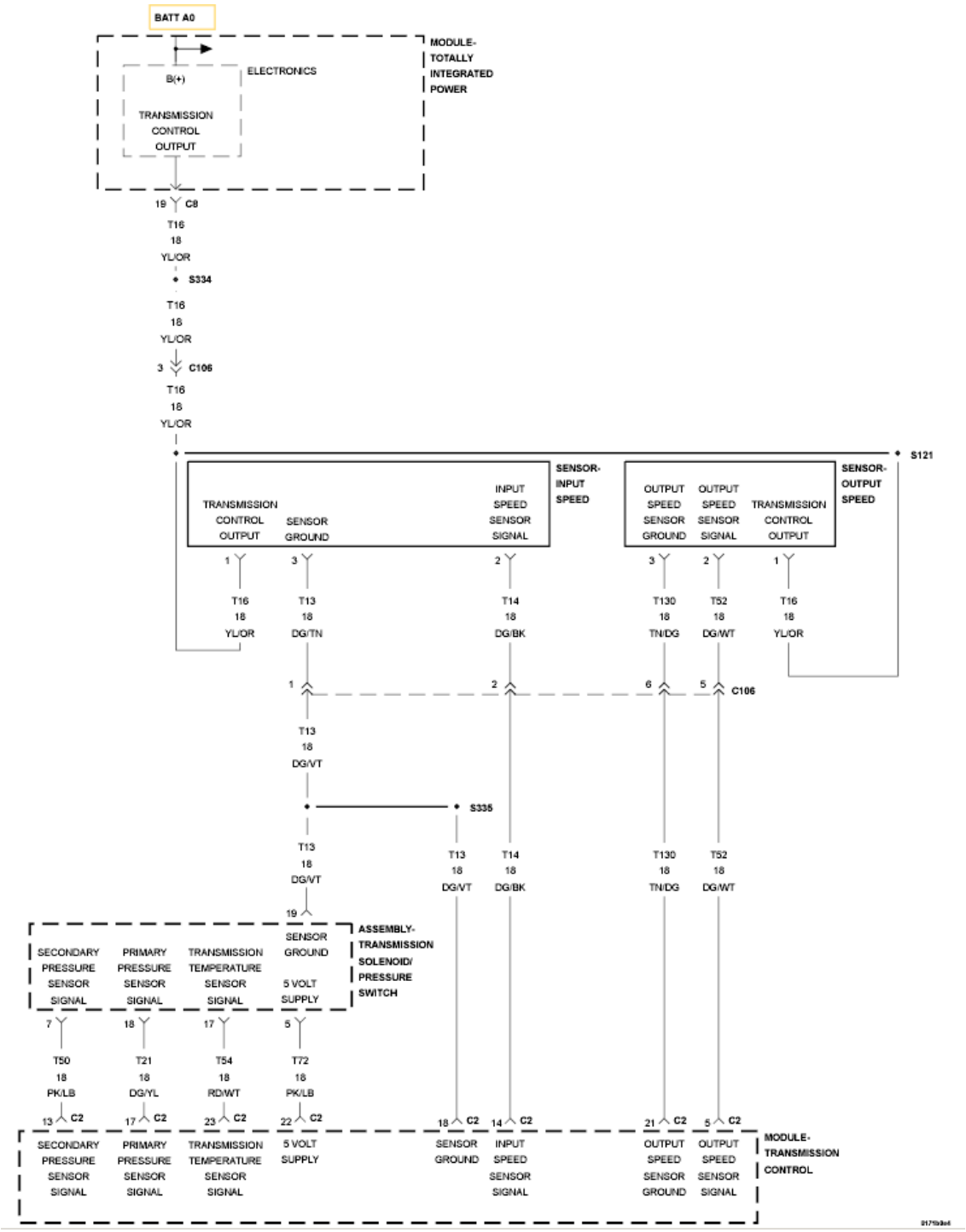

Fig. 25: Sensor Reference Voltage Wiring Diagram
Courtesy of CHRYSLER GROUP, LLC

For a complete wiring diagram, **refer to appropriate SYSTEM WIRING DIAGRAMS article** .

THEORY OF OPERATION

The transmission system uses two speed sensors. One is used to measure input

RPM (primary pulley) and one to measure output RPM (secondary pulley).

The Input Speed sensor detects the primary pulley RPM by the use of a three-wire magnetic pickup devices that generates a square wave signal as rotation occurs and is monitored by the Transmission Control Module (TCM). These inputs are essential for proper transmission operation.

WHEN MONITORED

Ignition on, engine running with the transmission in a valid forward gear.

System voltage between 9.0 and 16.0 volts

Vehicle speed greater than 10 Km/h (6 mph).

Accelerator Pedal Position (APP) greater than 12.5%.

Engine RPM greater than 450 RPM with TCC lock-up enabled.

No DTCs from the following:

TCC Solenoid

Lock-up solenoid

Step motor

Input or Output Speed Sensor No Signal

Transmission Range Sensor (TRS)

Sensor Ground

CAN

SET CONDITION

All the below conditions must be present for the period of 5 seconds for the DTC to set:

- Engine speed minus the primary speed is greater than 1000 RPM.
- Secondary speed multiplied by the estimated ratio, minus the Primary speed

is greater than 1000 RPM.

- Engine speed minus the Secondary speed, multiplied by the estimated ratio is less than 1000 RPM.

POSSIBLE CAUSES

Possible Causes
ENGINE CAM OR CRANK DTCS PRESENT
DIRTY OR DAMAGED INPUT SPEED SENSOR
(T16) TRANSMISSION CONTROL OUTPUT CIRCUIT HIGH RESISTANCE
(T14) INPUT SPEED SENSOR SIGNAL CIRCUIT SHORT TO VOLTAGE
(T14) INPUT SPEED SENSOR SIGNAL CIRCUIT HIGH RESISTANCE
INPUT SPEED SENSOR
TORQUE CONVERTER CLUTCH
TRANSMISSION CONTROL MODULE

Always perform the CVT Pre-Diagnostic Troubleshooting procedure before proceeding. Refer to CVT - PRE-DIAGNOSTIC TROUBLESHOOTING PROCEDURE .

DIAGNOSTIC TEST

1. **CHECK TO SEE IF THE DTC IS ACTIVE**
   1. With the scan tool, read Transmission DTCs.

      Is the status Active or is the Starts Since Set counter 2 or less for this DTC?

      Yes

      - Go To 2

      No

      - Go To 10
2. **CHECK FOR ENGINE CAM OR CRANK SENSOR DTCS**

1. With the scan tool, check engine DTCs.

   Are there any Engine Cam or Crank sensor DTCs present?

   Yes

   - Refer to **DTC INDEX** and perform the appropriate diagnostic procedure.
   - Perform CVT VERIFICATION TEST. Refer to **CVT VERIFICATION TEST** .

   No

   - Go To 3

3. **CHECK THE (T16) TRANSMISSION CONTROL OUTPUT CIRCUIT FOR AN OPEN (HIGH RESISTANCE)**

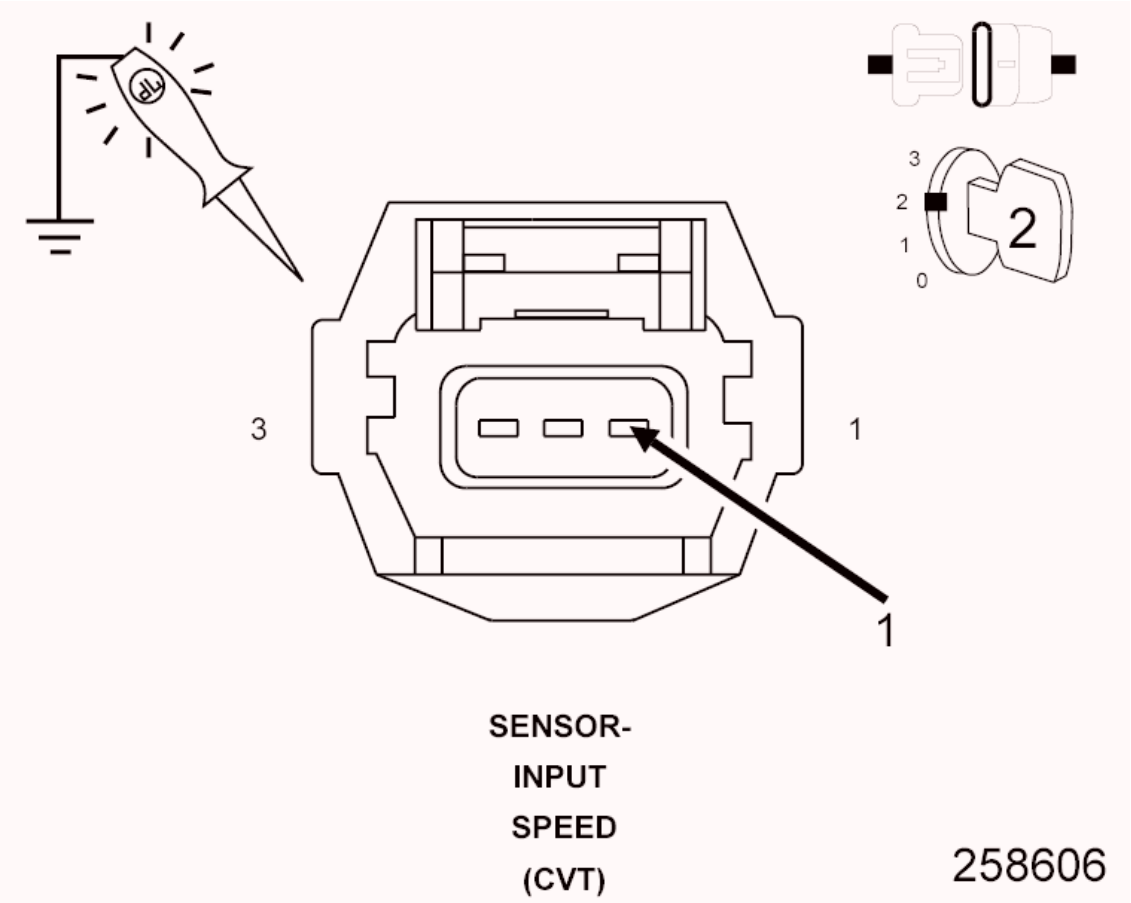

Fig. 26: Checking Transmission Control Output Circuit For An Open (High Resistance)
Courtesy of CHRYSLER GROUP, LLC

1. Disconnect the Input Speed Sensor harness connector.
2. Ignition on, engine not running
3. With the scan tool under TIPM, actuate the Transmission.
4. Using a 12-volt test light connected to ground, check the (T16) Transmission Control Output circuit at the Input Speed Sensor harness connector.

NOTE: The test light must illuminate brightly. Compare the brightness to that of a direct connection to the battery.

Does the test light illuminate brightly?

Yes

- Go To 4

No

- Repair the (T16) Transmission Control Output circuit for an open or high resistance.
- Perform CVT VERIFICATION TEST. Refer to **CVT VERIFICATION TEST** .

4. **CHECK THE (T14) INPUT SPEED SENSOR SIGNAL CIRCUIT**

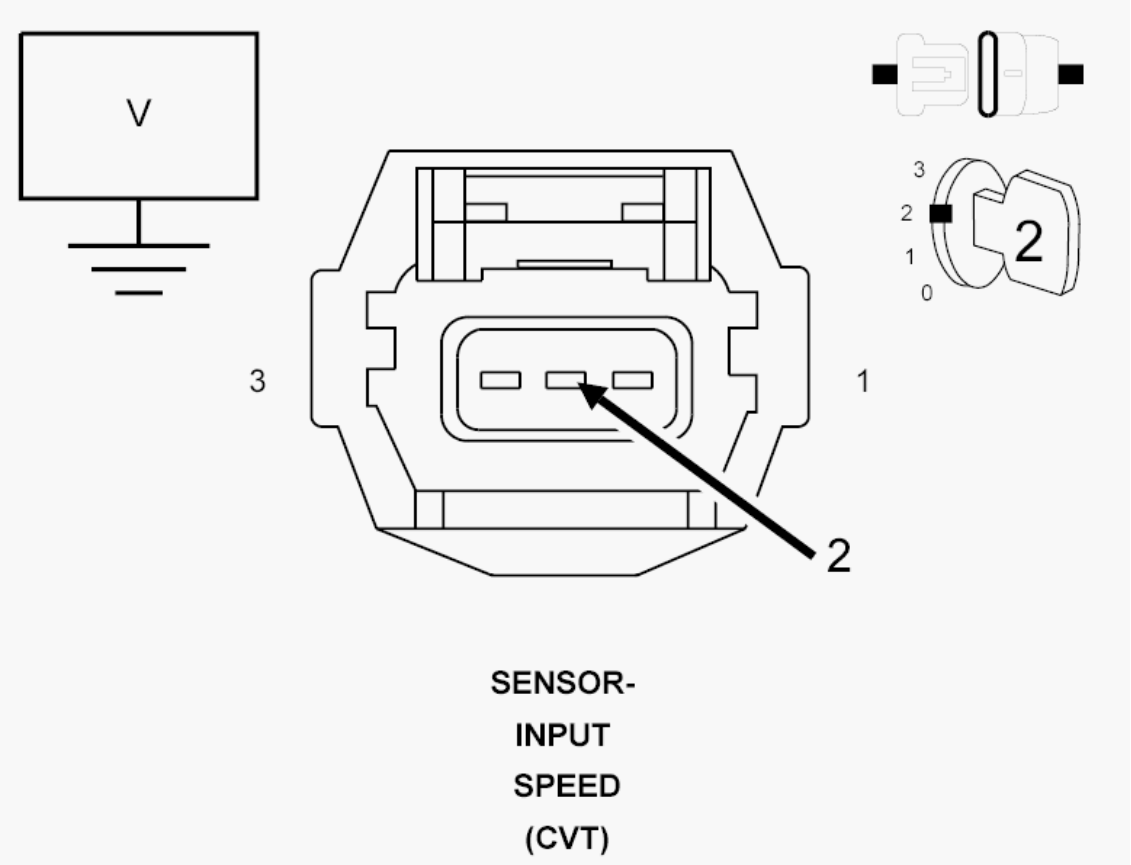

Fig. 27: Checking Input Speed Sensor Signal Circuit
Courtesy of CHRYSLER GROUP, LLC

1. With the scan tool under TIPM, stop the Transmission actuator.
2. Turn the ignition off, wait 5 seconds, then turn the ignition on.
3. Measure the voltage of the (T14) Input Speed Sensor Signal circuit.

   Pick the answer that best matches your findings:

   Voltage above 5.5 volts

   - Go To 6

   Voltage below 4.5 volts

   - Go To 5

   Voltage between 4.5 and 5.5 volts

   - Go To 7

5. **CHECK THE (T14) INPUT SPEED SENSOR SIGNAL CIRCUIT FOR**

AN OPEN (HIGH RESISTANCE)

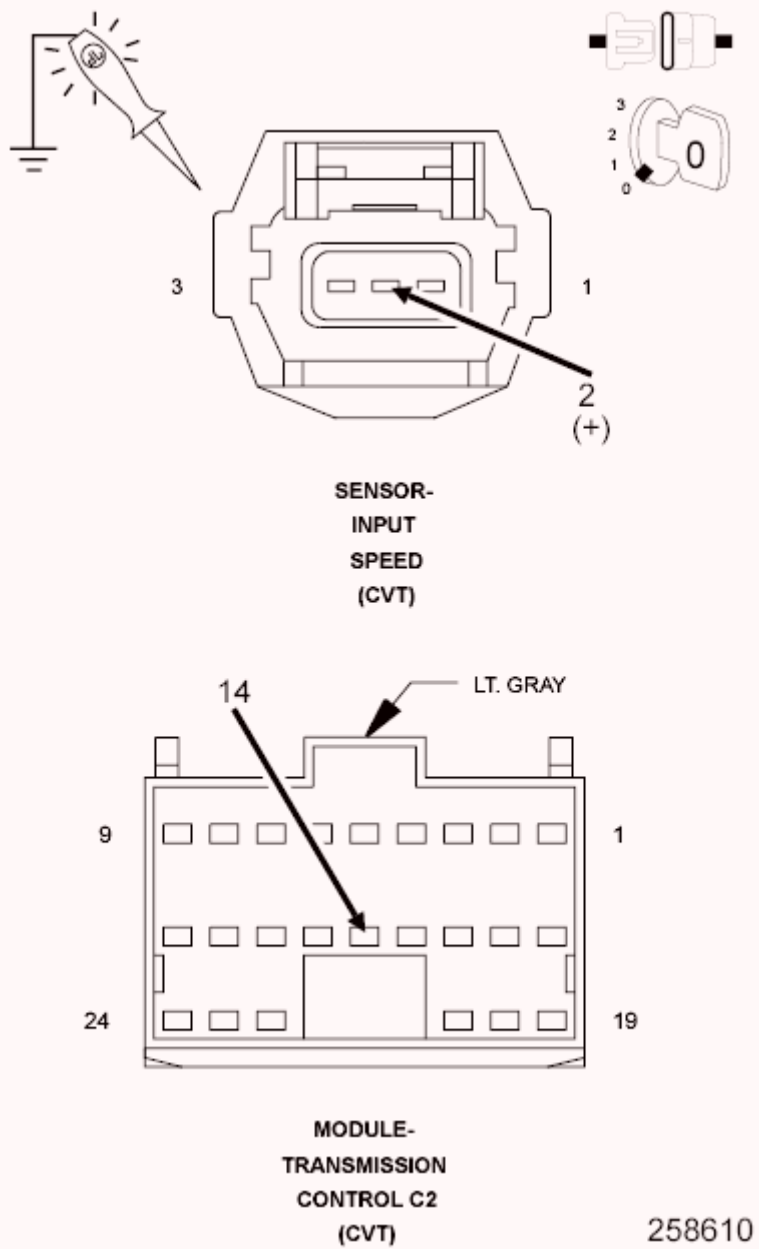

Fig. 28: Checking Input Speed Sensor Signal Circuit For An Open (High Resistance)
Courtesy of CHRYSLER GROUP, LLC

1. Turn the ignition off to the lock position.
2. Disconnect the TCM C2 harness connector.
3. Connect a jumper wire between the (T14) Input Speed Sensor Signal circuit in the Input Speed Sensor harness connector and B(+).
4. Using a 12-volt test light connected to ground, check the (T14) Input Speed Sensor Signal circuit in the TCM C2 harness connector.

NOTE: The test light must illuminate brightly. Compare the brightness to that of a direct connection to the battery.

Does the test light illuminate brightly?

Yes

- Using the schematics as a guide, check the Transmission Control Module (TCM) terminals for corrosion, damage, or terminal push out. Pay particular attention to all power and ground circuits. Check for any Service Bulletins for possible causes that may apply. If no problems are found, replace the TCM in accordance with the Service Information.
- Perform CVT VERIFICATION TEST. Refer to **CVT VERIFICATION TEST** .

No

- Repair the (T14) Input Speed Sensor Signal circuit for an open or high resistance.
- Perform CVT VERIFICATION TEST. Refer to **CVT VERIFICATION TEST** .

6. **CHECK THE (T14) INPUT SPEED SENSOR SIGNAL CIRCUIT FOR A SHORT TO VOLTAGE**

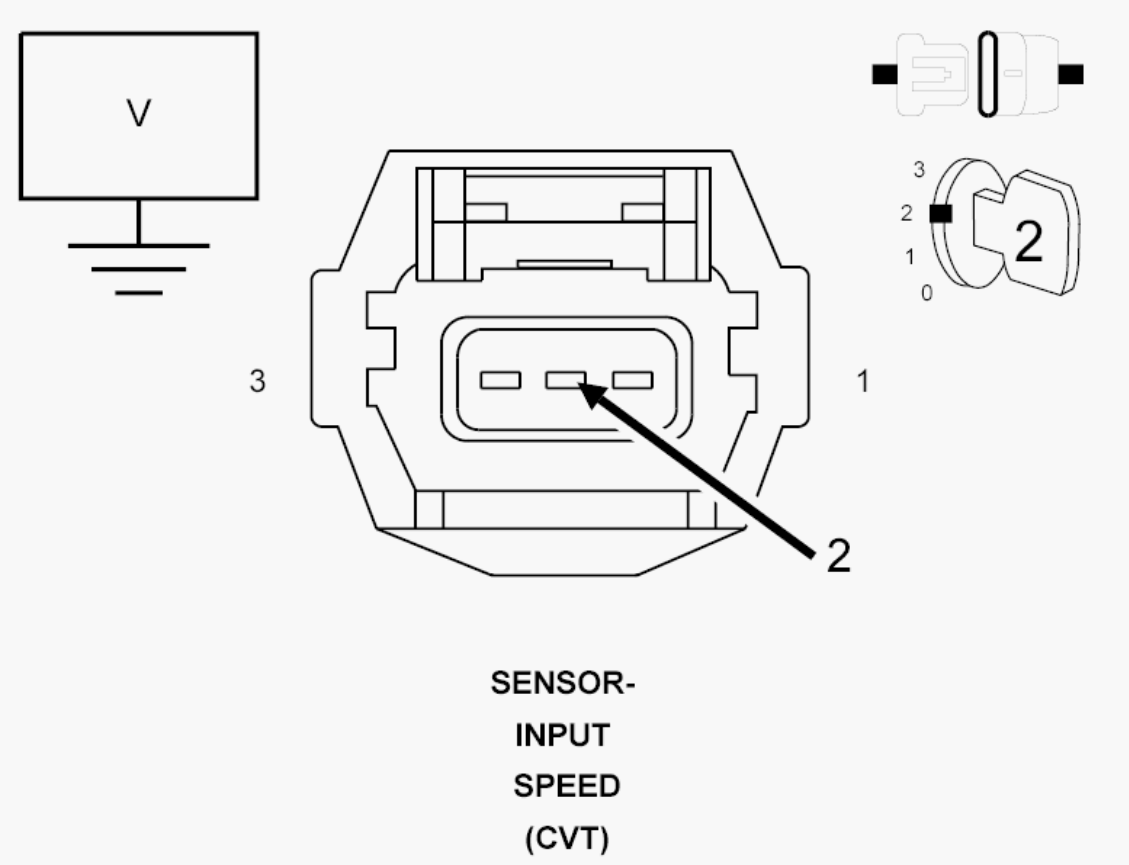

Fig. 29: Checking Input Speed Sensor Signal Circuit For Short To Voltage
Courtesy of CHRYSLER GROUP, LLC

1. Turn the ignition off to the lock position.
2. Disconnect the TCM C2 harness connector.
3. Ignition on, engine not running
4. Measure the voltage of the (T14) Input Speed Sensor Signal circuit.

   Is the voltage above 0.2 volts?

   Yes

   - Repair the (T14) Input Speed Sensor Signal circuit for a short to voltage.
   - Perform CVT VERIFICATION TEST. Refer to **CVT VERIFICATION TEST** .

   No

- Using the schematics as a guide, check the Transmission Control Module (TCM) terminals for corrosion, damage, or terminal push out. Pay particular attention to all power and ground circuits. Check for any Service Bulletins for possible causes that may apply. If no problems are found, replace the TCM in accordance with the Service Information.
- Perform CVT VERIFICATION TEST. Refer to **CVT VERIFICATION TEST** .

7. **CHECK THE TORQUE CONVERTER**
   1. Turn the ignition off to the lock position.
   2. Reinstall all components and reconnect all previously disconnected harness connectors.
   3. Ignition on, engine not running
   4. With the scan tool, erase all Transmission DTCs.
   5. Test drive the vehicle to speeds allowing the Torque Converter to obtain lock-up. Note the Engine RPM compared to the Transmission Input RPM.

      Did the difference between the Engine RPM and the Transmission Input RPM differ over 1000 RPM?

      Yes

      - Go To 8

      No

      - Go To 9
8. **CHECK THE INPUT SPEED SENSOR**
   1. Turn the ignition off to the lock position.
   2. Remove the Input Speed Sensor in accordance with the Service Information.
   3. Check the Input Speed Sensor for any debris buildup or damage.

      Did the Input Speed Sensor show any signs of debris buildup or damage?

Yes

- If there is a debris build up, clean the Output Speed Sensor as necessary and reinstall. If damaged or questionable in condition, replace the Input Speed Sensor.
- Perform CVT VERIFICATION TEST. Refer to **CVT VERIFICATION TEST** .

No

- Replace the Torque Converter in accordance with the Service Information.
- Perform CVT VERIFICATION TEST. Refer to **CVT VERIFICATION TEST** .

9. **CHECK IF THE DTC RESETS**

Did the DTC P0716-INPUT SPEED SENSOR 1 CIRCUIT PERFORMANCE reset during the test drive?

Yes

- Using the schematics as a guide, check the Transmission Control Module (TCM) terminals for corrosion, damage, or terminal push out. Pay particular attention to all power and ground circuits. Check for any Service Bulletins for possible causes that may apply. If no problems are found, replace the TCM in accordance with the Service Information.
- Perform CVT VERIFICATION TEST. Refer to **CVT VERIFICATION TEST** .

No

- Go To 10

10. **CHECK THE WIRING AND CONNECTORS**
    1. The conditions necessary to set this DTC are not present at this time.
    2. Using the schematics as a guide, inspect the wiring and connectors specific to this circuit.
    3. Wiggle the wires while checking for shorted and open circuits.
    4. Check for any Service Bulletins for possible causes that may apply.

Were there any problems found?

Yes

- Repair as necessary.
- Perform CVT VERIFICATION TEST. Refer to **CVT VERIFICATION TEST** .

No

- Test Complete.

P0717-INPUT SPEED SENSOR 1 CIRCUIT NO SIGNAL

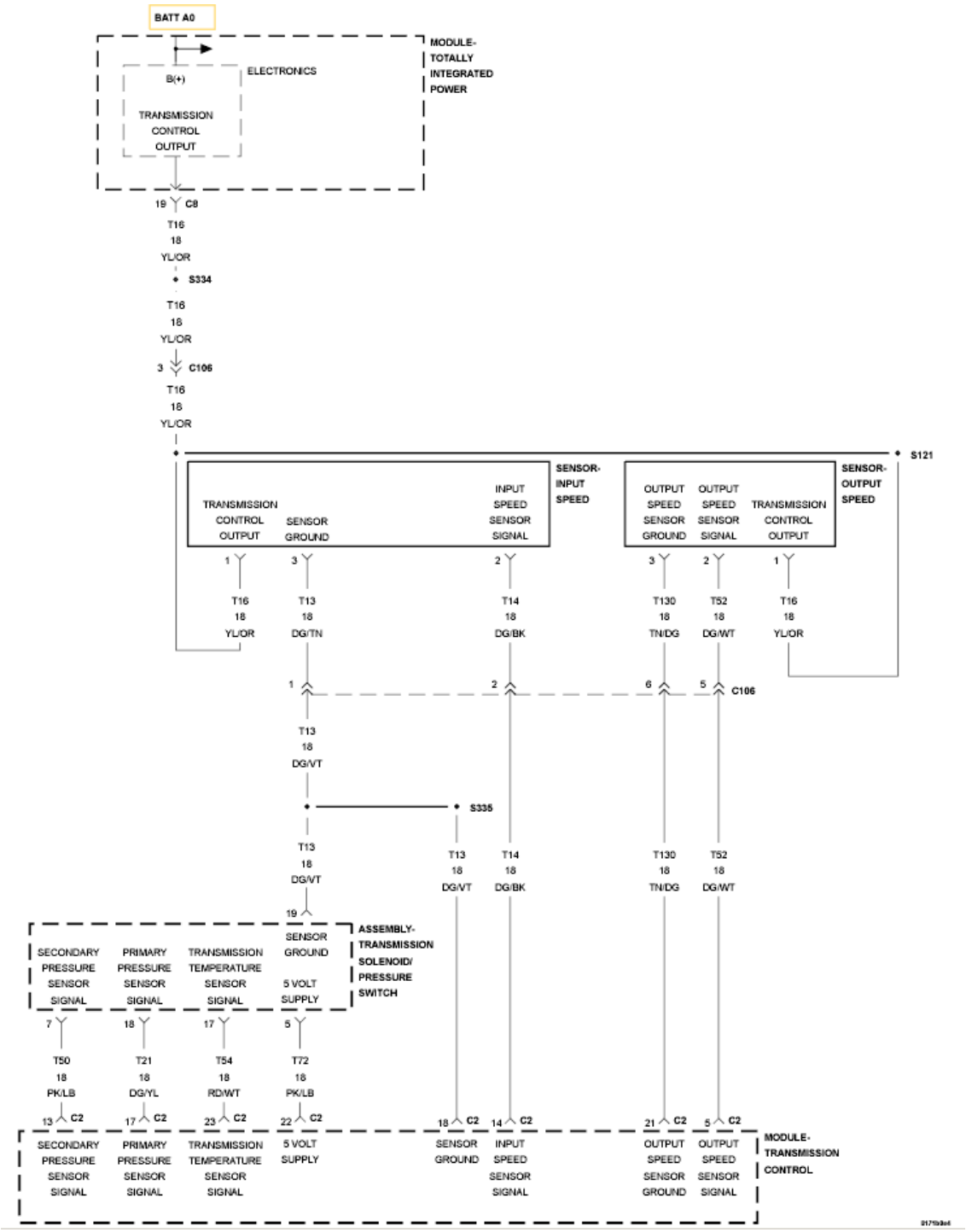

Fig. 30: Sensor Reference Voltage Wiring Diagram
Courtesy of CHRYSLER GROUP, LLC

For a complete wiring diagram, **refer to appropriate SYSTEM WIRING DIAGRAMS article** .

THEORY OF OPERATION

The transmission system uses two speed sensors. One is used to measure input

RPM (primary pulley) and one to measure output RPM (secondary pulley).

The Input Speed sensor detects the primary pulley RPM by the use of a three-wire magnetic pickup device that generates a square wave signal as rotation occurs and is monitored by the Transmission Control Module (TCM). These inputs are essential for proper transmission operation.

WHEN MONITORED

Ignition on, engine running with system voltage between 9.0 and 16.0 volts.

No detected Primary Speed Sensor and/or Sensor ground DTCs.

SET CONDITION

Condition one: Input speed RPM is less than 150 RPM with a Output speed RPM greater than 1000 RPM for the period of 5 seconds.

Condition two: Input speed RPM last value is greater than 1000 RPM where as the Input speed RPM current value is zero RPM for the period of 500 msec.

Condition three: Both the Input and Output Speed sensors are less than 150 RPM with a actual vehicle speed greater than 10 Km/h. (Note: this is an indication of either the power supply to both sensors is open or the C106 connector is disconnected.)

POSSIBLE CAUSES

Possible Causes
(T16) TRANSMISSION CONTROL OUTPUT CIRCUIT OPEN
(T14) INPUT SPEED SENSOR SIGNAL CIRCUIT SHORT TO VOLTAGE
(T14) INPUT SPEED SENSOR SIGNAL CIRCUIT OPEN
(T14) INPUT SPEED SENSOR SIGNAL CIRCUIT SHORT TO GROUND
(T13) SENSOR GROUND CIRCUIT OPEN
INPUT SPEED SENSOR
TRANSMISSION CONTROL MODULE

Always perform the CVT Pre-Diagnostic Troubleshooting procedure before proceeding. Refer to CVT - PRE-DIAGNOSTIC TROUBLESHOOTING PROCEDURE .

DIAGNOSTIC TEST

1. **CHECK IF THE DTC IS ACTIVE**
   1. With the scan tool, read Transmission DTCs.

      Is the status Active or is the Starts Since Set counter 2 or less for this DTC?

      Yes

      - Go To 2

      No

      - Go To 9
2. **CHECK IF BOTH SPEED SENSORS SHOW NO SIGNAL**
   1. With the scan tool, read Transmission DTCs.

      Are both the Input and Output Speed Sensor No Signal DTCs set?

      Yes

      - Check the C106 connector for improper connection and repair as necessary.
      - Perform CVT VERIFICATION TEST. Refer to **CVT VERIFICATION TEST** .
      - If no problem is found with the C106 connector - Go To 3

      No

      - Go To 3
3. **CHECK THE (T16) TRANSMISSION CONTROL OUTPUT CIRCUIT FOR AN OPEN**

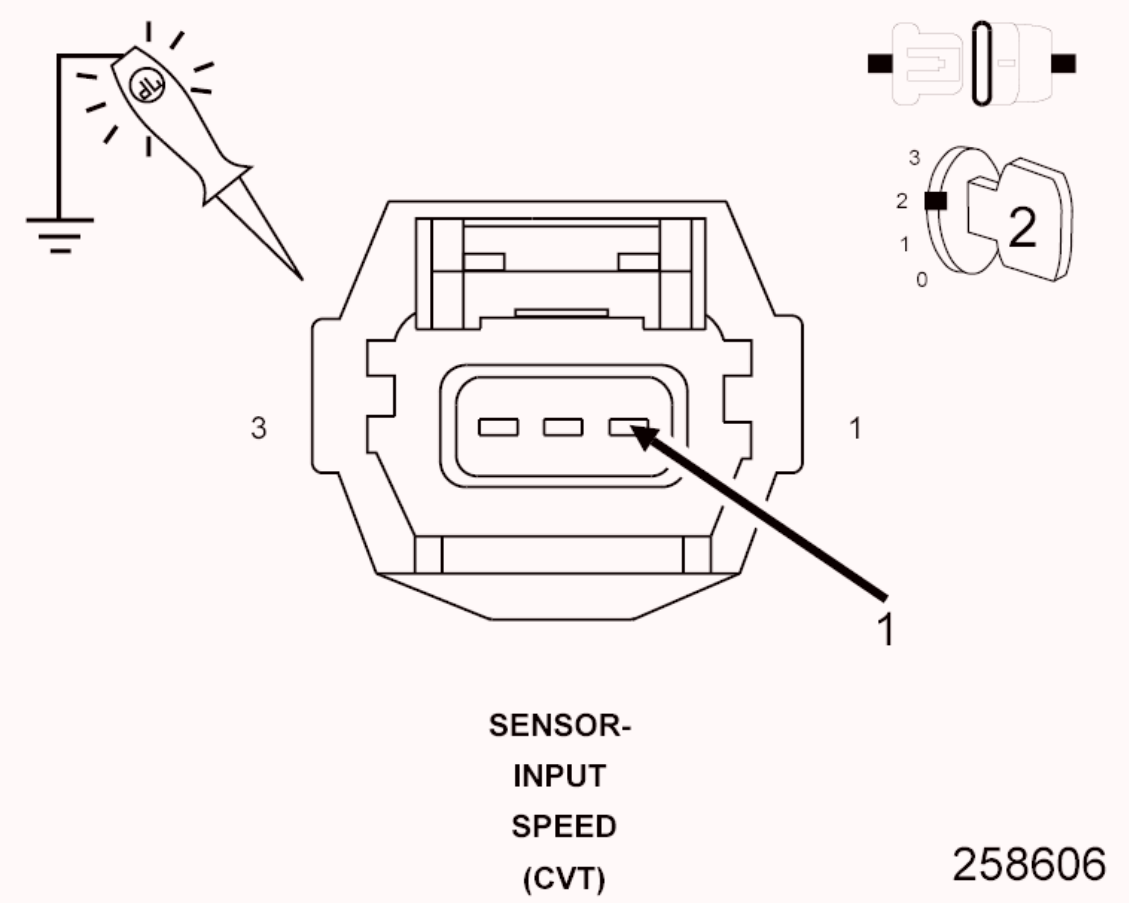

Fig. 31: Checking Transmission Control Output Circuit For An Open (High Resistance)
Courtesy of CHRYSLER GROUP, LLC

1. Turn the ignition off to the lock position.
2. Disconnect the Input Speed Sensor harness connector.
3. Ignition on, engine not running.
4. With the scan tool under TIPM, actuate the Transmission.
5. Using a 12-volt test light connected to ground, check the (T16) Transmission Control Output circuit at the Input Speed Sensor harness connector.

NOTE: The test light must illuminate brightly. Compare the brightness to that of a direct connection to the battery.

Does the test light illuminate brightly?

Yes

- Go To 4

No

- Repair the (T16) Transmission Control Output circuit for an open or high resistance.
- Perform CVT VERIFICATION TEST. Refer to **CVT VERIFICATION TEST** .

4. **CHECK THE (T14) INPUT SPEED SENSOR SIGNAL CIRCUIT SHORT TO VOLTAGE**

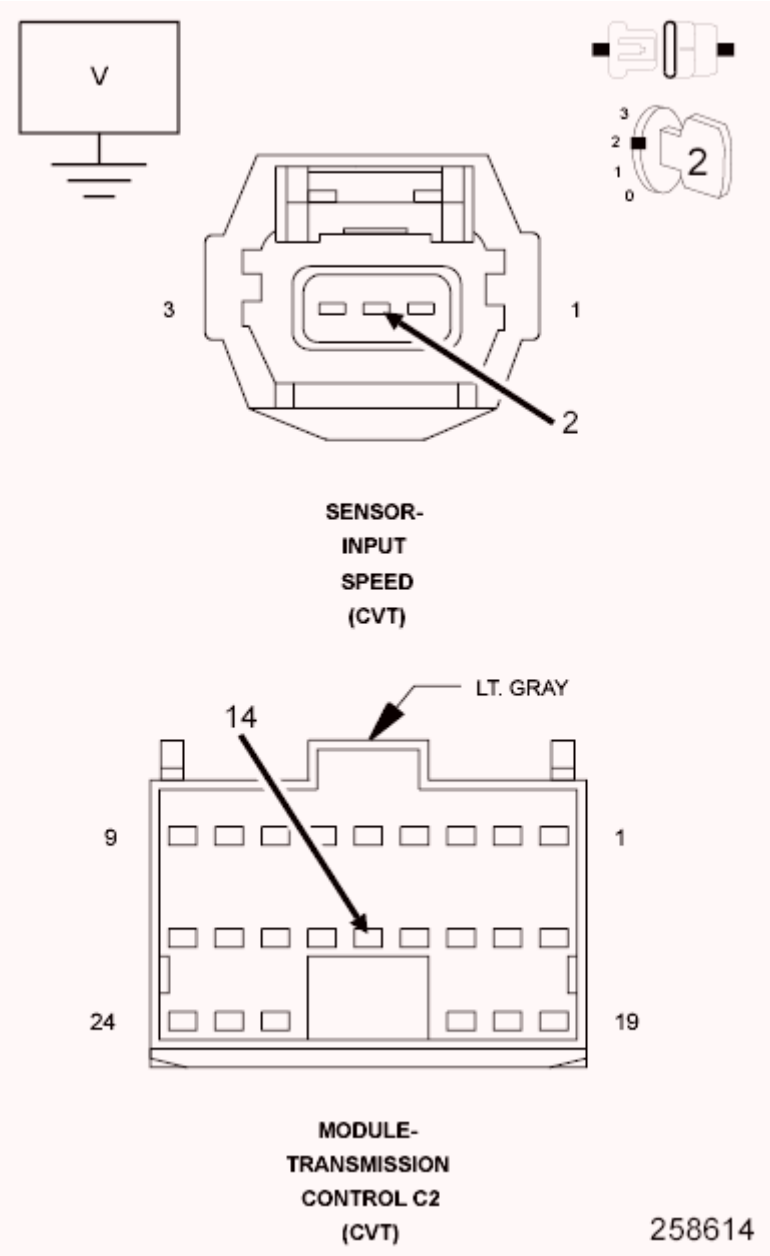

Fig. 32: Checking Input Speed Sensor Signal Circuit For Short To

Voltage
Courtesy of CHRYSLER GROUP, LLC

1. Turn the ignition off to the lock position.
2. Disconnect the TCM C2 harness connector.
3. Ignition on, engine not running.
4. Measure the voltage of the (T14) Input Speed Sensor Signal circuit.

   Is the voltage above 0.5 volts?

   Yes

   - Repair the (T14) Input Speed Sensor Signal circuit for a short to voltage.
   - Perform CVT VERIFICATION TEST. Refer to **CVT VERIFICATION TEST** .

   No

   - Go To 5

5. **CHECK THE (T14) INPUT SPEED SENSOR SIGNAL CIRCUIT FOR AN OPEN**

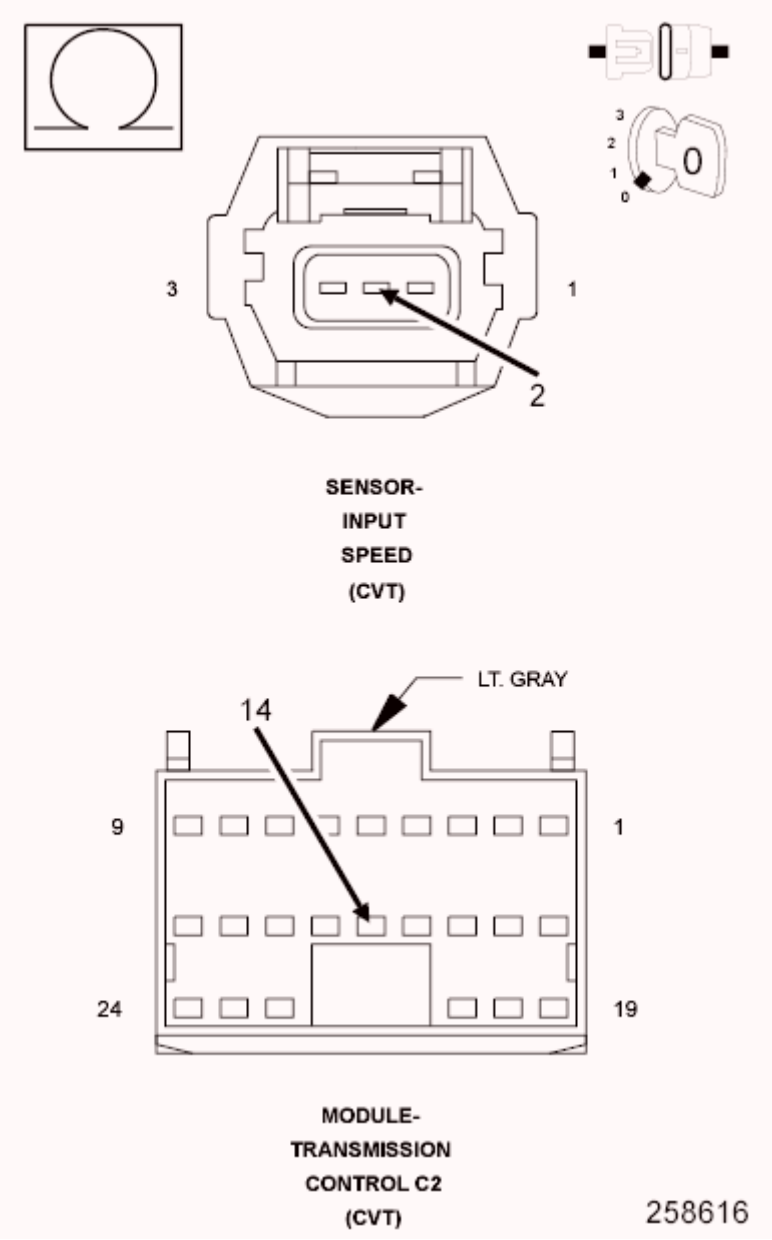

Fig. 33: Checking Input Speed Sensor Signal Circuit For An Open
Courtesy of CHRYSLER GROUP, LLC

1. Turn the ignition off to the lock position.
2. Measure the resistance of the (T14) Input Speed Sensor Signal circuit between the TCM C2 harness connector and the Input Speed Sensor harness connector.

   Is the resistance below 5.0 ohms?

   Yes

   - Go To 6

No

- Repair the (T14) Input Speed Sensor Signal circuit for an open.
- Perform CVT VERIFICATION TEST. Refer to **CVT VERIFICATION TEST** .

6. **CHECK THE (T14) INPUT SPEED SENSOR SIGNAL CIRCUIT FOR A SHORT TO GROUND**

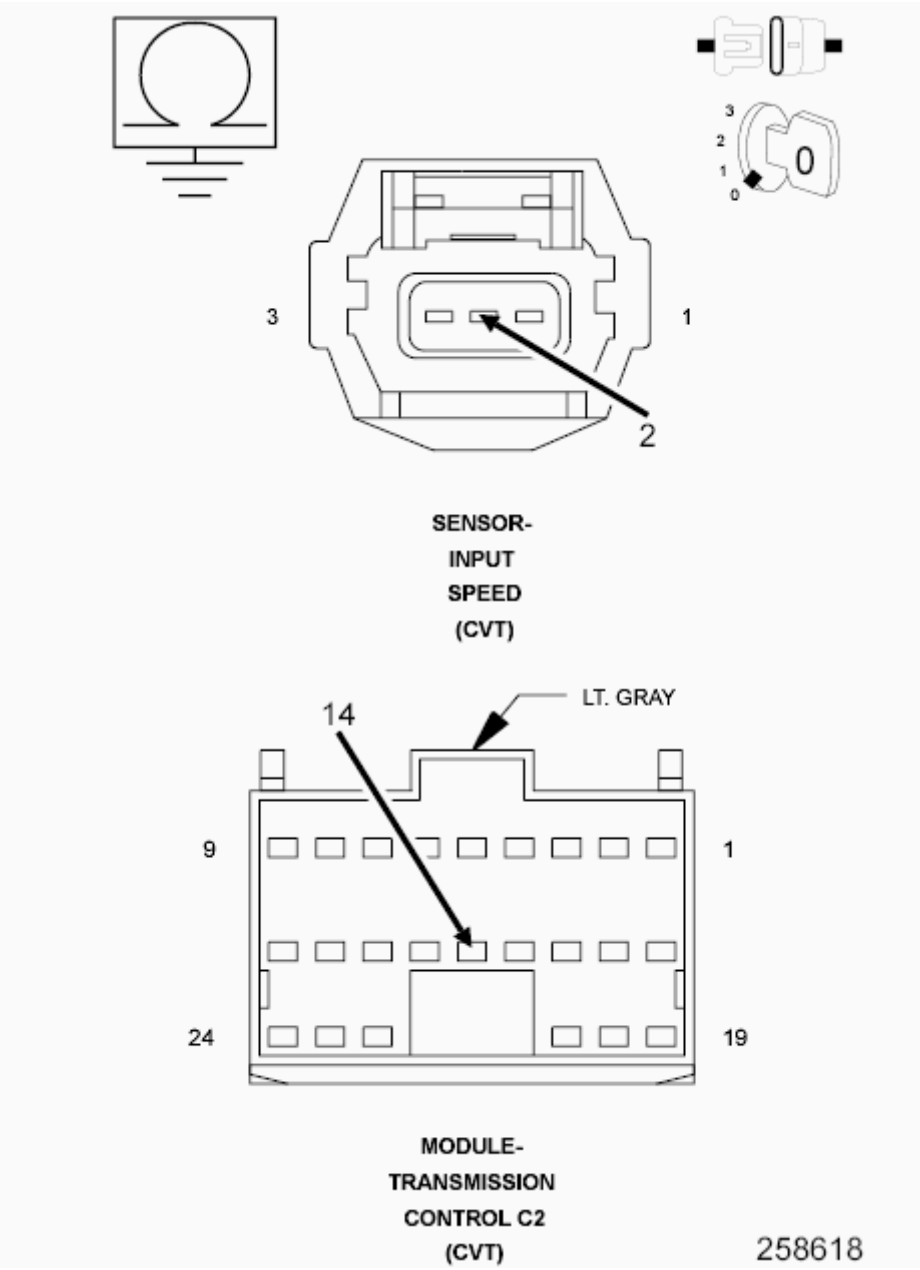

Fig. 34: Checking Input Speed Sensor Signal Circuit For A Short To Ground
Courtesy of CHRYSLER GROUP, LLC

1. Measure the resistance between ground and the (T14) Input Speed Sensor Signal circuit.

   Is the resistance below 5.0 ohms?

   Yes

   - Repair the (T14) Input Speed Sensor Signal circuit for a short to ground.
   - Perform CVT VERIFICATION TEST. Refer to **CVT VERIFICATION TEST** .

   No

   - Go To 7

7. **CHECK THE (T13) SENSOR GROUND CIRCUIT FOR AN OPEN (HIGH RESISTANCE)**

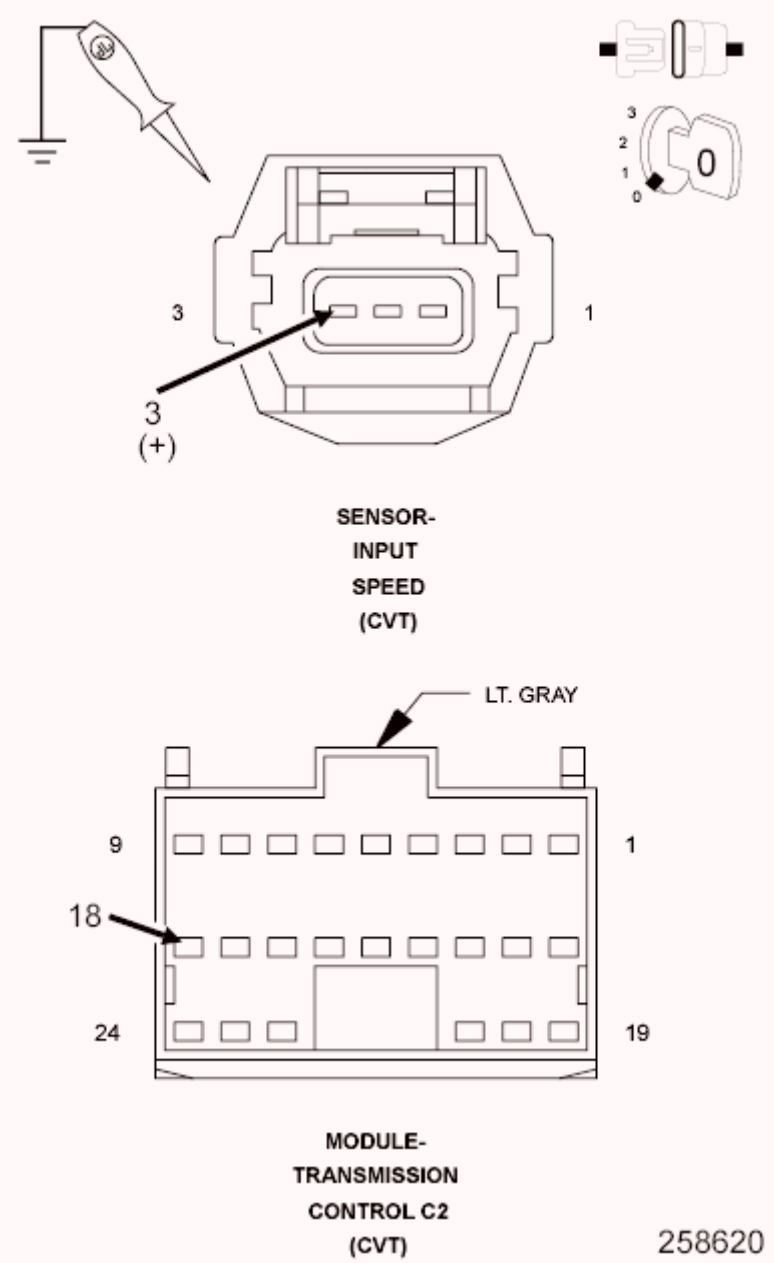

Fig. 35: Checking Sensor Ground Circuit For An Open (High Resistance)
Courtesy of CHRYSLER GROUP, LLC

1. Turn the ignition off to the lock position.
2. Disconnect the TCM C2 harness connector.
3. Connect a jumper wire between the (T13) Sensor Ground circuit in the Input Speed Sensor harness connector and B(+).
4. Using a 12-volt test light connected to ground, check the (T13) Sensor Ground circuit in the TCM C2 harness connector.

Does the test light illuminate brightly?

Yes

- Go To 8

No

- Repair the (T13) Sensor Ground circuit for an open or high resistance.
- Perform CVT VERIFICATION TEST. Refer to **CVT VERIFICATION TEST** .

8. **CHECK THE INPUT SPEED SENSOR**
   1. Turn the ignition off to the lock position
   2. Replace the Input Speed Sensor in accordance with the Service Information.
   3. Reconnect all previously disconnected connectors.
   4. Ignition on, engine not running.
   5. With the scan tool, erase all Transmission DTCs.
   6. Perform CVT VERIFICATION TEST. Refer to **CVT VERIFICATION TEST** .

   NOTE: Make sure to perform a test drive of the vehicle.

   7. With the scan tool, read Transmission DTCs.

   Did the DTC P0717 reset?

   Yes

   - Using the schematics as a guide, check the Transmission Control Module (TCM) terminals for corrosion, damage, or terminal push out. Pay particular attention to all power and ground circuits. Check for any Service Bulletins for possible causes that may apply. If no problems are found, replace the TCM in accordance with the Service Information.
   - Perform CVT VERIFICATION TEST. Refer to **CVT VERIFICATION TEST** .

No

- Repair is complete.

9. **CHECK THE WIRING AND CONNECTORS**
   1. The conditions necessary to set this DTC are not present at this time.
   2. Using the schematics as a guide, inspect the wiring and connectors specific to this circuit.
   3. Wiggle the wires while checking for shorted and open circuits.

   Were there any problems found?

   Yes

   - Repair as necessary.
   - Perform CVT VERIFICATION TEST. Refer to **CVT VERIFICATION TEST** .

   No

   - Test Complete.

P0721-OUTPUT SPEED SENSOR CIRCUIT PERFORMANCE

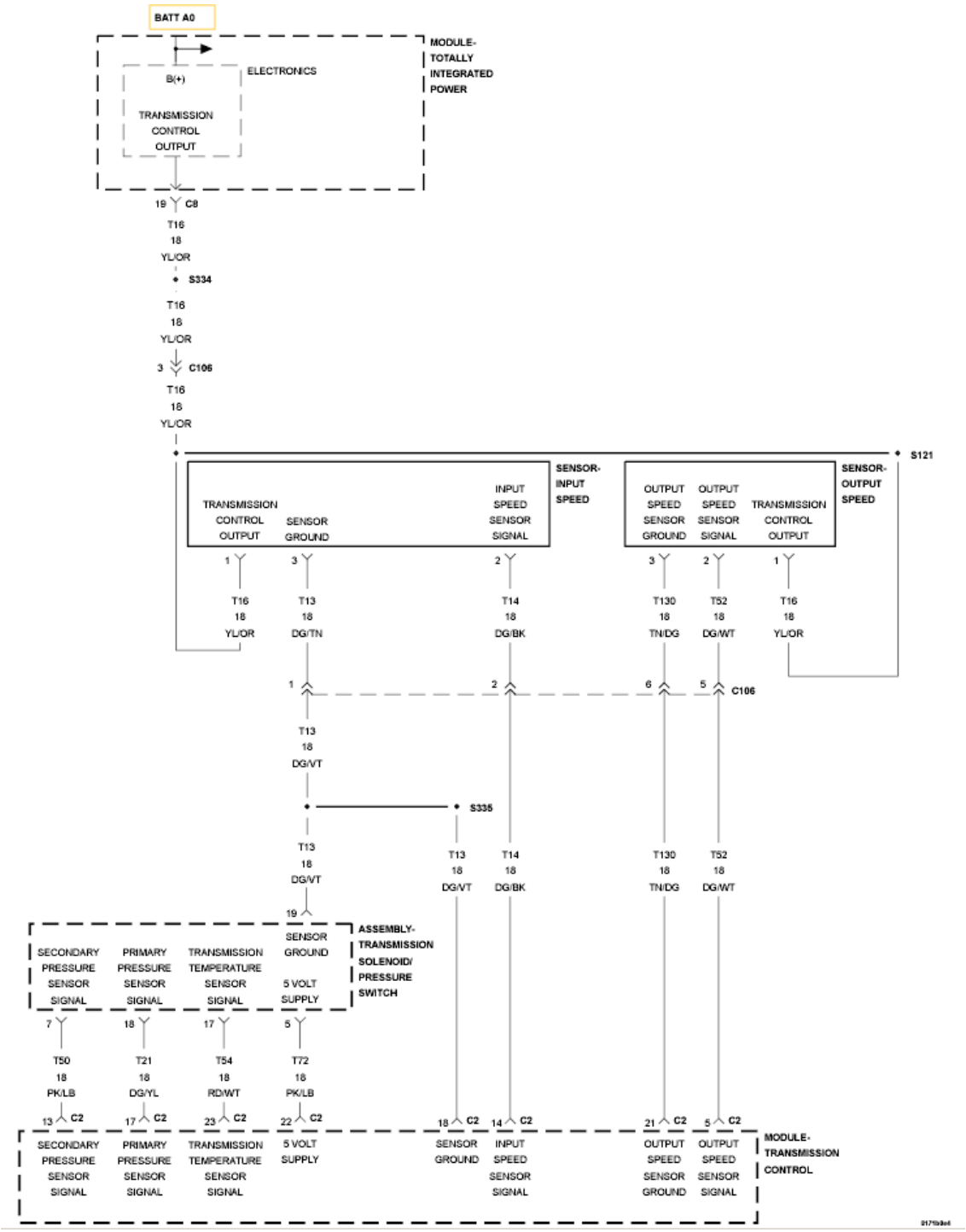

Fig. 36: Sensor Reference Voltage Wiring Diagram
Courtesy of CHRYSLER GROUP, LLC

For a complete wiring diagram, **refer to appropriate SYSTEM WIRING DIAGRAMS article** .

THEORY OF OPERATION

The transmission system uses two speed sensors. One is used to measure input

RPM (primary pulley) and one to measure output RPM (secondary pulley).

The Input Speed sensor detects the primary pulley RPM by the use of a three-wire magnetic pickup device that generates a square wave signal as rotation occurs and is monitored by the Transmission Control Module (TCM). These inputs are essential for proper transmission operation.

WHEN MONITORED

Ignition on, engine running with the transmission in a valid forward gear.

System voltage between 9.0 and 16+.0 volts.

Vehicle speed greater than 10 Km/h (6 mph).

Accelerator Pedal Position (APP) greater than 12.5%.

Engine RPM greater than 450 RPM with TCC lock-up enabled.

No active DTCs from the following:

Torque Convertor Clutch (TCC)

Lock-up Solenoid

CAN Bus

Step Motor

Input or Output Speed Sensor No Signal

Transmission Range Sensor (TRS)

Sensor Ground

SET CONDITION

All the below conditions must be present for the period of 5 seconds for the DTC to set:

- Engine speed minus the primary speed is less than 1000 RPM.
- Secondary speed multiplied by the estimated ratio, minus the Primary speed

is greater than 1000 RPM.

- Vehicle speed minus the Vehicle speed calculated using the Secondary speed, is greater than or equal to 20 Km/h (12.5 mph)

POSSIBLE CAUSES

Possible Causes
ENGINE CAM OR CRANK DTCS PRESENT
DIRTY OR DAMAGED OUTPUT SPEED SENSOR
(T16) TRANSMISSION CONTROL OUTPUT CIRCUIT HIGH RESISTANCE
(T52) OUTPUT SPEED SENSOR SIGNAL CIRCUIT HIGH RESISTANCE
(T52) OUTPUT SPEED SENSOR SIGNAL CIRCUIT SHORT TO VOLTAGE
(T130) OUTPUT SPEED SENSOR GROUND CIRCUIT HIGH RESISTANCE
(T130) OUTPUT SPEED SENSOR GROUND CIRCUIT SHORT TO VOLTAGE
OUTPUT SPEED SENSOR
TORQUE CONVERTER CLUTCH
TRANSMISSION CONTROL MODULE

Always perform the CVT Pre-Diagnostic Troubleshooting procedure before proceeding. Refer to CVT - PRE-DIAGNOSTIC TROUBLESHOOTING PROCEDURE .

DIAGNOSTIC TEST

1. **CHECK TO SEE IF THE DTC IS ACTIVE**
   1. With the scan tool, read Transmission DTCs.

      Is the status Active or is the Starts Since Set counter 2 or less for this DTC?

      Yes

      - Go To 2

No

- Go To 11

2. **CHECK FOR ENGINE CAM OR CRANK SENSOR DTCS**
   1. With the scan tool, check engine DTCs.

   Are there any Engine Cam or Crank sensor DTCs present?

   Yes

   - Refer to **DTC INDEX** and perform the appropriate diagnostic procedure.
   - Perform CVT VERIFICATION TEST. Refer to **CVT VERIFICATION TEST** .

   No

   - Go To 3

3. **CHECK THE (T16) TRANSMISSION CONTROL OUTPUT CIRCUIT FOR AN OPEN (HIGH RESISTANCE)**

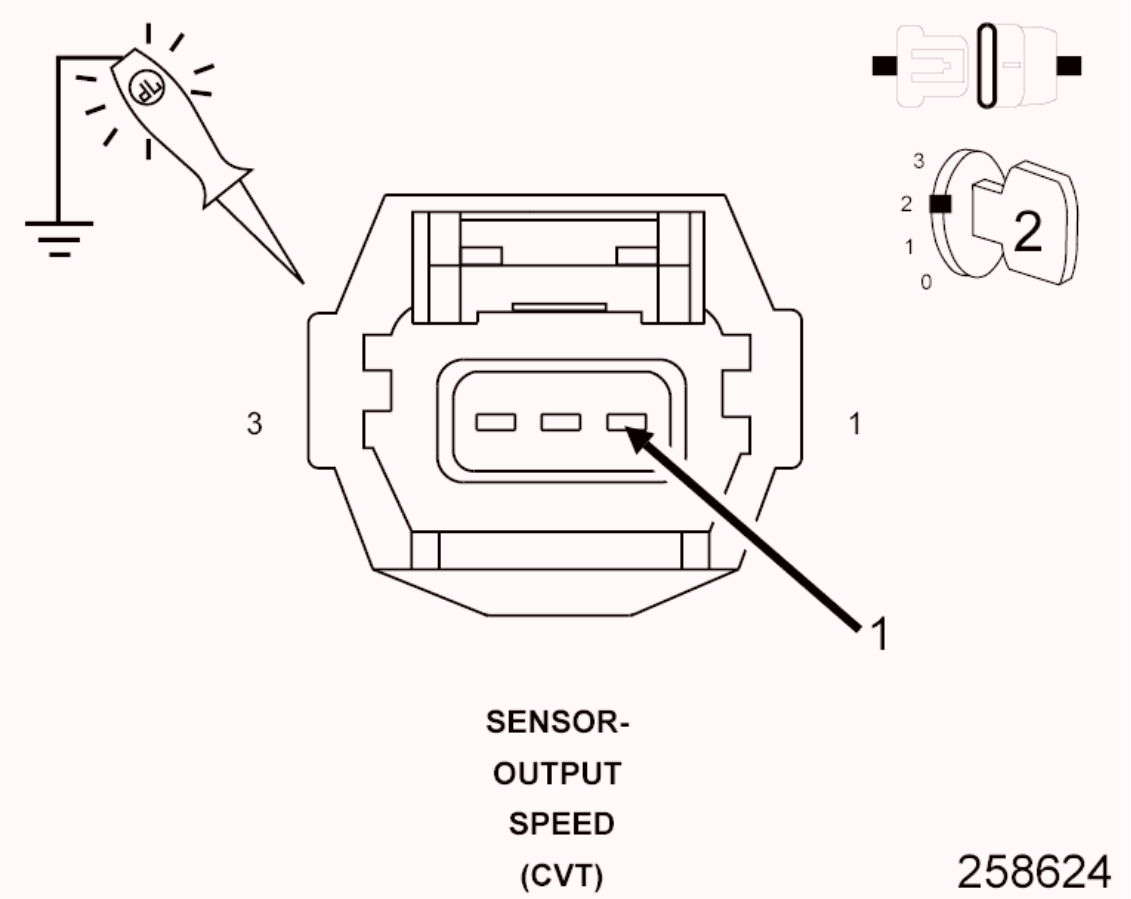

Fig. 37: Checking Transmission Control Output Circuit For An Open (High Resistance)
Courtesy of CHRYSLER GROUP, LLC

1. Disconnect the Output Speed Sensor harness connector.
2. Ignition on, engine not running
3. With the scan tool under TIPM, actuate the Transmission.
4. Using a 12-volt test light connected to ground, check the (T16) Transmission Control Output circuit at the Output Speed Sensor harness connector.

NOTE: The test light must illuminate brightly. Compare the brightness to that of a direct connection to the battery.

Does the test light illuminate brightly?

Yes

- Go To 4

No

- Repair the (T16) Transmission Control Output circuit for an open or high resistance.
- Perform CVT VERIFICATION TEST. Refer to **CVT VERIFICATION TEST** .

4. **CHECK THE (T52) OUTPUT SPEED SENSOR SIGNAL CIRCUIT**

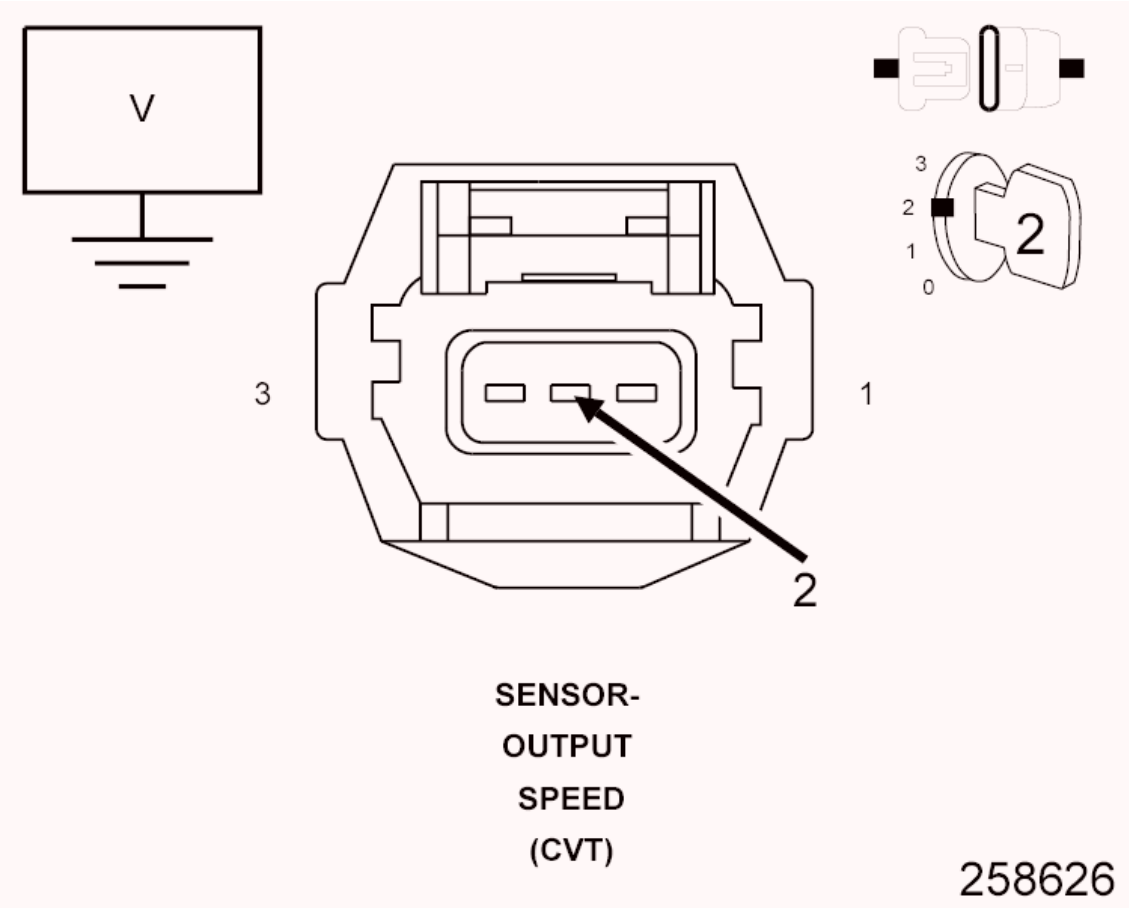

Fig. 38: Checking Output Speed Sensor Signal Circuit
Courtesy of CHRYSLER GROUP, LLC

1. With the scan tool under TIPM, stop the Transmission actuator.
2. Turn the ignition off, wait 5 seconds, then turn the ignition on.
3. Measure the voltage of the (T52) Output Speed Sensor Signal circuit.

Pick the answer that best matches your findings:

Voltage above 9.0 volts

- Go To 5

Voltage below 9.0 volts

- Go To 6

5. **CHECK THE (T52) OUTPUT SPEED SENSOR SIGNAL CIRCUIT FOR A SHORT TO VOLTAGE**

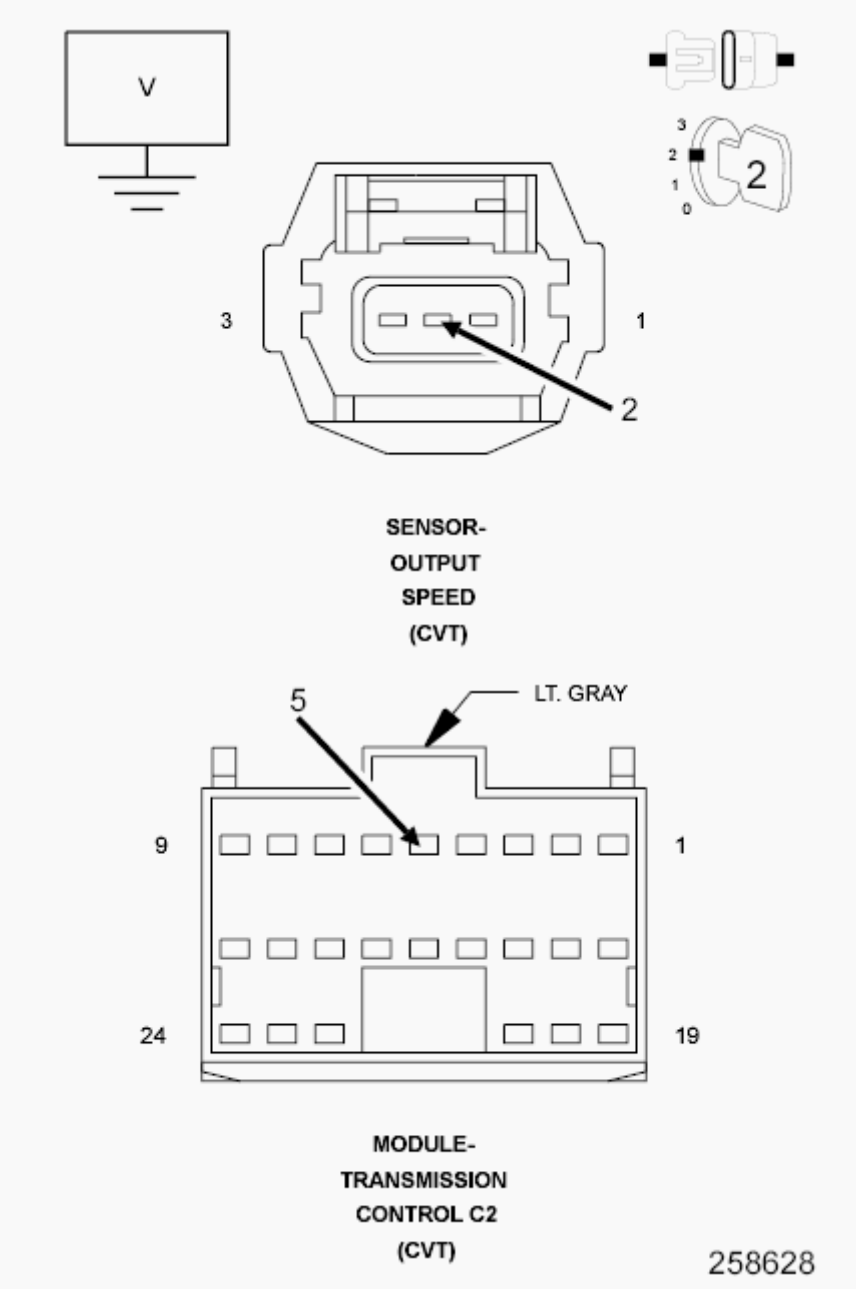

Fig. 39: Checking Output Speed Sensor Signal Circuit For A Short To Voltage

Courtesy of CHRYSLER GROUP, LLC

1. Turn the ignition off to the lock position.
2. Disconnect the TCM C2 harness connector.
3. Ignition on, engine not running
4. Measure the voltage of the (T52) Output Speed Sensor Signal circuit.

   Is the voltage above 0.2 volts?

   Yes

   - Repair the (T52) Output Speed Sensor Signal circuit for a short to voltage.
   - Perform CVT VERIFICATION TEST. Refer to **CVT VERIFICATION TEST** .

   No

   - Using the schematics as a guide, check the Transmission Control Module (TCM) terminals for corrosion, damage, or terminal push out. Pay particular attention to all power and ground circuits. Check for any Service Bulletins for possible causes that may apply. If no problems are found, replace the TCM in accordance with the Service Information.
   - Perform CVT VERIFICATION TEST. Refer to **CVT VERIFICATION TEST** .

6. **CHECK THE (T52) OUTPUT SPEED SENSOR SIGNAL CIRCUIT FOR AN OPEN (HIGH RESISTANCE)**

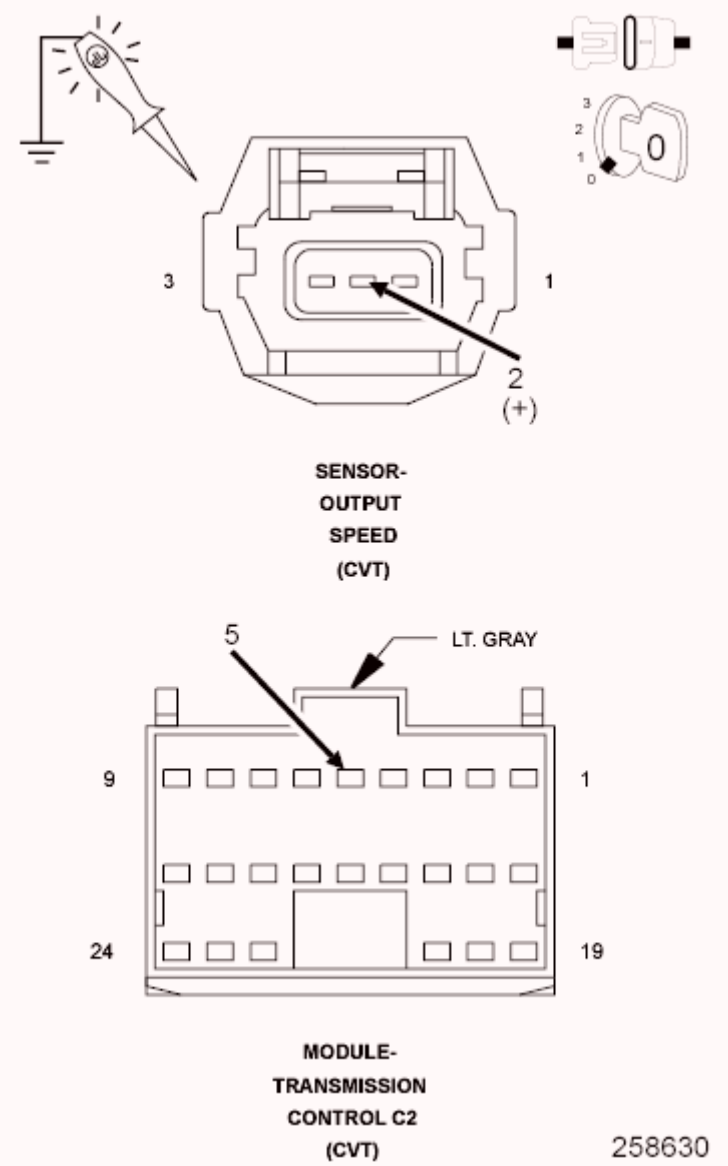

Fig. 40: Checking Output Speed Sensor Signal Circuit For An Open (High Resistance)
Courtesy of CHRYSLER GROUP, LLC

1. Turn the ignition off to the lock position.
2. Disconnect the TCM C2 harness connector.
3. Connect a jumper wire between the (T52) Output Speed Sensor Signal circuit and B(+) in the Output Speed Sensor harness connector.
4. Using a 12-volt test light connected to ground, check the (T52) Output Speed Sensor Signal circuit in the TCM C2 harness connector.

NOTE: The test light must illuminate brightly. Compare the brightness to that of a direct connection to

the battery.

Does the test light illuminate brightly?

Yes

- Go To 7

No

- Repair the (T52) Output Speed Sensor Signal circuit for an open or high resistance.
- Perform CVT VERIFICATION TEST. Refer to **CVT VERIFICATION TEST** .

7. **CHECK THE (T130) OUTPUT SPEED SENSOR GROUND CIRCUIT SHORT TO VOLTAGE**

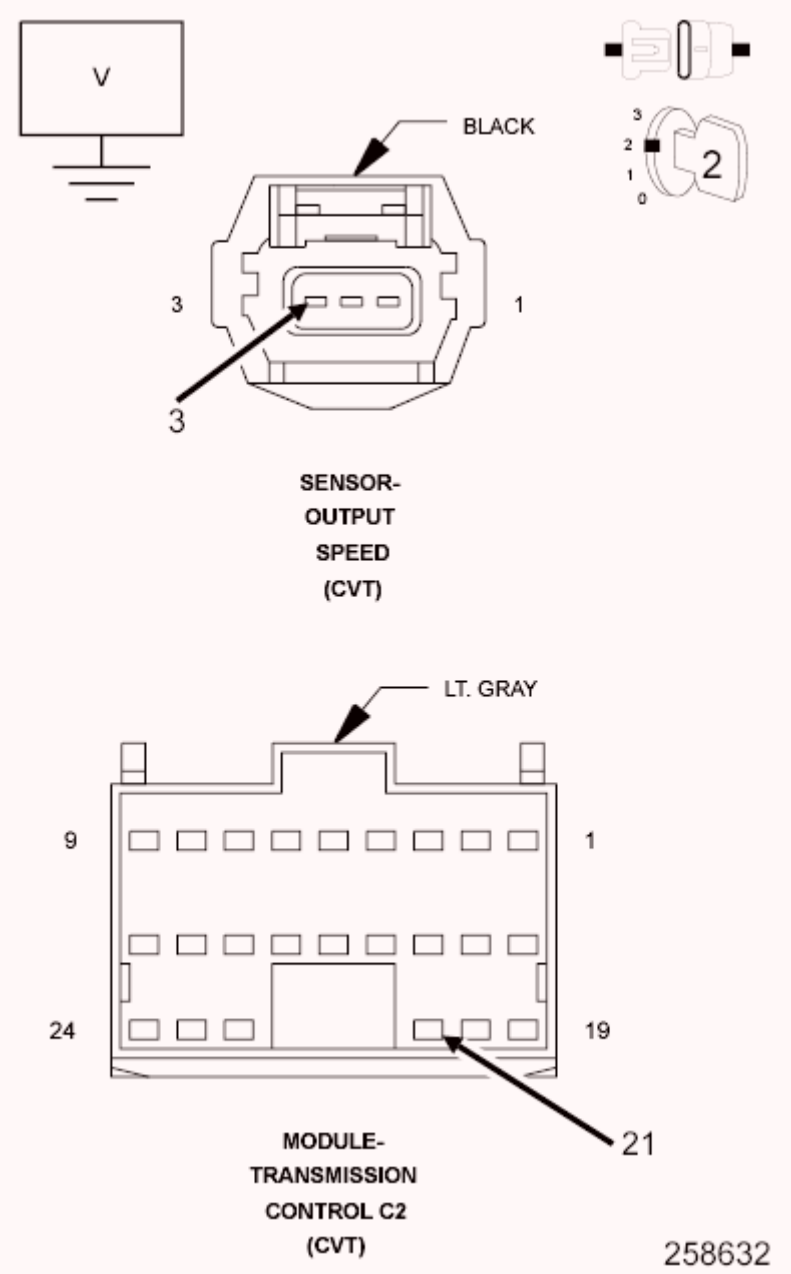

Fig. 41: Checking Output Speed Sensor Ground Circuit For Short To Voltage
Courtesy of CHRYSLER GROUP, LLC

1. Turn the ignition off to the lock position.
2. Disconnect the jumper wire.
3. Disconnect the TCM C2 harness connector.
4. Ignition on, engine not running
5. Measure the voltage of the (T130) Output Speed Sensor Ground circuit.

   Is the volage above 0.2 volts?

Yes

- Repair the (T130) Output Speed Sensor Ground circuit for a short to voltage
- Perform CVT VERIFICATION TEST. Refer to **CVT VERIFICATION TEST** .

No

- Go To 8

8. **CHECK THE (T130) OUTPUT SPEED SENSOR GROUND CIRCUIT FOR AN OPEN (HIGH RESISTANCE)**

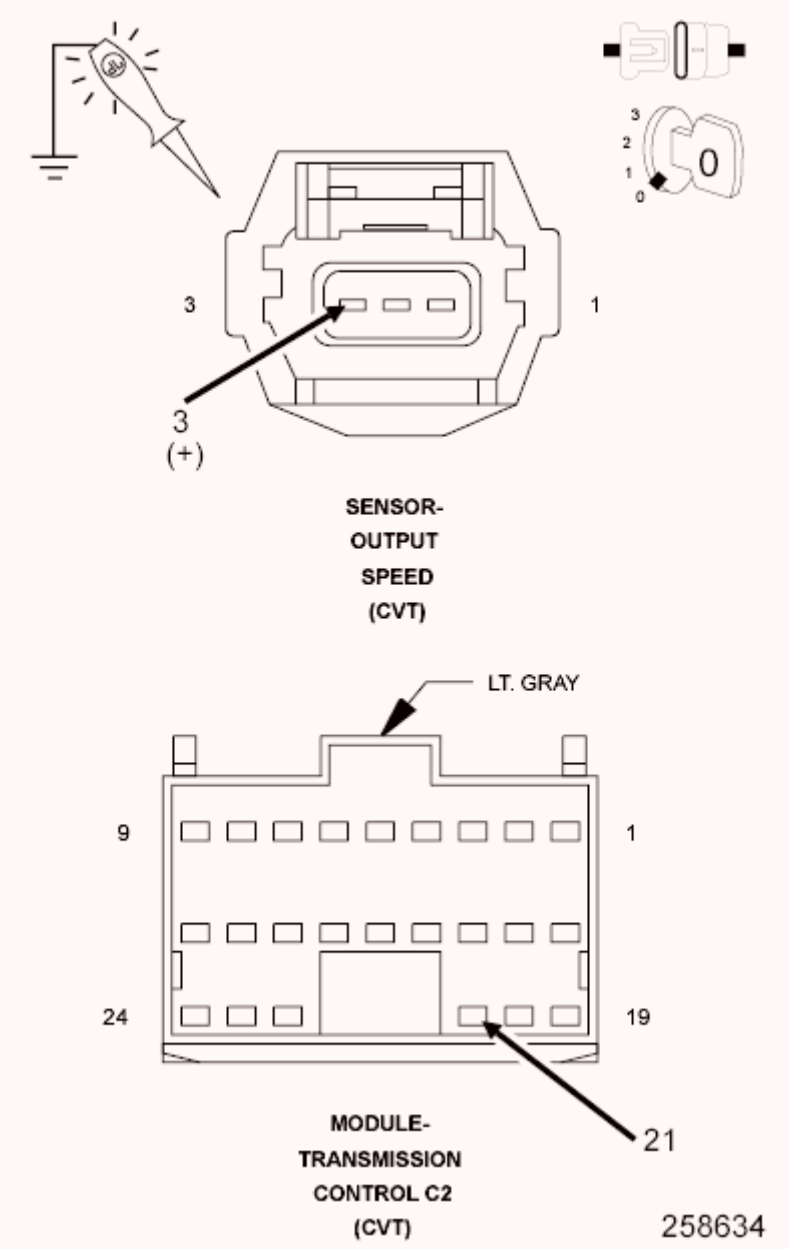

Fig. 42: Checking Output Speed Sensor Ground Circuit For An Open (High Resistance)
Courtesy of CHRYSLER GROUP, LLC

1. Turn the ignition off to the lock position.
2. Connect a jumper wire between the (T130) Output Speed Sensor Ground circuit in the Output Speed Sensor harness connector and B(+).
3. Using a 12-volt test light connected to ground, check the (T130) Output Speed Sensor Ground circuit in the TCM C2 harness connector.

   Does the test light illuminate brightly?

Yes

- Go To 9

No

- Repair the (T130) Output Speed Sensor Ground circuit for an open or high resistance.
- Perform CVT VERIFICATION TEST. Refer to **CVT VERIFICATION TEST** .

9. **CHECK THE OUTPUT SPEED SENSOR**
   1. Turn the ignition off to the lock position.
   2. Remove the Output Speed Sensor in accordance with the Service Information.
   3. Check the Output Speed Sensor for any debris buildup or damage.

   Did the Output Speed Sensor show any signs of debris buildup or damage?

   Yes

   - If there is a debris build up, clean the Output Speed Sensor as necessary and reinstall. If damaged or questionable in condition, replace the Output Speed Sensor.
   - Perform CVT VERIFICATION TEST. Refer to **CVT VERIFICATION TEST** .

   No

   - Go To 10

10. **REPLACE SPEED SENSOR AND TEST DRIVE VEHICLE**
    1. Turn the ignition off to the lock position.
    2. Replace the Output Speed Sensor in accordance with the Service Information
    3. Reconnect all previously disconnected harness connectors.
    4. Ignition on, engine not running
    5. With the scan tool, erase all Transmission DTCs.

6. Perform CVT VERIFICATION TEST. Refer to **CVT VERIFICATION TEST** .

NOTE: Test drive the vehicle to speeds that will allow Torque Converter lock-up.

7. With the scan tool, read Transmission DTCs.

   Does the DTC P0721 reset?

   Yes

   - Using the schematics as a guide, check the Transmission Control Module (TCM) terminals for corrosion, damage, or terminal push out. Pay particular attention to all power and ground circuits. Check for any Service Bulletins for possible causes that may apply. If no problems are found, replace the TCM in accordance with the Service Information.
   - Perform CVT VERIFICATION TEST. Refer to **CVT VERIFICATION TEST** .

   No

   - Test Complete.

11. **CHECK THE WIRING AND CONNECTORS**
    1. The conditions necessary to set this DTC are not present at this time.
    2. Using the schematics as a guide, inspect the wiring and connectors specific to this circuit.
    3. Wiggle the wires while checking for shorted and open circuits.

    Were there any problems found?

    Yes

    - Repair as necessary.
    - Perform CVT VERIFICATION TEST. Refer to **CVT VERIFICATION TEST** .

    No

- Test Complete.

P0722-OUTPUT SPEED SENSOR CIRCUIT NO SIGNAL

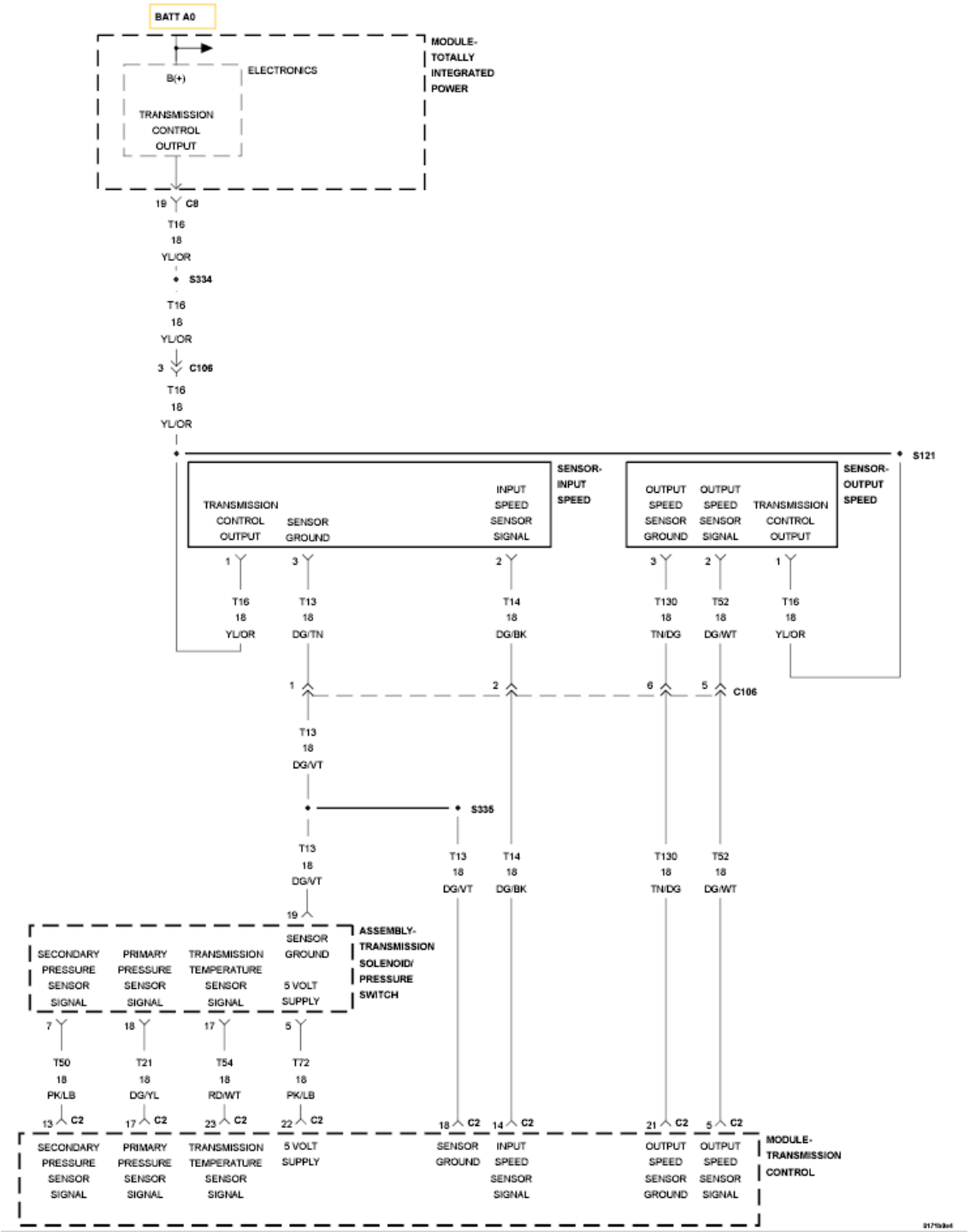

Fig. 43: Sensor Reference Voltage Wiring Diagram
Courtesy of CHRYSLER GROUP, LLC

For a complete wiring diagram, **refer to appropriate SYSTEM WIRING DIAGRAMS article** .

THEORY OF OPERATION

The transmission system uses two speed sensors. One is used to measure input RPM (primary pulley) and one to measure output RPM (secondary pulley).

The Output Speed sensor detects the secondary pulley RPM by the use of a three-wire magnetic pickup device that generates a square wave signal as rotation occurs and is monitored by the Transmission Control Module (TCM). These inputs are essential for proper transmission operation.

WHEN MONITORED

Ignition on, engine running with system voltage between 9.0 and 16.0 volts.

No detected Primary Speed Sensor DTCs.

SET CONDITION

Condition one: Output speed RPM is less than 150 RPM with a Input speed RPM greater than 1000 RPM for the period of 5 seconds.

Condition two: Vehicle speed is greater than 20 Km/h (12.5 mph) calculated by the last secondary speed with the current Output Speed value equals to 0 RPM for the period of 500 msec.

Condition three: Both the Input and Output Speed sensors are less than 150 RPM with a actual vehicle speed greater than 10 Km/h. (Note: this is an indication of either the power supply to both sensors is open or the C106 connector is disconnected.)

POSSIBLE CAUSES

Possible Causes
(T16) TRANSMISSION CONTROL OUTPUT CIRCUIT OPEN
(T52) OUTPUT SPEED SENSOR SIGNAL CIRCUIT SHORT TO VOLTAGE
(T52) OUTPUT SPEED SENSOR SIGNAL CIRCUIT OPEN
(T52) OUTPUT SPEED SENSOR SIGNAL CIRCUIT SHORT TO GROUND
(T130) OUTPUT SPEED SENSOR GROUND CIRCUIT OPEN
OUTPUT SPEED SENSOR

TRANSMISSION CONTROL MODULE

Always perform the CVT Pre-Diagnostic Troubleshooting procedure before proceeding. Refer to CVT - PRE-DIAGNOSTIC TROUBLESHOOTING PROCEDURE .

DIAGNOSTIC TEST

1. **CHECK TO SEE IF THE DTC IS ACTIVE**
   1. With the scan tool, read Transmission DTCs.

      Is the status Active or is the Starts Since Set counter 2 or less for this DTC?

      Yes

      - Go To 2

      No

      - Go To 9
2. **CHECK IF BOTH SPEED SENSORS SHOW NO SIGNAL**
   1. With the scan tool, read Transmission DTCs.

      Are both the Input and Output Speed Sensor No Signal DTCs set?

      Yes

      - Check the C106 connector for improper connection and repair as necessary.
      - Perform CVT VERIFICATION TEST. Refer to **CVT VERIFICATION TEST** .
      - If no problems are found in the C106 connector - Go To 3

      No

      - Go To 3
3. **CHECK THE (T16) TRANSMISSION CONTROL OUTPUT CIRCUIT FOR AN OPEN**

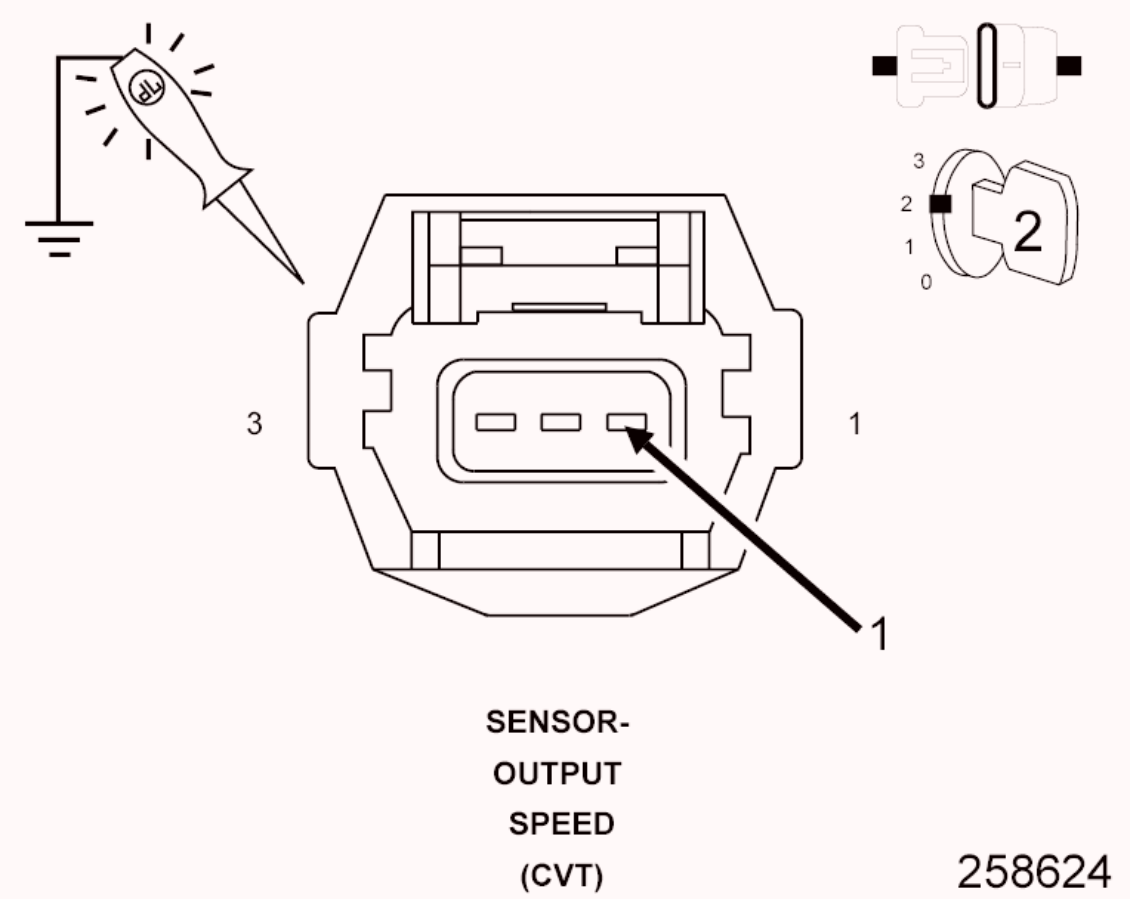

Fig. 44: Checking Transmission Control Output Circuit For An Open (High Resistance)
Courtesy of CHRYSLER GROUP, LLC

1. Turn the ignition off to the lock position.
2. Disconnect the Output Speed Sensor harness connector.
3. Ignition on, engine not running.
4. With the scan tool under TIPM, actuate the Transmission.
5. Using a 12-volt test light connected to ground, check the (T16) Transmission Control Output circuit at the Output Speed Sensor harness connector.

NOTE: The test light must illuminate brightly. Compare the brightness to that of a direct connection to the battery.

Does the test light illuminate brightly?

Yes

- Go To 4

No

- Repair the (T16) Transmission Control Output circuit for an open or high resistance.
- Perform CVT VERIFICATION TEST. Refer to **CVT VERIFICATION TEST** .

4. **CHECK THE (T52) OUTPUT SPEED SENSOR SIGNAL CIRCUIT SHORT TO VOLTAGE**

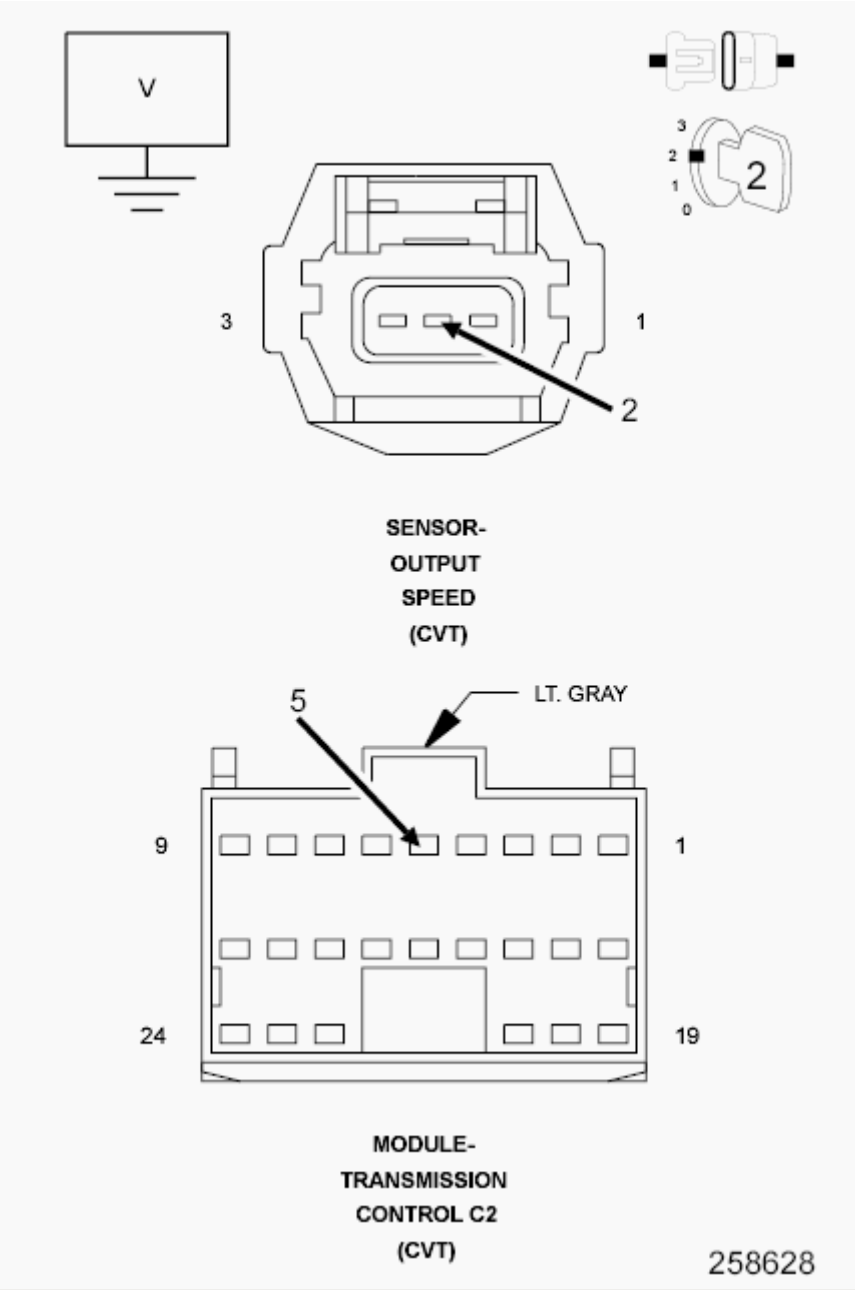

Fig. 45: Checking Output Speed Sensor Signal Circuit For A Short To Voltage
Courtesy of CHRYSLER GROUP, LLC

1. Turn the ignition off to the lock position.
2. Disconnect the TCM C2 harness connector.
3. Ignition on, engine not running.
4. Measure the voltage of the (T52) Output Speed Sensor Signal circuit.

   Is the voltage above 0.5 volts?

   Yes

   - Repair the (T52) Output Speed Sensor Signal circuit for a short to voltage.
   - Perform CVT VERIFICATION TEST. Refer to **CVT VERIFICATION TEST** .

   No

   - Go To 5

5. **CHECK THE (T52) OUTPUT SPEED SENSOR SIGNAL CIRCUIT FOR AN OPEN**

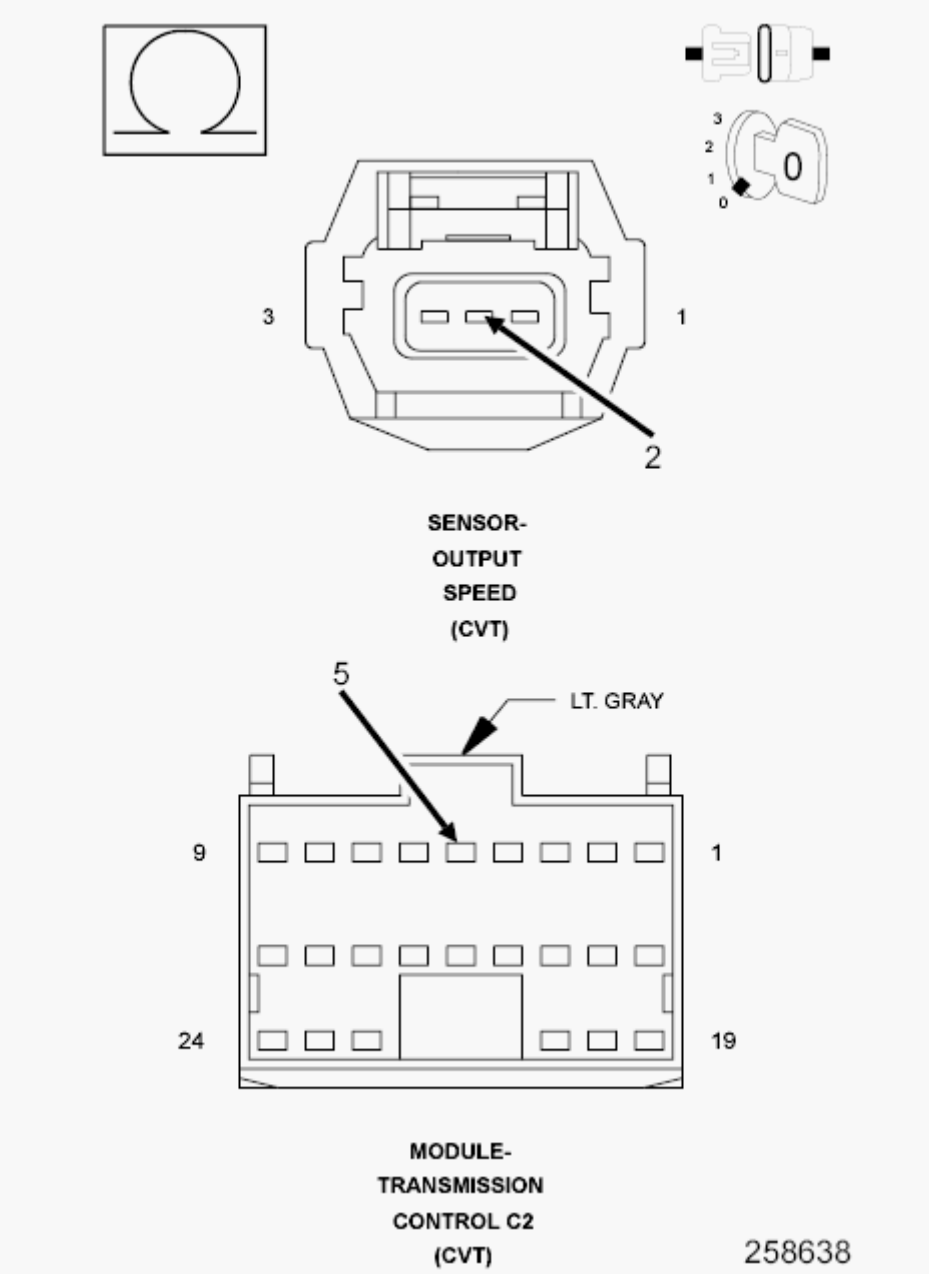

Fig. 46: Checking Output Speed Sensor Signal Circuit For An Open
Courtesy of CHRYSLER GROUP, LLC

1. Turn the ignition off to the lock position.
2. Measure the resistance of the (T52) Output Speed Sensor Signal circuit between the TCM C2 harness connector and the Output Speed Sensor harness connector.

   Is the resistance below 5.0 ohms?

   Yes

- Go To 6

No

- Repair the (T52) Output Speed Sensor Signal circuit for an open.
- Perform CVT VERIFICATION TEST. Refer to **CVT VERIFICATION TEST** .

6. **CHECK THE (T52) OUTPUT SPEED SENSOR SIGNAL CIRCUIT FOR A SHORT TO GROUND**

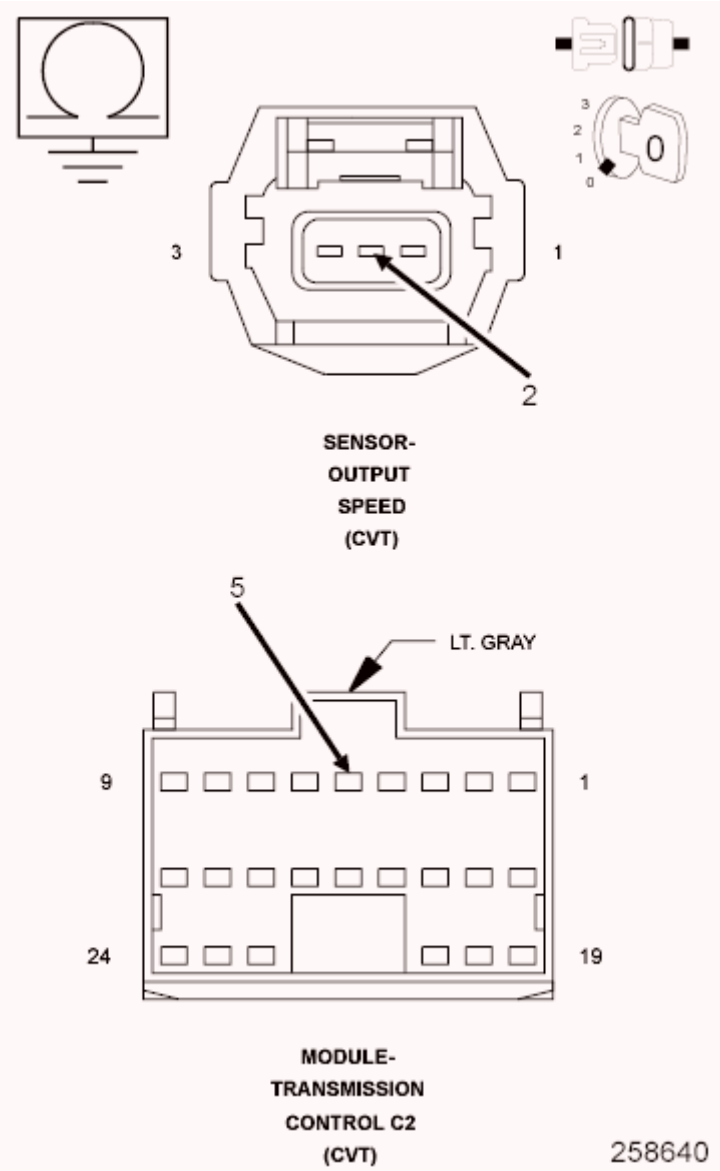

Fig. 47: Checking Output Speed Sensor Signal Circuit For A Short To Ground
Courtesy of CHRYSLER GROUP, LLC

1. Measure the resistance between ground and the (T52) Output Speed Sensor Signal circuit.

   Is the resistance below 5.0 ohms?

   Yes

   - Repair the (T52) Output Speed Sensor Signal circuit for a short to ground.
   - Perform CVT VERIFICATION TEST. Refer to **CVT VERIFICATION TEST** .

   No

   - Go To 7

7. **CHECK THE (T130) OUTPUT SPEED SENSOR GROUND CIRCUIT FOR AN OPEN**

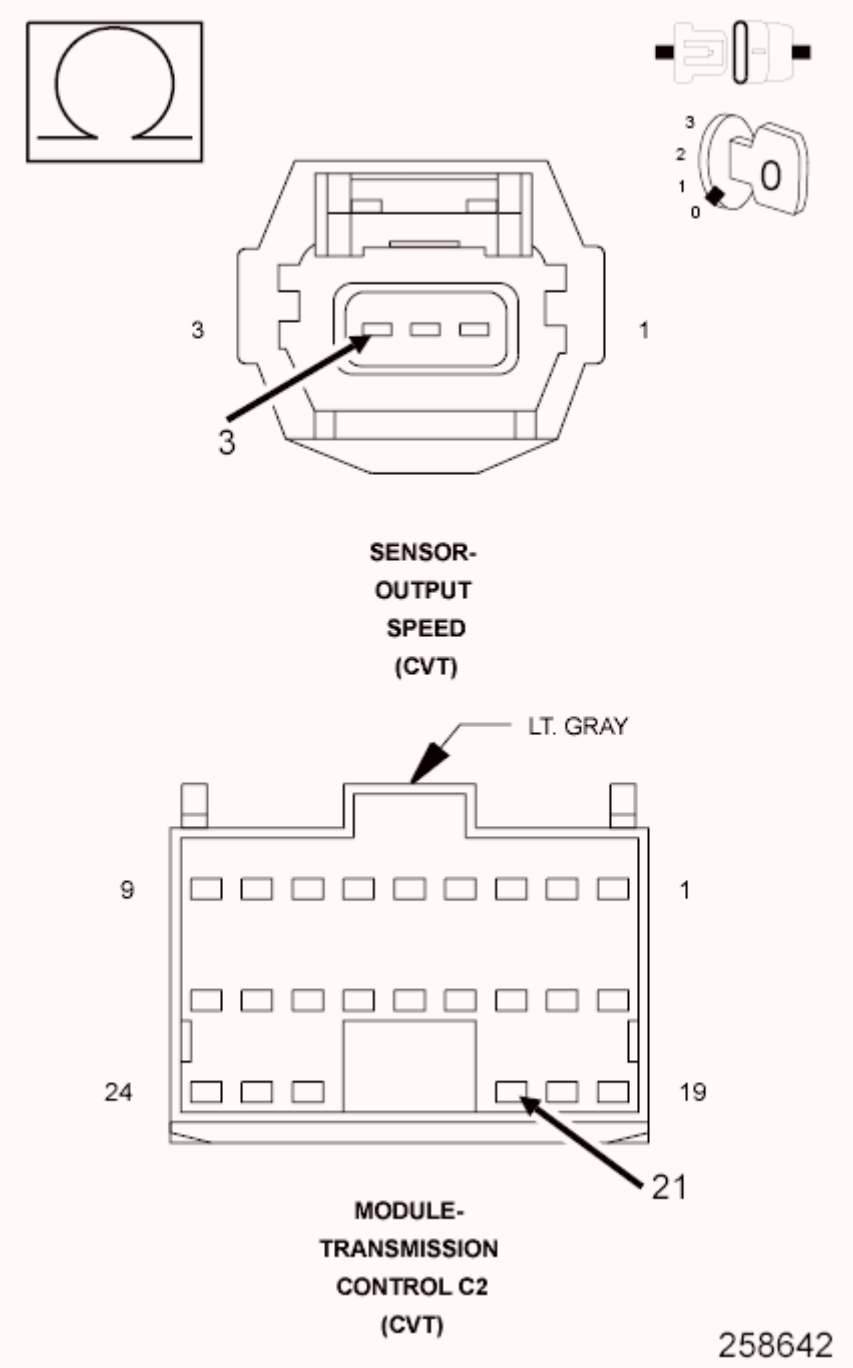

Fig. 48: Checking Output Speed Sensor Ground Circuit For An Open
Courtesy of CHRYSLER GROUP, LLC

1. Measure the resistance of the (T130) Output Speed Sensor Ground circuit between the TCM C2 harness connector and the Output Speed Sensor harness connector.

   Is the resistance below 5.0 ohms?

   Yes

- Go To 8

No

- Repair the (T130) Output Speed Sensor Ground circuit for an open.
- Perform CVT VERIFICATION TEST. Refer to **CVT VERIFICATION TEST** .

8. **CHECK THE OUTPUT SPEED SENSOR**
   1. Turn the ignition off to the lock position
   2. Replace the Output Speed Sensor in accordance with the Service Information.
   3. Reconnect all previously disconnected connectors.
   4. Ignition on, engine not running.
   5. With the scan tool, erase all Transmission DTCs.
   6. Perform CVT VERIFICATION TEST. Refer to **CVT VERIFICATION TEST** .

   NOTE: Make sure to perform a test drive of the vehicle.

   7. With the scan tool, read Transmission DTCs.

   Did the DTC P0722 reset?

   Yes

   - Using the schematics as a guide, check the Transmission Control Module (TCM) terminals for corrosion, damage, or terminal push out. Pay particular attention to all power and ground circuits. Check for any Service Bulletins for possible causes that may apply. If no problems are found, replace the TCM in accordance with the Service Information.
   - Perform CVT VERIFICATION TEST. Refer to **CVT VERIFICATION TEST** .

   No

   - Repair is complete.

9. **CHECK THE WIRING AND CONNECTORS**

1. The conditions necessary to set this DTC are not present at this time.
2. Using the schematics as a guide, inspect the wiring and connectors specific to this circuit.
3. Wiggle the wires while checking for shorted and open circuits.

   Were there any problems found?

   Yes

   - Repair as necessary.
   - Perform CVT VERIFICATION TEST. Refer to **CVT VERIFICATION TEST** .

   No

   - Test Complete.

P0730-INCORRECT GEAR RATIO

For a complete wiring diagram, **refer to appropriate SYSTEM WIRING DIAGRAMS article** .

THEORY OF OPERATION

The Transmission Control Module controls the gear ratio by the use of a Step motor that transfers electrical power to mechanical movement. The rationality is a continuous test that monitors the Step motor movement. If the Step motor is stuck at a certain position, the estimated ratio is increased or decreased continuously by the feedback value of the primary pulley speed difference. When the difference between the estimated and actual primary pulley speed has reached 1000 RPM, a DTC will set.

WHEN MONITORED

Ignition on, engine running with the transmission in a valid forward gear.

System voltage between 9.0 and 16.0 volts.

Accelerator Pedal Position (APP) greater than 12.5% with an engine RPM greater than 450 RPM.

Vehicle speed greater than 10 Km/h (6 mph).

Transmission fluid temperature greater than 20°C (68°F).

No active DTCs from the following:

- Step Motor
- Transmission Temperature Sensor
- Transmission Range Sensor
- Line Pressure Solenoid
- Input or Output Speed Sensor
- Primary or Secondary Pressure Sensor
- Over Temperature

SET CONDITION

If the difference between the transmission estimated pulley speed and the measured primary pulley speed is greater than 1000 RPM (belt slipping) for the continuous period of 5.0 seconds.

POSSIBLE CAUSES

Possible Causes
RELATED SPEED SENSOR DTCS PRESENT
STEP MOTOR PERFORMANCE
SHIFT VALVE STICKING
CVT BELT SLIPPING
HYDRAULIC CIRCUIT
INTERNAL TRANSMISSION

Always perform the CVT Pre-Diagnostic Troubleshooting procedure before proceeding. Refer to CVT - PRE-DIAGNOSTIC TROUBLESHOOTING PROCEDURE .

DIAGNOSTIC TEST

1. **CHECK FOR ENGINE CAM OR CRANK SENSOR DTCS**
    1. With the scan tool, read transmission DTCs.

Is the DTC P0717-Input Speed Sensor 1 Circuit No Signal also present?

Yes

- Refer to **P0717-INPUT SPEED SENSOR 1 CIRCUIT NO SIGNAL** and perform the diagnostic procedure.

No

- Go To 2

2. **REPAIR INTERNAL TRANSMISSION**
   1. This DTC indicates an internal transmission problem.
   2. Check for the following possible causes but not limited to these:
      - Step motor
      - Shift Valve sticking
      - CVT Belt slipping
      - Hydraulic control circuit including the Valve Body

Repair

- Replace or repair the CV Transmission per the Service Information. Refer to **REMOVAL** .
- Perform CVT VERIFICATION TEST. Refer to **CVT VERIFICATION TEST** .

P0741-TORQUE CONVERTER CLUTCH CIRCUIT PERFORMANCE

THEORY OF OPERATION

The Transmission Control Module (TCM) monitors the Torque Convertor Clutch for slippage using a calculation derived from turbine revolution (input speed) and engine RPM broadcast over the CAN C BUS. If the slip value exceeds a predetermined value the DTC will set.

WHEN MONITORED

Ignition on, engine running with the transmission in a valid forward gear.

System voltage between 9.0 and 16.0 Volts.

Vehicle speed greater than 10 Km/h (6 mph).

Accelerator Pedal Position (APP) greater than 12.5%.

Engine RPM greater than 450 RPM with TCC lock-up enabled.

TCC Lock up command is ON (True).

No active DTCs from the following:

- Step motor,
- Line Pressure Solenoid
- Secondary Solenoid
- Input or Output Speed Sensor
- Primary or Secondary Pressure Sensor
- CAN Bus

SET CONDITION

The DTC is detected If the Torque Convertor Clutch (TCC) slip monitored by the Transmission Control Module (TCM) is greater than a predetermined value for the period of 30 seconds. Note: This is not an electrical fault but a mechanical malfunction such as a control valve sticking in its bore or a TCC Solenoid hydraulic malfunction. It takes two consecutive problem identification trips for the DTC to mature and illuminate the MIL.

POSSIBLE CAUSES

Possible Causes
TORQUE CONVERTOR HYDRAULIC CIRCUIT
TORQUE CONVERTOR CLUTCH SOLENOID
TORQUE CONVERTOR CLUTCH
TRANSMISSION CONTROL MODULE

Always perform the CVT Pre-Diagnostic Troubleshooting procedure before proceeding. Refer to CVT - PRE-DIAGNOSTIC TROUBLESHOOTING PROCEDURE .

DIAGNOSTIC TEST

1. **CHECK TO SEE IF THE DIAGNOSTIC TROUBLE CODE (DTC) IS ACTIVE**
   1. Using the scan tool, erase Transmission DTCs.
   2. Start the vehicle and check Transmission Fluid Level in accordance with the Service Information and adjust as necessary.
   3. Test drive the vehicle to a constant speed greater than 40 Km/h (25 mph) for the period of at least 30 seconds.

   NOTE: This can not be performed on a hoist, actual road conditions must be present for proper results.

   Did the DTC reset (one trip) during the road test?

   Yes

   - Replace the valve body in accordance with the Service information. Note the components related to the Torque Converter Clutch (TCC) such as the TCC Solenoid, control valves, valve body leakage or the TCC.
   - Perform the CVT VERIFICATION TEST. Refer to **CVT VERIFICATION TEST** .

   No

   - Go To 2
2. **INTERMITTENT CONDITION**
   1. The conditions necessary to set this DTC are not present at this time.
   2. Perform any Technical Service Bulletins that may apply.
   3. It may be necessary to Test Drive the vehicle again trying different conditions that may cause the DTC to reset.

   Were there any problems found or did the DTC reset?

   Yes

   - Repair as necessary.
   - Perform the CVT VERIFICATION TEST. Refer to **CVT VERIFICATION TEST** .

No

- Test Complete.

P0746-LINE PRESSURE SOLENOID PERFORMANCE

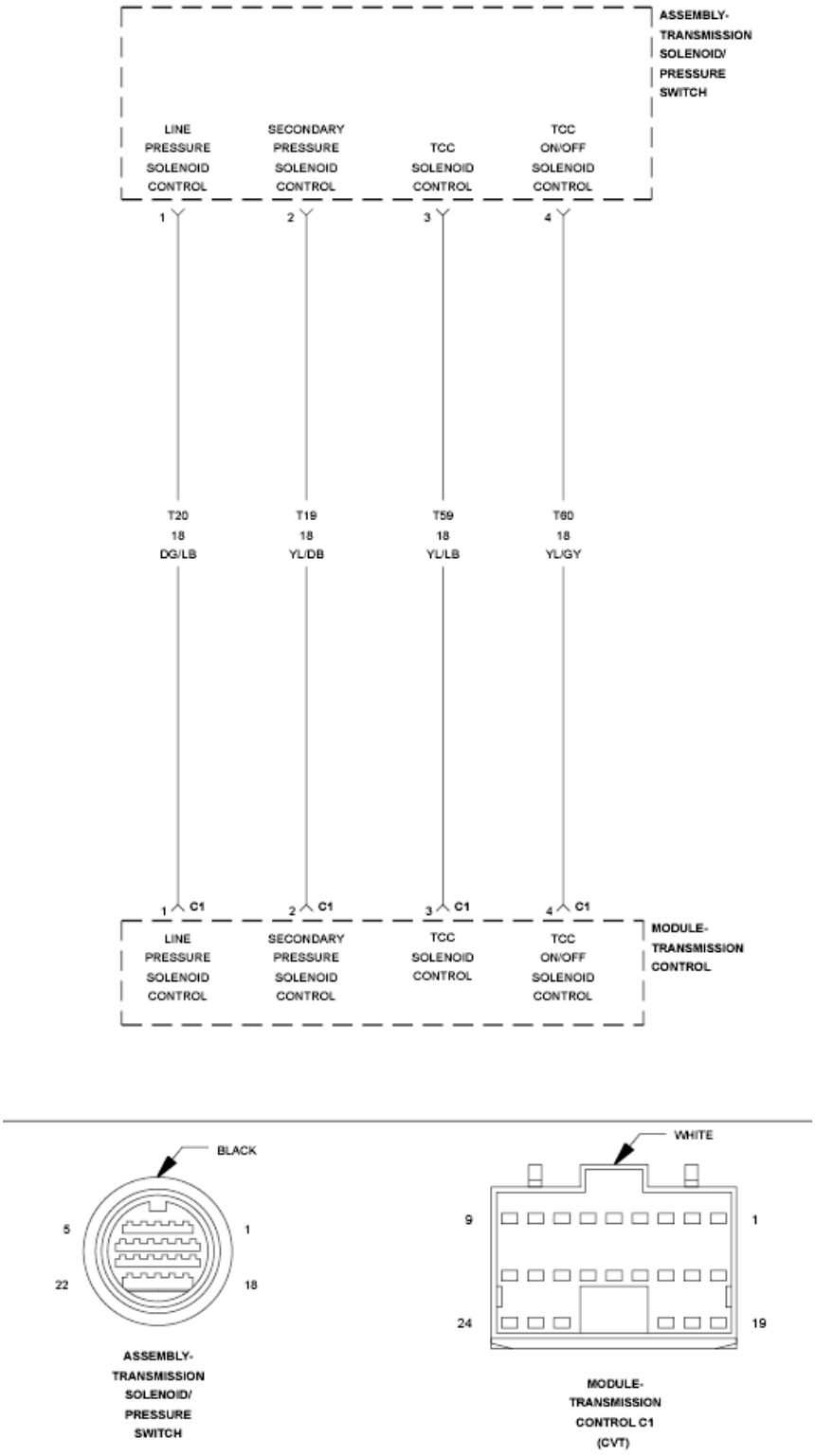

Fig. 49: Pressure Control Solenoid Control Wiring Diagram

Courtesy of CHRYSLER GROUP, LLC

For a complete wiring diagram, **refer to appropriate SYSTEM WIRING DIAGRAMS article** .

THEORY OF OPERATION

The Line Pressure Solenoid regulates the Line Pressure (Oil Pump discharge pressure) which is controlled by the Transmission Control Module (TCM). If the line pressure does not reach at the desired pressure due to driving conditions, the possibility of belt slippage can occur. The gear ratio changes to a value beyond the maximum gear ratio which is a calculation between the Primary Pulley speed and the Secondary Pulley speed. If the gear ratio exceeds a predetermined limit a DTC will set.

WHEN MONITORED

Ignition on, engine running with the transmission in a valid forward gear.

Vehicle speed greater than 10 Km/h (6 mph).

Accelerator Pedal Position (APP) greater than 12.5%.

Engine RPM greater than 450 RPM.

Primary Pulley Speed grater than 500 RPM.

No active DTCs from the following:

- Line Pressure Solenoid
- Temperature Sensor
- Primary or Secondary Pressure Sensor
- Transmission Range Sensor
- Step Motor
- Secondary Solenoid electrical
- Input and Output Speed Sensor
- Torque Convertor Clutch
- CAN Bus
- Over Temperature Condition

SET CONDITION

Condition one: Gear ratio is greater than 2.7 - 2 for the period of 0.2 of a second (first trip).

Condition two: Gear ratio is greater than 3.5 - 1 for the period of 0.1 of a second (second trip).

POSSIBLE CAUSES

Possible Causes
(T20) LINE PRESSURE SOLENOID CONTROL CIRCUIT OPEN (HIGH RESISTANCE)
INTERNAL TRANSMISSION
TRANSMISSION CONTROL MODULE

Always perform the CVT Pre-Diagnostic Troubleshooting procedure before proceeding. Refer to CVT - PRE-DIAGNOSTIC TROUBLESHOOTING PROCEDURE .

DIAGNOSTIC TEST

1. **CHECK TO SEE IF THE DTC IS ACTIVE**
   1. With the scan tool, read Transmission DTCs.

      Is the status Active or is the Starts Since Set counter 2 or less for this DTC?

      Yes

      - Go To 2

      No

      - Go To 5
2. **CHECK IF SPEED SENSOR DTCS ARE PRESENT**
   1. With the scan tool, read Transmission DTCs.

      Are there any Active or Stored Speed Sensor DTCs also present?

      Yes

- Refer to **DTC INDEX** and perform the appropriate diagnostic procedure.

No

- Go To 3

3. **CHECK THE (T20) LINE PRESSURE SOLENOID CONTROL CIRCUIT**

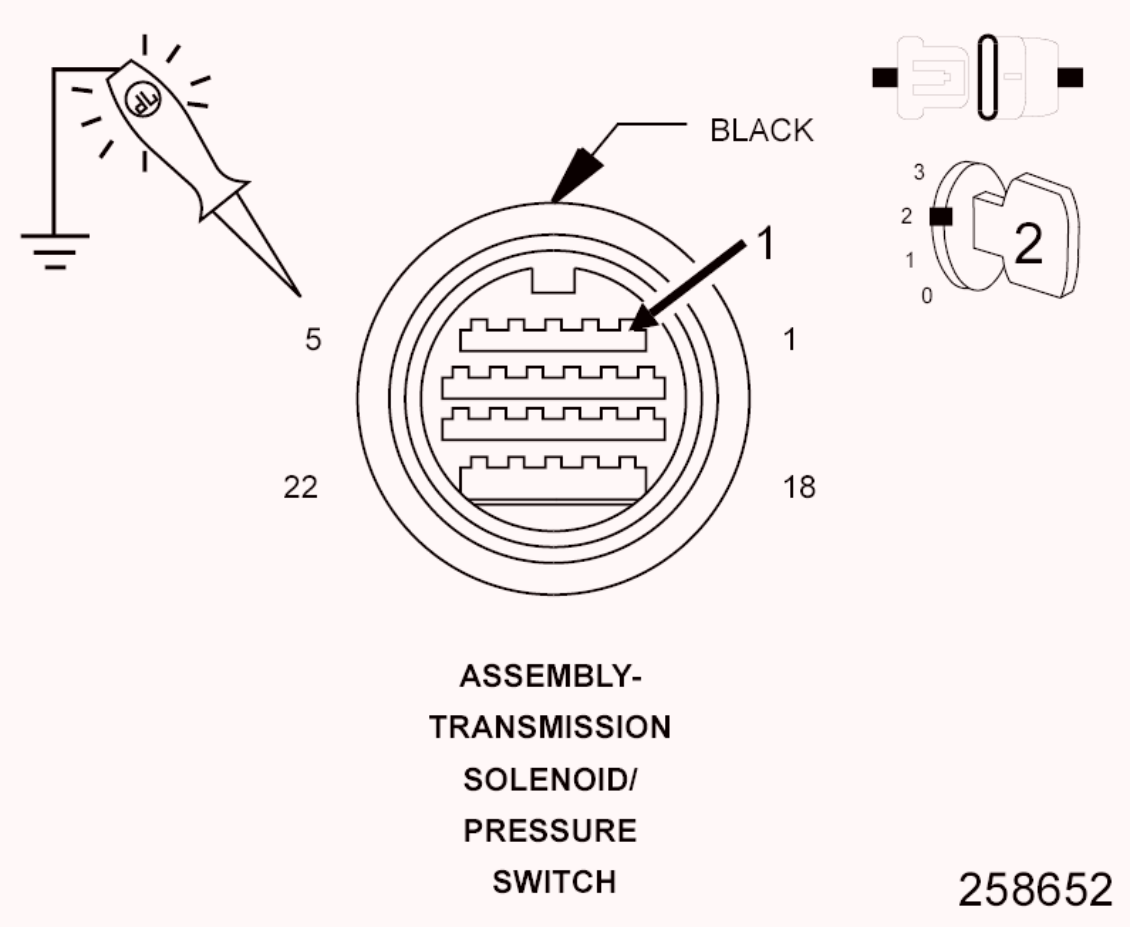

Fig. 50: Checking Line Pressure Solenoid Control Circuit
Courtesy of CHRYSLER GROUP, LLC

1. Turn the ignition off to the lock position.
2. Disconnect the Transmission Solenoid/Pressure Switch Assembly harness connector.
3. Ignition on, engine not running.
4. With the scan tool, actuate the Line Pressure Solenoid (PL).
5. Using a 12-volt test light connected to ground, check the (T20) Line

Pressure Solenoid Control circuit in the Transmission Solenoid/Pressure Switch Assembly harness connector.

NOTE: The test light must illuminate brightly. Compare the brightness to that of a direct connection to the battery.

Does the test light illuminate brightly?

Yes

- Replace the Valve Body in accordance with the Service Information.
- Perform the CVT VERIFICATION TEST. Refer to **CVT VERIFICATION TEST** .

No

- Go To 4

4. **CHECK THE TRANSMISSION CONTROL MODULE**

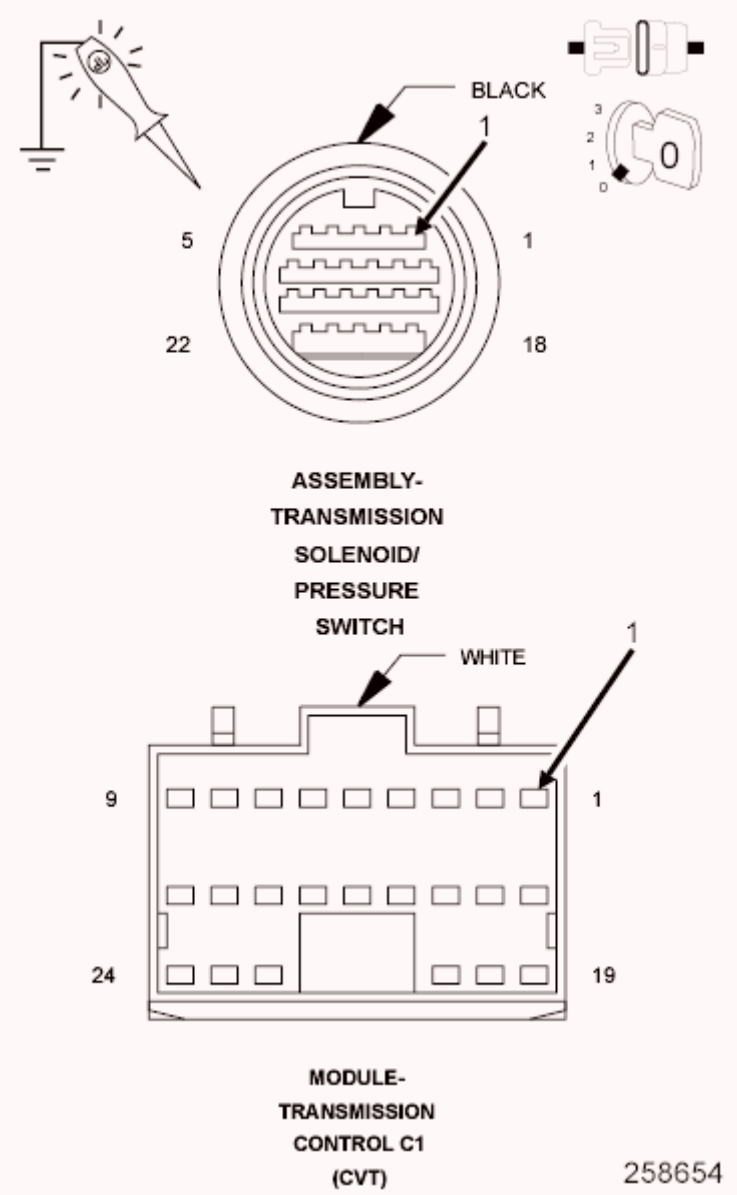

Fig. 51: Checking Transmission Control Module
Courtesy of CHRYSLER GROUP, LLC

1. Turn the ignition off to the lock position.
2. Disconnect the TCM C1 harness connector.
3. Connect a jumper wire between the (T20) Line Pressure Solenoid Control circuit in the TCM C1 harness connector and B(+).
4. Using a 12-volt test light connected to ground, check the (T20) Line Pressure Solenoid Control circuit in the Transmission Solenoid/Pressure Switch Assembly harness connector.

   Does the test light illuminate brightly?

Yes

- Using the schematics as a guide, check the Transmission Control Module (TCM) terminals for corrosion, damage, or terminal push out. Pay particular attention to all power and ground circuits. Check for any Service Bulletins for possible causes that may apply. If no problems are found, replace the TCM in accordance with the Service Information.
- Perform the CVT VERIFICATION TEST. Refer to **CVT VERIFICATION TEST** .

No

- Repair the (T20) Line Pressure Solenoid Control circuit for an open (high resistance).
- Perform the CVT VERIFICATION TEST. Refer to **CVT VERIFICATION TEST** .

5. **CHECK THE WIRING AND CONNECTORS**
   1. The conditions necessary to set this DTC are not present at this time.
   2. Using the schematics as a guide, inspect the wiring and connectors specific to this circuit.
   3. Wiggle the wires while checking for shorted and open circuits.

   Were there any problems found?

   Yes

   - Repair as necessary.
   - Perform the CVT VERIFICATION TEST. Refer to **CVT VERIFICATION TEST** .

   No

   - Test Complete.

P0776-SECONDARY PRESSURE SOLENOID STUCK OFF (HIGH PRESSURE)

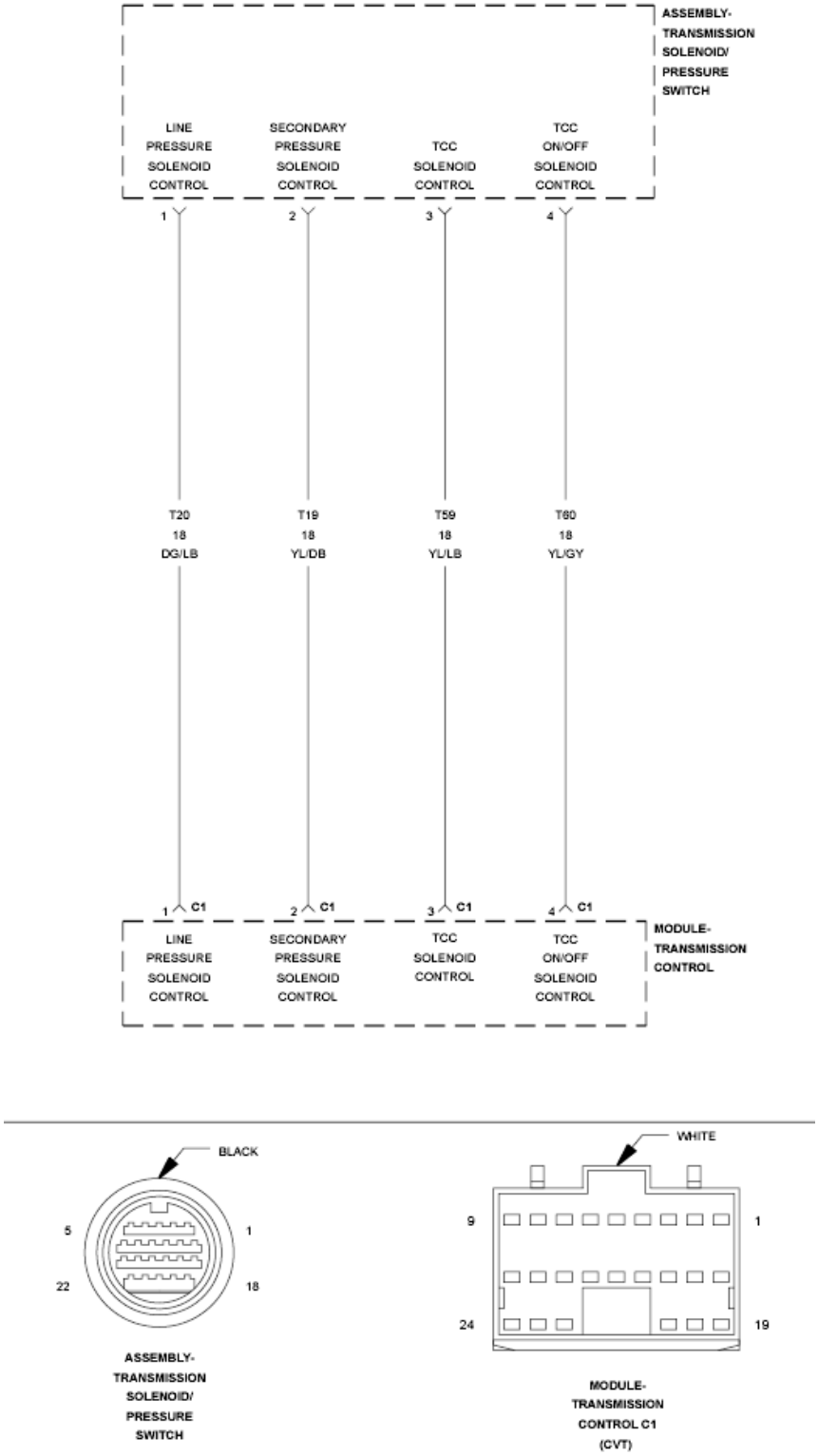

Fig. 52: Pressure Control Solenoid Control Wiring Diagram
Courtesy of CHRYSLER GROUP, LLC

For a complete wiring diagram, **refer to appropriate SYSTEM WIRING DIAGRAMS article** .

THEORY OF OPERATION

The Transmission Control Module (TCM) monitors the secondary line pressure (secondary pulley pressure) from the secondary pressure sensor. The TCM compares the actual secondary line pressure to the target (desired) line pressure. Failure to match the target line pressure over a given time will set the DTC.

WHEN MONITORED

Ignition on, engine running with the transmission in a valid forward gear.

Vehicle speed greater than 10 Km/h (6 mph).

Accelerator Pedal Position (APP) greater than 12.5%.

Engine RPM greater than 450 RPM with a transmission fluid temperature greater than 20° C (68° F)

No active DTCs from the following:

- Line Pressure Solenoid
- Lock-up Solenoid
- Primary or Secondary Pressure Sensor
- Transmission Range Sensor
- Step Motor
- Secondary Solenoid electrical
- Input and Output Speed Sensor
- Torque Convertor Clutch
- CAN Bus
- Over Temperature Condition

SET CONDITION

When the difference between actual secondary pressure compared to the target (desired) secondary pressure is greater than 1200 kPa (174 psi) for the period of 30 seconds. It takes two consecutive problem identified trips to set the DTC.

POSSIBLE CAUSES

Possible Causes
(T50) SECONDARY PRESSURE SENSOR SIGNAL CIRCUIT

LINE PRESSURE
SECONDARY PRESSURE SENSOR
SECONDARY PRESSURE SOLENOID
TRANSMISSION CONTROL MODULE

Always perform the CVT Pre-Diagnostic Troubleshooting procedure before proceeding. Refer to CVT - PRE-DIAGNOSTIC TROUBLESHOOTING PROCEDURE .

DIAGNOSTIC TEST

1. **CHECK IF THE DTC IS ACTIVE**
   1. With the scan tool, read Transmission DTCs.

      Is the status Active or is the Starts Since Set counter 2 or less for this DTC?

      Yes

      - Go To 2

      No

      - Go To 7
2. **CHECK LINE PRESSURE**

Approximate Engine RPM to Line pressure readings	**Line Pressure**
Engine RPM	750 kPa (108.8 psi) ± 400 kPa (58 psi)
2.0L - 2500 to 3000 RPM	5300 - 5700 kPa (768.5 - 826.5 psi) ± 400 kPa (58 psi)
2.4L - 2600 to 3100 RPM	

   1. Start the engine and warm the transmission to 50 - 80° C (122 - 174° F).
   2. Turn the ignition off to the lock position.
   3. Install an appropriate pressure gauge in the Line Pressure test port in accordance with the Service Information.

WARNING: The CV Transmission can generate a line pressure up to 7000 kPa (1015 psi). Failure to use recommended test equipment referred to by the Service Information can result in possible serious or fatal injury.

4. With the scan tool, erase Transmission DTCs.

WARNING: Apply the parking brake. Failure to follow these instructions can result in possible serious or fatal injury.

5. With the brakes firmly applied, start the engine allow to idle and shift the transmission into Reverse, Drive and Low while recording the scan tool Line pressure reading and the pressure gauge reading in each shift lever position.
6. With the brakes still firmly applied, raise the engine RPM between 2700 - 3250 RPM and shift the transmission into Reverse, Drive and Low while recording the scan tool line pressure reading and the pressure gauge reading in each shift lever position.

CAUTION: Do not hold the engine RPM between 2700 - 3250 RPM for more than 5 seconds in any given shift position. If the five second threshold is exceeded, transmission damage can occur. Allow to idle in neutral between shifts for at least 15 to 20 seconds to allow transmission fluid to cool.

Do the gauge readings fall into the desired pressure ranges?

Yes

- Go To 4

No

- Go To 3

3. **VERIFY PROBLEM**

Possible causes to conditions detected		
ENGINE RPM	**LINE PRESSURE CONDITION DETECTED**	**POSSIBLE CAUSES BUT NOT JUST LIMITED TO THESE**
Idle speed	Low for all shift lever positions	Oil Pump Wear
		Pressure Regulator Valve for plug sticking or spring fatigue
		Oil filter, oil pump, pressure regulator valve passage oil leak
		Engine idle speed too low
	Only low for a specific position	Oil pressure leak in a passage or component related to the position after the pressure is distributed by the manual valve
	High	TP or APP sensor signal malfunction
		CVT fluid temperature sensor malfunction
		Line pressure solenoid sticking in the off state, filter plugged, cut line
		Pressure regulator valve or plug sticking
	Line pressure does not rise above the line pressure at idle	TP or APP sensor signal malfunction
		Line pressure solenoid sticking in the on state, filter plugged
		Pressure regulator valve or plug sticking
		Transmission Control

Engine RPM between 2700 and 3250 RPM		Module (TCM)
		Oil pump weak or worn
	Line Pressure rises but does not reach desired level	TP or APP sensor signal malfunction
		Line pressure solenoid sticking in the off state, filter plugged, cut line
		Pressure regulator valve or plug sticking
		Oil pump weak or worn
	Line pressure is low in only one shift lever position	Oil pressure leak in a passage or component related to the position after the pressure is distributed by the manual valve

1. Use the above chart to help identify the possible cause.

NOTE: There may be other possible causes besides those listed on the above chart. Review any Service Bulletins and refer to the appropriate Service Information for any additional possible causes that may apply.

Repair

- Replace the Valve Body in accordance with the Service Information
- Perform the CVT VERIFICATION TEST. Refer to **CVT VERIFICATION TEST** .

4. **CHECK THE SECONDARY PRESSURE**
   1. Turn the ignition off to the lock position.
   2. Disconnect the pressure gauge from the Line Pressure test port and reinstall the test port plug.
   3. Install the pressure gauge in the Secondary Pressure test port in accordance with the Service Information.

4. With the scan tool, erase Transmission DTCs.

WARNING: Apply the parking brake. Failure to follow these instructions can result in possible serious or fatal injury.

5. With the brakes firmly applied, start the engine allow to idle and shift the transmission into Reverse, Drive and Low while comparing the Secondary Pressure gauge reading to the scan tool Secondary Pressure reading in each shift lever position and record your findings.
6. With the brakes still firmly applied, raise the engine RPM between 2700 - 3250 RPM and shift the transmission into Reverse, Drive and Low while comparing the gauge Secondary Pressure to the scan tool Secondary Pressure in each shift lever position and record your findings.

CAUTION: Do not hold the engine RPM between 2700 - 3250 RPM for more than 5 seconds in any given shift position. If the five second threshold is exceeded, transmission damage can occur. Allow to idle in neutral between shifts for at least 15 to 20 seconds to allow transmission fluid to cool.

Does the Secondary Pressure gauge readings match the scan tool readings in all of the above procedures?

Yes

- Repair the CV Transmission as necessary in accordance with the Service Information for components related to the Secondary pressure solenoid.
- Perform the CVT VERIFICATION TEST. Refer to **CVT VERIFICATION TEST** .

No

- Go To 5

5. **CHECK THE SECONDARY PRESSURE SENSOR**

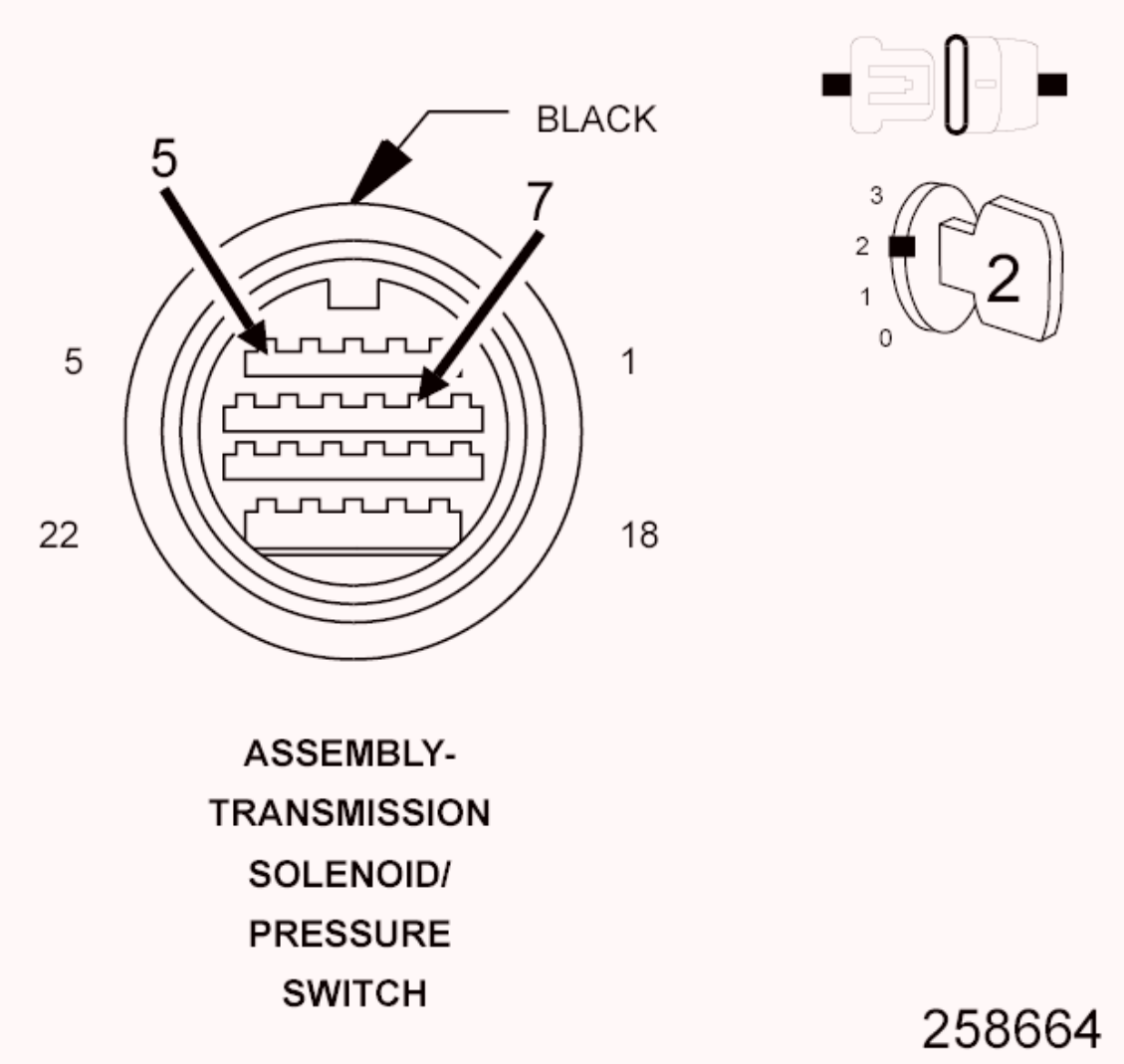

Fig. 53: Checking Secondary Pressure Sensor Signal Circuit
Courtesy of CHRYSLER GROUP, LLC

1. Turn the ignition off to the lock position.
2. Disconnect the pressure gauge from the Secondary Pressure test port and reinstall the test port plug.
3. Disconnect the Transmission Solenoid/Pressure Switch Assembly harness connector.
4. Connect a jumper wire between the (T50) Secondary Pressure Sensor Signal circuit and the (T72) 5-volt Supply circuit in the Transmission Solenoid/Pressure Switch Assembly harness connector.
5. Ignition on, engine not running.
6. With the scan tool read the Secondary Pressure voltage.

   Is the voltage between 4.5 and 5.5 volts?

Yes

- Replace the Secondary Pressure Sensor (Valve Body) in accordance with the Service Information.
- Perform the CVT VERIFICATION TEST. Refer to **CVT VERIFICATION TEST** .

No

- Go To 6

6. **CHECK THE (T21) PRIMARY PRESSURE SENSOR SIGNAL CIRCUIT FOR HIGH RESISTANCE**

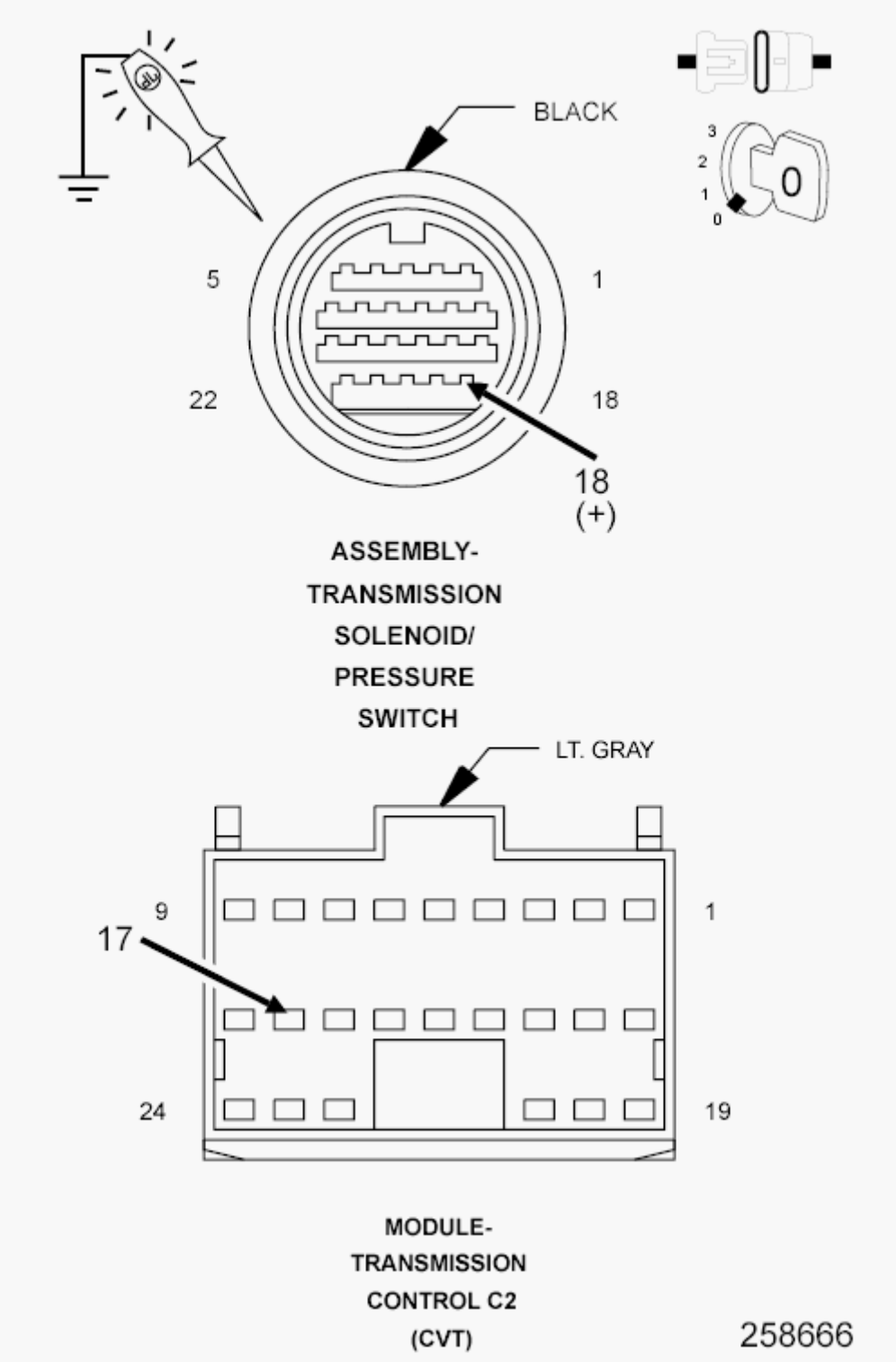

Fig. 54: Checking Primary Pressure Sensor Signal Circuit For High Resistance
Courtesy of CHRYSLER GROUP, LLC

1. Turn the ignition off to the lock position.
2. Disconnect the TCM C2 harness connector.

3. Connect a jumper wire between the B(+) and the (T21) Primary Pressure Sensor Signal circuit in the Transmission Solenoid/Pressure Switch harness connector.
4. Using a 12-volt test light connected to ground, check the (T21) Primary Pressure Sensor Signal circuit in the TCM C2 harness connector.

NOTE: The test light must illuminate brightly. Compare the brightness to that of a direct connection to the battery.

Does the test light illuminate brightly?

Yes

- Using the schematics as a guide, check the Transmission Control Module (TCM) terminals for corrosion, damage, or terminal push out. Pay particular attention to all power and ground circuits. Check for any Service Bulletins for possible causes that may apply. If no problems are found, replace the TCM in accordance with the Service Information.
- Perform the CVT VERIFICATION TEST. Refer to **CVT VERIFICATION TEST** .

No

- Repair the (T21) Primary Pressure Sensor Signal circuit for an open (high resistance).
- Perform the CVT VERIFICATION TEST. Refer to **CVT VERIFICATION TEST** .

7. **CHECK THE WIRING AND CONNECTORS**
   1. The conditions necessary to set this DTC are not present at this time.
   2. Using the schematics as a guide, inspect the wiring and connectors specific to this circuit.
   3. Wiggle the wires while checking for shorted and open circuits.

   Were there any problems found?

   Yes

- Repair as necessary.
- Perform the CVT VERIFICATION TEST. Refer to **CVT VERIFICATION TEST** .

No

- Test Complete.

P0777-SECONDARY PRESSURE SOLENOID STUCK ON (LOW PRESSURE)

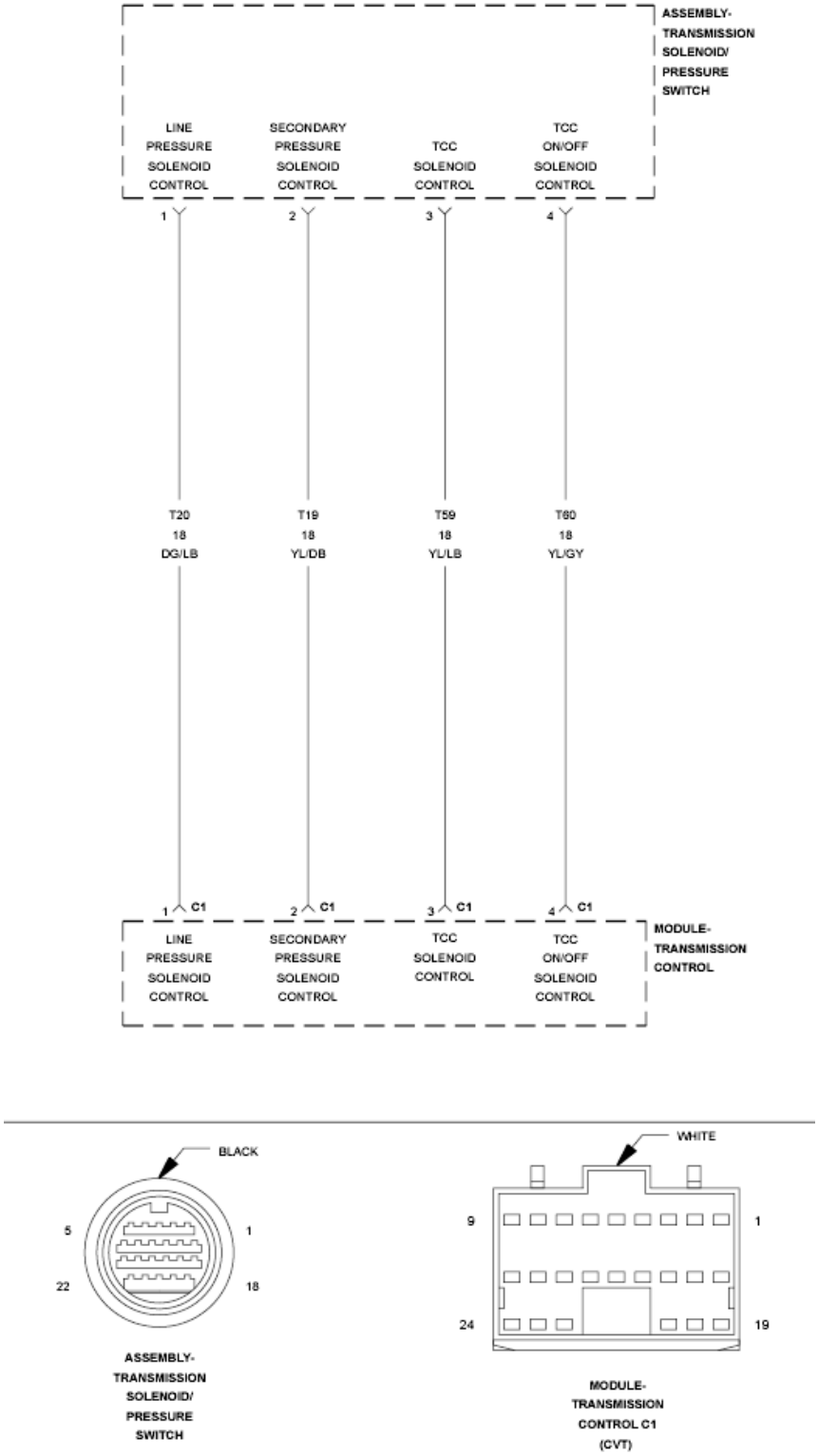

Fig. 55: Pressure Control Solenoid Control Wiring Diagram
Courtesy of CHRYSLER GROUP, LLC

For a complete wiring diagram, **refer to appropriate SYSTEM WIRING DIAGRAMS article** .

THEORY OF OPERATION

The Transmission Control Module (TCM) monitors the secondary line pressure (secondary pulley pressure) from the secondary pressure sensor. The TCM compares the actual secondary line pressure to the target (desired) line pressure. Failure to match the target line pressure over a given time will set the DTC.

WHEN MONITORED

Ignition on, engine running with the transmission not in neutral or park.

Transmission fluid temperature greater than -20° C (-4° F).

Brake Switch in the OFF mode.

Change rate of vehicle speed greater than 24 Km/h (15 mph).

Change rate of accelerator pedal position less than ± 6.25%.

Engine RPM greater than 450 RPM with a transmission fluid temperature greater than 20° C (68° F).

No active DTCs from the following:

- Line Pressure Solenoid
- Primary or Secondary Pressure Sensor
- Step Motor
- Secondary Solenoid electrical
- Input and Output Speed Sensor
- CAN Bus

SET CONDITION

When the secondary pressure goes down gradually below a predetermined value during a drive cycle. The DTC could be due to the failure of the secondary pressure control system, secondary pressure solenoid performance or line pressure solenoid. There are two possible setting conditions to set this DTC.

Condition one:

- Target secondary pressure minus the measured secondary pressure is greater than 0.25 MPa (36 psi) for two consecutive instances of a problem identification for the period of 1.5 seconds within a 30 second interval.

Condition two:

- Target secondary pressure minus the measured secondary pressure is greater than 2.0 MPa (291 psi) for the period of 800 msec.

POSSIBLE CAUSES

Possible Causes
(T50) SECONDARY PRESSURE SENSOR SIGNAL CIRCUIT
LINE PRESSURE SOLENOID
SECONDARY PRESSURE SENSOR
SECONDARY PRESSURE SOLENOID
SECONDARY PRESSURE CONTROL SYSTEM
TRANSMISSION CONTROL MODULE

Always perform the CVT Pre-Diagnostic Troubleshooting procedure before proceeding. Refer to CVT - PRE-DIAGNOSTIC TROUBLESHOOTING PROCEDURE .

DIAGNOSTIC TEST

1. **CHECK IF THE DIAGNOSTIC TROUBLE CODE (DTC) IS ACTIVE**
   1. Using the scan tool, read Transmission DTCs.

      Is the status Active for this DTC or is the Starts Since Set counter 2 or less?

      Yes

      - Go To 2

      No

      - Go To 7
2. **CHECK LINE PRESSURE**

   APPROXIMATE ENGINE RPM TO LINE PRESSURE READINGS

Engine RPM	Line Pressure
Idle	750 kPa (108.8 psi) ± 400 kPa (58 psi)
2.0L - 2500 to 3000	

RPM	5300 - 5700 kPa (768.5 - 826.5 psi) ± 400 kPa (58 psi)
2.4L - 2600 to 3100 RPM	

1. Start the engine and warm the transmission to 50 - 80° C (122 - 174° F).
2. Turn the ignition off to the lock position.
3. Install an appropriate pressure gauge in the Line Pressure test port in accordance with the Service Information.

WARNING: The CV Transmission can generate a line pressure up to 1800 psi. Failure to use recommended test equipment referred to by the Service Information can result in possible serious or fatal injury.

4. Using the scan tool, erase Transmission DTCs.

WARNING: Apply the parking brake. Failure to follow these instructions can result in possible serious or fatal injury.

5. With the brakes firmly applied, start the engine allow to idle and shift the transmission into Reverse, Drive and Low while recording the scan tool Line pressure reading and the pressure gauge reading in each shift lever position.
6. With the brakes still firmly applied, raise the engine RPM between 2700 - 3250 RPM and shift the transmission into Reverse, Drive and Low while recording the scan tool line pressure reading and the pressure gauge reading in each shift lever position.

CAUTION: Do not hold the engine RPM between 2700 - 3250 RPM for more than 5 seconds in any given shift position. If the five second threshold is exceeded, transmission damage can occur. Allow to idle in neutral between shifts for at least 15 to 20 seconds to allow transmission fluid to cool.

Do the gauge readings fall into the desired pressure ranges?

Yes

- Go To 4

No

- Go To 3

3. **VERIFY PROBLEM**

POSSIBLE CAUSES TO CONDITIONS DETECTED

ENGINE RPM	LINE PRESSURE CONDITION DETECTED	POSSIBLE CAUSES BUT NOT JUST LIMITED TO THESE
Idle speed	Low for all shift lever positions	Oil Pump Wear
		Pressure Regulator Valve for plug sticking or spring fatigue
		Oil filter, oil pump, pressure regulator valve passage oil leak
		Engine idle speed too low
	Only low for a specific position	Oil pressure leak in a passage or component related to the position after the pressure is distributed by the manual valve
	High	TP or APP sensor signal malfunction
		CVT fluid temperature sensor malfunction
		Line pressure solenoid sticking in the off state, filter plugged, cut line
		Pressure regulator valve or plug sticking
	Line pressure does not	TP or APP sensor signal malfunction
		Line pressure solenoid sticking in the on state, filter plugged

Engine RPM between 2700 and 3250 RPM	rise above the line pressure at idle	Pressure regulator valve or plug sticking
		Transmission Control Module (TCM)
		Oil pump weak or worn
	Line Pressure rises but does not reach desired level	TP or APP sensor signal malfunction
		Line pressure solenoid sticking in the off state, filter plugged, cut line
		Pressure regulator valve or plug sticking
		Oil pump weak or worn
	Line pressure is low in only one shift lever position	Oil pressure leak in a passage or component related to the position after the pressure is distributed by the manual valve

1. Use the above chart to help identify the possible cause.

NOTE: There may be other possible causes besides those listed on the above chart. Review any Service Bulletins and refer to the appropriate Service Information for any additional possible causes that may apply.

Repair

- Repair the CV Transmission as necessary in accordance with the Service Information
- Perform the CVT VERIFICATION TEST. Refer to **CVT VERIFICATION TEST** .

4. **CHECK THE SECONDARY PRESSURE**
   1. Turn the ignition off to the lock position.
   2. Disconnect the pressure gauge from the Line Pressure test port and reinstall the test port plug.
   3. Install the pressure gauge in the Secondary Pressure test port in accordance with the Service Information.

4. Using the scan tool, erase Transmission DTCs.

WARNING: Apply the parking brake. Failure to follow these instructions can result in possible serious or fatal injury.

5. With the brakes firmly applied, start the engine allow to idle and shift the transmission into Reverse, Drive and Low while comparing the Secondary Pressure gauge reading to the scan tool Secondary Pressure reading in each shift lever position and record your findings.
6. With the brakes still firmly applied, raise the engine RPM between 2700 - 3250 RPM and shift the transmission into Reverse, Drive and Low while comparing the gauge Secondary Pressure to the scan tool Secondary Pressure in each shift lever position and record your findings.

CAUTION: Do not hold the engine RPM between 2700 - 3250 RPM for more than 5 seconds in any given shift position. If the five second threshold is exceeded, transmission damage can occur. Allow to idle in neutral between shifts for at least 15 to 20 seconds to allow transmission fluid to cool.

Does the Secondary Pressure gauge readings match the scan tool readings in all of the above procedures?

Yes

- Replace the Valve Body in accordance with the Service Information for components related to the Secondary Pressure Control System.
- Perform the CVT VERIFICATION TEST. Refer to **CVT VERIFICATION TEST** .

No

- Go To 5

5. **CHECK THE SECONDARY PRESSURE SENSOR**

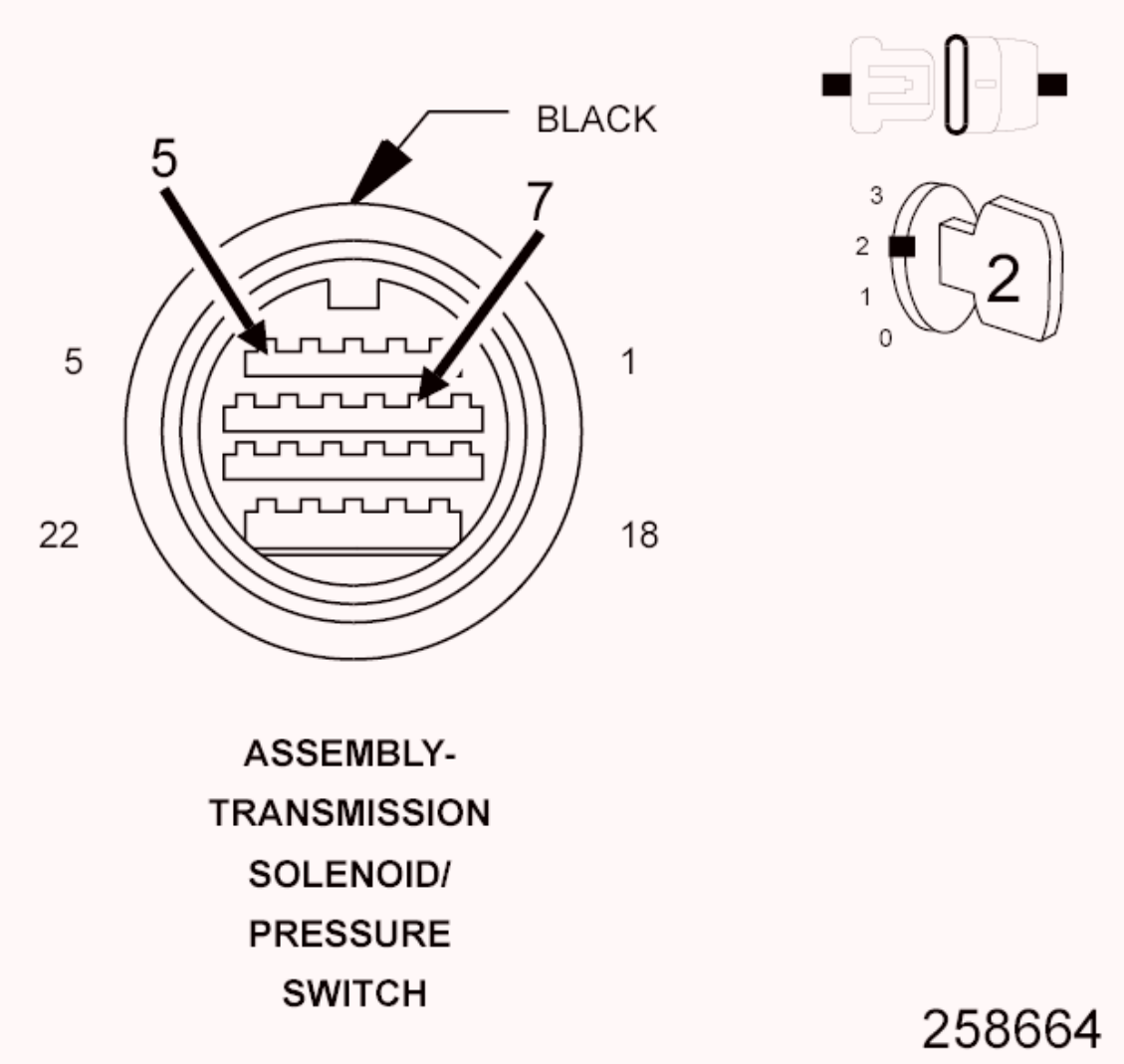

Fig. 56: Checking Secondary Pressure Sensor Signal Circuit
Courtesy of CHRYSLER GROUP, LLC

1. Turn the ignition off to the lock position.
2. Disconnect the pressure gauge from the Secondary Pressure test port and reinstall the test port plug.
3. Disconnect the Transmission Solenoid/Pressure Switch Assembly harness connector.
4. Connect a jumper wire between the (T50) Secondary Pressure Sensor Signal circuit and the (T72) 5-Volt Supply circuit in the Transmission Solenoid/Pressure Switch Assembly harness connector.
5. Ignition on, engine not running.
6. With the scan tool read the Secondary Pressure voltage.

   Is the voltage between 4.5 and 5.5 Volts?

Yes

- Replace the Secondary Pressure Sensor (Valve Body) in accordance with the Service Information.
- Perform the CVT VERIFICATION TEST. Refer to **CVT VERIFICATION TEST** .

No

- Go To 6

6. **CHECK THE (T21) PRIMARY PRESSURE SENSOR SIGNAL CIRCUIT FOR HIGH RESISTANCE**

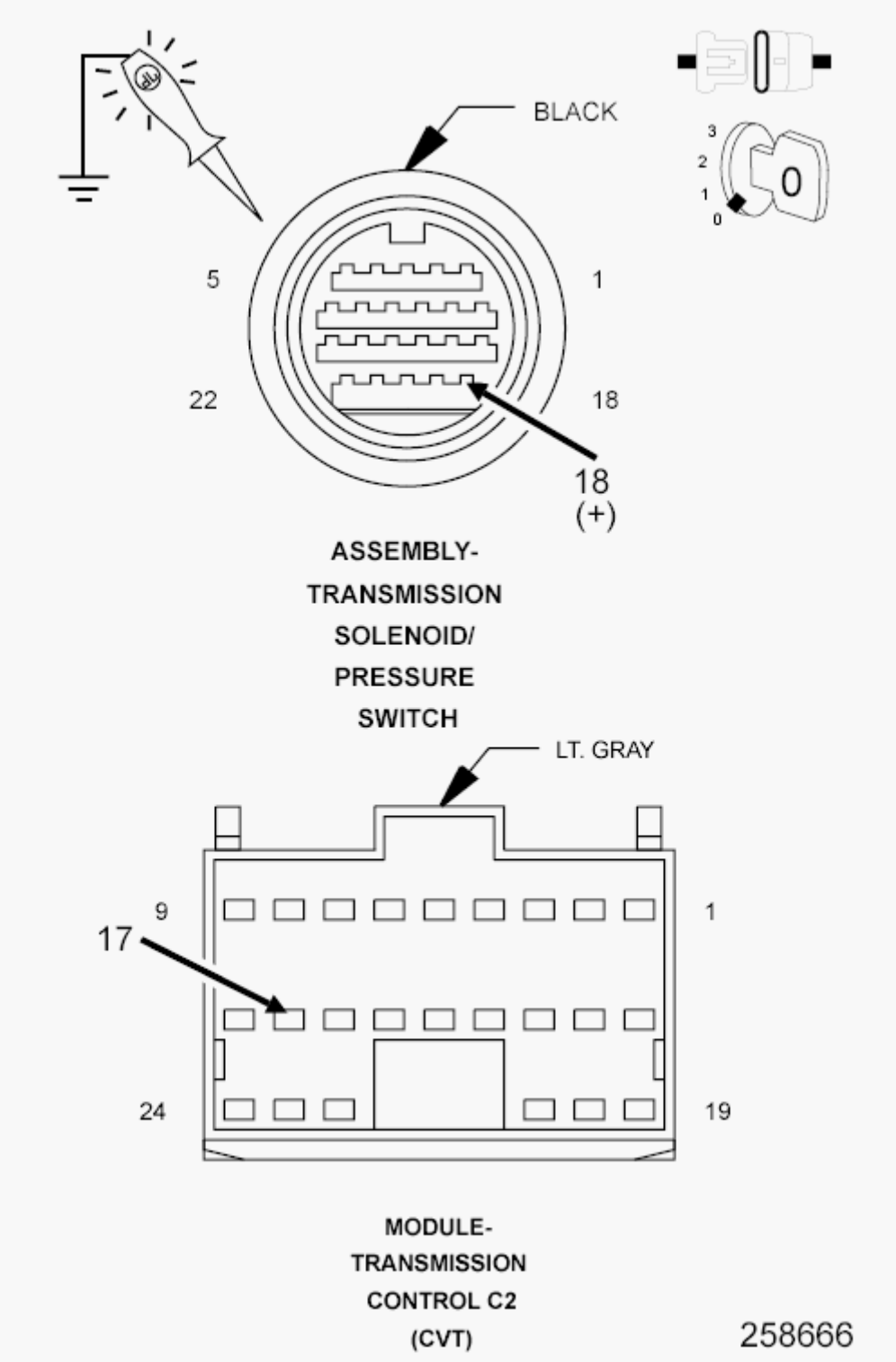

Fig. 57: Checking Primary Pressure Sensor Signal Circuit For High Resistance
Courtesy of CHRYSLER GROUP, LLC

1. Turn the ignition off to the lock position.
2. Disconnect the TCM C2 harness connector.

3. Connect a jumper wire between the B(+) and the (T21) Primary Pressure Sensor Signal circuit in the Transmission Solenoid/Pressure Switch harness connector.
4. Using a 12-volt test light connected to ground, check the (T21) Primary Pressure Sensor Signal circuit in the TCM C2 harness connector.

NOTE: The test light must illuminate brightly. Compare the brightness to that of a direct connection to the battery.

Does the test light illuminate brightly?

Yes

- Using the schematics as a guide, check the Transmission Control Module (TCM) terminals for corrosion, damage, or terminal push out. Pay particular attention to all power and ground circuits. Check for any Service Bulletins for possible causes that may apply. If no problems are found, replace the TCM in accordance with the Service Information.
- Perform the CVT VERIFICATION TEST. Refer to **CVT VERIFICATION TEST** .

No

- Repair the (T21) Primary Pressure Sensor Signal circuit for an open (high resistance).
- Perform the CVT VERIFICATION TEST. Refer to **CVT VERIFICATION TEST** .

7. **INTERMITTENT WIRING AND CONNECTORS**
   1. The conditions necessary to set this DTC are not present at this time.
   2. Using the schematics as a guide, inspect the wiring and connectors specific to this circuit.
   3. Wiggle the wires while checking for shorted and open circuits.

   Were there any problems found?

   Yes

- Repair as necessary.
- Perform the CVT VERIFICATION TEST. Refer to **CVT VERIFICATION TEST** .

No

- Test Complete.

P0826-UP/DOWN SHIFT SWITCH CIRCUIT

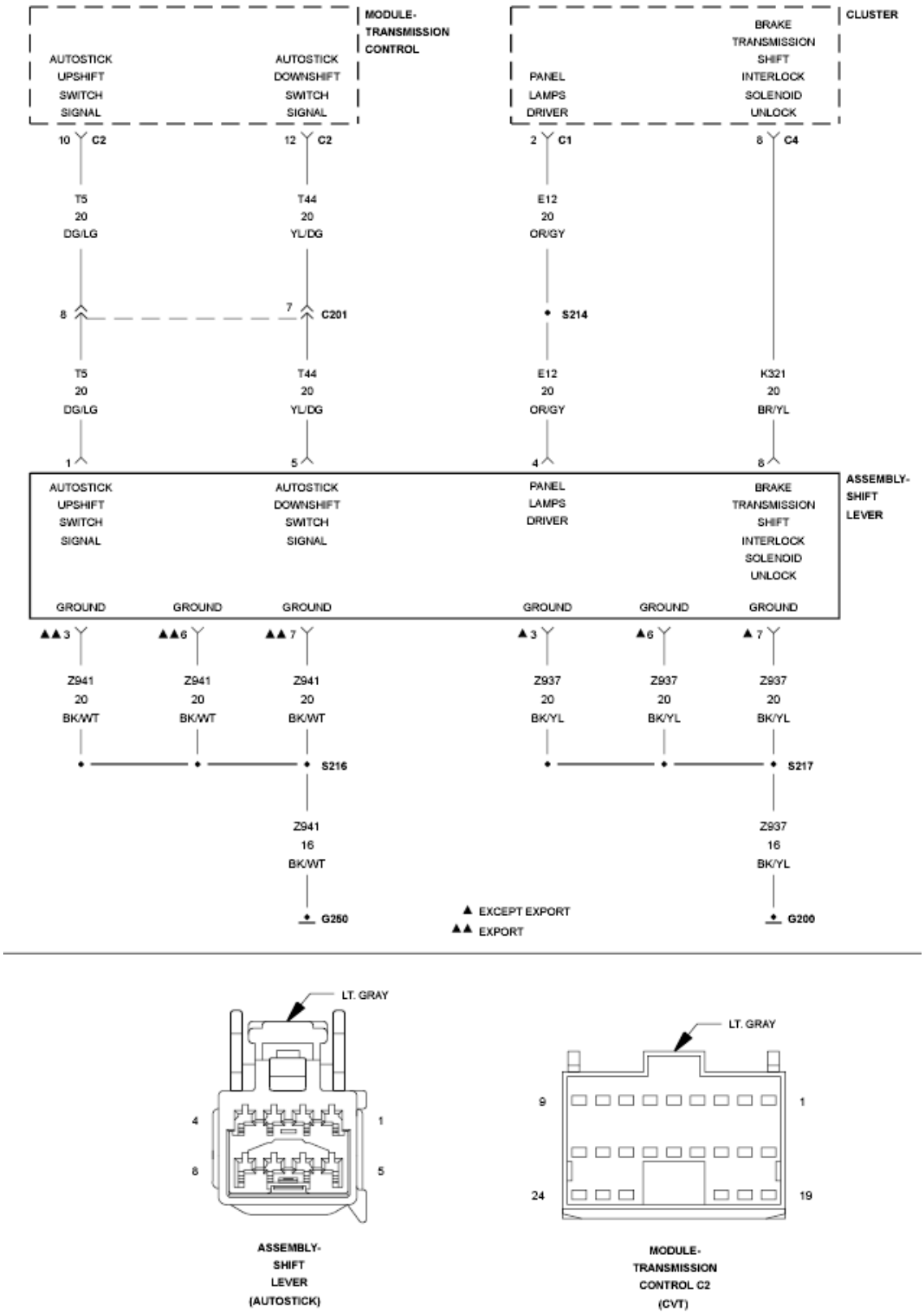

Fig. 58: Shift Switch Wiring Diagram
Courtesy of CHRYSLER GROUP, LLC

For a complete wiring diagram, **refer to appropriate SYSTEM WIRING**

DIAGRAMS article .

THEORY OF OPERATION

The AutoStick function allows the driver to manually change the gear ratio to a locked ratio. The Transmission Control Module (TCM) monitors the AutoStick Upshift and Downshift circuits. If the TCM receives an Upshift and Downshift request simultaneously, or manual mode Upshift/Downshift request while other than in the D-Range, a DTC will set.

WHEN MONITORED

Ignition on with a system voltage between 9.0 and 16 volts.

SET CONDITION

Upshift and Downshift requested simultaneously while in the Drive position or the Upshift and/or Downshift request during while not in the Drive position for the period of 1.0 second.

POSSIBLE CAUSES

Possible Causes
(T5) AUTOSTICK UPSHIFT SWITCH SIGNAL CIRCUIT SHORTED TO GROUND
(T44) AUTOSTICK DOWNSHIFT SWITCH SIGNAL CIRCUIT SHORTED TO GROUND
SHIFT LEVER ASSEMBLY
TRANSMISSION CONTROL MODULE

Always perform the CVT Pre-Diagnostic Troubleshooting procedure before proceeding. Refer to CVT - PRE-DIAGNOSTIC TROUBLESHOOTING PROCEDURE .

DIAGNOSTIC TEST

1. **CHECK IF THE DTC IS ACTIVE**
    1. With the scan tool, erase Transmission DTCs.
    2. Start the engine, with the brakes firmly applied shift the shift lever into Drive and make several AutoStick upshifts and downshifts.
    3. With the scan tool, read Transmission DTCs.

Is the status Active or is the Starts Since Set counter 2 or less for this DTC?

Yes

- Go To 2

No

- Go To 7

2. **VERIFY PROBLEM**
   1. With the scan tool, read the AutoStick upshift and downshift status.

      Does the scan tool show either the upshift or downshift as true with the shifter in the center position (pick best answer)?

      Upshift shows as true

      - Go To 3

      Downshift shows as true

      - Go To 5

      Neither circuit shows as true

      - Using the schematics as a guide, check the Transmission Control Module (TCM) terminals for corrosion, damage, or terminal push out. Pay particular attention to all power and ground circuits. Check for any Service Bulletins for possible causes that may apply. If no problems are found, replace the TCM in accordance with the Service Information.
      - Perform the CVT VERIFICATION TEST. Refer to **CVT VERIFICATION TEST** .

3. **CHECK THE SHIFT LEVER ASSEMBLY**
   1. Turn the ignition off to the lock position.
   2. Disconnect the Shift Lever Assembly harness connector.
   3. Ignition on, engine not running.
   4. With the scan tool read the AutoStick Upshift status.

Does the Upshift still show as true?

Yes

- Go To 4

No

- Replace the Shift Lever Assembly in accordance with the Service Information.
- Perform the CVT VERIFICATION TEST. Refer to **CVT VERIFICATION TEST** .

4. **CHECK THE (T5) AUTOSTICK UPSHIFT SWITCH SIGNAL CIRCUIT FOR A SHORT TO GROUND**

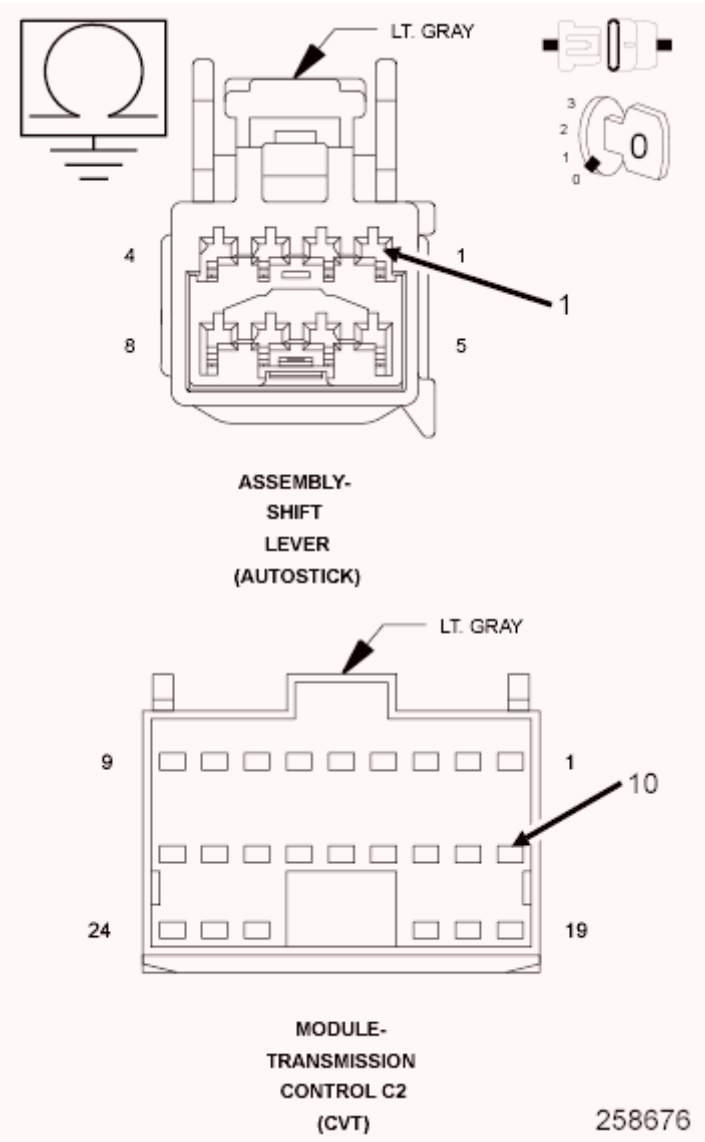

Fig. 59: Checking Autostick Upshift Switch Signal Circuit For A Short To Ground
Courtesy of CHRYSLER GROUP, LLC

1. Turn the ignition off to the lock position.
2. Disconnect the TCM C2 harness connector.
3. Measure the resistance between ground and the (T5) AutoStick Upshift Switch Signal circuit.

   Is the resistance below 5.0 Ohms?

   Yes

   - Repair the (T5) AutoStick Upshift Switch Signal circuit for a short to ground.
   - Perform the CVT VERIFICATION TEST. Refer to **CVT VERIFICATION TEST** .

   No

   - Using the schematics as a guide, check the Transmission Control Module (TCM) terminals for corrosion, damage, or terminal push out. Pay particular attention to all power and ground circuits. Check for any Service Bulletins for possible causes that may apply. If no problems are found, replace the TCM in accordance with the Service Information.
   - Perform the CVT VERIFICATION TEST. Refer to **CVT VERIFICATION TEST** .

5. **CHECK THE SHIFT LEVER ASSEMBLY**
   1. Turn the ignition off to the lock position.
   2. Disconnect the Shift Lever Assembly harness connector.
   3. Ignition on, engine not running.
   4. With the scan tool read the AutoStick Downshift status.

      Does the Downshift still show as true?

      Yes

- Go To 6

No

- Replace the Shift Lever Assembly in accordance with the Service Information.
- Perform the CVT VERIFICATION TEST. Refer to **CVT VERIFICATION TEST** .

6. **CHECK THE (T44) AUTOSTICK DOWNSHIFT SWITCH SIGNAL CIRCUIT FOR A SHORT TO GROUND**

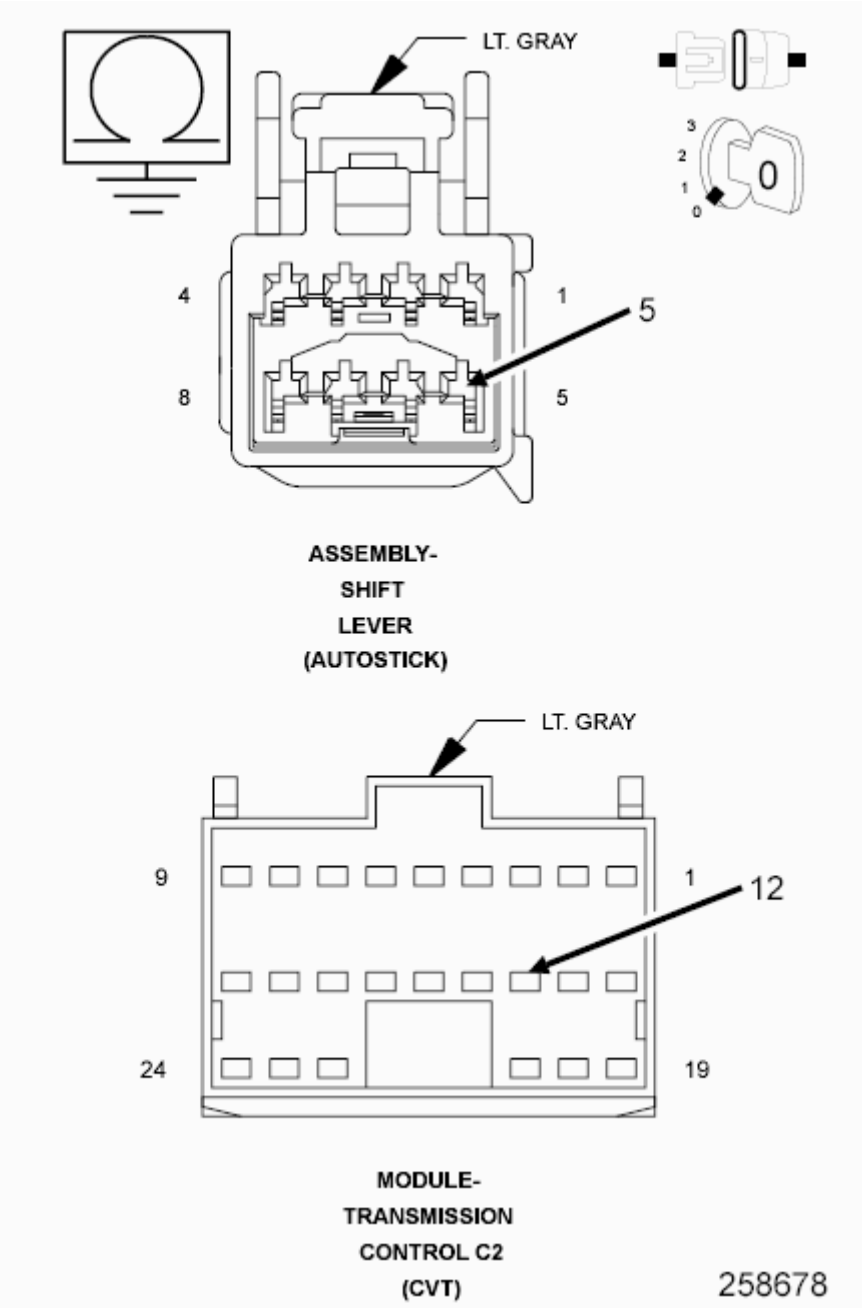

Fig. 60: Checking Autostick Downshift Switch Signal Circuit For A Short To Ground
Courtesy of CHRYSLER GROUP, LLC

1. Turn the ignition off to the lock position.
2. Disconnect the TCM C2 harness connector.
3. Measure the resistance between ground and the (T44) AutoStick Downshift Switch Signal circuit.

   Is the resistance below 5.0 Ohms?

   Yes

   - Repair the (T44) AutoStick Downshift Switch Signal circuit for a short to ground.
   - Perform the CVT VERIFICATION TEST. Refer to **CVT VERIFICATION TEST** .

   No

   - Using the schematics as a guide, check the Transmission Control Module (TCM) terminals for corrosion, damage, or terminal push out. Pay particular attention to all power and ground circuits. Check for any Service Bulletins for possible causes that may apply. If no problems are found, replace the TCM in accordance with the Service Information.
   - Perform the CVT VERIFICATION TEST. Refer to **CVT VERIFICATION TEST** .

7. **CHECK THE WIRING AND CONNECTORS**
   1. The conditions necessary to set this DTC are not present at this time.
   2. Using the schematics as a guide, inspect the wiring and connectors specific to this circuit.
   3. Wiggle the wires while checking for shorted and open circuits.

      Were there any problems found?

      Yes

      - Repair as necessary.

- Perform the CVT VERIFICATION TEST. Refer to **CVT VERIFICATION TEST** .

No

- Test Complete.

P0842-PRIMARY OIL PRESSURE SENSOR CIRCUIT LOW

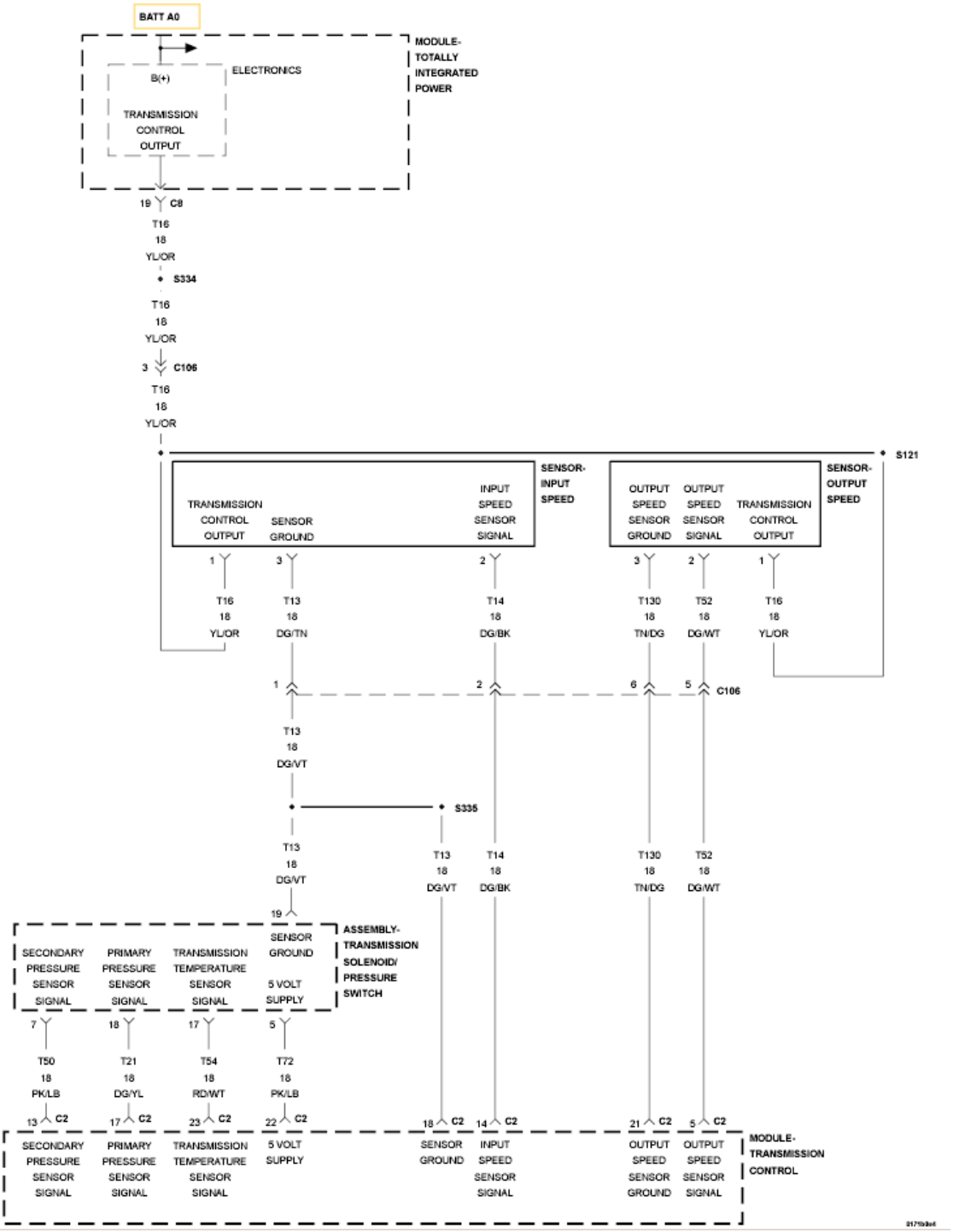

Fig. 61: Sensor Reference Voltage Wiring Diagram
Courtesy of CHRYSLER GROUP, LLC

For a complete wiring diagram, **refer to appropriate SYSTEM WIRING DIAGRAMS article** .

THEORY OF OPERATION

The Transmission Control Module (TCM) monitors the input voltage from the primary pulley pressure sensor. When the voltage is below a predetermined limit a DTC will set.

WHEN MONITORED

Ignition on, system voltage between 9.0 and 16.0 Volts.

Transmission temperature greater than -20° C (-4° F)

No active DTCs from the following:

- Primary Oil Pressure Sensor High
- Sensor ground

SET CONDITION

When the monitored voltage drops below 0.09 Volts for the period of five seconds.

POSSIBLE CAUSES

Possible Causes
(T72) 5 VOLT SUPPLY CIRCUIT OPEN
(T21) PRIMARY PRESSURE SENSOR SIGNAL CIRCUIT OPEN
(T21) PRIMARY PRESSURE SENSOR SIGNAL CIRCUIT SHORTED TO GROUND
PRIMARY PRESSURE SENSOR
TRANSMISSION CONTROL MODULE

Always perform the CVT Pre-Diagnostic Troubleshooting procedure before proceeding. Refer to CVT - PRE-DIAGNOSTIC TROUBLESHOOTING PROCEDURE .

DIAGNOSTIC TEST

1. **CHECK THE PRIMARY PRESSURE SENSOR VOLTAGE**
   1. Using the scan tool, read the Primary Pulley Pressure Sensor voltage.

      Is the voltage below 0.09 of a Volt?

      Yes

      - Go To 2

      No

      - Go To 7
2. **CHECK THE (T72) 5 VOLT SUPPLY CIRCUIT**

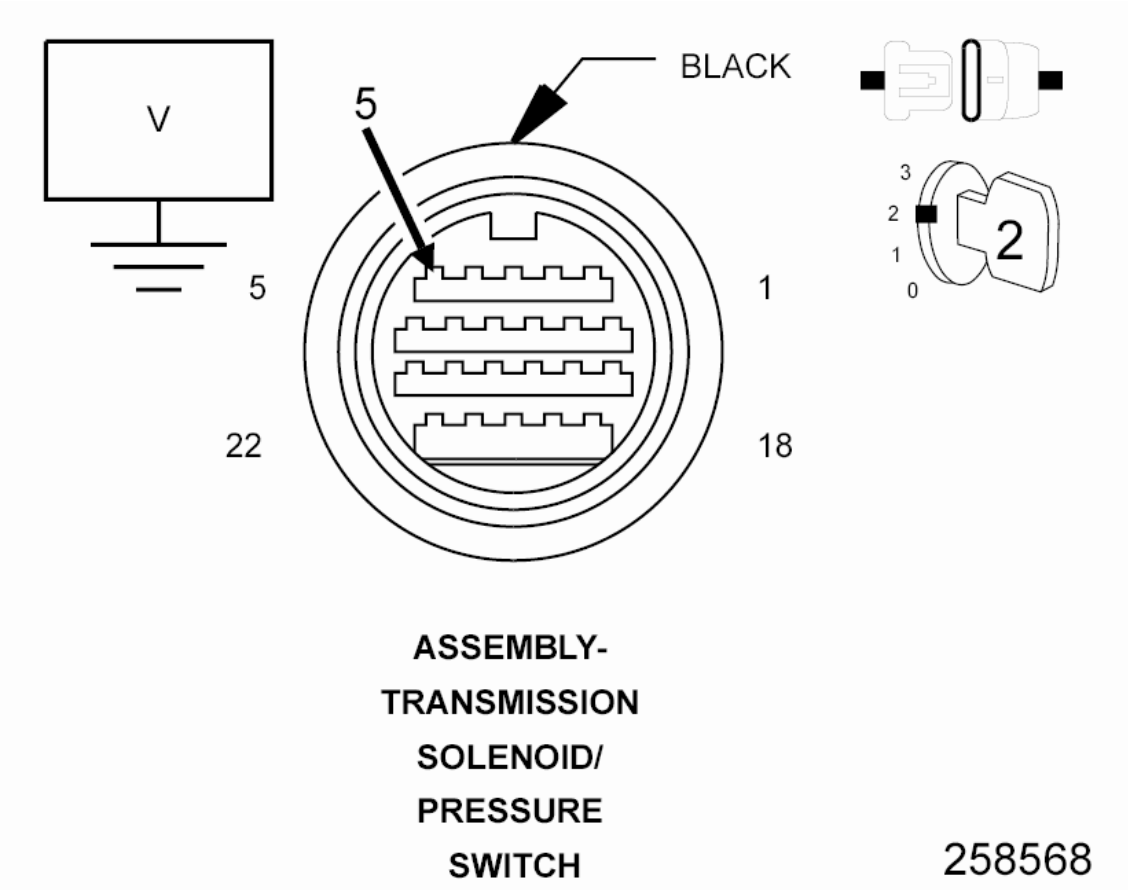

Fig. 62: Checking 5-Volt Supply Circuit Voltage
Courtesy of CHRYSLER GROUP, LLC

1. Turn the ignition off to the lock position.
2. Disconnect the Transmission Solenoid/Pressure Switch Assembly

harness connector.

3. Ignition on, engine not running.
4. Measure the voltage of the (T72) 5 Volt Supply circuit in the Transmission Solenoid/Pressure Switch Assembly harness connector.

   Is the voltage 5.0 Volts (± 0.2 of a Volt)?

   Yes

   - Go To 3

   No

   - Go To 6

3. **CHECK THE (T21) PRIMARY PRESSURE SENSOR SIGNAL CIRCUIT**

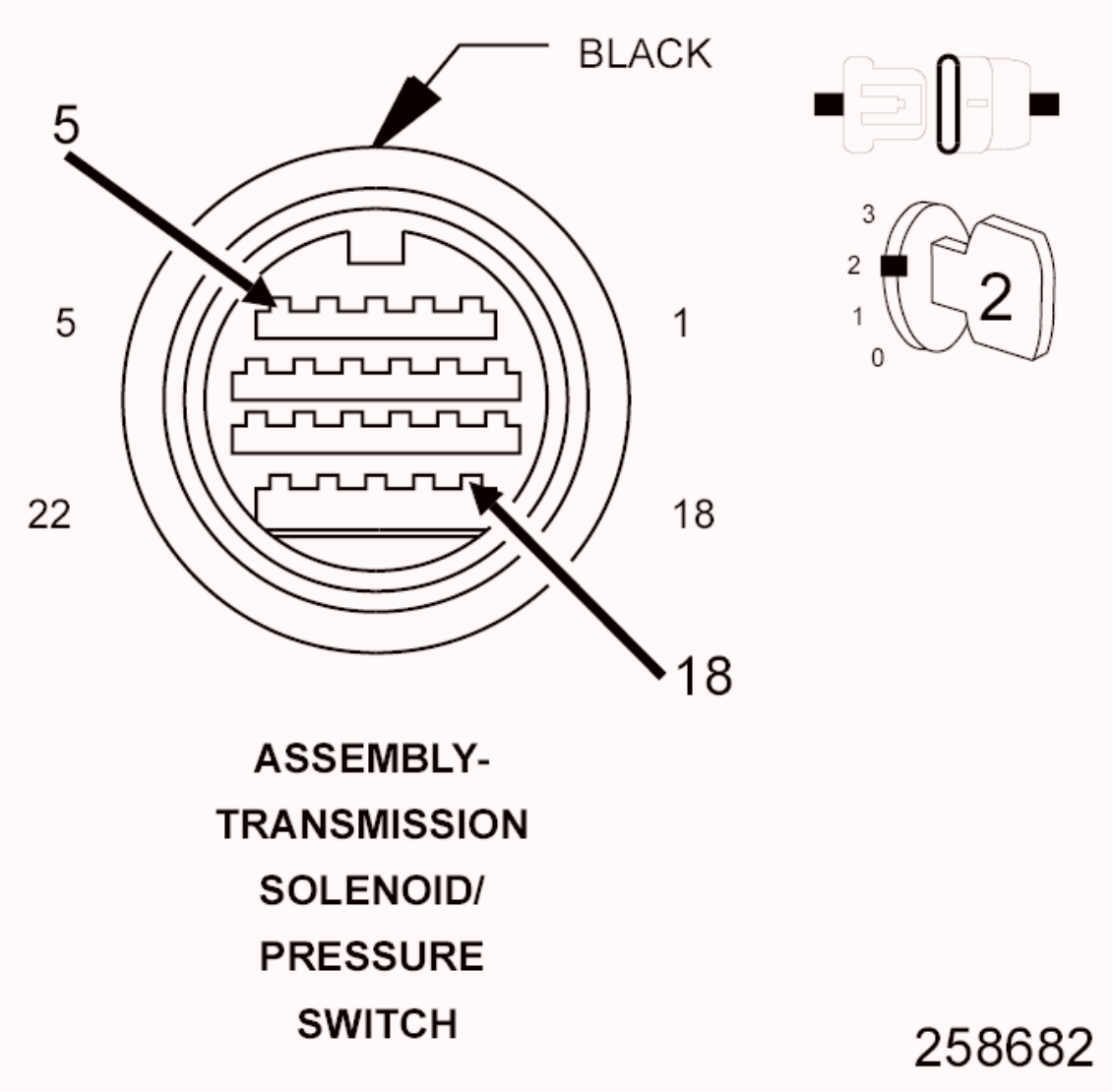

Fig. 63: Checking Primary Pressure Sensor Signal Circuit
Courtesy of CHRYSLER GROUP, LLC

1. Turn the ignition off to the lock position.
2. Disconnect the Transmission Solenoid/Pressure Switch Assembly harness connector.
3. Ignition on, engine not running.
4. Connect a jumper wire between the (T21) Primary Pressure Sensor Signal circuit and the (T72) 5 Volt Supply circuit in the Transmission Solenoid/Pressure Switch Assembly harness connector.
5. Using the scan tool, read the Primary Pulley Pressure Sensor voltage.

   Is the voltage 5.0 Volts (± 0.2 of a Volt)?

   Yes

- Replace the Primary Pressure Sensor (Valve Body) in accordance with the Service Information.
- Perform the CVT VERIFICATION TEST. Refer to **CVT VERIFICATION TEST** .

No

- Go To 4

4. **CHECK THE (T21) PRIMARY PRESSURE SENSOR SIGNAL CIRCUIT FOR AN OPEN**

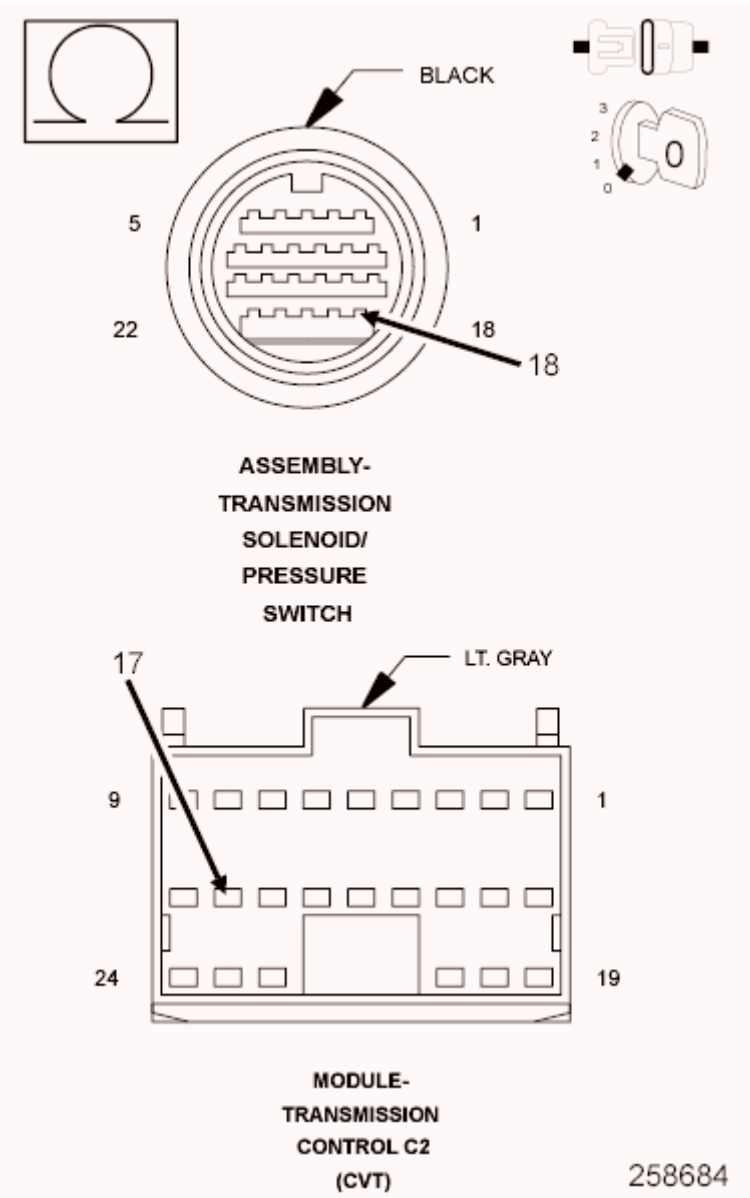

Fig. 64: Checking Primary Pressure Sensor Signal Circuit For An Open
Courtesy of CHRYSLER GROUP, LLC

1. Turn the ignition off to the lock position.
2. Disconnect the TCM C2 harness connector.
3. Measure the resistance of the (T21) Primary Pressure Sensor Signal circuit between the TCM C2 harness connector and the Transmission Solenoid/Pressure Switch Assembly harness connector.

   Is the resistance above 5.0 Ohms?

   Yes

   - Repair the (T21) Primary Pressure Sensor Signal circuit for an open or high resistance.
   - Perform the CVT VERIFICATION TEST. Refer to **CVT VERIFICATION TEST** .

   No

   - Go To 5

5. **CHECK THE (T21) PRIMARY PRESSURE SENSOR SIGNAL CIRCUIT FOR A SHORT TO GROUND**

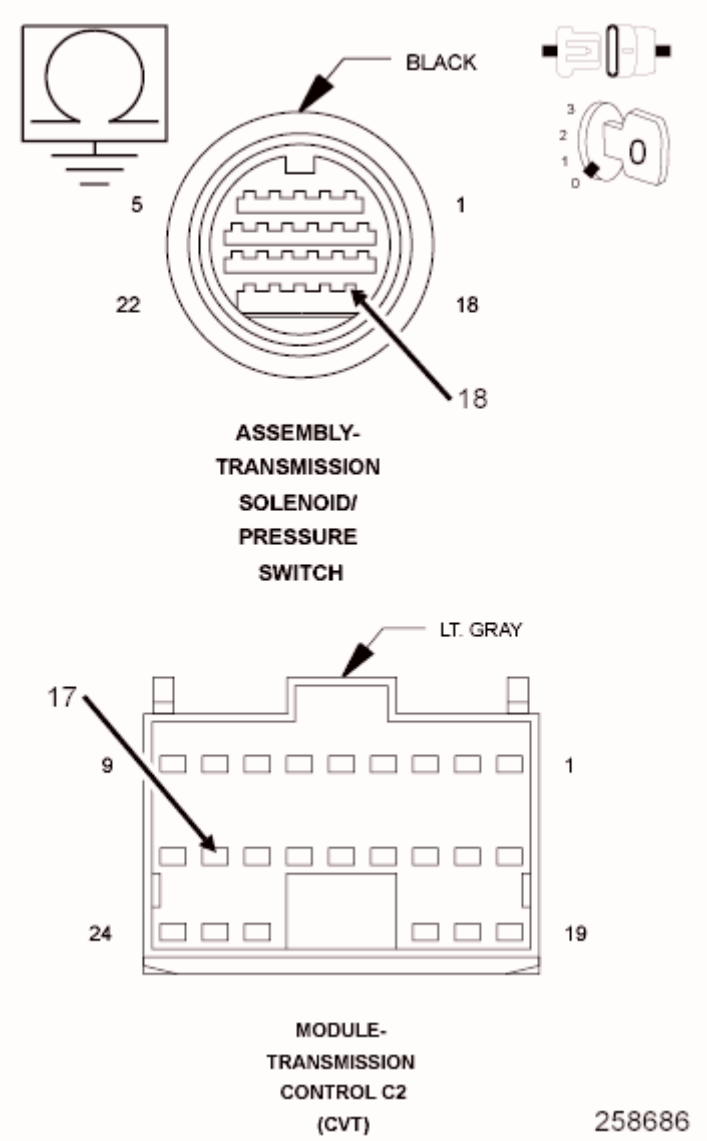

Fig. 65: Checking Primary Pressure Sensor Signal Circuit For A Short To Ground
Courtesy of CHRYSLER GROUP, LLC

1. Measure the resistance between ground and the (T21) Primary Pressure Sensor Signal circuit.

   Is the resistance below 5.0 Ohms?

   Yes

   - Repair the (T21) Primary Pressure Sensor Signal circuit for a short to ground.
   - Perform the CVT VERIFICATION TEST. Refer to **CVT VERIFICATION TEST** .

No

- Using the schematics as a guide, check the Transmission Control Module (TCM) terminals for corrosion, damage, or terminal push out. Pay particular attention to all power and ground circuits. Check for any Service Bulletins for possible causes that may apply. If no problems are found, replace the TCM in accordance with the Service Information.
- Perform the CVT VERIFICATION TEST. Refer to **CVT VERIFICATION TEST** .

6. **CHECK THE (T72) 5 VOLT SUPPLY CIRCUIT FOR AN OPEN**

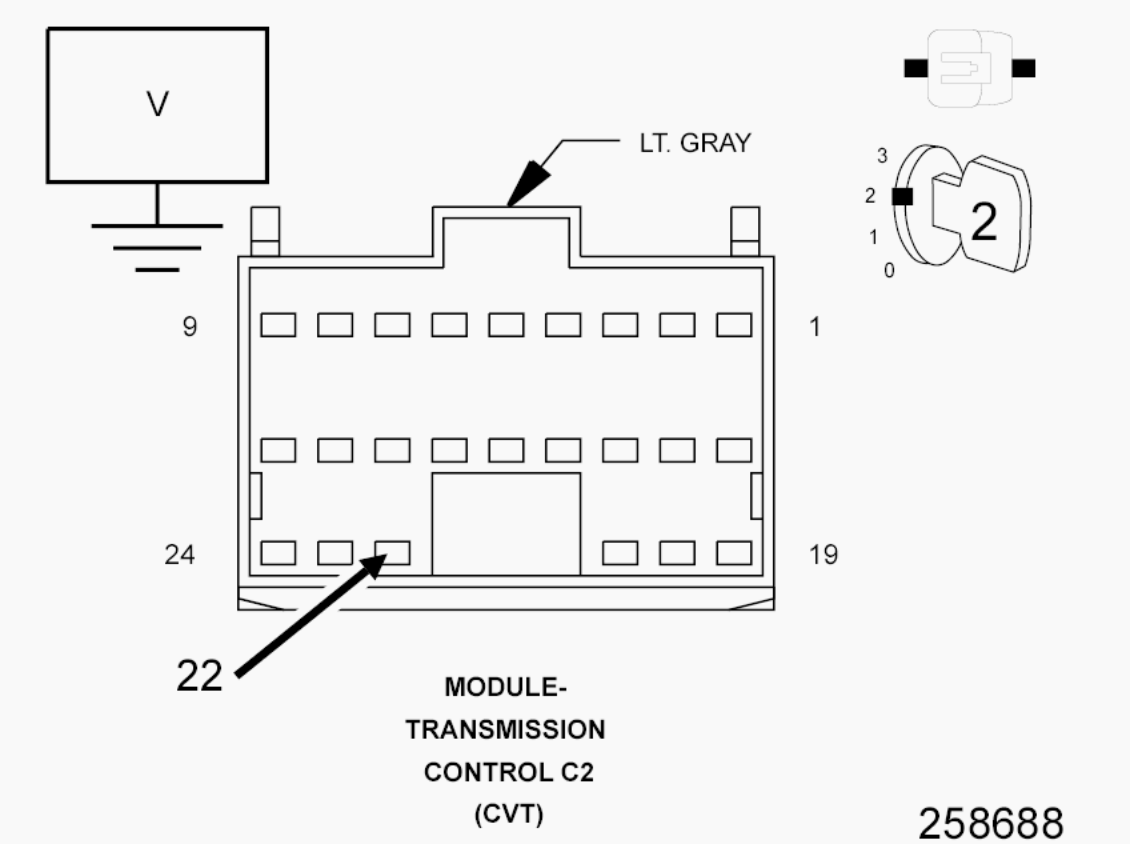

Fig. 66: Checking 5 Volt Supply Circuit For An Open
Courtesy of CHRYSLER GROUP, LLC

1. While back probing, measure the voltage of the (T72) 5 Volt Supply circuit in Transmission Solenoid/Pressure Switch Assembly harness connector.

   Is the voltage 5.0 Volts (± 0.2 of a Volt)?

Yes

- Repair the (T72) 5 Volt Supply circuit for an open or high resistance.
- Perform the CVT VERIFICATION TEST. Refer to **CVT VERIFICATION TEST** .

No

- Using the schematics as a guide, check the Transmission Control Module (TCM) terminals for corrosion, damage, or terminal push out. Pay particular attention to all power and ground circuits. Check for any Service Bulletins for possible causes that may apply. If no problems are found, replace the TCM in accordance with the Service Information.
- Perform the CVT VERIFICATION TEST. Refer to **CVT VERIFICATION TEST** .

7. **CHECK THE WIRING AND CONNECTORS**
   1. The conditions necessary to set this DTC are not present at this time.
   2. Using the schematics as a guide, inspect the wiring and connectors specific to this circuit.
   3. Wiggle the wires while checking for shorted and open circuits.

   Were there any problems found?

   Yes

   - Repair as necessary.
   - Perform the CVT VERIFICATION TEST. Refer to **CVT VERIFICATION TEST** .

   No

   - Test Complete.

P0843-PRIMARY OIL PRESSURE SENSOR CIRCUIT HIGH

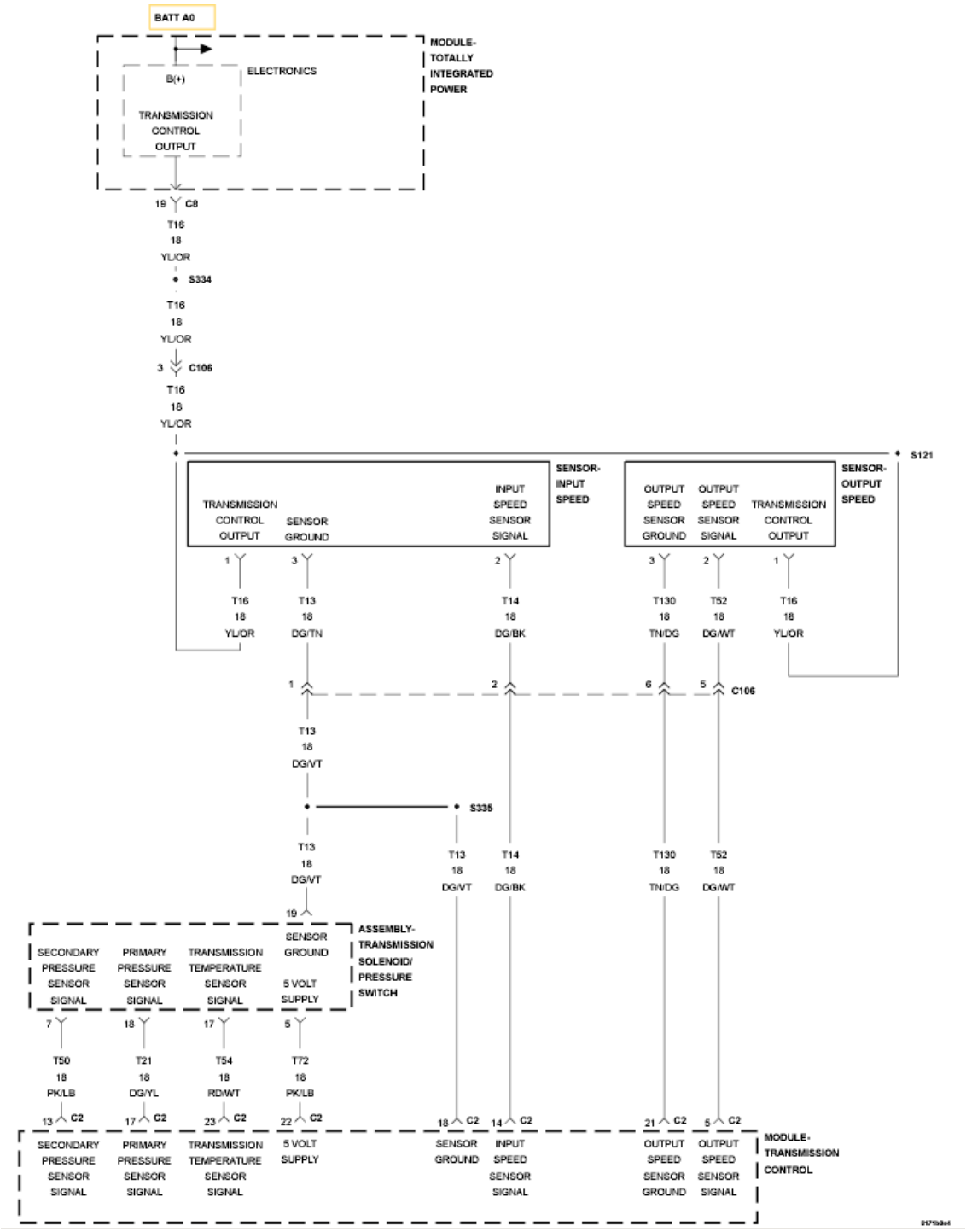

Fig. 67: Sensor Reference Voltage Wiring Diagram
Courtesy of CHRYSLER GROUP, LLC

For a complete wiring diagram, **refer to appropriate SYSTEM WIRING DIAGRAMS article** .

THEORY OF OPERATION

The Transmission Control Module (TCM) monitors the input voltage from the

primary pulley pressure sensor. When the voltage is above a predetermined limit a DTC will set.

WHEN MONITORED

Ignition on, system voltage between 9.0 and 16.0 volts.

Transmission temperature greater than -20° C (-4° F)

No active DTCs from the following:

- Primary Oil Pressure Sensor Low
- Sensor ground

SET CONDITION

When the monitored voltage rises above 4.7 volts for the period of 5 seconds.

POSSIBLE CAUSES

Possible Causes
(T72) 5 VOLT SUPPLY CIRCUIT SHORTED TO VOLTAGE
(T21) PRIMARY PRESSURE SENSOR SIGNAL CIRCUIT SHORTED TO VOLTAGE
PRIMARY PRESSURE SENSOR
TRANSMISSION CONTROL MODULE

Always perform the CVT Pre-Diagnostic Troubleshooting procedure before proceeding. Refer to CVT - PRE-DIAGNOSTIC TROUBLESHOOTING PROCEDURE .

DIAGNOSTIC TEST

1. **CHECK THE PRIMARY PRESSURE SENSOR VOLTAGE**
    1. With the scan tool, read the Primary Pulley Pressure Sensor voltage.

       Is the voltage greater than 4.7 volts?

       Yes

       - Go To 2

No

- Go To 6

2. **CHECK THE (T72) 5 VOLT SUPPLY CIRCUIT**

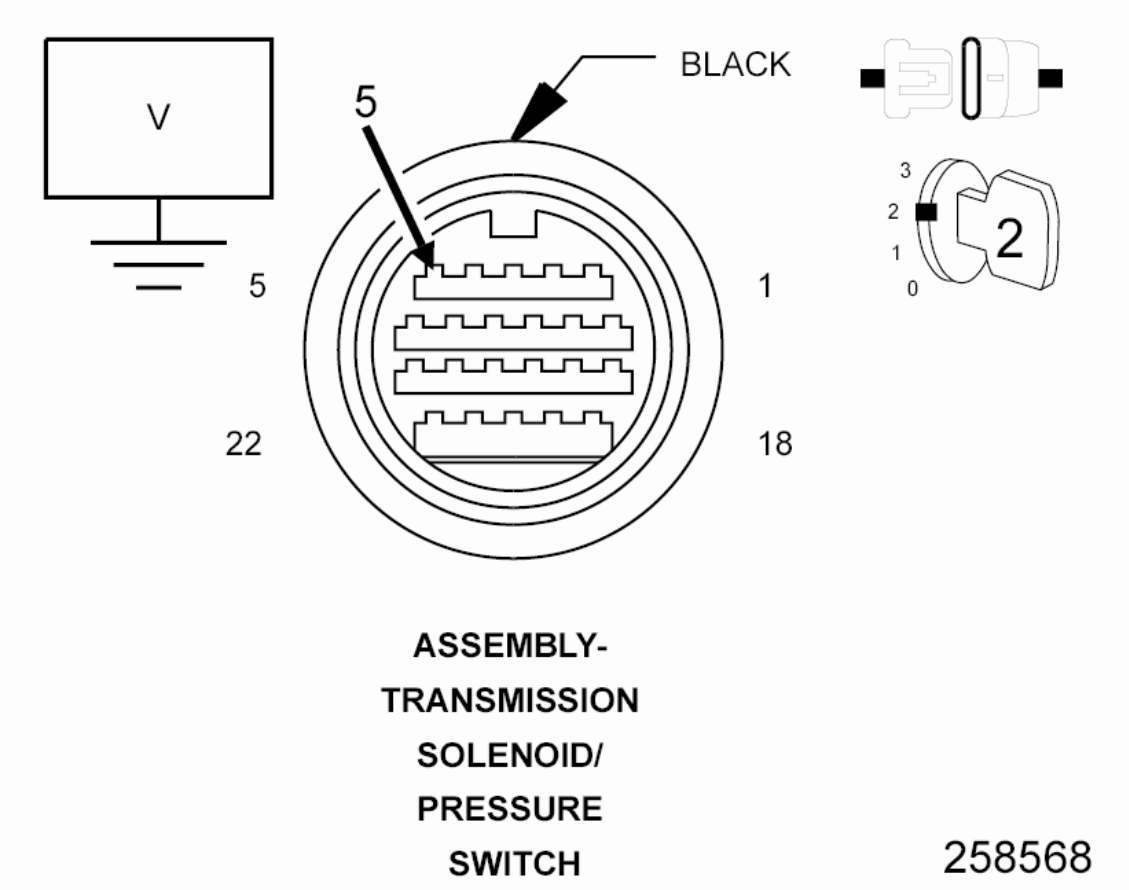

Fig. 68: Checking 5-Volt Supply Circuit Voltage
Courtesy of CHRYSLER GROUP, LLC

1. Turn the ignition off to the lock position.
2. Disconnect the Transmission Solenoid/Pressure Switch Assembly harness connector.
3. Ignition on, engine not running.
4. Measure the voltage of the (T72) 5 Volt Supply circuit in the Transmission Solenoid/Pressure Switch Assembly harness connector.

   Is the voltage between 4.5 and 5.5 volts?

   Yes

   - Go To 3

No

- Go To 5

3. **CHECK THE (T21) PRIMARY PRESSURE SENSOR SIGNAL CIRCUIT**
   1. Turn the ignition off to the lock position.
   2. Disconnect the Transmission Solenoid/Pressure Switch Assembly harness connector.
   3. Ignition on, engine not running.
   4. With the scan tool, read the Primary Pulley Pressure Sensor voltage.

   Does the scan tool read any voltage?

   Yes

   - Go To 4

   No

   - Replace the Primary Pressure Sensor (Valve Body) in accordance with the Service Information.
   - Perform the CVT VERIFICATION TEST. Refer to **CVT VERIFICATION TEST** .

4. **CHECK THE (T21) PRIMARY PRESSURE SENSOR SIGNAL CIRCUIT FOR A SHORT TO VOLTAGE**

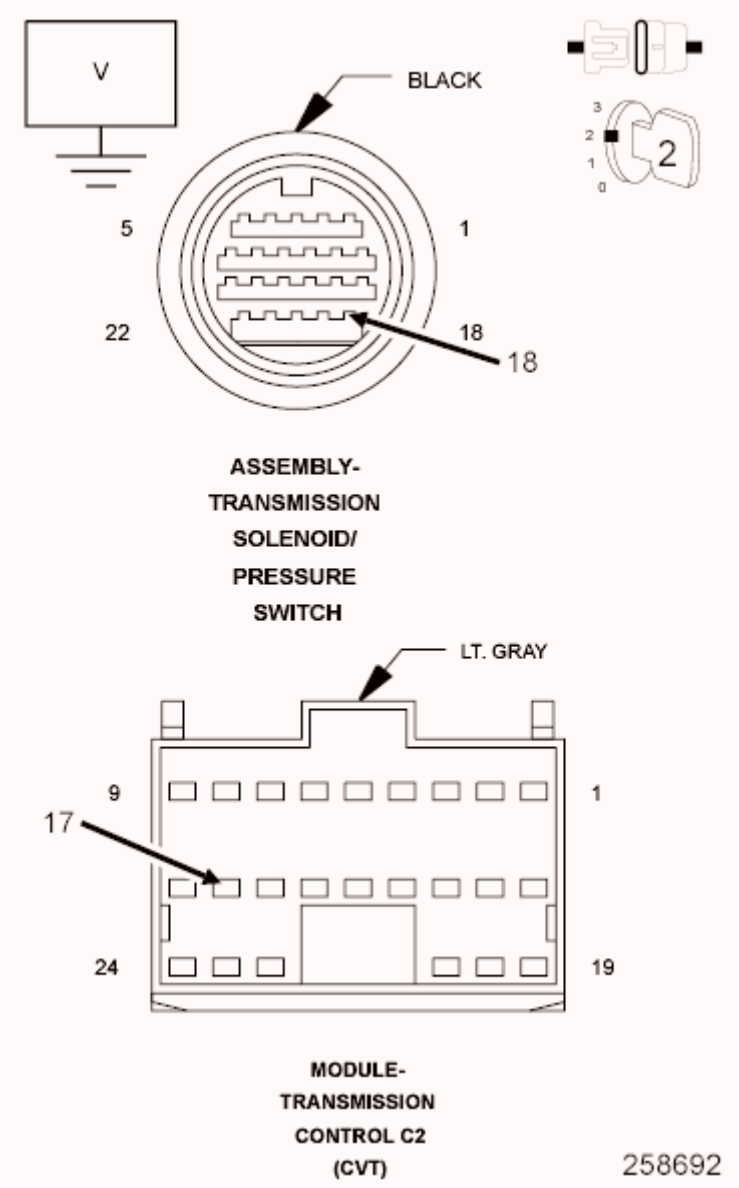

Fig. 69: Checking Primary Pressure Sensor Signal Circuit For A Short To Voltage
Courtesy of CHRYSLER GROUP, LLC

1. Turn the ignition off to the lock position.
2. Disconnect the TCM C2 harness connector.
3. Ignition on, engine not running.
4. Measure the voltage of the (T21) Primary Pressure Sensor Signal circuit.

   Is there any voltage present?

   Yes

- Repair the (T21) Primary Pressure Sensor Signal circuit for a short to voltage.
- Perform the CVT VERIFICATION TEST. Refer to **CVT VERIFICATION TEST** .

No

- Using the schematics as a guide, check the Transmission Control Module (TCM) terminals for corrosion, damage, or terminal push out. Pay particular attention to all power and ground circuits. Check for any Service Bulletins for possible causes that may apply. If no problems are found, replace the TCM in accordance with the Service Information.
- Perform the CVT VERIFICATION TEST. Refer to **CVT VERIFICATION TEST** .

5. **CHECK THE (T72) 5 VOLT SUPPLY CIRCUIT FOR A SHORT TO VOLTAGE**

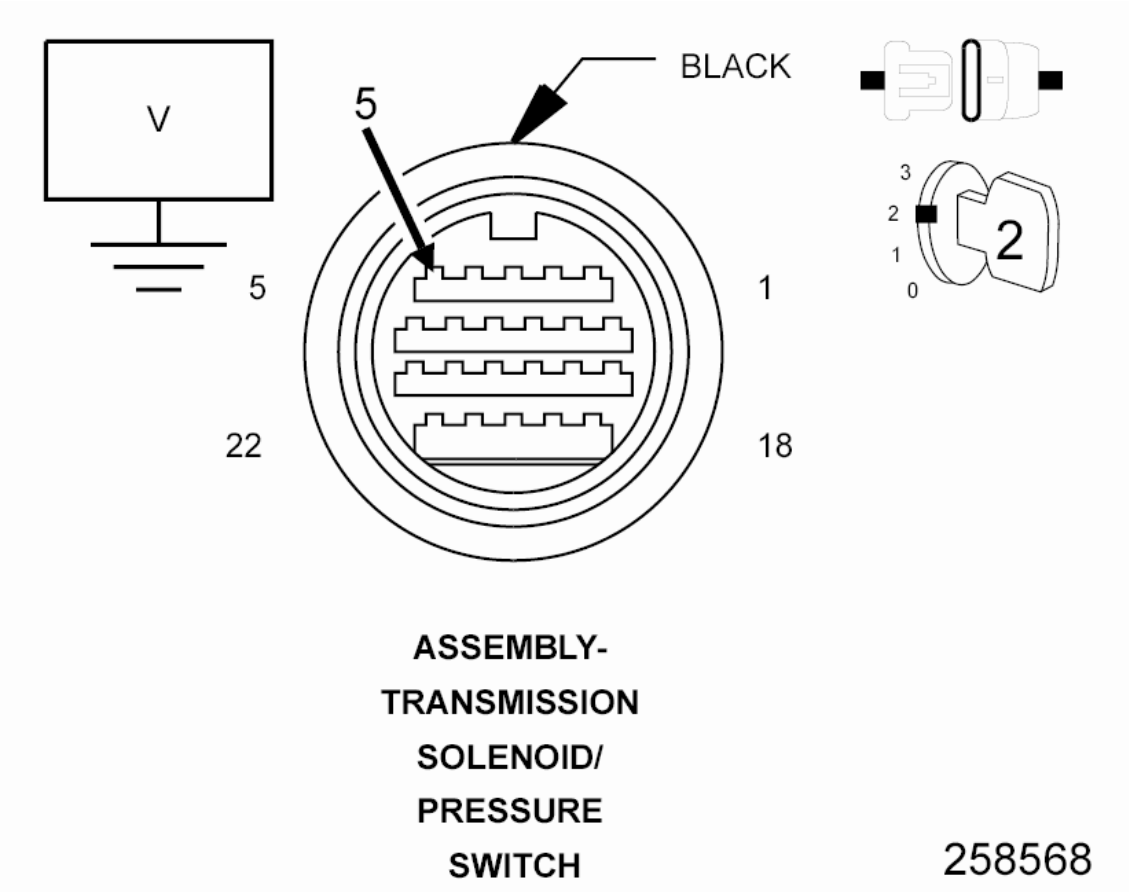

Fig. 70: Checking 5-Volt Supply Circuit For Short To Voltage

Courtesy of CHRYSLER GROUP, LLC

1. Turn the ignition off to the lock position.
2. Disconnect the TCM C2 harness connector.
3. Ignition on, engine not running.
4. Measure the voltage of the (T72) 5 Volt Supply circuit in the Transmission Solenoid/Pressure Switch Assembly harness connector.

   Is there any voltage present?

   Yes

   - Repair the (T72) 5 Volt Supply circuit for a short to voltage.
   - Perform the CVT VERIFICATION TEST. Refer to **CVT VERIFICATION TEST** .

   No

   - Using the schematics as a guide, check the Transmission Control Module (TCM) terminals for corrosion, damage, or terminal push out. Pay particular attention to all power and ground circuits. Check for any Service Bulletins for possible causes that may apply. If no problems are found, replace the TCM in accordance with the Service Information.
   - Perform the CVT VERIFICATION TEST. Refer to **CVT VERIFICATION TEST** .

6. **CHECK THE WIRING AND CONNECTORS**
   1. The conditions necessary to set this DTC are not present at this time.
   2. Using the schematics as a guide, inspect the wiring and connectors specific to this circuit.
   3. Wiggle the wires while checking for shorted and open circuits.

      Were there any problems found?

      Yes

      - Repair as necessary.
      - Perform the CVT VERIFICATION TEST. Refer to **CVT**

VERIFICATION TEST .

No

- Test Complete.

P0847-SECONDARY OIL PRESSURE SENSOR CIRCUIT LOW

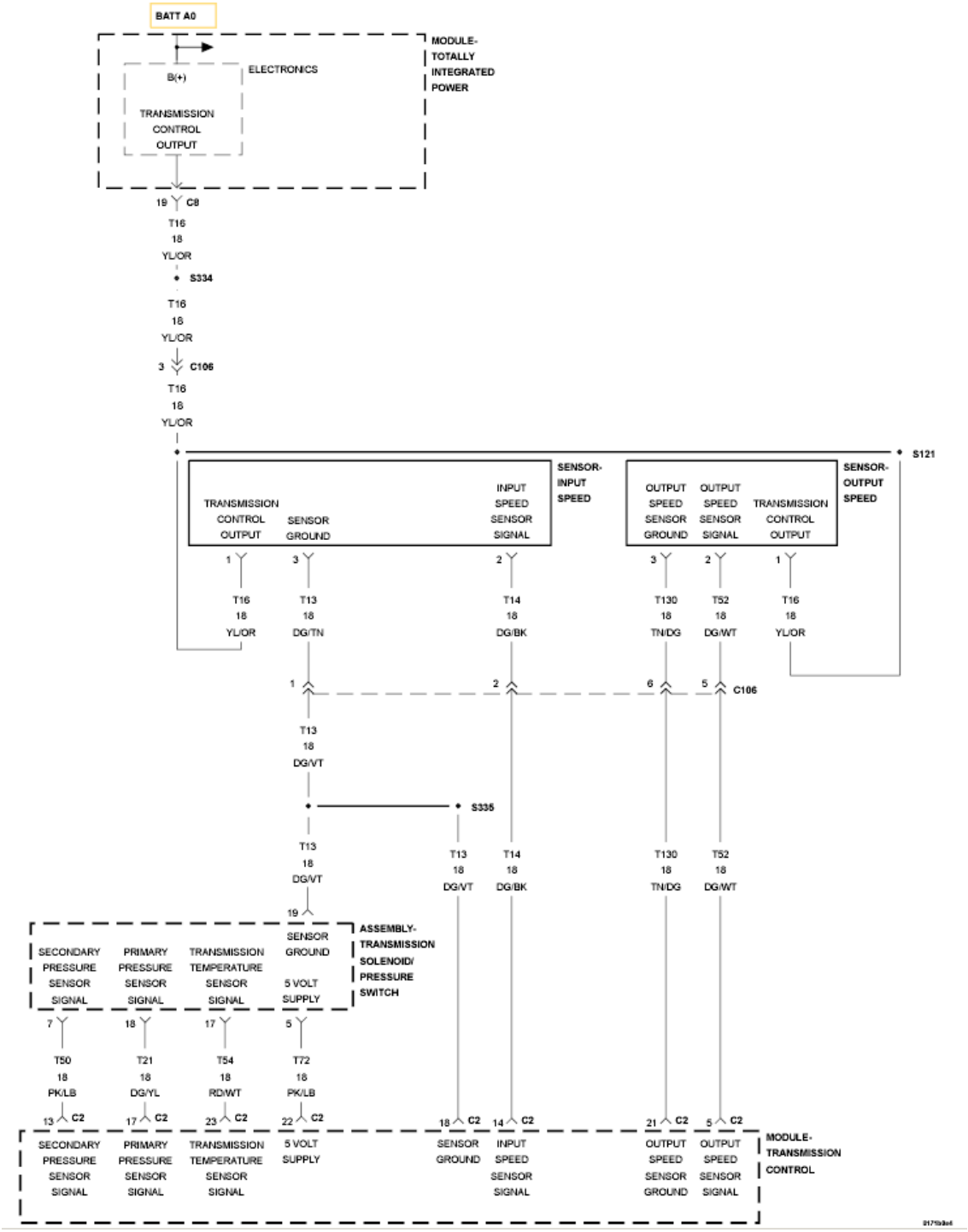

Fig. 71: Sensor Reference Voltage Wiring Diagram

Courtesy of CHRYSLER GROUP, LLC

For a complete wiring diagram, **refer to appropriate SYSTEM WIRING DIAGRAMS article** .

THEORY OF OPERATION

The Transmission Control Module (TCM) monitors the input voltage from the secondary pulley pressure sensor. When the voltage is below a predetermined limit a DTC will set.

WHEN MONITORED

Ignition on, system voltage between 9.0 and 16.0 volts.

Transmission temperature greater than -20° C (-4° F).

No active DTCs from the following:

- Primary Oil Pressure Sensor High
- Sensor ground

SET CONDITION

When the monitored voltage drops below 0.09 of a volt for the period of 5 seconds.

POSSIBLE CAUSES

Possible Causes
(T72) 5 VOLT SUPPLY CIRCUIT OPEN
(T50) SECONDARY PRESSURE SENSOR SIGNAL CIRCUIT OPEN
(T50) SECONDARY PRESSURE SENSOR SIGNAL CIRCUIT SHORTED TO GROUND
INTERNAL TRANSMISSION
TRANSMISSION CONTROL MODULE

Always perform the CVT Pre-Diagnostic Troubleshooting procedure before proceeding. Refer to CVT - PRE-DIAGNOSTIC TROUBLESHOOTING PROCEDURE .

DIAGNOSTIC TEST

1. **CHECK THE SECONDARY PRESSURE SENSOR VOLTAGE**
   1. With the scan tool, read the Secondary Pulley Pressure Sensor voltage.

      Is the voltage below 0.09 of a volt?

      Yes

      - Go To 2

      No

      - Go To 7
2. **CHECK THE (T72) 5 VOLT SUPPLY CIRCUIT**

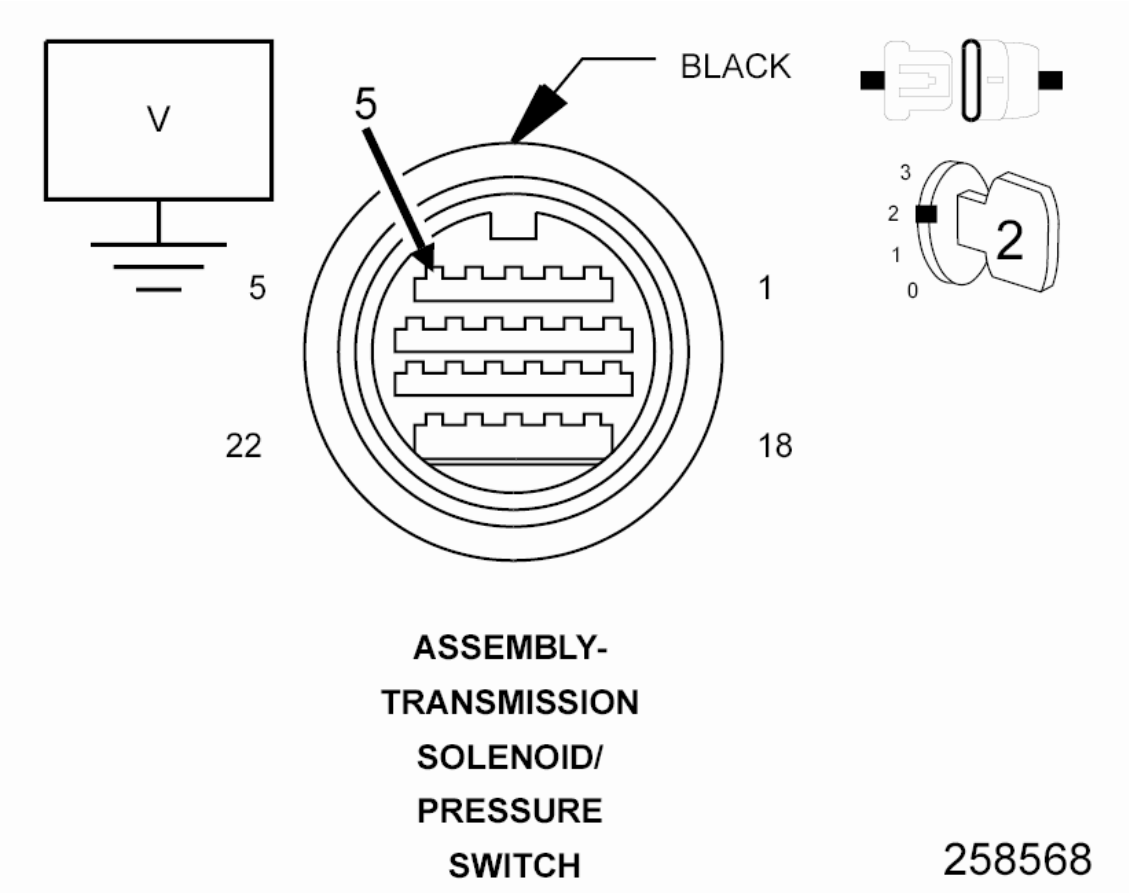

Fig. 72: Checking 5-Volt Supply Circuit Voltage
Courtesy of CHRYSLER GROUP, LLC

1. Turn the ignition off to the lock position.
2. Disconnect the Transmission Solenoid/Pressure Switch Assembly harness connector.

3. Ignition on, engine not running.
4. Measure the voltage of the (T72) 5 Volt Supply circuit in the Transmission Solenoid/Pressure Switch Assembly harness connector.

   Is the voltage 5.0 volts (± 0.2 of a volt)?

   Yes

   - Go To 3

   No

   - Go To 6

3. **CHECK THE (T50) SECONDARY PRESSURE SENSOR SIGNAL CIRCUIT**

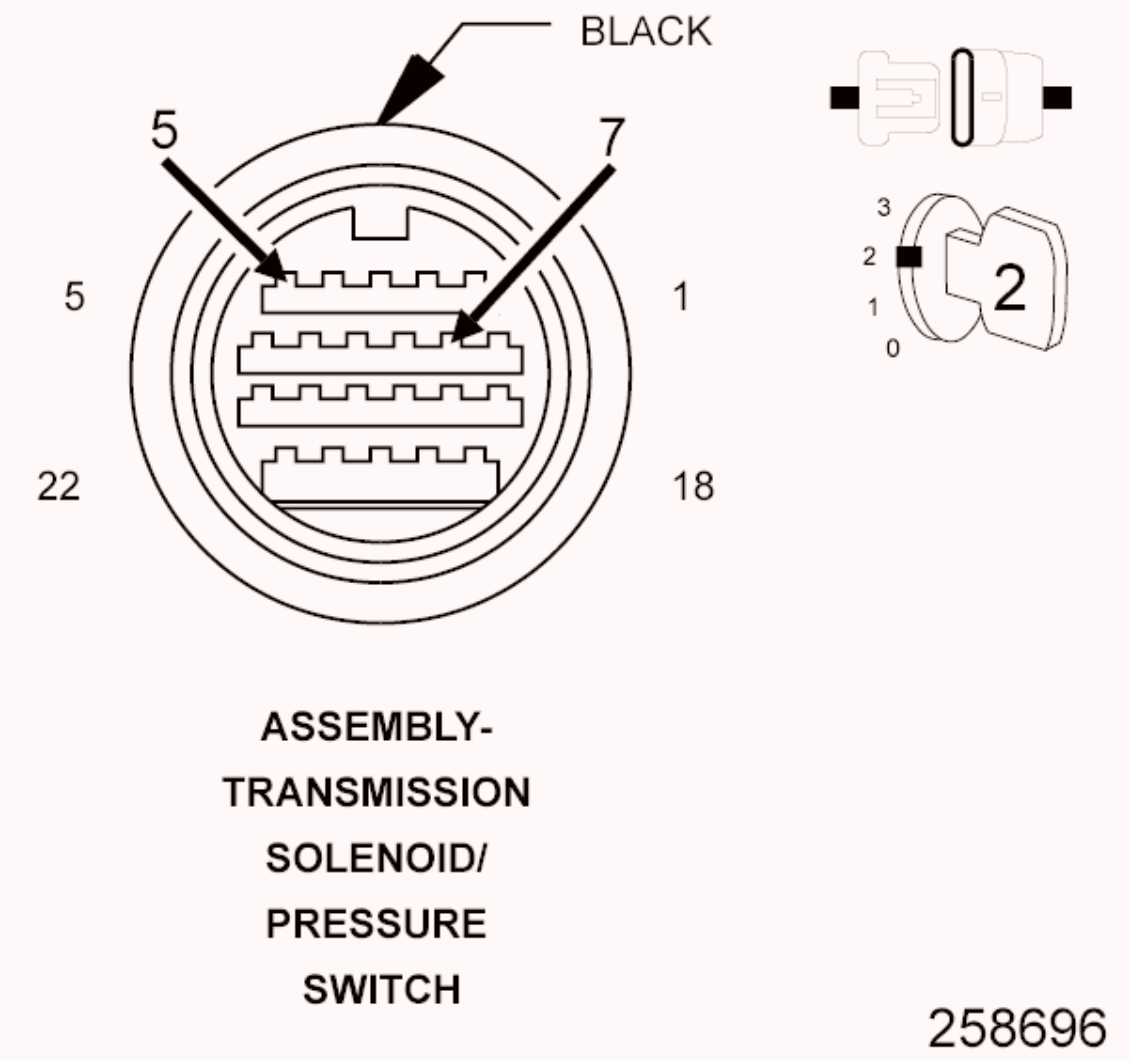

Fig. 73: Checking Secondary Pressure Sensor Signal Circuit
Courtesy of CHRYSLER GROUP, LLC

1. Turn the ignition off to the lock position.
2. Disconnect the Transmission Solenoid/Pressure Switch Assembly harness connector.
3. Ignition on, engine not running.
4. Connect a jumper wire between the (T50) Secondary Pressure Sensor Signal circuit and the (T72) 5 Volt Supply circuit in the Transmission Solenoid/Pressure Switch Assembly harness connector.
5. With the scan tool, read the Secondary Pulley Pressure Sensor voltage.

   Is the voltage 5.0 volts (± 0.2 of a volt)?

   Yes

   - Replace the Secondary Pressure Sensor (Valve Body) in accordance with the Service Information.
   - Perform the CVT VERIFICATION TEST. Refer to **CVT VERIFICATION TEST** .

   No

   - Go To 4

4. **CHECK THE (T50) SECONDARY PRESSURE SENSOR SIGNAL CIRCUIT FOR AN OPEN**

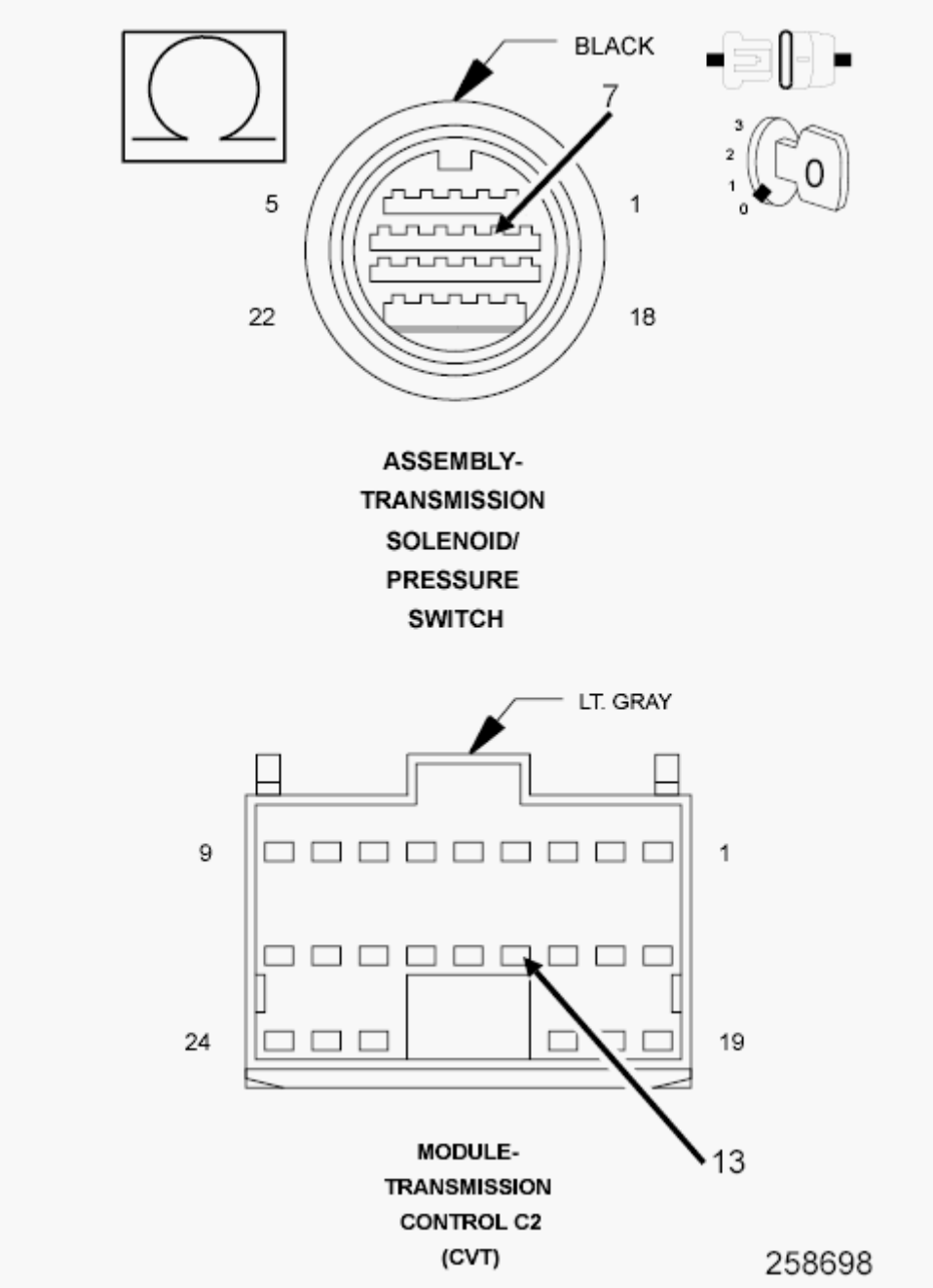

Fig. 74: Checking Secondary Pressure Sensor Signal Circuit For An Open
Courtesy of CHRYSLER GROUP, LLC

1. Turn the ignition off to the lock position.
2. Disconnect the TCM C2 harness connector.
3. Measure the resistance of the (T50) Secondary Pressure Sensor Signal circuit between the TCM C2 harness connector and the Transmission Solenoid/Pressure Switch Assembly harness connector.

Is the resistance above 5.0 Ohms?

Yes

- Repair the (T50) Secondary Pressure Sensor Signal circuit for an open or high resistance.
- Perform the CVT VERIFICATION TEST. Refer to **CVT VERIFICATION TEST** .

No

- Go To 5

5. **CHECK THE (T50) SECONDARY PRESSURE SENSOR SIGNAL CIRCUIT FOR A SHORT TO GROUND**

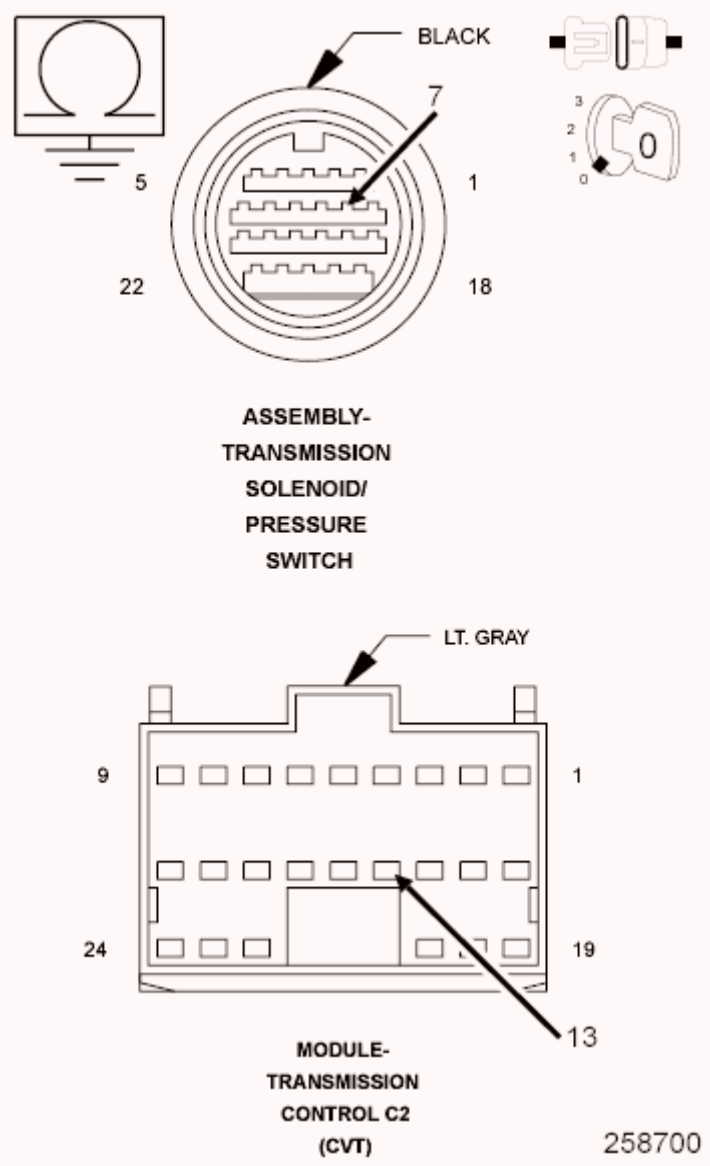

Fig. 75: Checking Secondary Pressure Sensor Signal Circuit For A Short To Ground
Courtesy of CHRYSLER GROUP, LLC

1. Measure the resistance between ground and the (T50) Secondary Pressure Sensor Signal circuit.

   Is the resistance below 5.0 Ohms?

   Yes

   - Repair the (T50) Secondary Pressure Sensor Signal circuit for a short to ground.
   - Perform the CVT VERIFICATION TEST. Refer to **CVT**

VERIFICATION TEST .

No

- Using the schematics as a guide, check the Transmission Control Module (TCM) terminals for corrosion, damage, or terminal push out. Pay particular attention to all power and ground circuits. Check for any Service Bulletins for possible causes that may apply. If no problems are found, replace the TCM in accordance with the Service Information.
- Perform the CVT VERIFICATION TEST. Refer to **CVT VERIFICATION TEST** .

6. **CHECK THE (T72) 5 VOLT SUPPLY CIRCUIT FOR AN OPEN**

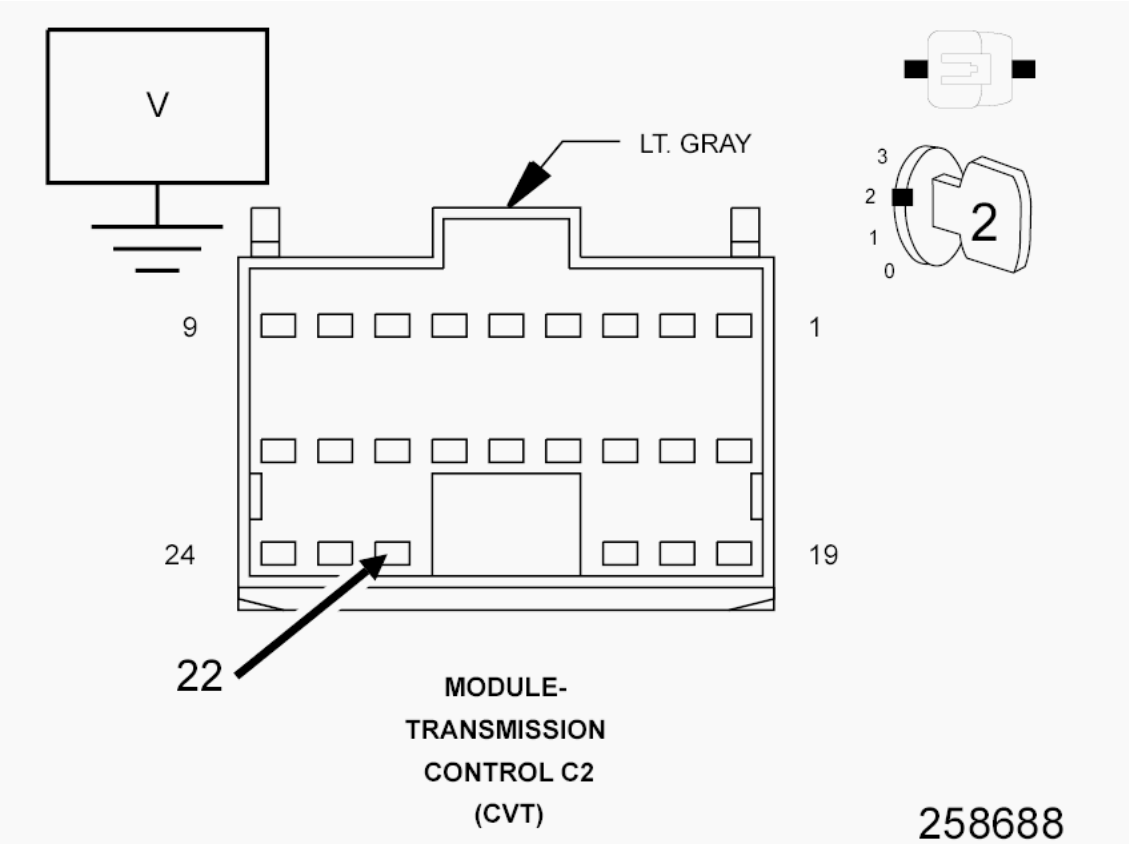

Fig. 76: Checking 5 Volt Supply Circuit For An Open
Courtesy of CHRYSLER GROUP, LLC

1. While back probing, measure the voltage of the (T72) 5 Volt Supply circuit in Transmission Solenoid/Pressure Switch Assembly harness connector.

Is the voltage 5.0 volts (± 0.2 of a volt)?

Yes

- Repair the (T72) 5 Volt Supply circuit for an open or high resistance.
- Perform the CVT VERIFICATION TEST. Refer to **CVT VERIFICATION TEST** .

No

- Using the schematics as a guide, check the Transmission Control Module (TCM) terminals for corrosion, damage, or terminal push out. Pay particular attention to all power and ground circuits. Check for any Service Bulletins for possible causes that may apply. If no problems are found, replace the TCM in accordance with the Service Information.
- Perform the CVT VERIFICATION TEST. Refer to **CVT VERIFICATION TEST** .

7. **CHECK THE WIRING AND CONNECTORS**
   1. The conditions necessary to set this DTC are not present at this time.
   2. Using the schematics as a guide, inspect the wiring and connectors specific to this circuit.
   3. Wiggle the wires while checking for shorted and open circuits.

   Were there any problems found?

   Yes

   - Repair as necessary.
   - Perform the CVT VERIFICATION TEST. Refer to **CVT VERIFICATION TEST** .

   No

   - Test Complete.

P0848-SECONDARY OIL PRESSURE SENSOR CIRCUIT HIGH

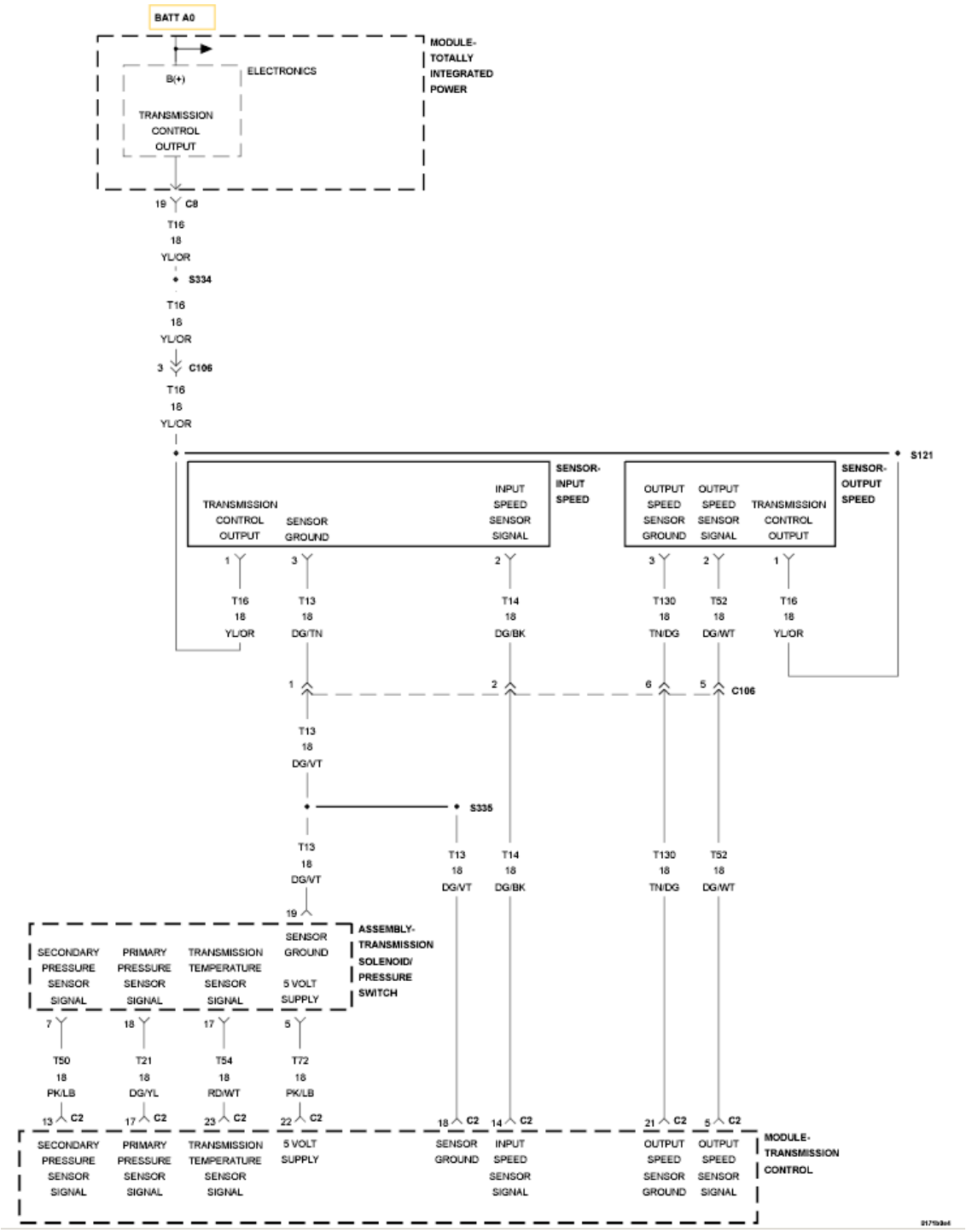

Fig. 77: Sensor Reference Voltage Wiring Diagram
Courtesy of CHRYSLER GROUP, LLC

For a complete wiring diagram, **refer to appropriate SYSTEM WIRING DIAGRAMS article** .

THEORY OF OPERATION

The Transmission Control Module (TCM) monitors the input voltage from the

secondary pulley pressure sensor. When the voltage is above a predetermined limit a DTC will set.

WHEN MONITORED

Ignition on, system voltage between 9.0 and 16.0 Volts.

Transmission temperature greater than -20° C (-4° F).

No active DTCs from the following:

- Secondary Oil Pressure Sensor Low
- Sensor ground

SET CONDITION

When the monitored voltage rises above 4.7 Volts for the period of five seconds.

POSSIBLE CAUSES

Possible Causes
(T72) 5 VOLT SUPPLY CIRCUIT SHORTED TO VOLTAGE
(T50) SECONDARY PRESSURE SENSOR SIGNAL CIRCUIT SHORTED TO VOLTAGE
SECONDARY PRESSURE SENSOR
TRANSMISSION CONTROL MODULE

Always perform the CVT Pre-Diagnostic Troubleshooting procedure before proceeding. Refer to CVT - PRE-DIAGNOSTIC TROUBLESHOOTING PROCEDURE .

DIAGNOSTIC TEST

1. **CHECK THE SECONDARY PRESSURE SENSOR VOLTAGE**
    1. Using the scan tool, read the Secondary Pulley Pressure Sensor voltage.

       Is the voltage greater than 4.7 Volts?

       Yes

       - Go To 2

No

- Go To 6

2. **CHECK THE (T72) 5 VOLT SUPPLY CIRCUIT**

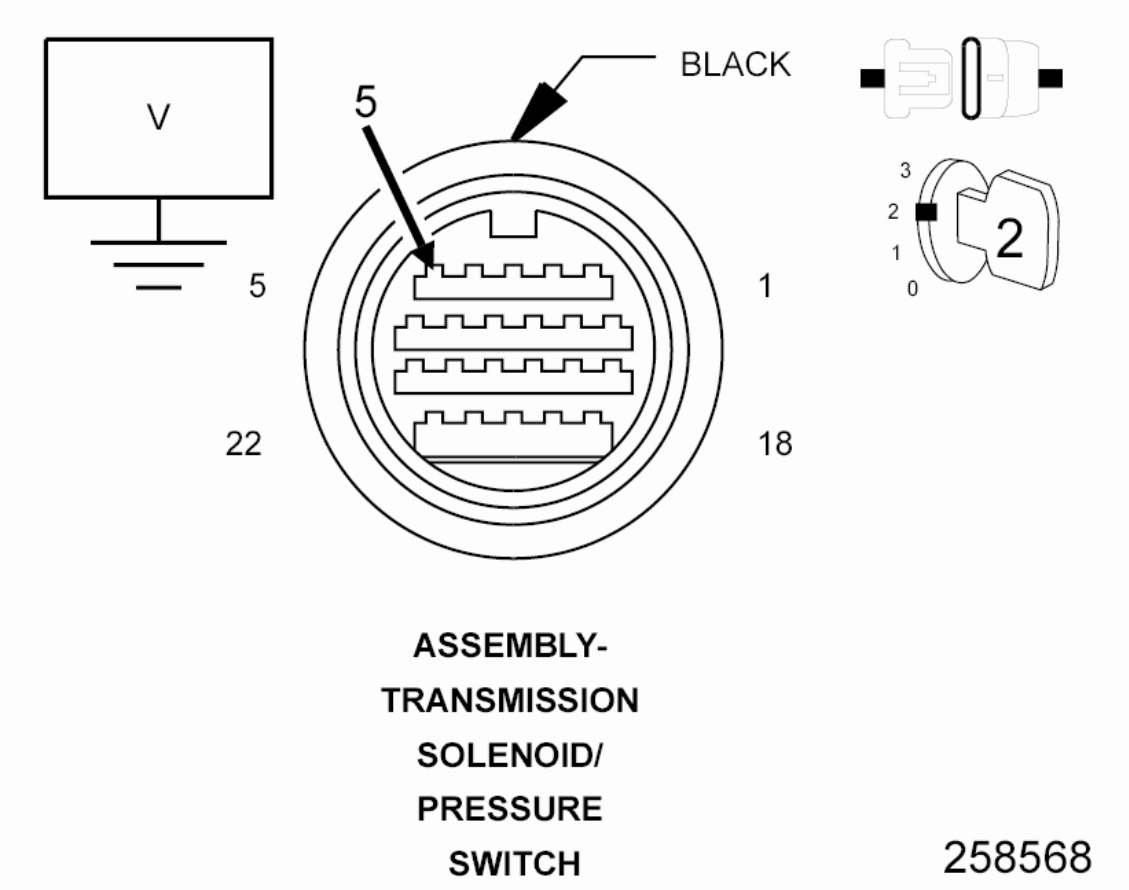

Fig. 78: Checking 5-Volt Supply Circuit Voltage
Courtesy of CHRYSLER GROUP, LLC

1. Turn the ignition off to the lock position.
2. Disconnect the Transmission Solenoid/Pressure Switch Assembly harness connector.
3. Ignition on, engine not running.
4. Measure the voltage of the (T72) 5 Volt Supply circuit in the Transmission Solenoid/Pressure Switch Assembly harness connector.

   Is the voltage between 4.5 and 5.5 Volts?

   Yes

   - Go To 3

No

- Go To 5

3. **CHECK THE (T50) SECONDARY PRESSURE SENSOR SIGNAL CIRCUIT**
   1. Turn the ignition off to the lock position.
   2. Disconnect the Transmission Solenoid/Pressure Switch Assembly harness connector.
   3. Ignition on, engine not running.
   4. Using the scan tool, read the Secondary Pulley Pressure Sensor voltage.

   Does the scan tool read any voltage?

   Yes

   - Go To 4

   No

   - Replace the Secondary Pressure Sensor (Valve Body) in accordance with the Service Information.
   - Perform the CVT VERIFICATION TEST. Refer to **CVT VERIFICATION TEST** .

4. **CHECK THE (T50) SECONDARY PRESSURE SENSOR SIGNAL CIRCUIT FOR A SHORT TO VOLTAGE**

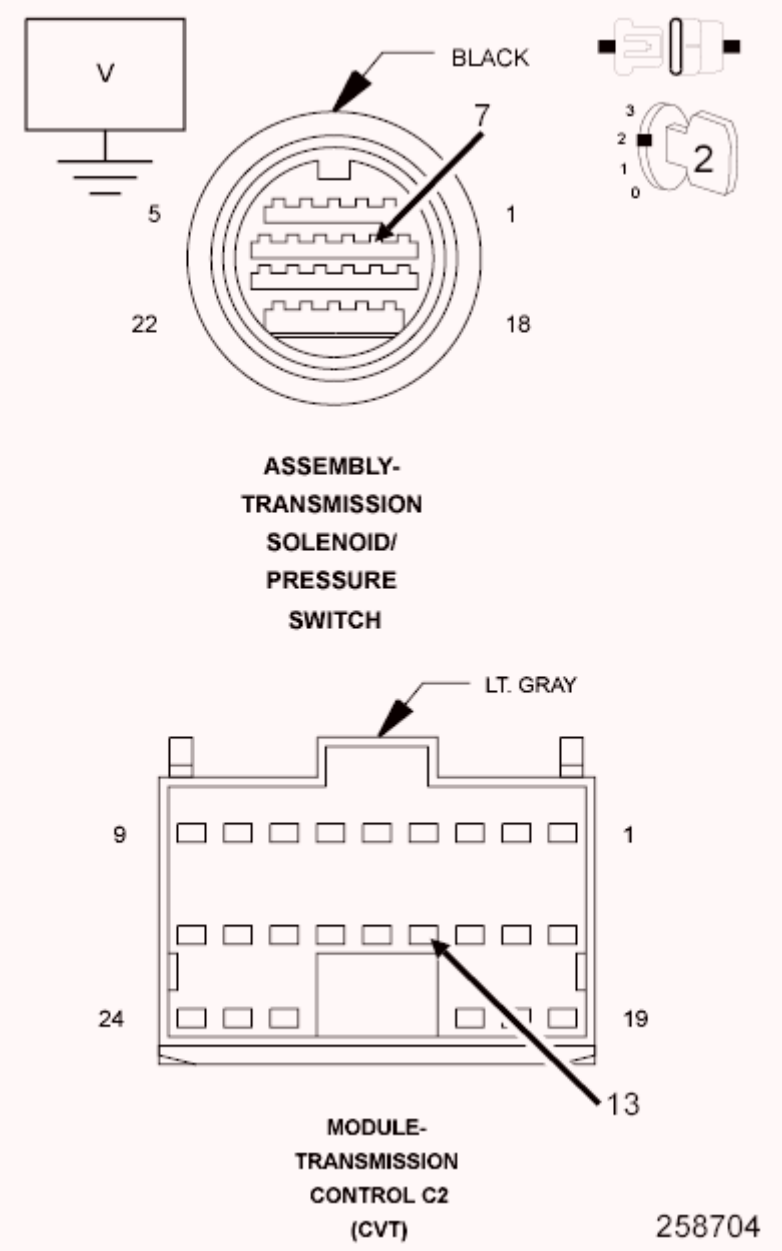

Fig. 79: Checking Secondary Pressure Sensor Signal Circuit For A Short To Voltage
Courtesy of CHRYSLER GROUP, LLC

1. Turn the ignition off to the lock position.
2. Disconnect the TCM C2 harness connector.
3. Ignition on, engine not running.
4. Measure the voltage of the (T50) Secondary Pressure Sensor Signal circuit.

   Is there any voltage present?

Yes

- Repair the (T50) Primary Pressure Sensor Signal circuit for a short to voltage.
- Perform the CVT VERIFICATION TEST. Refer to **CVT VERIFICATION TEST** .

No

- Using the schematics as a guide, check the Transmission Control Module (TCM) terminals for corrosion, damage, or terminal push out. Pay particular attention to all power and ground circuits. Check for any Service Bulletins for possible causes that may apply. If no problems are found, replace the TCM in accordance with the Service Information.
- Perform the CVT VERIFICATION TEST. Refer to **CVT VERIFICATION TEST** .

5. **CHECK THE (T72) 5 VOLT SUPPLY CIRCUIT FOR A SHORT TO VOLTAGE**

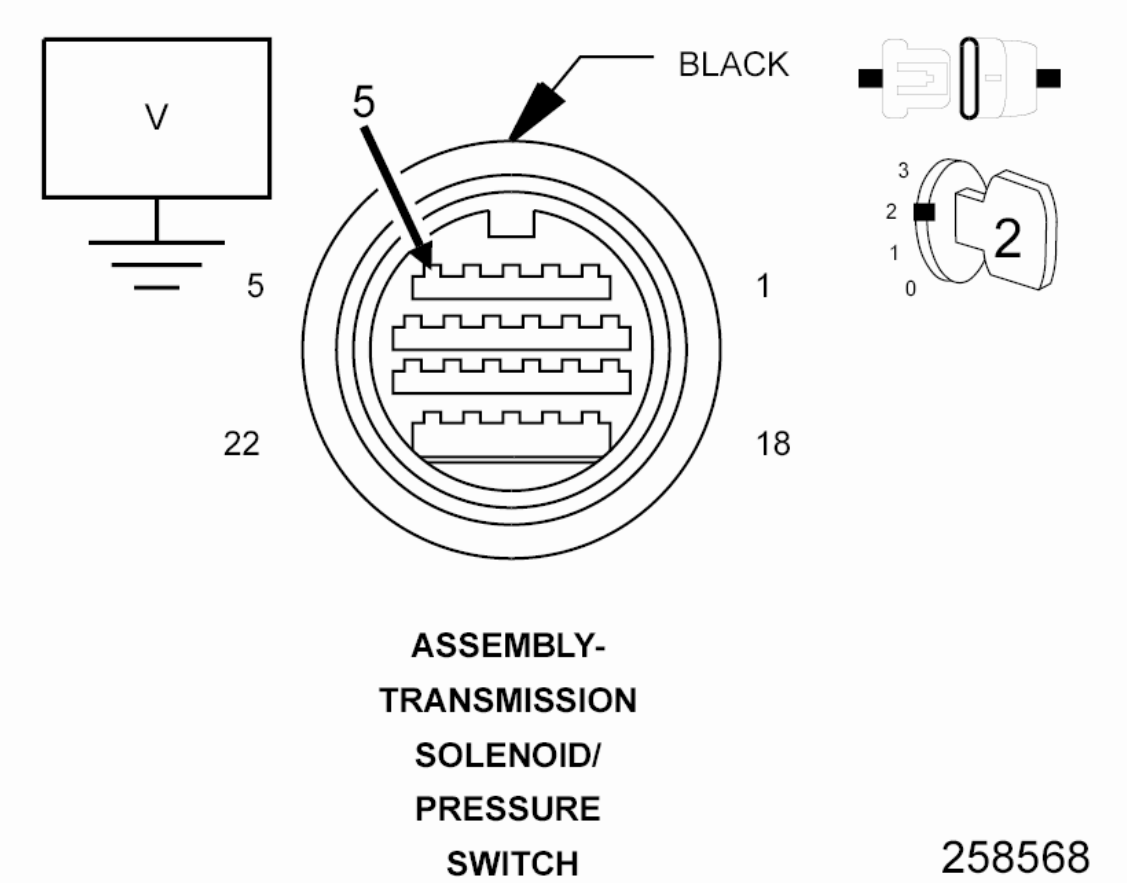

Fig. 80: Checking 5-Volt Supply Circuit For Short To Voltage
Courtesy of CHRYSLER GROUP, LLC

1. Turn the ignition off to the lock position.
2. Disconnect the TCM C2 harness connector.
3. Ignition on, engine not running.
4. Measure the voltage of the (T72) 5 Volt Supply circuit in the Transmission Solenoid/Pressure Switch Assembly harness connector.

   Is there any voltage present?

   Yes

   - Repair the (T72) 5 Volt Supply circuit for a short to voltage.
   - Perform the CVT VERIFICATION TEST. Refer to **CVT VERIFICATION TEST** .

   No

   - Using the schematics as a guide, check the Transmission Control Module (TCM) terminals for corrosion, damage, or terminal push out. Pay particular attention to all power and ground circuits. Check for any Service Bulletins for possible causes that may apply. If no problems are found, replace the TCM in accordance with the Service Information.
   - Perform the CVT VERIFICATION TEST. Refer to **CVT VERIFICATION TEST** .

6. **CHECK THE WIRING AND CONNECTORS**
   1. The conditions necessary to set this DTC are not present at this time.
   2. Using the schematics as a guide, inspect the wiring and connectors specific to this circuit.
   3. Wiggle the wires while checking for shorted and open circuits.

      Were there any problems found?

      Yes

      - Repair as necessary.

- Perform the CVT VERIFICATION TEST. Refer to **CVT VERIFICATION TEST** .

No

- Test Complete.

P0962-PRESSURE CONTROL SOLENOID A CONTROL CIRCUIT LOW

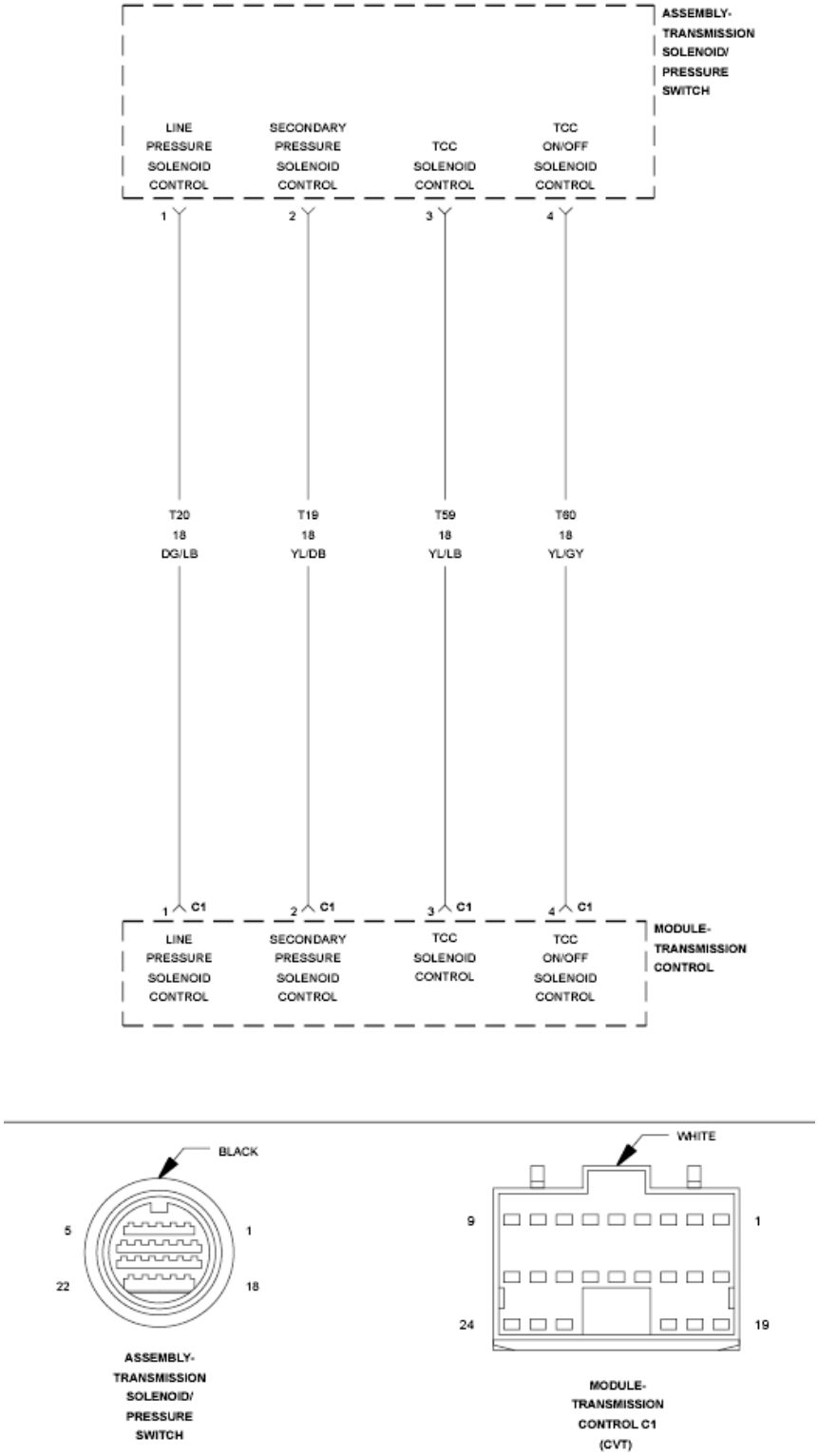

Fig. 81: Pressure Control Solenoid Control Wiring Diagram
Courtesy of CHRYSLER GROUP, LLC

For a complete wiring diagram, **refer to appropriate SYSTEM WIRING DIAGRAMS article** .

THEORY OF OPERATION

The Transmission Control Module (TCM) regulates the line pressure by pulsing the line pressure solenoid. The TCM monitors the line pressure solenoid voltage and current draw during operation.

WHEN MONITORED

Ignition on with a system voltage between 9.0 and 16.0 volts.

SET CONDITION

If the monitored line pressure solenoid voltage is less than 70% of the target line pressure solenoid voltage for the period of 1.0 second.

POSSIBLE CAUSES

Possible Causes
(T20) LINE PRESSURE SOLENOID CONTROL CIRCUIT SHORTED TO GROUND
LINE PRESSURE SOLENOID
TRANSMISSION CONTROL MODULE

Always perform the CVT Pre-Diagnostic Troubleshooting procedure before proceeding. Refer to CVT - PRE-DIAGNOSTIC TROUBLESHOOTING PROCEDURE .

DIAGNOSTIC TEST

1. **CHECK TO SEE IF THE DTC IS ACTIVE**
   1. With the scan tool, read Transmission DTCs.

      Is the status Active or is the Starts Since Set counter 2 or less for this DTC?

      Yes

      - Go To 2

      No

      - Go To 4
2. **CHECK THE (T20) LINE PRESSURE SOLENOID CONTROL CIRCUIT FOR A SHORT TO GROUND**

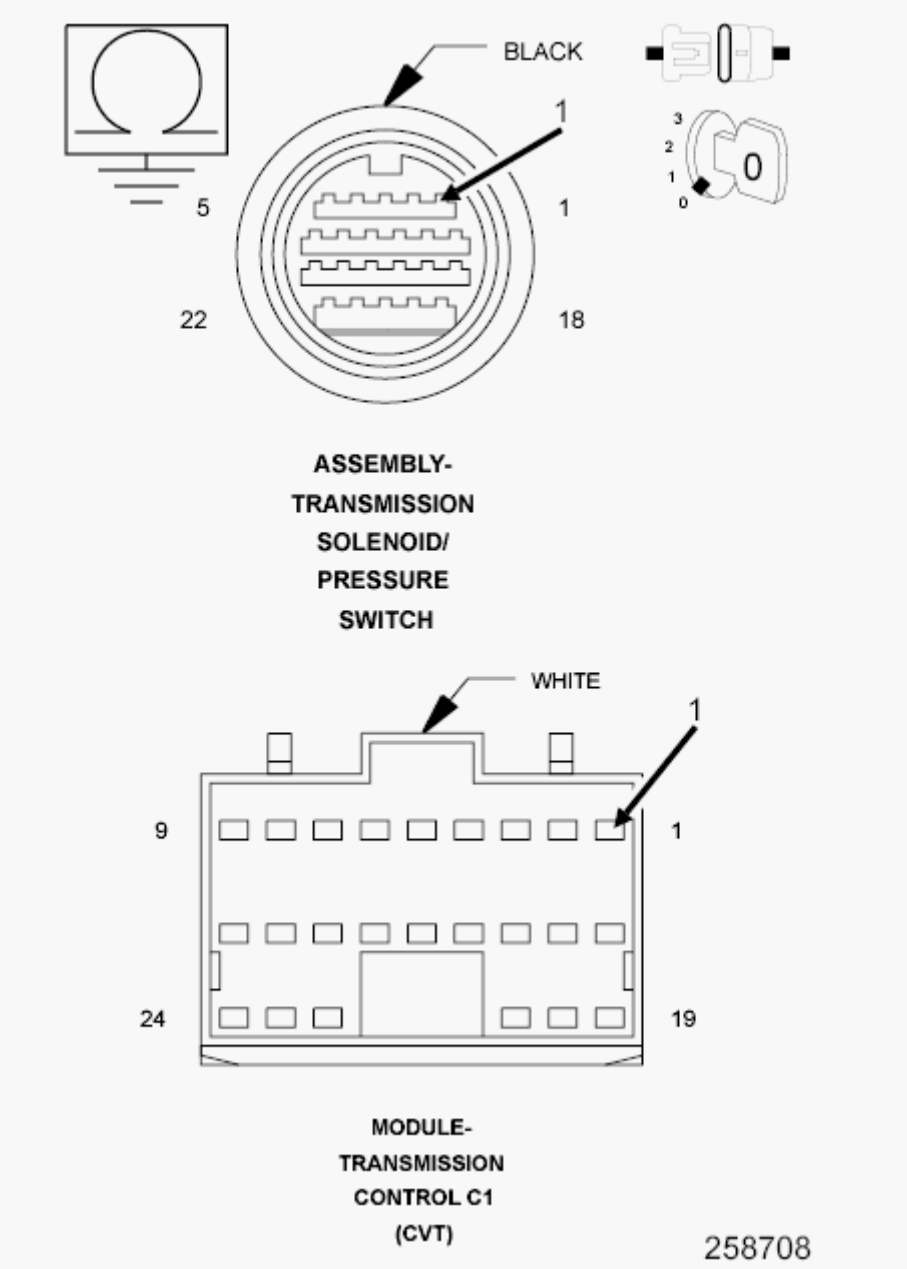

Fig. 82: Checking Line Pressure Solenoid Control Circuit For A Short To Ground
Courtesy of CHRYSLER GROUP, LLC

1. Turn the ignition off to the lock position.
2. Disconnect the TCM C1 harness connector.
3. Disconnect the Transmission Solenoid/Pressure Switch Assembly harness connector.
4. Measure the resistance between ground and the (T20) Line Pressure Solenoid Control circuit.

Is the resistance below 5.0 Ohms?

Yes

- Repair the (T20) Line Pressure Solenoid Control circuit for a short to ground.
- Perform the CVT VERIFICATION TEST. Refer to **CVT VERIFICATION TEST** .

No

- Go To 3

3. **CHECK THE (T20) LINE PRESSURE SOLENOID CONTROL CIRCUIT**

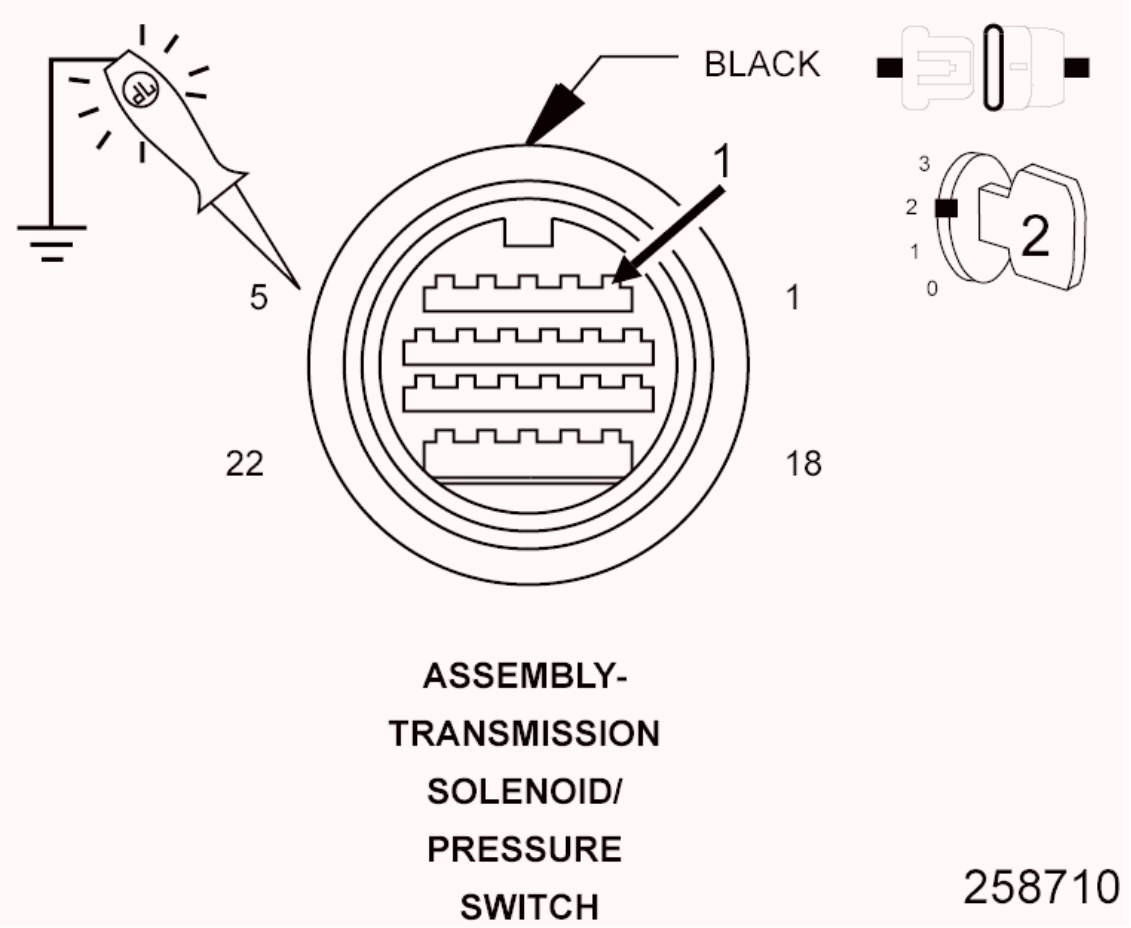

Fig. 83: Checking Line Pressure Solenoid Control Circuit
Courtesy of CHRYSLER GROUP, LLC

1. Turn the ignition off to the lock position.

2. Reconnect the TCM C1 harness connector.
3. Ignition on, engine not running.
4. With the scan tool actuate the Line Pressure Solenoid.
5. Using a test light connected to ground, check the (T20) Line Pressure Solenoid Control circuit in the Transmission Solenoid/Pressure Switch Assembly harness connector.

NOTE: The test light must illuminate brightly. Compare the brightness to that of a direct connection to the battery.

Does the test light illuminate brightly?

Yes

- Replace the Line Pressure Solenoid (Valve Body) in accordance with the Service Information.
- Perform the CVT VERIFICATION TEST. Refer to **CVT VERIFICATION TEST** .

No

- Using the schematics as a guide, check the Transmission Control Module (TCM) terminals for corrosion, damage, or terminal push out. Pay particular attention to all power and ground circuits. Check for any Service Bulletins for possible causes that may apply. If no problems are found, replace the TCM in accordance with the Service Information.
- Perform the CVT VERIFICATION TEST. Refer to **CVT VERIFICATION TEST** .

4. **CHECK THE WIRING AND CONNECTORS**
   1. The conditions necessary to set this DTC are not present at this time.
   2. Using the schematics as a guide, inspect the wiring and connectors specific to this circuit.
   3. Wiggle the wires while checking for shorted and open circuits.

   Were there any problems found?

Yes

- Repair as necessary.
- Perform the CVT VERIFICATION TEST. Refer to **CVT VERIFICATION TEST** .

No

- Test Complete.

P0963-PRESSURE CONTROL SOLENOID A CONTROL CIRCUIT HIGH

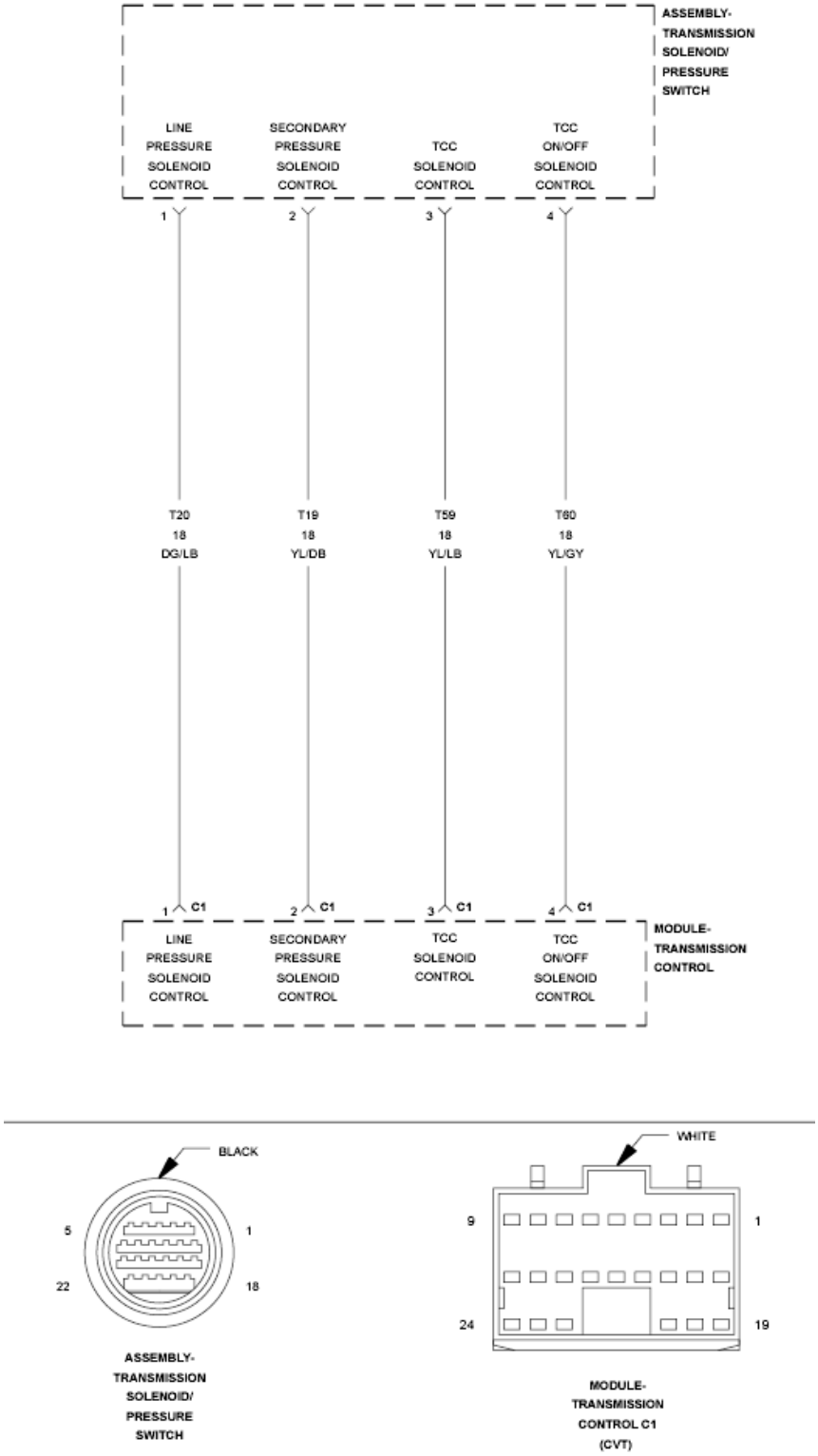

Fig. 84: Pressure Control Solenoid Control Wiring Diagram
Courtesy of CHRYSLER GROUP, LLC

For a complete wiring diagram, **refer to appropriate SYSTEM WIRING DIAGRAMS article** .

THEORY OF OPERATION

The Transmission Control Module (TCM) regulates the line pressure by pulsing the line pressure solenoid. The TCM monitors the line pressure solenoid voltage and current draw during operation.

WHEN MONITORED

Ignition on with a system voltage between 9.0 and 16.0 volts.

No Line Pressure Solenoid Circuit Low DTC present.

SET CONDITION

When the target line pressure solenoid current is greater than 0.75 of an amp while the monitored line pressure solenoid current is less than 0.4 of an amp for the period of five seconds.

POSSIBLE CAUSES

Possible Causes
(T20) LINE PRESSURE SOLENOID CONTROL CIRCUIT SHORTED TO VOLTAGE
(T20) LINE PRESSURE SOLENOID CONTROL CIRCUIT OPEN
LINE PRESSURE SOLENOID
TRANSMISSION CONTROL MODULE

Always perform the CVT Pre-Diagnostic Troubleshooting procedure before proceeding. Refer to CVT - PRE-DIAGNOSTIC TROUBLESHOOTING PROCEDURE .

DIAGNOSTIC TEST

1. **CHECK TO SEE IF THE DTC IS ACTIVE**
    1. With the scan tool, read Transmission DTCs.

       Is the status Active or is the Starts Since Set counter 2 or less for this DTC?

       Yes

       - Go To 2

       No

- Go To 6

2. **CHECK THE (T20) LINE PRESSURE SOLENOID CONTROL CIRCUIT**

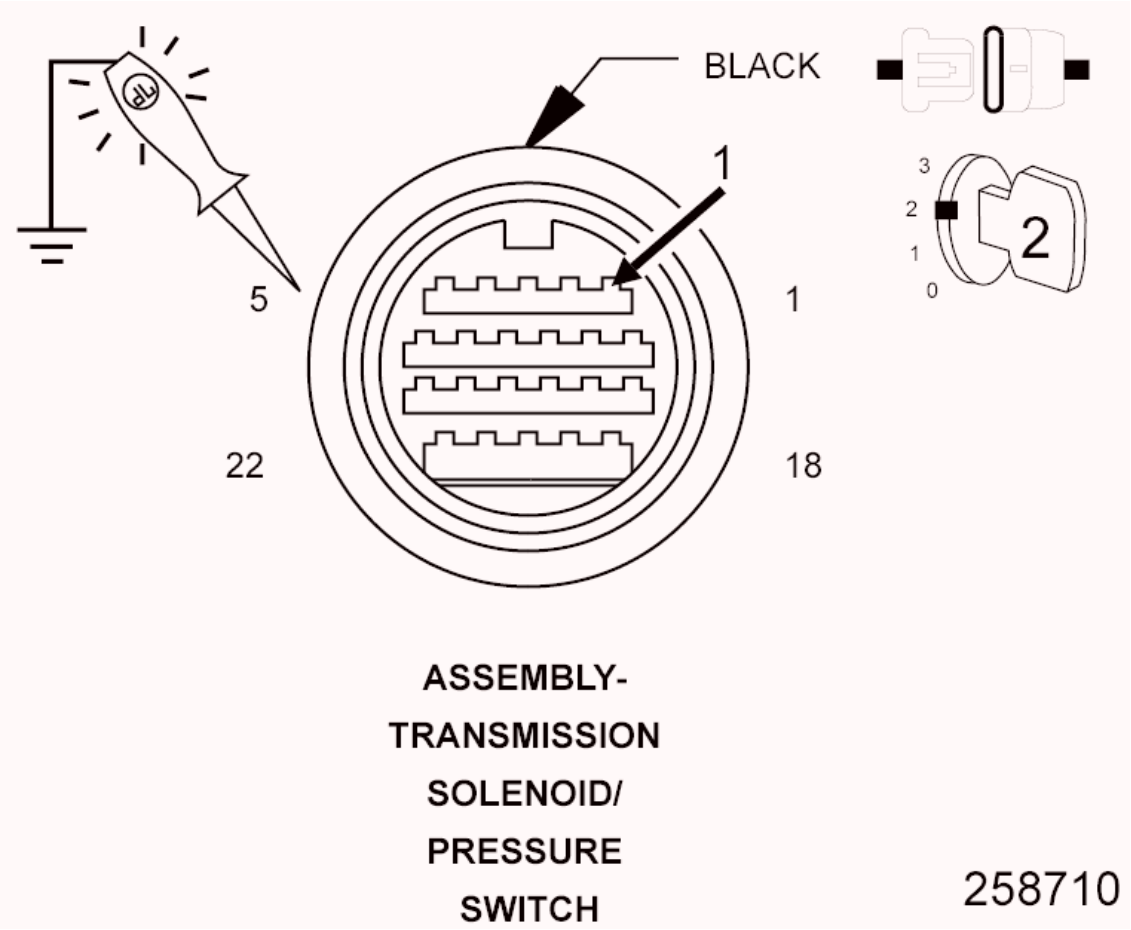

Fig. 85: Checking Line Pressure Solenoid Control Circuit
Courtesy of CHRYSLER GROUP, LLC

1. Turn the ignition off to the lock position.
2. Disconnect the Transmission Solenoid/Pressure Switch Assembly harness connector.
3. Ignition on, engine not running.
4. With the scan tool, actuate the Line Pressure Solenoid.
5. Using a test light connected to ground, check the (T20) Line Pressure Solenoid Control circuit in the Transmission Solenoid/Pressure Switch Assembly harness connector.

NOTE: The test light must illuminate brightly. Compare the brightness to that of a direct connection to

the battery.

Does the test light illuminate brightly?

Yes

- Go To 3

No

- Go To 5

3. **CHECK THE (T20) LINE PRESSURE SOLENOID CONTROL CIRCUIT FOR A SHORT TO VOLTAGE**

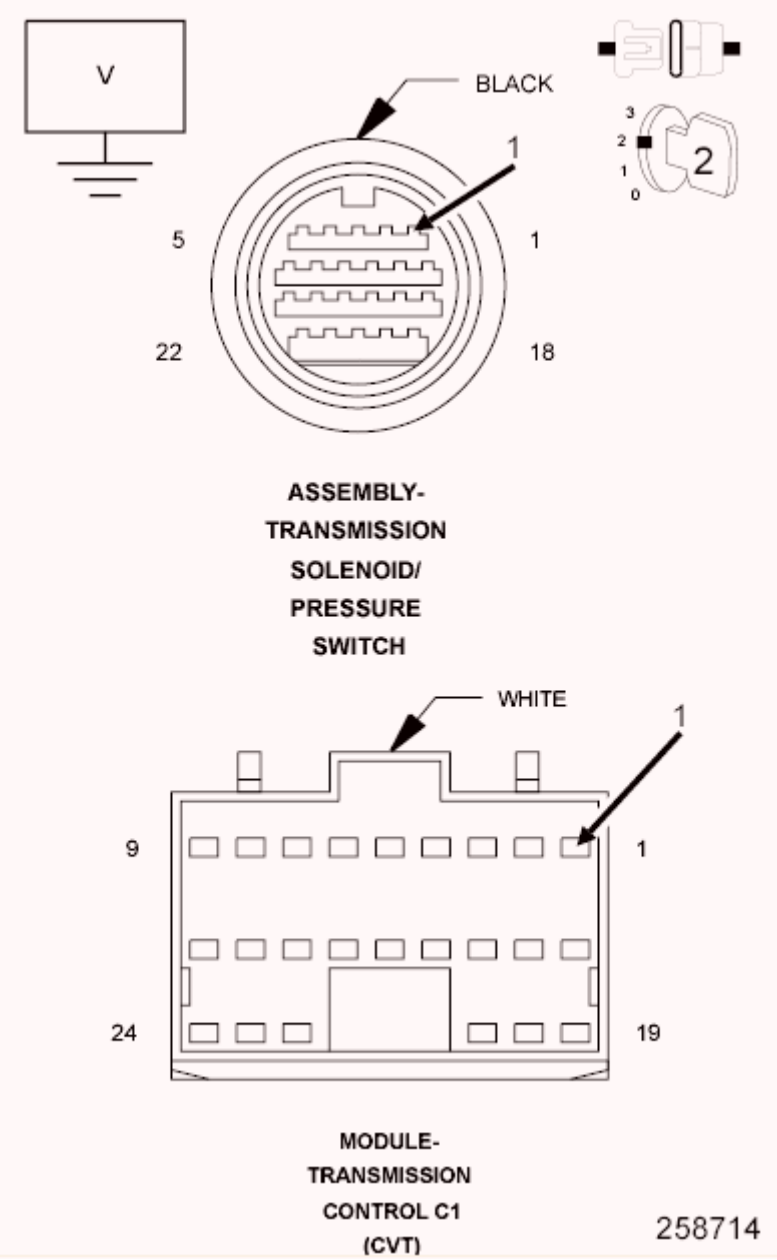

Fig. 86: Checking Line Pressure Solenoid Control Circuit For A Short To Voltage
Courtesy of CHRYSLER GROUP, LLC

1. With the scan tool, stop the actuation of the Line Pressure Solenoid.
2. Turn the ignition off to the lock position.
3. Disconnect the TCM C1 harness connector.
4. Ignition on, engine not running.
5. Measure the voltage of the (T20) Line Pressure Solenoid Control circuit.

Is the voltage above 0.05 of a volt?

Yes

- Repair the (T20) Line Pressure Solenoid Control circuit for a short to voltage.
- Perform the CVT VERIFICATION TEST. Refer to **CVT VERIFICATION TEST** .

No

- Go To 4

4. **CHECK THE LINE PRESSURE SOLENOID**

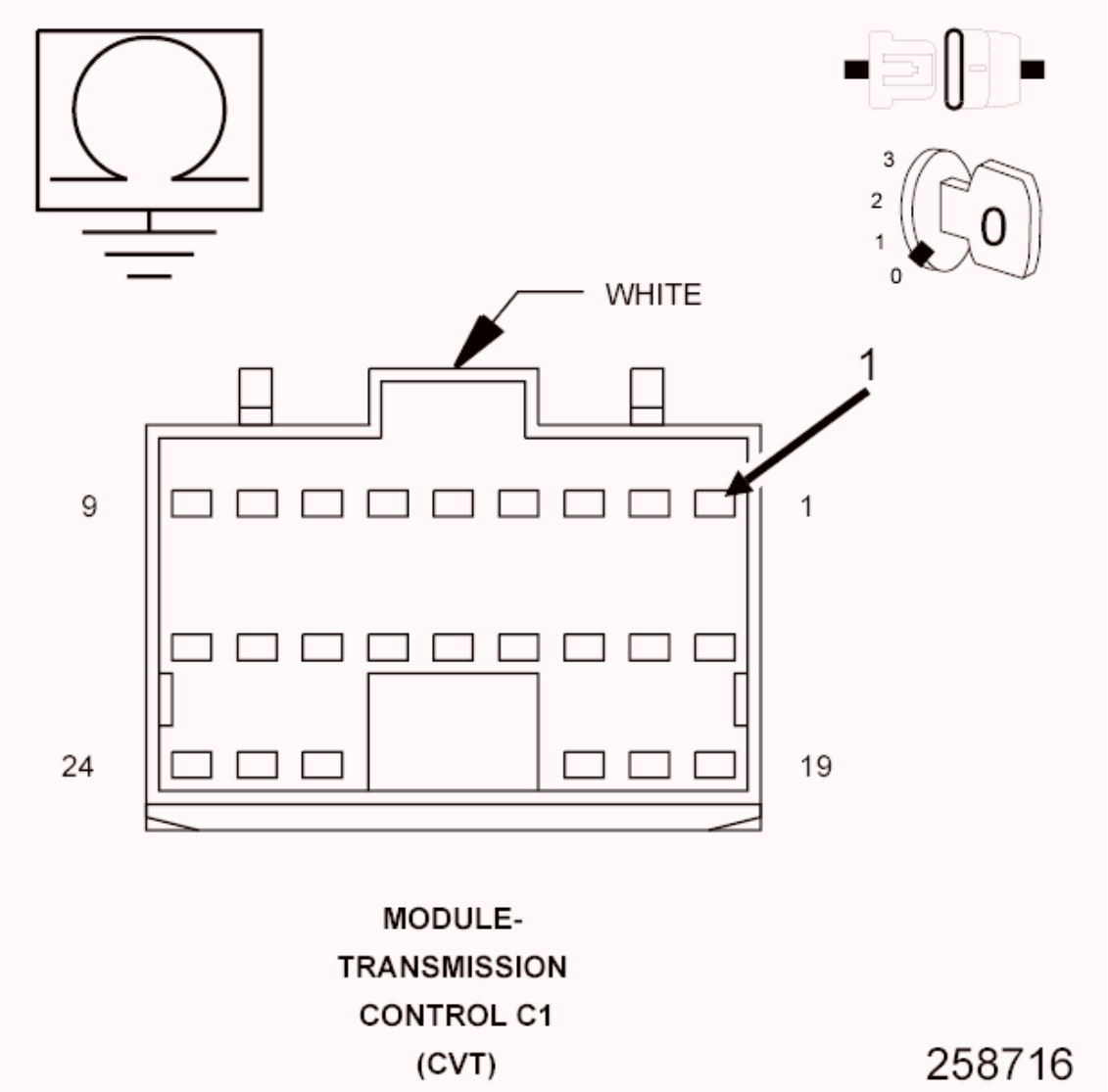

Fig. 87: Checking Line Pressure Solenoid

Courtesy of CHRYSLER GROUP, LLC

1. Turn the ignition off to the lock position.
2. Reconnect the Transmission Solenoid/Pressure Switch Assembly harness connector.
3. Measure the resistance between ground and the (T20) Line Pressure Solenoid Control circuit in the TCM C1 harness connector.

   Is the resistance between 3.0 and 9.0 Ohms?

   Yes

   - Using the schematics as a guide, check the Transmission Control Module (TCM) terminals for corrosion, damage, or terminal push out. Pay particular attention to all power and ground circuits. Check for any Service Bulletins for possible causes that may apply. If no problems are found, replace the TCM in accordance with the Service Information.
   - Perform the CVT VERIFICATION TEST. Refer to **CVT VERIFICATION TEST** .

   No

   - Replace the Line Pressure Solenoid (Valve Body) in accordance with the Service Information.
   - Perform the CVT VERIFICATION TEST. Refer to **CVT VERIFICATION TEST** .

5. **CHECK THE (T20) LINE PRESSURE SOLENOID CONTROL CIRCUIT FOR AN OPEN**

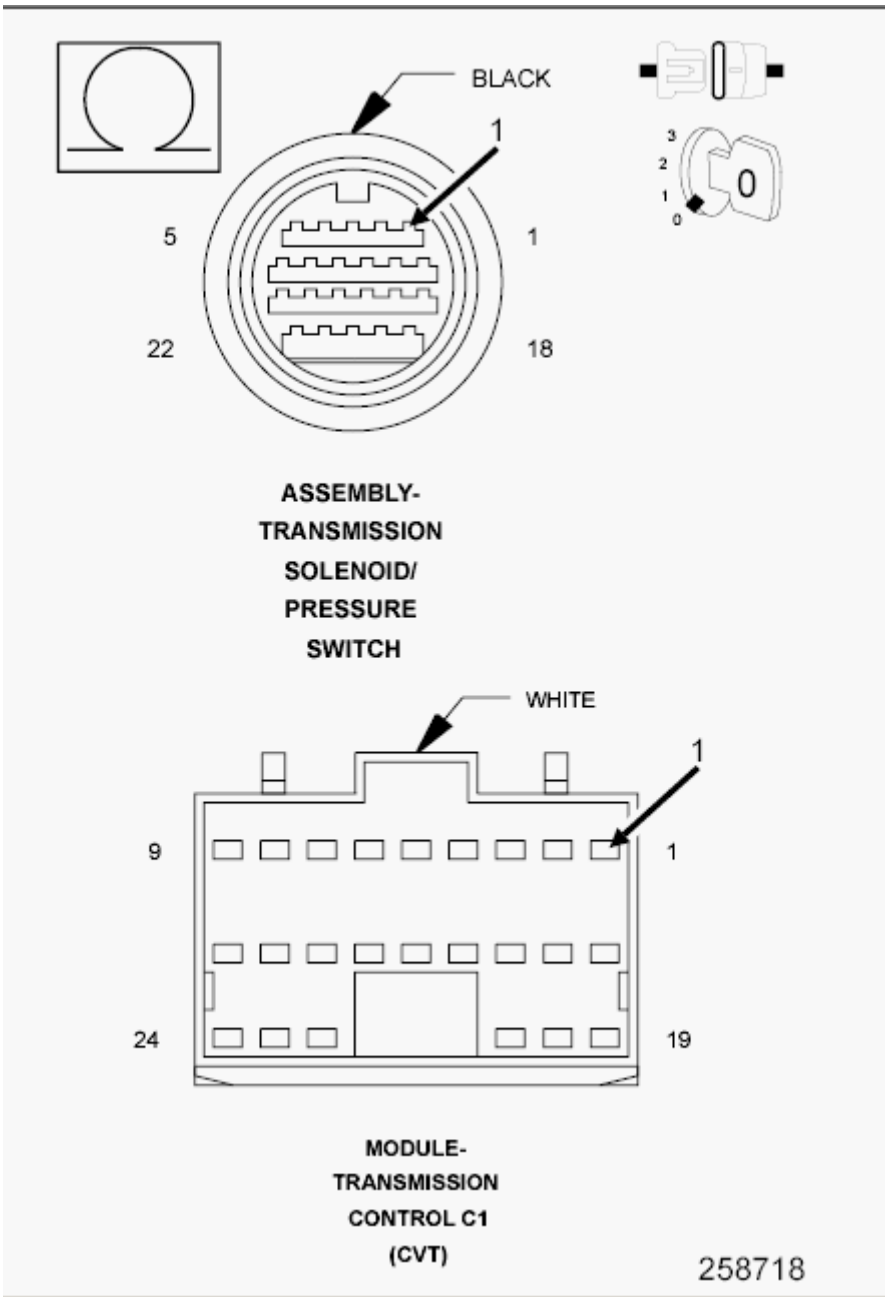

Fig. 88: Checking Line Pressure Solenoid Control Circuit For An Open
Courtesy of CHRYSLER GROUP, LLC

1. Turn the ignition off to the lock position.
2. Measure the resistance of the (T20) Line Pressure Solenoid Control circuit between the TCM C1 harness connector and the Transmission Solenoid/Pressure Switch Assembly harness connector.

   Is the resistance above 5.0 Ohms?

   Yes

- Repair the (T20) Line Pressure Solenoid Control circuit for an open.
- Perform the CVT VERIFICATION TEST. Refer to **CVT VERIFICATION TEST** .

No

- Using the schematics as a guide, check the Transmission Control Module (TCM) terminals for corrosion, damage, or terminal push out. Pay particular attention to all power and ground circuits. Check for any Service Bulletins for possible causes that may apply. If no problems are found, replace the TCM in accordance with the Service Information.
- Perform the CVT VERIFICATION TEST. Refer to **CVT VERIFICATION TEST** .

6. **CHECK THE WIRING AND CONNECTORS**
   1. The conditions necessary to set this DTC are not present at this time.
   2. Using the schematics as a guide, inspect the wiring and connectors specific to this circuit.
   3. Wiggle the wires while checking for shorted and open circuits.

   Were there any problems found?

   Yes

   - Repair as necessary.
   - Perform the CVT VERIFICATION TEST. Refer to **CVT VERIFICATION TEST** .

   No

   - Test Complete.

P0966-PRESSURE CONTROL SOLENOID B CONTROL CIRCUIT LOW

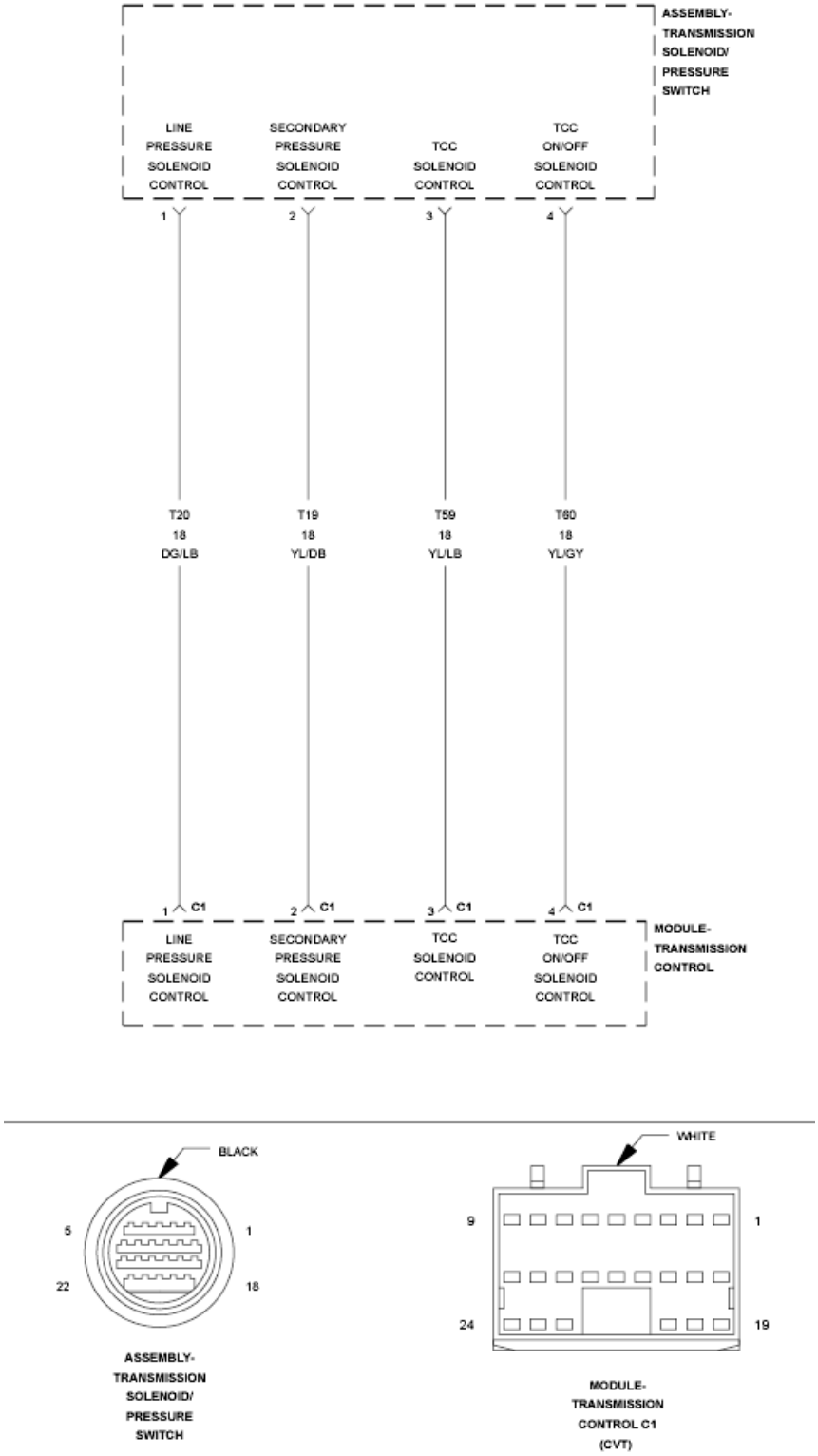

Fig. 89: Pressure Control Solenoid Control Wiring Diagram
Courtesy of CHRYSLER GROUP, LLC

For a complete wiring diagram, **refer to appropriate SYSTEM WIRING DIAGRAMS article** .

THEORY OF OPERATION

The Transmission Control Module (TCM) regulates the secondary pressure by pulsing the secondary pressure solenoid. The TCM monitors the secondary pressure solenoid voltage and current draw during operation.

WHEN MONITORED

Ignition on with a system voltage between 9.0 and 16.0 volts.

SET CONDITION

If the monitored secondary pressure solenoid voltage is less than 70% of the target secondary pressure solenoid voltage for the period of 1.0 second.

POSSIBLE CAUSES

Possible Causes
(T19) SECONDARY PRESSURE SOLENOID CONTROL CIRCUIT SHORTED TO GROUND
SECONDARY PRESSURE SOLENOID
TRANSMISSION CONTROL MODULE

Always perform the CVT Pre-Diagnostic Troubleshooting procedure before proceeding. Refer to CVT - PRE-DIAGNOSTIC TROUBLESHOOTING PROCEDURE .

DIAGNOSTIC TEST

1. **CHECK TO SEE IF THE DTC IS ACTIVE**
   1. With the scan tool, read Transmission DTCs.

      Is the status Active or is the Starts Since Set counter 2 or less for this DTC?

      Yes

      - Go To 2

      No

      - Go To 4
2. **CHECK THE (T19) SECONDARY PRESSURE SOLENOID CONTROL CIRCUIT FOR A SHORT TO GROUND**

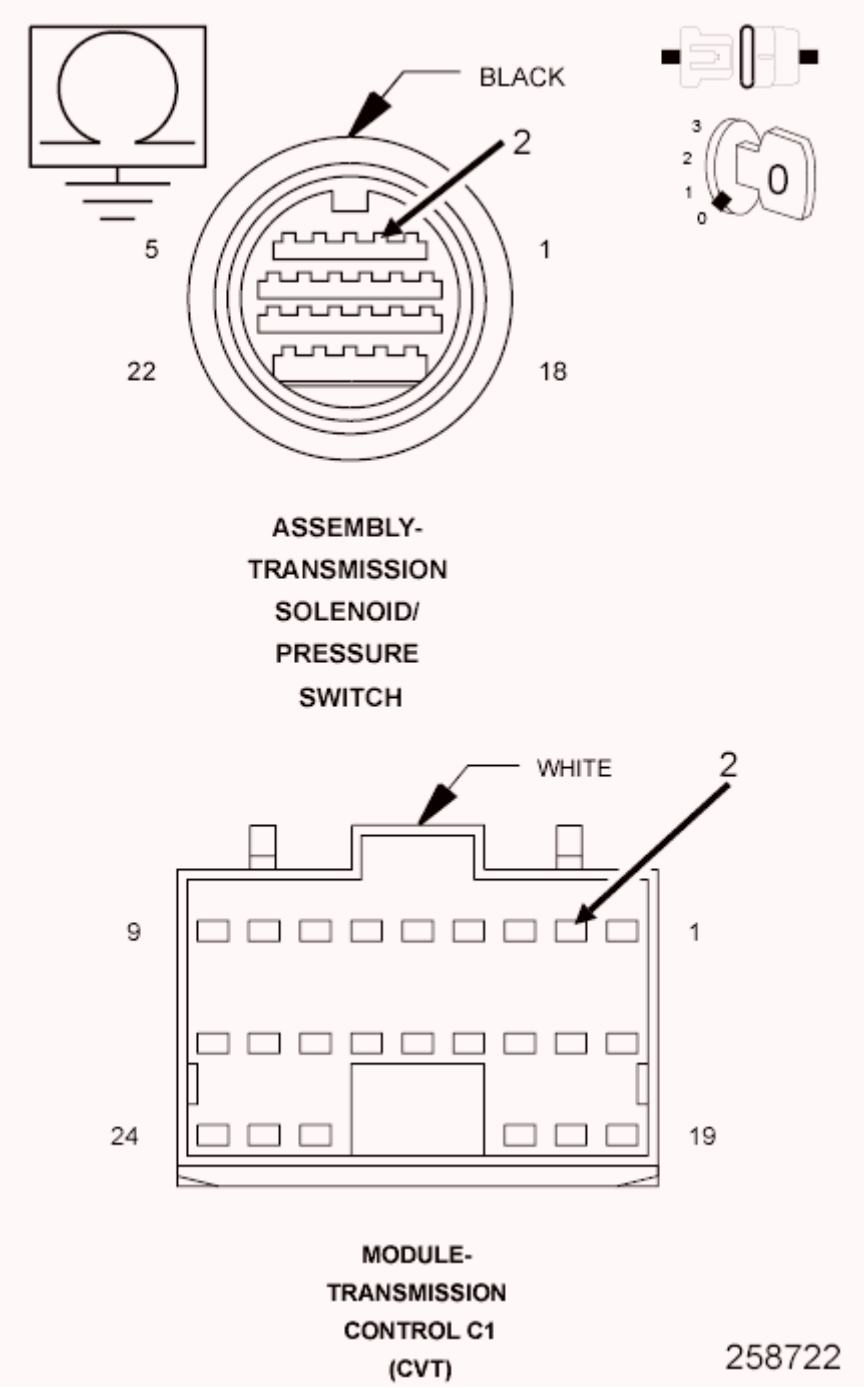

Fig. 90: Checking Secondary Pressure Solenoid Control Circuit For A Short To Ground
Courtesy of CHRYSLER GROUP, LLC

1. Turn the ignition off to the lock position.
2. Disconnect the TCM C1 harness connector.
3. Disconnect the Transmission Solenoid/Pressure Switch Assembly harness connector.
4. Measure the resistance between ground and the (T19) Secondary

Pressure Solenoid Control circuit.

Is the resistance below 5.0 Ohms?

Yes

- Repair the (T19) Secondary Pressure Solenoid Control circuit for a short to ground.
- Perform the CVT VERIFICATION TEST. Refer to **CVT VERIFICATION TEST** .

No

- Go To 3

3. **CHECK THE (T19) SECONDARY PRESSURE SOLENOID CONTROL CIRCUIT**

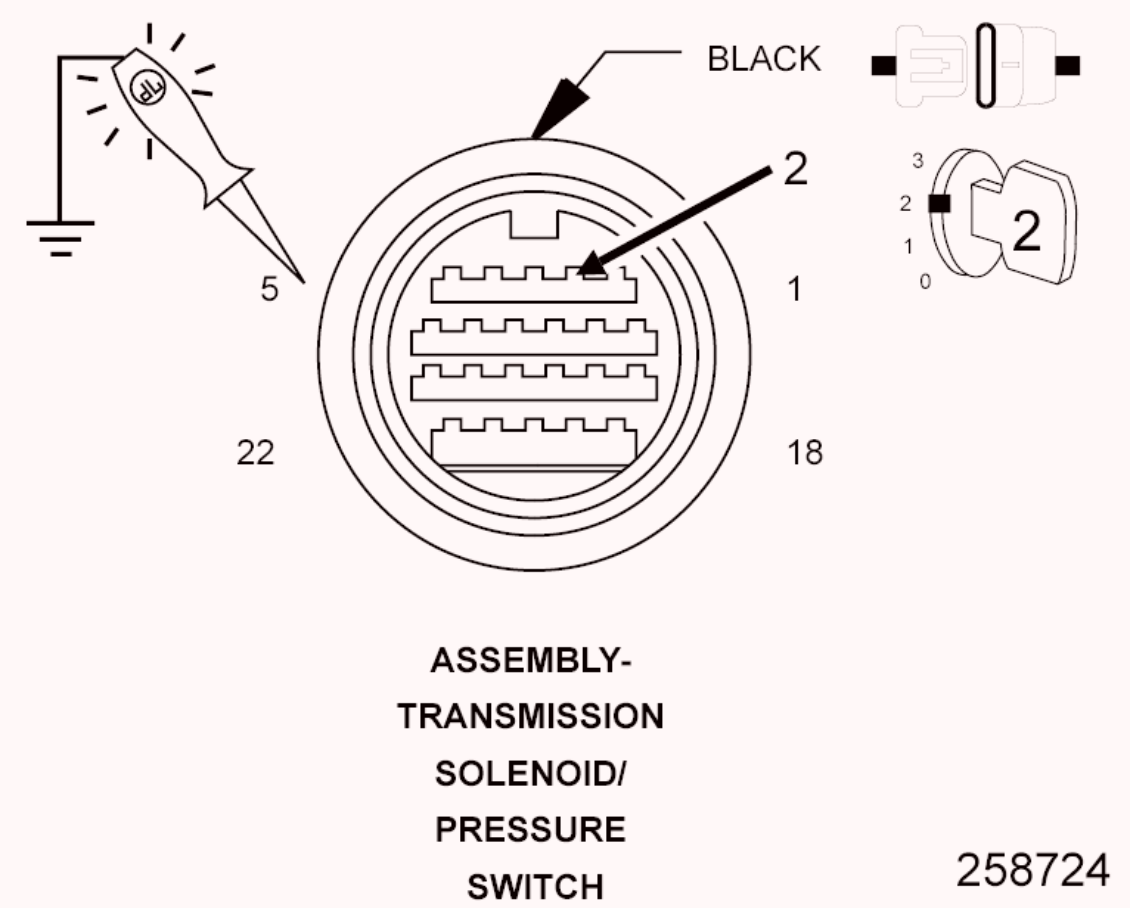

Fig. 91: Checking Secondary Pressure Solenoid Control Circuit
Courtesy of CHRYSLER GROUP, LLC

1. Turn the ignition off to the lock position.
2. Reconnect the TCM C1 harness connector.
3. Ignition on, engine not running.
4. With the scan tool actuate the Secondary Pressure Solenoid.
5. Using a test light connected to ground, check the (T19) Secondary Pressure Solenoid Control circuit in the Transmission Solenoid/Pressure Switch Assembly harness connector.

NOTE: The test light must illuminate brightly. Compare the brightness to that of a direct connection to the battery.

Does the test light illuminate brightly?

Yes

- Replace the Secondary Pressure Solenoid (Valve Body) in accordance with the Service Information.
- Perform the CVT VERIFICATION TEST. Refer to **CVT VERIFICATION TEST** .

No

- Using the schematics as a guide, check the Transmission Control Module (TCM) terminals for corrosion, damage, or terminal push out. Pay particular attention to all power and ground circuits. Check for any Service Bulletins for possible causes that may apply. If no problems are found, replace the TCM in accordance with the Service Information.
- Perform the CVT VERIFICATION TEST. Refer to **CVT VERIFICATION TEST** .

4. **CHECK THE WIRING AND CONNECTORS**
   1. The conditions necessary to set this DTC are not present at this time.
   2. Using the schematics as a guide, inspect the wiring and connectors specific to this circuit.
   3. Wiggle the wires while checking for shorted and open circuits.

Were there any problems found?

Yes

- Repair as necessary.
- Perform the CVT VERIFICATION TEST. Refer to **CVT VERIFICATION TEST** .

No

- Test Complete.

P0967-PRESSURE CONTROL SOLENOID B CONTROL CIRCUIT HIGH

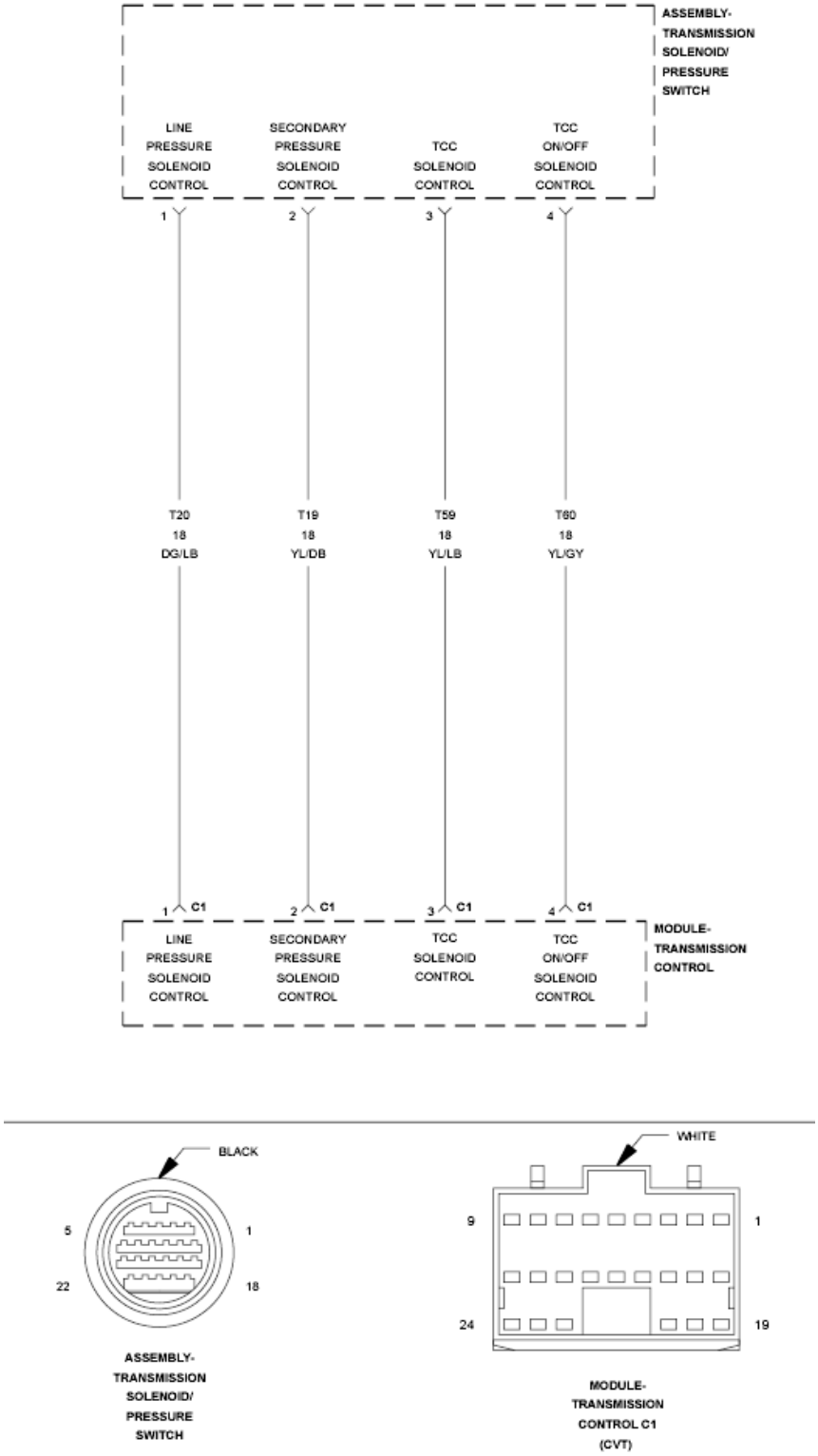

Fig. 92: Pressure Control Solenoid Control Wiring Diagram
Courtesy of CHRYSLER GROUP, LLC

For a complete wiring diagram, **refer to appropriate SYSTEM WIRING DIAGRAMS article** .

THEORY OF OPERATION

The Transmission Control Module (TCM) regulates the secondary pressure by pulsing the secondary pressure solenoid. The TCM monitors the secondary pressure solenoid voltage and current draw during operation.

WHEN MONITORED

Ignition on with a system voltage between 9.0 and 16.0 volts.

No Secondary Pressure Solenoid Low DTC present.

SET CONDITION

When the target secondary pressure solenoid current is greater than 0.75 of an amp while the monitored secondary pressure solenoid current is less than 0.4 of an amp for the period of five seconds.

POSSIBLE CAUSES

Possible Causes
(T19) SECONDARY PRESSURE SOLENOID CONTROL CIRCUIT SHORTED TO VOLTAGE (T19) SECONDARY PRESSURE SOLENOID CONTROL CIRCUIT OPEN
SECONDARY PRESSURE SOLENOID
TRANSMISSION CONTROL MODULE

Always perform the CVT Pre-Diagnostic Troubleshooting procedure before proceeding. Refer to CVT - PRE-DIAGNOSTIC TROUBLESHOOTING PROCEDURE .

DIAGNOSTIC TEST

1. **CHECK TO SEE IF THE DTC IS ACTIVE**
    1. With the scan tool, read Transmission DTCs.

       Is the status Active or is the Starts Since Set counter 2 or less for this DTC?

       Yes

       - Go To 2

No

- Go To 6

2. **CHECK THE (T19) SECONDARY PRESSURE SOLENOID CONTROL CIRCUIT**

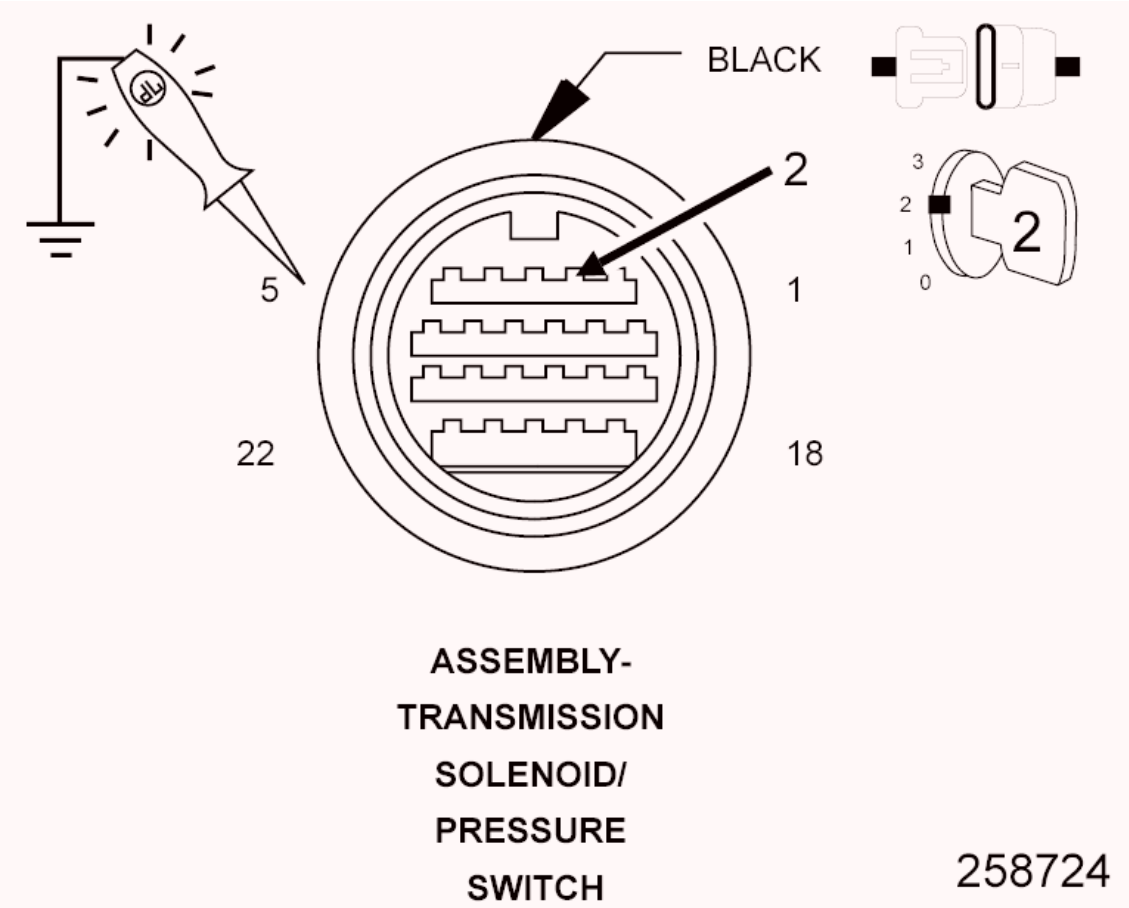

Fig. 93: Checking Secondary Pressure Solenoid Control Circuit
Courtesy of CHRYSLER GROUP, LLC

1. Turn the ignition off to the lock position.
2. Disconnect the Transmission Solenoid/Pressure Switch Assembly harness connector.
3. Ignition on, engine not running.
4. With the scan tool, actuate the Secondary Pressure Solenoid.
5. Using a test light connected to ground, check the (T19) Secondary Pressure Solenoid Control circuit in the Transmission Solenoid/Pressure Switch Assembly harness connector.

NOTE: The test light must illuminate brightly. Compare

the brightness to that of a direct connection to the battery.

Does the test light illuminate brightly?

Yes

- Go To 3

No

- Go To 5

3. **CHECK THE (T19) SECONDARY PRESSURE SOLENOID CONTROL CIRCUIT FOR A SHORT TO VOLTAGE**

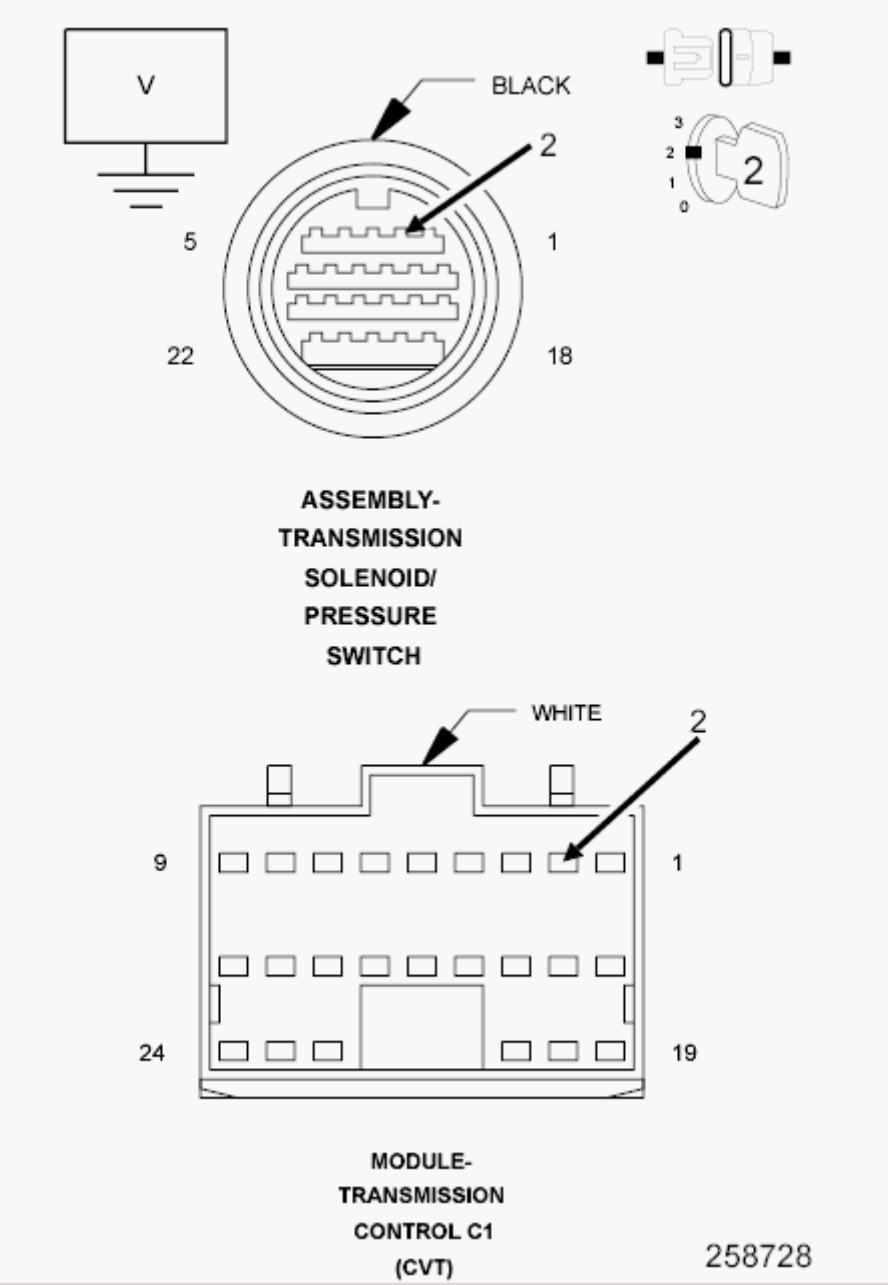

Fig. 94: Checking Secondary Pressure Solenoid Control Circuit For A Short To Voltage
Courtesy of CHRYSLER GROUP, LLC

1. With the scan tool, stop the actuation of the Secondary Pressure Solenoid.
2. Turn the ignition off to the lock position.
3. Disconnect the TCM C1 harness connector.
4. Ignition on, engine not running.
5. Measure the voltage of the (T19) Secondary Pressure Solenoid Control

circuit.

Is the voltage above 0.05 of a volt?

Yes

- Repair the (T19) Secondary Pressure Solenoid Control circuit for a short to voltage.
- Perform the CVT VERIFICATION TEST. Refer to **CVT VERIFICATION TEST** .

No

- Go To 4

4. **CHECK THE SECONDARY PRESSURE SOLENOID**

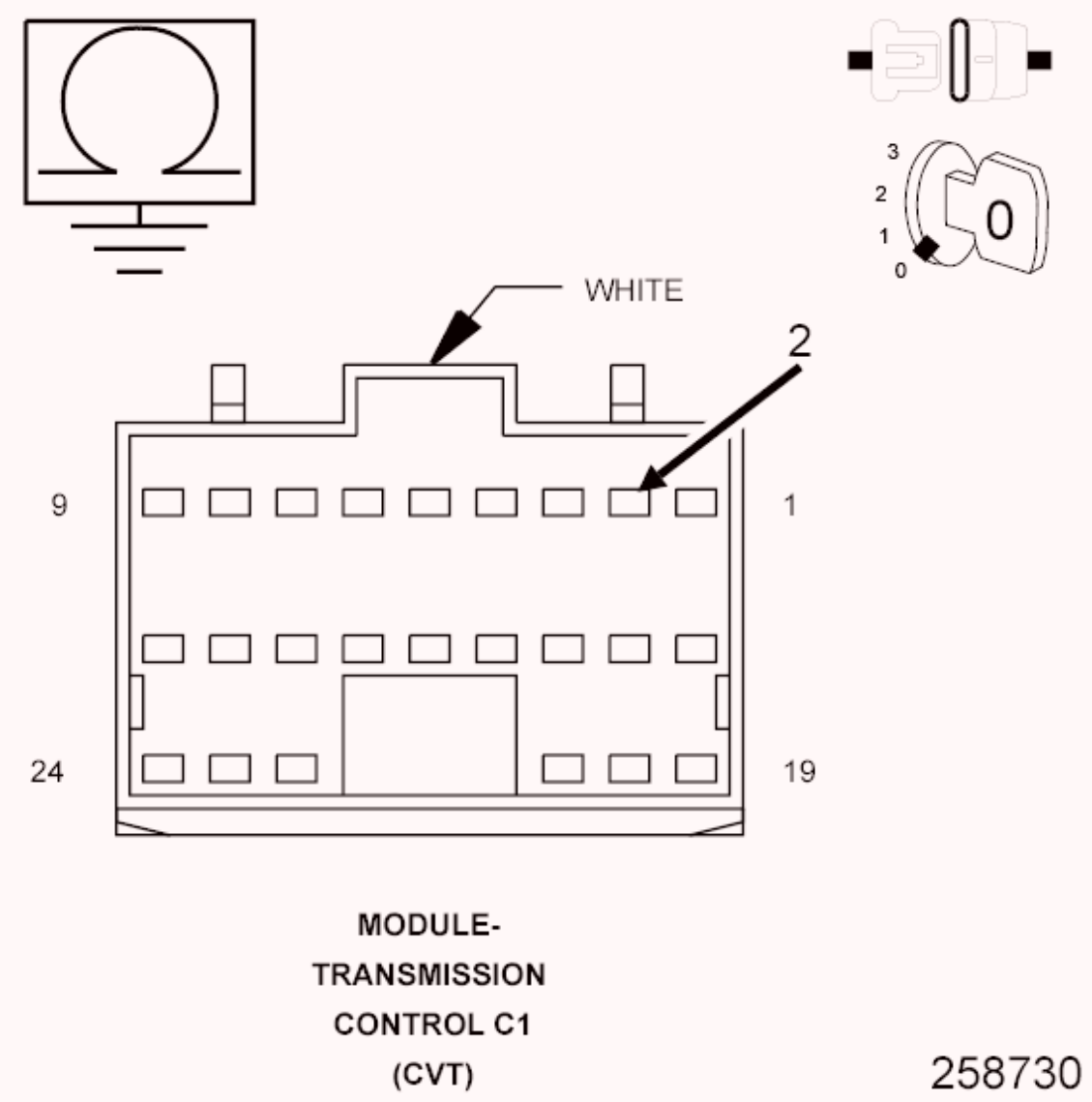

Fig. 95: Checking Secondary Pressure Solenoid
Courtesy of CHRYSLER GROUP, LLC

1. Turn the ignition off to the lock position.
2. Reconnect the Transmission Solenoid/Pressure Switch Assembly harness connector.
3. Measure the resistance between ground and the (T19) Secondary Pressure Solenoid Control circuit in the TCM C1 harness connector.

   Is the resistance between 3.0 and 9.0 Ohms?

   Yes

   - Using the schematics as a guide, check the Transmission Control Module (TCM) terminals for corrosion, damage, or terminal push

out. Pay particular attention to all power and ground circuits. Check for any Service Bulletins for possible causes that may apply. If no problems are found, replace the TCM in accordance with the Service Information.

- Perform the CVT VERIFICATION TEST. Refer to **CVT VERIFICATION TEST** .

No

- Replace the Secondary Pressure Solenoid (Valve Body) in accordance with the Service Information.
- Perform the CVT VERIFICATION TEST. Refer to **CVT VERIFICATION TEST** .

5. **CHECK THE (T19) SECONDARY PRESSURE SOLENOID CONTROL CIRCUIT FOR AN OPEN**

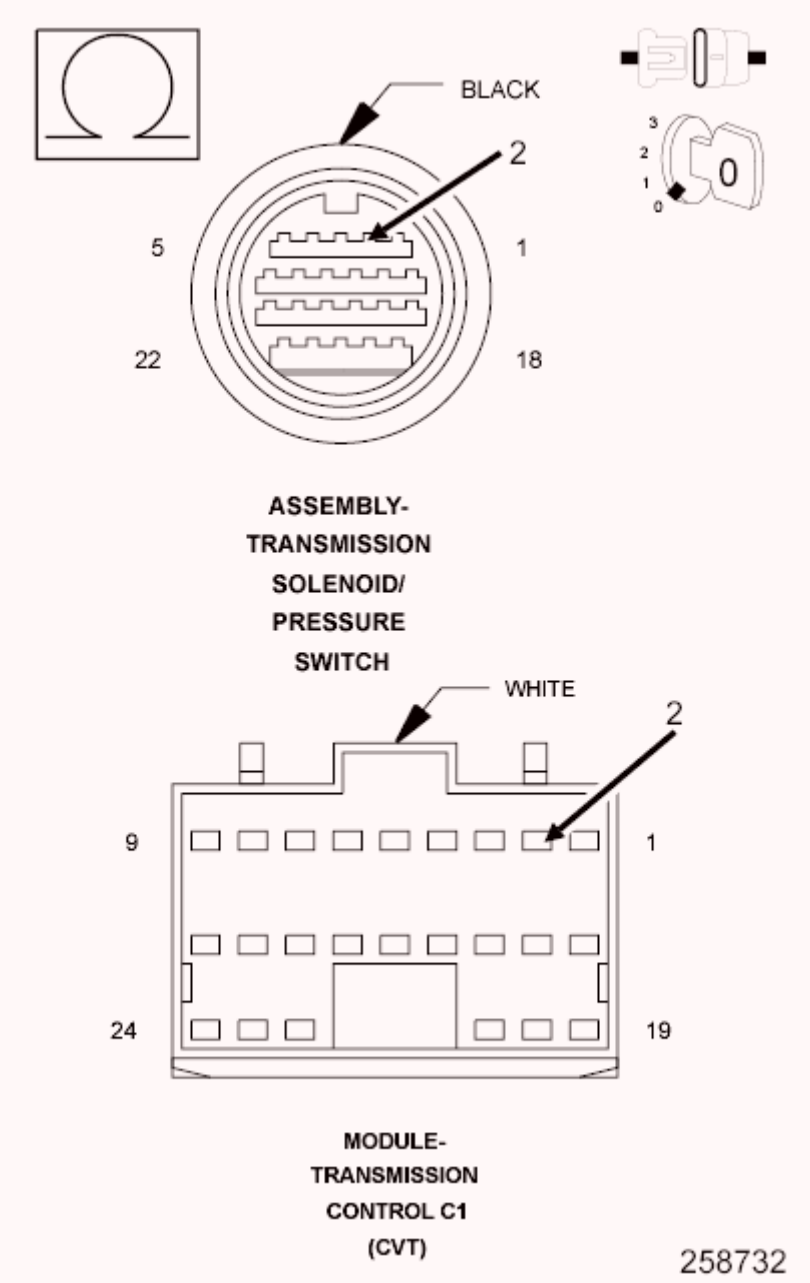

Fig. 96: Checking Secondary Pressure Solenoid Control Circuit For An Open
Courtesy of CHRYSLER GROUP, LLC

1. Turn the ignition off to the lock position.
2. Measure the resistance of the (T19) Secondary Pressure Solenoid Control circuit between the TCM C1 harness connector and the Transmission Solenoid/Pressure Switch Assembly harness connector.

   Is the resistance above 5.0 Ohms?

   Yes

- Repair the (T19) Secondary Pressure Solenoid Control circuit for an open.
- Perform the CVT VERIFICATION TEST. Refer to **CVT VERIFICATION TEST** .

No

- Using the schematics as a guide, check the Transmission Control Module (TCM) terminals for corrosion, damage, or terminal push out. Pay particular attention to all power and ground circuits. Check for any Service Bulletins for possible causes that may apply. If no problems are found, replace the TCM in accordance with the Service Information.
- Perform the CVT VERIFICATION TEST. Refer to **CVT VERIFICATION TEST** .

6. **CHECK THE WIRING AND CONNECTORS**
   1. The conditions necessary to set this DTC are not present at this time.
   2. Using the schematics as a guide, inspect the wiring and connectors specific to this circuit.
   3. Wiggle the wires while checking for shorted and open circuits.

   Were there any problems found?

   Yes

   - Repair as necessary.
   - Perform the CVT VERIFICATION TEST. Refer to **CVT VERIFICATION TEST** .

   No

   - Test Complete.

P161B-BATTERY DISCONNECT/TCM INTERNAL

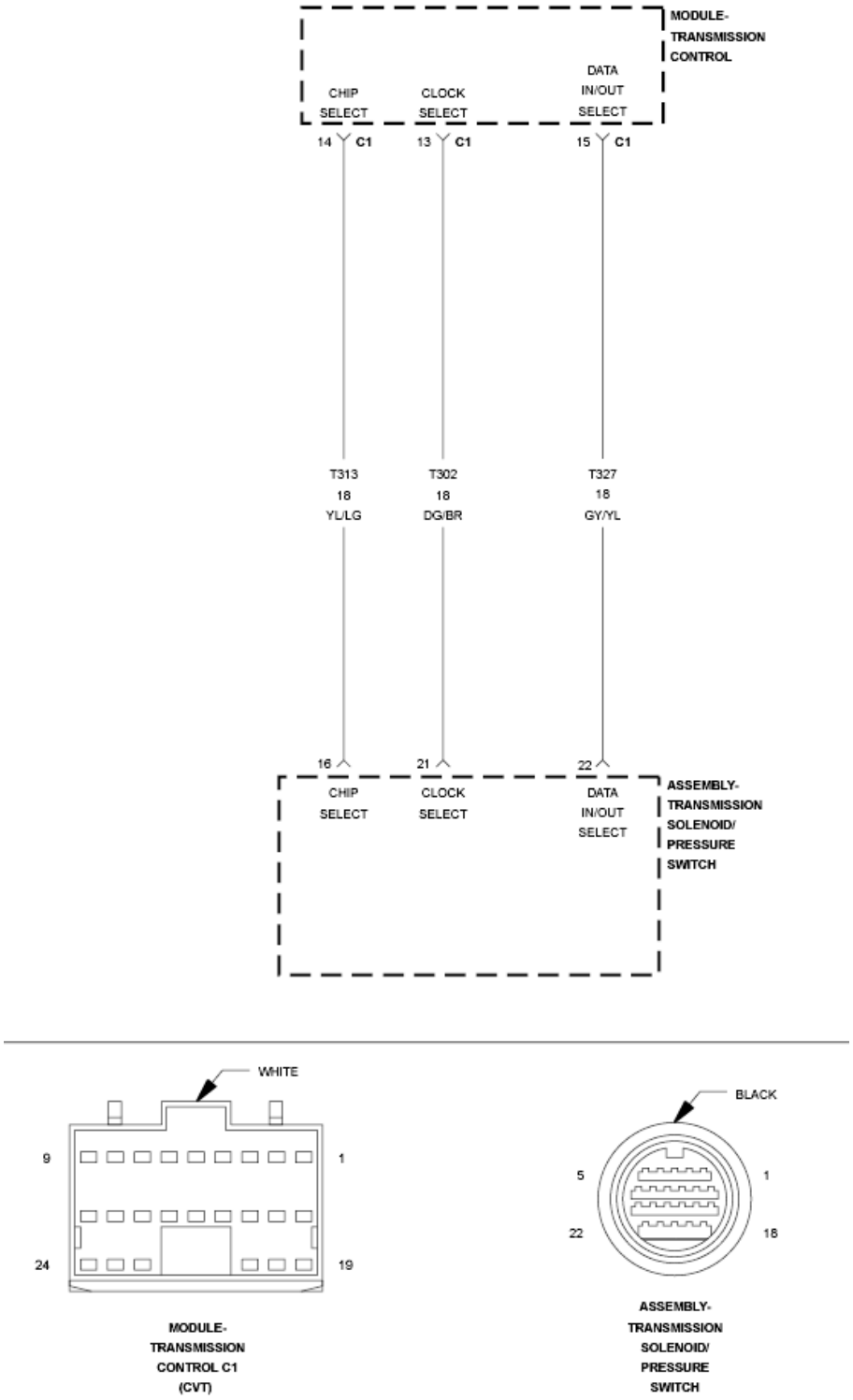

Fig. 97: Transmission Control Module & Pressure Switch Circuit Diagram
Courtesy of CHRYSLER GROUP, LLC

For a complete wiring diagram, **refer to appropriate SYSTEM WIRING DIAGRAMS article** .

THEORY OF OPERATION

The Transmission Control Module (TCM) calculates the checksum in the EEPROM and compares it to the stored checksum value. If the calculated checksum value does not match the stored checksum value the TCM sets the DTC and illuminates the MIL.

WHEN MONITORED

One time at every ignition on cycle.

SET CONDITION

When the calculated checksum does not equal the stored checksum configuration or loss of power to the controller. It takes one trip of problem identification to set the MIL.

POSSIBLE CAUSES

Possible Causes
WRONG VEHICLE CALIBRATION
FUSED B(+), TRANSMISSION CONTROL OUTPUT, AND/OR GROUND OPEN
TRANSMISSION CONTROL MODULE (TCM)

Always perform the CVT Pre-Diagnostic Troubleshooting procedure before proceeding. Refer to CVT - PRE-DIAGNOSTIC TROUBLESHOOTING PROCEDURE .

DIAGNOSTIC TEST

1. **CHECK TO SEE IF THE DTC IS ACTIVE**
    1. With the scan tool, read Transmission DTCs.

       Is the status Active for P161B?

       Yes

       - Go To 3

       No

       - Go To 2
2. **CHECK FOR OTHER DTCS**

1. With the scan tool, read Transmission DTCs.

   Is the status Active for P0602 also?

   Yes

   - Refer to **DTC INDEX** and perform the appropriate diagnostic procedure.

   No

   - Go To 3

3. **CHECK THE TCM**

   Has the TCM been flashed, a new TCM installed or the battery or TCM disconnected with the ignition in the On or Accessory position?

   Yes

   - This is a normal condition.

     Cycle the ignition off for 4 seconds and turn the ignition back on. Erase DTCs and cycle the ignition off again for 4 seconds and turn the ignition back on. Read TCM DTCs. If the DTC resets and remains active - Go To 4.

     If the DTC does not reset perform CVT TRANSMISSION VERIFICATION TEST. Refer to **CVT VERIFICATION TEST** .

   No

   - Using the schematics as a guide, check the Transmission Control Module (TCM) terminals for corrosion, damage, or terminal push out. Pay particular attention to all power and ground circuits.

     NOTE: A loss of the TCM Fused B(+), TCM ground, and/or the Transmission Control Output circuits can cause this fault to set.

   - Check for any Service Bulletins for possible causes that may apply. If no problems are found, replace and program the TCM in accordance

with the Service Information.

- Perform CVT TRANSMISSION VERIFICATION TEST. Refer to **CVT VERIFICATION TEST** .

4. **CHECK IF THE RIGHT PART NUMBER IS USED**
   1. With the scan tool, check the TCM part number and compare it to the vehicle configuration.

      Does the controller have the right part number?

      Yes

      - Using the schematics as a guide, check the Transmission Control Module (TCM) terminals for corrosion, damage, or terminal push out. Pay particular attention to all power and ground circuits.

        NOTE: A loss of the TCM Fused B(+), TCM ground, and/or the Transmission Control Output circuits can cause this fault to set.

      - Check for any Service Bulletins for possible causes that may apply. If no problems are found, replace and program the TCM in accordance with the Service Information.
      - Perform CVT TRANSMISSION VERIFICATION TEST. Refer to **CVT VERIFICATION TEST** .

      No

      - Do to the configuration mismatch the controller will need to be replaced with the proper part number for the configuration of the vehicle. Replace and program the TCM in accordance with the Service Information.
      - Perform CVT TRANSMISSION VERIFICATION TEST. Refer to **CVT VERIFICATION TEST** .

P1661-SENSOR GROUND REFERENCE CIRCUIT

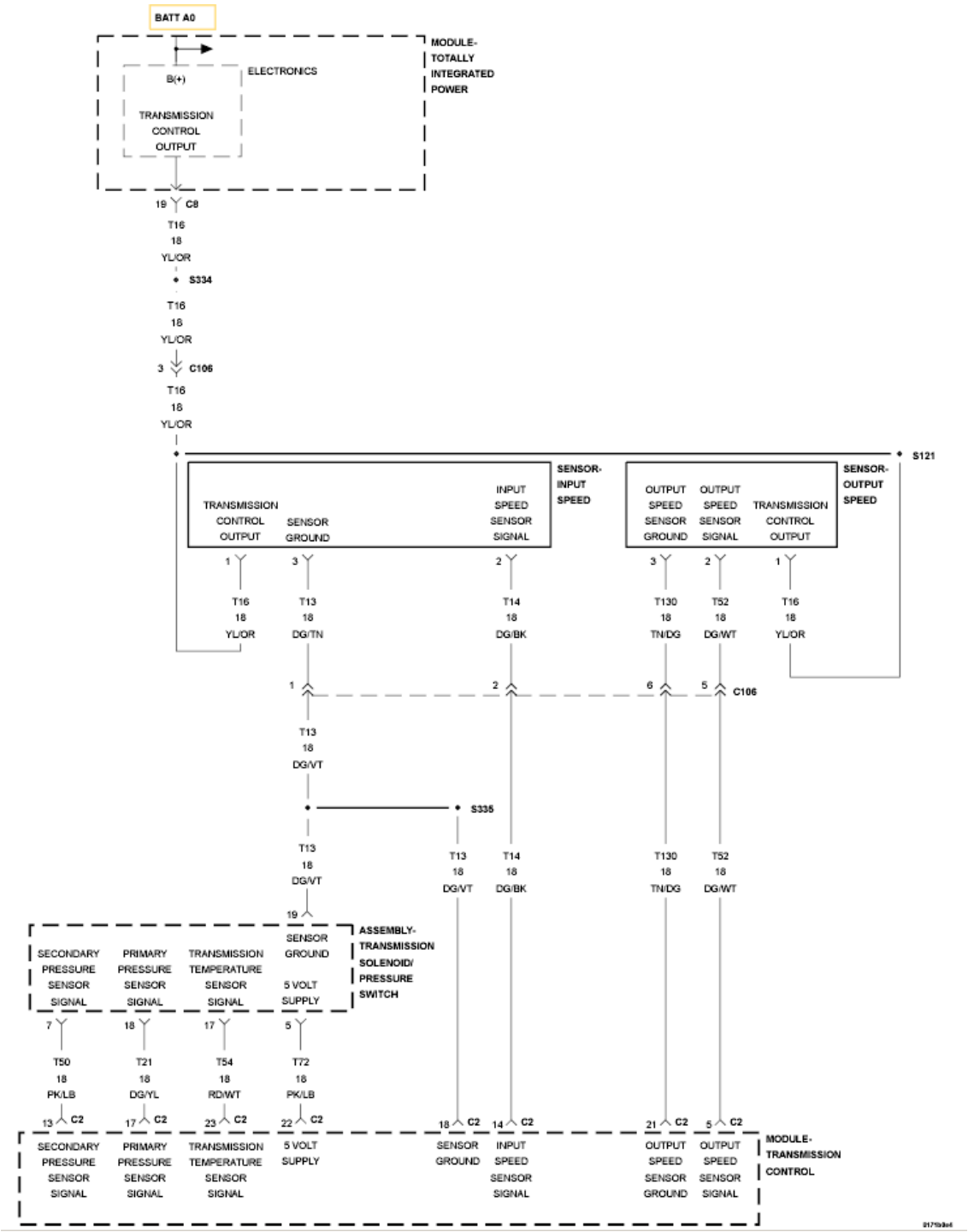

Fig. 98: Sensor Reference Voltage Wiring Diagram
Courtesy of CHRYSLER GROUP, LLC

For a complete wiring diagram, **refer to appropriate SYSTEM WIRING DIAGRAMS article** .

THEORY OF OPERATION

The Oil Temperature Sensor, Primary and Secondary Oil Pressure Sensor and the

Input Speed Sensor use a common ground circuit that returns to the Transmission Control Module (TCM). If all of these circuits show an open (high voltage) the DTC will set.

WHEN MONITORED

With the ignition on and a system voltage between 9.0 and 16.0 volts.

SET CONDITION

When all are present for the period of 200 msec:

- Transmission Fluid Temperature Sensor voltage is greater than 2.5 volts.
- Primary Pressure Sensor voltage greater than 5.0 volts.
- Secondary Pressure Sensor voltage is greater than 5.0 volts

POSSIBLE CAUSES

Possible Causes
(T13) SENSOR GROUND CIRCUIT OPEN
INTERNAL TRANSMISSION
TRANSMISSION CONTROL MODULE

Always perform the CVT Pre-Diagnostic Troubleshooting procedure before proceeding. Refer to CVT - PRE-DIAGNOSTIC TROUBLESHOOTING PROCEDURE .

DIAGNOSTIC TEST

1. **CHECK TO SEE IF THE DTC IS ACTIVE**
    1. With the scan tool, read Transmission DTCs.

       Is the status Active or is the Starts Since Set counter 2 or less for this DTC?

       Yes

       - Go To 2

       No

       - Go To 4

2. CHECK THE (T13) SENSOR GROUND CIRCUIT FOR AN OPEN

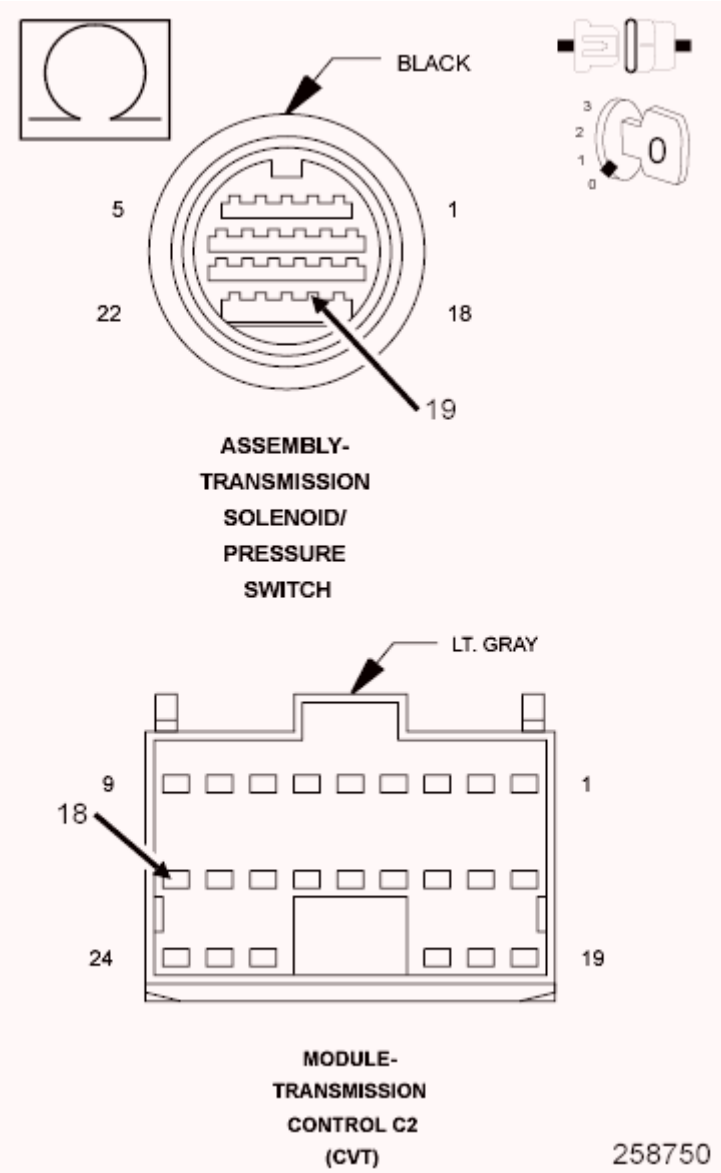

Fig. 99: Checking Sensor Ground Circuit For An Open
Courtesy of CHRYSLER GROUP, LLC

1. Turn the ignition off to the lock position.
2. Disconnect the TCM C2 harness connector.
3. Disconnect the Transmission Solenoid/Pressure Switch Assembly harness connector.
4. Measure the resistance of the (T13) Sensor Ground circuit between the TCM C2 harness connector and the Transmission Solenoid/Pressure Switch Assembly harness connector.

Is the resistance above 5.0 ohms?

Yes

- Repair the (T13) Sensor Ground circuit for an open.
- Perform CVT VERIFICATION TEST. Refer to **CVT VERIFICATION TEST** .

No

- Go To 3

3. **CHECK THE (T13) SENSOR GROUND CIRCUIT FOR AN OPEN INTERNALLY**
   1. Using the schematics as a guide, check the Transmission Control Module (TCM) terminals for corrosion, damage, or terminal push out. Pay particular attention to all power and ground circuits. Check for any Service Bulletins for possible causes that may apply. If no problems are found, replace and program the TCM in accordance with the Service Information.
   2. Perform CVT VERIFICATION TEST. Refer to **CVT VERIFICATION TEST** .

   Does the DTC reset during the Verification procedure?

   Yes

   - Replace the CV Transmission or repair the valve body (internal wiring) in accordance with the Service Information.
   - Perform CVT VERIFICATION TEST. Refer to **CVT VERIFICATION TEST** .

   No

   - Test Complete.

4. **CHECK THE WIRING AND CONNECTORS**
   1. The conditions necessary to set this DTC are not present at this time.
   2. Using the schematics as a guide, inspect the wiring and connectors specific to this circuit.

3. Wiggle the wires while checking for shorted and open circuits.

   Were there any problems found?

   Yes

   - Repair as necessary.
   - Perform CVT VERIFICATION TEST. Refer to **CVT VERIFICATION TEST** .

   No

   - Test Complete.

P1679-CALIBRATION NOT LEARNED

For a complete wiring diagram, **refer to appropriate SYSTEM WIRING DIAGRAMS article** .

THEORY OF OPERATION

The first time the vehicle is started, the Transmission Control Module (TCM) receives hydraulic calibration data from an external EEPROM (located in the transmission) and stores this information in the EEPROM of the TCM. If there is no stored hydraulic calibration stored in the TCM this DTC will set. It takes one failure to turn on the MIL.

WHEN MONITORED

Ignition on with a system voltage between 9.0 and 16.0 volts.

SET CONDITION

The TCM is unable to read the hydraulic calibration data stored in the TCM EEPROM for the period of 5.0 seconds.

POSSIBLE CAUSES

Possible Causes
OTHER TRANSMISSION DTCS PRESENT
TRANSMISSION RELEARN PERFORMED
TRANSMISSION CONTROL MODULE

CV TRANSMISSION REPLACED

Always perform the CVT Pre-Diagnostic Troubleshooting procedure before proceeding. Refer to CVT - PRE-DIAGNOSTIC TROUBLESHOOTING PROCEDURE .

DIAGNOSTIC TEST

1. **CHECK IF THE DTC IS ACTIVE**
   1. With the scan tool, read Transmission DTCs.

      Is the status Active for this DTC?

      Yes

      - Go To 2

      No

      - Go To 4
2. **CHECK FOR OTHER DTCS**
   1. With the scan tool, read Transmission DTCs.

      Is the DTC U1146-LOST COMMUNICATION WITH EXTERNAL MEMORY also present?

      Yes

      - Refer to **U1146-LOST COMMUNICATION WITH EXTERNAL MEMORY** and perform the diagnostic procedure.

      No

      - Go To 3
3. **CHECK THE TCM**

   Has the Transmission Control Module (TCM), the CV Transmission been replaced, or a Transmission relearn procedure been performed?

   Yes

- Cycle the ignition off for 5 seconds and then back on. Erase the DTC and cycle the ignition again. If the DTC still remains active, check the Transmission Control Module (TCM) terminals for corrosion, damage, or terminal push out. Pay particular attention to all power and ground circuits. Check for any Service Bulletins for possible causes that may apply. If no problems are found, replace the TCM in accordance with the Service Information.
- Perform CVT VERIFICATION TEST. Refer to **CVT VERIFICATION TEST** .

No

- Using the schematics as a guide, check the Transmission Control Module (TCM) terminals for corrosion, damage, or terminal push out. Pay particular attention to all power and ground circuits. Check for any Service Bulletins for possible causes that may apply. If no problems are found, replace the TCM in accordance with the Service Information.
- Perform CVT VERIFICATION TEST. Refer to **CVT VERIFICATION TEST** .

4. **CHECK THE WIRING AND CONNECTORS**
   1. If the DTC is not active, erase the DTC and perform the CVT VERIFICATION TEST. Refer to **CVT VERIFICATION TEST** .

      Did the DTC P1679-CALIBRATION NOT LEARNED reset?

      Yes

      - Go To 2

      No

      - Test Complete.

P167A-CALIBRATION MISMATCH

For a complete wiring diagram, **refer to appropriate SYSTEM WIRING DIAGRAMS article** .

THEORY OF OPERATION

During the initial ignition on, the Transmission Control Module (TCM) receives the calibrated data from the EEPROM assembly inside the transmission and stores this information in the EEPROM of the TCM. At every ignition on, the TCM compares the stored data in the EEPROM to the transmitted data from the EEPROM in the transmission. If the calibration data does not match the DTC will set and the MIL will illuminate after one failure.

WHEN MONITORED

One time at initial ignition on with a system voltage between 9.0 and 16.0 volts.

SET CONDITION

If the TCM stored calibration does not match the EEPROM assembly in the transmission. This DTC requires only one problem identification to set the MIL.

POSSIBLE CAUSES

Possible Causes
TRANSMISSION CONTROL MODULE RELEARN PROCEDURE NOT PERFORMED

Always perform the CVT Pre-Diagnostic Troubleshooting procedure before proceeding. Refer to CVT - PRE-DIAGNOSTIC TROUBLESHOOTING PROCEDURE .

DIAGNOSTIC TEST

PERFORM TCM RELEARN PROCEDURE

Repair

- This is an informational DTC indicating that the TCM, CV Transmission, or the CV Transmission internal controller (valve body) was replaced without being calibrated. With the scan tool perform a Re-initialize CVT procedure.
- Perform CVT VERIFICATION TEST. Refer to **CVT VERIFICATION TEST** .

P1702-PRIMARY OIL PRESSURE SENSOR/SECONDARY OIL PRESSURE SENSOR CORRELATION

For a complete wiring diagram, **refer to appropriate SYSTEM WIRING**

DIAGRAMS article .

THEORY OF OPERATION

The Transmission Control Module (TCM) monitors the correlation between the primary and secondary pressure sensors. If the correlation between the sensors is out of range a DTC will set.

WHEN MONITORED

Ignition on, system voltage between 9.0 and 16.0 volts.

Engine running with the transmission in Drive.

Vehicle speed greater than 10.0 Km/h (6.0 mph).

Accelerator Pedal Position (APP) greater than 12.5%.

Engine RPM greater than 450 RPM.

No active DTCs from the following:

- Primary or Secondary Pressure Sensor
- Transmission Temperature Sensor
- TCC Lock Up Solenoid
- Step Motor
- Input or Output Speed Sensor
- Transmission Range Sensor (TRS)
- Line Pressure Solenoid
- Secondary Pressure Solenoid

SET CONDITION

Condition one:

Reported primary pressure is less than the lower limit of the primary pressure correlated with the reported secondary pressure for more than five seconds.

Condition two:

Reported primary pressure is greater than the upper limit of the primary pressure

correlated with the reported secondary pressure for more than five seconds.

POSSIBLE CAUSES

Possible Causes
PRIMARY PRESSURE SENSOR
SECONDARY PRESSURE SENSOR
TRANSMISSION CONTROL MODULE

Always perform the CVT Pre-Diagnostic Troubleshooting procedure before proceeding. Refer to CVT - PRE-DIAGNOSTIC TROUBLESHOOTING PROCEDURE .

DIAGNOSTIC TEST

1. **CHECK FOR TRANSMISSION DTC(s)**
   1. With the scan tool, read Transmission DTCs.

      Are any of the following DTC(s) present P0842, P0843, P0847, or P0848?

      Yes

      - Refer to **DTC INDEX** and perform the appropriate diagnostic procedure.

      No

      - Go To 2
2. **CHECK TO SEE IF THE DTC IS ACTIVE**
   1. With the scan tool, read Transmission DTCs.

      Is the status Active or is the Starts Since Set counter 2 or less for this DTC?

      Yes

      - Go To 3

      No

- Go To 4

3. **CHECK THE TCM**
   1. Replace the Valve Body in accordance with the Service Information.
   2. Perform the CVT VERIFICATION TEST. Refer to **CVT VERIFICATION TEST** .

   Did the DTC reset during the verification test?

   Yes

   - Using the schematics as a guide, check the Transmission Control Module (TCM) terminals for corrosion, damage, or terminal push out. Pay particular attention to all power and ground circuits. Check for any Service Bulletins for possible causes that may apply. If no problems are found, replace the TCM in accordance with the Service Information.
   - Perform the CVT VERIFICATION TEST. Refer to **CVT VERIFICATION TEST** .

   No

   - Test Complete.

4. **CHECK THE WIRING AND CONNECTORS**
   1. The conditions necessary to set this DTC are not present at this time.
   2. Using the schematics as a guide, inspect the wiring and connectors specific to this circuit.
   3. Wiggle the wires while checking for shorted and open circuits.

   Were there any problems found?

   Yes

   - Repair as necessary.
   - Perform the CVT VERIFICATION TEST. Refer to **CVT VERIFICATION TEST** .

   No

- Test Complete.

P1723-LOCK UP/SELECT CONTROL CIRCUIT

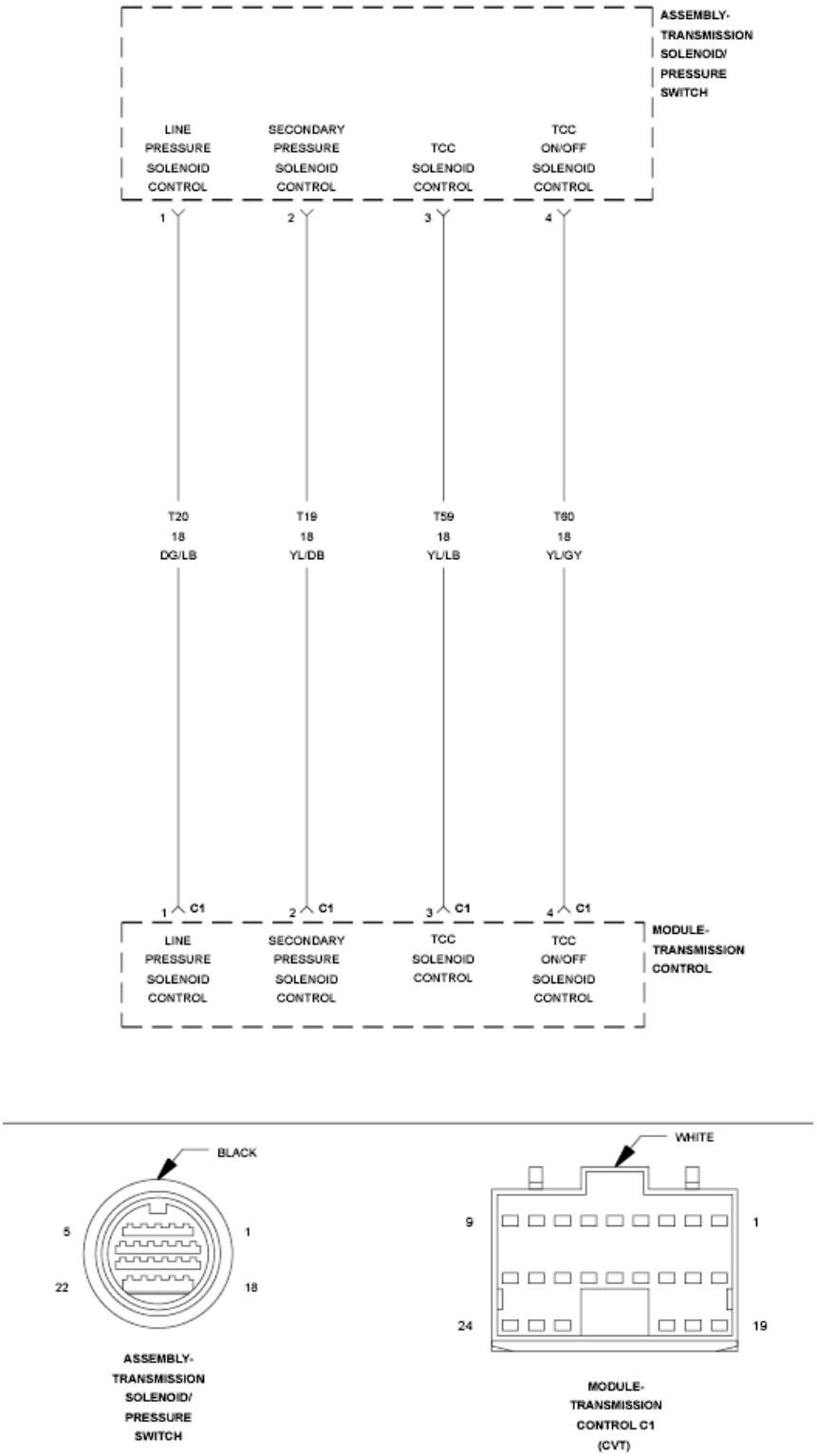

Fig. 100: Pressure Control Solenoid Control Wiring Diagram
Courtesy of CHRYSLER GROUP, LLC

For a complete wiring diagram, **refer to appropriate SYSTEM WIRING DIAGRAMS article** .

THEORY OF OPERATION

The Transmission Control Module (TCM) monitors the TCC ON/OFF Solenoid Control signal during normal operation. If the TCC ON/OFF Solenoid status does not match the TCM requested ON/OFF status a DTC will set.

WHEN MONITORED

Ignition on with a system voltage between 9.0 and 16.0 volts.

SET CONDITION

If the TCC ON/OFF Solenoid status does not match the TCM requested ON/OFF status for the period of 200 msec the DTC will set. It takes two consecutive problem identification trips to illuminate the MIL.

POSSIBLE CAUSES

Possible Causes
(T60) TCC ON/OFF SOLENOID CONTROL CIRCUIT SHORTED TO VOLTAGE
(T60) TCC ON/OFF SOLENOID CONTROL CIRCUIT OPEN
(T60) TCC ON/OFF SOLENOID CONTROL CIRCUIT SHORTED TO GROUND
TCC ON/OFF SOLENOID
TRANSMISSION CONTROL MODULE

Always perform the CVT Pre-Diagnostic Troubleshooting procedure before proceeding. Refer to CVT - PRE-DIAGNOSTIC TROUBLESHOOTING PROCEDURE .

DIAGNOSTIC TEST

1. **CHECK IF THE DTC IS ACTIVE**
    1. With the scan tool, read Transmission DTCs.

       Is the status Active or is the Starts Since Set counter 2 or less for this DTC?

Yes

- Go To 2

No

- Go To 6

2. **CHECK TO SEE IF THE DTC IS ACTIVE**

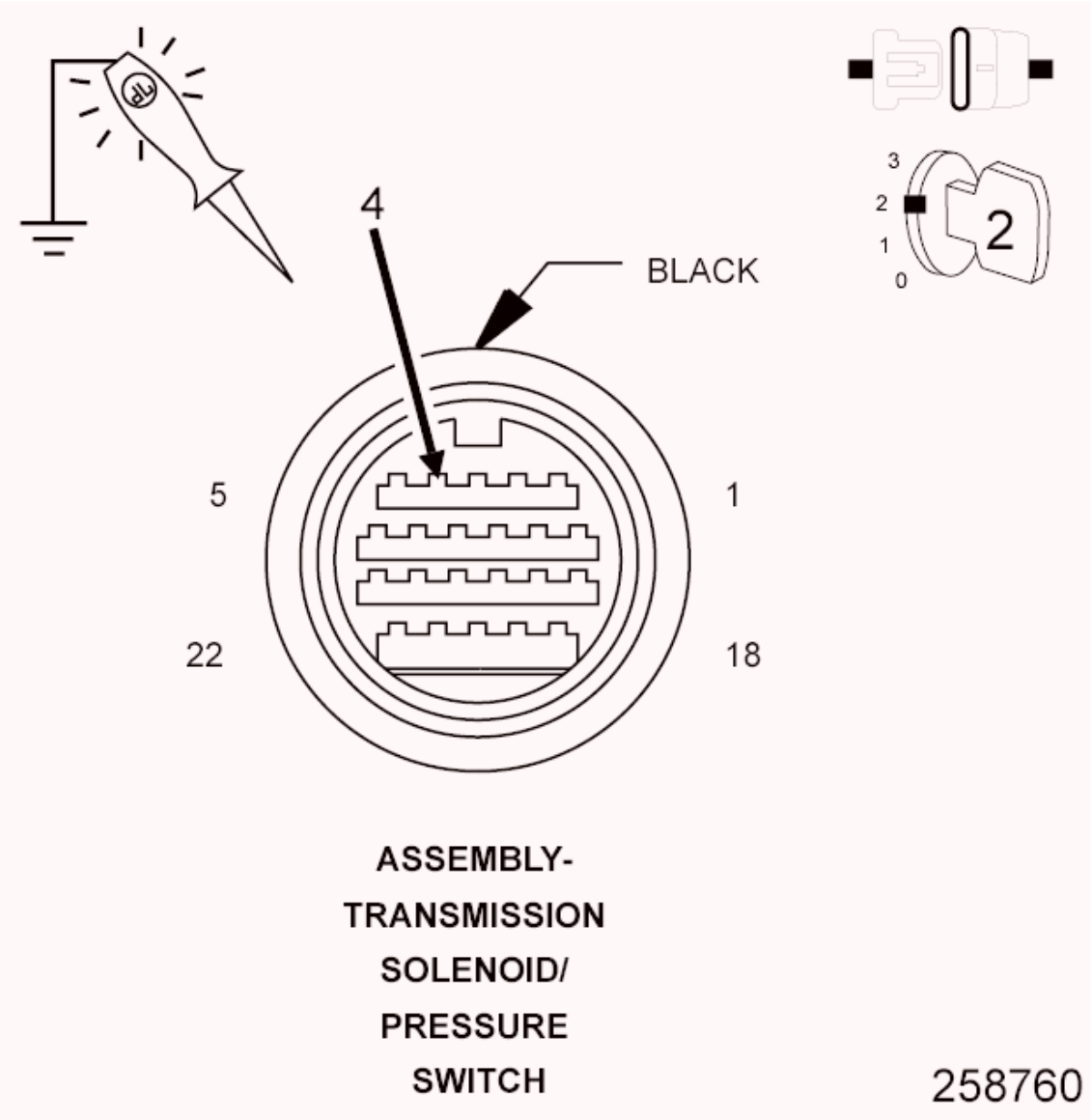

Fig. 101: Checking Solenoid Control Circuit
Courtesy of CHRYSLER GROUP, LLC

1. Turn the ignition off to the lock position.
2. Disconnect the Transmission Solenoid/Pressure Switch Assembly

harness connector.

3. Ignition on, engine not running.
4. With the scan tool actuate the TCC ON/OFF Solenoid.
5. Using a 12-volt test light connected to ground, check the (T60) TCC ON/OFF Solenoid Control circuit.

NOTE: The test light must illuminate brightly. Compare the brightness to that of a direct connection to the battery.

Does the test light illuminate brightly?

Yes

- Go To 3

No

- Go To 4

3. **CHECK THE (T60) TCC ON/OFF SOLENOID CONTROL CIRCUIT FOR A SHORT TO VOLTAGE**

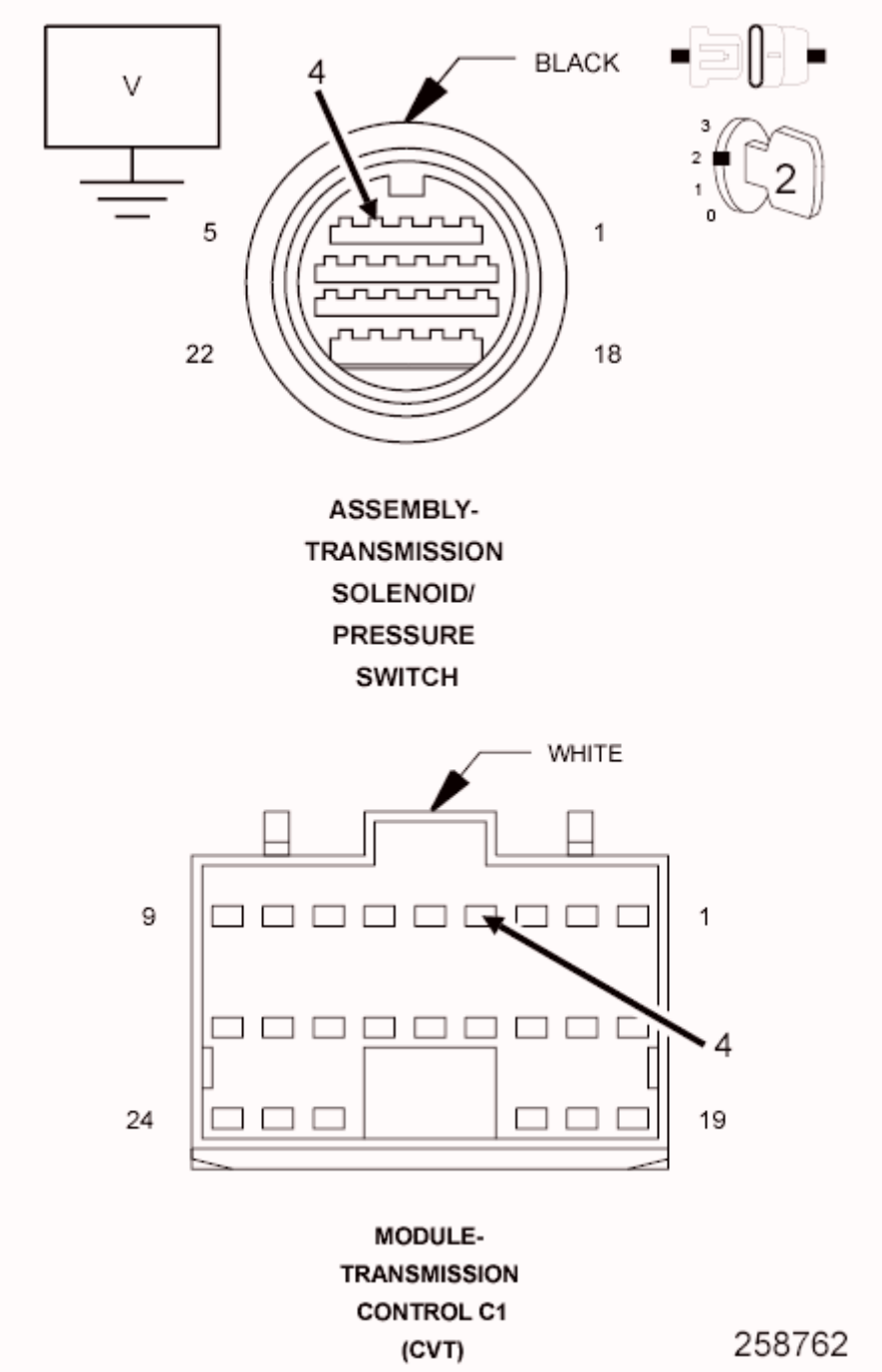

Fig. 102: Checking Torque Convertor Clutch ON/OFF Solenoid Control Circuit For A Short To Voltage
Courtesy of CHRYSLER GROUP, LLC

1. Turn the ignition off to the lock position.
2. Disconnect the TCM C1 harness connector.
3. Ignition on, engine not running.
4. Measure the voltage of the (T60) TCC ON/OFF Solenoid Control circuit.

Is the voltage above 0.05 of a volt?

Yes

- Repair the (T60) TCC ON/OFF Solenoid Control circuit for a short to voltage.
- Perform the CVT VERIFICATION TEST. Refer to **CVT VERIFICATION TEST** .

No

- Replace the Valve Body in accordance with the Service Information.
- Perform the CVT VERIFICATION TEST. Refer to **CVT VERIFICATION TEST** .

4. **CHECK THE (T60) TCC ON/OFF SOLENOID CONTROL CIRCUIT FOR AN OPEN**

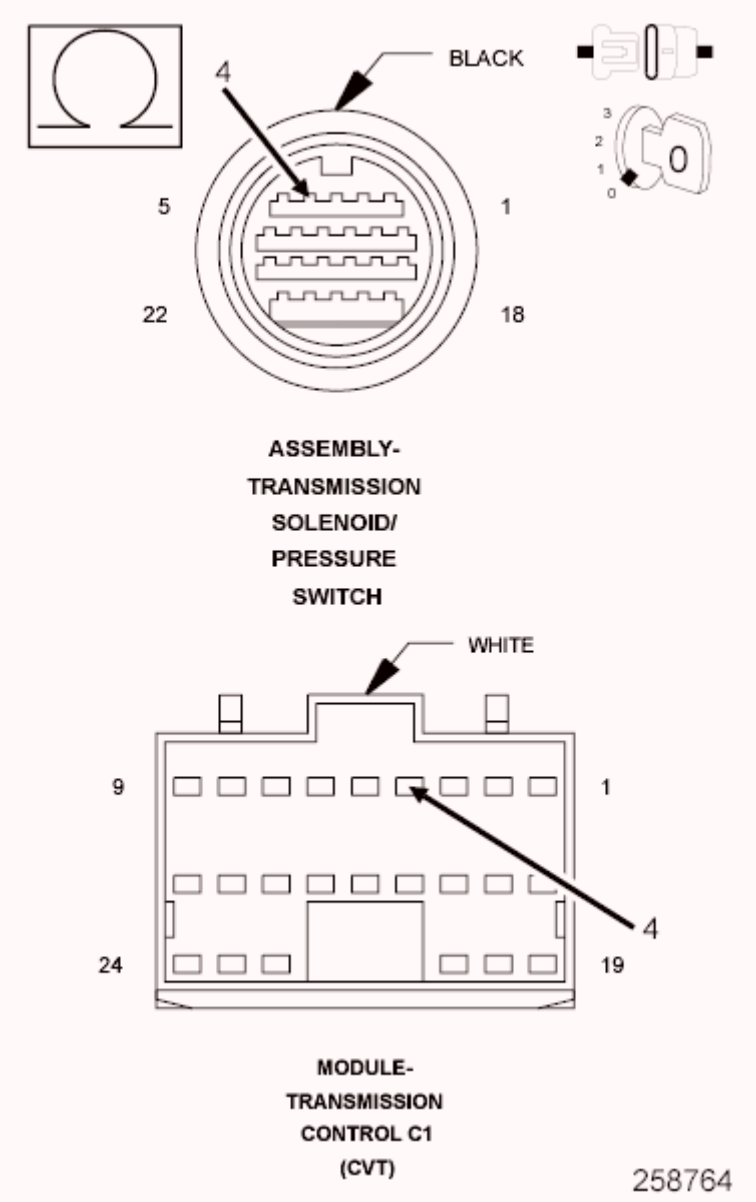

Fig. 103: Checking Torque Convertor Clutch ON/OFF Solenoid Control Circuit For An Open
Courtesy of CHRYSLER GROUP, LLC

1. Turn the ignition off to the lock position.
2. Measure the resistance of the (T60) TCC ON/OFF Solenoid Control circuit between the TCM C1 harness connector and the Transmission Solenoid/Pressure Switch Assembly harness connector.

   Is the resistance above 5.0 Ohms?

   Yes

- Repair the (T60) TCC ON/OFF Solenoid Control circuit for an open.
- Perform the CVT VERIFICATION TEST. Refer to **CVT VERIFICATION TEST** .

No

- Go To 5

5. **CHECK THE (T60) TCC ON/OFF SOLENOID CONTROL CIRCUIT FOR A SHORT TO GROUND**

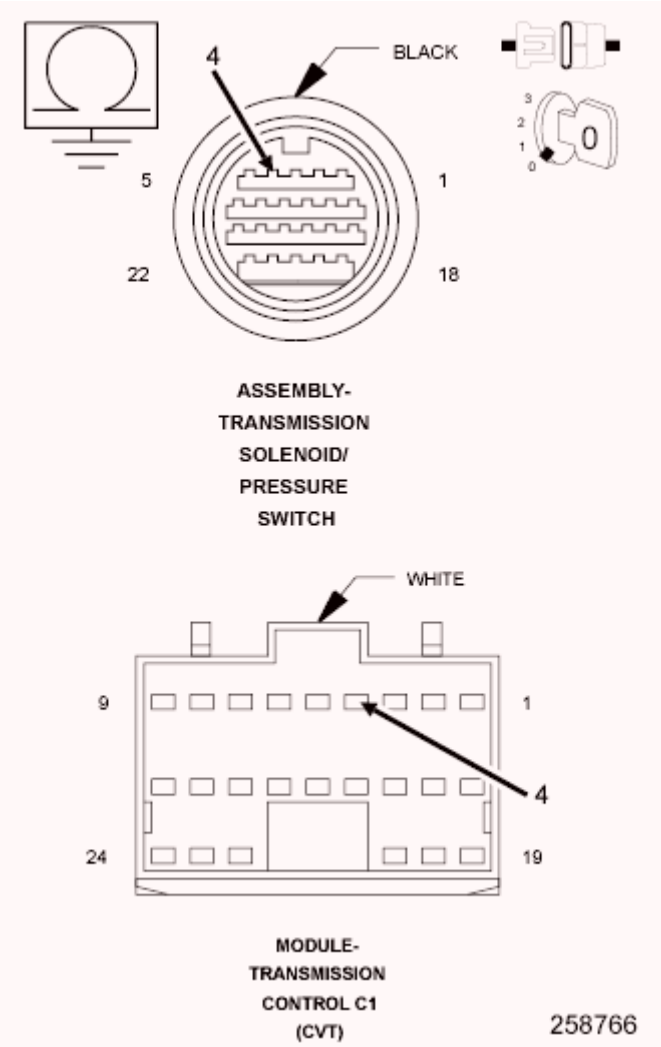

Fig. 104: Checking Torque Convertor Clutch ON/OFF Solenoid Control Circuit For A Short To Ground
Courtesy of CHRYSLER GROUP, LLC

1. Measure the resistance between ground and the (T60) TCC ON/OFF

Solenoid Control circuit.

Is the resistance below 5.0 Ohms?

Yes

- Repair the (T60) TCC ON/OFF Solenoid Control circuit for a short to ground.
- Perform the CVT VERIFICATION TEST. Refer to **CVT VERIFICATION TEST** .

No

- Using the schematics as a guide, check the Transmission Control Module (TCM) terminals for corrosion, damage, or terminal push out. Pay particular attention to all power and ground circuits. Check for any Service Bulletins for possible causes that may apply. If no problems are found, replace the TCM in accordance with the Service Information.
- Perform the CVT VERIFICATION TEST. Refer to **CVT VERIFICATION TEST** .

6. **CHECK THE WIRING AND CONNECTORS**
   1. The conditions necessary to set this DTC are not present at this time.
   2. Using the schematics as a guide, inspect the wiring and connectors specific to this circuit.
   3. Wiggle the wires while checking for shorted and open circuits.

   Were there any problems found?

   Yes

   - Repair as necessary.
   - Perform the CVT VERIFICATION TEST. Refer to **CVT VERIFICATION TEST** .

   No

   - Test Complete.

P1729-TRANSMISSION RATIO CONTROL CIRCUIT

For a complete wiring diagram, **refer to appropriate SYSTEM WIRING DIAGRAMS article** .

THEORY OF OPERATION

The Transmission Control Module monitors and controls the gear ratio by the use of a Step motor that transfers electrical power to mechanical movement. The rationality is a continuous test that monitors the Step motor movement. If the Step motor ON/OFF status does not match the TCM requested ON/OFF status a DTC will set.

WHEN MONITORED

Ignition on with a system voltage between 9.0 and 16.0 volts.

SET CONDITION

If the Step motor ON/OFF status does not match the TCM requested ON/OFF status for the period of 200 msec the DTC will set. It takes two consecutive problem identification trips to illuminate the MIL.

POSSIBLE CAUSES

Possible Causes
(T314) A, (T315) B, (T316) C, AND/OR (T317) D STEP MOTOR CONTROL CIRCUIT(S) SHORTED TO VOLTAGE
(T314) A, (T315) B, (T316) C, AND/OR (T317) D STEP MOTOR CONTROL CIRCUIT(S) OPEN
(T314) A, (T315) B, (T316) C, AND/OR (T317) D STEP MOTOR CONTROL CIRCUIT(S) SHORTED TO GROUND
STEP MOTOR
TRANSMISSION CONTROL MODULE

Always perform the CVT Pre-Diagnostic Troubleshooting procedure before proceeding. Refer to CVT - PRE-DIAGNOSTIC TROUBLESHOOTING PROCEDURE .

DIAGNOSTIC TEST

1. **CHECK TO SEE IF THE DTC IS ACTIVE**

1. With the scan tool, read Transmission DTCs.

   Is the status Active or is the Starts Since Set counter 2 or less for this DTC?

   Yes

   - Go To 2

   No

   - Go To 6

2. **CHECK THE (T314) A, (T315) B, (T316) C, AND (T317) D STEP MOTOR CONTROL CIRCUIT(S) FOR A SHORT TO VOLTAGE**

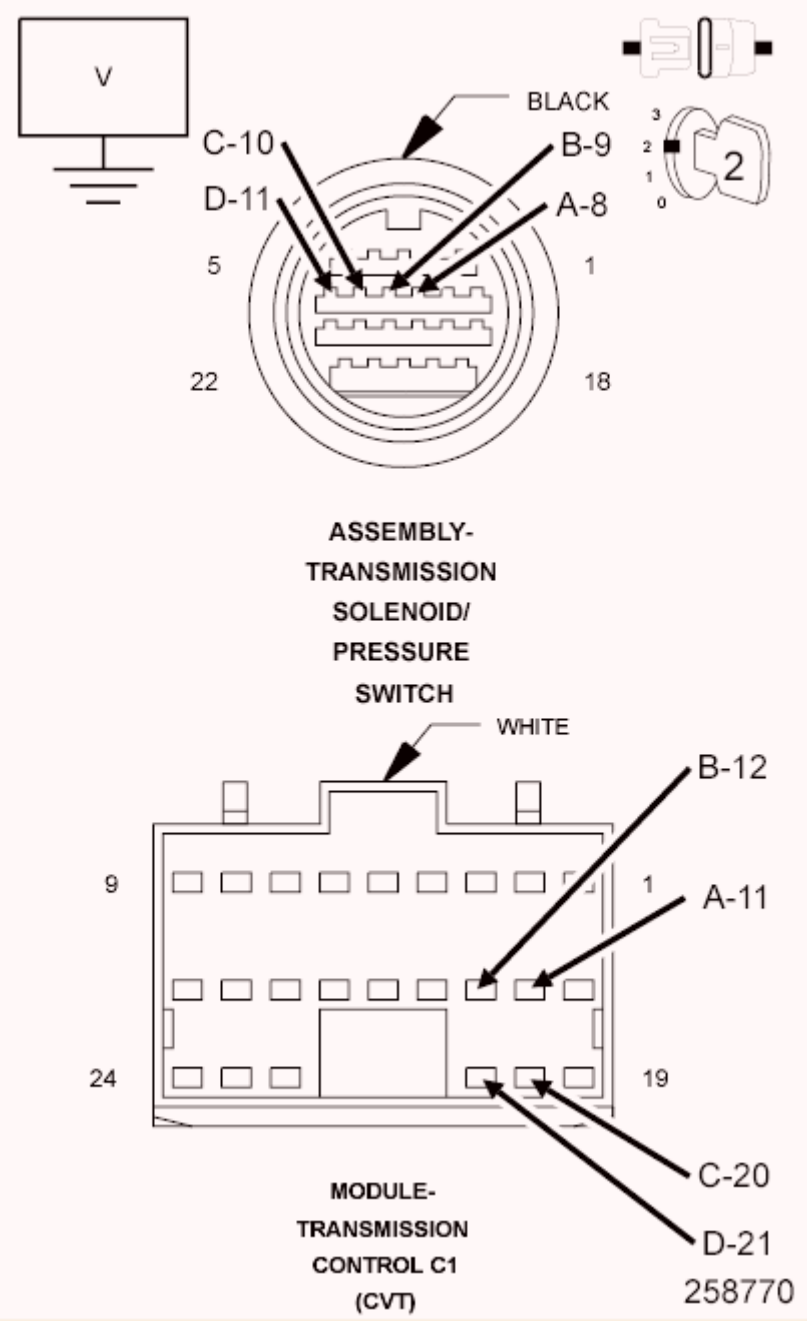

Fig. 105: Checking A-D Step Motor Control Circuit(s) For A Short To Voltage
Courtesy of CHRYSLER GROUP, LLC

1. Turn the ignition off to the lock position.
2. Disconnect the TCM C1 and C2 harness connectors.
3. Disconnect the Transmission Solenoid/Pressure Switch Assembly harness connector.
4. Ignition on, engine not running.
5. Measure separately the voltage of the (T314) A, (T315) B, (T316) C,

and (T317) D Step Motor Control circuits.

Is the voltage above 0.05 of a volt for any of the Step Motor Control circuits?

Yes

- Repair the (T314) A, (T315) B, (T316) C, and/or (T317) D Step Motor Control circuit(s) for a short to voltage.
- Perform the CVT VERIFICATION TEST. Refer to **CVT VERIFICATION TEST** .

No

- Go To 3

3. **CHECK THE (T314) A, (T315) B, (T316) C, AND (T317) D STEP MOTOR CONTROL CIRCUIT(S) FOR AN OPEN**

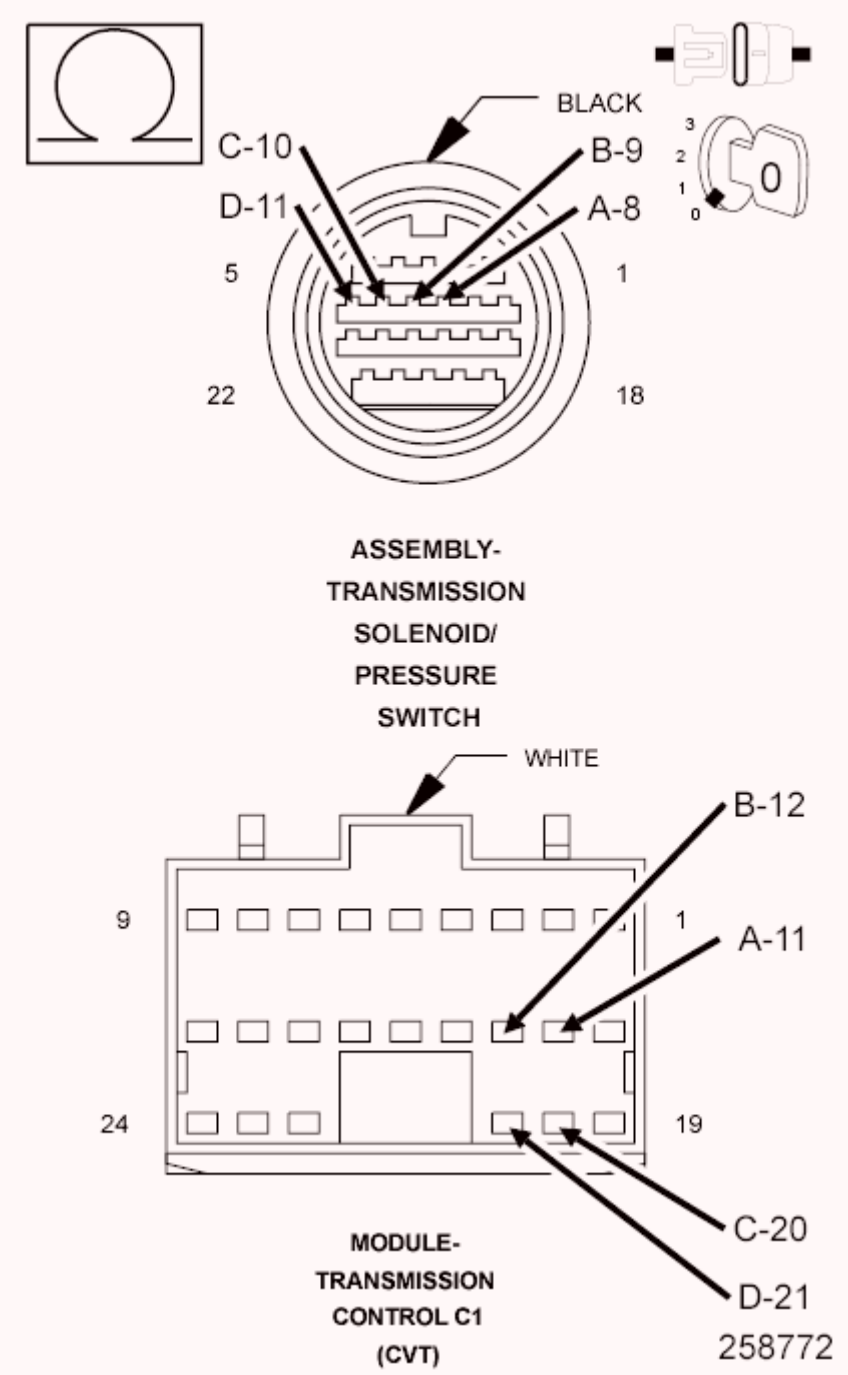

Fig. 106: Checking A-D Step Motor Control Circuit(s) For An Open
Courtesy of CHRYSLER GROUP, LLC

1. Turn the ignition off to the lock position.
2. Measure separately the resistance of the (T314) A, (T315) B, (T316) C, and (T317) D Step Motor Control circuits between the TCM C1 harness connector and the Transmission Solenoid/Pressure Switch harness connector.

Is the resistance above 5.0 Ohms for any of the Step Motor Control circuits?

Yes

- Repair the (T314) A, (T315) B, (T316) C, and/or (T317) D Step Motor Control circuit(s) for an open.
- Perform the CVT VERIFICATION TEST. Refer to **CVT VERIFICATION TEST** .

No

- Go To 4

4. **CHECK THE (T314) A, (T315) B, (T316) C, AND (T317) D STEP MOTOR CONTROL CIRCUIT(S) FOR A SHORT TO GROUND**

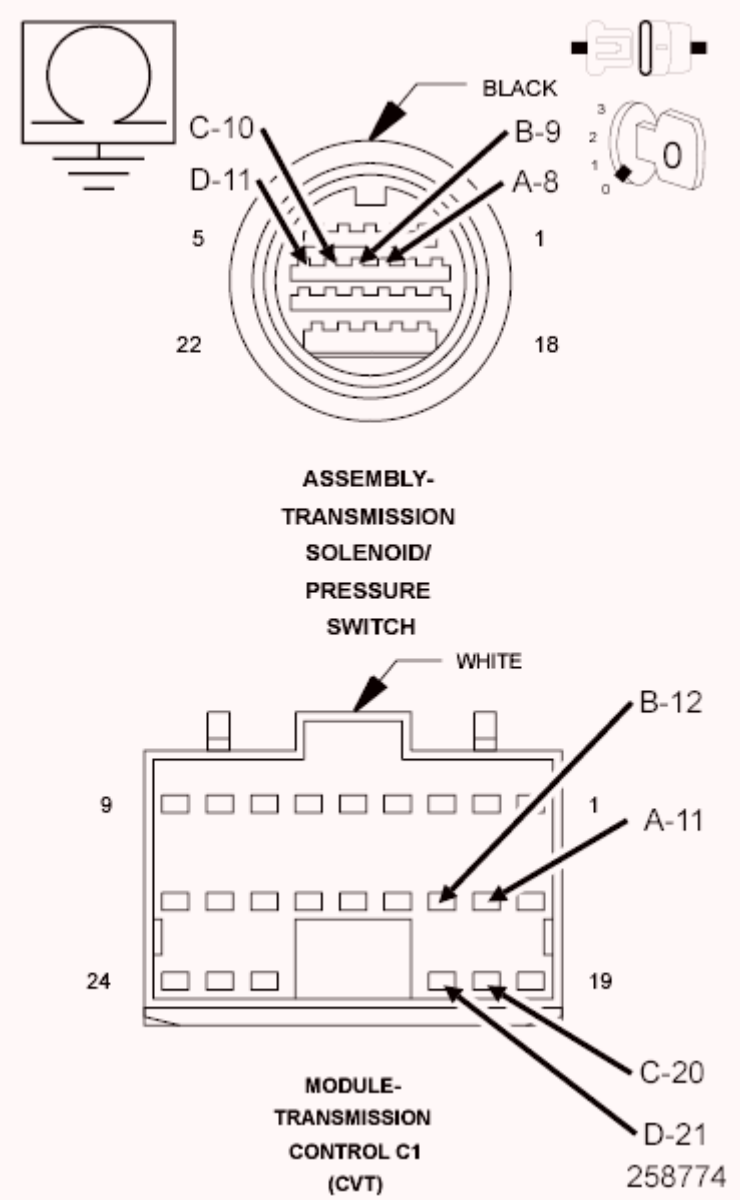

Fig. 107: Checking A-D Step Motor Control Circuit(s) For A Short To Ground
Courtesy of CHRYSLER GROUP, LLC

1. Measure separately the resistance between ground and the (T314) A, (T315) B, (T316) C, and (T317) D Step Motor Control circuits.

   Is the resistance below 5.0 Ohms for any of the Step Motor Control circuits?

   Yes

   - Repair the (T314) A, (T315) B, (T316) C, and/or (T317) D Step Motor Control circuit(s) for a short to ground.

- Perform the CVT VERIFICATION TEST. Refer to **CVT VERIFICATION TEST** .

No

- Go To 5

5. **TRANSMISSION CONTROL MODULE**
   1. Replace the Transmission Control Module in accordance with the Service Information.
   2. Perform the CVT VERIFICATION TEST. Refer to **CVT VERIFICATION TEST** .

   During the verification test did the DTC reset?

   Yes

   - Replace Step Motor in accordance with the Service Information.
   - Perform the CVT VERIFICATION TEST. Refer to **CVT VERIFICATION TEST** .

   No

   - Test Complete.

6. **CHECK THE WIRING AND CONNECTORS**
   1. The conditions necessary to set this DTC are not present at this time.
   2. Using the schematics as a guide, inspect the wiring and connectors specific to this circuit.
   3. Wiggle the wires while checking for shorted and open circuits.

   Were there any problems found?

   Yes

   - Repair as necessary.
   - Perform the CVT VERIFICATION TEST. Refer to **CVT VERIFICATION TEST** .

   No

- Test Complete.

P1744-TORQUE CONVERTER LOCK-UP CLUTCH HEAT CONTROL

THEORY OF OPERATION

The Transmission Control Module (TCM) monitors the Torque Convertor Clutch for temperature during normal operation. To protect the CV Transmission from a hot temperature condition, the TCM monitors the continuation time of stall speed condition. If the monitored time is more than a predetermined value, this DTC will set causing the TCM to change the allowable engine output torque and illuminating the Over Temperature lamp.

WHEN MONITORED

Ignition on, engine running with the transmission in a valid forward or reverse gear.

No inhibitor switch, secondary speed sensor, or engine speed DTCs present.

SET CONDITION

The DTC will set if an Engine stall speed condition is detected for the period of 18 seconds.

POSSIBLE CAUSES

Possible Causes
CHECK CUSTOMER DRIVING HABITS

Always perform the CVT Pre-Diagnostic Troubleshooting procedure before proceeding. Refer to CVT - PRE-DIAGNOSTIC TROUBLESHOOTING PROCEDURE .

DIAGNOSTIC TEST

CHECK CUSTOMER DRIVING HABITS

1. Check with the customer about how the vehicle is driven. Below are some conditions that can cause this DTC to set.
2. Driving a steep upward slope with low vehicle speed.
3. Accelerator pedal and brake pedal pressed simultaneously.

4. Accelerator pedal pressed under drive train locked condition (Off-Road)

   View repair

   Repair

   - As noted in the Theory Of Operation, this DTC is designed to protect the transmission from overheating. Explain to the customer that certain driving habits will cause this DTC to set. Continued overheating may cause Transmission failure.
   - Perform the CVT VERIFICATION TEST. Refer to **CVT VERIFICATION TEST** .

P198A-AWD SYSTEM PERFORMANCE

For a complete wiring diagram **refer to appropriate SYSTEM WIRING DIAGRAMS article** .

THEORY OF OPERATION

The TCM receives the On/Off-road signals from All Wheel Drive control module (AWD) and the Totally Integrated Power Module (TIPM) over the CAN BUS. If the signals from AWD and TIPM do not match, this DTC will set.

WHEN MONITORED

Ignition on, no CAN DTCs from either the AWD control module or the TIPM.

SET CONDITION

Condition One: Received On/Off-road signal pattern but not an existing pattern for the period of 20 seconds.

Condition Two: Received On/Off-road signal pattern but not a proper pattern for the period of 60 seconds.

POSSIBLE CAUSES

Possible Causes
OTHER DTCS PRESENT
ALL WHEEL DRIVE MODULE
TOTALLY INTEGRATED CONTROL MODULE

TRANSMISSION CONTROL MODULE

Always perform the CVT Pre-Diagnostic Troubleshooting procedure before proceeding. Refer to CVT - PRE-DIAGNOSTIC TROUBLESHOOTING PROCEDURE .

DIAGNOSTIC TEST

1. **CHECK IF THE DTC IS ACTIVE**
   1. With the scan tool, read Transmission DTCs.

      Is the status Active for this DTC?

      Yes

      - Go To 2

      No

      - Go To 6
2. **CHECK FOR AWD MODULE DTCS**
   1. With the scan tool, read DTCs.

      Does the AWD module have any DTCs present?

      Yes

      - Refer to **DIAGNOSIS AND TESTING** and perform the appropriate symptom.
      - Perform CVT VERIFICATION TEST. Refer to **CVT VERIFICATION TEST** .

      No

      - Go To 3
3. **CHECK FOR TIPM DTCS**
   1. With the scan tool, read DTCs.

      Does the TIPM have any DTCs present?

Yes

- Perform the appropriate diagnostic procedure.
- Perform CVT VERIFICATION TEST. Refer to **CVT VERIFICATION TEST** .

No

- Go To 4

4. **REPLACE THE AWD MODULE**
   1. Using the schematics as a guide, check the All Wheel Drive Module (AWD) terminals for corrosion, damage, or terminal push out. Pay particular attention to all power and ground circuits. Check for any Service Bulletins for possible causes that may apply. If no problems are found, replace the AWD module per the Service Information.
   2. Perform CVT VERIFICATION TEST. Refer to **CVT VERIFICATION TEST** .

      Did the DTC P198A reset?

      Yes

      - Go To 5

      No

      - Test complete.

5. **REPLACE THE TIPM**
   1. Using the schematics as a guide, check the Totally Integrated Control Module (TIPM) terminals for corrosion, damage, or terminal push out. Pay particular attention to all power and ground circuits. Check for any Service Bulletins for possible causes that may apply. If no problems are found, replace the TIPM per the Service Information.
   2. Perform CVT VERIFICATION TEST. Refer to **CVT VERIFICATION TEST** .

      Did the DTC P198A reset?

      Yes

- Using the schematics as a guide, check the Transmission Control Module (TCM) terminals for corrosion, damage, or terminal push out. Pay particular attention to all power and ground circuits. Check for any Service Bulletins for possible causes that may apply. If no problems are found, replace the TCM per the Service Information.
- Perform CVT VERIFICATION TEST. Refer to **CVT VERIFICATION TEST** .

No

- Test complete.

6. **CHECK THE WIRING AND CONNECTORS**
   1. The conditions necessary to set this DTC are not present at this time.
   2. Using the schematics as a guide, inspect the wiring and connectors specific to this circuit.
   3. Wiggle the wires while checking for shorted and open circuits.
   4. Check for any Service Bulletins that may apply.

   Were there any problems found?

   Yes

   - Repair as necessary.
   - Perform CVT VERIFICATION TEST. Refer to **CVT VERIFICATION TEST** .

   No

   - Test Complete.

P2769-TORQUE CONVERTER CLUTCH CIRCUIT LOW

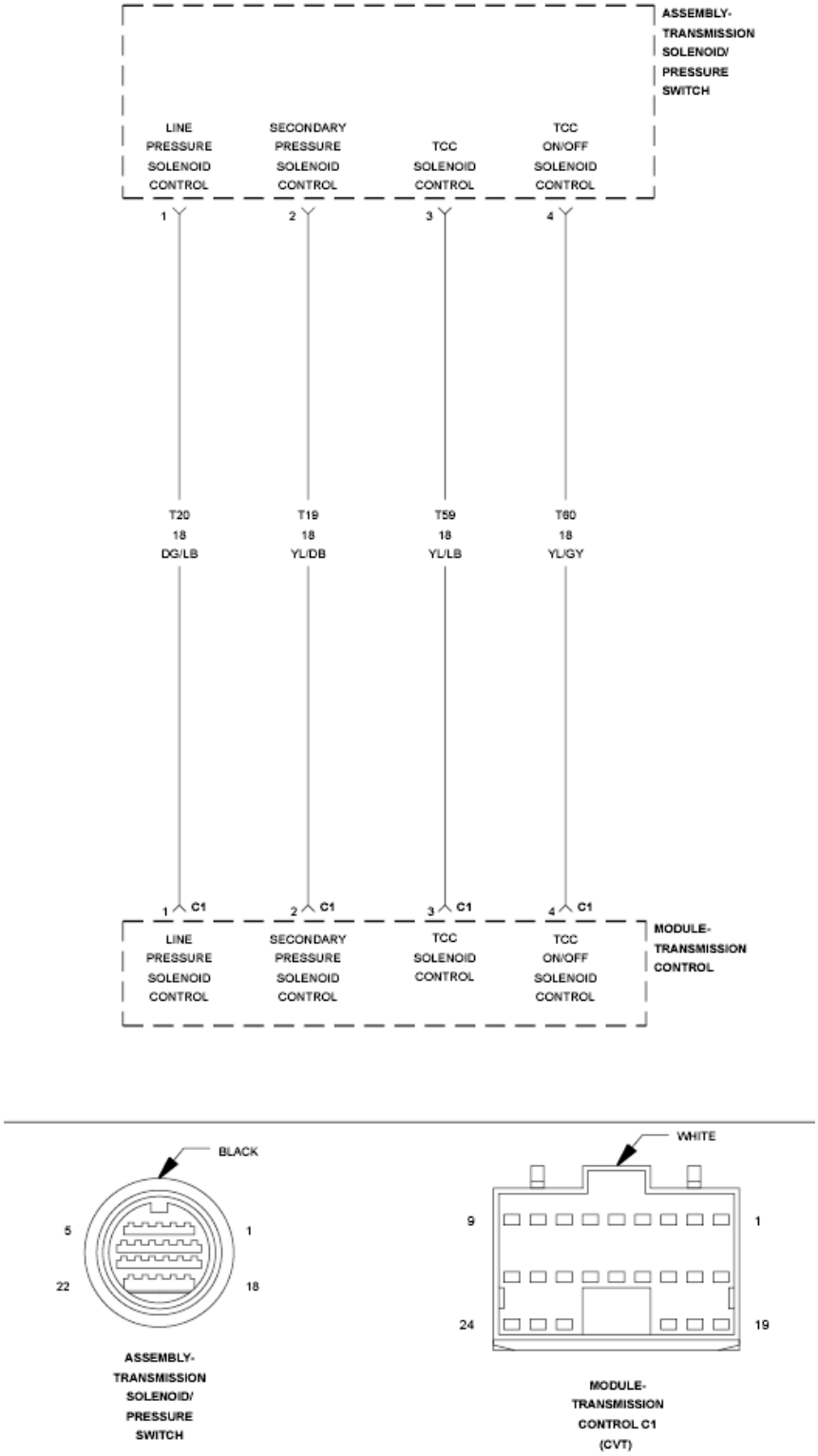

Fig. 108: Pressure Control Solenoid Control Wiring Diagram
Courtesy of CHRYSLER GROUP, LLC

For a complete wiring diagram, **refer to appropriate SYSTEM WIRING DIAGRAMS article** .

THEORY OF OPERATION

The Transmission Control Module monitors two signals from the TCC Solenoid during normal operation. One is the feedback electric current of the TCC Solenoid and the other is the voltage between ground and the TCM termination for the TCC Solenoid.

WHEN MONITORED

Ignition on, engine running with the transmission in a valid forward gear.

Vehicle speed greater than 10 Km/h (6 mph).

Accelerator Pedal Position (APP) greater than 12.5%.

Engine RPM greater than 450 RPM with TCC lock-up enabled.

TCC Lock up command is ON (True).

No DTCs active from the following:

- Step motor
- Line Pressure Solenoid,
- Secondary Solenoid
- Input and Output Speed Sensor
- Primary or Secondary Pressure Sensor
- CAN Bus

SET CONDITION

If the actual voltage is 70% of the target voltage for the period of one second. It takes two consecutive problem identification trips for the DTC to mature and illuminate the MIL.

POSSIBLE CAUSES

Possible Causes
(T59) TCC SOLENOID CONTROL CIRCUIT SHORTED TO GROUND
TORQUE CONVERTOR CLUTCH SOLENOID
TORQUE CONVERTOR CLUTCH
TRANSMISSION CONTROL MODULE

Always perform the CVT Pre-Diagnostic Troubleshooting procedure before proceeding. Refer to CVT - PRE-DIAGNOSTIC TROUBLESHOOTING PROCEDURE .

DIAGNOSTIC TEST

1. **CHECK TO SEE IF THE DTC IS ACTIVE**
   1. With the scan tool, read Transmission DTCs.

      Is the status Active or is the Starts Since Set counter 2 or less for this DTC?

      Yes

      - Go To 2

      No

      - Go To 5
2. **CHECK THE (T59) TCC SOLENOID CONTROL CIRCUIT**

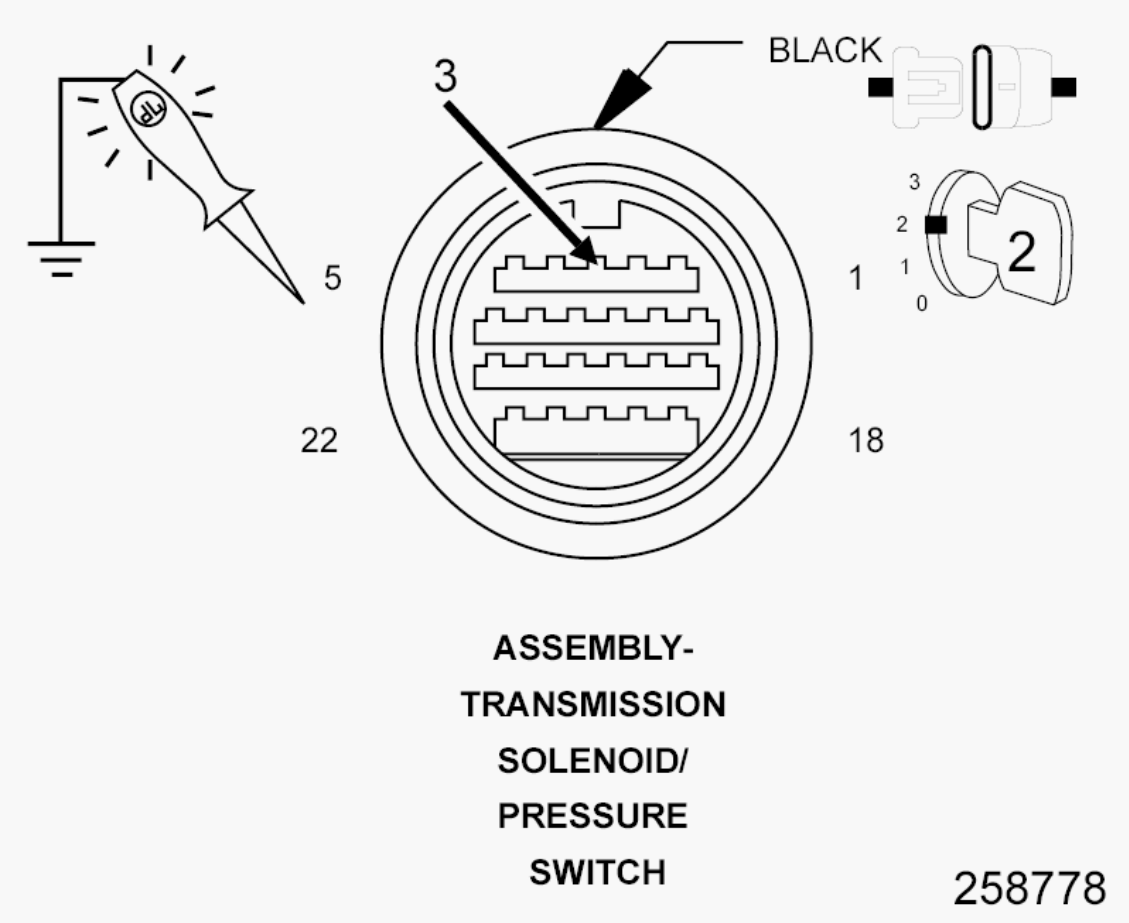

Fig. 109: Checking Torque Convertor Clutch Solenoid Control Circuit
Courtesy of CHRYSLER GROUP, LLC

1. Turn the ignition off to the lock position.
2. Disconnect the Transmission Solenoid/Pressure Switch Assembly harness connector.
3. Ignition on, engine not running.
4. With the scan tool, actuate the TCC Solenoid.
5. Using a 12-volt test light connected to ground, check the (T59) TCC Solenoid Control circuit.

NOTE: The test light must illuminate brightly. Compare the brightness to that of a direct connection to the battery.

Does the test light illuminate brightly?

Yes

- Go To 3

No

- Go To 4

3. **CHECK THE TCC SOLENOID**

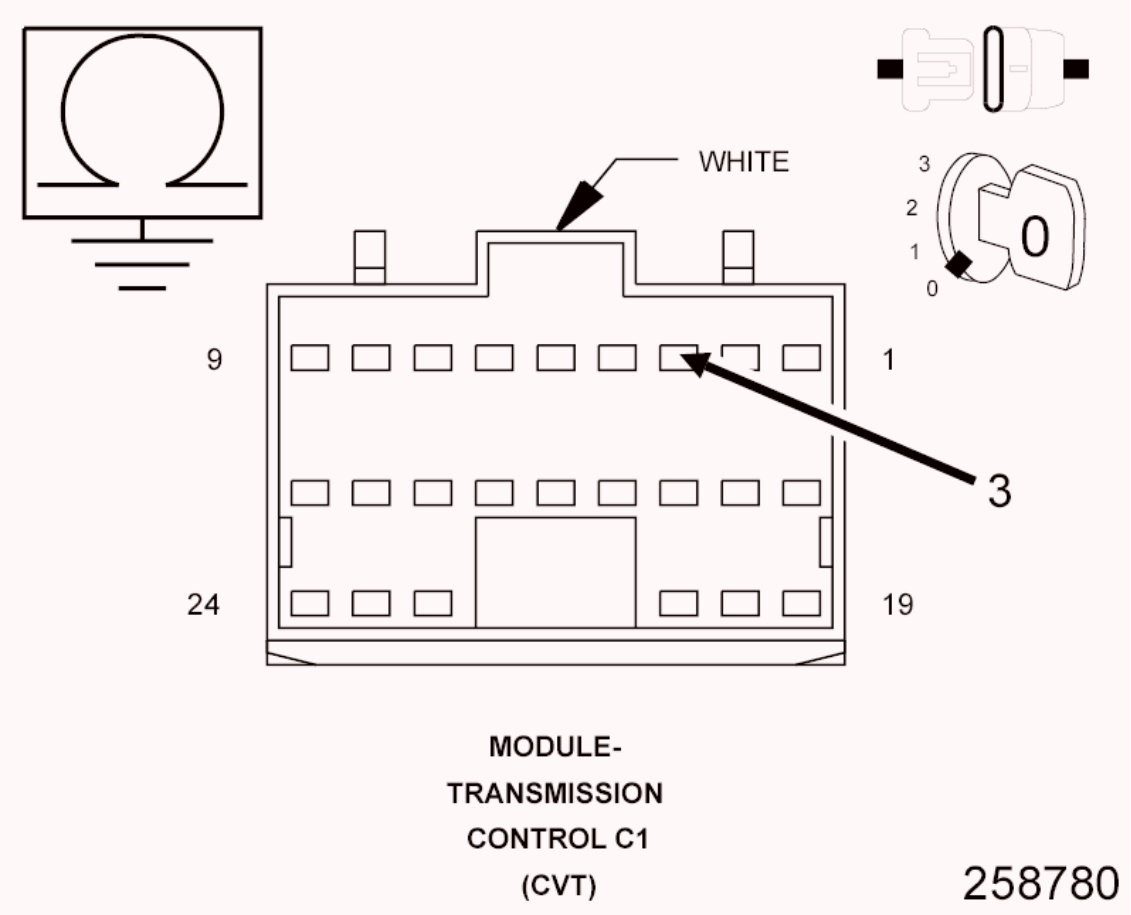

Fig. 110: Checking TCC Solenoid Control Circuit
Courtesy of CHRYSLER GROUP, LLC

1. Turn the ignition off to the lock position.
2. Reconnect the Transmission Solenoid/Pressure Switch Assembly harness connector.
3. Disconnect the TCM C1 harness connector.
4. Measure the resistance between ground and the (T59) TCC Solenoid Control circuit in the TCM C1 harness connector.

   Is the resistance between 3.0 and 9.0 Ohms?

Yes

- Using the schematics as a guide, check the Transmission Control Module (TCM) terminals for corrosion, damage, or terminal push out. Pay particular attention to all power and ground circuits. Check for any Service Bulletins for possible causes that may apply. If no problems are found, replace the TCM in accordance with the Service Information.
- Perform the CVT VERIFICATION TEST. Refer to **CVT VERIFICATION TEST** .

No

- Replace the TCC Solenoid (Valve Body) in accordance with the Service Information.
- Perform the CVT VERIFICATION TEST. Refer to **CVT VERIFICATION TEST** .

4. **CHECK THE (T59) TCC SOLENOID CONTROL CIRCUIT FOR A SHORT TO GROUND**

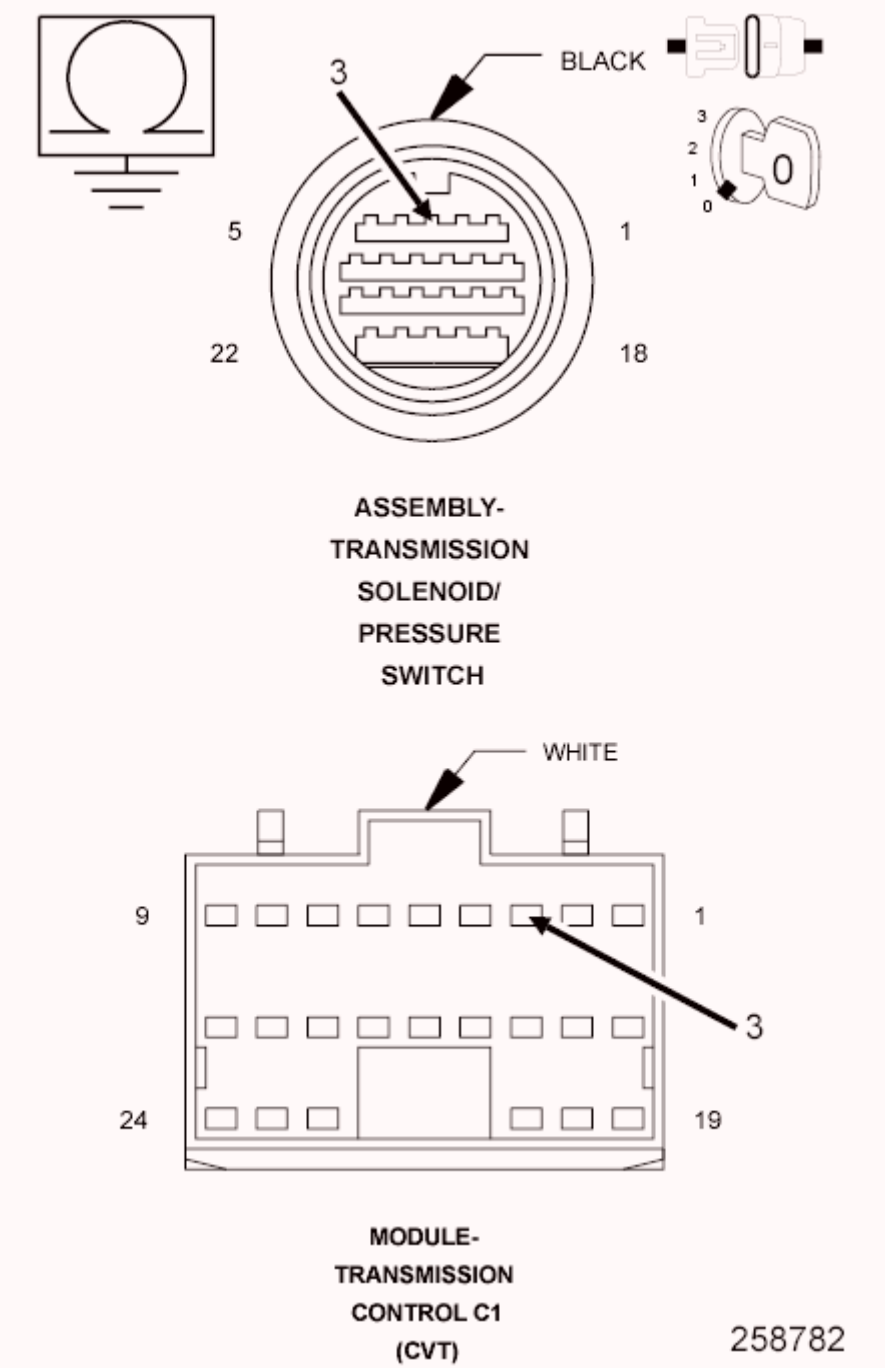

Fig. 111: Checking Torque Convertor Clutch Solenoid Control Circuit For A Short To Ground
Courtesy of CHRYSLER GROUP, LLC

1. Turn the ignition off to the lock position.
2. Disconnect the TCM C1 harness connector.
3. Measure the resistance between ground and the (T59) TCC Solenoid Control circuit.

Is the resistance below 5.0 Ohms?

Yes

- Repair the (T59) TCC Solenoid Control circuit for a short to ground.
- Perform the CVT VERIFICATION TEST. Refer to **CVT VERIFICATION TEST** .

No

- Using the schematics as a guide, check the Transmission Control Module (TCM) terminals for corrosion, damage, or terminal push out. Pay particular attention to all power and ground circuits. Check for any Service Bulletins for possible causes that may apply. If no problems are found, replace the TCM in accordance with the Service Information.
- Perform the CVT VERIFICATION TEST. Refer to **CVT VERIFICATION TEST** .

5. **CHECK THE WIRING AND CONNECTORS**
   1. The conditions necessary to set this DTC are not present at this time.
   2. Using the schematics as a guide, inspect the wiring and connectors specific to this circuit.
   3. Wiggle the wires while checking for shorted and open circuits.

   Were there any problems found?

   Yes

   - Repair as necessary.
   - Perform the CVT VERIFICATION TEST. Refer to **CVT VERIFICATION TEST** .

   No

   - Test Complete.

P2770-TORQUE CONVERTER CLUTCH CIRCUIT HIGH

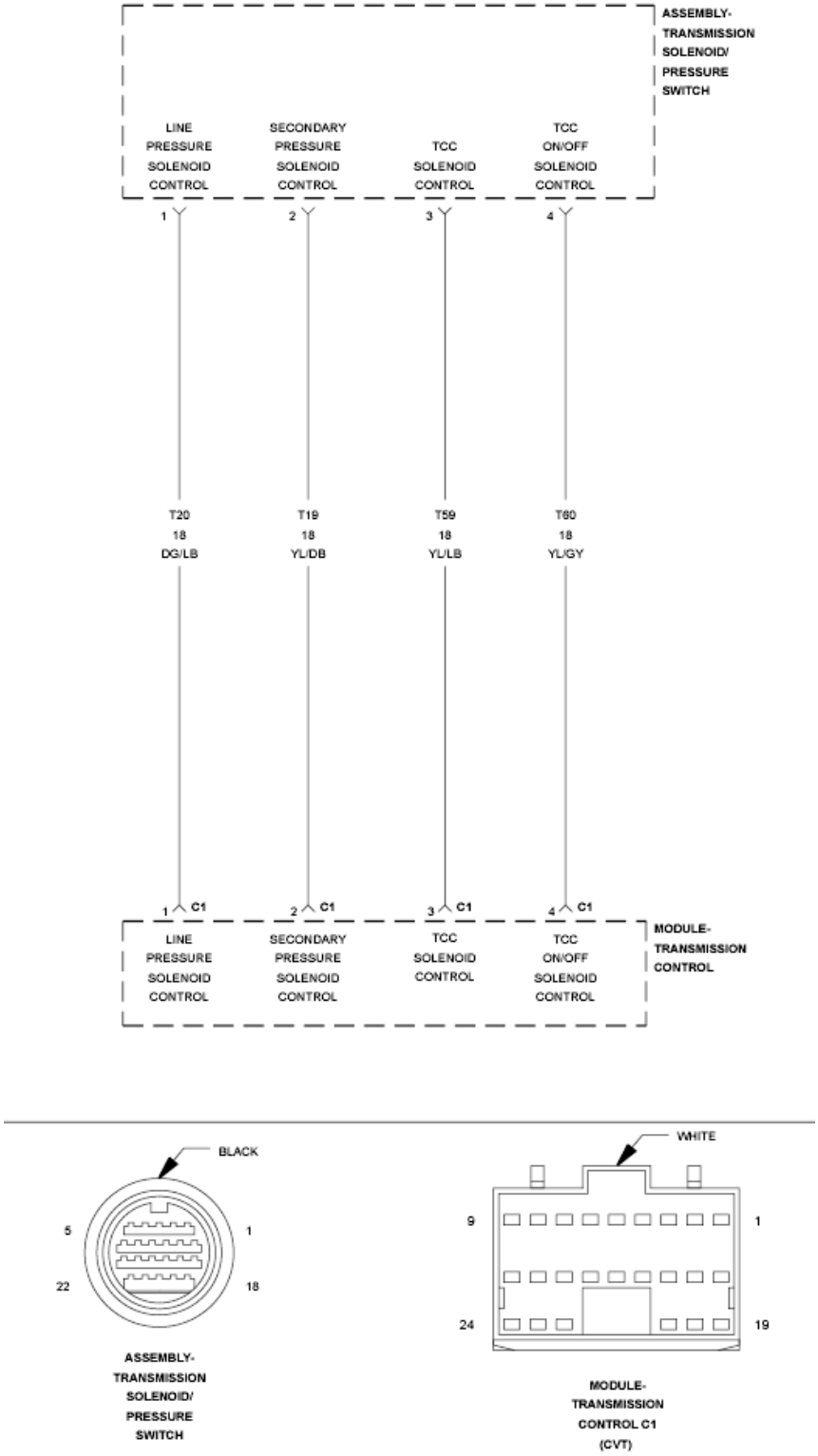

Fig. 112: Pressure Control Solenoid Control Wiring Diagram
Courtesy of CHRYSLER GROUP, LLC

For a complete wiring diagram, **refer to appropriate SYSTEM WIRING DIAGRAMS article** .

THEORY OF OPERATION

The Transmission Control Module monitors two signals from the TCC Solenoid during normal operation. One is the feedback electric current of the TCC Solenoid and the other is the voltage between ground and the TCM termination for the TCC Solenoid.

WHEN MONITORED

Ignition on, engine running with the transmission in a valid forward gear.

Vehicle speed greater than 10 Km/h (6 mph).

Accelerator Pedal Position (APP) greater than 12.5%.

Engine RPM greater than 450 RPM with TCC lock-up enabled.

TCC Lock up command is ON (True).

No active DTCs from the following:

Torque Convertor Clutch Circuit Low, Step motor, Line Pressure Solenoid, Secondary Solenoid, Input and Output Speed Sensor, Primary or Secondary Pressure Sensor, or CAN BUS.

SET CONDITION

If the target current is greater than 0.75 of an amp and the monitored current is less than 0.4 of an amp for the period of five seconds. It takes two consecutive problem identification trips for the DTC to mature and illuminate the MIL.

POSSIBLE CAUSES

Possible Causes
(T59) TCC SOLENOID CONTROL CIRCUIT SHORTED TO VOLTAGE
(T59) TCC SOLENOID CONTROL CIRCUIT OPEN
TORQUE CONVERTOR CLUTCH SOLENOID
TRANSMISSION CONTROL MODULE

Always perform the CVT Pre-Diagnostic Troubleshooting procedure before proceeding. Refer to CVT - PRE-DIAGNOSTIC TROUBLESHOOTING PROCEDURE .

DIAGNOSTIC TEST

1. **CHECK TO SEE IF THE DTC IS ACTIVE**
   1. With the scan tool, read Transmission DTCs.

      Is the status Active or is the Starts Since Set counter 2 or less for this DTC?

      Yes

      - Go To 2

      No

      - Go To 6
2. **CHECK THE (T59) TCC SOLENOID CONTROL CIRCUIT**

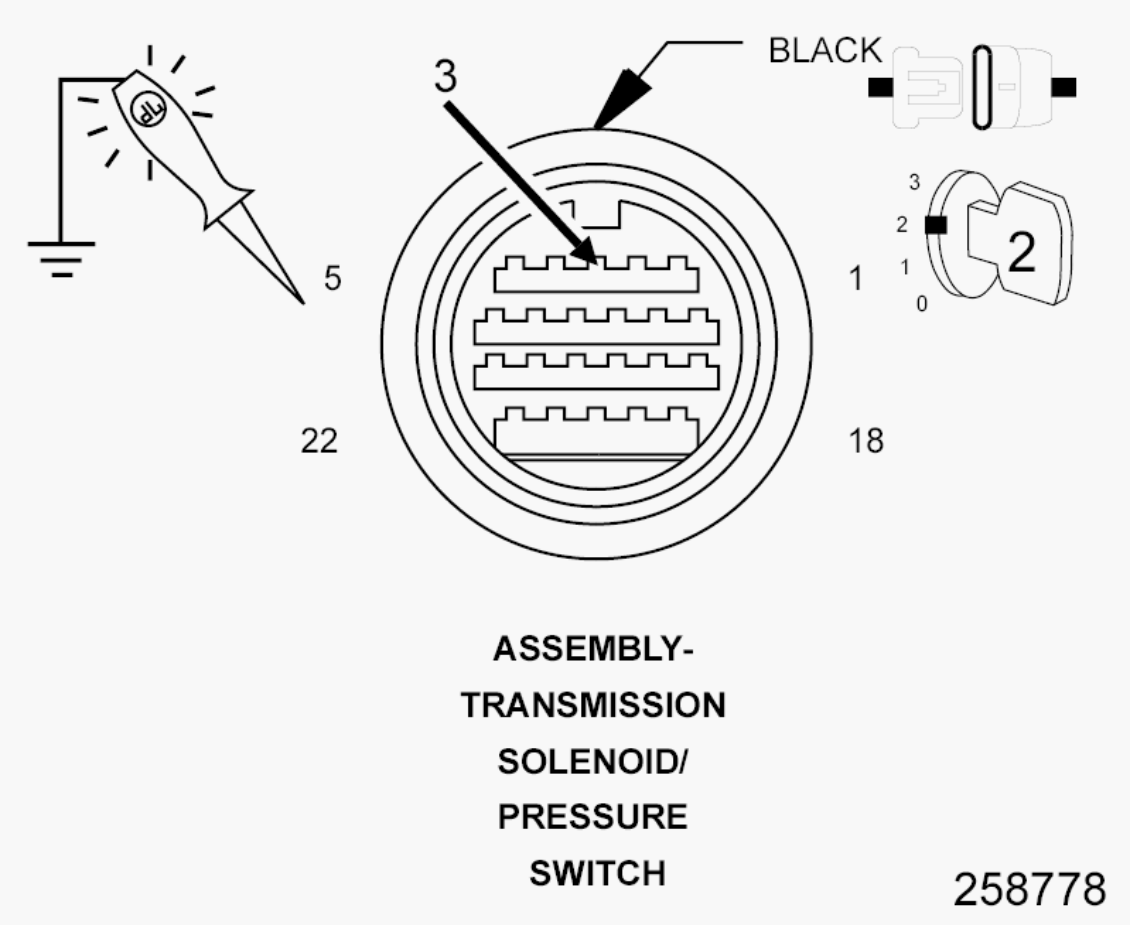

Fig. 113: Checking Torque Convertor Clutch Solenoid Control Circuit
Courtesy of CHRYSLER GROUP, LLC

1. Turn the ignition off to the lock position.

2. Disconnect the Transmission Solenoid/Pressure Switch Assembly harness connector.
3. Ignition on, engine not running.
4. With the scan tool, actuate the (L/U) TCC Solenoid.
5. Using a 12-volt test light connected to ground, check the (T59) TCC Solenoid Control circuit.

NOTE: The test light must illuminate brightly. Compare the brightness to that of a direct connection to the battery.

Does the test light illuminate brightly?

Yes

- Go To 3

No

- Go To 5

3. **CHECK THE (T59) TCC SOLENOID CONTROL CIRCUIT FOR A SHORT TO VOLTAGE**

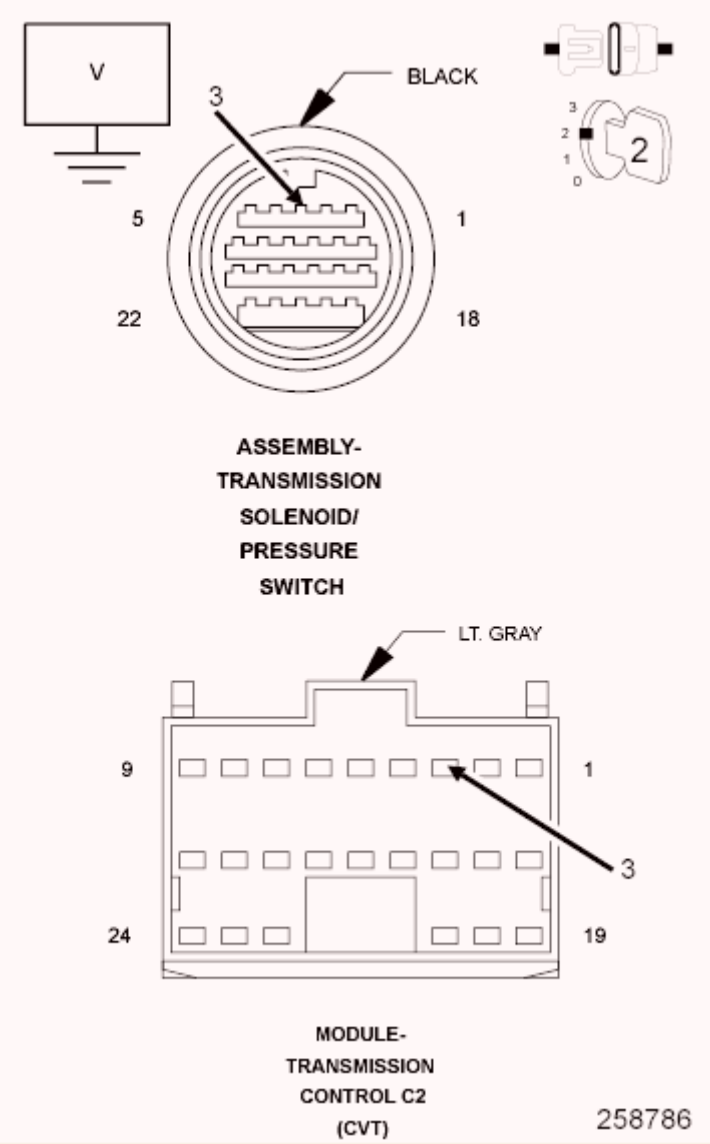

Fig. 114: Checking Torque Convertor Clutch Solenoid Control Circuit For A Short To Voltage
Courtesy of CHRYSLER GROUP, LLC

1. With the scan tool, stop the TCC Solenoid actuator.
2. Turn the ignition off to the lock position.
3. Disconnect the TCM C1 harness connector.
4. Ignition on, engine not running.
5. Measure the voltage of the (T59) TCC Solenoid Control circuit.

   Is the voltage above 0.5 of a volt?

   Yes

- Repair the (T59) TCC Solenoid Control circuit for a short to voltage.
- Perform the CVT VERIFICATION TEST. Refer to **CVT VERIFICATION TEST** .

No

- Go To 4

4. **CHECK THE TCC SOLENOID**

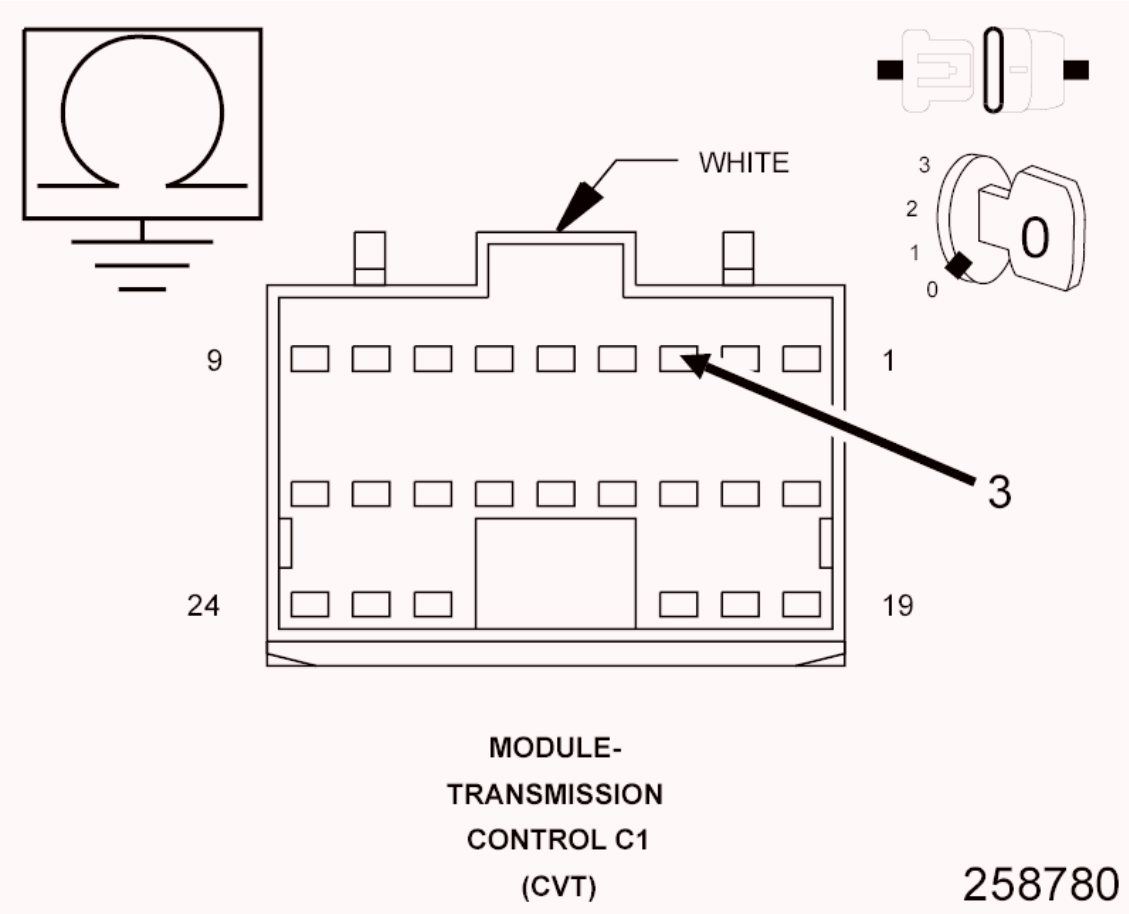

Fig. 115: Checking TCC Solenoid Control Circuit
Courtesy of CHRYSLER GROUP, LLC

1. Turn the ignition off to the lock position.
2. Reconnect the Transmission Solenoid/Pressure Switch Assembly harness connector.
3. Measure the resistance between ground and the (T59) TCC Solenoid Control circuit in the TCM C1 harness connector.

Is the resistance between 3.0 and 9.0 Ohms?

Yes

- Using the schematics as a guide, check the Transmission Control Module (TCM) terminals for corrosion, damage, or terminal push out. Pay particular attention to all power and ground circuits. Check for any Service Bulletins for possible causes that may apply. If no problems are found, replace the TCM in accordance with the Service Information.
- Perform the CVT VERIFICATION TEST. Refer to **CVT VERIFICATION TEST** .

No

- Replace the TCC Solenoid (Valve Body) in accordance with the Service Information.
- Perform the CVT VERIFICATION TEST. Refer to **CVT VERIFICATION TEST** .

5. **CHECK THE (T59) TCC SOLENOID CONTROL CIRCUIT FOR AN OPEN**

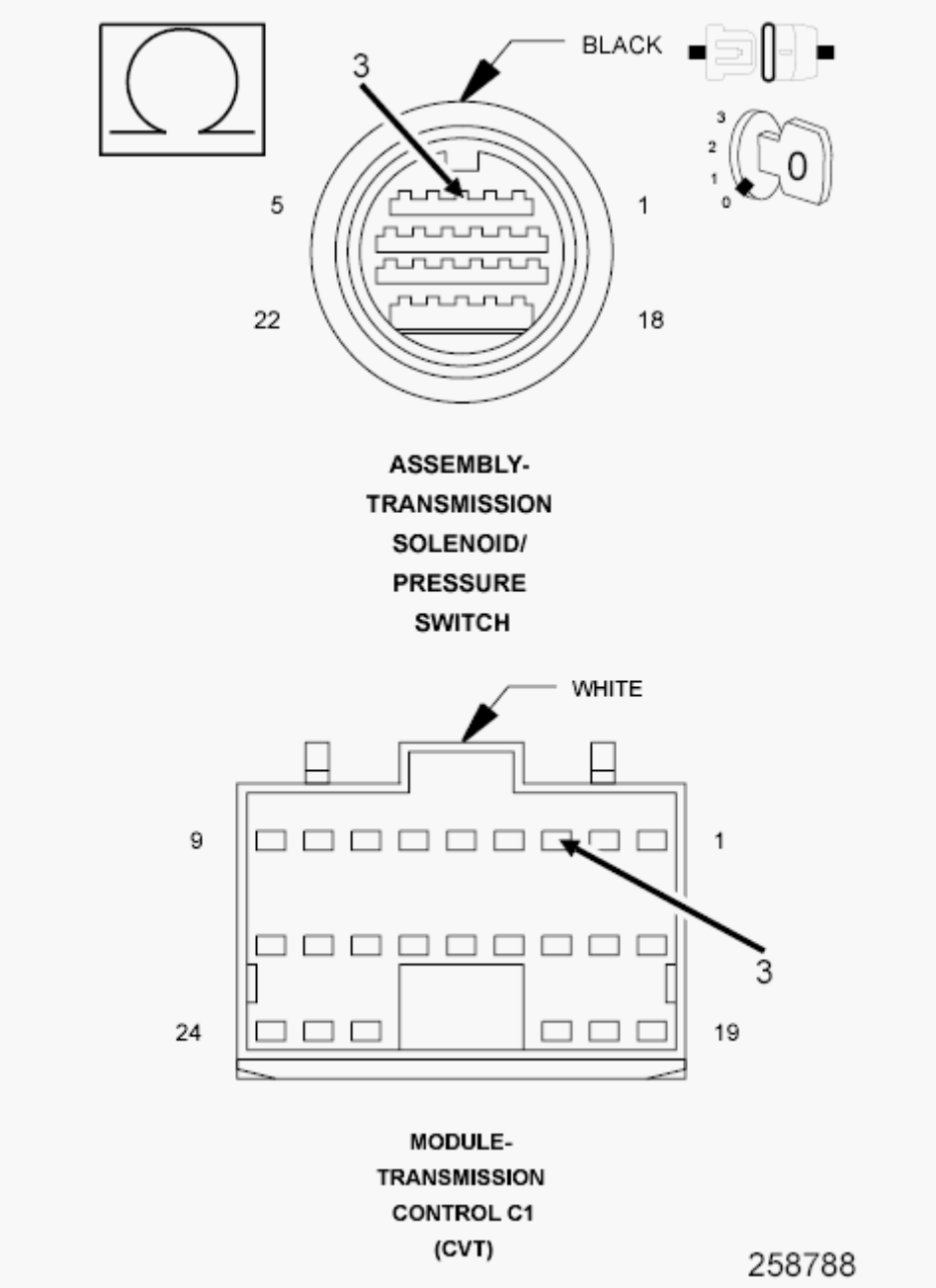

Fig. 116: Checking Torque Convertor Clutch Solenoid Control Circuit For An Open
Courtesy of CHRYSLER GROUP, LLC

1. With the scan tool, stop the TCC Solenoid actuator.
2. Turn the ignition off to the lock position.
3. Disconnect the TCM C1 harness connector.
4. Ignition on, engine not running.
5. Measure the resistance of the (T59) TCC Solenoid Control circuit between the TCM C1 harness connector and the Transmission

Solenoid/Pressure Switch harness connector.

Is the resistance above 5.0 Ohms?

Yes

- Repair the (T59) TCC Solenoid Control circuit for an open.
- Perform the CVT VERIFICATION TEST. Refer to **CVT VERIFICATION TEST** .

No

- Using the schematics as a guide, check the Transmission Control Module (TCM) terminals for corrosion, damage, or terminal push out. Pay particular attention to all power and ground circuits. Check for any Service Bulletins for possible causes that may apply. If no problems are found, replace the TCM in accordance with the Service Information.
- Perform the CVT VERIFICATION TEST. Refer to **CVT VERIFICATION TEST** .

6. **CHECK THE WIRING AND CONNECTORS**
   1. The conditions necessary to set this DTC are not present at this time.
   2. Using the schematics as a guide, inspect the wiring and connectors specific to this circuit.
   3. Wiggle the wires while checking for shorted and open circuits.

   Were there any problems found?

   Yes

   - Repair as necessary.
   - Perform the CVT VERIFICATION TEST. Refer to **CVT VERIFICATION TEST** .

   No

   - Test Complete.

U0001-CAN C BUS

For a complete wiring diagram, **refer to appropriate SYSTEM WIRING DIAGRAMS article** .

THEORY OF OPERATION

The Controller Area Network (CAN) is a high speed serial communication line for multiplex communication between multiple controllers that reside on the network. The Transmission Control Module monitors the transmit and receive message from the CAN BUS.

WHEN MONITORED

Ignition on in the run position with a system voltage between 9.0 and 16.0 volts.

SET CONDITION

If the Transmit or receive error counter is equal to or greater than 256.

Refer to **DTC INDEX** and perform the appropriate diagnostic procedure. .

U0100-LOST COMMUNICATION WITH ECM/PCM

For a complete wiring diagram, **refer to appropriate SYSTEM WIRING DIAGRAMS article** .

THEORY OF OPERATION

The Controller Area Network (CAN) is a high speed serial communication line for multiplex communication between multiple controllers that reside on the network. The Transmission Control Module monitors the transmit and receive message from the CAN BUS.

WHEN MONITORED

Ignition on in the run position with a system voltage between 9.0 and 16.0 volts.

IOD fuse is installed or vehicle odometer is over 80 kilometers (50 miles).

No CAN C Bus DTCs present.

SET CONDITION

A loss of CAN Bus communication between the TCM and ECM/PCM for the period of 2.0 seconds.

Refer to **DTC INDEX** and perform the appropriate diagnostic procedure. .

U0121-LOST COMMUNICATION WITH ANTILOCK BRAKE MODULE

For a complete wiring diagram, **refer to appropriate SYSTEM WIRING DIAGRAMS article** .

THEORY OF OPERATION

The Controller Area Network (CAN) is a high speed serial communication line for multiplex communication between multiple controllers that reside on the network. The Transmission Control Module monitors the transmit and receive message from the CAN BUS.

WHEN MONITORED

Ignition on in the run position with a system voltage between 9.0 and 16.0 volts.

IOD fuse is installed or vehicle odometer is over 80 kilometers (50 miles).

No CAN C BUS DTCs present.

SET CONDITION

A loss of CAN Bus communication between the TCM and ABS for the period of 2.0 seconds.

Refer to **DTC INDEX** and perform the appropriate diagnostic procedure. .

U0141-LOST COMMUNICATION WITH IPM (FCM/TIPM)

For a complete wiring diagram, **refer to appropriate SYSTEM WIRING DIAGRAMS article** .

THEORY OF OPERATION

The Controller Area Network (CAN) is a high speed serial communication line for multiplex communication between multiple controllers that reside on the network. The Transmission Control Module monitors the transmit and receive message from the CAN BUS.

WHEN MONITORED

Ignition on in the run position with a system voltage between 9.0 and 16.0 volts.

IOD fuse is installed or vehicle odometer is over 80 kilometers (50 miles).

No CAN C Bus DTCs present.

SET CONDITION

A loss of CAN Bus communication between the TCM and FCM/TIPM for the period of 2.0 seconds.

Refer to **DTC INDEX** and perform the appropriate diagnostic procedure. .

U1146-LOST COMMUNICATION WITH EXTERNAL MEMORY

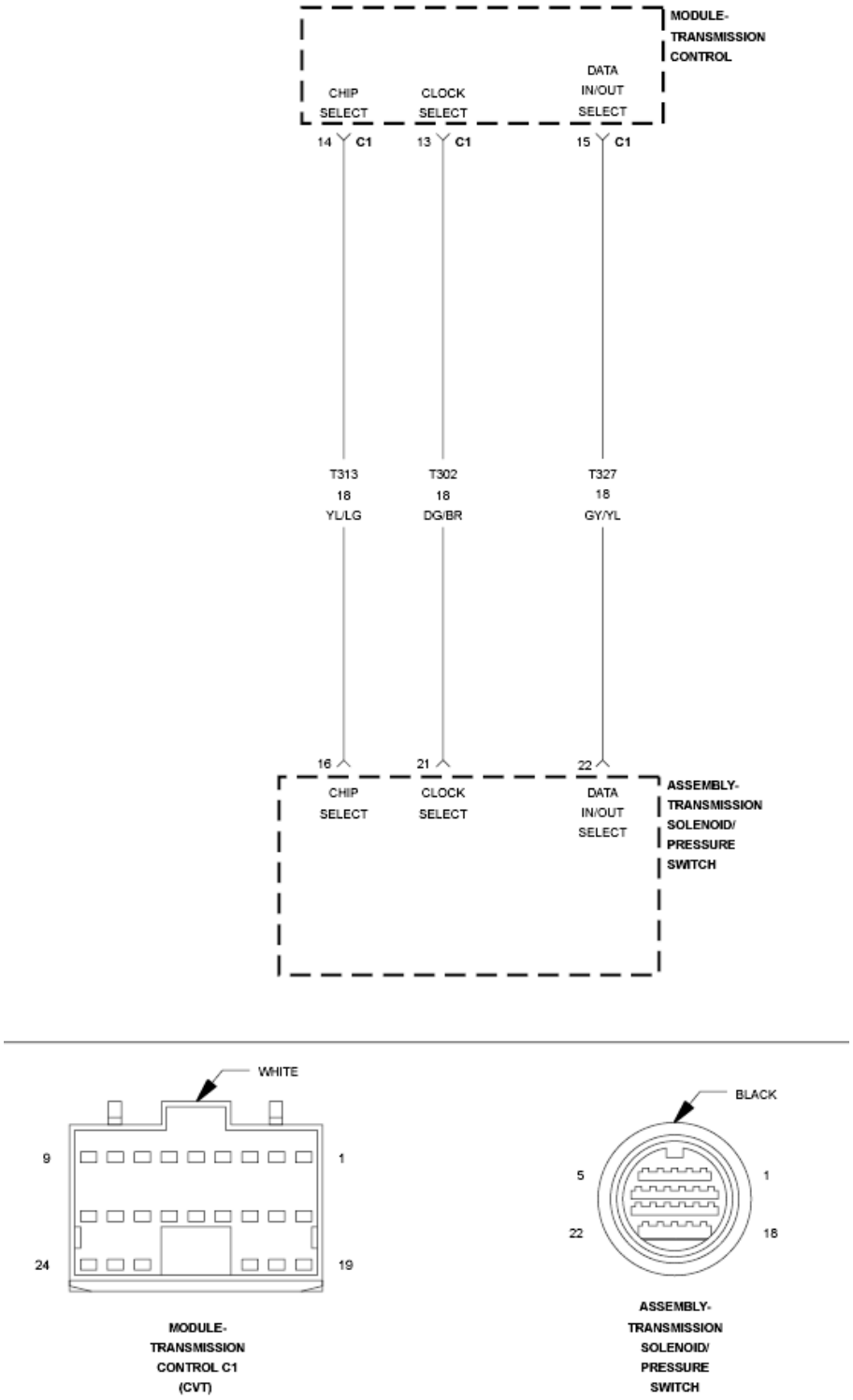

Fig. 117: Transmission Control Module & Pressure Switch Circuit Diagram
Courtesy of CHRYSLER GROUP, LLC

For a complete wiring diagram, **refer to appropriate SYSTEM WIRING DIAGRAMS article** .

THEORY OF OPERATION

The first time the vehicle is started, the Transmission Control Module (TCM) receives hydraulic calibration data from an external EEPROM (located in the transmission) and stores this information in the EEPROM of the TCM. If the TCM can not read the external EEPROM in the transmission this DTC will set. It takes two consecutive failures to turn on the MIL.

WHEN MONITORED

Ignition on in the run position with a system voltage between 9.0 and 16.0 volts.

Shift lever in Park or Reverse position.

SET CONDITION

Communication between the TCM and the EEPROM in the transmission is not active for the period of 5 seconds.

POSSIBLE CAUSES

Possible Causes
(T327) DATA IN/OUT SELECT CIRCUIT SHORT TO VOLTAGE
(T313) CHIP SELECT CIRCUIT SHORT TO VOLTAGE
(T302) CLOCK SELECT CIRCUIT SHORT TO VOLTAGE
(T327) DATA IN/OUT SELECT CIRCUIT OPEN
(T313) CHIP SELECT CIRCUIT OPEN
(T302) CLOCK SELECT CIRCUIT OPEN
(T302) CLOCK SELECT CIRCUIT SHORT TO GROUND
(T313) CHIP SELECT CIRCUIT SHORT TO GROUND
(T327) DATA IN/OUT SELECT CIRCUIT SHORT TO GROUND
INTERNAL TRANSMISSION
TRANSMISSION CONTROL MODULE

Always perform the CVT Pre-Diagnostic Troubleshooting procedure before proceeding. Refer to CVT - PRE-DIAGNOSTIC TROUBLESHOOTING PROCEDURE .

DIAGNOSTIC TEST

1. **CHECK IF THE DTC IS ACTIVE**
    1. With the scan tool, read Transmission DTCs.

Is the status Active for this DTC?

Yes

- Go To 2

No

- Go To 12

2. **CHECK THE (T327) DATA IN/OUT SELECT CIRCUIT FOR A SHORT TO VOLTAGE**

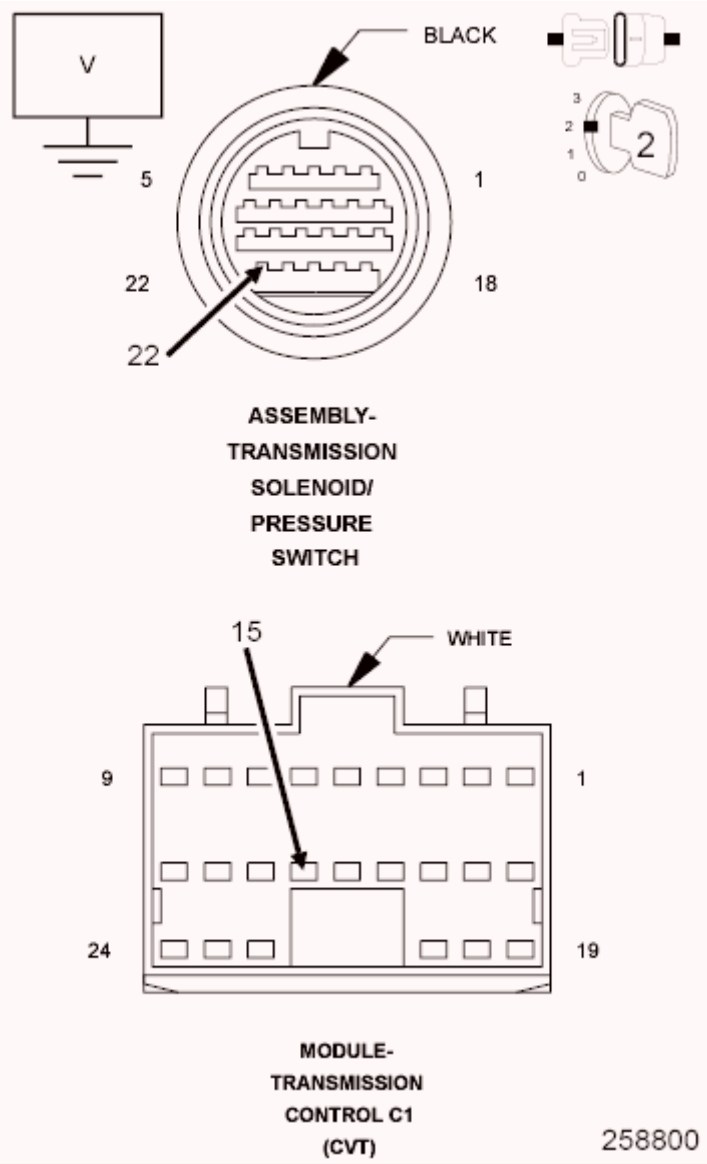

Fig. 118: Checking Data In/Out Select Circuit For A Short To Voltage
Courtesy of CHRYSLER GROUP, LLC

1. Turn the ignition off to the lock position.
2. Disconnect the TCM C1 harness connector.
3. Disconnect the Transmission Solenoid/Pressure Switch Assembly harness connector.
4. Ignition on, engine not running.
5. Measure the voltage of the (T327) Data IN/OUT Select circuit.

   Is the voltage above 0.02 volts?

   Yes

   - Repair the (T327) Data IN/OUT Select circuit for a short to voltage.
   - Perform CVT VERIFICATION TEST. Refer to **CVT VERIFICATION TEST** .

   No

   - Go To 3

3. **CHECK THE (T313) CHIP SELECT CIRCUIT FOR A SHORT TO VOLTAGE**

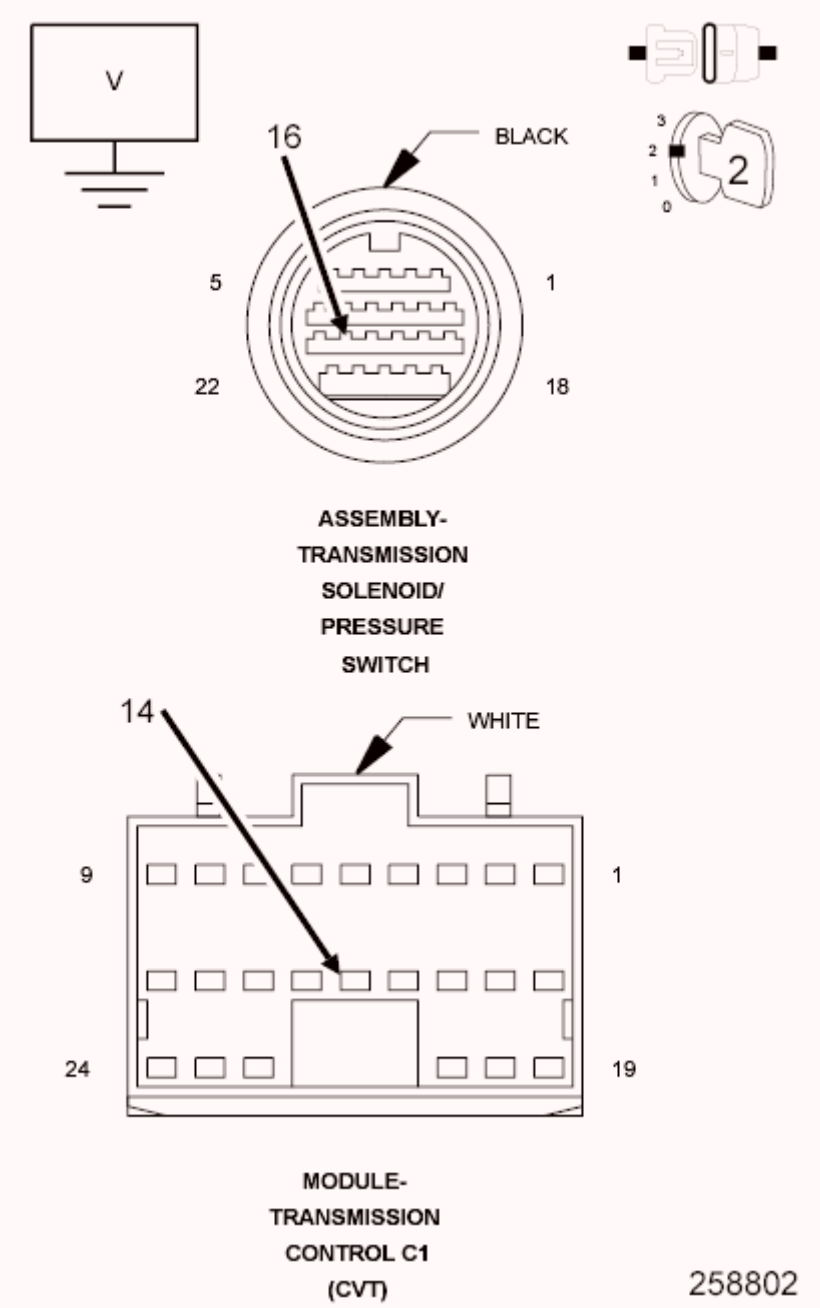

Fig. 119: Checking Chip Select Circuit For A Short To Voltage
Courtesy of CHRYSLER GROUP, LLC

1. Measure the voltage of the (T313) Chip Select circuit.

   Is the voltage above 0.1 volts?

   Yes

   - Repair the (T313) Chip Select circuit for a short to voltage.
   - Perform CVT VERIFICATION TEST. Refer to **CVT**

VERIFICATION TEST .

No

- Go To 4

4. **CHECK THE (T302) CLOCK SELECT CIRCUIT FOR A SHORT TO VOLTAGE**

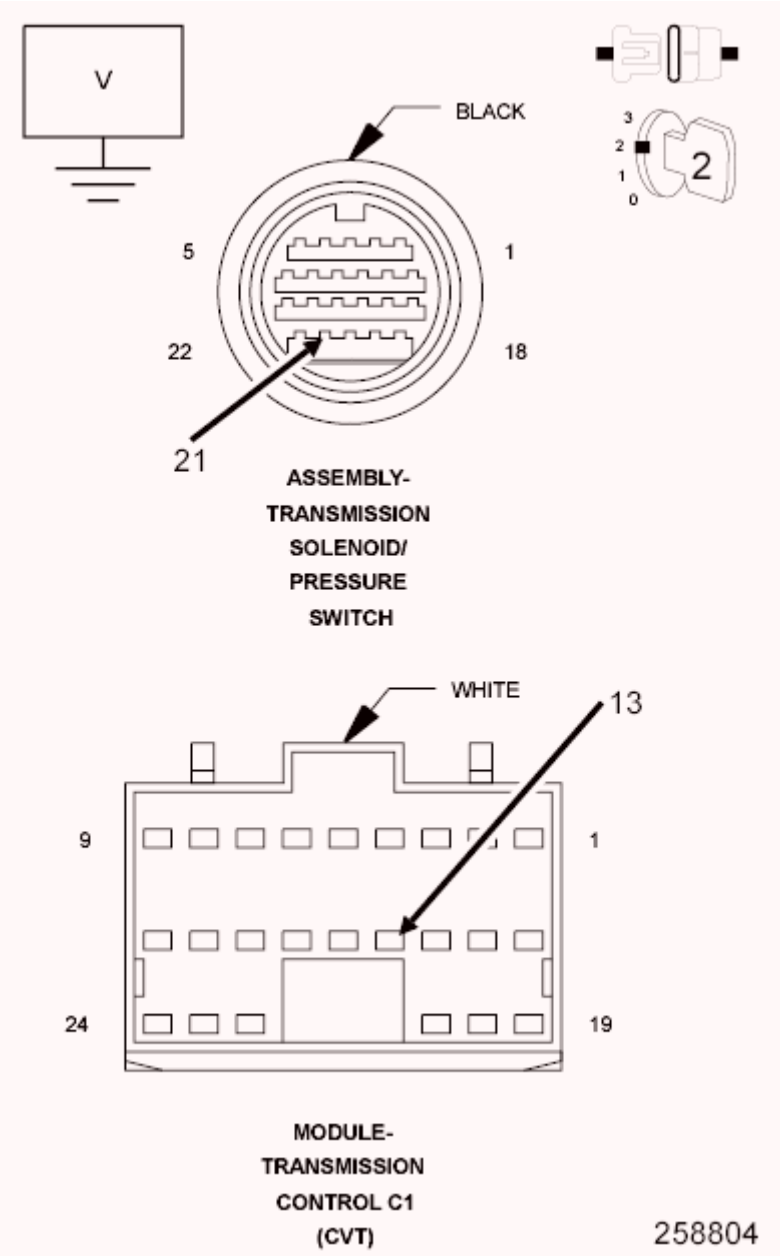

Fig. 120: Checking Clock Select Circuit For A Short To Voltage
Courtesy of CHRYSLER GROUP, LLC

1. Measure the voltage of the (T302) Clock Select circuit.

Is the voltage above 0.2 volts?

Yes

- Repair the (T302) Clock Select circuit for a short to voltage.
- Perform CVT VERIFICATION TEST. Refer to **CVT VERIFICATION TEST** .

No

- Go To 5

5. **CHECK THE (T327) DATA IN/OUT SELECT CIRCUIT FOR AN OPEN**

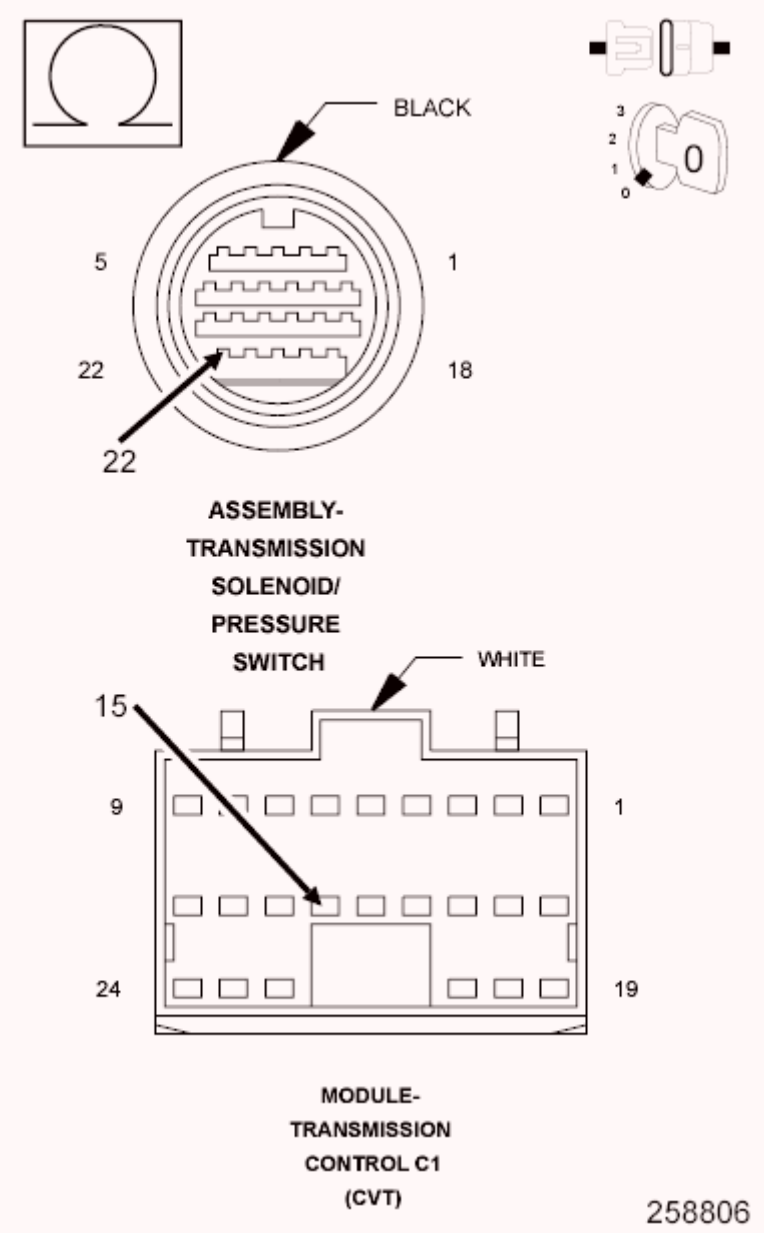

Fig. 121: Checking Data In/Out Select Circuit For An Open
Courtesy of CHRYSLER GROUP, LLC

1. Turn the ignition off to the lock position.
2. Measure the resistance of the (T327) Data In/Out Select circuit between the TCM C1 harness connector and the Transmission Solenoid/Pressure Switch Assembly harness connector.

   Is the resistance above 5.0 ohms?

   Yes

   - Repair the (T327) Data IN/OUT Select circuit for an open.

- Perform CVT VERIFICATION TEST. Refer to **CVT VERIFICATION TEST** .

No

- Go To 6

6. **CHECK THE (T313) CHIP SELECT CIRCUIT FOR AN OPEN**

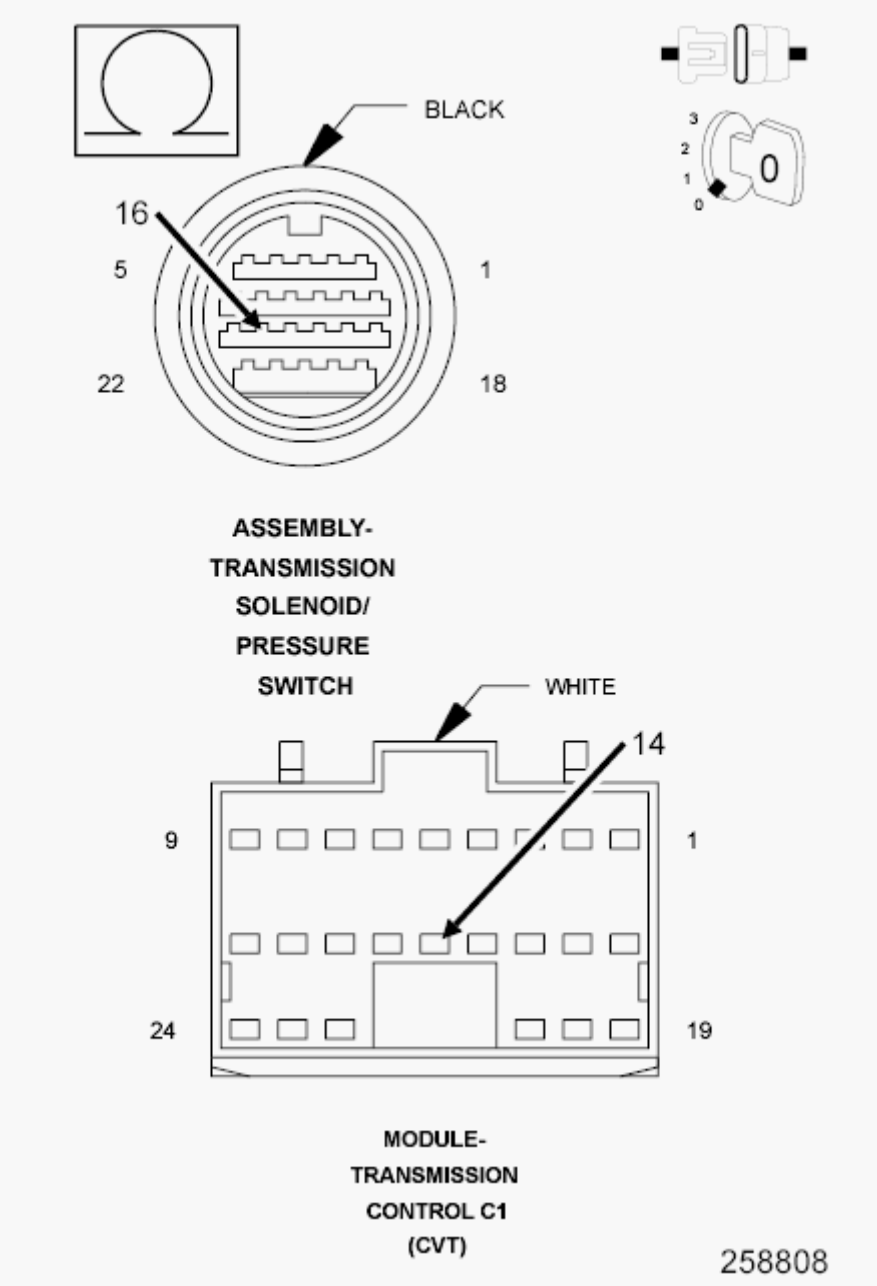

Fig. 122: Checking Chip Select Circuit For An Open
Courtesy of CHRYSLER GROUP, LLC

1. Measure the resistance of the (T313) Chip Select circuit between the TCM C1 harness connector and the Transmission Solenoid/Pressure Switch Assembly harness connector.

   Is the resistance above 5.0 ohms?

   Yes

   - Repair the (T313) Chip Select circuit for an open.
   - Perform CVT VERIFICATION TEST. Refer to **CVT VERIFICATION TEST** .

   No

   - Go To 7

7. **CHECK THE (T302) CLOCK SELECT CIRCUIT FOR AN OPEN**

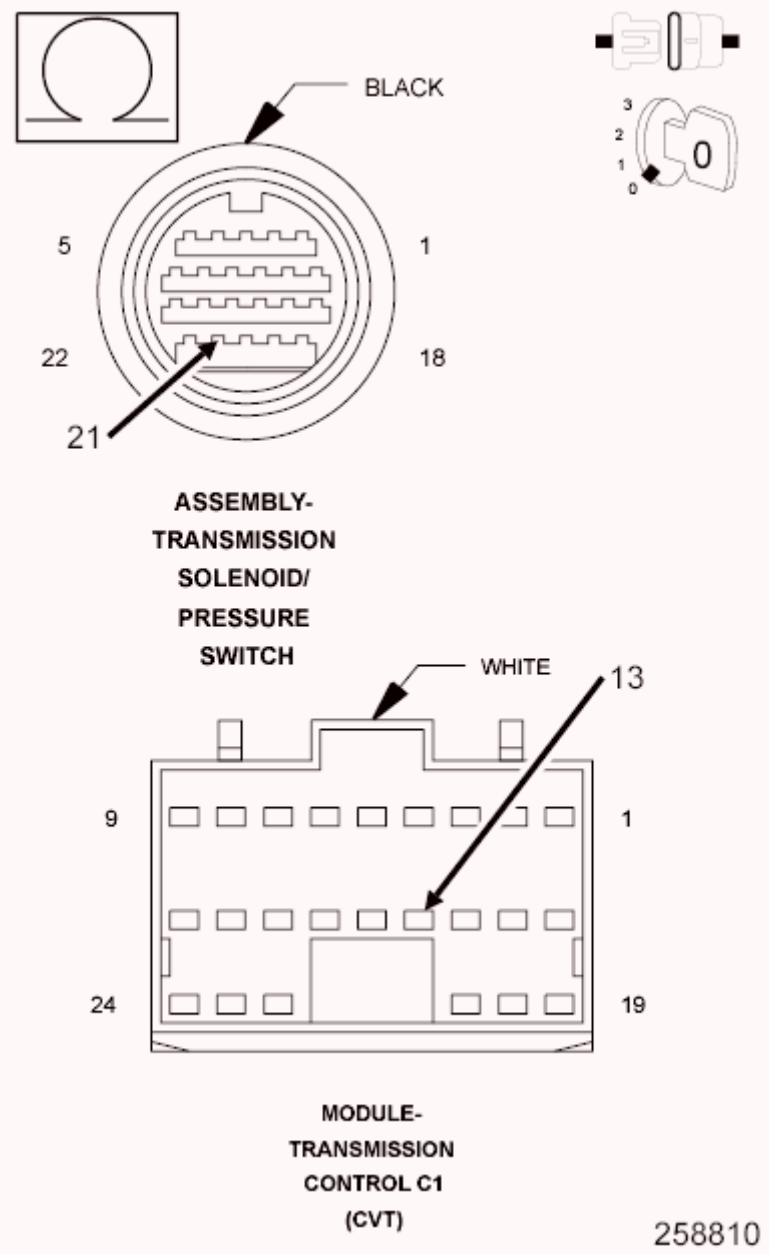

Fig. 123: Checking Clock Select Circuit For An Open
Courtesy of CHRYSLER GROUP, LLC

1. Measure the resistance of the (T302) Clock Select circuit between the TCM C1 harness connector and the Transmission Solenoid/Pressure Switch Assembly harness connector.

   Is the resistance above 5.0 ohms?

   Yes

   - Repair the (T302) Clock Select circuit for an open.

- Perform CVT VERIFICATION TEST. Refer to **CVT VERIFICATION TEST** .

No

- Go To 8

8. **CHECK THE (T327) DATA IN/OUT SELECT CIRCUIT FOR A SHORT TO GROUND**

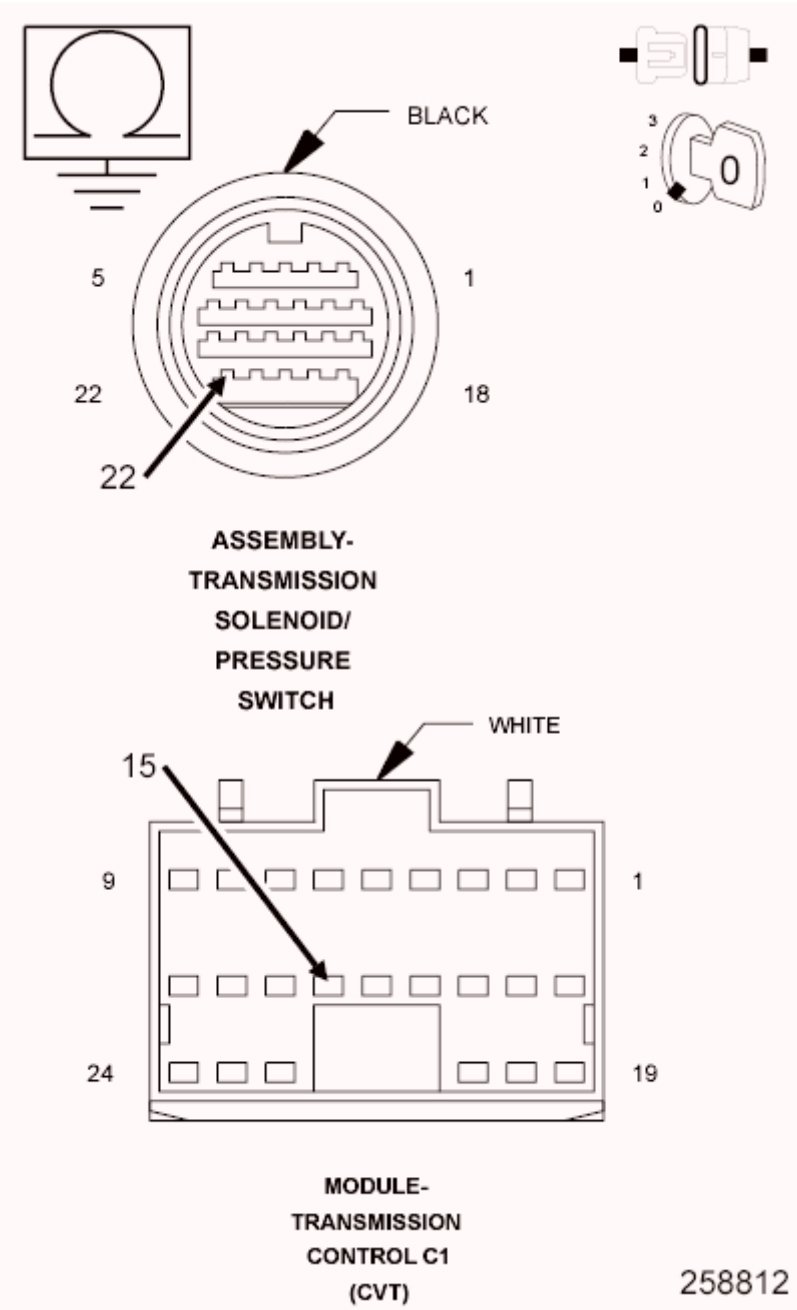

Fig. 124: Checking Data In/Out Select Circuit For A Short To Ground
Courtesy of CHRYSLER GROUP, LLC

1. Measure the resistance between ground and the (T327) Data IN/OUT Select circuit.

   Is the resistance below 5.0 ohms?

   Yes

   - Repair the (T327) Data IN/OUT Select circuit for a short to ground.
   - Perform CVT VERIFICATION TEST. Refer to **CVT VERIFICATION TEST** .

   No

   - Go To 9

9. **CHECK THE (T313) CHIP SELECT CIRCUIT FOR A SHORT TO GROUND**

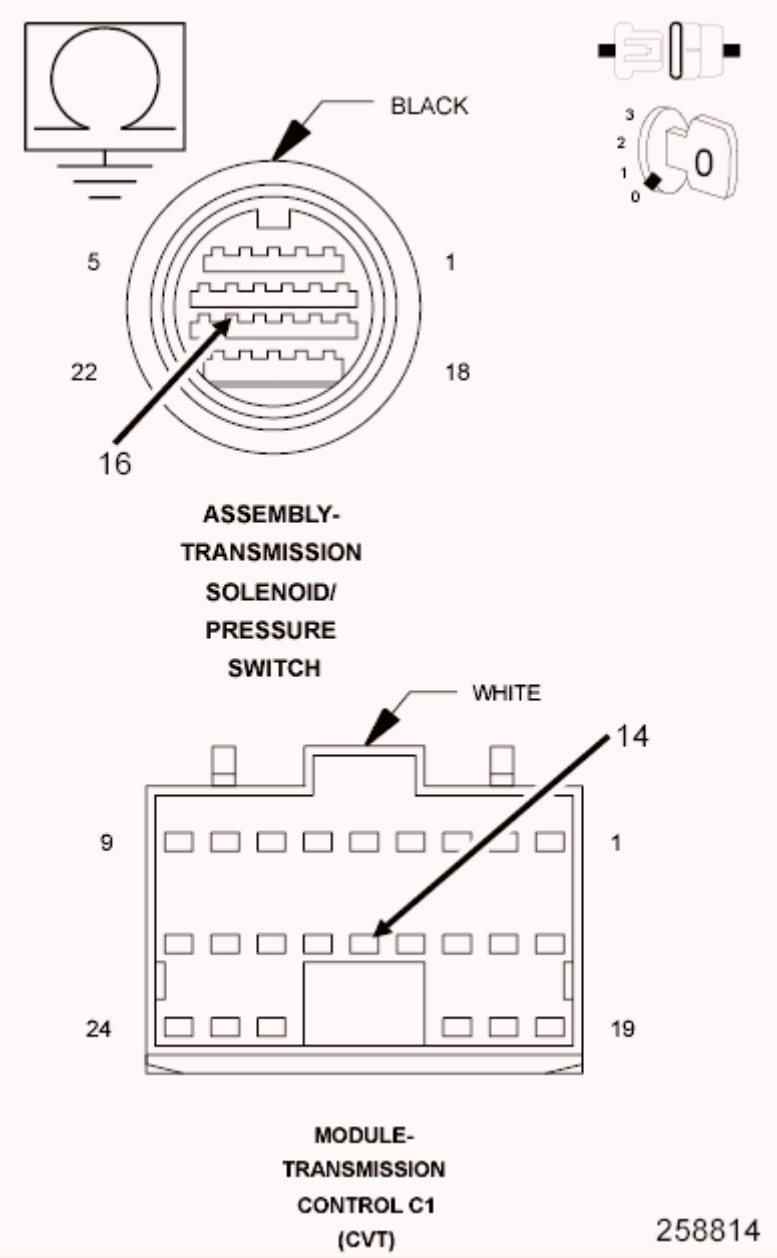

Fig. 125: Checking Chip Select Circuit For A Short To Ground
Courtesy of CHRYSLER GROUP, LLC

1. Measure the resistance between ground and the (T313) Chip Select circuit.

   Is the resistance below 5.0 ohms?

   Yes

   - Repair the (T313) Chip Select circuit for a short to ground.
   - Perform CVT VERIFICATION TEST. Refer to **CVT**

VERIFICATION TEST .

No

- Go To 10

10. **CHECK THE (T302) CLOCK SELECT CIRCUIT FOR A SHORT TO GROUND**

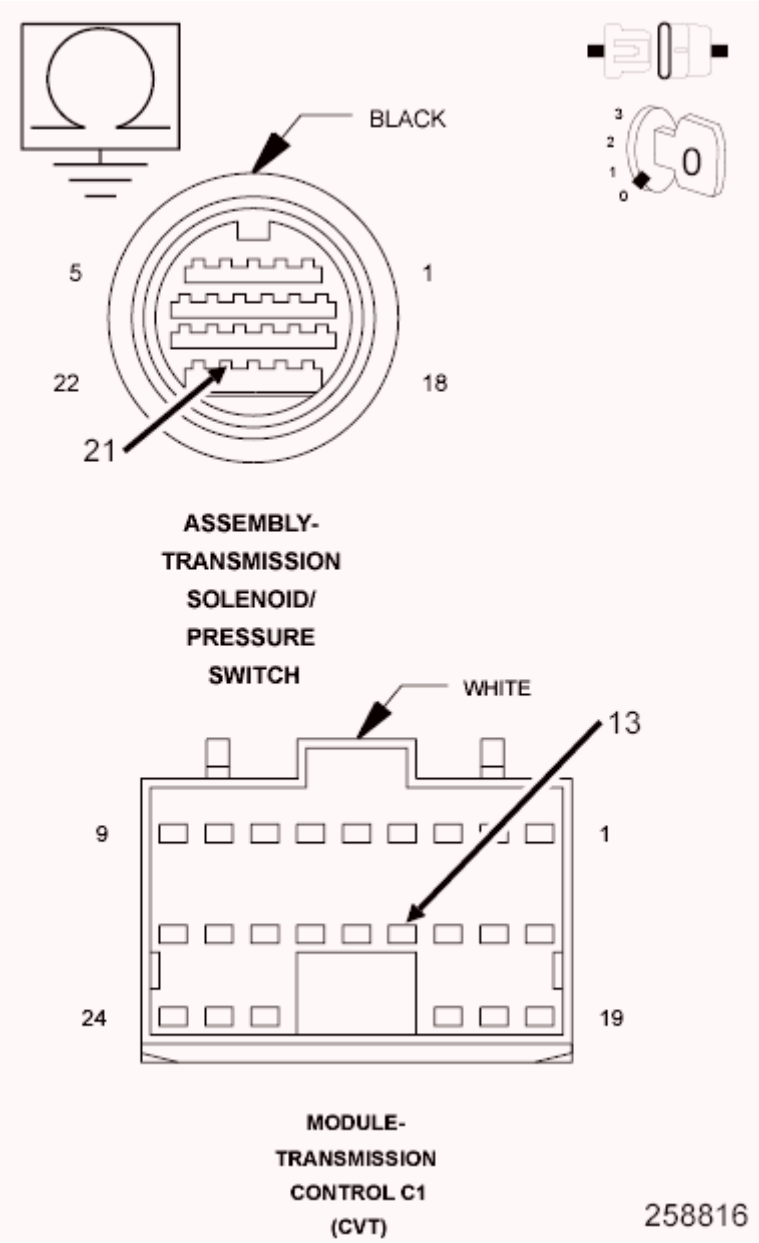

Fig. 126: Checking Clock Select Circuit For A Short To Ground
Courtesy of CHRYSLER GROUP, LLC

1. Measure the resistance between ground and the (T302) Clock Select circuit.

Is the resistance below 5.0 ohms?

Yes

- Repair the (T302) Clock Select circuit for a short to ground.
- Perform CVT VERIFICATION TEST. Refer to **CVT VERIFICATION TEST** .

No

- Go To 11

11. **CHECK THE TCM**
    1. Replace or repair the CV Transmission (valve body) in accordance with the Service Information. Perform CVT VERIFICATION TEST. Refer to **CVT VERIFICATION TEST** .

    Did the DTC reset during the verification test?

    Yes

    - Using the schematics as a guide, check the Transmission Control Module (TCM) terminals for corrosion, damage, or terminal push out. Pay particular attention to all power and ground circuits. Check for any Service Bulletins for possible causes that may apply. If no problems are found, replace the TCM in accordance with the Service Information.
    - Perform CVT VERIFICATION TEST. Refer to **CVT VERIFICATION TEST** .

    No

    - Test Complete.

12. **CHECK THE WIRING AND CONNECTORS**
    1. The conditions necessary to set this DTC are not present at this time.
    2. Using the schematics as a guide, inspect the wiring and connectors specific to this circuit.
    3. Wiggle the wires while checking for shorted and open circuits.

    Were there any problems found?

Yes

- Repair as necessary.
- Perform CVT VERIFICATION TEST. Refer to **CVT VERIFICATION TEST** .

No

- Test Complete.

U1400-IMPLAUSIBLE TPS SIGNAL RECEIVED

For a complete wiring diagram, **refer to appropriate SYSTEM WIRING DIAGRAMS article** .

THEORY OF OPERATION

The Transmission Control Module (TCM) receives two throttle position related signals over the CAN Bus. One is the throttle pedal position and the other is a throttle pedal position toggle bit. When the Toggle signal pattern is out of range from a predefined signal pattern a DTC will set.

WHEN MONITORED

Ignition on with no Lost Communication with Powertrain Control Module (PCM) DTCs present.

SET CONDITION

When the throttle pedal position toggle signal pattern is out of range from a predefined signal pattern for the period of 1 second.

POSSIBLE CAUSES

Possible Causes
TOTALLY INTEGRATED POWER MODULE (TIPM) CAN BUS DTCS PRESENT POWERTRAIN CONTROL MODULE (PCM) DTCS PRESENT
POWERTRAIN CONTROL MODULE (PCM)
TRANSMISSION CONTROL MODULE (TCM)

Always perform the CVT Pre-Diagnostic Troubleshooting procedure before

proceeding. Refer to CVT - PRE-DIAGNOSTIC TROUBLESHOOTING PROCEDURE .

DIAGNOSTIC TEST

1. **CHECK IF THE DTC IS ACTIVE**
   1. With the scan tool, read Transmission DTCs.

      Is the status Active or is the Starts Since Set counter 2 or less for this DTC?

      Yes

      - Go To 2

      No

      - Go To 4
2. **CHECK FOR TIPM CAN BUS DTCS**
   1. With the scan tool, read TIPM DTCs.

      Are there any TIPM CAN BUS DTCs present?

      Yes

      - Refer to **DTC INDEX** and perform the appropriate diagnostic procedure. .
      - Perform the CVT VERIFICATION TEST. Refer to **CVT VERIFICATION TEST** .

      No

      - Go To 3
3. **CHECK IF PCM DTCS ARE PRESENT**
   1. With the scan tool, read engine DTCs.

      Are there any engine DTCs present?

      Yes

- Perform the appropriate diagnostic procedure. Refer to **DTC INDEX** .
- Perform the CVT VERIFICATION TEST. Refer to **CVT VERIFICATION TEST** .

No

- Using the schematics as a guide, check the Transmission Control Module (TCM) terminals for corrosion, damage, or terminal push out. Pay particular attention to all power and ground circuits. Check for any Service Bulletins for possible causes that may apply. If no problems are found, replace the TCM in accordance with the Service Information.
- Perform the CVT VERIFICATION TEST. Refer to **CVT VERIFICATION TEST** .

4. **CHECK THE WIRING AND CONNECTORS**
   1. The conditions necessary to set this DTC are not present at this time.
   2. Using the schematics as a guide, inspect the wiring and connectors specific to this circuit.
   3. Wiggle the wires while checking for shorted and open circuits.

   Were there any problems found?

   Yes

   - Repair as necessary.
   - Perform the CVT VERIFICATION TEST. Refer to **CVT VERIFICATION TEST** .

   No

   - Test complete, the condition or conditions that originally set this DTC are not present at this time.

U1401-IMPLAUSIBLE ENGINE SPEED SIGNAL RECEIVED

For a complete wiring diagram, **refer to appropriate SYSTEM WIRING DIAGRAMS article** .

THEORY OF OPERATION

The Transmission Control Module (TCM) receives Engine RPM over the CAN Bus.

WHEN MONITORED

Ignition on with a system voltage between 9.0 and 16.0 volts.

Time since last TRS change greater than 2.0 seconds.

Condition one:

TCC ON/OFF in the ON position.

No Active DTCs from the following:

- Lost Communication with Powertrain Control Module (PCM).
- Step Motor.
- TCC ON/OFF Solenoid.
- Input or Output Speed Sensor.

Condition two:

No Active DTCs from the following:

- Lost Communication with Powertrain Control Module (PCM).
- Step Motor.

SET CONDITION

Condition one:

All the below conditions must be present for the period of 5 seconds for the DTC to set:

- Engine speed minus Input speed is greater than 1000 RPM for the period of 5 seconds.
- Engine speed minus Secondary speed estimated ratio is greater than 1000 RPM for the period of 5 seconds.
- Secondary speed multiplied by the estimated ratio minus the primary speed

is less than 1000 RPM.

Condition two:

- Engine speed is less than 450 RPM and the Input speed is greater than or equal to 1000 RPM for the period of 20 msec.

POSSIBLE CAUSES

Possible Causes
TOTALLY INTEGRATED POWER MODULE (TIPM) CAN BUS DTCS PRESENT ENGINE MODULE DTCS PRESENT
TRANSMISSION CONTROL MODULE (TCM)

Always perform the CVT Pre-Diagnostic Troubleshooting procedure before proceeding. Refer to CVT - PRE-DIAGNOSTIC TROUBLESHOOTING PROCEDURE .

DIAGNOSTIC TEST

1. **CHECK IF THE DTC IS ACTIVE**
   1. With the scan tool, read Transmission DTCs.

      Is the status Active or is the Starts Since Set counter 2 or less for this DTC?

      Yes

      - Go To 2

      No

      - Go To 4
2. **CHECK FOR TIPM CAN BUS DTCS**
   1. With the scan tool, read TIPM DTCs.

      Are there any TIPM CAN BUS DTCs present?

      Yes

- Perform the appropriate diagnostic procedure. Refer to **TOTALLY INTEGRATED POWER MODULE (TIPM) - DIAGNOSTIC CODE INDEX** .
- Perform the CVT VERIFICATION TEST. Refer to **CVT VERIFICATION TEST** .

No

- Go To 3

3. **CHECK IF ENGINE DTCS ARE PRESENT**
   1. With the scan tool, read engine DTCs.

      Are there any engine DTCs present?

      Yes

      - Perform the appropriate diagnostic procedure. Refer to **DTC INDEX** .
      - Perform the CVT VERIFICATION TEST. Refer to **CVT VERIFICATION TEST** .

      No

      - Using the schematics as a guide, check the Transmission Control Module (TCM) pins, terminals, and connectors for corrosion, damage, or terminal push out. Pay particular attention to all power and ground circuits. If no problems are found, replace the TCM in accordance with the Service Information.
      - Perform the CVT VERIFICATION TEST. Refer to **CVT VERIFICATION TEST** .
4. **CHECK THE WIRING AND CONNECTORS**
   1. The conditions necessary to set this DTC are not present at this time.
   2. Using the schematics as a guide, inspect the wiring and connectors specific to this circuit.
   3. Wiggle the wires while checking for shorted and open circuits.

      Were there any problems found?

Yes

- Repair as necessary.
- Perform the CVT VERIFICATION TEST. Refer to **CVT VERIFICATION TEST** .

No

- Test complete, the condition or conditions that originally set this DTC are not present at this time.

U1407-IMPLAUSIBLE ENGINE TORQUE REQUEST SIGNAL RECEIVED

For a complete wiring diagram, **refer to appropriate SYSTEM WIRING DIAGRAMS article** .

WHEN MONITORED

Ignition on with a system voltage between 9.0 and 16.0 volts with no CAN DTCs detected.

SET CONDITION

When the TCM receives an implausible engine torque request from the PCM over the CAN Bus.

POSSIBLE CAUSES

Possible Causes
TOTALLY INTEGRATED POWER MODULE (TIPM) CAN BUS DTCS PRESENT ENGINE DTCS PRESENT POWERTRAIN CONTROL MODULE (PCM) TRANSMISSION CONTROL MODULE (TCM)

Always perform the CVT Pre-Diagnostic Troubleshooting procedure before proceeding. Refer to CVT - PRE-DIAGNOSTIC TROUBLESHOOTING PROCEDURE .

DIAGNOSTIC TEST

1. **CHECK IF THE DTC IS ACTIVE**

1. With the scan tool, read Transmission DTCs.

   Is the status Active for this DTC?

   Yes

   - Go To 2

   No

   - Go To 5

2. **CHECK FOR TIPM CAN BUS DTCS**
   1. With the scan tool, read TIPM DTCs.

      Are there any TIPM CAN BUS DTCs present?

      Yes

      - Perform the appropriate diagnostic procedure. Refer to **TOTALLY INTEGRATED POWER MODULE (TIPM) - DIAGNOSTIC CODE INDEX** .
      - Perform the CVT VERIFICATION TEST. Refer to **CVT VERIFICATION TEST** .

      No

      - Go To 3

3. **CHECK IF ENGINE DTCS ARE PRESENT**
   1. With the scan tool, read engine DTCs.

      Are there any engine DTCs present?

      Yes

      - Perform the appropriate diagnostic procedure. Refer to **DTC INDEX** .
      - Perform the CVT VERIFICATION TEST. Refer to **CVT VERIFICATION TEST** .

      No

- Go To 4

4. **CHECK THE PCM**
   1. Replace and program the PCM in accordance with the Service Information.
   2. Perform the CVT VERIFICATION TEST. Refer to **CVT VERIFICATION TEST** .

   Does the DTC reset?

   Yes

   - Using the schematics as a guide, check the Transmission Control Module (TCM) pins, terminals, and connectors for corrosion, damage, or terminal push out. Pay particular attention to all power and ground circuits. If no problems are found, replace the TCM in accordance with the Service Information.
   - Perform the CVT VERIFICATION TEST. Refer to **CVT VERIFICATION TEST** .

   No

   - Test complete, the condition or conditions that originally set this DTC are not present at this time.

5. **CHECK THE WIRING AND CONNECTORS**
   1. The conditions necessary to set this DTC are not present at this time.
   2. Using the schematics as a guide, inspect the wiring and connectors specific to this circuit.
   3. Wiggle the wires while checking for shorted and open circuits.

   Were there any problems found?

   Yes

   - Repair as necessary.
   - Perform the CVT VERIFICATION TEST. Refer to **CVT VERIFICATION TEST** .

   No

- Test complete, the condition or conditions that originally set this DTC are not present at this time.

U140F-IMPLAUSIBLE ENGINE VARIANT DATA

For a complete wiring diagram, **refer to appropriate SYSTEM WIRING DIAGRAMS article** .

THEORY OF OPERATION

During the initial ignition on, the Transmission Control Module (TCM) receives the calibrated data from the Engine/Powertrain Control Module (ECM/PCM) over the CAN Bus and stores this information in the EEPROM of the TCM. During normal operation the TCM compares the stored data in the EEPROM to the transmitted data from the ECM/PCM. If the calibration data does not match the DTC will set and the MIL will illuminate after two consecutive failures.

WHEN MONITORED

Ignition on, engine running with a system voltage between 9.0 and 16.0 volts.

ECM/PCM variant data received more than twice in a row over the CAN Bus.

SET CONDITION

ECM/PCM has wrong variant data installed.

ECM/PCM sending wrong or improper CAN message for more than 5.0 seconds.

POSSIBLE CAUSES

Possible Causes
FCM/TIPM DTCS PRESENT
WRONG ENGINE CONTROLLER SOFTWARE
WRONG TRANSMISSION CONTROLLER SOFTWARE
ENGINE CONTROL MODULE
TRANSMISSION CONTROL MODULE

Always perform the CVT Pre-Diagnostic Troubleshooting procedure before proceeding. Refer to CVT - PRE-DIAGNOSTIC TROUBLESHOOTING PROCEDURE .

DIAGNOSTIC TEST

1. **CHECK IF THE DTC IS ACTIVE**
   1. With the scan tool, read Transmission DTCs.

      Is the status Active or is the Starts Since Set counter 2 or less for this DTC?

      Yes

      - Go To 2

      No

      - Go To 5
2. **CHECK FOR FCM/TIPM CAN BUS DTCS**
   1. With the scan tool, read FCM/TIPM DTCs.

      Are there any FCM/TIPM CAN BUS DTCs present?

      Yes

      - Refer to **DTC INDEX** and perform the appropriate diagnostic procedure. .
      - Perform CVT VERIFICATION TEST. Refer to **CVT VERIFICATION TEST** .

      No

      - Go To 3
3. **CHECK IF THE ECM/PCM WAS REPLACED**

   Was the ECM/PCM replaced?

   Yes

   - Check to make sure the right part number was used that correlates with the engine and transmission using the vehicle identification number. It may be necessary to flash the ECM/PCM to the proper configuration or replace the controller. With the scan tool perform a TCM relearn procedure.

- Perform CVT VERIFICATION TEST. Refer to **CVT VERIFICATION TEST** .

No

- Go To 4

4. **CHECK IF THE TCM WAS REPLACED**

   Was the TCM replaced?

   Yes

   - Check to make sure the right part number was used that correlates with engine and transmission using the vehicle identification number. It may be necessary to flash the PCM/TCM to the proper configuration or replace the TCM with the correct configuration. With the scan tool perform a TCM relearn procedure.
   - Perform CVT VERIFICATION TEST. Refer to **CVT VERIFICATION TEST** .

   No

   - Using the schematics as a guide, check the Transmission Control Module (TCM) terminals for corrosion, damage, or terminal push out. Pay particular attention to all power and ground circuits. Check for any Service Bulletins for possible causes that may apply. If no problems are found, replace the TCM in accordance with the Service Information.
   - Perform CVT VERIFICATION TEST. Refer to **CVT VERIFICATION TEST** .

5. **CHECK THE WIRING AND CONNECTORS**
   1. The conditions necessary to set this DTC are not present at this time.
   2. Using the schematics as a guide, inspect the wiring and connectors specific to this circuit.
   3. Wiggle the wires while checking for shorted and open circuits.

      Were there any problems found?

      Yes

- Repair as necessary.
- Perform CVT VERIFICATION TEST. Refer to **CVT VERIFICATION TEST** .

No

- Test Complete.

U1410-IMPLAUSIBLE FCM VARIANT DATA

For a complete wiring diagram, **refer to appropriate SYSTEM WIRING DIAGRAMS article** .

THEORY OF OPERATION

The Transmission Control Module receives vehicle information over the CAN Bus from the FCM/TIPM and stores this information in the EEPROM of the controller. This information is compared information received over the CAN Bus. If the information does not match, the DTC will set.

WHEN MONITORED

Ignition on with system voltage between 9.0 and 16.0 volts.

FCM/TIPM variant data received more than twice in a row over the CAN Bus.

SET CONDITION

One or more FCM/TIPM variant data received over the CAN Bus is not in a valid range for the period of 5.0 seconds.

POSSIBLE CAUSES

Possible Causes
FCM/TIPM WAS REPLACED
TCM WAS REPLACED
FCM/TIPM
TRANSMISSION CONTROL MODULE

Always perform the CVT Pre-Diagnostic Troubleshooting procedure before proceeding. Refer to CVT - PRE-DIAGNOSTIC TROUBLESHOOTING PROCEDURE .

DIAGNOSTIC TEST

CHECK MODULE PART NUMBERS TO VEHICLE IDENTIFICATION NUMBER

Repair

- This DTC is an indication of either the FCM/TIPM was replaced with the wrong configuration (improper tire size), or the TCM was replaced with the wrong configuration. If either controller was replaced, confirm the part numbers to the Vehicle Identification Number (VIN) and program or replace as necessary. With the scan tool perform a TCM relearn procedure.
- Perform CVT VERIFICATION TEST. Refer to **CVT VERIFICATION TEST** .

U1412-IMPLAUSIBLE VEHICLE SPEED SIGNAL RECEIVED

For a complete wiring diagram, **refer to appropriate SYSTEM WIRING DIAGRAMS article** .

THEORY OF OPERATION

The Transmission Control Module (TCM) receives Engine RPM over the CAN Bus.

WHEN MONITORED

Ignition on with system voltage between 9.0 and 16.0 volts.

No lost communication faults detected.

SET CONDITION

An implausible vehicle speed signal sent from the ABS module for the period of 5.0 seconds.

POSSIBLE CAUSES

Possible Causes
FCM/TIPM CAN BUS DTCS PRESENT
ABS MODULE DTCS PRESENT
TRANSMISSION CONTROL MODULE

Always perform the CVT Pre-Diagnostic Troubleshooting procedure before proceeding. Refer to CVT - PRE-DIAGNOSTIC TROUBLESHOOTING PROCEDURE .

DIAGNOSTIC TEST

1. **CHECK IF THE DTC IS ACTIVE**
   1. With the scan tool, read Transmission DTCs.

      Is the status Active or is the Starts Since Set counter 2 or less for this DTC?

      Yes

      - Go To 2

      No

      - Go To 4
2. **CHECK FOR FCM/TIPM CAN BUS DTCS**
   1. With the scan tool, read FCM DTCs.

      Are there any FCM/TIPM CAN BUS DTCs present?

      Yes

      - Refer to **DTC INDEX** and perform the appropriate diagnostic procedure. .
      - Perform CVT VERIFICATION TEST. Refer to **CVT VERIFICATION TEST** .

      No

      - Go To 3
3. **CHECK IF ABS DTCS ARE PRESENT**
   1. With the scan tool, read ABS DTCs.

      Are there any ABS DTCs present?

      Yes

- Refer to **DIAGNOSIS AND TESTING** and perform the appropriate diagnostic procedure.
- Perform CVT VERIFICATION TEST. Refer to **CVT VERIFICATION TEST** .

No

- Using the schematics as a guide, check the Transmission Control Module (TCM) pins, terminals, and connectors for corrosion, damage, or terminal push out. Pay particular attention to all power and ground circuits. If no problems are found, replace the TCM in accordance with the Service Information.
- Perform CVT VERIFICATION TEST. Refer to **CVT VERIFICATION TEST** .

4. **CHECK THE WIRING AND CONNECTORS**
   1. The conditions necessary to set this DTC are not present at this time.
   2. Using the schematics as a guide, inspect the wiring and connectors specific to this circuit.
   3. Wiggle the wires while checking for shorted and open circuits.

   Were there any problems found?

   Yes

   - Repair as necessary.
   - Perform CVT VERIFICATION TEST. Refer to **CVT VERIFICATION TEST** .

   No

   - Test Complete.

U1424-IMPLAUSIBLE ENGINE TORQUE SIGNAL RECEIVED

For a complete wiring diagram, **refer to appropriate SYSTEM WIRING DIAGRAMS article** .

THEORY OF OPERATION

The Transmission Control Module request from the PCM to change the torque of

the engine to avoid possible damage to the transmission.

WHEN MONITORED

Ignition on with system voltage between 9.0 and 16 volts.

No PCM CAN Bus DTCs present.

SET CONDITION

When the TCM receives an implausible engine torque signal from the PCM over the CAN Bus for a period of 1.0 second.

POSSIBLE CAUSES

Possible Causes
TOTALLY INTEGRATED POWER MODULE (TIPM) CAN BUS DTCS PRESENT ENGINE MODULE DTCS PRESENT POWERTRAIN CONTROL MODULE (PCM) TRANSMISSION CONTROL MODULE (TCM)

Always perform the CVT Pre-Diagnostic Troubleshooting procedure before proceeding. Refer to CVT - PRE-DIAGNOSTIC TROUBLESHOOTING PROCEDURE .

DIAGNOSTIC TEST

1. **CHECK IF THE DTC IS ACTIVE**
    1. With the scan tool, read Transmission DTCs.

       Is the status Active for this DTC?

       Yes

       - Go To 2

       No

       - Go To 5
2. **CHECK FOR TIPM CAN BUS DTCS**
    1. With the scan tool, read TIPM DTCs.

Are there any TIPM CAN BUS DTCs present?

Yes

- Perform the appropriate diagnostic procedure. Refer to **TOTALLY INTEGRATED POWER MODULE (TIPM) - DIAGNOSTIC CODE INDEX** .
- Perform the CVT VERIFICATION TEST. Refer to **CVT VERIFICATION TEST** .

No

- Go To 3

3. **CHECK IF ENGINE DTCS ARE PRESENT**
   1. With the scan tool, read engine DTCs.

   Are there any engine DTCs present?

   Yes

   - Perform the appropriate diagnostic procedure. Refer to **DTC INDEX** .
   - Perform the CVT VERIFICATION TEST. Refer to **CVT VERIFICATION TEST** .

   No

   - Go To 4

4. **CHECK THE PCM**
   1. Replace and program the PCM in accordance with the Service Information.
   2. Perform the CVT VERIFICATION TEST. Refer to **CVT VERIFICATION TEST** .

   Does the DTC reset?

   Yes

   - Using the schematics as a guide, check the Transmission Control

Module (TCM) pins, terminals, and connectors for corrosion, damage, or terminal push out. Pay particular attention to all power and ground circuits. If no problems are found, replace the TCM in accordance with the Service Information.

- Perform the CVT VERIFICATION TEST. Refer to **CVT VERIFICATION TEST** .

No

- Test complete, the condition or conditions that originally set this DTC are not present at this time.

5. **CHECK THE WIRING AND CONNECTORS**
   1. The conditions necessary to set this DTC are not present at this time.
   2. Using the schematics as a guide, inspect the wiring and connectors specific to this circuit.
   3. Wiggle the wires while checking for shorted and open circuits.

   Were there any problems found?

   Yes

   - Repair as necessary.
   - Perform the CVT VERIFICATION TEST. Refer to **CVT VERIFICATION TEST** .

   No

   - Test complete, the condition or conditions that originally set this DTC are not present at this time.

U1425-IMPLAUSIBLE PEDAL POSITION SIGNAL RECEIVED

For a complete wiring diagram, **refer to appropriate SYSTEM WIRING DIAGRAMS article** .

WHEN MONITORED

Ignition on with system voltage between 9.0 and 16.0 volts.

No PCM/ECM CAN Bus DTCs present.

SET CONDITION

When the TCM receives an implausible throttle pedal position over the CAN Bus from the PCM.

POSSIBLE CAUSES

Possible Causes
TOTALLY INTEGRATED POWER MODULE (TIPM) CAN BUS DTCS PRESENT ENGINE MODULE DTCS PRESENT POWERTRAIN CONTROL MODULE (PCM) TRANSMISSION CONTROL MODULE (TCM)

Always perform the CVT Pre-Diagnostic Troubleshooting procedure before proceeding. Refer to CVT - PRE-DIAGNOSTIC TROUBLESHOOTING PROCEDURE .

DIAGNOSTIC TEST

1. **CHECK IF THE DTC IS ACTIVE**
    1. With the scan tool, read Transmission DTCs.

       Is the status Active for this DTC?

       Yes

       - Go To 2

       No

       - Go To 5
2. **CHECK FOR TIPM CAN BUS DTCS**
    1. With the scan tool, read TIPM DTCs.

       Are there any TIPM CAN BUS DTCs present?

       Yes

       - Refer to **DTC INDEX** and perform the appropriate diagnostic procedure. .

- Perform the CVT VERIFICATION TEST. Refer to **CVT VERIFICATION TEST** .

No

- Go To 3

3. **CHECK IF ENGINE DTCS ARE PRESENT**
   1. With the scan tool, read engine DTCs.

      Are there any engine DTCs present?

      Yes

      - Perform the appropriate diagnostic procedure. Refer to **DTC INDEX** .
      - Perform the CVT VERIFICATION TEST. Refer to **CVT VERIFICATION TEST** .

      No

      - Go To 4

4. **CHECK THE PCM**
   1. Replace and program the PCM in accordance with the Service Information.
   2. Perform the CVT VERIFICATION TEST. Refer to **CVT VERIFICATION TEST** .

      Does the DTC reset?

      Yes

      - Using the schematics as a guide, check the Transmission Control Module (TCM) pins, terminals, and connectors for corrosion, damage, or terminal push out. Pay particular attention to all power and ground circuits. If no problems are found, replace the TCM in accordance with the Service Information.
      - Perform the CVT VERIFICATION TEST. Refer to **CVT VERIFICATION TEST** .

No

- Test complete, the condition or conditions that originally set this DTC are not present at this time.

5. **CHECK THE WIRING AND CONNECTORS**
   1. The conditions necessary to set this DTC are not present at this time.
   2. Using the schematics as a guide, inspect the wiring and connectors specific to this circuit.
   3. Wiggle the wires while checking for shorted and open circuits.

   Were there any problems found?

   Yes

   - Repair as necessary.
   - Perform the CVT VERIFICATION TEST. Refer to **CVT VERIFICATION TEST** .

   No

   - Test complete, the condition or conditions that originally set this DTC are not present at this time.

U1426-IMPLAUSIBLE TCC SLIP REQUEST SIGNAL RECEIVED

For a complete wiring diagram, **refer to appropriate SYSTEM WIRING DIAGRAMS article** .

WHEN MONITORED

Ignition on with no PCM CAN Bus DTCs present.

SET CONDITION

When the TCM receives an implausible Torque Converter Clutch slip request (EMCC) from the PCM.

POSSIBLE CAUSES

Possible Causes
TOTALLY INTEGRATED POWER MODULE (TIPM) CAN BUS DTCS

PRESENT
ENGINE MODULE DTCS PRESENT
POWERTRAIN CONTROL MODULE (PCM)
TRANSMISSION CONTROL MODULE (TCM)

Always perform the CVT Pre-Diagnostic Troubleshooting procedure before proceeding. Refer to CVT - PRE-DIAGNOSTIC TROUBLESHOOTING PROCEDURE .

DIAGNOSTIC TEST

1. **CHECK IF THE DTC IS ACTIVE**
   1. With the scan tool, read Transmission DTCs.

      Is the status Active for this DTC?

      Yes

      - Go To 2

      No

      - Go To 5
2. **CHECK FOR TIPM CAN BUS DTCS**
   1. With the scan tool, read TIPM DTCs.

      Are there any TIPM CAN BUS DTCs present?

      Yes

      - Perform the appropriate diagnostic procedure. Refer to **TOTALLY INTEGRATED POWER MODULE (TIPM) - DIAGNOSTIC CODE INDEX** .
      - Perform the CVT VERIFICATION TEST. Refer to **CVT VERIFICATION TEST** .

      No

      - Go To 3
3. **CHECK IF ENGINE DTCS ARE PRESENT**

1. With the scan tool, read engine DTCs.

   Are there any engine DTCs present?

   Yes

   - Perform the appropriate diagnostic procedure. Refer to **DTC INDEX** .
   - Perform the CVT VERIFICATION TEST. Refer to **CVT VERIFICATION TEST** .

   No

   - Go To 4

4. **CHECK THE PCM**
   1. Replace and program the PCM in accordance with the Service Information.
   2. Perform the CVT VERIFICATION TEST. Refer to **CVT VERIFICATION TEST** .

      Does the DTC reset?

      Yes

      - Using the schematics as a guide, check the Transmission Control Module (TCM) pins, terminals, and connectors for corrosion, damage, or terminal push out. Pay particular attention to all power and ground circuits. If no problems are found, replace the TCM in accordance with the Service Information.
      - Perform the CVT VERIFICATION TEST. Refer to **CVT VERIFICATION TEST** .

      No

      - Test complete, the condition or conditions that originally set this DTC are not present at this time.

5. **CHECK THE WIRING AND CONNECTORS**
   1. The conditions necessary to set this DTC are not present at this time.
   2. Using the schematics as a guide, inspect the wiring and connectors

specific to this circuit.

3. Wiggle the wires while checking for shorted and open circuits.

   Were there any problems found?

   Yes

   - Repair as necessary.
   - Perform the CVT VERIFICATION TEST. Refer to **CVT VERIFICATION TEST** .

   No

   - Test complete, the condition or conditions that originally set this DTC are not present at this time.

U1428-RECEIVED ENGINE TORQUE REQUEST SIGNAL STUCK

For a complete wiring diagram, **refer to appropriate SYSTEM WIRING DIAGRAMS article** .

WHEN MONITORED

Ignition on with no CAN DTCs detected.

SET CONDITION

When the TCM receives an engine torque request from the PCM over the CAN Bus that does not change for the period of 1.0 second.

POSSIBLE CAUSES

Possible Causes
TOTALLY INTEGRATED POWER MODULE (TIPM) CAN BUS DTCS PRESENT ENGINE MODULE DTCS PRESENT POWERTRAIN CONTROL MODULE (PCM) TRANSMISSION CONTROL MODULE (TCM)

Always perform the CVT Pre-Diagnostic Troubleshooting procedure before proceeding. Refer to CVT - PRE-DIAGNOSTIC TROUBLESHOOTING

PROCEDURE .

DIAGNOSTIC TEST

1. **CHECK IF THE DTC IS ACTIVE**
   1. With the scan tool, read Transmission DTCs.

      Is the status Active for this DTC?

      Yes

      - Go To 2

      No

      - Go To 5
2. **CHECK FOR TIPM CAN BUS DTCS**
   1. With the scan tool, read TIPM DTCs.

      Are there any TIPM CAN BUS DTCs present?

      Yes

      - Perform the appropriate diagnostic procedure. Refer to **TOTALLY INTEGRATED POWER MODULE (TIPM) - DIAGNOSTIC CODE INDEX** .
      - Perform the CVT VERIFICATION TEST. Refer to **CVT VERIFICATION TEST** .

      No

      - Go To 3
3. **CHECK IF ENGINE DTCS ARE PRESENT**
   1. With the scan tool, read engine DTCs.

      Are there any engine DTCs present?

      Yes

      - Perform the appropriate diagnostic procedure. Refer to **DTC**

INDEX .

- Perform the CVT VERIFICATION TEST. Refer to **CVT VERIFICATION TEST** .

No

- Go To 4

4. **CHECK THE PCM**
   1. Replace and program the PCM in accordance with the Service Information.
   2. Perform the CVT VERIFICATION TEST. Refer to **CVT VERIFICATION TEST** .

   Does the DTC reset?

   Yes

   - Using the schematics as a guide, check the Transmission Control Module (TCM) pins, terminals, and connectors for corrosion, damage, or terminal push out. Pay particular attention to all power and ground circuits. If no problems are found, replace the TCM in accordance with the Service Information.
   - Perform the CVT VERIFICATION TEST. Refer to **CVT VERIFICATION TEST** .

   No

   - Test complete, the condition or conditions that originally set this DTC are not present at this time.

5. **CHECK THE WIRING AND CONNECTORS**
   1. The conditions necessary to set this DTC are not present at this time.
   2. Using the schematics as a guide, inspect the wiring and connectors specific to this circuit.
   3. Wiggle the wires while checking for shorted and open circuits.

   Were there any problems found?

   Yes

- Repair as necessary.
- Perform the CVT VERIFICATION TEST. Refer to **CVT VERIFICATION TEST** .

No

- Test complete, the condition or conditions that originally set this DTC are not present at this time.

U1429-RECEIVED ENGINE TORQUE SIGNAL STUCK

For a complete wiring diagram, **refer to appropriate SYSTEM WIRING DIAGRAMS article** .

WHEN MONITORED

Ignition on with no CAN DTCs detected.

SET CONDITION

When the TCM receives an engine torque request from the PCM over the CAN Bus that does not change for the period of 1.0 second.

POSSIBLE CAUSES

Possible Causes
TOTALLY INTEGRATED POWER MODULE (TIPM) CAN BUS DTCS PRESENT
ENGINE MODULE DTCS PRESENT
POWERTRAIN CONTROL MODULE (PCM)
TRANSMISSION CONTROL MODULE (TCM)

Always perform the CVT Pre-Diagnostic Troubleshooting procedure before proceeding. Refer to CVT - PRE-DIAGNOSTIC TROUBLESHOOTING PROCEDURE .

DIAGNOSTIC TEST

1. **CHECK IF THE DTC IS ACTIVE**
    1. With the scan tool, read Transmission DTCs.

       Is the status Active for this DTC?

Yes

- Go To 2

No

- Go To 5

2. **CHECK FOR TIPM CAN BUS DTCS**
   1. With the scan tool, read TIPM DTCs.

      Are there any TIPM CAN BUS DTCs present?

      Yes

      - Perform the appropriate diagnostic procedure. Refer to **TOTALLY INTEGRATED POWER MODULE (TIPM) - DIAGNOSTIC CODE INDEX** .
      - Perform the CVT VERIFICATION TEST. Refer to **CVT VERIFICATION TEST** .

      No

      - Go To 3

3. **CHECK IF ENGINE DTCS ARE PRESENT**
   1. With the scan tool, read engine DTCs.

      Are there any engine DTCs present?

      Yes

      - Perform the appropriate diagnostic procedure. Refer to **DTC INDEX** .
      - Perform the CVT VERIFICATION TEST. Refer to **CVT VERIFICATION TEST** .

      No

      - Go To 4

4. **CHECK THE PCM**

1. Replace and program the PCM in accordance with the Service Information.
2. Perform the CVT VERIFICATION TEST. Refer to **CVT VERIFICATION TEST** .

   Does the DTC reset?

   Yes

   - Using the schematics as a guide, check the Transmission Control Module (TCM) pins, terminals, and connectors for corrosion, damage, or terminal push out. Pay particular attention to all power and ground circuits. If no problems are found, replace the TCM in accordance with the Service Information.
   - Perform the CVT VERIFICATION TEST. Refer to **CVT VERIFICATION TEST** .

   No

   - Test complete, the condition or conditions that originally set this DTC are not present at this time.

5. **CHECK THE WIRING AND CONNECTORS**
   1. The conditions necessary to set this DTC are not present at this time.
   2. Using the schematics as a guide, inspect the wiring and connectors specific to this circuit.
   3. Wiggle the wires while checking for shorted and open circuits.

   Were there any problems found?

   Yes

   - Repair as necessary.
   - Perform the CVT VERIFICATION TEST. Refer to **CVT VERIFICATION TEST** .

   No

   - Test complete, the condition or conditions that originally set this DTC are not present at this time.

STANDARD PROCEDURE

CVT - PRE-DIAGNOSTIC TROUBLESHOOTING PROCEDURE

For a complete wiring diagram **refer to appropriate SYSTEM WIRING DIAGRAMS article** .

Perform the following pre-diagnostic troubleshooting procedures prior to performing any diagnostic test.

Always perform diagnostics with a fully charged battery to avoid false symptoms. The Transmission Control Module (TCM) requires a system voltage between 9 and 16 volts.

1. Many transmission symptoms can be caused by a low fluid level. If the fluid level is low, locate and repair any leaks and fill the transmission to the proper fluid level. Refer to **STANDARD PROCEDURE** for the proper repair and fluid fill procedures.

   CAUTION: The CVT Transmission uses a specific green transmission fluid that is substantially different from standard ATF used in other automatic transmissions. Failure to use the proper fluid will result in excessive transmission damage or total failure. Refer to CAPACITIES AND RECOMMENDED FLUIDS for the proper fluid type.

2. With the scan tool, read Engine DTCs. If Engine DTCs are present, refer to **DTC INDEX** and perform to the appropriate diagnostic procedure(s) before proceeding. .
3. With the scan tool, read Transmission (TCM) DTCs. Record all Stored, Active, and Pending DTC information. Diagnose any Pending DTC as a matured DTC.
4. Use the wiring diagram as a guide, inspect the wiring and connectors related to this circuit and repair as necessary.
5. Refer to the When Monitored and Set Conditions for this DTC. DTCs can set at ignition on, at start up, driving under specific conditions, and after controller diagnostic monitors have run or otherwise know as a Good Trip.

6. Check for any Service Information Tune-ups or Service Bulletins for any possible causes that may apply. Check for controller software update information. Some conditions can be corrected by upgrading the Engine (PCM) or Transmission (TCM) controller software.

Did any of the above procedures repair the vehicle?

Yes

- Testing is complete.
- Perform CVT TRANSMISSION VERIFICATION TEST. Refer to **CVT VERIFICATION TEST** .

No

- Refer to **DTC INDEX** and perform the appropriate symptom(s). .

CVT VERIFICATION TEST

Perform the following after completion of a diagnostic repair:

1. Reconnect any disconnected components.
2. With the scan tool, erase all Transmission and Engine DTCs.
3. If the Transmission Control Module or the Transmission has been repaired or replaced, it is necessary to perform the scan tool Initialize CVT Re-learn Procedure. Refer to **MODULE, TRANSMISSION CONTROL, STANDARD PROCEDURE** .
4. With the scan tool, display Transmission Temperature. Start and run the engine until the transmission temperature is HOT, above 43° C or 110° F.
5. Check the transmission fluid and adjust if necessary. Refer to **STANDARD PROCEDURE** for the Fluid Fill procedure.

CAUTION: The CVT uses a specific transmission fluid type that is green in color. Do not use a standard ATF fluid. Doing so can damage the transmission. Make sure to follow the Service Information fluid type and fill procedure.

6. Road test the vehicle. With the scan tool, monitor the engine RPM and

throttle angle. Drive the vehicle from a standing start to 45 mph with a constant throttle opening of 20 to 25 degrees with an engine speed above 450 RPM.

7. For a specific DTC, drive the vehicle to the Symptom's When Monitored/When Set condition to verify the DTC is repaired.
8. If equipped with AutoStick®, upshift and downshift several times using the AutoStick® feature during the road test.

NOTE: Use the OBDII task manager to run a Good Trip. This will confirm the repair(s) made and to ensure the DTC has not re-matured.

9. Check for any Diagnostic Trouble Codes (DTCs) during and after the road test.

Did any Diagnostic Trouble Codes set during the road test?

Yes

- Repair is not complete. Refer to **DTC INDEX** and perform the appropriate symptom(s). .

No

- Repair is complete.

2014 AUTOMATIC TRANSMISSION

Transmission Control Module (TCM) - Electrical Diagnostics, 6F24 - Compass & Patriot

DIAGNOSTIC CODE INDEX

DIAGNOSTIC CODE INDEX

DTC	Description
P0607-00	ECU INTERNAL PERFORMANCE
P0705-00	TRANSMISSION RANGE SENSOR A CIRCUIT (PRNDL INPUT)
P0706-00	TRANSMISSION RANGE SENSOR PERFORMANCE
P0711-00	TRANSMISSION FLUID TEMPERATURE SENSOR A CIRCUIT RANGE-PERFORMANCE
P0712-00	TRANSMISSION FLUID TEMPERATURE SENSOR A CIRCUIT LOW
P0713-00	TRANSMISSION FLUID TEMPERATURE SENSOR A CIRCUIT HIGH
P0715-00	INPUT-TURBINE SHAFT SPEED SENSOR A CIRCUIT
P0716-00	INPUT SHAFT SPEED SENSOR 1 PERFORMANCE
P0720-00	OUTPUT SHAFT SPEED SENSOR CIRCUIT
P0721-00	OUTPUT SHAFT SPEED SENSOR CIRCUIT PERFORMANCE
P0729-00	GEAR 6 SHIFT INCORRECT RATIO
P0731-00	GEAR 1 SHIFT INCORRECT RATIO
P0732-00	GEAR 2 SHIFT INCORRECT RATIO
P0733-00	GEAR 3 SHIFT INCORRECT RATIO
P0734-00	GEAR 4 SHIFT INCORRECT RATIO
P0735-00	GEAR 5 SHIFT INCORRECT RATIO
P0741-00	TORQUE CONVERTER CLUTCH CIRCUIT PERFORMANCE-STUCK OFF
P0750-00	SHIFT SOLENOID 1 CONTROL CIRCUIT-OPEN
P0755-00	SHIFT SOLENOID 2 CONTROL CIRCUIT - OPEN
P077C-00	OUTPUT SHAFT SPEED SENSOR CIRCUIT LOW
P077D-00	OUTPUT SHAFT SPEED SENSOR CIRCUIT HIGH
P07BF-00	INPUT-TURBINE SHAFT SPEED SENSOR 1 CIRCUIT LOW

P07C0-00	INPUT-TURBINE SHAFT SPEED SENSOR 1 CIRCUIT HIGH
P0885-00	TCM POWER CONTROL CIRCUIT
P0951-00	AUTOSTICK CONTROL CIRCUIT PERFORMANCE
P0960-00	PRESSURE CONTROL SOLENOID 1 CONTROL CIRCUIT OPEN
P0961-00	PRESSURE CONTROL SOLENOID 1 CONTROL CIRCUIT PERFORMANCE
P0962-00	PRESSURE CONTROL SOLENOID 1 CONTROL CIRCUIT LOW
P0963-00	PRESSURE CONTROL SOLENOID 1 CONTROL CIRCUIT HIGH
P0973-00	SHIFT SOLENOID 1 CONTROL CIRCUIT LOW
P0974-00	SHIFT SOLENOID 1 CONTROL CIRCUIT HIGH
P0976-00	SHIFT SOLENOID 2 CONTROL CIRCUIT LOW
P0977-00	SHIFT SOLENOID 2 CONTROL CIRCUIT HIGH
P0978-00	SHIFT SOLENOID 3 CONTROL CIRCUIT RANGE-PERFORMANCE
P0979-00	SHIFT SOLENOID 3 CONTROL CIRCUIT LOW
P097C-00	SHIFT SOLENOID 3 CONTROL CIRCUIT OPEN
P097D-00	SHIFT SOLENOID 4 CONTROL CIRCUIT OPEN
P097E-00	SHIFT SOLENOID 5 CONTROL CIRCUIT OPEN
P097F-00	SHIFT SOLENOID 6 CONTROL CIRCUIT-OPEN
P0980-00	SHIFT SOLENOID 3 CONTROL CIRCUIT HIGH
P0981-00	SHIFT SOLENOID 4 CONTROL CIRCUIT RANGE-PERFORMANCE
P0982-00	SHIFT SOLENOID 4 CONTROL CIRCUIT LOW
P0983-00	SHIFT SOLENOID 4 CONTROL CIRCUIT HIGH
P0984-00	SHIFT SOLENOID 5 CONTROL CIRCUIT RANGE-PERFORMANCE
P0985-00	SHIFT SOLENOID 5 CONTROL CIRCUIT LOW
P0986-00	SHIFT SOLENOID 5 CONTROL CIRCUIT HIGH
P0997-00	SHIFT SOLENOID 6 CONTROL CIRCUIT RANGE-PERFORMANCE
P0998-00	SHIFT SOLENOID 6 CONTROL CIRCUIT LOW

P0999-00	SHIFT SOLENOID 6 CONTROL CIRCUIT HIGH
P1715-00	RESTRICTED MANUAL VALVE IN T3 RANGE
P2761-00	TORQUE CONVERTER CLUTCH PRESSURE CONTROL SOLENOID CONTROL CIRCUIT-OPEN
P2762-00	TORQUE CONVERTER CLUTCH PRESSURE CONTROL SOLENOID CONTROL CIRCUIT RANGE-PERFORMANCE
P2763-00	TORQUE CONVERTER CLUTCH PRESSURE CONTROL SOLENOID CONTROL CIRCUIT HIGH
P2764-00	TORQUE CONVERTER CLUTCH PRESSURE CONTROL SOLENOID CONTROL CIRCUIT LOW
U0001-00	CAN C BUS
U0100-00	LOST COMMUNICATION WITH ECM-PCM
U0121-00	LOST COMMUNICATION WITH ANTILOCK BRAKE SYSTEM (ABS) CONTROL MODULE
U0141-00	LOST COMMUNICATION WITH IPM FCM-TIPM
U0401-00	IMPLAUSIBLE DATA RECEIVED FROM ECM-PCM

DIAGNOSIS AND TESTING

P0607-00-ECU INTERNAL PERFORMANCE

For a complete wiring diagram, **refer to appropriate SYSTEM WIRING DIAGRAMS article** .

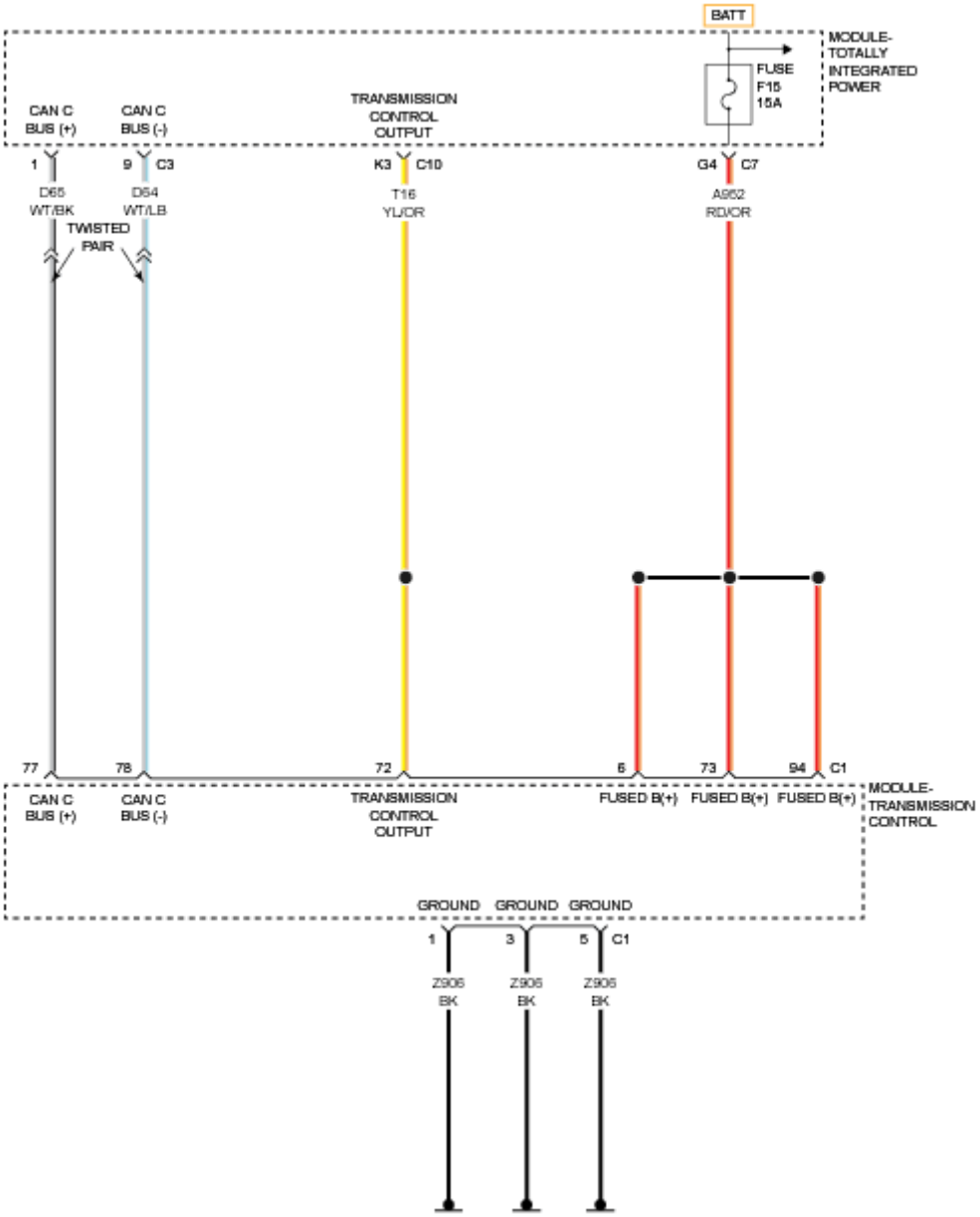

Fig. 1: Transmission Control Module Circuit Diagram
Courtesy of CHRYSLER GROUP, LLC

THEORY OF OPERATION

The purpose of this diagnostic is to check the integrity of the calibration data in the TCM. This is accomplished by calculating the checksum of all the calibration data after the TCM is powered up. The malfunction condition is detected if the calculated checksum of the calibration data is not equal to the stored checksum located in the Non-Volatile Random Access Memory (NVRAM).

WHEN MONITORED

TCM is powered up.

SET CONDITION

The fault is detected if the calculated checksum of the calibration data is not equal to the stored checksum located in the Non-Volatile Random Access Memory (NVRAM).

POSSIBLE CAUSES

Possible Causes
TRANSMISSION CONTROL MODULE (TCM)

Always perform the Pre-Diagnostic Troubleshooting procedure before proceeding. Refer to 6F24 PRE-DIAGNOSTIC TROUBLESHOOTING PROCEDURE .

DIAGNOSTIC TEST

TRANSMISSION CONTROL MODULE (TCM)

Repair

- Using the schematics as a guide, check the Transmission Control Module (TCM) terminals for corrosion, damage, or terminal push out. Pay particular attention to all power and ground circuits. If no problems are found, replace and program the TCM in accordance with the Service Information. Refer to **MODULE, TRANSMISSION CONTROL, REMOVAL** .
- Perform the TRANSMISSION VERIFICATION TEST. Refer to **6F24 TRANSMISSION VERIFICATION TEST** .

P0705-00-TRANSMISSION RANGE SENSOR A CIRCUIT (PRNDL INPUT)

For a complete wiring diagram, **refer to appropriate SYSTEM WIRING DIAGRAMS article** .

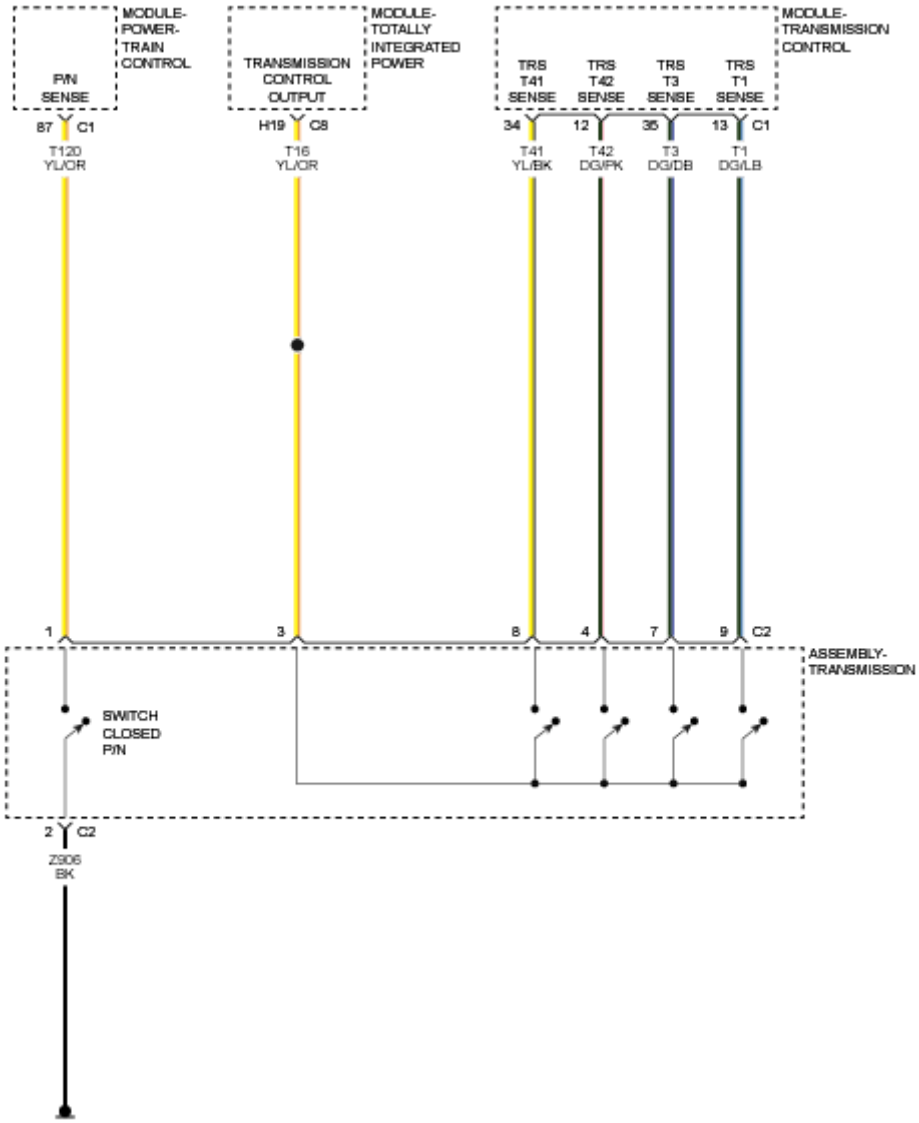

Fig. 2: Transmission Range Sensor Circuit Diagram
Courtesy of CHRYSLER GROUP, LLC

THEORY OF OPERATION

The purpose of this diagnostic is to check the electrical and rationality performance of the transmission range sensor (TRS) circuit. The range sensor circuit is connected to the TCM by four independent circuits which distinguish between the possible shifter positions (park, reverse, neutral, and drive). The shifter position is determined based upon a 4-bit pattern (S1, S2, S3, and S4).

WHEN MONITORED

TCM is in power on state and initialization is complete.

Battery voltage is greater than 9 volts.

No CAN bus DTCs are set.

Engine On signal received via CAN.

SET CONDITION

The fault is detected if the 4-bit pattern is an invalid combination for 4 seconds.

POSSIBLE CAUSES

Possible Causes
(T1, T3, T41, OR T42) TRS SENSE CIRCUIT OPEN
(T1, T3, T41, OR T42) TRS SENSE CIRCUIT SHORTED TO GROUND
(T1, T3, T41, OR T42) TRS SENSE CIRCUIT SHORTED TO VOLTAGE
TRANSMISSION RANGE SENSOR (TRS)
TRANSMISSION CONTROL MODULE (TCM)

Always perform the Pre-Diagnostic Troubleshooting procedure before proceeding. Refer to 6F24 PRE-DIAGNOSTIC TROUBLESHOOTING PROCEDURE .

DIAGNOSTIC TEST

1. **VERIFY DTC IS CURRENT**

   TRS SWITCH STATES

TRS Position	S4 (T1)	S3 (T3)	S2 (T42)	S1 (T41)
P	OPEN	OPEN	OPEN	CLOSED
R	OPEN	OPEN	CLOSED	OPEN
N	OPEN	CLOSED	OPEN	OPEN
D	CLOSED	OPEN	OPEN	OPEN

   With the scan tool, and observing the table above, shift the gear shift through all positions.

   Did all positions match the table above?

   Yes

- Go To 6

No

- Go To 2

2. **TRANSMISSION RANGE SENSOR (TRS)**
   1. Disconnect the TRS harness connector.
   2. With the scan tool, observe the TRS switch states.

      Did all switch states display open?

      Yes

      - Replace the Transmission Range Sensor in accordance with the Service Information.
      - Perform the TRANSMISSION VERIFICATION TEST. Refer to **6F24 TRANSMISSION VERIFICATION TEST** .

      No

      - Go To 3.

3. **TRS SENSE CIRCUIT OPEN**
   1. Turn the ignition off to the lock position.
   2. Disconnect the PCM harness connector.
   3. Measure the resistance of the identified S1, S2, S3, or S4 (T41, T41, T3, OR T1) TRS Sense circuit from the TRS harness connector to the appropriate terminal of the PCM harness connector.

      Is the resistance above 5.0 ohms?

      Yes

      - Repair the identified S1, S2, S3, or S4 (T41, T41, T3, OR T1) TRS Sense circuit for an open.
      - Perform the TRANSMISSION VERIFICATION TEST. Refer to **6F24 TRANSMISSION VERIFICATION TEST** .

      No

- Go To 4

4. **TRS SENSE CIRCUIT SHORT TO GROUND**
   1. Measure the resistance between ground and the identified S1, S2, S3, or S4 (T41, T41, T3, OR T1) TRS Sense circuit.

      Is the resistance below 100k ohms?

      Yes

      - Repair the identified S1, S2, S3, or S4 (T41, T41, T3, OR T1) TRS Sense circuit for a short to ground.
      - Perform the TRANSMISSION VERIFICATION TEST. Refer to **6F24 TRANSMISSION VERIFICATION TEST** .

      No

      - Go To 5

5. **TRS SENSE CIRCUIT SHORT TO OTHER CIRCUITS**
   1. Measure the resistance between the identified S1, S2, S3, or S4 (T41, T41, T3, OR T1) TRS Sense circuit and all other circuits in the Transmission Solenoid/TRS Assembly harness connector.

      Is the resistance below 100k ohms between the identified S1, S2, S3, or S4 (T41, T41, T3, OR T1) TRS Sense circuit and any other circuit(s) in the Transmission Solenoid/TRS Assembly harness connector?

      Yes

      - Repair the identified S1, S2, S3, or S4 (T41, T41, T3, OR T1) TRS Sense circuit for a short to other circuit(s).
      - Perform the TRANSMISSION VERIFICATION TEST. Refer to **6F24 TRANSMISSION VERIFICATION TEST** .

      No

      - Using the schematics as a guide, check the Transmission Control Module (TCM) terminals for corrosion, damage or terminal push out. Pay particular attention to all power and ground circuits. If no problems are found, replace the TCM in accordance with the

Service Information. Refer to **MODULE, TRANSMISSION CONTROL, REMOVAL** .

- Perform the TRANSMISSION VERIFICATION TEST. Refer to **6F24 TRANSMISSION VERIFICATION TEST** .

6. **CHECK THE WIRING AND CONNECTORS**
   1. The conditions necessary to set the DTC are not present at this time.
   2. Using the schematics as a guide, inspect the wiring and connectors specific to this circuit.
   3. Wiggle the wiring and connectors while checking for shorted and open circuits.
   4. With the scan tool, check the Event Data to help identify the conditions in which the DTC set.

   Were any problems found?

   Yes

   - Repair as necessary.
   - Perform the TRANSMISSION VERIFICATION TEST. Refer to **6F24 TRANSMISSION VERIFICATION TEST** .

   No

   - Test Complete.

P0706-00-TRANSMISSION RANGE SENSOR PERFORMANCE

For a complete wiring diagram, **refer to appropriate SYSTEM WIRING DIAGRAMS article** .

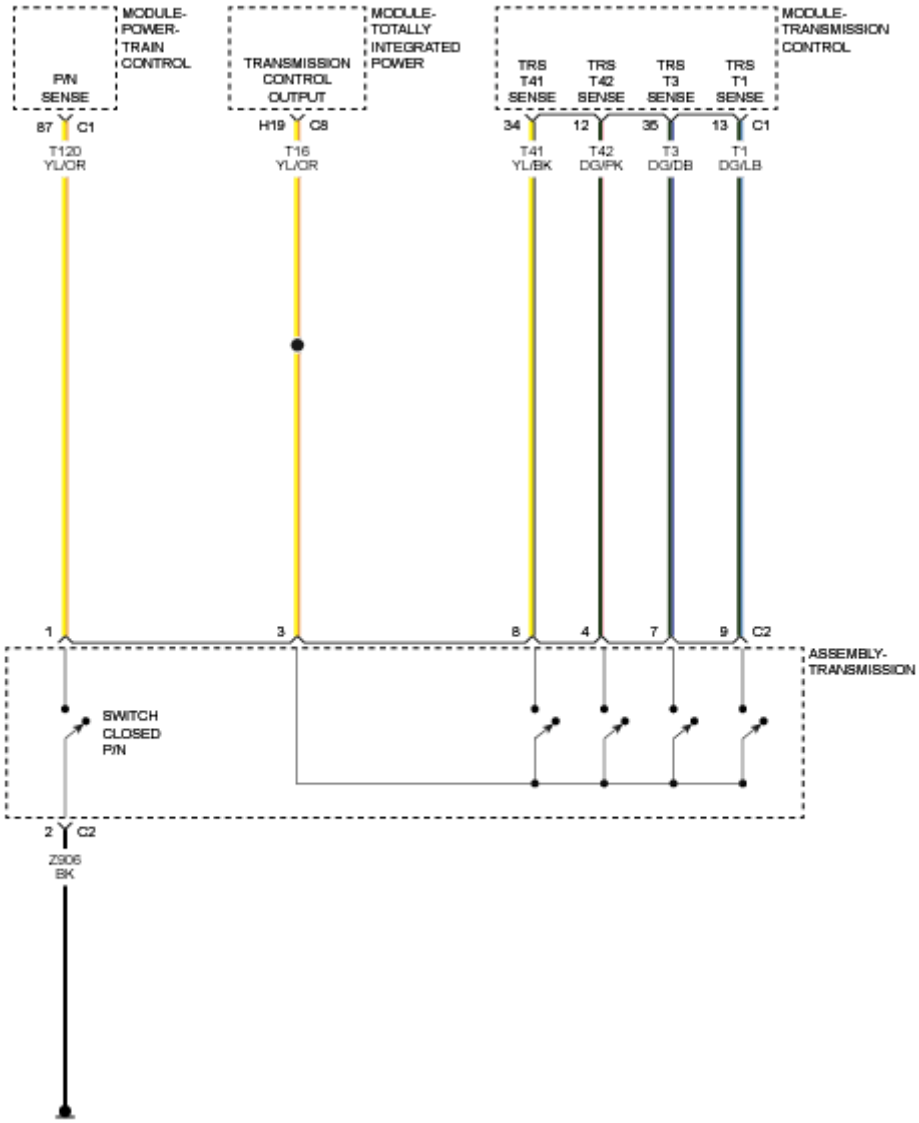

Fig. 3: Transmission Range Sensor Circuit Diagram
Courtesy of CHRYSLER GROUP, LLC

THEORY OF OPERATION

The purpose of this diagnostic is to check the electrical and rationality performance of the transmission range sensor (TRS) circuit. The range sensor circuit is connected to the TCM by four independent circuits which distinguish between the possible shifter positions (park, reverse, neutral, and drive). The shifter position is determined based upon a 4-bit pattern (S1, S2, S3, and S4).

WHEN MONITORED

TCM is in power on state and initialization is complete.

Battery voltage is greater than 9 volts.

Engine speed is greater than 1500 RPM.

No CAN bus DTCs set.

Engine On signal received via CAN.

SET CONDITION

Check 1

The fault is detected if the 4-bit pattern remains in an intermediate position (PR, RN, and ND) for 10 seconds.

POSSIBLE CAUSES

Possible Causes
(T1, T3, T41, OR T42) TRS SENSE CIRCUIT OPEN
(T1, T3, T41, OR T42) TRS SENSE CIRCUIT SHORTED TO GROUND
(T1, T3, T41, OR T42) TRS SENSE CIRCUIT SHORTED TO VOLTAGE
TRANSMISSION RANGE SENSOR (TRS)
TRANSMISSION CONTROL MODULE (TCM)

Always perform the Pre-Diagnostic Troubleshooting procedure before proceeding. Refer to 6F24 PRE-DIAGNOSTIC TROUBLESHOOTING PROCEDURE .

DIAGNOSTIC TEST

1. **VERIFY DTC IS CURRENT**

TRS SWITCH STATES

TRS Position	S4 (T1)	S3 (T3)	S2 (T42)	S1 (T41)
P	OPEN	OPEN	OPEN	CLOSED
R	OPEN	OPEN	CLOSED	OPEN
N	OPEN	CLOSED	OPEN	OPEN
D	CLOSED	OPEN	OPEN	OPEN

With the scan tool, and observing the table above, shift the gear shift

through all positions.

Did all positions match the table above?

Yes

- Go To 6

No

- Go To 2

2. **TRANSMISSION RANGE SENSOR (TRS)**
   1. Disconnect the TRS harness connector.
   2. With the scan tool, observe the TRS switch states.

      Did all switch states display open?

      Yes

      - Replace the Transmission Range Sensor in accordance with the Service Information.
      - Perform the TRANSMISSION VERIFICATION TEST. Refer to **6F24 TRANSMISSION VERIFICATION TEST** .

      No

      - Go To 3.

3. **TRS SENSE CIRCUIT OPEN**
   1. Turn the ignition off to the lock position.
   2. Disconnect the PCM harness connector.
   3. Measure the resistance of the identified S1, S2, S3, or S4 (T41, T41, T3, OR T1) TRS Sense circuit from the TRS harness connector to the appropriate terminal of the PCM harness connector.

      Is the resistance above 5.0 ohms?

      Yes

      - Repair the identified S1, S2, S3, or S4 (T41, T41, T3, OR T1) TRS

Sense circuit for an open.

- Perform the TRANSMISSION VERIFICATION TEST. Refer to **6F24 TRANSMISSION VERIFICATION TEST** .

No

- Go To 4

4. **TRS SENSE CIRCUIT SHORT TO GROUND**
   1. Measure the resistance between ground and the identified S1, S2, S3, or S4 (T41, T41, T3, OR T1) TRS Sense circuit.

      Is the resistance below 100k ohms?

      Yes

      - Repair the identified S1, S2, S3, or S4 (T41, T41, T3, OR T1) TRS Sense circuit for a short to ground.
      - Perform the TRANSMISSION VERIFICATION TEST. Refer to **6F24 TRANSMISSION VERIFICATION TEST** .

      No

      - Go To 5

5. **TRS SENSE CIRCUIT SHORT TO OTHER CIRCUITS**
   1. Measure the resistance between the identified S1, S2, S3, or S4 (T41, T41, T3, OR T1) TRS Sense circuit and all other circuits in the Transmission Solenoid/TRS Assembly harness connector.

      Is the resistance below 100k ohms between the identified S1, S2, S3, or S4 (T41, T41, T3, OR T1) TRS Sense circuit and any other circuit(s) in the Transmission Solenoid/TRS Assembly harness connector?

      Yes

      - Repair the identified S1, S2, S3, or S4 (T41, T41, T3, OR T1) TRS Sense circuit for a short to other circuit(s).
      - Perform the TRANSMISSION VERIFICATION TEST. Refer to **6F24 TRANSMISSION VERIFICATION TEST** .

No

- Using the schematics as a guide, check the Transmission Control Module (TCM) terminals for corrosion, damage or terminal push out. Pay particular attention to all power and ground circuits. If no problems are found, replace the TCM in accordance with the Service Information. Refer to **MODULE, TRANSMISSION CONTROL, REMOVAL** .
- Perform the TRANSMISSION VERIFICATION TEST. Refer to **6F24 TRANSMISSION VERIFICATION TEST** .

6. **CHECK THE WIRING AND CONNECTORS**
   1. The conditions necessary to set the DTC are not present at this time.
   2. Using the schematics as a guide, inspect the wiring and connectors specific to this circuit.
   3. Wiggle the wiring and connectors while checking for shorted and open circuits.
   4. With the scan tool, check the Event Data to help identify the conditions in which the DTC set.

   Were any problems found?

   Yes

   - Repair as necessary.
   - Perform the TRANSMISSION VERIFICATION TEST. Refer to **6F24 TRANSMISSION VERIFICATION TEST** .

   No

   - Test Complete.

P0711-00-TRANSMISSION FLUID TEMPERATURE SENSOR A CIRCUIT RANGE-PERFORMANCE

For a complete wiring diagram, **refer to appropriate SYSTEM WIRING DIAGRAMS article** .

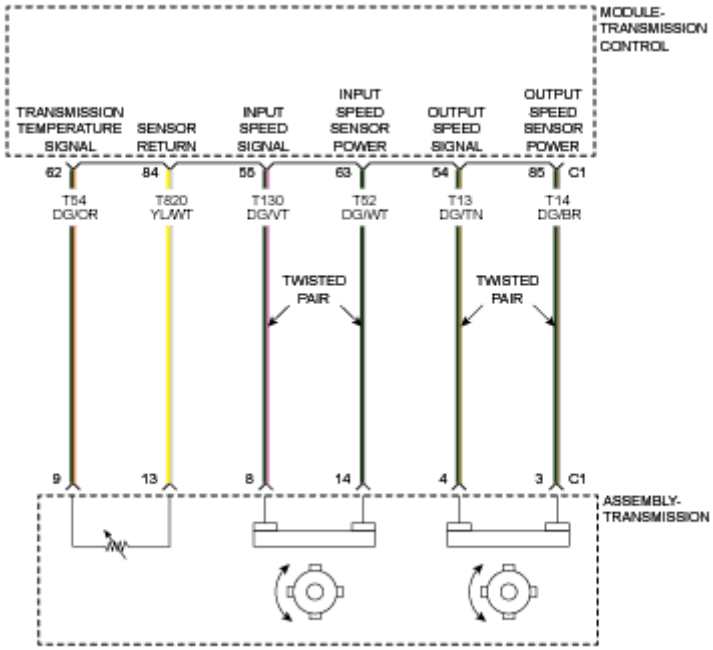

Fig. 4: Transmission Fluid Temperature & Speed Sensors Circuit Diagram
Courtesy of CHRYSLER GROUP, LLC

THEORY OF OPERATION

The purpose of this diagnostic is to check the rationality of the transmission fluid temperature (TFT) sensor signal. The TFT sensor is an analog device for which the TCM performs A/D conversion every 80 msec. The TFT sensor circuit diagram is shown above . The malfunction conditions detected in range by this diagnostic include TFT sensor signal stuck too low, stuck low and stuck high.

WHEN MONITORED

Conditions for TFT sensor stuck too low:

System voltage greater than 9.0 Volts.

Engine RPM greater than 400 RPM.

Shift lever in Drive.

No transmission fluid temperature sensor DTCs set.

Transmission fluid temperature is less than -10° C (14° F)

Conditions for TFT sensor stuck low:

System voltage greater than 9.0 Volts.

Shift lever in Drive.

Engine RPM greater than 1, 500 RPM.

No other temperature sensor or sensor ground DTCs present.

Transmission fluid temperature is more than or equal to -10° C (14° F).

All the above conditions are present for more than 0.8 seconds.

No CAN DTCs present.

No Engine RPM errors present.

Conditions for TFT sensor stuck high:

System voltage greater than 9.0 Volts.

Engine RPM greater than or equal to 400 RPM for more than 5 seconds.

Transmission fluid temperature at ignition off is greater than 60° C (140° F).

Engine coolant temperature at ignition off is greater than 74° C (164° F).

Engine coolant temperature decrease from previous ignition off to current ignition on is greater than 40° C (104° F).

SET CONDITION

Conditions for TFT sensor stuck too low:

Transmission fluid temperature is less than -10° C (14° F) for more than 300 seconds.

Conditions for TFT sensor stuck low:

Transmission fluid temperature is less than 20° C (68° F) for more than 800 seconds.

Conditions for TFT sensor stuck high:

The difference between transmission fluid temperature at ignition off and ignition on is less than 2° C (4° F).

POSSIBLE CAUSES

Possible Causes
TRANSMISSION TEMPERATURE SENSOR
TRANSMISSION CONTROL MODULE

Always perform the Pre-Diagnostic Troubleshooting procedure before proceeding. Refer to 6F24 PRE-DIAGNOSTIC TROUBLESHOOTING PROCEDURE .

DIAGNOSTIC TEST

1. **CHECK FOR PCM DTCS**
   1. Using the scan tool, read PCM DTCs.

      Are there any Engine Temperature Sensor DTCs present?

      Yes

      - Refer to the **2.0L & 2.4L - DIAGNOSTIC CODE INDEX** and perform the appropriate diagnostic procedure.
      - Perform the TRANSMISSION VERIFICATION TEST. Refer to **6F24 TRANSMISSION VERIFICATION TEST** .

      No

      - Go To 2
2. **CHECK TO SEE IF THE DIAGNOSTIC TROUBLE CODE (DTC) IS ACTIVE**
   1. Using the scan tool, read Transmission DTCs.

      Is the status Active or is the Starts Since Set counter 2 or less for this DTC?

      Yes

- Go To 3

No

- Go To 7

3. **IDENTIFY THE SETTING CONDITION**

NOTE: The vehicle must be completely cooled for a minimum period of 8 hours for the following test procedure.

1. With the scan tool monitor the Transmission Temperature while test driving the vehicle.

NOTE: It may take up to 10 minutes of continuous driving to accurately test the Transmission Temperature Sensor.

Did the Transmission Temperature stay the same or increase a very limited amount?

Yes

- Go To 6

No

- Go To 4

4. **CHECK THE TRANSMISSION TEMPERATURE SENSOR**

Did the TCM set a one trip DTC during the previous test drive?

Yes

- Go To 5

No

- Go To 7

5. **COMPARE TRANSMISSION TEMPERATURE TO OTHER**

TEMPERATURES

1. With the scan tool compare the Transmission Temperature to other Temperature sensors such as Engine Coolant, Intake, Oil Temperature.

   Is the Transmission Temperature within 40° C (104° F) of the other temperatures?

   Yes

   - Using the schematics as a guide, check the Transmission Control Module (TCM) terminals for corrosion, damage, or terminal push out. Pay particular attention to all power and ground circuits. Check for any Service Bulletins for possible causes that may apply. If no problems are found, replace the TCM in accordance with the Service Information. Refer to **MODULE, TRANSMISSION CONTROL, REMOVAL** .
   - Perform the TRANSMISSION VERIFICATION TEST. Refer to **6F24 TRANSMISSION VERIFICATION TEST** .

   No

   - Replace the Transmission Temperature Sensor in accordance with the Service Information.
   - Perform the TRANSMISSION VERIFICATION TEST. Refer to **6F24 TRANSMISSION VERIFICATION TEST** .

6. **CHECK THE (T54) TRANSMISSION TEMPERATURE SENSOR**

Temperature Sensor Resistive Values Chart	
Transmission Temperature	**Resistive Value Compared to Temperature (± 10%)**
20° C (68° F)	2.5k to 6.5k Ohms
80° C (176° F)	0.3k to 0.9k Ohms

1. Start the engine and allow to obtain normal operating temperature (approximately 10 min. of engine run time).
2. Turn the ignition off to the lock position.
3. Disconnect the TCM C1 harness connector.
4. Measure the resistance between the (T54) Transmission Temperature

Sensor Signal circuit and the (T820) Sensor Ground circuit in the TCM C1 harness connector.

Is the resistance within the desired range listed on the above chart?

Yes

- Using the schematics as a guide, check the Transmission Control Module (TCM) terminals for corrosion, damage, or terminal push out. Pay particular attention to all power and ground circuits. Check for any Service Bulletins for possible causes that may apply. If no problems are found, replace the TCM in accordance with the Service Information. Refer to **MODULE, TRANSMISSION CONTROL, REMOVAL** .
- Perform the TRANSMISSION VERIFICATION TEST. Refer to **6F24 TRANSMISSION VERIFICATION TEST** .

No

- Replace the Transmission Temperature Sensor in accordance with the Service Information.
- Perform the TRANSMISSION VERIFICATION TEST. Refer to **6F24 TRANSMISSION VERIFICATION TEST** .

7. **CHECK THE WIRING AND CONNECTORS**
   1. The conditions necessary to set this DTC are not present at this time.
   2. Using the schematics as a guide, inspect the wiring and connectors specific to this circuit.
   3. Wiggle the wires while checking for shorted and open circuits.

   Were there any problems found?

   Yes

   - Repair as necessary.
   - Perform the TRANSMISSION VERIFICATION TEST. Refer to **6F24 TRANSMISSION VERIFICATION TEST** .

   No

- Test Complete.

P0712-00-TRANSMISSION FLUID TEMPERATURE SENSOR A CIRCUIT LOW

For a complete wiring diagram, **refer to appropriate SYSTEM WIRING DIAGRAMS article** .

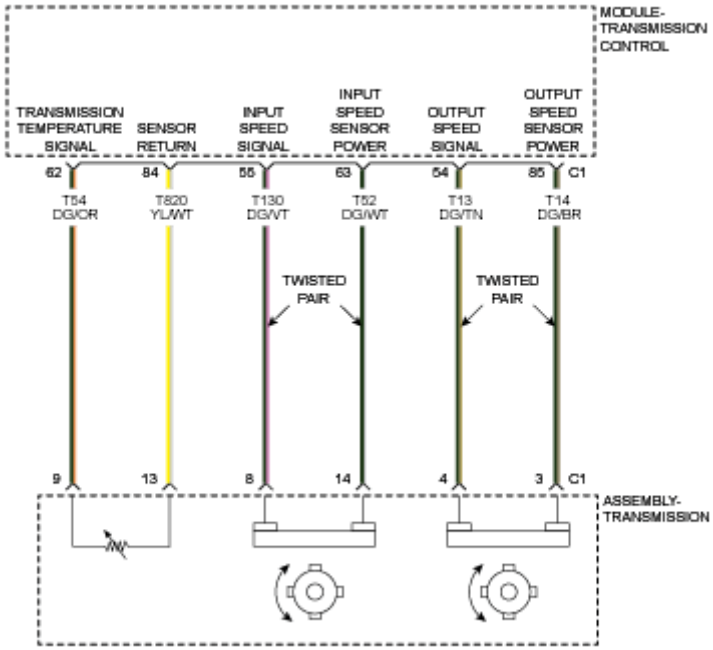

Fig. 5: Transmission Fluid Temperature & Speed Sensors Circuit Diagram
Courtesy of CHRYSLER GROUP, LLC

THEORY OF OPERATION

The purpose of this diagnostic is to check the electrical performance of the transmission fluid temperature (TFT) sensor circuit. The TFT sensor is an analog device for which the TCM performs A/D conversion every 80 msec. The malfunction conditions detected by this diagnostic include shorted to battery, short to ground, and open circuit failures. If the TFT sensor circuit is out of range high (shorted to battery or open circuit) or out of range low (shorted to ground), a fault is detected.

WHEN MONITORED

System voltage greater than 9.0 Volts.

Engine RPM greater than 400 RPM.

No other transmission temperature sensor DTCs.

SET CONDITION

Transmission fluid temperature voltage is less than 0.096 volts for more than 5 seconds.

POSSIBLE CAUSES

Possible Causes
(T54) TRANSMISSION TEMPERATURE SENSOR SIGNAL CIRCUIT SHORT TO GROUND
(T54) TRANSMISSION TEMPERATURE SENSOR SIGNAL CIRCUIT SHORT TO (T820) SENSOR GROUND CIRCUIT
TRANSMISSION TEMPERATURE SENSOR
TRANSMISSION CONTROL MODULE

Always perform the Pre-Diagnostic Troubleshooting procedure before proceeding. Refer to 6F24 PRE-DIAGNOSTIC TROUBLESHOOTING PROCEDURE .

DIAGNOSTIC TEST

1. **CHECK IF DTC IS CURRENT**
    1. Using the scan tool, read TCM DTCs.
    2. Record the Environmental Data and any DTCs.
    3. Clear DTCs.
    4. Using the recorded Environmental Data, along with the When Monitored and Set Conditions above, operate the vehicle in the conditions that set the DTC.
    5. Read TCM DTCs.

    Did the DTC reset?

    Yes

    - Go To 2

    No

- Go To 5

2. **CHECK THE (T54) TRANSMISSION TEMPERATURE SENSOR SIGNAL CIRCUIT FOR A SHORT TO GROUND**
   1. Turn the ignition off to the lock position.
   2. Disconnect the TCM C1 harness connector.
   3. Disconnect the Transmission harness connector.
   4. Measure the resistance between ground and the (T54) Transmission Temperature Sensor Signal circuit.

      Is the resistance above 100k Ohms?

      Yes

      - Go To 3

      No

      - Repair the (T54) Transmission Temperature Sensor Signal circuit for a short to ground.
      - Perform TRANSMISSION VERIFICATION TEST. Refer to **6F24 TRANSMISSION VERIFICATION TEST** .

3. **CHECK THE (T54) TRANSMISSION TEMPERATURE SENSOR SIGNAL CIRCUIT FOR A SHORT TO (T820) SENSOR GROUND CIRCUIT**
   1. Measure the resistance between the (T54) Transmission Temperature Sensor Signal circuit and (T820) Sensor Ground circuit in the Transmission harness connector.

      Is the resistance above 100k Ohms?

      Yes

      - Go To 4

      No

      - Repair the (T54) Transmission Temperature Sensor Signal circuit for a short to the (T820) Sensor Ground circuit.

- Perform TRANSMISSION VERIFICATION TEST. Refer to **6F24 TRANSMISSION VERIFICATION TEST** .

4. **CHECK THE TRANSMISSION TEMPERATURE SENSOR**

Temperature Sensor Resistive Values Chart	
Transmission Temperature	**Resistive Value Compared to Temperature (± 10%)**
20° C (68° F)	2.5k to 6.5k Ohms
80° C (176° F)	0.3k to 0.9k Ohms

1. Turn the ignition off to the lock position.
2. Reconnect the Transmission harness connector.
3. Measure the resistance of the Transmission Temperature Sensor between the (T54) Transmission Temperature Signal circuit and the (T820) Sensor Ground circuit in the TCM C1 harness connector.
4. Using the chart at the chart above, compare the Temperature Sensor temperature to the correlating resistance value.

   Is the resistance within the specified range when the sensor is at the given temperature?

   Yes

   - Using the schematics as a guide, check the Transmission Control Module (TCM) pins, terminals, and connectors for corrosion, damage, or terminal push out. Pay particular attention to all power and ground circuits. If no problems are found, replace and program the TCM in accordance with the Service Information.

   No

   - Remove the Transmission Oil Pan and inspect the internal Transmission harness, pins, terminals, and connectors for corrosion, damage, or terminal push out. If no problems are found, replace the Transmission Temperature Sensor in accordance with the Service Information.
   - Perform TRANSMISSION VERIFICATION TEST. Refer to **6F24 TRANSMISSION VERIFICATION TEST** .

5. **CHECK WIRING AND CONNECTORS**
    1. The conditions necessary to set the DTC are not present at this time.
    2. Using the schematics as a guide, inspect the wiring and connectors specific to this circuit.
    3. Wiggle the wires while checking for shorted and open circuits.
    4. Check for any Service Bulletins that may apply.

    Were there any problems found?

    Yes

    - Repair as necessary.
    - Perform TRANSMISSION VERIFICATION TEST. Refer to **6F24 TRANSMISSION VERIFICATION TEST** .

    No

    - Test Complete.

P0713-00-TRANSMISSION FLUID TEMPERATURE SENSOR A CIRCUIT HIGH

For a complete wiring diagram, **refer to appropriate SYSTEM WIRING DIAGRAMS article** .

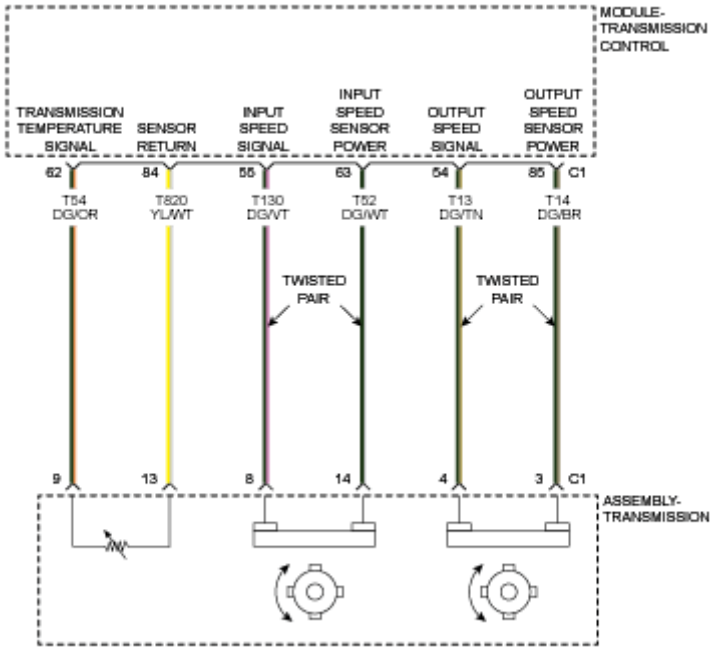

Fig. 6: Transmission Fluid Temperature & Speed Sensors Circuit Diagram
Courtesy of CHRYSLER GROUP, LLC

THEORY OF OPERATION

The purpose of this diagnostic is to check the electrical performance of the transmission fluid temperature (TFT) sensor circuit. The TFT sensor is an analog device for which the TCM performs A/D conversion every 80 msec. The malfunction conditions detected by this diagnostic include shorted to battery, short to ground, and open circuit failures. If the TFT sensor circuit is out of range high (shorted to battery or open circuit) or out of range low (shorted to ground), a fault is detected.

WHEN MONITORED

System voltage greater than 9.0 Volts.

Engine RPM greater than 400 RPM.

No other transmission temperature sensor DTCs.

SET CONDITION

Transmission fluid temperature voltage is greater than 3.26 volts for more than 5 seconds.

POSSIBLE CAUSES

Possible Causes
(T54) TRANSMISSION TEMPERATURE SENSOR SIGNAL CIRCUIT SHORT TO VOLTAGE
(T54) TRANSMISSION TEMPERATURE SENSOR SIGNAL CIRCUIT OPEN
(T820) SENSOR GROUND CIRCUIT OPEN
TRANSMISSION TEMPERATURE SENSOR
TRANSMISSION CONTROL MODULE

Always perform the Pre-Diagnostic Troubleshooting procedure before proceeding. Refer to 6F24 PRE-DIAGNOSTIC TROUBLESHOOTING PROCEDURE .

DIAGNOSTIC TEST

1. **CHECK IF DTC IS CURRENT**
    1. Using the scan tool, read TCM DTCs.
    2. Record the Environmental Data and any DTCs.
    3. Clear DTCs.
    4. Using the recorded Environmental Data, along with the When Monitored and Set Conditions above, operate the vehicle in the conditions that set the DTC.
    5. Read TCM DTCs.

    Did the DTC reset?

    Yes

    - Go To 2

    No

    - Go To 6
2. **CHECK THE (T54) TRANSMISSION TEMPERATURE SENSOR SIGNAL CIRCUIT FOR A SHORT TO VOLTAGE**
    1. Turn the ignition off to the lock position.
    2. Disconnect the TCM C1 harness connectors.

3. Disconnect the Transmission harness connector.
4. Ignition on, engine not running.
5. Measure the voltage of the (T54) Transmission Temperature Sensor Signal circuit in the TCM C1 harness connector.

   Is the voltage above 0.5 of a volt?

   Yes

   - Repair the (T54) Transmission Temperature Sensor Signal circuit for a short to voltage.
   - Perform TRANSMISSION VERIFICATION TEST. Refer to **6F24 TRANSMISSION VERIFICATION TEST** .

   No

   - Go To 3

3. **CHECK THE (T54) TRANSMISSION TEMPERATURE SENSOR SIGNAL CIRCUIT FOR AN OPEN**
   1. Measure the resistance of the (T54) Transmission Temperature Sensor Signal circuit between the TCM C1 harness connector and the Transmission harness connector.

      Is the resistance below 5.0 Ohms?

      Yes

      - Go To 4

      No

      - Repair the (T54) Transmission Temperature Sensor Signal circuit for an open.
      - Perform TRANSMISSION VERIFICATION TEST. Refer to **6F24 TRANSMISSION VERIFICATION TEST** .
4. **CHECK THE (T820) SENSOR GROUND CIRCUIT FOR AN OPEN**
   1. Measure the resistance of the (T820) Sensor Ground circuit between the TCM C1 harness connector and the Transmission harness connector.

Is the resistance below 5.0 Ohms?

Yes

- Go To 5

No

- Repair the (T820) Sensor Ground circuit for an open.
- Perform TRANSMISSION VERIFICATION TEST. Refer to **6F24 TRANSMISSION VERIFICATION TEST** .

5. **CHECK THE TRANSMISSION TEMPERATURE SENSOR**

Temperature Sensor Resistive Values Chart	
Transmission Temperature	**Resistive Value Compared to Temperature (± 10%)**
20° C (68° F)	2.5k to 6.5k Ohms
80° C (176° F)	0.3k to 0.9k Ohms

1. Turn the ignition off to the lock position.
2. Reconnect the Transmission Solenoid harness connector.
3. Measure the resistance of the Transmission Temperature Sensor between the (T54) Transmission Temperature Signal circuit and the (T820) Sensor Ground circuit in the TCM C1 harness connector.
4. Using the chart at the chart above, compare the Temperature Sensor temperature to the correlating resistance value.

   Is the resistance within the specified range when the sensor is at the given temperature?

   Yes

   - Using the schematics as a guide, check the Transmission Control Module (TCM) pins, terminals, and connectors for corrosion, damage, or terminal push out. Pay particular attention to all power and ground circuits. If no problems are found, replace and program the TCM in accordance with the Service Information. Refer to **MODULE, TRANSMISSION CONTROL, REMOVAL** .

- Perform TRANSMISSION VERIFICATION TEST. Refer to **6F24 TRANSMISSION VERIFICATION TEST** .

No

- Remove the Transmission Oil Pan and inspect the internal Transmission harness, pins, terminals, and connectors for corrosion, damage, or terminal push out. If no problems are found, replace the Transmission Temperature Sensor in accordance with the Service Information.
- Perform TRANSMISSION VERIFICATION TEST. Refer to **6F24 TRANSMISSION VERIFICATION TEST** .

6. **CHECK WIRING AND CONNECTORS**
   1. The conditions necessary to set the DTC are not present at this time.
   2. Using the schematics as a guide, inspect the wiring and connectors specific to this circuit.
   3. Wiggle the wires while checking for shorted and open circuits.
   4. Check for any Service Bulletins that may apply.

   Were there any problems found?

   Yes

   - Repair as necessary.
   - Perform TRANSMISSION VERIFICATION TEST. Refer to **6F24 TRANSMISSION VERIFICATION TEST** .

   No

   - Test Complete.

P0715-00-INPUT-TURBINE SHAFT SPEED SENSOR A CIRCUIT

For a complete wiring diagram, **refer to appropriate SYSTEM WIRING DIAGRAMS article** .

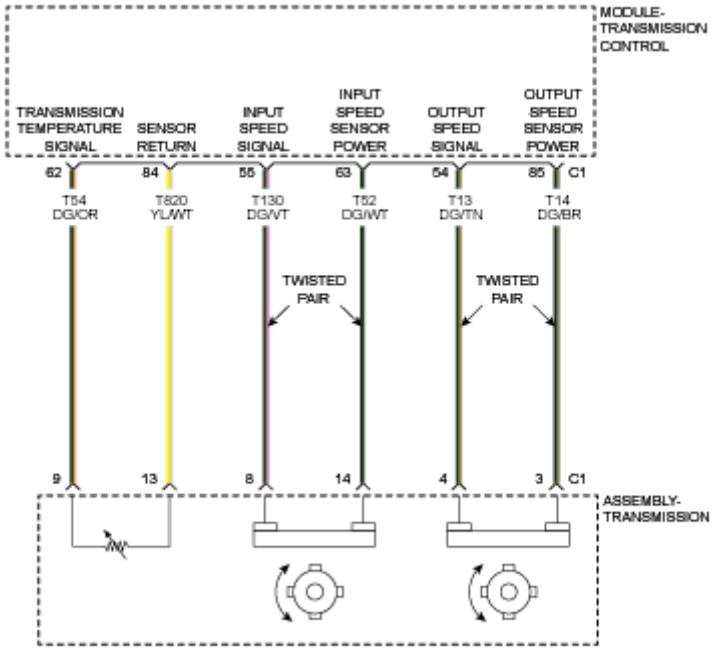

Fig. 7: Transmission Fluid Temperature & Speed Sensors Circuit Diagram
Courtesy of CHRYSLER GROUP, LLC

THEORY OF OPERATION

The purpose of this diagnostic is to check the electrical performance of the input speed sensor circuit. The sensor is located in front of the target wheel which is connected to the transmission input shaft, and measures the rotation of the target wheel. The input speed sensor is a Hall Effect sensor with a pulse train output frequency range of 50 ~ 8000 RPM. The normal operating output voltage range of the input speed sensor is in the range of 0.8 to 1.5 V. The malfunction conditions detected by this diagnostic include short to battery, short to ground, and open circuit failures. These malfunctions are determined based upon the A/D conversion value.

WHEN MONITORED

Battery supply voltage is greater than 9 volts.

No input speed sensor circuit failures (electrical or rationality).

SET CONDITION

The failure is detected if the measured voltage of the input speed sensor circuit is between 0.1 of a volt and less than 0.2 of a volt for 2 seconds.

POSSIBLE CAUSES

Possible Causes
(T130) INPUT SPEED SIGNAL CIRCUIT OPEN
(T52) SPEED SENSOR POWER CIRCUIT OPEN
(T130) INPUT SPEED SIGNAL CIRCUIT SHORTED TO GROUND
(T52) SPEED SENSOR POWER CIRCUIT SHORTED TO GROUND
(T130) INPUT SPEED SENSOR SIGNAL CIRCUIT FOR A SHORT TO ANOTHER CIRCUIT
INPUT SPEED SENSOR
TRANSMISSION CONTROL MODULE (TCM)

Always perform the Pre-Diagnostic Troubleshooting procedure before proceeding. Refer to 6F24 PRE-DIAGNOSTIC TROUBLESHOOTING PROCEDURE .

DIAGNOSTIC TEST

1. **CHECK IF THE DTC IS CURRENT**
    1. Using the scan tool, read TCM DTCs.
    2. Record the Environmental Data and any DTCs.
    3. Clear DTCs.
    4. Using the recorded Environmental Data, along with the When Monitored and Set Conditions above, operate the vehicle in the conditions that set the DTC.

    NOTE: It may be necessary to road test the vehicle to duplicate the original set conditions.

    5. Read TCM DTCs.

    Did the DTC reset?

    Yes

    - Go To 2

    No

- Go To 9

2. **CHECK THE (T52) POWER SUPPLY CIRCUIT**
   1. Turn the ignition off to the lock position.
   2. Disconnect the Transmission harness connector.
   3. Ignition on, engine not running.
   4. Measure the voltage of the (T52) Power Supply circuit on the appropriate terminal of the Transmission harness connector.

      Is the voltage 7.61 volts (± 0.65 of a volt)?

      Yes

      - Go To 5

      No

      - Go To 3

3. **CHECK THE (T52) POWER SUPPLY CIRCUIT FOR AN OPEN**
   1. Turn the ignition off to the lock position.
   2. Disconnect the TCM C1 harness connector.
   3. Measure the resistance of the (T52) Power Supply circuit between the TCM C1 harness connector and the Transmission harness connector.

      Is the resistance below 5.0 Ohms?

      Yes

      - Go To 4

      No

      - Repair the (T52) Power Supply circuit for an open.
      - Perform the TRANSMISSION VERIFICATION TEST. Refer to **6F24 TRANSMISSION VERIFICATION TEST** .

4. **CHECK THE (T52) POWER SUPPLY CIRCUIT FOR A SHORT TO GROUND**
   1. Measure the resistance between ground and the (T52) Power Supply Signal circuit.

Is the resistance below 100k Ohms?

Yes

- Repair the (T52) Power Supply circuit for a short to ground.
- Perform the TRANSMISSION VERIFICATION TEST. Refer to **6F24 TRANSMISSION VERIFICATION TEST** .

No

- Using the schematics as a guide, check the Transmission Control Module (TCM) pins, terminals, and connectors for corrosion, damage, or terminal push out. Pay particular attention to all power and ground circuits. If no problems are found, replace and program the TCM in accordance with the Service Information. Refer to **MODULE, TRANSMISSION CONTROL, REMOVAL** .
- Perform the TRANSMISSION VERIFICATION TEST. Refer to **6F24 TRANSMISSION VERIFICATION TEST** .

5. **CHECK THE (T130) INPUT SPEED SENSOR SIGNAL CIRCUIT FOR AN OPEN**
   1. Disconnect the TCM C1 harness connector.
   2. Measure the resistance of the (T130) Input Speed Sensor Signal circuit between the TCM C1 harness connector and the Transmission harness connector.

   Is the resistance below 5.0 Ohms?

   Yes

   - Go To 6

   No

   - Repair the (T130) Input Speed Sensor Signal circuit for an open.
   - Perform the TRANSMISSION VERIFICATION TEST. Refer to **6F24 TRANSMISSION VERIFICATION TEST** .
6. **CHECK THE (T130) INPUT SPEED SENSOR SIGNAL CIRCUIT FOR A SHORT TO GROUND**
   1. Measure the resistance between ground and the (T130) Input Speed

Sensor Signal circuit.

Is the resistance below 100k Ohms?

Yes

- Repair the (T130) Input Speed Sensor Signal circuit for a short to ground.
- Perform the TRANSMISSION VERIFICATION TEST. Refer to **6F24 TRANSMISSION VERIFICATION TEST** .

No

- Go To 7

7. **CHECK THE (T130) INPUT SPEED SENSOR SIGNAL CIRCUIT FOR A SHORT TO ANOTHER CIRCUIT**
   1. Measure the resistance between the (T130) Input Speed Sensor Signal circuit and all other circuits in the TCM C1 harness connector.

      Is the resistance below 100k Ohms between the (T130) Input Speed Sensor Signal circuit and any other circuit(s) in the TCM C1 harness connector?

      Yes

      - Repair the (T130) Input Speed Sensor Signal circuit for a short to another circuit(s).
      - Perform the TRANSMISSION VERIFICATION TEST. Refer to **6F24 TRANSMISSION VERIFICATION TEST** .

      No

      - Go To 8

8. **REPLACE THE INPUT SPEED SENSOR**
   1. Turn the ignition off to the lock position.
   2. Remove the transmission side cover and inspect the internal harness.
   3. Replace the Input Speed Sensor in accordance with the service information.
   4. Inspect the internal tone ring for damaged or missing teeth.

5. Reconnect all connectors.
6. Clear DTCs and road test the vehicle under the conditions in which the original DTC set.

   Did the Input Speed Sensor DTC reset?

   Yes

   - Using the schematics as a guide, check the Transmission Control Module (TCM) pins, terminals, and connectors for corrosion, damage, or terminal push out. Pay particular attention to all power and ground circuits. If no problems are found, replace and program the TCM in accordance with the Service Information. Refer to **MODULE, TRANSMISSION CONTROL, REMOVAL** .
   - Perform the TRANSMISSION VERIFICATION TEST. Refer to **6F24 TRANSMISSION VERIFICATION TEST** .

   No

   - Test complete.
   - Perform the TRANSMISSION VERIFICATION TEST. Refer to **6F24 TRANSMISSION VERIFICATION TEST** .

9. **CHECK THE WIRING AND CONNECTORS**
   1. The conditions necessary to set this DTC are not present at this time.
   2. Use the Freeze Frame Data to help duplicate the conditions in which the DTC originally set. Pay particular attention to the DTC set conditions, such as, VSS, MAP, ECT, and Load
   3. Using the schematics as a guide, visually inspect the related wiring harness. Look for any chafed, pierced, pinched, or partially broken wires.
   4. Visually inspect the related wiring harness connectors. Look for broken, bent, pushed out, or corroded terminals.
   5. Wiggle the wiring and connectors while checking for any possible open or shorted circuits.
   6. Check for any Service Information Tune-ups or Technical Service Bulletins that may apply.

Were there any problems found?

Yes

- Repair as necessary.
- Perform the TRANSMISSION VERIFICATION TEST. Refer to **6F24 TRANSMISSION VERIFICATION TEST** .

No

- Test Complete.

P0716-00-INPUT SHAFT SPEED SENSOR 1 PERFORMANCE

For a complete wiring diagram, **refer to appropriate SYSTEM WIRING DIAGRAMS article** .

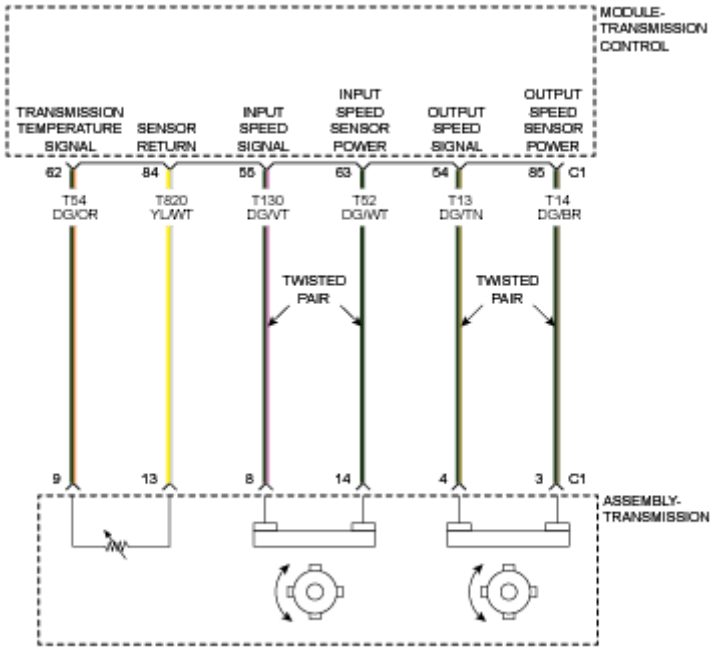

Fig. 8: Transmission Fluid Temperature & Speed Sensors Circuit Diagram
Courtesy of CHRYSLER GROUP, LLC

THEORY OF OPERATION

The purpose of this diagnostic is to check the rationality of the transmission input speed sensor signal. The transmission input speed should be synchronized with the transmission output speed. The malfunction condition is detected if the

measured input speed sensor signal is stuck below a low speed threshold or present above an out of range high speed threshold.

WHEN MONITORED

Battery supply voltage is greater than or equal to 9 volts.

Driving Conditions for stuck failure:

No input speed sensor errors.

No CAN related errors.

No engine RPM signal errors.

No output speed related errors.

No Transmission Range Switch (TRS) errors.

Input speed is equal to 0 RPM.

Engine speed is greater than or 650 RPM.

Time since gear shift is greater than or equal to 1 second.

Shift lever position is in park/neutral or shift lever position is in drive and the output speed sensor signal is greater than or equal to 100 RPM.

SET CONDITION

Input Speed Sensor stuck failure:

The failure is detected if the measured input speed sensor signal is stuck below 0 RPM for 2 seconds.

Input Speed Sensor out of range high failure:

The failure is detected if the measured input speed sensor signal is greater than or equal to 8000 RPM for 2 seconds.

POSSIBLE CAUSES

Possible Causes

(T130) INPUT SPEED SENSOR SIGNAL CIRCUIT OPEN
(T52) INPUT SPEED SENSOR POWER CIRCUIT OPEN
(T130) INPUT SPEED SENSOR SIGNAL CIRCUIT SHORTED TO GROUND
(T130) INPUT SPEED SENSOR SIGNAL CIRCUIT SHORTED TO VOLTAGE
(T52) INPUT SPEED SENSOR POWER CIRCUIT SHORTED TO VOLTAGE
INPUT SPEED SENSOR
TRANSMISSION CONTROL MODULE (TCM)

Always perform the Pre-Diagnostic Troubleshooting procedure before proceeding. Refer to 6F24 PRE-DIAGNOSTIC TROUBLESHOOTING PROCEDURE .

DIAGNOSTIC TEST

1. **CHECK IF THE DTC IS CURRENT**
   1. Using the scan tool, read TCM DTCs.
   2. Record the Environmental Data and any DTCs.
   3. Clear DTCs.
   4. Using the recorded Environmental Data, along with the When Monitored and Set Conditions above, operate the vehicle in the conditions that set the DTC.

      NOTE: It may be necessary to road test the vehicle to duplicate the original set conditions.

   5. Read TCM DTCs.

      Did the DTC reset?

      Yes

      - Go To 2

      No

      - Go To 9

2. **CHECK THE (T52) INPUT SPEED SENSOR POWER SUPPLY CIRCUIT**
   1. Turn the ignition off to the lock position.
   2. Disconnect the Transmission harness connector.
   3. Ignition on, engine not running.
   4. Measure the voltage of the (T52) Input Speed Sensor Power Supply circuit on the appropriate terminal of the Transmission harness connector.

      Is the voltage 7.61 volts (± 0.65 of a volt)?

      Yes

      - Go To 5

      No

      - Go To 3
3. **CHECK THE (T52) INPUT SPEED SENSOR POWER SUPPLY CIRCUIT FOR AN OPEN**
   1. Turn the ignition off to the lock position.
   2. Disconnect the TCM C1 harness connector.
   3. Measure the resistance of the (T52) Input Speed Sensor Power Supply circuit between the TCM C1 harness connector and the Transmission harness connector.

      Is the resistance below 5.0 Ohms?

      Yes

      - Go To 4

      No

      - Repair the (T52) Input Speed Sensor Power Supply circuit for an open.
      - Perform the TRANSMISSION VERIFICATION TEST. Refer to **6F24 TRANSMISSION VERIFICATION TEST** .

4. **CHECK THE (T52) INPUT SPEED SENSOR POWER SUPPLY CIRCUIT FOR A SHORT TO GROUND**
   1. Measure the resistance between ground and the (T52) Input Speed Sensor Power Supply Signal circuit.

      Is the resistance below 100k Ohms?

      Yes

      - Repair the (T52) Input Speed Sensor Power Supply circuit for a short to ground.
      - Perform the TRANSMISSION VERIFICATION TEST. Refer to **6F24 TRANSMISSION VERIFICATION TEST** .

      No

      - Using the schematics as a guide, check the Transmission Control Module (TCM) pins, terminals, and connectors for corrosion, damage, or terminal push out. Pay particular attention to all power and ground circuits. If no problems are found, replace and program the TCM in accordance with the Service Information. Refer to **MODULE, TRANSMISSION CONTROL, REMOVAL** .
      - Perform the TRANSMISSION VERIFICATION TEST. Refer to **6F24 TRANSMISSION VERIFICATION TEST** .
5. **CHECK THE (T130) INPUT SPEED SENSOR SIGNAL CIRCUIT FOR AN OPEN**
   1. Disconnect the TCM C1 harness connector.
   2. Measure the resistance of the (T130) Input Speed Sensor Signal circuit between the TCM C1 harness connector and the Transmission harness connector.

      Is the resistance below 5.0 Ohms?

      Yes

      - Go To 6

      No

- Repair the (T130) Input Speed Sensor Signal circuit for an open.
- Perform the TRANSMISSION VERIFICATION TEST. Refer to **6F24 TRANSMISSION VERIFICATION TEST** .

6. **CHECK THE (T130) INPUT SPEED SENSOR SIGNAL CIRCUIT FOR A SHORT TO GROUND**
   1. Measure the resistance between ground and the (T130) Input Speed Sensor Signal circuit.

      Is the resistance below 100k Ohms?

      Yes

      - Repair the (T130) Input Speed Sensor Signal circuit for a short to ground.
      - Perform the TRANSMISSION VERIFICATION TEST. Refer to **6F24 TRANSMISSION VERIFICATION TEST** .

      No

      - Go To 7

7. **CHECK THE (T130) INPUT SPEED SENSOR SIGNAL CIRCUIT FOR A SHORT TO ANOTHER CIRCUIT**
   1. Measure the resistance between the (T130) Input Speed Sensor Signal circuit and all other circuits in the TCM C1 harness connector.

      Is the resistance below 100k Ohms between the (T130) Input Speed Sensor Signal circuit and any other circuit(s) in the TCM C1 harness connector?

      Yes

      - Repair the (T130) Input Speed Sensor Signal circuit for a short to another circuit(s).
      - Perform the TRANSMISSION VERIFICATION TEST. Refer to **6F24 TRANSMISSION VERIFICATION TEST** .

      No

      - Go To 8

8. **REPLACE THE INPUT SPEED SENSOR**
    1. Turn the ignition off to the lock position.
    2. Remove the transmission side cover and inspect the internal harness.
    3. Replace the Input Speed Sensor in accordance with the service information.
    4. Inspect the internal tone ring for damaged or missing teeth.
    5. Reconnect all connectors.
    6. Clear DTCs and road test the vehicle under the conditions in which the original DTC set.

    Did the Input Speed Sensor DTC reset?

    Yes

    - Using the schematics as a guide, check the Transmission Control Module (TCM) pins, terminals, and connectors for corrosion, damage, or terminal push out. Pay particular attention to all power and ground circuits. If no problems are found, replace and program the TCM in accordance with the Service Information. Refer to **MODULE, TRANSMISSION CONTROL, REMOVAL** .
    - Perform the TRANSMISSION VERIFICATION TEST. Refer to **6F24 TRANSMISSION VERIFICATION TEST** .

    No

    - Test complete.
    - Perform the TRANSMISSION VERIFICATION TEST. Refer to **6F24 TRANSMISSION VERIFICATION TEST** .
9. **CHECK THE WIRING AND CONNECTORS**
    1. The conditions necessary to set this DTC are not present at this time.
    2. Use the Freeze Frame Data to help duplicate the conditions in which the DTC originally set. Pay particular attention to the DTC set conditions, such as, VSS, MAP, ECT, and Load
    3. Using the schematics as a guide, visually inspect the related wiring harness. Look for any chafed, pierced, pinched, or partially broken wires.

4. Visually inspect the related wiring harness connectors. Look for broken, bent, pushed out, or corroded terminals.
5. Wiggle the wiring and connectors while checking for any possible open or shorted circuits.
6. Check for any Service Information Tune-ups or Technical Service Bulletins that may apply.

   Were there any problems found?

   Yes

   - Repair as necessary.
   - Perform the TRANSMISSION VERIFICATION TEST. Refer to **6F24 TRANSMISSION VERIFICATION TEST** .

   No

   - Test Complete.

P0720-00-OUTPUT SHAFT SPEED SENSOR CIRCUIT

For a complete wiring diagram, **refer to appropriate SYSTEM WIRING DIAGRAMS article** .

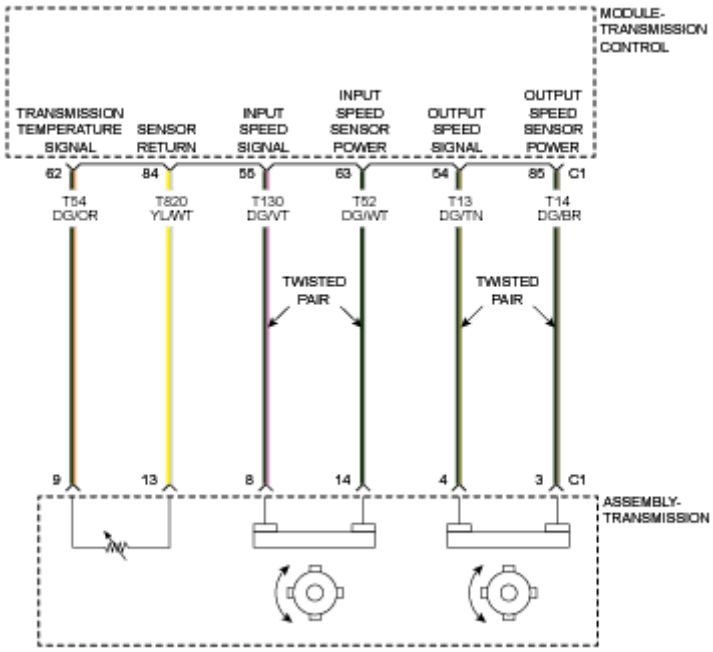

Fig. 9: Transmission Fluid Temperature & Speed Sensors Circuit Diagram
Courtesy of CHRYSLER GROUP, LLC

THEORY OF OPERATION

This is where you put the Theory of Operation.

WHEN MONITORED

Battery supply voltage is greater than 9 volts.

No output speed sensor circuit failures (electrical or rationality).

SET CONDITION

The failure is detected if the measured voltage of the output speed sensor circuit is between 0.1 of a volt and less than 0.2 of a volt for 2 seconds.

POSSIBLE CAUSES

Possible Causes
(T13) OUTPUT SPEED SIGNAL CIRCUIT OPEN
(T14) OUTPUT SPEED SENSOR POWER CIRCUIT OPEN
(T13) OUTPUT SPEED SIGNAL CIRCUIT SHORTED TO GROUND
(T14) OUTPUT SPEED SENSOR POWER CIRCUIT SHORTED TO GROUND
(T13) OUTPUT SPEED SENSOR SIGNAL CIRCUIT FOR A SHORT TO ANOTHER CIRCUIT
OUTPUT SPEED SENSOR
TRANSMISSION CONTROL MODULE (TCM)

Always perform the Pre-Diagnostic Troubleshooting procedure before proceeding. Refer to 6F24 PRE-DIAGNOSTIC TROUBLESHOOTING PROCEDURE .

DIAGNOSTIC TEST

1. **CHECK IF THE DTC IS CURRENT**
    1. Using the scan tool, read TCM DTCs.
    2. Record the Environmental Data and any DTCs.
    3. Clear DTCs.

4. Using the recorded Environmental Data, along with the When Monitored and Set Conditions above, operate the vehicle in the conditions that set the DTC.

   NOTE: It may be necessary to road test the vehicle to duplicate the original set conditions.

5. Read TCM DTCs.

   Did the DTC reset?

   Yes

   - Go To 2

   No

   - Go To 9

2. **CHECK THE (T14) OUTPUT SPEED SENSOR POWER SUPPLY CIRCUIT**
   1. Turn the ignition off to the lock position.
   2. Disconnect the Transmission harness connector.
   3. Ignition on, engine not running.
   4. Measure the voltage of the (T14) Output Speed Sensor Power Supply circuit on the appropriate terminal of the Transmission harness connector.

      Is the voltage 7.61 volts (± 0.65 of a volt)?

      Yes

      - Go To 5

      No

      - Go To 3

3. **CHECK THE (T14) OUTPUT SPEED SENSOR POWER SUPPLY CIRCUIT FOR AN OPEN**
   1. Turn the ignition off to the lock position.

2. Disconnect the TCM C1 harness connector.
3. Measure the resistance of the (T14) Output Speed Sensor Power circuit between the TCM C1 harness connector and the Transmission harness connector.

   Is the resistance below 5.0 Ohms?

   Yes

   - Go To 4

   No

   - Repair the (T14) Output Speed Sensor Power Supply circuit for an open.
   - Perform the TRANSMISSION VERIFICATION TEST. Refer to **6F24 TRANSMISSION VERIFICATION TEST** .

4. **CHECK THE (T14) OUTPUT SPEED SENSOR POWER SUPPLY CIRCUIT FOR A SHORT TO GROUND**
   1. Measure the resistance between ground and the (T14) Output Speed Sensor Power Supply Signal circuit.

      Is the resistance below 100k Ohms?

      Yes

      - Repair the (T14) Output Speed Sensor Power Supply circuit for a short to ground.
      - Perform the TRANSMISSION VERIFICATION TEST. Refer to **6F24 TRANSMISSION VERIFICATION TEST** .

      No

      - Using the schematics as a guide, check the Transmission Control Module (TCM) pins, terminals, and connectors for corrosion, damage, or terminal push out. Pay particular attention to all power and ground circuits. If no problems are found, replace and program the TCM in accordance with the Service Information. Refer to **MODULE, TRANSMISSION CONTROL, REMOVAL** .

- Perform the TRANSMISSION VERIFICATION TEST. Refer to **6F24 TRANSMISSION VERIFICATION TEST** .

5. **CHECK THE (T13) OUTPUT SPEED SENSOR SIGNAL CIRCUIT FOR AN OPEN**
   1. Disconnect the TCM C1 harness connector.
   2. Measure the resistance of the (T13) Output Speed Sensor Signal circuit between the TCM C1 harness connector and the Transmission harness connector.

      Is the resistance below 5.0 Ohms?

      Yes

      - Go To 6

      No

      - Repair the (T13) Output Speed Sensor Signal circuit for an open.
      - Perform the TRANSMISSION VERIFICATION TEST. Refer to **6F24 TRANSMISSION VERIFICATION TEST** .

6. **CHECK THE (T13) OUTPUT SPEED SENSOR SIGNAL CIRCUIT FOR A SHORT TO GROUND**
   1. Measure the resistance between ground and the (T13) Output Speed Sensor Signal circuit.

      Is the resistance below 100k Ohms?

      Yes

      - Repair the (T13) Output Speed Sensor Signal circuit for a short to ground.
      - Perform the TRANSMISSION VERIFICATION TEST. Refer to **6F24 TRANSMISSION VERIFICATION TEST** .

      No

      - Go To 7

7. **CHECK THE (T13) OUTPUT SPEED SENSOR SIGNAL CIRCUIT FOR A SHORT TO ANOTHER CIRCUIT**

1. Measure the resistance between the (T13) Output Speed Sensor Signal circuit and all other circuits in the TCM C1 harness connector.

   Is the resistance below 100k Ohms between the (T13) Output Speed Sensor Signal circuit and any other circuit(s) in the TCM C1 harness connector?

   Yes

   - Repair the (T13) Output Speed Sensor Signal circuit for a short to another circuit(s).
   - Perform the TRANSMISSION VERIFICATION TEST. Refer to **6F24 TRANSMISSION VERIFICATION TEST** .

   No

   - Go To 8

8. **REPLACE THE OUTPUT SPEED SENSOR**
   1. Turn the ignition off to the lock position.
   2. Remove the transmission side cover and inspect the internal harness.
   3. Replace the Output Speed Sensor in accordance with the service information.
   4. Inspect the internal tone ring for damaged or missing teeth.
   5. Reconnect all connectors.
   6. Clear DTCs and road test the vehicle under the conditions in which the original DTC set.

   Did the Output Speed Sensor DTC reset?

   Yes

   - Using the schematics as a guide, check the Transmission Control Module (TCM) pins, terminals, and connectors for corrosion, damage, or terminal push out. Pay particular attention to all power and ground circuits. If no problems are found, replace and program the TCM in accordance with the Service Information. Refer to **MODULE, TRANSMISSION CONTROL, REMOVAL** .
   - Perform the TRANSMISSION VERIFICATION TEST. Refer to

6F24 TRANSMISSION VERIFICATION TEST .

No

- Test complete.
- Perform the TRANSMISSION VERIFICATION TEST. Refer to **6F24 TRANSMISSION VERIFICATION TEST** .

9. **CHECK THE WIRING AND CONNECTORS**
   1. The conditions necessary to set this DTC are not present at this time.
   2. Use the Freeze Frame Data to help duplicate the conditions in which the DTC originally set. Pay particular attention to the DTC set conditions, such as, VSS, MAP, ECT, and Load
   3. Using the schematics as a guide, visually inspect the related wiring harness. Look for any chafed, pierced, pinched, or partially broken wires.
   4. Visually inspect the related wiring harness connectors. Look for broken, bent, pushed out, or corroded terminals.
   5. Wiggle the wiring and connectors while checking for any possible open or shorted circuits.
   6. Check for any Service Information Tune-ups or Technical Service Bulletins that may apply.

   Were there any problems found?

   Yes

   - Repair as necessary.
   - Perform the TRANSMISSION VERIFICATION TEST. Refer to **6F24 TRANSMISSION VERIFICATION TEST** .

   No

   - Test Complete.

P0721-00-OUTPUT SHAFT SPEED SENSOR CIRCUIT PERFORMANCE

For a complete wiring diagram, **refer to appropriate SYSTEM WIRING DIAGRAMS article** .

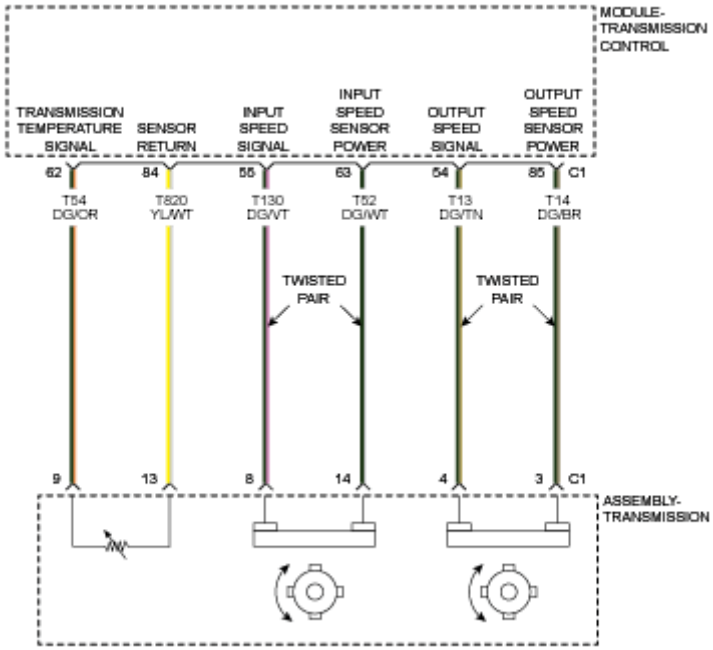

Fig. 10: Transmission Fluid Temperature & Speed Sensors Circuit Diagram
Courtesy of CHRYSLER GROUP, LLC

THEORY OF OPERATION

This is where you put the Theory of Operation.

WHEN MONITORED

Battery supply voltage is greater than or equal to 9 volts.

Driving Conditions for stuck failure:

Input speed is equal to 0 RPM.

Engine speed is greater than 400 RPM.

Shift lever position is in Drive.

Vehicle speed received from the BSM is greater than or equal to 50 km/h (31 mph).

SET CONDITION

The failure is detected if the ratio of the calculated vehicle speed based on the measured output speed sensor signal and the vehicle speed received from the

Brake System Module (BSM) via CAN is greater than or equal to 1.5 or less than or equal to 0.5 for 5 seconds.

POSSIBLE CAUSES

Possible Causes
(T13) OUTPUT SPEED SENSOR SIGNAL CIRCUIT OPEN
(T14) OUTPUT SPEED SENSOR POWER CIRCUIT OPEN
(T13) OUTPUT SPEED SENSOR SIGNAL CIRCUIT SHORTED TO GROUND
(T13) OUTPUT SPEED SENSOR SIGNAL CIRCUIT SHORTED TO VOLTAGE
(T14) OUTPUT SPEED SENSOR POWER CIRCUIT SHORTED TO VOLTAGE
OUTPUT SPEED SENSOR
TRANSMISSION CONTROL MODULE (TCM)

Always perform the Pre-Diagnostic Troubleshooting procedure before proceeding. Refer to 6F24 PRE-DIAGNOSTIC TROUBLESHOOTING PROCEDURE .

DIAGNOSTIC TEST

1. **CHECK IF THE DTC IS CURRENT**
    1. Using the scan tool, read TCM DTCs.
    2. Record the Environmental Data and any DTCs.
    3. Clear DTCs.
    4. Using the recorded Environmental Data, along with the When Monitored and Set Conditions above, operate the vehicle in the conditions that set the DTC.

    NOTE: It may be necessary to road test the vehicle to duplicate the original set conditions.

    5. Read TCM DTCs.

    Did the DTC reset?

    Yes

- Go To 2

No

- Go To 9

2. **CHECK THE (T14) OUTPUT SPEED SENSOR POWER SUPPLY CIRCUIT**
   1. Turn the ignition off to the lock position.
   2. Disconnect the Transmission harness connector.
   3. Ignition on, engine not running.
   4. Measure the voltage of the (T14) Output Speed Sensor Power Supply circuit on the appropriate terminal of the Transmission harness connector.

   Is the voltage 7.61 volts (± 0.65 of a volt)?

   Yes

   - Go To 5

   No

   - Go To 3

3. **CHECK THE (T14) OUTPUT SPEED SENSOR POWER SUPPLY CIRCUIT FOR AN OPEN**
   1. Turn the ignition off to the lock position.
   2. Disconnect the TCM C1 harness connector.
   3. Measure the resistance of the (T14) Output Speed Sensor Power Supply circuit between the TCM C1 harness connector and the Transmission harness connector.

   Is the resistance below 5.0 Ohms?

   Yes

   - Go To 4

   No

- Repair the (T14) Output Speed Sensor Power Supply circuit for an open.
- Perform the TRANSMISSION VERIFICATION TEST. Refer to **6F24 TRANSMISSION VERIFICATION TEST** .

4. **CHECK THE (T14) OUTPUT SPEED SENSOR POWER SUPPLY CIRCUIT FOR A SHORT TO GROUND**
   1. Measure the resistance between ground and the (T14) Output Speed Sensor Power Supply Signal circuit.

      Is the resistance below 100k Ohms?

      Yes

      - Repair the (T14) Output Speed Sensor Power Supply circuit for a short to ground.
      - Perform the TRANSMISSION VERIFICATION TEST. Refer to **6F24 TRANSMISSION VERIFICATION TEST** .

      No

      - Using the schematics as a guide, check the Transmission Control Module (TCM) pins, terminals, and connectors for corrosion, damage, or terminal push out. Pay particular attention to all power and ground circuits. If no problems are found, replace and program the TCM in accordance with the Service Information. Refer to **MODULE, TRANSMISSION CONTROL, REMOVAL** .
      - Perform the TRANSMISSION VERIFICATION TEST. Refer to **6F24 TRANSMISSION VERIFICATION TEST** .

5. **CHECK THE (T13) OUTPUT SPEED SENSOR SIGNAL CIRCUIT FOR AN OPEN**
   1. Disconnect the TCM C1 harness connector.
   2. Measure the resistance of the (T13) Output Speed Sensor Signal circuit between the TCM C1 harness connector and the Transmission harness connector.

      Is the resistance below 5.0 Ohms?

      Yes

- Go To 6

No

- Repair the (T13) Output Speed Sensor Signal circuit for an open.
- Perform the TRANSMISSION VERIFICATION TEST. Refer to **6F24 TRANSMISSION VERIFICATION TEST** .

6. **CHECK THE (T13) OUTPUT SPEED SENSOR SIGNAL CIRCUIT FOR A SHORT TO GROUND**
   1. Measure the resistance between ground and the (T13) Output Speed Sensor Signal circuit.

      Is the resistance below 100k Ohms?

      Yes

      - Repair the (T13) Output Speed Sensor Signal circuit for a short to ground.
      - Perform the TRANSMISSION VERIFICATION TEST. Refer to **6F24 TRANSMISSION VERIFICATION TEST** .

      No

      - Go To 7

7. **CHECK THE (T13) OUTPUT SPEED SENSOR SIGNAL CIRCUIT FOR A SHORT TO ANOTHER CIRCUIT**
   1. Measure the resistance between the (T13) Output Speed Sensor Signal circuit and all other circuits in the TCM C1 harness connector.

      Is the resistance below 100k Ohms between the (T13) Output Speed Sensor Signal circuit and any other circuit(s) in the TCM C1 harness connector?

      Yes

      - Repair the (T13) Output Speed Sensor Signal circuit for a short to another circuit(s).
      - Perform the TRANSMISSION VERIFICATION TEST. Refer to **6F24 TRANSMISSION VERIFICATION TEST** .

No

- Go To 8

8. **REPLACE THE OUTPUT SPEED SENSOR**
   1. Turn the ignition off to the lock position.
   2. Remove the transmission side cover and inspect the internal harness.
   3. Replace the Output Speed Sensor in accordance with the service information.
   4. Inspect the internal tone ring for damaged or missing teeth.
   5. Reconnect all connectors.
   6. Clear DTCs and road test the vehicle under the conditions in which the original DTC set.

   Did the Output Speed Sensor DTC reset?

   Yes

   - Using the schematics as a guide, check the Transmission Control Module (TCM) pins, terminals, and connectors for corrosion, damage, or terminal push out. Pay particular attention to all power and ground circuits. If no problems are found, replace and program the TCM in accordance with the Service Information. Refer to **MODULE, TRANSMISSION CONTROL, REMOVAL** .
   - Perform the TRANSMISSION VERIFICATION TEST. Refer to **6F24 TRANSMISSION VERIFICATION TEST** .

   No

   - Test complete.
   - Perform the TRANSMISSION VERIFICATION TEST. Refer to **6F24 TRANSMISSION VERIFICATION TEST** .

9. **CHECK THE WIRING AND CONNECTORS**
   1. The conditions necessary to set this DTC are not present at this time.
   2. Use the Freeze Frame Data to help duplicate the conditions in which the DTC originally set. Pay particular attention to the DTC set conditions, such as, VSS, MAP, ECT, and Load
   3. Using the schematics as a guide, visually inspect the related wiring

harness. Look for any chafed, pierced, pinched, or partially broken wires.

4. Visually inspect the related wiring harness connectors. Look for broken, bent, pushed out, or corroded terminals.
5. Wiggle the wiring and connectors while checking for any possible open or shorted circuits.
6. Check for any Service Information Tune-ups or Technical Service Bulletins that may apply.

Were there any problems found?

Yes

- Repair as necessary.
- Perform the TRANSMISSION VERIFICATION TEST. Refer to **6F24 TRANSMISSION VERIFICATION TEST** .

No

- Test Complete.

P0729-00-GEAR 6 SHIFT INCORRECT RATIO

For a complete wiring diagram, **refer to appropriate SYSTEM WIRING DIAGRAMS article** .

THEORY OF OPERATION

The purpose of this diagnostic is to check the rationality between the input speed sensor and the output speed sensor. Transmission input speed should be synchronized with output speed. The calculated input speed is determined by multiplying the output speed sensor signal and the gear ratio for each gear. The malfunction conditions which can cause a difference between the calculated and measured input speeds include input speed sensor failures, output speed sensor failures, solenoid failures, hydraulic system failures, gear failures, and clutch failures.

WHEN MONITORED

Engine speed is greater than or equal to 400 RPM.

Transmission fluid temperature is greater than or equal to -10 °C (14 °F)

Input speed is greater than or equal to 0 RPM.

Time passed from gear shift is greater than or equal to 1 second.

Solenoid supply voltage is greater than or equal to 9 volts.

Driving Conditions:

Output speed is greater than or equal to 200 RPM.

Sixth gear is engaged.

SET CONDITION

The failure is detected if the difference between the measured input speed and the calculated input speed is greater than or equal to 200 RPM for 1 second time or for 4 occurrences.

POSSIBLE CAUSES

Possible Causes
INTERNAL TRANSMISSION PROBLEM TRANSMISSION CONTROL MODULE (TCM)

Always perform the Pre-Diagnostic Troubleshooting procedure before proceeding. Refer to 6F24 PRE-DIAGNOSTIC TROUBLESHOOTING PROCEDURE .

DIAGNOSTIC TEST

CHECK FOR INTERNAL TRANSMISSION PROBLEM

NOTE: Transmission gear ratio errors can be caused by intermittent speed sensor(s) errors. If there are any speed sensor DTCs set, perform the speed sensor diagnostic test before diagnosing any gear ratio error DTC. Review the event data and the When Monitored and Set Conditions for the DTC and attempt to duplicate the condition the DTC set.

1. Determine if there are any Transmission mechanical problems present.
2. Remove the Transmission Oil Pan and inspect for excessive debris or a plugged Transmission Oil Filter.
3. Inspect valve body for foreign material.

   Is there any Transmission mechanical problems present?

   Yes

   - Repair as necessary in accordance with the Service Information.
   - Perform the TRANSMISSION VERIFICATION TEST. Refer to **6F24 TRANSMISSION VERIFICATION TEST** .

   No

   - Using the schematics as a guide, check the Transmission Control Module (TCM) pins, terminals, and connectors for corrosion, damage, or terminal push out. Pay particular attention to all power and ground circuits. If no problems are found, replace and program the TCM in accordance with the Service Information. Refer to **MODULE, TRANSMISSION CONTROL, REMOVAL** .
   - Perform the TRANSMISSION VERIFICATION TEST. Refer to **6F24 TRANSMISSION VERIFICATION TEST** .

P0731-00-GEAR 1 SHIFT INCORRECT RATIO

For a complete wiring diagram, **refer to appropriate SYSTEM WIRING DIAGRAMS article** .

THEORY OF OPERATION

The purpose of this diagnostic is to check the rationality between the input speed sensor and the output speed sensor. Transmission input speed should be synchronized with output speed. The calculated input speed is determined by multiplying the output speed sensor signal and the gear ratio for each gear. The malfunction conditions which can cause a difference between the calculated and measured input speeds include input speed sensor failures, output speed sensor failures, solenoid failures, hydraulic system failures, gear failures, and clutch failures.

WHEN MONITORED

Engine speed is greater than or equal to 400 RPM.

Transmission fluid temperature is greater than or equal to -10 °C (14 °F)

Input speed is greater than or equal to 0 RPM.

Time passed from gear shift is greater than or equal to 1 second.

Solenoid supply voltage is greater than or equal to 9 volts.

Driving Conditions:

Output speed is greater than or equal to 150 RPM.

First gear is engaged.

SET CONDITION

If the measured input speed is 200 RPM greater than or equal to the calculated input speed.

POSSIBLE CAUSES

Possible Causes
INTERNAL TRANSMISSION PROBLEM TRANSMISSION CONTROL MODULE (TCM)

Always perform the Pre-Diagnostic Troubleshooting procedure before proceeding. Refer to 6F24 PRE-DIAGNOSTIC TROUBLESHOOTING PROCEDURE .

DIAGNOSTIC TEST

CHECK FOR INTERNAL TRANSMISSION PROBLEM

NOTE: Transmission gear ratio errors can be caused by intermittent speed sensor(s) errors. If there are any speed sensor DTCs set, perform the speed sensor diagnostic test before diagnosing any gear ratio error DTC. Review the event data and the When Monitored and Set

Conditions for the DTC and attempt to duplicate the condition the DTC set.

1. Determine if there are any Transmission mechanical problems present.
2. Remove the Transmission Oil Pan and inspect for excessive debris or a plugged Transmission Oil Filter.
3. Inspect valve body for foreign material.

Is there any Transmission mechanical problems present?

Yes

- Repair as necessary in accordance with the Service Information.
- Perform the TRANSMISSION VERIFICATION TEST. Refer to **6F24 TRANSMISSION VERIFICATION TEST** .

No

- Using the schematics as a guide, check the Transmission Control Module (TCM) pins, terminals, and connectors for corrosion, damage, or terminal push out. Pay particular attention to all power and ground circuits. If no problems are found, replace and program the TCM in accordance with the Service Information. Refer to **MODULE, TRANSMISSION CONTROL, REMOVAL** .
- Perform the TRANSMISSION VERIFICATION TEST. Refer to **6F24 TRANSMISSION VERIFICATION TEST** .

P0732-00-GEAR 2 SHIFT INCORRECT RATIO

For a complete wiring diagram, **refer to appropriate SYSTEM WIRING DIAGRAMS article** .

THEORY OF OPERATION

The purpose of this diagnostic is to check the rationality between the input speed sensor and the output speed sensor. Transmission input speed should be synchronized with output speed. The calculated input speed is determined by multiplying the output speed sensor signal and the gear ratio for each gear. The malfunction conditions which can cause a difference between the calculated and measured input speeds include input speed sensor failures, output speed sensor

failures, solenoid failures, hydraulic system failures, gear failures, and clutch failures.

WHEN MONITORED

Engine speed is greater than or equal to 400 RPM.

Transmission fluid temperature is greater than or equal to -10 °C (14 °F)

Input speed is greater than or equal to 0 RPM.

Time passed from gear shift is greater than or equal to 1 second.

Solenoid supply voltage is greater than or equal to 9 volts.

Driving Conditions:

Output speed is greater than or equal to 200 RPM.

Second gear is engaged.

SET CONDITION

The failure is detected if the difference between the measured input speed and the calculated input speed is greater than or equal to 200 RPM for 1 second time or for 4 occurrences.

POSSIBLE CAUSES

Possible Causes
INTERNAL TRANSMISSION PROBLEM TRANSMISSION CONTROL MODULE (TCM)

Always perform the Pre-Diagnostic Troubleshooting procedure before proceeding. Refer to 6F24 PRE-DIAGNOSTIC TROUBLESHOOTING PROCEDURE .

DIAGNOSTIC TEST

CHECK FOR INTERNAL TRANSMISSION PROBLEM

NOTE: Transmission gear ratio errors can be caused by

intermittent speed sensor(s) errors. If there are any speed sensor DTCs set, perform the speed sensor diagnostic test before diagnosing any gear ratio error DTC. Review the event data and the When Monitored and Set Conditions for the DTC and attempt to duplicate the condition the DTC set.

1. Determine if there are any Transmission mechanical problems present.
2. Remove the Transmission Oil Pan and inspect for excessive debris or a plugged Transmission Oil Filter.
3. Inspect valve body for foreign material.

Is there any Transmission mechanical problems present?

Yes

- Repair as necessary in accordance with the Service Information.
- Perform the TRANSMISSION VERIFICATION TEST. Refer to **6F24 TRANSMISSION VERIFICATION TEST** .

No

- Using the schematics as a guide, check the Transmission Control Module (TCM) pins, terminals, and connectors for corrosion, damage, or terminal push out. Pay particular attention to all power and ground circuits. If no problems are found, replace and program the TCM in accordance with the Service Information. Refer to **MODULE, TRANSMISSION CONTROL, REMOVAL** .
- Perform the TRANSMISSION VERIFICATION TEST. Refer to **6F24 TRANSMISSION VERIFICATION TEST** .

P0733-00-GEAR 3 SHIFT INCORRECT RATIO

For a complete wiring diagram, **refer to appropriate SYSTEM WIRING DIAGRAMS article** .

THEORY OF OPERATION

The purpose of this diagnostic is to check the rationality between the input speed sensor and the output speed sensor. Transmission input speed should be

synchronized with output speed. The calculated input speed is determined by multiplying the output speed sensor signal and the gear ratio for each gear. The malfunction conditions which can cause a difference between the calculated and measured input speeds include input speed sensor failures, output speed sensor failures, solenoid failures, hydraulic system failures, gear failures, and clutch failures.

WHEN MONITORED

Engine speed is greater than or equal to 400 RPM.

Transmission fluid temperature is greater than or equal to -10 °C (14 °F)

Input speed is greater than or equal to 0 RPM.

Time passed from gear shift is greater than or equal to 1 second.

Solenoid supply voltage is greater than or equal to 9 volts.

Driving Conditions:

Output speed is greater than or equal to 200 RPM.

Third gear is engaged.

SET CONDITION

The failure is detected if the difference between the measured input speed and the calculated input speed is greater than or equal to 200 RPM for 1 second time or for 4 occurrences.

POSSIBLE CAUSES

Possible Causes
INTERNAL TRANSMISSION PROBLEM TRANSMISSION CONTROL MODULE (TCM)

Always perform the Pre-Diagnostic Troubleshooting procedure before proceeding. Refer to 6F24 PRE-DIAGNOSTIC TROUBLESHOOTING PROCEDURE .

DIAGNOSTIC TEST

CHECK FOR INTERNAL TRANSMISSION PROBLEM

NOTE: Transmission gear ratio errors can be caused by intermittent speed sensor(s) errors. If there are any speed sensor DTCs set, perform the speed sensor diagnostic test before diagnosing any gear ratio error DTC. Review the event data and the When Monitored and Set Conditions for the DTC and attempt to duplicate the condition the DTC set.

1. Determine if there are any Transmission mechanical problems present.
2. Remove the Transmission Oil Pan and inspect for excessive debris or a plugged Transmission Oil Filter.
3. Inspect valve body for foreign material.

Is there any Transmission mechanical problems present?

Yes

- Repair as necessary in accordance with the Service Information.
- Perform the TRANSMISSION VERIFICATION TEST. Refer to **6F24 TRANSMISSION VERIFICATION TEST** .

No

- Using the schematics as a guide, check the Transmission Control Module (TCM) pins, terminals, and connectors for corrosion, damage, or terminal push out. Pay particular attention to all power and ground circuits. If no problems are found, replace and program the TCM in accordance with the Service Information. Refer to **MODULE, TRANSMISSION CONTROL, REMOVAL** .
- Perform the TRANSMISSION VERIFICATION TEST. Refer to **6F24 TRANSMISSION VERIFICATION TEST** .

P0734-00-GEAR 4 SHIFT INCORRECT RATIO

For a complete wiring diagram, **refer to appropriate SYSTEM WIRING DIAGRAMS article** .

THEORY OF OPERATION

The purpose of this diagnostic is to check the rationality between the input speed sensor and the output speed sensor. Transmission input speed should be synchronized with output speed. The calculated input speed is determined by multiplying the output speed sensor signal and the gear ratio for each gear. The malfunction conditions which can cause a difference between the calculated and measured input speeds include input speed sensor failures, output speed sensor failures, solenoid failures, hydraulic system failures, gear failures, and clutch failures.

WHEN MONITORED

Engine speed is greater than or equal to 400 RPM.

Transmission fluid temperature is greater than or equal to -10 °C (14 °F)

Input speed is greater than or equal to 0 RPM.

Time passed from gear shift is greater than or equal to 1 second.

Solenoid supply voltage is greater than or equal to 9 volts.

Driving Conditions:

Output speed is greater than or equal to 200 RPM.

Fourth gear is engaged.

SET CONDITION

The failure is detected if the difference between the measured input speed and the calculated input speed is greater than or equal to 200 RPM for 1 second time or for 4 occurrences.

POSSIBLE CAUSES

Possible Causes
INTERNAL TRANSMISSION PROBLEM TRANSMISSION CONTROL MODULE (TCM)

Always perform the Pre-Diagnostic Troubleshooting procedure before proceeding. Refer to 6F24 PRE-DIAGNOSTIC TROUBLESHOOTING PROCEDURE .

DIAGNOSTIC TEST

CHECK FOR INTERNAL TRANSMISSION PROBLEM

NOTE: Transmission gear ratio errors can be caused by intermittent speed sensor(s) errors. If there are any speed sensor DTCs set, perform the speed sensor diagnostic test before diagnosing any gear ratio error DTC. Review the event data and the When Monitored and Set Conditions for the DTC and attempt to duplicate the condition the DTC set.

1. Determine if there are any Transmission mechanical problems present.
2. Remove the Transmission Oil Pan and inspect for excessive debris or a plugged Transmission Oil Filter.
3. Inspect valve body for foreign material.

Is there any Transmission mechanical problems present?

Yes

- Repair as necessary in accordance with the Service Information.
- Perform the TRANSMISSION VERIFICATION TEST. Refer to **6F24 TRANSMISSION VERIFICATION TEST** .

No

- Using the schematics as a guide, check the Transmission Control Module (TCM) pins, terminals, and connectors for corrosion, damage, or terminal push out. Pay particular attention to all power and ground circuits. If no problems are found, replace and program the TCM in accordance with the Service Information. Refer to **MODULE, TRANSMISSION CONTROL, REMOVAL** .
- Perform the TRANSMISSION VERIFICATION TEST. Refer to **6F24 TRANSMISSION VERIFICATION TEST** .

P0735-00-GEAR 5 SHIFT INCORRECT RATIO

For a complete wiring diagram, **refer to appropriate SYSTEM WIRING DIAGRAMS article** .

THEORY OF OPERATION

The purpose of this diagnostic is to check the rationality between the input speed sensor and the output speed sensor. Transmission input speed should be synchronized with output speed. The calculated input speed is determined by multiplying the output speed sensor signal and the gear ratio for each gear. The malfunction conditions which can cause a difference between the calculated and measured input speeds include input speed sensor failures, output speed sensor failures, solenoid failures, hydraulic system failures, gear failures, and clutch failures.

WHEN MONITORED

Engine speed is greater than or equal to 400 RPM.

Transmission fluid temperature is greater than or equal to -10 °C (14 °F)

Input speed is greater than or equal to 0 RPM.

Time passed from gear shift is greater than or equal to 1 second.

Solenoid supply voltage is greater than or equal to 9 volts.

Driving Conditions:

Output speed is greater than or equal to 200 RPM.

Fifth gear is engaged.

SET CONDITION

The failure is detected if the difference between the measured input speed and the calculated input speed is greater than or equal to 200 RPM for 1 second time or for 4 occurrences.

POSSIBLE CAUSES

Possible Causes
INTERNAL TRANSMISSION PROBLEM TRANSMISSION CONTROL MODULE (TCM)

Always perform the Pre-Diagnostic Troubleshooting procedure before

proceeding. Refer to 6F24 PRE-DIAGNOSTIC TROUBLESHOOTING PROCEDURE .

DIAGNOSTIC TEST

CHECK FOR INTERNAL TRANSMISSION PROBLEM

NOTE: Transmission gear ratio errors can be caused by intermittent speed sensor(s) errors. If there are any speed sensor DTCs set, perform the speed sensor diagnostic test before diagnosing any gear ratio error DTC. Review the event data and the When Monitored and Set Conditions for the DTC and attempt to duplicate the condition the DTC set.

1. Determine if there are any Transmission mechanical problems present.
2. Remove the Transmission Oil Pan and inspect for excessive debris or a plugged Transmission Oil Filter.
3. Inspect valve body for foreign material.

Is there any Transmission mechanical problems present?

Yes

- Repair as necessary in accordance with the Service Information.
- Perform the TRANSMISSION VERIFICATION TEST. Refer to **6F24 TRANSMISSION VERIFICATION TEST** .

No

- Using the schematics as a guide, check the Transmission Control Module (TCM) pins, terminals, and connectors for corrosion, damage, or terminal push out. Pay particular attention to all power and ground circuits. If no problems are found, replace and program the TCM in accordance with the Service Information. Refer to **MODULE, TRANSMISSION CONTROL, REMOVAL** .
- Perform the TRANSMISSION VERIFICATION TEST. Refer to **6F24 TRANSMISSION VERIFICATION TEST** .

P0741-00-TORQUE CONVERTER CLUTCH CIRCUIT PERFORMANCE-STUCK OFF

For a complete wiring diagram, **refer to appropriate SYSTEM WIRING DIAGRAMS article** .

THEORY OF OPERATION

The purpose of this diagnostic is to check the mechanical performance of the torque converter clutch (TCC). The TCC is a mechanical torque transfer device controlled by transmission fluid pressure to increase fuel economy through reducing frictional losses of the torque converter. The malfunction condition is detected if the torque converter clutch is stuck off. This failure may be caused by conditions including transmission fluid contamination or TCC mechanical failure.

WHEN MONITORED

No pressure control solenoid "A" failures (electrical or functionality).

No transmission range sensor failures (electrical or rationality).

No input speed sensor circuit failures (electrical or rationality).

Engine speed signal via CAN is not SNA (Signal Not Available).

Accelerator pedal position signal via CAN is not SNA (Signal Not Available).

TCM operates torque converter clutch lock up control.

Target slip is less than 10 RPM.

Line pressure is greater than 400 kPa (58 psi).

SET CONDITION

The failure is detected if the control duty cycle of the torque converter clutch is greater than 98 percent and the clutch slip amount is greater than 100 RPM for 4 seconds.

POSSIBLE CAUSES

Possible Causes
TCC HYDRAULIC CONTROL CIRCUIT LOCKUP CONTROL VALVE STICKING IN ITS BORE

TORQUE CONVERTER
TCC SOLENOID
INTERNAL TRANSMISSION
VALVE BODY
TRANSMISSION CONTROL MODULE (TCM)

Always perform the Pre-Diagnostic Troubleshooting procedure before proceeding. Refer to 6F24 PRE-DIAGNOSTIC TROUBLESHOOTING PROCEDURE .

DIAGNOSTIC TEST

1. **CHECK FOR RELATED DTCS**
   1. Ignition on, engine off.
   2. Using the scan tool, check DTCs.

      Are there any Speed Sensor and/or TCC DTCs present?

      Yes

      - Refer to **DIAGNOSTIC CODE INDEX** and perform the appropriate diagnostic procedure.

      No

      - Go To 2
2. **CHECK THE TORQUE CONVERTER CLUTCH PERFORMANCE**
   1. Operate the vehicle until the transmission sump temperature is to greater than 65° C (150° F).
   2. Using the shifter lever, select third gear.
   3. Accelerate the vehicle to third gear and hold.
   4. With the scan tool, verify the TCC status is reading "SLIP".
   5. Monitor TCC Desired Slip and TCC Actual Slip.
   6. Operate the vehicle at 49 kp/h (30 mph) while maintaining third gear.
   7. Lightly depress the accelerator and hold the throttle position steady between 40 and 50%.
   8. Slowly accelerate vehicle using steady throttle without causing TCC

Status to read "OPEN".

NOTE: If at any time during the above test the TCC Status changes from SLIP to OPEN, or the vehicle downshifts to a lower gear, the test is invalid and must be performed again.

9. Compare TCC Actual Slip and TCC Desired Slip during steady throttle acceleration with TCC Status continually reading "SLIP".

   Does TCC Actual Slip exceed TCC Desired Slip by more than 60 RPM while accelerating at a steady throttle and staying in SLIP mode?

   Yes

   - Inspect transmission fluid for water contamination.
   - Inspect internal transmission. Pay particular attention to the components related to the TCC such as possible missing Input Shaft Seal Ring, Lockup Control Valve sticking in its bore, and/or a leaking TCC Solenoid.
   - If no internal transmission issues found, replace the Torque Converter.
   - Perform the TRANSMISSION VERIFICATION TEST. Refer to **6F24 TRANSMISSION VERIFICATION TEST** .

   No

   - Go To 3

3. **TRANSMISSION CONTROL MODULE (TCM)**
   1. Using the schematics as a guide, check the Transmission Control Module (TCM) pins, terminals, and connectors for corrosion, damage, or terminal push out. Pay particular attention to all power and ground circuits. Check for Service Bulletins for any possible causes that may apply. If no problems are found, replace and program the TCM in accordance with the Service Information.
   2. Perform TCC slip test to verify repair.

NOTE: To set P0741 fault, TCM must encounter three

events where the TCM cannot control TCC Actual Slip to TCC Desired Slip in a single key cycle.

Does the DTC reset?

Yes

- Inspect transmission fluid for water contamination.
- Inspect internal transmission. Pay particular attention to the components related to the TCC such as possible missing Input Shaft Seal Ring, Lockup Control Valve sticking in its bore, and/or a leaking TCC Solenoid.
- If no internal transmission issues are found, replace the Torque Converter in accordance with the Service Information.
- Perform the TRANSMISSION VERIFICATION TEST. Refer to **6F24 TRANSMISSION VERIFICATION TEST** .

No

- Test complete.

P0750-00-SHIFT SOLENOID 1 CONTROL CIRCUIT - OPEN

For a complete wiring diagram, **refer to appropriate SYSTEM WIRING DIAGRAMS article** .

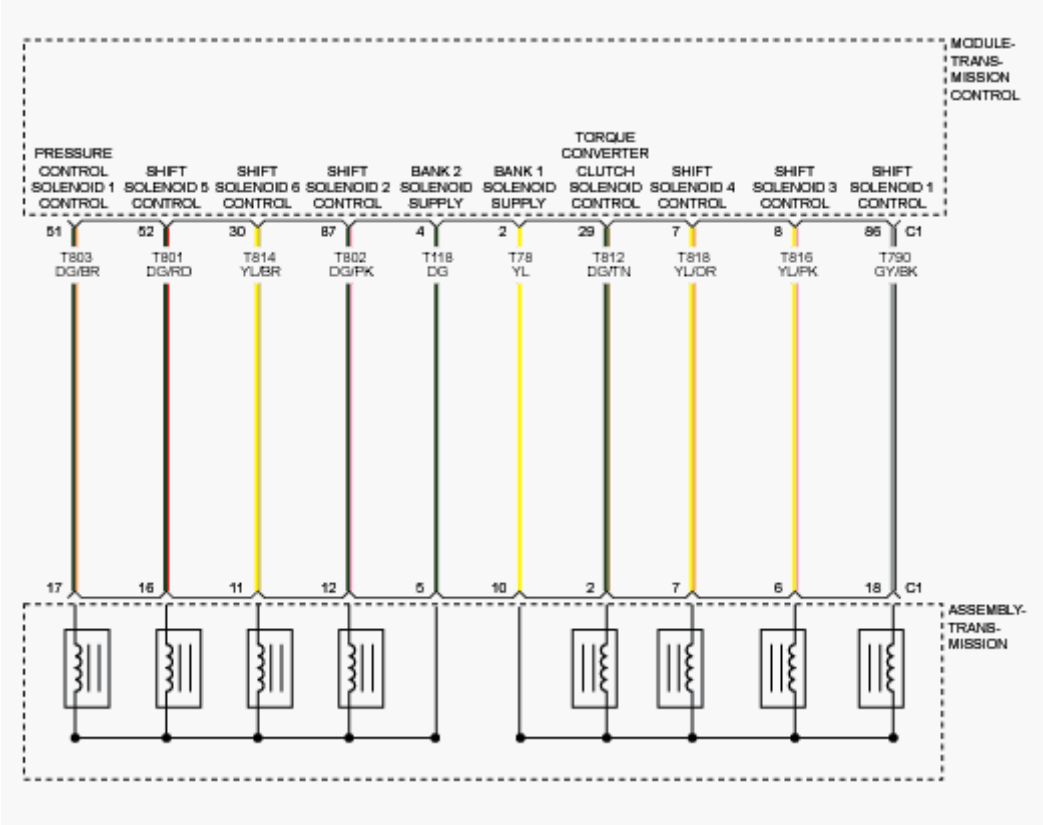

Fig. 11: Transmission Solenoids Circuit Diagram
Courtesy of CHRYSLER GROUP, LLC

THEORY OF OPERATION

The purpose of this diagnostic is to check the electrical performance of the on/off shift solenoid A (1) and B (2) circuits. Shift solenoid A (1) engages the Low, Reverse clutch when activated or the Over drive clutch when deactivated. Shift solenoid B (2) engages the 3rd , 5th , Reverse clutch when activated. The electrical failures that are detected include short to battery, short to ground, and open circuit. The power stage driver, which is located in the TCM, detects these electrical malfunctions.

WHEN MONITORED

Limp in condition is not present.

Time since last gear shift is greater than or equal to 300 ms.

TCM supply voltage for solenoid is between 9 and 16 volts.

Time since high side driver commanded on is greater than or equal to 300 ms.

Solenoid is commanded off (pulse width modulation duty cycle is 0%).

SET CONDITION

The failure is detected if measured voltage for solenoid output is between 1.3 volts and 4.7 volts for 0.32 of a second.

POSSIBLE CAUSES

Possible Causes
BANK 1 SOLENOID POWER SUPPLY CIRCUIT OPEN
(T790) SHIFT SOLENOID A (1) CONTROL CIRCUIT OPEN
SHIFT SOLENOID A (1)
TRANSMISSION CONTROL MODULE (TCM)

Always perform the Pre-Diagnostic Troubleshooting procedure before proceeding. Refer to 6F24 PRE-DIAGNOSTIC TROUBLESHOOTING PROCEDURE .

DIAGNOSTIC TEST

1. **CHECK IF DTC IS CURRENT**
    1. Using the scan tool, read TCM DTCs.
    2. Record the Environmental Data and any DTCs.
    3. Clear DTCs.
    4. Using the recorded Environmental Data, along with the When Monitored and Set Conditions above, operate the vehicle in the conditions that set the DTC.
    5. Read TCM DTCs.

    Did the DTC reset?

    Yes

    - Go To 2

    No

    - Go To 5
2. **CHECK THE (T78) BANK 1 SOLENOID POWER CIRCUIT FOR AN**

OPEN

1. Turn the ignition off to the lock position.
2. Disconnect the Transmission C1 harness connectors.
3. Disconnect the TCM C1 harness connector.
4. Measure the resistance of the (T78) Bank 1 Solenoid Control circuit between the Transmission C1 harness connector and the TCM C1 harness connector.

   Is the resistance below 5.0 Ohms?

   Yes

   - Go To 3

   No

   - Repair the (T78) Bank 1 Solenoid Control circuit for an open.
   - Perform TRANSMISSION VERIFICATION TEST. Refer to **6F24 TRANSMISSION VERIFICATION TEST** .

3. **CHECK THE (T790) SHIFT SOLENOID A (1) CONTROL CIRCUIT FOR AN OPEN**
   1. Measure the resistance of the (T790) Shift Solenoid A (1) Control circuit between the Transmission C1 harness connector and the TCM C1 harness connector.

      Is the resistance below 5.0 Ohms?

      Yes

      - Go To 4

      No

      - Repair the (T790) Shift Solenoid A (1) Control circuit for an open.
      - Perform TRANSMISSION VERIFICATION TEST. Refer to **6F24 TRANSMISSION VERIFICATION TEST** .

4. **CHECK THE SHIFT SOLENOID A (1)**
   1. Turn the ignition off to the lock position.

2. Measure the resistance of the Shift Solenoid A (1) between the appropriate terminals at the Transmission C1 harness connector.

   Is the resistance of the Shift Solenoid A (1) between 10 and 11 Ohms at 20° C (68° F)?

   Yes

   - Using the schematics as a guide, check the Transmission Control Module (TCM) pins, terminals, and connectors for corrosion, damage, or terminal push out. Pay particular attention to all power and ground circuits. If no problems are found, replace and program the TCM in accordance with the Service Information. Refer to **MODULE, TRANSMISSION CONTROL, REMOVAL** .
   - Perform TRANSMISSION VERIFICATION TEST. Refer to **6F24 TRANSMISSION VERIFICATION TEST** .

   No

   - Remove the transmission side cover and inspect the internal lead frame. If there are no problems found with the lead frame, replace the Shift Solenoid A (1) in accordance with the Service Information.
   - Perform TRANSMISSION VERIFICATION TEST. Refer to **6F24 TRANSMISSION VERIFICATION TEST** .

5. **CHECK WIRING AND CONNECTORS**
   1. The conditions necessary to set the DTC are not present at this time.
   2. Using the schematics as a guide, inspect the wiring and connectors specific to this circuit.
   3. Wiggle the wires while checking for shorted and open circuits.
   4. Check for any Service Bulletins that may apply.

   Were there any problems found?

   Yes

   - Repair as necessary.
   - Perform TRANSMISSION VERIFICATION TEST. Refer to **6F24**

TRANSMISSION VERIFICATION TEST .

No

- Test Complete.

P0755-00-SHIFT SOLENOID 2 CONTROL CIRCUIT - OPEN

For a complete wiring diagram, **refer to appropriate SYSTEM WIRING DIAGRAMS article** .

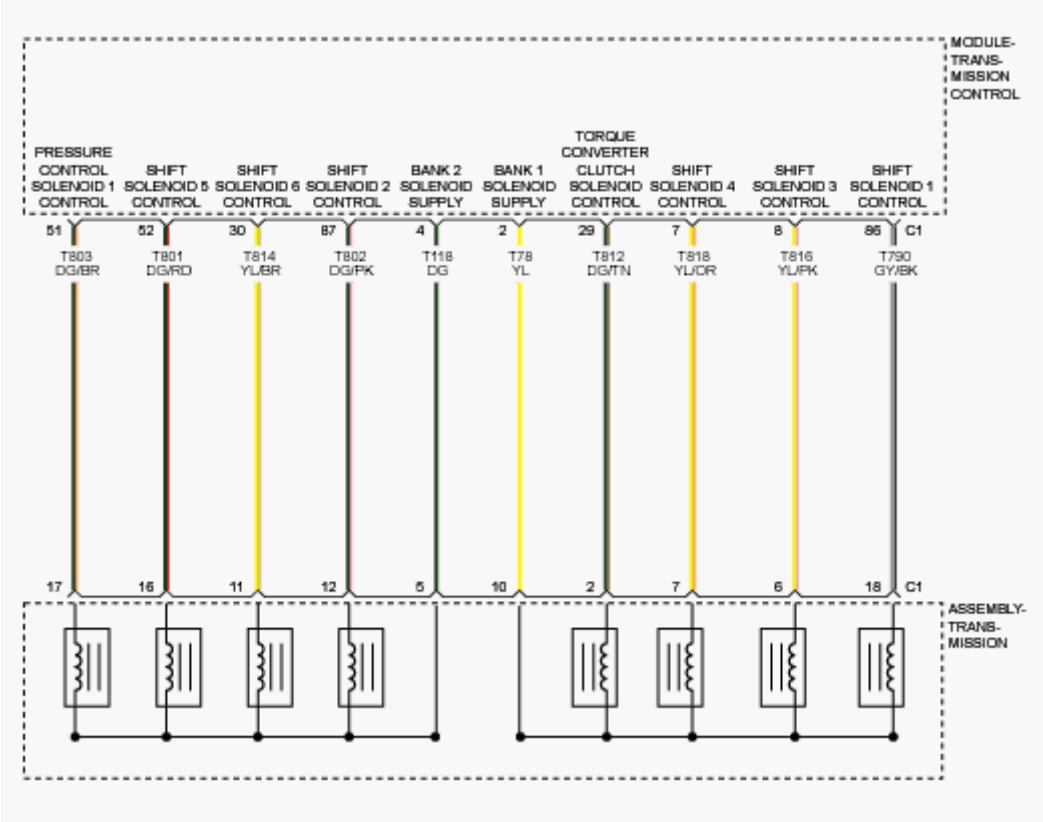

Fig. 12: Transmission Solenoids Circuit Diagram
Courtesy of CHRYSLER GROUP, LLC

THEORY OF OPERATION

The purpose of this diagnostic is to check the electrical performance of the on/off shift solenoid A (1) and B (2) circuits. Shift solenoid A (1) engages the Low, Reverse clutch when activated or the Over drive clutch when deactivated. Shift solenoid B (2) engages the 3rd , 5th , Reverse clutch when activated. The electrical failures that are detected include short to battery, short to ground, and open circuit. The power stage driver, which is located in the TCM, detects these

electrical malfunctions.

WHEN MONITORED

Limp in condition is not present.

Time since last gear shift is greater than or equal to 300 ms.

TCM supply voltage for solenoid is between 9 and 16 volts.

Time since high side driver commanded on is greater than or equal to 300 ms.

Solenoid is commanded off (pulse width modulation duty cycle is 0%).

SET CONDITION

The failure is detected if measured voltage for solenoid output is between 1.3 volts and 4.7 volts.

POSSIBLE CAUSES

Possible Causes
BANK 2 SOLENOID POWER SUPPLY CIRCUIT OPEN (T802) SHIFT SOLENOID B (2) CONTROL CIRCUIT OPEN SHIFT SOLENOID B (2) TRANSMISSION CONTROL MODULE (TCM)

Always perform the Pre-Diagnostic Troubleshooting procedure before proceeding. Refer to 6F24 PRE-DIAGNOSTIC TROUBLESHOOTING PROCEDURE .

DIAGNOSTIC TEST

1. **CHECK IF DTC IS CURRENT**
    1. Using the scan tool, read TCM DTCs.
    2. Record the Environmental Data and any DTCs.
    3. Clear DTCs.
    4. Using the recorded Environmental Data, along with the When Monitored and Set Conditions above, operate the vehicle in the conditions that set the DTC.
    5. Read TCM DTCs.

Did the DTC reset?

Yes

- Go To 2

No

- Go To 5

2. **CHECK THE (T118) BANK 2 SOLENOID POWER CIRCUIT FOR AN OPEN**
   1. Turn the ignition off to the lock position.
   2. Disconnect the Transmission C1 harness connectors.
   3. Disconnect the TCM C1 harness connector.
   4. Measure the resistance of the (T118) Bank 2 Solenoid Control circuit between the Transmission C1 harness connector and the TCM C1 harness connector.

   Is the resistance below 5.0 Ohms?

   Yes

   - Go To 3

   No

   - Repair the (T118) Bank 2 Solenoid B (2) Control circuit for an open.
   - Perform TRANSMISSION VERIFICATION TEST. Refer to **6F24 TRANSMISSION VERIFICATION TEST** .

3. **CHECK THE (T802) SHIFT SOLENOID B (2) CONTROL CIRCUIT FOR AN OPEN**
   1. Measure the resistance of the (T802) Shift Solenoid B (2) Control circuit between the Transmission C1 harness connector and the TCM C1 harness connector.

   Is the resistance below 5.0 Ohms?

   Yes

- Go To 4

No

- Repair the (T802) Shift Solenoid B (2) Control circuit for an open.
- Perform TRANSMISSION VERIFICATION TEST. Refer to **6F24 TRANSMISSION VERIFICATION TEST** .

4. **CHECK THE SHIFT SOLENOID B (2)**
   1. Turn the ignition off to the lock position.
   2. Measure the resistance of the Shift Solenoid B (2) between the appropriate terminals at the Transmission C1 harness connector.

      Is the resistance of the Shift Solenoid B (2) between 10 and 11 Ohms at 20° C (68° F)?

      Yes

      - Using the schematics as a guide, check the Transmission Control Module (TCM) pins, terminals, and connectors for corrosion, damage, or terminal push out. Pay particular attention to all power and ground circuits. If no problems are found, replace and program the TCM in accordance with the Service Information. Refer to **MODULE, TRANSMISSION CONTROL, REMOVAL** .
      - Perform TRANSMISSION VERIFICATION TEST. Refer to **6F24 TRANSMISSION VERIFICATION TEST** .

      No

      - Remove the transmission side cover and inspect the internal lead frame. If there are no problems found with the lead frame, replace the Shift Solenoid B (2) in accordance with the Service Information.
      - Perform TRANSMISSION VERIFICATION TEST. Refer to **6F24 TRANSMISSION VERIFICATION TEST** .

5. **CHECK WIRING AND CONNECTORS**
   1. The conditions necessary to set the DTC are not present at this time.
   2. Using the schematics as a guide, inspect the wiring and connectors specific to this circuit.

3. Wiggle the wires while checking for shorted and open circuits.
4. Check for any Service Bulletins that may apply.

Were there any problems found?

Yes

- Repair as necessary.
- Perform TRANSMISSION VERIFICATION TEST. Refer to **6F24 TRANSMISSION VERIFICATION TEST** .

No

- Test Complete.

P077C-00-OUTPUT SHAFT SPEED SENSOR CIRCUIT LOW

For a complete wiring diagram, **refer to appropriate SYSTEM WIRING DIAGRAMS article** .

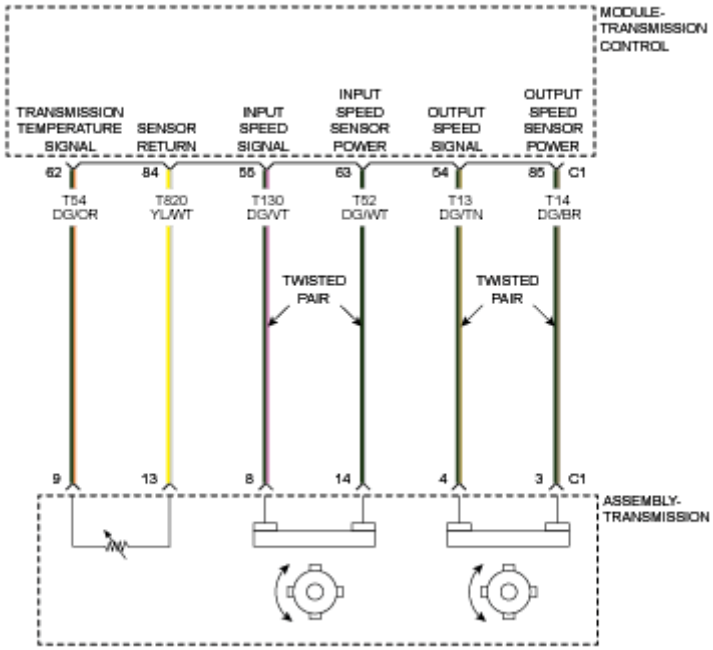

Fig. 13: Transmission Fluid Temperature & Speed Sensors Circuit Diagram Courtesy of CHRYSLER GROUP, LLC

THEORY OF OPERATION

This is where you put the Theory of Operation.

WHEN MONITORED

Battery supply voltage is greater than 9 volts.

No output speed sensor circuit failures (electrical or rationality).

SET CONDITION

The failure is detected if the measured voltage of the output speed sensor circuit is less than 0.1 of a volt for 2 seconds.

POSSIBLE CAUSES

Possible Causes
(T13) OUTPUT SPEED SIGNAL CIRCUIT OPEN
(T14) OUTPUT SPEED SENSOR POWER CIRCUIT OPEN
(T13) OUTPUT SPEED SIGNAL CIRCUIT SHORTED TO GROUND
(T14) OUTPUT SPEED SENSOR POWER CIRCUIT SHORTED TO GROUND
OUTPUT SPEED SENSOR
TRANSMISSION CONTROL MODULE (TCM)

Always perform the Pre-Diagnostic Troubleshooting procedure before proceeding. Refer to 6F24 PRE-DIAGNOSTIC TROUBLESHOOTING PROCEDURE .

DIAGNOSTIC TEST

1. **CHECK IF THE DTC IS CURRENT**
    1. Using the scan tool, read TCM DTCs.
    2. Record the Environmental Data and any DTCs.
    3. Clear DTCs.
    4. Using the recorded Environmental Data, along with the When Monitored and Set Conditions above, operate the vehicle in the conditions that set the DTC.

NOTE: It may be necessary to road test the vehicle to duplicate the original set conditions.

5. Read TCM DTCs.

   Did the DTC reset?

   Yes

   - Go To 2

   No

   - Go To 9

2. **CHECK THE (T14) OUTPUT SPEED SENSOR POWER SUPPLY CIRCUIT**
   1. Turn the ignition off to the lock position.
   2. Disconnect the Transmission harness connector.
   3. Ignition on, engine not running.
   4. Measure the voltage of the (T14) Output Speed Sensor Power Supply circuit on the appropriate terminal of the Transmission harness connector.

      Is the voltage 7.61 volts (± 0.65 of a volt)?

      Yes

      - Go To 5

      No

      - Go To 3

3. **CHECK THE (T14) OUTPUT SPEED SENSOR POWER SUPPLY CIRCUIT FOR AN OPEN**
   1. Turn the ignition off to the lock position.
   2. Disconnect the TCM C1 harness connector.
   3. Measure the resistance of the (T14) Output Speed Sensor Power circuit between the TCM C1 harness connector and the Transmission harness connector.

      Is the resistance below 5.0 Ohms?

Yes

- Go To 4

No

- Repair the (T14) Output Speed Sensor Power Supply circuit for an open.
- Perform the TRANSMISSION VERIFICATION TEST. Refer to **6F24 TRANSMISSION VERIFICATION TEST** .

4. **CHECK THE (T14) OUTPUT SPEED SENSOR POWER SUPPLY CIRCUIT FOR A SHORT TO GROUND**
   1. Measure the resistance between ground and the (T14) Output Speed Sensor Power Supply Signal circuit.

      Is the resistance below 100k Ohms?

      Yes

      - Repair the (T14) Output Speed Sensor Power Supply circuit for a short to ground.
      - Perform the TRANSMISSION VERIFICATION TEST. Refer to **6F24 TRANSMISSION VERIFICATION TEST** .

      No

      - Using the schematics as a guide, check the Transmission Control Module (TCM) pins, terminals, and connectors for corrosion, damage, or terminal push out. Pay particular attention to all power and ground circuits. If no problems are found, replace and program the TCM in accordance with the Service Information. Refer to **MODULE, TRANSMISSION CONTROL, REMOVAL** .
      - Perform the TRANSMISSION VERIFICATION TEST. Refer to **6F24 TRANSMISSION VERIFICATION TEST** .
5. **CHECK THE (T13) OUTPUT SPEED SENSOR SIGNAL CIRCUIT FOR AN OPEN**
   1. Disconnect the TCM C1 harness connector.
   2. Measure the resistance of the (T13) Output Speed Sensor Signal circuit

between the TCM C1 harness connector and the Transmission harness connector.

Is the resistance below 5.0 Ohms?

Yes

- Go To 6

No

- Repair the (T13) Output Speed Sensor Signal circuit for an open.
- Perform the TRANSMISSION VERIFICATION TEST. Refer to **6F24 TRANSMISSION VERIFICATION TEST** .

6. **CHECK THE (T13) OUTPUT SPEED SENSOR SIGNAL CIRCUIT FOR A SHORT TO GROUND**
   1. Measure the resistance between ground and the (T13) Output Speed Sensor Signal circuit.

      Is the resistance below 100k Ohms?

      Yes

      - Repair the (T13) Output Speed Sensor Signal circuit for a short to ground.
      - Perform the TRANSMISSION VERIFICATION TEST. Refer to **6F24 TRANSMISSION VERIFICATION TEST** .

      No

      - Go To 7

7. **CHECK THE (T13) OUTPUT SPEED SENSOR SIGNAL CIRCUIT FOR A SHORT TO ANOTHER CIRCUIT**
   1. Measure the resistance between the (T13) Output Speed Sensor Signal circuit and all other circuits in the TCM C1 harness connector.

      Is the resistance below 100k Ohms between the (T13) Output Speed Sensor Signal circuit and any other circuit(s) in the TCM C1 harness connector?

Yes

- Repair the (T13) Output Speed Sensor Signal circuit for a short to another circuit(s).
- Perform the TRANSMISSION VERIFICATION TEST. Refer to **6F24 TRANSMISSION VERIFICATION TEST** .

No

- Go To 8

8. **REPLACE THE OUTPUT SPEED SENSOR**
   1. Turn the ignition off to the lock position.
   2. Remove the transmission side cover and inspect the internal harness.
   3. Replace the Output Speed Sensor in accordance with the service information.
   4. Inspect the internal tone ring for damaged or missing teeth.
   5. Reconnect all connectors.
   6. Clear DTCs and road test the vehicle under the conditions in which the original DTC set.

   Did the Output Speed Sensor DTC reset?

   Yes

   - Using the schematics as a guide, check the Transmission Control Module (TCM) pins, terminals, and connectors for corrosion, damage, or terminal push out. Pay particular attention to all power and ground circuits. If no problems are found, replace and program the TCM in accordance with the Service Information. Refer to **MODULE, TRANSMISSION CONTROL, REMOVAL** .
   - Perform the TRANSMISSION VERIFICATION TEST. Refer to **6F24 TRANSMISSION VERIFICATION TEST** .

   No

   - Test complete.
   - Perform the TRANSMISSION VERIFICATION TEST. Refer to **6F24 TRANSMISSION VERIFICATION TEST** .

9. **CHECK THE WIRING AND CONNECTORS**
    1. The conditions necessary to set this DTC are not present at this time.
    2. Use the Freeze Frame Data to help duplicate the conditions in which the DTC originally set. Pay particular attention to the DTC set conditions, such as, VSS, MAP, ECT, and Load
    3. Using the schematics as a guide, visually inspect the related wiring harness. Look for any chafed, pierced, pinched, or partially broken wires.
    4. Visually inspect the related wiring harness connectors. Look for broken, bent, pushed out, or corroded terminals.
    5. Wiggle the wiring and connectors while checking for any possible open or shorted circuits.
    6. Check for any Service Information Tune-ups or Technical Service Bulletins that may apply.

    Were there any problems found?

    Yes

    - Repair as necessary.
    - Perform the TRANSMISSION VERIFICATION TEST. Refer to **6F24 TRANSMISSION VERIFICATION TEST** .

    No

    - Test Complete.

P077D-00-OUTPUT SHAFT SPEED SENSOR CIRCUIT HIGH

For a complete wiring diagram, **refer to appropriate SYSTEM WIRING DIAGRAMS article** .

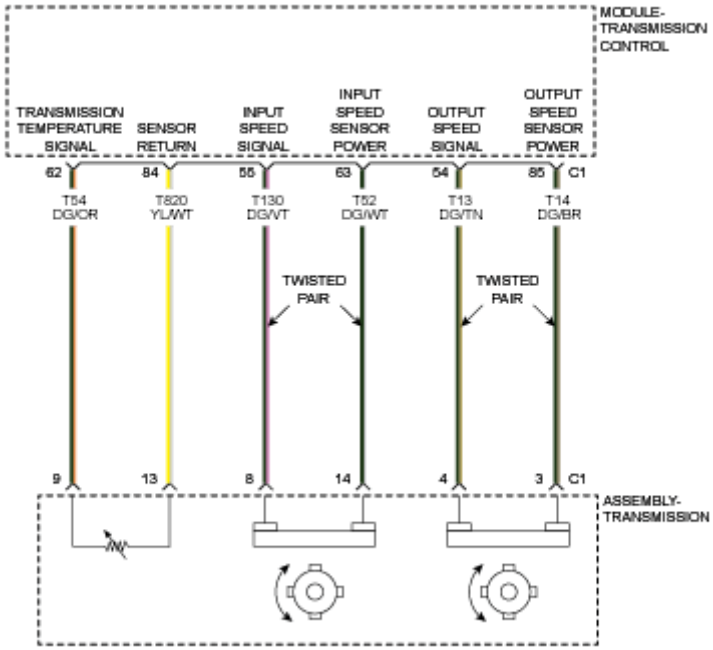

Fig. 14: Transmission Fluid Temperature & Speed Sensors Circuit Diagram
Courtesy of CHRYSLER GROUP, LLC

THEORY OF OPERATION

This is where you put the Theory of Operation.

WHEN MONITORED

Battery supply voltage is greater than 9 volts.

No output speed sensor circuit failures (electrical or rationality).

SET CONDITION

The failure is detected if the measured voltage of the output speed sensor circuit is greater than 3 volts for 2 seconds.

POSSIBLE CAUSES

Possible Causes
(T13) OUTPUT SPEED SIGNAL CIRCUIT SHORTED TO VOLTAGE (T14) OUTPUT SPEED SENSOR POWER CIRCUIT SHORTED TO VOLTAGE OUTPUT SPEED SENSOR

TRANSMISSION CONTROL MODULE (TCM)

Always perform the Pre-Diagnostic Troubleshooting procedure before proceeding. Refer to 6F24 PRE-DIAGNOSTIC TROUBLESHOOTING PROCEDURE .

DIAGNOSTIC TEST

1. **CHECK IF THE DTC IS CURRENT**
   1. Using the scan tool, read TCM DTCs.
   2. Record the Environmental Data and any DTCs.
   3. Clear DTCs.
   4. Using the recorded Environmental Data, along with the When Monitored and Set Conditions above, operate the vehicle in the conditions that set the DTC.

      NOTE: It may be necessary to road test the vehicle to duplicate the original set conditions.

   5. Read TCM DTCs.

      Did the DTC reset?

      Yes

      - Go To 2

      No

      - Go To 6
2. **CHECK THE (T14) OUTPUT SPEED SENSOR POWER SUPPLY CIRCUIT**
   1. Turn the ignition off to the lock position.
   2. Disconnect the Transmission harness connector.
   3. Ignition on, engine not running.
   4. Measure the voltage of the (T14) Output Speed Sensor Power Supply circuit on the appropriate terminal of the Transmission harness connector.

Is the voltage 7.61 volts (± 0.65 of a volt)?

Yes

- Go To 4

No

- Go To 3

3. **CHECK THE (T14) OUTPUT SPEED SENSOR POWER SUPPLY CIRCUIT FOR A SHORT TO VOLTAGE**
   1. Turn the ignition off to the lock position.
   2. Disconnect the TCM C1 harness connector.
   3. Turn the ignition to the run position.
   4. Measure the voltage of the (T14) Output Speed Sensor Power Supply circuit between the TCM C1 harness connector and the Transmission harness connector.

   Is the voltage above 0.5 of a volt?

   Yes

   - Go To 4

   No

   - Repair the (T14) Output Speed Sensor Power Supply circuit for a short to voltage.
   - Perform the TRANSMISSION VERIFICATION TEST. Refer to **6F24 TRANSMISSION VERIFICATION TEST** .

4. **CHECK THE (T13) OUTPUT SPEED SIGNAL CIRCUIT FOR A SHORT TO VOLTAGE**
   1. Measure the voltage of the (T13) Output Speed signal circuit between the TCM C1 harness connector and the Transmission harness connector.

   Is the voltage above 0.5 of a volt?

   Yes

- Repair the (T13) Output Speed signal circuit for a short to voltage.
- Perform the TRANSMISSION VERIFICATION TEST. Refer to **6F24 TRANSMISSION VERIFICATION TEST** .

No

- Go To 5

5. **REPLACE THE OUTPUT SPEED SENSOR**
   1. Turn the ignition off to the lock position.
   2. Remove the transmission side cover and inspect the internal harness.
   3. Replace the Output Speed Sensor in accordance with the service information.
   4. Inspect the internal tone ring for damaged or missing teeth.
   5. Reconnect all connectors.
   6. Clear DTCs and road test the vehicle under the conditions in which the original DTC set.

   Did the Output Speed Sensor DTC reset?

   Yes

   - Using the schematics as a guide, check the Transmission Control Module (TCM) pins, terminals, and connectors for corrosion, damage, or terminal push out. Pay particular attention to all power and ground circuits. If no problems are found, replace and program the TCM in accordance with the Service Information. Refer to **MODULE, TRANSMISSION CONTROL, REMOVAL** .
   - Perform the TRANSMISSION VERIFICATION TEST. Refer to **6F24 TRANSMISSION VERIFICATION TEST** .

   No

   - Test complete.
   - Perform the TRANSMISSION VERIFICATION TEST. Refer to **6F24 TRANSMISSION VERIFICATION TEST** .

6. **CHECK THE WIRING AND CONNECTORS**
   1. The conditions necessary to set this DTC are not present at this time.

2. Use the Freeze Frame Data to help duplicate the conditions in which the DTC originally set. Pay particular attention to the DTC set conditions, such as, VSS, MAP, ECT, and Load
3. Using the schematics as a guide, visually inspect the related wiring harness. Look for any chafed, pierced, pinched, or partially broken wires.
4. Visually inspect the related wiring harness connectors. Look for broken, bent, pushed out, or corroded terminals.
5. Wiggle the wiring and connectors while checking for any possible open or shorted circuits.
6. Check for any Service Information Tune-ups or Technical Service Bulletins that may apply.

   Were there any problems found?

   Yes

   - Repair as necessary.
   - Perform the TRANSMISSION VERIFICATION TEST. Refer to **6F24 TRANSMISSION VERIFICATION TEST** .

   No

   - Test Complete.

P07BF-00-INPUT-TURBINE SHAFT SPEED SENSOR 1 CIRCUIT LOW

For a complete wiring diagram, **refer to appropriate SYSTEM WIRING DIAGRAMS article** .

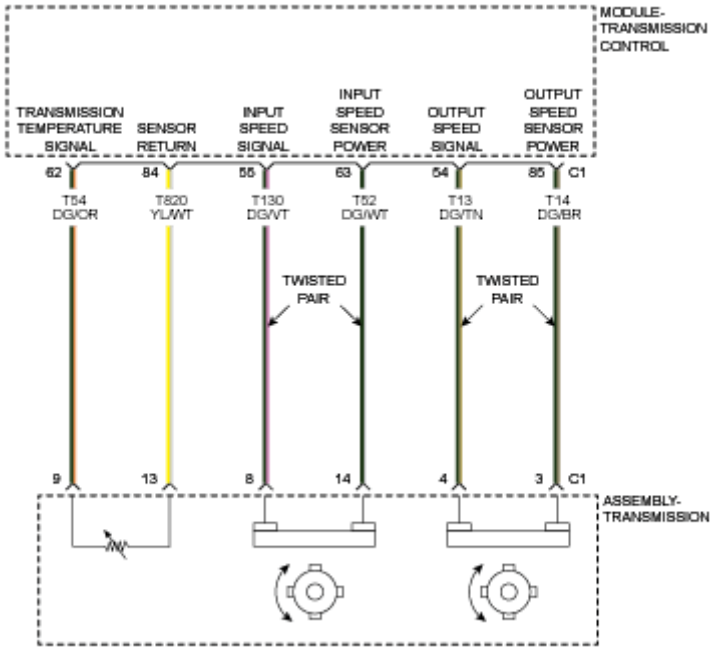

Fig. 15: Transmission Fluid Temperature & Speed Sensors Circuit Diagram
Courtesy of CHRYSLER GROUP, LLC

THEORY OF OPERATION

The purpose of this diagnostic is to check the electrical performance of the input speed sensor circuit. The sensor is located in front of the target wheel which is connected to the transmission input shaft, and measures the rotation of the target wheel. The input speed sensor is a Hall Effect sensor with a pulse train output frequency range of 50 ~ 8000 RPM. The normal operating output voltage range of the input speed sensor is in the range of 0.8 to 1.5 V. The malfunction conditions detected by this diagnostic include short to battery, short to ground, and open circuit failures. These malfunctions are determined based upon the A/D conversion value.

WHEN MONITORED

Battery supply voltage is greater than 9 volts.

No input speed sensor circuit failures (electrical or rationality).

SET CONDITION

The failure is detected if the measured voltage of the input speed sensor circuit is less than 0.1 of a volt for 2 seconds.

POSSIBLE CAUSES

Possible Causes
(T130) INPUT SPEED SIGNAL CIRCUIT OPEN (T52) INPUT SPEED SENSOR POWER CIRCUIT OPEN (T130) INPUT SPEED SIGNAL CIRCUIT SHORTED TO GROUND (T52) INPUT SPEED SENSOR POWER CIRCUIT SHORTED TO GROUND INPUT SPEED SENSOR TRANSMISSION CONTROL MODULE (TCM)

Always perform the Pre-Diagnostic Troubleshooting procedure before proceeding. Refer to 6F24 PRE-DIAGNOSTIC TROUBLESHOOTING PROCEDURE .

DIAGNOSTIC TEST

1. **CHECK IF THE DTC IS CURRENT**
    1. Using the scan tool, read TCM DTCs.
    2. Record the Environmental Data and any DTCs.
    3. Clear DTCs.
    4. Using the recorded Environmental Data, along with the When Monitored and Set Conditions above, operate the vehicle in the conditions that set the DTC.

    NOTE: It may be necessary to road test the vehicle to duplicate the original set conditions.

    5. Read TCM DTCs.

    Did the DTC reset?

    Yes

    - Go To 2

    No

    - Go To 9

2. **CHECK THE (T52) POWER SUPPLY CIRCUIT**
   1. Turn the ignition off to the lock position.
   2. Disconnect the Transmission harness connector.
   3. Ignition on, engine not running.
   4. Measure the voltage of the (T52) Power Supply circuit on the appropriate terminal of the Transmission harness connector.

      Is the voltage 7.61 volts (± 0.65 of a volt)?

      Yes

      - Go To 5

      No

      - Go To 3
3. **CHECK THE (T52) POWER SUPPLY CIRCUIT FOR AN OPEN**
   1. Turn the ignition off to the lock position.
   2. Disconnect the TCM C1 harness connector.
   3. Measure the resistance of the (T52) Power Supply circuit between the TCM C1 harness connector and the Transmission harness connector.

      Is the resistance below 5.0 Ohms?

      Yes

      - Go To 4

      No

      - Repair the (T52) Power Supply circuit for an open.
      - Perform the TRANSMISSION VERIFICATION TEST. Refer to **6F24 TRANSMISSION VERIFICATION TEST** .
4. **CHECK THE (T52) POWER SUPPLY CIRCUIT FOR A SHORT TO GROUND**
   1. Measure the resistance between ground and the (T52) Power Supply Signal circuit.

Is the resistance below 100k Ohms?

Yes

- Repair the (T52) Power Supply circuit for a short to ground.
- Perform the TRANSMISSION VERIFICATION TEST. Refer to **6F24 TRANSMISSION VERIFICATION TEST** .

No

- Using the schematics as a guide, check the Transmission Control Module (TCM) pins, terminals, and connectors for corrosion, damage, or terminal push out. Pay particular attention to all power and ground circuits. If no problems are found, replace and program the TCM in accordance with the Service Information. Refer to **MODULE, TRANSMISSION CONTROL, REMOVAL** .
- Perform the TRANSMISSION VERIFICATION TEST. Refer to **6F24 TRANSMISSION VERIFICATION TEST** .

5. **CHECK THE (T130) INPUT SPEED SENSOR SIGNAL CIRCUIT FOR AN OPEN**
   1. Disconnect the TCM C1 harness connector.
   2. Measure the resistance of the (T130) Input Speed Sensor Signal circuit between the TCM C1 harness connector and the Transmission harness connector.

   Is the resistance below 5.0 Ohms?

   Yes

   - Go To 6

   No

   - Repair the (T130) Input Speed Sensor Signal circuit for an open.
   - Perform the TRANSMISSION VERIFICATION TEST. Refer to **6F24 TRANSMISSION VERIFICATION TEST** .
6. **CHECK THE (T130) INPUT SPEED SENSOR SIGNAL CIRCUIT FOR A SHORT TO GROUND**
   1. Measure the resistance between ground and the (T130) Input Speed

Sensor Signal circuit.

Is the resistance below 100k Ohms?

Yes

- Repair the (T130) Input Speed Sensor Signal circuit for a short to ground.
- Perform the TRANSMISSION VERIFICATION TEST. Refer to **6F24 TRANSMISSION VERIFICATION TEST** .

No

- Go To 7

7. **CHECK THE (T130) INPUT SPEED SENSOR SIGNAL CIRCUIT FOR A SHORT TO ANOTHER CIRCUIT**
   1. Measure the resistance between the (T130) Input Speed Sensor Signal circuit and all other circuits in the TCM C1 harness connector.

      Is the resistance below 100k Ohms between the (T130) Input Speed Sensor Signal circuit and any other circuit(s) in the TCM C1 harness connector?

      Yes

      - Repair the (T130) Input Speed Sensor Signal circuit for a short to another circuit(s).
      - Perform the TRANSMISSION VERIFICATION TEST. Refer to **6F24 TRANSMISSION VERIFICATION TEST** .

      No

      - Go To 8

8. **REPLACE THE INPUT SPEED SENSOR**
   1. Turn the ignition off to the lock position.
   2. Remove the transmission side cover and inspect the internal harness.
   3. Replace the Input Speed Sensor in accordance with the service information.
   4. Inspect the internal tone ring for damaged or missing teeth.

5. Reconnect all connectors.
6. Clear DTCs and road test the vehicle under the conditions in which the original DTC set.

   Did the Input Speed Sensor DTC reset?

   Yes

   - Using the schematics as a guide, check the Transmission Control Module (TCM) pins, terminals, and connectors for corrosion, damage, or terminal push out. Pay particular attention to all power and ground circuits. If no problems are found, replace and program the TCM in accordance with the Service Information. Refer to **MODULE, TRANSMISSION CONTROL, REMOVAL** .
   - Perform the TRANSMISSION VERIFICATION TEST. Refer to **6F24 TRANSMISSION VERIFICATION TEST** .

   No

   - Test complete.
   - Perform the TRANSMISSION VERIFICATION TEST. Refer to **6F24 TRANSMISSION VERIFICATION TEST** .

9. **CHECK THE WIRING AND CONNECTORS**
   1. The conditions necessary to set this DTC are not present at this time.
   2. Use the Freeze Frame Data to help duplicate the conditions in which the DTC originally set. Pay particular attention to the DTC set conditions, such as, VSS, MAP, ECT, and Load
   3. Using the schematics as a guide, visually inspect the related wiring harness. Look for any chafed, pierced, pinched, or partially broken wires.
   4. Visually inspect the related wiring harness connectors. Look for broken, bent, pushed out, or corroded terminals.
   5. Wiggle the wiring and connectors while checking for any possible open or shorted circuits.
   6. Check for any Service Information Tune-ups or Technical Service Bulletins that may apply.

Were there any problems found?

Yes

- Repair as necessary.
- Perform the TRANSMISSION VERIFICATION TEST. Refer to **6F24 TRANSMISSION VERIFICATION TEST** .

No

- Test Complete.

P07C0-00-INPUT-TURBINE SHAFT SPEED SENSOR 1 CIRCUIT HIGH

For a complete wiring diagram, **refer to appropriate SYSTEM WIRING DIAGRAMS article** .

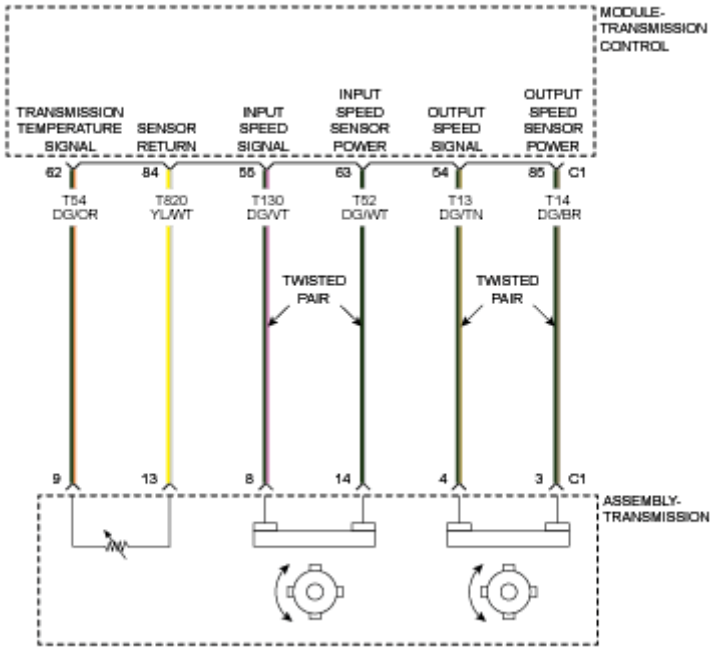

Fig. 16: Transmission Fluid Temperature & Speed Sensors Circuit Diagram
Courtesy of CHRYSLER GROUP, LLC

THEORY OF OPERATION

The purpose of this diagnostic is to check the electrical performance of the input speed sensor circuit. The sensor is located in front of the target wheel which is connected to the transmission input shaft, and measures the rotation of the target

wheel. The input speed sensor is a Hall Effect sensor with a pulse train output frequency range of 50 ~ 8000 RPM. The normal operating output voltage range of the input speed sensor is in the range of 0.8 to 1.5 V. The malfunction conditions detected by this diagnostic include short to battery, short to ground, and open circuit failures. These malfunctions are determined based upon the A/D conversion value.

WHEN MONITORED

Battery supply voltage is greater than 9 volts.

No input speed sensor circuit failures (electrical or rationality).

SET CONDITION

The failure is detected if the measured voltage of the input speed sensor circuit is greater than 3 volts for 2 seconds.

POSSIBLE CAUSES

Possible Causes
(T130) INPUT SPEED SIGNAL CIRCUIT SHORTED TO VOLTAGE (T52) INPUT SPEED SENSOR POWER CIRCUIT SHORTED TO VOLTAGE INPUT SPEED SENSOR TRANSMISSION CONTROL MODULE (TCM)

Always perform the Pre-Diagnostic Troubleshooting procedure before proceeding. Refer to 6F24 PRE-DIAGNOSTIC TROUBLESHOOTING PROCEDURE .

DIAGNOSTIC TEST

1. **CHECK IF THE DTC IS CURRENT**
    1. Using the scan tool, read TCM DTCs.
    2. Record the Environmental Data and any DTCs.
    3. Clear DTCs.
    4. Using the recorded Environmental Data, along with the When Monitored and Set Conditions above, operate the vehicle in the conditions that set the DTC.

NOTE: It may be necessary to road test the vehicle to duplicate the original set conditions.

5. Read TCM DTCs.

   Did the DTC reset?

   Yes

   - Go To 2

   No

   - Go To 6

2. **CHECK THE (T52) INPUT SPEED SENSOR POWER SUPPLY CIRCUIT**
   1.
   2. Turn the ignition off to the lock position.
   3. Disconnect the Transmission harness connector.
   4. Ignition on, engine not running.
   5. Measure the voltage of the (T52) Input Speed Sensor Power Supply circuit on the appropriate terminal of the Transmission harness connector.

   Is the voltage 7.61 volts (± 0.65 of a volt)?

   Yes

   - Go To 4

   No

   - Go To 3

3. **CHECK THE (T52) INPUT SPEED SENSOR POWER SUPPLY CIRCUIT FOR A SHORT TO VOLTAGE**
   1. Turn the ignition off to the lock position.
   2. Disconnect the TCM C1 harness connector.
   3. Turn the ignition to the run position.

4. Measure the voltage of the (T52) Input Speed Sensor Power Supply circuit between the TCM C1 harness connector and the Transmission harness connector.

   Is the voltage above 0.5 of a volt?

   Yes

   - Go To 4

   No

   - Repair the (T52) Input Speed Sensor Power Supply circuit for a short to voltage.
   - Perform the TRANSMISSION VERIFICATION TEST. Refer to **6F24 TRANSMISSION VERIFICATION TEST** .

4. **CHECK THE (T130) INPUT SPEED SIGNAL CIRCUIT FOR A SHORT TO VOLTAGE**
   1. Measure the voltage of the (T130) Input Speed signal circuit between the TCM C1 harness connector and the Transmission harness connector.

      Is the voltage above 0.5 of a volt?

      Yes

      - Repair the (T130) Input Speed signal circuit for a short to voltage.
      - Perform the TRANSMISSION VERIFICATION TEST. Refer to **6F24 TRANSMISSION VERIFICATION TEST** .

      No

      - Go To 5

5. **REPLACE THE INPUT SPEED SENSOR**
   1. Turn the ignition off to the lock position.
   2. Remove the transmission side cover and inspect the internal harness.
   3. Replace the Input Speed Sensor in accordance with the service information.

4. Inspect the internal tone ring for damaged or missing teeth.
5. Reconnect all connectors.
6. Clear DTCs and road test the vehicle under the conditions in which the original DTC set.

   Did the Input Speed Sensor DTC reset?

   Yes

   - Using the schematics as a guide, check the Transmission Control Module (TCM) pins, terminals, and connectors for corrosion, damage, or terminal push out. Pay particular attention to all power and ground circuits. If no problems are found, replace and program the TCM in accordance with the Service Information. Refer to **MODULE, TRANSMISSION CONTROL, REMOVAL** .
   - Perform the TRANSMISSION VERIFICATION TEST. Refer to **6F24 TRANSMISSION VERIFICATION TEST** .

   No

   - Test complete.
   - Perform the TRANSMISSION VERIFICATION TEST. Refer to **6F24 TRANSMISSION VERIFICATION TEST** .

6. **CHECK THE WIRING AND CONNECTORS**
   1. The conditions necessary to set this DTC are not present at this time.
   2. Use the Freeze Frame Data to help duplicate the conditions in which the DTC originally set. Pay particular attention to the DTC set conditions, such as, VSS, MAP, ECT, and Load
   3. Using the schematics as a guide, visually inspect the related wiring harness. Look for any chafed, pierced, pinched, or partially broken wires.
   4. Visually inspect the related wiring harness connectors. Look for broken, bent, pushed out, or corroded terminals.
   5. Wiggle the wiring and connectors while checking for any possible open or shorted circuits.
   6. Check for any Service Information Tune-ups or Technical Service Bulletins that may apply.

Were there any problems found?

Yes

- Repair as necessary.
- Perform the TRANSMISSION VERIFICATION TEST. Refer to **6F24 TRANSMISSION VERIFICATION TEST** .

No

- Test Complete.

P0885-00-TCM POWER CONTROL CIRCUIT

For a complete wiring diagram, **refer to appropriate SYSTEM WIRING DIAGRAMS article** .

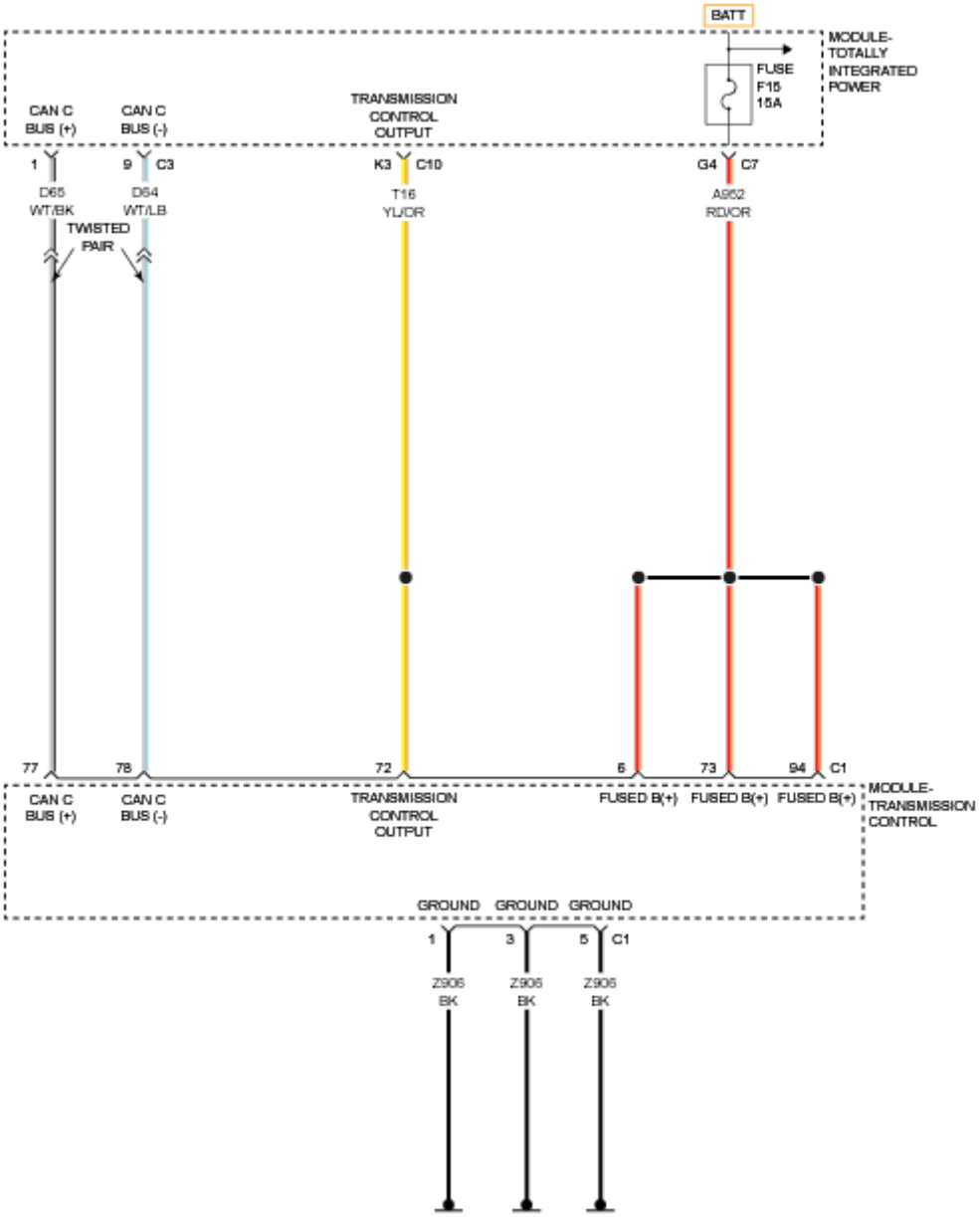

Fig. 17: Transmission Control Module Circuit Diagram
Courtesy of CHRYSLER GROUP, LLC

THEORY OF OPERATION

The purpose of this diagnostic procedure is to check the electrical performance of the power source which supplies the solenoid power circuit. The malfunction conditions detected by this diagnostic include out of range high and out of range low failures. The TCM measures the power source using a common input internal to the controller.

There are two solenoid power circuits (High Side Driver 1 and High Side Driver

2) within the TCM supplying battery voltage to two banks of four solenoids each. The diagnostic checks that the voltage supplied to these two solenoid power circuits is in the normal operating range.

WHEN MONITORED

Battery voltage is greater than or equal to 9 volts and less than or equal to 22 volts.

Time since high side driver commanded on is greater than or equal to 0.3 of a second.

SET CONDITION

The failure is detected if the internally measured voltage of the power source in the TCM is less than 7 volts or greater than 24.5 volts for 0.2 of a second.

POSSIBLE CAUSES

Possible Causes
TCM POWER INPUT CIRCUITS
TCM GROUND CIRCUITS
CIRCUIT T78 SHORTED TO GROUND
CIRCUIT T118 SHORTED TO GROUND
VEHICLE CHARGING SYSTEM
TRANSMISSION CONTROL MODULE (TCM)

Always perform the Pre-Diagnostic Troubleshooting procedure before proceeding. Refer to 6F24 PRE-DIAGNOSTIC TROUBLESHOOTING PROCEDURE.

DIAGNOSTIC TEST

1. **CHECK IF DTC IS CURRENT**
    1. Using the scan tool, read TCM DTCs.
    2. Record the Environmental Data and any DTCs.
    3. Clear DTCs.
    4. Using the recorded Environmental Data, along with the When Monitored and Set Conditions above, operate the vehicle in the conditions that set the DTC.

5. Read TCM DTCs.

   Did the DTC reset?

   Yes

   - Go To 2

   No

   - Go To 9

2. **CHECK FOR ENGINE CHARGING SYSTEM DTCS**
   1. With the scan tool, read Engine DTCs.

      Are any Engine Charging System DTCs present?

      Yes

      - Repair any Charging System DTCs before proceeding. After repairing the Charging System, perform the Transmission Verification test to verify the transmission and or controller was not damaged. Refer to **6F24 TRANSMISSION VERIFICATION TEST** .

      No

      - Go To 3

3. **CHECK FOR SOLENOID SUPPLY CIRCUIT DTCS**
   1. Refer to recorded Transmission DTCs.

      Were DTCs P0962 and or P0979 Set?

      Yes

      - Perform the appropriate diagnostic procedure. Refer to **DIAGNOSTIC CODE INDEX** .
      - Perform the TRANSMISSION VERIFICATION TEST. Refer to **6F24 TRANSMISSION VERIFICATION TEST** .

      No

- Go to 4.

4. **CHECK SYSTEM VOLTAGE**
   1. Start the engine.
   2. With the scan tool, under transmission, check system voltage.

      Is the transmission system voltage above 9.0 volts?

      Yes

      - Go To 5

      No

      - Go To 7

5. **CHECK IF VOLTAGE IS GREATER THAN 16.9 VOLTS**
   1. Start the engine and raise the engine speed to 2000 RPM.
   2. With the scan tool, monitor the Transmission system voltage for at least 60 seconds.

      Does the Transmission system voltage read above 16.9 volts for any period of time?

      Yes

      - Repair the charging system for an over charging condition. and repair any Charging System symptoms before proceeding. Refer to **DIAGNOSIS AND TESTING** . After repairing the Charging System, perform the Transmission Verification test to verify the transmission and or controller was not damaged.
      - Perform the TRANSMISSION VERIFICATION TEST. Refer to **6F24 TRANSMISSION VERIFICATION TEST** .

      No

      - Go To 6

6. **VERIFY IF VEHICLE WAS JUMP STARTED WITH 24-VOLT SYSTEM**
   1. Verify if the vehicle was jump started by another vehicle using a 24-

volt charging system.

Was the vehicle jump started by another vehicle using a 24-volt charging system?

Yes

- This is the cause of the DTC. Erase the DTC and return the vehicle to the customer.
- Perform TRANSMISSION VERIFICATION TEST. Refer to **6F24 TRANSMISSION VERIFICATION TEST** .

No

- Go To 9

7. **CHECK THE TCM POWER INPUT CIRCUITS**
   1. Turn the ignition off to the lock position.
   2. Disconnect the TCM C1 harness connector.
   3. Ignition ON, Engine Not Running.
   4. Using a 12-volt test light connected to ground, check the TCM Power Input circuits at the Transmission Control Module (TCM) C1 harness connector.

NOTE: The test light must illuminate brightly. Compare the brightness to that of a direct connection to the battery.

Does the test light illuminate brightly?

Yes

- Go To 8

No

- Repair the TCM Power Input circuits for an open or high resistance.
- Perform the TRANSMISSION VERIFICATION TEST. Refer to **6F24 TRANSMISSION VERIFICATION TEST** .

8. **CHECK THE TCM GROUND CIRCUITS**
   1. Ignition ON, Engine Not Running.
   2. Using a 12-volt test light connected to B(+), check the ground circuits at the Transmission Control Module (TCM) C1 harness connector.

      NOTE: The test light must illuminate brightly. Compare the brightness to that of a direct connection to the battery.

      Does the test light illuminate brightly?

      Yes

      - Replace and program the TCM in accordance with the service information. Refer to **MODULE, TRANSMISSION CONTROL, REMOVAL** .
      - Perform the TRANSMISSION VERIFICATION TEST. Refer to **6F24 TRANSMISSION VERIFICATION TEST** .

      No

      - Repair the TCM grounds circuits for an open or high resistance.
      - Perform the TRANSMISSION VERIFICATION TEST. Refer to **6F24 TRANSMISSION VERIFICATION TEST** .
9. **INTERMITTENT WIRING AND CONNECTORS**
   1. The conditions necessary to set this DTC are not present at this time.
   2. Using the schematics as a guide, inspect the wiring and connectors specific to this circuit.
   3. Wiggle the wires while checking for shorted and open circuits.

      Were there any problems found?

      Yes

      - Repair as necessary.
      - Perform the TRANSMISSION VERIFICATION TEST. Refer to **6F24 TRANSMISSION VERIFICATION TEST** .

No

- Test Complete.

P0951-00-AUTOSTICK CONTROL CIRCUIT PERFORMANCE

For a complete wiring diagram, **refer to appropriate SYSTEM WIRING DIAGRAMS article** .

THEORY OF OPERATION

This DTC checks if the shifter is in P, R or N while the Autostick is commanding either an upshift or downshift of the transmission for calibrated amount of time or if the Autostick circuit is commanding both an upshift and downshift of the transmission at the same time for calibrated amount of time.

WHEN MONITORED

TCM is in power on state and initialization is complete.

Battery voltage is more than or equal to 9 volts.

Engine speed is more than or equal to 400 RPM.

SET CONDITION

Autostick is commanding either an upshift or downshift of the transmission in P, R or N. Or, the Autostick circuit is commanding both an upshift and downshift of the transmission at the same time.

POSSIBLE CAUSES

Possible Causes
SHIFT LEVER ASSEMBLY

Always perform the Pre-Diagnostic Troubleshooting procedure before proceeding. Refer to 6F24 PRE-DIAGNOSTIC TROUBLESHOOTING PROCEDURE.

DIAGNOSTIC TEST

1. **CHECK IF DTC IS CURRENT**
    1. With the scan tool, read TCM DTCs.

2. Record the Environmental Data and any DTCs.
3. With the scan tool, erase DTCs.
4. Using the recorded Environmental Data, along with the When Monitored and Set Conditions above, operate the vehicle in the conditions that set the DTC.
5. With the scan tool, read TCM DTCs.

Did the DTC reset?

Yes

- Using the schematics as a guide, check the Electric Shift Module (ESM) terminals and connectors for corrosion, damage or pushed out terminals. Pay particular attention to the power and ground circuits. If no problems are found, replace the ESM and perform programming procedures in accordance with the Service Information.
- Perform the Transmission Verification Test. Refer to **6F24 TRANSMISSION VERIFICATION TEST** .

No

- Go to 2.

2. **CHECK WIRING AND CONNECTORS**
   1. The conditions necessary to set the DTC are not present at this time.
   2. Using the schematics as a guide, inspect the wiring and connectors specific to this circuit.
   3. Wiggle the wires while checking for shorted and open circuits.
   4. Check for any Service Bulletins that may apply.

   Were there any problems found?

   Yes

   - Repair as necessary.
   - Perform the Transmission Verification Test. Refer to **6F24 TRANSMISSION VERIFICATION TEST** .

No

- Test complete.

P0960-00-PRESSURE CONTROL SOLENOID 1 CONTROL CIRCUIT OPEN

For a complete wiring diagram, **refer to appropriate SYSTEM WIRING DIAGRAMS article** .

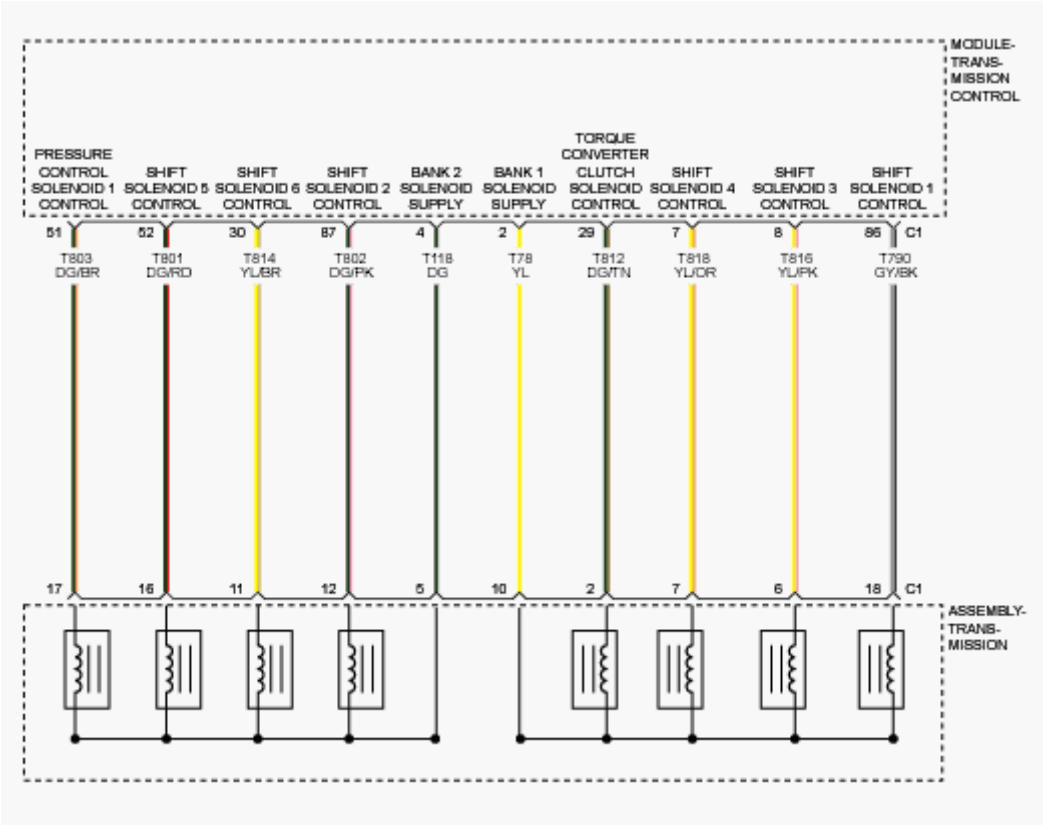

Fig. 18: Transmission Solenoids Circuit Diagram
Courtesy of CHRYSLER GROUP, LLC

THEORY OF OPERATION

The purpose of this diagnostic is to check the electrical performance of each of the six variable force solenoid circuits. The six variable force solenoids include a shift solenoid C which controls the 3rd , 5th , Reverse clutch, shift solenoid D which controls the Over Drive clutch, shift solenoid E which controls the Under Drive brake, shift solenoid F which controls the 2nd , 6th brake, pressure control solenoid A which controls the hydraulic line pressure, and torque converter clutch pressure control solenoid which controls the torque converter lock up clutch. The electrical failures that are detected include short to battery, short to

ground, and open circuit. The power stage driver, which is located in the TCM, detects these electrical malfunctions.

WHEN MONITORED

Limp in condition is not present.

Time since last gear shift is greater than or equal to 300 ms.

TCM supply voltage for solenoid is between 9 and 16 volts.

Time since high side driver commanded on is greater than or equal to 300 ms.

Solenoid is commanded off (pulse width modulation duty cycle is 0%).

SET CONDITION

The failure is detected if measured voltage for solenoid output is between 1.3 volts and 4.7 volts for 0.32 of a second.

POSSIBLE CAUSES

Possible Causes
(T118) BANK 2 SOLENOID POWER SUPPLY CIRCUIT OPEN (T803) PRESSURE CONTROL SOLENOID A (1) CONTROL CIRCUIT OPEN PRESSURE CONTROL SOLENOID A (1) TRANSMISSION CONTROL MODULE (TCM)

Always perform the Pre-Diagnostic Troubleshooting procedure before proceeding. Refer to 6F24 PRE-DIAGNOSTIC TROUBLESHOOTING PROCEDURE .

DIAGNOSTIC TEST

1. **CHECK IF DTC IS CURRENT**
    1. Using the scan tool, read TCM DTCs.
    2. Record the Environmental Data and any DTCs.
    3. Clear DTCs.
    4. Using the recorded Environmental Data, along with the When Monitored and Set Conditions above, operate the vehicle in the

conditions that set the DTC.

5. Read TCM DTCs.

   Did the DTC reset?

   Yes

   - Go To 2

   No

   - Go To 5

2. **CHECK THE (T118) BANK 2 SOLENOID POWER CIRCUIT FOR AN OPEN**
   1. Turn the ignition off to the lock position.
   2. Disconnect the Transmission C1 harness connectors.
   3. Disconnect the TCM C1 harness connector.
   4. Measure the resistance of the (T118) Bank 2 Solenoid Power circuit between the Transmission C1 harness connector and the TCM C1 harness connector.

      Is the resistance below 5.0 Ohms?

      Yes

      - Go To 3

      No

      - Repair the (T118) Bank 2 Solenoid Power circuit for an open.
      - Perform TRANSMISSION VERIFICATION TEST. Refer to **6F24 TRANSMISSION VERIFICATION TEST** .

3. **CHECK THE (T803) PRESSURE CONTROL SOLENOID A (1) CONTROL CIRCUIT FOR AN OPEN**
   1. Measure the resistance of the (T803) Pressure Control Solenoid A (1) Control circuit between the Transmission C1 harness connector and the TCM C1 harness connector.

      Is the resistance below 5.0 Ohms?

Yes

- Go To 4

No

- Repair the (T803) Pressure Control Solenoid A (1) Control circuit for an open.
- Perform TRANSMISSION VERIFICATION TEST. Refer to **6F24 TRANSMISSION VERIFICATION TEST** .

4. **CHECK THE PRESSURE CONTROL SOLENOID A (1)**
   1. Turn the ignition off to the lock position.
   2. Measure the resistance of the Pressure Control Solenoid A (1) between the appropriate terminals at the Transmission C1 harness connector.

   Is the resistance of the Pressure Control Solenoid A (1) 5.1 Ohms (± 0.3 Ohm) at 25° C (77° F)?

   Yes

   - Using the schematics as a guide, check the Transmission Control Module (TCM) pins, terminals, and connectors for corrosion, damage, or terminal push out. Pay particular attention to all power and ground circuits. If no problems are found, replace and program the TCM in accordance with the Service Information.
   - Perform TRANSMISSION VERIFICATION TEST. Refer to **6F24 TRANSMISSION VERIFICATION TEST** .

   No

   - Remove the transmission side cover and inspect the internal lead frame. If there are no problems found with the lead frame, replace the Pressure Control Solenoid A (1) in accordance with the Service Information.
   - Perform TRANSMISSION VERIFICATION TEST. Refer to **6F24 TRANSMISSION VERIFICATION TEST** .
5. **CHECK WIRING AND CONNECTORS**
   1. The conditions necessary to set the DTC are not present at this time.

2. Using the schematics as a guide, inspect the wiring and connectors specific to this circuit.
3. Wiggle the wires while checking for shorted and open circuits.
4. Check for any Service Bulletins that may apply.

Were there any problems found?

Yes

- Repair as necessary.
- Perform TRANSMISSION VERIFICATION TEST. Refer to **6F24 TRANSMISSION VERIFICATION TEST** .

No

- Test Complete.

P0961-00-PRESSURE CONTROL SOLENOID 1 CONTROL CIRCUIT PERFORMANCE

For a complete wiring diagram, **refer to appropriate SYSTEM WIRING DIAGRAMS article** .

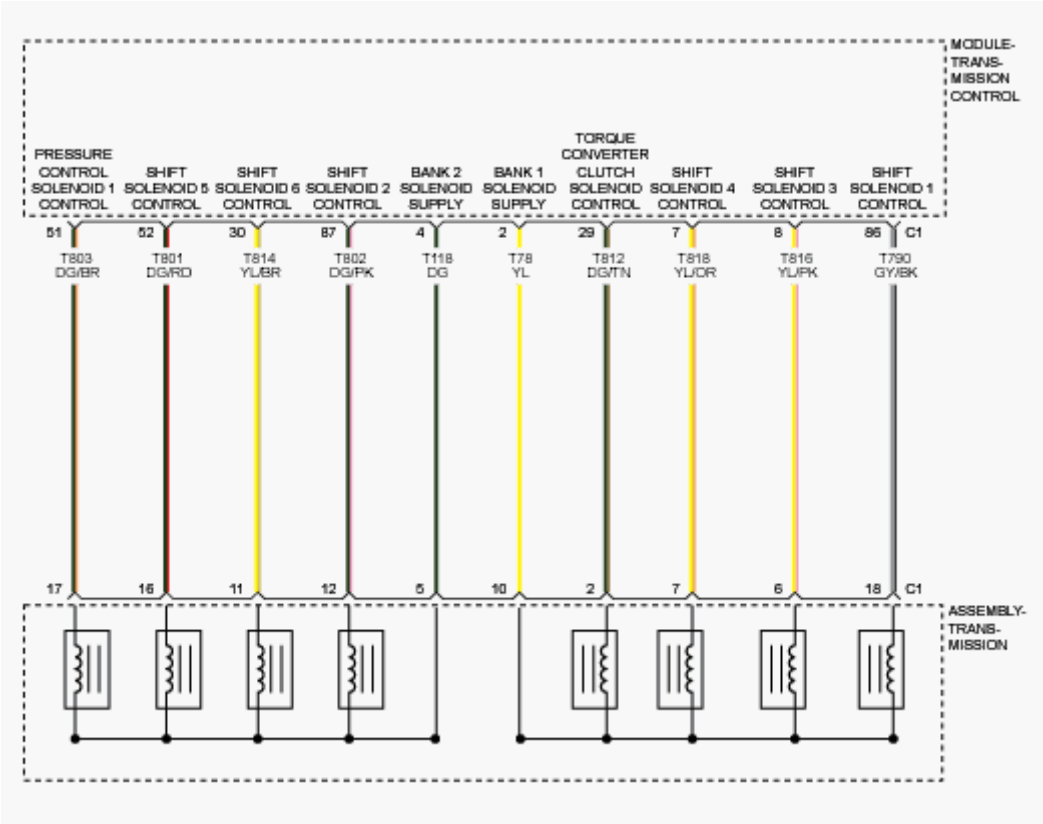

Fig. 19: Transmission Solenoids Circuit Diagram
Courtesy of CHRYSLER GROUP, LLC

THEORY OF OPERATION

The purpose of this diagnostic is to check the functionality of each of the six variable force solenoid circuits. The six variable force solenoids include a shift solenoid C which controls the 3rd, 5th, Reverse clutch, shift solenoid D which controls the Over Drive clutch, shift solenoid E which controls the Under Drive brake, shift solenoid F which controls the 2nd, 6th brake, pressure control solenoid A which controls the hydraulic line pressure, and torque converter clutch pressure control solenoid which controls the torque converter lock up clutch. The malfunction condition is detected if the measured solenoid feedback current does not correlate to the TCM commanded solenoid current. This failure may be caused by conditions such as internal circuit corrosion or manufacturing defects.

WHEN MONITORED

Limp in condition is not present.

Time since last gear shift is greater than or equal to 300 ms.

TCM supply voltage for solenoid is between 9 volts and 16 volts.

Time since high side driver commanded on is greater than or equal to 300 ms.

No variable force solenoid circuit failures.

Solenoid control duty cycle is 0%.

SET CONDITION

The failure is detected if the measured solenoid feedback current is greater than 50 mA but less than or equal to 550 mA of the commanded solenoid current for 320 ms.

POSSIBLE CAUSES

Possible Causes
CIRCUIT(S) HIGH RESISTANCE (T803) PRESSURE CONTROL SOLENOID A (1) CONTROL CIRCUIT

SHORTED TO GROUND
PRESSURE CONTROL SOLENOID A (1)
TRANSMISSION CONTROL MODULE (TCM)

Always perform the Pre-Diagnostic Troubleshooting procedure before proceeding. Refer to 6F24 PRE-DIAGNOSTIC TROUBLESHOOTING PROCEDURE.

DIAGNOSTIC TEST

1. **CHECK IF DTC IS CURRENT**
   1. Using the scan tool, read TCM DTCs.
   2. Record the Environmental Data and any DTCs.
   3. Clear DTCs.
   4. Using the recorded Environmental Data, along with the When Monitored and Set Conditions above, operate the vehicle in the conditions that set the DTC.
   5. Read TCM DTCs.

   Did the DTC reset?

   Yes

   - Go To 2

   No

   - Go To 6
2. **CHECK THE PRESSURE CONTROL SOLENOID A (1) CIRCUITS FOR HIGH RESISTANCE**
   1. Turn the ignition off to the lock position.
   2. Disconnect the Transmission C1 harness connectors.
   3. Disconnect the TCM C1 harness connector.
   4. Using the schematics as a guide, inspect the Transmission C1 and TCM C1 harness connectors, pins and terminals for the Pressure Control Solenoid A (1) circuits for corrosion, damage, or terminal push out.

   Were any problems found?

Yes

- Repair as necessary.
- Perform the TRANSMISSION VERIFICATION TEST. Refer to **6F24 TRANSMISSION VERIFICATION TEST** .

No

- Go To 3

3. **CHECK THE (T118) BANK 2 SOLENOID POWER CIRCUIT FOR A SHORT TO GROUND**
   1. Measure the resistance of the (T118) Bank 2 Solenoid Power circuit between ground and the Transmission C1 harness connector.

      Is the resistance above 100k ohms?

      Yes

      - Go To 4

      No

      - Repair the (T118) Bank 2 Solenoid Power circuit for a short to ground.
      - Perform the TRANSMISSION VERIFICATION TEST. Refer to **6F24 TRANSMISSION VERIFICATION TEST** .

4. **CHECK THE (T803) PRESSURE CONTROL SOLENOID A (1) CONTROL CIRCUIT FOR A SHORT TO GROUND**
   1. Measure the resistance of the (T803) Pressure Control Solenoid A (1) Control circuit between ground and the Transmission C1 harness connector.

      Is the resistance above 100k ohms?

      Yes

      - Go To 5

      No

- Repair the (T803) Pressure Control Solenoid A (1) Control circuit for a short to ground.
- Perform the TRANSMISSION VERIFICATION TEST. Refer to **6F24 TRANSMISSION VERIFICATION TEST** .

5. **CHECK THE PRESSURE CONTROL SOLENOID A (1)**
   1. Turn the ignition off to the lock position.
   2. Measure the resistance of the Pressure Control Solenoid A (1) between the appropriate terminals of the Transmission C1 harness connector.

      Is the resistance of the Pressure Control Solenoid A (1) 5.1 Ohms (± 0.3 Ohm) at 25° C (77° F)?

      Yes

      - Using the schematics as a guide, check the Transmission Control Module (TCM) pins, terminals, and connectors for corrosion, damage, or terminal push out. Pay particular attention to all power and ground circuits. If no problems are found, replace and program the TCM in accordance with the Service Information. Refer to **MODULE, TRANSMISSION CONTROL, REMOVAL** .
      - Perform the TRANSMISSION VERIFICATION TEST. Refer to **6F24 TRANSMISSION VERIFICATION TEST** .

      No

      - Remove the transmission side cover and inspect the internal lead frame. If there are no problems found with the lead frame, replace the Pressure Control Solenoid A (1) in accordance with the Service Information.
      - Perform the TRANSMISSION VERIFICATION TEST. Refer to **6F24 TRANSMISSION VERIFICATION TEST** .

6. **CHECK WIRING AND CONNECTORS**
   1. The conditions necessary to set the DTC are not present at this time.
   2. Using the schematics as a guide, inspect the wiring and connectors specific to this circuit.
   3. Wiggle the wires while checking for shorted and open circuits.
   4. Check for any Service Bulletins that may apply.

Were there any problems found?

Yes

- Repair as necessary.
- Perform TRANSMISSION VERIFICATION TEST. Refer to **6F24 TRANSMISSION VERIFICATION TEST** .

No

- Test Complete.

P0962-00-PRESSURE CONTROL SOLENOID 1 CONTROL CIRCUIT LOW

For a complete wiring diagram, **refer to appropriate SYSTEM WIRING DIAGRAMS article** .

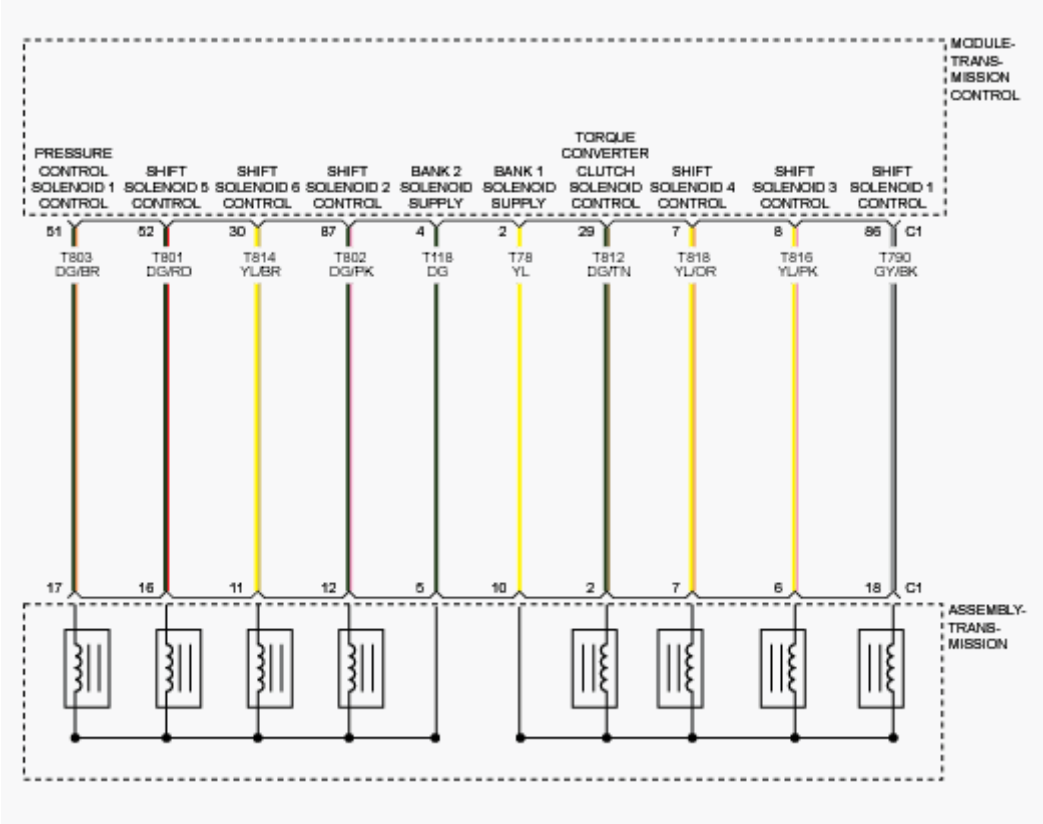

Fig. 20: Transmission Solenoids Circuit Diagram
Courtesy of CHRYSLER GROUP, LLC

THEORY OF OPERATION

The purpose of this diagnostic is to check the electrical performance of each of

the six variable force solenoid circuits. The six variable force solenoids include a shift solenoid C which controls the 3rd , 5th , Reverse clutch, shift solenoid D which controls the Over Drive clutch, shift solenoid E which controls the Under Drive brake, shift solenoid F which controls the 2nd , 6th brake, pressure control solenoid A which controls the hydraulic line pressure, and torque converter clutch pressure control solenoid which controls the torque converter lock up clutch. The electrical failures that are detected include short to battery, short to ground, and open circuit. The power stage driver, which is located in the TCM, detects these electrical malfunctions.

WHEN MONITORED

Limp in condition is not present.

Time since last gear shift is greater than or equal to 300 ms.

TCM supply voltage for solenoid is between 9 and 16 volts.

Time since high side driver commanded on is greater than or equal to 300 ms.

Solenoid is commanded off (pulse width modulation duty cycle is 0%).

SET CONDITION

The failure is detected if the measured voltage for solenoid output is less than or equal to 1.3 volts for 0.32 of a second.

POSSIBLE CAUSES

Possible Causes
(T803) PRESSURE CONTROL SOLENOID A (1) CONTROL CIRCUIT SHORT TO GROUND PRESSURE CONTROL SOLENOID A (1) TRANSMISSION CONTROL MODULE (TCM)

Always perform the Pre-Diagnostic Troubleshooting procedure before proceeding. Refer to 6F24 PRE-DIAGNOSTIC TROUBLESHOOTING PROCEDURE .

DIAGNOSTIC TEST

1. **CHECK IF DTC IS CURRENT**
   1. Using the scan tool, read TCM DTCs.
   2. Record the Environmental Data and any DTCs.
   3. Clear DTCs.
   4. Using the recorded Environmental Data, along with the When Monitored and Set Conditions above, operate the vehicle in the conditions that set the DTC.
   5. Read TCM DTCs.

   Did the DTC reset?

   Yes

   - Go To 2

   No

   - Go To 4
2. **CHECK THE (T803) PRESSURE CONTROL SOLENOID A (1) CONTROL CIRCUIT FOR A SHORT TO GROUND**
   1. Measure the resistance of the (T803) Pressure Control Solenoid A (1) Control circuit between ground and the Transmission C1 harness connector.

   Is the resistance above 100k ohms?

   Yes

   - Go To 3

   No

   - Repair the (T803) Pressure Control Solenoid A (1) Control circuit for a short to ground.
   - Perform the TRANSMISSION VERIFICATION TEST. Refer to **6F24 TRANSMISSION VERIFICATION TEST** .
3. **CHECK THE PRESSURE CONTROL SOLENOID A (1)**
   1. Turn the ignition off to the lock position.

2. Measure the resistance of the Pressure Control Solenoid A (1) between the appropriate terminals of the Transmission C1 harness connector.

   Is the resistance of the Pressure Control Solenoid A (1) 5.1 Ohms (± 0.3 Ohm) at 25° C (77° F)?

   Yes

   - Using the schematics as a guide, check the Transmission Control Module (TCM) pins, terminals, and connectors for corrosion, damage, or terminal push out. Pay particular attention to all power and ground circuits. If no problems are found, replace and program the TCM in accordance with the Service Information. Refer to **MODULE, TRANSMISSION CONTROL, REMOVAL** .
   - Perform the TRANSMISSION VERIFICATION TEST. Refer to **6F24 TRANSMISSION VERIFICATION TEST** .

   No

   - Remove the transmission side cover and inspect the internal lead frame. If there are no problems found with the lead frame, replace the Pressure Control Solenoid A (1) in accordance with the Service Information.
   - Perform the TRANSMISSION VERIFICATION TEST. Refer to **6F24 TRANSMISSION VERIFICATION TEST** .

4. **CHECK WIRING AND CONNECTORS**
   1. The conditions necessary to set the DTC are not present at this time.
   2. Using the schematics as a guide, inspect the wiring and connectors specific to this circuit.
   3. Wiggle the wires while checking for shorted and open circuits.
   4. Check for any Service Bulletins that may apply.

   Were there any problems found?

   Yes

   - Repair as necessary.
   - Perform the TRANSMISSION VERIFICATION TEST. Refer to

6F24 TRANSMISSION VERIFICATION TEST .

No

- Test Complete.

P0963-00-PRESSURE CONTROL SOLENOID 1 CONTROL CIRCUIT HIGH

For a complete wiring diagram, **refer to appropriate SYSTEM WIRING DIAGRAMS article** .

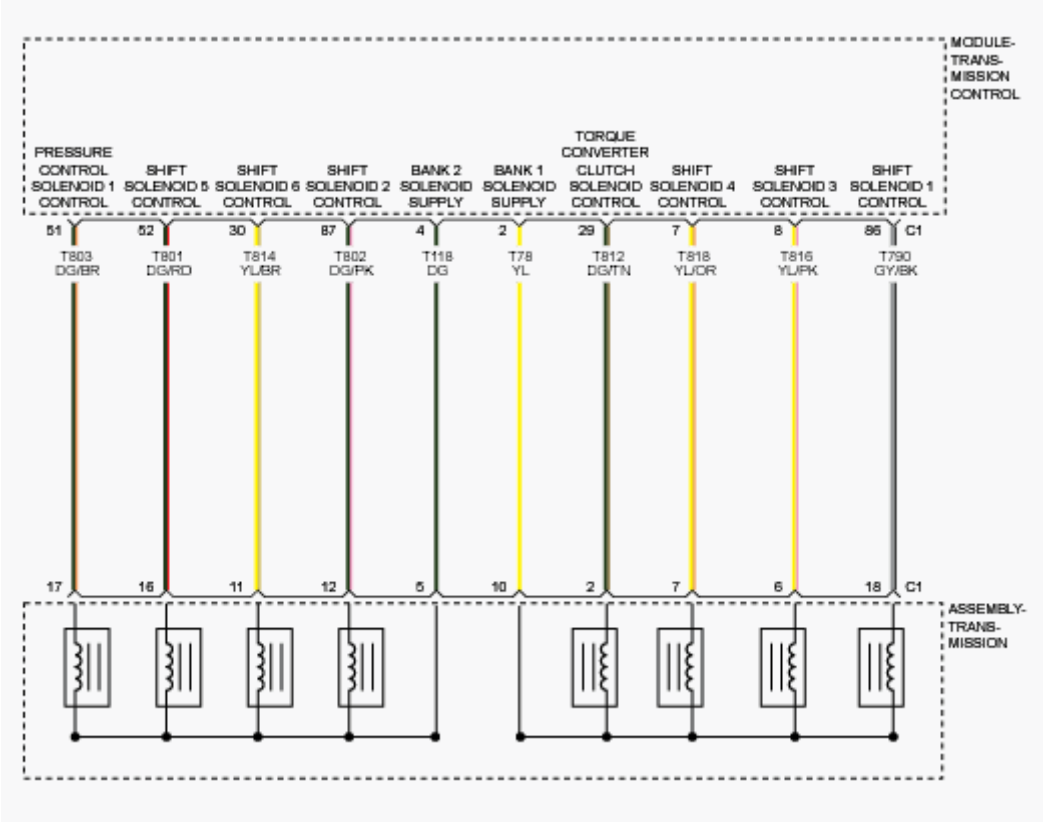

Fig. 21: Transmission Solenoids Circuit Diagram
Courtesy of CHRYSLER GROUP, LLC

THEORY OF OPERATION

The purpose of this diagnostic is to check the electrical performance of each of the six variable force solenoid circuits. The six variable force solenoids include a shift solenoid C which controls the 3rd , 5th , Reverse clutch, shift solenoid D which controls the Over Drive clutch, shift solenoid E which controls the Under Drive brake, shift solenoid F which controls the 2nd , 6th brake, pressure control solenoid A which controls the hydraulic line pressure, and torque converter

clutch pressure control solenoid which controls the torque converter lock up clutch. The electrical failures that are detected include short to battery, short to ground, and open circuit. The power stage driver, which is located in the TCM, detects these electrical malfunctions.

WHEN MONITORED

Limp in condition is not present.

Time since last gear shift is greater than or equal to 300 ms.

TCM supply voltage for solenoid is between 9 and 16 volts.

Time since high side driver commanded on is greater than or equal to 300 ms.

Solenoid is commanded on (pulse width modulation duty cycle is greater than 10%).

SET CONDITION

The failure is detected if the measured voltage for solenoid output is greater than or equal to 0.575 of a volt for 0.32 of a second.

POSSIBLE CAUSES

Possible Causes
(T803) PRESSURE CONTROL SOLENOID A (1) CONTROL CIRCUIT SHORTED TO VOLTAGE PRESSURE CONTROL SOLENOID A (1) TRANSMISSION CONTROL MODULE (TCM)

Always perform the Pre-Diagnostic Troubleshooting procedure before proceeding. Refer to 6F24 PRE-DIAGNOSTIC TROUBLESHOOTING PROCEDURE .

DIAGNOSTIC TEST

1. **CHECK IF DTC IS CURRENT**
    1. Using the scan tool, read TCM DTCs.
    2. Record the Environmental Data and any DTCs.
    3. Clear DTCs.

4. Using the recorded Environmental Data, along with the When Monitored and Set Conditions above, operate the vehicle in the conditions that set the DTC.
5. Read TCM DTCs.

   Did the DTC reset?

   Yes

   - Go To 2

   No

   - Go To 4

2. **CHECK THE (T803) PRESSURE CONTROL SOLENOID A (1) CONTROL CIRCUIT FOR A SHORT TO VOLTAGE**
   1. Measure the voltage of the (T803) Pressure Control Solenoid A (1) Control circuit between ground and the Transmission C1 harness connector.

      Is the voltage above 0.5 of a volt?

      Yes

      - Repair the (T803) Pressure Control Solenoid A (1) Control circuit for a short to voltage.
      - Perform the TRANSMISSION VERIFICATION TEST. Refer to **6F24 TRANSMISSION VERIFICATION TEST** .

      No

      - Go To 3

3. **CHECK THE PRESSURE CONTROL SOLENOID A (1)**
   1. Turn the ignition off to the lock position.
   2. Measure the resistance of the Pressure Control Solenoid A (1) between the appropriate terminals of the Transmission C1 harness connector.

      Is the resistance of the Pressure Control Solenoid A (1) 5.1 Ohms (± 0.3 Ohm) at 25° C (77° F)?

Yes

- Using the schematics as a guide, check the Transmission Control Module (TCM) pins, terminals, and connectors for corrosion, damage, or terminal push out. Pay particular attention to all power and ground circuits. If no problems are found, replace and program the TCM in accordance with the Service Information. Refer to **MODULE, TRANSMISSION CONTROL, REMOVAL** .
- Perform the TRANSMISSION VERIFICATION TEST. Refer to **6F24 TRANSMISSION VERIFICATION TEST** .

No

- Remove the transmission side cover and inspect the internal lead frame. If there are no problems found with the lead frame, replace the Pressure Control Solenoid A (1) in accordance with the Service Information.
- Perform the TRANSMISSION VERIFICATION TEST. Refer to **6F24 TRANSMISSION VERIFICATION TEST** .

4. **CHECK WIRING AND CONNECTORS**
   1. The conditions necessary to set the DTC are not present at this time.
   2. Using the schematics as a guide, inspect the wiring and connectors specific to this circuit.
   3. Wiggle the wires while checking for shorted and open circuits.
   4. Check for any Service Bulletins that may apply.

   Were there any problems found?

   Yes

   - Repair as necessary.
   - Perform the TRANSMISSION VERIFICATION TEST. Refer to **6F24 TRANSMISSION VERIFICATION TEST** .

   No

   - Test Complete.

P0973-00-SHIFT SOLENOID 1 CONTROL CIRCUIT LOW

For a complete wiring diagram, **refer to appropriate SYSTEM WIRING DIAGRAMS article** .

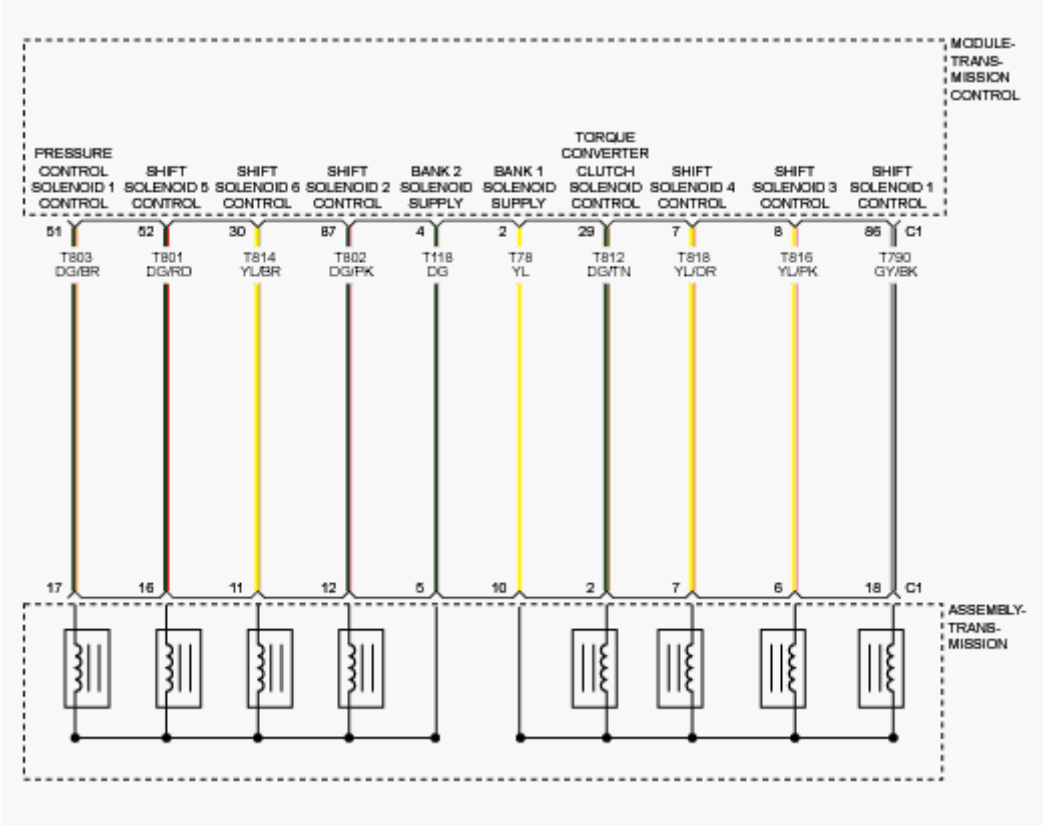

Fig. 22: Transmission Solenoids Circuit Diagram
Courtesy of CHRYSLER GROUP, LLC

THEORY OF OPERATION

The purpose of this diagnostic is to check the electrical performance of the on/off shift solenoid A (1) and B (2) circuits. Shift solenoid A (1) engages the Low, Reverse clutch when activated or the Over drive clutch when deactivated. Shift solenoid B (2) engages the 3rd , 5th , Reverse clutch when activated. The electrical failures that are detected include short to battery, short to ground, and open circuit. The power stage driver, which is located in the TCM, detects these electrical malfunctions.

WHEN MONITORED

Limp in condition is not present.

Time since last gear shift is greater than or equal to 300 ms.

TCM supply voltage for solenoid is between 9 and 16 volts.

Time since high side driver commanded on is greater than or equal to 300 ms.

Solenoid is commanded off (pulse width modulation duty cycle is 0%).

SET CONDITION

The failure is detected if the measured voltage for solenoid output is less than or equal to 1.3 volts for 0.32 of a second.

POSSIBLE CAUSES

Possible Causes
(T790) SHIFT SOLENOID A (1) CONTROL CIRCUIT SHORT TO GROUND SHIFT SOLENOID A (1) TRANSMISSION CONTROL MODULE (TCM)

Always perform the Pre-Diagnostic Troubleshooting procedure before proceeding. Refer to 6F24 PRE-DIAGNOSTIC TROUBLESHOOTING PROCEDURE .

DIAGNOSTIC TEST

1. **CHECK IF DTC IS CURRENT**
    1. Using the scan tool, read TCM DTCs.
    2. Record the Environmental Data and any DTCs.
    3. Clear DTCs.
    4. Using the recorded Environmental Data, along with the When Monitored and Set Conditions above, operate the vehicle in the conditions that set the DTC.
    5. Read TCM DTCs.

    Did the DTC reset?

    Yes

    - Go To 2

    No

- Go To 4

2. **CHECK THE (T790) SHIFT SOLENOID A (1) CONTROL CIRCUIT FOR A SHORT TO GROUND**
   1. Measure the resistance of the (T790) Shift Solenoid A (1) Control circuit between ground and the Transmission C1 harness connector.

      Is the resistance above 100k ohms?

      Yes

      - Go To 3

      No

      - Repair the (T790) Shift Solenoid A (1) Control circuit for a short to ground.
      - Perform TRANSMISSION VERIFICATION TEST. Refer to **6F24 TRANSMISSION VERIFICATION TEST** .
3. **CHECK THE SHIFT SOLENOID A (1)**
   1. Turn the ignition off to the lock position.
   2. Measure the resistance of the Shift Solenoid A (1) between the appropriate terminals of the Transmission C1 harness connector.

      Is the resistance of the Shift Solenoid A (1) between 10 and 11 Ohms at 20° C (68° F)?

      Yes

      - Using the schematics as a guide, check the Transmission Control Module (TCM) pins, terminals, and connectors for corrosion, damage, or terminal push out. Pay particular attention to all power and ground circuits. If no problems are found, replace and program the TCM in accordance with the Service Information. Refer to **MODULE, TRANSMISSION CONTROL, REMOVAL** .
      - Perform TRANSMISSION VERIFICATION TEST. Refer to **6F24 TRANSMISSION VERIFICATION TEST** .

      No

- Remove the transmission side cover and inspect the internal lead frame. If there are no problems found with the lead frame, replace the Shift Solenoid A (1) in accordance with the Service Information.
- Perform TRANSMISSION VERIFICATION TEST. Refer to **6F24 TRANSMISSION VERIFICATION TEST** .

4. **CHECK WIRING AND CONNECTORS**
   1. The conditions necessary to set the DTC are not present at this time.
   2. Using the schematics as a guide, inspect the wiring and connectors specific to this circuit.
   3. Wiggle the wires while checking for shorted and open circuits.
   4. Check for any Service Bulletins that may apply.

   Were there any problems found?

   Yes

   - Repair as necessary.
   - Perform TRANSMISSION VERIFICATION TEST. Refer to **6F24 TRANSMISSION VERIFICATION TEST** .

   No

   - Test Complete.

P0974-00-SHIFT SOLENOID 1 CONTROL CIRCUIT HIGH

For a complete wiring diagram, **refer to appropriate SYSTEM WIRING DIAGRAMS article** .

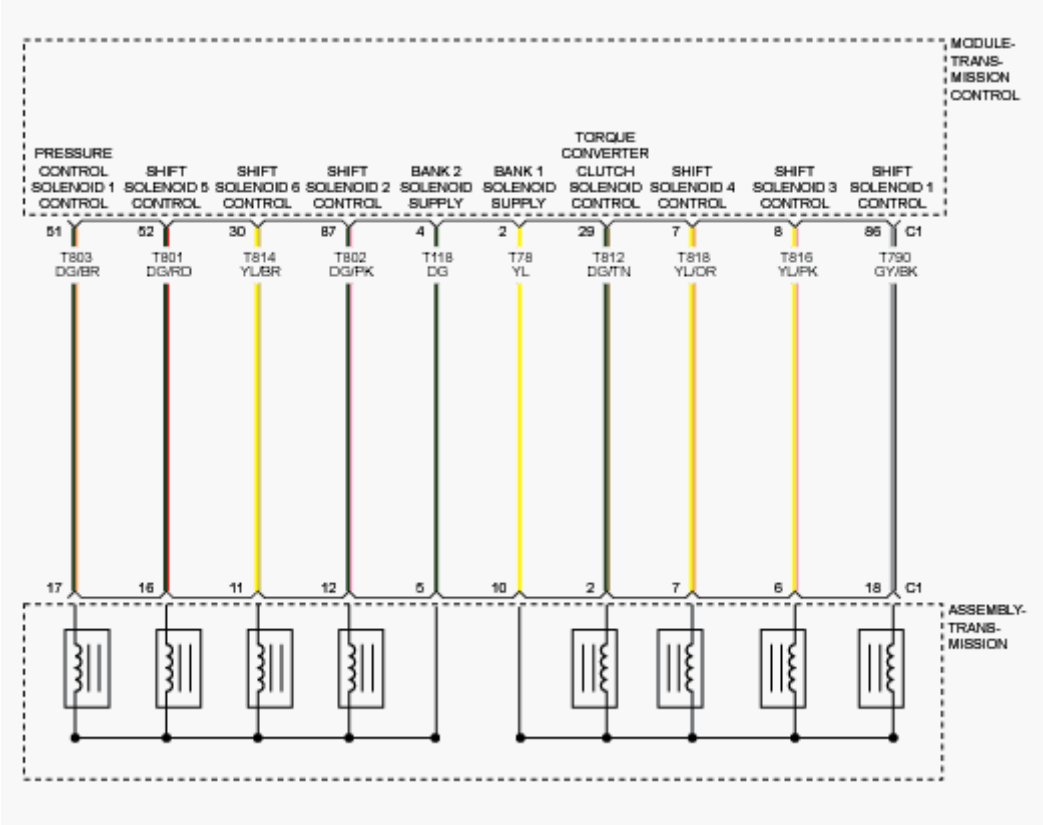

Fig. 23: Transmission Solenoids Circuit Diagram
Courtesy of CHRYSLER GROUP, LLC

THEORY OF OPERATION

The purpose of this diagnostic is to check the electrical performance of the on/off shift solenoid A (1) and B (2) circuits. Shift solenoid A (1) engages the Low, Reverse clutch when activated or the Over drive clutch when deactivated. Shift solenoid B (2) engages the 3rd , 5th , Reverse clutch when activated. The electrical failures that are detected include short to battery, short to ground, and open circuit. The power stage driver, which is located in the TCM, detects these electrical malfunctions.

WHEN MONITORED

Limp in condition is not present.

Time since last gear shift is greater than or equal to 300 ms.

TCM supply voltage for solenoid is between 9 and 16 volts.

Time since high side driver commanded on is greater than or equal to 300 ms.

Solenoid is commanded on (pulse width modulation duty cycle is greater than 10%).

SET CONDITION

The failure is detected if the measured voltage for solenoid output is greater than or equal to 0.575 of a volt for 0.32 of a second.

POSSIBLE CAUSES

Possible Causes
(T790) SHIFT SOLENOID A (1) CONTROL CIRCUIT SHORTED TO VOLTAGE SHIFT SOLENOID A (1) TRANSMISSION CONTROL MODULE (TCM)

Always perform the Pre-Diagnostic Troubleshooting procedure before proceeding. Refer to 6F24 PRE-DIAGNOSTIC TROUBLESHOOTING PROCEDURE .

DIAGNOSTIC TEST

1. **CHECK IF DTC IS CURRENT**
    1. Using the scan tool, read TCM DTCs.
    2. Record the Environmental Data and any DTCs.
    3. Clear DTCs.
    4. Using the recorded Environmental Data, along with the When Monitored and Set Conditions above, operate the vehicle in the conditions that set the DTC.
    5. Read TCM DTCs.

    Did the DTC reset?

    Yes

    - Go To 2

    No

    - Go To 4

2. **CHECK THE (T790) SHIFT SOLENOID A (1) CONTROL CIRCUIT FOR A SHORT TO VOLTAGE**
   1. Measure the voltage of the (T790) Shift Solenoid A (1) Control circuit between ground and the Transmission C1 harness connector.

      Is the voltage above 0.5 of a volt?

      Yes

      - Repair the (T790) Shift Solenoid A (1) Control circuit for a short to voltage.
      - Perform TRANSMISSION VERIFICATION TEST. Refer to **6F24 TRANSMISSION VERIFICATION TEST** .

      No

      - Go To 3
3. **CHECK THE SHIFT SOLENOID A (1)**
   1. Turn the ignition off to the lock position.
   2. Measure the resistance of the Shift Solenoid A (1) between the appropriate terminals of the Transmission C1 harness connector.

      Is the resistance of the Shift Solenoid A (1) between 10 and 11 Ohms at 20° C (68° F)?

      Yes

      - Using the schematics as a guide, check the Transmission Control Module (TCM) pins, terminals, and connectors for corrosion, damage, or terminal push out. Pay particular attention to all power and ground circuits. If no problems are found, replace and program the TCM in accordance with the Service Information. Refer to **MODULE, TRANSMISSION CONTROL, REMOVAL** .
      - Perform TRANSMISSION VERIFICATION TEST. Refer to **6F24 TRANSMISSION VERIFICATION TEST** .

      No

      - Remove the transmission side cover and inspect the internal lead

frame. If there are no problems found with the lead frame, replace the Shift Solenoid A (1) in accordance with the Service Information.

- Perform TRANSMISSION VERIFICATION TEST. Refer to **6F24 TRANSMISSION VERIFICATION TEST** .

4. **CHECK WIRING AND CONNECTORS**
   1. The conditions necessary to set the DTC are not present at this time.
   2. Using the schematics as a guide, inspect the wiring and connectors specific to this circuit.
   3. Wiggle the wires while checking for shorted and open circuits.
   4. Check for any Service Bulletins that may apply.

   Were there any problems found?

   Yes

   - Repair as necessary.
   - Perform TRANSMISSION VERIFICATION TEST. Refer to **6F24 TRANSMISSION VERIFICATION TEST** .

   No

   - Test Complete.

P0976-00-SHIFT SOLENOID 2 CONTROL CIRCUIT LOW

For a complete wiring diagram, **refer to appropriate SYSTEM WIRING DIAGRAMS article** .

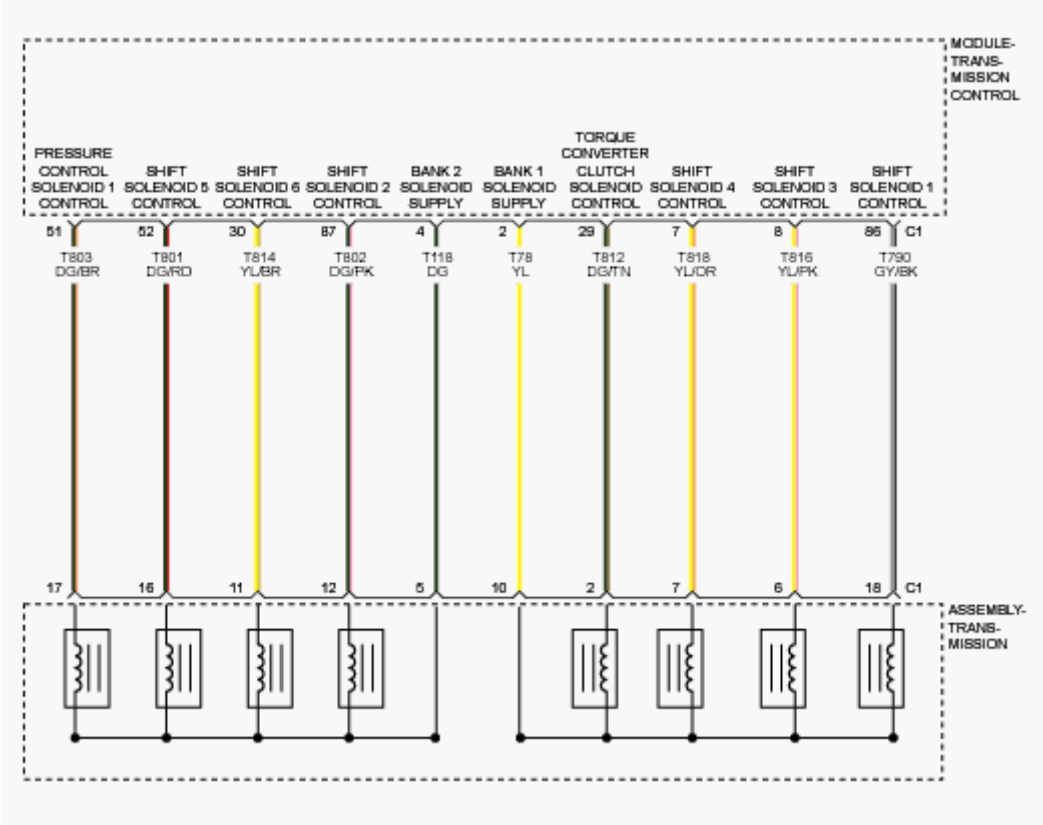

Fig. 24: Transmission Solenoids Circuit Diagram
Courtesy of CHRYSLER GROUP, LLC

THEORY OF OPERATION

The purpose of this diagnostic is to check the electrical performance of the on/off shift solenoid A (1) and B (2) circuits. Shift solenoid A (1) engages the Low, Reverse clutch when activated or the Over drive clutch when deactivated. Shift solenoid B (2) engages the 3rd , 5th , Reverse clutch when activated. The electrical failures that are detected include short to battery, short to ground, and open circuit. The power stage driver, which is located in the TCM, detects these electrical malfunctions.

WHEN MONITORED

Limp in condition is not present.

Time since last gear shift is greater than or equal to 300 ms.

TCM supply voltage for solenoid is between 9 and 16 volts.

Time since high side driver commanded on is greater than or equal to 300 ms.

Solenoid is commanded off (pulse width modulation duty cycle is 0%).

SET CONDITION

The failure is detected if the measured voltage for solenoid output is less than or equal to 1.3 volts for 0.32 of a second.

POSSIBLE CAUSES

Possible Causes
(T802) SHIFT SOLENOID B (2) CONTROL CIRCUIT SHORT TO GROUND SHIFT SOLENOID B (2) TRANSMISSION CONTROL MODULE (TCM)

Always perform the Pre-Diagnostic Troubleshooting procedure before proceeding. Refer to 6F24 PRE-DIAGNOSTIC TROUBLESHOOTING PROCEDURE .

DIAGNOSTIC TEST

1. **CHECK IF DTC IS CURRENT**
    1. Using the scan tool, read TCM DTCs.
    2. Record the Environmental Data and any DTCs.
    3. Clear DTCs.
    4. Using the recorded Environmental Data, along with the When Monitored and Set Conditions above, operate the vehicle in the conditions that set the DTC.
    5. Read TCM DTCs.

    Did the DTC reset?

    Yes

    - Go To 2

    No

    - Go To 4
2. **CHECK THE (T802) SHIFT SOLENOID B (2) CONTROL CIRCUIT**

FOR A SHORT TO GROUND

1. Measure the resistance of the (T802) Shift Solenoid B (2) Control circuit between ground and the Transmission C1 harness connector.

   Is the resistance above 100k ohms?

   Yes

   - Go To 3

   No

   - Repair the (T802) Shift Solenoid B (2) Control circuit for a short to ground.
   - Perform TRANSMISSION VERIFICATION TEST. Refer to **6F24 TRANSMISSION VERIFICATION TEST** .

3. **CHECK THE SHIFT SOLENOID B (2)**
   1. Turn the ignition off to the lock position.
   2. Measure the resistance of the Shift Solenoid B (2) between the appropriate terminals of the Transmission C1 harness connector.

      Is the resistance of the Shift Solenoid B (2) between 10 and 11 Ohms at 20° C (68° F)?

      Yes

      - Using the schematics as a guide, check the Transmission Control Module (TCM) pins, terminals, and connectors for corrosion, damage, or terminal push out. Pay particular attention to all power and ground circuits. If no problems are found, replace and program the TCM in accordance with the Service Information. Refer to **MODULE, TRANSMISSION CONTROL, REMOVAL** .
      - Perform TRANSMISSION VERIFICATION TEST. Refer to **6F24 TRANSMISSION VERIFICATION TEST** .

      No

      - Remove the transmission side cover and inspect the internal lead frame. If there are no problems found with the lead frame, replace

the Shift Solenoid B (2) in accordance with the Service Information.

- Perform TRANSMISSION VERIFICATION TEST. Refer to **6F24 TRANSMISSION VERIFICATION TEST** .

4. **CHECK WIRING AND CONNECTORS**
   1. The conditions necessary to set the DTC are not present at this time.
   2. Using the schematics as a guide, inspect the wiring and connectors specific to this circuit.
   3. Wiggle the wires while checking for shorted and open circuits.
   4. Check for any Service Bulletins that may apply.

   Were there any problems found?

   Yes

   - Repair as necessary.
   - Perform TRANSMISSION VERIFICATION TEST. Refer to **6F24 TRANSMISSION VERIFICATION TEST** .

   No

   - Test Complete.

P0977-00-SHIFT SOLENOID 2 CONTROL CIRCUIT HIGH

For a complete wiring diagram, **refer to appropriate SYSTEM WIRING DIAGRAMS article** .

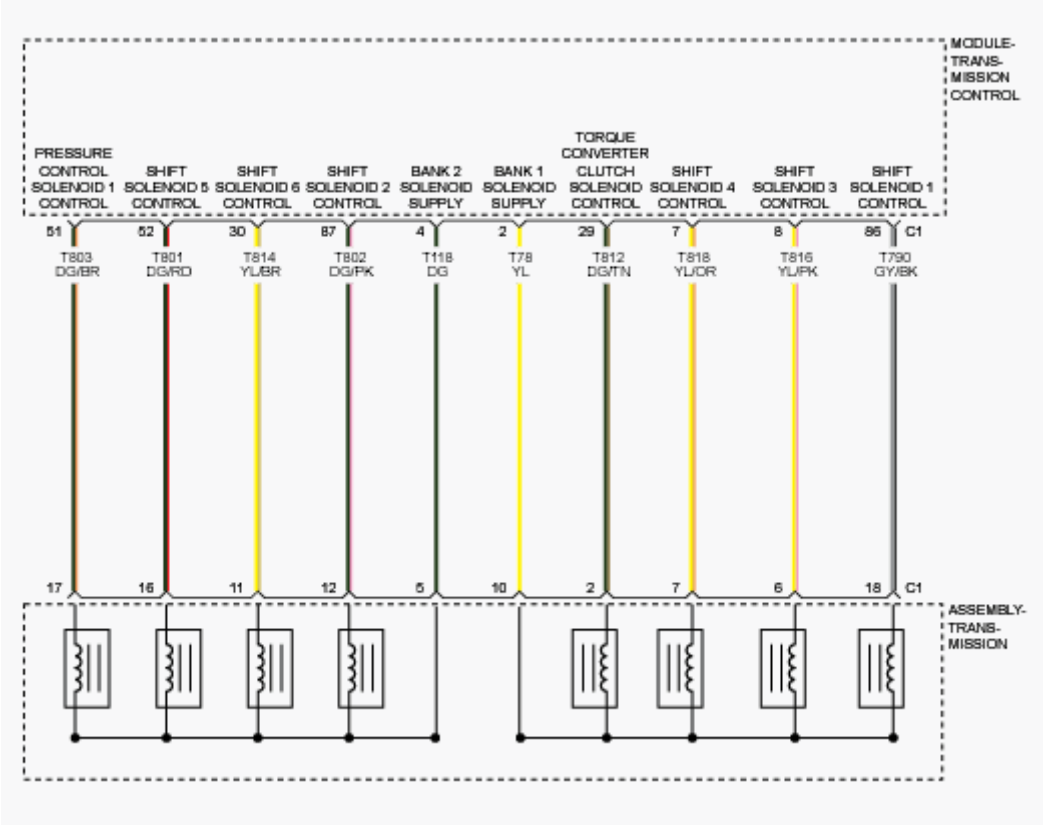

Fig. 25: Transmission Solenoids Circuit Diagram
Courtesy of CHRYSLER GROUP, LLC

THEORY OF OPERATION

The purpose of this diagnostic is to check the electrical performance of the on/off shift solenoid A (1) and B (2) circuits. Shift solenoid A (1) engages the Low, Reverse clutch when activated or the Over drive clutch when deactivated. Shift solenoid B (2) engages the 3rd , 5th , Reverse clutch when activated. The electrical failures that are detected include short to battery, short to ground, and open circuit. The power stage driver, which is located in the TCM, detects these electrical malfunctions.

WHEN MONITORED

Limp in condition is not present.

Time since last gear shift is greater than or equal to 300 ms.

TCM supply voltage for solenoid is between 9 and 16 volts.

Time since high side driver commanded on is greater than or equal to 300 ms.

Solenoid is commanded on (pulse width modulation duty cycle is greater than 10%).

SET CONDITION

The failure is detected if the measured voltage for solenoid output is greater than or equal to 0.575 of a volt for 0.32 of a second.

POSSIBLE CAUSES

Possible Causes
(T802) SHIFT SOLENOID B (2) CONTROL CIRCUIT SHORTED TO VOLTAGE SHIFT SOLENOID B (2) TRANSMISSION CONTROL MODULE (TCM)

Always perform the Pre-Diagnostic Troubleshooting procedure before proceeding. Refer to 6F24 PRE-DIAGNOSTIC TROUBLESHOOTING PROCEDURE .

DIAGNOSTIC TEST

1. **CHECK IF DTC IS CURRENT**
    1. Using the scan tool, read TCM DTCs.
    2. Record the Environmental Data and any DTCs.
    3. Clear DTCs.
    4. Using the recorded Environmental Data, along with the When Monitored and Set Conditions above, operate the vehicle in the conditions that set the DTC.
    5. Read TCM DTCs.

    Did the DTC reset?

    Yes

    - Go To 2

    No

    - Go To 4

2. **CHECK THE (T802) SHIFT SOLENOID B (2) CONTROL CIRCUIT FOR A SHORT TO VOLTAGE**
   1. Measure the voltage of the (T802) Shift Solenoid B (2) Control circuit between ground and the Transmission C1 harness connector.

      Is the voltage above 0.5 of a volt?

      Yes

      - Repair the (T802) Shift Solenoid B (2) Control circuit for a short to voltage.
      - Perform TRANSMISSION VERIFICATION TEST. Refer to **6F24 TRANSMISSION VERIFICATION TEST** .

      No

      - Go To 3
3. **CHECK THE SHIFT SOLENOID B (2)**
   1. Turn the ignition off to the lock position.
   2. Measure the resistance of the Shift Solenoid B (2) between the appropriate terminals of the Transmission C1 harness connector.

      Is the resistance of the Shift Solenoid B (2) between 10 and 11 Ohms at 20° C (68° F)?

      Yes

      - Using the schematics as a guide, check the Transmission Control Module (TCM) pins, terminals, and connectors for corrosion, damage, or terminal push out. Pay particular attention to all power and ground circuits. If no problems are found, replace and program the TCM in accordance with the Service Information. Refer to **MODULE, TRANSMISSION CONTROL, REMOVAL** .
      - Perform TRANSMISSION VERIFICATION TEST. Refer to **6F24 TRANSMISSION VERIFICATION TEST** .

      No

      - Remove the transmission side cover and inspect the internal lead

frame. If there are no problems found with the lead frame, replace the Shift Solenoid B (2) in accordance with the Service Information.

- Perform TRANSMISSION VERIFICATION TEST. Refer to **6F24 TRANSMISSION VERIFICATION TEST** .

4. **CHECK WIRING AND CONNECTORS**
   1. The conditions necessary to set the DTC are not present at this time.
   2. Using the schematics as a guide, inspect the wiring and connectors specific to this circuit.
   3. Wiggle the wires while checking for shorted and open circuits.
   4. Check for any Service Bulletins that may apply.

   Were there any problems found?

   Yes

   - Repair as necessary.
   - Perform TRANSMISSION VERIFICATION TEST. Refer to **6F24 TRANSMISSION VERIFICATION TEST** .

   No

   - Test Complete.

P0978-00-SHIFT SOLENOID 3 CONTROL CIRCUIT RANGE-PERFORMANCE

For a complete wiring diagram, **refer to appropriate SYSTEM WIRING DIAGRAMS article** .

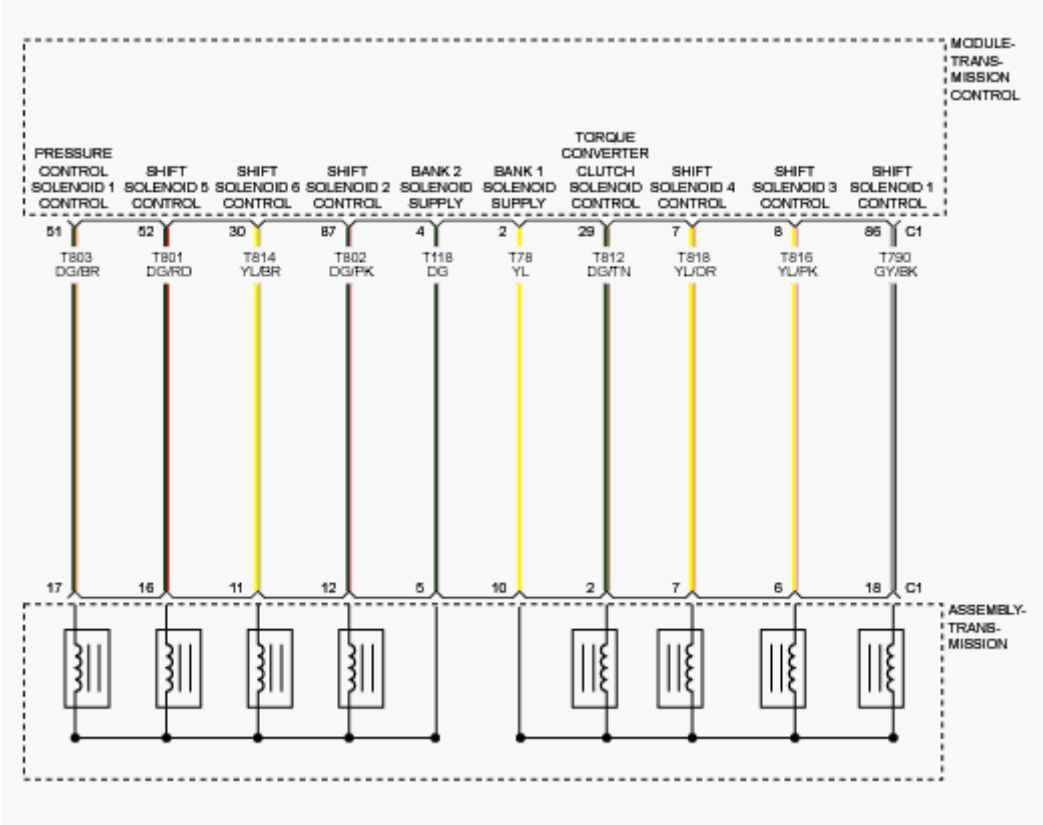

Fig. 26: Transmission Solenoids Circuit Diagram
Courtesy of CHRYSLER GROUP, LLC

THEORY OF OPERATION

The purpose of this diagnostic is to check the functionality of each of the six variable force solenoid circuits. The six variable force solenoids include a shift solenoid C which controls the 3rd, 5th, Reverse clutch, shift solenoid D which controls the Over Drive clutch, shift solenoid E which controls the Under Drive brake, shift solenoid F which controls the 2nd, 6th brake, pressure control solenoid A which controls the hydraulic line pressure, and torque converter clutch pressure control solenoid which controls the torque converter lock up clutch. The malfunction condition is detected if the measured solenoid feedback current does not correlate to the TCM commanded solenoid current. This failure may be caused by conditions such as internal circuit corrosion or manufacturing defects.

WHEN MONITORED

Limp in condition is not present.

Time since last gear shift is greater than or equal to 300 ms.

TCM supply voltage for solenoid is between 9 volts and 16 volts.

Time since high side driver commanded on is greater than or equal to 300 ms.

No variable force solenoid circuit failures.

Solenoid control duty cycle is 0%.

SET CONDITION

The failure is detected if the measured solenoid feedback current is greater than 50 mA but less than or equal to 550 mA of the commanded solenoid current for 320 ms.

POSSIBLE CAUSES

Possible Causes
CIRCUIT(S) HIGH RESISTANCE (T816) SHIFT SOLENOID C (3) CONTROL CIRCUIT SHORTED TO GROUND SHIFT SOLENOID C (3) TRANSMISSION CONTROL MODULE (TCM)

Always perform the Pre-Diagnostic Troubleshooting procedure before proceeding. Refer to 6F24 PRE-DIAGNOSTIC TROUBLESHOOTING PROCEDURE.

DIAGNOSTIC TEST

1. **CHECK IF DTC IS CURRENT**
    1. Using the scan tool, read TCM DTCs.
    2. Record the Environmental Data and any DTCs.
    3. Clear DTCs.
    4. Using the recorded Environmental Data, along with the When Monitored and Set Conditions above, operate the vehicle in the conditions that set the DTC.
    5. Read TCM DTCs.

    Did the DTC reset?

Yes

- Go To 2

No

- Go To 5

2. **CHECK THE SHIFT SOLENOID C (3) CIRCUITS FOR HIGH RESISTANCE**
   1. Turn the ignition off to the lock position.
   2. Disconnect the Transmission C1 harness connectors.
   3. Disconnect the TCM C1 harness connector.
   4. Using the schematics as a guide, inspect the Transmission C1 and TCM C1 harness connectors, pins and terminals for the Shift Solenoid C (3) circuits for corrosion, damage, or terminal push out.

   Were any problems found?

   Yes

   - Repair as necessary.
   - Perform TRANSMISSION VERIFICATION TEST. Refer to **6F24 TRANSMISSION VERIFICATION TEST** .

   No

   - Go To 3

3. **CHECK THE (T816) SHIFT SOLENOID C (3) CONTROL CIRCUIT FOR A SHORT TO GROUND**
   1. Measure the resistance of the (T816) Shift Solenoid C (3) Control circuit between ground and the Transmission C1 harness connector.

   Is the resistance above 100k ohms?

   Yes

   - Go To 4

   No

- Repair the (T816) Shift Solenoid C (3) Control circuit for a short to ground.
- Perform TRANSMISSION VERIFICATION TEST. Refer to **6F24 TRANSMISSION VERIFICATION TEST** .

4. **CHECK THE SHIFT SOLENOID C (3)**
   1. Turn the ignition off to the lock position.
   2. Measure the resistance of the Shift Solenoid C (3) between the appropriate terminals of the Transmission C1 harness connector.

      Is the resistance of the Shift Solenoid C (3) 5.1 Ohms (± 0.3 Ohm) at 25° C (77° F)?

      Yes

      - Using the schematics as a guide, check the Transmission Control Module (TCM) pins, terminals, and connectors for corrosion, damage, or terminal push out. Pay particular attention to all power and ground circuits. If no problems are found, replace and program the TCM in accordance with the Service Information. Refer to **MODULE, TRANSMISSION CONTROL, REMOVAL** .
      - Perform TRANSMISSION VERIFICATION TEST. Refer to **6F24 TRANSMISSION VERIFICATION TEST** .

      No

      - Remove the transmission side cover and inspect the internal lead frame. If there are no problems found with the lead frame, replace the Shift Solenoid C (3) in accordance with the Service Information.
      - Perform TRANSMISSION VERIFICATION TEST. Refer to **6F24 TRANSMISSION VERIFICATION TEST** .

5. **CHECK WIRING AND CONNECTORS**
   1. The conditions necessary to set the DTC are not present at this time.
   2. Using the schematics as a guide, inspect the wiring and connectors specific to this circuit.
   3. Wiggle the wires while checking for shorted and open circuits.
   4. Check for any Service Bulletins that may apply.

Were there any problems found?

Yes

- Repair as necessary.
- Perform TRANSMISSION VERIFICATION TEST. Refer to **6F24 TRANSMISSION VERIFICATION TEST** .

No

- Test Complete.

P0979-00-SHIFT SOLENOID 3 CONTROL CIRCUIT LOW

For a complete wiring diagram, **refer to appropriate SYSTEM WIRING DIAGRAMS article** .

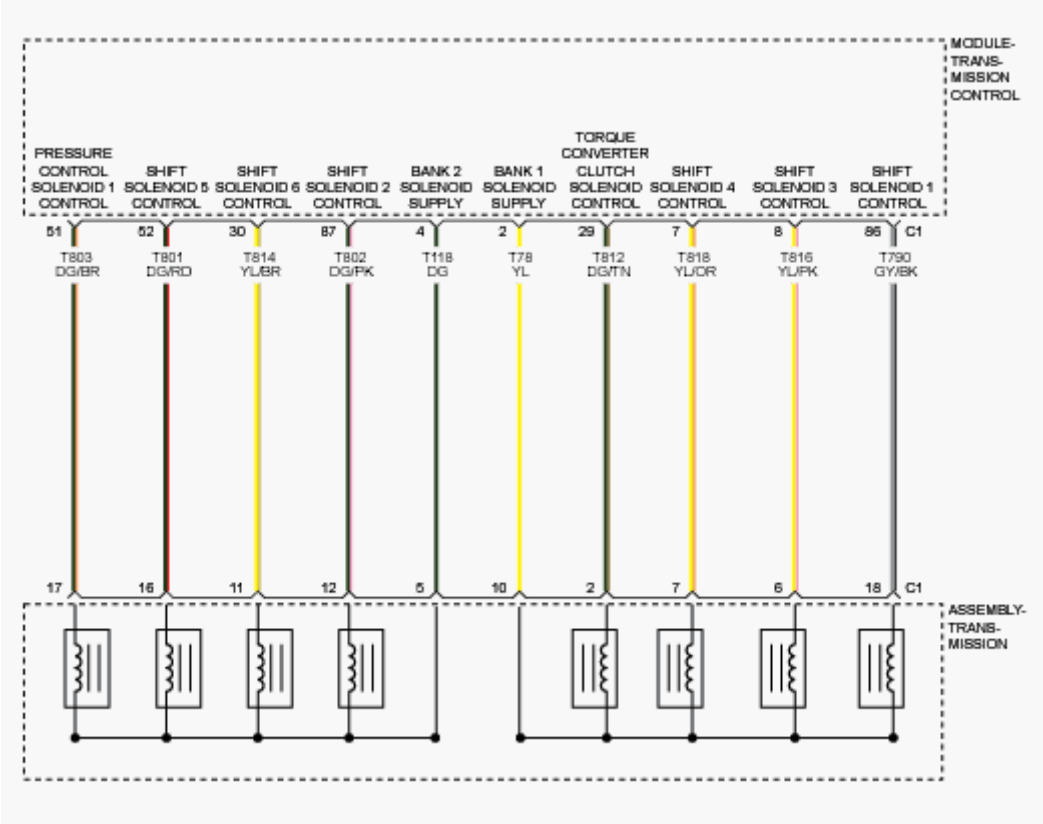

Fig. 27: Transmission Solenoids Circuit Diagram
Courtesy of CHRYSLER GROUP, LLC

THEORY OF OPERATION

The purpose of this diagnostic is to check the electrical performance of each of

the six variable force solenoid circuits. The six variable force solenoids include a shift solenoid C which controls the 3rd , 5th , Reverse clutch, shift solenoid D which controls the Over Drive clutch, shift solenoid E which controls the Under Drive brake, shift solenoid F which controls the 2nd , 6th brake, pressure control solenoid A which controls the hydraulic line pressure, and torque converter clutch pressure control solenoid which controls the torque converter lock up clutch. The electrical failures that are detected include short to battery, short to ground, and open circuit. The power stage driver, which is located in the TCM, detects these electrical malfunctions.

WHEN MONITORED

Limp in condition is not present.

Time since last gear shift is greater than or equal to 300 ms.

TCM supply voltage for solenoid is between 9 and 16 volts.

Time since high side driver commanded on is greater than or equal to 300 ms.

Solenoid is commanded off (pulse width modulation duty cycle is 0%).

SET CONDITION

The failure is detected if the measured voltage for solenoid output is less than or equal to 1.3 volts for 0.32 of a second.

POSSIBLE CAUSES

Possible Causes
(T816) SHIFT SOLENOID C (3) CONTROL CIRCUIT SHORT TO GROUND SHIFT SOLENOID C (3) TRANSMISSION CONTROL MODULE (TCM)

Always perform the Pre-Diagnostic Troubleshooting procedure before proceeding. Refer to 6F24 PRE-DIAGNOSTIC TROUBLESHOOTING PROCEDURE .

DIAGNOSTIC TEST

1. **CHECK IF DTC IS CURRENT**
   1. Using the scan tool, read TCM DTCs.
   2. Record the Environmental Data and any DTCs.
   3. Clear DTCs.
   4. Using the recorded Environmental Data, along with the When Monitored and Set Conditions above, operate the vehicle in the conditions that set the DTC.
   5. Read TCM DTCs.

   Did the DTC reset?

   Yes

   - Go To 2

   No

   - Go To 4
2. **CHECK THE (T816) SHIFT SOLENOID C (3) CONTROL CIRCUIT FOR A SHORT TO GROUND**
   1. Measure the resistance of the (T816) Shift Solenoid C (3) Control circuit between ground and the Transmission C1 harness connector.

   Is the resistance above 100k ohms?

   Yes

   - Go To 3

   No

   - Repair the (T816) Shift Solenoid C (3) Control circuit for a short to ground.
   - Perform TRANSMISSION VERIFICATION TEST. Refer to **6F24 TRANSMISSION VERIFICATION TEST** .
3. **CHECK THE SHIFT SOLENOID C (3)**
   1. Turn the ignition off to the lock position.
   2. Measure the resistance of the Shift Solenoid C (3) between the

appropriate terminals of the Transmission C1 harness connector.

Is the resistance of the Shift Solenoid C (3) 5.1 Ohms (± 0.3 Ohm) at 25° C (77° F)?

Yes

- Using the schematics as a guide, check the Transmission Control Module (TCM) pins, terminals, and connectors for corrosion, damage, or terminal push out. Pay particular attention to all power and ground circuits. If no problems are found, replace and program the TCM in accordance with the Service Information. Refer to **MODULE, TRANSMISSION CONTROL, REMOVAL** .
- Perform TRANSMISSION VERIFICATION TEST. Refer to **6F24 TRANSMISSION VERIFICATION TEST** .

No

- Remove the transmission side cover and inspect the internal lead frame. If there are no problems found with the lead frame, replace the Shift Solenoid C (3) in accordance with the Service Information.
- Perform TRANSMISSION VERIFICATION TEST. Refer to **6F24 TRANSMISSION VERIFICATION TEST** .

4. **CHECK WIRING AND CONNECTORS**
   1. The conditions necessary to set the DTC are not present at this time.
   2. Using the schematics as a guide, inspect the wiring and connectors specific to this circuit.
   3. Wiggle the wires while checking for shorted and open circuits.
   4. Check for any Service Bulletins that may apply.

   Were there any problems found?

   Yes

   - Repair as necessary.
   - Perform TRANSMISSION VERIFICATION TEST. Refer to **6F24 TRANSMISSION VERIFICATION TEST** .

No

- Test Complete.

P097C-00-SHIFT SOLENOID 3 CONTROL CIRCUIT OPEN

For a complete wiring diagram, **refer to appropriate SYSTEM WIRING DIAGRAMS article** .

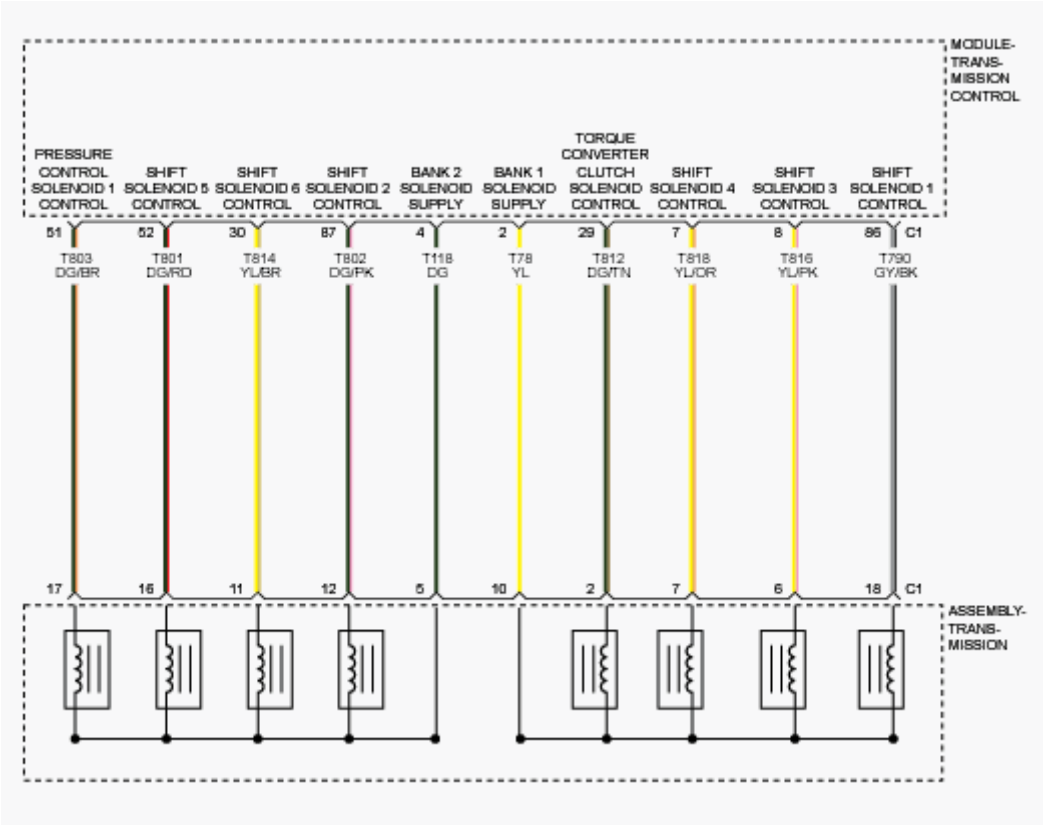

Fig. 28: Transmission Solenoids Circuit Diagram
Courtesy of CHRYSLER GROUP, LLC

THEORY OF OPERATION

The purpose of this diagnostic is to check the electrical performance of each of the six variable force solenoid circuits. The six variable force solenoids include a shift solenoid C which controls the 3rd , 5th , Reverse clutch, shift solenoid D which controls the Over Drive clutch, shift solenoid E which controls the Under Drive brake, shift solenoid F which controls the 2nd , 6th brake, pressure control solenoid A which controls the hydraulic line pressure, and torque converter clutch pressure control solenoid which controls the torque converter lock up clutch. The electrical failures that are detected include short to battery, short to

ground, and open circuit. The power stage driver, which is located in the TCM, detects these electrical malfunctions.

WHEN MONITORED

Limp in condition is not present.

Time since last gear shift is greater than or equal to 300 ms.

TCM supply voltage for solenoid is between 9 and 16 volts.

Time since high side driver commanded on is greater than or equal to 300 ms.

Solenoid is commanded off (pulse width modulation duty cycle is 0%).

SET CONDITION

The failure is detected if measured voltage for solenoid output is between 1.3 volts and 4.7 volts for 0.32 of a second.

POSSIBLE CAUSES

Possible Causes
(T78) BANK 1 SOLENOID POWER SUPPLY CIRCUIT OPEN (T816) SHIFT SOLENOID C (3) CONTROL CIRCUIT OPEN SHIFT SOLENOID C (3) TRANSMISSION CONTROL MODULE (TCM)

Always perform the Pre-Diagnostic Troubleshooting procedure before proceeding. Refer to 6F24 PRE-DIAGNOSTIC TROUBLESHOOTING PROCEDURE .

DIAGNOSTIC TEST

1. **CHECK IF DTC IS CURRENT**
    1. Using the scan tool, read TCM DTCs.
    2. Record the Environmental Data and any DTCs.
    3. Clear DTCs.
    4. Using the recorded Environmental Data, along with the When Monitored and Set Conditions above, operate the vehicle in the conditions that set the DTC.

5. Read TCM DTCs.

   Did the DTC reset?

   Yes

   - Go To 2

   No

   - Go To 5

2. **CHECK THE (T78) BANK 1 SOLENOID POWER CIRCUIT FOR AN OPEN**
   1. Turn the ignition off to the lock position.
   2. Disconnect the Transmission C1 harness connectors.
   3. Disconnect the TCM C1 harness connector.
   4. Measure the resistance of the (T78) Bank 1 Solenoid Power circuit between the Transmission C1 harness connector and the TCM C1 harness connector.

      Is the resistance below 5.0 Ohms?

      Yes

      - Go To 3

      No

      - Repair the (T78) Bank 1 Solenoid Power circuit for an open.
      - Perform TRANSMISSION VERIFICATION TEST. Refer to **6F24 TRANSMISSION VERIFICATION TEST** .

3. **CHECK THE (T816) SHIFT SOLENOID C (3) CONTROL CIRCUIT FOR AN OPEN**
   1. Measure the resistance of the (T816) Shift Solenoid C (3) Control circuit between the Transmission C1 harness connector and the TCM C1 harness connector.

      Is the resistance below 5.0 Ohms?

Yes

- Go To 4

No

- Repair the (T816) Shift Solenoid C (3) Control circuit for an open.
- Perform TRANSMISSION VERIFICATION TEST. Refer to **6F24 TRANSMISSION VERIFICATION TEST** .

4. **CHECK THE SHIFT SOLENOID C (3)**
   1. Turn the ignition off to the lock position.
   2. Measure the resistance of the Shift Solenoid C (3) between the appropriate terminals at the Transmission C1 harness connector.

   Is the resistance of the Shift Solenoid C (3) 5.1 Ohms (± 0.3 Ohm) at 25° C (77° F)?

   Yes

   - Using the schematics as a guide, check the Transmission Control Module (TCM) pins, terminals, and connectors for corrosion, damage, or terminal push out. Pay particular attention to all power and ground circuits. If no problems are found, replace and program the TCM in accordance with the Service Information. Refer to **MODULE, TRANSMISSION CONTROL, REMOVAL** .
   - Perform TRANSMISSION VERIFICATION TEST. Refer to **6F24 TRANSMISSION VERIFICATION TEST** .

   No

   - Remove the transmission side cover and inspect the internal lead frame. If there are no problems found with the lead frame, replace the Shift Solenoid C (3) in accordance with the Service Information.
   - Perform TRANSMISSION VERIFICATION TEST. Refer to **6F24 TRANSMISSION VERIFICATION TEST** .

5. **CHECK WIRING AND CONNECTORS**
   1. The conditions necessary to set the DTC are not present at this time.

2. Using the schematics as a guide, inspect the wiring and connectors specific to this circuit.
3. Wiggle the wires while checking for shorted and open circuits.
4. Check for any Service Bulletins that may apply.

Were there any problems found?

Yes

- Repair as necessary.
- Perform TRANSMISSION VERIFICATION TEST. Refer to **6F24 TRANSMISSION VERIFICATION TEST** .

No

- Test Complete.

P097D-00-SHIFT SOLENOID 4 CONTROL CIRCUIT OPEN

For a complete wiring diagram, **refer to appropriate SYSTEM WIRING DIAGRAMS article** .

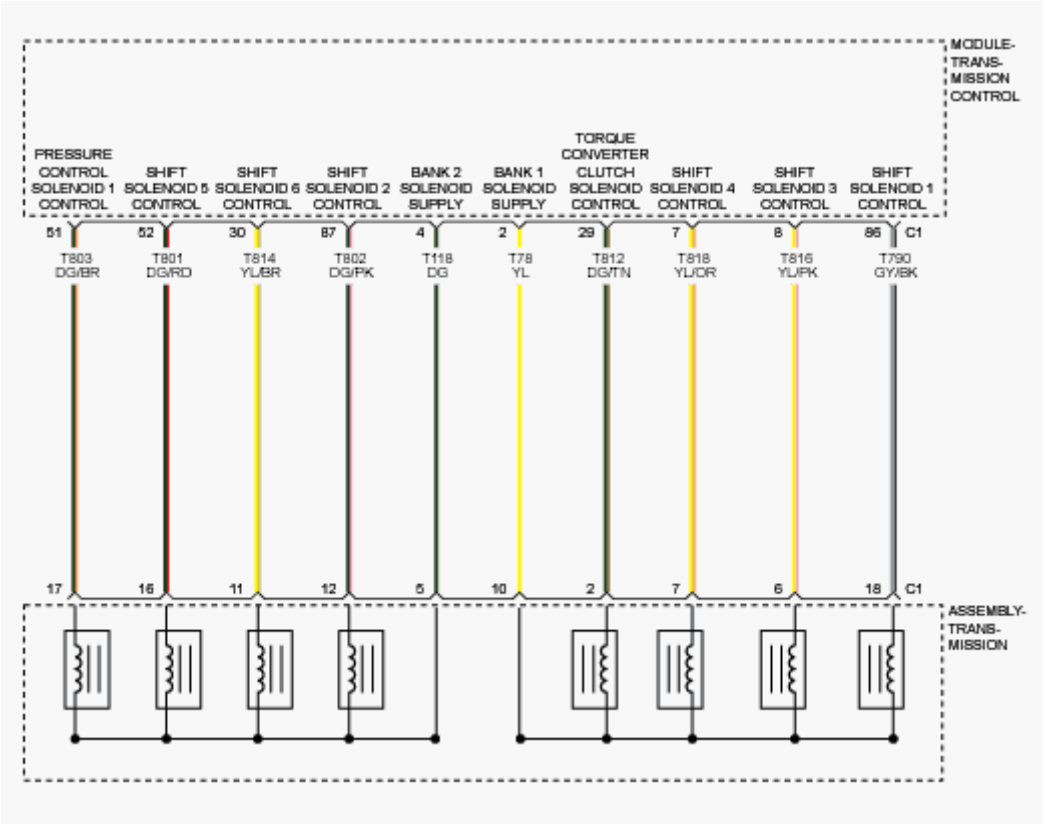

Fig. 29: Transmission Solenoids Circuit Diagram
Courtesy of CHRYSLER GROUP, LLC

THEORY OF OPERATION

The purpose of this diagnostic is to check the electrical performance of each of the six variable force solenoid circuits. The six variable force solenoids include a shift solenoid C which controls the 3rd , 5th , Reverse clutch, shift solenoid D which controls the Over Drive clutch, shift solenoid E which controls the Under Drive brake, shift solenoid F which controls the 2nd , 6th brake, pressure control solenoid A which controls the hydraulic line pressure, and torque converter clutch pressure control solenoid which controls the torque converter lock up clutch. The electrical failures that are detected include short to battery, short to ground, and open circuit. The power stage driver, which is located in the TCM, detects these electrical malfunctions.

WHEN MONITORED

Limp in condition is not present.

Time since last gear shift is greater than or equal to 300 ms.

TCM supply voltage for solenoid is between 9 and 16 volts.

Time since high side driver commanded on is greater than or equal to 300 ms.

Solenoid is commanded off (pulse width modulation duty cycle is 0%).

SET CONDITION

The failure is detected if measured voltage for solenoid output is between 1.3 volts and 4.7 volts for 0.32 of a second.

POSSIBLE CAUSES

Possible Causes
(T78) BANK 1 SOLENOID POWER SUPPLY CIRCUIT OPEN (T818) SHIFT SOLENOID D (4) CONTROL CIRCUIT OPEN SHIFT SOLENOID D (4) TRANSMISSION CONTROL MODULE (TCM)

Always perform the Pre-Diagnostic Troubleshooting procedure before proceeding. Refer to 6F24 PRE-DIAGNOSTIC TROUBLESHOOTING PROCEDURE .

DIAGNOSTIC TEST

1. **CHECK IF DTC IS CURRENT**
   1. Using the scan tool, read TCM DTCs.
   2. Record the Environmental Data and any DTCs.
   3. Clear DTCs.
   4. Using the recorded Environmental Data, along with the When Monitored and Set Conditions above, operate the vehicle in the conditions that set the DTC.
   5. Read TCM DTCs.

      Did the DTC reset?

      Yes

      - Go To 2

      No

      - Go To 5
2. **CHECK THE (T78) BANK 1 SOLENOID POWER CIRCUIT FOR AN OPEN**
   1. Turn the ignition off to the lock position.
   2. Disconnect the Transmission C1 harness connectors.
   3. Disconnect the TCM C1 harness connector.
   4. Measure the resistance of the (T78) Bank 1 Solenoid Power circuit between the Transmission C1 harness connector and the TCM C1 harness connector.

      Is the resistance below 5.0 Ohms?

      Yes

      - Go To 3

No

- Repair the (T78) Bank 1 Solenoid Power circuit for an open.
- Perform TRANSMISSION VERIFICATION TEST. Refer to **6F24 TRANSMISSION VERIFICATION TEST** .

3. **CHECK THE (T818) SHIFT SOLENOID D (4) CONTROL CIRCUIT FOR AN OPEN**
   1. Measure the resistance of the (T818) Shift Solenoid D (4) Control circuit between the Transmission C1 harness connector and the TCM C1 harness connector.

      Is the resistance below 5.0 Ohms?

      Yes

      - Go To 4

      No

      - Repair the (T818) Shift Solenoid D (4) Control circuit for an open.
      - Perform TRANSMISSION VERIFICATION TEST. Refer to **6F24 TRANSMISSION VERIFICATION TEST** .
4. **CHECK THE SHIFT SOLENOID D (4)**
   1. Turn the ignition off to the lock position.
   2. Measure the resistance of the Shift Solenoid D (4) between the appropriate terminals at the Transmission C1 harness connector.

      Is the resistance of the Shift Solenoid D (4) 5.1 Ohms (± 0.3 Ohm) at 25° C (77° F)?

      Yes

      - Using the schematics as a guide, check the Transmission Control Module (TCM) pins, terminals, and connectors for corrosion, damage, or terminal push out. Pay particular attention to all power and ground circuits. If no problems are found, replace and program the TCM in accordance with the Service Information. Refer to **MODULE, TRANSMISSION CONTROL, REMOVAL** .
      - Perform TRANSMISSION VERIFICATION TEST. Refer to **6F24**

TRANSMISSION VERIFICATION TEST .

No

- Remove the transmission side cover and inspect the internal lead frame. If there are no problems found with the lead frame, replace the Shift Solenoid D (4) in accordance with the Service Information.
- Perform TRANSMISSION VERIFICATION TEST. Refer to **6F24 TRANSMISSION VERIFICATION TEST** .

5. **CHECK WIRING AND CONNECTORS**
   1. The conditions necessary to set the DTC are not present at this time.
   2. Using the schematics as a guide, inspect the wiring and connectors specific to this circuit.
   3. Wiggle the wires while checking for shorted and open circuits.
   4. Check for any Service Bulletins that may apply.

   Were there any problems found?

   Yes

   - Repair as necessary.
   - Perform TRANSMISSION VERIFICATION TEST. Refer to **6F24 TRANSMISSION VERIFICATION TEST** .

   No

   - Test Complete.

P097E-00-SHIFT SOLENOID 5 CONTROL CIRCUIT OPEN

For a complete wiring diagram, **refer to appropriate SYSTEM WIRING DIAGRAMS article** .

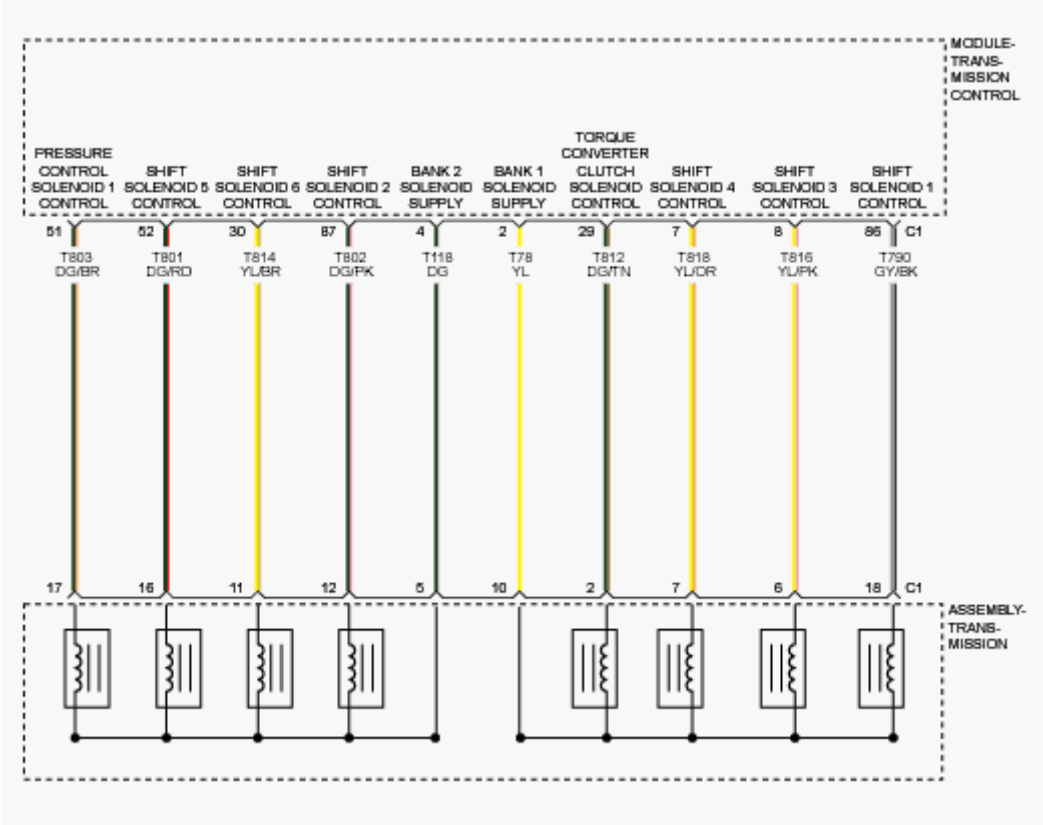

Fig. 30: Transmission Solenoids Circuit Diagram
Courtesy of CHRYSLER GROUP, LLC

THEORY OF OPERATION

The purpose of this diagnostic is to check the electrical performance of each of the six variable force solenoid circuits. The six variable force solenoids include a shift solenoid C which controls the 3rd , 5th , Reverse clutch, shift solenoid D which controls the Over Drive clutch, shift solenoid E which controls the Under Drive brake, shift solenoid F which controls the 2nd , 6th brake, pressure control solenoid A which controls the hydraulic line pressure, and torque converter clutch pressure control solenoid which controls the torque converter lock up clutch. The electrical failures that are detected include short to battery, short to ground, and open circuit. The power stage driver, which is located in the TCM, detects these electrical malfunctions.

WHEN MONITORED

Limp in condition is not present.

Time since last gear shift is greater than or equal to 300 ms.

TCM supply voltage for solenoid is between 9 and 16 volts.

Time since high side driver commanded on is greater than or equal to 300 ms.

Solenoid is commanded off (pulse width modulation duty cycle is 0%).

SET CONDITION

The failure is detected if measured voltage for solenoid output is between 1.3 volts and 4.7 volts for 0.32 of a second.

POSSIBLE CAUSES

Possible Causes
BANK 2 SOLENOID POWER SUPPLY CIRCUIT OPEN (T801) SHIFT SOLENOID E (5) CONTROL CIRCUIT OPEN SHIFT SOLENOID E (5) TRANSMISSION CONTROL MODULE (TCM)

Always perform the Pre-Diagnostic Troubleshooting procedure before proceeding. Refer to 6F24 PRE-DIAGNOSTIC TROUBLESHOOTING PROCEDURE .

DIAGNOSTIC TEST

1. **CHECK IF DTC IS CURRENT**
    1. Using the scan tool, read TCM DTCs.
    2. Record the Environmental Data and any DTCs.
    3. Clear DTCs.
    4. Using the recorded Environmental Data, along with the When Monitored and Set Conditions above, operate the vehicle in the conditions that set the DTC.
    5. Read TCM DTCs.

    Did the DTC reset?

    Yes

    - Go To 2

No

- Go To 5

2. **CHECK THE (T118) BANK 2 SOLENOID POWER CIRCUIT FOR AN OPEN**
   1. Turn the ignition off to the lock position.
   2. Disconnect the Transmission C1 harness connectors.
   3. Disconnect the TCM C1 harness connector.
   4. Measure the resistance of the (T118) Bank 2 Solenoid Power circuit between the Transmission C1 harness connector and the TCM C1 harness connector.

   Is the resistance below 5.0 Ohms?

   Yes

   - Go To 3

   No

   - Repair the (T118) Bank 2 Solenoid Power circuit for an open.
   - Perform TRANSMISSION VERIFICATION TEST. Refer to **6F24 TRANSMISSION VERIFICATION TEST** .

3. **CHECK THE (T801) SHIFT SOLENOID E (5) CONTROL CIRCUIT FOR AN OPEN**
   1. Measure the resistance of the (T801) Shift Solenoid E (5) Control circuit between the Transmission C1 harness connector and the TCM C1 harness connector.

   Is the resistance below 5.0 Ohms?

   Yes

   - Go To 4

   No

   - Repair the (T801) Shift Solenoid E (5) Control circuit for an open.
   - Perform TRANSMISSION VERIFICATION TEST. Refer to **6F24**

TRANSMISSION VERIFICATION TEST .

4. **CHECK THE SHIFT SOLENOID E (5)**
   1. Turn the ignition off to the lock position.
   2. Measure the resistance of the Shift Solenoid E (5) between the appropriate terminals at the Transmission C1 harness connector.

      Is the resistance of the Shift Solenoid E (5) 5.1 Ohms (± 0.3 Ohm) at 25° C (77° F)?

      Yes

      - Using the schematics as a guide, check the Transmission Control Module (TCM) pins, terminals, and connectors for corrosion, damage, or terminal push out. Pay particular attention to all power and ground circuits. If no problems are found, replace and program the TCM in accordance with the Service Information. Refer to **MODULE, TRANSMISSION CONTROL, REMOVAL** .
      - Perform TRANSMISSION VERIFICATION TEST. Refer to **6F24 TRANSMISSION VERIFICATION TEST** .

      No

      - Remove the transmission side cover and inspect the internal lead frame. If there are no problems found with the lead frame, replace the Shift Solenoid E (5) in accordance with the Service Information.
      - Perform TRANSMISSION VERIFICATION TEST. Refer to **6F24 TRANSMISSION VERIFICATION TEST** .
5. **CHECK WIRING AND CONNECTORS**
   1. The conditions necessary to set the DTC are not present at this time.
   2. Using the schematics as a guide, inspect the wiring and connectors specific to this circuit.
   3. Wiggle the wires while checking for shorted and open circuits.
   4. Check for any Service Bulletins that may apply.

      Were there any problems found?

      Yes

- Repair as necessary.
- Perform TRANSMISSION VERIFICATION TEST. Refer to **6F24 TRANSMISSION VERIFICATION TEST** .

No

- Test Complete.

P097F-00-SHIFT SOLENOID 6 CONTROL CIRCUIT-OPEN

For a complete wiring diagram, **refer to appropriate SYSTEM WIRING DIAGRAMS article** .

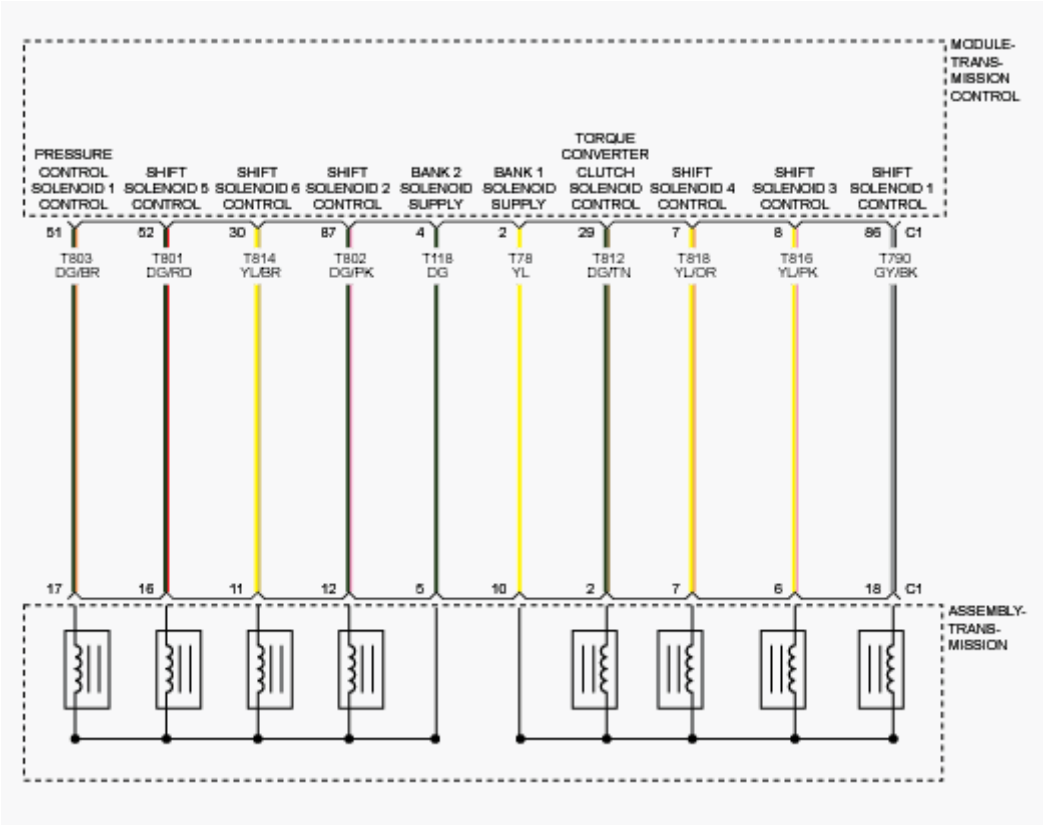

Fig. 31: Transmission Solenoids Circuit Diagram
Courtesy of CHRYSLER GROUP, LLC

THEORY OF OPERATION

The purpose of this diagnostic is to check the electrical performance of each of the six variable force solenoid circuits. The six variable force solenoids include a shift solenoid C which controls the 3rd , 5th , Reverse clutch, shift solenoid D which controls the Over Drive clutch, shift solenoid E which controls the Under

Drive brake, shift solenoid F which controls the 2nd , 6th brake, pressure control solenoid A which controls the hydraulic line pressure, and torque converter clutch pressure control solenoid which controls the torque converter lock up clutch. The electrical failures that are detected include short to battery, short to ground, and open circuit. The power stage driver, which is located in the TCM, detects these electrical malfunctions.

WHEN MONITORED

Limp in condition is not present.

Time since last gear shift is greater than or equal to 300 ms.

TCM supply voltage for solenoid is between 9 and 16 volts.

Time since high side driver commanded on is greater than or equal to 300 ms.

Solenoid is commanded off (pulse width modulation duty cycle is 0%).

SET CONDITION

The failure is detected if measured voltage for solenoid output is between 1.3 volts and 4.7 volts for 0.32 of a second.

POSSIBLE CAUSES

Possible Causes
BANK 2 SOLENOID POWER SUPPLY CIRCUIT OPEN (T814) SHIFT SOLENOID F (6) CONTROL CIRCUIT OPEN SHIFT SOLENOID F (6) TRANSMISSION CONTROL MODULE (TCM)

Always perform the Pre-Diagnostic Troubleshooting procedure before proceeding. Refer to 6F24 PRE-DIAGNOSTIC TROUBLESHOOTING PROCEDURE .

DIAGNOSTIC TEST

1. **CHECK IF DTC IS CURRENT**
    1. Using the scan tool, read TCM DTCs.
    2. Record the Environmental Data and any DTCs.

3. Clear DTCs.
4. Using the recorded Environmental Data, along with the When Monitored and Set Conditions above, operate the vehicle in the conditions that set the DTC.
5. Read TCM DTCs.

   Did the DTC reset?

   Yes

   - Go To 2

   No

   - Go To 5

2. **CHECK THE (T118) BANK 2 SOLENOID POWER CIRCUIT FOR AN OPEN**
   1. Turn the ignition off to the lock position.
   2. Disconnect the Transmission C1 harness connectors.
   3. Disconnect the TCM C1 harness connector.
   4. Measure the resistance of the (T118) Bank 2 Solenoid Power circuit between the Transmission C1 harness connector and the TCM C1 harness connector.

      Is the resistance below 5.0 Ohms?

      Yes

      - Go To 3

      No

      - Repair the (T118) Bank 2 Solenoid Power circuit for an open.
      - Perform TRANSMISSION VERIFICATION TEST. Refer to **6F24 TRANSMISSION VERIFICATION TEST** .

3. **CHECK THE (T814) SHIFT SOLENOID F (6) CONTROL CIRCUIT FOR AN OPEN**
   1. Measure the resistance of the (T814) Shift Solenoid F (6) Control

circuit between the Transmission C1 harness connector and the TCM C1 harness connector.

Is the resistance below 5.0 Ohms?

Yes

- Go To 4

No

- Repair the (T814) Shift Solenoid F (6) Control circuit for an open.
- Perform TRANSMISSION VERIFICATION TEST. Refer to **6F24 TRANSMISSION VERIFICATION TEST** .

4. **CHECK THE SHIFT SOLENOID F (6)**
   1. Turn the ignition off to the lock position.
   2. Measure the resistance of the Shift Solenoid F (6) between the appropriate terminals at the Transmission C1 harness connector.

   Is the resistance of the Shift Solenoid F (6) 5.1 Ohms (± 0.3 Ohm) at 25° C (77° F)?

   Yes

   - Using the schematics as a guide, check the Transmission Control Module (TCM) pins, terminals, and connectors for corrosion, damage, or terminal push out. Pay particular attention to all power and ground circuits. If no problems are found, replace and program the TCM in accordance with the Service Information. Refer to **MODULE, TRANSMISSION CONTROL, REMOVAL** .
   - Perform TRANSMISSION VERIFICATION TEST. Refer to **6F24 TRANSMISSION VERIFICATION TEST** .

   No

   - Remove the transmission side cover and inspect the internal lead frame. If there are no problems found with the lead frame, replace the Shift Solenoid F (6) in accordance with the Service Information.

- Perform TRANSMISSION VERIFICATION TEST. Refer to **6F24 TRANSMISSION VERIFICATION TEST** .

5. **CHECK WIRING AND CONNECTORS**
   1. The conditions necessary to set the DTC are not present at this time.
   2. Using the schematics as a guide, inspect the wiring and connectors specific to this circuit.
   3. Wiggle the wires while checking for shorted and open circuits.
   4. Check for any Service Bulletins that may apply.

   Were there any problems found?

   Yes

   - Repair as necessary.
   - Perform TRANSMISSION VERIFICATION TEST. Refer to **6F24 TRANSMISSION VERIFICATION TEST** .

   No

   - Test Complete.

P0980-00-SHIFT SOLENOID 3 CONTROL CIRCUIT HIGH

For a complete wiring diagram, **refer to appropriate SYSTEM WIRING DIAGRAMS article** .

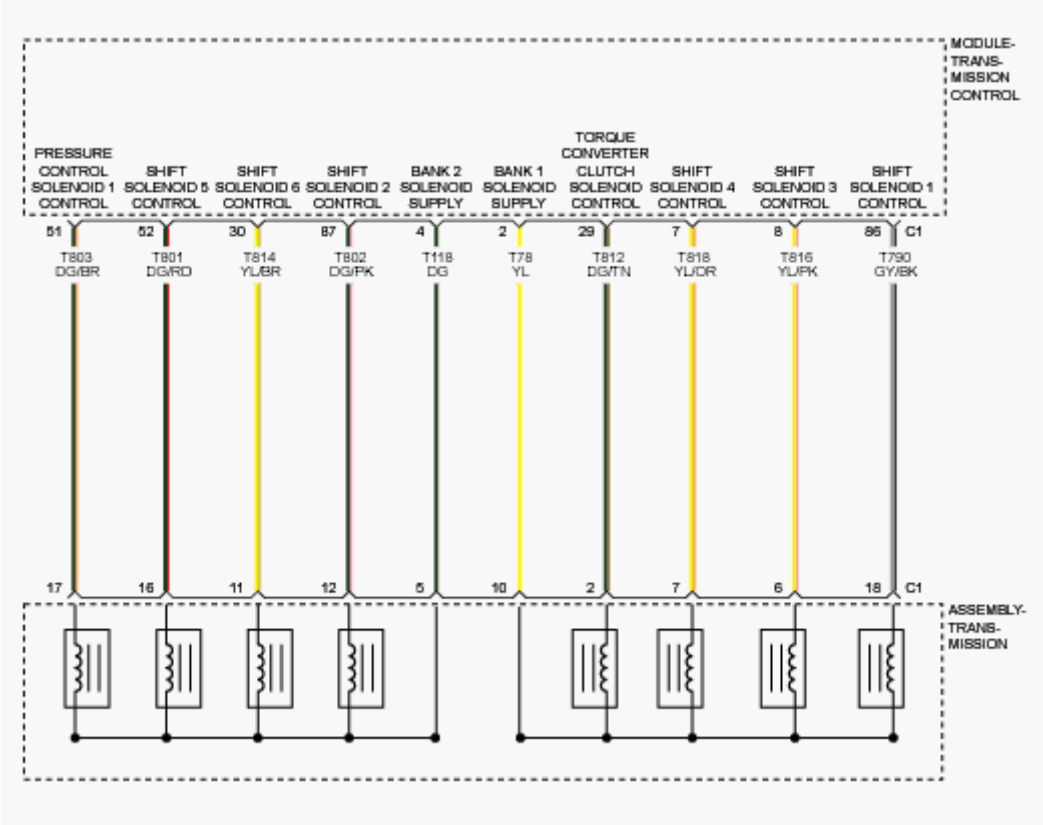

Fig. 32: Transmission Solenoids Circuit Diagram
Courtesy of CHRYSLER GROUP, LLC

THEORY OF OPERATION

The purpose of this diagnostic is to check the electrical performance of each of the six variable force solenoid circuits. The six variable force solenoids include a shift solenoid C which controls the 3rd , 5th , Reverse clutch, shift solenoid D which controls the Over Drive clutch, shift solenoid E which controls the Under Drive brake, shift solenoid F which controls the 2nd , 6th brake, pressure control solenoid A which controls the hydraulic line pressure, and torque converter clutch pressure control solenoid which controls the torque converter lock up clutch. The electrical failures that are detected include short to battery, short to ground, and open circuit. The power stage driver, which is located in the TCM, detects these electrical malfunctions.

WHEN MONITORED

Limp in condition is not present.

Time since last gear shift is greater than or equal to 300 ms.

TCM supply voltage for solenoid is between 9 and 16 volts.

Time since high side driver commanded on is greater than or equal to 300 ms.

Solenoid is commanded on (pulse width modulation duty cycle is greater than 10%).

SET CONDITION

The failure is detected if the measured voltage for solenoid output is greater than or equal to 0.575 of a volt for 0.32 of a second.

POSSIBLE CAUSES

Possible Causes
(T816) SHIFT SOLENOID C (3) CONTROL CIRCUIT SHORTED TO VOLTAGE SHIFT SOLENOID C (3) TRANSMISSION CONTROL MODULE (TCM)

Always perform the Pre-Diagnostic Troubleshooting procedure before proceeding. Refer to 6F24 PRE-DIAGNOSTIC TROUBLESHOOTING PROCEDURE .

DIAGNOSTIC TEST

1. **CHECK IF DTC IS CURRENT**
    1. Using the scan tool, read TCM DTCs.
    2. Record the Environmental Data and any DTCs.
    3. Clear DTCs.
    4. Using the recorded Environmental Data, along with the When Monitored and Set Conditions above, operate the vehicle in the conditions that set the DTC.
    5. Read TCM DTCs.

    Did the DTC reset?

    Yes

    - Go To 2

No

- Go To 4

2. **CHECK THE (T816) SHIFT SOLENOID C (3) CONTROL CIRCUIT FOR A SHORT TO VOLTAGE**
   1. Measure the voltage of the (T816) Shift Solenoid C (3) Control circuit between ground and the Transmission C1 harness connector.

      Is the voltage above 0.5 of a volt?

      Yes

      - Repair the (T816) Shift Solenoid C (3) Control circuit for a short to voltage.
      - Perform TRANSMISSION VERIFICATION TEST. Refer to **6F24 TRANSMISSION VERIFICATION TEST** .

      No

      - Go To 3

3. **CHECK THE SHIFT SOLENOID C (3)**
   1. Turn the ignition off to the lock position.
   2. Measure the resistance of the Shift Solenoid C (3) between the appropriate terminals of the Transmission C1 harness connector.

      Is the resistance of the Shift Solenoid C (3) 5.1 Ohms (± 0.3 Ohm) at 25° C (77° F)?

      Yes

      - Using the schematics as a guide, check the Transmission Control Module (TCM) pins, terminals, and connectors for corrosion, damage, or terminal push out. Pay particular attention to all power and ground circuits. If no problems are found, replace and program the TCM in accordance with the Service Information. Refer to **MODULE, TRANSMISSION CONTROL, REMOVAL** .
      - Perform TRANSMISSION VERIFICATION TEST. Refer to **6F24 TRANSMISSION VERIFICATION TEST** .

No

- Remove the transmission side cover and inspect the internal lead frame. If there are no problems found with the lead frame, replace the Shift Solenoid C (3) in accordance with the Service Information.
- Perform TRANSMISSION VERIFICATION TEST. Refer to **6F24 TRANSMISSION VERIFICATION TEST** .

4. **CHECK WIRING AND CONNECTORS**
   1. The conditions necessary to set the DTC are not present at this time.
   2. Using the schematics as a guide, inspect the wiring and connectors specific to this circuit.
   3. Wiggle the wires while checking for shorted and open circuits.
   4. Check for any Service Bulletins that may apply.

   Were there any problems found?

   Yes

   - Repair as necessary.
   - Perform TRANSMISSION VERIFICATION TEST. Refer to **6F24 TRANSMISSION VERIFICATION TEST** .

   No

   - Test Complete.

P0981-00-SHIFT SOLENOID 4 CONTROL CIRCUIT RANGE-PERFORMANCE

For a complete wiring diagram, **refer to appropriate SYSTEM WIRING DIAGRAMS article** .

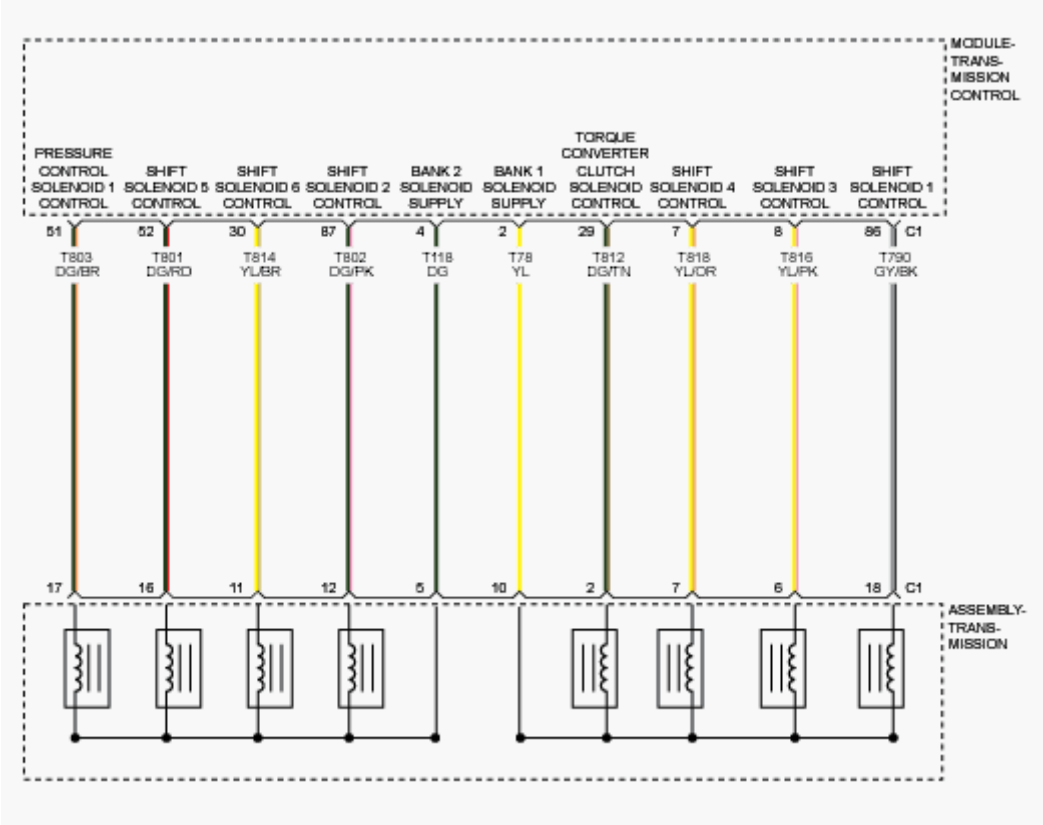

Fig. 33: Transmission Solenoids Circuit Diagram
Courtesy of CHRYSLER GROUP, LLC

THEORY OF OPERATION

The purpose of this diagnostic is to check the functionality of each of the six variable force solenoid circuits. The six variable force solenoids include a shift solenoid C which controls the 3rd, 5th, Reverse clutch, shift solenoid D which controls the Over Drive clutch, shift solenoid E which controls the Under Drive brake, shift solenoid F which controls the 2nd, 6th brake, pressure control solenoid A which controls the hydraulic line pressure, and torque converter clutch pressure control solenoid which controls the torque converter lock up clutch. The malfunction condition is detected if the measured solenoid feedback current does not correlate to the TCM commanded solenoid current. This failure may be caused by conditions such as internal circuit corrosion or manufacturing defects.

WHEN MONITORED

Limp in condition is not present.

Time since last gear shift is greater than or equal to 300 ms.

TCM supply voltage for solenoid is between 9 volts and 16 volts.

Time since high side driver commanded on is greater than or equal to 300 ms.

No variable force solenoid circuit failures.

Solenoid control duty cycle is 0%.

SET CONDITION

The failure is detected if the measured solenoid feedback current is greater than 50 mA but less than or equal to 550 mA of the commanded solenoid current for 320 ms.

POSSIBLE CAUSES

Possible Causes
CIRCUIT(S) HIGH RESISTANCE (T818) SHIFT SOLENOID D (4) CONTROL CIRCUIT SHORTED TO GROUND SHIFT SOLENOID D (4) TRANSMISSION CONTROL MODULE (TCM)

Always perform the Pre-Diagnostic Troubleshooting procedure before proceeding. Refer to 6F24 PRE-DIAGNOSTIC TROUBLESHOOTING PROCEDURE.

DIAGNOSTIC TEST

1. **CHECK IF DTC IS CURRENT**
    1. Using the scan tool, read TCM DTCs.
    2. Record the Environmental Data and any DTCs.
    3. Clear DTCs.
    4. Using the recorded Environmental Data, along with the When Monitored and Set Conditions above, operate the vehicle in the conditions that set the DTC.
    5. Read TCM DTCs.

    Did the DTC reset?

Yes

- Go To 2

No

- Go To 5

2. **CHECK THE SHIFT SOLENOID D (4) CIRCUITS FOR HIGH RESISTANCE**
   1. Turn the ignition off to the lock position.
   2. Disconnect the Transmission C1 harness connectors.
   3. Disconnect the TCM C1 harness connector.
   4. Using the schematics as a guide, inspect the Transmission C1 and TCM C1 harness connectors, pins and terminals for the Shift Solenoid D (4) circuits for corrosion, damage, or terminal push out.

   Were any problems found?

   Yes

   - Repair as necessary.
   - Perform TRANSMISSION VERIFICATION TEST. Refer to **6F24 TRANSMISSION VERIFICATION TEST** .

   No

   - Go To 3

3. **CHECK THE (T818) SHIFT SOLENOID D (4) CONTROL CIRCUIT FOR A SHORT TO GROUND**
   1. Measure the resistance of the (T818) Shift Solenoid D (4) Control circuit between ground and the Transmission C1 harness connector.

   Is the resistance above 100k ohms?

   Yes

   - Go To 4

   No

- Repair the (T818) Shift Solenoid D (4) Control circuit for a short to ground.
- Perform TRANSMISSION VERIFICATION TEST. Refer to **6F24 TRANSMISSION VERIFICATION TEST** .

4. **CHECK THE SHIFT SOLENOID D (4)**
   1. Turn the ignition off to the lock position.
   2. Measure the resistance of the Shift Solenoid D (4) between the appropriate terminals of the Transmission C1 harness connector.

      Is the resistance of the Shift Solenoid D (4) 5.1 Ohms (± 0.3 Ohm) at 25° C (77° F)?

      Yes

      - Using the schematics as a guide, check the Transmission Control Module (TCM) pins, terminals, and connectors for corrosion, damage, or terminal push out. Pay particular attention to all power and ground circuits. If no problems are found, replace and program the TCM in accordance with the Service Information. Refer to **MODULE, TRANSMISSION CONTROL, REMOVAL** .
      - Perform TRANSMISSION VERIFICATION TEST. Refer to **6F24 TRANSMISSION VERIFICATION TEST** .

      No

      - Remove the transmission side cover and inspect the internal lead frame. If there are no problems found with the lead frame, replace the Shift Solenoid D (4) in accordance with the Service Information.
      - Perform TRANSMISSION VERIFICATION TEST. Refer to **6F24 TRANSMISSION VERIFICATION TEST** .

5. **CHECK WIRING AND CONNECTORS**
   1. The conditions necessary to set the DTC are not present at this time.
   2. Using the schematics as a guide, inspect the wiring and connectors specific to this circuit.
   3. Wiggle the wires while checking for shorted and open circuits.
   4. Check for any Service Bulletins that may apply.

Were there any problems found?

Yes

- Repair as necessary.
- Perform TRANSMISSION VERIFICATION TEST. Refer to **6F24 TRANSMISSION VERIFICATION TEST** .

No

- Test Complete.

P0982-00-SHIFT SOLENOID 4 CONTROL CIRCUIT LOW

For a complete wiring diagram, **refer to appropriate SYSTEM WIRING DIAGRAMS article** .

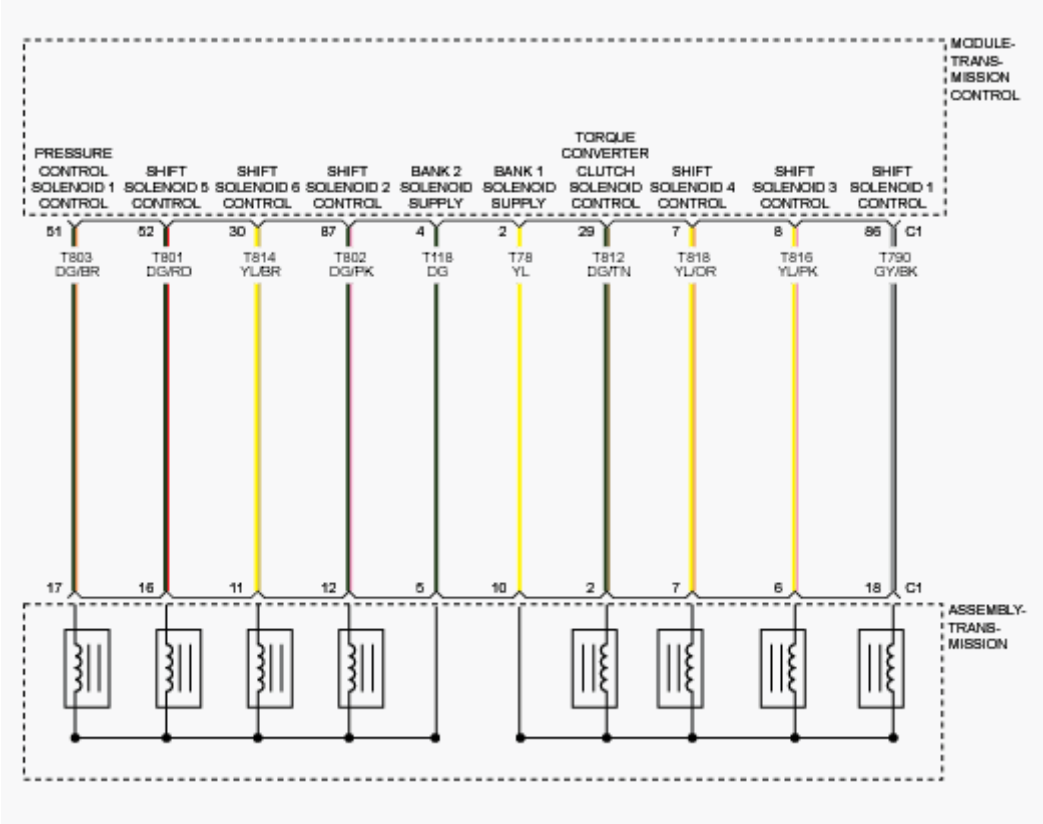

Fig. 34: Transmission Solenoids Circuit Diagram
Courtesy of CHRYSLER GROUP, LLC

THEORY OF OPERATION

The purpose of this diagnostic is to check the electrical performance of each of

the six variable force solenoid circuits. The six variable force solenoids include a shift solenoid C which controls the 3rd , 5th , Reverse clutch, shift solenoid D which controls the Over Drive clutch, shift solenoid E which controls the Under Drive brake, shift solenoid F which controls the 2nd , 6th brake, pressure control solenoid A which controls the hydraulic line pressure, and torque converter clutch pressure control solenoid which controls the torque converter lock up clutch. The electrical failures that are detected include short to battery, short to ground, and open circuit. The power stage driver, which is located in the TCM, detects these electrical malfunctions.

WHEN MONITORED

Limp in condition is not present.

Time since last gear shift is greater than or equal to 300 ms.

TCM supply voltage for solenoid is between 9 and 16 volts.

Time since high side driver commanded on is greater than or equal to 300 ms.

Solenoid is commanded off (pulse width modulation duty cycle is 0%).

SET CONDITION

The failure is detected if the measured voltage for solenoid output is less than or equal to 1.3 volts for 0.32 of a second.

POSSIBLE CAUSES

Possible Causes
(T818) SHIFT SOLENOID D (4) CONTROL CIRCUIT SHORT TO GROUND SHIFT SOLENOID D (4) TRANSMISSION CONTROL MODULE (TCM)

Always perform the Pre-Diagnostic Troubleshooting procedure before proceeding. Refer to 6F24 PRE-DIAGNOSTIC TROUBLESHOOTING PROCEDURE .

DIAGNOSTIC TEST

1. **CHECK IF DTC IS CURRENT**
   1. Using the scan tool, read TCM DTCs.
   2. Record the Environmental Data and any DTCs.
   3. Clear DTCs.
   4. Using the recorded Environmental Data, along with the When Monitored and Set Conditions above, operate the vehicle in the conditions that set the DTC.
   5. Read TCM DTCs.

   Did the DTC reset?

   Yes

   - Go To 2

   No

   - Go To 4
2. **CHECK THE (T818) SHIFT SOLENOID D (4) CONTROL CIRCUIT FOR A SHORT TO GROUND**
   1. Measure the resistance of the (T818) Shift Solenoid D (4) Control circuit between ground and the Transmission C1 harness connector.

   Is the resistance above 100k ohms?

   Yes

   - Go To 3

   No

   - Repair the (T818) Shift Solenoid D (4) Control circuit for a short to ground.
   - Perform TRANSMISSION VERIFICATION TEST. Refer to **6F24 TRANSMISSION VERIFICATION TEST** .
3. **CHECK THE SHIFT SOLENOID D (4)**
   1. Turn the ignition off to the lock position.
   2. Measure the resistance of the Shift Solenoid D (4) between the

appropriate terminals of the Transmission C1 harness connector.

Is the resistance of the Shift Solenoid D (4) 5.1 Ohms (± 0.3 Ohm) at 25° C (77° F)?

Yes

- Using the schematics as a guide, check the Transmission Control Module (TCM) pins, terminals, and connectors for corrosion, damage, or terminal push out. Pay particular attention to all power and ground circuits. If no problems are found, replace and program the TCM in accordance with the Service Information. Refer to **MODULE, TRANSMISSION CONTROL, REMOVAL** .
- Perform TRANSMISSION VERIFICATION TEST. Refer to **6F24 TRANSMISSION VERIFICATION TEST** .

No

- Remove the transmission side cover and inspect the internal lead frame. If there are no problems found with the lead frame, replace the Shift Solenoid D (4) in accordance with the Service Information.
- Perform TRANSMISSION VERIFICATION TEST. Refer to **6F24 TRANSMISSION VERIFICATION TEST** .

4. **CHECK WIRING AND CONNECTORS**
   1. The conditions necessary to set the DTC are not present at this time.
   2. Using the schematics as a guide, inspect the wiring and connectors specific to this circuit.
   3. Wiggle the wires while checking for shorted and open circuits.
   4. Check for any Service Bulletins that may apply.

   Were there any problems found?

   Yes

   - Repair as necessary.
   - Perform TRANSMISSION VERIFICATION TEST. Refer to **6F24 TRANSMISSION VERIFICATION TEST** .

No

- Test Complete.

P0983-00-SHIFT SOLENOID 4 CONTROL CIRCUIT HIGH

For a complete wiring diagram, **refer to appropriate SYSTEM WIRING DIAGRAMS article** .

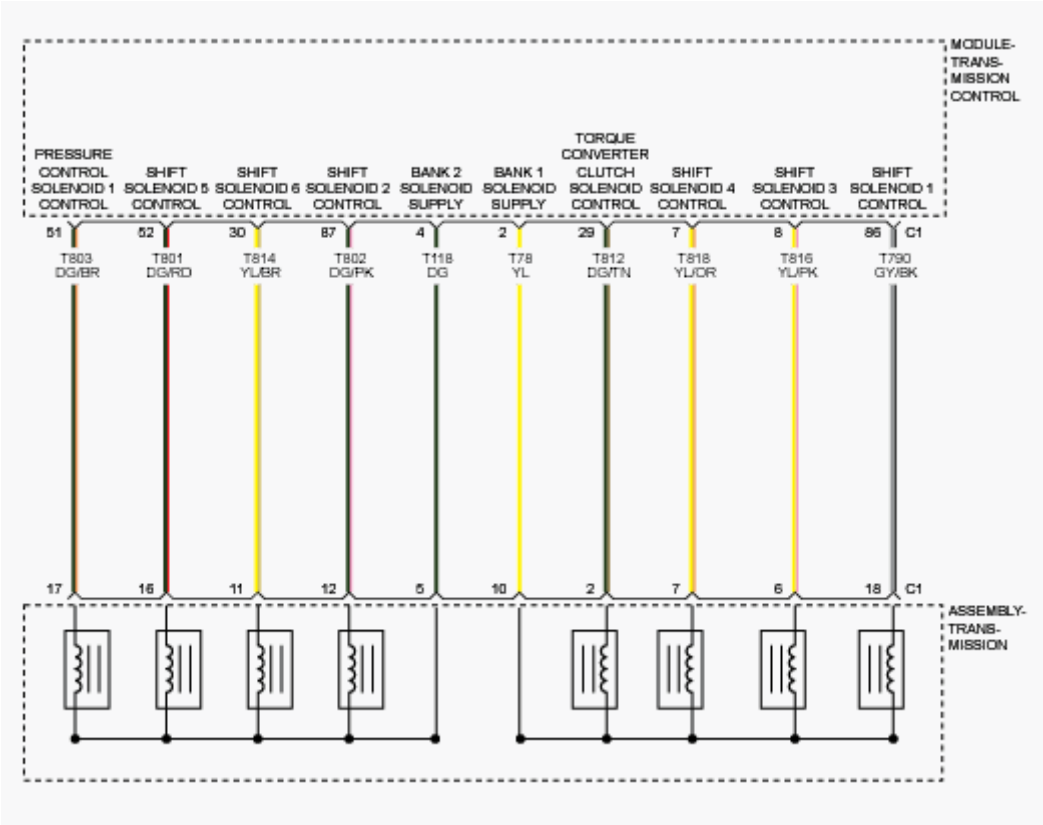

Fig. 35: Transmission Solenoids Circuit Diagram
Courtesy of CHRYSLER GROUP, LLC

THEORY OF OPERATION

The purpose of this diagnostic is to check the electrical performance of each of the six variable force solenoid circuits. The six variable force solenoids include a shift solenoid C which controls the 3rd , 5th , Reverse clutch, shift solenoid D which controls the Over Drive clutch, shift solenoid E which controls the Under Drive brake, shift solenoid F which controls the 2nd , 6th brake, pressure control solenoid A which controls the hydraulic line pressure, and torque converter clutch pressure control solenoid which controls the torque converter lock up clutch. The electrical failures that are detected include short to battery, short to

ground, and open circuit. The power stage driver, which is located in the TCM, detects these electrical malfunctions.

WHEN MONITORED

Limp in condition is not present.

Time since last gear shift is greater than or equal to 300 ms.

TCM supply voltage for solenoid is between 9 and 16 volts.

Time since high side driver commanded on is greater than or equal to 300 ms.

Solenoid is commanded on (pulse width modulation duty cycle is greater than 10%).

SET CONDITION

The failure is detected if the measured voltage for solenoid output is greater than or equal to 0.575 of a volt for 0.32 of a second.

POSSIBLE CAUSES

Possible Causes
(T818) SHIFT SOLENOID D (4) CONTROL CIRCUIT SHORTED TO VOLTAGE SHIFT SOLENOID D (4) TRANSMISSION CONTROL MODULE (TCM)

Always perform the Pre-Diagnostic Troubleshooting procedure before proceeding. Refer to 6F24 PRE-DIAGNOSTIC TROUBLESHOOTING PROCEDURE .

DIAGNOSTIC TEST

1. **CHECK IF DTC IS CURRENT**
    1. Using the scan tool, read TCM DTCs.
    2. Record the Environmental Data and any DTCs.
    3. Clear DTCs.
    4. Using the recorded Environmental Data, along with the When Monitored and Set Conditions above, operate the vehicle in the

conditions that set the DTC.

5. Read TCM DTCs.

   Did the DTC reset?

   Yes

   - Go To 2

   No

   - Go To 4

2. **CHECK THE (T818) SHIFT SOLENOID D (4) CONTROL CIRCUIT FOR A SHORT TO VOLTAGE**
   1. Measure the voltage of the (T818) Shift Solenoid D (4) Control circuit between ground and the Transmission C1 harness connector.

      Is the voltage above 0.5 of a volt?

      Yes

      - Repair the (T818) Shift Solenoid D (4) Control circuit for a short to voltage.
      - Perform TRANSMISSION VERIFICATION TEST. Refer to **6F24 TRANSMISSION VERIFICATION TEST** .

      No

      - Go To 3

3. **CHECK THE SHIFT SOLENOID D (4)**
   1. Turn the ignition off to the lock position.
   2. Measure the resistance of the Shift Solenoid D (4) between the appropriate terminals of the Transmission C1 harness connector.

      Is the resistance of the Shift Solenoid D (4) 5.1 Ohms (± 0.3 Ohm) at 25° C (77° F)?

      Yes

      - Using the schematics as a guide, check the Transmission Control

Module (TCM) pins, terminals, and connectors for corrosion, damage, or terminal push out. Pay particular attention to all power and ground circuits. If no problems are found, replace and program the TCM in accordance with the Service Information. Refer to **MODULE, TRANSMISSION CONTROL, REMOVAL** .

- Perform TRANSMISSION VERIFICATION TEST. Refer to **6F24 TRANSMISSION VERIFICATION TEST** .

No

- Remove the transmission side cover and inspect the internal lead frame. If there are no problems found with the lead frame, replace the Shift Solenoid D (4) in accordance with the Service Information.
- Perform TRANSMISSION VERIFICATION TEST. Refer to **6F24 TRANSMISSION VERIFICATION TEST** .

4. **CHECK WIRING AND CONNECTORS**
   1. The conditions necessary to set the DTC are not present at this time.
   2. Using the schematics as a guide, inspect the wiring and connectors specific to this circuit.
   3. Wiggle the wires while checking for shorted and open circuits.
   4. Check for any Service Bulletins that may apply.

   Were there any problems found?

   Yes

   - Repair as necessary.
   - Perform TRANSMISSION VERIFICATION TEST. Refer to **6F24 TRANSMISSION VERIFICATION TEST** .

   No

   - Test Complete.

P0984-00-SHIFT SOLENOID 5 CONTROL CIRCUIT RANGE-PERFORMANCE

For a complete wiring diagram, **refer to appropriate SYSTEM WIRING DIAGRAMS article** .

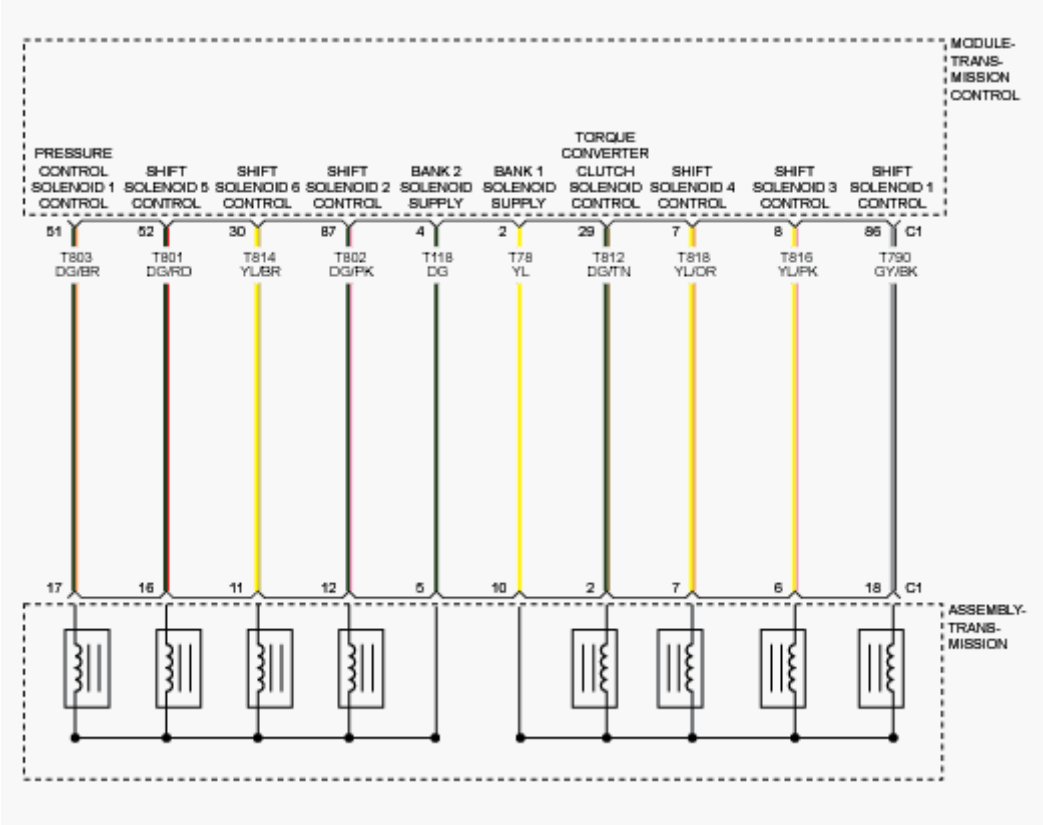

Fig. 36: Transmission Solenoids Circuit Diagram
Courtesy of CHRYSLER GROUP, LLC

THEORY OF OPERATION

The purpose of this diagnostic is to check the functionality of each of the six variable force solenoid circuits. The six variable force solenoids include a shift solenoid C which controls the 3rd, 5th, Reverse clutch, shift solenoid D which controls the Over Drive clutch, shift solenoid E which controls the Under Drive brake, shift solenoid F which controls the 2nd, 6th brake, pressure control solenoid A which controls the hydraulic line pressure, and torque converter clutch pressure control solenoid which controls the torque converter lock up clutch. The malfunction condition is detected if the measured solenoid feedback current does not correlate to the TCM commanded solenoid current. This failure may be caused by conditions such as internal circuit corrosion or manufacturing defects.

WHEN MONITORED

Limp in condition is not present.

Time since last gear shift is greater than or equal to 300 ms.

TCM supply voltage for solenoid is between 9 volts and 16 volts.

Time since high side driver commanded on is greater than or equal to 300 ms.

No variable force solenoid circuit failures.

Solenoid control duty cycle is 0%.

SET CONDITION

The failure is detected if the measured solenoid feedback current is greater than 50 mA but less than or equal to 550 mA of the commanded solenoid current for 320 ms.

POSSIBLE CAUSES

Possible Causes
BANK 2 SOLENOID POWER CIRCUIT SHORTED TO GROUND (T801) SHIFT SOLENOID E (5) CONTROL CIRCUIT SHORTED TO GROUND SHIFT SOLENOID E (5) TRANSMISSION CONTROL MODULE (TCM)

Always perform the Pre-Diagnostic Troubleshooting procedure before proceeding. Refer to 6F24 PRE-DIAGNOSTIC TROUBLESHOOTING PROCEDURE.

DIAGNOSTIC TEST

1. **CHECK IF DTC IS CURRENT**
    1. Using the scan tool, read TCM DTCs.
    2. Record the Environmental Data and any DTCs.
    3. Clear DTCs.
    4. Using the recorded Environmental Data, along with the When Monitored and Set Conditions above, operate the vehicle in the conditions that set the DTC.
    5. Read TCM DTCs.

    Did the DTC reset?

Yes

- Go To 2

No

- Go To 6

2. **CHECK THE SHIFT SOLENOID E (5) CIRCUITS FOR HIGH RESISTANCE**
   1. Turn the ignition off to the lock position.
   2. Disconnect the Transmission C1 harness connectors.
   3. Disconnect the TCM C1 harness connector.
   4. Using the schematics as a guide, inspect the Transmission C1 and TCM C1 harness connectors, pins and terminals for the Shift Solenoid E (5) circuits for corrosion, damage, or terminal push out.

   Were any problems found?

   Yes

   - Repair as necessary.
   - Perform TRANSMISSION VERIFICATION TEST. Refer to **6F24 TRANSMISSION VERIFICATION TEST** .

   No

   - Go To 3

3. **CHECK THE (T118) BANK 2 SOLENOID POWER CIRCUIT FOR A SHORT TO GROUND**
   1. Measure the resistance of the (T118) Bank 2 Solenoid Power circuit between ground and the Transmission C1 harness connector.

   Is the resistance above 100k ohms?

   Yes

   - Go To 4

   No

- Repair the (T118) Bank 2 Solenoid Power circuit for a short to ground.
- Perform TRANSMISSION VERIFICATION TEST. Refer to **6F24 TRANSMISSION VERIFICATION TEST** .

4. **CHECK THE (T801) SHIFT SOLENOID E (5) CONTROL CIRCUIT FOR A SHORT TO GROUND**
   1. Measure the resistance of the (T801) Shift Solenoid E (5) Control circuit between ground and the Transmission C1 harness connector.

      Is the resistance above 100k ohms?

      Yes

      - Go To 5

      No

      - Repair the (T801) Shift Solenoid E (5) Control circuit for a short to ground.
      - Perform TRANSMISSION VERIFICATION TEST. Refer to **6F24 TRANSMISSION VERIFICATION TEST** .
5. **CHECK THE SHIFT SOLENOID E (5)**
   1. Turn the ignition off to the lock position.
   2. Measure the resistance of the Shift Solenoid E (5) between the appropriate terminals of the Transmission C1 harness connector.

      Is the resistance of the Shift Solenoid E (5) 5.1 Ohms (± 0.3 Ohm) at 25° C (77° F)?

      Yes

      - Using the schematics as a guide, check the Transmission Control Module (TCM) pins, terminals, and connectors for corrosion, damage, or terminal push out. Pay particular attention to all power and ground circuits. If no problems are found, replace and program the TCM in accordance with the Service Information. Refer to **MODULE, TRANSMISSION CONTROL, REMOVAL** .
      - Perform TRANSMISSION VERIFICATION TEST. Refer to **6F24**

TRANSMISSION VERIFICATION TEST .

No

- Remove the transmission side cover and inspect the internal lead frame. If there are no problems found with the lead frame, replace the Shift Solenoid E (5) in accordance with the Service Information.
- Perform TRANSMISSION VERIFICATION TEST. Refer to **6F24 TRANSMISSION VERIFICATION TEST** .

6. **CHECK WIRING AND CONNECTORS**
   1. The conditions necessary to set the DTC are not present at this time.
   2. Using the schematics as a guide, inspect the wiring and connectors specific to this circuit.
   3. Wiggle the wires while checking for shorted and open circuits.
   4. Check for any Service Bulletins that may apply.

   Were there any problems found?

   Yes

   - Repair as necessary.
   - Perform TRANSMISSION VERIFICATION TEST. Refer to **6F24 TRANSMISSION VERIFICATION TEST** .

   No

   - Test Complete.

P0985-00-SHIFT SOLENOID 5 CONTROL CIRCUIT LOW

For a complete wiring diagram, **refer to appropriate SYSTEM WIRING DIAGRAMS article** .

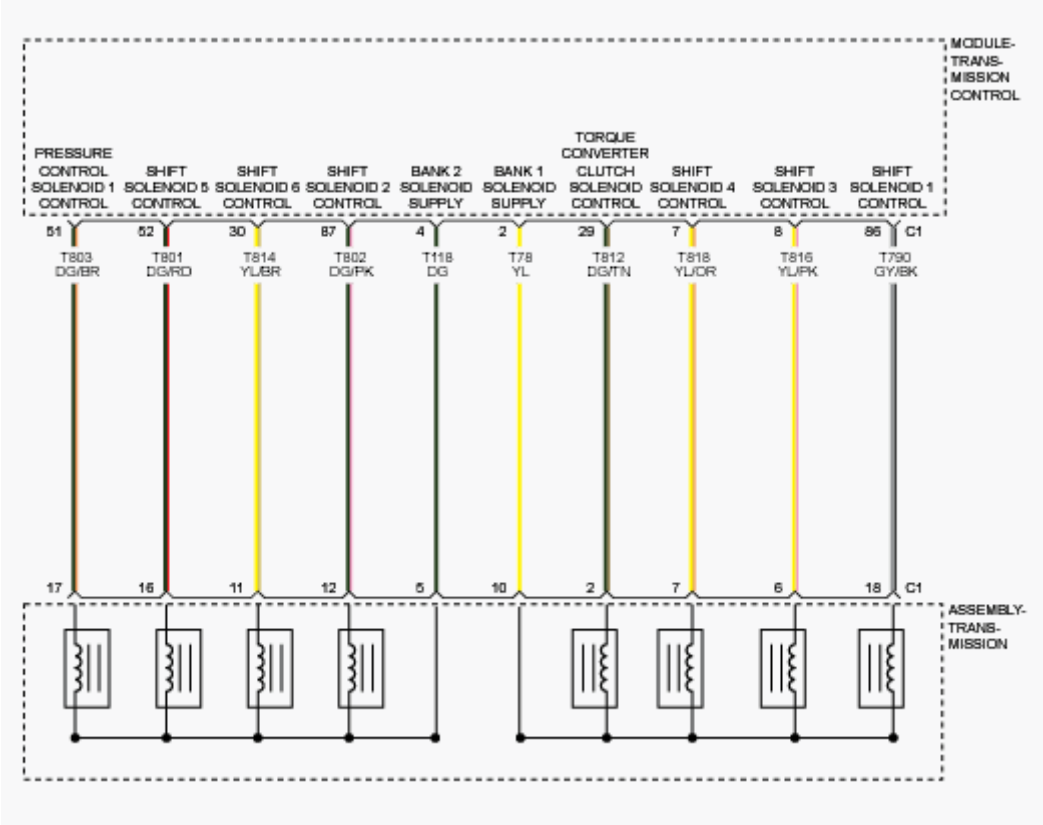

Fig. 37: Transmission Solenoids Circuit Diagram
Courtesy of CHRYSLER GROUP, LLC

THEORY OF OPERATION

The purpose of this diagnostic is to check the electrical performance of each of the six variable force solenoid circuits. The six variable force solenoids include a shift solenoid C which controls the 3rd , 5th , Reverse clutch, shift solenoid D which controls the Over Drive clutch, shift solenoid E which controls the Under Drive brake, shift solenoid F which controls the 2nd , 6th brake, pressure control solenoid A which controls the hydraulic line pressure, and torque converter clutch pressure control solenoid which controls the torque converter lock up clutch. The electrical failures that are detected include short to battery, short to ground, and open circuit. The power stage driver, which is located in the TCM, detects these electrical malfunctions.

WHEN MONITORED

Limp in condition is not present.

Time since last gear shift is greater than or equal to 300 ms.

TCM supply voltage for solenoid is between 9 and 16 volts.

Time since high side driver commanded on is greater than or equal to 300 ms.

Solenoid is commanded off (pulse width modulation duty cycle is 0%).

SET CONDITION

The failure is detected if the measured voltage for solenoid output is less than or equal to 1.3 volts for 0.32 of a second.

POSSIBLE CAUSES

Possible Causes
(T801) SHIFT SOLENOID E (5) CONTROL CIRCUIT SHORT TO GROUND SHIFT SOLENOID E (5) TRANSMISSION CONTROL MODULE (TCM)

Always perform the Pre-Diagnostic Troubleshooting procedure before proceeding. Refer to 6F24 PRE-DIAGNOSTIC TROUBLESHOOTING PROCEDURE .

DIAGNOSTIC TEST

1. **CHECK IF DTC IS CURRENT**
    1. Using the scan tool, read TCM DTCs.
    2. Record the Environmental Data and any DTCs.
    3. Clear DTCs.
    4. Using the recorded Environmental Data, along with the When Monitored and Set Conditions above, operate the vehicle in the conditions that set the DTC.
    5. Read TCM DTCs.

    Did the DTC reset?

    Yes

    - Go To 2

No

- Go To 4

2. **CHECK THE (T801) SHIFT SOLENOID E (5) CONTROL CIRCUIT FOR A SHORT TO GROUND**
   1. Measure the resistance of the (T801) Shift Solenoid E (5) Control circuit between ground and the Transmission C1 harness connector.

      Is the resistance above 100k ohms?

      Yes

      - Go To 3

      No

      - Repair the (T801) Shift Solenoid E (5) Control circuit for a short to ground.
      - Perform TRANSMISSION VERIFICATION TEST. Refer to **6F24 TRANSMISSION VERIFICATION TEST** .

3. **CHECK THE SHIFT SOLENOID E (5)**
   1. Turn the ignition off to the lock position.
   2. Measure the resistance of the Shift Solenoid E (5) between the appropriate terminals of the Transmission C1 harness connector.

      Is the resistance of the Shift Solenoid E (5) 5.1 Ohms (± 0.3 Ohm) at 25° C (77° F)?

      Yes

      - Using the schematics as a guide, check the Transmission Control Module (TCM) pins, terminals, and connectors for corrosion, damage, or terminal push out. Pay particular attention to all power and ground circuits. If no problems are found, replace and program the TCM in accordance with the Service Information. Refer to **MODULE, TRANSMISSION CONTROL, REMOVAL** .
      - Perform TRANSMISSION VERIFICATION TEST. Refer to **6F24 TRANSMISSION VERIFICATION TEST** .

No

- Remove the transmission side cover and inspect the internal lead frame. If there are no problems found with the lead frame, replace the Shift Solenoid E (5) in accordance with the Service Information.
- Perform TRANSMISSION VERIFICATION TEST. Refer to **6F24 TRANSMISSION VERIFICATION TEST** .

4. **CHECK WIRING AND CONNECTORS**
   1. The conditions necessary to set the DTC are not present at this time.
   2. Using the schematics as a guide, inspect the wiring and connectors specific to this circuit.
   3. Wiggle the wires while checking for shorted and open circuits.
   4. Check for any Service Bulletins that may apply.

   Were there any problems found?

   Yes

   - Repair as necessary.
   - Perform TRANSMISSION VERIFICATION TEST. Refer to **6F24 TRANSMISSION VERIFICATION TEST** .

   No

   - Test Complete.

P0986-00-SHIFT SOLENOID 5 CONTROL CIRCUIT HIGH

For a complete wiring diagram, **refer to appropriate SYSTEM WIRING DIAGRAMS article** .

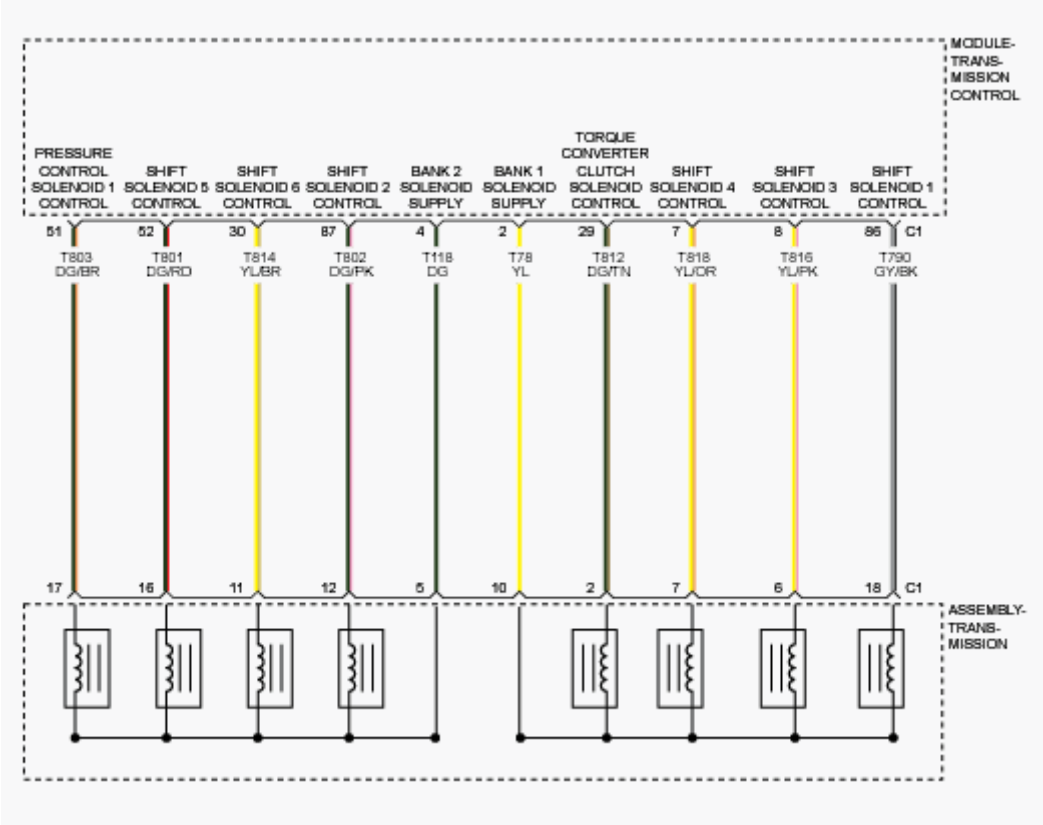

Fig. 38: Transmission Solenoids Circuit Diagram
Courtesy of CHRYSLER GROUP, LLC

THEORY OF OPERATION

The purpose of this diagnostic is to check the electrical performance of each of the six variable force solenoid circuits. The six variable force solenoids include a shift solenoid C which controls the 3rd , 5th , Reverse clutch, shift solenoid D which controls the Over Drive clutch, shift solenoid E which controls the Under Drive brake, shift solenoid F which controls the 2nd , 6th brake, pressure control solenoid A which controls the hydraulic line pressure, and torque converter clutch pressure control solenoid which controls the torque converter lock up clutch. The electrical failures that are detected include short to battery, short to ground, and open circuit. The power stage driver, which is located in the TCM, detects these electrical malfunctions.

WHEN MONITORED

Limp in condition is not present.

Time since last gear shift is greater than or equal to 300 ms.

TCM supply voltage for solenoid is between 9 and 16 volts.

Time since high side driver commanded on is greater than or equal to 300 ms.

Solenoid is commanded on (pulse width modulation duty cycle is greater than 10%).

SET CONDITION

The failure is detected if the measured voltage for solenoid output is greater than or equal to 0.575 of a volt for 0.32 of a second.

POSSIBLE CAUSES

Possible Causes
(T801) SHIFT SOLENOID E (5) CONTROL CIRCUIT SHORTED TO VOLTAGE SHIFT SOLENOID E (5) TRANSMISSION CONTROL MODULE (TCM)

Always perform the Pre-Diagnostic Troubleshooting procedure before proceeding. Refer to 6F24 PRE-DIAGNOSTIC TROUBLESHOOTING PROCEDURE .

DIAGNOSTIC TEST

1. **CHECK IF DTC IS CURRENT**
    1. Using the scan tool, read TCM DTCs.
    2. Record the Environmental Data and any DTCs.
    3. Clear DTCs.
    4. Using the recorded Environmental Data, along with the When Monitored and Set Conditions above, operate the vehicle in the conditions that set the DTC.
    5. Read TCM DTCs.

    Did the DTC reset?

    Yes

    - Go To 2

No

- Go To 4

2. **CHECK THE (T801) SHIFT SOLENOID E (5) CONTROL CIRCUIT FOR A SHORT TO VOLTAGE**
   1. Measure the voltage of the (T801) Shift Solenoid E (5) Control circuit between ground and the Transmission C1 harness connector.

      Is the voltage above 0.5 of a volt?

      Yes

      - Repair the (T801) Shift Solenoid E (5) Control circuit for a short to voltage.
      - Perform TRANSMISSION VERIFICATION TEST. Refer to **6F24 TRANSMISSION VERIFICATION TEST** .

      No

      - Go To 3

3. **CHECK THE SHIFT SOLENOID E (5)**
   1. Turn the ignition off to the lock position.
   2. Measure the resistance of the Shift Solenoid E (5) between the appropriate terminals of the Transmission C1 harness connector.

      Is the resistance of the Shift Solenoid E (5) 5.1 Ohms (± 0.3 Ohm) at 25° C (77° F)?

      Yes

      - Using the schematics as a guide, check the Transmission Control Module (TCM) pins, terminals, and connectors for corrosion, damage, or terminal push out. Pay particular attention to all power and ground circuits. If no problems are found, replace and program the TCM in accordance with the Service Information. Refer to **MODULE, TRANSMISSION CONTROL, REMOVAL** .
      - Perform TRANSMISSION VERIFICATION TEST. Refer to **6F24 TRANSMISSION VERIFICATION TEST** .

No

- Remove the transmission side cover and inspect the internal lead frame. If there are no problems found with the lead frame, replace the Shift Solenoid E (5) in accordance with the Service Information.
- Perform TRANSMISSION VERIFICATION TEST. Refer to **6F24 TRANSMISSION VERIFICATION TEST** .

4. **CHECK WIRING AND CONNECTORS**
   1. The conditions necessary to set the DTC are not present at this time.
   2. Using the schematics as a guide, inspect the wiring and connectors specific to this circuit.
   3. Wiggle the wires while checking for shorted and open circuits.
   4. Check for any Service Bulletins that may apply.

   Were there any problems found?

   Yes

   - Repair as necessary.
   - Perform TRANSMISSION VERIFICATION TEST. Refer to **6F24 TRANSMISSION VERIFICATION TEST** .

   No

   - Test Complete.

P0997-00-SHIFT SOLENOID 6 CONTROL CIRCUIT RANGE-PERFORMANCE

For a complete wiring diagram, **refer to appropriate SYSTEM WIRING DIAGRAMS article** .

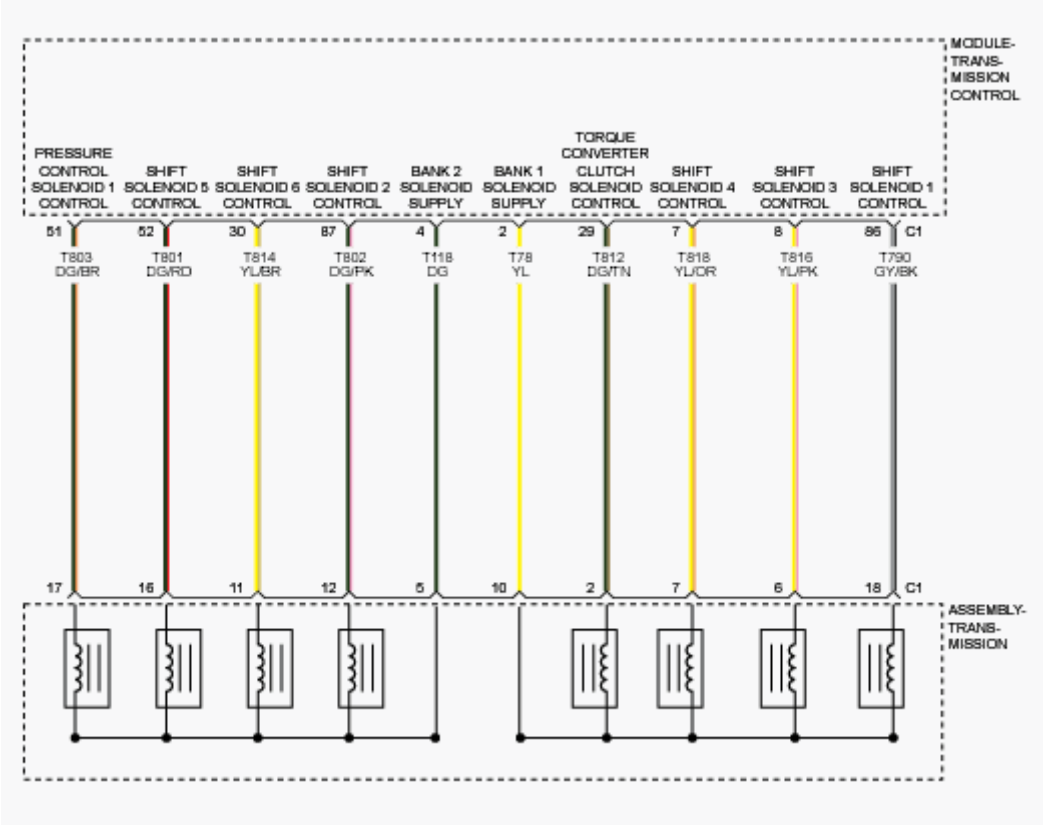

Fig. 39: Transmission Solenoids Circuit Diagram
Courtesy of CHRYSLER GROUP, LLC

THEORY OF OPERATION

The purpose of this diagnostic is to check the functionality of each of the six variable force solenoid circuits. The six variable force solenoids include a shift solenoid C which controls the 3rd, 5th, Reverse clutch, shift solenoid D which controls the Over Drive clutch, shift solenoid E which controls the Under Drive brake, shift solenoid F which controls the 2nd, 6th brake, pressure control solenoid A which controls the hydraulic line pressure, and torque converter clutch pressure control solenoid which controls the torque converter lock up clutch. The malfunction condition is detected if the measured solenoid feedback current does not correlate to the TCM commanded solenoid current. This failure may be caused by conditions such as internal circuit corrosion or manufacturing defects.

WHEN MONITORED

Limp in condition is not present.

Time since last gear shift is greater than or equal to 300 ms.

TCM supply voltage for solenoid is between 9 volts and 16 volts.

Time since high side driver commanded on is greater than or equal to 300 ms.

No variable force solenoid circuit failures.

Solenoid control duty cycle is 0%.

SET CONDITION

The failure is detected if the measured solenoid feedback current is greater than 50 mA but less than or equal to 550 mA of the commanded solenoid current for 320 ms.

POSSIBLE CAUSES

Possible Causes
(T814) SHIFT SOLENOID F (6) CONTROL CIRCUIT SHORTED TO GROUND SHIFT SOLENOID F (6) TRANSMISSION CONTROL MODULE (TCM)

Always perform the Pre-Diagnostic Troubleshooting procedure before proceeding. Refer to 6F24 PRE-DIAGNOSTIC TROUBLESHOOTING PROCEDURE.

DIAGNOSTIC TEST

1. **CHECK IF DTC IS CURRENT**
    1. Using the scan tool, read TCM DTCs.
    2. Record the Environmental Data and any DTCs.
    3. Clear DTCs.
    4. Using the recorded Environmental Data, along with the When Monitored and Set Conditions above, operate the vehicle in the conditions that set the DTC.
    5. Read TCM DTCs.

    Did the DTC reset?

    Yes

- Go To 2

No

- Go To 5

2. **CHECK THE SHIFT SOLENOID F (6) CIRCUITS FOR HIGH RESISTANCE**
   1. Turn the ignition off to the lock position.
   2. Disconnect the Transmission C1 harness connectors.
   3. Disconnect the TCM C1 harness connector.
   4. Using the schematics as a guide, inspect the Transmission C1 and TCM C1 harness connectors, pins and terminals for the Shift Solenoid F (6) circuits for corrosion, damage, or terminal push out.

   Were any problems found?

   Yes

   - Repair as necessary.
   - Perform TRANSMISSION VERIFICATION TEST. Refer to **6F24 TRANSMISSION VERIFICATION TEST** .

   No

   - Go To 3

3. **CHECK THE (T814) SHIFT SOLENOID F (6) CONTROL CIRCUIT FOR A SHORT TO GROUND**
   1. Measure the resistance of the (T814) Shift Solenoid F (6) Control circuit between ground and the Transmission C1 harness connector.

   Is the resistance above 100k ohms?

   Yes

   - Go To 4

   No

   - Repair the (T814) Shift Solenoid F (6) Control circuit for a short to

ground.

- Perform TRANSMISSION VERIFICATION TEST. Refer to **6F24 TRANSMISSION VERIFICATION TEST** .

4. **CHECK THE SHIFT SOLENOID F (6)**
   1. Turn the ignition off to the lock position.
   2. Measure the resistance of the Shift Solenoid F (6) between the appropriate terminals of the Transmission C1 harness connector.

      Is the resistance of the Shift Solenoid F (6) 5.1 Ohms (± 0.3 Ohm) at 25° C (77° F)?

      Yes

      - Using the schematics as a guide, check the Transmission Control Module (TCM) pins, terminals, and connectors for corrosion, damage, or terminal push out. Pay particular attention to all power and ground circuits. If no problems are found, replace and program the TCM in accordance with the Service Information. Refer to **MODULE, TRANSMISSION CONTROL, REMOVAL** .
      - Perform TRANSMISSION VERIFICATION TEST. Refer to **6F24 TRANSMISSION VERIFICATION TEST** .

      No

      - Remove the transmission side cover and inspect the internal lead frame. If there are no problems found with the lead frame, replace the Shift Solenoid F (6) in accordance with the Service Information.
      - Perform TRANSMISSION VERIFICATION TEST. Refer to **6F24 TRANSMISSION VERIFICATION TEST** .

5. **CHECK WIRING AND CONNECTORS**
   1. The conditions necessary to set the DTC are not present at this time.
   2. Using the schematics as a guide, inspect the wiring and connectors specific to this circuit.
   3. Wiggle the wires while checking for shorted and open circuits.
   4. Check for any Service Bulletins that may apply.

Were there any problems found?

Yes

- Repair as necessary.
- Perform TRANSMISSION VERIFICATION TEST. Refer to **6F24 TRANSMISSION VERIFICATION TEST** .

No

- Test Complete.

P0998-00-SHIFT SOLENOID 6 CONTROL CIRCUIT LOW

For a complete wiring diagram, **refer to appropriate SYSTEM WIRING DIAGRAMS article** .

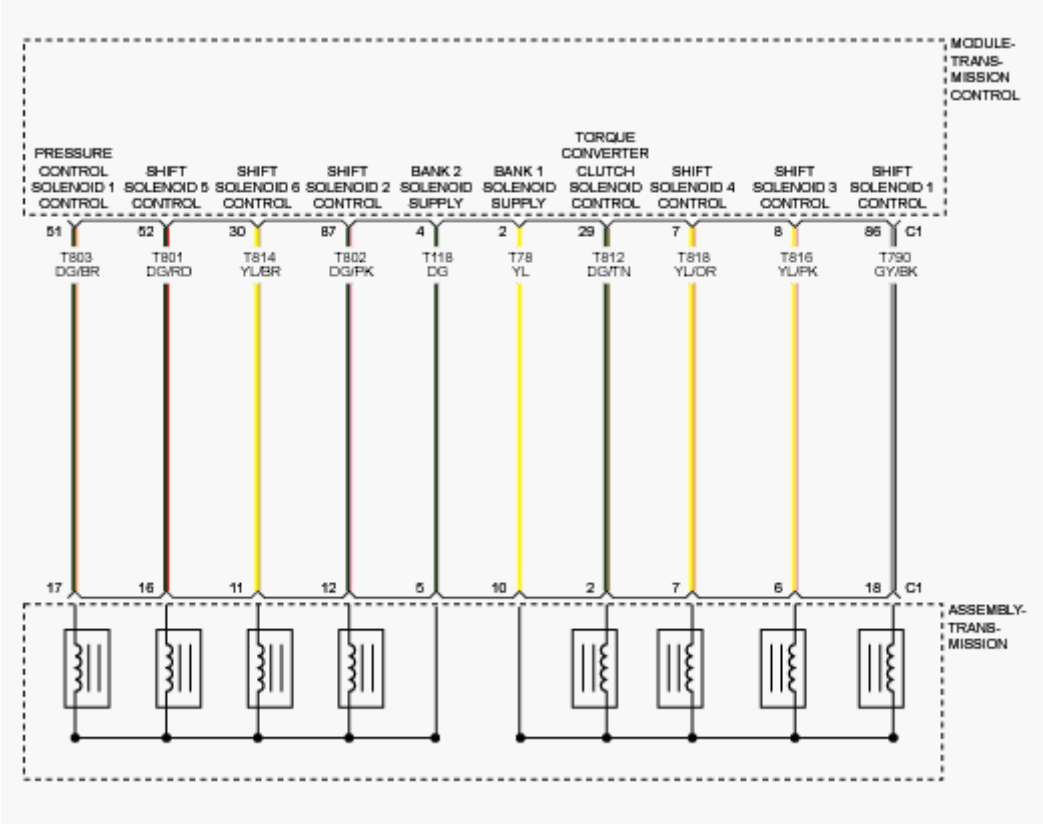

Fig. 40: Transmission Solenoids Circuit Diagram
Courtesy of CHRYSLER GROUP, LLC

THEORY OF OPERATION

The purpose of this diagnostic is to check the electrical performance of each of

the six variable force solenoid circuits. The six variable force solenoids include a shift solenoid C which controls the 3rd , 5th , Reverse clutch, shift solenoid D which controls the Over Drive clutch, shift solenoid E which controls the Under Drive brake, shift solenoid F which controls the 2nd , 6th brake, pressure control solenoid A which controls the hydraulic line pressure, and torque converter clutch pressure control solenoid which controls the torque converter lock up clutch. The electrical failures that are detected include short to battery, short to ground, and open circuit. The power stage driver, which is located in the TCM, detects these electrical malfunctions.

WHEN MONITORED

Limp in condition is not present.

Time since last gear shift is greater than or equal to 300 ms.

TCM supply voltage for solenoid is between 9 and 16 volts.

Time since high side driver commanded on is greater than or equal to 300 ms.

Solenoid is commanded off (pulse width modulation duty cycle is 0%).

SET CONDITION

The failure is detected if the measured voltage for solenoid output is less than or equal to 1.3 volts for 0.32 of a second.

POSSIBLE CAUSES

Possible Causes
(T814) SHIFT SOLENOID F (6) CONTROL CIRCUIT SHORT TO GROUND SHIFT SOLENOID F (6) TRANSMISSION CONTROL MODULE (TCM)

Always perform the Pre-Diagnostic Troubleshooting procedure before proceeding. Refer to 6F24 PRE-DIAGNOSTIC TROUBLESHOOTING PROCEDURE .

DIAGNOSTIC TEST

1. **CHECK IF DTC IS CURRENT**
   1. Using the scan tool, read TCM DTCs.
   2. Record the Environmental Data and any DTCs.
   3. Clear DTCs.
   4. Using the recorded Environmental Data, along with the When Monitored and Set Conditions above, operate the vehicle in the conditions that set the DTC.
   5. Read TCM DTCs.

   Did the DTC reset?

   Yes

   - Go To 2

   No

   - Go To 4
2. **CHECK THE (T814) SHIFT SOLENOID F (6) CONTROL CIRCUIT FOR A SHORT TO GROUND**
   1. Measure the resistance of the (T814) Shift Solenoid F (6) Control circuit between ground and the Transmission C1 harness connector.

   Is the resistance above 100k ohms?

   Yes

   - Go To 3

   No

   - Repair the (T814) Shift Solenoid F (6) Control circuit for a short to ground.
   - Perform TRANSMISSION VERIFICATION TEST. Refer to **6F24 TRANSMISSION VERIFICATION TEST** .
3. **CHECK THE SHIFT SOLENOID F (6)**
   1. Turn the ignition off to the lock position.
   2. Measure the resistance of the Shift Solenoid F (6) between the

appropriate terminals of the Transmission C1 harness connector.

Is the resistance of the Shift Solenoid F (6) 5.1 Ohms (± 0.3 Ohm) at 25° C (77° F)?

Yes

- Using the schematics as a guide, check the Transmission Control Module (TCM) pins, terminals, and connectors for corrosion, damage, or terminal push out. Pay particular attention to all power and ground circuits. If no problems are found, replace and program the TCM in accordance with the Service Information. Refer to **MODULE, TRANSMISSION CONTROL, REMOVAL** .
- Perform TRANSMISSION VERIFICATION TEST. Refer to **6F24 TRANSMISSION VERIFICATION TEST** .

No

- Remove the transmission side cover and inspect the internal lead frame. If there are no problems found with the lead frame, replace the Shift Solenoid F (6) in accordance with the Service Information.
- Perform TRANSMISSION VERIFICATION TEST. Refer to **6F24 TRANSMISSION VERIFICATION TEST** .

4. **CHECK WIRING AND CONNECTORS**
   1. The conditions necessary to set the DTC are not present at this time.
   2. Using the schematics as a guide, inspect the wiring and connectors specific to this circuit.
   3. Wiggle the wires while checking for shorted and open circuits.
   4. Check for any Service Bulletins that may apply.

   Were there any problems found?

   Yes

   - Repair as necessary.
   - Perform TRANSMISSION VERIFICATION TEST. Refer to **6F24 TRANSMISSION VERIFICATION TEST** .

No

- Test Complete.

P0999-00-SHIFT SOLENOID 6 CONTROL CIRCUIT HIGH

For a complete wiring diagram, **refer to appropriate SYSTEM WIRING DIAGRAMS article** .

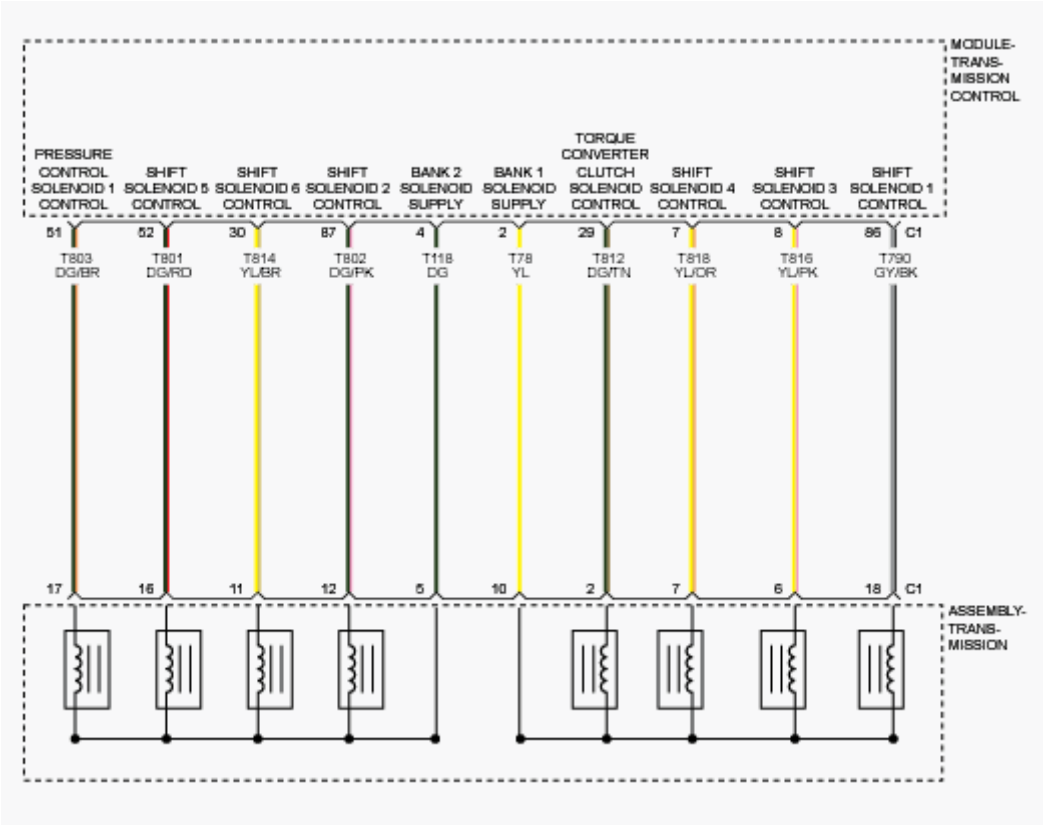

Fig. 41: Transmission Solenoids Circuit Diagram
Courtesy of CHRYSLER GROUP, LLC

THEORY OF OPERATION

The purpose of this diagnostic is to check the electrical performance of each of the six variable force solenoid circuits. The six variable force solenoids include a shift solenoid C which controls the 3rd , 5th , Reverse clutch, shift solenoid D which controls the Over Drive clutch, shift solenoid E which controls the Under Drive brake, shift solenoid F which controls the 2nd , 6th brake, pressure control solenoid A which controls the hydraulic line pressure, and torque converter clutch pressure control solenoid which controls the torque converter lock up clutch. The electrical failures that are detected include short to battery, short to

ground, and open circuit. The power stage driver, which is located in the TCM, detects these electrical malfunctions.

WHEN MONITORED

Limp in condition is not present.

Time since last gear shift is greater than or equal to 300 ms.

TCM supply voltage for solenoid is between 9 and 16 volts.

Time since high side driver commanded on is greater than or equal to 300 ms.

Solenoid is commanded on (pulse width modulation duty cycle is greater than 10%).

SET CONDITION

The failure is detected if the measured voltage for solenoid output is greater than or equal to 0.575 of a volt for 0.32 of a second.

POSSIBLE CAUSES

Possible Causes
(T814) SHIFT SOLENOID F (6) CONTROL CIRCUIT SHORTED TO VOLTAGE SHIFT SOLENOID F (6) TRANSMISSION CONTROL MODULE (TCM)

Always perform the Pre-Diagnostic Troubleshooting procedure before proceeding. Refer to 6F24 PRE-DIAGNOSTIC TROUBLESHOOTING PROCEDURE .

DIAGNOSTIC TEST

1. **CHECK IF DTC IS CURRENT**
    1. Using the scan tool, read TCM DTCs.
    2. Record the Environmental Data and any DTCs.
    3. Clear DTCs.
    4. Using the recorded Environmental Data, along with the When Monitored and Set Conditions above, operate the vehicle in the

conditions that set the DTC.

5. Read TCM DTCs.

   Did the DTC reset?

   Yes

   - Go To 2

   No

   - Go To 4

2. **CHECK THE (T814) SHIFT SOLENOID F (6) CONTROL CIRCUIT FOR A SHORT TO VOLTAGE**
   1. Measure the voltage of the (T814) Shift Solenoid F (6) Control circuit between ground and the Transmission C1 harness connector.

      Is the voltage above 0.5 of a volt?

      Yes

      - Repair the (T814) Shift Solenoid F (6) Control circuit for a short to voltage.
      - Perform TRANSMISSION VERIFICATION TEST. Refer to **6F24 TRANSMISSION VERIFICATION TEST** .

      No

      - Go To 3

3. **CHECK THE SHIFT SOLENOID F (6)**
   1. Turn the ignition off to the lock position.
   2. Measure the resistance of the Shift Solenoid F (6) between the appropriate terminals of the Transmission C1 harness connector.

      Is the resistance of the Shift Solenoid F (6) 5.1 Ohms (± 0.3 Ohm) at 25° C (77° F)?

      Yes

      - Using the schematics as a guide, check the Transmission Control

Module (TCM) pins, terminals, and connectors for corrosion, damage, or terminal push out. Pay particular attention to all power and ground circuits. If no problems are found, replace and program the TCM in accordance with the Service Information. Refer to **MODULE, TRANSMISSION CONTROL, REMOVAL** .

- Perform TRANSMISSION VERIFICATION TEST. Refer to **6F24 TRANSMISSION VERIFICATION TEST** .

No

- Remove the transmission side cover and inspect the internal lead frame. If there are no problems found with the lead frame, replace the Shift Solenoid F (6) in accordance with the Service Information.
- Perform TRANSMISSION VERIFICATION TEST. Refer to **6F24 TRANSMISSION VERIFICATION TEST** .

4. **CHECK WIRING AND CONNECTORS**
   1. The conditions necessary to set the DTC are not present at this time.
   2. Using the schematics as a guide, inspect the wiring and connectors specific to this circuit.
   3. Wiggle the wires while checking for shorted and open circuits.
   4. Check for any Service Bulletins that may apply.

   Were there any problems found?

   Yes

   - Repair as necessary.
   - Perform TRANSMISSION VERIFICATION TEST. Refer to **6F24 TRANSMISSION VERIFICATION TEST** .

   No

   - Test Complete.

P1715-00-RESTRICTED MANUAL VALVE IN T3 RANGE

For a complete wiring diagram, **refer to appropriate SYSTEM WIRING DIAGRAMS article** .

THEORY OF OPERATION

The purpose of this diagnose is to check the mechanical alignment of the linkage between the shifter and transmission range sensor. One distinct failure condition is detected by this diagnostic based upon clutch slip which is determined by comparing turbine speed to output speed.

WHEN MONITORED

Ignition voltage is above a calibrated value.

Power signal diagnostic is enabled and reports a normal state.

Shift is not in progress.

Time passed from gear shift is greater than or equal to a calibrated threshold.

Turbine (Input) speed sensor error is not detected.

Output speed sensor error is not detected.

Transmission fluid temperature sensor error is not detected.

No Engine speed error detected.

No EMS CAN error detected.

No BCM CAN error detected.

No CAN bus off error detected.

Engine speed is greater than or equal to threshold.

Turbine speed is greater than or equal to threshold.

Output speed is greater than or equal to threshold.

Not in neutral control state.

Transmission fluid temperature is greater than or equal to threshold.

Engine is running.

SET CONDITION

The failure is detected if the clutch slip is greater than or equal to a calibrated threshold for a calibrated amount time when manual shift valve is in an intermediate position due to misalignment between shift lever and transmission.

POSSIBLE CAUSES

Possible Causes
Shifter linkage is out of adjustment.

Always perform the Pre-Diagnostic Troubleshooting procedure before proceeding. Refer to 6F24 PRE-DIAGNOSTIC TROUBLESHOOTING PROCEDURE .

DIAGNOSTIC TEST

1. **CHECK IF DTC IS CURRENT**
    1. With the scan tool, read TCM DTCs.
    2. Record the Environmental Data and any DTCs.
    3. With the scan tool, erase DTCs.
    4. Using the recorded Environmental Data, along with the When Monitored and Set Conditions above, operate the vehicle in the conditions that set the DTC.
    5. With the scan tool, read TCM DTCs.

    Did the DTC reset?

    Yes

    - Adjust the shifter cable in accordance with the Service Information.
    - Perform the TRANSMISSION VERIFICATION TEST. Refer to **6F24 TRANSMISSION VERIFICATION TEST** .

    No

    - Go to 2.
2. **CHECK WIRING AND CONNECTORS**
    1. The conditions necessary to set the DTC are not present at this time.

2. Using the schematics as a guide, inspect the wiring and connectors specific to this circuit.
3. Wiggle the wires while checking for shorted and open circuits.
4. Check for any Service Bulletins that may apply.

Were there any problems found?

Yes

- Repair as necessary.
- Perform the Transmission Verification Test. Refer to **6F24 TRANSMISSION VERIFICATION TEST** .

No

- Test complete.

P2761-00-TORQUE CONVERTER CLUTCH PRESSURE CONTROL SOLENOID CONTROL CIRCUIT-OPEN

For a complete wiring diagram, **refer to appropriate SYSTEM WIRING DIAGRAMS article** .

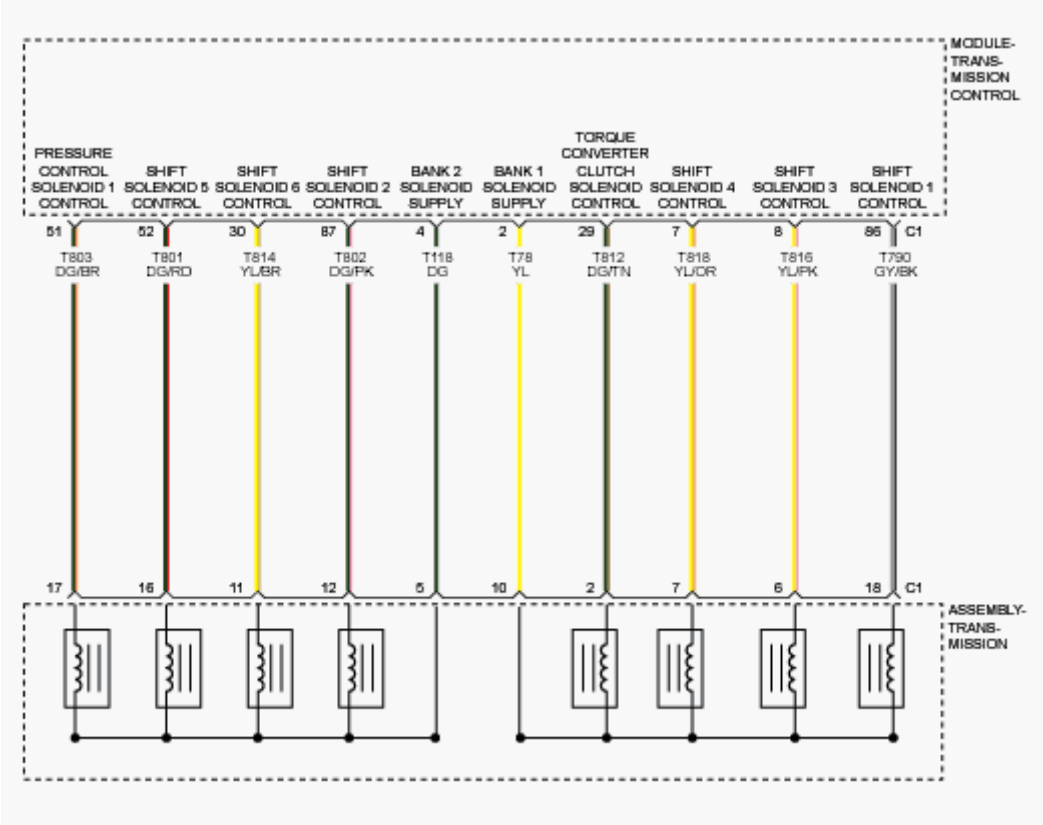

Fig. 42: Transmission Solenoids Circuit Diagram
Courtesy of CHRYSLER GROUP, LLC

THEORY OF OPERATION

The purpose of this diagnostic is to check the electrical performance of each of the six variable force solenoid circuits. The six variable force solenoids include a shift solenoid C which controls the 3rd , 5th , Reverse clutch, shift solenoid D which controls the Over Drive clutch, shift solenoid E which controls the Under Drive brake, shift solenoid F which controls the 2nd , 6th brake, pressure control solenoid A which controls the hydraulic line pressure, and torque converter clutch pressure control solenoid which controls the torque converter lock up clutch. The electrical failures that are detected include short to battery, short to ground, and open circuit. The power stage driver, which is located in the TCM, detects these electrical malfunctions.

WHEN MONITORED

Limp in condition is not present.

Time since last gear shift is greater than or equal to 300 ms.

TCM supply voltage for solenoid is between 9 and 16 volts.

Time since high side driver commanded on is greater than or equal to 300 ms.

Solenoid is commanded off (pulse width modulation duty cycle is 0%).

SET CONDITION

The failure is detected if measured voltage for solenoid output is between 1.3 volts and 4.7 volts for 0.32 of a second.

POSSIBLE CAUSES

Possible Causes
(T78) BANK 1 SOLENOID POWER SUPPLY CIRCUIT OPEN (T812) TORQUE CONVERTER CLUTCH PRESSURE CONTROL SOLENOID CONTROL CIRCUIT OPEN TORQUE CONVERTER CLUTCH PRESSURE CONTROL SOLENOID TRANSMISSION CONTROL MODULE (TCM)

Always perform the Pre-Diagnostic Troubleshooting procedure before proceeding. Refer to 6F24 PRE-DIAGNOSTIC TROUBLESHOOTING PROCEDURE .

DIAGNOSTIC TEST

1. **CHECK IF DTC IS CURRENT**
    1. Using the scan tool, read TCM DTCs.
    2. Record the Environmental Data and any DTCs.
    3. Clear DTCs.
    4. Using the recorded Environmental Data, along with the When Monitored and Set Conditions above, operate the vehicle in the conditions that set the DTC.
    5. Read TCM DTCs.

    Did the DTC reset?

    Yes

    - Go To 2

No

- Go To 5

2. **CHECK THE (T78) BANK 1 SOLENOID POWER CIRCUIT FOR AN OPEN**
   1. Turn the ignition off to the lock position.
   2. Disconnect the Transmission C1 harness connectors.
   3. Disconnect the TCM C1 harness connector.
   4. Measure the resistance of the (T78) Bank 1 Solenoid Power circuit between the Transmission C1 harness connector and the TCM C1 harness connector.

   Is the resistance below 5.0 Ohms?

   Yes

   - Go To 3

   No

   - Repair the (T78) Bank 1 Solenoid Power circuit for an open.
   - Perform TRANSMISSION VERIFICATION TEST. Refer to **6F24 TRANSMISSION VERIFICATION TEST** .

3. **CHECK THE (T812) TORQUE CONVERTER CLUTCH PRESSURE CONTROL SOLENOID CONTROL CIRCUIT FOR AN OPEN**
   1. Measure the resistance of the (T812) Torque Converter Clutch Pressure Control Solenoid Control circuit between the Transmission C1 harness connector and the TCM C1 harness connector.

   Is the resistance below 5.0 Ohms?

   Yes

   - Go To 4

   No

   - Repair the (T812) Torque Converter Clutch Pressure Control Solenoid Control circuit for an open.

- Perform TRANSMISSION VERIFICATION TEST. Refer to **6F24 TRANSMISSION VERIFICATION TEST** .

4. **CHECK THE TORQUE CONVERTER CLUTCH PRESSURE CONTROL SOLENOID A (1)**
   1. Turn the ignition off to the lock position.
   2. Measure the resistance of the Torque Converter Clutch Pressure Control Solenoid between the appropriate terminals at the Transmission C1 harness connector.

      Is the resistance of the Torque Converter Clutch Pressure Control Solenoid 5.1 Ohms (± 0.3 Ohm) at 25° C (77° F)?

      Yes

      - Using the schematics as a guide, check the Transmission Control Module (TCM) pins, terminals, and connectors for corrosion, damage, or terminal push out. Pay particular attention to all power and ground circuits. If no problems are found, replace and program the TCM in accordance with the Service Information. Refer to **MODULE, TRANSMISSION CONTROL, REMOVAL** .
      - Perform TRANSMISSION VERIFICATION TEST. Refer to **6F24 TRANSMISSION VERIFICATION TEST** .

      No

      - Remove the transmission side cover and inspect the internal lead frame. If there are no problems found with the lead frame, replace the Torque Converter Clutch Pressure Control Solenoid in accordance with the Service Information.
      - Perform TRANSMISSION VERIFICATION TEST. Refer to **6F24 TRANSMISSION VERIFICATION TEST** .

5. **CHECK WIRING AND CONNECTORS**
   1. The conditions necessary to set the DTC are not present at this time.
   2. Using the schematics as a guide, inspect the wiring and connectors specific to this circuit.
   3. Wiggle the wires while checking for shorted and open circuits.
   4. Check for any Service Bulletins that may apply.

Were there any problems found?

Yes

- Repair as necessary.
- Perform TRANSMISSION VERIFICATION TEST. Refer to **6F24 TRANSMISSION VERIFICATION TEST** .

No

- Test Complete.

P2762-00-TORQUE CONVERTER CLUTCH PRESSURE CONTROL SOLENOID CONTROL CIRCUIT RANGE-PERFORMANCE

For a complete wiring diagram, **refer to appropriate SYSTEM WIRING DIAGRAMS article** .

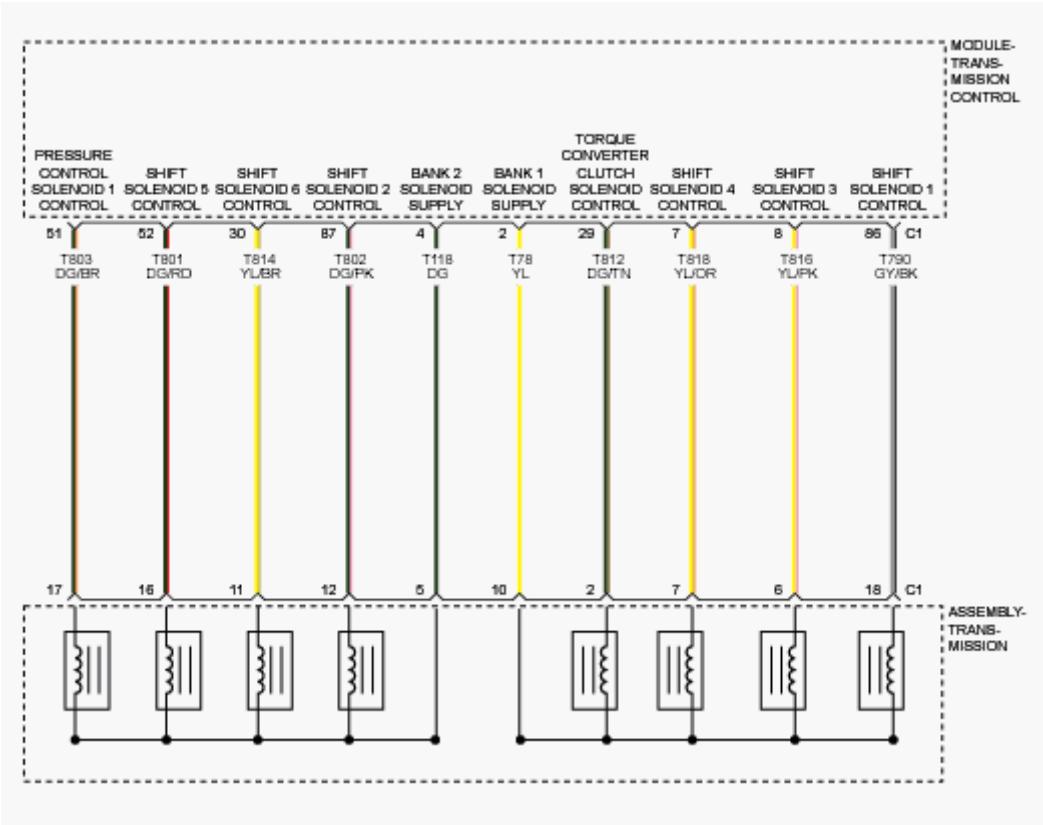

Fig. 43: Transmission Solenoids Circuit Diagram
Courtesy of CHRYSLER GROUP, LLC

THEORY OF OPERATION

The purpose of this diagnostic is to check the functionality of each of the six variable force solenoid circuits. The six variable force solenoids include a shift solenoid C which controls the 3rd, 5th, Reverse clutch, shift solenoid D which controls the Over Drive clutch, shift solenoid E which controls the Under Drive brake, shift solenoid F which controls the 2nd, 6th brake, pressure control solenoid A which controls the hydraulic line pressure, and torque converter clutch pressure control solenoid which controls the torque converter lock up clutch. The malfunction condition is detected if the measured solenoid feedback current does not correlate to the TCM commanded solenoid current. This failure may be caused by conditions such as internal circuit corrosion or manufacturing defects.

WHEN MONITORED

Limp in condition is not present.

Time since last gear shift is greater than or equal to 300 ms.

TCM supply voltage for solenoid is between 9 volts and 16 volts.

Time since high side driver commanded on is greater than or equal to 300 ms.

No variable force solenoid circuit failures.

Solenoid control duty cycle is 0%.

SET CONDITION

The failure is detected if the measured solenoid feedback current is greater than 50 mA but less than or equal to 550 mA of the commanded solenoid current for 320 ms.

POSSIBLE CAUSES

Possible Causes
CIRCUIT(S) HIGH RESISTANCE (T78) BANK 1 SOLENOID POWER CIRCUIT SHORTED TO GROUND (T812) TORQUE CONVERTER CLUTCH PRESSURE CONTROL SOLENOID CONTROL CIRCUIT SHORTED TO GROUND TORQUE CONVERTER CLUTCH PRESSURE CONTROL SOLENOID TRANSMISSION CONTROL MODULE (TCM)

Always perform the Pre-Diagnostic Troubleshooting procedure before proceeding. Refer to 6F24 PRE-DIAGNOSTIC TROUBLESHOOTING PROCEDURE.

DIAGNOSTIC TEST

1. **CHECK IF DTC IS CURRENT**
   1. Using the scan tool, read TCM DTCs.
   2. Record the Environmental Data and any DTCs.
   3. Clear DTCs.
   4. Using the recorded Environmental Data, along with the When Monitored and Set Conditions above, operate the vehicle in the conditions that set the DTC.
   5. Read TCM DTCs.

   Did the DTC reset?

   Yes

   - Go To 2

   No

   - Go To 6
2. **CHECK THE TORQUE CONVERTER CLUTCH PRESSURE CONTROL SOLENOID CIRCUITS FOR HIGH RESISTANCE**
   1. Turn the ignition off to the lock position.
   2. Disconnect the Transmission C1 harness connectors.
   3. Disconnect the TCM C1 harness connector.
   4. Using the schematics as a guide, inspect the Transmission C1 and TCM C1 harness connectors, pins and terminals for the Torque Converter Clutch Pressure Control Solenoid circuits for corrosion, damage, or terminal push out.

   Were any problems found?

   Yes

   - Repair as necessary.

- Perform TRANSMISSION VERIFICATION TEST. Refer to **6F24 TRANSMISSION VERIFICATION TEST** .

No

- Go To 3

3. **CHECK THE (T78) BANK 1 SOLENOID POWER CIRCUIT FOR A SHORT TO GROUND**
   1. Measure the resistance of the (T78) Bank 1 Solenoid Power circuit between ground and the Transmission C1 harness connector.

      Is the resistance above 100k ohms?

      Yes

      - Go To 4

      No

      - Repair the (T78) Bank 1 Solenoid Power circuit for a short to ground.
      - Perform TRANSMISSION VERIFICATION TEST. Refer to **6F24 TRANSMISSION VERIFICATION TEST** .

4. **CHECK THE (T812) TORQUE CONVERTER CLUTCH PRESSURE CONTROL SOLENOID CONTROL CIRCUIT FOR A SHORT TO GROUND**
   1. Measure the resistance of the (T812) Torque Converter Clutch Pressure Control Solenoid Control circuit between ground and the Transmission C1 harness connector.

      Is the resistance above 100k ohms?

      Yes

      - Go To 5

      No

      - Repair the (T812) Torque Converter Clutch Pressure Control Solenoid Control circuit for a short to ground.

- Perform TRANSMISSION VERIFICATION TEST. Refer to **6F24 TRANSMISSION VERIFICATION TEST** .

5. **CHECK THE TORQUE CONVERTER CLUTCH PRESSURE CONTROL SOLENOID**
   1. Turn the ignition off to the lock position.
   2. Measure the resistance of the Torque Converter Clutch Pressure Control Solenoid between the appropriate terminals of the Transmission C1 harness connector.

      Is the resistance of the Torque Converter Clutch Pressure Control Solenoid 5.1 Ohms (± 0.3 Ohm) at 25° C (77° F)?

      Yes

      - Using the schematics as a guide, check the Transmission Control Module (TCM) pins, terminals, and connectors for corrosion, damage, or terminal push out. Pay particular attention to all power and ground circuits. If no problems are found, replace and program the TCM in accordance with the Service Information. Refer to **MODULE, TRANSMISSION CONTROL, REMOVAL** .
      - Perform TRANSMISSION VERIFICATION TEST. Refer to **6F24 TRANSMISSION VERIFICATION TEST** .

      No

      - Remove the transmission side cover and inspect the internal lead frame. If there are no problems found with the lead frame, replace the Torque Converter Clutch Pressure Control Solenoid in accordance with the Service Information.
      - Perform TRANSMISSION VERIFICATION TEST. Refer to **6F24 TRANSMISSION VERIFICATION TEST** .

6. **CHECK WIRING AND CONNECTORS**
   1. The conditions necessary to set the DTC are not present at this time.
   2. Using the schematics as a guide, inspect the wiring and connectors specific to this circuit.
   3. Wiggle the wires while checking for shorted and open circuits.
   4. Check for any Service Bulletins that may apply.

Were there any problems found?

Yes

- Repair as necessary.
- Perform TRANSMISSION VERIFICATION TEST. Refer to **6F24 TRANSMISSION VERIFICATION TEST** .

No

- Test Complete.

P2763-00-TORQUE CONVERTER CLUTCH PRESSURE CONTROL SOLENOID CONTROL CIRCUIT HIGH

For a complete wiring diagram, **refer to appropriate SYSTEM WIRING DIAGRAMS article** .

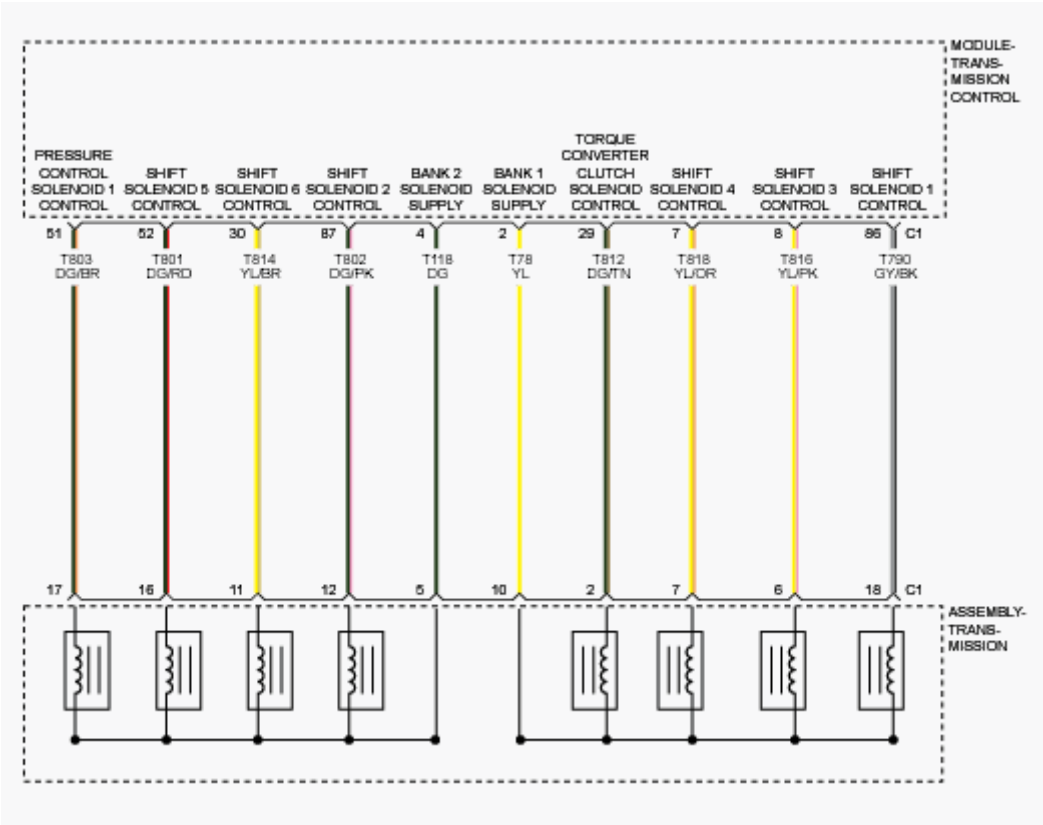

Fig. 44: Transmission Solenoids Circuit Diagram
Courtesy of CHRYSLER GROUP, LLC

THEORY OF OPERATION

The purpose of this diagnostic is to check the electrical performance of each of the six variable force solenoid circuits. The six variable force solenoids include a shift solenoid C which controls the 3rd , 5th , Reverse clutch, shift solenoid D which controls the Over Drive clutch, shift solenoid E which controls the Under Drive brake, shift solenoid F which controls the 2nd , 6th brake, pressure control solenoid A which controls the hydraulic line pressure, and torque converter clutch pressure control solenoid which controls the torque converter lock up clutch. The electrical failures that are detected include short to battery, short to ground, and open circuit. The power stage driver, which is located in the TCM, detects these electrical malfunctions.

WHEN MONITORED

Limp in condition is not present.

Time since last gear shift is greater than or equal to 300 ms.

TCM supply voltage for solenoid is between 9 and 16 volts.

Time since high side driver commanded on is greater than or equal to 300 ms.

Solenoid is commanded on (pulse width modulation duty cycle is greater than 10%).

SET CONDITION

The failure is detected if the measured voltage for solenoid output is greater than or equal to 0.575 of a volt for 0.32 of a second.

POSSIBLE CAUSES

Possible Causes
(T78) BANK 1 SOLENOID POWER SUPPLY CIRCUIT SHORTED TO VOLTAGE (T812) TORQUE CONVERTER CLUTCH PRESSURE CONTROL SOLENOID CONTROL CIRCUIT SHORTED TO VOLTAGE TORQUE CONVERTER CLUTCH PRESSURE CONTROL SOLENOID TRANSMISSION CONTROL MODULE (TCM)

Always perform the Pre-Diagnostic Troubleshooting procedure before

proceeding. Refer to 6F24 PRE-DIAGNOSTIC TROUBLESHOOTING PROCEDURE .

DIAGNOSTIC TEST

1. **CHECK IF DTC IS CURRENT**
   1. Using the scan tool, read TCM DTCs.
   2. Record the Environmental Data and any DTCs.
   3. Clear DTCs.
   4. Using the recorded Environmental Data, along with the When Monitored and Set Conditions above, operate the vehicle in the conditions that set the DTC.
   5. Read TCM DTCs.

   Did the DTC reset?

   Yes

   - Go To 2

   No

   - Go To 5
2. **CHECK THE (T78) BANK 1 SOLENOID POWER CIRCUIT FOR A SHORT TO VOLTAGE**
   1. Turn the ignition off to the lock position.
   2. Disconnect the Transmission C1 harness connectors.
   3. Disconnect the TCM C1 harness connector.
   4. Turn the ignition on.
   5. Measure the voltage of the (T78) Bank 1 Solenoid Power circuit between ground and the Transmission C1 harness connector.

   Is the voltage above 0.5 of a volt?

   Yes

   - Repair the (T78) Bank 1 Solenoid Power circuit for a short to voltage.

- Perform TRANSMISSION VERIFICATION TEST. Refer to **6F24 TRANSMISSION VERIFICATION TEST** .

No

- Go To 3

3. **CHECK THE (T812) TORQUE CONVERTER CLUTCH PRESSURE CONTROL SOLENOID CONTROL CIRCUIT FOR A SHORT TO VOLTAGE**
   1. Measure the voltage of the (T812) Torque Converter Clutch Pressure Control Solenoid Control circuit between ground and the Transmission C1 harness connector.

      Is the voltage above 0.5 of a volt?

      Yes

      - Repair the (T812) Torque Converter Clutch Pressure Control Solenoid Control circuit for a short to voltage.
      - Perform TRANSMISSION VERIFICATION TEST. Refer to **6F24 TRANSMISSION VERIFICATION TEST** .

      No

      - Go To 4

4. **CHECK THE TORQUE CONVERTER CLUTCH PRESSURE CONTROL SOLENOID A (1)**
   1. Turn the ignition off to the lock position.
   2. Measure the resistance of the Torque Converter Clutch Pressure Control Solenoid between the appropriate terminals of the Transmission C1 harness connector.

      Is the resistance of the Torque Converter Clutch Pressure Control Solenoid 5.1 Ohms (± 0.3 Ohm) at 25° C (77° F)?

      Yes

      - Using the schematics as a guide, check the Transmission Control Module (TCM) pins, terminals, and connectors for corrosion,

damage, or terminal push out. Pay particular attention to all power and ground circuits. If no problems are found, replace and program the TCM in accordance with the Service Information. Refer to **MODULE, TRANSMISSION CONTROL, REMOVAL** .
- Perform TRANSMISSION VERIFICATION TEST. Refer to **6F24 TRANSMISSION VERIFICATION TEST** .

No

- Remove the transmission side cover and inspect the internal lead frame. If there are no problems found with the lead frame, replace the Torque Converter Clutch Pressure Control Solenoid in accordance with the Service Information.
- Perform TRANSMISSION VERIFICATION TEST. Refer to **6F24 TRANSMISSION VERIFICATION TEST** .

5. **CHECK WIRING AND CONNECTORS**
   1. The conditions necessary to set the DTC are not present at this time.
   2. Using the schematics as a guide, inspect the wiring and connectors specific to this circuit.
   3. Wiggle the wires while checking for shorted and open circuits.
   4. Check for any Service Bulletins that may apply.

   Were there any problems found?

   Yes

   - Repair as necessary.
   - Perform TRANSMISSION VERIFICATION TEST. Refer to **6F24 TRANSMISSION VERIFICATION TEST** .

   No

   - Test Complete.

P2764-00-TORQUE CONVERTER CLUTCH PRESSURE CONTROL SOLENOID CONTROL CIRCUIT LOW

For a complete wiring diagram, **refer to appropriate SYSTEM WIRING DIAGRAMS article** .

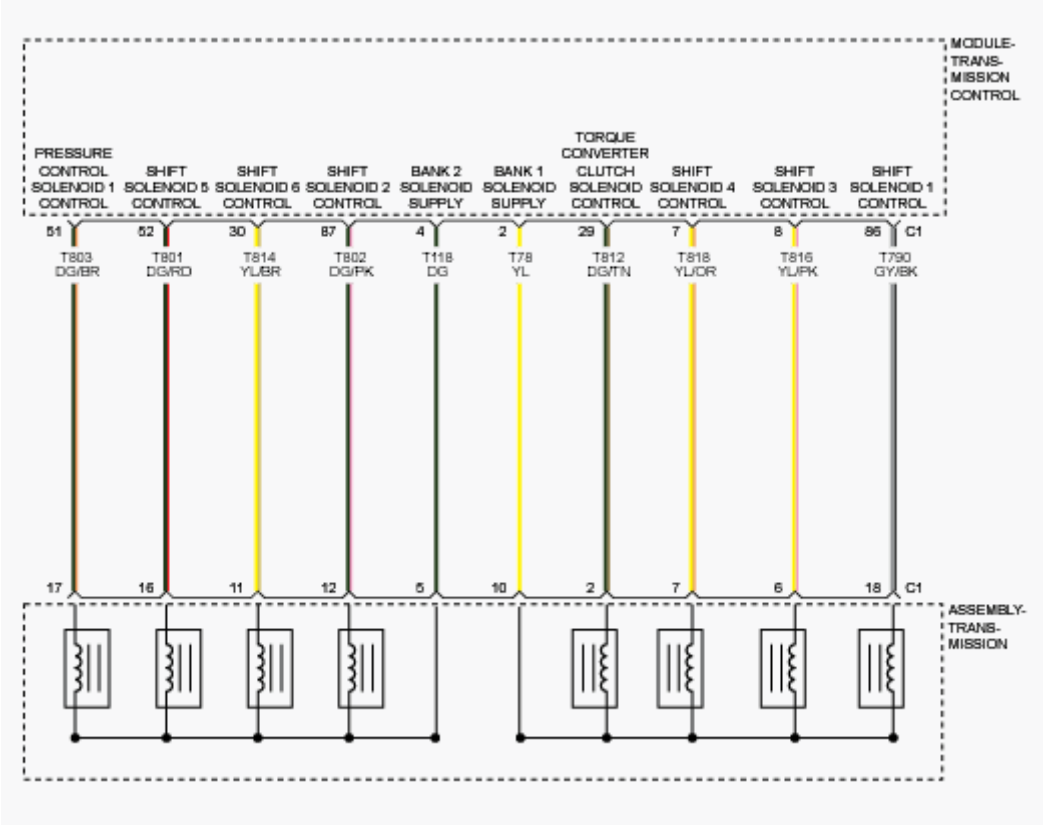

Fig. 45: Transmission Solenoids Circuit Diagram
Courtesy of CHRYSLER GROUP, LLC

THEORY OF OPERATION

The purpose of this diagnostic is to check the electrical performance of each of the six variable force solenoid circuits. The six variable force solenoids include a shift solenoid C which controls the 3rd , 5th , Reverse clutch, shift solenoid D which controls the Over Drive clutch, shift solenoid E which controls the Under Drive brake, shift solenoid F which controls the 2nd , 6th brake, pressure control solenoid A which controls the hydraulic line pressure, and torque converter clutch pressure control solenoid which controls the torque converter lock up clutch. The electrical failures that are detected include short to battery, short to ground, and open circuit. The power stage driver, which is located in the TCM, detects these electrical malfunctions.

WHEN MONITORED

Limp in condition is not present.

Time since last gear shift is greater than or equal to 300 ms.

TCM supply voltage for solenoid is between 9 and 16 volts.

Time since high side driver commanded on is greater than or equal to 300 ms.

Solenoid is commanded off (pulse width modulation duty cycle is 0%).

SET CONDITION

The failure is detected if the measured voltage for solenoid output is less than or equal to 1.3 volts for 0.32 of a second.

POSSIBLE CAUSES

Possible Causes
(T78) BANK 1 SOLENOID POWER SUPPLY CIRCUIT SHORT TO GROUND (T812) TORQUE CONVERTER CLUTCH PRESSURE CONTROL SOLENOID CONTROL CIRCUIT SHORT TO GROUND TORQUE CONVERTER CLUTCH PRESSURE CONTROL SOLENOID TRANSMISSION CONTROL MODULE (TCM)

Always perform the Pre-Diagnostic Troubleshooting procedure before proceeding. Refer to <u>6F24 PRE-DIAGNOSTIC TROUBLESHOOTING PROCEDURE</u> .

DIAGNOSTIC TEST

1. **CHECK IF DTC IS CURRENT**
    1. Using the scan tool, read TCM DTCs.
    2. Record the Environmental Data and any DTCs.
    3. Clear DTCs.
    4. Using the recorded Environmental Data, along with the When Monitored and Set Conditions above, operate the vehicle in the conditions that set the DTC.
    5. Read TCM DTCs.

    Did the DTC reset?

    Yes

- Go To 2

No

- Go To 5

2. **CHECK THE (T78) BANK 1 SOLENOID POWER CIRCUIT FOR A SHORT TO GROUND**
   1. Turn the ignition off to the lock position.
   2. Disconnect the Transmission C1 harness connectors.
   3. Disconnect the TCM C1 harness connector.
   4. Measure the resistance of the (T78) Bank 1 Solenoid Power circuit between ground and the Transmission C1 harness connector.

   Is the resistance above 100k ohms?

   Yes

   - Go To 3

   No

   - Repair the (T78) Bank 1 Solenoid Power circuit for a short to ground.
   - Perform TRANSMISSION VERIFICATION TEST. Refer to **6F24 TRANSMISSION VERIFICATION TEST** .

3. **CHECK THE (T812) TORQUE CONVERTER CLUTCH PRESSURE CONTROL SOLENOID CONTROL CIRCUIT FOR A SHORT TO GROUND**
   1. Measure the resistance of the (T812) Torque Converter Clutch Pressure Control Solenoid Control circuit between ground and the Transmission C1 harness connector.

   Is the resistance above 100k ohms?

   Yes

   - Go To 4

   No

- Repair the (T812) Torque Converter Clutch Pressure Control Solenoid Control circuit for a short to ground.
- Perform TRANSMISSION VERIFICATION TEST. Refer to **6F24 TRANSMISSION VERIFICATION TEST** .

4. **CHECK THE TORQUE CONVERTER CLUTCH PRESSURE CONTROL SOLENOID A (1)**
   1. Turn the ignition off to the lock position.
   2. Measure the resistance of the Torque Converter Clutch Pressure Control Solenoid between the appropriate terminals of the Transmission C1 harness connector.

      Is the resistance of the Torque Converter Clutch Pressure Control Solenoid 5.1 Ohms (± 0.3 Ohm) at 25° C (77° F)?

      Yes

      - Using the schematics as a guide, check the Transmission Control Module (TCM) pins, terminals, and connectors for corrosion, damage, or terminal push out. Pay particular attention to all power and ground circuits. If no problems are found, replace and program the TCM in accordance with the Service Information. Refer to **MODULE, TRANSMISSION CONTROL, REMOVAL** .
      - Perform TRANSMISSION VERIFICATION TEST. Refer to **6F24 TRANSMISSION VERIFICATION TEST** .

      No

      - Remove the transmission side cover and inspect the internal lead frame. If there are no problems found with the lead frame, replace the Torque Converter Clutch Pressure Control Solenoid in accordance with the Service Information.
      - Perform TRANSMISSION VERIFICATION TEST. Refer to **6F24 TRANSMISSION VERIFICATION TEST** .

5. **CHECK WIRING AND CONNECTORS**
   1. The conditions necessary to set the DTC are not present at this time.
   2. Using the schematics as a guide, inspect the wiring and connectors specific to this circuit.

3. Wiggle the wires while checking for shorted and open circuits.
4. Check for any Service Bulletins that may apply.

Were there any problems found?

Yes

- Repair as necessary.
- Perform TRANSMISSION VERIFICATION TEST. Refer to **6F24 TRANSMISSION VERIFICATION TEST** .

No

- Test Complete.

U0001-00-CAN C BUS

For a complete wiring diagram, **refer to appropriate SYSTEM WIRING DIAGRAMS article** .

WHEN MONITORED

Continuously when the ignition is on and battery voltage between 10 and 16 volts.

SET CONDITION

The controller detects an open, short to ground or a short to voltage on the CAN C Bus circuit.

POSSIBLE CAUSES

Possible Causes
CAN C BUS CIRCUITS OPEN OR SHORTED
DTCS RELATED TO BATTERY VOLTAGE, IGNITION, OR VIN MESSAGES
TOTALLY INTEGRATED POWER MODULE (TIPM) POWER AND GROUND
TOTALLY INTEGRATED POWER MODULE (TIPM)
MODULE THAT SET THIS DTC

DIAGNOSTIC TEST

VERIFY THE DTC IS ACTIVE

NOTE: For vehicle communication problems, use the scan tool to refer to the Network Review Screen. The screen depicts a high level view of the vehicle network. Fault and problem areas appear in red. Selecting any of the network components allows access to the source of the problem.

1. Turn the ignition on.
2. With the scan tool, read active DTCs.

   Is the DTC active at this time?

   Yes

   - Refer to the **TOTALLY INTEGRATED POWER MODULE (TIPM) - DIAGNOSTIC CODE INDEX** and perform the U0002-CAN C Bus Off Performance diagnostic procedure.

   No

   - Refer to **DIAGNOSIS AND TESTING** and perform the Stored Lost Communication DTCs diagnostic procedure.

U0100-00-LOST COMMUNICATION WITH ECM-PCM

For a complete wiring diagram, **refer to appropriate SYSTEM WIRING DIAGRAMS article** .

WHEN MONITORED

Ignition run time is greater than one second.

Battery voltage between 9 and 16 volts.

Engine run time greater than three seconds.

SET CONDITION

Bus messages not received from the Powertrain Control Module (ECM/PCM) for

approximately two to five seconds.

POSSIBLE CAUSES

Possible Causes
CAN BUS CIRCUITS OPEN OR SHORTED DTCS RELATED TO BATTERY VOLTAGE, IGNITION, OR VIN MESSAGES POWERTRAIN CONTROL MODULE POWER AND GROUND TIPM NOT CONFIGURED CORRECTLY POWERTRAIN CONTROL MODULE (ECM/PCM) MODULE THAT SET THIS DTC

DIAGNOSTIC TEST

VERIFY THE DTC IS ACTIVE

NOTE: Make sure the IOD fuse is installed and the battery is fully charged before proceeding.

1. Turn the ignition on.
2. With the scan tool, read the active DTCs.

   Is the DTC active at this time?

   Yes

   - Perform the U0100-87-Lost Communication with ECM/PCM diagnostic procedure. Refer to the **TOTALLY INTEGRATED POWER MODULE (TIPM) - DIAGNOSTIC CODE INDEX** .

   No

   - Perform the Stored Lost Communication DTCs diagnostic procedure. Refer to **DIAGNOSIS AND TESTING** .

U0121-00-LOST COMMUNICATION WITH ANTILOCK BRAKE SYSTEM (ABS) CONTROL MODULE

For a complete wiring diagram, **refer to appropriate SYSTEM WIRING DIAGRAMS article** .

THEORY OF OPERATION

The Controller Area Network (CAN) is a high speed serial communication line for multiplex communication between multiple controllers that reside on the network. The Transmission Control Module monitors the transmit and receive message from the CAN BUS.

WHEN MONITORED

Ignition on in the run position with a system voltage between 9.0 and 16.0 volts.

IOD fuse is installed or vehicle odometer is over 80 kilometers (50 miles).

No CAN C BUS DTCs present.

SET CONDITION

A loss of CAN Bus communication between the TCM and ABS for the period of 2.0 seconds.

Refer to DTC Based Diagnostics and perform the appropriate diagnostic procedure. Refer to the **TOTALLY INTEGRATED POWER MODULE (TIPM) - DIAGNOSTIC CODE INDEX** .

U0141-00-LOST COMMUNICATION WITH IPM FCM-TIPM

For a complete wiring diagram, **refer to appropriate SYSTEM WIRING DIAGRAMS article** .

THEORY OF OPERATION

The Controller Area Network (CAN) is a high speed serial communication line for multiplex communication between multiple controllers that reside on the network. The Transmission Control Module monitors the transmit and receive message from the CAN BUS.

WHEN MONITORED

Ignition on in the run position with a system voltage between 9.0 and 16.0 volts.

IOD fuse is installed or vehicle odometer is over 80 kilometers (50 miles).

No CAN C Bus DTCs present.

SET CONDITION

A loss of CAN Bus communication between the TCM and FCM/TIPM for the period of 2.0 seconds.

Refer to DTC Based Diagnostics and perform the appropriate diagnostic procedure. Refer to the **TOTALLY INTEGRATED POWER MODULE (TIPM) - DIAGNOSTIC CODE INDEX** .

U0401-00-IMPLAUSIBLE DATA RECEIVED FROM ECM-PCM

For a complete wiring diagram, **refer to appropriate SYSTEM WIRING DIAGRAMS article** .

THEORY OF OPERATION

This diagnostic checks the validity of the two CAN messages sent by the Powertrain Controller Module (PCM) containing information about the engine torque. The diagnostic checks the validity by performing a CRC and message counter check to be sure the CAN messages are continuously updated by the PCM and they contain valid values.

WHEN MONITORED

Ignition key is ON.

The Bus OFF failure is not present, the TCM receives messages on the CAN network, the CAN communication between the TCM and PCM is not lost, there are no dual port RAM faults and the CAN message was read at least once.

SET CONDITION

A signal toggle bit and a signal parity bit are sent by the PCM within the CAN message. In order to be sure the message content is continuously updated, the value of the toggle bit changes from 0 to 1 and vice versa every two messages. In order to be sure that the message content is valid, the parity bit value is set so the sum of specific signal bits of the message content, plus the toggle bit, plus the parity bit is an even number. If the toggle bit value does not change for a calibrated amount of time or the signal parity is not verified for a calibrated amount of time then DTC U0401 is set.

POSSIBLE CAUSES

Possible Causes
PCM - INTERNAL ERROR TRANSMISSION CONTROL MODULE (TCM)

Always perform the Pre-Diagnostic Troubleshooting procedure before proceeding. Refer to 6F24 PRE-DIAGNOSTIC TROUBLESHOOTING PROCEDURE .

DIAGNOSTIC TEST

1. **CHECK FOR BCM CAN BUS DTCS**
   1. With the scan tool, read BCM DTCs.

      Are any BCM CAN BUS DTC's present?

      Yes

      - Refer to the **TOTALLY INTEGRATED POWER MODULE (TIPM) - DIAGNOSTIC CODE INDEX** and perform the appropriate diagnostic procedure. Perform the diagnostic procedure for DTC U0001-CAN C BUS first if it is present.
      - Perform the TRANSMISSION VERIFICATION TEST. Refer to **6F24 TRANSMISSION VERIFICATION TEST** .

      No

      - Go To 2
2. **CHECK IF ENGINE DTC'S ARE PRESENT**
   1. With the scan tool, read engine DTCs.

      Are any engine DTC's present?

      Yes

      - Refer to the **2.0L & 2.4L - DIAGNOSTIC CODE INDEX** and perform the appropriate diagnostic procedure.
      - Perform the TRANSMISSION VERIFICATION TEST. Refer to **6F24 TRANSMISSION VERIFICATION TEST** .

      No

- Using the schematics as a guide, check the Transmission Control Module (TCM) terminals for corrosion, damage or terminal push out. Pay particular attention to all power and ground circuits. If no problems are found, replace and program the TCM in accordance to the Service Information. Refer to **MODULE, TRANSMISSION CONTROL, REMOVAL** .
- Perform the TRANSMISSION VERIFICATION TEST. Refer to **6F24 TRANSMISSION VERIFICATION TEST** .

STANDARD PROCEDURE

6F24 PRE-DIAGNOSTIC TROUBLESHOOTING PROCEDURE

1. Many transmission symptoms can be caused by a low fluid level. If the fluid level is low, locate and repair any leaks and fill the transmission to the proper fluid level in accordance with the Service Information.
2. Testing should only be performed with the battery fully charged to avoid false diagnosis.
3. With the scan tool, read Powertrain (PCM) DTCs. If Engine DTCs are present, refer to the **2.0L & 2.4L - DIAGNOSTIC CODE INDEX** and perform to the appropriate diagnostic procedure(s) before proceeding. .
4. With the scan tool, read Transmission (TCM) DTCs. Record all Stored, Active, and Pending DTC information. Diagnose any Pending DTC as a matured DTC.
5. Refer to the WHEN MONITORED and SET CONDITIONS for this DTC. DTCs can set at ignition on, at start up, driving under specific conditions, or after controller diagnostic monitors have run.
6. Perform any applicable Service Bulletins for controller software update information. Some conditions can be corrected by upgrading the Powertrain (PCM) or Transmission (TCM) controller software.
7. Check for any Service Information Updates or Service Bulletins for any possible causes that may apply.

Were there any repairs made that fixed the vehicle?

Yes

- Testing complete.

- Perform the TRANSMISSION VERIFICATION TEST. Refer to **6F24 TRANSMISSION VERIFICATION TEST** .

No

- Perform the appropriate diagnostic procedure.

6F24 TCM PROGRAMMING PROCEDURE

PROGRAMMING THE TRANSMISSION CONTROL MODULE (TCM)

NOTE: While performing the TCM programming procedure, the vehicle battery must be maintained between 10 and 16 volts. Ambient temperature must be between 0° C (32° F) 60° C (140° F). Vehicle must be in Park with brake pedal depressed.

1. Using the scan tool and Dealer Connect, download the appropriate TCM flash file to the scan tool.
2. Ignition on, engine not running.
3. Vehicle in park with the brake pedal depressed.
4. Following the menu on the scan tool, program the TCM.
5. Clear any stored DTCs.
6. Road test the vehicle above 40 m.p.h. for at least two minutes.
7. With the scan tool, select View DTCs in the TCM.

   Are there any DTCs present?

   Yes

   - Perform the appropriate diagnostic procedure(s).

   No

   - Test Complete
   - Perform the TRANSMISSION VERIFICATION TEST. Refer to **6F24 TRANSMISSION VERIFICATION TEST** .

6F24 TRANSMISSION VERIFICATION TEST

1. Perform the following after completion of a diagnostic repair:
    1. Reconnect any disconnected components.
    2. Connect the scan tool to the Data Link Connector (DLC).
    3. With the scan tool, erase all Transmission and Engine DTCs.
    4. If the transmission or valve body has been replaced, a Clear Learned Values procedure must be performed with the scan tool.
    5. With the scan tool, display Transmission Temperature. Start and run the engine until the Transmission Temperature is HOT.
    6. Check the Transmission fluid level and adjust if necessary. Refer to **STANDARD PROCEDURES** for the Fluid Fill procedure.
    7. Road test the vehicle allowing the vehicle to shift through all gears.
    8. Check for DTCs during and after the road test.

Were there any Diagnostic Trouble Codes (DTCs) set during the road test?

Yes

- Refer to **DIAGNOSTIC CODE INDEX** and perform the appropriate diagnostic procedure.

No

- Repair is complete.

2014 BRAKES

Antilock Brake System (ABS) - Electrical Diagnostics - Compass & Patriot

DIAGNOSTIC CODE INDEX

DIAGNOSTIC CODE INDEX

DTC	Description
C1000	BRAKE PEDAL SWITCH 1 CIRCUIT PERFORMANCE
C100A	LEFT FRONT WHEEL SPEED SENSOR CIRCUIT
C1011	LEFT FRONT WHEEL SPEED SENSOR SIGNAL ERRATIC PERFORMANCE
C1014	LEFT FRONT WHEEL SPEED COMPARATIVE PERFORMANCE
C1015	RIGHT FRONT WHEEL SPEED SENSOR CIRCUIT
C101C	RIGHT FRONT WHEEL SPEED SENSOR SIGNAL ERRATIC PERFORMANCE
C101F	RIGHT FRONT WHEEL SPEED COMPARATIVE PERFORMANCE
C1020	LEFT REAR WHEEL SPEED SENSOR CIRCUIT
C1027	LEFT REAR WHEEL SPEED SENSOR SIGNAL ERRATIC PERFORMANCE
C102A	LEFT REAR WHEEL SPEED COMPARATIVE PERFORMANCE
C102B	RIGHT REAR WHEEL SPEED SENSOR CIRCUIT
C102C	RIGHT REAR WHEEL SPEED SENSOR CIRCUIT PERFORMANCE
C1032	RIGHT REAR WHEEL SPEED SENSOR SIGNAL ERRATIC PERFORMANCE
C1035	RIGHT REAR WHEEL SPEED COMPARATIVE PERFORMANCE
C1038	REAR WHEEL SPEED SENSOR CIRCUIT LOW
C1039	REAR WHEEL SPEED SENSOR CIRCUIT HIGH
C1041	LEFT FRONT TONE WHEEL PERFORMANCE
C1042	RIGHT FRONT TONE WHEEL PERFORMANCE
C1043	LEFT REAR TONE WHEEL PERFORMANCE
C1044	RIGHT REAR TONE WHEEL PERFORMANCE

C1046	LEFT FRONT WHEEL PRESSURE PHASE MONITORING
C1047	RIGHT FRONT WHEEL PRESSURE PHASE MONITORING
C1048	LEFT REAR WHEEL PRESSURE PHASE MONITORING
C1049	RIGHT REAR WHEEL PRESSURE PHASE MONITORING
C1073	ABS PUMP MOTOR CONTROL CIRCUIT
C1078	TIRE REVOLUTIONS RANGE PERFORMANCE
C107C	BRAKE PEDAL SWITCH 1/2 STUCK
C107D	BRAKE PEDAL SWITCH 1/2 CORRELATION
C1090	ABS BRAKE LAMP CONTROL CIRCUIT LOW
C1091	ABS BRAKE LAMP CONTROL CIRCUIT HIGH
C1210	G SENSOR INPUT CIRCUIT PERFORMANCE
C1219	STEERING ANGLE SENSOR ERRATIC PERFORMANCE
C121A	STEERING ANGLE SENSOR NOT INITIALIZED
C121C	TORQUE REQUEST SIGNAL DENIED
C121D	BRAKE PRESSURE SENSOR CIRCUIT
C121E	BRAKE PRESSURE SENSOR COMPARATIVE PERFORMANCE
C1221	BRAKE PRESSURE SENSOR/ACCEL PEDAL POSITION SENSOR CORRELATION
C1231	DRIVE TEST: STEERING ANGLE SENSOR
C1232	DRIVE TEST: PRESSURE SENSOR
C1234	DRIVE TEST: SENSOR CLUSTER INSTALLATION
C1238	DRIVE TEST: UNSUCCESSFUL
C123A	ESP SYSTEM SENSORS CALIBRATION
C123B	ESP SYSTEM CONTROL TOO LONG
C123C	DYNAMICS SENSOR MOUNTING/INSTALLATION PERFORMANCE
C123F	STEERING ANGLE SENSOR COMPARATIVE PERFORMANCE
C1240	STEERING ANGLE SENSOR OVERTRAVEL PERFORMANCE

C1242	G SENSOR INPUT SIGNAL PERFORMANCE
C1243	G SENSOR NOT INITIALIZED
C2100	BATTERY VOLTAGE LOW
C2101	BATTERY VOLTAGE HIGH
C2114	DYNAMICS SENSOR SUPPLY VOLTAGE LOW
C2115	DYNAMICS SENSOR SUPPLY VOLTAGE HIGH
C2116	ABS PUMP MOTOR SUPPLY LOW VOLTAGE
C2200	ANTI-LOCK BRAKE MODULE INTERNAL
C2204	DYNAMICS SENSOR INTERNAL
C2205	STEERING ANGLE SENSOR INTERNAL
C2206	VEHICLE CONFIGURATION MISMATCH
C2312	TCS/ESP SWITCH STUCK
U0002	CAN C BUS OFF PERFORMANCE
U0100	LOST COMMUNICATION WITH THE ECM/PCM
U0101	LOST COMMUNICATION WITH TCM
U0114	LOST COMMUNICATION WITH FINAL DRIVE MODULE
U0125	LOST COMMUNICATION WITH DYNAMICS SENSOR
U0126	LOST COMMUNICATION WITH STEERING ANGLE SENSOR
U0141	LOST COMMUNICATION WITH IPM (FCM/TIPM)
U0146	LOST COMMUNICATION WITH CENTRAL GATEWAY
U0401	IMPLAUSIBLE DATA RECEIVED FROM ECM/PCM
U1003	ESP CAN C BUS PERFORMANCE
U1104	CAN C BUS CRC PERFORMANCE
U140E	IMPLAUSIBLE VEHICLE CONFIGURATION DATA RECEIVED
U1501	IMPLAUSIBLE MESSAGE DATA LENGTH RECEIVED FROM PCM
U1502	IMPLAUSIBLE MESSAGE DATA LENGTH RECEIVED FROM TCM
U1503	IMPLAUSIBLE MESSAGE DATA LENGTH RECEIVED FROM FCM (TIPM)

DIAGNOSIS AND TESTING

C1000-BRAKE PEDAL SWITCH 1 CIRCUIT PERFORMANCE

For a complete wiring diagram, **refer to appropriate SYSTEM WIRING DIAGRAMS article** .

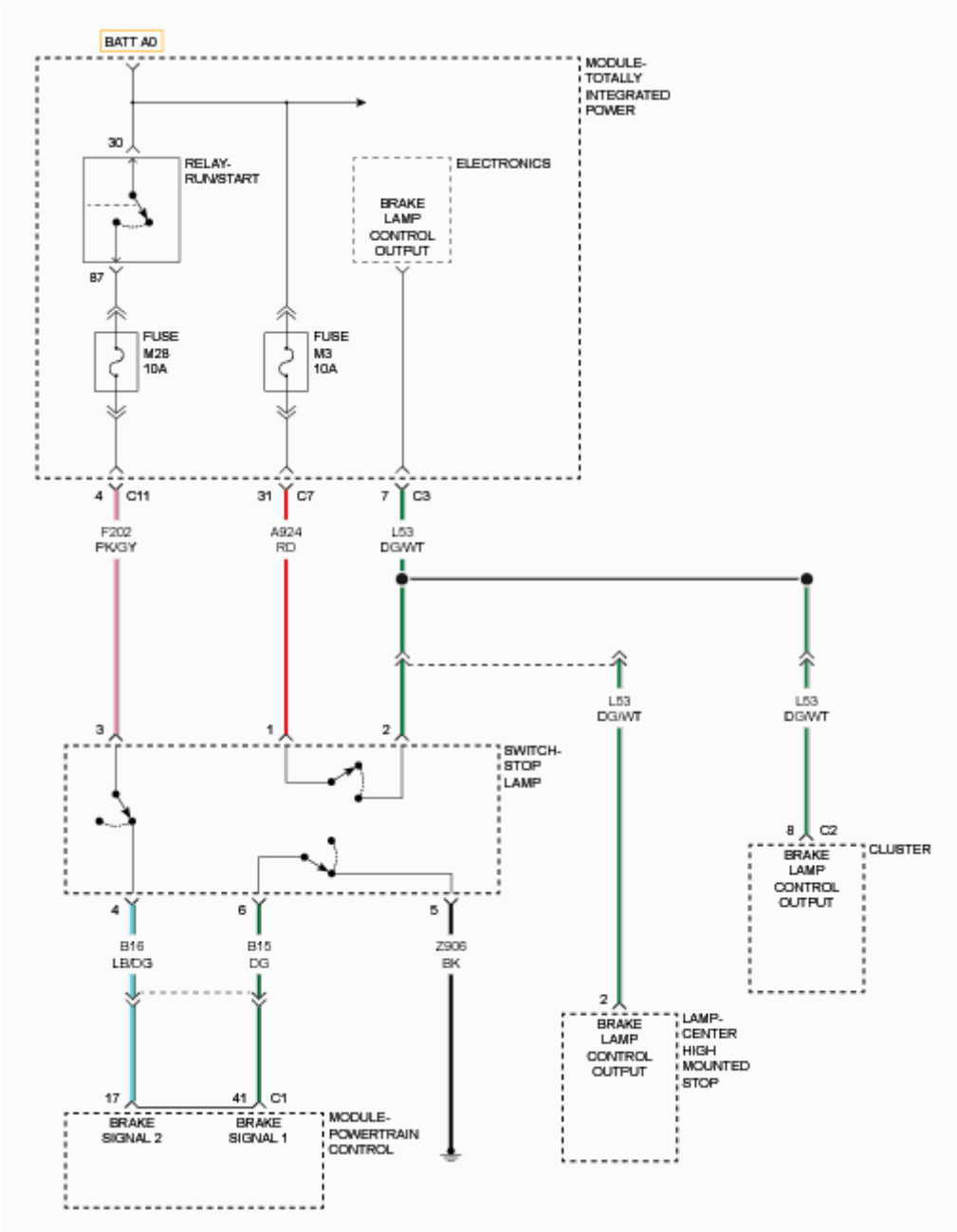

Fig. 1: Brake Pedal Switch Circuit Diagram
Courtesy of CHRYSLER GROUP, LLC

WHEN MONITORED

With the ignition on.

SET CONDITION

This DTC will set if the hard wired input from the Stop Lamp Switch does not match the Stop Lamp Switch CAN Bus input from the Powertrain Control Module (PCM).

POSSIBLE CAUSES

Possible Causes
BRAKE LAMP CONTROL OUTPUT CIRCUIT OPEN
FUSED B (+) CIRCUIT OPEN OR SHORTED TO GROUND
STOP LAMP SWITCH
TOTALLY INTEGRATED POWER MODULE (TIPM)

DIAGNOSTIC TEST

1. **CHECK FOR AN ACTIVE DTC**

NOTE: If any Brake Switch DTCs are present in the PCM, diagnose those DTCs before continuing.

NOTE: Verify the Stop Lamp Switch is properly adjusted before continuing.

1. Turn the ignition on.
2. With the scan tool, read DTCs.

Does the scan tool display this DTC as active?

Yes

- Go To 2

No

- Test complete. The condition or conditions that originally set this DTC are not present at this time. Using the wiring diagrams as a guide, check all related splices and connectors for signs of water intrusion, corrosion, pushed out or bent terminals and correct pin tension.
- Perform the BODY VERIFICATION TEST. Refer to **STANDARD PROCEDURE** .

2. **CHECK CENTER HIGH MOUNTED STOP LAMP (CHMSL) OPERATION**
   1. Turn the ignition on.
   2. Press the brake pedal.

   Does the CHMSL illuminate?

   Yes

   - Go To 5

   No

   - Go To 3
3. **CHECK THE (A924) FUSED B (+) CIRCUIT FOR AN OPEN OR SHORT TO GROUND**
   1. Back probe and measure the voltage of the (A924) Fused B (+) circuit at the Stop Lamp Switch harness connector.

   Is the voltage above 10.0 volts?

   Yes

   - Go To 4

   No

   - Repair the (A924) Fused B (+) circuit for an open or short to ground.
   - Perform the BODY VERIFICATION TEST. Refer to **STANDARD PROCEDURE** .
4. **CHECK THE OPERATION OF THE STOP LAMP SWITCH**
   1. With the Brake Pedal pressed, back probe and measure the voltage of the (L53) Brake Lamp Control Output circuit at the Stop Lamp Switch harness connector.

   Is the voltage above 10.0 volts?

   Yes

- Go To 5

No

- Replace the Stop Lamp Switch in accordance with the Service Information.
- Perform the BODY VERIFICATION TEST. Refer to **STANDARD PROCEDURE** .

5. **CHECK THE (L53) BRAKE LAMP CONTROL OUTPUT CIRCUIT FOR VOLTAGE WITH THE STOP LAMP SWITCH DEPRESSED**
   1. Disconnect the TIPM C3 harness connector.
   2. With the brake pedal pressed, check the voltage of the (L53) Brake Lamp Control Output circuit at the TIPM C3 harness connector.

   Is the voltage above 10.0 volts?

   Yes

   - Replace the Totally Integrated Power Module (TIPM) in accordance with the Service Information.
   - Perform the BODY VERIFICATION TEST. Refer to **STANDARD PROCEDURE** .

   No

   - Repair the (L53) Brake Lamp Control Output circuit for an open.
   - Perform the BODY VERIFICATION TEST. Refer to **STANDARD PROCEDURE** .

C100A-LEFT FRONT WHEEL SPEED SENSOR CIRCUIT

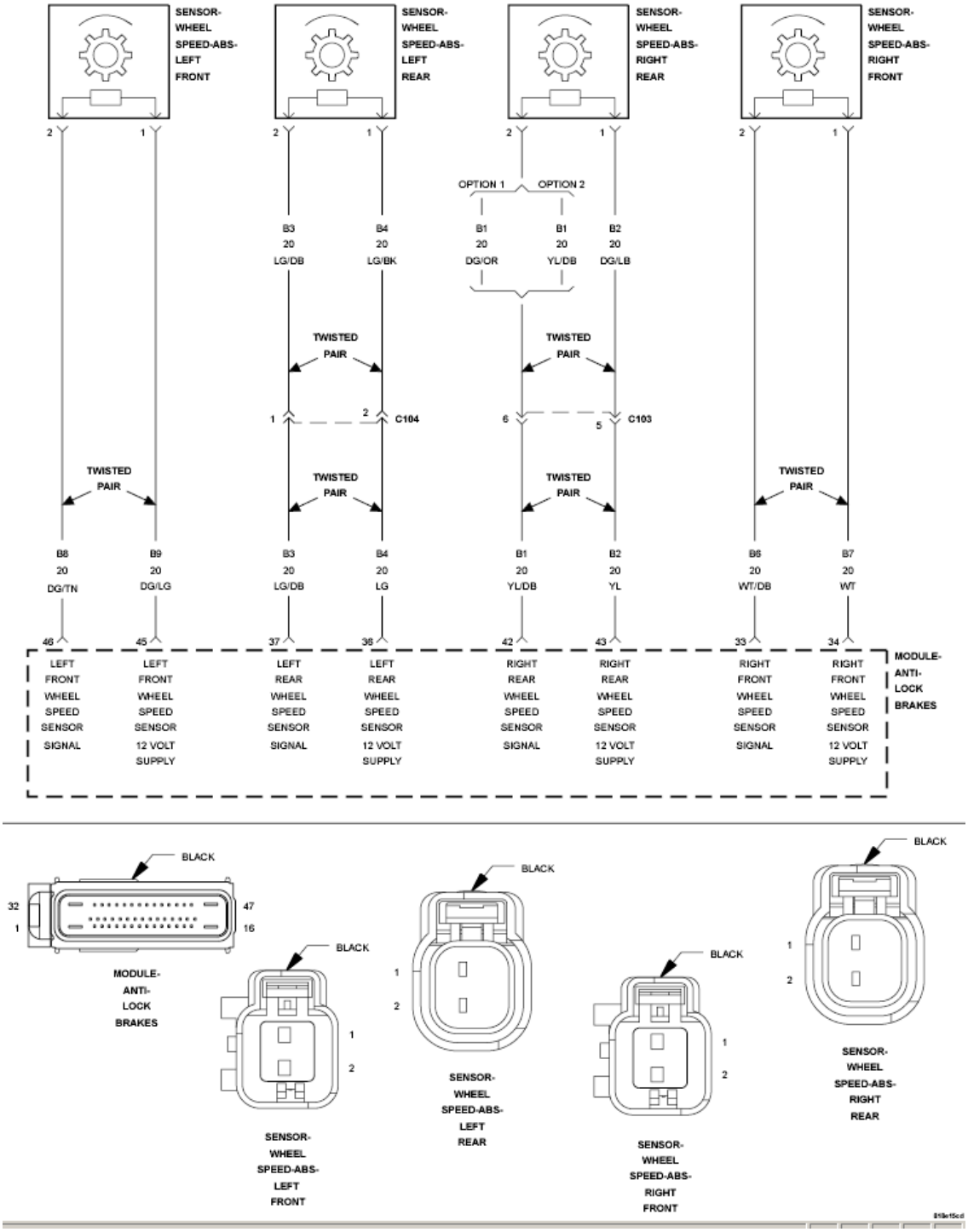

Fig. 2: Wheel Speed Sensor Circuit Schematic
Courtesy of CHRYSLER GROUP, LLC

For a complete wiring diagram, **refer to appropriate SYSTEM WIRING DIAGRAMS article** .

WHEN MONITORED

With the ignition on.

SET CONDITION

When the Left Front Wheel Speed Sensor circuit fails the diagnostic test.

POSSIBLE CAUSES

Possible Causes
CONNECTOR/TERMINAL DAMAGE
(B9) LEFT FRONT WSS SUPPLY CIRCUIT SHORTED TO VOLTAGE, GROUND OR OPEN
(B8) LEFT FRONT WSS SIGNAL CIRCUIT SHORTED TO VOLTAGE, GROUND, OR OPEN
(B8) LEFT FRONT WSS SIGNAL CIRCUIT AND (B9) LEFT FRONT WSS SUPPLY CIRCUIT SHORTED TOGETHER
LEFT FRONT WSS
ANTI-LOCK BRAKE MODULE

DIAGNOSTIC TEST

1. **CHECK FOR DTC C100A-LEFT FRONT WHEEL SPEED SENSOR CIRCUIT**

   NOTE: This DTC must be active for the results of this test to be valid.

   1. Turn the ignition on.
   2. With the scan tool, record and erase DTCs.
   3. Cycle the ignition switch from off to on.
   4. With the scan tool, read DTCs.

   Does the scan tool display: C100A-LEFT FRONT WHEEL SPEED SENSOR CIRCUIT active?

   Yes

   - Go To 2

   No

   - The condition that caused the symptom is currently not present.

Inspect the related wiring for a possible intermittent condition. Look for any chafed, pierced, pinched, or partially broken wires.

- Perform the ABS-INTERMITTENT CONDITION TEST. Refer to **STANDARD PROCEDURE**.

2. **CHECK CONNECTOR/TERMINAL FOR DAMAGE**

NOTE: Check all terminals for broken, bent, pushed out, or corroded terminals.

1. Turn the ignition off.
2. Inspect the Anti-Lock Brake Module harness connector, Left Front WSS, and Left Front WSS harness connector.

Is the Left Front WSS or any of the connectors/terminals damaged?

Yes

- Repair as necessary.
- Perform ABS VERIFICATION TEST. Refer to **STANDARD PROCEDURE**.

No

- Go To 3

3. **CHECK (B9) LEFT FRONT WSS SUPPLY CIRCUIT VOLTAGE**

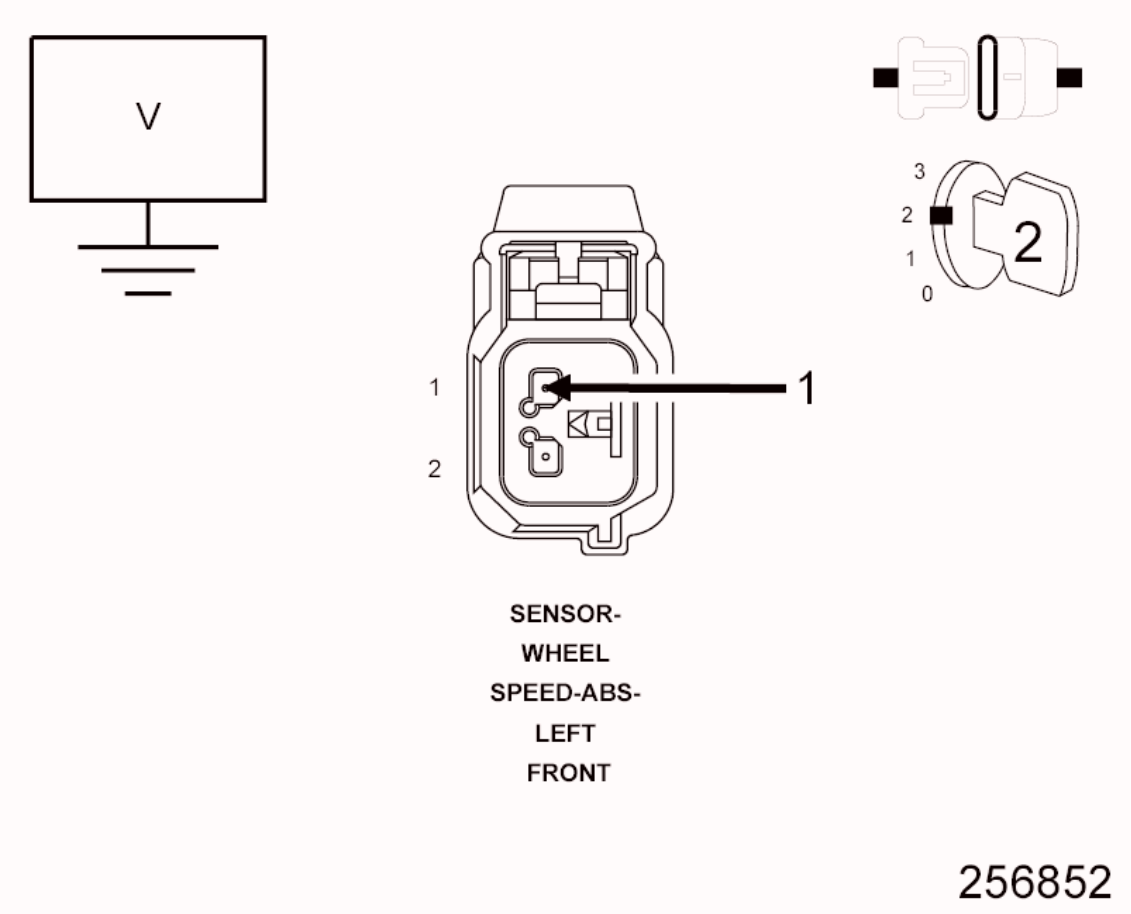

Fig. 3: Measuring Voltage Between Left Front WSS Supply Circuit & Ground
Courtesy of CHRYSLER GROUP, LLC

1. Disconnect the Left Front WSS harness connector.
2. Turn the ignition on.
3. Measure the voltage between the (B9) Left Front WSS Supply circuit and ground.

   Is the voltage above 10 volts?

   Yes

   - Go To 6

   No

   - Go To 4

4. **CHECK (B9) LEFT FRONT WSS SUPPLY CIRCUIT SHORT TO GROUND**

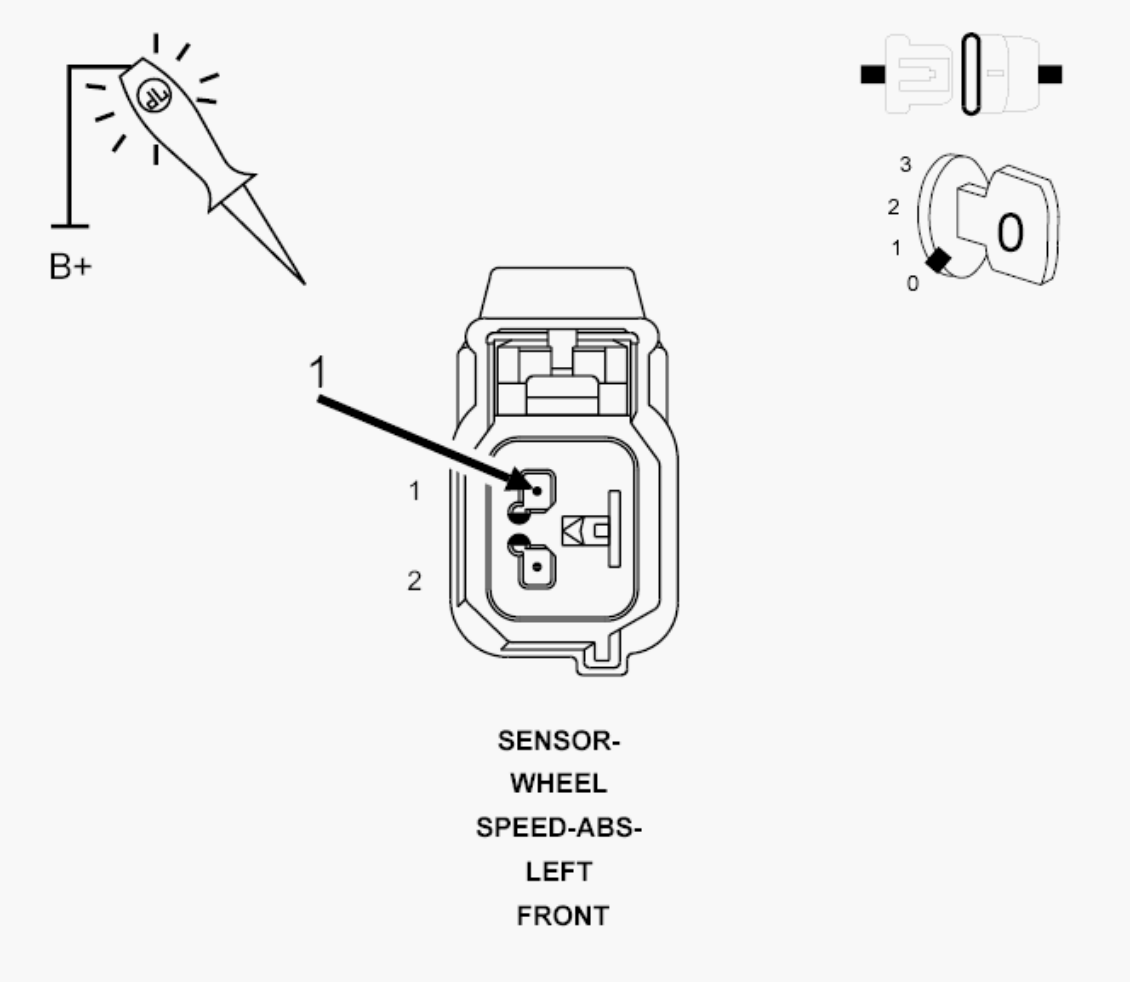

Fig. 4: Checking Left Front WSS Supply Circuit For A Short To Ground
Courtesy of CHRYSLER GROUP, LLC

1. Disconnect the Anti-Lock Brake Module harness connector.
2. Using a 12-volt test light connected to 12-volts, probe the (B9) Left Front WSS Supply circuit.

   Does the test light illuminate brightly?

   Yes

   - Repair the (B9) Left Front WSS Supply circuit for a short to ground.
   - Perform ABS VERIFICATION TEST. Refer to **STANDARD PROCEDURE**.

   No

- Go To 5

5. **CHECK (B9) LEFT FRONT WSS SUPPLY CIRCUIT OPEN**

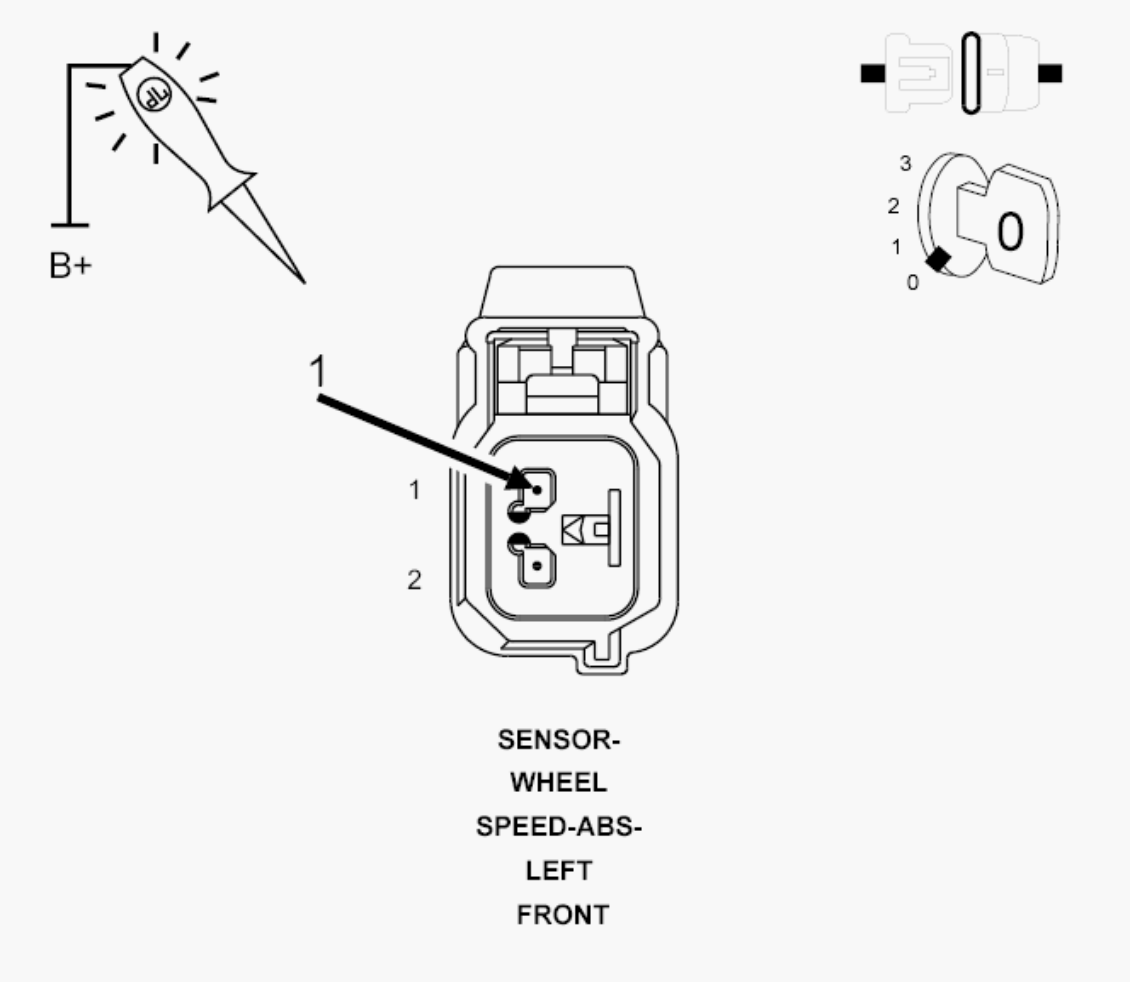

Fig. 5: Checking Left Front WSS Supply Circuit
Courtesy of CHRYSLER GROUP, LLC

1. Connect a jumper wire between ground and the (B9) Left Front WSS Supply circuit in the Anti-Lock Brakes Module harness connector.
2. Using a 12-volt test light connected to 12-volts, probe the (B9) Left Front WSS Supply circuit.

   Does the test light illuminate brightly?

   Yes

   - Go To 6

   No

- Repair the (B9) Left Front WSS Supply circuit for an open.
- Perform ABS VERIFICATION TEST. Refer to **STANDARD PROCEDURE**.

6. **CHECK (B8) LEFT FRONT WSS SIGNAL CIRCUIT SHORT TO VOLTAGE**

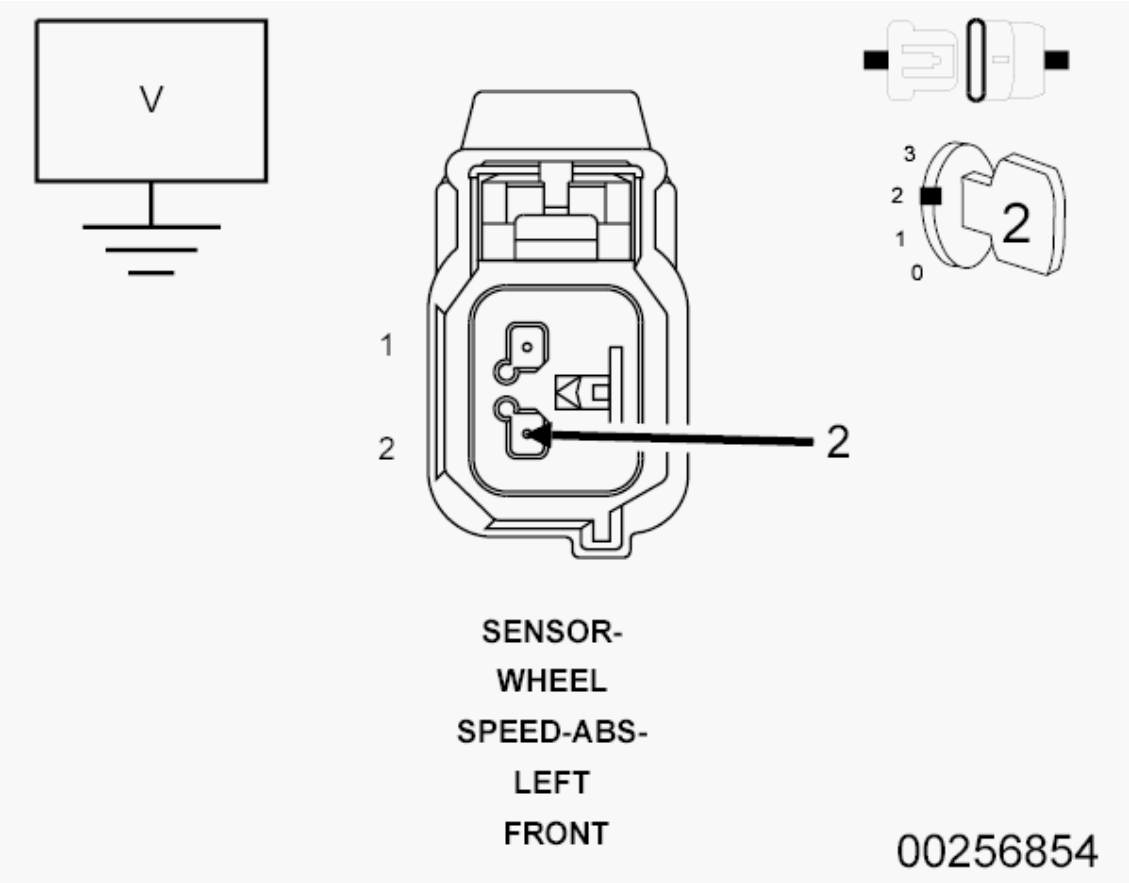

Fig. 6: Measuring Voltage Between Left Front WSS Signal Circuit & Ground
Courtesy of CHRYSLER GROUP, LLC

1. Turn the ignition on.
2. Measure the voltage between the (B8) Left Front WSS Signal circuit and ground.

   Is the voltage above one volt?

   Yes

   - Repair the (B8) Left Front WSS Signal circuit for a short to voltage.

- Perform ABS VERIFICATION TEST. Refer to **STANDARD PROCEDURE**.

No

- Go To7

7. **CHECK (B8) LEFT FRONT WSS SIGNAL CIRCUIT SHORT TO GROUND**

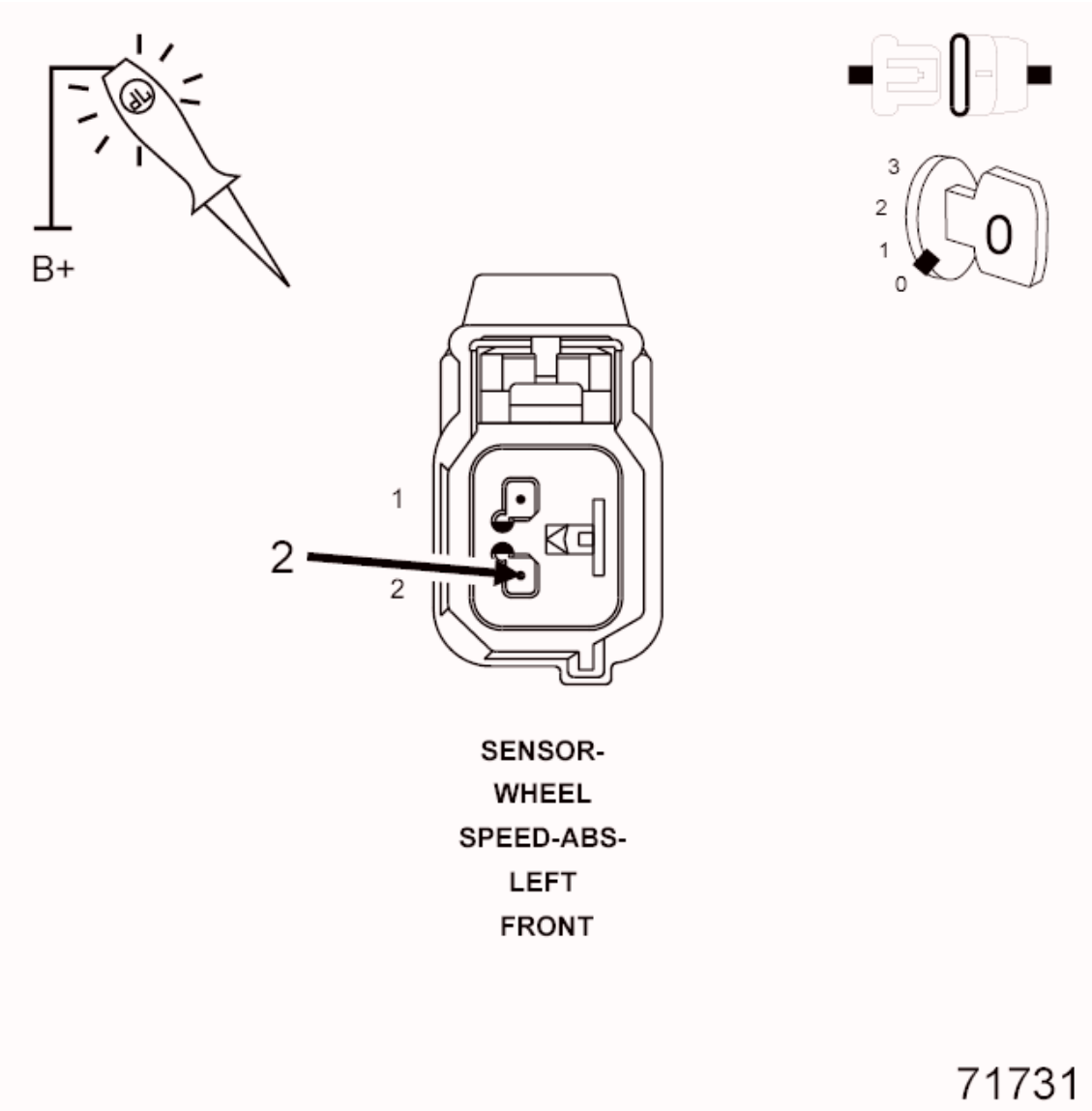

Fig. 7: Checking Left Front WSS Signal Circuit Short To Ground
Courtesy of CHRYSLER GROUP, LLC

1. Turn the ignition off.
2. If not done previously, disconnect the Anti-Lock Brake Module harness

connector.

3. Using a 12-volt test light connected to 12-volts, probe the (B8) Left Front WSS Signal circuit.

   Does the test light illuminate brightly?

   Yes

   - Repair the (B8) Left Front WSS Signal circuit for a short to ground.
   - Perform ABS VERIFICATION TEST. Refer to **STANDARD PROCEDURE**.

   No

   - Go To 8

8. **CHECK (B8) LEFT FRONT WSS SIGNAL CIRCUIT OPEN**

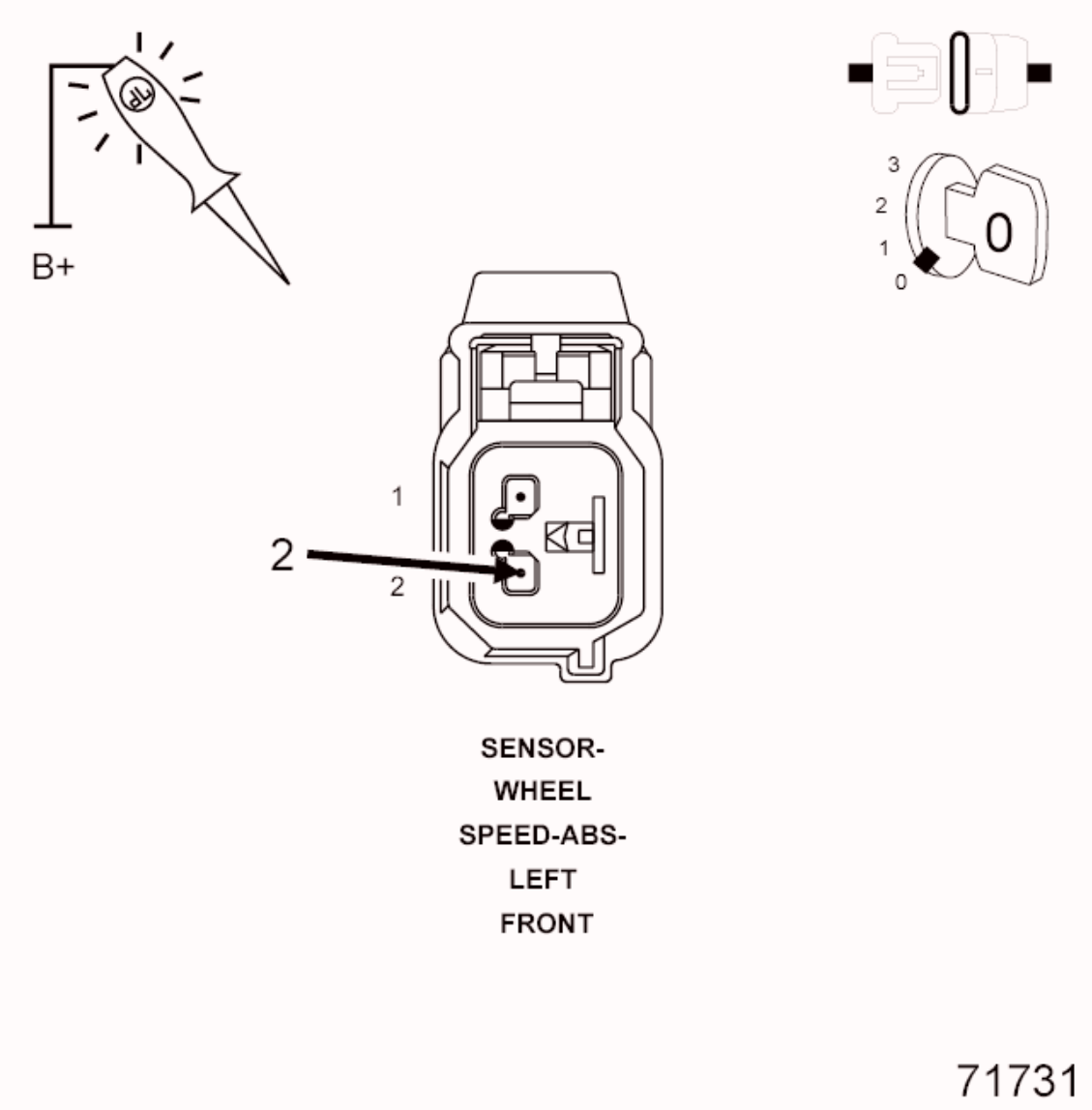

Fig. 8: Checking Left Front WSS Signal Circuit For Open
Courtesy of CHRYSLER GROUP, LLC

1. Connect a jumper wire between ground and the (B8) Left Front WSS Signal circuit in the Anti-Lock Brakes Module harness connector.
2. Using a 12-volt test light connected to 12-volts, probe the (B8) Left Front WSS Signal circuit.

   Does the test light illuminate brightly?

   Yes

   - Go To 9

   No

- Repair the (B8) Left Front WSS Signal circuit for an open.
- Perform ABS VERIFICATION TEST. Refer to **STANDARD PROCEDURE**.

9. **CHECK (B8) LEFT FRONT WSS SIGNAL CIRCUIT AND (B9) LEFT FRONT WSS SUPPLY CIRCUIT SHORT TOGETHER**

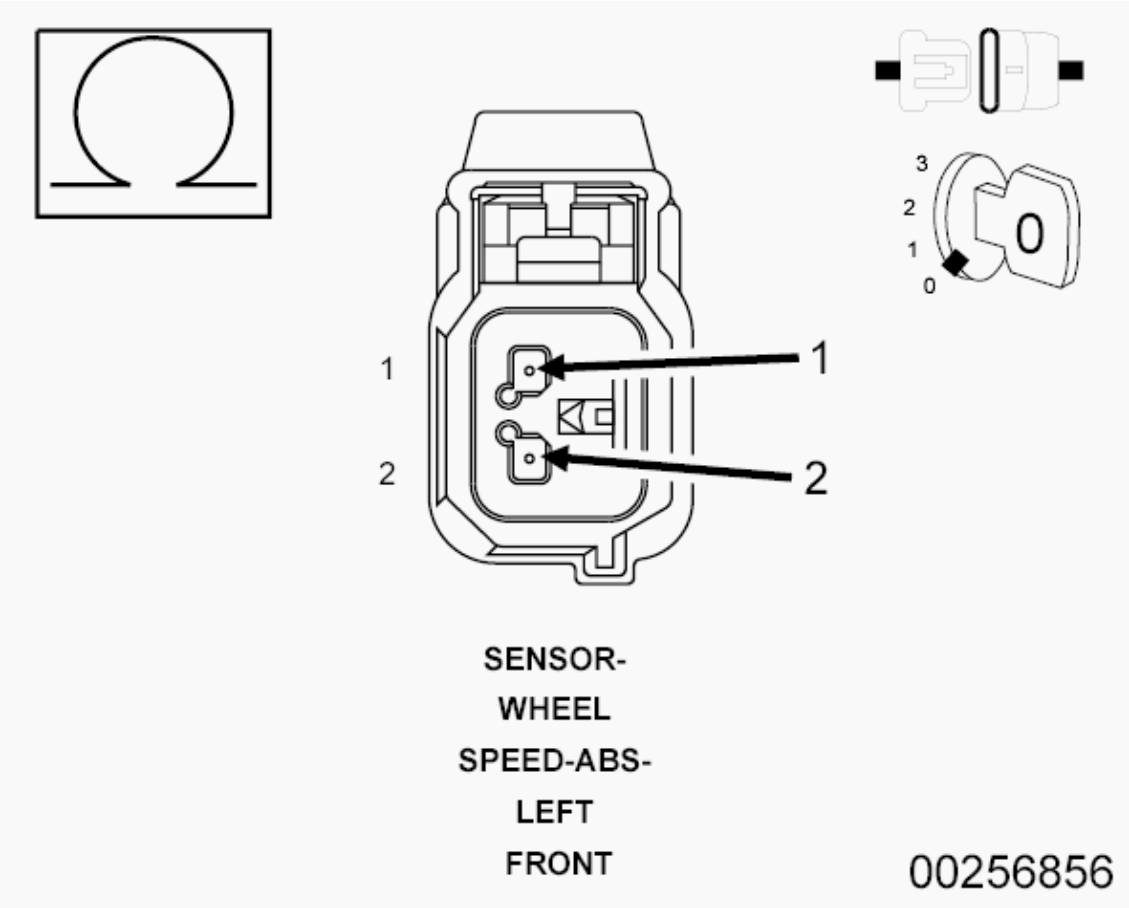

Fig. 9: Measuring Resistance Between Left Front WSS Signal Circuit & Left Front WSS Supply Circuit
Courtesy of CHRYSLER GROUP, LLC

1. Remove all jumper wires.
2. Measure the resistance between the (B8) Left Front WSS Signal circuit and the (B9) Left Front WSS Supply circuit.

   Is the resistance above 5.0 ohms?

   Yes

   - Go To 10

No

- Repair the (B8) Left Front WSS Signal circuit and the (B9) Left Front WSS Supply circuit for a short together.
- Perform ABS VERIFICATION TEST. Refer to **STANDARD PROCEDURE**.

10. **LEFT FRONT WHEEL SPEED SENSOR**
    1. Replace the Left Front Wheel Speed Sensor in accordance with the Service Information.
    2. Perform ABS VERIFICATION TEST. Refer to **STANDARD PROCEDURE**.

WARNING: To avoid possible serious or fatal injury, check brake capability is available before road testing.

3. Road test the vehicle over 40 km/h (25 mph).

NOTE: Vehicle must be driven above 40 km/h (25 mph) for set conditions to be met.

4. With the scan tool, read ABS DTCs.

Did DTC C100A-LEFT FRONT WHEEL SPEED SENSOR CIRCUIT reset?

Yes

- Replace the Anti-Lock Brakes Module in accordance with the Service Information.
- Perform ABS VERIFICATION TEST. Refer to **STANDARD PROCEDURE**.

No

- Test Complete.

C1011-LEFT FRONT WHEEL SPEED SENSOR SIGNAL ERRATIC PERFORMANCE

For a complete wiring diagram **refer to appropriate SYSTEM WIRING DIAGRAMS article** .

WHEN MONITORED

With the ignition on.

SET CONDITION

When the Left Front Wheel Speed Sensor (WSS) Signal is intermittently missing while vehicle speed is above 25 mph (40 km/h) or erratic wheel speed signal during acceleration or sensed wheel speed is different from other wheels.

POSSIBLE CAUSES

Possible Causes
LEFT FRONT WSS LOOSE - B8, B9
CIRCUITS/CONNECTOR/TERMINAL DAMAGE
LEFT FRONT TONE WHEEL DAMAGE
LEFT FRONT WHEEL/ BEARING DAMAGE
IMPROPER LEFT FRONT TIRE PRESSURE/MISMATCHED TIRES
LEFT FRONT WSS
ANTI-LOCK BRAKE MODULE

DIAGNOSTIC TEST

1. **CHECK FOR DTC C1011-LEFT FRONT WHEEL SPEED SENSOR SIGNAL ERRATIC PERFORMANCE**

NOTE: This DTC must be active for the results of this test to be valid.

NOTE: If DTC C100A Left Front Wheel Speed Sensor Circuit is present it must be repaired before continuing.

1. Turn the ignition on.
2. With the scan tool, record and erase DTCs.

CAUTION: Make sure braking capability is available before road testing.

3. Road test the vehicle over 25 mph (40 km/h).

NOTE: Vehicle must be driven above 25 mph (40 km/h) for set conditions to be met.

4. With the scan tool, read DTCs.

   Does the scan tool display: C1011-LEFT FRONT WHEEL SPEED SENSOR SIGNAL ERRATIC PERFORMANCE active?

   Yes

   - Go To 3

   No

   - Go To 2

2. **CHECK WHEEL SPEED SENSOR SIGNALS**
   1. Turn the ignition on.
   2. With the scan tool, monitor and graph ALL the WSS speeds and compare graph while an assistant drives the vehicle.

   NOTE: If graph shows periodic dropouts pay close attention to the tone wheel.

   3. Slowly accelerate as straight as possible from a stop to 25 mph (40 km/h).

      Is the Left Front WSS speed showing 0 mph (0 km/h) or not matching other wheels or showing erratic behavior?

      Yes

      - Go To 3

      No

      - Perform the ABS-INTERMITTENT CONDITION TEST. Refer to **STANDARD PROCEDURE**.

3. **CHECK FOR IMPROPER LEFT FRONT TIRE**

PRESSURE/MISMATCHED TIRES

1. Turn the ignition off.
2. Check and adjust the Left Front Tire pressure.
3. Check and adjust all other tire pressures.
4. Inspect for mismatched tires on vehicle.

   Is the Left Front Tire improperly inflated or mismatched tires on vehicle?

   Yes

   - Repair as necessary.
   - Perform ABS VERIFICATION TEST. Refer to **STANDARD PROCEDURE**.

   No

   - Go To 4

4. **CHECK LEFT FRONT WSS LOOSENESS, INSPECT B8, B9 CIRCUITS/TERMINALS FOR DAMAGE**

   NOTE: Check all terminals for broken, bent, pushed out, or corroded terminals

   1. Inspect the Anti-Lock Brake Module harness connector, Left Front WSS, and Left Front WSS harness connector
   2. Inspect the Left Front WSS for looseness, excessive corrosion and not properly fastened.
   3. Inspect the (B8) Left Front WSS Signal and (B9) Left Front WSS Supply circuits between the Left Front WSS and Anti-Lock Brake Module for damage.

      Is the Left Front WSS loose or any of the wiring/connectors/terminals damaged?

      Yes

      - Repair as necessary.

- Perform ABS VERIFICATION TEST. Refer to **STANDARD PROCEDURE**.

No

- Go To 5

5. **CHECK LEFT FRONT WHEEL SPEED SENSOR FOR DAMAGE**
   1. Remove the Left Front Wheel Speed Sensor
   2. Inspect the Left Front Wheel Speed Sensor face for damage.

   Is the Left Front Wheel Speed Sensor damaged?

   Yes

   - Replace sensor and hub assembly.
   - Perform ABS VERIFICATION TEST. Refer to **STANDARD PROCEDURE**.

   No

   - Go To 6

6. **CHECK LEFT FRONT TONE WHEEL/BEARING FOR DAMAGE**
   1. Inspect the Left Front Tone Wheel/Bearing for damage, missing teeth, cracks, corrosion or looseness.

   NOTE: The Tone Wheel teeth should be perfectly square, not bent, or nicked.

   Is the Left Front Tone Wheel/Bearing damaged?

   Yes

   - Repair as necessary.
   - Perform ABS VERIFICATION TEST. Refer to **STANDARD PROCEDURE**.

   No

   - Go To 7

7. **CHECK LEFT FRONT WHEEL BEARING FOR DAMAGE**
   1. Inspect the Left Front wheel bearing for excessive runout or clearance.

      NOTE: Refer to the appropriate service information, if necessary, for procedures or specifications.

      Is the Left Front Wheel Bearing Damaged?

      Yes

      - Repair as necessary.
      - Perform ABS VERIFICATION TEST. Refer to **STANDARD PROCEDURE**.

      No

      - Go To 8
8. **LEFT FRONT WHEEL SPEED SENSOR**
   1. Replace the Left Front Wheel Speed Sensor in accordance with the Service Information.
   2. Perform ABS VERIFICATION TEST. Refer to **STANDARD PROCEDURE**.
   3. Road test the vehicle over 25 mph (40 km/h).

      NOTE: Vehicle must be driven above 25 mph (40 km/h) for set conditions to be met.

   4. With the scan tool, read ABS DTCs.

      Did DTC C1011-LEFT FRONT WHEEL SPEED SENSOR SIGNAL ERRATIC PERFORMANCE reset?

      Yes

      - Replace the Anti-Lock Brake Module in accordance with the Service Information.
      - Perform ABS VERIFICATION TEST. Refer to **STANDARD PROCEDURE**.

No

- Test complete.

C1014-LEFT FRONT WHEEL SPEED COMPARATIVE PERFORMANCE

For a complete wiring diagram, **refer to appropriate SYSTEM WIRING DIAGRAMS article** .

WHEN MONITORED

With the ignition on.

SET CONDITION

When the Left Front Wheel Speed Sensor (WSS) Signal reading is different from the readings received from the other WSS's at a vehicle speed above 40 km/h (25 mph). The Anti-Lock Brake Module compares WSS readings from side-to-side on an axle and front-to-rear.

POSSIBLE CAUSES

Possible Causes
LEFT FRONT WSS LOOSE - B8, B9
CIRCUITS/CONNECTOR/TERMINAL DAMAGE
IMPROPER LEFT FRONT TIRE PRESSURE/MISMATCHED TIRES
LEFT FRONT TONE WHEEL/BEARING DAMAGE
LEFT FRONT WSS
ANTI-LOCK BRAKE MODULE

DIAGNOSTIC TEST

1. **CHECK FOR DTC C1014-LEFT FRONT WHEEL SPEED COMPARATIVE PERFORMANCE**

   NOTE: This DTC must be active for the results of this test to be valid.

   1. Turn the ignition on.
   2. With the scan tool, record and erase DTCs.

CAUTION: Make sure braking capability is available before road testing.

3. Road test the vehicle over 40 km/h (25 mph).

NOTE: Vehicle must be driven above 40 km/h (25 mph) for set conditions to be met.

4. With the scan tool, read DTCs.

   Does the scan tool display: C1014-LEFT FRONT WHEEL SPEED COMPARATIVE PERFORMANCE active?

   Yes

   - Go To 3

   No

   - Go To 2

2. **CHECK WHEEL SPEED SENSOR SIGNALS**
   1. Turn the ignition on.
   2. With the scan tool, monitor and graph ALL the WSS speeds and compare graph while an assistant drives the vehicle.

   NOTE: If graph shows periodic dropouts pay close attention to the tone wheel.

   3. Slowly accelerate as straight as possible from a stop to 40 km/h (25 mph).

      Is the Left Front WSS speed showing 0 km/h (0 mph) or not matching other wheels or showing erratic behavior?

      Yes

      - Go To 3

      No

- The condition that caused the symptom is currently not present. Inspect the related wiring for a possible intermittent condition. Look for any chafed, pierced, pinched, or partially broken wires.
- Perform ABS VERIFICATION TEST. Refer to **STANDARD PROCEDURE**.

3. **CHECK FOR IMPROPER LEFT FRONT TIRE PRESSURE/MISMATCHED TIRES**
   1. Turn the ignition off.
   2. Check and adjust the Left Front Tire pressure.
   3. Check and adjust all other tire pressures.
   4. Inspect for mismatched tires on vehicle.

   Is the Left Front Tire improperly inflated or mismatched tires on vehicle?

   Yes

   - Repair as necessary
   - Perform ABS VERIFICATION TEST. Refer to **STANDARD PROCEDURE**.

   No

   - Go To 4

4. **CHECK LEFT FRONT WSS LOOSENESS, INSPECT B8, B9 CIRCUITS/TERMINALS FOR DAMAGE**

   NOTE: Check all terminals for broken, bent, pushed out, or corroded terminals

   1. Inspect the Anti-Lock Brake Module harness connector, Left Front WSS, and Left Front WSS harness connector.
   2. Inspect the Left Front WSS for looseness, excessive corrosion and not properly fastened.
   3. Inspect the (B8) Left Front WSS Signal and (B9) Left Front WSS Supply circuits between the Left Front WSS and Anti-Lock Brake Module for damage.

Is the Left Front WSS loose or any of the wiring/connectors/terminals damaged?

Yes

- Repair as necessary.
- Perform ABS VERIFICATION TEST. Refer to **STANDARD PROCEDURE**.

No

- Go To 5

5. **CHECK LEFT FRONT WHEEL SPEED SENSOR FOR DAMAGE**
   1. Remove the Left Front Wheel Speed Sensor
   2. Inspect the Left Front Wheel Speed Sensor face for damage.

   Is the Left Front Wheel Speed Sensor damaged?

   Yes

   - Replace sensor and hub assembly.
   - Perform ABS VERIFICATION TEST. Refer to **STANDARD PROCEDURE**.

   No

   - Go To 6

6. **CHECK LEFT FRONT TONE WHEEL/BEARING FOR DAMAGE**
   1. Inspect the Left Front Tone Wheel/Bearing for damage, missing teeth, cracks, corrosion or looseness.

   NOTE: The Tone Wheel teeth should be perfectly square, not bent, or nicked.

   Is the Left Front Tone Wheel/Bearing damaged?

   Yes

   - Repair as necessary.

- Perform ABS VERIFICATION TEST. Refer to **STANDARD PROCEDURE**.

No

- Go To 7

7. **LEFT FRONT WHEEL SPEED SENSOR**
   1. Replace the Left Front Wheel Speed Sensor in accordance with the Service Information.
   2. Perform ABS VERIFICATION TEST. Refer to **STANDARD PROCEDURE**.
   3. Road test the vehicle over 40 km/h (25 mph).

      NOTE: Vehicle must be driven above 40 km/h (25 mph) for set conditions to be met.

   4. With the scan tool, read ABS DTCs.

      Did DTC C1014-LEFT FRONT WHEEL SPEED COMPARATIVE PERFORMANCE reset?

      Yes

      - Replace the Anti-Lock Brakes Module in accordance with the Service Information.
      - Perform ABS VERIFICATION TEST. Refer to **STANDARD PROCEDURE**.

      No

      - Test Complete.

C1015-RIGHT FRONT WHEEL SPEED SENSOR CIRCUIT

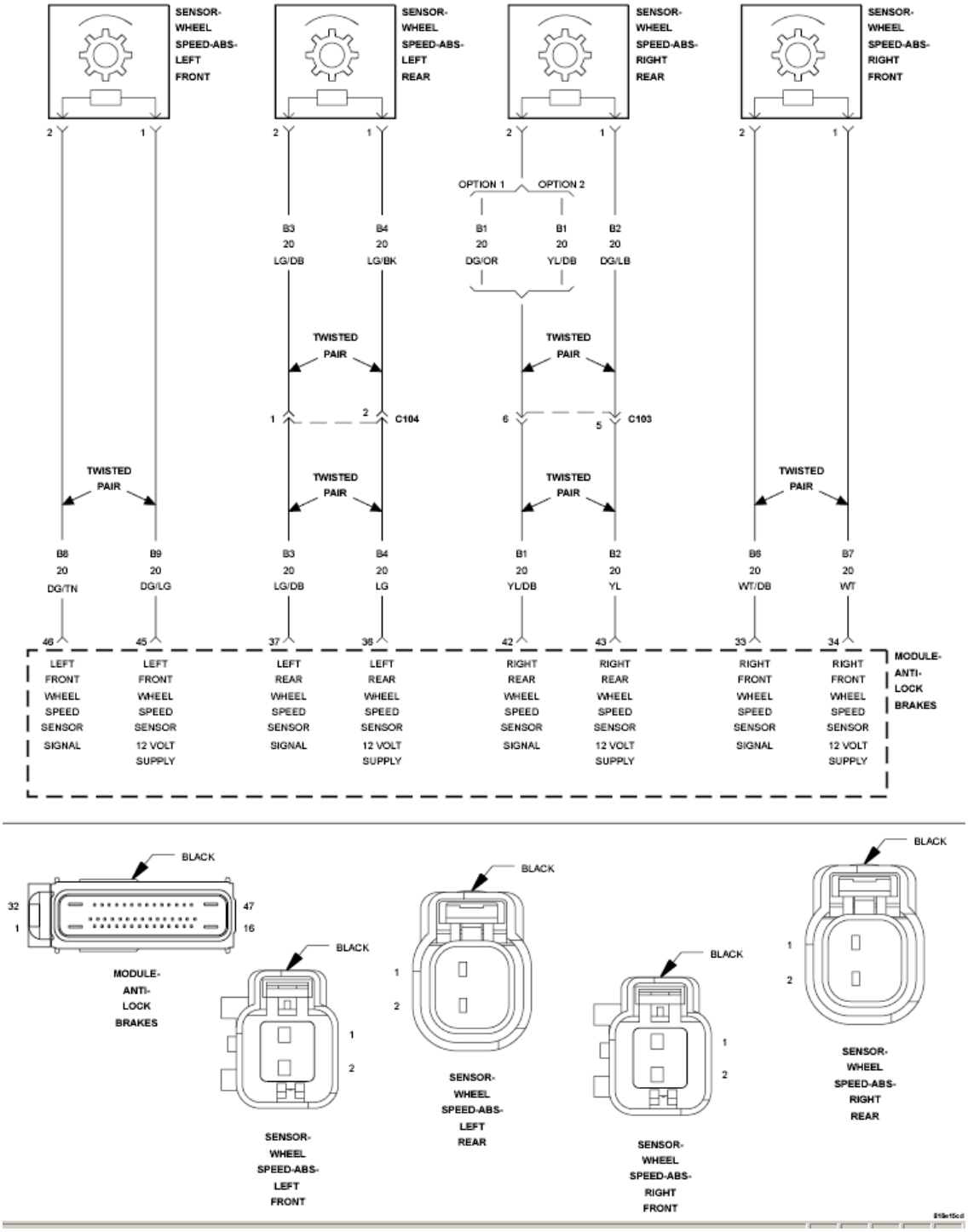

Fig. 10: Wheel Speed Sensor Circuit Schematic
Courtesy of CHRYSLER GROUP, LLC

For a complete wiring diagram, **refer to appropriate SYSTEM WIRING DIAGRAMS article** .

WHEN MONITORED

With the ignition on.

SET CONDITION

If the Right Front Wheel Speed Sensor circuit fails the diagnostic test.

POSSIBLE CAUSES

Possible Causes
WIRING HARNESS, TERMINAL, CONNECTOR DAMAGE
(B7) RIGHT FRONT WSS 12 VOLT SUPPLY CIRCUIT SHORTED TO VOLTAGE, GROUND, OR OPEN
(B6) RIGHT FRONT WSS SIGNAL CIRCUIT SHORTED TO VOLTAGE, GROUND, OR OPEN
(B6) RIGHT FRONT WSS SIGNAL CIRCUIT SHORTED TO (B7) RIGHT FRONT WSS 12 VOLT SUPPLY CIRCUIT
RIGHT FRONT WSS
ANTI-LOCK BRAKES MODULE

DIAGNOSTIC TEST

1. **CHECK FOR DTC C1015-RIGHT FRONT WHEEL SPEED SENSOR CIRCUIT**

   NOTE: This DTC must be active for the results of this test to be valid.

   1. Turn the ignition on.
   2. With the scan tool, record and erase DTCs.
   3. Cycle the ignition switch from off to on.
   4. With the scan tool, read DTCs.

   Does the scan tool display: C1015-RIGHT FRONT WHEEL SPEED SENSOR CIRCUIT active?

   Yes

   - Go To 2

   No

   - The condition that caused the symptom is currently not present.

Inspect the related wiring for a possible intermittent condition. Look for any chafed, pierced, pinched, or partially broken wires.

- Perform the ABS-INTERMITTENT CONDITION TEST. Refer to **STANDARD PROCEDURE**.

2. **CHECK CONNECTOR/TERMINAL FOR DAMAGE**

NOTE: Check all terminals for broken, bent, pushed out, or corroded terminals.

1. Turn the ignition off.
2. Inspect the Anti-Lock Brake Module harness connector, Right Front WSS, and Right Front WSS harness connector.

   Is the Right Front WSS or any of the connectors/terminals damaged?

   Yes

   - Repair as necessary.
   - Perform the ABS VERIFICATION TEST. Refer to **STANDARD PROCEDURE**.

   No

   - Go To 3

3. **CHECK (B7) RIGHT FRONT WSS 12 VOLT SUPPLY CIRCUIT VOLTAGE**

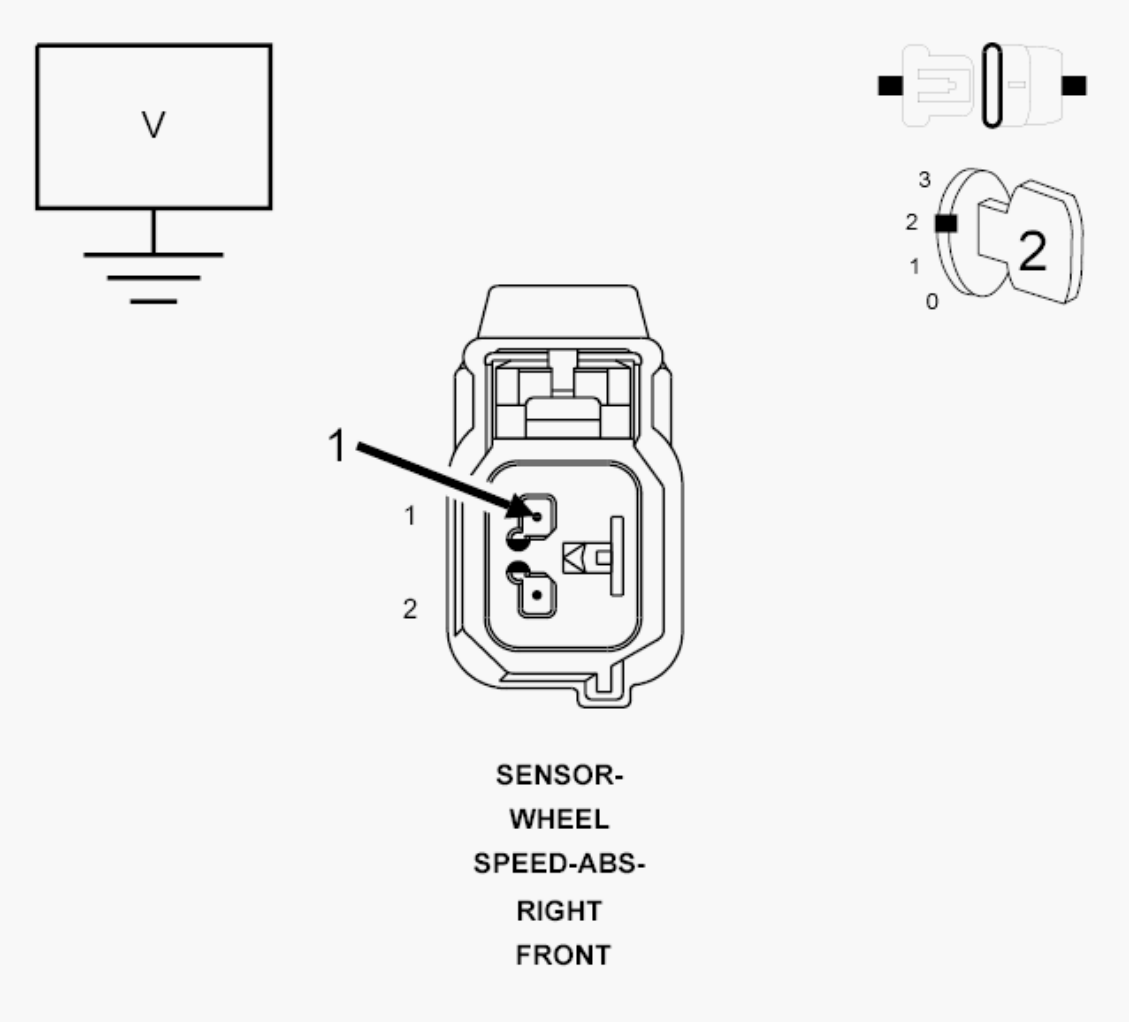

Fig. 11: Measuring Voltage Of Right Front WSS 12 Volt Supply Circuit
Courtesy of CHRYSLER GROUP, LLC

1. Disconnect the Right Front WSS harness connector.
2. Turn the ignition on.
3. Measure the voltage of the (B7) Right Front WSS 12 Volt Supply circuit.

   Is the voltage above 10.0 volts?

   Yes

   - Go To 6

   No

   - Go To 4

4. **CHECK (B7) RIGHT FRONT WSS 12 VOLT SUPPLY CIRCUIT FOR A SHORT TO GROUND**

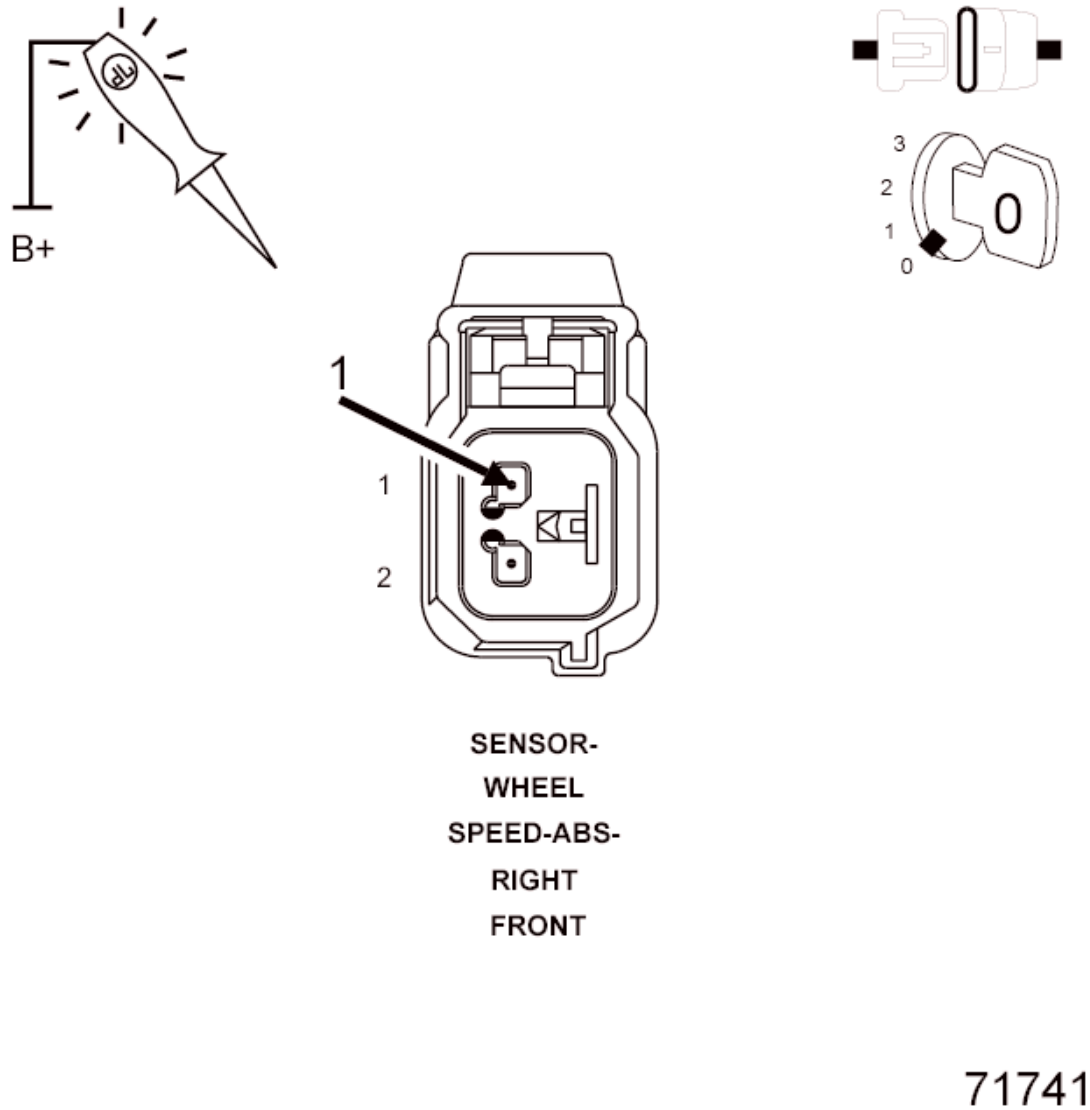

Fig. 12: Checking Right Front WSS 12 Volt Supply Circuit For A Short To Ground
Courtesy of CHRYSLER GROUP, LLC

1. Turn the ignition off.
2. Disconnect the Right Front WSS harness connector.
3. Disconnect the Anti-Lock Brake Module harness connector.
4. Using a 12-volt test light connected to 12-volts, probe the (B7) Right Front WSS Supply circuit.

   Does the test light illuminate brightly?

Yes

- Repair the (B7) Right Front WSS Supply circuit for a short to ground.
- Perform the ABS VERIFICATION TEST. Refer to **STANDARD PROCEDURE**.

No

- Go To 5

5. **CHECK (B7) RIGHT FRONT WSS 12 VOLT SUPPLY CIRCUIT FOR AN OPEN**

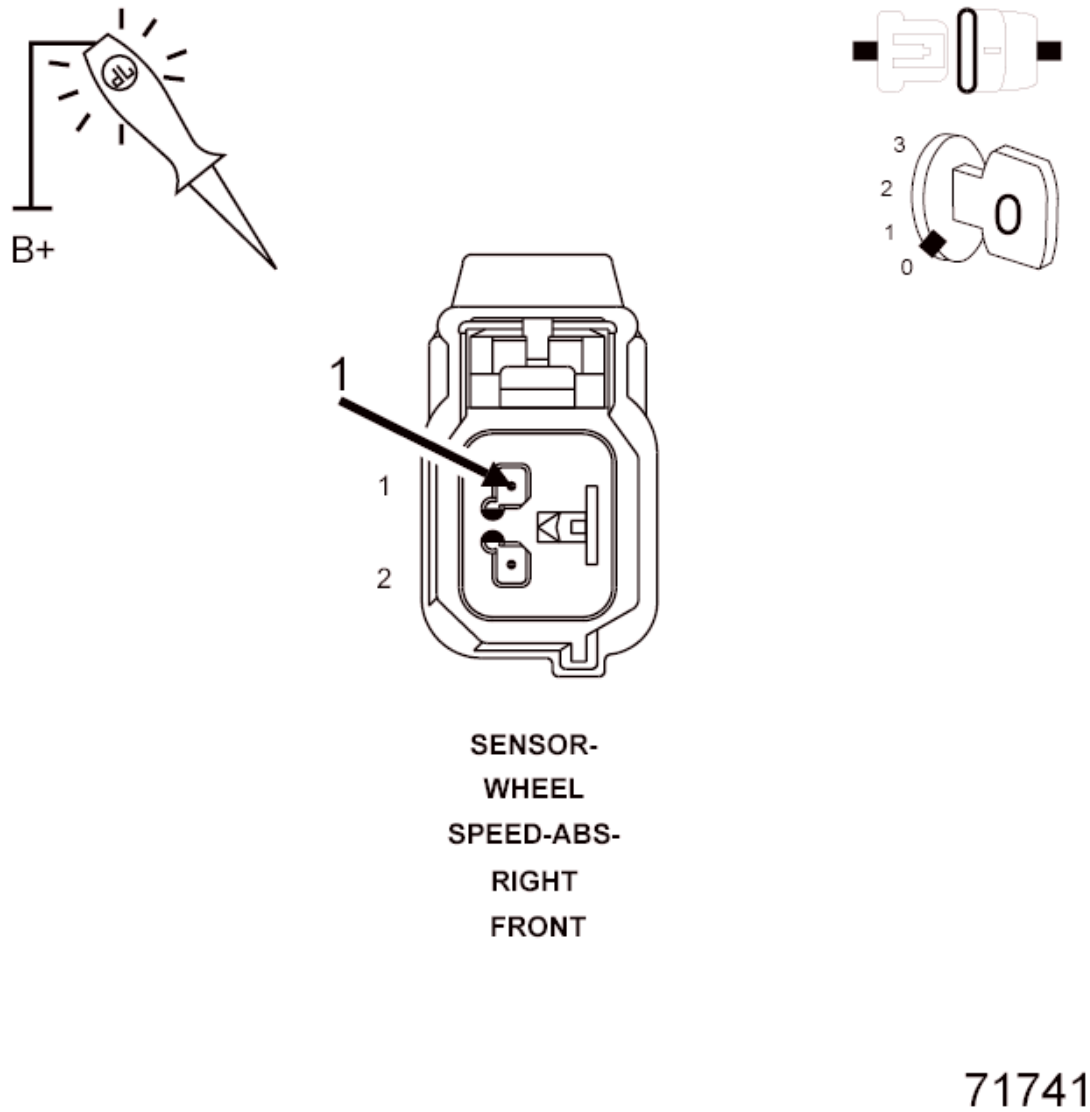

Fig. 13: Checking Right Front WSS 12 Volt Supply Circuit For Open
Courtesy of CHRYSLER GROUP, LLC

1. Connect a jumper wire between ground and the (B7) Right Front WSS Supply circuit in the Anti-Lock Brakes Module harness connector.
2. Using a 12-volt test light connected to 12-volts, probe the (B7) Right Front WSS Supply circuit.

   Does the test light illuminate brightly?

   Yes

   - Replace the Anti-Lock Brakes Module in accordance with the Service Information.
   - Perform the ABS VERIFICATION TEST. Refer to **STANDARD PROCEDURE**.

   No

   - Repair the (B7) Right Front WSS Supply circuit for an open.
   - Perform the ABS VERIFICATION TEST. Refer to **STANDARD PROCEDURE**.

6. **CHECK (B6) RIGHT FRONT WSS SIGNAL CIRCUIT SHORT TO GROUND**

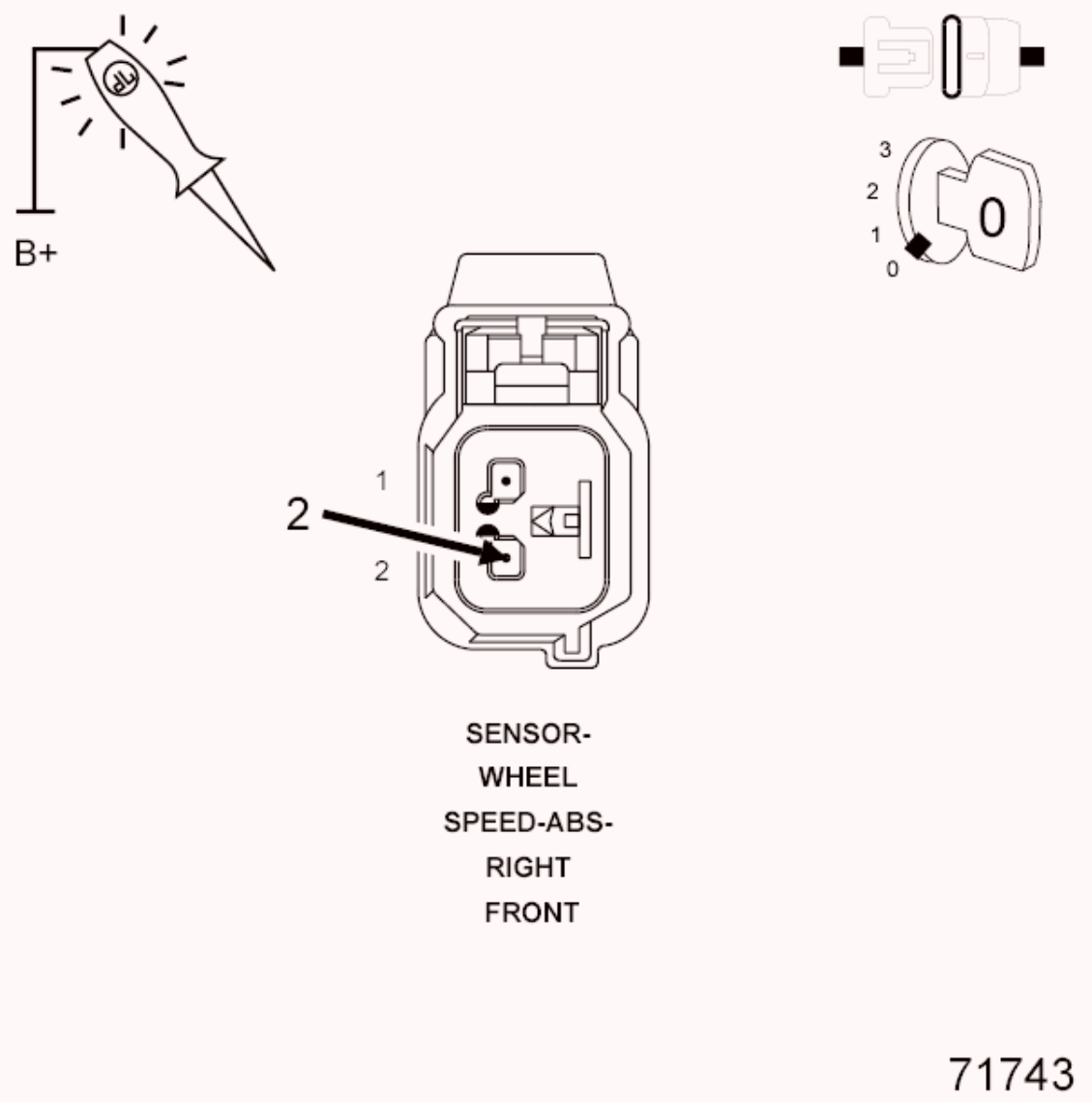

Fig. 14: Checking Right Front WSS Signal Circuit For A Short To Ground
Courtesy of CHRYSLER GROUP, LLC

1. Turn the ignition off.
2. If not done previously, disconnect the Anti-Lock Brake Module harness connector.
3. Turn the ignition on.
4. Using a 12-volt test light connected to 12-volts, probe the (B6) Right Front WSS Signal circuit.

   Does the test light illuminate brightly?

   Yes

- Repair the (B6) Right Front WSS Signal circuit for a short to ground.
- Perform the ABS VERIFICATION TEST. Refer to **STANDARD PROCEDURE**.

No

- Go To 7

7. **CHECK (B6) RIGHT FRONT WSS SIGNAL CIRCUIT OPEN**

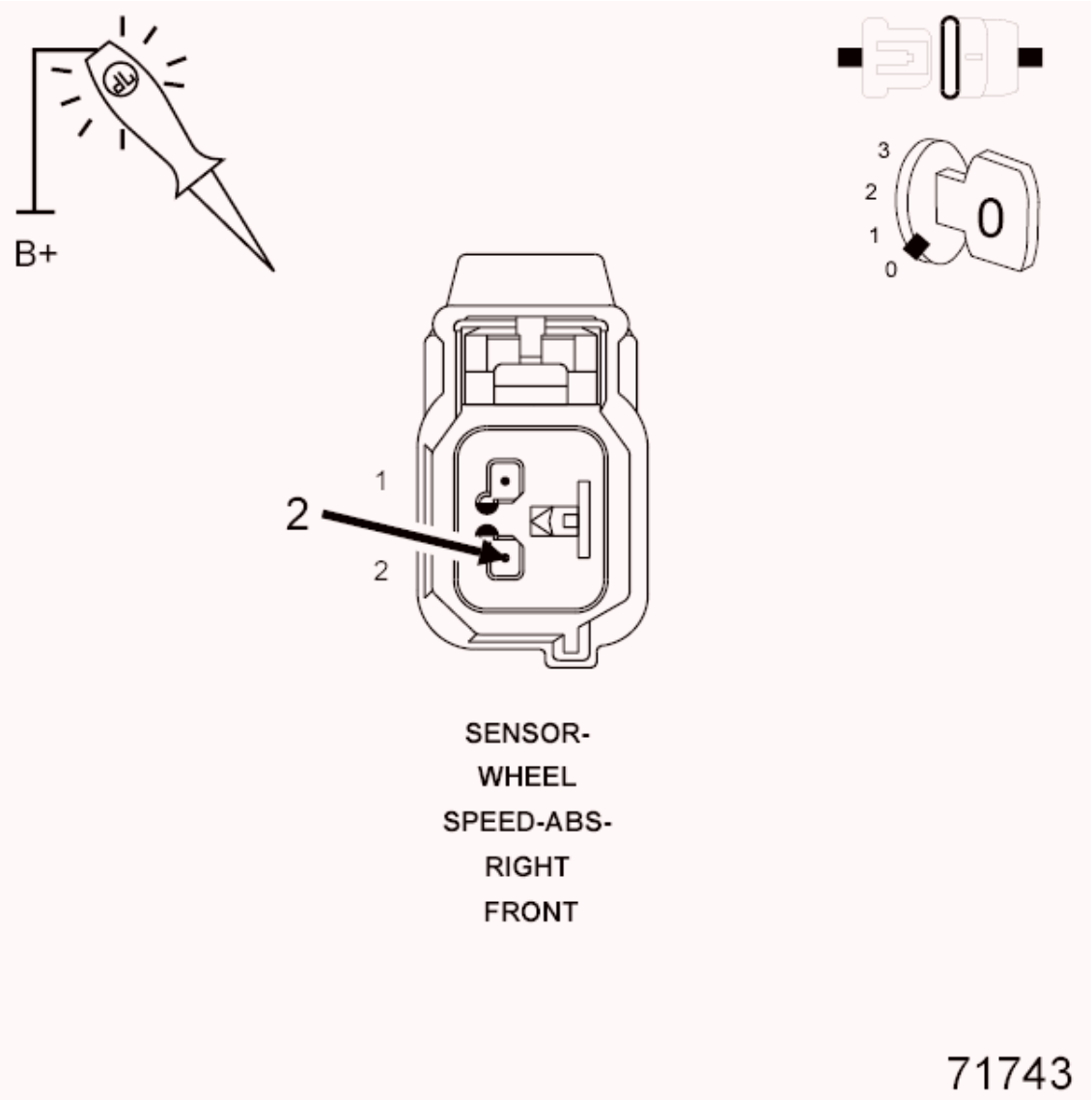

Fig. 15: Checking Right Front WSS Signal Circuit
Courtesy of CHRYSLER GROUP, LLC

1. Connect a jumper wire between ground and the (B6) Right Front WSS

Signal circuit in the Anti-Lock Brakes Module harness connector.

2. Using a 12-volt test light connected to 12-volts, probe the (B6) Right Front WSS Signal circuit.

   Does the test light illuminate brightly?

   Yes

   - Go To 8

   No

   - Repair the (B6) Right Front WSS Signal circuit for an open.
   - Perform the ABS VERIFICATION TEST. Refer to **STANDARD PROCEDURE**.

8. **CHECK (B6) RIGHT FRONT WSS SIGNAL CIRCUIT FOR A SHORT TO VOLTAGE**

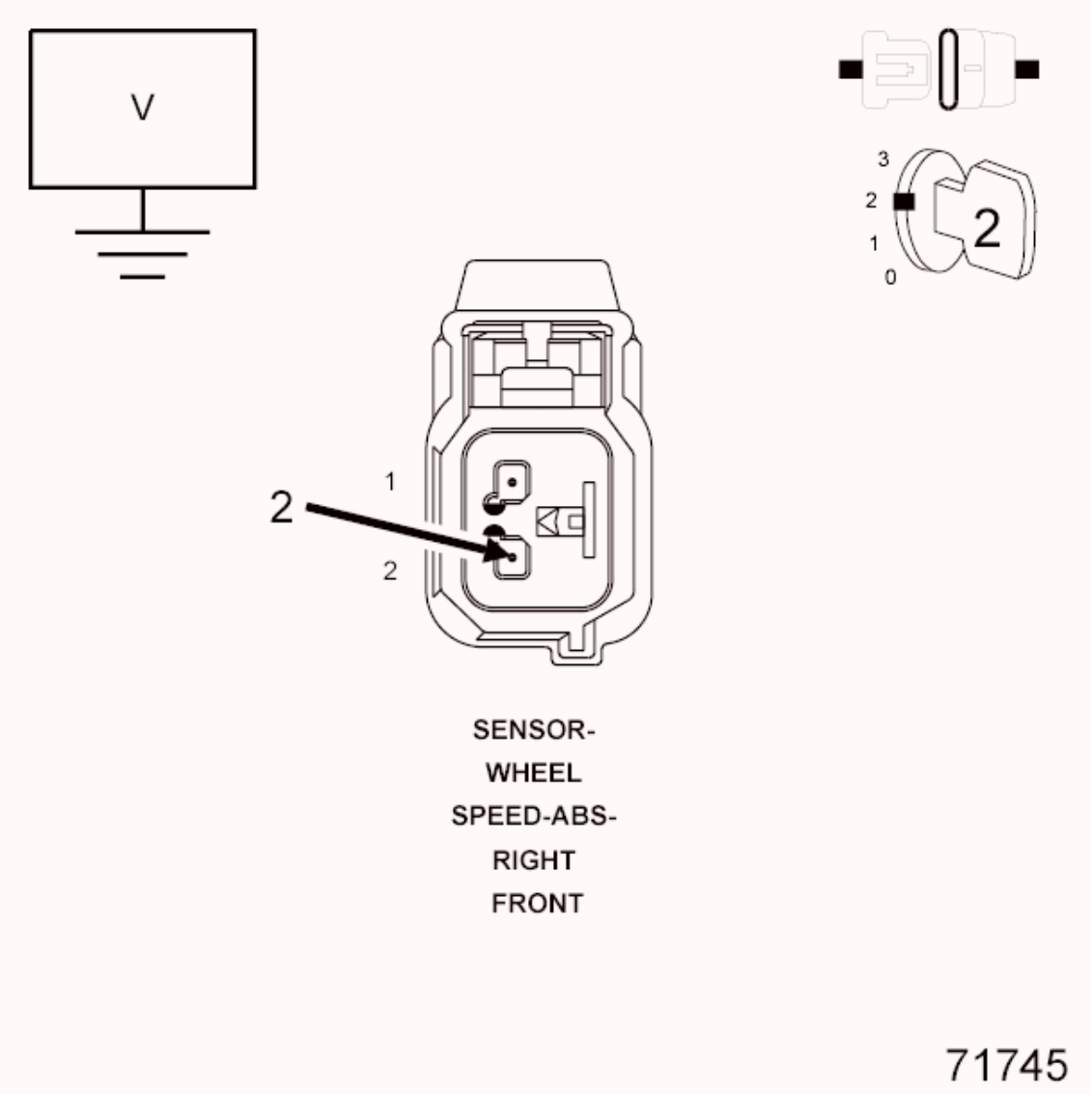

Fig. 16: Measuring Voltage Between Right Front WSS Signal Circuit & Ground
Courtesy of CHRYSLER GROUP, LLC

1. Turn the ignition on.
2. Remove all jumper wires.
3. Measure the voltage between the (B6) Right Front WSS Signal circuit and ground.

   Is the voltage above one volt?

   Yes

   - Repair the (B6) Right Front WSS Signal circuit for a short to voltage.

- Perform the ABS VERIFICATION TEST. Refer to **STANDARD PROCEDURE**.

No

- Go To 9

9. **CHECK (B6) RIGHT FRONT WSS SIGNAL CIRCUIT AND (B7) RIGHT FRONT WSS 12 VOLT SUPPLY CIRCUIT SHORTED TOGETHER**

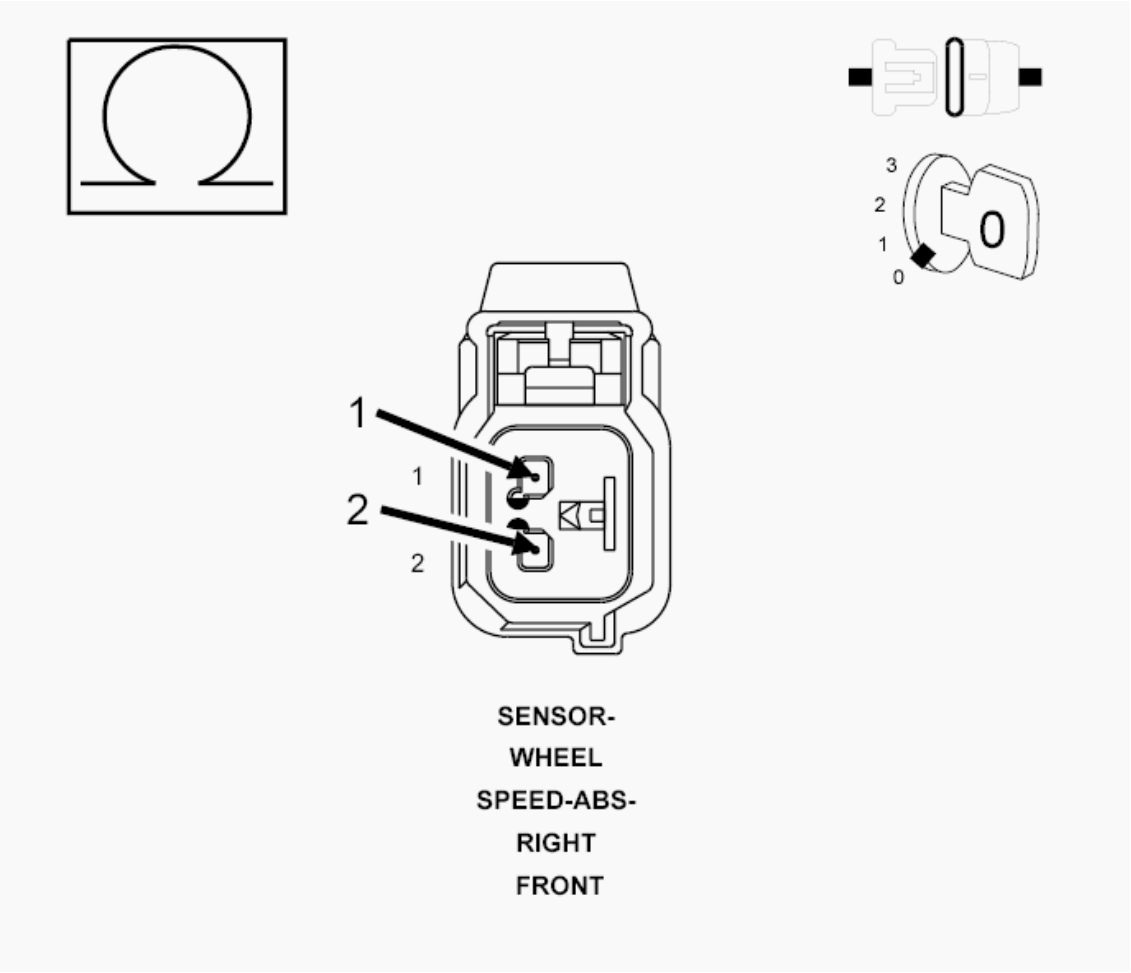

Fig. 17: Measuring Resistance Between Right Front WSS Signal Circuits & Right Front WSS Supply Circuit
Courtesy of CHRYSLER GROUP, LLC

1. Turn the ignition off.
2. Measure the resistance between the (B6) Right Front WSS Signal circuit and the (B7) Right Front WSS Supply circuit.

Is the resistance above 5.0 Ohms?

Yes

Go To 10

No

- Repair the (B6) Right Front WSS Signal circuit and the (B7) Right Front WSS Supply circuit for a short together.
- Perform the ABS VERIFICATION TEST. Refer to **STANDARD PROCEDURE**.

10. **RIGHT FRONT WHEEL SPEED SENSOR**
    1. Replace the Right Front Wheel Speed Sensor in accordance with the Service Information.
    2. Perform the ABS VERIFICATION TEST. Refer to **STANDARD PROCEDURE**.

    WARNING: To avoid possible serious or fatal injury, check brake capability is available before road testing.

    3. Road test the vehicle over 40 km/h (25 mph).

    NOTE: Vehicle must be driven above 40 km/h (25 mph) for set conditions to be met.

    4. With the scan tool, read ABS DTCs.

    Did DTC C1015-RIGHT FRONT WHEEL SPEED SENSOR CIRCUIT reset?

    Yes

    - Replace the Anti-Lock Brakes Module in accordance with the Service Information.
    - Perform the ABS VERIFICATION TEST. Refer to **STANDARD PROCEDURE**.

No

- Test Complete.

C101C-RIGHT FRONT WHEEL SPEED SENSOR SIGNAL ERRATIC PERFORMANCE

For a complete wiring diagram, **refer to appropriate SYSTEM WIRING DIAGRAMS article** .

WHEN MONITORED

With the ignition on.

SET CONDITION

When the Right Front Wheel Speed Sensor (WSS) Signal is intermittently missing while vehicle speed is above 40 km/h (25 mph) or erratic wheel speed signal during acceleration or sensed wheel speed is different from other wheels.

POSSIBLE CAUSES

Possible Causes
RIGHT FRONT WSS LOOSE - B6, B7
CIRCUITS/CONNECTOR/TERMINAL DAMAGE
RIGHT FRONT TONE WHEEL DAMAGE
RIGHT FRONT WHEEL/BEARING DAMAGE
IMPROPER RIGHT FRONT TIRE PRESSURE/MISMATCHED TIRES
RIGHT FRONT WSS
ANTI-LOCK BRAKE MODULE

DIAGNOSTIC TEST

1. **CHECK FOR DTC C101C-RIGHT FRONT WHEEL SPEED SENSOR SIGNAL ERRATIC PERFORMANCE**

NOTE: This DTC must be active for the results of this test to be valid.

NOTE: If DTC C1015-Right Front Wheel Speed Sensor Circuit is present it must be repaired before continuing.

1. Turn the ignition on.
2. With the scan tool, record and erase DTCs.

CAUTION: Make sure braking capability is available before road testing.

3. Road test the vehicle over 40 km/h (25 mph).

NOTE: Vehicle must be driven above 40 km/h (25 mph) for set conditions to be met.

4. With the scan tool, read DTCs.

   Does the scan tool display: C101C-RIGHT FRONT WHEEL SPEED SENSOR SIGNAL ERRATIC PERFORMANCE active?

   Yes

   - Go To 3

   No

   - Go To 2

2. **CHECK WHEEL SPEED SENSOR SIGNALS**
   1. Turn the ignition on.
   2. With the scan tool, monitor and graph ALL the WSS speeds and compare graph while an assistant drives the vehicle.

   NOTE: If graph shows periodic dropouts pay close attention to the tone wheel.

   3. Slowly accelerate as straight as possible from a stop to 40 km/h (25 mph).

      Is the Right Front WSS speed showing 0 km/h (0 mph) or not matching other wheels or showing erratic behavior?

      Yes

- Go To 3

No

- Perform ABS VERIFICATION TEST. Refer to **STANDARD PROCEDURE**.

3. **CHECK FOR IMPROPER RIGHT FRONT TIRE PRESSURE/MISMATCHED TIRES**
   1. Turn the ignition off.
   2. Check and adjust the Right Front Tire pressure.
   3. Check and adjust all other tire pressures.
   4. Inspect for mismatched tires on vehicle.

   Is the Right Front Tire improperly inflated or mismatched tires on vehicle?

   Yes

   - Repair as necessary.
   - Perform ABS VERIFICATION TEST. Refer to **STANDARD PROCEDURE**.

   No

   - Go To 4

4. **CHECK RIGHT FRONT WSS LOOSENESS, INSPECT B6, B7 CIRCUITS/TERMINALS FOR DAMAGE**

   NOTE: Check all terminals for broken, bent, pushed out, or corroded terminals

   1. Inspect the Anti-Lock Brake Module harness connector, Right Front WSS, and Right Front WSS harness connector
   2. Inspect the Right Front WSS for looseness, excessive corrosion and not properly fastened.
   3. Inspect the (B6) Right Front WSS Signal and (B7) Right Front WSS Supply circuits between the Right Front WSS and Anti-Lock Brake Module for damage.

Is the Right Front WSS loose or any of the wiring/connectors/terminals damaged?

Yes

- Repair as necessary.
- Perform ABS VERIFICATION TEST. Refer to **STANDARD PROCEDURE**.

No

- Go To 5

5. **CHECK RIGHT FRONT WHEEL SPEED SENSOR FOR DAMAGE**
   1. Remove the Right Front Wheel Speed Sensor
   2. Inspect the Right Front Wheel Speed Sensor face for damage.

   Is the Right Front Wheel Speed Sensor damaged?

   Yes

   - Replace sensor and hub assembly.
   - Perform ABS VERIFICATION TEST. Refer to **STANDARD PROCEDURE**.

   No

   - Go To 6

6. **CHECK RIGHT FRONT TONE WHEEL/BEARING FOR DAMAGE**
   1. Inspect the Right Front Tone Wheel/Bearing for damage, missing teeth, cracks, corrosion or looseness.

   NOTE: The Tone Wheel teeth should be perfectly square, not bent, or nicked.

   Is the Right Front Tone Wheel/Bearing damaged?

   Yes

   - Repair as necessary.

- Perform ABS VERIFICATION TEST. Refer to **STANDARD PROCEDURE**.

No

- Go To 7

7. **CHECK RIGHT FRONT WHEEL BEARING FOR DAMAGE**
   1. Inspect the Right Front wheel bearing for excessive runout or clearance.

      NOTE: Refer to the appropriate service information, if necessary, for procedures or specifications.

      Is the Right Front Wheel Bearing Damaged?

      Yes

      - Repair as necessary.
      - Perform ABS VERIFICATION TEST. Refer to **STANDARD PROCEDURE**.

      No

      - Go To 8

8. **RIGHT FRONT WHEEL SPEED SENSOR**
   1. Replace the Right Front Wheel Speed Sensor in accordance with the Service Information.
   2. Perform ABS VERIFICATION TEST. Refer to **STANDARD PROCEDURE**.
   3. Road test the vehicle over 40 km/h (25 mph).

      NOTE: Vehicle must be driven above 40 km/h (25 mph) for set conditions to be met.

   4. With the scan tool, read ABS DTCs.

      Did DTC C101C-RIGHT FRONT WHEEL SPEED SENSOR SIGNAL ERRATIC PERFORMANCE reset?

      Yes

- Replace the Anti-Lock Brakes Module in accordance with the Service Information.
- Perform ABS VERIFICATION TEST. Refer to **STANDARD PROCEDURE**.

No

- Test Complete.

C101F-RIGHT FRONT WHEEL SPEED COMPARATIVE PERFORMANCE

For a complete wiring diagram, **refer to appropriate SYSTEM WIRING DIAGRAMS article** .

WHEN MONITORED

With the ignition on.

SET CONDITION

When the Right Front Wheel Speed Sensor (WSS) reading is different from the readings received from the other sensors at a vehicle speed above 40 km/h (25 mph). The Anti-Lock Brake Module compares WSS readings from side-to-side on an axle and front-to-rear.

POSSIBLE CAUSES

Possible Causes
RIGHT FRONT WSS LOOSE - B6, B7
CIRCUITS/CONNECTOR/TERMINAL DAMAGE
IMPROPER RIGHT FRONT TIRE PRESSURE/MISMATCHED TIRES
RIGHT FRONT TONE WHEEL/BEARING DAMAGE
RIGHT FRONT WSS
ANTI-LOCK BRAKE MODULE

DIAGNOSTIC TEST

1. **CHECK FOR DTC C101F-RIGHT FRONT WHEEL SPEED COMPARATIVE PERFORMANCE**

NOTE: This DTC must be active for the results of this test to

be valid.

1. Turn the ignition on.
2. With the scan tool, record and erase DTCs.

CAUTION: Make sure braking capability is available before road testing.

3. Road test the vehicle over 40 km/h (25 mph).

NOTE: Vehicle must be driven above 40 km/h (25 mph) for set conditions to be met.

4. With the scan tool, read DTCs.

   Does the scan tool display: C101F-RIGHT FRONT WHEEL SPEED COMPARATIVE PERFORMANCE active?

   Yes

   - Go To 3

   No

   - Go To 2

2. **CHECK WHEEL SPEED SENSOR SIGNALS**
   1. Turn the ignition on.
   2. With the scan tool, monitor and graph ALL the WSS speeds and compare graph while an assistant drives the vehicle.

   NOTE: If graph shows periodic dropouts pay close attention to the tone wheel.

   3. Slowly accelerate as straight as possible from a stop to 40 km/h (25 mph).

      Is the Right Front WSS speed showing 0 km/h (0 mph) or not matching other wheels or showing erratic behavior?

Yes

- Go To 3

No

- The condition that caused the symptom is currently not present. Inspect the related wiring for a possible intermittent condition. Look for any chafed, pierced, pinched, or partially broken wires.
- Perform ABS INTERMITTENT CONDITION diagnostic procedure. Refer to **STANDARD PROCEDURE**.

3. **CHECK FOR IMPROPER RIGHT FRONT TIRE PRESSURE/MISMATCHED TIRES**
   1. Turn the ignition off.
   2. Check and adjust the Right Front Tire pressure.
   3. Check and adjust all other tire pressures.
   4. Inspect for mismatched tires on vehicle.

   Is the Right Front Tire improperly inflated or mismatched tires on vehicle?

   Yes

   - Repair as necessary.
   - Perform ABS VERIFICATION TEST. Refer to **STANDARD PROCEDURE**.

   No

   - Go To 4

4. **CHECK RIGHT FRONT WSS LOOSENESS, INSPECT B6, B7 CIRCUITS/TERMINALS FOR DAMAGE**

   NOTE: Check all terminals for broken, bent, pushed out, or corroded terminals

   1. Inspect the Anti-Lock Brake Module harness connector, Right Front WSS, and Right Front WSS harness connector

2. Inspect the Right Front WSS for looseness, excessive corrosion and not properly fastened.
3. Inspect the (B6) Right Front WSS Signal and (B7) Right Front WSS Supply circuits between the Right Front WSS and Anti-Lock Brake Module for damage.

   Is the Right Front WSS loose or any of the wiring/connectors/terminals damaged?

   Yes

   - Repair as necessary.
   - Perform ABS VERIFICATION TEST. Refer to **STANDARD PROCEDURE**.

   No

   - Go To 5

5. **CHECK RIGHT FRONT WHEEL SPEED SENSOR FOR DAMAGE**
   1. Remove the Right Front Wheel Speed Sensor
   2. Inspect the Right Front Wheel Speed Sensor face for damage.

      Is the Right Front Wheel Speed Sensor damaged?

      Yes

      - Replace sensor and hub assembly.
      - Perform ABS VERIFICATION TEST. Refer to **STANDARD PROCEDURE**.

      No

      - Go To 6

6. **CHECK RIGHT FRONT TONE WHEEL/BEARING FOR DAMAGE**
   1. Inspect the Right Front Tone Wheel/Bearing for damage, missing teeth, cracks, corrosion or looseness.

      NOTE: The Tone Wheel teeth should be perfectly square,

not bent, or nicked.

Is the Right Front Tone Wheel/Bearing damaged?

Yes

- Repair as necessary.
- Perform ABS VERIFICATION TEST. Refer to **STANDARD PROCEDURE**.

No

- Go To 7

7. **RIGHT FRONT WHEEL SPEED SENSOR**
   1. Replace the Right Front Wheel Speed Sensor in accordance with the Service Information.
   2. Perform ABS VERIFICATION TEST. Refer to **STANDARD PROCEDURE**.
   3. Road test the vehicle over 40 km/h (25 mph).

      NOTE: Vehicle must be driven above 40 km/h (25 mph) for set conditions to be met.

   4. With the scan tool, read ABS DTCs.

      Did DTC C101F-RIGHT FRONT WHEEL SPEED COMPARATIVE PERFORMANCE reset?

      Yes

      - Replace the Anti-Lock Brakes Module in accordance with the Service Information.
      - Perform ABS VERIFICATION TEST. Refer to **STANDARD PROCEDURE**.

      No

      - Test Complete.

C1020-LEFT REAR WHEEL SPEED SENSOR CIRCUIT

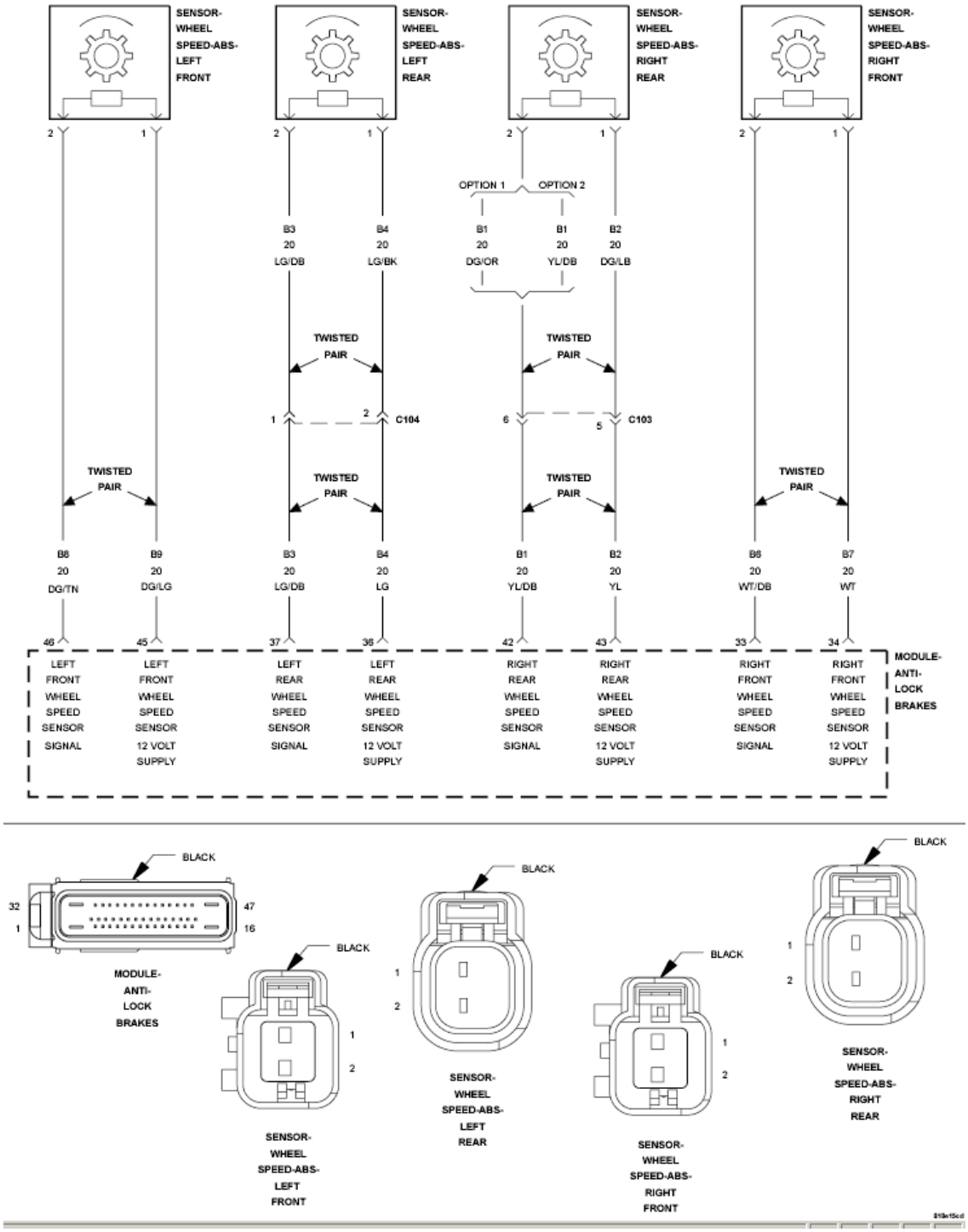

Fig. 18: Wheel Speed Sensor Circuit Schematic
Courtesy of CHRYSLER GROUP, LLC

For a complete wiring diagram, **refer to appropriate SYSTEM WIRING DIAGRAMS article** .

WHEN MONITORED

With the ignition on.

SET CONDITION

If the Left Rear Wheel Speed Sensor circuit fails the diagnostic test.

POSSIBLE CAUSES

Possible Causes
WIRING HARNESS, TERMINAL, CONNECTOR DAMAGE
(B4) LEFT REAR WSS 12 VOLT SUPPLY CIRCUIT SHORTED TO VOLTAGE, GROUND, OR OPEN
(B3) LEFT REAR WSS SIGNAL CIRCUIT SHORTED TO VOLTAGE, GROUND, OR OPEN
(B3) LEFT REAR WSS SIGNAL CIRCUIT SHORTED TO THE (B4) LEFT REAR WSS 12 VOLT SUPPLY CIRCUIT
LEFT REAR WSS
ANTI-LOCK BRAKES MODULE

DIAGNOSTIC TEST

1. **CHECK FOR DTC C1020-LEFT REAR WHEEL SPEED SENSOR CIRCUIT**

   NOTE: This DTC must be active for the results of this test to be valid.

   1. Turn the ignition on.
   2. With the scan tool, record and erase DTCs.
   3. Cycle the ignition switch from off to on.
   4. With the scan tool, read DTCs.

   Does the scan tool display: C1020-LEFT REAR WHEEL SPEED SENSOR CIRCUIT active?

   Yes

   - Go To 2

   No

- The condition that caused the symptom is currently not present. Inspect the related wiring for a possible intermittent condition. Look for any chafed, pierced, pinched, or partially broken wires.
- Perform the ABS-INTERMITTENT CONDITION TEST. Refer to **STANDARD PROCEDURE**.

2. **CHECK CONNECTOR/TERMINAL FOR DAMAGE**

NOTE: Check all terminals for broken, bent, pushed out, or corroded terminals.

1. Turn the ignition off.
2. Inspect the Anti-Lock Brake Module harness connector, Left Rear WSS, and Left Rear WSS harness connector.

   Is the Left Rear WSS or any of the connectors/terminals damaged?

   Yes

   - Repair as necessary.
   - Perform the ABS VERIFICATION TEST. Refer to **STANDARD PROCEDURE**.

   No

   - Go To 3

3. **CHECK (B4) LEFT REAR WSS 12 VOLT SUPPLY CIRCUIT VOLTAGE**

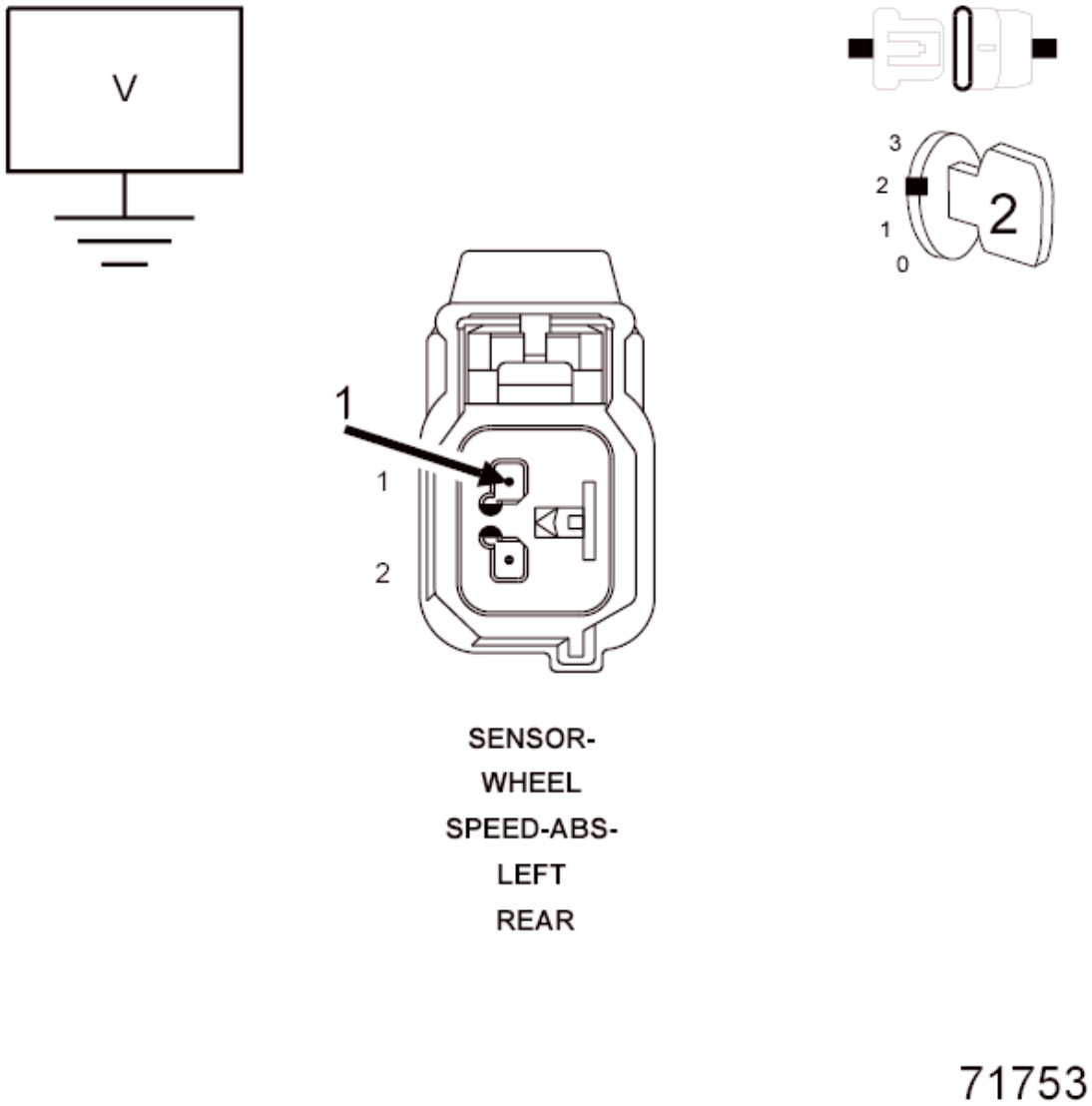

Fig. 19: Measuring Voltage Of Left Rear WSS 12 Volt Supply Circuit
Courtesy of CHRYSLER GROUP, LLC

1. Disconnect the Left Rear WSS harness connector.
2. Turn the ignition on.
3. Measure the voltage of the (B4) Left Rear WSS 12 Volt Supply circuit.

   Is the voltage above 10.0 volts?

   Yes

   - Go To 6

   No

- Go To 4

4. **CHECK (B4) LEFT REAR WSS 12 VOLT SUPPLY CIRCUIT FOR A SHORT TO GROUND**

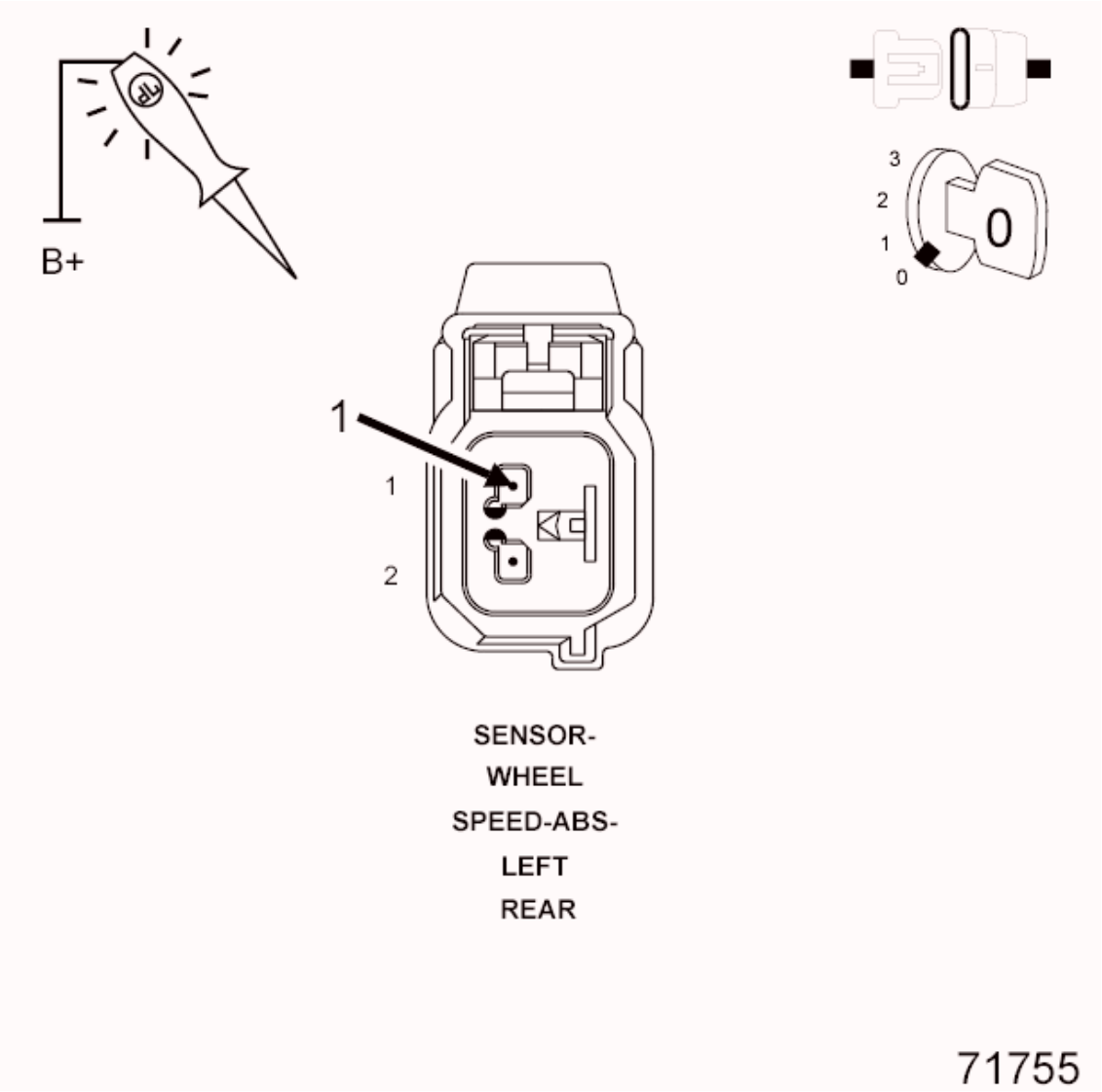

Fig. 20: Checking Left Rear WSS Supply Circuit For A Short To Ground
Courtesy of CHRYSLER GROUP, LLC

1. Turn the ignition off.
2. Disconnect the Left Rear WSS harness connector.
3. Disconnect the Anti-Lock Brake Module harness connector.
4. Using a 12-volt test light connected to 12-volts, probe the (B4) Left Rear WSS Supply circuit.

Does the test light illuminate brightly?

Yes

- Repair the (B4) Left Rear WSS Supply circuit for a short to ground.
- Perform the ABS VERIFICATION TEST. Refer to **STANDARD PROCEDURE**.

No

- Go To 5

5. **CHECK (B4) LEFT REAR WSS 12 VOLT SUPPLY CIRCUIT FOR AN OPEN**

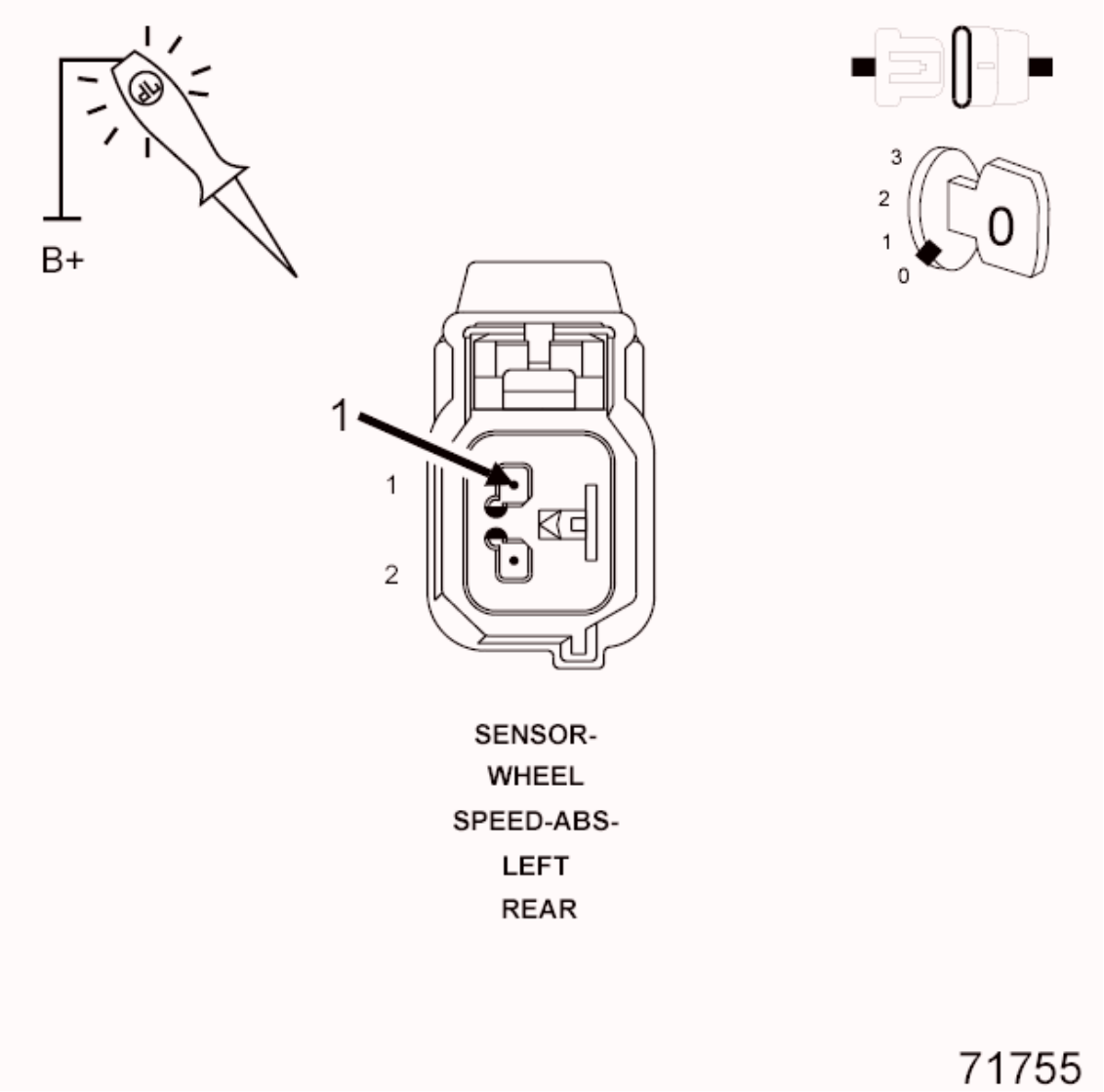

Fig. 21: Checking Left Rear WSS 12 Volt Supply Circuit For An Open
Courtesy of CHRYSLER GROUP, LLC

1. Connect a jumper wire between ground and the (B4) Left Rear WSS Supply circuit in the Anti-Lock Brakes Module harness connector.
2. Using a 12-volt test light connected to 12-volts, probe the (B4) Left Rear WSS Supply circuit.

   Does the test light illuminate brightly?

   Yes

   - Replace the Anti-Lock Brakes Module in accordance with the Service Information.
   - Perform the ABS VERIFICATION TEST. Refer to **STANDARD PROCEDURE**.

   No

   - Repair the (B4) Left Rear WSS Supply circuit for an open.
   - Perform the ABS VERIFICATION TEST. Refer to **STANDARD PROCEDURE**.

6. **CHECK (B3) LEFT REAR WSS SIGNAL CIRCUIT FOR A SHORT TO GROUND**

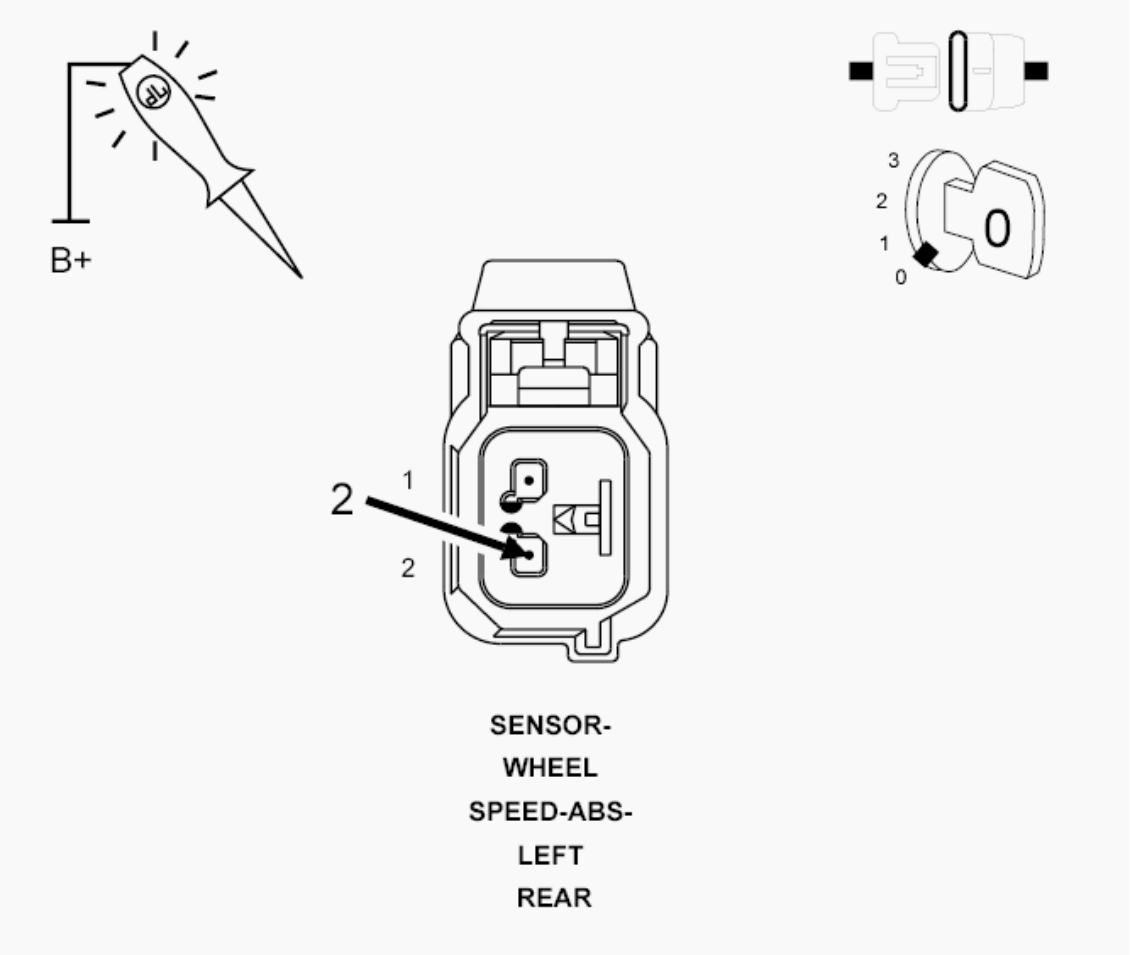

Fig. 22: Checking Left Rear WSS Signal Circuit For A Short To Ground
Courtesy of CHRYSLER GROUP, LLC

1. Turn the ignition off.
2. If not done previously, disconnect the Anti-Lock Brake Module harness connector.
3. Turn the ignition on.
4. Using a 12-volt test light connected to 12-volts, probe the (B3) Left Rear WSS Signal circuit.

   Does the test light illuminate brightly?

   Yes

   - Repair the (B3) Left Rear WSS Signal circuit for a short to ground.
   - Perform the ABS VERIFICATION TEST. Refer to **STANDARD PROCEDURE**.

No

- Go To 7

7. **CHECK (B3) LEFT REAR WSS SIGNAL CIRCUIT FOR AN OPEN**

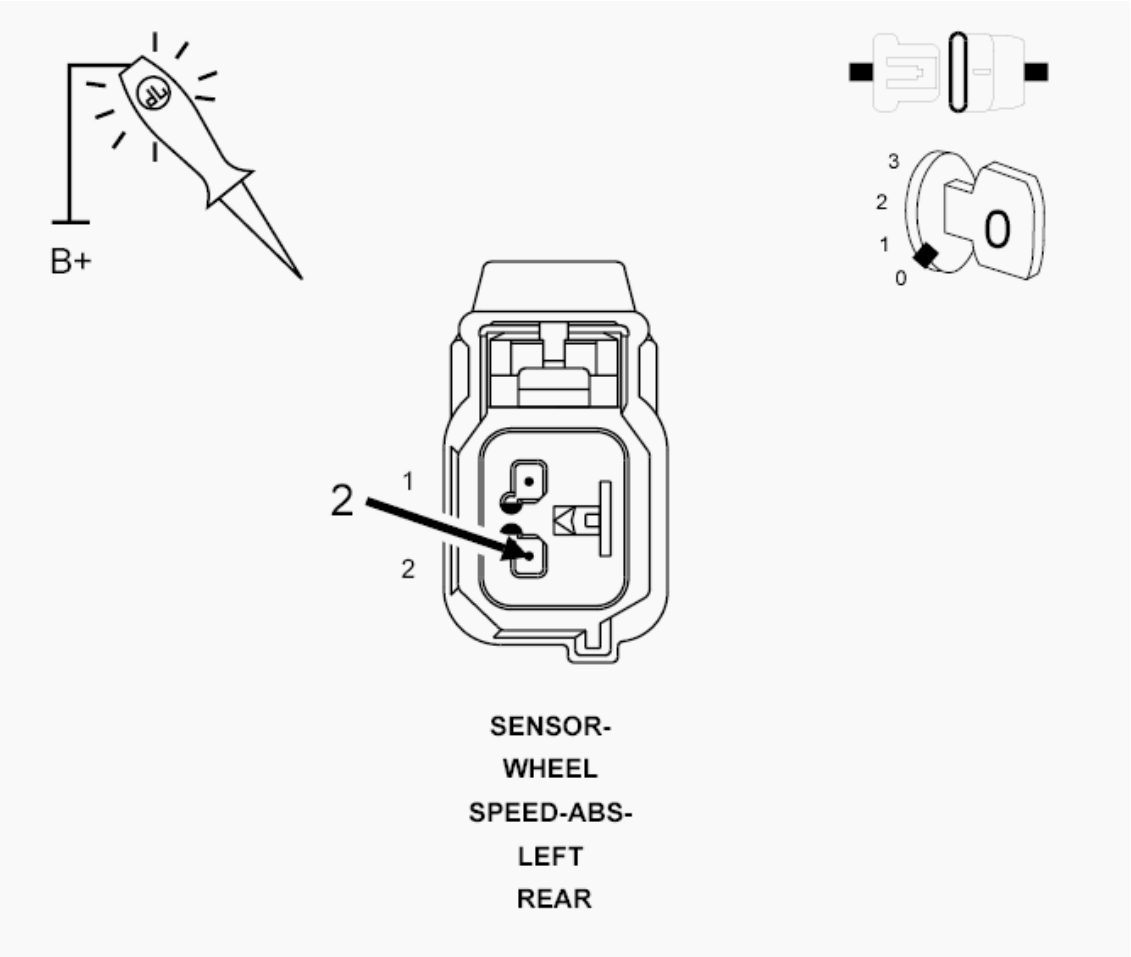

Fig. 23: Checking Left Rear WSS Signal Circuit For An Open
Courtesy of CHRYSLER GROUP, LLC

1. Connect a jumper wire between ground and the (B3) Left Rear WSS Signal circuit in the Anti-Lock Brakes Module harness connector.
2. Using a 12-volt test light connected to 12-volts, probe the (B3) Left Rear WSS Signal circuit.

   Does the test light illuminate brightly?

   Yes

   - Go To 8

No

- Repair the (B3) Left Rear WSS Signal circuit for an open.
- Perform the ABS VERIFICATION TEST. Refer to **STANDARD PROCEDURE**.

8. **CHECK (B3) LEFT REAR WSS SIGNAL CIRCUIT SHORT TO VOLTAGE**

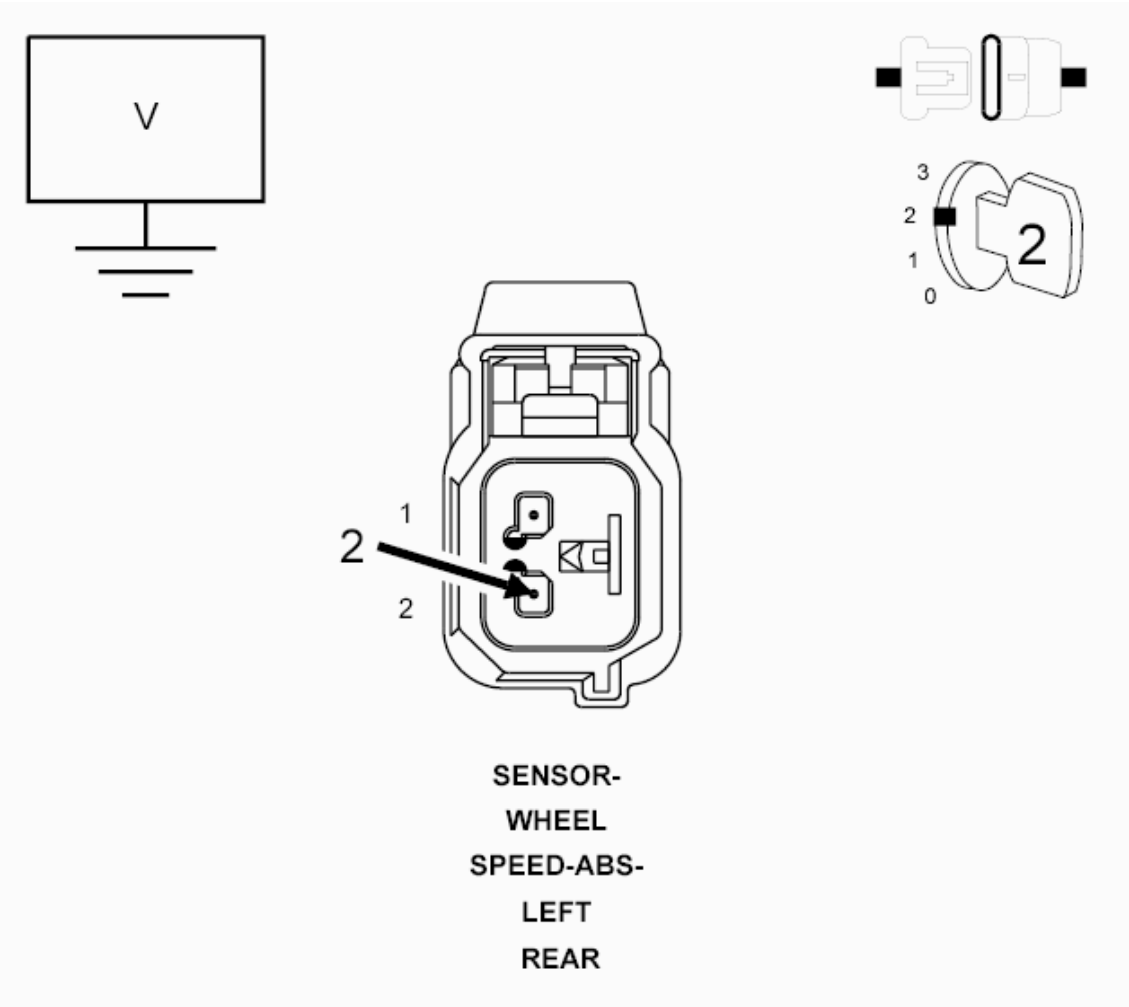

Fig. 24: Measuring Voltage Between Left Rear WSS Signal Circuit & Ground
Courtesy of CHRYSLER GROUP, LLC

1. Turn the ignition on.
2. Remove all jumper wires.
3. Measure the voltage between the (B3) Left Rear WSS Signal circuit and ground.

Is the voltage above one volt?

Yes

- Repair the (B3) Left Rear WSS Signal circuit for a short to voltage.
- Perform the ABS VERIFICATION TEST. Refer to **STANDARD PROCEDURE**.

No

- Go To 9

9. **CHECK (B3) LEFT REAR WSS SIGNAL CIRCUIT AND (B4) LEFT REAR WSS 12 VOLT SUPPLY CIRCUIT SHORTED TOGETHER**

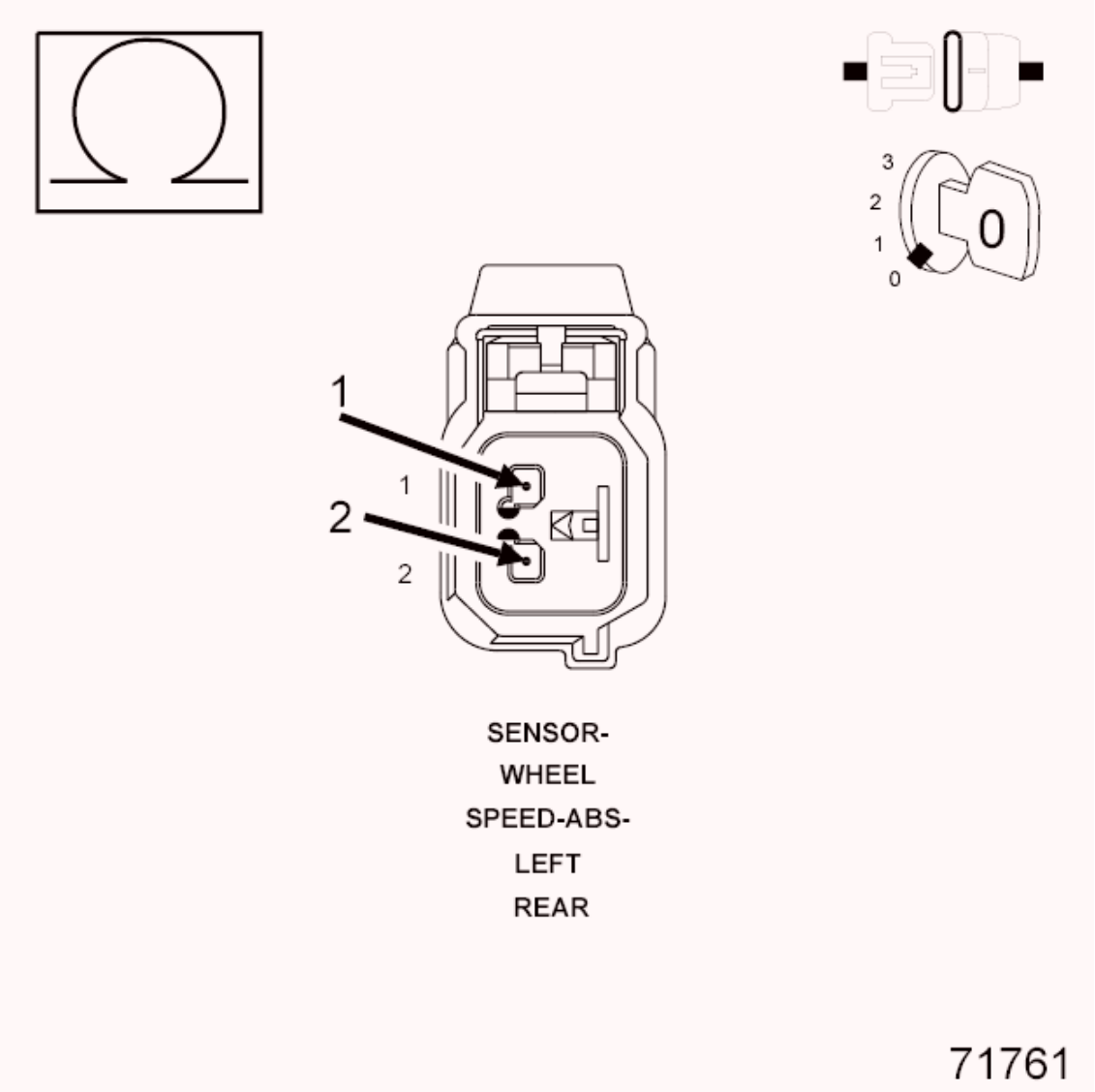

Fig. 25: Measuring Resistance Between Left Rear WSS Signal Circuit &

Left Rear WSS Supply Circuit
Courtesy of CHRYSLER GROUP, LLC

1. Turn the ignition off.
2. Measure the resistance between the (B3) Left Rear WSS Signal circuit and the (B4) Left Rear WSS Supply circuit.

   Is the resistance above 5.0 Ohms?

   Yes

   Go To 10

   No

   - Repair the (B3) Left Rear WSS Signal circuit and the (B4) Left Rear WSS Supply circuit for a short together.
   - Perform the ABS VERIFICATION TEST. Refer to **STANDARD PROCEDURE**.

10. **LEFT REAR WHEEL SPEED SENSOR**
    1. Replace the Left Rear Wheel Speed Sensor in accordance with the Service Information.
    2. Perform the ABS VERIFICATION TEST. Refer to **STANDARD PROCEDURE**.

       WARNING: **To avoid possible serious or fatal injury, check brake capability is available before road testing.**

    3. Road test the vehicle over 40 km/h (25 mph.).

       NOTE: **Vehicle must be driven above 40 km/h (25 mph) for set conditions to be met.**

    4. With the scan tool, read ABS DTCs.

       Did DTC C1020-LEFT REAR WHEEL SPEED SENSOR CIRCUIT reset?

Yes

- Replace the Anti-Lock Brakes Module in accordance with the Service Information.
- Perform the ABS VERIFICATION TEST. Refer to **STANDARD PROCEDURE**.

No

- Test Complete.

C1027-LEFT REAR WHEEL SPEED SENSOR SIGNAL ERRATIC PERFORMANCE

For a complete wiring diagram, **refer to appropriate SYSTEM WIRING DIAGRAMS article** .

WHEN MONITORED

With the ignition on.

SET CONDITION

When the Left Rear Wheel Speed Sensor (WSS) Signal is intermittently missing while vehicle speed is above 25 mph (40 km/h) or erratic wheel speed signal during acceleration or sensed wheel speed is different from other wheels.

POSSIBLE CAUSES

Possible Causes
LEFT REAR WSS LOOSE - B3, B4
CIRCUITS/CONNECTOR/TERMINAL DAMAGE
LEFT REAR TONE WHEEL DAMAGE
LEFT REAR WHEEL BEARING DAMAGE
AXLE SHAFT FASTENER HARDWARE
IMPROPER LEFT REAR TIRE PRESSURE/MISMATCHED TIRES
LEFT REAR WSS
ANTI-LOCK BRAKE MODULE

DIAGNOSTIC TEST

1. **CHECK FOR DTC C1027-LEFT REAR WHEEL SPEED SENSOR SIGNAL ERRATIC PERFORMANCE**

NOTE: This DTC must be active for the results of this test to be valid.

1. Turn the ignition on.
2. With the scan tool, record and erase DTCs.

CAUTION: Make sure brake capability is available before road testing.

3. Road test the vehicle over 25 mph (40 km/h).

NOTE: Vehicle must be driven above 25 mph (40 km/h) for set conditions to be met.

4. With the scan tool, read DTCs.

   Does the scan tool display: C1027-LEFT REAR WHEEL SPEED SENSOR SIGNAL ERRATIC PERFORMANCE active?

   Yes

   - Go To 3

   No

   - Go To 2

2. **CHECK WHEEL SPEED SENSOR SIGNALS**
   1. Turn the ignition on.
   2. With the scan tool, monitor and graph ALL the WSS speeds and compare graph while an assistant drives the vehicle.

   NOTE: If graph shows periodic dropouts pay close attention to the tone wheel.

   3. Slowly accelerate as straight as possible from a stop to 25 mph (40 km/h).

   Is the Left Rear WSS speed showing 0 mph (0 km/h) or not matching other wheels or showing erratic behavior?

Yes

- Go To 3

No

- Perform the ABS INTERMITTENT CONDITION diagnostic procedure. Refer to **STANDARD PROCEDURE**.

3. **CHECK FOR IMPROPER LEFT REAR TIRE PRESSURE/MISMATCHED TIRES**
   1. Turn the ignition off.
   2. Check and adjust the Left Rear Tire pressure.
   3. Check and adjust all other tire pressures.
   4. Inspect for mismatched tires on vehicle.

   Is the Left Rear Tire improperly inflated or mismatched tires on vehicle?

   Yes

   - Repair as necessary.
   - Perform the ABS VERIFICATION TEST. Refer to **STANDARD PROCEDURE**.

   No

   - Go To 4

4. **CHECK AXLE SHAFT FASTENER HARDWARE FOR LOOSENESS**
   1. Inspect the axle shaft fastener for looseness, and not properly fastened. Tighten fastener to proper specification as required.

   Was the Axle Shaft fastener loose?

   Yes

   - Repair as necessary.

   No

- Go To 5

5. **CHECK LEFT REAR WSS LOOSENESS, INSPECT B3, B4 CIRCUITS/TERMINALS FOR DAMAGE**

NOTE: Check all terminals for broken, bent, pushed out, or corroded terminals

1. Inspect the Anti-Lock Brake Module harness connector, Left Rear WSS, and Left Rear WSS harness connector
2. Inspect the Left Rear WSS for looseness, excessive corrosion and not properly fastened.
3. Inspect the (B3) Left Rear WSS Signal and (B4) Left Rear WSS Supply circuits between the Left Rear WSS and Anti-Lock Brake Module for damage.

Is the Left Rear WSS loose or any of the wiring/connectors/terminals damaged?

Yes

- Repair as necessary.
- Perform the ABS VERIFICATION TEST. Refer to **STANDARD PROCEDURE**.

No

- Go To 6

6. **CHECK LEFT REAR WHEEL SPEED SENSOR FOR DAMAGE**
1. Remove the Left Rear Wheel Speed Sensor
2. Inspect the Left Rear Wheel Speed Sensor face for damage.

Is the Left Rear Wheel Speed Sensor damaged?

Yes

- Replace sensor and hub assembly.
- Perform the ABS VERIFICATION TEST. Refer to **STANDARD PROCEDURE**.

No

- Go To 7

7. **CHECK LEFT REAR TONE WHEEL FOR DAMAGE**
   1. Inspect the Left Rear Tone Wheel for damage, missing teeth, cracks, corrosion or looseness.

      NOTE: The Tone Wheel teeth should be perfectly square, not bent, or nicked.

      Is the Left Rear Tone Wheel damaged?

      Yes

      - Repair as necessary.
      - Perform the ABS VERIFICATION TEST. Refer to **STANDARD PROCEDURE**.

      No

      - Go To 8

8. **CHECK LEFT REAR WHEEL BEARING FOR DAMAGE**
   1. Inspect the Left Rear wheel bearing for excessive runout or clearance.

      NOTE: Refer to the appropriate service information, if necessary, for procedures or specifications.

      Is the Left Rear Wheel Bearing Damaged?

      Yes

      - Repair as necessary.
      - Perform the ABS VERIFICATION TEST. Refer to **STANDARD PROCEDURE**.

      No

      - Go To 9

9. **LEFT REAR WHEEL SPEED SENSOR**

1. Replace the Left Rear Wheel Speed Sensor in accordance with the Service Information.
2. Perform the ABS VERIFICATION TEST. Refer to **STANDARD PROCEDURE**.
3. Road test the vehicle over 25 mph (40 km/h).

   NOTE: Vehicle must be driven above 25 mph (40 km/h) for set conditions to be met.

4. With the scan tool, read ABS DTCs.

   Did DTC C1027-LEFT REAR WHEEL SPEED SENSOR SIGNAL ERRATIC PERFORMANCE reset?

   Yes

   - Replace the Anti-Lock Brake Module in accordance with the Service Information.
   - Perform the ABS VERIFICATION TEST. Refer to **STANDARD PROCEDURE**.

   No

   - Test complete.

C102A-LEFT REAR WHEEL SPEED COMPARATIVE PERFORMANCE

For a complete wiring diagram, **refer to appropriate SYSTEM WIRING DIAGRAMS article** .

WHEN MONITORED

With the ignition on.

SET CONDITION

When the Left Rear Wheel Speed Sensor (WSS) reading is different from the readings received from the other sensors at a vehicle speed above 40 km/h (25 mph). The Anti-Lock Brake Module compares WSS readings from side-to-side on an axle and front-to-rear.

POSSIBLE CAUSES

Possible Causes
LEFT REAR WSS LOOSE - B3, B4
CIRCUITS/CONNECTOR/TERMINAL DAMAGE
IMPROPER LEFT REAR TIRE PRESSURE/MISMATCHED TIRES
LEFT REAR TONE WHEEL DAMAGE
AXLE SHAFT FASTENER HARDWARE
LEFT REAR WSS
ANTI-LOCK BRAKE MODULE

DIAGNOSTIC TEST

1. **CHECK FOR DTC C102A-LEFT REAR WHEEL SPEED COMPARATIVE PERFORMANCE**

   NOTE: This DTC must be active for the results of this test to be valid.

   1. Turn the ignition on.
   2. With the scan tool, record and erase DTCs.

      CAUTION: Make sure brake capability is available before road testing.

   3. Road test the vehicle over 40 km/h (25 mph).

      NOTE: Vehicle must be driven above 40 km/h (25 mph) for set conditions to be met.

   4. With the scan tool, read DTCs.

      Does the scan tool display: C102A-LEFT REAR WHEEL SPEED COMPARATIVE PERFORMANCE active?

      Yes

      - Go To 3

      No

- Go To 2

2. **CHECK WHEEL SPEED SENSOR SIGNALS**
   1. Turn the ignition on.
   2. With the scan tool, monitor and graph ALL the WSS speeds and compare graph while an assistant drives the vehicle.

      NOTE: If graph shows periodic dropouts pay close attention to the tone wheel.

   3. Slowly accelerate as straight as possible from a stop to 40 km/h (25 mph).

      Is the Left Rear WSS speed showing 0 km/h (0 mph) or not matching other wheels or showing erratic behavior?

      Yes

      - Go To 3

      No

      - The condition that caused the symptom is currently not present. Inspect the related wiring for a possible intermittent condition. Look for any chafed, pierced, pinched, or partially broken wires.
      - Perform the ABS-INTERMITTENT CONDITION TEST. Refer to **STANDARD PROCEDURE**.

3. **CHECK FOR IMPROPER LEFT REAR TIRE PRESSURE/MISMATCHED TIRES**
   1. Turn the ignition off.
   2. Check and adjust the Left Rear Tire pressure.
   3. Check and adjust all other tire pressures.
   4. Inspect for mismatched tires on vehicle.

      Is the Left Rear Tire improperly inflated or mismatched tires on vehicle?

      Yes

- Repair as necessary.
- Perform ABS VERIFICATION TEST. Refer to **STANDARD PROCEDURE**.

No

- Go To 4

4. **CHECK AXLE SHAFT FASTENER HARDWARE FOR LOOSENESS**
   1. Inspect the axle shaft fastener for looseness, and not properly fastened. Tighten fastener to proper specification as required.

      Was the Axle Shaft fastener loose?

      Yes

      - Repair as necessary.

      No

      - Go To 5

5. **CHECK LEFT REAR WSS LOOSENESS, INSPECT B3, B4 CIRCUITS/TERMINALS FOR DAMAGE**

   NOTE: Check all terminals for broken, bent, pushed out, or corroded terminals

   1. Inspect the Anti-Lock Brake Module harness connector, Left Rear WSS, and Left Rear WSS harness connector.
   2. Inspect the Left Rear WSS for looseness, excessive corrosion and not properly fastened.
   3. Inspect the (B3) Left Rear WSS Signal and (B4) Left Rear WSS Supply circuits between the Left Rear WSS and Anti-Lock Brake Module for damage.

      Is the Left Rear WSS loose or any of the wiring/connectors/terminals damaged?

      Yes

- Repair as necessary.
- Perform ABS VERIFICATION TEST. Refer to **STANDARD PROCEDURE**.

No

- Go To 6

6. **CHECK LEFT REAR WHEEL SPEED SENSOR FOR DAMAGE**
   1. Remove the Left Rear Wheel Speed Sensor
   2. Inspect the Left Rear Wheel Speed Sensor face for damage.

   Is the Left Rear Wheel Speed Sensor damaged?

   Yes

   - Replace sensor and hub assembly.
   - Perform ABS VERIFICATION TEST. Refer to **STANDARD PROCEDURE**.

   No

   - Go To 7

7. **CHECK LEFT REAR TONE WHEEL FOR DAMAGE**
   1. Inspect the Left Rear Tone Wheel for damage, missing teeth, cracks, corrosion or looseness.

   NOTE: The Tone Wheel teeth should be perfectly square, not bent, or nicked.

   Is the Left Rear Tone Wheel damaged?

   Yes

   - Repair as necessary.
   - Perform ABS VERIFICATION TEST. Refer to **STANDARD PROCEDURE**.

   No

- Go To 8

8. **LEFT REAR WHEEL SPEED SENSOR**
   1. Replace the Left Rear Wheel Speed Sensor in accordance with the Service Information.
   2. Perform ABS VERIFICATION TEST. Refer to **STANDARD PROCEDURE**.
   3. Road test the vehicle over 40 km/h (25 mph).

      NOTE: Vehicle must be driven above 40 km/h (25 mph) for set conditions to be met.

   4. With the scan tool, read ABS DTCs.

      Did DTC C102A-LEFT REAR WHEEL SPEED COMPARATIVE PERFORMANCE reset?

      Yes

      - Replace the Anti-Lock Brakes Module in accordance with the Service Information.
      - Perform ABS VERIFICATION TEST. Refer to **STANDARD PROCEDURE**.

      No

      - Test Complete.

C102B-RIGHT REAR WHEEL SPEED SENSOR CIRCUIT

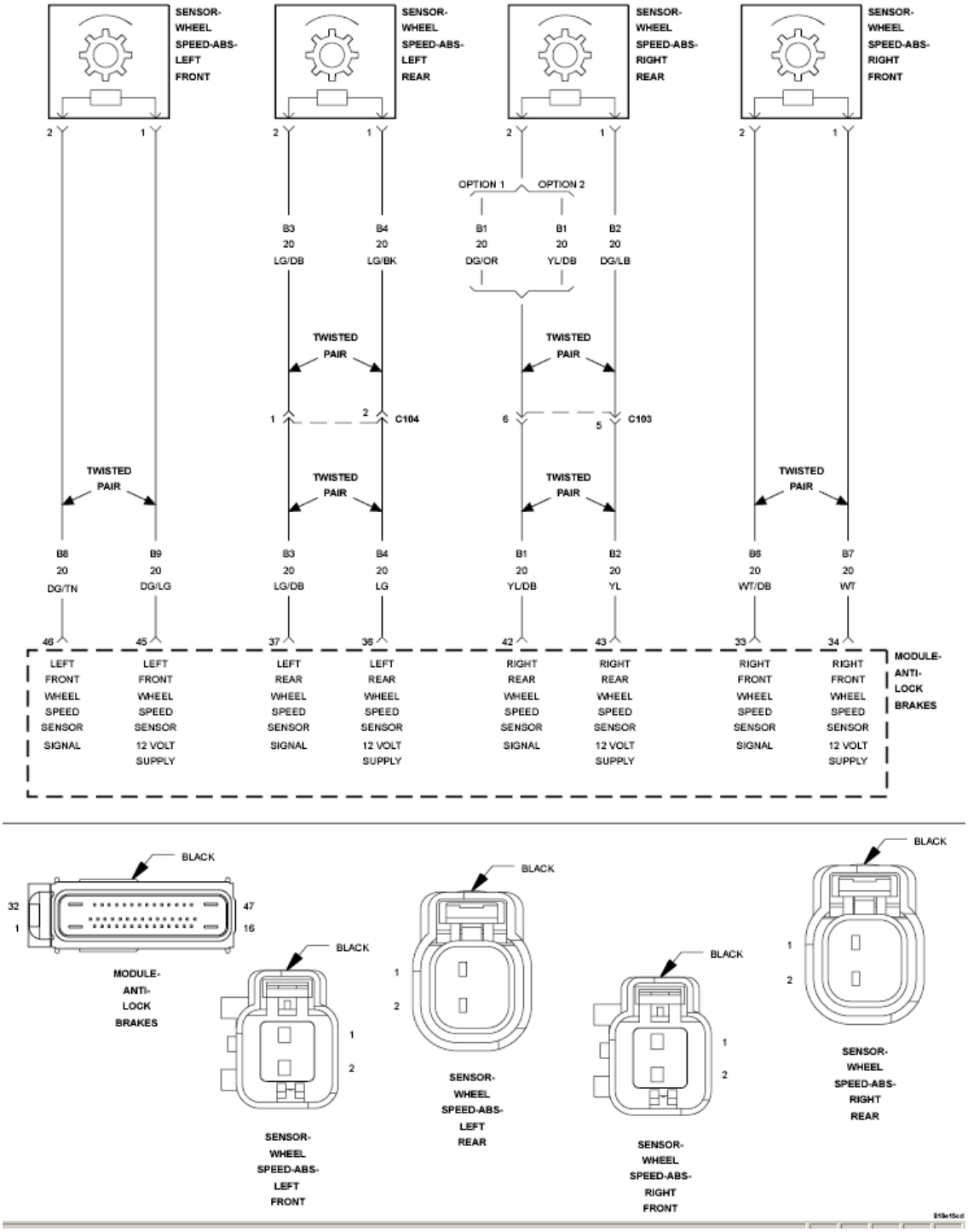

Fig. 26: Wheel Speed Sensor Circuit Schematic
Courtesy of CHRYSLER GROUP, LLC

For a complete wiring diagram, **refer to appropriate SYSTEM WIRING DIAGRAMS article** .

WHEN MONITORED

With the ignition on.

SET CONDITION

If the Right Rear Wheel Speed Sensor circuit fails the diagnostic test.

POSSIBLE CAUSES

Possible Causes
WIRING HARNESS, TERMINAL, CONNECTOR DAMAGE
(B2) RIGHT REAR WSS 12 VOLT SUPPLY CIRCUIT SHORTED TO VOLTAGE, GROUND, OR OPEN
(B1) RIGHT REAR WSS SIGNAL CIRCUIT SHORTED TO VOLTAGE, GROUND, OR OPEN
(B1) RIGHT REAR WSS SIGNAL CIRCUIT SHORTED TO THE (B2) RIGHT REAR WSS 12 VOLT SUPPLY CIRCUIT
RIGHT REAR WSS
ANTI-LOCK BRAKES MODULE

DIAGNOSTIC TEST

1. **CHECK FOR DTC C102B-RIGHT REAR WHEEL SPEED SENSOR CIRCUIT**

   NOTE: This DTC must be active for the results of this test to be valid.

   1. Turn the ignition on.
   2. With the scan tool, record and erase DTCs.
   3. Cycle the ignition switch from off to on.
   4. With the scan tool, read DTCs.

   Does the scan tool display: C102B-RIGHT REAR WHEEL SPEED SENSOR CIRCUIT active?

   Yes

   - Go To 2

   No

   - The condition that caused the symptom is currently not present.

Inspect the related wiring for a possible intermittent condition. Look for any chafed, pierced, pinched, or partially broken wires.

- Perform the ABS-INTERMITTENT CONDITION TEST. Refer to **STANDARD PROCEDURE**.

2. **CHECK CONNECTOR/TERMINAL FOR DAMAGE**

NOTE: Check all terminals for broken, bent, pushed out, or corroded terminals.

1. Turn the ignition off.
2. Inspect the Anti-Lock Brake Module harness connector, Right Rear WSS, and Right Rear WSS harness connector.

   Is the Right Rear WSS or any of the connectors/terminals damaged?

   Yes

   - Repair as necessary.
   - Perform the ABS VERIFICATION TEST. Refer to **STANDARD PROCEDURE**.

   No

   - Go To 3

3. **CHECK (B2) RIGHT REAR WSS 12 VOLT SUPPLY CIRCUIT VOLTAGE**

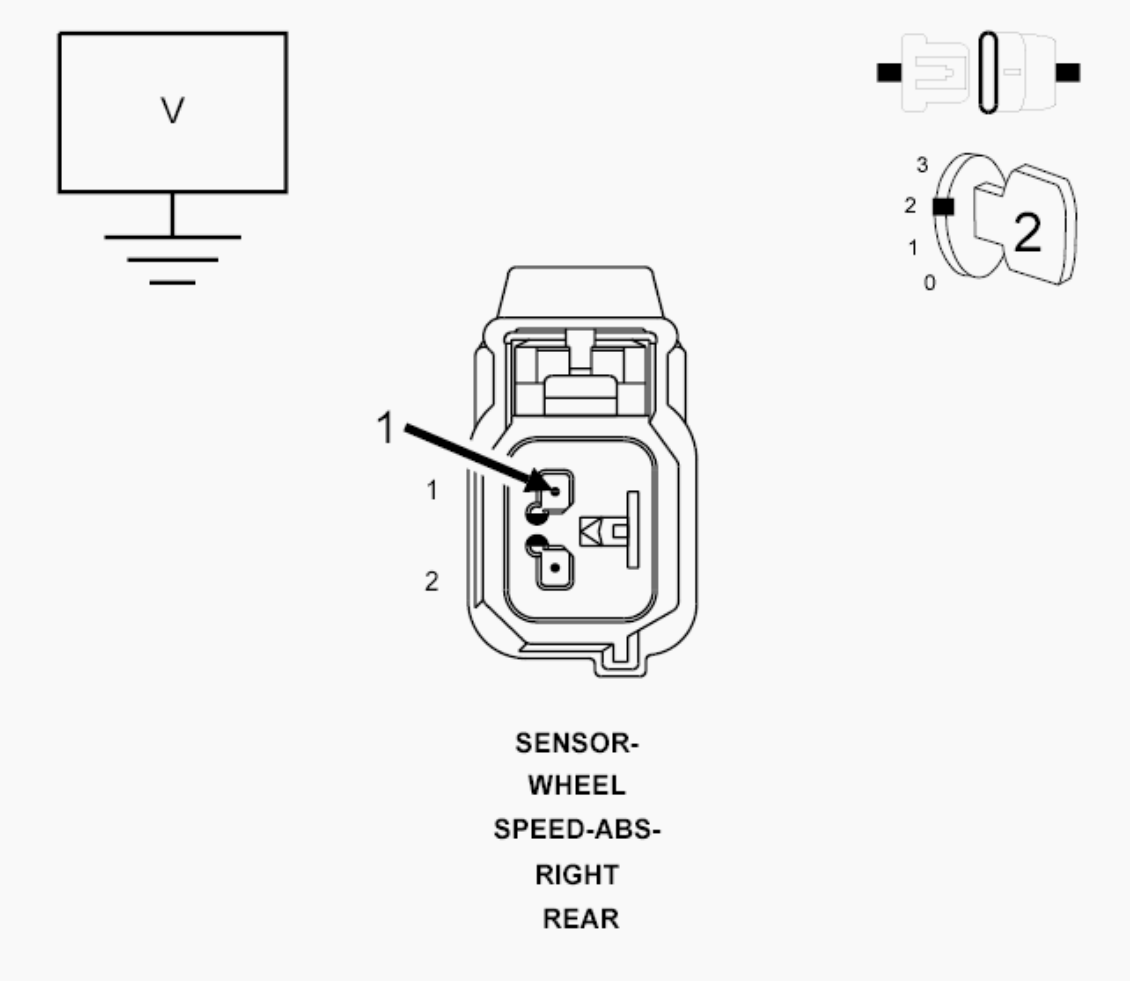

Fig. 27: Measuring Voltage Of Right Rear WSS 12 Volt Supply Circuit
Courtesy of CHRYSLER GROUP, LLC

1. Disconnect the Right Rear WSS harness connector.
2. Turn the ignition on.
3. Measure the voltage of the (B2) Right Rear WSS 12 Volt Supply circuit.

   Is the voltage above 10.0 volts?

   Yes

   - Go To 6

   No

   - Go To 4

4. **CHECK (B2) RIGHT REAR WSS 12 VOLT SUPPLY CIRCUIT FOR**

A SHORT TO GROUND

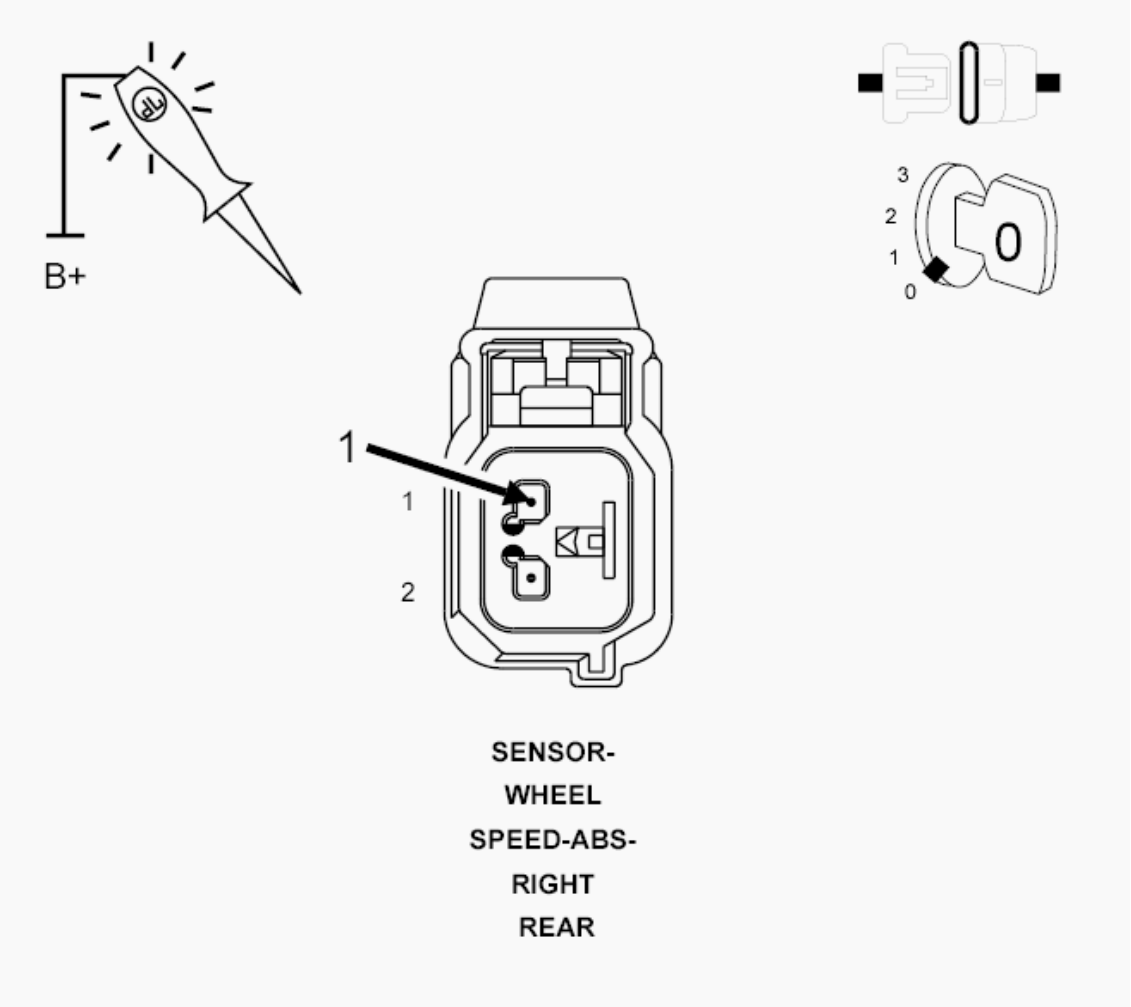

Fig. 28: Checking Right Rear WSS 12 Volt Supply Circuit For A Short To Ground
Courtesy of CHRYSLER GROUP, LLC

1. Turn the ignition off.
2. Disconnect the Right Rear WSS harness connector.
3. Disconnect the Anti-Lock Brake Module harness connector.
4. Using a 12-volt test light connected to 12-volts, probe the (B2) Right Rear WSS Supply circuit.

   Does the test light illuminate brightly?

   Yes

   - Repair the (B2) Right Rear WSS Supply circuit for a short to

ground.

- Perform the ABS VERIFICATION TEST. Refer to **STANDARD PROCEDURE**.

No

- Go To 5

5. **CHECK (B2) RIGHT REAR WSS 12 VOLT SUPPLY CIRCUIT FOR AN OPEN**

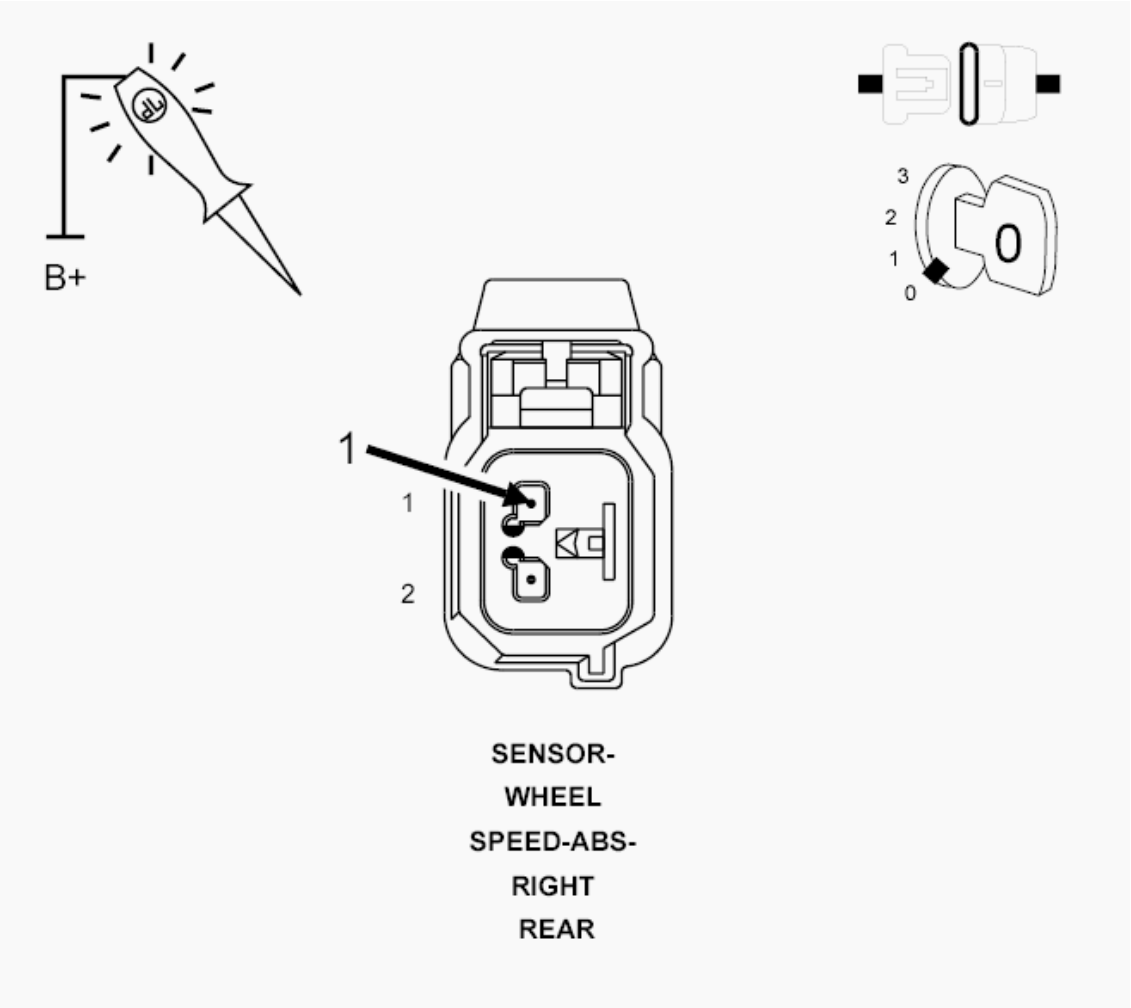

Fig. 29: Checking Right Rear Wheel Speed Sensor 12 Volt Supply Circuit For An Open
Courtesy of CHRYSLER GROUP, LLC

1. Connect a jumper wire between ground and the (B2) Right Rear WSS Supply circuit in the Anti-Lock Brakes Module harness connector.
2. Using a 12-volt test light connected to 12-volts, probe the (B2) Right

Rear WSS Supply circuit.

Does the test light illuminate brightly?

Yes

- Replace the Anti-Lock Brakes Module in accordance with the Service Information.
- Perform the ABS VERIFICATION TEST. Refer to **STANDARD PROCEDURE**.

No

- Repair the (B2) Right Rear WSS Supply circuit for an open.
- Perform the ABS VERIFICATION TEST. Refer to **STANDARD PROCEDURE**.

6. **CHECK (B1) RIGHT REAR WSS SIGNAL CIRCUIT FOR A SHORT TO GROUND**

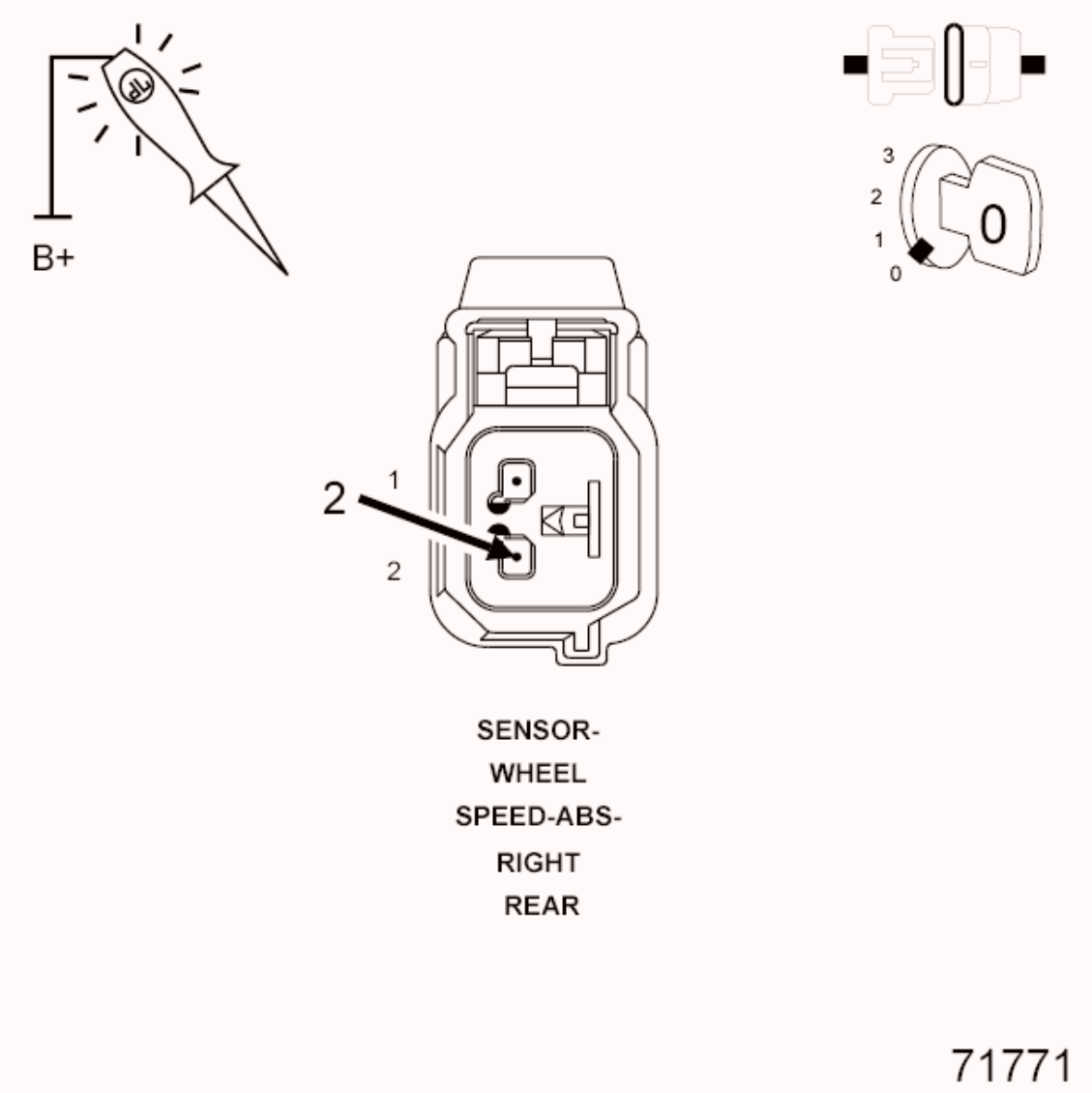

Fig. 30: Checking Right Rear WSS Signal Circuit For A Short To Ground
Courtesy of CHRYSLER GROUP, LLC

1. Turn the ignition off.
2. If not done previously, disconnect the Anti-Lock Brake Module harness connector.
3. Turn the ignition on.
4. Using a 12-volt test light connected to 12-volts, probe the (B1) Right Rear WSS Signal circuit.

   Does the test light illuminate brightly?

   Yes

- Repair the (B1) Right Rear WSS Signal circuit for a short to ground.
- Perform the ABS VERIFICATION TEST. Refer to **STANDARD PROCEDURE**.

No

- Go To 7

7. **CHECK (B1) RIGHT REAR WSS SIGNAL CIRCUIT FOR AN OPEN**

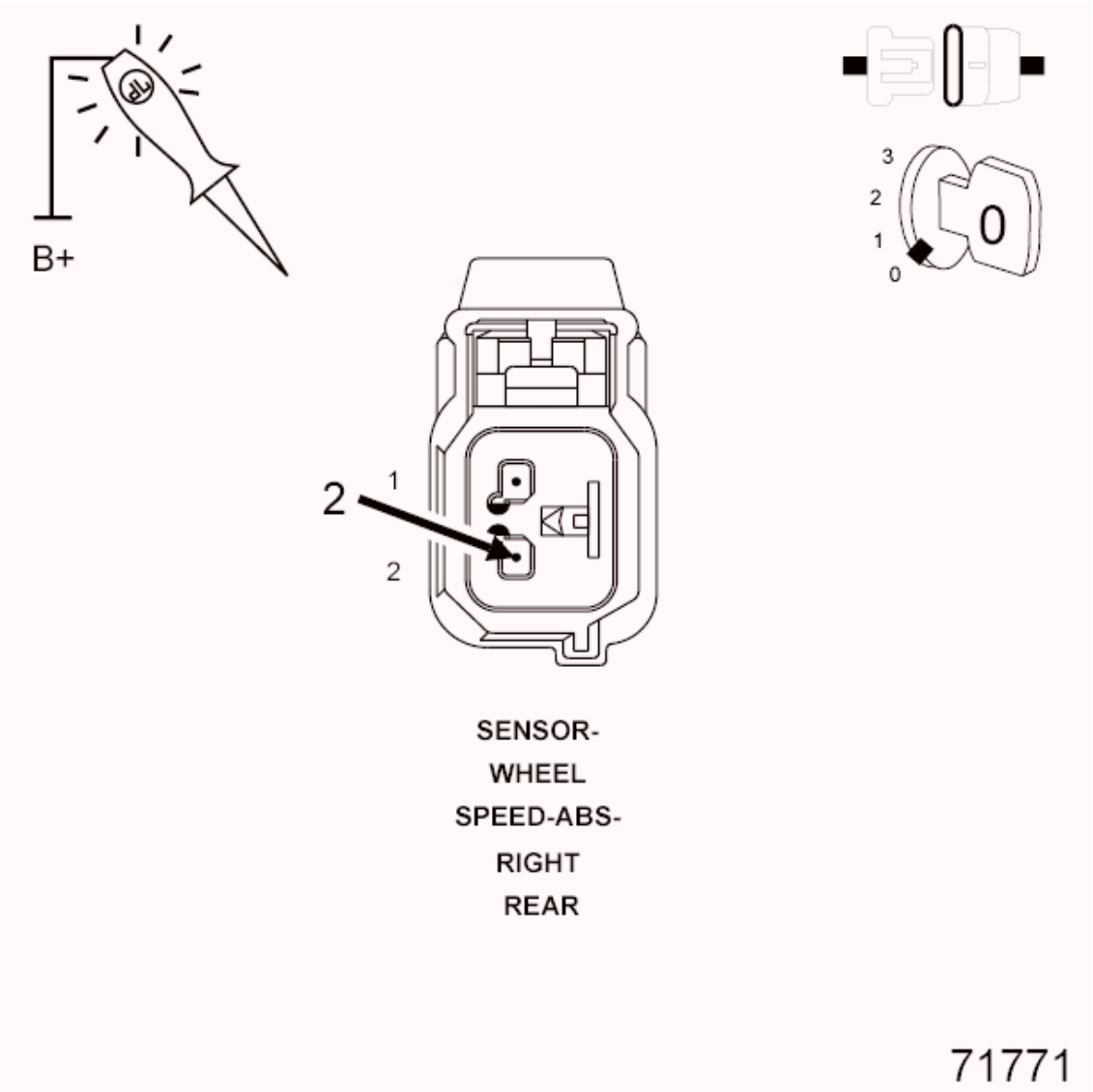

Fig. 31: Checking Right Rear WSS Signal Circuit For An Open
Courtesy of CHRYSLER GROUP, LLC

1. Connect a jumper wire between ground and the (B1) Right Rear WSS Signal circuit in the Anti-Lock Brakes Module harness connector.

2. Using a 12-volt test light connected to 12-volts, probe the (B1) Right Rear WSS Signal circuit.

   Does the test light illuminate brightly?

   Yes

   - Go To 8

   No

   - Repair the (B1) Right Rear WSS Signal circuit for an open.
   - Perform the ABS VERIFICATION TEST. Refer to **STANDARD PROCEDURE**.

8. **CHECK (B1) RIGHT REAR WSS SIGNAL CIRCUIT SHORT TO VOLTAGE**

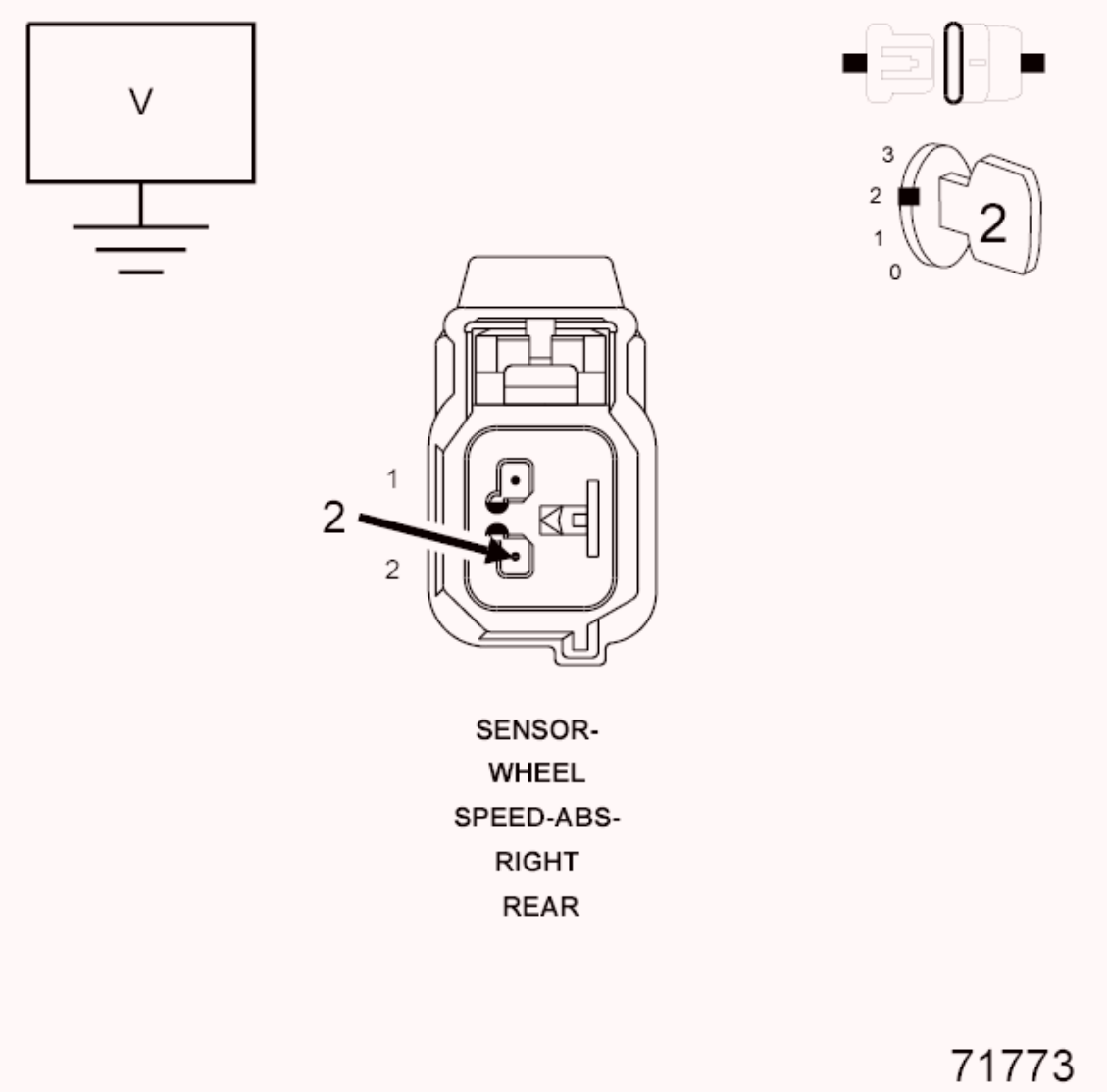

Fig. 32: Measuring Voltage Between Right Rear WSS Signal Circuit & Ground
Courtesy of CHRYSLER GROUP, LLC

1. Turn the ignition on.
2. Remove all jumper wires.
3. Measure the voltage between the (B1) Right Rear WSS Signal circuit and ground.

   Is the voltage above one volt?

   Yes

   - Repair the (B1) Right Rear WSS Signal circuit for a short to voltage.

- Perform the ABS VERIFICATION TEST. Refer to **STANDARD PROCEDURE**.

No

- Go To 9

9. **CHECK (B1) RIGHT REAR WSS SIGNAL CIRCUIT FOR A SHORT TO (B2) RIGHT REAR WSS 12 VOLT SUPPLY CIRCUIT**

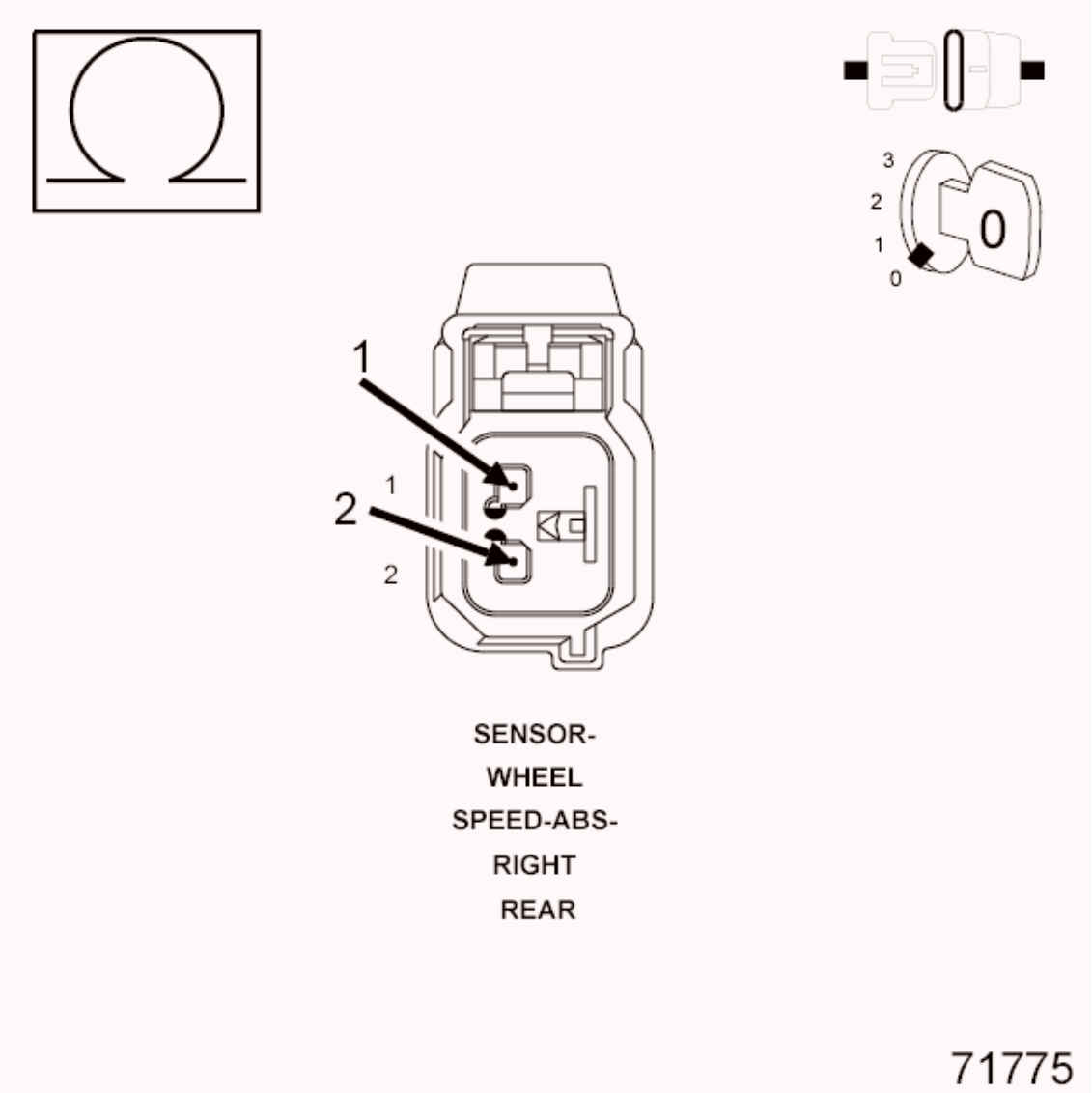

Fig. 33: Measuring Resistance Between Right Rear WSS Signal Circuit & Right Rear WSS Supply Circuit
Courtesy of CHRYSLER GROUP, LLC

1. Turn the ignition off.
2. Measure the resistance between the (B1) Right Rear WSS Signal circuit

and the (B2) Right Rear WSS Supply circuit.

Is the resistance above 5.0 Ohms?

Yes

Go To 10

No

- Repair the (B1) Right Rear WSS Signal circuit and the (B2) Right Rear WSS Supply circuit for a short together.
- Perform the ABS VERIFICATION TEST. Refer to **STANDARD PROCEDURE**.

10. **RIGHT REAR WHEEL SPEED SENSOR**
    1. Replace the Right Rear Wheel Speed Sensor in accordance with the Service Information.
    2. Perform the ABS VERIFICATION TEST. Refer to **STANDARD PROCEDURE**.

    WARNING: To avoid possible serious or fatal injury, check brake capability is available before road testing.

    3. Road test the vehicle over 40 km/h (25 mph).

    NOTE: Vehicle must be driven above 40 km/h (25 mph) for set conditions to be met.

    4. With the scan tool, read ABS DTCs.

    Did DTC C102B-RIGHT REAR WHEEL SPEED SENSOR CIRCUIT reset?

    Yes

    - Replace the Anti-Lock Brakes Module in accordance with the Service Information.
    - Perform the ABS VERIFICATION TEST. Refer to **STANDARD**

PROCEDURE.

No

- Test Complete.

C102C-RIGHT REAR WHEEL SPEED SENSOR CIRCUIT PERFORMANCE

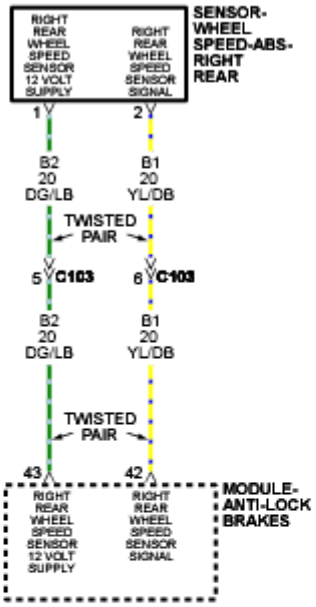

Fig. 34: Right Rear Wheel Speed Sensor Circuit Schematic
Courtesy of CHRYSLER GROUP, LLC

For a complete wiring diagram, **refer to appropriate SYSTEM WIRING DIAGRAMS article** .

WHEN MONITORED

With the ignition on.

SET CONDITION

If the Right Rear Wheel Speed Sensor circuit fails the diagnostic test.

POSSIBLE CAUSES

Possible Causes
WIRING HARNESS, TERMINAL, CONNECTOR DAMAGE
(B2) RIGHT REAR WSS 12 VOLT SUPPLY CIRCUIT SHORTED TO VOLTAGE, GROUND, OR OPEN
(B1) RIGHT REAR WSS SIGNAL CIRCUIT SHORTED TO VOLTAGE, GROUND, OR OPEN
(B1) RIGHT REAR WSS SIGNAL CIRCUIT SHORTED TO (B2) RIGHT REAR WSS 12 VOLT SUPPLY CIRCUIT
RIGHT REAR WSS
TOTALLY INTEGRATED POWER MODULE

DIAGNOSTIC TEST

1. **CHECK FOR DTC C102B-RIGHT REAR WHEEL SPEED SENSOR CIRCUIT**

   NOTE: This DTC must be active for the results of this test to be valid.

   1. Turn the ignition on.
   2. With the scan tool, record and erase DTCs.
   3. Cycle the ignition switch from off to on.
   4. With the scan tool, read DTCs.

   Does the scan tool display: C102B-RIGHT REAR WHEEL SPEED SENSOR CIRCUIT?

   Yes

   - Go To 2

   No

- The condition that caused the symptom is currently not present. Inspect the related wiring for a possible intermittent condition. Look for any chafed, pierced, pinched, or partially broken wires.
- Perform ABS VERIFICATION TEST. Refer to **STANDARD PROCEDURE**.

2. **CHECK CONNECTOR/TERMINAL FOR DAMAGE**

NOTE: Check all terminals for broken, bent, pushed out, or corroded terminals.

1. Turn the ignition off.
2. Inspect the Anti-Lock Brake Module harness connector, Right Rear WSS, and Right Rear WSS harness connector.

   Is the Right Rear WSS or any of the connectors/terminals damaged?

   Yes

   - Repair as necessary.
   - Perform ABS VERIFICATION TEST. Refer to **STANDARD PROCEDURE**.

   No

   - Go To 3

3. **CHECK (B2) RIGHT REAR WSS 12 VOLT SUPPLY CIRCUIT VOLTAGE**

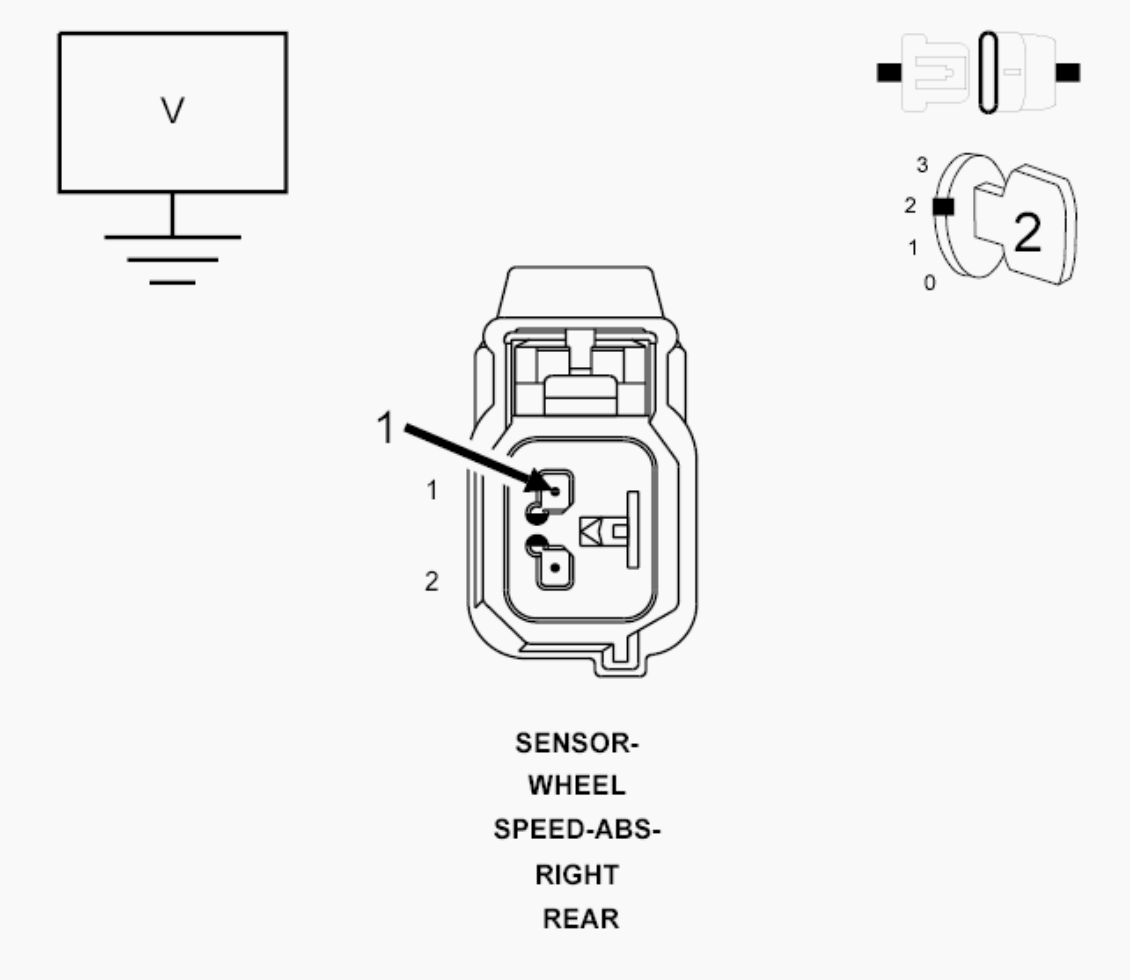

Fig. 35: Measuring Voltage Of Right Rear WSS 12 Volt Supply Circuit
Courtesy of CHRYSLER GROUP, LLC

1. Disconnect the Right Rear WSS harness connector.
2. Turn the ignition on.
3. Measure the voltage of the (B2) Right Rear WSS 12 Volt Supply circuit.

   Is the voltage above 10.0 volts?

   Yes

   - Go To 6

   No

   - Go To 4

4. **CHECK (B2) RIGHT REAR WSS 12 VOLT SUPPLY CIRCUIT FOR**

A SHORT TO GROUND

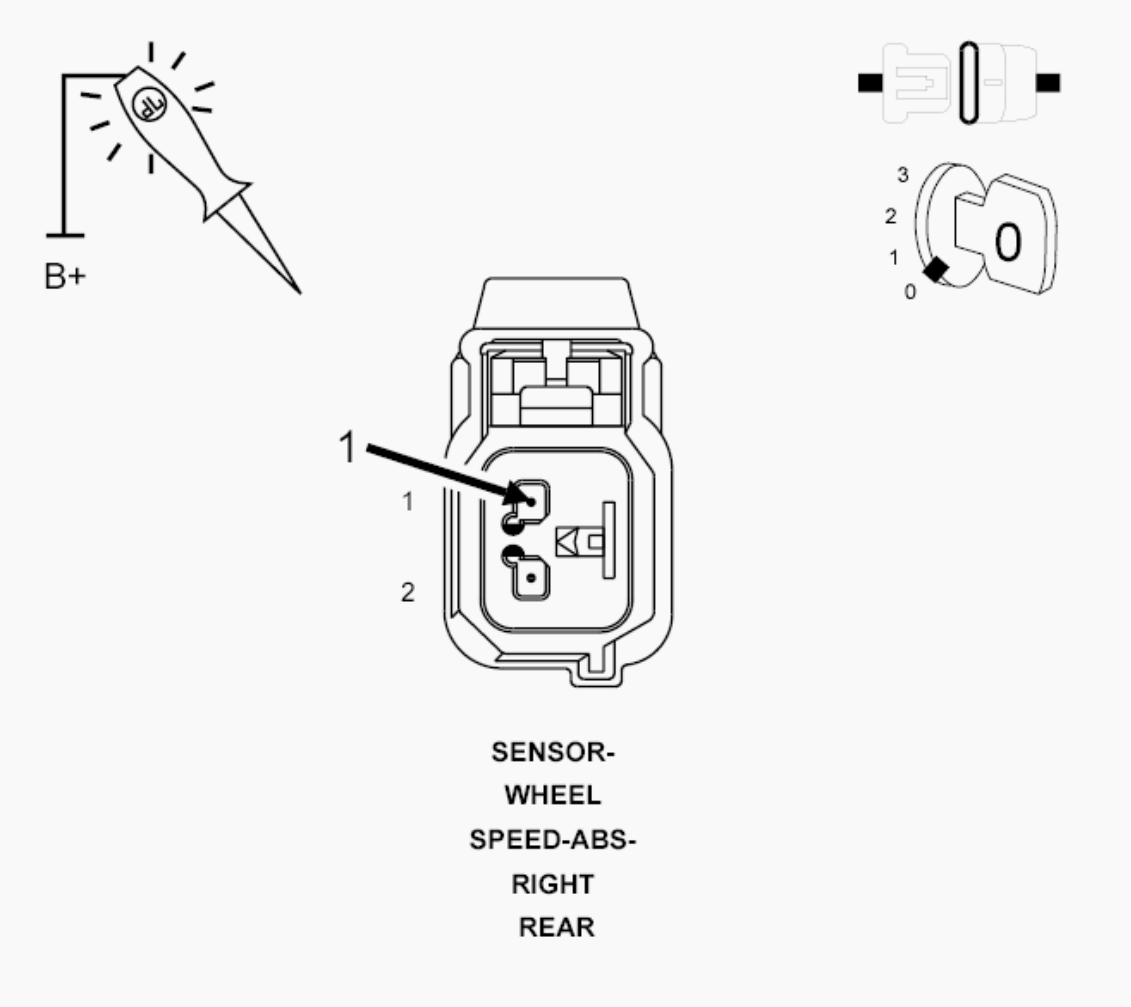

Fig. 36: Checking Right Rear WSS 12 Volt Supply Circuit For A Short To Ground
Courtesy of CHRYSLER GROUP, LLC

1. Turn the ignition off.
2. Disconnect the Right Rear WSS harness connector.
3. Disconnect the Anti-Lock Brake Module harness connector.
4. Using a 12-volt test light connected to 12-volts, probe the (B2) Right Rear WSS Supply circuit.

   Does the test light illuminate brightly?

   Yes

   - Repair the (B2) Right Rear WSS Supply circuit for a short to

ground.

- Perform ABS VERIFICATION TEST. Refer to **STANDARD PROCEDURE**.

No

- Go To 5

5. **CHECK (B2) RIGHT REAR WSS 12 VOLT SUPPLY CIRCUIT FOR AN OPEN**

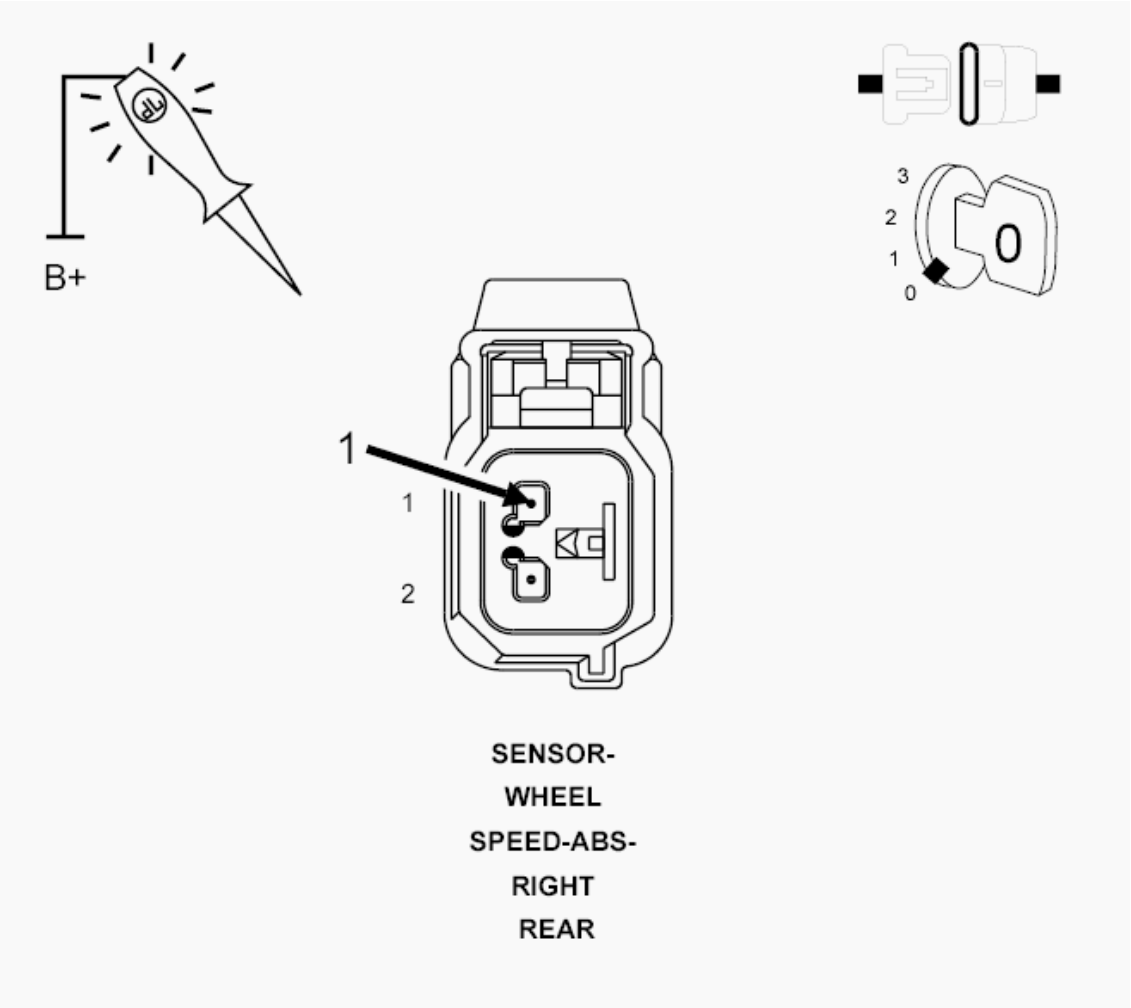

Fig. 37: Checking Right Rear Wheel Speed Sensor 12 Volt Supply Circuit For An Open
Courtesy of CHRYSLER GROUP, LLC

1. Connect a jumper wire between ground and the (B2) Right Rear WSS Supply circuit in the Anti-Lock Brakes Module harness connector.
2. Using a 12-volt test light connected to 12-volts, probe the (B2) Right

Rear WSS Supply circuit.

Does the test light illuminate brightly?

Yes

- Replace the Anti-Lock Brakes Module in accordance with the Service Information.
- Perform ABS VERIFICATION TEST. Refer to **STANDARD PROCEDURE**.

No

- Repair the (B2) Right Rear WSS Supply circuit for an open.
- Perform ABS VERIFICATION TEST. Refer to **STANDARD PROCEDURE**.

6. **CHECK (B1) RIGHT REAR WSS SIGNAL CIRCUIT FOR A SHORT TO GROUND**

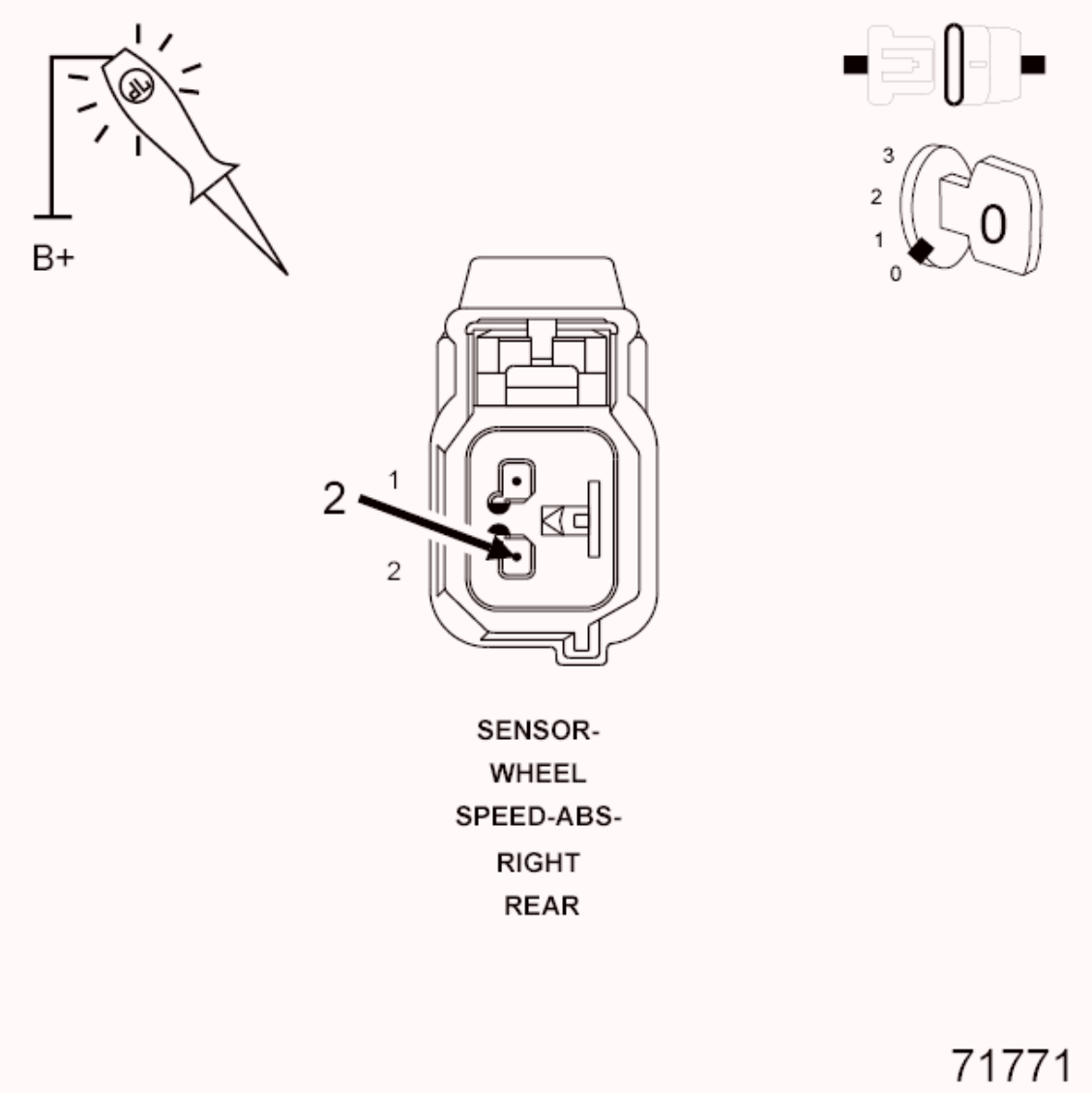

Fig. 38: Checking Right Rear WSS Signal Circuit For A Short To Ground
Courtesy of CHRYSLER GROUP, LLC

1. Using a 12-volt test light connected to 12-volts, probe the (B1) Right Rear WSS Signal circuit.

   Does the test light illuminate brightly?

   Yes

   - Repair the (B1) Right Rear WSS Signal circuit for a short to ground.
   - Perform ABS VERIFICATION TEST. Refer to **STANDARD PROCEDURE**.

No

- Go To 7

7. **CHECK (B1) RIGHT REAR WSS SIGNAL CIRCUIT FOR AN OPEN**

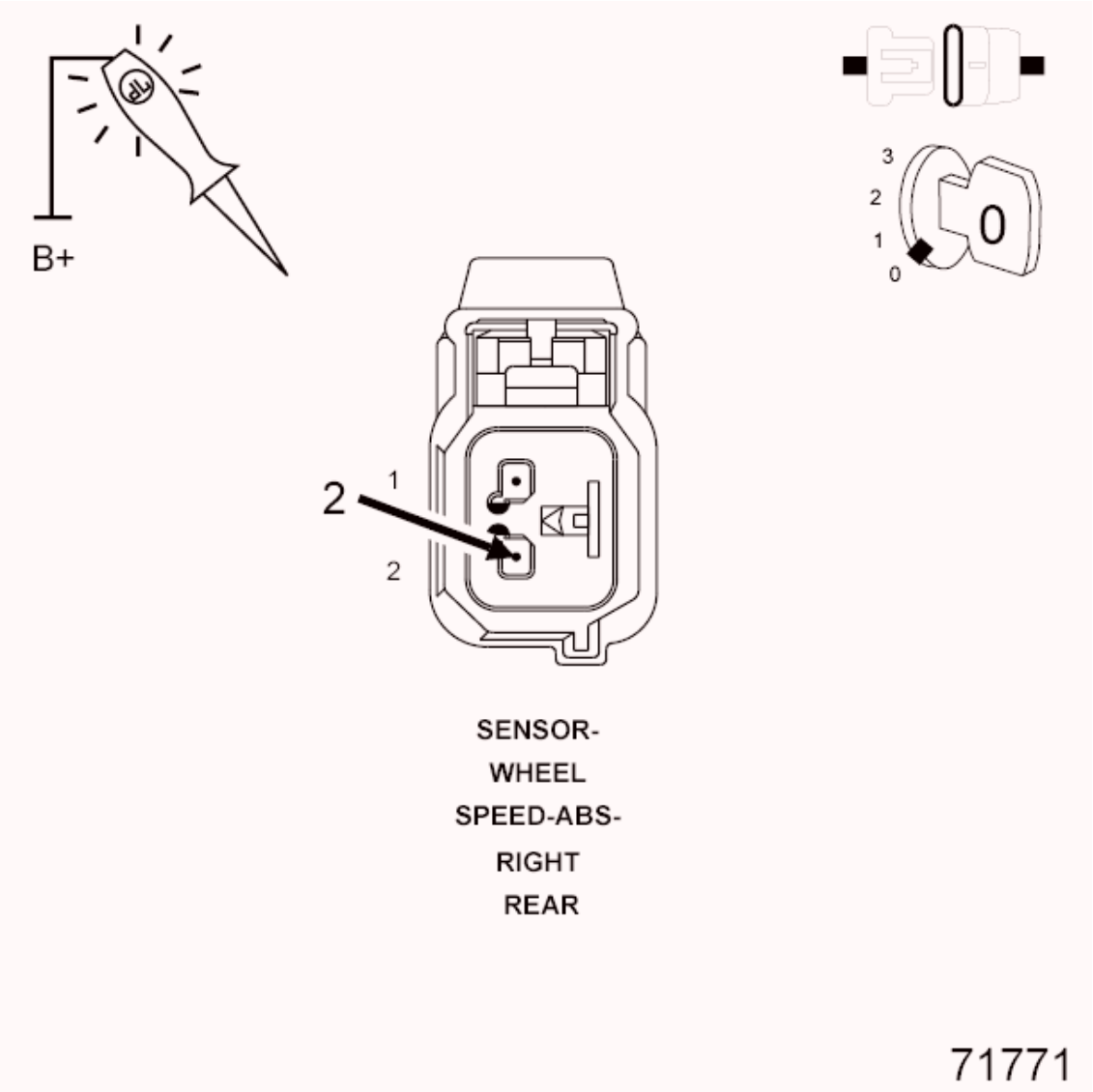

Fig. 39: Checking Right Rear WSS Signal Circuit For An Open
Courtesy of CHRYSLER GROUP, LLC

1. Connect a jumper wire between ground and the (B1) Right Rear WSS Signal circuit in the Anti-Lock Brakes Module harness connector.
2. Using a 12-volt test light connected to 12-volts, probe the (B1) Right Rear WSS Signal circuit.

   Does the test light illuminate brightly?

Yes

- Go To 8

No

- Repair the (B1) Right Rear WSS Signal circuit for an open.
- Perform ABS VERIFICATION TEST. Refer to **STANDARD PROCEDURE**.

8. **CHECK (B1) RIGHT REAR WSS SIGNAL CIRCUIT SHORT TO VOLTAGE**

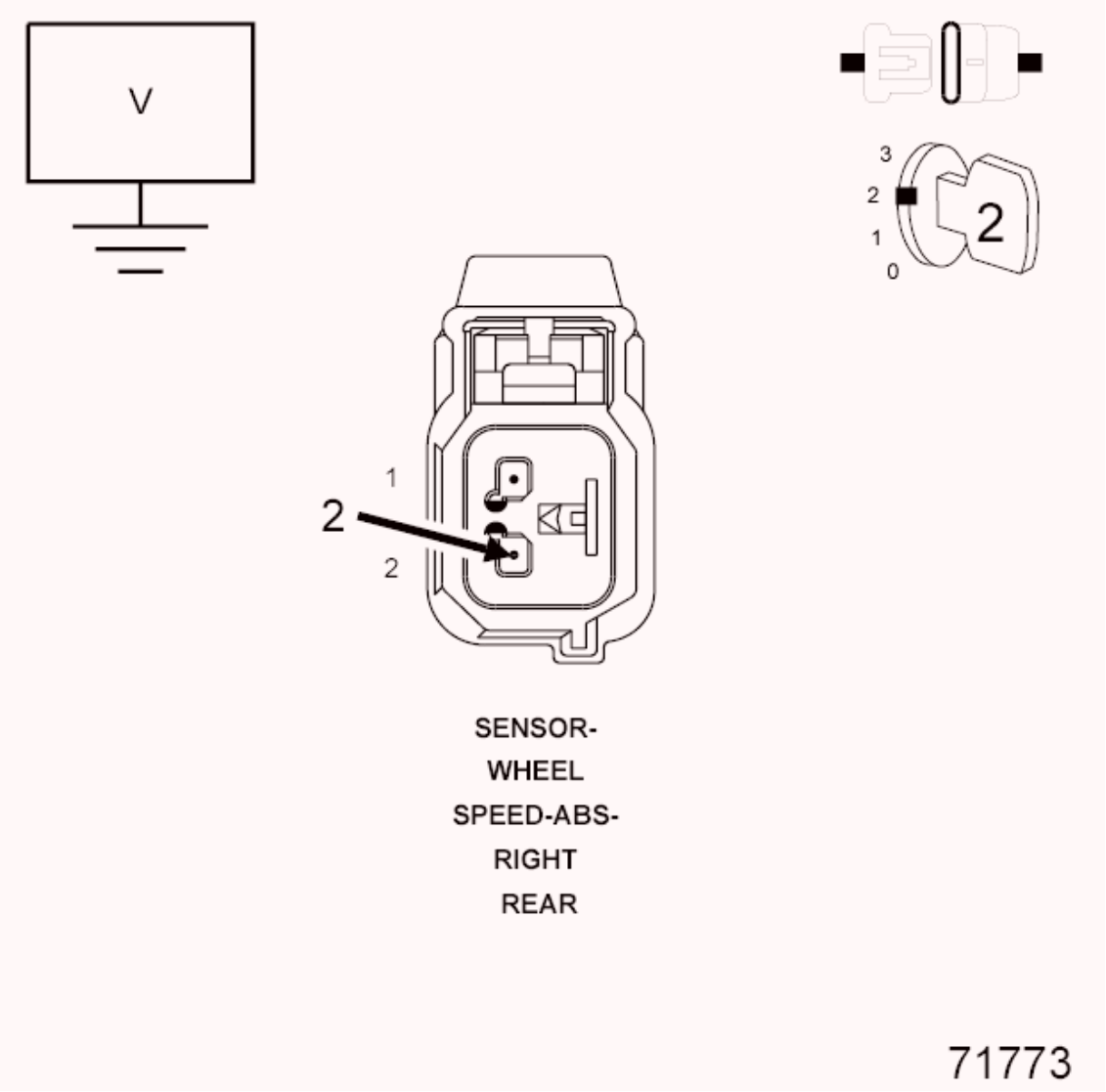

Fig. 40: Measuring Voltage Between Right Rear WSS Signal Circuit & Ground
Courtesy of CHRYSLER GROUP, LLC

1. Turn the ignition on.
2. Remove all jumper wires.
3. Measure the voltage between the (B1) Right Rear WSS Signal circuit and ground.

   Is the voltage above one volt?

   Yes

   - Repair the (B1) Right Rear WSS Signal circuit for a short to voltage.
   - Perform ABS VERIFICATION TEST. Refer to **STANDARD PROCEDURE**.

   No

   - Go To 9

9. **CHECK (B1) RIGHT REAR WSS SIGNAL CIRCUIT FOR A SHORT TO (B2) RIGHT REAR WSS 12 VOLT SUPPLY CIRCUIT**

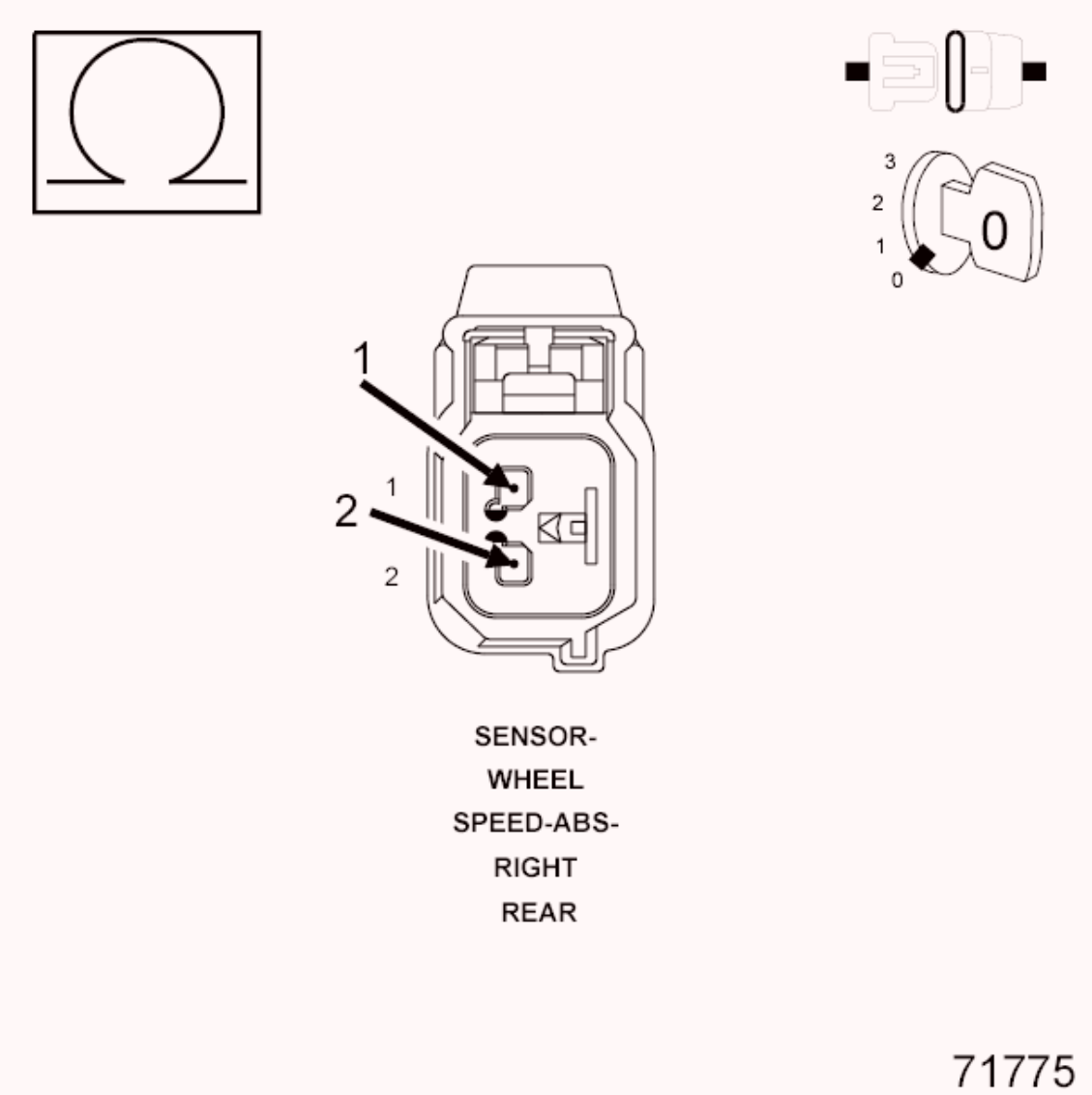

Fig. 41: Measuring Resistance Between Right Rear WSS Signal Circuit & Right Rear WSS Supply Circuit
Courtesy of CHRYSLER GROUP, LLC

1. Turn the ignition off.
2. Measure the resistance between the (B1) Right Rear WSS Signal circuit and the (B2) Right Rear WSS Supply circuit.

   Is the resistance above 5.0 ohms?

   Yes

   - Go To 10

   No

- Repair the (B1) Right Rear WSS Signal circuit and the (B2) Right Rear WSS Supply circuit for a short together.
- Perform ABS VERIFICATION TEST. Refer to **STANDARD PROCEDURE**.

10. **RIGHT REAR WHEEL SPEED SENSOR**
    1. Replace the Right Rear Wheel Speed Sensor in accordance with the Service Information.
    2. Perform ABS VERIFICATION TEST. Refer to **STANDARD PROCEDURE**.

WARNING: To avoid possible serious or fatal injury, check brake capability is available before road testing.

3. Road test the vehicle over 40 km/h (25 mph).

NOTE: Vehicle must be driven above 40 km/h (25 mph) for set conditions to be meet.

4. With the scan tool, read ABS DTCs.

   Did DTC C102B-RIGHT REAR WHEEL SPEED SENSOR CIRCUIT reset?

   Yes

   - Replace the Totally Integrated Power Module in accordance with the Service Information.
   - Perform ABS VERIFICATION TEST. Refer to **STANDARD PROCEDURE**.

   No

   - Test Complete.

C1032-RIGHT REAR WHEEL SPEED SENSOR SIGNAL ERRATIC PERFORMANCE

For a complete wiring diagram, **refer to appropriate SYSTEM WIRING DIAGRAMS article** .

WHEN MONITORED

With the ignition on.

SET CONDITION

When the Right Rear Wheel Speed Sensor (WSS) Signal is intermittently missing while vehicle speed is above 40 km/h (25 mph) or erratic wheel speed signal during acceleration or sensed wheel speed is different from other wheels.

POSSIBLE CAUSES

Possible Causes
RIGHT REAR WSS LOOSE - B1, B2
CIRCUITS/CONNECTOR/TERMINAL DAMAGE
RIGHT REAR TONE WHEEL DAMAGE
RIGHT REAR WHEEL BEARING DAMAGE
AXLE SHAFT FASTENER HARDWARE
IMPROPER RIGHT REAR TIRE PRESSURE/MISMATCHED TIRES
RIGHT REAR WSS
ANTI-LOCK BRAKE MODULE

DIAGNOSTIC TEST

1. **CHECK FOR DTC C1032-RIGHT REAR WHEEL SPEED SENSOR SIGNAL ERRATIC PERFORMANCE**

   NOTE: This DTC must be active for the results of this test to be valid.

   1. Turn the ignition on.
   2. With the scan tool, record and erase DTCs.

      CAUTION: Make sure brake capability is available before road testing.

   3. Road test the vehicle over 40 km/h (25 mph).

      NOTE: Vehicle must be driven above 40 km/h (25 mph) for set conditions to be met.

4. With the scan tool, read DTCs.

   Does the scan tool display: C1032-RIGHT REAR WHEEL SPEED SENSOR SIGNAL ERRATIC PERFORMANCE active?

   Yes

   - Go To 3

   No

   - Go To 2

2. **CHECK WHEEL SPEED SENSOR SIGNALS**
   1. Turn the ignition on.
   2. With the scan tool, monitor and graph ALL the WSS speeds and compare graph while an assistant drives the vehicle.

      NOTE: If graph shows periodic dropouts pay close attention to the tone wheel.

   3. Slowly accelerate as straight as possible from a stop to 40 km/h (25 mph).

      Is the Right Rear WSS speed showing 0 km/h (0 mph) or not matching other wheels or showing erratic behavior?

      Yes

      - Go To 3

      No

      - Perform the ABS-INTERMITTENT CONDITION diagnostic procedure. Refer to **STANDARD PROCEDURE**.

3. **CHECK FOR IMPROPER RIGHT REAR TIRE PRESSURE/MISMATCHED TIRES**
   1. Turn the ignition off.
   2. Check and adjust the Right Rear Tire pressure.
   3. Check and adjust all other tire pressures.

4. Inspect for mismatched tires on vehicle.

   Is the Right Rear Tire improperly inflated or mismatched tires on vehicle?

   Yes

   - Repair as necessary.
   - Perform ABS VERIFICATION TEST. Refer to **STANDARD PROCEDURE**.

   No

   - Go To 4

4. **CHECK AXLE SHAFT FASTENER HARDWARE FOR LOOSENESS**
   1. Inspect the axle shaft fastener for looseness, and not properly fastened. Tighten fastener to proper specification as required.

      Was the Axle Shaft fastener loose?

      Yes

      - Repair as necessary.

      No

      - Go To 5

5. **CHECK RIGHT REAR WSS LOOSENESS, INSPECT B1, B2 CIRCUITS/TERMINALS FOR DAMAGE**

   NOTE: Check all terminals for broken, bent, pushed out, or corroded terminals.

   1. Inspect the Anti-Lock Brake Module harness connector, Right Rear WSS, and Right Rear WSS harness connector.
   2. Inspect the Right Rear WSS for looseness, excessive corrosion and not properly fastened.
   3. Inspect the (B1) Right Rear WSS Signal and (B2) Right Rear WSS Supply circuits between the Right Rear WSS and Anti-Lock Brake

Module for damage.

Is the Right Rear WSS loose or any of the wiring/connectors/terminals damaged?

Yes

- Repair as necessary.
- Perform ABS VERIFICATION TEST. Refer to **STANDARD PROCEDURE**.

No

- Go To 6

6. **CHECK RIGHT REAR WHEEL SPEED SENSOR FOR DAMAGE**
   1. Remove the Right Rear Wheel Speed Sensor.
   2. Inspect the Right Rear Wheel Speed Sensor face for damage.

   Is the Right Rear Wheel Speed Sensor damaged?

   Yes

   - Replace sensor and hub assembly.
   - Perform ABS VERIFICATION TEST. Refer to **STANDARD PROCEDURE**.

   No

   - Go To 7

7. **CHECK RIGHT REAR TONE WHEEL FOR DAMAGE**
   1. Inspect the Right Rear Tone Wheel for damage, missing teeth, cracks, corrosion or looseness.

   NOTE: The Tone Wheel teeth should be perfectly square, not bent, or nicked.

   Is the Right Rear Tone Wheel damaged?

   Yes

- Repair as necessary.
- Perform ABS VERIFICATION TEST. Refer to **STANDARD PROCEDURE**.

No

- Go To 8

8. **CHECK RIGHT REAR WHEEL BEARING FOR DAMAGE**
   1. Inspect the Right Rear wheel bearing for excessive runout or clearance.

      NOTE: Refer to the appropriate service information, if necessary, for procedures or specifications.

      Is the Right Rear Wheel Bearing Damaged?

      Yes

      - Repair as necessary.
      - Perform ABS VERIFICATION TEST. Refer to **STANDARD PROCEDURE**.

      No

      - Go To 9

9. **RIGHT REAR WHEEL SPEED SENSOR**
   1. Replace the Right Rear Wheel Speed Sensor in accordance with the Service Information.
   2. Perform ABS VERIFICATION TEST. Refer to **STANDARD PROCEDURE**.
   3. Road test the vehicle over 40 km/h (25 mph).

      NOTE: Vehicle must be driven above 40 km/h (25 mph) for set conditions to be met.

   4. With the scan tool, read ABS DTCs.

      Did DTC C1032-RIGHT REAR WHEEL SPEED SENSOR SIGNAL ERRATIC PERFORMANCE reset?

Yes

- Replace the Anti-Lock Brakes Module in accordance with the Service Information.
- Perform ABS VERIFICATION TEST. Refer to **STANDARD PROCEDURE**.

No

- Test Complete.

C1035-RIGHT REAR WHEEL SPEED COMPARATIVE PERFORMANCE

For a complete wiring diagram **refer to appropriate SYSTEM WIRING DIAGRAMS article** .

WHEN MONITORED

With the ignition on.

SET CONDITION

When the Right Rear Wheel Speed Sensor (WSS) reading is different from the readings received from the other sensors at a vehicle speed above 40 km/h (25 mph). The Anti-Lock Brake Module compares WSS readings from side-to-side on an axle and front-to-rear.

POSSIBLE CAUSES

Possible Causes
RIGHT REAR WSS LOOSE - B1, B2
CIRCUITS/CONNECTOR/TERMINAL DAMAGE
IMPROPER RIGHT REAR TIRE PRESSURE/MISMATCHED TIRES
RIGHT REAR TONE WHEEL/BEARING DAMAGE
AXLE SHAFT FASTENER HARDWARE
RIGHT REAR WSS
ANTI-LOCK BRAKE MODULE

DIAGNOSTIC TEST

1. **CHECK FOR DTC C1035-RIGHT REAR WHEEL SPEED COMPARATIVE PERFORMANCE**

NOTE: This DTC must be active for the results of this test to be valid.

1. Turn the ignition on.
2. With the scan tool, record and erase DTCs.

CAUTION: Make sure brake capability is available before road testing.

3. Road test the vehicle over 40 km/h (25 mph).

NOTE: Vehicle must be driven above 40 km/h (25 mph) for set conditions to be met.

4. With the scan tool, read DTCs.

   Does the scan tool display: C1035-RIGHT REAR WHEEL SPEED COMPARATIVE PERFORMANCE active?

   Yes

   - Go To 3

   No

   - Go To 2

2. **CHECK WHEEL SPEED SENSOR SIGNALS**
   1. Turn the ignition on.
   2. With the scan tool, monitor and graph ALL the WSS speeds and compare graph while an assistant drives the vehicle.

   NOTE: If graph shows periodic dropouts pay close attention to the tone wheel.

   3. Slowly accelerate as straight as possible from a stop to 40 km/h (25 mph).

   Is the Right Rear WSS speed showing 0 km/h (0 mph) or not matching other wheels or showing erratic behavior?

Yes

- Go To 3

No

- The condition that caused the symptom is currently not present. Inspect the related wiring for a possible intermittent condition. Look for any chafed, pierced, pinched, or partially broken wires.
- Refer to the ABS-INTERMITTENT CONDITION TEST. Refer to **STANDARD PROCEDURE**.

3. **CHECK FOR IMPROPER RIGHT REAR TIRE PRESSURE/MISMATCHED TIRES**
   1. Turn the ignition off.
   2. Check and adjust the Right Rear Tire pressure.
   3. Check and adjust all other tire pressures.
   4. Inspect for mismatched tires on vehicle.

   Is the Right Rear Tire improperly inflated or mismatched tires on vehicle?

   Yes

   - Repair as necessary.
   - Perform ABS VERIFICATION TEST. Refer to **STANDARD PROCEDURE**.

   No

   - Go To 4

4. **CHECK AXLE SHAFT FASTENER HARDWARE FOR LOOSENESS**
   1. Inspect the axle shaft fastener for looseness, and not properly fastened. Tighten fastener to proper specification as required.

   Was the Axle Shaft fastener loose?

   Yes

   - Repair as necessary.

No

- Go To 5

5. **CHECK RIGHT REAR WSS LOOSENESS, INSPECT B1, B2 CIRCUITS/TERMINALS FOR DAMAGE**

NOTE: Check all terminals for broken, bent, pushed out, or corroded terminals

1. Inspect the Anti-Lock Brake Module harness connector, Right Rear WSS, and Right Rear WSS harness connector
2. Inspect the Right Rear WSS for looseness, excessive corrosion and not properly fastened.
3. Inspect the (B1) Right Rear WSS Signal and (B2) Right Rear WSS Supply circuits between the Right Rear WSS and Anti-Lock Brake Module for damage.

Is the Right Rear WSS loose or any of the wiring/connectors/terminals damaged?

Yes

- Repair as necessary.
- Perform ABS VERIFICATION TEST. Refer to **STANDARD PROCEDURE**.

No

- Go To 6

6. **CHECK RIGHT REAR WHEEL SPEED SENSOR FOR DAMAGE**

1. Remove the Right Rear Wheel Speed Sensor.
2. Inspect the Right Rear Wheel Speed Sensor face for damage.

Is the Right Rear Wheel Speed Sensor damaged?

Yes

- Replace sensor and hub assembly.
- Perform ABS VERIFICATION TEST. Refer to **STANDARD**

PROCEDURE.

No

- Go To 7

7. **CHECK RIGHT REAR TONE WHEEL/BEARING FOR DAMAGE**
   1. Inspect the Right Rear Tone Wheel/Bearing for damage, missing teeth, cracks, corrosion or looseness.

      NOTE: The Tone Wheel teeth should be perfectly square, not bent, or nicked.

      Is the Right Rear Tone Wheel/Bearing damaged?

      Yes

      - Repair as necessary.
      - Perform ABS VERIFICATION TEST. Refer to **STANDARD PROCEDURE**.

      No

      - Go To 8

8. **RIGHT REAR WHEEL SPEED SENSOR**
   1. Replace the Right Rear Wheel Speed Sensor in accordance with the Service Information.
   2. Perform ABS VERIFICATION TEST. Refer to **STANDARD PROCEDURE**.
   3. Road test the vehicle over 40 km/h (25 mph).

      NOTE: Vehicle must be driven above 40 km/h (25 mph) for set conditions to be met.

   4. With the scan tool, read ABS DTCs.

      Did DTC C1035-RIGHT REAR WHEEL SPEED COMPARATIVE PERFORMANCE reset?

      Yes

- Replace the Anti-Lock Brakes Module in accordance with the Service Information.
- Perform ABS VERIFICATION TEST. Refer to **STANDARD PROCEDURE**.

No

- Test Complete.

C1038-REAR WHEEL SPEED SENSOR CIRCUIT LOW

For a complete wiring diagram, **refer to appropriate SYSTEM WIRING DIAGRAMS article** .

WHEN MONITORED

With the ignition on.

SET CONDITION

When the Right Rear Wheel Speed Sensor circuit fails the diagnostic test.

POSSIBLE CAUSES

Possible Causes
WIRING HARNESS, TERMINAL, CONNECTOR DAMAGE
(B2) RIGHT REAR WSS 12 VOLT SUPPLY CIRCUIT SHORTED TO GROUND, OR OPEN
(B1) RIGHT REAR WSS SIGNAL CIRCUIT SHORTED TO GROUND, OR OPEN
RIGHT REAR WSS
TOTALLY INTEGRATED POWER MODULE

DIAGNOSTIC TEST

1. **CHECK FOR DTC C1038-REAR WHEEL SPEED SENSOR CIRCUIT LOW**

NOTE: This DTC must be active for the results of this test to be valid.

1. Turn the ignition on.
2. With the scan tool, record and erase the DTCs.
3. Cycle the ignition switch from off to on.
4. With the scan tool, read the DTCs.

   Does the scan tool display: C1038-REAR WHEEL SPEED SENSOR CIRCUIT LOW active?

   Yes

   - Go To 2

   No

   - The condition that caused the symptom is currently not present. Inspect the related wiring for a possible intermittent condition. Look for any chafed, pierced, pinched, or partially broken wires.
   - Perform ABS VERIFICATION TEST. Refer to **STANDARD PROCEDURE**.

2. **CHECK CONNECTOR/TERMINAL FOR DAMAGE**

   NOTE: Check all terminals for broken, bent, pushed out, or corroded terminals.

   1. Turn the ignition off.
   2. Inspect the TIPM harness connector, Right Rear WSS, and Right Rear WSS harness connector.

      Is the Right Rear WSS or any of the connectors/terminals damaged?

      Yes

      - Repair as necessary.
      - Perform ABS VERIFICATION TEST. Refer to **STANDARD PROCEDURE**.

      No

      - Go To 3

3. **CHECK (B2) RIGHT REAR WSS 12 VOLT SUPPLY CIRCUIT VOLTAGE**

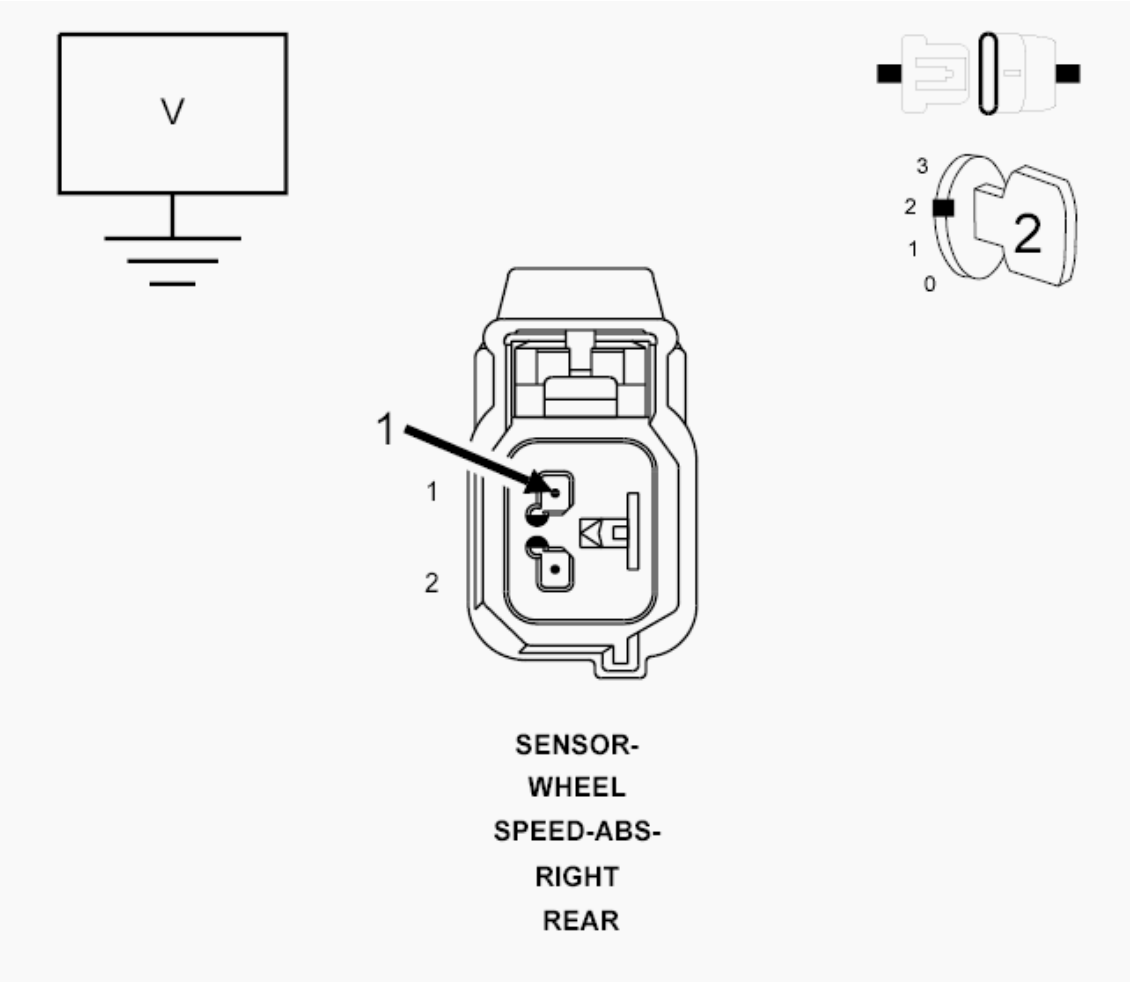

Fig. 42: Measuring Voltage Of Right Rear WSS 12 Volt Supply Circuit
Courtesy of CHRYSLER GROUP, LLC

1. Disconnect the Right Rear WSS harness connector.
2. Turn the ignition on.
3. Measure the voltage of the (B2) Right Rear WSS 12 Volt Supply circuit.

   Is the voltage above 10.0 volts?

   Yes

   - Go To 6

   No

- Go To 4

4. **CHECK (B2) RIGHT REAR WSS 12 VOLT SUPPLY CIRCUIT FOR A SHORT TO GROUND**

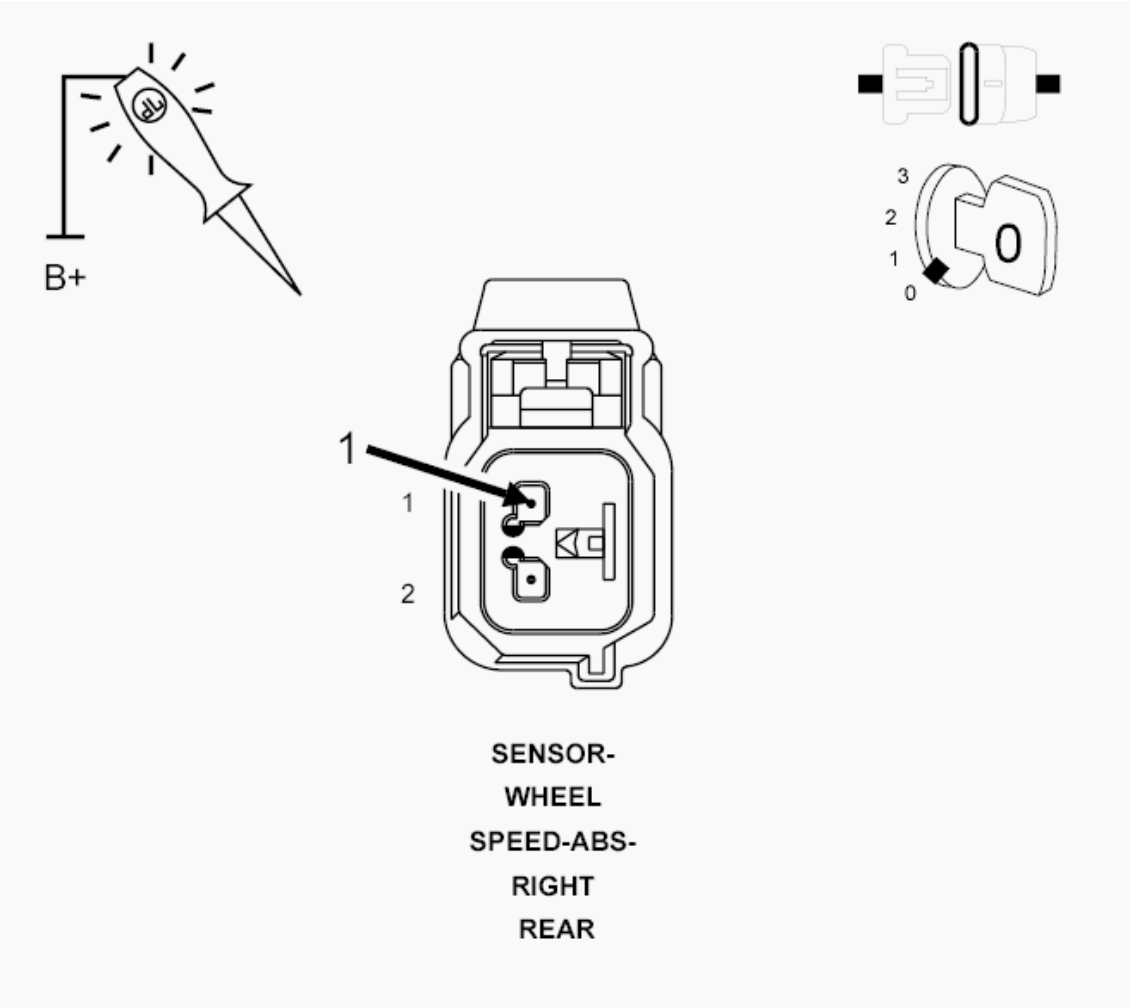

Fig. 43: Checking Right Rear WSS 12 Volt Supply Circuit For A Short To Ground
Courtesy of CHRYSLER GROUP, LLC

1. Turn the ignition off.
2. Disconnect the Right Rear WSS harness connector.
3. Disconnect the TIPM harness connector.
4. Using a 12-volt test light connected to 12 volts, probe the (B2) Right Rear WSS Supply circuit.

   Does the test light illuminate brightly?

   Yes

- Repair the (B2) Right Rear WSS Supply circuit for a short to ground.
- Perform ABS VERIFICATION TEST. Refer to **STANDARD PROCEDURE**.

No

- Go To 5

5. **CHECK (B2) RIGHT REAR WSS 12 VOLT SUPPLY CIRCUIT FOR AN OPEN**

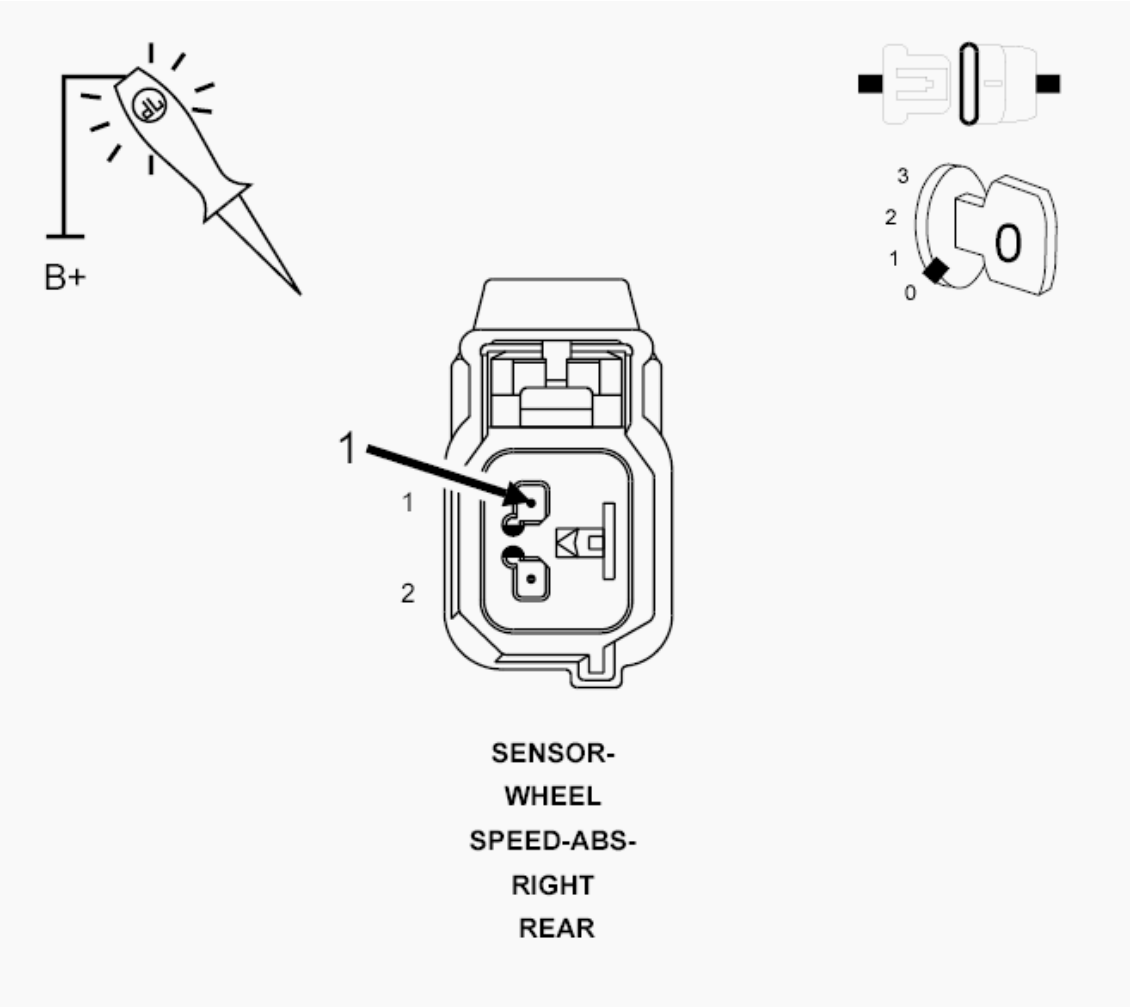

Fig. 44: Checking Right Rear Wheel Speed Sensor 12 Volt Supply Circuit For An Open
Courtesy of CHRYSLER GROUP, LLC

1. Connect a jumper wire between ground and the (B2) Right Rear WSS Supply circuit in the TIPM harness connector.

2. Using a 12-volt test light connected to 12 volts, probe the (B2) Right Rear WSS Supply circuit.

   Does the test light illuminate brightly?

   Yes

   - Replace the TIPM in accordance with the Service Information.
   - Perform BODY VERIFICATION TEST. Refer to **STANDARD PROCEDURE** .

   No

   - Repair the (B2) Right Rear WSS Supply circuit for an open.
   - Perform ABS VERIFICATION TEST. Refer to **STANDARD PROCEDURE**.

6. **CHECK (B1) RIGHT REAR WSS SIGNAL CIRCUIT FOR A SHORT TO GROUND**

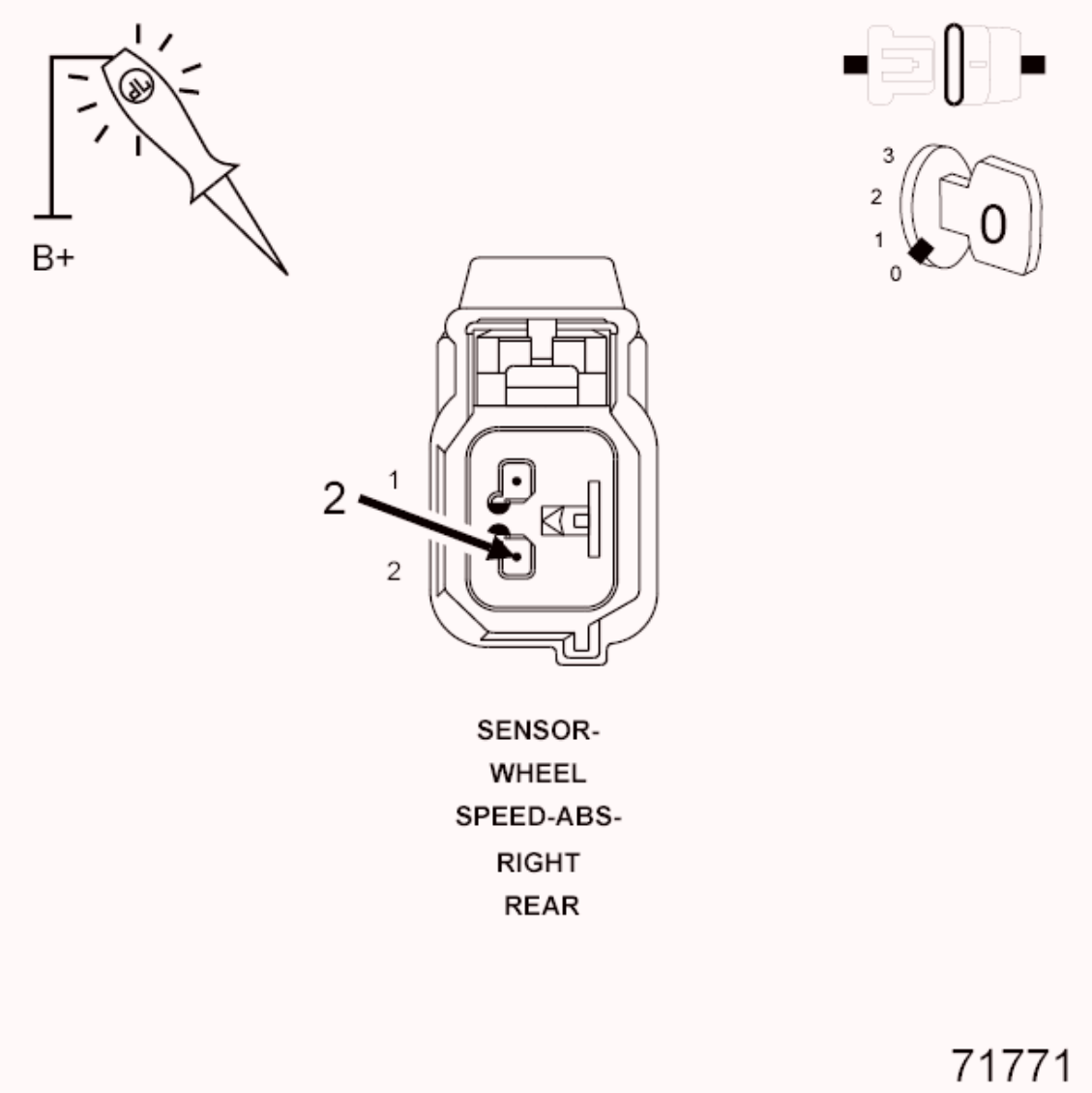

Fig. 45: Checking Right Rear WSS Signal Circuit For A Short To Ground
Courtesy of CHRYSLER GROUP, LLC

1. Using a 12-volt test light connected to 12 volts, probe the (B1) Right Rear WSS Signal circuit.

   Does the test light illuminate brightly?

   Yes

   - Repair the (B1) Right Rear WSS Signal circuit for a short to ground.
   - Perform ABS VERIFICATION TEST. Refer to **STANDARD PROCEDURE**.

No

- Go To 7

7. **CHECK (B1) RIGHT REAR WSS SIGNAL CIRCUIT FOR AN OPEN**

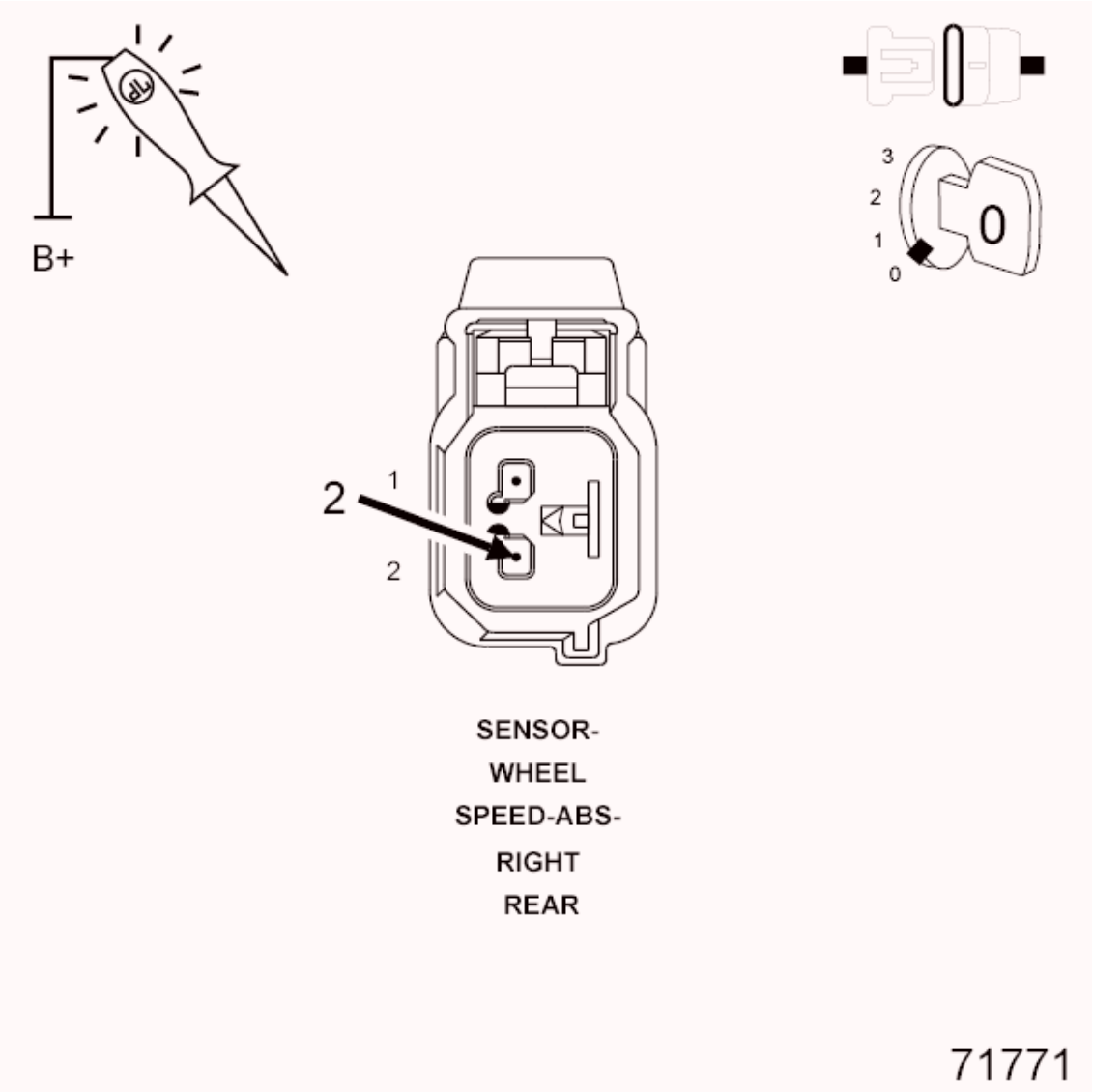

Fig. 46: Checking Right Rear WSS Signal Circuit For An Open
Courtesy of CHRYSLER GROUP, LLC

1. Connect a jumper wire between ground and the (B1) Right Rear WSS Signal circuit in the Anti-Lock Brake Module harness connector.
2. Using a 12-volt test light connected to 12 volts, probe the (B1) Right Rear WSS Signal circuit.

   Does the test light illuminate brightly?

Yes

- Go To 8

No

- Repair the (B1) Right Rear WSS Signal circuit for an open.
- Perform ABS VERIFICATION TEST. Refer to **STANDARD PROCEDURE**.

8. **RIGHT REAR WHEEL SPEED SENSOR**
   1. Replace the Right Rear Wheel Speed Sensor in accordance with the Service Information.
   2. Perform ABS VERIFICATION TEST. Refer to **STANDARD PROCEDURE**.

      WARNING: **To avoid possible serious or fatal injury, check brake capability is available before road testing.**

   3. With the scan tool, read TIPM DTCs.

      Did DTC C1038-REAR WHEEL SPEED SENSOR CIRCUIT LOW reset?

      Yes

      - Replace the TIPM in accordance with the Service Information.
      - Perform BODY VERIFICATION TEST. Refer to **STANDARD PROCEDURE** .

      No

      - Test complete.

C1039-REAR WHEEL SPEED SENSOR CIRCUIT HIGH

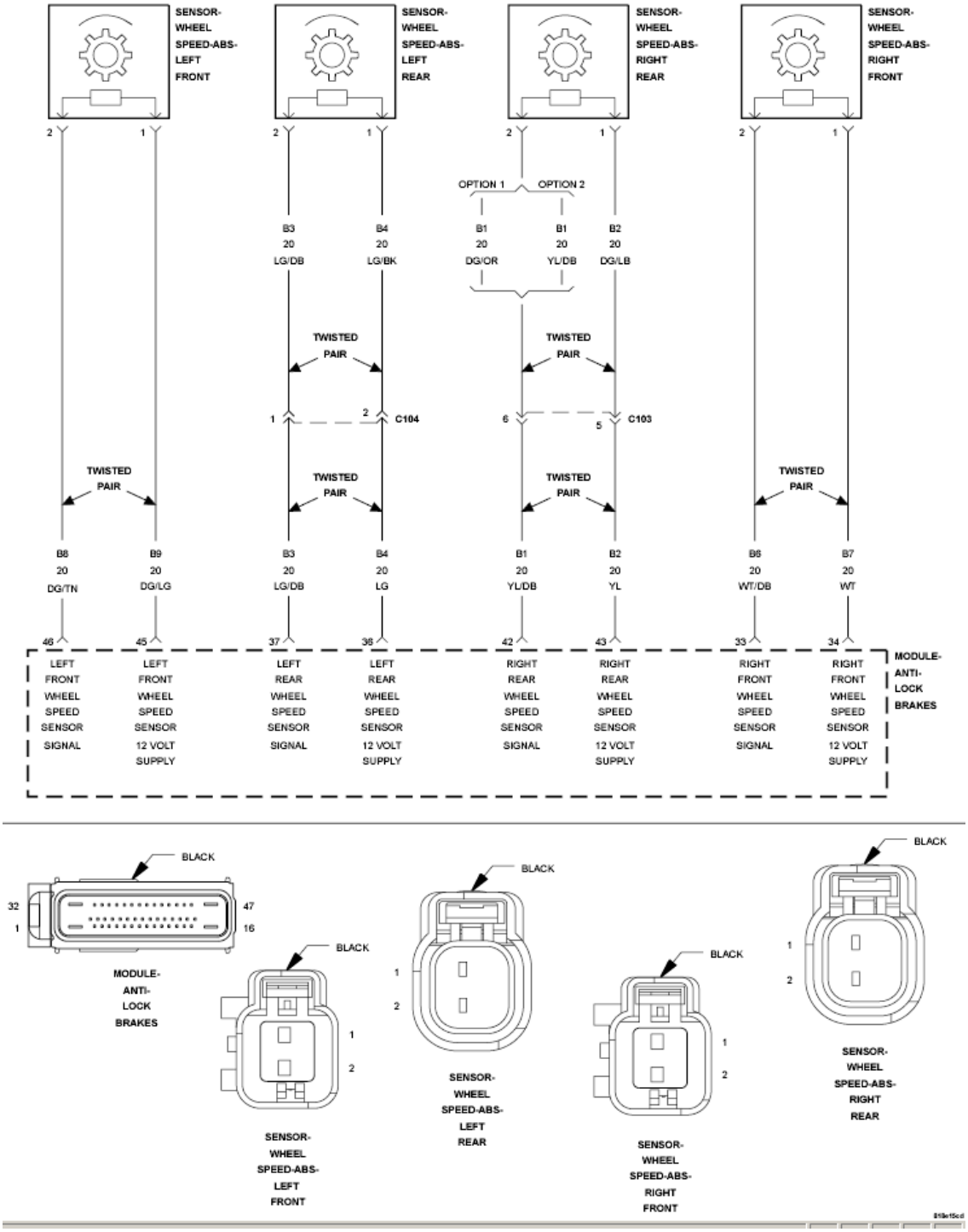

Fig. 47: Wheel Speed Sensor Circuit Schematic
Courtesy of CHRYSLER GROUP, LLC

For a complete wiring diagram, **refer to appropriate SYSTEM WIRING DIAGRAMS article** .

WHEN MONITORED

With the ignition on.

SET CONDITION

When the Right Rear Wheel Speed Sensor circuit fails the diagnostic test.

POSSIBLE CAUSES

Possible Causes
WIRING HARNESS, TERMINAL, CONNECTOR DAMAGE
(B2) RIGHT REAR WSS 12 VOLT SUPPLY CIRCUIT SHORTED TO VOLTAGE OR OPEN
(B1) RIGHT REAR WSS SIGNAL CIRCUIT SHORTED TO VOLTAGE, OR OPEN
(B1) RIGHT REAR WSS SIGNAL CIRCUIT SHORTED TO (B2) RIGHT REAR WSS 12 VOLT SUPPLY CIRCUIT
RIGHT REAR WSS
TOTALLY INTEGRATED POWER MODULE

DIAGNOSTIC TEST

1. **CHECK FOR DTC C1039-REAR WHEEL SPEED SENSOR CIRCUIT HIGH**

   NOTE: This DTC must be active for the results of this test to be valid.

   1. Turn the ignition on.
   2. With the scan tool, record and erase DTCs.
   3. Cycle the ignition switch from off to on.
   4. With the scan tool, read DTCs.

   Does the scan tool display: C1039-REAR WHEEL SPEED SENSOR CIRCUIT HIGH active?

   Yes

   - Go To 2

   No

   - The condition that caused the symptom is currently not present.

Inspect the related wiring for a possible intermittent condition. Look for any chafed, pierced, pinched, or partially broken wires.

- Perform ABS VERIFICATION TEST. Refer to **STANDARD PROCEDURE**.

2. **CHECK CONNECTOR/TERMINAL FOR DAMAGE**

NOTE: Check all terminals for broken, bent, pushed out, or corroded terminals.

1. Turn the ignition off.
2. Inspect the TIPM harness connector, Right Rear WSS, and Right Rear WSS harness connector.

   Is the Right Rear WSS or any of the connectors/terminals damaged?

   Yes

   - Repair as necessary.
   - Perform ABS VERIFICATION TEST. Refer to **STANDARD PROCEDURE**.

   No

   - Go To 3

3. **CHECK (B2) RIGHT REAR WSS 12 VOLT SUPPLY CIRCUIT VOLTAGE**

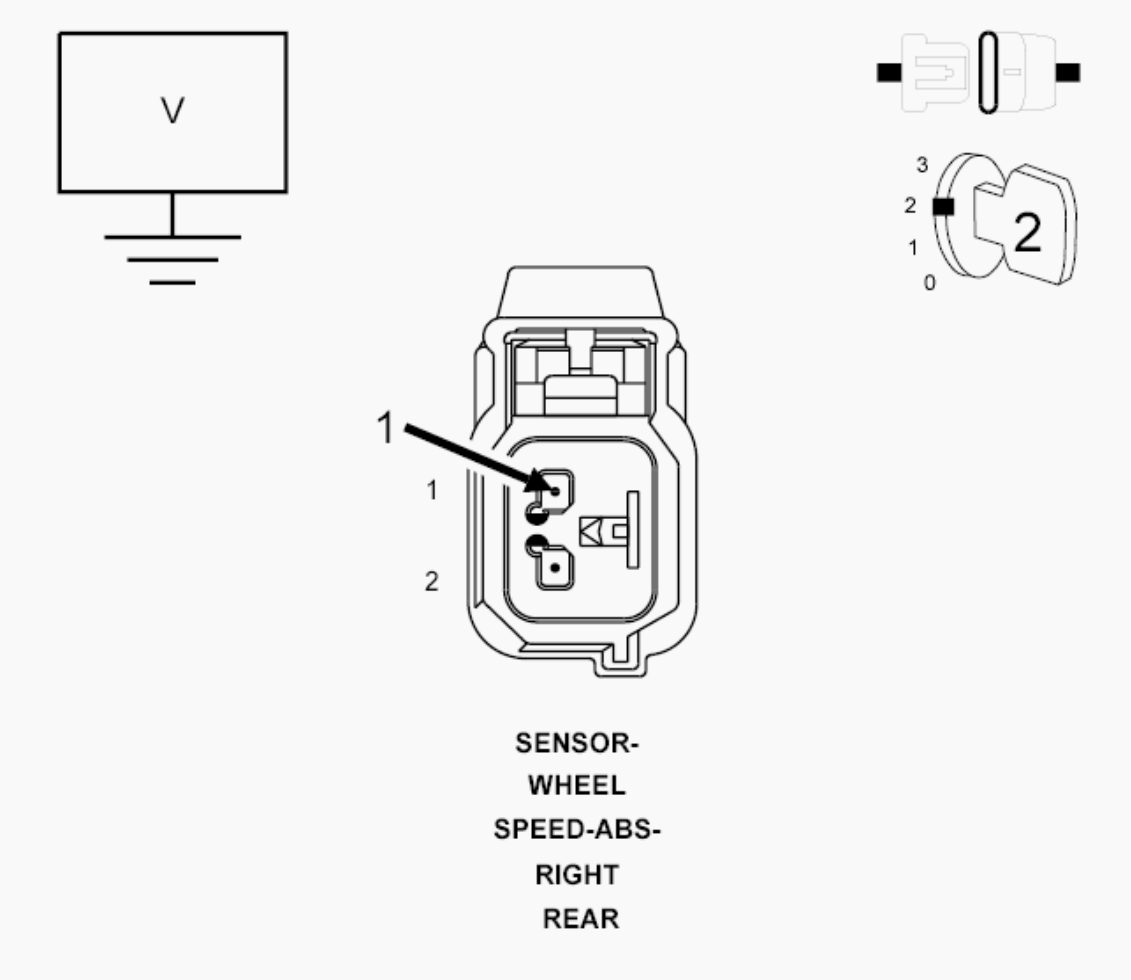

Fig. 48: Checking Right Rear WSS 12 Volt Supply Circuit Voltage
Courtesy of CHRYSLER GROUP, LLC

1. Disconnect the Right Rear WSS harness connector.
2. Turn the ignition on.
3. Measure the voltage of the (B2) Right Rear WSS 12 Volt Supply circuit.

   Is the voltage above 10.0 volts?

   Yes

   - Go To 5

   No

   - Go To 4

4. **CHECK (B2) RIGHT REAR WSS 12 VOLT SUPPLY CIRCUIT FOR**

AN OPEN

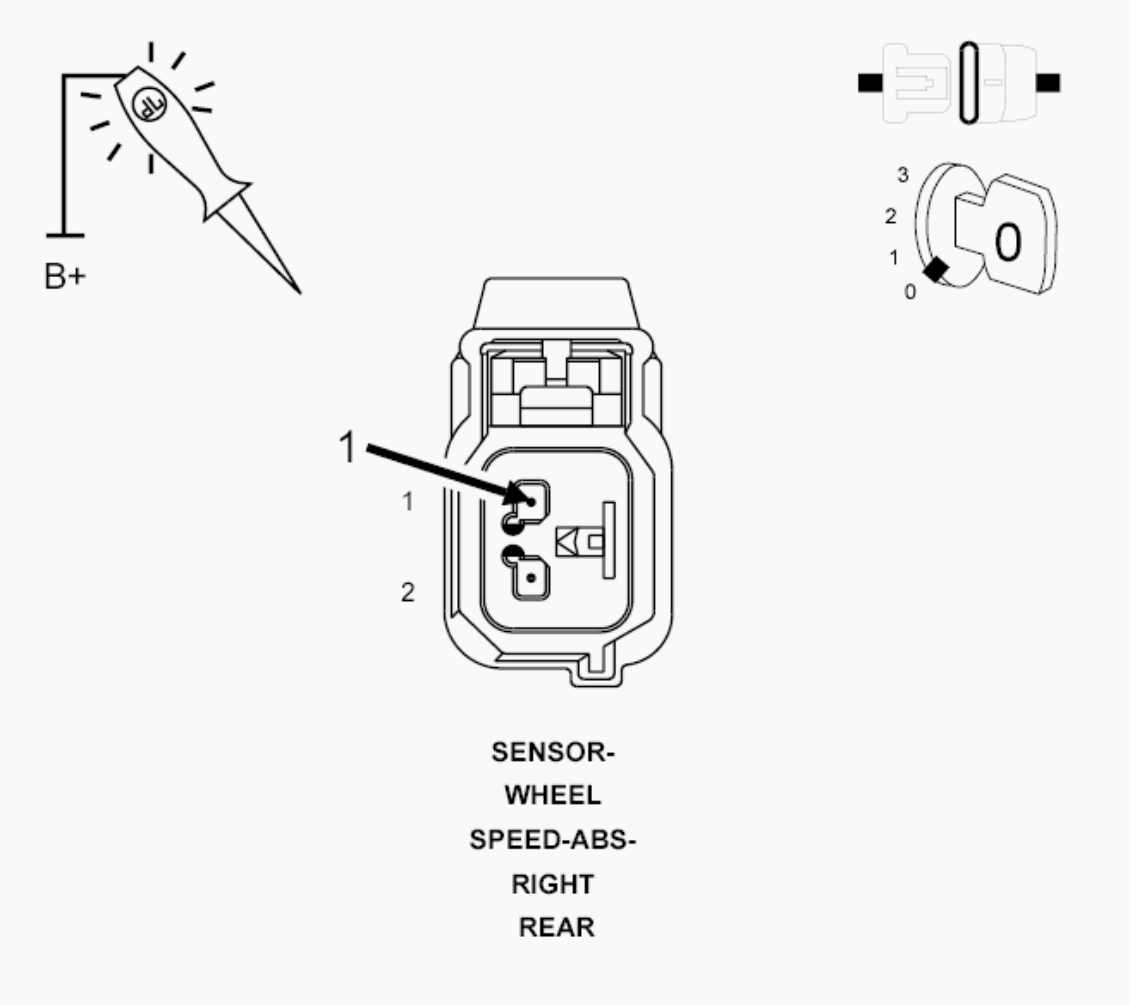

Fig. 49: Checking Right Rear Wheel Speed Sensor 12 Volt Supply Circuit For An Open
Courtesy of CHRYSLER GROUP, LLC

1. Connect a jumper wire between ground and the (B2) Right Rear WSS Supply circuit in the TIPM harness connector.
2. Using a 12-volt test light connected to 12-volts, probe the (B2) Right Rear WSS Supply circuit.

   Does the test light illuminate brightly?

   Yes

   - Replace the TIPM in accordance with the Service Information.
   - Perform ABS VERIFICATION TEST. Refer to **STANDARD PROCEDURE**.

No

- Repair the (B2) Right Rear WSS Supply circuit for an open.
- Perform ABS VERIFICATION TEST. Refer to **STANDARD PROCEDURE**.

5. **CHECK (B1) RIGHT REAR WSS SIGNAL CIRCUIT FOR AN OPEN**

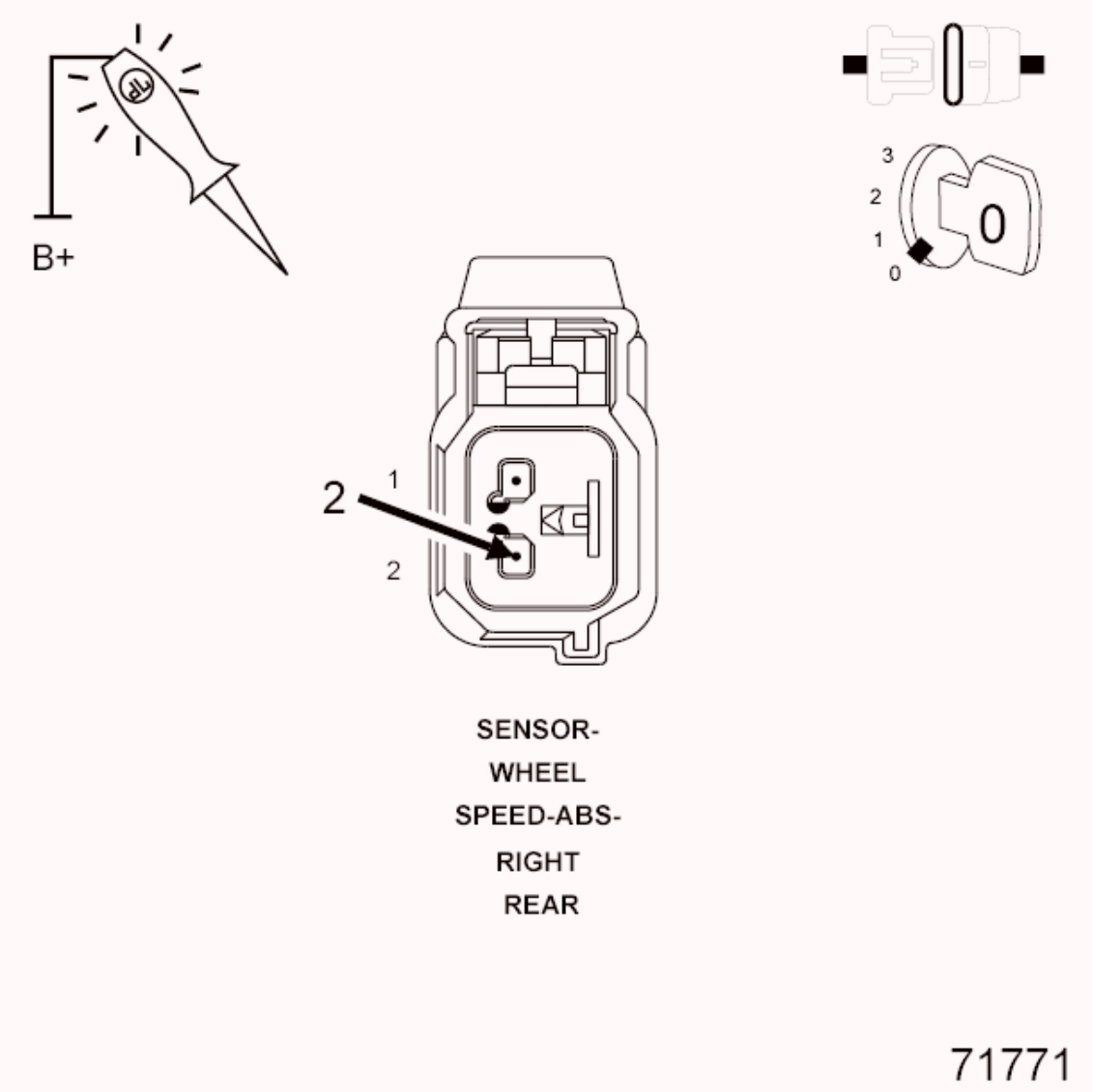

Fig. 50: Checking Right Rear WSS Signal Circuit For An Open
Courtesy of CHRYSLER GROUP, LLC

1. Connect a jumper wire between ground and the (B1) Right Rear WSS Signal circuit in the Anti-Lock Brakes Module harness connector.
2. Using a 12-volt test light connected to 12-volts, probe the (B1) Right Rear WSS Signal circuit.

Does the test light illuminate brightly?

Yes

- Go To 6

No

- Repair the (B1) Right Rear WSS Signal circuit for an open.
- Perform ABS VERIFICATION TEST. Refer to **STANDARD PROCEDURE**.

6. **CHECK (B1) RIGHT REAR WSS SIGNAL CIRCUIT SHORT TO VOLTAGE**

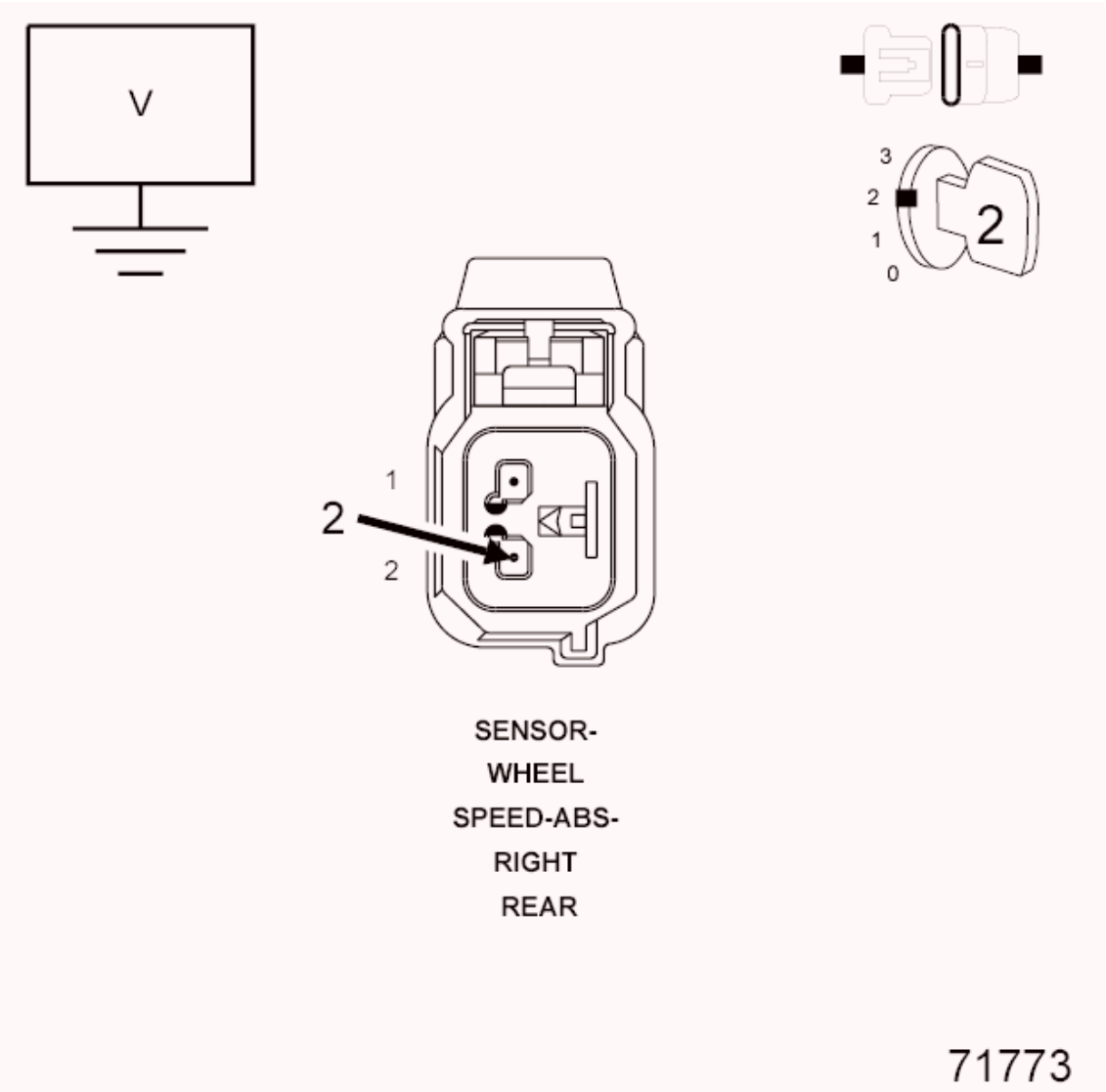

Fig. 51: Measuring Voltage Between Right Rear WSS Signal Circuit &

Ground
Courtesy of CHRYSLER GROUP, LLC

1. Turn the ignition on.
2. Remove all jumper wires.
3. Measure the voltage between the (B1) Right Rear WSS Signal circuit and ground.

   Is the voltage above one volt?

   Yes

   - Repair the (B1) Right Rear WSS Signal circuit for a short to voltage.
   - Perform ABS VERIFICATION TEST. Refer to **STANDARD PROCEDURE**.

   No

   - Go To 7

7. **CHECK (B1) RIGHT REAR WSS SIGNAL CIRCUIT FOR A SHORT TO (B2) RIGHT REAR WSS 12 VOLT SUPPLY CIRCUIT**

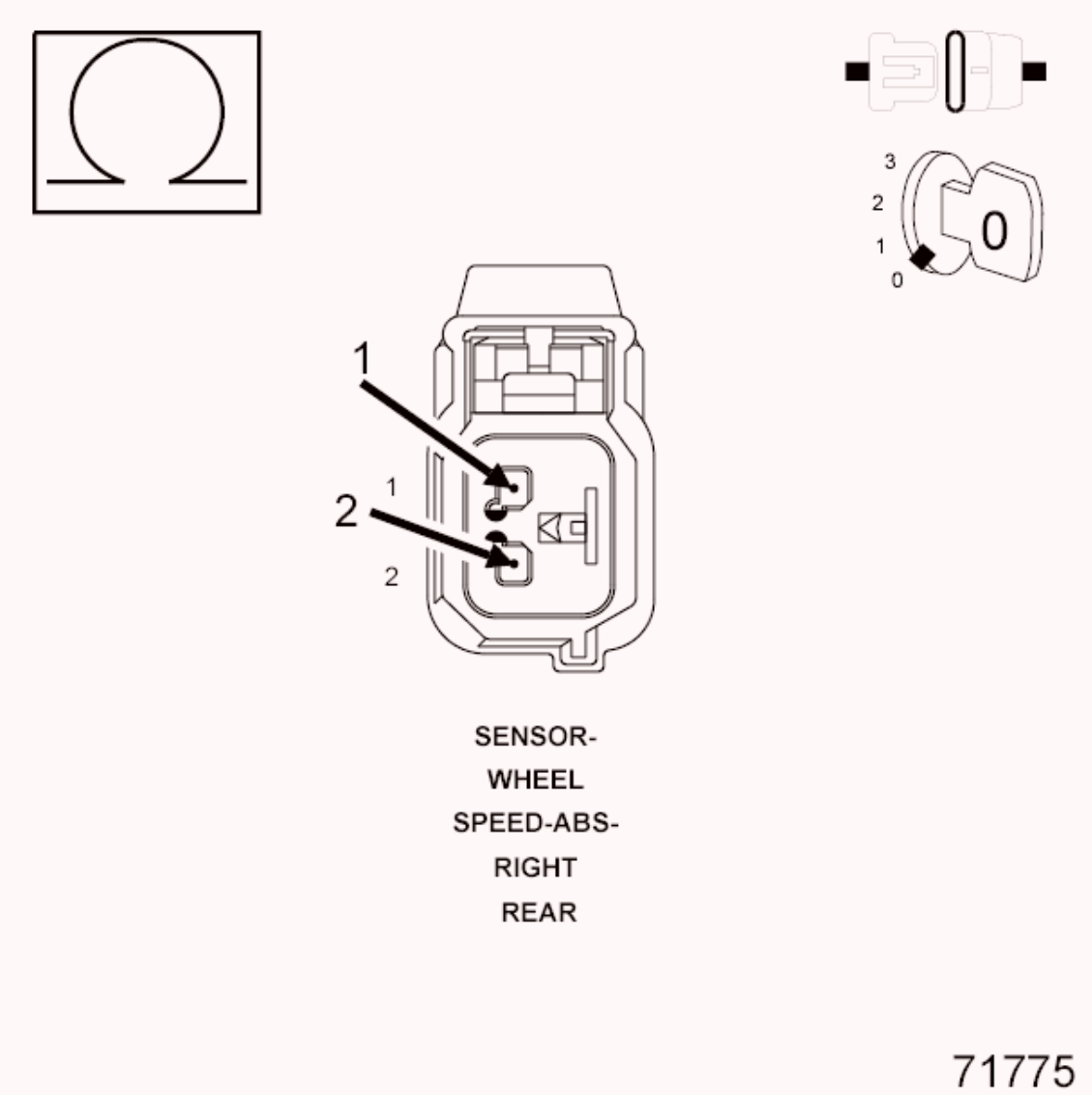

Fig. 52: Measuring Resistance Between Right Rear WSS Signal Circuit & Right Rear WSS Supply Circuit
Courtesy of CHRYSLER GROUP, LLC

1. Turn the ignition off.
2. Measure the resistance between the (B1) Right Rear WSS Signal circuit and the (B2) Right Rear WSS Supply circuit.

   Is the resistance above 5.0 ohms?

   Yes

   - Go To 8

   No

- Repair the (B1) Right Rear WSS Signal circuit and the (B2) Right Rear WSS Supply circuit for a short together.
- Perform ABS VERIFICATION TEST. Refer to **STANDARD PROCEDURE**.

8. **RIGHT REAR WHEEL SPEED SENSOR**
   1. Replace the Right Rear Wheel Speed Sensor in accordance with the Service Information.
   2. Perform ABS VERIFICATION TEST. Refer to **STANDARD PROCEDURE**.

      WARNING: **To avoid possible serious or fatal injury, check brake capability is available before road testing.**

   3. With the scan tool, read TIPM DTCs.

      Did DTC C1039-REAR WHEEL SPEED SENSOR CIRCUIT HIGH reset?

      Yes

      - Replace the TIPM in accordance with the Service Information.
      - Perform ABS VERIFICATION TEST. Refer to **STANDARD PROCEDURE**.

      No

      - Test Complete.

C1041-LEFT FRONT TONE WHEEL PERFORMANCE

For a complete wiring diagram, **refer to appropriate SYSTEM WIRING DIAGRAMS article** .

WHEN MONITORED

With the ignition on.

SET CONDITION

When the Anti-Lock Brake Module detects periodic drops of a Wheel Speed Sensor (WSS) signal.

POSSIBLE CAUSES

Possible Causes
LEFT FRONT TONE WHEEL/BEARING DAMAGE IMPROPER LEFT FRONT TIRE PRESSURE/MISMATCHED TIRES DIRT, METAL, DAMAGED TONE WHEEL/SENSOR

DIAGNOSTIC TEST

1. **CHECK FOR A DIAGNOSTIC TROUBLE CODE (DTC) C1041-LEFT FRONT TONE WHEEL PERFORMANCE**

   NOTE: This DTC must be active for the results of this test to be valid.

   1. Turn the ignition on.
   2. Using the scan tool, read DTCs.
   3. Record DTC and Freeze Frame information.
   4. Using the scan tool, erase DTCs.
   5. Cycle the ignition switch off then on.

   CAUTION: Make sure braking capability is available before road testing.

   6. Test drive the vehicle in a straight line to 40 km/h (25 mph).

   NOTE: Vehicle must be driven above 40 km/h (25 mph) for set conditions to be met.

   7. Using the scan tool, read DTCs.

   Does the scan tool display: C1041-LEFT FRONT TONE WHEEL PERFORMANCE active?

   Yes

- Go To 3

No

- Go To 2

2. **CHECK WHEEL SPEED SENSOR SIGNALS**
   1. Turn the ignition on.
   2. Using the scan tool, monitor and graph ALL the WSS speeds and compare graph while an assistant drives the vehicle.

      NOTE: If graph shows periodic dropouts pay close attention to the tone wheel.

   3. Slowly accelerate as straight as possible from a stop to 40 km/h (25 mph).

      Is the Left Front WSS speed showing 0 km/h (0 mph) or not matching other wheels or showing erratic behavior?

      Yes

      - Go To 3

      No

      - Perform ABS VERIFICATION TEST. Refer to **STANDARD PROCEDURE**.

3. **CHECK FOR IMPROPER LEFT FRONT TIRE PRESSURE/MISMATCHED TIRES**
   1. Turn the ignition off.
   2. Check and adjust the Left Front Tire pressure.
   3. Check and adjust all other tire pressures.
   4. Inspect for mismatched tires on vehicle.

      Is the Left Front Tire improperly inflated or mismatched tires on vehicle?

      Yes

- Repair as necessary.
- Perform ABS VERIFICATION TEST. Refer to **STANDARD PROCEDURE**.

No

- Go To 4

4. **CHECK THE LEFT FRONT TONE WHEEL/BEARING FOR DAMAGE**

NOTE: Check the tone wheel teeth for missing teeth, cracks, or looseness. Teeth should be perfectly square, not bent, or nicked.

1. Check the Left Front Tone Wheel/Bearing for damage.
2. Check the Left Front Tone Wheel for dirt.

Was the tone wheel dirty?

Yes

- Clean tone wheel and sensor. Clear codes and retest.
- Perform ABS VERIFICATION TEST. Refer to **STANDARD PROCEDURE**.

No

- Replace the Left Front Tone Wheel/Bearing in accordance with the Service Information.
- Perform ABS VERIFICATION TEST. Refer to **STANDARD PROCEDURE**.

C1042-RIGHT FRONT TONE WHEEL PERFORMANCE

For a complete wiring diagram, **refer to appropriate SYSTEM WIRING DIAGRAMS article** .

WHEN MONITORED

With the ignition on.

SET CONDITION

When the Anti-Lock Brake Module detects periodic drops of a Wheel Speed Sensor (WSS) signal.

POSSIBLE CAUSES

Possible Causes
DIRTY TONE WHEEL/SENSOR IMPROPER RIGHT FRONT TIRE PRESSURE/MISMATCHED TIRES RIGHT FRONT TONE WHEEL/BEARING DAMAGE

DIAGNOSTIC TEST

1. **CHECK FOR A DTC C1042-RIGHT FRONT TONE WHEEL PERFORMANCE**

   NOTE: This DTC must be active for the results of this test to be valid.

   1. Turn the ignition on.
   2. With the scan tool, read DTCs.
   3. Record DTC and Freeze Frame information.
   4. With the scan tool, erase DTCs.
   5. Cycle the ignition switch off then on.

   CAUTION: Make sure braking capability is available before road testing.

   6. Test drive the vehicle in a straight line to 40 km/h (25 mph).

   NOTE: Vehicle must be driven above 40 km/h (25 mph) for set conditions to be met.

   7. With the scan tool, read DTCs.

   Does the scan tool display: C1042-RIGHT FRONT TONE WHEEL PERFORMANCE?

   Yes

- Go To 3

No

- Go To 2

2. **CHECK WHEEL SPEED SENSOR SIGNALS**
   1. Turn the ignition on.
   2. With the scan tool, monitor and graph ALL the WSS speeds and compare graph while an assistant drives the vehicle.

      NOTE: If graph shows periodic dropouts pay close attention to the tone wheel.

   3. Slowly accelerate as straight as possible from a stop to 40 km/h (25 mph).

      Is the Right Front WSS speed showing 0 km/h (0 mph) or not matching other wheels or showing erratic behavior?

      Yes

      - Go To 3

      No

      - Perform ABS VERIFICATION TEST. Refer to **STANDARD PROCEDURE**.

3. **CHECK FOR IMPROPER RIGHT FRONT TIRE PRESSURE/MISMATCHED TIRES**
   1. Turn the ignition off.
   2. Check and adjust the Right Front Tire pressure.
   3. Check and adjust all other tire pressures.
   4. Inspect for mismatched tires on vehicle.

      Is the Right Front Tire improperly inflated or mismatched tires on vehicle?

      Yes

- Repair as necessary.
- Perform ABS VERIFICATION TEST. Refer to **STANDARD PROCEDURE**.

No

- Go To 4

4. **CHECK THE RIGHT FRONT TONE WHEEL/BEARING FOR DAMAGE**

NOTE: Check the tone wheel teeth for missing teeth, cracks, or looseness. Teeth should be perfectly square, not bent, or nicked.

1. Check the Right Front Tone Wheel/Bearing for damage.
2. Check the Right Front Tone Wheel for dirt.

Was the tone wheel dirty?

Yes

- Clean tone wheel and sensor. Clear codes and retest.
- Perform ABS VERIFICATION TEST. Refer to **STANDARD PROCEDURE**.

No

- Replace the Right Front Tone Wheel/Bearing in accordance with the Service Information.
- Perform ABS VERIFICATION TEST. Refer to **STANDARD PROCEDURE**.

C1043-LEFT REAR TONE WHEEL PERFORMANCE

For a complete wiring diagram, **refer to appropriate SYSTEM WIRING DIAGRAMS article** .

WHEN MONITORED

With the ignition on.

SET CONDITION

When the Anti-Lock Brake Module detects periodic drops of a Wheel Speed Sensor (WSS) signal.

POSSIBLE CAUSES

Possible Causes
DIRTY TONE WHEEL/SENSOR
IMPROPER LEFT REAR TIRE PRESSURE/MISMATCHED TIRES
AXLE SHAFT FASTENER HARDWARE
LEFT REAR TONE WHEEL/BEARING DAMAGE

DIAGNOSTIC TEST

1. **CHECK FOR A DTC C1043-LEFT REAR TONE WHEEL PERFORMANCE**

   NOTE: This DTC must be active for the results of this test to be valid.

   1. Turn the ignition on.
   2. With the scan tool, read DTCs.
   3. Record DTC and Freeze Frame information.
   4. With the scan tool, erase DTCs.
   5. Cycle the ignition switch off then on.

   CAUTION: Make sure braking capability is available before road testing.

   6. Test drive the vehicle in a straight line to 40 km/h (25 mph).

   NOTE: Vehicle must be driven above 40 km/h (25 mph) for set conditions to be met.

   7. With the scan tool, read DTCs.

   Does the scan tool display: C1043-LEFT REAR TONE WHEEL PERFORMANCE?

Yes

- Go To 3

No

- Go To 2

2. **CHECK WHEEL SPEED SENSOR SIGNALS**
   1. Turn the ignition on.
   2. With the scan tool, monitor and graph ALL the WSS speeds and compare graph while an assistant drives the vehicle.

      NOTE: If graph shows periodic dropouts pay close attention to the tone wheel.

   3. Slowly accelerate as straight as possible from a stop to 40 km/h (25 mph).

      Is the Left Rear WSS speed showing 0 km/h (0 mph) or not matching other wheels or showing erratic behavior?

      Yes

      - Go To 3

      No

      - Perform ABS VERIFICATION TEST. Refer to **STANDARD PROCEDURE**.

3. **CHECK FOR IMPROPER LEFT REAR TIRE PRESSURE/MISMATCHED TIRES**
   1. Turn the ignition off.
   2. Check and adjust the Left Rear Tire pressure.
   3. Check and adjust all other tire pressures.
   4. Inspect for mismatched tires on vehicle.

      Is the Left Rear Tire improperly inflated or mismatched tires on vehicle?

Yes

- Repair as necessary.
- Perform ABS VERIFICATION TEST. Refer to **STANDARD PROCEDURE**.

No

- Go To 4

4. **CHECK AXLE SHAFT FASTENER HARDWARE FOR LOOSENESS**
   1. Inspect the axle shaft fastener for looseness, and not properly fastened. Tighten fastener to proper specification as required.

   Was the Axle Shaft fastener loose?

   Yes

   - Repair as necessary.

   No

   - Go To 5

5. **CHECK THE LEFT REAR TONE WHEEL/BEARING FOR DAMAGE**

   NOTE: Check the tone wheel teeth for missing teeth, cracks, or looseness. Teeth should be perfectly square, not bent, or nicked.

   1. Check the Left Rear Tone Wheel/Bearing for damage.
   2. Check the Left Rear Tone Wheel for dirt.

   Was the tone wheel dirty?

   Yes

   - Clean tone wheel and sensor. Clear codes and retest.
   - Perform ABS VERIFICATION TEST. Refer to **STANDARD PROCEDURE**.

No

- Replace the Left Rear Tone Wheel/Bearing in accordance with the Service Information.
- Perform ABS VERIFICATION TEST. Refer to **STANDARD PROCEDURE**.

C1044-RIGHT REAR TONE WHEEL PERFORMANCE

For a complete wiring diagram, **refer to appropriate SYSTEM WIRING DIAGRAMS article** .

WHEN MONITORED

With the ignition on.

SET CONDITION

When the Anti-Lock Brake Module detects periodic drops of a Wheel Speed Sensor (WSS) signal.

POSSIBLE CAUSES

Possible Causes
DIRTY TONE WHEEL/SENSOR
IMPROPER RIGHT REAR TIRE PRESSURE/MISMATCHED TIRES
AXLE SHAFT FASTENER HARDWARE
RIGHT REAR TONE WHEEL/BEARING DAMAGE

DIAGNOSTIC TEST

1. **CHECK FOR A DTC C1044-RIGHT REAR TONE WHEEL PERFORMANCE**

NOTE: This DTC must be active for the results of this test to be valid.

1. Turn the ignition on.
2. With the scan tool, read DTCs.
3. Record DTC and Freeze Frame information.
4. With the scan tool, erase DTCs.

5. Cycle the ignition switch off then on.

CAUTION: Make sure braking capability is available before road testing.

6. Test drive the vehicle in a straight line to 40 km/h (25 mph).

NOTE: Vehicle must be driven above 40 km/h (25 mph) for set conditions to be met.

7. With the scan tool, read DTCs.

   Does the scan tool display: C1044-RIGHT REAR TONE WHEEL PERFORMANCE?

   Yes

   - Go To 3

   No

   - Go To 2

2. **CHECK WHEEL SPEED SENSOR SIGNALS**
   1. Turn the ignition on.
   2. With the scan tool, monitor and graph ALL the WSS speeds and compare graph while an assistant drives the vehicle.

      NOTE: If graph shows periodic dropouts pay close attention to the tone wheel.

   3. Slowly accelerate as straight as possible from a stop to 40 km/h (25 mph).

      Is the Right Rear WSS speed showing 0 km/h (0 mph) or not matching other wheels or showing erratic behavior?

      Yes

      - Go To 3

No

- Perform ABS VERIFICATION TEST. Refer to **STANDARD PROCEDURE**.

3. **CHECK FOR IMPROPER RIGHT REAR TIRE PRESSURE/MISMATCHED TIRES**
   1. Turn the ignition off.
   2. Check and adjust the Right Rear Tire pressure.
   3. Check and adjust all other tire pressures.
   4. Inspect for mismatched tires on vehicle.

   Is the Right Rear Tire improperly inflated or mismatched tires on vehicle?

   Yes

   - Repair as necessary.
   - Perform ABS VERIFICATION TEST. Refer to **STANDARD PROCEDURE**.

   No

   - Go To 4

4. **CHECK AXLE SHAFT FASTENER HARDWARE FOR LOOSENESS**
   1. Inspect the axle shaft fastener for looseness, and not properly fastened. Tighten fastener to proper specification as required.

   Was the Axle Shaft fastener loose?

   Yes

   - Repair as necessary.

   No

   - Go To 5

5. **CHECK THE RIGHT REAR TONE WHEEL FOR DAMAGE**

NOTE: Check the tone wheel teeth for missing teeth, cracks,

or looseness. Teeth should be perfectly square, not bent, or nicked.

1. Check the Right Rear Tone Wheel for damage.
2. Check the Right Rear Tone Wheel for dirt.

Was the tone wheel dirty?

Yes

- Clean tone wheel and sensor. Clear codes and retest.
- Perform ABS VERIFICATION TEST. Refer to **STANDARD PROCEDURE**.

No

- Replace the Right Rear Tone Wheel in accordance with the Service Information.
- Perform ABS VERIFICATION TEST. Refer to **STANDARD PROCEDURE**.

C1046-LEFT FRONT WHEEL PRESSURE PHASE MONITORING

For a complete wiring diagram, **refer to appropriate SYSTEM WIRING DIAGRAMS article** .

WHEN MONITORED

During active ABS control.

SET CONDITION

If the Anti-Lock Brakes Module detects a pressure reduction phase and the following pressure hold phase is too long.

POSSIBLE CAUSES

Possible Causes
LEFT FRONT TONE WHEEL/BEARING DAMAGED WHEEL SPEED SIGNALS SWAPPED LEFT FRONT WSS

ANTI-LOCK BRAKES MODULE

DIAGNOSTIC TEST

1. **COMPARE WHEEL SPEED SENSOR SIGNALS**

   WARNING: Make sure brake capability is available before road testing.

   1. With the scan tool, monitor ALL the WSS speeds while an assistant drives the vehicle.
   2. Slowly accelerate as straight as possible from a stop to 40 km/h (25 mph).

      Does the Left Front WSS speed differ from the other WSS speeds by 8 km/h (5 mph) or show NO speed?

      Yes

      - Go To 3

      No

      - Go To 2
2. **CHECKING INSIDE WHEEL SPEED**
   1. Slowly accelerate as straight as possible from a stop to 40 km/h (25 mph) and perform a 90 degree turn while monitoring if inside wheel is slower than outside.

      Was the inside wheel slower than outside?

      Yes

      - Perform the ABS-INTERMITTENT CONDITION TEST. Refer to **STANDARD PROCEDURE**.

      No

      - Go To 3
3. **INSPECT TONE WHEEL/BEARING**

1. Turn the ignition off.
2. Visually inspect the tone wheel and bearing for damage.
   - Check the tone wheel teeth for missing teeth, cracks, and looseness. The teeth must be perfectly square, not bent, or nicked. Check the wheel bearing for worn/looseness.

   Were any problems found?

   Yes

   - Repair as necessary.
   - Perform the ABS VERIFICATION TEST. Refer to **STANDARD PROCEDURE**.

   No

   - Go To 4

4. **CHECK WHEEL SPEED SENSOR WIRING**
   1. Check the Anti-Lock Brakes Module and Wheel Speed Sensors harness connectors for incorrectly wired connectors.

      Were any problems found?

      Yes

      - Repair as necessary.
      - Perform the ABS VERIFICATION TEST. Refer to **STANDARD PROCEDURE**.

      No

      - Go To 5

5. **LEFT FRONT WHEEL SPEED SENSOR**
   1. Replace the Left Front Wheel Speed Sensor in accordance with the Service Information.
   2. Perform the ABS VERIFICATION TEST. Refer to **STANDARD PROCEDURE**.

CAUTION: Make sure braking capability is available before road testing.

3. Road test the vehicle over 40 km/h (25 mph).

NOTE: Vehicle must be driven above 40 km/h (25 mph) for set conditions to be met.

4. With the scan tool, read ABS DTCs.

NOTE: The Anti-Lock Brake Module must sense ALL 4 wheels at 12 km/h (7.5 mph) before it will extinguish the ABS indicators.

Did DTC C1046-LEFT FRONT WHEEL PRESSURE PHASE MONITORING reset?

Yes

- Replace the Anti-Lock Brakes Module in accordance with the Service Information.
- Perform the ABS VERIFICATION TEST. Refer to **STANDARD PROCEDURE**.

No

- Test Complete.

C1047-RIGHT FRONT WHEEL PRESSURE PHASE MONITORING

For a complete wiring diagram, **refer to appropriate SYSTEM WIRING DIAGRAMS article** .

WHEN MONITORED

During active ABS control.

SET CONDITION

If the Anti-Lock Brakes Module detects a pressure reduction phase and the following pressure hold phase is too long.

POSSIBLE CAUSES

Possible Causes
RIGHT FRONT TONE WHEEL DAMAGED
WHEEL SPEED SIGNALS SWAPPED
RIGHT FRONT WSS
ANTI-LOCK BRAKES MODULE

DIAGNOSTIC TEST

1. **COMPARE WHEEL SPEED SENSOR SIGNALS**

   WARNING: Make sure brake capability is available before road testing.

   1. With the scan tool, monitor ALL the WSS speeds while an assistant drives the vehicle.
   2. Slowly accelerate as straight as possible from a stop to 40 km/h (25 mph).

      Does the Right Front WSS speed differ from the other WSS speeds by 8 km/h (5 mph) or show NO speed?

      Yes

      - Go To 3

      No

      - Go To 2
2. **CHECKING INSIDE WHEEL SPEED**
   1. Slowly accelerate as straight as possible from a stop to 40 km/h (25 mph) and perform a 90 degree turn while monitoring if inside wheel is slower than outside.

      Was the inside wheel slower than outside?

      Yes

      - Perform the ABS-INTERMITTENT CONDITION TEST. Refer to

STANDARD PROCEDURE.

No

- Go To 3

3. **INSPECT TONE WHEEL/BEARING**
   1. Turn the ignition off.
   2. Visually inspect the tone wheel and bearing for damage.
      - Check the tone wheel teeth for missing teeth, cracks, and looseness. The teeth must be perfectly square, not bent, or nicked. Check the wheel bearing for worn/looseness.

   Were any problems found?

   Yes

   - Repair as necessary.
   - Perform the ABS VERIFICATION TEST. Refer to **STANDARD PROCEDURE**.

   No

   - Go To 4

4. **CHECK WHEEL SPEED SENSOR WIRING**
   1. Check the Anti-Lock Brakes Module and Wheel Speed Sensors harness connectors for incorrectly wired connectors.

   Were any problems found?

   Yes

   - Repair as necessary.
   - Perform the ABS VERIFICATION TEST. Refer to **STANDARD PROCEDURE**.

   No

   - Go To 5

5. **RIGHT FRONT WHEEL SPEED SENSOR**

1. Replace the Right Front Wheel Speed Sensor in accordance with the Service Information.
2. Perform the ABS VERIFICATION TEST. Refer to **STANDARD PROCEDURE**.

CAUTION: Make sure brake capability is available before road testing.

3. Road test the vehicle over 40 km/h (25 mph).

NOTE: Vehicle must be driven above 40 km/h (25 mph) for set conditions to be meet.

4. With the scan tool, read ABS DTCs.

NOTE: The Anti-Lock Brake Module must sense ALL 4 wheels at 12 km/h (7.5 mph) before it will extinguish the ABS indicators.

Did DTC C1047-RIGHT FRONT WHEEL PRESSURE PHASE MONITORING reset?

Yes

- Replace the Anti-Lock Brakes Module in accordance with the Service Information.
- Perform the ABS VERIFICATION TEST. Refer to **STANDARD PROCEDURE**.

No

- Test Complete.

C1048-LEFT REAR WHEEL PRESSURE PHASE MONITORING

For a complete wiring diagram, **refer to appropriate SYSTEM WIRING DIAGRAMS article** .

WHEN MONITORED

During active ABS control.

SET CONDITION

If the Anti-Lock Brakes Module detects a pressure reduction phase and the following pressure hold phase is too long.

POSSIBLE CAUSES

Possible Causes
LEFT REAR TONE WHEEL/WHEEL BEARING
WHEEL SPEED SIGNALS SWAPPED
LEFT REAR WSS
ANTI-LOCK BRAKES MODULE

DIAGNOSTIC TEST

1. **COMPARE WHEEL SPEED SENSOR SIGNALS**

   WARNING: **Make sure brake capability is available before road testing.**

   1. With the scan tool, monitor ALL the WSS speeds while an assistant drives the vehicle.
   2. Slowly accelerate as straight as possible from a stop to 40 km/h (25 mph).

      Does the Left Rear WSS speed differ from the other WSS speeds by 8 km/h (5 mph) or show NO speed?

      Yes

      - Go To 3

      No

      - Go To 2
2. **CHECKING INSIDE WHEEL SPEED**
   1. Slowly accelerate as straight as possible from a stop to 40 km/h (25 mph) and perform a 90 degree turn while monitoring if inside wheel is slower than outside.

Was the inside wheel slower than outside?

Yes

- Peform the ABS-INTERMITTENT CONDITION TEST. Refer to **STANDARD PROCEDURE**.

No

- Go To 3

3. **INSPECT TONE WHEEL/BEARING**
   1. Turn the ignition off.
   2. Visually inspect the tone wheel and bearing for damage.
      - Check the tone wheel teeth for missing teeth, cracks, and looseness. The teeth must be perfectly square, not bent, or nicked. Check the wheel bearing for worn/looseness.

   Were any problems found?

   Yes

   - Repair as necessary.
   - Perform the ABS VERIFICATION TEST. Refer to **STANDARD PROCEDURE**.

   No

   - Go To 4

4. **CHECK WHEEL SPEED SENSOR WIRING**
   1. Check the Anti-Lock Brakes Module and Wheel Speed Sensors harness connectors for incorrectly wired connectors.

   Were any problems found?

   Yes

   - Repair as necessary.
   - Perform the ABS VERIFICATION TEST. Refer to **STANDARD PROCEDURE**.

No

- Go To 5

5. **LEFT REAR WHEEL SPEED SENSOR**
   1. Replace the Left Rear Wheel Speed Sensor in accordance with the Service Information.
   2. Perform the ABS VERIFICATION TEST. Refer to **STANDARD PROCEDURE**.

      CAUTION: Make sure brake capability is available before road testing.

   3. Road test the vehicle over 40 km/h (25 mph).

      NOTE: Vehicle must be driven above 40 km/h (25 mph) for set conditions to be met.

   4. With the scan tool, read ABS DTCs.

      NOTE: The Anti-Lock Brake Module must sense ALL 4 wheels at 12 km/h (7.5 mph) before it will extinguish the ABS indicators.

      Did DTC C1048-LEFT REAR WHEEL PRESSURE PHASE MONITORING reset?

      Yes

      - Replace the Anti-Lock Brakes Module in accordance with the Service Information.
      - Perform the ABS VERIFICATION TEST. Refer to **STANDARD PROCEDURE**.

      No

      - Test Complete.

C1049-RIGHT REAR WHEEL PRESSURE PHASE MONITORING

For a complete wiring diagram, **refer to appropriate SYSTEM WIRING**

DIAGRAMS article .

WHEN MONITORED

During active ABS control.

SET CONDITION

When the Anti-Lock Brakes Module detects a pressure reduction phase and the following pressure hold phase is too long.

POSSIBLE CAUSES

Possible Causes
RIGHT REAR TONE WHEEL DAMAGED
WHEEL SPEED SIGNALS SWAPPED
RIGHT REAR WSS
ANTI-LOCK BRAKES MODULE

DIAGNOSTIC TEST

1. **COMPARE WHEEL SPEED SENSOR SIGNALS**

   WARNING: **Make sure brake capability is available before road testing.**

   1. With the scan tool, monitor ALL the WSS speeds while an assistant drives the vehicle.
   2. Slowly accelerate as straight as possible from a stop to 40 km/h (25 mph).

      Does the Right Rear WSS speed differ from the other WSS speeds by 8 km/h (5 mph) or show NO speed?

      Yes

      - Go To 3

      No

      - Go To 2

2. **CHECKING INSIDE WHEEL SPEED**
   1. Slowly accelerate as straight as possible from a stop to 40 km/h (25 mph) and perform a 90 degree turn while monitoring if inside wheel is slower than outside.

      Was the inside wheel slower than outside?

      Yes

      - Perform ABS INTERMITTENT CONDITION diagnostic procedure. Refer to **STANDARD PROCEDURE**.

      No

      - Go To 3
3. **INSPECT TONE WHEEL/BEARING**
   1. Turn the ignition off.
   2. Visually inspect the tone wheel and bearing for damage.
      - Check the tone wheel teeth for missing teeth, cracks, and looseness. The teeth must be perfectly square, not bent, or nicked. Check the wheel bearing for worn/looseness.

      Were any problems found?

      Yes

      - Repair as necessary.
      - Perform the ABS VERIFICATION TEST. Refer to **STANDARD PROCEDURE**.

      No

      - Go To 4
4. **CHECK WHEEL SPEED SENSOR WIRING**
   1. Check the Anti-Lock Brakes Module and Wheel Speed Sensors harness connectors for incorrectly wired connectors.

      Were any problems found?

Yes

- Repair as necessary.
- Perform the ABS VERIFICATION TEST. Refer to **STANDARD PROCEDURE**.

No

- Go To 5

5. **RIGHT REAR WHEEL SPEED SENSOR**
   1. Replace the Right Rear Wheel Speed Sensor in accordance with the Service Information.
   2. Perform the ABS VERIFICATION TEST. Refer to **STANDARD PROCEDURE**.

      CAUTION: Make sure braking capability is available before road testing.

   3. Road test the vehicle over 40 km/h (25 mph).

      NOTE: Vehicle must be driven above 40 km/h (25 mph) for set conditions to be met.

   4. With the scan tool, read ABS DTCs.

      NOTE: The Anti-Lock Brake Module must sense ALL 4 wheels at 12 km/h (7.5 mph) before it will extinguish the ABS indicators.

      Did DTC C1049-RIGHT REAR WHEEL PRESSURE PHASE MONITORING reset?

      Yes

      - Replace the Anti-Lock Brakes Module in accordance with the Service Information.
      - Perform the ABS VERIFICATION TEST. Refer to **STANDARD PROCEDURE**.

No

- Test Complete.

C1073-ABS PUMP MOTOR CONTROL CIRCUIT

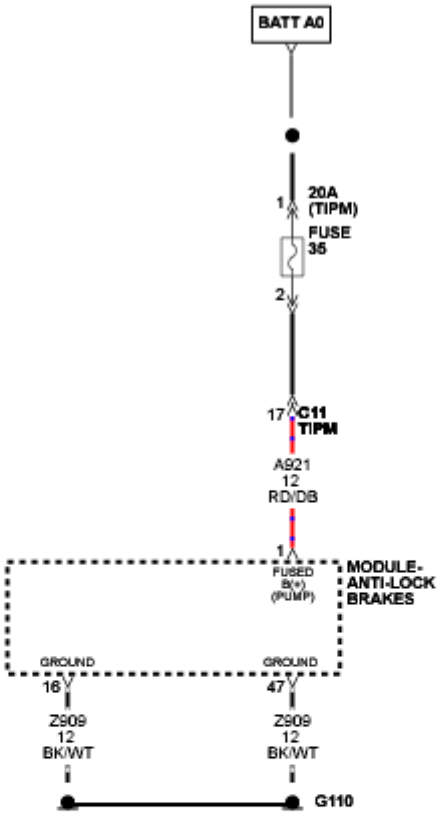

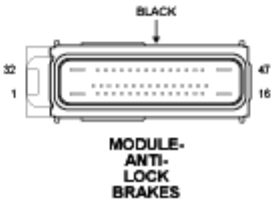

Fig. 53: ABS Pump Motor Control Circuit Schematic
Courtesy of CHRYSLER GROUP, LLC

For a complete wiring diagram, **refer to appropriate SYSTEM WIRING**

DIAGRAMS article .

WHEN MONITORED

Continuous

SET CONDITION

The ABM detects low pump motor feedback voltage with actuation of the pump motor relay.

POSSIBLE CAUSES

Possible Causes
BLOWN PUMP FUSE WIRING HARNESS, TERMINAL, CONNECTOR DAMAGE (A921) HIGH RESISTANCE IN B+ CIRCUITS (Z909) HIGH RESISTANCE IN GROUND CIRCUITS INTEGRATED CONTROL UNIT

DIAGNOSTIC TEST

1. **CHECK FOR A DTC C1073-ABS PUMP MOTOR CONTROL CIRCUIT**

   NOTE: This DTC must be active for the results of this test to be valid. If present, diagnose and repair DTC C2116-ABS PUMP MOTOR SUPPLY LOW VOLTAGE before diagnosing this DTC.

   1. Turn the ignition on.
   2. With the scan tool, record and erase DTCs.
   3. Cycle the ignition switch from off to on.
   4. Road test the vehicle over 40 km/h (25 mph).

      NOTE: Vehicle must be driven above 40 km/h (25 mph) for set conditions to be meet.

   5. With the scan tool, read DTCs.

NOTE: The Anti-Lock Brake Module must sense ALL 4 wheels at 12 km/h (7.5 mph) before it will extinguish the ABS indicators.

Does the scan tool display: C1073-ABS PUMP MOTOR CONTROL CIRCUIT?

Yes

- Go To 2

No

- The condition that caused the symptom is currently not present. Inspect the related wiring for a possible intermittent condition. Look for any chafed, pierced, pinched, or partially broken wires.
- Perform the ABS-INTERMITTENT CONDITION TEST. Refer to **STANDARD PROCEDURE**.

2. **INSPECT RELATED WIRING HARNESS, TERMINALS, AND CONNECTORS**
   1. Turn the ignition off.
   2. Visually inspect the related wiring harness. Look for any pinched, chafed, pierced, and partially broken wires.
   3. Visually inspect the related wiring harness connectors. Look for broken, bent, pushed out, and corroded terminals.

   Were any problems found?

   Yes

   - Repair as necessary.
   - Perform ABS VERIFICATION TEST. Refer to **STANDARD PROCEDURE**.

   No

   - Go To 3
3. **CHECK THE ABS PUMP MOTOR FUSED B+ FOR AN OPEN**

1. Turn the ignition off.
2. Remove and visually inspect the ABS Pump Motor B+ fuse.

   Is the ABS Pump Motor B+ fuse open?

   Yes

   - Go To 4

   No

   - Go To 6

4. **CHECK THE (A921) FUSED B(+) FOR A SHORT TO GROUND**

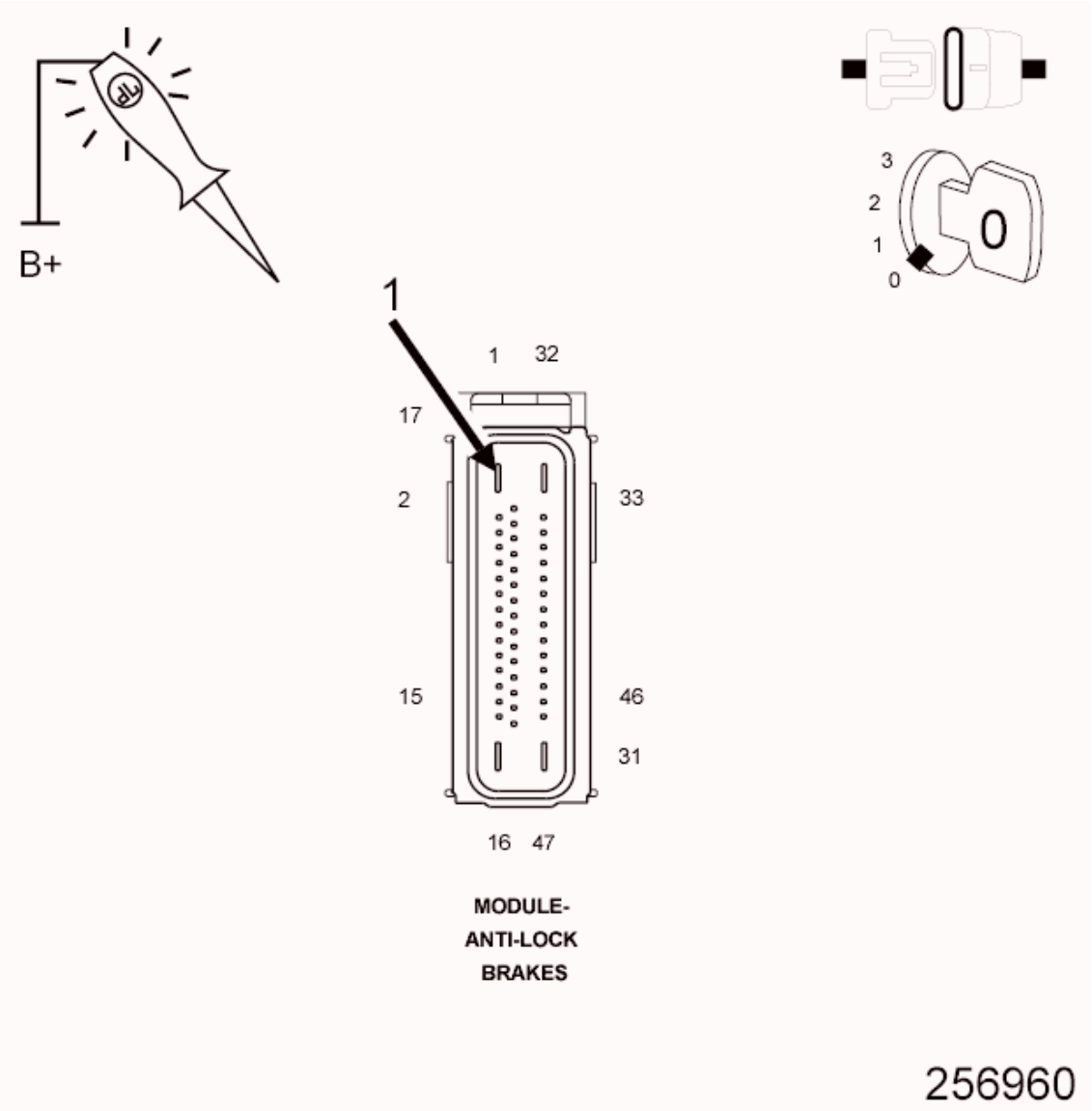

Fig. 54: Checking Fused B(+) For A Short To Ground

Courtesy of CHRYSLER GROUP, LLC

1. Turn the ignition off.
2. Disconnect the Anti-Lock Brake Module harness connector.
3. Using a 12-volt test light connected to 12-volts, probe the (A921) Fused B+ circuit.

   Does the test light illuminate brightly?

   Yes

   - Repair the (A921) Fused B(+) circuit for a short to ground.
   - Perform ABS VERIFICATION TEST. Refer to **STANDARD PROCEDURE**.

   No

   - Go To 5

5. **CHECK THE (A921) FUSED B(+) CIRCUIT**
   1. Turn the ignition off.
   2. Visually inspect the (A921) Fused B(+) circuit in the wiring harness.
   3. Look for any signs of intermittent short to ground.

      Is the wiring harness OK?

      Yes

      - Go To 6

      No

      - Repair the (A921) Fused B(+) circuit for a short to ground.
      - Perform ABS VERIFICATION TEST. Refer to **STANDARD PROCEDURE**.

6. **CHECK THE VOLTAGE ON THE (A921) FUSED B(+) CIRCUIT**

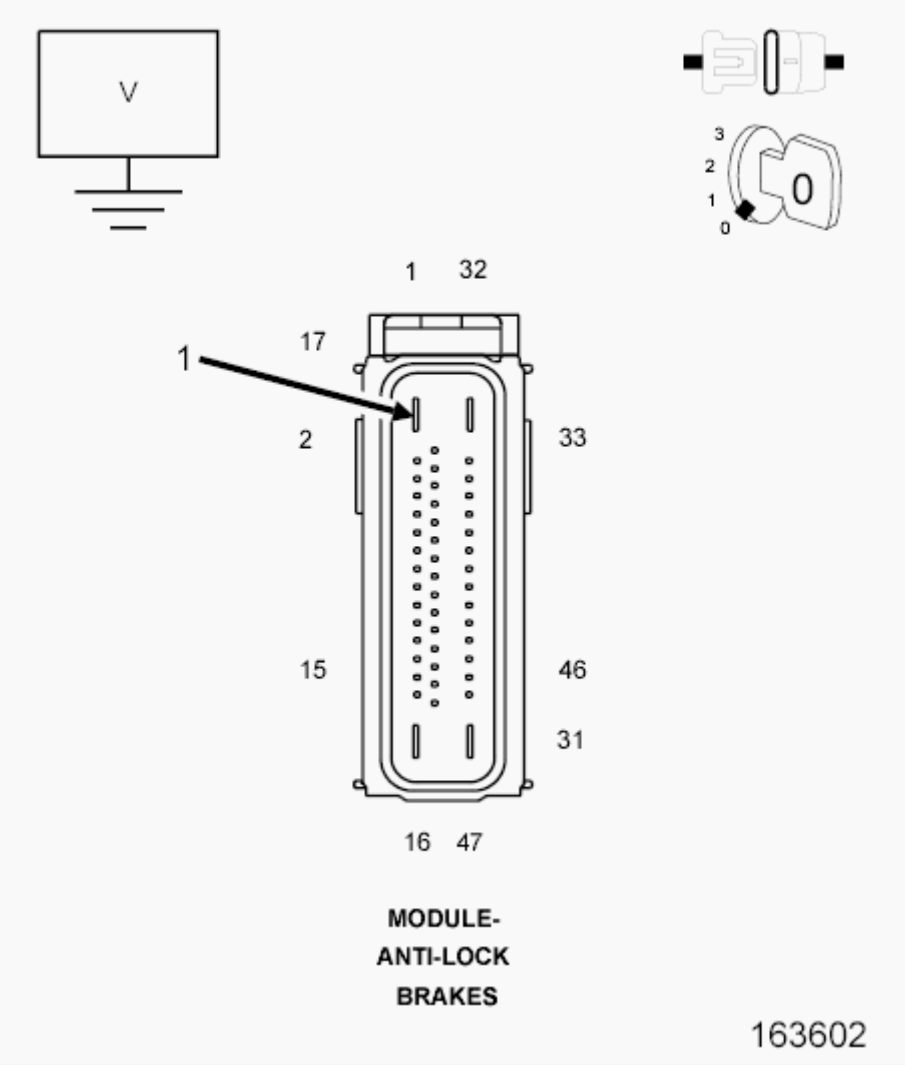

Fig. 55: Measuring Voltage Of Fused B(+) Circuit In Antilock Brake Module Harness Connector
Courtesy of CHRYSLER GROUP, LLC

1. Turn the ignition off.
2. Disconnect the Anti-Lock Brake Module harness connector.
3. Measure the voltage of the (A921) Fused B(+) circuit in the Anti-Lock Brake Module harness connector.

   Is the voltage above 10 volts?

   Yes

   - Go To 7

   No

- Repair the (A921) Fused B(+) circuit for an open.
- Perform ABS VERIFICATION TEST. Refer to **STANDARD PROCEDURE**.

7. **CHECK THE (Z909) GROUND CIRCUITS FOR AN OPEN**

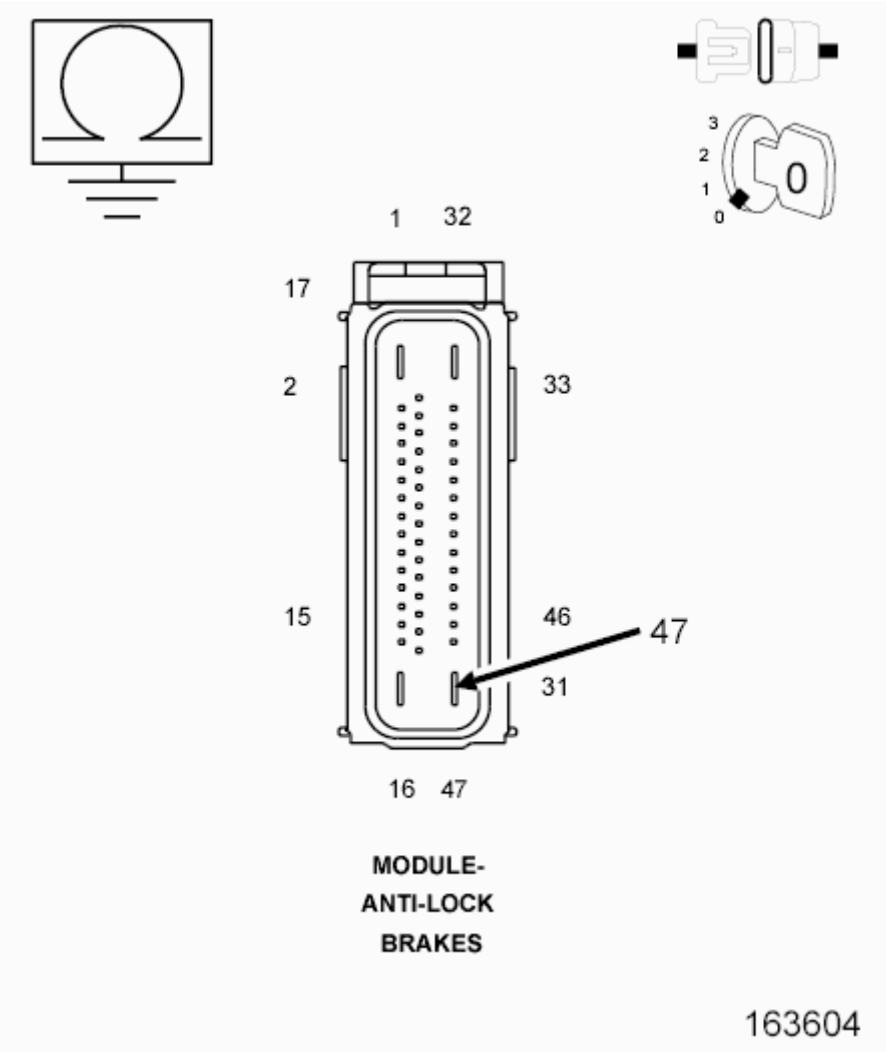

Fig. 56: Measuring Resistance Of Ground Circuits Between Anti-Lock Brake Module Harness Connector & Ground
Courtesy of CHRYSLER GROUP, LLC

1. Measure the resistance of the (Z902) Ground circuits between the Anti-Lock Brake Module harness connector and ground

   Is the resistance below 5.0 ohms?

   Yes

- Replace the ICU per service information.
- Perform ABS VERIFICATION TEST. Refer to **STANDARD PROCEDURE**.

No

- Repair the high resistance in the affected circuit.
- Perform ABS VERIFICATION TEST. Refer to **STANDARD PROCEDURE**.

C1078-TIRE REVOLUTIONS RANGE PERFORMANCE

For a complete wiring diagram **refer to appropriate SYSTEM WIRING DIAGRAMS article** .

WHEN MONITORED

Continuous.

SET CONDITION

Programmed value for tire size is not within acceptable range.

POSSIBLE CAUSES

Possible Causes
INCORRECT VALUE PROGRAMMED INTO TOTALLY INTEGRATED POWER MODULE

DIAGNOSTIC TEST

INCORRECT VALUE PROGRAMMED INTO TIPM

TIRE SIZE	BODY STYLE	ENGINE SIZE	SALES CODE	TIRE CIRCUMFERENCE (MM)
P205/70R 16 BSW Good Year All Season	MK	ALL	TLB	2112
P215/60R 17 BSW Continental	MK	ALL	TMQ	2115

Summer Performance				
P215/55R 18 BSW Continental Summer Performance	MK	ALL	TMZ	2117
P215/65R 17 OWL Good Year All Terrain	MK	ALL	TRX	2117
P215/60R 17 BSW Firestone AS Touring	MK	ALL	TTU	2087
P215/55R 18 BSW Firestone AS Performance	MK	ALL	TT1	2115

1. Verify the correct tire/wheel information is programmed in the TIPM.

   Is the correct value programmed in the TIPM according to the chart?

   Yes

   - Test complete.
   - Perform ABS VERIFICATION TEST. Refer to **STANDARD PROCEDURE**.

   No

   - Program the correct Tire/Wheel information in the TIPM.
   - Perform ABS VERIFICATION TEST. Refer to **STANDARD PROCEDURE**.

C107C-BRAKE PEDAL SWITCH 1/2 STUCK

For a complete wiring diagram, **refer to appropriate SYSTEM WIRING DIAGRAMS article** .

DIAGNOSTIC TEST

ENGINE DTCS PRESENT

1. With the scan tool, read PCM Brake DTCs.

   Are there any PCM Brake DTCs present?

   Yes

   - Perform the appropriate diagnostic procedure. Refer to the **DTC INDEX** article .

   No

   - Using the schematics as a guide, check the PCM terminals for corrosion, damage, or terminal push out. Pay particular attention to all power and ground circuits.
   - Perform the appropriate VERIFICATION TEST. Refer to the appropriate TESTING & DIAGNOSTICS article in ENGINE PERFORMANCE .

C107D-BRAKE PEDAL SWITCH 1/2 CORRELATION

For a complete wiring diagram, **refer to appropriate SYSTEM WIRING DIAGRAMS article** .

DIAGNOSTIC TEST

POWERTRAIN CONTROL MODULE (PCM) DTCS PRESENT

1. With the scan tool, read PCM Brake DTCs.

   Are there any PCM Brake DTCs present?

   Yes

   - Perform the appropriate diagnostic procedure. Refer to the **DTC INDEX** article .

   No

   - Using the schematics as a guide, check the PCM terminals for corrosion, damage, or terminal push out. Pay particular attention to all power and ground circuits.

- Perform the appropriate VERIFICATION TEST. Refer to the appropriate TESTING & DIAGNOSTICS article in ENGINE PERFORMANCE .

C1090-ABS BRAKE LAMP CONTROL CIRCUIT LOW

For a complete wiring diagram, **refer to appropriate SYSTEM WIRING DIAGRAMS article** .

WHEN MONITORED

Continuous monitoring.

SET CONDITION

When monitoring the Brake Lamp Activation Relay Control circuit the module detects a short to ground.

POSSIBLE CAUSES

Possible Causes
(B122) BRAKE LAMP ACTIVATION RELAY CONTROL OPEN OR SHORTED TO GROUND
BLOWEN FUSE
(A924) FUSED B+ OPEN OR SHORTED TO GROUND
BRAKE LAMP ACTIVATION RELAY
ANTI-LOCK BRAKE MODULE (ABM)

DIAGNOSTIC TEST

1. **CHECK FOR DTC C1090-ABS BRAKE LAMP CONTROL CIRCUIT LOW**

   NOTE: This DTC must be active for the results of this test to be valid.

   1. Turn the ignition on.
   2. With the scan tool, record and erase the DTCs.
   3. Start engine.
   4. Apply brake pedal firmly with at least 80 bar (1160 psi.).

5. With the scan tool, read the DTCs.

   Does the scan tool display: C1090-ABS BRAKE LAMP CONTROL CIRCUIT LOW?

   Yes

   - Go To 2

   No

   - Perform the ABS INTERMITTENT CONDITION diagnostic procedure. Refer to **STANDARD PROCEDURE**.

2. **CHECK CONNECTOR/TERMINAL FOR DAMAGE**

   NOTE: Check all terminals for broken, bent, pushed out or corroded terminals.

   1. Turn the ignition off.
   2. Inspect the Anti-Lock Brake Module harness connector and the Brake Lamp Activation Relay harness connector.

      Is the ABM or any of the connectors/terminals damaged?

      Yes

      - Repair as necessary.
      - Perform the ABS VERIFICATION TEST. Refer to **STANDARD PROCEDURE**.

      No

      - Go To 3

3. **CHECK (B122) BRAKE LAMP ACTIVATION RELAY CONTROL SHORTED TO GROUND**

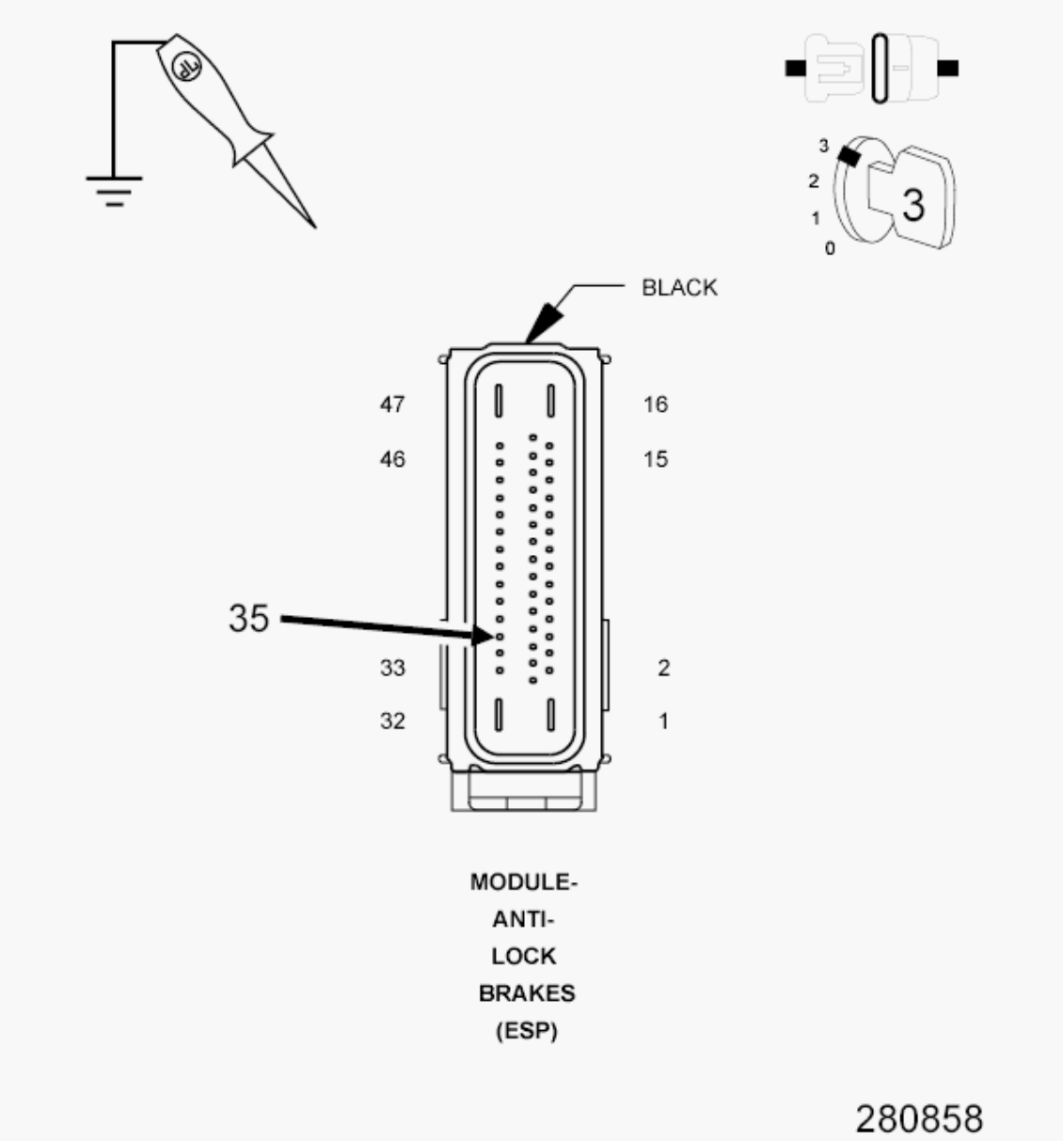

Fig. 57: Checking Brake Lamp Activation Relay Control For Short To Ground
Courtesy of CHRYSLER GROUP, LLC

1. Turn the ignition off.
2. Disconnect the ABM.
3. Start the engine.
4. Using a 12-volt test light connected to ground, probe the (B122) Brake Lamp Activation Relay Control Circuit at the ABM harness connector.

   Does the test light illuminate?

   Yes

- Replace the ABM in accordance with the Service Iinformation.
- Perform the ABS VERIFICATION TEST. Refer to **STANDARD PROCEDURE**.

No

- Go To 4

4. **CHECK (A924) FUSED B+**

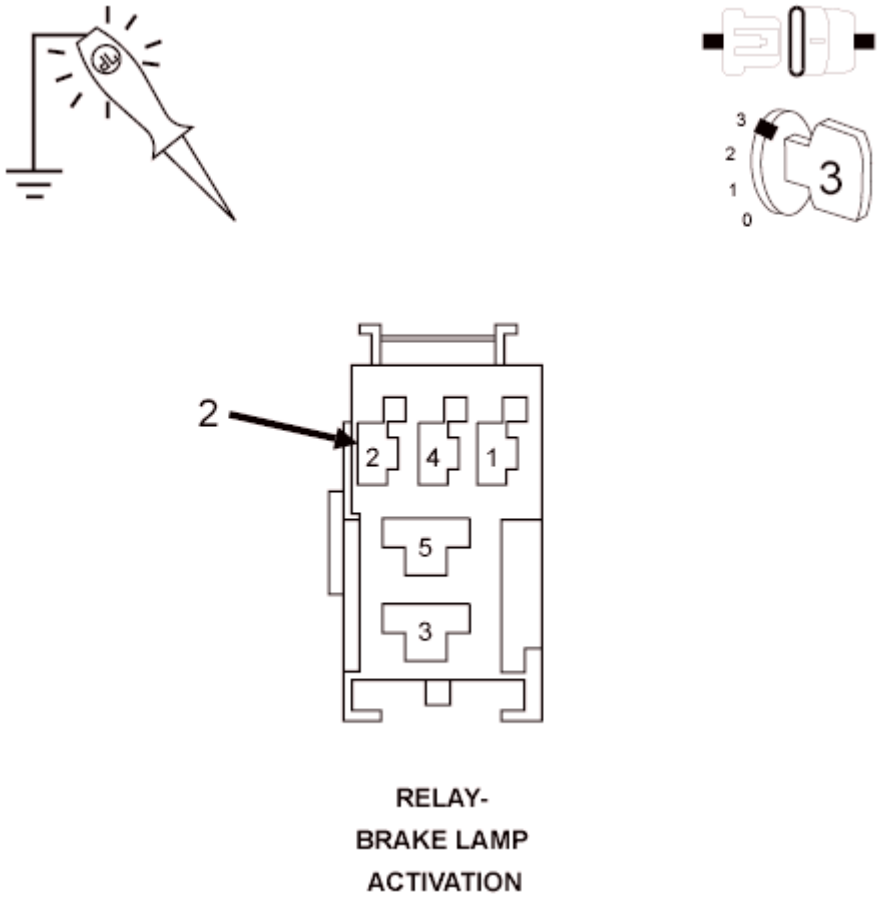

Fig. 58: Checking Fused Run/Start Relay Output Voltage
Courtesy of CHRYSLER GROUP, LLC

1. Turn the ignition off.
2. Disconnect the Brake Lamp Activation Relay.
3. Start the engine.
4. Using a 12-volt test light connected to ground, probe the (A924) Fused B+ Circuit at the Brake Lamp Activation Relay harness connector.

Does the test light illuminate brightly?

Yes

- Go To 5

No

- Check for open Fuse, if okay repair open or short to ground in the (A924) Fused B+ Circuit or short to ground in (B122) Brake Lamp Activation Relay Control circuit.
- Perform the ABS VERIFICATION TEST. Refer to **STANDARD PROCEDURE**.

5. **BRAKE LAMP ACTIVATION RELAY**

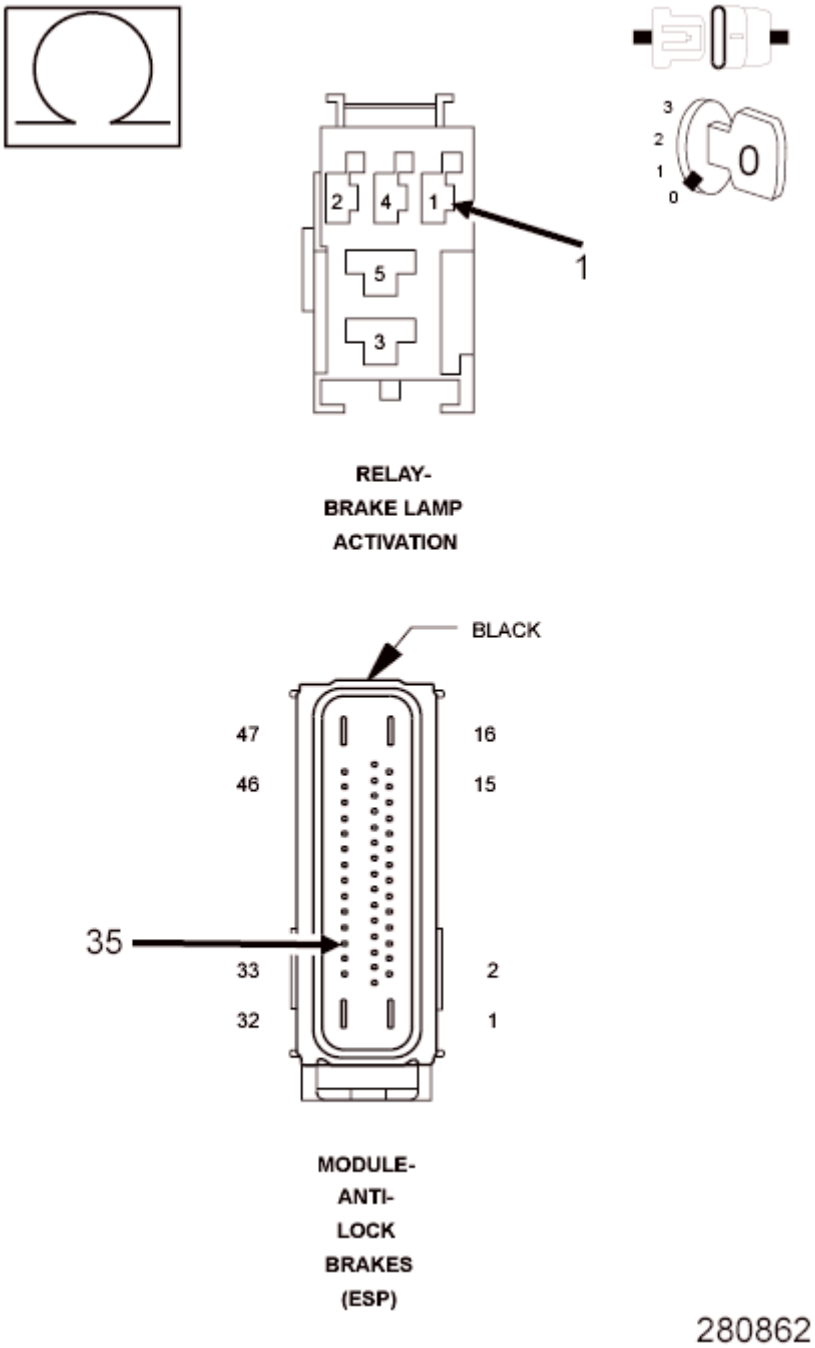

Fig. 59: Measuring Resistance Of Brake Lamp Activation Relay Control Circuit Between Brake Lamp Activation Relay And ABM
Courtesy of CHRYSLER GROUP, LLC

1. Turn the ignition off.
2. Measure the resistance of the (B122) Brake Lamp Activation Relay Control Circuit between the Brake Lamp Activation relay and the ABM.

   Is the resistance below 5 Ohms?

Yes

- Replace the Brake Lamp Activation Relay in accordance with the Service Information.
- Perform the ABS VERIFICATION TEST. Refer to **STANDARD PROCEDURE**.

No

- Repair open in the (B122) Brake Lamp Activation Relay Control circuit.
- Perform the ABS VERIFICATION TEST. Refer to **STANDARD PROCEDURE**.

C1091-ABS BRAKE LAMP CONTROL CIRCUIT HIGH

For a complete wiring diagram, **refer to appropriate SYSTEM WIRING DIAGRAMS article** .

WHEN MONITORED

With the ignition on.

When Set:

When monitoring the Brake Lamp Activation Relay Control circuit the module detects a short to B+.

POSSIBLE CAUSES

Possible Causes
(B122) BRAKE LAMP ACTIVATION RELAY CONTROL CIRCUIT SHORTED TO VOLTAGE BRAKE LAMP ACTIVATION RELAY ANTI-LOCK BRAKE MODULE

DIAGNOSTIC TEST

1. **CHECK FOR DTC C1091-ABS BRAKE LAMP CONTROL CIRCUIT HIGH**

NOTE: This DTC must be active for the results of this test to be valid.

1. Turn the ignition on.
2. With the scan tool, record and erase DTCs.
3. Start the engine.
4. Apply brake pedal firmly with at least 80 bar (1160 psi.).
5. With the scan tool, read the DTCs.

   Does the scan tool display: C1091-ABS BRAKE LAMP CONTROL CIRCUIT HIGH?

   Yes

   - Go To 2

   No

   - Perform the ABS-INTERMITTENT CONDITION TEST. Refer to **STANDARD PROCEDURE**.

2. **CHECK CONNECTOR/TERMINAL FOR DAMAGE**

NOTE: Check all terminals for broken, bent, pushed out or corroded terminals.

1. Turn the ignition off.
2. Inspect the Anti-Lock Brake Module harness connector and the Brake Lamp Activation Relay harness connector.

   Is the ABM or any of the connectors/terminals damaged?

   Yes

   - Repair as necessary.
   - Perform the ABS VERIFICATION TEST. Refer to **STANDARD PROCEDURE**.

   No

- Go To 3

3. **CHECK (B122) BRAKE LAMP ACTIVATION RELAY CONTROL SHORTED TO VOLTAGE**

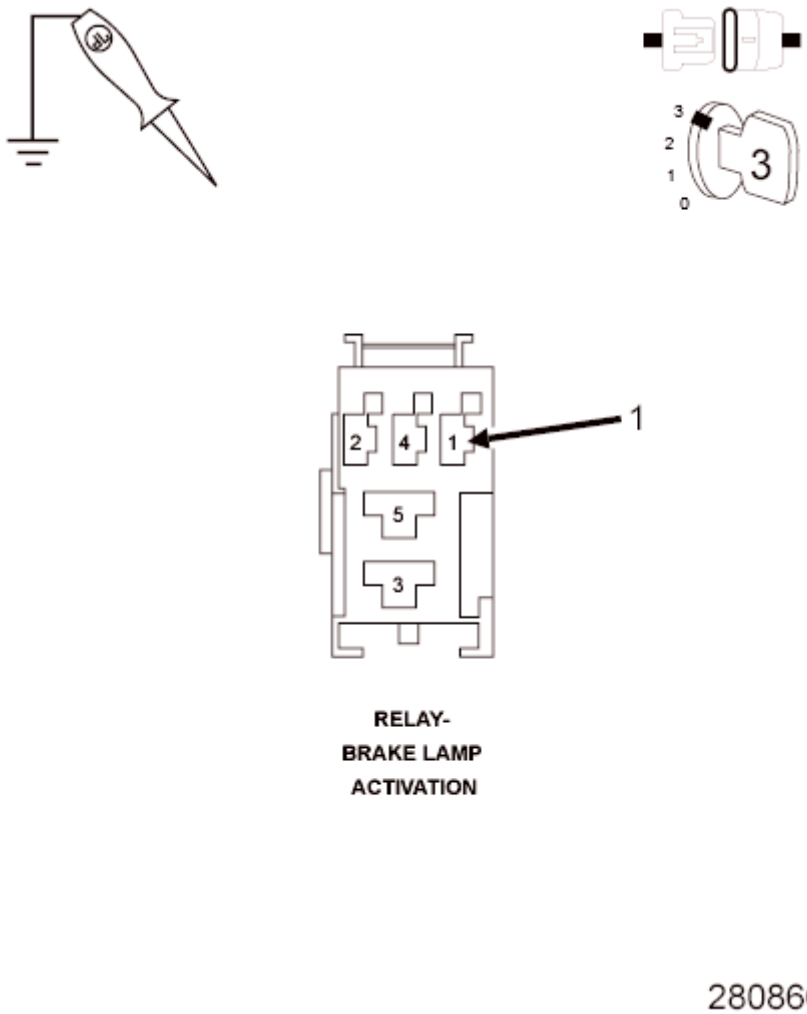

Fig. 60: Checking Brake Lamp Activation Relay Control For Short To Voltage
Courtesy of CHRYSLER GROUP, LLC

1. Turn the ignition off.
2. Disconnect the ABM.
3. Disconnect the Brake Lamp Activation Relay.
4. Start the engine.
5. Using a 12-volt test light connected to ground, probe the (B122) Brake Lamp Activation Relay Control at the Brake Lamp Activation Relay harness connector.

Does the test light illuminate brightly?

Yes

- Repair the short to voltage in the (B122) Brake Lamp Activation Relay Control Circuit.
- Perform the ABS VERIFICATION TEST. Refer to **STANDARD PROCEDURE**.

No

- Go To 4

4. **BRAKE LAMP ACTIVATION RELAY**

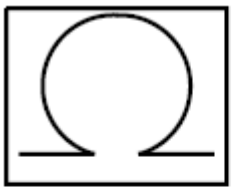

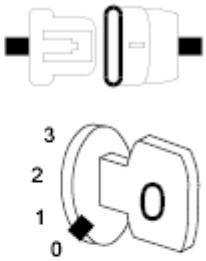

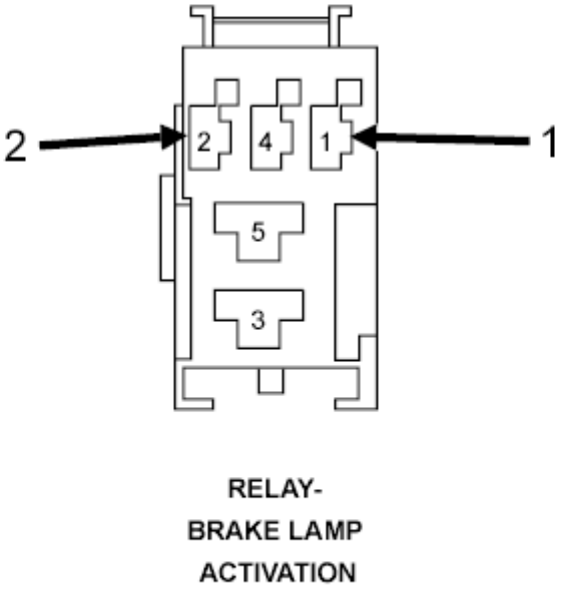

Fig. 61: Checking Brake Lamp Activation Relay Control Circuit
Courtesy of CHRYSLER GROUP, LLC

1. Turn the ignition off.
2. Measure the resistance across the relay between the (B122) Brake Lamp Activation Relay Control Circuit and the (A924) Fused B+ Circuit.

   Is the resistance 75 - 95 Ohms?

   Yes

   - Replace the ABM in accordance with the Service Information.
   - Perform the ABS VERIFICATION TEST. Refer to **STANDARD PROCEDURE**.

   No

   - Replace the Brake Lamp Activation Relay in accordance with the Service Information.
   - Perform the ABS VERIFICATION TEST. Refer to **STANDARD PROCEDURE**.

C1210-G SENSOR INPUT CIRCUIT PERFORMANCE

For a complete wiring diagram, **refer to appropriate SYSTEM WIRING DIAGRAMS article** .

WHEN MONITORED

Once per loop, but not during active test function of acceleration sensor if the sensor voltage is out of range.

SET CONDITION

Longitudinal acceleration sensor signal is out of range.

POSSIBLE CAUSES

Possible Causes
DYNAMICS SENSOR INSTALLATION DYNAMICS SENSOR

DIAGNOSTIC TEST

CHECK FOR A DTC C1210-G SENSOR INPUT CIRCUIT PERFORMANCE

NOTE: This DTC must be active for the results of this test to be valid.

1. Turn the ignition on.
2. With the scan tool, read and record DTCs.
3. With the scan tool, read and record Freeze Frame information.
4. With the scan tool, erase DTCs.
5. Cycle the ignition switch from off to on.
6. With the scan tool, read and record DTCs.

   Does the scan tool display: C1210-G SENSOR INPUT CIRCUIT PERFORMANCE?

   Yes

   - Replace the Dynamics Sensor in accordance with the Service Information.
   - Perform ABS VERIFICATION TEST. Refer to **STANDARD PROCEDURE**.

   No

   - The condition that caused the symptom is currently not present. Inspect the related wiring for a possible intermittent condition. Look for any chafed, pierced, pinched, or partially broken wires.
   - Perform ABS VERIFICATION TEST. Refer to **STANDARD PROCEDURE**.

C1219-STEERING ANGLE SENSOR ERRATIC PERFORMANCE

For a complete wiring diagram, **refer to appropriate SYSTEM WIRING DIAGRAMS article** .

WHEN MONITORED

Continuous monitoring.

SET CONDITION

If the Anti-Lock Brake Module detects that the calculated steering wheel angle and the actual steering angle disagree.

POSSIBLE CAUSES

Possible Causes
VEHICLE DAMAGE STEERING COLUMN / INTERMEDIATE SHAFT DAMAGE STEERING ANGLE SENSOR LOOSE CLOCKSPRING (SAS)

DIAGNOSTIC TEST

1. **PERFORM TEST DRIVE AND VERIFY DTC IS STILL ACTIVE**

NOTE: If present, diagnose and repair DTC C123F-STEERING ANGLE SENSOR COMPARATIVE PERFORMANCE before diagnosing this DTC.

1. Turn the ignition on.
2. With the scan tool, read and record DTCs.
3. With the scan tool, read and record Environmental Data to help identify the conditions in which the DTC was set.
4. Perform ECU initialization with drive test. Perform the ABS VERIFICATION TEST. Refer to **STANDARD PROCEDURE**.

WARNING: To avoid possible serious or fatal injury, check brake capability is available before road testing.

5. Test drive the vehicle by driving straight at a velocity between 10 and 25 km/hr (6 and 15 mph.) for 1 minute.
6. Park the vehicle.
7. Turn the steering wheel from stop to stop.
8. With the scan tool, read ABS DTCs.

Does this DTC reset?

Yes

- Go To 2

No

- The condition that caused the symptom is currently not present. Inspect the related wiring for a possible intermittent condition. Look for any chafed, pierced, pinched, or partially broken wires.
- Perform the ABS-INTERMITTENT CONDITION TEST. Refer to **STANDARD PROCEDURE**.

2. **CHECK STEERING ANGLE SENSOR OUTPUT**
   1. Start the engine.
   2. Center the steering wheel.
   3. With the scan tool, read the Steering Angle Sensor Position.

   Is the Steering Angle Sensor Position within ±15°?

   Yes

   - Go To 3

   No

   - Go To 4

3. **INSPECT VEHICLE, STEERING COLUMN, AND INTERMEDIATE SHAFT FOR DAMAGE**

   NOTE: If possible, check vehicle repair history for collision damage. ABS module must be reinitialized after repair.

   1. Turn the ignition off.
   2. Inspect the vehicle for damage causing tracking problems.
   3. Inspect the steering column and intermediate shaft for damage.

   Were any problems found?

   Yes

- Repair as necessary and clear offsets by initializing ECU with wheels pointing straight ahead.
- Perform the ABS VERIFICATION TEST. Refer to **STANDARD PROCEDURE**.

No

- Go To 4

4. **CHECK CLOCKSPRING (SAS) INSTALLATION**

WARNING: To avoid serious or fatal injury on vehicles equipped with airbags, disable the Supplemental Restraint System (SRS). Refer to RESTRAINTS - SERVICE INFORMATION before attempting any steering wheel, steering column, airbag, seat belt tensioner, impact sensor, or instrument panel component diagnosis or service. Disconnect and isolate the battery negative (ground) cable, then wait two minutes for the system capacitor to discharge before performing further diagnosis or service. This is the only sure way to disable the SRS. Failure to take the proper precautions could result in accidental airbag deployment.

NOTE: Proper Clockspring (SAS) installation is crucial for proper operation.

1. Verify that the Clockspring (SAS) is properly installed.

   Is the Steering Angle Sensor properly installed?

   Yes

   - Replace the Clockspring (SAS) in accordance with the Service Information and clear offsets by initializing ECU with wheels pointing straight ahead.
   - Perform the ABS VERIFICATION TEST. Refer to **STANDARD**

PROCEDURE.

No

- Repair as necessary and clear offsets by initializing ECU with wheels pointing straight ahead.
- Perform the ABS VERIFICATION TEST. Refer to **STANDARD PROCEDURE**.

C121A-STEERING ANGLE SENSOR NOT INITIALIZED

For a complete wiring diagram, **refer to appropriate SYSTEM WIRING DIAGRAMS article** .

WHEN MONITORED

During the Drive Test.

SET CONDITION

This DTC may set with DTC C1231-DRIVE TEST: STEERING ANGLE SENSOR due to cycling of ignition several times or entering and exiting diagnostics several times.

Perform the diagnostic procedure for **C1231-DRIVE TEST: STEERING ANGLE SENSOR** as if the DTC is Active.

C121C-TORQUE REQUEST SIGNAL DENIED

For a complete wiring diagram, **refer to appropriate SYSTEM WIRING DIAGRAMS article** .

WHEN MONITORED

With the engine running.

SET CONDITION

When the Powertrain Control Module indicates, for an extended period of time, that engine management relevant for Automatic Yaw Control/Traction Control System control can not be accomplished.

POSSIBLE CAUSES

Possible Causes
ANTI-LOCK BRAKE MODULE POWERTRAIN CONTROL MODULE

DIAGNOSTIC TEST

1. **CHECK FOR A DTC C121C-TORQUE REQUEST SIGNAL DENIED**

   NOTE: This DTC must be active for the results of this test to be valid and this DTC may set while driving under severe load conditions.

   1. Turn the ignition on.
   2. With the scan tool, read and record DTCs.
   3. With the scan tool, read and record Environmental Data to help identify the conditions in which the DTC was set.
   4. With the scan tool, erase DTCs.
   5. Cycle the ignition switch from off to on.
   6. Start Engine.
   7. With the scan tool, read and record DTCs and monitor ESP Torque Request status.

   Does the scan tool display: C121C-TORQUE REQUEST SIGNAL DENIED?

   Yes

   - Go To 2

   No

   - Perform the ABS-INTERMITTENT CONDITION diagnostic procedure. Refer to **STANDARD PROCEDURE**.

2. **CHECK THE POWERTRAIN DTCS**
   1. With the scan tool, read and record Powertrain DTCs.

   Were any Powertrain related DTCs found?

   Yes

- Repair the Powertrain diagnostics. Refer to the **DTC INDEX** article .

No

- Go To 3

3. **ESP TORQUE REQUEST SIGNAL**
   1. Engine started.
   2. With the scan tool, read the Allow ESP Torque Request status bit.

   Was the Allow ESP Torque Request showing NOT set?

   Yes

   - Replace the Powertrain Module in accordance with the Service Information.
   - Perform POWERTRAIN VERIFICATION TEST. Refer to the appropriate TESTING & DIAGNOSTICS article in ENGINE PERFORMANCE .

   No

   - Replace the Anti-Lock Brake Module in accordance with the Service Information.
   - Perform ABS VERIFICATION TEST. Refer to **STANDARD PROCEDURE**.

C121D-BRAKE PRESSURE SENSOR CIRCUIT

For a complete wiring diagram, **refer to appropriate SYSTEM WIRING DIAGRAMS article** .

WHEN MONITORED

With the ignition on.

SET CONDITION

When the Anti-Lock Brake Module indicates that the Brake Pressure Sensor Signal is out of range.

POSSIBLE CAUSES

Possible Causes
AIR IN BRAKE SYSTEM/WORN MECHANICAL COMPONENTS ECU INTERNAL FAILURE HCU INTERNAL FAILURE

DIAGNOSTIC TEST

1. **CHECK FOR A DTC C121D-BRAKE PRESSURE SENSOR CIRCUIT**

   NOTE: This DTC must be active for the results of this test to be valid.

   1. Turn the ignition on.
   2. With the scan tool, read and record DTCs.
   3. With the scan tool, read and record Freeze Frame information.
   4. With the scan tool, erase DTCs.
   5. Start the engine.
   6. Slowly depress and release the brake pedal.
   7. With the scan tool, read and record DTCs.

   Does the scan tool display: C121D-BRAKE PRESSURE SENSOR CIRCUIT?

   Yes

   - Go To 2

   No

   - Perform ABS INTERMITTENT CONDITION diagnostic procedure. Refer to **STANDARD PROCEDURE**.

2. **HCU/ECU ISOLATION**
   1. Turn the ignition off.
   2. Separate the ECU from the HCU.
   3. With the scan tool, monitor brake pressure.

Does the scan tool display brake pressure above 218 bar (3162 psi)?

Yes

- Replace the HCU in accordance with the Service Information.
- Perform ABS VERIFICATION TEST. Refer to **STANDARD PROCEDURE**.

No

- Replace the ECU in accordance with the Service Information.
- Perform ABS VERIFICATION TEST. Refer to **STANDARD PROCEDURE**.

C121E-BRAKE PRESSURE SENSOR COMPARATIVE PERFORMANCE

For a complete wiring diagram, **refer to appropriate SYSTEM WIRING DIAGRAMS article** .

WHEN MONITORED

With the ignition on.

SET CONDITION

When the Anti-Lock Brake Module indicates that the Brake Pressure Sensor Signal is out of range.

POSSIBLE CAUSES

Possible Causes
ECU INTERNAL FAILURE HCU INTERNAL FAILURE

DIAGNOSTIC TEST

1. **CHECK FOR A DTC C121E-BRAKE PRESSURE SENSOR COMPARATIVE PERFORMANCE**

NOTE: This DTC must be active for the results of this test to be valid.

1. Turn the ignition on.
2. With the scan tool, read and record the DTCs.
3. With the scan tool, read and record the Environmental Data to help identify the conditions in which the DTC was set.
4. With the scan tool, erase the DTCs.
5. Start the engine.
6. Slowly press and release the brake pedal.
7. With the scan tool, read and record the DTCs.

   Does the scan tool display: C121E-BRAKE PRESSURE SENSOR COMPARATIVE PERFORMANCE?

   Yes

   - Go To 2

   No

   - Perform the ABS-INTERMITTENT CONDITION TEST. Refer to **STANDARD PROCEDURE**.

2. **HCU/ECU ISOLATION**
   1. Turn the ignition off.
   2. Separate the ECU from the HCU.
   3. Turn the ignition on.
   4. With the scan tool, monitor the brake pressure.

      Does the scan tool display brake pressure above 218 bar (3162 psi)?

      Yes

      - Replace the HCU in accordance with the Service Information.
      - Perform the ABS VERIFICATION TEST. Refer to **STANDARD PROCEDURE**.

      No

      - Replace the ECU in accordance with the Service Information.

- Perform the ABS VERIFICATION TEST. Refer to **STANDARD PROCEDURE**.

C1221-BRAKE PRESSURE SENSOR/ACCEL PEDAL POSITION SENSOR CORRELATION

For a complete wiring diagram, **refer to appropriate SYSTEM WIRING DIAGRAMS article** ,

WHEN MONITORED

With the ignition on.

SET CONDITION

When the Anti-Lock Brake Module indicates that the Brake Pressure Sensor output signal is not plausible.

POSSIBLE CAUSES

Possible Causes
AIR IN BRAKE SYSTEM / WORN MECHANICAL COMPONENTS
BRAKE SWITCH SIGNAL OPEN
BRAKE PRESSURE SENSOR
INTEGRATED CONTROL MODULE

DIAGNOSTIC TEST

1. **CHECK FOR A DTC C1221-BRAKE PRESSURE SENSOR/ACCEL PEDAL POSITION SENSOR CORRELATION**
    1. Turn the ignition on.
    2. With the scan tool, read and record DTCs.
    3. With the scan tool, read and record Freeze Frame information.
    4. With the scan tool, erase DTCs.
    5. Start the engine.
    6. Depress and release the brake pedal.
    7. With the scan tool, read and record DTCs.

    Does the scan tool display: C1221-BRAKE PRESSURE SENSOR/ACCEL PEDAL POSITION SENSOR CORRELATION?

Yes

- Go To 2

No

- The condition that caused the symptom is currently not present. Inspect the related wiring for a possible intermittent condition. Look for any chafed, pierced, pinched, or partially broken wires.
- Perform ABS VERIFICATION TEST. Refer to **STANDARD PROCEDURE**.

2. **CHECK BRAKE SWITCH**
   1. With the scan tool look at the Brake Switch Signal.
   2. Apply the brakes on and off while checking for a Brake Switch Signal change.

   Did the Brake Switch Signal change?

   Yes

   - Go To 3

   No

   - Repair as needed.

3. **CHECK BRAKE PRESSURE SENSOR**
   1. With the scan tool look at Pressure Sensor Signal and the Brake Switch Signal.
   2. With the brakes not applied the Pressure Sensor should read ± 15 bar (218 psi).
   3. Apply the brakes the Pressure Sensor should read above 15 bar (218 psi).

   Did Brake Pressure Sensor increase above 15 bar (218 psi)?

   Yes

   - Replace the Integrated Control Unit in accordance with the Service Information.

- Perform ABS VERIFICATION TEST. Refer to **STANDARD PROCEDURE**.

No

- Go To 4

4. **CHECK FOR AIR IN BRAKE SYSTEM**

NOTE: Before continuing the brake system must be bled to verify there is no air in the brake system.

1. Turn ignition off.
2. Bleed brake system.
3. Check worn mechanical components.

Was there any air in the brake system or worn mechanical components?

Yes

- Repair as needed.
- Perform ABS VERIFICATION TEST. Refer to **STANDARD PROCEDURE**.

No

- Replace the Integrated Control Unit in accordance with the Service Information.
- Perform ABS VERIFICATION TEST. Refer to **STANDARD PROCEDURE**.

C1231-DRIVE TEST: STEERING ANGLE SENSOR

For a complete wiring diagram, **refer to appropriate SYSTEM WIRING DIAGRAMS article** .

WHEN MONITORED

During the Drive Test.

SET CONDITION

If the Anti-Lock Brakes Module detects implausible Steering Angle Sensor data.

POSSIBLE CAUSES

Possible Causes
CLOCKSPRING INSTALLATION CLOCKSPRING (SAS) ANTI-LOCK BRAKES MODULE

DIAGNOSTIC TEST

1. **CHECK FOR A DTC C1231-DRIVE TEST: STEERING ANGLE SENSOR**

   NOTE: This DTC must be active for the results of this test to be valid.

   NOTE: If any of the following DTCs are present they must be repaired before continuing: DTC C1219-STEERING ANGLE SENSOR ERRATIC PERFORMANCE, DTC C123F-STEERING ANGLE SENSOR COMPARATIVE PERFORMANCE or DTC C1240-STEERING ANGLE SENSOR ANGLE OVERTRAVEL PERFORMANCE

   1. Turn the ignition on.
   2. With the scan tool, read and record DTCs.
   3. With the scan tool, read and record Freeze Frame information.
   4. Perform ECU initialization with drive test. Perform the ABS VERIFICATION TEST. Refer to **STANDARD PROCEDURE**.
   5. **NOTE: The drive test requires a 90° turn.**
   6. Start the engine.
   7. With the scan tool, read and record DTCs.

   Does the scan tool display: C1231-DRIVE TEST: STEERING ANGLE SENSOR?

   Yes

   - Go To 2

No

- Perform the ABS-INTERMITTENT CONDITION TEST. Refer to **STANDARD PROCEDURE**.

2. **VERIFY THAT THE STEERING ANGLE SENSOR IS ACTIVE ON THE BUS**
   1. With the scan tool, select Steering Angle Sensor (SAS).
   2. Verify that the Steering Angle Sensor is active on the bus.

   Is the Steering Angle Sensor active on the bus?

   Yes

   - Go To 3

   No

   - Refer to **DIAGNOSIS AND TESTING** and perform the NO RESPONSE FROM SAS DIAGNOSTIC procedure.

3. **CHECK STEERING ANGLE**
   1. Turn steering wheel so wheels point in a straight ahead position.
   2. With scan tool check steering angle.

   Is the Steering Angle reading within ±15 degrees?

   Yes

   - Go To 4

   No

   - Go To 5

4. **CHECK STEERING ANGLE CHANGE**
   1. Turn steering wheel so wheels point in a straight ahead position.
   2. With scan tool check steering angle.
   3. Slowly rotate steering wheel while looking for a smooth change. The degrees will decrease to the right and increase when rotating steering wheel to the left.

Did the steering angle change accordingly?

Yes

- Replace the Anti-Lock Brake Module in accordance with the Service Information.
- Perform the ABS VERIFICATION TEST. Refer to **STANDARD PROCEDURE**.

No

- Replace the Clockspring (SAS) in accordance with the Service Information and clear offsets by initializing ECU with wheels pointing straight ahead.
- Perform the ABS VERIFICATION TEST. Refer to **STANDARD PROCEDURE**.

5. **CHECK STEERING ANGLE SENSOR INSTALLATION**

WARNING: To avoid serious or fatal injury on vehicles equipped with airbags, disable the Supplemental Restraint System (SRS). Refer to RESTRAINTS - SERVICE INFORMATION before attempting any steering wheel, steering column, airbag, seat belt tensioner, impact sensor, or instrument panel component diagnosis or service. Disconnect and isolate the battery negative (ground) cable, then wait two minutes for the system capacitor to discharge before performing further diagnosis or service. This is the only sure way to disable the SRS. Failure to take the proper precautions could result in accidental airbag deployment.

NOTE: Proper Clockspring (SAS) installation is crucial for proper operation.

1. Turn the ignition off.

2. Verify that the Clockspring (SAS) is properly installed.

   Is the Clockspring (SAS) properly installed?

   Yes

   - Replace the Anti-Lock Brake Module in accordance with the Service Information.
   - Perform the ABS VERIFICATION TEST. Refer to **STANDARD PROCEDURE**.

   No

   - Repair as necessary and clear offsets by initializing ECU with wheels pointing straight ahead.
   - Perform the ABS VERIFICATION TEST. Refer to **STANDARD PROCEDURE**.

C1232-DRIVE TEST: PRESSURE SENSOR

For a complete wiring diagram **refer to appropriate SYSTEM WIRING DIAGRAMS article** .

WHEN MONITORED

During the Drive Test.

SET CONDITION

If the Pressure Sensor fails to activate.

POSSIBLE CAUSES

Possible Causes
HYDRAULIC / BRAKE SYSTEM COMPONENT INSTALLATION INTEGRATED CONTROL UNIT PRESSURE SENSOR (HYDRAULIC CONTROL UNIT)

DIAGNOSTIC TEST

1. **CHECK FOR A DTC C1232-DRIVE TEST: PRESSURE SENSOR**

NOTE: This DTC must be active for the results of this test to be valid.

1. Turn the ignition on.
2. With the scan tool, read and record DTCs.
3. With the scan tool, read and record Environmental Data to help identify the conditions in which the DTC was set.
4. Perform ECU initialization with drive test. Refer to ABS VERIFICATION TEST **STANDARD PROCEDURE**.
5. Start the engine and apply the brake firmly.
6. With the scan tool, read and record DTCs.

   Does the scan tool display: C1232-DRIVE TEST: PRESSURE SENSOR?

   Yes

   - Go To 2

   No

   - Perform the ABS-INTERMITTENT CONDITION TEST. Refer to **STANDARD PROCEDURE**.

2. **CHECK HYDRAULIC SYSTEM AND BRAKE SYSTEM COMPONENT INSTALLATION AND FUNCTION**
   1. Verify that the Anti-Lock Brake Module and Hydraulic Control Unit are properly installed.
   2. Verify that the hydraulic system is properly filled and bled.
   3. Verify that the brake system components are installed and functioning properly.

   Were any problems found?

   Yes

   - Repair as necessary.
   - Perform ABS VERIFICATION TEST. Refer to **STANDARD PROCEDURE**.

No

- Clean contacts in HCU first if problem reoccurs replace the Integrated Control Unit in accordance with the Service Information.
- Perform ABS VERIFICATION TEST. Refer to **STANDARD PROCEDURE**.

C1234-DRIVE TEST: SENSOR CLUSTER INSTALLATION

For a complete wiring diagram **refer to appropriate SYSTEM WIRING DIAGRAMS article** .

WHEN MONITORED

During the Drive Test.

SET CONDITION

If the Anti-Lock Brake Module detects implausible Dynamics Sensor data.

POSSIBLE CAUSES

Possible Causes
DYNAMICS SENSOR INSTALLATION
DYNAMICS SENSOR
ANTI-LOCK BRAKES MODULE

DIAGNOSTIC TEST

1. **CHECK FOR A DTC C1234-DRIVE TEST: SENSOR CLUSTER INSTALLATION**

   NOTE: This DTC must be active for the results of this test to be valid.

   1. Turn the ignition on.
   2. With the scan tool, read and record DTCs.
   3. With the scan tool, read and record Environmental Data to help identify the conditions in which the DTC was set.
   4. Perform ECU initialization with drive test. Refer to ABS

VERIFICATION TEST **STANDARD PROCEDURE**.

5. **NOTE: The drive test requires a 90° turn.**
6. Start the engine.
7. With the scan tool, read and record DTCs.

   Does the scan tool display: C1234-DRIVE TEST: SENSOR CLUSTER INSTALLATION?

   Yes

   - Go To 2

   No

   - Perform the ABS-INTERMITTENT CONDITION TEST. Refer to **STANDARD PROCEDURE**.

2. **CHECK THE DYNAMICS SENSOR INSTALLATION**

NOTE: Dynamics Sensor installation and mounting bolt torque is crucial for proper operation.

1. Turn the ignition off.
2. Check the Dynamics Sensor for damaged, modified, and bent mounting brackets.
3. Check the Dynamics Sensor mounting bolts for a loose or over tightened condition.

   Were any problems found?

   Yes

   - Repair as necessary.
   - Perform ABS VERIFICATION TEST. Refer to **STANDARD PROCEDURE**.

   No

   - Replace the Dynamics Sensor in accordance with the Service Information.

- Perform ABS VERIFICATION TEST. Refer to **STANDARD PROCEDURE**.

C1238-DRIVE TEST: UNSUCCESSFUL

For a complete wiring diagram, **refer to appropriate SYSTEM WIRING DIAGRAMS article** .

WHEN MONITORED

During the Drive Test.

SET CONDITION

If the Anti-Lock Brakes Module detects a fault with the Steering Angle Sensor, the Pressure Sensor, or the Dynamics Sensor.

POSSIBLE CAUSES

Possible Causes
STEERING ANGLE SENSOR PRESSURE SENSOR DYNAMICS SENSOR ANTI-LOCK BRAKES MODULE

DIAGNOSTIC TEST

DIAGNOSE AND REPAIR ALL DTCs

Repair

- Diagnose and repair all DTCs.

C123A-ESP SYSTEM SENSORS CALIBRATION

For a complete wiring diagram **refer to appropriate SYSTEM WIRING DIAGRAMS article** .

WHEN MONITORED

Once per ignition cycle.

SET CONDITION

If the calculated checksum does not match the stored checksum.

POSSIBLE CAUSES

Possible Causes
ANTI-LOCK BRAKES MODULE

DIAGNOSTIC TEST

INITIALIZE ANTI-LOCK BRAKES MODULE

1. Initialize ECU refer to ABS VERIFICATION TEST. Refer to **STANDARD PROCEDURE**.

   Does this DTC reset?

   Yes

   - Replace the Anti-Lock Brake Module in accordance with the Service Information.
   - Perform ABS VERIFICATION TEST. Refer to **STANDARD PROCEDURE**.

   No

   - Test complete.

C123B-ESP SYSTEM CONTROL TOO LONG

For a complete wiring diagram, **refer to appropriate SYSTEM WIRING DIAGRAMS article** .

WHEN MONITORED

With the ignition on.

SET CONDITION

When the Anti-Lock Brake Module indicates ESP control lasting longer the 10 seconds.

POSSIBLE CAUSES

Possible Causes
HYDRAULIC/BRAKE ISSUE
DYNAMICS SENSOR
INTEGRATED CONTROL MODULE
STEERING ANGLE SENSOR
WHEEL ALIGNMENT

DIAGNOSTIC TEST

1. **CHECK FOR A DTC C123B-ESP SYSTEM CONTROL TOO LONG**

NOTE: If other DTCs are set they must be repaired before continuing. To help in the service of the ESP System, it is recommend speaking to the customer to find out what type of environment they were driving in when the ESP concern took place, heavy rain, snow or ice. This should be considered normal operation and no repair is necessary. This DTC may set while driving under excessive driving conditions.

1. Turn the ignition on.
2. Perform ECU initialization with drive test. Perform the ABS VERIFICATION TEST. Refer to **STANDARD PROCEDURE**.

NOTE: Drive test must be performed correctly for ECU to initialize.

3. Cycle the ignition switch from off to on.

Did the ECU initialization/drive test pass?

Yes

- Go To 2

No

- Refer to associated drive test diagnostic procedure.
- Refer to the DTC list. Refer to **DIAGNOSIS AND TESTING**.

2. **CHECK STEERING ANGLE SIGNAL**
   1. Turn steering wheel so wheels point in a straight ahead position.
   2. With scan tool read Steering Angle Sensor Signal.

   Is the Steering Angle reading within ± 6 degrees?

   Yes

   - Go To 4

   No

   - Go To 3
3. **CHECK STEERING ANGLE INSTALLATION AND WHEEL ALIGNMENT**

   NOTE: Proper Steering Angle Sensor installation is crucial for proper operation.

   1. Turn the ignition off.
   2. Inspect the vehicle for damage causing tracking problems or steering wheel misalignment.
   3. Inspect the steering column and intermediate shaft for damage.
   4. Verify that the Steering Angle Sensor is properly installed.

   Were any problems found?

   Yes

   - Repair as necessary.
   - Perform ABS VERIFICATION TEST. Refer to **STANDARD PROCEDURE**.

   No

   - Replace the Steering Angle Sensor in accordance with the Service Information.
   - Perform ABS VERIFICATION TEST. Refer to **STANDARD PROCEDURE**.

4. **CHECK HYDRAULIC SYSTEM AND BRAKE SYSTEM COMPONENT INSTALLATION AND FUNCTION**
   1. Verify that the Anti-Lock Brakes Module and Hydraulic Control Unit are properly installed.
   2. Verify that the hydraulic system is properly filled and bled.
   3. Verify that the brake system components are installed and functioning properly.

   Were any problems found?

   Yes

   - Repair as necessary.
   - Perform ABS VERIFICATION TEST. Refer to **STANDARD PROCEDURE**.

   No

   - Go To 5
5. **REPLACE THE INTEGRATED CONTROL MODULE AND VERIFY IF THE DTC IS STILL ACTIVE**
   1. Replace the Integrated Control Module in accordance with the Service Information.
   2. Perform the ABS VERIFICATION TEST. Refer to **STANDARD PROCEDURE**.
   3. Connect all previously disconnected components and connectors.
   4. Turn the ignition on.
   5. With the scan tool, erase ABS DTCs.
   6. Cycle the ignition switch.

   WARNING: Make sure brake capability is available before road testing.

   7. Test drive the vehicle by turning the vehicle left or right in a curving manner at a velocity between 10 and 20 km/h (6 and 12 mph).
   8. Park the vehicle.
   9. With the scan tool, read ABS DTCs.

Does this DTC reset?

Yes

- Replace the Dynamics Sensor in accordance with the Service Information.
- Perform ABS VERIFICATION TEST. Refer to **STANDARD PROCEDURE**.

No

- Test complete.

C123C-DYNAMICS SENSOR MOUNTING/INSTALLATION PERFORMANCE

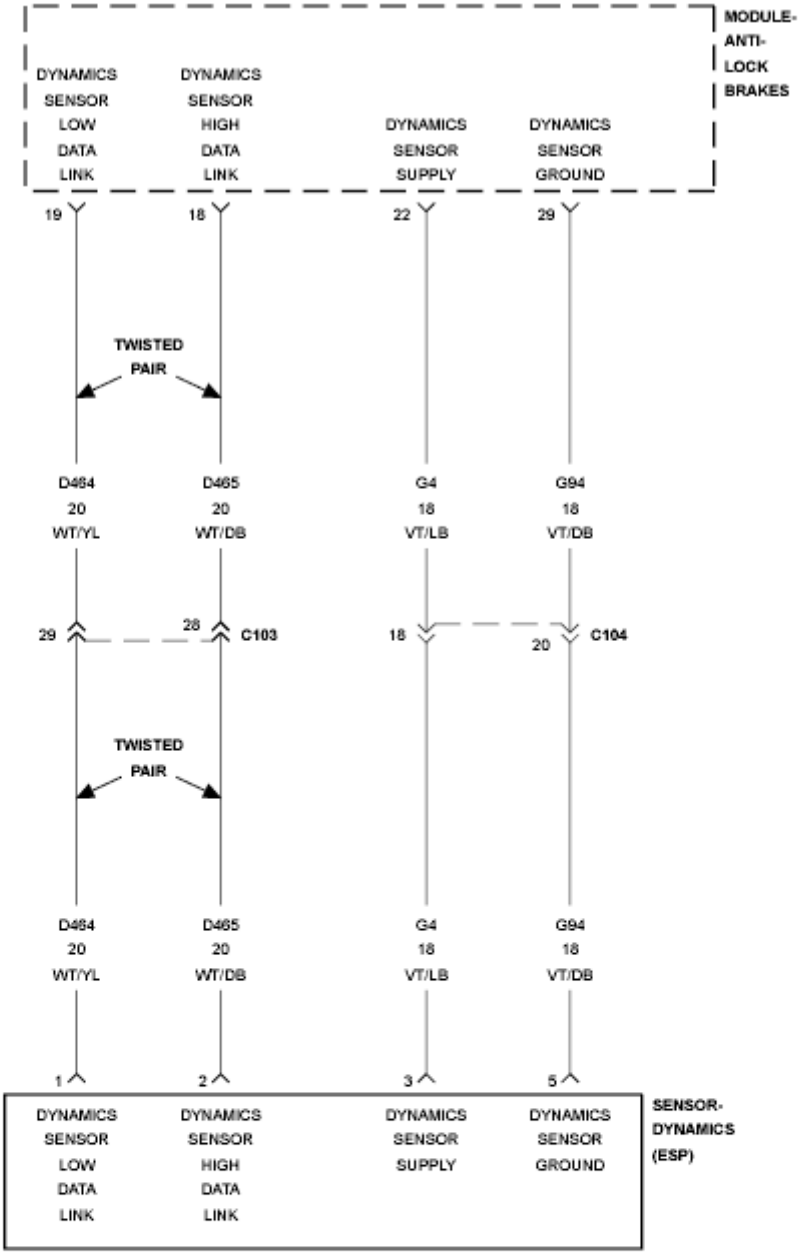
MODULE-
ANTI-
LOCK
BRAKES
DYNAMICS SENSOR LOW DATA LINK
DYNAMICS SENSOR HIGH DATA LINK
DYNAMICS SENSOR SUPPLY
DYNAMICS SENSOR GROUND
19
18
22
29
TWISTED PAIR
D464 20 WT/YL
D465 20 WT/DB
G4 18 VT/LB
G94 18 VT/DB
29
28
C103
18
20
C104
TWISTED PAIR
D464 20 WT/YL
D465 20 WT/DB
G4 18 VT/LB
G94 18 VT/DB
1
2
3
5
DYNAMICS SENSOR LOW DATA LINK
DYNAMICS SENSOR HIGH DATA LINK
DYNAMICS SENSOR SUPPLY
DYNAMICS SENSOR GROUND
SENSOR-
DYNAMICS
(ESP)

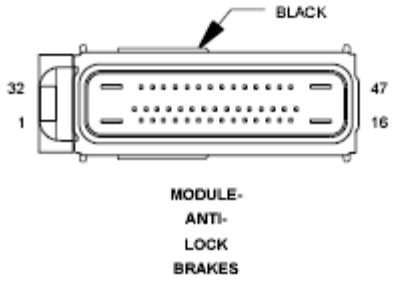
BLACK
32
1
47
16
MODULE-
ANTI-
LOCK
BRAKES

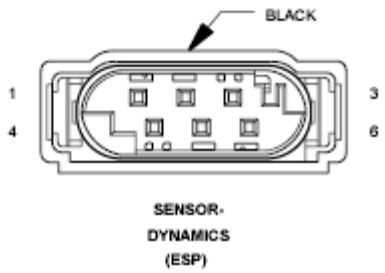
BLACK
1
4
3
6
SENSOR-
DYNAMICS
(ESP)

Fig. 62: Dynamics Sensor Circuit Schematic
Courtesy of CHRYSLER GROUP, LLC

For a complete wiring diagram **refer to appropriate SYSTEM WIRING DIAGRAMS article** .

WHEN MONITORED

With vehicle speed above 11 km/h (7 mph), but not if the sensor signal is invalid.

Or, during skidding.

Or, when driving in reverse.

SET CONDITION

If the Anti-Lock Brakes Module detects implausible Dynamics Sensor values.

POSSIBLE CAUSES

Possible Causes
WIRING HARNESS, TERMINAL, CONNECTOR DAMAGE
DYNAMICS SENSOR INSTALLATION
DYNAMICS SENSOR

DIAGNOSTIC TEST

1. **VERIFY DTC IS ACTIVE**

NOTE: If present, diagnose and repair DTC C2114-DYNAMICS SENSOR SUPPLY VOLTAGE LOW or DTC C2115-DYNAMICS SENSOR SUPPLY VOLTAGE HIGH before diagnosing this DTC.

1. Turn the ignition on.
2. With the scan tool, read and record ABS DTCs.
3. With the scan tool, read and record Environmental Data (EV Data).
4. With the scan tool, erase ABS DTCs.
5. Cycle the ignition switch.

WARNING: To avoid possible serious or fatal injury,

check brake capability is available before road testing.

6. Test drive the vehicle by turning the vehicle left or right in a curving manner at a velocity between 10 and 20 km/h (6 and 12 mph).
7. Park the vehicle.
8. With the scan tool, read ABS DTCs.

   Does this DTC reset?

   Yes

   - Go To 2

   No

   - The condition that caused the symptom is currently not present. Inspect the related wiring for a possible intermittent condition. Look for any chafed, pierced, pinched, or partially broken wires.
   - Refer to the ABS-INTERMITTENT CONDITION TEST. Refer to **STANDARD PROCEDURE**.

2. **CHECK THE DYNAMICS SENSOR INSTALLATION**

NOTE: Dynamics Sensor installation and mounting bolt torque is crucial for proper operation.

1. Turn the ignition off.
2. Check the Dynamics Sensor for damaged, modified, and bent mounting brackets.
3. Check the Dynamics Sensor mounting bolts for a loose or over tightened condition.

   Were any problems found?

   Yes

   - Repair as necessary.
   - Perform ABS VERIFICATION TEST. Refer to **STANDARD PROCEDURE**.

No

- Go To 3

3. **INSPECT RELATED WIRING HARNESS, TERMINALS, AND CONNECTORS**
   1. Visually inspect the related wiring harness. Look for any pinched, chafed, pierced, and partially broken wires.
   2. Visually inspect the related wiring harness connectors. Look for broken, bent, pushed out, and corroded terminals.

   Were any problems found?

   Yes

   - Repair as necessary.
   - Perform ABS VERIFICATION TEST. Refer to **STANDARD PROCEDURE**.

   No

   - Replace the Dynamics Sensor in accordance with the Service Information.
   - Perform ABS VERIFICATION TEST. Refer to **STANDARD PROCEDURE**.

C123F-STEERING ANGLE SENSOR COMPARATIVE PERFORMANCE

For a complete wiring diagram, **refer to appropriate SYSTEM WIRING DIAGRAMS article** .

WHEN MONITORED

With ignition on, but not if a checksum failure of the stored offset values is detected.

Or, a CAN time-out failure is detected.

Or, a failure is detected by the Steering Angle Sensor.

SET CONDITION

If the Anti-Lock Brake Module detects that either the calculated steering wheel angle offset or the steering wheel angle signal measured output is out of range.

POSSIBLE CAUSES

Possible Causes
VEHICLE DAMAGE
STEERING COLUMN / INTERMEDIATE SHAFT DAMAGE
STEERING WHEEL ALIGNMENT
STEERING ANGLE SENSOR LOOSE
CLOCKSPRING (SAS) IMPROPERLY INSTALLED (WRONG MOUNTING POSITION)
CLOCKSPRING (SAS)
ANTI-LOCK BRAKE MODULE

DIAGNOSTIC TEST

1. **PERFORM TEST DRIVE AND VERIFY DTC IS STILL ACTIVE**

NOTE: If present, diagnose and repair DTC C1219-STEERING ANGLE SENSOR ERRATIC PERFORMANCE, C121A-STEERING ANGLE SENSOR NOT INITIALIZED, or C1240-STEERING ANGLE SENSOR OVERTRAVEL PERFORMANCE before diagnosing this DTC.

1. Turn the ignition on.
2. With the scan tool, erase ABS DTCs.
3. Cycle the ignition switch.

WARNING: To avoid possible serious or fatal injury, check brake capability is available before road testing.

4. Test drive the vehicle by turning the vehicle left or right in a curving manner at a velocity between 10 and 25 km/h (6 and 15 mph).
5. Park the vehicle.
6. With the scan tool, read ABS DTCs.

Does this DTC reset?

Yes

- Go To 2

No

- Perform the ABS-INTERMITTENT CONDITION TEST. Refer to **STANDARD PROCEDURE**.

2. **INSPECT VEHICLE, STEERING COLUMN, AND INTERMEDIATE SHAFT FOR DAMAGE**

NOTE: If possible, check vehicle repair history for collision damage.

1. Turn the ignition off.
2. Inspect the vehicle for damage causing tracking problems or steering wheel misalignment.
3. Inspect the steering column and intermediate shaft for damage.

Were any problems found?

Yes

- Repair as necessary and clear offsets by initializing ECU with wheels pointing straight ahead.
- Perform the ABS VERIFICATION TEST. Refer to **STANDARD PROCEDURE**.

No

- Go To 3

3. **CHECK STEERING ANGLE SENSOR OUTPUT**

1. Start the engine.
2. Turn the steering wheel so wheels point in a straight ahead position.
3. With the scan tool, read the Steering Angle Sensor position.

Is the Steering Angle Sensor Position within ± 15° degrees?

Yes

- Go To 5

No

- Go To 4

4. **CHECK CLOCKSPRING (SAS) INSTALLATION**

WARNING: To avoid serious or fatal injury on vehicles equipped with airbags, disable the Supplemental Restraint System (SRS). Refer to RESTRAINTS - SERVICE INFORMATION before attempting any steering wheel, steering column, airbag, seat belt tensioner, impact sensor, or instrument panel component diagnosis or service. Disconnect and isolate the battery negative (ground) cable, then wait two minutes for the system capacitor to discharge before performing further diagnosis or service. This is the only sure way to disable the SRS. Failure to take the proper precautions could result in accidental airbag deployment.

NOTE: Proper Clockspring (SAS) installation is crucial for proper operation.

1. Verify that the Clockspring (SAS) is properly installed.

   Is the Clockspring (SAS) properly installed?

   Yes

   - Go To 5

   No

   - Repair as necessary and clear offsets by initializing ECU with wheels pointing straight ahead.
   - Perform the ABS VERIFICATION TEST. Refer to **STANDARD**

PROCEDURE.

5. **RE-INITIALIZE THE ESP MODULE**
   1. Perform ECU initialization with drive test to clear offsets. Perform the ABS VERIFICATION TEST. Refer to **STANDARD PROCEDURE**.

      Is DTC C123F-STEERING ANGLE SENSOR COMPARATIVE PERFORMANCE still active?

      Yes

      - Go To 6

      No

      - Sensor was probably loose or calibrated with wheels not centered to vehicle. Test complete.
      - Perform the ABS VERIFICATION TEST. Refer to **STANDARD PROCEDURE**.
6. **CHECK STEERING ANGLE SENSOR OUTPUT WHILE ROTATING THE STEERING WHEEL**
   1. With the scan tool, read the Steering Angle Sensor position while rotating the steering wheel to the right and then to the left. The Steering Angle Sensor position should decrease when rotating the steering wheel to the right and increase when rotating the steering wheel to the left.

      Did the steering angle change accordingly?

      Yes

      - Replace the Anti-Lock Brake Module in accordance with the Service Information.
      - Perform the ABS VERIFICATION TEST. Refer to **STANDARD PROCEDURE**.

      No

      - Replace the Clockspring (SAS) in accordance with the Service Information and clear offsets by initializing ECU with wheels pointing straight ahead.

- Perform the ABS VERIFICATION TEST. Refer to **STANDARD PROCEDURE**.

C1240-STEERING ANGLE SENSOR OVERTRAVEL PERFORMANCE

For a complete wiring diagram, **refer to appropriate SYSTEM WIRING DIAGRAMS article** .

WHEN MONITORED

With ignition on, but not if a CAN time out failure is detected.

Or, if a fault is detected by the Steering Angle Sensor.

SET CONDITION

If the Anti-Lock Brakes Module detects that the absolute value of the measured steering wheel angle is greater than 720 degrees.

POSSIBLE CAUSES

Possible Causes
VEHICLE DAMAGE STEERING COLUMN / INTERMEDIATE SHAFT DAMAGE STEERING WHEEL ALIGNMENT STEERING ANGLE SENSOR LOOSE CLOCKSPRING (SAS) IMPROPERLY INSTALLED (WRONG MOUNTING POSITION) CLOCKSPRING (SAS)

DIAGNOSTIC TEST

1. **PERFORM TEST DRIVE AND VERIFY DTC IS STILL ACTIVE**
    1. Turn the ignition on.
    2. With the scan tool, erase ABS DTCs.
    3. Cycle the ignition switch.
    4. Turn steering wheel from lock to lock.
    5. With the scan tool, read ABS DTCs.

    Does this DTC reset?

Yes

- Go To 2

No

- Perform the ABS-INTERMITTENT CONDITION TEST. Refer to **STANDARD PROCEDURE**.

2. **CHECK STEERING ANGLE SENSOR OUTPUT**
   1. Start the engine.
   2. Center the steering wheel.
   3. With the scan tool, read the Steering Angle Sensor Position.

   Is the Steering Angle Sensor Position within ±15°?

   Yes

   - Go To 4

   No

   - Go To 3

3. **INSPECT VEHICLE, STEERING COLUMN, AND INTERMEDIATE SHAFT FOR DAMAGE**

   NOTE: If possible, check vehicle repair history for collision damage.

   1. Turn the ignition off.
   2. Inspect the vehicle for damage causing tracking problems or steering wheel misalignment.
   3. Inspect the steering column and intermediate shaft for damage.
   4. Center the steering wheel.
   5. With the scan tool, read the Steering Angle Sensor Position.

   Is the Steering Angle Sensor Position within ±15°?

   Yes

- Repair as necessary.
- Perform the ABS VERIFICATION TEST. Refer to **STANDARD PROCEDURE**.

No

- Go To 4

4. **CHECK STEERING ANGLE CHANGE**
   1. Turn steering wheel so wheels point in a straight ahead position.
   2. With scan tool check steering angle if reading travels to 720 degrees while rotating wheel from lock to lock.

      NOTE: Sensor damage can occur if wheel is turned over 720 degrees.

   3. Rotate steering wheel to the right and the degrees will decrease and rotate steering wheel to the left and the degrees will increase.

      Did the steering angle change accordingly and display less than 720 degrees from lock to lock?

      Yes

      - Go To 5

      No

      - Replace the Clockspring (SAS) in accordance with the Service Information and clear offsets by initializing ECU with wheels pointing straight ahead.
      - Perform the ABS VERIFICATION TEST. Refer to **STANDARD PROCEDURE**.

5. **CHECK CLOCKSPRING (SAS) INSTALLATION**

   WARNING: To avoid serious or fatal injury on vehicles equipped with airbags, disable the Supplemental Restraint System (SRS). Refer to RESTRAINTS - SERVICE INFORMATION

before attempting any steering wheel, steering column, airbag, seat belt tensioner, impact sensor, or instrument panel component diagnosis or service. Disconnect and isolate the battery negative (ground) cable, then wait two minutes for the system capacitor to discharge before performing further diagnosis or service. This is the only sure way to disable the SRS. Failure to take the proper precautions could result in accidental airbag deployment.

NOTE: Proper Clockspring (SAS) installation is crucial for proper operation.

1. Verify that the Clockspring (SAS) is properly installed.

   Is the Clockspring (SAS) properly installed?

   Yes

   - Replace the Clockspring (SAS) and clear offsets by initializing ECU with wheels pointing straight ahead, in accordance with the Service Information.
   - Perform the ABS VERIFICATION TEST. Refer to **STANDARD PROCEDURE**.

   No

   - Repair as necessary and clear offsets by initializing ECU with wheels pointing straight ahead.
   - Perform the ABS VERIFICATION TEST. Refer to **STANDARD PROCEDURE**.

C1242-G SENSOR INPUT SIGNAL PERFORMANCE

For a complete wiring diagram **refer to appropriate SYSTEM WIRING DIAGRAMS article** .

WHEN MONITORED

Continuously, with ignition on and vehicle speed present.

SET CONDITION

If the measured acceleration and calculated signal differs or have opposite signs.

POSSIBLE CAUSES

Possible Causes
DYNAMICS SENSOR INSTALLATION DYNAMICS SENSOR

DIAGNOSTIC TEST

1. **VERIFY DTC IS ACTIVE**
    1. Turn the ignition on.
    2. With the scan tool, read and record ABS DTCs.
    3. With the scan tool, read and record Environmental Data to help identify the conditions in which the DTC was set.
    4. With the scan tool, erase ABS DTCs.
    5. Cycle the ignition switch.
    6. Perform ECU initialization with drive test. Perform ABS VERIFICATION TEST. Refer to **STANDARD PROCEDURE**.

    WARNING: To avoid possible serious or fatal injury, check brake capability is available before road testing.

    7. Test drive the vehicle by turning the vehicle left or right in a curving manner at a velocity greater than 20 km/hr (12 m.p.h.).
    8. Park the vehicle.
    9. With the scan tool, read ABS DTCs.

    Does this DTC reset?

    Yes

    - Go To 2

No

- Perform the ABS-INTERMITTENT CONDITION TEST. Refer to **STANDARD PROCEDURE**.

2. **CHECK THE DYNAMICS SENSOR INSTALLATION**

NOTE: Dynamics Sensor installation and mounting bolt torque is crucial for proper operation.

1. Turn the ignition off.
2. Check the Dynamics Sensor for damaged, modified, and bent mounting brackets.
3. Check the Dynamics Sensor mounting bolts for a loose or over tightened condition.

Were any problems found?

Yes

- Repair as necessary.
- Perform ABS VERIFICATION TEST. Refer to **STANDARD PROCEDURE**.

No

- Replace the Dynamics Sensor in accordance with the Service Information.
- Perform ABS VERIFICATION TEST. Refer to **STANDARD PROCEDURE**.

C1243-G SENSOR NOT INITIALIZED

For a complete wiring diagram **refer to appropriate SYSTEM WIRING DIAGRAMS article** .

WHEN MONITORED

Once after ignition on.

SET CONDITION

If the stored zero point calibration value of the longitudinal acceleration sensor is invalid.

POSSIBLE CAUSES

Possible Causes
DYNAMICS SENSOR NOT CALIBRATED DYNAMICS SENSOR ANTI-LOCK BRAKES MODULE

DIAGNOSTIC TEST

1. **PERFORM ECU INITIALIZATION**
    1. Turn the ignition on.
    2. With the scan tool, erase ABS DTCs.
    3. Cycle the ignition switch.

    WARNING: To avoid possible serious or fatal injury, check brake capability is available before road testing.

    4. Perform ECU initialization with drive test. Refer to ABS VERIFICATION TEST. Refer to **STANDARD PROCEDURE**.

    NOTE: The ECU Initialization process must include driving the vehicle into a 90° turn.

    5. Park the vehicle.
        - Go To 2
2. **VERIFY IF DTC IS STILL ACTIVE**
    1. Cycle the ignition switch.

    WARNING: To avoid possible serious or fatal injury, check brake capability is available before road testing.

    2. Test drive the vehicle by turning the vehicle left or right in a curving manner at a velocity between 10 and 25 km/h (6 and 15 mph).

3. Park the vehicle.
4. With the scan tool, read ABS DTCs.

Does this DTC reset?

Yes

NOTE: Vehicles without a Dynamics Sensor replace Anti-Lock Brake Module.

- Replace the Dynamics Sensor or Anti-Lock Brake Module in accordance with the Service Information.
- Perform ABS VERIFICATION TEST. Refer to **STANDARD PROCEDURE**.

No

- Perform the ABS-INTERMITTENT CONDITION TEST. Refer to **STANDARD PROCEDURE**.

C2100-BATTERY VOLTAGE LOW

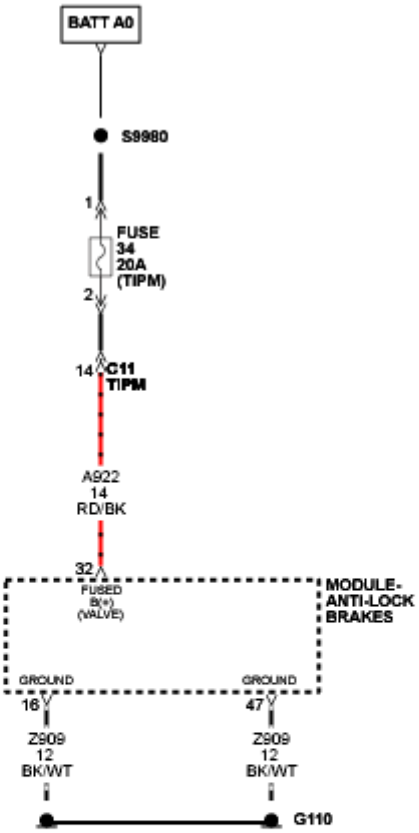

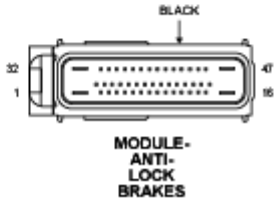

Fig. 63: ABS Power Supply Circuit Schematic
Courtesy of CHRYSLER GROUP, LLC

For a complete wiring diagram, **refer to appropriate SYSTEM WIRING DIAGRAMS article** .

WHEN MONITORED

With the ignition on.

SET CONDITION

If the Anti-Lock Brake System (ABS) Module detects system voltage is below 7.5 volts.

POSSIBLE CAUSES

Possible Causes
POWERTRAIN CONTROL MODULE (PCM) DTCs PRESENT VEHICLE BATTERY / CHARGING SYSTEM ANTI-LOCK BRAKES SYSTEM (ABS) MODULE

DIAGNOSTIC TEST

1. **DTCS IN THE PCM**

   NOTE: This DTC must be active for the results of this test to be valid.

   1. Turn the ignition on.
   2. With the scan tool, read and record DTCs from the PCM.
   3. With the scan tool, read and record Environmental Data to help identify the conditions in which the DTC was set.
   4. With the scan tool, erase DTCs.
   5. Start the engine.
   6. With the scan tool, read and record DTCs.
   7. With the scan tool read DTCs from the PCM.

   Are any charging system DTCs present?

   Yes

   - Repair the charging system DTCs. Refer to the **DTC INDEX** article .

   No

   - Go To 2

2. **CHARGING SYSTEM FAILURE**
   1. Start the engine.
   2. Connect voltmeter to vehicle battery.

Is the vehicle battery voltage under 8.2 volts?

No

- Go To 3

Yes

- Repair the charging system per service information.
- Perform ABS VERIFICATION TEST. Refer to **STANDARD PROCEDURE**.

3. **CHARGING POWER SUPPLY VOLTAGE**
   1. With a scan tool read Power Supply Voltage.

   Is Power Supply Voltage under 8.2 volts?

   No

   - Perform the ABS-INTERMITTENT CONDITION TEST. Refer to **STANDARD PROCEDURE**.

   Yes

   - Replace the Anti-Lock Brake System (ABS) Module in accordance with the Service Information.
   - Perform ABS VERIFICATION TEST. Refer to **STANDARD PROCEDURE**.

C2101-BATTERY VOLTAGE HIGH

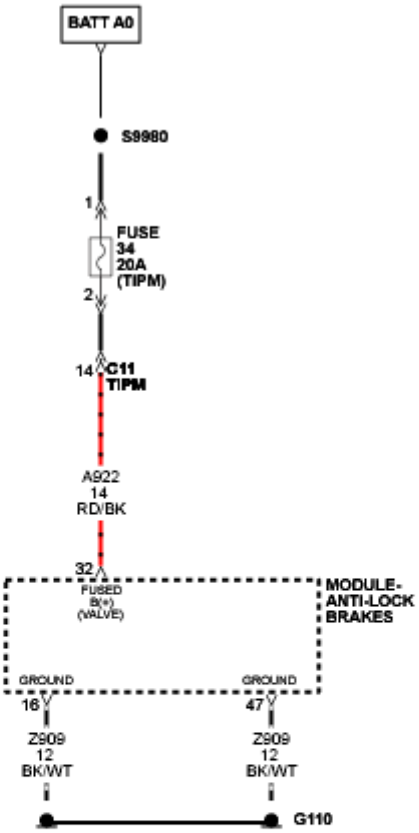

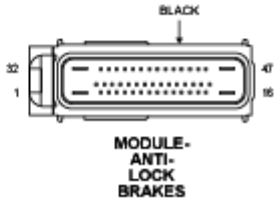

Fig. 64: ABS Power Supply Circuit Schematic
Courtesy of CHRYSLER GROUP, LLC

For a complete wiring diagram, **refer to appropriate SYSTEM WIRING DIAGRAMS article** .

WHEN MONITORED

With the ignition on.

SET CONDITION

If the Anti-Lock Brake Module detects system voltage is above 16 volts.

POSSIBLE CAUSES

Possible Causes
ECM/PCM DTCs PRESENT VEHICLE BATTERY / CHARGING SYSTEM ANTI-LOCK BRAKES MODULE

DIAGNOSTIC TEST

NOTE: This DTC must be active for the results of this test to be valid.

1.
    1. Turn the ignition on.
    2. With the scan tool, read and record DTCs from the ECM/PCM.
    3. With the scan tool, read and record Environmental Data to help identify the conditions in which the DTC was set.
    4. With the scan tool, erase DTCs.
    5. Start the engine.
    6. With the scan tool, read and record DTCs.
    7. With the scan tool read DTCs from the PCM.

    Are any charging system codes present?

    Yes

    - Repair the charging system DTC. Refer to the **DTC INDEX** article .

    No

    - Go To 2
2. **CHARGING SYSTEM FAILURE**
    1. Start the engine.
    2. Connect voltmeter to vehicle battery.

Is the vehicle battery voltage over 15.8 volts?

No

- Go To 3

Yes

- Repair the charging system per service information.
- Perform the ABS VERIFICATION TEST. Refer to **STANDARD PROCEDURE**.

3. **CHARGING POWER SUPPLY VOLTAGE**
   1. With a scan tool read Power Supply Voltage.

   Is Power Supply Voltage over 15.8 volts?

   No

   - Perform the ABS VERIFICATION TEST. Refer to **STANDARD PROCEDURE**.

   Yes

   - Replace the Anti-Lock Brake Module in accordance with the Service Information.
   - Perform the ABS VERIFICATION TEST. Refer to **STANDARD PROCEDURE**.

C2114-DYNAMICS SENSOR SUPPLY VOLTAGE LOW

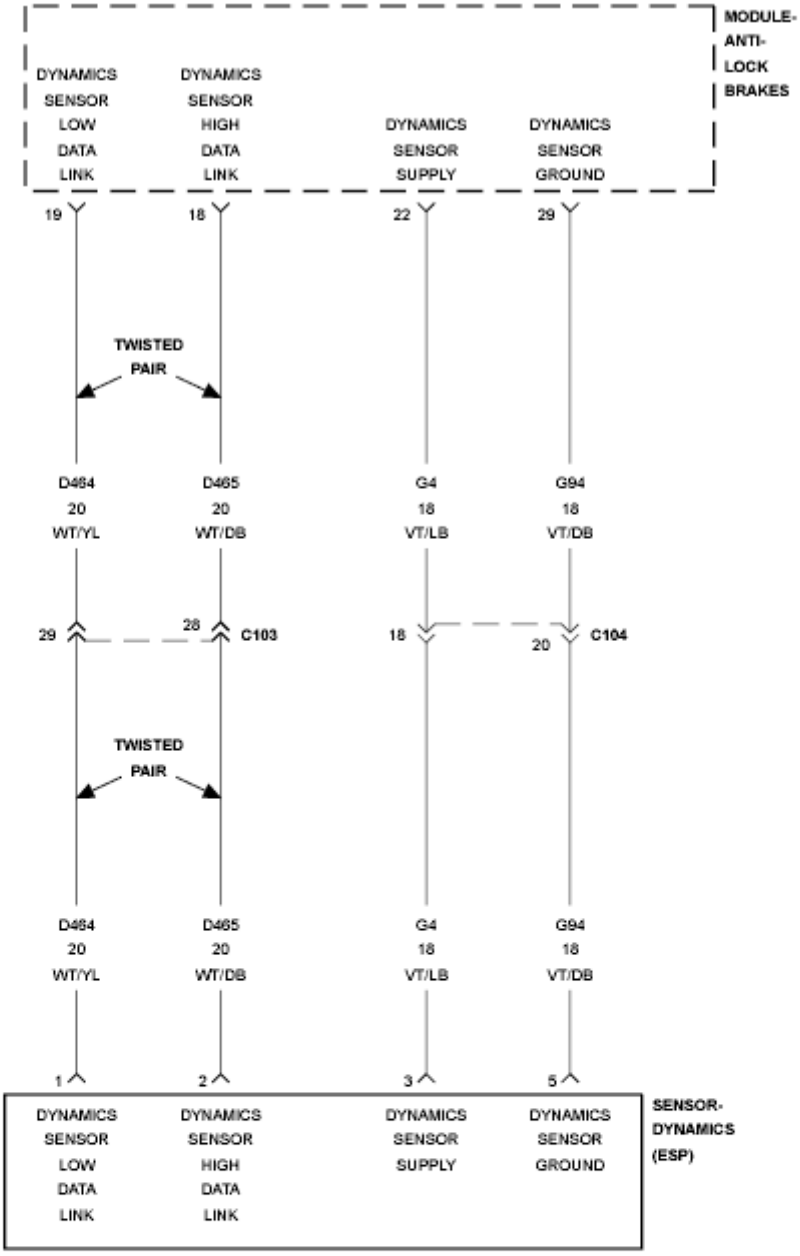
MODULE-
ANTI-
LOCK
BRAKES
DYNAMICS SENSOR LOW DATA LINK
DYNAMICS SENSOR HIGH DATA LINK
DYNAMICS SENSOR SUPPLY
DYNAMICS SENSOR GROUND
19
18
22
29
TWISTED PAIR
D464 20 WT/YL
D465 20 WT/DB
G4 18 VT/LB
G94 18 VT/DB
29
28
C103
18
20
C104
TWISTED PAIR
D464 20 WT/YL
D465 20 WT/DB
G4 18 VT/LB
G94 18 VT/DB
1
2
3
5
DYNAMICS SENSOR LOW DATA LINK
DYNAMICS SENSOR HIGH DATA LINK
DYNAMICS SENSOR SUPPLY
DYNAMICS SENSOR GROUND
SENSOR-
DYNAMICS
(ESP)

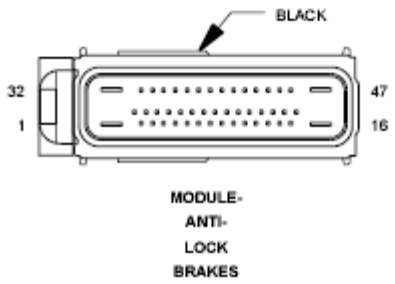
BLACK
32
1
47
16
MODULE-
ANTI-
LOCK
BRAKES

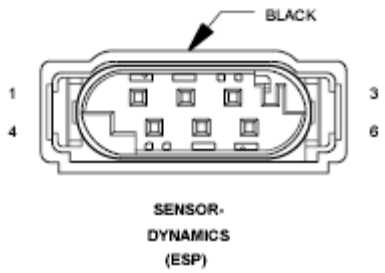
BLACK
1
4
3
6
SENSOR-
DYNAMICS
(ESP)

Fig. 65: Dynamics Sensor Circuit Schematic
Courtesy of CHRYSLER GROUP, LLC

For a complete wiring diagram **refer to appropriate SYSTEM WIRING DIAGRAMS article** .

WHEN MONITORED

With the ignition on.

SET CONDITION

If the Dynamics Sensor status changes from initialized to not initialized due to low voltage on the (G4) Dynamics Sensor Supply circuit.

POSSIBLE CAUSES

Possible Causes
WIRING HARNESS, TERMINAL, CONNECTOR DAMAGE (G4) DYNAMICS SENSOR SUPPLY CIRCUIT HIGH RESISTANCE (G94) DYNAMICS SENSOR GROUND CIRCUIT HIGH RESISTANCE DYNAMICS SENSOR ANTI-LOCK BRAKES MODULE

DIAGNOSTIC TEST

1. **VERIFY DTC IS ACTIVE**

NOTE: The Sensor Cluster is the same as the Dynamics sensor.

NOTE: This DTC must be active for the results of this test to be valid.

1. Turn the ignition on.
2. With the scan tool, read and record ABS DTCs.
3. With the scan tool, read and record Environmental Data to help identify the conditions in which the DTC was set.
4. With the scan tool, erase ABS DTCs.
5. Cycle the ignition switch.

6. With the scan tool, read ABS DTCs.

NOTE: Attempt to operate the vehicle under conditions similar to which the DTC was set. It may be necessary to test drive the vehicle within the DTC monitoring and set conditions in order for this DTC to set.

Does this DTC reset?

Yes

- Go To 2

No

- Perform the ABS-INTERMITTENT CONDITION TEST. Refer to **STANDARD PROCEDURE**.

2. **INSPECT RELATED WIRING HARNESS, TERMINALS, AND CONNECTORS**
   1. Turn the ignition off.
   2. Check all related wiring for pinched, chafed, pierced, and partially broken wires.
   3. Check all related connectors for broken, bent, pushed out, and corroded terminals.

   Were any problems found?

   Yes

   - Repair as necessary.
   - Perform ABS VERIFICATION TEST. Refer to **STANDARD PROCEDURE**.

   No

   - Go To 3

3. **CHECK (G4) DYNAMICS SENSOR SUPPLY CIRCUIT AND (G94) DYNAMICS SENSOR GROUND CIRCUIT FUNCTION**

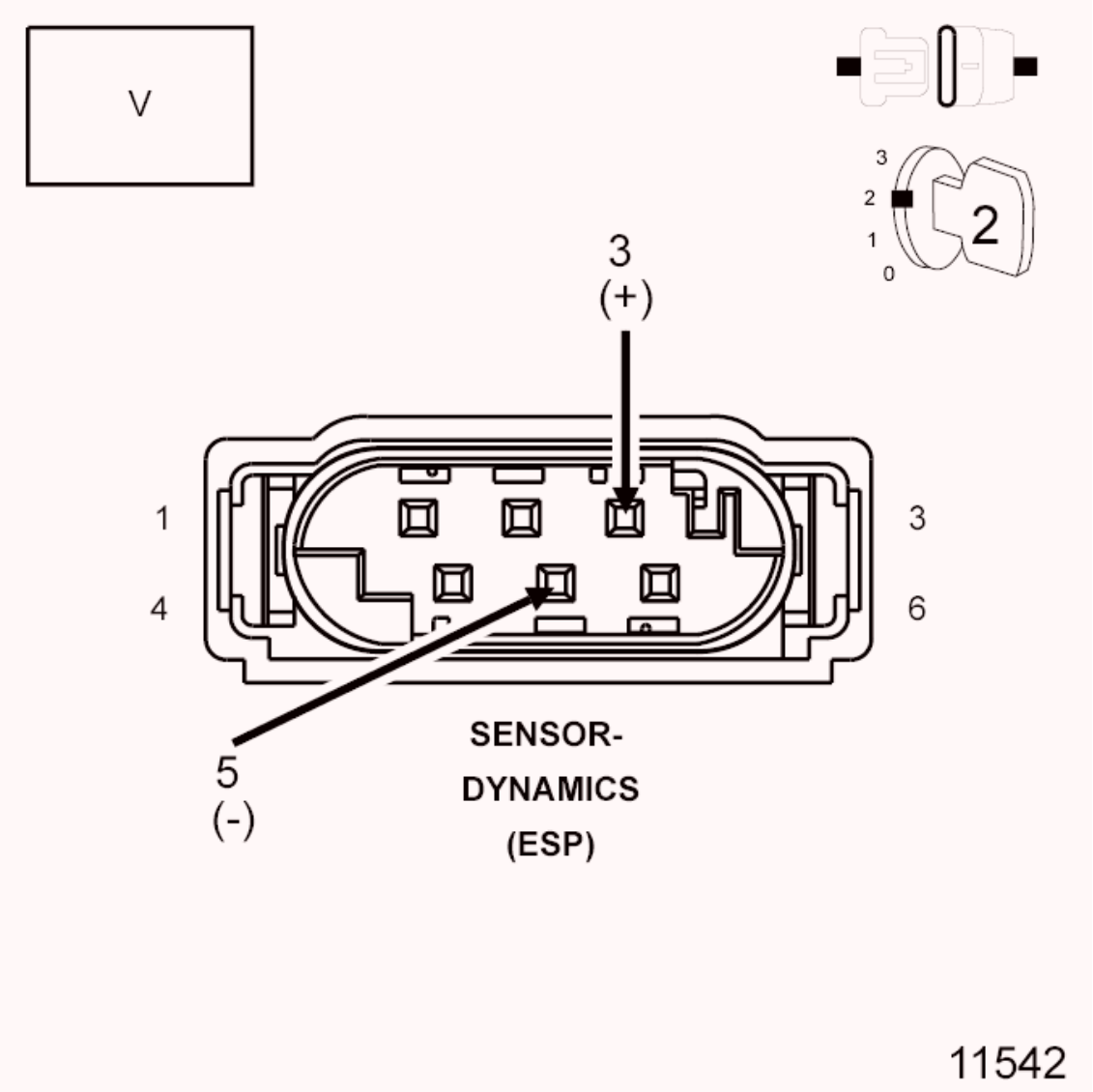

Fig. 66: Measuring Voltage Between Dynamics Sensor Supply Circuit & Dynamics Sensor Ground Circuit
Courtesy of CHRYSLER GROUP, LLC

1. Disconnect the Dynamics Sensor harness connector.
2. Turn the ignition on.
3. Measure the voltage between the (G4) Dynamics Sensor Supply Circuit and the (G94) Dynamics Sensor Ground Circuit.

   Is the voltage above 10 volts?

   Yes

   - Replace the Dynamics Sensor in accordance with the Service Information.

- Perform ABS VERIFICATION TEST. Refer to **STANDARD PROCEDURE**.

No

- Go To 4

4. **CHECK (G4) DYNAMICS SENSOR SUPPLY CIRCUIT FOR HIGH RESISTANCE**

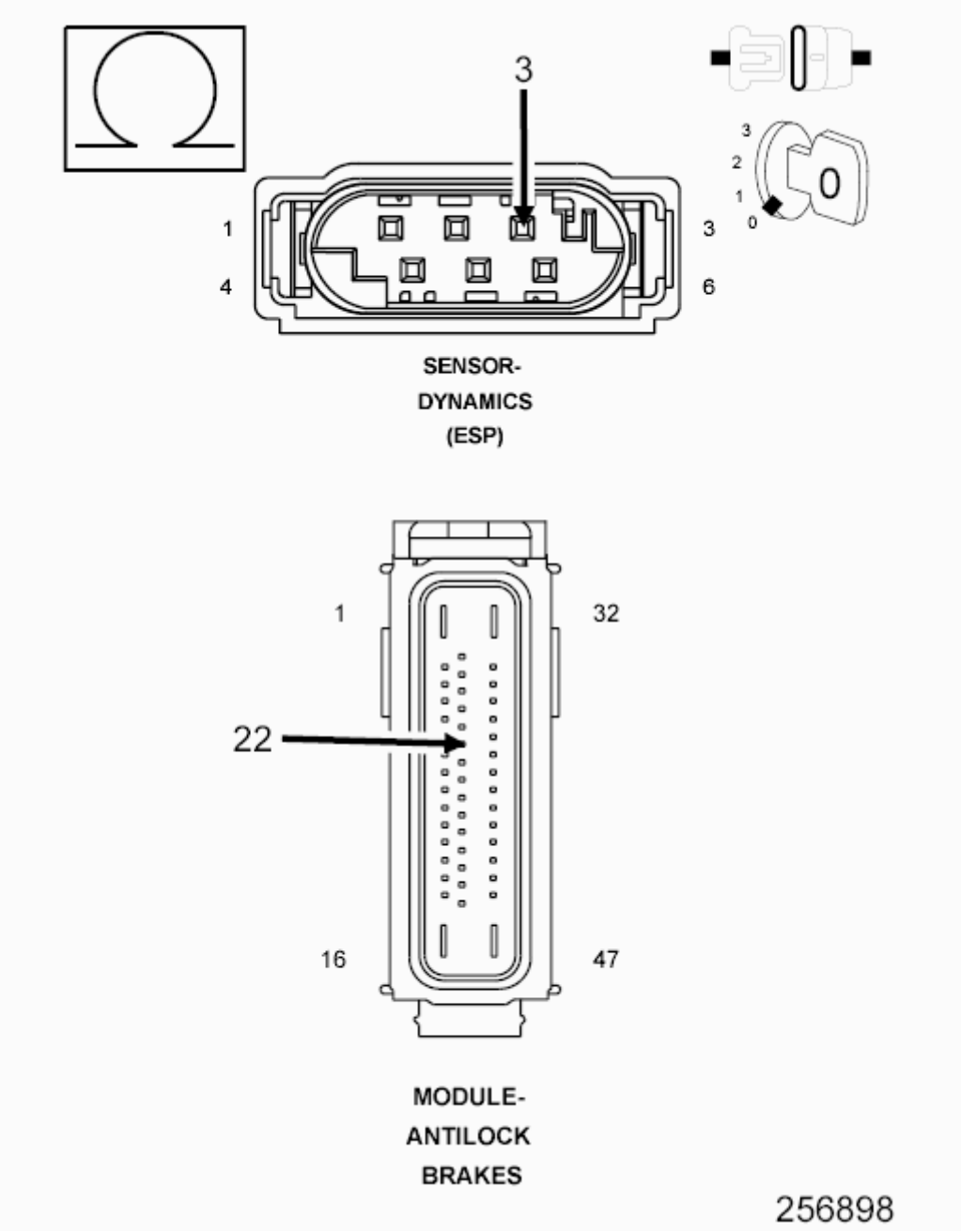

Fig. 67: Checking Dynamics Sensor Supply Circuit For High Resistance
Courtesy of CHRYSLER GROUP, LLC

1. Turn the ignition off.
2. Disconnect the Anti-Lock Brake Module harness connector.
3. Measure the resistance of the (G4) Dynamics Sensor Supply circuit between the Dynamics Sensor harness connector and the Anti-Lock Brake Module harness connector.

   Is the resistance below 5.0 ohms?

   Yes

   - Go To 5

   No

   - Repair the (G4) Dynamics Sensor Supply circuit for high resistance.
   - Perform ABS VERIFICATION TEST. Refer to **STANDARD PROCEDURE**.

5. **CHECK (G94) DYNAMICS SENSOR GROUND CIRCUIT FOR HIGH RESISTANCE**

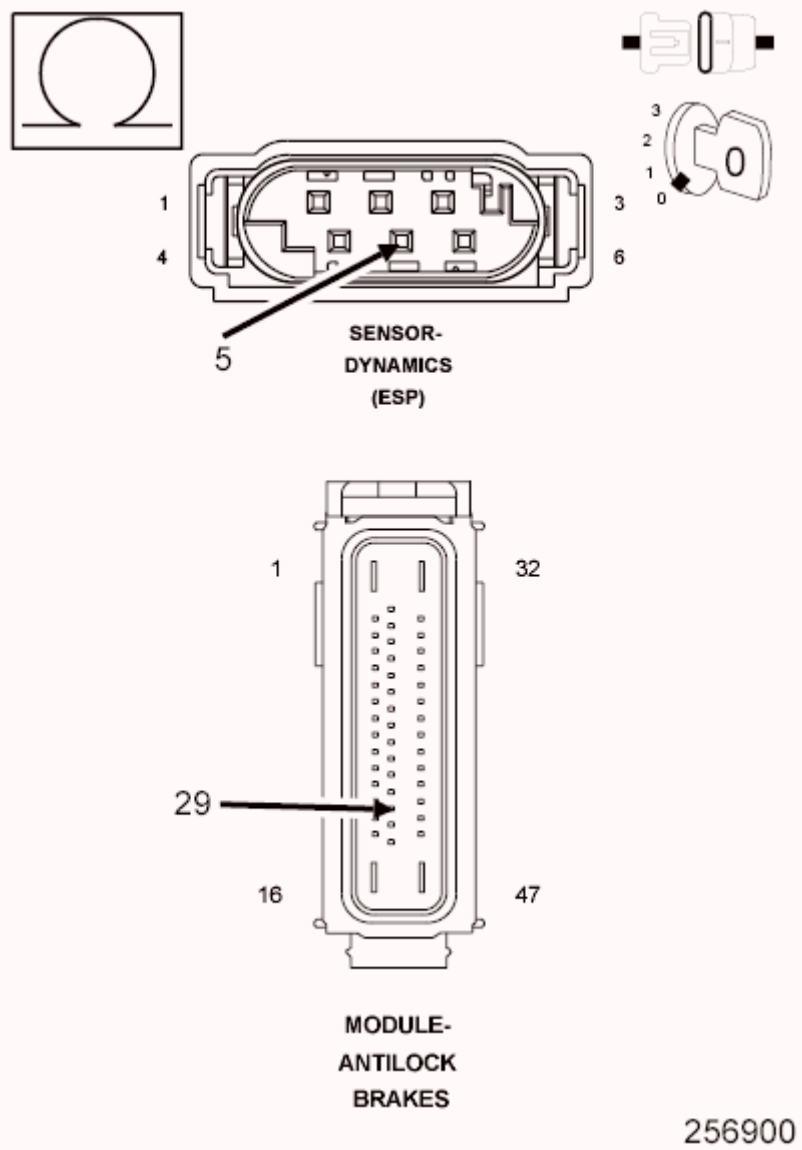

Fig. 68: Checking Dynamics Sensor Ground Circuit For High Resistance
Courtesy of CHRYSLER GROUP, LLC

1. Measure the resistance of the (G94) Dynamics Sensor Ground circuit between the Dynamics Sensor harness connector and the Anti-Lock Brake Module harness connector.

   Is the resistance below 5.0 ohms?

   Yes

   - Replace the Anti-Lock Brake Module in accordance with the Service Information.
   - Perform ABS VERIFICATION TEST. Refer to **STANDARD**

PROCEDURE.

No

- Repair the (G94) Dynamics Sensor Ground circuit for high resistance.
- Perform ABS VERIFICATION TEST. Refer to **STANDARD PROCEDURE**.

C2115-DYNAMICS SENSOR SUPPLY VOLTAGE HIGH

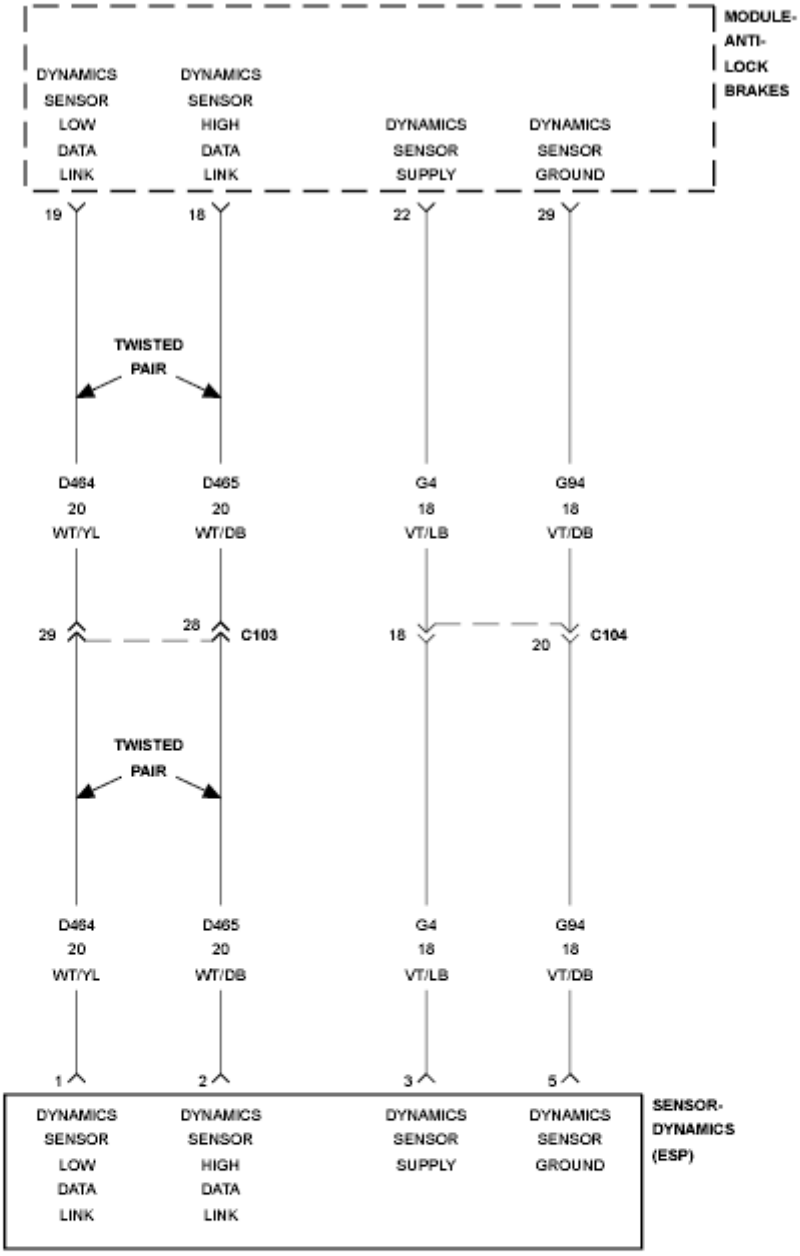
MODULE-
ANTI-
LOCK
BRAKES
DYNAMICS SENSOR LOW DATA LINK
DYNAMICS SENSOR HIGH DATA LINK
DYNAMICS SENSOR SUPPLY
DYNAMICS SENSOR GROUND
19
18
22
29
TWISTED PAIR
D464 20 WT/YL
D465 20 WT/DB
G4 18 VT/LB
G94 18 VT/DB
29
28
C103
18
20
C104
TWISTED PAIR
D464 20 WT/YL
D465 20 WT/DB
G4 18 VT/LB
G94 18 VT/DB
1
2
3
5
DYNAMICS SENSOR LOW DATA LINK
DYNAMICS SENSOR HIGH DATA LINK
DYNAMICS SENSOR SUPPLY
DYNAMICS SENSOR GROUND
SENSOR-
DYNAMICS
(ESP)

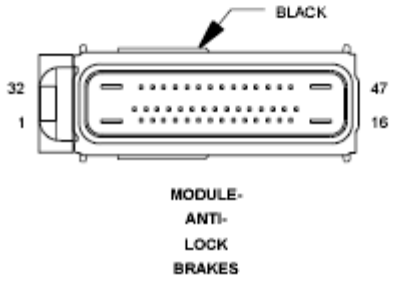
BLACK
32
1
47
16
MODULE-
ANTI-
LOCK
BRAKES

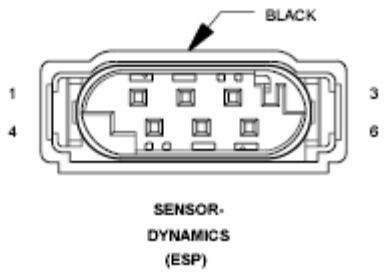
BLACK
1
4
3
6
SENSOR-
DYNAMICS
(ESP)

Fig. 69: Dynamics Sensor Circuit Schematic
Courtesy of CHRYSLER GROUP, LLC

For a complete wiring diagram **refer to appropriate SYSTEM WIRING DIAGRAMS article** .

WHEN MONITORED

Upon ignition on, prior to switching the (G4) Dynamics Sensor Supply circuit power on.

SET CONDITION

If the Anti-Lock Brake Module detects voltage on the (G4) Dynamics Sensor Supply circuit when the circuit's power is turned off.

POSSIBLE CAUSES

Possible Causes
WIRING HARNESS, TERMINAL, CONNECTOR DAMAGE
(G4) DYNAMICS SENSOR SUPPLY CIRCUIT SHORTED TO VOLTAGE
ANTI-LOCK BRAKES MODULE

DIAGNOSTIC TEST

1. **VERIFY DTC IS ACTIVE**
    1. Turn the ignition on.
    2. With the scan tool, read and record ABS DTCs.
    3. With the scan tool, read and record Environmental Data to help identify the conditions in which the DTC was set.
    4. With the scan tool, erase ABS DTCs.
    5. Cycle the ignition switch.
    6. With the scan tool, read ABS DTCs.

    Does this DTC reset?

    Yes

    - Go To 2

No

- Perform the ABS-INTERMITTENT CONDITION TEST. Refer to **STANDARD PROCEDURE**.

2. **INSPECT RELATED WIRING HARNESS, TERMINALS, AND CONNECTORS**
   1. Turn the ignition off.
   2. Check all related wiring for pinched, chafed, pierced, and partially broken wires.
   3. Check all related connectors for broken, bent, pushed out, and corroded terminals.

   Were any problems found?

   Yes

   - Repair as necessary.
   - Perform ABS VERIFICATION TEST. Refer to **STANDARD PROCEDURE**.

   No

   - Go To 3

3. **CHECK (G4) DYNAMICS SENSOR SUPPLY CIRCUIT SHORT FOR A SHORT TO VOLTAGE**

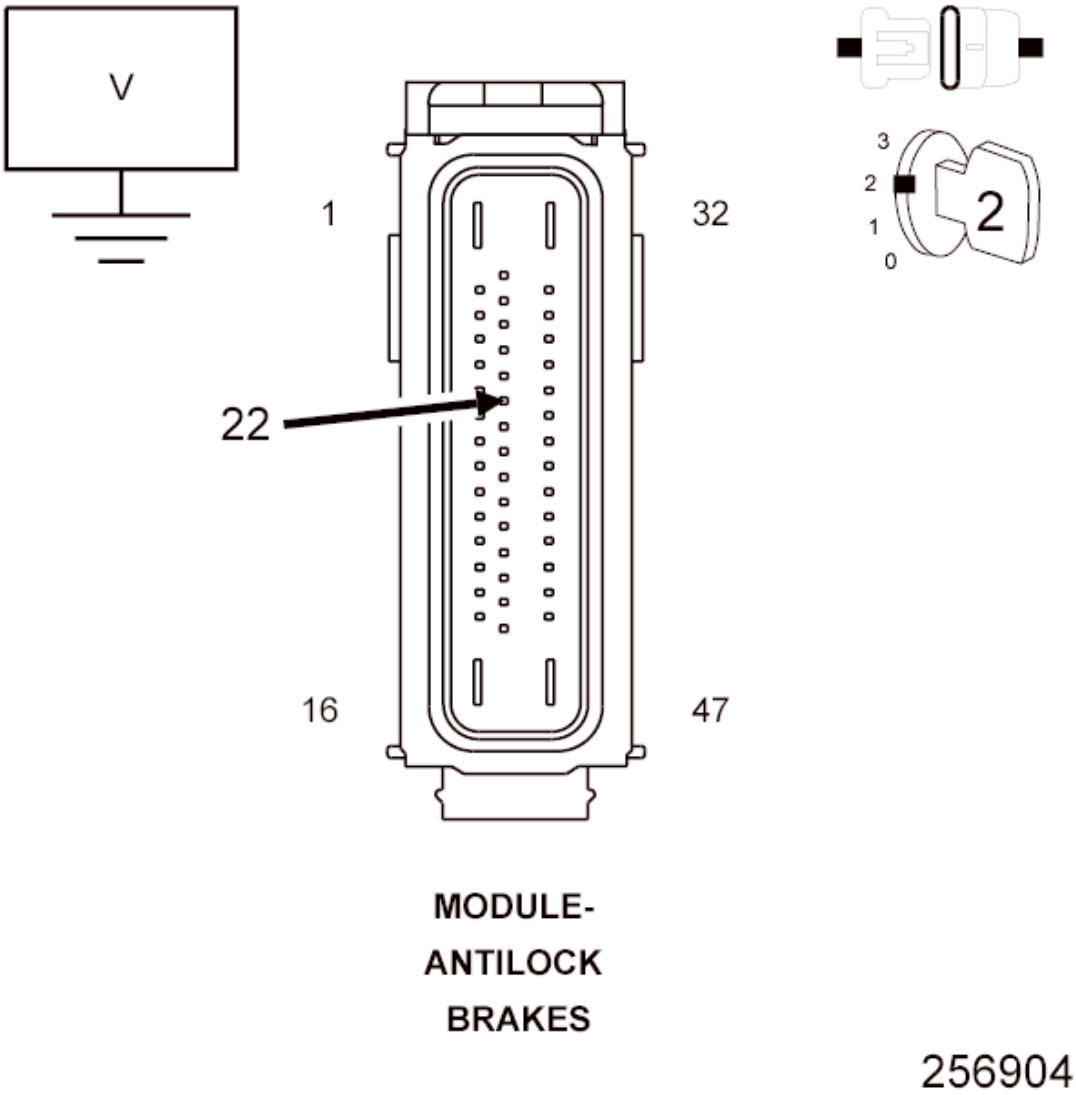

Fig. 70: Measuring Voltage Of Dynamics Sensor Supply Circuit
Courtesy of CHRYSLER GROUP, LLC

1. Disconnect the Anti-Lock Brake Module harness connector.
2. Turn the ignition on.
3. Measure the voltage of the (G4) Dynamics Sensor Supply Circuit.

   Is the voltage above 0.2 volts?

   Yes

   - Repair the (G4) Dynamics Sensor Supply Circuit for a short to voltage.
   - Perform ABS VERIFICATION TEST. Refer to **STANDARD PROCEDURE**.

No

- Replace the Anti-Lock Brake Module in accordance with the Service Information.
- Perform ABS VERIFICATION TEST. Refer to **STANDARD PROCEDURE**.

C2116-ABS PUMP MOTOR SUPPLY LOW VOLTAGE

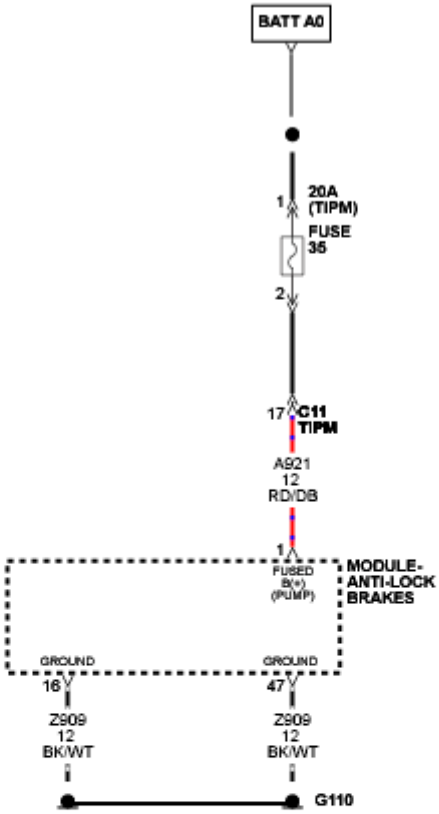

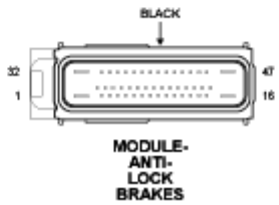

Fig. 71: ABS Pump Motor Control Circuit Schematic

Courtesy of CHRYSLER GROUP, LLC

For a complete wiring diagram **refer to appropriate SYSTEM WIRING DIAGRAMS article** .

WHEN MONITORED

With the ignition on and the ABS Pump Motor deactivated, but not if supply voltage faults are detected.

Or, if the control is switched off.

SET CONDITION

If the Anti-Lock Brake Module detects either a low voltage condition when the ABS Pump Motor is activated or deactivated or a high voltage condition when the ABS Pump Motor is deactivated.

POSSIBLE CAUSES

Possible Causes
WIRING HARNESS, TERMINAL, CONNECTOR DAMAGE
ABS PUMP MOTOR FUSE OPEN
(A921) FUSED B(+) CIRCUIT SHORTED TO GROUND, OPEN, OR HIGH RESISTANCE
(Z909) GROUND CIRCUIT OPEN, OR HIGH RESISTANCE
ANTI-LOCK BRAKES MODULE
PUMP MOTOR (HYDRAULIC CONTROL UNIT)

DIAGNOSTIC TEST

1. **CHECK FOR A DTC C2116-ABS PUMP MOTOR SUPPLY LOW VOLTAGE**

   NOTE: This DTC must be active for the results of this test to be valid.

   1. Turn the ignition on.
   2. With the scan tool, record and erase DTCs.
   3. Cycle the ignition switch from off to on.

4. Road test the vehicle over 40 km/h (25 mph).

   NOTE: Vehicle must be driven above 40 km/h (25 mph) for set conditions to be meet.

5. With the scan tool, read DTCs.

   Does the scan tool display: C2116-ABS PUMP MOTOR SUPPLY LOW VOLTAGE active?

   Yes

   - Go To 2

   No

   - Perform the ABS-INTERMITTENT CONDITION TEST. Refer to **STANDARD PROCEDURE**.

2. **INSPECT RELATED WIRING HARNESS, TERMINALS, AND CONNECTORS**
   1. Turn the ignition off.
   2. Visually inspect the Anti-Lock Brake Module harness connector and wiring harness for damage.
   3. Check all related wiring for pinched, chafed, pierced, and partially broken wires.
   4. Check all related connectors for broken, bent, pushed out, and corroded terminals.

   Were any problems found?

   Yes

   - Repair as necessary.
   - Perform ABS VERIFICATION TEST. Refer to **STANDARD PROCEDURE**.

   No

   - Go To 3

3. **CHECK ABS PUMP MOTOR FUSE**
   1. Remove and visually inspect the ABS Pump Motor fuse.

      Is the fuse open?

      Yes

      - Go To 4

      No

      - Go To 5
4. **CHECK (A921) FUSED B(+) CIRCUIT FOR A SHORT TO GROUND**

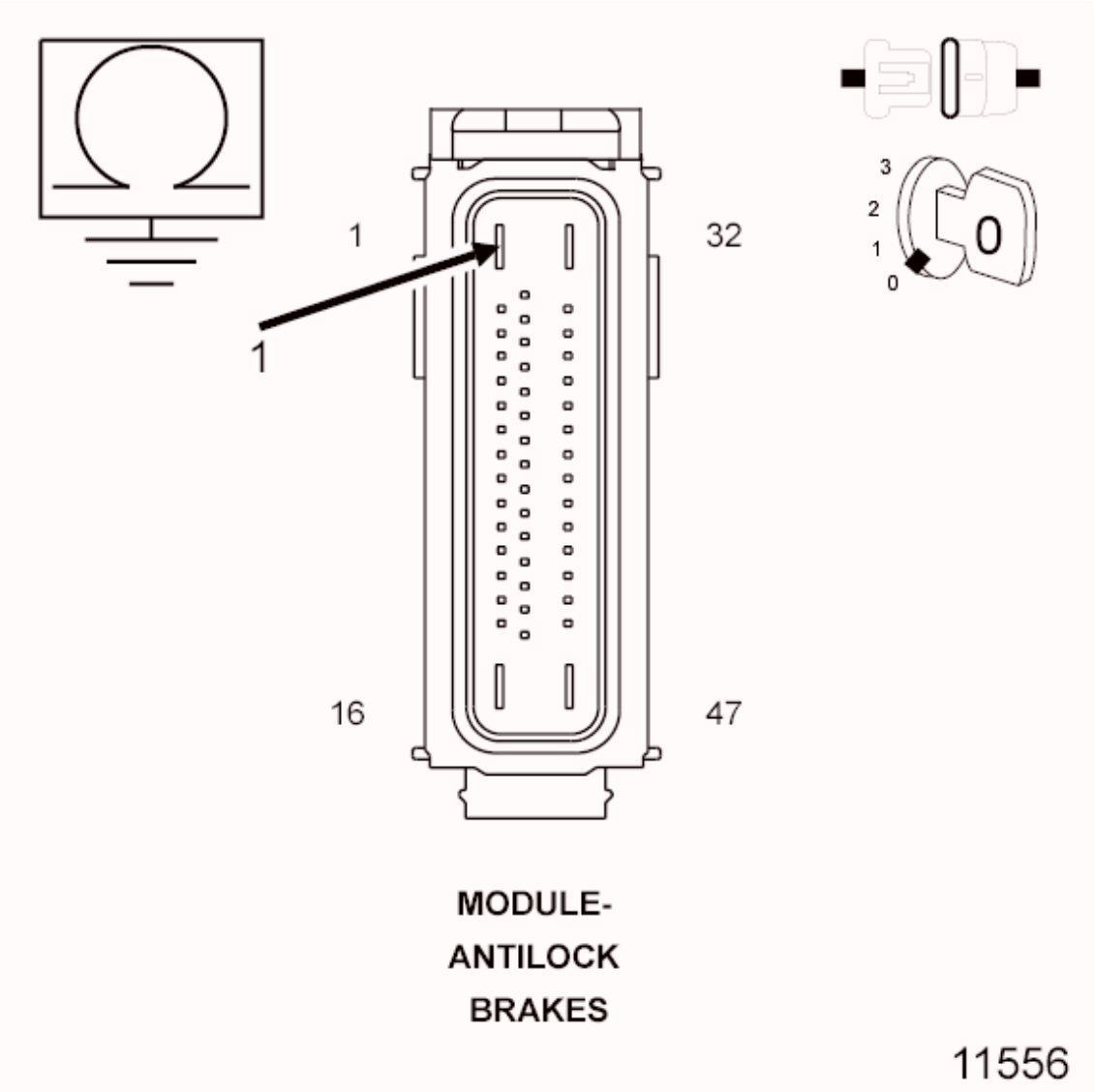

Fig. 72: Measuring Resistance Of Fused B (+) Circuit Between Ground

& ABS Module Harness Connector
Courtesy of CHRYSLER GROUP, LLC

1. Disconnect the Anti-Lock Brake Module harness connector.
2. Measure the resistance of the (A921) Fused B(+) circuit between ground and the Anti-Lock Brake Module harness connector.

   Is the resistance below 10k ohms?

   Yes

   - Repair the (A921) Fused B(+) circuit for a short to ground.
   - Perform ABS VERIFICATION TEST. Refer to **STANDARD PROCEDURE**.

   No

   - Go To 5

5. **CHECK (A921) FUSED B(+) CIRCUIT FOR AN OPEN OR HIGH RESISTANCE**

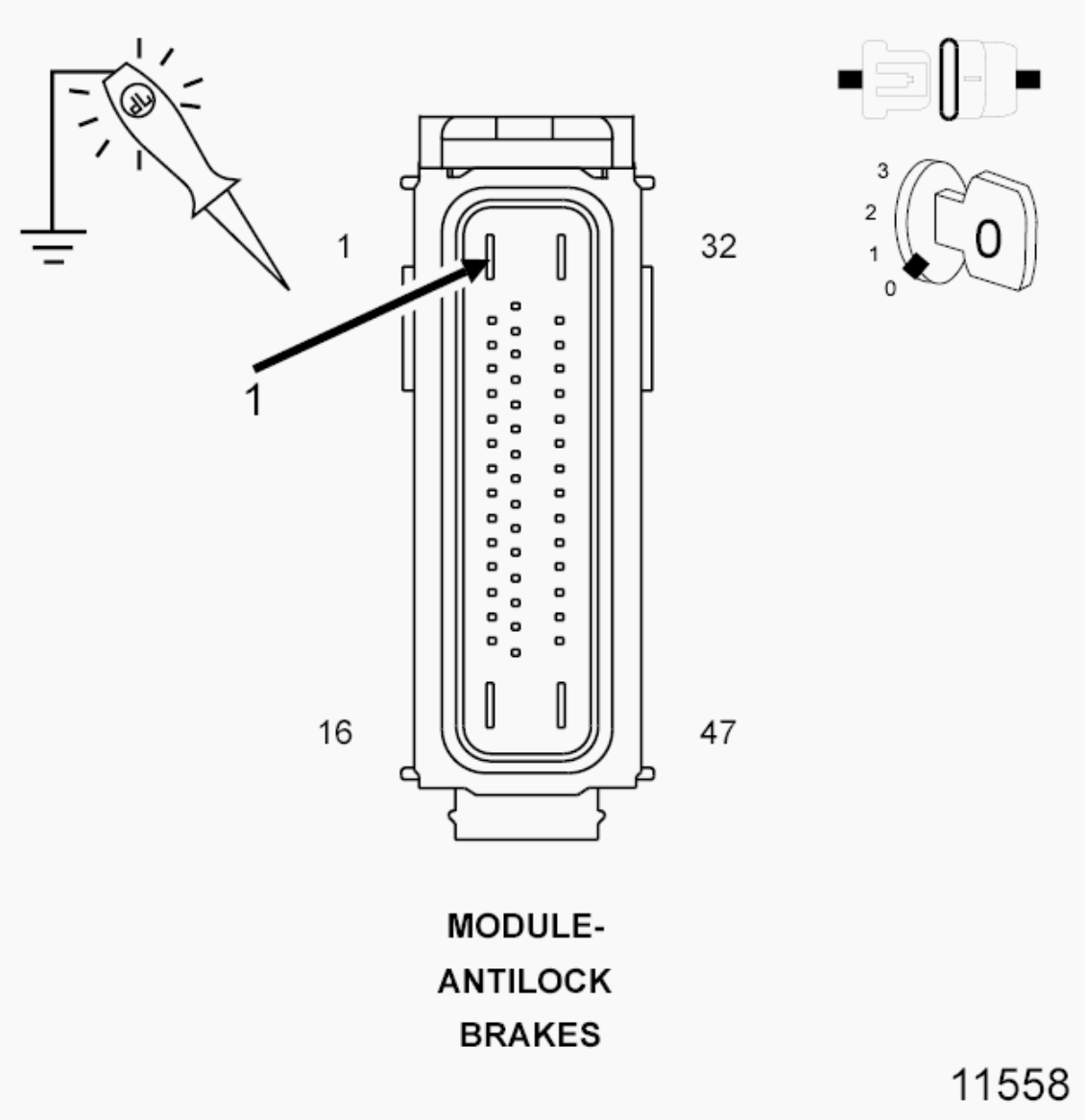

Fig. 73: Checking Fused B(+) Circuit For An Open Or High Resistance
Courtesy of CHRYSLER GROUP, LLC

1. Replace the ABS Pump Motor fuse.
2. Using a 12-volt test light connected to ground, probe the (A921) Fused B(+) circuit.

NOTE: The test light should illuminate brightly. Compare the brightness to that of a direct connection to the battery.

Does the test light illuminate brightly?

Yes

- Go To 6

No

- Repair the (A921) Fused B(+) circuit for an open or high resistance.
- Perform ABS VERIFICATION TEST. Refer to **STANDARD PROCEDURE**.

6. **CHECK (Z909) GROUND CIRCUIT FOR AN OPEN OR HIGH RESISTANCE**

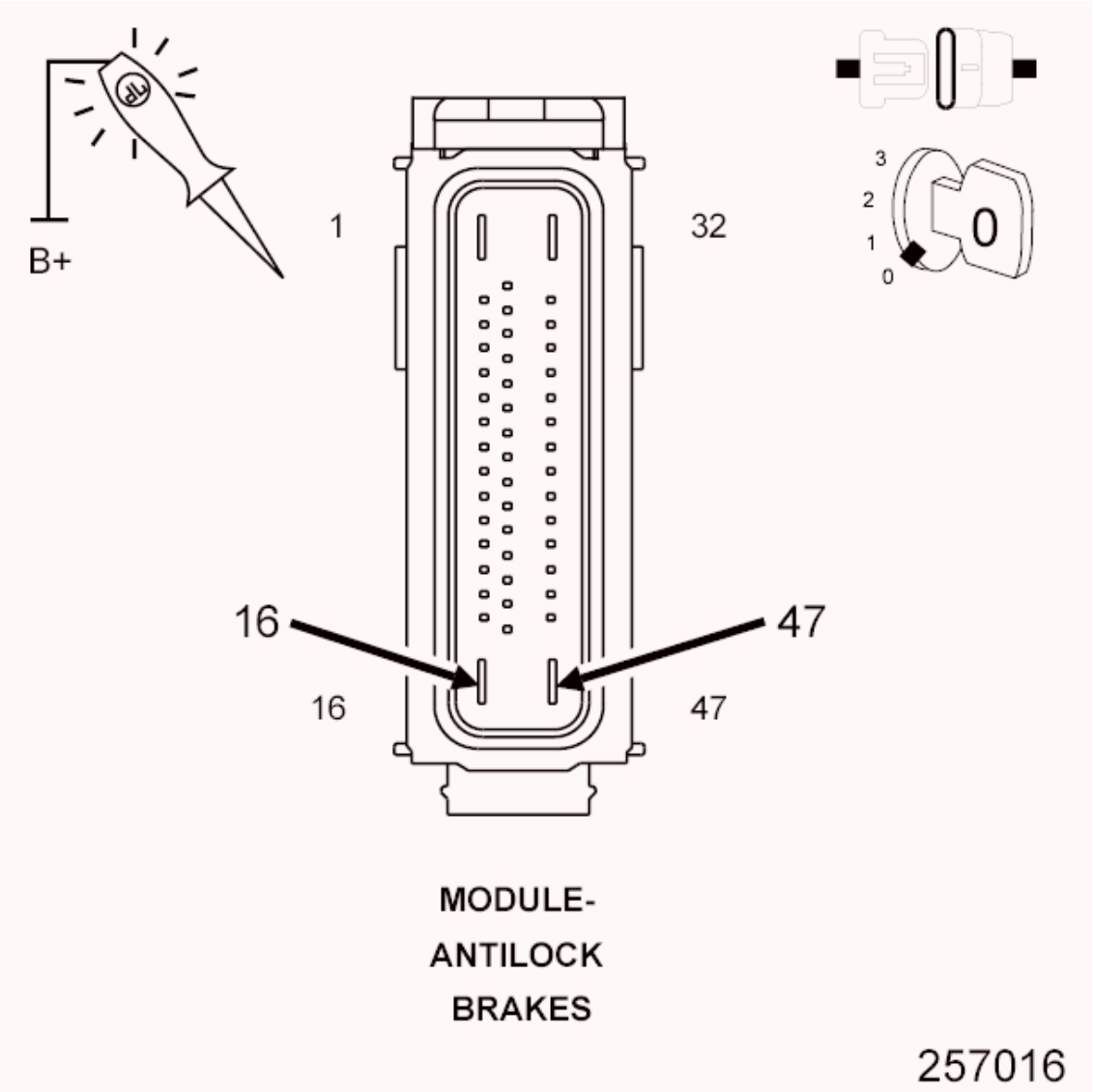

Fig. 74: Checking Ground Circuit For An Open Or High Resistance
Courtesy of CHRYSLER GROUP, LLC

1. Using a 12-volt test light connected to 12 volts, probe the (Z909)

Ground circuit.

NOTE: The test light should illuminate brightly. Compare the brightness to that of a direct connection to the battery.

Does the test light illuminate brightly on both circuits?

Yes

- Go To 7

No

- Repair (Z909) circuit for an open or high resistance.
- Perform ABS VERIFICATION TEST. Refer to **STANDARD PROCEDURE**.

7. **REPLACE ANTI-LOCK BRAKES MODULE AND VERIFY IF DTC IS STILL ACTIVE**
   1. Replace the Anti-Lock Brake Module in accordance with the Service Information.
   2. Perform ABS VERIFICATION TEST. Refer to **STANDARD PROCEDURE**.
   3. Turn the ignition on.
   4. With the scan tool, read ABS DTCs.

   Does this DTC reset?

   Yes

   - Replace the Hydraulic Control Unit in accordance with the Service Information.
   - Perform ABS VERIFICATION TEST. Refer to **STANDARD PROCEDURE**.

   No

   - Perform the ABS-INTERMITTENT CONDITION TEST. Refer to **STANDARD PROCEDURE**.

C2200-ANTI-LOCK BRAKE MODULE INTERNAL

For a complete wiring diagram **refer to appropriate SYSTEM WIRING DIAGRAMS article** .

WHEN MONITORED

Ignition on. The Anti-Lock Brake Module (ABM) monitors its internal microprocessors for correct operation.

SET CONDITION

If the Anti-lock brake module detects an internal fault, the DTC is set.

POSSIBLE CAUSES

Possible Causes
ABM - INTERNAL FAULT

DIAGNOSTIC TEST

ABM INTERNAL FAILURE DTC PRESENT

1. Turn the ignition on.
2. With the scan tool, read DTCs.
3. With the scan tool, erase DTCs.
4. Turn the ignition off.
5. Turn the ignition on.
6. With the scan tool, read DTCs.

   Does the scan tool display ANTI-LOCK BRAKE MODULE INTERNAL FAILURE?

   Yes

   - Replace the Anti-Lock Brake Module in accordance with the Service Information.
   - Perform ABS VERIFICATION TEST. Refer to **STANDARD PROCEDURE**.

   No

- Perform the ABS-INTERMITTENT CONDITION TEST. Refer to **STANDARD PROCEDURE**.

C2204-DYNAMICS SENSOR INTERNAL

For a complete wiring diagram, **refer to appropriate SYSTEM WIRING DIAGRAMS article** .

WHEN MONITORED

Continuously, with ignition on, until vehicle speed exceeds 12.4 mph (20 km/h) for the first time, but not if the sensor voltage is out of range.

SET CONDITION

If the Anti-Lock Brake Module detects that the Yaw or Lateral Sensor signal is out of range.

POSSIBLE CAUSES

Possible Causes
DYNAMICS SENSOR INSTALLATION DYNAMICS SENSOR

DIAGNOSTIC TEST

VERIFY DTC IS ACTIVE

NOTE: If present, diagnose and repair DTC C123C-DYNAMICS SENSOR MOUNTING/INSTALLATION PERFORMANCE before diagnosing this DTC.

1. Turn the ignition on.
2. With the scan tool, read and record the ABS DTCs.
3. With the scan tool, read and record Environmental Data to help identify the conditions in which the DTC was set.
4. With the scan tool, erase the ABS DTCs.
5. Cycle the ignition switch.

WARNING: Make sure brake capability is available before road testing.

NOTE: Attempt to operate the vehicle under conditions similar to which the DTC was set. It may be necessary to test drive the vehicle within the DTC monitoring and set conditions in order for this DTC to set.

6. Test drive the vehicle by turning the vehicle left or right in a curving manner at a velocity between 6 and 12 mph (10 and 20 km/h).
7. Park the vehicle.
8. With the scan tool, read the ABS DTCs.

   Does this DTC reset?

   Yes

   - Replace the Dynamics Sensor in accordance with the Service Information.
   - Perform ABS VERIFICATION TEST. Refer to **STANDARD PROCEDURE**.

   No

   - Perform the ABS INTERMITTENT CONDITION TEST. Refer to **STANDARD PROCEDURE**.

C2205-STEERING ANGLE SENSOR INTERNAL

For a complete wiring diagram, **refer to appropriate SYSTEM WIRING DIAGRAMS article** .

WHEN MONITORED

With ignition on, but not if supply voltage faults are detected.

SET CONDITION

If the Anti-Lock Brake Module detects that the Steering Angle Sensor sends an internal failure message.

POSSIBLE CAUSES

Possible Causes

CLOCKSPRING (SAS)

DIAGNOSTIC TEST

CHECK FOR A DTC C2205-STEERING ANGLE SENSOR INTERNAL

NOTE: This DTC must be active for the results of this test to be valid.

1. Turn the ignition on.
2. With the scan tool, read and record DTCs.
3. With the scan tool, read and record Environmental Data to help identify the conditions in which the DTC was set.
4. With the scan tool, erase DTCs.

WARNING: Make sure brake capability is available before road testing.

5. Start the vehicle and turn the wheel from lock to lock.
6. Test drive the vehicle by turning the vehicle left or right in a curving manner at a velocity between 10 and 25 km/h (6 and 15 mph).
7. Park the vehicle.
8. With the scan tool, read and record DTCs.

Does the scan tool display: C2205-STEERING ANGLE SENSOR INTERNAL?

Yes

- Replace the Clockspring (SAS) in accordance with the Service Information.
- Perform the ABS VERIFICATION TEST. Refer to **STANDARD PROCEDURE**.

No

- Perform the ABS VERIFICATION TEST. Refer to **STANDARD PROCEDURE**.

C2206-VEHICLE CONFIGURATION MISMATCH

For a complete wiring diagram, **refer to appropriate SYSTEM WIRING DIAGRAMS article** .

WHEN MONITORED

With the ignition on.

SET CONDITION

When the Anti-lock Brake (ABS) Module detects the signal from the gateway module relevant for vehicle characteristic is missing for a period greater than the specified fault duration.

POSSIBLE CAUSES

Possible Causes
VEHICLE CONFIGURATION MISMATCH ABS MODULE INITIALIZATION ANTI-LOCK BRAKE SYSTEM (ABS) MODULE

DIAGNOSTIC TEST

1. **VERIFY THE DTC IS ACTIVE**
    1. Turn the ignition on.
    2. With the scan tool, select "Miscellaneous Functions" and Restore Vehicle Configuration.
    3. With the scan tool, record and erase the DTCs.
    4. Cycle the ignition switch off then on.
    5. With the scan tool, read the DTCs.

    Is the DTC active at this time?

    Yes

    - Go To 2

    No

    - Perform the ABS VERIFICATION TEST. Refer to **STANDARD**

PROCEDURE.

2. **INITIALIZE THE ABS MODULE**
   1. Cycle the ignition switch off then on.
   2. With the scan tool, under "Miscellaneous Functions" run the ABS Initialization routine.
   3. With the scan tool, erase the DTCs.
   4. With the scan tool, read the DTCs.

   Does the DTC remain active?

   Yes

   - Replace the Anti-lock Brake System (ABS) Module in accordance with the service information.
   - Perform the ABS VERIFICATION TEST. Refer to **STANDARD PROCEDURE**.

   No

   - Test complete, the condition or conditions that originally set this DTC are not present at this time.

C2312-TCS/ESP SWITCH STUCK

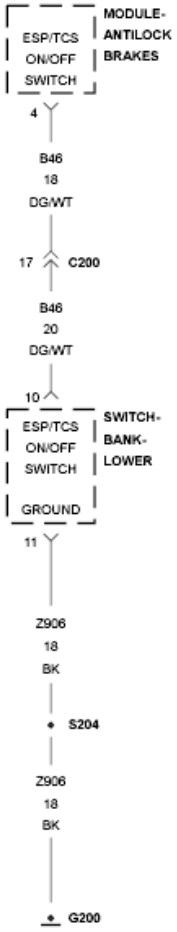

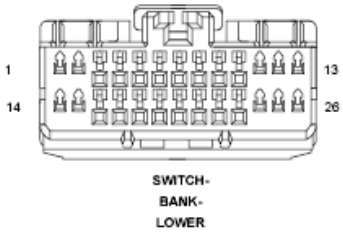

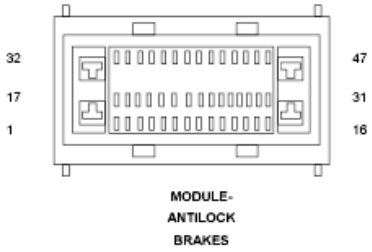

Fig. 75: TCS/ESP Switch Circuit Schematic
Courtesy of CHRYSLER GROUP, LLC

For a complete wiring diagram, **refer to appropriate SYSTEM WIRING DIAGRAMS article** .

WHEN MONITORED

With the ignition on.

SET CONDITION

When the Anti-Lock Brake Module indicates that the ESP/TCS Switch is low for 30 seconds.

POSSIBLE CAUSES

Possible Causes
STUCK CLOSED ESP/TCS SWITCH (Z906) GROUND CIRCUIT OPEN (B46) ESP/TCS CONTROL SWITCH SENSE CIRCUIT SHORTED TO GROUND ANTI-LOCK BRAKE MODULE

DIAGNOSTIC TEST

1. **ESP/TCS SWITCH CIRCUIT**

   NOTE: If any other DTCs are present they must be repaired before continuing.

   1. Turn the ignition on.
   2. Turn the ESP/TCS switch on then off.
   3. Check for car icon on solid in cluster and pressing ESP/TCS switch does not change state.
   4. With the scan tool, read the switch state for the ESP/TCS switch with NO pressure on the brake, read and record DTCs.

   Does the scan tool display switch state indicating pressed?

   Yes

   - Go To 2

   No

   - The condition that caused the symptom is currently not present. Inspect the related wiring for a possible intermittent condition. Look for any chafed, pierced, pinched, or partially broken wires.

- Perform the ABS-INTERMITTENT CONDITION TEST. Refer to **STANDARD PROCEDURE**.

2. **(Z906) OPEN CIRCUIT**

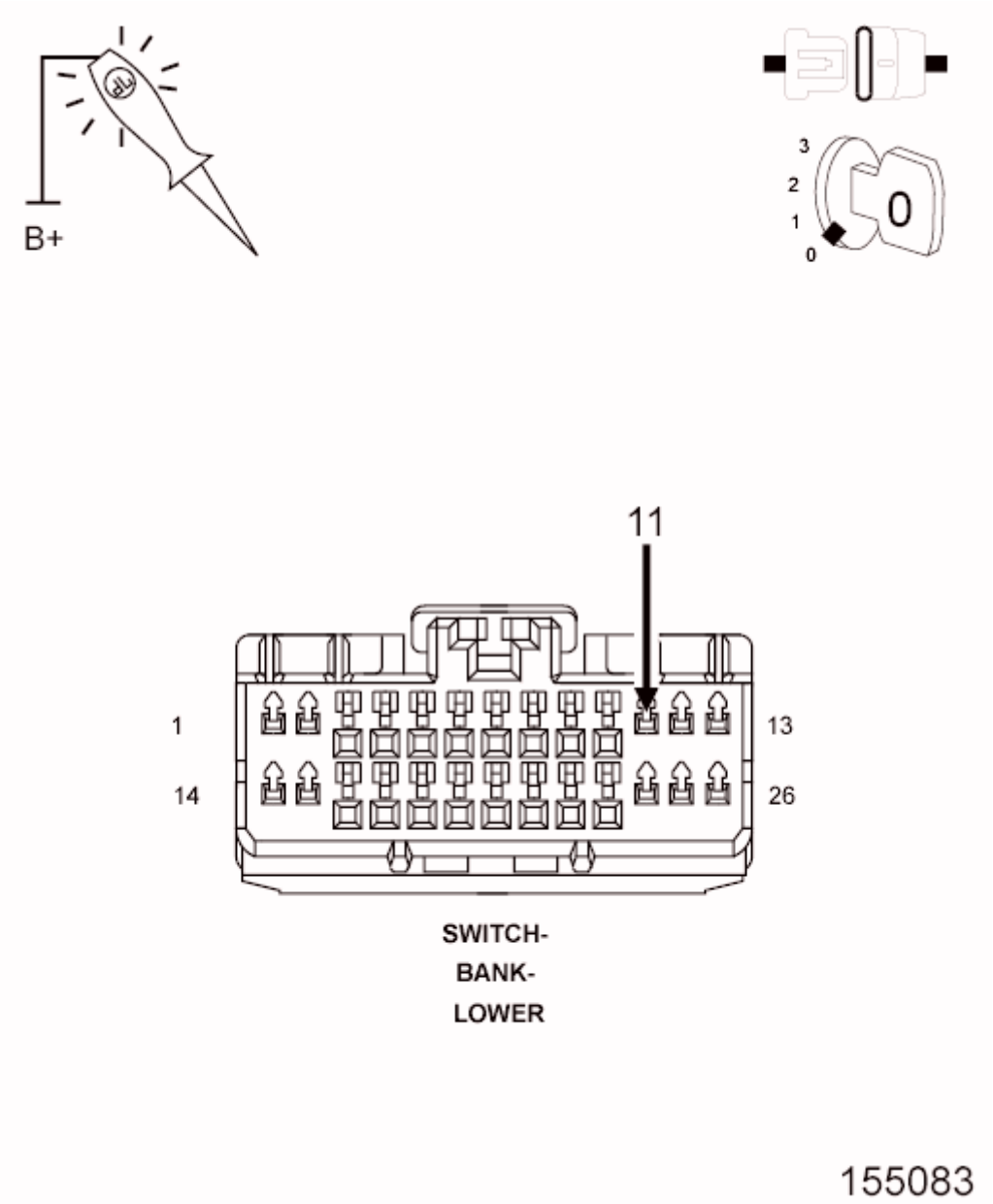

Fig. 76: Checking For An Open Circuit
Courtesy of CHRYSLER GROUP, LLC

1. Turn the ignition off.
2. Disconnect the ESP/TCS switch.
3. Using a 12-volt test light connected to 12-volts, check the (Z906) ground circuit.

Does the test light illuminate brightly?

Yes

- Go To 3

No

- Repair (Z906) ground circuit for an open circuit or high resistance.
- Perform ABS VERIFICATION TEST. Refer to **STANDARD PROCEDURE**.

3. **CHECK FOR A STUCK ESP/TCS SWITCH**

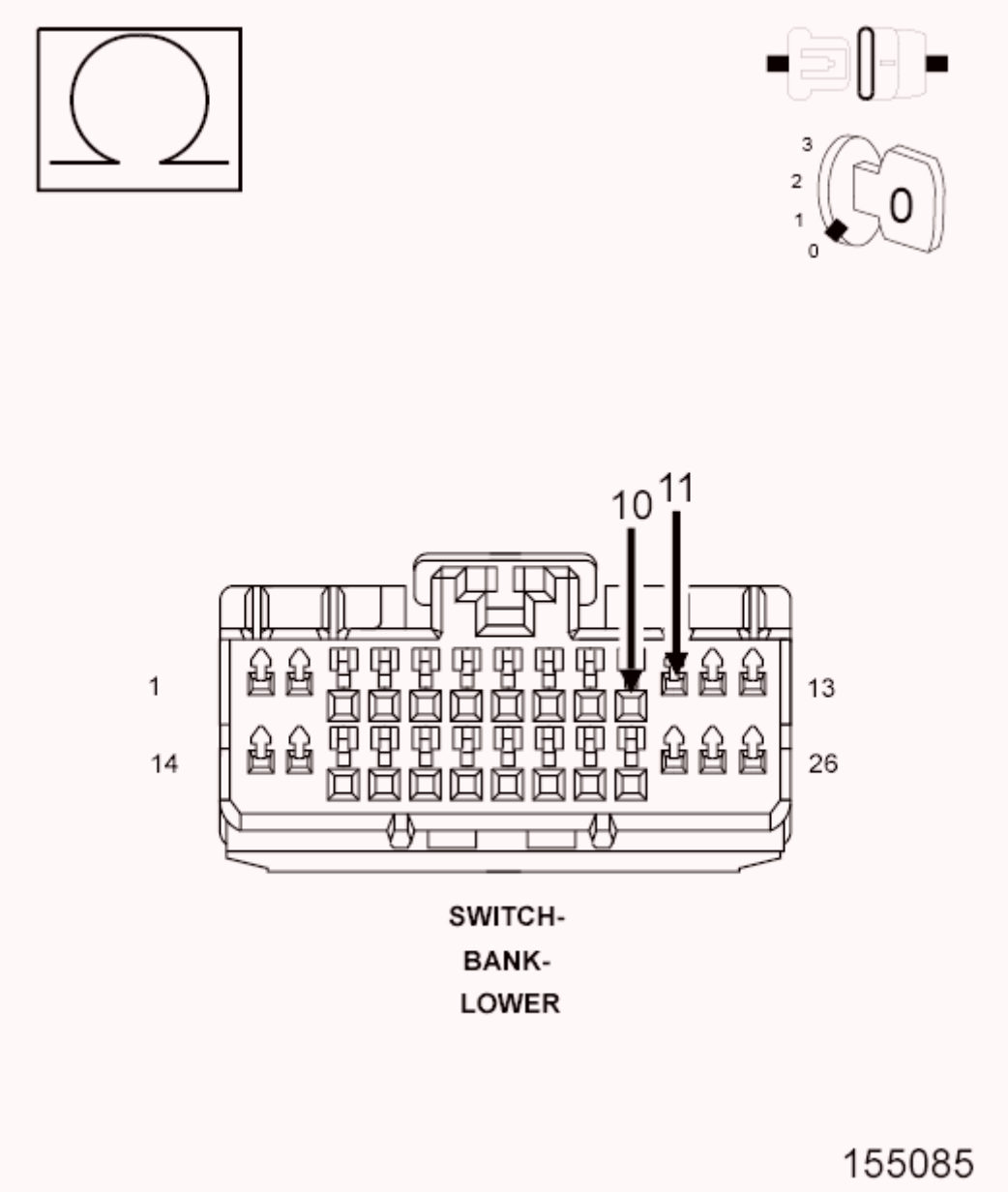

Fig. 77: Checking For Stuck ESP/TCS Switch
Courtesy of CHRYSLER GROUP, LLC

1. Turn the ignition off.
2. Measure the internal resistance of the ESP/TCS Switch between the (B46) ESP/TCS control circuit and (Z906) Ground circuit.

   Is the resistance below 5.0 ohms?

   Yes

   - Replace the ESP/TCS Switch in accordance with the Service Information.
   - Perform ABS VERIFICATION TEST. Refer to **STANDARD PROCEDURE**.

   No

   - Go To 4

4. **ESP/TCS CONTROL CIRCUIT**

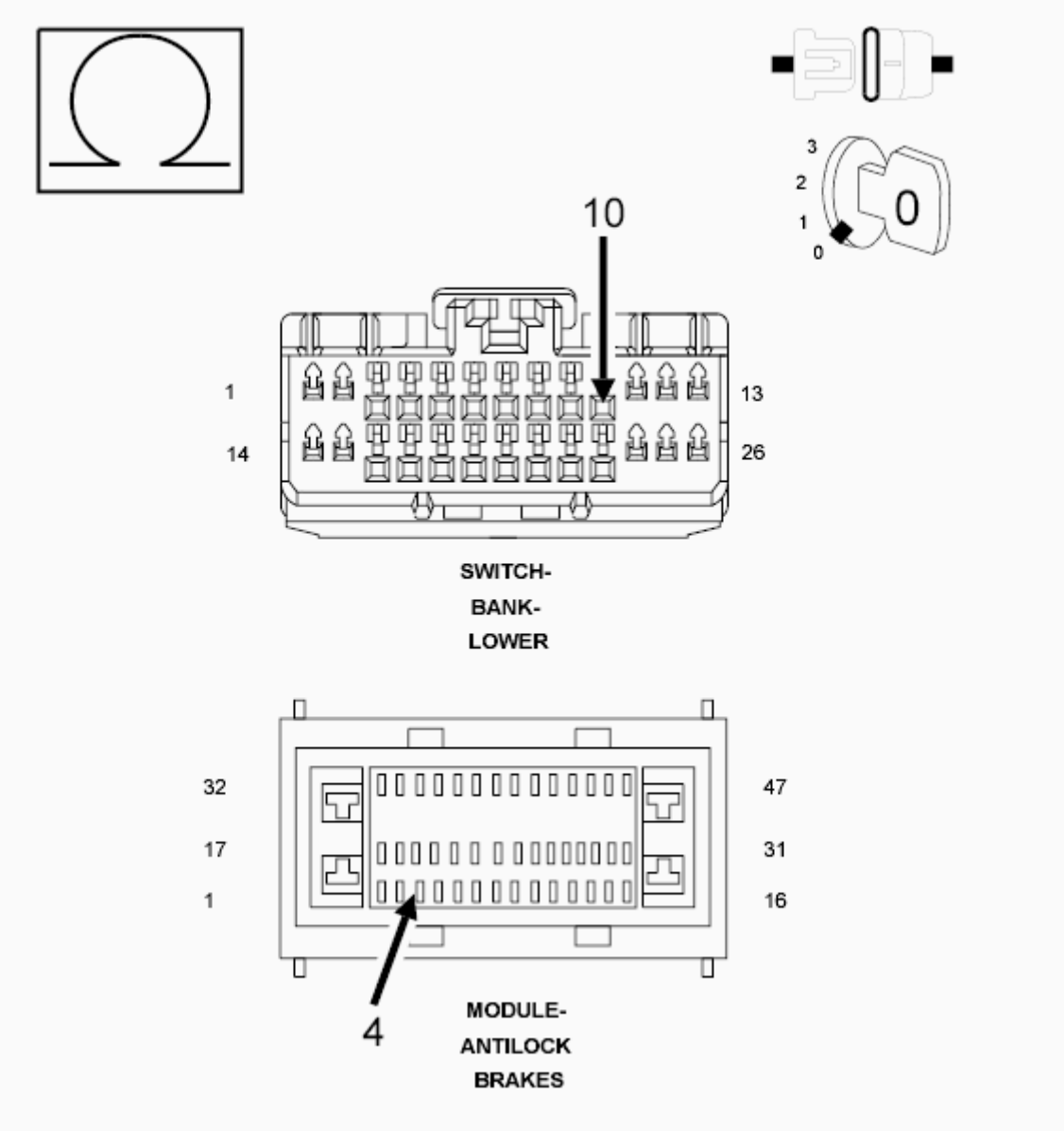

Fig. 78: Checking Resistance Of ESP/TCS Control Circuit
Courtesy of CHRYSLER GROUP, LLC

1. Turn the ignition off.
2. Disconnect the ESP/TCS Switch.
3. Disconnect the Anti-Lock Brake Module harness connector.
4. Measure the resistance of the (B46) ESP/TCS control circuit to ground.

   Is the resistance below 5.0 ohms?

   Yes

   - Repair the (B46) ESP/TCS control circuit for a short to ground.

- Perform ABS VERIFICATION TEST. Refer to **STANDARD PROCEDURE**.

No

- Replace the Anti-Lock Brake Module in accordance with the Service Information.
- Perform ABS VERIFICATION TEST. Refer to **STANDARD PROCEDURE**.

U0002-CAN C BUS OFF PERFORMANCE

For a complete wiring diagram, **refer to appropriate SYSTEM WIRING DIAGRAMS article** .

WHEN MONITORED

Ignition run time is greater than one second.

Battery voltage between 9 and 16 volts.

Engine run time greater than three seconds.

SET CONDITION

Bus messages not received from the Totally Integrated Power Module (TIPM) for approximately two to five seconds.

POSSIBLE CAUSES

Possible Causes
CAN BUS CIRCUITS OPEN OR SHORTED
DTCS RELATED TO BATTERY VOLTAGE, IGNITION, OR VIN MESSAGES
TOTALLY INTEGRATED POWER MODULE POWER AND GROUND
TIPM NOT CONFIGURED CORRECTLY
TOTALLY INTEGRATED POWER MODULE (TIPM)
MODULE THAT SET THIS DTC

DIAGNOSTIC TEST

ACTIVE DTC

1. Ignition on, engine not running.
2. With the scan tool, select view DTCs.

   Is the DTC Active at this time?

   Yes

   - Diagnose the U0002-CAN C BUS OFF PERFORMANCE as the U0001-CAN C BUS CIRCUIT test. Perform the U0001-CAN C Bus diagnostic procedure.

   No

   - Refer to **DIAGNOSIS AND TESTING** and perform the STORED LOST COMMUNICATION DTCs diagnostic procedure.

U0100-LOST COMMUNICATION WITH THE ECM/PCM

For a complete wiring diagram, **refer to appropriate SYSTEM WIRING DIAGRAMS article** .

WHEN MONITORED

Ignition run time is greater than one second.

Battery voltage between 9 and 16 volts.

Engine run time greater than three seconds.

SET CONDITION

Bus messages not received from the Powertrain Control Module (ECM/PCM) for approximately two to five seconds.

POSSIBLE CAUSES

Possible Causes
CAN BUS CIRCUITS OPEN OR SHORTED DTCS RELATED TO BATTERY VOLTAGE, IGNITION, OR VIN MESSAGES POWERTRAIN CONTROL MODULE POWER AND GROUND TIPM NOT CONFIGURED CORRECTLY

POWERTRAIN CONTROL MODULE (ECM/PCM) MODULE THAT SET THIS DTC

DIAGNOSTIC TEST

ACTIVE DTC

1. Ignition on, engine not running.
2. With the scan tool, select view DTCs.

   Is the DTC Active at this time?

   Yes

   - Perform the U0100-LOST COMMUNICATION WITH ECM/PCM diagnostic procedure.

   No

   - Refer to **DIAGNOSIS AND TESTING** and perform the STORED LOST COMMUNICATION DTCs diagnostic procedure.

U0101-LOST COMMUNICATION WITH TCM

For a complete wiring diagram, **refer to appropriate SYSTEM WIRING DIAGRAMS article** .

WHEN MONITORED

- With the ignition on
- Battery voltage between 10 and 16 volts
- IOD fuse installed

SET CONDITION

If the Anti-Lock Brakes Module fails to receive bus messages from the TCM for approximately 500 ms.

POSSIBLE CAUSES

Possible Causes
DTCs RELATED TO BATTERY VOLTAGE, IGNITION, OR VIN

MESSAGES
CAN C BUS CIRCUITS OPEN OR SHORTED
TCM POWER AND GROUND
PCM DTCs PRESENT
TCM
ANTI-LOCK BRAKES MODULE

DIAGNOSTIC TEST

1. **VERIFY DTC IS ACTIVE**

   NOTE: Verify the IOD fuse is installed and battery voltage is between 10 and 16 volts before proceeding.

   NOTE: If present, diagnose and repair DTC U0002-CAN C BUS OFF PERFORMANCE, DTC or DTC U1502-IMPLAUSIBLE MESSAGE DATA LENGTH RECEIVED FROM TIPM before diagnosing this DTC.

   1. Turn the ignition on.
   2. With the scan tool, read and record the ABS DTCs.
   3. With the scan tool, read and record Environmental Data (EV Data).
   4. With the scan tool, erase the ABS DTCs.
   5. Cycle the ignition switch.
   6. With the scan tool, read the ABS DTCs.

   Does this DTC reset?

   Yes

   - Go To 2

   No

   - Perform the STORED LOST COMMUNICATION DTCs test procedure. Refer to **DIAGNOSIS AND TESTING** .

2. **CHECK FOR ANY OF THE FOLLOWING ACTIVE DTCs**
   1. With the scan tool, read all active DTCs from all CAN C Bus modules.

NOTE: Check for CAN C hardware electrical, VIN Missing/Mismatch, battery or ignition related DTCs.

Does the scan tool display any active DTCs related to the conditions listed above?

Yes

- Diagnose and repair the DTC(s). Refer to the **DIAGNOSTIC CODE INDEX** .

No

- Go To 3

3. **VERIFY THAT THE TCM IS ACTIVE ON THE BUS**
   1. With the scan tool, select ECU View.
   2. Verify that the TCM is active on the bus.

   Is the TCM active on the bus?

   Yes

   - Go To 4

   No

   - For a NO RESPONSE FROM TCM test procedure. Refer to **DIAGNOSIS AND TESTING** .

4. **CHECK FOR ADDITIONAL COMMUNICATION RELATED DTCs**
   1. With the scan tool, select Network View and select Advanced.

   Is there more than one module with active DTCs "Logged Against" the TCM?

   Yes

   - Replace/update the TCM in accordance with the service information.

- Perform the TCM VERIFICATION TEST. Refer to **STANDARD PROCEDURE** for 6F24 automatic transmission or **STANDARD PROCEDURE** for CVT automatic transmission. .

No

- Replace the Anti-Lock Brakes Module in accordance with the service information.
- Perform the ABS VERIFICATION TEST. Refer to **STANDARD PROCEDURE**.

U0114-LOST COMMUNICATION WITH FINAL DRIVE MODULE

For a complete wiring diagram, **refer to appropriate SYSTEM WIRING DIAGRAMS article** .

WHEN MONITORED

- With the ignition on
- Battery voltage between 10 and 16 volts
- Ignition Off Draw (IOD) fused installed.
- Totally Integrated Power Module (TIPM) is configured correctly.

SET CONDITION

Bus messages not received from the Final Drive Control Module (FDCM) for approximately two to five seconds.

POSSIBLE CAUSES

Possible Causes
CAN B BUS CIRCUITS OPEN OR SHORTED
DTCS RELATED TO BATTERY VOLTAGE, IGNITION, OR VIN MESSAGES
TIPM NOT CONFIGURED CORRECTLY
TOTALLY INTEGRATED CONTROL MODULE
TOTALLY INTEGRATED CONTROL MODULE POWER AND GROUND
ANTI-LOCK BRAKE MODULE

DIAGNOSTIC TEST

1. **VERIFY DTC IS ACTIVE**

   NOTE: Verify the IOD fuse is installed and battery voltage is between 10 and 16 volts before proceeding.

   1. With the scan tool, read active DTCs.

      Is this DTC active?

      Yes

      - Go To 2

      No

      - Refer to **DIAGNOSIS AND TESTING** and perform the STORED LOST COMMUNICATION DTCs diagnostic procedure.

2. **CHECK FOR ANY OF THE FOLLOWING ACTIVE DTCS**
   1. With the scan tool, read all active DTCs from all modules.

      NOTE: Check for TIPM configuration, CAN B or C hardware electrical, VIN Missing/Mismatch, battery or ignition related DTCs.

      Does the scan tool display any active DTCs to the conditions listed above?

      Yes

      - Go to the **DTC INDEX** and perform the appropriate diagnostic procedure.

      No

      - Go To 3

3. **VERIFY THAT THE TIPM IS ACTIVE ON THE BUS**
   1. Turn the ignition on.
   2. With the scan tool, select Network Diagnostics.

3. Verify that the FDCM is active on the bus.

   Is the FDCM active on the bus?

   Yes

   - Go To 4

   No

   - Refer to **DIAGNOSIS AND TESTING** and perform the NO RESPONSE FROM FDCM diagnostic procedure.

4. **CHECK FOR ADDITIONAL COMMUNICATION RELATED DTCS**
   1. With the scan tool, select Network Diagnostics.

      Is there more than one module with active DTCs "Logged Against" the FDCM?

      Yes

      - Replace/update the Final Drive Control Module (FDCM) in accordance with the service information.
      - Perform the BODY VERIFICATION TEST. Refer to **STANDARD PROCEDURE** .

      No

      - Replace the Anti-lock Brake Module in accordance with the service information
      - Perform the ABS VERIFICATION TEST. Refer to **STANDARD PROCEDURE**.

U0125-LOST COMMUNICATION WITH DYNAMICS SENSOR

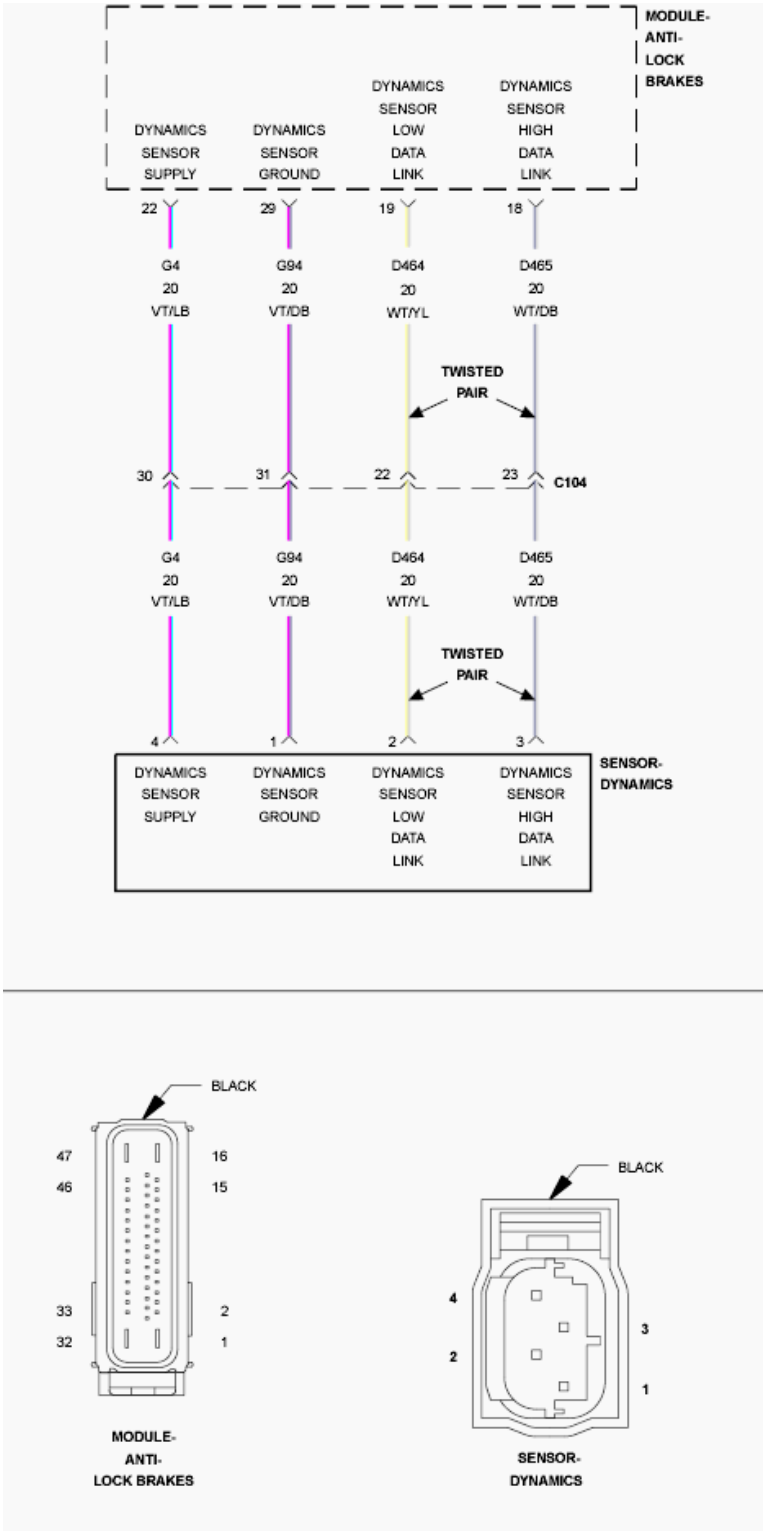

Fig. 79: Dynamics Sensor Circuit Schematic
Courtesy of CHRYSLER GROUP, LLC

For a complete wiring diagram, **refer to appropriate SYSTEM WIRING DIAGRAMS article** .

WHEN MONITORED

With the ignition on.

SET CONDITION

If the Anti-Lock Brake Module fails to receive bus messages from the Dynamics Sensor.

POSSIBLE CAUSES

Possible Causes
WIRING HARNESS, TERMINAL, CONNECTOR DAMAGE
(G4) DYNAMICS SENSOR SUPPLY CIRCUIT SHORTED TO VOLTAGE, GROUND, OR OPEN
(G94) DYNAMICS SENSOR GROUND CIRCUIT SHORTED TO VOLTAGE, GROUND, OR OPEN
(D465) DYNAMICS SENSOR HIGH DATA LINK CIRCUIT SHORTED TO GROUND, SHORTED TO VOLTAGE, OR OPEN
(D464) DYNAMICS SENSOR LOW DATA LINK CIRCUIT SHORTED TO GROUND, SHORTED TO VOLTAGE, OR OPEN
DYNAMICS SENSOR
ANTI-LOCK BRAKE MODULE

DIAGNOSTIC TEST

1. **VERIFY DTC IS ACTIVE**

NOTE: If present, diagnose and repair DTC C2114-DYNAMICS SENSOR SUPPLY VOLTAGE LOW or DTC C2115-DYNAMICS SENSOR SUPPLY VOLTAGE HIGH before proceeding.

1. Turn the ignition on.
2. With the scan tool, read and record the ABS DTCs.
3. With the scan tool, read and record Environmental Data to help identify the conditions in which the DTC was set.
4. With the scan tool, erase the ABS DTCs.
5. Start the engine.

NOTE: Attempt to operate the vehicle under conditions

similar to which the DTC was set. It may be necessary to test drive the vehicle within the DTC monitoring and set conditions in order for this DTC to set.

6. With the scan tool, read the ABS DTCs.

   Does this DTC reset?

   Yes

   - Go To 2

   No

   - The condition that caused the symptom is currently not present. Inspect the related wiring for a possible intermittent condition. Look for any chafed, pierced, pinched, or partially broken wires.
   - Perform the ABS INTERMITTENT CONDITION TEST. Refer to **STANDARD PROCEDURE**.

2. **INSPECT RELATED WIRING HARNESS, TERMINALS, AND CONNECTORS**
   1. Visually inspect the related wiring harness. Look for any pinched, chafed, pierced, and partially broken wires.
   2. Visually inspect the related wiring harness connectors. Look for broken, bent, pushed out, and corroded terminals.

   Were any problems found?

   Yes

   - Repair as necessary.
   - Perform ABS VERIFICATION TEST. Refer to **STANDARD PROCEDURE**.

   No

   - Go To 3

3. **CHECK THE VOLTAGE ON THE (G4) DYNAMICS SENSOR**

SUPPLY CIRCUIT

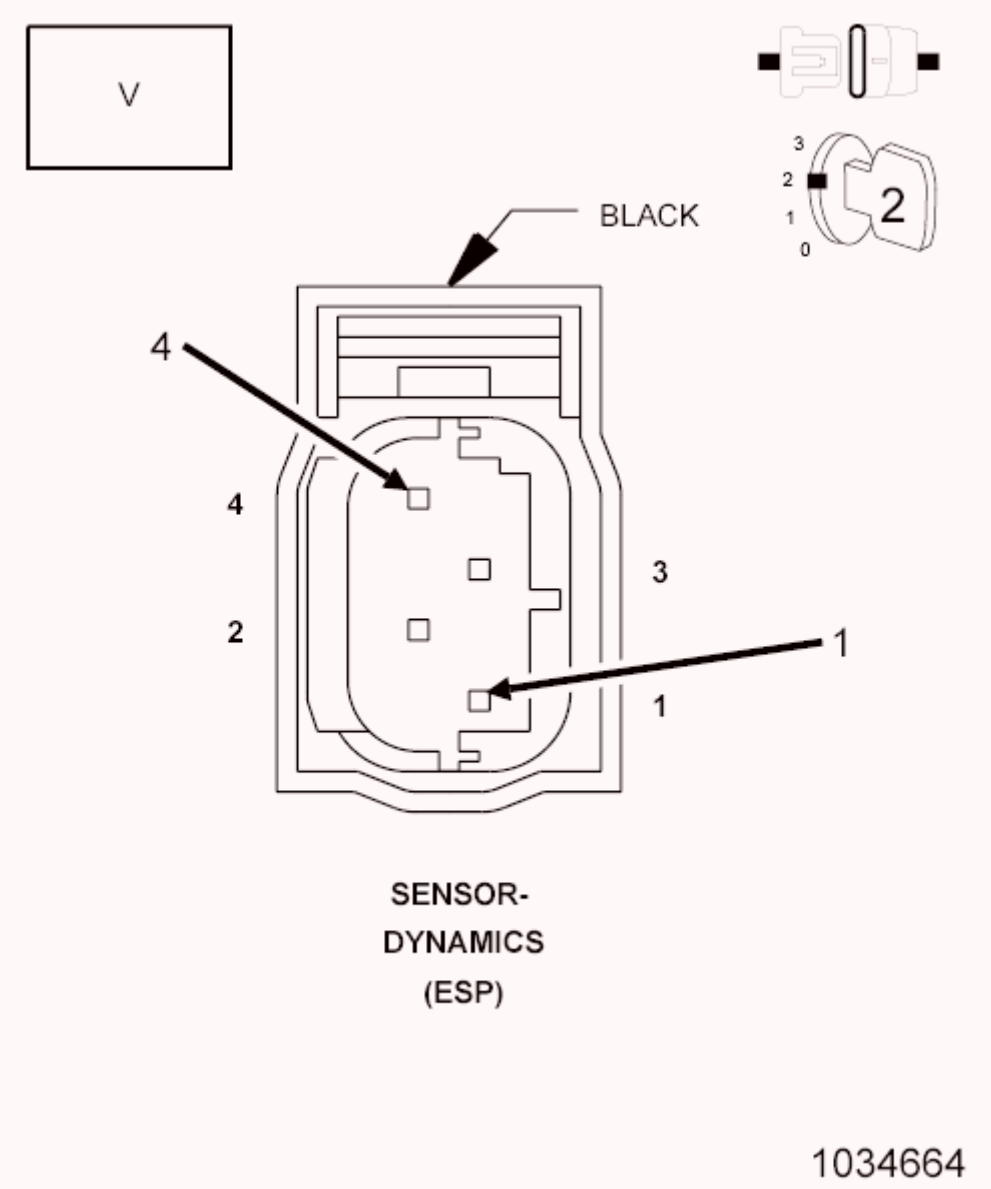

Fig. 80: Measuring Voltage Across Dynamics Sensor Supply Circuit & Dynamics Sensor Ground Circuit
Courtesy of CHRYSLER GROUP, LLC

1. Turn the ignition off.
2. Disconnect the Dynamics Sensor harness connector.
3. Turn the ignition on.
4. Measure the voltage across (G4) Dynamics Sensor Supply Circuit and (G94) Dynamics Sensor Ground Circuit.

   Is the voltage above 10 volts?

Yes

- Go To 10

No

- Go To 4

4. **(G4) DYNAMICS SENSOR SUPPLY CIRCUIT SHORT TO GROUND**

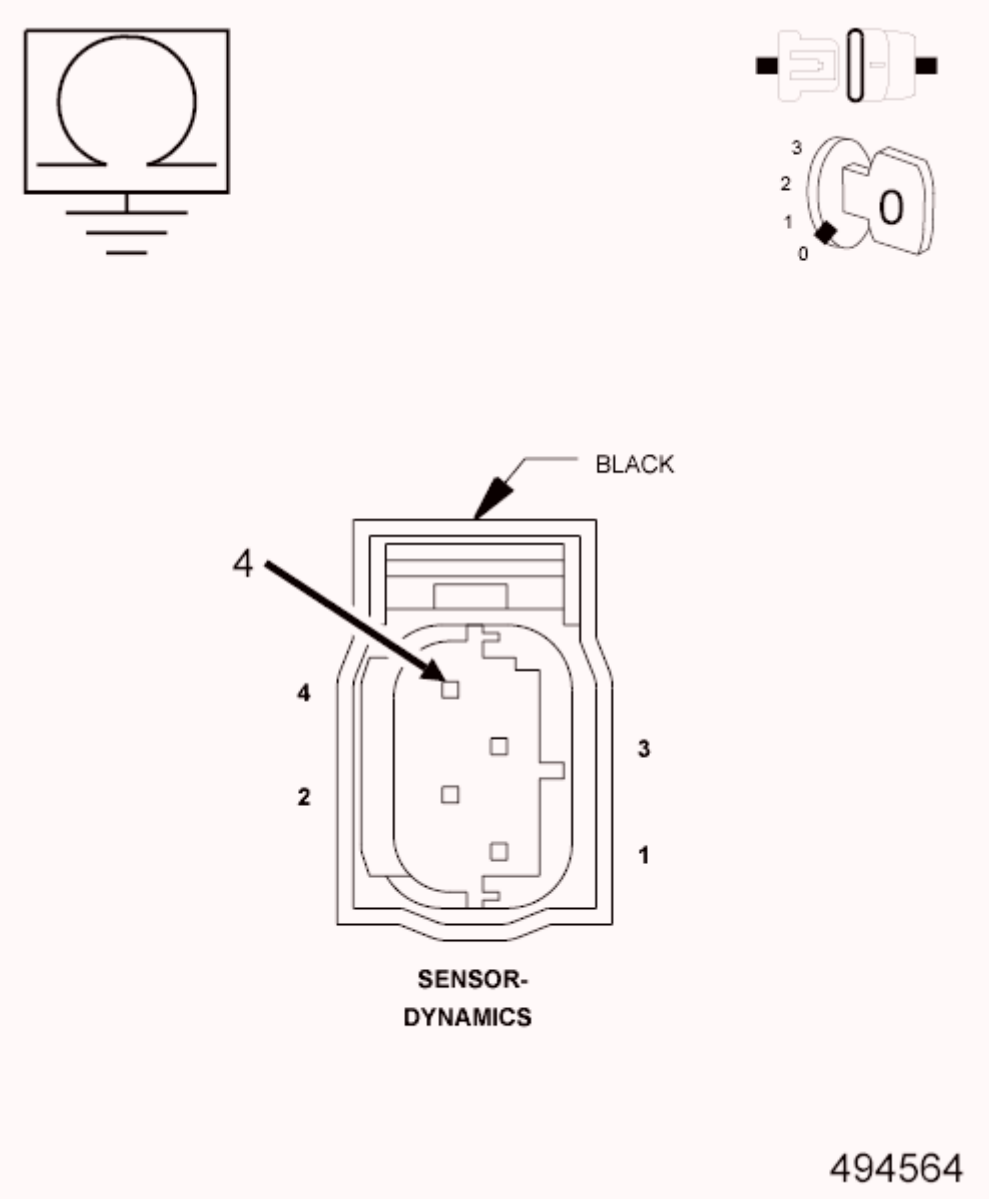

Fig. 81: Measuring Resistance Between Ground & Dynamics Sensor Supply Circuit
Courtesy of CHRYSLER GROUP, LLC

1. Turn the ignition off.
2. Disconnect the Anti-Lock Brake Module harness connector.
3. Measure the resistance between ground and the (G4) Dynamics Sensor Supply circuit.

   Is the resistance below 5.0 Ohms?

   Yes

   - Repair the (G4) Dynamics Sensor Supply circuit for a short to ground.
   - Perform ABS VERIFICATION TEST. Refer to **STANDARD PROCEDURE**.

   No

   - Go To 5

5. **(G4) DYNAMICS SENSOR SUPPLY CIRCUIT SHORT TO VOLTAGE**

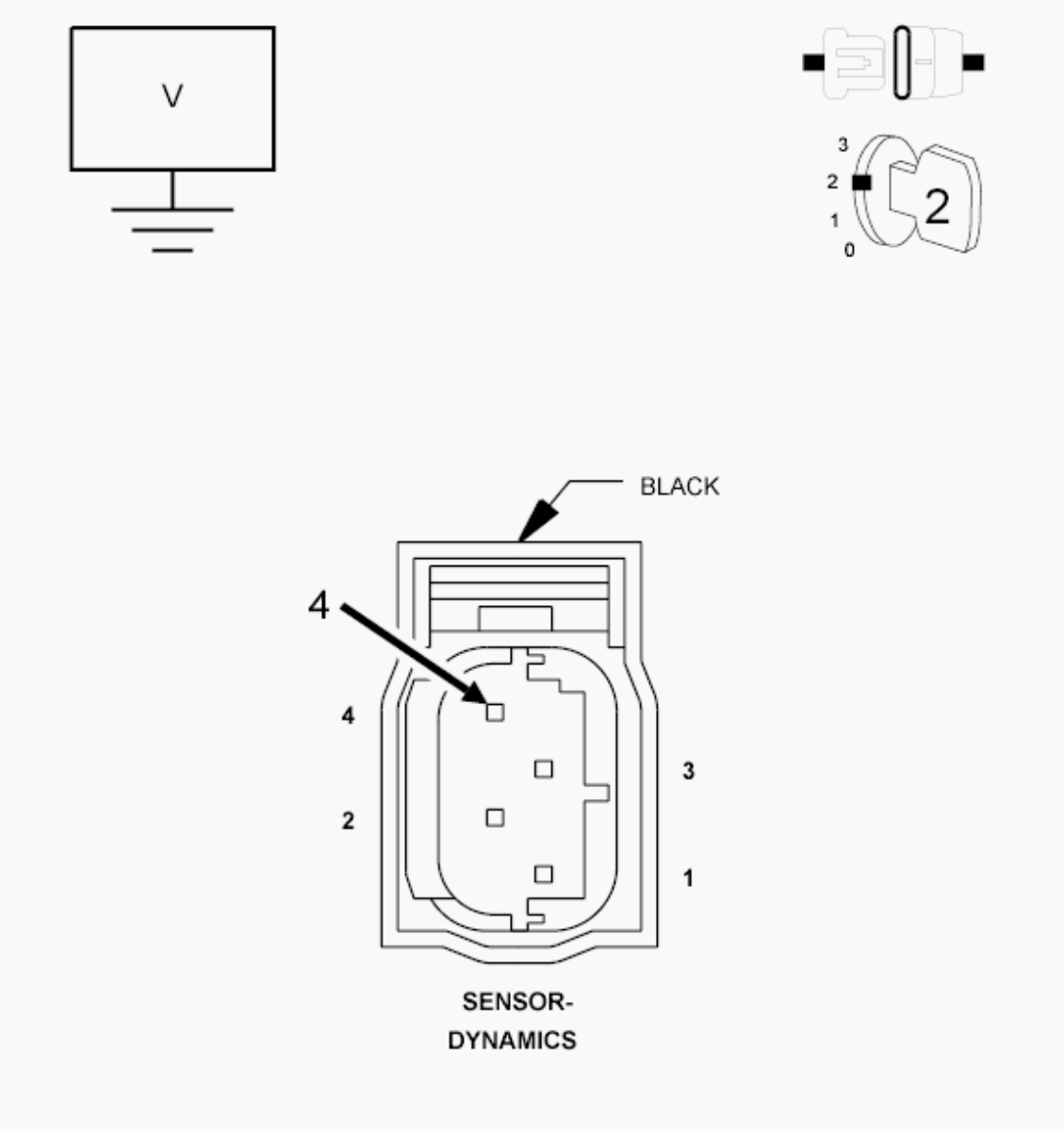

Fig. 82: Measuring Voltage Of Dynamics Sensor Supply Circuit
Courtesy of CHRYSLER GROUP, LLC

1. Turn the ignition on.
2. Measure the voltage of the (G4) Dynamics Sensor Supply circuit.

   Is there any voltage present?

   Yes

   - Repair the (G4) Dynamics Sensor Supply circuit for a short to voltage.
   - Perform ABS VERIFICATION TEST. Refer to **STANDARD**

PROCEDURE.

No

- Go To 6

6. **(G4) DYNAMICS SENSOR SUPPLY CIRCUIT OPEN**

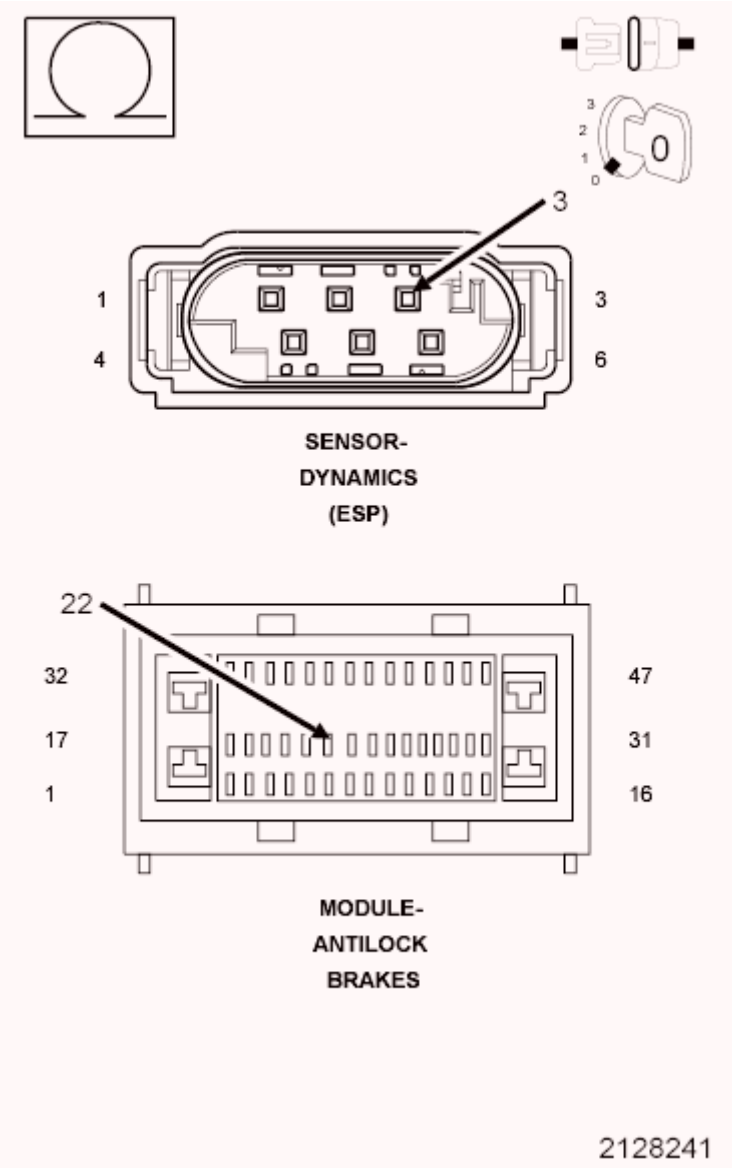

Fig. 83: Measuring Resistance Of Dynamics Sensor Supply Circuit
Courtesy of CHRYSLER GROUP, LLC

1. Turn the ignition off.
2. Measure the resistance of the (G4) Dynamics Sensor Supply circuit.

   Is the resistance below 5.0 Ohms?

Yes

- Go To 7

No

- Repair the (G4) Dynamics Sensor Supply circuit for an open.
- Perform ABS VERIFICATION TEST. Refer to **STANDARD PROCEDURE**.

7. **CHECK THE RESISTANCE BETWEEN THE (G94) DYNAMICS SENSOR GROUND CIRCUIT AND GROUND**

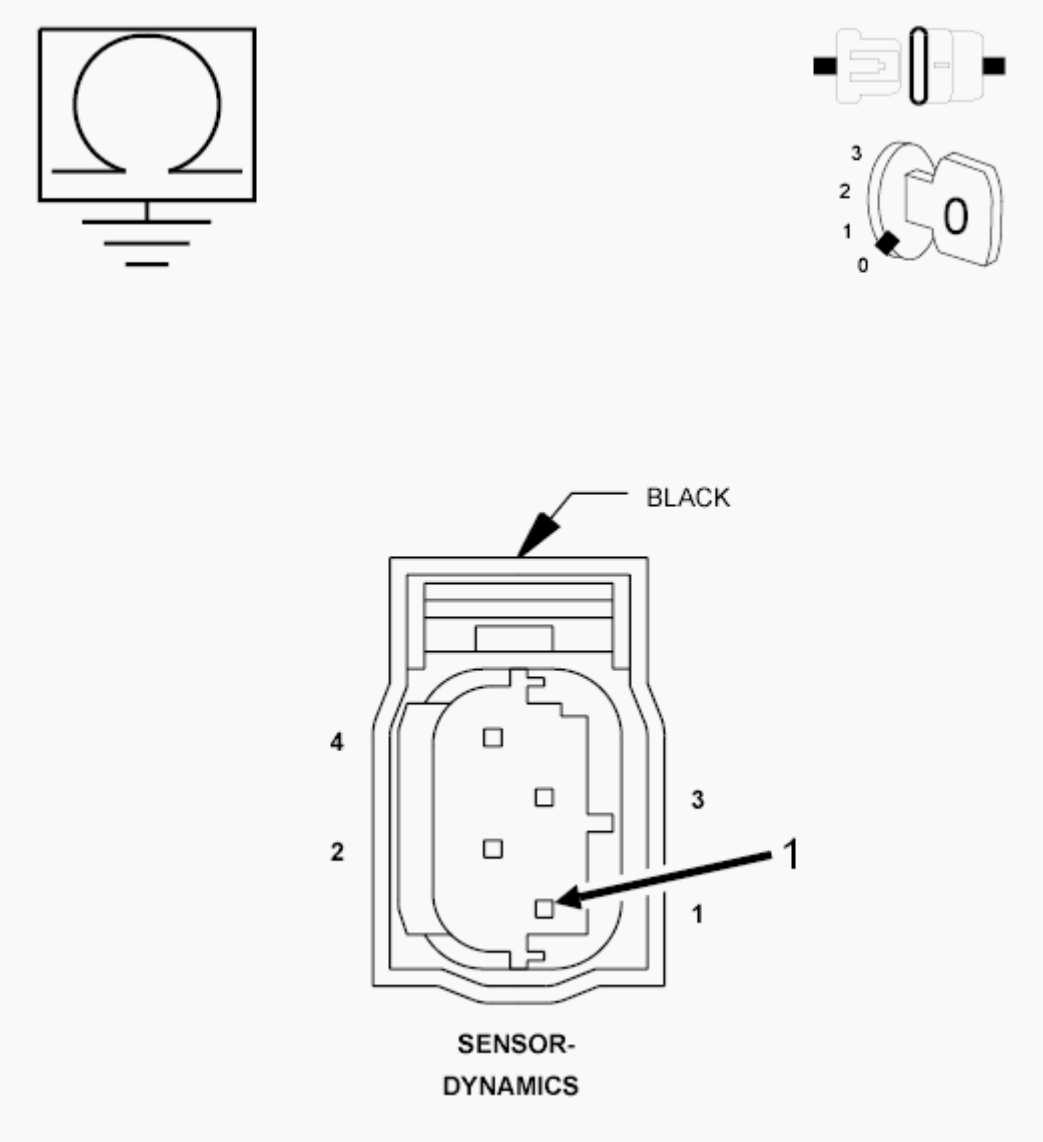

Fig. 84: Measuring Resistance Between The Dynamics Sensor Ground Circuit And Ground
Courtesy of CHRYSLER GROUP, LLC

1. Disconnect the Dynamics Sensor harness connector.
2. Measure the resistance between the (G94) Dynamics Sensor Ground Circuit and Ground.

   Is the resistance below 5.0 Ohms?

   Yes

   - Replace the Anti-Lock Brake Module in accordance with the Service Information.
   - Perform ABS VERIFICATION TEST. Refer to **STANDARD PROCEDURE**.

   No

   - Go To 8

8. **(G94) DYNAMICS SENSOR GROUND CIRCUIT SHORT TO VOLTAGE**

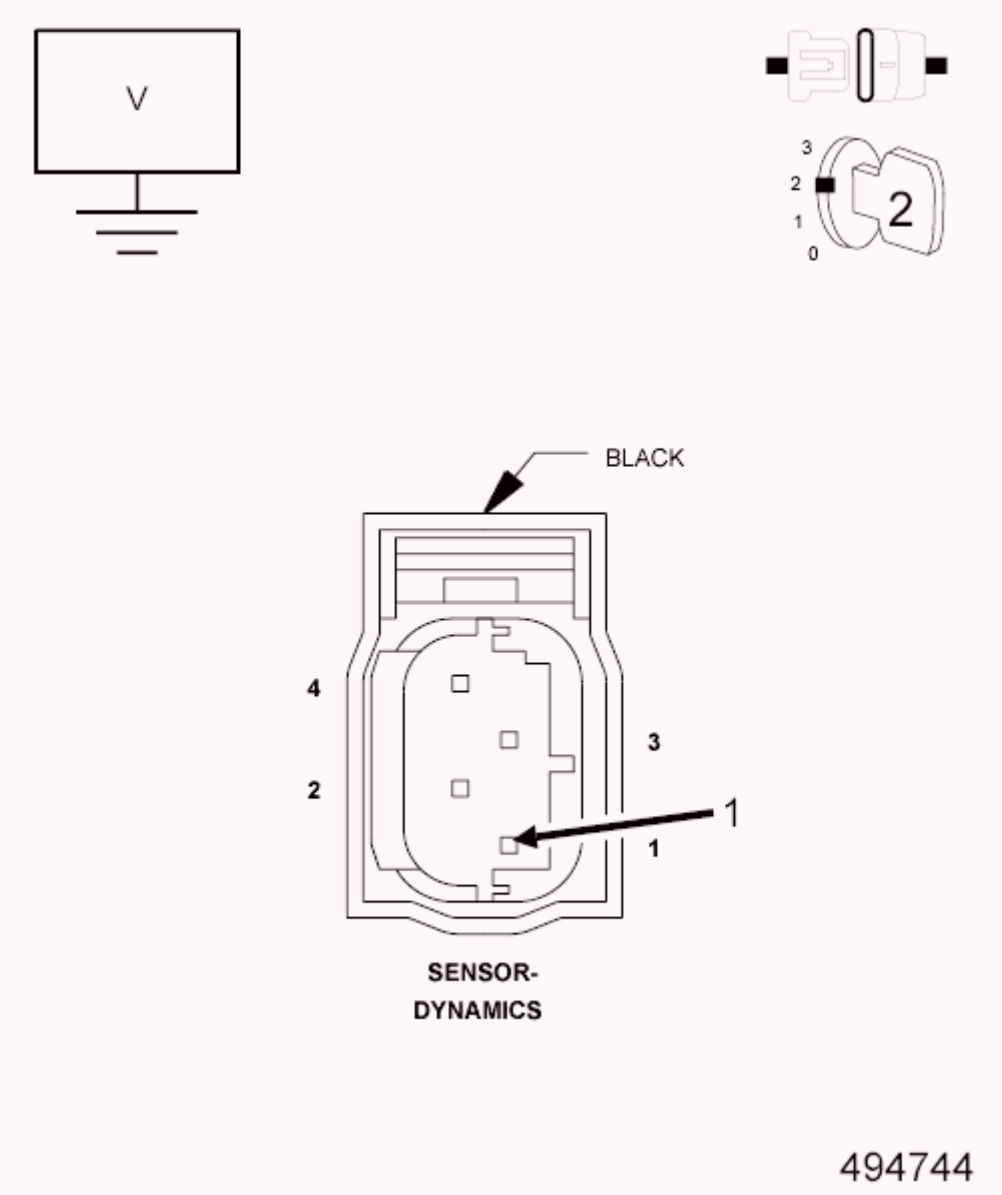

Fig. 85: Measuring Voltage Of Dynamics Sensor Ground Circuit
Courtesy of CHRYSLER GROUP, LLC

1. Turn the ignition off.
2. Disconnect the Anti-Lock Brake Module harness connector.
3. Turn the ignition on.
4. Measure the voltage of the (G94) Dynamics Sensor Ground circuit.

   Is there any voltage present?

   Yes

   - Repair the (G94) Dynamics Sensor Ground circuit for a short to

voltage.

- Perform ABS VERIFICATION TEST. Refer to **STANDARD PROCEDURE**.

No

- Go To 9

9. **(G94) DYNAMICS SENSOR GROUND CIRCUIT OPEN**

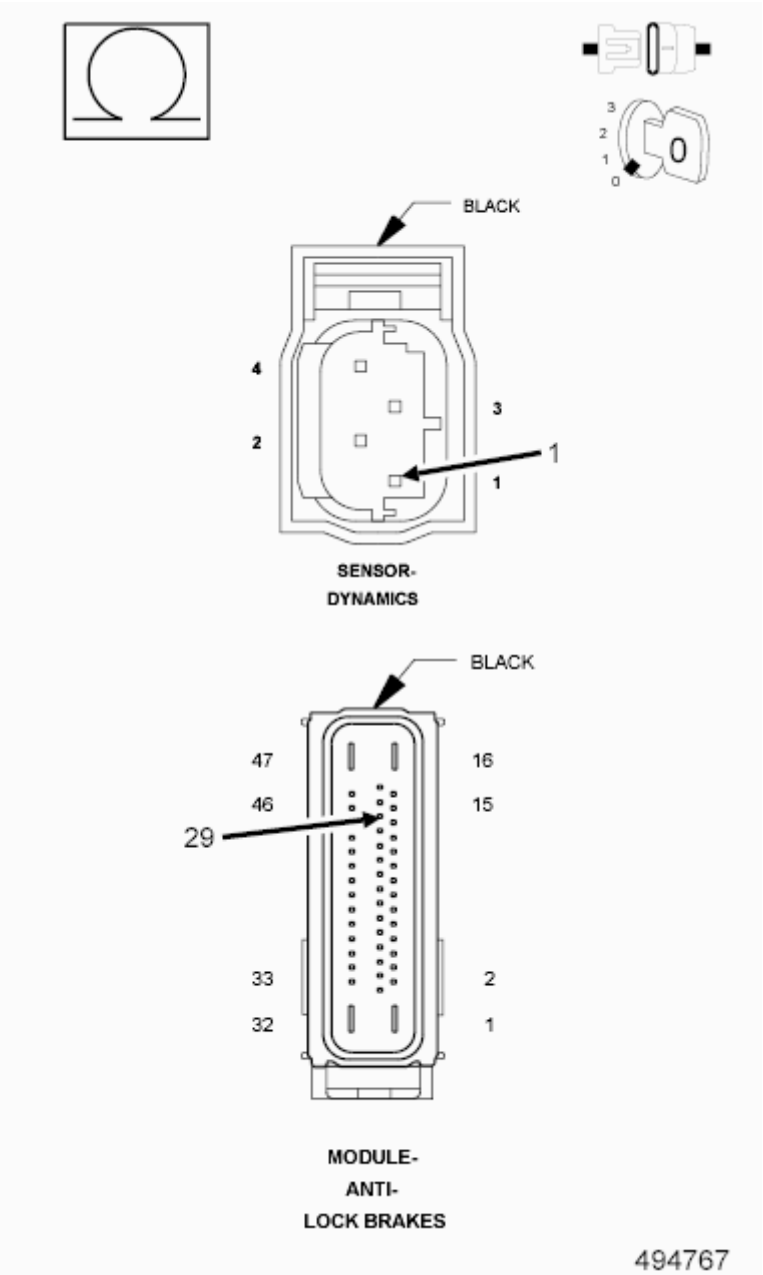

Fig. 86: Measuring Resistance Of Dynamics Sensor Return Circuit
Courtesy of CHRYSLER GROUP, LLC

1. Turn the ignition off.
2. Measure the resistance of the (G94) Dynamics Sensor Return circuit between the Dynamics Sensor and the Anti-Lock Brake Module.

   Is the resistance below 5.0 Ohms?

   Yes

   - Replace the Anti-Lock Brake Module in accordance with the Service Information.
   - Perform ABS VERIFICATION TEST. Refer to **STANDARD PROCEDURE**.

   No

   - Repair the (G94) Dynamics Sensor Ground circuit for an open.
   - Perform ABS VERIFICATION TEST. Refer to **STANDARD PROCEDURE**.

10. **CHECK THE DATA LINK OUTPUT**

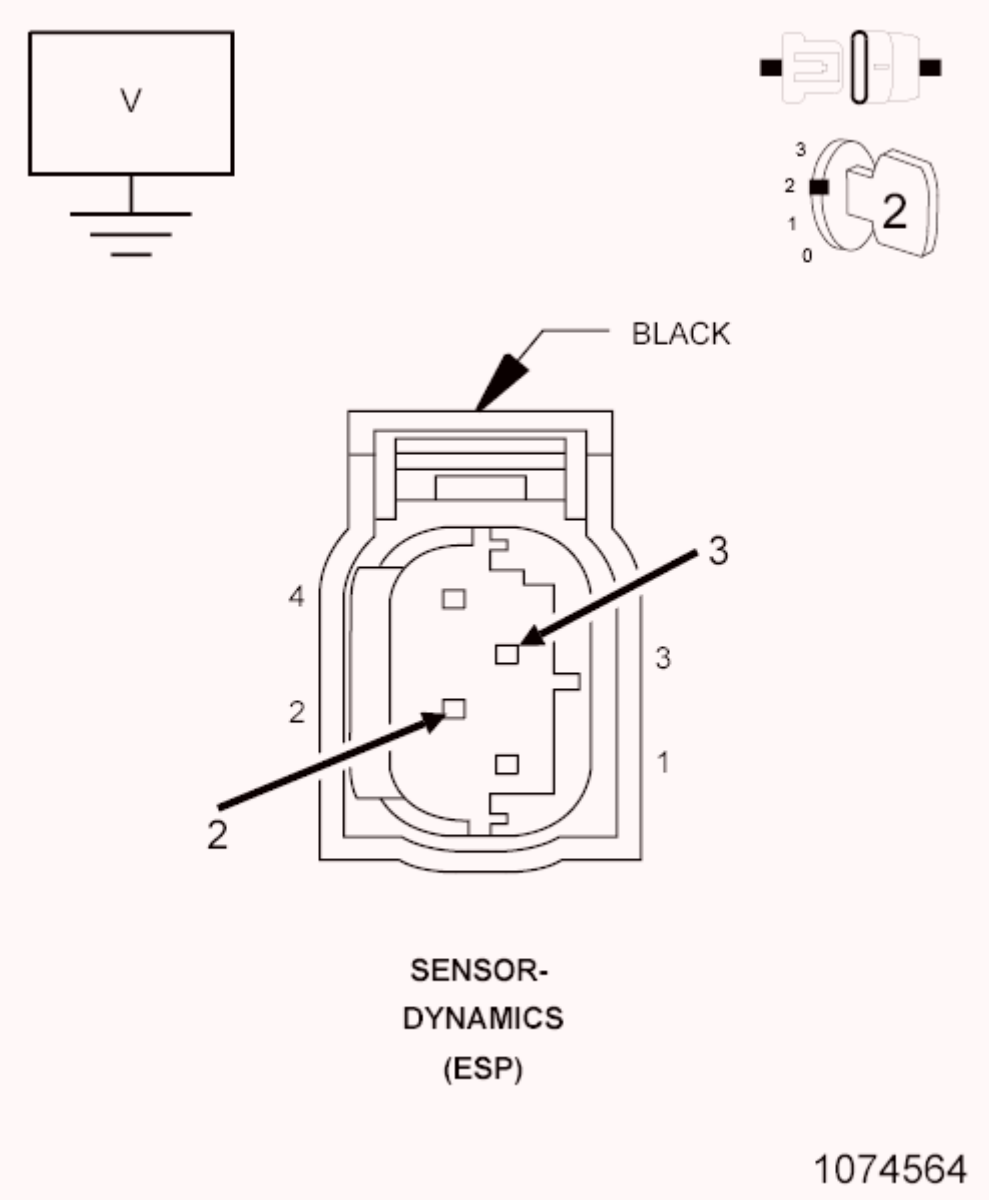

Fig. 87: Measuring Voltage Of Data Links Circuits
Courtesy of CHRYSLER GROUP, LLC

1. Measure the voltage of the Data Links Circuits the (D465) DYNAMICS SENSOR HIGH DATA LINK CIRCUIT will measure a minimum of 3 volts and the (D464) DYNAMICS SENSOR LOW DATA LINK CIRCUIT will measure a minimum of 2 volts

   Is the voltage within specifications?

   Yes

   - Replace the Dynamic Sensor in accordance with the Service Information.

- Perform ABS VERIFICATION TEST. Refer to **STANDARD PROCEDURE**.

No

- Go To 11

11. **CHECK THE (D465) DYNAMICS SENSOR HIGH DATA LINK CIRCUIT FOR A SHORT TO VOLTAGE**

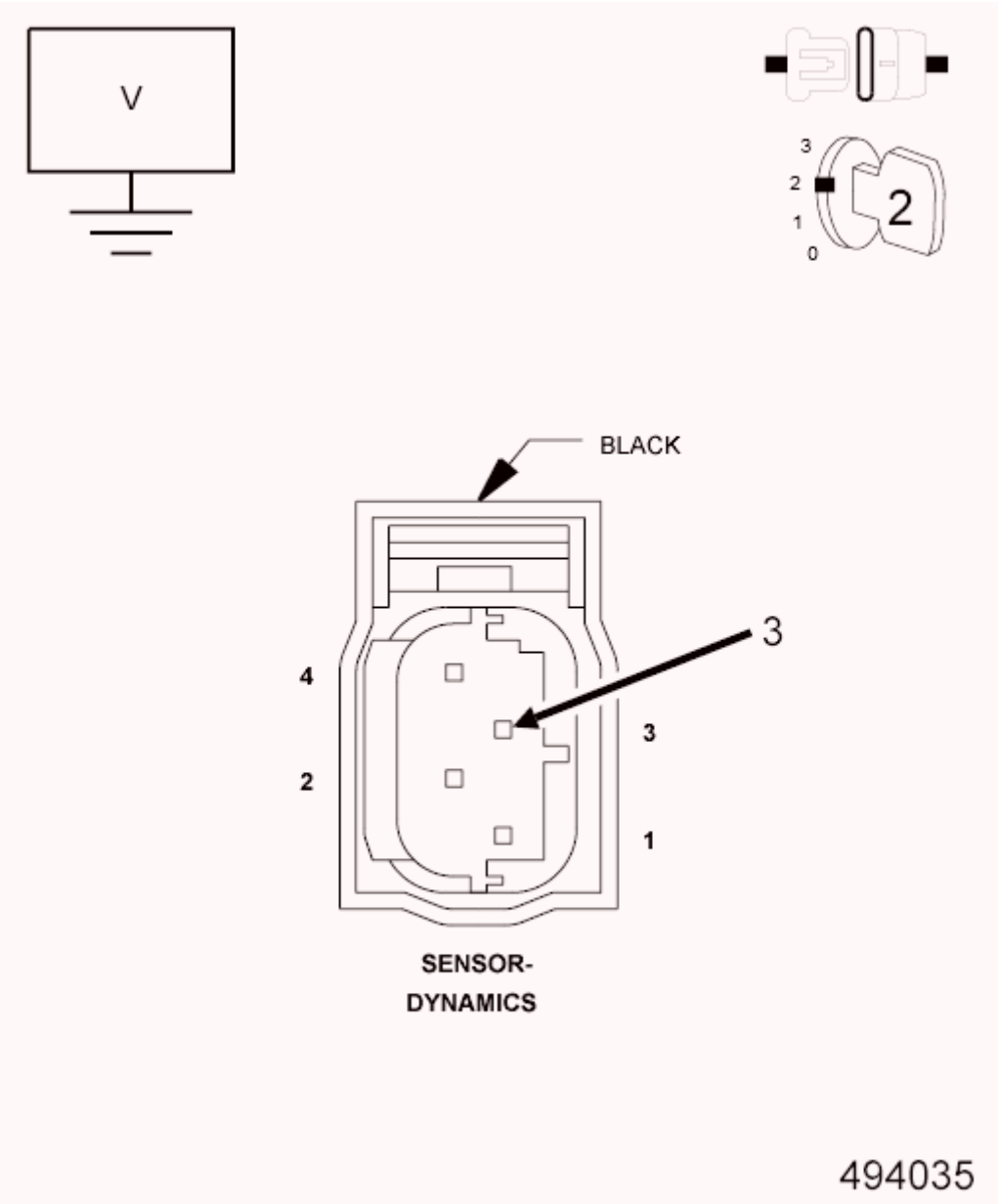

Fig. 88: Checking Dynamics Sensor High Data Link Circuit For A Short To Voltage
Courtesy of CHRYSLER GROUP, LLC

1. Disconnect the Anti-Lock Brakes Module harness connector.
2. Disconnect the Dynamics Sensor harness connector.
3. Turn the ignition on.
4. Measure the voltage of the (D465) Dynamics Sensor High Data Link circuit.

   Is there any voltage present?

   Yes

   - Repair the (D465) Dynamics Sensor High Data Link circuit for a short to voltage.
   - Perform ABS VERIFICATION TEST. Refer to **STANDARD PROCEDURE**.

   No

   - Go To 12

12. **CHECK THE (D465) DYNAMICS SENSOR HIGH DATA LINK CIRCUIT FOR A SHORT TO GROUND**

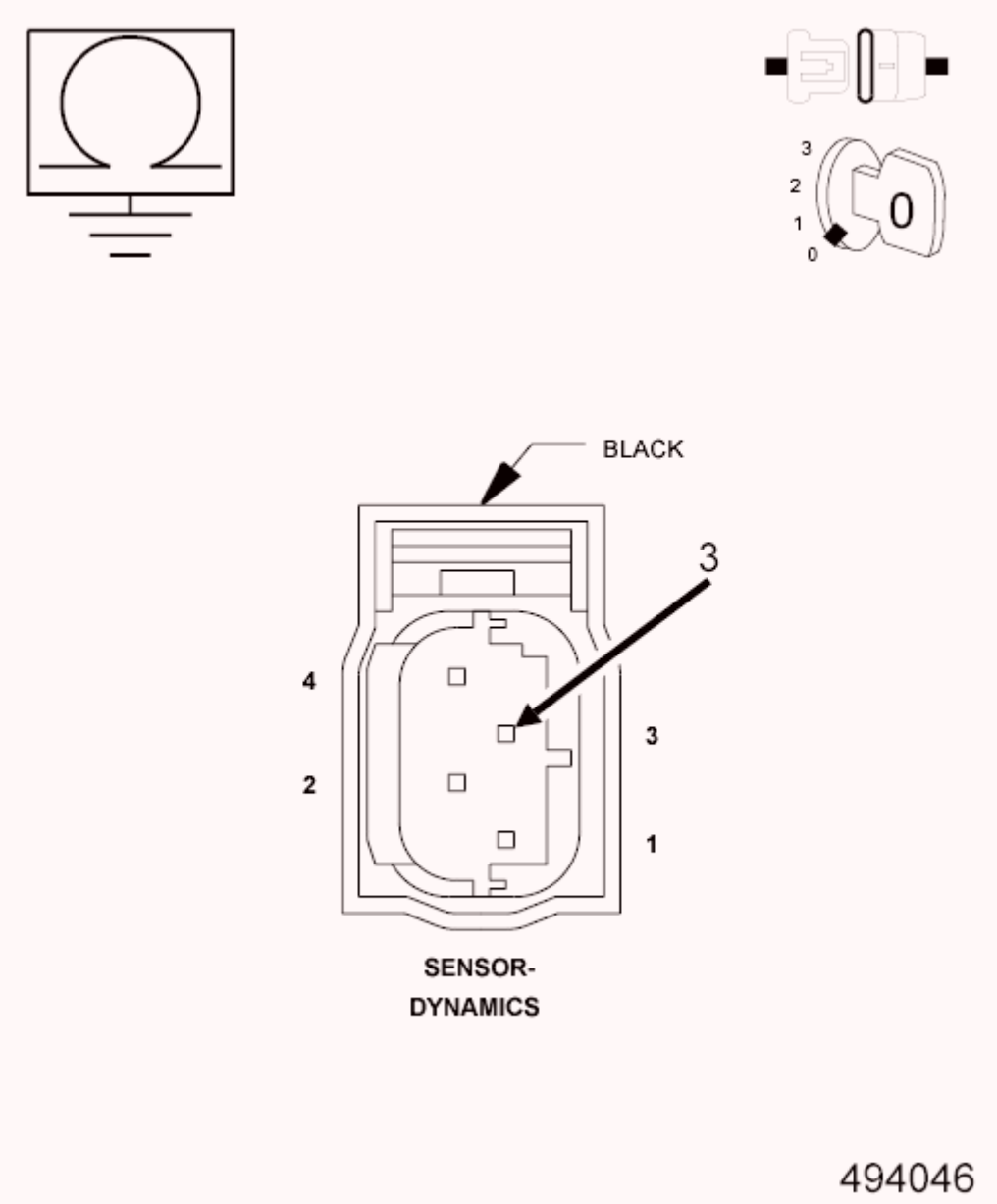

Fig. 89: Measuring Resistance Of Dynamics Sensor High Data Link Circuit Between Ground & Dynamics Sensor Harness Connector
Courtesy of CHRYSLER GROUP, LLC

1. Turn the ignition off.
2. Measure the resistance of the (D465) Dynamics Sensor High Data Link circuit between ground and the Dynamics Sensor harness connector.

   Is the resistance below 5.0 Ohms?

   Yes

   - Repair the (D465) Dynamics Sensor High Data Link circuit for a

short to ground.

- Perform ABS VERIFICATION TEST. Refer to **STANDARD PROCEDURE**.

No

- Go To 13

13. **CHECK THE (D465) DYNAMICS SENSOR HIGH DATA LINK CIRCUIT FOR AN OPEN**

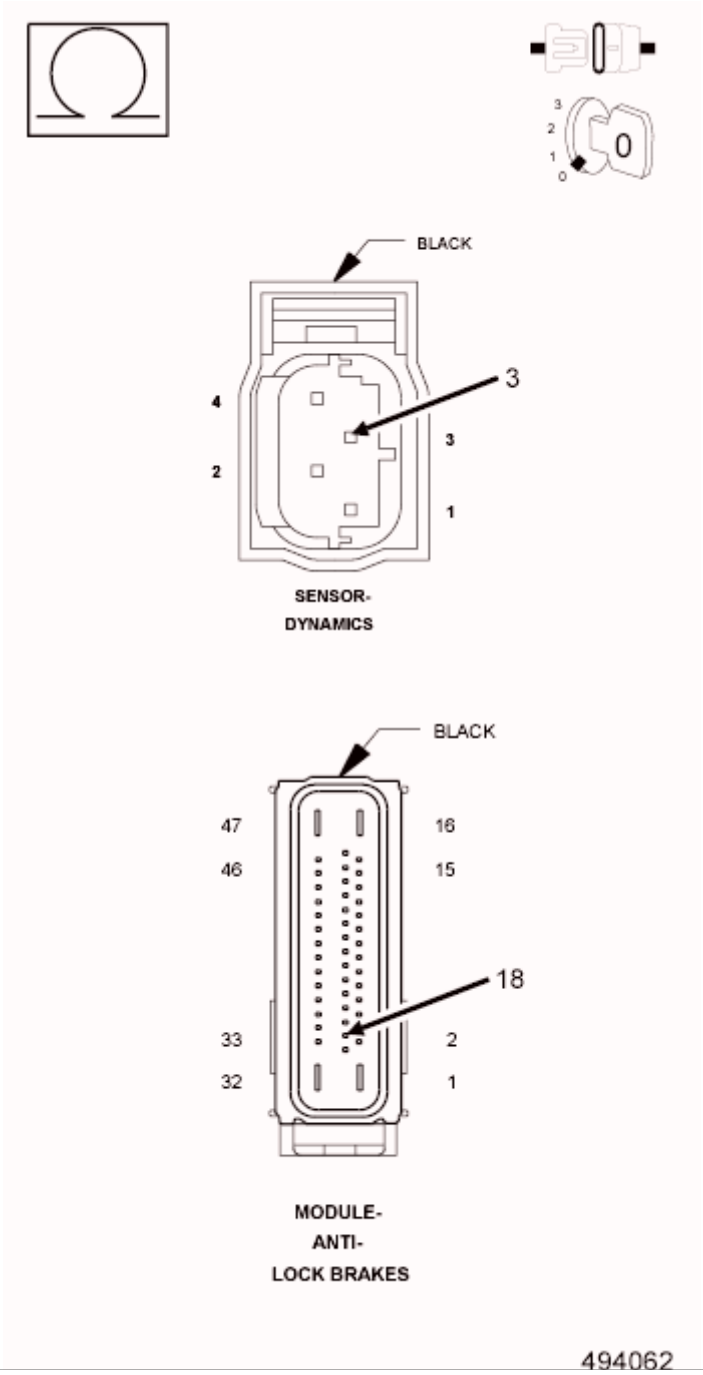

Fig. 90: Measuring Resistance Of Dynamics Sensor High Data Link Circuit
Courtesy of CHRYSLER GROUP, LLC

1. Measure the resistance of the (D465) Dynamics Sensor High Data Link circuit between the Dynamics Sensor harness connector and the Anti-Lock Brakes Module harness connector.

   Is the resistance below 5.0 Ohms?

   Yes

   - Go To 14

   No

   - Repair the (D465) Dynamics Sensor High Data Link circuit for an open.
   - Perform ABS VERIFICATION TEST. Refer to **STANDARD PROCEDURE**.

14. **CHECK THE (D464) DYNAMICS SENSOR LOW DATA LINK CIRCUIT FOR A SHORT TO VOLTAGE**

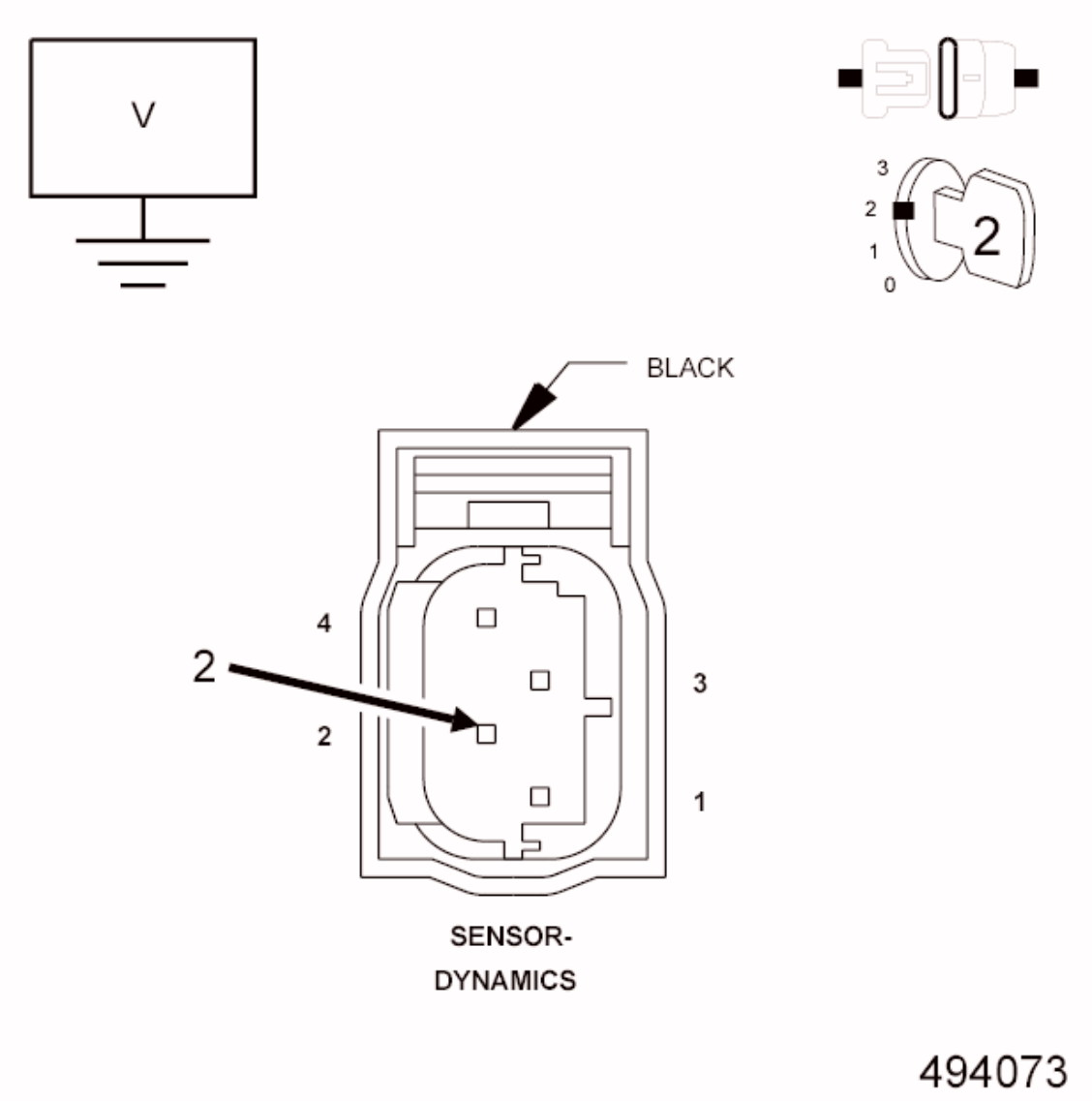

Fig. 91: Measuring Voltage Of Dynamics Sensor Low Data Link circuit
Courtesy of CHRYSLER GROUP, LLC

1. Turn the ignition on.
2. Measure the voltage of the (D464) Dynamics Sensor Low Data Link circuit.

   Is there any voltage present?

   Yes

   - Repair the (D464) Dynamics Sensor Low Data Link circuit for a short to voltage.
   - Perform ABS VERIFICATION TEST. Refer to **STANDARD**

PROCEDURE.

No

- Go To 15

15. **CHECK THE (D464) DYNAMICS SENSOR LOW DATA LINK CIRCUIT FOR A SHORT TO GROUND**

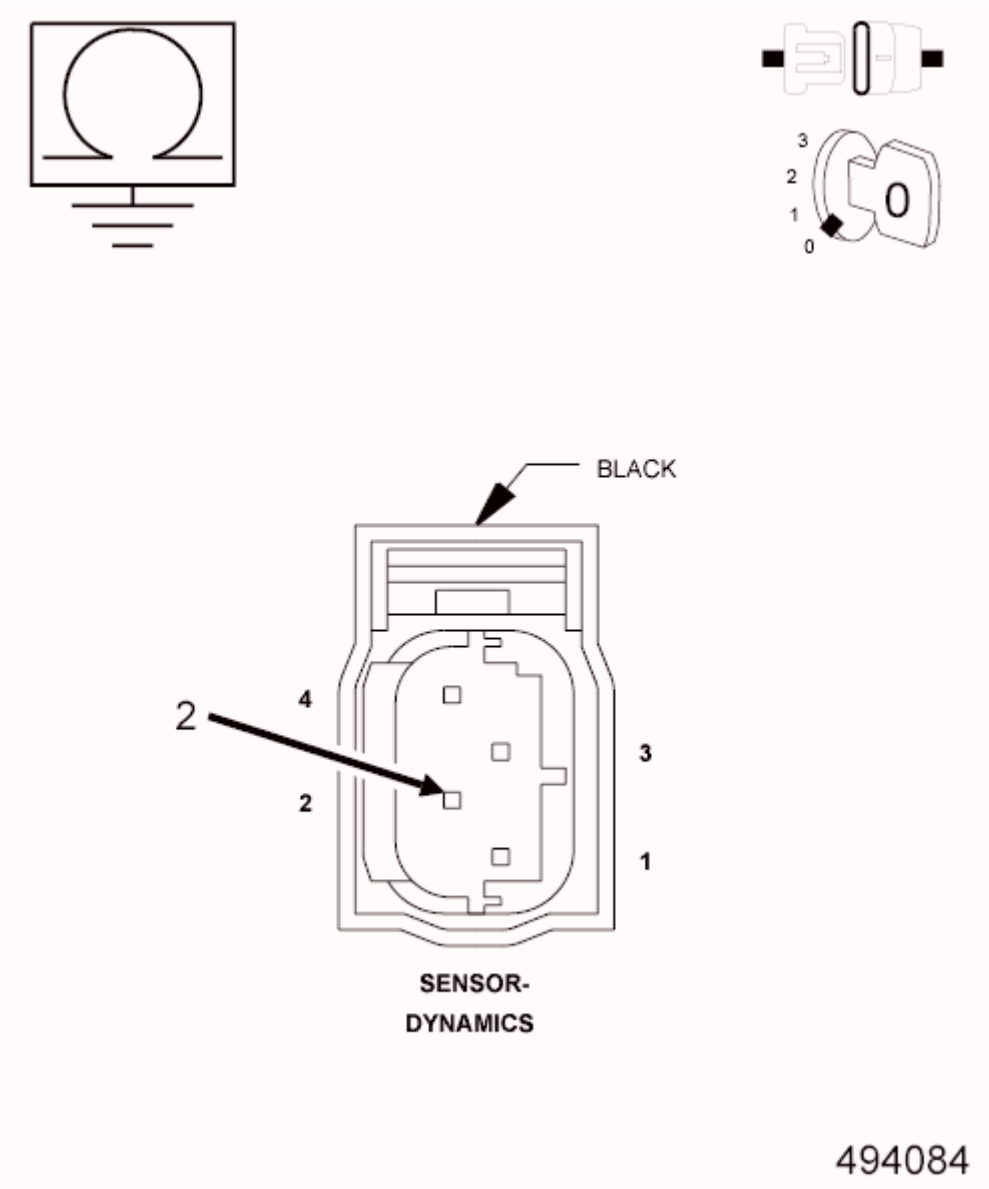

Fig. 92: Measuring Resistance Of Dynamics Sensor Low Data Link Circuit Between Ground & Dynamics Sensor Harness Connector
Courtesy of CHRYSLER GROUP, LLC

1. Turn the ignition off.
2. Measure the resistance of the (D464) Dynamics Sensor Low Data Link

circuit between ground and the Dynamics Sensor harness connector.

Is the resistance below 5.0 Ohms?

Yes

- Repair the (D464) Dynamics Sensor Low Data Link circuit for a short to ground.
- Perform ABS VERIFICATION TEST. Refer to **STANDARD PROCEDURE**.

No

- Go To 16

16. **CHECK THE (D464) DYNAMICS SENSOR LOW DATA LINK CIRCUIT FOR AN OPEN**

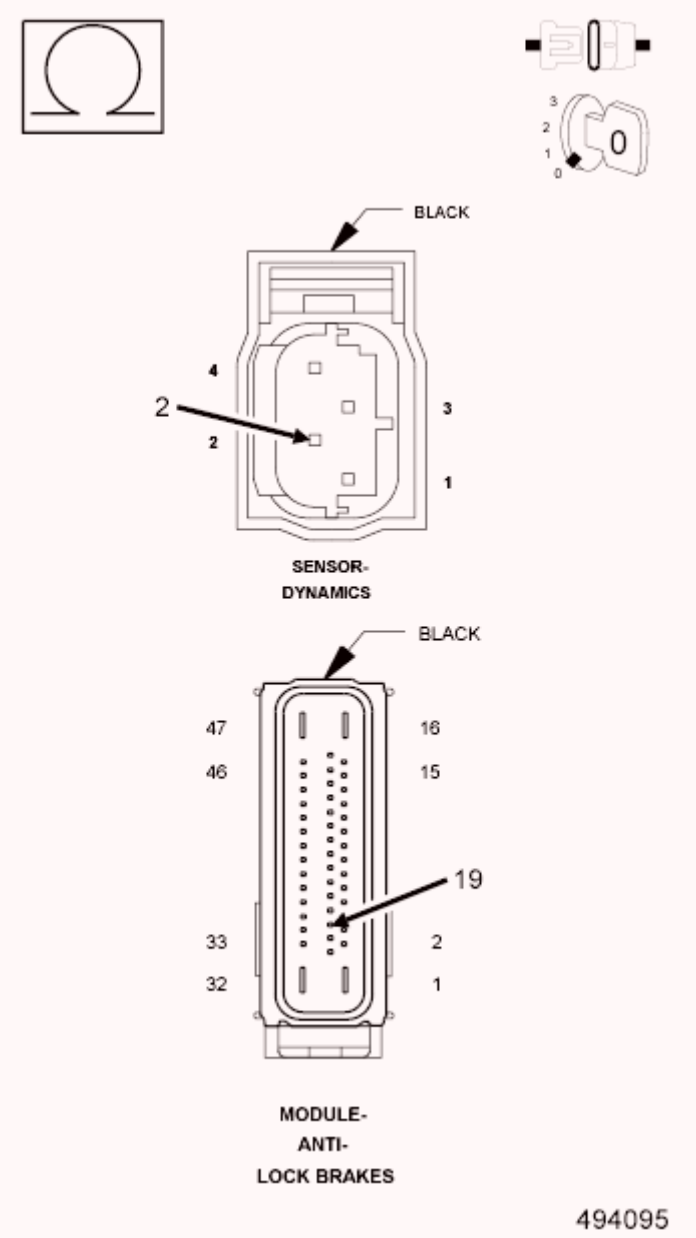

Fig. 93: Measuring Resistance Of Dynamics Sensor Low Data Link Circuit
Courtesy of CHRYSLER GROUP, LLC

1. Measure the resistance of the (D464) Dynamics Sensor Low Data Link circuit between the Dynamics Sensor harness connector and the Anti-Lock Brake Module harness connector.

   Is the resistance below 5.0 Ohms?

   Yes

   - Replace the Anti-Lock Brake Module in accordance with the

Service Information.

- Perform ABS VERIFICATION TEST. Refer to **STANDARD PROCEDURE**.

No

- Repair the (D464) Dynamics Sensor Low Data Link circuit for an open.
- Perform ABS VERIFICATION TEST. Refer to **STANDARD PROCEDURE**.

U0126-LOST COMMUNICATION WITH STEERING ANGLE SENSOR

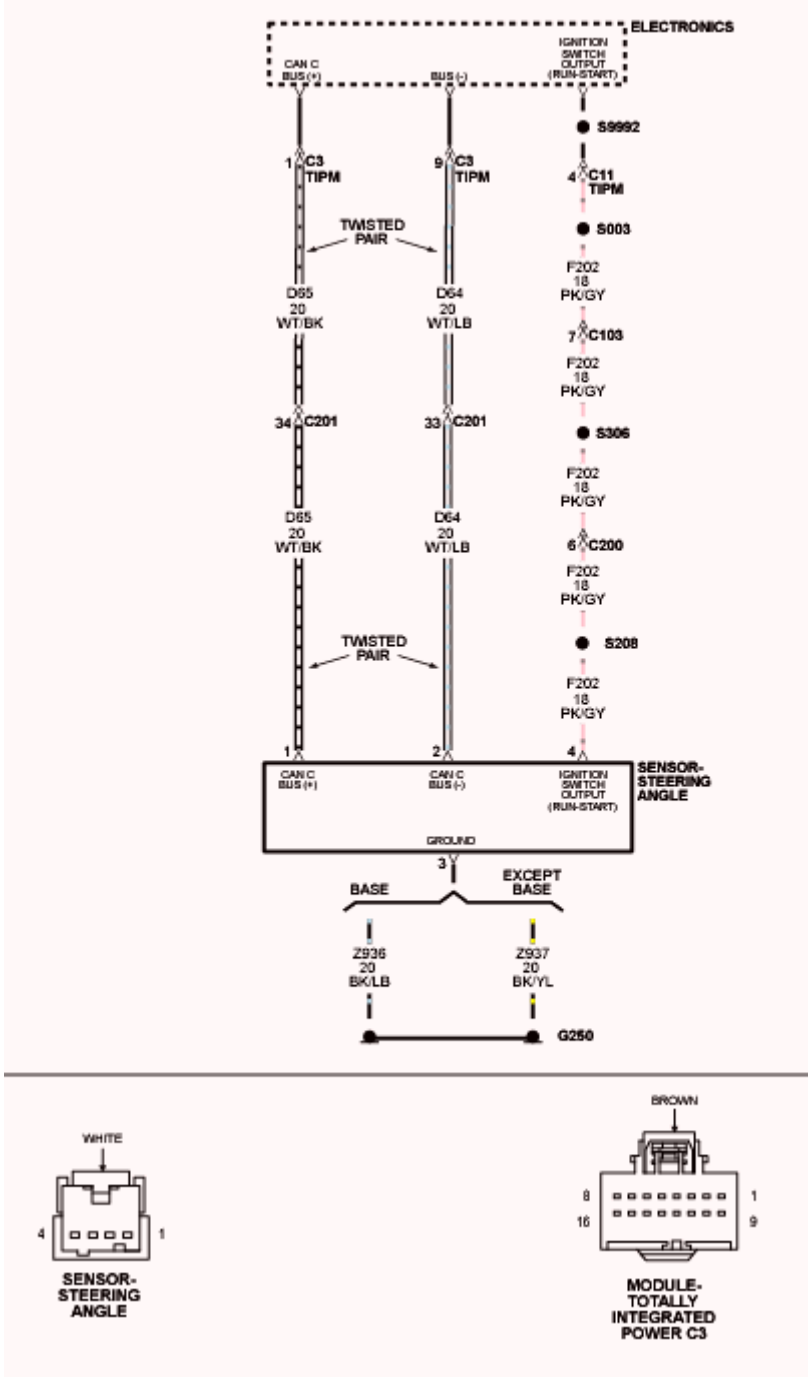

Fig. 94: Steering Angle Sensor Circuit Schematic
Courtesy of CHRYSLER GROUP, LLC

For a complete wiring diagram, **refer to appropriate SYSTEM WIRING DIAGRAMS article** .

WHEN MONITORED

- With the ignition on
- Battery voltage between 10 and 16 volts

- Ignition Off Draw (IOD) fuse installed

SET CONDITION

If the Anti-Lock Brake Module fails to receive bus messages from the Steering Angle Sensor for approximately 100 ms.

POSSIBLE CAUSES

Possible Causes
DTCs RELATED TO BATTERY VOLTAGE, IGNITION, OR VIN MESSAGES
CAN C BUS CIRCUITS OPEN OR SHORTED
STEERING ANGLE SENSOR POWER AND GROUND
STEERING ANGLE SENSOR (SAS)

DIAGNOSTIC TEST

1. **VERIFY DTC IS ACTIVE**

   NOTE: Make sure the IOD fuse is installed and battery voltage is between 10 and 16 volts before proceeding.

   1. Turn the ignition on.
   2. With the scan tool, read and record the ABS DTCs.
   3. With the scan tool, read and record Environmental Data to help identify the conditions in which the DTC was set.
   4. With the scan tool, erase the ABS DTCs.
   5. Cycle the ignition switch.
   6. With the scan tool, read the ABS DTCs.

   Does this DTC reset?

   Yes

   - Go To 2

   No

   - The condition that caused the symptom is currently not present.

Inspect the related wiring for a possible intermittent condition. Look for any chafed, pierced, pinched, or partially broken wires.

- Perform the ABS INTERMITTENT CONDITION TEST. Refer to **STANDARD PROCEDURE**.

2. **CHECK FOR ANY OF THE FOLLOWING ACTIVE DTCs**
   1. With the scan tool, read all active DTCs from all CAN C Bus modules.

      NOTE: Check for CAN C hardware electrical, VIN Missing/Mismatch, battery or ignition related DTCs.

      Does the scan tool display any active DTCs related to the conditions listed above?

      Yes

      - Diagnose and repair the DTC(s). Refer to the **DIAGNOSTIC CODE INDEX** .

      No

      - Go To 3

3. **CHECK THE VOLTAGE ON THE (F202) IGNITION SWITCH OUTPUT CIRCUIT**

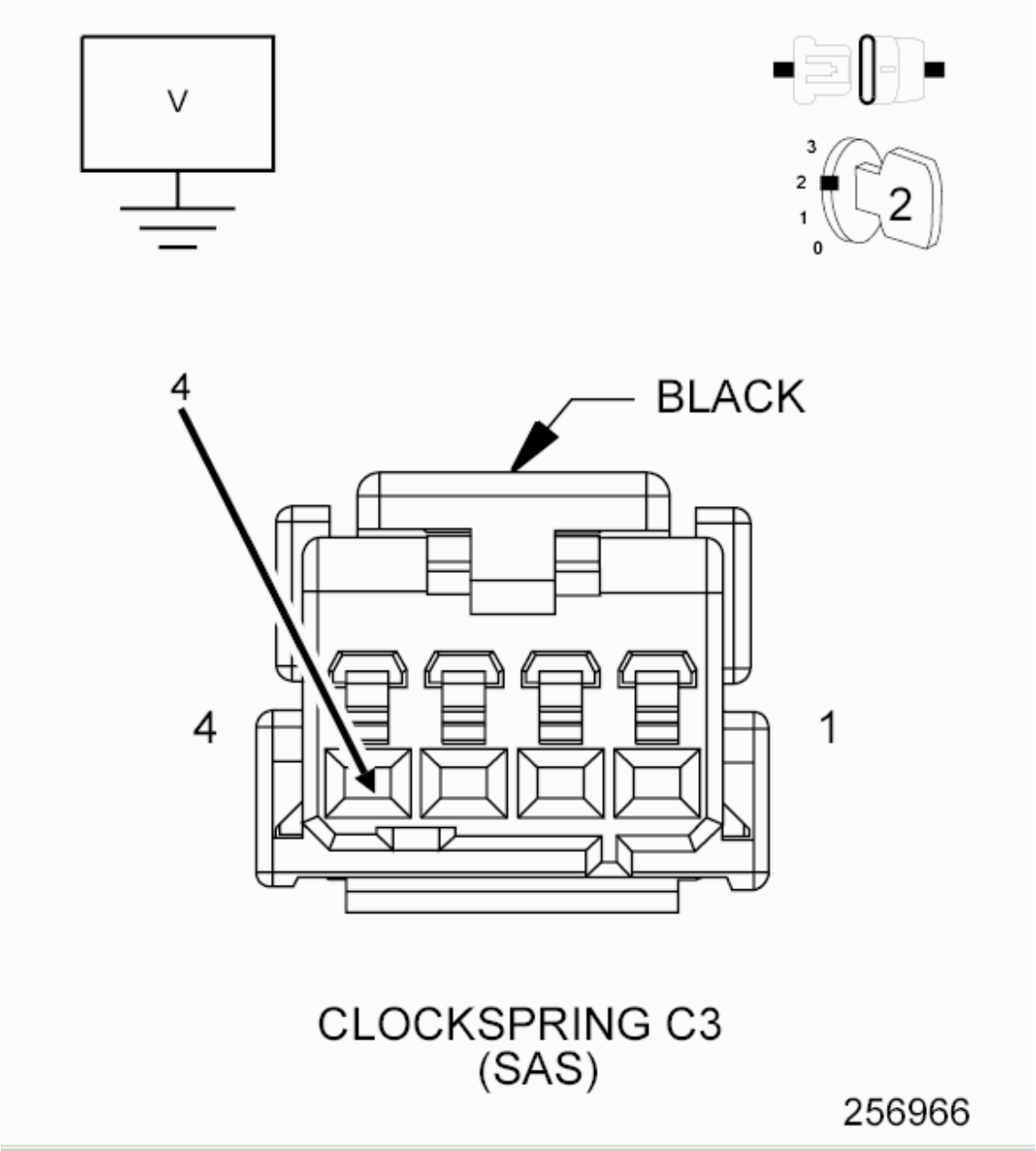

Fig. 95: Measuring Voltage Of Fused B(+) Circuit In Clockspring C3 Harness Connector
Courtesy of CHRYSLER GROUP, LLC

1. Turn the ignition off.
2. Disconnect the Steering Angle Sensor harness connector.
3. Turn the ignition on.
4. Measure the voltage of the (F202) Ignition Switch Output circuit.

   Is the voltage above 10 volts?

   Yes

- Go To 4

No

- Repair the (F202) Ignition Switch Output circuit for an open.
- Perform the ABS VERIFICATION TEST. Refer to **STANDARD PROCEDURE**.

4. **CHECK THE RESISTANCE OF THE (Z937) GROUND CIRCUIT**

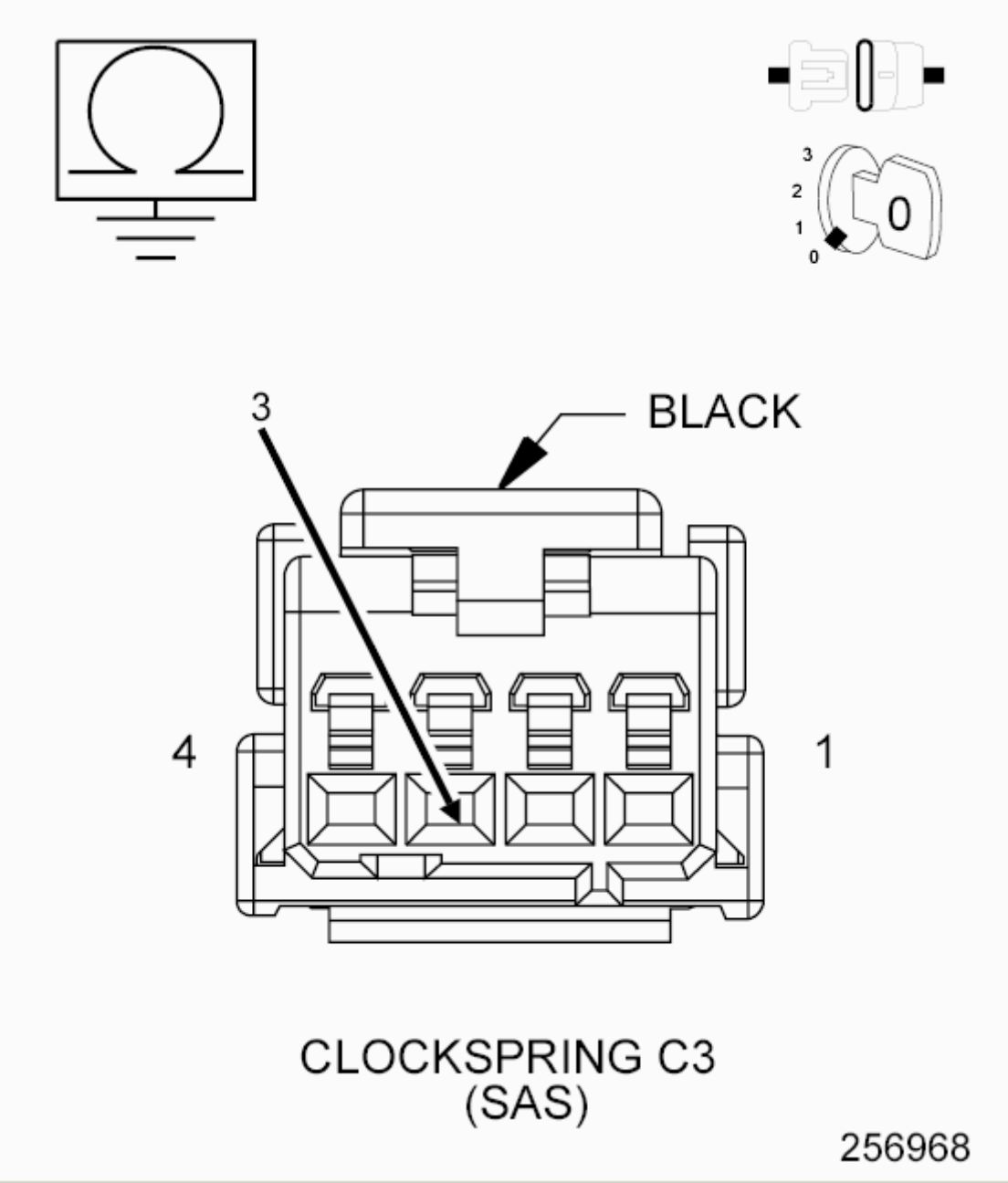

Fig. 96: Checking Resistance Of Ground Circuit
Courtesy of CHRYSLER GROUP, LLC

1. Turn the ignition off.
2. Measure the resistance between the (Z937) Ground circuit and ground.

   Is the resistance below 5.0 Ohms?

   Yes

   - Go To 5

   No

   - Repair the (Z937) Ground circuit for an open.
   - Perform the ABS VERIFICATION TEST. Refer to **STANDARD PROCEDURE**.

5. **VERIFY THAT THE STEERING ANGLE SENSOR IS ACTIVE ON THE BUS**
   1. With the scan tool, select ECU View.
   2. Verify that the Steering Angle Sensor is active on the bus.

      Is the Steering Angle Sensor active on the bus?

      Yes

      - Replace the Steering Angle Sensor in accordance with the service information.
      - Perform the ABS VERIFICATION TEST. Refer to **STANDARD PROCEDURE**.

      No

      - Refer to **DIAGNOSIS AND TESTING** and perform the STORED LOST COMMUNICATION DTCs diagnostic procedure.

U0141-LOST COMMUNICATION WITH IPM (FCM/TIPM)

For a complete wiring diagram, **refer to appropriate SYSTEM WIRING DIAGRAMS article** .

WHEN MONITORED

Continuously when the ignition is on.

The battery voltage between 10.0 and 16.0 Volts.

Ignition Off Draw (IOD) fuse installed.

Totally Integrated Power Module (TIPM) is configured correctly.

SET CONDITION

Bus messages not received from the Totally Integrated Power Module (TIPM) for approximately two to five seconds.

POSSIBLE CAUSES

Possible Causes
CAN BUS CIRCUITS OPEN OR SHORTED DTCS RELATED TO BATTERY VOLTAGE, IGNITION, OR VIN MESSAGES TOTALLY INTEGRATED POWER MODULE POWER AND GROUND TIPM NOT CONFIGURED CORRECTLY TOTALLY INTEGRATED POWER MODULE (TIPM) MODULE THAT SET THIS DTC

DIAGNOSTIC TEST

VERIFY DTC IS ACTIVE

NOTE: Make sure the IOD fuse is installed and the battery is fully charged before proceeding.

1. Turn the ignition on.
2. With the scan tool, read active DTCs.

   Is this DTC active?

   Yes

   - Refer to **DIAGNOSIS AND TESTING** and perform the U0141-LOST COMMUNICATION WITH IPM (FCM/TIPM) diagnostic procedure.

No

- Refer to **DIAGNOSIS AND TESTING** and perform the STORED LOST COMMUNICATION DTCs diagnostic procedure.

U0146-LOST COMMUNICATION WITH CENTRAL GATEWAY

For a complete wiring diagram, **refer to appropriate SYSTEM WIRING DIAGRAMS article** .

WHEN MONITORED

- With the ignition on
- Battery voltage between 10 and 16 volts
- IOD fuse installed

SET CONDITION

If the Anti-Lock Brake Module either fails to receive bus messages from the Totally Integrated Control Module (TIPM) for approximately 500 ms, or it receives invalid messages from the TIPM, or it detects messages from the TIPM are of improper data length.

POSSIBLE CAUSES

Possible Causes
DTCs RELATED TO BATTERY VOLTAGE, IGNITION, OR VIN MESSAGES
CAN C BUS CIRCUITS OPEN OR SHORTED
TIPM POWER AND GROUND
TOTALLY INTEGRATED POWER MODULE (TIPM)
ANTI-LOCK BRAKE MODULE

DIAGNOSTIC TEST

1. **VERIFY DTC IS ACTIVE**

NOTE: Verify the IOD fuse is installed and battery voltage is between 10 and 16 volts before proceeding.

1. Turn the ignition on.

2. With the scan tool, read and record ABS DTCs.
3. With the scan tool, read and record Environmental Data to help identify the conditions in which the DTC was set.
4. With the scan tool, erase ABS DTCs.
5. Cycle the ignition switch.
6. With the scan tool, read ABS DTCs.

Does this DTC reset?

Yes

- Go To 2

No

- Perform the STORED LOST COMMUNICATION test procedure. Refer to **DIAGNOSIS AND TESTING** .

2. **CHECK FOR ANY OF THE FOLLOWING ACTIVE DTCs**
   1. With the scan tool, read all active DTCs from all CAN C Bus modules.

NOTE: Check for CAN C hardware electrical, VIN Missing/Mismatch, battery or ignition related DTCs.

Does the scan tool display any active DTCs related to the conditions listed above?

Yes

- Perform the appropriate diagnostic procedure.

No

- Go To 3

3. **VERIFY THAT THE TIPM IS ACTIVE ON THE BUS**
   1. With the scan tool, select ECU View.
   2. Verify that the TIPM is active on the bus.

Is the TIPM active on the bus?

Yes

- Go To 4

No

- For NO RESPONSE diagnostic procedures, refer to **DIAGNOSIS AND TESTING** .

4. **CHECK FOR ADDITIONAL COMMUNICATION RELATED DTCs**
   1. With the scan tool, select Network View and select Advanced.

      Is there more than one module with active DTCs."Logged Against" the TIPM?

      Yes

      - Replace/update the TIPM in accordance with the service information.
      - Perform BODY VERIFICATION TEST. Refer to **STANDARD PROCEDURE** .

      No

      - Replace the Anti-Lock Brake Module in accordance with the service information.
      - Perform ABS VERIFICATION TEST. Refer to **STANDARD PROCEDURE**.

U0401-IMPLAUSIBLE DATA RECEIVED FROM ECM/PCM

For a complete wiring diagram **refer to appropriate SYSTEM WIRING DIAGRAMS article** .

WHEN MONITORED

Continuously with the ignition on, one valid CAN message received at least once, and no U0002-CAN C Bus Off Performance DTC present.

SET CONDITION

When the Anti-Lock Brake Module detects an incorrect CAN message from the Engine Module.

POSSIBLE CAUSES

Possible Causes
ABM CAN BUS DTCS ENGINE DTCS ANTI-LOCK BRAKE MODULE

DIAGNOSTIC TEST

1. **CHECK FOR DTC U0401-IMPLAUSIBLE DATA RECEIVED FROM ECM/PCM**

   NOTE: This DTC must be active for the results of this test to be valid.

   1. Turn the ignition on.
   2. With the scan tool, record and erase DTCs.
   3. Cycle the ignition switch from off to on.
   4. With the scan tool, read DTCs.

   Does the scan tool display: U0401-IMPLAUSIBLE DATA RECEIVED FROM ECM/PCM?

   Yes

   - Go To 2

   No

   - Perform the ABS-INTERMITTENT CONDITION TEST. Refer to **STANDARD PROCEDURE**.

2. **CHECK IF TIPM CAN BUS DTCs ARE PRESENT**
   1. With the scan tool, read TIPM DTCs.

   Are there any TIPM CAN BUS DTCs present?

   Yes

- Refer to the appropriate diagnostics. Refer to **DIAGNOSIS AND TESTING** .

No

- Go To 3

3. **CHECK IF ENGINE DTCs ARE PRESENT**
   1. With the scan tool, read Engine DTCs.

   Are there any Engine DTCs present?

   Yes

   - Refer to the Engine DTCs. Refer to the **DTC INDEX** article .

   No

   - Using the schematics as a guide, check the Anti-Lock Brake Module pins, terminals, and connectors for corrosion, damage, or terminal push out. Pay particular attention to all power and ground circuits. If no problems are found, replace the Anti-Lock Brake Module in accordance with the Service Information.
   - Perform ABS VERIFICATION TEST. Refer to **STANDARD PROCEDURE**.

U1003-ESP CAN C BUS PERFORMANCE

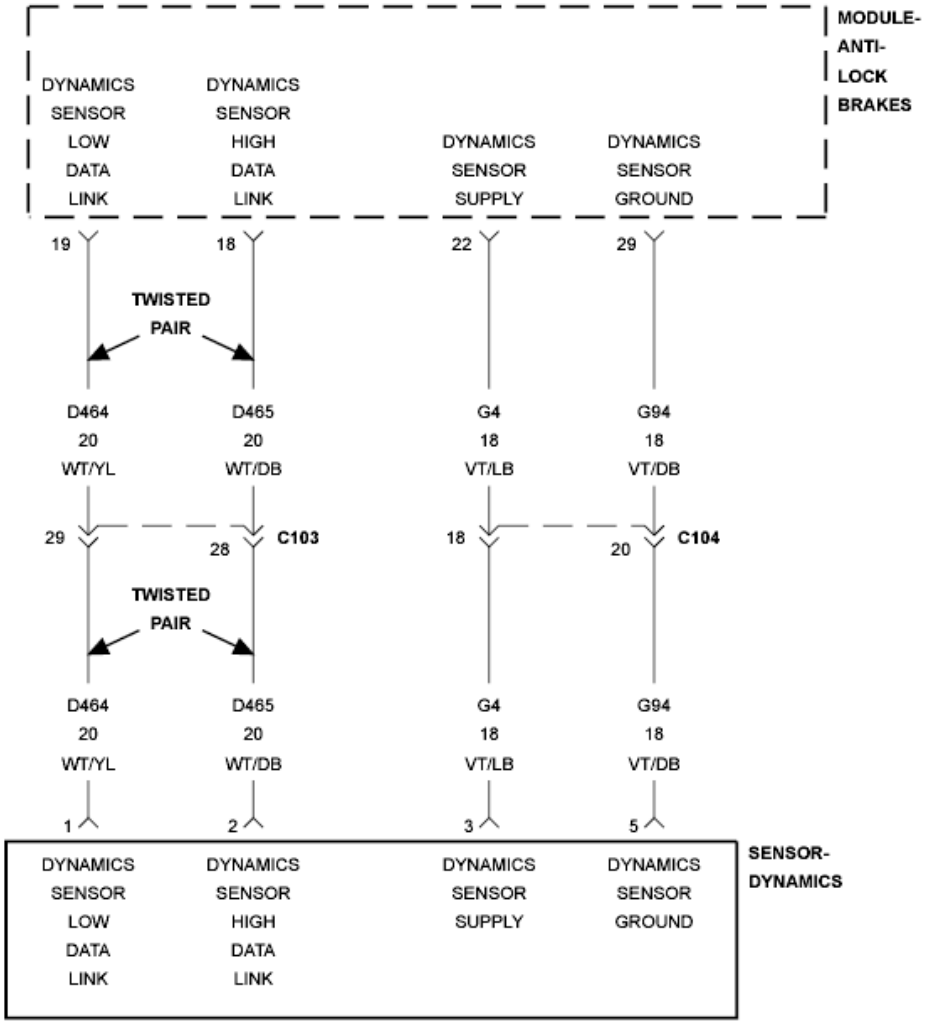

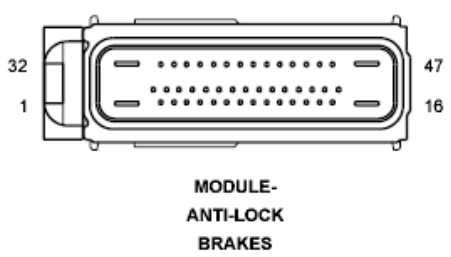

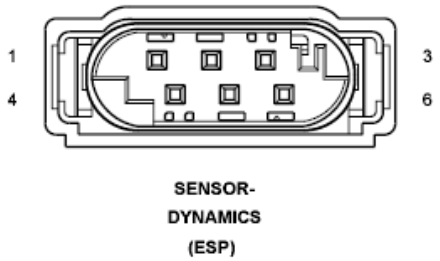

Fig. 97: ESP CAN C BUS Circuit Schematic
Courtesy of CHRYSLER GROUP, LLC

For a complete wiring diagram, **refer to appropriate SYSTEM WIRING DIAGRAMS article** .

WHEN MONITORED

With the ignition on.

SET CONDITION

If the Anti-Lock Brake Module detects too many CAN Bus off events on the Dynamics Sensor Data Link circuits.

POSSIBLE CAUSES

Possible Causes
WIRING HARNESS, TERMINAL, CONNECTOR DAMAGE (D465) DYNAMICS SENSOR HIGH DATA LINK CIRCUIT SHORTED TO GROUND, VOLTAGE, OR OPEN (D464) DYNAMICS SENSOR LOW DATA LINK CIRCUIT SHORTED TO GROUND, VOLTAGE, OR OPEN DYNAMICS SENSOR ANTI-LOCK BRAKE MODULE

DIAGNOSTIC TEST

1. **VERIFY DTC IS ACTIVE**
    1. Turn the ignition on.
    2. With the scan tool, read and record ABS DTCs.
    3. With the scan tool, read and record Environmental Data to help identify the conditions in which the DTC was set.
    4. With the scan tool, erase ABS DTCs.
    5. Cycle the ignition switch.
    6. With the scan tool, read ABS DTCs.

    Does this DTC reset?

    Yes

    - Go To 2

    No

    - The condition that caused the symptom is currently not present. Inspect the related wiring for a possible intermittent condition. Look for any chafed, pierced, pinched, or partially broken wires.

- Perform the ABS-INTERMITTENT CONDITION TEST. Refer to **STANDARD PROCEDURE**.

2. **INSPECT RELATED WIRING HARNESS, TERMINALS, AND CONNECTORS**
   1. Visually inspect the related wiring harness. Look for any pinched, chafed, pierced, and partially broken wires.
   2. Visually inspect the related wiring harness connectors. Look for broken, bent, pushed out, and corroded terminals.

   Were any problems found?

   Yes

   - Repair as necessary.
   - Perform ABS VERIFICATION TEST. Refer to **STANDARD PROCEDURE**.

   No

   - Go To 3

3. **CHECK THE (D465) DYNAMICS SENSOR HIGH DATA LINK CIRCUIT FOR A SHORT TO VOLTAGE**

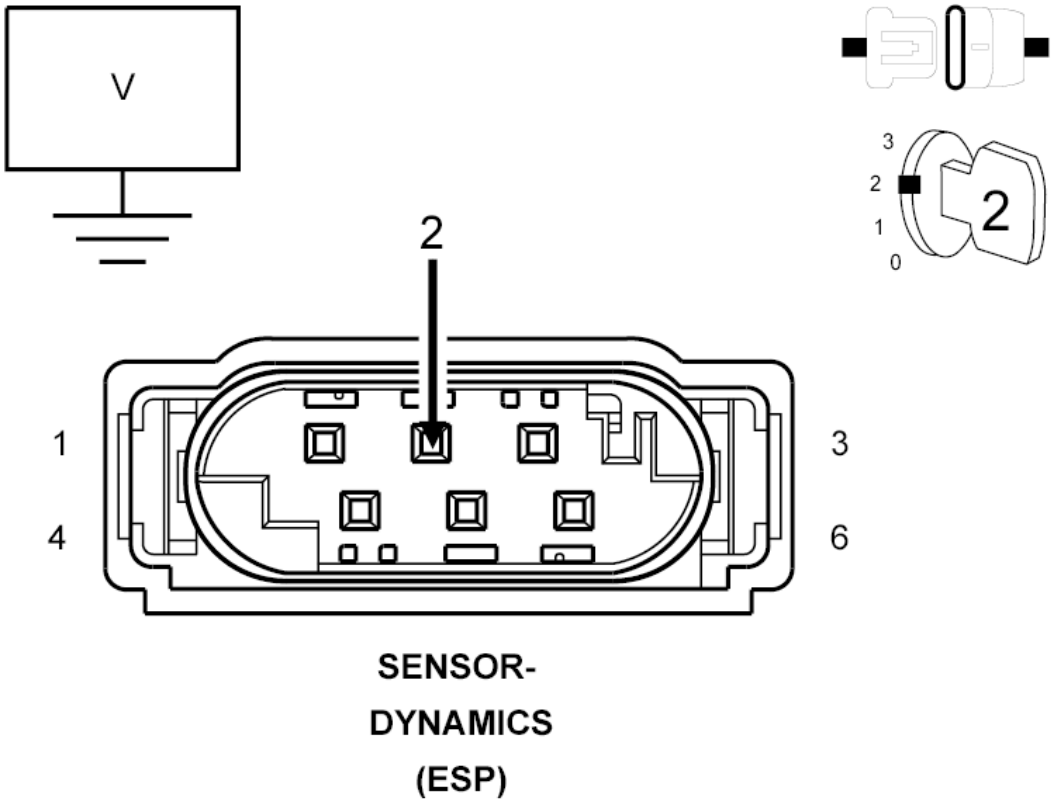

Fig. 98: Checking Dynamics Sensor High Data Link Circuit For A Short To Voltage
Courtesy of CHRYSLER GROUP, LLC

1. Disconnect the Anti-Lock Brake Module harness connector.
2. Disconnect the Dynamics Sensor harness connector.
3. Turn the ignition on.
4. Measure the voltage of the (D465) Dynamics Sensor High Data Link circuit.

   Is there any voltage present?

   Yes

   - Repair the (D465) Dynamics Sensor High Data Link circuit for a short to voltage.
   - Perform ABS VERIFICATION TEST. Refer to **STANDARD PROCEDURE**.

   No

- Go To 4

4. **CHECK THE (D465) DYNAMICS SENSOR HIGH DATA LINK CIRCUIT FOR A SHORT TO GROUND**

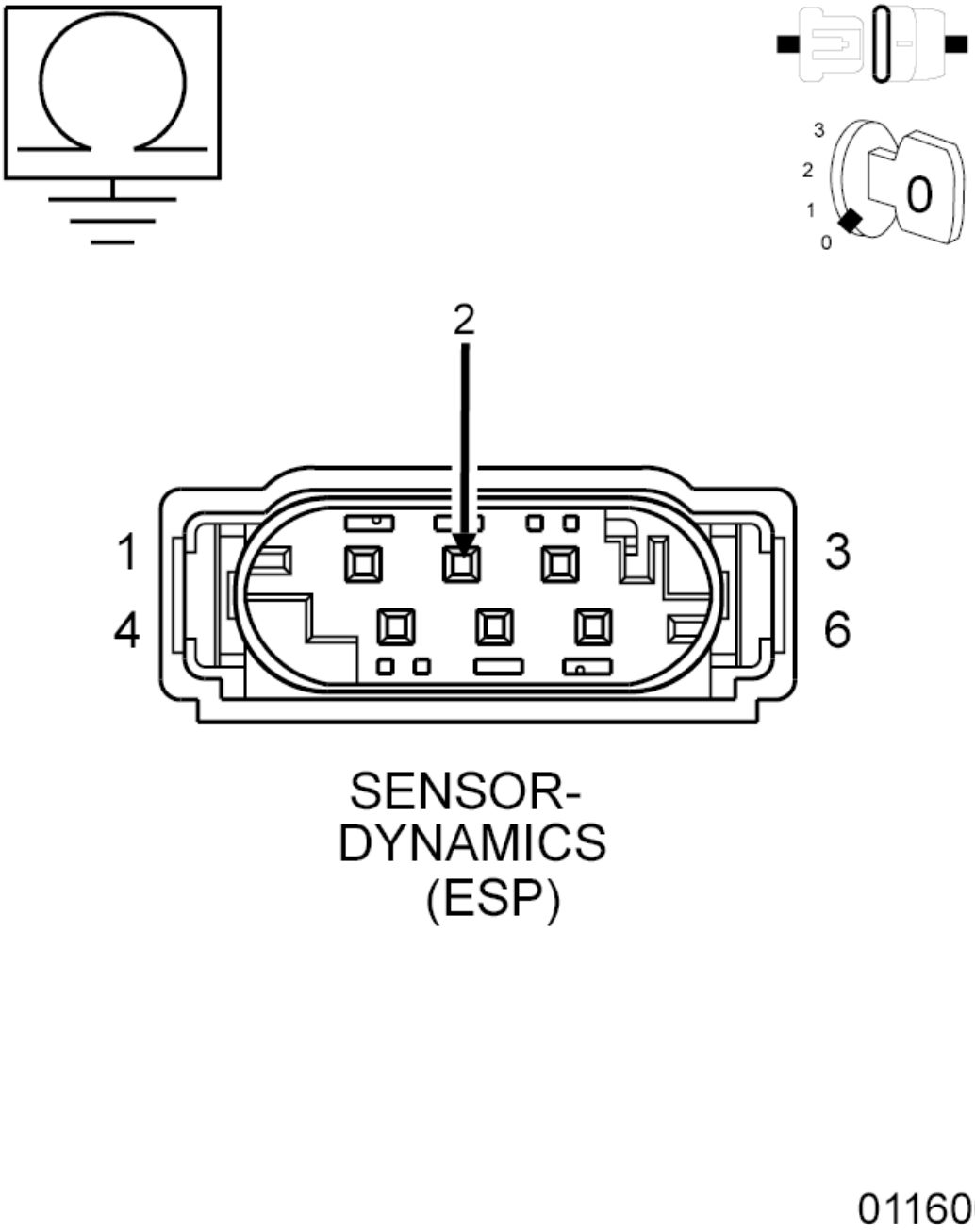

Fig. 99: Checking Dynamics Sensor High Data Link Circuit For Short To Ground
Courtesy of CHRYSLER GROUP, LLC

1. Turn the ignition off.
2. Measure the resistance of the (D465) Dynamics Sensor High Data Link

circuit between ground and the Dynamics Sensor harness connector.

Is the resistance below 5.0 ohms?

Yes

- Repair the (D465) Dynamics Sensor High Data Link circuit for a short to ground.
- Perform ABS VERIFICATION TEST. Refer to **STANDARD PROCEDURE**.

No

- Go To 5

5. **CHECK THE (D465) DYNAMICS SENSOR HIGH DATA LINK CIRCUIT FOR AN OPEN**

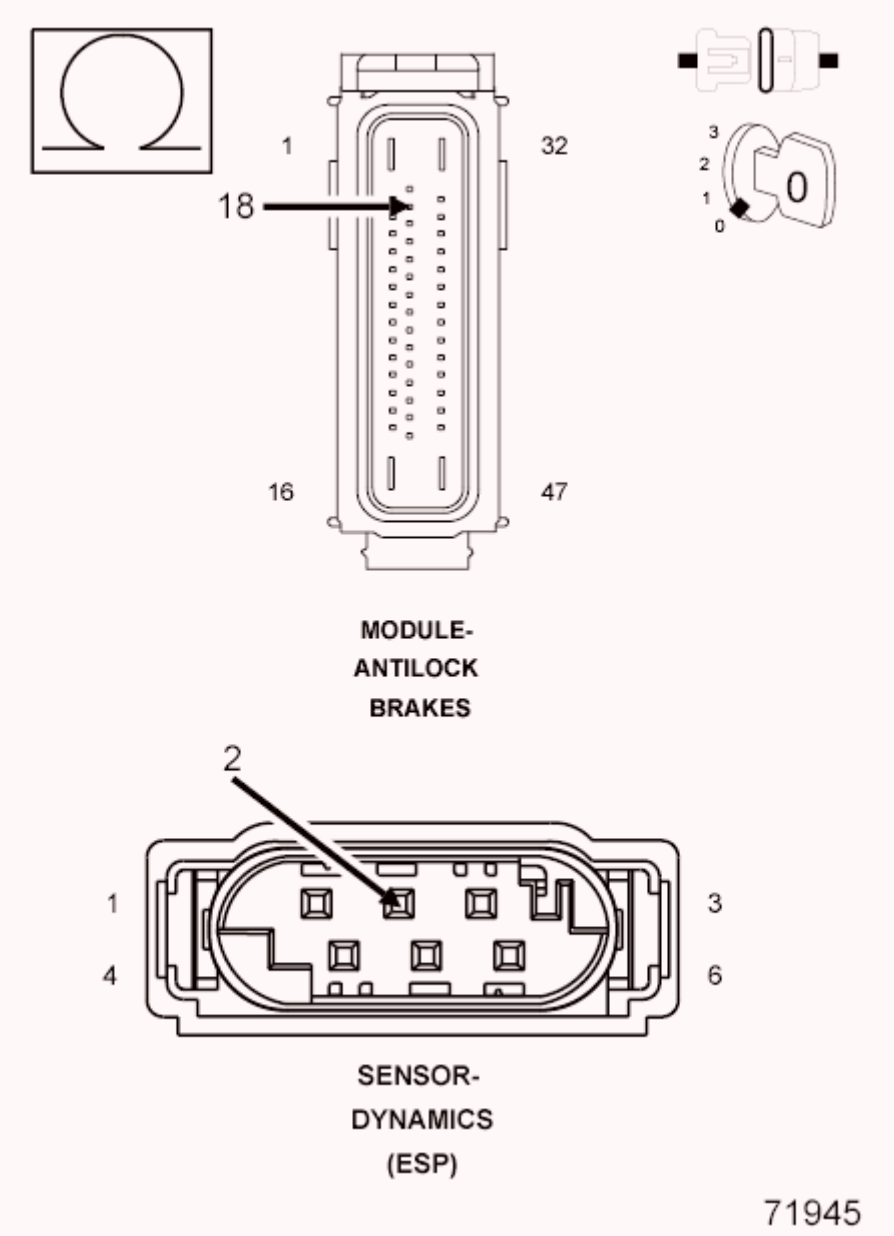

Fig. 100: Measuring Resistance Of Dynamics Sensor High Data Link Circuit
Courtesy of CHRYSLER GROUP, LLC

1. Measure the resistance of the (D465) Dynamics Sensor High Data Link circuit between the Dynamics Sensor harness connector and the Anti-Lock Brake Module harness connector.

   Is the resistance below 5.0 ohms?

   Yes

   - Go To 6

No

- Repair the (D465) Dynamics Sensor High Data Link circuit for an open.
- Perform ABS VERIFICATION TEST. Refer to **STANDARD PROCEDURE**.

6. **CHECK THE (D464) DYNAMICS SENSOR LOW DATA LINK CIRCUIT FOR A SHORT TO VOLTAGE**

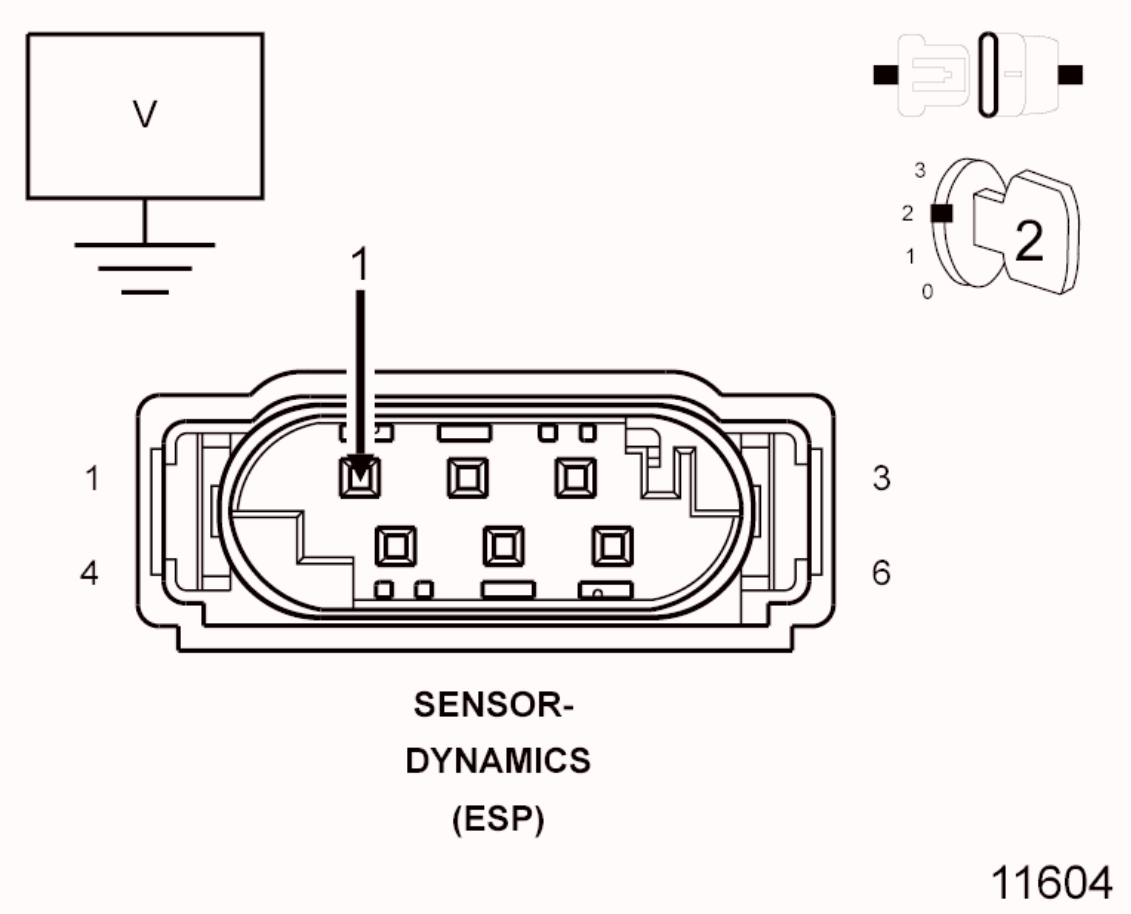

Fig. 101: Measuring Voltage Of Dynamics Sensor Low Data Link Circuit
Courtesy of CHRYSLER GROUP, LLC

1. Turn the ignition on.
2. Measure the voltage of the (D464) Dynamics Sensor Low Data Link circuit.

   Is there any voltage present?

Yes

- Repair the (D464) Dynamics Sensor Low Data Link circuit for a short to voltage.
- Perform ABS VERIFICATION TEST. Refer to **STANDARD PROCEDURE**.

No

- Go To 7

7. **CHECK THE (D464) DYNAMICS SENSOR LOW DATA LINK CIRCUIT FOR A SHORT TO GROUND**

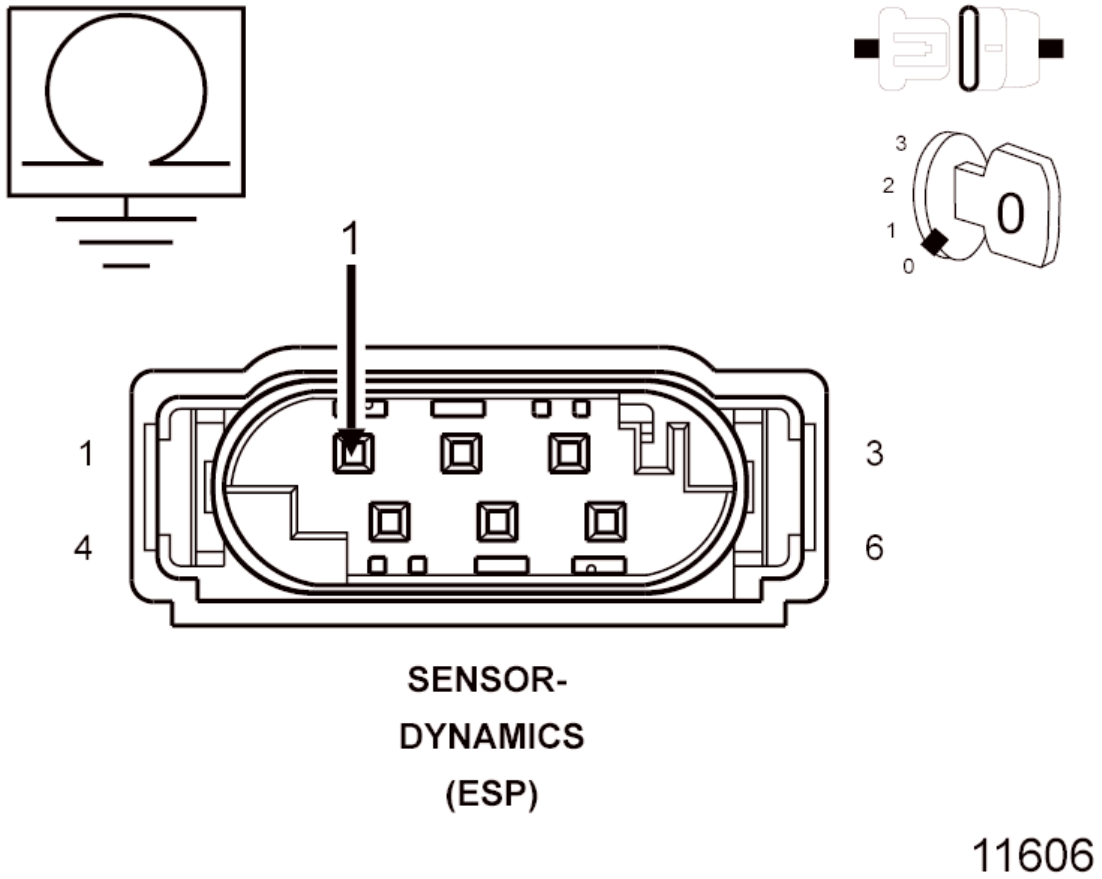

Fig. 102: Checking Dynamics Sensor Low Data Link Circuit For Short To Ground
Courtesy of CHRYSLER GROUP, LLC

1. Turn the ignition off.
2. Measure the resistance of the (D464) Dynamics Sensor Low Data Link

circuit between ground and the Dynamics Sensor harness connector.

Is the resistance below 5.0 ohms?

Yes

- Repair the (D464) Dynamics Sensor Low Data Link circuit for a short to ground.
- Perform ABS VERIFICATION TEST. Refer to **STANDARD PROCEDURE**.

No

- Go To 8

8. **CHECK THE (D464) DYNAMICS SENSOR LOW DATA LINK CIRCUIT FOR AN OPEN**

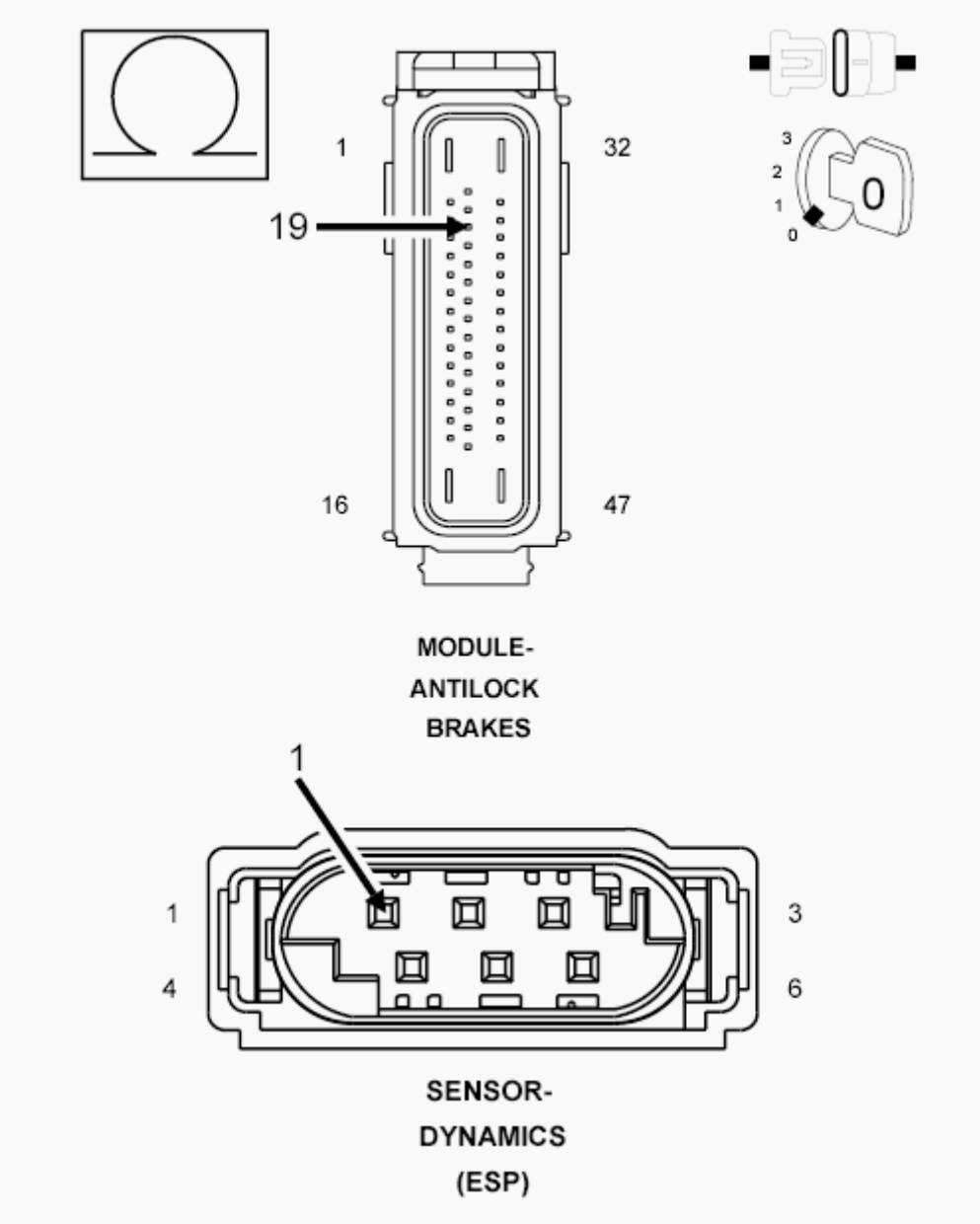

Fig. 103: Measuring Resistance Of Dynamics Sensor Low Data Link Circuit
Courtesy of CHRYSLER GROUP, LLC

1. Measure the resistance of the (D464) Dynamics Sensor Low Data Link circuit between the Dynamics Sensor harness connector and the Anti-Lock Brake Module harness connector.

   Is the resistance below 5.0 ohms?

   Yes

   - Go To 9

No

- Repair the (D464) Dynamics Sensor Low Data Link circuit for an open.
- Perform ABS VERIFICATION TEST. Refer to **STANDARD PROCEDURE**.

9. **REPLACE DYNAMICS SENSOR AND VERIFY IF DTC IS STILL ACTIVE**
   1. Replace the Dynamics Sensor in accordance with the Service Information. Perform ABS VERIFICATION TEST. Refer to **STANDARD PROCEDURE**.
   2. Turn the ignition on.
   3. With the scan tool, erase ABS DTCs.
   4. Cycle the ignition switch.

   WARNING: Make sure brake capability is available before road testing.

   5. Test drive the vehicle by turning the vehicle left or right in a curving manner at a velocity between 6 and 15 mph (10 and 25 km/h).
   6. Park the vehicle.
   7. With the scan tool, read ABS DTCs.

   Does this DTC reset?

   Yes

   - Replace the Anti-Lock Brake Module in accordance with the Service Information.
   - Perform ABS VERIFICATION TEST. Refer to **STANDARD PROCEDURE**.

   No

   - Test complete.

U1104-CAN C BUS CRC PERFORMANCE

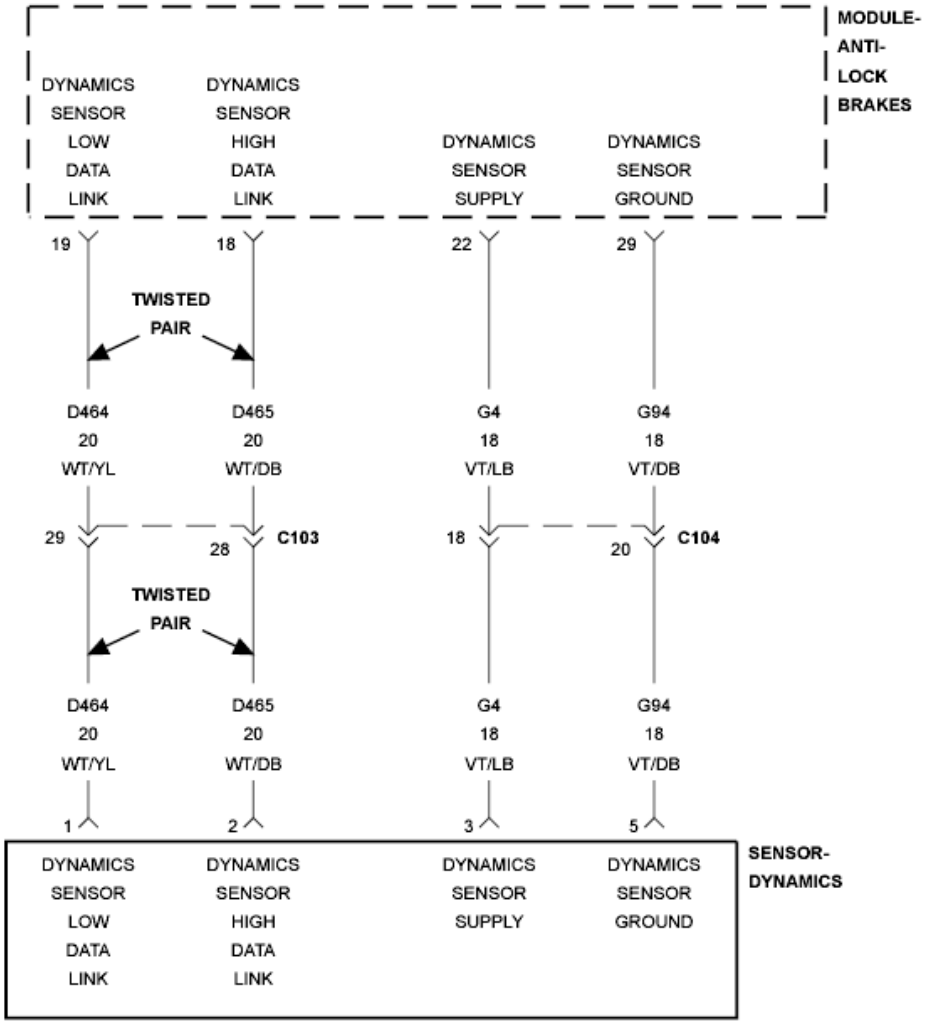

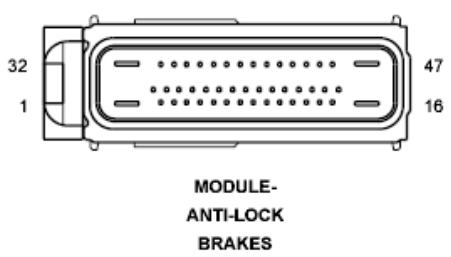

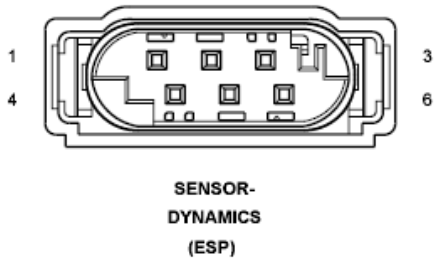

Fig. 104: ESP CAN C BUS Wiring Diagram
Courtesy of CHRYSLER GROUP, LLC

For a complete wiring diagram, **refer to appropriate SYSTEM WIRING DIAGRAMS article** .

WHEN MONITORED

With the ignition on.

SET CONDITION

If the Anti-Lock Brakes Module detects an invalid CAN message from the Dynamics Sensor.

POSSIBLE CAUSES

Possible Causes
DYNAMICS SENSOR

DIAGNOSTIC TEST

VERIFY DTC IS ACTIVE

1. Turn the ignition on.
2. With the scan tool, read and record ABS DTCs.
3. With the scan tool, read and record Environmental Data (EV Data).
4. With the scan tool, erase ABS DTCs.
5. Cycle the ignition switch.
6. With the scan tool, read ABS DTCs.

   Does this DTC reset?

   Yes

   - Replace the Dynamics Sensor in accordance with the Service Information.
   - Perform ABS VERIFICATION TEST. Refer to **STANDARD PROCEDURE**.

   No

   - The condition that caused the symptom is currently not present. Inspect the related wiring for a possible intermittent condition. Look for any chafed, pierced, pinched, or partially broken wires.
   - Refer to the ABS-INTERMITTENT CONDITION TEST. Refer to **STANDARD PROCEDURE**.

U140E-IMPLAUSIBLE VEHICLE CONFIGURATION DATA RECEIVED

For a complete wiring diagram, **refer to appropriate SYSTEM WIRING DIAGRAMS article**

WHEN MONITORED

Once per ignition cycle, but not during cranking.

SET CONDITION

If the Anti-Lock Brake Module either fails to receive vehicle configuration data from the Engine Control Module (ECM) or Powertrain Control Module (PCM) or the configuration data it receives from the ECM or PCM is different than that received during the previous ignition cycle.

POSSIBLE CAUSES

Possible Causes
WIRING HARNESS, TERMINAL, CONNECTOR DAMAGE
DTCs RELATED TO BATTERY VOLTAGE, IGNITION, OR VIN MESSAGES
CAN C BUS CIRCUITS OPEN OR SHORTED
ECM OR PCM DTCs PRESENT
ECM OR PCM NOT PROGRAMMED OR PROGRAMMED WITH INCORRECT VIN
TIPM NOT PROGRAMMED OR PROGRAMMED WITH INCORRECT INFORMATION
ECM OR PCM
ANTI-LOCK BRAKES MODULE

DIAGNOSTIC TEST

1. **VERIFY DTC IS ACTIVE**
    1. Turn the ignition on.
    2. With the scan tool, read and record the ABS DTCs.
    3. With the scan tool, read and record Environmental Data to help identify the conditions in which the DTC was set.
    4. With the scan tool, erase the ABS DTCs.
    5. Cycle the ignition switch.

6. With the scan tool, read the ABS DTCs.

   Does this DTC reset?

   Yes

   - Go To 2

   No

   - The condition that caused the symptom is currently not present. Inspect the related wiring for a possible intermittent condition. Look for any chafed, pierced, pinched, or partially broken wires.
   - Perform the ABS INTERMITTENT CONDITION TEST. Refer to **STANDARD PROCEDURE**.

2. **CHECK FOR ANY OF THE FOLLOWING ACTIVE DTCs**
   1. With the scan tool, read all active DTCs from all CAN C Bus modules.

      NOTE: Check for CAN C hardware electrical, VIN Missing/Mismatch, battery or ignition related DTCs.

      Does the scan tool display any active DTCs related to the conditions listed above?

      Yes

      - Diagnose and repair the DTC. Refer to the **DIAGNOSTIC CODE INDEX** .

      No

      - Go To 3

3. **CHECK IF TIPM DTCs ARE PRESENT**
   1. With the scan tool, read TIPM DTCs.

      Are any DTCs present?

      Yes

- Diagnose and repair the DTC(s). Refer to **DIAGNOSIS AND TESTING** .

No

- Go To 4

4. **VERIFY TIPM IS CONFIGURED CORRECTLY**
   1. With the scan tool, verify that the TIPM part number is correct for the vehicle and programmed correctly by selecting TIPM from ECU view then Misc Functions and Restore Vehicle Configuration

      Is the correct TIPM installed in the vehicle?

      No

      - Replace and program the TIPM in accordance with the Service Information.
      - Perform BODY VERIFICATION TEST. Refer to **STANDARD PROCEDURE** .

      Yes

      - Go To 5

5. **CHECK IF ECM OR PCM DTCs ARE PRESENT**
   1. With the scan tool, read ECM or PCM DTCs.

      Are any DTCs present?

      Yes

      - Diagnose and repair the DTC(s). Refer to the **DTC INDEX** article .

      No

      - Go To 6

6. **VERIFY CORRECT ECM OR PCM IS INSTALLED IN THE VEHICLE**
   1. With the scan tool, verify that the ECM or PCM part number is correct

for the vehicle.

Is the correct ECM or PCM installed in the vehicle?

Yes

- Go To 7

No

- Replace and program the ECM or PCM in accordance with the Service Information.
- Perform POWERTRAIN VERIFICATION TEST. Refer to the appropriate TESTING & DIAGNOSTICS article in ENGINE PERFORMANCE .

7. **VERIFY ECM OR PCM IS PROGRAMMED WITH CORRECT VIN**
   1. With the scan tool, verify that the ECM or PCM is programmed with the correct VIN.

      Is the ECM or PCM programmed with the correct VIN?

      Yes

      - Go To 8

      No

      - Using the scan tool, perform PCM Replaced to update the VIN in the PCM.
      - Perform POWERTRAIN VERIFICATION TEST. Refer to the appropriate TESTING & DIAGNOSTICS article in ENGINE PERFORMANCE .
8. **CHECK FOR ADDITIONAL COMMUNICATION RELATED DTCs**
   1. With the scan tool, select Network View and select Advanced.

      Is there more than one module with active DTCs "Logged Against" the ECM or PCM?

      Yes

- Replace/update the ECM or PCM in accordance with the service information.
- Perform POWERTRAIN VERIFICATION TEST. Refer to the appropriate TESTING & DIAGNOSTICS article in ENGINE PERFORMANCE .

No

- Using the schematics as a guide, check the Anti-Lock Brake Module pins, terminals, and connectors for corrosion, damage, and terminal push out. Pay particular attention to all Communication circuits. If no problems are found, replace the Anti-Lock Brake Module in accordance with the Service Information.
- Perform ABS VERIFICATION TEST. Refer to **STANDARD PROCEDURE**.

U1501-IMPLAUSIBLE MESSAGE DATA LENGTH RECEIVED FROM PCM

For a complete wiring diagram, **refer to appropriate SYSTEM WIRING DIAGRAMS article** .

WHEN MONITORED

Continuously, with ignition on.

SET CONDITION

If the Anti-Lock Brake System (ABS) Module detects bus messages from the Powertrain Control Module (PCM) are of improper data length.

POSSIBLE CAUSES

Possible Causes
WIRING HARNESS, TERMINAL, CONNECTOR DAMAGE
DTCs RELATED TO BATTERY VOLTAGE, IGNITION, OR VIN MESSAGES
CAN C BUS CIRCUITS OPEN OR SHORTED
POWERTRAIN CONTROL MODULE (PCM) DTCs PRESENT
POWERTRAIN CONTROL MODULE (PCM)
ANTI-LOCK BRAKE SYSTEM (ABS) MODULE

DIAGNOSTIC TEST

1. **VERIFY THE DIAGNOSTIC TROUBLE CODE (DTC) IS ACTIVE**
   1. Turn the ignition on.
   2. With the scan tool, read and record ABS DTCs.
   3. With the scan tool, read and record Environmental Data to help identify the conditions in which the DTC was set.
   4. With the scan tool, erase ABS DTCs.
   5. Cycle the ignition switch.
   6. With the scan tool, read ABS DTCs.

   Does this DTC reset?

   Yes

   - Go To 2

   No

   - The condition that caused the symptom is currently not present. Inspect the related wiring for a possible intermittent condition. Look for any chafed, pierced, pinched or partially broken wires.
   - Perform the ABS VERIFICATION TEST. Refer to **STANDARD PROCEDURE**.
2. **CHECK FOR ANY OF THE FOLLOWING ACTIVE DIAGNOSTIC TROUBLE CODE (DTC)s**
   1. With the scan tool, read all active DTCs from all CAN C Bus modules.

   NOTE: Check for CAN C hardware electrical, VIN Missing/Mismatch, battery or ignition related DTCs.

   Does the scan tool display any active DTCs related to the conditions listed above?

   Yes

   - Perform the appropriate diagnostic procedure.

No

- Go To 3

3. **CHECK IF PCM DTCs ARE PRESENT**
   1. With the scan tool, read PCM DTCs.

      Are any DTCs present?

      Yes

      - Perform the appropriate diagnostic procedure. Refer to the **DTC INDEX** article .

      No

      - Go To 4

4. **CHECK FOR ADDITIONAL COMMUNICATION RELATED DTCs**
   1. With the scan tool, select Network View and select Advanced.

      Is there more than one module with active DTCs "Logged Against" the PCM?

      Yes

      - Replace/update the PCM in accordance with the Service Information.
      - Perform the appropriate POWERTRAIN VERIFICATION TEST. Refer to the appropriate TESTING & DIAGNOSTICS article in ENGINE PERFORMANCE .

      No

      - Using the schematics as a guide, check the Anti-Lock Brake System (ABS) Module pins, terminals, and connectors for corrosion, damage and terminal push out. Pay particular attention to all Communication circuits. If no problems are found, replace the Anti-Lock Brake System (ABS) Module in accordance with the Service Information.
      - Perform the ABS VERIFICATION TEST. Refer to **STANDARD**

PROCEDURE.

U1502-IMPLAUSIBLE MESSAGE DATA LENGTH RECEIVED FROM TCM

For a complete wiring diagram, **refer to appropriate SYSTEM WIRING DIAGRAMS article** .

WHEN MONITORED

Continuously, with ignition on.

SET CONDITION

If the Anti-Lock Brakes Module detects bus messages from the Transmission Control Module (TCM) are of improper data length.

POSSIBLE CAUSES

Possible Causes
WIRING HARNESS, TERMINAL, CONNECTOR DAMAGE
DTCs RELATED TO BATTERY VOLTAGE, IGNITION, OR VIN MESSAGES
CAN C BUS CIRCUITS OPEN OR SHORTED
TCM DTCs PRESENT
TCM
ANTI-LOCK BRAKES MODULE

DIAGNOSTIC TEST

1. **VERIFY DTC IS ACTIVE**
    1. Turn the ignition on.
    2. With the scan tool, read and record ABS DTCs.
    3. With the scan tool, read and record Environmental Data (EV Data).
    4. With the scan tool, erase ABS DTCs.
    5. Cycle the ignition switch.
    6. With the scan tool, read ABS DTCs.

    Does this DTC reset?

    Yes

- Go To 2

No

- The condition that caused the symptom is currently not present. Inspect the related wiring for a possible intermittent condition. Look for any chafed, pierced, pinched, or partially broken wires.
- Perform the ABS-INTERMITTENT CONDITION TEST. Refer to **STANDARD PROCEDURE**.

2. **CHECK FOR ANY OF THE FOLLOWING ACTIVE DTCs**
   1. With the scan tool, read all active DTCs from all CAN C Bus modules.

      NOTE: Check for CAN C hardware electrical, VIN Missing/Mismatch, battery or ignition related DTCs.

      Does the scan tool display any active DTCs related to the conditions listed above?

      Yes

      - Perform the appropriate diagnostic procedure.

      No

      - Go To 3

3. **CHECK IF TCM DTCs ARE PRESENT**
   1. With the scan tool, read TCM DTCs.

      Are any TCM DTCs present?

      Yes

      - Diagnose and repair the DTC(s).
      - Perform TRANSMISSION VERIFICATION TEST. Refer to **STANDARD PROCEDURE** for 6F24 automatic transmission or **STANDARD PROCEDURE** for CVT automatic transmission. .

      No

- Using the schematics as a guide, check the Anti-Lock Brakes Module pins, terminals, and connectors for corrosion, damage, and terminal push out. Pay particular attention to all Communication circuits. If no problems are found, replace the Anti-Lock Brakes Module in accordance with the Service Information.
- Perform ABS VERIFICATION TEST. Refer to **STANDARD PROCEDURE**.

U1503-IMPLAUSIBLE MESSAGE DATA LENGTH RECEIVED FROM FCM (TIPM)

For a complete wiring diagram **refer to appropriate SYSTEM WIRING DIAGRAMS article** .

WHEN MONITORED

Continuously with the ignition on.

SET CONDITION

When the Anti-Lock Brake Module detects an incorrect CAN message from the Totally Integrated Control Module (TIPM).

POSSIBLE CAUSES

Possible Causes
TIPM CAN BUS DTCS ANTI-LOCK BRAKE MODULE

DIAGNOSTIC TEST

CHECK IF TIPM CAN BUS DTCs ARE PRESENT

1. With the scan tool, read TIPM DTCs.

   Are there any TIPM CAN BUS DTCs present?

   Yes

   - Refer to TIPM diagnostics. Refer to **DIAGNOSIS AND TESTING** .

   No

- Replace the Anti-Lock Brake Module in accordance with the Service Information.
- Perform ABS VERIFICATION TEST. Refer to **STANDARD PROCEDURE**.

STANDARD PROCEDURE

ABS VERIFICATION TEST

DIAGNOSTIC TEST

ABS VERIFICATION TEST

WARNING: To avoid possible serious or fatal injury, check brake capability is available before road testing.

NOTE: If the Anti-Lock Brake System (ABS) Module, Clockspring/Steering Angle Sensor (SAS), or Dynamics Sensor were replaced, or if any mounting problems with Clockspring/SAS or Dynamics Sensor, ABS Module must be initialized using the scan tool. If not initialized, the ABS indicator will flash continuously with no DTCs. To initialize the ABS Module and clear offsets have wheels pointing straight ahead and follow the directions on the scan tool. The drive test requires a 90° turn. If the Dynamics Sensor was replaced, test drive the vehicle by turning the vehicle left or right in a curving manner at a velocity between 10 and 25 km/h (6 and 15 mph).

1. Turn the ignition off.
2. Connect all previously disconnected components and connectors.
3. Verify all accessories are turned off and the battery is fully charged.
4. Verify that the ignition is on, with the scan tool, erase all Diagnostic Trouble Codes from All modules. Start the engine and allow it to run for two minutes and fully operate the system that was indicating the failure.
5. Turn the ignition off and wait five seconds. Turn the ignition on and using the scan tool, read DTCs from all modules.
6. If any Diagnostic Trouble Codes are present, refer to the **DTC INDEX**

article and diagnosis appropriate diagnostic procedure.

NOTE: For Sensor Signal and Pump Motor faults, the ABS Module must sense all 4 wheels at 12 km/h (7.5 mph) before it will extinguish the ABS indicator.

7. If there are no DTCs present after turning ignition on, road test the vehicle for at least five minutes. Perform several anti-lock braking stops.
8. Again, with the scan tool read DTCs, refer to the **DTC INDEX** article and diagnosis appropriate diagnostic procedure. for the diagnostic test procedure and troubleshoot the new or recurring symptom.
9. If there are no Diagnostic Trouble Codes (DTCs) present, and the customer's concern can no longer be duplicated, the repair is complete.

   Are any DTCs present or is the original concern still present?

   Yes

   - Repair is not complete, perform the appropriate diagnostic procedure. Refer to **DIAGNOSIS AND TESTING**.

   No

   - Repair is complete.

ABS-INTERMITTENT CONDITION

For a complete wiring diagram **refer to appropriate SYSTEM WIRING DIAGRAMS article** .

POSSIBLE CAUSES

Possible Causes
INTERMITTENT CONDITION

DIAGNOSTIC TEST

INTERMITTENT CONDITION

NOTE: The conditions that set the DTC are not present at this time. The following list may help in identifying the

intermittent condition.

WARNING: **When the engine is operating, do not stand in direct line with the fan. Do not put your hands near the pulleys, belts or fan. Do not wear loose clothing. Failure to follow these instructions may result in possible serious or fatal injury.**

1. Refer to any Technical Service Bulletins (TSBs) that may apply.
2. Review the scan tool Freeze Frame information. If possible, try to duplicate the conditions under which the DTC set.
3. Turn the ignition off.
4. Visually inspect the related wire harness. Wiggle the related wire harness and look for an interrupted signal on the affected circuit. Disconnect all the related harness connectors. Look for any chafed, pierced, pinched, partially broken wires and broken, bent, pushed out, or corroded terminals.
5. Perform a voltage drop test on the related circuits between the suspected component and the Anti-Lock Brake Module.
6. Inspect and clean all PCM, ABS, engine, and chassis grounds that are related to the most current DTC.
7. If numerous trouble codes were set, use a wire schematic and look for any common ground or supply circuits
8. For any Tone Wheel DTCs inspect for dirt/metal debris.
9. For any Relay DTCs, actuate the Relay with the scan tool and wiggle the related wire harness to try to interrupt the actuation.
10. Use the scan tool to perform a System Test if one applies to failing component.
11. A co-pilot, data recorder, and/or lab scope should be used to help diagnose intermittent conditions.

Were any problems found during the above inspections?

Yes

- Perform the necessary repairs.
- Perform ABS VERIFICATION TEST. Refer to **STANDARD PROCEDURE**.

No

- Test Complete.

2014 BRAKES

Antilock Brake System (ABS) - Service Information - Compass & Patriot

CAUTION

CAUTION

The antilock brake system uses an electronic control module known as the Antilock Brake Module (ABM). This module is designed to withstand normal current draws associated with vehicle operation. Care must be taken to avoid overloading the circuits.

CAUTION: In testing for open or short circuits, do not ground or apply voltage to any of the circuits unless instructed to do so for a diagnostic procedure.

CAUTION: These circuits should only be tested using a high impedance multi-meter or the designated scan tool as described in this service information . Power should never be removed or applied to any control module with the ignition in the ON position. Before removing or connecting battery cables, fuses, or connectors, always turn the ignition to the OFF position.

CAUTION: The ABM 47-way connector should never be connected or disconnected with the ignition switch in the ON position.

CAUTION: This vehicle utilizes active wheel speed sensors. Do not apply voltage to wheel speed sensors at any time.

CAUTION: Use only factory wiring harnesses. Do not cut or splice wiring to the brake circuits. The addition of aftermarket electrical equipment (car phone, radar detector, citizen band radio, trailer lighting, trailer brakes, etc.) on a vehicle equipped with antilock brakes may affect the function of the antilock

brake system.

CAUTION: When performing any service procedure on a vehicle equipped with ABS, do not apply a 12-volt power source to the ground circuit of the pump motor in the HCU. Doing this will damage the pump motor and will require replacement of the entire HCU.

CAUTION: An attempt to remove or disconnect certain system components may result in improper system operation. Only those components with approved removal and installation procedures in this service information should be serviced.

CAUTION: If welding work is to be performed on the vehicle using an electric arc welder, the ABM connector should be disconnected during the welding operation.

CAUTION: Many components of the ABS are not serviceable and must be replaced as an assembly. Do not disassemble any component which is not designed to be serviced.

CAUTION: Brake fluid will damage painted surfaces. If brake fluid is spilled on any painted surface, wash off with water immediately.

CAUTION: Only the recommended jacking or hoisting positions for this vehicle are to be used whenever it is necessary to lift a vehicle.

DESCRIPTION

ANTILOCK BRAKE SYSTEM

NOTE: The Electronic Stability Control (ESC) may also be

referred to as Electronic Stability Program (ESP) depending on the vehicle model year and configuration. Certain components may also reference ESP, ESC, or use the traction control symbol.

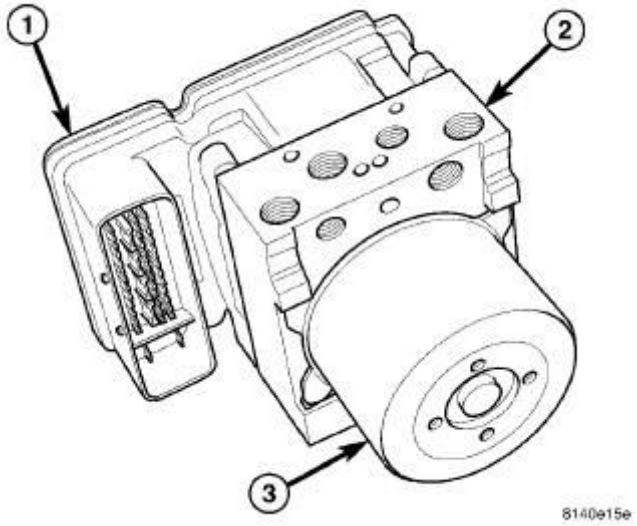

Fig. 1: Integrated Control Unit
Courtesy of CHRYSLER GROUP, LLC

This vehicle uses an antilock brake system designated MK25e. For this vehicle, MK25e is standard with Electronic Stability Control (ESC) and All-Speed Traction Control.

This antilock brake system uses components of the base brake system, but also features the following components:

- Integrated Control Unit (ICU) - Hydraulic Control Unit (HCU) (2) and Antilock Brake Module (ABM) (1)
- Wheel Speed Sensors (WSS) - Four sensors (one at each wheel)

The MK25e ICU is made up of the Hydraulic Control Unit (HCU) and the Antilock Brake Module (ABM). For additional information on these components, refer to **HYDRAULIC CONTROL UNIT (HCU), DESCRIPTION** and **MODULE, ANTI-LOCK BRAKE SYSTEM, DESCRIPTION** .

ABS

The purpose of the antilock brake system (ABS) is to prevent wheel lockup under braking conditions on virtually any type of road surface. Antilock braking is desirable because a vehicle that is stopped without locking the wheels retains directional stability and some steering capability. This allows the driver to retain greater control of the vehicle during braking.

All vehicles use Electronic Variable Brake Proportioning (EVBP) to balance front-to-rear braking when the brakes are applied in the partial braking range. For more information on electronic brake distribution. Refer to **DESCRIPTION**.

ELECTRONIC STABILITY CONTROL

For information on the Electronic Stability Control. Refer to **DESCRIPTION**.

TRACTION CONTROL

For information on the All-Speed Traction Control. Refer to **DESCRIPTION**.

OFF-ROAD ABS

Four-wheel-drive vehicles are equipped with Off-Road ABS. Off-Road ABS provides more sustained wheel lockup than normal ABS for improved stopping performance on plowable surfaces like loose dirt, gravel, sand and mud. Such plowable surfaces move out of the way as the tires roll on them and form a wedge in front of the tires during braking because more sustained wheel lock up causes the tires to drag and the loose surface to build up in front of the tires, helping to stop the vehicle. A vehicle with normal ABS requires a longer stopping distance on the same terrain because the wheels continue rotating, not allowing the drag and build up material in front of the tires.

ELECTRONIC STABILITY CONTROL

NOTE: The Electronic Stability Control (ESC) may also be referred to as Electronic Stability Program (ESP) depending on the vehicle model year and configuration. Certain components may also reference ESP, ESC, or use the traction control symbol.

Electronic Stability Control (ESC®), which includes Hydraulic Brake Assist, Traction Control, Electronic Roll Mitigation, and Brake Lock Differentials is standard on all vehicles. ESC® aids the driver in maintaining vehicle directional

stability. ESC will do whatever can be done, within the limits of available traction, to keep the car on course.

ESC® uses the ABS with Traction Control (MK25E) along with the following components to operate:

- Dynamics (ESC) Sensor
- Steering Angle Sensor (SAS)

The Dynamics Sensor that is mounted under the center console, which is near the center of gravity of the car for effective sensing. Refer to **SENSOR, DYNAMICS, DESCRIPTION**. The Steering Angle Sensor is located in the steering column. Refer to **SENSOR, STEERING WHEEL ANGLE, DESCRIPTION**.

On this vehicle, ESC® has three modes: Full-On, Partial and Full-Off. The ESC® default mode is Full-On with every key-on. Pressing the ESC Off switch button in the center stack once activates the Partial mode. In Partial mode, Traction Control is deactivated and ESC® operates at a higher threshold, therefore, it will not come on as aggressively as in the Full-On mode. Pressing and holding the ESC Off switch button for five seconds or longer turns the system completely off. This condition is confirmed by a single warning chime and a text message in the odometer display "ESC FULL OFF." The system can be returned to "normal" Full-On mode by briefly pressing and releasing the ESC Off switch.

HYDRAULIC BRAKE ASSIST

Brake Assist is programmed into the ESC® system. Brake assist helps the driver overcome the tendency to not apply the brakes hard enough or quick enough to achieve the minimum stopping distance during a panic stop. During this situation, the ESC® system instantly applies the maximum available pressure to the brakes and the vehicle stops as quickly as available traction will allow.

TRACTION CONTROL

For information on the All-Speed Traction Control. Refer to **DESCRIPTION**.

ELECTRONIC ROLL MITIGATION

ESC® Full-On and Partial modes include an algorithm for Electronic Roll

Mitigation (ERM). ERM is an algorithm on top of ESC® control that is targeted toward preventing wheel lift in the NHTSA Fish Hook maneuvers. These very extreme situations are well out of normal everyday driving, but by chance a high dynamic maneuver occurs, ERM can help return vehicle stability and control to the driver. Electronic Roll Mitigation attempts to determine when a vehicle is in a position to mitigate vehicle rollover and minimize the risk by applying the appropriate braking force to reduce the likelihood that such an event will occur. This added measure is designed to aid the driver in maintaining vehicle stability during an emergency maneuver or accident avoidance situation. ERM will not aid vehicle stability in "trip" situations, such as when a vehicle slides sideways and strikes a curb, which could then cause the side opposite the curb to lift and the vehicle to roll.

BRAKE LOCK DIFFERENTIALS

Brake Lock Differentials (BLDs) are part of the ESC® base algorithm and tuned for on-road activity. Brake Lock differentials improve vehicle mobility by applying braking force to a driven wheel that is spinning faster than the mate on the same axle to provide an equal amount of torque for each wheel, thereby providing torque to the wheel with the most traction. The on-road BLD is calibrated for on-road conditions such as when one wheel is on ice or gravel and the other is on dry pavement, this type of condition is called a split-friction surface.

Vehicles equipped with the Off-Road Group (sales code AWL) include a separate set of BLD calibrations that are designed for Off-Road mode use while crawling over obstacles, during heavy articulation activity, split-friction surfaces and other conditions. Off-Road BLDs direct torque from the wheel that slips to the wheel with more grip on a given axle helping maintain forward mobility over all types of off-road terrain.

Off-Road BLD calibrations are activated when the vehicle is in the Off-Road mode. The Off-road calibration applies much more aggressive and longer duration brake caliper clamping than the calibration for on-road BLDs to achieve the desired performance over off-road events.

HILL DESCENT CONTROL

Hill Descent Control (HDC) is included on vehicles equipped with the Off-Road Group (sales code AWL). It provides downhill assistance at a safe and controlled

rate of speed without requiring the driver to touch the brakes or press a button. This feature operates in low and reverse gears. By means of electronics it replaces the gear reduction and engine braking that a traditional mechanical low-range transfer case provides. For ease of operation, HDC is activated and deactivated automatically according to changes in topography using grade sensing.

TRACTION CONTROL

NOTE: The Electronic Stability Control (ESC) may also be referred to as Electronic Stability Program (ESP) depending on the vehicle model year and configuration. Certain components may also reference ESP, ESC, or use the traction control symbol.

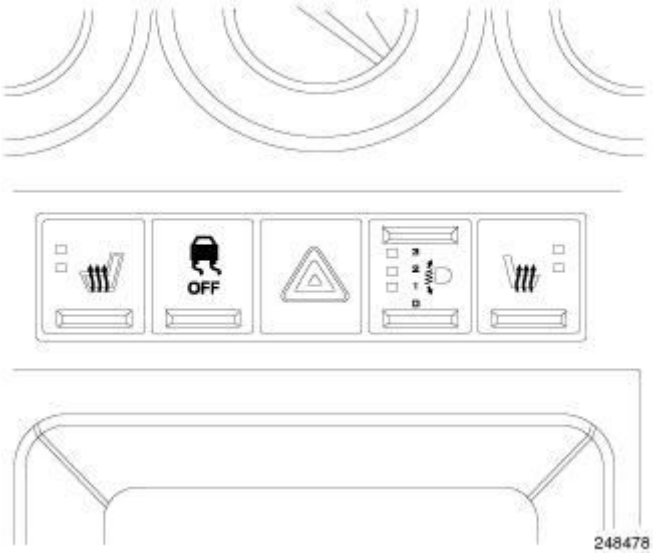

Fig. 2: I/P Switch Pod
Courtesy of CHRYSLER GROUP, LLC

The traction control system that is part of the Electronic Stability Control (ESC®), is an all-speed traction control. All-Speed Traction Control enhances mobility and prevents wheel slip when accelerating on slippery surfaces. It also provides a measure of directional stability control. Using the wheel-speed sensors, it can detect excessive yaw and help keep the car on the intended course, as for instance, when accelerating around a curve.

All-Speed Traction Control is effective up to 85 mph (137 km/h).

The traction control system may be turned off or on by depressing the ESC Off

switch button located on the instrument panel.

ELECTRONIC VARIABLE BRAKE PROPORTIONING

Vehicles equipped with ABS use Electronic Variable Brake Proportioning (EVBP) to balance front-to-rear braking. The EVBP is used in place of a rear proportioning valve. The EVBP system uses the ABS system to control the slip of the rear wheels in partial braking range. The braking force of the rear wheels is controlled electronically by using the inlet and outlet valves located in the Integrated Control Unit (ICU).

OPERATION

ANTILOCK BRAKE SYSTEM

NOTE: The Electronic Stability Control (ESC) may also be referred to as Electronic Stability Program (ESP) depending on the vehicle model year and configuration. Certain components may also reference ESP, ESC, or use the traction control symbol.

ABS

There are a few performance characteristics of the Antilock Brake System (ABS) that may at first seem abnormal, but in fact are normal. These characteristics are described below.

NORMAL BRAKING

Under normal braking conditions, the ABS functions the same as a standard base brake system with a diagonally split master cylinder and conventional vacuum assist.

ABS BRAKING

ABS operation is available at all vehicle speeds above 5-8 km/h (3-5 mph) If a wheel locking tendency is detected during a brake application, the brake system enters the ABS mode. During ABS braking, hydraulic pressure in the four wheel circuits is modulated to prevent any wheel from locking. Each wheel circuit is designed with a set of electric solenoids to allow modulation, although for vehicle stability, both rear wheel solenoids receive the same electrical signal. Wheel lockup may be perceived at the very end of an ABS stop and is considered

normal.

During an ABS event, the Integrated Control Unit (ICU) regulates hydraulic pressure at all four of the vehicle's wheels.

The hydraulic pressure at each front wheel is controlled independently (relative to the amount of slip at each wheel) in order to maximize the braking force generated by the front brakes. The rear wheels are controlled such that the hydraulic pressure at either rear wheel does not exceed that of the highest slip rear wheel in order to maintain vehicle stability.

The system can build and release pressure at each wheel, depending on signals generated by the Wheel Speed Sensors (WSS) at each wheel and received at the Antilock Brake Module (ABM).

NOISE AND BRAKE PEDAL FEEL

During ABS braking, some brake pedal movement may be felt. In addition, ABS braking will create ticking, popping, or groaning noises heard by the driver. This is normal and is due to pressurized fluid being transferred between the master cylinder and the brakes. If ABS operation occurs during hard braking, some pulsation may be felt in the vehicle body due to fore and aft movement of the suspension as brake pressures are modulated.

At the end of an ABS stop, ABS is turned off when the vehicle is slowed to a speed of 5-6 km/h (3-4 mph). There may be a slight brake pedal drop anytime that the ABS is deactivated, such as at the end of the stop when the vehicle speed is less than 3 mph (5 km/h) or during an ABS stop where ABS is no longer required. These conditions exist when a vehicle is being stopped on a road surface with patches of ice, loose gravel, or sand on it. Also, stopping a vehicle on a bumpy road surface activates ABS because of the wheel hop caused by the bumps.

TIRE NOISE AND MARKS

Although the ABS system prevents complete wheel lockup, some wheel slip is desired in order to achieve optimum braking performance. Wheel slip is defined as follows: 0 percent slip means the wheel is rolling freely and 100 percent slip means the wheel is fully locked. During brake pressure modulation, wheel slip is allowed to reach up to 25-30 percent. This means that the wheel rolling velocity is 25-30 percent less than that of a free rolling wheel at a given vehicle speed.

This slip may result in some tire chirping, depending on the road surface. This sound should not be interpreted as total wheel lockup.

Complete wheel lockup normally leaves black tire marks on dry pavement. The ABS will not leave dark black tire marks since the wheel never reaches a fully locked condition. However, tire marks may be noticeable as light patched marks.

START-UP AND DRIVE-OFF CYCLES

When the ignition is turned on, a popping sound and a slight brake pedal movement may be noticed. The ABS warning lamp will also be on for up to 5 seconds after the ignition is turned on.

When the vehicle is first driven off, a humming may be heard or felt by the driver at approximately 12-25 mph (20-40 km/h). All of these conditions are a normal function of ABS as the system is performing a diagnosis check.

PREMATURE ABS CYCLING

Symptoms of premature ABS cycling include: clicking sounds from the solenoid valves; pump/motor running; and pulsations in the brake pedal. Premature ABS cycling can occur at any braking rate of the vehicle and on any type of road surface. Neither the red BRAKE indicator lamp, nor the amber ABS indicator lamp, illuminate and no faults are stored in the ABM.

Premature ABS cycling is a condition that needs to be correctly assessed when diagnosing problems with the antilock brake system. It may be necessary to use a scan tool to detect and verify premature ABS cycling.

Check the following common causes when diagnosing premature ABS cycling: damaged wheel bearings (causing tone wheel issues); damaged wheel speed sensor mounting bosses; and loose wheel speed sensor mounting screws.

After diagnosing the defective component, repair or replace it as required. When the component repair or replacement is completed, test drive the vehicle to verify that premature ABS cycling has been corrected.

ELECTRONIC STABILITY CONTROL

For information on the Electronic Stability Control. Refer to **OPERATION**.

TRACTION CONTROL

For information on the All-Speed Traction Control. Refer to **OPERATION**.

OFF-ROAD ABS

Programed into vehicles equipped with Four-Wheel-Drive (4WD), Off-Road ABS is activated by one of two ways. The first method requires no action by the driver. Wheel speed sensors located at each wheel include a rough road-sensing feature. The wheel speed sensors give off a characteristic oscillation associated with traveling on gravel roads and when the ABS/ESC controller recognizes this pattern, it triggers the threshold for Off-Road ABS. The second way Off-Road ABS is activated is when the customer selects the 4WD Off-Road Mode, indicating it is very likely the vehicle will be traveling over loose dirt, gravel, sand or mud and the ABS system increases the amount of allowable wheel lock for improved stopping during off road activity.

ELECTRONIC STABILITY CONTROL

NOTE: The Electronic Stability Control (ESC) may also be referred to as Electronic Stability Program (ESP) depending on the vehicle model year and configuration. Certain components may also reference ESP, ESC, or use the traction control symbol.

To determine whether the car is responding properly to cornering commands, ESC® uses steering wheel angle, yaw (turning) rate and lateral acceleration sensors (combined into Dynamics Sensor). Using signals from these sensors, in addition to individual wheel speed sensor signals, the system determines appropriate brake and throttle actions. Once initiated, ESC® operates much like All-Speed Traction Control, except that the goal is directional stability. If the vehicle yaw response, or rate of turning, is inconsistent with the steering angle and vehicle speed indications, the ESC® system applies the brakes and, if necessary closes the throttle, to restore control. This occurs whether the vehicle is turning too rapidly (oversteering) or not rapidly enough (understeering).

HYDRAULIC BRAKE ASSIST

Brake Assist is programmed into the ESC® system. During a panic stop, a pressure sensor determines when the driver is doing so by measuring the brake pedal pressure application rate. A high rate of pedal pressure application causes the ESC® system to apply maximum available pressure to the brakes and the

vehicle stops as quickly as available traction will allow.

TRACTION CONTROL

For information on the All-Speed Traction Control. Refer to **OPERATION**.

ELECTRONIC ROLL MITIGATION

Typically when a vehicle makes a sudden turn, the outside wheel takes the majority of the cornering loads. In order for the vehicle to make the turn, a significant amount of grip must exist at the tire contact patch. The additional body roll that occurs during this event places additional weight on this outside tire. These conditions, plus the lateral acceleration of the vehicle, combined with the center of gravity position in the vehicle can cause the vehicle to lift the two inside wheels in the turn and the vehicle rolls over the outside tire. Electronic Roll Mitigation (ERM) takes advantage of the principle that a tire in slip cannot handle cornering loads by building and applying enough brake pressure to intentionally drive the outside wheel into slip, not to the point of total lockup but close. As a result, the outside tire cannot support the cornering loads and the vehicle cannot maintain its original path. The new path is straighter, reducing the amount of lateral acceleration and transferring some of the weight back over to the inside tires, thus preventing a rollover.

BRAKE LOCK DIFFERENTIALS

Split-friction surfaces (where one wheel has grip and the other side of the vehicle is on a low-friction surface) or where a wheel is suspended off the ground and spins in the air are common off-road situations. An open differential by nature directs torque to the wheel that has the least amount of grip, and in these cases, the wheel spinning on the low-friction surface or the wheel spinning in the air, which is undesirable. While some vehicles use locking differentials to help overcome this situation and provide a solid connection between two wheels on a given axle, Brake Lock Differentials (BLDs) are used on this vehicle as an effective solution.

Vehicles equipped with the Off-Road Group (sales code AWL) include a separate set of BLD calibrations that are designed for Off-Road mode use while crawling over obstacles, during heavy articulation activity, split-friction surfaces and other conditions. These BLDs provide an alternative solution to locking differentials found on other vehicles by replacing the locking differential with the brake control hardware that is already in place on the vehicle. The same

hardware used for Electronic Stability Control is used for Brake Lock Differentials.

Under normal conditions with the vehicle in Off-Road mode, for example, assume that the Electronically Controlled Coupling directs 148 ft. lbs. (200 N.m) of torque to the rear differential and each wheel receives an equal share, 74 ft. lbs. (100 N.m) of torque.

When wheel speeds are unequal across a given axle, the BLDs respond. In this example, the vehicle is crawling over rocky terrain and the vehicle experiences heavy axle articulation that suspends the right rear wheel in the air and the wheel spins. The open differential ports all 148 ft. lbs. (200 N.m) of torque to the wheel in the air.

The Antilock Brake Module (ABM) senses the right wheel is spinning faster than its mate on the opposite side of the rear axle and clamps the brake caliper on the spinning wheel to stop it from spinning and form a solid connection across the axle. If 74 ft. lbs. (100 N.m) of brake force is applied to stop the spinning wheel, an equal amount of torque is ported to the wheel with grip. This allows the vehicle to continue moving forward. The amount of torque the BLDs can send to the wheel with traction is dependent on the amount of torque the brake caliper can hold. The brakes are capable of holding the amount of torque used in this example.

HILL DESCENT CONTROL

Hill Descent Control (HDC) included on vehicles equipped with the Off-Road Group (sales code AWL) works automatically once the vehicle is in the Off-Road Mode and the transaxle selector is in Low or Reverse. A green icon will illuminate on the instrument cluster indicating that the HDC is operating. Should a driver decide to back down a hill, HDC will back the vehicle down at a controlled rate of speed. The system determines when the vehicle is on a grade or level terrain by input from the acceleration sensor located in the Dynamics Module. Grade Sensing logic built into it activates the brakes only when descending a hill; the driver does not need to turn it on or off.

As the vehicle crests a hill, the brakes will automatically begin to pulsate and adjust the brake pressure to maintain the vehicle at a set speed of 3 mph (5 km/h.) The vehicle speed can be lowered by applying the brake or raised by applying the accelerator pedal to provide a safe descent down a hill. Once the

driver releases the brake or the throttle, vehicle speed will ramp up or down to the Hill Descent Control limit speed.

TRACTION CONTROL

NOTE: The Electronic Stability Control (ESC) may also be referred to as Electronic Stability Program (ESP) depending on the vehicle model year and configuration. Certain components may also reference ESP, ESC, or use the traction control symbol.

Traction control systems sense impending wheel spin based on a model of the rate of change of wheel speed under normal traction conditions. The All-Speed Traction Control uses signals from the same wheel speed sensors as ABS to determine when to apply the brakes to one or more wheels and when to reduce engine torque output using the electronic throttle control (ETC) to prevent wheel slip during acceleration. Throttle control makes the vehicle less reliant on brake application alone to maintain traction, increasing the operating speed range and more closely modulates speed, resulting in smoother operation. With All-Speed Traction Control reducing engine torque as well as applying the brakes, it is possible to achieve almost seamless torque application at the wheels.

If the wheel slip is severe enough to require throttle intervention, All-Speed Traction Control will reduce engine torque and sometimes upshift the transmission to avoid the condition. In milliseconds, All-Speed Traction Control interrogates the engine control system to determine the current torque output, determines how much the torque output the current conditions will allow, and signals this requirement to the engine control system, which reduces the torque by partially closing the throttle. With execution of the torque reduction, the brake system reduces brake pressure to make the transition smooth, while maintaining forward progress. By reducing engine power, braking effectiveness is maintained and the system can operate throughout the normal vehicle speed range. That is why the system is identified as providing "all-speed" traction control.

The traction control system is enabled at each ignition cycle. It may be turned off by depressing the ESC OFF switch button. The ESC/TCS function indicator lamp illuminates immediately upon depressing the button. Pressing this button again or turning off and restarting the vehicle will enable the traction control system.

ELECTRONIC VARIABLE BRAKE PROPORTIONING

NOTE: The Electronic Stability Control (ESC) may also be referred to as Electronic Stability Program (ESP) depending on the vehicle model year and configuration. Certain components may also reference ESP, ESC, or use the traction control symbol.

Upon entry into EVBP, the inlet valve for the rear brake circuit is switched on so that the fluid supply from the master cylinder is shut off. In order to decrease the rear brake pressure, the outlet valve for the rear brake circuit is pulsed. This allows fluid to enter the Low Pressure Accumulator (LPA) in the Hydraulic Control Unit (HCU) resulting in a drop in fluid pressure to the rear brakes. In order to increase the rear brake pressure, the outlet valve is switched off and the inlet valve is pulsed. This increases the pressure to the rear brakes. This back-and-forth process will continue until the required slip difference is obtained. At the end of EVBP braking (brakes released) the fluid in the LPA is pumped back to the master cylinder by switching on the motor for ABS systems or by opening the ESVs for ESC systems. At the same time the inlet valve is switched on in case of another brake application.

The EVBP will remain functional during many ABS fault modes. If both the red BRAKE and amber ABS warning indicators are illuminated, the EVBP may not be functioning.

DIAGNOSIS AND TESTING

DIAGNOSIS AND TESTING - INSPECTION AND ROAD TEST

1. Visually inspect the ABS for damaged or disconnected components and connectors.
2. Verify the brake lamps are operational. If they are not, repair them prior to continuing.
3. Connect a scan tool to the Data Link Connector located under the instrument panel to the left of the steering column. If the scan tool does not power-up, check the power and ground supplies to the connector.
4. Turn the ignition key to the ON position.
5. Using the scan tool, read and record any Diagnostic Trouble Codes (DTCs). If any DTCs are present, refer to the appropriate diagnostic information.

If no problems are observed, it will be necessary to road test the vehicle.

Many ABS conditions judged to be a problem by the driver may be normal operating conditions. To become familiarized with the normal operating characteristics of this antilock brake system. Refer to **OPERATION**.

WARNING: Conditions that result in turning on the red brake warning indicator lamp may indicate reduced braking ability.

Before road testing a brake complaint vehicle, note whether the red BRAKE warning indicator lamp, amber ABS warning indicator lamp, or both are turned on. If it is the red BRAKE warning indicator, there is a brake hydraulic problem that must be corrected before driving the vehicle

Refer to **DIAGNOSIS AND TESTING** .

The following conditions will cause the red BRAKE lamp to illuminate:

- Low fluid in the brake reservoir
- Park Brake engaged
- Brake hydraulic problem
- ABS issue that will not allow the Brake Proportioning function

If the amber ABS warning indicator is on, road test the vehicle as described below. While only the amber ABS warning indicator is on, the ABS is not functional. The ability to stop the car using the base brake system should not be affected.

6. Turn the key to the OFF position and then back to the ON position. Note whether the amber ABS warning indicator lamp continues to stay on.
7. If the amber ABS warning indicator lamp stays on, shift into gear and drive the car to a speed of approximately 25 km/h (15 mph) to complete the ABS Start-Up and Drive-Off Cycles. Refer to **OPERATION**. If at this time the amber ABS warning indicator lamp stays on, refer to the appropriate diagnostic information.
8. If the amber ABS warning indicator lamp goes out at any time, drive the vehicle a short distance. Accelerate the vehicle to a speed of at least 64 km/h (40 mph). Bring the vehicle to a complete stop, braking hard enough to

cause the ABS to cycle. Repeat this action several times. Using the scan tool, read and record any Diagnostic Trouble Codes (DTCs). If any DTCs are present, refer to the appropriate diagnostic information.

STANDARD PROCEDURE

STANDARD PROCEDURE - ANTILOCK BRAKE SYSTEM BLEEDING

The base brake's hydraulic system must be bled anytime air enters the hydraulic system. The ABS must always be bled anytime it is suspected that the HCU has ingested air.

Brake systems with ABS must be bled as two independent braking systems. The non-ABS portion of the brake system with ABS is to be bled the same as any non-ABS system.

The ABS portion of the brake system must be bled separately. Use the following procedure to properly bleed the brake hydraulic system including the ABS.

NOTE: During the brake bleeding procedure, be sure the brake fluid level remains close to the FULL level in the master cylinder fluid reservoir. Check the fluid level periodically during the bleeding procedure and add Mopar® DOT 3 brake fluid as required.

BLEEDING

When bleeding the ABS system, the following bleeding sequence must be followed to insure complete and adequate bleeding.

1. Make sure all hydraulic fluid lines are installed and properly torqued.
2. Connect the scan tool to the diagnostics connector. The diagnostic connector is located under the lower steering column cover to the left of the steering column.
3. Using the scan tool, check to make sure the ABM does not have any fault codes stored. If it does, clear them.

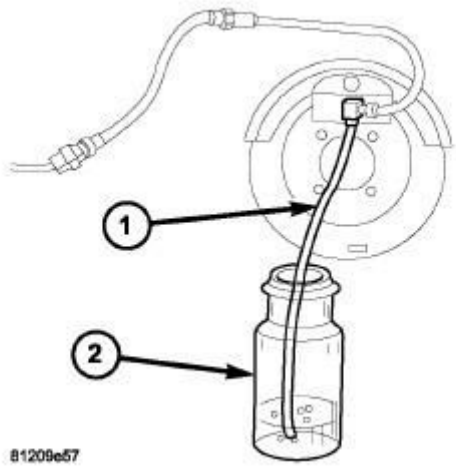

Fig. 3: Bleeding Brakes
Courtesy of CHRYSLER GROUP, LLC

WARNING: When bleeding the brake system wear safety glasses. A clear bleed tube (1) must be attached to the bleeder screws and submerged in a clear container filled part way with clean brake fluid (2). Direct the flow of brake fluid away from yourself and the painted surfaces of the vehicle. Brake fluid at high pressure may come out of the bleeder screws when opened.

NOTE: Pressure bleeding is recommended to bleed the base brake system to ensure all air is removed from system. Manual bleeding may also be used, but additional time is needed to remove all air from system.

4. Bleed the base brake system. Refer to **STANDARD PROCEDURE** .
5. Using the scan tool, select ECU VIEW, followed by ABS MISCELLANEOUS FUNCTIONS to access bleeding. Follow the instructions displayed. When finished, disconnect the scan tool and proceed.
6. Bleed the base brake system a second time. Check brake fluid level in the reservoir periodically to prevent emptying, causing air to enter the hydraulic system.

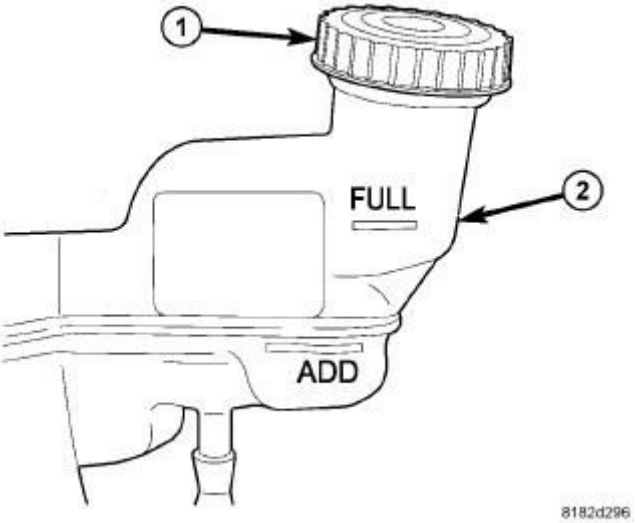

Fig. 4: Master Cylinder Fill Markings
Courtesy of CHRYSLER GROUP, LLC

7. Fill the master cylinder fluid reservoir (1) to the FULL level.
8. Test drive the vehicle to be sure the brakes are operating correctly and that the brake pedal does not feel spongy.

SPECIFICATIONS

TORQUE

For ABS fastener torque specifications, see Brake Fastener Torque. Refer to **SPECIFICATIONS** .

ELECTRICAL

SENSOR, DYNAMICS

DESCRIPTION

DESCRIPTION

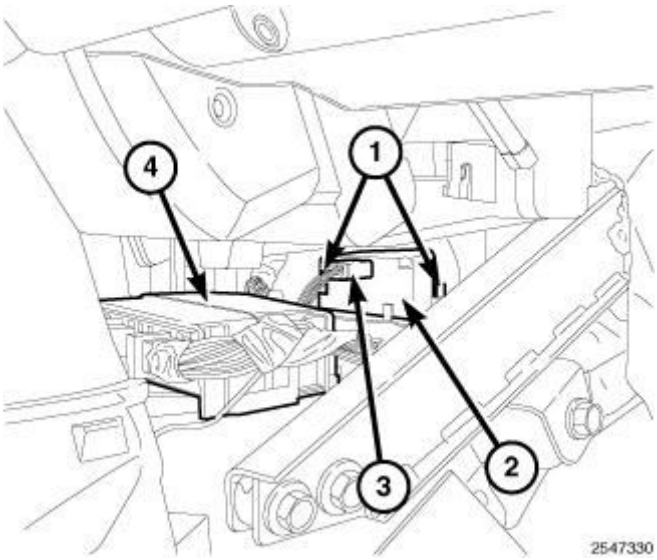

Fig. 5: Vehicle Dynamics Sensor
Courtesy of CHRYSLER GROUP, LLC

The Yaw Rate and Lateral Acceleration Sensors are housed into one unit known as the Dynamics Sensor (2). The sensor is used to measure side-to-side (Lateral) motion and vehicle rotational sensing (how fast the vehicle is turning - Yaw).

Yaw and Lateral Acceleration Sensors cannot be serviced separately. The entire Dynamics Sensor must be replaced when necessary.

REMOVAL

REMOVAL

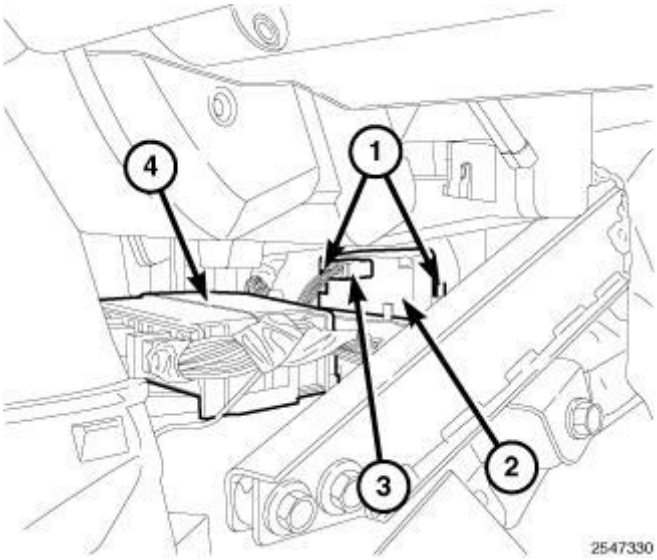

Fig. 6: Vehicle Dynamics Sensor
Courtesy of CHRYSLER GROUP, LLC

NOTE: The Occupancy Restraint Module (ORC) (4) is directly behind the vehicle dynamics sensor (2). Care must be taken while working near the ORC to avoid jostling or bumping the module.

1. Disconnect and isolate the battery negative cable from the battery post.
2. Remove the shifter housing. Refer to **HOUSING, SHIFTER, REMOVAL** .
3. Position the carpeting out of the way so that the dynamics sensor is accessible.
4. Remove the two nuts (1) mounting the dynamics sensor to the floor pan tunnel.
5. Disconnect the wiring harness connector (3) at the dynamics sensor (2).
6. Remove the dynamics sensor (2).

INSTALLATION

INSTALLATION

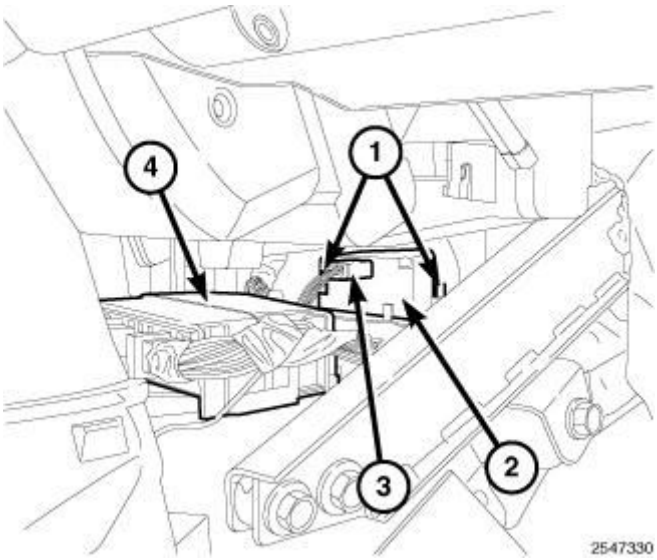

Fig. 7: Vehicle Dynamics Sensor
Courtesy of CHRYSLER GROUP, LLC

NOTE: The Occupancy Restraint Module (ORC) (4) is directly behind the vehicle dynamics sensor (2). Care must be taken while working near the ORC to avoid jostling or bumping the module.

1. Install the dynamics sensor (2) over the studs mounted to the floor pan tunnel.
2. Install the two mounting nuts (1). Tighten the nuts to 9 N.m (80 in. lbs.).
3. Connect the wiring harness connector (3) to the dynamics sensor (2).
4. Move carpeting back into original location.
5. Install the shifter housing. Refer to **HOUSING, SHIFTER, INSTALLATION** .
6. Connect the battery negative cable to the battery post. It is important that this be performed properly.
7. Perform the Verification Test and clear any faults. Refer to **STANDARD PROCEDURE** .

STEERING WHEEL ANGLE SENSOR

DESCRIPTION

DESCRIPTION

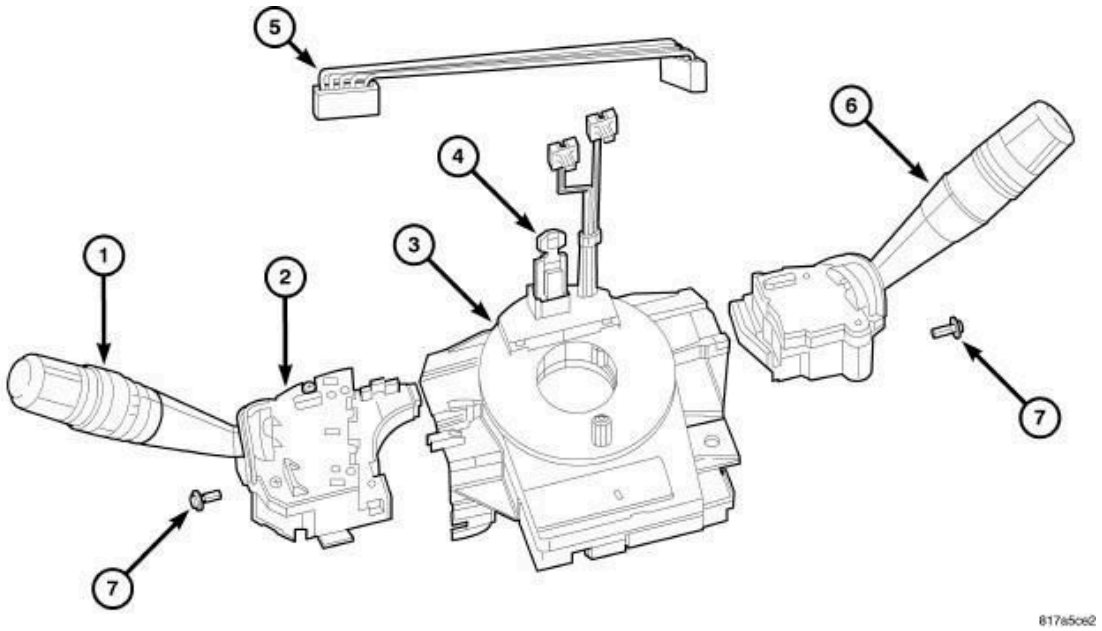

Fig. 8: Steering Control Module
Courtesy of CHRYSLER GROUP, LLC

The steering angle sensor is an integral part of the clockspring (3) mounted on the steering column. Refer to **CLOCKSPRING, DESCRIPTION** .

FRONT WHEEL SPEED SENSOR

DESCRIPTION

DESCRIPTION

The antilock brake system uses two-wire wheel speed sensors, known as active wheel speed sensors. The sensors use an electronic principle known as magnetoresistive to help increase performance and durability. The sensors convert wheel speed into a small digital signal. A Wheel Speed Sensor (WSS) is used at each wheel. A magnetic pole encoder serves as the trigger mechanism for each sensor. At each wheel of the vehicle there is one wheel speed sensor and one encoder.

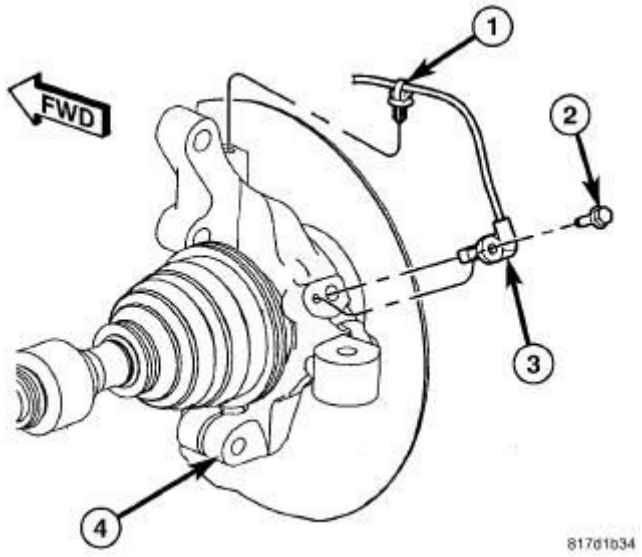

Fig. 9: Identifying Front Wheel Speed Sensor
Courtesy of CHRYSLER GROUP, LLC

A front wheel speed sensor (3) is attached to a mounting boss on each front knuckle (4). The encoder is an integral part of the hub and bearing.

WSS air gaps are not adjustable.

OPERATION

OPERATION

The ABM sends 12 volts to power an Integrated Circuit (IC) in the sensor. The IC supplies a constant 7 mA power supply to the ABM. The relationship of the magnetic pole encoder to the permanent magnet in the sensor, signals the IC to enable a second 7 mA power supply. The output of the sensor, sent to the ABM, is a DC voltage signal with changing voltage and current levels. The ground for the IC and the current sense circuit is provided by the ABM.

When a pole is properly aligned with the sensor, the voltage signal is approximately 0.8 volts and a constant 7 mA current is sent to the ABM. As the magnetic pole encoder rotates, the encoder shifts the magnetic field and the IC enables a second 7 mA current source. The ABM senses a voltage signal of approximately 1.6 volts and 14 mA. The ABM measures the amperage of the digital signal for each wheel. The resulting signal is interpreted by the ABM as the wheel speed.

REMOVAL

REMOVAL

NOTE: Before proceeding, refer to WARNING and CAUTION .

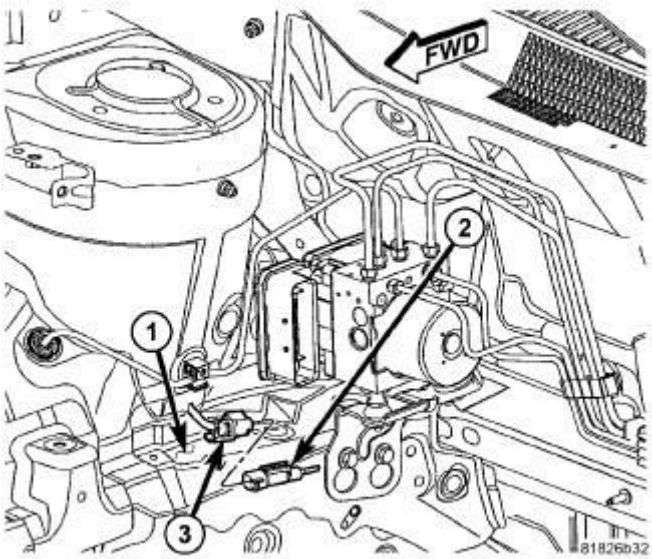

Fig. 10: Front Wheel Speed Sensor Wiring Connector
Courtesy of CHRYSLER GROUP, LLC

1. Open the hood.
2. Disconnect the wheel speed sensor cable connector (2) from the wiring harness connector (3) on top of the frame rail (1) to the inside of the strut tower.
3. Raise and support the vehicle. Refer to **HOISTING, STANDARD PROCEDURE** .

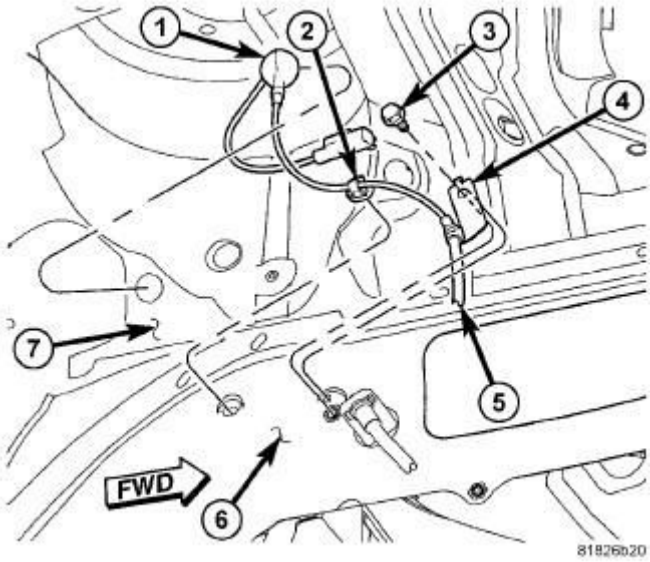

Fig. 11: Front Wheel Speed Sensor Mounting To Body
Courtesy of CHRYSLER GROUP, LLC

4. Remove the grommet (1) from the hole in the body (7) and pull the wheel speed sensor cable out of the hole.
5. Remove the speed sensor cable routing clip (2) from the outside frame rail (6).
6. Remove the screw fastening the cable routing clamp (3) to the outside frame rail (6).

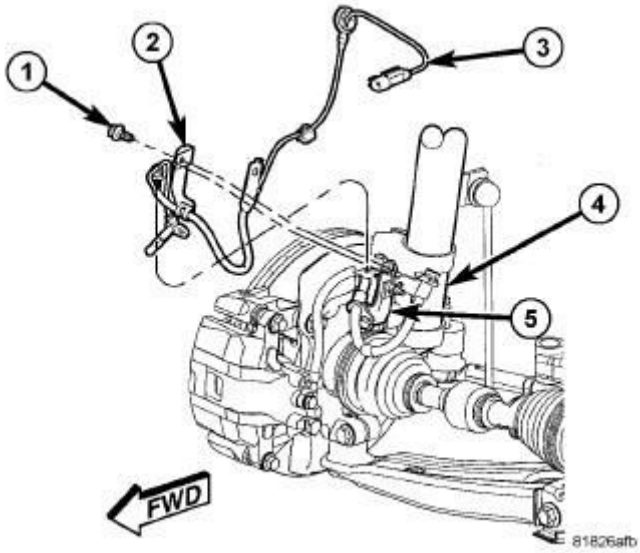

Fig. 12: Front Wheel Speed Sensor Mounting At Strut
Courtesy of CHRYSLER GROUP, LLC

7. Remove the screw (1) securing the wheel speed sensor routing bracket (2) to the brake flex hose bracket (5).

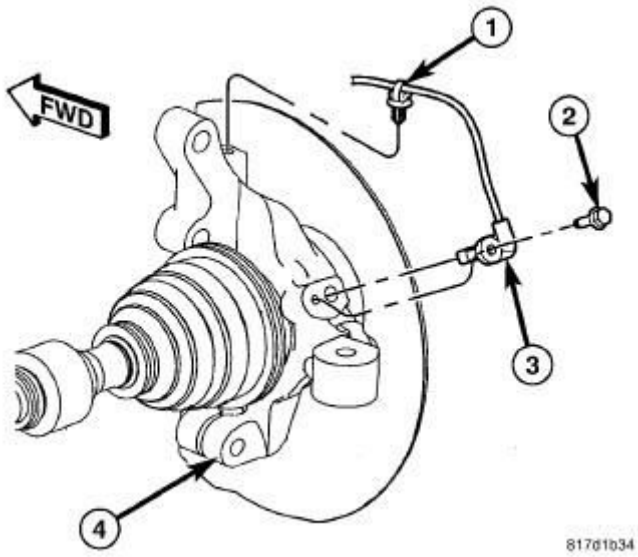

Fig. 13: Identifying Front Wheel Speed Sensor
Courtesy of CHRYSLER GROUP, LLC

8. Remove the mounting screw (2) fastening the wheel speed sensor head (3) to the knuckle (4). Pull the sensor head out of the knuckle.

NOTE: In the following step, the routing clip can be easily removed without damaging it by rotating it (with entire sensor) counterclockwise.

9. Remove the routing clip (1) securing wheel speed sensor cable to the knuckle (4). Remove the sensor from the vehicle.

INSTALLATION

INSTALLATION

CAUTION: Failure to install speed sensor cables properly may result in contact with moving parts or an over extension of cables causing an open circuit. Be sure that cables are installed, routed, and clipped properly.

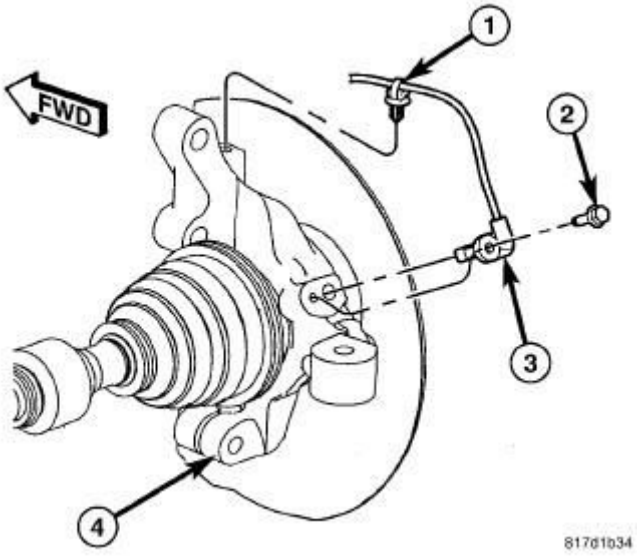

Fig. 14: Identifying Front Wheel Speed Sensor
Courtesy of CHRYSLER GROUP, LLC

1. Install the wheel speed sensor head (3) into the knuckle (4). Install the mounting screw (2) and tighten it to 12 N.m (106 in. lbs.).
2. Install the routing clip (1) securing the wheel speed sensor cable to the knuckle (4).

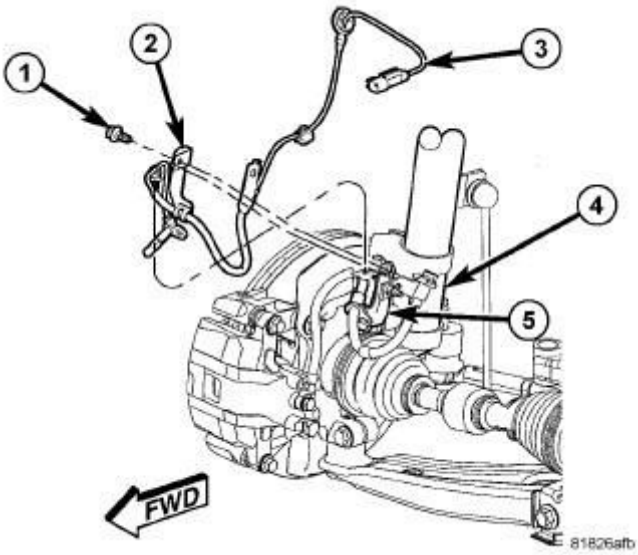

Fig. 15: Front Wheel Speed Sensor Mounting At Strut
Courtesy of CHRYSLER GROUP, LLC

3. Position the wheel speed sensor routing bracket (2) on the brake flex hose bracket (5) and install the mounting screw (1). Tighten the mounting screw

to 18 N.m (13 ft. lbs.).

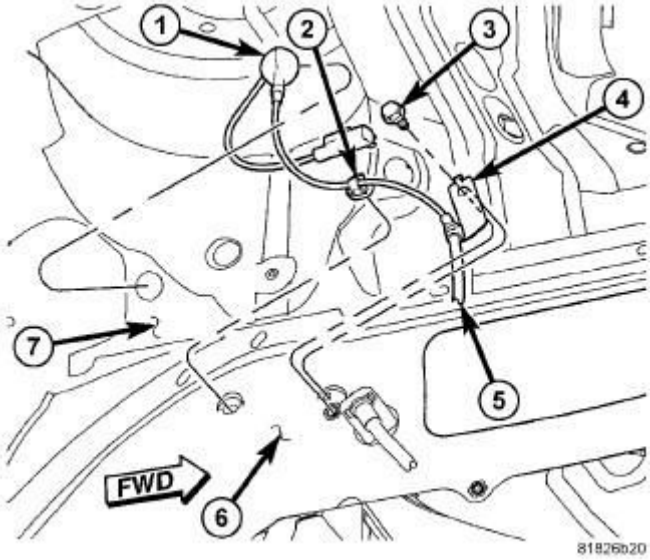

Fig. 16: Front Wheel Speed Sensor Mounting To Body
Courtesy of CHRYSLER GROUP, LLC

4. Position the wheel speed sensor cable routing clamp (4) on the outside frame rail (6) and install the mounting screw (3). Tighten the mounting screw to 18 N.m (13 ft. lbs.).
5. Install the speed sensor cable routing clip (2) on the outside frame rail (6).
6. Insert the wheel speed sensor cable through the hole in the body (7) and install the grommet (1) in the hole.

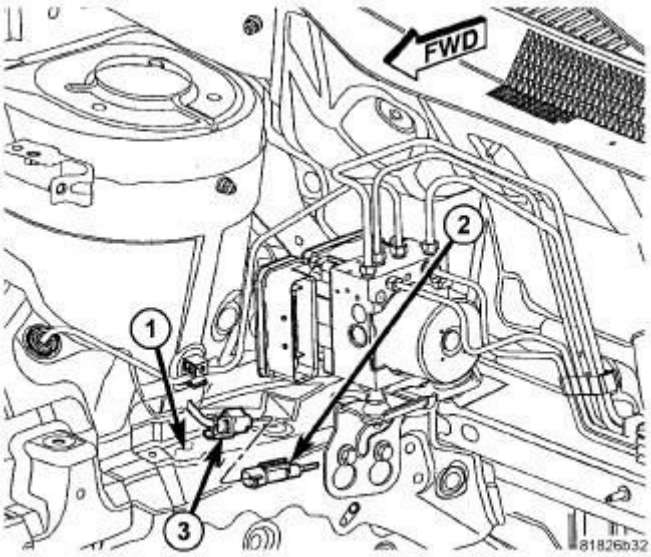

Fig. 17: Front Wheel Speed Sensor Wiring Connector

Courtesy of CHRYSLER GROUP, LLC

7. Lower the vehicle.
8. Connect the wheel speed sensor cable connector (2) to the wiring harness connector (3) on top of the frame rail (1).
9. Perform the Diagnostic Verification Test and clear any faults. Refer to **STANDARD PROCEDURE** .

SENSOR, WHEEL SPEED, REAR

DESCRIPTION

DESCRIPTION

The antilock brake system uses two-wire wheel speed sensors, known as active wheel speed sensors. The sensors use an electronic principle known as magnetoresistive to help increase performance and durability. The sensors convert wheel speed into a small digital signal. A Wheel Speed Sensor (WSS) is used at each wheel. A magnetic pole encoder serves as the trigger mechanism for each sensor. At each wheel of the vehicle there is one wheel speed sensor and one encoder.

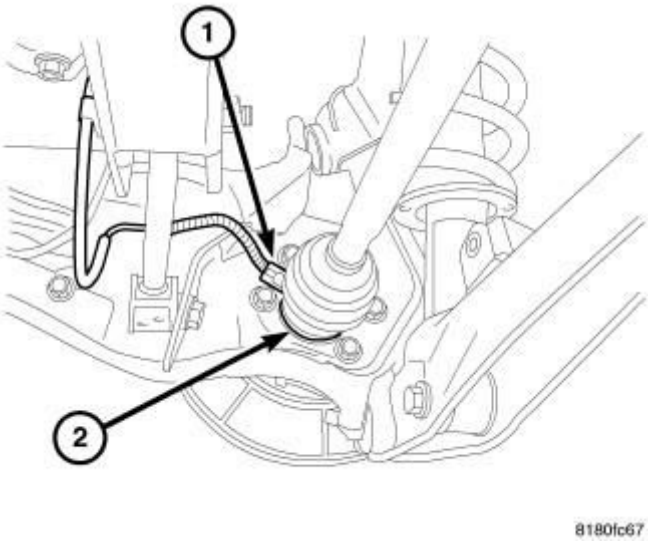

Fig. 18: AWD Rear Wheel Speed Sensor
Courtesy of CHRYSLER GROUP, LLC

On all-wheel-drive vehicles, the rear wheel speed sensor head (1) is secured to the rear hub and bearing (2) by a spring-loaded clip on the rear of the assembly. The encoder is integral to the hub and bearing assembly. The encoder is serviced as part of the rear hub and bearing.

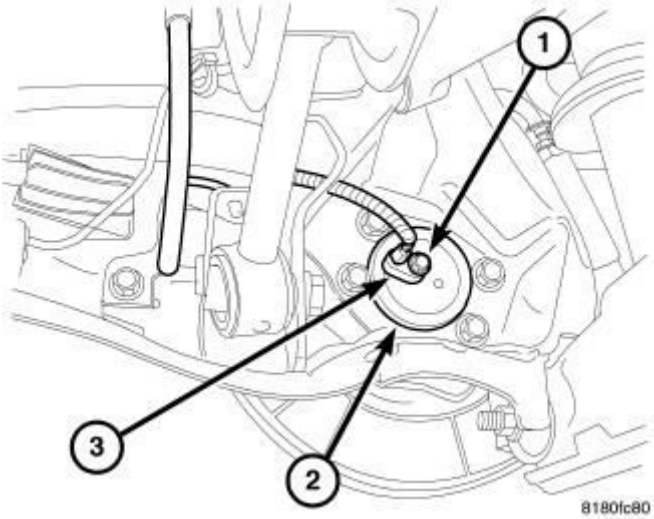

Fig. 19: Rear Wheel Speed Sensor (FWD)
Courtesy of CHRYSLER GROUP, LLC

On front-wheel-drive vehicles, the rear wheel speed sensor head (3) is mounted to the rear of the hub and bearing by a screw. The encoder is integral to the hub and bearing assembly. The encoder is are serviced as part of the rear hub and bearing.

The WSS air gaps are not adjustable.

OPERATION

OPERATION

The ABM sends 12 volts to power an Integrated Circuit (IC) in the sensor. The IC supplies a constant 7 mA power supply to the ABM. The relationship of the magnetic pole encoder to the permanent magnet in the sensor, signals the IC to enable a second 7 mA power supply. The output of the sensor, sent to the ABM, is a DC voltage signal with changing voltage and current levels. The ground for the IC and the current sense circuit is provided by the ABM.

When a pole is properly aligned with the sensor, the voltage signal is approximately 0.8 volts and a constant 7 mA current is sent to the ABM. As the magnetic pole encoder rotates, the encoder shifts the magnetic field and the IC enables a second 7 mA current source. The ABM senses a voltage signal of approximately 1.6 volts and 14 mA. The ABM measures the amperage of the digital signal for each wheel. The resulting signal is interpreted by the ABM as the wheel speed.

REMOVAL

ALL-WHEEL-DRIVE

NOTE: Before proceeding, refer to CAUTION and WARNING .

1. Raise the cargo floor cover.

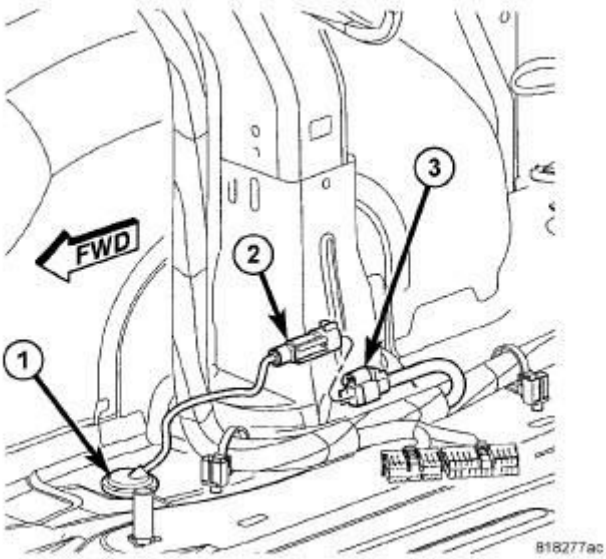

Fig. 20: Identifying Wheel Speed Sensor Cable Connector & Body Wiring Harness Connector
Courtesy of CHRYSLER GROUP, LLC

2. Through the opening in the bottom of the quarter trim panel, disconnect the wheel speed sensor cable connector (2) at the body wiring harness connector (3).
3. Raise and support the vehicle. Refer to **HOISTING, STANDARD PROCEDURE** .

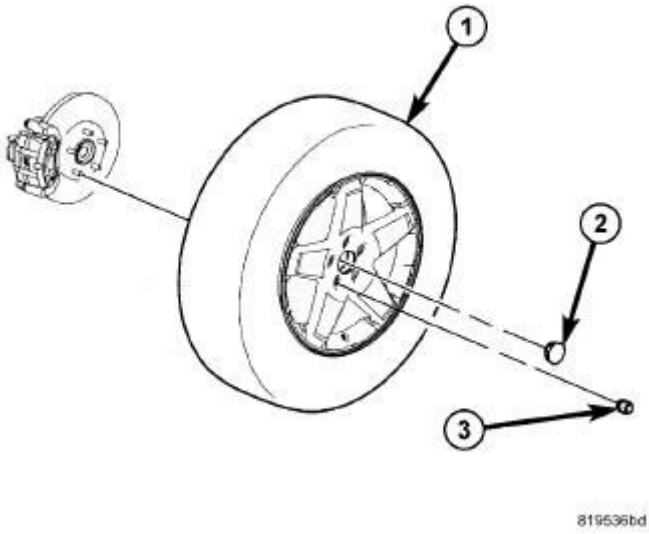

Fig. 21: Tire And Wheel Mounting
Courtesy of CHRYSLER GROUP, LLC

4. Remove the wheel mounting nuts (3), then the rear tire and wheel assembly (1).

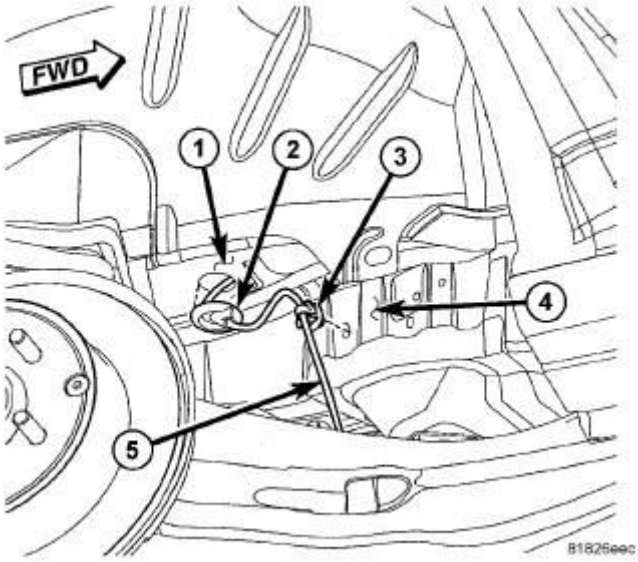

Fig. 22: Rear WSS Mounting To Body
Courtesy of CHRYSLER GROUP, LLC

5. Remove the grommet (2) from the hole in the body (1) and pull the wheel speed sensor cable out through the hole.
6. Remove the speed sensor cable routing clip (3) from the outside frame rail (4).

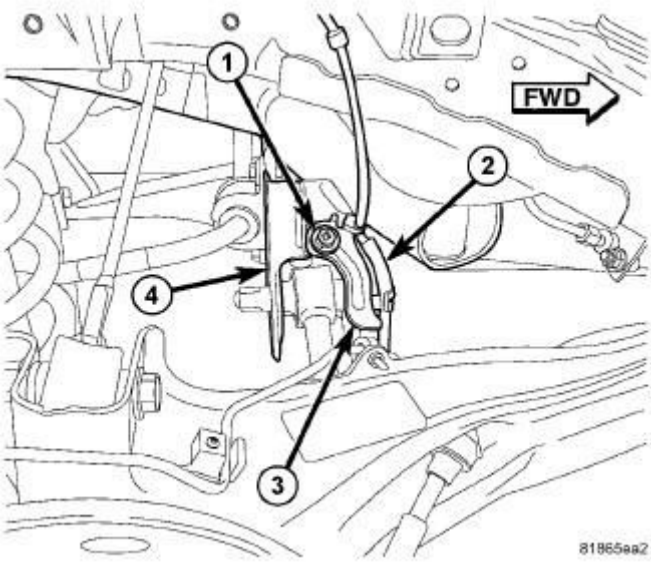

Fig. 23: Sensor Mounting To Rear Crossmember
Courtesy of CHRYSLER GROUP, LLC

7. Remove the screw (1) fastening the cable routing clamp (3) to the rear suspension crossmember (4).

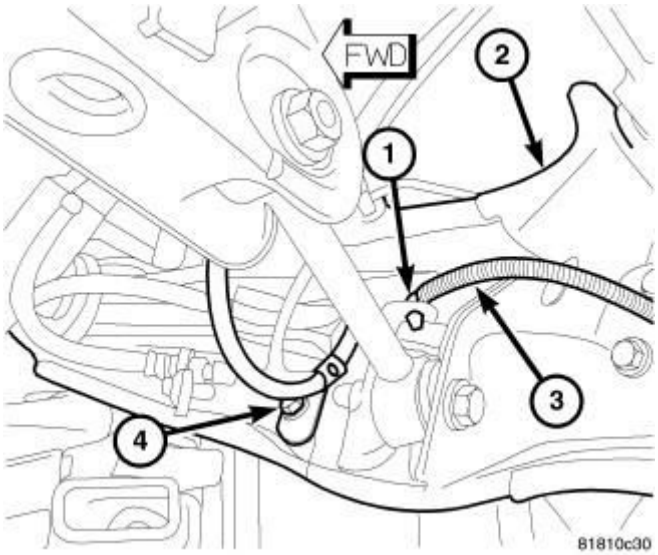

Fig. 24: Rear Wheel Speed Sensor Mounting To Trailing Link
Courtesy of CHRYSLER GROUP, LLC

8. Remove the speed sensor cable routing clip (1) from the trailing link (2).
9. Remove the screw (4) fastening the cable routing clamp to the trailing link.

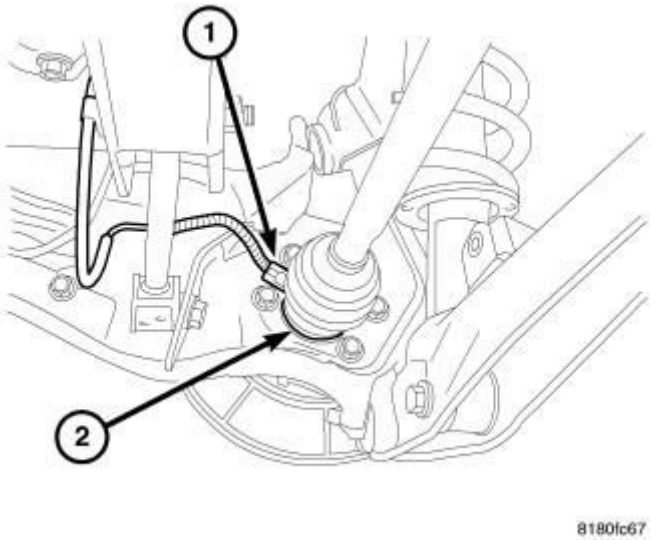

Fig. 25: Rear Wheel Speed Sensor
Courtesy of CHRYSLER GROUP, LLC

10. Unclip the wheel speed sensor head (1) from the spring-loaded retainer on the rear of the hub and bearing (2). Remove the sensor from the vehicle.

FRONT-WHEEL-DRIVE

NOTE: Before proceeding. Refer to CAUTION and WARNING .

1. Raise the cargo floor cover.

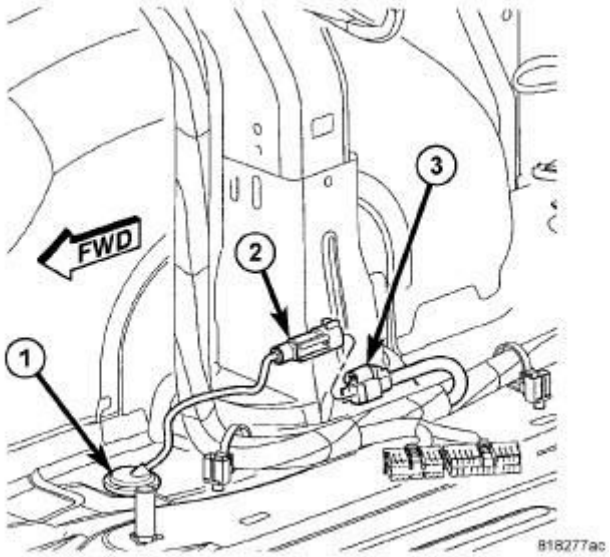

Fig. 26: Rear WSS At Harness Connector
Courtesy of CHRYSLER GROUP, LLC

2. Through the opening in the bottom of the quarter trim panel, disconnect the wheel speed sensor cable connector (2) at the body wiring harness connector (3).
3. Raise and support the vehicle. Refer to **HOISTING, STANDARD PROCEDURE** .

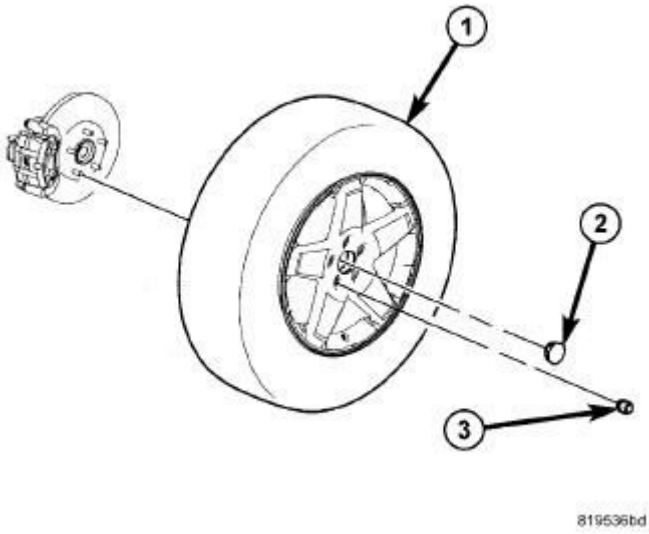

Fig. 27: Tire And Wheel Mounting
Courtesy of CHRYSLER GROUP, LLC

4. Remove the wheel mounting nuts (3), then the rear tire and wheel assembly (1).

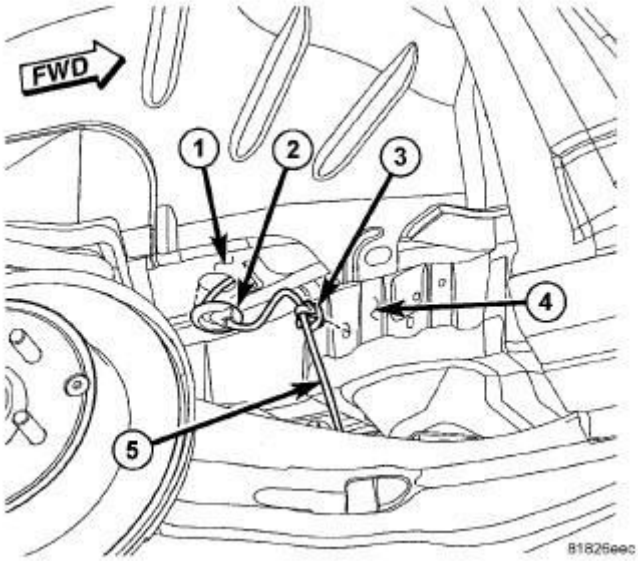

Fig. 28: Rear WSS Mounting To Body

Courtesy of CHRYSLER GROUP, LLC

5. Remove the grommet (2) from the hole in the body (1) and pull the wheel speed sensor cable out through the hole.
6. Remove the speed sensor cable routing clip (3) from the outside frame rail (4).

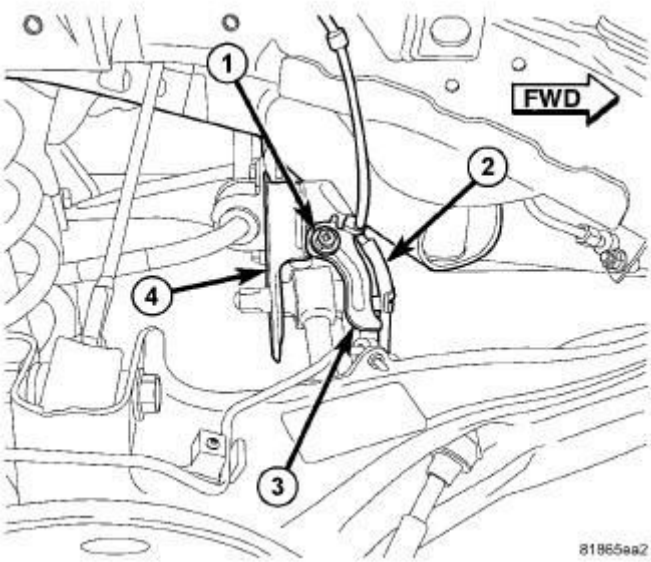

Fig. 29: Sensor Mounting To Rear Crossmember
Courtesy of CHRYSLER GROUP, LLC

7. Remove the screw (1) fastening the cable routing clamp (3) to the rear suspension crossmember (4).

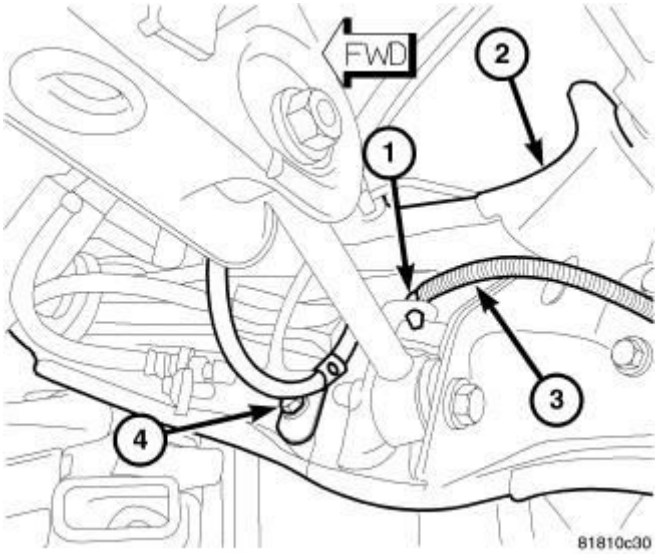

Fig. 30: Rear Wheel Speed Sensor Mounting To Trailing Link

Courtesy of CHRYSLER GROUP, LLC

8. Remove the speed sensor cable routing clip (1) from the trailing link (2).
9. Remove the screw (4) fastening the cable routing clamp to the trailing link.

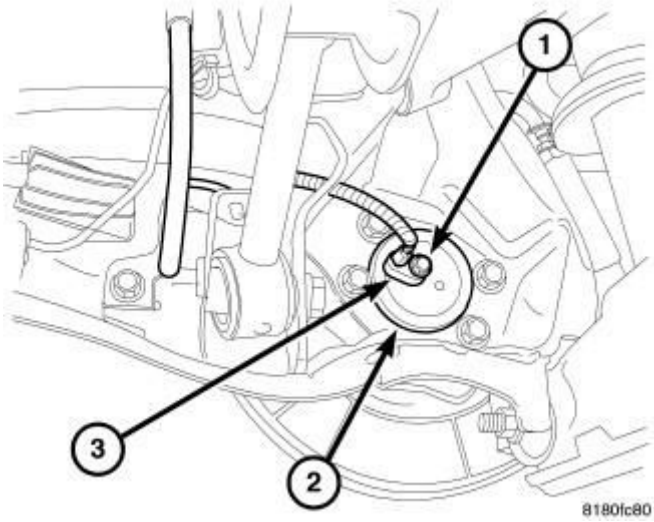

Fig. 31: Rear Wheel Speed Sensor (FWD)
Courtesy of CHRYSLER GROUP, LLC

10. Remove the screw (1) fastening the wheel speed sensor head (3) in the rear of the hub and bearing (2). Remove the sensor from the vehicle.

INSTALLATION

ALL-WHEEL-DRIVE

CAUTION: Failure to install speed sensor cables properly may result in contact with moving parts or an over extension of cables causing an open circuit. Be sure that cables are installed, routed, and clipped properly.

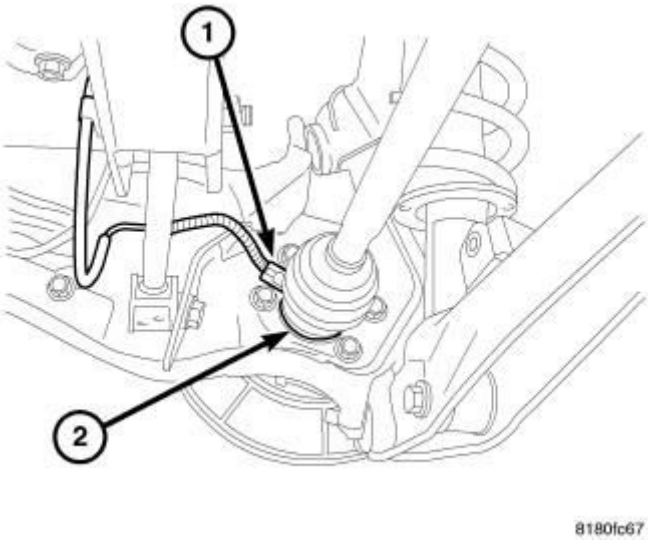

Fig. 32: AWD Rear Wheel Speed Sensor
Courtesy of CHRYSLER GROUP, LLC

NOTE: When installing the sensor head to the spring-loaded retainer on the hub and bearing, make sure the head is held snug in the retainer. If there is any play, the clip is deformed and the hub and bearing must be replaced. The retainer is not serviced separately.

1. Clip the wheel speed sensor head (1) (flat side to bearing rear face) into the spring-loaded retainer on the rear of the hub and bearing (2).

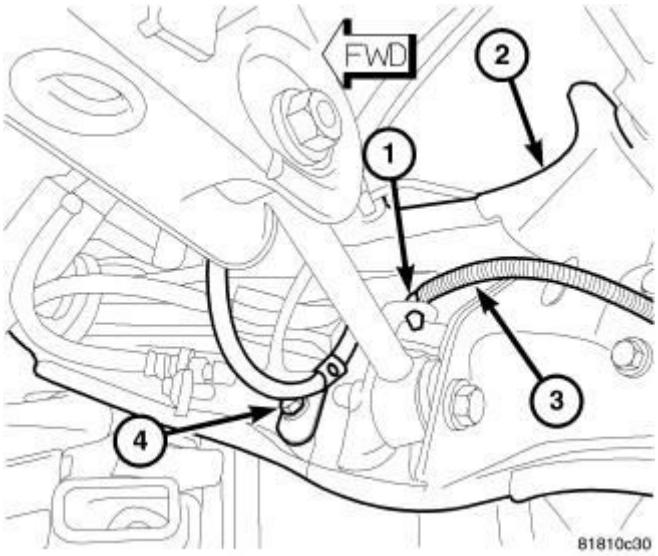

Fig. 33: Rear Wheel Speed Sensor Mounting To Trailing Link
Courtesy of CHRYSLER GROUP, LLC

2. Position the wheel speed sensor (3) on the trailing link (2) and install the screw (4) securing it in place. Tighten the mounting screw to 18 N.m (13 ft. lbs.).
3. Position the wheel speed sensor (3) and install the routing clip (1) fastening the sensor to the trailing link (2).

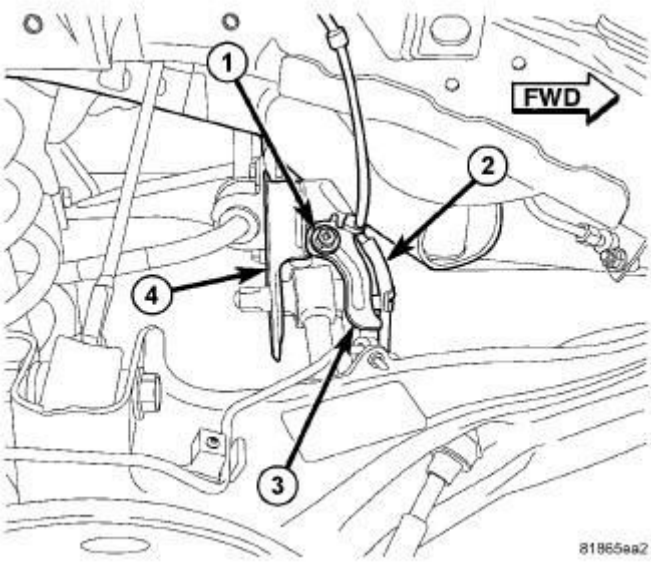

Fig. 34: Sensor Mounting To Rear Crossmember
Courtesy of CHRYSLER GROUP, LLC

4. Position the wheel speed sensor cable routing clamp (3) on the rear suspension crossmember (4) and install the mounting screw (1). Tighten the mounting screw to 18 N.m (13 ft. lbs.).

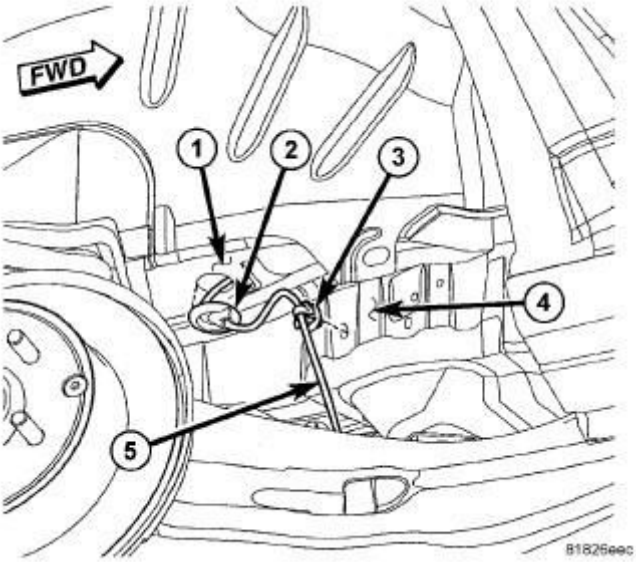

Fig. 35: Rear WSS Mounting To Body
Courtesy of CHRYSLER GROUP, LLC

5. Install the speed sensor cable routing clip (3) on the outside frame rail (4).

NOTE: When inserting the wheel speed sensor cable through the hole in the body, route the cable toward the shock tower to make it easier to grasp the cable to connect it to the body wiring harness connector in a later step.

6. Insert the wheel speed sensor cable (5) through the hole in the body (1) and install the grommet (2) in the hole.

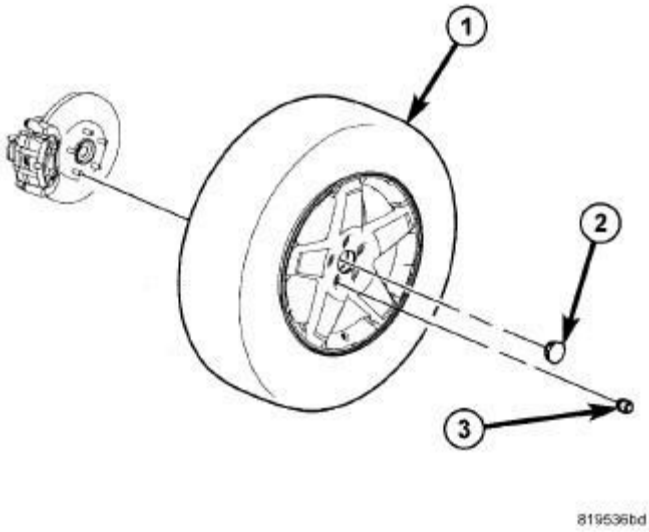

Fig. 36: Tire And Wheel Mounting
Courtesy of CHRYSLER GROUP, LLC

7. Install the tire and wheel assembly (1). Refer to **INSTALLATION** and tighten the wheel mounting nuts (3) to 135 N.m (100 ft. lbs.).
8. Lower the vehicle.

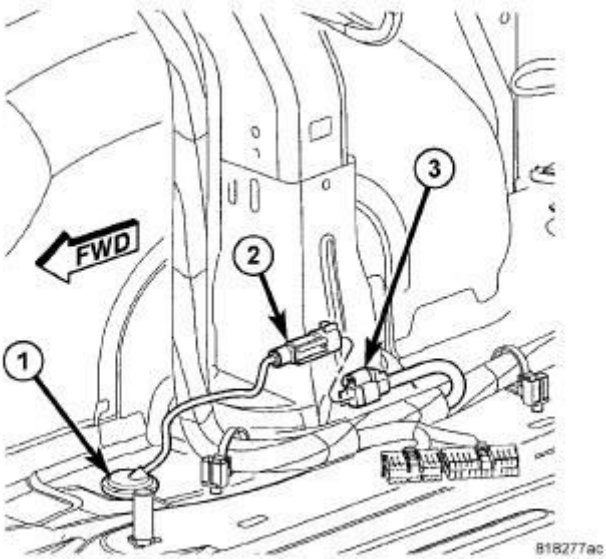

Fig. 37: Rear WSS At Harness Connector
Courtesy of CHRYSLER GROUP, LLC

9. Through the opening in the bottom of the quarter trim panel, connect the wheel speed sensor cable connector (2) to the body wiring harness connector (3).
10. Install the cargo floor cover.
11. Perform the Diagnostic Verification Test and clear any faults. Refer to **STANDARD PROCEDURE** .

FRONT-WHEEL-DRIVE

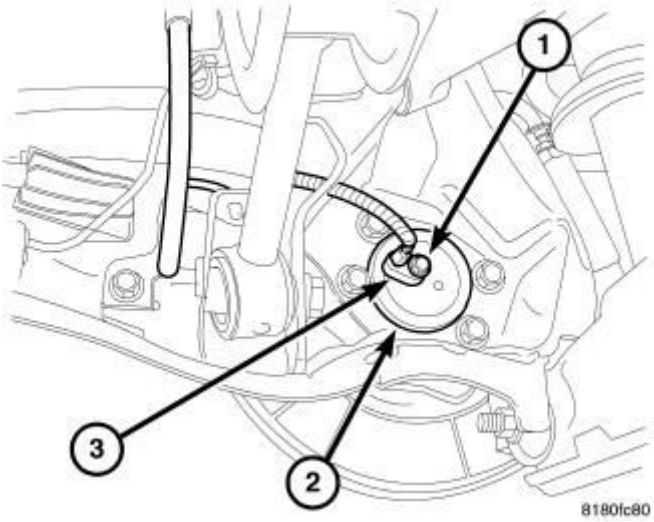

Fig. 38: Rear Wheel Speed Sensor (FWD)
Courtesy of CHRYSLER GROUP, LLC

1. Install the wheel speed sensor head (3) into the rear of the hub and bearing (2).
2. Install the wheel speed sensor head mounting screw (1). Tighten the screw to 10 N.m (89 in. lbs.).

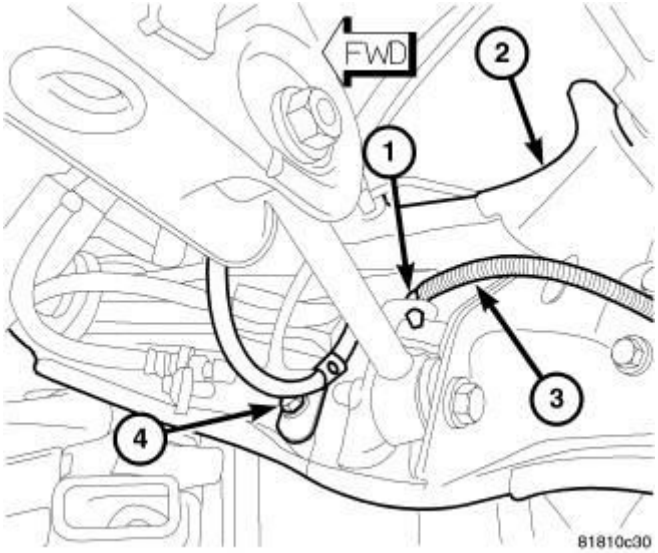

Fig. 39: Rear Wheel Speed Sensor Mounting To Trailing Link
Courtesy of CHRYSLER GROUP, LLC

3. Position the wheel speed sensor (3) on the trailing link (2) and install the screw (4) securing it in place. Tighten the mounting screw to 18 N.m (13 ft. lbs.).
4. Position the wheel speed sensor (3) and install the routing clip (1) fastening the sensor to the trailing link (2).

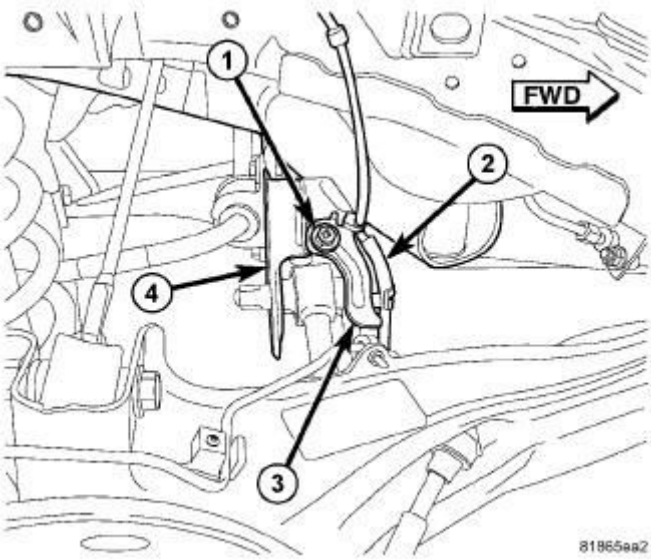

Fig. 40: Sensor Mounting To Rear Crossmember
Courtesy of CHRYSLER GROUP, LLC

5. Position the wheel speed sensor cable routing clamp (3) on the rear suspension crossmember (4) and install the mounting screw (1). Tighten the mounting screw to 18 N.m (13 ft. lbs.).

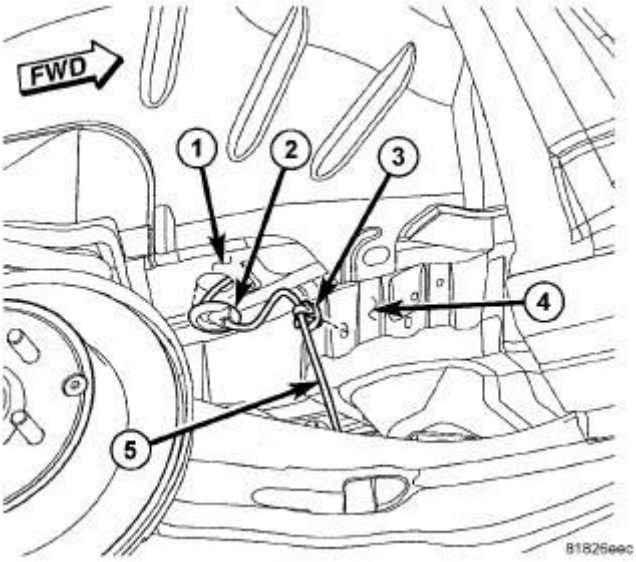

Fig. 41: Rear WSS Mounting To Body
Courtesy of CHRYSLER GROUP, LLC

6. Install the speed sensor cable routing clip (3) on the outside frame rail (4).

NOTE: When inserting the wheel speed sensor cable through the hole in the body, route the cable toward the shock tower to make it easier to grasp the cable to connect it to the body wiring harness connector in a later step.

7. Insert the wheel speed sensor cable (5) through the hole in the body (1) and install the grommet (2) in the hole.

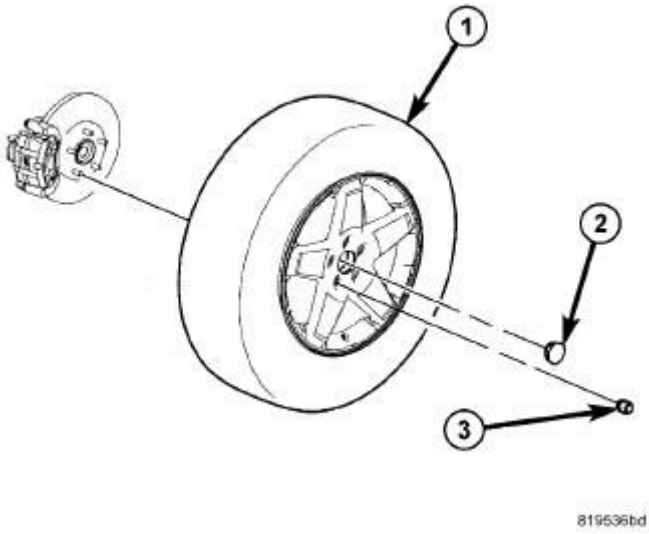

Fig. 42: Tire And Wheel Mounting
Courtesy of CHRYSLER GROUP, LLC

8. Install the tire and wheel assembly (1). Refer to **INSTALLATION** and tighten the wheel mounting nuts (3) to 135 N.m (100 ft. lbs.).
9. Lower the vehicle.

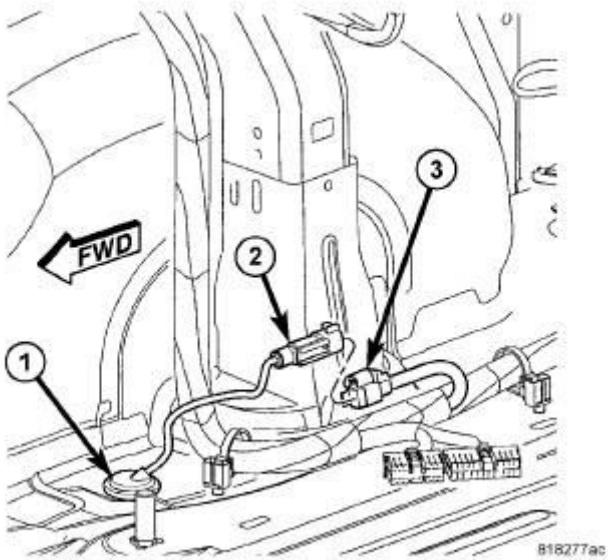

Fig. 43: Rear WSS At Harness Connector
Courtesy of CHRYSLER GROUP, LLC

10. Through the opening in the bottom of the quarter trim panel, connect the wheel speed sensor cable connector (2) at the body wiring harness connector (3).

11. Install the cargo floor cover.
12. Perform the Diagnostic Verification Test and clear any faults. Refer to **ABS VERIFICATION TEST** .

SWITCH, ELECTRONIC STABILITY PROGRAM (ESP)

DESCRIPTION

DESCRIPTION

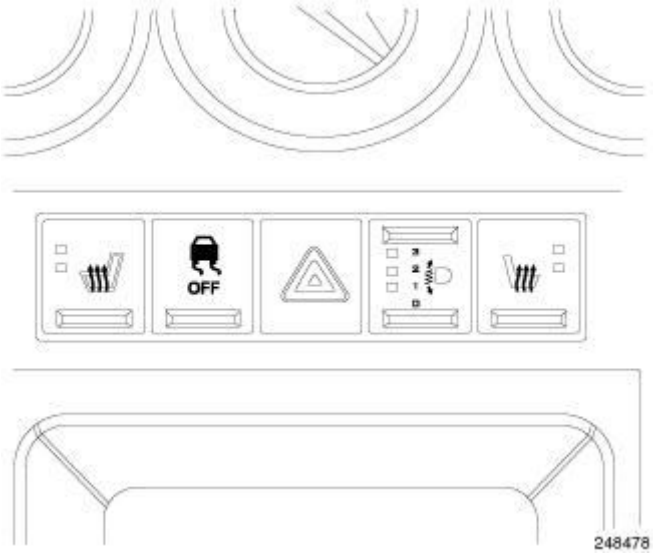

Fig. 44: I/P Switch Pod
Courtesy of CHRYSLER GROUP, LLC

The ESC Off Switch is part of the accessory switch bank module located in the center bezel on the instrument panel above the transmission gear shifter.

The ESC Off switch turns the Electronic Stability Control off and back on. The ESC has three modes: Full-On, Partial and Full-Off. The ESC default mode is Full-On with every key-on. Pressing the ESC Off switch button in the center stack once activates the Partial mode. In Partial mode, Traction Control is deactivated and ESC operates at a higher threshold, therefore, it will not come on as aggressively as in the Full-On mode. Pressing and holding the ESC button for five seconds or longer turns the system completely off. This condition is confirmed by a single warning chime and a text message in the odometer display "ESC FULL OFF." The system can be returned to "normal" Full-On mode by briefly pressing and releasing the ESC Off switch. The switch resets itself each time the ignition is cycled.

OPERATION

OPERATION

NOTE: The Electronic Stability Control (ESC) may also be referred to as Electronic Stability Program (ESP) depending on the vehicle model year and configuration. Certain components may also reference ESP, ESC, or use the traction control symbol.

The Electronic Stability Control (ESC) Off switch is serviced as part of the accessory switch bank. There are different accessory switch banks available based on the option content of the vehicle. Ensure the accessory switch bank being installed matches the vehicle options.

If the ESC Off Switch needs to be replaced, the entire POD switch bank must be replaced. Refer to **POD, SWITCH, REMOVAL** .

HYDRAULIC/MECHANICAL

HYDRAULIC CONTROL UNIT (HCU)

DESCRIPTION

DESCRIPTION

NOTE: The Electronic Stability Control (ESC) may also be referred to as Electronic Stability Program (ESP) depending on the vehicle model year and configuration. Certain components may also reference ESP, ESC, or use the traction control symbol.

The Hydraulic Control Unit (HCU) is mounted to the Antilock Brake Module (ABM) as part of the Integrated Control Unit (ICU). The HCU controls the flow of brake fluid to the brakes using a series of valves and accumulators. A pump/motor is mounted on the HCU to empty the accumulators during an ABS stop and supply build pressure to the brakes during a traction control or ESC event.

VALVES AND SOLENOIDS

The valve block contains four inlet valves and four outlet solenoid valves. The inlet valves are spring-loaded in the open position and the outlet valves are spring-loaded in the closed position during normal braking. The fluid is allowed

to flow from the master cylinder to the wheel brakes.

During an ABS stop, these valves cycle to maintain the proper slip ratio for each wheel. The inlet valve closes preventing further pressure increase and the outlet valve opens to provide a path from the wheel brake to the HCU accumulators and pump/motor. This releases (decays) pressure from the wheel brake, thus releasing the wheel from excessive slippage. Once the wheel is no longer slipping, the outlet valve is closed and the inlet valve is opened to reapply (build) pressure.

If the ABS includes the traction control feature, there are four other valves in the HCU. Two Traction Control (TC) (or ESC) valves, mounted in the HCU valve block, are normally in the open position and close only when the traction control is applied. There are also two normally closed shuttle valves which open during traction control and ESC events to provide a direct fluid path from the brake fluid reservoir to the inlet of the HCU pump.

These TC valves are used to isolate the rear (non-driving) wheels of the vehicle from the hydraulic pressure that the HCU pump/motor is sending to the front (driving) wheels when traction control is being applied. The rear brakes need to be isolated from the master cylinder when traction control is being applied so the rear wheels do not drag.

BRAKE FLUID ACCUMULATORS

There are two fluid accumulators in the HCU: one for the primary hydraulic circuit, and one for the secondary hydraulic circuit. Each hydraulic circuit uses a 3 cc accumulator.

The fluid accumulators temporarily store brake fluid that is removed from the wheel brakes during an ABS cycle. This stored fluid is used by the pump/motor to provide build pressure for the brake hydraulic system. When the antilock stop is complete, the accumulators are drained by the pump/motor.

There are two noise dampening chambers in the HCU on this vehicle equipped with traction control.

PUMP/MOTOR

There are two pump assemblies in the HCU: one for the primary hydraulic circuit, and one for the secondary hydraulic circuit. Both pumps are driven by a common electric motor. This DC-type motor is integral to the HCU and is

controlled by the ABM.

Brake fluid is released to the accumulators when the outlet valve is opened during an antilock stop. The pump mechanism consists of two opposing pistons operated by an eccentric camshaft. In operation, these pistons are used to purge fluid from the accumulators back into the master cylinder circuits. When the antilock stop is complete, the pump/motor drains the accumulators.

The pump motor is also used to build pressure when the system goes into Electronic Stability Control (ESC®) and traction control mode.

The ABM may turn on the pump/motor when an antilock stop is detected. The pump/motor continues to run during the antilock stop and is turned off after the stop is complete. Under some conditions, the pump/motor runs to drain the accumulators during the next drive-off.

The pump/motor is not a serviceable item; if it requires replacement, the HCU must be replaced.

REMOVAL

REMOVAL

To remove the HCU, the ICU must be removed and disassembled. Refer to **INTEGRATED CONTROL UNIT (ICU), REMOVAL**.

INSTALLATION

INSTALLATION

To install the HCU, assemble and install the ICU. Refer to **INTEGRATED CONTROL UNIT (ICU), INSTALLATION**.

INTEGRATED CONTROL UNIT (ICU)

DESCRIPTION

DESCRIPTION

NOTE: The Electronic Stability Control (ESC) may also be referred to as Electronic Stability Program (ESP) depending on the vehicle model year and configuration. Certain components may also reference ESP, ESC, or use

the traction control symbol.

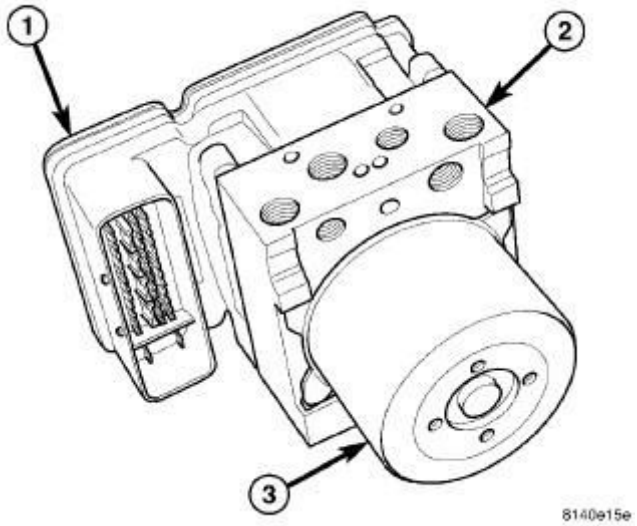

Fig. 45: Integrated Control Unit
Courtesy of CHRYSLER GROUP, LLC

1 - ANTILOCK BRAKE MODULE (ABM)
2 - HYDRAULIC CONTROL UNIT (HCU)
3 - PUMP/MOTOR

The Hydraulic Control Unit (HCU) (2) and the Antilock Brake Module (ABM) (1) used with this antilock brake system are combined (integrated) into one unit, which is called the Integrated Control Unit (ICU).

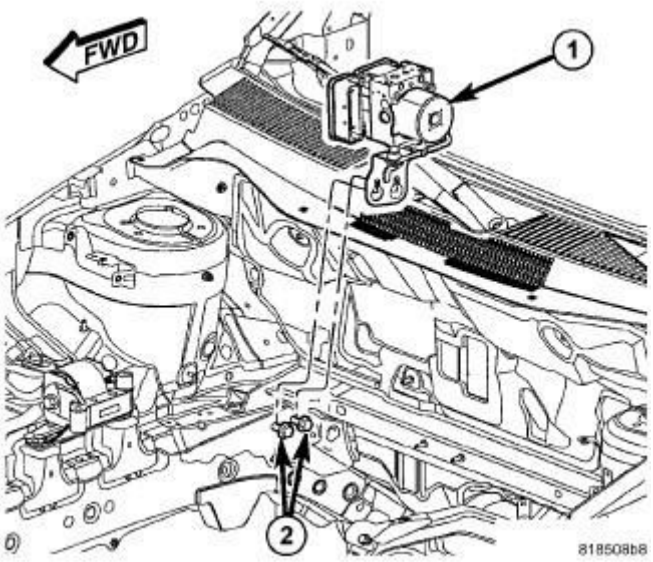

Fig. 46: ICU Mounting
Courtesy of CHRYSLER GROUP, LLC

The ICU (1) is located in the engine compartment, mounted to the right side body frame rail near the strut tower.

The ABS with ESC and All-Speed Traction Control ICU consists of the following components: the ABM, 12 (build/decay) solenoid valves, two traction control solenoid valves, two hydraulic shuttle valves, valve block, fluid accumulators, a pump, and an electric pump/motor.

The replaceable components of the ICU are the HCU and the ABM. No attempt should be made to service any components of the HCU or ABM.

For additional information on the ABM, refer to **MODULE, ANTI-LOCK BRAKE SYSTEM, DESCRIPTION** . For additional information on the HCU, refer to **HYDRAULIC CONTROL UNIT (HCU), DESCRIPTION**.

OPERATION

OPERATION

For information of the ICU, refer to these individual components of the ICU:

- ANTILOCK BRAKE MODULE (ABM). Refer to **MODULE, ANTI-LOCK BRAKE SYSTEM, DESCRIPTION** .
- HYDRAULIC CONTROL UNIT (HCU). Refer to **HYDRAULIC CONTROL UNIT (HCU), DESCRIPTION**.

REMOVAL

GAS ENGINE

NOTE: Before proceeding, refer to CAUTION and WARNING .

1. Disconnect and isolate battery negative cable from battery post.

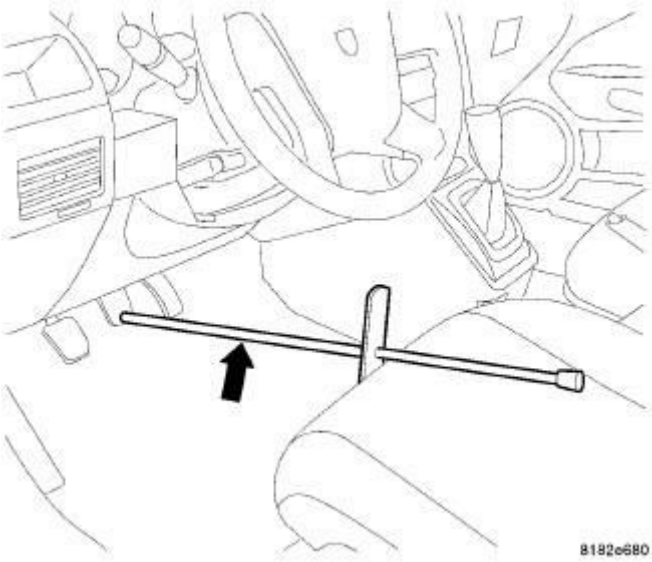

Fig. 47: Brake Pedal Holding Tool
Courtesy of CHRYSLER GROUP, LLC

2. Using a brake pedal holding tool as shown in the illustration, depress the brake pedal past its first 25 mm (1 inch) of travel and hold it in this position. This will isolate the master cylinder from the brake hydraulic system and will not allow the brake fluid to drain out of the master cylinder reservoir while the lines are disconnected.
3. Remove the engine appearance cover.
4. Loosen lower and upper mounting nuts, then remove the exhaust heat shield from the dash panel.
5. Pull the brake tube bundle routing clips (with tubes) loose from studs on the dash panel.

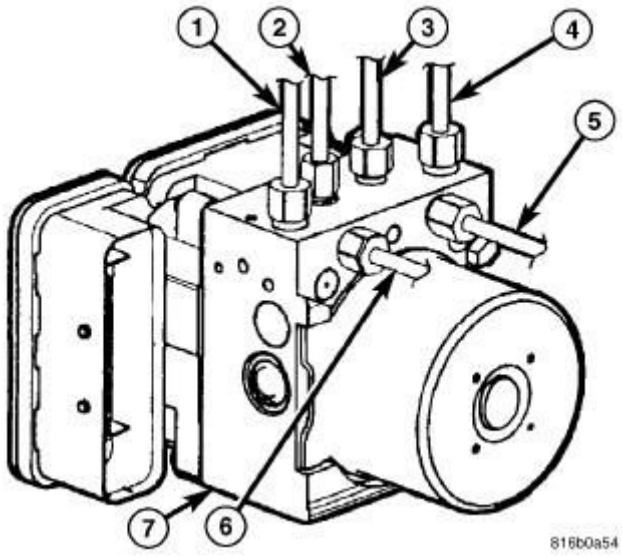

Fig. 48: Identifying Brake Tubes At Hydraulic Control Unit
Courtesy of CHRYSLER GROUP, LLC

6. Remove the primary (4) and secondary (1) brake tubes (from master cylinder) at the hydraulic control unit (7).
7. Remove the remaining brake tubes (2, 3, 5, 6) at the hydraulic control unit (7).

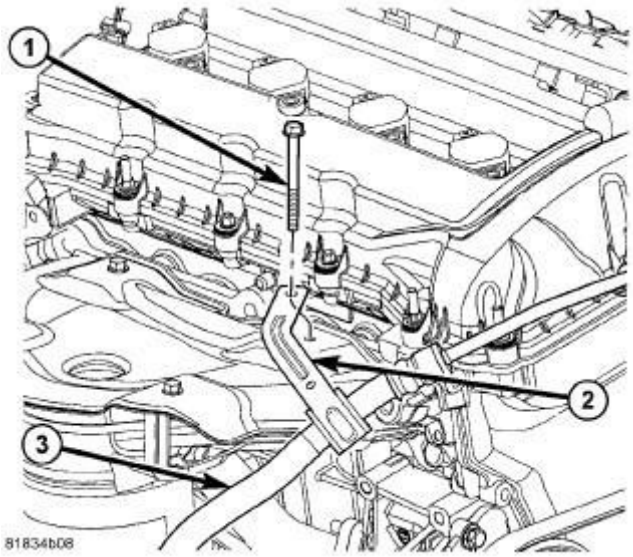

Fig. 49: Power Steering Pressure Hose Routing Clamp & Screw
Courtesy of CHRYSLER GROUP, LLC

8. Remove the screw (1) fastening the power steering pressure hose routing clamp (2) to the exhaust manifold.

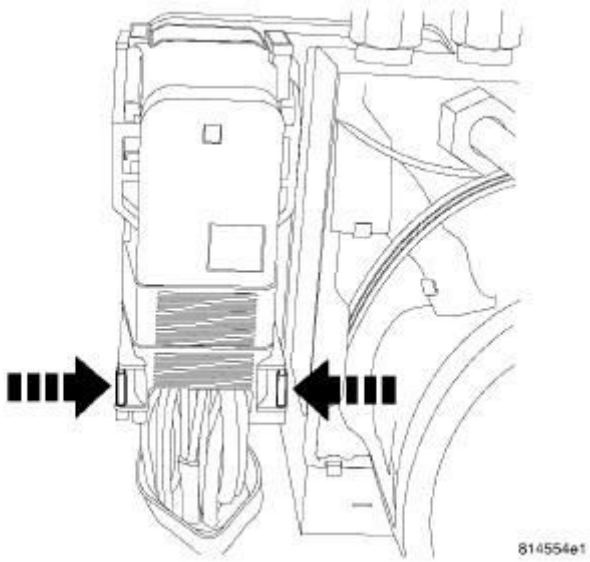

Fig. 50: ABM Connector Release Tabs
Courtesy of CHRYSLER GROUP, LLC

NOTE: Use this figure in the following step to release the ABM harness connector cover. It shows the location of the release tabs.

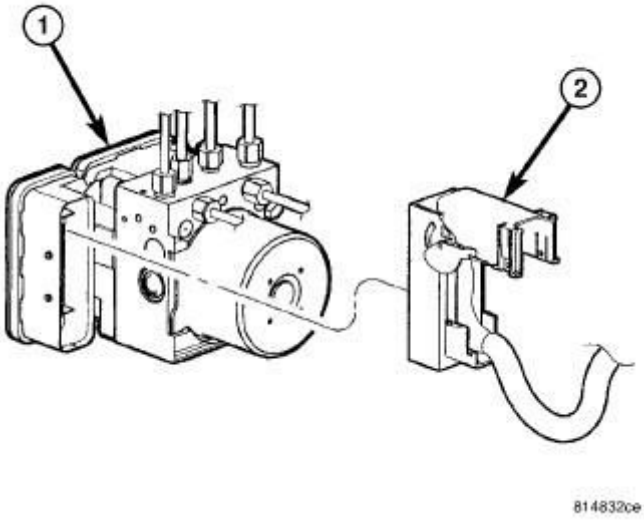

Fig. 51: Wiring Harness Connector At ABM
Courtesy of CHRYSLER GROUP, LLC

1 - ABM (PART OF ICU) 2 - WIRING HARNESS CONNECTOR

9. Disconnect the ABM harness connector from the Antilock Brake Module (ABM). To do so:
   a. Depress the tabs on each side of the connector cover, then
   b. Pull outward and upward on the lower half of the cover until it locks into position pointing straight outward (2). The connector can then be pulled straight outward off the ABM (1).

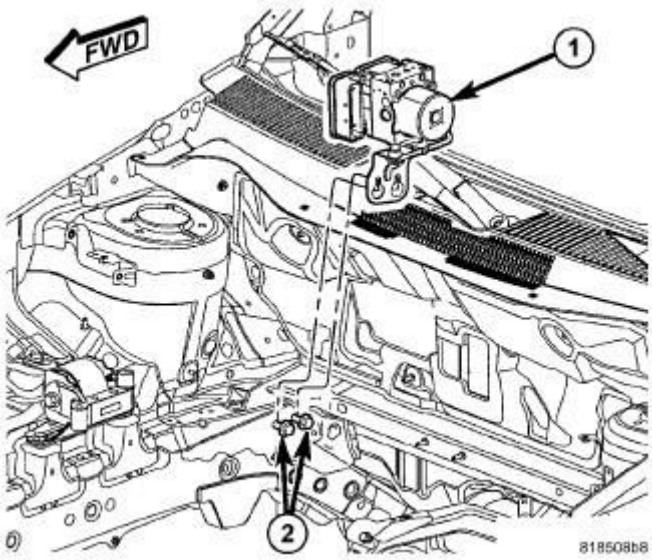

Fig. 52: ICU Mounting
Courtesy of CHRYSLER GROUP, LLC

10. Loosen, but do not remove, the two mounting screws (2) attaching the ICU (1) mounting bracket to the body.
11. Lift the ICU and mounting bracket (1) off the mounting screws (2).
12. Move the brake tubes around as necessary without bending them and remove the ICU with bracket through the opening between the A/C lines and the exhaust manifold.
13. To separate the ABM from the HCU, refer to **INTEGRATED CONTROL UNIT (ICU), DISASSEMBLY**.

DIESEL ENGINE

NOTE: Before proceeding, refer to CAUTION and WARNING .

1. Disconnect and isolate battery negative cable from battery post.

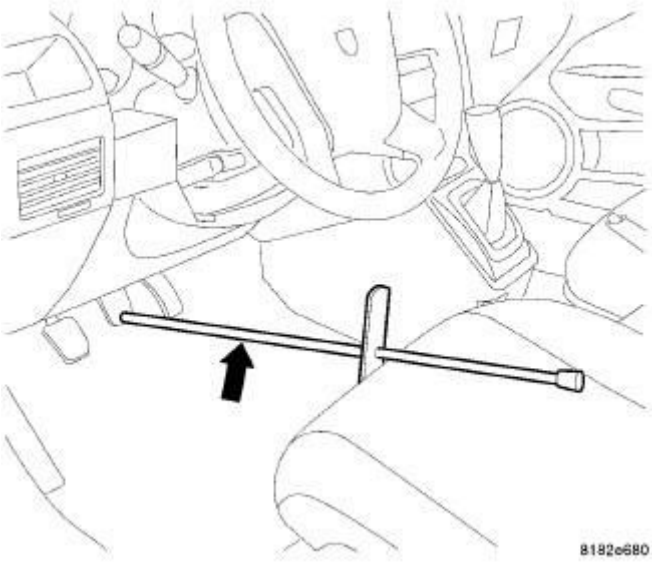

Fig. 53: Brake Pedal Holding Tool
Courtesy of CHRYSLER GROUP, LLC

2. Using a brake pedal holding tool as shown in the illustration, depress the brake pedal past its first 25 mm (1 inch) of travel and hold it in this position. This will isolate the master cylinder from the brake hydraulic system and will not allow the brake fluid to drain out of the master cylinder reservoir while the lines are disconnected.
3. Raise and support the vehicle. Refer to **HOISTING, STANDARD PROCEDURE** .

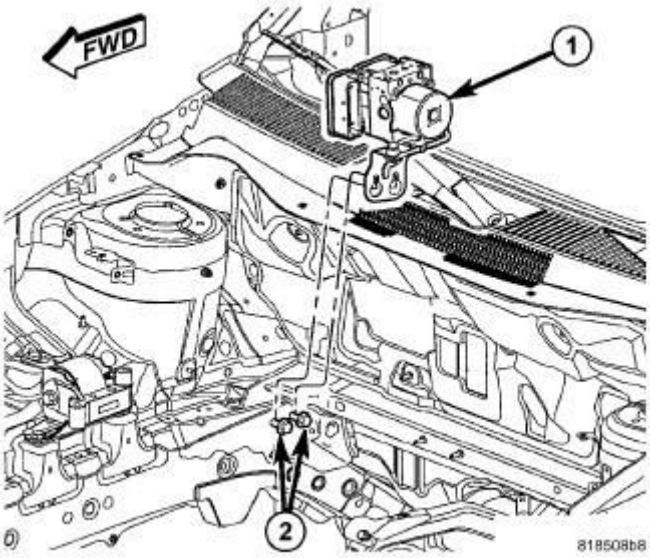

Fig. 54: ICU Mounting
Courtesy of CHRYSLER GROUP, LLC

4. Loosen, but do not remove, the two mounting screws (2) attaching the ICU (1) mounting bracket to the body.
5. Loosen the air inlet tube at the turbocharger.
6. Lower the vehicle.
7. Remove the engine appearance cover.
8. Loosen the air inlet tube at the air cleaner and engine cylinder head cover, then remove the tube.
9. Loosen lower and upper mounting nuts, then remove the heat shield from the dash panel.
10. Pull the brake tube bundle routing clips (with tubes) loose from studs on the dash panel.

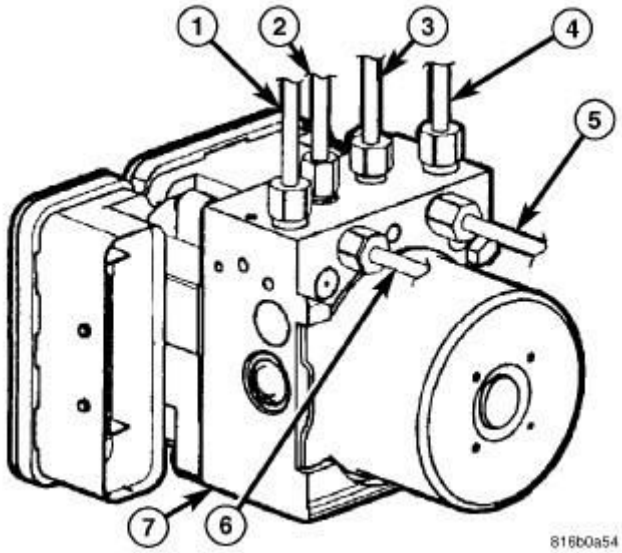

Fig. 55: Identifying Brake Tubes At Hydraulic Control Unit
Courtesy of CHRYSLER GROUP, LLC

11. Remove primary (4) and secondary (1) brake tubes (from master cylinder) at hydraulic control unit (7).
12. Remove remaining brake tubes (2, 3, 5, 6) at hydraulic control unit (7).

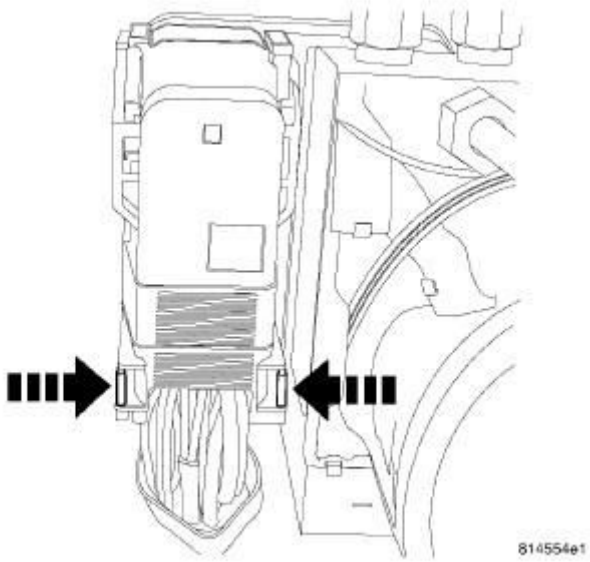

Fig. 56: ABM Connector Release Tabs
Courtesy of CHRYSLER GROUP, LLC

NOTE: Use this figure in the following step to release the ABM harness connector cover. It shows the location of the release tabs.

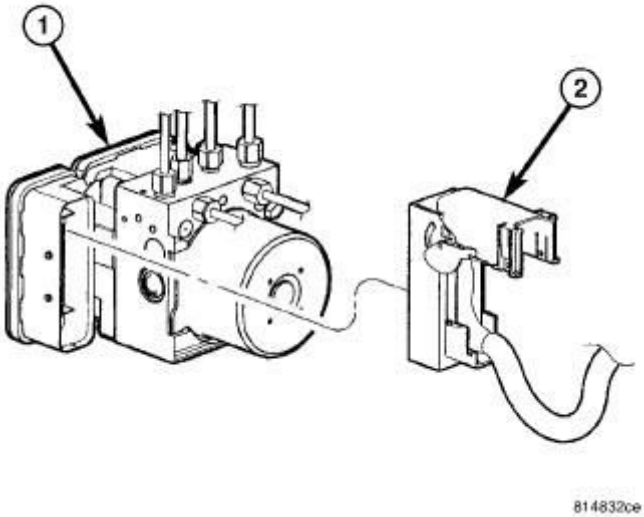

Fig. 57: Wiring Harness Connector At ABM
Courtesy of CHRYSLER GROUP, LLC

1 - ABM (PART OF ICU) 2 - WIRING HARNESS CONNECTOR

13. Disconnect the ABM harness connector from the Antilock Brake Module (ABM). To do so:
    a. Depress the tabs on each side of the connector cover, then
    b. Pull outward and upward on the lower half of the cover until it locks into position pointing straight outward (2). The connector can then be pulled straight outward off the ABM (1).

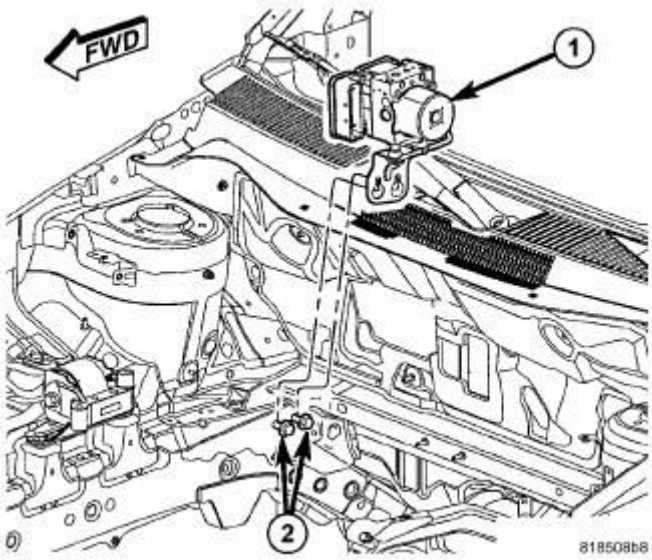

Fig. 58: ICU Mounting
Courtesy of CHRYSLER GROUP, LLC

14. Lift the ICU and mounting bracket (1) off the mounting screws (2).

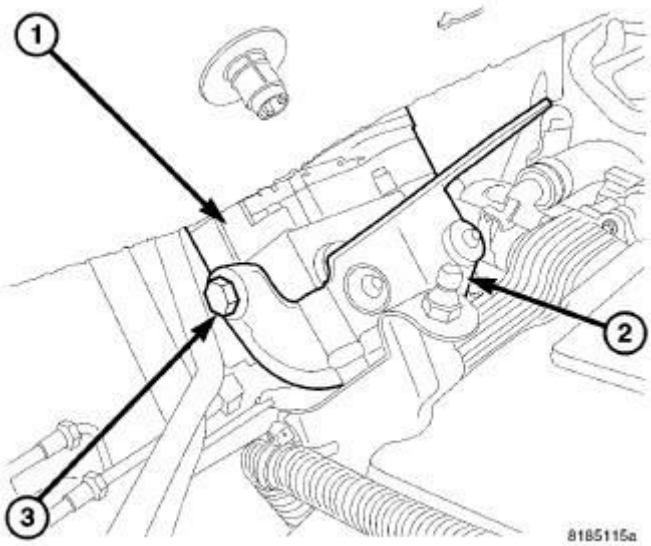

Fig. 59: Removing/Installing ICU Mounting Bracket

Courtesy of CHRYSLER GROUP, LLC

15. Rotate the ICU (1) around behind the engine until the bracket mounting screw (3) can be accessed.
16. Remove the ICU bracket mounting screw (3), then remove the bracket (2) from the ICU (1). The ICU has mounting pins that are inserted into grommets in the bracket that must be overcome to remove bracket.

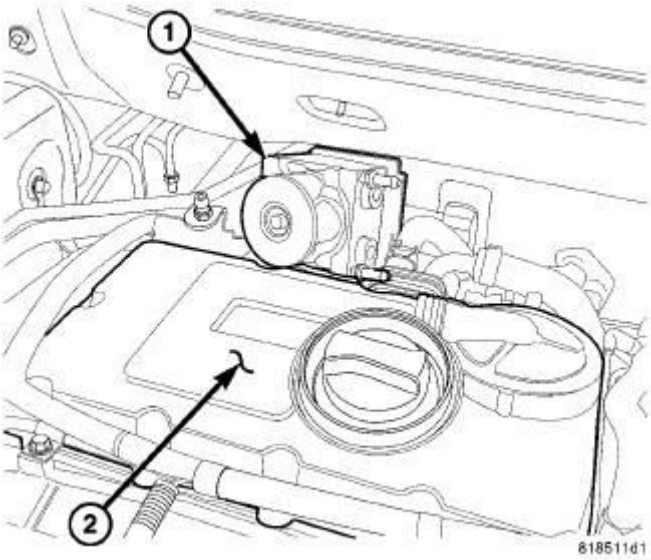

Fig. 60: ICU Removal/Installation
Courtesy of CHRYSLER GROUP, LLC

17. Remove the ICU (1) from the engine compartment out over the engine cylinder head cover (2).
18. To separate the ABM from the HCU, refer to **INTEGRATED CONTROL UNIT (ICU), DISASSEMBLY**.

RIGHT-HAND-DRIVE

NOTE: Before proceeding, refer to CAUTION and WARNING .

1. Disconnect and isolate battery negative cable from battery post.

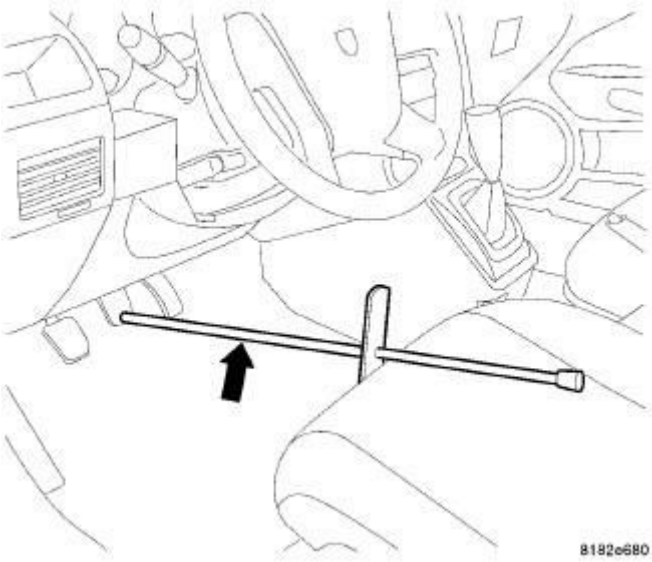

Fig. 61: Brake Pedal Holding Tool
Courtesy of CHRYSLER GROUP, LLC

2. Using a brake pedal holding tool as shown in the illustration, depress the brake pedal past its first 25 mm (1 inch) of travel and hold it in this position. This will isolate the master cylinder from the brake hydraulic system and will not allow the brake fluid to drain out of the master cylinder reservoir while the lines are disconnected.
3. Remove the engine appearance cover.

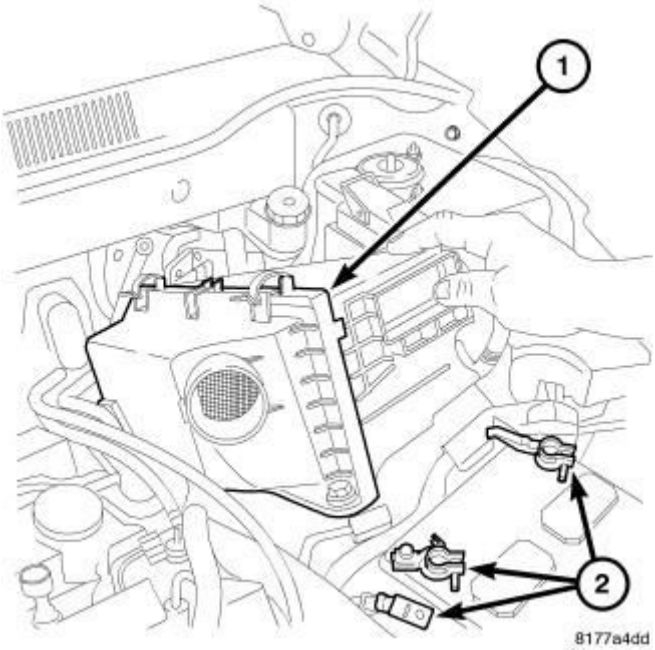

Fig. 62: Air Cleaner Assembly
Courtesy of CHRYSLER GROUP, LLC

4. Remove the air cleaner housing (1). Refer to **BODY, AIR CLEANER, REMOVAL** for 2.0L engine, **BODY, AIR CLEANER, REMOVAL** for 2.2L diesel and **BODY, AIR CLEANER, REMOVAL** for 2.4L engine.

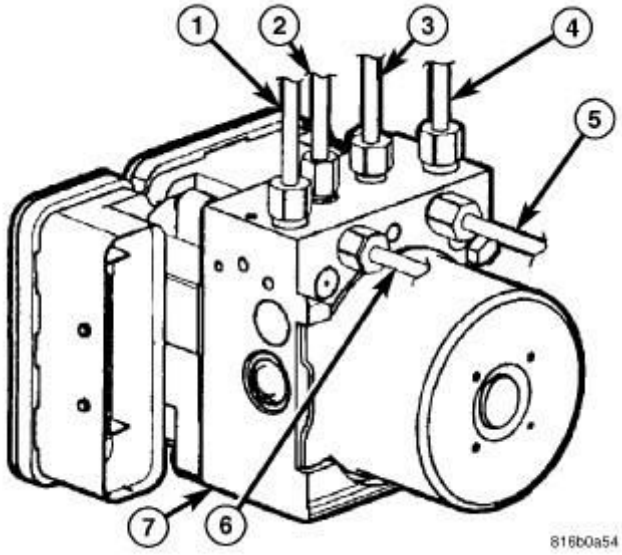

Fig. 63: Identifying Brake Tubes At Hydraulic Control Unit
Courtesy of CHRYSLER GROUP, LLC

5. Remove the primary (4) and secondary (1) brake tubes (from master cylinder) at the Hydraulic Control Unit (HCU) (7).
6. Remove the remaining brake tubes (2, 3, 5, 6) at the HCU (7).

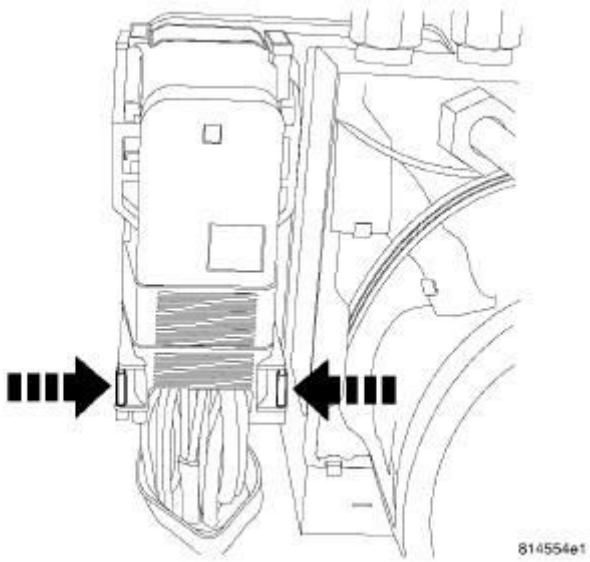

Fig. 64: ABM Connector Release Tabs
Courtesy of CHRYSLER GROUP, LLC

NOTE: Use this figure in the following step to release the Antilock Brake Module (ABM) harness connector cover. It shows the location of the release tabs.

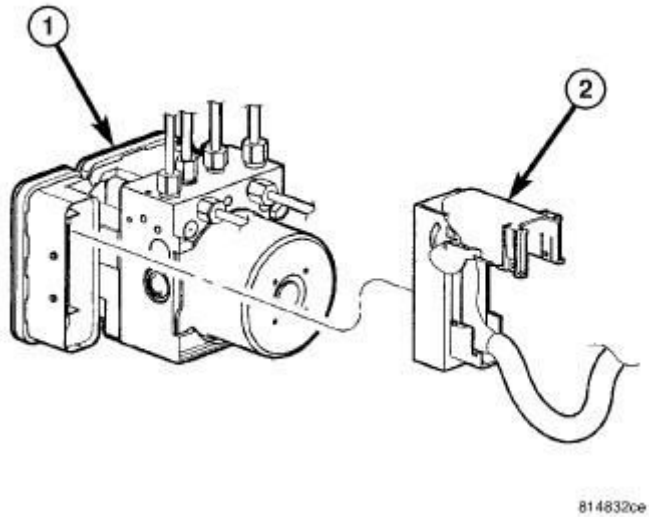

Fig. 65: Wiring Harness Connector At ABM
Courtesy of CHRYSLER GROUP, LLC

1 - ABM (PART OF ICU)
2 - WIRING HARNESS CONNECTOR

7. Disconnect the ABM harness connector from the Antilock Brake Module (ABM). To do so:
   a. Depress the tabs on each side of the connector cover, then
   b. Pull outward and upward on the lower half of the cover until it locks into position pointing straight outward (2). The connector can then be pulled straight outward off the ABM (1).

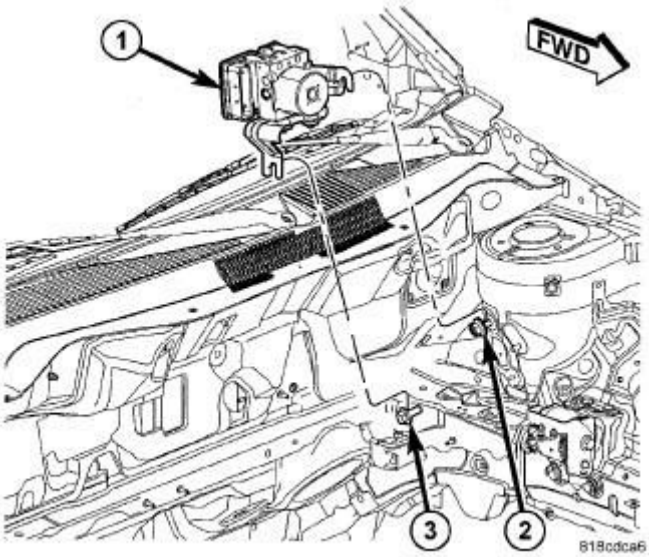

Fig. 66: Integrated Control Unit Mounting - RHD
Courtesy of CHRYSLER GROUP, LLC

8. Loosen, but do not remove, the mounting nut (2) and screw (3) attaching the Integrated Control Unit (ICU) (1) mounting bracket to the body.
9. Lift the ICU and mounting bracket (1) off the mounting stud and screw.
10. To separate the ABM from the HCU , refer to **INTEGRATED CONTROL UNIT (ICU), DISASSEMBLY**.

DISASSEMBLY

DISASSEMBLY

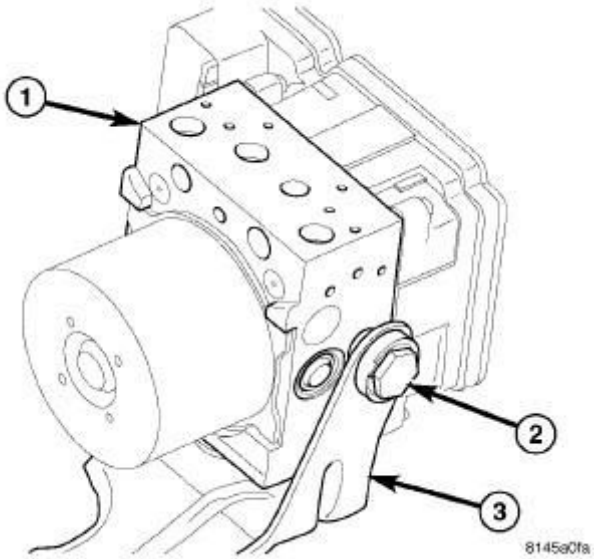

Fig. 67: ICU Mounting Bolt

Courtesy of CHRYSLER GROUP, LLC

1 - ICU 2 - MOUNTING BOLT 3 - MOUNTING BRACKET

1. If the mounting bracket (3) needs to be removed from the ICU, remove the single mounting bolt (2), then slide the ICU's mounting pins out of the grommets in the bracket and remove the bracket.

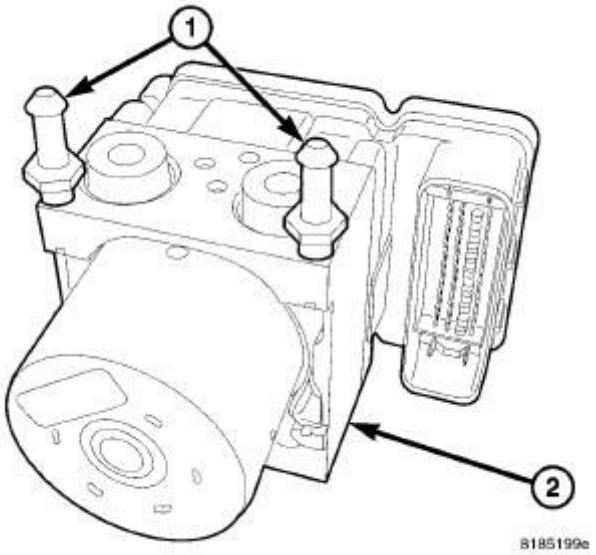

Fig. 68: ICU Mounting Pins
Courtesy of CHRYSLER GROUP, LLC

2. Remove the mounting pins from the ICU.

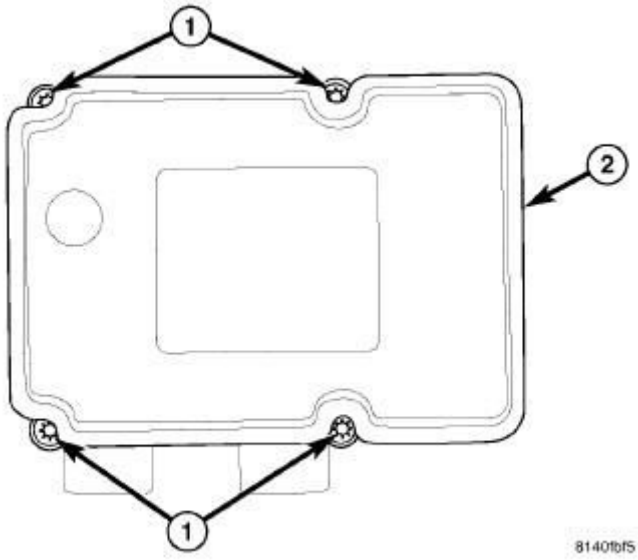

Fig. 69: ABM & Mounting Screws
Courtesy of CHRYSLER GROUP, LLC

1 - MOUNTING SCREWS 2 - ABM

3. Remove the four screws (1) attaching the ABM (2) to the HCU.

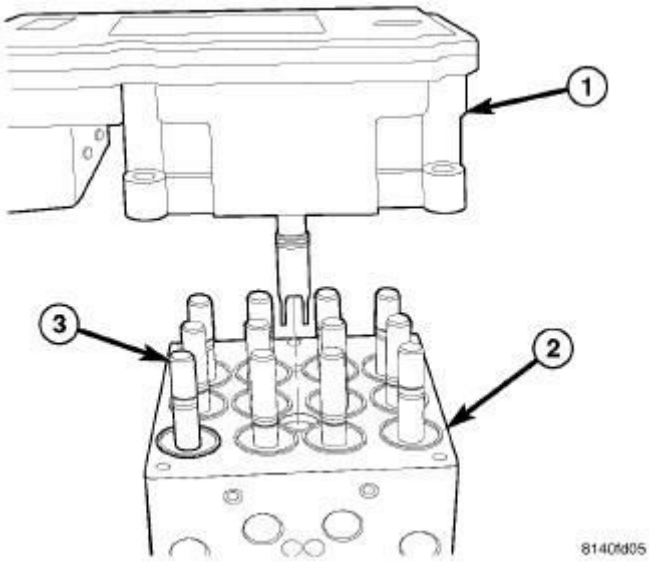

Fig. 70: Identifying ABM, HCU, & Solenoid Valve Stem
Courtesy of CHRYSLER GROUP, LLC

1 - ABM 2 - HCU

3 - SOLENOID VALVE STEM

4. Separate the ABM (1) from the HCU (2).

ASSEMBLY

ASSEMBLY

1. Clean any debris off the mating surfaces of the HCU and ABM.

CAUTION: When installing new O-rings or solenoid valve stem seals, do not use any type of lubricant.

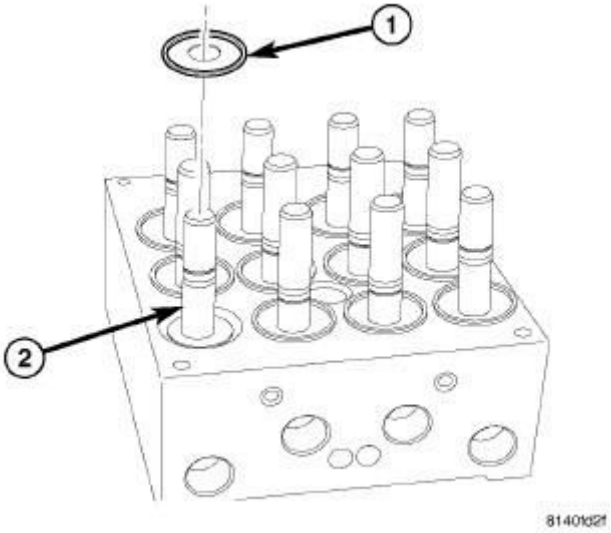

Fig. 71: Solenoid Valve Seal
Courtesy of CHRYSLER GROUP, LLC

1 - SEAL
2 - SOLENOID VALVE STEM

2. If the seals (1) on the solenoid valve stems (2) are not new, replace them all. Each of the solenoid valve stem seals must be new to keep out moisture and debris;**do not reuse solenoid valve stem seals.**

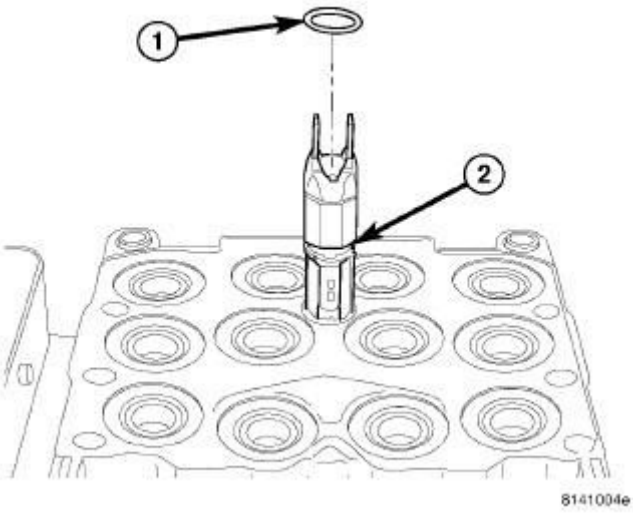

Fig. 72: Internal Pump Connector O-Ring
Courtesy of CHRYSLER GROUP, LLC

1 - O-RING 2 - O-RING MOUNTING GROOVE

3. Replace the pump/motor connector O-ring (1) if it is not new. Be sure the O-ring is properly seated in the mounting groove (2).

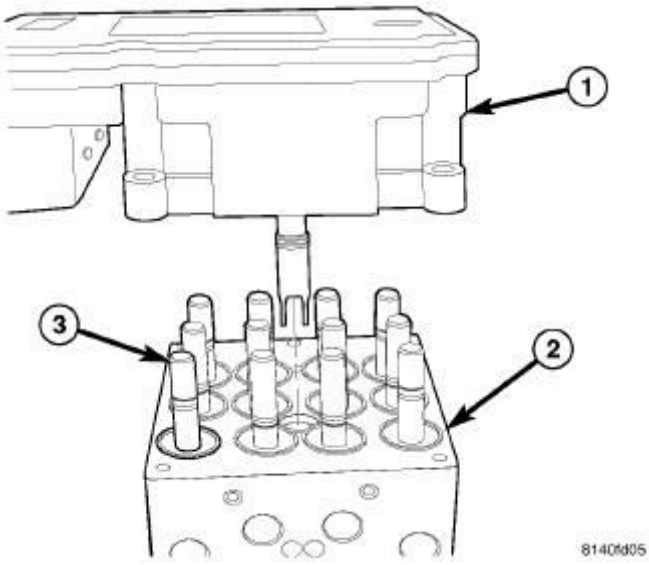

Fig. 73: Identifying ABM, HCU, & Solenoid Valve Stem
Courtesy of CHRYSLER GROUP, LLC

1 - ABM

2 - HCU 3 - SOLENOID VALVE STEM

4. Align components and install the ABM (1) on the HCU (2).

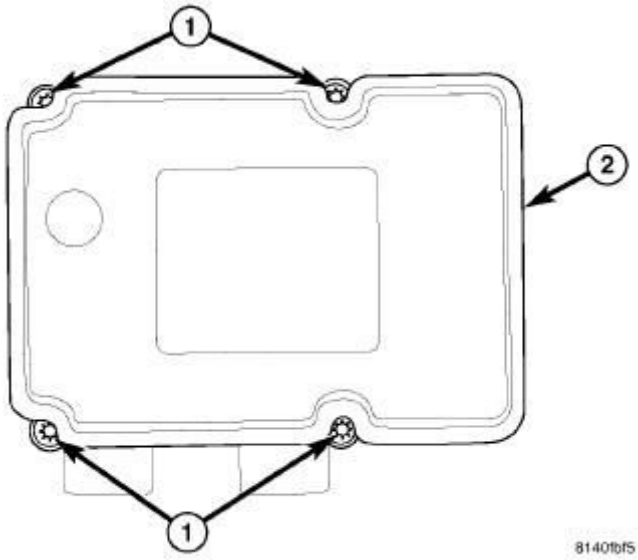

Fig. 74: ABM & Mounting Screws
Courtesy of CHRYSLER GROUP, LLC

1 - MOUNTING SCREWS 2 - ABM

5. Install the four screws (1) attaching the ABM (2) to the HCU. Tighten the mounting screws to 2 N.m (17 in. lbs.).

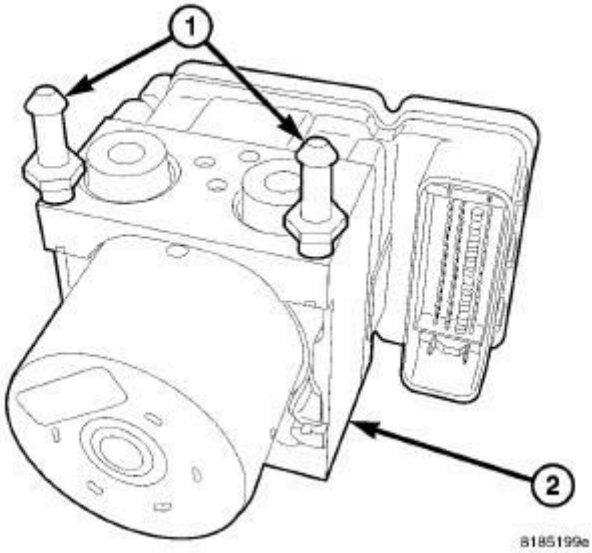

Fig. 75: ICU Mounting Pins
Courtesy of CHRYSLER GROUP, LLC

6. If necessary, install the mounting pins (1) in the ICU (2) and tighten to 11 N.m (97 in. lbs.).

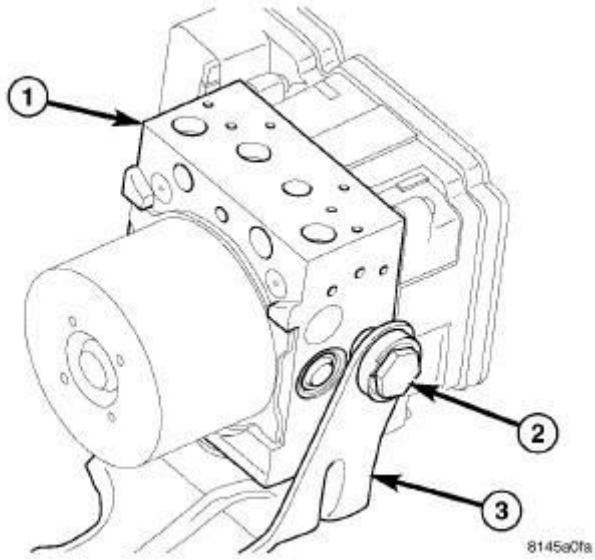

Fig. 76: ICU Mounting Bolt
Courtesy of CHRYSLER GROUP, LLC

1 - ICU
2 - MOUNTING BOLT
3 - MOUNTING BRACKET

7. If the mounting bracket (3) needs to be installed on the ICU (1), install the mounting pins in the ICU as necessary and tighten to 11 N.m (97 in. lbs.). Insert the mounting pins into the grommets mounted in the bracket, then install the single mounting bolt (2). Tighten the mounting bolt to 8 N.m (71 in. lbs.).
8. Install the ICU in the vehicle. Refer to **INTEGRATED CONTROL UNIT (ICU), INSTALLATION**.

INSTALLATION

GAS ENGINE

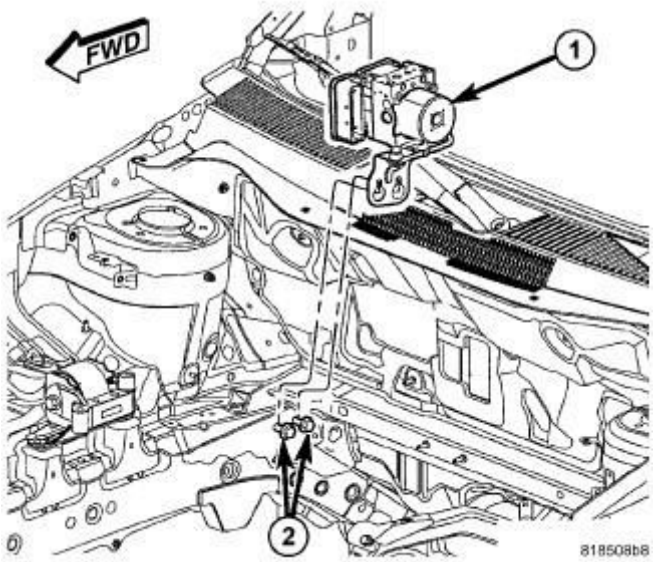

Fig. 77: ICU Mounting
Courtesy of CHRYSLER GROUP, LLC

1. Install the ICU with bracket (1) through the opening between the A/C lines and the exhaust manifold using the opposite of how it was removed.
2. Place the mounting bracket for the ICU (1) over the mounting screws (2) and hang the assembly in place. Tighten the two mounting screws (2) to 23 N.m (17 ft. lbs.).

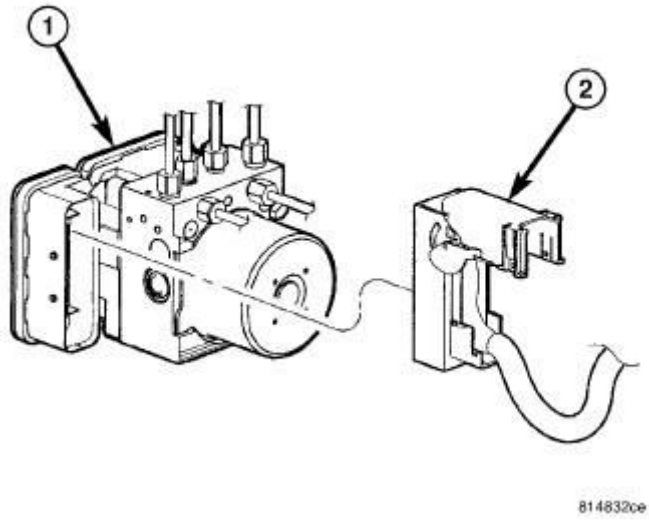

Fig. 78: Wiring Harness Connector At ABM
Courtesy of CHRYSLER GROUP, LLC

1 - ABM (PART OF ICU)
2 - WIRING HARNESS CONNECTOR

CAUTION: Before installing the ABM harness connector on the ABM, be sure the seal is properly installed in the connector.

3. Insert the ABM wiring harness connector (2) into the socket of the ABM (1) and close the cover, locking the connector in place.

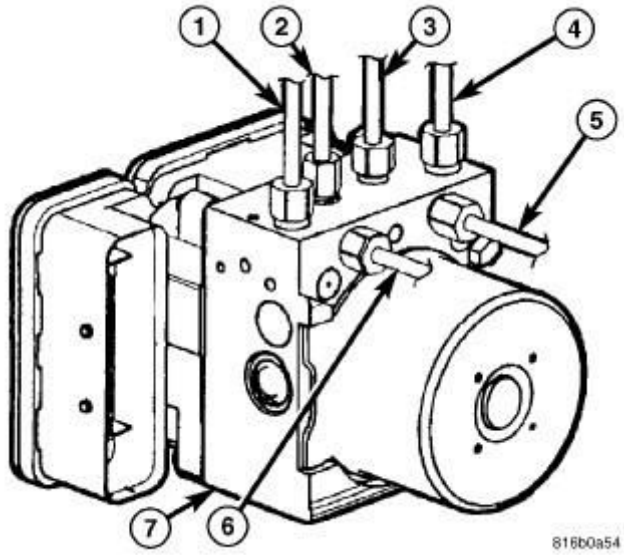

Fig. 79: Identifying Brake Tubes At Hydraulic Control Unit
Courtesy of CHRYSLER GROUP, LLC

4. Install the four chassis brake tubes (2, 3, 5, 6) brake tubes at the ICU hydraulic control unit (7). Tighten the tube nuts to 17 N.m (150 in. lbs.).
5. Install the primary (4) and secondary (1) brake tubes at the ICU hydraulic control unit (7). Tighten the tube nuts to 17 N.m (150 in. lbs.).

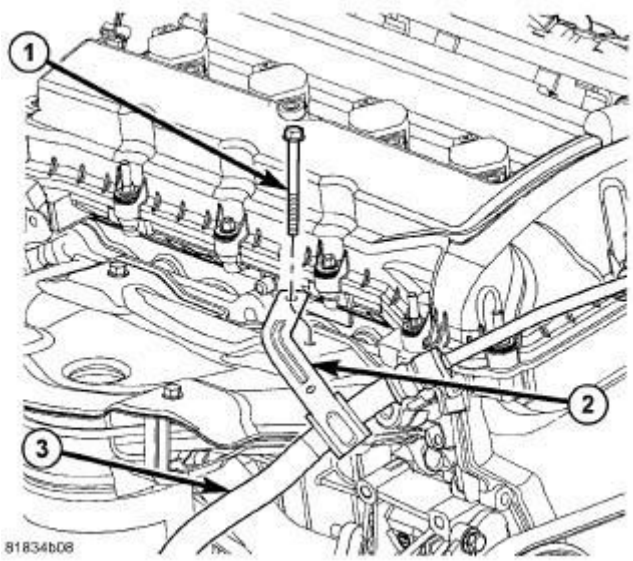

Fig. 80: Power Steering Pressure Hose Routing Clamp & Screw
Courtesy of CHRYSLER GROUP, LLC

6. Position the power steering pressure hose routing clamp (2) on the exhaust manifold and install the mounting screw (1). Tighten the mounting screw to 9 N.m (80 in. lbs.).
7. Push the brake tube bundle routing clips (with tubes) onto the studs on the dash panel.
8. Install the heat shield on the dash panel and tighten the lower and upper mounting nuts.

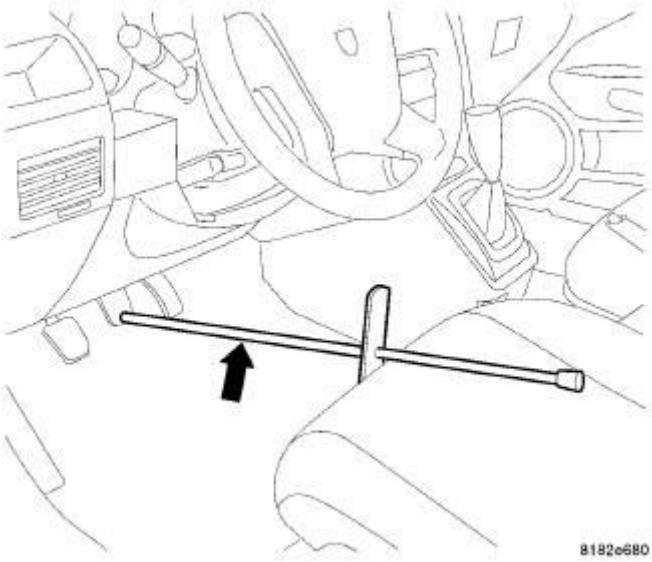

Fig. 81: Brake Pedal Holding Tool
Courtesy of CHRYSLER GROUP, LLC

9. Remove the brake pedal holding tool.
10. Install the engine appearance cover.
11. Connect the battery negative cable to the battery post. It is important that this be performed properly.

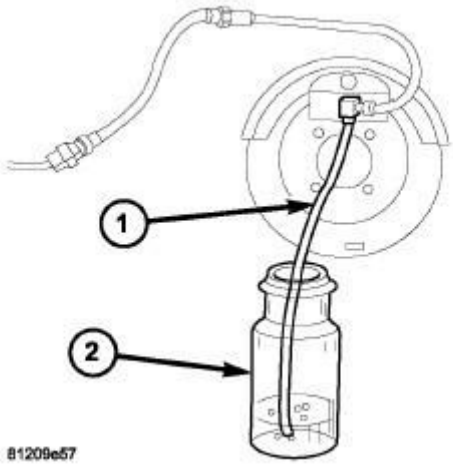

Fig. 82: Bleeding Brakes
Courtesy of CHRYSLER GROUP, LLC

12. Hook up the scan tool to initialize the ABM and perform the following:
    a. Clear any faults.
    b. Fill the master cylinder to the proper fill level and bleed the base and ABS hydraulic systems. Refer to **STANDARD PROCEDURE** .

c. Check for leaks.
d. Perform the ABS Verification Test and road test the vehicle.

DIESEL ENGINE

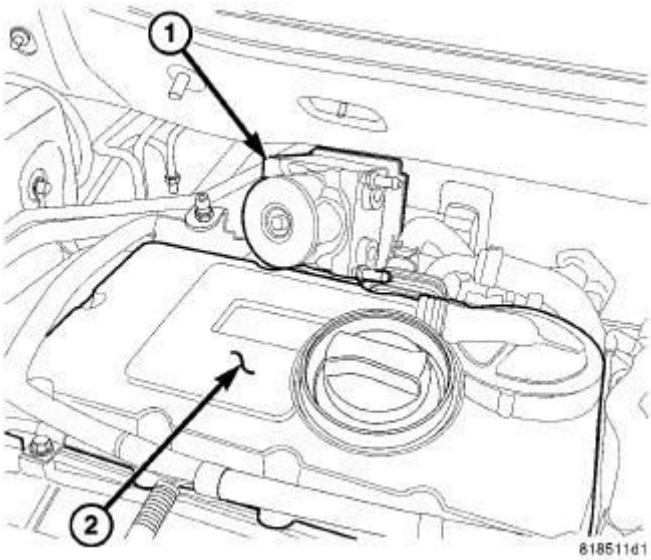

Fig. 83: ICU Removal/Installation
Courtesy of CHRYSLER GROUP, LLC

NOTE: Before installation, be sure the mounting pins are installed in the ICU block, but do not install the mounting bracket.

1. Install the ICU (1) into the engine compartment over the top of the engine cylinder head cover (2) as shown in the illustration.

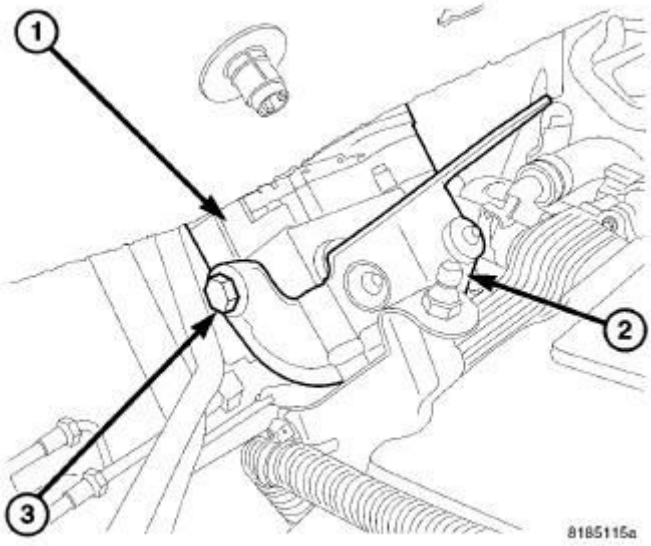

Fig. 84: Removing/Installing ICU Mounting Bracket
Courtesy of CHRYSLER GROUP, LLC

2. Rotate the ICU (1) around behind the engine until the mounting bracket (2) can be installed.
3. Install the mounting bracket (2) onto the ICU (1). Push the bracket mounting grommets onto the mounting pins of the ICU. Install the single mounting bolt (3). Tighten the mounting bolt to 11 N.m (97 in. lbs.).

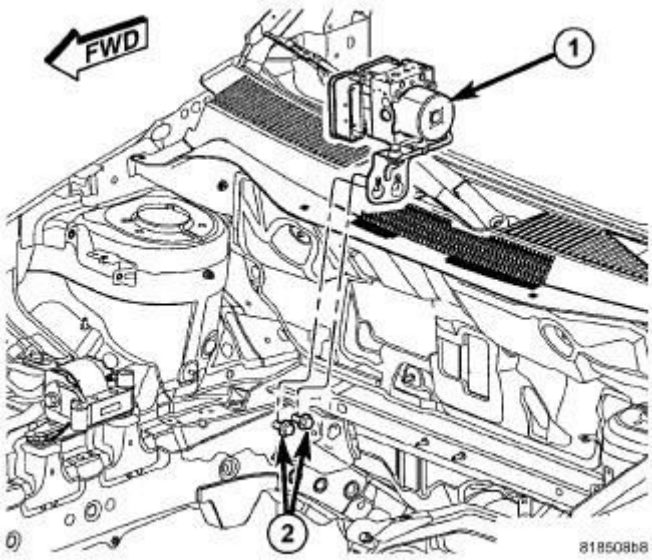

Fig. 85: ICU Mounting
Courtesy of CHRYSLER GROUP, LLC

4. Place mounting bracket for the ICU (1) over the mounting screws (2) and

hang the assembly in place.

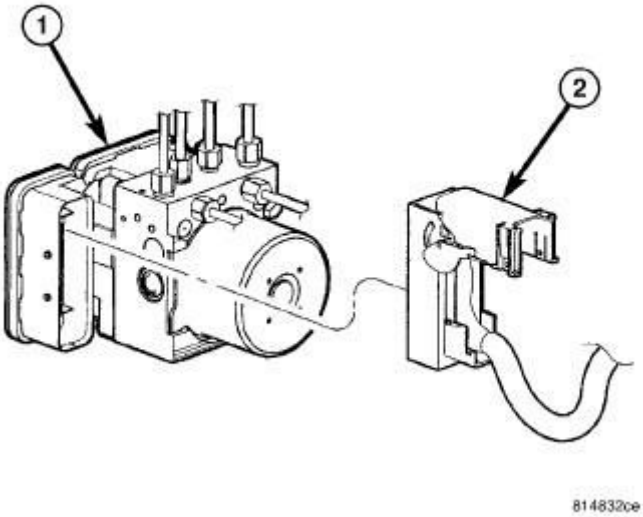

Fig. 86: Wiring Harness Connector At ABM
Courtesy of CHRYSLER GROUP, LLC

1 - ABM (PART OF ICU)
2 - WIRING HARNESS CONNECTOR

CAUTION: Before installing the ABM harness connector on the ABM, be sure the seal is properly installed in the connector.

5. Insert the ABM wiring harness connector (2) into the socket of the ABM (1) and close the cover, locking the connector in place.

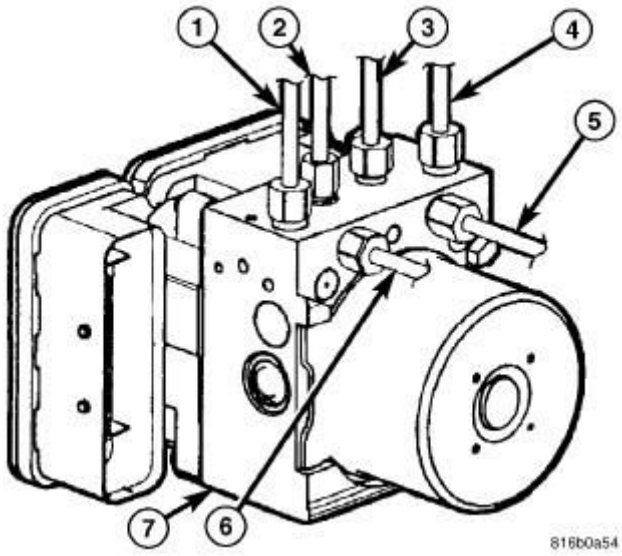

Fig. 87: Identifying Brake Tubes At Hydraulic Control Unit
Courtesy of CHRYSLER GROUP, LLC

6. Install the four chassis brake tubes (2, 3, 5, 6) brake tubes at the ICU hydraulic control unit (7). Tighten the tube nuts to 17 N.m (150 in. lbs.).
7. Install the primary (4) and secondary (1) brake tubes at the ICU hydraulic control unit (7). Tighten the tube nuts to 17 N.m (150 in. lbs.).
8. Push the brake tube bundle routing clips (with tubes) onto the studs on the dash panel.
9. Install the heat shield on the dash panel and tighten the lower and upper mounting nuts.
10. Install the air inlet tube at the air cleaner and engine cylinder head cover.

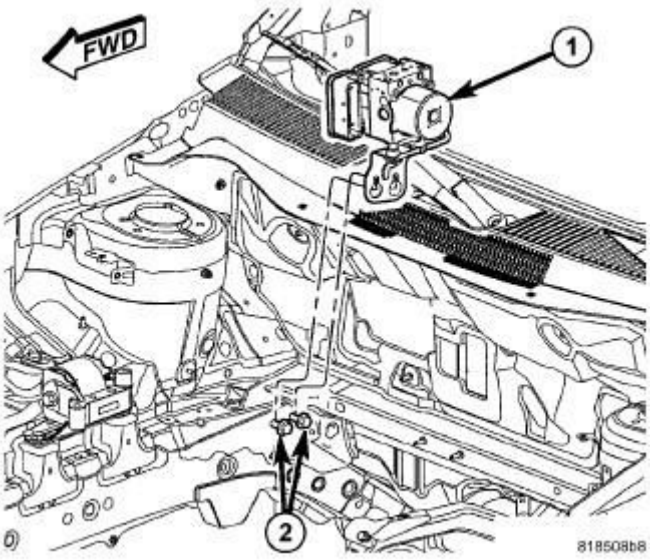

Fig. 88: ICU Mounting
Courtesy of CHRYSLER GROUP, LLC

11. Raise and support the vehicle. Refer to **HOISTING, STANDARD PROCEDURE** .
12. Tighten the two mounting screws (2) attaching the ICU (1) mounting bracket to the body. Tighten the mounting screws to 23 N.m (17 ft. lbs.).
13. Tighten the air inlet tube at the turbocharger.
14. Lower the vehicle.

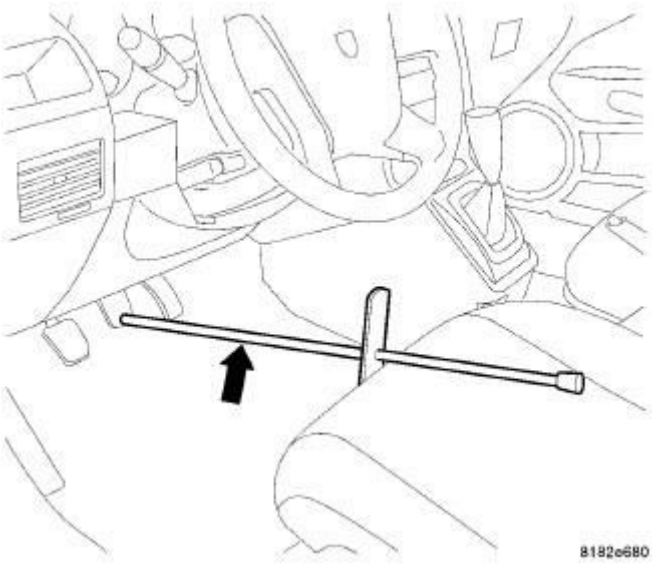

Fig. 89: Brake Pedal Holding Tool
Courtesy of CHRYSLER GROUP, LLC

15. Remove brake pedal holding tool.
16. Install the engine appearance cover.
17. Connect the battery negative cable to the battery post. It is important that this be performed properly.

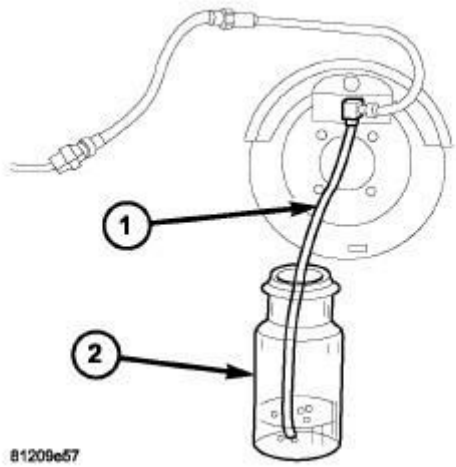

Fig. 90: Bleeding Brakes
Courtesy of CHRYSLER GROUP, LLC

18. Hook up the scan tool to initialize the ABM and perform the following:
    a. Clear any faults.
    b. Fill the master cylinder to the proper fill level and bleed the base and ABS hydraulic systems. Refer to **STANDARD PROCEDURE** .
    c. Perform the ABS Verification Test and road test the vehicle. Refer to **STANDARD PROCEDURE** .

RIGHT-HAND-DRIVE

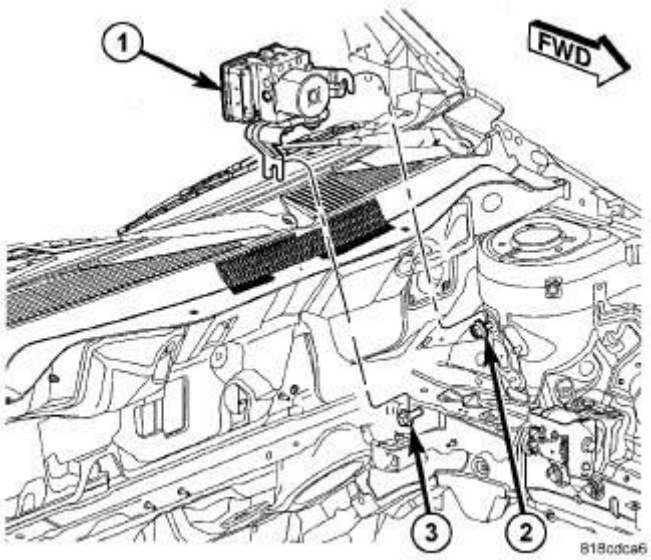

Fig. 91: Integrated Control Unit Mounting - RHD
Courtesy of CHRYSLER GROUP, LLC

1. Install the ICU with bracket (1) through the opening between the A/C lines and the exhaust manifold using the opposite of how it was removed.
2. Install the ICU with bracket (1) into the engine compartment. Place the mounting bracket for the ICU (1) over the mounting stud and screw (3) and hang the assembly in place. Tighten the mounting nut (2) and mounting screw (3) to 23 N.m (17 ft. lbs.).

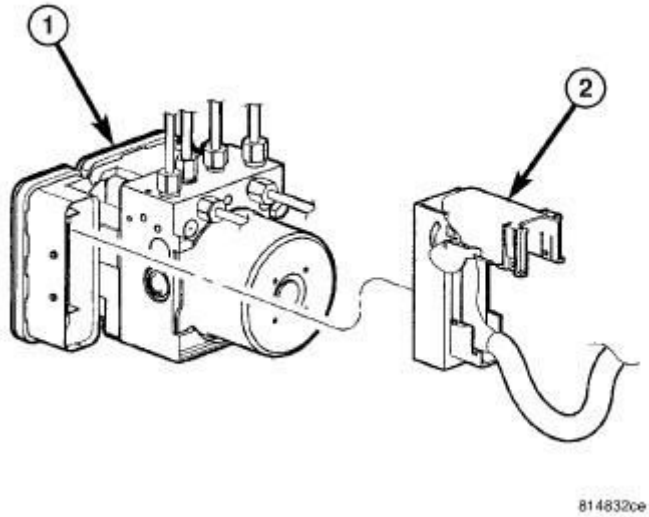

Fig. 92: Wiring Harness Connector At ABM
Courtesy of CHRYSLER GROUP, LLC

1 - ABM (PART OF ICU)
2 - WIRING HARNESS CONNECTOR

CAUTION: Before installing the ABM harness connector on the ABM, be sure the seal is properly installed in the connector.

3. Insert the ABM wiring harness connector (2) into the socket of the ABM (1) and close the cover, locking the connector in place.

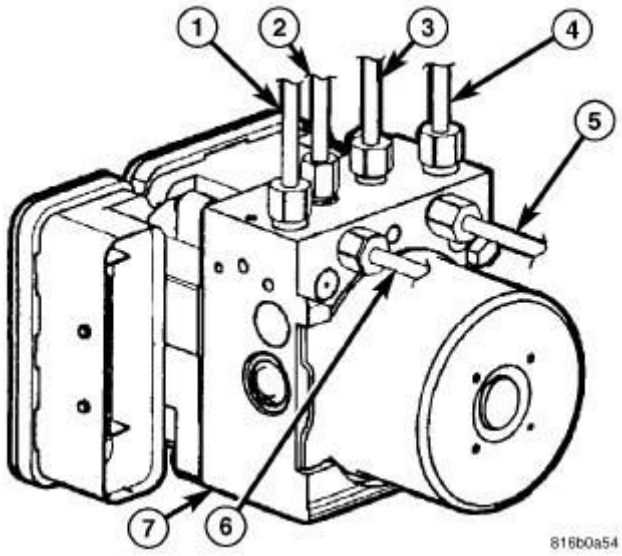

Fig. 93: Identifying Brake Tubes At Hydraulic Control Unit
Courtesy of CHRYSLER GROUP, LLC

4. Install the four chassis brake tubes (2, 3, 5, 6) brake tubes at the ICU hydraulic control unit (7). Tighten the tube nuts to 17 N.m (150 in. lbs.).
5. Install the primary (4) and secondary (1) brake tubes at the ICU hydraulic control unit (7). Tighten the tube nuts to 17 N.m (150 in. lbs.).

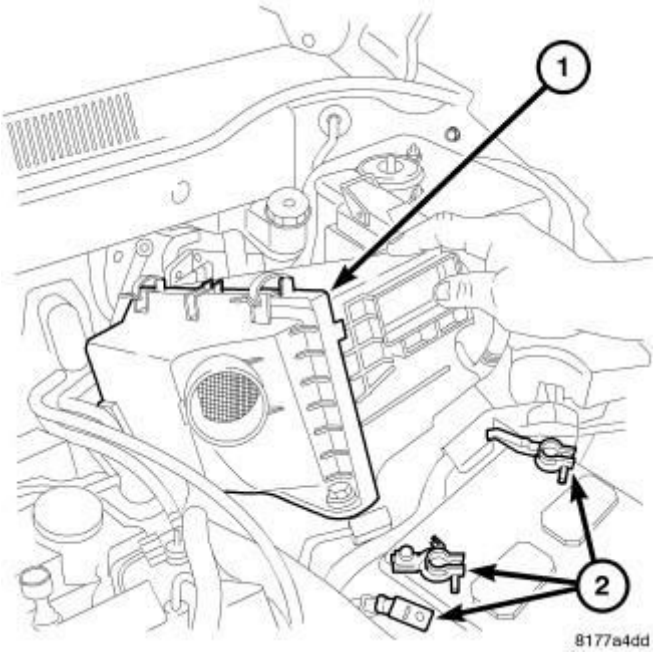

Fig. 94: Air Cleaner Assembly
Courtesy of CHRYSLER GROUP, LLC

6. Install the air cleaner housing (1). Refer to **BODY, AIR CLEANER,**

INSTALLATION for 2.0L engine, **BODY, AIR CLEANER, INSTALLATION** for 2.2L diesel and **BODY, AIR CLEANER, INSTALLATION** for 2.4L engine.

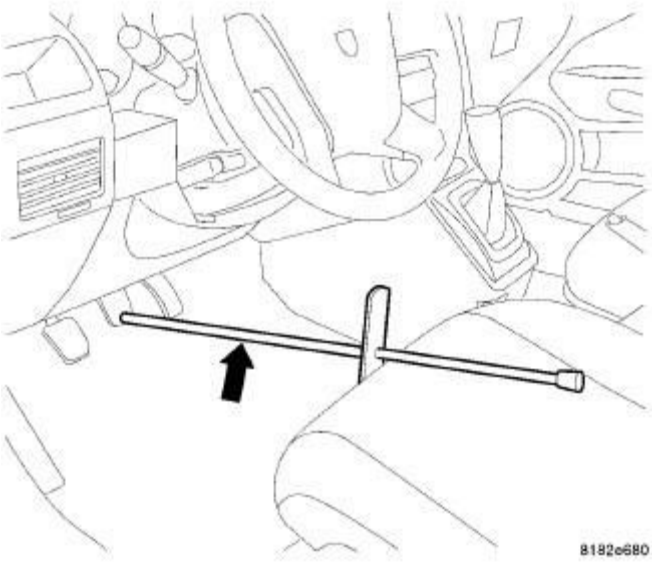

Fig. 95: Brake Pedal Holding Tool
Courtesy of CHRYSLER GROUP, LLC

7. Remove the brake pedal holding tool.
8. Install the engine appearance cover.
9. Connect the battery negative cable to the battery post. It is important that this be performed properly.

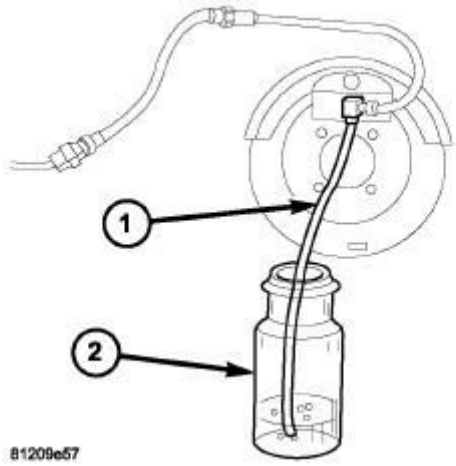

Fig. 96: Bleeding Brakes
Courtesy of CHRYSLER GROUP, LLC

10. Hook up the scan tool to initialize the ABM and perform the following:
    a. Clear any faults.
    b. Fill the master cylinder to the proper fill level and bleed the base and ABS hydraulic systems. Refer to **STANDARD PROCEDURE** .
    c. Check for leaks.
    d. Perform the ABS Verification Test and road test the vehicle. Refer to **STANDARD PROCEDURE** .

2014 BRAKES

Base - Service Information - Compass & Patriot

WARNING

WARNING

WARNING: Chrysler LLC does not manufacture any vehicles or replacement parts that contain asbestos. Aftermarket products may or may not contain asbestos. Refer to aftermarket product packaging for product information.

Whether the product contains asbestos or not, dust and dirt can accumulate on brake parts during normal use. Follow practices prescribed by appropriate regulations for the handling, processing and disposing of dust and debris.

CAUTION

CAUTION

CAUTION: Use only Mopar® Brake Fluid DOT 3 Motor Vehicle or equivalent from a tightly sealed container. Do not use petroleum-based fluid because seal damage in the brake system will result.

CAUTION: Brake fluid will damage painted surfaces. If brake fluid is spilled on any painted surfaces, wash it off immediately with water.

CAUTION: Never use gasoline, kerosene, alcohol, motor oil, transmission fluid, or any fluid containing mineral oil to clean system components. These fluids damage rubber cups and seals.

CAUTION: During service procedures, grease or any other foreign material must be kept off the caliper

assembly, brake linings, brake rotor and external surfaces of the hub.

CAUTION: When handling the brake rotor and caliper, be careful to avoid damaging the brake rotor and caliper, and scratching or nicking the brake shoe lining.

DIAGNOSIS AND TESTING

DIAGNOSIS AND TESTING - BASE BRAKE SYSTEM DIAGNOSIS CHARTS

NOTE: There are three diagnosis charts following that cover the RED BRAKE WARNING INDICATOR, BRAKE NOISE and OTHER BRAKE CONDITIONS.

RED BRAKE WARNING INDICATOR

CONDITION	POSSIBLE CAUSES	CORRECTION
RED BRAKE WARNING INDICATOR ON	1. Parking brake lever not fully released.	1. Release parking brake lever.
	2. Parking brake warning switch on parking brake lever.	2. Inspect and replace switch as necessary.
	3. Brake fluid level low in reservoir.	3. Fill reservoir. Check entire system for leaks. Repair or replace as required.
	4. Brake fluid level switch.	4. Disconnect switch wiring connector. If lamp goes out, replace switch.
	5. Mechanical instrument cluster (MIC) problem.	5. Refer to appropriate diagnostic information.
	6. ABS EVBP malfunction.	6. Refer to ABS service information and appropriate diagnostic information.

BRAKE NOISE

CONDITION	POSSIBLE CAUSES	CORRECTION
DISC BRAKE CHIRP	1. Excessive brake rotor runout.	1. Diagnose and correct as necessary. Refer to **ROTOR, BRAKE, DIAGNOSIS AND TESTING**.
DISC BRAKE MOAN OR HOWL WHILE BRAKING IN REVERSE	1. Rear disc brake caliper guide pin bolts installed in incorrect locations.	1. Remove lower guide pin bolt and inspect for special sleeve on tip. If sleeve is present, remove upper and lower guide pin bolts and install special sleeved bolt in upper location and standard guide pin bolt in lower location. Refer to **CALIPER, DISC BRAKE, FRONT, REMOVAL** for front disc brakes or **CALIPER, DISC BRAKE, REAR, REMOVAL** for rear disc brakes. Perform on both sides of vehicle as necessary.
DISC BRAKE RATTLE OR CLUNK	1. Broken or missing brake pad spring clips/shims. 2. Caliper guide pin bolts loose.	1. Replace spring clips/shims. 2. Tighten guide pin bolts.
DISC BRAKE SQUEAK AT LOW SPEED (WHILE APPLYING LIGHT BRAKE PEDAL EFFORT)	1. Brake pad linings.	1. Replace brake pads.
SCRAPING (METAL-TO-METAL).	1. Foreign object interference with brakes. 2. Brake pads worn out.	1. Inspect brakes and remove foreign object. 2. Replace brake pads. Inspect rotors. Reface or replace as necessary.

SCRAPING OR WHIRRING	1. Wheel speed sensor hitting tone wheel.	1. Inspect, correct or replace faulty component(s).

OTHER BRAKE CONDITIONS

CONDITION	POSSIBLE CAUSES	CORRECTION
BRAKES CHATTER	1. Disc brake rotor has excessive thickness variation.	1. Isolate condition as rear or front. Reface or replace brake rotors as necessary.
BRAKES DRAG (FRONT OR ALL)	1. Contaminated brake fluid.	1. Check for swollen seals. Replace all system components containing rubber.
	2. Binding caliper pins or bushings.	2. Replace pins and bushings
	3. Misadjusted stop lamp switch.	3. Replace stop lamp switch. Refer to **SWITCH, STOP LAMP, REMOVAL** .
	4. Master cylinder not fully returning.	4. Inspect master cylinder and replace as necessary.
	5. Binding brake pedal.	5. Replace brake pedal/bushings.
BRAKES DRAG (REAR ONLY)	1. Parking brake cables binding or froze up.	1. Check cable routing. Replace cables as necessary.
	2. Parking brake cable return spring not returning shoes.	2. Replace cables as necessary.
	3. Obstruction inside the center console preventing full return of the parking brake cables.	3. Remove console and remove obstruction.

BRAKES GRAB	1. Contaminated brake linings.	1. Inspect and clean, or replace pads. Repair source of contamination.
	2. Improper power brake booster assist.	2. Refer to POWER BRAKE BOOSTER in this service information .
EXCESSIVE PEDAL EFFORT	1. Obstruction of brake pedal.	1. Inspect, remove or move obstruction.
	2. Low power brake booster assist.	2. Refer to POWER BRAKE BOOSTER in this service information .
	3. Glazed brake linings.	3. Reface or replace brake rotors as necessary. Replace brake pads.
	4. Brake lining transfer to brake rotor.	4. Reface or replace brake rotors as necessary. Replace brake pads.
EXCESSIVE PEDAL EFFORT (HARD PEDAL - CAN'T SKID WHEELS)	1. Power brake booster runout (vacuum assist).	1. Check booster vacuum hose and engine tune for adequate vacuum supply. Refer to POWER BRAKE BOOSTER in this service information.
EXCESSIVE PEDAL TRAVEL (VEHICLE STOPS OK)	1. Air in brake lines.	1. Bleed brakes.
EXCESSIVE PEDAL TRAVEL (ONE FRONT WHEEL LOCKS UP DURING HARD BRAKING)	1. One of the two hydraulic circuits is malfunctioning.	1. Inspect system for leaks. Check master cylinder for internal malfunction.
PEDAL	1. Disc brake rotor has	1. Isolate condition as

PULSATES/SURGES DURING BRAKING	excessive thickness variation.	rear or front. Reface or replace brake rotors as necessary.
PEDAL IS SPONGY	1. Air in brake lines.	1. Bleed brakes.
PREMATURE REAR WHEEL LOCKUP	1. Contaminated brake linings.	1. Inspect and clean, or replace pads. Repair source of contamination.
	2. EVBP not functioning.	2. Refer to the ABS service information and appropriate diagnostic information.
STOP LAMPS STAY ON	1. Stop lamp switch out of adjustment.	1. Replace stop lamp switch. Refer to **SWITCH, STOP LAMP, REMOVAL** .
	2. Brake pedal binding.	2. Inspect and replace as necessary.
	3. Power brake booster not allowing pedal to return completely.	3. Replace power brake booster.
VEHICLE PULLS TO RIGHT OR LEFT ON BRAKING	1. Frozen brake caliper piston.	1. Replace frozen piston or caliper. Bleed brakes.
	2. Contaminated brake lining (most likely front lining).	2. Inspect and clean, or replace pads. Repair source of contamination.
	3. Pinched brake lines.	3. Replace pinched line.
	4. Leaking piston seal.	4. Replace piston seal or brake caliper.
	5. Suspension problem.	5. Refer to the appropriate Suspension service information .
PARKING BRAKE - EXCESSIVE HANDLE TRAVEL	1. Parking brake shoes out of adjustment.	1. Adjust parking brake shoes.

STANDARD PROCEDURE

STANDARD PROCEDURE - BASE BRAKE BLEEDING

NOTE: For bleeding the ABS hydraulic system, refer to Antilock Brake System Bleeding in the Antilock Brake System service information. Refer to STANDARD PROCEDURE .

CAUTION: Before removing the master cylinder cap, wipe it clean to prevent dirt and other foreign matter from dropping into the master cylinder reservoir.

CAUTION: Use only Mopar® brake fluid or an equivalent from a fresh, tightly sealed container. Brake fluid must conform to DOT 3 specifications.

NOTE: For bleeding of the Antilock Brake System. Refer to STANDARD PROCEDURE . .

Do not pump the brake pedal at any time while having a bleeder screw open during the bleeding process. This will only increase the amount of air in the system and make additional bleeding necessary.

Do not allow the master cylinder reservoir to run out of brake fluid while bleeding the system. An empty reservoir will allow additional air into the brake system. Check the fluid level frequently and add fluid as needed.

The following wheel circuit sequence for bleeding the brake hydraulic system should be used to ensure adequate removal of all trapped air from the hydraulic system.

- Left rear wheel
- Right front wheel
- Right rear wheel
- Left front wheel

MANUAL BLEEDING

NOTE: To bleed the brakes manually, the aid of a helper will be required.

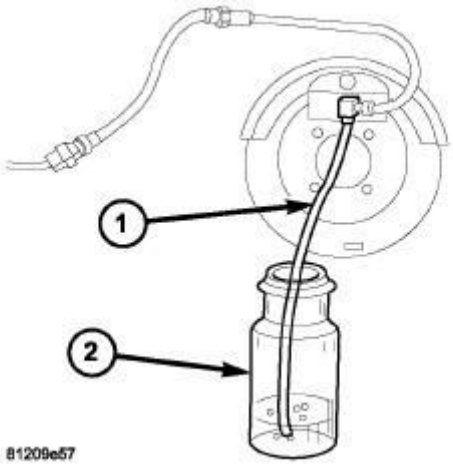

Fig. 1: Bleeding Brakes
Courtesy of CHRYSLER GROUP, LLC

1. Attach a clear plastic hose (1) to the bleeder screw and feed the hose into a clear jar (2) containing enough fresh brake fluid to submerge the end of the hose.
2. Have a helper pump the brake pedal three or four times and hold it in the down position.
3. With the pedal in the down position, open the bleeder screw at least one full turn.
4. Once the brake pedal has dropped, close the bleeder screw. After the bleeder screw is closed, release the brake pedal.
5. Repeat the above steps until all trapped air is removed from that wheel circuit (usually four or five times).

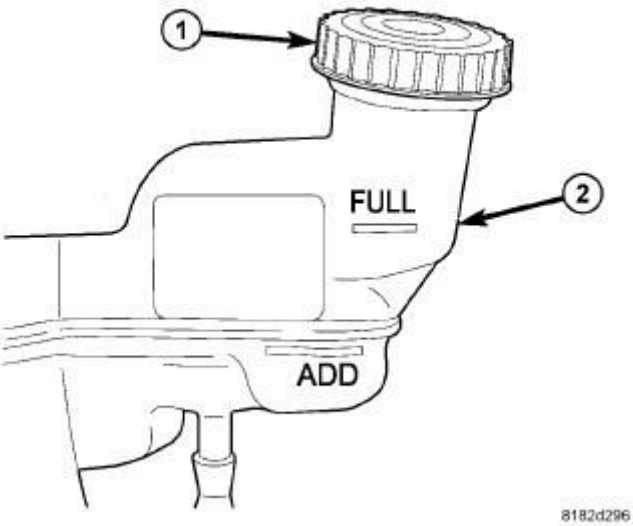

Fig. 2: Master Cylinder Fill Markings
Courtesy of CHRYSLER GROUP, LLC

6. Bleed the remaining wheel circuits in the same manner until all air is removed from the brake system. Monitor the fluid level in the master cylinder reservoir (2) to make sure it does not go dry.
7. Check and adjust brake fluid level to the FULL mark.
8. Check the brake pedal travel. If pedal travel is excessive or has not been improved, some air may still be trapped in the system. Re-bleed the brakes as necessary.
9. Test drive the vehicle to verify the brakes are operating properly and pedal feel is correct.

PRESSURE BLEEDING

NOTE: Follow pressure bleeder manufacturer instructions for use of pressure bleeding equipment.

1. Install pressure bleeding equipment by following the pressure bleeder manufacturer instructions.

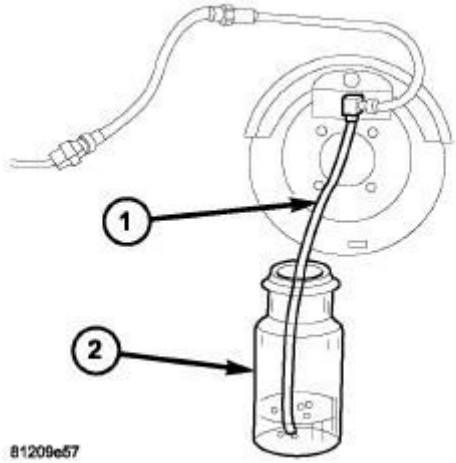

Fig. 3: Bleeding Brakes
Courtesy of CHRYSLER GROUP, LLC

2. Attach a clear plastic hose (1) to the bleeder screw and feed the hose into a clear jar (2) containing enough fresh brake fluid to submerge the end of the hose.
3. Open the bleeder screw at least one full turn or more to obtain a steady

stream of brake fluid.

4. After approximately 120-240 ml (4-8 ounces) of fluid have been bled through the brake circuit and an air-free flow is maintained in the clear plastic hose and jar, close the bleeder screw.
5. Repeat this procedure at all the remaining bleeder screws.

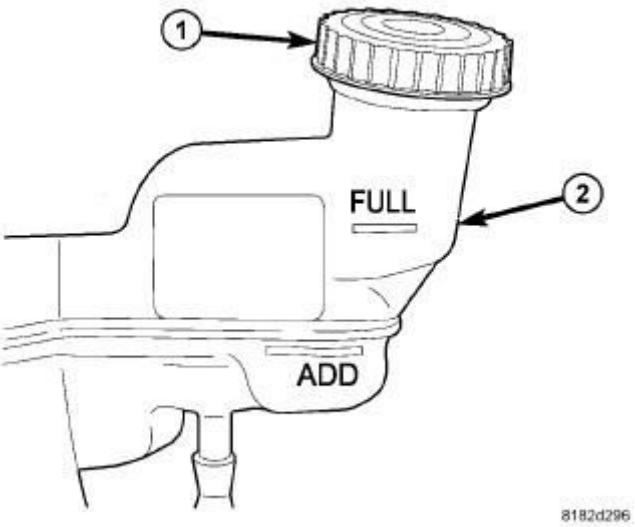

Fig. 4: Master Cylinder Fill Markings
Courtesy of CHRYSLER GROUP, LLC

6. Check and adjust brake fluid level to the FULL mark on the reservoir (2).
7. Check the brake pedal travel. If pedal travel is excessive or has not been improved, some air may still be trapped in the system. Re-bleed the brakes as necessary.
8. Test drive the vehicle to verify the brakes are operating properly and pedal feel is correct.

SPECIFICATIONS

SPECIFICATIONS

ACTUATION:	
Vacuum Operated Power Brakes	Standard
Hydraulic System	Dual-Diagonally Split
BRAKE PEDAL:	
Pedal Ratio	3.3:1

POWER BRAKE BOOSTER:	
Type	Vacuum Assist
Mounting Studs	M8 x 1.25
Diaphragm Size/Type	254 mm /Single Diaphragm
MASTER CYLINDER ASSEMBLY:	
Type	Compact
Body Material	Anodized Aluminum
Reservoir Material	Polypropelene
Bore and Stroke	20.6 mm x 42 mm (0.812 in. x 1.654 in.)
Displacement Split	50 / 50
MASTER CYLINDER FLUID OUTLET PORTS:	
Tube Fitting Type	ISO Flare
Primary Tube Nut Thread	M12 x 1
Secondary Tube Nut Thread	M12 x 1
ABS HYDRAULIC CONTROL UNIT PORTS:	
Tube Fitting Type	ISO Flare
Inlet Port Threads (Both)	M12 x 1
Outlet Port Threads-Left Front and Left Rear	M12 x 1
Outlet Port Threads-Right Front and Right Rear	M10 x 1

TORQUE

TORQUE SPECIFICATIONS

DESCRIPTION	N.m	Ft. Lbs.	In. Lbs.
ABS ICU Mounting Bolt (To Bracket)	11	-	97
ABS ICU Mounting Pins	11	-	97
ABS ICU Mounting Bracket Screws (To Frame)	23	17	203
ABS ICU Mounting Bracket Screw And Nut (To Frame) - Right-Hand-Drive	23	17	203
ABS ABM Mounting Screws (To HCU)	2	-	17
ABS Dynamics Sensor Mounting Nuts	9	6.5	80

ABS Wheel Speed Sensor Head Mounting Screw - Front	12	9	106
ABS Wheel Speed Sensor Head Mounting Screw - Rear	10	7	89
ABS Wheel Speed Sensor Routing Bracket Mounting Screw	18	13	160
Brake Flex Hose Banjo Bolt - Front Caliper	24	18	210
Brake Flex Hose Fitting- Rear Caliper	15	11	133
Brake Pedal/Booster Mounting Nuts	23	17	200
Brake Tube Nuts	17	12.5	150
Disc Brake Caliper Adapter Bracket (To Knuckle) - Front	108	80	-
Disc Brake Caliper Adapter Bracket (To Support) - Rear	71	52	-
Disc Brake Caliper Guide Pin Bolts - Front	43	32	-
Disc Brake Caliper Guide Pin Bolts - Rear	43	32	-
Disc Brake Caliper Bleeder Screw	8	6	71
Drum Brake Wheel Cylinder Mounting Screws	13	-	115
Drum Brake Wheel Cylinder Bleeder Screw	10	-	89
Fluid Reservoir Mounting Screw	5.5	4	48
Master Cylinder Mounting Nuts	25	18	221
Parking Brake Lever Mounting Nuts	25	21	-
Proportioning Valves	30	22	-
Wheel Mounting (Lug) Nuts	125	92	-

SPECIAL TOOLS

SPECIAL TOOLS

25-W - Roller Contact Point

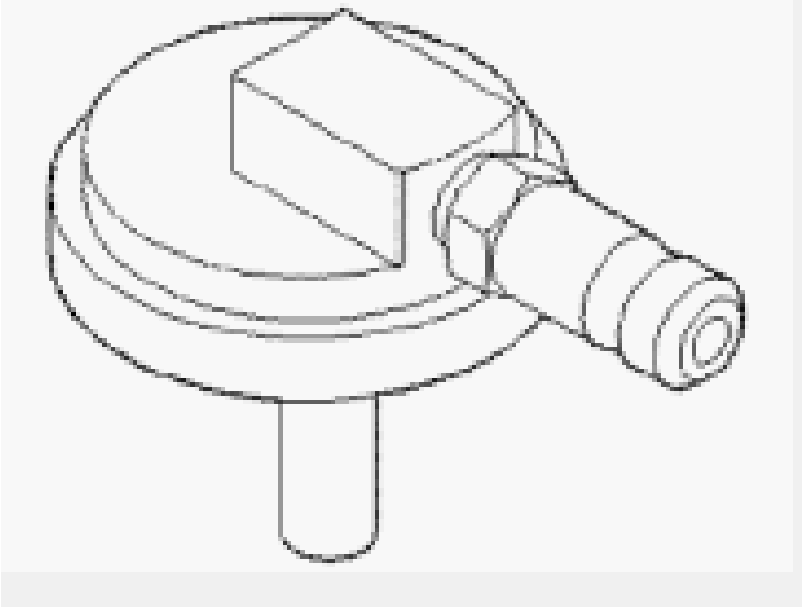

6921 - Cap, Master Cylinder (Originally Shipped In Kit Number(s) 6907.)

8358-1 - Bleed Tube (Originally Shipped In Kit Number(s) 8646, 8647, 8648.)

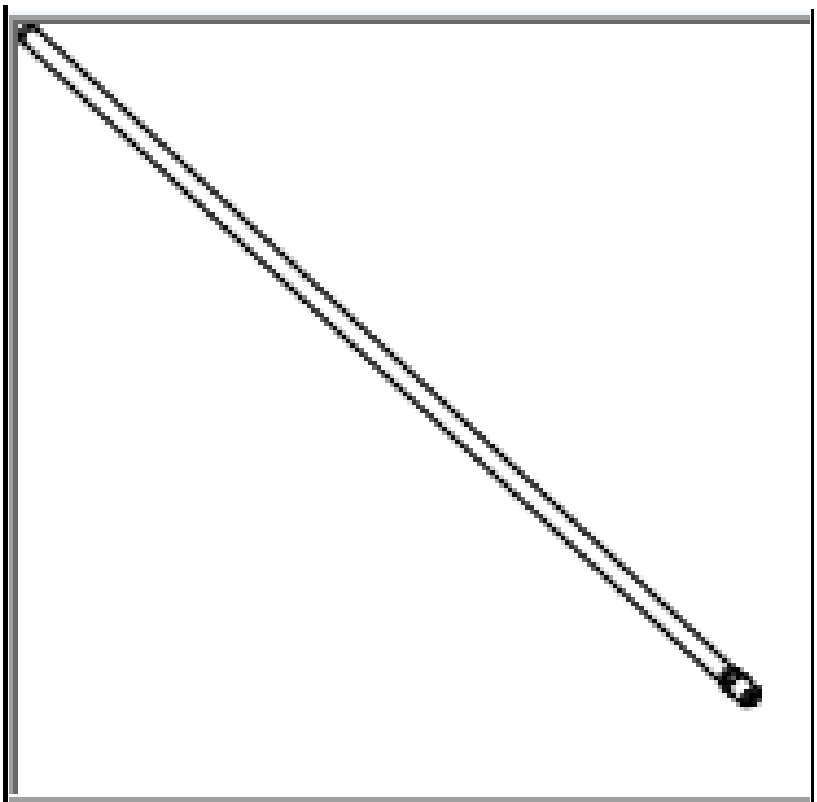

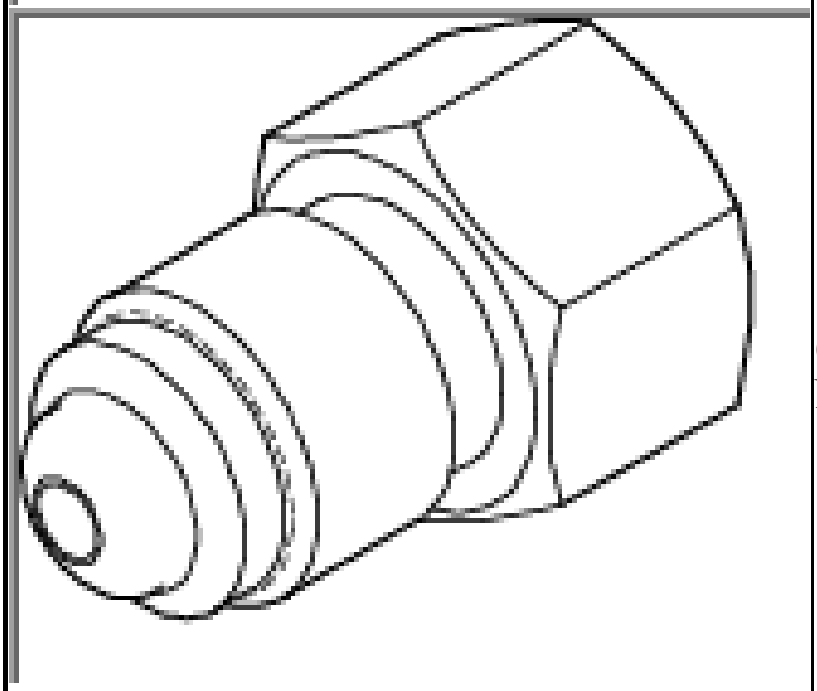

8822-2 - Adapter, M12 X 1.0 (Originally Shipped In Kit Number(s) 9974.)

C-3339A - Set, Dial Indicator
(Originally Shipped In Kit

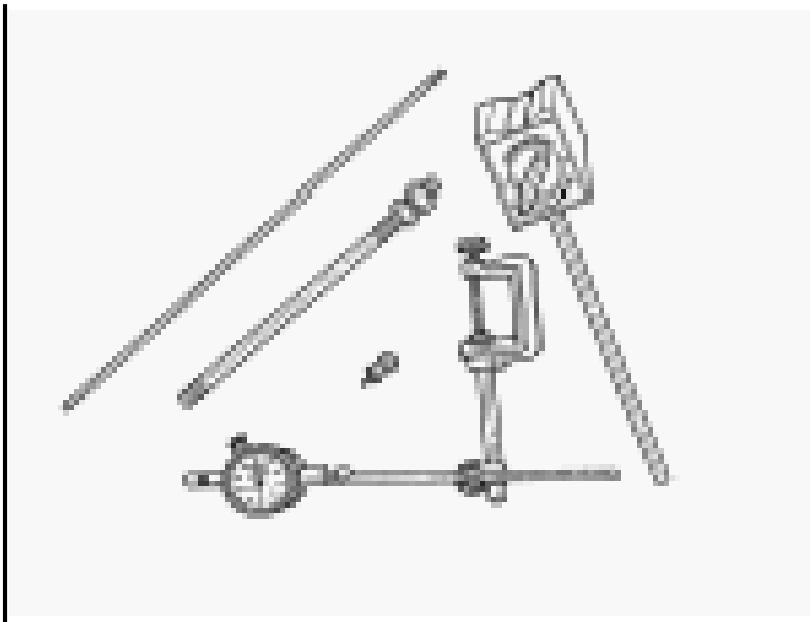	Number(s) 9202.)
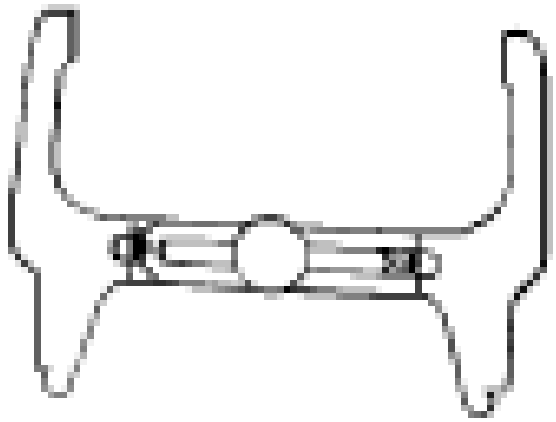	C-3919 - Gauge, Brake Shoes

ELECTRICAL

SWITCH, BRAKE FLUID LEVEL

DESCRIPTION

DESCRIPTION

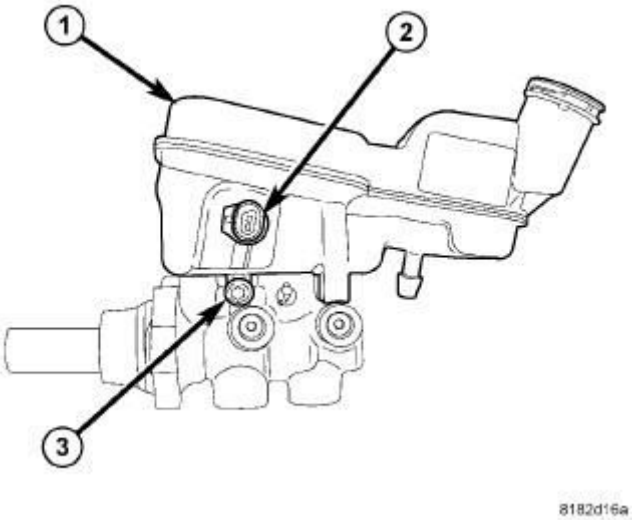

Fig. 5: Brake Fluid Level Switch Components
Courtesy of CHRYSLER GROUP, LLC

The brake fluid level switch (2) is mounted through the center of the fluid reservoir (1). The switch can be serviced separately from the master cylinder fluid reservoir.

REMOVAL

REMOVAL

NOTE: Before proceeding, refer to CAUTION and WARNING.

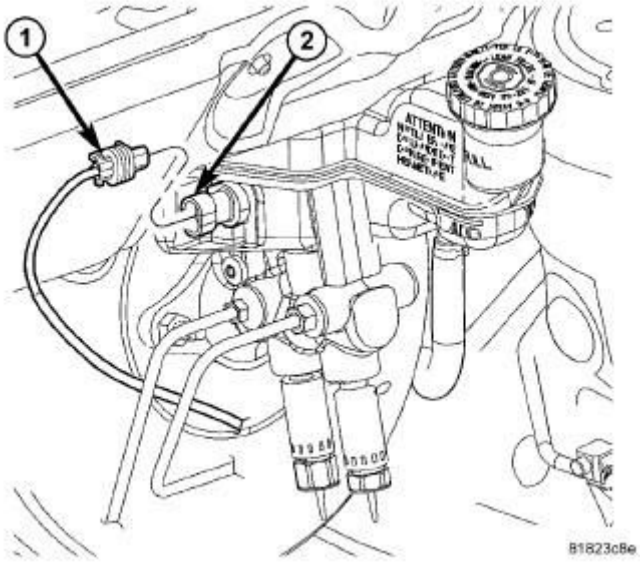

Fig. 6: Brake Fluid Level Switch Connector

Courtesy of CHRYSLER GROUP, LLC

1. Remove the wiring harness connector (1) from the brake fluid level switch (2) in the master cylinder brake fluid reservoir.

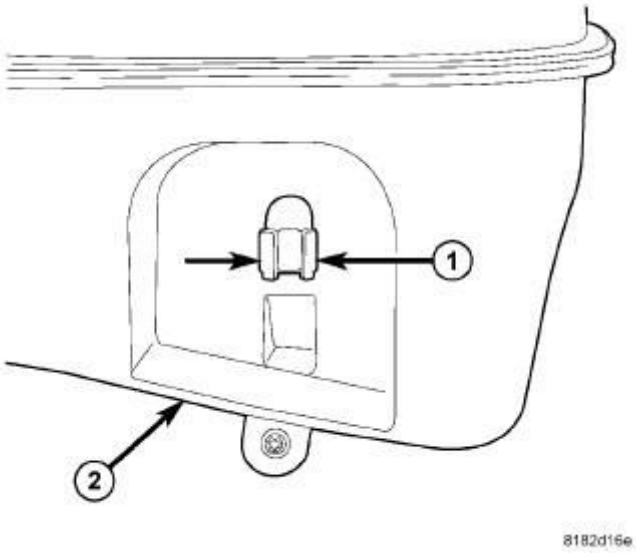

Fig. 7: Level Switch Retaining Tabs
Courtesy of CHRYSLER GROUP, LLC

2. Push together the retaining tabs (1) holding the brake fluid level switch in place in the brake fluid reservoir (2).
3. Pull the brake fluid level switch out the right side of the reservoir.

INSTALLATION

INSTALLATION

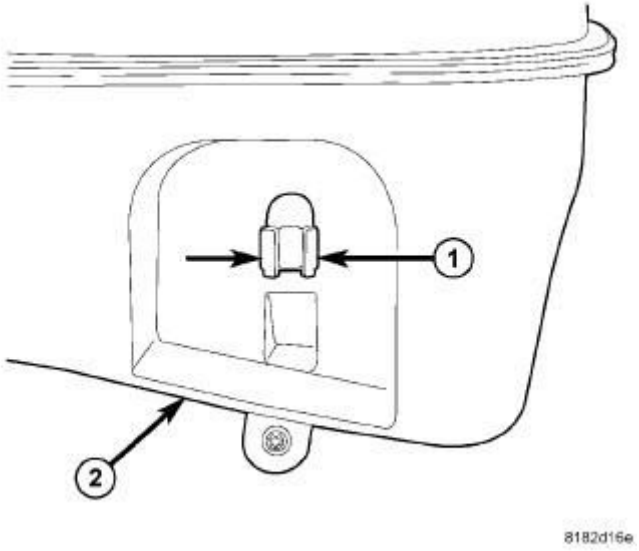

Fig. 8: Level Switch Retaining Tabs
Courtesy of CHRYSLER GROUP, LLC

1. Align the brake fluid level switch with its mounting hole on the right side of the master cylinder brake fluid reservoir. Push the switch into the fluid reservoir until the switch retaining tabs (1) are expanded on the opposite side of the reservoir (2), locking it in place.

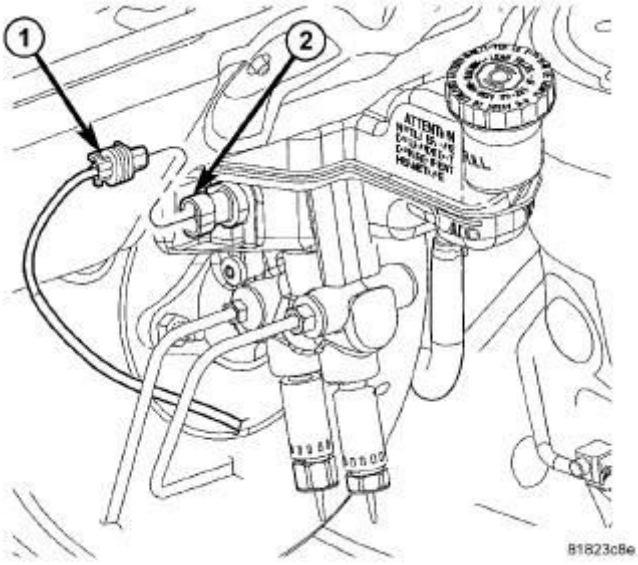

Fig. 9: Brake Fluid Level Switch Connector
Courtesy of CHRYSLER GROUP, LLC

2. Connect the wiring harness connector (1) to the switch (2).

HYDRAULIC/MECHANICAL

DESCRIPTION

DISC BRAKES

NOTE: The Electronic Stability Control (ESC) may also be referred to as Electronic Stability Program (ESP) depending on the vehicle model year and configuration. Certain components may also reference ESP, ESC, or use the traction control symbol.

There are several brake packages available featuring either a disc/drum combination or a disc/disc combination.

- "16-inch" vented front disc/"9-inch" rear drum with ESC (BRJ)
- "16-inch" vented front disc/"14-inch" solid rear disc with ESC (BRF)
- EXPORT ONLY - "16-inch" vented front disc/"16-inch" solid rear disc with ESC (BR1)

NOTE: Refer to REAR DRUM BRAKES for information on the "9-inch" rear drum brakes.

"16-inch" front disc brakes (so called because they are designed to fit inside 16-inch or larger wheels) feature 2.2 inch (57 mm) single-piston floating calipers acting on 11.5 x 1.0 in. (294 x 26 mm) vented disc rotors.

"14-inch" rear disc brakes (so called because they are designed to fit inside 14-inch or larger wheels) feature 1.4 inch (35 mm) single-piston floating calipers acting on 10.3 x 0.39 in. (262 x 10 mm) solid disc rotors.

"16-inch" rear disc brakes (so called because they are designed to fit inside 16-inch or larger wheels) feature 1.4 inch (35 mm) single-piston floating calipers acting on 11.8 x 0.39 in. (302 x 10 mm) solid disc rotors.

Each disc brake assembly consists of the following major components:

- Caliper
- Caliper adapter bracket
- Pads (Shoe and lining assemblies)
- Rotor

All calipers are the low-drag type. New technology caliper construction allows minimal drag of the pads on the discs with low clearance to the rotors to maintain maximum pedal feel and responsiveness.

All calipers are coated, giving them a bright appearance. This coating offers corrosion protection and a long-term neat appearance. Steel pistons are used in all calipers.

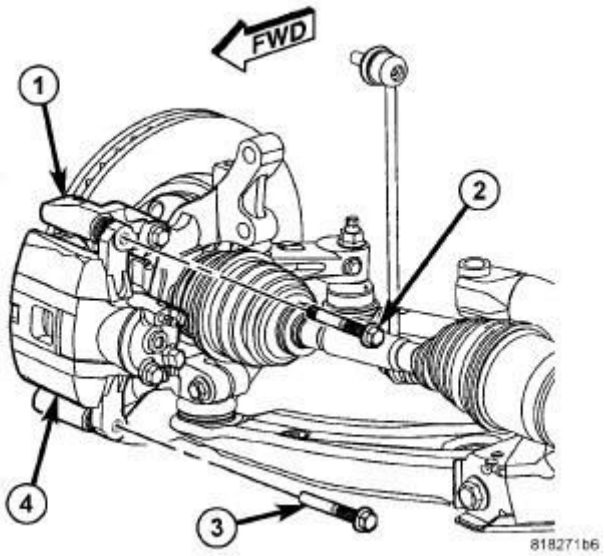

Fig. 10: Caliper Guide Pin Bolts
Courtesy of CHRYSLER GROUP, LLC

The main difference between the two front disc brakes packages are rotor size (diameter) and caliper adapter bracket (1) length.

The caliper guide pin bolts are of special interest. There are two different caliper guide pin bolts used at each brake caliper, one of which has a special sleeve at the tip of the guide pin. It is there for anti-rattle and noise suppression issues and must be placed correctly to work properly. At each front brake caliper (4) this bolt (2) is placed at the upper location.

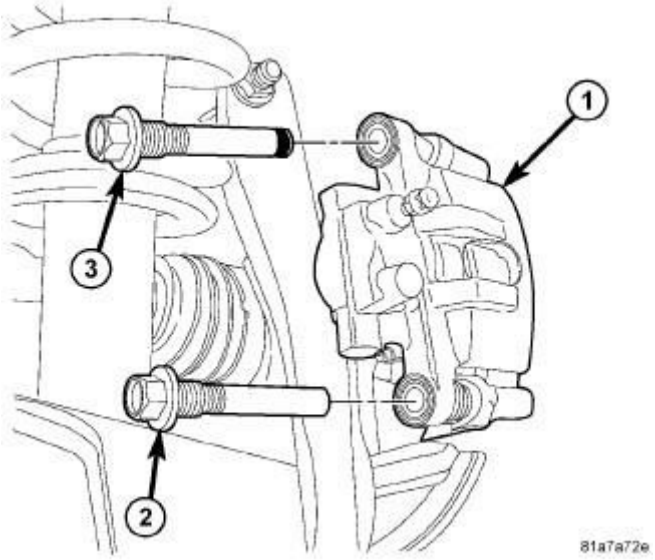

Fig. 11: Rear Caliper Guide Pin Bolts
Courtesy of CHRYSLER GROUP, LLC

At each rear brake caliper (1), this bolt (3) is placed at the upper location.

Front disc brakes are equipped with an audible wear indicator on the right side inboard brake pad only. The left side pads do not include an audible wear indicator.

Rear disc brakes are equipped with audible wear indicators on both left side and right side inboard brake pads.

When the brake pads are replaced, only brake pads meeting the Original Equipment Manufacturer (OEM) formulation (such as Mopar® replacement parts) should be used.

All brake rotors are fully coated with zinc dust, water-soluble, environmentally friendly corrosion preventive. Both the friction surfaces and the vents are coated. During initial brake applications of a new rotor, the brake pads scrub the coating off the friction surfaces, ensuring that the remainder will be rust free. Coating the vents also ensures that there will not be a loss of heat capacity over time.

REAR DRUM BRAKES

All rear drum brake equipped vehicles feature 9 inch (229 mm) rear drum brakes. The drum brakes are all two-shoe, internal-expanding type with an automatic adjuster screw.

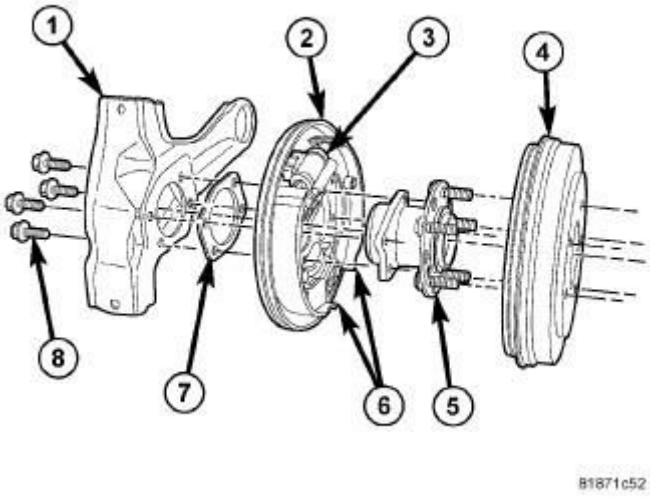

Fig. 12: Rear Drum Brakes
Courtesy of CHRYSLER GROUP, LLC

Each rear drum brake consists of these major components as well as the attaching hardware:

- Adjuster
- Drum (4)
- Shoes (6)
- Support Plate (2)
- Wheel Cylinder (3)

The rear drum brakes also serve as part of the parking brake system. Refer to **PARKING BRAKE, DESCRIPTION**.

POWER BRAKE BOOSTER

DESCRIPTION

DESCRIPTION

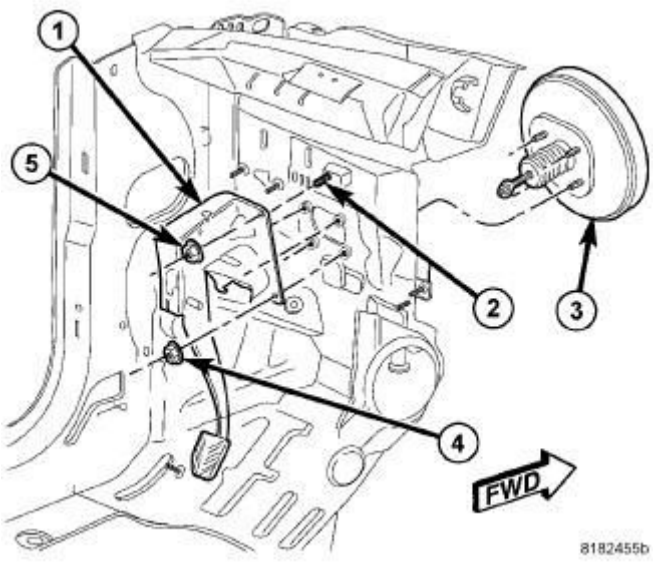

Fig. 13: Brake Pedal & Booster Mounting
Courtesy of CHRYSLER GROUP, LLC

The power brake booster (3) is mounted to the engine side of the dash panel. The master cylinder is bolted to the front of the booster. A vacuum check valve is also mounted on the front of the booster. A vacuum line connects the check valve to engine source vacuum. The booster input rod extends through the dash panel and connects to the brake pedal.

This vehicle uses a 254 mm single diaphragm power brake booster. Power brake boosters are internally tuned differently depending on whether the vehicle is equipped with ABS or without ABS. If the power brake booster requires replacement, be sure it is replaced with the correct part.

The power brake booster can be identified by the tag attached to the body of the booster. This tag contains the following information:

- The production part number
- The date it was built, and
- The booster manufacturer.

DIAGNOSIS AND TESTING

DIAGNOSIS AND TESTING - MASTER CYLINDER/POWER BOOSTER

1. Start the engine and check the booster vacuum hose connections. A hissing noise indicates a vacuum leak. Correct any vacuum leaks before proceeding.

2. Stop the engine and pump the brake pedal until all vacuum reserve in the booster is depleted.
3. Press and hold the brake pedal under light foot pressure. The pedal should hold firm. If the pedal falls away, there may be an external leak or the master cylinder is faulty (internal leakage).
4. Start the engine and note pedal action. It should fall away slightly under light foot pressure, then hold firm. If no pedal action is discernible, the power booster, vacuum supply or vacuum check valve is faulty, proceed to the POWER BOOSTER VACUUM TEST.
5. If the POWER BOOSTER VACUUM TEST passes, rebuild the booster vacuum reserve as follows: Release the brake pedal. Increase engine speed to 1500 RPM, close the throttle and immediately turn off the ignition to stop the engine.
6. Wait a minimum of 90 seconds and try brake action again. The booster should provide two or more vacuum assisted pedal applications. If the vacuum assist is not provided, the booster is faulty.

POWER BOOSTER VACUUM TEST

1. Connect a vacuum gauge to the booster check valve with a short length of hose and T-fitting.
2. Start and run the engine at curb idle for one minute.
3. Observe the vacuum supply. If the vacuum supply is less that 12 inches HG (406 millibars), repair the vacuum supply.
4. Clamp the hose shut between the intake vacuum source and the check valve.
5. Stop the engine and observe the vacuum gauge.
6. If the vacuum drops more than one inch HG (33 millibars) within 15 seconds, the booster diaphragm or check valve is faulty.

POWER BOOSTER CHECK VALVE TEST

1. Remove the power booster check valve from the power booster.
2. Using a hand operated vacuum pump, apply 15-20 inches HG (508-677 millibars) vacuum at the booster side of the check valve.
3. The vacuum should hold steady. If the gauge on the pump indicates vacuum loss, the check valve is faulty and should be replaced.

REMOVAL

POWER BRAKE BOOSTER

NOTE: Before proceeding, refer to CAUTION and WARNING.

1. Disconnect and isolate the battery negative cable from its post on the battery.
2. Remove the master cylinder. Refer to **MASTER CYLINDER, BRAKE, REMOVAL**.

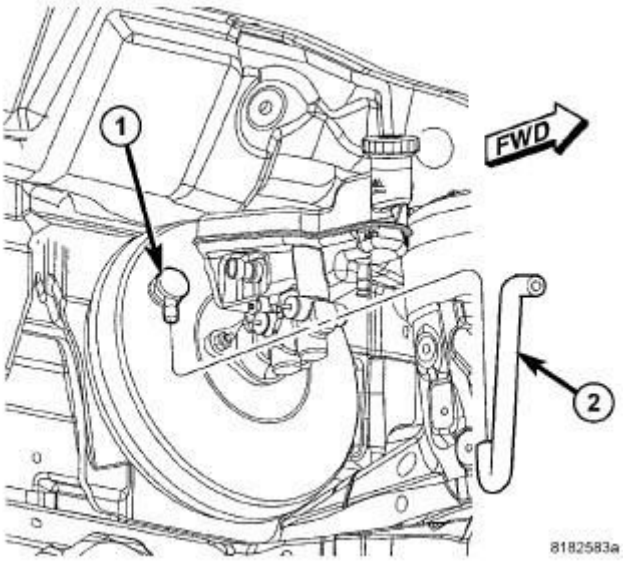

Fig. 14: Vacuum Hose At Booster - LHD
Courtesy of CHRYSLER GROUP, LLC

3. Disconnect the vacuum hose (2) from the check valve (1) on the power brake booster. **Do not remove the check valve from power brake booster.**
4. Remove the steering column opening cover (and airbag if equipped) on the instrument panel. Refer to **COVER, STEERING COLUMN OPENING, REMOVAL** .

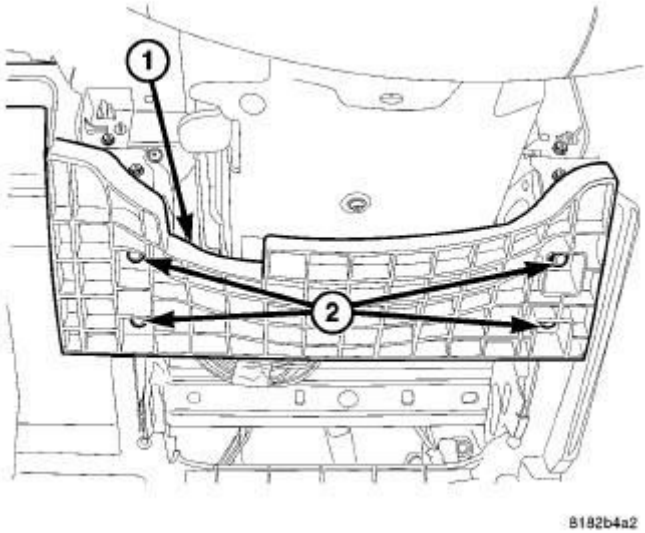

Fig. 15: Reinforcement
Courtesy of CHRYSLER GROUP, LLC

5. Remove the mounting screws (2) and reinforcement (1) behind the steering column opening cover.
6. Remove the stop lamp switch. Refer to **SWITCH, STOP LAMP, REMOVAL** .

NOTE: Do not discard the stop lamp switch as it can be adjusted and reinstalled.

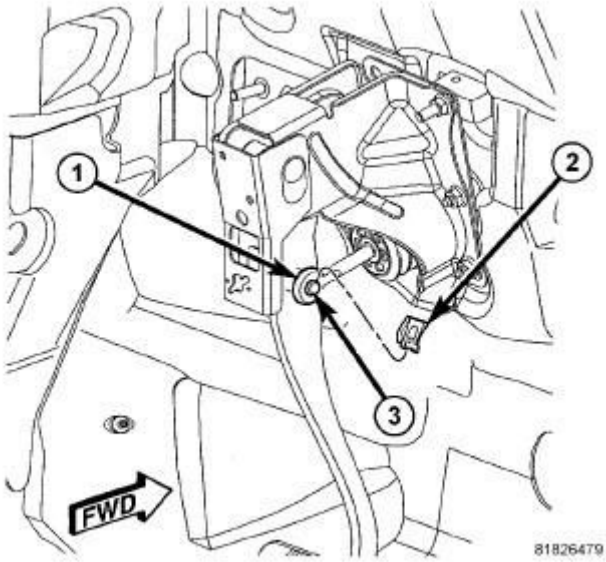

Fig. 16: Brake Pedal Clip
Courtesy of CHRYSLER GROUP, LLC

7. Remove the retaining clip (2) securing the power brake booster push rod (1) to the brake pedal. To do so, position a small screwdriver under the center tang of the retaining clip, then rotate the screwdriver enough to allow the retaining clip tang to pass over the end of the brake pedal pin (3). Remove and discard the clip. **Do not reuse the clip.**
8. Slide the booster push rod (1) off the brake pedal pin (3).

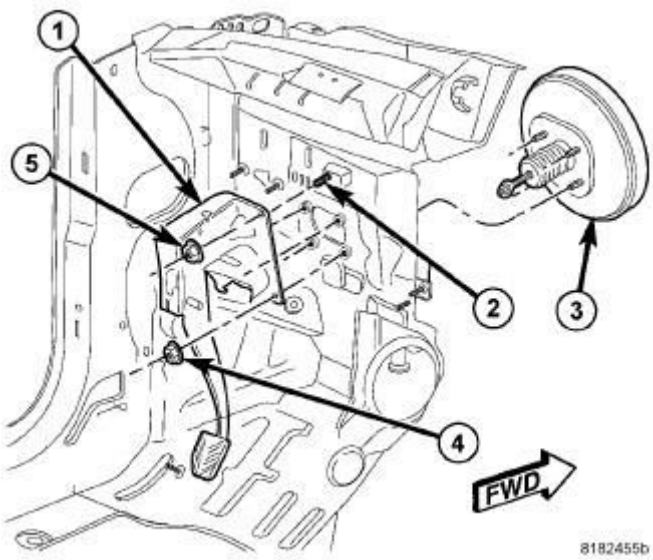

Fig. 17: Brake Pedal & Booster Mounting
Courtesy of CHRYSLER GROUP, LLC

9. Remove the four nuts (4) attaching the power brake booster (3) to the dash panel.
10. Slide the power brake booster (3) forward until its mounting studs clear the dash panel, then remove it through the engine compartment.

RIGHT-HAND-DRIVE

NOTE: Before proceeding, refer to CAUTION and WARNING.

CAUTION: The vacuum in the power brake booster must be pumped down before removing the master cylinder to prevent the booster from sucking in any contamination. This can be done by pumping the brake pedal while the engine is not running until a firm brake pedal is achieved.

1. With the engine not running, pump the brake pedal 4-5 strokes until the pedal feel is firm.
2. Disconnect the negative (ground) cable from the battery and isolate the cable.
3. Remove the engine appearance cover.

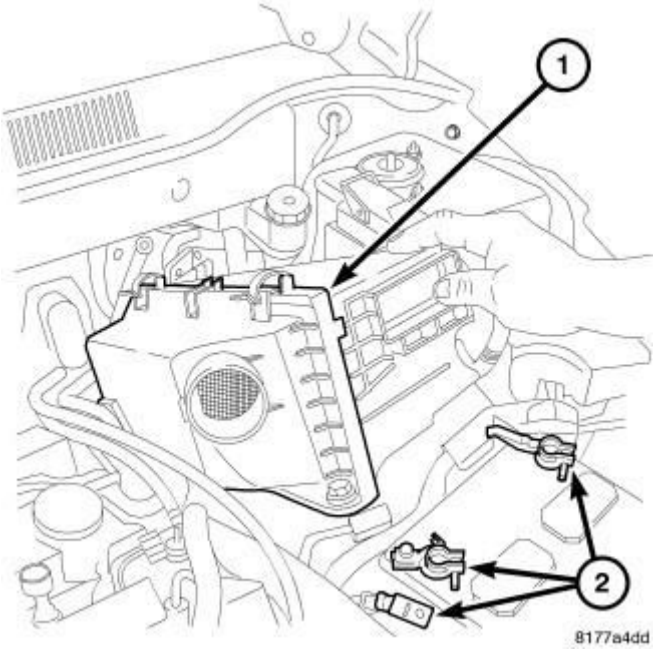

Fig. 18: Air Cleaner Assembly
Courtesy of CHRYSLER GROUP, LLC

4. Remove the air cleaner housing (1). Refer to **BODY, AIR CLEANER, REMOVAL** for 2.0L gas engine, **BODY, AIR CLEANER, REMOVAL** for 2.2L diesel or **BODY, AIR CLEANER, REMOVAL** for 2.4L gas engine.
5. Using a refrigerant recovery machine, remove the refrigerant from the air conditioning system. Refer to **PLUMBING, STANDARD PROCEDURE** .

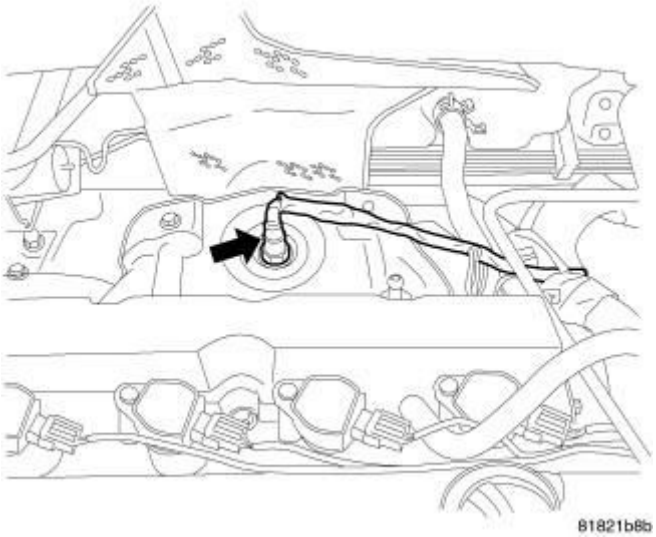

Fig. 19: Upstream Oxygen Sensor 1/1 - 2.4L
Courtesy of CHRYSLER GROUP, LLC

6. If equipped with a 2.4L gas engine and all-wheel-drive, remove the oxygen sensor from the top of the exhaust manifold. Refer to **SENSOR, OXYGEN, REMOVAL** .

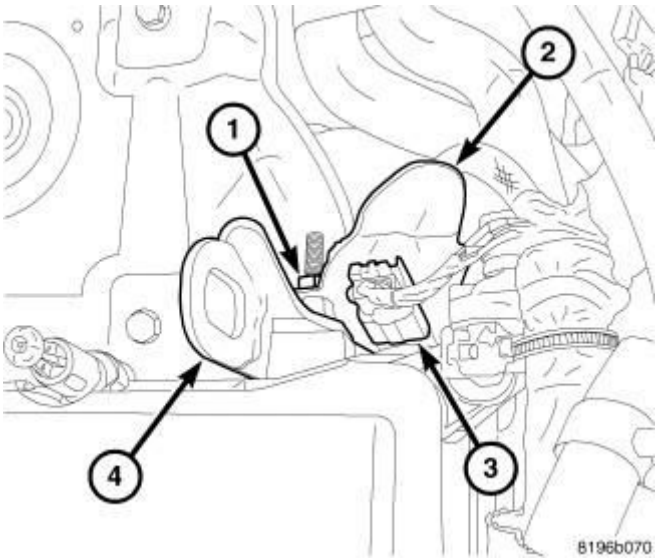

Fig. 20: Cam Sensor Heat Shield, Engine Lift Bracket & Wiring Connector
Courtesy of CHRYSLER GROUP, LLC

7. If equipped with a gas engine, perform the following:
   a. Remove the nut (1) securing the cam sensor heat shield (2) in place on the rear of the engine cylinder head. Remove the heat shield.
   b. Remove the stud securing the engine lift bracket (4) to the rear of the

engine cylinder head. Remove the bracket.

c. Disconnect the wiring connector (3) at the cam sensor and move it down out of the way.

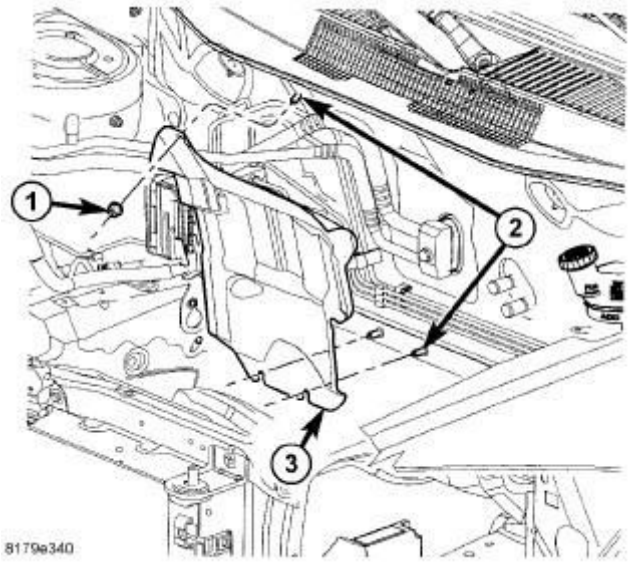

Fig. 21: Heat Shield
Courtesy of CHRYSLER GROUP, LLC

8. Remove the upper and loosen the two lower fasteners (1) securing the heat shield (3) to the studs (2) located on the dash panel. Remove the heat shield.
9. Remove the fasteners securing the coolant recovery bottle to its mounts and move it away from the power steering fluid reservoir and air conditioning liquid and suction line assembly. It is not necessary to disconnect the coolant recovery bottle fluid lines. Refer to **BOTTLE, COOLANT RECOVERY, REMOVAL** .
10. Remove the fastener securing the power steering fluid reservoir to its mount and move it away from the air conditioning liquid and suction line assembly. It is not necessary to disconnect the power steering fluid lines. Refer to **RESERVOIR, POWER STEERING PUMP, REMOVAL** .
11. Remove the fastener securing the windshield washer reservoir to its mount and move it away from the air conditioning liquid and suction line assembly. It is not necessary to disconnect the washer fluid line. Refer to **RESERVOIR, WINDSHIELD WASHER, REMOVAL** .

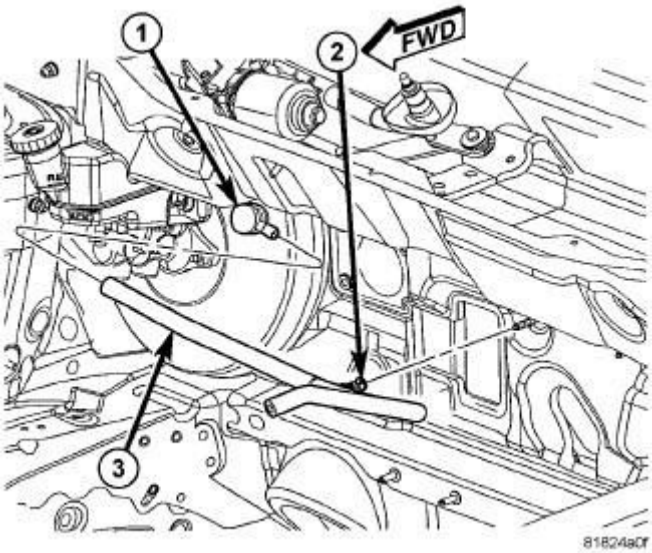

Fig. 22: Vacuum Hose At Booster - RHD
Courtesy of CHRYSLER GROUP, LLC

12. Remove the vacuum hose routing clip (2) from the stud securing the vacuum hose to the dash panel.
13. Disconnect the vacuum hose (3) from the check valve (1) on the power brake booster. **Do not remove the check valve from the power brake booster.**

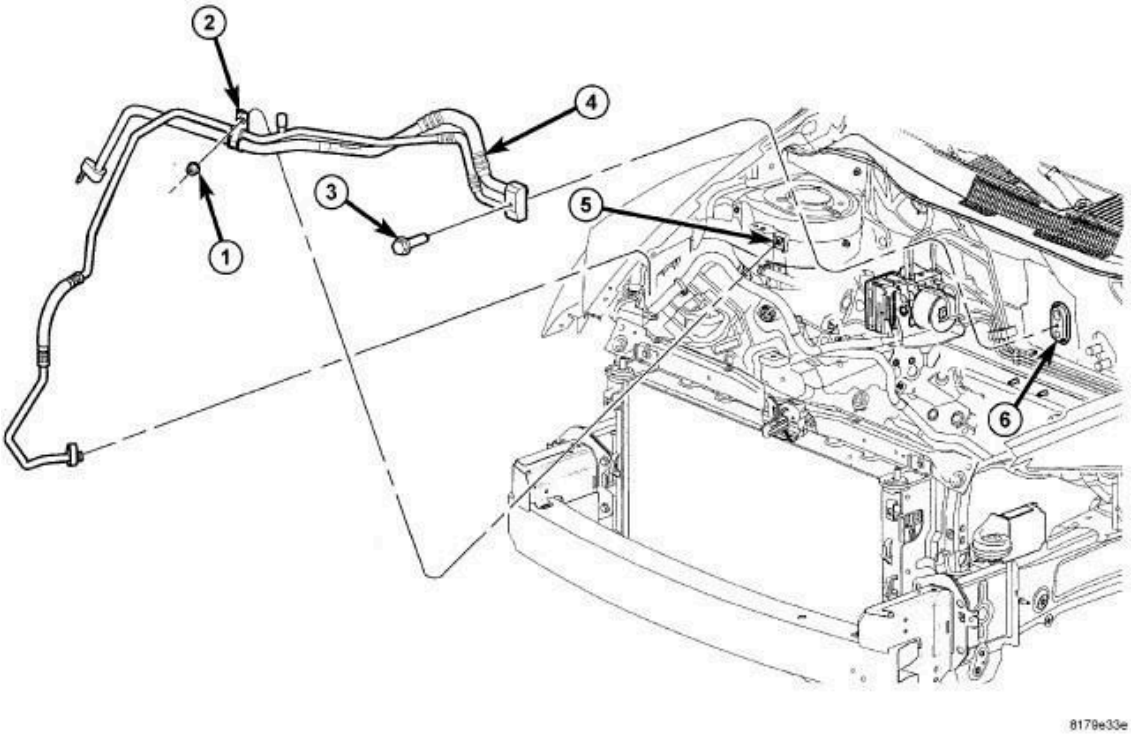

Fig. 23: A/C Liquid And Suction Line Assembly
Courtesy of CHRYSLER GROUP, LLC

14. Remove the nut (1) securing the air conditioning line retaining bracket (2) to the right strut tower (5).
15. Remove the bolt (3) that secures the air conditioning liquid and suction line assembly (4) to the air conditioning evaporator (6).
16. Disconnect the air conditioning liquid and suction line assembly from the air conditioning evaporator and remove and discard the dual-plane seals.
17. Install plugs in, or tape over the open refrigerant line fittings and the evaporator ports.
18. Move air conditioning liquid and suction line assembly away from the power brake booster. Use care not to bend lines.
19. Remove the master cylinder. Refer to **MASTER CYLINDER, BRAKE, REMOVAL**.

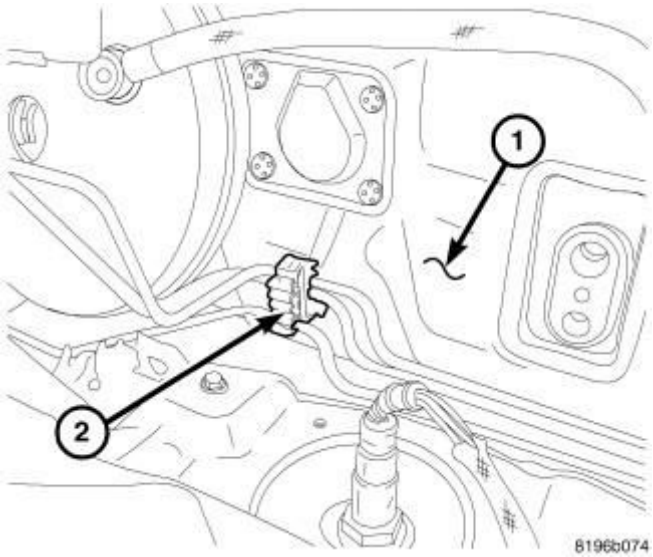

Fig. 24: Brake Tube Routing Clip At Dash Panel
Courtesy of CHRYSLER GROUP, LLC

20. Remove the brake tube routing clip (2) with tubes from the stud on the dash panel (1). Do not bend the brake tubes.
21. Remove the steering column opening cover (and airbag if equipped) on the instrument panel. Refer to **COVER, STEERING COLUMN OPENING, REMOVAL** .

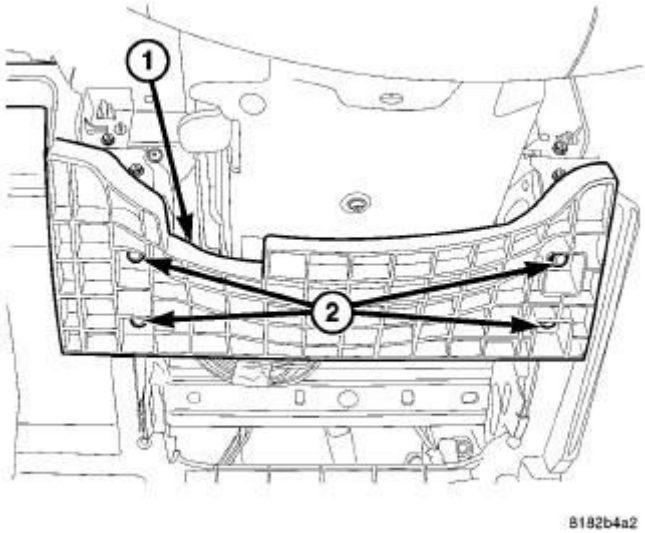

Fig. 25: Reinforcement
Courtesy of CHRYSLER GROUP, LLC

22. Remove the mounting screws (2) and reinforcement (1) behind the steering column opening cover.
23. Remove the stop lamp switch Refer to **SWITCH, STOP LAMP, REMOVAL** .

NOTE: Do not discard the stop lamp switch as it can be adjusted and reinstalled.

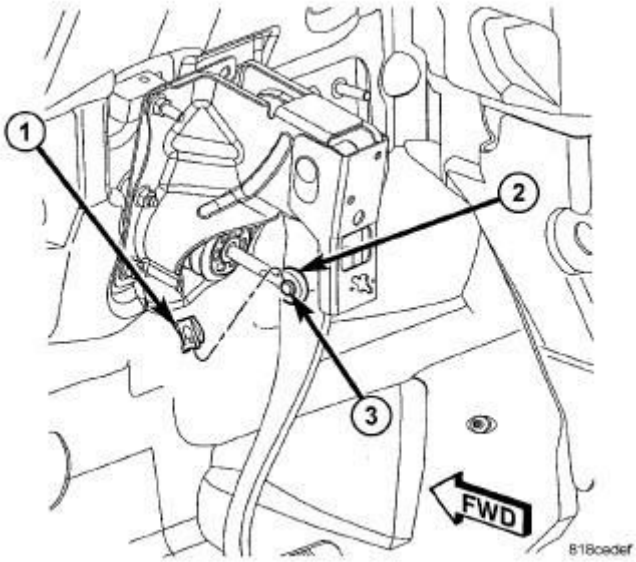

Fig. 26: Brake Pedal Clip - RHD
Courtesy of CHRYSLER GROUP, LLC

24. Remove the retaining clip (1) securing the power brake booster push rod (2) to the brake pedal. To do so, position a small screwdriver under the center tang of the retaining clip, then rotate the screwdriver enough to allow the retaining clip tang to pass over the end of the brake pedal pin (3). Remove and discard the clip. **Do not reuse the clip.**
25. Slide the booster push rod (2) off the brake pedal pin (3).
26. If equipped with a manual transaxle, remove the clutch master cylinder from the pedal bracket assembly and dash panel. Refer to **CYLINDER, CLUTCH MASTER, LHD, REMOVAL** for LHD or **CYLINDER, CLUTCH MASTER, RHD, REMOVAL** for RHD.

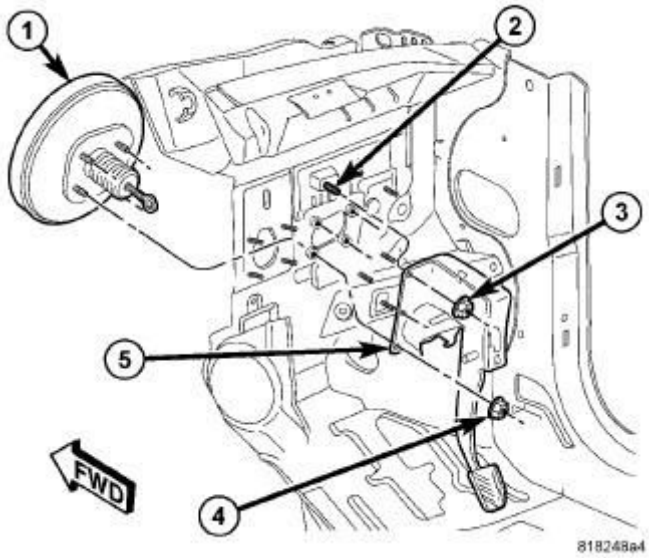

Fig. 27: Pedal And Booster Mounting - RHD
Courtesy of CHRYSLER GROUP, LLC

27. Remove the four nuts (4) attaching the power brake booster (1) to the dash panel.
28. Slide the power brake booster (3) forward clearing the dash panel, then move it inboard of the brake tubes. At the same time, rotate it so the push rod on the rear of the booster is facing upward, then move it slowly across the rear of the engine compartment above the exhaust manifold. Remove the booster through the opening where the air cleaner housing is normally mounted.

INSTALLATION

POWER BRAKE BOOSTER

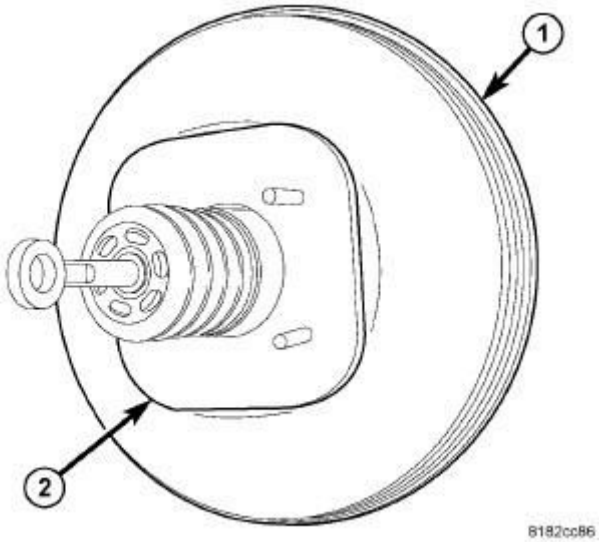

Fig. 28: Power Brake Booster & New Dash Seal
Courtesy of CHRYSLER GROUP, LLC

NOTE: Before power brake booster (1) installation, be certain a NEW dash seal (2) is installed on the booster mounting studs.

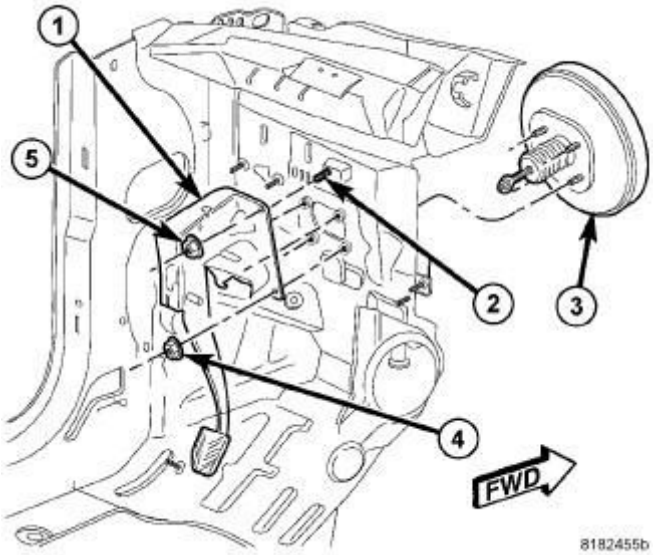

Fig. 29: Brake Pedal & Booster Mounting
Courtesy of CHRYSLER GROUP, LLC

1. Install the power brake booster (3) by sliding the push rod and studs through the dash panel and into mounting position.
2. Under the instrument panel, install the four power brake booster mounting

nuts (4). To tighten the nuts, refer to the following step 3

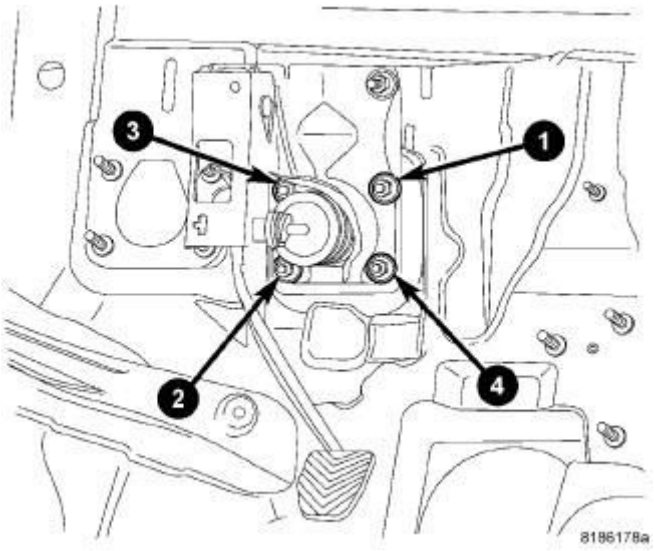

Fig. 30: Mounting Nut Torque Sequence
Courtesy of CHRYSLER GROUP, LLC

CAUTION: Because of power brake booster design, it is very important to tighten the mounting nuts in the proper sequence.

3. Tighten the brake pedal/booster mounting nuts in the proper sequence to 23 N.m (17 ft. lbs.).

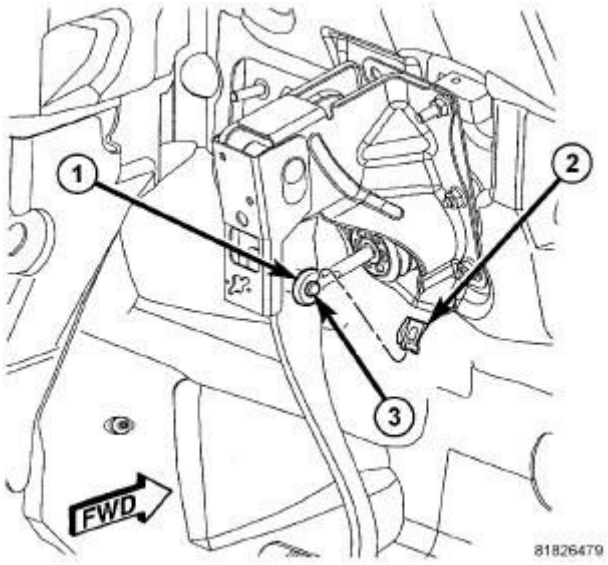

Fig. 31: Brake Pedal Clip

Courtesy of CHRYSLER GROUP, LLC

4. Using Mopar® Lubriplate, or an equivalent, coat the surface of the brake pedal pin (3) where it contacts the brake booster input rod (1).
5. Install the power brake booster push rod (1) on the pin (3) mounted on the side of the brake pedal. Install a NEW retaining clip (2) on the end of the pin. **Do not reuse the old clip.**
6. Reinstall and adjust the stop lamp switch that was set aside for reuse, refer to **SWITCH, STOP LAMP, INSTALLATION** .

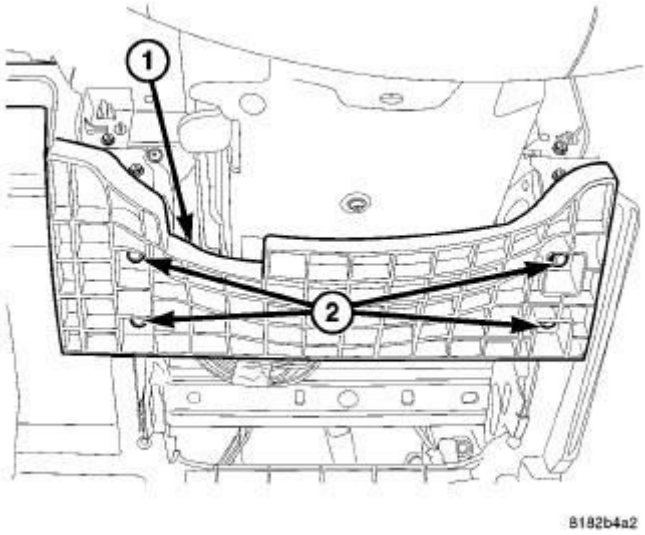

Fig. 32: Reinforcement
Courtesy of CHRYSLER GROUP, LLC

7. Install the steering column opening cover reinforcement (1) in the steering column opening. Install the mounting screws (2).
8. Install the steering column opening cover (and airbag if equipped) on the instrument panel. Refer to **COVER, STEERING COLUMN OPENING, INSTALLATION** .

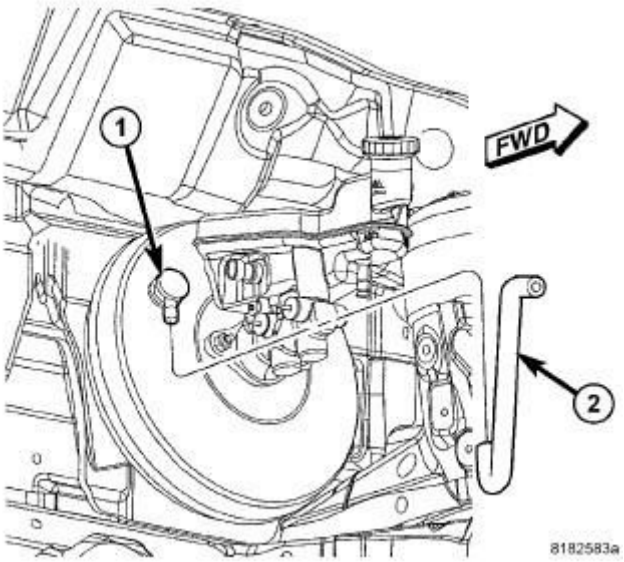

Fig. 33: Vacuum Hose At Booster - LHD
Courtesy of CHRYSLER GROUP, LLC

CAUTION: When installing the vacuum hose on the check valve (1), make sure the hose is routed properly to avoid possible contact with unfriendly surfaces.

9. Connect the vacuum hose (2) to the vacuum check valve (1).
10. Install the master cylinder. Refer to **MASTER CYLINDER, BRAKE, INSTALLATION**.
11. Connect the battery negative cable to its post on the battery.
12. Bleed the base brake system if necessary. Refer to **STANDARD PROCEDURE** .

WARNING: Be certain a firm brake pedal is achieved prior to attempting to operate the vehicle.

13. Road test the vehicle to ensure proper operation of the brakes.

RIGHT-HAND-DRIVE

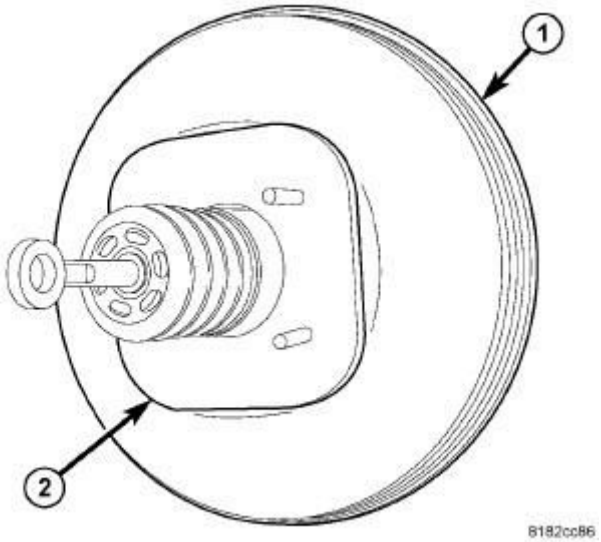

Fig. 34: Power Brake Booster & New Dash Seal
Courtesy of CHRYSLER GROUP, LLC

NOTE: Before power brake booster (1) installation, be certain a NEW dash seal (2) is installed on the booster mounting studs.

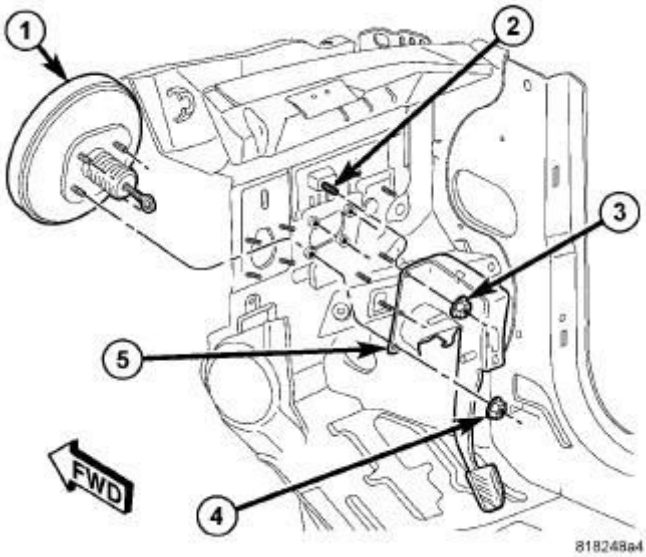

Fig. 35: Pedal And Booster Mounting - RHD
Courtesy of CHRYSLER GROUP, LLC

1. Install the power brake booster (1) into the engine compartment where the air cleaner housing is normally mounted. Rotate the booster so the push rod on the rear is facing upward, then move the booster slowly across the rear of

the engine compartment above the exhaust manifold. Once past the exhaust manifold, rotate the booster and move it past the brake tubes. Slide the power brake booster push rod and studs through the dash panel and into mounting position.

2. Under the instrument panel, install the four power brake booster mounting nuts (4). To tighten the nuts, refer to the following step3.

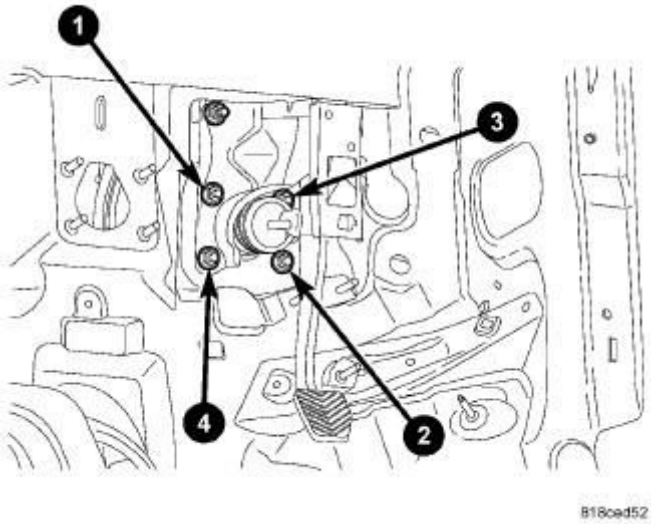

Fig. 36: Mounting Nut Torque Sequence - RHD
Courtesy of CHRYSLER GROUP, LLC

CAUTION: Because of power brake booster design, it is very important to tighten the mounting nuts in the proper sequence.

3. Tighten the four brake pedal/booster mounting nuts in the proper sequence to 23 N.m (17 ft. lbs.).
4. If equipped with a manual transaxle, install the clutch master cylinder on the dash panel and clutch pedal bracket assembly. Refer to **CYLINDER, CLUTCH MASTER, LHD, INSTALLATION** for LHD or **CYLINDER, CLUTCH MASTER, RHD, INSTALLATION** for RHD.

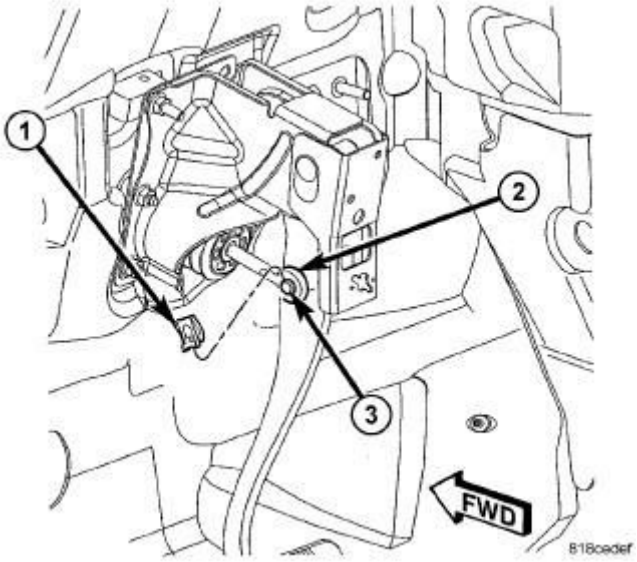

Fig. 37: Brake Pedal Clip - RHD
Courtesy of CHRYSLER GROUP, LLC

5. Using Mopar® Lubriplate, or an equivalent, coat the surface of the brake pedal pin (3) where it contacts the brake booster input rod (2).
6. Install the power brake booster push rod (2) on the pin (3) mounted on the side of the brake pedal. Install a NEW retaining clip (1) on the end of the pin. **Do not reuse the old clip.**
7. Reinstall and adjust the stop lamp switch that was set aside for reuse Refer to **SWITCH, STOP LAMP, INSTALLATION** .

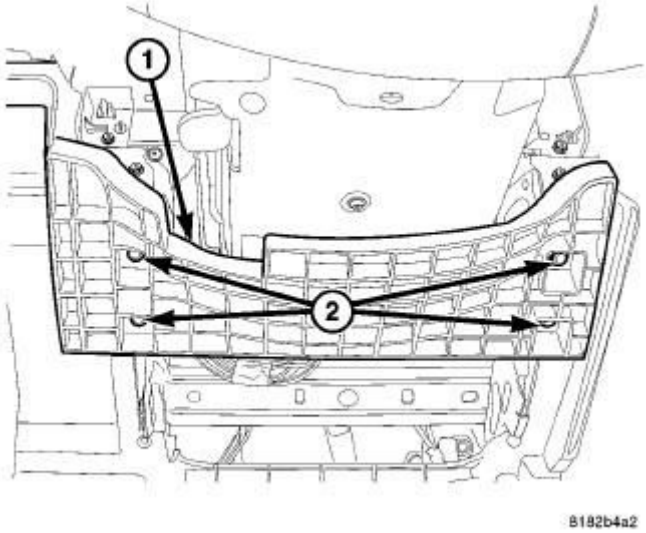

Fig. 38: Reinforcement
Courtesy of CHRYSLER GROUP, LLC

8. Install the steering column opening cover reinforcement (1) in the steering column opening. Install the mounting screws (2).
9. Install the steering column opening cover (and airbag if equipped) on the instrument panel. Refer to **COVER, STEERING COLUMN OPENING, INSTALLATION** .

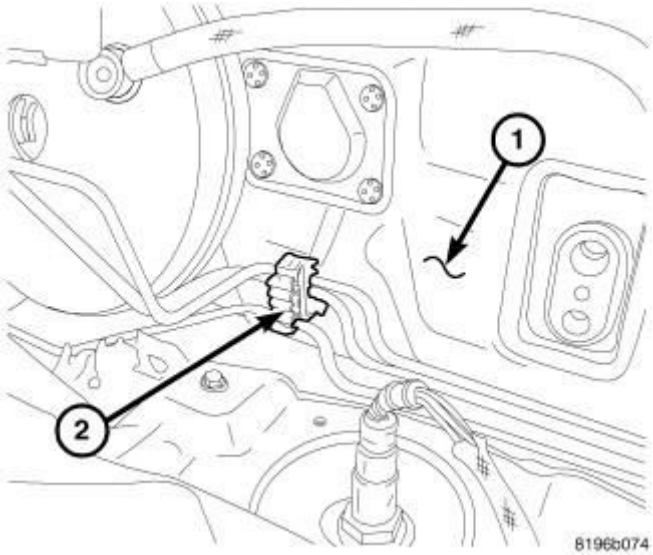

Fig. 39: Brake Tube Routing Clip At Dash Panel
Courtesy of CHRYSLER GROUP, LLC

10. Install the brake tube routing clip (2) with tubes onto the stud on the dash panel (1).
11. Install the master cylinder. Refer to **MASTER CYLINDER, BRAKE, INSTALLATION**.

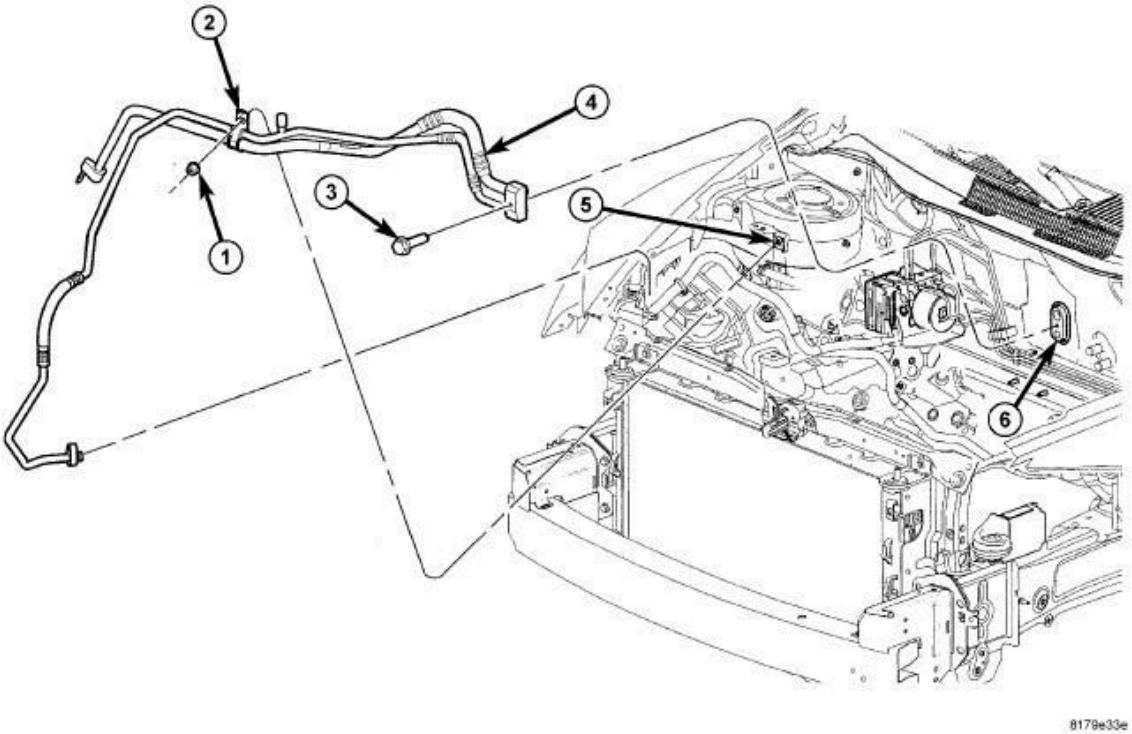

Fig. 40: A/C Liquid And Suction Line Assembly
Courtesy of CHRYSLER GROUP, LLC

12. Remove the tape or plugs from the refrigerant line fittings and the evaporator ports.
13. Lubricate the rubber O-rings on new dual-plan seals with clean refrigerant oil and install the seals onto the liquid and suction line fittings. Use only the specified seals as they are made of special materials compatible to the R-134a system. Use only refrigerant oil of the type recommended for the air conditioning compressor in the vehicle.
14. Connect the air conditioning liquid and suction line assembly to the air conditioning evaporator (6).
15. Install the bolt (3) that secures the air conditioning liquid and suction line assembly to the air conditioning evaporator. Tighten the bolt to 12 N.m (105 in. lbs.).
16. Install the nut (1) that secures the air conditioning line bracket (2) to the right front strut tower (5). Tighten the nut to 4.5 N.m (40 in. lbs.).

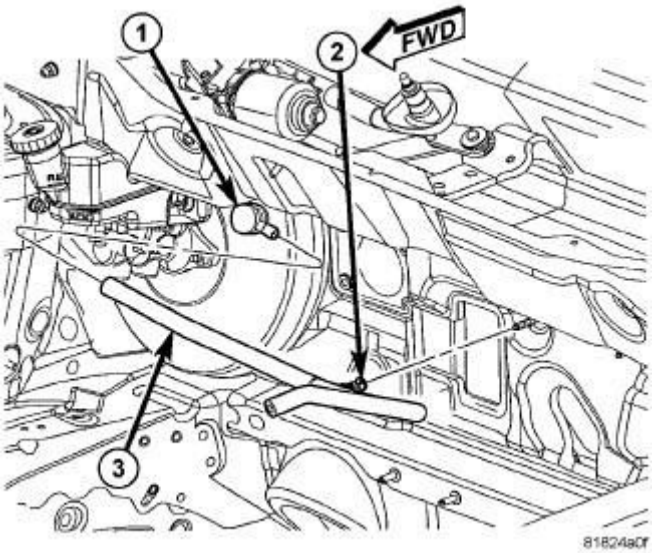

Fig. 41: Vacuum Hose At Booster - RHD
Courtesy of CHRYSLER GROUP, LLC

CAUTION: When installing the vacuum hose on the check valve (1), make sure the hose is routed properly to avoid possible contact with unfriendly surfaces.

17. Connect the vacuum hose (3) to the vacuum check valve (1).
18. Push the vacuum hose routing clip (2) onto the stud securing the vacuum hose to the dash panel.
19. Install the windshield washer reservoir. Refer to **RESERVOIR, WINDSHIELD WASHER, INSTALLATION** .
20. Install the power steering fluid reservoir. Refer to **RESERVOIR, POWER STEERING PUMP, INSTALLATION** .
21. Install the coolant recovery bottle. Refer to **BOTTLE, COOLANT RECOVERY, INSTALLATION** .

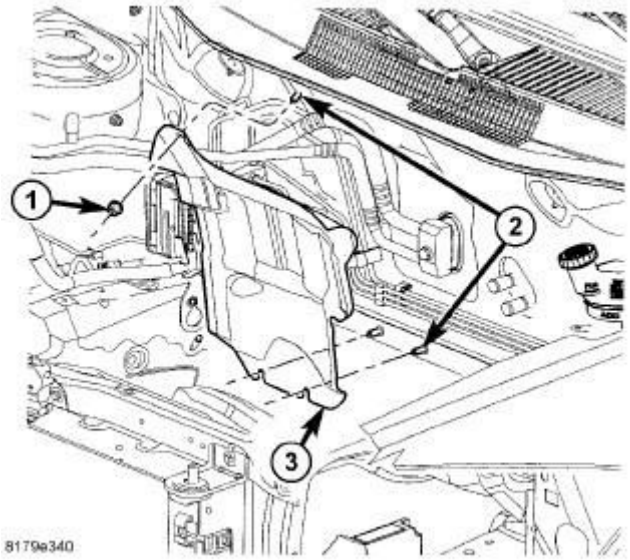

Fig. 42: Heat Shield
Courtesy of CHRYSLER GROUP, LLC

22. Position the heat shield (3) onto the studs (2) located on the dash panel in the engine compartment.
23. Install the upper fastener (1) securing the heat shield to the dash panel. Tighten all three fasteners to 1 N.m (10 in. lbs.).

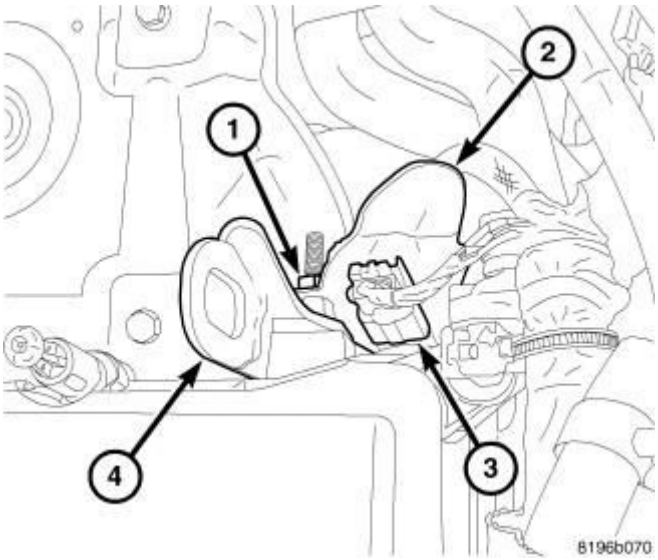

Fig. 43: Cam Sensor Heat Shield, Engine Lift Bracket & Wiring Connector
Courtesy of CHRYSLER GROUP, LLC

24. If equipped with a gas engine, perform the following:
    a. Install the engine lift bracket (4) on the rear of the engine cylinder head

with its mounting stud.

b. Position the cam sensor heat shield (2) over the engine lift bracket mounting stud and secure it in place with its mounting nut (1).
c. Connect the wiring connector (3) to the cam sensor.

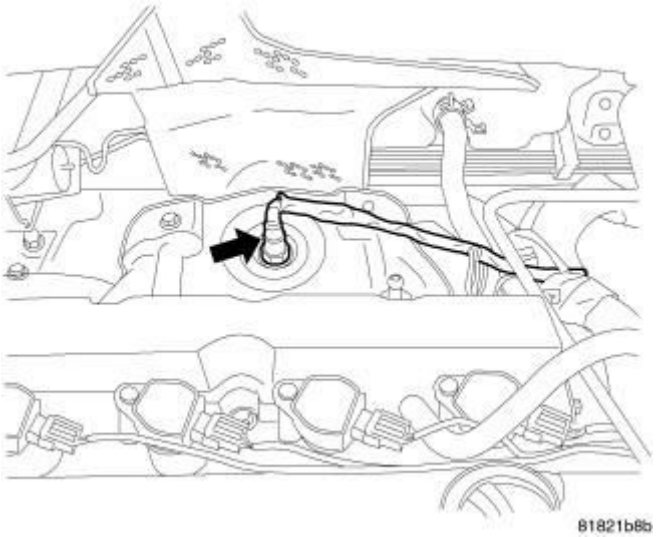

Fig. 44: Upstream Oxygen Sensor 1/1 - 2.4L
Courtesy of CHRYSLER GROUP, LLC

25. If equipped with a 2.4L gas engine and all-wheel-drive, install the oxygen sensor in the top of the exhaust manifold. Refer to **SENSOR, OXYGEN, INSTALLATION** .

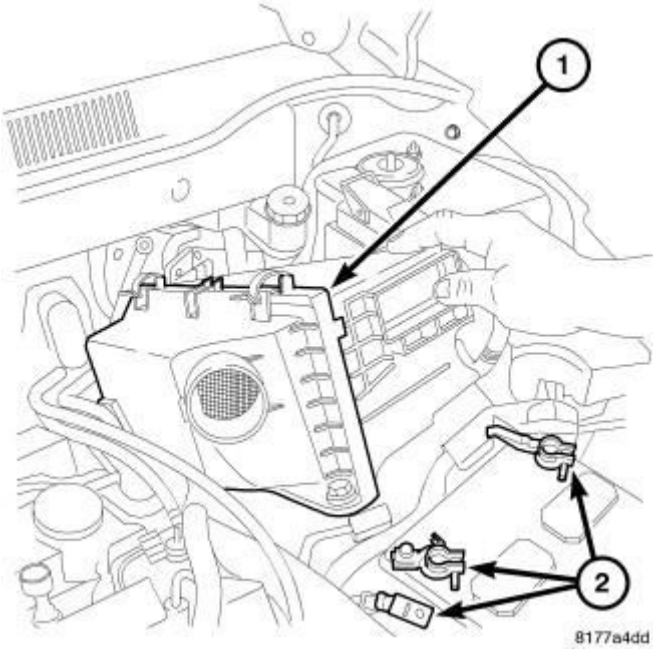

Fig. 45: Air Cleaner Assembly

Courtesy of CHRYSLER GROUP, LLC

26. Install the air cleaner housing (1). Refer to **BODY, AIR CLEANER, INSTALLATION** for 2.0L gas engine, **BODY, AIR CLEANER, INSTALLATION** for 2.2L diesel or **BODY, AIR CLEANER, INSTALLATION** for 2.4L gas engine.
27. Install the engine appearance cover.
28. Connect the battery negative (ground) cable to its post on the battery.
29. Bleed the base brake system as necessary. Refer to **STANDARD PROCEDURE** .
30. Using a refrigerant recovery machine, evacuate and charge the refrigerant system. Refer to **PLUMBING, STANDARD PROCEDURE** .

WARNING: Be certain a firm brake pedal is achieved prior to attempting to operate the vehicle.

31. Road test the vehicle to ensure proper operation of the brakes.

CALIPER, DISC BRAKE, FRONT

REMOVAL

REMOVAL

NOTE: Before proceeding, refer to CAUTION and WARNING.

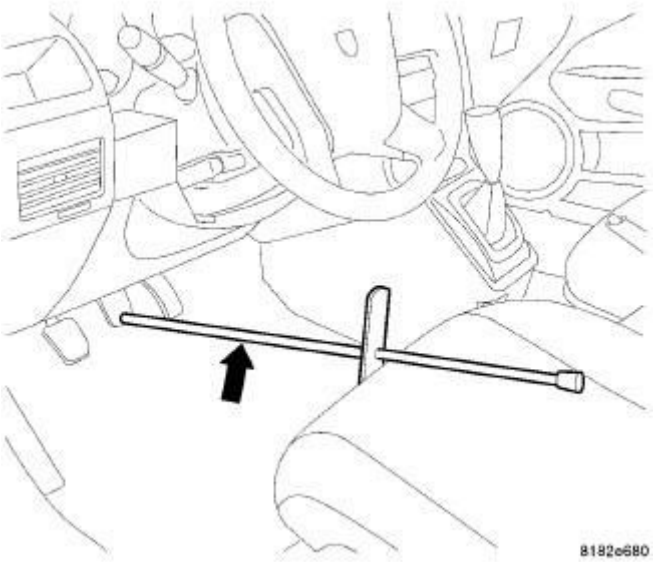

Fig. 46: Brake Pedal Holding Tool

Courtesy of CHRYSLER GROUP, LLC

1. Using a brake pedal holding tool as shown in illustration, depress the brake pedal past its first 25 mm (1 inch) of travel and hold it in this position. This will isolate the master cylinder from the brake hydraulic system and will not allow the brake fluid to drain out of the master cylinder reservoir when the lines are opened.
2. Raise and support the vehicle. Refer to **HOISTING, STANDARD PROCEDURE** .

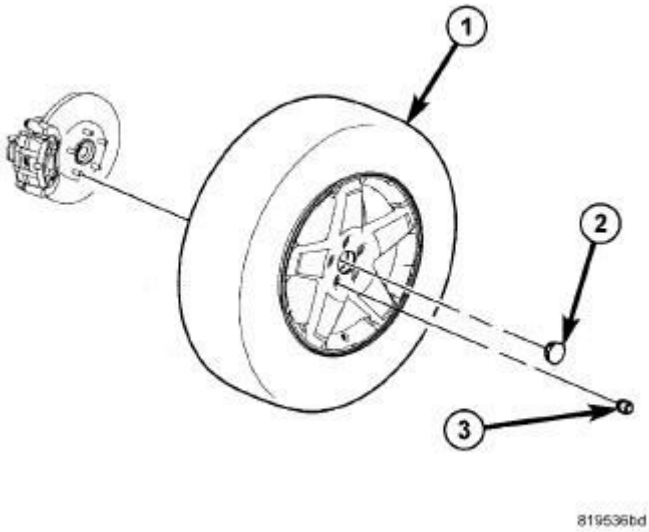

Fig. 47: Tire And Wheel Mounting
Courtesy of CHRYSLER GROUP, LLC

3. Remove the wheel mounting nuts (3), then the tire and wheel assembly (1).

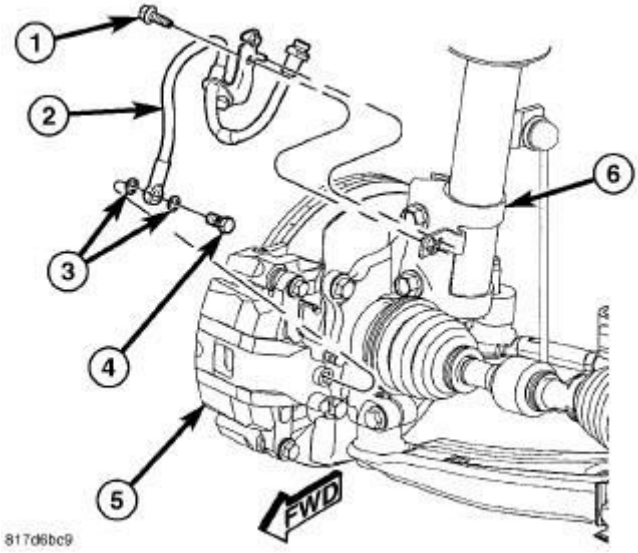

Fig. 48: Brake Hose Mounting To Strut
Courtesy of CHRYSLER GROUP, LLC

4. Remove the banjo bolt (4) connecting the brake flex hose (2) to the brake caliper (5). There are two washers (3) that will come off with the banjo bolt. Discard the washers.

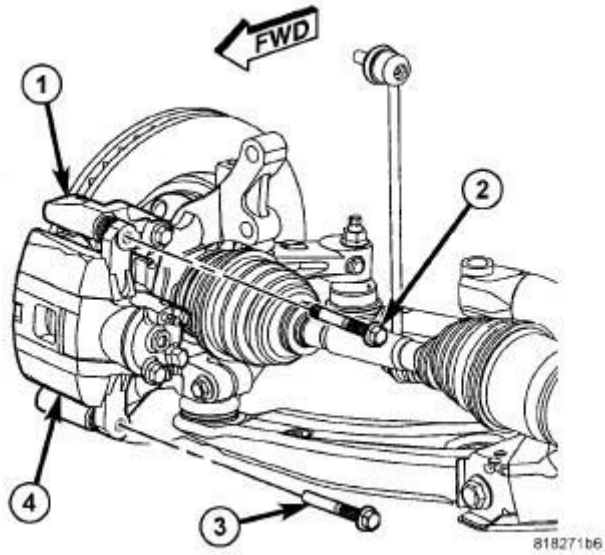

Fig. 49: Caliper Guide Pin Bolts
Courtesy of CHRYSLER GROUP, LLC

NOTE: When removing the caliper guide pin bolts (2, 3) note that one (upper) has a special sleeve on the end. It important that his bolt be installed in the upper

mounting hole when the caliper is installed.

5. Remove the two brake caliper guide pin bolts (2, 3).
6. Slide the disc brake caliper (4) from the disc brake adapter bracket (1) and brake pads and remove.

DISASSEMBLY

DISASSEMBLY

NOTE: Before disassembling the brake caliper, remove it from the vehicle. Refer to CALIPER, DISC BRAKE, FRONT, REMOVAL for front disc brakes or CALIPER, DISC BRAKE, REAR, REMOVAL for rear disc brakes.

NOTE: Before disassembling the brake caliper, clean and inspect it. Refer to CLEANING and INSPECTION . .

WARNING: Under no condition should high pressure air ever be used to remove a piston from a caliper bore. Personal injury could result from such a practice.

CAUTION: Do not use excessive force when clamping caliper in vise. Excessive vise pressure will cause bore distortion.

1. Mount the caliper in a vise equipped with protective jaws.

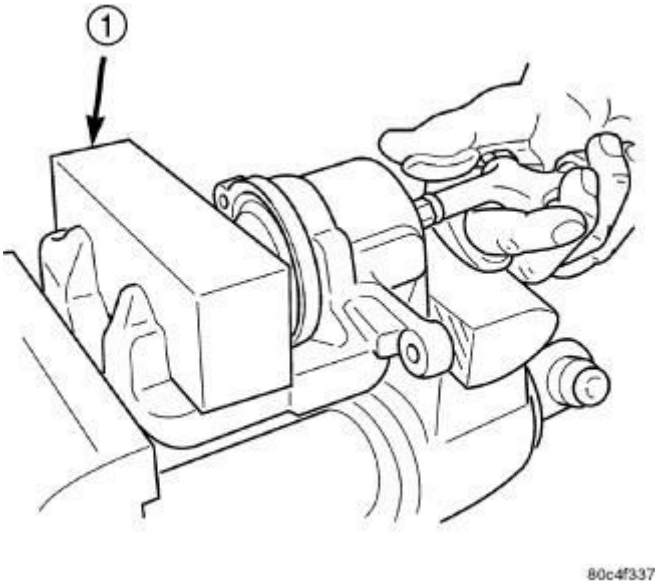

Fig. 50: Identifying Wooden Block Placed In Brake Caliper
Courtesy of CHRYSLER GROUP, LLC

1 - WOOD BLOCK

WARNING: Do not place face or hands near caliper and piston if using compressed air pressure to remove piston. Do not use high pressure.

2. Place a wooden block (1) in the caliper as shown in illustration.
3. If necessary, apply low pressure compressed air to the caliper fluid inlet in short spurts to force the piston out.
4. Remove the piston from the caliper.
5. Remove the dust boot from the piston and discard it.

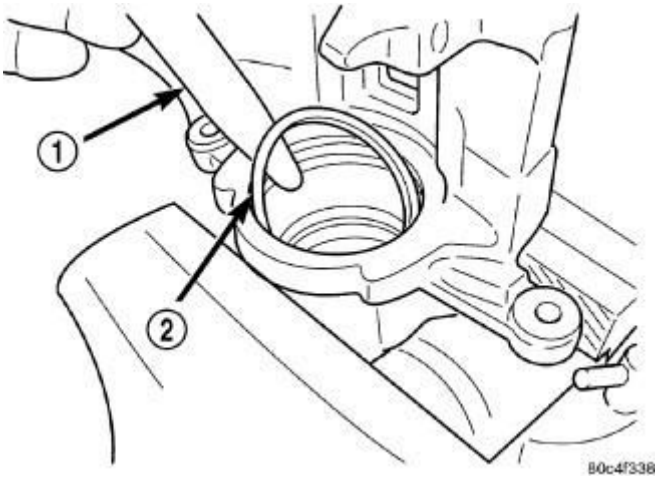

Fig. 51: Piston Seal Removal
Courtesy of CHRYSLER GROUP, LLC

1 - TRIM STICK 2 - SEAL

CAUTION: Do not use a screw driver or other metal tool for seal removal. Using such tools can scratch the bore or leave burrs on the seal groove edges.

6. Using a soft tool such as a plastic trim stick (1), work the piston seal (2) out of its groove in caliper piston bore. Discard the used seal.
7. Clean the piston bore and drilled passage ways with alcohol or a suitable solvent. Wipe it dry using only a lint-free cloth.
8. Inspect both the piston and bore for scoring or pitting. Bores that show light scratches or corrosion can usually be cleared of the light scratches or corrosion using crocus cloth.

CLEANING

CLEANING

WARNING: Chrysler LLC does not manufacture any vehicles or replacement parts that contain asbestos. Aftermarket products may or may not contain asbestos. Refer to aftermarket product packaging for product information.

Whether the product contains asbestos or not, dust and dirt can accumulate on brake parts during normal use. Follow practices prescribed by appropriate regulations for the handling, processing and disposing of dust and debris.

To clean or flush the internal passages of the brake caliper, use fresh brake fluid or Mopar® Non-Chlorinated Brake Parts Cleaner. Never use gasoline, kerosene, alcohol, oil, transmission fluid or any fluid containing mineral oil to clean the caliper. These fluids will damage rubber cups and seals.

INSPECTION

INSPECTION

Inspect the disc brake caliper for the following:

- Brake fluid leaks in and around piston boot area
- Ruptures, brittleness or damage to the piston dust boot

If caliper fails inspection, disassemble and recondition caliper, replacing the seals and dust boots.

ASSEMBLY

ASSEMBLY

NOTE: Always have clean hands when assembling a brake caliper.

NOTE: Always use fresh, clean brake fluid when assembling a brake caliper.

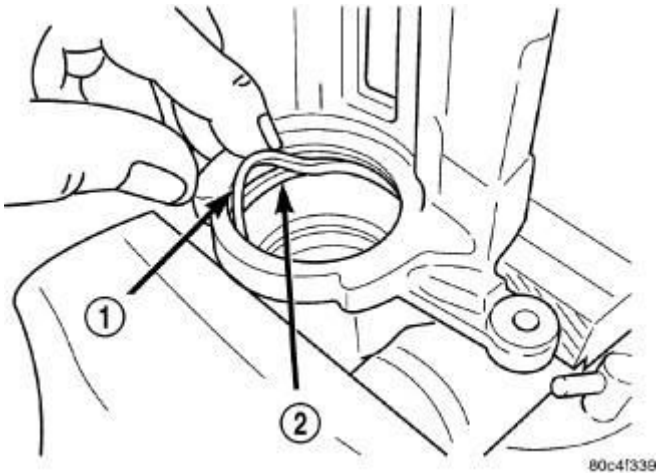

Fig. 52: New Piston Seal Installation
Courtesy of CHRYSLER GROUP, LLC

1 - SEAL 2 - GROOVE

NOTE: Never use an old piston seal.

1. Dip the NEW piston seal in clean brake fluid and install it in the groove (2)

of the caliper bore. The seal (1) should be started at one area of the groove and gently worked around into the groove using only your clean fingers to seat it.

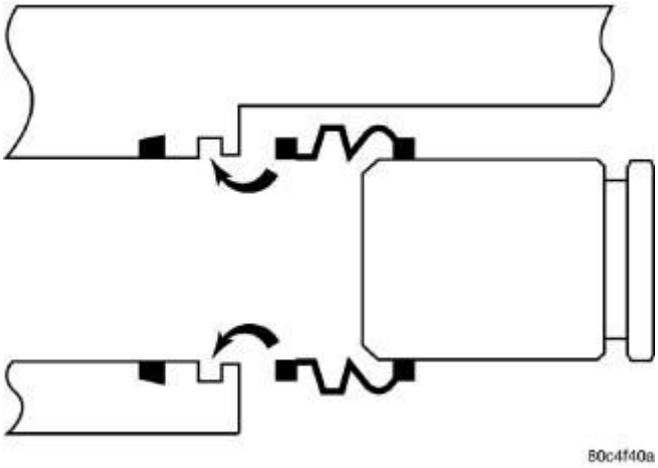

Fig. 53: Boot Installation
Courtesy of CHRYSLER GROUP, LLC

2. Coat the NEW piston with clean brake fluid.
3. Coat the NEW piston boot with clean brake fluid leaving a generous amount inside the boot.
4. Position the dust boot over the lower section of the piston.
5. Extend the dust boot below the bottom of the piston and guide the lip seal into the groove in the caliper piston bore.

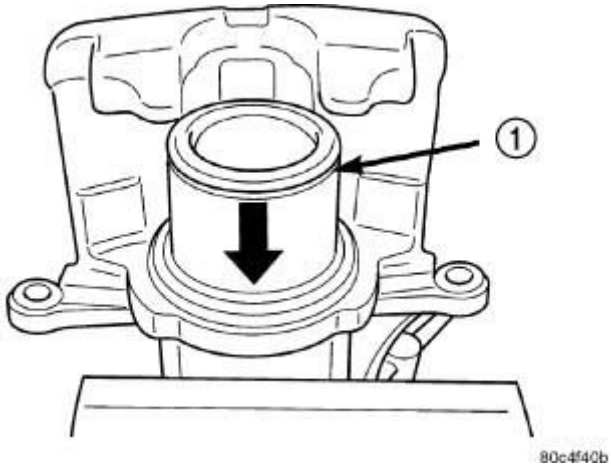

Fig. 54: Piston Installation
Courtesy of CHRYSLER GROUP, LLC

1 - PISTON GROOVE

CAUTION: Force applied to the piston (1) to seat it in the bore must be applied uniformly to avoid cocking and binding of the piston.

6. Install the piston (1) into the bore, carefully pushing it past the piston seal using **hand pressure** . Push the piston in until it bottoms in the caliper bore and the dust boot lip seal falls into the groove near the top of the piston.
7. Install the caliper on the vehicle and bleed the brakes as necessary. Refer to **CALIPER, DISC BRAKE, FRONT, INSTALLATION** .

INSTALLATION

INSTALLATION

1. Completely retract the caliper piston back into the bore of the caliper. Use a C-clamp to retract the piston. Place a wood block over the piston before installing the C-clamp to avoid damaging the piston.

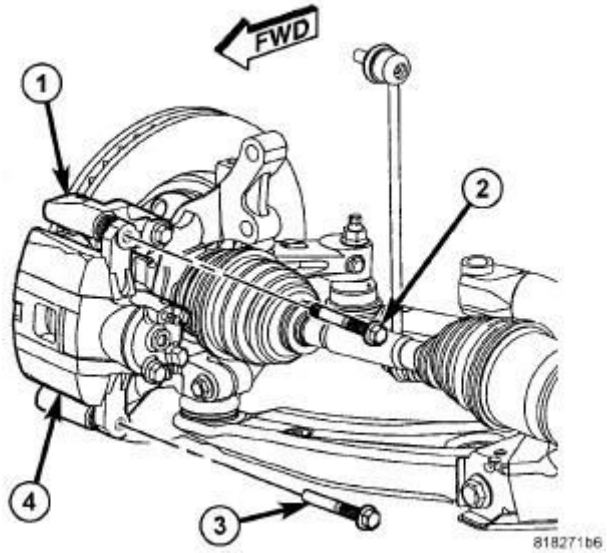

Fig. 55: Caliper Guide Pin Bolts
Courtesy of CHRYSLER GROUP, LLC

CAUTION: Use care when installing the caliper (4) onto the adapter bracket (1) to avoid damaging the guide pin boots.

2. Install the disc brake caliper over the brake pads on the brake caliper adapter bracket.

NOTE: When installing the caliper guide pin bolts (2, 3) make sure that the one that has a special sleeve on the end is installed in the upper mounting hole.

3. Align the caliper guide pin bolt holes with the adapter bracket. Install the upper (with special sleeve) (2) and lower (3) caliper guide pin bolts. Tighten the guide pin bolts to 43 N.m (32 ft. lbs.).

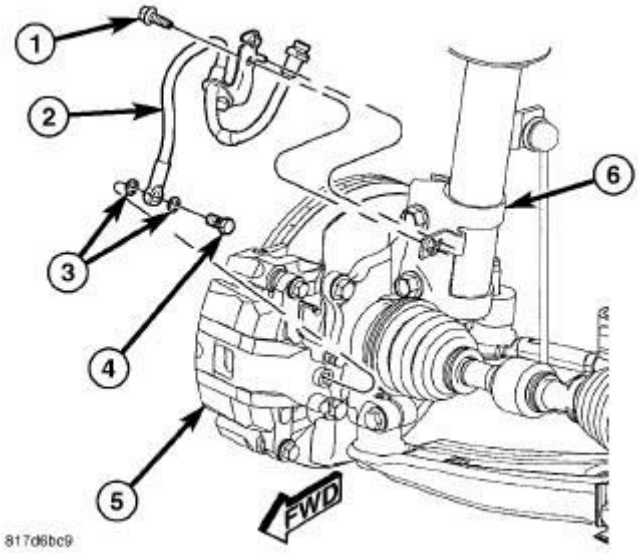

Fig. 56: Brake Hose Mounting To Strut
Courtesy of CHRYSLER GROUP, LLC

4. Install the banjo bolt (4) connecting the brake flex hose (2) to the brake caliper (5). Install NEW washers (3) on each side of the hose fitting as the banjo bolt is guided through the fitting. Thread the banjo bolt into the caliper and tighten it to 24 N.m (18 ft. lbs.).

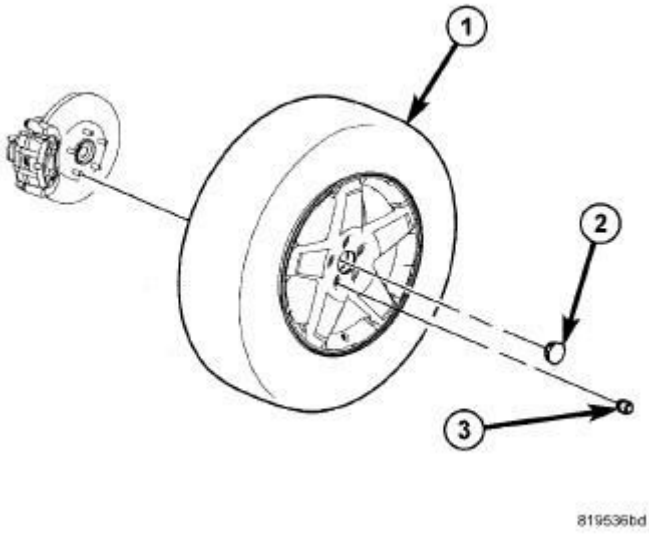

Fig. 57: Tire And Wheel Mounting
Courtesy of CHRYSLER GROUP, LLC

5. Install the tire and wheel assembly (1). Refer to **INSTALLATION** . Install and tighten the wheel mounting nuts (3) to 125 N.m (92 ft. lbs.).
6. Lower the vehicle.

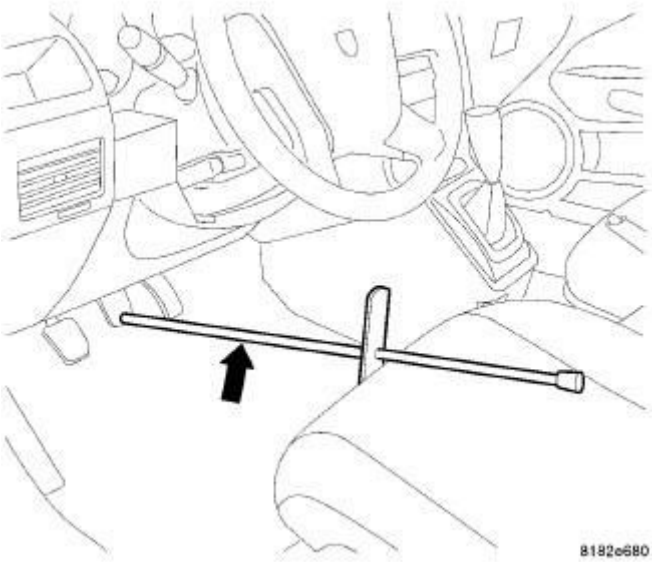

Fig. 58: Brake Pedal Holding Tool
Courtesy of CHRYSLER GROUP, LLC

7. Remove the brake pedal holding tool.

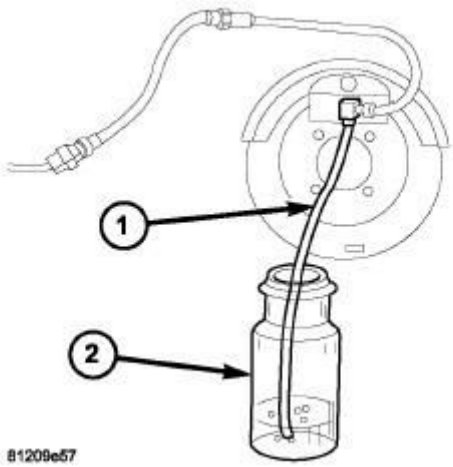

Fig. 59: Bleeding Brakes
Courtesy of CHRYSLER GROUP, LLC

8. Bleed the caliper as necessary. Refer to **STANDARD PROCEDURE** .
9. Road test the vehicle and make several stops to wear off any foreign material on the brakes and to seat the brake shoes.

CALIPER, DISC BRAKE, REAR

REMOVAL

REMOVAL

NOTE: Before proceeding, refer to CAUTION and WARNING.

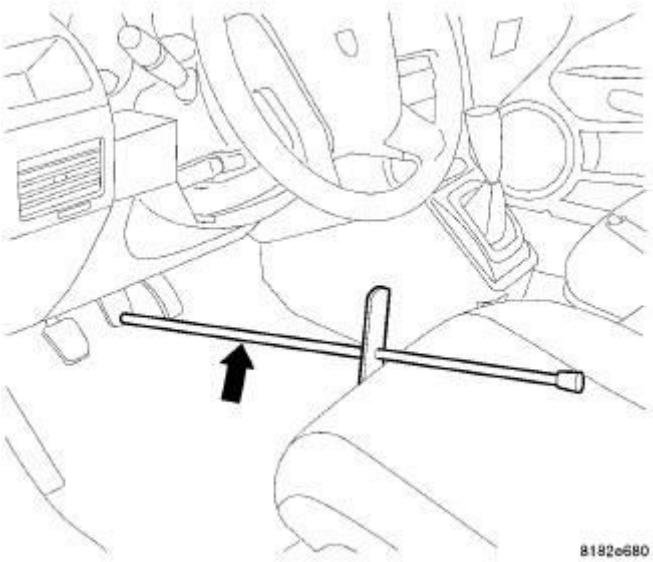

Fig. 60: Brake Pedal Holding Tool
Courtesy of CHRYSLER GROUP, LLC

1. Using a brake pedal holding tool as shown in illustration, depress the brake pedal past its first one inch of travel and hold it in this position. This will isolate the master cylinder from the brake hydraulic system and will not allow the brake fluid to drain out of the master cylinder reservoir while the lines are disconnected.
2. Raise and support the vehicle. Refer to **HOISTING, STANDARD PROCEDURE** .

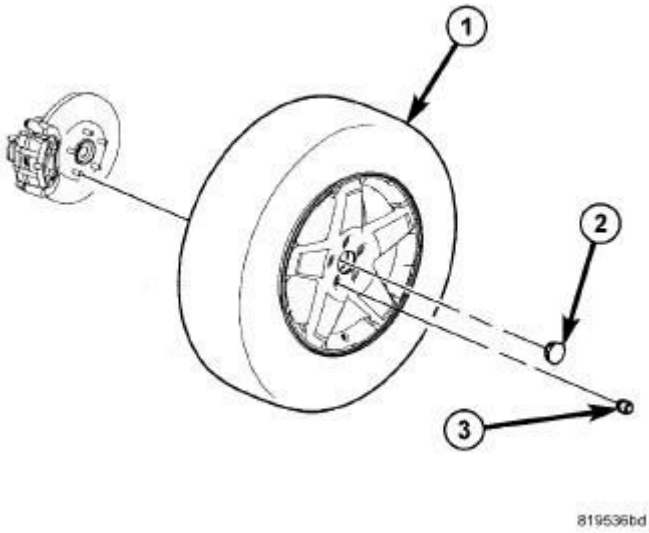

Fig. 61: Tire And Wheel Mounting
Courtesy of CHRYSLER GROUP, LLC

3. Remove the wheel mounting nuts (3), then the rear tire and wheel assembly.

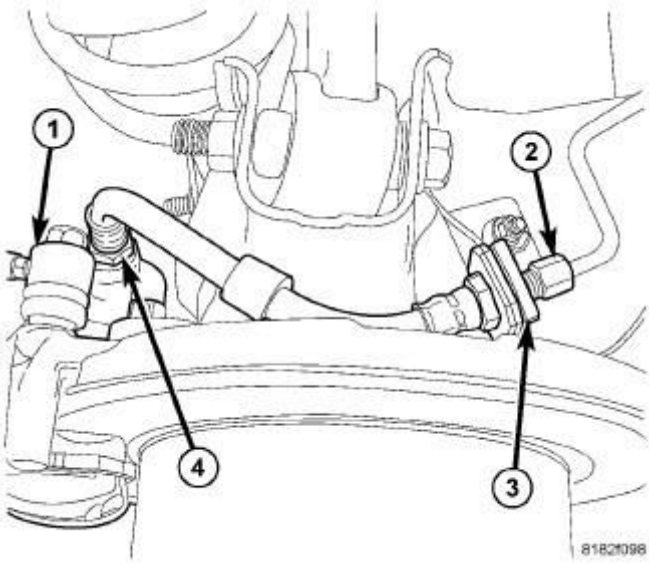

Fig. 62: Rear Flex Hose
Courtesy of CHRYSLER GROUP, LLC

4. Unthread the brake tube nut (2) at the rear flex hose.
5. Remove the clip (3) securing the rear flex hose to the trailing link mounted bracket. Remove the flex hose from the bracket.
6. Unthread and remove the brake flex hose (4) from the brake caliper (1).

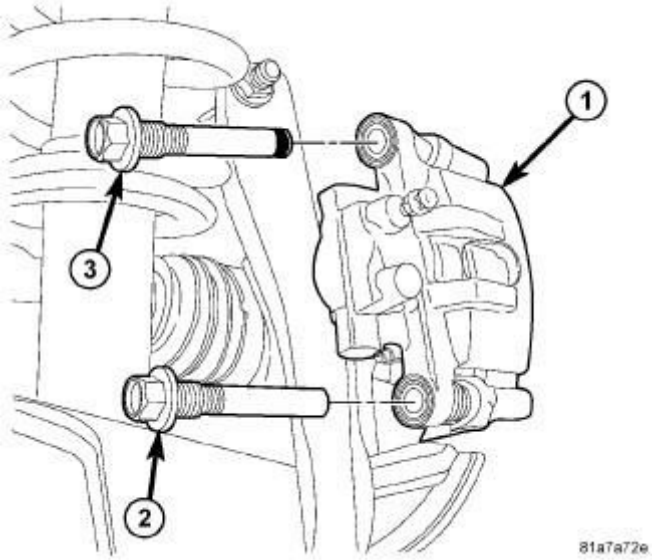

Fig. 63: Rear Caliper Guide Pin Bolts
Courtesy of CHRYSLER GROUP, LLC

NOTE: When removing the caliper guide pin bolts (2, 3), note that one bolt has a special sleeve on the tip and the other does not. Depending on the build date, this special sleeve bolt (3) can be located in either the top or bottom location. When installing, make sure the bolts are put back in the same locations as when removed to avoid NVH issues.

7. Remove the two brake caliper guide pin bolts (2, 3).
8. Slide and remove the disc brake caliper (1) with outboard brake pad attached from the disc brake adapter bracket, inboard brake pad and rotor.
9. Remove the outboard brake pad from the caliper by prying the brake pad retaining clip over the raised area on the caliper. Slide the brake pad off of the brake caliper.

DISASSEMBLY

DISASSEMBLY

NOTE: Before disassembling the brake caliper, remove it from the vehicle. Refer to CALIPER, DISC BRAKE, REAR, REMOVAL.

NOTE: Before disassembling the brake caliper, clean and inspect it. Refer to CLEANING and INSPECTION . .

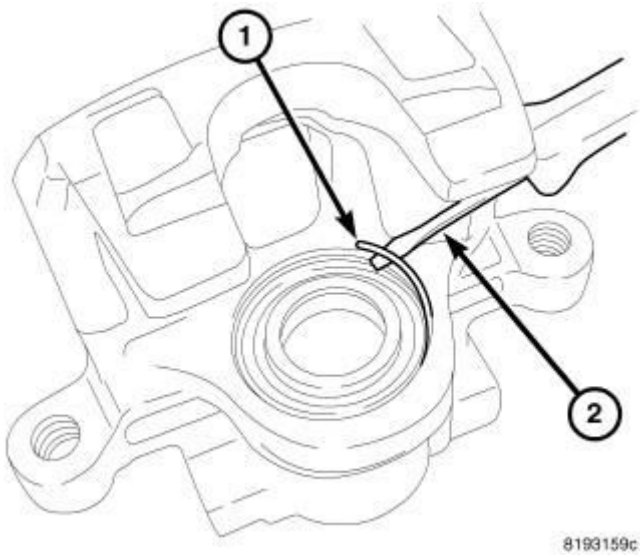

Fig. 64: Snap Ring Removal
Courtesy of CHRYSLER GROUP, LLC

1. With finger tip, trace around the outside perimeter of the piston dust boot to find the ends of the boot snap-ring.
2. Using a small screwdriver (2) or like tool, carefully remove the boot snap-ring (1) making sure not to damage the dust boot, piston or piston bore.
3. Carefully pull the piston dust boot away from the caliper boot groove.

WARNING: Under no condition should high pressure air ever be used to remove a piston from a caliper bore. Personal injury could result from such a practice.

CAUTION: Do not use excessive force when clamping caliper in vise. Excessive vise pressure will

cause bore distortion.

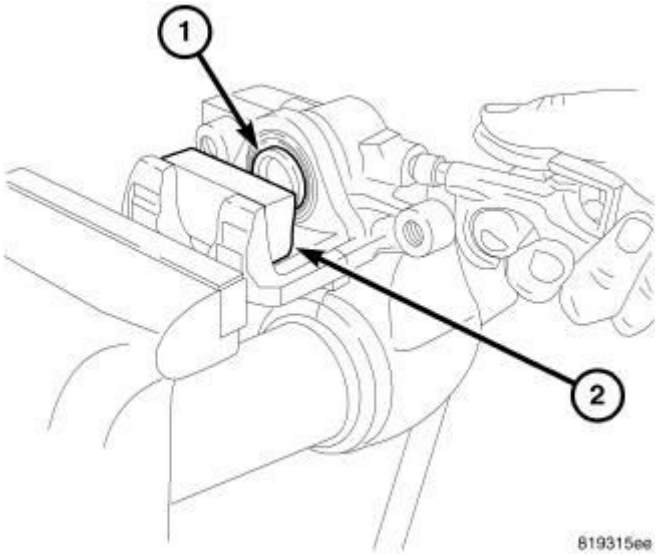

Fig. 65: Piston Removal
Courtesy of CHRYSLER GROUP, LLC

4. Mount the caliper in a vise equipped with protective jaws.

WARNING: Do not place face or hands near caliper and piston if using compressed air pressure to remove piston. Do not use high pressure.

5. Place a wooden block (2) in the caliper as shown in illustration.
6. As necessary, apply low pressure compressed air to the caliper fluid inlet in short spurts to force the piston (1) out.
7. Remove the piston (with dust boot) from the caliper.
8. Remove the dust boot from the piston and discard it.

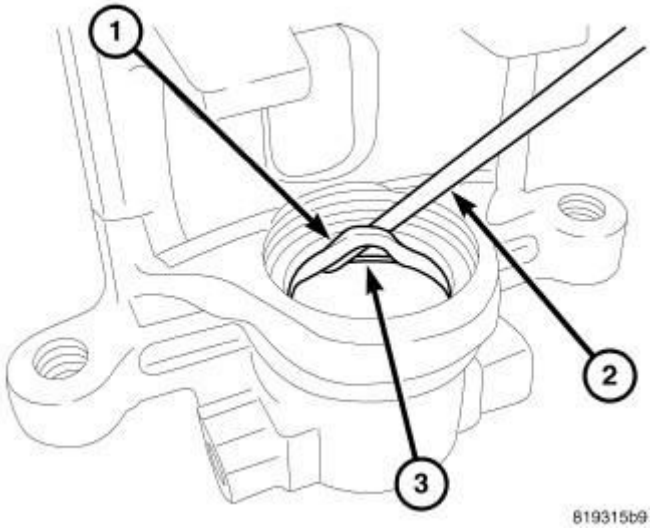

Fig. 66: Seal Removal
Courtesy of CHRYSLER GROUP, LLC

CAUTION: Do not use a screw driver or other metal tool for seal removal. Using such tools can scratch the bore or leave burrs on the seal groove edges.

9. Using a soft tool such as a plastic trim stick (2), work the piston seal (1) out of its groove (3) in the caliper piston bore. Discard the used seal.
10. Clean the piston bore and drilled passage ways with alcohol or a suitable solvent. Wipe it dry using only a lint-free cloth.
11. Inspect both the piston and bore for scoring or pitting. Bores that show light scratches or corrosion can usually be cleared of the light scratches or corrosion using crocus cloth.

CLEANING

CLEANING

WARNING: Chrysler LLC does not manufacture any vehicles or replacement parts that contain asbestos. Aftermarket products may or may not contain asbestos. Refer to aftermarket product packaging for product information.

Whether the product contains asbestos or not, dust and dirt can accumulate on brake parts

during normal use. Follow practices prescribed by appropriate regulations for the handling, processing and disposing of dust and debris.

To clean or flush the internal passages of the brake caliper, use fresh brake fluid or Mopar® Non-Chlorinated Brake Parts Cleaner. Never use gasoline, kerosene, alcohol, oil, transmission fluid or any fluid containing mineral oil to clean the caliper. These fluids will damage rubber cups and seals.

INSPECTION

INSPECTION

Inspect the disc brake caliper for the following:

- Brake fluid leaks in and around boot area and inboard lining
- Ruptures, brittleness or damage to the piston dust boot
- Damaged, dry or brittle guide pin dust boots

If caliper fails inspection, disassemble and recondition caliper, replacing the seals and dust boots.

ASSEMBLY

ASSEMBLY

NOTE: Always have clean hands when assembling a brake caliper.

NOTE: Always use fresh, clean brake fluid when assembling a brake caliper.

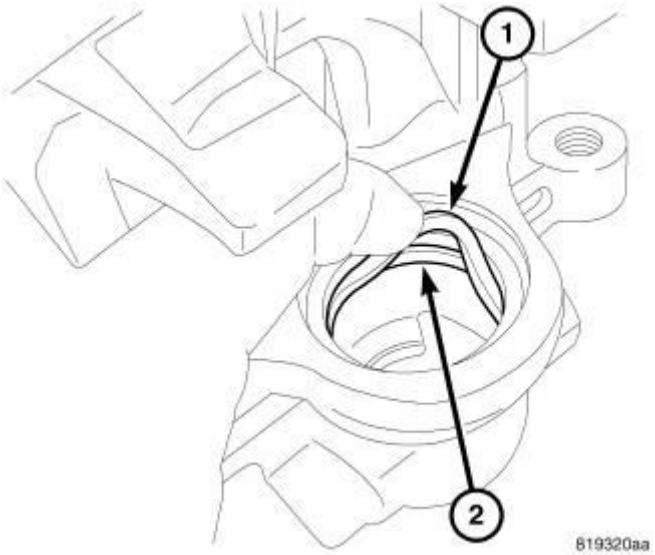

Fig. 67: Seal Installation
Courtesy of CHRYSLER GROUP, LLC

NOTE: Never use an old piston seal.

1. Dip the NEW piston seal in clean brake fluid and install it in the groove (2) of the caliper piston bore. The seal (1) should be started at one area of the groove and gently worked around into the groove using only clean finger tips to seat it.

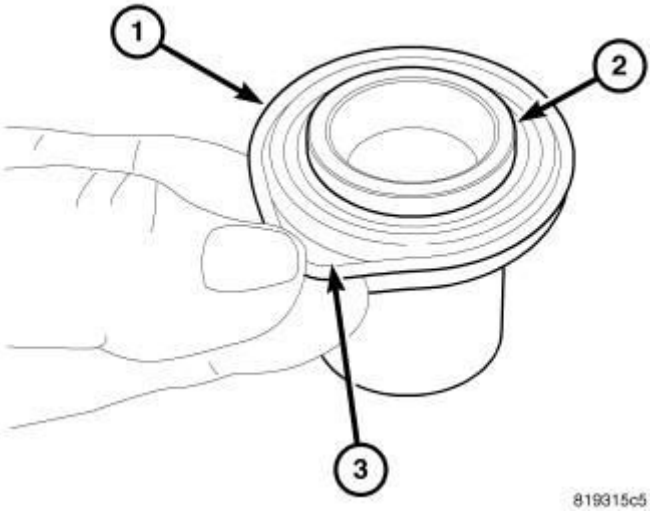

Fig. 68: Positioning The Dust Boot Over The Top Of The Piston
Courtesy of CHRYSLER GROUP, LLC

2. Coat the NEW piston dust boot (1) with clean brake fluid leaving a generous amount inside the boot.

3. Position the dust boot over the top of the piston (2) and into the piston groove. Make sure the side of the dust boot with the outer lip (3) for the boot snap-ring is positioned upward as shown in illustration.
4. Coat the piston with clean brake fluid.

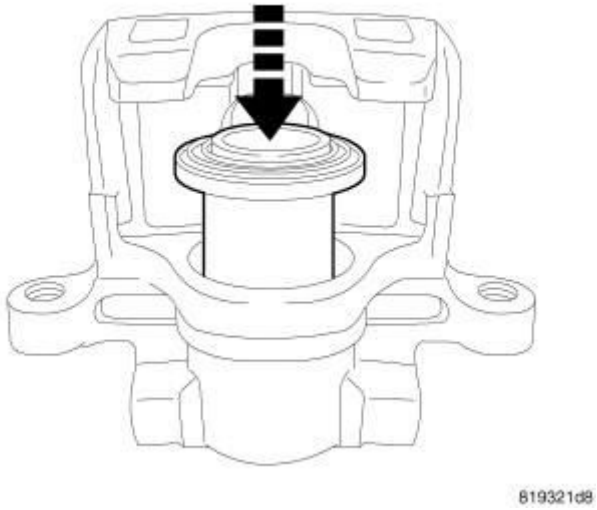

Fig. 69: Piston Installation
Courtesy of CHRYSLER GROUP, LLC

CAUTION: Force applied to the piston to seat it in the bore must be applied uniformly to avoid cocking and binding of the piston.

5. Insert the piston into the caliper bore, carefully pushing it past the piston seal using **hand pressure** . Push the piston in until it bottoms in the caliper bore.

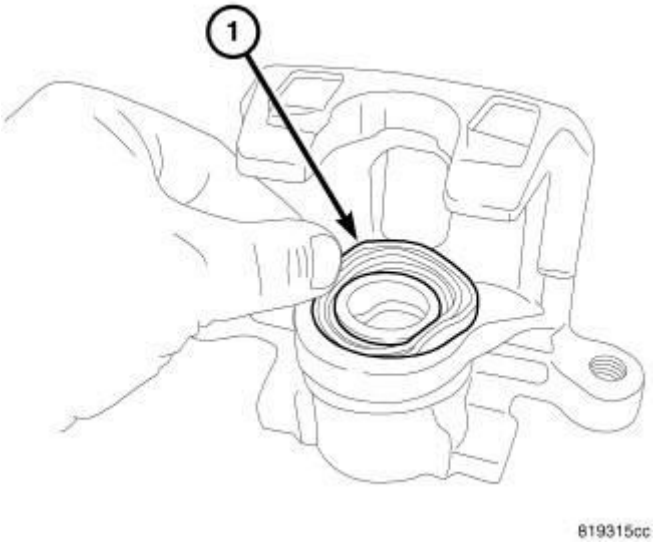

Fig. 70: Installing Boot In Groove
Courtesy of CHRYSLER GROUP, LLC

6. With finger tips, seat the dust boot lip (1) into the boot groove in the caliper bore. Trace around the outside perimeter of the dust boot with a finger tip making sure the lip is properly seated in the groove and not much air is trapped behind the boot.

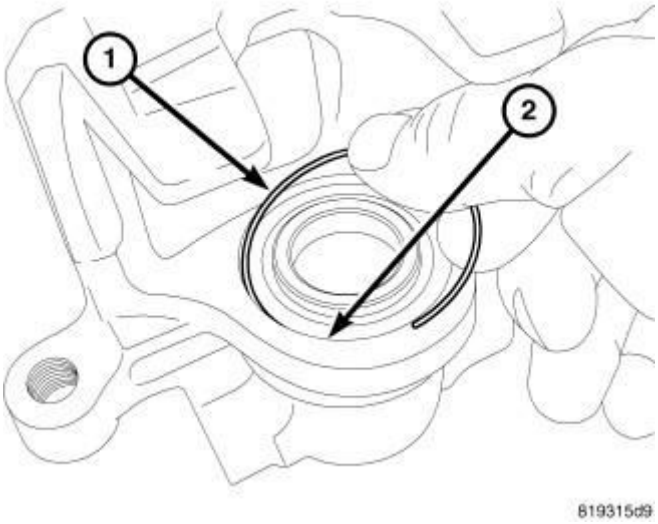

Fig. 71: Snap Ring Installation
Courtesy of CHRYSLER GROUP, LLC

7. Position one end of the boot snap-ring (1) inside the boot outer lip (2), then making a circular motion, walk the snap-ring around the boot lip, completely installing and seating it.
8. Inspect whether the two ends of the boot snap-ring are not overlapping one

another. If they are, push the snap ring and dust boot further into groove removing any overlap of the snap-ring.

9. Install the caliper on the vehicle and bleed the brakes as necessary. Refer to **CALIPER, DISC BRAKE, REAR, INSTALLATION**.

INSTALLATION

INSTALLATION

1. If not already performed, completely retract the caliper piston back into the piston bore of the caliper. Use a C-clamp to retract the piston. Place a wood block over the piston before installing the C-clamp to avoid damaging the piston.
2. Slide the outboard brake pad onto the caliper. Be sure the retaining clip is squarely seated in the depressed areas on the caliper beyond the raised retaining bead.

CAUTION: Use care when installing the caliper onto the disc brake adapter to avoid damaging the guide pin boots.

3. Install the disc brake caliper with outboard brake pad attached over the inboard brake pad and rotor, onto the brake caliper adapter bracket.

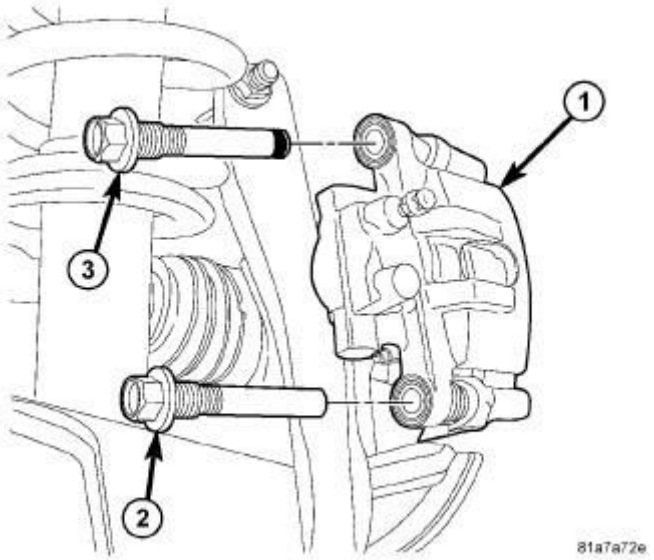

Fig. 72: Rear Caliper Guide Pin Bolts
Courtesy of CHRYSLER GROUP, LLC

NOTE: When installing the caliper guide pin bolts (2, 3), make sure the bolts are put back in the same locations as when removed to avoid NVH issues. Depending on the build date and services performed, the location of the bolt with the special sleeve on the tip (3) can vary.

4. Align the caliper guide pin bolt holes with the adapter bracket. Install the lower (with special sleeve) (2) and upper (3) caliper guide pin bolts. Tighten the guide pin bolts to 43 N.m (32 ft. lbs.).

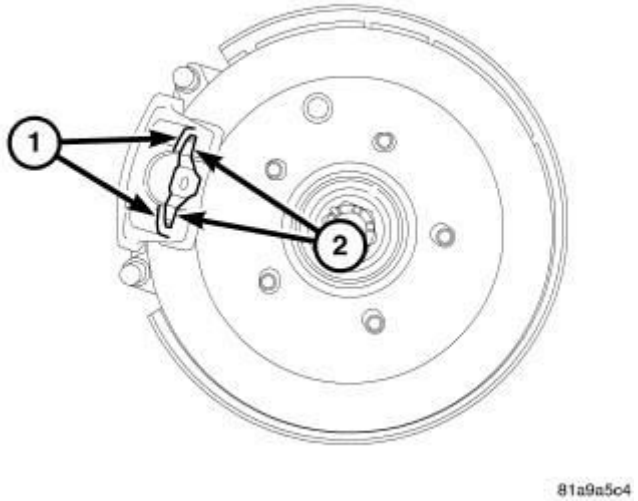

Fig. 73: Outboard Pad Correctly Positioned
Courtesy of CHRYSLER GROUP, LLC

NOTE: Once the caliper is installed, inspect the outboard brake pad to make sure it is correctly positioned. The retaining clip (2) must be squarely seated in the depressed areas (1) on the caliper fingers. Also, the nubs on the pad's steel backing plate must be fully seated in the depressions formed into the inside of the caliper fingers. There should be no gap between the pad backing plate and the caliper fingers.

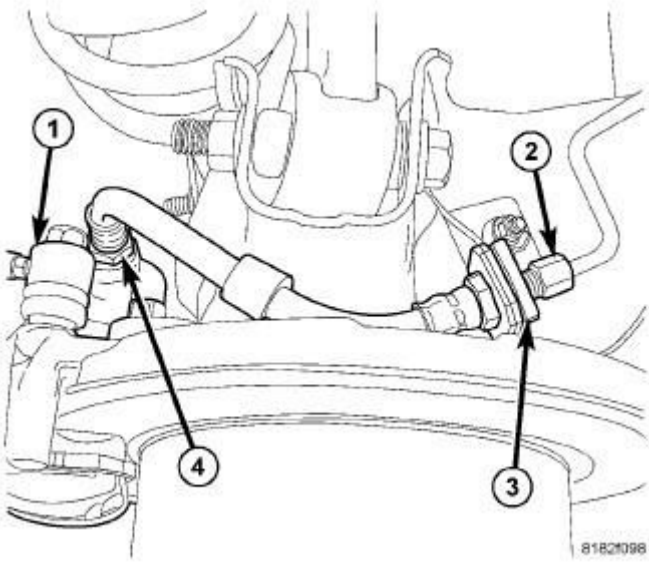

Fig. 74: Rear Flex Hose
Courtesy of CHRYSLER GROUP, LLC

5. Thread the rear brake flex hose (4) into the brake caliper (1). Tighten the flex hose fitting at the caliper to 15 N.m (133 in. lbs.).
6. Route and install the brake flex hose into the trailing link mounted bracket. Install the clip (3) securing the flex hose to the bracket.
7. Thread the brake tube nut (2) into brake flex hose. Tighten the brake tube nut to 17 N.m (150 in. lbs.).

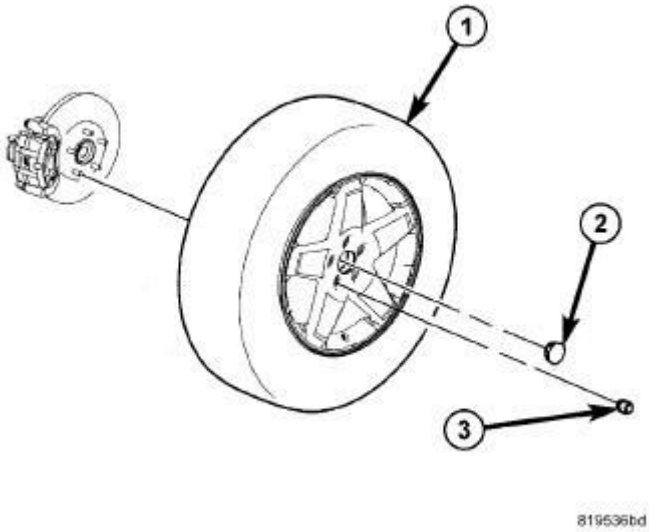

Fig. 75: Tire And Wheel Mounting
Courtesy of CHRYSLER GROUP, LLC

8. Install the tire and wheel assembly (1). Refer to **INSTALLATION** . Install and tighten the wheel mounting nuts (3) to 125 N.m (92 ft. lbs.).
9. Lower the vehicle.

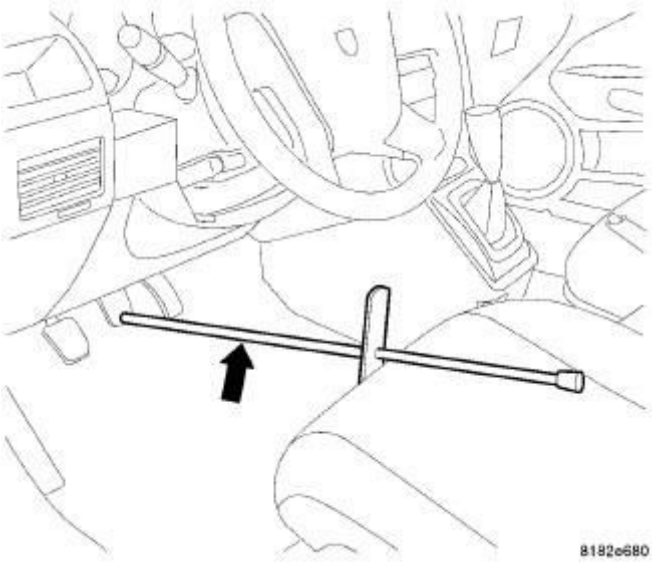

Fig. 76: Brake Pedal Holding Tool
Courtesy of CHRYSLER GROUP, LLC

10. Remove the brake pedal holding tool.

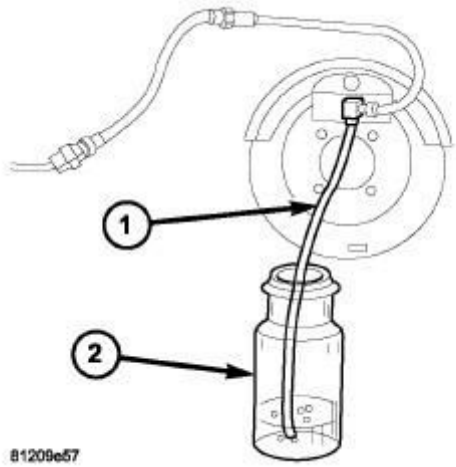

Fig. 77: Bleeding Brakes
Courtesy of CHRYSLER GROUP, LLC

11. Bleed the caliper as necessary. Refer to **STANDARD PROCEDURE** .
12. Road test the vehicle and make several stops to wear off any foreign material on the brakes and to seat the brake shoes.

CYLINDER ASSEMBLY, WHEEL

REMOVAL

REMOVAL

NOTE: Before proceeding, refer to CAUTION and WARNING.

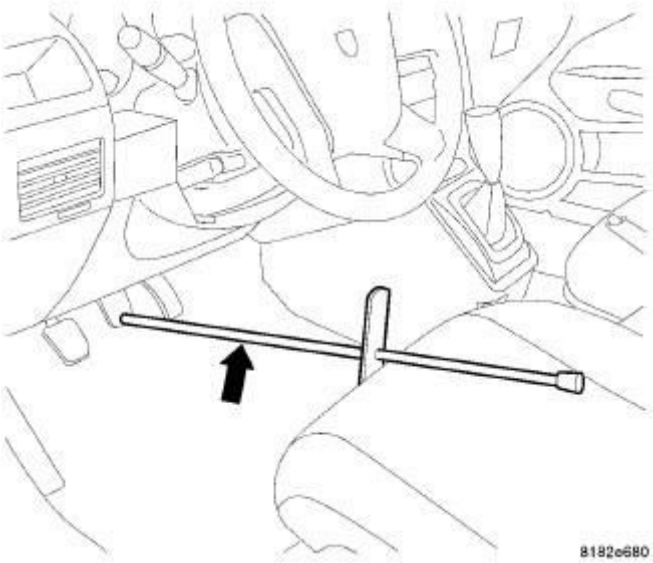

Fig. 78: Brake Pedal Holding Tool
Courtesy of CHRYSLER GROUP, LLC

1. Using a brake pedal holder, depress the brake pedal past its first one inch of travel and hold it in this position. This will isolate the master cylinder from the brake hydraulic system and will not allow the brake fluid to drain out of the master cylinder reservoir.
2. Raise and support the vehicle. Refer to **HOISTING, STANDARD PROCEDURE** .

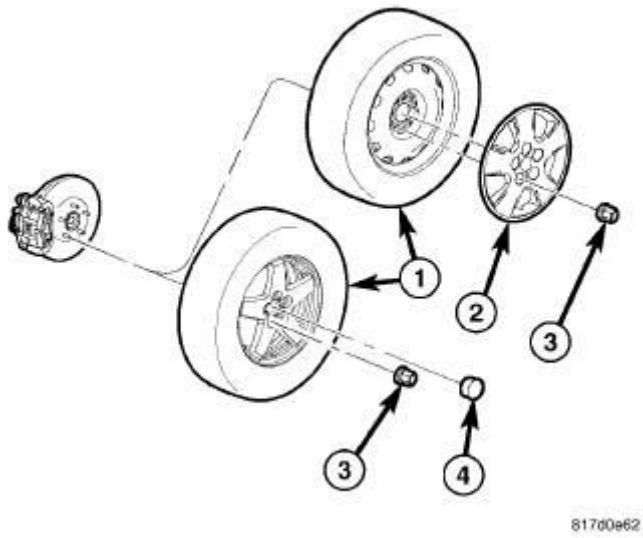

Fig. 79: Tire & Wheel Mounting
Courtesy of CHRYSLER GROUP, LLC

3. Remove the wheel mounting nuts (3), then the tire and wheel assembly.

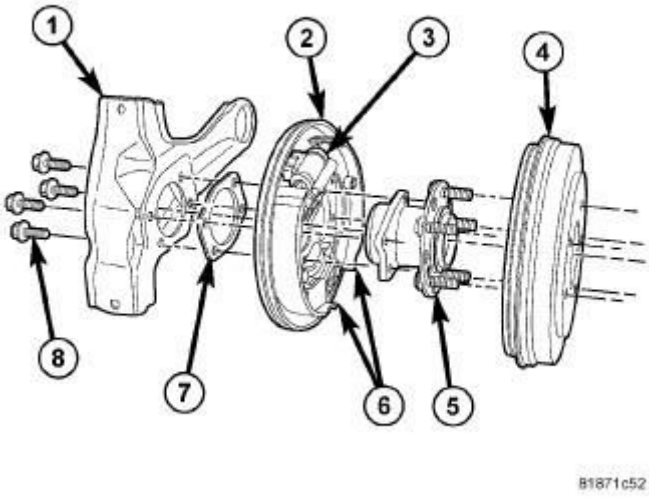

Fig. 80: Rear Drum Brakes
Courtesy of CHRYSLER GROUP, LLC

4. Access and remove the drum brake shoes (6) from the support plate (2). Refer to **SHOES, BRAKE, REMOVAL**.

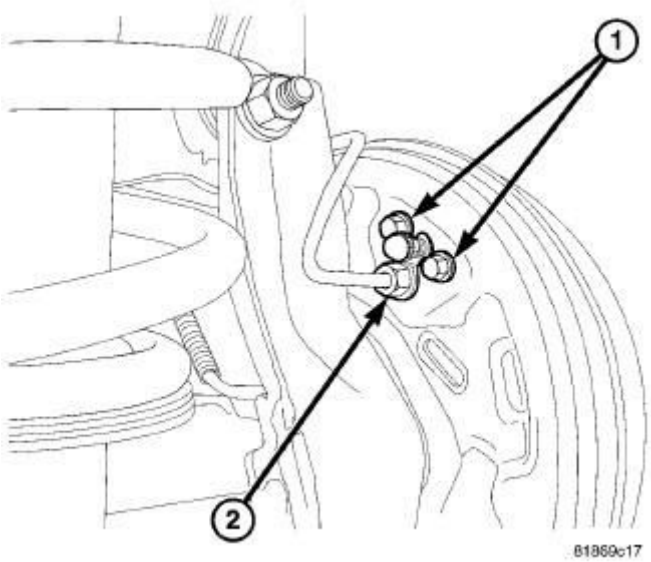

Fig. 81: Wheel Cylinder Brake Tube & Screws
Courtesy of CHRYSLER GROUP, LLC

5. Disconnect the brake tube (2) at the wheel cylinder.
6. Remove the wheel cylinder attaching screws (1).
7. Remove the wheel cylinder from the support plate.

INSPECTION

INSPECTION

With the brake drum removed, inspect the wheel cylinder boots for evidence of a brake fluid leak. Visually check the boots for cuts, tears, or heat cracks. If any of these conditions exist, the wheel cylinders must be replaced.

If a wheel cylinder is leaking and the brake lining material is saturated with brake fluid, the brake shoes must be replaced.

INSTALLATION

INSTALLATION

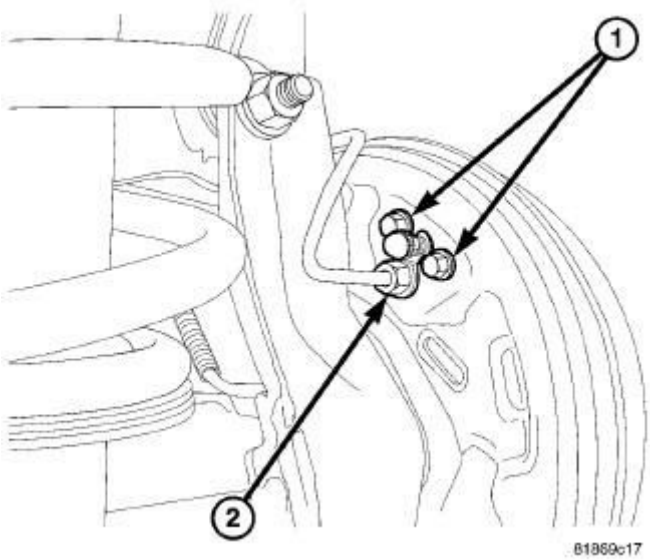

Fig. 82: Wheel Cylinder Brake Tube & Screws
Courtesy of CHRYSLER GROUP, LLC

1. Install the wheel cylinder onto the brake support plate. Install and tighten the mounting screws (1) to 13 N.m (115 in. lbs.).
2. Hand start the brake tube nut (2) into the wheel cylinder (1). Tighten the tube nut to 17 N.m (150 in. lbs.).

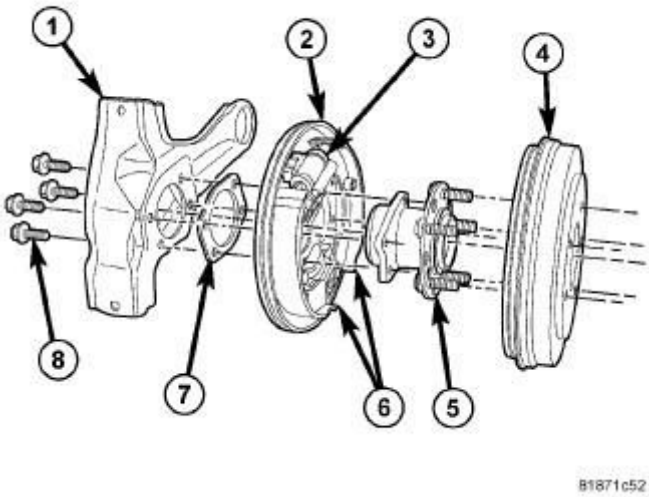

Fig. 83: Rear Drum Brakes
Courtesy of CHRYSLER GROUP, LLC

NOTE: Inspect the brake shoes before installation. Refer to SHOES, BRAKE, INSPECTION.

3. Install the drum brake shoes (6) and drum. Adjust shoes as necessary, refer to **SHOES, BRAKE, INSTALLATION**.

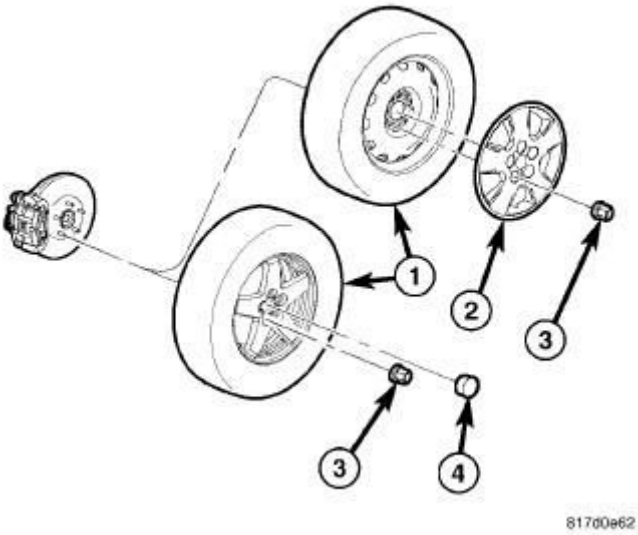

Fig. 84: Tire & Wheel Mounting
Courtesy of CHRYSLER GROUP, LLC

4. Install the tire and wheel assembly (1). Refer to **INSTALLATION** . Install and tighten the wheel mounting nuts (3) to 125 N.m (92 ft. lbs.).
5. Slowly rotate the rear wheel and verify that the brake drum **lightly** drags on the shoes.
6. Lower the vehicle.

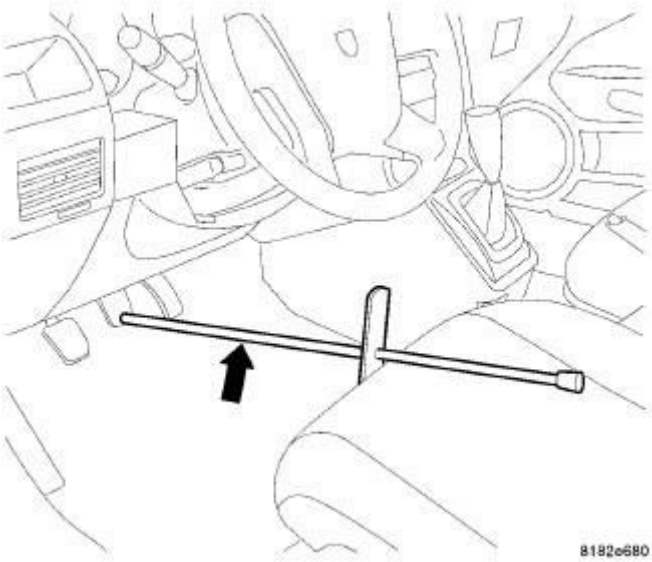

Fig. 85: Brake Pedal Holding Tool

Courtesy of CHRYSLER GROUP, LLC

7. Remove the brake pedal holder.
8. Bleed the wheel cylinder as necessary. Refer to **STANDARD PROCEDURE** .
9. Road test the vehicle to make sure the brakes operate correctly.

DRUM, BRAKE

DIAGNOSIS AND TESTING

DIAGNOSIS AND TESTING - BRAKE DRUM

With the drum off the vehicle, measure the drum for diameter variation (oval shape). The diameter variation of the drum braking surface must not exceed specifications listed in the following table.

Measure brake drum runout. Brake drum runout should be checked with the drum mounted on a brake lathe. Brake drum runout should not exceed specifications listed in the following table.

If either of these measurements are not within specification, reface or replace the drum. Refer to **DRUM, BRAKE, STANDARD PROCEDURE**.

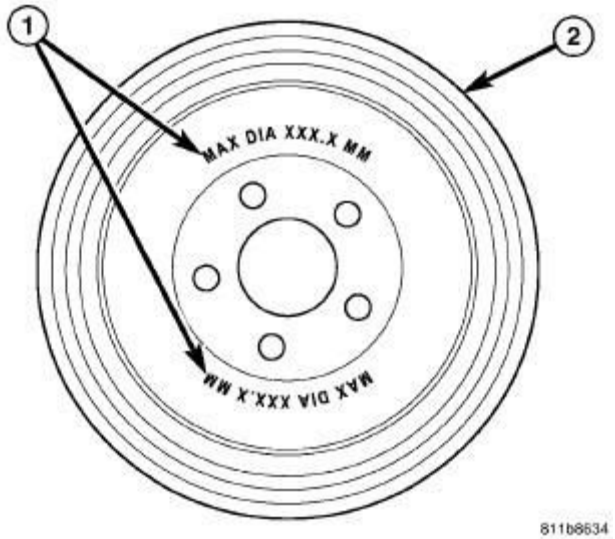

Fig. 86: Drum Maximum Diameter Identification (Inside Drum)
Courtesy of CHRYSLER GROUP, LLC

Always replace the drum if machining will cause the diameter to exceed drum

maximum diameter. All brake drums (2) are marked on the inside with the maximum allowable brake drum diameter (1). Maximum brake drum diameter can also be found in the following table.

BRAKE DRUM LIMITS

SALES CODE	DIAMETER VARIATION	RUNOUT	MAXIMUM DIAMETER
ALL	0.20 mm (0.008 in.)	0.06 mm (0.002 in.)	230.60 mm (9.079 in.)

STANDARD PROCEDURE

STANDARD PROCEDURE - BRAKE DRUM MACHINING

If a brake drum is deeply scored or warped, it can be machined on a brake lathe equipped to machine brake drums. Follow the manufacturers instructions on the machining procedure.

Measure the brake drum diameter before machining. If machining the drum will cause the drum to exceed maximum allowable diameter, do not machine the brake drum. It needs to be replaced.

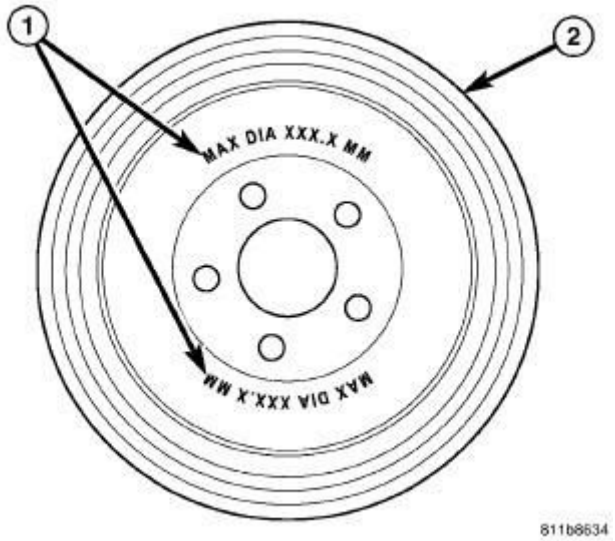

Fig. 87: Drum Maximum Diameter Identification (Inside Drum)
Courtesy of CHRYSLER GROUP, LLC

1 - MAXIMUM DIAMETER IDENTIFICATION MARKING
2 - BRAKE DRUM

CAUTION: Do not machine the brake drum if it will cause the drum to exceed maximum allowable diameter.

All brake drums (2) are marked with the maximum allowable brake drum diameter. All vehicles have it marked on the inside of the drum (1).

When machining, make sure the feed rate for the final cut is set to deliver a fine finish. A fine finish helps to avoid a screw effect on the brake shoes when the brakes are applied. This final feed cut specification varies from lathe manufacturer to lathe manufacturer.

REMOVAL

REMOVAL

NOTE: Before proceeding, refer to CAUTION and WARNING.

1. Raise vehicle. Refer to **HOISTING, STANDARD PROCEDURE** .

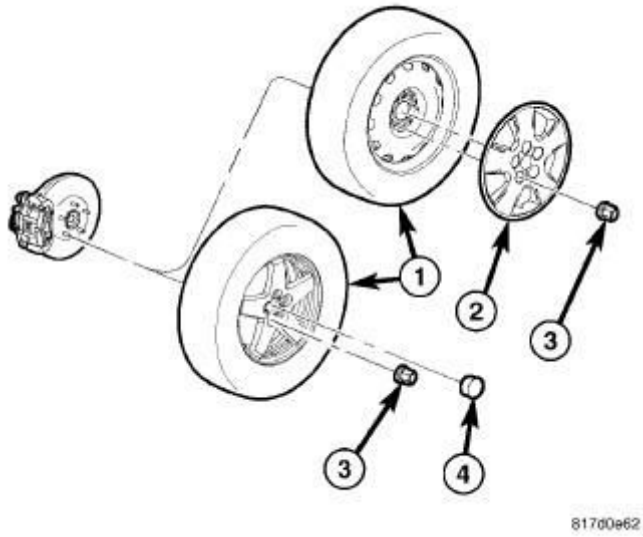

Fig. 88: Tire & Wheel Mounting
Courtesy of CHRYSLER GROUP, LLC

2. Remove the wheel mounting nuts (3), then the tire and wheel assembly.

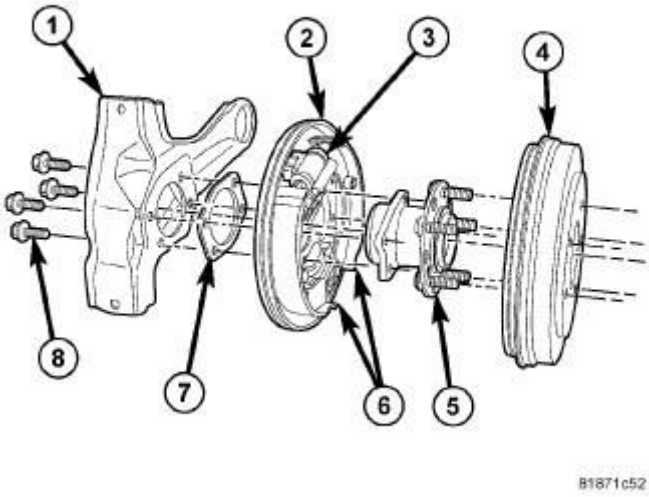

Fig. 89: Rear Drum Brakes
Courtesy of CHRYSLER GROUP, LLC

3. Slide the brake drum (4) off the wheel mounting studs of the hub and bearing (5) and remove it from the vehicle. If the drum does not come off, further brake clearance can be obtained by backing off the brake adjuster screw. To do so, perform the following procedure.

BACKING OFF SHOE ADJUSTMENT

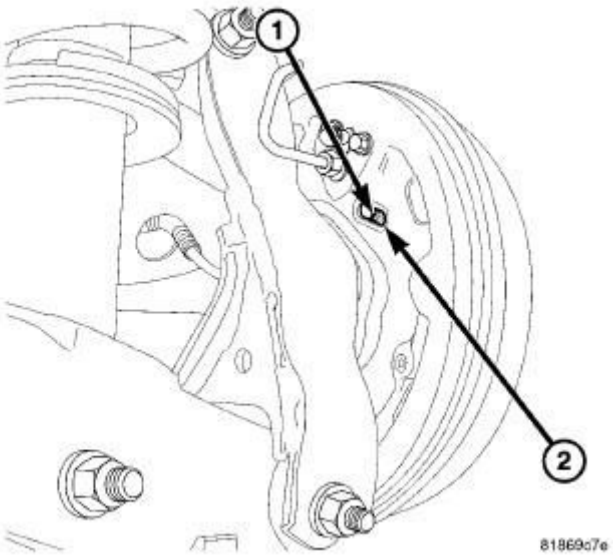

Fig. 90: View Of Adjuster Wheel Through Support Plate
Courtesy of CHRYSLER GROUP, LLC

1. Remove the plug from the rear of the support plate below the wheel

cylinder.

2. Insert a small screwdriver through the access hole (2) in the support plate, under the adjuster, against the lever pawl. The pawl is attached to and pivots from the rear brake shoe.
3. While pushing on the pawl with the screwdriver to disengage it from the adjuster wheel teeth, rotate the wheel (1) upward to back off the adjustment using another screwdriver or a brake adjuster tool.
4. Once the adjuster screw is backed off a sufficient amount, slide the drum off the wheel mounting studs.

INSTALLATION

INSTALLATION

NOTE: Before installing drum, inspect brake shoe linings for wear, alignment, and contamination. Repair or replace as necessary.

NOTE: If rust or any foreign material is present on hub, drum or wheel mating surfaces, wet wire brush these areas to remove prior to assembly of parts.

1. Properly remove any buildup formed along outer edge of drum's machined braking surface.
2. Adjust the brake shoes-to-drum diameter using a brake shoe gauge. Refer to **SHOES, BRAKE, ADJUSTMENTS**.

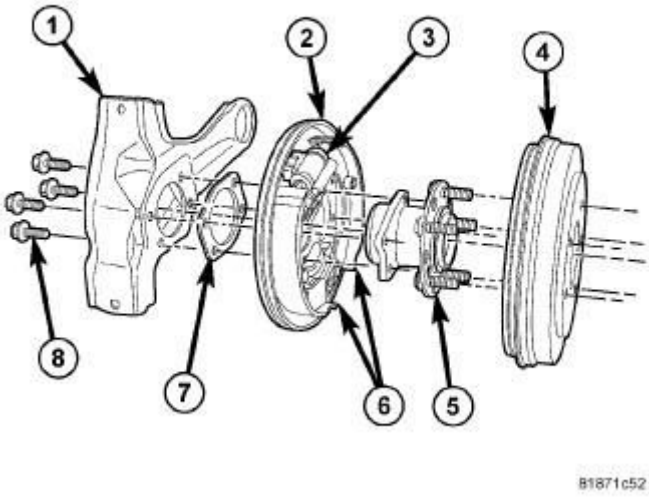

Fig. 91: Rear Drum Brakes
Courtesy of CHRYSLER GROUP, LLC

3. Slide the brake drum (4) onto the wheel mounting studs on the hub and bearing (5).

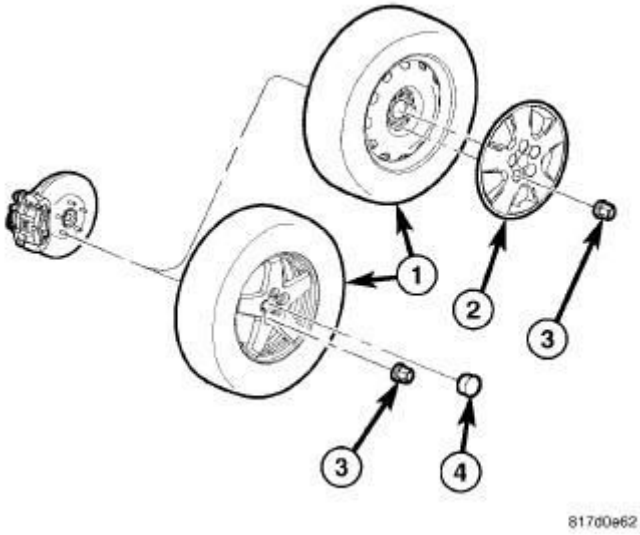

Fig. 92: Tire & Wheel Mounting
Courtesy of CHRYSLER GROUP, LLC

4. Install the tire and wheel assembly (1). Refer to **INSTALLATION** . Install and tighten the wheel mounting nuts (3) to 125 N.m (92 ft. lbs.).
5. Lower the vehicle.
6. Road test the vehicle stopping in both forward and reverse directions. The

automatic-adjuster will continue to adjust the brakes as necessary during the road test.

FLUID

DIAGNOSIS AND TESTING

DIAGNOSIS AND TESTING - BRAKE FLUID CONTAMINATION

Indications of fluid contamination are swollen or deteriorated rubber parts. Swelling indicates the presence of petroleum in the brake fluid.

To test for contamination, put a small amount of drained brake fluid in clear glass jar. If the fluid separates into layers, there is mineral oil or other fluid contamination of the brake fluid.

If the brake fluid is contaminated, drain and thoroughly flush the brake system. Replace all the rubber parts or components containing rubber coming into contact with the brake fluid including: the master cylinder and reservoir; proportioning valves (non-ABS); caliper seals; wheel cylinder seals; ABS hydraulic control unit; and all hydraulic fluid hoses.

SPECIFICATIONS

SPECIFICATIONS

The brake fluid used in this vehicle must conform to DOT 3 specifications and SAE J1703 standards. No other type of brake fluid is recommended or approved for usage in the vehicle brake system. Use only Mopar® Brake Fluid DOT 3 Motor Vehicle or equivalent from a tightly sealed container.

CAUTION: Never use reclaimed brake fluid or fluid from a container which has been left open. An open container will absorb moisture from the air and contaminate the fluid.

CAUTION: Never use any type of a petroleum-based fluid in the brake hydraulic system. Use of such type fluids will result in seal damage of the vehicle brake hydraulic system causing a failure of the vehicle brake system. Petroleum based fluids would be items such as engine oil, transmission fluid, power

steering fluid, etc.

MASTER CYLINDER, BRAKE

DESCRIPTION

DESCRIPTION

The master cylinder used on this vehicle is a Plunger II design supplied by Continental Teves. The bore diameter for all applications is 20.6 mm (0.812 in.).

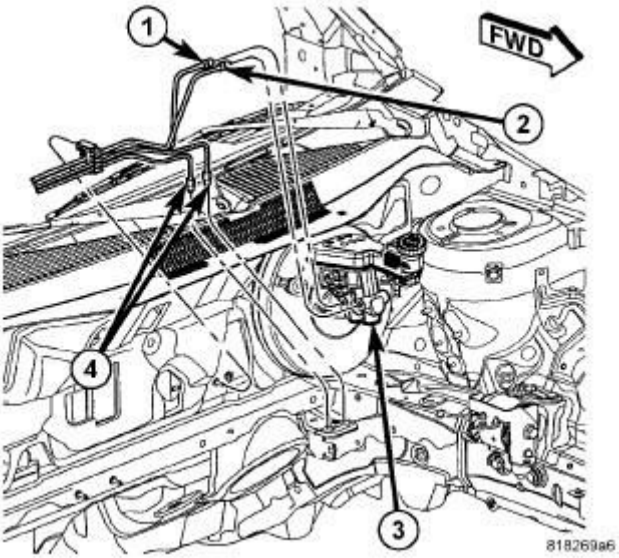

Fig. 93: Primary And Secondary Brake Tubes To ICU
Courtesy of CHRYSLER GROUP, LLC

All master cylinders (3) are a two-outlet design and the brake tubes from these primary and secondary outlet ports lead directly to the Integrated Control Unit (ICU) before going to each wheel brake.

The master cylinder body is an anodized aluminum casting. It has a machined bore to accept the master cylinder pistons and also has threaded ports with seats for hydraulic brake tube connections.

The master cylinder has the brake fluid reservoir mounted on top of it which gravity feeds brake fluid to the master cylinder when it is required. On manual transmission model vehicles the brake fluid reservoir also feeds the clutch hydraulic circuit. The reservoir is made of see-through plastic and it houses the brake fluid level switch. A removable brake fluid level switch is mounted in the right side.

OPERATION

OPERATION

NOTE: The Electronic Stability Control (ESC) may also be referred to as Electronic Stability Program (ESP) depending on the vehicle model year and configuration. Certain components may also reference ESP, ESC, or use the traction control symbol.

When the brake pedal is pressed, the master cylinder primary and secondary pistons apply brake pressure through the ABS Integrated Control Unit (ICU) and chassis brake tubes to each brake assembly. The brake fluid reservoir supplies the brake hydraulic system with the necessary fluid to operate properly.

ABS (ESC) equipped master cylinder outlet ports supply hydraulic pressure to the ABS ICU where it is distributed to the individual wheel brakes.

The master cylinder reservoir cap diaphragm is slit to allow atmospheric pressure to equalize on both sides of the diaphragm.

DIAGNOSIS AND TESTING

DIAGNOSIS AND TESTING - MASTER CYLINDER/POWER BOOSTER

1. Start the engine and check the booster vacuum hose connections. A hissing noise indicates a vacuum leak. Correct any vacuum leaks before proceeding.
2. Stop the engine and pump the brake pedal until all vacuum reserve in the booster is depleted.
3. Press and hold the brake pedal under light foot pressure. The pedal should hold firm. If the pedal falls away, there may be an external leak or the master cylinder is faulty (internal leakage).
4. Start the engine and note pedal action. It should fall away slightly under light foot pressure, then hold firm. If no pedal action is discernible, the power booster, vacuum supply or vacuum check valve is faulty, proceed to the POWER BOOSTER VACUUM TEST.
5. If the POWER BOOSTER VACUUM TEST passes, rebuild the booster vacuum reserve as follows: Release the brake pedal. Increase engine speed to 1500 RPM, close the throttle and immediately turn off the ignition to stop the engine.

6. Wait a minimum of 90 seconds and try brake action again. The booster should provide two or more vacuum assisted pedal applications. If the vacuum assist is not provided, the booster is faulty.

POWER BOOSTER VACUUM TEST

1. Connect a vacuum gauge to the booster check valve with a short length of hose and T-fitting.
2. Start and run the engine at curb idle for one minute.
3. Observe the vacuum supply. If the vacuum supply is less that 12 inches HG (406 millibars), repair the vacuum supply.
4. Clamp the hose shut between the intake vacuum source and the check valve.
5. Stop the engine and observe the vacuum gauge.
6. If the vacuum drops more than one inch HG (33 millibars) within 15 seconds, the booster diaphragm or check valve is faulty.

POWER BOOSTER CHECK VALVE TEST

1. Remove the power booster check valve from the power booster.
2. Using a hand operated vacuum pump, apply 15-20 inches HG (508-677 millibars) vacuum at the booster side of the check valve.
3. The vacuum should hold steady. If the gauge on the pump indicates vacuum loss, the check valve is faulty and should be replaced.

STANDARD PROCEDURE

STANDARD PROCEDURE - MASTER CYLINDER BLEEDING

NOTE: On vehicles without ABS this procedure is designed to be performed with the proportioning valves installed in the master cylinder.

1. Clamp the master cylinder in a vise with soft-jaw caps.

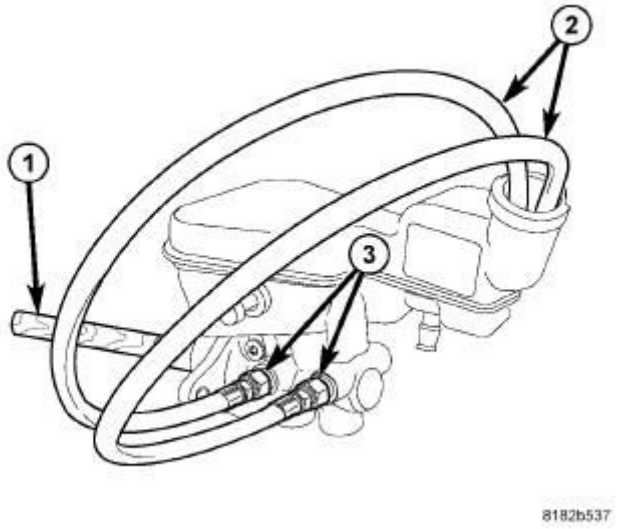

Fig. 94: Bleeding Master Cylinder With ABS
Courtesy of CHRYSLER GROUP, LLC

2. Attach the special tools for bleeding the master cylinder in the following fashion:
   a. Thread Bleeder Tube Adapters (3), Special Tool (special tool #8822-2, Adapter, M12 X 1.0), into the primary and secondary outlet ports of the master cylinder. Tighten Adapters to 17 N.m (150 in. lbs.).
   b. Thread a Bleeder Tube (2), Special Tool (special tool #8358-1, Bleed Tube), into each Adapter. Tighten tube nuts to 17 N.m (150 in. lbs.).
   c. Flex each Bleeder Tube and place the open ends into the neck of the master cylinder reservoir. Position the open ends of the tubes into the reservoir so their outlets are below the surface of the brake fluid in the reservoir when filled.

NOTE: Make sure the ends of the Bleeder Tubes stay below the surface of the brake fluid in the reservoir at all times during the bleeding procedure.

3. Fill the brake fluid reservoir with fresh Mopar® Brake Fluid DOT 3 Motor Vehicle, or equivalent. Refer to **FLUID, SPECIFICATIONS**.
4. Using an appropriately sized wooden dowel as a pushrod, slowly press the pistons inward discharging brake fluid through the Bleeder Tubes, then release the pressure, allowing the pistons to return to the released position. Repeat this several times until all air bubbles are expelled from the master

cylinder bore and Bleeder Tubes.

5. Remove the Bleeder Tubes and Adapters from the master cylinder and plug the master cylinder outlet ports.
6. Install the fill cap on the reservoir.
7. Remove the master cylinder from the vise.
8. Install the master cylinder on the vehicle. Refer to **MASTER CYLINDER, BRAKE, INSTALLATION**.

REMOVAL

MASTER CYLINDER

NOTE: Before proceeding, refer to CAUTION and WARNING.

CAUTION: The vacuum in the power brake booster must be pumped down before removing the master cylinder to prevent the booster from sucking in any contamination. This can be done by pumping the brake pedal while the engine is not running until a firm brake pedal is achieved.

1. With the engine not running, pump the brake pedal 4-5 strokes until the pedal feel is firm.
2. Disconnect the negative (ground) cable from the battery and isolate the cable.

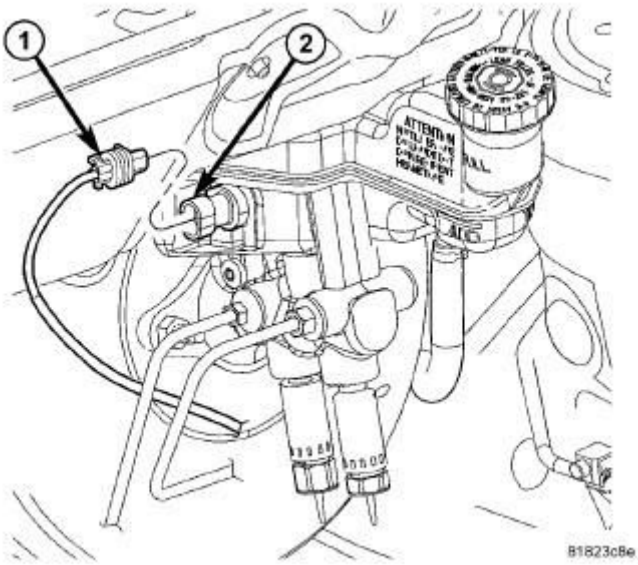

Fig. 95: Brake Fluid Level Switch Connector
Courtesy of CHRYSLER GROUP, LLC

3. Disconnect the wiring harness connector (1) from the brake fluid level switch (2) in the master cylinder brake fluid reservoir.

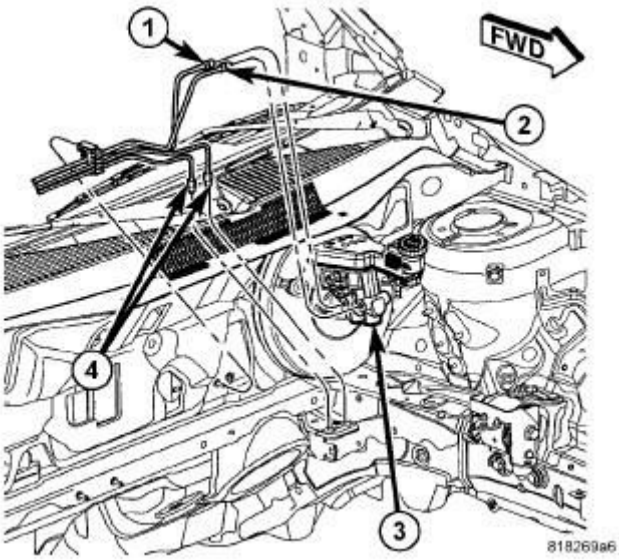

Fig. 96: Primary And Secondary Brake Tubes To ICU
Courtesy of CHRYSLER GROUP, LLC

4. Disconnect the primary (1) and secondary (2) brake tubes at the master cylinder outlet ports. Install plugs at all of the open brake tube outlets on the master cylinder.

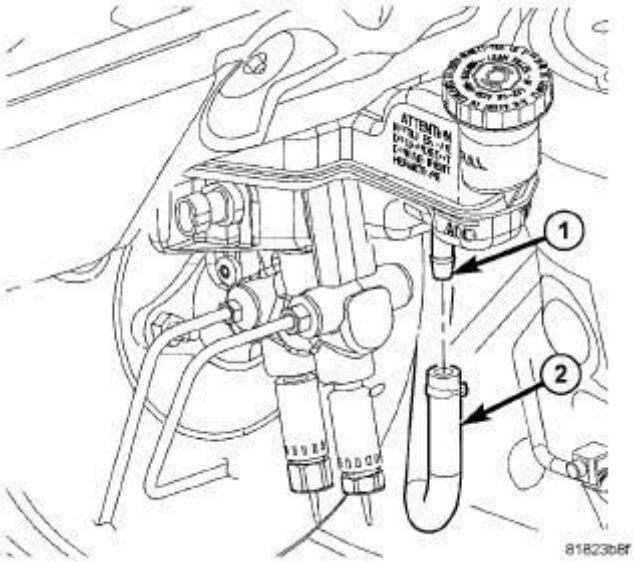

Fig. 97: Clutch Actuator Hose At Master Cylinder

Courtesy of CHRYSLER GROUP, LLC

5. If equipped with a manual transaxle, remove the clamp and slide the clutch actuator hose (2) off the reservoir port (1).

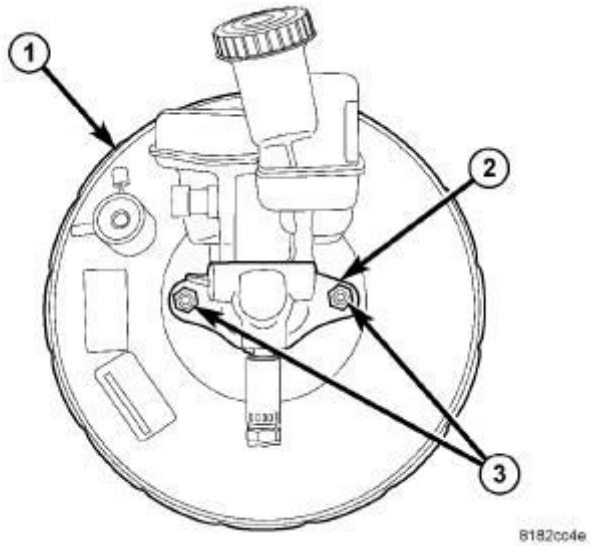

Fig. 98: Master Cylinder Mounting Nuts
Courtesy of CHRYSLER GROUP, LLC

6. Clean the area around where the master cylinder (2) attaches to the power brake booster (1) using a suitable brake cleaner such as Mopar® Brake Parts Cleaner or an equivalent.
7. Remove the two nuts (3) attaching the master cylinder (2) to the power brake booster (1).
8. Slide the master cylinder straight out of the power brake booster.

RIGHT-HAND-DRIVE

NOTE: Before proceeding, refer to CAUTION and WARNING.

CAUTION: The vacuum in the power brake booster must be pumped down before removing the master cylinder to prevent the booster from sucking in any contamination. This can be done by pumping the brake pedal while the engine is not running until a firm brake pedal is achieved.

1. With the engine not running, pump the brake pedal 4-5 strokes until the pedal feel is firm.
2. Disconnect the negative (ground) cable from the battery and isolate the cable.
3. Remove the engine appearance cover.

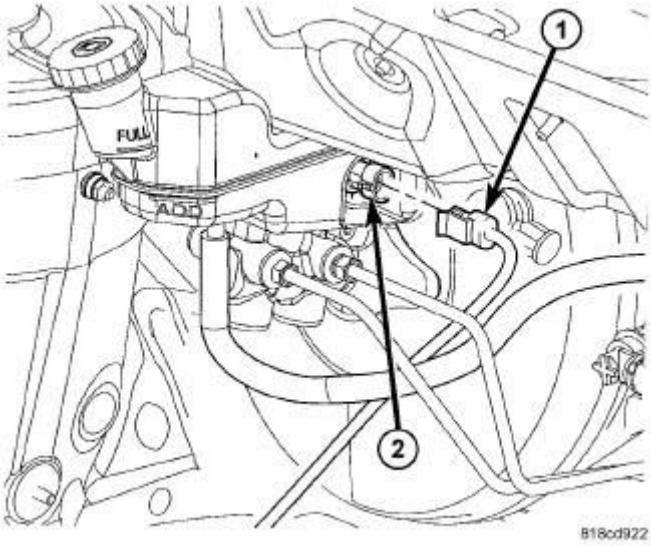

Fig. 99: Brake Fluid Level Switch Connector - RHD
Courtesy of CHRYSLER GROUP, LLC

4. Disconnect the wiring harness connector (1) from the brake fluid level switch (2) in the master cylinder brake fluid reservoir.

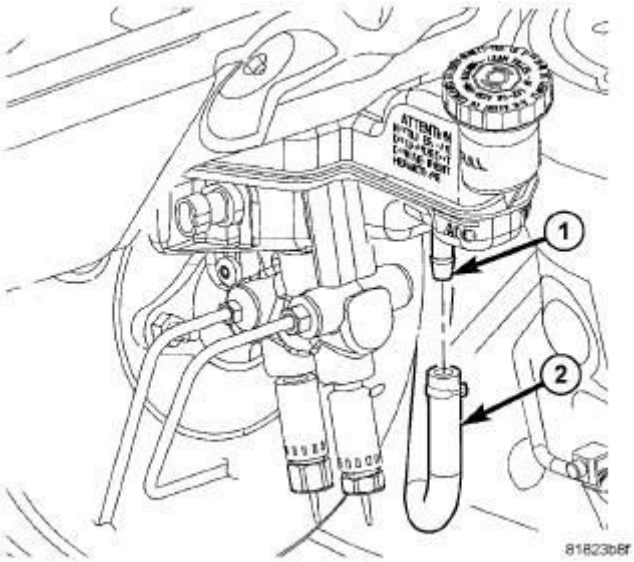

Fig. 100: Clutch Actuator Hose At Master Cylinder

Courtesy of CHRYSLER GROUP, LLC

5. If equipped with a manual transaxle, remove the clamp and slide the clutch actuator hose (2) off the reservoir port (1).

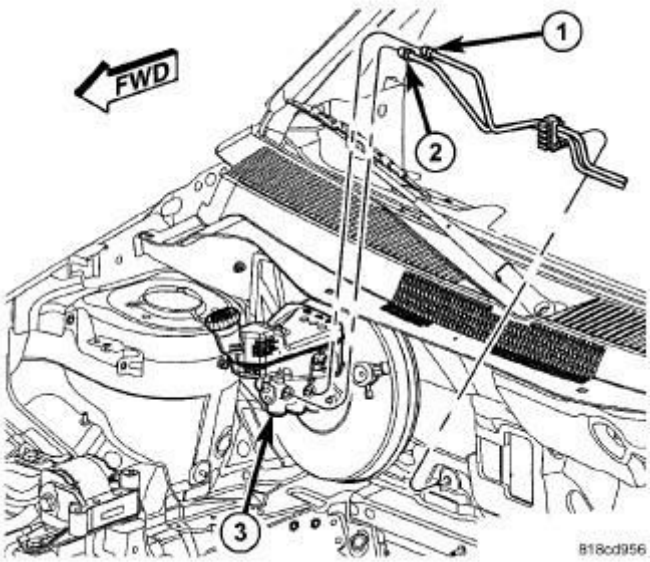

Fig. 101: Primary And Secondary Brake Tubes - RHD
Courtesy of CHRYSLER GROUP, LLC

6. Disconnect the primary (1) and secondary (2) brake tubes at the master cylinder outlet ports. Install plugs at both of the open brake tube outlets on the master cylinder.

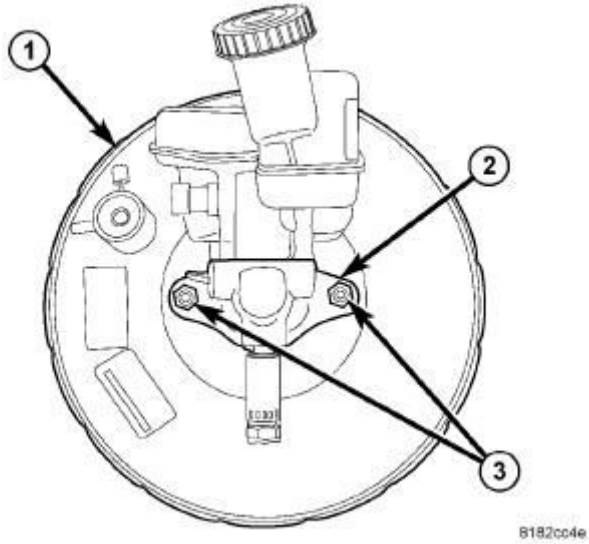

Fig. 102: Master Cylinder Mounting Nuts
Courtesy of CHRYSLER GROUP, LLC

7. Clean the area around where the master cylinder (2) attaches to the power brake booster (1) using a suitable brake cleaner such as Mopar® Brake Parts Cleaner or an equivalent.
8. Remove the two nuts (3) attaching the master cylinder (2) to the power brake booster (1).
9. Slide the master cylinder straight out of the power brake booster, then lower it below the air conditioning lines and remove it from the engine compartment inboard of the air conditioning lines.

DISASSEMBLY

DISASSEMBLY

1. Clean the master cylinder housing and brake fluid reservoir. Use only Mopar® Brake Parts Cleaner or equivalent.

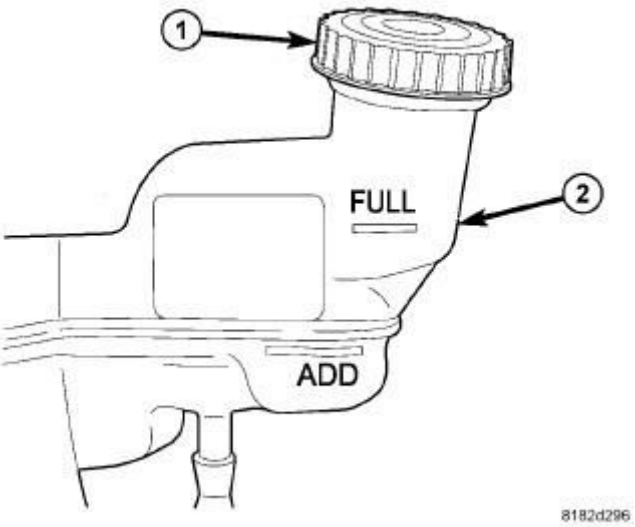

Fig. 103: Master Cylinder Fill Markings
Courtesy of CHRYSLER GROUP, LLC

2. Remove the brake fluid reservoir cap (1). Using a syringe or equivalent type tool, empty as much brake fluid as possible from the reservoir.

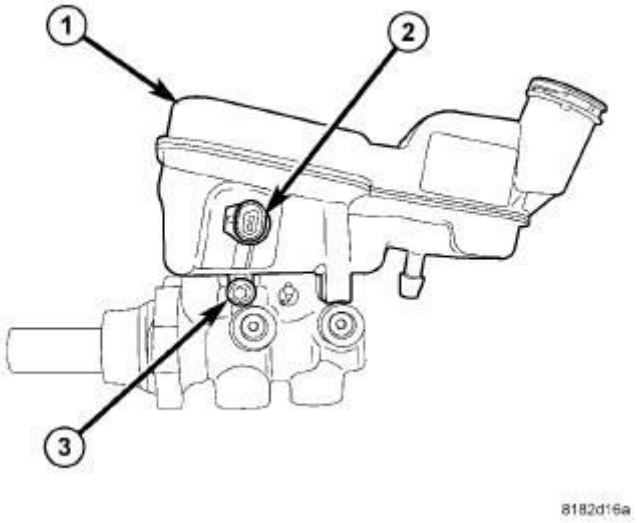

Fig. 104: Brake Fluid Level Switch Components
Courtesy of CHRYSLER GROUP, LLC

CAUTION: When removing the fluid reservoir (1) from the master cylinder, do not attempt to pry it off using any type of tool. This can damage the fluid reservoir or master cylinder housing.

3. Remove the screw (3) fastening the fluid reservoir (1) to the master cylinder housing.

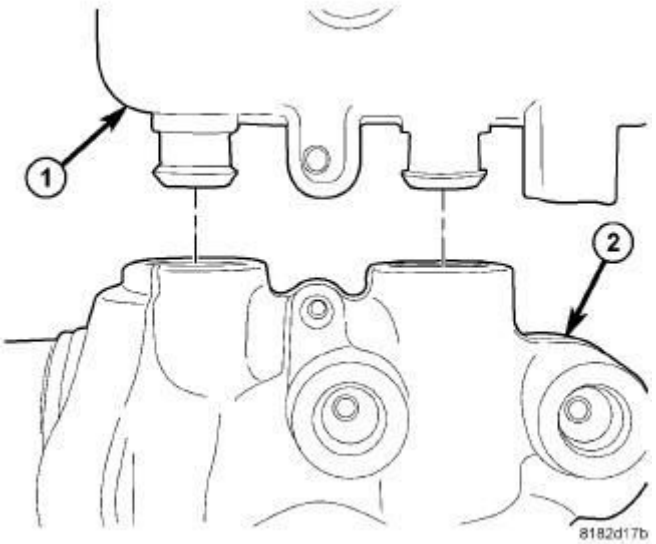

Fig. 105: Reservoir & Grommet Seals
Courtesy of CHRYSLER GROUP, LLC

4. Pull the reservoir (1) straight up and remove it from the grommet seals in master cylinder housing (2).

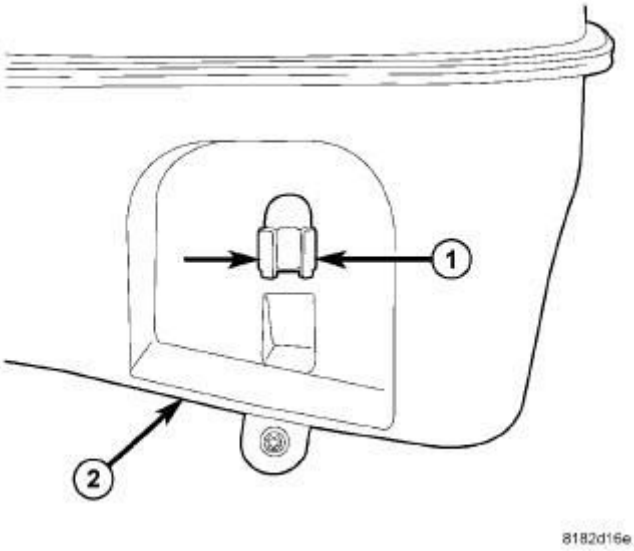

Fig. 106: Level Switch Retaining Tabs
Courtesy of CHRYSLER GROUP, LLC

5. If the reservoir is being replaced, remove the fluid level switch. Push together the retaining tabs (1) holding the brake fluid level switch in place in the brake fluid reservoir (2), then pull the brake fluid level switch out the opposite side of the reservoir.

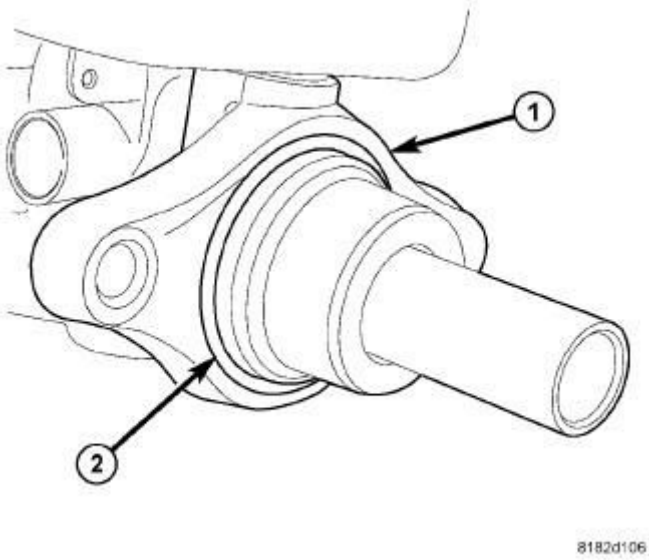

Fig. 107: Master Cylinder Mounting Flange & Seal
Courtesy of CHRYSLER GROUP, LLC

6. Remove the vacuum seal (2) from the master cylinder mounting flange (1).

ASSEMBLY

ASSEMBLY

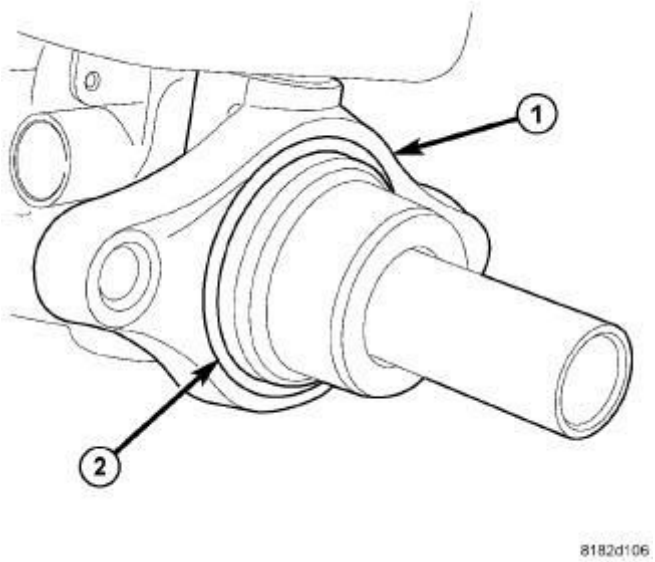

Fig. 108: Master Cylinder Mounting Flange & Seal
Courtesy of CHRYSLER GROUP, LLC

1. Install a NEW vacuum seal (2) on the master cylinder mounting flange (1) making sure the seal fits squarely in its groove.

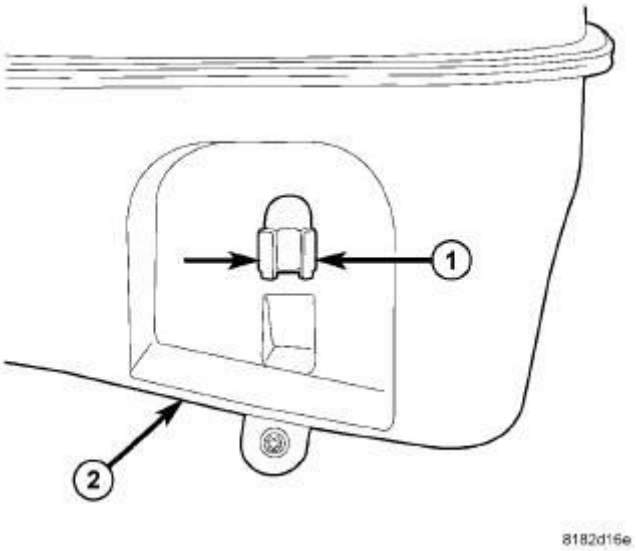

Fig. 109: Level Switch Retaining Tabs
Courtesy of CHRYSLER GROUP, LLC

2. If the reservoir is being replaced, align the brake fluid level switch with its mounting hole on the left side of the master cylinder brake fluid reservoir. Push the switch into the fluid reservoir until the switch retaining tabs (1) are expanded on the other side of the reservoir (2), locking it in place.

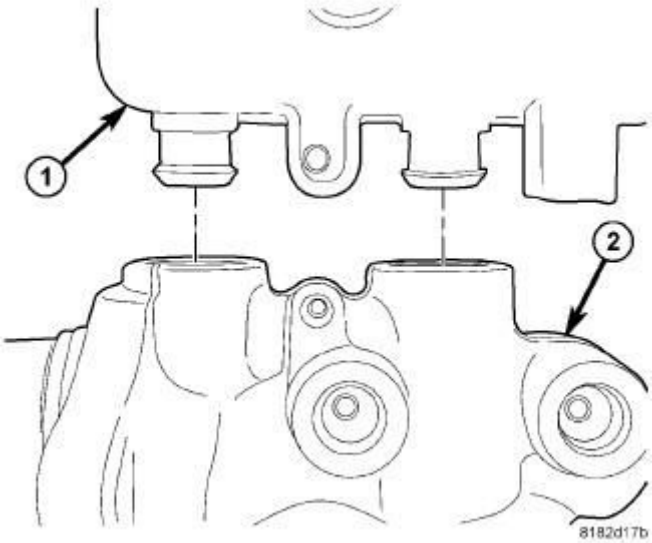

Fig. 110: Reservoir & Grommet Seals
Courtesy of CHRYSLER GROUP, LLC

3. Lubricate the reservoir mounting area with fresh clean brake fluid. Place the reservoir (1) in position over the grommet seals in the master cylinder (2). Slide the reservoir into the grommet seals by firmly pressing down on the fluid reservoir. Once installed, make sure fluid reservoir is touching the top of both grommet seals.

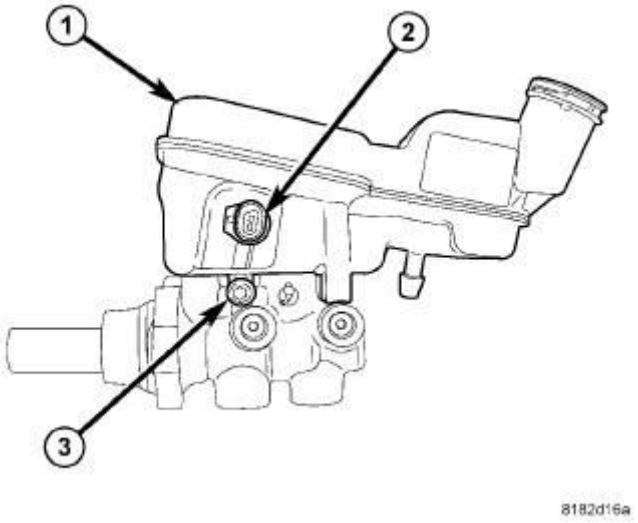

Fig. 111: Brake Fluid Level Switch Components
Courtesy of CHRYSLER GROUP, LLC

4. Install the fluid reservoir mounting screw (3). Tighten the screw to 5.5 N.m (48 in. lbs.).
5. Thoroughly bleed the master cylinder before installing it. Refer to **MASTER CYLINDER, BRAKE, STANDARD PROCEDURE**.
6. Install the master cylinder. Refer to **MASTER CYLINDER, BRAKE, INSTALLATION**.

INSTALLATION

LEFT HAND DRIVE

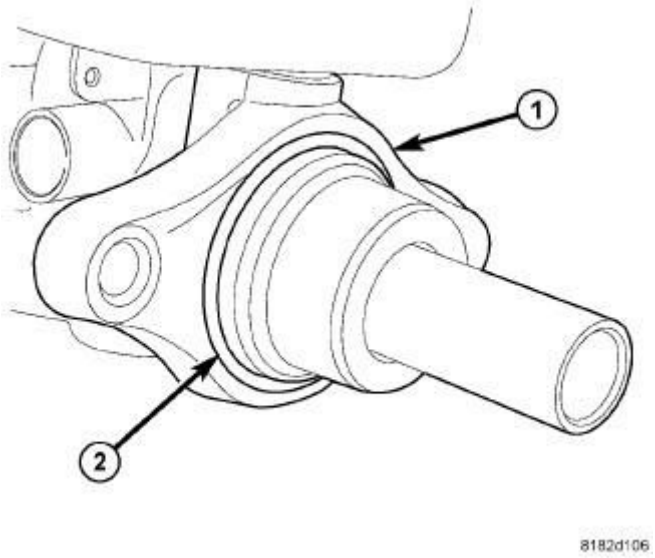

Fig. 112: Master Cylinder Mounting Flange & Seal
Courtesy of CHRYSLER GROUP, LLC

NOTE: The master cylinder must be bled before installing it on the vehicle.

1. Bench bleed the master cylinder. Refer to **MASTER CYLINDER, BRAKE, STANDARD PROCEDURE**.
2. Wipe the face of the power brake booster clean where the vacuum seal on the rear of the master cylinder comes in contact when it's installed. Do not get any cleaner or debris inside the booster.

CAUTION: When installing a master cylinder on the vehicle, a NEW vacuum seal (2) MUST be installed on the master cylinder mounting flange (1).

3. If the master cylinder does not have a new vacuum seal (2) on the mounting flange (1), remove it. Install a NEW vacuum seal on the master cylinder mounting flange making sure the seal fits squarely in its groove.

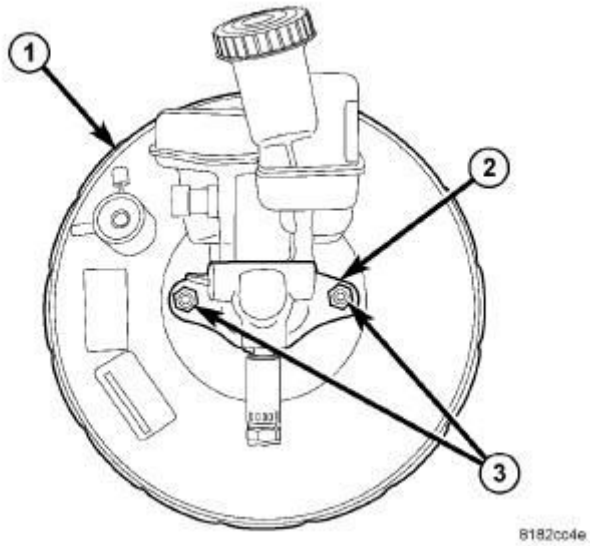

Fig. 113: Master Cylinder Mounting Nuts
Courtesy of CHRYSLER GROUP, LLC

CAUTION: If resistance is met during master cylinder insertion into power brake booster, the master

cylinder push rod may not be lined up with the booster push rod. Remove the master cylinder, realign and insert it again.

4. Line up the master cylinder mounting holes with the mounting studs on the power brake booster. Ensure the master cylinder piston push rod lines up with the booster push rod, then carefully slide the master cylinder into the power brake booster until it contacts the face of the booster.
5. Install two NEW master cylinder mounting nuts (3). Tighten each nut to 25 N.m (18 ft. lbs.).

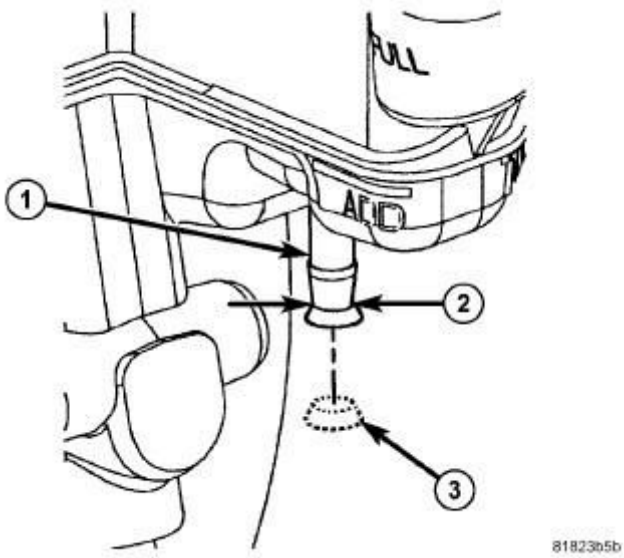

Fig. 114: Cut And Remove Clutch Port Plug
Courtesy of CHRYSLER GROUP, LLC

6. If equipped with a manual transaxle and a new reservoir is being installed, using an appropriate cutting tool, cut the clutch actuator port at the center of the "V" groove (2) opening the hydraulic clutch port (1). Discard the severed plug (3).

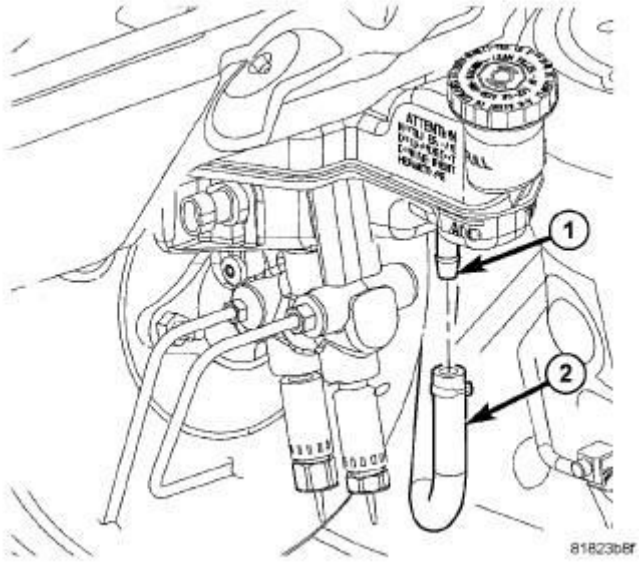

Fig. 115: Clutch Actuator Hose At Master Cylinder
Courtesy of CHRYSLER GROUP, LLC

7. If equipped with a manual transaxle, slide the clutch actuator hose (2) onto the reservoir port (1). Install the hose clamp just past the upset bead on the port.

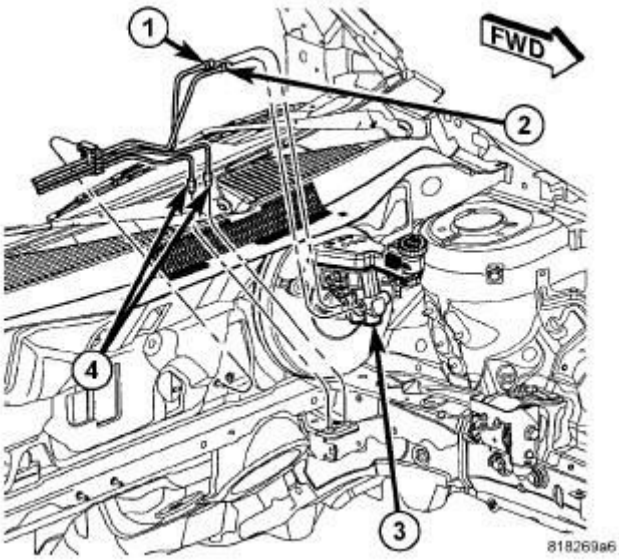

Fig. 116: Primary And Secondary Brake Tubes To ICU
Courtesy of CHRYSLER GROUP, LLC

8. Connect the primary (1) and secondary (2) brake tubes to the master cylinder outlet ports. Tighten the tube nuts to 17 N.m (150 in. lbs.).

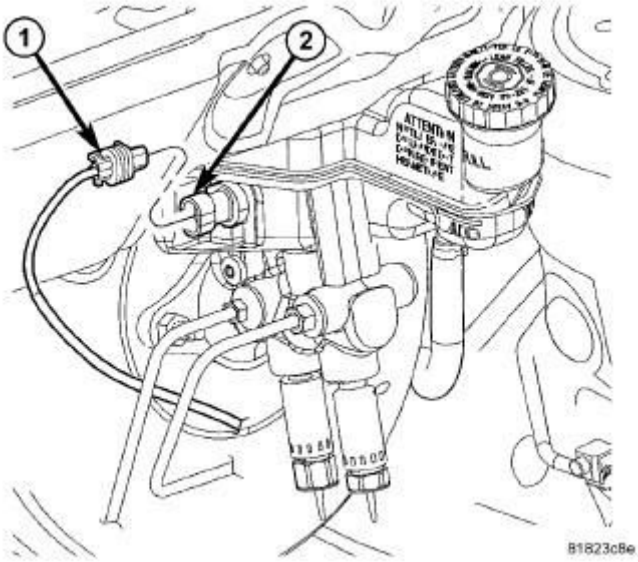

Fig. 117: Brake Fluid Level Switch Connector
Courtesy of CHRYSLER GROUP, LLC

9. Connect the wiring harness connector (1) to the brake fluid level switch (2).

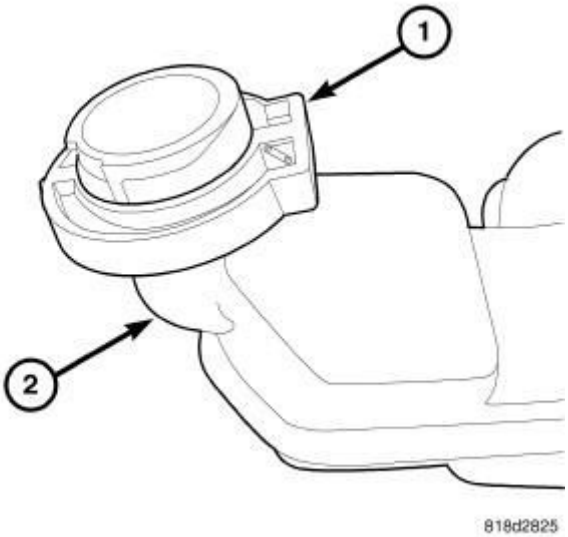

Fig. 118: Blocker On Master Cylinder Reservoir
Courtesy of CHRYSLER GROUP, LLC

WARNING: **A reservoir blocker must be installed on the master cylinder brake fluid reservoir. Failure to install the reservoir blocker can result in fire in the event of an accident, resulting in serious or fatal injury.**

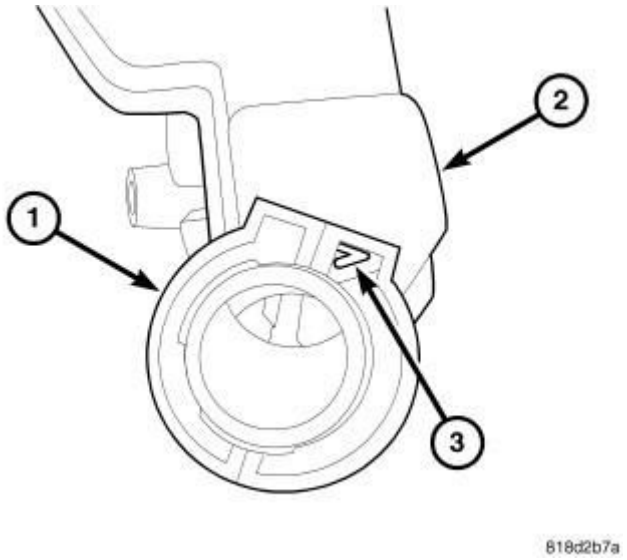

Fig. 119: Retaining Tab On Blocker
Courtesy of CHRYSLER GROUP, LLC

10. If not present, a reservoir blocker (1) must be installed on the fluid reservoir (2). The blocker can be removed from the original reservoir by releasing the retaining tab (3) and opening the blocker. To install the blocker, encircle the reservoir neck with the blocker, close the blocker, snapping the retaining tab into place. **Make sure the blocker is securely latched.**
11. Connect the negative (ground) cable on the battery.
12. Fill the master cylinder reservoir to the proper level.

WARNING: **Be certain a firm brake pedal is achieved prior to attempting to operate the vehicle. If a firm brake pedal cannot be achieved, bleed the brake hydraulic system and check for leaks.**

13. Road test the vehicle to ensure proper operation of the brakes.

RIGHT-HAND-DRIVE

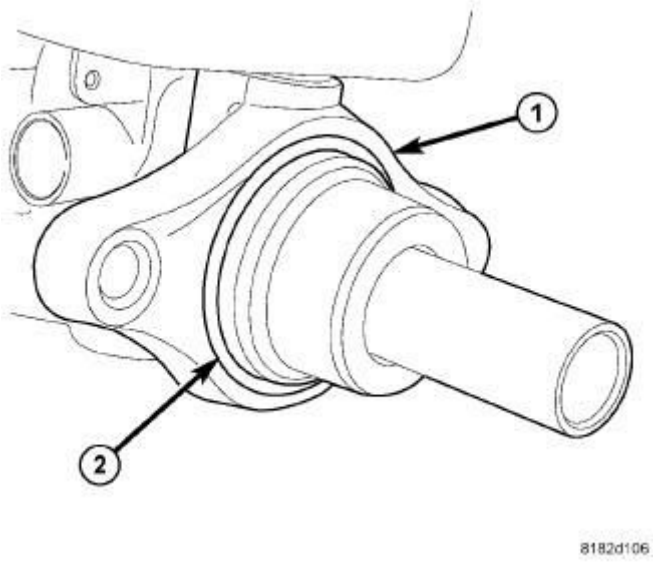

Fig. 120: Master Cylinder Mounting Flange & Seal
Courtesy of CHRYSLER GROUP, LLC

NOTE: The master cylinder must be bled before installing it on the vehicle.

1. Bench bleed the master cylinder. Refer to **MASTER CYLINDER, BRAKE, STANDARD PROCEDURE**.
2. Wipe the face of the power brake booster clean where the vacuum seal on the rear of the master cylinder comes in contact when it's installed. Do not get any cleaner or debris inside the booster.

CAUTION: When installing a master cylinder on the vehicle, a NEW vacuum seal (2) MUST be installed on the master cylinder mounting flange (1).

3. If the master cylinder does not have a new vacuum seal (2) on the mounting flange (1), remove it. Install a NEW vacuum seal on the master cylinder mounting flange making sure the seal fits squarely in its groove.

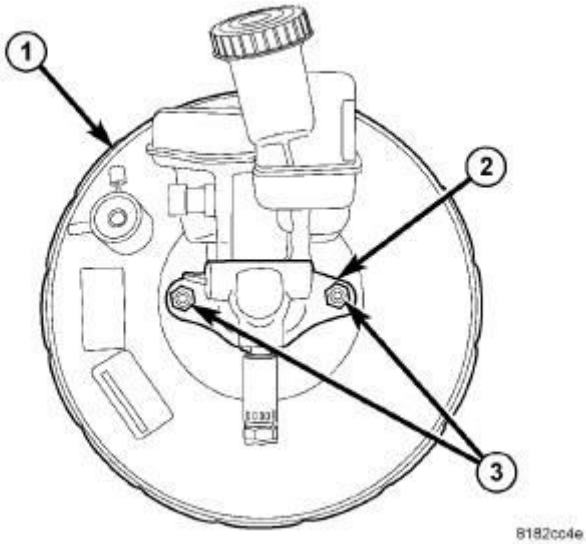

Fig. 121: Master Cylinder Mounting Nuts
Courtesy of CHRYSLER GROUP, LLC

CAUTION: If resistance is met during master cylinder insertion into power brake booster, the master cylinder push rod may not be lined up with the booster push rod. Remove the master cylinder, realign and insert it again.

4. Install the master cylinder into the engine compartment as follows:
   a. Starting on the inboard side of the air conditioning lines behind the engine, guide the master cylinder below the air conditioning lines, then up in front of the power brake booster.
   b. Line up the master cylinder mounting holes with the mounting studs on the power brake booster. Ensure the master cylinder piston push rod lines up with the booster push rod, then carefully slide the master cylinder into the power brake booster until it contacts the face of the booster.
5. Install two NEW master cylinder mounting nuts (3). Tighten each nut to 25 N.m (18 ft. lbs.).

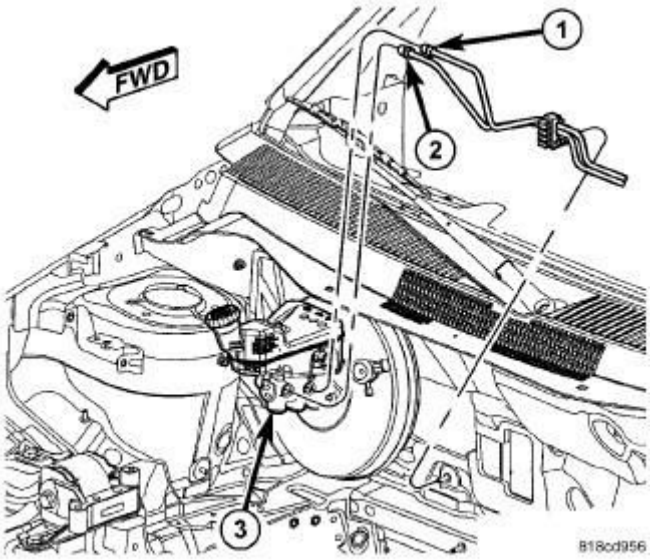

Fig. 122: Primary And Secondary Brake Tubes - RHD
Courtesy of CHRYSLER GROUP, LLC

6. Connect the primary (1) and secondary (2) brake tubes to the master cylinder outlet ports. Tighten the tube nuts to 17 N.m (150 in. lbs.).

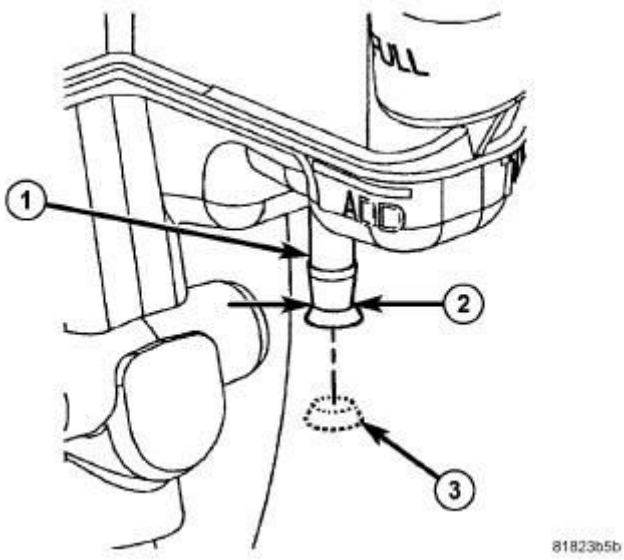

Fig. 123: Cut And Remove Clutch Port Plug
Courtesy of CHRYSLER GROUP, LLC

7. If equipped with a manual transaxle and a new reservoir is being installed, using an appropriate cutting tool, cut the clutch actuator port at the center of the "V" groove (2) opening the hydraulic clutch port (1). Discard the severed plug (3).

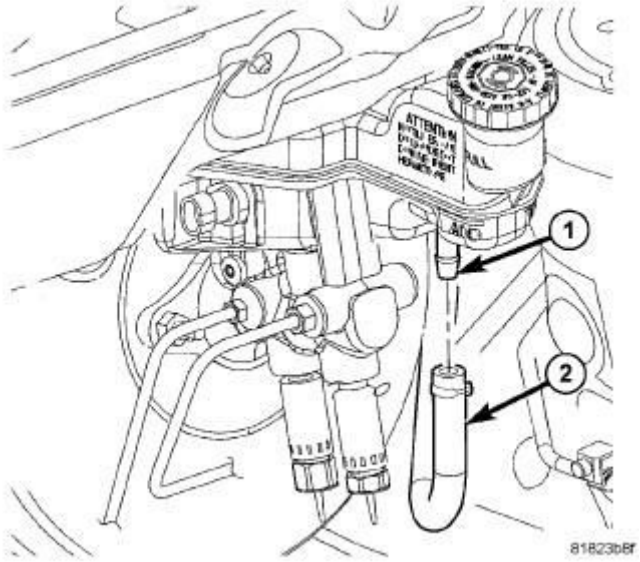

Fig. 124: Clutch Actuator Hose At Master Cylinder
Courtesy of CHRYSLER GROUP, LLC

8. If equipped with a manual transaxle, slide the clutch actuator hose (2) onto the reservoir port (1). Install the hose clamp just past the upset bead on the port.

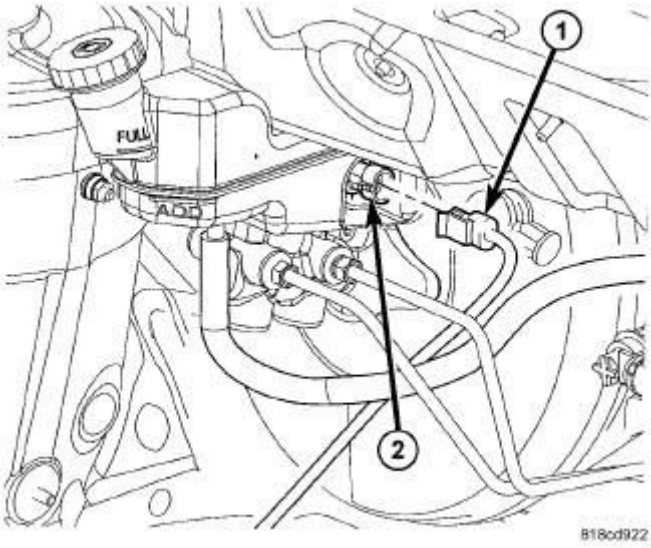

Fig. 125: Brake Fluid Level Switch Connector - RHD
Courtesy of CHRYSLER GROUP, LLC

9. Connect the wiring harness connector (1) to the brake fluid level switch (2).
10. Install the engine appearance cover.
11. Connect the negative (ground) cable on the battery.

12. Fill the master cylinder reservoir to the proper level.

WARNING: Be certain a firm brake pedal is achieved prior to attempting to operate the vehicle. If a firm brake pedal cannot be achieved, bleed the brake hydraulic system and check for leaks.

13. Road test the vehicle to ensure proper operation of the brakes.

PADS, BRAKE, FRONT

REMOVAL

REMOVAL

NOTE: Before proceeding, refer to CAUTION and WARNING.

1. Raise and support the vehicle. Refer to **HOISTING, STANDARD PROCEDURE** .

NOTE: Perform 2 through 5 on each side of the vehicle to complete pad set removal.

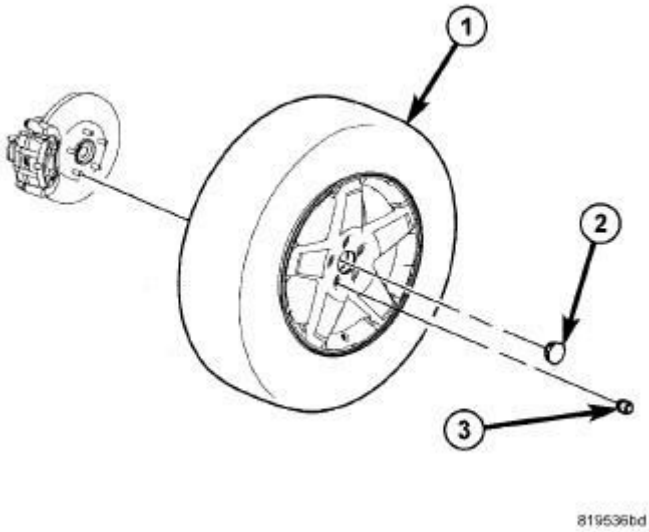

Fig. 126: Tire And Wheel Mounting
Courtesy of CHRYSLER GROUP, LLC

2. Remove the wheel mounting nuts (3), then the tire and wheel assembly (1).

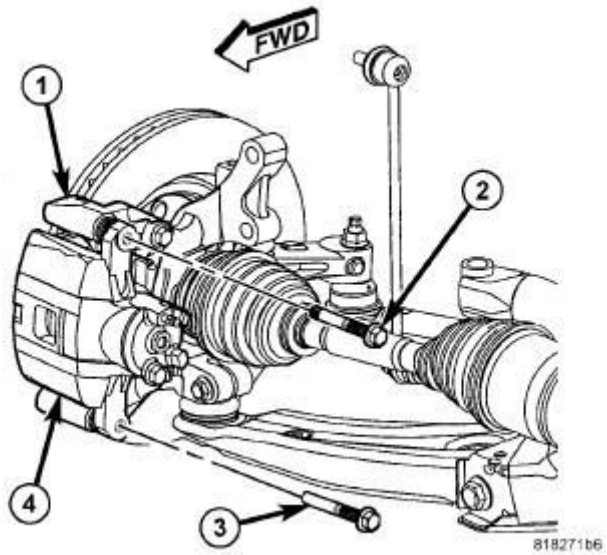

Fig. 127: Caliper Guide Pin Bolts
Courtesy of CHRYSLER GROUP, LLC

NOTE: When removing the caliper guide pin bolts (2, 3) note that one (upper) has a special sleeve on the end. It important that his bolt be installed in the upper mounting hole when the caliper is installed.

3. Remove the two brake caliper guide pin bolts (2, 3).
4. Remove the disc brake caliper (4) from the disc brake adapter bracket (1) and hang it out of the way using wire or a bungee cord. Use care not to overextend the brake hose when doing this.

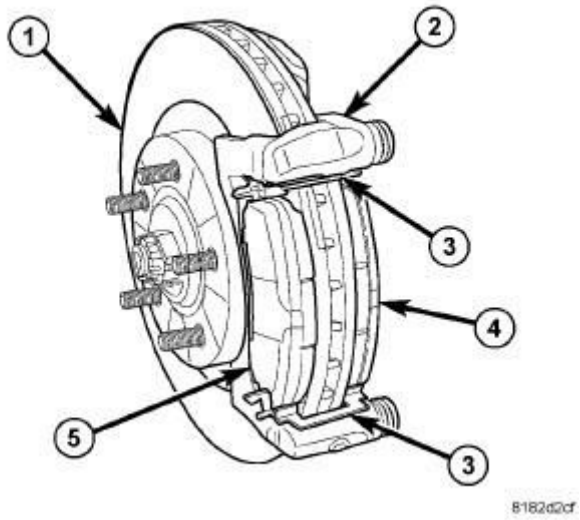

Fig. 128: Front Brake Caliper Adapter Bracket & Pads
Courtesy of CHRYSLER GROUP, LLC

5. Remove the brake pads (4, 5) from the caliper adapter bracket (2).

CLEANING

CLEANING

WARNING: Chrysler LLC does not manufacture any vehicles or replacement parts that contain asbestos. Aftermarket products may or may not contain asbestos. Refer to aftermarket product packaging for product information.

Whether the product contains asbestos or not, dust and dirt can accumulate on brake parts during normal use. Follow practices prescribed by appropriate regulations for the handling, processing and disposing of dust and debris.

INSPECTION

INSPECTION

Visually inspect brake pads for uneven lining wear. Also inspect for excessive lining deterioration. Check the clearance between the tips of the wear indicators (if equipped) on the pads and the brake rotors.

If a visual inspection does not adequately determine the condition of the lining, a physical check will be necessary. To check the amount of lining wear, remove the disc brake pads from the vehicle.

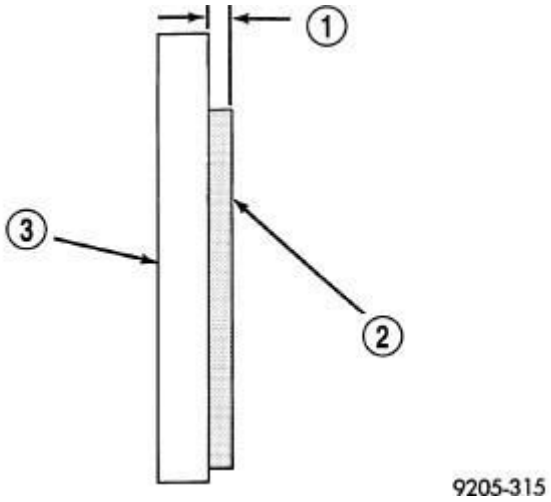

Fig. 129: Measuring Brake Pad Friction Material Thickness
Courtesy of CHRYSLER GROUP, LLC

1 - BRAKE SHOE ASSEMBLY FRICTION MATERIAL THICKNESS IS TO BE MEASURED AT THE THINNEST POINT. 2 - BRAKE SHOE ASSEMBLY FRICTION MATERIAL 3 - BRAKE SHOE ASSEMBLY BACKING PLATE

Measure brake pad minimum thickness (1). Brake pads must be replaced when usable material on a brake pad lining (2) measured at its **thinnest point** measures one millimeter (0.04 inches) or less.

If a brake pad fails inspection, replace **both** disc brake pads (inboard and outboard) at each caliper. It is also necessary to replace the pads on the opposite side of the vehicle as well as the pads failing inspection to maintain proper braking characteristics.

If the brake pad assemblies do not require replacement, be sure to reinstall the brake pads in the original position they were removed from.

NOTE: It is important to inspect both front and rear brake pads during the same inspection.

INSTALLATION

INSTALLATION

NOTE: Perform 1 through 5 on each side of the vehicle to complete pad set installation, then proceed to step 6.

NOTE: Make sure that the audible wear indicators (if equipped) are placed toward the top when the inboard brake pads are installed on each side of the vehicle.

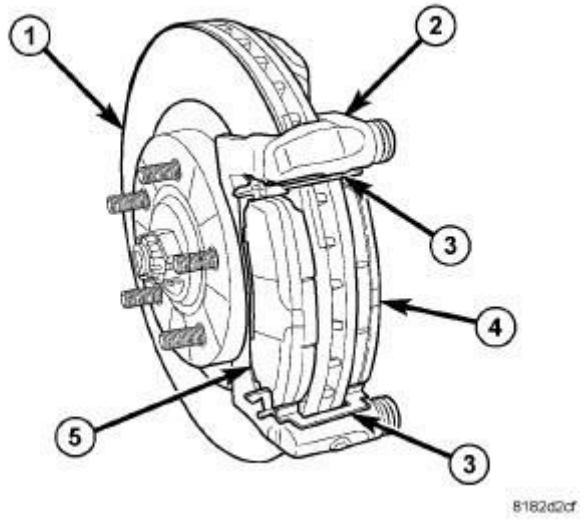

Fig. 130: Front Brake Caliper Adapter Bracket & Pads
Courtesy of CHRYSLER GROUP, LLC

1. Place the brake pads (4, 5) in the abutment shims (3) clipped into the disc brake caliper adapter bracket (2) as shown in illustration. Place the pad with the wear indicator attached on the inboard side (2).
2. Completely retract the caliper piston back into the bore of the caliper.

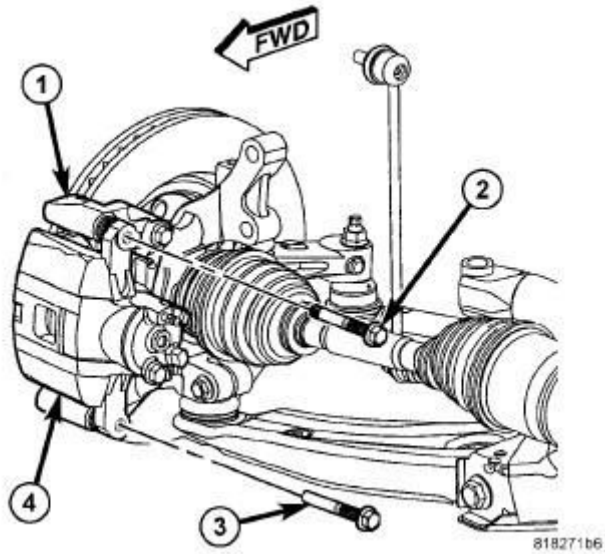

Fig. 131: Caliper Guide Pin Bolts

Courtesy of CHRYSLER GROUP, LLC

CAUTION: Use care when installing the caliper (4) onto the adapter bracket (1) to avoid damaging the boots.

3. Install the disc brake caliper over the brake pads on the brake caliper adapter bracket.

NOTE: When installing the caliper guide pin bolts (2, 3) make sure that the one that has a special sleeve on the end is installed in the upper mounting hole.

4. Align the caliper guide pin bolt holes with the adapter bracket. Install the upper (with special sleeve) (2) and lower (3) caliper guide pin bolts. Tighten the guide pin bolts to 43 N.m (32 ft. lbs.).

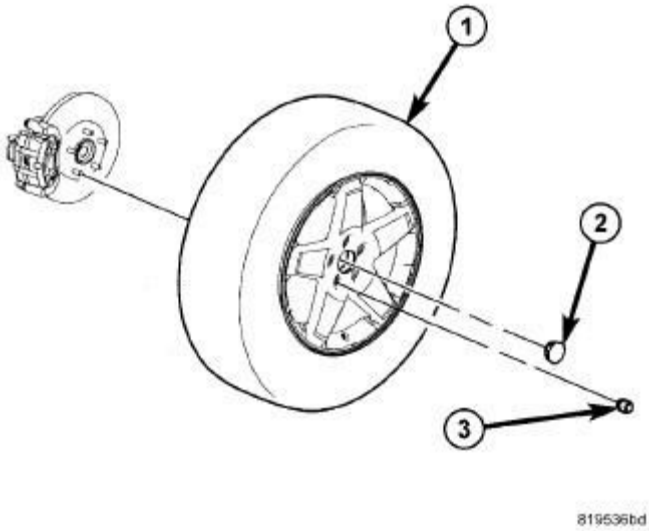

Fig. 132: Tire And Wheel Mounting
Courtesy of CHRYSLER GROUP, LLC

5. Install the tire and wheel assembly (1). Refer to **INSTALLATION** . Install and tighten the wheel mounting nuts (3) to 135 N.m (100 ft. lbs.).
6. Lower the vehicle.

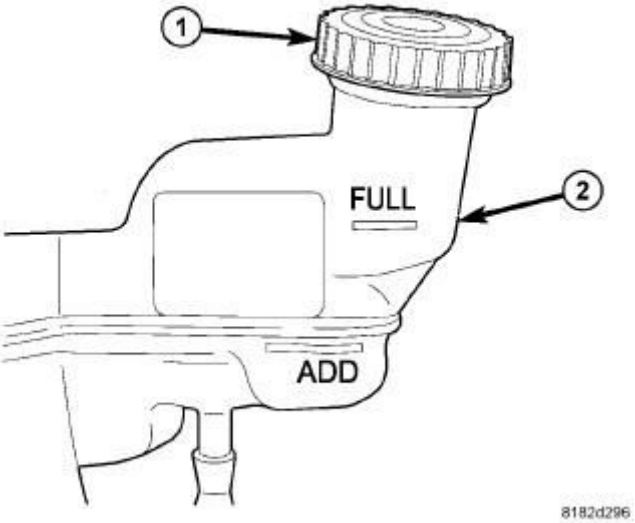

Fig. 133: Master Cylinder Fill Markings
Courtesy of CHRYSLER GROUP, LLC

7. Pump the brake pedal several times before moving the vehicle to set the pads to the brake rotor.
8. Check and adjust the brake fluid level in the reservoir (2) as necessary.
9. Road test the vehicle and make several stops to wear off any foreign material on the brakes and to seat the brake pads.

PADS, BRAKE, REAR

REMOVAL

REMOVAL

NOTE: Before proceeding, refer to CAUTION and WARNING.

NOTE: If the rear brake pads are being replaced due to a howl or moan while driving in reverse, proper diagnosis and correction is essential. Refer to DIAGNOSIS AND TESTING .

1. Raise and support the vehicle. Refer to **HOISTING, STANDARD PROCEDURE** .

NOTE: Perform 2 through6 on each side of the vehicle to complete pad set removal. .

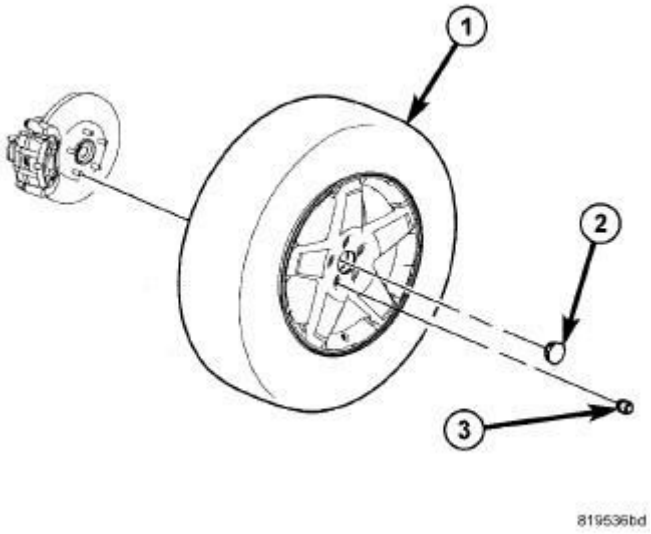

Fig. 134: Tire And Wheel Mounting
Courtesy of CHRYSLER GROUP, LLC

2. Remove the wheel mounting nuts (3), then the tire and wheel assembly (1).

NOTE: **In some cases, it may be necessary to retract the caliper piston in its bore a small amount in order to provide sufficient clearance between the pads and the rotor to easily remove the caliper from the knuckle. This can usually be accomplished before the guide pin bolts are removed, by grasping the rear of the caliper and pulling outward working with the guide pins, thus retracting the piston. Never push on the piston directly as it may get damaged.**

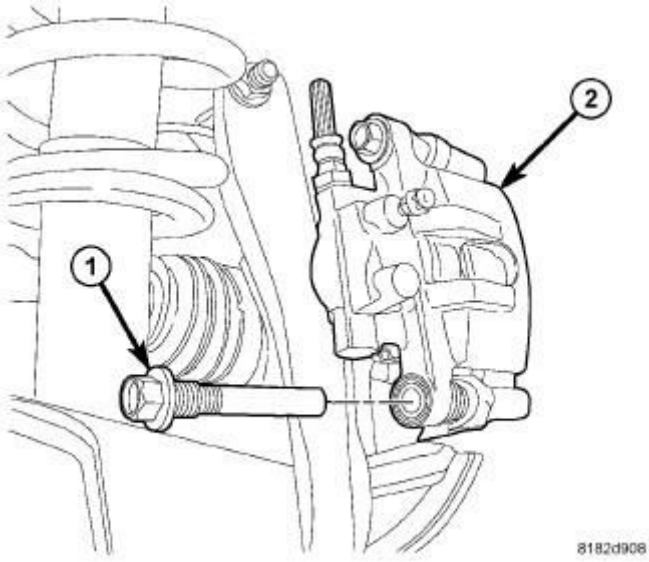

Fig. 135: Lower Caliper Guide Pin Bolt
Courtesy of CHRYSLER GROUP, LLC

3. Remove the disc brake caliper (2) lower guide pin bolt (1).

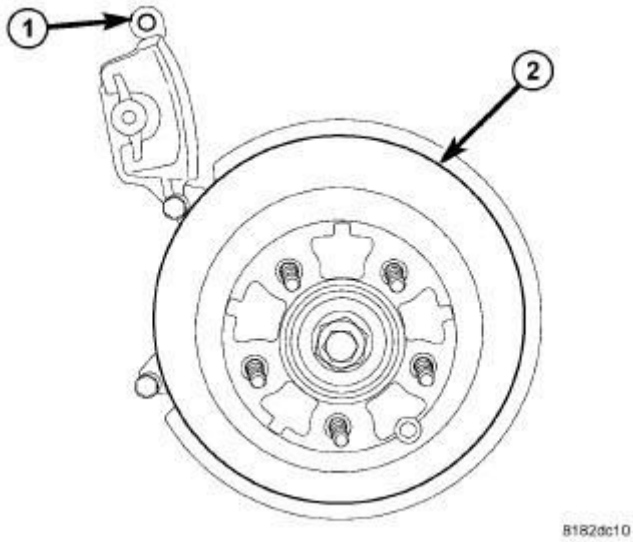

Fig. 136: Rear Caliper Rotated Up
Courtesy of CHRYSLER GROUP, LLC

CAUTION: When moving rear brake caliper upward, use extreme care not to damage or overextend the flex hose. Damage may occur.

4. Rotate the caliper (1) upward hinging off the upper guide pin bolt. Rotate

the caliper upward just enough to allow brake pad removal. Hang the caliper assembly in this position using wire or a bungee cord.

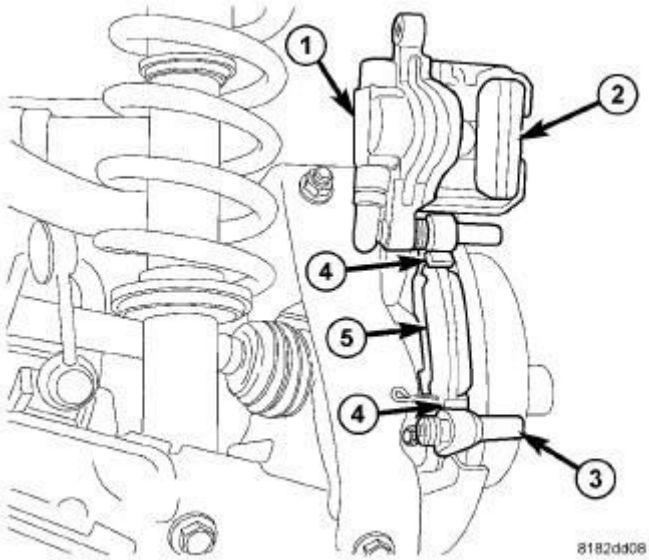

Fig. 137: Rear Brake Caliper Adapter Bracket & Pads
Courtesy of CHRYSLER GROUP, LLC

5. Remove the inboard brake pad (5) from the caliper adapter bracket (3).
6. Remove the outboard brake pad (2) from the caliper (1) by prying the brake pad retaining clip over the raised area on the caliper. Slide the brake pad off of the brake caliper.

CLEANING

CLEANING

WARNING: Chrysler LLC does not manufacture any vehicles or replacement parts that contain asbestos. Aftermarket products may or may not contain asbestos. Refer to aftermarket product packaging for product information.

Whether the product contains asbestos or not, dust and dirt can accumulate on brake parts during normal use. Follow practices prescribed by appropriate regulations for the handling, processing and disposing of dust and debris.

INSPECTION

INSPECTION

Visually inspect brake pads for uneven lining wear. Also inspect for excessive lining deterioration. Check the clearance between the tips of the wear indicators (if equipped) on the pads and the brake rotors.

If a visual inspection does not adequately determine the condition of the lining, a physical check will be necessary. To check the amount of lining wear, remove the disc brake pads from the vehicle.

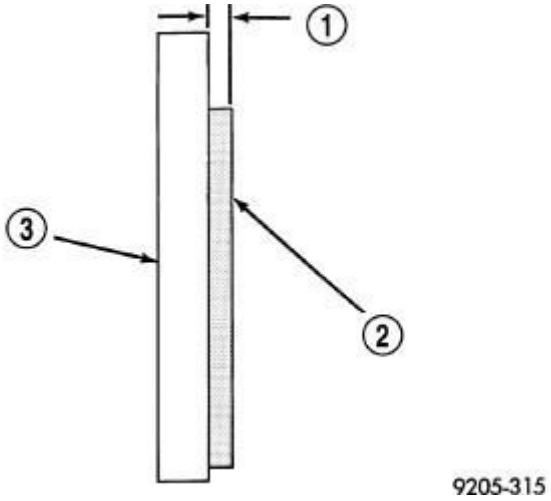

Fig. 138: Measuring Brake Pad Friction Material Thickness
Courtesy of CHRYSLER GROUP, LLC

1 - BRAKE SHOE ASSEMBLY FRICTION MATERIAL THICKNESS IS TO BE MEASURED AT THE THINNEST POINT. 2 - BRAKE SHOE ASSEMBLY FRICTION MATERIAL 3 - BRAKE SHOE ASSEMBLY BACKING PLATE

Measure brake pad minimum thickness (1). Brake pads must be replaced when usable material on a brake pad lining (2) measured at its **thinnest point** measures one millimeter (0.04 inches) or less.

If a brake pad fails inspection, replace **both** disc brake pads (inboard and outboard) at each caliper. It is also necessary to replace the pads on the opposite side of the vehicle as well as the pads failing inspection to maintain proper braking characteristics.

If the brake pad assemblies do not require replacement, be sure to reinstall the brake pads in the original position they were removed from.

NOTE: It is important to inspect both front and rear brake pads during the same inspection.

INSTALLATION

INSTALLATION

NOTE: If the rear brake pads are being replaced due to a howl or moan while driving in reverse, proper diagnosis and correction is essential. Refer to DIAGNOSIS AND TESTING .

NOTE: Perform 1 through 6 on each side of the vehicle to complete pad set installation, then proceed to step 7.

1. Completely retract the caliper piston back into the piston bore of the caliper. This is required to gain the necessary pad-to-rotor clearance for the caliper installation onto the steering knuckle.

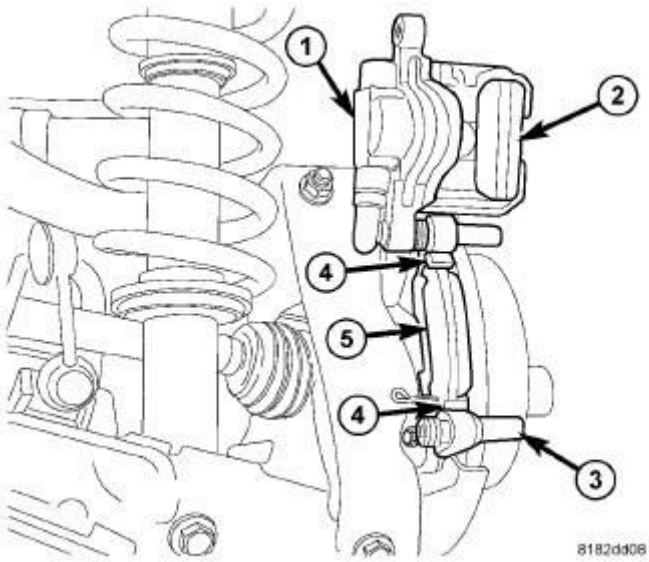

Fig. 139: Rear Brake Caliper Adapter Bracket & Pads
Courtesy of CHRYSLER GROUP, LLC

NOTE: Place the brake pad with the audible wear indicator attached on the inboard side. The audible wear indicator should be positioned at the bottom when installed.

2. Slide the outboard brake pad (2) onto the caliper (1). Be sure the retaining clip is squarely seated in the depressed areas on the caliper beyond the raised retaining bead.
3. Place the inboard brake pad (5) in the abutment shims (4) clipped into the disc brake caliper adapter bracket (3) as shown in illustration (see preceding note).

CAUTION: Use care when installing the caliper onto the adapter bracket to avoid damaging the guide pin boot.

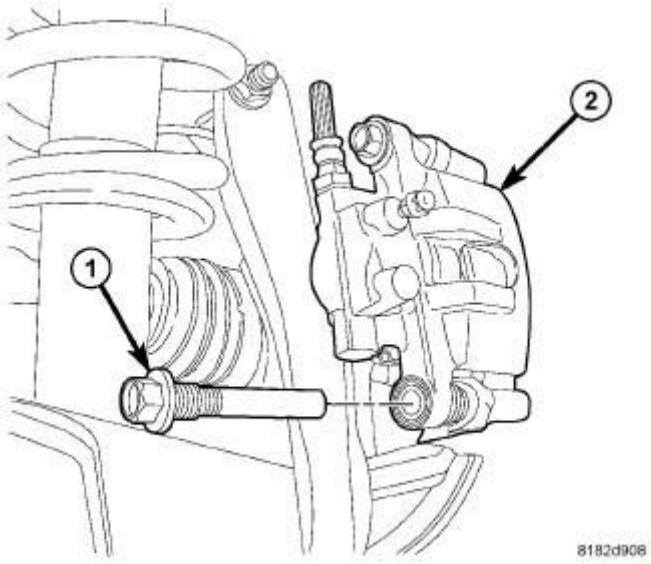

Fig. 140: Lower Caliper Guide Pin Bolt
Courtesy of CHRYSLER GROUP, LLC

4. Rotate the disc brake caliper downward over the brake rotor and lower part of caliper adapter.
5. Install the disc brake caliper (2) lower guide pin bolt (1). Tighten the guide pin bolt to 43 N.m (32 ft. lbs.).

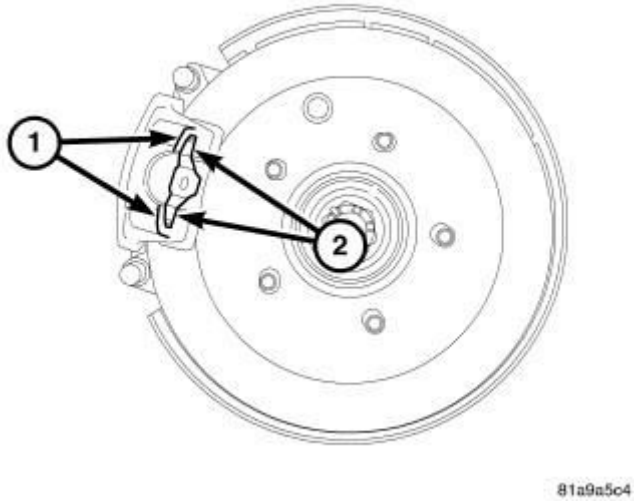

Fig. 141: Outboard Pad Correctly Positioned
Courtesy of CHRYSLER GROUP, LLC

NOTE: **Once the caliper is installed, inspect the outboard brake pad to make sure it is correctly positioned. The retaining clip (2) must be squarely seated in the depressed areas (1) on the caliper fingers. Also, the nubs on the pad's steel backing plate must be fully seated in the depressions formed into the inside of the caliper fingers. There should be no gap between the pad backing plate and the caliper fingers.**

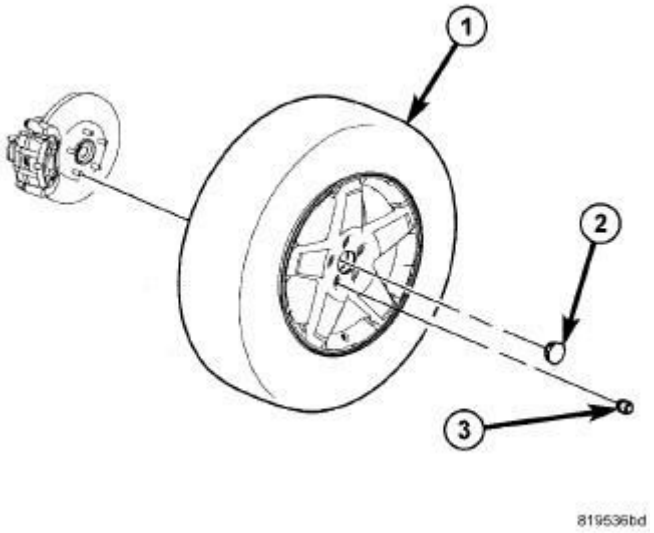

Fig. 142: Tire And Wheel Mounting
Courtesy of CHRYSLER GROUP, LLC

6. Install the tire and wheel assembly (1). Refer to **INSTALLATION** . Install and tighten the wheel mounting nuts (3) to 135 N.m (100 ft. lbs.).
7. Lower the vehicle.
8. Pump the brake pedal several times to ensure the vehicle has a firm brake pedal before moving the vehicle.
9. Road test the vehicle and make several stops to wear off any foreign material on the brakes and to seat the brake pads.

PEDAL(S), BRAKE AND/OR ACCELERATOR

REMOVAL

LEFT-HAND DRIVE

NOTE: Before proceeding, refer to CAUTION and WARNING.

1. Disconnect and isolate the battery negative cable from its post on the battery.
2. If equipped, remove the silencer pad below the steering column opening cover.
3. Remove the steering column opening cover on the instrument panel. Refer to **COVER, STEERING COLUMN OPENING, REMOVAL** .
4. Remove the reinforcement behind the steering column opening cover.
5. Remove the stop lamp switch Refer to **SWITCH, STOP LAMP, REMOVAL** .

NOTE: Do not discard the stop lamp switch as it can be adjusted and reinstalled.

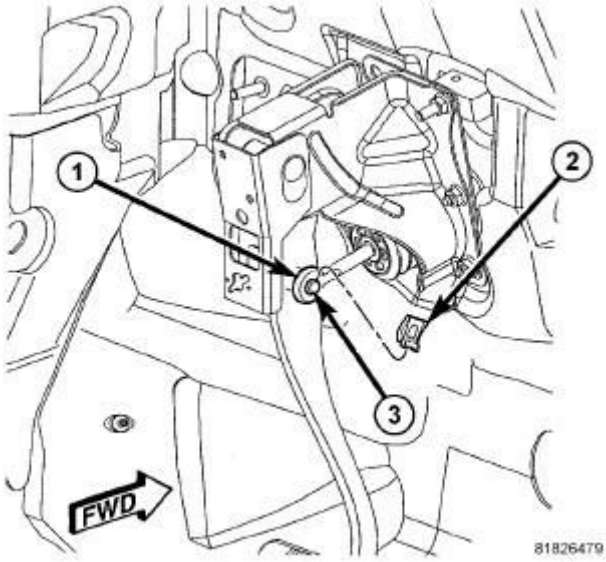

Fig. 143: Brake Pedal Clip
Courtesy of CHRYSLER GROUP, LLC

6. Remove the retaining clip (2) securing the power brake booster push rod (1) to the brake pedal. To do so, position a small screwdriver under the center tang of the retaining clip, then rotate the screwdriver enough to allow the retaining clip tang to pass over the end of the brake pedal pin (3). Remove and discard the clip. **Do not reuse the clip.**
7. Slide the booster push rod (1) off the brake pedal pin (3).

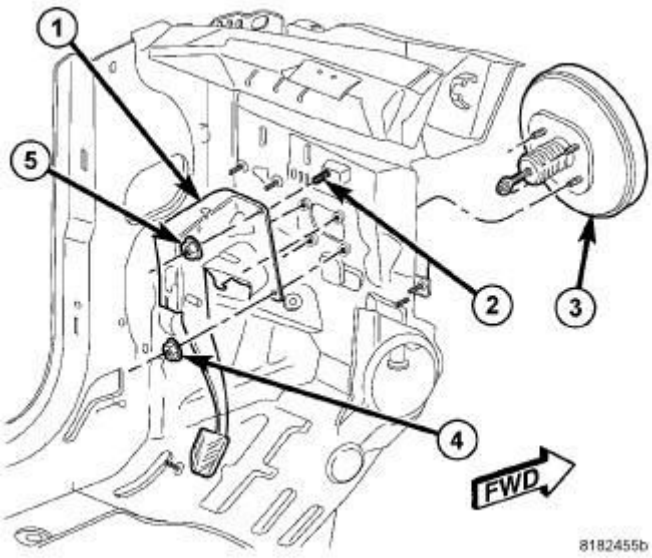

Fig. 144: Brake Pedal & Booster Mounting
Courtesy of CHRYSLER GROUP, LLC

8. Remove the four nuts (4) attaching the brake pedal (1) (and power brake booster) to the dash panel.
9. Remove the remaining nut (5) attaching the brake pedal (1) to the dash panel.
10. Remove the brake pedal (1).

RIGHT-HAND-DRIVE

NOTE: Before proceeding, refer to CAUTION and WARNING.

1. Disconnect and isolate the battery negative cable from its post on the battery.
2. If equipped, remove the silencer pad below the steering column opening cover.
3. Remove the steering column opening cover (and airbag if equipped) on the instrument panel. Refer to **COVER, STEERING COLUMN OPENING, REMOVAL** .
4. Remove the reinforcement behind the steering column opening cover.
5. Remove the stop lamp switch. Refer to **SWITCH, STOP LAMP, REMOVAL** .

NOTE: Do not discard the stop lamp switch as it can be adjusted and reinstalled.

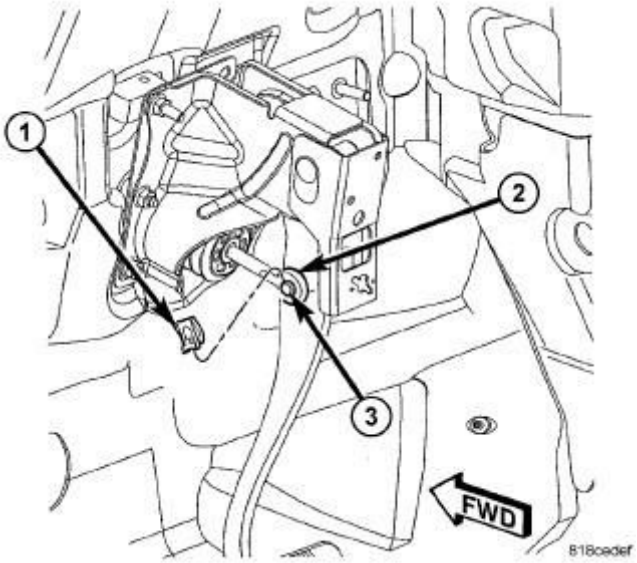

Fig. 145: Brake Pedal Clip - RHD

Courtesy of CHRYSLER GROUP, LLC

6. Remove the retaining clip (1) securing the power brake booster push rod (2) to the brake pedal. To do so, position a small screwdriver under the center tang of the retaining clip, then rotate the screwdriver enough to allow the retaining clip tang to pass over the end of the brake pedal pin (3). Remove and discard the clip. **Do not reuse the clip.**
7. Slide the booster push rod (2) off the brake pedal pin (3).

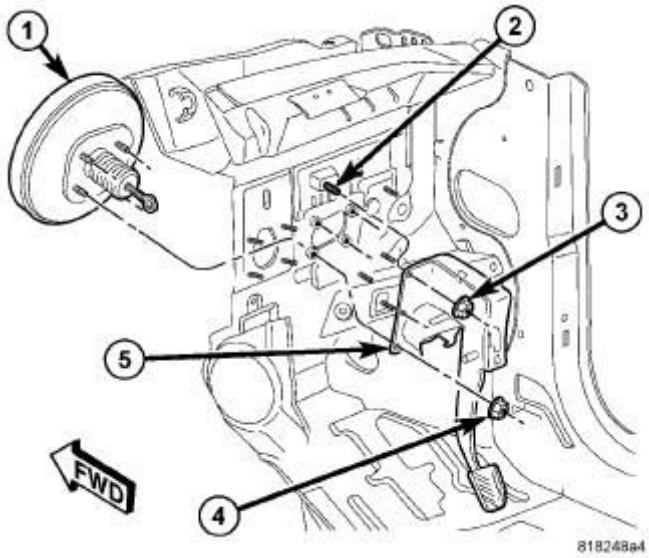

Fig. 146: Pedal And Booster Mounting - RHD
Courtesy of CHRYSLER GROUP, LLC

8. Remove the four nuts (4) attaching the brake pedal (5) (and power brake booster) to the dash panel.
9. Remove the remaining nut (3) attaching the brake pedal (5) to the dash panel.
10. Remove the brake pedal (5).

INSTALLATION

LEFT-HAND DRIVE

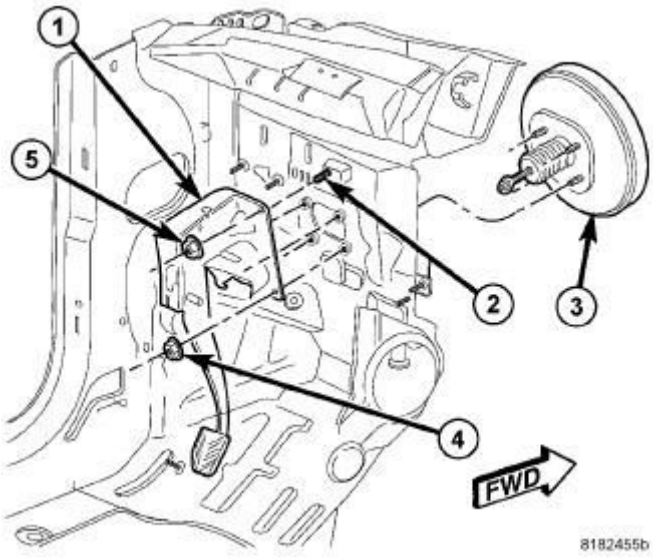

Fig. 147: Brake Pedal & Booster Mounting
Courtesy of CHRYSLER GROUP, LLC

1. Carefully install the brake pedal and bracket assembly (1) in the vehicle lining up the bracket with the power brake booster mounting studs and the stud (2) on the dash panel.
2. Install the four nuts (4) attaching the brake pedal (1) (and power brake booster) to the dash panel. **Do not tighten the nuts at this time.**
3. Install the remaining nut (5) attaching the brake pedal (1) to the dash panel. To tighten this nut (and the other four from the preceding step), refer to the following step.

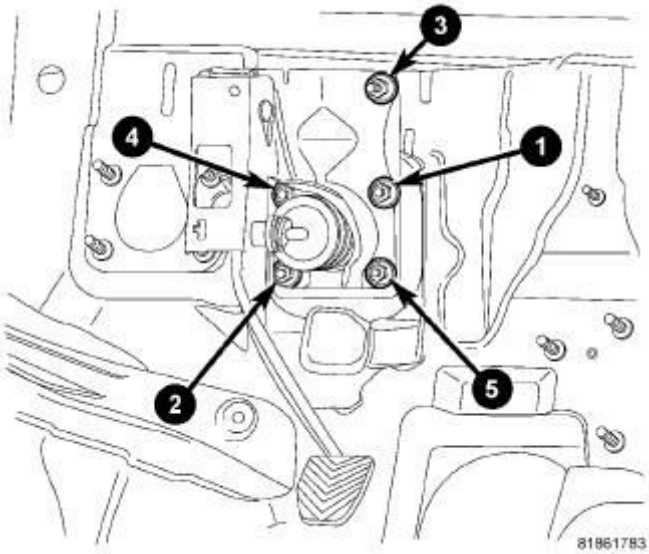

Fig. 148: Mounting Nut Torque Sequence

Courtesy of CHRYSLER GROUP, LLC

CAUTION: Because of power brake booster design, it is very important to tighten the mounting nuts in the proper sequence.

4. Tighten the brake pedal/booster mounting nuts in the proper sequence to 23 N.m (17 ft. lbs.).

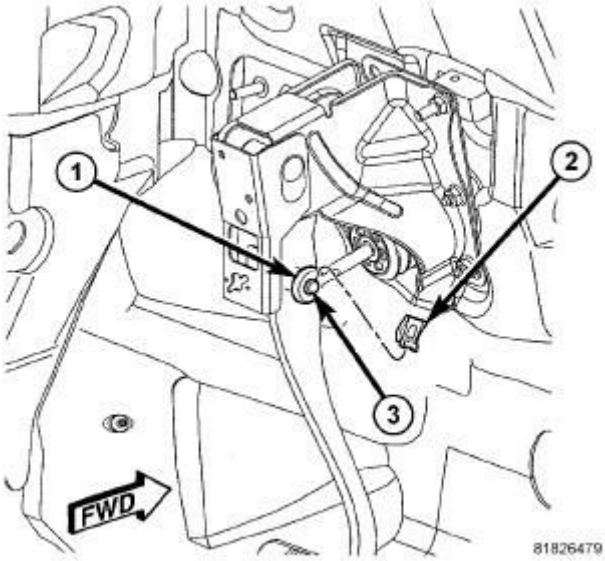

Fig. 149: Brake Pedal Clip
Courtesy of CHRYSLER GROUP, LLC

5. Using Mopar® Lubriplate, or an equivalent, coat the surface of the brake pedal pin (3) where it contacts the brake booster push rod (1).
6. Install the power brake booster push rod (1) on the pin (3) mounted on the side of the brake pedal. Install a NEW retaining clip (2) on the end of the pin. **Do not reuse the old clip.**
7. Reinstall and adjust the stop lamp switch that was set aside for reuse Refer to **SWITCH, STOP LAMP, INSTALLATION** .
8. Install the steering column opening cover reinforcement in the steering column opening.
9. Install the steering column opening cover (and airbag if equipped) on the instrument panel. Refer to **COVER, STEERING COLUMN OPENING, INSTALLATION** .
10. If equipped, install the silencer pad below the instrument panel.

11. Connect the battery negative cable to its post on the battery.
12. Check the stop lamps to verify they are operating properly and not staying on when the pedal is in the released position.
13. Road test the vehicle to ensure proper operation of the brakes.

RIGHT-HAND-DRIVE

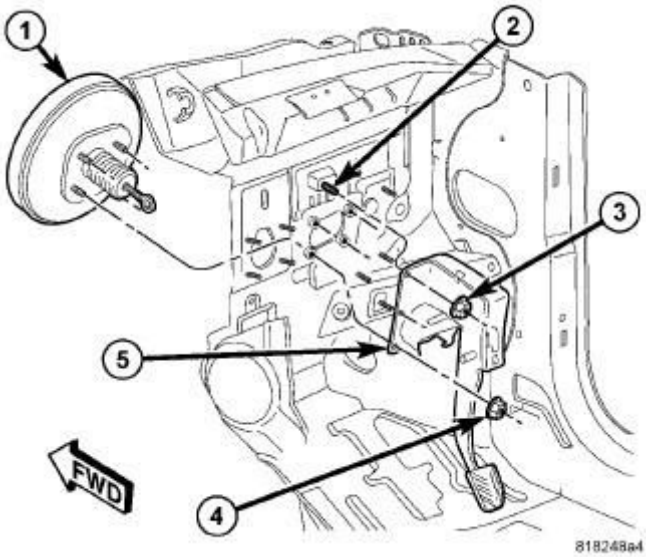

Fig. 150: Pedal And Booster Mounting - RHD
Courtesy of CHRYSLER GROUP, LLC

1. Carefully install the brake pedal and bracket assembly (5) in the vehicle lining up the bracket with the power brake booster mounting studs and the stud (2) on the dash panel.
2. Install the four nuts (4) attaching the brake pedal (5) (and power brake booster) to the dash panel. **Do not tighten the nuts at this time.**
3. Install the remaining nut (3) attaching the brake pedal (5) to the dash panel. To tighten these nuts, refer to the following step.

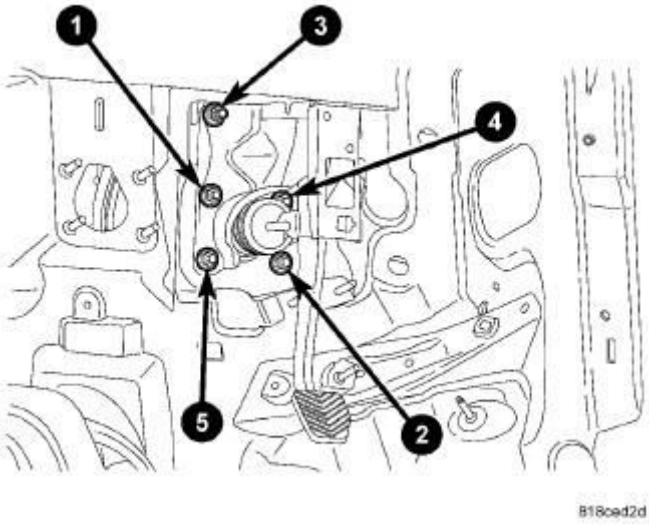

Fig. 151: Mounting Nut Torque Sequence - RHD
Courtesy of CHRYSLER GROUP, LLC

CAUTION: Because of power brake booster design, it is very important to tighten the mounting nuts in the proper sequence.

4. Tighten the brake pedal/booster mounting nuts in the proper sequence to 23 N.m (17 ft. lbs.).

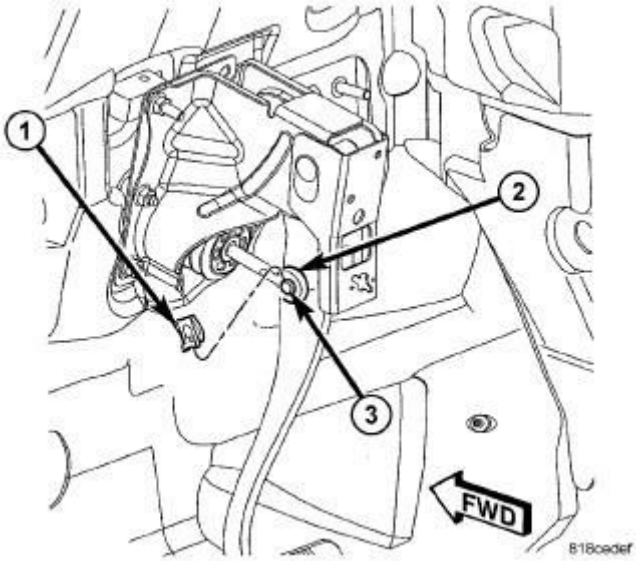

Fig. 152: Brake Pedal Clip - RHD
Courtesy of CHRYSLER GROUP, LLC

5. Using Mopar® Lubriplate, or an equivalent, coat the surface of the brake pedal pin (3) where it contacts the brake booster push rod.
6. Install the power brake booster push rod (2) on the pin (3) mounted on the side of the brake pedal. Install a NEW retaining clip (1) on the end of the pin. **Do not reuse the old clip.**
7. Reinstall and adjust the stop lamp switch that was set aside for reuse Refer to **SWITCH, STOP LAMP, INSTALLATION** .
8. Install the steering column opening cover reinforcement in the steering column opening.
9. Install the steering column opening cover (and airbag if equipped) on the instrument panel. Refer to **COVER, STEERING COLUMN OPENING, INSTALLATION** .
10. If equipped, install the silencer pad below the instrument panel.
11. Connect the battery negative cable to its post on the battery.
12. Check the stop lamps to verify they are operating properly and not staying on when the pedal is in the released position.
13. Road test the vehicle to ensure proper operation of the brakes.

PLATE, BRAKE BACKING

REMOVAL

REMOVAL

NOTE: Before proceeding, refer to CAUTION and WARNING.

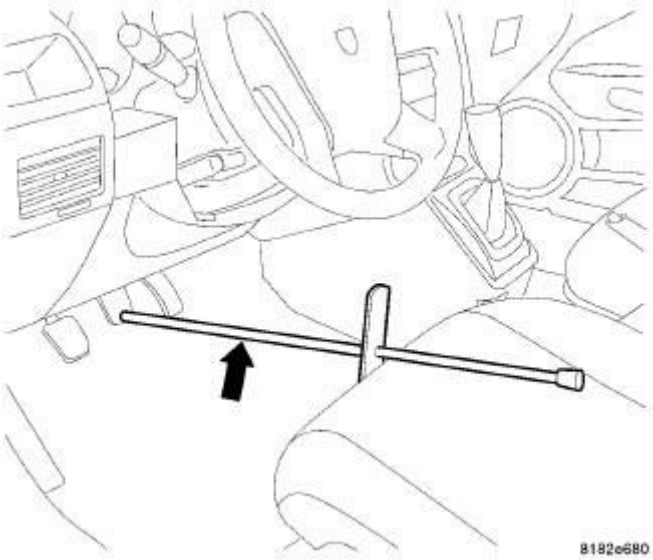

Fig. 153: Brake Pedal Holding Tool
Courtesy of CHRYSLER GROUP, LLC

1. Using a brake pedal holding tool as shown in illustration, depress the brake pedal past its first one inch of travel and hold it in this position. This will isolate the master cylinder from the brake hydraulic system and will not allow the brake fluid to drain out of the master cylinder reservoir.
2. Raise and support the vehicle. Refer to **HOISTING, STANDARD PROCEDURE** .

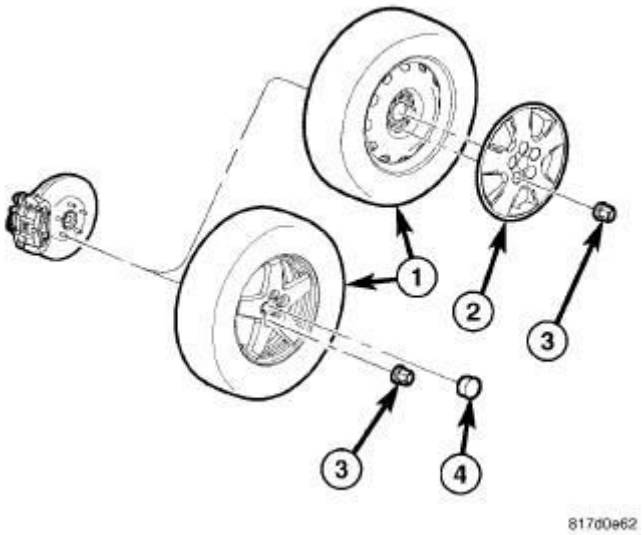

Fig. 154: Tire & Wheel Mounting
Courtesy of CHRYSLER GROUP, LLC

3. Remove the wheel mounting nuts (3), then the tire and wheel assembly.

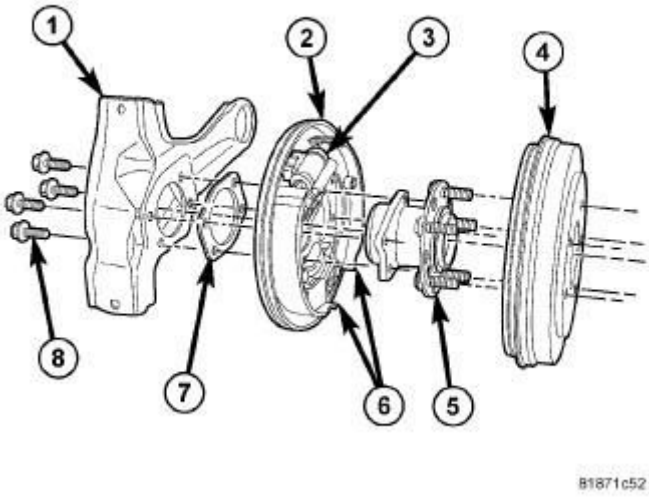

Fig. 155: Rear Drum Brakes
Courtesy of CHRYSLER GROUP, LLC

4. Access and remove the drum brake shoes (6) from the support plate (2). Refer to **REMOVAL** .

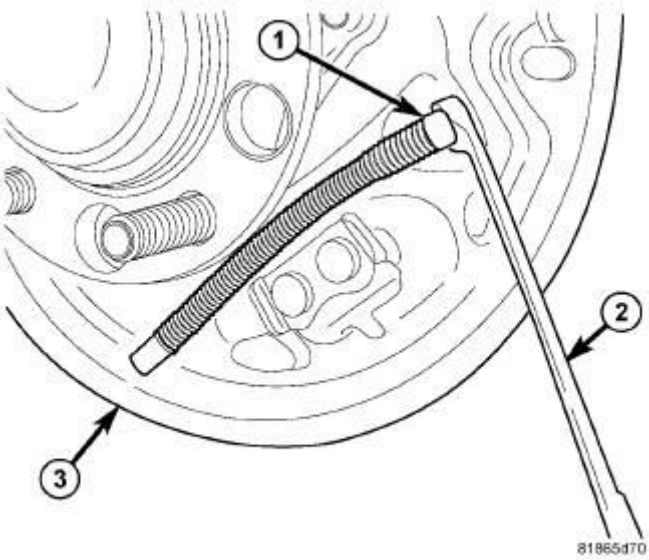

Fig. 156: Removing Cable From Plate
Courtesy of CHRYSLER GROUP, LLC

5. Position a 10 mm box wrench (2) over the retainer fingers on the end of the parking brake cable housing (1). Compress the cable housing retaining fingers with the wrench, then pull the cable housing out of the support plate.

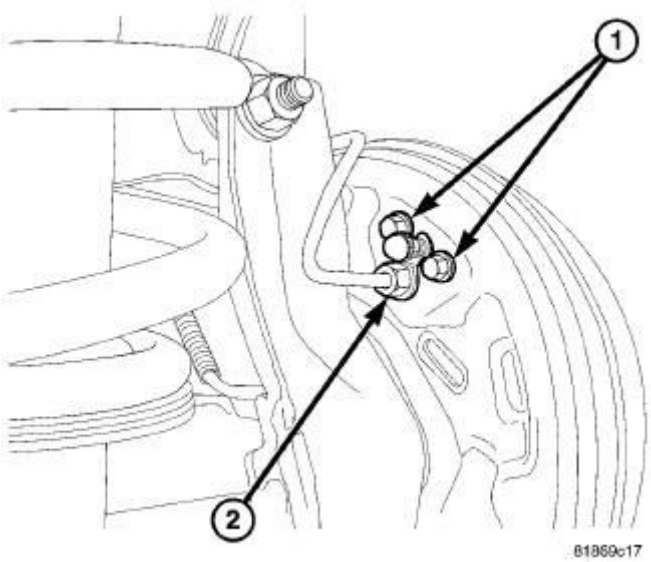

Fig. 157: Wheel Cylinder Brake Tube & Screws
Courtesy of CHRYSLER GROUP, LLC

6. Disconnect the brake tube (2) at the wheel cylinder.
7. Remove the wheel cylinder attaching screws (1).
8. Remove the wheel cylinder from the support plate.

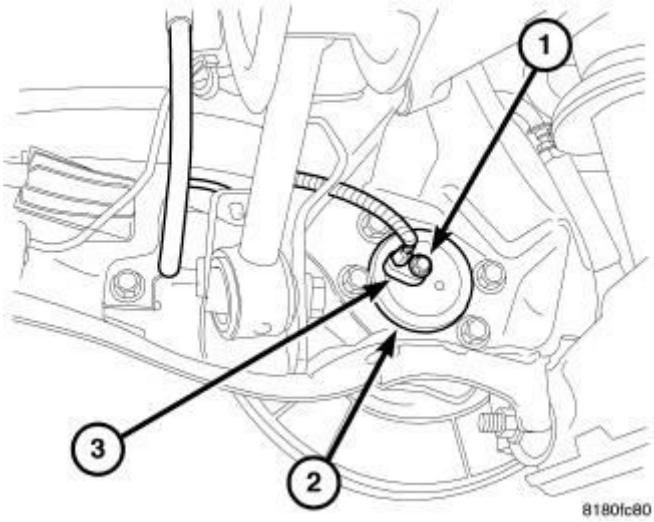

Fig. 158: FWD Rear Wheel Speed Sensor At Hub & Bearing
Courtesy of CHRYSLER GROUP, LLC

9. If equipped with a wheel speed sensor, remove the screw (1) fastening the wheel speed sensor head (3) in the rear of the hub and bearing (2). Remove the sensor head from the hub and bearing.

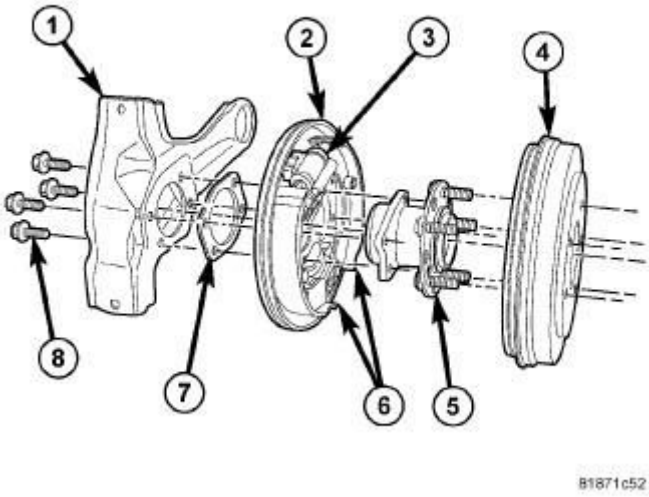

Fig. 159: Rear Drum Brakes
Courtesy of CHRYSLER GROUP, LLC

10. Remove the four bolts (8) securing the hub and bearing (5), support plate (2), and spacer (7) to the trailing link (1).

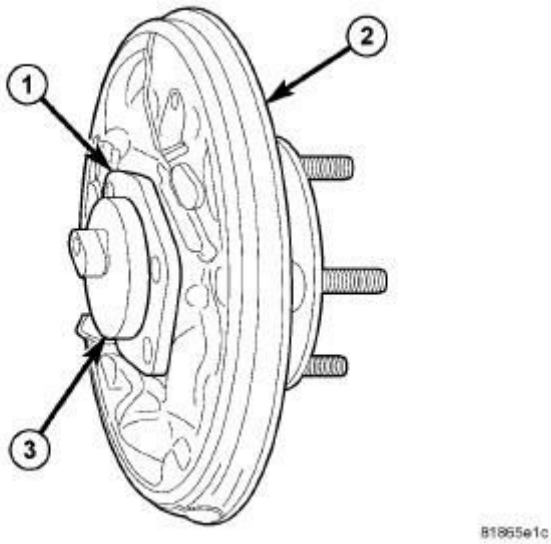

Fig. 160: Identifying Support Plate With Hub & Bearing
Courtesy of CHRYSLER GROUP, LLC

11. Remove the hub and bearing (3), support plate (2), and spacer (1) as an assembly from the trailing link. Separate the spacer and hub and bearing from the support plate once removed.

INSTALLATION

INSTALLATION

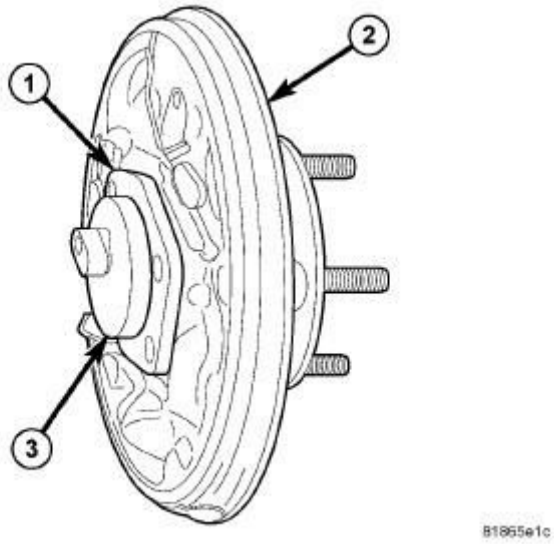

Fig. 161: Identifying Support Plate With Hub & Bearing
Courtesy of CHRYSLER GROUP, LLC

1. Assemble the hub and bearing (3) through the support plate (2) and install the spacer (1) on the rear of the assembly.
2. Install the hub and bearing (3), support plate (2), and spacer (1) as an assembly on the trailing link.

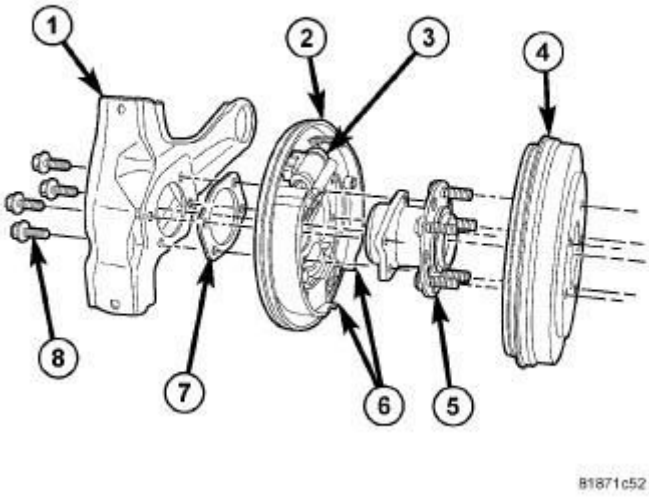

Fig. 162: Rear Drum Brakes
Courtesy of CHRYSLER GROUP, LLC

NOTE: When performing the following step, use NEW

mounting bolts or clean and apply Mopar® Stud AND Bearing Mount Adhesive or equivalent to the original mounting bolt threads before reuse.

3. Install the four bolts (8) securing the hub and bearing (5), support plate (2), and spacer (7) to the trailing link (1). Tighten the mounting bolts to 105 N.m (77 ft. lbs.).
4. Insert the parking brake cable into its mounting hole in the brake support plate. Push the cable housing in until the retainer's fingers lock into place.

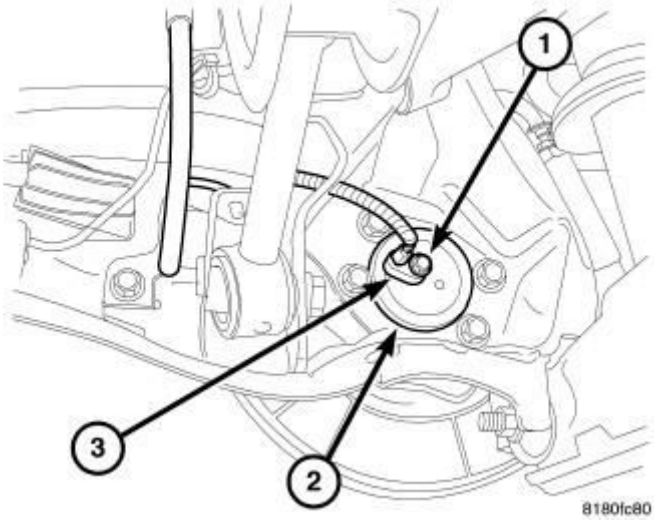

Fig. 163: FWD Rear Wheel Speed Sensor At Hub & Bearing
Courtesy of CHRYSLER GROUP, LLC

5. If equipped with a wheel speed sensor, Install the wheel speed sensor head (3) into the rear of the hub and bearing (2). Install the wheel speed sensor head mounting screw (1). Tighten the screw to 10 N.m (89 in. lbs.).

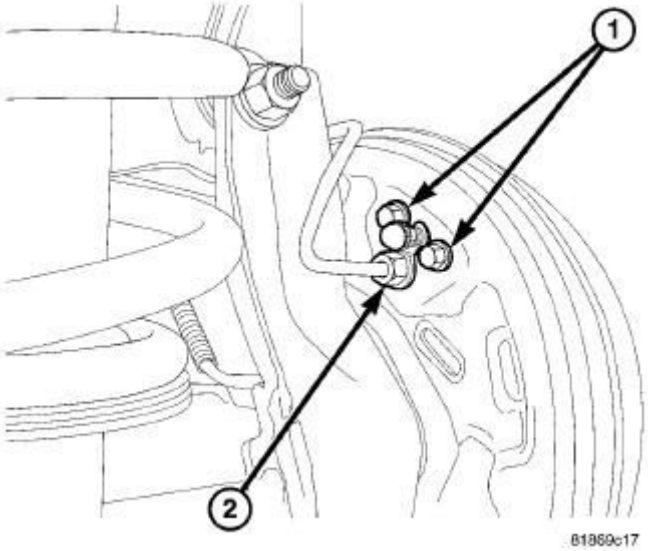

Fig. 164: Wheel Cylinder Brake Tube & Screws
Courtesy of CHRYSLER GROUP, LLC

6. Install the wheel cylinder onto the brake support plate. Install and tighten the mounting screws (1) to 13 N.m (115 in. lbs.).
7. Connect the brake tube (2) to the wheel cylinder (1). Tighten the tube nut to 17 N.m (150 in. lbs.).

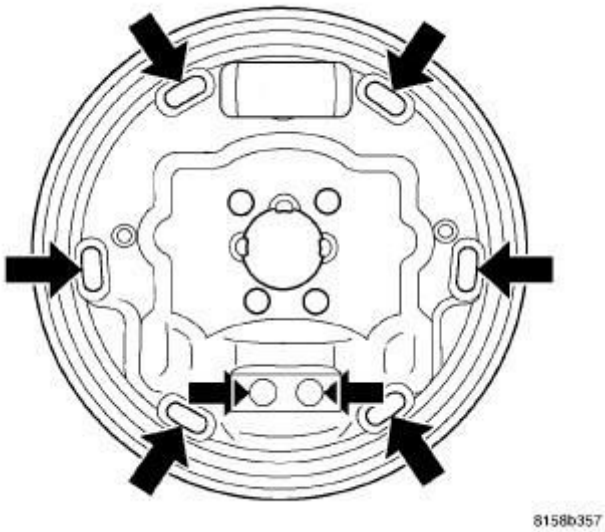

Fig. 165: Locating Shoe Contact Areas On Support
Courtesy of CHRYSLER GROUP, LLC

8. Lubricate shoe contact areas on support plate and anchor using Mopar® Brake Lubricant or equivalent.

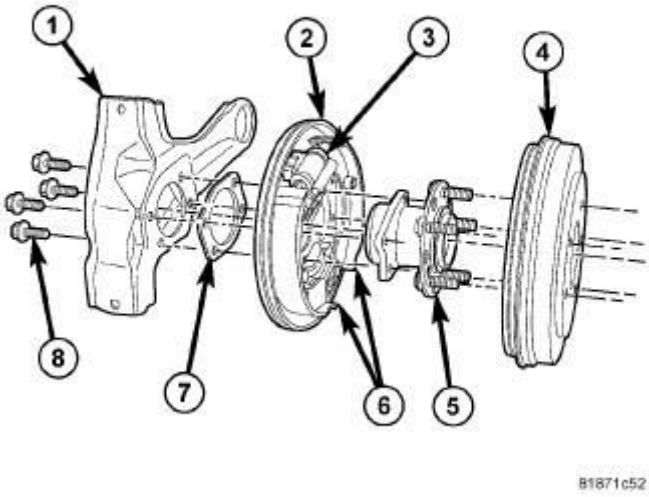

Fig. 166: Rear Drum Brakes
Courtesy of CHRYSLER GROUP, LLC

NOTE: Inspect the brake shoes before installation. Refer to SHOES, BRAKE, INSPECTION.

9. Install the drum brake shoes (6) and drum (4). Adjust shoes as necessary. Refer to **SHOES, BRAKE, INSTALLATION**.

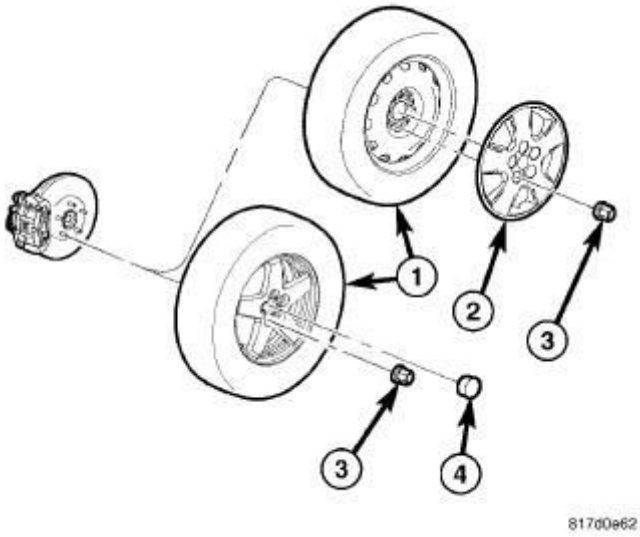

Fig. 167: Tire & Wheel Mounting
Courtesy of CHRYSLER GROUP, LLC

10. Install the tire and wheel assembly (1). Refer to **INSTALLATION** . Install

and tighten the wheel mounting nuts (3) to 125 N.m (92 ft. lbs.).

11. Slowly rotate the rear wheel and verify that the brake drum **lightly** drags on the shoes.
12. Lower the vehicle.

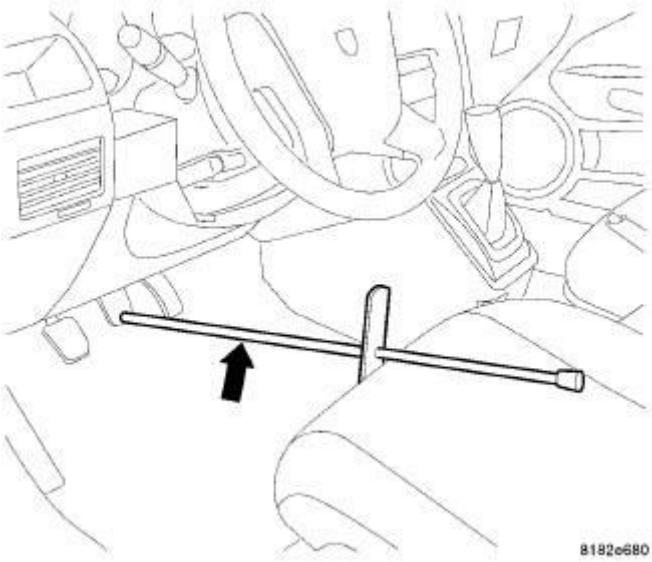

Fig. 168: Brake Pedal Holding Tool
Courtesy of CHRYSLER GROUP, LLC

13. Remove the brake pedal holding tool.
14. Bleed the affected wheel cylinder as necessary. Refer to **STANDARD PROCEDURE** .
15. Road test the vehicle to ensure proper brake operation.

ROTOR, BRAKE

DIAGNOSIS AND TESTING

DIAGNOSIS AND TESTING - BRAKE ROTOR

Any servicing of the rotor requires extreme care to maintain the rotor within service tolerances to ensure proper brake action.

Excessive runout or wobble in a rotor can increase pedal travel due to piston knock-back. This increases guide pin sleeve wear due to the tendency of the caliper to follow the rotor wobble.

When diagnosing a brake noise or pulsation, the machined disc braking surface

should be inspected.

BRAKING SURFACE INSPECTION

Light braking surface scoring and wear is acceptable. If heavy scoring or warping is evident, the rotor must be refaced or replaced. Refer to **ROTOR, BRAKE, STANDARD PROCEDURE**.

Excessive wear and scoring of the rotor can cause improper lining contact on the rotor's braking surface. If the ridges on the rotor are not removed before new brake shoes are installed, improper wear of the shoes will result.

If a vehicle has not been driven for a period of time, the rotor's braking surface will rust in the areas not covered by the brake shoes at that time. Once the vehicle is driven, noise and chatter from the disc brakes can result when the brakes are applied.

Some discoloration or wear of the rotor surface is normal and does not require resurfacing when linings are replaced. If cracks or burned spots are evident, the rotor must be replaced.

ROTOR MINIMUM THICKNESS

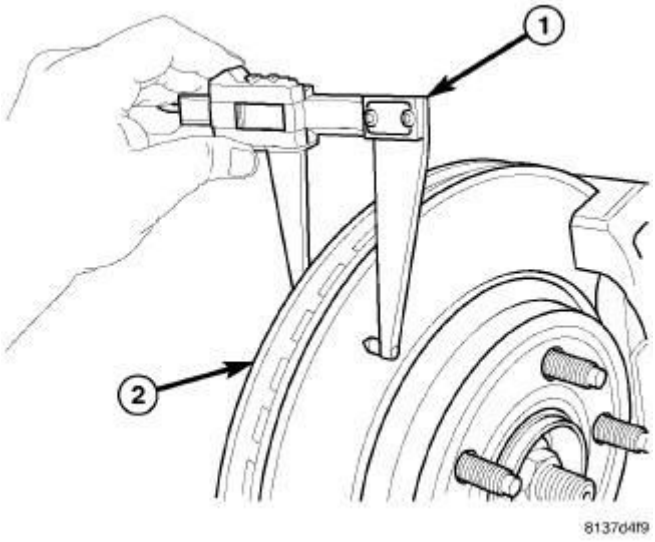

Fig. 169: Measuring Rotor Thickness
Courtesy of CHRYSLER GROUP, LLC

Measure rotor thickness (1) at the center of the brake pad contact surface. Replace the rotor if it is worn below minimum thickness or if machining the rotor

will cause its thickness to fall below specifications.

CAUTION: Do not machine the rotor if it will cause the rotor to fall below minimum thickness.

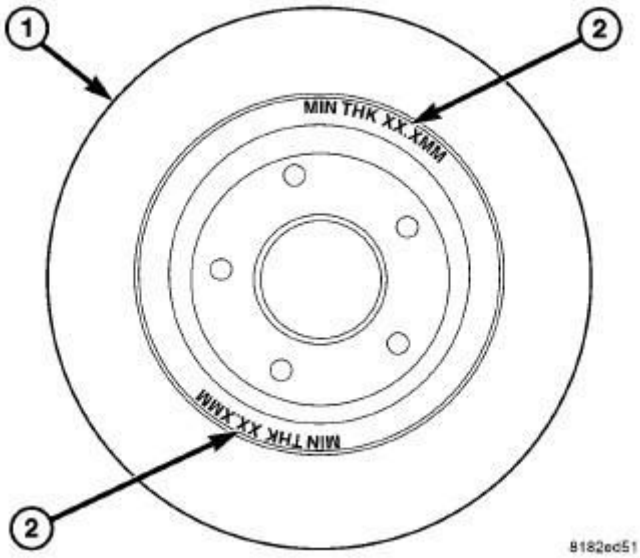

Fig. 170: Front Rotor Min. Thickness Marks
Courtesy of CHRYSLER GROUP, LLC

On front rotors, Minimum thickness specifications (2) are cast on the rotor's unmachined surface on the inside of the rotor (1). Limits can also be found in this component's specification table. Refer to **ROTOR, BRAKE, SPECIFICATIONS**.

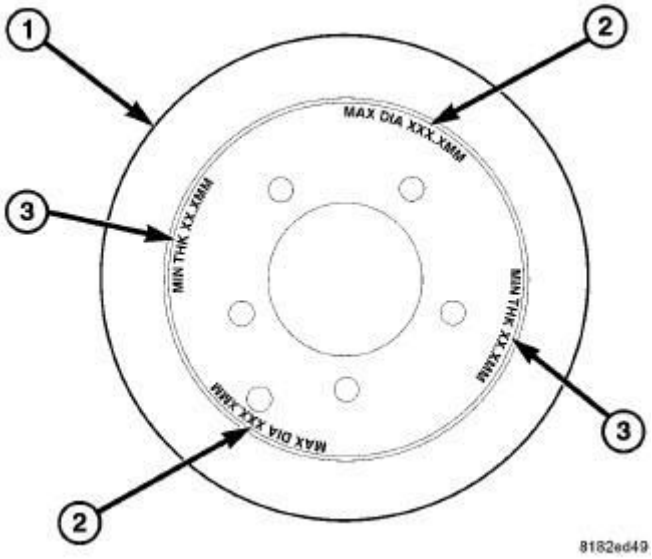

Fig. 171: Rear Rotor Maximum Diameter/Minimum Thickness Marks
Courtesy of CHRYSLER GROUP, LLC

On rear rotors, Minimum thickness specifications (3) are cast into the rotor's unmachined surface on the outside of the rotor (1). This area also shows the maximum thickness specifications (2) for the hat section of the rotor. Limits can also be found in this component's specification table. Refer to **ROTOR, BRAKE, SPECIFICATIONS**.

ROTOR THICKNESS VARIATION

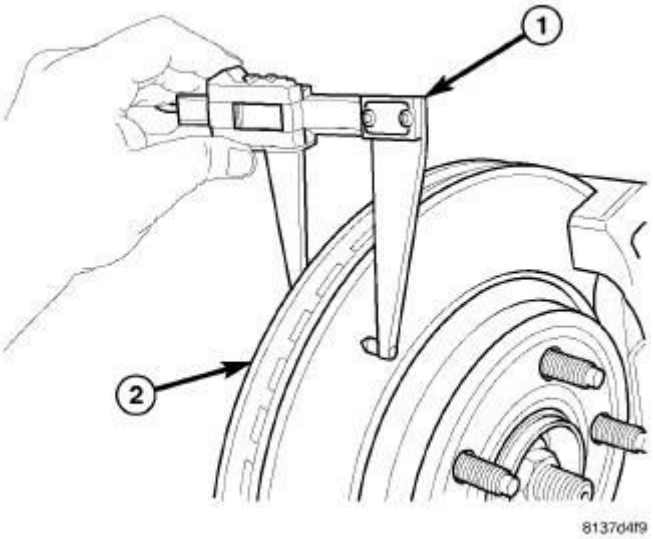

Fig. 172: Measuring Rotor Thickness
Courtesy of CHRYSLER GROUP, LLC

Thickness variation in a rotor's braking surface can result in pedal pulsation, chatter and surge. This can also be caused by excessive runout in the rotor or the hub.

Rotor thickness variation measurements should be made in conjunction with measuring runout. Measure thickness of the brake rotor (2) at 12 equal points around the rotor braking surface with a micrometer (1) at a radius approximately 25 mm (1 inch) from edge of rotor. If thickness measurements vary beyond the specification listed in the specification table, the rotor should be refaced or replaced. Refer to **ROTOR, BRAKE, SPECIFICATIONS** and **ROTOR, BRAKE, STANDARD PROCEDURE**.

ROTOR RUNOUT

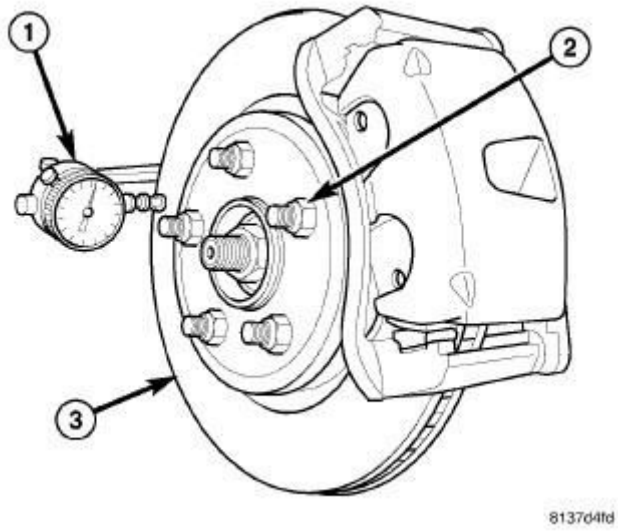

Fig. 173: Measuring Rotor Runout
Courtesy of CHRYSLER GROUP, LLC

On-vehicle rotor runout is the combination of the individual runout of the hub face and the runout of the brake rotor (hub runout can be measured separately). To measure rotor runout on the vehicle:

1. Raise and support the vehicle. Refer to **HOISTING, STANDARD PROCEDURE** .
2. Remove the tire and wheel assembly. Refer to **REMOVAL** .
3. Install standard wheel mounting nuts, flat side to rotor, on all the wheel studs (2). Progressively tighten the nuts in a crisscross pattern to 135 N.m (100 ft. lbs.).
4. Mount Dial Indicator (special tool #C-3339A, Set, Dial Indicator) (1) with Wheel (special tool #25-W, Roller Contact Point), or equivalent, to the knuckle. Position the dial indicator wheel to contact the rotor braking surface approximately 10 mm (0.39 in.) from the outer edge of the rotor (3).
5. Slowly rotate the brake rotor checking lateral runout, marking the low and high spots. Record these measurements.
6. Check and record the runout on the opposite side of the rotor in the same fashion, marking the low and high spots.
7. Compare runout measurement to specifications. Refer to **ROTOR, BRAKE, SPECIFICATIONS**.

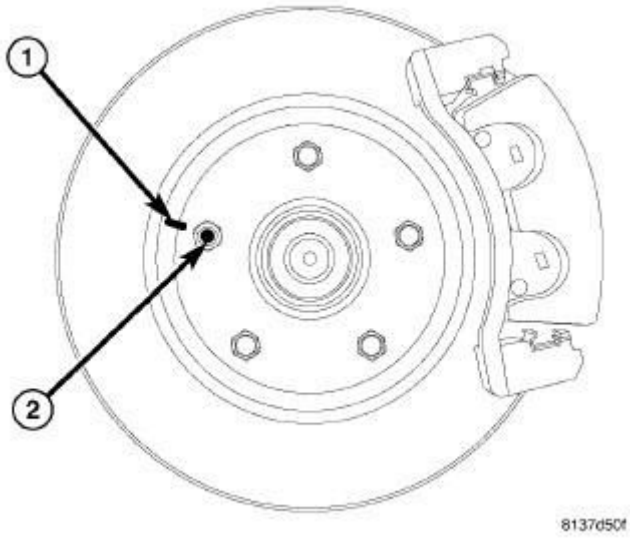

Fig. 174: Wheel Stud & Rotor Index Marked
Courtesy of CHRYSLER GROUP, LLC

8. If runout is in excess of specifications, check the lateral runout of the hub face. Before removing the rotor from the hub, place a chalk mark across both the rotor (1) and the one wheel stud (2) closest to where the high runout measurement was taken. This way, the original mounting spot of the rotor on the hub is indexed.
9. Remove the rotor from the hub. Refer to **ROTOR, BRAKE, REMOVAL**.

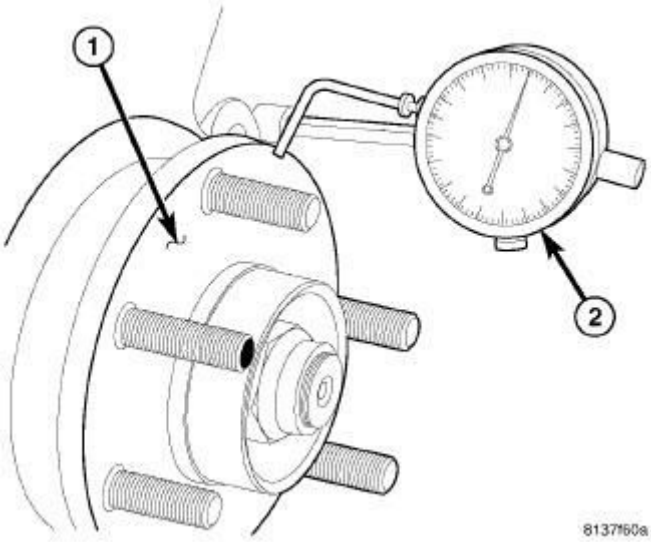

Fig. 175: Measuring Hub Runout
Courtesy of CHRYSLER GROUP, LLC

NOTE: Before measuring hub runout, clean the hub face surface with an appropriate cleaner. This provides a clean surface to get an accurate indicator reading.

10. Mount Dial Indicator (special tool #C-3339A, Set, Dial Indicator) (2) to the knuckle. Position the dial indicator stem so it contacts the hub face (1) near the outer diameter. Care must be taken to position the stem outside of the stud circle, but inside of the chamfer on the hub rim.
11. Slowly rotate the hub measuring runout. Hub runout should not exceed 0.040 mm (0.0016 inch). If runout exceeds this specification, the hub must be replaced. Refer to **HUB AND BEARING, REMOVAL** and **KNUCKLE, STEERING, REMOVAL** .

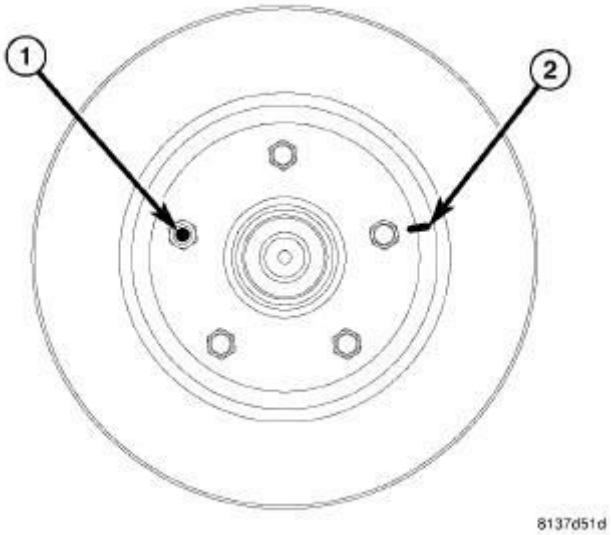

Fig. 176: Rotor Reindexed On Wheel Studs
Courtesy of CHRYSLER GROUP, LLC

12. If hub runout does not exceed this specification, install the original rotor back on the hub, aligning the chalk mark on the rotor (2) with a wheel mounting stud, two studs apart from the original stud (1).

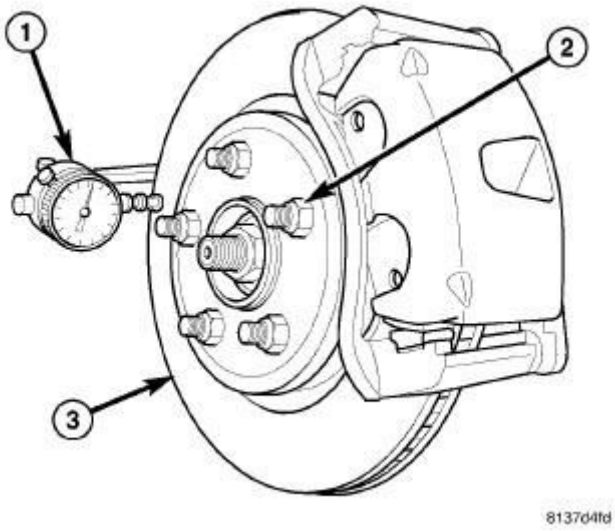

Fig. 177: Measuring Rotor Runout
Courtesy of CHRYSLER GROUP, LLC

13. Install standard wheel mounting nuts, flat side to rotor, on all the wheel studs (2). Progressively tighten the nuts in a crisscross pattern to 135 N.m (100 ft. lbs.).
14. Mount the Dial Indicator (special tool #C-3339A, Set, Dial Indicator) (1) and remeasure runout on both sides of the brake rotor as explained in earlier steps to see if runout is now within specifications.

    Refer to **ROTOR, BRAKE, SPECIFICATIONS**.

15. If runout is still not within specifications, reface or replace brake rotor. Refer to **ROTOR, BRAKE, STANDARD PROCEDURE**.

STANDARD PROCEDURE

STANDARD PROCEDURE - BRAKE ROTOR MACHINING

NOTE: Refacing the rotor is not required each time the brake pads are replaced, only when the need is foreseen.

Any servicing of the rotor requires extreme care to maintain the rotor within service tolerances to ensure proper brake action.

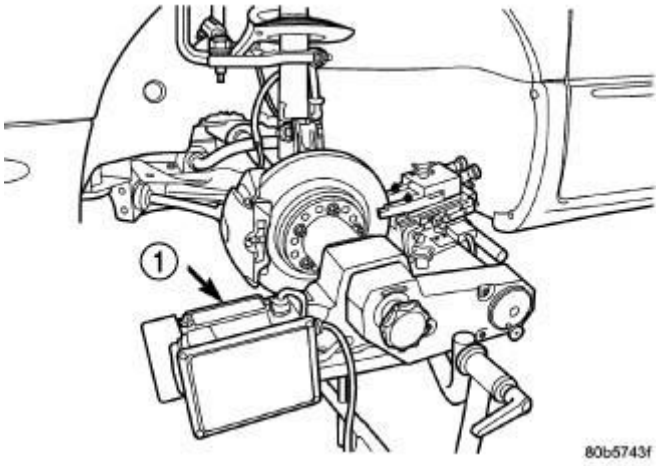

Fig. 178: On-Car Brake Lathe
Courtesy of CHRYSLER GROUP, LLC

1 - ON-CAR BRAKE LATHE

If the rotor surface is deeply scored or warped, or there is a complaint of brake roughness or brake pedal pulsation, the rotor should be refaced using a hub-mounted on-car brake lathe (1), or replaced.

The use of a hub-mounted on-car brake lathe (1) is highly recommended to eliminate the possibility of excessive runout. It trues the brake rotor to the vehicle's hub and bearing.

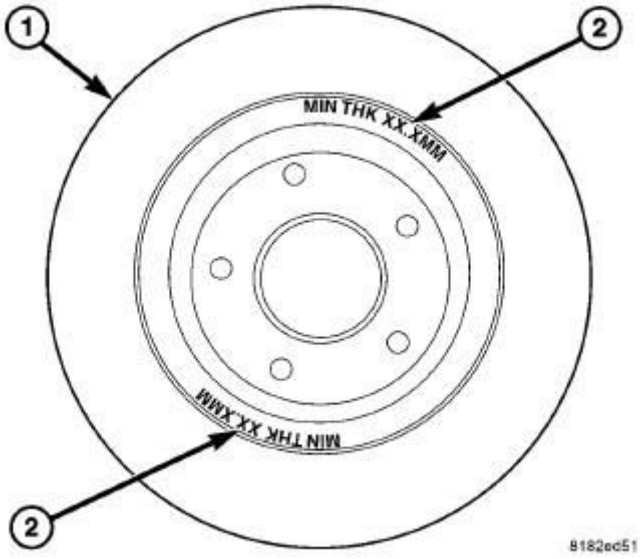

Fig. 179: Front Rotor Min. Thickness Marks
Courtesy of CHRYSLER GROUP, LLC

NOTE: All brake rotors (1) have markings for minimum allowable thickness cast on an unmachined surface of the rotor (2) or stamped into the hat section. On this vehicle, the minimum thickness specification for the front brake rotor is located on the inside of the rotor. The minimum thickness specification for the rear brake rotor is located on the outside of the rotor. Minimum thickness specifications can also be found in this component's specification table. Refer to ROTOR, BRAKE, SPECIFICATIONS.

Minimum allowable thickness is the minimum thickness which the brake rotor machined surface may be cut to.

CAUTION: Do not machine the rotor if it will cause the rotor to fall below minimum thickness.

Before lathe installation, verify the brake rotor face and the hub adapters are free of any chips, rust, or contamination.

When mounting and using the brake lathe, strict attention to the brake lathe manufacturer's operating instructions is required.

Machine both sides of the brake rotor at the same time. Cutting both sides at the same time minimizes the possibility of a tapered or uneven cut.

When refacing a rotor, the required TIR (Total Indicator Reading) and thickness variation limits MUST BE MAINTAINED. Extreme care in the operation of rotor turning equipment is required. Specifications for brake rotor machining can be found in this service information's specification table. Refer to **ROTOR, BRAKE, SPECIFICATIONS**.

SPECIFICATIONS

SPECIFICATIONS

NOTE: When refacing a rotor, the required TIR (Total Indicator Reading) and thickness variation limits MUST BE MAINTAINED.

Braking Rotor	Rotor Thickness	Minimum Rotor Thickness	Rotor Thickness Variation	Rotor Runout*
Front Rotor - 16-inch**	25.90-26.10 mm (1.020-1.028 in.)	24.40 mm (0.961 in.)	0.005 mm (0.0002 in.)	0.100 mm (0.004 in.)
Rear Rotor - 14-inch***	9.80-10.20 mm (0.386-0.402 in.)	8.40 mm (0.331 in.)	0.015 mm (0.0006 in.)	0.06 mm (0.0024 in.)
Rear Rotor - 16-inch**	9.80-10.20 mm (0.386-0.402 in.)	8.40 mm (0.331 in.)	0.015 mm (0.0006 in.)	0.04 mm (0.0016 in.)
* TIR Total Indicator Reading (Measured On Vehicle)				
** Referred to as "16-inch" because they are designed to fit inside 16-inch or larger wheels. Actual **front** rotor diameter is 294 mm (11.5 in.). Actual **rear** rotor diameter is 302 mm (11.8 in.).				
*** Referred to as "14-inch" because they are designed to fit inside 14-inch or larger wheels. Actual rotor diameter is 262 mm (10.3 in.).				

REMOVAL

FRONT BRAKE ROTOR

NOTE: Before proceeding, refer to CAUTION and WARNING.

1. Raise and support the vehicle. Refer to **HOISTING, STANDARD PROCEDURE** .

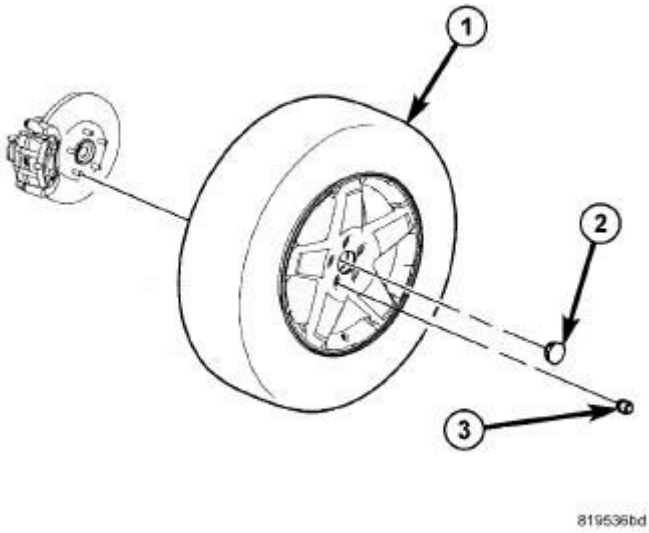

Fig. 180: Tire And Wheel Mounting

Courtesy of CHRYSLER GROUP, LLC

2. Remove the wheel mounting nuts (3), then the tire and wheel assembly (1).

NOTE: In some cases, it may be necessary to retract the caliper piston in its bore a small amount in order to provide sufficient clearance between the pads and the rotor to easily remove the caliper from the knuckle. This can usually be accomplished before the guide pin bolts are removed, by grasping the inboard side of the caliper and pulling outward working with the guide pins, thus retracting the piston. Never push on the piston directly as it may get damaged.

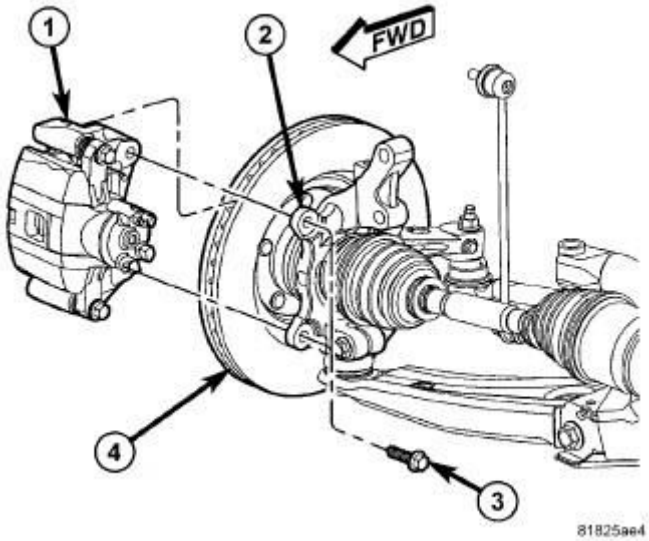

Fig. 181: Removing/Installing Brake Caliper & Adapter Bracket
Courtesy of CHRYSLER GROUP, LLC

3. Remove the two bolts (3) securing disc brake caliper and adapter bracket (1) to the steering knuckle (2).
4. Remove the disc brake caliper and adapter bracket (1) from the knuckle (2) and rotor (4) as an assembly. Hang the assembly out of the way using wire or a bungee cord. Use care not to overextend the brake hose when doing this.

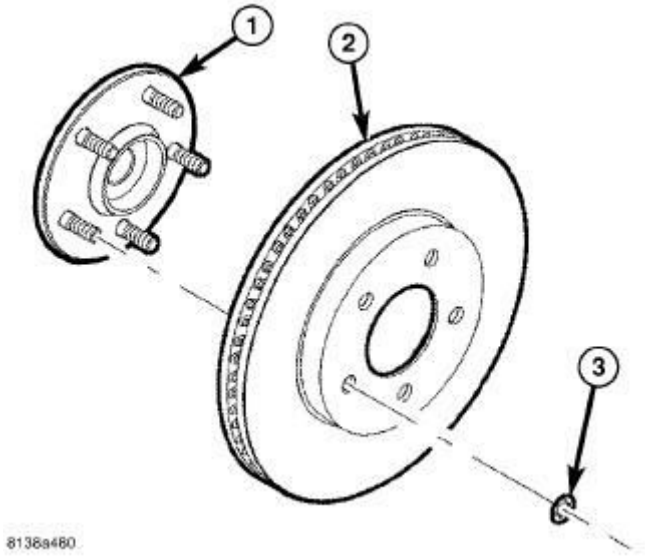

Fig. 182: Brake Rotor, Hub & Clips
Courtesy of CHRYSLER GROUP, LLC

5. Remove any clips (3) retaining the brake rotor (2) to the wheel studs.
6. Slide the brake rotor (2) off the hub and bearing (1).

REAR BRAKE ROTOR

NOTE: Before proceeding, refer to CAUTION and WARNING.

1. Raise and support the vehicle. Refer to **HOISTING, STANDARD PROCEDURE** .

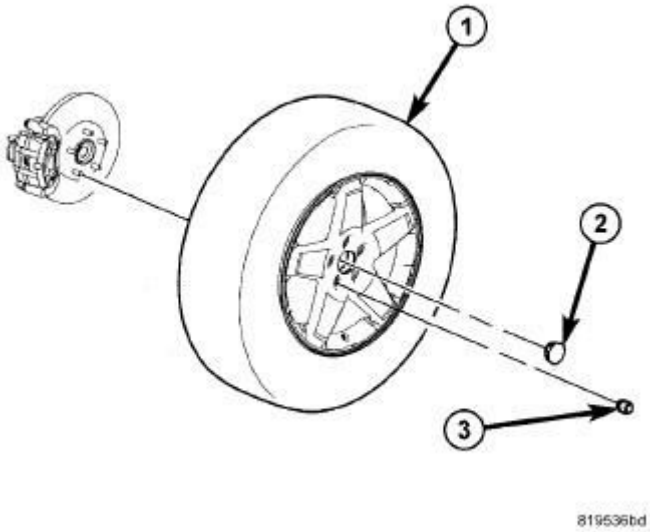

Fig. 183: Tire And Wheel Mounting

Courtesy of CHRYSLER GROUP, LLC

2. Remove the wheel mounting nuts (3), then the tire and wheel assembly (1).

NOTE: In some cases, it may be necessary to retract the caliper piston in its bore a small amount in order to provide sufficient clearance between the pads and the rotor to easily remove the caliper from the knuckle. This can usually be accomplished before the guide pin bolts are removed, by grasping the inboard side of the caliper and pulling outward working with the guide pins, thus retracting the piston. Never push on the piston directly as it may get damaged.

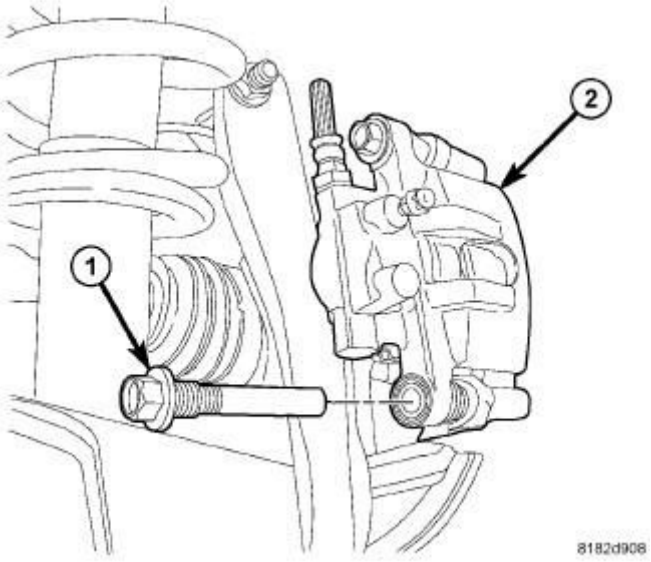

Fig. 184: Lower Caliper Guide Pin Bolt
Courtesy of CHRYSLER GROUP, LLC

3. Remove the disc brake caliper (2) lower guide pin bolt (1).

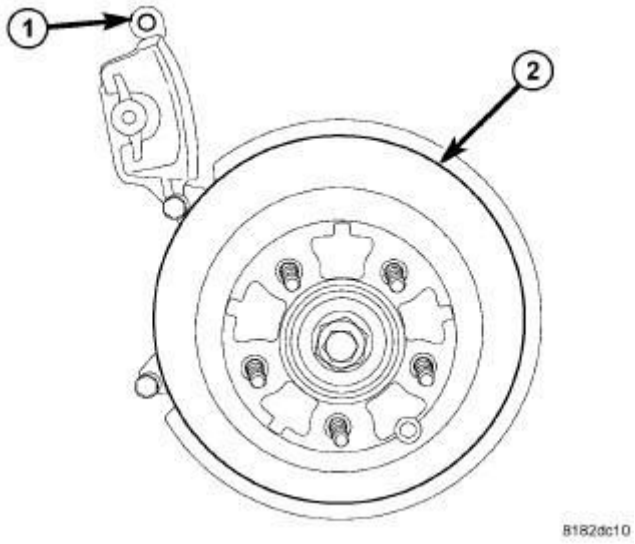

Fig. 185: Rear Caliper Rotated Up
Courtesy of CHRYSLER GROUP, LLC

CAUTION: When moving rear brake caliper upward, use extreme care not to damage or overextend the flex hose. Damage may occur.

4. Rotate the caliper upward hinging off the upper guide pin bolt. Rotate the caliper upward just enough to allow brake rotor removal. Hang the caliper assembly in this position using wire or a bungee cord.

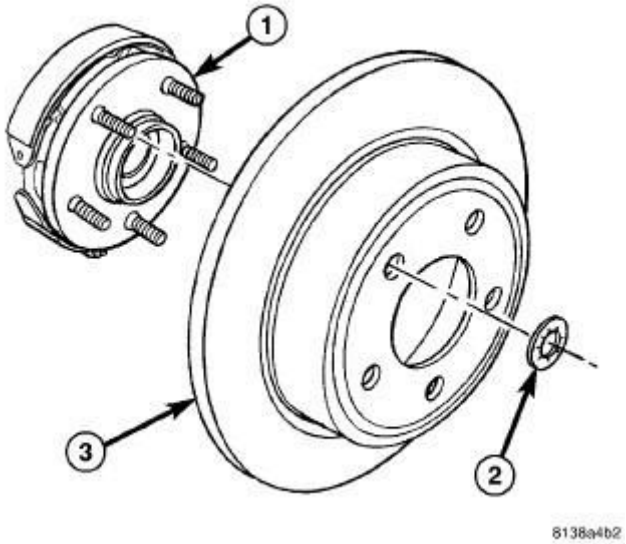

Fig. 186: Rear Brake Rotor, Hub & Clips
Courtesy of CHRYSLER GROUP, LLC

5. Remove any clips (2) retaining the brake rotor (3) to the wheel studs.
6. Slide the brake rotor (3) off the hub and bearing (1) and remove.

INSTALLATION

FRONT BRAKE ROTOR

NOTE: Inspect disc brake pads before installation. Refer to INSPECTION .

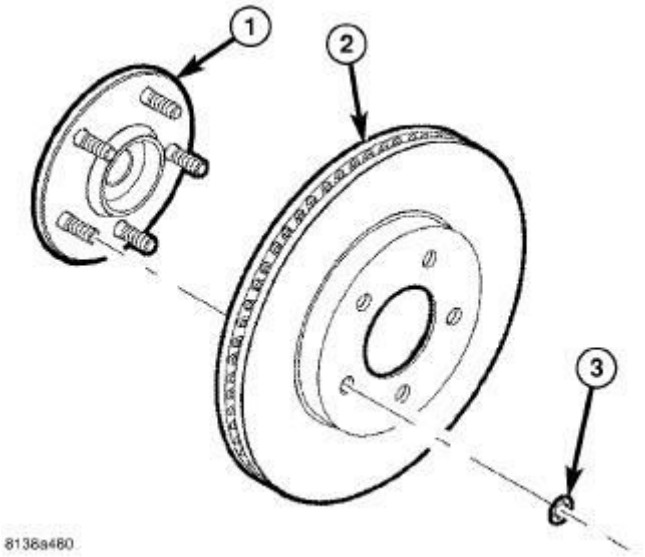

Fig. 187: Brake Rotor, Hub & Clips
Courtesy of CHRYSLER GROUP, LLC

1. Clean the hub face (1) to remove any dirt or corrosion where the rotor mounts.
2. Install the brake rotor (2) over the studs on the hub and bearing.

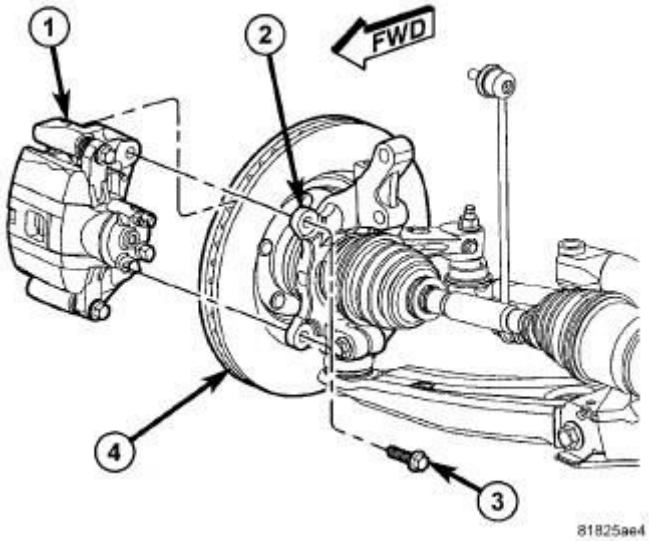

Fig. 188: Caliper/Adapter Mounting
Courtesy of CHRYSLER GROUP, LLC

3. Install the disc brake caliper and adapter bracket assembly (1) over the brake rotor (4) and knuckle (2).
4. Install the mounting bolts (3) securing the caliper adapter bracket to the knuckle (2). Tighten the bolts to 108 N.m (80 ft. lbs.).

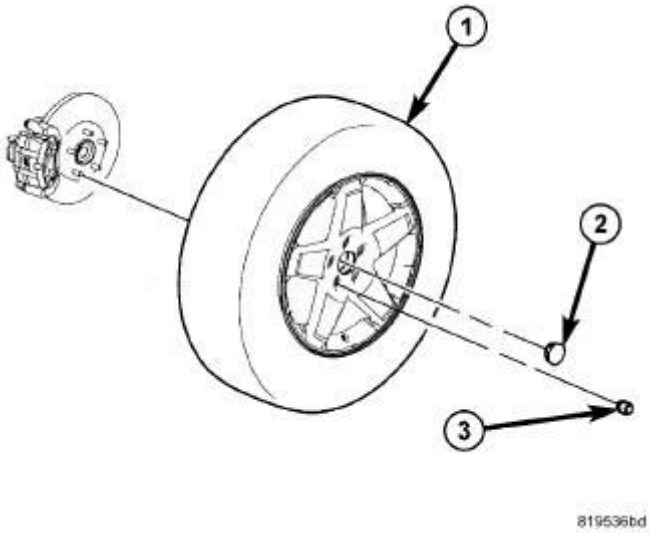

Fig. 189: Tire And Wheel Mounting
Courtesy of CHRYSLER GROUP, LLC

5. Install the tire and wheel assembly (1). Refer to **INSTALLATION** . Tighten the wheel mounting nuts (3) to 135 N.m (100 ft. lbs.).

6. Lower the vehicle.
7. Pump the brake pedal several times before moving the vehicle to set the pads to the brake rotor.
8. Check and adjust the brake fluid level in the reservoir as necessary.
9. Road test the vehicle and make several stops to seat the brake pads to the rotor.

REAR BRAKE ROTOR

NOTE: Inspect disc brake pads and parking brake shoes before installation. Refer to INSPECTION .

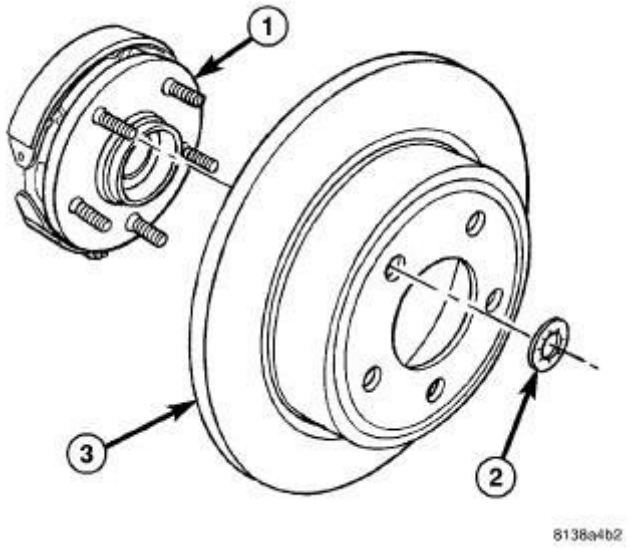

Fig. 190: Rear Brake Rotor, Hub & Clips
Courtesy of CHRYSLER GROUP, LLC

1. Clean the hub face (1) to remove any dirt or corrosion where the rotor mounts.
2. Install the brake rotor (3) over the studs on the hub and bearing (1).

CAUTION: Use care when installing the caliper onto the adapter bracket to avoid damaging the guide pin boot.

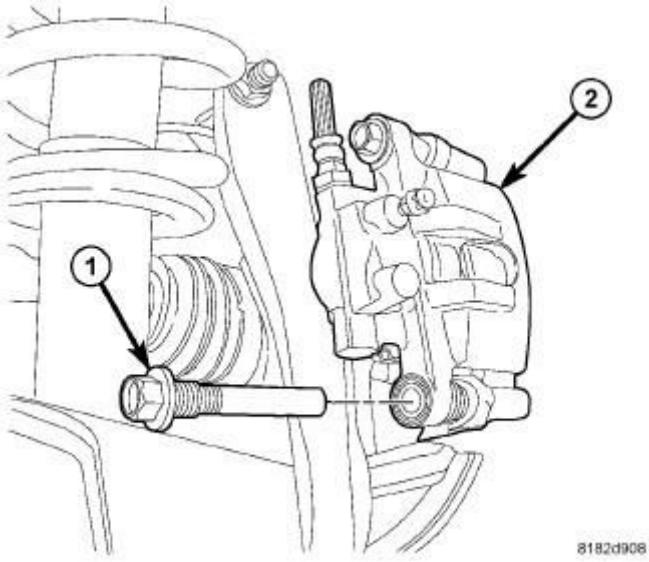

Fig. 191: Lower Caliper Guide Pin Bolt
Courtesy of CHRYSLER GROUP, LLC

3. Rotate the disc brake caliper downward over the brake rotor and lower part of caliper adapter.
4. Install the disc brake caliper (2) lower guide pin bolt (1). Tighten the guide pin bolt to 43 N.m (32 ft. lbs.).

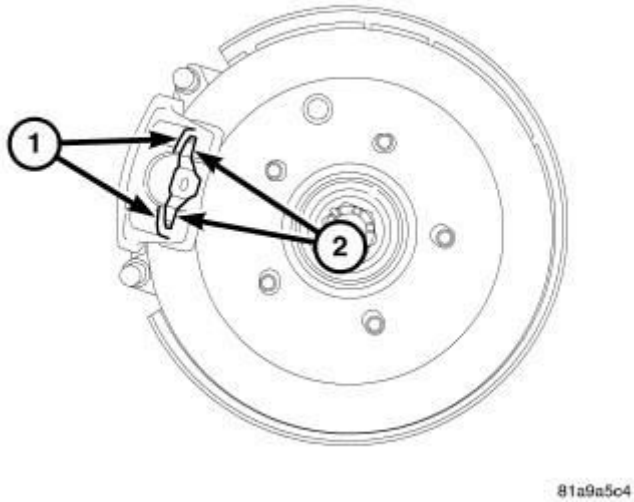

Fig. 192: Outboard Pad Correctly Positioned
Courtesy of CHRYSLER GROUP, LLC

NOTE: Once the caliper is installed, inspect the outboard brake pad to make sure it is correctly positioned. The retaining clip (2) must be squarely seated in the

depressed areas (1) on the caliper fingers. Also, the nubs on the pad's steel backing plate must be fully seated in the depressions formed into the inside of the caliper fingers. There should be no gap between the pad backing plate and the caliper fingers.

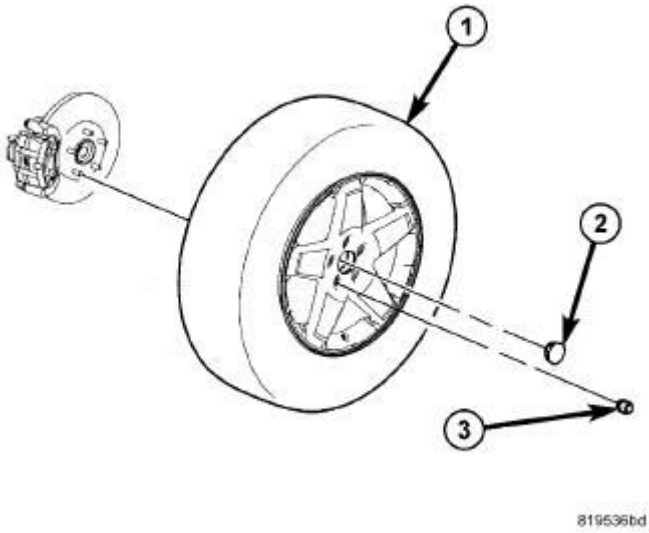

Fig. 193: Tire And Wheel Mounting
Courtesy of CHRYSLER GROUP, LLC

5. Install tire and wheel assembly (1). Refer to **INSTALLATION** . Install and tighten the wheel mounting nuts (3) to 135 N.m (100 ft. lbs.).
6. Lower the vehicle.
7. Pump the brake pedal several times before moving the vehicle to set the pads to the brake rotor.
8. Check and adjust the brake fluid level in the reservoir as necessary.
9. Road test the vehicle and make several stops to seat the brake pads to the rotor.

SHOES, BRAKE

ADJUSTMENTS

ADJUSTMENTS

NOTE: Before proceeding, refer to CAUTION and WARNING.

1. Verify the parking brake lever is in the fully released position.

2. Raise and support the vehicle. Refer to **HOISTING, STANDARD PROCEDURE** .

NOTE: Perform the following steps on each rear drum brake assembly as necessary.

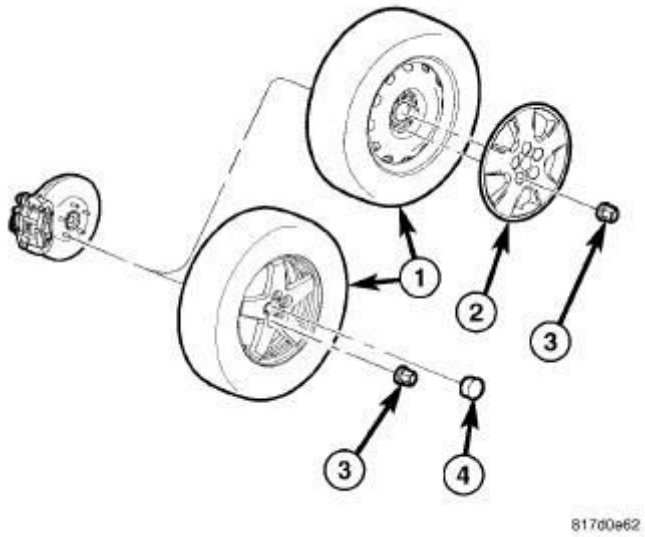

Fig. 194: Tire & Wheel Mounting
Courtesy of CHRYSLER GROUP, LLC

3. Remove the wheel mounting nuts (3), then the rear tire and wheel assembly.

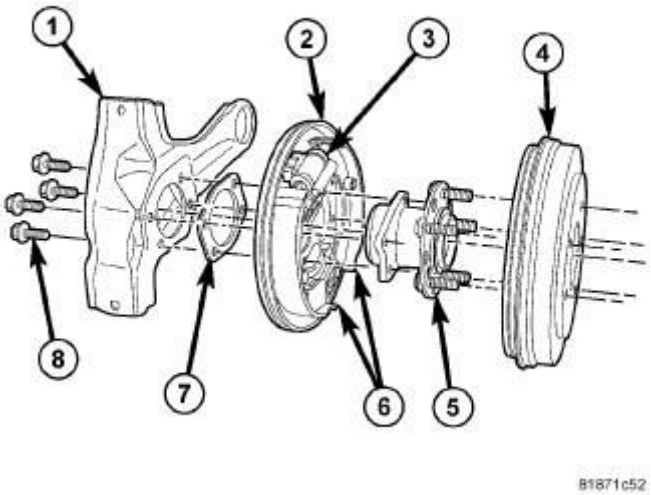

Fig. 195: Rear Drum Brakes
Courtesy of CHRYSLER GROUP, LLC

4. Remove the brake drum (4). Refer to **DRUM, BRAKE, REMOVAL**.

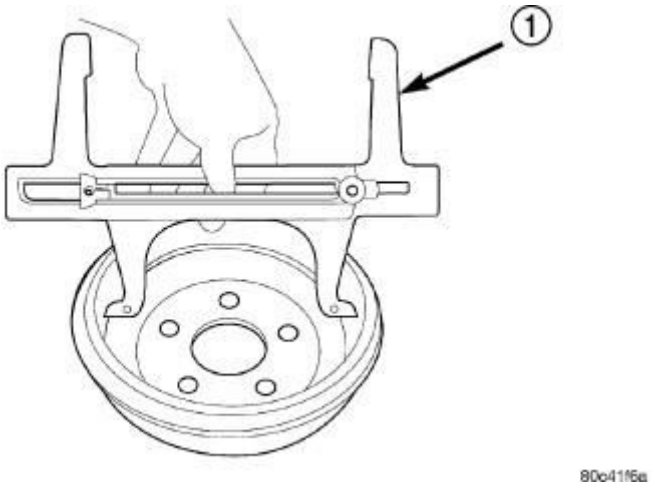

Fig. 196: Brake Drum Measurement
Courtesy of CHRYSLER GROUP, LLC

1 - BRAKE SHOE GAUGE

5. Using a Brake Shoe Gauge (special tool #C-3919, Gauge, Brake Shoes) (1) or equivalent, measure the inside diameter of the brake drum at the center of the shoe contact area. Tighten the Gauge setscrew at this measurement.

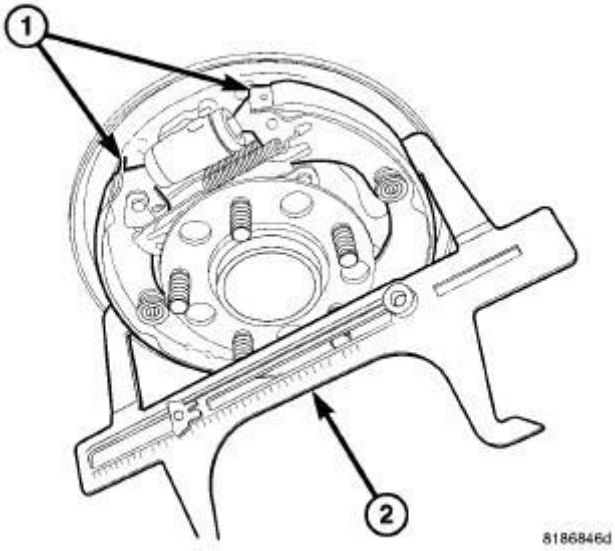

Fig. 197: Measuring Brake Shoes
Courtesy of CHRYSLER GROUP, LLC

6. Place the opposite side of the brake shoe gauge (2) over the brake shoes (1) as shown in illustration.

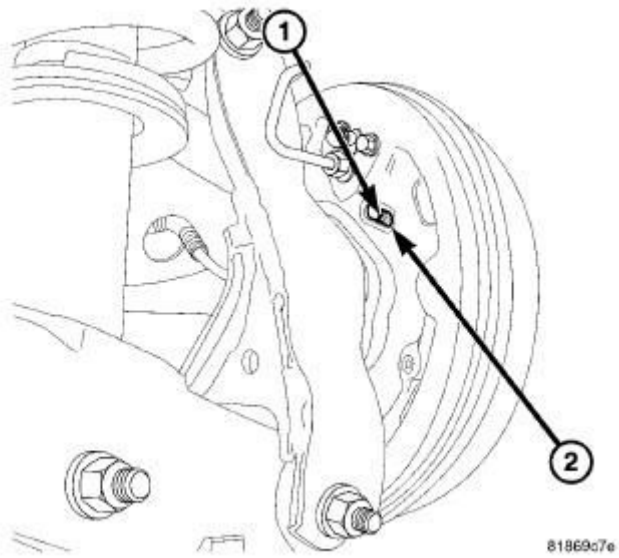

Fig. 198: View Of Adjuster Wheel Through Support Plate
Courtesy of CHRYSLER GROUP, LLC

7. Adjust the shoe diameter to the setting on the gauge. To adjust the shoe diameter, turn the adjuster wheel using a screwdriver inserted through the adjusting hole in the rear of the shoe support plate. Once the tip of the screwdriver contacts the adjuster wheel teeth, move the handle of tool upward using the support plate as a pivot to adjust the shoes outward.

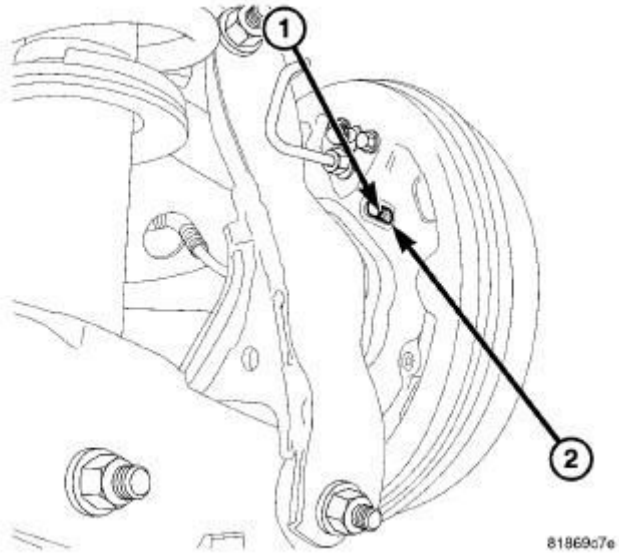

Fig. 199: View Of Adjuster Wheel Through Support Plate
Courtesy of CHRYSLER GROUP, LLC

8. If at any time the adjustment needs to be backed off, perform the following:

a. Remove the plug from the rear of the support plate below the wheel cylinder.
b. Insert a small screwdriver through the access hole (2) in the support plate, under the adjuster, against the lever pawl. The pawl is attached to and pivots from the rear brake shoe.
c. While pushing on the pawl with the screwdriver to disengage it from the adjuster wheel teeth, rotate the wheel (1) upward to back off the adjustment using another screwdriver or a brake adjuster tool.

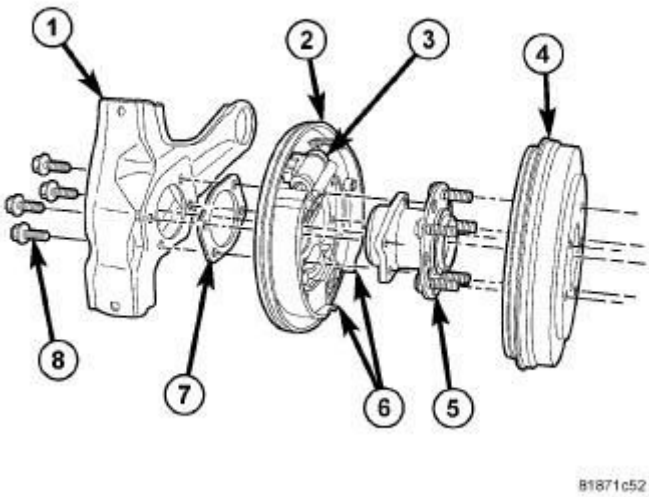

Fig. 200: Rear Drum Brakes
Courtesy of CHRYSLER GROUP, LLC

9. Once the shoe diameter is set, remove the tool and install the brake drum (4). Refer to **DRUM, BRAKE, INSTALLATION**.
10. Turn the brake drum. A **slight** drag should be felt while rotating the drum. If not, repeat the above procedure.

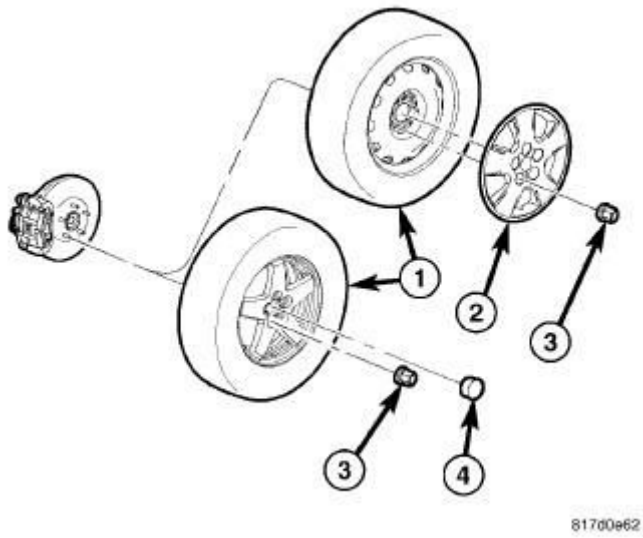

Fig. 201: Tire & Wheel Mounting
Courtesy of CHRYSLER GROUP, LLC

11. Install the tire and wheel assembly (1). Refer to **INSTALLATION** . Install and tighten wheel mounting nuts (3) to 135 N.m (100 ft. lbs.).
12. After adjusting both rear drum brakes as necessary, lower the vehicle.
13. Apply and release the parking brake lever one time after the adjustment process is completed checking parking brake operation.
14. Road test the vehicle stopping in both forward and reverse directions. The automatic-adjuster will continue to adjust the brakes as necessary during the road test.

REMOVAL

REMOVAL

NOTE: Before proceeding, refer to CAUTION and WARNING.

NOTE: Make sure parking brake is in "released" position before raising vehicle.

1. Raise and support the vehicle. Refer to **HOISTING, STANDARD PROCEDURE** .

NOTE: Perform 2 through16 on each side of the vehicle to complete shoe set removal. It may be easier to install

the new components on the first side of the vehicle before disassembling the opposite side so it may be used as a reference guide for proper installation.

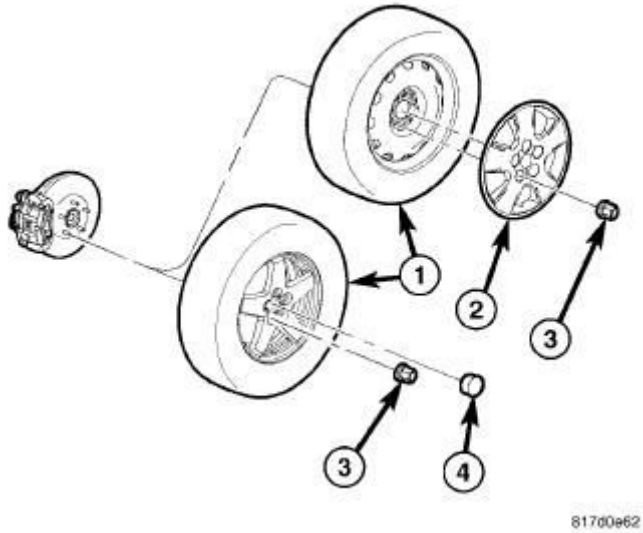

Fig. 202: Tire & Wheel Mounting
Courtesy of CHRYSLER GROUP, LLC

2. Remove the wheel mounting nuts (3), then the rear tire and wheel assembly.

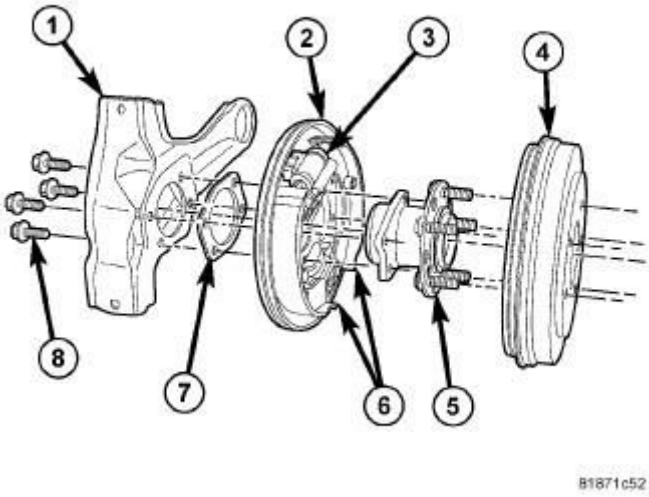

Fig. 203: Rear Drum Brakes
Courtesy of CHRYSLER GROUP, LLC

3. Remove the brake drum (4). Refer to **DRUM, BRAKE, REMOVAL**.

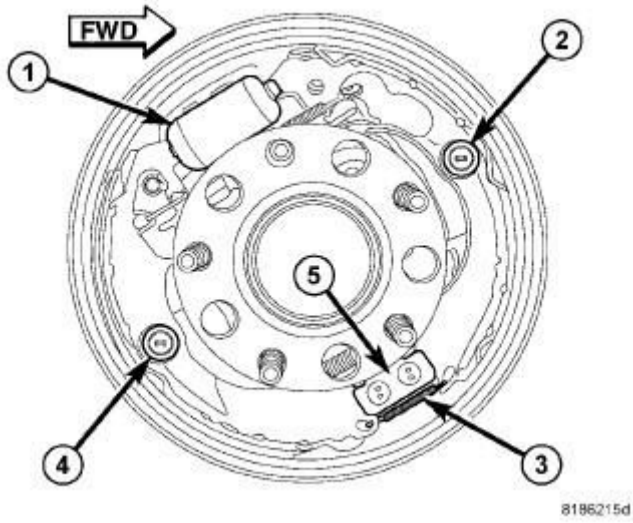

Fig. 204: Identifying Brake Shoe Hold-Down Springs
Courtesy of CHRYSLER GROUP, LLC

4. Remove the lower shoe spring (3).
5. Compress and remove the hold-down spring (4) retaining the rear shoe to the support plate.

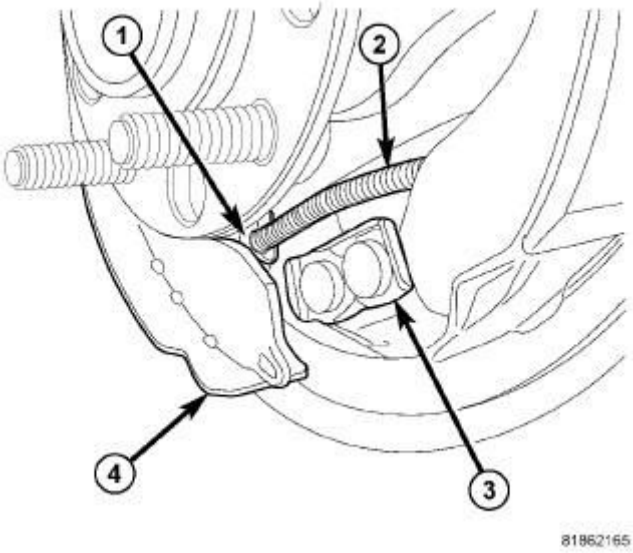

Fig. 205: Identifying Accessing Parking Brake Cable
Courtesy of CHRYSLER GROUP, LLC

6. Pull the rear shoe (4) away from the anchor (3) allowing better access to the parking brake cable (2) connection at the lever (1).

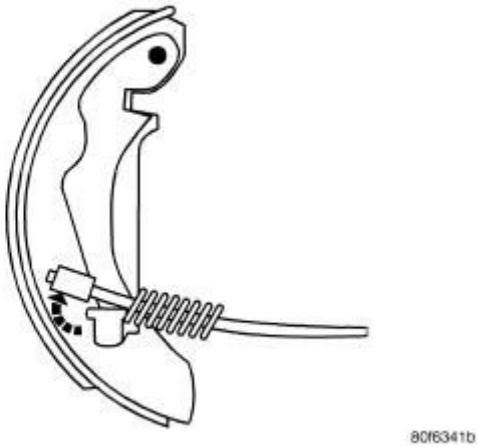

Fig. 206: Removing Parking Brake Cable From Lever
Courtesy of CHRYSLER GROUP, LLC

7. Compress the cable return spring, then remove the parking brake cable from the parking brake lever.

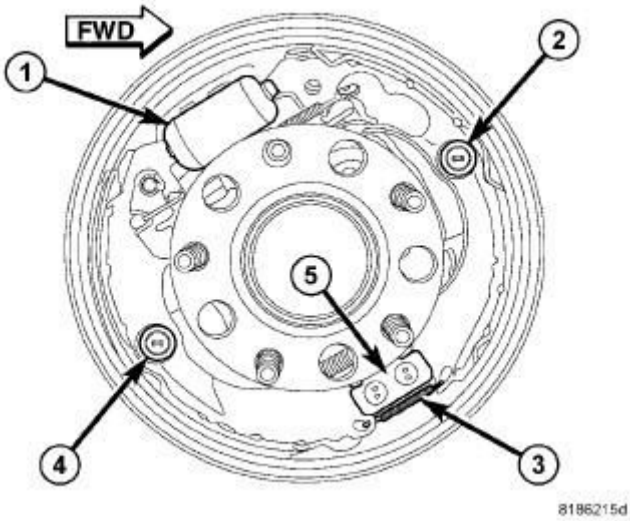

Fig. 207: Identifying Brake Shoe Hold-Down Springs
Courtesy of CHRYSLER GROUP, LLC

8. Compress and remove the hold-down spring (2) retaining the front shoe to the support plate.

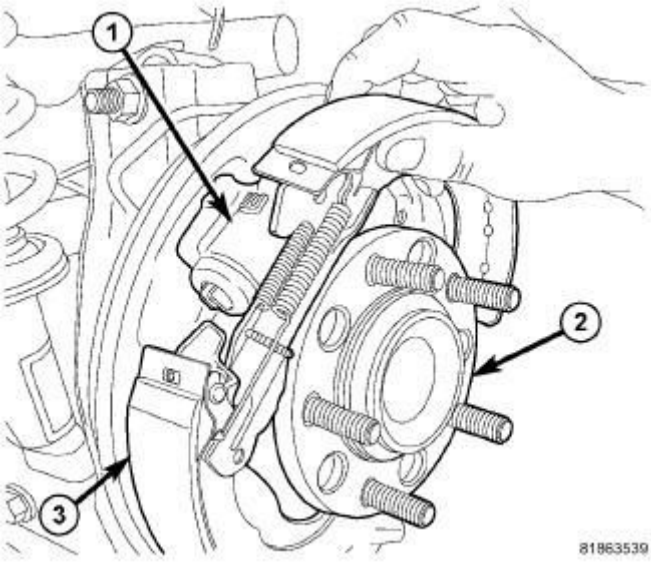

Fig. 208: Removing/Installing Brake Shoe Assembly
Courtesy of CHRYSLER GROUP, LLC

9. Remove both brake shoes from the wheel cylinder.
10. Remove both shoes and remaining parts as an assembly (3) through the opening between the wheel cylinder (1) and support plate hub and bearing.

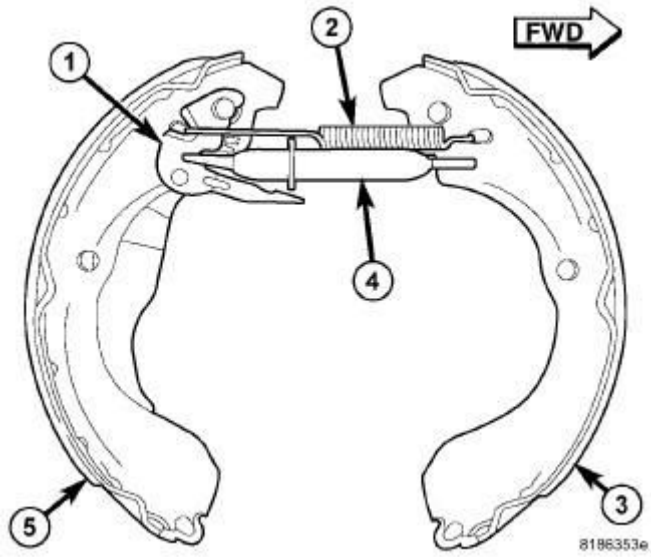

Fig. 209: Brake Shoe Assembly - Front View
Courtesy of CHRYSLER GROUP, LLC

11. Place the shoe assembly outboard-side-up on a flat surface.
12. Remove the adjuster spring (2) from the leading shoe (3) and the lever pawl (1).

13. Remove the lever pawl (1) from the pivot on the rear shoe (5).

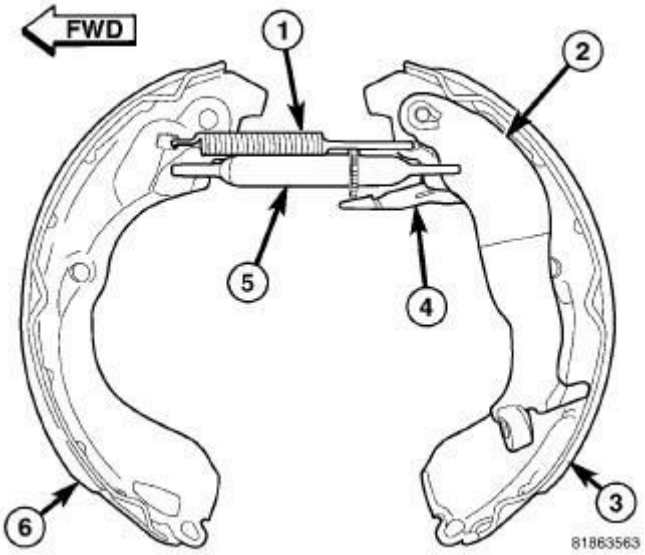

Fig. 210: Brake Shoe Assembly - Rear View
Courtesy of CHRYSLER GROUP, LLC

14. Flip the shoe assembly over to show the inboard side.
15. Remove the upper shoe return spring (1).
16. Remove the adjuster (5) from the shoes and parking brake lever (2).

CLEANING

CLEANING

WARNING: Chrysler LLC does not manufacture any vehicles or replacement parts that contain asbestos. Aftermarket products may or may not contain asbestos. Refer to aftermarket product packaging for product information.

Whether the product contains asbestos or not, dust and dirt can accumulate on brake parts during normal use. Follow practices prescribed by appropriate regulations for the handling, processing and disposing of dust and debris.

INSPECTION

INSPECTION

Inspect the shoe linings. Rear brake shoe linings should show contact across the entire width of the lining and also from the heel to the toe of the lining. Replace the shoes if noted otherwise. Brake shoes with lack of contact at the toe or heel of the brake shoe lining may be improperly ground.

Clean and inspect the brake support plate and shoe adjuster screw. Apply a thin coat of Mopar® Multi-Purpose Grease or equivalent to the threads of the self-adjuster. Replace the adjuster screw if it is corroded.

NOTE: Adjuster screws are different side-to-side. Left side adjuster screws have left-hand threads and right side adjuster screws have right-hand threads.

Inspect the return springs and hold-down spring clips. If the existing brake shoe return springs or hold-down spring clips have been overheated or damaged, replace them. Overheating indications are paint discoloration or distorted end coils.

INSTALLATION

INSTALLATION

NOTE: Perform 1 through 21 on each side of vehicle to complete shoe set installation, then proceed to step 22.

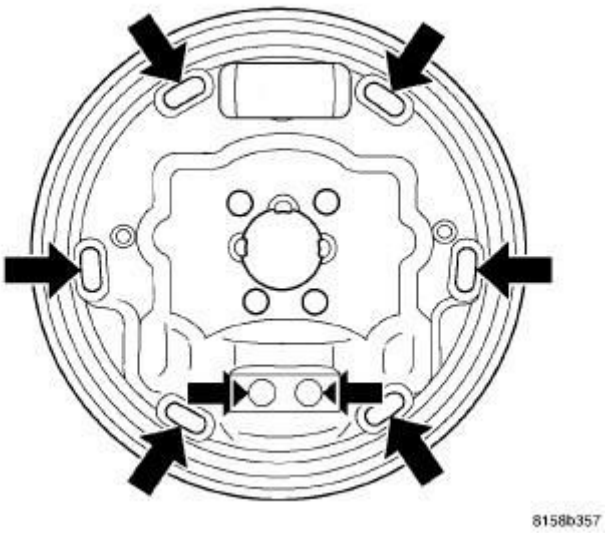

Fig. 211: Locating Shoe Contact Areas On Support
Courtesy of CHRYSLER GROUP, LLC

1. Lubricate shoe contact areas on support plate and anchor using Mopar® Brake Lubricant or equivalent.
2. Lubricate the adjuster screw threads with Mopar® Brake Lubricant or equivalent. Turn adjuster wheel in until it is completely seated.

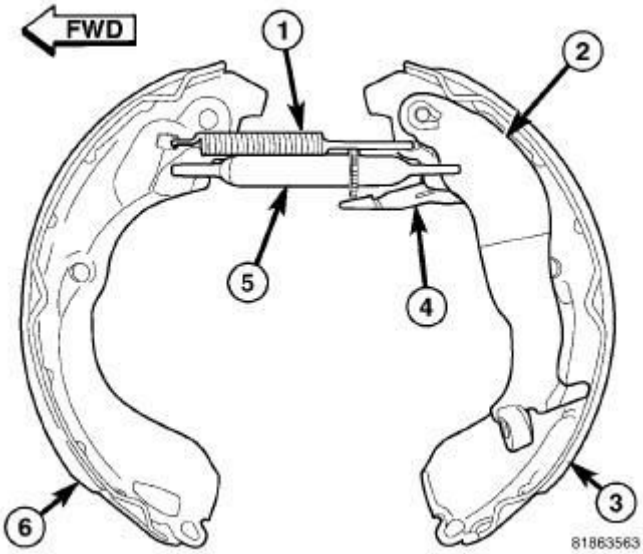

Fig. 212: Brake Shoe Assembly - Rear View
Courtesy of CHRYSLER GROUP, LLC

NOTE: Right side drum brake shown in illustration. Left side is a mirror image.

3. Place one front shoe (6) and one rear shoe (3) inboard-side-up on a flat surface. (rear shoe has parking brake lever attached to it).
4. Install the adjuster (5), adjuster wheel toward the rear, between the two brake shoes. Make sure the wide notch in the rear fork aligns with the parking brake lever (2).
5. Install the upper return spring (1) as shown in illustration.

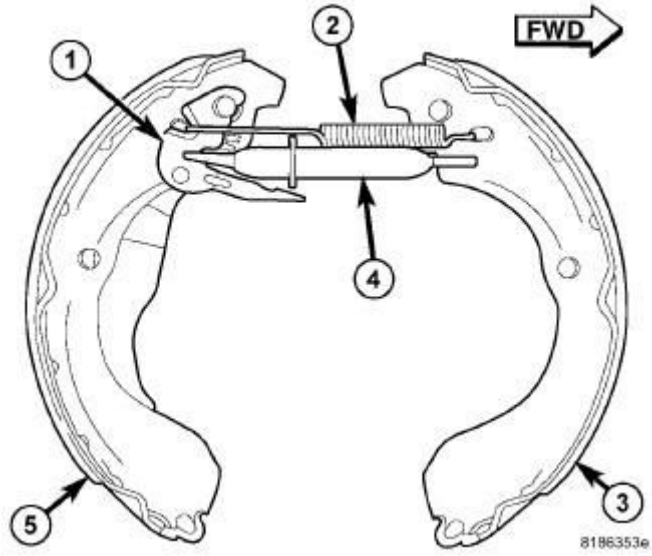

Fig. 213: Brake Shoe Assembly - Front View
Courtesy of CHRYSLER GROUP, LLC

6. Flip the shoe assembly over to show the outboard side.
7. Install the lever pawl (1) onto the pivot located on the rear shoe (5).
8. Install the adjuster spring (2) between the front shoe (3) and the lever pawl (1).

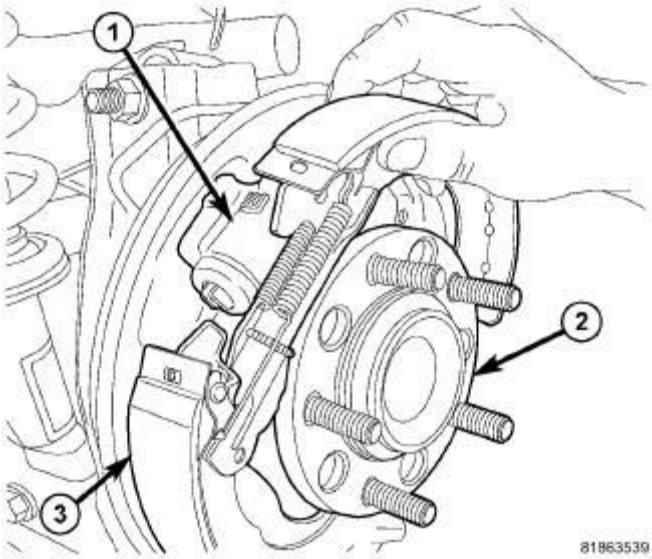

Fig. 214: Removing/Installing Brake Shoe Assembly
Courtesy of CHRYSLER GROUP, LLC

9. Install the pre-assembled brake shoe assembly (3) through the opening between the wheel cylinder (1) and support plate hub and bearing.

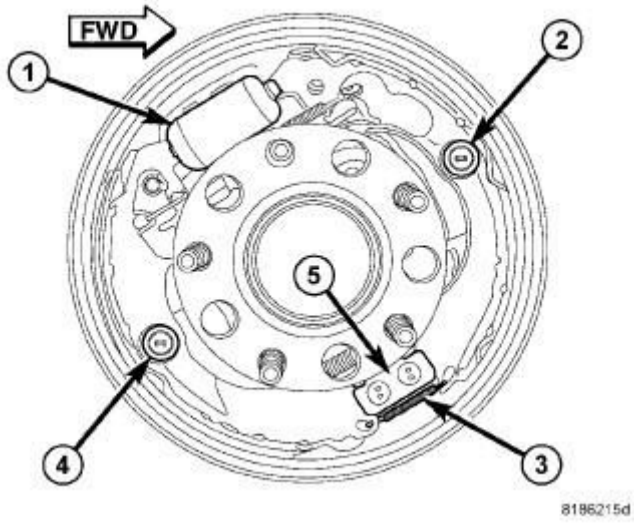

Fig. 215: Identifying Brake Shoe Hold-Down Springs
Courtesy of CHRYSLER GROUP, LLC

10. Insert the upper tips of the brake shoes into the grooves of the wheel cylinder (1) pistons.
11. Position the bottom of the front shoe against the anchor pin (5).
12. Install a shoe hold-down pin from the rear, through the support plate and the front shoe.
13. Compress and install the hold-down spring (2) retaining the front shoe to the support plate.

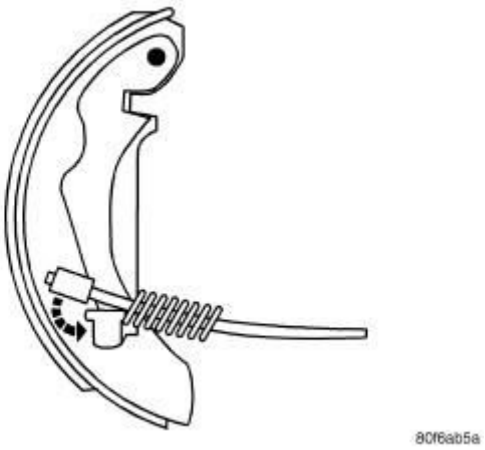

Fig. 216: Installing Cable To Lever
Courtesy of CHRYSLER GROUP, LLC

14. Compress the parking brake cable return spring, then carefully install the

cable onto the parking brake lever. Release the spring guiding it beneath the retaining tab on the lever.

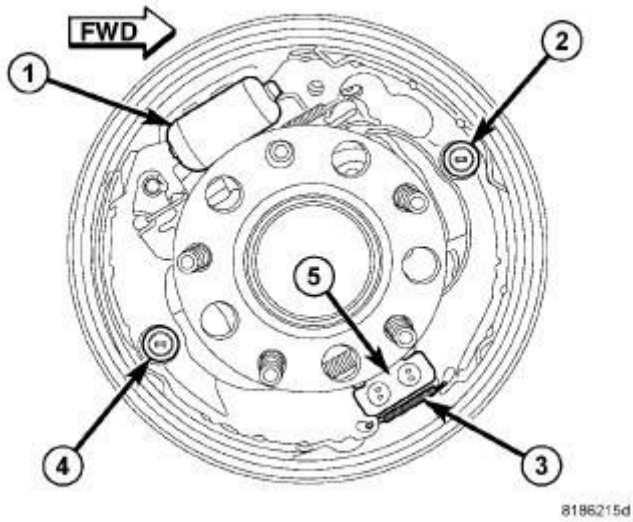

Fig. 217: Identifying Brake Shoe Hold-Down Springs
Courtesy of CHRYSLER GROUP, LLC

15. Position the bottom of the rear shoe against the anchor pin (5).
16. Install a shoe hold-down pin from the rear, through the support plate and the rear shoe.
17. Compress and install the hold-down spring (4) retaining the rear shoe to the support plate.
18. Install the lower shoe spring (3).
19. Adjust the brake shoes to the drum diameter using a brake shoe gauge. Refer to **SHOES, BRAKE, ADJUSTMENTS**.

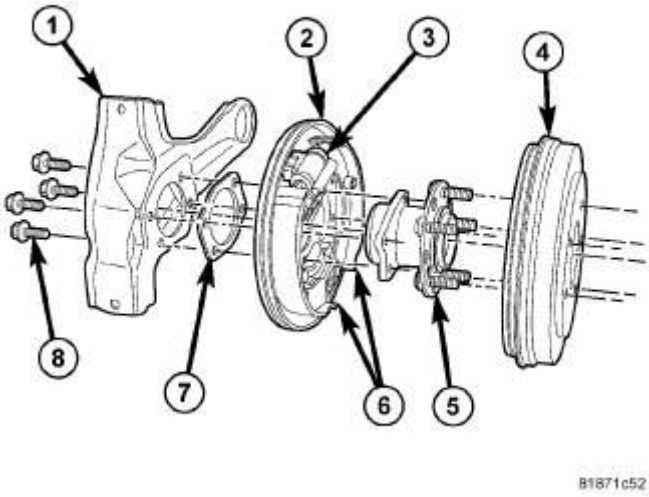

Fig. 218: Rear Drum Brakes
Courtesy of CHRYSLER GROUP, LLC

20. Install the brake drum (4). Refer to **DRUM, BRAKE, INSTALLATION**.

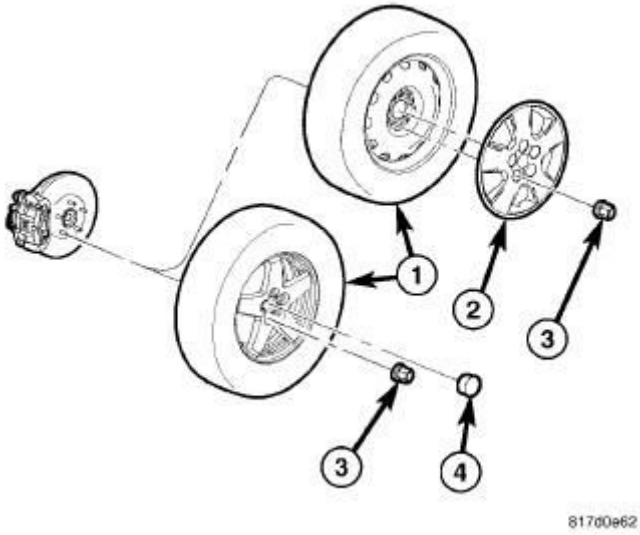

Fig. 219: Tire & Wheel Mounting
Courtesy of CHRYSLER GROUP, LLC

21. Install tire and wheel assembly (1). Refer to **INSTALLATION** . Install and tighten wheel mounting nuts (3) to 125 N.m (92 ft. lbs.).
22. Slowly rotate both rear wheels and verify that the brake drums **lightly** drag on the shoes. Further adjustments may be done using the adjustment procedure as necessary. Refer to **SHOES, BRAKE, ADJUSTMENTS**.

23. Lower the vehicle.
24. Road test vehicle stopping in both forward and reverse directions. The automatic-adjuster will continue to adjust brakes as necessary during road test.

TUBES AND HOSES, BRAKE

INSPECTION

INSPECTION

Brake tubing should be inspected periodically for evidence of physical damage or contact with moving or hot components.

Flexible rubber hose is used at both the front and rear wheel brakes. Inspection of the flexible brake hoses should be performed whenever the brake system is serviced and every 12, 000 km (7, 500 miles) or 12 months, whichever comes first. Inspect hydraulic brake hoses for surface cracking, scuffing, or worn spots. If the fabric casing of the hose becomes exposed due to cracks or abrasions in the hose cover, the hose should be replaced immediately. Eventual deterioration of the hose can take place with possible burst failure. Faulty installation can cause twisting, resulting in wheel, tire, or chassis interference.

NOTE: This vehicle is equipped with more than one size (diameter) brake tube depending on location on the vehicle. If a brake tube must be replaced, always use the same size brake tubing as that being replaced. Never use under-size brake tubing.

PARKING BRAKE

DESCRIPTION

DESCRIPTION

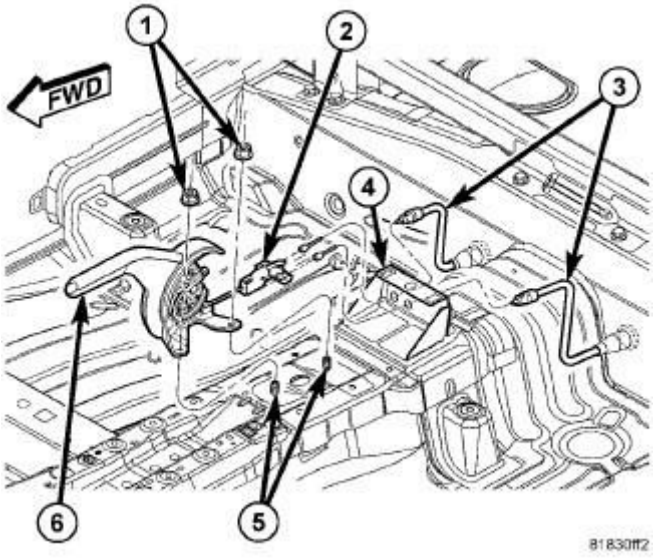

Fig. 220: Parking Brake Lever Mounting
Courtesy of CHRYSLER GROUP, LLC

The parking brakes consist of the following components:

- Hand-operated park brake lever (6)
- Parking brake cables (one each side) (3)
- Actuation levers and struts
- Duo-servo parking brake assembly (rear disc only)

All vehicles are equipped with a center-mounted, hand-operated parking brake lever mounted between the front seats. A bent nail tensioner is built into the equalizer mounted on the end of the lever's output cable.

There is an individual parking brake cable for each rear wheel that joins a parking brake cable equalizer, attached to the parking brake lever, to the rear parking brakes. The parking brake cables are made of flexible steel cable. Both drum rear brakes and disc rear brakes use the same parking brake cable configuration, but the cables are different.

On vehicles equipped with rear drum brakes, the rear wheel service brakes also act as the vehicle's parking brakes. The rear drum brake shoes, when acting as parking brakes, are mechanically operated using an internal actuating lever and strut connected to the flexible steel parking brake cable.

The parking brakes on vehicles equipped with rear disc brakes consist of a small

duo-servo brake assembly mounted to the disc brake caliper adapter including two shoes, an actuating lever and strut, as well as the attaching springs and clips. This parking brake application uses the same operating cable configuration as the drum brake equipped vehicles, but uses different cables.

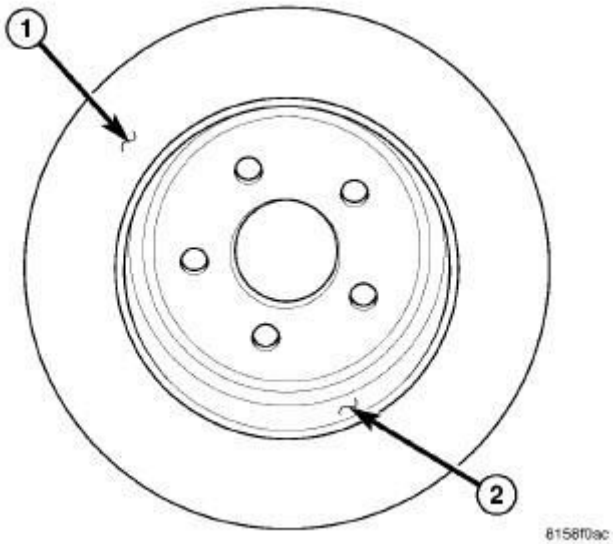

Fig. 221: Drum-In-Hat Brake Rotor
Courtesy of CHRYSLER GROUP, LLC

The hat (center) section (2) of each rear disc brake rotor (1) serves as the braking surface (drum) for the parking brakes.

CABLE, PARKING BRAKE

REMOVAL

REMOVAL

NOTE: Before proceeding, refer to CAUTION and WARNING.

NOTE: The procedure below applies to either of the two rear parking brake cables.

1. Disconnect and isolate the battery negative cable from its post on the battery.
2. Block the tire and wheel assemblies so the vehicle does not move once the vehicle parking brake lever is released.

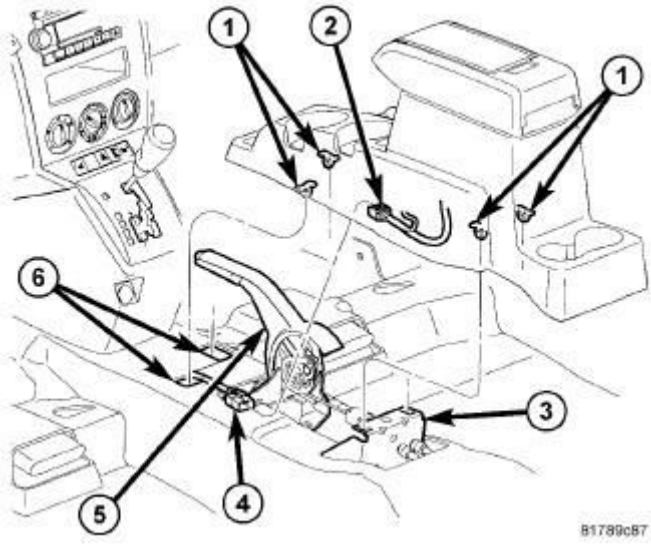

Fig. 222: Center Console
Courtesy of CHRYSLER GROUP, LLC

3. Remove the floor center console. Refer to **CONSOLE, FLOOR, REMOVAL** .
4. Release and lower the parking brake lever (5).

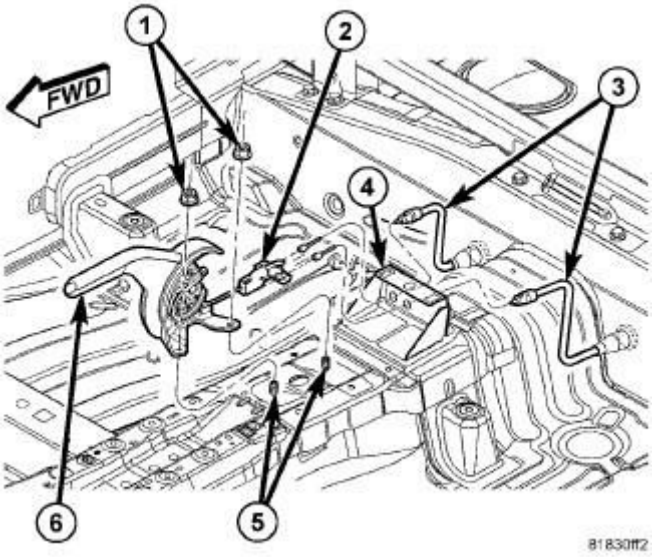

Fig. 223: Parking Brake Lever Mounting
Courtesy of CHRYSLER GROUP, LLC

5. Loosen the adjusting nut on the lever's output cable taking tension off parking brake cables.
6. Remove the parking brake cables (3) from the parking brake cable equalizer

(2).

7. Remove the rear seat cushion.

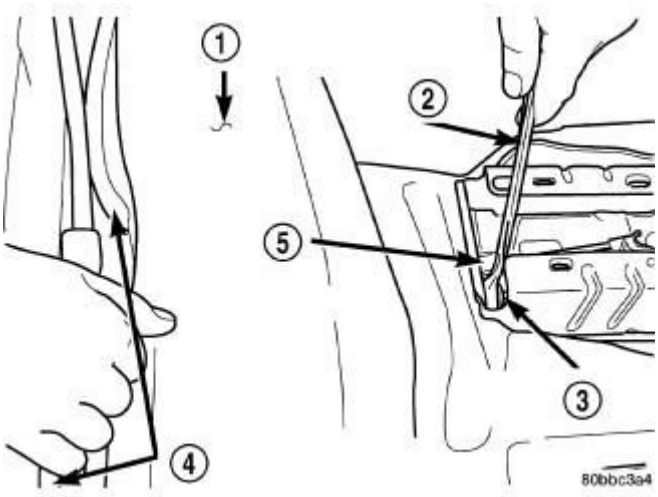

Fig. 224: Compressing Cable Retainer
Courtesy of CHRYSLER GROUP, LLC

1 - CARPET ROLLED FORWARD
2 - WRENCH
3 - RIGHT REAR CABLE
4 - REAR PARKING BRAKE CABLES
5 - LEFT REAR CABLE

8. Fold the rear carpeting forward (1) to expose the parking brake cables (4) at the end of the rear floor.
9. Install the box end of a 1/2 inch (13 mm) wrench (2) over the retainer for either the right (3) or left (5) parking brake cable. Push the wrench onto the retainer until the retainer fingers are collapsed. From under the carpeting, grasp the parking brake cable housing and pull the cable straight out of the bracket attached to the floor.
10. Raise and support the vehicle. Refer to **HOISTING, STANDARD PROCEDURE** .

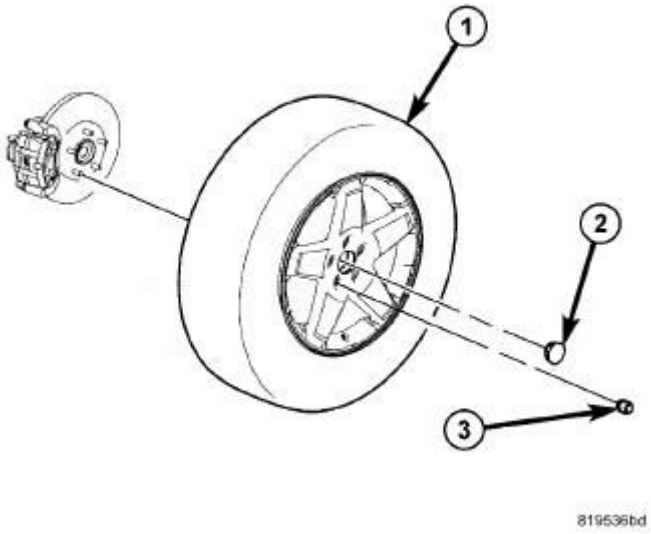

Fig. 225: Tire And Wheel Mounting
Courtesy of CHRYSLER GROUP, LLC

11. Remove the wheel mounting nuts (3), then the rear tire and wheel assembly (1).
12. Access and remove the parking brake shoes. Refer to **SHOES, PARKING BRAKE, REMOVAL**.

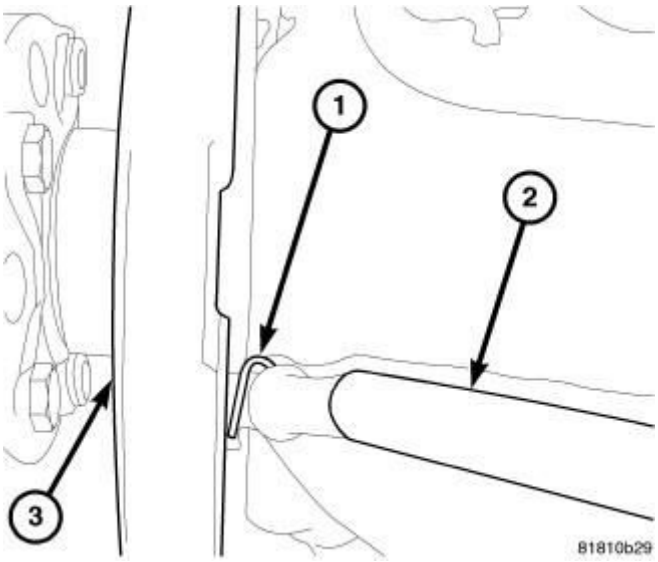

Fig. 226: Parking Brake Cable Hair Pin
Courtesy of CHRYSLER GROUP, LLC

13. Remove the hair pin (1) securing the parking brake cable (2) to the brake support plate (3).
14. Pull the parking brake cable from the support plate and hole in trailing link.

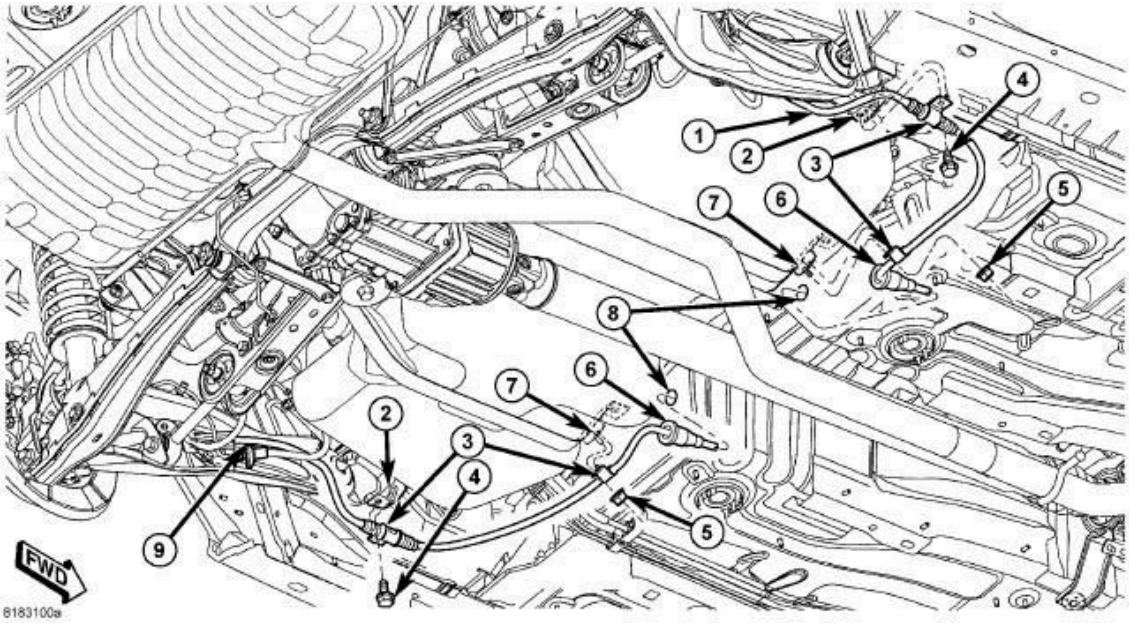

Fig. 227: Parking Brake Cables
Courtesy of CHRYSLER GROUP, LLC

15. Remove the screw (4) securing the cable routing clamp (3) to the body (2).
16. Remove the nut (5) securing the cable routing clamp (3) to the fuel tank strap (7).
17. Remove the parking brake cable (1 - right cable, 9 - left cable) with sealing grommet (6) through the hole (8) in the floor pan of the vehicle.

INSTALLATION

INSTALLATION

NOTE: The following procedure applies to either of the two rear parking brake cables.

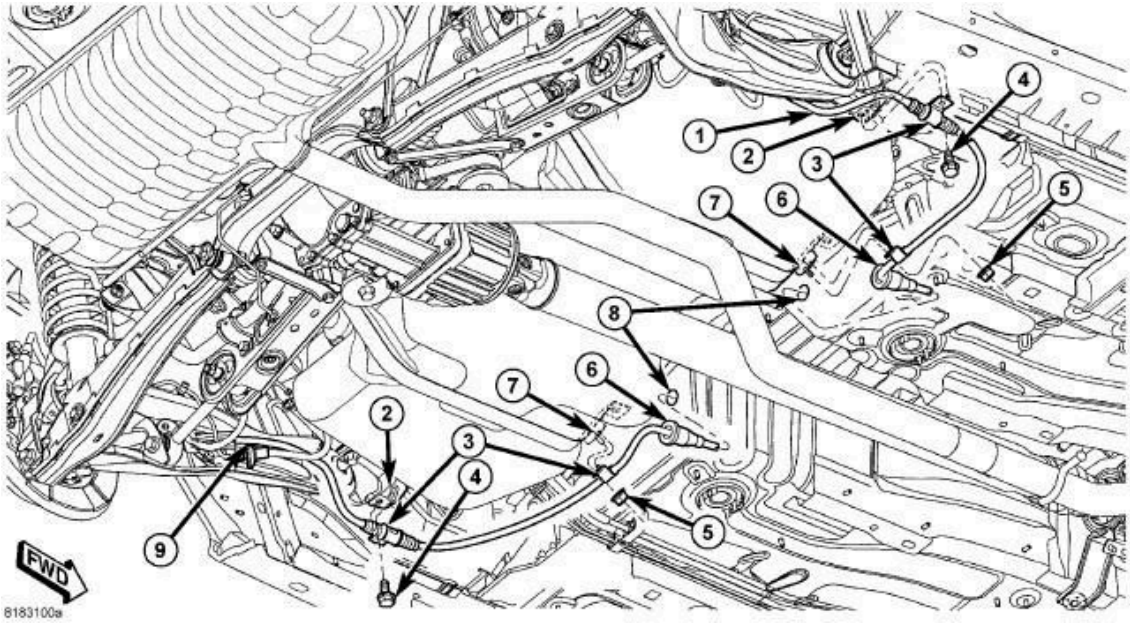

Fig. 228: Parking Brake Cables
Courtesy of CHRYSLER GROUP, LLC

1. From underneath, push the parking brake cable through the hole (8) in the floor pan of the vehicle making sure the cable sealing grommet (6) is installed in the floor pan as far as possible (without going all the way through) to ensure a good seal.
2. Position the cable routing clamp (3) over the stud on the fuel tank strap (7) and install the nut (5).
3. Position the cable routing clamp (3) and install the screw (4) securing the cable (1 - right cable, 9 - left cable) to the body (2).

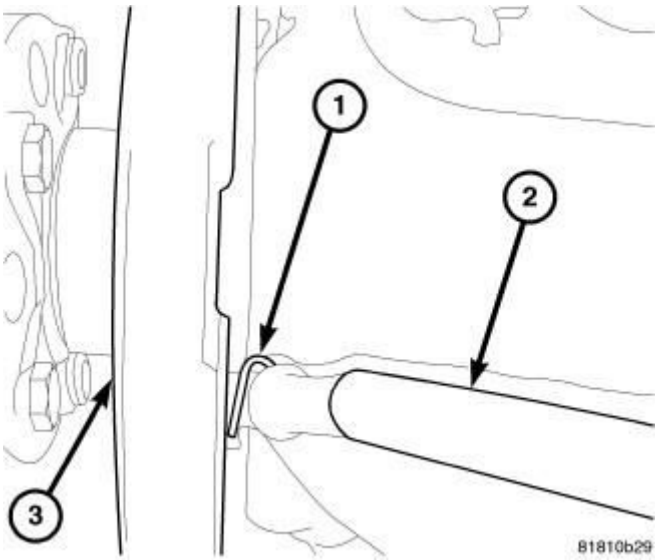

Fig. 229: Parking Brake Cable Hair Pin

Courtesy of CHRYSLER GROUP, LLC

4. Insert the parking brake cable through the hole in the trailing link and the support plate (3).
5. Install the hair pin (1) securing the parking brake cable (2) to the brake support plate (3).
6. Install the parking brake shoes (and check adjustment) and components removed to access them. Refer to **SHOES, PARKING BRAKE, INSTALLATION**.

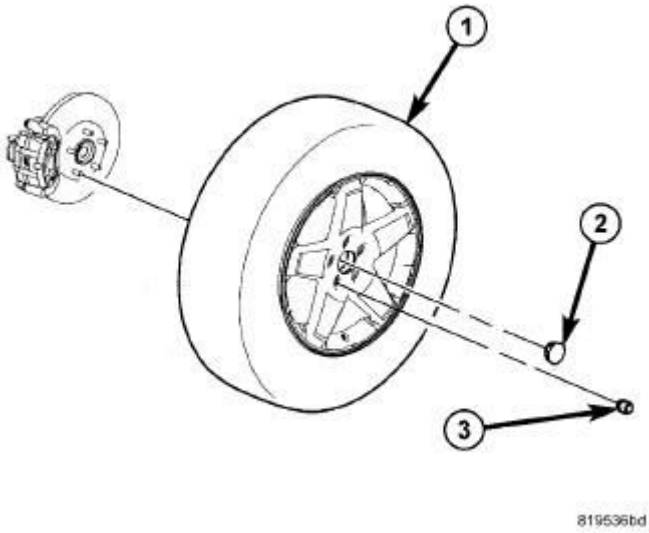

Fig. 230: Tire And Wheel Mounting
Courtesy of CHRYSLER GROUP, LLC

7. Install the tire and wheel assembly (1). Refer to **INSTALLATION** . Install and tighten the wheel mounting nuts (3) to 135 N.m (100 ft. lbs.).
8. Lower the vehicle.
9. Block the tire and wheel assemblies so the vehicle does not move with the vehicle parking brake lever released.

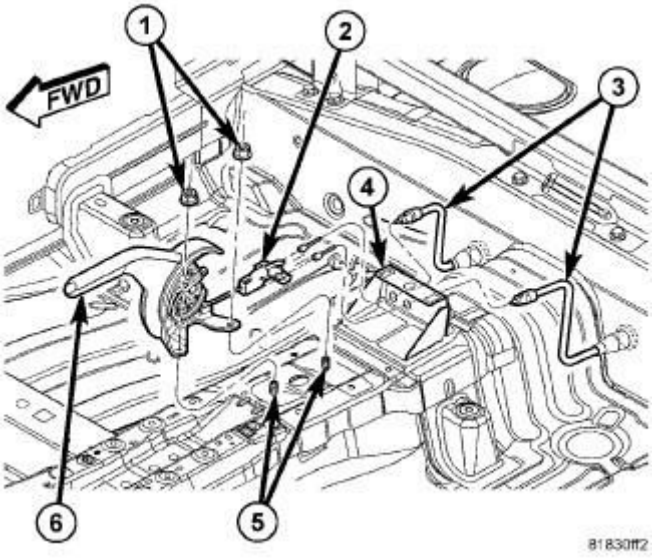

Fig. 231: Parking Brake Lever Mounting
Courtesy of CHRYSLER GROUP, LLC

10. Ensure that the seal grommet on the cable installed from underneath is fully seated into the floor pan.
11. Route the parking brake cable under the carpeting, up to the parking brake cable retaining bracket (4) on the floor pan. Insert the parking brake cable (3) through the retaining bracket. Push the cable in until the locking fingers on the cable retainer lock the cable into place.

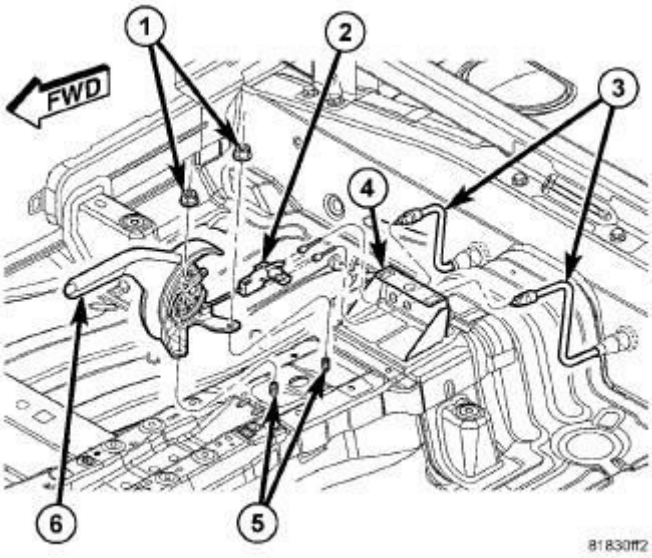

Fig. 232: Parking Brake Lever Mounting
Courtesy of CHRYSLER GROUP, LLC

CAUTION: A NEW parking brake cable equalizer (2) must be installed when servicing the parking brake cables or lever. The equalizer has an integrated bent nail tensioner that needs to be stretched upon installation placing the correct tension on the cables.

12. Remove and install a NEW parking brake cable equalizer (2) on the parking brake lever output cable.
13. Install the rear parking brake cables (3) into the equalizer (2) on the parking brake lever output cable.
14. Ensure that the parking brake cables are correctly installed on the equalizer and aligned with the cable track on the parking brake lever.

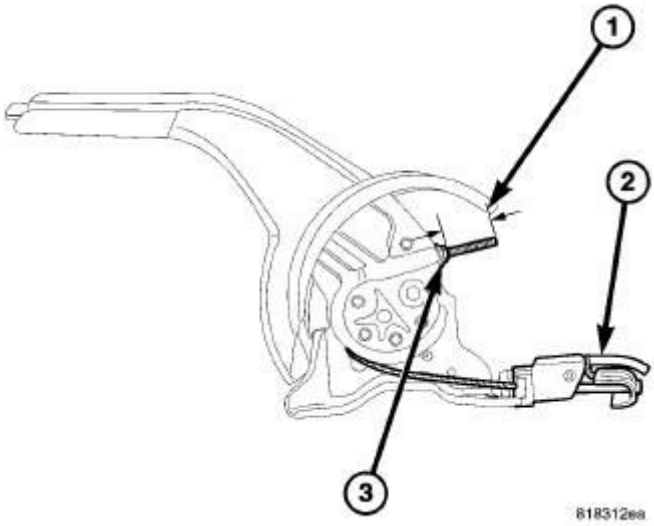

Fig. 233: Parking Brake Cable Adjustment
Courtesy of CHRYSLER GROUP, LLC

NOTE: Actuating the parking brake lever to its fully applied position one time after tightening the adjustment nut will yield (stretch) the bent nail portion of the equalizer approximately 6 mm (1/4 inch). This process will correctly set the parking brake cable tension.

15. Adjust parking brake cable tension using the following steps:

a. Place the parking brake lever in the fully released (down) position.
b. Tighten the adjusting nut (3) on the parking brake lever output cable until 31 millimeters (1.220 inches) of thread is out past the end of the adjustment nut (1).
c. Actuate the parking brake lever to its fully applied position one time, then reposition it to its fully released (down) position.

16. Raise the vehicle to a point where the rear wheels just clear the floor.
17. Check the rear wheels of the vehicle; they should rotate freely without dragging.
18. Apply the parking brake. Check the rear wheels of the vehicle. They should not rotate.
19. Return the parking brake lever to its fully released (down) position and check the rear wheels. They should rotate freely without dragging.
20. Apply the parking brake.
21. Lower the vehicle.

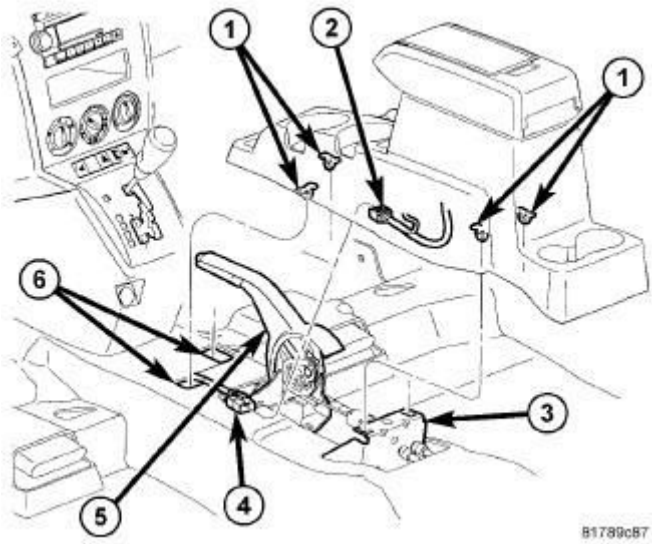

Fig. 234: Center Console
Courtesy of CHRYSLER GROUP, LLC

22. Install the floor center console. Refer to **CONSOLE, FLOOR, INSTALLATION** .
23. Remove the blocks from the tires and wheel assemblies.
24. Connect the battery negative cable to its post on the battery.

LEVER, PARKING BRAKE

REMOVAL

REMOVAL

NOTE: Before proceeding, refer to CAUTION and WARNING.

NOTE: The procedure below applies to either of the two rear parking brake cables.

1. Disconnect and isolate the battery negative cable from its post on the battery.
2. Block the tire and wheel assemblies so the vehicle does not move once the vehicle parking brake lever is released.

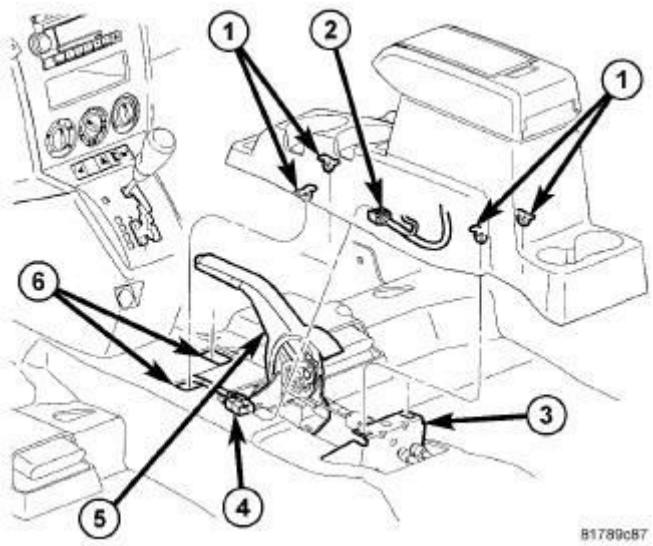

Fig. 235: Center Console
Courtesy of CHRYSLER GROUP, LLC

3. Remove the floor center console. Refer to **CONSOLE, FLOOR, REMOVAL** .
4. Release and lower the parking brake lever (5).

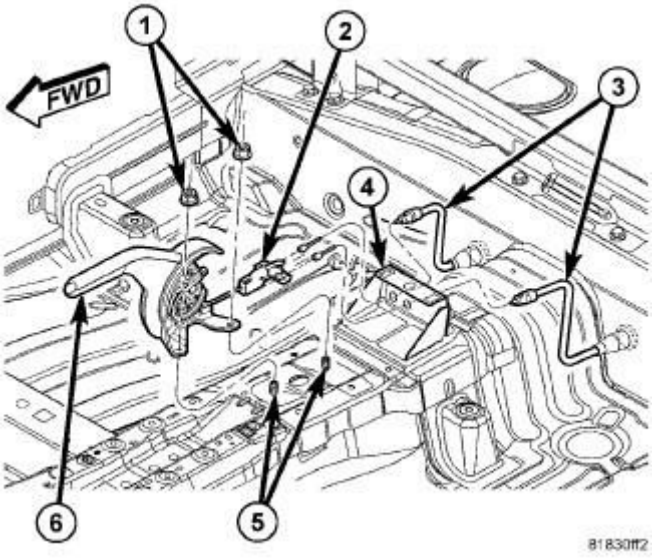

Fig. 236: Parking Brake Lever Mounting
Courtesy of CHRYSLER GROUP, LLC

5. Loosen the adjusting nut on the lever's output cable taking tension off parking brake cables. Back the nut off until it is flush with the end of the output cable.
6. Remove the parking brake cables (3) from the parking brake cable equalizer (2).

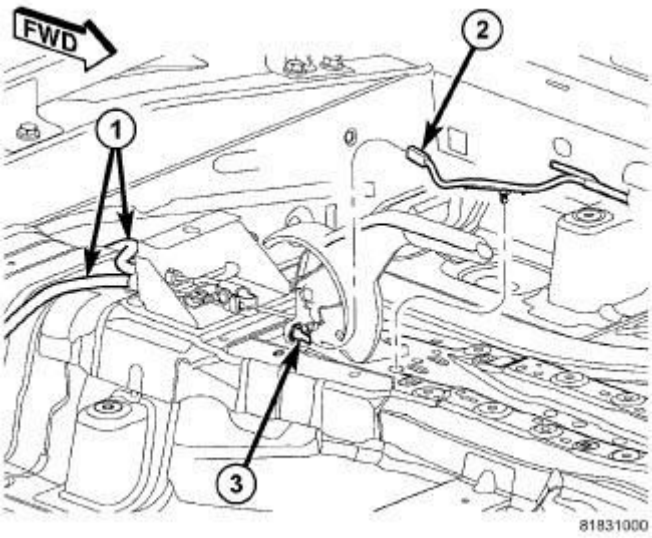

Fig. 237: Parking Brake Switch Wiring Connector
Courtesy of CHRYSLER GROUP, LLC

7. Disconnect the wiring harness connector (2) from the parking brake switch

(3).

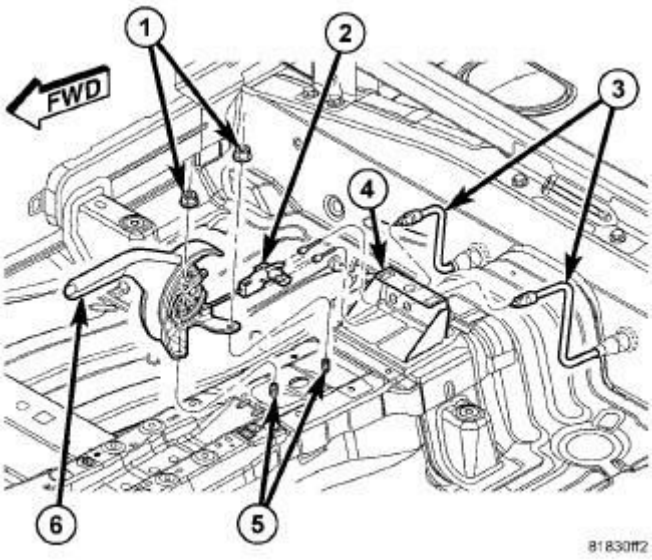

Fig. 238: Parking Brake Lever Mounting
Courtesy of CHRYSLER GROUP, LLC

8. Remove the nuts (1) attaching the parking brake lever (6) to the vehicle.
9. Remove the parking brake lever (6).

INSTALLATION

INSTALLATION

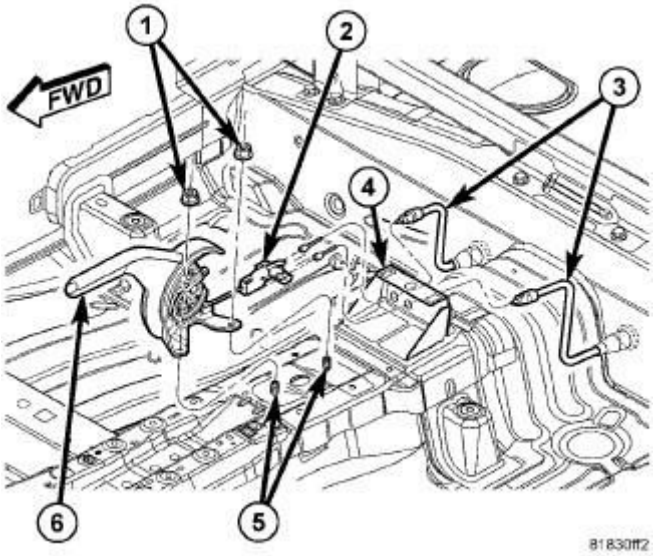

Fig. 239: Parking Brake Lever Mounting
Courtesy of CHRYSLER GROUP, LLC

1. Place the parking brake lever (6) on the mounting studs (5) affixed to the vehicle floor pan. Install and tighten the nuts to 25 N.m (18 ft. lbs.).

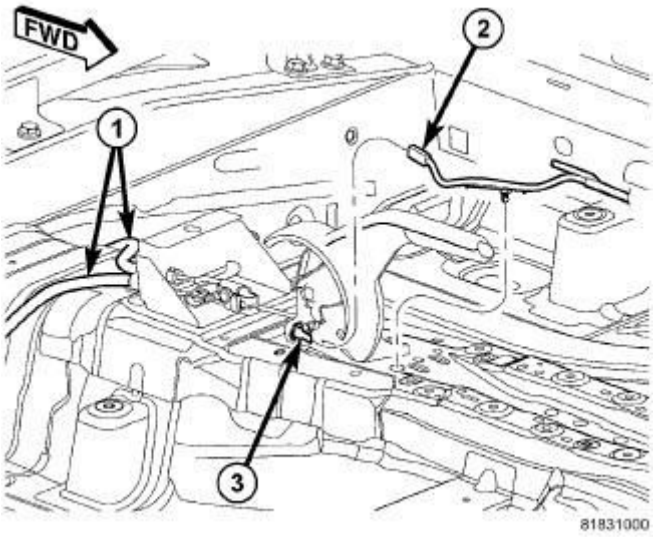

Fig. 240: Parking Brake Switch Wiring Connector
Courtesy of CHRYSLER GROUP, LLC

2. Connect the wiring harness connector (2) to the parking brake switch (3).

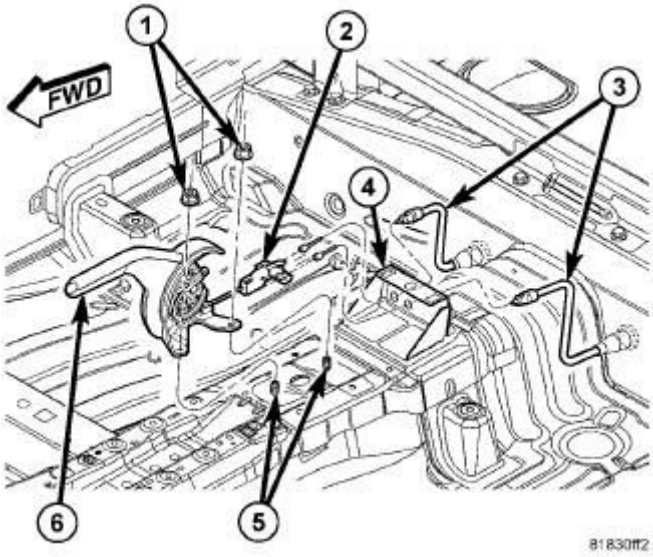

Fig. 241: Parking Brake Lever Mounting
Courtesy of CHRYSLER GROUP, LLC

CAUTION: A NEW parking brake cable equalizer (2) must be installed when servicing the parking brake

cables or lever. The equalizer has an integrated bent nail tensioner that needs to be stretched upon installation placing the correct tension on the cables.

3. Remove and install a NEW parking brake cable equalizer (2) on the parking brake lever output cable.
4. Install the rear parking brake cables (3) into the equalizer (2) on the parking brake lever output cable.
5. Ensure that the parking brake cables are correctly installed on the equalizer and aligned with the cable track on the parking brake lever.

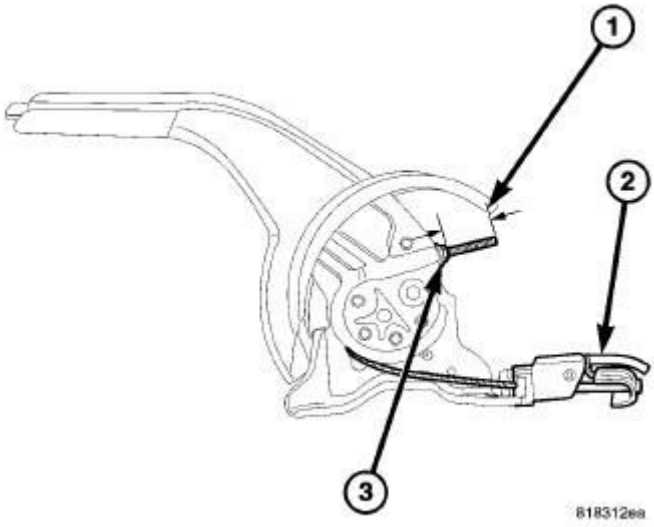

Fig. 242: Parking Brake Cable Adjustment
Courtesy of CHRYSLER GROUP, LLC

NOTE: Actuating the parking brake lever to its fully applied position one time after tightening the adjustment nut will yield (stretch) the bent nail portion of the equalizer approximately 6 mm (1/4 inch). This process will correctly set the parking brake cable tension.

6. Adjust parking brake cable tension using the following steps:
   a. Place the parking brake lever in the fully released (down) position.
   b. Tighten the adjusting nut (3) on the parking brake lever output cable

until 31 millimeters (1.220 inches) of thread is out past the end of the adjustment nut (1).

c. Actuate the parking brake lever to its fully applied position one time, then reposition it to its fully released (down) position.

7. Raise the vehicle to a point where the rear wheels just clear the floor.
8. Check the rear wheels of the vehicle; they should rotate freely without dragging.
9. Apply the parking brake. Check the rear wheels of the vehicle. They should not rotate.
10. Return the parking brake lever to its fully released (down) position and check the rear wheels. They should rotate freely without dragging.
11. Apply the parking brake.
12. Lower the vehicle.

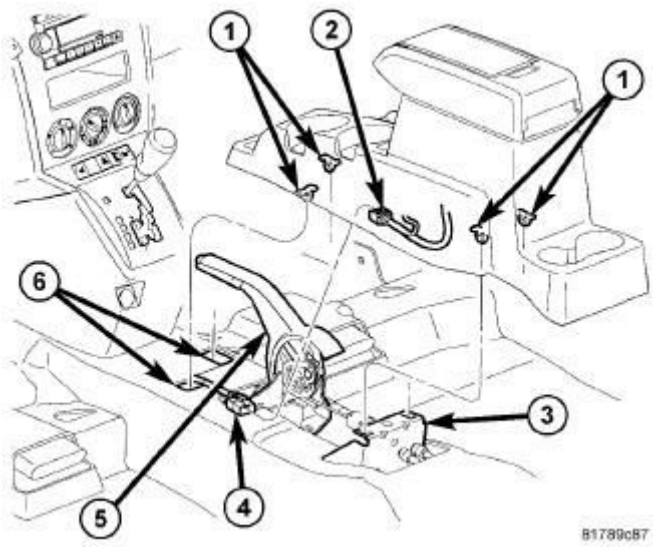

Fig. 243: Center Console
Courtesy of CHRYSLER GROUP, LLC

13. Install the floor center console. Refer to **CONSOLE, FLOOR, INSTALLATION** .
14. Remove the blocks from the tires and wheel assemblies.
15. Connect the battery negative cable to its post on the battery.

SHOES, PARKING BRAKE

ADJUSTMENTS

ADJUSTMENTS

NOTE: Before proceeding, refer to CAUTION and WARNING.

NOTE: The parking brake shoes used in the drum-in-hat park brake system do not automatically adjust to compensate for brake shoe lining wear. Therefore, it is necessary to manually adjust the parking brake shoes.

1. Verify the parking brake lever is in the released (down) position.
2. Raise and support the vehicle. Refer to **HOISTING, STANDARD PROCEDURE** .

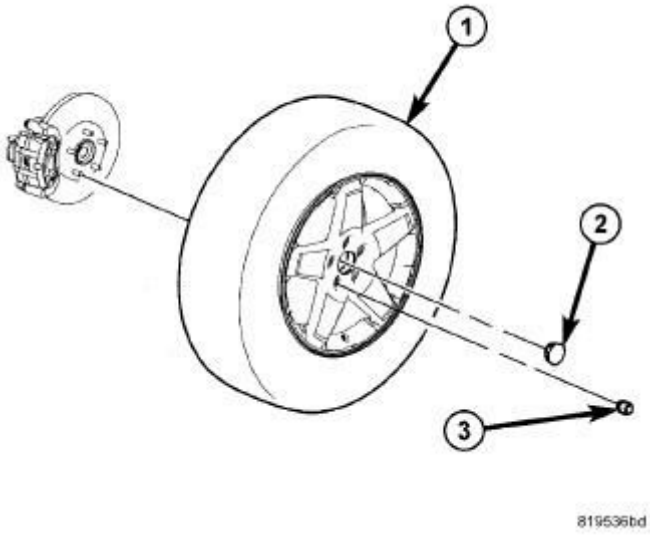

Fig. 244: Tire And Wheel Mounting
Courtesy of CHRYSLER GROUP, LLC

3. Remove the wheel mounting nuts (3), then the tire and wheel assembly (1).
4. Install a couple wheel mounting nuts to hold the brake rotor in place while adjustment of the brake shoes is made.

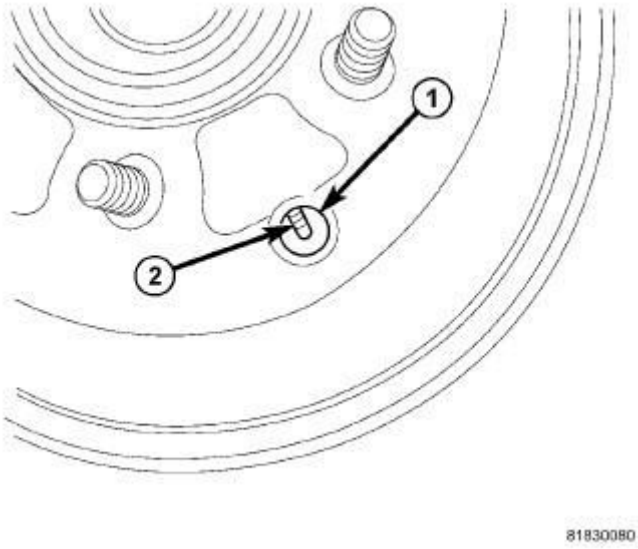

Fig. 245: Adjuster Access Hole
Courtesy of CHRYSLER GROUP, LLC

NOTE: To find the adjuster wheel with the drum on position the hole (1) in the front of the rotor drum as follows:

- **Left side - 7 o'clock.**
- **Right side - 5 o'clock.**

NOTE: When adjusting the parking brake shoes with the drum-in hat rotor installed, rotating the adjuster wheel (2) upward will loosen the adjustment. Rotating the adjuster wheel (2) downward will tighten the adjustment.

5. Remove the rubber plug from the hole (1) in the front of the rotor.
6. Utilizing the hole (1) in the front of the rotor, make a fine adjustment of the shoes.
7. Reinstall the rubber plug.
8. Lower the vehicle far enough to access the interior of the vehicle.
9. Reach inside the vehicle and cycle (fully apply and release) the park brakes.
10. With the parking brake lever in the fully applied (up) position, attempt to hand rotate each rear brake rotor to ensure that the parking brake shoes are working properly.

11. With the parking brake lever in the released (down) position, hand rotate each rear brake rotor to ensure that the parking brake shoes are not dragging.
12. Raise and support the vehicle. Refer to **HOISTING, STANDARD PROCEDURE** .

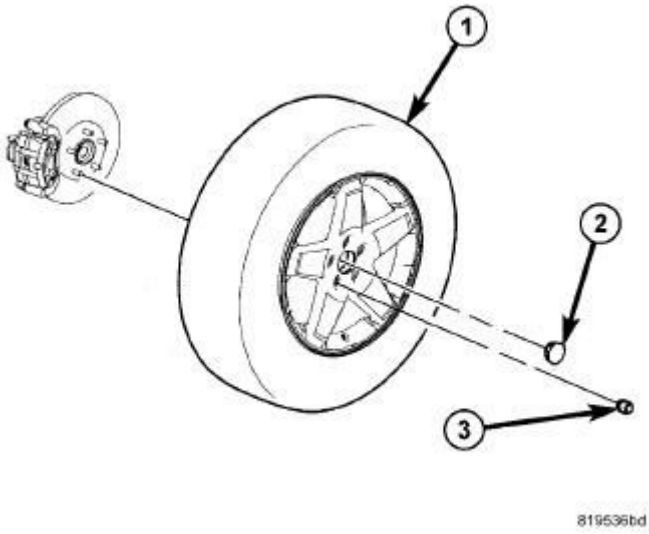

Fig. 246: Tire And Wheel Mounting
Courtesy of CHRYSLER GROUP, LLC

13. Remove the wheel mounting nuts and install the tire and wheel assembly (1). Refer to **INSTALLATION** . Install and tighten the wheel mounting nuts (3) to 135 N.m (100 ft. lbs.).
14. Lower the vehicle.

REMOVAL

REMOVAL

NOTE: Before proceeding, refer to CAUTION and WARNING.

1. Raise and support the vehicle. Refer to **HOISTING, STANDARD PROCEDURE** .

NOTE: If removing parking brake shoes on both sides of vehicle, perform remaining steps on each side of the vehicle.

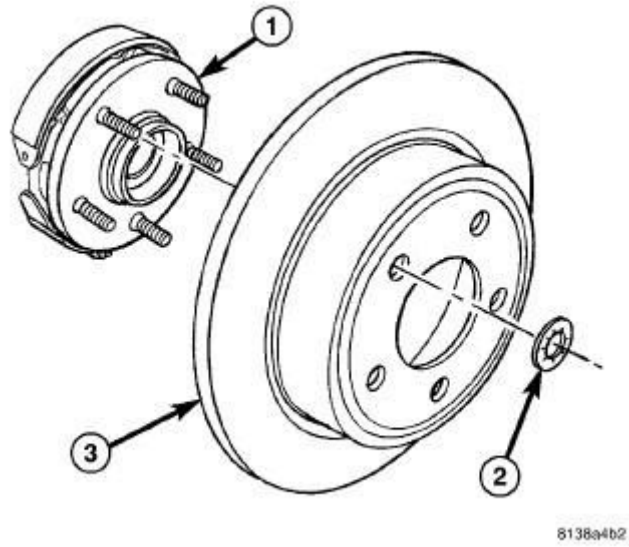

Fig. 247: Rear Brake Rotor, Hub & Clips
Courtesy of CHRYSLER GROUP, LLC

2. Access and remove the rear brake rotor (3). Refer to **ROTOR, BRAKE, REMOVAL**.
3. Turn the brake shoe adjuster wheel until the adjuster is at shortest length.

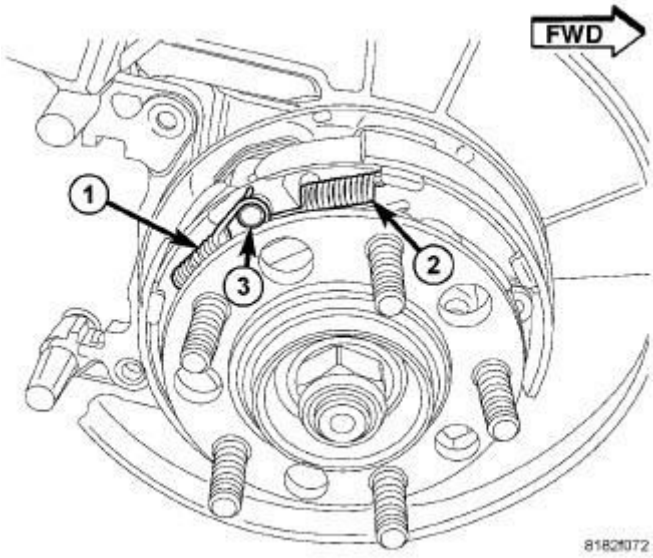

Fig. 248: Parking Brake Return Springs
Courtesy of CHRYSLER GROUP, LLC

4. Remove the upper return spring (1) from the anchor pin (3) and the rear brake shoe.
5. Remove the upper return spring (2) from the anchor pin (3) and the front

brake shoe.

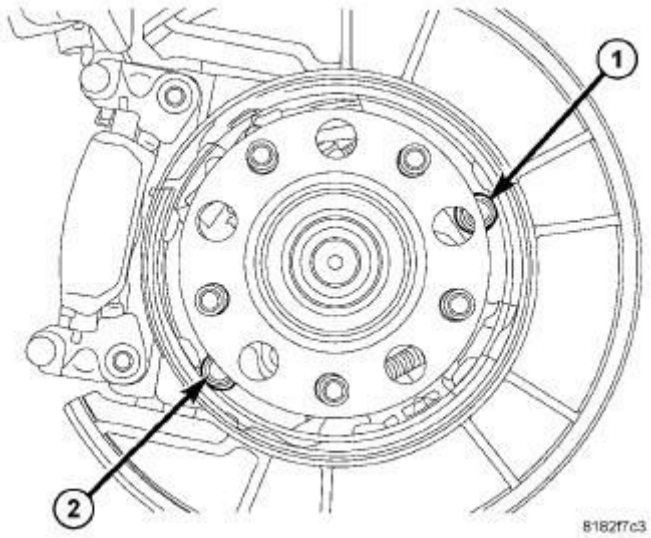

Fig. 249: Brake Shoe Hold Down Springs
Courtesy of CHRYSLER GROUP, LLC

6. Remove the brake shoe hold-down springs and pins (1, 2). Rotate the pins 90° to disengage.

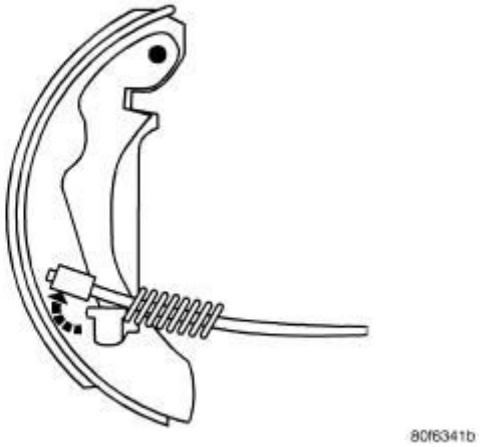

Fig. 250: Removing Cable From Lever
Courtesy of CHRYSLER GROUP, LLC

7. Remove the parking brake cable from the lever on the rear parking brake shoe.

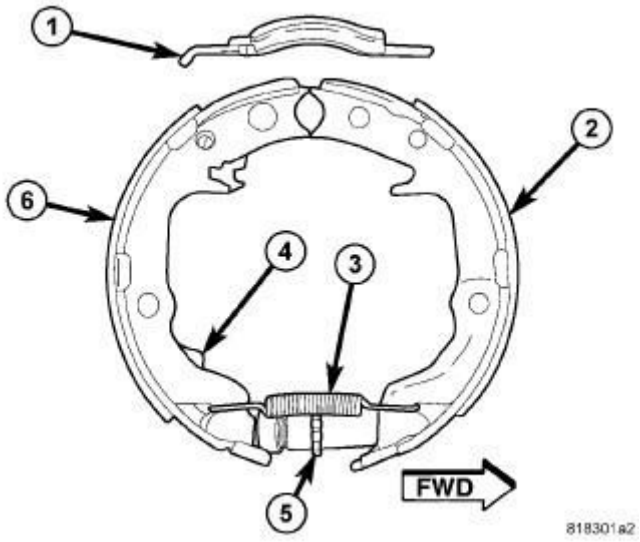

Fig. 251: Parking Brake Shoe Assembly
Courtesy of CHRYSLER GROUP, LLC

8. Remove the brake shoes (2, 6), adjuster (5) and lower return spring (3) as an assembly from the support plate.
9. If necessary, remove the strut (1).
10. Remove the lower return spring (3) and adjuster (5) from the shoes (2, 6).

INSTALLATION

INSTALLATION

NOTE: If replacing parking brake shoes on both sides of vehicle, perform steps 1 through 15 on each side of the vehicle to complete shoe set installation, then proceed to step 16.

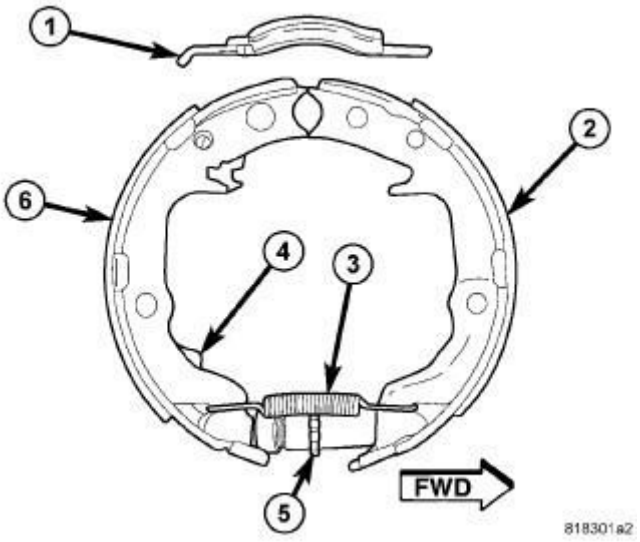

Fig. 252: Parking Brake Shoe Assembly
Courtesy of CHRYSLER GROUP, LLC

NOTE: Left side shoes are shown in the figure. Right side shoes are a mirror image of the left except for the adjuster. The threaded portion of the adjuster should always be positioned to the left side in order to maintain consistent side-to-side rotational direction for adjustment purposes.

1. Install the lower return spring (3) and adjuster (5) between the parking brake shoes (2, 6). The rear shoe will have the lever mounted on the inside. Make sure the threaded portion of the adjuster is mounted to the left on both right and left side parking brake assemblies (see preceding note).
2. If necessary, place the strut (1) above the hub and bearing on the vehicle. Note the curved end of the strut (1) is positioned to the rear.
3. Install the assembled brake shoes (2, 6), adjuster (5) and lower return spring (3) over the hub and bearing and onto the support plate and anchor. Be sure to install the strut between the front shoe and the lever on the rear shoe.

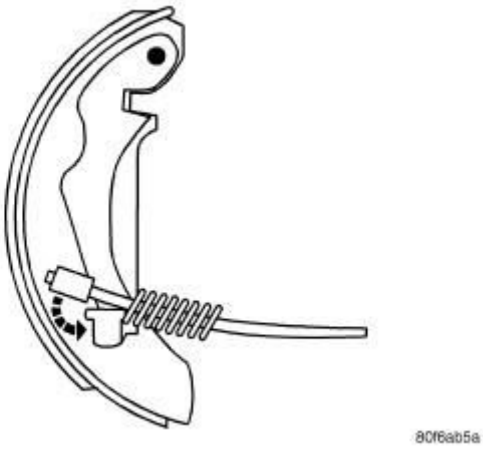

Fig. 253: Installing Cable To Lever
Courtesy of CHRYSLER GROUP, LLC

4. Install the parking brake cable onto the lever on the parking brake shoe.

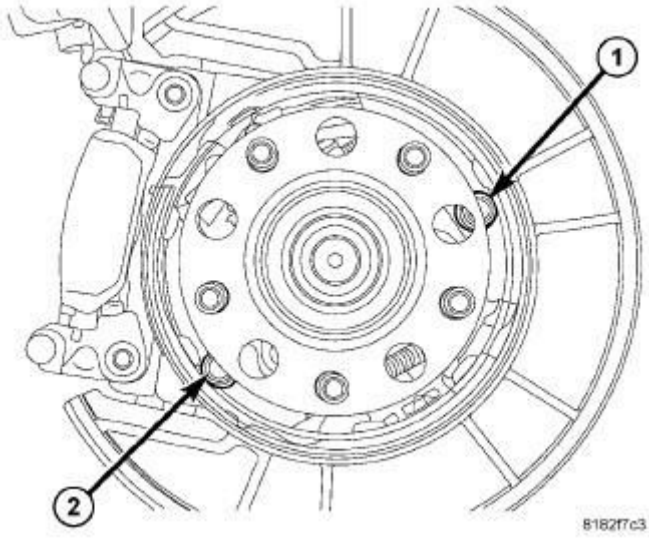

Fig. 254: Parking Brake Shoe Hold Down Springs
Courtesy of CHRYSLER GROUP, LLC

5. Install the brake shoe hold-down springs and pins (1, 2). Rotate the pins 90° to engage.

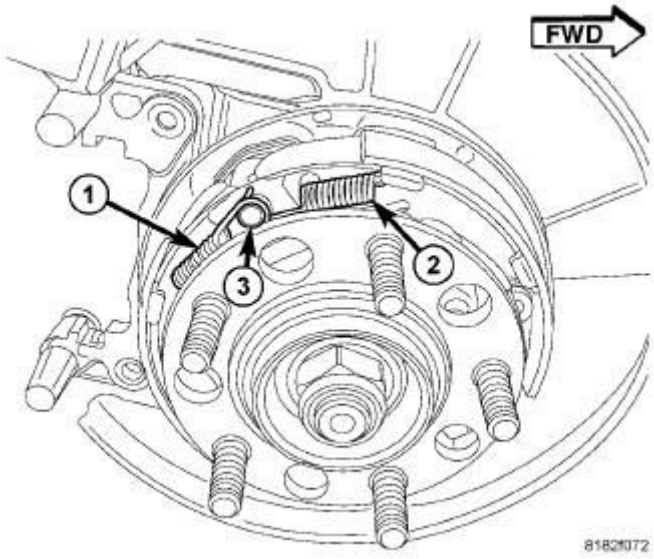

Fig. 255: Parking Brake Return Springs
Courtesy of CHRYSLER GROUP, LLC

6. Install the front upper return spring (2) holding the front brake shoe and anchor pin (3).
7. Install the rear upper return spring (2) holding the rear brake shoe and anchor pin (3).

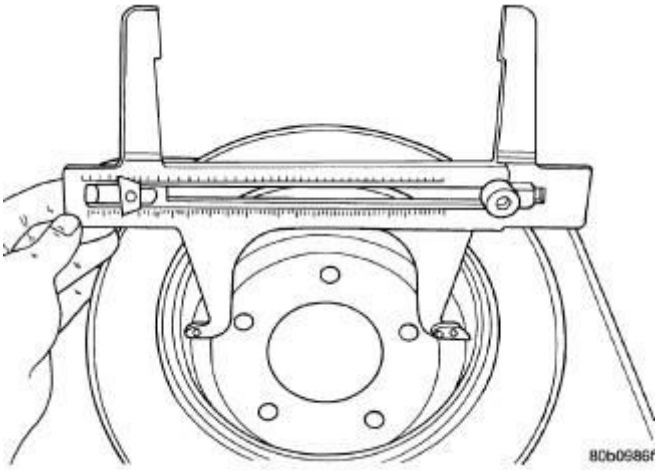

Fig. 256: Measuring Parking Brake Drum Diameter
Courtesy of CHRYSLER GROUP, LLC

8. Using Brake Shoe Gauge (special tool #C-3919, Gauge, Brake Shoes), or equivalent, measure the inside diameter of parking brake drum portion of rotor. Set the Gauge.

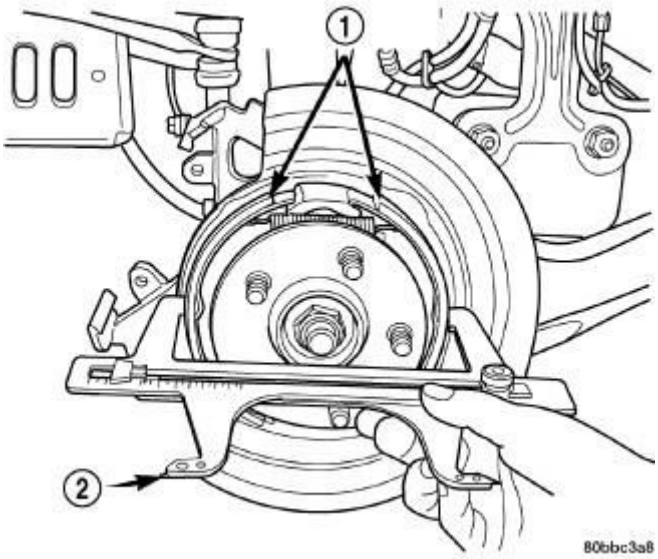

Fig. 257: Measuring Brake Shoes
Courtesy of CHRYSLER GROUP, LLC

1 - REAR PARKING BRAKE SHOES
2 - BRAKE SHOE GAUGE

9. Place Gauge (2) over the parking brake shoes (1) at their widest point.
10. Using the adjuster wheel, adjust the parking brake shoes until the linings on both parking brake shoes just touch the jaws on the Gauge.

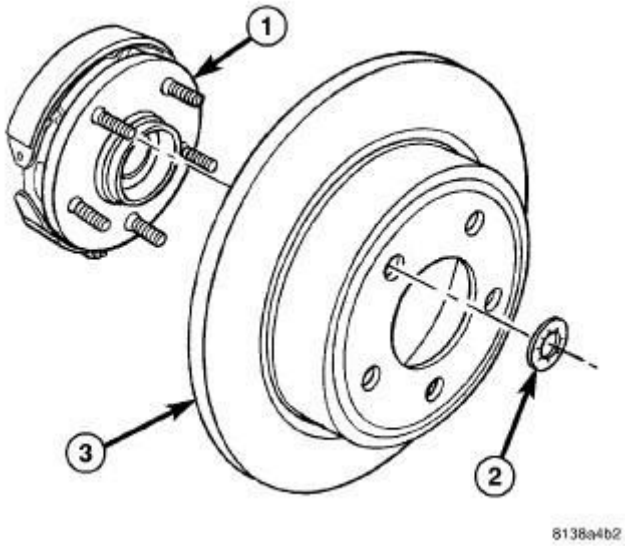

Fig. 258: Rear Brake Rotor, Hub & Clips
Courtesy of CHRYSLER GROUP, LLC

11. Install the rear brake rotor (3) and install a couple wheel mounting nuts to hold it in place while a final adjustment is made.

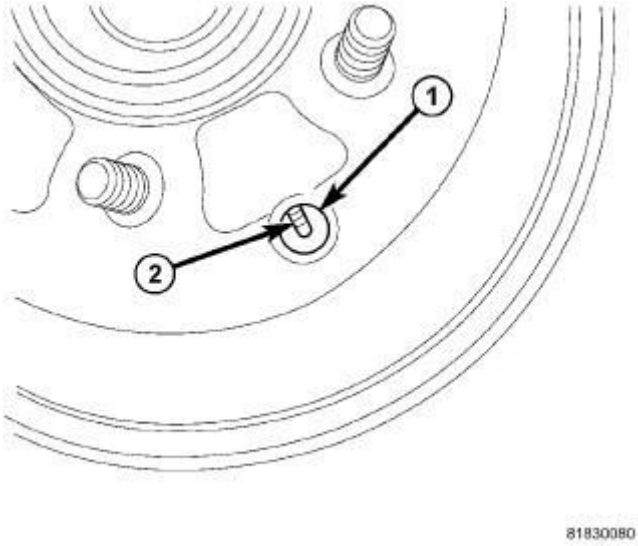

Fig. 259: Adjuster Access Hole
Courtesy of CHRYSLER GROUP, LLC

NOTE: To find the adjuster wheel with the drum on position the hole (1) in the front of the rotor drum as follows:

- **Left side - 7 o'clock.**
- **Right side - 5 o'clock.**

NOTE: When adjusting the parking brake shoes with the drum-in hat rotor installed, rotating the adjuster wheel (2) upward will loosen the adjustment. Rotating the adjuster wheel (2) downward will tighten the adjustment.

12. Remove the rubber plug from the hole (1) in the front of the rotor.
13. Utilizing the hole (1) in the front of the rotor, make a final adjustment of the shoes if necessary.
14. Reinstall the rubber plug.

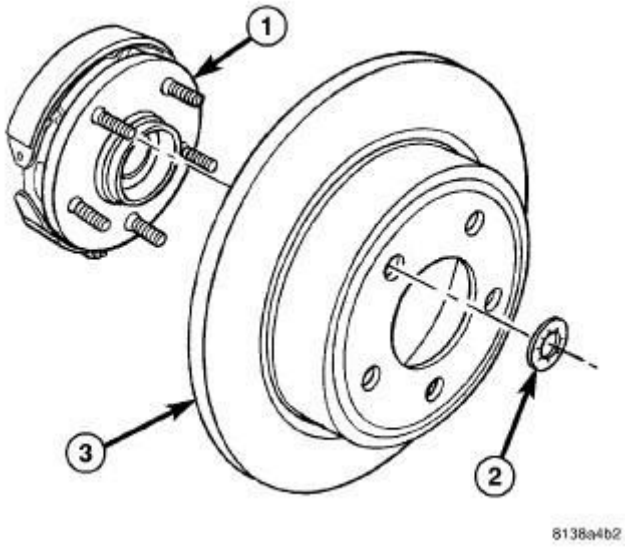

Fig. 260: Rear Brake Rotor, Hub & Clips
Courtesy of CHRYSLER GROUP, LLC

15. Remove the wheel mounting nuts and finish installing the brake rotor (3) as well as all components removed to access it. Refer to **ROTOR, BRAKE, INSTALLATION**.
16. Lower the vehicle.
17. Cycle the parking brake lever once, verifying proper operation of the parking brake.

2014 CLUTCH

Clutch System - Compass & Patriot

DESCRIPTION

DESCRIPTION

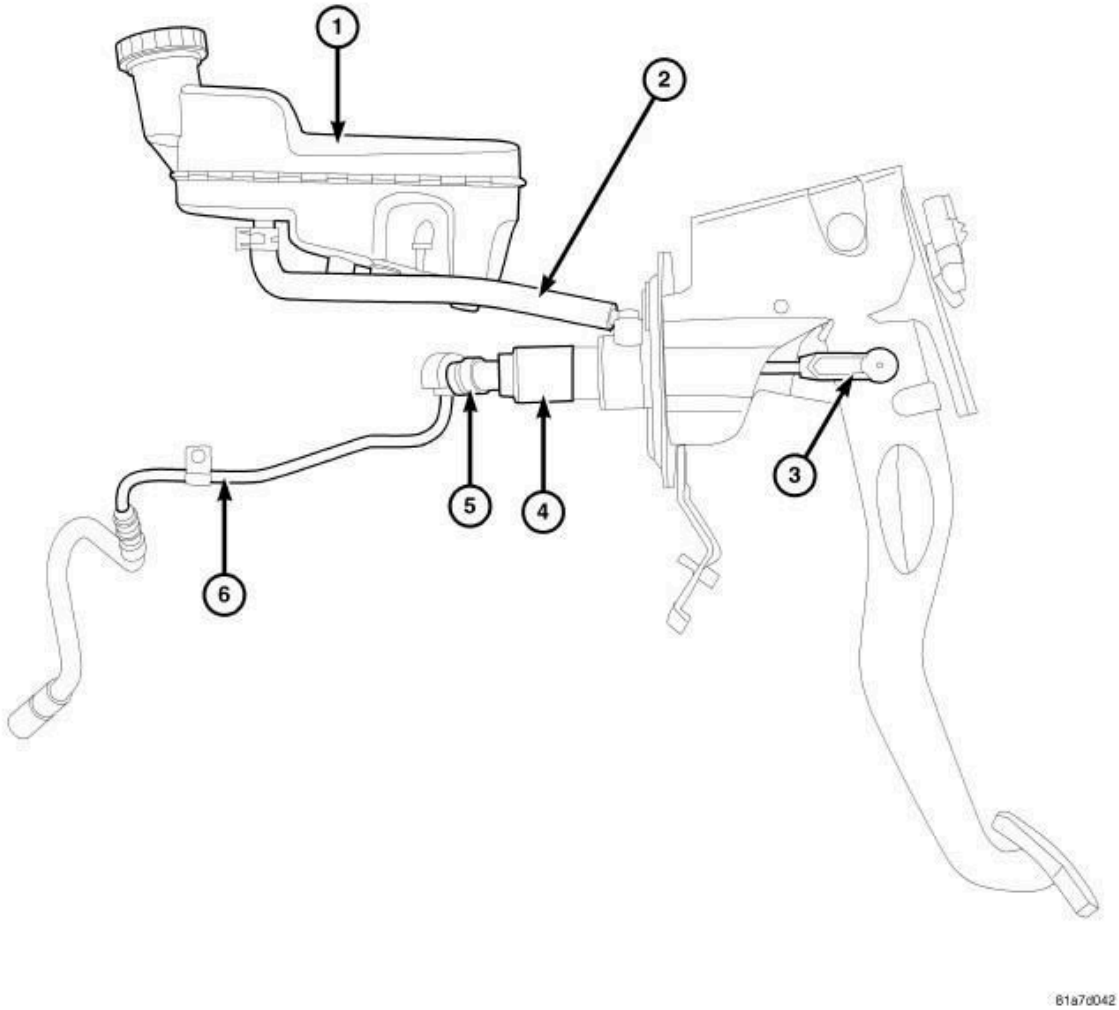

Fig. 1: Clutch Master Cylinder, Interconnecting Fluid Line, Brake Master Cylinder Reservoir & Clutch Pedal Pushrod
Courtesy of CHRYSLER GROUP, LLC

The typical clutch hydraulic system consists of a clutch master cylinder (4) Concentric Slave Cylinder (CSC) and an interconnecting fluid line (2). Clutch hydraulic fluid is supplied by the brake system via the brake master cylinder reservoir (1). The clutch pedal pushrod (3) is non-adjustable.

FLUID

CAUTION: Never use any type of petroleum-based fluid (engine oil, transmission oil, power steering fluid, etc.) in the clutch hydraulic system. Use of such fluids will result in master/slave cylinder seal damage, and cause a failure of the hydraulic clutch release system.

NOTE: Under normal operating conditions, the clutch hydraulic system does not require additional fluid for the life of the vehicle. Since the clutch shares the brake reservoir, the fluid level will be maintained whenever the brake system is checked.

The fluid required for use in the clutch hydraulic system is brake fluid conforming to DOT 3 specifications and J1703 standards. No other type of fluid is recommended or approved for use in the clutch hydraulic system. Use only MOPAR® brake fluid or equivalent from a tightly sealed container.

OPERATION

OPERATION

The clutch hydraulic system is responsible for engaging and disengaging the clutch. Depressing the clutch pedal develops fluid pressure in the clutch master cylinder. This pressure is transmitted to the integral release bearing which is in contact with the pressure plate diaphragm spring. As additional force is applied, the bearing depresses the diaphragm spring fingers inward on the fulcrums. The action moves the pressure plate rearward, relieving clamping force on the clutch disc.

DIAGNOSIS AND TESTING

CLUTCH SYSTEM

Clutch problem diagnosis will generally require a road test to determine the type of fault. Component inspection will then determine the problem after road testing.

Drive the vehicle at normal speeds during road test. Shift the transaxle through all gear ranges and observe clutch action. If chatter, grab, slip, or improper

release is experienced, remove and inspect the clutch components. If the problem is noise or hard shifting, further diagnosis may be needed. The transaxle or other driveline components may actually be at fault.

CLUTCH GRAB/CHATTER

CONDITION	POSSIBLE CAUSES	CORRECTION
CLUTCH DISC FACING COVERED WITH OIL OR GREASE	Oil leak at engine rear main or transaxle input shaft seal.	Correct leak and replace modular clutch assembly.
	Too much grease applied to splines of disc and input shaft.	Apply lighter coating of grease to splines.
NO FAULT FOUND WITH CLUTCH COMPONENTS	Problem actually related to suspension or driveline component.	Further diagnosis required. Check engine/transmission mounts, suspension attaching parts and other driveline components as needed.
	Engine related problems.	Check EFI and ignition systems.
PARTIAL ENGAGEMENT OF CLUTCH DISC	Clutch cover, spring, or release fingers bent, distorted (rough handling, improper assembly).	Replace clutch assembly.
	Clutch disc damaged or distorted.	Replace clutch assembly.
	Clutch Misalignment	Check clutch housing to engine dowels and dowel holes for damage. Correct as necessary.

CLUTCH SLIPS

CONDITION	POSSIBLE CAUSES	CORRECTION
DISC FACING WORN OUT	Normal wear.	Replace clutch assembly.
	Driver frequently rides (slips) clutch, results in	Replace clutch assembly.

	rapid wear, overheating.	
	Insufficient clutch cover diaphragm spring tension	Replace clutch assembly.
CLUTCH DISC FACING CONTAMINATED WITH OIL OR GREASE	Leak at rear main oil seal or transaxle input shaft seal	Replace leaking seals. Replace clutch assembly.
	Excessive amount of grease applied to input shaft splines	Apply less grease to input shaft. Replace clutch assembly.
	Road splash, water entering housing	Seal housing. Inspect clutch assembly.
	Concentric Slave Cylinder leaking hydraulic fluid	Replace Concentric Slave Cylinder (CSC)
CLUTCH IS RUNNING PARTIALLY DISENGAGED	Release bearing sticking or binding, does not return to normal running position.	Verify that bearing is actually binding. Then, replace bearing and transmission front bearing retainer if sleeve surface is damaged.
	Concentric Slave cylinder (CSC) binding	Replace Concentric Slave cylinder (CSC)
CLUTCH DISC FACINGS HAVE FRACTURED INTO SMALL PIECES	Driver performs a 5-1 downshift at vehicle speed in excess of 60 miles per hour	Alert driver to problem cause. Replace clutch assembly. Inspect slave cylinder and bearing for damage.
	Leak at rear main or transaxle input shaft seal	Replace seal. Replace clutch assembly.
	Excessive heat from slippage	Replace Clutch Assembly

IMPROPER CLUTCH RELEASE

CONDITION	POSSIBLE CAUSES	CORRECTION
CLUTCH DISC BINDS ON INPUT SHAFT SPLINES	Clutch disc hub splines damaged during installation	Clean, smooth, and lubricate disc and shaft splines. Replace modular clutch assembly, or clutch disc, and/or input shaft if splines are severely damaged.
	Input shaft splines rough, damaged.	Clean input shaft splines. Then lube.
	Corrosion or rust formations on splines of input shaft and disc	Clean input shaft splines and disc splines, then lube
CLUTCH DISC RUSTED TO FLYWHEEL AND/OR PRESSURE PLATE	Occurs in vehicles stored or not driven for extended period of time. Also occurs after steam cleaning if vehicle is not used for extended period.	Replace clutch assembly.
CLUTCH WILL NOT DISENGAGE PROPERLY	Disc bent, distorted during transaxle installation	Replace clutch assembly.
	Clutch cover diaphragm spring damaged during transaxle installation	Replace clutch assembly.
	Air in clutch hydraulic system.	Bleed clutch hydraulic system to purge air.
	Clutch master cylinder or slave cylinder leaking	Check and replace master and/or slave cylinder

CLUTCH PEDAL NOISE

CONDITION	POSSIBLE CAUSES	CORRECTION
CLUTCH PEDAL SQUEAKS WHEN DEPRESSED TO	Pedal bushings worn out or inadequate lubrication	Replace the Pedal assembly

FLOOR	Push rod ball joint worn out	Lubricate or replace the push rod
	Clutch pedal return spring worn out	Replace the Pedal assembly

CLUTCH CHATTER COMPLAINTS

For all clutch chatter complaints, perform the following:

1. Check for loose, misaligned, or broken engine and transmission mounts. If present, they should be corrected at this time. Test vehicle for chatter. If chatter is gone, there is no need to go any further.
2. If chatter persists, check hydraulic clutch release system is functioning properly.
3. Check for loose connections in drivetrain. Correct any problems and determine if clutch chatter complaints have been satisfied. If not:
   a. Remove transaxle.
   b. Check to see if the release bearing is sticky or binding. Replace bearing, if needed.
   c. Check clutch assembly for contamination (dirt, oil). Replace clutch assembly, if required.
   d. Check to see if the clutch disc hub splines are damaged. Replace with new clutch assembly, if necessary.
   e. Check input shaft splines for damage. Replace, if necessary.
   f. Check for uneven wear on clutch fingers.
   g. Check for broken clutch cover diaphragm spring fingers. Replace with new clutch assembly, if necessary.

DRIVE PLATE MISALIGNMENT

Common causes of misalignment are:

- Heat warping
- Mounting drive plate on a dirty crankshaft flange
- Incorrect bolt tightening
- Improper seating on the crankshaft shoulder
- Loose crankshaft bolts

Clean the crankshaft flange before mounting the drive plate. Dirt and grease on the flange surface may misalignment the flywheel, causing excessive runout. Use new bolts when mounting drive plate to crankshaft. Tighten drive plate bolts to specified torque only. Over-tightening can distort the drive plate hub causing excessive runout.

CLASH-INTO-REVERSE COMPLAINTS

All T355 manual transaxles are equipped with a reverse brake. It prevents clash when shifting into reverse, but only if the vehicle is not moving.

1. Depress clutch pedal to floor and hold. After three seconds, shift to reverse. If clash is present, clutch has excessive spin time, and the reverse brake may not be functioning.
2. Remove transaxle.
3. Check the input shaft spline, clutch disc splines, and release bearing for dry rust. If present, clean rust off and apply a light coat of bearing grease to the input shaft splines. Apply grease on the input shaft splines only where the clutch disc slides. Verify that the clutch disc slides freely along the input shaft spline.
4. Check to see if the clutch disc hub splines are damaged, and replace with new clutch assembly if required.
5. Check the input shaft for damaged splines. Replace as necessary.
6. Check for broken clutch cover diaphragm spring fingers.
7. Install clutch assembly and transaxle.

STANDARD PROCEDURE

STANDARD PROCEDURE - MANUAL BLEEDING CLUTCH HYDRAULIC CIRCUIT

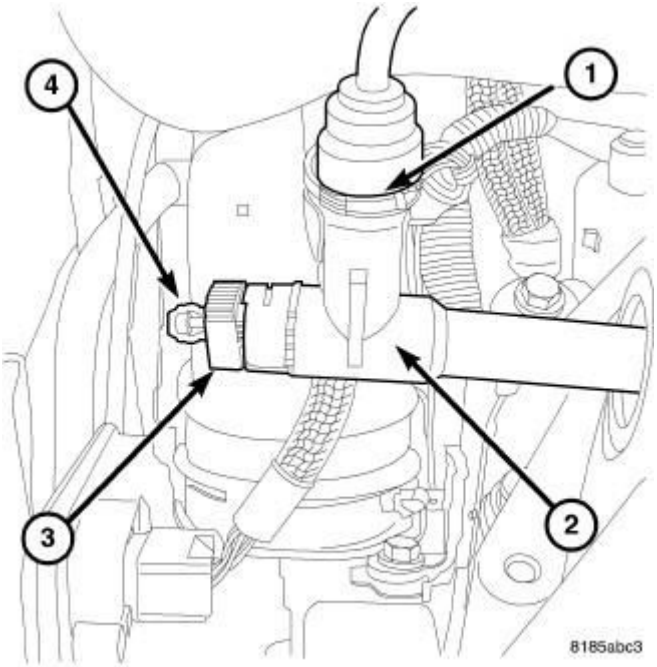

Fig. 2: Bleeder
Courtesy of CHRYSLER GROUP, LLC

NOTE: An assistant is required to perform this procedure

1. Verify fluid level in clutch/brake cylinder. Top off with DOT 3 brake fluid as necessary. Leave cap off.
2. Raise vehicle on hoist.

NOTE: The container must be positioned at a lower level than the bleeder valve on the clutch slave cylinder

3. Remove the dust cap from the bleed port on the clutch slave cylinder and install suitable size and length of clear hose (4) to monitor and divert fluid into a suitable container.
4. Lower vehicle, but only enough to gain access to and fill the brake master cylinder.
5. Have the assistant press down and hold the clutch pedal until it reaches the floor.

NOTE: Do not allow clutch/brake fluid reservoir to run dry while fluid exits bleed port. If the reservoir runs dry during this procedure, it must be refilled. and this step must be repeated.

NOTE: Ensure the assistant does not release the clutch pedal from the floor while the bleed port on the clutch slave cylinder is open. Otherwise, air will enter the clutch hydraulic circuit.

6. Open the bleed port on the clutch slave cylinder enough to allow hydraulic fluid to drain. Any air in the system will escape at this time.
7. Close the bleed port on the clutch slave cylinder, and have the assistant release the clutch pedal to the full up position.
8. Repeat steps 5 through 7 at least 15 times or until air bubbles are no longer present in the clutch hydraulic fluid.
9. Slowly actuate the clutch pedal 10 times between the full up and pedal stop position.
10. **Apply parking brake** . Start engine and verify clutch operation and pedal feel. If the clutch pedal feels fine and the transaxle can be easily shifted from neutral to any gear, the clutch is operating correctly. If pedal still feels spongy or clutch does not fully disengage, excessive air is still trapped within the system, most likely at the master cylinder.
11. Disconnect the hose from the bleed port on the clutch master cylinder and install the dust cap.
12. Top off brake master cylinder fluid level with DOT 3 brake fluid as necessary.

POWER BLEEDING CLUTCH HYDRAULIC CIRCUIT

1. Remove reservoir cap and connect bleeder cap to clutch/brake fluid reservoir.

NOTE: Use Bleeder Cap/Modified reservoir cap adapter Snap-on #901-059 or equivalent.

2. Connect service filling machine to bleeder cap.

NOTE: Use Service Filling Machine/Brake power bleeder or equivalent.

3. Service filling machine should be pressurized between 2.0 and 2.5 bar (29 - 36 PSI).

4. Remove dust cap from bleeder valve and connect the transparent bleeder hose to bleeder valve.

NOTE: Use Bleeder Container to capture hydraulic fluid and the Transparent Bleeder Hose to route fluid to container.

NOTE: The Container must be at a lower level than the bleeder valve on the clutch slave cylinder.

5. Place the other end of hose in the bleeder container to capture the used fluid. The end of the hose MUST be submerged in the DOT 3 brake fluid.
6. Turn on the service filling machine.

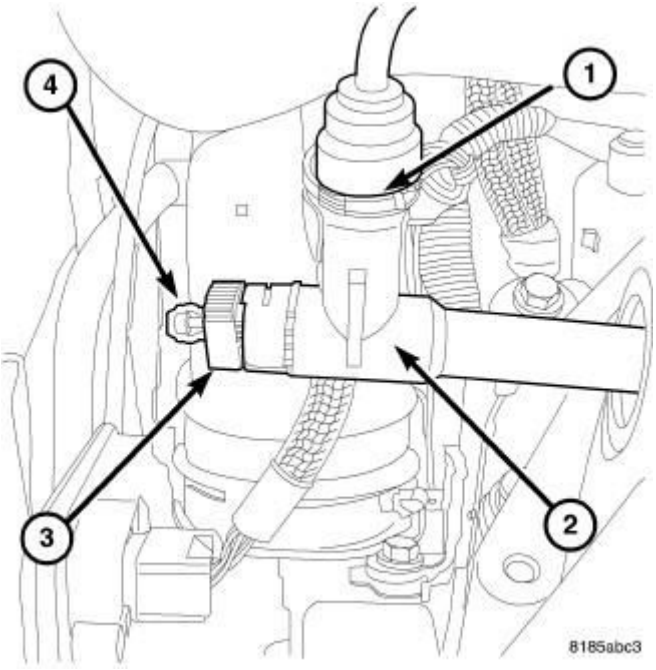

Fig. 3: Bleeder
Courtesy of CHRYSLER GROUP, LLC

NOTE: While bleeding the system, do not allow the clutch fluid reservoir to completely empty out. If this happens, refill the clutch fluid reservoir, and repeat the procedure.

7. Open the bleeder valve (3) on the clutch slave cylinder enough to allow fluid to flow from the clutch hydraulic system.

8. Allow fluid to flow out of bleed port until no more air bubbles can be seen in the transparent bleeder hose.
9. Once fluid is free of air bubbles; make 15 quick actuations between clutch pedal stop positions.
10. Close the bleeder valve at the clutch slave cylinder and disconnect the service filling machine.
11. Check clutch pedal to see if vehicle is properly bled.
12. If vehicle is not properly bled, repeat procedure.
13. Remove bleeder cap from the clutch fluid reservoir and replace reservoir cap.
14. Disconnect transparent bleeder hose from bleeder valve and replace dust cap.

SPECIFICATIONS

TORQUE SPECIFICATIONS

TORQUE SPECIFICATIONS TABLE

DESCRIPTION	N.m	Ft. Lbs.	In. Lbs.
Clutch Pedal Assembly-to-Instrument Panel Fasteners	34	-	300
Pressure Plate-to-Flywheel Bolts	20	15	177
Damper-to-Transaxle Nuts	24	-	215
Driveplate-to-Crankshaft Bolts	95	70	-
Modular Clutch-to-Drive Plate Bolts	88	65	-
Slave Cylinder-to-Transaxle	10	-	88
Clutch pipe to Transaxle Mounting Bolts	18	-	159
Transaxle-to-Engine Mounting Bolts	95	70	-

SPECIAL TOOLS

SPECIAL TOOLS

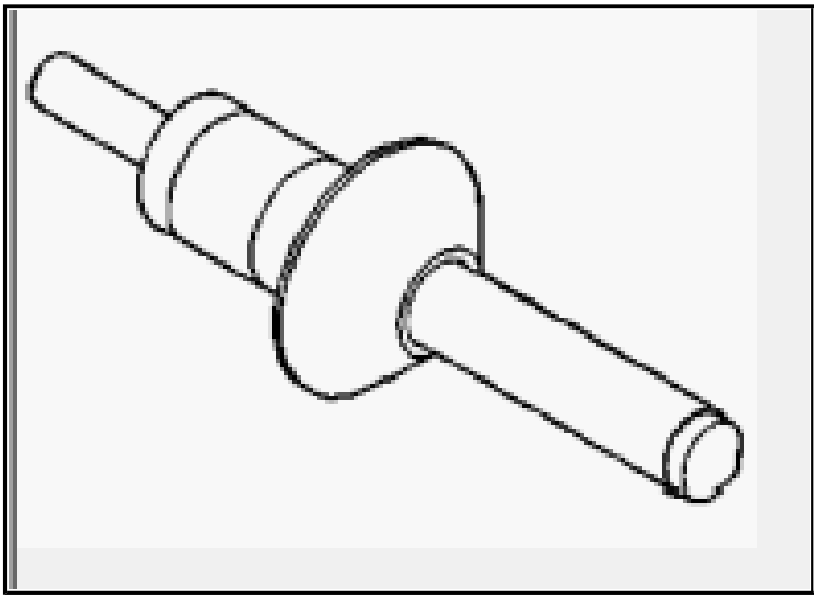	6724 - Aligner, Clutch (Originally Shipped In Kit Number(s) 6784, 6809, 6822.)

CLUTCH ASSEMBLY, MODULAR

DESCRIPTION

DESCRIPTION

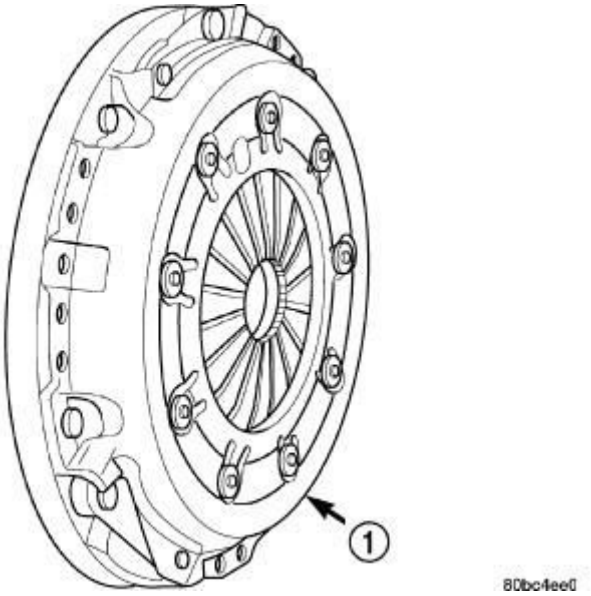

Fig. 4: Modular Clutch Assembly
Courtesy of CHRYSLER GROUP, LLC

The modular clutch assembly (1) is located between the engine and manual transaxle in the transaxle bellhousing, and is responsible for transmitting engine

power to the transaxle. The modular clutch is an assembly which incorporates a the following components:

- Flywheel
- Clutch Disc
- Pressure Plate
- Diaphragm Spring
- Sensor
- Cover

OPERATION

OPERATION

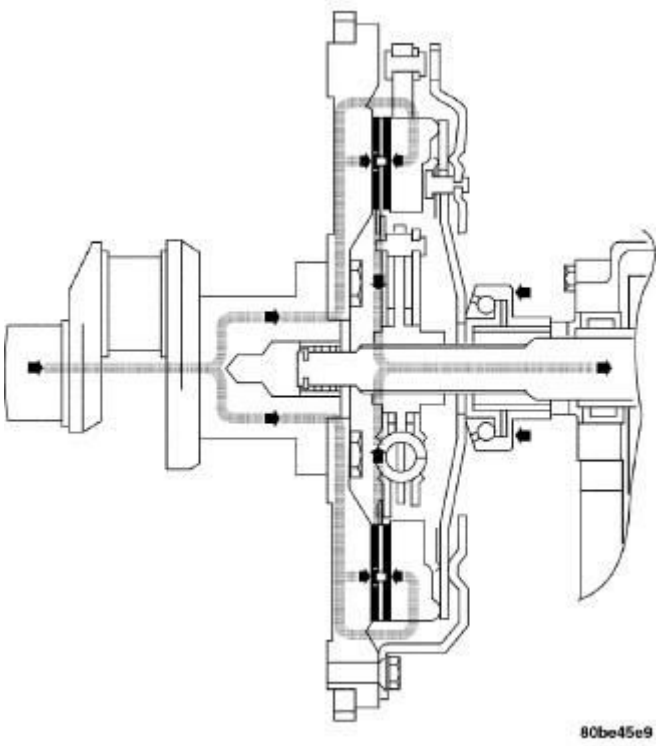

Fig. 5: Clutch Coupling Powerflow
Courtesy of CHRYSLER GROUP, LLC

The modular clutch assembly is designed to transmit power from the engine to the manual transaxle. This is accomplished by the friction and clamping force generated when the spring loaded pressure plate locks the clutch disc to the flywheel. The clutch disc, which is splined to the transaxle input shaft, transmits power until the center of the diaphragm spring is depressed, and the clamp force is removed from the disc.

REMOVAL

REMOVAL

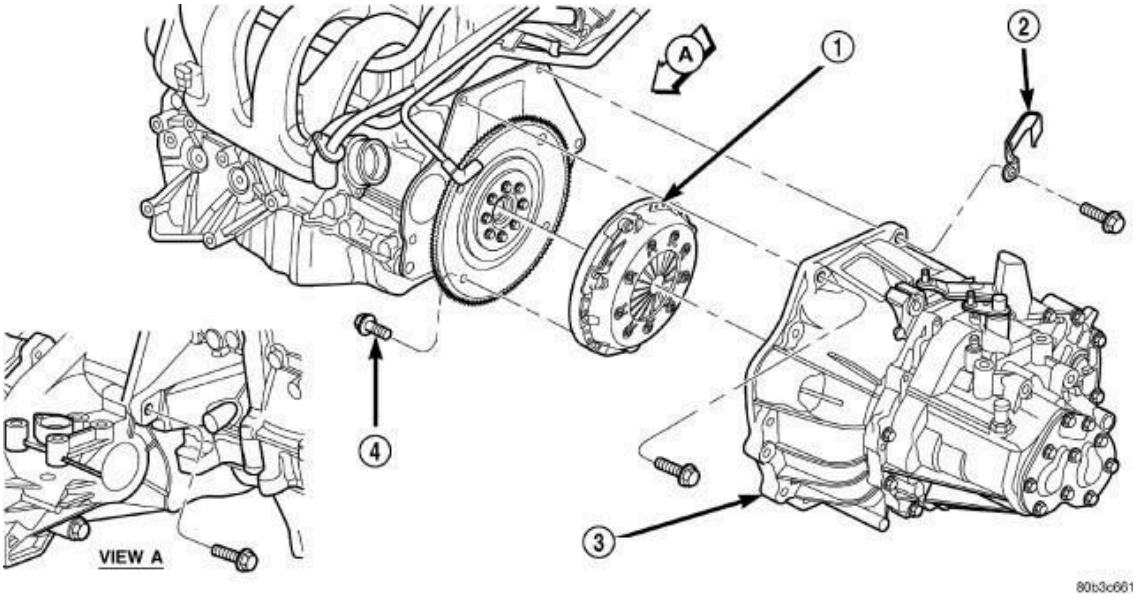

Fig. 6: Transaxle Removal/Installation
Courtesy of CHRYSLER GROUP, LLC

1 - MODULAR CLUTCH ASSEMBLY
2 - CLIP
3 - TRANSAXLE
4 - CLUTCH TO DRIVE PLATE BOLTS (4)

WARNING: Chrysler LLC does not manufacture any vehicles or replacement parts that contain asbestos. Aftermarket products may or may not contain asbestos. Refer to aftermarket product packaging for product information. Whether the product contains asbestos or not, dust and dirt can accumulate on manual clutch parts during normal use. Follow practices prescribed by appropriate regulations for the handling, processing and disposing of dust and debris.

1. Remove transaxle (3) from vehicle. Refer to **BG6 REMOVAL** or **T355 REMOVAL** .

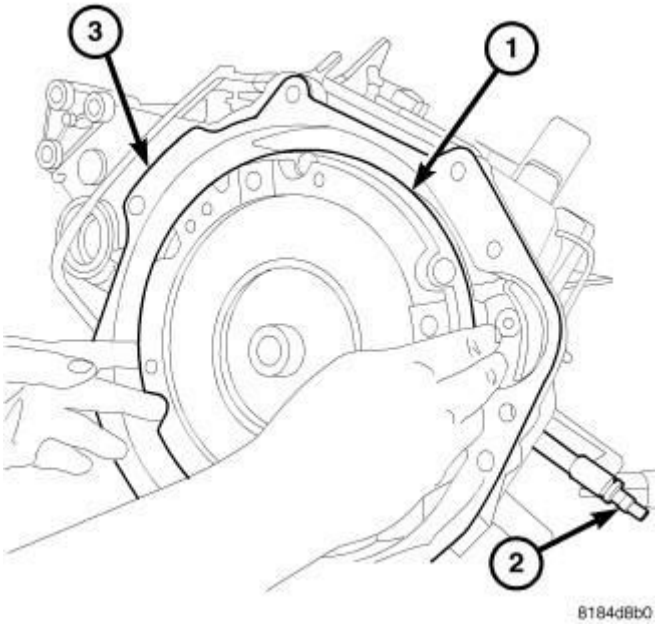

Fig. 7: Removing/Installing Modular Clutch Assembly
Courtesy of CHRYSLER GROUP, LLC

2. Remove modular clutch assembly (1) from transaxle input shaft.

INSPECTION

INSPECTION

Fluid contamination is a frequent cause of clutch malfunctions. Oil, grease, water, or other fluids on the clutch contact surfaces will cause faulty operation.

During inspection, note if any components are contaminated. Look for evidence of oil, grease, or water/road splash on clutch components.

OIL CONTAMINATION

Oil contamination indicates a leak at the rear main seal and/or transaxle input shaft. Oil leaks produce a residue of oil on the transaxle housing interior, clutch cover and flywheel. Heat buildup caused by slippage can bake the oil residue onto the components. This glaze-like residue ranges in color from amber to black.

GREASE CONTAMINATION

Grease contamination is usually a product of over-lubrication. During clutch service, apply only a small amount of grease to the input shaft splines. Excess grease may be thrown off during operation, contaminating the disc.

ROAD SPLASH/WATER CONTAMINATION

Road splash contamination is usually caused by driving the vehicle through deep water puddles. Water can be forced into the clutch housing, causing clutch components to become contaminated. Facing of disc will absorb moisture and bond to the flywheel and/or, pressure plate, if vehicle is allowed to stand for some time before use. If this condition occurs, replacement of clutch assembly may be required. Drive the vehicle until normal clutch operating temperature has been obtained. This will dry off disc assembly, pressure plate, and flywheel.

INSTALLATION

INSTALLATION

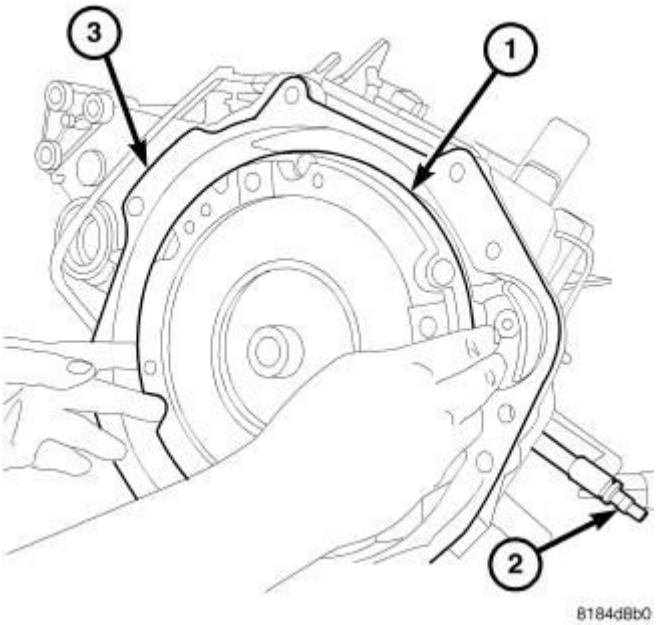

Fig. 8: Removing/Installing Modular Clutch Assembly
Courtesy of CHRYSLER GROUP, LLC

WARNING: Chrysler LLC does not manufacture any vehicles or replacement parts that contain asbestos. Aftermarket products may or may not contain asbestos. Refer to aftermarket product packaging for product information. Whether the product contains asbestos or not, dust and dirt can accumulate on manual clutch parts during normal use. Follow practices prescribed by appropriate regulations for the handling, processing and

disposing of dust and debris.

1. Install clutch module onto input shaft.
2. Install transaxle into vehicle. Refer to **BG6 INSTALLATION** or **T355 INSTALLATION** .

CYLINDER, CLUTCH MASTER, LHD

DESCRIPTION

DESCRIPTION

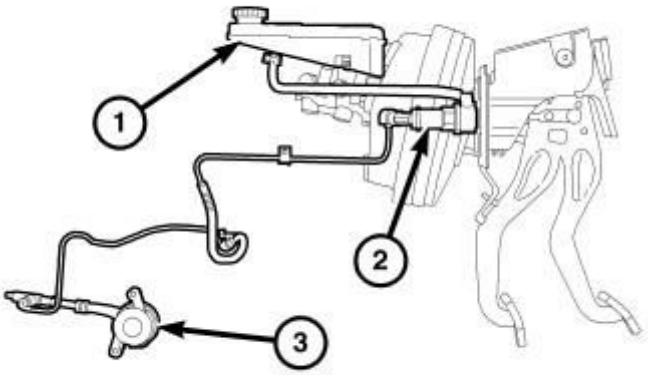

Fig. 9: Clutch Hydraulic System - Typical
Courtesy of CHRYSLER GROUP, LLC

NOTE: The clutch master cylinder/hydraulic release system does not have its own reservoir. This system is supplied fluid from the brake master cylinder reservoir.

The clutch master cylinder (2) mounts to the clutch pedal and consists of a push rod, a piston and cylinder housing, an interconnecting hydraulic tube and a supply hose which connects to the brake master cylinder reservoir (1) for fluid supply.

OPERATION

OPERATION

When the clutch pedal is depressed, the push rod moves the piston in the master

cylinder (2), displacing fluid through the hydraulic line and into the release bearing. The release bearing is forced into the fingers of the clutch diaphragm springs. As the fingers move, they release the clamping pressure on the clutch disc between the clutch pressure plate and the flywheel. The clutch becomes disengaged as this pressure is released.

When the clutch pedal is released, the system hydraulic pressure is released. This allows the force of the clutch diaphragm springs to return to their original position, re-clamping the clutch disc between the flywheel and the clutch pressure plate. Also, the release bearing and lever are forced to return, which reverses the movement of the hydraulic system and returns the pedal to its original position against the up-stop.

REMOVAL

REMOVAL

CAUTION: Brake fluid will damage painted surfaces. If brake fluid is spilled on any painted surfaces, wash it off immediately with water.

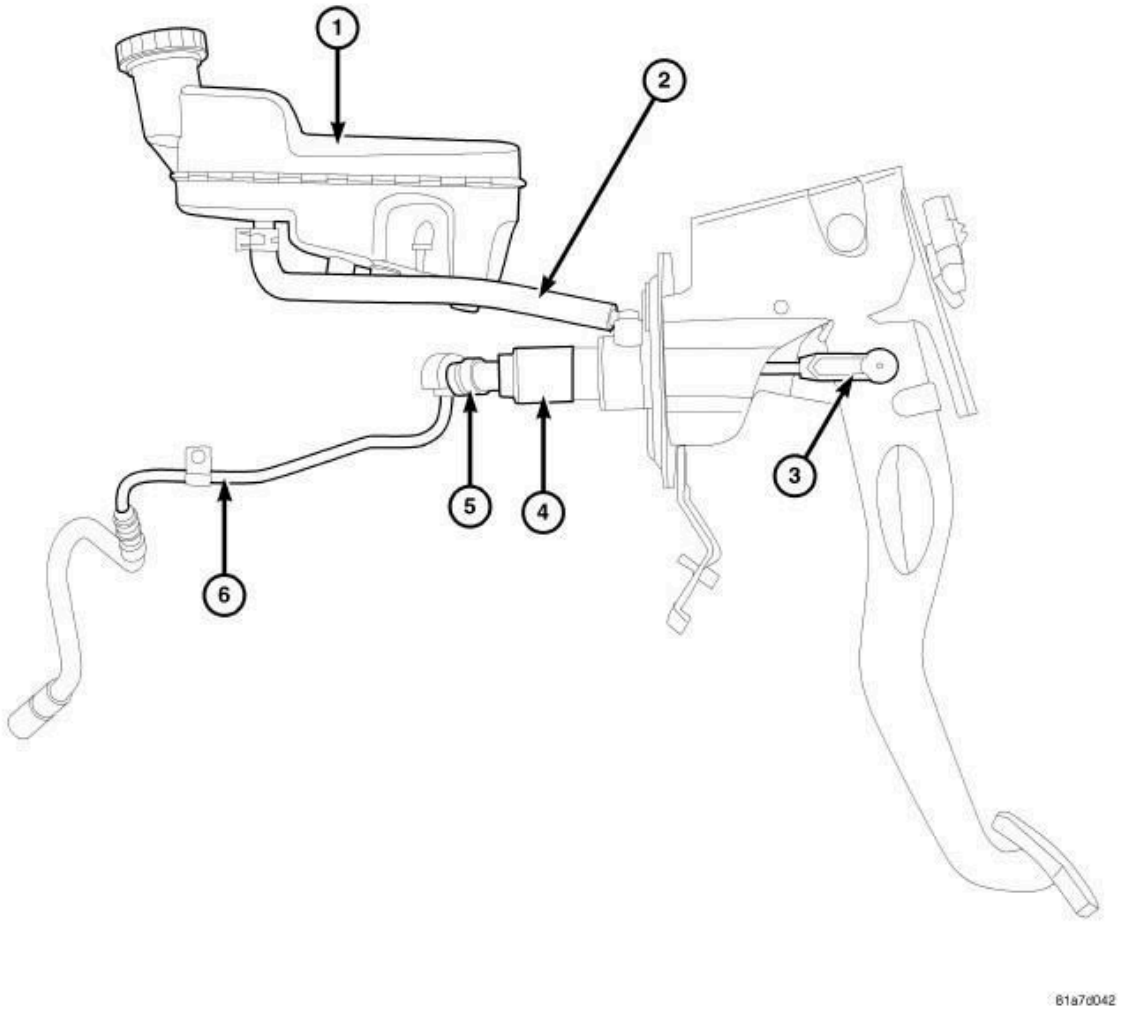

Fig. 10: Clutch Master Cylinder, Interconnecting Fluid Line, Brake Master Cylinder Reservoir & Clutch Pedal Pushrod
Courtesy of CHRYSLER GROUP, LLC

1. Disconnect negative battery cable.
2. Remove air cleaner assembly. Refer to **BODY, AIR CLEANER, REMOVAL 2.0L** or **BODY, AIR CLEANER, REMOVAL 2.2L** or **BODY, AIR CLEANER, REMOVAL 2.4L** .
3. Disconnect hydraulic tube (6) at the clutch master cylinder pressure line connector (5) by pulling retaining clip then pulling out on tube. Cap off hydraulic tube to prevent fluid loss. To completely drain clutch master cylinder and tubing, remove brake master cylinder cap and drain fluid into suitable container.
4. Disconnect hydraulic supply tube (2) at the clutch master cylinder (4).
5. Remove lower instrument panel bezel.

6. Disconnect clutch master cylinder pushrod (3) from clutch pedal.

CAUTION: Use care when removing clutch master cylinder from engine compartment. Aggressive handling can result in a damaged hydraulic tube and improper clutch release operation upon reassembly.

7. Remove master cylinder assembly (4) from mounting position by turning 1/4 turn and carefully remove from engine compartment.

INSTALLATION

INSTALLATION

CAUTION: Brake fluid will damage painted surfaces. If brake fluid is spilled on any painted surfaces, wash it off immediately with water.

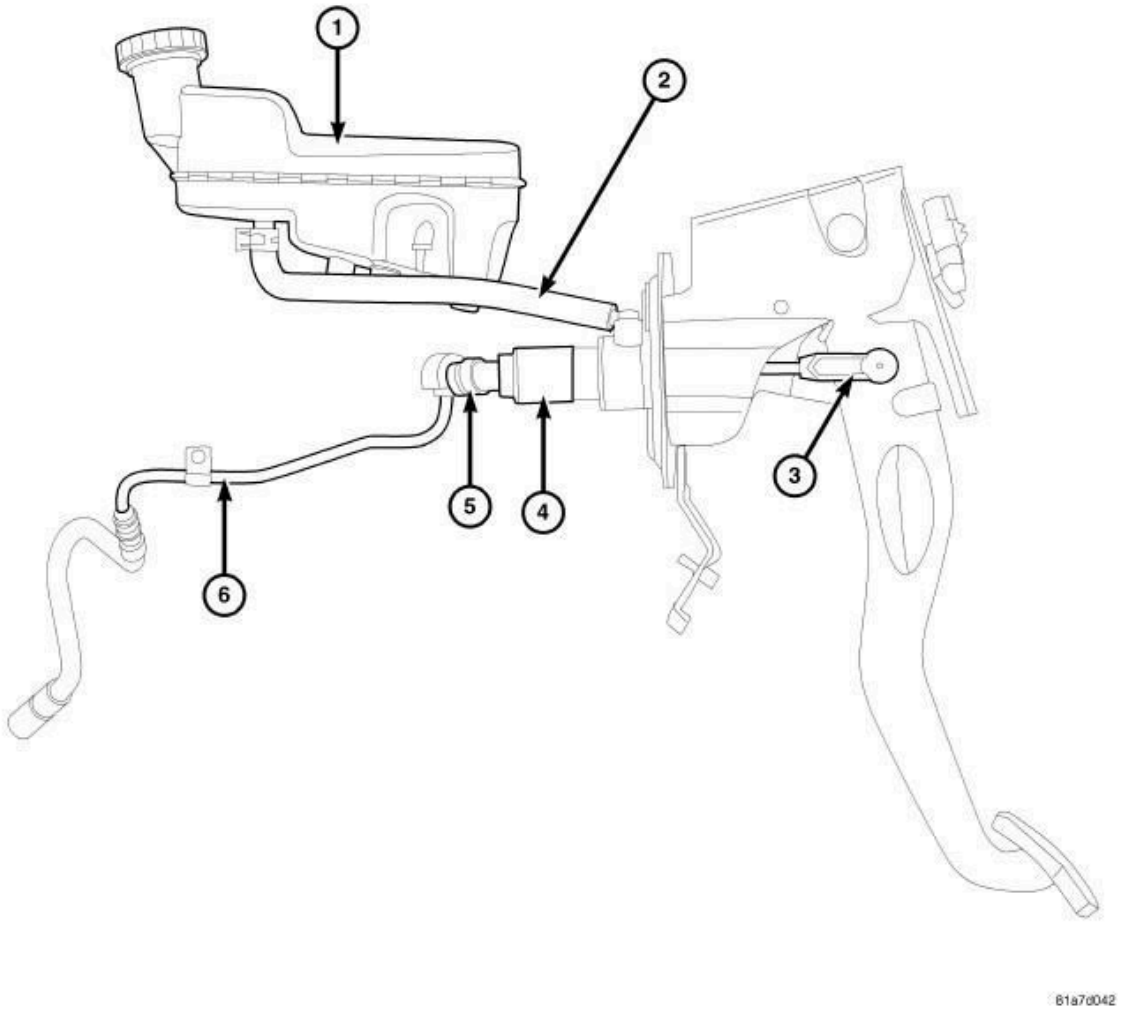

Fig. 11: Clutch Master Cylinder, Interconnecting Fluid Line, Brake Master Cylinder Reservoir & Clutch Pedal Pushrod
Courtesy of CHRYSLER GROUP, LLC

1. Connect clutch master cylinder supply hose (2) to clutch master cylinder (4).
2. Verify that brake master cylinder reservoir (1) is full and cap is off.
3. Position clutch master cylinder body vertically, with pushrod pointing down, for about ten seconds to purge air trapped from end of cylinder.
4. Install clutch master cylinder body (4) to dash panel and 1/4 turn to secure.
5. Insert hydraulic tube (6) into master cylinder pressure line connector (5) and install retaining clip.
6. Connect clutch master cylinder rod (3) to clutch pedal pin. An audible "click" should be heard.
7. Install lower instrument panel bezel.

8. Connect negative battery cable.
9. Install air cleaner assembly. Refer to **BODY, AIR CLEANER, INSTALLATION 2.0L** or **BODY, AIR CLEANER, INSTALLATION 2.2L** or **BODY, AIR CLEANER, INSTALLATION 2.4L** .
10. Verify that brake master cylinder reservoir (1) is full. Top off with DOT 3 brake fluid if necessary.
11. Bleed clutch system. Refer to **STANDARD PROCEDURE**.
12. Actuate clutch pedal a minimum of fifteen times to allow any air ingested into the system to vent to the master cylinder reservoir. If residual air becomes trapped in the system, it is necessary to bleed the clutch hydraulic system. Refer to **STANDARD PROCEDURE**.
13. Verify proper clutch release system operation.

CYLINDER, CLUTCH MASTER, RHD

DESCRIPTION

DESCRIPTION

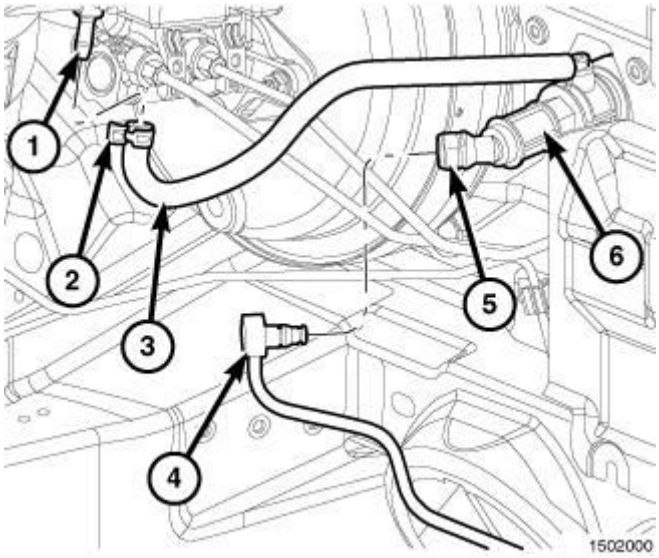

Fig. 12: RHD Clutch Master Cylinder
Courtesy of CHRYSLER GROUP, LLC

The clutch master cylinder (6) mounts to the clutch pedal and consists of a piston and cylinder housing, an actuating push rod, and an interconnecting hydraulic tube. Fluid is supplied to the clutch master cylinder via the brake master cylinder reservoir.

OPERATION

OPERATION

When the clutch pedal is depressed, the push rod moves the piston in the master cylinder, displacing fluid through the hydraulic line and into the release bearing. As the release bearing extend it is forced into the fingers of the clutch diaphragm springs. As the fingers move, they release the clamping pressure on the clutch disc between the clutch pressure plate and the flywheel. The clutch becomes disengaged as this pressure is released.

When the clutch pedal is released, the system hydraulic pressure is released. This allows the force of the clutch diaphragm springs to return themselves to their original position, re-clamping the clutch disc between the flywheel and the clutch pressure plate. Also, the release bearing is forced to return, which reverses the movement of the hydraulic system and returns the pedal to its original position against the upstop.

REMOVAL

REMOVAL

1. Remove the engine cover.
2. Disconnect battery negative cable. Refer to **CABLES, BATTERY, REMOVAL** .
3. Remove front skid plate (if equipped).

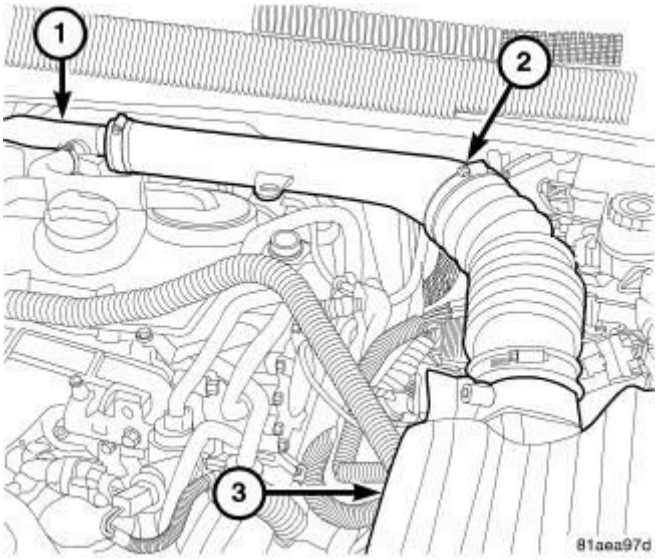

Fig. 13: Air Intake Hoses
Courtesy of CHRYSLER GROUP, LLC

4. Remove air intake tube (2) from air cleaner housing (3) and the tube (1) leading down the back of the engine.

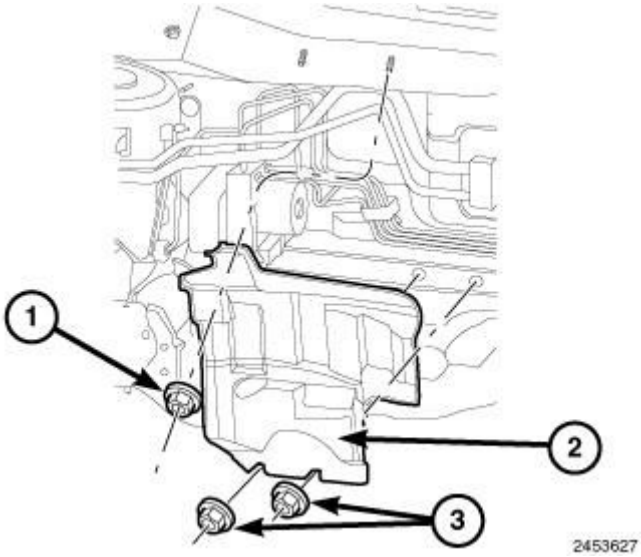

Fig. 14: Identifying Heat Shield Upper Mounting Nut & Two Lower Mounting Nuts
Courtesy of CHRYSLER GROUP, LLC

5. Remove heat shield upper mounting nut (1) and two lower mounting nuts (3).
6. Remove heat shield (2).

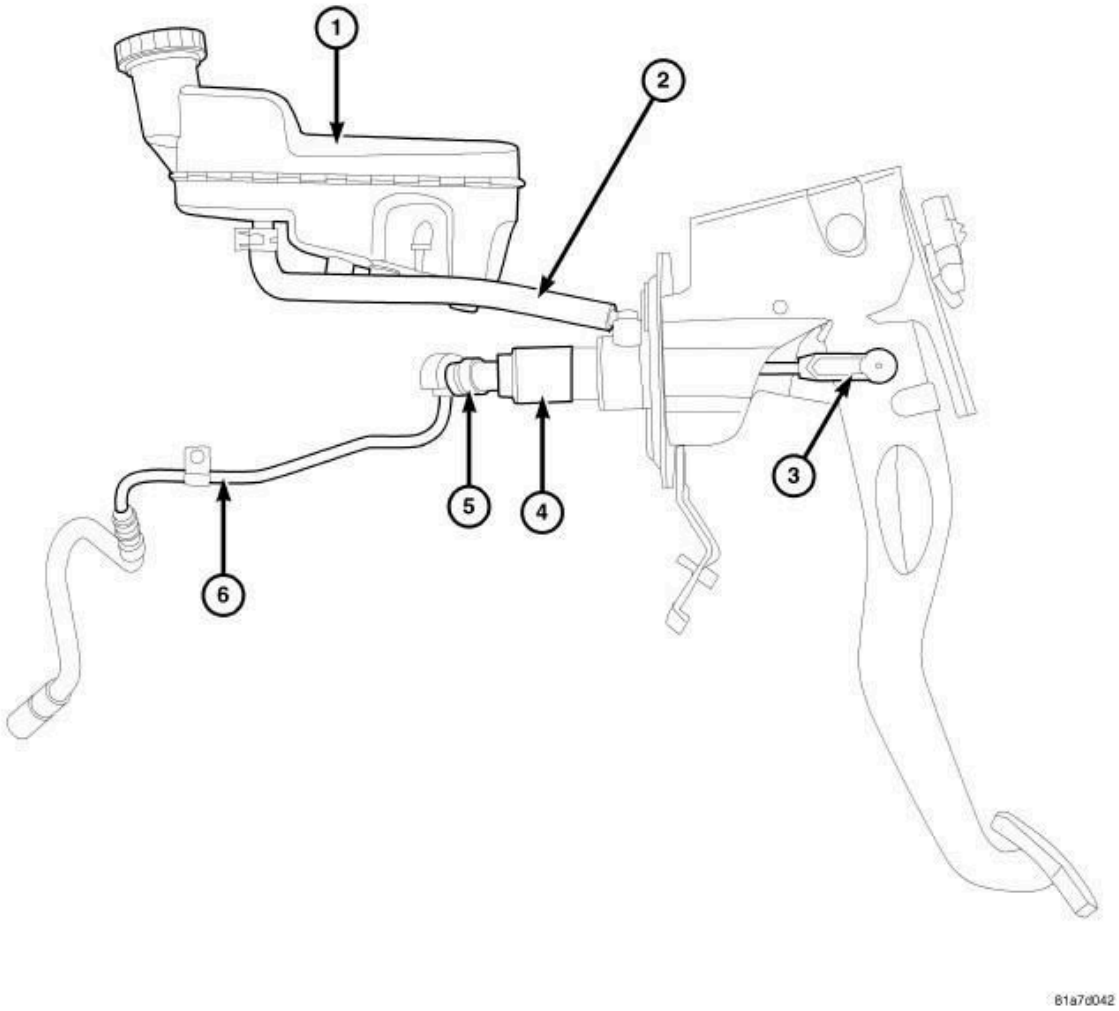

Fig. 15: Clutch Master Cylinder, Interconnecting Fluid Line, Brake Master Cylinder Reservoir & Clutch Pedal Pushrod
Courtesy of CHRYSLER GROUP, LLC

CAUTION: Brake fluid will damage painted surfaces. If brake fluid is spilled on any painted surfaces, wash it off immediately with water.

7. Disconnect hydraulic tube (6) at the clutch master cylinder pressure line connector (5) by pulling retaining clip then pulling out on tube. Cap off hydraulic tube to prevent fluid loss. To completely drain clutch master cylinder and tubing, remove brake master cylinder cap and drain fluid into suitable container.
8. Disconnect hydraulic supply tube (2) at the clutch master cylinder (4).
9. Remove lower instrument panel bezel.

10. Disconnect clutch master cylinder pushrod (3) from clutch pedal.

CAUTION: Use care when removing clutch master cylinder from engine compartment. Aggressive handling can result in a damaged hydraulic tube and improper clutch release operation upon reassembly.

11. Remove master cylinder assembly (4) from mounting position by turning 1/4 turn and carefully remove from engine compartment.

INSTALLATION

INSTALLATION

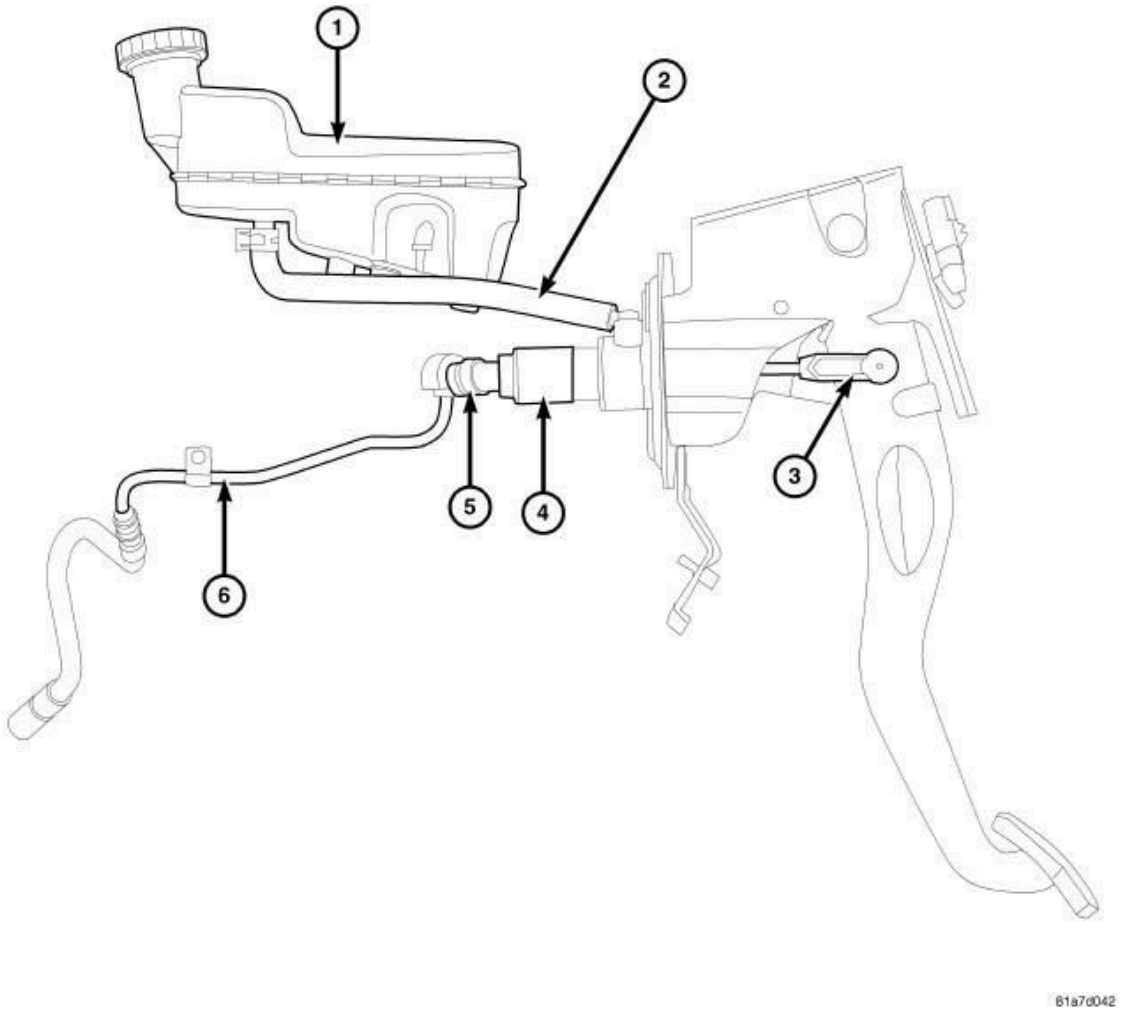

Fig. 16: Clutch Master Cylinder, Interconnecting Fluid Line, Brake Master

Cylinder Reservoir & Clutch Pedal Pushrod
Courtesy of CHRYSLER GROUP, LLC

CAUTION: Brake fluid will damage painted surfaces. If brake fluid is spilled on any painted surfaces, wash it off immediately with water.

1. Connect clutch master cylinder supply hose (2) to clutch master cylinder (4).
2. Verify that brake master cylinder reservoir (1) is full and cap is off.
3. Position clutch master cylinder body vertically, with pushrod pointing down, for about ten seconds to purge air trapped from end of cylinder.
4. Install clutch master cylinder body (4) to dash panel and 1/4 turn to secure.
5. Insert hydraulic tube (6) into master cylinder pressure line connector (5) and install retaining clip.
6. Connect clutch master cylinder rod (3) to clutch pedal pin. An audible "click" should be heard.
7. Install lower instrument panel bezel.
8. Connect battery negative cable. Refer to **CABLES, BATTERY, INSTALLATION** .
9. Verify that brake master cylinder reservoir (1) is full. Top off with DOT 3 brake fluid if necessary.
10. Bleed clutch system. Refer to **STANDARD PROCEDURE**.
11. Actuate clutch pedal a minimum of fifteen times to allow any air ingested into the system to vent to the master cylinder reservoir. If residual air becomes trapped in the system, it is necessary to bleed the clutch hydraulic system.
12. Verify proper clutch release system operation.

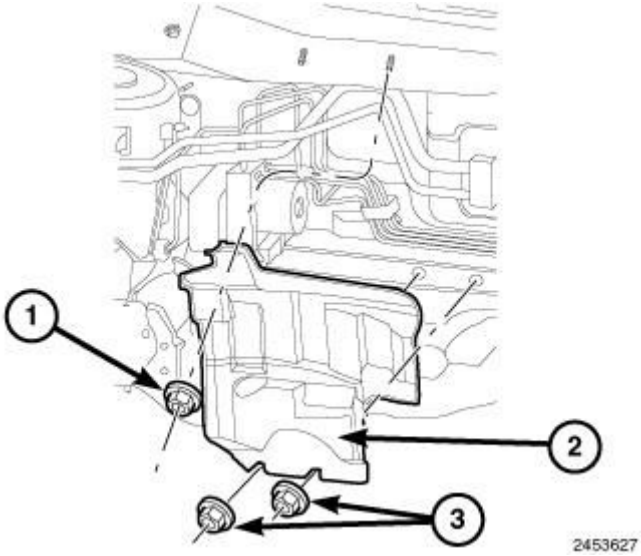

Fig. 17: Identifying Heat Shield Upper Mounting Nut & Two Lower Mounting Nuts
Courtesy of CHRYSLER GROUP, LLC

13. Install heat shield.
14. Install heat shield upper mounting nut (1) and two lower mounting nuts (3).

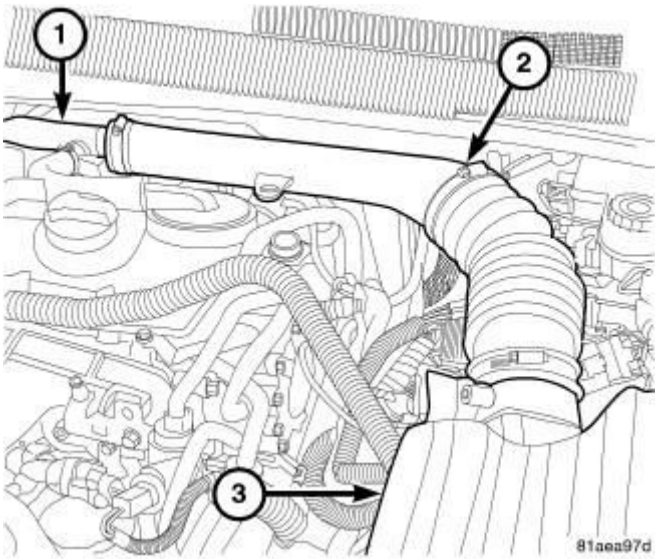

Fig. 18: Air Intake Hoses
Courtesy of CHRYSLER GROUP, LLC

15. Install air intake tube (2) from air cleaner housing (3) and the tube (1) leading down the back of the engine.
16. Install the engine cover.

CYLINDER, CLUTCH SLAVE

DESCRIPTION

DESCRIPTION

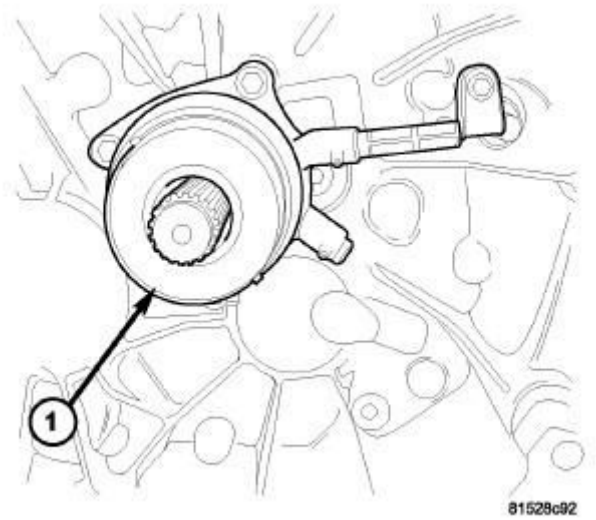

Fig. 19: Clutch Slave Cylinder
Courtesy of CHRYSLER GROUP, LLC

The clutch slave cylinder (1) consists of a hydraulic piston and cylinder, seal and return spring. It is fastened to the transaxle bellhousing. The slave cylinder is connected to the clutch master cylinder hydraulic pipe, which is retained to the cylinder by a pair of retainer clips, and has a bleed port to facilitate the removal of air from the system.

The clutch release system (1) utilizes a slave cylinder of a concentric design, having all components fixed about the same axis. The concentric slave cylinder (CSC) is mounted to the inside of the clutch bellhousing and is serviced only as an assembly.

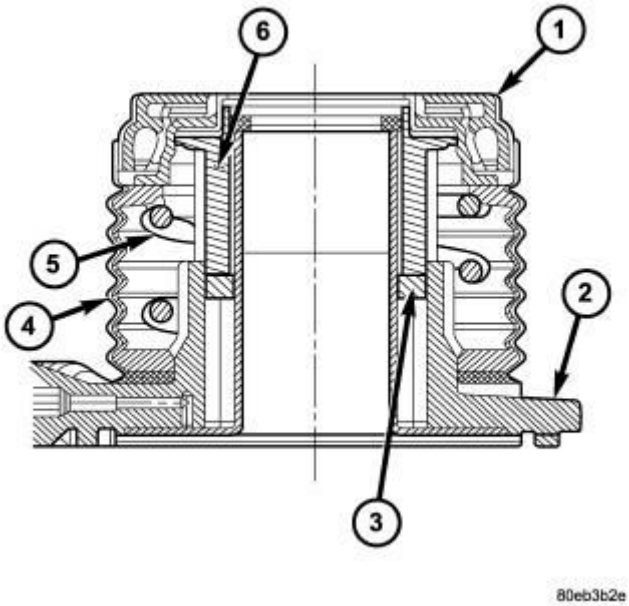

Fig. 20: Concentric Slave Cylinder (CSC) Components
Courtesy of CHRYSLER GROUP, LLC

The concentric design permits high efficiency, resulting in low and consistent pedal effort, as well as automatic adjustment to compensate for clutch disc wear. The CSC is a self-contained unit, consisting of a main body (2) and piston (6), spring (5), integrated release bearing (1), and a rubber boot (4).

REMOVAL

REMOVAL

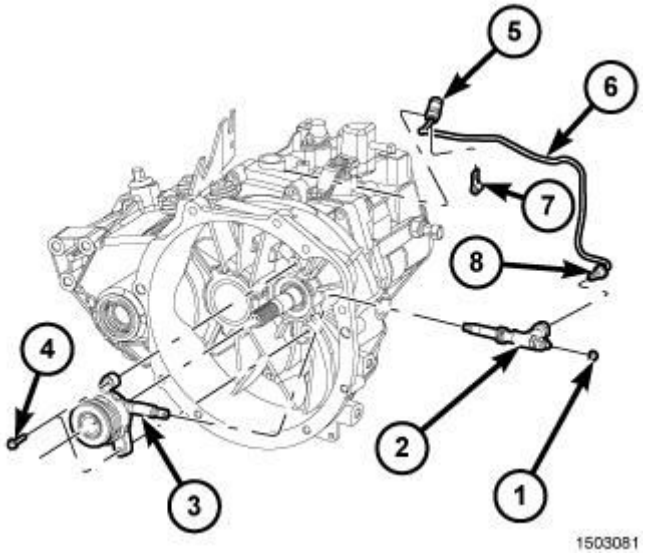

Fig. 21: Removing/Installing Concentric Slave Cylinder

Courtesy of CHRYSLER GROUP, LLC

WARNING: Chrysler LLC does not manufacture any vehicles or replacement parts that contain asbestos. Aftermarket products may or may not contain asbestos. Refer to aftermarket product packaging for product information. Whether the product contains asbestos or not, dust and dirt can accumulate on manual clutch parts during normal use. Follow practices prescribed by appropriate regulations for the handling, processing and disposing of dust and debris.

NOTE: To prevent drainage of clutch master cylinder assembly upon slave cylinder removal, it is necessary to make sure brake master cylinder fluid level is full and reservoir cap is installed tight.

1. Remove transaxle from vehicle. Refer to **BG6 REMOVAL** or **T355 REMOVAL** .
2. Disconnect the clutch hydraulic line (6) from the bleeder assembly (2).
3. Disconnect and remove bleeder assembly (2) from the clutch master cylinder (3).
4. Remove the slave cylinder-to-clutch bellhousing bolts (4) and remove slave cylinder (3) from transaxle.

INSTALLATION

INSTALLATION

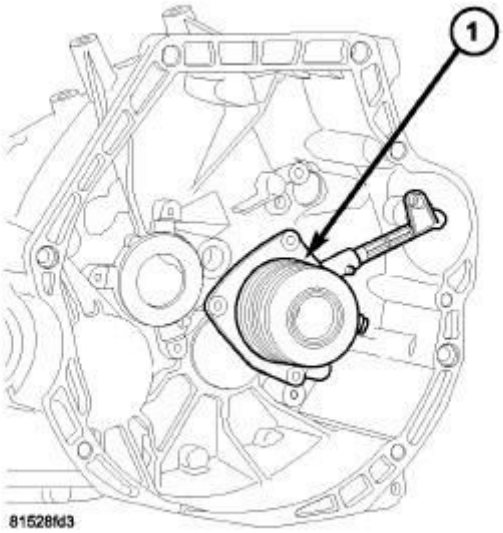

Fig. 22: Slave Cylinder
Courtesy of CHRYSLER GROUP, LLC

1. Install slave cylinder (1) to transaxle using new bolts.

NOTE: Torque three CSC body screws first, then torque the fluid tube attachment.

2. Torque slave cylinder-to-case bolts in three steps:
   1. 2 N.m (18 in. lbs.)
   2. 5 N.m (44 in. lbs.)
   3. 8.4 N.m (74 in. lbs.)
3. Install transaxle. Refer to **BG6 INSTALLATION** or **T355 INSTALLATION** .
4. Bleed clutch hydraulic system. Refer to **STANDARD PROCEDURE**.

DISC, CLUTCH

REMOVAL

REMOVAL

DIESEL

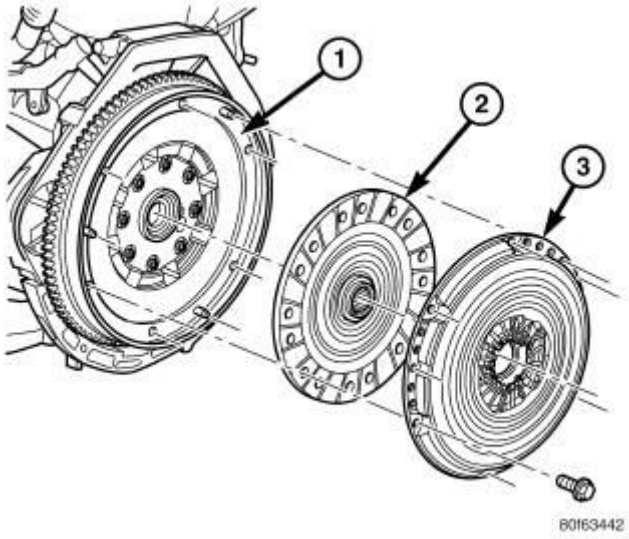

Fig. 23: Identifying Clutch Disc, Pressure Plate, & Flywheel
Courtesy of CHRYSLER GROUP, LLC

1 - FLYWHEEL (DUAL-MASS)
2 - CLUTCH DISC
3 - PRESSURE PLATE

WARNING: Chrysler does not manufacture any vehicles or replacement parts that contain asbestos. Aftermarket products may or may not contain asbestos. Refer to aftermarket product packaging for product information. Whether the product contains asbestos or not, dust and dirt can accumulate on manual clutch parts during normal use. Follow practices prescribed by appropriate regulations for the handling, processing and disposing of dust and debris

1. Remove transaxle assembly. Refer to **BG6 REMOVAL** or **T355 REMOVAL** .
2. Mark position of pressure plate (3) on flywheel (1) with paint or scribe for assembly reference.
3. Loosen and remove six pressure plate-to-flywheel bolts. Remove pressure plate (3) and clutch disc (2).

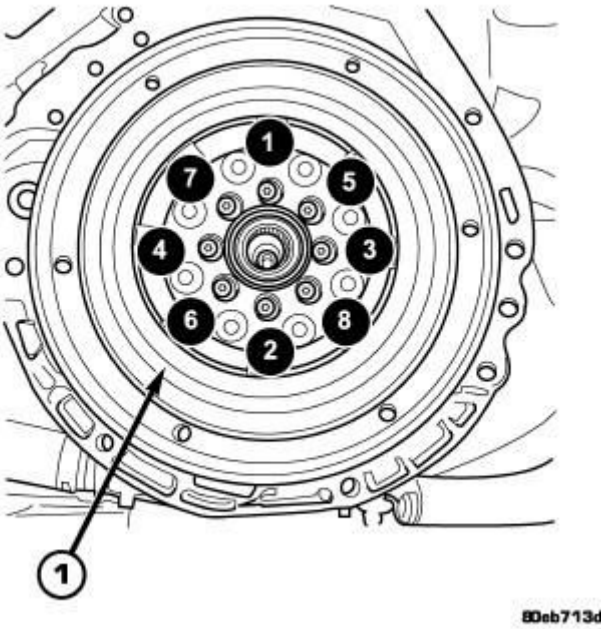

Fig. 24: Flywheel Bolt Removal Sequence
Courtesy of CHRYSLER GROUP, LLC

1 - FLYWHEEL ASSEMBLY

4. Remove eight flywheel-to-crankshaft bolts and remove flywheel assembly (1).

GAS

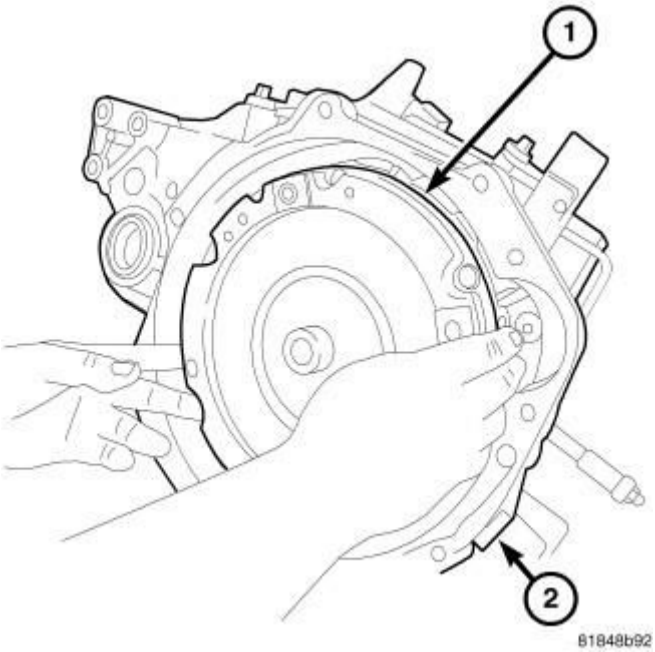

Fig. 25: Removing/Installing Modular Clutch Assembly
Courtesy of CHRYSLER GROUP, LLC

WARNING: Chrysler does not manufacture any vehicles or replacement parts that contain asbestos. Aftermarket products may or may not contain asbestos. Refer to aftermarket product packaging for product information. Whether the product contains asbestos or not, dust and dirt can accumulate on manual clutch parts during normal use. Follow practices prescribed by appropriate regulations for the handling, processing and disposing of dust and debris

1. Remove transaxle assembly. Refer to **BG6 REMOVAL** or **T355 REMOVAL** .
2. Remove the modular clutch assembly (1).

INSTALLATION

INSTALLATION

DIESEL

WARNING: Chrysler LLC does not manufacture any vehicles or replacement parts that contain asbestos. Aftermarket products may or may not contain asbestos. Refer to aftermarket product packaging for product information. Whether the product contains asbestos or not, dust and dirt can accumulate on manual clutch parts during normal use. Follow practices prescribed by appropriate regulations for the handling, processing and disposing of dust and debris.

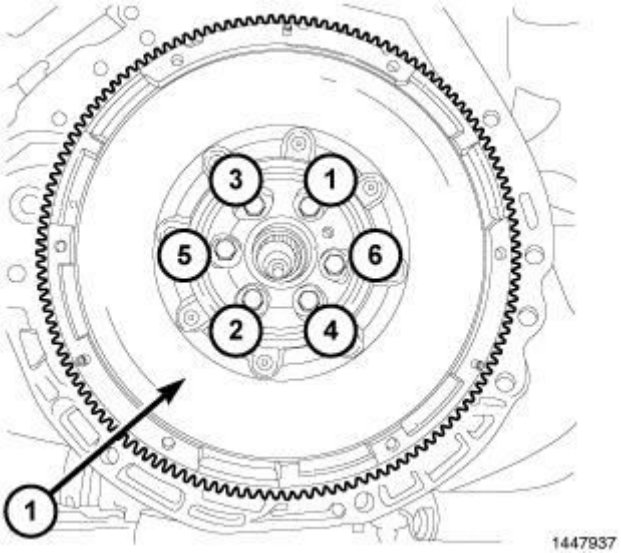

Fig. 26: Flywheel Bolt Tightening Sequence
Courtesy of CHRYSLER GROUP, LLC

1. Inspect clutch release bearing and lever for excessive wear and replace as necessary. The release bearing is integral to the Concentric Slave Cylinder (CSC).
2. Clean the surfaces of the flywheel (1) and pressure plate to make certain that all oil, grease, and rust have been removed.
3. Verify the crankshaft mounting flange is free of debris, oil, grease, etc. Position the flywheel (1) onto the engine crankshaft.
4. Install flywheel to crankshaft. Install flywheel-to-crankshaft bolts. Do not tighten at this time.
5. Tighten the first flywheel-to-crankshaft bolt slightly beyond hand tight. Then use a star pattern to tighten the remaining flywheel-to-crankshaft bolts to 70 N.m (52 ft. lbs.), then finally tighten the first flywheel-to-crankshaft bolt to 70 N.m (52 ft. lbs.).

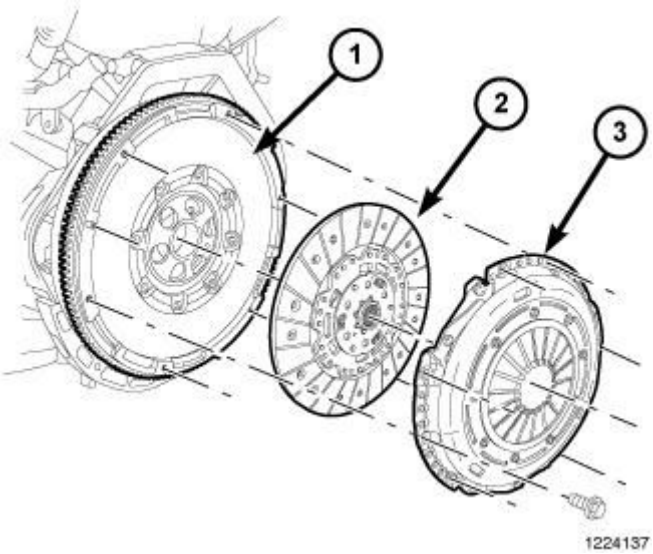

Fig. 27: Flywheel & Clutch Disc And Pressure Plate
Courtesy of CHRYSLER GROUP, LLC

1 - FLYWHEEL (DUAL-MASS)
2 - CLUTCH DISC
3 - PRESSURE PLATE

6. Apply a very light coating of grease to the splines in the clutch disc hub.

NOTE: The pressure plate and clutch disc are serviced as a matched set. Do not replace one without replacing the other.

7. Position the clutch disc (2) to the flywheel (1). Make sure the side marked "FLYWHEEL SIDE" faces the flywheel (1).
8. Install the clutch pressure plate (1) to the flywheel and clutch disc. Finger tighten the six pressure plate-to-flywheel bolts.

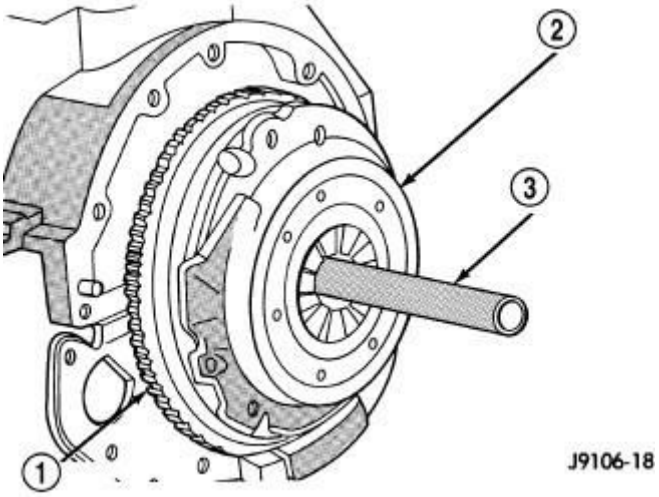

Fig. 28: Aligning Clutch Disc
Courtesy of CHRYSLER GROUP, LLC

1 - FLYWHEEL 2 - PRESSURE PLATE 3 - CLUTCH DISC ALIGNMENT TOOL

9. Use Clutch Alignment Tool (special tool #6724, Aligner, Clutch) (3) to position the clutch disc (2) to the center of the flywheel (1).

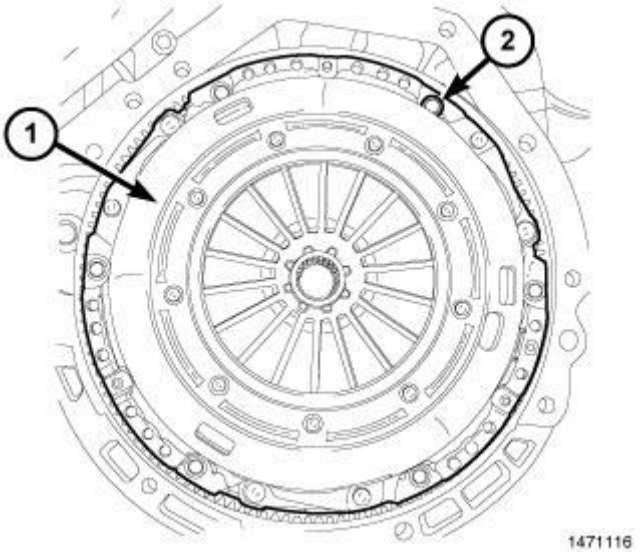

Fig. 29: Pressure Plate Assembly
Courtesy of CHRYSLER GROUP, LLC

1 - PRESSURE PLATE ASSEMBLY 2 - BOLT (6)

10. Tighten pressure plate bolts (2) evenly and in rotation a few threads at a time **The bolts must be tightened evenly and to specified torque to avoid distorting the pressure plate.**
11. Using a "criss-cross" pattern, torque pressure plate bolts (2) to 31 N.m (23 ft. lbs.). Remove the clutch disc alignment tool.
12. Apply light coat of MOPAR® High Temperature Bearing Grease or equivalent to clutch disc hub and splines of transmission input shaft.

CAUTION: Do not over lubricate shaft splines. This will result in grease contamination of disc.

13. Install transaxle. Refer to **BG6 INSTALLATION** or **T355 INSTALLATION** .

GAS

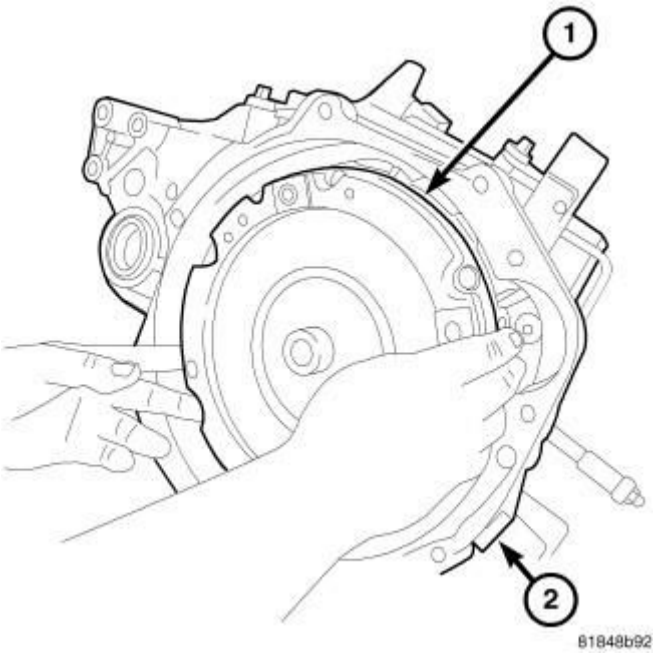

Fig. 30: Removing/Installing Modular Clutch Assembly
Courtesy of CHRYSLER GROUP, LLC

WARNING: Chrysler LLC does not manufacture any vehicles or replacement parts that contain asbestos. Aftermarket products may or may not contain asbestos. Refer to aftermarket product packaging for product information. Whether the product contains asbestos or not, dust and dirt can

accumulate on manual clutch parts during normal use. Follow practices prescribed by appropriate regulations for the handling, processing and disposing of dust and debris.

1. Install new modular clutch assembly onto input shaft of transmission.
2. Install the transmission. Refer to **BG6 INSTALLATION** or **T355 INSTALLATION** .

FLYWHEEL

OPERATION

OPERATION

The flywheel serves to dampen the engine firing pulses. The heavy weight of the flywheel relative to the rotating mass of the engine components serves to stabilize the flow of power to the remainder of the drivetrain. The crankshaft has the tendency to attempt to speed up and slow down in response to the cylinder firing pulses. The flywheel dampens these impulses by absorbing energy when the crankshaft speeds and releasing the energy back into the system when the crankshaft slows down.

CAUTION: The Dual Mass Flywheel is serviced as an assembly only and should never be disassembled.

On a Dual Mass Flywheel, the additional secondary mass coupled to the transmission lowers the natural frequency of the transmission rotating elements. This decreases the transmission gear rattle. The damper springs between the two flywheel masses replace the clutch disc damper springs and assist in a smooth transfer of torque to the transmission.

REMOVAL

REMOVAL

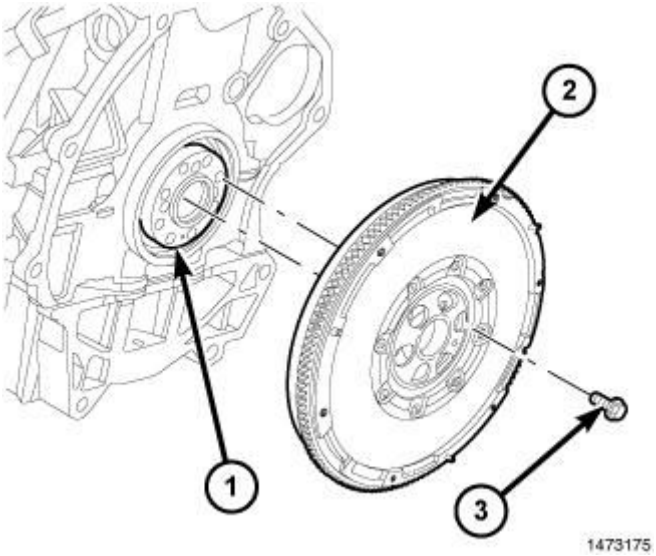

Fig. 31: Removing/Installing Flywheel-To-Crankshaft Bolts And Flywheel Assembly
Courtesy of CHRYSLER GROUP, LLC

1 - CRANKSHAFT FLANGE
2 - FLYWHEEL
3 - BOLT (6)

WARNING: Chrysler LLC does not manufacture any vehicles or replacement parts that contain asbestos. Aftermarket products may or may not contain asbestos. Refer to aftermarket product packaging for product information. Whether the product contains asbestos or not, dust and dirt can accumulate on manual clutch parts during normal use. Follow practices prescribed by appropriate regulations for the handling, processing and disposing of dust and debris.

1. Remove transmission. Refer to **BG6 REMOVAL** or **T355 REMOVAL** .
2. Remove clutch pressure plate and disc. Refer to **DISC, CLUTCH, REMOVAL**.
3. Remove the six flywheel-to-crankshaft bolts (3) and remove flywheel assembly (2).

INSTALLATION

INSTALLATION

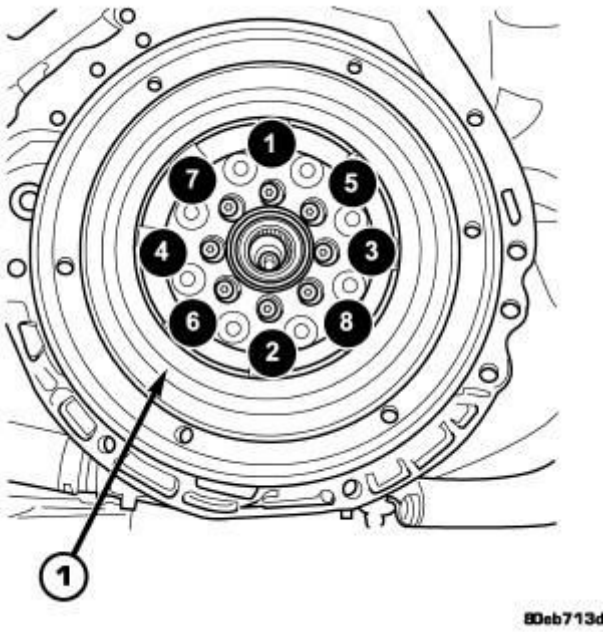

Fig. 32: Flywheel Bolt Tightening Sequence
Courtesy of CHRYSLER GROUP, LLC

1 - FLYWHEEL ASSEMBLY

WARNING: Chrysler LLC does not manufacture any vehicles or replacement parts that contain asbestos. Aftermarket products may or may not contain asbestos. Refer to aftermarket product packaging for product information. Whether the product contains asbestos or not, dust and dirt can accumulate on manual clutch parts during normal use. Follow practices prescribed by appropriate regulations for the handling, processing and disposing of dust and debris.

1. Clean the surfaces of the flywheel and pressure plate to make certain that all oil, grease, and rust have been removed.
2. Install and torque the flywheel-to-crankshaft bolts to 95 N.m (70 ft. lbs.).
3. Install clutch pressure plate and disc. Refer to **DISC, CLUTCH, INSTALLATION**.

4. Install transmission assembly. Refer to **BG6 INSTALLATION** or **T355 INSTALLATION** .

2014 DRIVELINE/AXLES

All Wheel Drive (AWD) Module - Electrical Diagnostics - Compass & Patriot

DIAGNOSTIC CODE INDEX

DIAGNOSTIC CODE INDEX

DTC	Description
C1456	AWD CLUTCH POWER CONTROL CIRCUIT LOW
C145A	AWD CLUTCH RETURN CONTROL CIRCUIT LOW
C145D	AWD CLUTCH POWER/RETURN CONTROL CIRCUIT OPEN
C145F	AWD SYSTEM TEMPORARILY DISABLED - OVERTEMPERATURE
C1460	AWD SWITCH CIRCUIT PERFORMANCE
C2100	BATTERY VOLTAGE LOW
C2101	BATTERY VOLTAGE HIGH
C211C	IGNITION RUN/START INPUT CIRCUIT LOW
C211D	IGNITION RUN/START INPUT CIRCUIT HIGH
C211E	BATTERY SUPPLY VOLTAGE LOW
C211F	BATTERY SUPPLY VOLTAGE HIGH
C2208	AWD ECU INTERNAL
U0001	CAN C BUS
U0002	CAN C BUS OFF PERFORMANCE
U0100	LOST COMMUNICATION WITH THE ECM/PCM
U0121	LOST COMMUNICATION WITH ABS
U0141	LOST COMMUNICATION WITH IPM (FCM/TIPM)
U0401	IMPLAUSIBLE DATA RECEIVED FROM ECM/PCM
U0415	IMPLAUSIBLE DATA RECEIVED FROM ABS
U0423	IMPLAUSIBLE DATA RECEIVED FROM CLUSTER/CCN
U1113	LOST WHEEL SPEED MESSAGES
U1415	IMPLAUSIBLE/MISSING VEHICLE CONFIGURATION RECEIVED

DIAGNOSIS AND TESTING

C1456-AWD CLUTCH POWER CONTROL CIRCUIT LOW

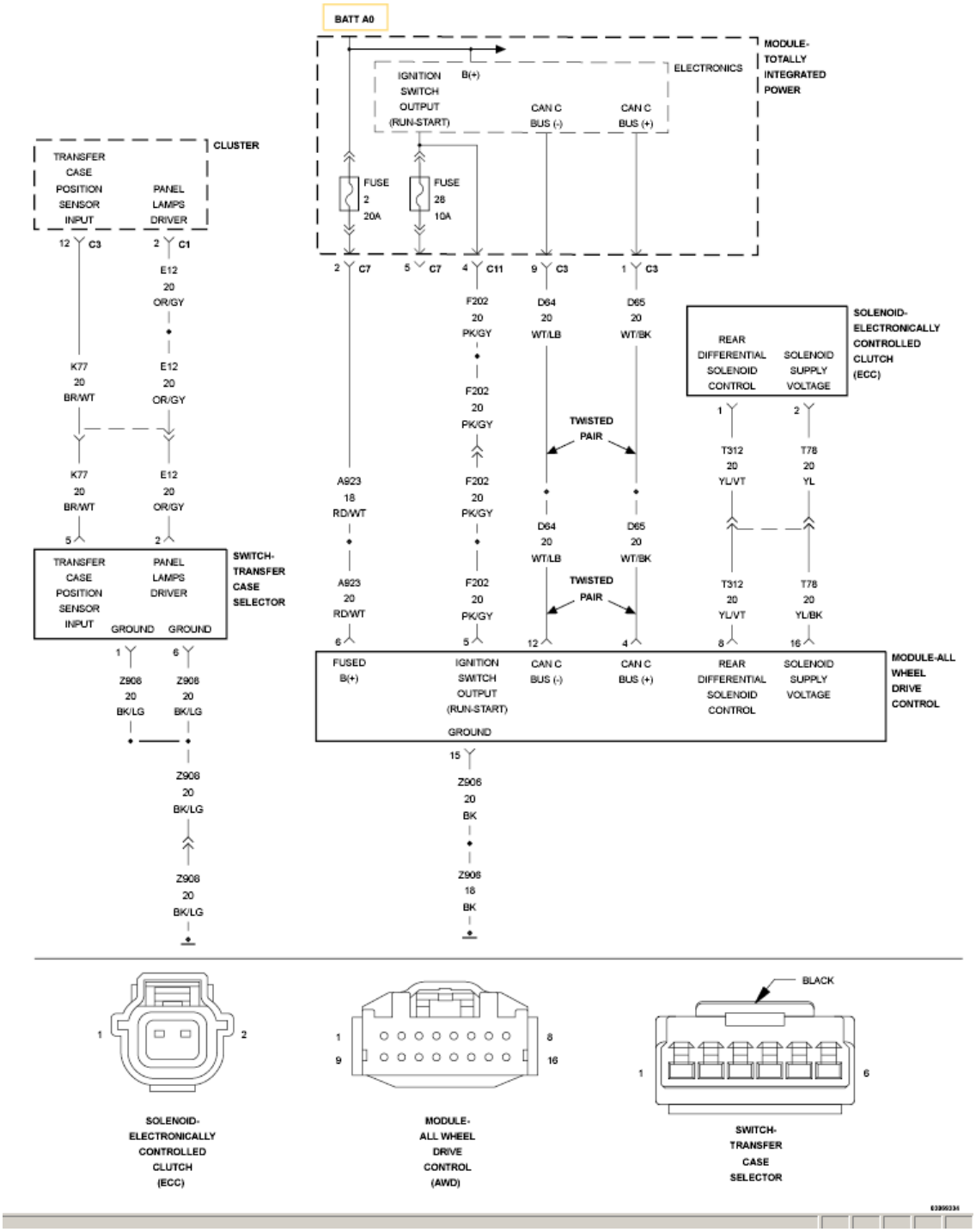

Fig. 1: All Wheel Drive Control Module Circuit Diagram
Courtesy of CHRYSLER GROUP, LLC

For a complete wiring diagram, **refer to appropriate SYSTEM WIRING DIAGRAMS article** .

WHEN MONITORED

The Solenoid is active, no solenoid supply circuit DTCs are present and battery voltage is normal.

SET CONDITION

The All Wheel Drive (AWD) Control Module detects the Electronically Controlled Clutch (ECC) Solenoid Power Control is shorted low.

POSSIBLE CAUSES

Possible Causes
(T312) REAR DIFFERENTIAL SOLENOID CONTROL CIRCUIT SHORTED TO GROUND
(T312) REAR DIFFERENTIAL SOLENOID CONTROL CIRCUIT OPEN
(T78) SOLENOID SUPPLY VOLTAGE OPEN
(T78) SOLENOID SUPPLY VOLTAGE SHORTED TO GROUND
ALL WHEEL DRIVE (AWD) CONTROL MODULE
ELECTRONIC CONTROLLED CLUTCH (ECC)

DIAGNOSTIC TEST

1. **VERIFY THE DTC IS ACTIVE**
    1. Ignition on, engine not running.
    2. With the scan tool, read DTCs.

    Is the DTC active at this time?

    Yes

    - Go To 2

    No

    - Go To 10
2. **ECC SOLENOID OPERATION**

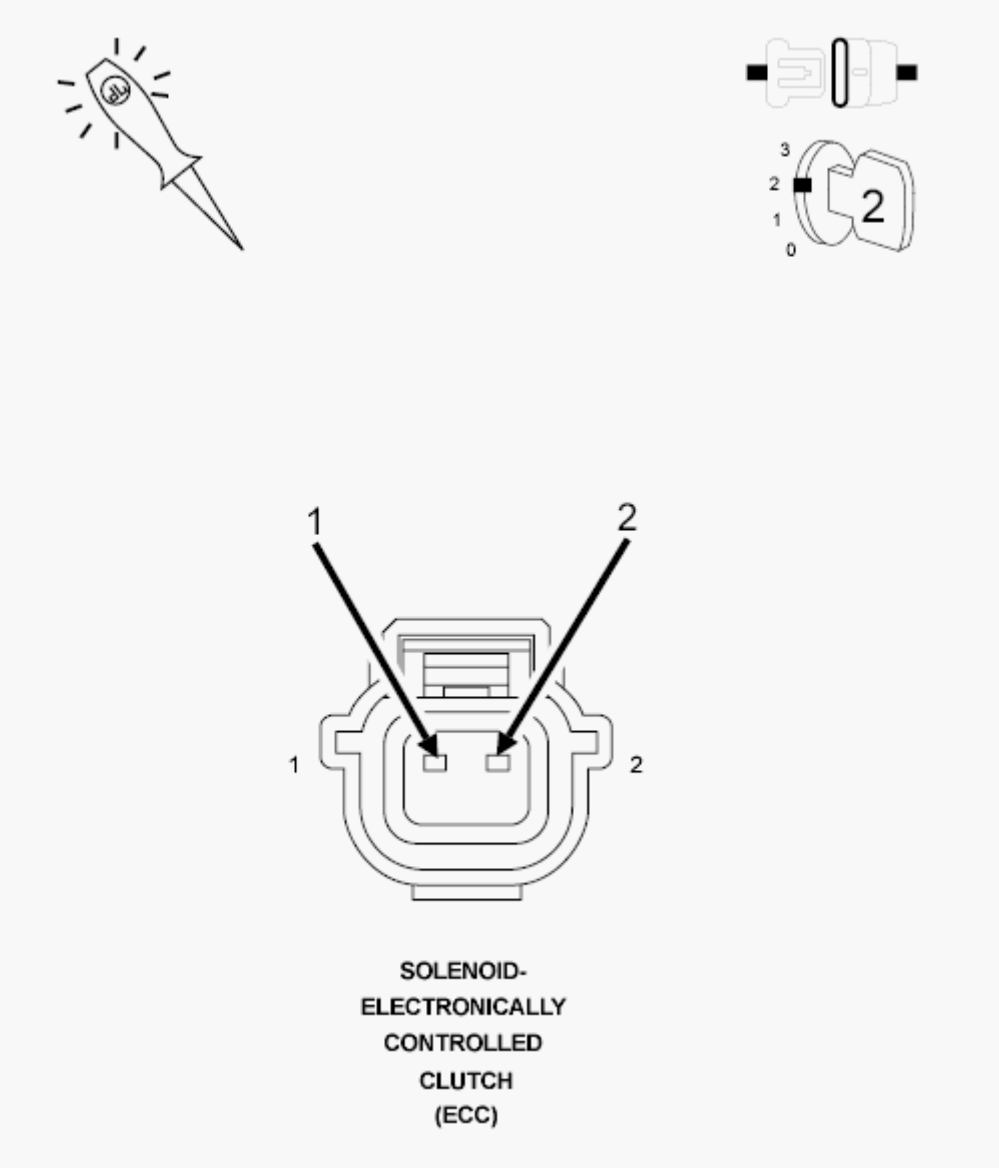

Fig. 2: Checking ECC Solenoid Operation
Courtesy of CHRYSLER GROUP, LLC

1. Turn the ignition off.
2. Disconnect the ECC Solenoid harness connector.
3. Ignition on, engine not running.
4. Using a 12-volt test light, jump across from the (T78) Solenoid Supply Voltage circuit and the (T312) Rear Differential Solenoid Control circuit in the ECC Solenoid harness connector.
5. With the scan tool, actuate the ECC Solenoid.

   Does the test light illuminate brightly and flash on and off?

Yes

- Go To 9

No

- Go To 3

3. **(T312) REAR DIFFERENTIAL SOLENOID CONTROL CIRCUIT SHORTED TO GROUND**

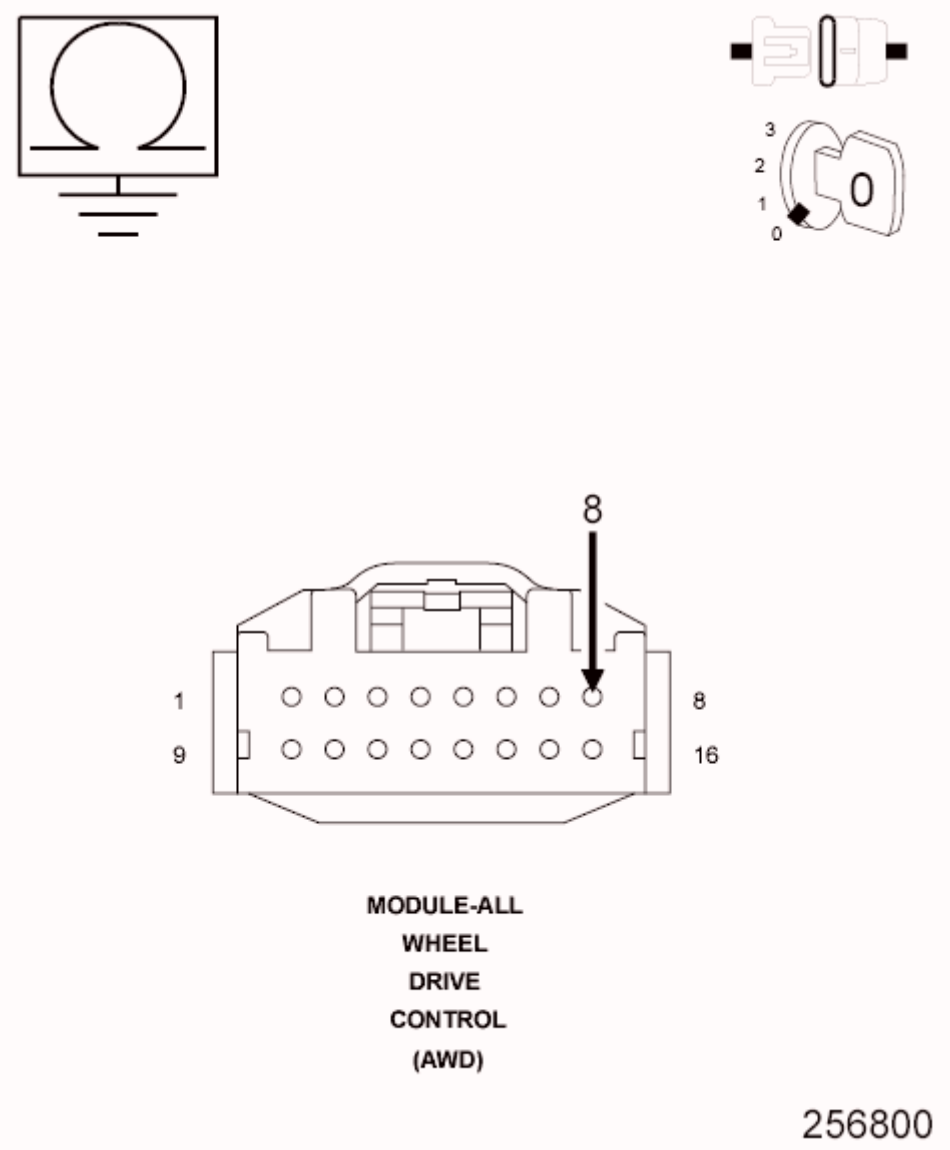

Fig. 3: Checking Rear Differential Solenoid Control Circuit
Courtesy of CHRYSLER GROUP, LLC

1. Turn the ignition off.
2. Disconnect the AWD Control Module harness connector.

3. Measure the resistance between ground and the (T312) Rear Differential Solenoid Control circuit at the AWD Module harness connector.

   Is the resistance below 100 Ohms?

   Yes

   - Repair the short to ground in the (T312) Rear Differential Solenoid Control circuit.
   - Perform the AWD CONTROL MODULE VERIFICATION TEST. Refer to **STANDARD PROCEDURE**.

   No

   - Go To 4

4. **(T312) REAR DIFFERENTIAL SOLENOID CONTROL CIRCUIT OPEN**

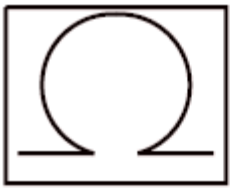

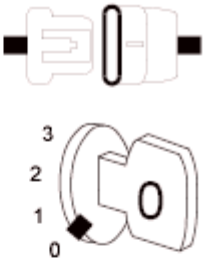

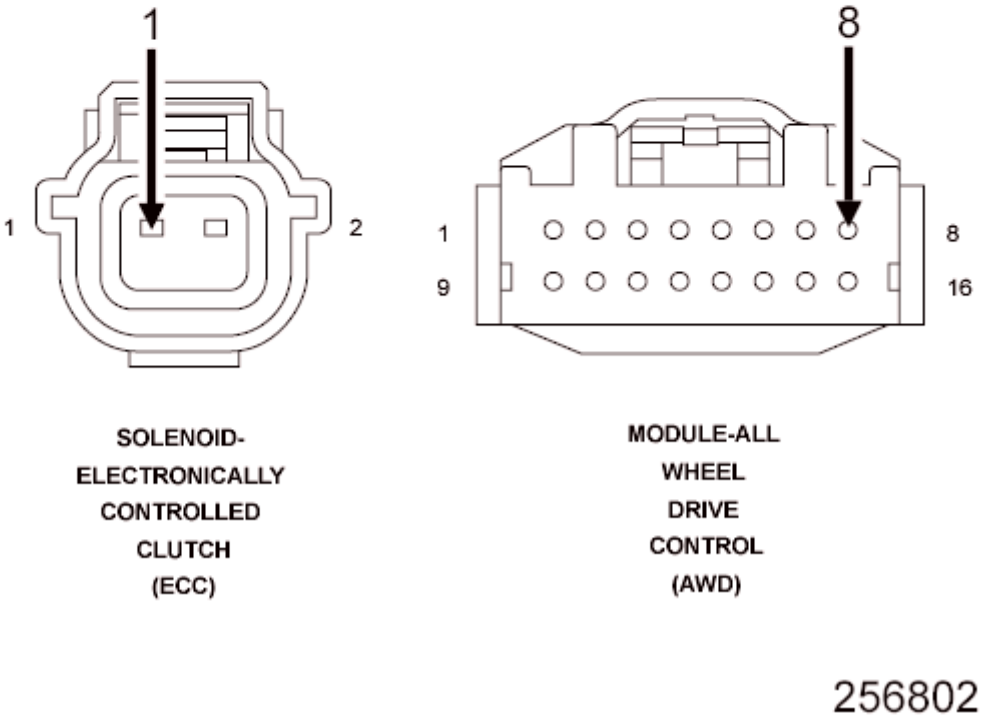

Fig. 4: Checking Rear Differential Solenoid Control Circuit For An Open
Courtesy of CHRYSLER GROUP, LLC

1. Measure the resistance of the (T312) Rear Differential Solenoid Control circuit between the ECC Solenoid harness connector and the AWD Control Module harness connector.

   Is the resistance below 5.0 Ohms?

   Yes

- Go To 5

No

- Repair the open in the (T312) Rear Differential Solenoid Control circuit.
- Perform the AWD CONTROL MODULE VERIFICATION TEST. Refer to **STANDARD PROCEDURE**.

5. **(T78) SWITCHED BATTERY SOLENOID SUPPLY CIRCUIT SHORTED TO GROUND**

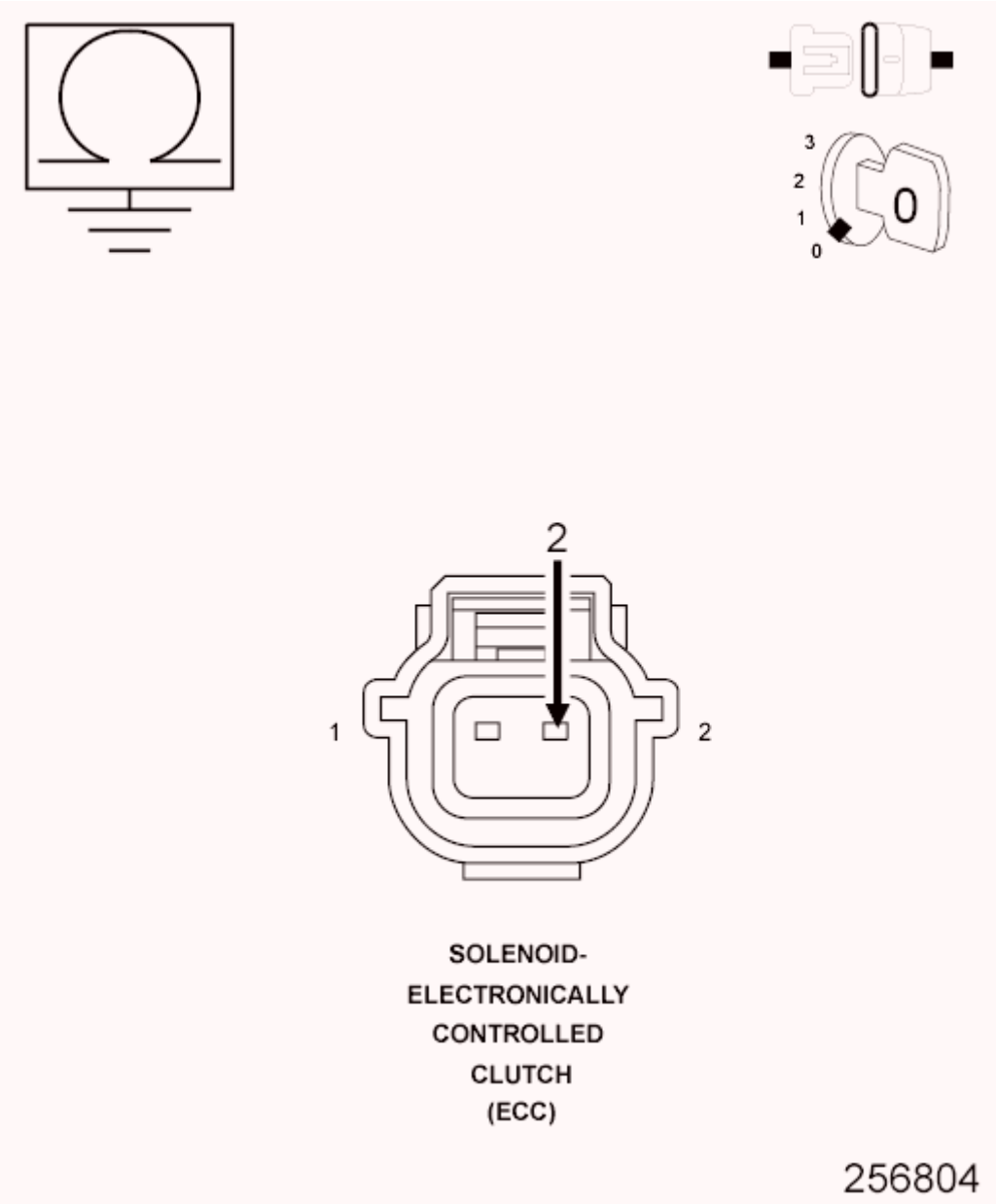

Fig. 5: Checking Switched Battery Solenoid Supply Circuit For A Short

To Ground
Courtesy of CHRYSLER GROUP, LLC

1. Measure the resistance between ground and the (T78) Solenoid Supply Voltage circuit at the ECC Solenoid harness connector.

   Is the resistance below 100 Ohms?

   Yes

   - Repair the short to ground in the (T78) Solenoid Supply Voltage circuit.
   - Perform the AWD CONTROL MODULE VERIFICATION TEST. Refer to **STANDARD PROCEDURE**.

   No

   - Go To 6

6. **(T78) SWITCHED BATTERY SOLENOID SUPPLY CIRCUIT OPEN**

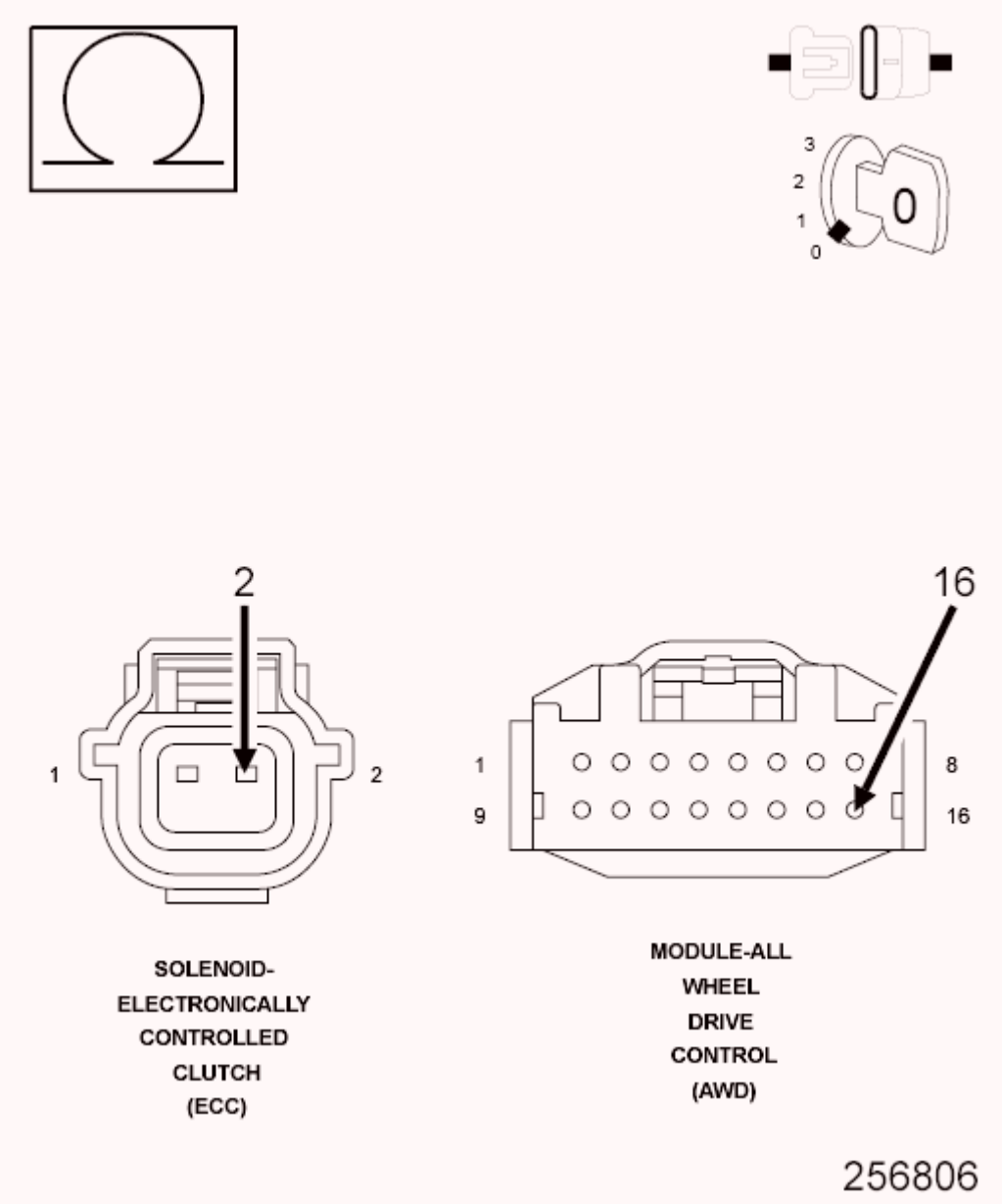

Fig. 6: Checking Switched Battery Solenoid Supply Circuit For An Open
Courtesy of CHRYSLER GROUP, LLC

1. Measure the resistance of the (T78) Solenoid Supply Voltage circuit between the ECC Solenoid harness connector and the AWD Control Module harness connector.

   Is the resistance below 5.0 Ohms?

   Yes

   - Go To 7

No

- Repair the open in the (T78) Solenoid Supply Voltage circuit.
- Perform the AWD CONTROL MODULE VERIFICATION TEST. Refer to **STANDARD PROCEDURE**.

7. **ECC SOLENOID (T312) REAR DIFFERENTIAL SOLENOID CONTROL CIRCUIT SHORTED INTERNALLY**

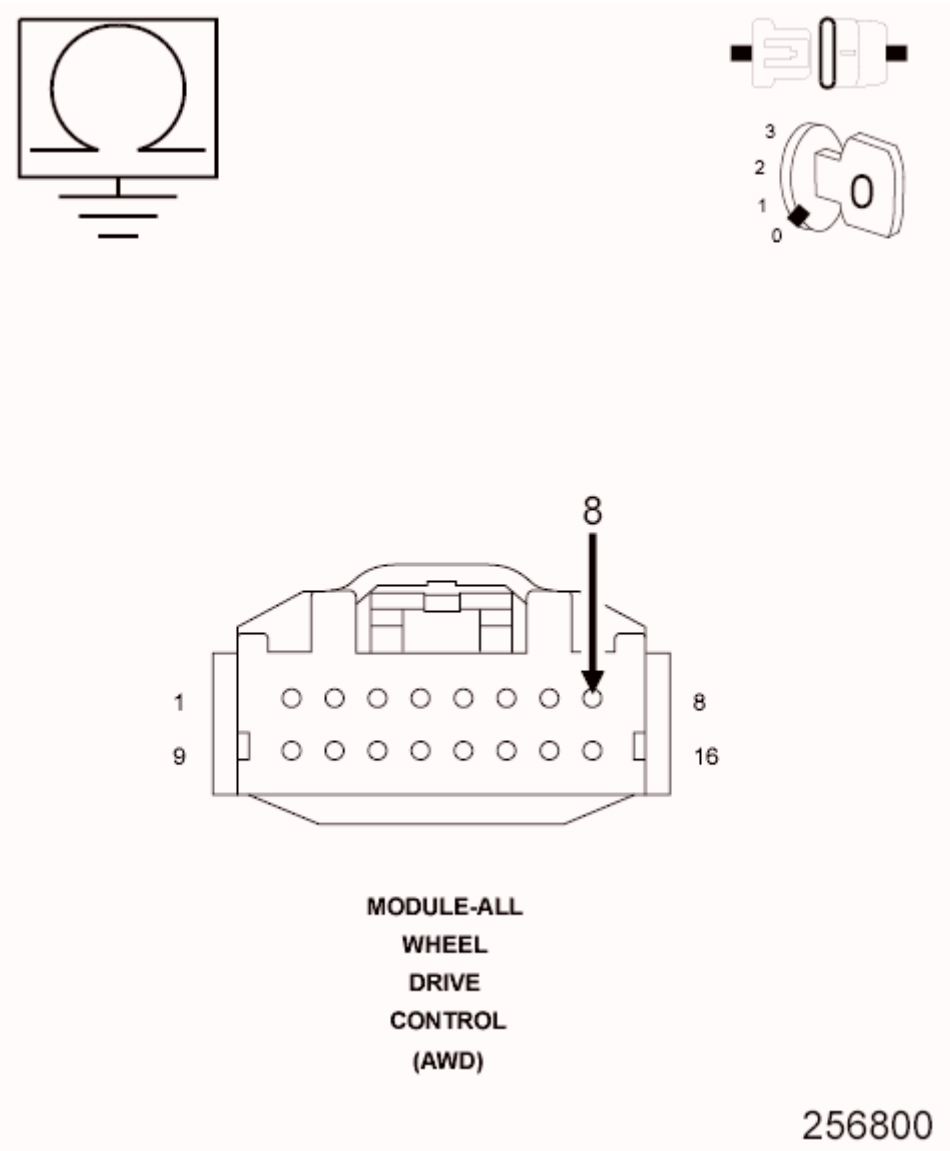

Fig. 7: Checking Rear Differential Solenoid Control Circuit
Courtesy of CHRYSLER GROUP, LLC

1. Turn the ignition off.
2. Disconnect the AWD Control Module harness connector.
3. Connect the ECC Solenoid harness connector.

4. Measure the resistance between ground and the (T312) Rear Differential Solenoid Control circuit at the AWD Module harness connector.

   Is the resistance below 100 Ohms?

   Yes

   - Repair the short to ground in the (T312) Rear Differential Solenoid Control circuit.
   - Perform the AWD CONTROL MODULE VERIFICATION TEST. Refer to **STANDARD PROCEDURE**.

   No

   - Go To 8

8. **AWD CONTROL MODULE**

   NOTE: Before continuing, check the AWD Control Module harness connector terminals for corrosion, damage, or terminal push out. Repair as necessary.

   1. Using the schematics as a guide, inspect the wire harness and connectors. Pay particular attention to all Power and Ground circuits.

      Were there any problems found?

      Yes

      - Repair as necessary.
      - Perform the AWD CONTROL MODULE VERIFICATION TEST. Refer to **STANDARD PROCEDURE**.

      No

      - Replace the All Wheel Drive (AWD) Control Module Control Module in accordance with Service Information.
      - Perform the AWD CONTROL MODULE VERIFICATION TEST. Refer to **STANDARD PROCEDURE**.

9. **ELECTRONICALLY CONTROLLED CLUTCH (ECC)**

NOTE: Before continuing, check the ECC Solenoid jumper harness connector terminals for corrosion, damage, or terminals push out, repair/replace as necessary.

1. Using the schematics as a guide, inspect the wire harness and connectors. Pay particular attention to all Power and Ground circuits.

   Were there any problems found?

   Yes

   - Repair as necessary.
   - Perform the AWD CONTROL MODULE VERIFICATION TEST. Refer to **STANDARD PROCEDURE**.

   No

   - Replace the Electronically Controlled Clutch (ECC) Solenoid in accordance with Service Information.
   - Perform the AWD CONTROL MODULE VERIFICATION TEST. Refer to **STANDARD PROCEDURE**.

10. **INTERMITTENT WIRING AND CONNECTORS**
    1. The conditions necessary to set this DTC are not present at this time.
    2. Using the schematics as a guide, inspect the wiring and connectors specific to this circuit.
    3. Wiggle test the wiring harness and connectors while checking for shorted and open circuits.
    4. Using the scan tool, monitor the data related to this circuit while performing the wiggle test. Look for the data to change or for the DTC to reset.

       Were there any problems found?

       Yes

       - Repair as necessary.

- Perform the AWD CONTROL MODULE VERIFICATION TEST. Refer to **STANDARD PROCEDURE**.

No

- Test Complete.

C145A-AWD CLUTCH RETURN CONTROL CIRCUIT LOW

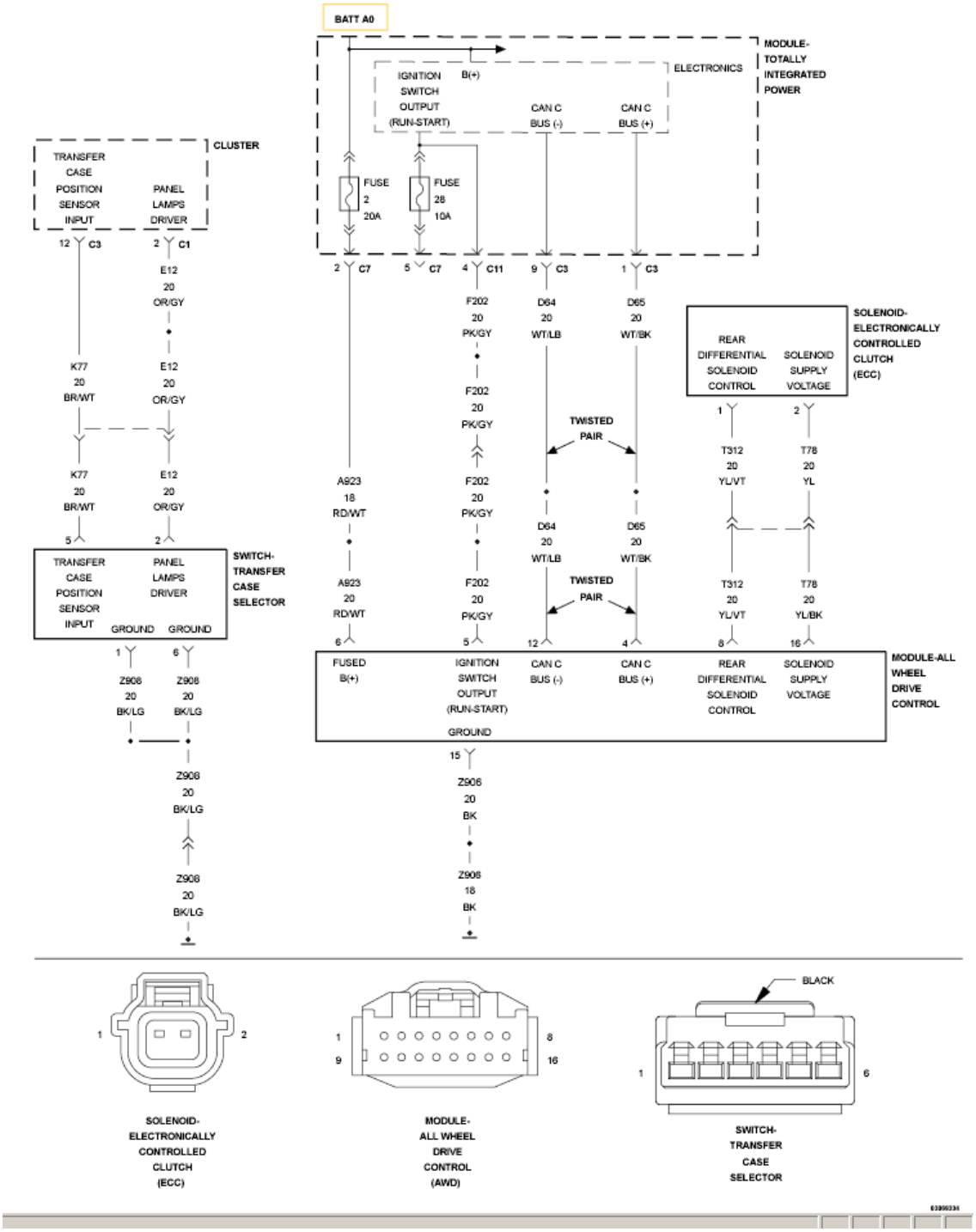

Fig. 8: All Wheel Drive Control Module Circuit Diagram
Courtesy of CHRYSLER GROUP, LLC

For a complete wiring diagram, **refer to appropriate SYSTEM WIRING DIAGRAMS article** .

WHEN MONITORED

The Solenoid is active, no solenoid supply circuit DTCs are present and battery voltage is normal.

SET CONDITION

The All Wheel Drive (AWD) Control Module detects the Electronically Controlled Clutch (ECC) Solenoid Supply is shorted low.

POSSIBLE CAUSES

Possible Causes
(T78) SOLENOID SUPPLY VOLTAGE OPEN
(T78) SOLENOID SUPPLY VOLTAGE SHORTED TO GROUND
(T312) REAR DIFFERENTIAL SOLENOID CONTROL CIRCUIT SHORTED TO GROUND
(T312) REAR DIFFERENTIAL SOLENOID CONTROL CIRCUIT OPEN
ALL WHEEL DRIVE (AWD) CONTROL MODULE
ELECTRONIC CONTROLLED CLUTCH (ECC)

DIAGNOSTIC TEST

1. **VERIFY THE DTC IS ACTIVE**
    1. Ignition on, engine not running.
    2. With the scan tool, read DTCs.

    Is the DTC active at this time?

    Yes

    - Go To 2

    No

- Go To 10

2. **ECC SOLENOID OPERATION**

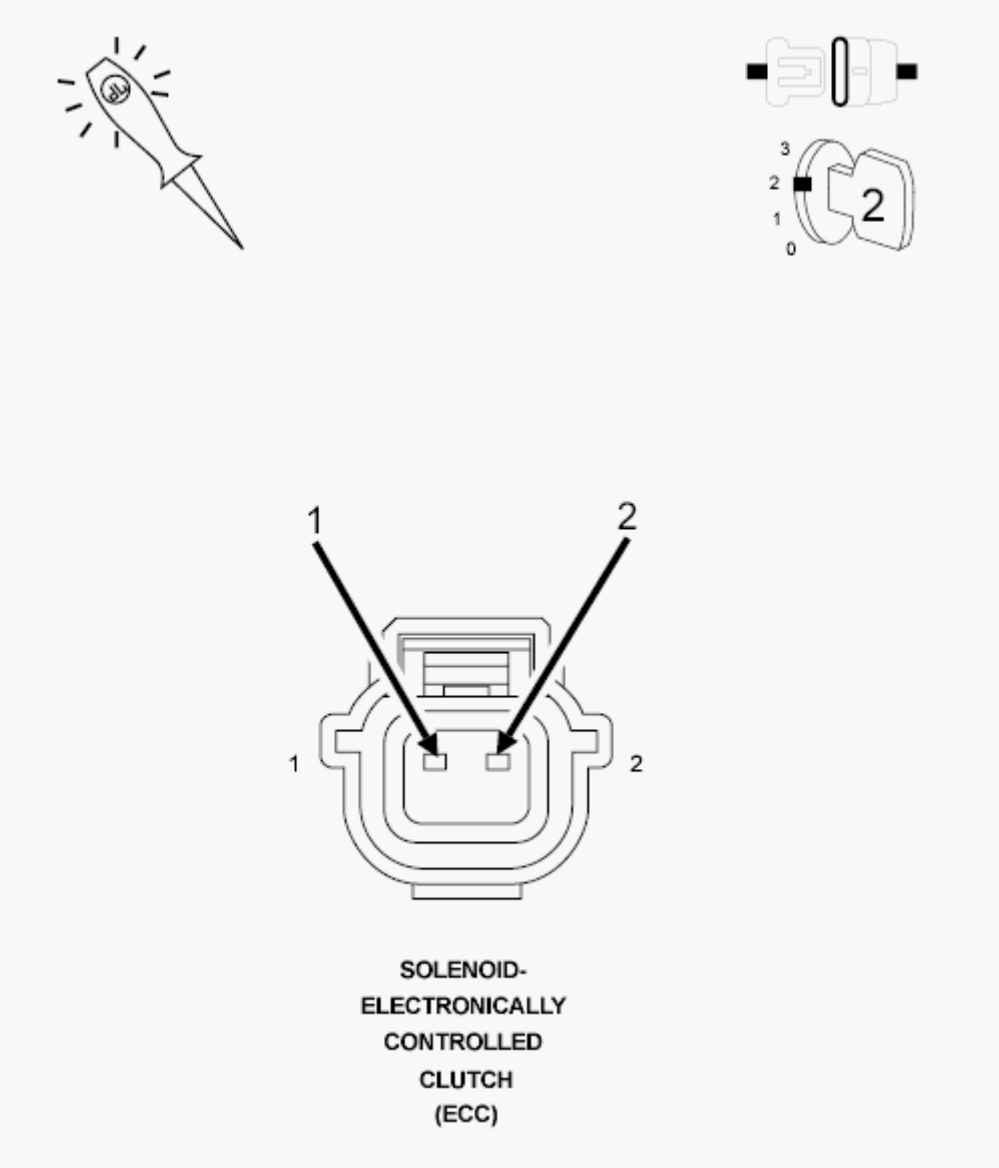

Fig. 9: Checking ECC Solenoid Operation
Courtesy of CHRYSLER GROUP, LLC

1. Turn the ignition off.
2. Disconnect the ECC Solenoid harness connector.
3. Ignition on, engine not running.
4. Using a 12-volt test light, jump across from the (T78) Solenoid Supply Voltage circuit and the (T312) Rear Differential Solenoid Control circuit in the ECC Solenoid harness connector.
5. With the scan tool, actuate the ECC Solenoid.

Does the test light illuminate brightly and flash on and off?

Yes

- Go To 9

No

- Go To 3

3. **(T78) SWITCHED BATTERY SOLENOID SUPPLY CIRCUIT SHORTED TO GROUND**

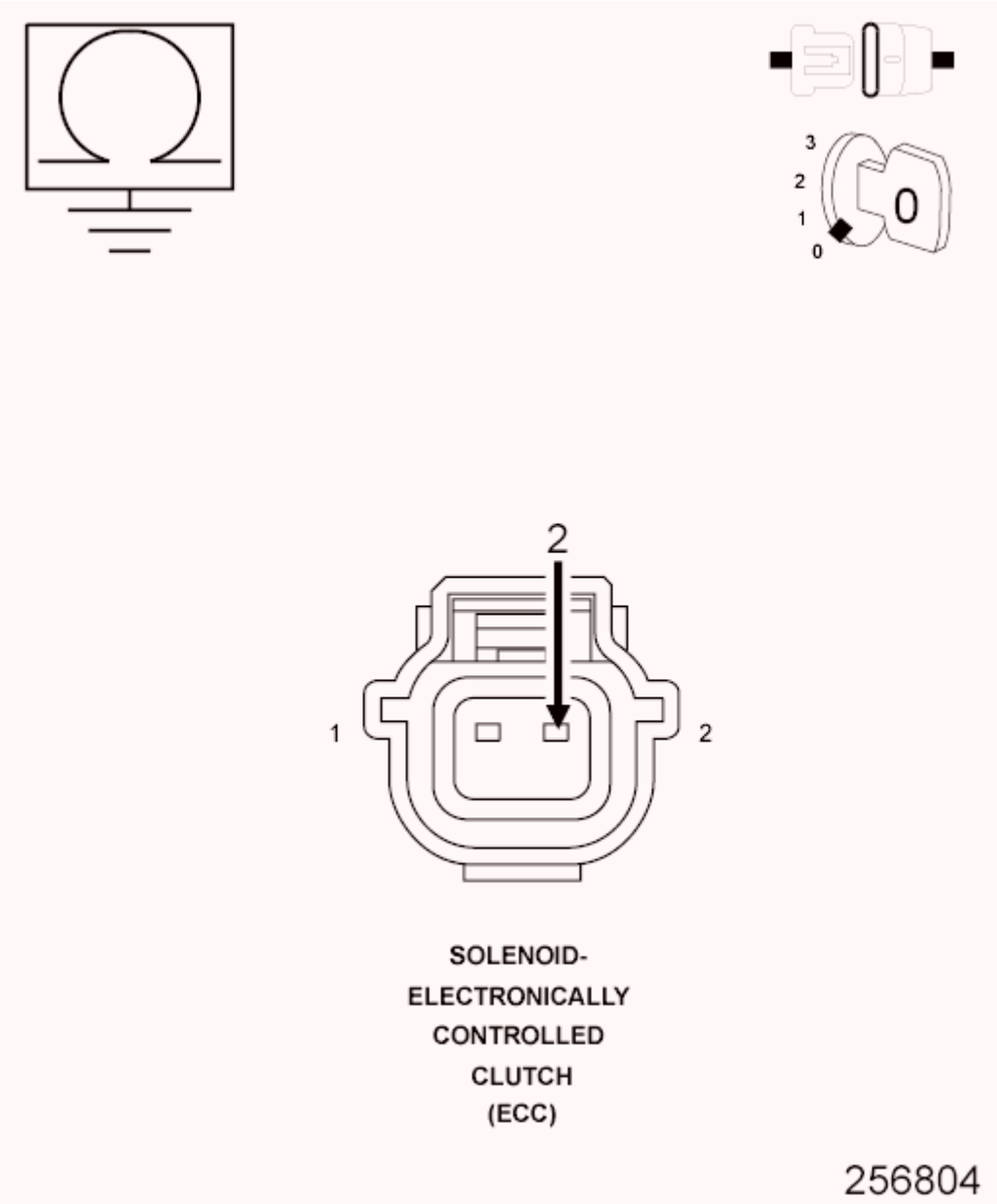

Fig. 10: Checking Switched Battery Solenoid Supply Circuit For A

Short To Ground
Courtesy of CHRYSLER GROUP, LLC

1. Measure the resistance between ground and the (T78) Solenoid Supply Voltage circuit at the ECC Solenoid harness connector.

   Is the resistance below 100 Ohms?

   Yes

   - Repair the short to ground in the (T78) Solenoid Supply Voltage circuit.
   - Perform the AWD CONTROL MODULE VERIFICATION TEST. Refer to **STANDARD PROCEDURE**.

   No

   - Go To 4

4. **(T78) SWITCHED BATTERY SOLENOID SUPPLY CIRCUIT OPEN**

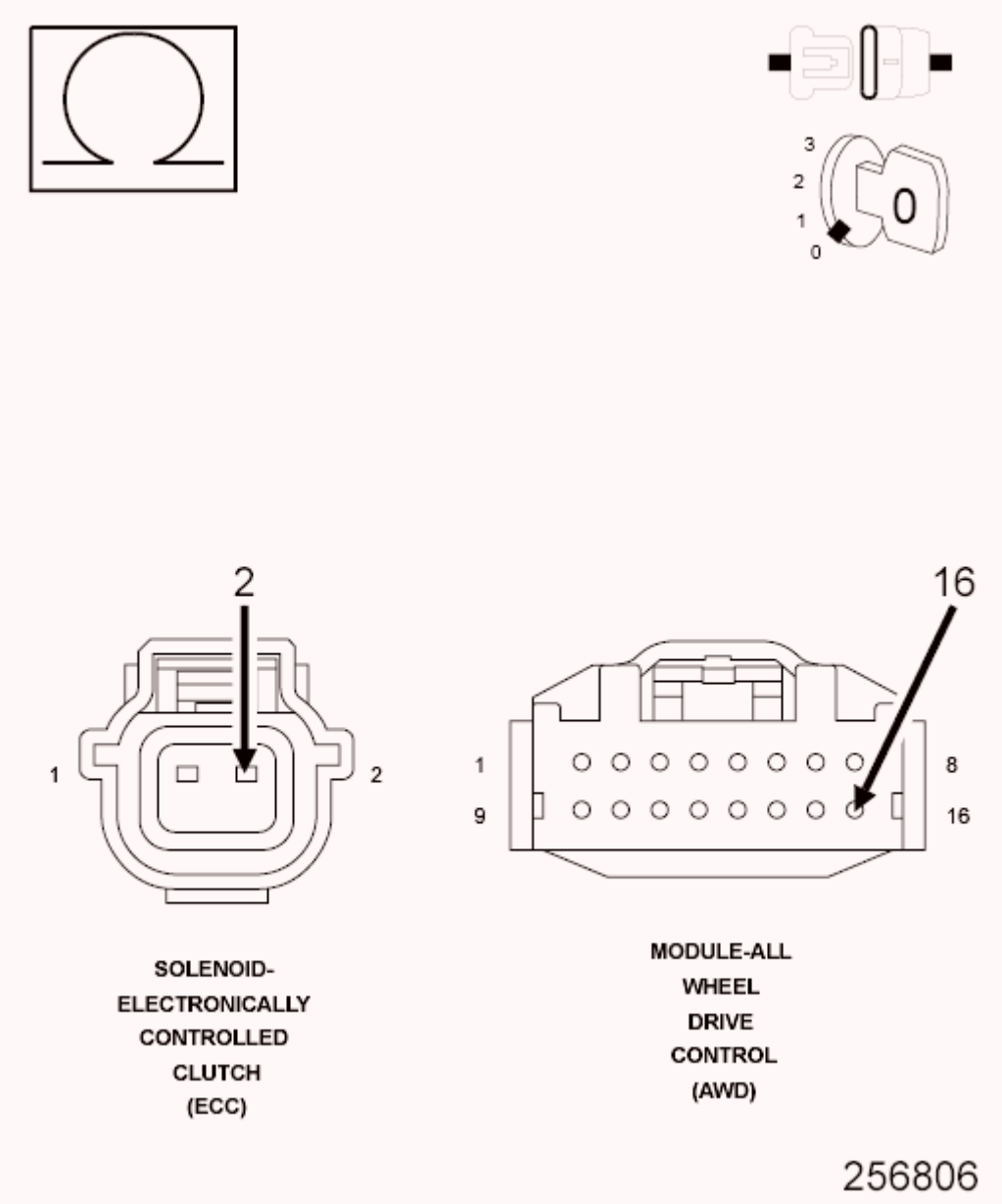

Fig. 11: Checking Switched Battery Solenoid Supply Circuit For An Open
Courtesy of CHRYSLER GROUP, LLC

1. Measure the resistance of the (T78) Solenoid Supply Voltage circuit between the ECC Solenoid harness connector and the AWD Control Module harness connector.

   Is the resistance below 5.0 Ohms?

   Yes

   - Go To 5

No

- Repair the open in the (T78) Solenoid Supply Voltage circuit.
- Perform the AWD CONTROL MODULE VERIFICATION TEST. Refer to **STANDARD PROCEDURE**.

5. **(T312) REAR DIFFERENTIAL SOLENOID CONTROL CIRCUIT SHORTED TO GROUND**

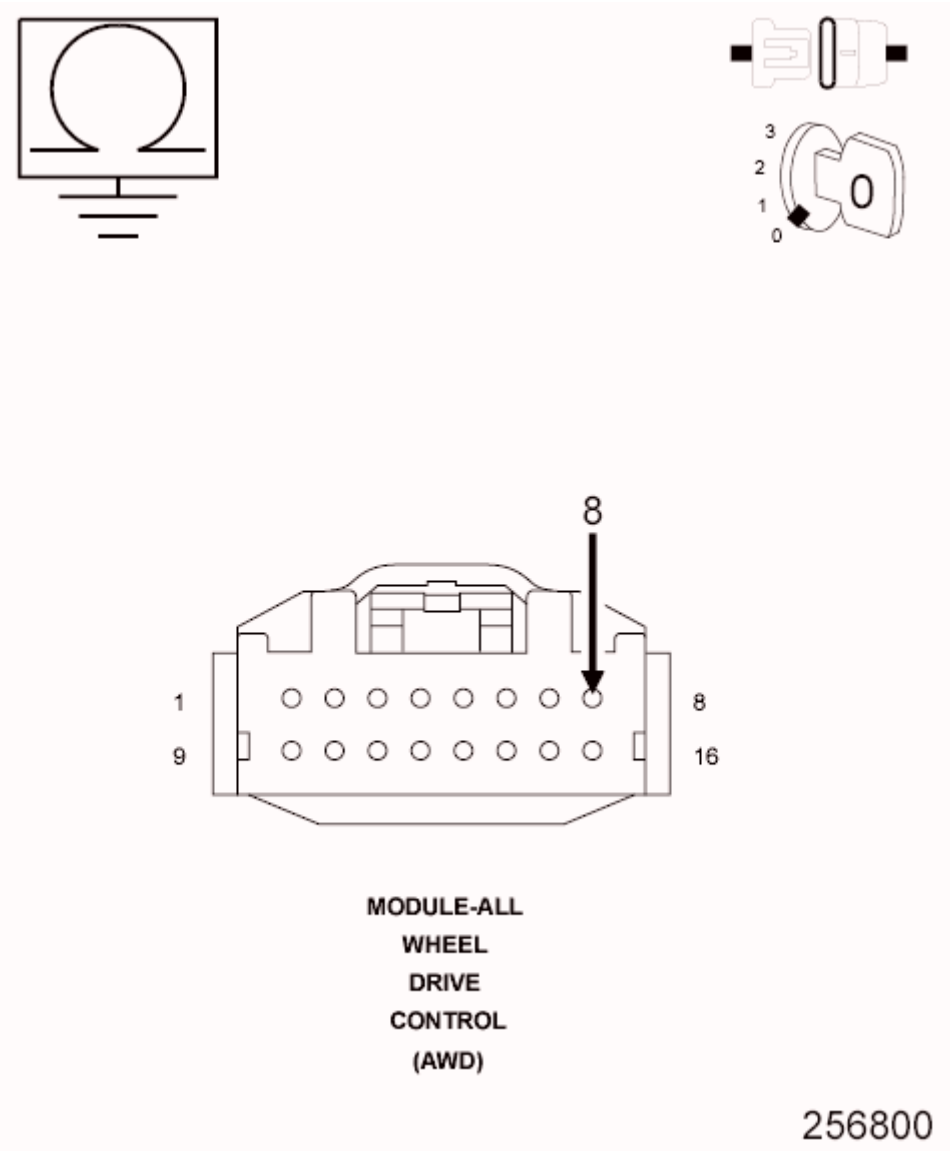

Fig. 12: Checking Rear Differential Solenoid Control Circuit
Courtesy of CHRYSLER GROUP, LLC

1. Turn the ignition off.
2. Disconnect the AWD Control Module harness connector.
3. Measure the resistance between ground and the (T312) Rear

Differential Solenoid Control circuit at the AWD Module harness connector.

Is the resistance below 100 Ohms?

Yes

- Repair the short to ground in the (T312) Rear Differential Solenoid Control circuit.
- Perform the AWD CONTROL MODULE VERIFICATION TEST. Refer to **STANDARD PROCEDURE**.

No

- Go To 6

6. **(T312) REAR DIFFERENTIAL SOLENOID CONTROL CIRCUIT OPEN**

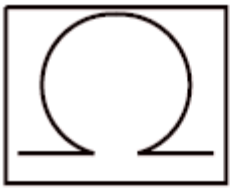

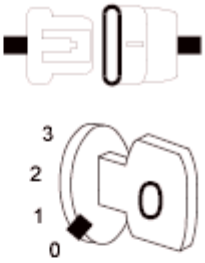

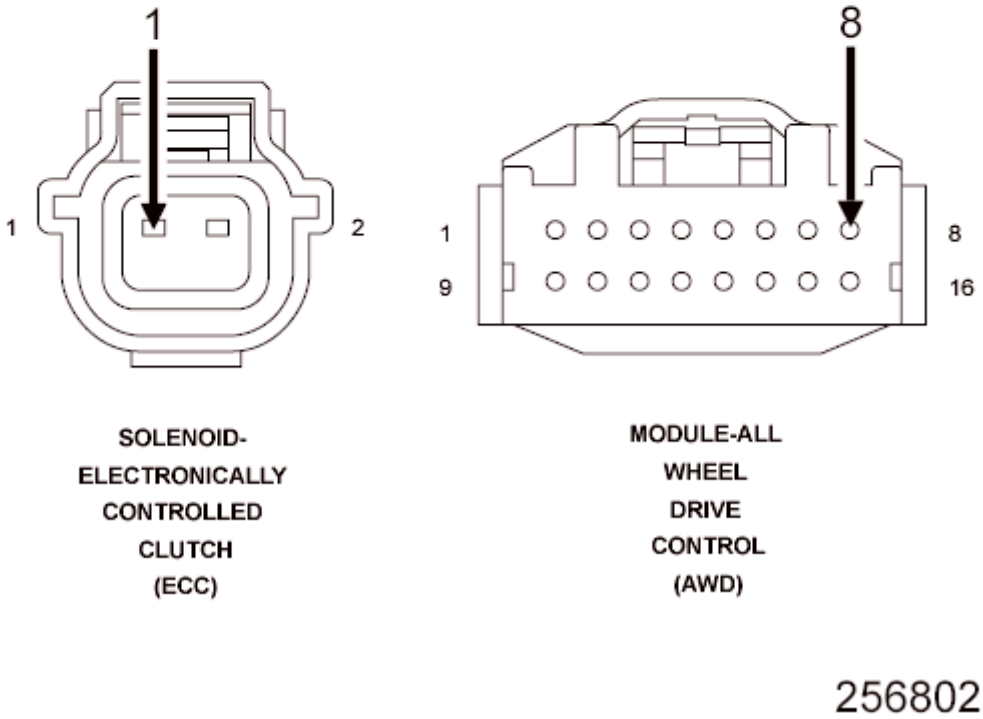

Fig. 13: Checking Rear Differential Solenoid Control Circuit For An Open
Courtesy of CHRYSLER GROUP, LLC

1. Measure the resistance of the (T312) Rear Differential Solenoid Control circuit between the ECC Solenoid harness connector and the AWD Control Module harness connector.

   Is the resistance below 5.0 Ohms?

   Yes

- Go To 7

No

- Repair the open in the (T312) Rear Differential Solenoid Control circuit.
- Perform the AWD CONTROL MODULE VERIFICATION TEST. Refer to **STANDARD PROCEDURE**.

7. **ECC SOLENOID (T312) REAR DIFFERENTIAL SOLENOID CONTROL CIRCUIT SHORTED INTERNALLY**

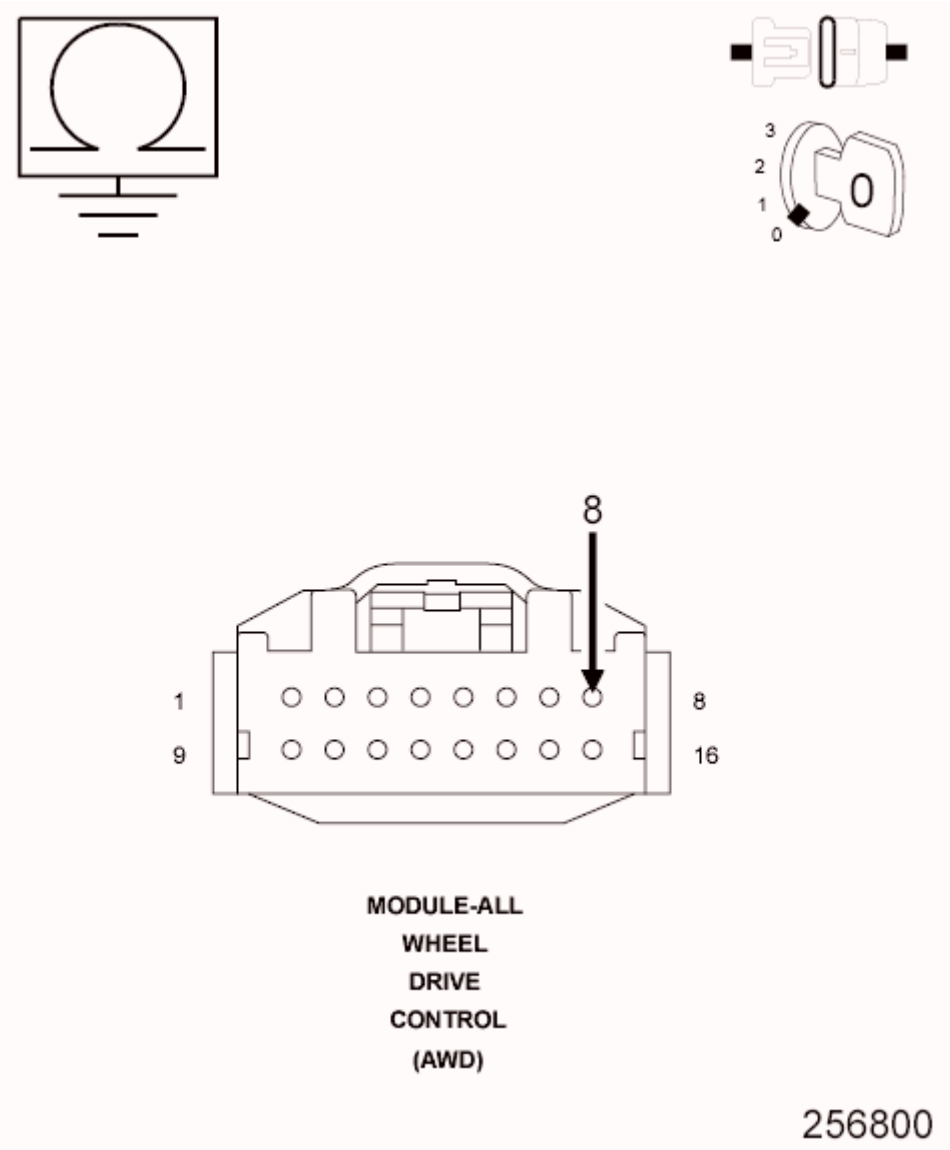

Fig. 14: Checking Rear Differential Solenoid Control Circuit
Courtesy of CHRYSLER GROUP, LLC

1. Turn the ignition off.
2. Disconnect the AWD Control Module harness connector.
3. Connect the ECC Solenoid harness connector.
4. Measure the resistance between ground and the (T312) Rear Differential Solenoid Control circuit at the AWD Module harness connector.

   Is the resistance below 100 Ohms?

   Yes

   - Repair the short to ground in the (T312) Rear Differential Solenoid Control circuit.
   - Perform the AWD CONTROL MODULE VERIFICATION TEST. Refer to **STANDARD PROCEDURE**.

   No

   - Go To 8

8. **AWD CONTROL MODULE**

   NOTE: Before continuing, check the AWD Control Module harness connector terminals for corrosion, damage, or terminal push out. Repair as necessary.

   1. Using the schematics as a guide, inspect the wire harness and connectors. Pay particular attention to all Power and Ground circuits.

      Were there any problems found?

      Yes

      - Repair as necessary.
      - Perform the AWD CONTROL MODULE VERIFICATION TEST. Refer to **STANDARD PROCEDURE**.

      No

      - Replace the All Wheel Drive (AWD) Control Module in

accordance with Service Information.

- Perform the AWD CONTROL MODULE VERIFICATION TEST. Refer to **STANDARD PROCEDURE**.

9. **ELECTRONICALLY CONTROLLED CLUTCH (ECC)**

NOTE: Before continuing, check the ECC Solenoid jumper harness connector terminals for corrosion, damage, or terminals push out, repair/replace as necessary.

1. Using the schematics as a guide, inspect the wire harness and connectors. Pay particular attention to all Power and Ground circuits.

   Were there any problems found?

   Yes

   - Repair as necessary.
   - Perform the AWD CONTROL MODULE VERIFICATION TEST. Refer to **STANDARD PROCEDURE**.

   No

   - Replace the Electronically Controlled Clutch (ECC) Solenoid in accordance with Service Information.
   - Perform the AWD CONTROL MODULE VERIFICATION TEST. Refer to **STANDARD PROCEDURE**.

10. **INTERMITTENT WIRING AND CONNECTORS**
    1. The conditions necessary to set this DTC are not present at this time.
    2. Using the schematics as a guide, inspect the wiring and connectors specific to this circuit.
    3. Wiggle test the wiring harness and connectors while checking for shorted and open circuits.
    4. Using the scan tool, monitor the data related to this circuit while performing the wiggle test. Look for the data to change or for the DTC to reset.

       Were there any problems found?

Yes

- Repair as necessary.
- Perform the AWD CONTROL MODULE VERIFICATION TEST. Refer to **STANDARD PROCEDURE**.

No

- Test Complete.

C145D-AWD CLUTCH POWER/RETURN CONTROL CIRCUIT OPEN

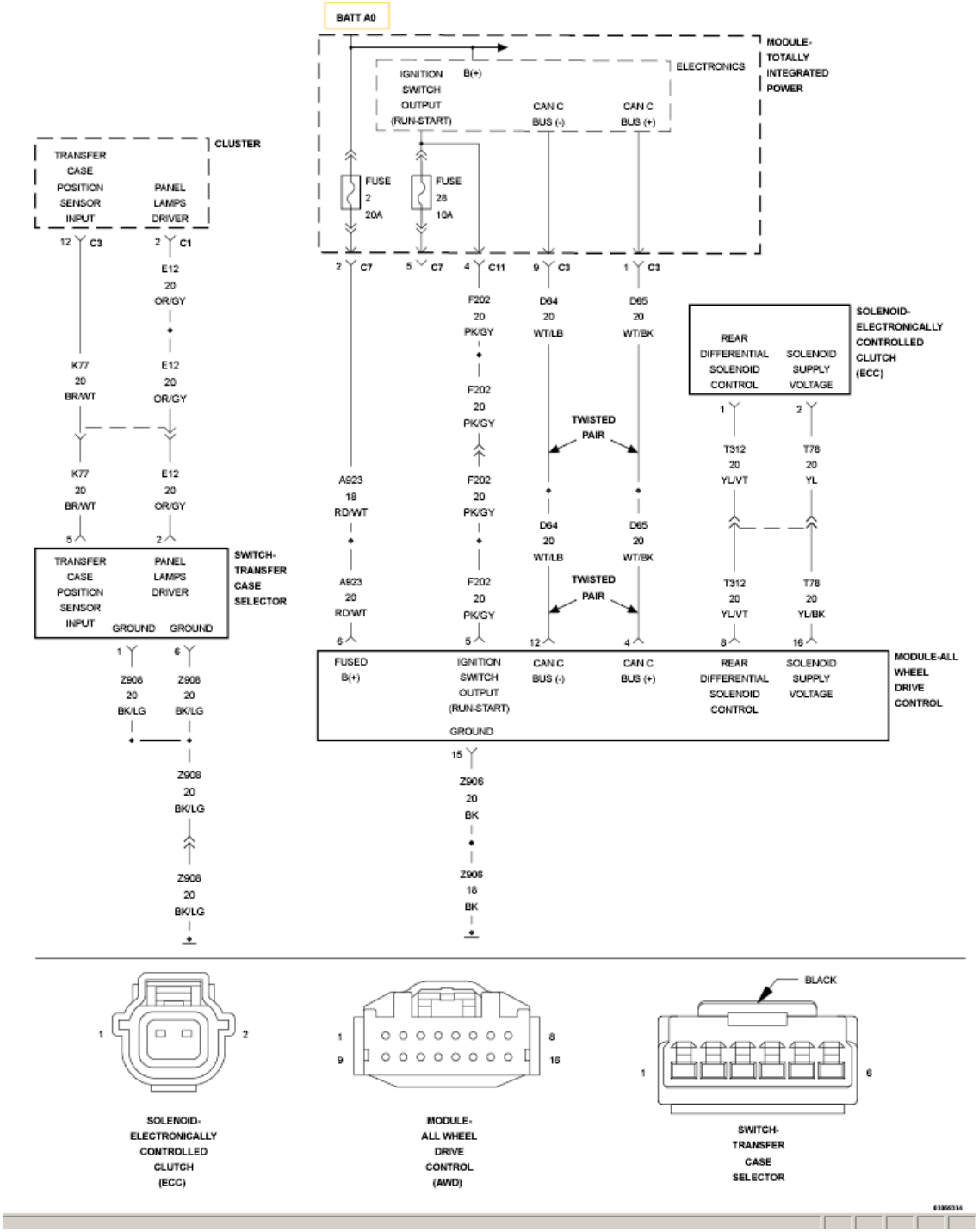

Fig. 15: All Wheel Drive Control Module Circuit Diagram
Courtesy of CHRYSLER GROUP, LLC

For a complete wiring diagram, **refer to appropriate SYSTEM WIRING DIAGRAMS article** .

WHEN MONITORED

The Solenoid is active, no solenoid supply circuit DTCs are present and battery

voltage is normal.

SET CONDITION

The All Wheel Drive (AWD) Control Module detects the Electronically Controlled Clutch (ECC) Solenoid Supply or Return Control circuit is open.

POSSIBLE CAUSES

Possible Causes
(T78) SOLENOID SUPPLY VOLTAGE OPEN
(T78) SOLENOID SUPPLY VOLTAGE SHORTED TO GROUND
(T312) REAR DIFFERENTIAL SOLENOID CONTROL CIRCUIT OPEN
ELECTRONIC CONTROLLED CLUTCH (ECC)
ALL WHEEL DRIVE (AWD) CONTROL MODULE

DIAGNOSTIC TEST

1. **VERIFY THE DTC IS ACTIVE**
    1. Ignition on, engine not running.
    2. Push the accelerator pedal and hold for 10 seconds.
    3. With the scan tool, read DTCs.

    Is the DTC active at this time?

    Yes

    - Go To 2

    No

    - Go To 8
2. **ECC SOLENOID OPERATION**

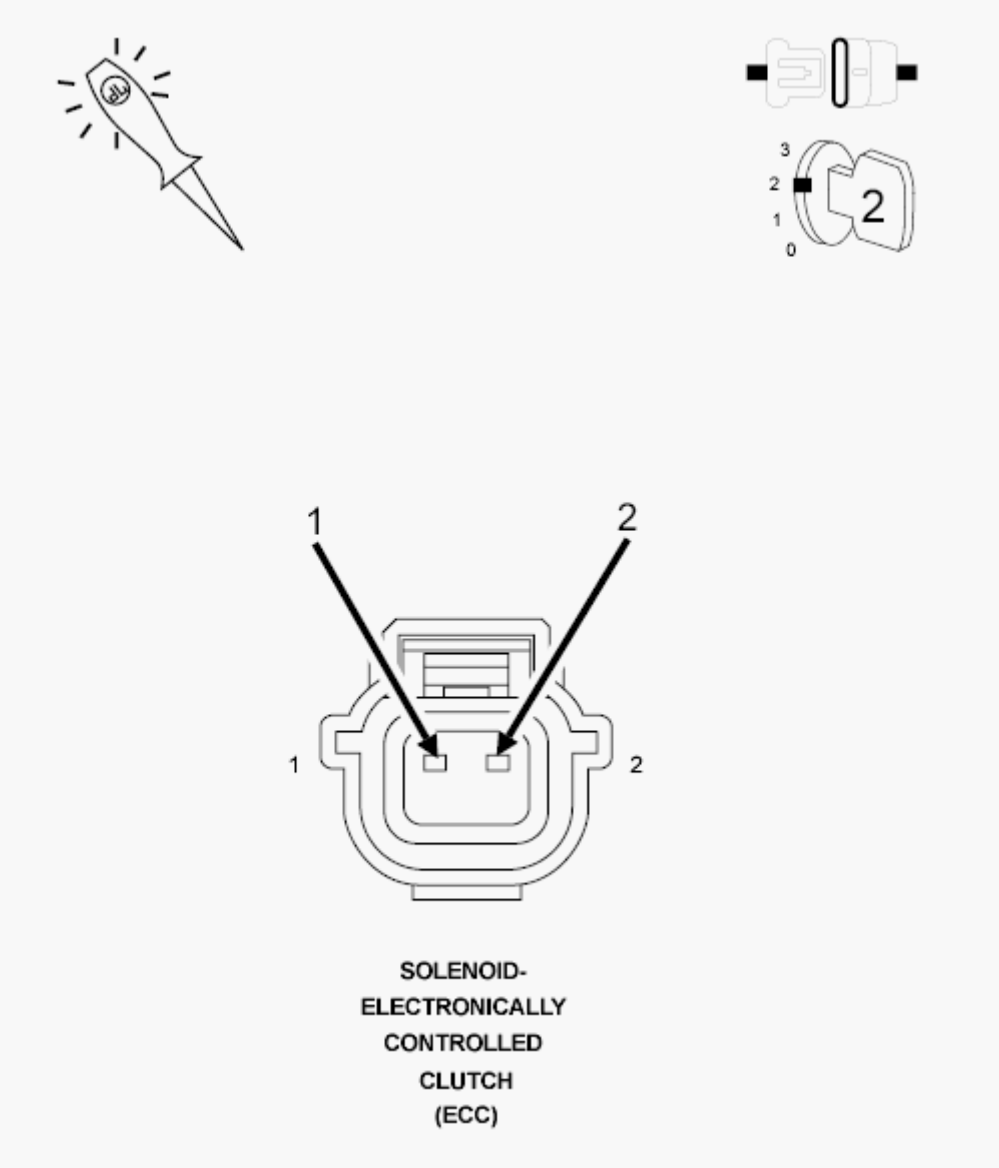

Fig. 16: Checking ECC Solenoid Operation
Courtesy of CHRYSLER GROUP, LLC

1. Turn the ignition off.
2. Disconnect the ECC Solenoid harness connector.
3. Ignition on, engine not running.
4. Using a 12-volt test light, jump across from the (T78) Solenoid Supply Voltage circuit and the (T312) Rear Differential Solenoid Control circuit in the ECC Solenoid harness connector.
5. With the scan tool, actuate the ECC Solenoid.

   Does the test light illuminate brightly and flash on and off?

Yes

- Go To 7

No

- Go To 3

3. **(T78) SWITCHED BATTERY SOLENOID SUPPLY CIRCUIT OPEN**

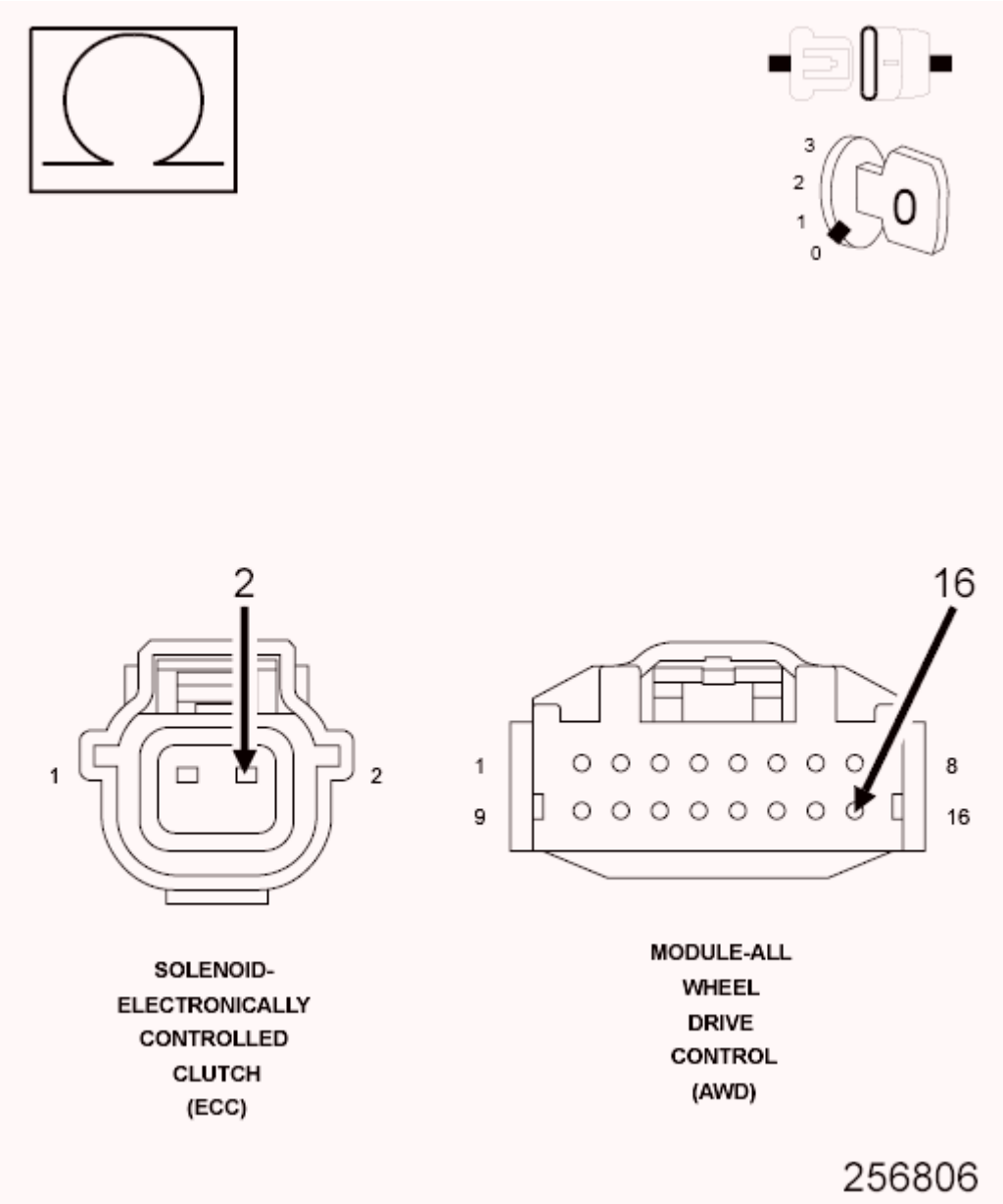

Fig. 17: Checking Switched Battery Solenoid Supply Circuit For An Open
Courtesy of CHRYSLER GROUP, LLC

1. Turn the ignition off.
2. Disconnect the AWD Control Module harness connector.
3. Measure the resistance of the (T78) Solenoid Supply Voltage circuit between the ECC Solenoid harness connector and the AWD Control Module harness connector.

   Is the resistance below 5.0 Ohms?

   Yes

   - Go To 4

   No

   - Repair the open in the (T78) Solenoid Supply Voltage circuit.
   - Perform the AWD CONTROL MODULE VERIFICATION TEST. Refer to **STANDARD PROCEDURE**.

4. **(T78) SWITCHED BATTERY SOLENOID SUPPLY CIRCUIT SHORTED TO GROUND**

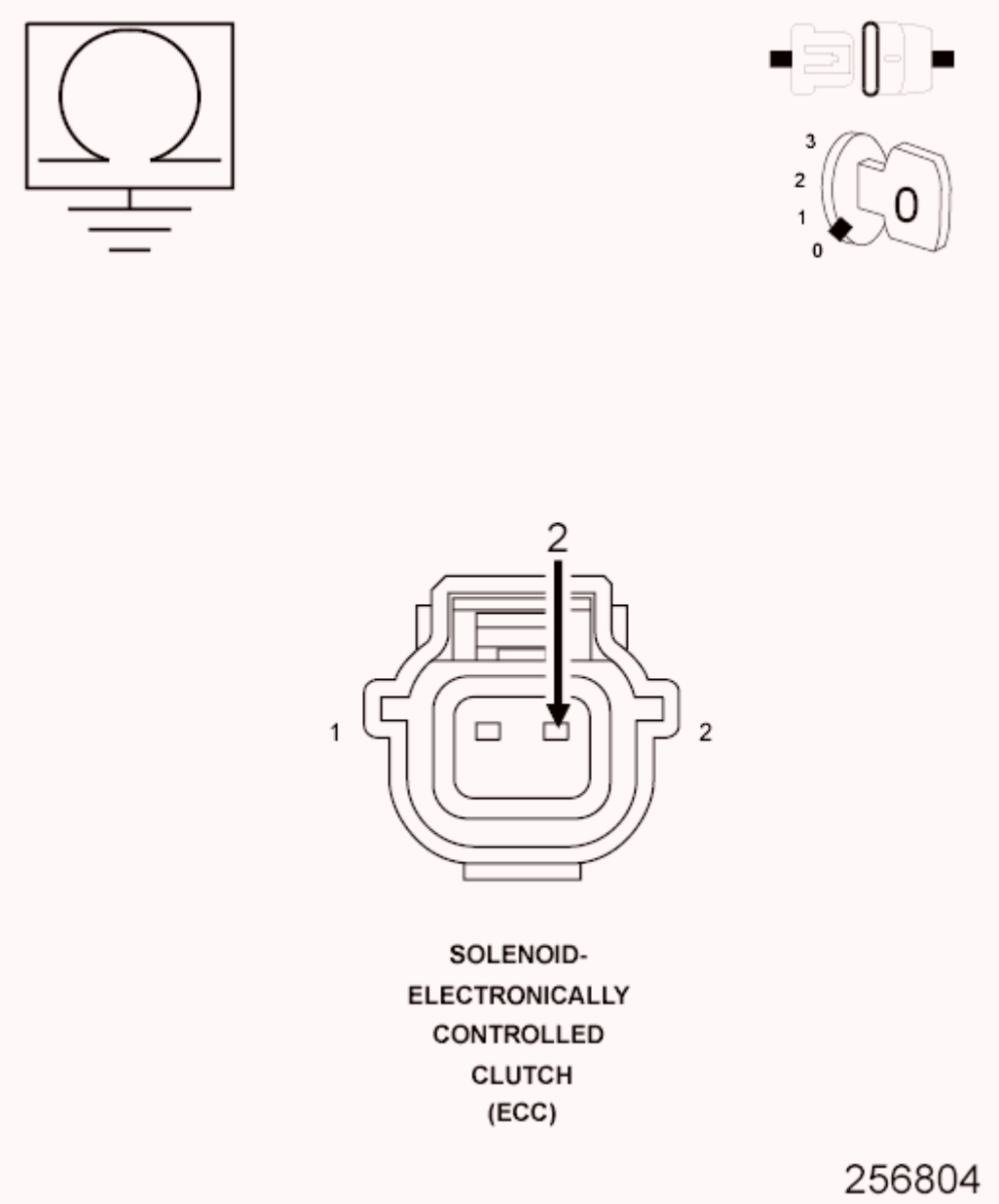

Fig. 18: Checking Switched Battery Solenoid Supply Circuit For A Short To Ground
Courtesy of CHRYSLER GROUP, LLC

1. Measure the resistance between ground and the (T78) Solenoid Supply Voltage circuit at the ECC Solenoid harness connector.

   Is the resistance below 100 Ohms?

   Yes

   - Repair the short to ground in the (T78) Solenoid Supply Voltage circuit.

- Perform the AWD CONTROL MODULE VERIFICATION TEST. Refer to **STANDARD PROCEDURE**.

No

- Go To 5

5. **(T312) REAR DIFFERENTIAL SOLENOID CONTROL CIRCUIT OPEN**

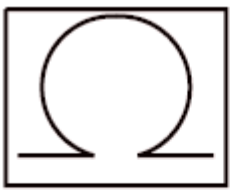

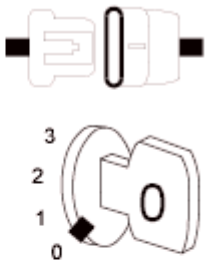

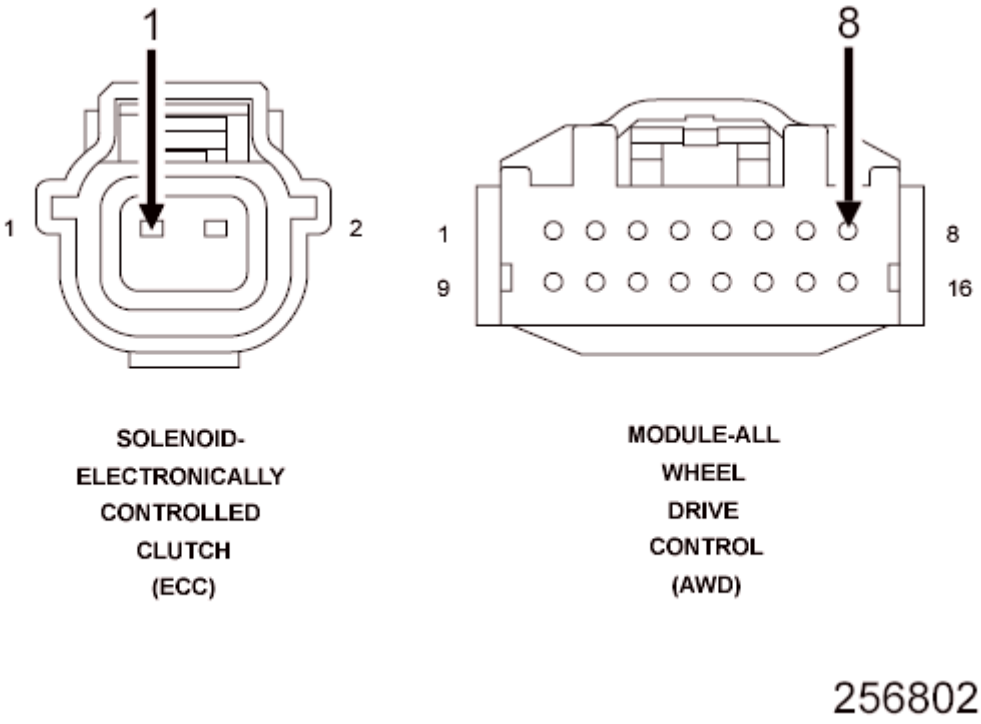

Fig. 19: Checking Rear Differential Solenoid Control Circuit For An Open

Courtesy of CHRYSLER GROUP, LLC

1. Measure the resistance of the (T312) Rear Differential Solenoid Control circuit between the ECC Solenoid harness connector and the AWD Control Module harness connector.

   Is the resistance below 5.0 Ohms?

   Yes

   - Go To 6

   No

   - Repair the open in the (T312) Rear Differential Solenoid Control circuit.
   - Perform the AWD CONTROL MODULE VERIFICATION TEST. Refer to **STANDARD PROCEDURE**.

6. **AWD CONTROL MODULE**

   NOTE: Before continuing, check the AWD Control Module harness connector terminals for corrosion, damage, or terminal push out. Repair as necessary.

   1. Using the schematics as a guide, inspect the wire harness and connectors. Pay particular attention to all Power and Ground circuits.

      Were there any problems found?

      Yes

      - Repair as necessary.
      - Perform the AWD CONTROL MODULE VERIFICATION TEST. Refer to **STANDARD PROCEDURE**.

      No

      - Replace the All Wheel Drive (AWD) Control Module in accordance with Service Information.
      - Perform the AWD CONTROL MODULE VERIFICATION TEST.

Refer to **STANDARD PROCEDURE**.

7. **ELECTRONICALLY CONTROLLED CLUTCH (ECC)**

NOTE: Before continuing, check the ECC Solenoid jumper harness connector terminals for corrosion, damage, or terminals push out, repair/replace as necessary.

1. Using the schematics as a guide, inspect the wire harness and connectors. Pay particular attention to all Power and Ground circuits.

   Were there any problems found?

   Yes

   - Repair as necessary.
   - Perform the AWD CONTROL MODULE VERIFICATION TEST. Refer to **STANDARD PROCEDURE**.

   No

   - Replace Electronically Controlled Clutch (ECC) Solenoid in accordance with service information.
   - Perform the AWD CONTROL MODULE VERIFICATION TEST. Refer to **STANDARD PROCEDURE**.

8. **INTERMITTENT WIRING AND CONNECTORS**
   1. The conditions necessary to set this DTC are not present at this time.
   2. Using the schematics as a guide, inspect the wiring and connectors specific to this circuit.
   3. Wiggle test the wiring harness and connectors while checking for shorted and open circuits.
   4. Using the scan tool, monitor the data related to this circuit while performing the wiggle test. Look for the data to change or for the DTC to reset.

   Were there any problems found?

   Yes

- Repair as necessary.
- Perform the AWD CONTROL MODULE VERIFICATION TEST. Refer to **STANDARD PROCEDURE**.

No

- Test Complete.

C145F-AWD SYSTEM TEMPORARILY DISABLED - OVERTEMPERATURE

For a complete wiring diagram, **refer to appropriate SYSTEM WIRING DIAGRAMS article** .

WHEN MONITORED

Ignition on.

SET CONDITION

The AWD Control Module detects an overheat condition due to excessive difference in speed across the ECC from hard driving conditions (Mud, Sand, Snow, 2WD Chassis dynamometer etc.).

POSSIBLE CAUSES

Possible Causes
DRIVING CONDITIONS ALL WHEEL DRIVE (AWD) CONTROL MODULE ELECTRONICALLY CONTROLLED CLUTCH (ECC)

Always perform the AWD Pre-Diagnostic Troubleshooting procedure before proceeding. Refer to STANDARD PROCEDURE.

DIAGNOSTIC TEST

1. **ANTI-LOCK BRAKE SYSTEM (ABS) MODULE DTCS PRESENT**
    1. Ignition on, engine not running.
    2. With the scan tool, select View DTCs in the ABS Module.

    Are there any ABS DTCs present?

    Yes

- Refer to **DIAGNOSIS AND TESTING** and perform the diagnostics for the DTCs in the ABS Module.

No

- Go To 2

2. **DTC IS ACTIVE**

NOTE: If C1456, C145A or C145D has set along with this DTC, diagnose those DTC(s) first before continuing.

1. Ignition on, engine not running.
2. With the scan tool, select View DTCs.

Is the status Active for this DTC?

Yes

- Go To 3

No

- Go To 5

3. **VERIFY SET CONDITION**

NOTE: Check with customer on driving terrain (e.g. mud, sand, snow) for set condition.

1. With the scan tool, erase DTCs.
2. Test drive vehicle on dry paved road.
3. With the scan tool, read DTCs.

Is the status Active for this DTC?

Yes

- Go To 4

No

- Test Complete.
- Perform AWD Control Module VERIFICATION TEST. Refer to **STANDARD PROCEDURE**.

4. **AWD CONTROL MODULE**

NOTE: Before continuing, check the AWD Control Module harness connector terminals for corrosion, damage, or terminal push out. Repair as necessary.

1. Using the schematics as a guide, inspect the wire harness and connectors. Pay particular attention to all Power and Ground circuits.

   Were there any problems found?

   Yes

   - Repair as necessary.
   - Perform AWD Control Module VERIFICATION TEST. Refer to **STANDARD PROCEDURE**.

   No

   - Replace AWD Control Module in accordance with Service Information.
   - Perform AWD Control Module VERIFICATION TEST. Refer to **STANDARD PROCEDURE**.

5. **CHECK THE WIRING AND CONNECTORS**
   1. The conditions necessary to set this DTC are not present at this time.
   2. Using the schematics as a guide, inspect the wiring and connectors specific to this circuit.
   3. Wiggle test the wiring harness and connectors while checking for shorted and open circuits.
   4. Using the scan tool, monitor the data related to this circuit while performing the wiggle test. Look for the data to change or for the DTC to reset.

   Were there any problems found?

Yes

- Repair as necessary.
- Perform AWD Control Module VERIFICATION TEST. Refer to **STANDARD PROCEDURE**.

No

- Test Complete.

C1460-AWD SWITCH CIRCUIT PERFORMANCE

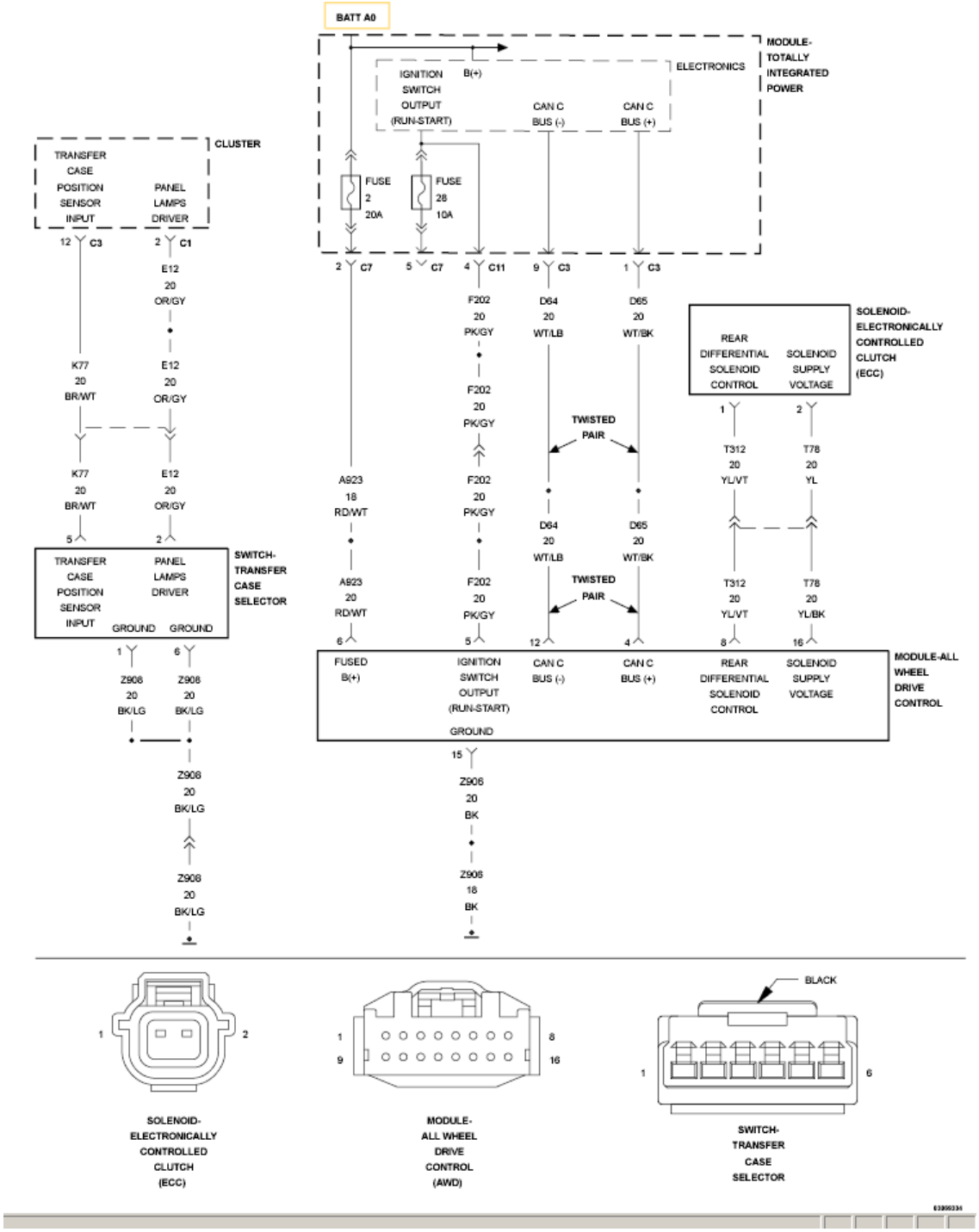

Fig. 20: All Wheel Drive Control Module Circuit Diagram
Courtesy of CHRYSLER GROUP, LLC

For a complete wiring diagram, **refer to appropriate SYSTEM WIRING DIAGRAMS article** .

WHEN MONITORED

With the ignition on and no system undervoltage or overvoltage condition

present.

SET CONDITION

The All Wheel Drive (AWD) Control Module Switch is not reporting a valid voltage for either switch position.

POSSIBLE CAUSES

Possible Causes
(K77) TRANSFER CASE POSITION SENSOR INPUT CIRCUIT SHORT TO GROUND (K77) TRANSFER CASE POSITION SENSOR INPUT CIRCUIT SHORT TO VOLTAGE (K77) TRANSFER CASE POSITION SENSOR INPUT CIRCUIT OPEN (Z908) GROUND CIRCUIT OPEN TRANSFER CASE SELECTOR SWITCH ALL WHEEL DRIVE (AWD) CONTROL MODULE

DIAGNOSTIC TEST

1. **VERIFY THE DTC IS ACTIVE**
   1. Ignition on, engine not running.

      NOTE: Repair any system undervoltage or overvoltage DTCs that are set in this module before proceeding.

   2. With the scan tool, read DTCs in the TIPM.

      Is the DTC active at this time?

      Yes

      - Go To 2

      No

      - Go To 7
2. **TRANSFER CASE SELECTOR SWITCH**

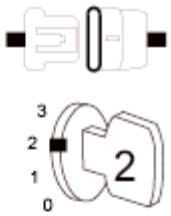

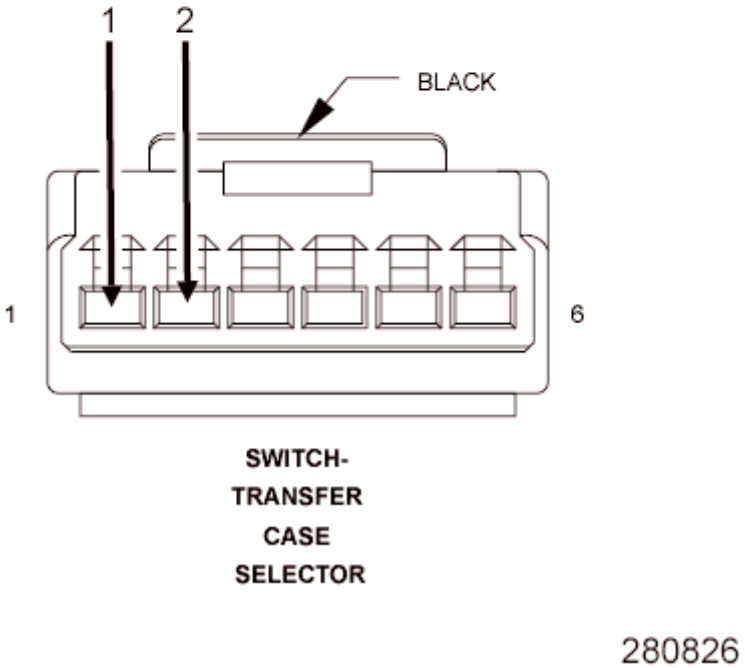

Fig. 21: Checking Transfer Case Selector Switch
Courtesy of CHRYSLER GROUP, LLC

1. Turn the ignition off to the lock position.
2. Disconnect the Transfer Case Selector Switch harness connector.
3. Connect a jumper wire between the (K77) Transfer Case Position Sensor Input circuit and the (Z908) Ground circuit in the Transfer Case Selector Switch harness connector.
4. Ignition on, engine not running.
5. With the scan tool, read the Transfer Case Position Sensor Switch voltage.
6. The switch voltage should be approximately 5.0 volts.

Does the voltage display as described?

Yes

- Replace the Transfer Case Selector Switch in accordance with the service information.
- Perform the AWD CONTROL MODULE VERIFICATION TEST. Refer to **STANDARD PROCEDURE**.

No

- Go To 3

3. **(K77) TRANSFER CASE POSITION SENSOR INPUT CIRCUIT SHORTED TO GROUND**

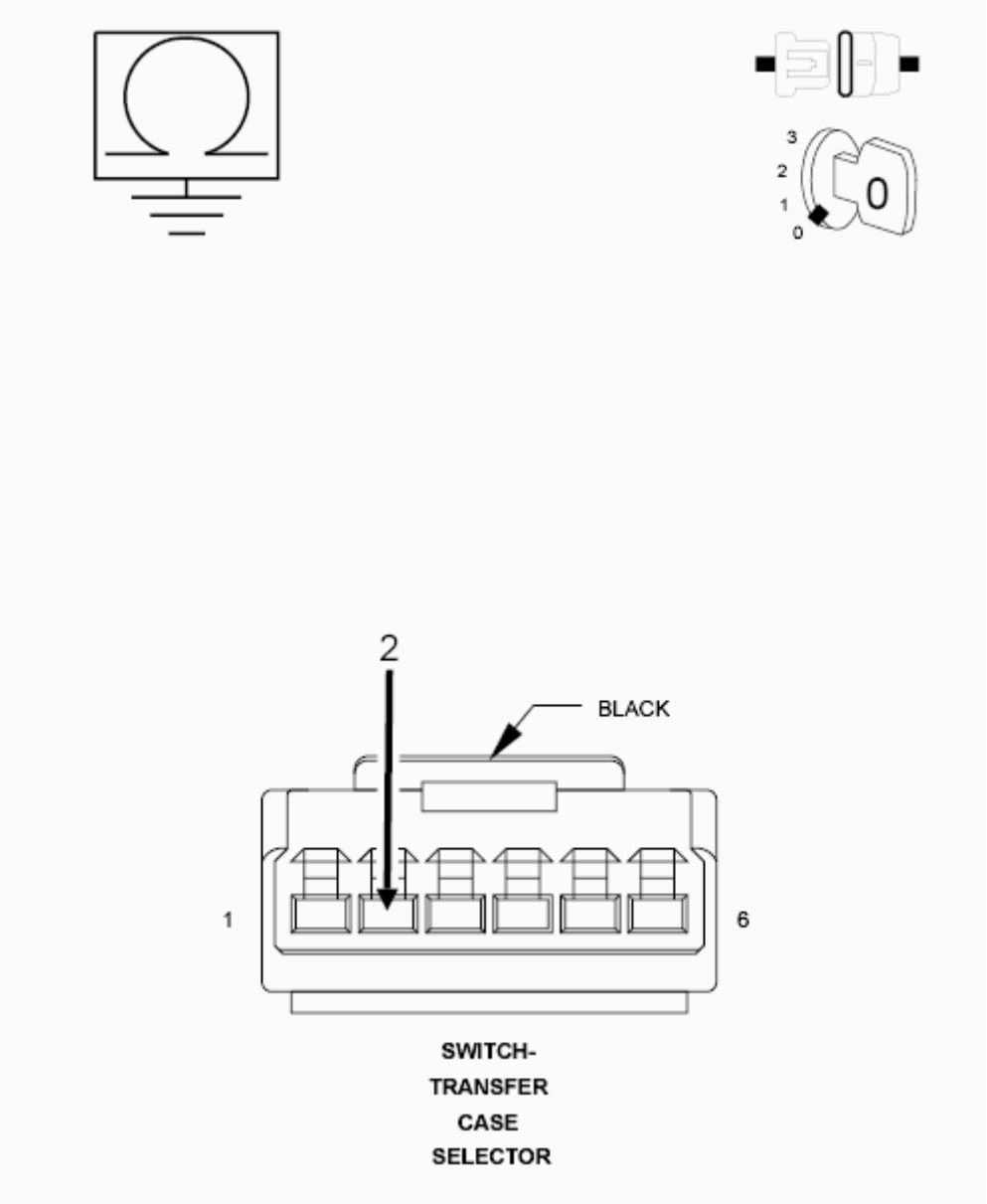

Fig. 22: Checking Transfer Case Position Sensor Input Circuit For A Short To Ground
Courtesy of CHRYSLER GROUP, LLC

1. Turn the ignition off to the lock position.
2. Disconnect the CCN C3 harness connector.
3. Measure the resistance between ground and the (K77) Transfer Case Position Sensor Input circuit.

   Is the resistance less than 5.0 Ohms?

   Yes

- Repair the (K77) Transfer Case Position Sensor Input circuit for a short to ground.
- Perform the AWD CONTROL MODULE VERIFICATION TEST. Refer to **STANDARD PROCEDURE**.

No

- Go To 4

4. **(K77) TRANSFER CASE POSITION SENSOR INPUT CIRCUIT SHORTED TO VOLTAGE**

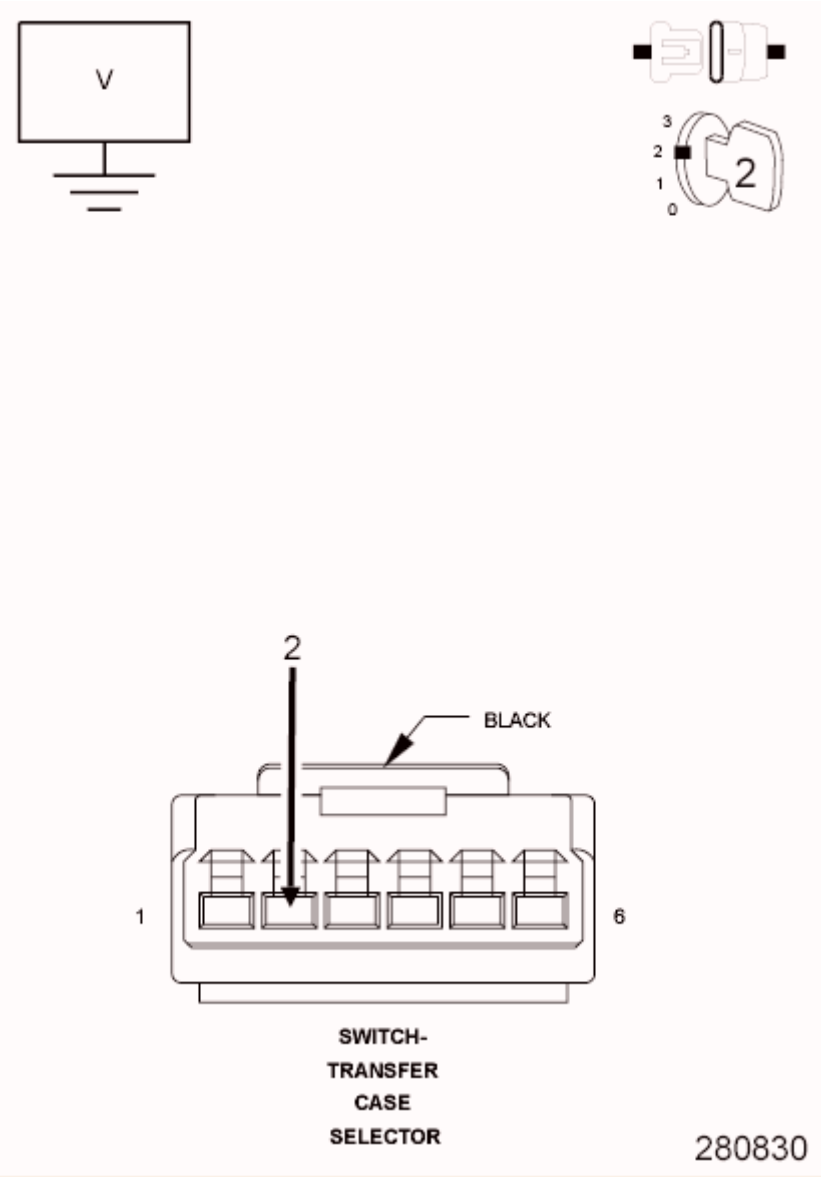

Fig. 23: Checking Transfer Case Position Sensor Input Circuit For A Short To Voltage

Courtesy of CHRYSLER GROUP, LLC

1. Ignition on, engine not running.
2. Measure the voltage of the (K77) Transfer Case Position Sensor Input circuit.

   Is the voltage above 10 volts?

   Yes

   - Repair the (K77) Transfer Case Position Sensor Input circuit for a short to voltage.
   - Perform the AWD CONTROL MODULE VERIFICATION TEST. Refer to **STANDARD PROCEDURE**.

   No

   - Go To 5

5. **(K77) TRANSFER CASE POSITION SENSOR INPUT CIRCUIT OPEN**

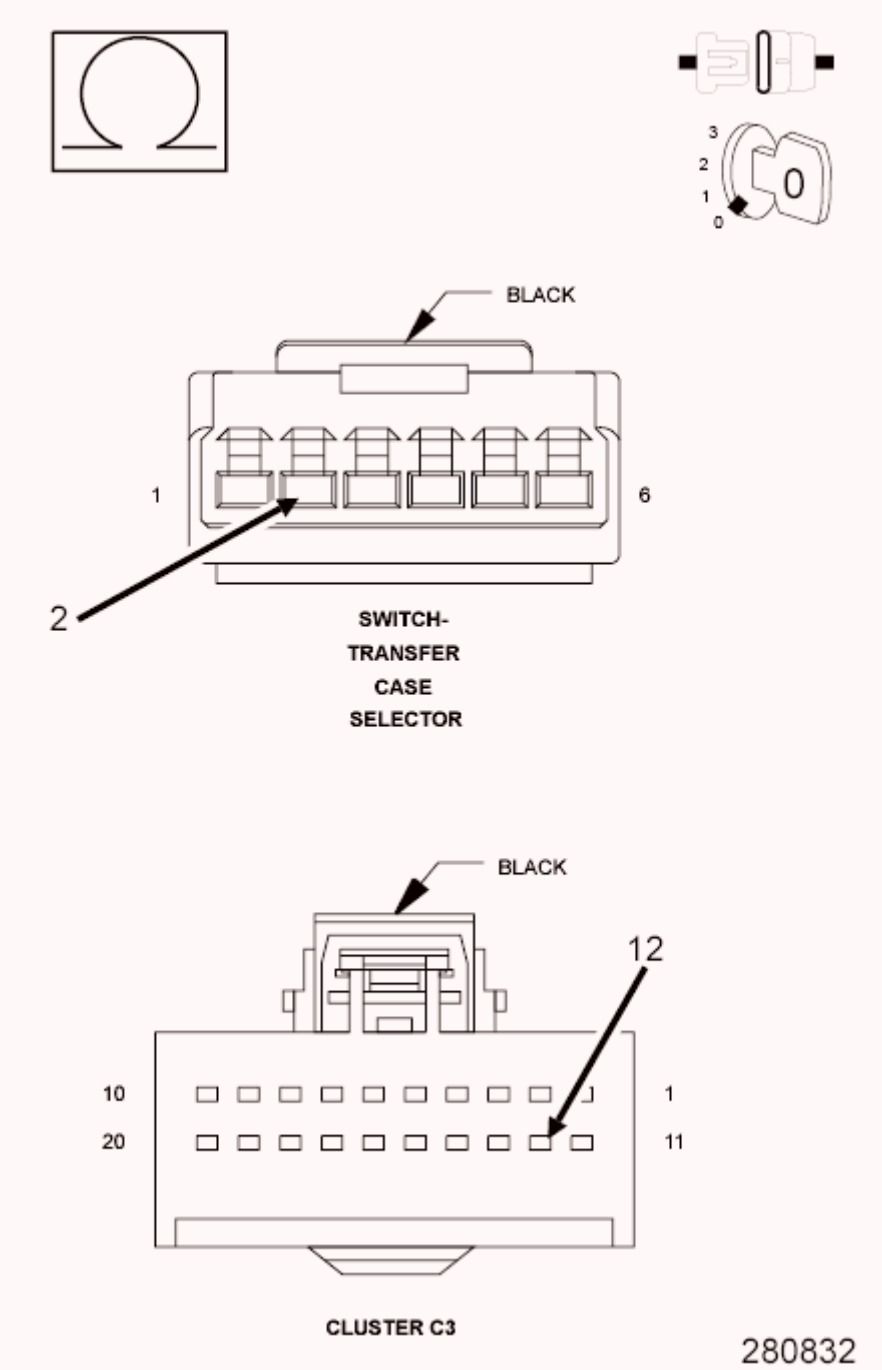

Fig. 24: Checking Transfer Case Position Sensor Input Circuit
Courtesy of CHRYSLER GROUP, LLC

1. Turn the ignition off to the lock position.
2. Measure the resistance of the (K77) Transfer Case Position Sensor Input circuit between the Transfer Case Selector Switch harness connector and the CCN C3 harness connector.

   Is the resistance greater than 5.0 Ohms?

Yes

- Repair the (K77) Transfer Case Position Sensor Input circuit for an open.
- Perform the AWD CONTROL MODULE VERIFICATION TEST. Refer to **STANDARD PROCEDURE**.

No

- Go To 6

6. **(Z908) GROUND CIRCUIT OPEN**

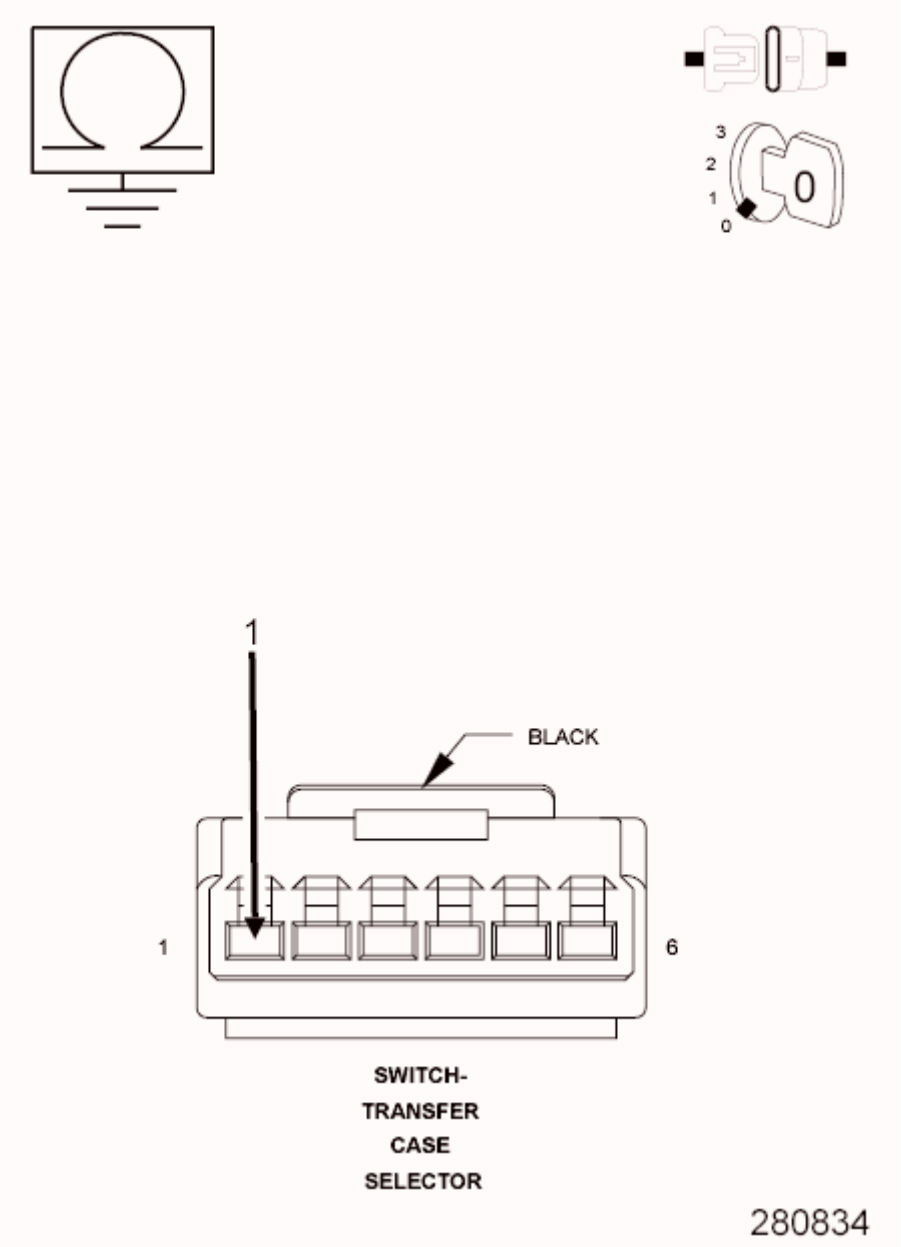

Fig. 25: Checking Ground Circuit For An Open
Courtesy of CHRYSLER GROUP, LLC

1. Measure the resistance of the (Z908) Ground circuit between the Transfer Case Selector Switch harness connector and the CCN C3 harness connector.

   Is the resistance above 5.0 Ohms?

   Yes

   - Repair the (Z908) Ground circuit for an open.
   - Perform the AWD CONTROL MODULE VERIFICATION TEST. Refer to **STANDARD PROCEDURE**.

   No

   - Replace the All Wheel Drive (AWD) Control Module in accordance with Service Information.
   - Perform the AWD CONTROL MODULE VERIFICATION TEST. Refer to **STANDARD PROCEDURE**.

7. **INTERMITTENT TRANSFER CASE RANGE SELECT SWITCH PERFORMANCE**
   1. The conditions necessary to set this DTC are not present at this time.
   2. Using the wiring diagram/schematic as a guide, inspect the wiring and connectors.
   3. While monitoring the scan tool data relative to this circuit, wiggle test the wiring and connectors.
   4. Look for the data to change or for the DTC to reset during the wiggle test.
   5. While monitoring the scan tool data relative to this circuit, move the selector switch to each position several times.
   6. Look for the data to change other than as expected or for the DTC to reset.

      Were any problems found?

      Yes

- Repair as necessary.
- Perform the AWD CONTROL MODULE VERIFICATION TEST. Refer to **STANDARD PROCEDURE**.

No

- Test complete.

C2100-BATTERY VOLTAGE LOW

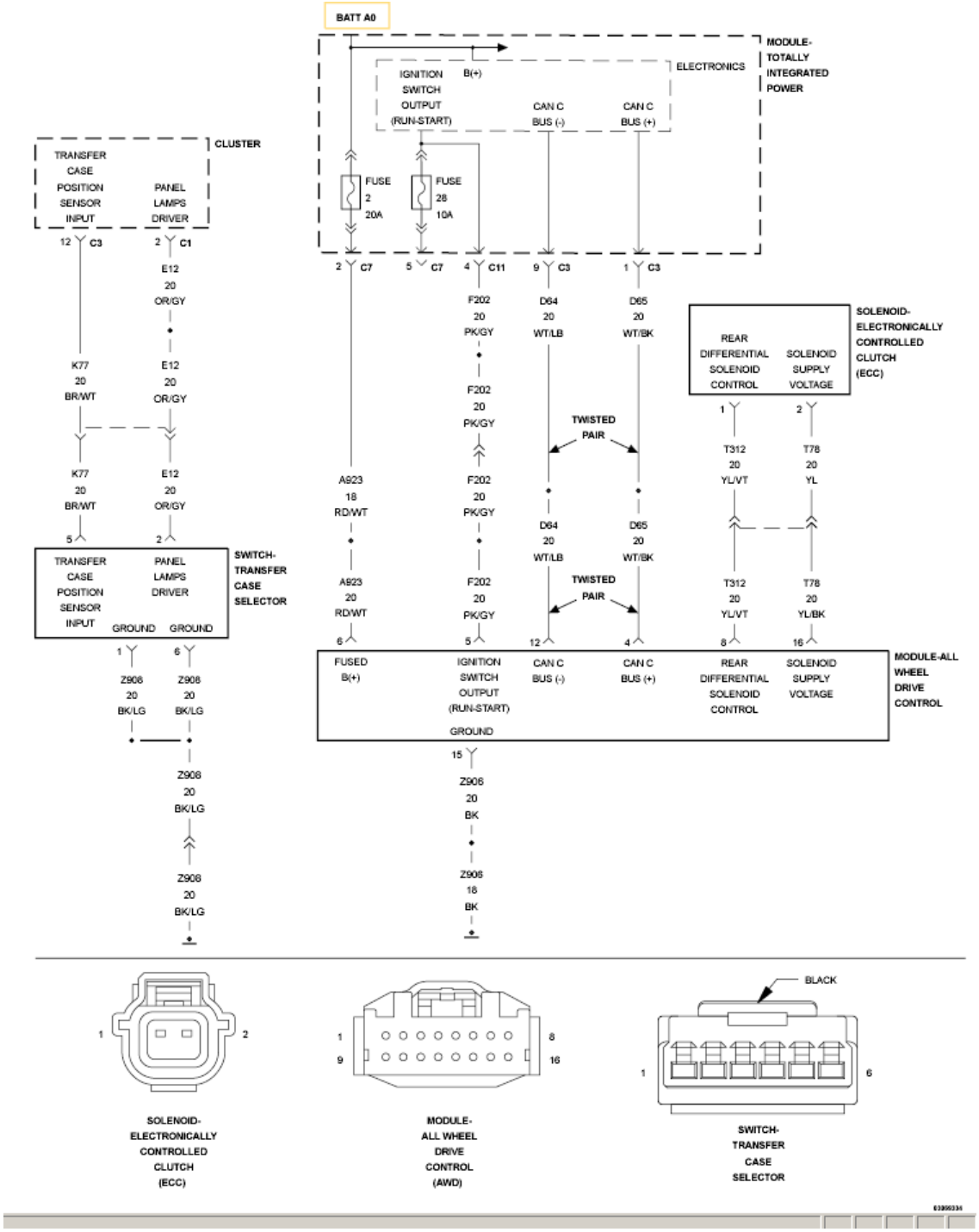

Fig. 26: All Wheel Drive Control Module Circuit Diagram
Courtesy of CHRYSLER GROUP, LLC

For a complete wiring diagram, **refer to appropriate SYSTEM WIRING DIAGRAMS article** .

WHEN MONITORED

Continuously.

SET CONDITION

The All Wheel Drive Control Module (AWD) detects that system voltage is below 8.0 volts for 10 seconds.

POSSIBLE CAUSES

Possible Causes
CHARGING SYSTEM DTCS PRESENT
(A923) FUSED B(+) FOR VOLTAGE
(F202) IGNITION SWITCH OUTPUT RUN/START FOR VOLTAGE
(F202) IGNITION SWITCH OUTPUT (RUN/START) CIRCUIT OPEN OR HIGH RESISTANCE
(A923) FUSED B(+) CIRCUIT OPEN OR HIGH RESISTANCE
(Z906) GROUND CIRCUIT OPEN OR HIGH RESISTANCE
ALL WHEEL DRIVE (AWD) CONTROL MODULE
TOTALLY INTEGRATED POWER MODULE (TIPM)

DIAGNOSTIC TEST

1. **CHARGING SYSTEM DTCS PRESENT**
   1. Ignition on, engine not running.
   2. With the scan tool, select View DTCs in the Powertrain Control Module.

      Are there any Charging System or related voltage DTCs present?

      Yes

      - Perform the appropriate diagnostic procedure. Refer to the **DTC INDEX** article .

      No

      - Go To 2
2. **VERIFY THE DTC IS ACTIVE**
   1. Ignition on, engine running. Keep the engine at 1500 rpm for 15 seconds
   2. Maintain the engine at 1500 rpm for 15 seconds

3. With the scan tool, select View DTCs.

   Is the DTC active at this time?

   Yes

   - Go To 3

   No

   - Go To 10

3. **CHECK THE TIPM (A923) FUSED B(+) VOLTAGE**

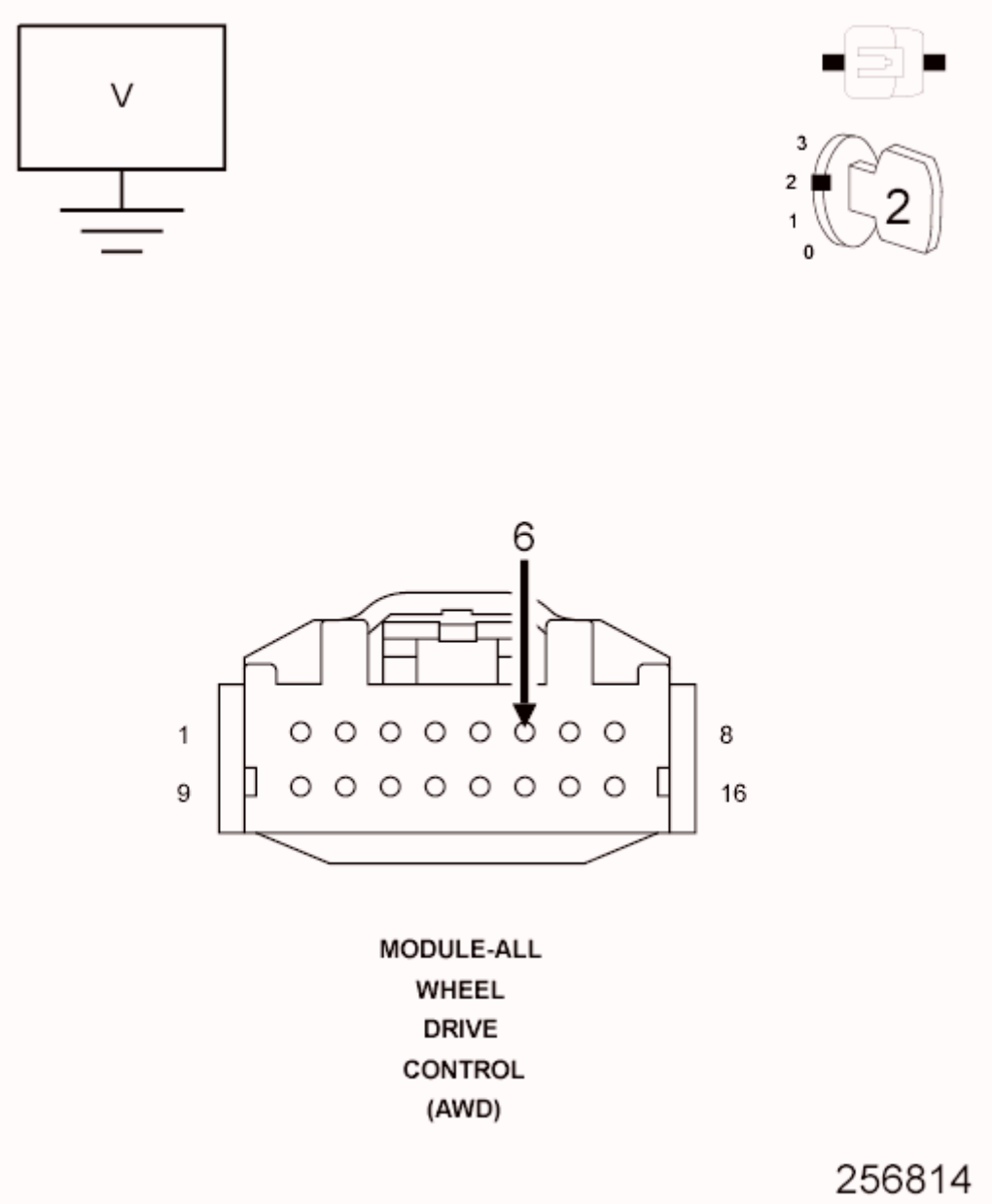

Fig. 27: Checking TIPM Fused B(+) Voltage
Courtesy of CHRYSLER GROUP, LLC

1. While back probing, measure the voltage of the (A923) Fused B(+) circuit in the TIPM C7 harness connector.

   Is the voltage above 9 volts?

   Yes

   - Go To 4

   No

   - Go To 9

4. **CHECK THE TIPM (F202) IGNITION SWITCH OUTPUT RUN/START VOLTAGE**

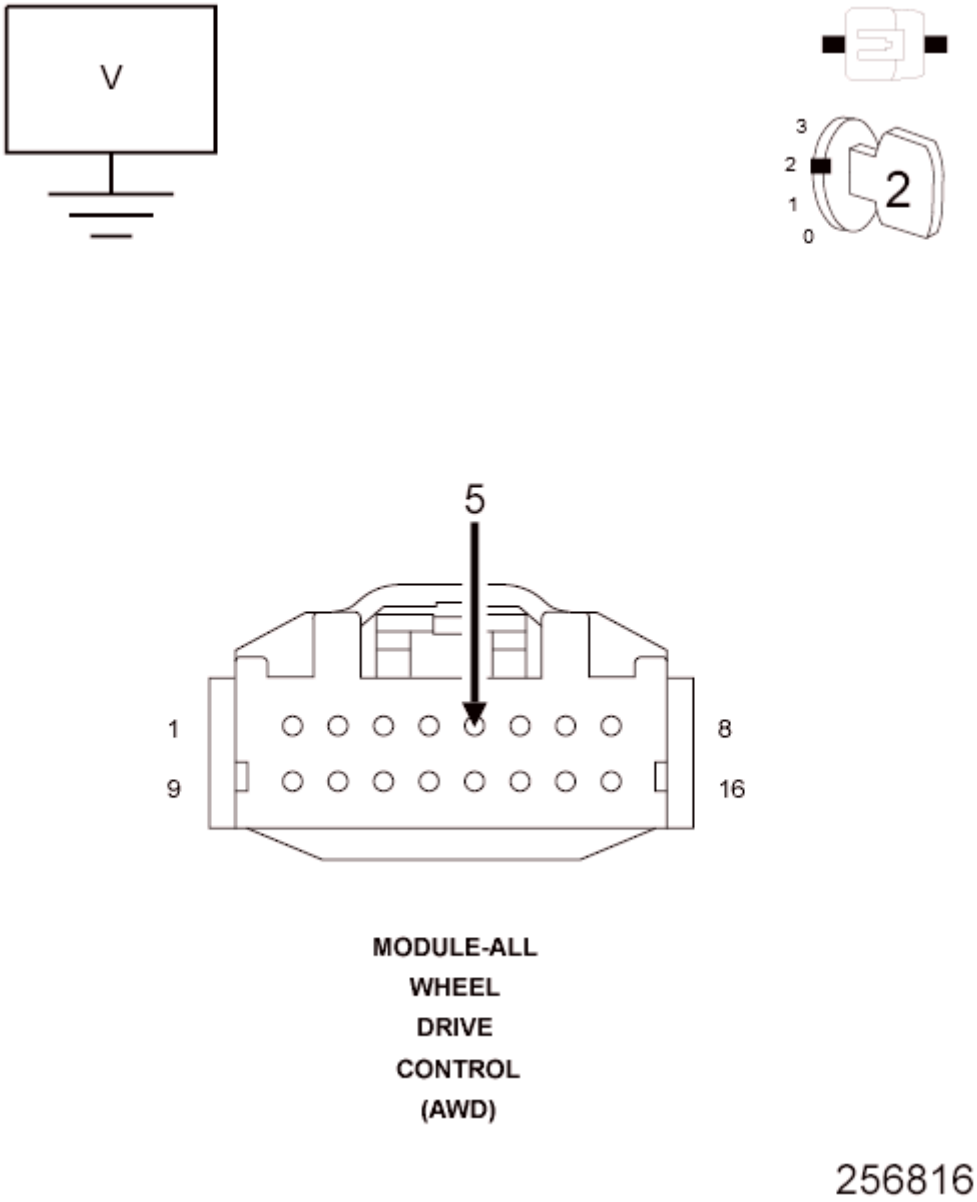

Fig. 28: Checking TIPM Ignition Switch Output Run/Start Voltage
Courtesy of CHRYSLER GROUP, LLC

1. While back probing, measure the voltage of the (F202) Ignition Switch Output Run/Start circuit in the TIPM C11 harness connector.

   Is the voltage above 8 volts?

   Yes

   - Go To 5

   No

- Go To 9

5. **(A923) FUSED B(+) CIRCUIT OPEN OR HIGH RESISTANCE**

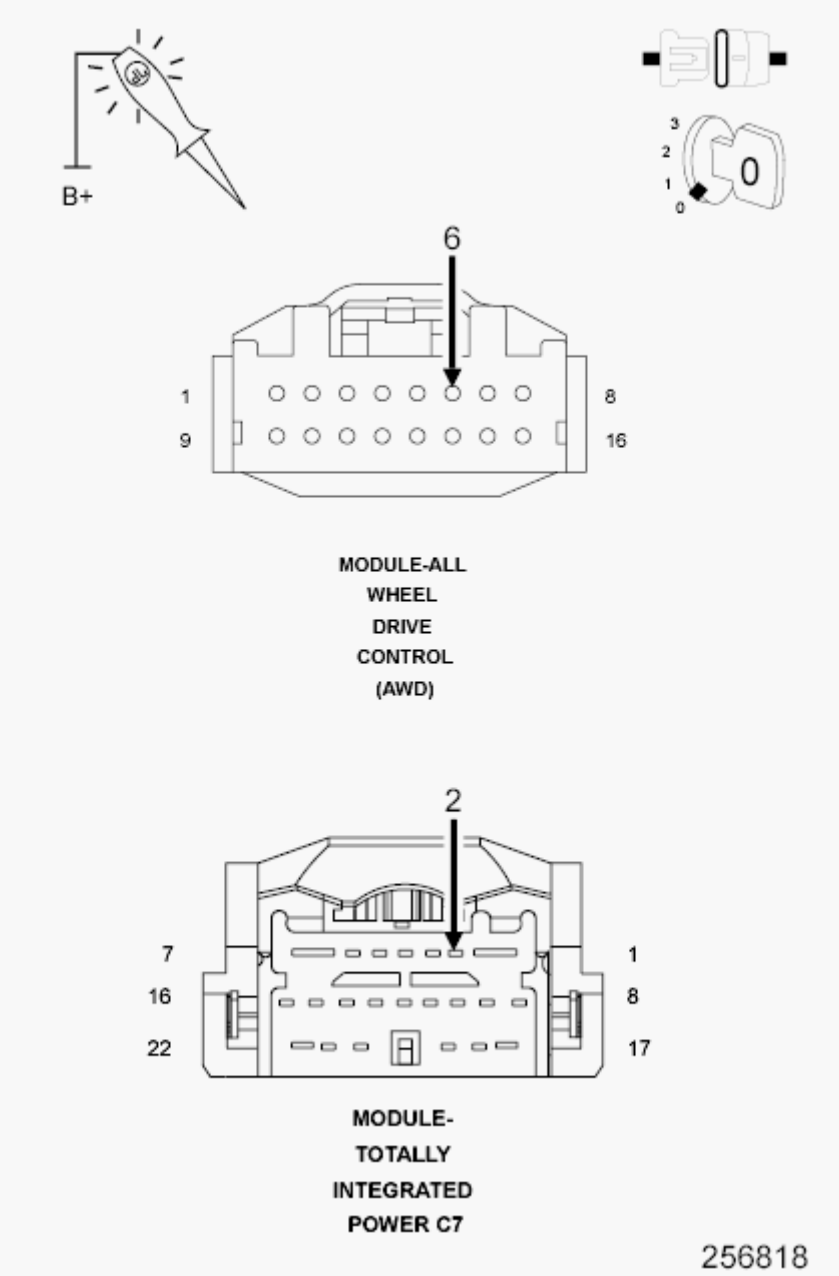

Fig. 29: Checking Fused B(+) Circuit For An Open Or High Resistance
Courtesy of CHRYSLER GROUP, LLC

1. Turn the ignition off.
2. Disconnect the AWD Module harness connector.
3. Disconnect the TIPM C7 harness connector.
4. Connect a jumper wire between the (A923) Fused B(+) circuit and Ground in the TIPM C7 harness connector.

5. With a 12-volt test light connected to B(+), check the (A923) Fused B (+) circuit in the AWD Control Module harness connector.

   NOTE: The test light must illuminate brightly. Compare the brightness to that of a direct connection to the battery.

   Does the test light illuminate brightly?

   Yes

   - Go To 6

   No

   - Repair the (F202) Ignition Switch Output (RUN/START) circuit for an open circuit or high resistance.
   - Perform the AWD CONTROL MODULE VERIFICATION TEST. Refer to **STANDARD PROCEDURE**.

6. **(F202) IGNITION SWITCH OUTPUT (RUN/START) CIRCUIT OPEN OR HIGH RESISTANCE**

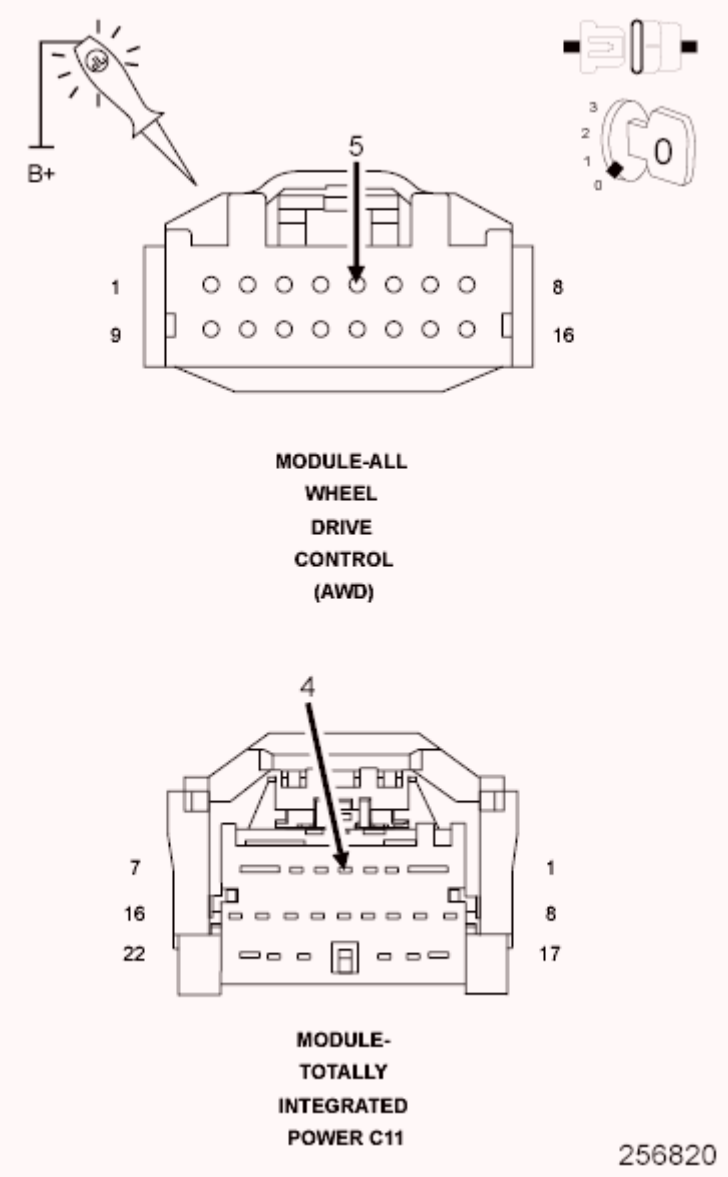

Fig. 30: Checking Ignition Switch Output (Run/Start) Circuit For An Open Or High Resistance
Courtesy of CHRYSLER GROUP, LLC

1. Disconnect the TIPM C11 harness connector.
2. Connect a jumper wire between the (F202) Ignition Switch Output (RUN/START) circuit and ground in the TIPM C11 harness connector.
3. With a 12-volt test light connected to B(+), check the (F202) Ignition Switch Output (RUN/START) circuit in the AWD Control Module harness connector.

NOTE: The test light must illuminate brightly. Compare the brightness to that of a direct connection to

the battery.

Does the test light illuminate brightly?

Yes

- Go To 7

No

- Repair the (F202) Ignition Switch Output (RUN/START) circuit for an open circuit or high resistance.
- Perform the AWD CONTROL MODULE VERIFICATION TEST. Refer to **STANDARD PROCEDURE**.

7. **(Z906) GROUND CIRCUIT OPEN OR HIGH RESISTANCE**

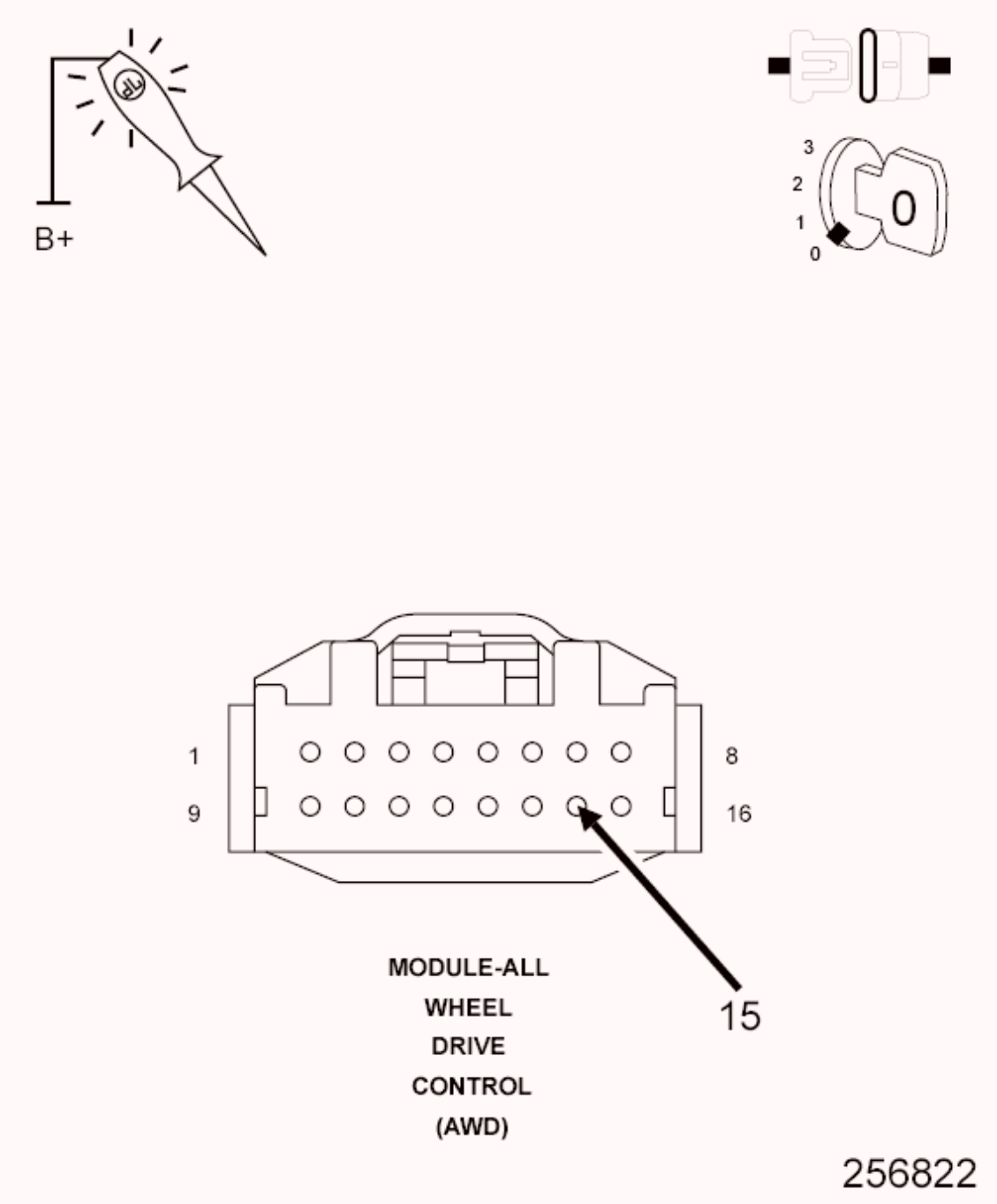

Fig. 31: Checking Ground Circuit For Open or High Resistance
Courtesy of CHRYSLER GROUP, LLC

1. With a 12-volt test light connected to B(+), check the (Z906) ground circuit in the AWD Control Module harness connector.

NOTE: The test light must illuminate brightly. Compare the brightness to that of a direct connection to the battery.

Does the test light illuminate brightly?

Yes

- Go To 8

No

- Repair the (Z906) Ground circuit for an open circuit or high resistance.
- Perform the AWD CONTROL MODULE VERIFICATION TEST. Refer to **STANDARD PROCEDURE**.

8. **AWD CONTROL MODULE**

NOTE: Before continuing, check the AWD Module harness connector terminals for corrosion, damage, or terminal push out. Repair as necessary.

1. Using the schematics as a guide, inspect the wire harness and connectors.
2. Pay particular attention to all Power and Ground circuits.

Were any problems found?

Repair

- Replace theAll Wheel Drive (AWD) Control Module in accordance with the Service information.
- Perform the AWD CONTROL MODULE VERIFICATION TEST. Refer to **STANDARD PROCEDURE**.

9. **TOTALLY INTEGRATED POWER MODULE**

NOTE: Before continuing, check the TIPM harness connector terminals for corrosion, damage, or terminal push out. Repair as necessary.

1. Using the schematics as a guide, inspect the wire harness and connectors.
2. Pay particular attention to all Power and Ground circuits.

Were any problems found?

Repair

- Replace the Totally Integrated Power Module (TIPM) in accordance with the Service Information.
- Perform the BODY VERIFICATION TEST. Refer to **STANDARD PROCEDURE** .

10. **INTERMITTENT WIRING AND CONNECTORS**
    1. The conditions necessary to set this DTC are not present at this time.
    2. Using the schematics as a guide, inspect the wiring and connectors specific to this circuit.
    3. Wiggle test the wiring harness and connectors while checking for shorted and open circuits.
    4. Using the scan tool, monitor the data related to this circuit while performing the wiggle test. Look for the data to change or for the DTC to reset.

    Were there any problems found?

    Yes

    - Repair as necessary.
    - Perform the AWD CONTROL MODULE VERIFICATION TEST. Refer to **STANDARD PROCEDURE**.

    No

    - Test Complete.

C2101-BATTERY VOLTAGE HIGH

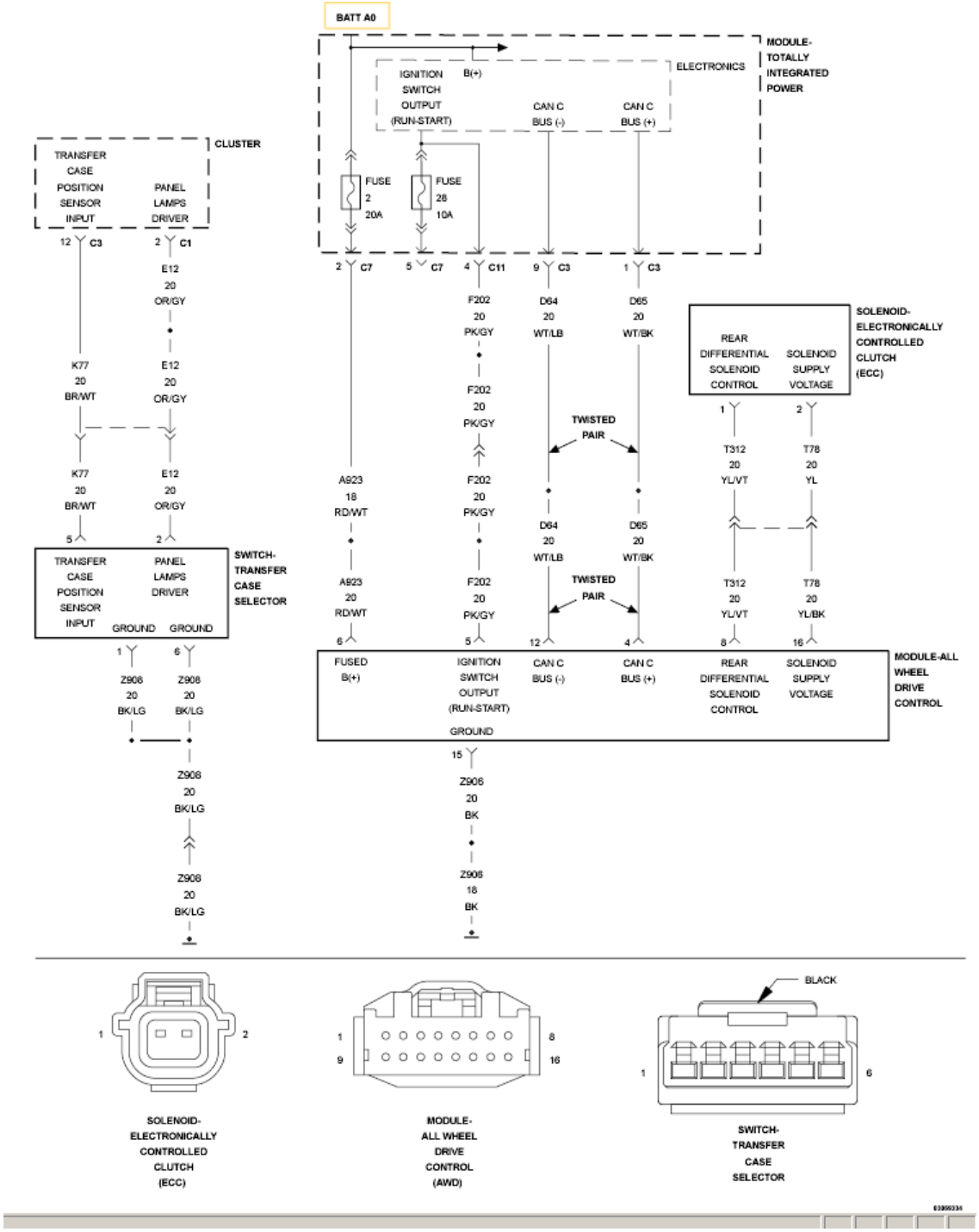

Fig. 32: All Wheel Drive Control Module Circuit Diagram
Courtesy of CHRYSLER GROUP, LLC

For a complete wiring diagram, **refer to appropriate SYSTEM WIRING DIAGRAMS article** .

WHEN MONITORED

Continuously.

SET CONDITION

The All Wheel Drive Control Module (AWD) detects that system voltage is above 17.0 volts for more than 10 seconds.

POSSIBLE CAUSES

Possible Causes
CHARGING SYSTEM DTCS PRESENT (F202) IGNITION SWITCH OUTPUT (RUN/START) CIRCUIT FOR VOLTAGE (A923) FUSED B(+) CIRCUIT FOR VOLTAGE ALL WHEEL DRIVE (AWD) CONTROL MODULE TOTALLY INTEGRATED POWER MODULE (TIPM)

DIAGNOSTIC TEST

1. **CHARGING SYSTEM DTCS PRESENT**
   1. Ignition on, engine not running.
   2. With the scan tool, select View DTCs in the Powertrain Control Module.

      Are there any Charging System or related voltage DTCs present?

      Yes

      - Perform the appropriate diagnostic procedure. Refer to the **DTC INDEX** article .

      No

      - Go To 2
2. **VERIFY THE DTC IS ACTIVE**

   NOTE: Leave the ignition on for 15 seconds.

   1. With the scan tool, select View DTCs.

      Is the DTC active at this time?

      Yes

- Go To 3

No

- Go To 7

3. **CHECK THE TIPM (A923) FUSED B(+) VOLTAGE**

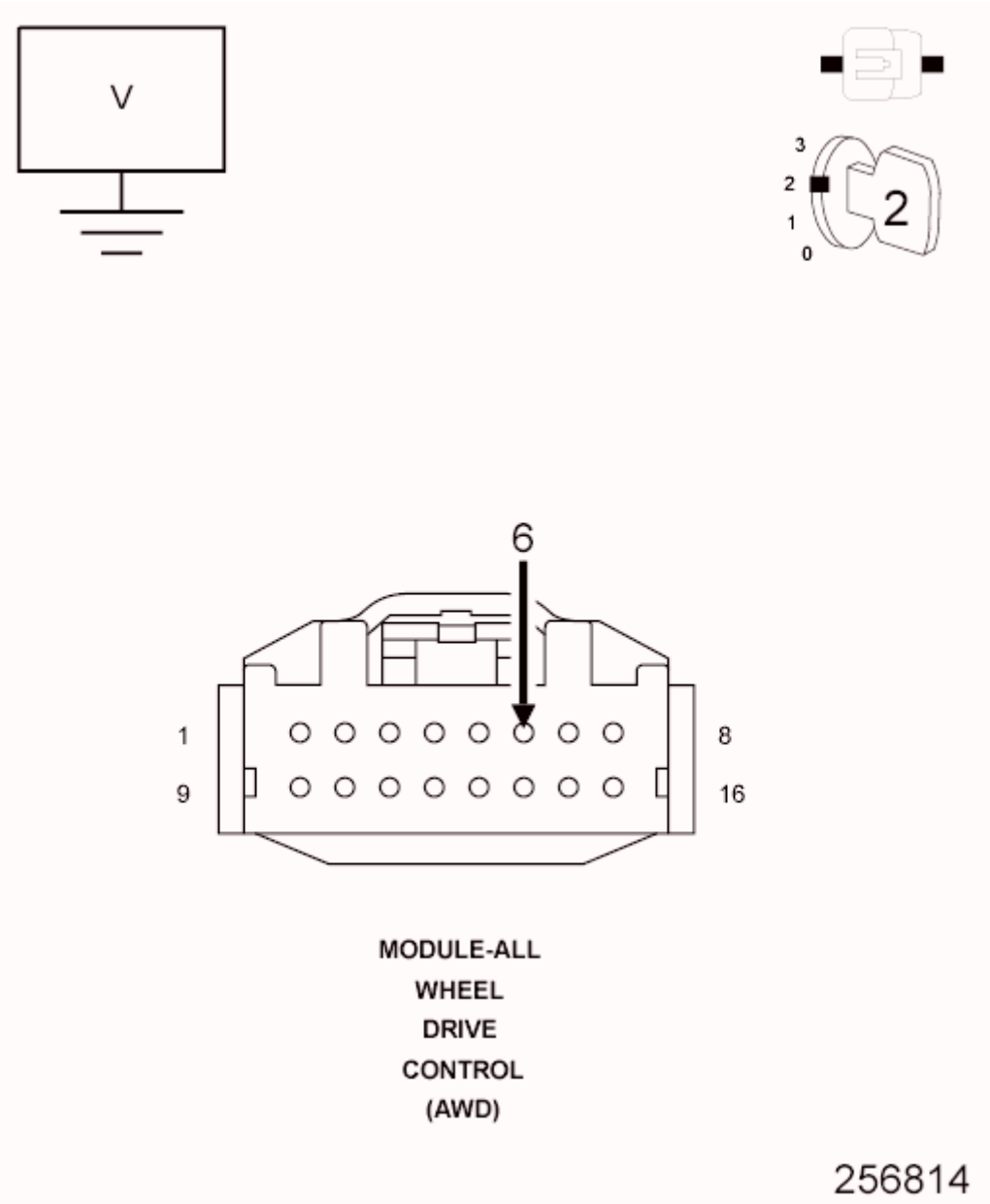

Fig. 33: Checking TIPM Fused B(+) Voltage
Courtesy of CHRYSLER GROUP, LLC

1. While back probing, measure the voltage of the (A923) Fused B(+) circuit in the TIPM C7 harness connector.

Is the voltage below 17 volts?

Yes

- Go To 4

No

- Go To 6

4. **CHECK THE TIPM (F202) IGNITION SWITCH OUTPUT RUN/START VOLTAGE**

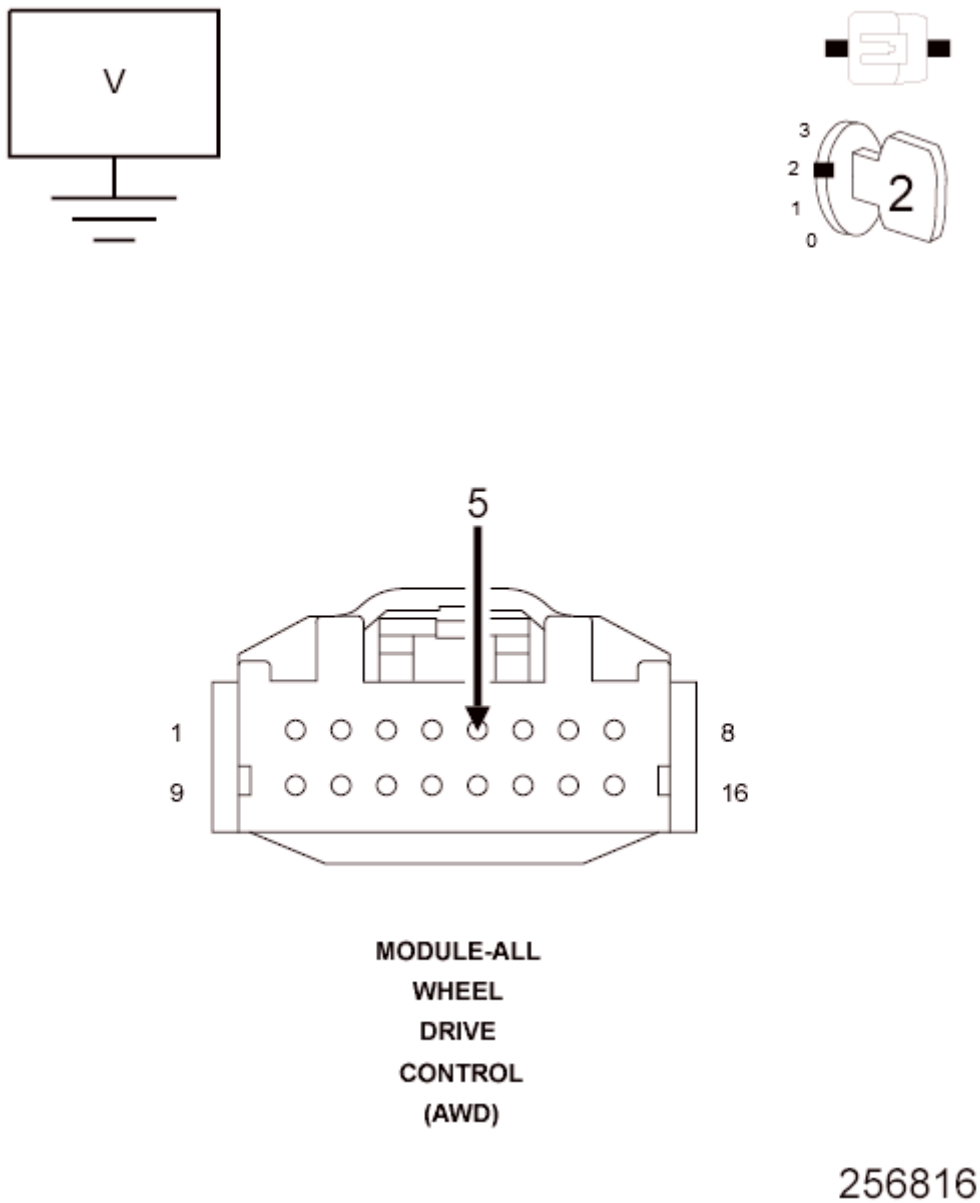

Fig. 34: Checking TIPM Ignition Switch Output Run/Start Voltage

Courtesy of CHRYSLER GROUP, LLC

1. While back probing, measure the voltage of the (F202) Ignition Switch Output Run/Start circuit in the TIPM C11 harness connector.

   Is the voltage below 17 volts?

   Yes

   - Go To 5

   No

   - Go To 6

5. **AWD CONTROL MODULE**

NOTE: Before continuing, check the AWD Module harness connector terminals for corrosion, damage, or terminal push out. Repair as necessary.

1. Using the schematics as a guide, inspect the wire harness and connectors.
2. Pay particular attention to all Power and Ground circuits.

   Were any problems found?

   Repair

   - Replace the All Wheel Drive Control Module in accordance with the Service information.
   - Perform the AWD CONTROL MODULE VERIFICATION TEST. Refer to **STANDARD PROCEDURE**.

6. **TOTALLY INTEGRATED POWER MODULE**

NOTE: Before continuing, check the TIPM harness connector terminals for corrosion, damage, or terminal push out. Repair as necessary.

1. Using the schematics as a guide, inspect the wire harness and connectors.

2. Pay particular attention to all Power and Ground circuits.

   Were any problems found?

   Repair

   - Replace the Totally Integrated Power Module (TIPM) in accordance with the Service Information.
   - Perform the BODY VERIFICATION TEST. Refer to **STANDARD PROCEDURE** .

7. **INTERMITTENT WIRING AND CONNECTORS**
   1. The conditions necessary to set this DTC are not present at this time.
   2. Using the schematics as a guide, inspect the wiring and connectors specific to this circuit.
   3. Wiggle test the wiring harness and connectors while checking for shorted and open circuits.
   4. Using the scan tool, monitor the data related to this circuit while performing the wiggle test. Look for the data to change or for the DTC to reset.

      Were there any problems found?

      Yes

      - Repair as necessary.
      - Perform the AWD CONTROL MODULE VERIFICATION TEST. Refer to **STANDARD PROCEDURE**.

      No

      - Test Complete.

C211C-IGNITION RUN/START INPUT CIRCUIT LOW

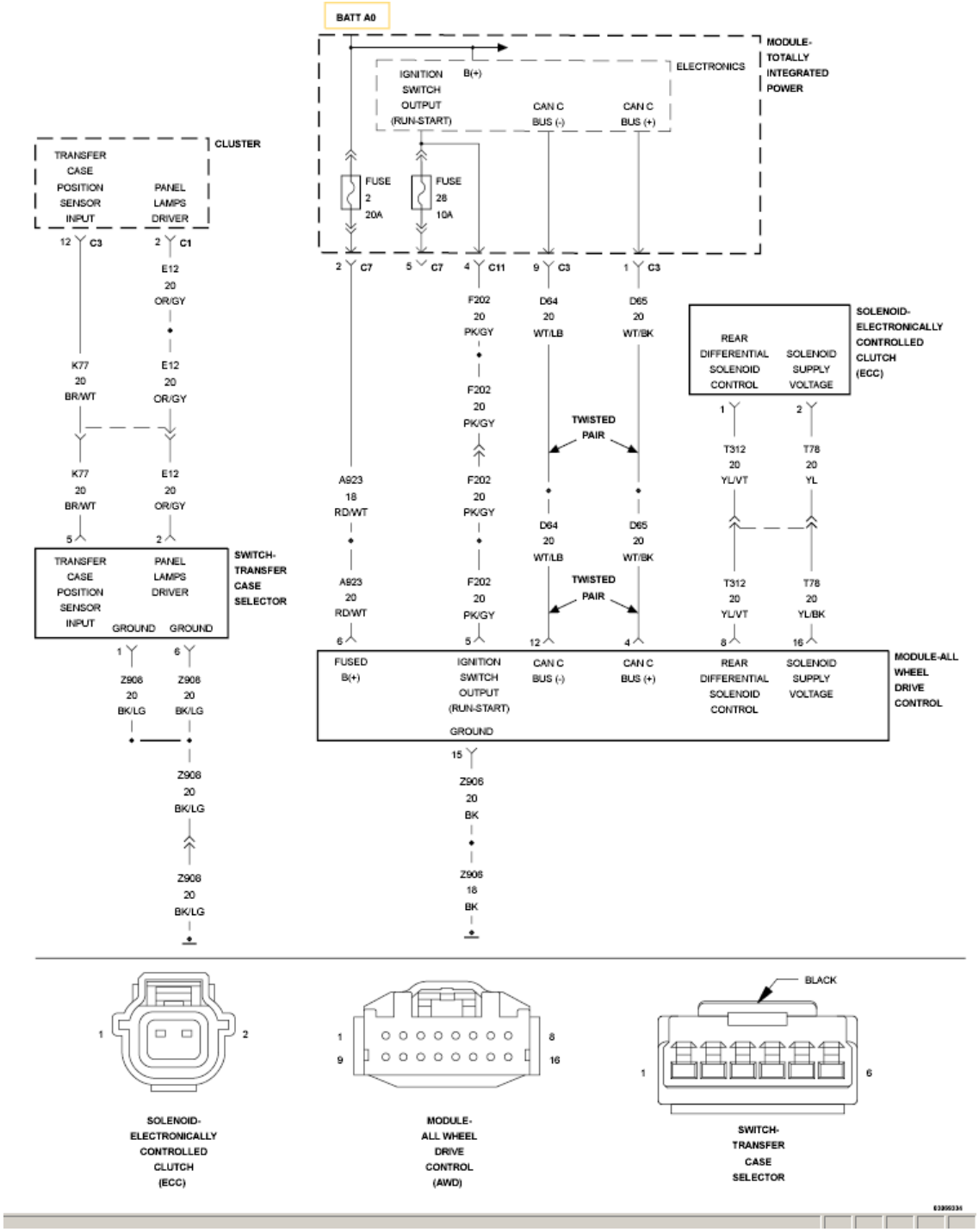

Fig. 35: All Wheel Drive Control Module Circuit Diagram
Courtesy of CHRYSLER GROUP, LLC

For a complete wiring diagram, **refer to appropriate SYSTEM WIRING DIAGRAMS article** .

WHEN MONITORED

With the ignition on.

SET CONDITION

The All Wheel Drive (AWD) Control Module will set this DTC if the Ignition Run/Start circuit voltage is less than the expected value for more than 10 seconds.

POSSIBLE CAUSES

Possible Causes
(F202) IGNITION SWITCH OUTPUT (RUN/START) CIRCUIT VOLTAGE
(F202) IGNITION SWITCH OUTPUT (RUN/START) CIRCUIT OPEN OR HIGH RESISTANCE
(Z906) GROUND CIRCUIT OPEN OR HIGH RESISTANCE
ALL WHEEL DRIVE (AWD) CONTROL MODULE
TOTALLY INTEGRATED POWER MODULE (TIPM)

DIAGNOSTIC TEST

1. **VERIFY THE DTC IS ACTIVE**
    1. Ignition on, engine not running.
    2. With the scan tool, read the active DTC.
    3. Cycle the ignition switch from off to on, leaving the ignition on for a minimum of 10 seconds.
    4. With the scan tool, read the active DTC.

    Is the DTC active at this time?

    Yes

    - Go To 2

    No

    - Go To 7
2. **(F202) IGNITION SWITCH OUTPUT (RUN/START) VOLTAGE**

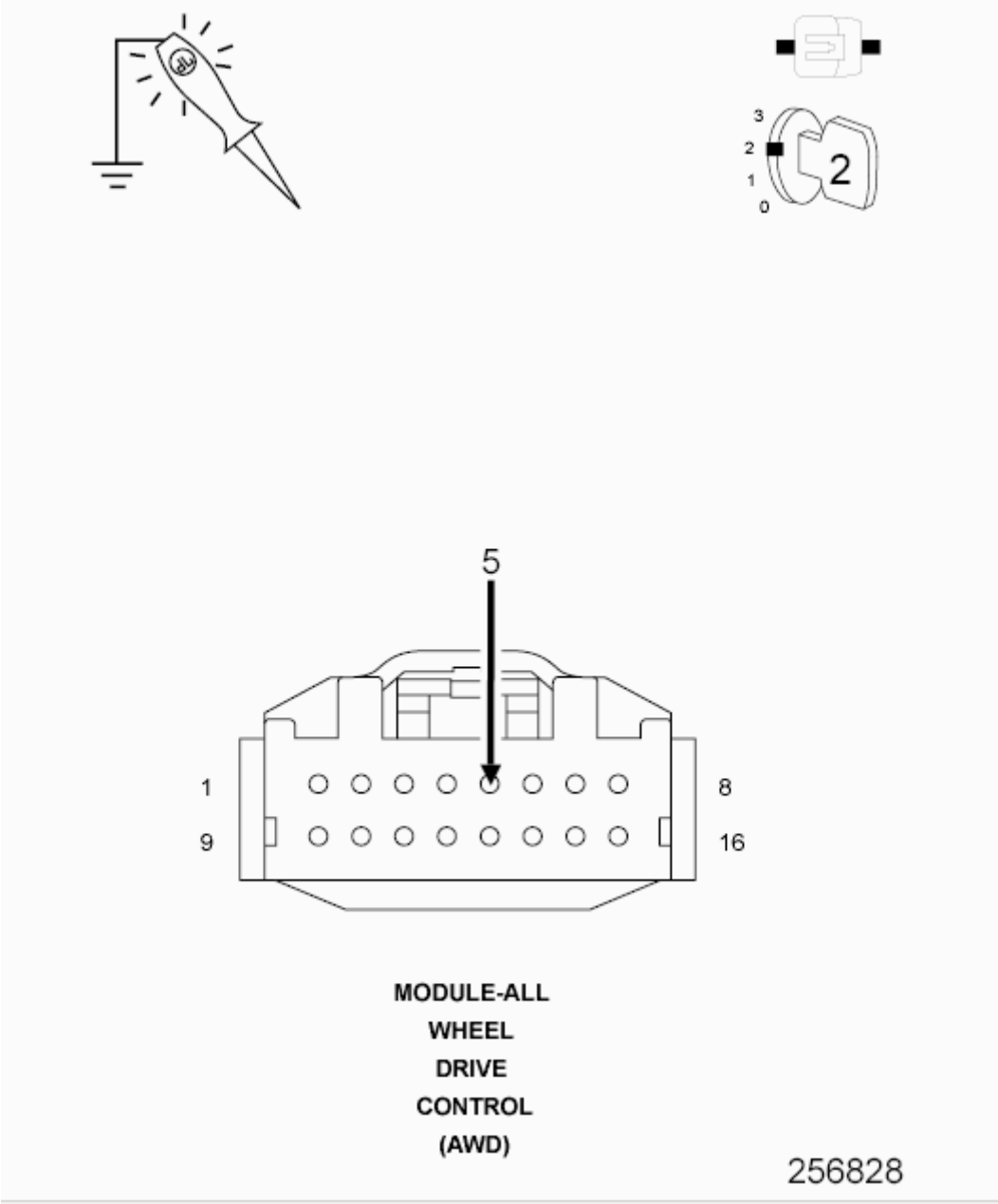

Fig. 36: Checking Ignition Switch Output (Run/Start)
Courtesy of CHRYSLER GROUP, LLC

1. Turn the ignition off.
2. Disconnect the AWD Control Module harness connector.
3. Ignition on, engine not running.
4. With a 12-volt test light connected to ground, check the (F202) Ignition Switch Output (RUN/START) circuit in the AWD Control Module harness connector.

NOTE: The test light must illuminate brightly. Compare

the brightness to that of a direct connection to the battery.

Does the test light illuminate brightly?

Yes

- Go To 3

No

- Go To 4

3. **(Z906) GROUND CIRCUIT OPEN OR HIGH RESISTANCE**

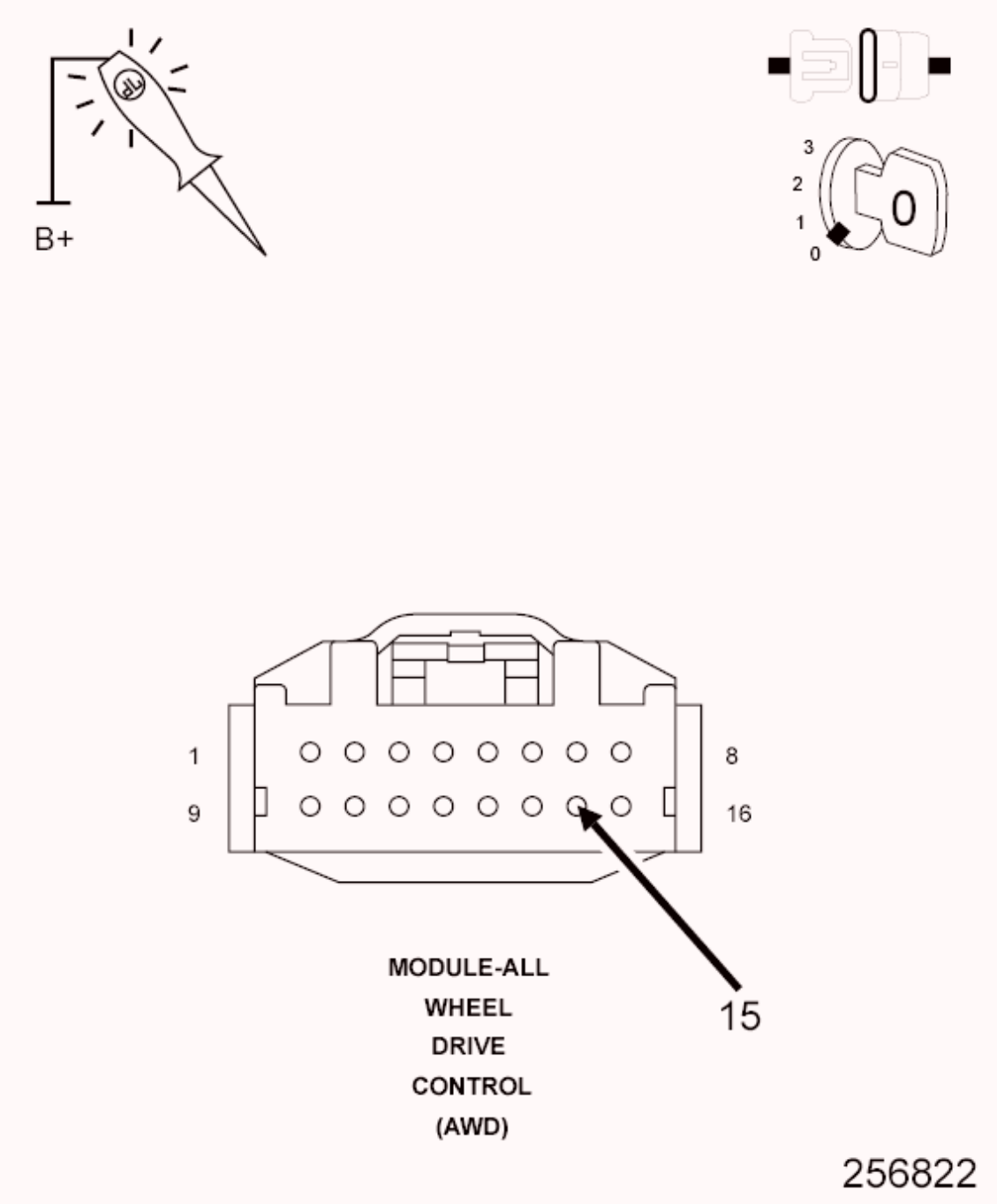

Fig. 37: Checking Ground Circuit For Open or High Resistance
Courtesy of CHRYSLER GROUP, LLC

1. Turn the ignition off.
2. Disconnect the AWD Control Module harness connector.
3. With a 12-volt test light connected to B+, check the (Z906) Ground circuit in the AWD Control Module harness connector.

NOTE: The test light must illuminate brightly. Compare

the brightness to that of a direct connection to the battery.

Does the test light illuminate brightly?

Yes

- Go To 5

No

- Repair the (Z906) Ground circuit for an open circuit or high resistance.
- Perform the AWD CONTROL MODULE VERIFICATION TEST. Refer to **STANDARD PROCEDURE**.

4. **(F202) IGNITION SWITCH OUTPUT (RUN/START) CIRCUIT OPEN OR HIGH RESISTANCE**

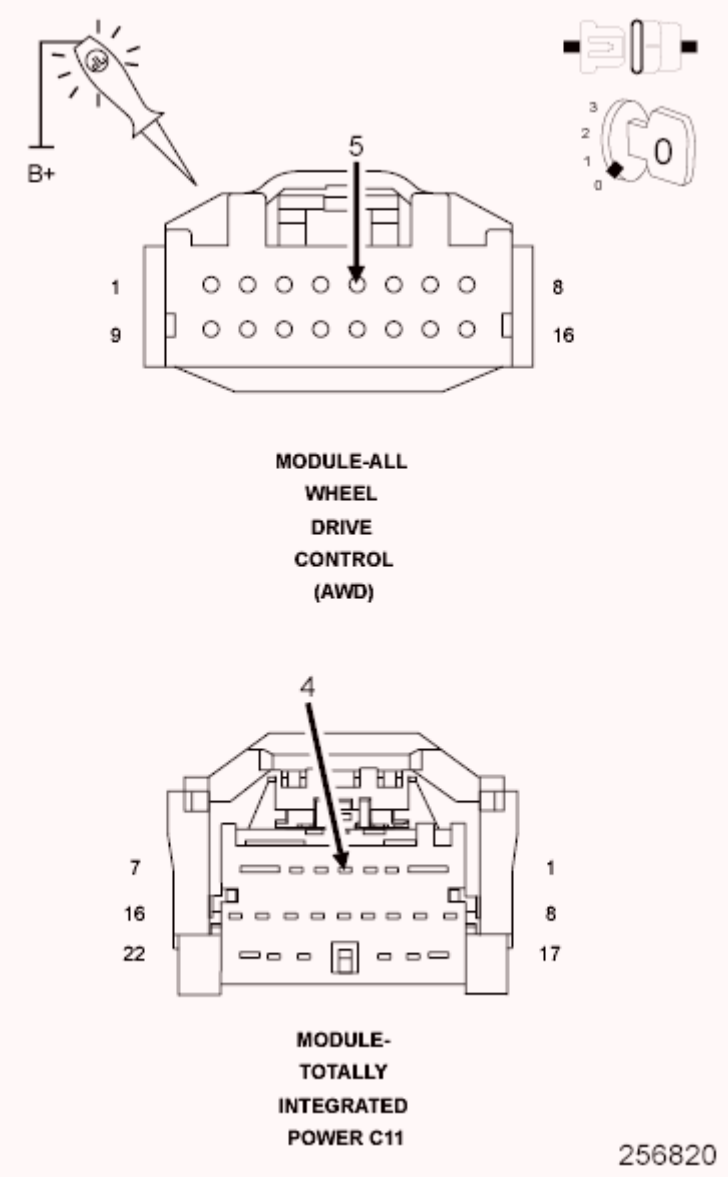

Fig. 38: Checking Ignition Switch Output (Run/Start) Circuit For An Open Or High Resistance
Courtesy of CHRYSLER GROUP, LLC

1. Disconnect the TIPM C11 harness connector.
2. Connect a jumper wire between the (F202) Ignition Switch Output (RUN/START) circuit and B(+) in the TIPM C11 harness connector.
3. With a 12-volt test light connected to ground, check the (F202) Ignition Switch Output (RUN/START) circuit in the AWD Control Module harness connector.

NOTE: The test light must illuminate brightly. Compare the brightness to that of a direct connection to

the battery.

Does the test light illuminate brightly?

Yes

- Go To 6

No

- Repair the (F202) Ignition Switch Output (RUN/START) circuit for an open circuit or high resistance.
- Perform the AWD CONTROL MODULE VERIFICATION TEST. Refer to **STANDARD PROCEDURE**.

5. **AWD CONTROL MODULE**

NOTE: Before continuing, check the AWD Module harness connector terminals for corrosion, damage, or terminal push out. Repair as necessary.

1. Using the schematics as a guide, inspect the wire harness and connectors.
2. Pay particular attention to all Power and Ground circuits.

.

Repair

- Replace the All Wheel Drive (AWD) Control Module in accordance with the Service information.
- Perform the AWD CONTROL MODULE VERIFICATION TEST. Refer to **STANDARD PROCEDURE**.

6. **TOTALLY INTEGRATED POWER MODULE**

NOTE: Before continuing, check the TIPM harness connector terminals for corrosion, damage, or terminal push out. Repair as necessary.

1. Using the schematics as a guide, inspect the wire harness and

connectors.

2. Pay particular attention to all Power and Ground circuits.

Were any problems found?

Repair

- Replace the Totally Integrated Power Module in accordance with the Service Information.
- Perform the BODY VERIFICATION TEST. Refer to **STANDARD PROCEDURE** .

7. **INTERMITTENT WIRING AND CONNECTORS**
   1. The conditions necessary to set this DTC are not present at this time.
   2. Using the schematics as a guide, inspect the wiring and connectors specific to this circuit.
   3. Wiggle test the wiring harness and connectors while checking for shorted and open circuits.
   4. Using the scan tool, monitor the data related to this circuit while performing the wiggle test. Look for the data to change or for the DTC to reset.

   Were there any problems found?

   Yes

   - Repair as necessary.
   - Perform the AWD CONTROL MODULE VERIFICATION TEST. Refer to **STANDARD PROCEDURE**.

   No

   - Test Complete.

C211D-IGNITION RUN/START INPUT CIRCUIT HIGH

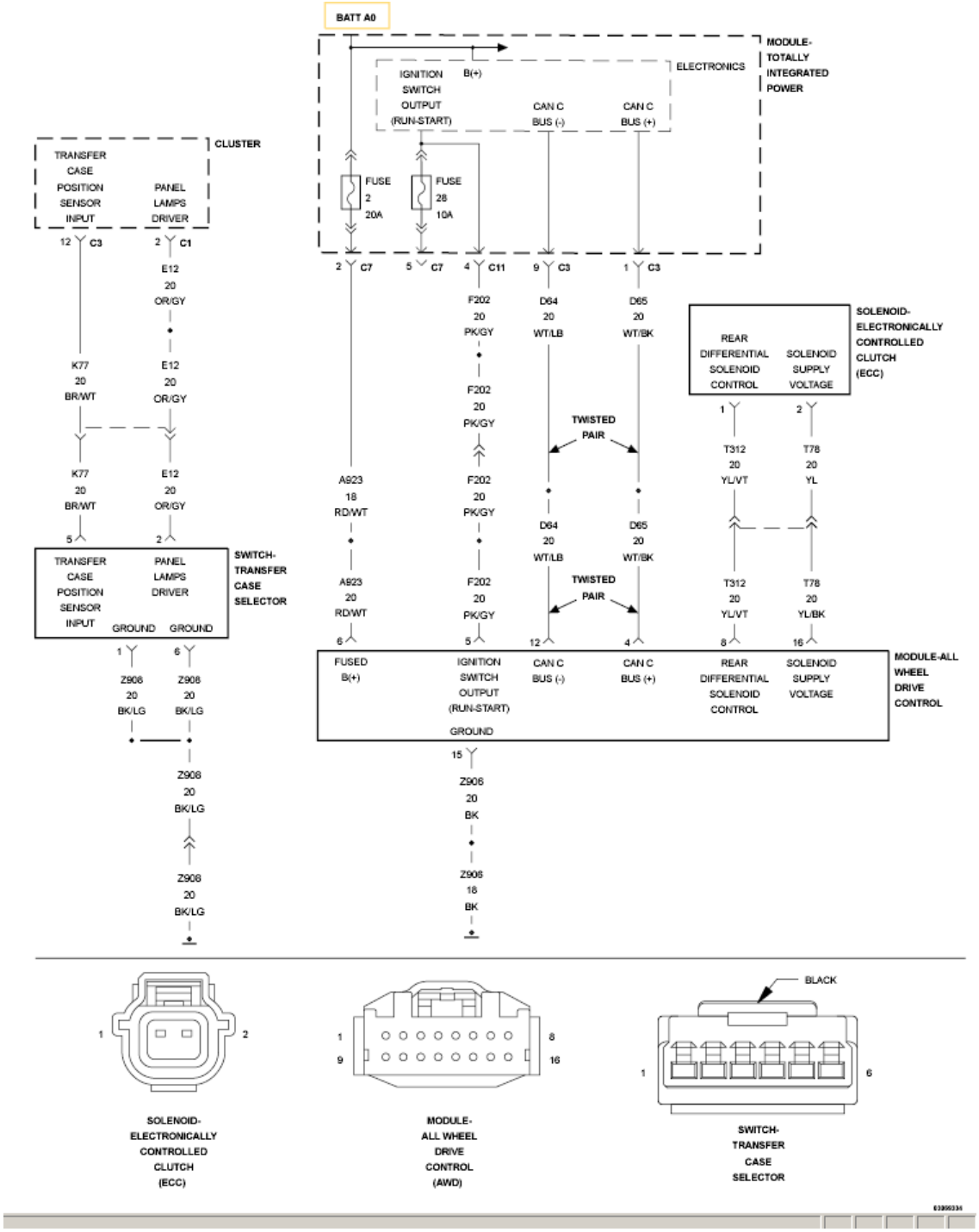

Fig. 39: All Wheel Drive Control Module Circuit Diagram
Courtesy of CHRYSLER GROUP, LLC

For a complete wiring diagram, **refer to appropriate SYSTEM WIRING DIAGRAMS article** .

WHEN MONITORED

Continuously.

SET CONDITION

The All Wheel Drive (AWD) Control Module detects that the ignition Switch circuit voltage is above 17.0 volts for more than 10 seconds.

POSSIBLE CAUSES

Possible Causes
(F202) IGNITION SWITCH OUTPUT (RUN/START) VOLTAGE
(F202) IGNITION SWITCH OUTPUT (RUN/START) CIRCUIT OPEN OR HIGH RESISTANCE
ALL WHEEL DRIVE (AWD) CONTROL MODULE
TOTALLY INTEGRATED POWER MODULE (TIPM)

DIAGNOSTIC TEST

1. **CHARGING SYSTEM DTCS PRESENT**
   1. Ignition on, engine not running.
   2. With the scan tool, select View DTCs in the Powertrain Control Module.

      Are there any Charging System or related voltage DTCs present?

      Yes

      - Perform the appropriate diagnostic procedure. Refer to the **DTC INDEX** article .

      No

      - Go To 2
2. **VERIFY THE DTC IS ACTIVE**
   1. Ignition on, engine not running.
   2. With the scan tool, read the DTCs.
   3. Cycle the ignition switch from the OFF to ON position, leaving the ignition on for a minimum of 10 seconds.
   4. With the scan tool, read the DTCs.

      Is the DTC active at this time?

Yes

- Go To 3

No

- Go To 8

3. **(F202) IGNITION SWITCH OUTPUT (RUN/START) CIRCUIT SHORTED TO VOLTAGE**

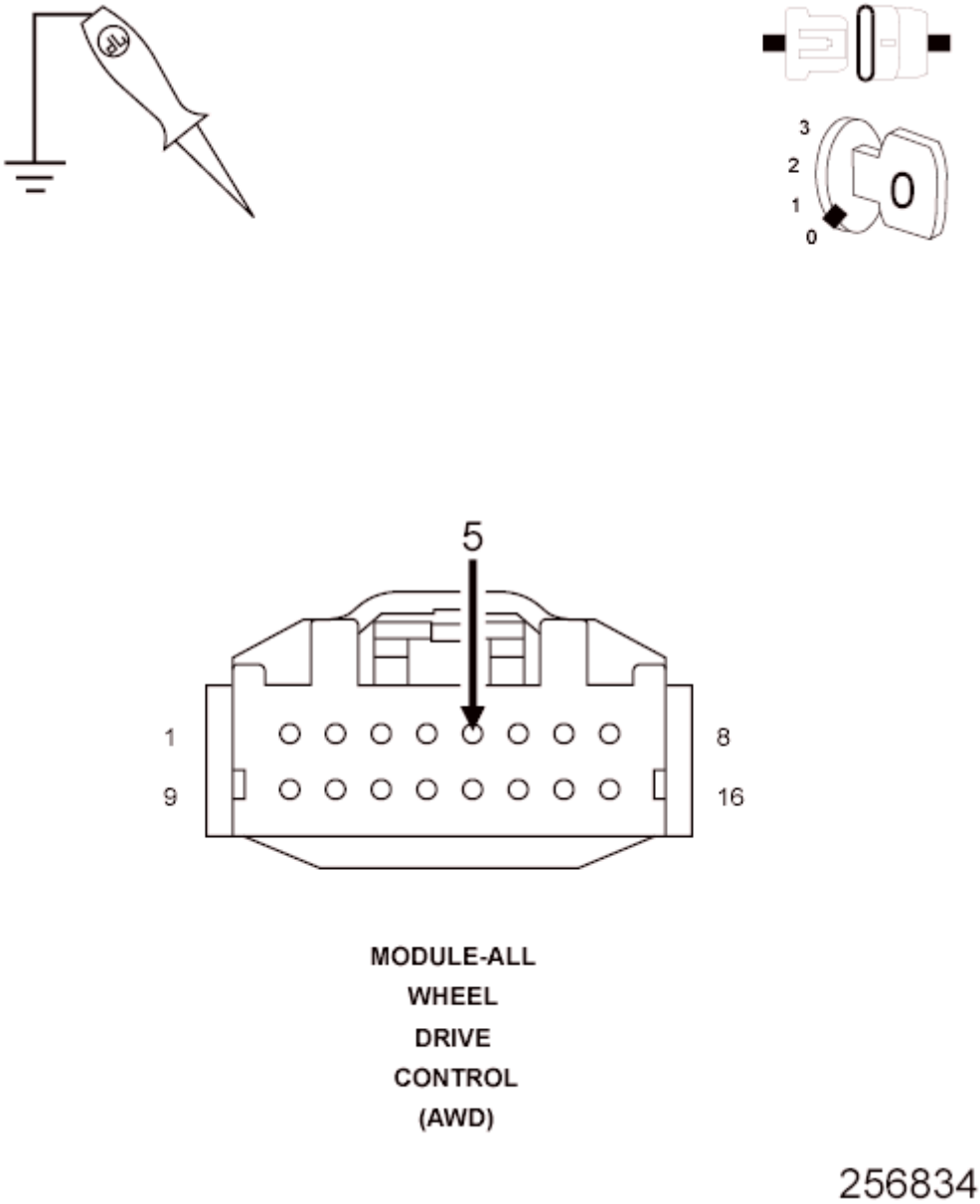

Fig. 40: Checking Ignition Switch Output (Run/Start) Circuit For A Short To Voltage

Courtesy of CHRYSLER GROUP, LLC

1. Turn the ignition off.
2. Disconnect the TIPM C11 harness connector.
3. Disconnect the AWD Control Module harness connector.
4. With a 12-volt test light connected to ground, check the (F202) Ignition Switch Output (RUN/START) circuit in the AWD Control Module harness connector.

NOTE: The test light must illuminate brightly. Compare the brightness to that of a direct connection to the battery.

Does the test light illuminate brightly?

Yes

- Repair the (F202) Ignition Switch Output (RUN/START) circuit for a short to voltage.
- Perform the AWD CONTROL MODULE VERIFICATION TEST. Refer to **STANDARD PROCEDURE**.

No

Go To 4

4. **(F202) IGNITION SWITCH OUTPUT (RUN/START)**

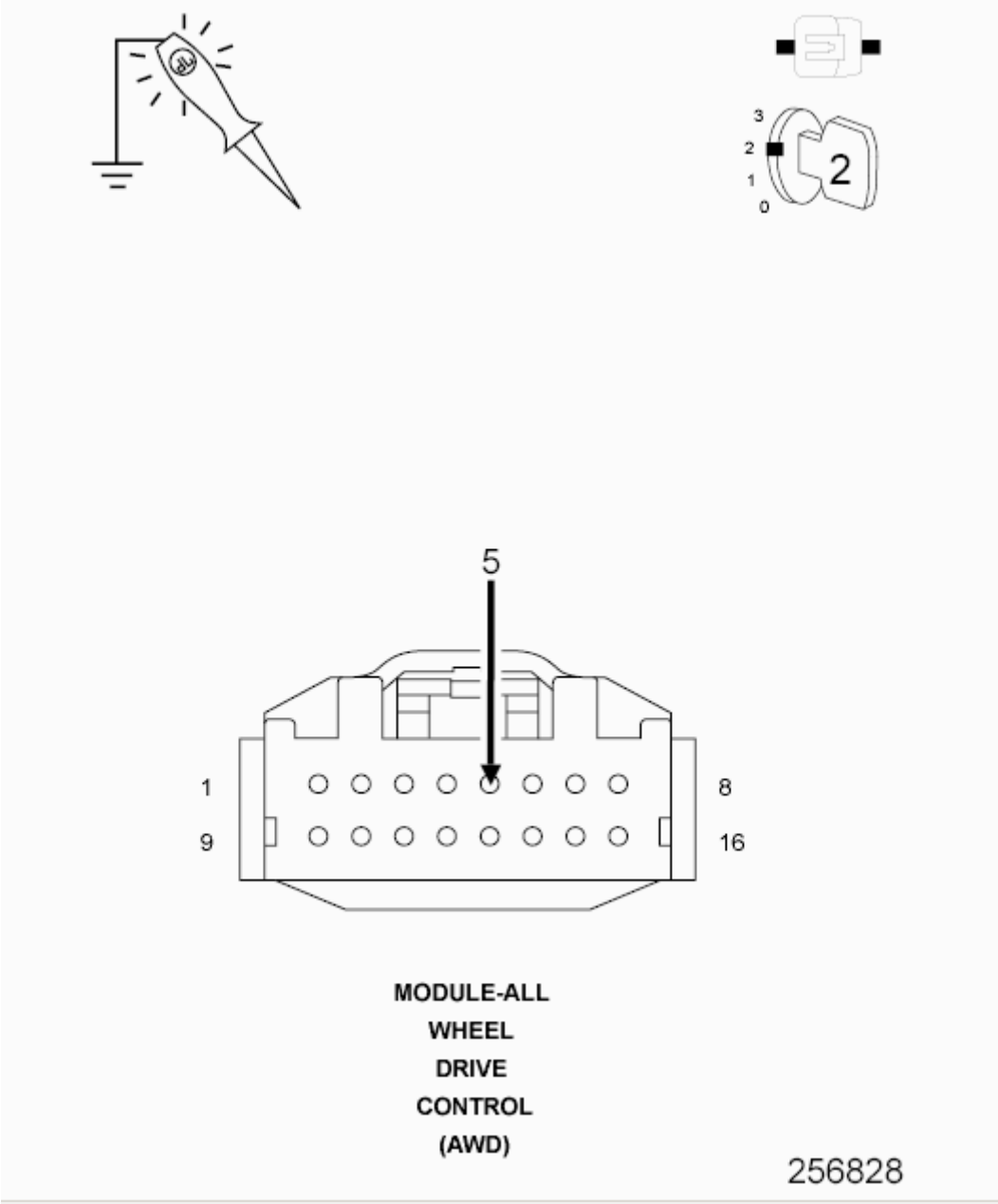

Fig. 41: Checking Ignition Switch Output (Run/Start)
Courtesy of CHRYSLER GROUP, LLC

1. Reconnect the AWD Control Module harness connector.
2. Reconnect the TIPM C11 harness connector.
3. Ignition on, engine not running.
4. With a 12-volt test light connected to ground, check the (F202) Ignition Switch Output (RUN/START) circuit in the AWD Control Module harness connector.

NOTE: The test light must illuminate brightly. Compare

the brightness to that of a direct connection to the battery.

Does the test light illuminate brightly?

Yes

- Go To 7

No

- Go To 5

5. **CHECK THE TIPM (F202) IGNITION SWITCH OUTPUT (RUN/START) VOLTAGE**

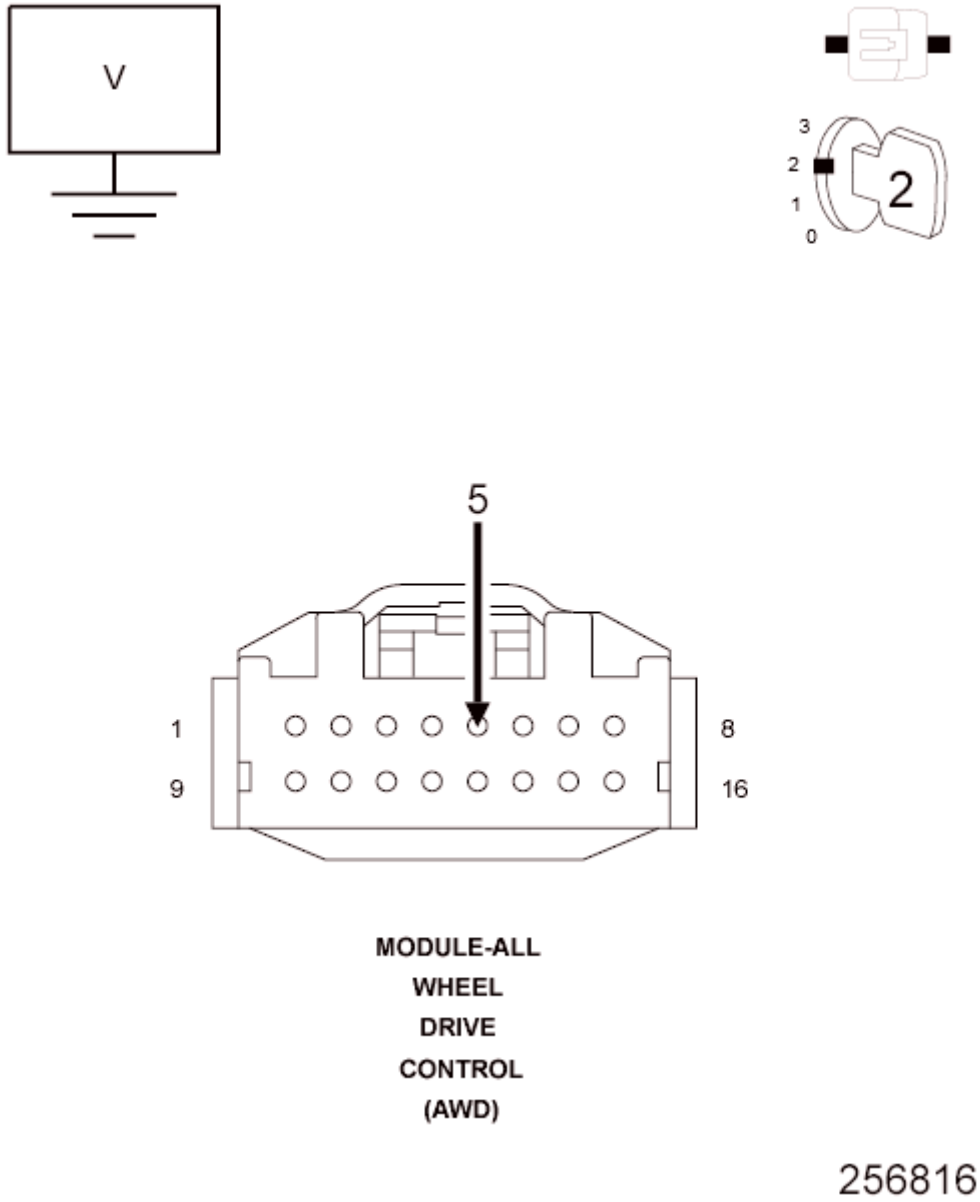

Fig. 42: Checking TIPM Ignition Switch Output Run/Start Voltage
Courtesy of CHRYSLER GROUP, LLC

1. While back probing, measure the voltage of the (F202) Ignition Switch Output Run/Start circuit in the TIPM C7 harness connector.

   Is the voltage below 17 volts?

   Yes

   - Go To 7

   No

- Go To 6

6. **AWD CONTROL MODULE**

NOTE: Before continuing, check the AWD Module harness connector terminals for corrosion, damage, or terminal push out. Repair as necessary.

1. Using the schematics as a guide, inspect the wire harness and connectors.
2. Pay particular attention to all Power and Ground circuits.

View repair.

Repair

- Replace the All Wheel Drive (AWD) Control Module in accordance with the Service information.
- Perform the AWD CONTROL MODULE VERIFICATION TEST. Refer to **STANDARD PROCEDURE**.

7. **TOTALLY INTEGRATED POWER MODULE**

NOTE: Before continuing, check the TIPM harness connector terminals for corrosion, damage, or terminal push out. Repair as necessary.

1. Using the schematics as a guide, inspect the wire harness and connectors.
2. Pay particular attention to all Power and Ground circuits.

View repair.

Repair

- Replace the Totally Integrated Power Module in accordance with the Service Information.
- Perform the BODY VERIFICATION TEST. Refer to **STANDARD PROCEDURE** .

8. **INTERMITTENT WIRING AND CONNECTORS**

1. The conditions necessary to set this DTC are not present at this time.
2. Using the schematics as a guide, inspect the wiring and connectors specific to this circuit.
3. Wiggle test the wiring harness and connectors while checking for shorted and open circuits.
4. Using the scan tool, monitor the data related to this circuit while performing the wiggle test. Look for the data to change or for the DTC to reset.

   Were there any problems found?

   Yes

   - Repair as necessary.
   - Perform the AWD CONTROL MODULE VERIFICATION TEST. Refer to **STANDARD PROCEDURE**.

   No

   - Test Complete.

C211E-BATTERY SUPPLY VOLTAGE LOW

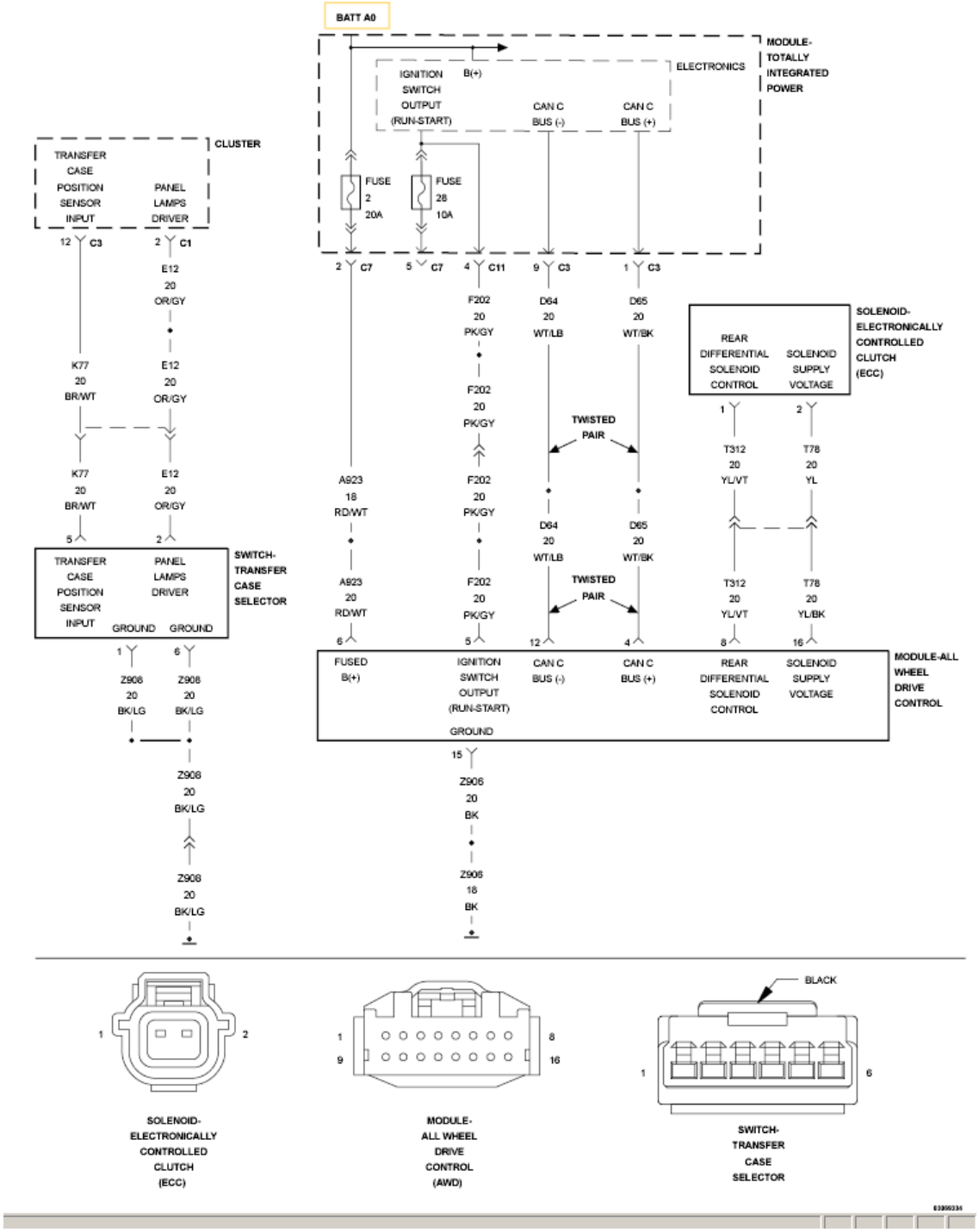

Fig. 43: All Wheel Drive Control Module Circuit Diagram
Courtesy of CHRYSLER GROUP, LLC

For a complete wiring diagram, **refer to appropriate SYSTEM WIRING DIAGRAMS article** .

WHEN MONITORED

Continuously.

SET CONDITION

The All Wheel Drive (AWD) Control Module detects that the Fused Battery (+) circuit voltage is below 2.0 volts for more than 1 second.

POSSIBLE CAUSES

Possible Causes
CHARGING SYSTEM DTCS PRESENT
(A923) FUSED B+ CIRCUIT VOLTAGE
(A923) FUSED B+ CIRCUIT OPEN OR HIGH RESISTANCE
(Z906) GROUND CIRCUIT OPEN OR HIGH RESISTANCE
ALL WHEEL DRIVE (AWD) CONTROL MODULE
TOTALLY INTEGRATED POWER MODULE (TIPM)

DIAGNOSTIC TEST

1. **CHARGING SYSTEM DTCS PRESENT**
   1. Ignition on, engine not running.
   2. With the scan tool, select View DTCs in the Powertrain Control Module.

      Are there any Charging System or related voltage DTCs present?

      Yes

      - Perform the appropriate diagnostic procedure. Refer to the **DTC INDEX** article .

      No

      - Go To 2
2. **VERIFY THE DTC IS ACTIVE**

   NOTE: Leave the ignition on for 2 seconds.

   1. With the scan tool, read DTCs.

      Is the DTC active at this time?

      Yes

- Go To 3

No

- Go To 8

3. **CHECK THE TIPM (A923) FUSED B+ VOLTAGE**

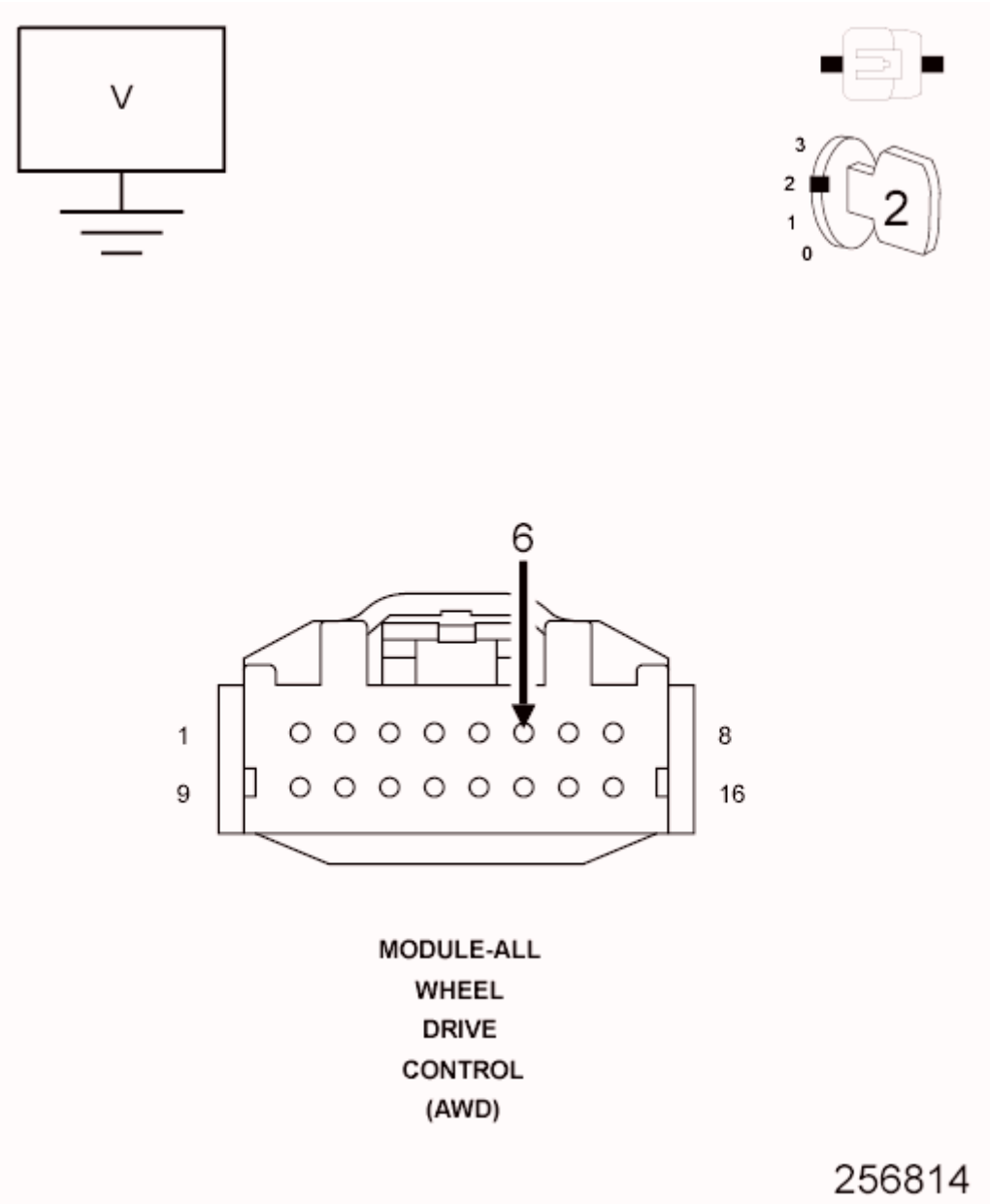

Fig. 44: Checking TIPM Fused B(+) Voltage
Courtesy of CHRYSLER GROUP, LLC

1. While back probing, measure the voltage of the (A923) Fused B+ circuit in the TIPM C7 harness connector.

Is the voltage below 2 volts?

Yes

- Go To 7

No

- Go To 4

4. **(A923) FUSED B+ CIRCUIT OPEN OR HIGH RESISTANCE**

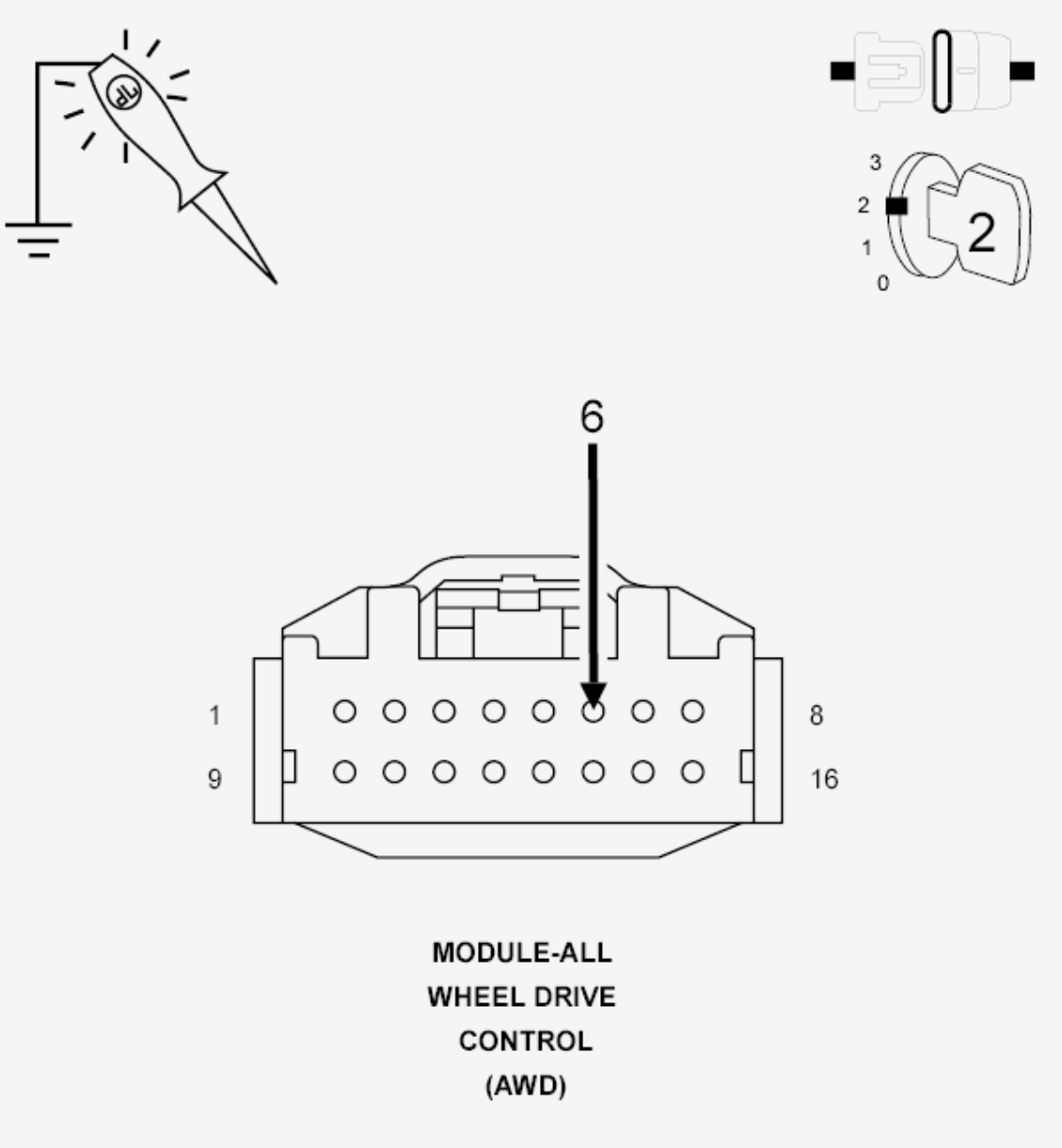

Fig. 45: Checking Fused B+ Circuit For Open Or High Resistance
Courtesy of CHRYSLER GROUP, LLC

1. Turn the ignition off.
2. Disconnect the AWD module harness connector.
3. Ignition on, engine not running.
4. With a 12-volt test light connected to ground, check the (A923) Fused B(+) circuit in the AWD Control Module harness connector.

NOTE: The test light must illuminate brightly. Compare the brightness to that of a direct connection to the battery.

Does the test light illuminate brightly?

Yes

- Go To 5

No

- Repair the (A923) Fused B+ circuit for an open circuit or high resistance.
- Perform the AWD CONTROL MODULE VERIFICATION TEST. Refer to **STANDARD PROCEDURE**.

5. **(Z906) GROUND CIRCUIT OPEN OR HIGH RESISTANCE**

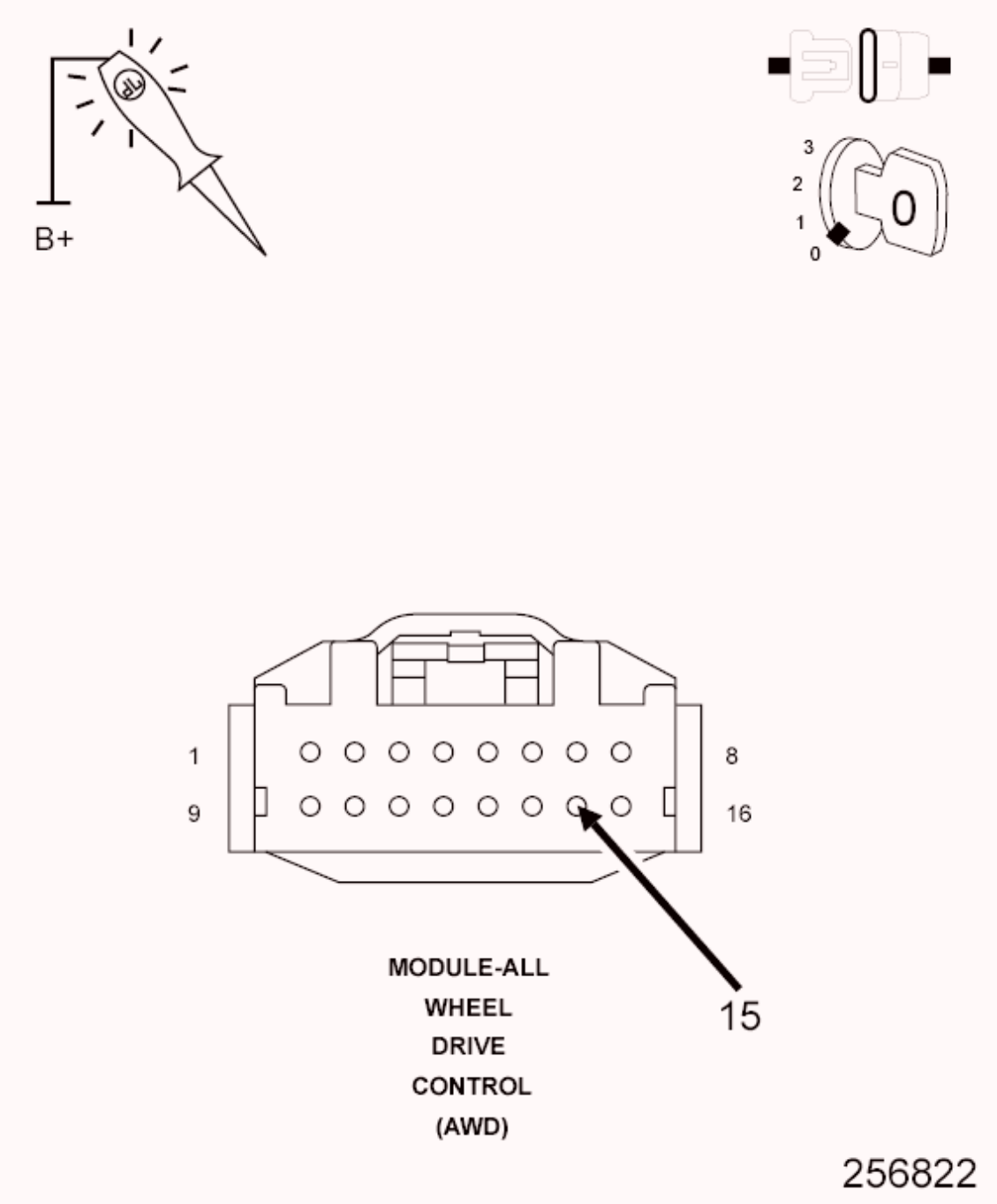

Fig. 46: Checking Ground Circuit For Open or High Resistance
Courtesy of CHRYSLER GROUP, LLC

1. Using a 12-volt test light connected to B(+), check the (Z906) Ground circuit in the AWD Control Module harness connector.

NOTE: The test light must illuminate brightly. Compare the brightness to that of a direct connection to the battery.

Does the test light illuminate brightly?

Yes

- Go To 6

No

- Repair the (Z906) Ground circuit for an open circuit or high resistance.
- Perform the AWD CONTROL MODULE VERIFICATION TEST. Refer to **STANDARD PROCEDURE**.

6. **AWD CONTROL MODULE**

NOTE: Before continuing, check the AWD Module harness connector terminals for corrosion, damage, or terminal push out. Repair as necessary.

1. Using the schematics as a guide, inspect the wire harness and connectors.
2. Pay particular attention to all Power and Ground circuits.

View repair.

Repair

- Replace the All Wheel Drive (AWD) Control Module in accordance with the Service information.
- Perform the AWD CONTROL MODULE VERIFICATION TEST. Refer to **STANDARD PROCEDURE**.

7. **TOTALLY INTEGRATED POWER MODULE**

NOTE: Before continuing, check the TIPM harness connector terminals for corrosion, damage, or terminal push out. Repair as necessary.

1. Using the schematics as a guide, inspect the wire harness and connectors.
2. Pay particular attention to all Power and Ground circuits.

View repair.

Repair

- Replace the Totally Integrated Power Module in accordance with the Service Information.
- Perform the BODY VERIFICATION TEST. Refer to **STANDARD PROCEDURE** .

8. **INTERMITTENT WIRING AND CONNECTORS**
   1. The conditions necessary to set this DTC are not present at this time.
   2. Using the schematics as a guide, inspect the wiring and connectors specific to this circuit.
   3. Wiggle test the wiring harness and connectors while checking for shorted and open circuits.
   4. Using the scan tool, monitor the data related to this circuit while performing the wiggle test. Look for the data to change or for the DTC to reset.

   Were there any problems found?

   Yes

   - Repair as necessary.
   - Perform the AWD CONTROL MODULE VERIFICATION TEST. Refer to **STANDARD PROCEDURE**.

   No

   - Test Complete.

C211F-BATTERY SUPPLY VOLTAGE HIGH

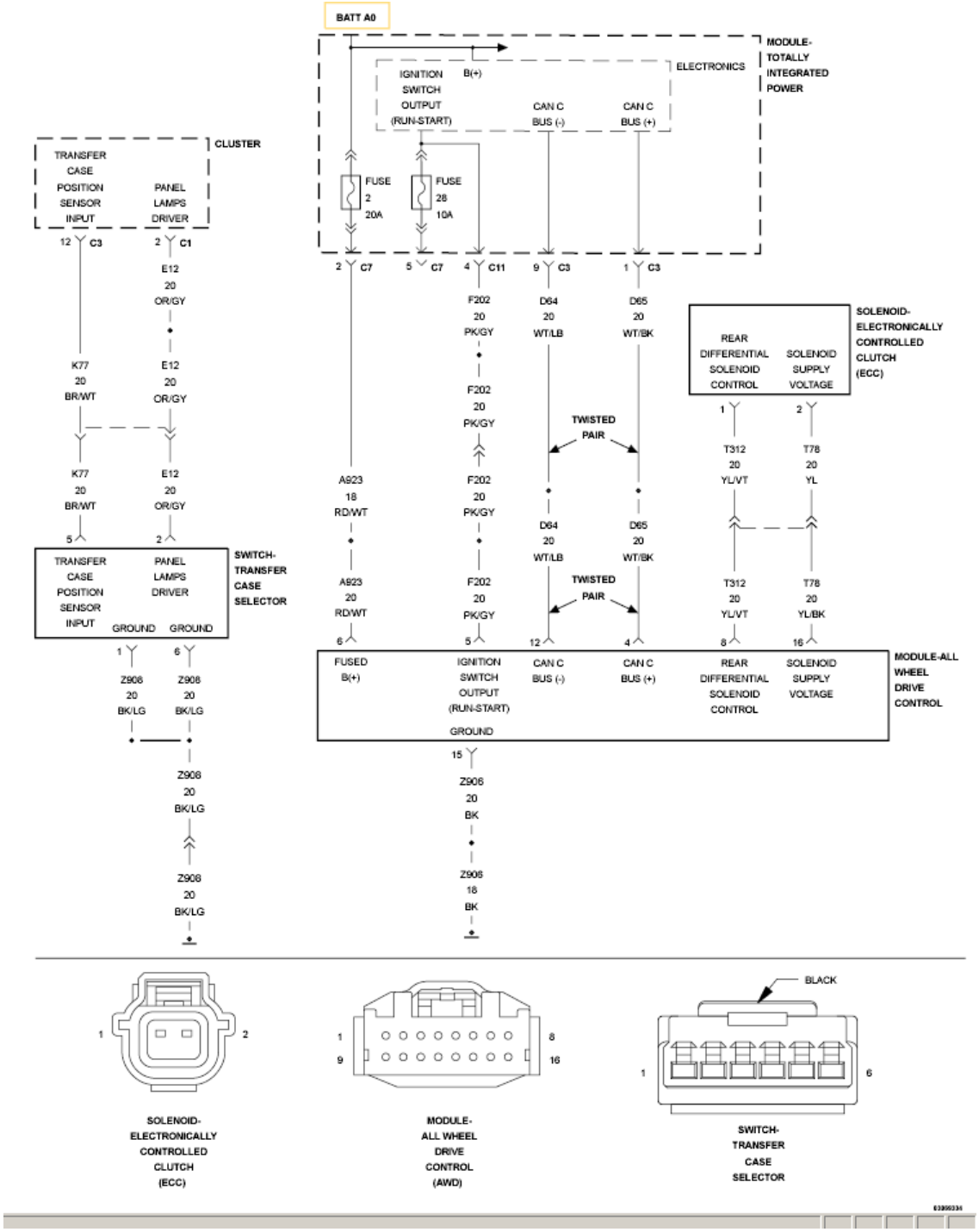

Fig. 47: All Wheel Drive Control Module Circuit Diagram
Courtesy of CHRYSLER GROUP, LLC

For a complete wiring diagram, **refer to appropriate SYSTEM WIRING DIAGRAMS article** .

WHEN MONITORED

Continuously.

SET CONDITION

The All Wheel Drive (AWD) Control Module detects that the Fused Battery (+) circuit voltage is above 17.0 volts for more than 10 seconds.

POSSIBLE CAUSES

Possible Causes
(A923) FUSED B+ CIRCUIT VOLTAGE
CHARGING SYSTEM DTCS PRESENT
ALL WHEEL DRIVE (AWD) CONTROL MODULE
TOTALLY INTEGRATED POWER MODULE (TIPM)

DIAGNOSTIC TEST

1. **CHARGING SYSTEM DTCS PRESENT**
   1. Ignition on, engine not running.
   2. With the scan tool, select View DTCs in the Powertrain Control Module.

      Are there any Charging System or related voltage DTCs present?

      Yes

      - Perform the appropriate diagnostic procedure. Refer to the **DTC INDEX** article .

      No

      - Go To 2
2. **VERIFY THE DTC IS ACTIVE**

   NOTE: Leave the ignition on for 15 seconds.

   1. With the scan tool, select View DTCs.

      Is the DTC active at this time?

      Yes

      - Go To 3

No

- Go To 6

3. **CHECK THE TIPM (A923) FUSED B+ VOLTAGE**

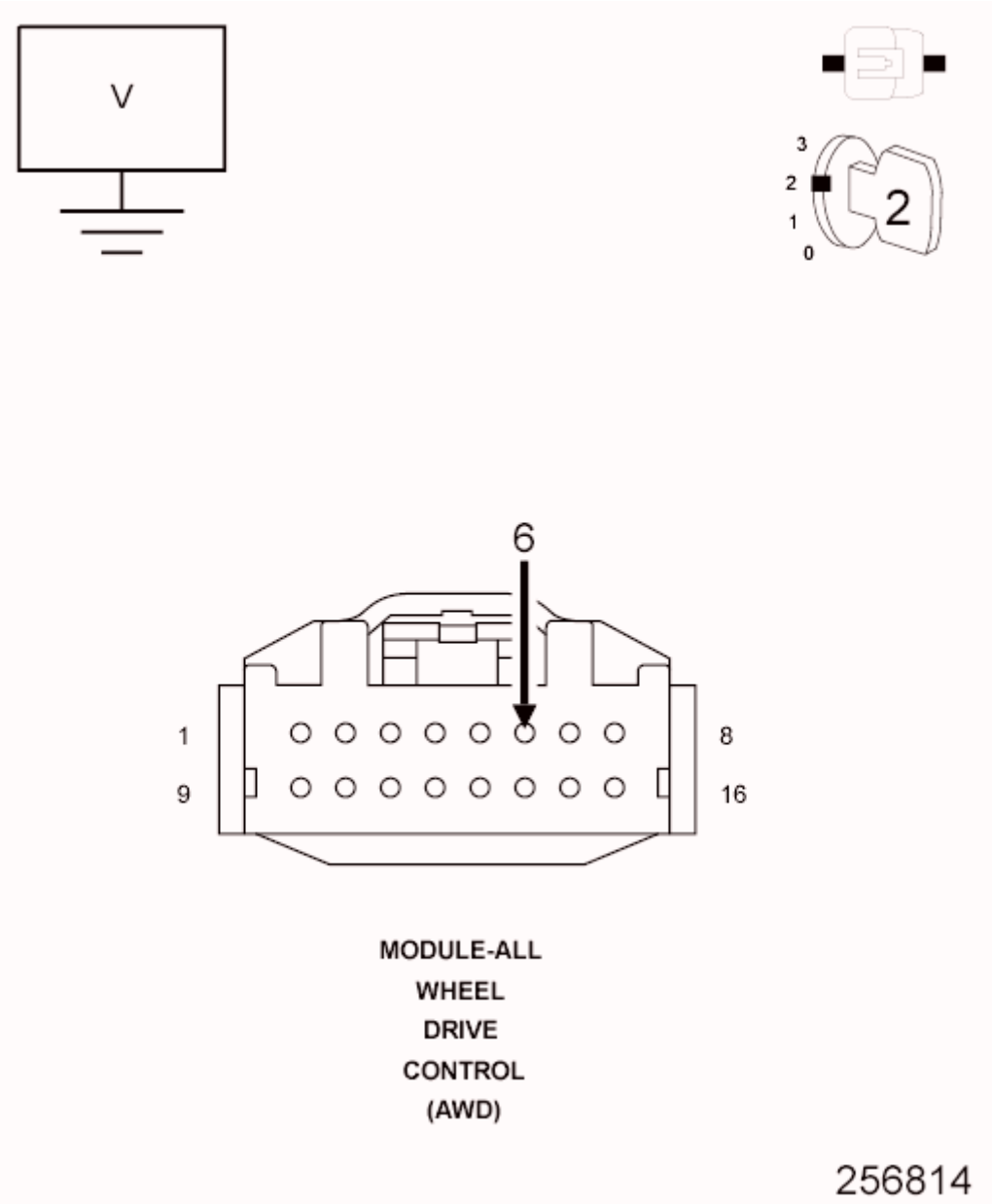

Fig. 48: Checking TIPM Fused B(+) Voltage
Courtesy of CHRYSLER GROUP, LLC

1. While back probing, measure the voltage of the (A923) Fused B+ circuit in the TIPM C7 harness connector.

   Is the voltage below 17 volts?

Yes

- Go To 4

No

- Go To 5

4. **AWD CONTROL MODULE**

NOTE: Before continuing, check the AWD Module harness connector terminals for corrosion, damage, or terminal push out. Repair as necessary.

1. Using the schematics as a guide, inspect the wire harness and connectors.
2. Pay particular attention to all Power and Ground circuits.

.

Repair

- Replace the All Wheel Drive (AWD) Control Module in accordance with the Service information.
- Perform the AWD CONTROL MODULE VERIFICATION TEST. Refer to **STANDARD PROCEDURE**.

5. **TOTALLY INTEGRATED POWER MODULE**

NOTE: Before continuing, check the TIPM harness connector terminals for corrosion, damage, or terminal push out. Repair as necessary.

1. Using the schematics as a guide, inspect the wire harness and connectors.
2. Pay particular attention to all Power and Ground circuits.

.

Repair

- Replace the Totally Integrated Power Module in accordance with the Service Information.
- Perform the BODY VERIFICATION TEST. Refer to **STANDARD PROCEDURE** .

6. **CHECK THE WIRING AND CONNECTORS**
   1. The conditions necessary to set this DTC are not present at this time.
   2. Using the schematics as a guide, inspect the wiring and connectors specific to this circuit.
   3. Wiggle test the wiring harness and connectors while checking for shorted and open circuits.
   4. Using the scan tool, monitor the data related to this circuit while performing the wiggle test. Look for the data to change or for the DTC to reset.

   Were any problems found?

   Yes

   - Repair as necessary.
   - Perform the AWD CONTROL MODULE VERIFICATION TEST. Refer to **STANDARD PROCEDURE**.

   No

   - Test complete.

C2208-AWD ECU INTERNAL

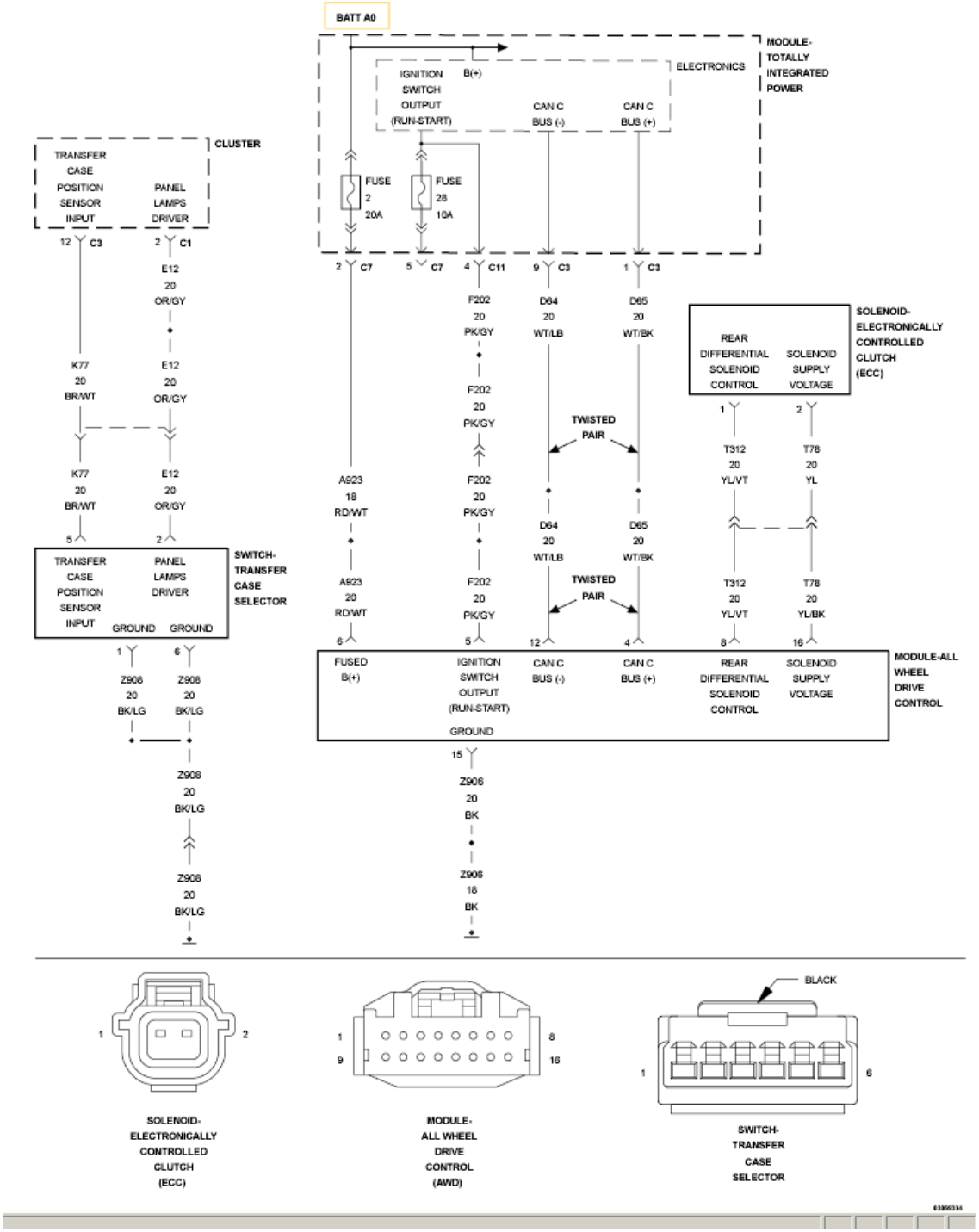

Fig. 49: All Wheel Drive Control Module Circuit Diagram
Courtesy of CHRYSLER GROUP, LLC

For a complete wiring diagram, **refer to appropriate SYSTEM WIRING DIAGRAMS article** .

WHEN MONITORED

With the ignition on.

SET CONDITION

The All Wheel Drive (AWD) Module has detected a failure internal to the controller.

POSSIBLE CAUSES

Possible Causes
(T312) REAR DIFFERENTIAL SOLENOID CONTROL CIRCUIT SHORTED TO VOLTAGE ALL WHEEL DRIVE (AWD) MODULE

DIAGNOSTIC TEST

1. **VERIFY THE DTC IS ACTIVE**
    1. Ignition on, engine not running.
    2. With the scan tool, read DTCs.

    Is the DTC active at this time?

    Yes

    - Go To 2

    No

    - Go To5
2. **ALL WHEEL DRIVE (AWD) MODULE INTERNAL FAILURE**
    1. With the scan tool, check the AWD failure indicator light.

    Is the AWD failure indicator light active at this time?

    Yes

    - Go To 3

    No

    - Go To4
3. **(T312) REAR DIFFERENTIAL SOLENOID CONTROL CIRCUIT SHORTED TO VOLTAGE**

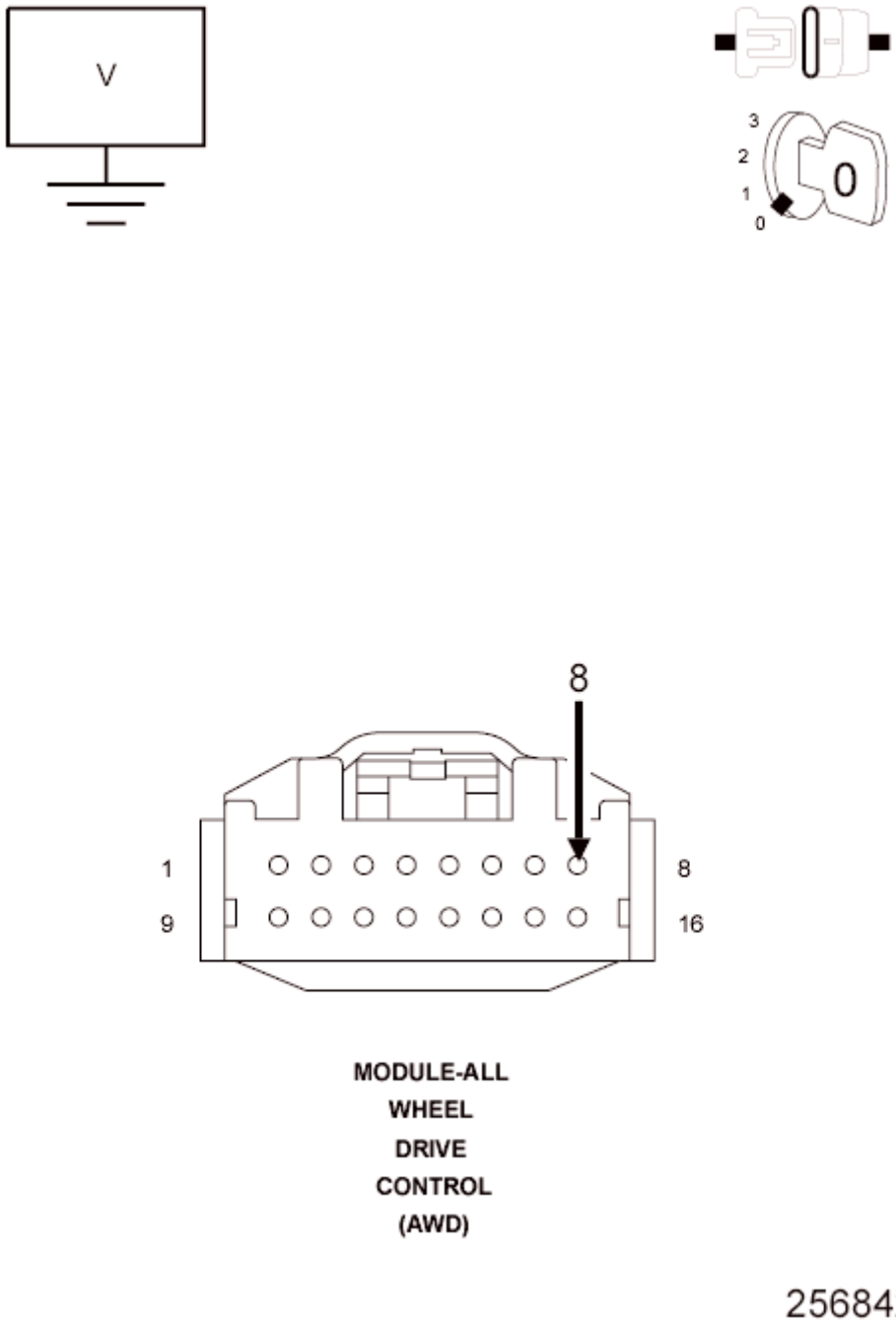

Fig. 50: Checking Rear Differential Solenoid Control Circuit For A Short To Voltage
Courtesy of CHRYSLER GROUP, LLC

1. Turn the ignition off to the lock position.
2. Disconnect the AWD Control Module harness connector.
3. Measure the voltage of the (T312) Rear Differential Solenoid Control circuit in the AWD Module harness connector.

Is there any voltage present?

Yes

- Repair the short to voltage in the (T312) Rear Differential Solenoid Control circuit.
- Perform the AWD CONTROL MODULE VERIFICATION TEST. Refer to **STANDARD PROCEDURE**.

No

- Go To 4

4. **ALL WHEEL DRIVE CONTROL MODULE**
   1. The AWD Control Module has detected an internal failure.

      Repair

      - Replace the All Wheel Drive (AWD) Control Module in accordance with the Service Information.
      - Perform the AWD CONTROL MODULE VERIFICATION TEST. Refer to **STANDARD PROCEDURE**.
5. **INTERMITTENT WIRING AND CONNECTORS**
   1. The conditions necessary to set this DTC are not present at this time.
   2. Using the schematics as a guide, inspect the wiring and connectors specific to this circuit.
   3. Wiggle test the wiring harness and connectors while checking for shorted and open circuits.
   4. Using the scan tool, monitor the data related to this circuit while performing the wiggle test. Look for the data to change or for the DTC to reset.

      Were there any problems found?

      Yes

      - Repair as necessary.
      - Perform the AWD CONTROL MODULE VERIFICATION TEST. Refer to **STANDARD PROCEDURE**.

No

- Test Complete.

U0001-CAN C BUS

For a complete wiring diagram, **refer to appropriate SYSTEM WIRING DIAGRAMS article** .

THEORY OF OPERATION

The All Wheel Drive (AWD) communicates with other controllers over the CAN C bus. The AWD Module continuously monitors the bus activity and receives the messages it needs.

WHEN MONITORED

Ignition run time is greater than one second. Battery voltage between 10 and 16 volts. Engine run time greater than three seconds.

SET CONDITION

The circuit is continuously monitored. Two Trip fault.

POSSIBLE CAUSES

Possible Causes
CAN C BUS OPEN OR SHORTED CONDITION
ANTI-LOCK BRAKE SYSTEM (ABS) MODULE
ALL WHEEL DRIVE (AWD) CONTROL MODULE
OCCUPANT RESTRAINT CONTROLLER
POWERTRAIN CONTROL MODULE (PCM)
STEERING ANGLE SENSOR (SAS)
TRANSMISSION CONTROL MODULE (TCM)
TOTALLY INTEGRATED POWER MODULE (TIPM)
WIRELESS IGNITION NODE (WIN)

DIAGNOSTIC TEST

ACTIVE DTC

NOTE: For vehicle communication problems, use the scan tool

to refer to the Network Review Screen. The screen depicts a high level view of the vehicle network. Fault and problem areas appear in red. Selecting any of the network components allows access to the source of the problem.

1. Turn the ignition on.
2. With a scan tool, read DTCs.

   Is the status Active for this DTC?

   Yes

   - Refer to **DIAGNOSIS AND TESTING** and perform the U0001-CAN C BUS CIRCUIT diagnostic procedure.

   No

   - Refer to **DIAGNOSIS AND TESTING** and perform the STORED LOST COMMUNICATION DTCs diagnostic procedure.

U0002-CAN C BUS OFF PERFORMANCE

For a complete wiring diagram, **refer to appropriate SYSTEM WIRING DIAGRAMS article** .

WHEN MONITORED

Ignition run time is greater than one second.

Battery voltage between 9 and 16 volts.

Engine run time greater than three seconds.

SET CONDITION

Bus messages not received from the Totally Integrated Power Module (TIPM) for approximately two to five seconds.

POSSIBLE CAUSES

Possible Causes
CAN BUS CIRCUITS OPEN OR SHORTED

DTCS RELATED TO BATTERY VOLTAGE, IGNITION, OR VIN MESSAGES
TOTALLY INTEGRATED POWER MODULE POWER AND GROUND
TIPM NOT CONFIGURED CORRECTLY
TOTALLY INTEGRATED POWER MODULE (TIPM)
MODULE THAT SET THIS DTC

DIAGNOSTIC TEST

ACTIVE DTC

1. Ignition on, engine not running.
2. With the scan tool, select view DTCs.

   Is the DTC Active at this time?

   Yes

   - Diagnose the U0002-CAN C BUS OFF PERFORMANCE as the U0001-CAN C BUS CIRCUIT test. Refer to **DIAGNOSIS AND TESTING** and perform the U0001-CAN C Bus diagnostic procedure.

   No

   - Refer to **DIAGNOSIS AND TESTING** and perform the STORED LOST COMMUNICATION DTCs diagnostic procedure.

U0100-LOST COMMUNICATION WITH THE ECM/PCM

For a complete wiring diagram, **refer to appropriate SYSTEM WIRING DIAGRAMS article** .

WHEN MONITORED

Ignition run time is greater than one second.

Battery voltage between 9 and 16 volts.

Engine run time greater than three seconds.

SET CONDITION

Bus messages not received from the Powertrain Control Module (ECM/PCM) for approximately two to five seconds.

POSSIBLE CAUSES

Possible Causes
CAN BUS CIRCUITS OPEN OR SHORTED DTCS RELATED TO BATTERY VOLTAGE, IGNITION, OR VIN MESSAGES POWERTRAIN CONTROL MODULE POWER AND GROUND TIPM NOT CONFIGURED CORRECTLY POWERTRAIN CONTROL MODULE (ECM/PCM) MODULE THAT SET THIS DTC

DIAGNOSTIC TEST

ACTIVE DTC

1. Ignition on, engine not running.
2. With the scan tool, select view DTCs.

   Is the DTC Active at this time?

   Yes

   - Perform the U0100-LOST COMMUNICATION WITH ECM/PCM diagnostic procedure. Refer to **DIAGNOSIS AND TESTING** .

   No

   - Refer to **DIAGNOSIS AND TESTING** and perform the STORED LOST COMMUNICATION DTCs diagnostic procedure.

U0121-LOST COMMUNICATION WITH ABS

For a complete wiring diagram, **refer to appropriate SYSTEM WIRING DIAGRAMS article** .

WHEN MONITORED

Ignition run time is greater than one second.

Battery voltage between 9 and 16 volts.

Engine run time greater than three seconds.

SET CONDITION

Bus messages not received from the Totally Integrated Power Module (TIPM) for approximately two to five seconds.

POSSIBLE CAUSES

Possible Causes
CAN BUS CIRCUITS OPEN OR SHORTED
ABS MODULE
DTCS RELATED TO BATTERY VOLTAGE, IGNITION, OR VIN MESSAGES
TOTALLY INTEGRATED POWER MODULE POWER AND GROUND
TIPM NOT CONFIGURED CORRECTLY
TOTALLY INTEGRATED POWER MODULE (TIPM)
MODULE THAT SET THIS DTC

DIAGNOSTIC TEST

ACTIVE DTC

1. Ignition on, engine not running.
2. With the scan tool, select view DTCs.

   Is the DTC Active at this time?

   Yes

   - Refer to **DIAGNOSIS AND TESTING** and perform the U0121-LOST COMMUNICATION WITH ANTI-LOCK BRAKE MODULE diagnostic procedure.

   No

   - Refer to **DIAGNOSIS AND TESTING** and perform the STORED LOST COMMUNICATION DTCs diagnostic procedure.

U0141-LOST COMMUNICATION WITH IPM (FCM/TIPM)

For a complete wiring diagram, **refer to appropriate SYSTEM WIRING DIAGRAMS article** .

WHEN MONITORED

Continuously when the ignition is on.

The battery voltage between 10.0 and 16.0 Volts.

Ignition Off Draw (IOD) fuse installed.

Totally Integrated Power Module (TIPM) is configured correctly.

SET CONDITION

Bus messages not received from the Totally Integrated Power Module (TIPM) for approximately two to five seconds.

POSSIBLE CAUSES

Possible Causes
CAN BUS CIRCUITS OPEN OR SHORTED
DTCS RELATED TO BATTERY VOLTAGE, IGNITION, OR VIN MESSAGES
TOTALLY INTEGRATED POWER MODULE POWER AND GROUND
TIPM NOT CONFIGURED CORRECTLY
TOTALLY INTEGRATED POWER MODULE (TIPM)
MODULE THAT SET THIS DTC

DIAGNOSTIC TEST

VERIFY DTC IS ACTIVE

NOTE: Make sure the IOD fuse is installed and the battery is fully charged before proceeding.

1. Turn the ignition on.
2. With the scan tool, read active DTCs.

   Is this DTC active?

Yes

- Refer to **DIAGNOSIS AND TESTING** and perform the U0141-LOST COMMUNICATION WITH IPM (FCM/TIPM) diagnostic procedure.

No

- Refer to **DIAGNOSIS AND TESTING** and perform the STORED LOST COMMUNICATION DTCs diagnostic procedure.

U0401-IMPLAUSIBLE DATA RECEIVED FROM ECM/PCM

For a complete wiring diagram, **refer to appropriate SYSTEM WIRING DIAGRAMS article**

WHEN MONITORED

Continuously with the ignition on, one valid CAN message received at least once, and no U0002-CAN C Bus Off Performance DTC present.

SET CONDITION

When the AWD Control Module detects an incorrect CAN message from the Power Control Module (PCM).

POSSIBLE CAUSES

Possible Causes
TIPM NOT CONFIGURED CORRECTLY
ABM CAN BUS DTCS
ENGINE DTCS
ALL WHEEL DRIVE (AWD) CONTROL MODULE

DIAGNOSTIC TEST

1. **CHECK FOR DTC U0401-IMPLAUSIBLE DATA RECEIVED FROM ECM/PCM**

NOTE: This DTC must be active for the results of this test to be valid.

1. Ignition on, engine not running.

2. With the scan tool, record and erase DTCs.
3. Cycle the ignition switch from off to on.
4. With the scan tool, read DTCs.

   Does the scan tool display: U0401-IMPLAUSIBLE DATA RECEIVED FROM ECM/PCM?

   Yes

   - Go To 2

   No

   - The conditions that caused this code to set are not present at this time. Using the wiring diagram/schematic as a guide, inspect the wiring and connectors.
   - Perform the AWD CONTROL MODULE VERIFICATION TEST. Refer to **STANDARD PROCEDURE**.

2. **CHECK IF TIPM CAN BUS DTCs ARE PRESENT**
   1. With the scan tool, read TIPM DTCs.

      Are there any TIPM CAN BUS DTCs present?

      Yes

      - Perform the appropriate symptom. Refer to the **DIAGNOSTIC CODE INDEX** article .
      - Perform AWD Control Module VERIFICATION TEST. Refer to **STANDARD PROCEDURE**.

      No

      - Go To 3

3. **CHECK IF ENGINE DTCs ARE PRESENT**
   1. With the scan tool, read Engine DTCs.

      Are there any Engine DTCs present?

      Yes

- Perform the appropriate symptom. Refer to the **DTC INDEX** article .
- Perform AWD CONTROL MODULE VERIFICATION TEST. Refer to **STANDARD PROCEDURE**.

No

- Using the schematics as a guide, check the AWD Control Module pins, terminals, and connectors for corrosion, damage, or terminal push out. Pay particular attention to all power and ground circuits. If no problems are found, replace the AWD Control Module in accordance with the Service Information.
- Perform AWD CONTROL MODULE VERIFICATION TEST. Refer to **STANDARD PROCEDURE**.

U0415-IMPLAUSIBLE DATA RECEIVED FROM ABS

For a complete wiring diagram, **refer to appropriate SYSTEM WIRING DIAGRAMS article**

THEORY OF OPERATION

The messages sent on the CAN bus are distinguished by an identifier (ID). Each CAN ID is defined to contain a certain number of bytes. The Transmission Control Module (TCM) verifies that it has received the proper number of bytes for each ID.

WHEN MONITORED

Continuously with the ignition on, one valid CAN ID received at least once, and no U0002-CAN Bus Off Performance DTC present.

SET CONDITION

When the TCM detects an incorrect CAN ID from the ABS control module.

POSSIBLE CAUSES

Possible Causes
TIPM CAN BUS DTCS PRESENT ABS DTCS PRESENT

ALL WHEEL DRIVE (AWD) CONTROL MODULE

DIAGNOSTIC TEST

1. **CHECK FOR TIPM CAN BUS DTCS**
   1. With the scan tool, read TIPM DTCs.

      Are there any TIPM CAN BUS DTCs present?

      Yes

      - Refer to the **DIAGNOSTIC CODE INDEX** article and perform the appropriate symptom.
      - Perform AWD CONTROL MODULE VERIFICATION TEST. Refer to **STANDARD PROCEDURE**.

      No

      - Go To 2
2. **CHECK IF ABS DTCS ARE PRESENT**
   1. With the scan tool, read ABS DTCs.

      Are there any ABS DTCs present?

      Yes

      - Refer to **DIAGNOSIS AND TESTING** and perform the appropriate symptom.
      - Perform AWD CONTROL MODULE VERIFICATION TEST. Refer to **STANDARD PROCEDURE**.

      No

      - Using the schematics as a guide, check the AWD Control Module pins, terminals, and connectors for corrosion, damage, or terminal push out. Pay particular attention to all power and ground circuits. If no problems are found, replace the PCM/TCM in accordance with the Service Information.
      - Perform AWD CONTROL MODULE VERIFICATION TEST. Refer to **STANDARD PROCEDURE**.

U0423-IMPLAUSIBLE DATA RECEIVED FROM CLUSTER/CCN

For a complete wiring diagram, **refer to appropriate SYSTEM WIRING DIAGRAMS article**

THEORY OF OPERATION

The messages sent on the CAN bus are distinguished by an identifier (ID). Each CAN ID is defined to contain a certain number of bytes. The All Wheel Drive (AWD) Control Module verifies that it has received the proper number of bytes for each ID.

WHEN MONITORED

Continuously with the ignition on, one valid CAN ID received at least once, and no U0002-CAN Bus Off Performance DTC present.

SET CONDITION

When the AWD Control Module detects an incorrect CAN ID from the CLUSTER/CCN.

POSSIBLE CAUSES

Possible Causes
TOTALLY INTEGRATED POWER MODULE (TIPM) NOT CONFIGURED CORRECTLY
CAN BUS DTCs PRESENT
CLUSTER/CCN MODULE DTCs PRESENT
ALL WHEEL DRIVE (AWD) CONTROL MODULE

DIAGNOSTIC TEST

1. **CHECK FOR TIPM CAN BUS DTCS**
    1. With the scan tool, read TIPM DTCs.

       Are there any TIPM CAN BUS DTCs present?

       Yes

       - Perform the appropriate diagnostic procedure. Refer to the **DIAGNOSTIC CODE INDEX** article .

- Perform AWD CONTROL MODULE VERIFICATION TEST. Refer to **STANDARD PROCEDURE**.

No

- Go To 2

2. **CHECK IF CLUSTER/CCN DTCS ARE PRESENT**
   1. With the scan tool, read CLUSTER/CCN DTCs.

      Are there any CLUSTER/CCN DTCs present?

      Yes

      - Perform the appropriate diagnostic procedure Refer to **DIAGNOSIS AND TESTING** .
      - Perform AWD CONTROL MODULE VERIFICATION TEST. Refer to **STANDARD PROCEDURE**.

      No

      - Using the schematics as a guide, check the AWD Control Module pins, terminals, and connectors for corrosion, damage, or terminal push out. Pay particular attention to all power and ground circuits. If no problems are found, replace the AWD Control Module in accordance with the Service Information.
      - Perform AWD CONTROL MODULE VERIFICATION TEST. Refer to **STANDARD PROCEDURE**.

U1113C-LOST WHEEL SPEED MESSAGES

For a complete wiring diagram, **refer to appropriate SYSTEM WIRING DIAGRAMS article** .

THEORY OF OPERATION

The ABS communicates with other controllers over the CAN C bus. The AWD Module continuously monitors the bus activity and receives the messages it needs. The CAN C bus is also used to communicate AWD Control Module MIL status to the Engine Controller, therefor if the Engine Controller is unable to communicate with the AWD Control Module, the Engine Controller will light

the MIL.

WHEN MONITORED

Ignition on.

SET CONDITION

The AWD does not receive a vehicle speed signal from the Anti-lock brake Module over the CAN C bus.

POSSIBLE CAUSES

Possible Causes
CAN C BUS CIRCUIT OPEN OR SHORTED ANTI-LOCK BRAKE (ABS) MODULE ALL WHEEL DRIVE (AWD) CONTROL MODULE

Always perform the Pre-Diagnostic Troubleshooting procedure before proceeding. Refer to STANDARD PROCEDURE.

DIAGNOSTIC TEST

1. **ACTIVE DTC**

NOTE: For vehicle communication problems, use the scan tool to refer to the Network Review Screen. The screen depicts a high level view of the vehicle network. Fault and problem areas appear in red. Selecting any of the network components allows access to the source of the problem.

1. Ignition on, engine not running.
2. With a scan tool, select View DTCs.

Is the status Active for this DTC?

Yes

- Go To 2

No

- Perform the CHECKING FOR AN INTERMITTENT DTC Diagnostic Procedure. Refer to **INTERMITTENT CONDITION** for 2.0L/2.4L engine or **INTERMITTENT CONDITION** for 2.2L diesel. .
- Perform AWD CONTROL MODULE VERIFICATION TEST. Refer to **STANDARD PROCEDURE**.

2. **U0121-LOST COMMUNICATION WITH ANTI-LOCK BRAKE MODULE ALSO SET**
   1. With a scan tool, select View DTCs.

      Is the DTC U0121-LOST COMMUNICATION WITH ANTI-LOCK BRAKE MODULE also set?

      Yes

      - Perform the diagnostic procedure for U0121-LOST COMMUNICATION WITH ANTI-LOCK BRAKE MODULE. Refer to **DIAGNOSIS AND TESTING** .
      - Perform AWD CONTROL MODULE VERIFICATION TEST. Refer to **STANDARD PROCEDURE**.

      No

      - Replace the AWD Control Module in accordance with the Service information. Refer to **REMOVAL**
      - Perform AWD CONTROL MODULE VERIFICATION TEST. Refer to **STANDARD PROCEDURE**.

U1415-IMPLAUSIBLE/MISSING VEHICLE CONFIGURATION RECEIVED

For a complete wiring diagram, **refer to appropriate SYSTEM WIRING DIAGRAMS article**

WHEN MONITORED

Continuously with the ignition on.

SET CONDITION

When the All Wheel Drive (AWD) Module detects an incorrect CAN messages

from the Engine Control Module (ECM) or the Totally Integrated Power Module (TIPM).

POSSIBLE CAUSES

Possible Causes
TOTALLY INTEGRATED POWER MODULE (TIPM) NOT CONFIGURED CORRECTLY
TIPM CAN BUS DTCS
ENGINE DTCS
ALL WHEEL DRIVE (AWD) CONTROL MODULE

DIAGNOSTIC TEST

1. **CHECK IF TIPM CAN BUS DTCs ARE PRESENT**
    1. With the scan tool, read TIPM DTCs.

       Are there any TIPM CAN BUS DTCs present?

       Yes

       - Perform the appropriate diagnostic procedure. Refer to **DIAGNOSTIC CODE INDEX** .
       - Perform AWD VERIFICATION TEST. Refer to **STANDARD PROCEDURE**.

       No

       - Go To 2
2. **CHECK IF ENGINE DTCs ARE PRESENT**
    1. With the scan tool, read Engine DTCs.

       Are there any Engine DTCs present?

       Yes

       - Perform the appropriate diagnostic procedure. Refer to the **DTC INDEX** article .
       - Perform AWD VERIFICATION TEST. Refer to **STANDARD PROCEDURE**.

No

- Using the schematics as a guide, check the AWD Module pins, terminals, and connectors for corrosion, damage, or terminal push out. Pay particular attention to all power and ground circuits. If no problems are found, replace the AWD Module in accordance with the service information.
- Perform AWD VERIFICATION TEST. Refer to **STANDARD PROCEDURE**.

STANDARD PROCEDURE

AWD - PRE-DIAGNOSTIC TROUBLESHOOTING PROCEDURE

For a complete wiring diagram **refer to appropriate SYSTEM WIRING DIAGRAMS article** .

Perform the following pre-diagnostic troubleshooting procedures prior to performing any diagnostic test.

Always perform diagnostics with a fully charged battery to avoid false symptoms.

1. With the scan tool, read ABS DTCs. If ABS DTCs are present, and perform to the appropriate diagnostic procedure(s) before proceeding. Refer to **DIAGNOSIS AND TESTING** .
2. Check the vehicles repair history.
3. If the vehicle has a repair history that pertains to the customer's current complaint, review the repair.
4. Check for any TSBs related to the customer's complaint.
5. Inspect the vehicle for any aftermarket accessories that may have been installed incorrectly.
6. With the scan tool, read All Wheel Drive (AWD) Control Module DTCs. Record all Stored, Active, and Pending DTC information. Diagnose any Pending DTC as a matured DTC.
7. Use the wiring diagram as a guide, inspect the wiring and connectors related to this circuit and repair as necessary.
8. Refer to the When Monitored and Set Conditions for this DTC. DTCs can

set at ignition on, at start up, driving under specific conditions, and after controller diagnostic monitors have run or otherwise known as a Good Trip.

9. Check for any Service Information Tune-ups or Service Bulletins for any possible causes that may apply. Check for controller software update information. Some conditions can be corrected by upgrading the Engine (PCM) controller software.

Did any of the above procedures repair the vehicle?

Yes

- Testing is complete.
- Perform AWD CONTROL MODULE VERIFICATION TEST. Refer to **STANDARD PROCEDURE**.

No

- Repair complete.

AWD CONTROL MODULE VERIFICATION TEST

DIAGNOSTIC TEST

AWD CONTROL MODULE VERIFICATION TEST

1. Disconnect all jumper wires and reconnect all previously disconnected components and connectors.
2. With the scan tool, select Clear Stored DTCs.
3. Make sure that all accessories are turned off and that the battery is fully charged.
4. Test drive the vehicle and verify proper operation.
5. With the scan tool, select View DTCs in the AWD Control Module.

   Are there any DTCs present in the AWD Control Module?

   Yes

   - Perform the appropriate diagnostic test. Refer to **DIAGNOSIS AND TESTING**.

No

- Repair is complete.

2014 DRIVELINE/AXLES

Electronically Controlled Clutch - Compass & Patriot

REMOVAL

REMOVAL

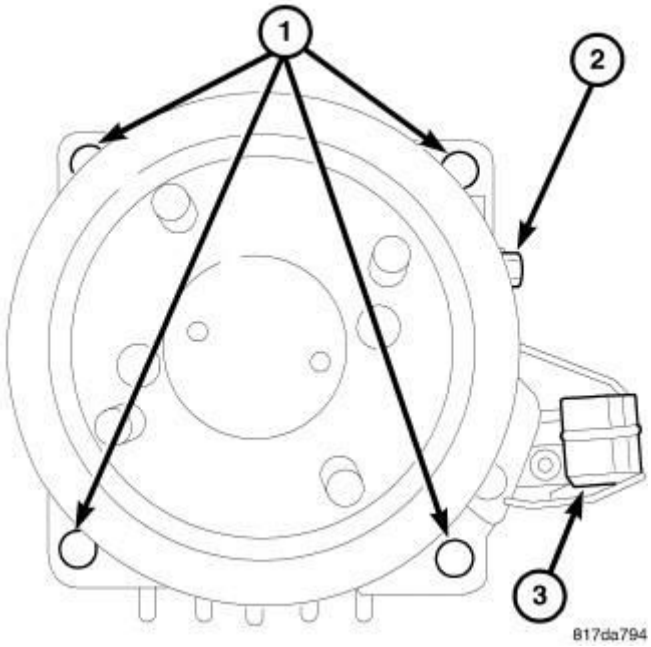

Fig. 1: Electric Clutch At Rear Axle
Courtesy of CHRYSLER GROUP, LLC

1. Raise vehicle on a hoist.
2. Remove the rear propeller shaft. Refer to **REMOVAL** .
3. Remove the exhaust system up to the catalytic converter. Refer to **MUFFLER, EXHAUST, REMOVAL** .
4. Remove the ECC wire routing bracket bolt and bracket.
5. Disconnect ECC breather hose.
6. Unplug the electrical connector (3).
7. Remove the four ECC mounting bolts (1).
8. Slide ECC from rear axle and lower.
9. Remove all old gasket material on the mating surfaces of the ECC and RDA. Remove wave washer.

INSTALLATION

INSTALLATION

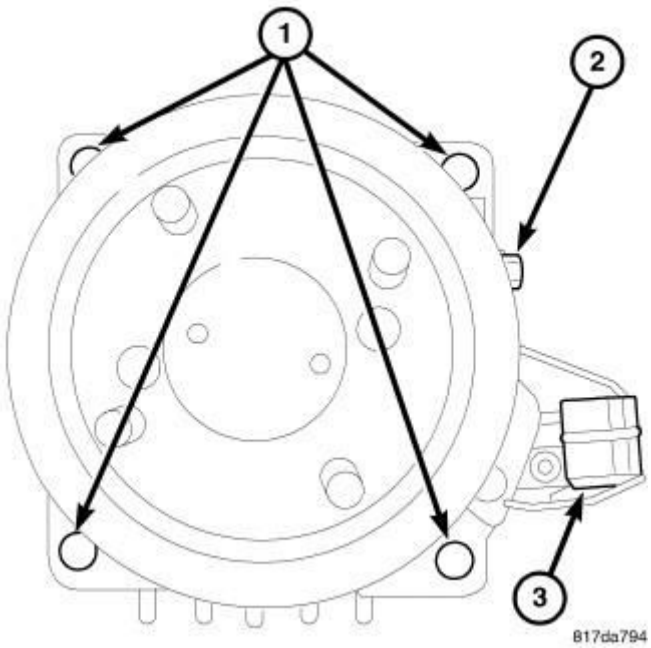

Fig. 2: Electric Clutch At Rear Axle
Courtesy of CHRYSLER GROUP, LLC

1. Apply RTV to the EEC mounting surface.
2. Install wave washer.
3. Slide ECC into rear axle.
4. Install the four ECC mounting bolts and tighten to 68 N.m (50 ft. lbs.).
5. Plug the electrical connector (3) in.
6. Connect the breather hose to EEC.
7. Install the EEC Harness routing bracket bolt and tighten to 14 N.m (124 in. lbs.).
8. Install the rear propeller shaft. Refer to **INSTALLATION** .
9. Install the exhaust system. Refer to **MUFFLER, EXHAUST, INSTALLATION** .

2014 DRIVELINE/AXLES

Front Half Shaft - Compass & Patriot

DESCRIPTION

DESCRIPTION

Naturally aspirated models equipped with either an automatic or manual transmission use an unequal-length halfshaft system. The system incorporates two halfshaft assemblies (left and right) that consist of an inner and outer constant velocity (CV) joint and a solid interconnecting shaft. The right halfshaft is longer than the left due to transaxle packaging and powertrain design. Manual transmission models use equal length halfshafts.

Both halfshaft assemblies use the same type of inner and outer joints. The inner joint of both halfshaft assemblies is a tripod joint, and the outer joint of both halfshaft assemblies is a Rzeppa joint. Both tripod joints and Rzeppa joints are true constant velocity (CV) joint assemblies. The inner tripod joint allows for the changes in halfshaft length through the jounce and rebound travel of the front suspension.

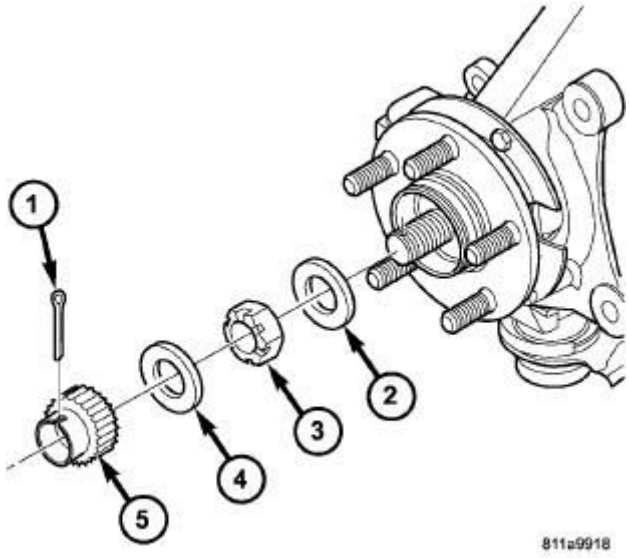

Fig. 1: Halfshaft Retaining Hardware
Courtesy of CHRYSLER GROUP, LLC

The left halfshaft inner tripod joint and the intermediate shaft are both splined into the transaxle side gears. The inner tripod joints are retained using a snap ring located in the stub shaft of the tripod joint. The outer CV joint has a stub shaft

that is splined into the wheel hub and retained by a hub nut (3) and washer (2), nut lock (5), spring washer (4) and cotter pin (1).

OPERATION

OPERATION

Halfshaft assemblies are designed to transmit power from the transaxle to the front wheels, while allowing for powertrain and suspension flex.

DIAGNOSIS AND TESTING

DIAGNOSIS AND TESTING - HALFSHAFT DIAGNOSIS

VEHICLE INSPECTION

1. Check for grease in the vicinity of the inboard tripod joint and outboard CV joint; this is a sign of inner or outer joint seal boot or seal boot clamp damage.

NOISE AND/OR VIBRATION IN TURNS

A clicking noise and/or a vibration in turns could be caused by one of the following conditions:

1. Loose hub nut. Using a click-style torque wrench, tighten hub nut to 244 N.m (180 ft. lbs.).
2. Damaged outer CV or inner tripod joint seal boot or seal boot clamps, which is evident by the presence of grease slung outward from the joint. This will result in the loss and/or contamination of the joint grease, resulting in inadequate lubrication of the joint.
3. Noise may also be caused by another component of the vehicle coming in contact with the halfshafts.

CLUNKING NOISE DURING ACCELERATION

This noise may be a result of one of the following conditions:

1. A torn seal boot on the inner or outer joint of the halfshaft assembly, which is evident by the presence of grease slung outward from the joint. This will result in the loss and/or contamination of the joint grease, resulting in inadequate lubrication of the joint.

2. A loose or missing clamp on the inner or outer joint of the halfshaft assembly. This may be accompanied by the visible loss of grease.
3. A damaged or worn halfshaft CV joint. Isolate the noise to one side of the vehicle. Replace only the affected side. Replacing both halfshafts is not necessary.

SHUDDER OR VIBRATION DURING ACCELERATION

This noise may be a result of one of the following conditions:

1. A worn or damaged halfshaft inner tripod joint. Isolate the condition to one side of the vehicle. Replace only the affected side. Replacing both halfshafts is not necessary.
2. A sticking tripod joint spider assembly (inner tripod joint only). Isolate the condition to one side of the vehicle. Replace only the affected side. Replacing both halfshafts is not necessary.
3. Improper wheel balance.

VIBRATION AT HIGHWAY SPEEDS

This noise may be a result of one of the following conditions:

1. Foreign material (mud, etc.) packed on the backside of the wheel(s).
2. Out of balance front tires or wheels.
3. Improper tire and/or wheel runout.

SPECIFICATIONS

SPECIFICATIONS

TORQUE SPECIFICATIONS

DESCRIPTION	N.m	Ft. Lbs.	In. Lbs.
Bolt, Intermediate Shaft Bracket- to-block, 2.2 diesel (om651) equipped	23	17	-
Bolt, Intermediate Shaft Bracket- to- block, gasoline engines	48	35	-
Nut, Driveshaft-to-	244	180	-

Hub/Bearing			
Nut, Knuckle-to-Ball Joint Bolt	95	70	-
Nut, Wheel to Hub	125	92	-

REMOVAL

REMOVAL

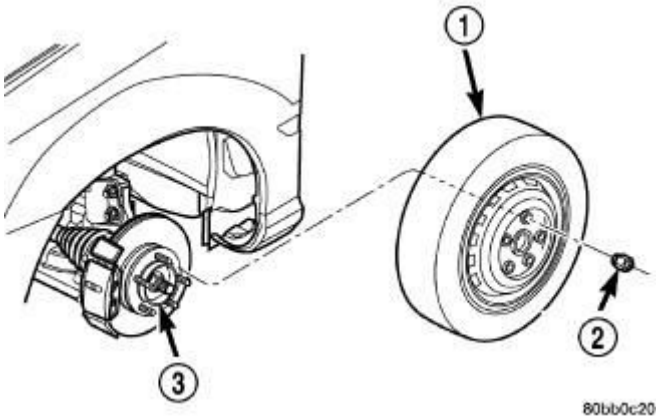

Fig. 2: Wheel and Tire Removal/Installation
Courtesy of CHRYSLER GROUP, LLC

1 - WHEEL/TIRE ASSY.
2 - LUG NUT (5)
3 - HUB

CAUTION: Boot sealing is vital to retain special lubricants and to prevent foreign contaminants from entering the CV joint. Mishandling, such as allowing the assemblies to dangle unsupported, or pulling or pushing the ends can cut boots or damage CV joints. During removal and installation procedures, always support both ends of the halfshaft to prevent damage.

CAUTION: The halfshaft, when installed, acts as a bolt and secures the front hub/bearing assembly. If vehicle is to be supported or moved on its wheels with a halfshaft removed, install a PROPER-SIZED BOLT

AND NUT through front hub. Tighten bolt and nut to 244 N.m (180 ft. lbs.). This will ensure that the hub bearing cannot loosen.

1. Disconnect battery negative cable.
2. Place transaxle in gated park.
3. Raise vehicle on hoist.
4. Remove wheel and tire assembly (1).

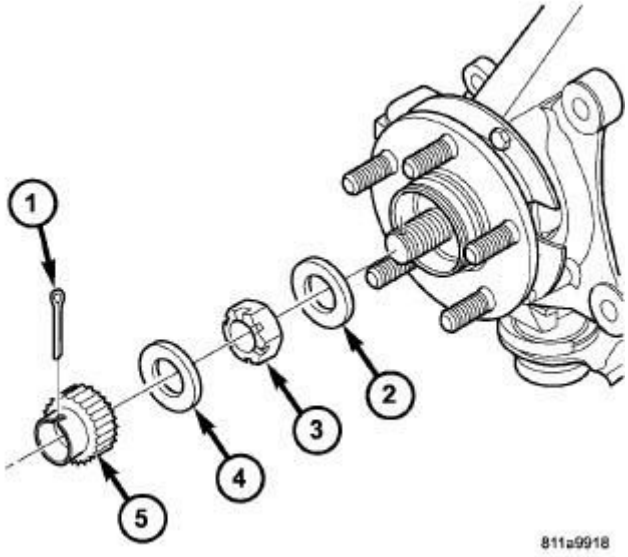

Fig. 3: Halfshaft Retaining Hardware
Courtesy of CHRYSLER GROUP, LLC

5. Remove the cotter pin (1), nut lock (5), spring washer (4), and hub nut (3) from the end of the outer C/V joint stub axle.

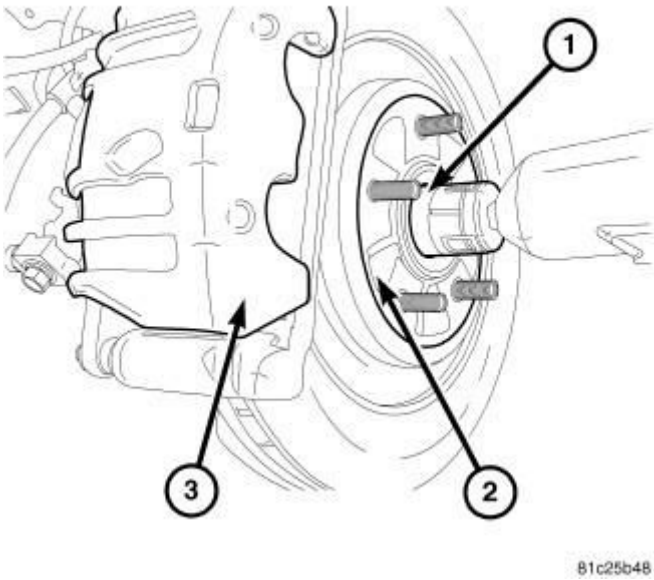

Fig. 4: Removing/Installing Left Side Hub Nut
Courtesy of CHRYSLER GROUP, LLC

6. SRT 4 Remove hub nut (1).

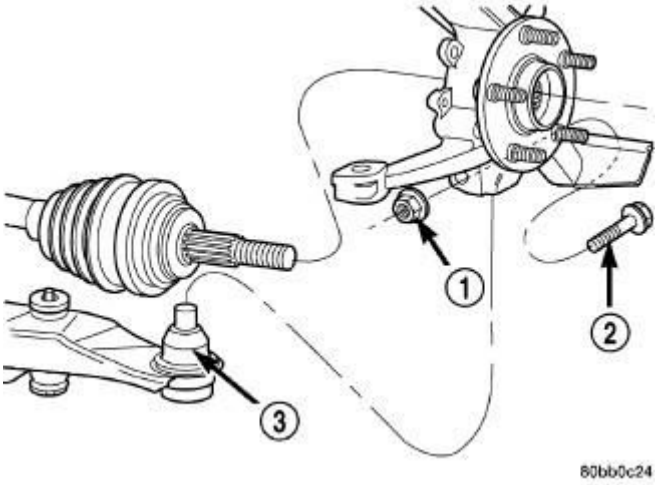

Fig. 5: Steering Knuckle At Lower Control Arm Ball Joint
Courtesy of CHRYSLER GROUP, LLC

1 - NUT 2 - BOLT 3 - BALL JOINT

7. If equipped with ABS, disconnect the front wheel speed sensor and secure harness out of the way.

8. Remove nut and bolt (1, 2) retaining ball joint stud (3) into steering knuckle.

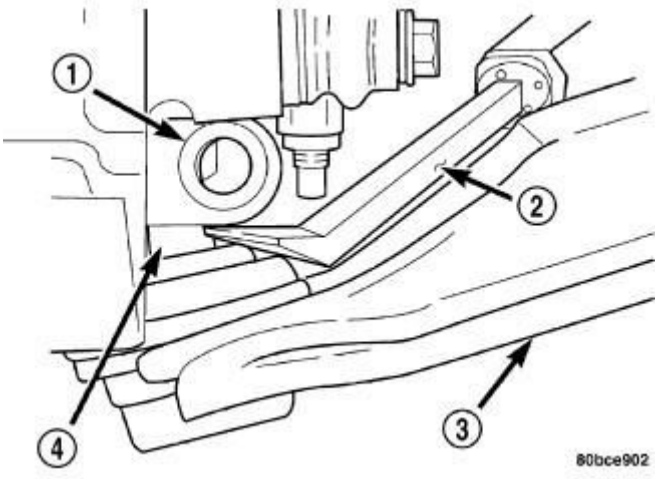

Fig. 6: Separating Lower Control Arm From Steering Knuckle
Courtesy of CHRYSLER GROUP, LLC

1 - STEERING KNUCKLE
2 - PRY BAR
3 - LOWER CONTROL ARM
4 - BALL JOINT STUD

NOTE: Use caution when separating ball joint stud from steering knuckle, so ball joint seal does not get damaged.

9. Separate ball joint stud (4) from steering knuckle (1) by prying down on lower control arm (3).

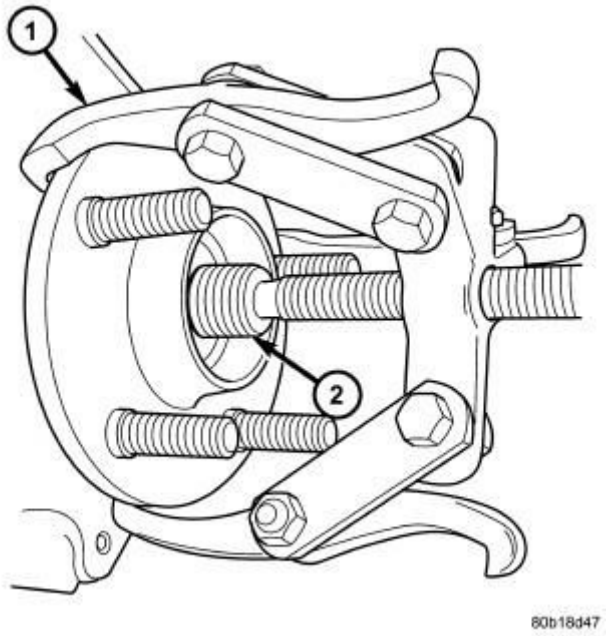

Fig. 7: Separating Halfshaft from Hub/Bearing
Courtesy of CHRYSLER GROUP, LLC

1 - PULLER 1026
2 - HALFSHAFT

NOTE: Care must be taken not to separate the inner CV joint during this operation. Do not allow halfshaft to hang by inner CV joint, halfshaft must be supported.

10. Remove halfshaft (2) from steering knuckle by pulling outward on knuckle while pressing in on halfshaft. Support outer end of halfshaft assembly. If difficulty in separating halfshaft from hub is encountered, **do not strike shaft with hammer,** instead use Puller (special tool #1026, Puller) (1) to separate.

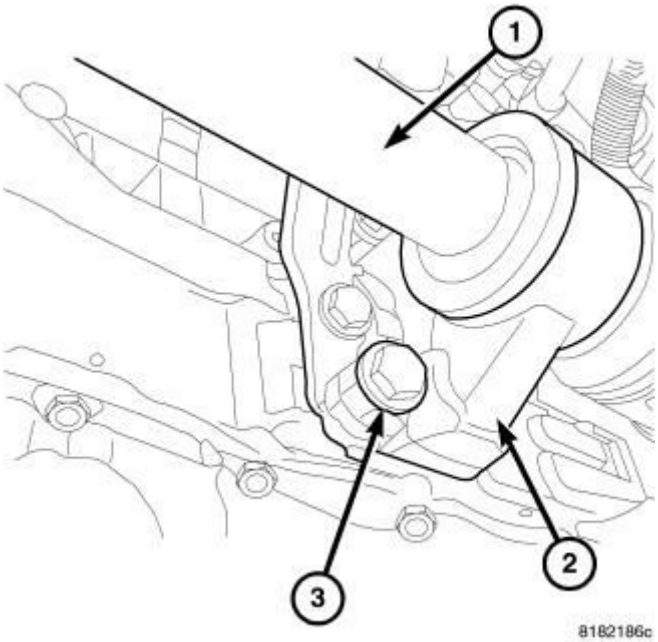

Fig. 8: Removing/Installing Halfshaft Bracket
Courtesy of CHRYSLER GROUP, LLC

11. Two wheel drive vehicles, remove halfshaft bracket (2) from engine lower mounting bolt (3).

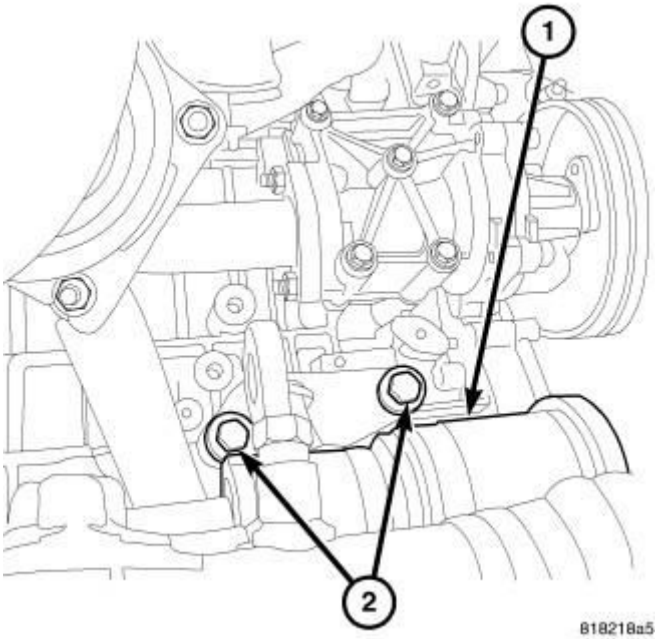

Fig. 9: Identifying Halfshaft & Engine Upper Mounting Bolts
Courtesy of CHRYSLER GROUP, LLC

12. Two wheel drive vehicles, remove halfshaft bracket from engine upper mounting bolts (2).

13. Support outer end of the halfshaft assembly.

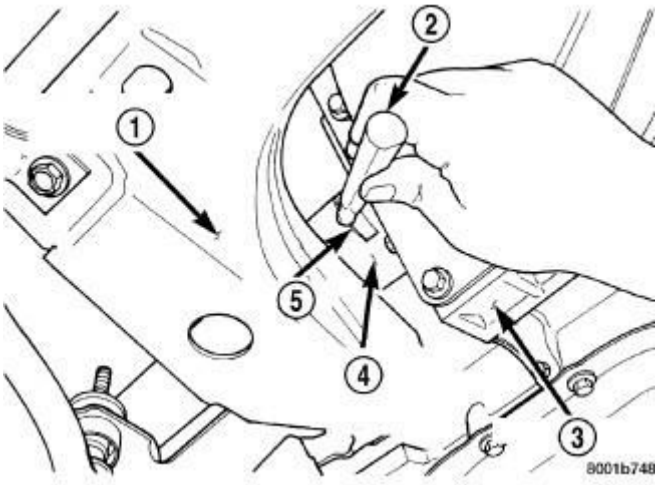

Fig. 10: Disengaging Left Inner Tripod Joint From Transaxle
Courtesy of CHRYSLER GROUP, LLC

1 - FRONT SUSPENSION CROSS MEMBER
2 - PUNCH
3 - TRANSAXLE
4 - HALFSHAFT INNER TRIPOD JOINT
5 - NOTCH

NOTE: Removal of the inner tripod joints is made easier if you apply outward pressure on the joint as you strike the punch with a hammer. Do not pull on interconnecting shaft to remove, as the inner joint will become separated.

14. Remove the inner tripod joints (4) from the side gears of the transaxle using a punch (2) to dislodge the inner tripod joint retaining ring from the transaxle side gear. If removing the right side inner tripod joint, position the punch to the inner tripod joint extraction groove (5) (if equipped). Strike the punch sharply with a hammer to dislodge the right inner joint from the side gear. If removing the left side inner tripod joint, position the punch to the inner tripod joint extraction groove. Strike the punch sharply with a hammer to dislodge the left inner tripod joint from the side gear.

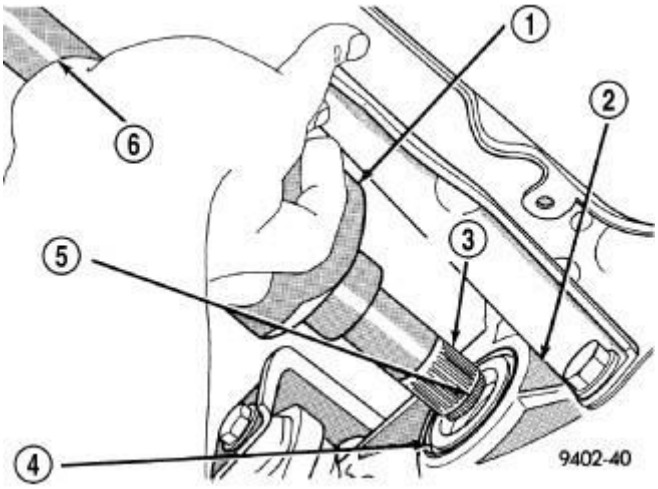

Fig. 11: Removing/Installing Inner Tripod Joint
Courtesy of CHRYSLER GROUP, LLC

1 - INNER TRIPOD JOINT
2 - TRANSAXLE
3 - SPLINE
4 - OIL SEAL
5 - SNAP RING
6 - INTERCONNECTING SHAFT

15. Hold inner tripod joint (1) and interconnecting shaft (6) of halfshaft assembly. Remove inner tripod joint from transaxle by pulling it straight out of transaxle side gear and transaxle oil seal (4). **When removing tripod joint, do not let spline or snap ring drag across sealing lip of the transaxle to tripod joint oil seal. When tripod joint is removed from transaxle, some fluid will leak out.**

INSTALLATION

INSTALLATION

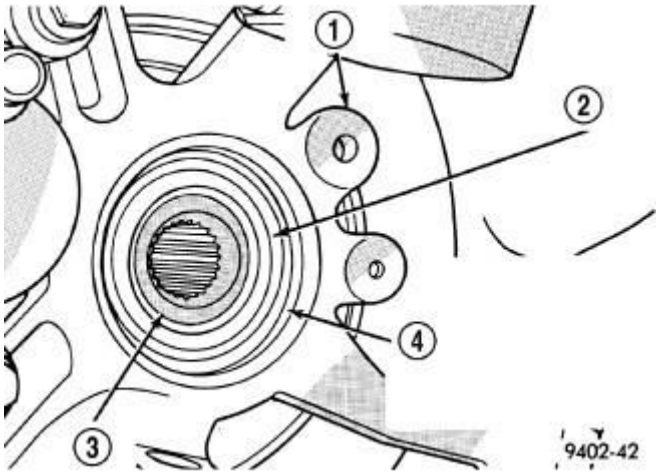

Fig. 12: Steering Knuckle To C/V Joint Sealing Area
Courtesy of CHRYSLER GROUP, LLC

1 - STEERING KNUCKLE
2 - WHEEL BEARING
3 - FRONT HUB
4 - THIS AREA OF THE STEERING KNUCKLE IS TO BE FREE OF ALL DEBRIS AND MOISTURE BEFORE INSTALLING HALFSHAFT IN STEERING KNUCKLE

1. Clean all debris and moisture out of steering knuckle (4).

CAUTION: Boot sealing is vital to retain special lubricants and to prevent foreign contaminants from entering the CV joint. Mishandling, such as allowing the assemblies to dangle unsupported, or pulling or pushing the ends can cut boots or damage CV joints. During removal and installation procedures, always support both ends of the halfshaft to prevent damage.

2. Thoroughly clean spline and oil seal sealing surface on tripod joint. Lightly lubricate oil seal sealing surface on tripod joint with fresh clean transmission lubricant.

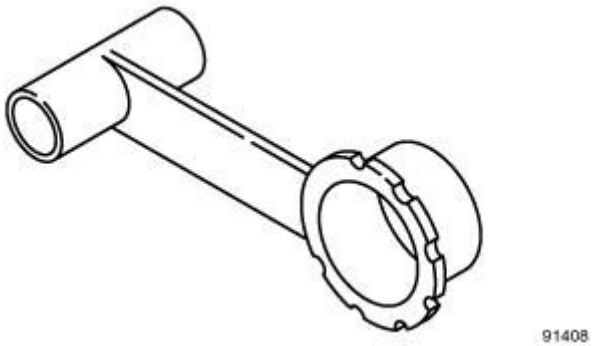

Fig. 13: Seal Protector
Courtesy of CHRYSLER GROUP, LLC

NOTE: Always use Seal Protector (special tool #9099, Seal Protector, Differential Output) when installing half shaft into the transaxle.

3. Holding halfshaft assembly by tripod joint and interconnecting shaft, install tripod joint into transaxle side gear as far as possible by hand.
4. Carefully align tripod joint with transaxle side gears. Then grasp halfshaft interconnecting shaft and push tripod joint into transaxle side gear until fully seated. **Test that snap ring is fully engaged with side gear by attempting to remove tripod joint from transaxle by hand. If snap ring is fully engaged with side gear, tripod joint will not be removable by hand.**

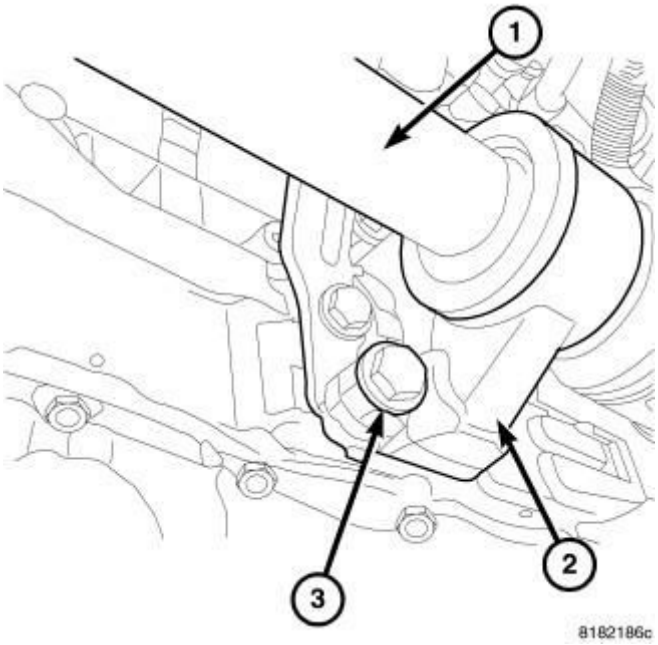

Fig. 14: Removing/Installing Halfshaft Bracket
Courtesy of CHRYSLER GROUP, LLC

5. Two wheel drive vehicles install Intermediate Shaft Bracket-to-block (2) and tighten bolt (3) to. Refer to **SPECIFICATIONS**.

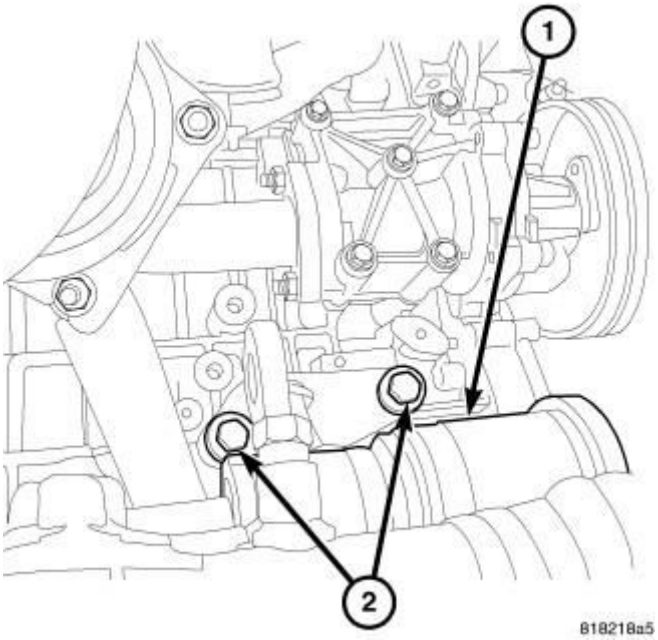

Fig. 15: Identifying Halfshaft & Engine Upper Mounting Bolts
Courtesy of CHRYSLER GROUP, LLC

6. Two wheel drive vehicles install Intermediate Shaft Bracket- to-block upper mounting bolts (2) and tighten to. Refer to **SPECIFICATIONS**.

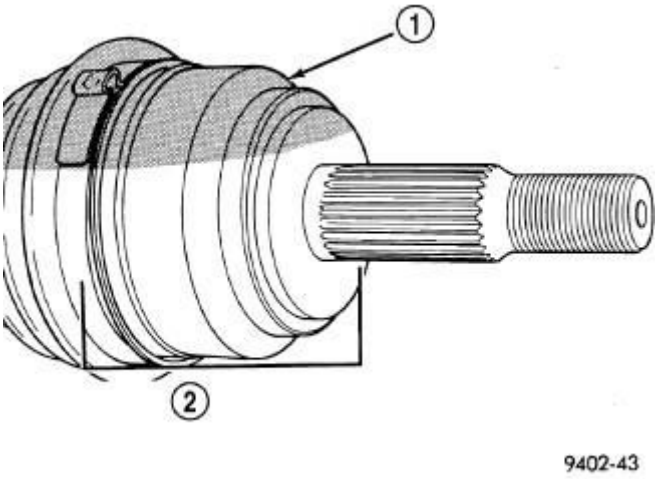

Fig. 16: Outer C/V Joint Inspection
Courtesy of CHRYSLER GROUP, LLC

7. Ensure that front of outer CV joint (2) which fits into steering knuckle, is free of debris and moisture before assembling into steering knuckle.

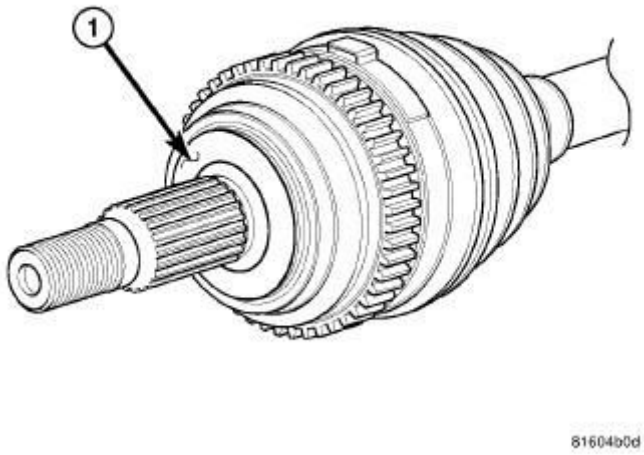

Fig. 17: Applying Grease To Clean Face Of Outer CV Joint
Courtesy of CHRYSLER GROUP, LLC

8. Apply a light coating of MOPAR® multi-purpose wheel bearing grease around the circumference of the flat surface (1). **Do not apply too much grease, which could spill onto the non-mating and adversely affect the function of the halfshaft.**
9. Wipe the rear of the hub and bearing in the knuckle clean where they contact the C/V joint.
10. Install halfshaft back into front hub.

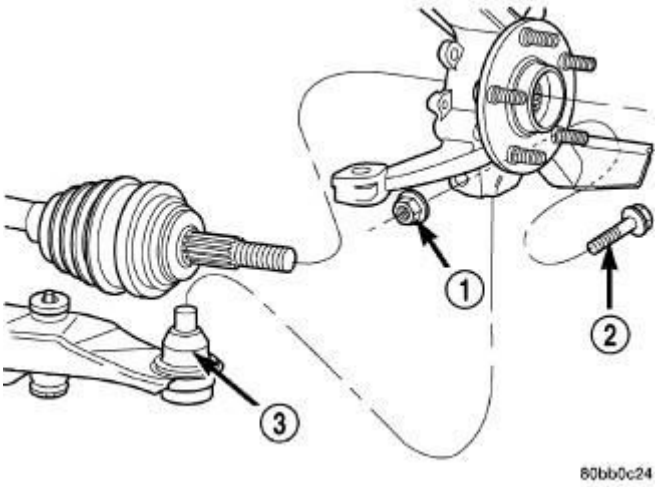

Fig. 18: Halfshaft Installation Into Hub And Knuckle
Courtesy of CHRYSLER GROUP, LLC

11. Install steering knuckle onto the ball joint stud (3).

NOTE: At this point, the outer joint will not seat completely into the front hub. The outer joint will be pulled into hub and seated when the hub nut is installed and tighten to specification.

12. Install a **NEW** steering knuckle to ball joint stud bolt (2) and nut (1). Tighten the nut and bolt to 95 N.m (70 ft. lbs.).

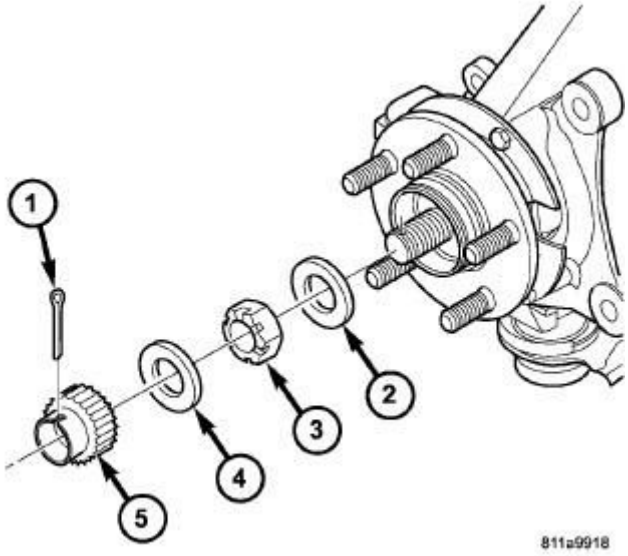

Fig. 19: Halfshaft Retaining Hardware
Courtesy of CHRYSLER GROUP, LLC

13. Clean all foreign matter from threads of halfshaft outer stub axle. Install washer (2) and hub nut (3) onto the threads of the stub axle and tighten nut (3) to 244 N.m (180 ft. lbs.).
14. Install spring washer (4), nut lock (5), and cotter pin (1).

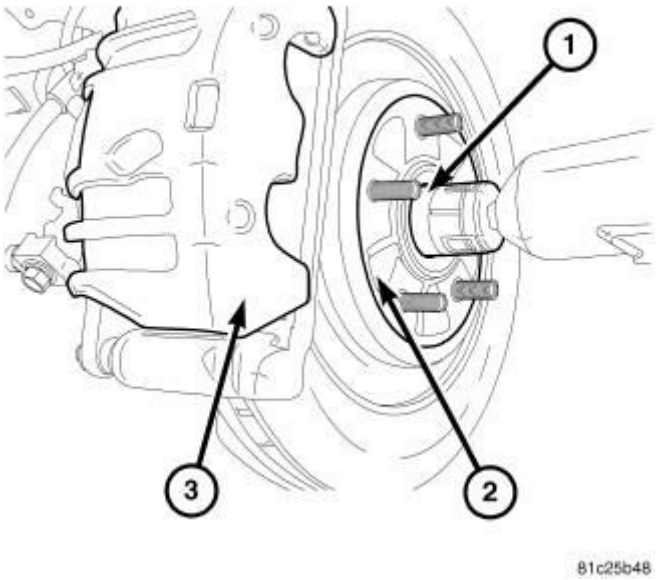

Fig. 20: Removing/Installing Left Side Hub Nut
Courtesy of CHRYSLER GROUP, LLC

15. SRT 4 install hub nut and tighten to 244 N.m (180 ft. lbs.).

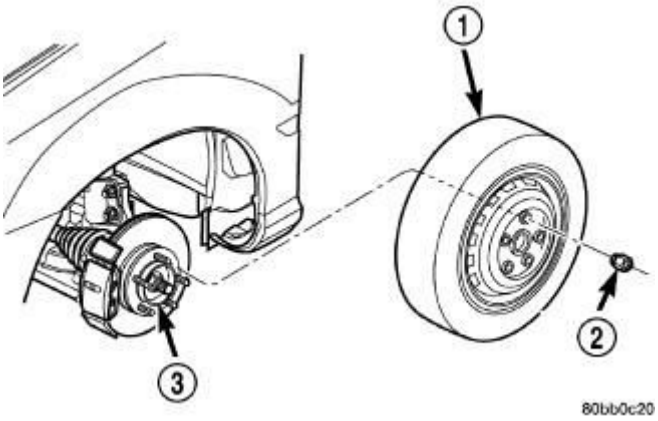

Fig. 21: Wheel And Tire Installation
Courtesy of CHRYSLER GROUP, LLC

16. Install front wheel and tire assembly (1). Install front wheel lug nuts (2) and tighten to 128 N.m (95 ft. lbs.).
17. Check for correct fluid level in transaxle assembly.
18. Lower vehicle.
19. Connect battery negative cable.

SPECIAL TOOLS

SPECIAL TOOLS

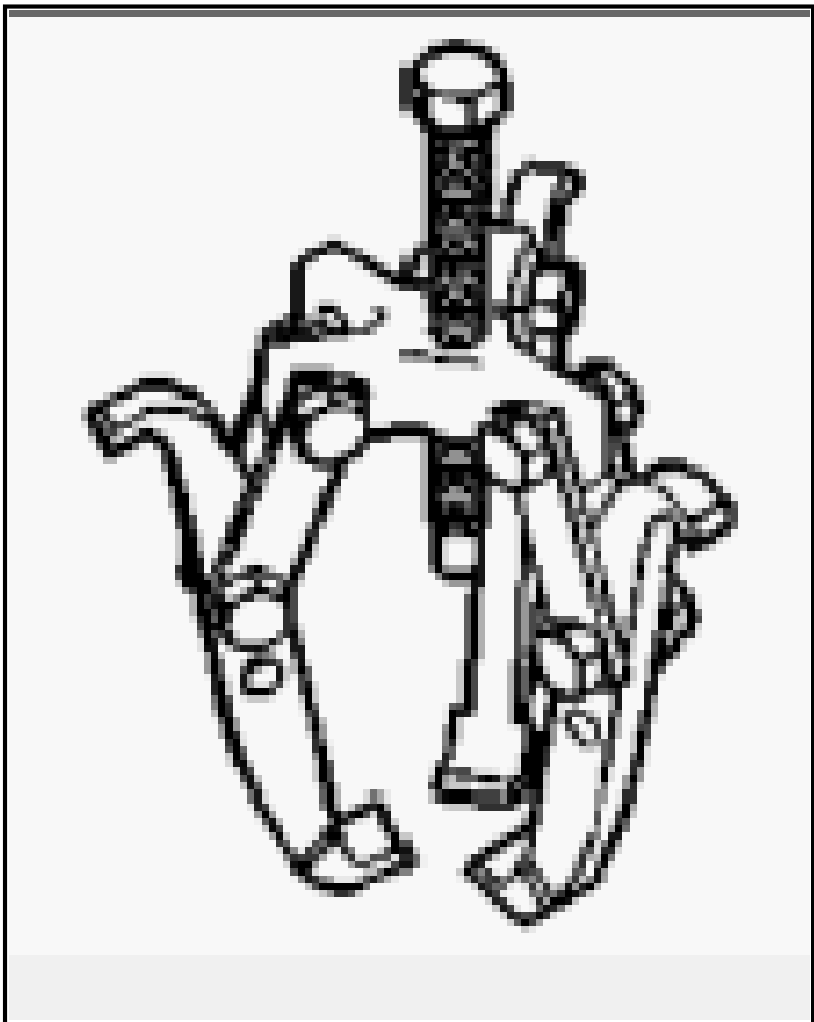	1026 - Puller (Originally Shipped In Kit Number(s) 9202, 9202A-CAN, 9202CC.)
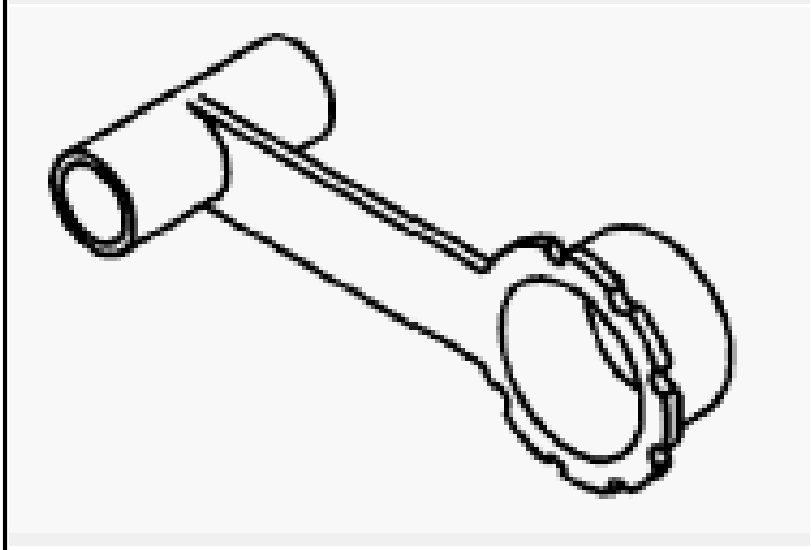	9099 - Seal Protector, Differential Output (Originally Shipped In Kit Number(s) 9324, 9324CC.)

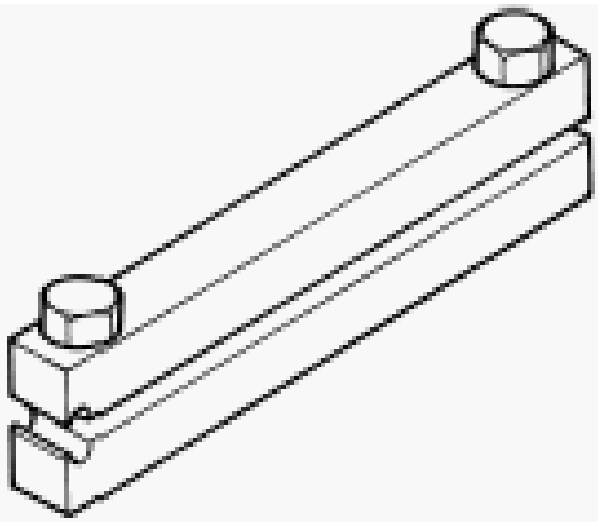	C-4975A - Installer, Axle Clamp

BOOT, DRIVE SHAFT, INNER

REMOVAL

REMOVAL

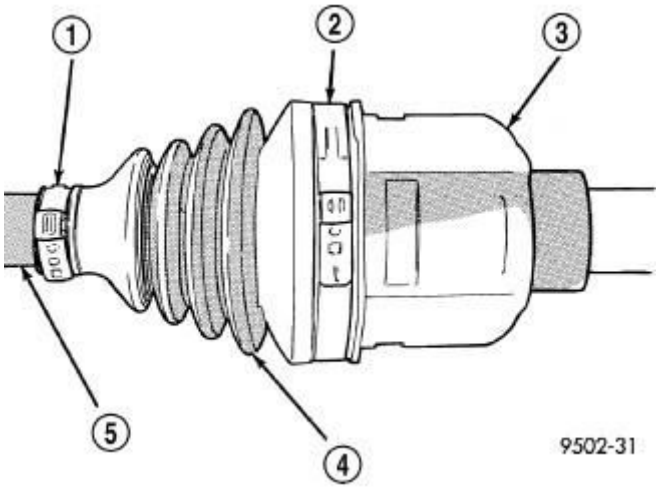

Fig. 22: Inner Tripod Joint Sealing Boot Clamps
Courtesy of CHRYSLER GROUP, LLC

CAUTION: The inner tripod joints will use a retaining clip inside the housing to keep the spider assembly in the housing. Do not pull on the interconnecting shaft to disengage tripod housing from transmission stub shaft. Removal in this manner will cause damage to the inboard joint sealing

boots.

1. Remove the halfshaft requiring boot replacement from the vehicle. Refer to **REMOVAL** .
2. Remove large boot clamp (2) that retains inner tripod joint sealing boot to tripod joint housing (3) and discard. Then remove small clamp (1) that retains inner tripod joint sealing boot to interconnecting shaft (5) and discard. Remove the sealing boot (4) from the tripod housing and slide it down the interconnecting shaft.

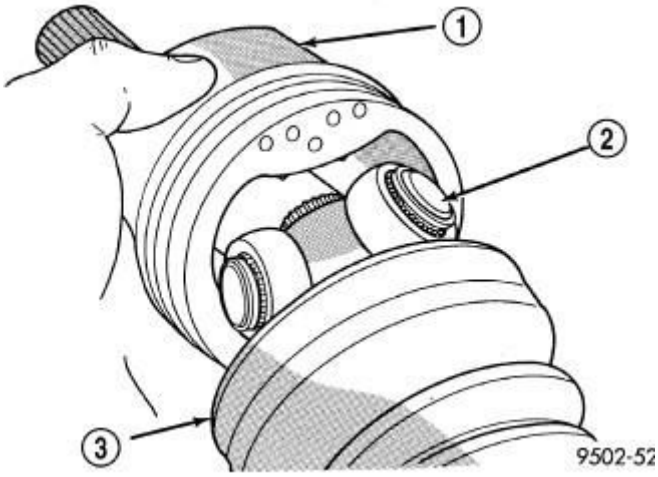

Fig. 23: Identifying Spider Assembly & Tripod Joint Housing
Courtesy of CHRYSLER GROUP, LLC

CAUTION: When removing the spider joint from the tripod joint housing, hold the rollers in place on the spider trunions to prevent the rollers and needle bearings from falling away.

3. Slide the interconnecting shaft and spider assembly (2) out of the tripod joint housing (1).

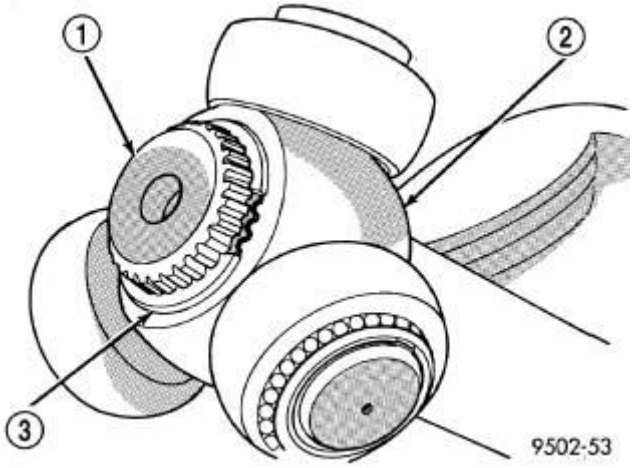

Fig. 24: Identifying Spider Assembly, Snap Ring, & Interconnecting Shaft
Courtesy of CHRYSLER GROUP, LLC

4. Remove snap ring (3) that retains spider assembly (2) to interconnecting shaft (1).

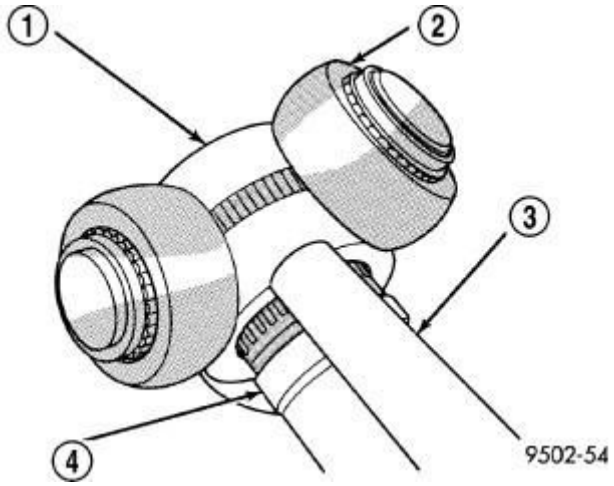

Fig. 25: Removing Spider Assembly From Interconnecting Shaft
Courtesy of CHRYSLER GROUP, LLC

5. Remove the spider assembly (1) from interconnecting shaft (4). If spider assembly will not come off interconnecting shaft by hand, it can be removed by tapping spider assembly with a brass drift (3). **Do not hit the outer tripod bearings in an attempt to remove spider assembly from interconnecting shaft.**
6. Slide sealing boot off interconnecting shaft.
7. Thoroughly clean and inspect spider assembly, tripod joint housing, and interconnecting shaft for any signs of excessive wear. **If any parts show**

signs of excessive wear, the halfshaft assembly will require replacement. Component parts of these halfshaft assemblies are not serviceable.

INSTALLATION

INSTALLATION

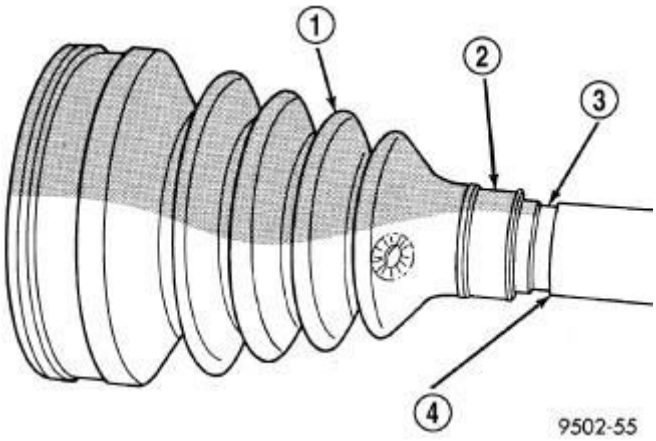

Fig. 26: Sealing Boot Installation/Removal On Interconnecting Shaft
Courtesy of CHRYSLER GROUP, LLC

NOTE: The inner tripod joint sealing boots are made from two different types of material. High-temperature applications (close to exhaust system) use silicone rubber whereas standard temperature applications use Hytrel plastic. The silicone sealing boots are soft and pliable. The Hytrel sealing boots are stiff and rigid. The replacement sealing boot MUST BE the same type of material as the sealing boot that was removed.

1. Slide inner tripod joint seal boot retaining clamp onto interconnecting shaft (4). Then slide the replacement inner tripod joint sealing boot (1) onto interconnecting shaft. **Inner tripod joint seal boot MUST be positioned on interconnecting shaft, so the raised bead on the inside of the seal boot is in groove (3) on interconnecting shaft.**

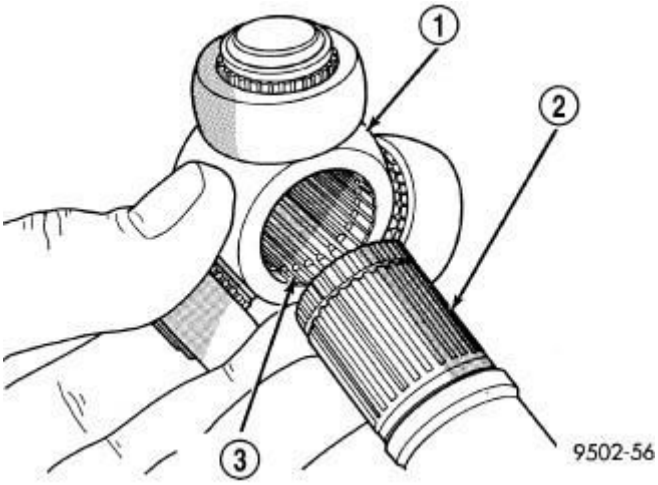

Fig. 27: Installing Spider Assembly Onto Interconnecting Shaft With Chamfer
Courtesy of CHRYSLER GROUP, LLC

NOTE: The rollers can fall off, use caution when installing the tripod

2. Install spider assembly (1) onto interconnecting shaft with chamfer (3) on spider assembly toward interconnecting shaft (2).

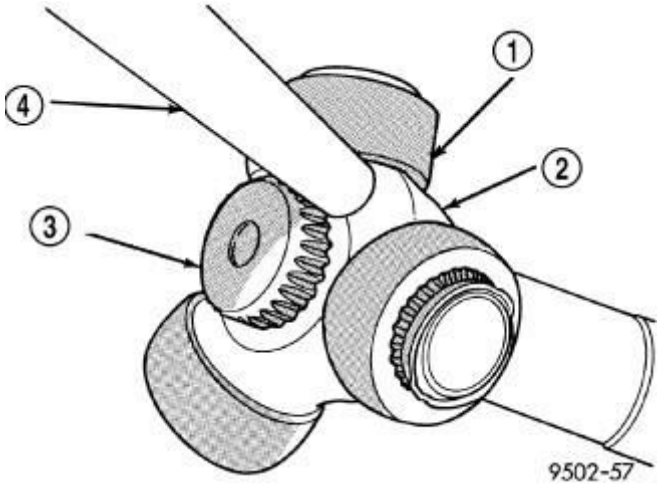

Fig. 28: Installing Spider Assembly On Interconnecting Shaft
Courtesy of CHRYSLER GROUP, LLC

3. Spider assembly (2) must be installed on interconnecting shaft (3) far enough to fully install spider retaining snap ring. If spider assembly will not fully install on interconnecting shaft by hand, it can be installed by tapping the spider body with a brass drift (4). **Do not hit the outer tripod bearings in an attempt to install spider assembly on interconnecting shaft.**

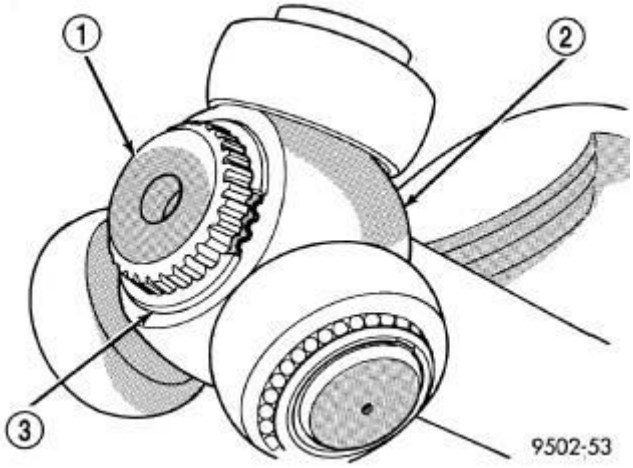

Fig. 29: Spider Assembly Retaining Snap Ring Installed
Courtesy of CHRYSLER GROUP, LLC

4. Install the spider assembly (2) to interconnecting shaft retaining snap ring (3) into groove on end of interconnecting shaft. Be sure the snap ring is fully seated into groove on interconnecting shaft (1).

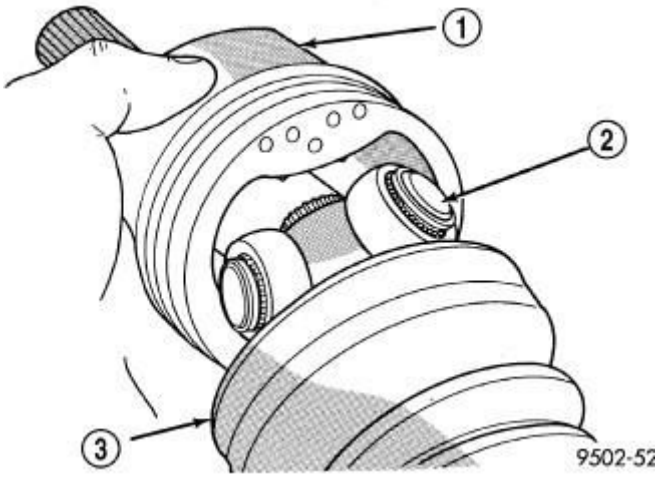

Fig. 30: Installing Tripod Housing On Spider Assembly
Courtesy of CHRYSLER GROUP, LLC

5. Distribute 1/2 the amount of grease provided in the seal boot service package (DO NOT USE ANY OTHER TYPE OF GREASE) into tripod housing. Put the remaining amount into the sealing boot (3).
6. Align tripod housing (1) with spider assembly (2) and then slide tripod housing over spider assembly and interconnecting shaft.

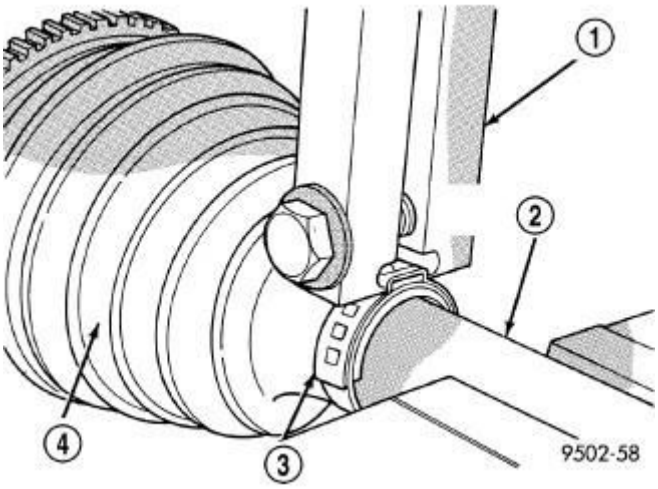

Fig. 31: Installing Inner Tripod Joint Seal Boot To Interconnecting Shaft Clamp
Courtesy of CHRYSLER GROUP, LLC

7. Install inner tripod joint seal boot to interconnecting shaft clamp (3) evenly on sealing boot (4).
8. Clamp sealing boot onto interconnecting shaft using Clamp (special tool #C-4975A, Installer, Axle Clamp) and the following procedure. Place Clamp (special tool #C-4975A, Installer, Axle Clamp) over bridge of clamp.

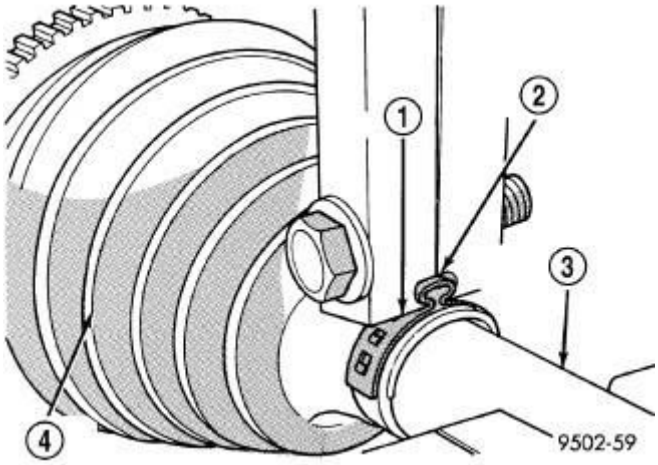

Fig. 32: Sealing Boot Retaining Clamp Installed
Courtesy of CHRYSLER GROUP, LLC

9. Tighten nut on Clamp (special tool #C-4975A, Installer, Axle Clamp) until jaws on tool are closed completely together (2), face to face.

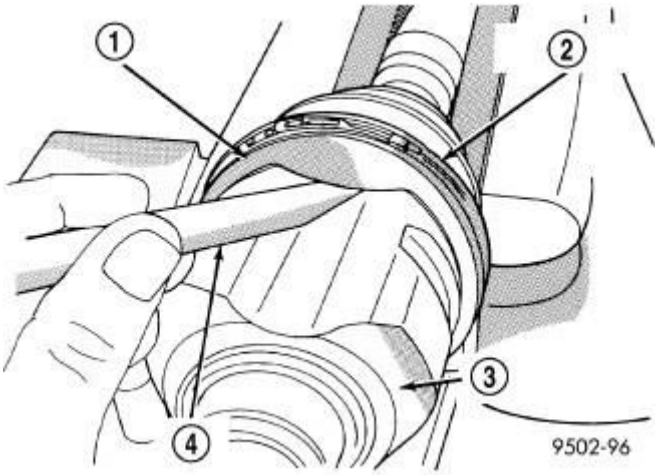

Fig. 33: Trim Stick Inserted for Venting Tripod Joint
Courtesy of CHRYSLER GROUP, LLC

CAUTION: Seal must not be dimpled, stretched, or out-of-shape in any way. If seal is NOT shaped correctly, equalize pressure in seal and shape it by hand.

10. Position sealing boot into the tripod (3) retaining groove. Install seal boot retaining clamp (2) evenly on sealing boot (1).

CAUTION: The following positioning procedure determines the correct air pressure inside the inner tripod joint assembly prior to clamping the sealing boot to inner tripod joint housing. If this procedure is not done prior to clamping sealing boot to tripod joint housing, boot durability can be adversely affected.

CAUTION: When venting the inner tripod joint assembly, use care so inner tripod sealing boot does not get punctured or, in any other way, damaged. If sealing boot is punctured or damaged while being vented, the sealing boot can not be used.

11. Insert a trim stick (4) between the tripod (3) and the sealing boot (1) to vent inner tripod joint assembly. **When inserting trim stick between tripod**

housing and sealing boot, ensure trim stick is held flat and firmly against the tripod housing. If this is not done, damage to the sealing boot can occur. If inner tripod joint has a Hytrel (hard plastic) sealing boot, be sure trim stick is inserted between soft rubber insert and tripod housing, and not the hard plastic sealing boot and soft rubber insert.

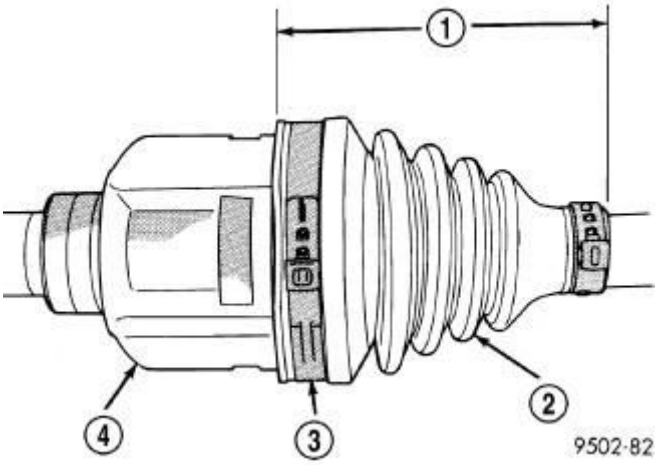

Fig. 34: Sealing Boot End To End Length
Courtesy of CHRYSLER GROUP, LLC

12. With trim stick inserted between sealing boot (2) and tripod joint housing (4), position inner tripod joint on halfshaft until correct sealing boot edge to edge length (1) is obtained for type of sealing boot material being used. Then remove the trim stick.

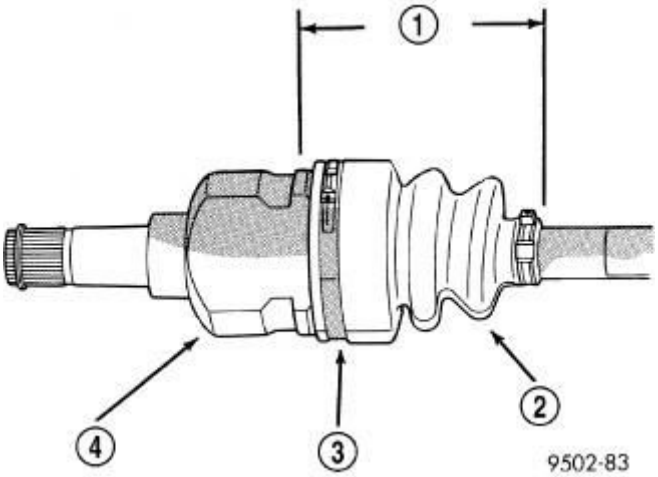

Fig. 35: Sealing Boot End To End Length With Silicone Boot
Courtesy of CHRYSLER GROUP, LLC

13. With trim stick inserted between sealing boot (2) and tripod housing (4), position inner tripod joint on halfshaft until correct sealing boot edge to edge

length (1) is obtained for type of sealing boot material being used. Then remove the trim stick.

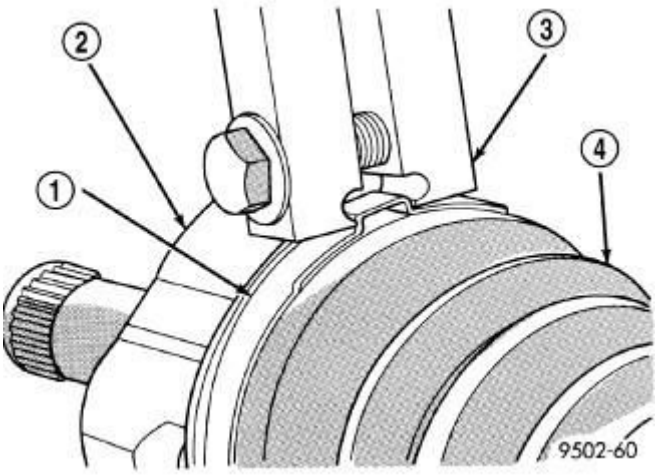

Fig. 36: Crimping Tool Installed On Sealing Boot Clamp
Courtesy of CHRYSLER GROUP, LLC

14. Clamp (1) tripod joint sealing boot (4) to tripod joint (2) using required procedure for type of boot clamp application. If seal boot uses crimp type boot clamp, clamp sealing boot onto tripod housing using Clamp (special tool #C-4975A, Installer, Axle Clamp) (3). Place Clamp (special tool #C-4975A, Installer, Axle Clamp) over bridge of clamp (1).

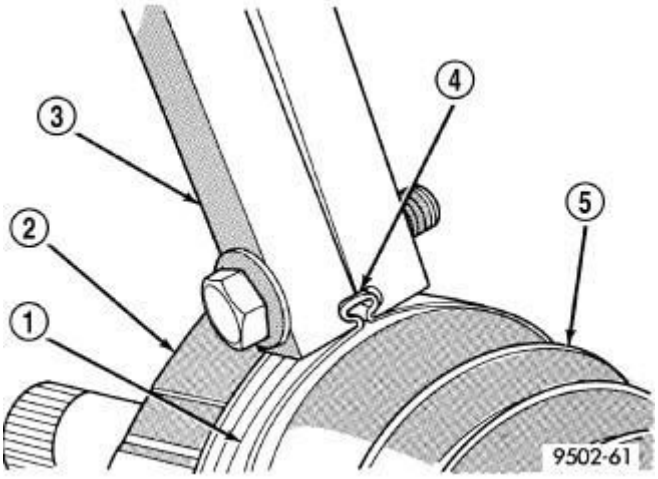

Fig. 37: Sealing Boot Retaining Clamp Installed
Courtesy of CHRYSLER GROUP, LLC

15. Tighten nut on Clamp (special tool #C-4975A, Installer, Axle Clamp) (3) until jaws on tool (3) are closed completely together (4), face-to-face.

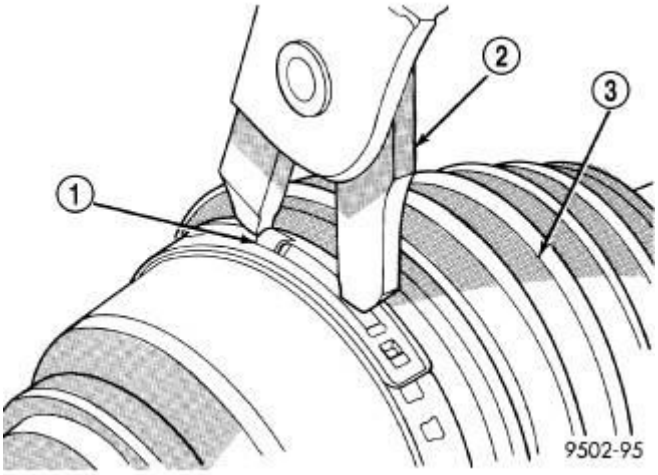

Fig. 38: Clamping Sealing Boot Onto Tripod Housing Using Clamping Tool
Courtesy of CHRYSLER GROUP, LLC

16. If seal boot (3) uses low profile latching type boot clamp, clamp sealing boot onto tripod housing using Clamping Tool, Snap-On® YA3050 (2) (or an equivalent). Place prongs of Clamp Locking Tool in the holes of the clamp (1).

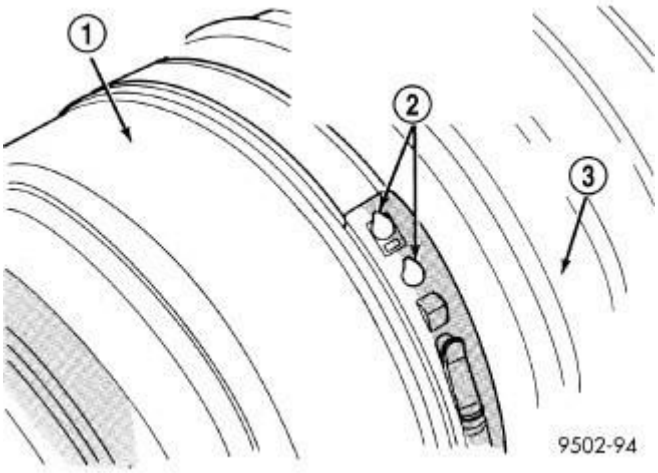

Fig. 39: Sealing Boot Clamp Correctly Installed
Courtesy of CHRYSLER GROUP, LLC

17. Squeeze tool together until top band of clamp is latched behind the two tabs (2) on lower band of clamp.
18. Install the halfshaft requiring boot replacement back on the vehicle. Refer to **INSTALLATION** .

BOOT, DRIVE SHAFT, OUTER

REMOVAL

REMOVAL

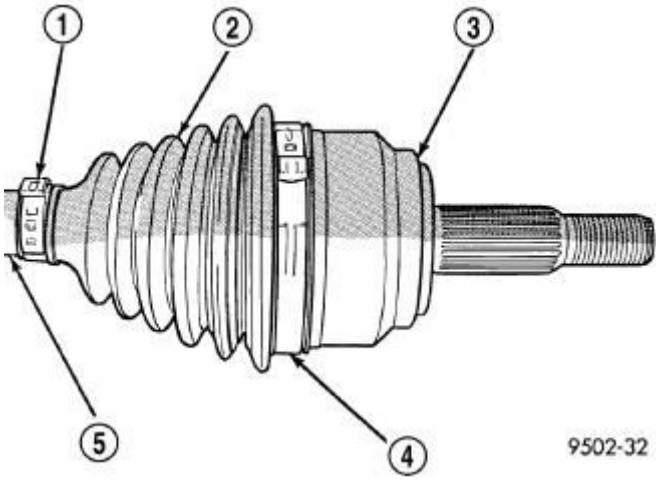

Fig. 40: Outer C/V Joint Seal Boot Clamps
Courtesy of CHRYSLER GROUP, LLC

1 - SMALL CLAMP
2 - SEALING BOOT
3 - OUTER CV JOINT HOUSING
4 - LARGE CLAMP
5 - INTERCONNECTING SHAFT

1. Remove halfshaft assembly requiring boot replacement from vehicle. Refer to **REMOVAL** .
2. Remove large boot clamp (4) retaining CV joint sealing boot to CV joint housing (3) and discard. Remove small clamp (1) that retains outer CV joint sealing boot to interconnecting shaft (5) and discard. Remove sealing boot (2) from outer CV joint housing and slide it down interconnecting shaft.
3. Wipe away grease to expose outer CV joint and interconnecting shaft.

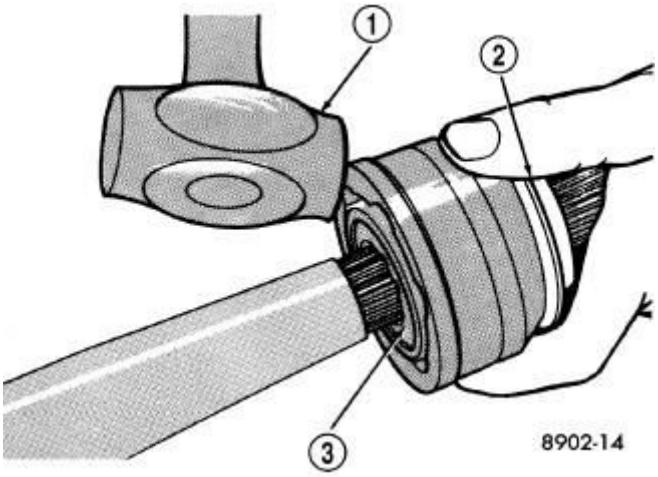

Fig. 41: Removing Outer CV Joint From Interconnecting Shaft
Courtesy of CHRYSLER GROUP, LLC

1 - SOFT HAMMER (TAP INNER RACE ONLY)
2 - WEAR SLEEVE
3 - CIRCLIP (OUTER END OF SHAFT)

4. Remove outer CV joint from interconnecting shaft using the following procedure: Support interconnecting shaft in a vise equipped with protective caps on jaws of vise to prevent damage to interconnecting shaft. Then, using a soft-faced hammer (1), sharply hit the end of the CV joint housing to dislodge housing from internal circlip (3) on interconnecting shaft. Then slide outer CV joint off end of interconnecting shaft, joint may have to be tapped off shaft using a **soft-faced** hammer.

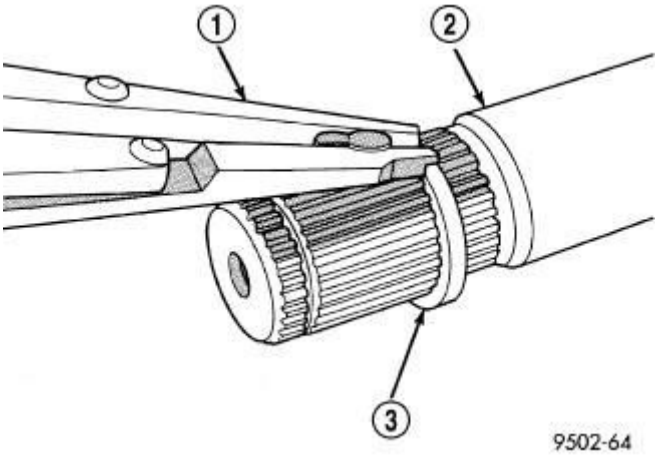

Fig. 42: Removing Large Circlip From Interconnecting Shaft
Courtesy of CHRYSLER GROUP, LLC

1 - SNAP RING PLIERS
2 - INTERCONNECTING SHAFT
3 - CIRCLIP

5. Remove large circlip (3) from the interconnecting shaft (2) before attempting to remove outer CV joint sealing boot.
6. Slide sealing boot off interconnecting shaft.
7. Thoroughly clean and inspect outer CV joint assembly and interconnecting joint for any signs of excessive wear. **If any parts show signs of excessive wear, the halfshaft assembly will require replacement. Component parts of these halfshaft assemblies are not serviceable.**

INSTALLATION

INSTALLATION

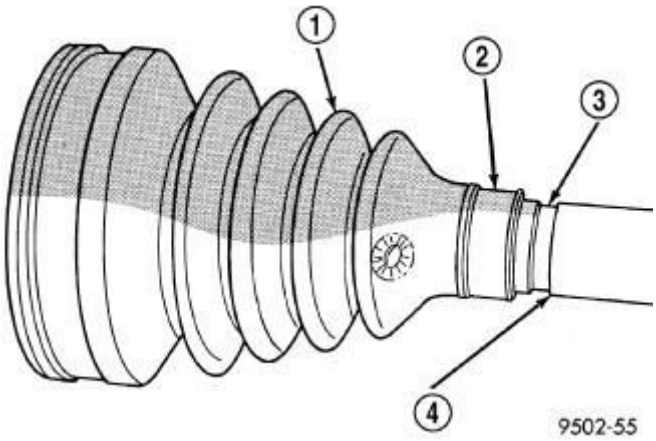

Fig. 43: Sealing Boot Installation On Interconnecting Shaft
Courtesy of CHRYSLER GROUP, LLC

1. Slide new sealing boot clamp (2) onto interconnecting shaft (4). Slide the outer CV joint assembly sealing boot (1) onto the interconnecting shaft (4). **Seal boot MUST be positioned on interconnecting shaft so the raised bead on the inside of the seal boot is in groove on interconnecting shaft.**

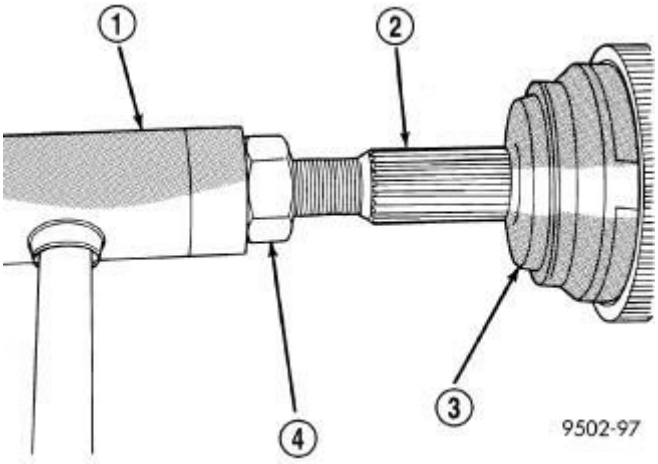

Fig. 44: Installing Outer CV Joint Assembly Onto Interconnecting Shaft
Courtesy of CHRYSLER GROUP, LLC

2. Align splines on interconnecting shaft with splines on cross of outer CV joint assembly and start outer CV joint onto interconnecting shaft.
3. Install outer CV joint assembly onto interconnecting shaft by using a **soft-faced** hammer (1) and tapping end of stub axle (2) (with hub nut (4) installed) until outer CV joint (3) is fully seated on interconnecting shaft.

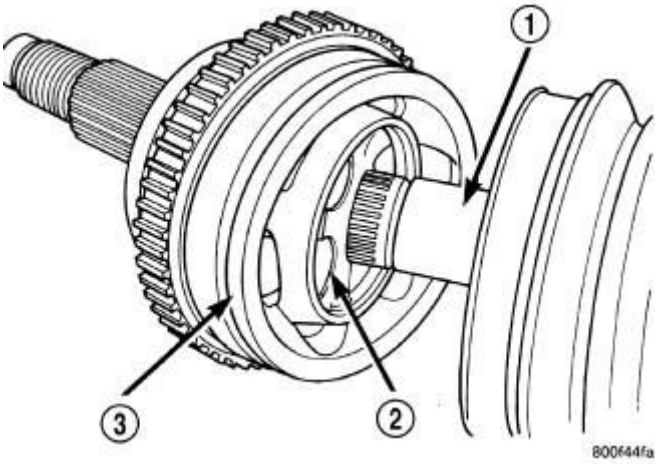

Fig. 45: Outer CV Joint Correctly Installed on Interconnecting Shaft
Courtesy of CHRYSLER GROUP, LLC

4. Outer CV joint assembly must be installed on interconnecting shaft until cross (2) of outer CV joint assembly (3) is seated against circlip on interconnecting shaft (1).

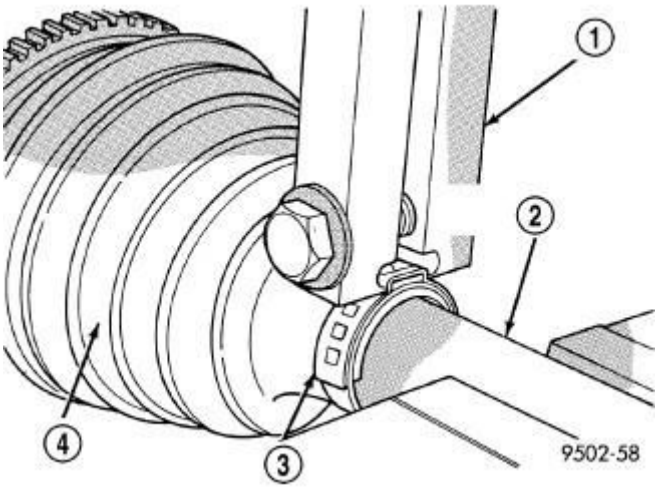

Fig. 46: Crimping Tool Installed on Sealing Boot Clamp
Courtesy of CHRYSLER GROUP, LLC

5. Distribute 1/2 the amount of grease provided in seal boot service package (DO NOT USE ANY OTHER TYPE OF GREASE) into outer CV joint assembly housing. Put the remaining amount into the sealing boot (4).
6. Install outer CV joint sealing boot to interconnecting shaft clamp evenly on sealing boot.
7. Clamp sealing boot onto interconnecting shaft (2) using crimper, Clamp (special tool #C-4975A, Installer, Axle Clamp) and the following procedure. Place Clamp C-4975A (1) over bridge of clamp (3).

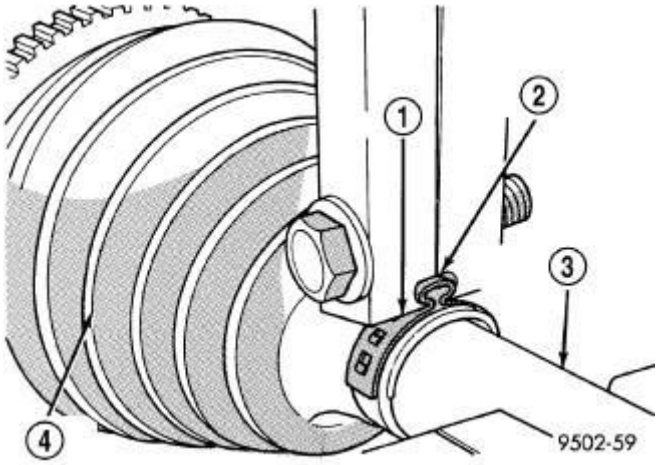

Fig. 47: Sealing Boot Retaining Clamp Installed
Courtesy of CHRYSLER GROUP, LLC

8. Tighten nut on Clamp (special tool #C-4975A, Installer, Axle Clamp) until jaws on tool are closed completely together (2), face to face.

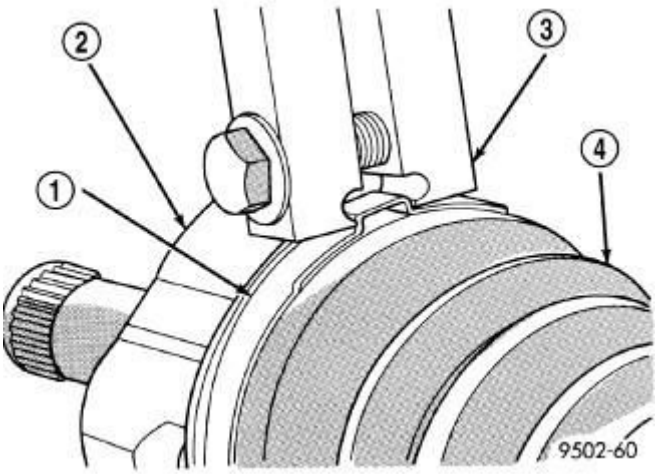

Fig. 48: Crimping Tool Installed On Sealing Boot Clamp
Courtesy of CHRYSLER GROUP, LLC

CAUTION: Seal must not be dimpled, stretched, or out-of-shape in any way. If seal is NOT shaped correctly, equalize pressure in seal and shape it by hand.

9. Position outer CV joint sealing boot (4) into its retaining groove on outer CV joint housing. Install sealing boot to outer CV joint retaining clamp (1) evenly on sealing boot.
10. Clamp sealing boot onto outer CV joint housing using Clamp (special tool #C-4975A, Installer, Axle Clamp) (3) and the following procedure. Place Clamp (special tool #C-4975A, Installer, Axle Clamp) over bridge of clamp (1).

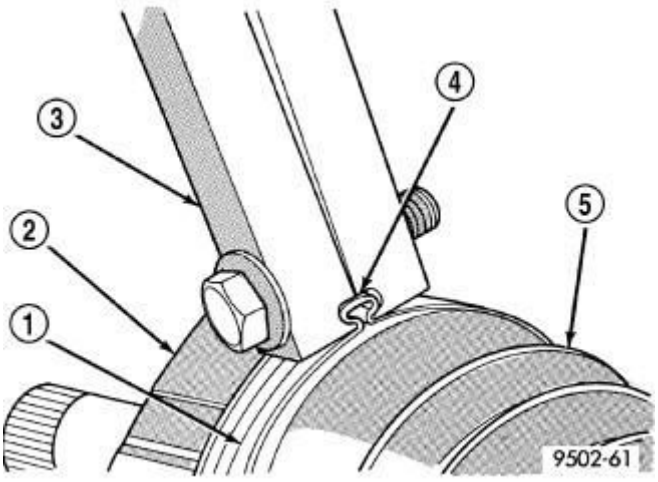

Fig. 49: Sealing Boot Retaining Clamp Installed

Courtesy of CHRYSLER GROUP, LLC

11. Tighten nut on Clamp (special tool #C-4975A, Installer, Axle Clamp) until jaws on tool are closed completely together (4), face to face.
12. Install the halfshaft requiring boot replacement back on the vehicle. Refer to **INSTALLATION** .

2014 DRIVELINE/AXLES

Left Rear Half Shaft - Compass & Patriot

REMOVAL

REMOVAL

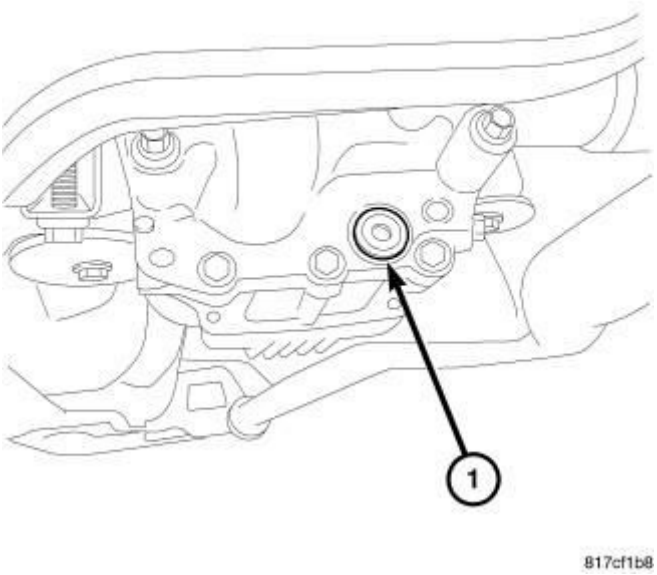

Fig. 1: Rear Driveline Module Drain Plug
Courtesy of CHRYSLER GROUP, LLC

1. Raise vehicle on a hoist.
2. Remove the rear tires.
3. Drain the fluid from the rear driveline module.
4. Remove the rear propeller shaft. Refer to **REMOVAL** .

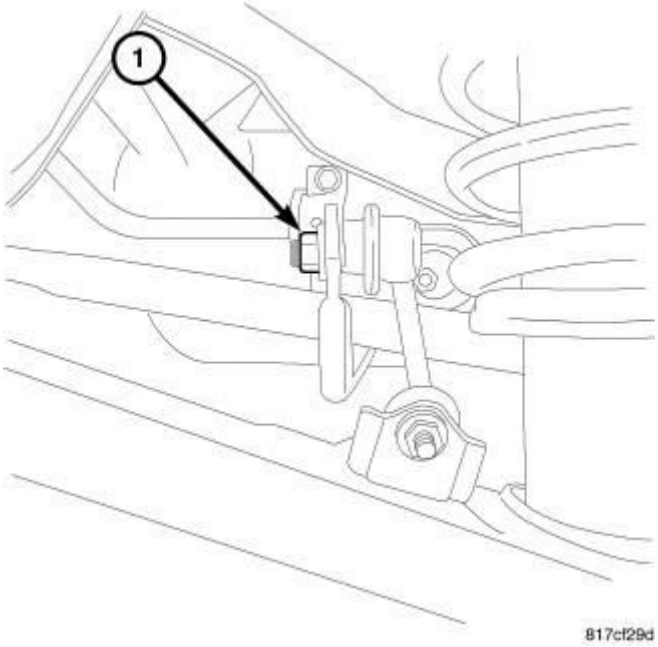

Fig. 2: Right Sway Bar Nut
Courtesy of CHRYSLER GROUP, LLC

5. Remove right side sway bar nut (1) (if equipped).

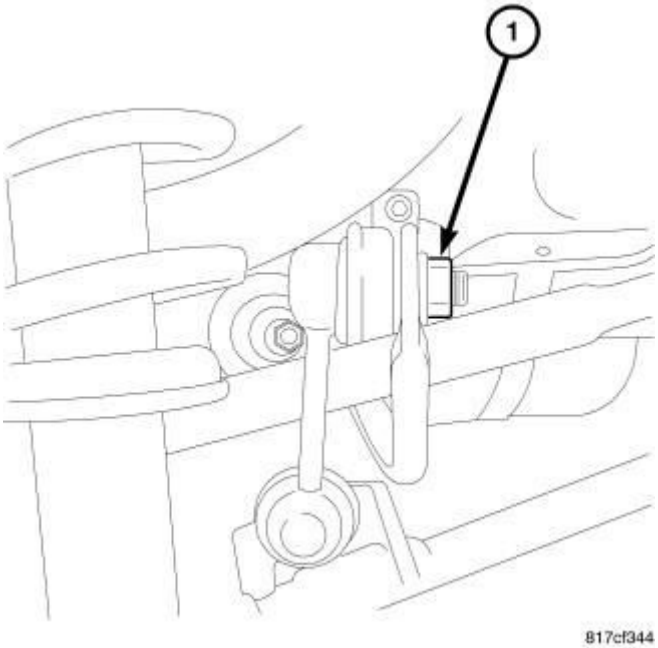

Fig. 3: Left Side Sway Bar Nut
Courtesy of CHRYSLER GROUP, LLC

6. Remove left side sway bar nut (1) (if equipped).

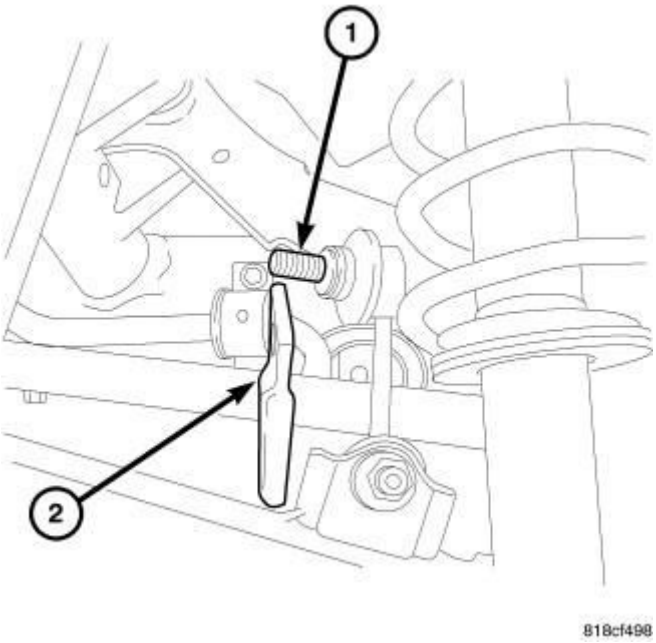

Fig. 4: Sway Bar
Courtesy of CHRYSLER GROUP, LLC

7. Roll sway bar (2) (if equipped) down and out of the way.

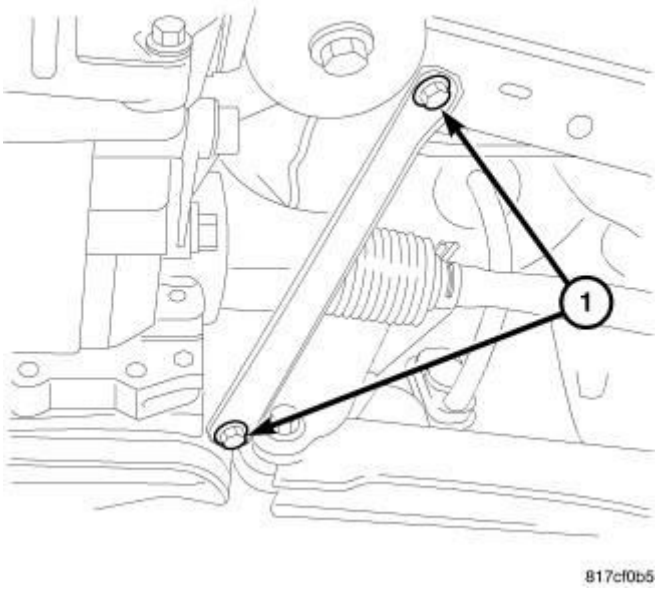

Fig. 5: Left Side Stay Bar
Courtesy of CHRYSLER GROUP, LLC

8. Remove the left side stay bracket bolts (1).

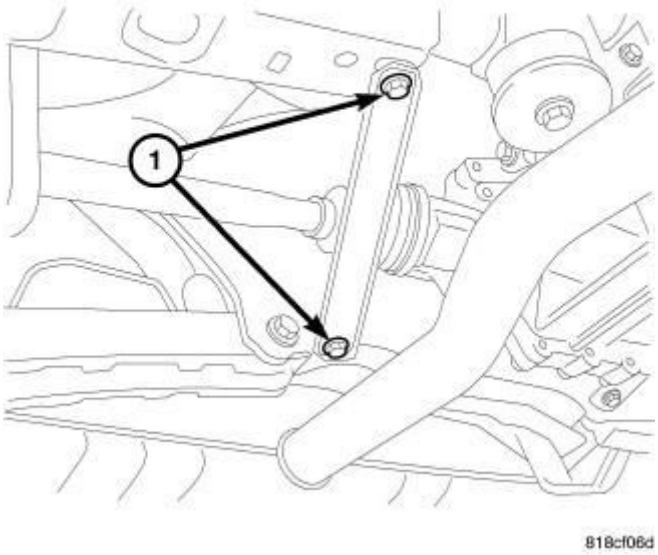

Fig. 6: Right Stay Bar
Courtesy of CHRYSLER GROUP, LLC

9. Remove the right side stay bracket bolts (1).
10. Remove the exhaust system up to the catalytic converter. Refer to **MUFFLER, EXHAUST, REMOVAL** .
11. Support the rear driveline module with a transmission jack.

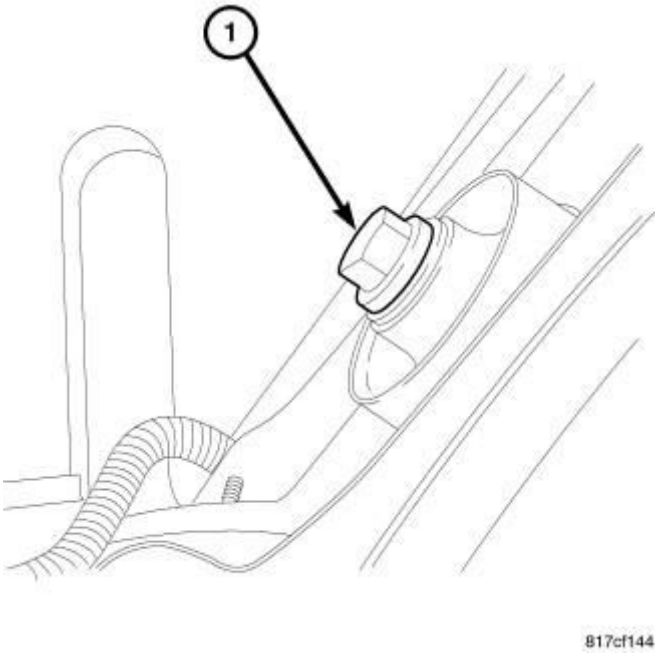

Fig. 7: Rear Bolt At Axle
Courtesy of CHRYSLER GROUP, LLC

12. Remove the rear bolt (1) at the driveline module.

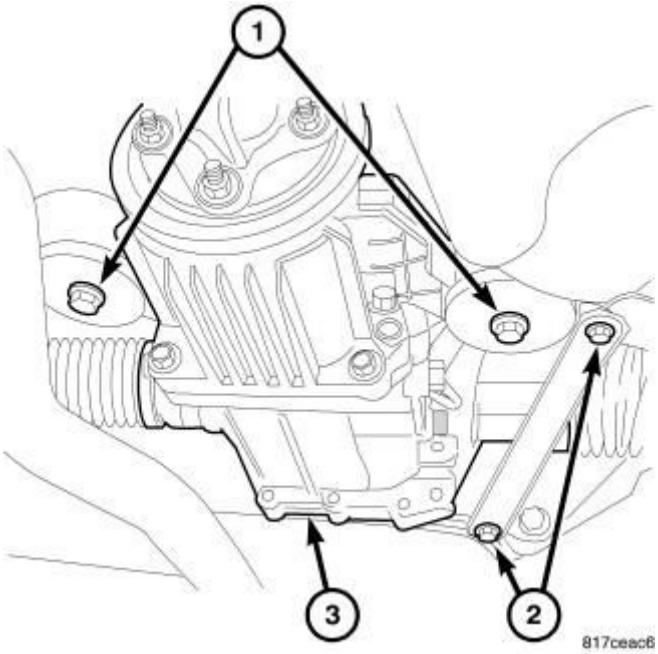

Fig. 8: Driveline Module Mounting Bolts
Courtesy of CHRYSLER GROUP, LLC

13. Remove the two side bolts (1) at driveline module (3).

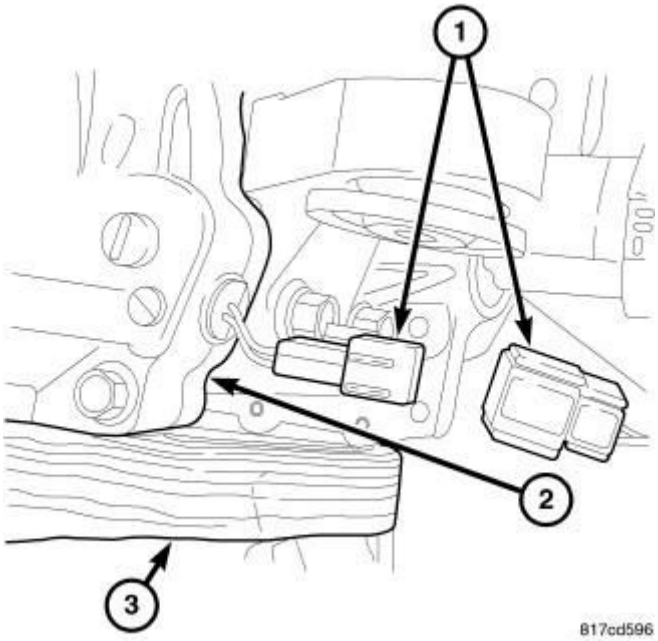

Fig. 9: Electrical Connector
Courtesy of CHRYSLER GROUP, LLC

14. Lower driveline module enough to gain access to the electrical connector

and bracket.

15. Remove the routing bracket bolt.
16. Remove the breather hose from the ECC.
17. Unplug the electrical connector (1).

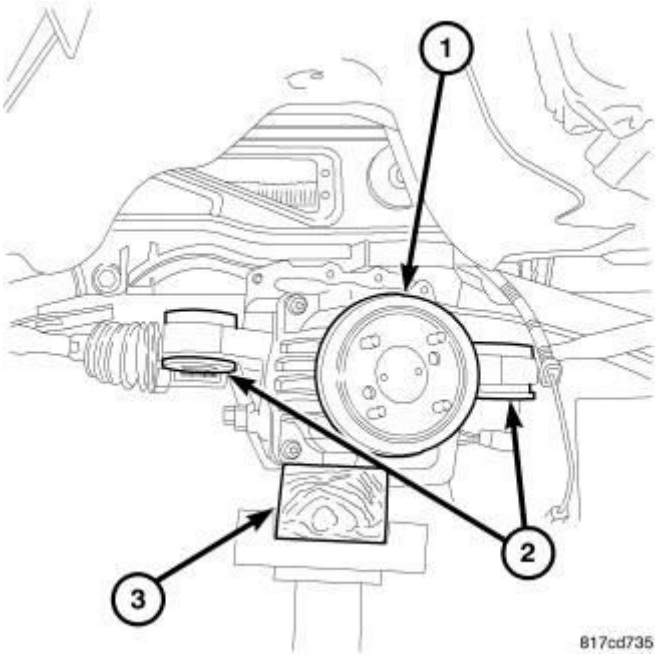

Fig. 10: Rear Axle Remove And Install
Courtesy of CHRYSLER GROUP, LLC

18. Lower the driveline module (1).
19. Disengage axle shaft.
20. Remove nut and washer from halfshaft to left rear hub.
21. Remove halfshaft from rear hub. If hard to remove or sticking, use a punch and hammer to tap out.

INSTALLATION

INSTALLATION

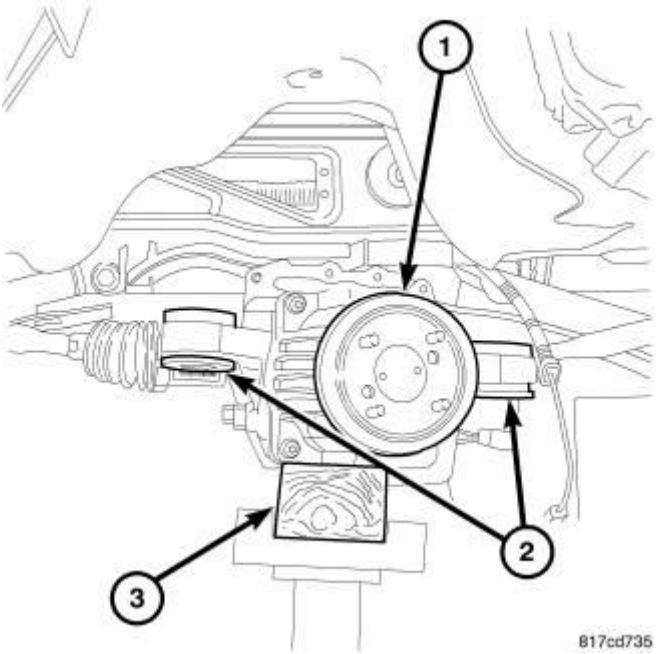

Fig. 11: Rear Axle Remove And Install
Courtesy of CHRYSLER GROUP, LLC

1. Lift driveline module (1) with a transmission jack while installing halfshaft.
2. Install nut and washer halfshaft to left rear hub and tighten to 244 N.m (180 ft.lbs.).

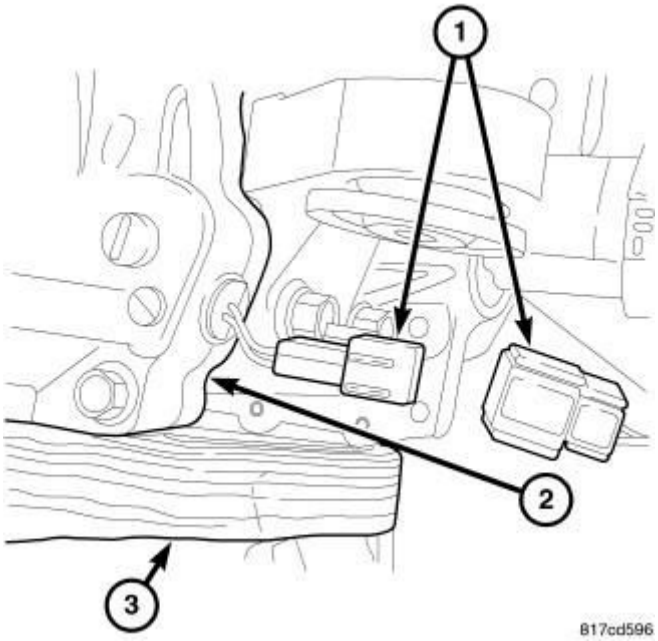

Fig. 12: Electrical Connector
Courtesy of CHRYSLER GROUP, LLC

3. Connect the breather hose to ECC.

4. Connect the electrical connector (1).
5. Install wire harness bracket and two mounting bolt and tighten to 10 N.m (89 in. lbs.).

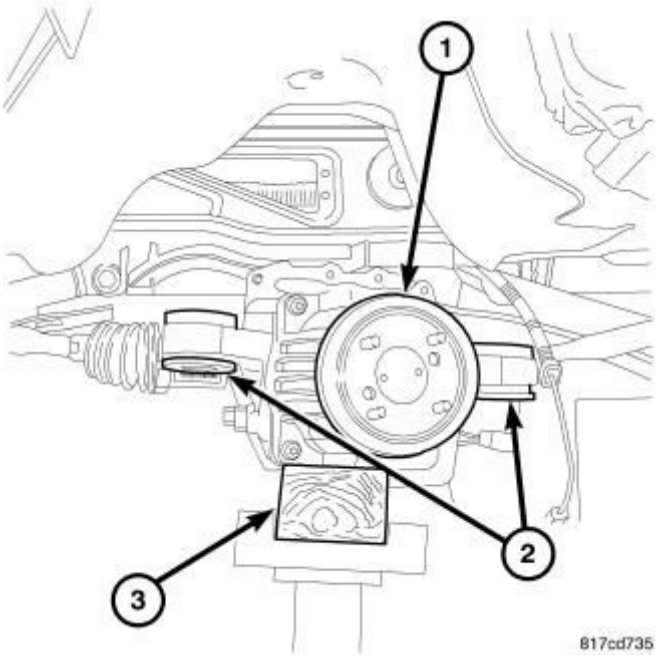

Fig. 13: Rear Axle Remove And Install
Courtesy of CHRYSLER GROUP, LLC

6. Lift driveline module (1) into place.

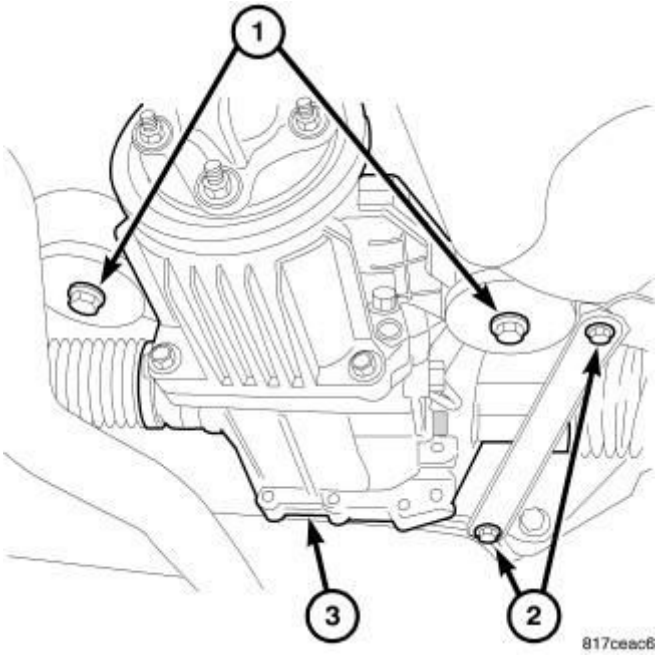

Fig. 14: Driveline Module Mounting Bolts
Courtesy of CHRYSLER GROUP, LLC

7. Install the two driveline module side mounting bolts (1) and tighten to 102 N.m (75 ft. lbs.).

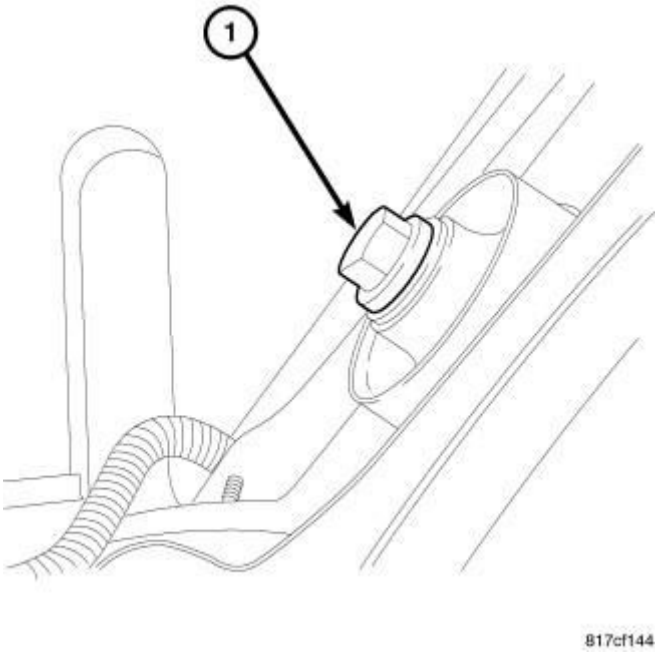

Fig. 15: Rear Bolt At Axle
Courtesy of CHRYSLER GROUP, LLC

8. Install the rear driveline module mounting bolt (1) and tighten to 102 N.m (75 ft. lbs.).

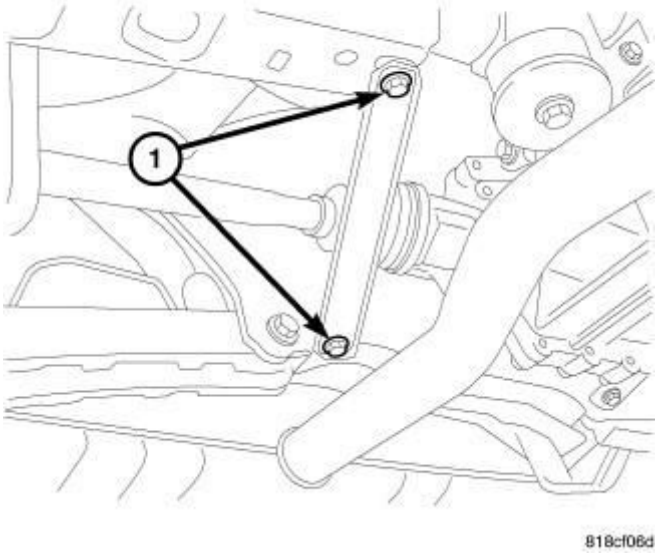

Fig. 16: Right Stay Bar
Courtesy of CHRYSLER GROUP, LLC

9. Install the right side stay bracket and bolts (1) tighten to 61 N.m (45 ft. lbs.).

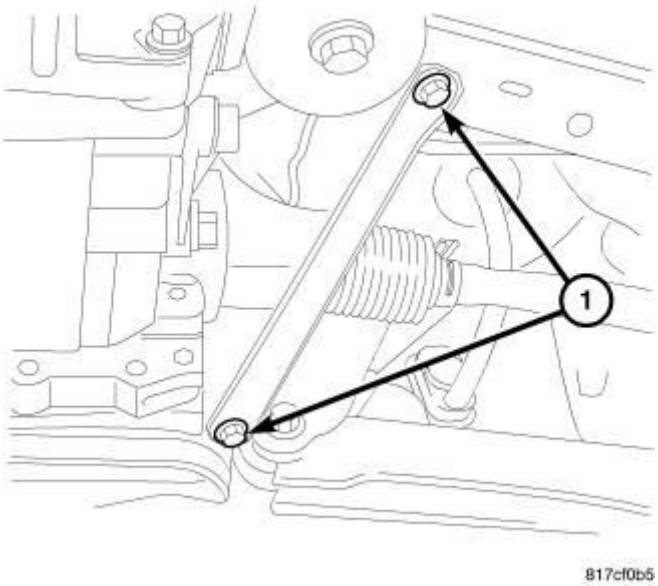

Fig. 17: Left Side Stay Bar
Courtesy of CHRYSLER GROUP, LLC

10. Install the left side stay bracket and bolts (1) and tighten to 61 N.m (45 ft. lbs.).
11. Install the propeller shaft. Refer to **INSTALLATION** .
12. Fill the rear axle with fluid.

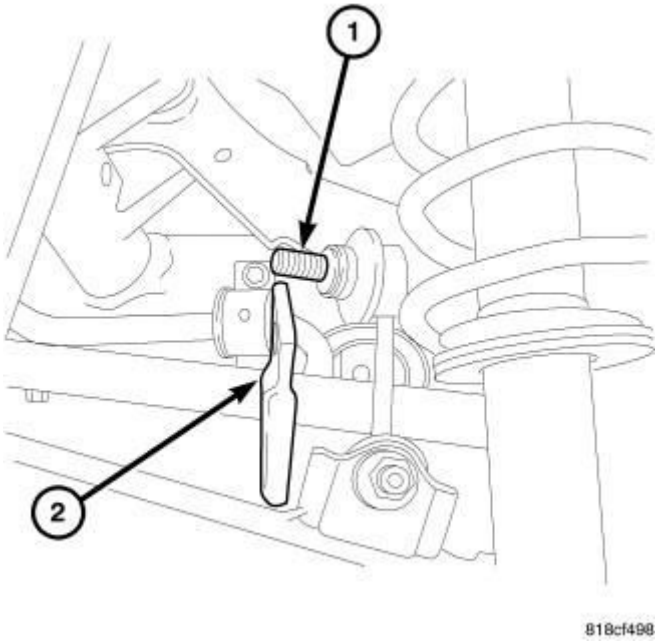

Fig. 18: Sway Bar
Courtesy of CHRYSLER GROUP, LLC

13. Roll sway bar (2) (if equipped) into place.

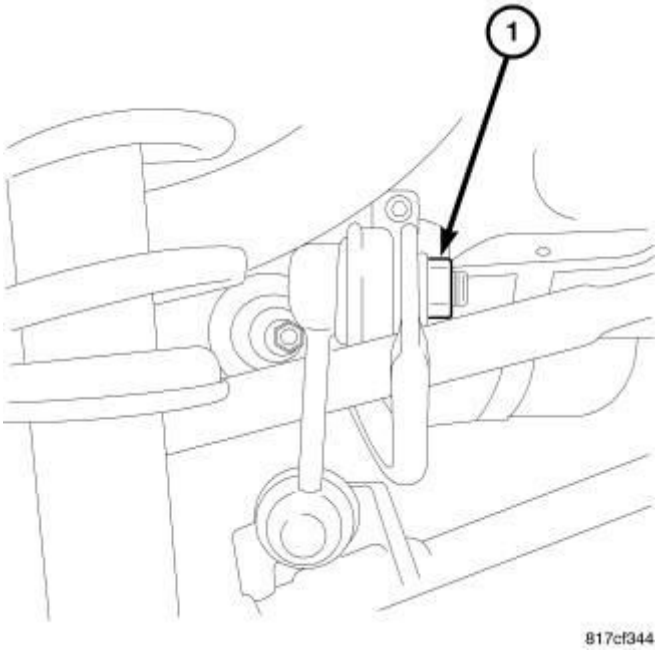

Fig. 19: Left Side Sway Bar Nut
Courtesy of CHRYSLER GROUP, LLC

14. Install left side sway bar nut (1) (if equipped) and tighten to 61 N.m (45 ft. lbs.).

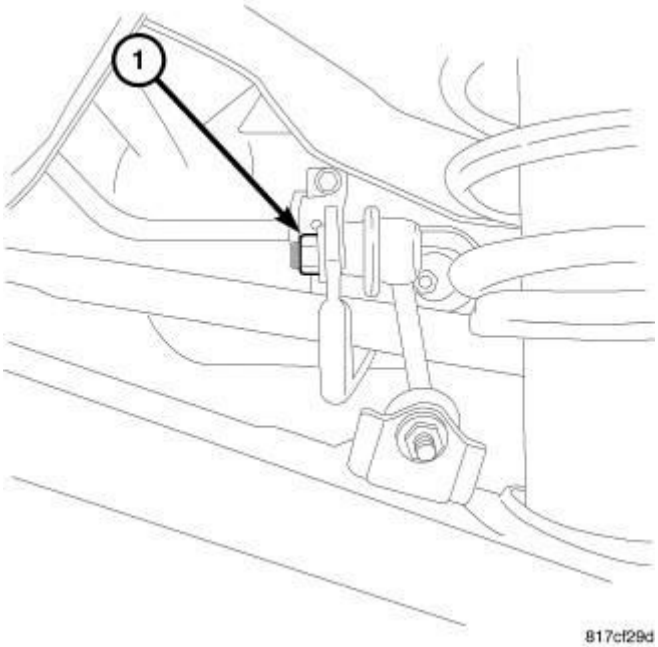

Fig. 20: Right Sway Bar Nut
Courtesy of CHRYSLER GROUP, LLC

15. Install right side sway bar nut (1) (if equipped) and tighten to 61 N.m (45 ft. lbs.).
16. install the exhaust. Refer to **MUFFLER, EXHAUST, INSTALLATION** .
17. Install the wheels. Refer to **INSTALLATION** .

2014 DRIVELINE/AXLES

Propeller Shaft - Compass & Patriot

REMOVAL

REMOVAL

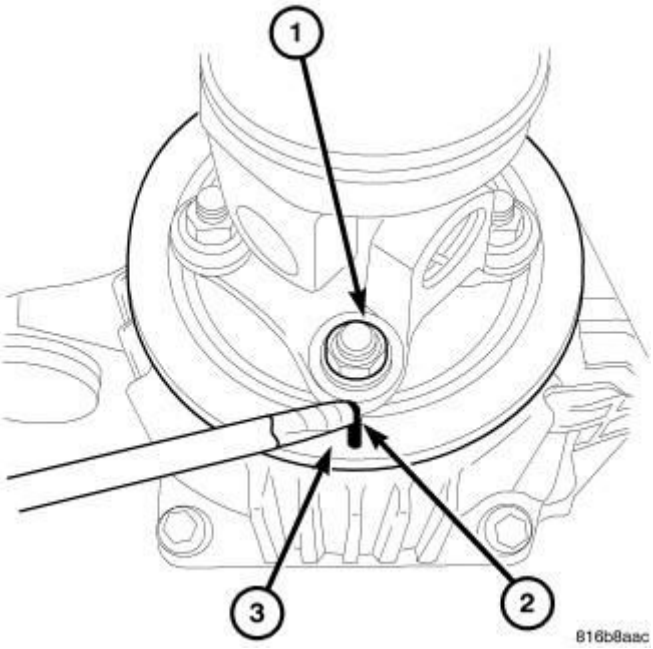

Fig. 1: Mark Prop Shaft
Courtesy of CHRYSLER GROUP, LLC

1. Raise the vehicle on the hoist.
2. Mark (2) propeller shaft and differential (3) for proper installation.

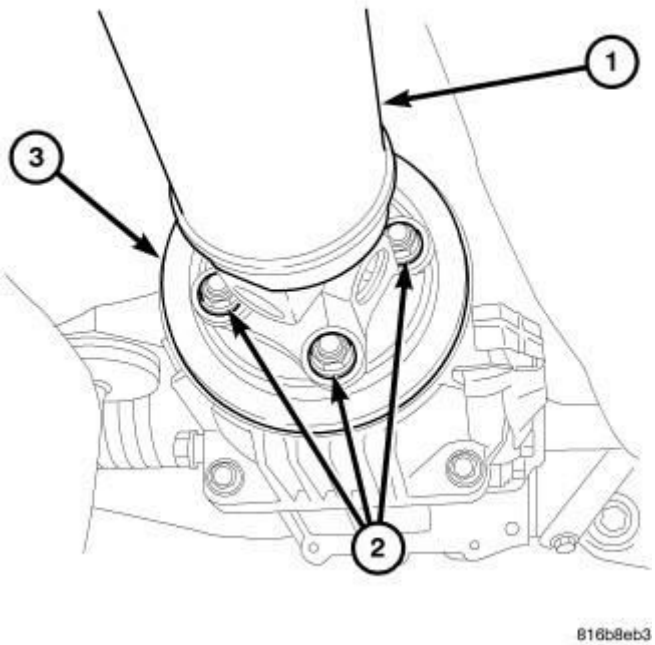

Fig. 2: Retaining Nuts At Prop Shaft
Courtesy of CHRYSLER GROUP, LLC

3. Remove four rear propeller shaft (1) to rear axle retaining nuts (2).

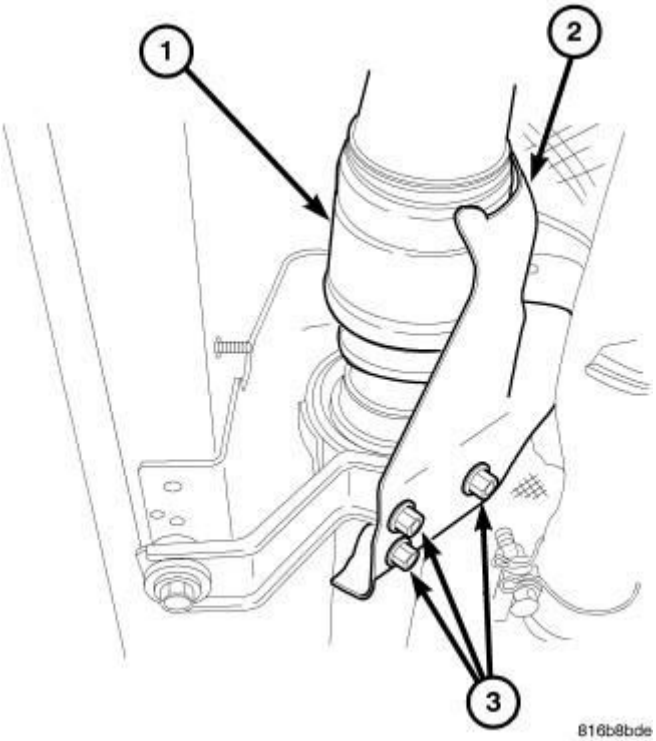

Fig. 3: Prop Shaft Heat Shield Bolts
Courtesy of CHRYSLER GROUP, LLC

4. Remove the three bolts (3) from the center support heat shield (2).

5. Remove the heat shield (2).

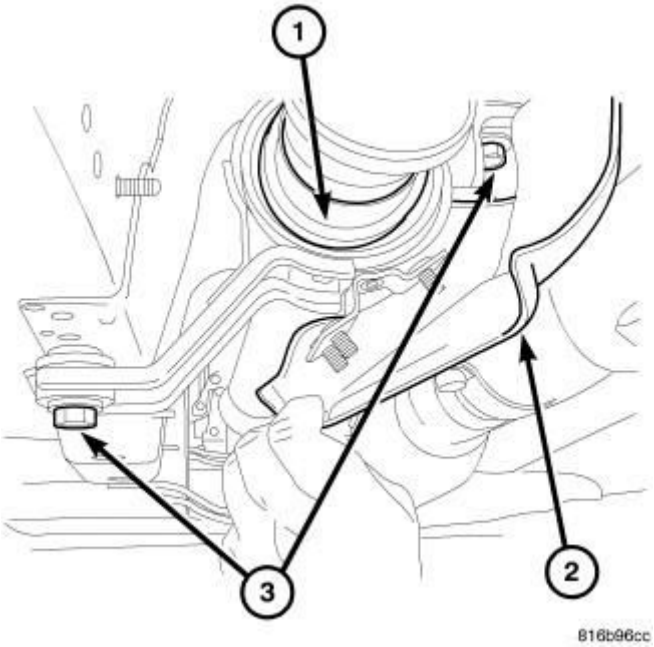

Fig. 4: Prop Shaft Heat Shield
Courtesy of CHRYSLER GROUP, LLC

CAUTION: Propeller shaft removal. Never allow propeller shaft to hang while connected to Power Transfer Unit (PTU), rear driveline module flanges or center bearings. If propeller shaft section is hung unsupported, damage may occur to joint, boot and/or center bearing from over-angulation. This may result in vibration/balance issues. A helper may be needed.

6. Remove the two center support mounting bolts (3).

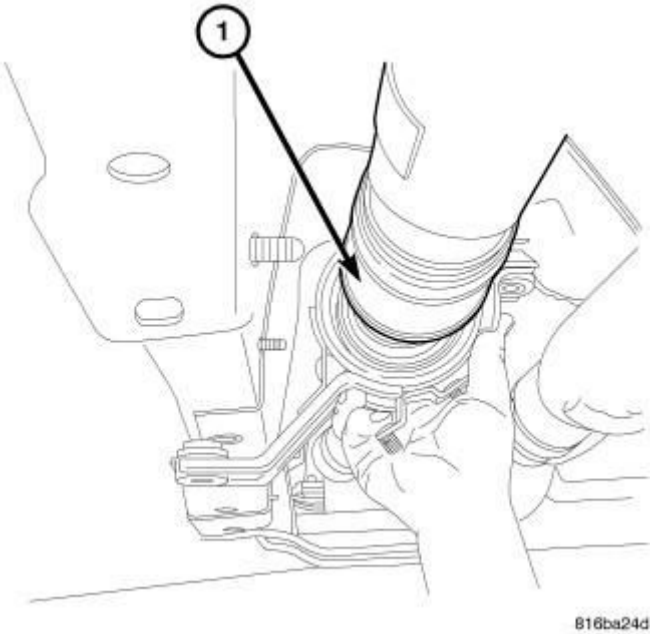

Fig. 5: Remove/Install Prop Shaft
Courtesy of CHRYSLER GROUP, LLC

7. Obtain a helper (if needed) slide propeller shaft (1) out of the PTU and remove the propeller shaft assembly.

INSTALLATION

INSTALLATION

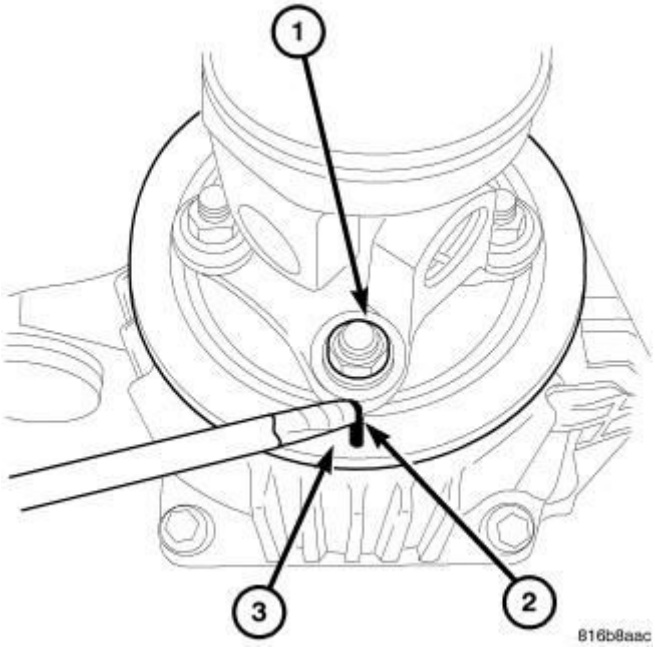

Fig. 6: Mark Prop Shaft
Courtesy of CHRYSLER GROUP, LLC

CAUTION: Propeller shaft installation. Never allow propeller shaft to hang while connected to Power Transfer Unit (PTU), rear driveline module flanges or center bearings. If propeller shaft section is hung unsupported, damage may occur to joint, boot and/or center bearing from over-angulation. This may result in vibration/balance issues. A helper may be needed.

1. Make sure transaxle is in Neutral (N) position.
2. Obtain a helper (if needed) and lift propeller shaft assembly into position. Install propeller shaft spline into PTU.
3. Align marks (2) on propeller shaft with marks on rear axle flange (3). Slide propeller shaft over studs on rear axle flange (1).

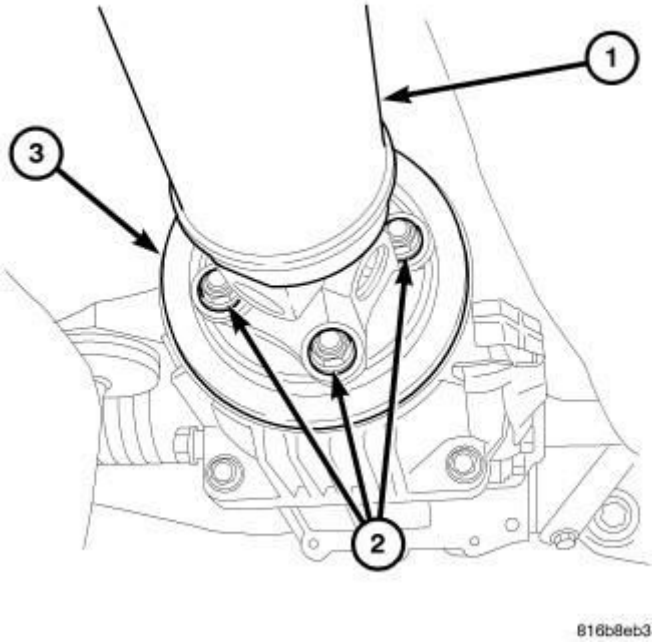

Fig. 7: Retaining Nuts At Prop Shaft
Courtesy of CHRYSLER GROUP, LLC

4. Install the four retaining nuts (2).

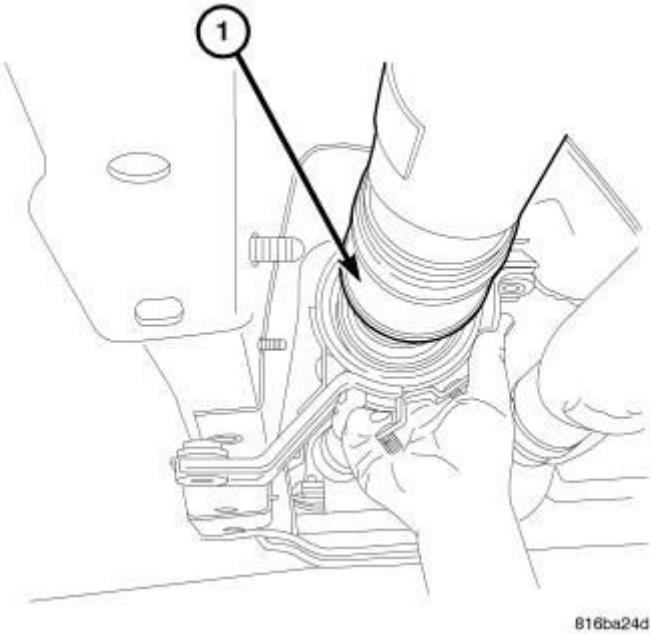

Fig. 8: Remove/Install Prop Shaft
Courtesy of CHRYSLER GROUP, LLC

5. Raise the center support into position (1).

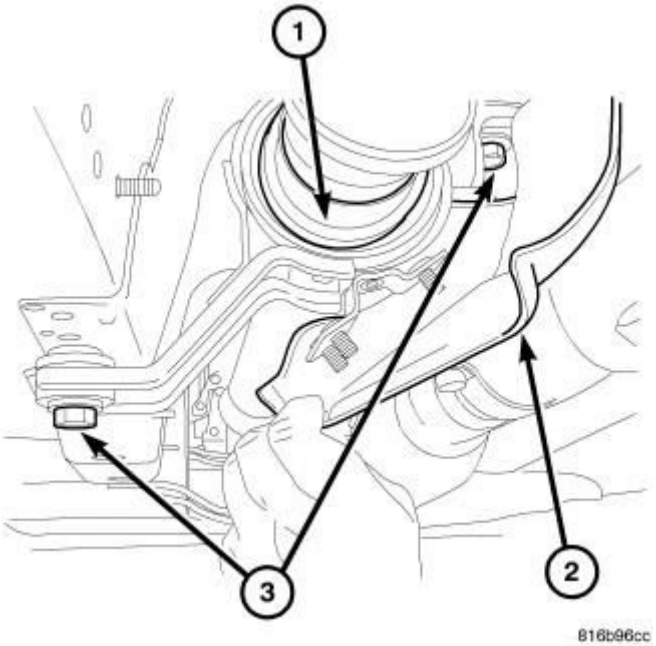

Fig. 9: Prop Shaft Heat Shield
Courtesy of CHRYSLER GROUP, LLC

6. Install center support bolts (3) and tighten to 41 N.m (30 ft. lbs.).

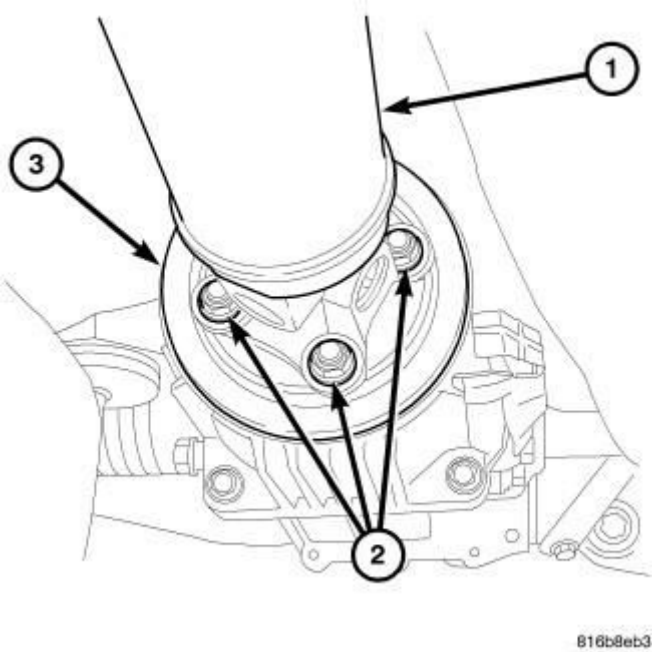

Fig. 10: Retaining Nuts At Prop Shaft
Courtesy of CHRYSLER GROUP, LLC

7. Install propeller shaft nuts (2) and tighten to 58 N.m (43 ft. lbs.).

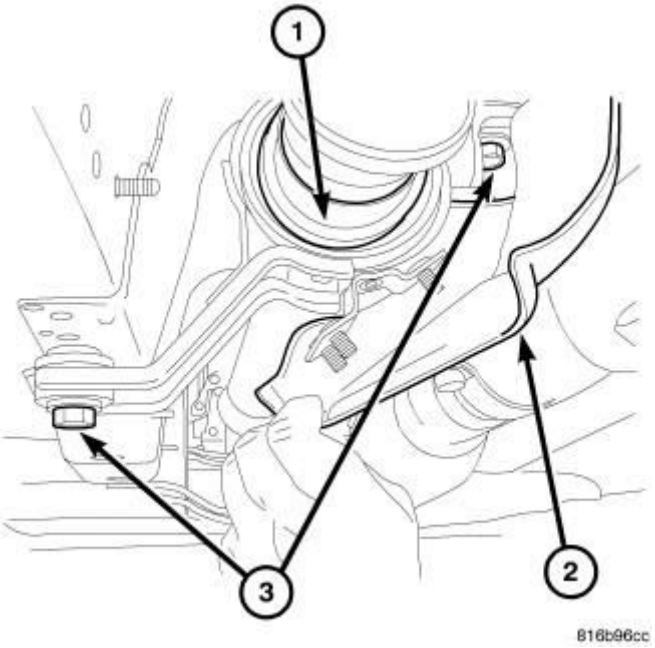

Fig. 11: Prop Shaft Heat Shield
Courtesy of CHRYSLER GROUP, LLC

8. Install heat shield (2) nuts and tighten to 21 N.m (15 ft. lbs.).
9. Check fluid levels starting with PTU.

2014 DRIVELINE/AXLES

Rear Driveline Module - Compass & Patriot

STANDARD PROCEDURE

STANDARD PROCEDURE - DRAIN AND FILL

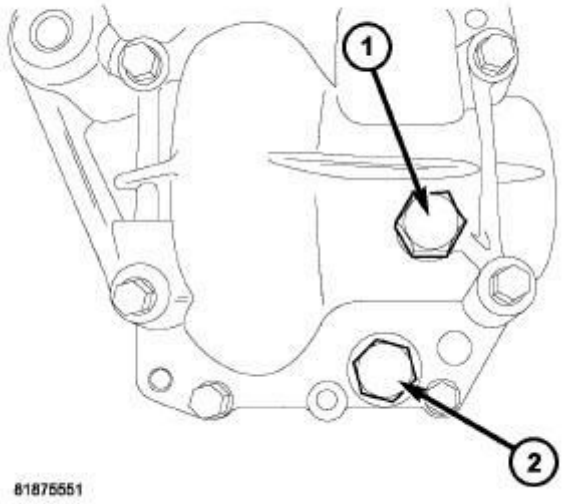

Fig. 1: Drain And Fill Plugs
Courtesy of CHRYSLER GROUP, LLC

1. Remove fill plug (1) and drain plug (2). Drain fluid.
2. Install drain plug (2) and tighten to 32 N.m (24 ft.lb.).
3. Fill with MOPAR® MS (special tool #9020, Insert, Crankshaft) SAE 80 W90 Gear Lube to bottom of fill plug.
4. Install fill plug (1) and tighten to 32 N.m (24 ft.lb.).

SPECIFICATIONS

SPECIFICATIONS

TORQUE SPECIFICATIONS

DESCRIPTION	N.m	Ft. Lbs.	In. Lbs.
Bolt, Harness Bracket	10	-	89
Bolts, Driveline Module	102	75	-

Side Mounting			
Bolt, Rear Driveline Module	102	75	-
Bolts, Stay Bracket	61	45	-
Nut, Sway Bar	61	45	-
Nut, Pinion	74	54	-
Bolts, Ring Gear	41	30	-
Bolts, Carrier Cap	48	35	-
Bolts, Differential Cover	23	16	-
Bolts, ECC to RDA	78	58	-

REMOVAL

REMOVAL

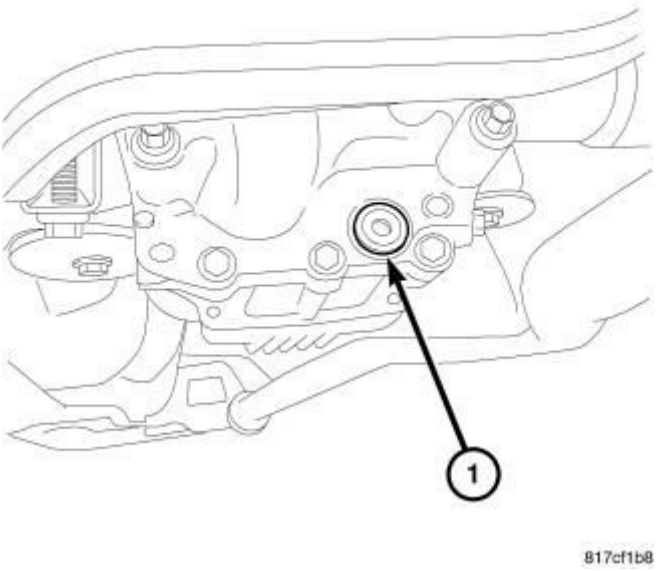

Fig. 2: Rear Driveline Module Drain Plug
Courtesy of CHRYSLER GROUP, LLC

1. Raise vehicle on a hoist.
2. Remove the rear tires.
3. Remove the drain plug (1) and drain the fluid from the rear driveline module.
4. Remove the rear propeller shaft. Refer to **REMOVAL** .

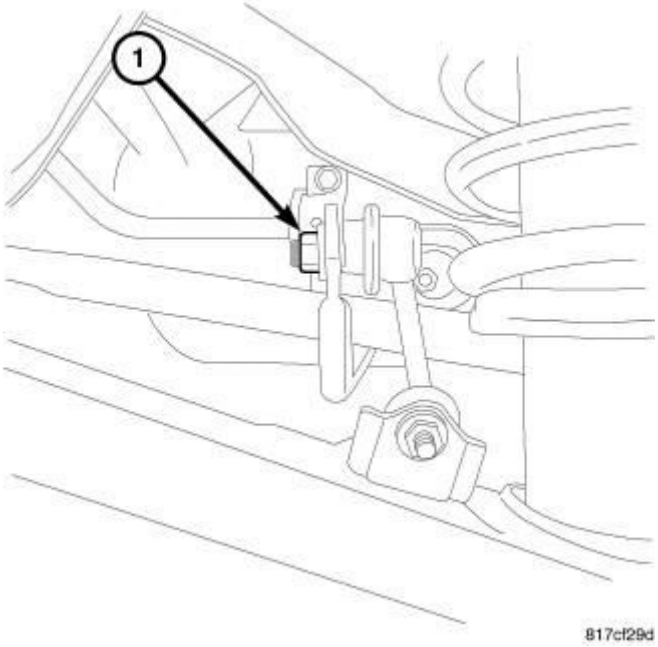

Fig. 3: Right Sway Bar Nut
Courtesy of CHRYSLER GROUP, LLC

5. Remove right side sway bar nut (1) (if equipped).

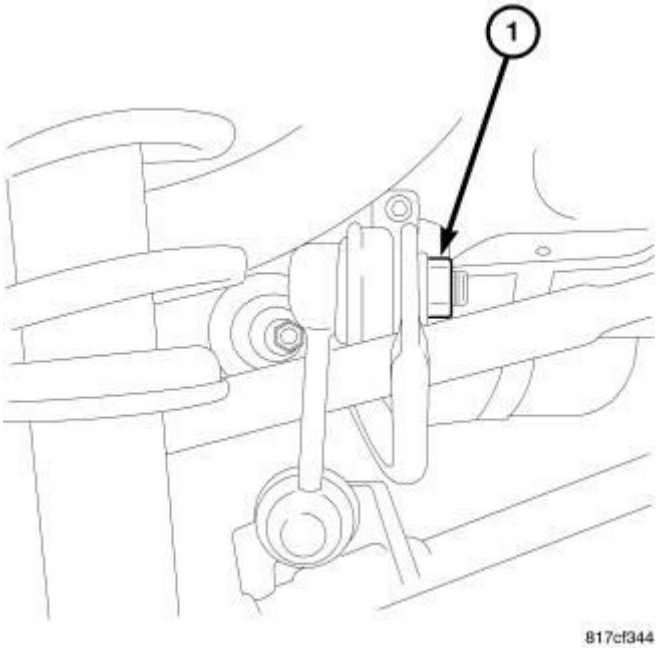

Fig. 4: Left Side Sway Bar Nut
Courtesy of CHRYSLER GROUP, LLC

6. Remove left side sway bar nut (1) (if equipped).

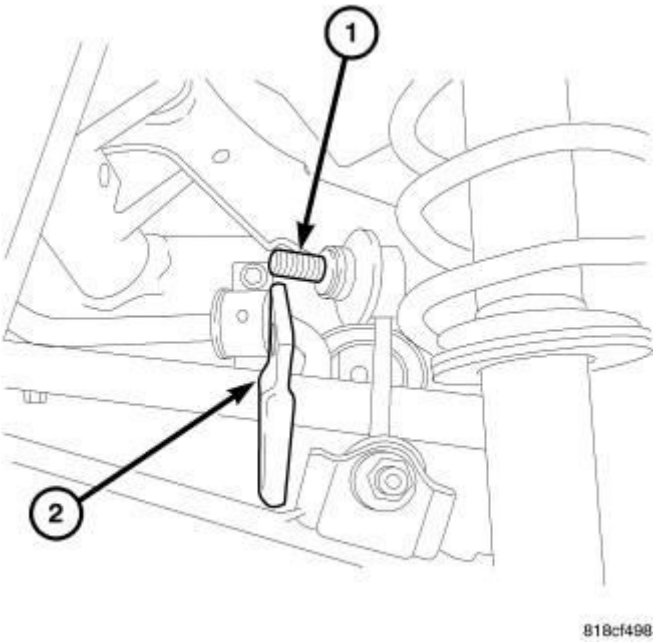

Fig. 5: Sway Bar
Courtesy of CHRYSLER GROUP, LLC

7. Roll sway bar (2) (if equipped) down and out of the way.

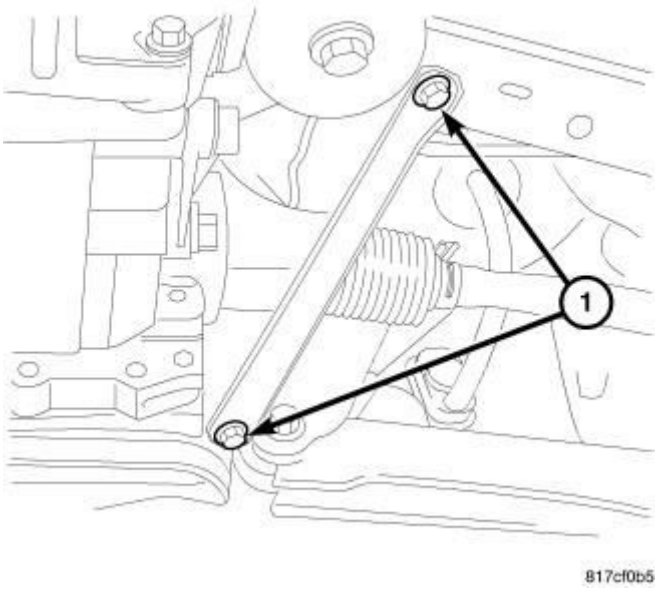

Fig. 6: Left Side Stay Bar
Courtesy of CHRYSLER GROUP, LLC

8. Remove the left side stay bracket bolts (1).

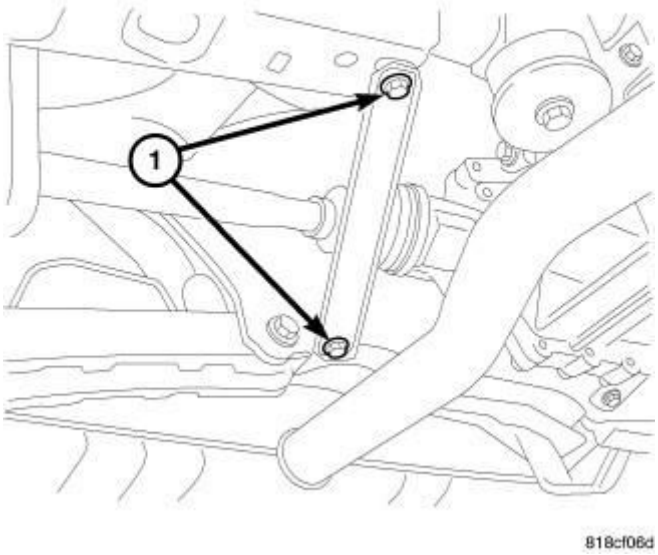

Fig. 7: Right Stay Bar
Courtesy of CHRYSLER GROUP, LLC

9. Remove the right side stay bracket bolts (1).
10. Remove the exhaust system up to the catalytic converter. Refer to **MUFFLER, EXHAUST, REMOVAL** .
11. Support the rear driveline module with a transmission jack.

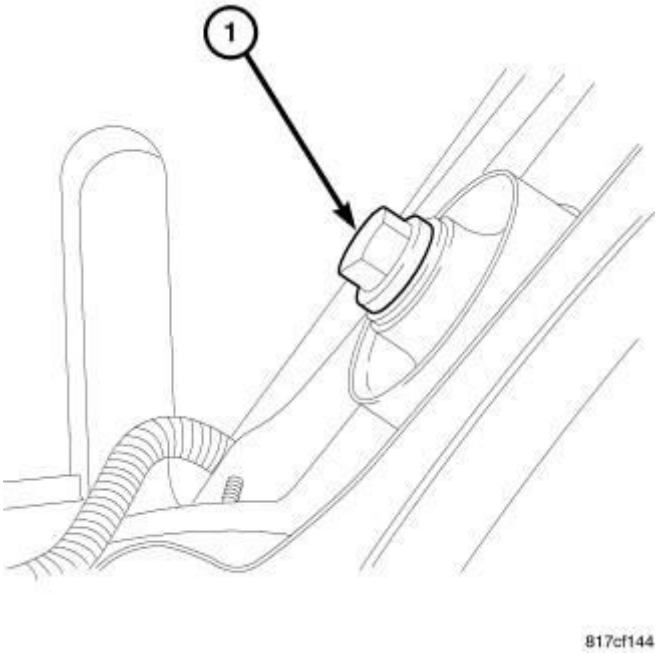

Fig. 8: Rear Bolt At Axle
Courtesy of CHRYSLER GROUP, LLC

12. Remove the rear bolt (1) at the driveline module.

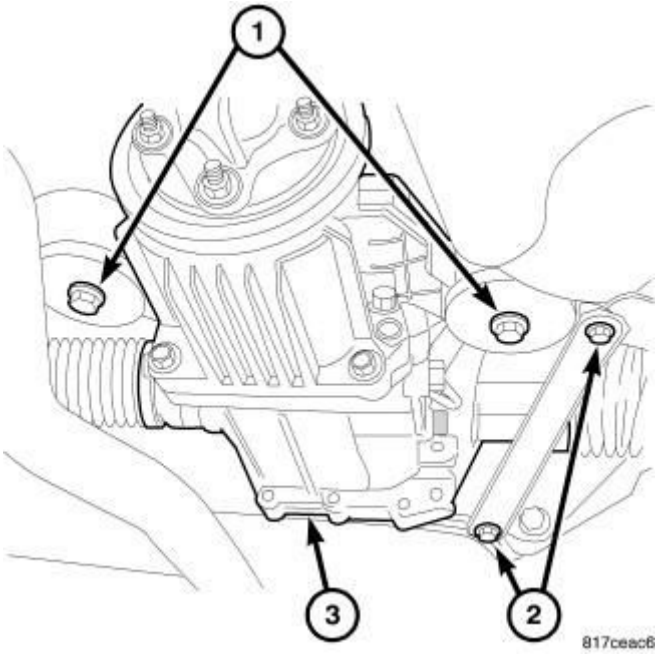

Fig. 9: Driveline Module Mounting Bolts
Courtesy of CHRYSLER GROUP, LLC

13. Remove the two side bolts (1) at driveline module (3).

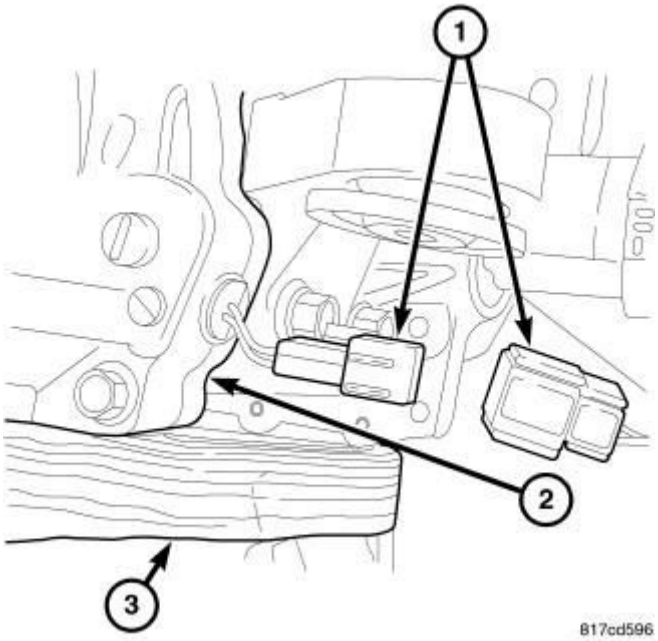

Fig. 10: Electrical Connector
Courtesy of CHRYSLER GROUP, LLC

14. Lower driveline module enough to gain access to the electrical connector

and bracket.

15. Remove the routing bracket bolt.
16. Unplug the electrical connector (1).
17. Remove breather hose off of ECC.

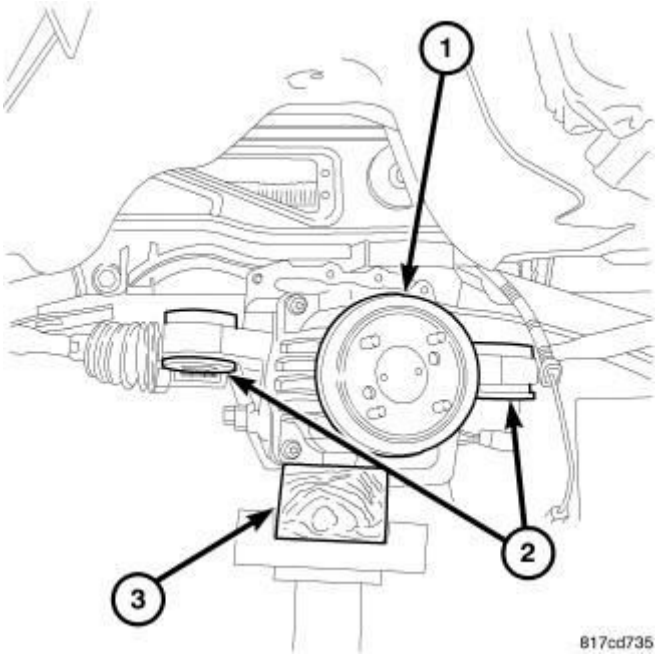

Fig. 11: Rear Axle Remove And Install
Courtesy of CHRYSLER GROUP, LLC

18. Lower the driveline module (1).
19. Disengage both halfshafts.
20. Remove driveline module.
21. Remove the ECC bolts.
22. Separate the ECC from the RDA.

DISASSEMBLY

DISASSEMBLY

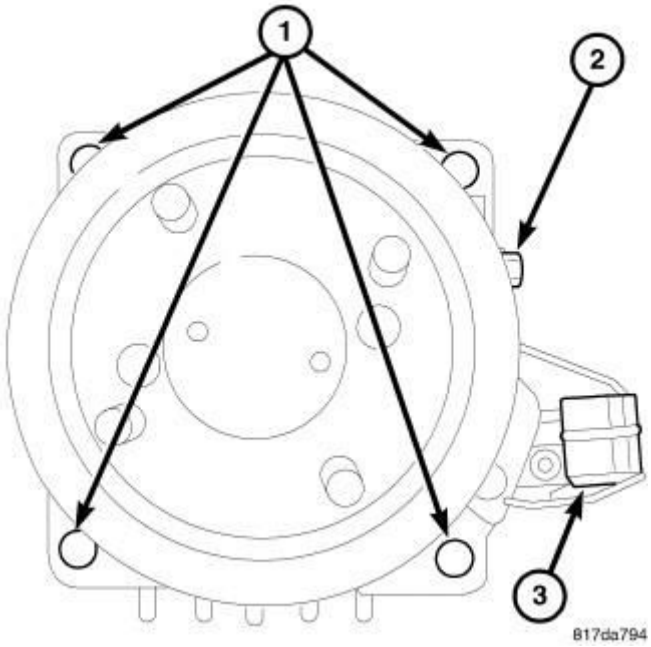

Fig. 12: Electric Clutch At Rear Axle
Courtesy of CHRYSLER GROUP, LLC

1. Remove the four bolts (1) holding the rear axle electric clutch.
2. Separate the rear axle electric clutch from the rear axle.

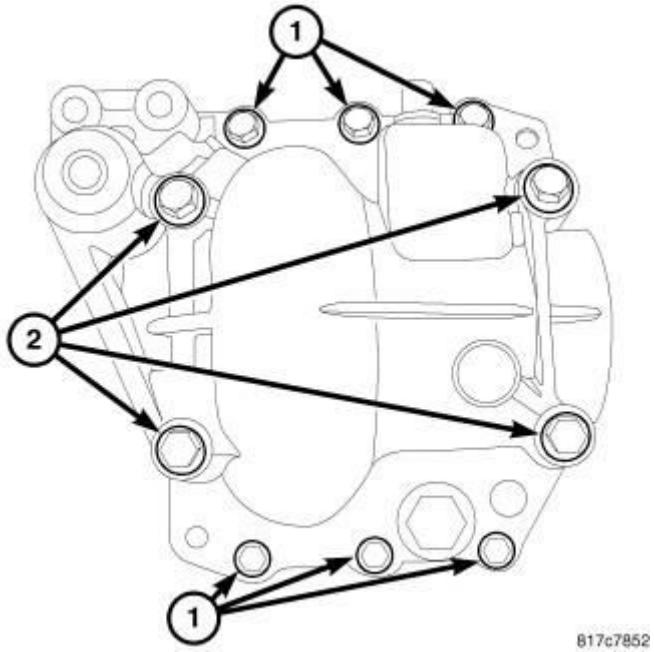

Fig. 13: Bolts At Rear Axle
Courtesy of CHRYSLER GROUP, LLC

3. Remove the differential case bolts (1).
4. Remove the cap bolts (2).

5. Remove differential cover and both axle seals.

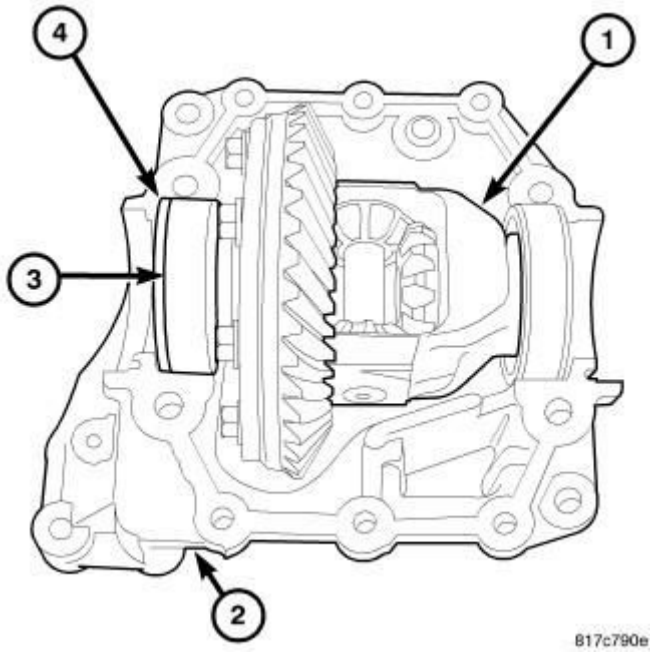

Fig. 14: Carrier At Rear Axle
Courtesy of CHRYSLER GROUP, LLC

NOTE: There are select shims at each side of the carrier.

6. Remove the carrier (1) from the differential housing (2).
7. Measure the select shims on each side of the carrier roller bearings and note for installation.

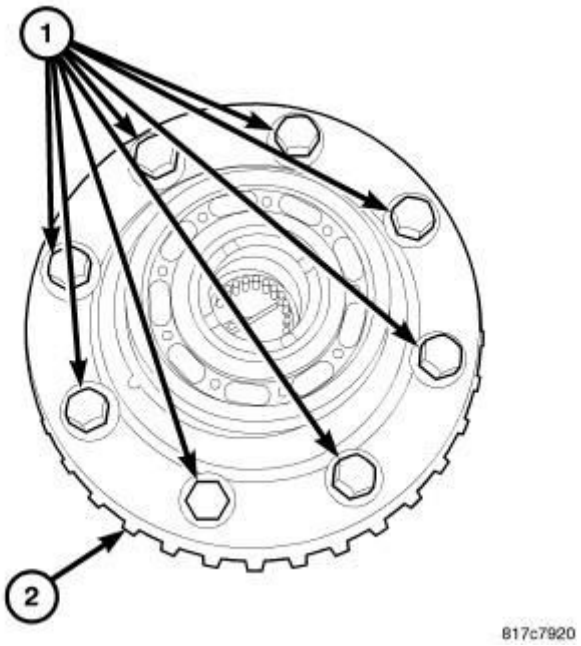

Fig. 15: Ring Gear Bolts
Courtesy of CHRYSLER GROUP, LLC

8. Remove the ring gear bolts (1).
9. Remove the ring gear (2).

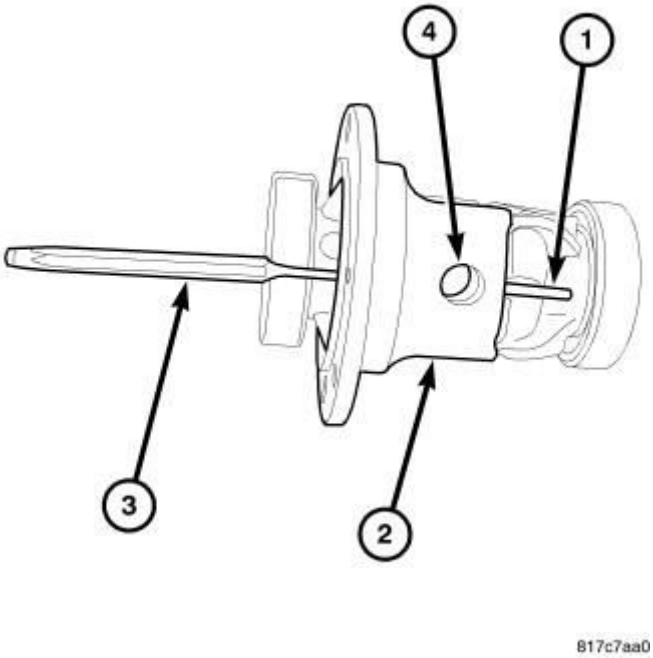

Fig. 16: Roll Pin
Courtesy of CHRYSLER GROUP, LLC

10. Remove roll pin (1) in carrier case (2) and through the pinion mate shaft (4) using a punch (3).

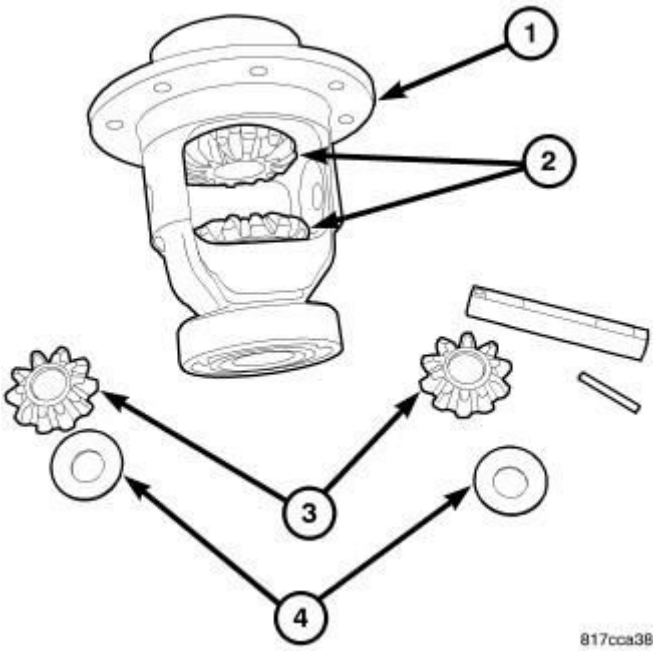

Fig. 17: Spider And Side Gears
Courtesy of CHRYSLER GROUP, LLC

11. Remove spider gears (3), thrust washers (4) and side gears (2).

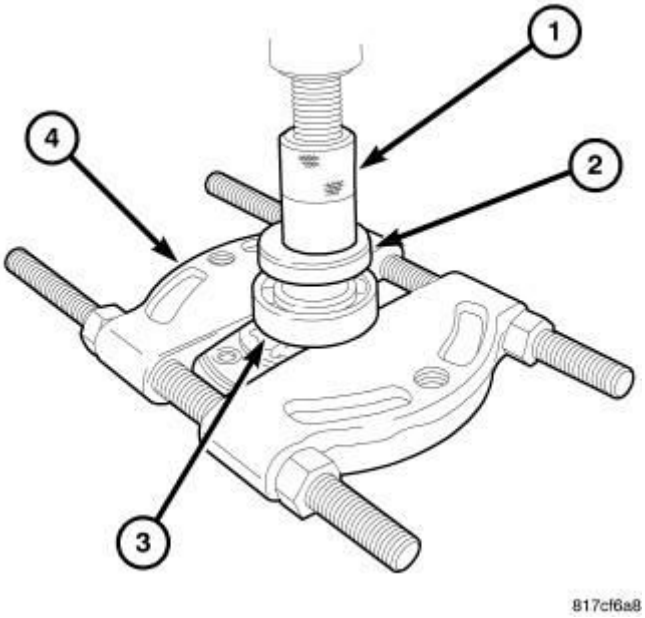

Fig. 18: Removing Carrier Bearings Using Splitter
Courtesy of CHRYSLER GROUP, LLC

12. Remove carrier bearings (3) using Splitter (special tool #1130, Splitter, Bearing/Gear) (4), Installer (special tool #9643, Installer, Bearing) (2) and a press (1).

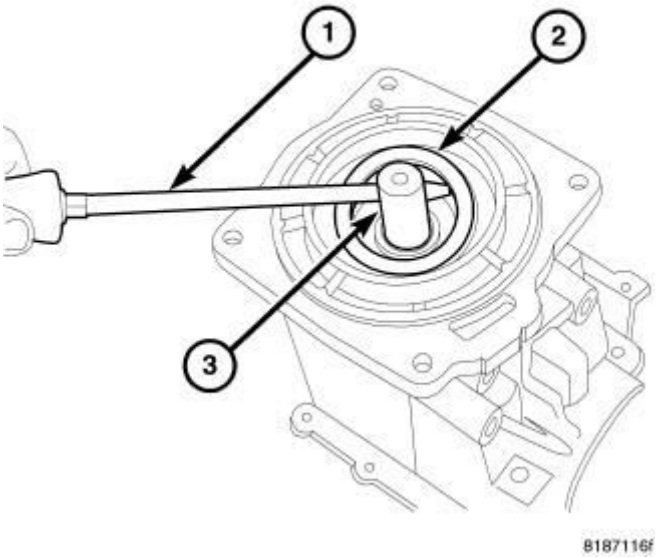

Fig. 19: Remove Pinion Seal
Courtesy of CHRYSLER GROUP, LLC

13. Use a screw driver to remove the pinion seal.

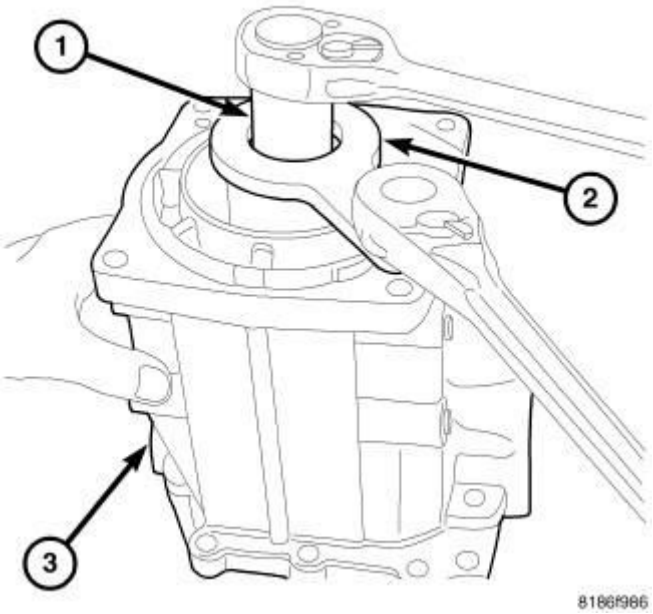

Fig. 20: Pinion Nut On And Off
Courtesy of CHRYSLER GROUP, LLC

14. Remove pinion retaining nut using Spline Holder (special tool #9742, Splined Socket) (1) and Socket (special tool #9921, Wrench, Pinion Nut) (2).

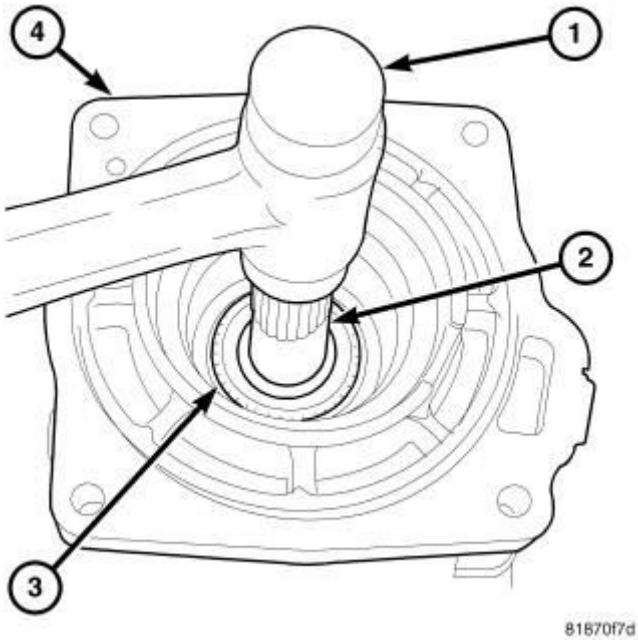

Fig. 21: Remove Pinion
Courtesy of CHRYSLER GROUP, LLC

15. Tap pinion (3) with a soft hammer (1) to remove from case (4).

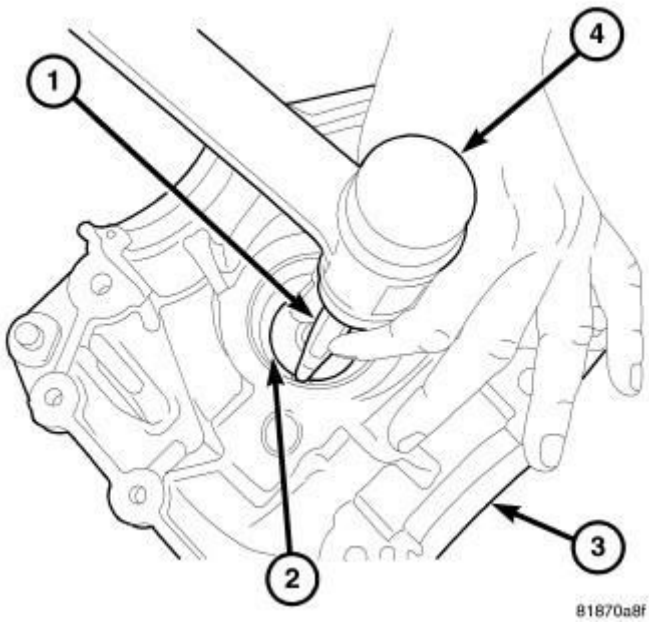

Fig. 22: Outer Pinion Bearing Cup
Courtesy of CHRYSLER GROUP, LLC

16. Using a hammer (4) and a punch (1) remove the outer pinion bearing cup (2).

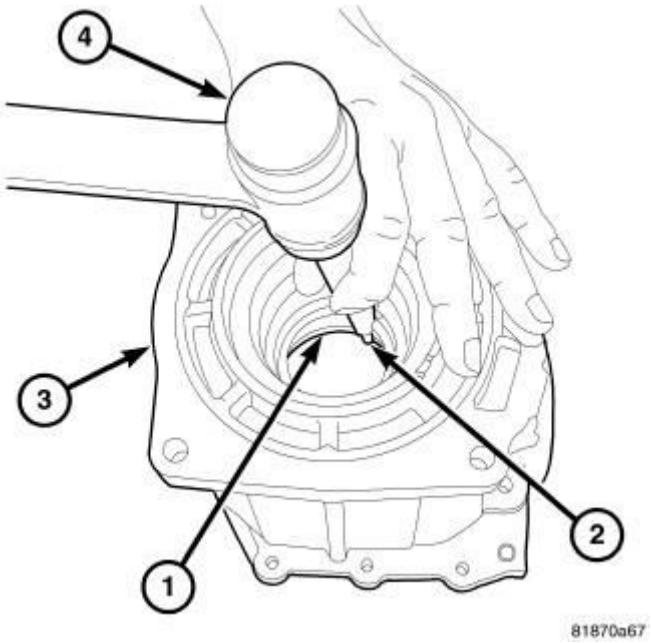

Fig. 23: Pinion Head Bearing Cup
Courtesy of CHRYSLER GROUP, LLC

17. Using a hammer (4) and a punch (2) remove the pinion head bearing cup (1).

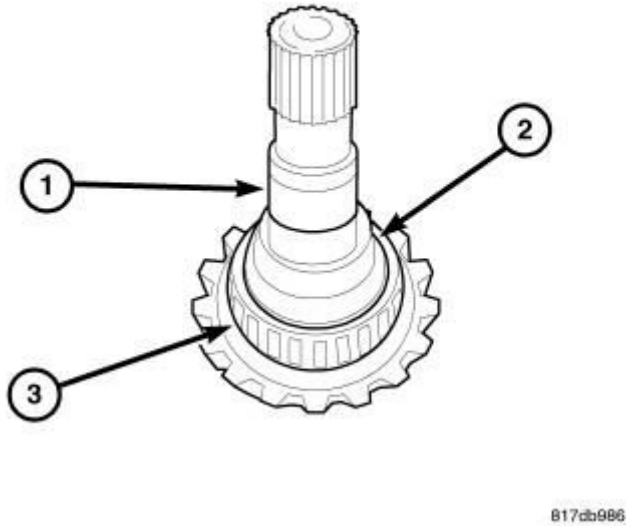

Fig. 24: Removing Collapsible Spacer From The Pinion Shaft
Courtesy of CHRYSLER GROUP, LLC

18. Remove collapsible spacer (2) from the pinion shaft (1).

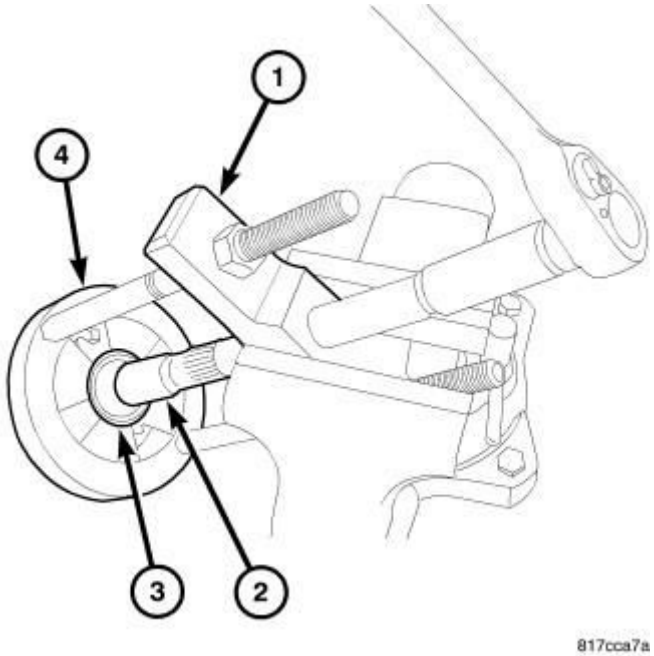

Fig. 25: Removing Pinion Bearing Using Puller And Adapters
Courtesy of CHRYSLER GROUP, LLC

19. Remove the pinion bearing (3) using Puller (special tool #C-293-PA, Puller, Press) (1) and Adapters (special tool #C-293-45, Block Set, Puller) (2).

ASSEMBLY

ASSEMBLY

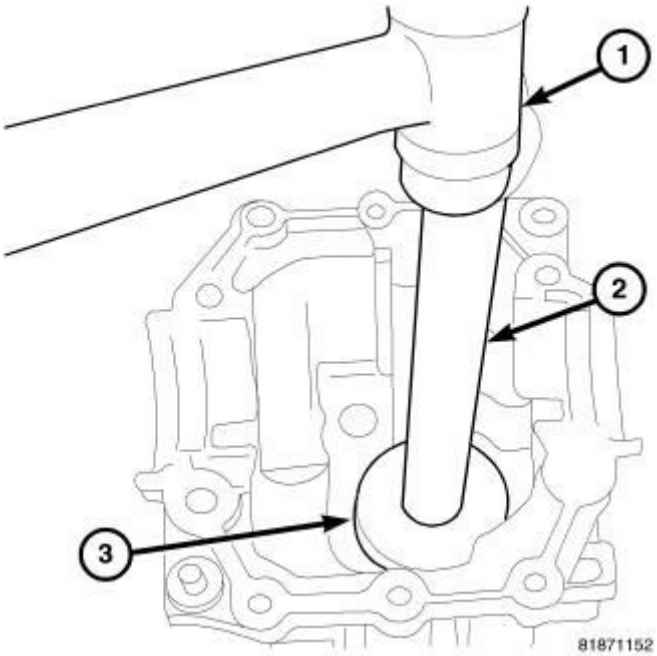

Fig. 26: Installing Pinion Head Bearing Cup
Courtesy of CHRYSLER GROUP, LLC

1. Install the pinion head bearing using Installer (special tool #5050A, Installer, Bearing Cup) (3) and Handle (special tool #C-4171, Driver Handle, Universal) (2).

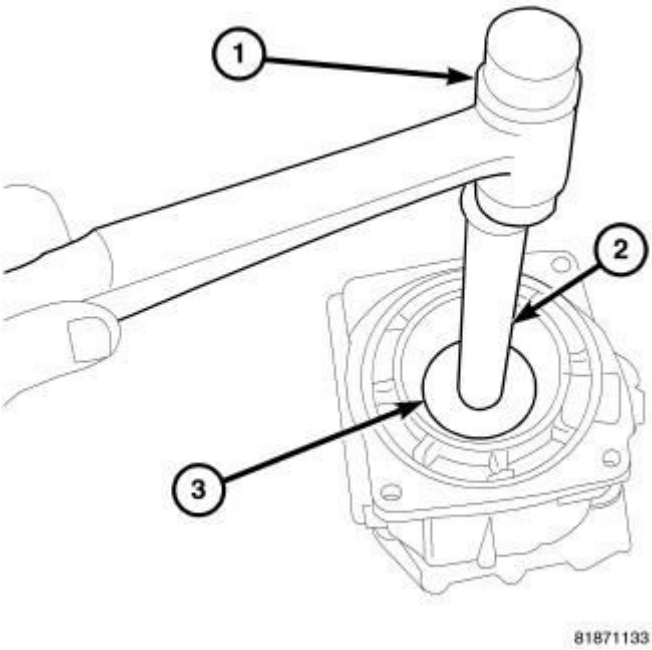

Fig. 27: Installing Outer Pinion Bearing Cup
Courtesy of CHRYSLER GROUP, LLC

2. Install the outer pinion bearing cup using Installer (special tool #8594, Installer, Bearing Cup) and Handle (special tool #C-4171, Driver Handle, Universal).

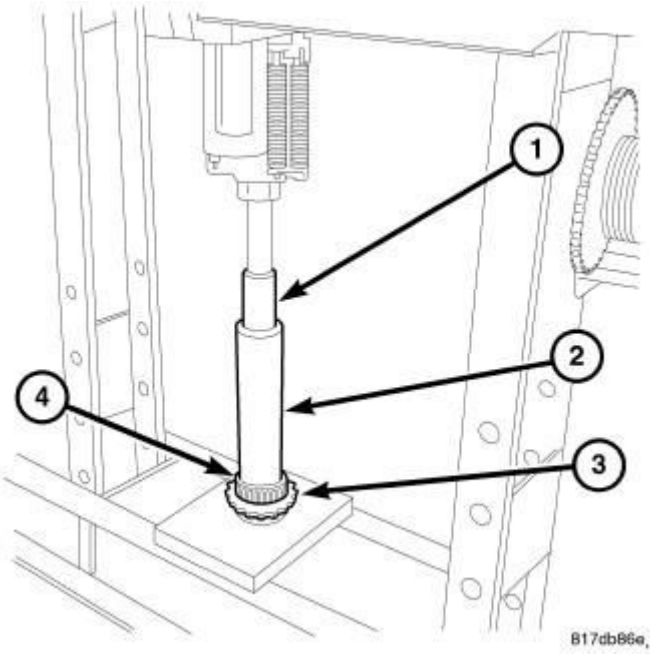

Fig. 28: Installing Pinion Bearing
Courtesy of CHRYSLER GROUP, LLC

3. Install bearing (4) on pinion (3) using Installer (special tool #6052, Installer, Bearing/Seal) (2) and press (1).

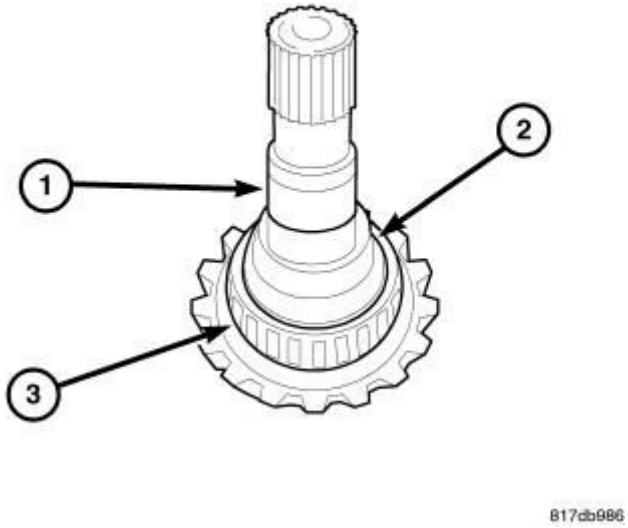

Fig. 29: Installing New Collapsible Spacer Onto The Pinion Shaft
Courtesy of CHRYSLER GROUP, LLC

4. Install a new collapsible spacer (2) onto the pinion shaft (1).

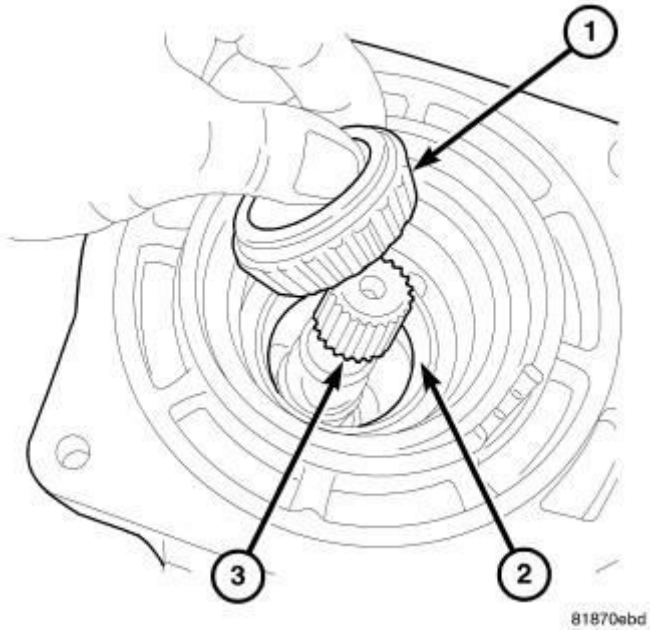

Fig. 30: Installing Pinion Into Housing
Courtesy of CHRYSLER GROUP, LLC

5. Install the pinion into the housing and place the outer bearing over the pinion.

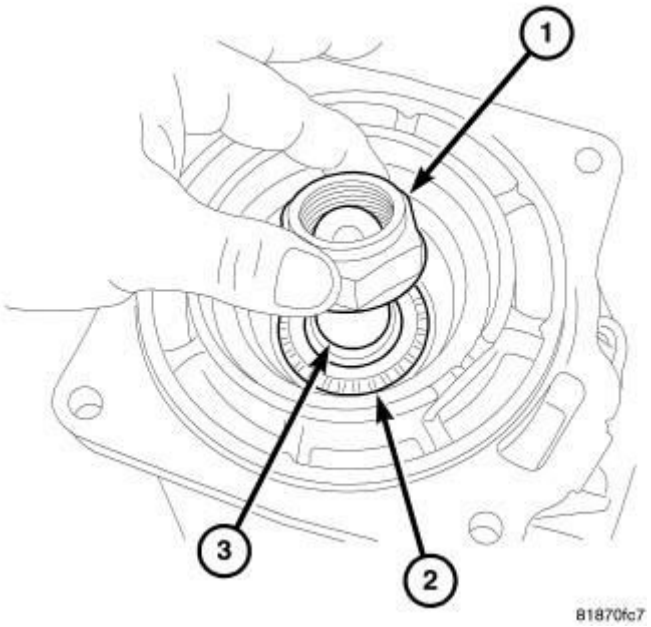

Fig. 31: Pinion Nut
Courtesy of CHRYSLER GROUP, LLC

6. Install the pinion nut (1) onto the pinion shaft (3).

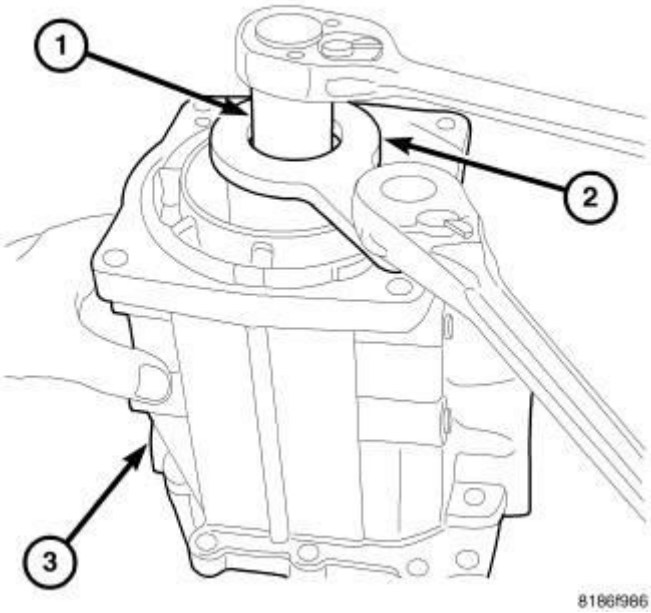

Fig. 32: Pinion Nut On And Off
Courtesy of CHRYSLER GROUP, LLC

7. Using Spline Holder (special tool #9742, Splined Socket) (1) and Socket (special tool #9921, Wrench, Pinion Nut) (2), tighten pinion nut to 74 N.m (54 ft. lbs.).

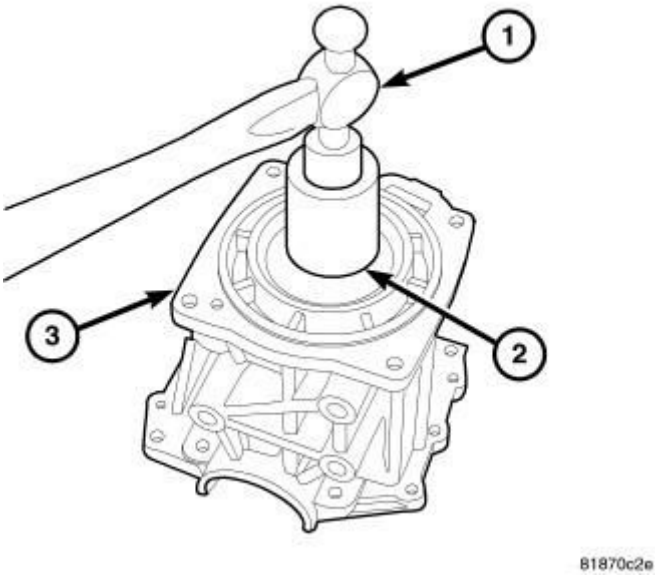

Fig. 33: Installing Pinion Seal
Courtesy of CHRYSLER GROUP, LLC

8. Install the pinion seal using Installer (special tool #9931, Installer, Seal) (2) and a hammer (1).

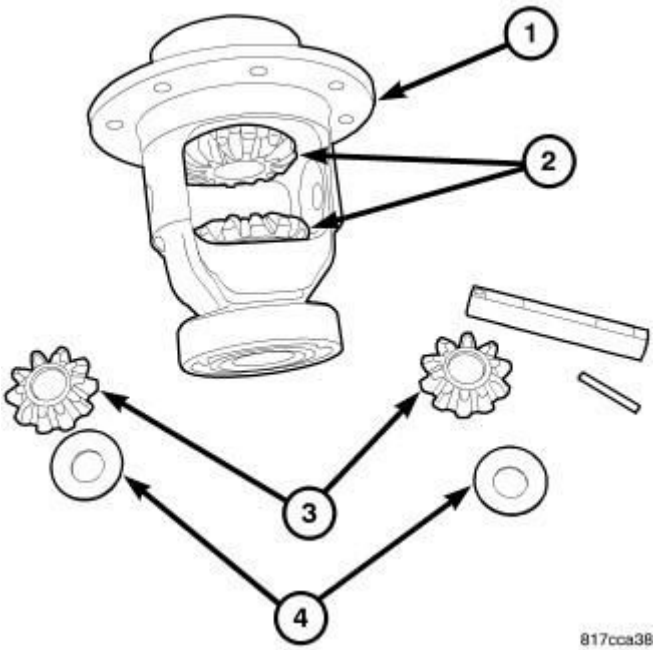

Fig. 34: Installing Side Gears, Shims And Pinion Gears Into Carrier
Courtesy of CHRYSLER GROUP, LLC

9. Install side gears (2), shims (4) and pinion gears (3) into carrier (1).
10. Install the pinion gear shaft into the pinion gears and start the roll pin.

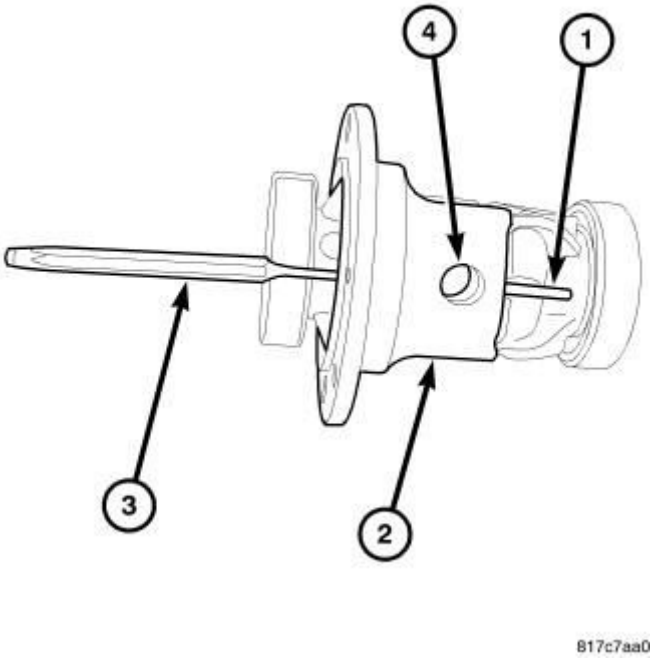

Fig. 35: Installing Roll Pin
Courtesy of CHRYSLER GROUP, LLC

11. Use a pin punch to install the roll pin (1).

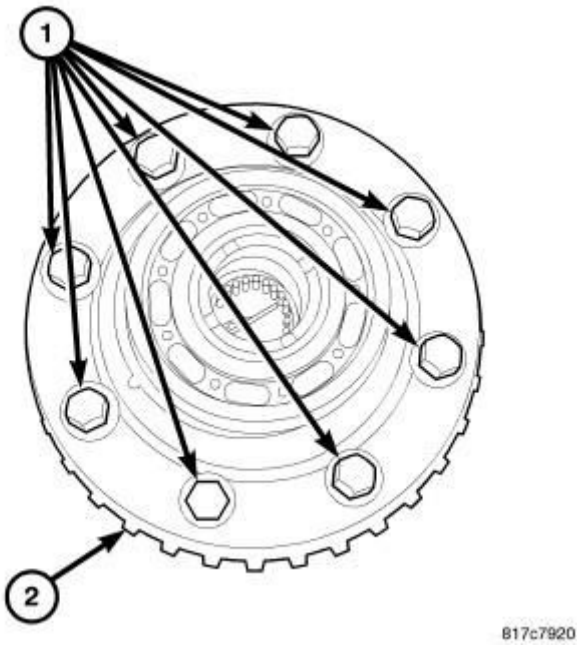

Fig. 36: Ring Gear Bolts
Courtesy of CHRYSLER GROUP, LLC

12. Apply MOPAR© Lock AND Seal Adhesive or an equivalent to the ring gear bolts (1).
13. Install ring gear (2) onto the carrier.
14. Install ring gear bolts (1) and tighten to 41 N.m (30 ft. lbs.).

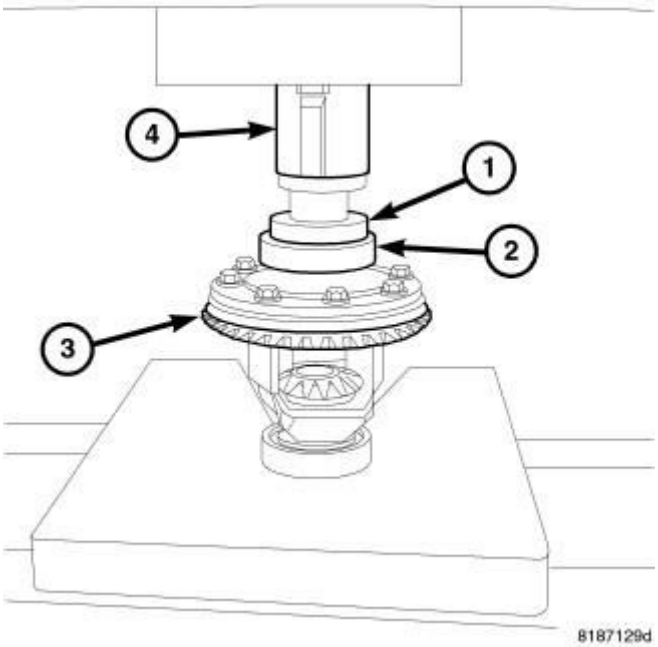

Fig. 37: Installing Ring Gear Side Carrier Bearing
Courtesy of CHRYSLER GROUP, LLC

15. Press ring gear side (3) carrier bearing (2) onto shaft using Installer (special tool #9643, Installer, Bearing) (1) and press (4).

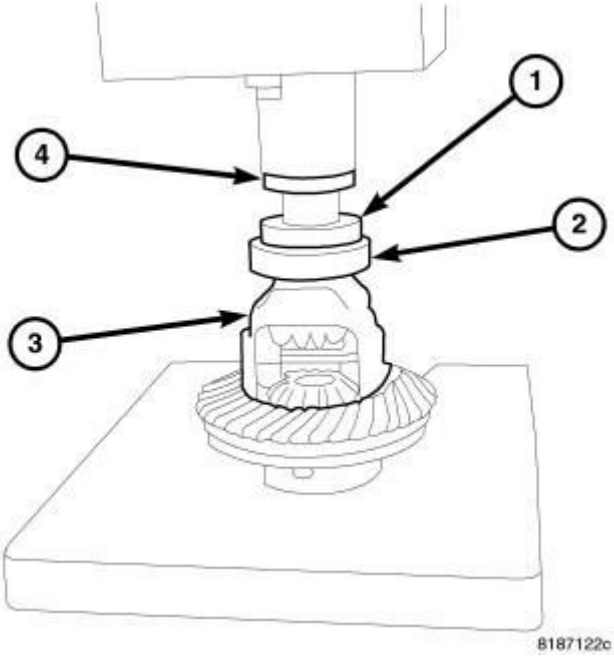

Fig. 38: Installing Pinion Side Carrier Bearing
Courtesy of CHRYSLER GROUP, LLC

16. Coat the ring and pinion gears with pattern grease before assembling.
17. Press pinion gear side (3) carrier bearing (2) onto shaft using Installer (special tool #9643, Installer, Bearing) (1) and press (4).

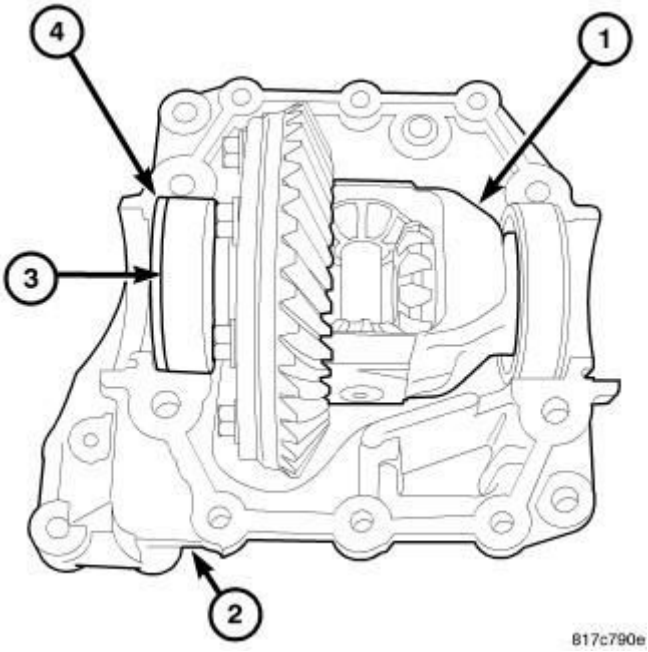

Fig. 39: Carrier At Rear Axle
Courtesy of CHRYSLER GROUP, LLC

18. Install measured side shims (3) and carrier (1) into the carrier housing (2).
19. Apply a bead of MOPAR© AXLE RTV on the case to seal the cover.

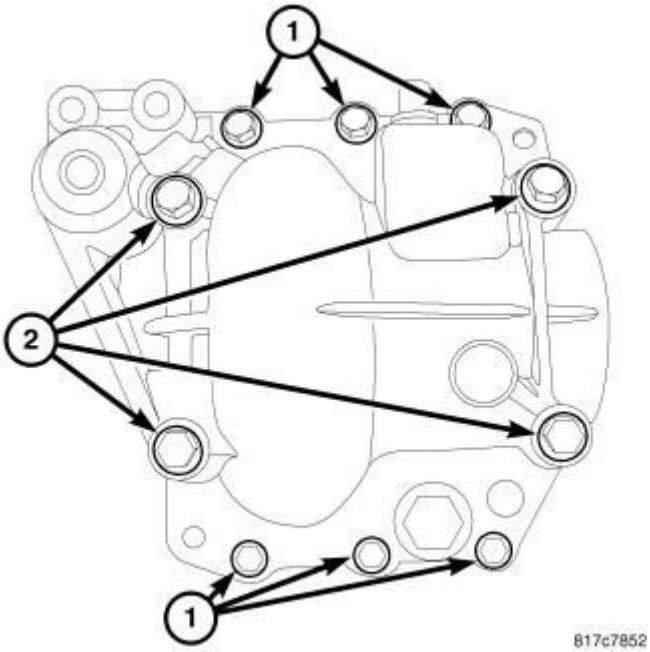

Fig. 40: Bolts At Rear Axle
Courtesy of CHRYSLER GROUP, LLC

20. Install cover onto carrier case.
21. Tighten cap bolts (2) to 48 N.m (35 ft. lbs.) and tighten cover bolts (1) to 23

N.m (16 ft. lbs.).

22. Open the window on the cover and do a pattern check of the gears.

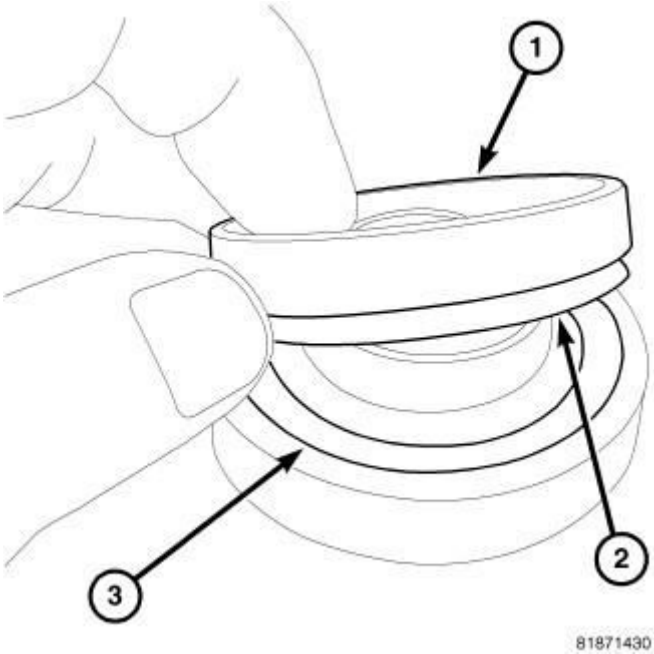

Fig. 41: Seal Onto Installer
Courtesy of CHRYSLER GROUP, LLC

23. Place pinion side axle seal (1) onto Installer (special tool #9893, Installer, Seal) (3) with lip side down (2).

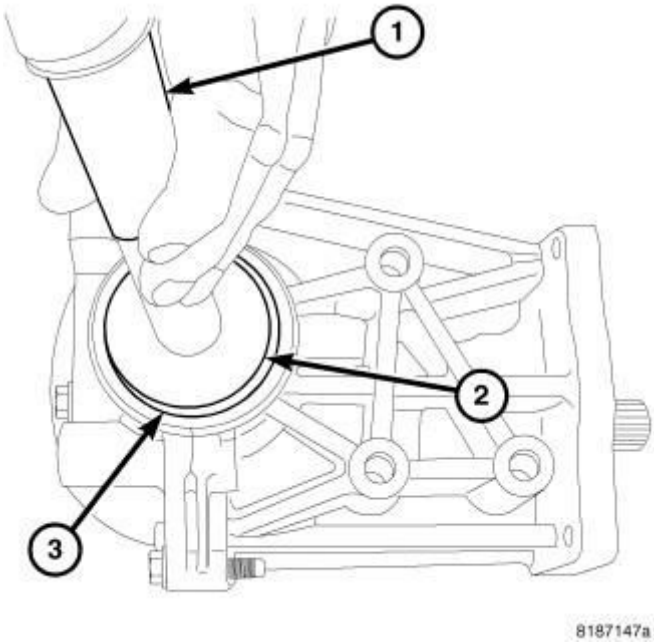

Fig. 42: Installing Pinion Side Seal
Courtesy of CHRYSLER GROUP, LLC

24. Install pinion side axle seal using Installer (special tool #9893, Installer, Seal) (2) and Handle (special tool #C-4171, Driver Handle, Universal) (1).

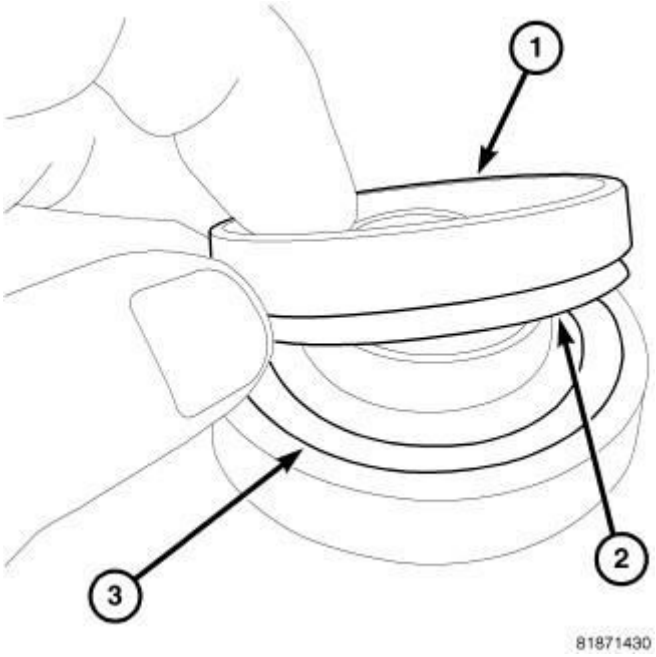

Fig. 43: Seal Onto Installer
Courtesy of CHRYSLER GROUP, LLC

25. Place pinion side axle seal (1) onto Installer (special tool #9893, Installer, Seal) (3) with lip side down (2).

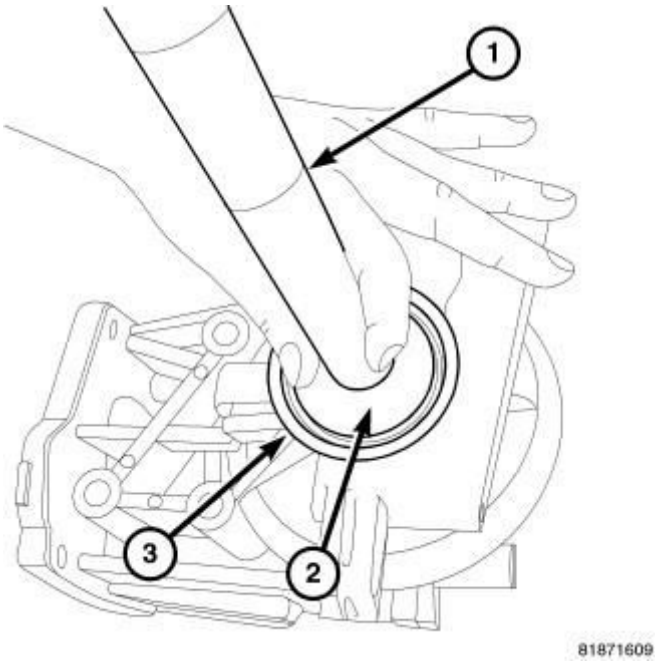

Fig. 44: Install Ring Gear Side Seal
Courtesy of CHRYSLER GROUP, LLC

26. Install ring gear side axle seal using Installer (special tool #9893, Installer, Seal) (2) and Handle (special tool #C-4171, Driver Handle, Universal) (1).

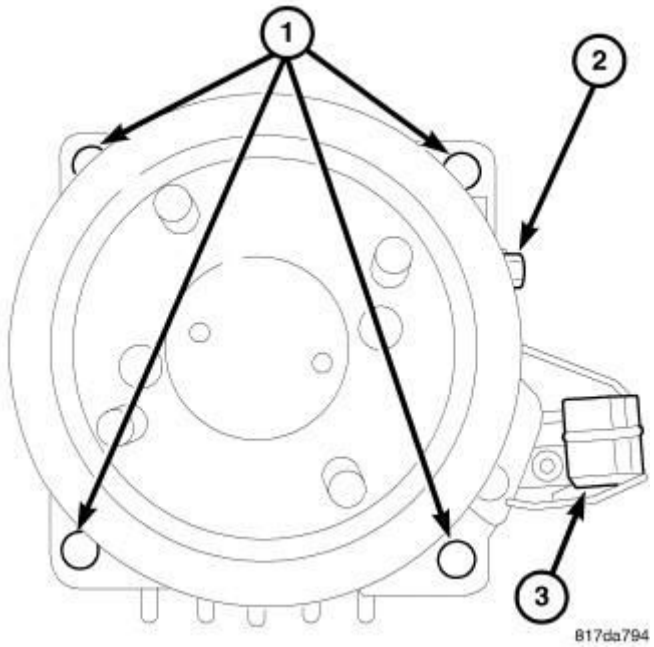

Fig. 45: Electric Clutch At Rear Axle
Courtesy of CHRYSLER GROUP, LLC

27. Remove all old gasket material on the mating surfaces of the ECC and RDA. Coat the edge face with liquid gasket. Install wave washer.
28. Install the ECC to the RDA and tighten the bolts to 78 N.m (58 ft. lbs.).

INSTALLATION

INSTALLATION

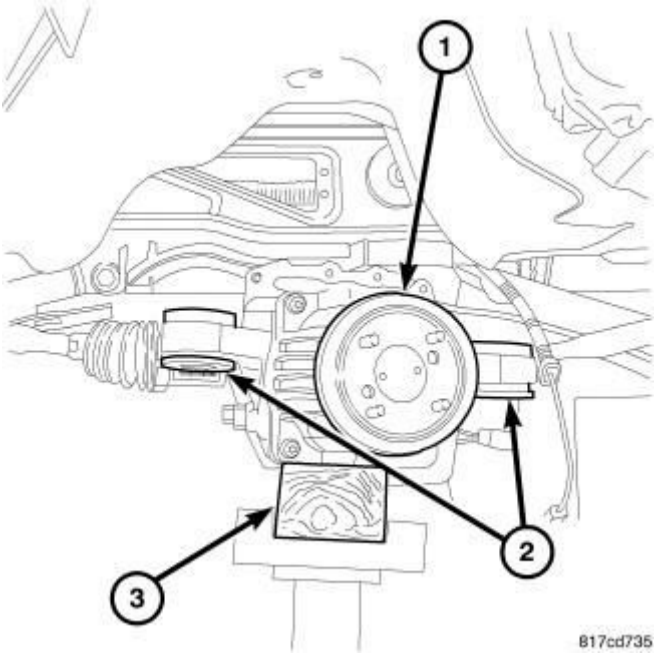

Fig. 46: Rear Axle Remove And Install
Courtesy of CHRYSLER GROUP, LLC

1. Install the ECC to the RDA.
2. Install the ECC bolts and tighten to 68 N.m (50 ft. lbs.).
3. Lift driveline module (1) with a transmission jack (3) while installing both axles.

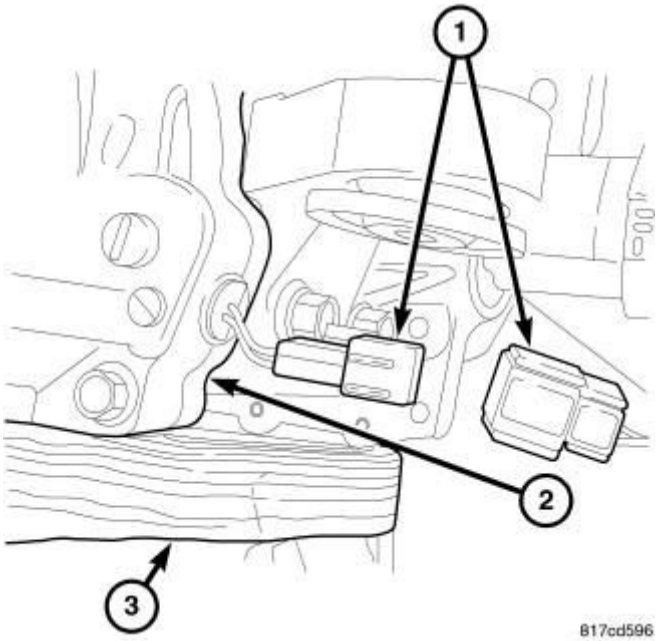

Fig. 47: Electrical Connector
Courtesy of CHRYSLER GROUP, LLC

4. Connect breather hose to ECC.
5. Connect the electrical connector (1).
6. Install wire harness bracket and two mounting bolt and tighten to 10 N.m (89 in. lbs.).

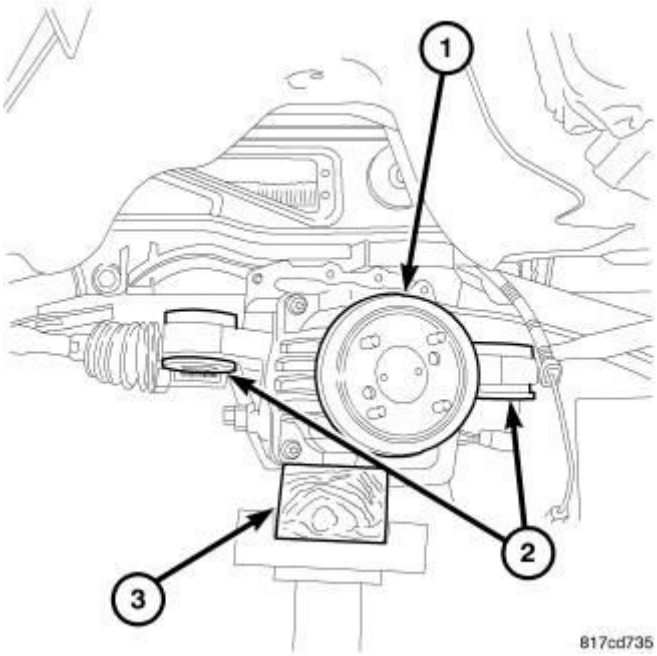

Fig. 48: Rear Axle Remove And Install
Courtesy of CHRYSLER GROUP, LLC

7. Lift driveline module (1) into place.

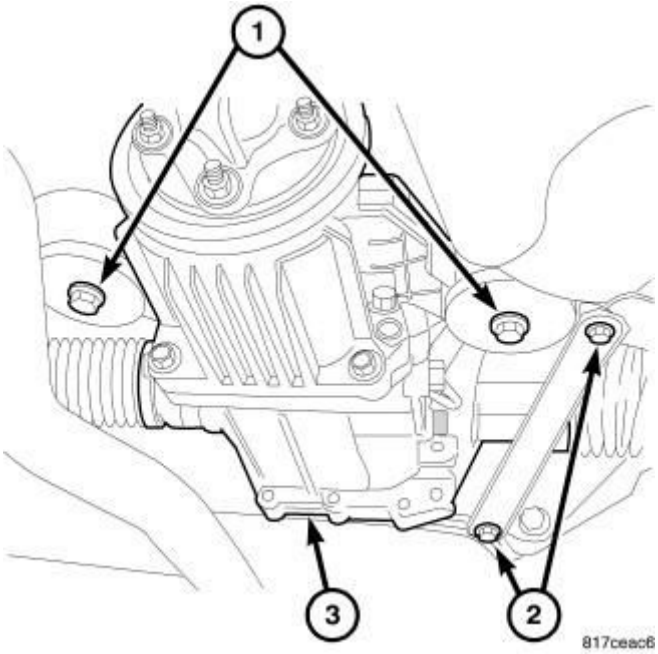

Fig. 49: Driveline Module Mounting Bolts
Courtesy of CHRYSLER GROUP, LLC

8. Install the two driveline module side mounting bolts (1) and tighten to 102 N.m (75 ft. lbs.).

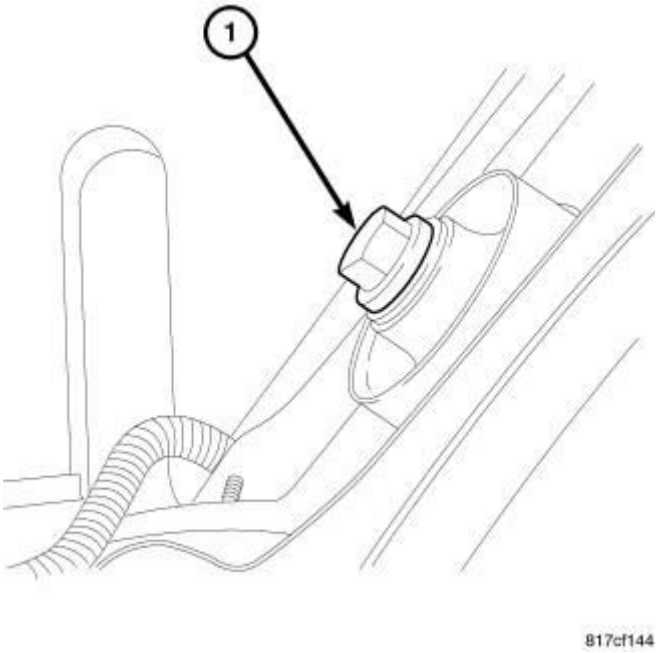

Fig. 50: Rear Bolt At Axle
Courtesy of CHRYSLER GROUP, LLC

9. Install the one rear driveline module mounting bolt (1) and tighten to 102 N.m (75 ft. lbs.).

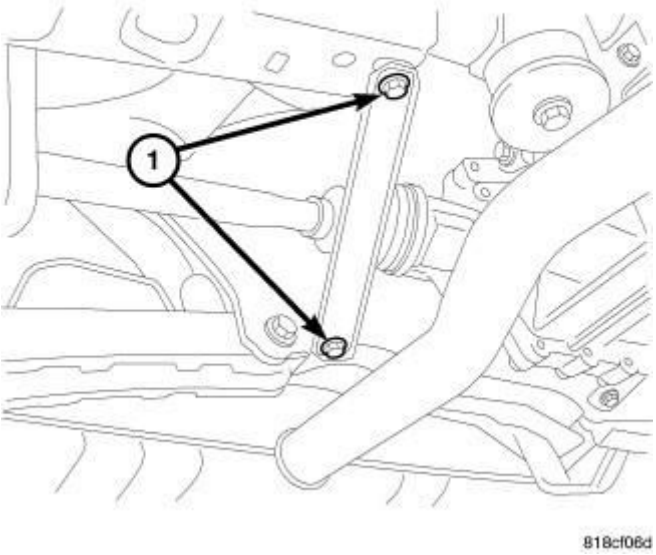

Fig. 51: Right Stay Bar
Courtesy of CHRYSLER GROUP, LLC

10. Install right side stay bracket and tighten bolts (1) to 61 N.m (45 ft. lbs.).

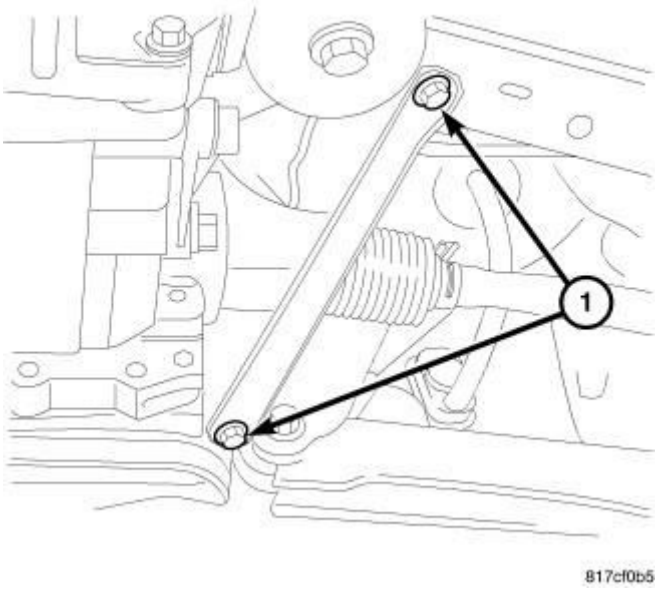

Fig. 52: Left Side Stay Bar
Courtesy of CHRYSLER GROUP, LLC

11. Install left side stay bracket and tighten bolts (1) to 61 N.m (45 ft. lbs.).
12. Install the propeller shaft. Refer to **INSTALLATION** .
13. Fill the rear axle with fluid.

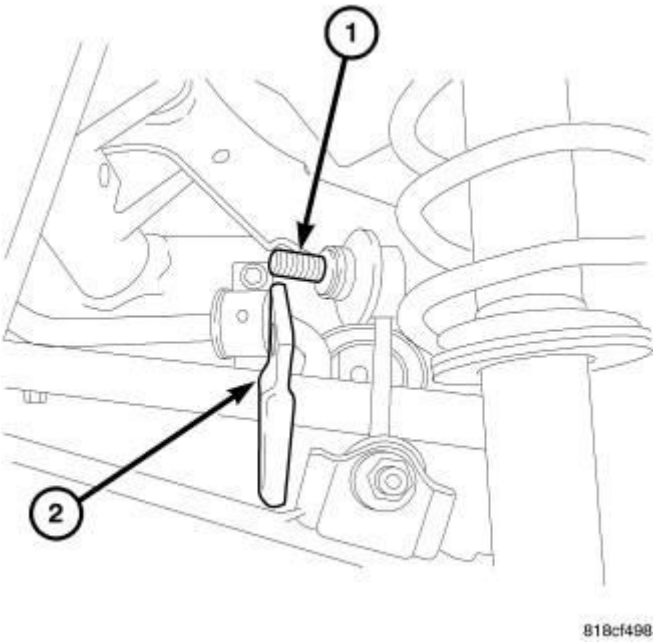

Fig. 53: Sway Bar
Courtesy of CHRYSLER GROUP, LLC

14. Roll sway bar (2) into place (if equipped).

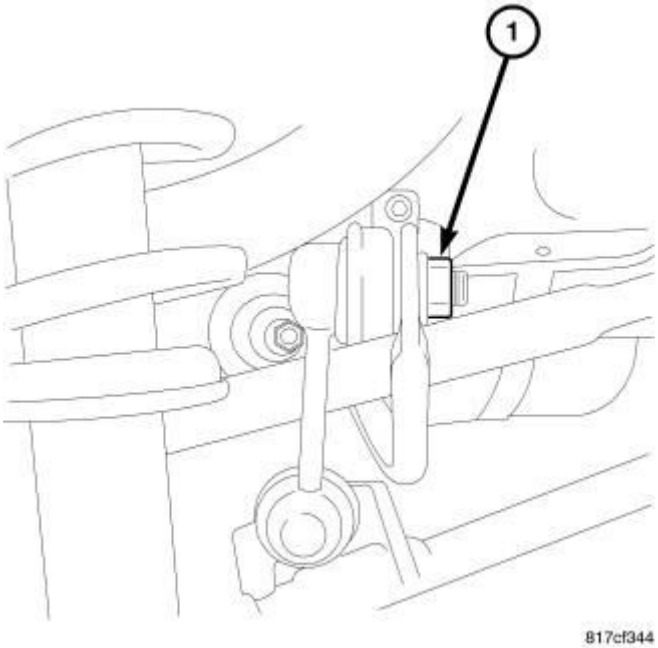

Fig. 54: Left Side Sway Bar Nut
Courtesy of CHRYSLER GROUP, LLC

15. Install left side sway bar nut (1) (if equipped) and tighten to (61 N.m (45 ft. lbs).

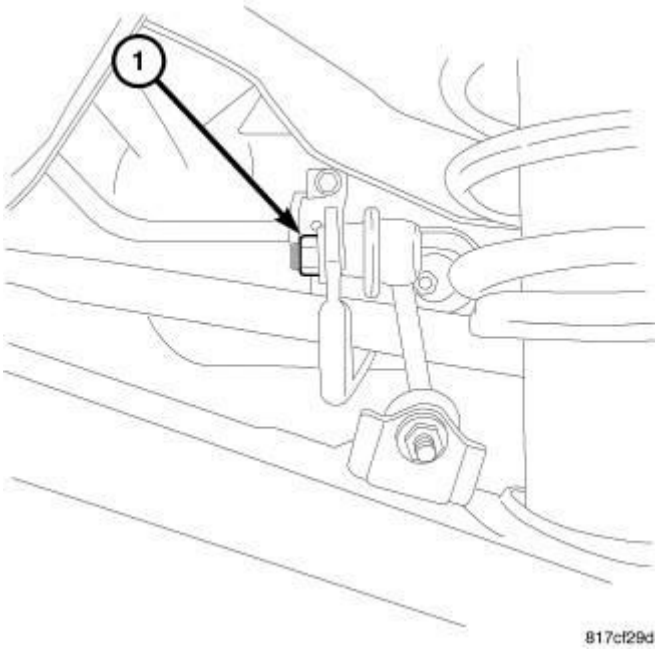

Fig. 55: Right Sway Bar Nut
Courtesy of CHRYSLER GROUP, LLC

16. Install right side sway bar nut (1) (if equipped) and tighten to 61 N.m (45 ft. lbs).
17. Install the exhaust. Refer to **MUFFLER, EXHAUST, INSTALLATION** .
18. Install the wheels. Refer to **REMOVAL** .

SPECIAL TOOLS

SPECIAL TOOLS

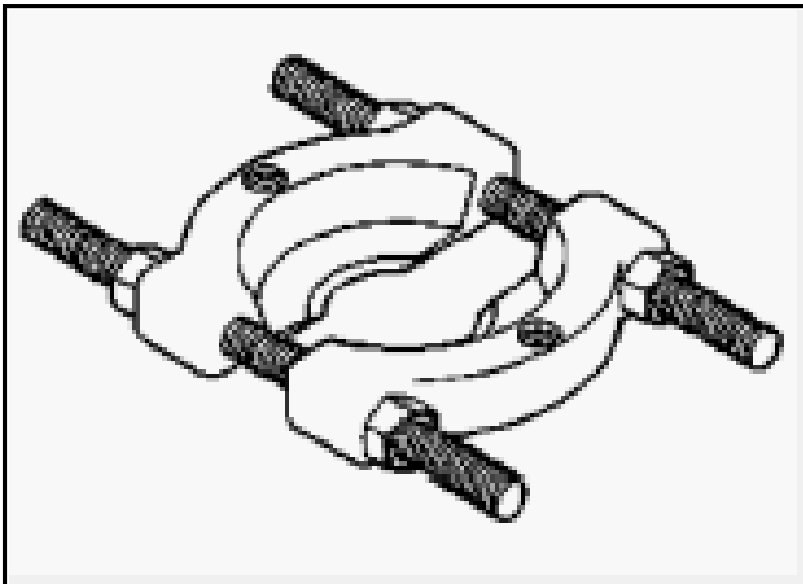	1130 - Splitter, Bearing/Gear (Originally Shipped In Kit Number(s) 6745, 6947, 6949, 9202, 9202A-CAN, 9202CC, 9299.)

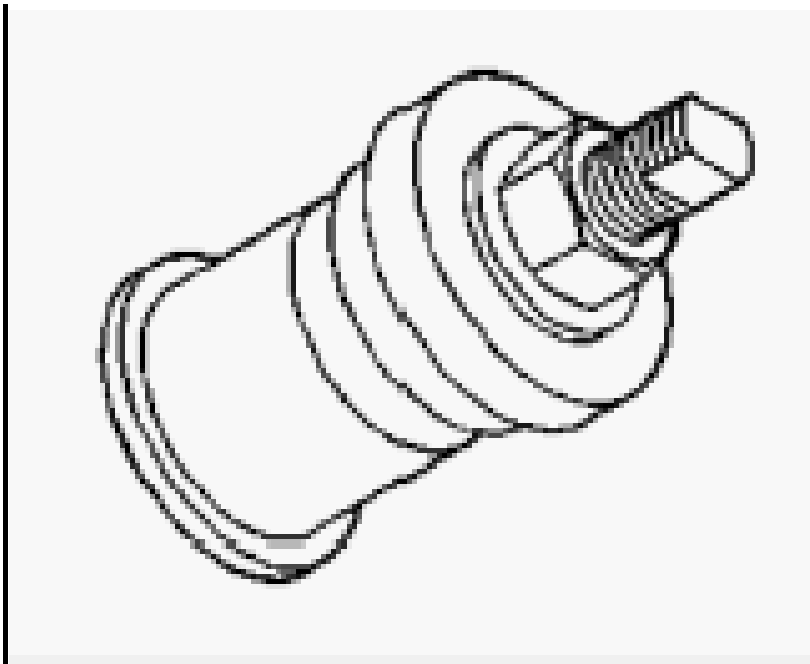	5050A - Installer, Bearing Cup (Originally Shipped In Kit Number(s) 6303, 6671, 8853.)
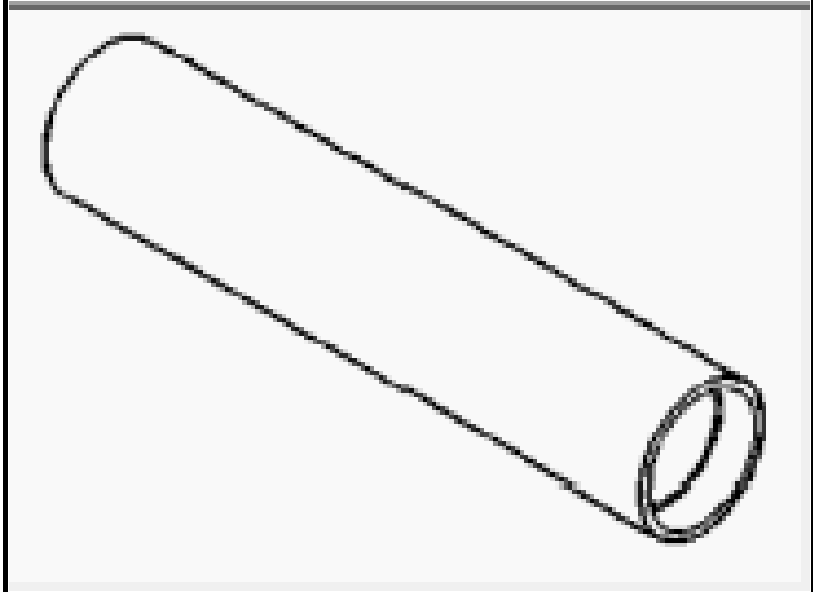	6052 - Installer, Bearing/Seal (Originally Shipped In Kit Number(s) 6303, 6672, 8853.)
	8594 - Installer, Bearing Cup (Originally Shipped In Kit Number(s) 8666, 8667, 8705, 8705CC.)

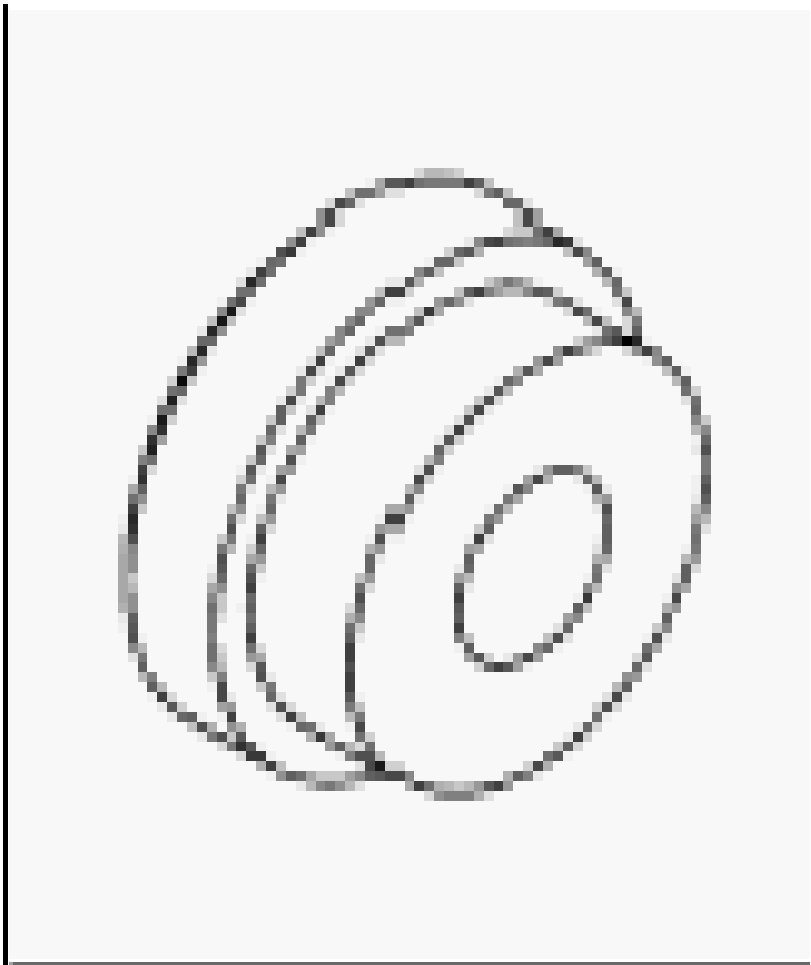

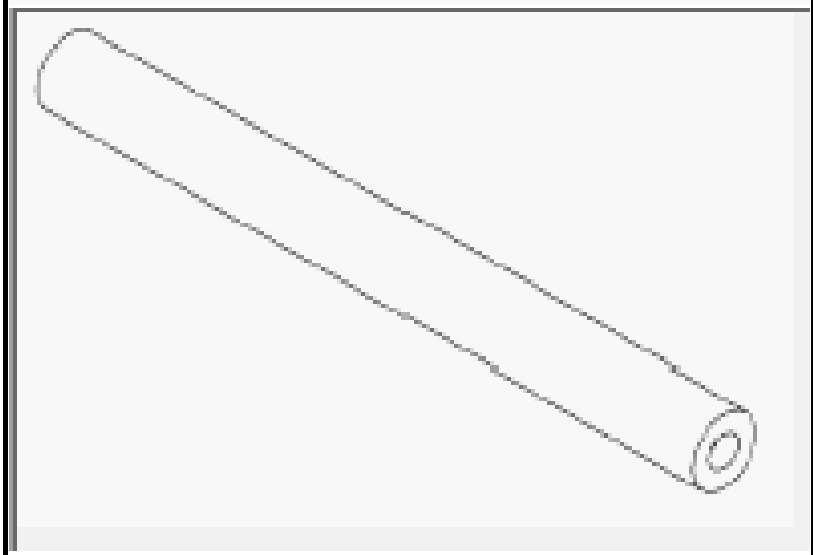

9020 - Insert, Crankshaft (Originally Shipped In Kit Number(s) 9076, 9090, 9090CC.)

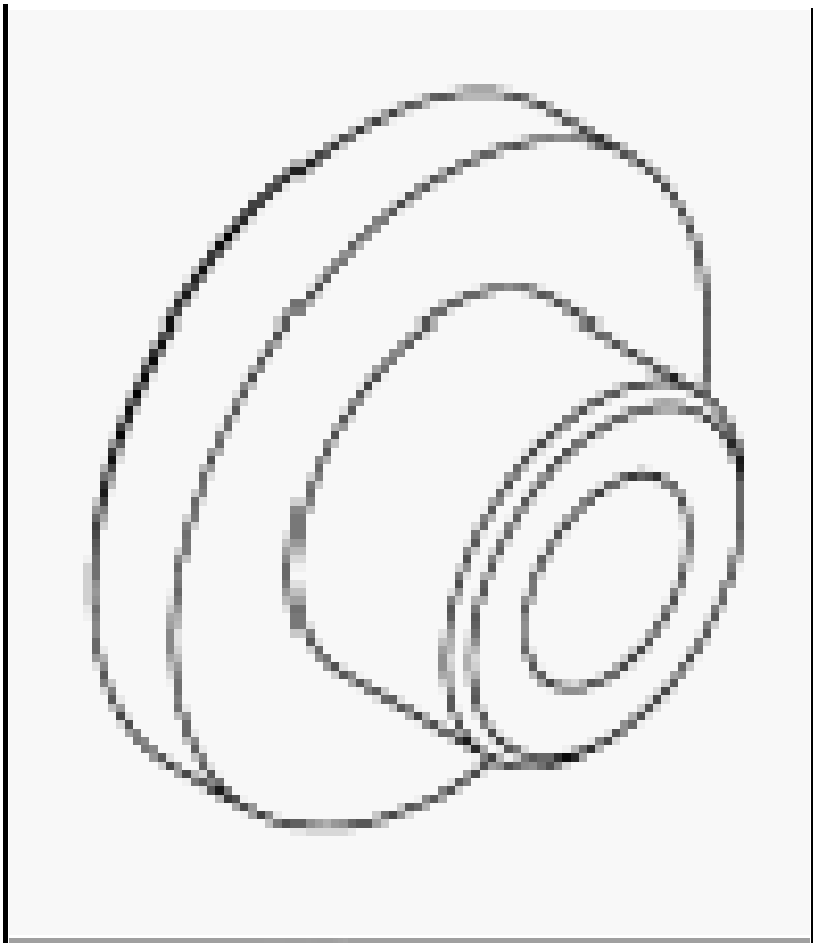	9643 - Installer, Bearing (Originally Shipped In Kit Number(s) 9526, 9575, 9923, 9924, 9960.)
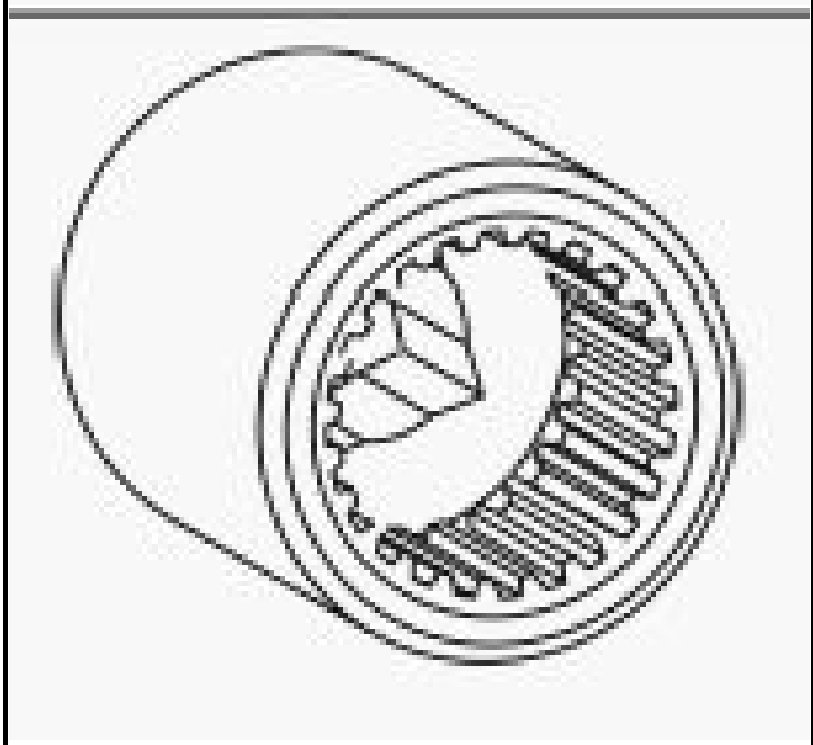	9742 - Splined Socket (Originally Shipped In Kit Number(s) 9895-SUP, 9972.)

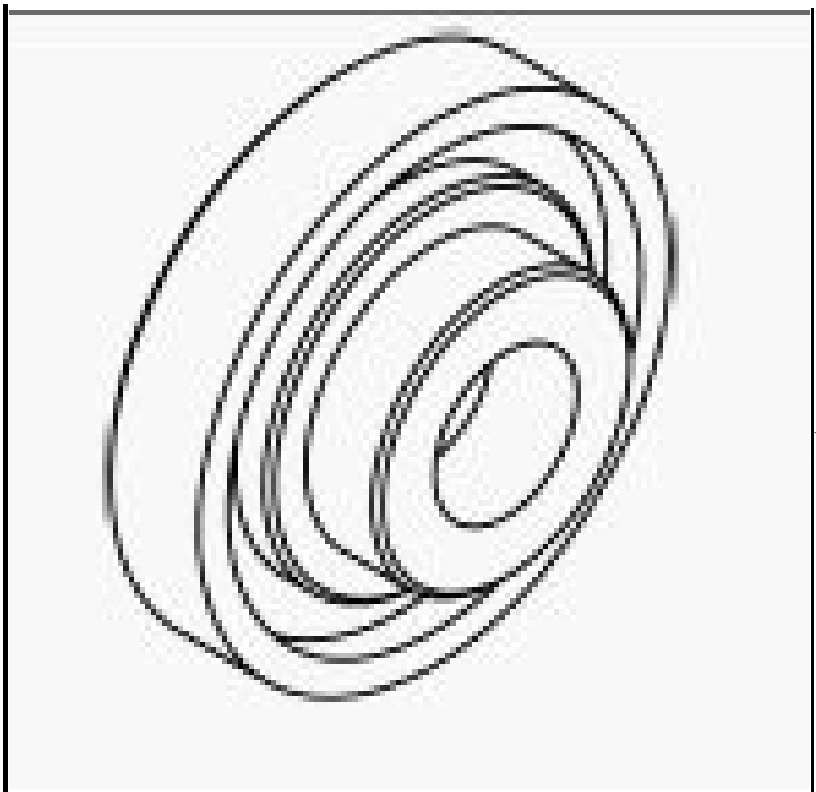

9893 - Installer, Seal (Originally Shipped In Kit Number(s) 9895, 9972.)

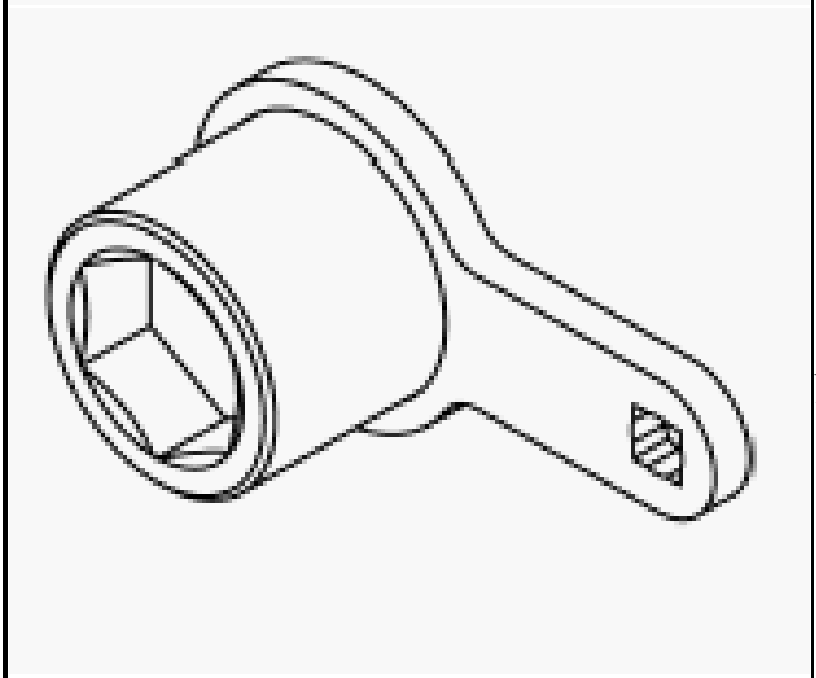

9921 - Wrench, Pinion Nut (Originally Shipped In Kit Number(s) 9895, 9972.)

9931 - Installer, Seal (Originally Shipped In Kit

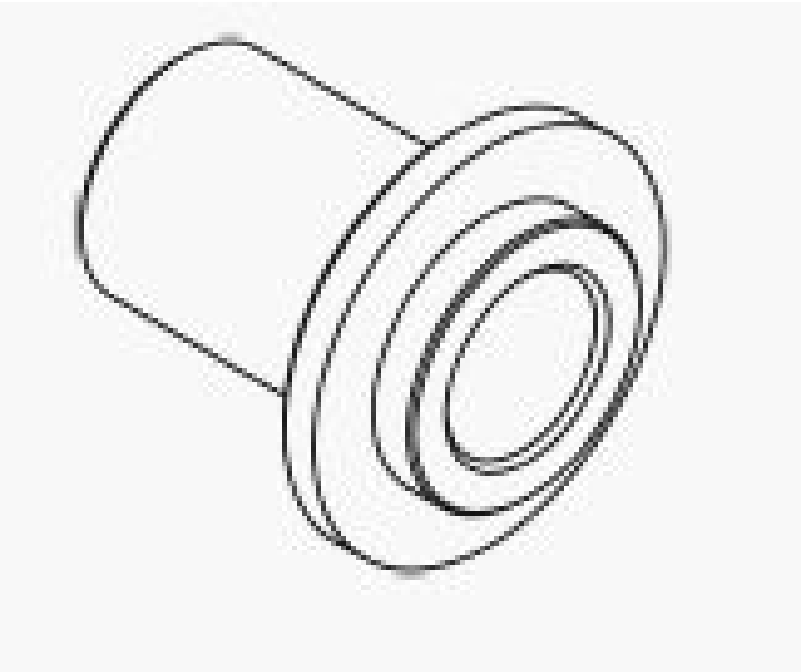	Number(s) 9895-SUP, 9972.)
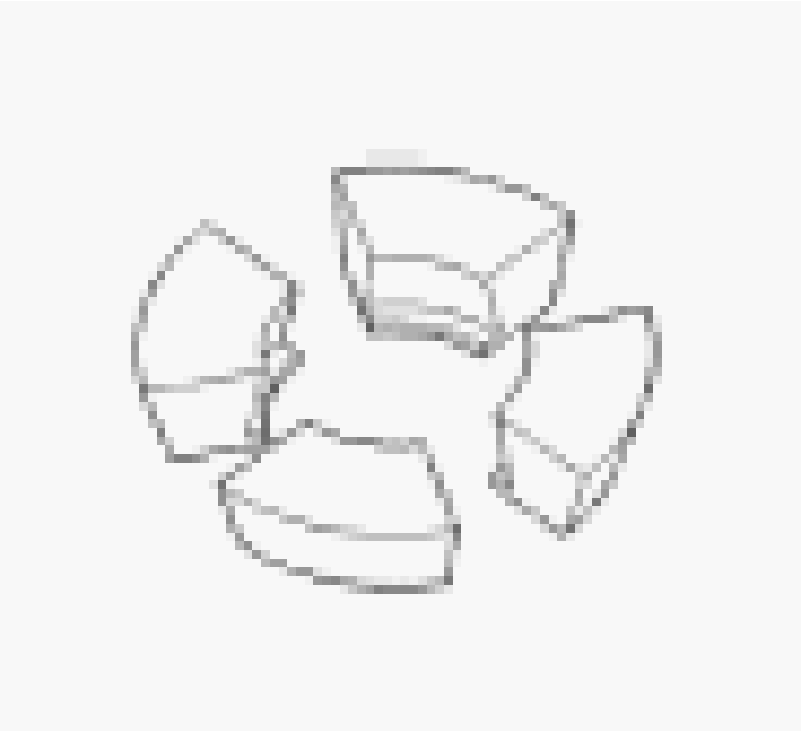	C-293-45 - Block Set, Puller (Originally Shipped In Kit Number(s) C-293-M.)
	C-293-PA - Puller, Press (Originally Shipped In Kit Number(s) 8418, 8837, C-293-M.)

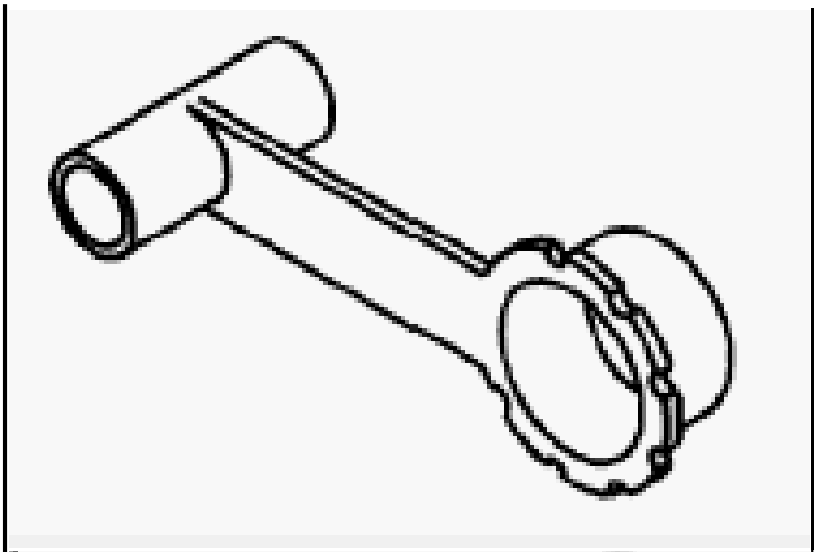	
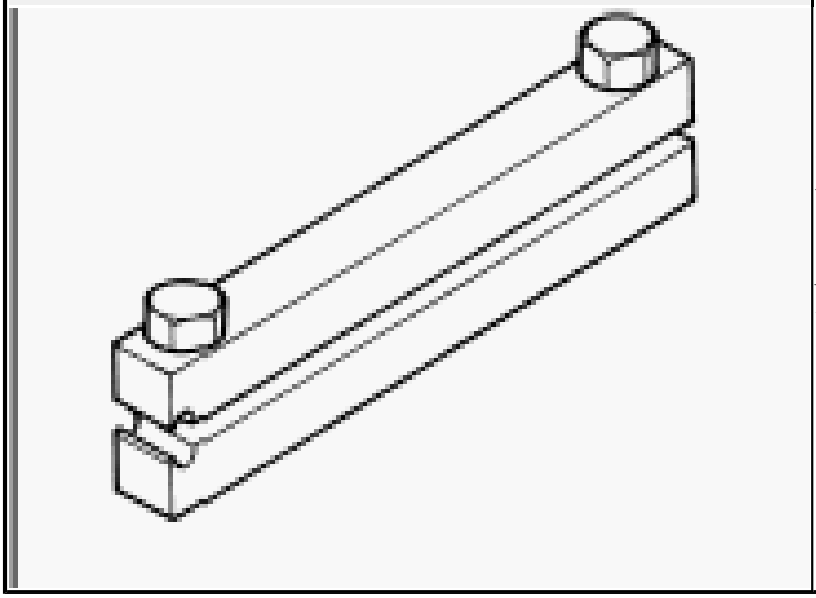	C-4171 - Driver Handle, Universal (Originally Shipped In Kit Number(s) 9202, 9202A-CAN, 9202CC, 9299, 9299CC, 9299CC, 9300A-CAN.)

INPUT FLANGE SEAL

REMOVAL

REMOVAL

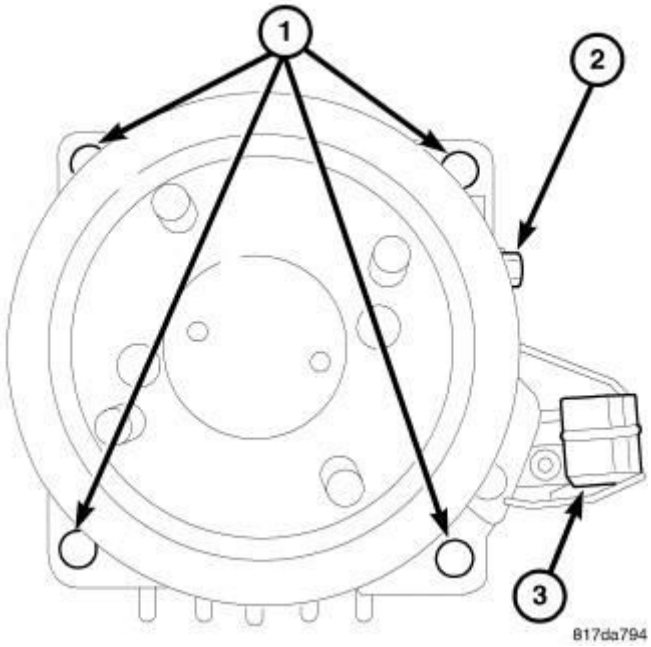

Fig. 56: Electric Clutch At Rear Axle
Courtesy of CHRYSLER GROUP, LLC

1. Raise the vehicle on a hoist.
2. Remove the propeller shaft. Refer to **REMOVAL** .
3. Unplug the electrical connector (3) at the ECC.
4. Disconnect ECC breather hose.
5. Remove the ECC to RDA mounting bolts.
6. Separate and lower ECC.
7. Remove all old gasket material on the mating surfaces of the ECC and RDA. Remove wave washer
8. Remove wave washer.

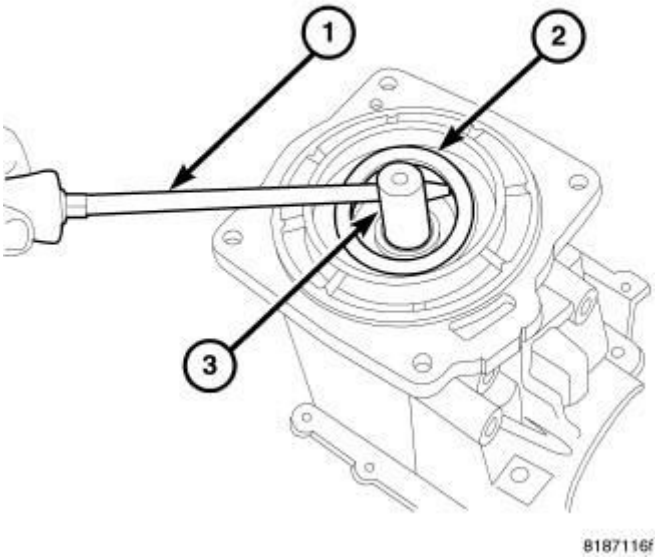

Fig. 57: Removing Input Flange Seal
Courtesy of CHRYSLER GROUP, LLC

9. Remove the input flange seal.

INSTALLATION

INSTALLATION

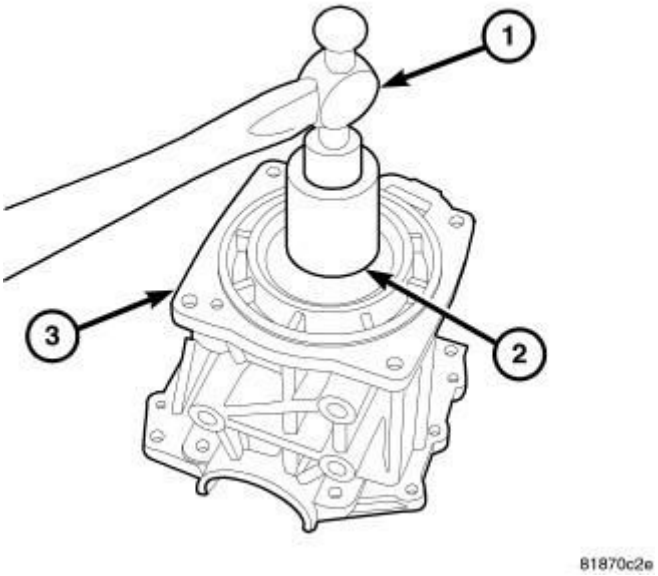

Fig. 58: Installing Pinion Seal
Courtesy of CHRYSLER GROUP, LLC

1. Coat the edge face of the seal with the liquid gasket sealer.
2. Install wave washer.
3. Install the pinion seal using Installer (special tool #9931, Installer, Seal).

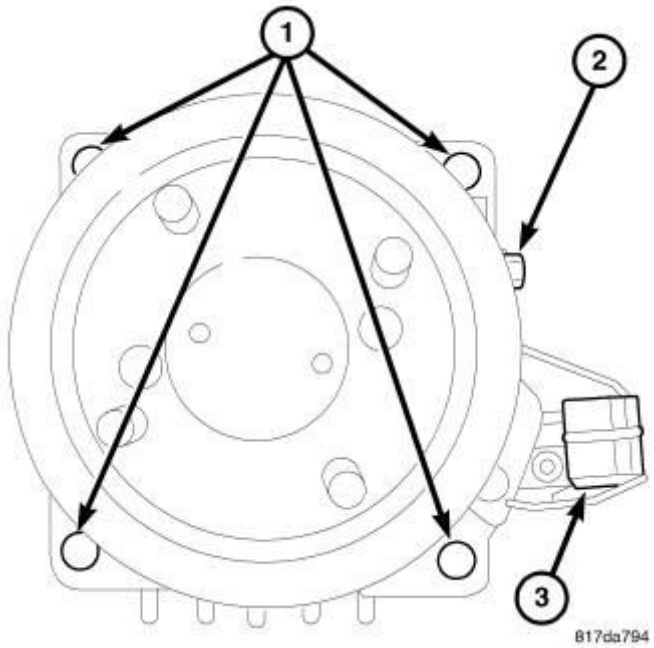

Fig. 59: Electric Clutch At Rear Axle
Courtesy of CHRYSLER GROUP, LLC

4. Install the ECC onto the RDA.
5. Install the mounting bolts (1) that hold the ECC to the RDA and Tighten to 78 N.m (58 ft. lbs.).
6. Plug in the electrical connector (3).
7. Install the propeller shaft. Refer to **INSTALLATION** .
8. Fill RDA as needed. Refer to **STANDARD PROCEDURE** .
9. Lower vehicle and road test.

OUTPUT FLANGE SEAL

REMOVAL

REMOVAL

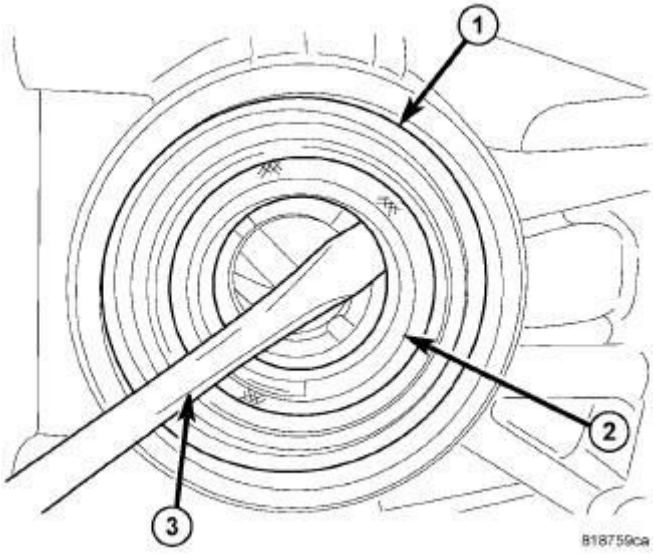

Fig. 60: Removing Pinion Side Seal
Courtesy of CHRYSLER GROUP, LLC

1. Raise the vehicle on a hoist.
2. Remove right side halfshaft. Refer to **REMOVAL** .
3. Remove the pinion side seal (2).

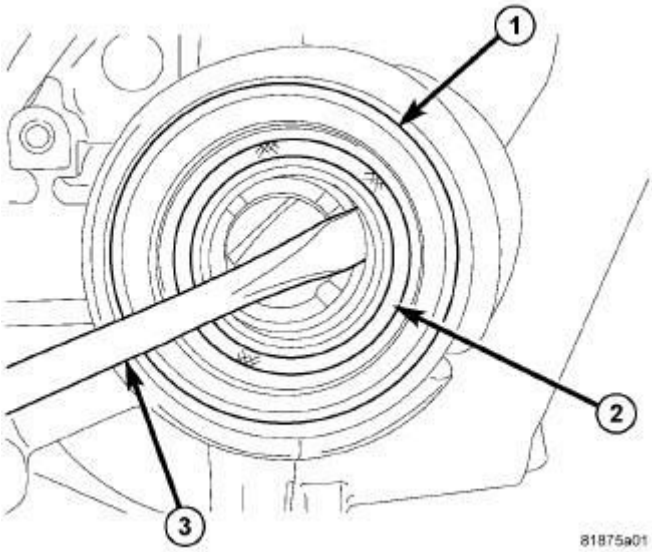

Fig. 61: Removing Ring Gear Side Seal
Courtesy of CHRYSLER GROUP, LLC

4. Remove left side halfshaft. Refer to **REMOVAL** .
5. Remove ring gear side seal.

INSTALLATION

INSTALLATION

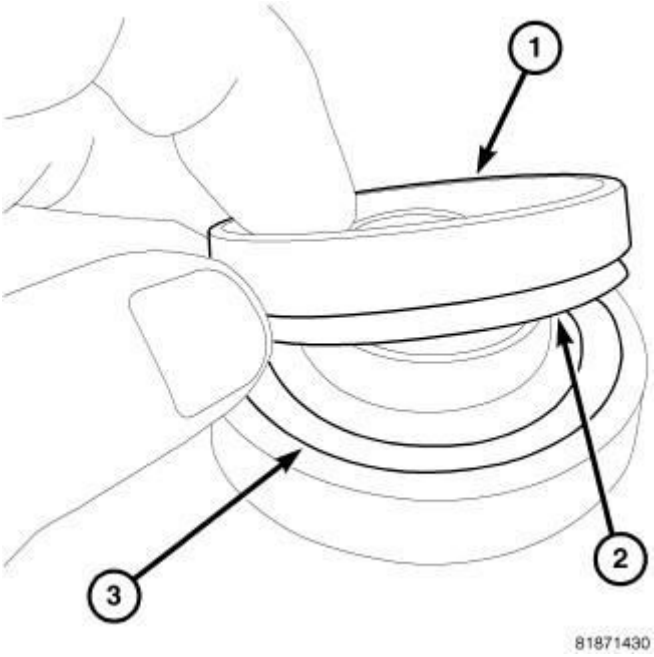

Fig. 62: Seal Onto Installer
Courtesy of CHRYSLER GROUP, LLC

1. Place the seal on the installer.

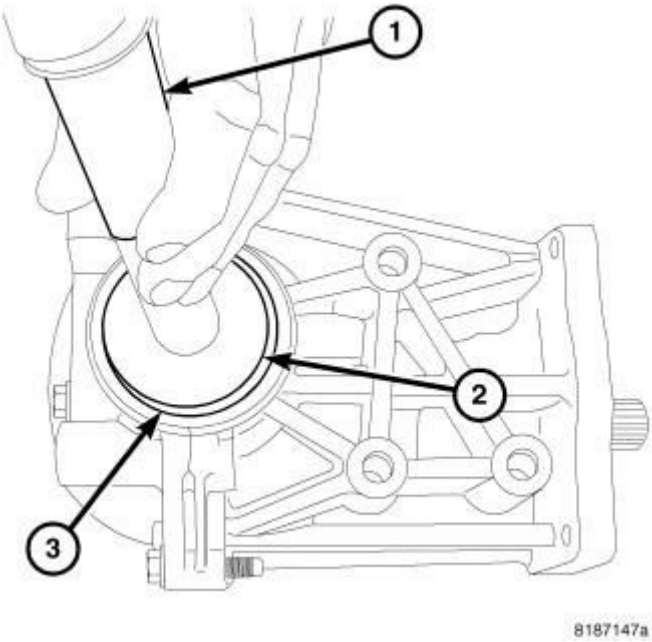

Fig. 63: Installing Pinion Side Seal
Courtesy of CHRYSLER GROUP, LLC

2. Install the pinion side seal using Installer (special tool #9893, Installer, Seal) and Handle (special tool #C-4171, Driver Handle, Universal).
3. Install right side halfshaft. Refer to **INSTALLATION** .

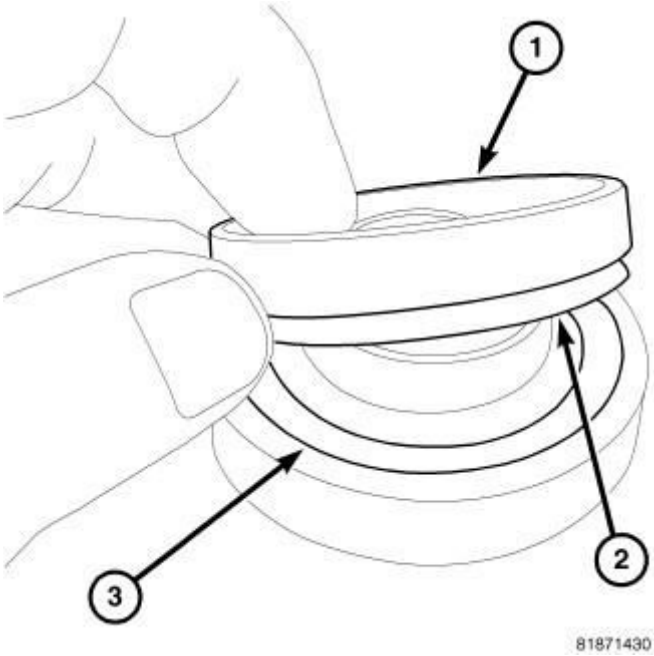

Fig. 64: Seal Onto Installer
Courtesy of CHRYSLER GROUP, LLC

4. Place the seal on the installer.

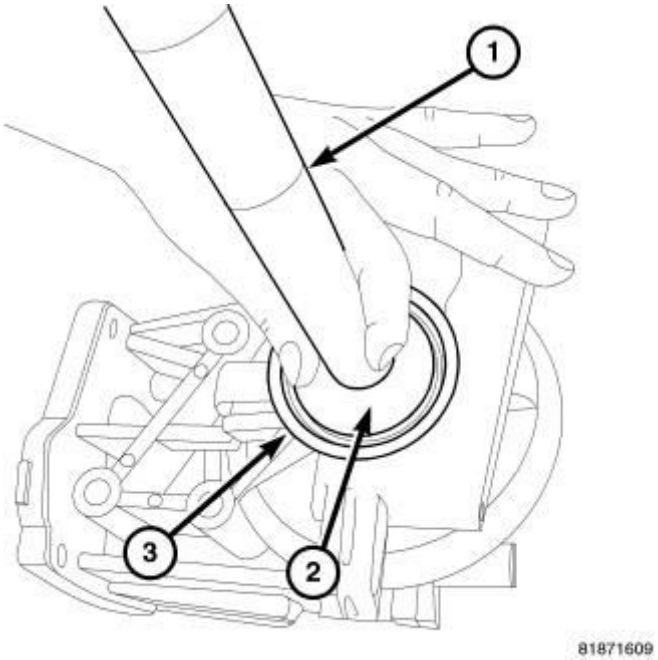

Fig. 65: Installing Ring Gear Side Seal
Courtesy of CHRYSLER GROUP, LLC

5. Install the ring gear side seal using Installer (special tool #9893, Installer, Seal) and Handle (special tool #C-4171, Driver Handle, Universal).
6. Install left side halfshaft. Refer to **INSTALLATION** .
7. Fill RDA as needed. Refer to **STANDARD PROCEDURE**.
8. Lower vehicle and road test.

2014 DRIVELINE/AXLES

Right Rear Half Shaft - Compass & Patriot

REMOVAL

REMOVAL

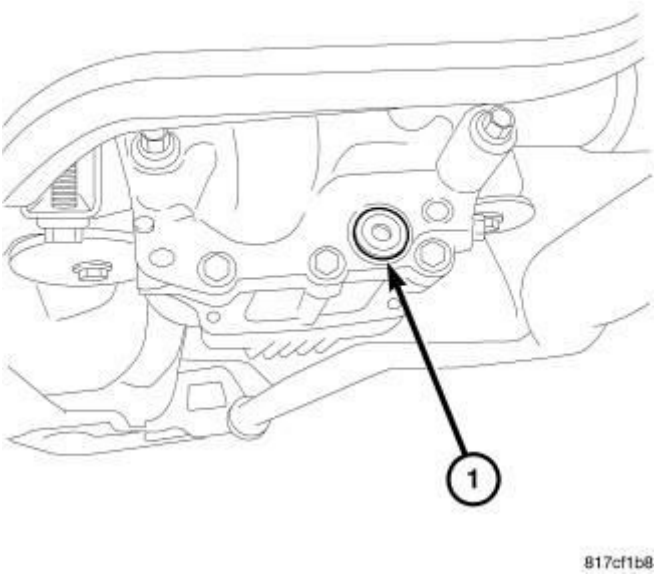

Fig. 1: Rear Driveline Module Drain Plug
Courtesy of CHRYSLER GROUP, LLC

1. Raise vehicle on a hoist.
2. Remove the rear tires.
3. Drain the fluid from the rear driveline module.
4. Remove the rear propeller shaft. Refer to **REMOVAL** .

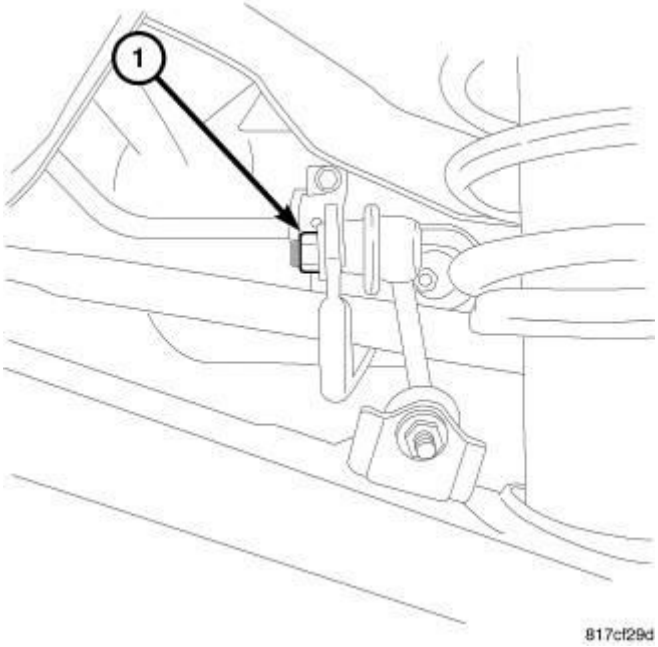

Fig. 2: Right Sway Bar Nut
Courtesy of CHRYSLER GROUP, LLC

5. Remove right side sway bar nut (1) (if equipped).

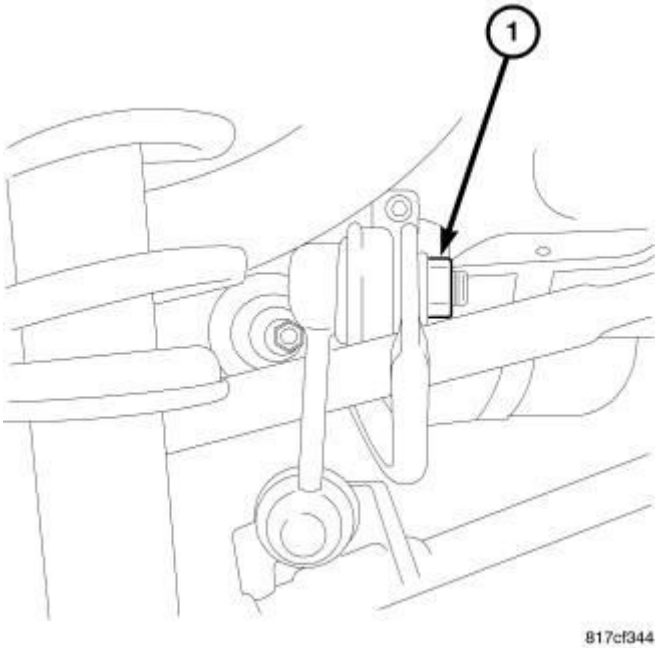

Fig. 3: Left Side Sway Bar Nut
Courtesy of CHRYSLER GROUP, LLC

6. Remove left side sway bar nut (1) (if equipped).

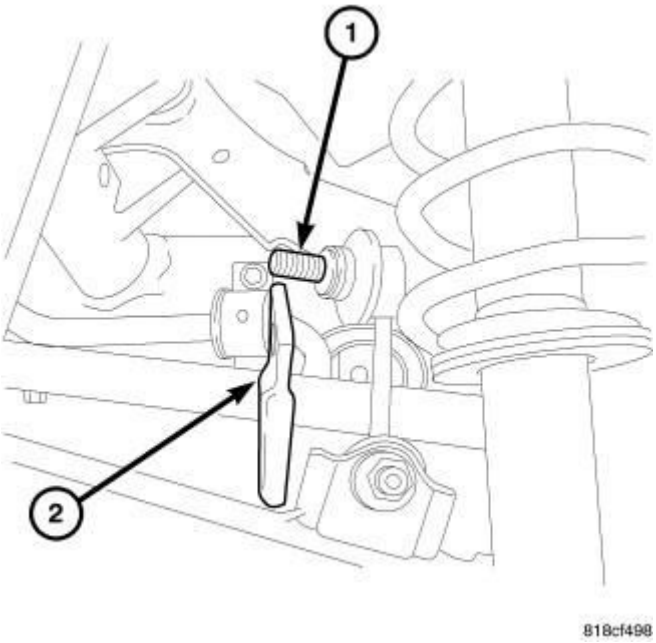

Fig. 4: Sway Bar
Courtesy of CHRYSLER GROUP, LLC

7. Roll sway bar (2) (if equipped) down and out of the way.

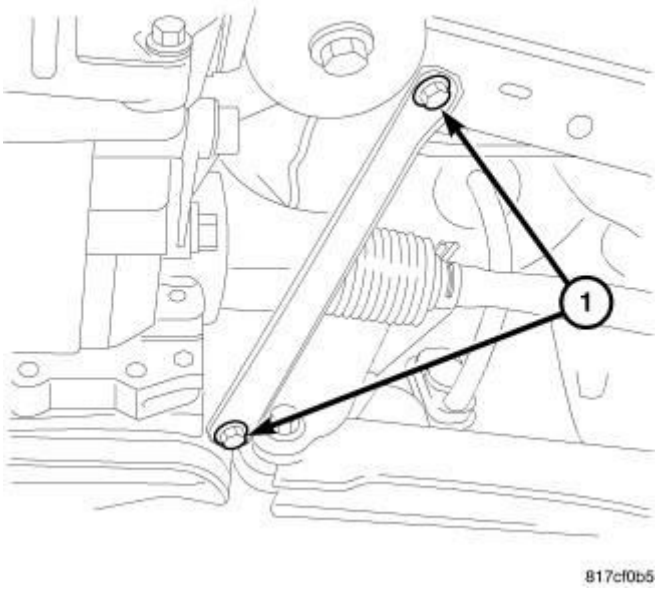

Fig. 5: Left Side Stay Bar
Courtesy of CHRYSLER GROUP, LLC

8. Remove the left side stay bracket bolts (1).

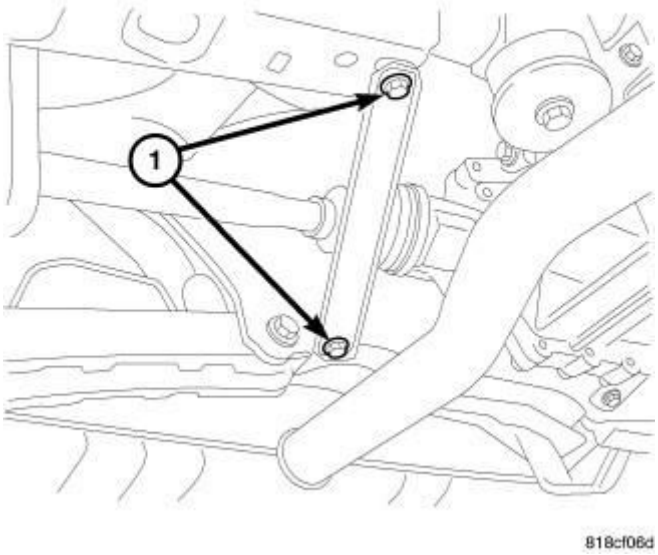

Fig. 6: Right Stay Bar
Courtesy of CHRYSLER GROUP, LLC

9. Remove the right side stay bracket bolts (1).
10. Remove the exhaust system up to the catalytic converter. Refer to **MUFFLER, EXHAUST, REMOVAL** .
11. Support the rear driveline module with a transmission jack.

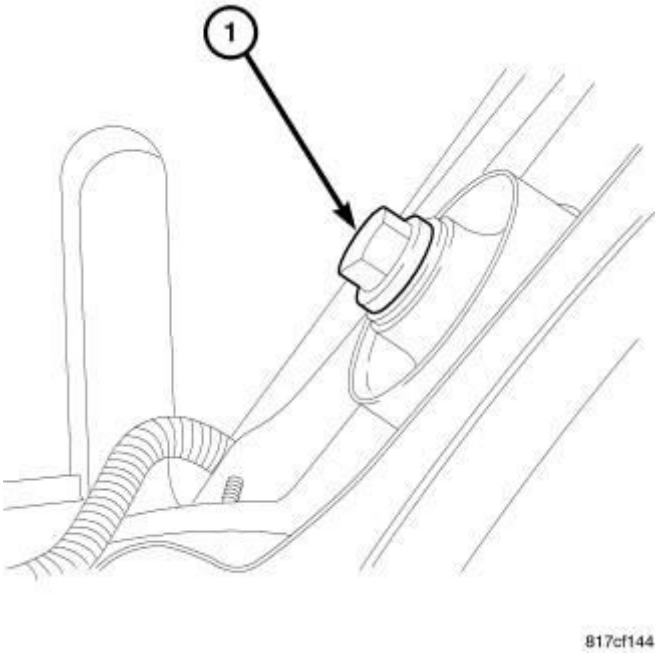

Fig. 7: Rear Bolt At Axle
Courtesy of CHRYSLER GROUP, LLC

12. Remove the rear bolt (1) at the driveline module.

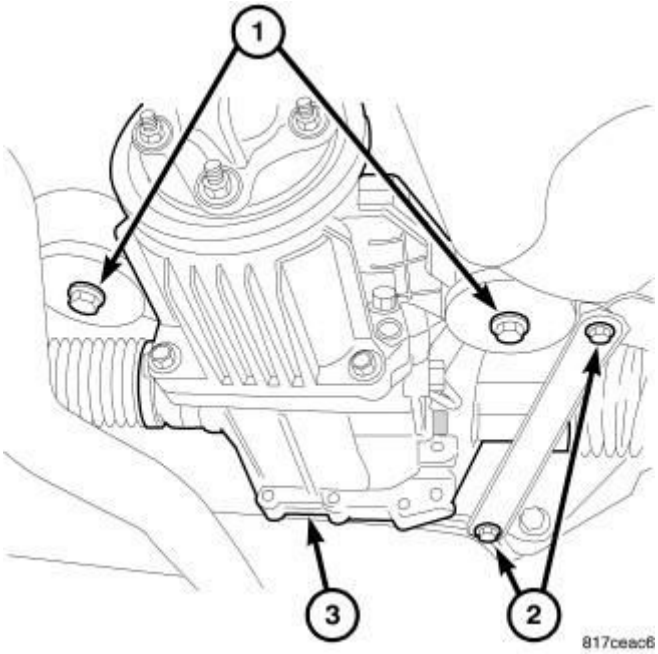

Fig. 8: Driveline Module Mounting Bolts
Courtesy of CHRYSLER GROUP, LLC

13. Remove the two side bolts (1) at driveline module (3).

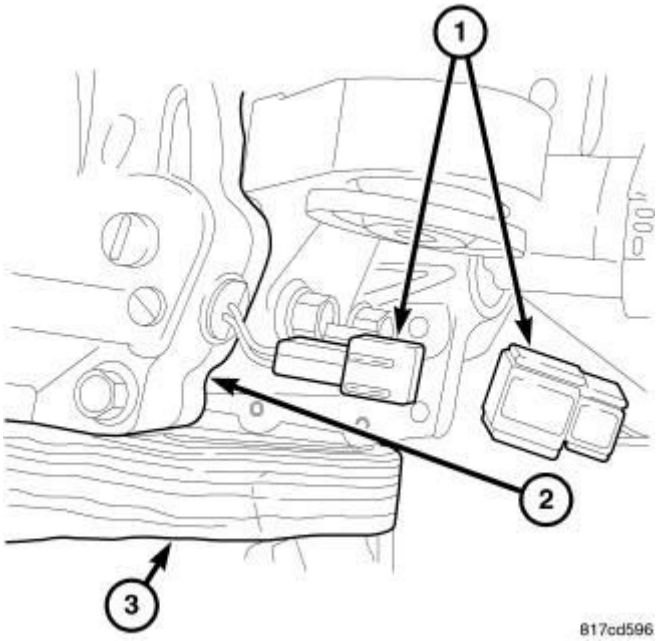

Fig. 9: Electrical Connector
Courtesy of CHRYSLER GROUP, LLC

14. Lower driveline module enough gain to access to the electrical connector

and bracket.

15. Remove the routing bracket bolt.
16. Remove breather hose from ECC.
17. Unplug the electrical connector (1).

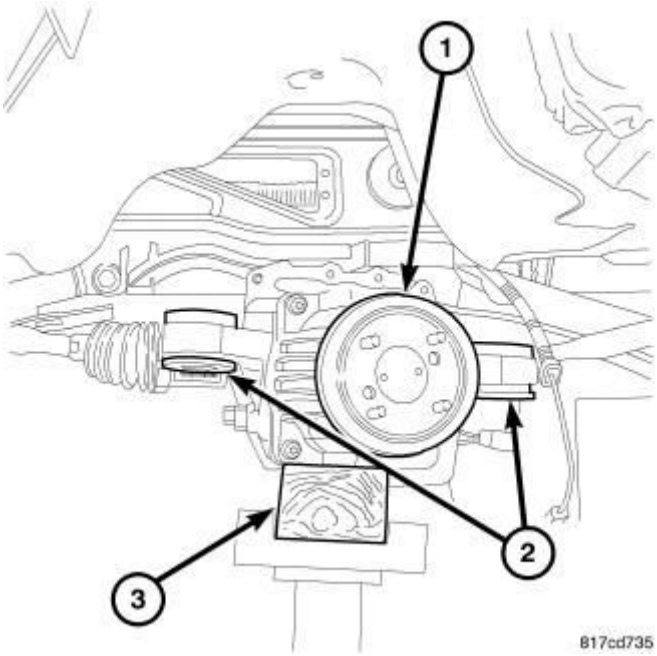

Fig. 10: Rear Axle Remove And Install
Courtesy of CHRYSLER GROUP, LLC

18. Lower the driveline module (1).
19. Disengage axle shaft (2).
20. Remove nut and washer halfshaft from right rear hub.
21. Remove halfshaft from rear hub. If hard to remove, or sticking, use a punch and hammer to tap out.

INSTALLATION

INSTALLATION

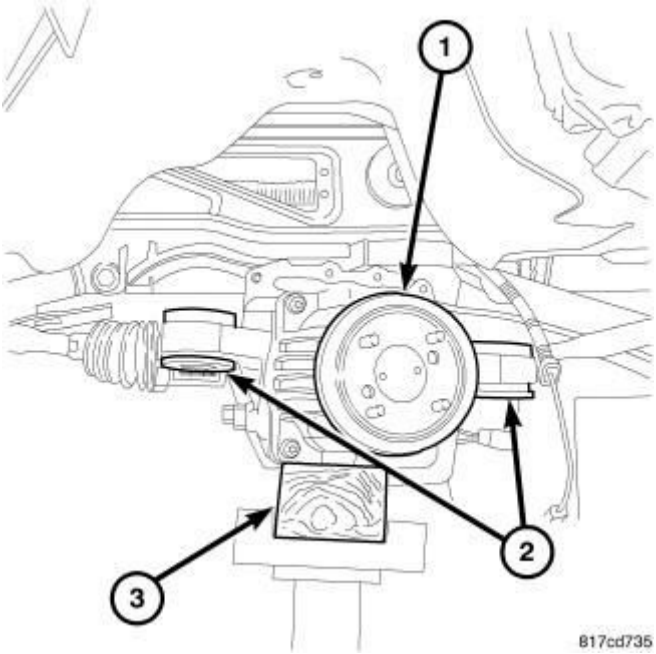

Fig. 11: Rear Axle Remove And Install
Courtesy of CHRYSLER GROUP, LLC

1. Lift driveline module (1) with a transmission jack while installing halfshaft (2).
2. Install halfshaft washer and nut on left rear hub and tighten to 244 N.m (180 ft.lbs.).

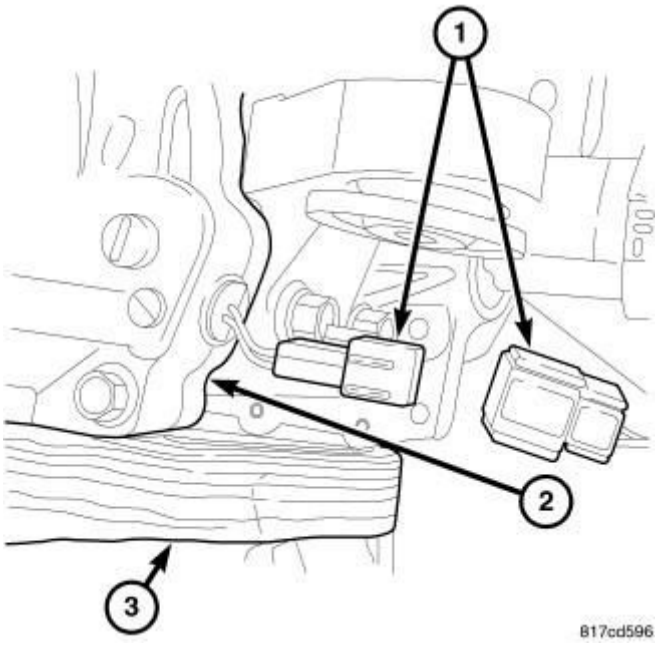

Fig. 12: Electrical Connector
Courtesy of CHRYSLER GROUP, LLC

3. Connect the electrical connector (1).
4. Connect the breather hose to ECC.
5. Install wire harness bracket and two mounting bolt and tighten to 10 N.m (89 in. lbs.).

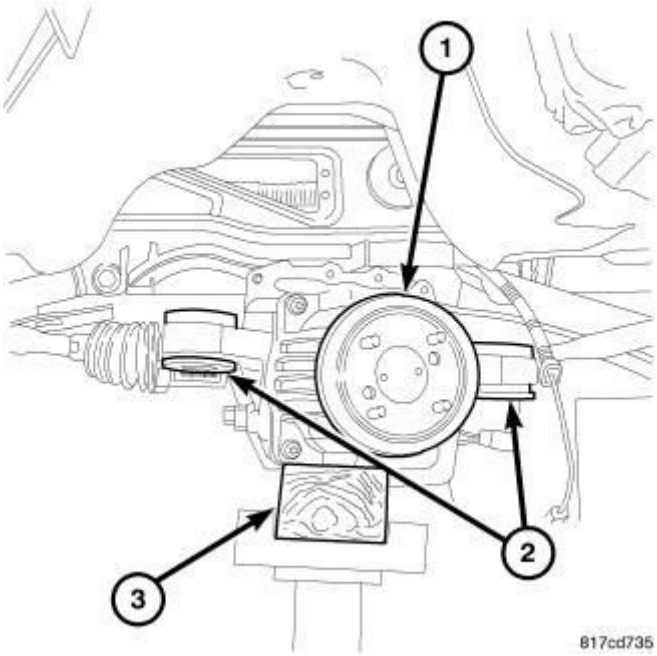

Fig. 13: Rear Axle Remove And Install
Courtesy of CHRYSLER GROUP, LLC

6. Lift driveline module (1) into place.

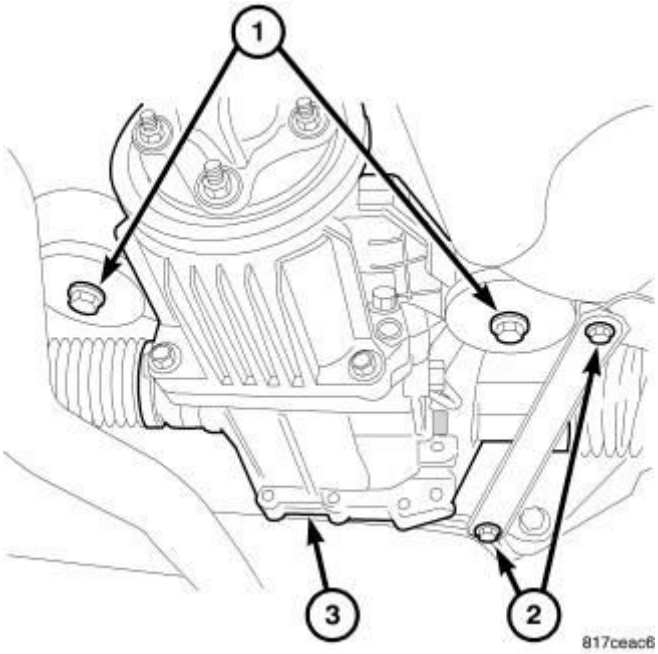

Fig. 14: Driveline Module Mounting Bolts
Courtesy of CHRYSLER GROUP, LLC

7. Install the two driveline module side mounting bolts (1) and tighten to 102 N.m (75 ft.lbs.).

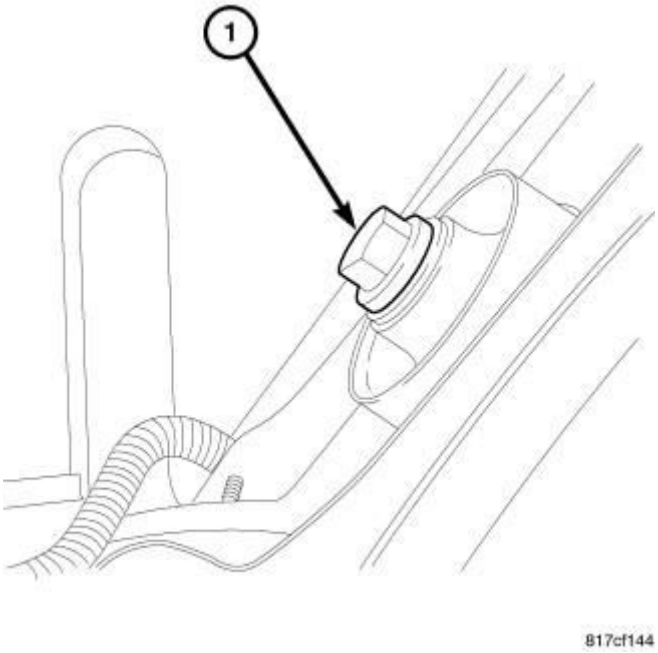

Fig. 15: Rear Bolt At Axle
Courtesy of CHRYSLER GROUP, LLC

8. Install the one rear driveline module mounting bolt (1) and tighten to 102 N.m (75 ft. lbs.).

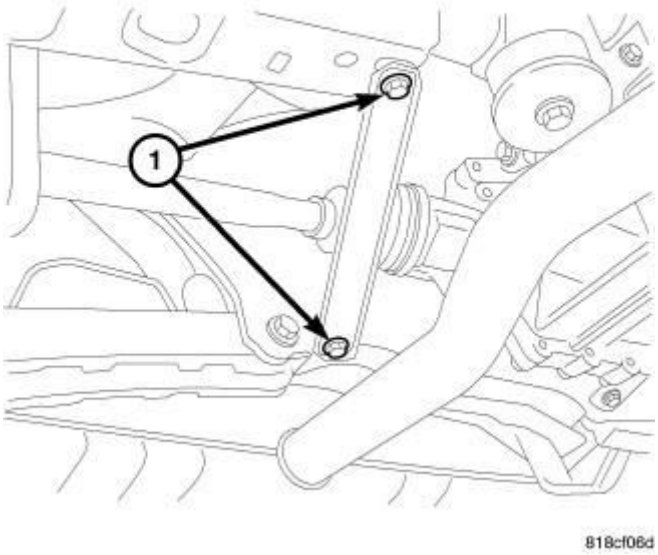

Fig. 16: Right Stay Bar
Courtesy of CHRYSLER GROUP, LLC

9. Install the right side stay bracket and bolts (1) and tighten to 61 N.m (45 ft. lbs.).

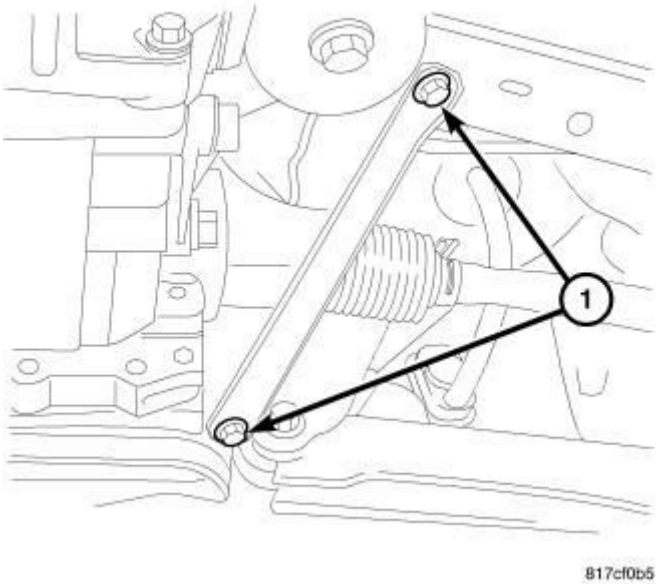

Fig. 17: Left Side Stay Bar
Courtesy of CHRYSLER GROUP, LLC

10. Install the left side stay bracket bolts (1) and tighten to 61 N.m (45 ft. lbs.).
11. Install the propeller shaft. Refer to **INSTALLATION** .

12. Fill the rear axle with fluid.

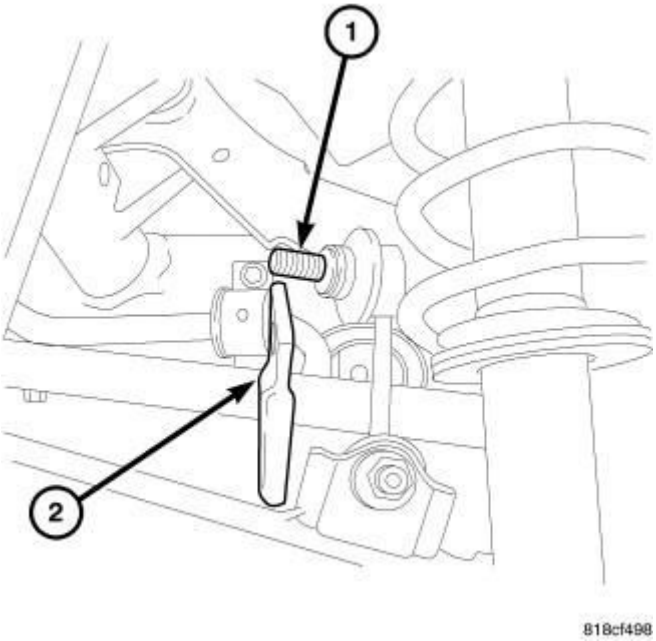

Fig. 18: Sway Bar
Courtesy of CHRYSLER GROUP, LLC

13. Roll sway bar (2) (if equipped) into place.

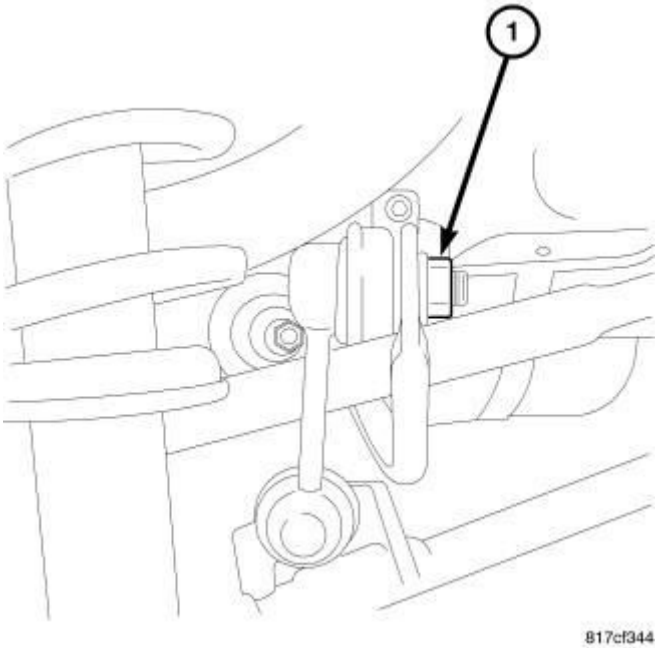

Fig. 19: Left Side Sway Bar Nut
Courtesy of CHRYSLER GROUP, LLC

14. Install left side sway bar nut (1) (if equipped) and tighten to 61 N.m (45 ft.

lbs.).

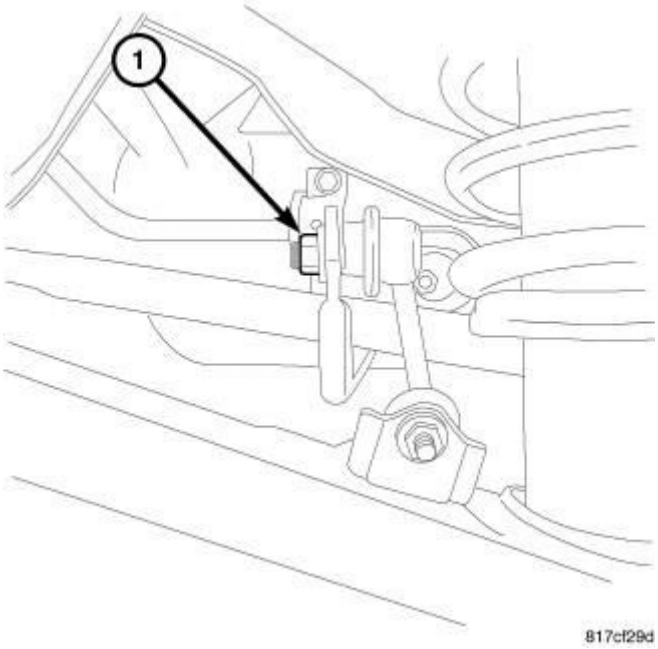

Fig. 20: Right Sway Bar Nut
Courtesy of CHRYSLER GROUP, LLC

15. Install right side sway bar nut (1) (if equipped) and tighten to 61 N.m (45 ft. lbs.).
16. Install the exhaust. Refer to **MUFFLER, EXHAUST, INSTALLATION** .
17. Install the wheels. Refer to **INSTALLATION** .

2014 ELECTRICAL

Battery System - Service Information - Compass & Patriot

DIAGNOSIS AND TESTING

GR8 ELECTRICAL SYSTEM TESTER

The Midtronics GR8 battery system tester is designed to help diagnose the cause of a defective battery. for directions on using the Midtronics GR8 battery tester. Refer to **BATTERY, STANDARD PROCEDURE**.

DIAGNOSIS AND TESTING - BATTERY SYSTEM

The battery, starting, and charging systems in the vehicle operate with one another and must be tested as a complete system. In order for the engine to start and the battery to maintain its charge properly, all of the components that are used in these systems must perform within specifications. It is important that the battery, starting, and charging systems be thoroughly tested and inspected any time a battery needs to be charged or replaced. The cause of abnormal battery discharge, overcharging or early battery failure must be diagnosed and corrected before a battery is replaced and before a vehicle is returned to service. The service information for these systems has been separated within this Service Information to make it easier to locate the specific information you are seeking. However, when attempting to diagnose any of these systems, it is important that you keep their interdependency in mind.

The diagnostic procedures used for the battery, starting, and charging systems include the most basic conventional diagnostic methods, to the more sophisticated On-Board Diagnostics (OBD) built into the Powertrain Control Module (PCM). Use of an induction-type milliampere ammeter, a volt/ohmmeter, a battery charger, a carbon pile rheostat (load tester) and a 12-volt test lamp may be required. All OBD-sensed systems are monitored by the PCM. Each monitored circuit is assigned a Diagnostic Trouble Code (DTC). The PCM will store a DTC in electronic memory for any failure it detects. Refer to **DIAGNOSIS AND TESTING** for the proper charging system on-board diagnostic test procedures.

BATTERY SYSTEM DIAGNOSIS		
CONDITION	POSSIBLE CAUSES	CORRECTION

THE BATTERY SEEMS WEAK OR DEAD WHEN ATTEMPTING TO START THE ENGINE.	1. The electrical system ignition-off draw is excessive.	1. Refer to **BATTERY, STANDARD PROCEDURE** for the proper test procedures. Repair the excessive ignition-off draw, as required.
	2. The charging system is inoperative.	2. Determine if the charging system is performing to specifications. Refer to **DIAGNOSIS AND TESTING** . Repair the inoperative charging system, as required.
	3. The battery is discharged.	3. Determine the battery state-of-charge using the Midtronics GR8 battery tester. Refer to **BATTERY, STANDARD PROCEDURE**. Charge the battery as required.
	4. The battery terminal connections are loose or corroded.	4. Refer to **CABLES, BATTERY, DIAGNOSIS AND TESTING**. Clean and tighten the battery terminal connections, as required.
	5. The battery has an incorrect size or rating for this vehicle.	5. Refer to **SPECIFICATIONS** for the proper size and rating. Replace an incorrect battery, as required.
	6. The battery is inoperative.	6. Determine the battery cranking capacity using the Midtronics GR8 battery tester. Refer to **BATTERY, STANDARD PROCEDURE**. Replace the inoperative battery, as required.
	7. The starting system is inoperative.	7. Determine if the starting system is performing to specifications. Refer to **DIAGNOSIS AND TESTING** .

		Repair the inoperative starting system, as required.
	8. The battery is physically damaged.	8. Inspect the battery for loose terminal posts or a cracked and leaking case. Replace the damaged battery, as required.
THE BATTERY STATE OF CHARGE CANNOT BE MAINTAINED.	1. The battery has an incorrect size or rating for this vehicle.	1. Refer to **SPECIFICATIONS** for the proper size and rating. Replace an incorrect battery, as required.
	2. The battery terminal connections are loose or corroded.	2. Refer to **CABLES, BATTERY, DIAGNOSIS AND TESTING**. Clean and tighten the battery terminal connections, as required.
	3. The electrical system ignition-off draw is excessive.	3. Refer to **BATTERY, STANDARD PROCEDURE** for the proper test procedures. Repair the inoperative electrical system, as required.
	4. The battery is inoperative.	4. Test the battery using the Midtronics GR8 battery tester. Refer to **BATTERY, STANDARD PROCEDURE**. Replace the inoperative battery, as required.
	5. The starting system is inoperative.	5. Determine if the starting system is performing to specifications. Refer to **DIAGNOSIS AND TESTING** . Repair the inoperative starting system, as required.
	6. The charging system is inoperative.	6. Determine if the charging system is performing to specifications. Refer to **DIAGNOSIS AND TESTING** . Repair the inoperative charging

		system, as required.
	7. Electrical loads exceed the output of the charging system.	7. Inspect the vehicle for aftermarket electrical equipment which might cause excessive electrical loads.
	8. Slow driving or prolonged idling with high-amperage draw systems in use.	8. Advise the vehicle operator, as required.
THE BATTERY WILL NOT ACCEPT A CHARGE.	1. The battery is inoperative.	1. Test the battery using the Midtronics GR8 battery tester. Refer to **BATTERY, STANDARD PROCEDURE**. Replace the inoperative battery, as required.

SPECIFICATIONS

BATTERY

The battery Group Size number, the Cold Cranking Amperage (CCA) rating, and the Reserve Capacity (RC) rating or Ampere-Hours (AH) rating can be found on the original equipment battery label. Be certain that a replacement battery has the correct Group Size number, as well as CCA, and RC or AH ratings that equal or exceed the original equipment specification for the vehicle being serviced. Battery sizes and ratings are discussed in more detail below.

NOTE: Vehicles equipped with a diesel engine utilize a unique battery. The specifications for this battery may differ from the standards shown here. Refer to the battery manufacturer for detailed specifications.

- **Group Size** - The outside dimensions and terminal placement of the battery conform to standards established by the Battery Council International (BCI). Each battery is assigned a BCI Group Size number to help identify a correctly-sized replacement.
- **Cold Cranking Amperage** - The Cold Cranking Amperage (CCA) rating specifies how much current (in amperes) the battery can deliver for thirty

seconds at -18° C (0° F). Terminal voltage must not fall below 7.2 volts during or after the thirty second discharge period. The CCA required is generally higher as engine displacement increases, depending also upon the starter current draw requirements.

- **Reserve Capacity** - The Reserve Capacity (RC) rating specifies the time (in minutes) it takes for battery terminal voltage to fall below 10.5 volts, at a discharge rate of 25 amperes. RC is determined with the battery fully-charged at 26.7° C (80° F). This rating estimates how long the battery might last after a charging system failure, under minimum electrical load.
- **Ampere-Hours** - The Ampere-Hours (AH) rating specifies the current (in amperes) that a battery can deliver steadily for twenty hours, with the voltage in the battery not falling below 10.5 volts. This rating is also sometimes identified as the twenty-hour discharge rating.
- **Load Test Amperage** - The Load Test Amperage rating specifies the current (in amperes) that a battery should be tested at with the battery load test equipment. This value should always be 50 percent of the CCA. For example: if the CCA for this battery is 700 amps, the Load Test Amperage is 50 percent of that or 350 amps.

BATTERY CLASSIFICATIONS AND RATINGS TABLE

BATTERY CLASSIFICATIONS AND RATINGS				
BCI Group Size Classification	**Cold Cranking Amperage**	**Reserve Capacity**	**Ampere - Hours**	**Load Test Amperage**
34	700	95 Minutes	48	350
86	525	92 Minutes	50	255

TORQUE SPECIFICATIONS

TORQUE SPECIFICATIONS TABLE

DESCRIPTION	N.m	Ft. Lbs.	In. Lbs.
Battery Terminal Clamp Pinch-Bolt Hex Nut	5	-	45
Battery Hold Down Bolt	7	-	62
Starter Solenoid B(+) Terminal Stud Nut	13	-	115
Battery Negative Cable	16.5	-	145

Ground Eyelet Terminal To Engine Block Bolt			
Generator Output Terminal Stud Nut	14	-	125
Totally Integrated Power Module B(+) Terminal Stud Nut	10	-	90
Battery Negative Cable Eyelet Terminal To The Inner Fender Bolt	12	9	-
Lower Battery Tray Bolts	10.5	-	93
Upper Battery Tray Bolts	10.5	-	93
Battery Tray Nut	10.5	-	93

CLEANING

CLEANING

The following information details the recommended cleaning procedures for the battery and related components. In addition to the maintenance schedules found in this Service Information and the Owner's Manual, it is recommended that these procedures be performed any time the battery or related components must be removed for vehicle service.

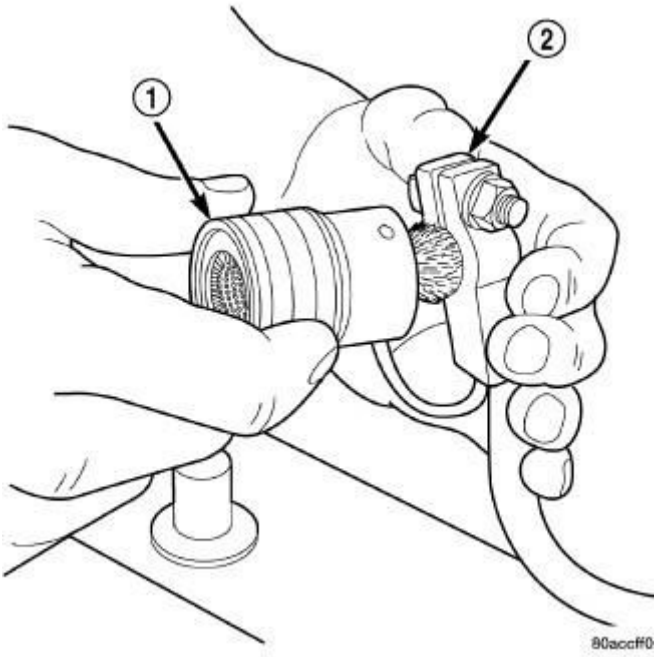

Fig. 1: Cleaning Battery Cable Terminal Clamps
Courtesy of CHRYSLER GROUP, LLC

1. Clean the battery cable terminal clamps (2) of all corrosion. Remove any corrosion using a wire brush (1) or a post and terminal cleaning tool, and a sodium bicarbonate (baking soda) and warm water cleaning solution.
2. Clean the battery tray and battery hold down hardware of all corrosion. Remove any corrosion using a wire brush and a sodium bicarbonate (baking soda) and warm water cleaning solution. Paint any exposed bare metal.

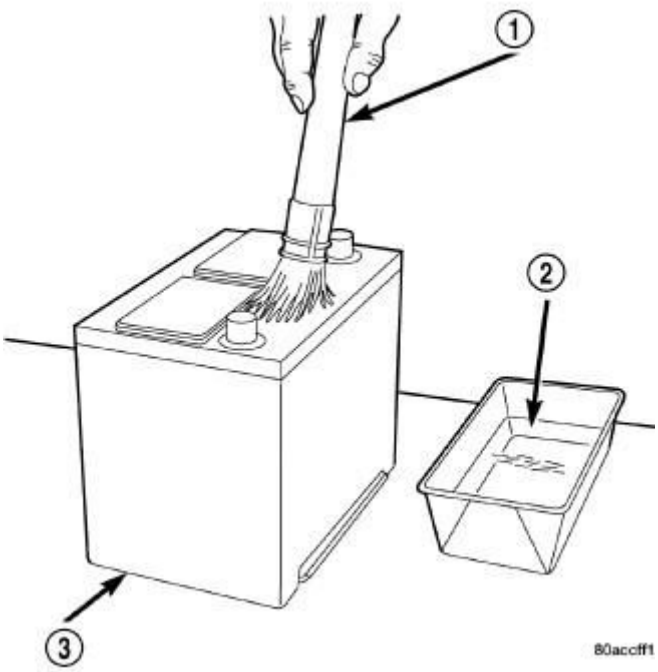

Fig. 2: Cleaning Outside Of Battery Case
Courtesy of CHRYSLER GROUP, LLC

3. If the removed battery is to be reinstalled, clean the outside of the battery case (3) and the top cover with a sodium bicarbonate (baking soda) and warm water cleaning solution using a stiff bristle parts cleaning brush (1) to remove any acid film. Rinse the battery with clean water. Ensure that the cleaning solution does not enter the battery cells through the vent holes. If the battery is being replaced, refer to **SPECIFICATIONS** for the factory-installed battery specifications. Confirm that the replacement battery is the correct size and has the correct ratings for the vehicle.
4. Clean the battery thermal guard with a sodium bicarbonate (baking soda) and warm water cleaning solution using a stiff bristle parts cleaning brush to remove any acid film.

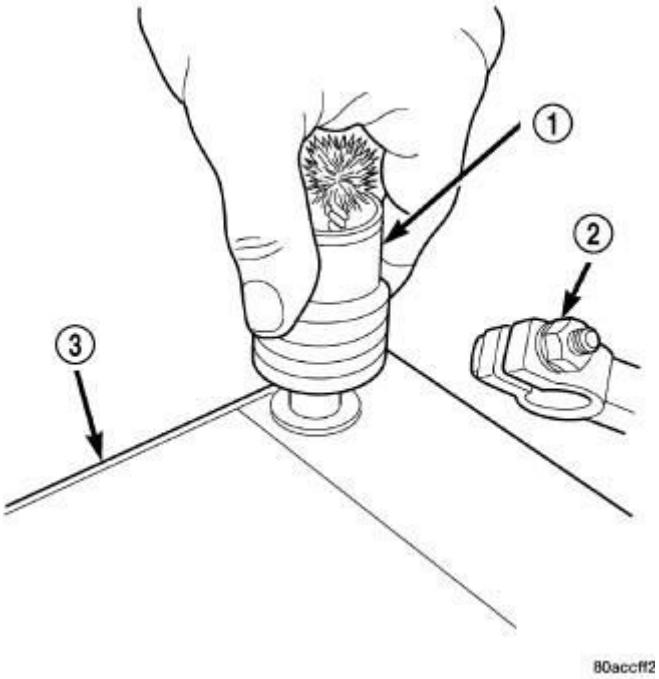

Fig. 3: Cleaning Battery Terminal Post Using Terminal Cleaner
Courtesy of CHRYSLER GROUP, LLC

5. Clean any corrosion from the battery terminal posts with a wire brush or a post and terminal cleaner, and a sodium bicarbonate (baking soda) and warm water cleaning solution.

INSPECTION

INSPECTION

The following information details the recommended inspection procedures for the battery and related components. In addition to the maintenance schedules found in this Service Information and the owner's manual, it is recommended that these procedures be performed any time the battery or related components must be removed for vehicle service.

1. Inspect the battery cable terminal clamps for damage. Replace any battery cable that has a damaged or deformed terminal clamp.
2. Inspect the battery tray and battery hold down hardware for damage. Replace any damaged parts.
3. Slide the thermal guard off of the battery case (if equipped). Inspect the battery case for cracks or other damage that could result in electrolyte leaks. Also, check the battery terminal posts for looseness. Batteries with damaged cases or loose terminal posts must be replaced.

4. Inspect the battery thermal guard for tears, cracks, deformation or other damage (if equipped). Replace any battery thermal guard that has been damaged.
5. Inspect the battery built-in test indicator sight glass (if equipped) for an indication of the battery condition. If the battery is discharged, charge as required. Refer to **STANDARD PROCEDURE** for detailed instructions.

BATTERY

DIAGNOSIS AND TESTING

DIAGNOSIS AND TESTING - BATTERY

WARNING: IF THE BATTERY SHOWS SIGNS OF FREEZING, LEAKING OR LOOSE POSTS, DO NOT TEST, ASSIST-BOOST, OR CHARGE. THE BATTERY MAY ARC INTERNALLY AND EXPLODE. PERSONAL INJURY AND/OR VEHICLE DAMAGE MAY RESULT.

WARNING: EXPLOSIVE HYDROGEN GAS FORMS IN AND AROUND THE BATTERY. DO NOT SMOKE, USE FLAME, OR CREATE SPARKS NEAR THE BATTERY. PERSONAL INJURY AND/OR VEHICLE DAMAGE MAY RESULT.

WARNING: THE BATTERY CONTAINS SULFURIC ACID, WHICH IS POISONOUS AND CAUSTIC. AVOID CONTACT WITH THE SKIN, EYES, OR CLOTHING. IN THE EVENT OF CONTACT, FLUSH WITH WATER AND CALL A PHYSICIAN IMMEDIATELY. KEEP OUT OF THE REACH OF CHILDREN.

A battery that will not accept a charge is inoperative, and must be replaced. Further testing is not required. A fully-charged battery must be load tested to determine its cranking capacity. A battery that is fully-charged, but does not pass the load test, is inoperative and must be replaced.

NOTE: Completely discharged batteries may take several hours

to accept a charge. Refer to STANDARD PROCEDURE for the proper battery charging procedures.

MIDTRONICS GR8 BATTERY TESTER

The Midtronics GR8 battery tester is designed to help diagnose the cause of an inoperative battery. Refer to **BATTERY, STANDARD PROCEDURE** for instructions on the use of the Midtronics GR8 battery tester.

STANDARD PROCEDURE

SPIRAL CELL BATTERY CHARGING

WARNING: **Never exceed 14.4 volts when charging a spiral cell battery. Personal injury and/or battery damage may result.**

Vehicles equipped with a diesel engine utilize a unique spiral cell battery. This battery has a maximum charging voltage that must not be exceeded in order to restore the battery to its full potential, failure to use the following spiral cell battery charging procedure could result in damage to the battery or personal injury.

Battery charging is the means by which the battery can be restored to its full voltage potential. A battery is fully-charged when:

- Midtronics (special tool #GR8-1220KIT-CHRY, AGM Battery Tester/Charger Station) tester indicates battery is OK.
- Open-circuit voltage of the battery is 12.65 volts or above.
- Battery passes Load Test multiple times.

WARNING: **If the battery shows signs of freezing, leaking, loose posts or low electrolyte level, do not test, assist-boost, or charge. The battery may arc internally and explode. Personal injury and/or vehicle damage may result.**

WARNING: **EXPLOSIVE HYDROGEN GAS FORMS IN AND AROUND THE BATTERY. DO NOT SMOKE, USE FLAME, OR CREATE SPARKS NEAR THE**

BATTERY. PERSONAL INJURY AND/OR VEHICLE DAMAGE MAY RESULT.

WARNING: THE BATTERY CONTAINS SULFURIC ACID, WHICH IS POISONOUS AND CAUSTIC. AVOID CONTACT WITH THE SKIN, EYES, OR CLOTHING. IN THE EVENT OF CONTACT, FLUSH WITH WATER AND CALL A PHYSICIAN IMMEDIATELY. KEEP OUT OF THE REACH OF CHILDREN.

CAUTION: Always disconnect and isolate the battery negative cable before charging a battery. Charge the battery directly at the battery terminals. Do not exceed 14.4 volts while charging a battery.

CAUTION: The battery should not be hot to the touch. If the battery feels hot to the touch, turn off the charger and let the battery cool before continuing the charging operation. Damage to the battery may result.

After the battery has been charged to 12.6 volts or greater, perform a load test to determine the battery cranking capacity. If the battery passes a load test, return the battery to service. If the battery fails a load test, it is faulty and must be replaced.

Clean and inspect the battery hold downs, tray, terminals, posts, and top before completing battery service. Refer to **CLEANING** for the proper battery system cleaning procedures. Refer to **INSPECTION** for the proper battery system inspection procedures.

CHARGING A COMPLETELY DISCHARGED BATTERY - SPIRAL CELL BATTERY

WARNING: Never exceed 14.4 volts when charging a spiral cell battery. Personal injury and/or battery damage may result.

The following procedure should be used to recharge a completely discharged battery. Unless this procedure is properly followed, a good battery may be

needlessly replaced.

1. Measure the voltage at the battery posts with a voltmeter, accurate to 1/10 (0.10) volt. Refer to **REMOVAL** and **INSTALLATION** for access instructions. If the reading is below ten volts, the battery charging current will be low. It could take several hours before the battery accepts a current greater than a few milliamperes. Such low current may not be detectable on the ammeters built into many battery chargers.
2. Disconnect and isolate the battery negative cable. Connect the Midtronics (special tool #GR8-1220KIT-CHRY, AGM Battery Tester/Charger Station).

NOTE: Some battery chargers are equipped with polarity-sensing circuitry. This circuitry protects the battery charger and the battery from being damaged if they are improperly connected. If the battery state-of-charge is too low for the polarity-sensing circuitry to detect, the battery charger will not operate. This makes it appear that the battery will not accept charging current. See the instructions provided by the manufacturer of the battery charger for details on how to bypass the polarity-sensing circuitry.

3. Battery chargers vary in the amount of voltage and current they provide. The amount of time required for a battery to accept measurable charging current at various voltages is shown in the Charge Rate Table. If the charging current is still not measurable at the end of the charging time, the battery is faulty and must be replaced. If the charging current is measurable during the charging time, the battery may be good and the charging should be completed in the normal manner.

SPIRAL-PLATE BATTERY CHARGE RATE TABLE

Voltage	Minutes
14.4 volts maximum	up to 10 minutes
13.0 to 14 volts	up to 20 minutes
12.9 volts or less	up to 30 minutes

CHARGING TIME REQUIRED

The time required to charge a battery will vary, depending upon the following

factors:

- **Battery Capacity** - A completely discharged heavy-duty battery requires twice the charging time of a small capacity battery.
- **Temperature** - A longer time will be needed to charge a battery at -18° C (0° F) than at 27° C (80° F). When a fast battery charger is connected to a cold battery, the current accepted by the battery will be very low at first. As the battery warms, it will accept a higher charging current rate (amperage).
- **Charger Capacity** - A battery charger that supplies only five amperes will require a longer charging time. A battery charger that supplies eight amperes will require a shorter charging time.
- **State-Of-Charge** - A completely discharged battery requires more charging time than a partially discharged battery. Electrolyte is nearly pure water in a completely discharged battery. At first, the charging current (amperage) will be low. As the battery charges, the specific gravity of the electrolyte will gradually rise.

The Battery Charging Time Table gives an indication of the time required to charge a typical battery at room temperature based upon the battery state-of-charge and the charger capacity.

SPIRAL-PLATE BATTERY CHARGING TIME TABLE

Charging Amperage	5 Amps	8 Amps
Open Circuit Voltage	**Hours Charging @ 21° C (70° F)**	
12.25 to 12.49	6 hours	3 hours
12.00 to 12.24	10 hours	5 hours
10.00 to 11.99	14 hours	7 hours
Below 10.00	18 hours	9 hours

CONVENTIONAL BATTERY CHARGING

CAUTION: Vehicles equipped with a diesel engine utilize a unique spiral cell battery. This battery has a maximum charging voltage that must be used in order to restore the battery to its full potential, failure to use the spiral cell battery charging procedure could result in damage to the battery or personal injury. for the appropriate procedure.

Battery charging is the means by which the battery can be restored to its full voltage potential. A battery is fully-charged when:

- Midtronics (special tool #GR8-1220KIT-CHRY, AGM Battery Tester/Charger Station) tester indicates battery is OK.
- Open-circuit voltage of the battery is 12.65 volts or above.
- Battery passes Load Test multiple times.

WARNING: If the battery shows signs of freezing, leaking, loose posts, do not test, assist-boost, or charge. The battery may arc internally and explode. Personal injury and/or vehicle damage may result.

WARNING: EXPLOSIVE HYDROGEN GAS FORMS IN AND AROUND THE BATTERY. DO NOT SMOKE, USE FLAME, OR CREATE SPARKS NEAR THE BATTERY. PERSONAL INJURY AND/OR VEHICLE DAMAGE MAY RESULT.

WARNING: THE BATTERY CONTAINS SULFURIC ACID, WHICH IS POISONOUS AND CAUSTIC. AVOID CONTACT WITH THE SKIN, EYES, OR CLOTHING. IN THE EVENT OF CONTACT, FLUSH WITH WATER AND CALL A PHYSICIAN IMMEDIATELY. KEEP OUT OF THE REACH OF CHILDREN.

WARNING: If the battery is equipped with removable cell caps, be certain that each of the cell caps is in place and tight before the battery is returned to service. Personal injury and/or vehicle damage may result from loose or missing cell caps.

CAUTION: Always disconnect and isolate the battery negative cable before charging a battery. Do not exceed sixteen volts while charging a battery. Damage to the vehicle electrical system components may result.

CAUTION: Battery electrolyte will bubble inside the battery case during normal battery charging. Electrolyte boiling or being discharged from the battery vents indicates a battery overcharging condition. Immediately reduce the charging rate or turn off the charger to evaluate the battery condition. Damage to the battery may result from overcharging.

CAUTION: The battery should not be hot to the touch. If the battery feels hot to the touch, turn off the charger and let the battery cool before continuing the charging operation. Damage to the battery may result.

After the battery has been charged to an open-circuit voltage reading of 12.4 volts or greater, retest the battery with the Midtronics (special tool #GR8-1220KIT-CHRY, AGM Battery Tester/Charger Station) tester indicates battery is OK or perform a load test to determine the battery cranking capacity.

Refer to **BATTERY, STANDARD PROCEDURE**.

Clean and inspect the battery hold downs, tray, terminals, posts, and top before completing battery service. Refer to **CLEANING** for the proper battery system cleaning procedures. Refer to **INSPECTION** for the proper battery system inspection procedures.

CHARGING A COMPLETELY DISCHARGED CONVENTIONAL BATTERY

The following procedure should be used to recharge a completely discharged battery. Unless this procedure is properly followed, a good battery may be needlessly replaced.

1. Measure the voltage at the battery posts with a voltmeter, accurate to 1/10 (0.10) volt. If the reading is below ten volts, the battery charging current will be low. It could take some time before the battery accepts a current greater than a few milliamperes. Such low current may not be detectable on the ammeters built into many battery chargers.
2. Disconnect and isolate the battery negative cable. Connect the Midtronics

(special tool #GR8-1220KIT-CHRY, AGM Battery Tester/Charger Station).

NOTE: Some battery chargers are equipped with polarity-sensing circuitry. This circuitry protects the battery charger and the battery from being damaged if they are improperly connected. If the battery state-of-charge is too low for the polarity-sensing circuitry to detect, the battery charger will not operate. This makes it appear that the battery will not accept charging current. See the instructions provided by the manufacturer of the battery charger for details on how to bypass the polarity-sensing circuitry.

3. Battery chargers vary in the amount of voltage and current they provide. The amount of time required for a battery to accept measurable charging current at various voltages is shown in the Charge Rate Table. If the charging current is still not measurable at the end of the charging time, the battery is faulty and must be replaced. If the charging current is measurable during the charging time, the battery may be good and the charging should be completed in the normal manner.

CONVENTIONAL BATTERY CHARGE RATE TABLE

Voltage	Minutes
16.0 volts maximum	up to 10 min.
14.0 to 15.9 volts	up to 20 min.
13.9 volts or less	up to 30 min.

CHARGING TIME REQUIRED

The time required to charge a battery will vary, depending upon the following factors:

- **Battery Capacity** - A completely discharged heavy-duty battery requires twice the charging time of a small capacity battery.
- **Temperature** - A longer time will be needed to charge a battery at -18° C (0° F) than at 27° C (80° F). When a fast battery charger is connected to a cold battery, the current accepted by the battery will be very low at first. As the battery warms, it will accept a higher charging current rate (amperage).
- **Charger Capacity** - A battery charger that supplies only five amperes will

require a longer charging time. A battery charger that supplies twenty amperes or more will require a shorter charging time.

- **State-Of-Charge** - A completely discharged battery requires more charging time than a partially discharged battery. Electrolyte is nearly pure water in a completely discharged battery. At first, the charging current (amperage) will be low. As the battery charges, the specific gravity of the electrolyte will gradually rise.

The Conventional Battery Charging Time Table gives an indication of the time required to charge a typical battery at room temperature based upon the battery state-of-charge and the charger capacity.

CONVENTIONAL BATTERY CHARGING TIME TABLE

Charging Amperage	5 Amps	10 Amps	20 Amps
Open Circuit Voltage	**Hours Charging @ 21° C (70° F)**		
12.25 to 12.49	6 hours	3 hours	1.5 hours
12.00 to 12.24	10 hours	5 hours	2.5 hours
10.00 to 11.99	14 hours	7 hours	3.5 hours
Below 10.00	18 hours	9 hours	4.5 hours

GR8 BATTERY TESTER / CHARGER

Always use the Midtronics GR8 Instruction Manual that was supplied with the tester as a reference. If the Instruction Manual is not available the following procedure can be used:

WARNING: Always wear appropriate eye protection and use extreme caution when working with batteries.

BATTERY TESTING

1. If testing the battery OUT-OF-VEHICLE, clean the battery terminals with a wire brush before testing. Refer to **CLEANING**. If the battery is equipped with side post terminals, install and tighten the supplied lead terminal stud adapters. Do not use steel bolts. Failure to properly install the stud adapters, or using stud adapters that are dirty or worn-out may result in false test readings.
2. If testing the battery IN-THE-VEHICLE, make certain all of the vehicle accessory loads are OFF, including the ignition. Connect the Midtronics

GR8 directly to the battery posts.

NOTE: Multiple batteries connected in parallel must have the ground cable disconnected to perform a battery test. Failure to disconnect may result in false battery test readings.

3. Using the ARROW key select **in** or **out** of vehicle testing and press ENTER to make a selection.
4. If not selected, choose the Cold Cranking Amp (CCA) battery rating. Or select the appropriate battery rating for your area (see menu). The tester will then run its self programmed test of the battery and display the results. Refer to the test result chart noted below.
5. While viewing the battery test result, press the CODE button and the tester will prompt you for the last 4 digits of the VIN. Use the UP/DOWN arrow buttons to scroll to the correct character; then press ENTER to select and move to the next digit. Then press the ENTER button to view the SERVICE CODE. Pressing the CODE button a second time will return you to the test results.

NOTE: The SERVICE CODE is required on every warranty claim submitted for battery replacement.

QUICK REFERENCE GUIDE

Inspect the battery for damages and check the electrolyte level. Always use the necessary safety precautions when working with batteries to prevent severe injury or death. Follow all manufacturers' instructions and BCI (Battery Council International) safety recommendations, which include the following precautions:

MAIN MENU

The Main Menu is the starting point for all tools and utilities, which are depicted as icons. Some icons lead directly to the function they represent, while others are menu icons that lead to two or more options.

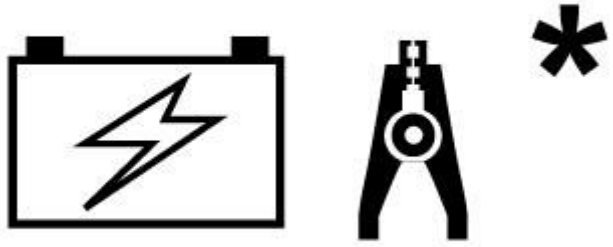

2906815

Fig. 4: Battery Tester Main Menu Icon 1
Courtesy of CHRYSLER GROUP, LLC

Automatically tests, charges, and provides battery decision using the information you select in a series of screens. Start here to generate warranty codes.

2907015

Fig. 5: Battery Tester Main Menu Icon 2
Courtesy of CHRYSLER GROUP, LLC

Tests the starting and charging systems.

2906976

Fig. 6: Battery Tester Main Menu Icon 3
Courtesy of CHRYSLER GROUP, LLC

Maintains battery voltage at 13.5 volts to provide uninterrupted reprogramming of ECUs and retain vehicle system settings.

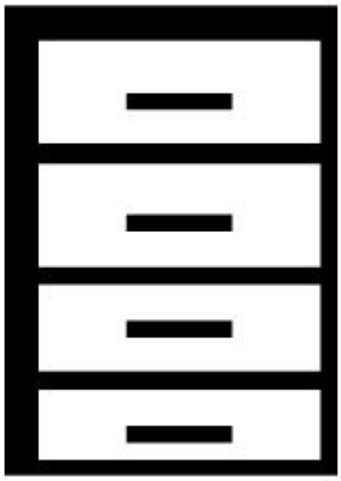

2906894

Fig. 7: Battery Tester Main Menu Icon 4
Courtesy of CHRYSLER GROUP, LLC

Includes a utility to view and print a test counter, a data transfer utility, the software version and date, the Midtronics GR8 serial number for the control module, and current wireless channel.

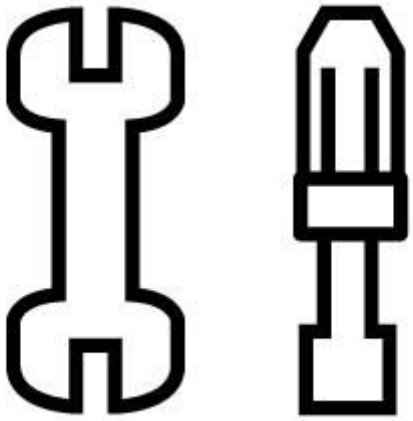

2907001

Fig. 8: Battery Tester Main Menu Icon 5
Courtesy of CHRYSLER GROUP, LLC

The Setup Menu lets you customize options in the Midtronics GR8 to suit your needs.

2906883

Fig. 9: Battery Tester Main Menu Icon 6
Courtesy of CHRYSLER GROUP, LLC

Provides a list of topics and definitions. Also includes Midtronics Customer Service phone numbers.

CHARGE/TEST MENU

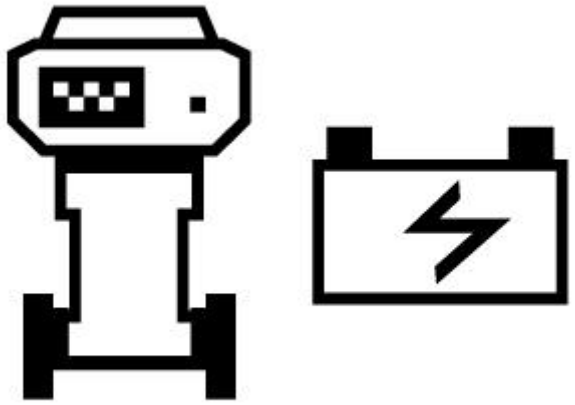

2906844

Fig. 10: Charge/Test Menu Icon 1
Courtesy of CHRYSLER GROUP, LLC

Automatically tests and charges battery, starting, and charging system. Generates a warranty code for Replace and Bad Cell decisions.

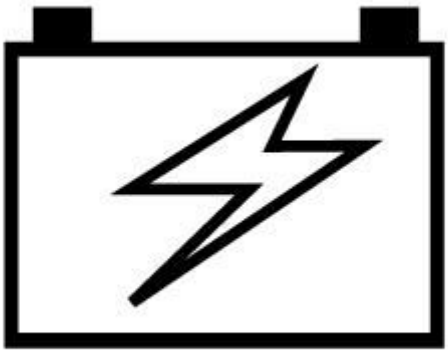

2906961

Fig. 11: Charge/Test Menu Icon 2
Courtesy of CHRYSLER GROUP, LLC

Pre Delivery Inspection (PDI): For testing delivered vehicles and lot maintenance. Uses the same inputs as a diagnostic charge.

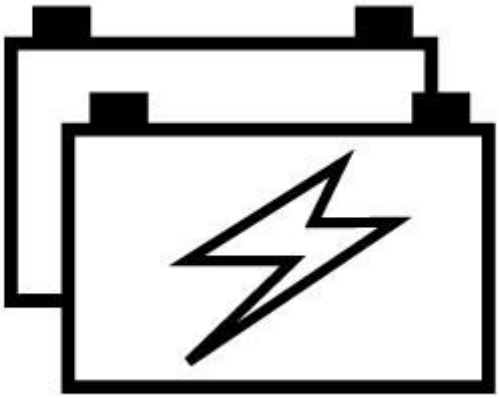

2906860

Fig. 12: Charge/Test Menu Icon 3
Courtesy of CHRYSLER GROUP, LLC

Dual Battery Charge mode allows the charger to be used with dual battery systems.

2906906

Fig. 13: Charge/Test Menu Icon 4
Courtesy of CHRYSLER GROUP, LLC

Makes high output current available to boost charge an in-vehicle battery and assist in starting the engine.

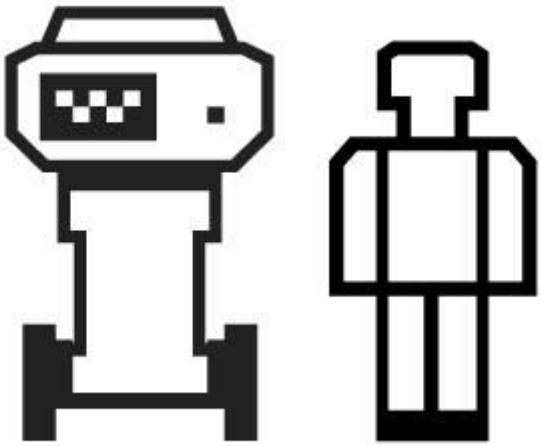

2906933

Fig. 14: Charge/Test Menu Icon 5
Courtesy of CHRYSLER GROUP, LLC

Provides a timed charge that ranges from 5 to 120 minutes or a continuous charge that ends when you press the STOP key.

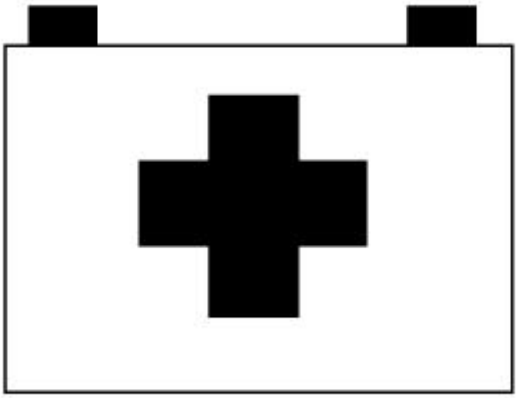

2906991

Fig. 15: Charge/Test Menu Icon 6
Courtesy of CHRYSLER GROUP, LLC

In this mode the charger can provide a trickle charge for long term, low amp battery charging.

2906871

Fig. 16: Charge/Test Menu Icon 7
Courtesy of CHRYSLER GROUP, LLC

Generates 15-digit warranty codes for physically defective batteries or customer good will.

GR8 BATTERY TESTER

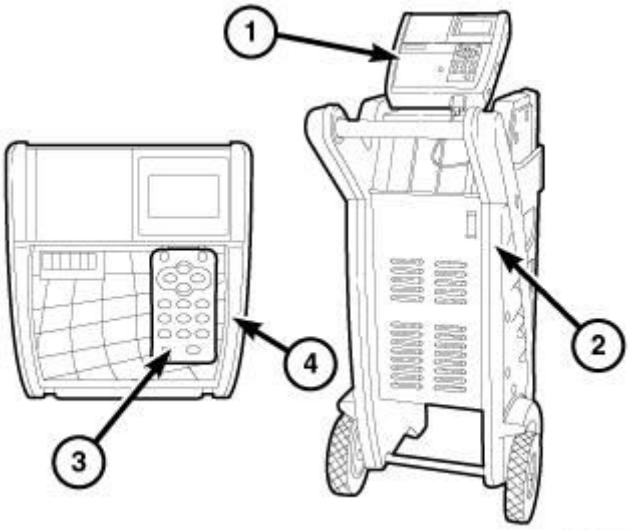

2906919

Fig. 17: Identifying GR8 Battery Tester
Courtesy of CHRYSLER GROUP, LLC

1. **Control module:** Backlit graphical display and keypad for data entry.
2. **ON/OFF switch:** ON/OFF switch Turns power on and off to the GR8.
3. **STATUS light:** Lights in conjunction with beeping alarm to indicate transitions and warnings.

4. **Data card slot:** For future upgrades via a data card. The slot contains a plastic filler card for protection.

REPLACE BATTERY DECISIONS

BATTERY DECISIONS

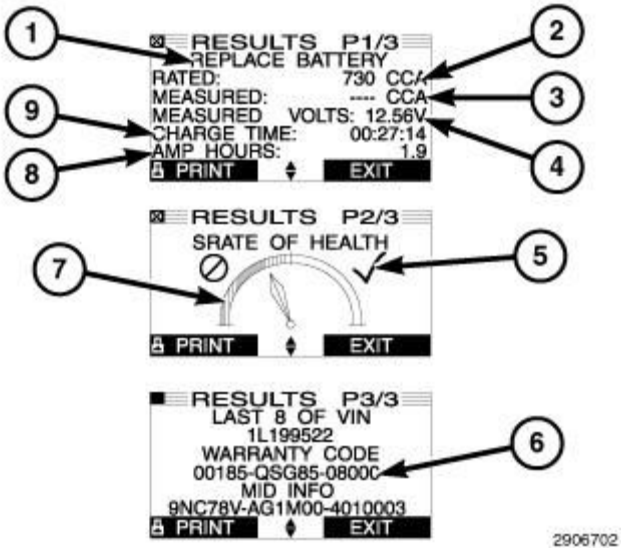

Fig. 18: Battery Test Screen - Example
Courtesy of CHRYSLER GROUP, LLC

1. Battery Decisions
2. Select Rating
3. Measured capacity
4. Measured voltage
5. Good Range

NOTE: The warranty code screen will only be displayed for REPLACE BATTERY and BAD CELL-REPLACE decisions.

6. Enter this number into wiTech
7. Replace range
8. Replaced AMP Hours
9. Charging Time

TEST RESULTS-CHARGING SYSTEM

A REPLACE BATTERY or BAD CELL-REPLACE decision gives you the option of generating a warranty code. For Chrysler vehicles model year 2011 or later, enter that warranty code into your wiTECH in the Midtronics warranty code validation routine.

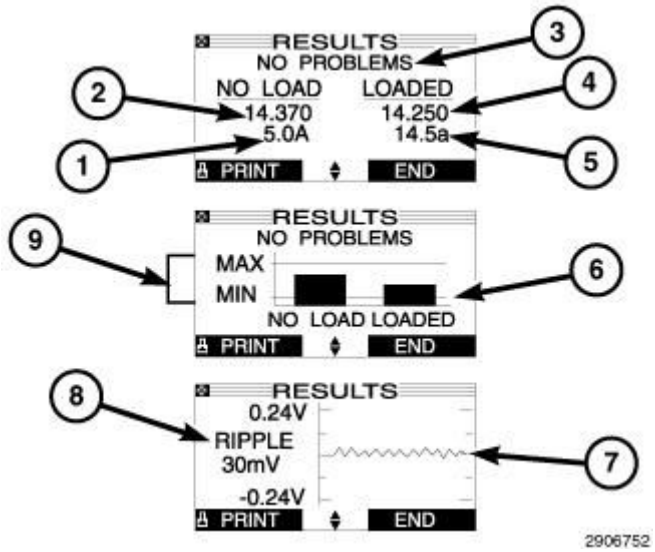

Fig. 19: Battery Tester Test Results Screen - Example
Courtesy of CHRYSLER GROUP, LLC

1. Loads-off current at rev if amp clamp is used
2. Loads-off DC voltage at rev
3. Decision
4. Loads-on DC voltage at rev
5. Loads-on current at rev if amp clamp is used
6. Bar graph of DC voltage within normal range (loads on and off)
7. Graph of diode waveform
8. Peak-to-peak AC voltage
9. Normal DC voltage range

TEST RESULTS-STARTER SYSTEM

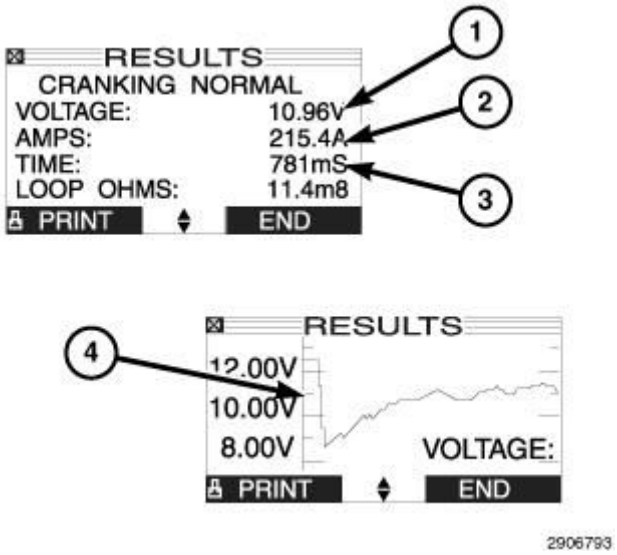

Fig. 20: Test Results-Starter System Example
Courtesy of CHRYSLER GROUP, LLC

1. Average cranking voltage
2. Average cranking current if amp clamp is used
3. Cranking time in seconds
4. Y axis = System performance: cranking voltage

IGNITION-OFF DRAW TEST

The term Ignition-Off Draw (IOD) identifies a normal condition where power is being drained from the battery with the ignition switch in the Off position. A normal vehicle electrical system will draw from five to thirty-five milliamperes (0.005 to 0.035 ampere) with the ignition switch in the Off position, and all non-ignition controlled circuits in proper working order. Up to thirty-five milliamperes are needed to enable the memory functions for the Powertrain Control Module (PCM), digital clock, electronically tuned radio, and other modules which may vary with the vehicle equipment.

A vehicle that has not been operated for approximately twenty days, may discharge the battery to an inadequate level. When a vehicle will not be used for twenty days or more (stored), remove the IOD fuse from the Junction Block (JB). This will reduce battery discharging.

Excessive IOD can be caused by:

- Electrical items left on.

- Inoperative or improperly adjusted switches.
- Inoperative or shorted electronic modules and components.
- An internally shorted generator.
- Intermittent shorts in the wiring.

If the IOD is over thirty-five milliamperes, the problem must be found and corrected before replacing a battery. In most cases, the battery can be charged and returned to service after the excessive IOD condition has been corrected.

1. Verify that all electrical accessories are off. Turn off all lamps, remove the ignition key, and close all doors. If the vehicle is equipped with an illuminated entry system or an electronically tuned radio, allow the electronic timer function of these systems to automatically shut off (time out). This may take up to ten minutes. See the Electronic Module Ignition-Off Draw Table for more information.

ELECTRONIC MODULE IGNITION-OFF DRAW (IOD) TABLE

ELECTRONIC MODULE IGNITION-OFF DRAW (IOD) TABLE			
Module	**Time Out? (If Yes, Interval And Wake-Up Input)**	**IOD**	**IOD After Time Out**
Radio	No	1 to 3 milliamperes	N/A
Audio Power Amplifier	No	up to 1 milliampere	N/A
Powertrain Control Module (PCM)	No	0.95 milliampere	N/A
Cabin Compartment Node (CCN)	No	0.44 milliampere	N/A

2. Determine that the underhood lamp is operating properly, then disconnect the lamp wire harness connector or remove the lamp bulb.
3. Turn off all electrical accessories.
4. Disconnect the battery negative cable.

CAUTION: Do not open any doors, or turn on any

electrical accessories with the lowest milliampere scale selected, or the multi-meter may be damaged.

5. Connect a 10 amp fused jumper wire between the negative battery cable and the negative battery post.
6. Turn the ignition key ON and then OFF and wait 10 minutes for all systems to enter sleep mode.

NOTE: Do not break the connection between the 10 amp fused jumper wire and the battery. If the connection between the battery negative terminal post and the negative cable terminal clamp is lost during any part of the IOD test, the electronic timer function will be activated and all of the tests will have to be repeated.

7. Set an electronic digital multi-meter to its highest amperage scale. Connect the multi-meter to the battery negative cable terminal clamp and the battery negative terminal post, but not on the jumper connection.
8. Remove the 10 amp jumper wire without breaking the digital multi-meter connection.
9. The multi-meter leads must be securely clamped to the battery negative cable terminal clamp and the battery negative terminal post, but not the 10 amp jumper wire.
10. The high-amperage IOD reading on the multi-meter should be very low or nonexistent, depending upon the electrical equipment in the vehicle. If the amperage reading remains high, remove and replace each fuse or circuit breaker in the TIPM, one at a time until the amperage reading becomes very low, or nonexistent. Refer to the appropriate wiring information for complete TIPM, circuit breaker, and circuit identification. This will isolate each circuit and identify the circuit that is the source of the high-amperage IOD. If the amperage reading remains high after removing and replacing each fuse, disconnect the wire harness from the generator. If the amperage reading now becomes very low or nonexistent, diagnose and repair the Charging System as necessary. After the high-amperage IOD has been corrected, switch the multi-meter to progressively lower amperage scales and, if necessary, repeat the fuse and circuit breaker remove-and-replace process to identify and correct all sources of excessive IOD. It is now safe to

select the lowest milliampere scale of the multi-meter to check the low-amperage IOD.

11. Observe the multi-meter reading. The low-amperage IOD should not exceed thirty-five milliamperes (0.035 ampere). If the current draw exceeds thirty-five milliamperes, isolate each circuit using the fuse and circuit breaker remove-and-replace process in. Go to 10. The multi-meter reading will drop to within the acceptable limit when the source of the excessive current draw is disconnected. Repair this circuit as required; whether a wiring short, incorrect switch adjustment, or an inoperative component is the cause.

OPEN-CIRCUIT VOLTAGE TEST

A battery open-circuit voltage (no load) test will show the approximate state-of-charge of a battery.

Before proceeding with this test, completely charge the battery. Refer **STANDARD PROCEDURE** .

1. Before measuring the open-circuit voltage, the surface charge must be removed from the battery. Turn on the headlamps for fifteen seconds, then allow up to five minutes for the battery voltage to stabilize.
2. Disconnect and isolate both battery cables, negative cable first.
3. Using a voltmeter connected to the battery posts (see the instructions provided by the manufacturer of the voltmeter), measure the open-circuit voltage.

See the Open-Circuit Voltage Table. This voltage reading will indicate the battery state-of-charge, but will not reveal its cranking capacity. If a battery has an open-circuit voltage reading of 12.4 volts or greater, it may be load tested to reveal its cranking capacity.

OPEN CIRCUIT VOLTAGE TABLE

OPEN CIRCUIT VOLTAGE TABLE	
Open Circuit Voltage	**Charge Percentage**
11.7 volts or less	0%
12.0 volts	25%
12.2 volts	50%
12.4 volts	75%

12.6 volts or more	100%

REMOVAL

REMOVAL

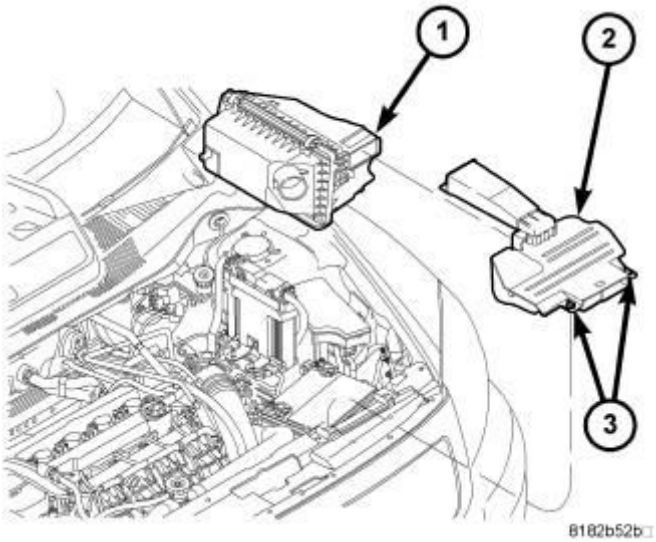

Fig. 21: Air Cleaner Box And Snorkel
Courtesy of CHRYSLER GROUP, LLC

WARNING: To protect the hands from battery acid, a suitable pair of heavy duty rubber gloves should be worn when removing or servicing a battery. Safety glasses also should be worn.

WARNING: Remove metallic jewelry to avoid injury by accidental arcing of battery current.

1. Rotate the two retaining clips (3) and remove the air cleaner fresh air duct (2).

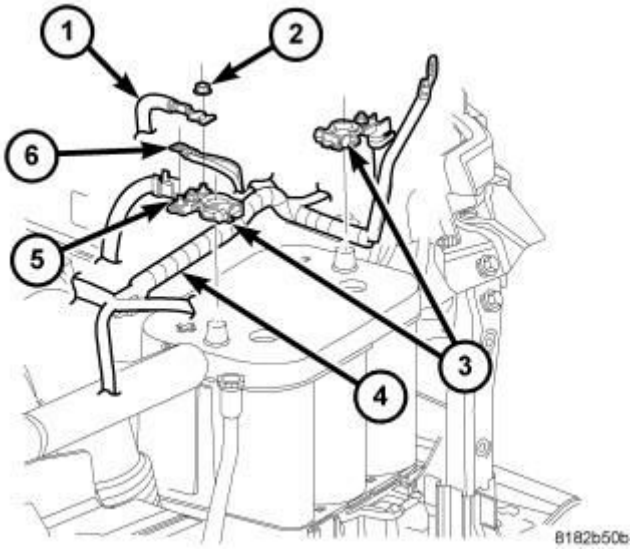

Fig. 22: Removing/Installing Battery
Courtesy of CHRYSLER GROUP, LLC

WARNING: The battery negative and positive cable polarity are different from the gasoline engine equipped vehicles to the diesel engine equipped vehicles. Please note the location of the positive and negative cables prior to service of the battery or related components.

NOTE: Diesel battery shown, gasoline battery similar.

2. Disconnect and isolate the battery negative cable then the positive cable (3).

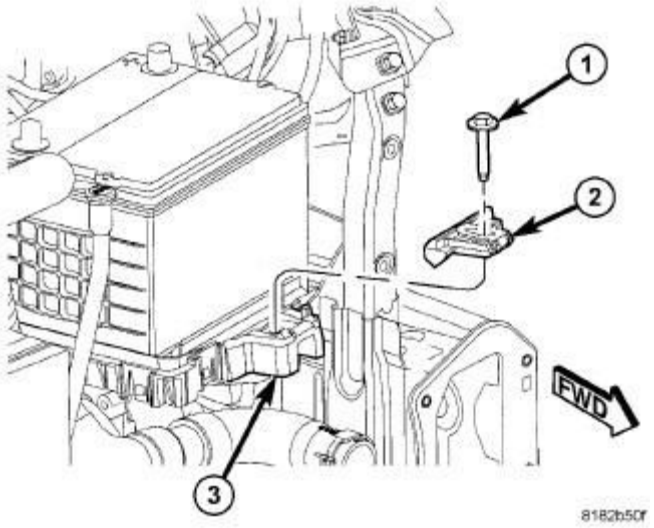

Fig. 23: Identifying Battery Tray, Bolt, & Retainer
Courtesy of CHRYSLER GROUP, LLC

3. Loosen bolt (1) and retainer (2) that holds the battery down to the tray (3).
4. Lift battery out of battery tray and remove from vehicle.
5. Remove thermal guard (if equipped) from battery.

INSTALLATION

INSTALLATION

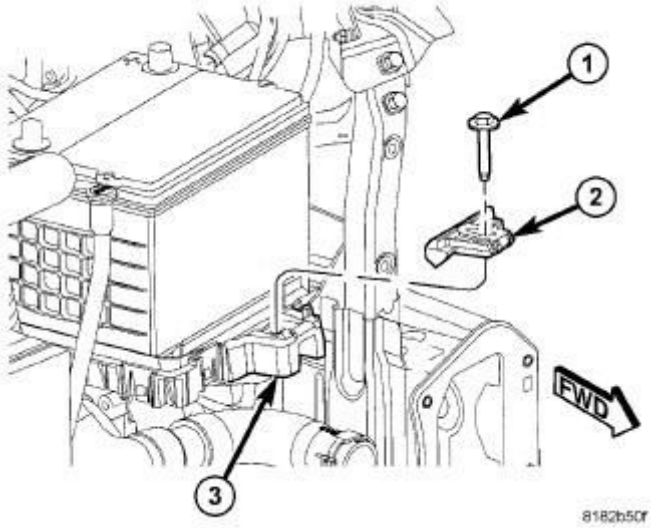

Fig. 24: Identifying Battery Tray, Bolt, & Retainer
Courtesy of CHRYSLER GROUP, LLC

WARNING: To protect the hands from battery acid, a suitable pair of heavy duty rubber gloves should be worn when removing or servicing a battery. Safety glasses also should be worn.

WARNING: Remove metallic jewelry to avoid injury by accidental arcing of battery current.

NOTE: When replacing battery, the thermal guard MUST be transferred to the new battery (if equipped).

1. Install battery in vehicle making sure that the thermal guard (if equipped) is present and battery is properly positioned on battery tray (3).

2. Install the battery hold down retainer (2) and bolt (1) making sure that it is properly positioned on battery. Tighten the hold down bolt to 7 N.m (62 in. lbs.)

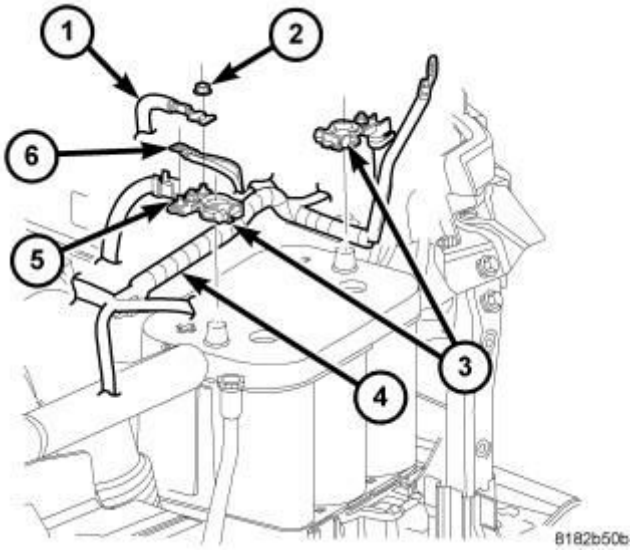

Fig. 25: Removing/Installing Battery
Courtesy of CHRYSLER GROUP, LLC

WARNING: **The battery negative and positive cable polarity are different from the gasoline engine equipped vehicles to the diesel engine equipped vehicles. Please note the location of the positive and negative cables prior to service of the battery or related components.**

NOTE: Diesel battery shown, gasoline battery similar.

3. Connect the battery positive cable then the negative cable (3).
4. Tighten the cable clamp nuts to 5 N.m (45 in. lbs.).

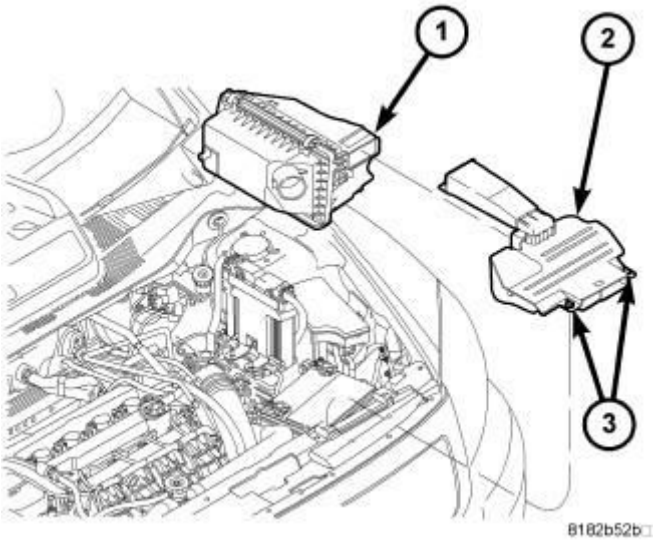

Fig. 26: Air Cleaner Box And Snorkel
Courtesy of CHRYSLER GROUP, LLC

5. Install the air cleaner fresh air duct (2) and secure in place by rotating the two retaining clips (3).
6. Verify proper vehicle operation.

CABLES, BATTERY

DESCRIPTION

DESCRIPTION

The battery cables are large gauge, stranded copper wires sheathed within a heavy plastic or synthetic rubber insulating jacket. The wire used in the battery cables combines excellent flexibility and reliability with high electrical current carrying capacity. The battery cables feature a clamping type female battery terminal made of stamped sheet metal that is die cast onto one end of the battery cable wire. A pinch-bolt and nut are installed at the open end of the female battery terminal clamp. Large eyelet type terminals are crimped onto the opposite end of the battery cable wire and then soldered. The battery positive cable wires feature a larger female battery terminal clamp to allow connection to the larger battery positive terminal post. The battery negative cable wires have a smaller female battery terminal clamp.

Both the battery positive and negative cables are available for service replacement only as a unit with the battery wire harness, which may include portions of the wiring circuits for the generator and other components on some

vehicles.

OPERATION

OPERATION

The battery cables connect the battery terminal posts to the vehicle electrical system. These cables also provide a path back to the battery for electrical current generated by the charging system for restoring the voltage potential of the battery. The female battery terminal clamps on the ends of the battery cable wires provide a strong and reliable connection of the battery cable to the battery terminal posts. The terminal pinch bolts allow the female terminal clamps to be tightened around the male terminal posts on the top of the battery. The eyelet terminals secured to the opposite ends of the battery cable wires from the female battery terminal clamps provide secure and reliable connection of the battery cables to the vehicle electrical system.

One wire has an eyelet terminal that connects the battery positive cable to the B (+) terminal stud of the Totally Integrated Power Module (TIPM), and the other wire has an eyelet terminal that connects the battery positive cable to the B(+) terminal stud of the engine starter motor solenoid. The battery negative cable terminal clamp has one wire as an eyelet terminal that connects the battery negative cable to the vehicle powertrain through a ground connection, typically on the engine cylinder block.

DIAGNOSIS AND TESTING

DIAGNOSIS AND TESTING - BATTERY CABLES

A voltage drop test will determine if there is excessive resistance in the battery cable terminal connections or the battery cable. If excessive resistance is found in the battery cable connections, the connection point should be disassembled, cleaned of all corrosion or foreign material, then reassembled. Following reassembly, check the voltage drop for the battery cable connection and the battery cable again to confirm repair.

When performing the voltage drop test, it is important to remember that the voltage drop is giving an indication of the resistance between the two points at which the voltmeter probes are attached. **EXAMPLE:** When testing the resistance of the battery positive cable, touch the voltmeter leads to the battery positive cable terminal clamp and to the battery positive cable eyelet terminal at

the starter solenoid B(+) terminal stud. If you probe the battery positive terminal post and the battery positive cable eyelet terminal at the starter solenoid B(+) terminal stud, you are reading the combined voltage drop in the battery positive cable terminal clamp-to-terminal post connection and the battery positive cable.

VOLTAGE DROP TEST

The following operation will require a voltmeter accurate to 1/10 (0.10) volt. Before performing this test, be certain that the following procedures are accomplished:

- The battery is fully-charged and load tested. Refer to **STANDARD PROCEDURE** for the proper battery charging and load test procedures.
- Fully engage the parking brake.
- If the vehicle is equipped with an automatic transmission, place the gearshift selector lever in the Park position. If the vehicle is equipped with a manual transmission, place the gearshift selector lever in the Neutral position and block the clutch pedal in the fully depressed position.
- Verify that all lamps and accessories are turned off.
- To prevent the engine from starting, remove the Automatic Shut Down (ASD) relay. The ASD relay can be found in the Fuse Block located in the left front bumper fascia. See the fuse and relay layout label affixed to the underside of the Fuse Block cover for ASD relay identification and location.

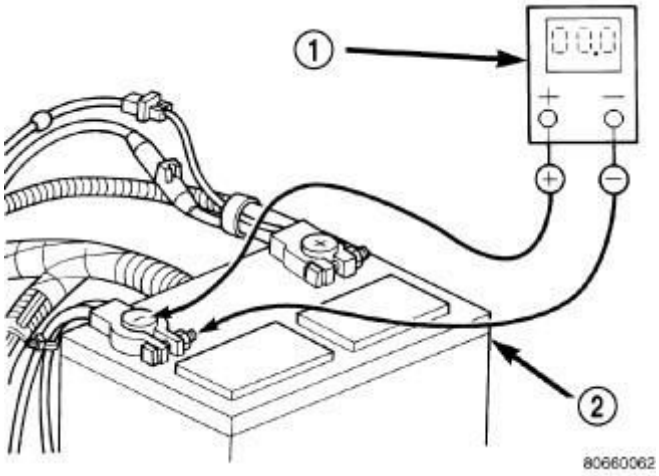

Fig. 27: Connecting Positive Lead Of Voltmeter
Courtesy of CHRYSLER GROUP, LLC

1. Connect the positive lead of the voltmeter (1) to the battery (2) negative terminal post. Connect the negative lead of the voltmeter (1) to the battery

(2) negative cable terminal clamp. Rotate and hold the ignition switch in the Start position. Observe the voltmeter. If voltage is detected, correct the poor connection between the battery negative cable terminal clamp and the battery negative terminal post.

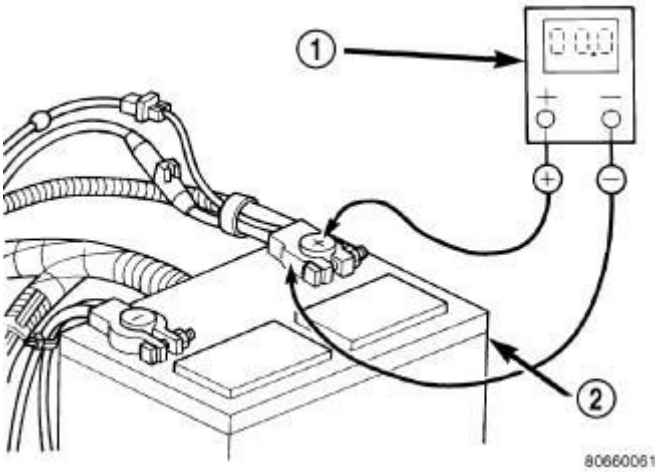

Fig. 28: Connecting Negative Lead Of Voltmeter
Courtesy of CHRYSLER GROUP, LLC

2. Connect the positive lead of the voltmeter (1) to the battery (2) positive terminal post. Connect the negative lead of the voltmeter (1) to the battery (2) positive cable terminal clamp. Rotate and hold the ignition switch in the Start position. Observe the voltmeter. If voltage is detected, correct the poor connection between the battery positive cable terminal clamp and the battery positive terminal post.

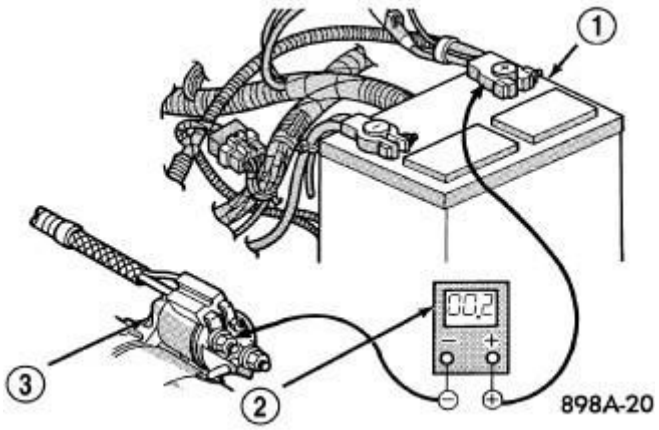

Fig. 29: Voltmeter, Terminal Clamp & Stud←
Courtesy of CHRYSLER GROUP, LLC

3. Connect the voltmeter (2) to measure between the battery positive cable

terminal clamp (1) and the starter solenoid B(+) terminal stud (3). Rotate and hold the ignition switch in the Start position. Observe the voltmeter. If the reading is above 0.2 volt, clean and tighten the battery positive cable eyelet terminal connection at the starter solenoid B(+) terminal stud. Repeat the test. If the reading is still above 0.2 volt, replace the faulty battery positive cable.

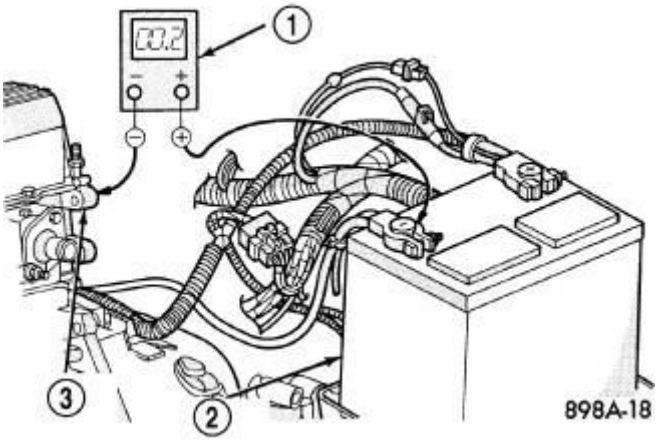

Fig. 30: Voltmeter, Battery & Engine Block
Courtesy of CHRYSLER GROUP, LLC

4. Connect the voltmeter (1) to measure between the battery (2) negative cable terminal clamp and a good clean ground on the engine block (3). Rotate and hold the ignition switch in the Start position. Observe the voltmeter. If the reading is above 0.2 volt, clean and tighten the battery negative cable eyelet terminal connection to the engine block. Repeat the test. If the reading is still above 0.2 volt, replace the faulty battery negative cable.

REMOVAL

REMOVAL

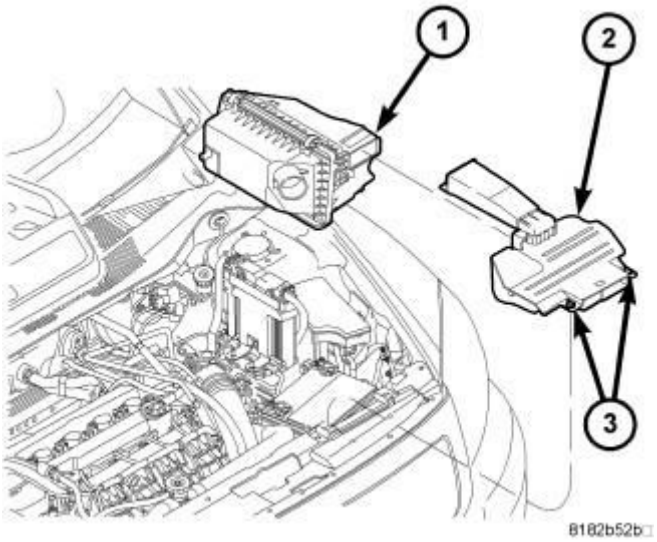

Fig. 31: Air Cleaner Box And Snorkel
Courtesy of CHRYSLER GROUP, LLC

1. Rotate the two retaining clips (3) and remove the air cleaner fresh air duct (2).

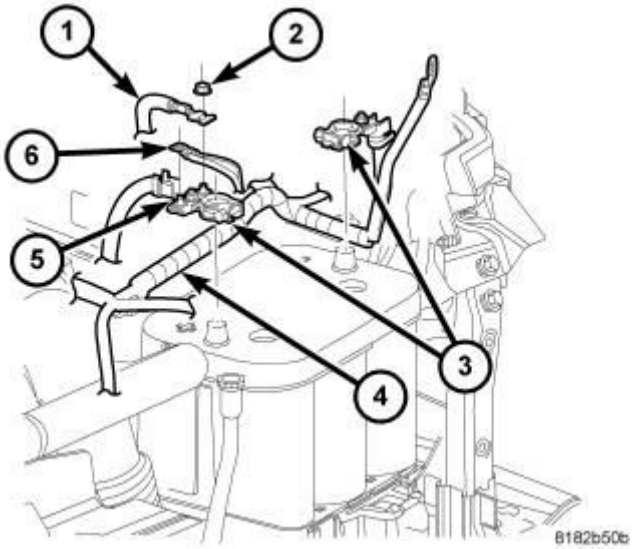

Fig. 32: Removing/Installing Battery
Courtesy of CHRYSLER GROUP, LLC

WARNING: **The battery negative and positive cable polarity are different from the gasoline engine equipped vehicles to the diesel engine equipped vehicles. Please note the location of the positive and negative cables prior to service of the battery or related components.**

NOTE: Diesel battery shown, gasoline battery similar.

2. Disconnect and isolate the battery negative cable then the positive cable (3).
3. Remove the nut (2) securing the Totally Integrated Power Module (TIPM) cable (1) to the battery clamp stud (5).

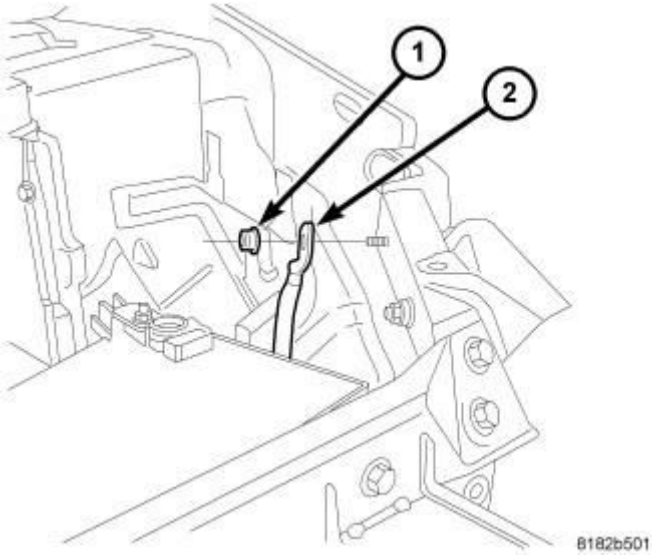

Fig. 33: Identifying Negative Cable
Courtesy of CHRYSLER GROUP, LLC

4. Remove the nut (1) securing the negative cable (2) to the body ground stud.

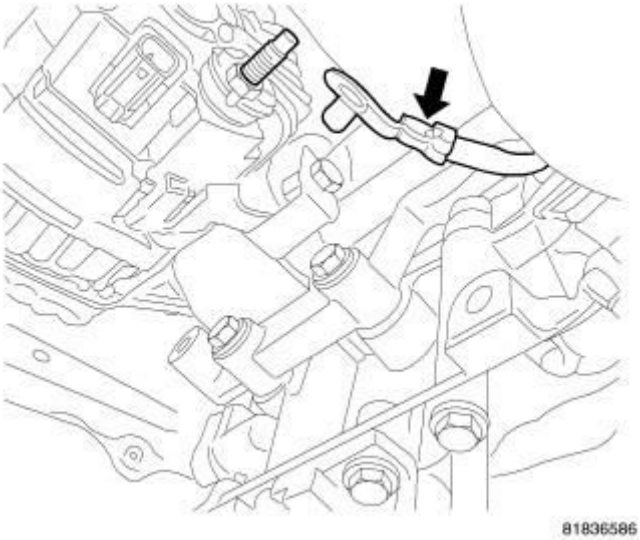

Fig. 34: Battery Cable Connection
Courtesy of CHRYSLER GROUP, LLC

5. Remove the battery cable from the B+ terminal of the generator.

6. Remove the battery cable from the B+ terminal of the starter motor.
7. One at a time, trace the battery cable retaining pushpins, fasteners and routing clips until the cables are free from the vehicle.
8. Remove the battery cables from the engine compartment.

INSTALLATION

INSTALLATION

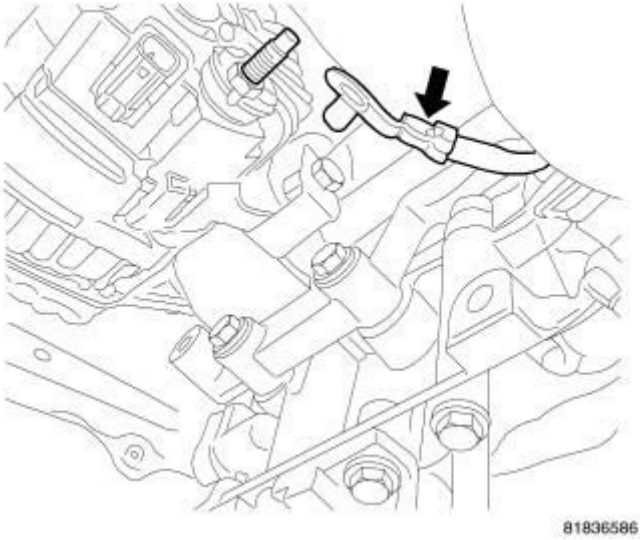

Fig. 35: Battery Cable Connection
Courtesy of CHRYSLER GROUP, LLC

1. Position the battery cables in the engine compartment.
2. One at a time, install the battery cable retaining pushpins, fasteners and routing clips until the cables are installed exactly where they were in the vehicle.
3. Connect the battery cable to the B+ terminal of the starter motor. Tighten the cable nut to 13 N.m (115 in. lbs.).
4. Connect the battery cable to the B+ terminal of the generator. Tighten the cable nut to 14 N.m (125 in. lbs.).

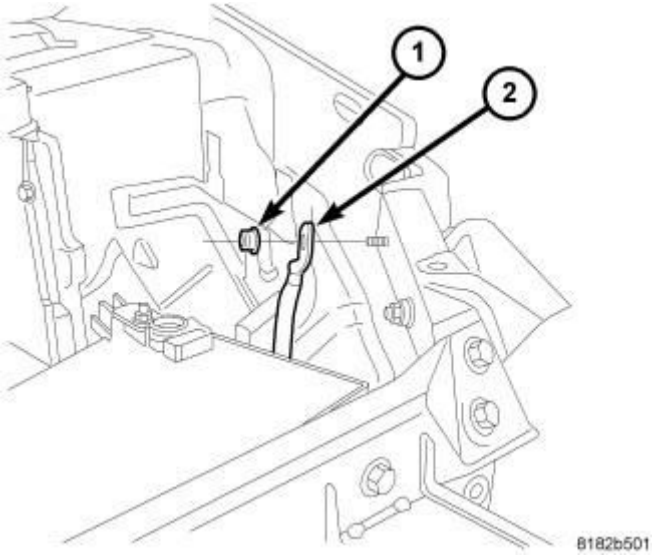

Fig. 36: Identifying Negative Cable
Courtesy of CHRYSLER GROUP, LLC

5. Install the nut (1) securing the negative cable (2) to the body ground stud. Tighten the cable nut to 12 N.m (9 ft. lbs.).

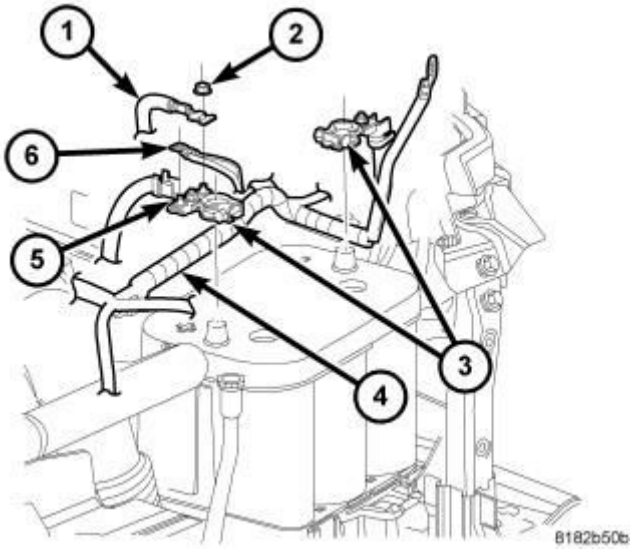

Fig. 37: Removing/Installing Battery
Courtesy of CHRYSLER GROUP, LLC

WARNING: **The battery negative and positive cable polarity are different from the gasoline engine equipped vehicles to the diesel engine equipped vehicles. Please note the location of the positive and negative cables prior to service of the battery or related components.**

NOTE: Diesel battery shown, gasoline battery similar.

6. Connect the battery positive cable then the negative cable (3).
7. Tighten the cable clamp nuts to 5 N.m (45 in. lbs.).
8. Install the nut (2) securing the Totally Integrated Power Module (TIPM) cable (1) to the battery clamp stud (5).

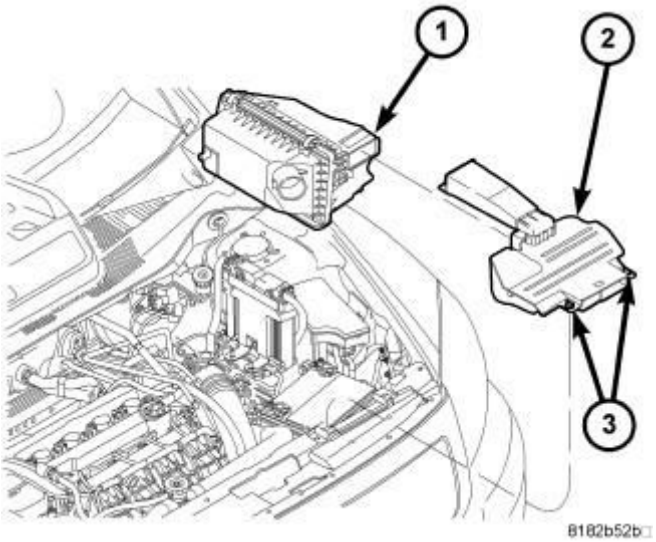

Fig. 38: Air Cleaner Box And Snorkel
Courtesy of CHRYSLER GROUP, LLC

9. Install the air cleaner fresh air duct (2) and secure in place by rotating the two retaining clips (3).

COVER, BATTERY, THERMOGUARD

DESCRIPTION

DESCRIPTION

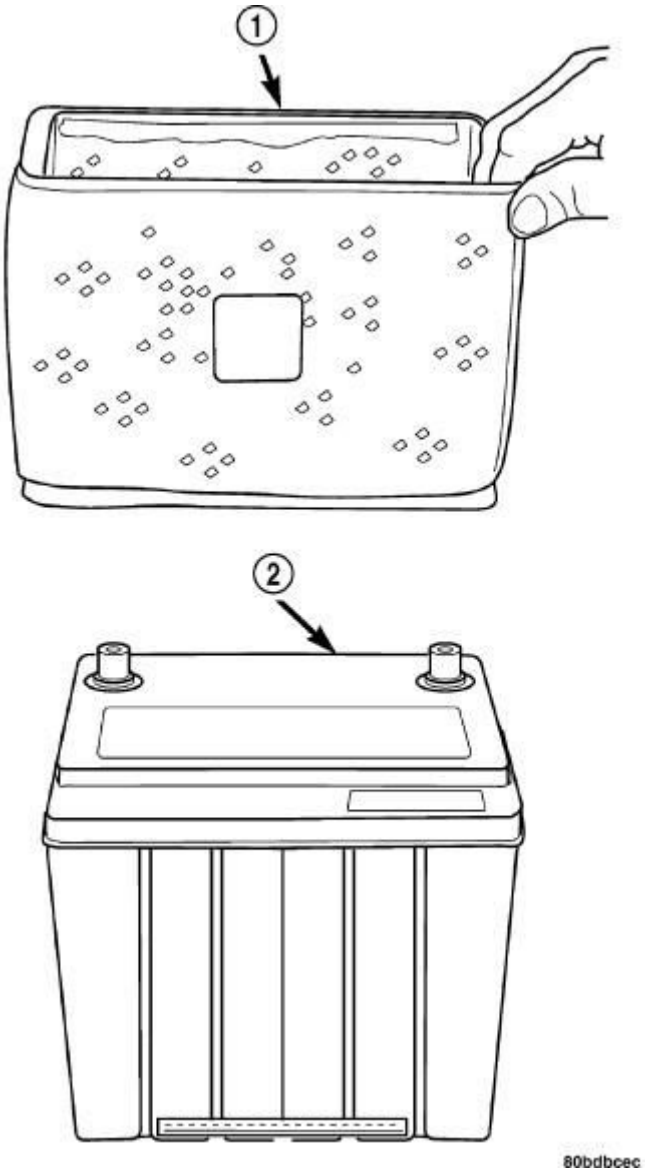

Fig. 39: Identifying Battery Case & Thermal Guard
Courtesy of CHRYSLER GROUP, LLC

On gasoline engine equipped vehicles, a flexible thermal guard wraps around the battery case (2) to enclose the sides of the battery. The thermal guard (1) consists of a plastic cloth outer skin with a polyester based insulator fiber.

REMOVAL

REMOVAL

WARNING: To protect the hands from battery acid, a suitable pair of heavy duty rubber gloves, not the household type, should be worn when removing or servicing a battery. Safety glasses also should

be worn.

1. Disconnect and isolate the battery negative cable.
2. Remove the battery. Refer to **BATTERY, REMOVAL**.
3. Carefully lift the thermal guard off over the battery taking care not to tear it.
4. Remove the thermal guard from battery.

INSTALLATION

INSTALLATION

NOTE: When replacing battery, the thermal guard MUST be transferred to the new battery.

1. Slip the battery thermal guard over the battery being careful not to tear it.
2. Install the battery into the vehicle. Refer to **BATTERY, INSTALLATION**.
3. Connect the battery negative cable.

RETAINER, BATTERY

REMOVAL

REMOVAL

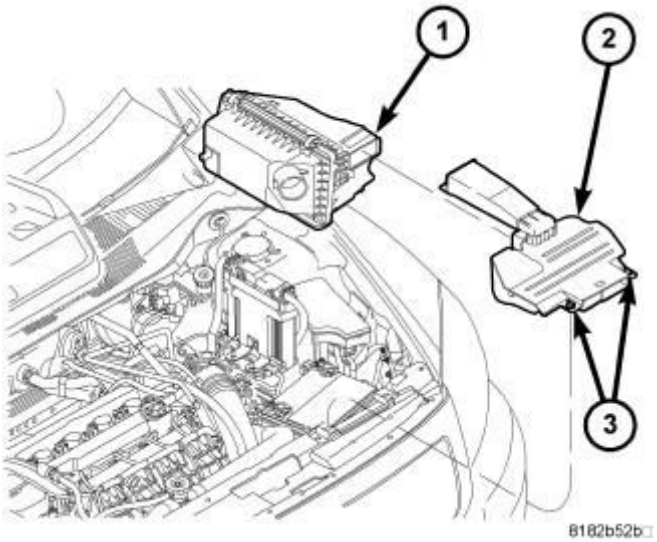

Fig. 40: Air Cleaner Box And Snorkel
Courtesy of CHRYSLER GROUP, LLC

1. Disconnect and isolate the battery negative cable.

2. Rotate the two retaining clips (3) and remove the air cleaner fresh air duct (2).

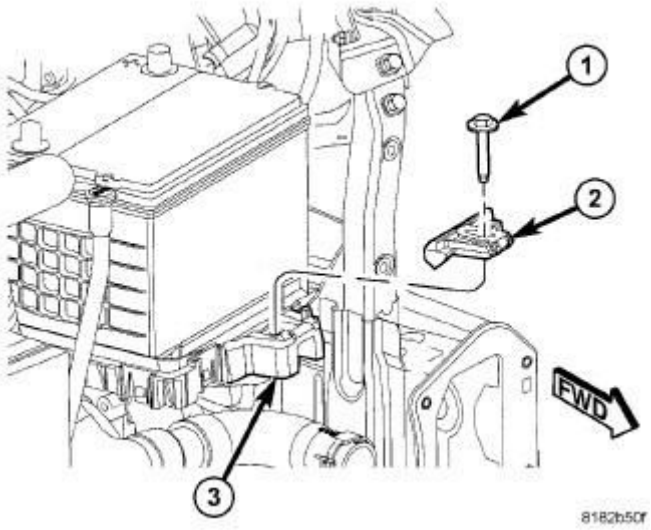

Fig. 41: Identifying Battery Tray, Bolt, & Retainer
Courtesy of CHRYSLER GROUP, LLC

3. Remove the battery hold down retaining bolt (1).
4. Remove the battery hold down (2) from the vehicle.

INSTALLATION

INSTALLATION

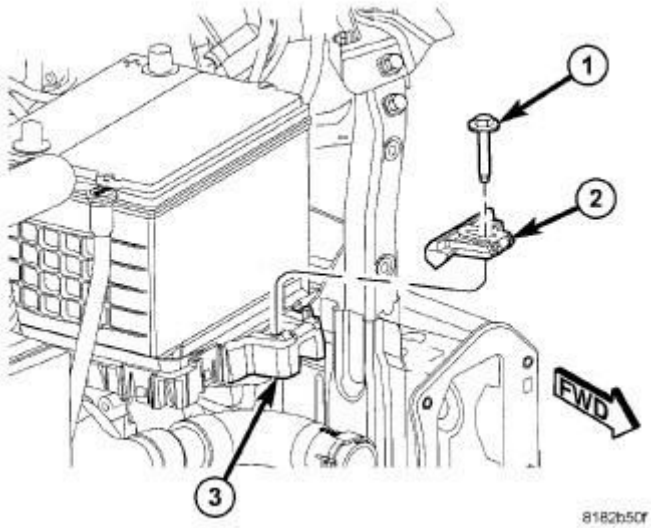

Fig. 42: Identifying Battery Tray, Bolt, & Retainer

Courtesy of CHRYSLER GROUP, LLC

1. Install the battery hold down (2) into the vehicle.
2. Install the battery hold down retaining bolt (1). Tighten the bolt to 7 N.m (62 in. lbs.).

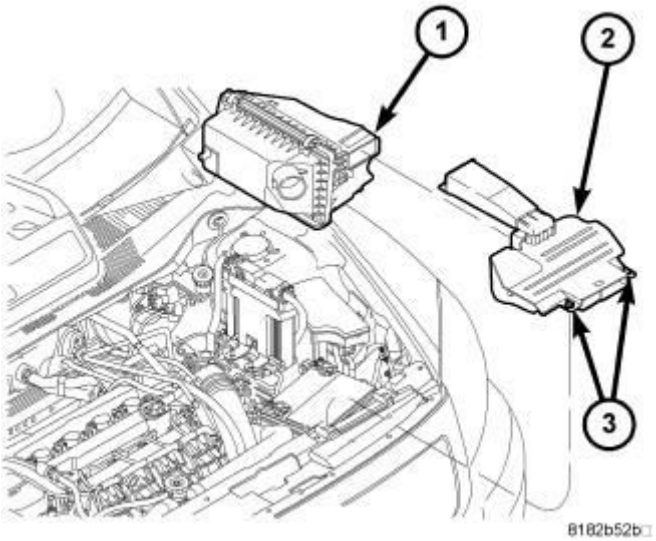

Fig. 43: Air Cleaner Box And Snorkel
Courtesy of CHRYSLER GROUP, LLC

3. Install the air cleaner fresh air duct (2) and secure in place by rotating the two retaining clips (3).
4. Connect the battery negative cable.

TRAY, BATTERY

DESCRIPTION

DESCRIPTION

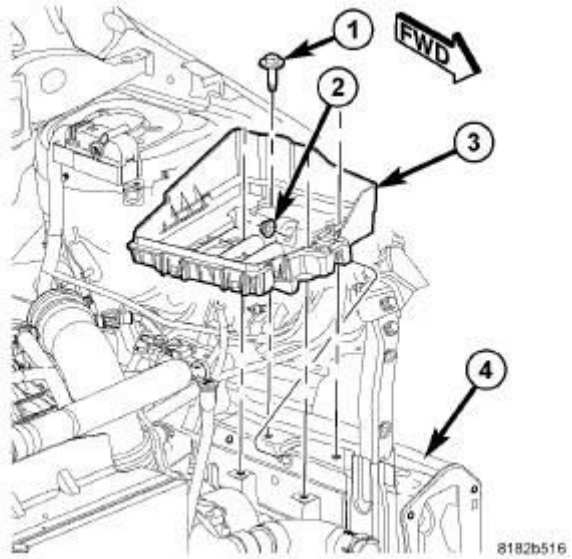

Fig. 44: Identifying Battery Tray, Nut, & Bolts
Courtesy of CHRYSLER GROUP, LLC

The battery is placed and secured in a plastic battery tray (3). The battery tray is located in the left front side of the vehicle and is secured in place by one nut (2) and four bolts (1).

REMOVAL

REMOVAL

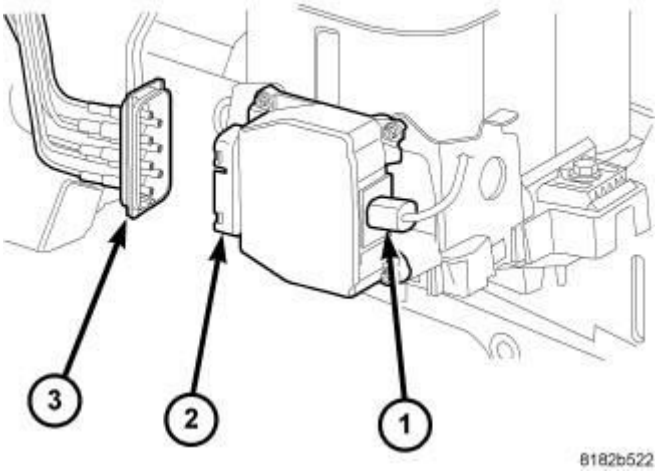

Fig. 45: View Of Electrical Connector, Diesel Vacuum Valve & Vacuum Connector
Courtesy of CHRYSLER GROUP, LLC

1. Disconnect and isolate the battery negative cable.
2. On diesel engine equipped vehicles disconnect the vacuum connector (3) and electrical connector (1) from the diesel vacuum valve (2).

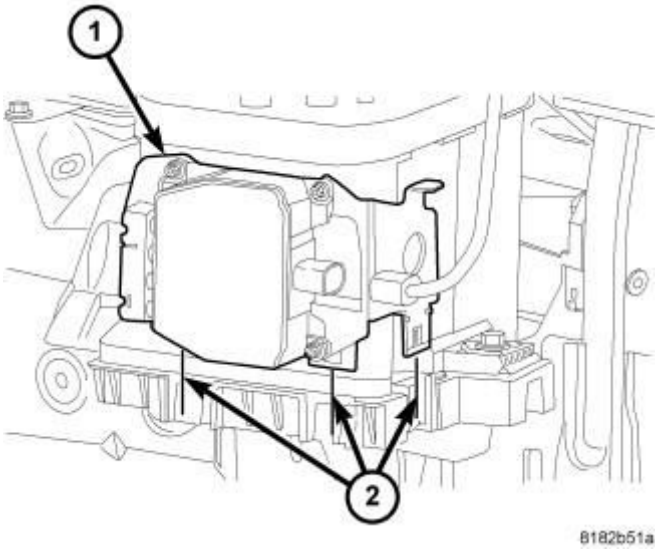

Fig. 46: Identifying Diesel Vacuum Valve Bracket With Mounting Tabs & Battery Tray With Receptacles
Courtesy of CHRYSLER GROUP, LLC

3. On diesel engine equipped vehicles lift the diesel vacuum valve bracket (1) up disengaging the mounting tabs from the receptacles (2) in the battery tray.

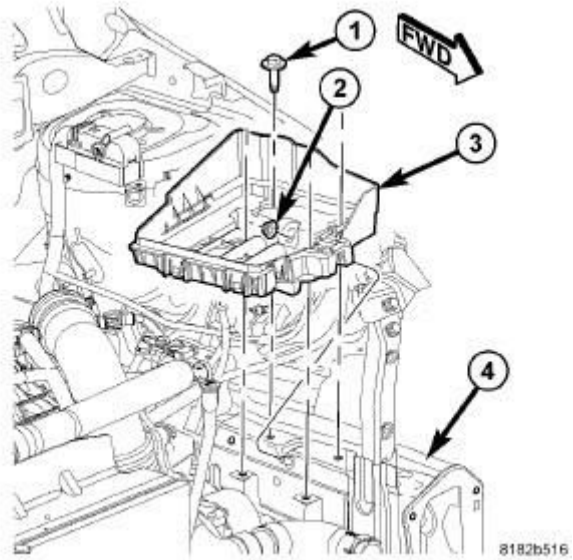

Fig. 47: Identifying Battery Tray, Nut, & Bolts
Courtesy of CHRYSLER GROUP, LLC

4. Remove the battery. Refer to **BATTERY, REMOVAL**.
5. Remove the four bolts (1) and one nut (2) securing the battery tray (3) to the left frame rail (4).
6. Lift the battery tray out of the engine compartment and remove from the vehicle.

INSTALLATION

INSTALLATION

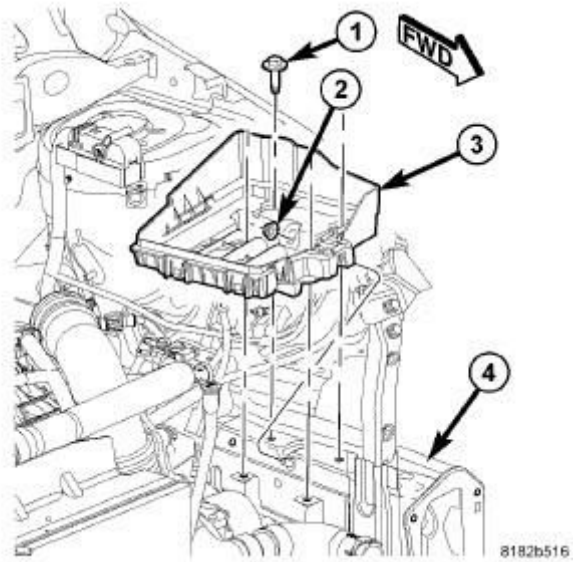

Fig. 48: Identifying Battery Tray, Nut, & Bolts
Courtesy of CHRYSLER GROUP, LLC

1. Place the battery tray (3) into the engine compartment over the left frame rail (4).
2. Install the one nut (2) and four bolts (1) securing the battery tray (3) to the frame rail (4).
3. Tighten the nut to 10.5 N.m (93 in. lbs.).
4. Tighten the bolts to 10.5 N.m (93 in. lbs.).
5. Install the battery. Refer to **BATTERY, INSTALLATION**.

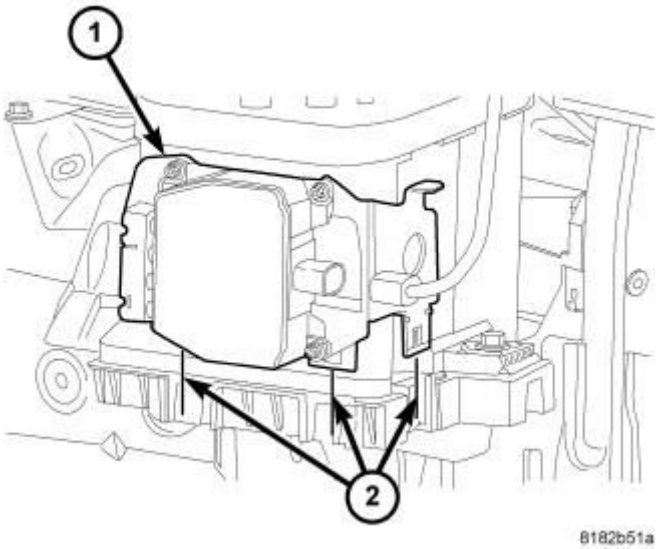

Fig. 49: Identifying Diesel Vacuum Valve Bracket With Mounting Tabs & Battery Tray With Receptacles
Courtesy of CHRYSLER GROUP, LLC

6. On diesel engine equipped vehicles install the diesel vacuum valve. Push the bracket (1) down until the mounting tabs are completely seated into the receptacles (2) in the battery tray.

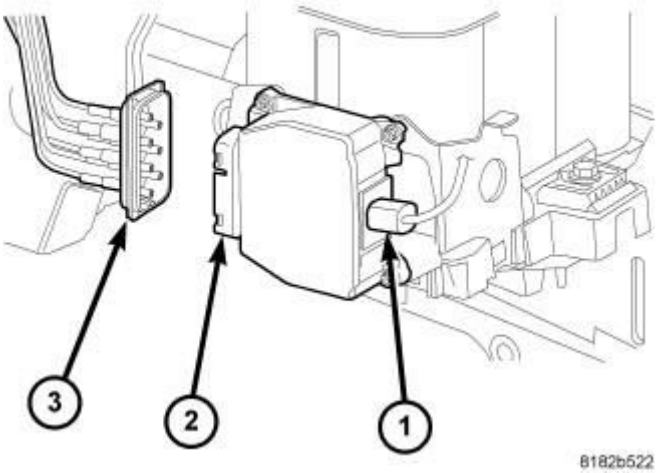

Fig. 50: View Of Electrical Connector, Diesel Vacuum Valve & Vacuum Connector
Courtesy of CHRYSLER GROUP, LLC

7. On diesel engine equipped vehicles connect the vacuum connector (3) and electrical connector (1) to the diesel vacuum valve (2).
8. Connect the battery negative cable.

2014 ELECTRICAL

Charging - Service Information - Compass & Patriot

DESCRIPTION

DESCRIPTION

The charging system consists of:

- Generator
- Decoupler Pulley (If equipped)
- Electronic Voltage Regulator (EVR) circuitry within the Powertrain Control Module (PCM)
- Ignition switch (refer to **IGNITION SYSTEM - SERVICE INFORMATION** for information)
- Battery (refer to **BATTERY** for information)
- Inlet Air Temperature
- Voltmeter (refer to **INSTRUMENT CLUSTER - SERVICE INFORMATION** for information if equipped)
- Wiring harness and connections (refer to **SYSTEM WIRING DIAGRAMS** for information)
- Accessory drive belt (refer to **ACCESSORY DRIVE** for more information)
- Clutch Pulley (If equipped)
- Electronic Voltage Regulator (EVR) circuitry internally regulated for the diesel application.

OPERATION

OPERATION

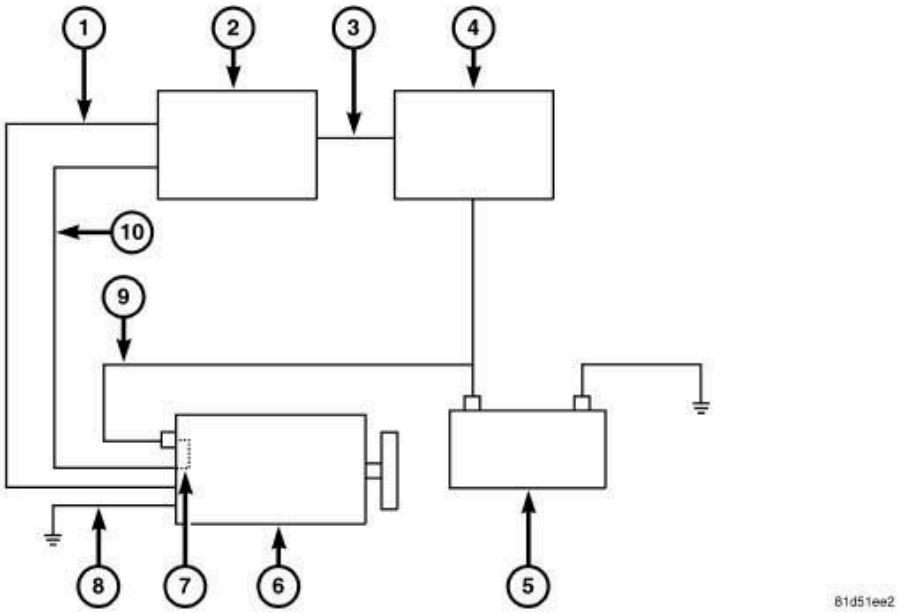

Fig. 1: Charging System Operation
Courtesy of CHRYSLER GROUP, LLC

1 - Generator Field Circuit
6 - Generator
2 - Powertrain Control Module (PCM)
7 - Resistor (Direct Connection No Resistor on PT Models)
3 - Battery Sense Input
8 - Generator Case Ground
4 - Gateway (Totally Integrated Power Module, Integrated Power Module)
9 - B+ Circuit (Generator Output)
5 - Battery
10 - B+ Sense Circuit

The charging system is turned on and off with the Powertrain Control Module (PCM) (2) and ignition switch with engine running. The field circuit will not be energized until engine is running and ignition switch is on. This voltage is connected through the PCM (2) and supplied to the generator field circuit (1) at the back of the generator (6). The generator (6) is internally grounded through the generator case ground (8). The generator (6) regulates the field using Pin 1 of the field connector (High side driver).

The generator (6) is driven by the engine through a serpentine belt and pulley or decoupler pulley arrangement.

The PCM (2) receives a voltage input from the generator (6) via the B+ sense circuit (10) and also a battery sense input (3) from the Gateway (Totally Integrated Power Module, Integrated Power Module) (4), it then compares the voltages to the desired voltage programed in the Electronic Voltage Regulator (EVR) software and if there is a difference it sends a signal to the generator EVR circuit to increase or decrease output. It uses Pulse Width Modulation (PWM) to send signals to the generator circuitry to control the amount of output from the generator. The amount of DC current produced by the generator is controlled by the EVR circuitry contained within the PCM (2).

All vehicles are equipped with On-Board Diagnostics (OBD). All OBD-sensed systems, including EVR circuitry, are monitored by the PCM. Each monitored circuit is assigned a Diagnostic Trouble Code (DTC). The PCM will store a DTC in electronic memory for certain failures it detects.

The Check Gauges Lamp (if equipped) monitors: **charging system voltage,** engine coolant temperature and engine oil pressure. If an extreme condition is indicated, the lamp will be illuminated. This is done as reminder to check the three gauges. The lamp is located on the instrument panel. Refer to **INSTRUMENT CLUSTER - SERVICE INFORMATION** for additional information.

Voltage is monitored at B+ sense circuit (10) to insure the cable is connected. If the B+ circuit (generator output) (9) cable is loose anywhere in the circuit the B+ sense circuit (10) will show high voltage. This condition causes the PCM (2) to shut down the generator field circuit (1). Because of this feature, pin 2 of the field connector is internally connected to the B+ circuit (9).

The diesel generator is internally regulated. The generator and PCM communicate for diagnostics, etc. If the generator regulator becomes disconnected from the PCM it will operate, but in a default mode.

DIAGNOSIS AND TESTING

DIAGNOSIS AND TESTING - ON-BOARD DIAGNOSTIC SYSTEM

The Powertrain Control Module (PCM) monitors critical input and output circuits of the charging system, making sure they are operational. A Diagnostic Trouble Code (DTC) is assigned to each input and output circuit monitored by the OBD system. Some circuits are checked continuously and some are checked

only under certain conditions.

If the OBD system senses that a monitored circuit is bad, it will put a DTC into electronic memory. The DTC will stay in electronic memory as long as the circuit continues to be bad. The PCM is programmed to clear the memory after 40 good trips if the problem does not occur again.

The following procedures may be used to diagnose the charging system if:

- the check gauges lamp or battery lamp is illuminated with the engine running
- the voltmeter (if equipped) does not register properly
- an undercharged or overcharged battery condition occurs.

Remember that an undercharged battery is often caused by:

- accessories being left on with the engine not running
- a faulty or improperly adjusted switch that allows a lamp to stay on. Refer to **IGNITION-OFF DRAW TEST** .
- loose generator belt.

DIAGNOSTIC TROUBLE CODES

A DTC description can be read using the scan tool. Refer to the appropriate Powertrain Diagnostic Procedures Service Information .

A DTC does not identify which component in a circuit is bad. Thus, a DTC should be treated as a symptom, not as the cause for the problem. In some cases, because of the design of the diagnostic test procedure, a DTC can be the reason for another DTC to be set. Therefore, it is important that the test procedures be followed in sequence, to understand what caused a DTC to be set.

ERASING DIAGNOSTIC TROUBLE CODES

The scan tool must be used to erase a DTC.

INSPECTION

The Powertrain Control Module (PCM) monitors critical input and output circuits of the charging system, making sure they are operational. A Diagnostic Trouble Code (DTC) is assigned to each input and output circuit monitored by

the On-Board Diagnostic (OBD) system. Some charging system circuits are checked continuously, and some are checked only under certain conditions.

Refer to Diagnostic Trouble Codes in; Powertrain Diagnostic Information for more DTC information. This will include a complete list of DTC's including DTC's for the charging system.

To perform a complete test of the charging system, refer to the appropriate Powertrain Diagnostic Information and the scan tool. Perform the following inspections before attaching the scan tool.

1. Inspect the battery condition. Refer to **DIAGNOSIS AND TESTING** .
2. Inspect condition of battery cable terminals, battery posts, connections at engine block, starter solenoid and relay. They should be clean and tight. Repair as required.
3. Inspect all fuses in the fuseblock for tightness in receptacles. They should be properly installed and tight. Repair or replace as required.
4. Inspect generator mounting bolts for tightness. Replace or tighten bolts if required. Refer to **SPECIFICATIONS** for torque specifications.
5. Inspect generator drive belt condition and tension. Tighten or replace belt as required.
6. Inspect decoupler pulley (if equipped). Ensure decoupler pulley is driving the alternator rotor.
7. Inspect automatic belt tensioner (if equipped). Refer to **TENSIONER, BELT** for more information.
8. Inspect generator electrical connections at generator field, battery output, and ground terminal (if equipped). Also check generator ground wire connection at engine (if equipped). They should all be clean and tight. Repair as required.

SPECIFICATIONS

GENERATOR

SPECIFICATIONS TABLE

MANUFACTURER	ENGINE	NOMINAL RATING	MINIMUM OUTPUT (AMPS) (@ SPECIFIED

			TEST CONDITIONS)
MITSUBISHI ELECTRIC	1.8, 2.0, 2.4L	120A	70A
MITSUBISHI ELECTRIC	1.8, 2.0, 2.4L	140A	90A
MITSUBISHI ELECTRIC	2.0L TURBO DIESEL	150A	100A
TEST CONDITIONS			
1. Engine RPM : 2500 RPM (ENGINE HOT)			
2. Voltage Output : 13.0 - 16.0 V			

TORQUE

TORQUE SPECIFICATIONS TABLE

DESCRIPTION	N.m	Ft. Lbs.	In. Lbs.
Battery Terminal Nut	5	-	45
Generator B+ nut	10	-	88.5
Generator Mounting Bolt - GAS (2.0/2.4L)	54	40	-
Generator Mounting Bolt - 2.0L TURBO DIESEL	28	21	-

GENERATOR

DESCRIPTION

DESCRIPTION

The generator is belt-driven by the engine. It is serviced only as a complete assembly. If the generator fails for any reason, the entire assembly must be replaced. The generator produces DC voltage.

OPERATION

OPERATION

As the energized rotor begins to rotate within the generator, the spinning magnetic field induces a current into the windings of the stator coil.

The Y type stator winding connections deliver the induced AC current to positive and negative diodes for rectification. From the diodes, rectified DC current is delivered to the vehicles electrical system through the generator, battery, and ground terminals.

Noise emitting from the generator may be caused by:

- Worn, loose or defective bearings
- Loose or defective drive pulley
- Incorrect, worn, damaged or misadjusted drive belt
- Loose mounting bolts
- Misaligned drive pulley
- Defective stator or diode
- Damaged internal fins

REMOVAL

DIESEL

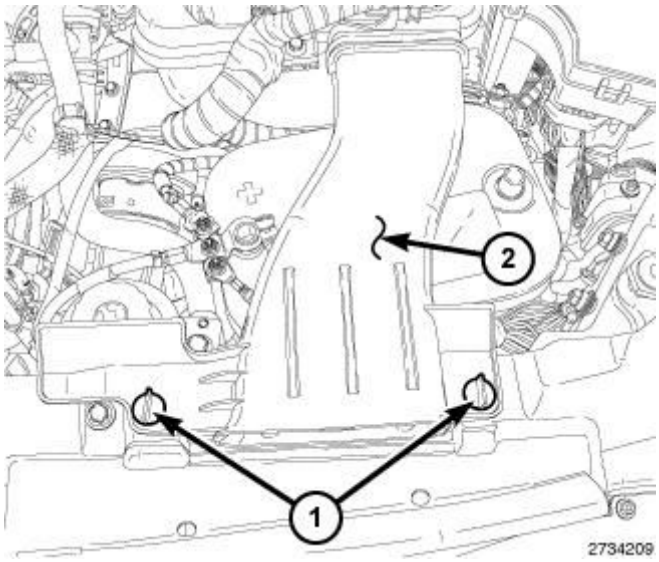

Fig. 2: Identifying Air Inlet Tube
Courtesy of CHRYSLER GROUP, LLC

1. Remove the air inlet tube (2).

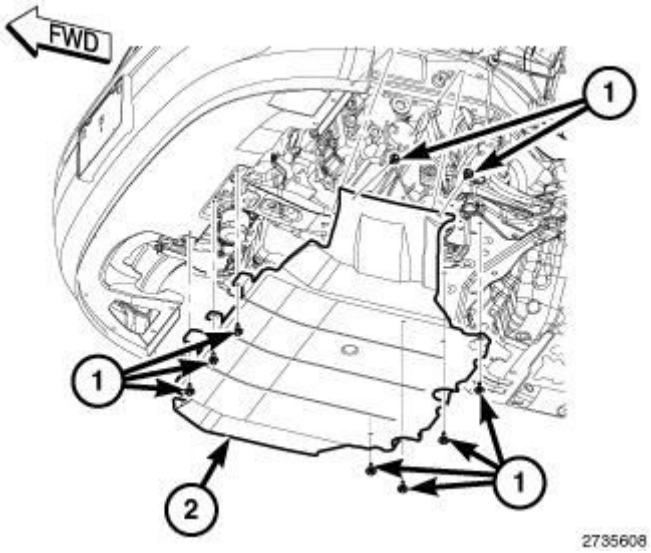

Fig. 3: Identifying Bolts & Belly Pan
Courtesy of CHRYSLER GROUP, LLC

2. Disconnect and isolate the negative battery cable.
3. If equipped, remove the belly pan (2).

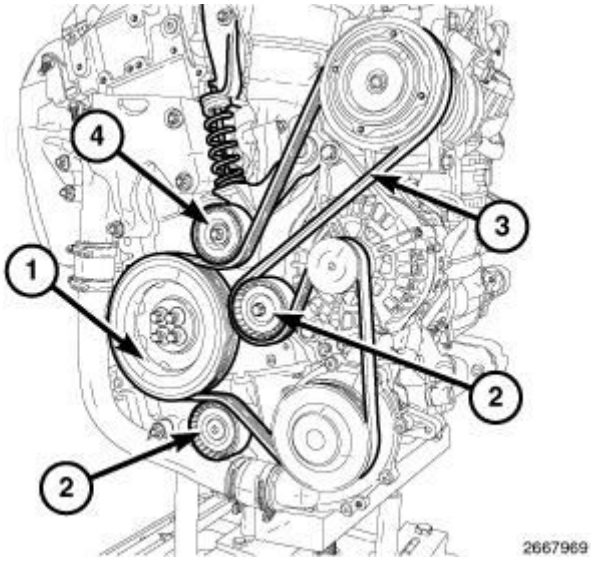

Fig. 4: Identifying Main Drive Belt
Courtesy of CHRYSLER GROUP, LLC

4. Partially drain the radiator. Refer to **STANDARD PROCEDURE** .
5. Remove the serpentine belt (3). Refer to **BELT, SERPENTINE, REMOVAL** .

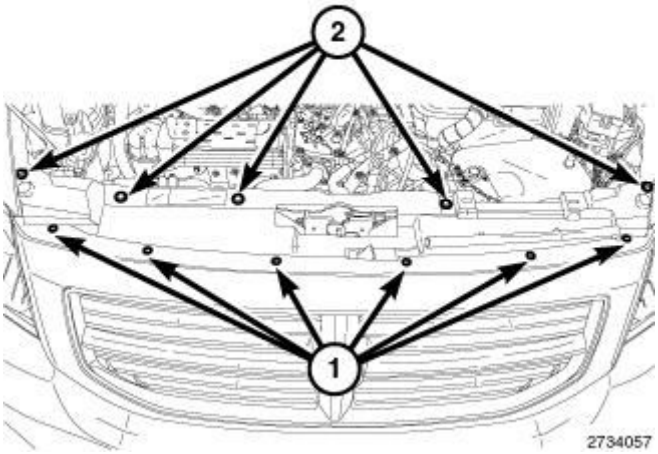

Fig. 5: Identifying Radiator Support Shroud
Courtesy of CHRYSLER GROUP, LLC

6. Remove the radiator support shroud.

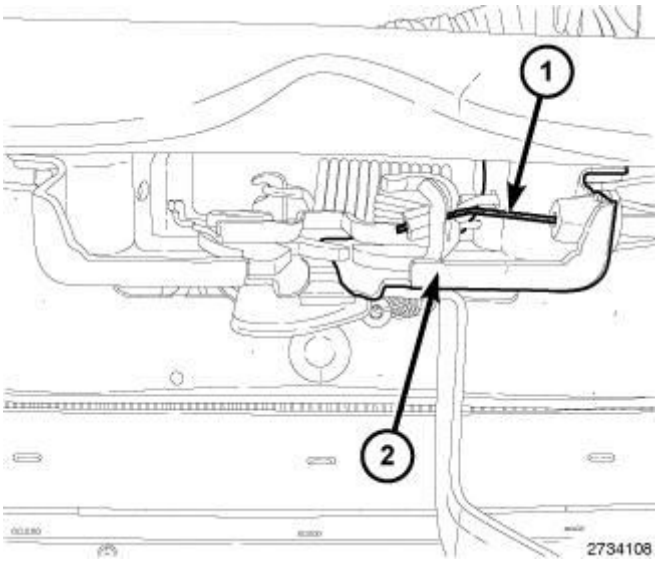

Fig. 6: Identifying Hood Release Cable
Courtesy of CHRYSLER GROUP, LLC

7. Disconnect the hood release cable (2).

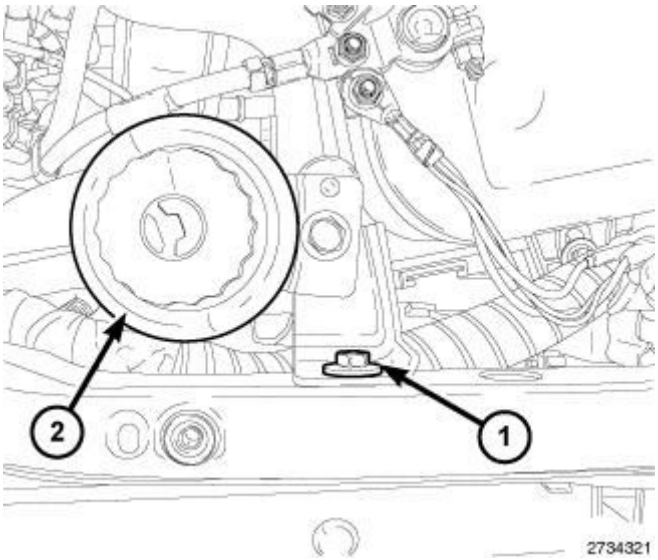

Fig. 7: Identifying Power Steering Reservoir
Courtesy of CHRYSLER GROUP, LLC

8. Remove bolt (1) and position aside the power steering reservoir (2).

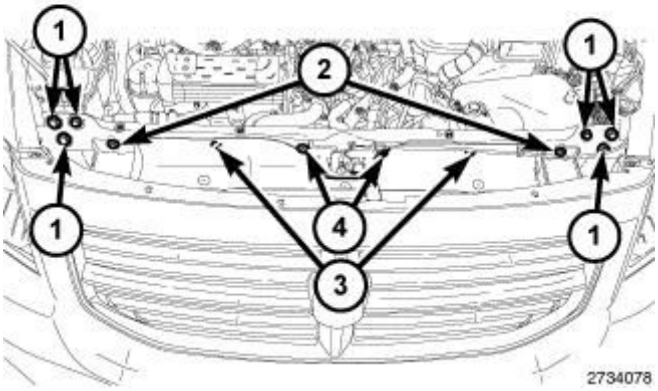

Fig. 8: Upper Core Support Seal Push Pins & Radiator Core Support Bolts
Courtesy of CHRYSLER GROUP, LLC

9. Remove the radiator core support.

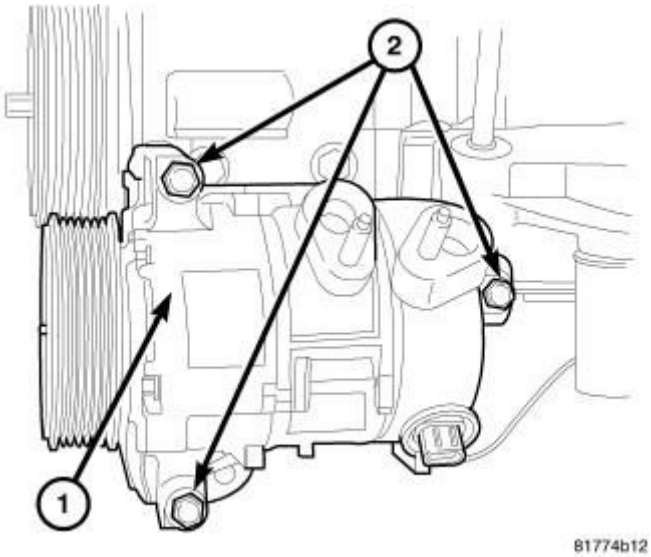

Fig. 9: A/C Compressor-R & I
Courtesy of CHRYSLER GROUP, LLC

10. Remove bolts (2) and position aside the A/C compressor (1).

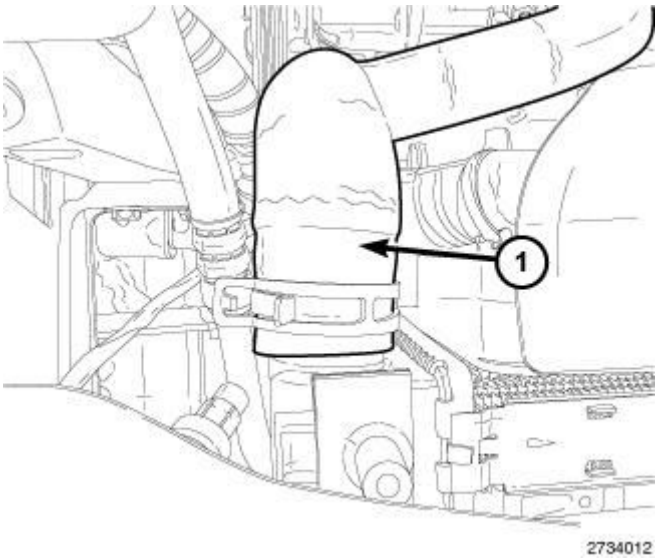

Fig. 10: Identifying Upper Radiator Hose
Courtesy of CHRYSLER GROUP, LLC

11. Disconnect the upper radiator hose (1) from the radiator.

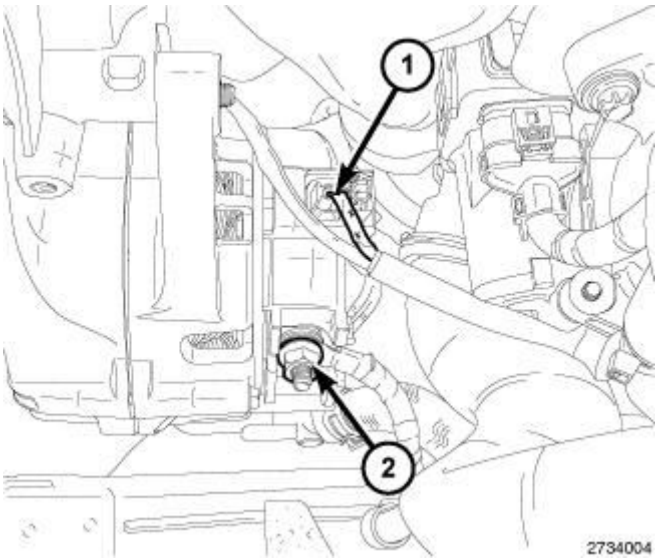

Fig. 11: Identifying Electrical Connector
Courtesy of CHRYSLER GROUP, LLC

12. Disconnect the generator field wire harness connector (1).
13. Remove nut (2) and the B+ cable from the generator.

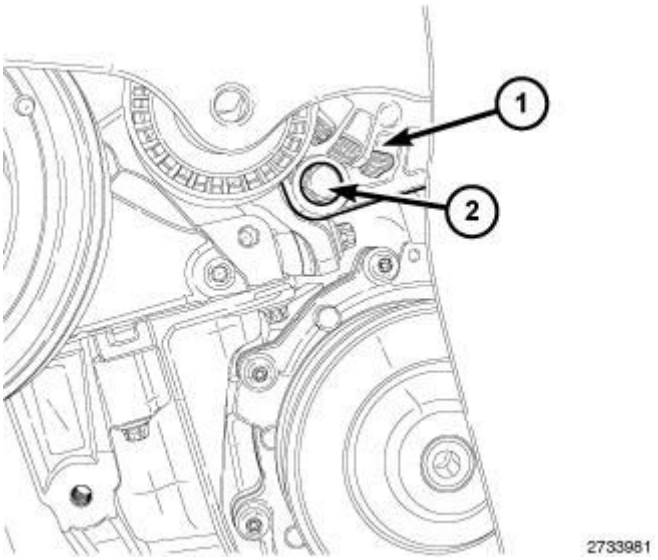

Fig. 12: Identifying Generator Mounting Retainer
Courtesy of CHRYSLER GROUP, LLC

14. Remove the bottom generator mounting bolt (2).

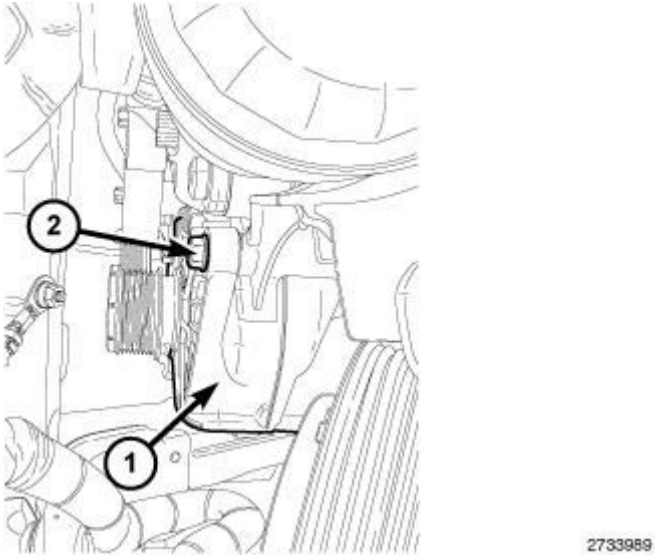

Fig. 13: Identifying Upper Generator Mounting Bolt & Generator
Courtesy of CHRYSLER GROUP, LLC

15. Remove upper bolts (2) and the generator (2).

REMOVAL

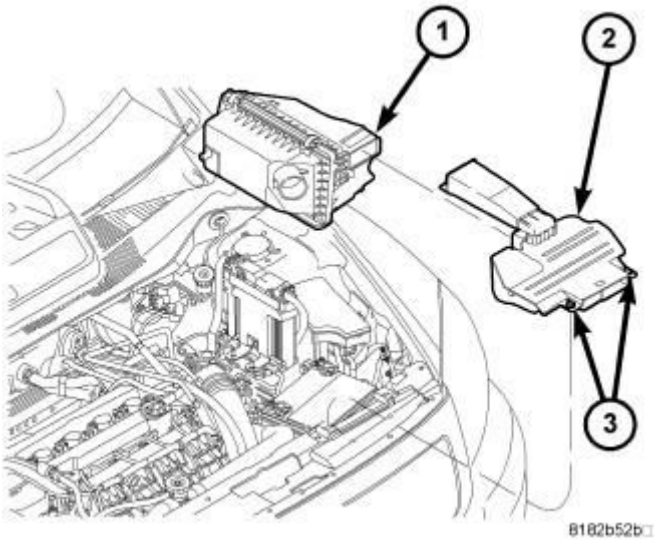

Fig. 14: Air Cleaner Box And Snorkel
Courtesy of CHRYSLER GROUP, LLC

1. Rotate the two retaining clips (3) and remove the air cleaner fresh air duct (2).
2. Disconnect and isolate negative battery cable at battery.

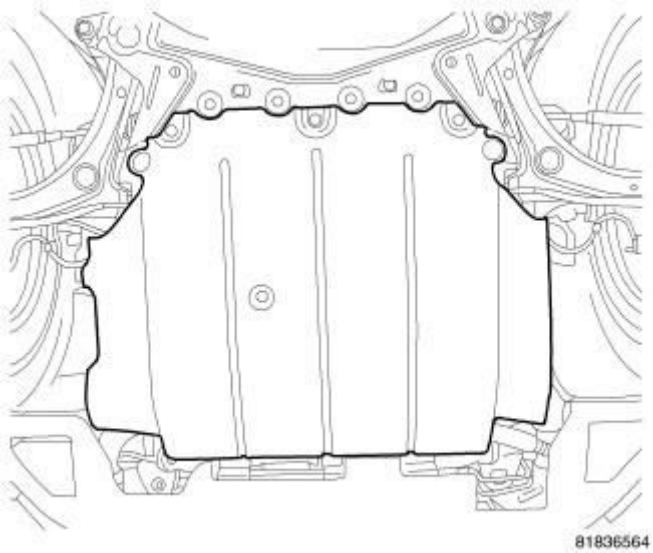

Fig. 15: Lower Air Dam/Belly Pan
Courtesy of CHRYSLER GROUP, LLC

3. Evacuate the A/C system. Refer to **PLUMBING, STANDARD PROCEDURE** .
4. Remove the right front wheel.
5. Remove the underbody air dam.

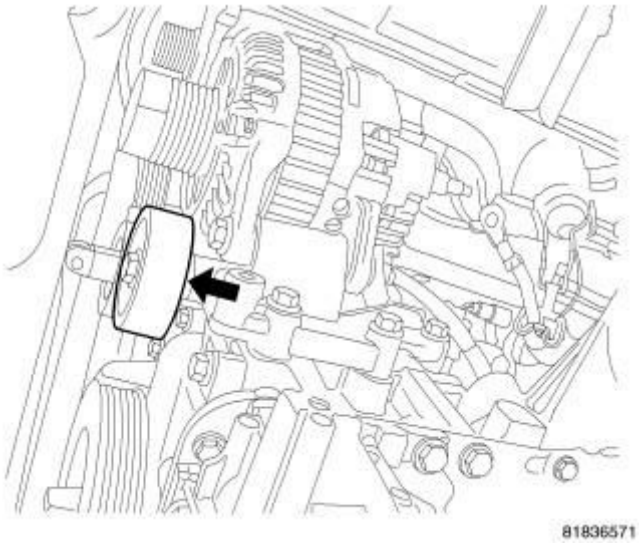

Fig. 16: Idler Pulley Location
Courtesy of CHRYSLER GROUP, LLC

6. Remove the accessory drive splash shield.

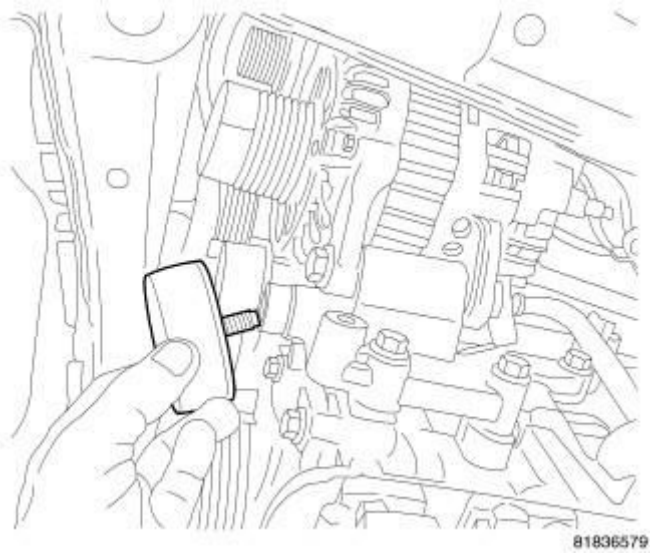

Fig. 17: Idler Pulley Removal/Install
Courtesy of CHRYSLER GROUP, LLC

7. Position aside the serpentine belt. Refer to **BELT, SERPENTINE, REMOVAL** .
8. Remove the accessory drive idler pulley.

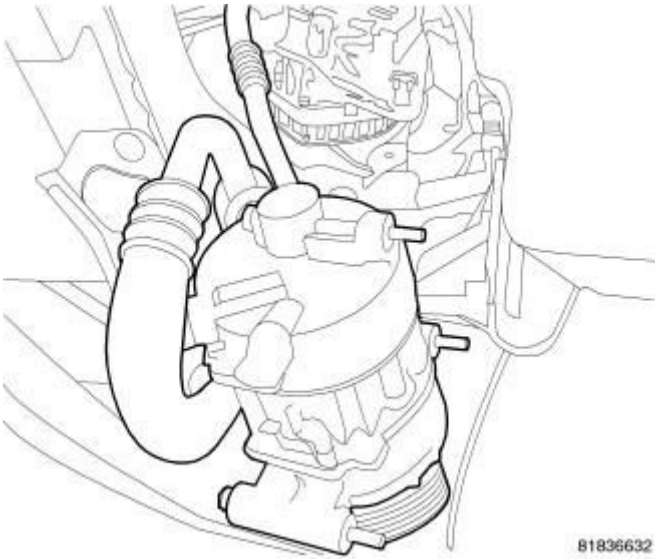

Fig. 18: A/C Compressor Relocation
Courtesy of CHRYSLER GROUP, LLC

9. Remove the A/C compressor. Refer to **COMPRESSOR, A/C, REMOVAL** .

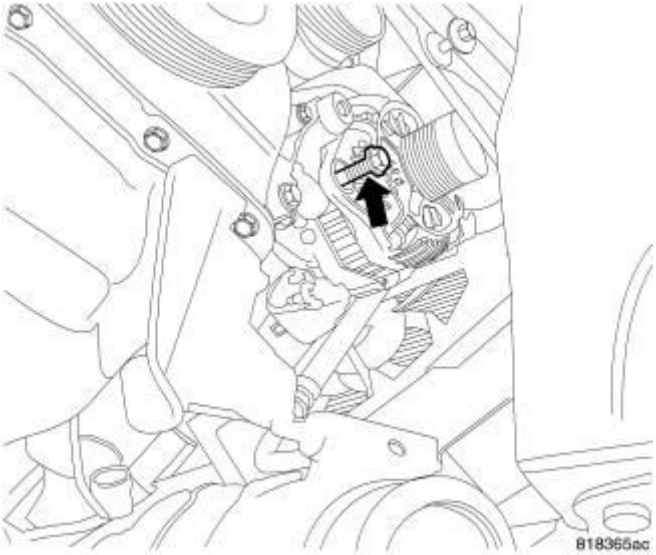

Fig. 19: Lower Mounting Bolt
Courtesy of CHRYSLER GROUP, LLC

10. Loosen the lower mounting bolt.

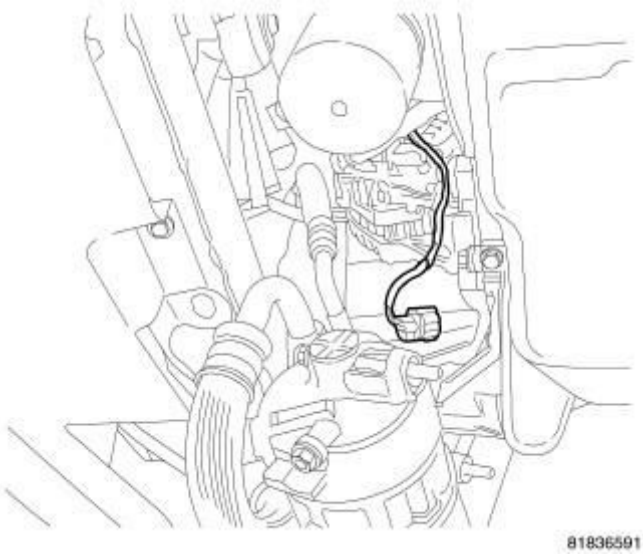

Fig. 20: Field Connection
Courtesy of CHRYSLER GROUP, LLC

11. Unplug field circuit from generator.

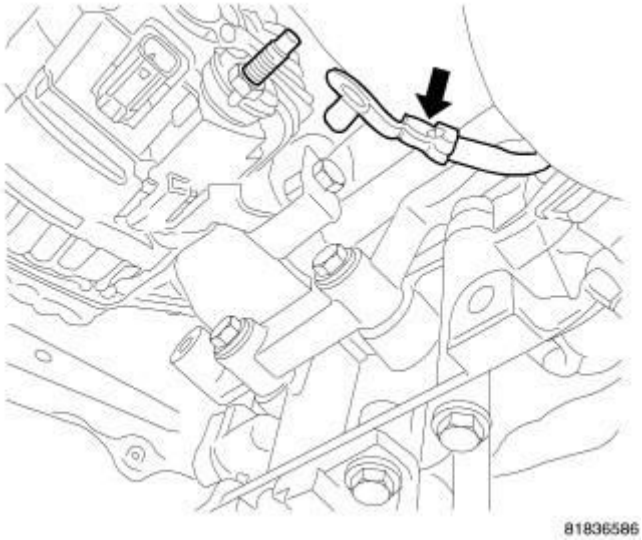

Fig. 21: Battery Cable Connection
Courtesy of CHRYSLER GROUP, LLC

12. Remove the B+ terminal nut and wire.

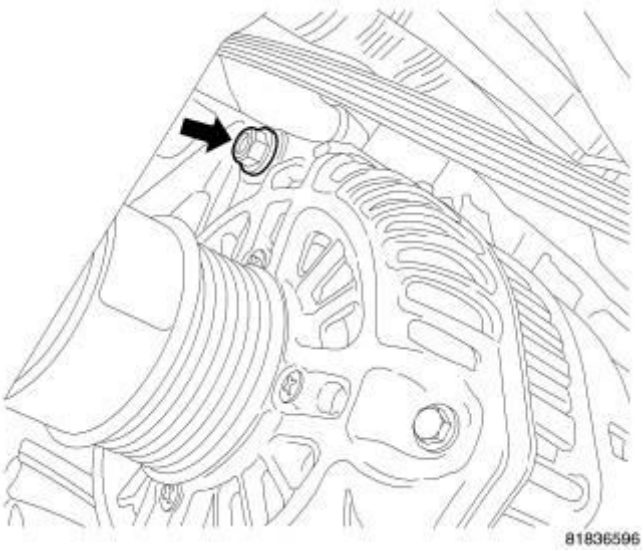

Fig. 22: Upper Mounting Bolt
Courtesy of CHRYSLER GROUP, LLC

13. Remove the upper mounting bolt.
14. Remove the generator lower mounting bolt.

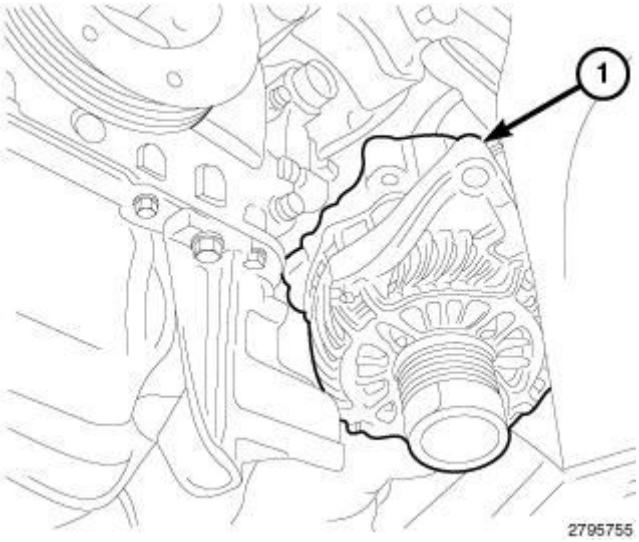

Fig. 23: Generator Removal
Courtesy of CHRYSLER GROUP, LLC

15. Slide the generator (1) down and out of vehicle.

INSTALLATION

DIESEL

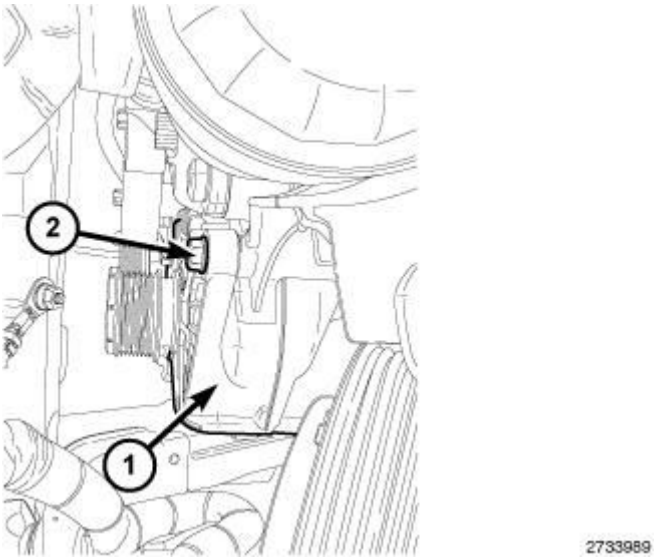

Fig. 24: Identifying Upper Generator Mounting Bolt & Generator
Courtesy of CHRYSLER GROUP, LLC

1. Install the generator (1). Tighten bolt finger tight.

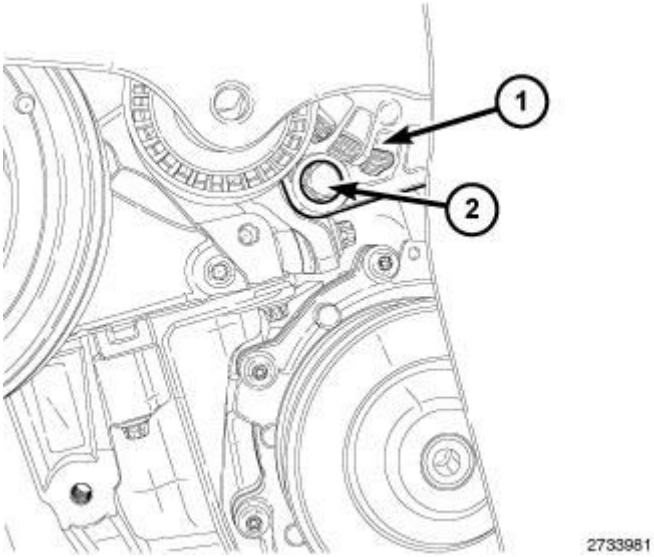

Fig. 25: Identifying Generator Mounting Retainer
Courtesy of CHRYSLER GROUP, LLC

2. Install the bottom generator mounting retainer (2). Tighten upper and lower bolts to 28 N.m (21 ft. lbs.).

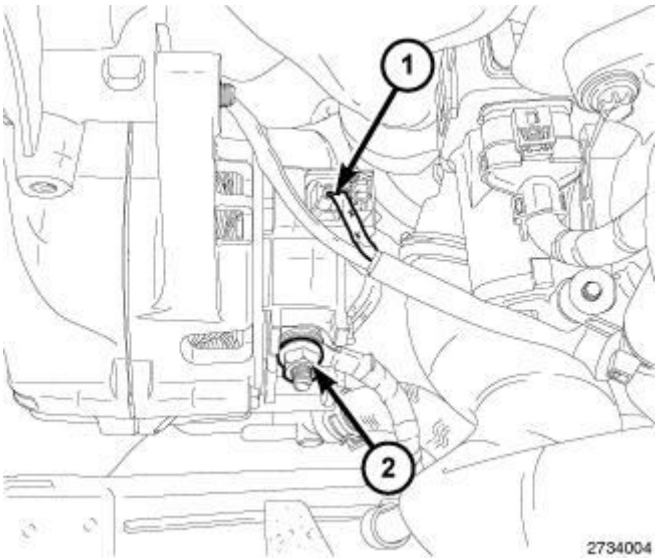

Fig. 26: Identifying Electrical Connector
Courtesy of CHRYSLER GROUP, LLC

3. Install the B+ cable. Tighten nut (2) to 10 N.m (89 in. lbs.).
4. Connect the generator field wire harness connector (1).

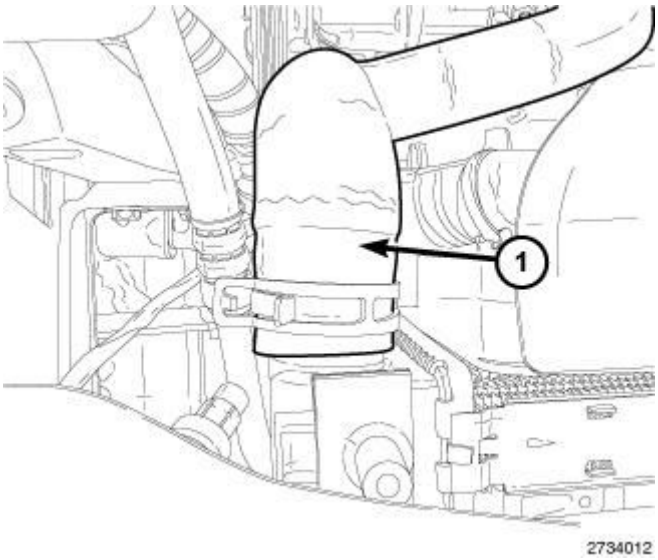

Fig. 27: Identifying Upper Radiator Hose
Courtesy of CHRYSLER GROUP, LLC

5. Connect the upper radiator hose (1) to the radiator.

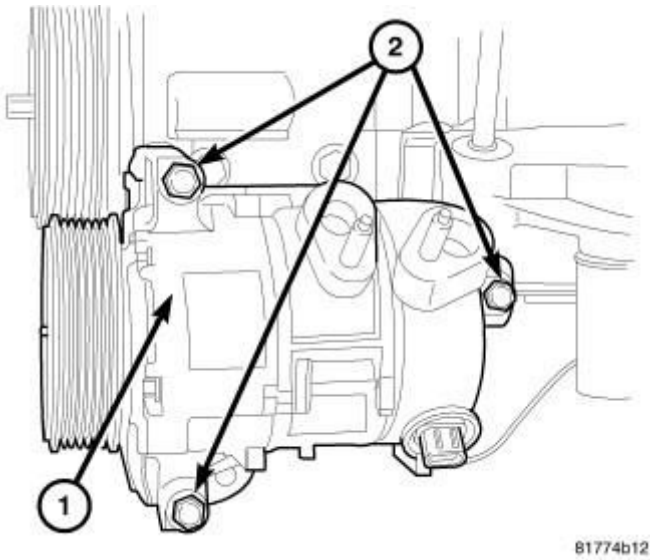

Fig. 28: A/C Compressor-R & I
Courtesy of CHRYSLER GROUP, LLC

6. Install the A/C compressor (1). Tighten bolts (2) to 25 N.m (18 ft. lbs.).

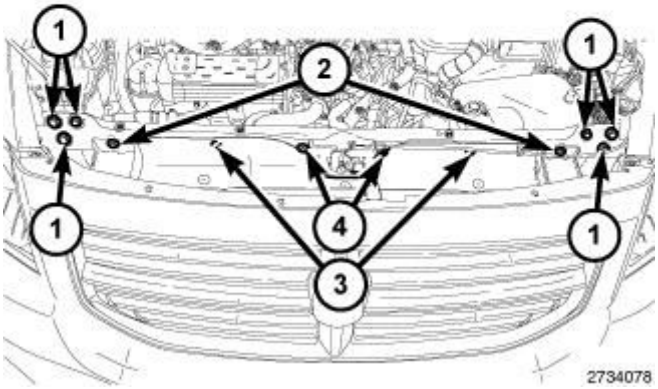

Fig. 29: Upper Core Support Seal Push Pins & Radiator Core Support Bolts
Courtesy of CHRYSLER GROUP, LLC

7. Install the radiator core support.

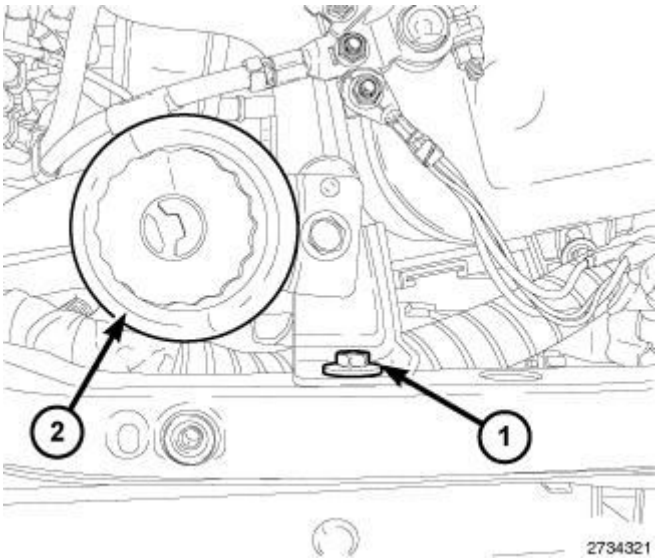

Fig. 30: Identifying Power Steering Reservoir
Courtesy of CHRYSLER GROUP, LLC

8. Position the power steering reservoir (2) and securely tighten the bolt (1).

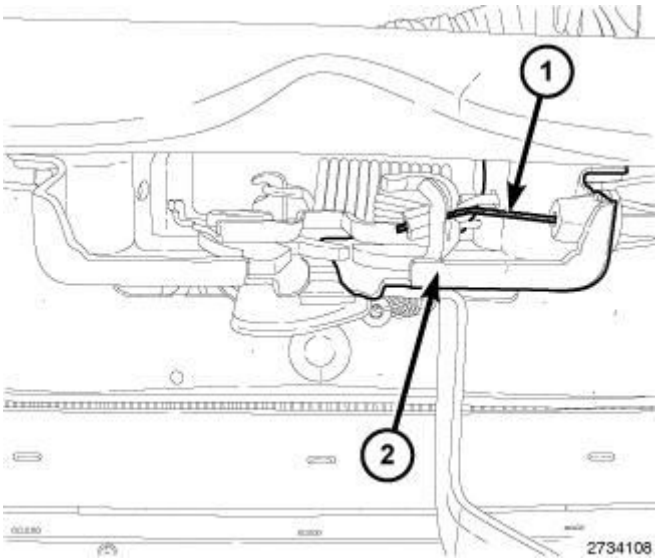

Fig. 31: Identifying Hood Release Cable
Courtesy of CHRYSLER GROUP, LLC

9. Connect the hood release cable (2).

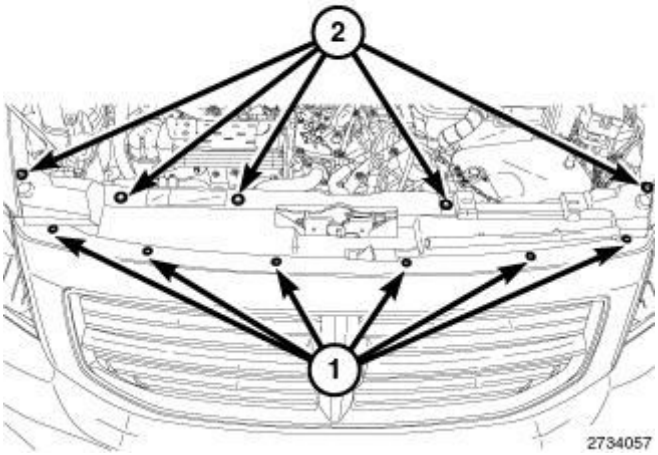

Fig. 32: Identifying Radiator Support Shroud
Courtesy of CHRYSLER GROUP, LLC

10. Install the radiator support shroud.

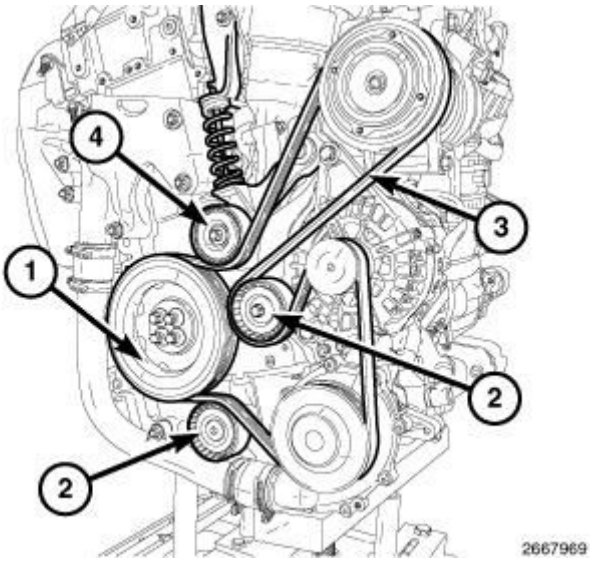

Fig. 33: Identifying Main Drive Belt
Courtesy of CHRYSLER GROUP, LLC

11. Install the serpentine belt (3). Refer to **BELT, SERPENTINE, INSTALLATION** .
12. Evacuate and fill the cooling system. Refer to **STANDARD PROCEDURE** .

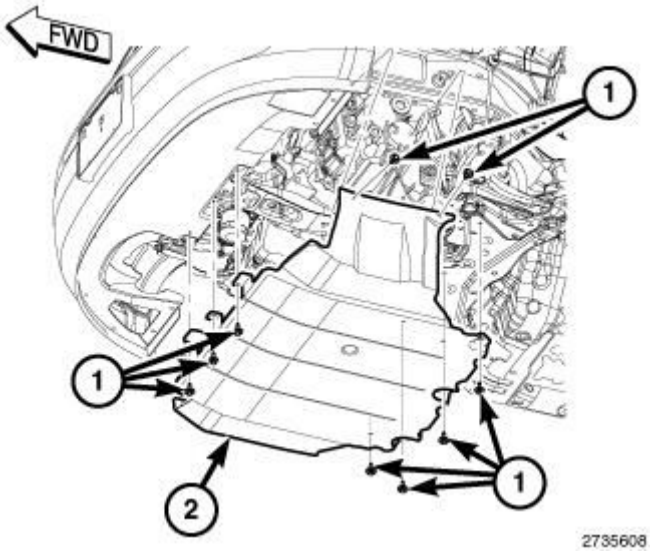

Fig. 34: Identifying Bolts & Belly Pan
Courtesy of CHRYSLER GROUP, LLC

13. If equipped, install the belly pan.
14. Connect the negative battery cable.

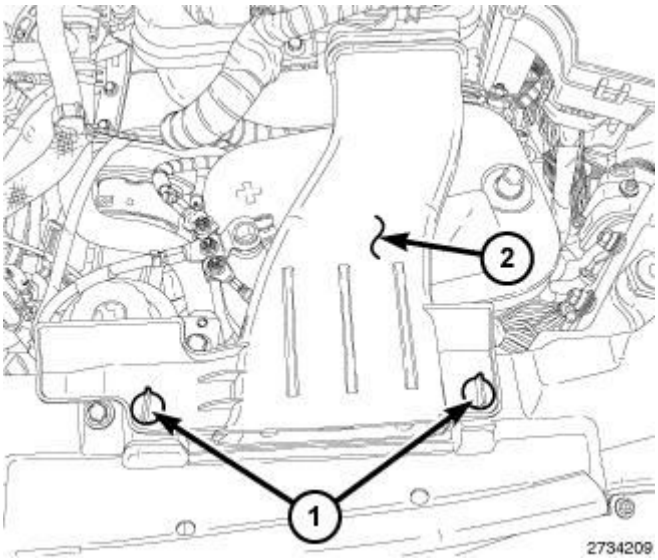

Fig. 35: Identifying Air Inlet Tube
Courtesy of CHRYSLER GROUP, LLC

15. Install the air inlet tube (2).

INSTALLATION

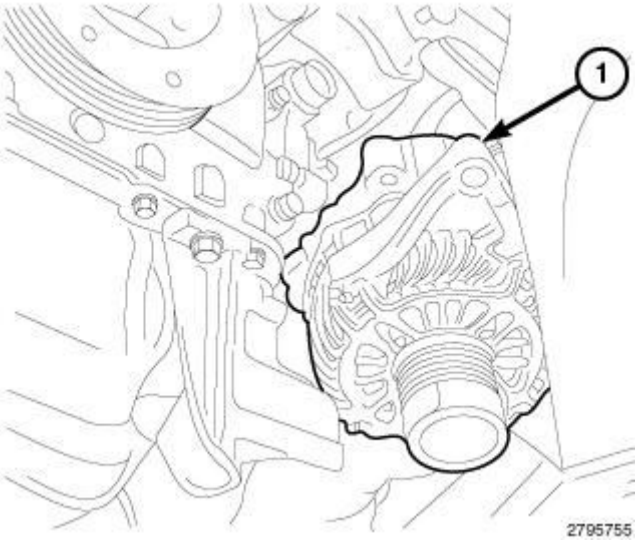

Fig. 36: Generator Removal
Courtesy of CHRYSLER GROUP, LLC

1. Install the generator (1).

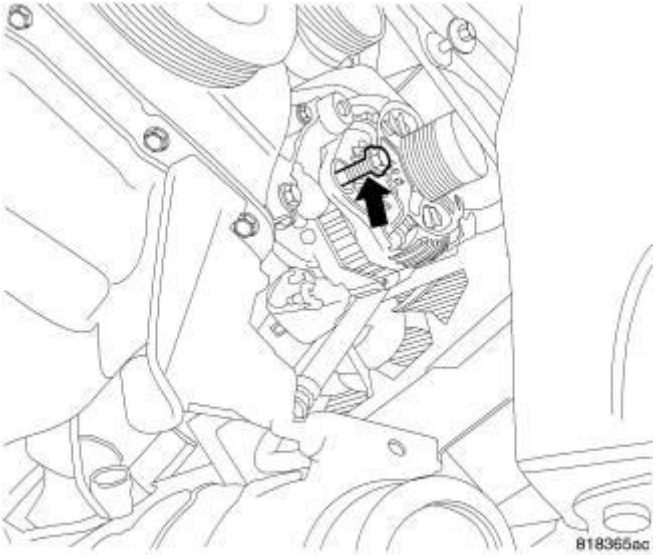

Fig. 37: Lower Mounting Bolt
Courtesy of CHRYSLER GROUP, LLC

2. Install the lower bolt finger tight.

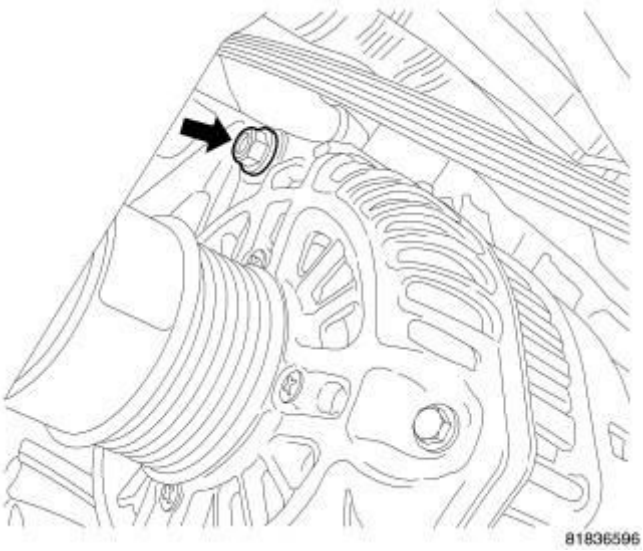

Fig. 38: Upper Mounting Bolt
Courtesy of CHRYSLER GROUP, LLC

3. Install the upper generator mounting bolt. Tighten upper and lower bolts to 54 N.m (40 ft. lbs.).

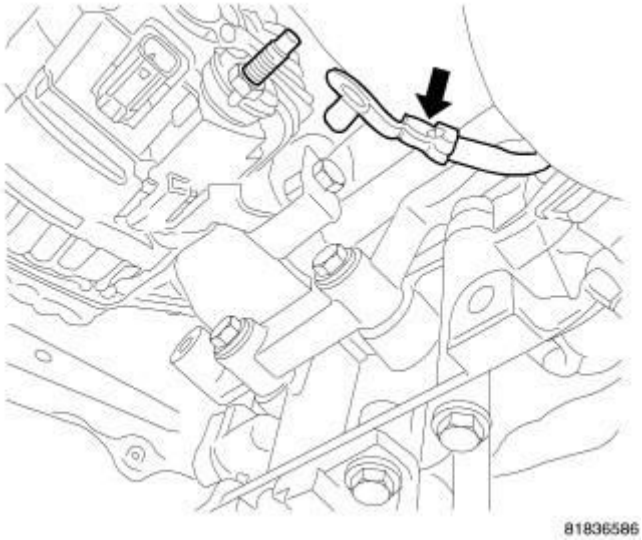

Fig. 39: Battery Cable Connection
Courtesy of CHRYSLER GROUP, LLC

4. Install the B+ cable. Tighten nut to 10 N.m (89 in. lbs.).

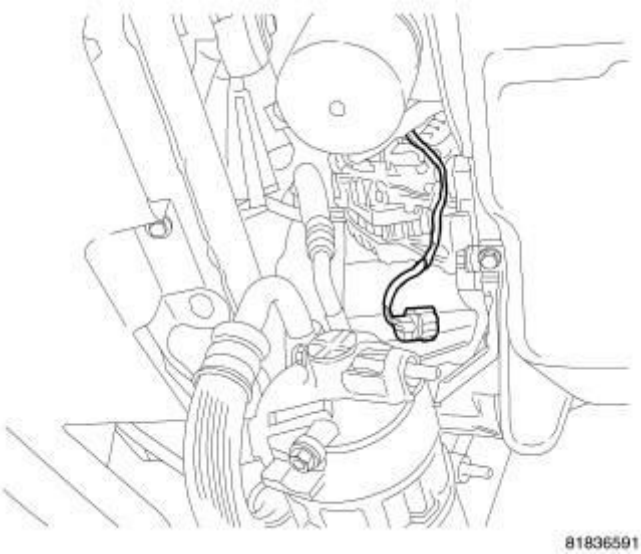

Fig. 40: Field Connection
Courtesy of CHRYSLER GROUP, LLC

5. Connect the generator field wire harness connector.

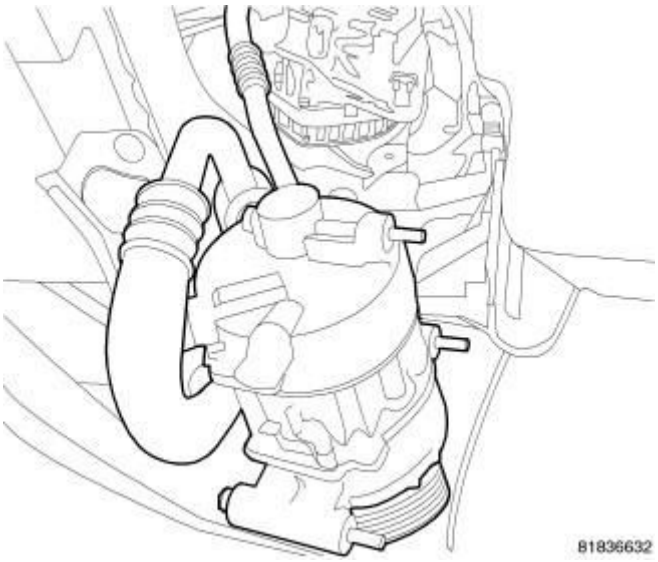

Fig. 41: A/C Compressor Relocation
Courtesy of CHRYSLER GROUP, LLC

6.
7. Install the A/C compressor. Refer to **COMPRESSOR, A/C, INSTALLATION** .

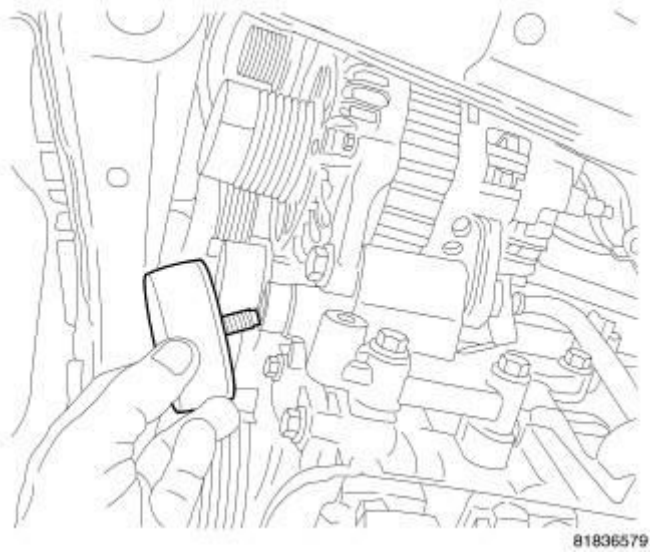

Fig. 42: Idler Pulley Removal/Install
Courtesy of CHRYSLER GROUP, LLC

8. Install the accessory drive idler pulley.
9. Install the serpentine belt (3). Refer to **BELT, SERPENTINE, INSTALLATION** .

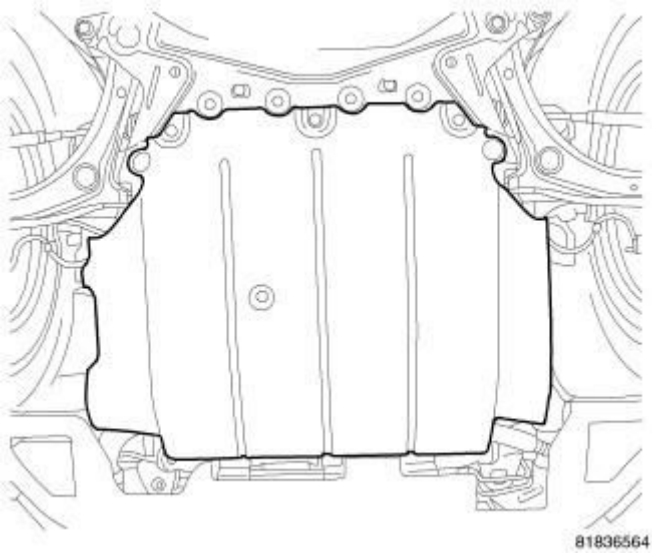

Fig. 43: Lower Air Dam/Belly Pan
Courtesy of CHRYSLER GROUP, LLC

10. Install the accessory drive splash shield.
11. Install the underbody air dam.
12. Install the right front wheel.
13. Evacuate and fill the A/C System. Refer to **PLUMBING, STANDARD PROCEDURE** .
14. Connect the negative battery cable.

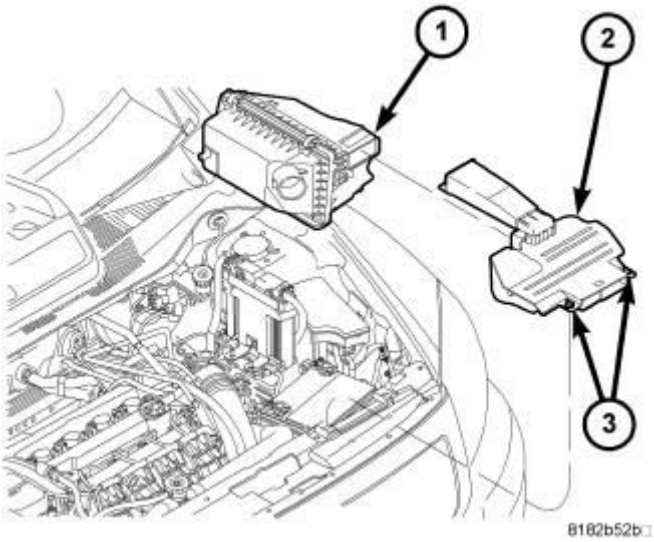

Fig. 44: Air Cleaner Box And Snorkel
Courtesy of CHRYSLER GROUP, LLC

15. Install the air inlet tube.

2014 ELECTRICAL

Power Distribution - Compass & Patriot

DESCRIPTION

DESCRIPTION

The power distribution system for this vehicle consists of the following components:

- Totally Integrated Power Module (TIPM)
- Fuse Block

For specific fuse location and types, refer to **FUSE - RELAY LOCATIONS AND TYPES, SPECIFICATIONS** .

OPERATION

OPERATION

The power distribution system for this vehicle is designed to provide safe, reliable, centralized, and convenient to access, distribution of the electrical current required to operate all of the many standard and optional factory-installed electrical and electronic powertrain, chassis, safety, comfort and convenience systems. At the same time, these systems were designed to provide centralized locations for conducting diagnosis of faulty circuits, and for sourcing the additional current requirements of many aftermarket vehicle accessory and convenience items.

These power distribution systems also incorporate various types of circuit control and protection features, including fuses and relays.

BLOCK, FUSE

DESCRIPTION

DESCRIPTION

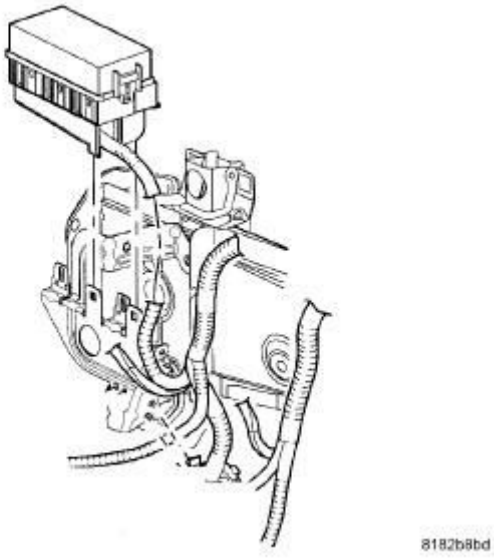

Fig. 1: Locating Fuse Block
Courtesy of CHRYSLER GROUP, LLC

An electrical Fuse Block is located in the left front bumper fascia. It serves to simplify and centralize numerous electrical components, as well as to distribute electrical current to many of the accessory systems in the vehicle.

There are two clips that retain the fuse block cover to the fuse block. The cover can be removed to service the fuses and relays by depressing the clips and lifting off the cover. If fuse block wire terminal or insulator service is required the complete fuse block assembly must be removed. Refer to **BLOCK, FUSE, REMOVAL**.

OPERATION

OPERATION

The fuse block houses relays and blade-type fuses. The fuses, relays and fuse block unit are available for service replacement. Refer to **SYSTEM WIRING DIAGRAMS** for complete circuit diagrams.

REMOVAL

REMOVAL

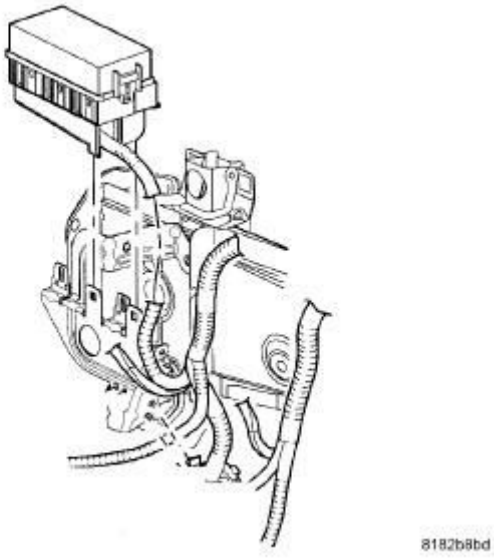

Fig. 2: Locating Fuse Block
Courtesy of CHRYSLER GROUP, LLC

WARNING: ON VEHICLES EQUIPPED WITH AIRBAGS, REFER TO RESTRAINTS - SERVICE INFORMATION BEFORE ATTEMPTING ANY STEERING COLUMN OR INSTRUMENT PANEL COMPONENT DIAGNOSIS OR SERVICE. FAILURE TO TAKE THE PROPER PRECAUTIONS COULD RESULT IN ACCIDENTAL AIRBAG DEPLOYMENT AND POSSIBLE PERSONAL INJURY.

1. Disconnect and isolate the battery negative cable.
2. Remove the front bumper fascia. Refer to **FASCIA, FRONT, INSTALLATION** .
3. Depress mounting clips and lift the fuse block off the bracket.
4. Remove the wire harness and fuse block.

INSTALLATION

INSTALLATION

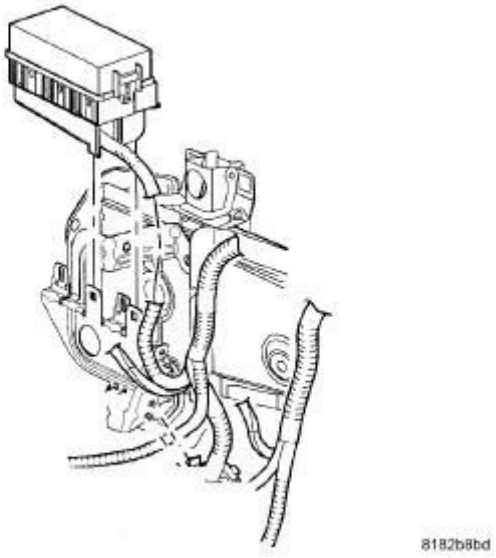

Fig. 3: Locating Fuse Block
Courtesy of CHRYSLER GROUP, LLC

WARNING: ON VEHICLES EQUIPPED WITH AIRBAGS, REFER TO RESTRAINTS - SERVICE INFORMATION BEFORE ATTEMPTING ANY STEERING COLUMN OR INSTRUMENT PANEL COMPONENT DIAGNOSIS OR SERVICE. FAILURE TO TAKE THE PROPER PRECAUTIONS COULD RESULT IN ACCIDENTAL AIRBAG DEPLOYMENT AND POSSIBLE PERSONAL INJURY.

1. Install the new wire harness and fuse block into the vehicle.
2. Position the fuse block onto the mounting bracket and push down until the mounting clips are fully seated.
3. Install the front bumper fascia. Refer to **FASCIA, FRONT, REMOVAL** .
4. Connect the battery negative cable.

FUSE, IOD

DESCRIPTION

DESCRIPTION

All vehicles are equipped with an Ignition-Off Draw (IOD) fuse that is disconnected within the Totally Integrated Power Module (TIPM) when the vehicle is shipped from the factory. Dealer personnel are to reconnect the IOD

fuse in the TIPM as part of the preparation procedures performed just prior to new vehicle delivery.

OPERATION

OPERATION

The term ignition-off draw identifies a normal condition where power is being drained from the battery with the ignition switch in the Off position. The IOD fuse feeds the memory and sleep mode functions for some of the electronic modules in the vehicle as well as various other accessories that require battery current when the ignition switch is in the Off position, including the clock. The only reason the IOD fuse is disconnected is to reduce the normal IOD of the vehicle electrical system during new vehicle transportation and pre-delivery storage to reduce battery depletion, while still allowing vehicle operation so that the vehicle can be loaded, unloaded and moved as needed by both vehicle transportation company and dealer personnel.

The IOD fuse is disconnected from Totally Integrated Power Module (TIPM) fuse cavities 7 and 8 in a preset fuse holder. when the vehicle is shipped from the assembly plant. Dealer personnel must reconnect the IOD fuse when the vehicle is being prepared for delivery in order to restore full electrical system operation. Once the vehicle is prepared for delivery, the IOD function of this fuse becomes transparent and the fuse that has been assigned the IOD designation becomes only another Fused B(+) circuit fuse. The IOD fuse serves no useful purpose to the dealer technician in the service or diagnosis of any vehicle system or condition, other than the same purpose as that of any other standard circuit protection device.

The IOD fuse can be used by the vehicle owner as a convenient means of reducing battery depletion when a vehicle is to be stored for periods not to exceed about thirty days. However, it must be remembered that disconnecting the IOD fuse will not eliminate IOD, but only reduce this normal condition. If a vehicle will be stored for more than about thirty days, the battery negative cable should be disconnected to eliminate normal IOD; and, the battery should be tested and recharged at regular intervals during the vehicle storage period to prevent the battery from becoming discharged or damaged.

REMOVAL

REMOVAL

NOTE: When removing or installing the IOD fuse, it is important that the ignition switch be in the Off position. Failure to place the ignition switch in the Off position can cause the radio display to become scrambled when the IOD fuse is installed. Removing and installing the IOD fuse again with the ignition switch in the Off position will usually correct the scrambled radio display condition.

1. Turn the ignition switch to the Off position.
2. Remove the cover from the Totally Integrated Power Module (TIPM).
3. Remove fuse 7/8 from the TIPM.

INSTALLATION

INSTALLATION

CAUTION: It is extremely important that the Ignition Off Draw (IOD) fuses are fully seated into the Totally Integrated Power Module (TIPM) fuse cavities. Failure to install the fuses correctly could result in erratic electrical systems behavior.

1. Remove TIPM cover.
2. Insert fuse 7/8 into the TIPM. Push fuses down until they are fully seated in the TIPM cavities.
3. Install the cover to the TIPM.

MODULE, POWER INVERTER

DESCRIPTION

DESCRIPTION

The inverter module is located in the instrument panel. The A/C outlet is mounted in the center console. The inverter module provides A/C power for user accessories. The inverter converts the 12 Volt DC from the battery system to a 110 Volt AC output.

OPERATION

OPERATION

The AC power outlet receives 12 volts from the Totally Integrated Power Module (TIPM) and passes it as an enable signal to the inverter module. The inverter module also receives 12 volts via the TIPM and inverts this to a 110 volt AC output. The enable signal received from the power outlet enables the inverter to convert the received voltage and pass it to the power outlet to power external devices.

DIAGNOSIS AND TESTING

DIAGNOSIS AND TESTING - INVERTER MODULE

For complete circuit diagrams, refer to the appropriate wiring information.

WARNING: Disable the airbag system before attempting any steering wheel, steering column, seat belt tensioner, side airbag or instrument panel component diagnosis or service. Disconnect and isolate the negative battery (ground) cable. Wait two minutes for the airbag system capacitor to discharge before performing further diagnosis or service. This is the only sure way to disable the airbag system. Failure to follow these instructions may result in accidental airbag deployment and possible serious or fatal injury.

110 VOLT POWER OUTLET DIAGNOSIS

CONDITION	POSSIBLE CAUSES	CORRECTION
NO POWER AT THE 110 VOLT POWER OUTLET	1. Fuse inoperative.	1. Check Totally Integrated Power Module (TIPM) fuse number 37. Replace fuse, if required.
	2. Power outlet connector damaged.	2. Check for loose or corroded power outlet connector. Repair, if required.
	3. Inverter module connector damaged.	3. Check for loose or corroded inverter module connector. Repair, if required.
	4. Wiring damaged.	4. Check for shorted or open

		wires. Repair wiring, if required.
	5. Inverter module ground damaged.	5. Check for continuity between the inverter module and a known good ground. There should be continuity. Repair ground, if required.
	6. Power outlet inoperative.	6. Replace the power outlet.
	7. Inverter module inoperative.	7. Replace the inverter module.

REMOVAL

REMOVAL

WARNING: Disable the airbag system before attempting any steering wheel, steering column or instrument panel component diagnosis or service. Disconnect and isolate the negative battery (ground) cable, then wait two minutes for the airbag system capacitor to discharge before performing further diagnosis or service. This is the only sure way to disable the airbag system. Failure to follow these instructions may result in accidental airbag deployment and possible serious or fatal injury.

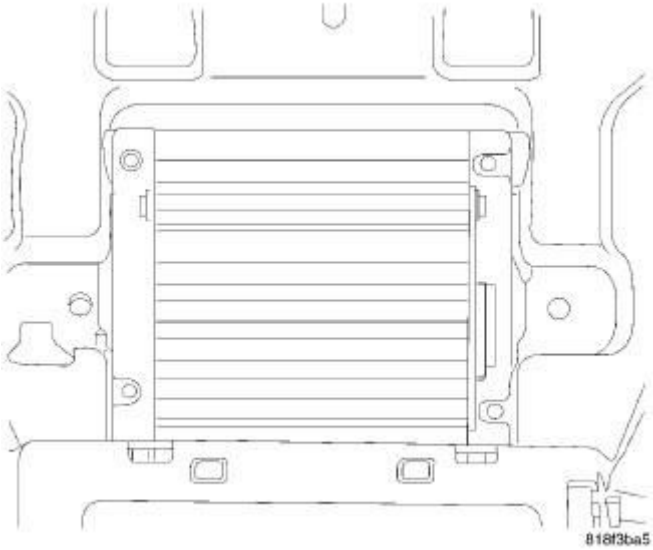

Fig. 4: Locating Inverter Module
Courtesy of CHRYSLER GROUP, LLC

1. Disconnect and isolate the negative battery cable.
2. Remove the shift bezel. Refer to **BEZEL, SHIFTER, REMOVAL** .
3. Remove the center bezel from the instrument panel. Refer to **BEZEL, INSTRUMENT PANEL, CENTER, REMOVAL** .
4. Remove the fasteners from the mounting brackets of the inverter module.
5. Disconnect the electrical connectors and remove the inverter module.

INSTALLATION

INSTALLATION

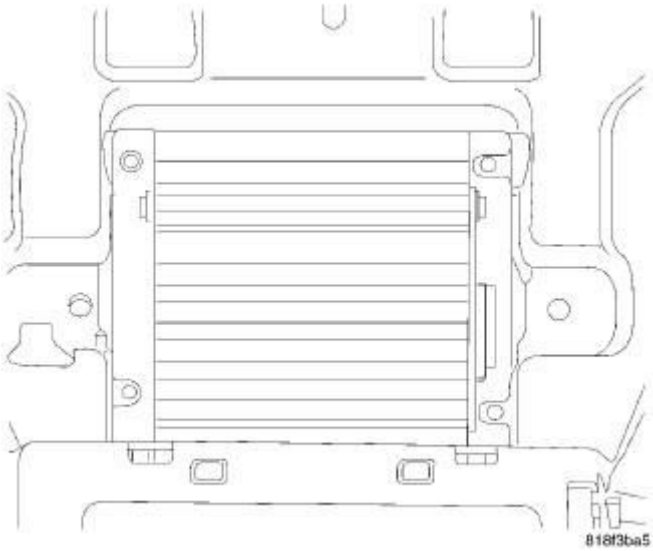

Fig. 5: Locating Inverter Module
Courtesy of CHRYSLER GROUP, LLC

1. Connect the electrical connectors to the inverter module.
2. Install the fasteners to the mounting brackets.
3. Install the center bezel to the instrument panel. Refer to **BEZEL, INSTRUMENT PANEL, CENTER, INSTALLATION** .
4. Install the shift bezel. Refer to **BEZEL, SHIFTER, INSTALLATION** .
5. Connect the battery negative cable.

MODULE, TOTALLY INTEGRATED POWER (TIPM)

DESCRIPTION

DESCRIPTION

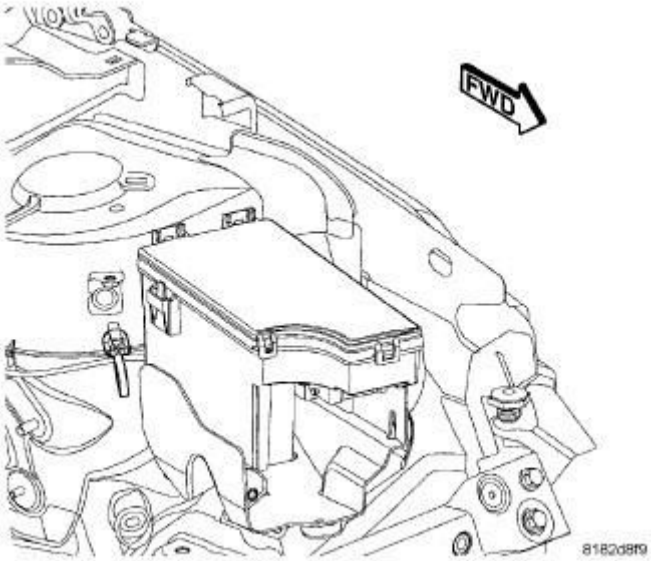

Fig. 6: Locating Power Distribution Center
Courtesy of CHRYSLER GROUP, LLC

All of the electrical current distributed throughout this vehicle is directed through the standard equipment Totally Integrated Power Module (TIPM). The molded plastic TIPM housing is located in the left front corner of the engine compartment, just behind the air cleaner housing and the battery. The TIPM housing has a molded plastic cover. The TIPM cover is easily removed for service access and has a convenient fuse layout label affixed to the inside surface of the cover to ensure proper component identification.

The TIPM housing is secured to the TIPM mounting bracket by three clips integral to the TIPM housing. All of the TIPM outputs are through the integral engine compartment wire harness.

OPERATION

OPERATION

All of the current to the Totally Integrated Power Module (TIPM) comes directly from the positive battery cable to a stud located on the bottom of the TIPM. The cable is secured to the TIPM stud with a nut. Internal connection of all the Totally Integrated Power Module (TIPM) circuits is accomplished by an intricate network of hard wiring and bus bars. Refer to **SYSTEM WIRING DIAGRAMS** for complete circuit diagrams.

The fuses and TIPM housing assembly are available for service replacement.

STANDARD PROCEDURE

STANDARD PROCEDURE - PROGRAMMING

1. Install a battery charger.
2. Verify that the charging rate provides approximately 13.5 volts.

NOTE: Do not allow the charger to time out during the reconfiguration process. Set the battery charger timer (if so equipped) to continuous charge.

3. Connect the CH9410 StarSCAN ethernet cable to the StarSCAN and the dealer's network drop.
4. Connect the CH9404 StarSCAN vehicle cable to the StarSCAN and the vehicle.
5. Place the Ignition in the "RUN" position, then Power "ON" the StarSCAN.
6. Select "ECU View".
7. Select "TIPMCGW" or "FCMCGW".
8. Select "MISC".
9. Select "Restore Vehicle Configuration".
10. Follow prompts on StarSCAN to complete the reconfigure procedure.
11. Once complete, Wait one minute and turn the ignition key to the "OFF"

position.

12. Remove the StarSCAN unit, cable and charger from the vehicle.
13. Verify proper operation.

REMOVAL

REMOVAL

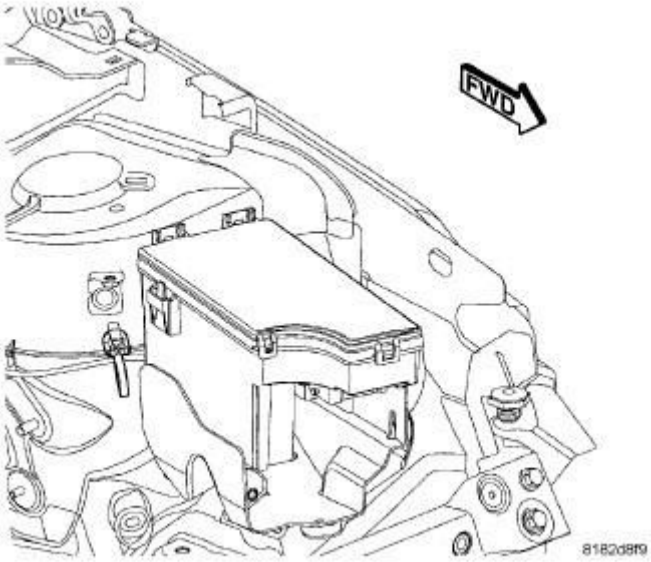

Fig. 7: Locating Power Distribution Center
Courtesy of CHRYSLER GROUP, LLC

1. Open hood.
2. Disconnect and isolate the battery negative cable.
3. Disconnect each of the Totally Integrated Power Module (TIPM) wire harness connectors.
4. Remove the TIPM positive cable retaining nut and remove the cable from the stud.
5. Depress the three mounting clips to disengage and remove the TIPM housing from its mounting bracket.
6. Remove the TIPM from the vehicle.

INSTALLATION

INSTALLATION

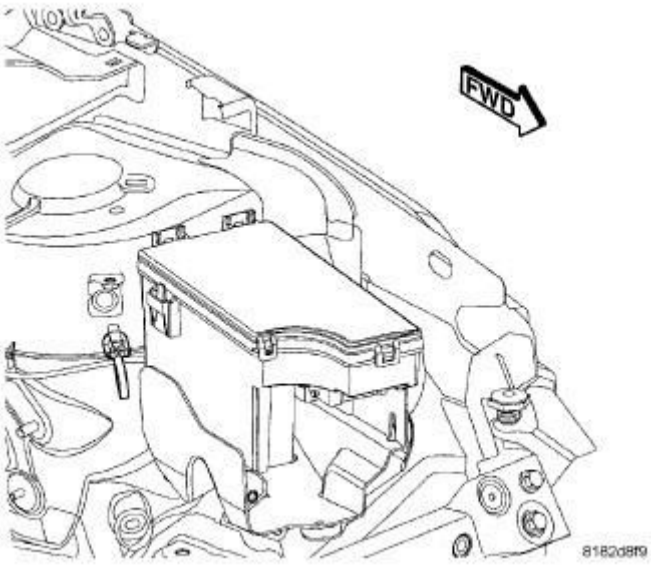

Fig. 8: Locating Power Distribution Center
Courtesy of CHRYSLER GROUP, LLC

CAUTION: The original Cabin Compartment Node (CCN) and Powertrain Control Module (PCM) must be installed and functioning properly prior to powering up the new Totally Integrated Power Module (TIPM). The TIPM receives vehicle configuration data from the CCN and Vehicle Identification Number (VIN) information from the PCM. If configuration information becomes lost or corrupted, the data can be obtained from DealerCONNECT

1. Position the TIPM onto the mounting bracket and push down until the mounting clips are fully seated.
2. Position the TIPM positive cable onto the mounting stud and install the retaining nut. Torque nut 9 - 11 N.m (80 - 100 in. lbs.).
3. Connect each of the TIPM wire harness connectors.
4. Remove TIPM cover and fully seat the Airbag fuse holder (two fuses in one yellow carrier). Fully seat the Ignition Off Draw (IOD) fuses (two fuses in a white/natural carrier).
5. Connect the battery negative cable.
6. Close hood.
7. Insert the ignition key and turn it to the "RUN" position and wait twelve

seconds. The TIPM will collect the necessary vehicle configuration and VIN data from the CCN and PCM at this time. After twelve seconds turn the ignition key to the "OFF" position and then back to the "ON" position and verify proper vehicle systems operation.

OUTLET, POWER

DESCRIPTION

DESCRIPTION

INSTRUMENT PANEL MOUNTED

An instrument panel mounted cigar lighter/power outlet receptacle is optional equipment on this model. On models equipped with the optional Smoker's Package, the cigar lighter knob and heating element are included. On models without the Smoker's Package, the cigar lighter receptacle is equipped with a snap fit plastic cap and is treated as an auxiliary power outlet. The cigar lighter receptacle is installed in the instrument panel accessory switch bezel, which is located near the bottom of the instrument panel center stack area, below the radio. The cigar lighter base is secured by a snap fit within the center lower bezel. This power outlet has a constant 12 volt battery feed.

The cigar lighter receptacle is serviced with the accessory switch bezel and if defective, the entire switch bezel must be replaced. The plastic cap and the knob and heating element unit are available for service replacement. These components cannot be repaired and, if faulty or damaged, they must be replaced.

FRONT CONSOLE AND REAR CARGO MOUNTED

A front console mounted power outlet is standard equipment and a rear cargo area power outlet is optional equipment on this model. The front console mounted power outlet is mounted near the front of the console just in front of the cup holders. This outlet can be used as a cigar lighter or power outlet, but only has 12 volt battery voltage when the ignition is in the ON or ACC positions. The rear power outlet is installed in the right rear quarter trim panel, near the spare tire jack. The power outlet base and mount are secured by a snap fit within the quarter trim panel. A plastic protective cap snaps into the power outlet base when the power outlet is not being used, and hangs from the power outlet base mount by an integral bail strap while the power outlet is in use. While the power outlet is very similar to a cigar lighter base unit, it does not include the two small

spring-clip retainers inside the bottom of the receptacle shell that are used to secure the cigar lighter heating element to the insulated contact. It has 12 volt battery voltage when the ignition is in the ON or ACC positions.

OPERATION

OPERATION

CIGAR LIGHTER/POWER OUTLET

The cigar lighter consists of two major components: a knob and heating element unit, and the cigar lighter base or receptacle shell. The receptacle shell is connected to ground, and an insulated contact in the bottom of the shell is connected to battery current.

The cigar lighter knob and heating element are encased within a spring-loaded housing, which also features a sliding protective heat shield. When the knob and heating element are inserted in the receptacle shell, the heating element resistor coil is grounded through its housing to the receptacle shell. If the cigar lighter knob is pushed inward, the heat shield slides up toward the knob exposing the heating element, and the heating element extends from the housing toward the insulated contact in the bottom of the receptacle shell.

Two small spring-clip retainers are located on either side of the insulated contact inside the bottom of the receptacle shell. These clips engage and hold the heating element against the insulated contact long enough for the resistor coil to heat up. When the heating element is engaged with the contact, battery current can flow through the resistor coil to ground, causing the resistor coil to heat.

When the resistor coil becomes sufficiently heated, excess heat radiates from the heating element causing the spring-clips to expand. Once the spring-clips expand far enough to release the heating element, the spring-loaded housing forces the knob and heating element to pop back outward to their relaxed position. When the cigar lighter knob and element are pulled out of the receptacle shell, the protective heat shield slides downward on the housing so that the heating element is recessed and shielded around its circumference for safety.

POWER OUTLET

The power outlet base or receptacle shell is connected to ground, and an insulated contact in the bottom of the shell is connected to battery current. The power outlet receives battery voltage from a fuse in the Totally Integrated Power

Module (TIPM) through a fuse in the fuse block when the ignition is in the ON or ACC positions.

REMOVAL

REMOVAL

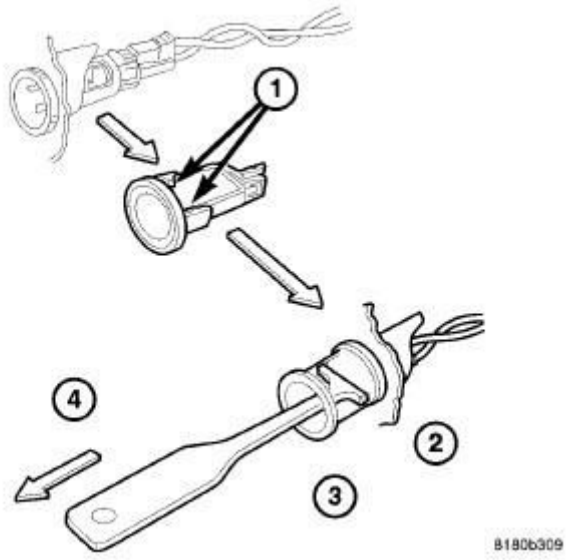

Fig. 9: Removing Cigar Lighter/Power Outlet
Courtesy of CHRYSLER GROUP, LLC

1. Disconnect and isolate the battery negative cable.
2. Look inside and note position of the retaining bosses (1).
3. Using special tool (special tool #9857, Remover, Power Outlet) Power Outlet Remover. Insert the tool forcing the bosses out of base.
4. Pull out the base through mounting ring by gently rocking the tool (3).
5. Disconnect the base wires.
6. Set base aside and remove base mount ring.

INSTALLATION

INSTALLATION

1. Position mount ring to the instrument panel and feed the wires through ring. Index the cap and the mount ring with the index tab at 9 o'clock to the key in the instrument panel. Install the ring.
2. Connect wires to base. Orient base alignment rib at 11 o'clock to mate the groove in mount ring at the same location.

3. Push base into the bezel till it locks.
4. Install cigar lighter cap.
5. Connect the battery negative cable.

OUTLET, POWER, AC

REMOVAL

REMOVAL

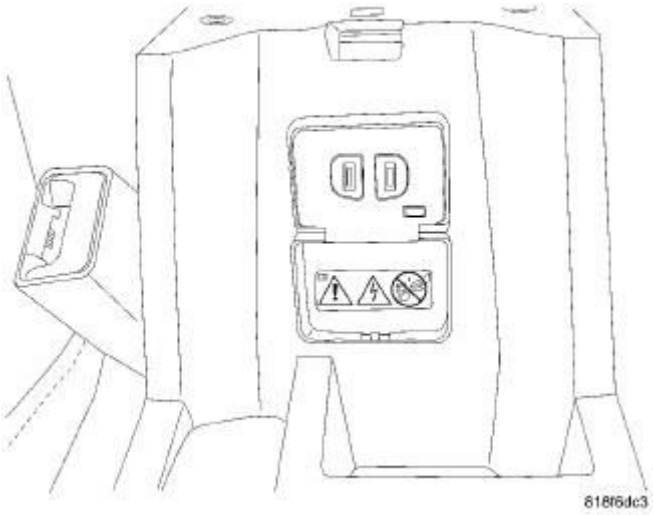

Fig. 10: Removing/Installing Power Outlet - AC
Courtesy of CHRYSLER GROUP, LLC

1. Disconnect and isolate the negative battery cable.
2. Remove the center console. Refer to **CONSOLE, FLOOR, REMOVAL** .
3. Disconnect electrical connector.
4. Remove AC power outlet.

INSTALLATION

INSTALLATION

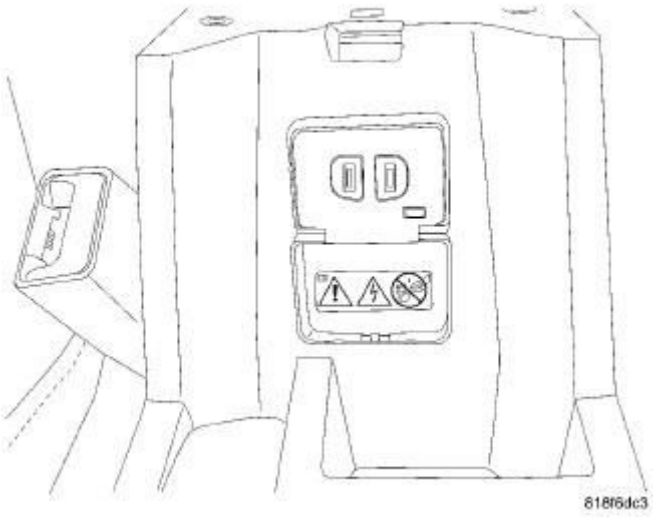

Fig. 11: Removing/Installing Power Outlet - AC
Courtesy of CHRYSLER GROUP, LLC

1. Install the AC power outlet.
2. Connect electrical connector.
3. Install the center console. Refer to **CONSOLE, FLOOR, INSTALLATION** .
4. Connect the battery negative cable.

2014 ELECTRICAL

Special Tools - Compass & Patriot

SPECIAL TOOLS

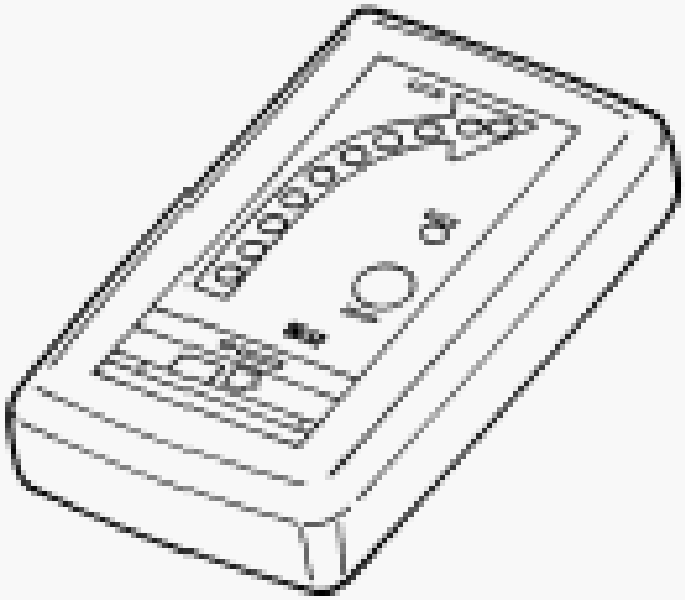	9001 - Rf Detector (Originally Shipped In Kit Number(s) 9001.)
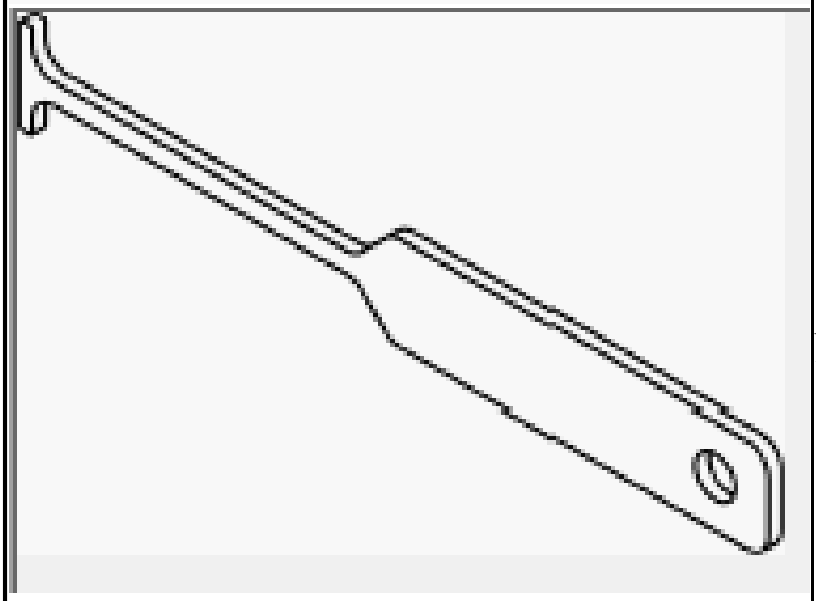	9857 - Remover, Power Outlet (Originally Shipped In Kit Number(s) 9896, 9927, 9973, 9974.)
	C-4755 - Trim Stick (Originally Shipped In Kit

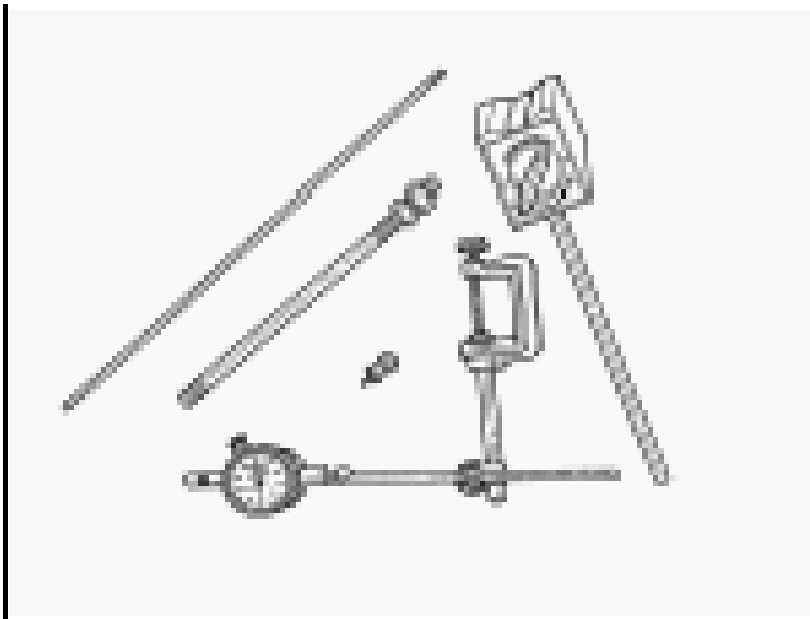	Number(s) 9299, 9299CC, 9299CC, 9300A-CAN.)
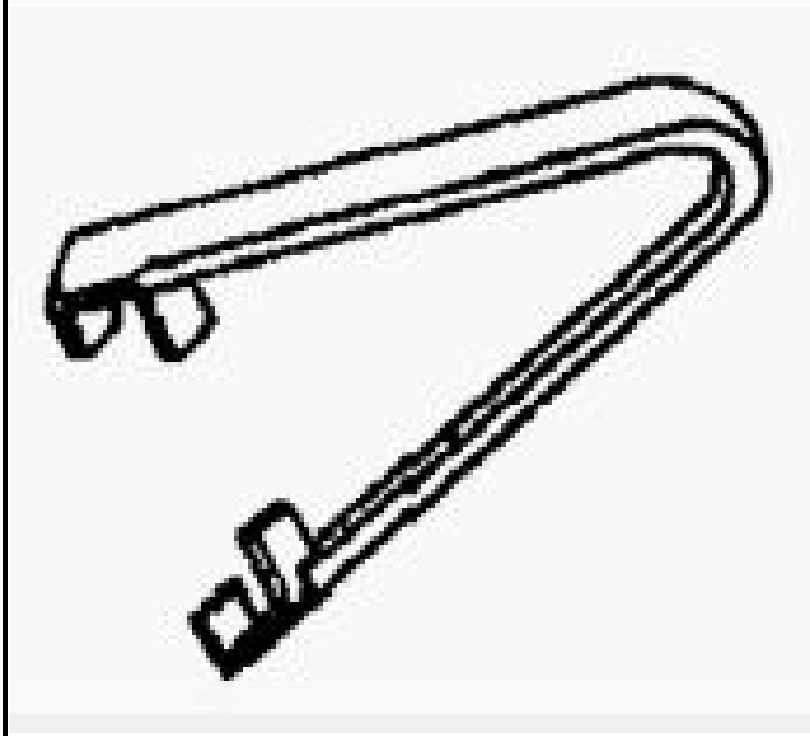	C-4817 - Remover/Installer (Originally Shipped In Kit Number(s) 8673, 8674, 8674CC, 8675, 8676, 8709, 8709CC.)
	GR8-1220KIT-CHRY - AGM Battery Tester/Charger Station (Originally Shipped In Kit Number(s) GR8-1220KIT-CHRY.)

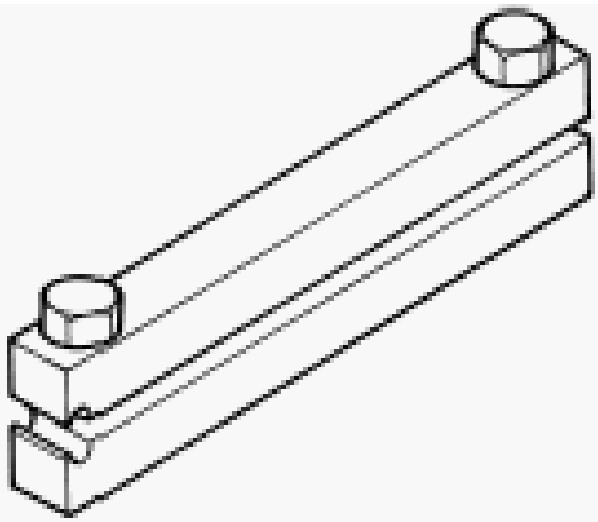

2014 ENGINE

2.0L - Service Information - Compass & Patriot

DESCRIPTION

DESCRIPTION

The 2.0 Liter (122 cu. in.) in-line four cylinder engine is a double over head camshaft with mechanical lash buckets and four valves per cylinder design. This engine is NOT free-wheeling; meaning that the pistons will contact the valves in the event of a timing chain failure.

The cylinders are numbered from front of the engine to the rear. The firing order is 1-3-4-2.

The engine serial number is located on the rear of the cylinder block. The serial number contains engine build date information.

DIAGNOSIS AND TESTING

INTRODUCTION

Engine diagnosis is helpful in determining the causes of malfunctions not detected and remedied by routine maintenance.

These malfunctions may be classified as either mechanical (e.g., a strange noise), or performance (e.g., engine idles rough and stalls).

Refer to the Engine **MECHANICAL** and the Engine **PERFORMANCE** diagnostic charts, for possible causes and corrections of malfunctions. Refer to **DIAGNOSIS AND TESTING** .

For fuel system diagnosis, refer to **FUEL SYSTEM** article .

Additional tests and diagnostic procedures may be necessary for specific engine malfunctions that cannot be isolated with the Service Diagnosis charts. Information concerning additional tests and diagnosis is provided within the following:

- Cylinder Compression Pressure Test: Refer to **CYLINDER COMPRESSION PRESSURE TEST**.

- Cylinder Combustion Pressure Leakage Test: Refer to **CYLINDER COMBUSTION PRESSURE LEAKAGE TEST**.
- Engine Cylinder Head Gasket Failure Diagnosis: Refer to **DIAGNOSIS AND TESTING - CYLINDER HEAD GASKET**.
- Intake Manifold Leakage Diagnosis: Refer to **MANIFOLD, INTAKE**.
- Mechanical Valve Tappet Noise Diagnosis: Refer to **DIAGNOSIS AND TESTING - MECHANICAL VALVE TAPPET NOISE DIAGNOSIS**.
- Engine Oil Leak Inspection: Refer to **ENGINE OIL LEAK INSPECTION**.

PERFORMANCE

CONDITION	POSSIBLE CAUSE	CORRECTION
ENGINE WILL NOT START	1. Weak battery.	1. Test battery. Charge or replace as necessary. Refer to **DIAGNOSIS AND TESTING** .
	2. Corroded or loose battery connections.	2. Clean and tighten battery connections. Apply a coat of light mineral grease to terminals.
	3. Faulty starter.	3. Test starting system. Check for codes. (Refer to **DIAGNOSIS AND TESTING**)
	4. Faulty coil(s) or control unit.	4. Test and replace as needed. (Refer to **CHECKING THE IGNITION COIL OPERATION**)
	5. Incorrect spark plug gap.	5. Set gap. Refer to **SPECIFICATIONS** .
	6. Contamination in fuel system.	6. Clean system and replace fuel filter.
	7. Faulty fuel pump.	7. Test fuel pump and replace as needed. (Refer to **FUEL SYSTEM**)

	8. Incorrect engine timing.	8. Check for a skipped timing belt/chain.
ENGINE STALLS OR IDLES ROUGH	1. Idle speed too low.	1. Test minimum air flow. (Refer to Appropriate Diagnostic Information)
	2. Incorrect fuel mixture.	2. (Refer to **FUEL SYSTEM**)
	3. Intake manifold leakage.	3. Inspect intake manifold, manifold gasket, and vacuum hoses.
	4. Faulty ignition coil (s).	4. Test and replace as necessary. (Refer to **CHECKING THE IGNITION COIL OPERATION**
	5. Contamination in Oil Control Valve (OCV).	5. Remove OCV and inspect for contamination. Replace OCV if contaminated.
ENGINE LOSS OF POWER	1. Dirty or incorrectly gapped plugs.	1. Clean plugs and set gap.
	2. Contamination in fuel system.	2. Clean system and replace fuel filter.
	3. Faulty fuel pump.	3. Test and replace as necessary. (Refer to **FUEL SYSTEM**)
	4. Incorrect valve timing.	4. Correct valve timing.
	5. Leaking cylinder head gasket.	5. Replace cylinder head gasket.
	6. Low compression.	6. Test compression of each cylinder.
	7. Burned, warped, or pitted valves.	7. Replace valves.
	8. Plugged or restricted exhaust	8. Perform exhaust restriction test. Install new

	system.	parts, as necessary. Refer to **DIAGNOSIS AND TESTING** .
	9. Faulty ignition coil (s).	9. Test and replace as necessary. (Refer to **CHECKING THE IGNITION COIL OPERATION**)
ENGINE MISSES ON ACCELERATION	1. Dirty or incorrectly gapped spark plugs.	1. Clean spark plugs and set gap.
	2. Contamination in Fuel System.	2. Clean fuel system and replace fuel filter.
	3. Burned, warped, or pitted valves.	3. Replace valves.
	4. Faulty ignition coil (s).	4. Test and replace as necessary. (Refer to **CHECKING THE IGNITION COIL OPERATION**)
ENGINE MISSES AT HIGH SPEED	1. Dirty or incorrect spark plug gap.	1. Clean spark plugs and set gap.
	2. Faulty ignition coil (s).	2. Test and replace as necessary. (Refer to **CHECKING THE IGNITION COIL OPERATION**)
	3. Dirty fuel injector (s).	3. Test and replace as necessary. (Refer to **FUEL SYSTEM**)
	4. Contamination in fuel system.	4. Clean system and replace fuel filter.

MECHANICAL

CONDITION	POSSIBLE CAUSES	CORRECTION

VALVETRAIN NOISE	1. High or low oil level in crankcase.	1. Check and correct engine oil level.
	2. Thin or diluted oil.	2. Change oil to correct viscosity.
	3. Thick oil	3. (a) Change engine oil and filter.
		(b) Run engine to operating temperature.
		(c) Change engine oil and filter again.
	4. Low oil pressure.	4. (a) Check and correct engine oil level.
		(b) Check pressure regulating valve.
	5. Worn cam lobe.	5. Install new camshaft.
	6. Worn tappet bucket.	6. Install new select fit tappet bucket.
	7. Worn valve guides.	7. Replace cylinder head.
	8. Excessive runout of valve seats on valve faces.	8. Grind valve seats and replace valves.
CONNECTING ROD NOISE	1. Insufficient oil supply.	1. Check engine oil level.
	2. Low oil pressure.	2. Check engine oil level. Inspect oil pump relief valve and spring.
	3. Thin or diluted oil.	3. Change oil to correct viscosity.
	4. Thick oil	4. (a) Change engine oil and filter.
		(b) Run engine to operating temperature.
		(c) Change engine oil and filter again.
	5. Excessive bearing clearance.	5. Measure bearings for correct clearance. Repair

		as necessary.
	6. Connecting rod journal out-of-round.	6. Replace crankshaft or grind surface.
	7. Connecting rod out-of-round.	7. Replace connecting rod.
	8. Misaligned connecting rods.	8. Replace bent connecting rods.
MAIN BEARING NOISE	1. Insufficient oil supply.	1. Check engine oil level.
	2. Low oil pressure.	2. Check engine oil level. Inspect oil pump relief valve and spring.
	3. Thin or diluted oil.	3. Change oil to correct viscosity.
	4. Thick oil	4. (a) Change engine oil and filter.
		(b) Run engine to operating temperature.
		(c) Change engine oil and filter again.
	5. Excessive bearing clearance.	5. Measure bearings for correct clearance. Repair as necessary.
	6. Excessive end play.	6. Check thrust bearing for wear on flanges.
	7. Crankshaft journal out-of-round or worn.	7. Replace crankshaft or grind journals.
	8. Loose flywheel or torque converter.	8. Tighten to correct torque.
OIL PRESSURE DROP	1. Low oil level.	1. Check engine oil level.
	2. Faulty oil pressure sending unit.	2. Install new sending unit.
	3. Low oil pressure.	3. Check sending unit and main bearing oil clearance.
	4. Clogged oil filter.	4. Install new oil filter.

	5. Worn parts in oil pump.	5. Replace balance shaft module.
	6. Thin or diluted oil.	6. Change oil to correct viscosity.
	7. Oil pump relief valve stuck.	7. Remove valve and inspect, clean, or replace.
	8. Excessive bearing clearance.	8. Measure bearings for correct clearance.
OIL LEAKS	1. Misaligned or deteriorated gaskets.	1. Replace gasket(s).
	2. Loose fastener, broken or porous metal part.	2. Tighten, repair or replace the part.
	3. Misaligned or deteriorated cup or threaded plug.	3. Replace as necessary.
OIL CONSUMPTION OR SPARK PLUGS FOULED	1. PCV system malfunction.	1. Check system and repair as necessary. Refer to **VALVE, POSITIVE CRANKCASE VENTILATION (PCV), DIAGNOSIS AND TESTING** .
	2. Worn, scuffed or broken rings.	2. Hone cylinder bores. Install new rings.
	3. Carbon in oil ring slots.	3. Install new rings.
	4. Rings fitted too tightly in grooves.	4. Remove rings and check grooves. If groove is not proper width, replace piston.
	5. Worn valve guide (s).	5. Replace cylinder head.
	6. Valve stem seal(s) worn or damaged.	6. Replace seal(s).

CYLINDER COMBUSTION PRESSURE LEAKAGE TEST

The combustion pressure leakage test provides an accurate means for determining engine condition.

Combustion pressure leakage testing will detect:

- Exhaust and intake valve leaks (improper seating).
- Leaks between adjacent cylinders or into water jacket.
- Any causes for combustion/compression pressure loss.

WARNING: Do not remove the pressure cap with the system hot and under pressure because serious burns from coolant can occur.

1. Check the coolant level and fill as required. DO NOT install the pressure cap.
2. Start and operate the engine until it attains normal operating temperature, then turn the engine OFF.
3. Clean spark plug recesses with compressed air.
4. Remove the spark plugs.
5. Remove the oil filler cap.
6. Remove the air cleaner.
7. Calibrate the tester according to the manufacturer's instructions. The shop air source for testing should maintain 483 kPa (70 psi) minimum, 1, 379 kPa (200 psi) maximum, with 552 kPa (80 psi) recommended.
8. Perform the test procedures on each cylinder according to the tester manufacturer's instructions. While testing, listen for pressurized air escaping through the throttle body, tailpipe and oil filler cap opening. Check for bubbles in the coolant.
9. All gauge pressure indications should be equal, with no more than 25% leakage per cylinder.
10. **FOR EXAMPLE:** At 552 kPa (80 psi) input pressure, a minimum of 414 kPa (60 psi) should be maintained in the cylinder.

CYLINDER COMPRESSION PRESSURE TEST

The results of a cylinder compression pressure test can be utilized to diagnose several engine malfunctions.

Ensure the battery is completely charged and the engine starter motor is in good operating condition. Otherwise the indicated compression pressures may not be valid for diagnosis purposes.

1. Check engine oil level and add oil if necessary.
2. Drive the vehicle until engine reaches normal operating temperature. Select a route free from traffic and other forms of congestion, observe all traffic laws, and accelerate through the gears several times briskly.
3. Remove engine cover.
4. Disconnect coil electrical connectors and remove coils.
5. Remove all spark plugs from engine. As spark plugs are being removed, check electrodes for abnormal firing indicators such as fouled, hot, oily, etc. Record cylinder number of spark plug for future reference.
6. Disconnect injector electrical connectors.
7. Insert compression pressure adaptor (special tool #8116, Adapter, Pressure PEP) or the equivalent, into the #1 spark plug hole in cylinder head. Connect the 0-500 psi (Blue) pressure transducer CH7059 with cable adaptors to the DRBIII®. For Special Tool identification, refer to **SPECIAL TOOLS** .
8. Crank engine until maximum pressure is reached on gauge. Record this pressure as #1 cylinder pressure.
9. Repeat the previous step for all remaining cylinders.
10. Compression should not be less than 689 kPa (100 psi) and not vary more than 25 percent from cylinder to cylinder.
11. If one or more cylinders have abnormally low compression pressures, repeat the compression test.
12. If the same cylinder or cylinders repeat an abnormally low reading on the second compression test, it could indicate the existence of a problem in the cylinder in question. **The recommended compression pressures are to be used only as a guide to diagnosing engine problems. An engine should not be disassembled to determine the cause of low compression unless some malfunction is present.**

OIL CONSUMPTION TEST AND DIAGNOSIS

The following diagnostic procedures are used to determine the source of excessive internal oil consumption, these procedures and tests apply to vehicles with 50, 000 miles or less.

NOTE: Engine oil consumption may be greater than normal during engine break-in. Repairs should be delayed until vehicle has been driven at least 7, 500 miles.

Severe service (high ambient temperature, short trips, heavy loading, trailer towing, taxi, off-road, or law enforcement use) may result in greater oil consumption than normal.

Sustained high speed driving and high engine RPM operation may result in increased oil consumption.

Failure to comply with the recommended oil type and viscosity rating, as outlined in the owner's manual, may impact oil economy as well as fuel economy.

Oil consumption may increase with vehicle age and mileage due to normal engine wear.

NOTE: Because a few drops of external oil leakage per mile can quickly account for the loss of one quart of oil in a few hundred miles, be certain there is no external engine oil leaks present.

- **Oil leakage is not the same as oil consumption and all external leakage must be eliminated before any action can be taken to verify and/or correct oil consumption complaints.**
- **Verify that the engine has the correct oil level dipstick and dipstick tube installed.**
- **Verify that the engine is not being run in an overfilled condition. Check the oil level 15 minutes after a hot shutdown with the vehicle parked on a level surface. In no case should the level be above MAX or the FULL mark on the dipstick.**

OIL CONSUMPTION TEST

1. Check the oil level at least 15 minutes after a hot shutdown.
2. If the oil level is low, top off with the proper viscosity and API service level engine oil. Add one bottle of MOPAR® 4-In-1 Leak Detection Dye into the engine oil.

3. Tamper proof the oil pan drain plug, oil filter, dipstick and oil fill cap.
4. Record the vehicle mileage.
5. Instruct the customer to drive the vehicle as usual.
6. Ask the customer to return to the servicing dealer after accumulating 500 miles, Check the oil level at least 15 minutes after a hot shutdown. If the oil level is half way between the "FULL" and "ADD" mark continue with the next step.
7. Using a black light, re-check for any external engine oil leaks, repair as necessary, if no external engine oil leaks are present, continue with oil consumption diagnosis.

OIL CONSUMPTION DIAGNOSIS

1. Check the positive crankcase ventilation (PCV) system. Make sure the system is not restricted and the PCV valve has the correct part number and correct vacuum source (18-20 in. Hg at idle below 3000 ft. above sea level is considered normal).
2. Perform a cylinder compression test and cylinder leak down test using the standard leak down gauge following manufacturers suggested best practices.

   NOTE: Verify the spark plugs are not oil saturated. If the spark plugs are oil saturated and compression is good it can be assumed the valve seals or valve guides are at fault.

3. If one or more cylinders have more than 15% leak down further engine tear down and inspection will be required.

TOP 19 REASONS THAT MAY LEAD TO ENGINE OIL CONSUMPTION

1. **Tapered and Out-of-Round Cylinders**

   The increased piston clearances permit the pistons to rock in the worn cylinders. While tilted momentarily, an abnormally large volume of oil is permitted to enter on one side of the piston. The rings, also tilted in the cylinder, permit oil to enter on one side. Upon reversal of the piston on each stroke, some of this oil is passed into the combustion chamber.

2. **Distorted Cylinders**

This may be caused by unequal heat distribution or unequal tightening of cylinder head bolts. This condition presents a surface which the rings may not be able to follow completely. In this case, there may be areas where the rings will not remove all of the excess oil. When combustion takes place, this oil will be burned and cause high oil consumption.

3. **Improper operation of "PCV "system**

   The main purpose of the Positive Crankcase Ventilation (PCV) valve is to recirculate blow-by gases back from the crankcase area through the engine to consume unburned hydrocarbons. The PCV system usually has a one way check valve and a make up air source. The system uses rubber hoses that route crankcase blow by gases to the intake manifold. Vacuum within the engine intake manifold pulls the blow by gases out of the crankcase into the combustion chamber along with the regular intake air and fuel mixture.

   The PCV system can become clogged with sludge and varnish deposits and trap blow by gases in the crankcase. This degrades the oil, promoting additional formation of deposit material. If left uncorrected, the result is plugged oil rings, oil consumption, rapid ring wear due to sludge buildup, ruptured gaskets and seals due to crankcase pressurization.

4. **Worn Piston Ring Grooves**

   For piston rings to form a good seal, the sides of the ring grooves must be true and flat - not flared or shouldered. Piston rings in tapered or irregular grooves will not seal properly and, consequently, oil will pass around behind the rings into the combustion chamber.

5. **Worn, Broken or Stuck Piston Rings**

   When piston rings are broken, worn or stuck to such an extent that the correct tension and clearances are not maintained, this will allow oil to be drawn into the combustion chamber on the intake stroke and hot gases of combustion to be blown down the cylinder past the piston on the power stroke. All of these conditions will result in burning and carbon build up of the oil on the cylinders, pistons and rings.

6. **Cracked or Broken Ring Lands**

Cracked or broken ring lands prevent the rings from seating completely on their sides and cause oil pumping. This condition will lead to serious damage to the cylinders as well as complete destruction of the pistons and rings. Cracked or broken ring lands cannot be corrected by any means other than piston replacement.

7. **Worn Valve Stems and Guides**

   When wear has taken place on valve stems and valve guides, the vacuum in the intake manifold will draw oil and oil vapor between the intake valve stems and guides into the intake manifold and then into the cylinder where it will be burned.

8. **Bent or Misaligned Connecting Rods**

   Bent or misaligned connecting rods will not allow the pistons to ride straight in the cylinders. This will prevent the pistons and rings from forming a proper seal with the cylinder walls and promote oil consumption. In addition, it is possible that a bearing in a bent connect rod will not have uniform clearance on the connecting rod wrist pin. Under these conditions, the bearing will wear rapidly and throw off an excessive amount of oil into the cylinder.

9. **Fuel Dilution**

   If raw fuel is allowed to enter the lubrication system, the oil will become thinner and more volatile and will result in higher oil consumption. The following conditions will lead to higher oil consumption;

   - Excess fuel can enter and mix with the oil via a leaking fuel injector
   - Gasoline contaminated with diesel fuel
   - Restricted air intake
   - Excessive idling

10. **Contaminated Cooling Systems**

    Corrosion, rust, scale, sediment or other formations in the water jacket and radiator will prevent a cooling system from extracting heat efficiently. This is likely to cause cylinder distortion thus leading to higher oil consumption.

11. **Oil Viscosity**

    The use of oil with a viscosity that is too light may result in high oil consumption. Refer to the vehicle owner's manual for the proper oil viscosity to be used under specific driving conditions and/or ambient temperatures.

12. **Dirty Engine Oil**

    Failure to change the oil and filter at proper intervals may cause the oil to be so dirty that it will promote accumulation of sludge and varnish and restrict oil passages in the piston rings and pistons. This will increase oil consumption; dirty oil by nature is also consumed at a higher rate than clean oil.

13. **Crankcase Overfull**

    Due to an error in inserting the oil dip stick so that it does not come to a seat on its shoulder, a low reading may be obtained. Additional oil may be added to make the reading appear normal with the stick in this incorrect position which will actually make the oil level too high. If the oil level is so high that the lower ends of the connecting rods touch the oil in the oil pan excessive quantities of oil will be thrown on the cylinder walls and some of it will work its way up into the combustion chamber.

14. **Excessively High Oil Pressure**

    A faulty oil pressure relief valve may cause the oil pressure to be too high. The result will be that the engine will be flooded with an abnormally large amount of oil in a manner similar to that which occurs with worn bearings. This condition may also cause the oil filter to burst.

15. **Aftermarket Performance Chips and Modification**

    Increasing performance through the use of performance/power enhancement products to a stock or factory engine will increase the chance of excessive oil consumption.

16. **Lugging Engine**

Lugging is running the engine at a lower RPM in a condition where a higher RPM (more power/torque) should be implemented. Especially susceptible on vehicles equipped with a manual transmission. This driving habit causes more stress loading on the piston and can lead to increases in engine oil consumption.

17. **Turbocharged Engines**

    There is a possibility for PCV "push-over" due to higher crankcase pressure (as compared to naturally aspirated engines) which is normal for turbocharged engines. This condition causes varying amounts of engine oil to enter the intake manifold, charge air cooler and associated plumbing to and from the charge air cooler, also a leaking turbocharger seal will draw oil into the combustion chamber where it will burn (blue smoke from tail pipe may be present) and form carbon deposits which contribute to further oil consumption as they interfere with proper engine function.

18. **Restricted Air Intake**

    Excessive restriction in the air intake system will increase engine vacuum and can increase oil consumption, an extremely dirty air filter would be one example of this situation.

19. **Intake Manifold port seals**

    Engines that have a "V" configuration and a "wet valley" (3.3/3.8L) could draw oil into the intake ports due to improper sealing between the intake manifold ports and cylinder head. Causes may include improper torque of intake manifold bolts, corrosion (aluminum intake manifold) and or warped sealing surface.

ENGINE OIL LEAK INSPECTION

Begin with a thorough visual inspection of the engine, particularly at the area of the suspected leak. If an oil leak source is not readily identifiable, the following steps should be followed:

1. Do not clean or degrease the engine at this time because some solvents may cause rubber to swell, temporarily stopping the leak.
2. Add an oil soluble dye (use as recommended by manufacturer). Start the

engine and let idle for approximately 15 minutes. Check the oil dipstick to make sure the dye is thoroughly mixed as indicated with a bright yellow color under a black light.

3. Using a black light, inspect the entire engine for fluorescent dye, particularly at the suspected area of oil leak. If the oil leak is found and identified, repair as necessary.
4. If dye is not observed, drive the vehicle at various speeds for approximately 24 km (15 miles), and repeat inspection.
5. **If the oil leak source is not positively identified at this time** , proceed with the air leak detection test method as follows:
   - Disconnect the fresh air hose (make-up air) at the cylinder head cover and plug or cap the nipple on the cover.
   - Remove the PCV valve hose from the cylinder head cover. Cap or plug the PCV valve nipple on the cover.
   - Attach an air hose with pressure gauge and regulator to the dipstick tube.

CAUTION: Do not subject the engine assembly to more than 20.6 kPa (3 PSI) of test pressure.

   - Gradually apply air pressure from 1 psi to 2.5 psi maximum while applying soapy water at the suspected source. Adjust the regulator to the suitable test pressure that provides the best bubbles which will pinpoint the leak source. If the oil leak is detected and identified, repair per service manual procedures.
   - If the leakage occurs at the crankshaft rear oil seal area, refer to **INSPECTION FOR REAR SEAL AREA LEAKS** .
6. If no leaks are detected, turn off the air supply. Remove the air hose, all plugs, and caps. Install the PCV valve and fresh air hose (make-up air). Proceed to next step.
7. Clean the oil off the suspect oil leak area using a suitable solvent. Drive the vehicle at various speeds approximately 24 km (15 miles). Inspect the engine for signs of an oil leak by using a black light.

NOTE: If oil leakage is observed at the dipstick tube to block location; remove the tube, clean and reseal using Mopar® Stud AND Bearing Mount (press fit tube applications

only), and for O-ring style tubes, remove tube and replace the O-ring seal.

INSPECTION FOR REAR SEAL AREA LEAKS

Since it is sometimes difficult to determine the source of an oil leak in the rear seal area of the engine, a more involved inspection is necessary. The following steps should be followed to help pinpoint the source of the leak.

If the leakage occurs at the crankshaft rear oil seal area:

1. Disconnect the battery.
2. Raise the vehicle.
3. Remove torque converter or clutch housing cover and inspect rear of block for evidence of oil. Use a black light to check for the oil leak. If a leak is present in this area, remove transmission for further inspection.
   a. Circular spray pattern generally indicates seal leakage or crankshaft damage.
   b. Where leakage tends to run straight down, possible causes are a porous block, oil gallery cup plug, bedplate to cylinder block mating surfaces and seal bore. See appropriate repair procedures for these items.
4. If no leaks are detected, pressurize the crankcase as previously described.

CAUTION: Do not exceed 20.6 kPa (3 psi).

5. If the leak is not detected, very slowly turn the crankshaft and watch for leakage. If a leak is detected between the crankshaft and seal while slowly turning the crankshaft, it is possible the crankshaft seal surface is damaged. The seal area on the crankshaft could have minor nicks or scratches that can be polished out with emery cloth.

CAUTION: Use extreme caution when crankshaft polishing is necessary to remove minor nicks and scratches. The crankshaft seal flange is especially machined to complement the function of the rear oil seal.

6. For bubbles that remain steady with shaft rotation, no further inspection can

be done until disassembled.

7. After the oil leak root cause and appropriate corrective action have been identified, replace component(s) as necessary.

STANDARD PROCEDURE

DUST COVERS AND CAPS

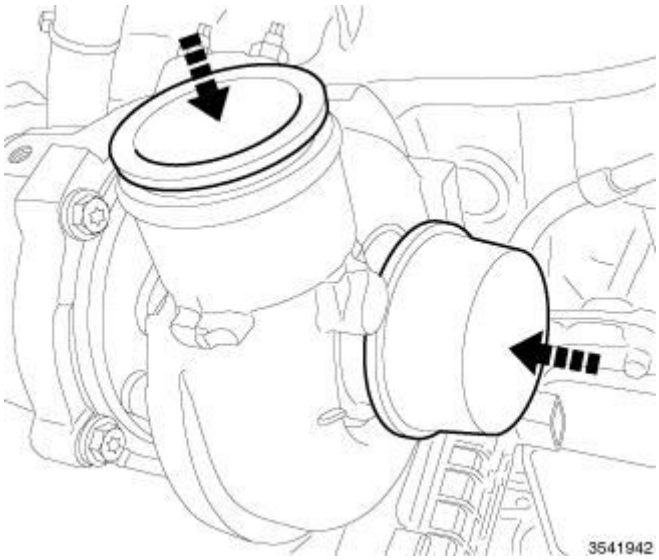

Fig. 1: Covers/Caps
Courtesy of CHRYSLER GROUP, LLC

Due to the high amounts of failures caused by dust, dirt, moisture and other foreign debris being introduced to the engine during service. Covers or caps are needed to reduce the possible damage that can be caused or created.

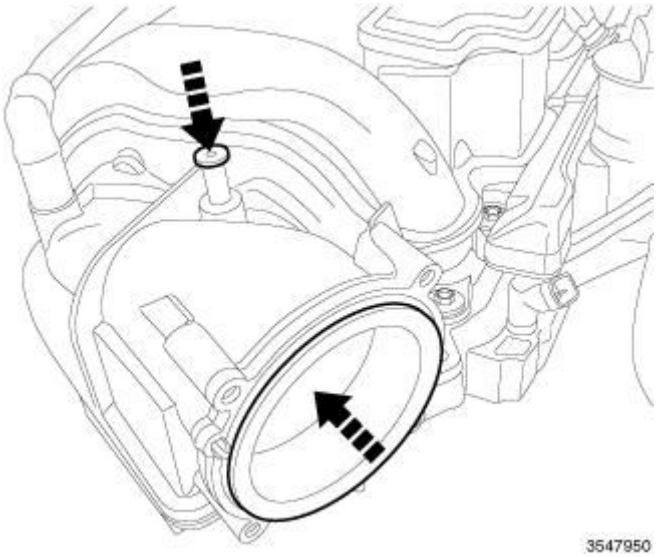

Fig. 2: Opening Cover

Courtesy of CHRYSLER GROUP, LLC

Covers over openings will reduce any possibilities for foreign materials to enter the engine systems. Using miller tool (special tool #10368, Set, Universal Protective Cap), Select the appropriated cover needed to the procedure.

ENGINE GASKET SURFACE PREPARATION

Fig. 3: Proper Tool Usage For Surface Preparation
Courtesy of CHRYSLER GROUP, LLC

To ensure engine gasket sealing, proper surface preparation must be performed, especially with the use of aluminum engine components and multi-layer steel cylinder head gaskets.

Never use the following to clean gasket surfaces:

- Metal scraper (1).
- Abrasive pad or paper to clean cylinder block and head.
- High speed power tool with an abrasive pad or a wire brush (2).

Fig. 4: Proper Tool Usage For Surface Preparation
Courtesy of CHRYSLER GROUP, LLC

NOTE: Multi-Layer Steel (MLS) head gaskets require a scratch free sealing surface.

Only use the following for cleaning gasket surfaces:

- Solvent or a commercially available gasket remover
- Plastic or wood scraper (4).
- High speed power tool with a plastic bristle brush style disc (3).

Sealing surfaces must be free of grease or oil residue. Clean surfaces with Mopar® brake parts cleaner (or equivalent).

REPAIR OF DAMAGED OR WORN THREADS

Damaged or worn threads (excluding spark plug and camshaft bearing cap attaching threads) can be repaired. Essentially, this repair consists of drilling out worn or damaged threads, tapping the hole with a special Heli-Coil Tap, (or equivalent) and installing an insert into the tapped hole. This brings the hole back to its original thread size.

CAUTION: Be sure that the tapped holes maintain the original center line.

Heli-Coil tools and inserts are readily available from automotive parts jobbers.

HYDROSTATIC LOCKED ENGINE

When an engine is suspected to be hydrostatically locked, regardless of what caused the problem, the following steps should be used.

CAUTION: DO NOT use starter motor to rotate the engine, severe damage may occur.

1. Inspect air cleaner, induction system and intake manifold to insure system is dry and clear of foreign material.
2. Remove negative battery cable.
3. Place a shop towel around the spark plugs when removing them from the engine. This will catch any fluid that may possibly be in the cylinder under pressure.
4. With all spark plugs removed, rotate engine crankshaft using a breaker bar and socket.
5. Identify the fluid in the cylinder(s) (i.e., coolant, fuel, oil or other).
6. Make sure all fluid has been removed from the cylinders. Inspect engine for damage (i.e., connecting rods, pistons, valves, etc.)
7. Repair engine or components as necessary to prevent this problem from re-occurring.

CAUTION: Squirt approximately one teaspoon of oil into the cylinders, rotate engine to lubricate the cylinder walls to prevent damage on restart.

8. Install new spark plugs.
9. Drain engine oil and remove oil filter.
10. Install a new oil filter.
11. Fill engine with specified amount of approved oil.
12. Connect negative battery cable.
13. Start engine and check for any leaks.

FORM-IN-PLACE GASKETS AND SEALERS

NOTE: All of the sealants mentioned below are not used on every engine, they are listed as a general reference guide.

See appropriate service information for specific sealer usage.

There are numerous places where form-in-place gaskets are used on the engine. Care must be taken when applying form-in-place gaskets to assure obtaining the desired results.**Do not use form-in-place gasket material unless specified.** Bead size, continuity, and location are of great importance. Too thin a bead can result in leakage while too much can result in spill-over which can break off and obstruct fluid feed lines. A continuous bead of the proper width is essential to obtain a leak-free gasket. All sealing surfaces that use form-in-place gaskets and sealers **must** free of grease or oil. Surfaces should be cleaned with Mopar® brake parts cleaner prior to sealer application. After the sealer is applied, the parts should be assembled in no more than 10 minutes.

There are numerous types of form-in-place gasket materials that are used in the engine area. Mopar® Engine RTV GEN II, Mopar® ATF-RTV, and Mopar® Gasket Maker gasket materials, each have different properties and can not be used in place of the other.

MOPAR® ENGINE RTV GEN II is used to seal components exposed to engine oil. This material is a specially designed black silicone rubber RTV that retains adhesion and sealing properties when exposed to engine oil. Moisture in the air causes the material to cure. This material is available in three ounce tubes and has a shelf life of one year. After one year this material will not properly cure. Always inspect the package for the expiration date before use.

MOPAR® ATF RTV is a specifically designed black silicone rubber RTV that retains adhesion and sealing properties to seal components exposed to automatic transmission fluid, engine coolants, and moisture. This material is available in three ounce tubes and has a shelf life of one year. After one year this material will not properly cure. Always inspect the package for the expiration date before use.

MOPAR® GASKET MAKER is an anaerobic type gasket material. The material cures in the absence of air when squeezed between two metallic surfaces. It will not cure if left in the uncovered tube. The anaerobic material is for use between two machined surfaces. Do not use on flexible metal flanges.

MOPAR® BED PLATE SEALANT is a unique (green-in-color) anaerobic

type gasket material that is specially made to seal the area between the bed plate and cylinder block without disturbing the bearing clearance or alignment of these components. The material cures slowly in the absence of air when torqued between two metallic surfaces, and will rapidly cure when heat is applied.

MOPAR® GASKET SEALANT is a slow drying, permanently soft sealer. This material is recommended for sealing threaded fittings and gaskets against leakage of oil and coolant. Can be used on threaded and machined parts under all temperatures. This material also will prevent corrosion. Mopar® Gasket Sealant is available in a 13 oz. aerosol can or 4 oz./16 oz. can w/applicator.

SEALER APPLICATION

Mopar® Gasket Maker material should be applied sparingly 1 mm (0.040 in.) diameter or less of sealant to one gasket surface. Be certain the material surrounds each mounting hole. Excess material can easily be wiped off. Components should be torqued in place within 15 minutes. The use of a locating dowel is recommended during assembly to prevent smearing material off the location.

Mopar® Engine RTV GEN II or ATF RTV gasket material should be applied in a continuous bead approximately 3 mm (0.120 in.) in diameter. All mounting holes must be circled. For corner sealing and "T" joint locations, a 3.17 or 6.35 mm (1/8 or 1/4 in.) drop is placed in the center of the gasket contact area. Uncured sealant may be removed with a shop towel. Components should be torqued in place while the sealant is still wet to the touch (within 10 minutes). The usage of a locating dowel is recommended during assembly to prevent smearing material off the location.

Mopar® Gasket Sealant in an aerosol can should be applied using a thin, even coat sprayed completely over both surfaces to be joined, and both sides of a gasket. Then proceed with assembly. Material in a can w/applicator can be brushed on evenly over the sealing surfaces.

CORE/GALLERY PLUGS

CYLINDER HEAD CORE PLUGS

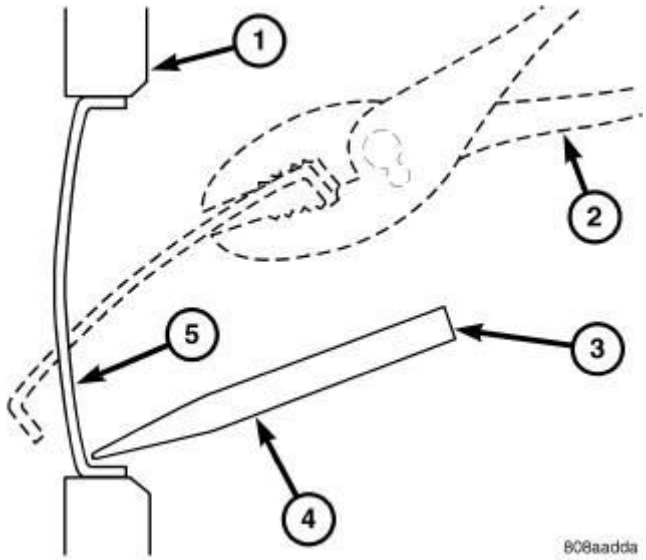

Fig. 5: Core Hole Plug Removal
Courtesy of CHRYSLER GROUP, LLC

Using a blunt tool (3) such as a drift and a hammer, strike the bottom edge of the cup plug (5). With the cup plug rotated, grasp firmly with pliers or other suitable tool (2) and remove plug (5).

CAUTION: Do not drive cup plug into the casting as restricted cooling can result and cause serious engine problems.

Thoroughly clean inside of cup plug hole in cylinder head. Be sure to remove old sealer. Lightly coat inside of cup plug hole with Mopar® Stud and Bearing Mount (or equivalent). Make certain the new plug is cleaned of all oil or grease. Using proper drive plug, drive plug into hole so that the sharp edge of the plug is at least 0.5 mm (0.020 in.) inside the lead-in chamfer.

It is not necessary to wait for curing of the sealant. The cooling system can be refilled and the vehicle placed in service immediately.

MEASURING BEARING CLEARANCE USING PLASTIGAGE

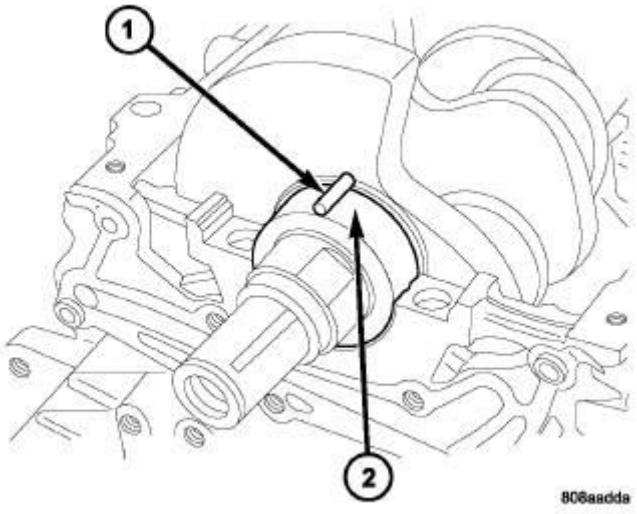

Fig. 6: Plastigage Placed In Lower Shell-Typical
Courtesy of CHRYSLER GROUP, LLC

Engine crankshaft bearing clearances can be determined by use of Plastigage or equivalent. The following is the recommended procedure for the use of Plastigage:

1. Remove oil film from surface to be checked. Plastigage is soluble in oil.
2. Place a piece of Plastigage (1) across the entire width of the journal. (In addition, suspected areas can be checked by placing the Plastigage in the suspected area). Tighten the bearing cap bolts of the bearing being checked to the proper specifications.
3. Remove the bearing cap and compare the width of the flattened Plastigage with the scale provided on the package. Locate the band closest to the same width. This band shows the amount of clearance. Differences in readings between the ends indicate the amount of taper present. Record all readings taken. Compare clearance measurements to specs found in engine specifications. Refer to **SPECIFICATIONS** . **Plastigage generally is accompanied by two scales. One scale is in inches, the other is a metric scale.**

   NOTE: Plastigage is available in a variety of clearance ranges. Use the most appropriate range for the specifications you are checking.

4. Install the proper crankshaft bearings to achieve the specified bearing

clearances.

SPECIFICATIONS

2.0L ENGINE

GENERAL SPECIFICATIONS

DESCRIPTION	SPECIFICATION	
	Metric	Standard
Type	In-Line OHV, DOHC	
Number of Cylinders	4	
Firing Order	1-3-4-2	
Compression Ratio	10.5:1	
Displacement	2.0 L	122 cu. in.
Bore	86 mm	3.386 in.
Stroke	86 mm	3.386 in.
Compression Pressure	1172 - 1551 kPa	170 - 225 psi
Max. Variation Between Cylinders	25%	

CYLINDER BLOCK

DESCRIPTION	SPECIFICATION	
	Metric	Standard
Material	Cast Aluminum	
Cylinder Bore Diameter		
A	86.0 - 86.010 mm	3.3858 - 3.3862 in.
B	86.010 - 86.020 mm	3.3862 - 3.3866 in.
C	86.020 - 86.030 mm	3.3866 - 3.3869 in.
Cylinder Bore Out-of-Round (Max.)	0.020 mm	0.0008 in.
Cylinder Bore Taper (Max.)	0.028 mm	0.001 in.
Main Bearing Bore Diameter		
1	56.000 - 56.006 mm	2.2047 - 2.2049 in.
2	56.006 - 56.012 mm	2.2049 - 2.2051 in.
3	56.012 - 56.018 mm	2.2051 - 2.2054 in.
Main Bearing Bore Diameter	0.0082 mm	0.0003 in.

Taper (Max.)		

PISTONS

DESCRIPTION	SPECIFICATION	
	Metric	Standard
Piston Diameter		
A	85.995 - 86.015 mm	3.3856 - 3.3864 in.
B	86.005 - 86.025 mm	3.3860 - 3.3868 in.
C	86.015 - 86.035 mm	3.3864 - 3.3872 in.
Clearance to Bore	(-0.015) - 0.015 mm	(-0.0006) - 0.0006 in.
Weight	345 - 355 grams	12.17 - 12.52 oz.
Land Clearance (Diametrical)	0.60 - 0.73 mm	0.0236 - 0.0287 in.
Piston Length	49.0 mm	2.929 in.
Piston Ring Groove Depth No. 1	3.51 - 3.68 mm	0.1382 - 0.0256 in.
Piston Ring Groove Depth No. 2	4.05 - 4.25 mm	0.1594 - 0.1673 in.
Piston Ring Groove Depth No. 3	2.70 - 2.90 mm	0.1063 - 0.1142 in.

PISTON RINGS

DESCRIPTION	SPECIFICATION	
	Metric	Standard
Ring Gap-Top Compression Ring	0.15 - 0.30 mm	0.0059 - 0.0118 in.
Wear Limit	0.8 mm	0.031 in.
Ring Gap-2nd Compression Ring	0.30 - 0.45 mm	0.0118 - 0.0177 in.
Wear Limit	0.8 mm	0.031 in.
Ring Gap-Oil Control Steel Rails	0.20 - 0.70 mm	0.0079 - 0.0276 in.
Wear Limit	1.0 mm	0.039 in.
Ring Side Clearance-Compression Rings	0.03 - 0.07 mm	0.1182 - 0.0028 in.
Wear Limit	0.10 mm	0.004 in.

Ring Side Clearance-Oil Ring Pack	0.06 - 0.15 mm	0.0024 - 0.0059 in.
Ring Width-Top Compression Ring	2.95 - 3.25 mm	0.1161 - 0.1280 in.
Ring Width-2nd Compression Ring	3.45 - 3.75 mm	0.1358 - 0.1476 in.
Ring Width-Oil Ring Pack	2.30 - 2.60 mm	0.0906 - 0.1024 in.
Ring Thickness-Top Compression Ring	1.17 - 1.19 mm	0.0461 - 0.0469 in.
Ring Thickness-2nd Compression Ring	1.17 - 1.19 mm	0.0461 - 0.0469 in.
Ring Thickness-Oil Ring Pack	1.88 - 1.95 mm	0.0740 - 0.0768 in.

CONNECTING ROD

DESCRIPTION	SPECIFICATION	
	Metric	Standard
Bearing Clearance	0.032 - 0.060 mm	0.001 - 0.002 in.
Wear Limit	0.070 mm	0.0027 in.
Bore Diameter-Piston Pin	20.974 - 20.985 mm	0.8257 - 0.8261 in.
Bore Diameter-Crankshaft End	51 - 51.015 mm	2.0078 - 2.0084 in.
Side Clearance	0.1 - 0.25 mm	0.0039 - 0.0098 in.
Wear Limit	0.27 mm	0.0106 in.
Weight-Total (Less Bearing)	490 grams	17.28 oz.

CRANKSHAFT

DESCRIPTION	SPECIFICATION	
	Metric	Standard
Connecting Rod Journal Diameter		
Journal Grade		
1	47.966 - 47.972 mm	1.8884 - 1.8886 in.
2	47.960 - 47.966 mm	1.8884 - 1.8881 in.
3	47.954 - 47.960 mm	1.8879 - 1.8881 in.
Rod Journal- Taper (Max)	0.005 mm	0.0001 in.

Main Bearing Journal Diameter		
Journal Grade		
0	51.985 - 51.988 mm	2.0466 - 2.0467 in.
1	51.982 - 51.985 mm	2.0465 - 2.0466 in.
2	51.979 - 51.982 mm	2.0464 - 2.0465 in.
3	51.976 - 51.979 mm	2.0462 - 2.0464 in.
4	51.973 - 51.976 mm	2.0461 - 2.0462 in.
Journal Out-of-Round (Max.)	0.005 mm	0.0001 in.
Journal Taper (Max.)	0.006 mm	0.0002 in.
End Play	0.05 - 0.25 mm	0.0019 - 0.0098 in.
Wear Limit	0.30 mm	0.0118 in.
Main Bearing Diametrical Clearance	0.028 - 0.048 mm	0.0011 - 0.0018 in.
Main Bearing Diametrical Clearance (Max)	0.058 mm	0.0022 in.

CYLINDER HEAD CAMSHAFT BEARING BORE DIAMETER

DESCRIPTION	SPECIFICATION	
	Metric	Standard
Cam Bearing Bore		
Front Intake	30.000 - 30.021 mm	1.1810 - 1.1819 in.
Front Exhaust	40.000 - 40.024 mm	1.5747 - 1.5756 in.
Cam Bearing Bore No. 1-4	24.000 - 24.021 mm	0.9448 - 0.9457 in.

CAMSHAFT

DESCRIPTION	SPECIFICATION	
	Metric	Standard
Cam Journal Diameter		
Front Intake Cam	29.964 - 29.980 mm	1.1797 - 1.1803 in.
Front Exhaust Cam	35.984 - 36.000 mm	1.4166 - 1.4173 in.
Cam Journal Diameter No. 1-4	23.954 - 23.970 mm	0.943 - 0.944 in.
Bearing Clearance - Diametrical		
Front Intake Journal	0.020 - 0.057 mm	0.0008 - 0.0022 in.

Front Exhaust Journal	0.019 - 0.051 mm	0.0007 - 0.0020 in.
All Others	0.020 - 0.067 mm	0.0008 - 0.0026 in.
End Play	0.11 - 0.25 mm	0.004 - 0.009 in.
Max Lift @ 0.2mm (0.007 in.) lash		
Intake	9.2 mm	0.362 in.
Max Lift @ 0.28mm (0.011 in.) lash		
Exhaust	8.42 mm	0.331 in.
Intake Valve Timing w/ VVT in lock-pin position*		
Closes (ABDC)	49.3°	
Opens (ATDC)	10.3°	
Duration	219°	
Exhaust Valve Timing w/ VVT in lock-pin position*		
Closes (BTDC)	8.45°	
Opens (BBDC)	45°	
Duration	216.55°	
Valve Overlap @ 0.5mm (0.019 in.) w/ VVT in lock-pin position	18.75°	
* All reading in crankshaft degrees at 0.5 mm (0.019 in.) valve lift.		

CYLINDER HEAD

DESCRIPTION	SPECIFICATION	
	Metric	**Standard**
Material	Cast Aluminum - Heat treated	
Gasket Thickness (Compressed)	0.54 mm	0.021 in.
Valve Tappet Bore I.D.	32.000 - 32.025 mm	1.2598 - 1.2608 in.
Valve Tappet O.D	31.964 - 31.980 mm	1.2584 - 1.2590 in.

VALVE SEAT

DESCRIPTION	SPECIFICATION	
	Metric	**Standard**
Angle	44.75° - 45.10°	
Seat Outer Diameter - Intake	34.45 - 34.61 mm	1.3562 - 1.3625 in.
Seat Outer Diameter -		

Exhaust	28.04 - 28.20 mm	1.1039 - 1.1102 in.
Runout (Max.)	0.05 mm	0.002 in.
Valve Seat Width		
Intake	1.16 - 1.46 mm	0.0456 - 0.0574 in.
Service Limit	2.0 mm	0.079 in.
Exhaust	1.35 - 1.65 mm	0.0531 - 0.0649 in.
Service Limit	2.5 mm	0.098 in.

VALVE GUIDE

DESCRIPTION	SPECIFICATION	
	Metric	Standard
Diameter I.D.	5.500 - 5.518 mm	0.2165 - 0.2172 in.
Guide Bore Diameter	10.983 - 11.001 mm	0.432 - 0.4331 in.
Guide Height (spring seat to guide tip)	14.6 - 15.2 mm	0.5748 - 0.5984 in.

VALVES

DESCRIPTION	SPECIFICATION	
	Metric	Standard
Face Angle - Intake and Exhaust	45.25° - 45.75°	
Head Diameter - Intake	34.9 - 35.1 mm	1.374 - 1.3818 in.
Head Diameter - Exhaust	28.9 - 29.1 mm	1.1377 - 1.1456 in.
Valve Lash		
Intake	0.17 - 0.23 mm	0.006 - 0.009 in.
Exhaust	0.27 - 0.33 mm	0.010 - 0.012 in.
Valve Length (Overall)		
Intake	113.18 mm	4.455 in.
Exhaust	105.887 mm	4.168 in.
Valve Stem Diameter		
Intake	5.465 - 5.480 mm	0.2151 - 0.2157 in.
Exhaust	5.458 - 5.470 mm	0.2148 - 0.2153 in.

VALVE MARGIN

DESCRIPTION	SPECIFICATION	

	Metric	Standard
Intake	0.672 mm	0.0264 in.
Exhaust	0.744 mm	0.02929 in.

VALVE STEM TIP

DESCRIPTION	SPECIFICATION	
	Metric	Standard
Intake	48.04 mm	1.891 in.
Exhaust	47.99 mm	1.889 in.

VALVE STEM TO GUIDE CLEARANCE

DESCRIPTION	SPECIFICATION	
	Metric	Standard
Intake	0.020 - 0.053 mm	0.0008 - 0.0021 in.
Max. Allowable	0.076 mm	0.003 in.
Exhaust	0.030 - 0.060 mm	0.0012 - 0.0024 in.
Max. Allowable	0.101 mm	0.004 in.

VALVE SPRINGS

DESCRIPTION	SPECIFICATION	
	Metric	Standard
Free Length (Approx.)	47.0 mm	1.850 in.
Nominal Force (Valve Closed)	179.5 N ± 9 @ 35.0 mm	40.35 lbs. @ 1.38 in.
Nominal Force (Valve Open)	364.8 N ± 17 N @ 29.25 mm	82.01 lbs. ± 3.82 lbs. @ 1.152 in.
Installed Height	35.00 mm	1.378 in.
Number of Coils	8.5 ± 0.1	
Wire Diameter	2.90 mm ± 0.03	0.114 in ± 0.001 in.

OIL PRESSURE

DESCRIPTION	SPECIFICATION	
	Metric	Standard
At Curb Idle Speed*	25 kPa	4 psi. min.
At 3000 RPM	170 - 550 kPa	25 - 80 psi.

CAUTION:
***If pressure is ZERO at curb idle, DO NOT run engine at 3000 RPM.**

TORQUE

DESCRIPTION	N.m	Ft. Lbs.	In. Lbs.
Balance Shaft Module	Refer to **PUMP, ENGINE OIL, INSTALLATION**		
Bell Housing-Bolts	48	35	-
Camshaft Bearing Cap-Bolts			
M6 Bolts	12	-	106
M8 Bolts	30	22	-
Coils	8	-	71
Connecting Rod Cap-Bolts	20 + 90°	15 + 90°	-
Coolant Temperature Sender	18	13	-
Crankshaft Main Bearing Cap-Bolts	Refer to **INSTALLATION**		
Crankshaft Damper-Bolt	210	155	-
Cylinder Head-Bolts	Refer to **INSTALLATION**		
Cylinder Head Cover-Bolts	Refer to **INSTALLATION**		
Engine Support Bracket-Bolts	48	36	-
Exhaust Manifold-Bolts	34	25	-
Exhaust Manifold Heat Shield-Bolts			
M6x25mm Bolts	7	-	62
M6x70mm Bolts	9	-	80
Flex Plate to Crankshaft-Bolts	29 + 51°	22 + 51°	-
Intake Manifold-Bolts	24	18	-
Ladder Frame	22	16	-
Oil Cooler Connector Bolt	49	36	-
Oil Filter	14	10	-
Oil Filter Nipple	49	36	-
Oil Jet Fastener	12	-	106
Oil Pan-Bolts			
M6 Bolts	9	-	80
M8 Bolts	24	18	-
Oil Pan Drain-Plug	27	20	-

Oil Pressure Switch	8	-	71
PCV Valve	5	-	44
Phaser to Camshaft-Bolt	75	55	-
Spark Plugs	27	20	239
Timing Chain Cover M6 Bolts	9	-	80
Timing Chain Cover M8 Bolts	26	19	-
Timing Chain Tensioner Assembly-Bolts	10	-	89
Timing Chain Guides	12	-	106

REMOVAL

ENGINE COVER

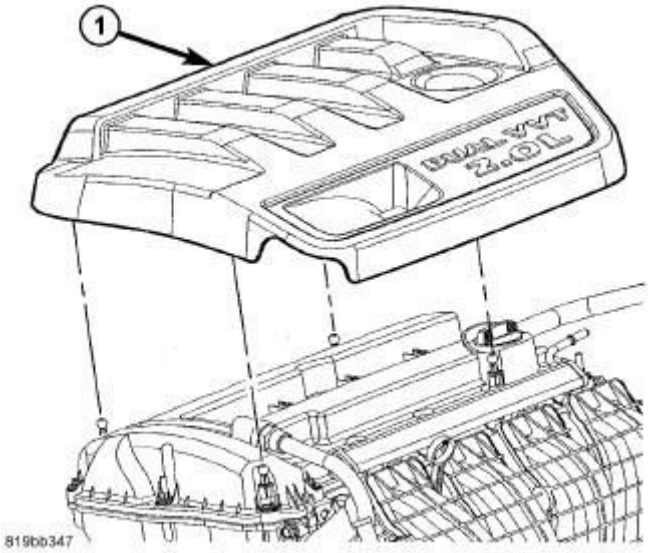

Fig. 7: Engine Cover - 2.0L
Courtesy of CHRYSLER GROUP, LLC

1. Remove engine cover (1) by pulling upwards.

REMOVAL - ENGINE

CAUTION: If the original engine has experienced a catastrophic failure or an individual failure with the piston, cylinder bore, engine block, valve or valve seat, the intake manifold MUST be replaced with a

new manifold.

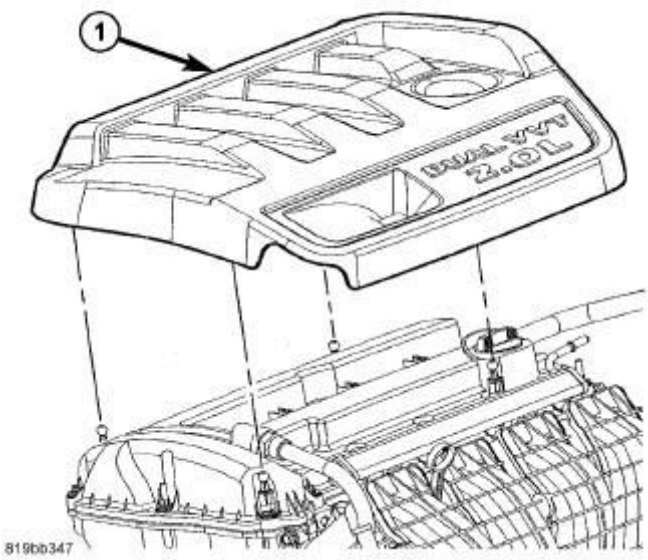

Fig. 8: Engine Cover - 2.0L
Courtesy of CHRYSLER GROUP, LLC

1. Remove the hood. Refer to **HOOD, REMOVAL** .
2. Remove the engine cover (1).

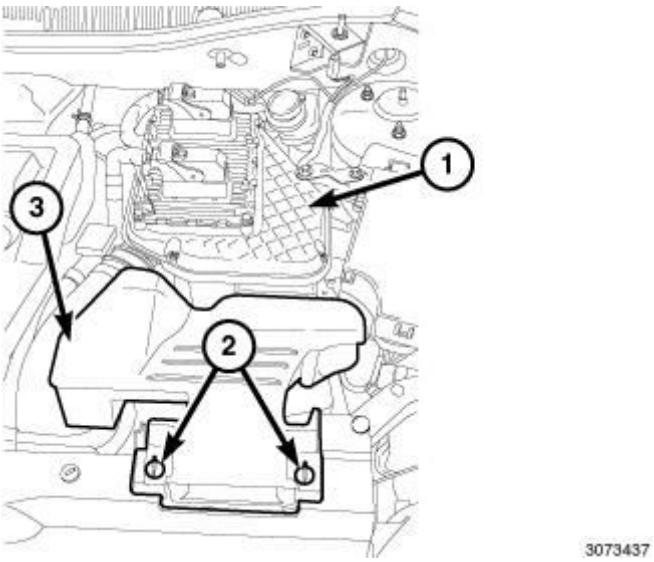

Fig. 9: Retainers, Fresh Air Inlet Duct & Air Cleaner Body
Courtesy of CHRYSLER GROUP, LLC

3. Perform fuel pressure release procedure. Refer to **FUEL SYSTEM PRESSURE RELEASE PROCEDURE** .
4. Unlock the retainers (2) and remove the fresh air inlet duct (3) from air

cleaner body (1).

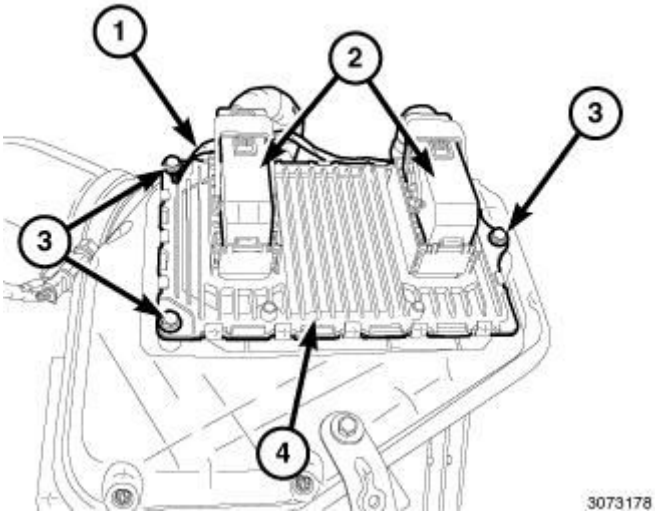

Fig. 10: Electrical Connectors, PCM, Three Mounting Bolts & Ground Wire
Courtesy of CHRYSLER GROUP, LLC

5. Disconnect and isolate the negative battery cable.
6. Unlock and disconnect the electrical connectors (2) from the PCM (4).
7. Remove the mounting bolt (3) and ground wire (1).

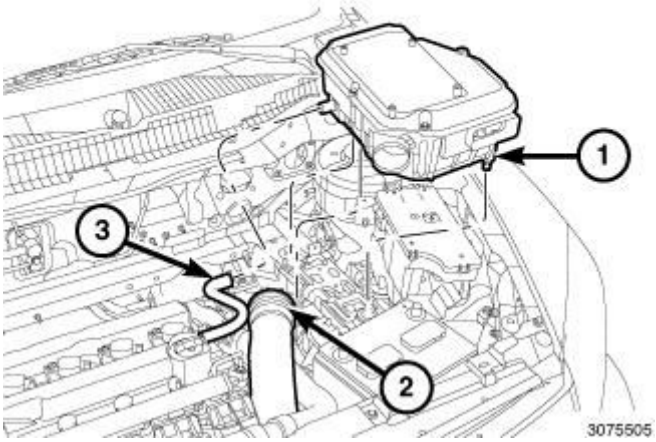

Fig. 11: Air Cleaner Body, Air Inlet Tube & Make-Up Air Hose
Courtesy of CHRYSLER GROUP, LLC

8. Remove the air inlet tube (2) from the air cleaner body (1).
9. Disconnect the make-up air hose (3) from the air cleaner body.

10. Remove the support bracket bolt from the strut tower.
11. Pull upward to disengage the pins from the rubber grommets and remove the air cleaner body (1).

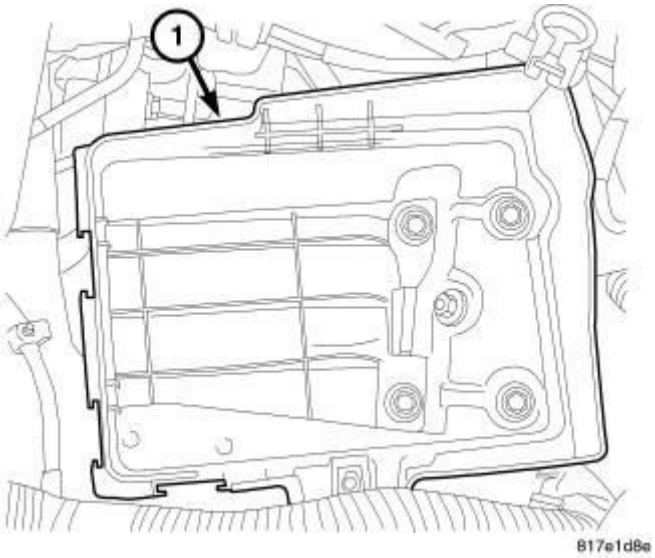

Fig. 12: Battery Tray
Courtesy of CHRYSLER GROUP, LLC

12. Remove the battery and the battery tray (1). Refer to **TRAY, BATTERY, REMOVAL** .
13. Discharge air conditioning system, if equipped. Refer to **PLUMBING, STANDARD PROCEDURE** .
14. Drain cooling system. Refer to **STANDARD PROCEDURE** .

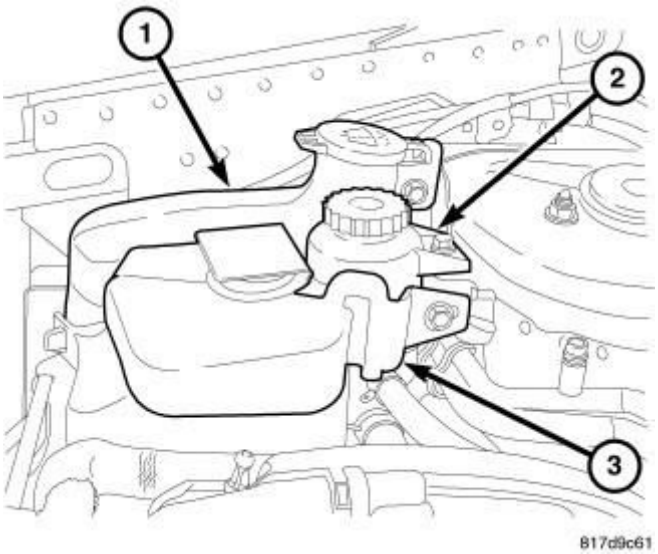

Fig. 13: Windshield Washer Reservoir, Power Steering Reservoir &

Coolant Reservoir
Courtesy of CHRYSLER GROUP, LLC

15. Remove coolant reservoir (3).
16. Remove power steering reservoir (2).
17. Remove windshield washer reservoir (1).

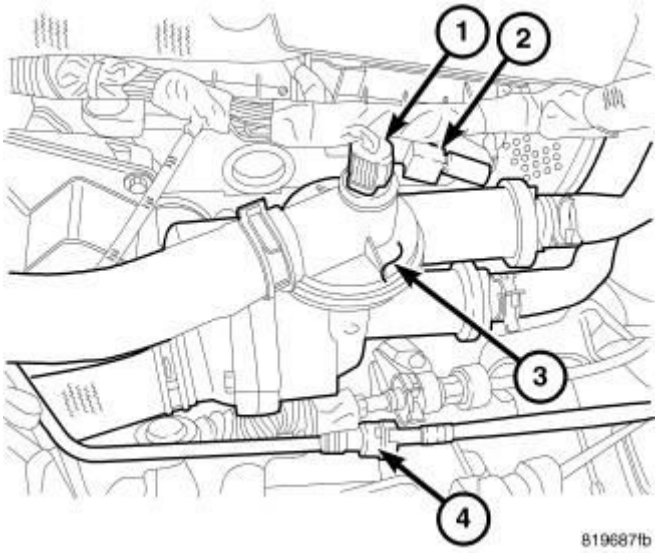

Fig. 14: Coolant Adapter
Courtesy of CHRYSLER GROUP, LLC

18. Remove coolant hoses from coolant adapter (3).

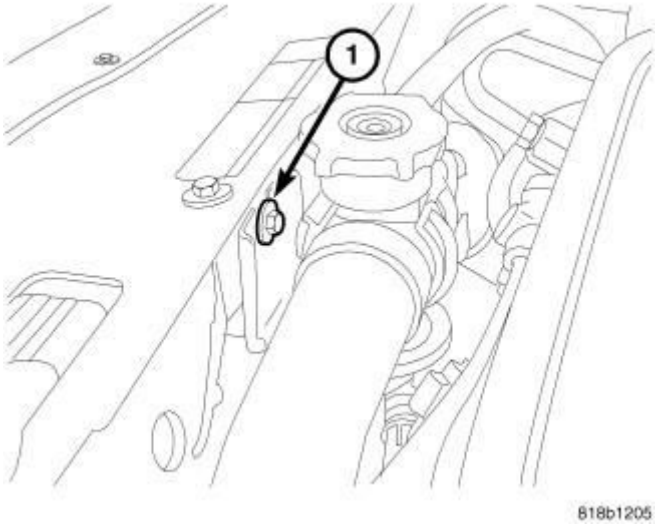

Fig. 15: Radiator Hose Support
Courtesy of CHRYSLER GROUP, LLC

19. Remove grill closure panel.
20. Remove upper radiator hose support (1).

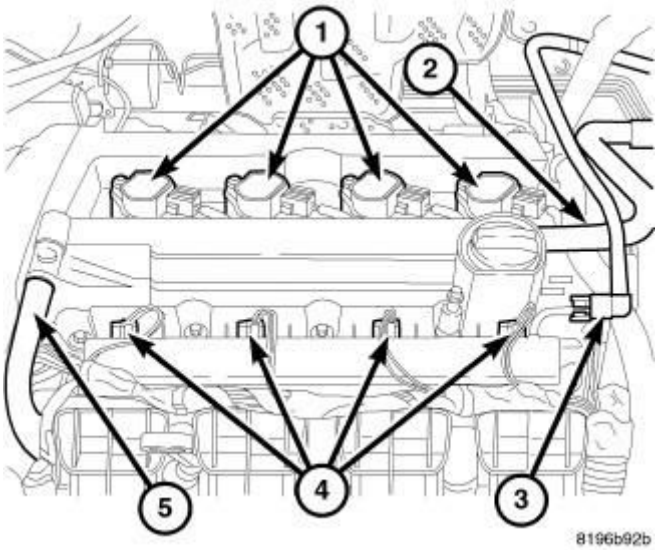

Fig. 16: Coil Connector
Courtesy of CHRYSLER GROUP, LLC

21. Disconnect engine electrical connectors and reposition harness.
22. Remove air intake tube from throttle body.
23. Disconnect fuel line (3) from fuel rail.

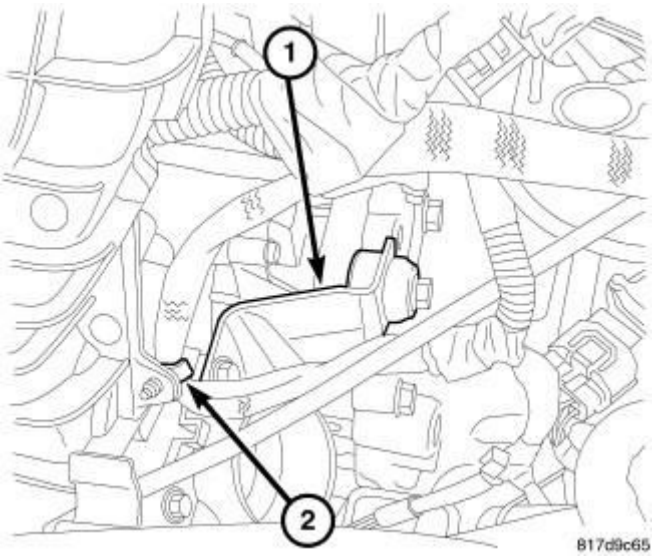

Fig. 17: Throttle Body Support
Courtesy of CHRYSLER GROUP, LLC

24. Remove vacuum lines from throttle body and intake manifold.
25. Remove harness from intake (2).

26. Remove throttle body support bracket (1).

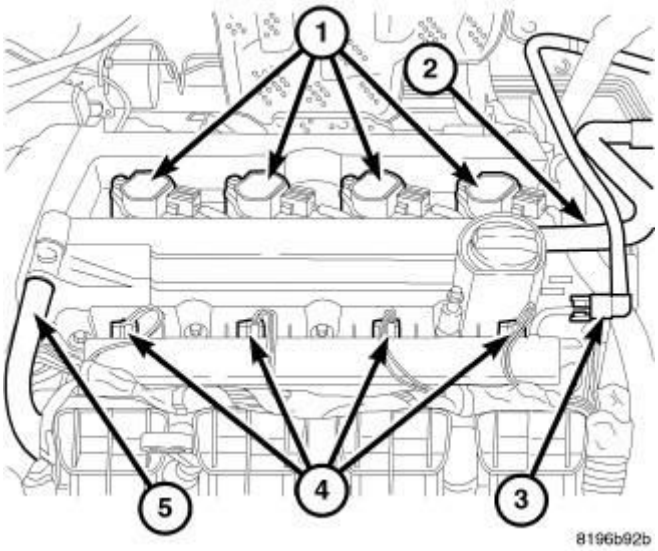

Fig. 18: Coil Connector
Courtesy of CHRYSLER GROUP, LLC

27. Disconnect electronic throttle control and manifold flow control valve electrical connectors.
28. Remove PCV hose (5), and make-up air hose (2) from valve cover.
29. Remove dipstick.

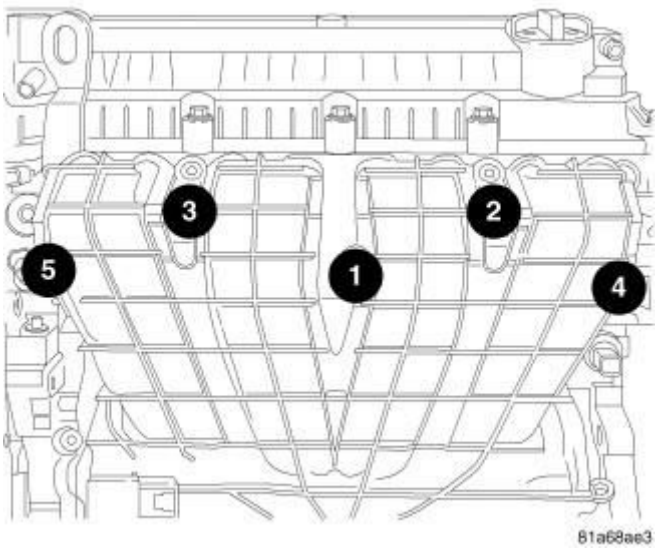

Fig. 19: Intake Manifold Bolt Removal & Tightening Sequence
Courtesy of CHRYSLER GROUP, LLC

30. Remove intake bolts (1-5) and remove intake.
31. Disconnect electrical connectors and reposition harness.

32. Remove accessory drive belt.

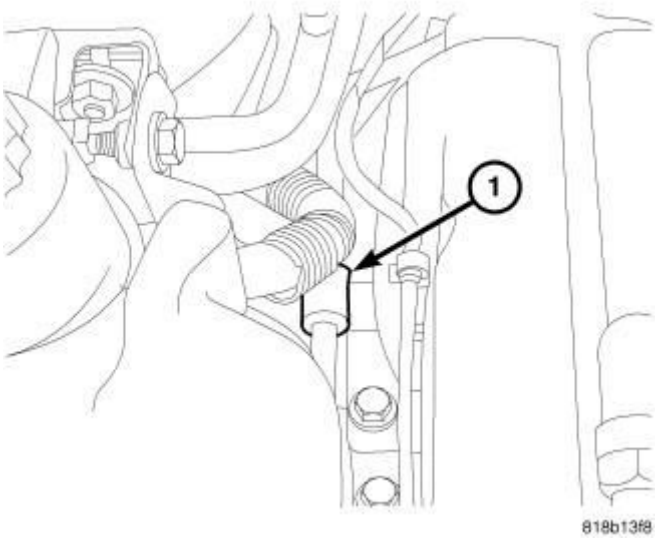

Fig. 20: Power Steering Line Support
Courtesy of CHRYSLER GROUP, LLC

33. Remove power steering line support at engine mount (1) and exhaust manifold.
34. Remove power steering pump and set aside.
35. Remove upper idler pulley.

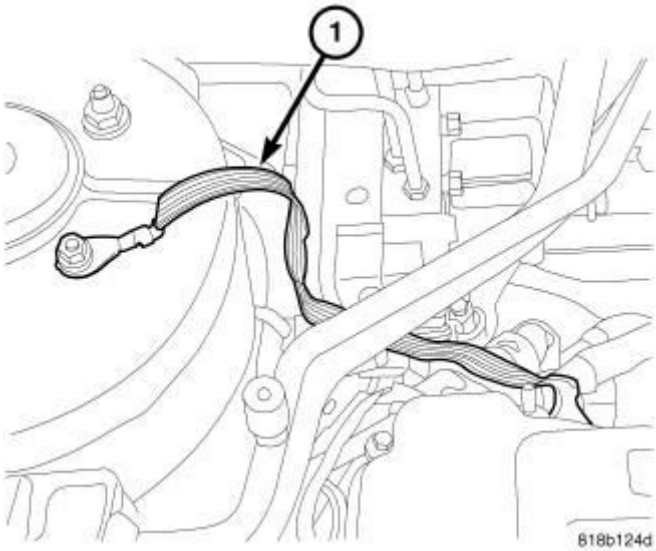

Fig. 21: Ground Strap
Courtesy of CHRYSLER GROUP, LLC

36. Remove ground strap near right tower.
37. Raise vehicle.

38. Remove right front tire.
39. Remove splash shield.

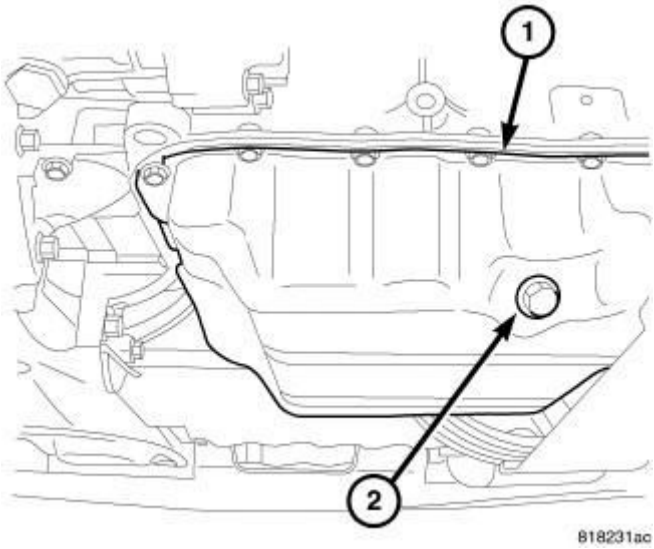

Fig. 22: Oil Drain Plug
Courtesy of CHRYSLER GROUP, LLC

40. Drain oil (2).

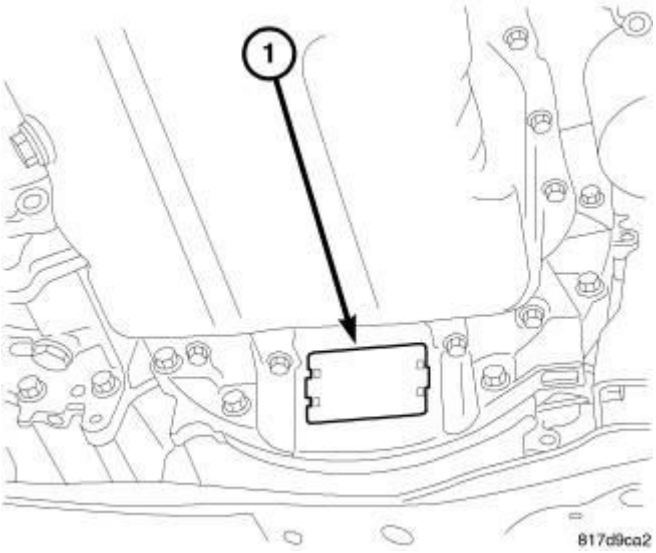

Fig. 23: Inspection Cover
Courtesy of CHRYSLER GROUP, LLC

41. Remove inspection cover (1) and mark torque converter to flywheel.

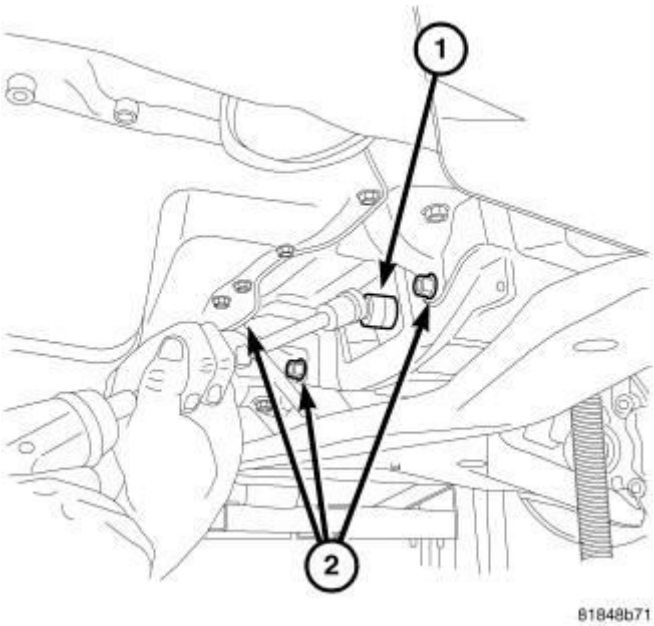

Fig. 24: Modular Clutch To Flex Plate Bolts
Courtesy of CHRYSLER GROUP, LLC

42. Remove torque converter bolts (1).
43. Remove lower bellhousing bolts (2).

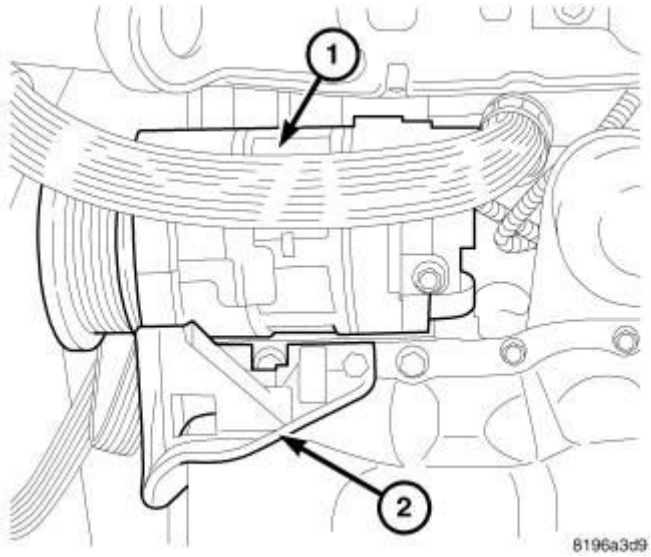

Fig. 25: A/C Compressor
Courtesy of CHRYSLER GROUP, LLC

44. Remove A/C compressor (1) mounting bolts.
45. Remove generator and lower idler pulley.

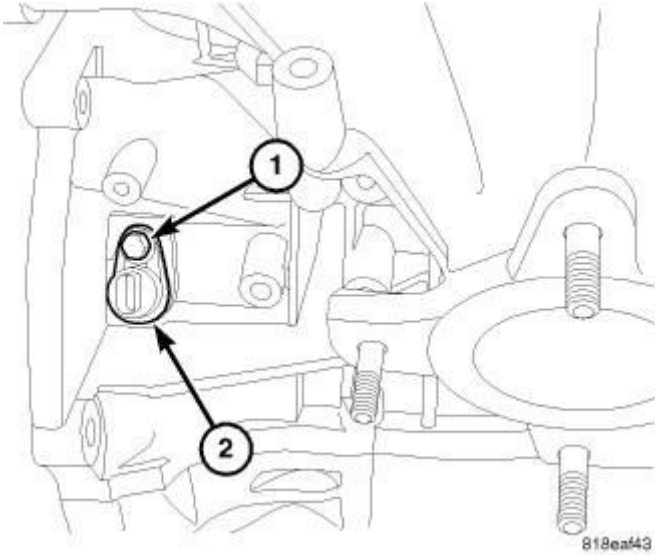

Fig. 26: Crankshaft Position Sensor
Courtesy of CHRYSLER GROUP, LLC

46. Disconnect crankshaft position sensor electrical connector and remove crankshaft position sensor (2).

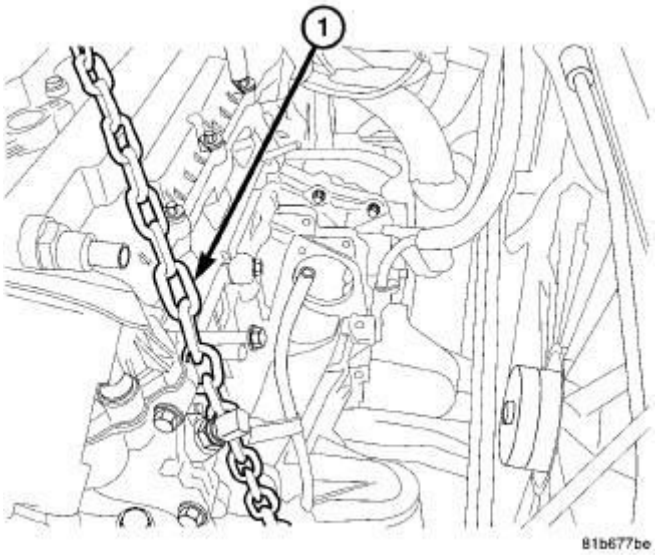

Fig. 27: Identifying Lift Chain
Courtesy of CHRYSLER GROUP, LLC

47. Remove exhaust variable valve timing solenoid.
48. Install engine lift chain (1) as shown in illustration to cylinder head.
49. Connect the chain to the rear engine lift hook.
50. Install engine lifting crane.

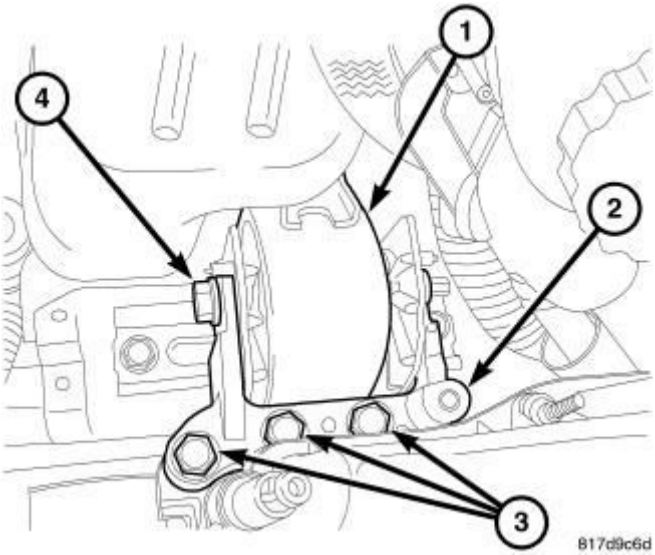

Fig. 28: Right Engine Mount
Courtesy of CHRYSLER GROUP, LLC

51. Remove right engine mount through bolt (4).
52. Remove engine mount adapter retaining bolts (3) and mount adapter (2).
53. Lift engine from engine compartment.

INSTALLATION

ENGINE COVER

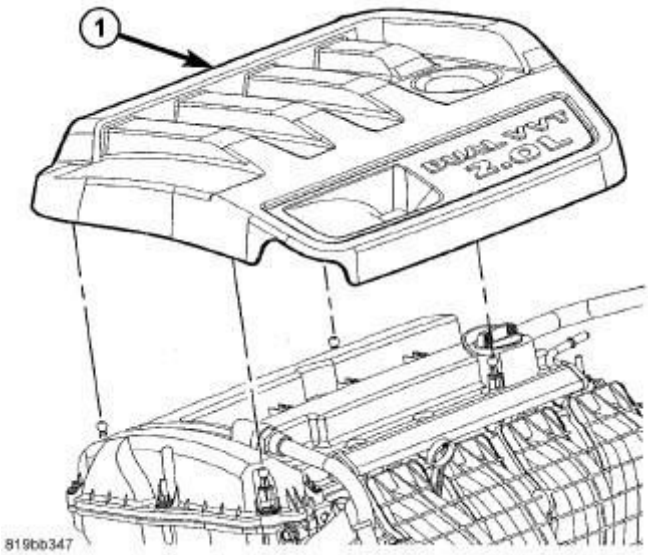

Fig. 29: Engine Cover - 2.0L
Courtesy of CHRYSLER GROUP, LLC

1. Position engine cover (1) over mounting studs.

2. Seat the cover on the rear studs by pushing downwards.
3. Push downward on the front of the cover to seat the front studs.

INSTALLATION - ENGINE

CAUTION: If the original engine has experienced a catastrophic failure or an individual failure with the piston, cylinder bore, engine block, valve or valve seat, the intake manifold MUST be replaced with a new manifold.

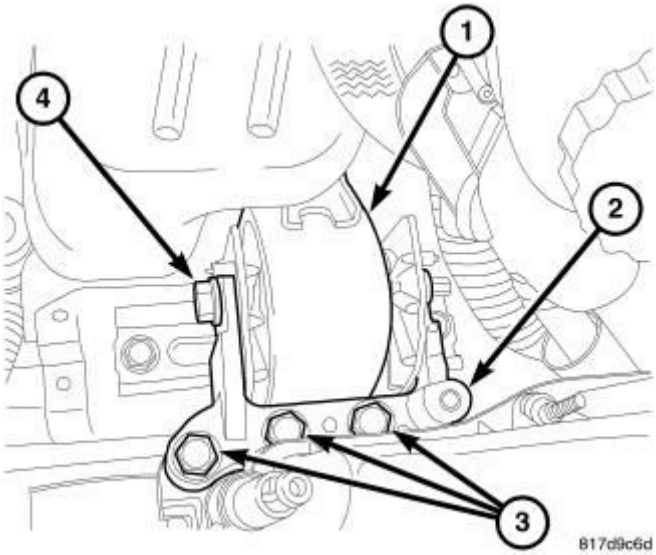

Fig. 30: Right Engine Mount
Courtesy of CHRYSLER GROUP, LLC

1. Position engine assembly over vehicle and slowly lower the engine into place.
2. Continue lowering engine until engine and transaxle are aligned. to mounting locations.
3. Install engine mount adapter (2) and tighten bolts (3). Install mount through bolt (4) and tighten to 118 N.m (87 ft. lbs.).

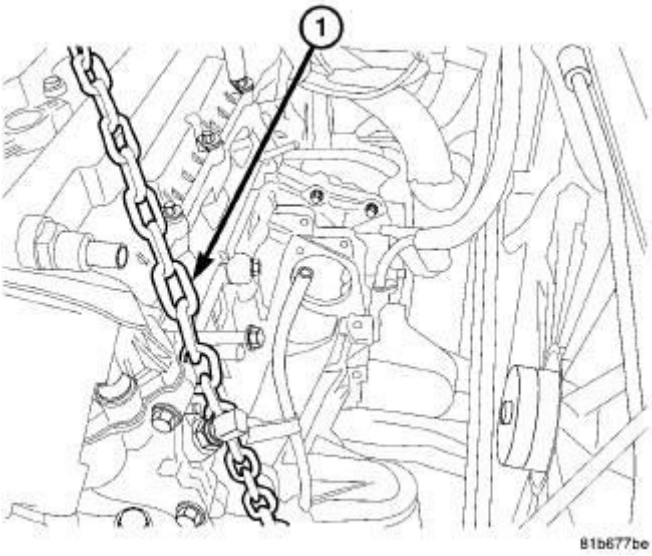

Fig. 31: Identifying Lift Chain
Courtesy of CHRYSLER GROUP, LLC

4. Remove engine lift chain (1).
5. Install oil control valve.

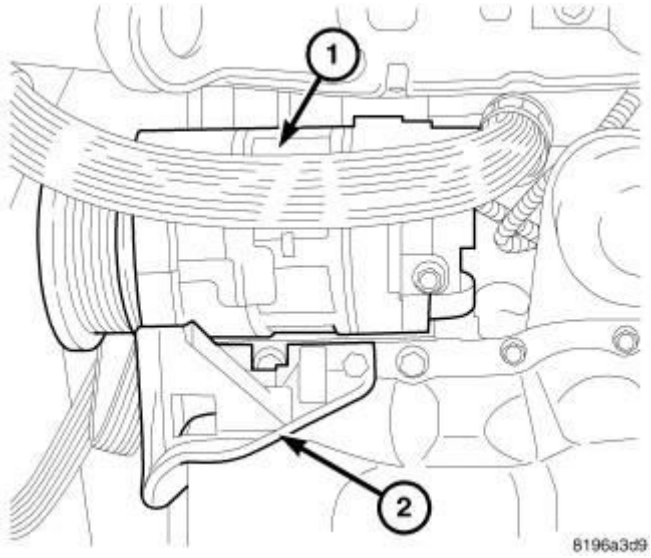

Fig. 32: A/C Compressor
Courtesy of CHRYSLER GROUP, LLC

6. Raise vehicle.
7. Install A/C compressor (1).

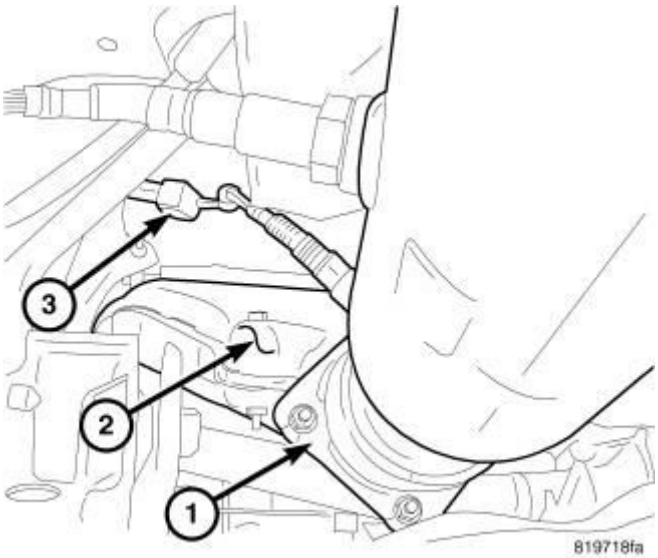

Fig. 33: Removing/Installing Exhaust Manifold, Heat Shields, & Oxygen Sensor
Courtesy of CHRYSLER GROUP, LLC

8. Install exhaust manifold and heat shields (2). Refer to **MANIFOLD, EXHAUST, INSTALLATION**.
9. Install oxygen sensor and connect electrical connector (3).

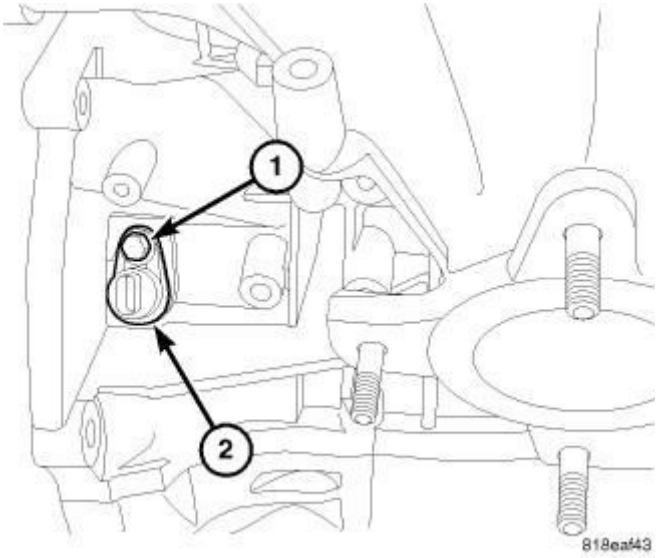

Fig. 34: Crankshaft Position Sensor
Courtesy of CHRYSLER GROUP, LLC

10. Install crankshaft position sensor (2) and connect connector.

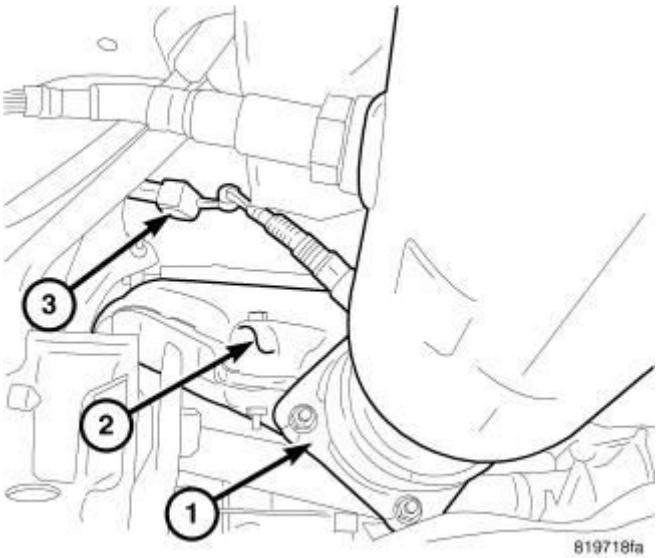

Fig. 35: Removing/Installing Exhaust Manifold, Heat Shields, & Oxygen Sensor
Courtesy of CHRYSLER GROUP, LLC

11. Install manifold to exhaust pipe bolts (1) and tighten bolts.
12. Install generator.

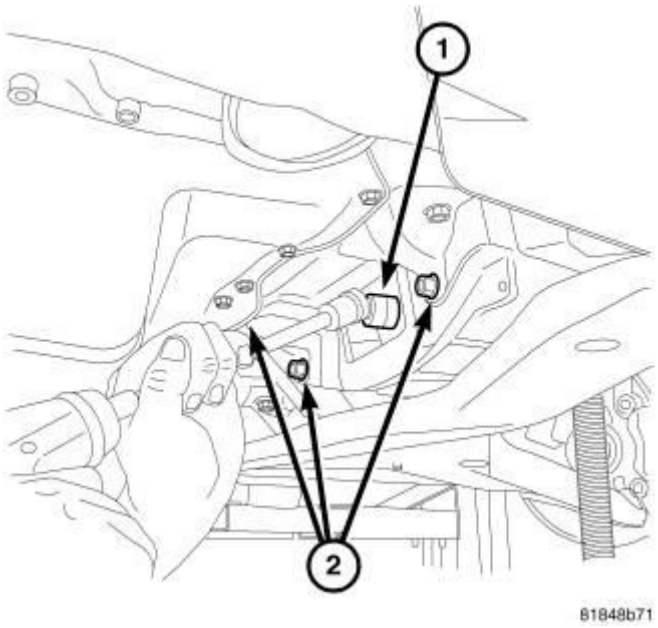

Fig. 36: Modular Clutch To Flex Plate Bolts
Courtesy of CHRYSLER GROUP, LLC

13. Install lower bell housing bolts (2) and tighten bolts.
14. Align torque converter and flex plate mark. Install torque converter bolts (1) and tighten.

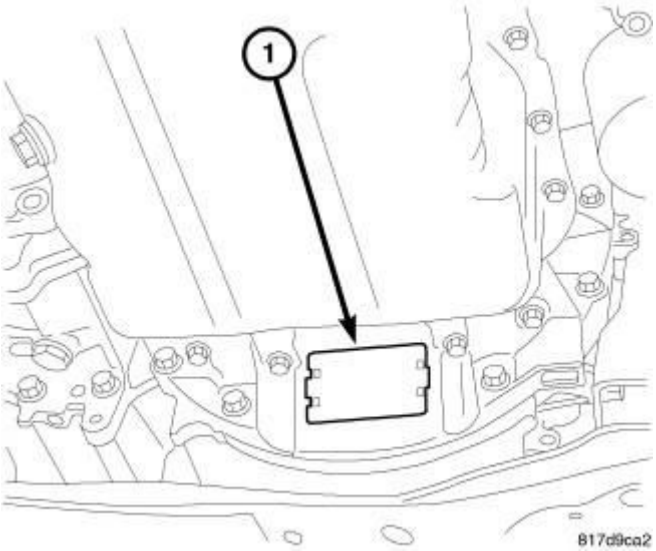

Fig. 37: Inspection Cover
Courtesy of CHRYSLER GROUP, LLC

15. Install inspection cover (1).

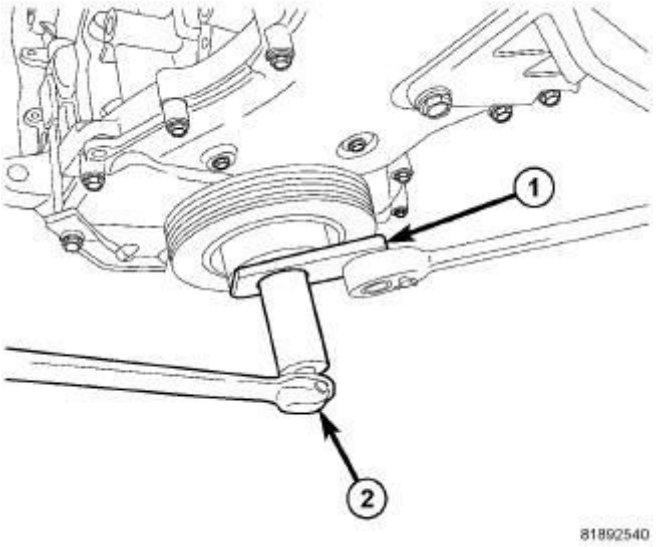

Fig. 38: Removing/Installing Damper Bolt
Courtesy of CHRYSLER GROUP, LLC

16. Install crankshaft damper
17. Install Damper holder (special tool #9707, Holder, Vibration Damper) (1).
18. Apply clean engine oil crankshaft damper bolt threads and between bolt head and washer. Tighten bolt to 210 N.m (155 ft. lbs.).
19. Install right splash shield.
20. Install tire.

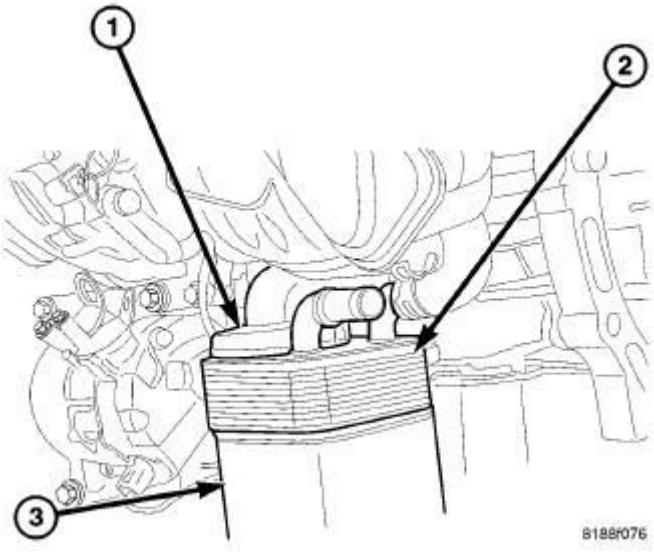

Fig. 39: Oil Cooler
Courtesy of CHRYSLER GROUP, LLC

21. Install coolant hose to oil cooler (2).
22. Install new oil filter (3).
23. Lower vehicle.
24. Install upper idler pulley.

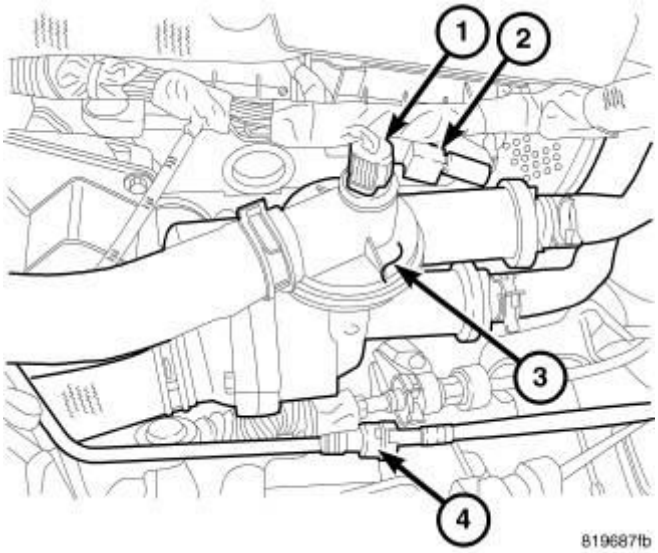

Fig. 40: Coolant Adapter
Courtesy of CHRYSLER GROUP, LLC

25. Install coolant adapter assembly (3).

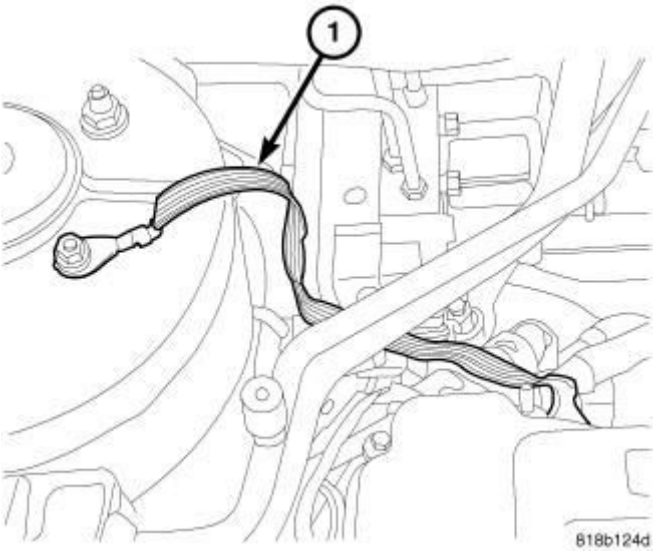

Fig. 41: Ground Strap
Courtesy of CHRYSLER GROUP, LLC

26. Install Ground strap (1) near right strut tower.

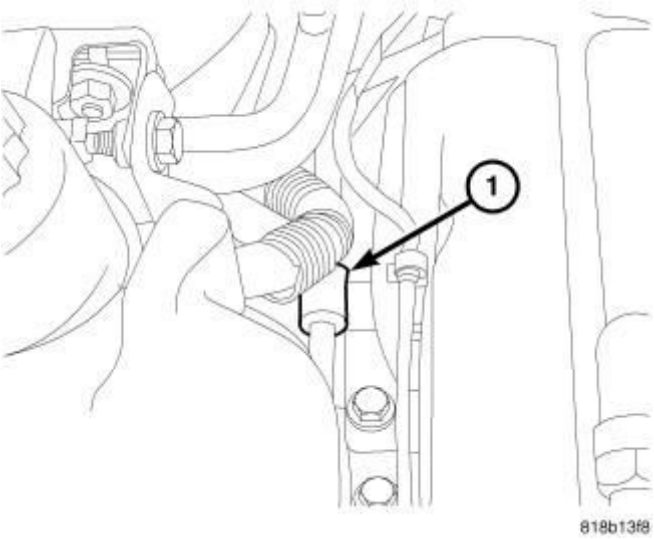

Fig. 42: Power Steering Line Support
Courtesy of CHRYSLER GROUP, LLC

27. Install power steering line support bracket (1).
28. Install power steering pump.
29. Install accessory drive belt.
30. Connect electrical connectors at block ground, starter, A/C compressor, knock sensor, Oil pressure sensor, generator, Coolant temperature sensor at block, and block heater (if equipped).

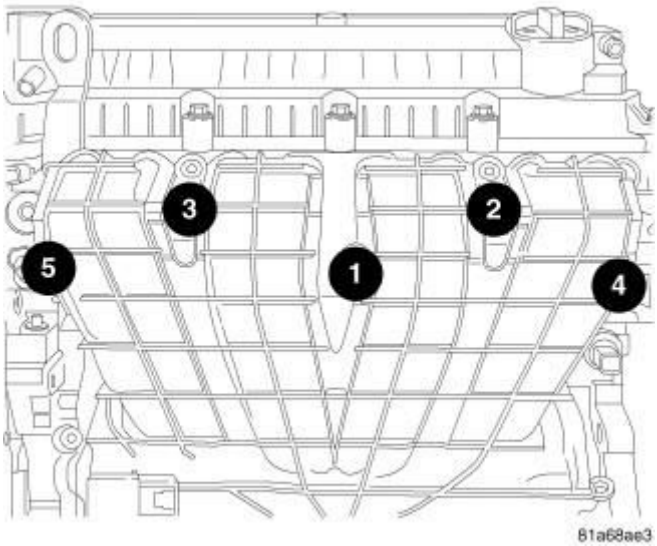

Fig. 43: Intake Manifold Bolt Removal & Tightening Sequence
Courtesy of CHRYSLER GROUP, LLC

31. Install intake manifold and tighten bolts as shown in illustration.

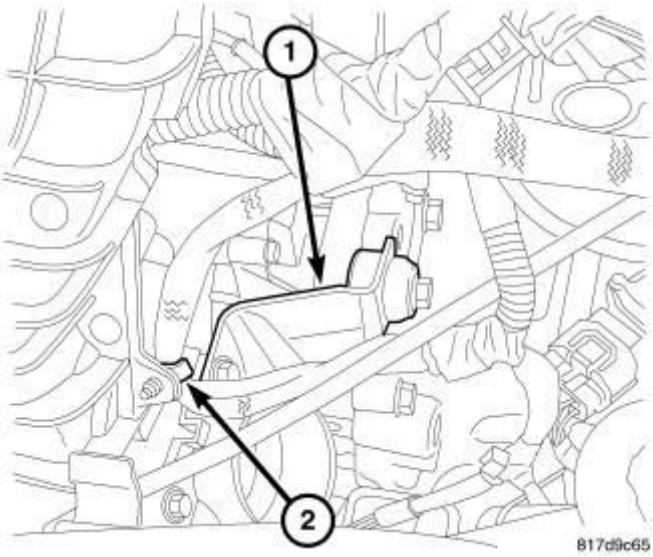

Fig. 44: Throttle Body Support
Courtesy of CHRYSLER GROUP, LLC

32. Install throttle body support bracket (1).
33. Install harness retainer (2).
34. Install engine oil level indicator.

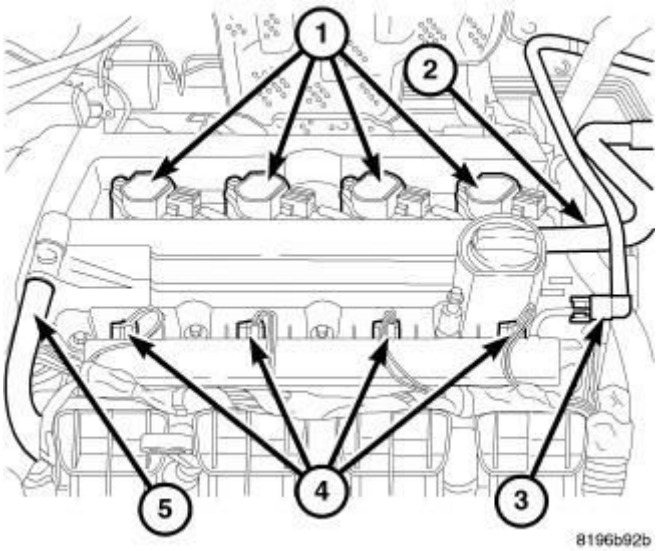

Fig. 45: Ignition Coils, Air Hose, Fuel Line, Injectors & PCV Hose
Courtesy of CHRYSLER GROUP, LLC

35. Install PCV hose (5) to valve cover.
36. Install make-up air hose (2).
37. Connect manifold flow control valve and electronic throttle control electrical connectors.
38. Install vacuum lines at throttle body and intake manifold.
39. Install intake air tube to throttle body.

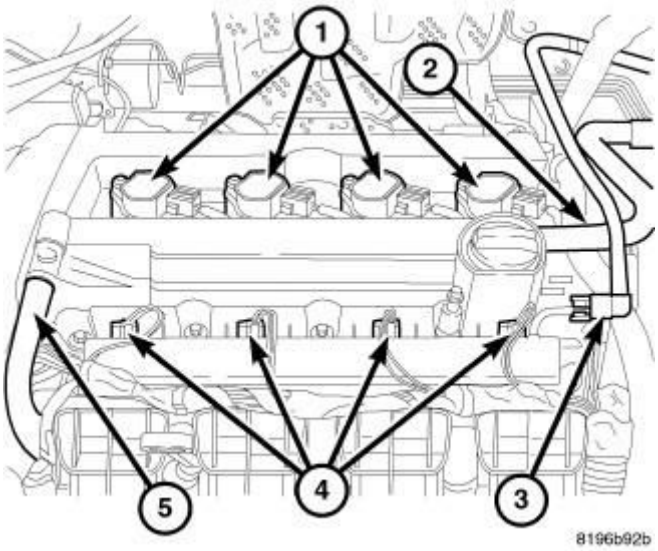

Fig. 46: Ignition Coils, Air Hose, Fuel Line, Injectors & PCV Hose
Courtesy of CHRYSLER GROUP, LLC

40. Connect coil electrical connectors (1).

41. Connect injector electrical connectors (4).
42. Connect fuel line (3) to rail.
43. Connect intake and exhaust oil control valve electrical connectors.

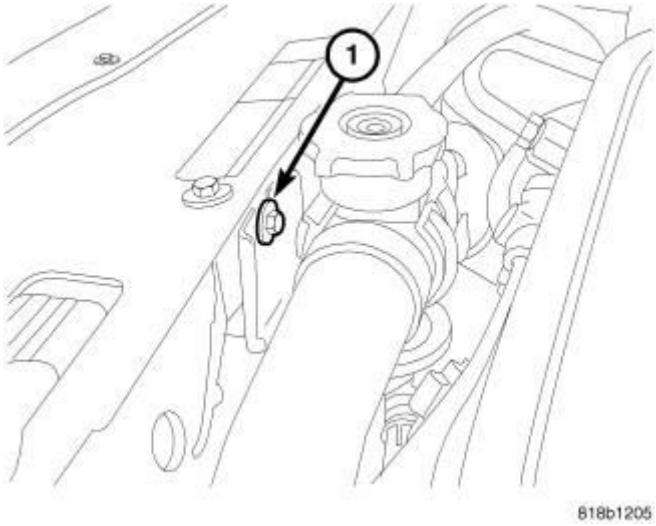

Fig. 47: Radiator Hose Support
Courtesy of CHRYSLER GROUP, LLC

44. Install grill trim panel.
45. Install upper radiator support bracket (1).

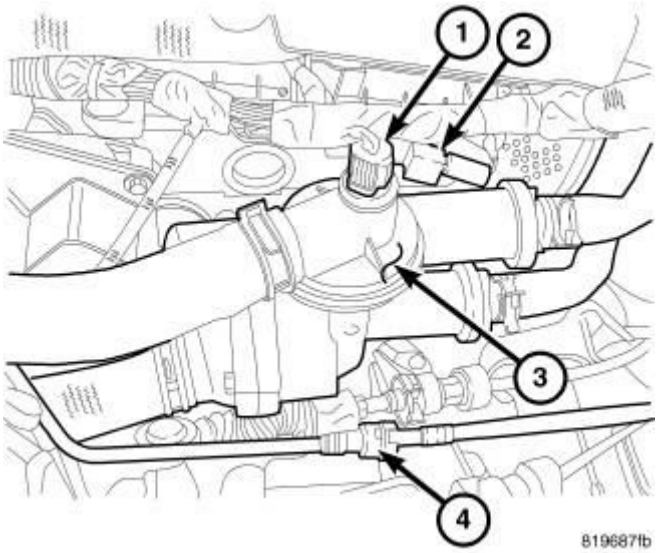

Fig. 48: Coolant Adapter
Courtesy of CHRYSLER GROUP, LLC

46. Connect coolant temperature sensor (1).
47. Connect capacitor electrical connector (2).

48. Install coolant hoses at coolant adapter (3).

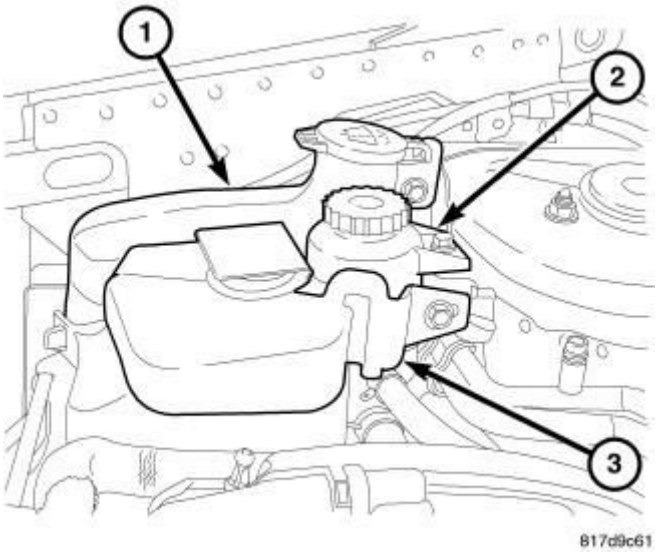

Fig. 49: Coolant Reservoir
Courtesy of CHRYSLER GROUP, LLC

49. Install coolant reservoir (3) and connect hose.

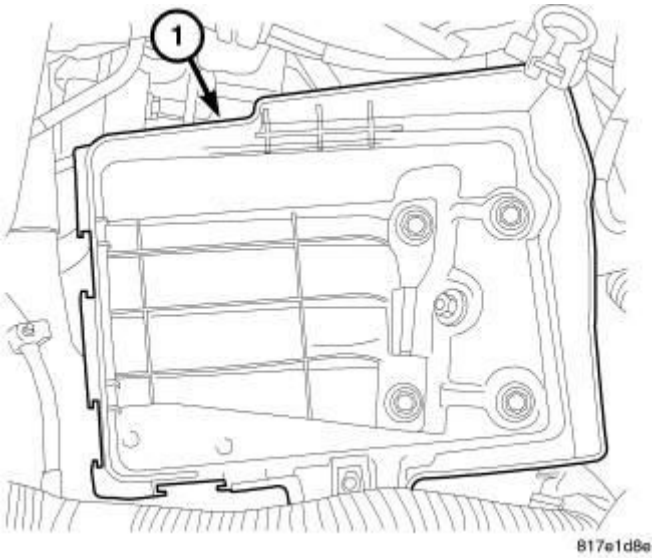

Fig. 50: Battery Tray
Courtesy of CHRYSLER GROUP, LLC

50. Install the battery tray (1). Refer to **TRAY, BATTERY, INSTALLATION** .

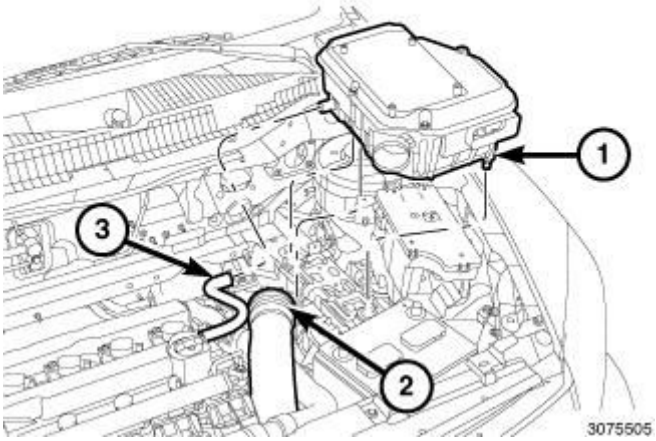

Fig. 51: Air Cleaner Body, Air Inlet Tube & Make-Up Air Hose
Courtesy of CHRYSLER GROUP, LLC

51. Push down on the air cleaner body (1) to engage the pins into the grommets.
52. Install the support bracket bolt to the strut tower and tighten to 10 N.m (89 in. lbs.).
53. Install the air inlet tube (2) to the air cleaner body (1).
54. Connect the make-up air hose (3) to the air cleaner body.

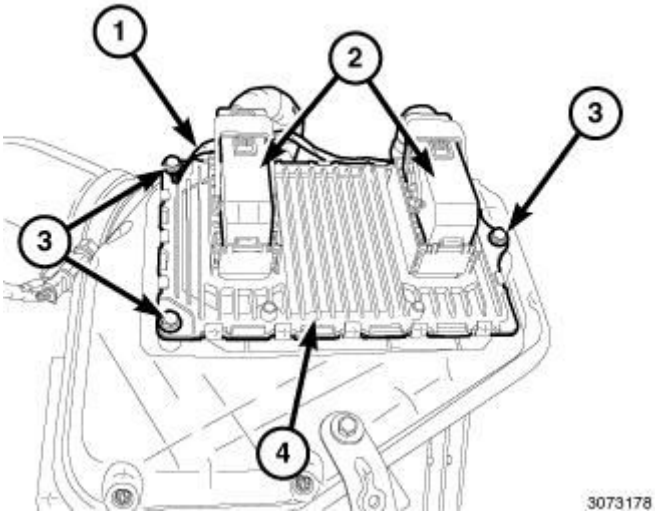

Fig. 52: Electrical Connectors, PCM, Three Mounting Bolts & Ground Wire
Courtesy of CHRYSLER GROUP, LLC

55. Install the mounting bolt (3) with ground wire (1) and tighten to 12 N.m (106 in. lbs.).

56. Connect and lock the electrical connectors (2).

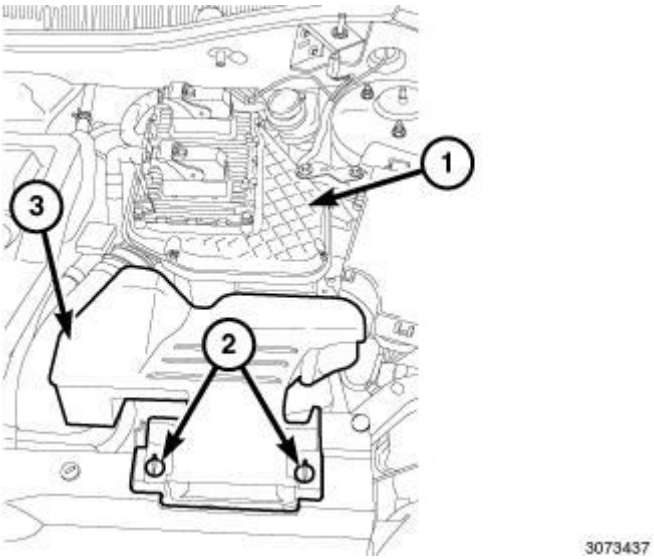

Fig. 53: Retainers, Fresh Air Inlet Duct & Air Cleaner Body
Courtesy of CHRYSLER GROUP, LLC

57. Install the battery and connect the battery cables. Refer to **BATTERY, INSTALLATION** .
58. Install the fresh air inlet duct (3) on the air cleaner body (1) and lock the retainers (2).

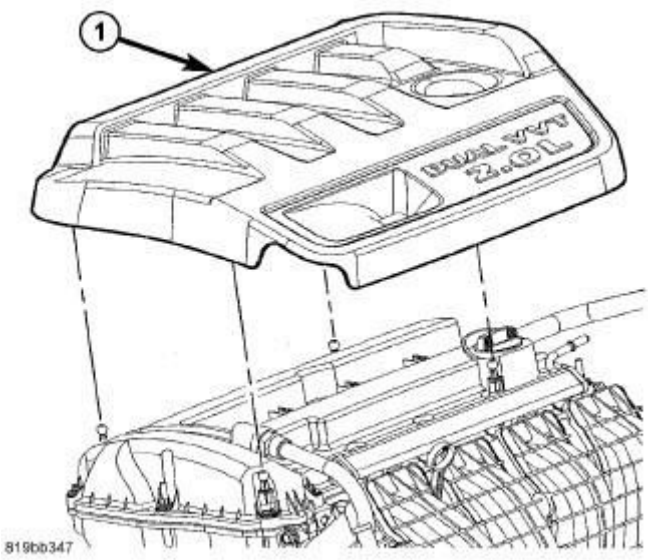

Fig. 54: Engine Cover - 2.0L
Courtesy of CHRYSLER GROUP, LLC

59. Install the hood. Refer to **HOOD, INSTALLATION** .

60. Fill with coolant. Refer to **STANDARD PROCEDURE** .
61. Fill with oil.
62. Start engine and check for leaks.
63. Install engine cover (1).

SPECIAL TOOLS

SPECIAL TOOLS

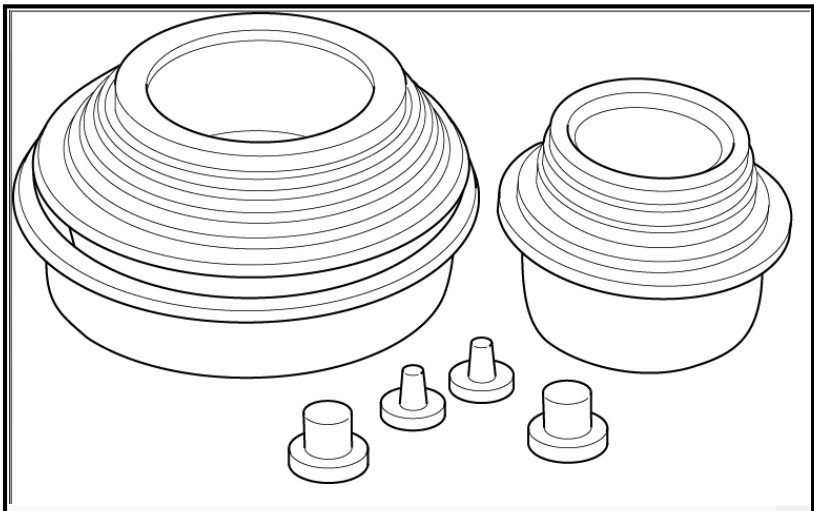	10368 - Set, Universal Protective Cap
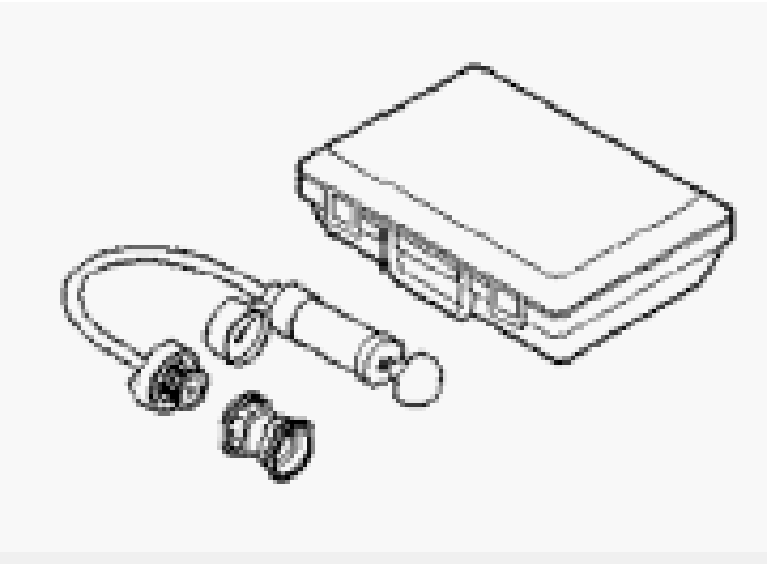	7700 - Tester, Cooling System (Originally Shipped In Kit Number(s) 7700-A.)
	8116 - Adapter, Pressure PEP (Originally Shipped In Kit

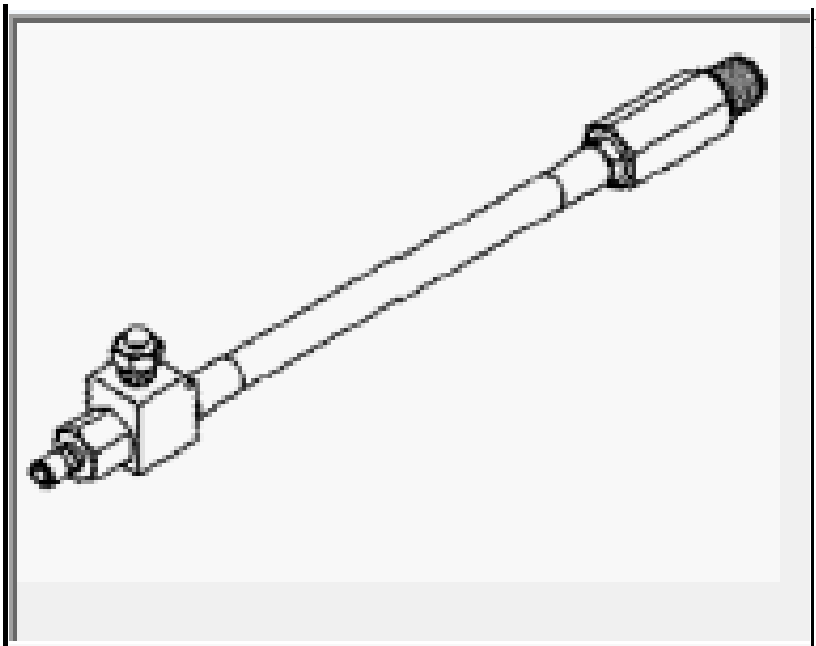	Number(s) 8201, 8201CC, 8204, 8204CC.)
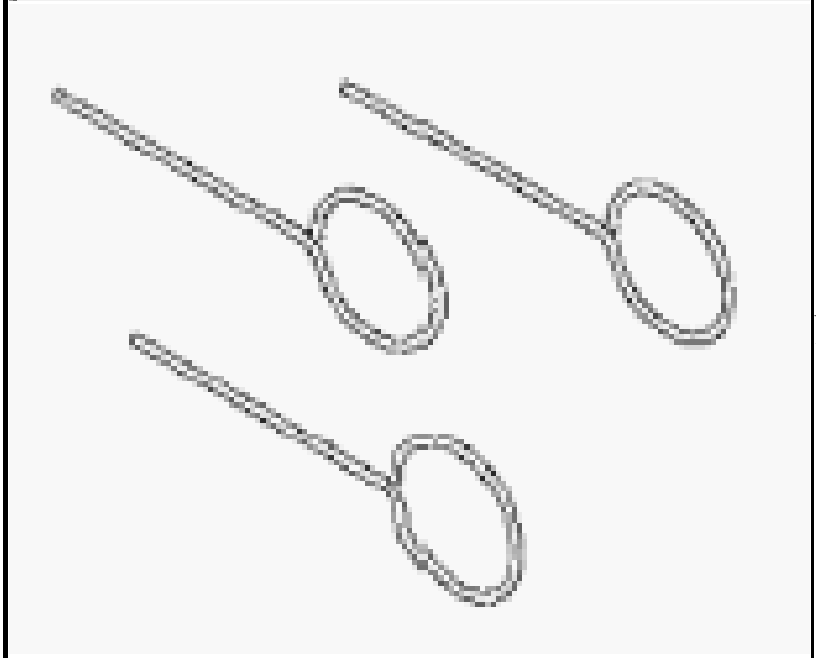	8514 - Pins, Tensioner (Originally Shipped In Kit Number(s) 8283, 8283CC, 8527, 8527CC, 8575, 8575CC, 9975.)
	9506 - Installer, Oil Seal (Originally Shipped In Kit Number(s) 9610, 9970.)

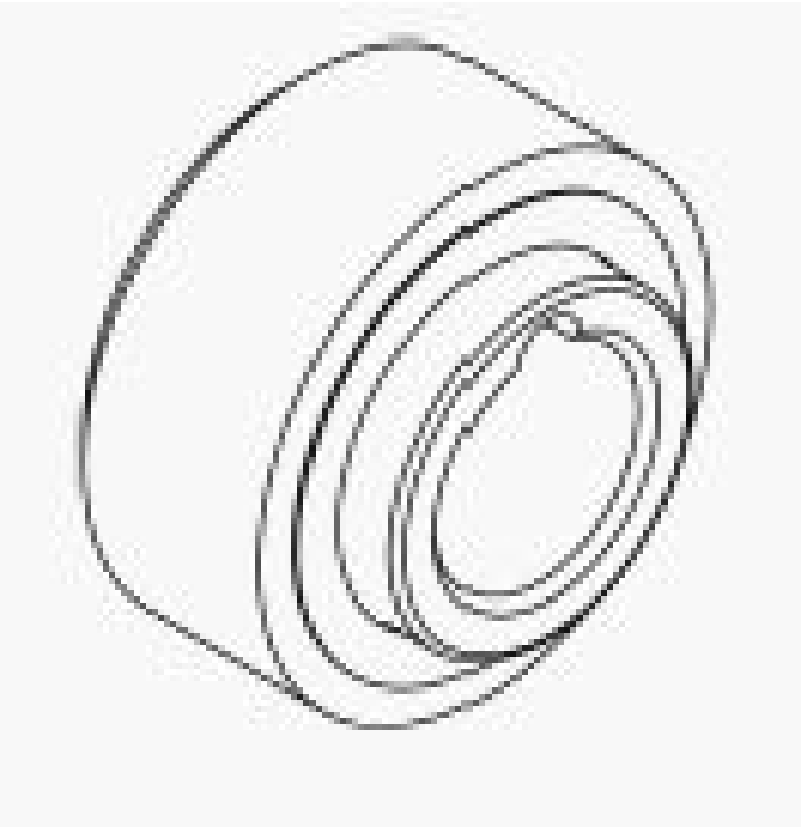

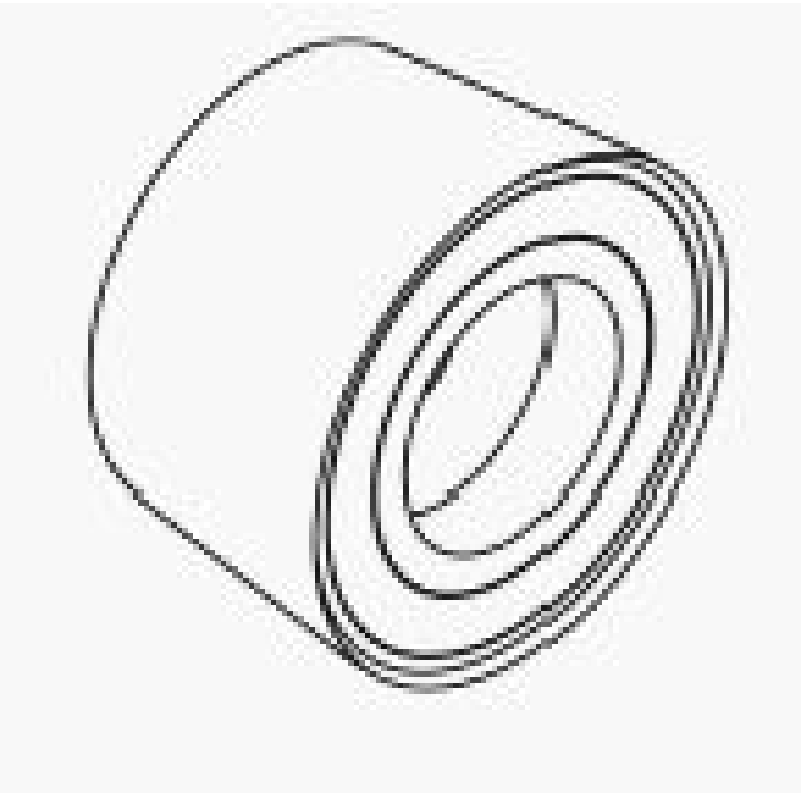

9509 - Installer, Oil Seal (Originally Shipped In Kit Number(s) 9610, 9970.)

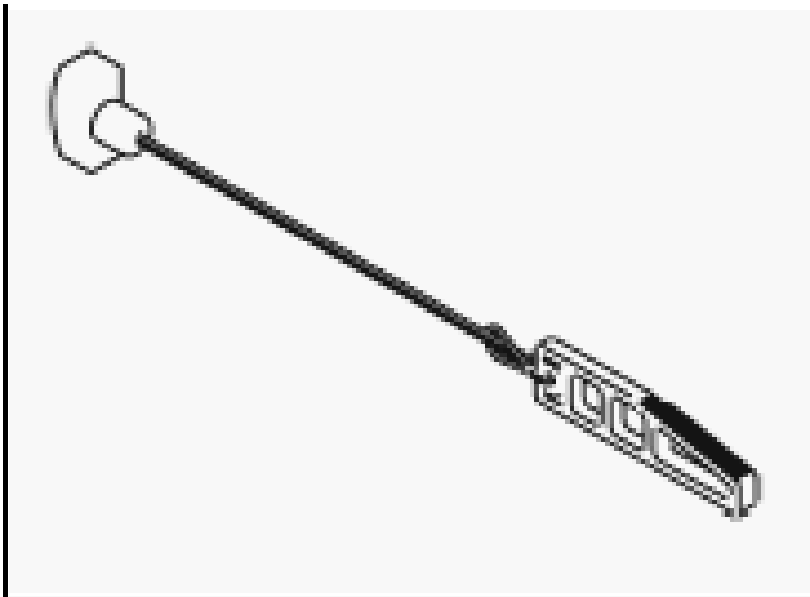

9701 - Wedge, Locking
(Originally Shipped In Kit Number(s) 9610, 9970.)

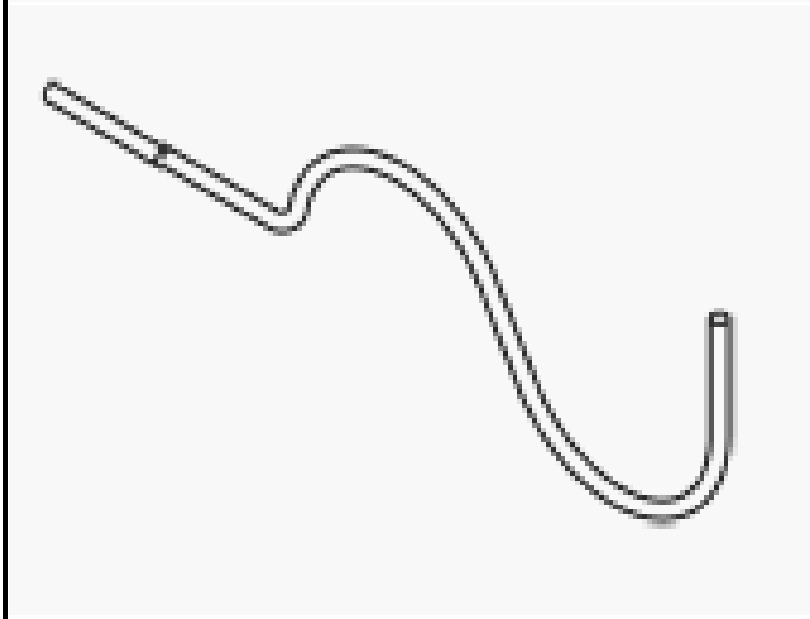

9703 - Pin, Tensioner
(Originally Shipped In Kit Number(s) 9610, 9970.)

9706 - Installer, Crankshaft Rear Oil Seal
(Originally Shipped In Kit Number(s) 9610, 9970.)

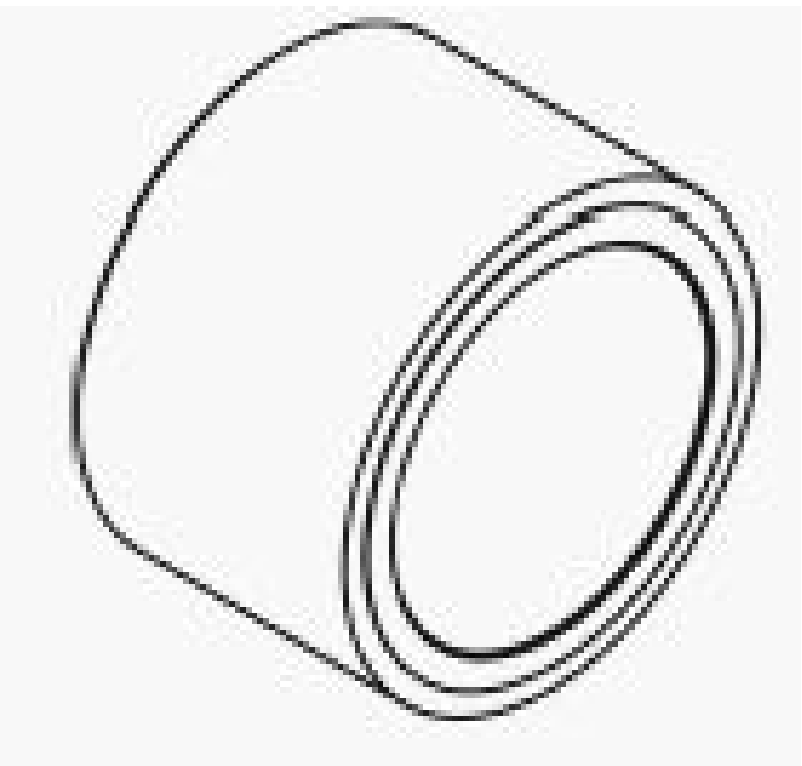

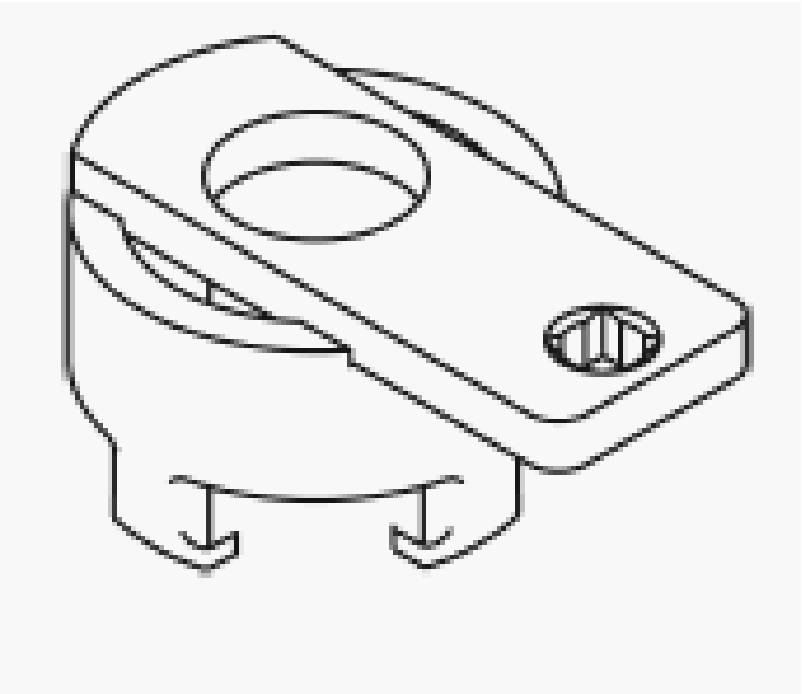

9707 - Holder, Vibration Damper
(Originally Shipped In Kit Number(s) 9610, 9970.)

9879 - Adapter, Oil Pressure Test

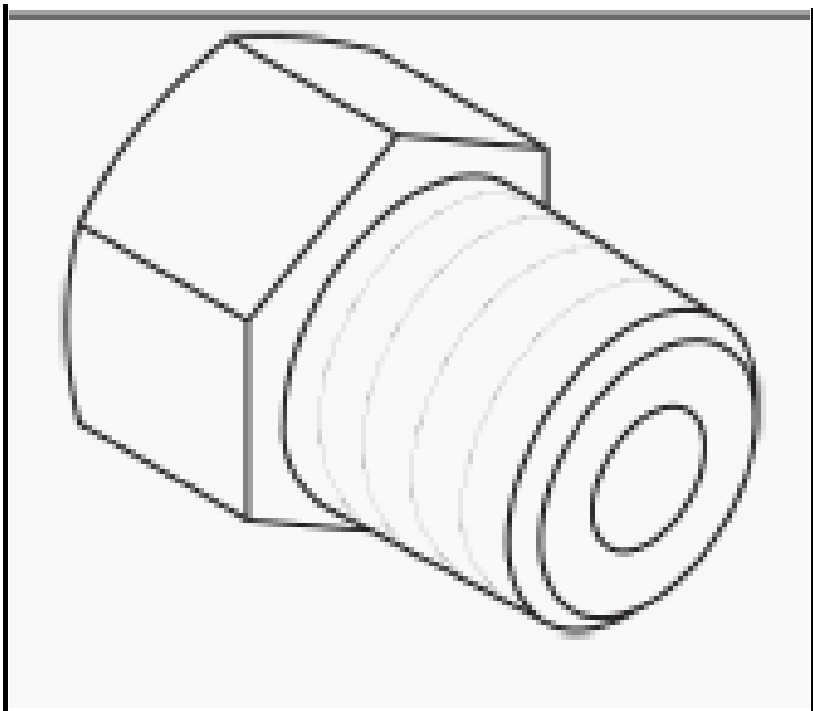	(Originally Shipped In Kit Number(s) 9998.)
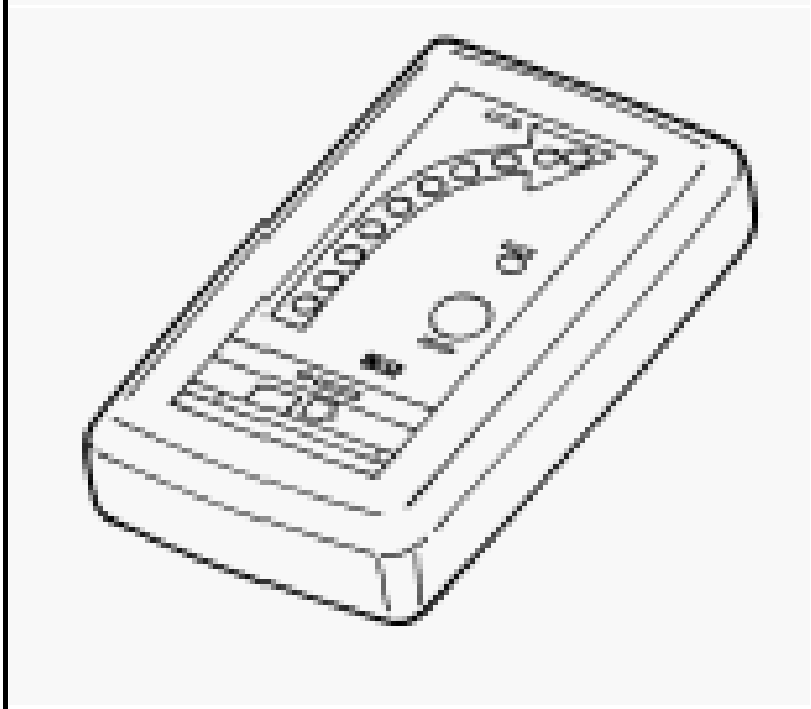	C-3685-A - Bloc-Chek Kit
	C-4171 - Driver Handle, Universal (Originally Shipped In Kit Number(s) 9202, 9202A-CAN, 9202CC, 9299,

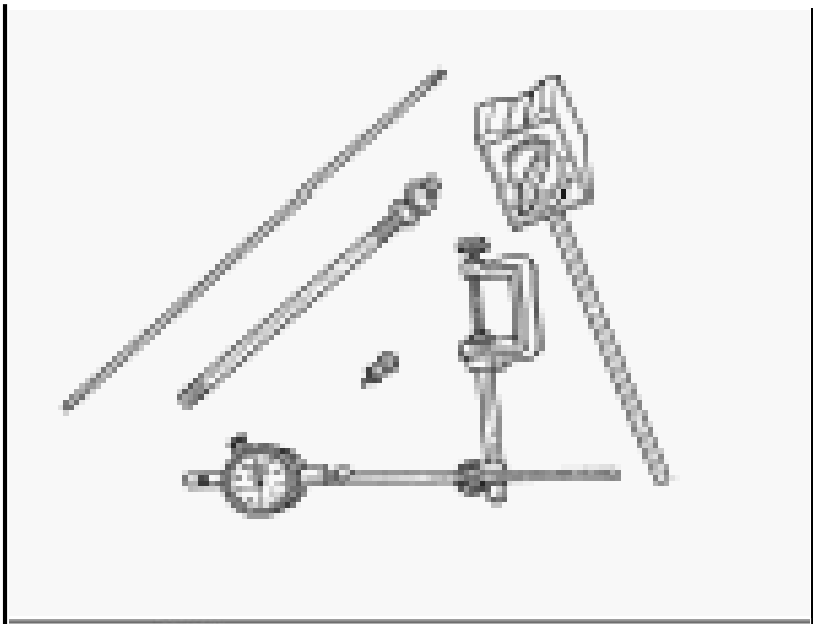	9299CC, 9300A-CAN.)
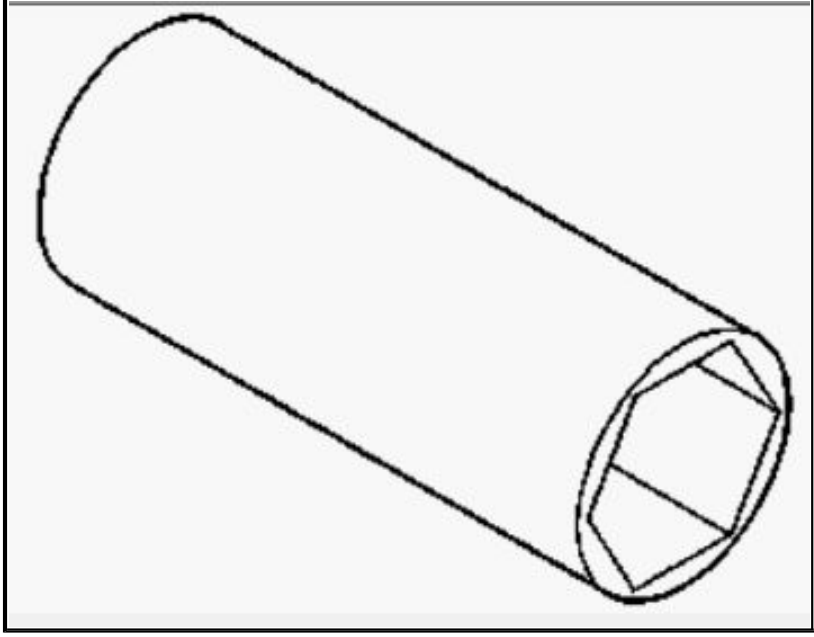	C-4597 - Socket, Oil Pressure

PLATE, IDENTIFICATION

DESCRIPTION

DESCRIPTION

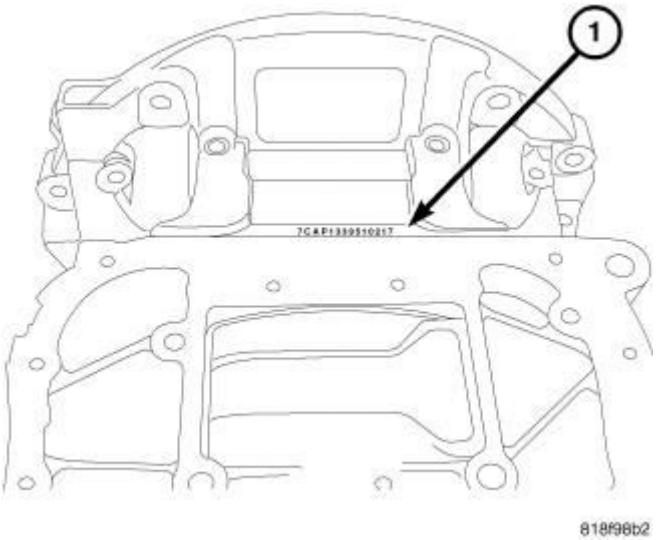

Fig. 55: Locating Engine Serial Number
Courtesy of CHRYSLER GROUP, LLC

The engine serial number (1) is located between the oil pan and the bellhousing. The serial number contains engine build date, build location, and displacement.

Example: 8CAP1339710217

WORLD ENGINE							
8	C	A	P1	339	7	1	0217
Model Year	Engine Displacement	Engine Build Variation (with oil cooler, turbo, for MMNA)	Engine Plant	Julian Day of Year	Julian Year 2007	Shift	Build Sequence Number
2008	A = 1.8L		P1 = GEMA North				
	B = 2.0L		P2 = GEMA South				
	C = 2.4L						

AIR INTAKE SYSTEM

AIR CLEANER

REMOVAL

REMOVAL

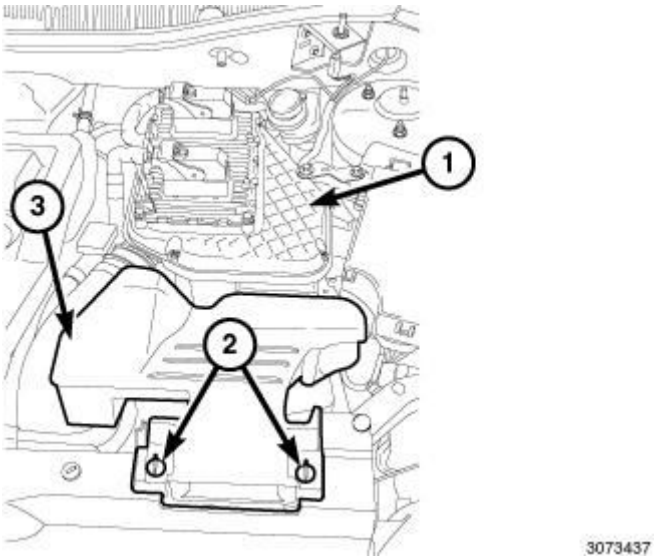

Fig. 56: Retainers, Fresh Air Inlet Duct & Air Cleaner Body
Courtesy of CHRYSLER GROUP, LLC

1. Unlock the retainers (2) and remove the fresh air inlet duct (3) from air cleaner housing (1).
2. Remove the support bracket bolt from the strut tower.
3. Remove the screws that hold the cover on the air cleaner housing.

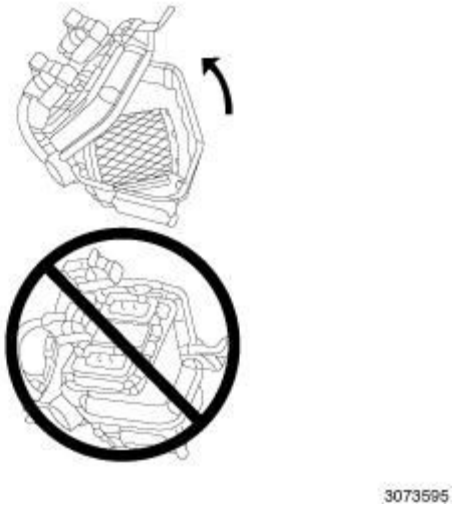

Fig. 57: Electrical Connectors At Powertrain Control Module (PCM) - DO NOT Unplug
Courtesy of CHRYSLER GROUP, LLC

CAUTION: Do Not unplug the electrical connectors from the Powertrain Control Module (PCM). A possible voltage spike can erase and damage

the PCM.

4. Position the air cleaner housing cover aside.

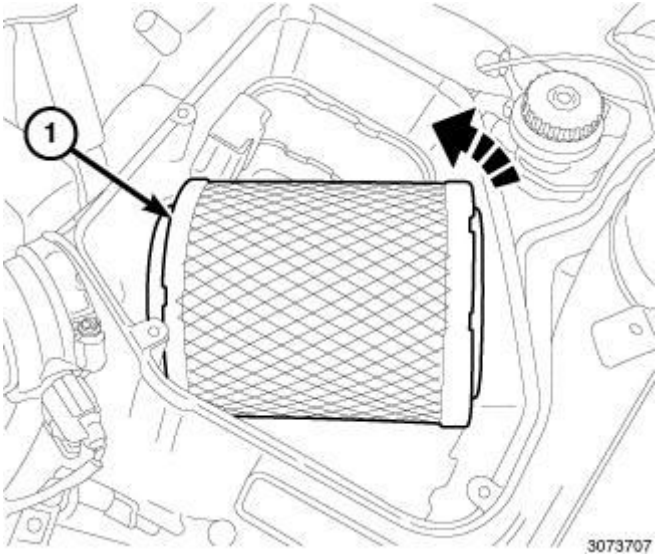

Fig. 58: Air Cleaner Element
Courtesy of CHRYSLER GROUP, LLC

5. Remove the air cleaner element (1).
6. If necessary, clean the inside of the air cleaner housing.

INSTALLATION

INSTALLATION

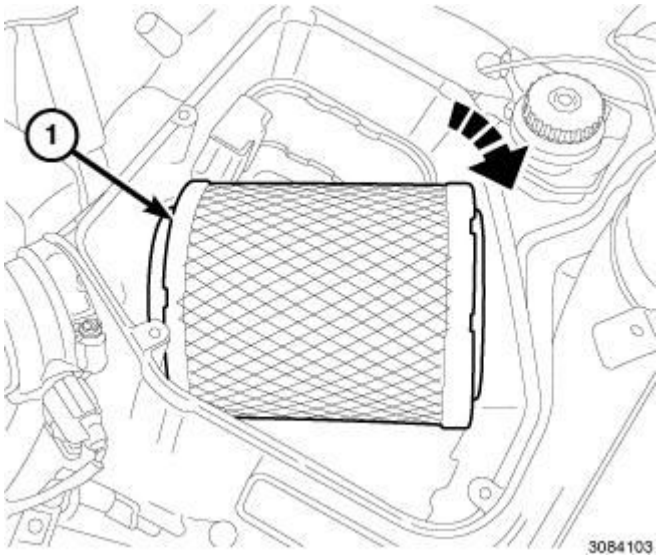

Fig. 59: Air Cleaner Element
Courtesy of CHRYSLER GROUP, LLC

1. Install the new cleaner element (1).

Fig. 60: Electrical Connectors At Powertrain Control Module (PCM) - DO NOT Unplug
Courtesy of CHRYSLER GROUP, LLC

CAUTION: Do Not unplug the electrical connectors from the Powertrain Control Module (PCM). A possible voltage spike can erase and damage the PCM.

2. Place the cover over the air cleaner housing. Hand tighten the cover screws.

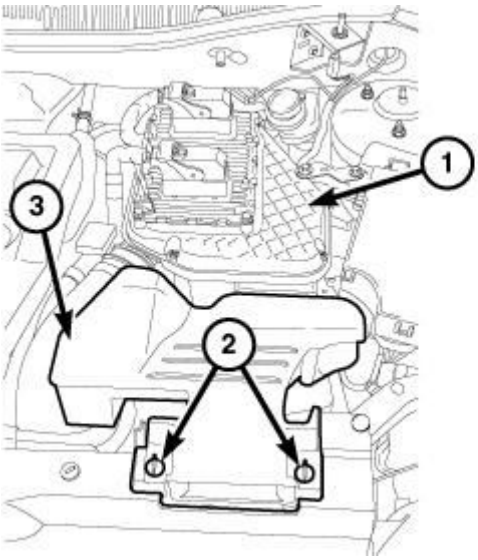

Fig. 61: Retainers, Fresh Air Inlet Duct & Air Cleaner Body
Courtesy of CHRYSLER GROUP, LLC

3. Install the support bracket bolt to the strut tower and tighten to 10 N.m (89 in. lbs.).
4. Install the fresh air inlet duct (3) on the air cleaner housing (1) and lock the retainers (2).

BODY, AIR CLEANER

REMOVAL

REMOVAL

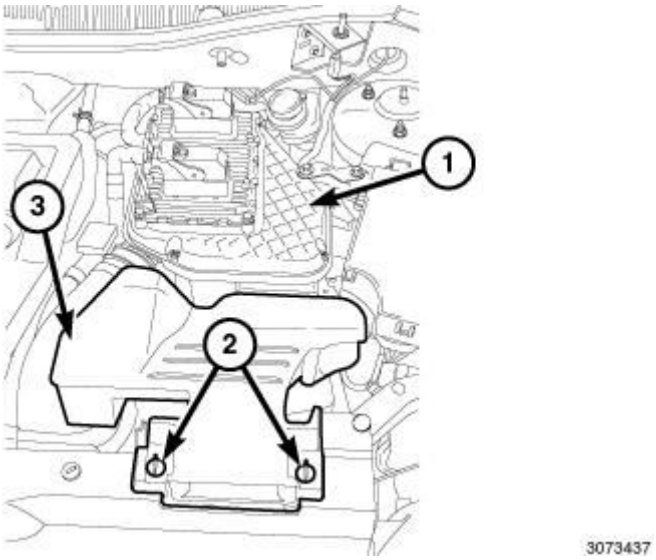

Fig. 62: Retainers, Fresh Air Inlet Duct & Air Cleaner Body
Courtesy of CHRYSLER GROUP, LLC

1. Unlock the retainers (2) and remove the fresh air inlet duct (3) from air cleaner body (1).

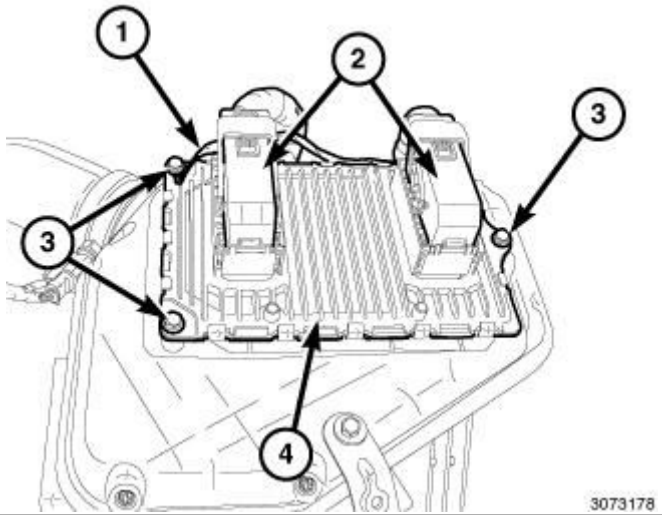

Fig. 63: Electrical Connectors, PCM, Three Mounting Bolts & Ground Wire
Courtesy of CHRYSLER GROUP, LLC

2. Remove the bolts (3) that secure the PCM (4) to the air cleaner body cover and position aside.

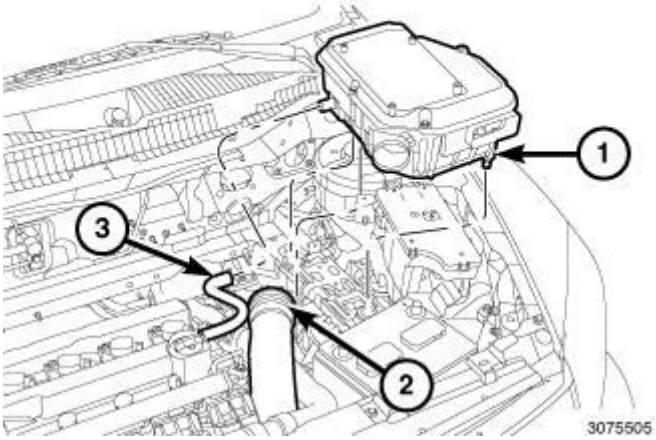

Fig. 64: Air Cleaner Body, Air Inlet Tube & Make-Up Air Hose
Courtesy of CHRYSLER GROUP, LLC

3. Remove the air inlet tube (2) from the air cleaner body (1).
4. Disconnect the make-up air hose (3) from the air cleaner body.
5. Remove the support bracket bolt from the strut tower.
6. Pull upward to disengage the pins from the rubber grommets and remove the air cleaner body (1).

INSTALLATION

INSTALLATION

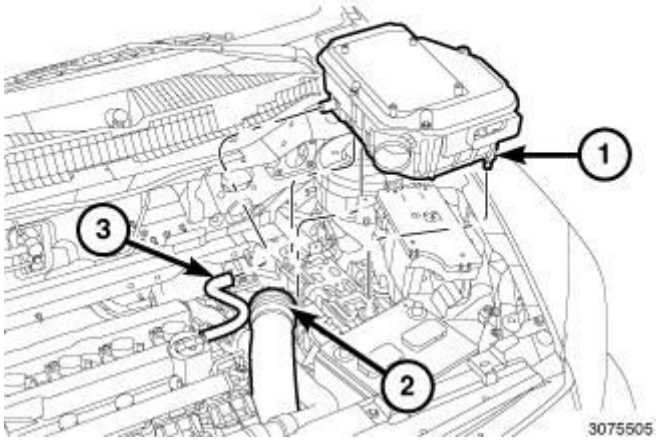

Fig. 65: Air Cleaner Body, Air Inlet Tube & Make-Up Air Hose
Courtesy of CHRYSLER GROUP, LLC

1. Make sure the rubber grommets, for the air cleaner body lower pins, are in place when reinstalling the air cleaner body.
2. Push down on the air cleaner body (1) to engage the pins into the grommets.
3. Install the support bracket bolt to the strut tower and tighten to 10 N.m (89 in. lbs.).
4. Install the air inlet tube (2) to the air cleaner body (1).
5. Connect the make-up air hose (3) to the air cleaner body.

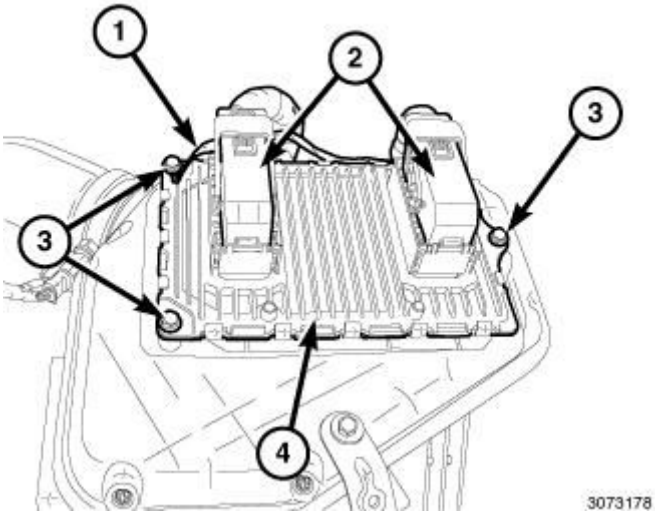

Fig. 66: Electrical Connectors, PCM, Three Mounting Bolts & Ground Wire
Courtesy of CHRYSLER GROUP, LLC

6. Position the PCM (4) on the air cleaner body cover.
7. Install three mounting bolts (3) with one ground wire (1) and tighten to 10 N.m (89 in. lbs.).

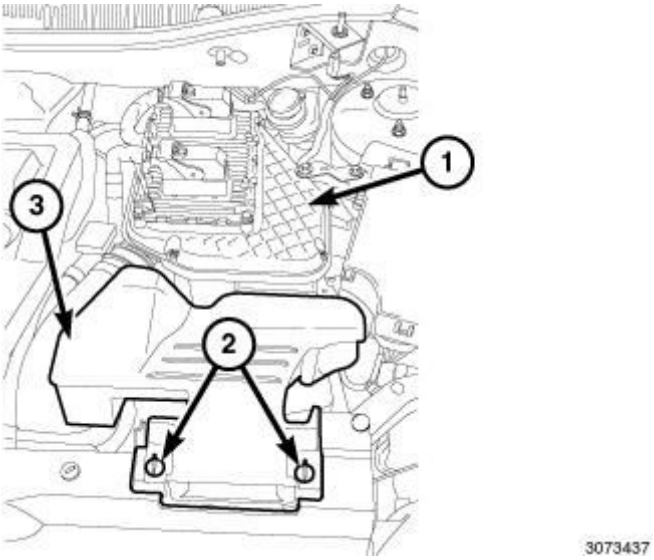

Fig. 67: Retainers, Fresh Air Inlet Duct & Air Cleaner Body
Courtesy of CHRYSLER GROUP, LLC

8. Install the fresh air inlet duct (3) on the air cleaner body (1) and lock the retainers (2).

CYLINDER HEAD

DESCRIPTION

DESCRIPTION

The cross flow designed, aluminum cylinder head contains dual over-head camshafts with four valves per cylinder. The valves are arranged in two in-line banks. The intake valves face toward the front of the vehicle. The exhaust valves face the dash panel. The cylinder head incorporates powdered metal valve guides and seats. The cylinder head is sealed to the block using a multi-layer steel head gasket and retaining bolts.

Integral oil galleries provide lubrication passages to the variable camshaft timing phasers, camshafts, and valve mechanisms.

NOTE: Replacement cylinder heads will come complete with valves, seals, springs, retainers, keepers, lash buckets,

and camshafts.

DIAGNOSIS AND TESTING

DIAGNOSIS AND TESTING - CYLINDER HEAD GASKET

A cylinder head gasket leak can be located between adjacent cylinders, between a cylinder and the adjacent water jacket or from an oil passage to the exterior of the engine.

Possible indications of the cylinder head gasket leaking between adjacent cylinders are:

- Loss of engine power
- Engine misfiring
- Poor fuel economy

Possible indications of the cylinder head gasket leaking between a cylinder and an adjacent water jacket are:

- Engine overheating
- Loss of coolant
- Excessive steam (white smoke) emitting from exhaust
- Coolant foaming

CYLINDER-TO-CYLINDER LEAKAGE TEST

To determine if an engine cylinder head gasket is leaking between adjacent cylinders, follow the procedures in Cylinder Compression Pressure Test. Refer to **CYLINDER COMPRESSION PRESSURE TEST** . An engine cylinder head gasket leaking between adjacent cylinders will result in approximately a 50-70% reduction in compression pressure.

CYLINDER-TO-WATER JACKET LEAKAGE TEST

WARNING: USE EXTREME CAUTION WHEN THE ENGINE IS OPERATING WITH COOLANT PRESSURE CAP REMOVED.

VISUAL TEST METHOD

With the engine cool, remove the coolant pressure cap. Start the engine and allow it to warm up until thermostat opens.

If a large combustion/compression pressure leak exists, bubbles will be visible in the coolant.

COOLING SYSTEM TESTER METHOD

WARNING: WITH THE COOLING SYSTEM TESTER IN PLACE, PRESSURE WILL BUILD UP FAST. EXCESSIVE PRESSURE BUILT UP BY CONTINUOUS ENGINE OPERATION MUST BE RELEASED TO A SAFE PRESSURE POINT. NEVER PERMIT THE PRESSURE TO EXCEED 138 kPa (20 psi).

Install Cooling System Tester (special tool #7700, Tester, Cooling System) or equivalent to pressure cap neck. Start the engine and observe the tester's pressure gauge. If gauge pulsates with every power stroke of a cylinder a combustion pressure leak is evident.

CHEMICAL TEST METHOD

Combustion leaks into the cooling system can also be checked by using combustion leak tester (special tool #C-3685-A, Bloc-Chek Kit) or equivalent. Perform test following the procedures supplied with the tool kit.

REMOVAL

REMOVAL

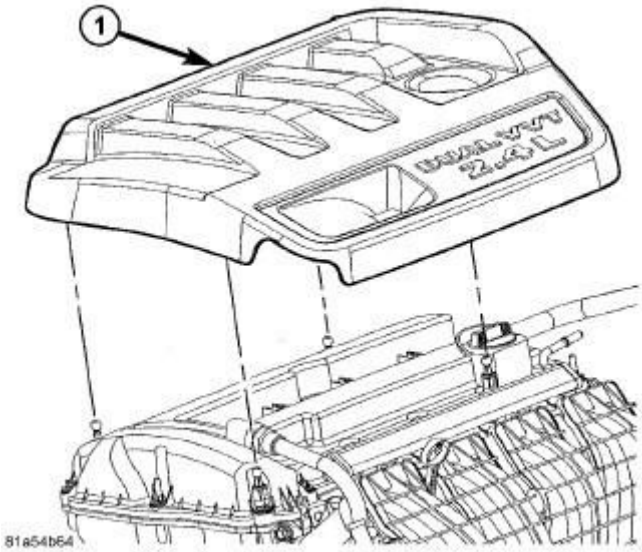

Fig. 68: Engine Cover
Courtesy of CHRYSLER GROUP, LLC

1. Remove the engine cover (1) by pulling upward.
2. Perform the fuel system pressure release procedure. Refer to **FUEL SYSTEM PRESSURE RELEASE PROCEDURE** .

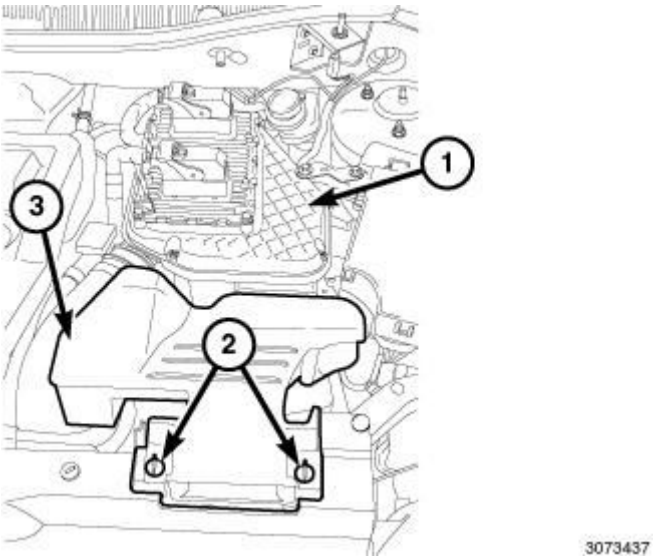

Fig. 69: Retainers, Fresh Air Inlet Duct & Air Cleaner Body
Courtesy of CHRYSLER GROUP, LLC

3. Unlock the retainers (2) and remove the fresh air inlet duct (3) from air cleaner body (1).

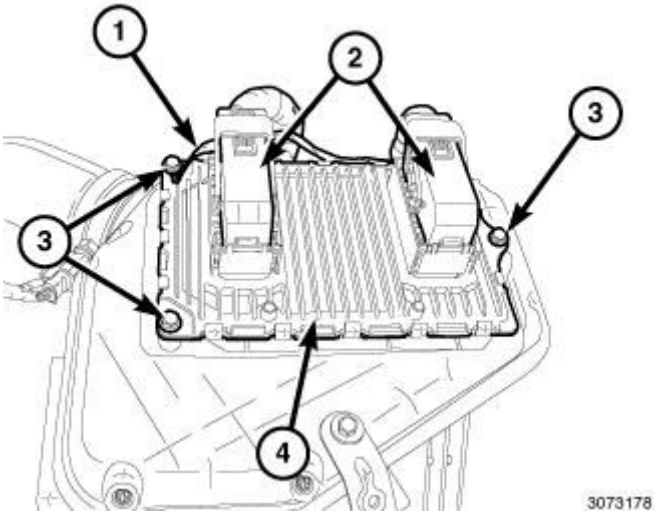

Fig. 70: Electrical Connectors, PCM, Three Mounting Bolts & Ground Wire
Courtesy of CHRYSLER GROUP, LLC

4. Disconnect and isolate the negative battery cable.
5. Unlock and disconnect the electrical connectors (2) from the PCM (4).
6. Remove the mounting bolt (3) and ground wire (1).

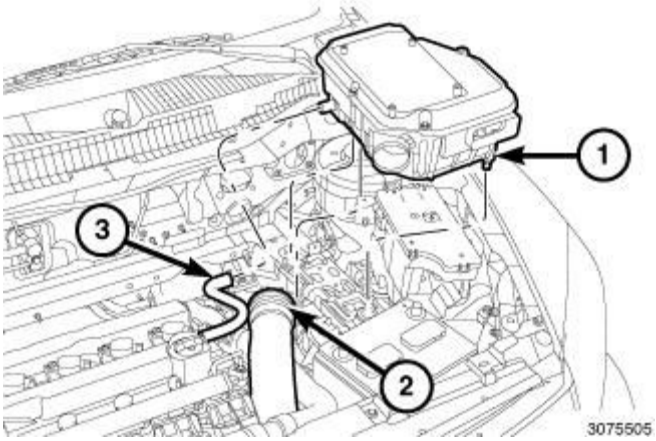

Fig. 71: Air Cleaner Body, Air Inlet Tube & Make-Up Air Hose
Courtesy of CHRYSLER GROUP, LLC

7. Remove the air inlet tube (2) from the air cleaner body (1).
8. Disconnect the make-up air hose (3) from the air cleaner body.
9. Remove the support bracket bolt from the strut tower.

10. Pull upward to disengage the pins from the rubber grommets and remove the air cleaner body (1).

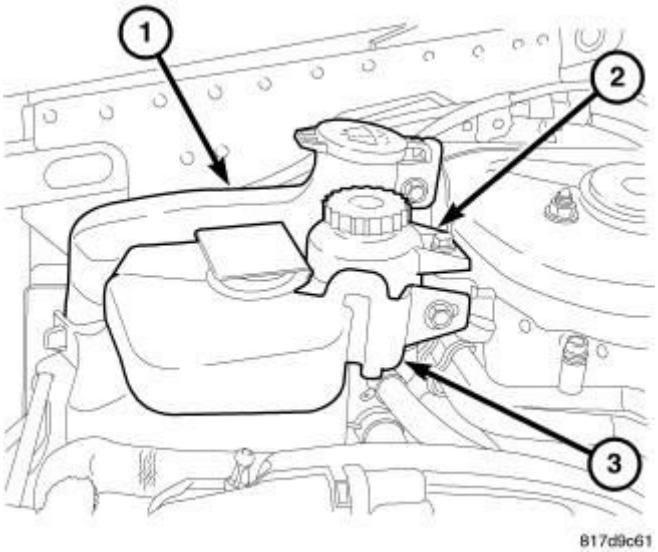

Fig. 72: Windshield Washer Reservoir, Power Steering Reservoir & Coolant Reservoir
Courtesy of CHRYSLER GROUP, LLC

11. Drain the cooling system. Refer to **STANDARD PROCEDURE** .
12. Remove the coolant recovery bottle (3). Refer to **BOTTLE, COOLANT RECOVERY, REMOVAL** .
13. Remove and reposition power steering reservoir (2).
14. Remove windshield washer bottle (1). Refer to **RESERVOIR, WINDSHIELD WASHER, REMOVAL** .
15. Remove accessory drive belt. Refer to **BELT, SERPENTINE, REMOVAL** .

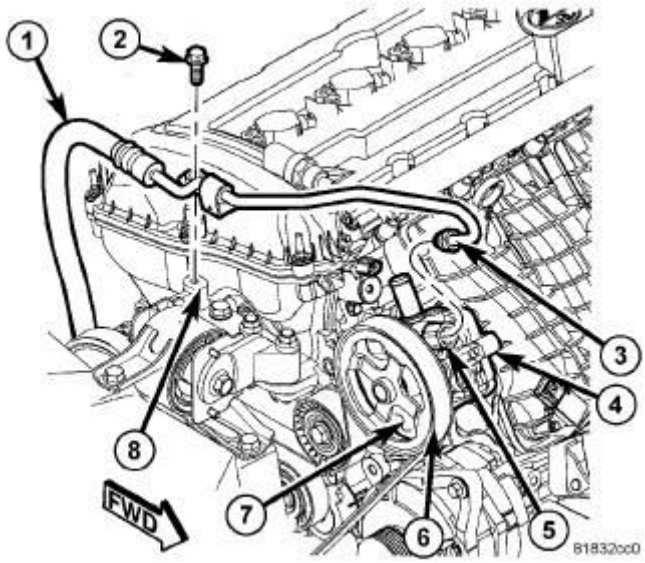

Fig. 73: Power Steering Pressure Hose
Courtesy of CHRYSLER GROUP, LLC

16. Remove power steering hose hold down (2).

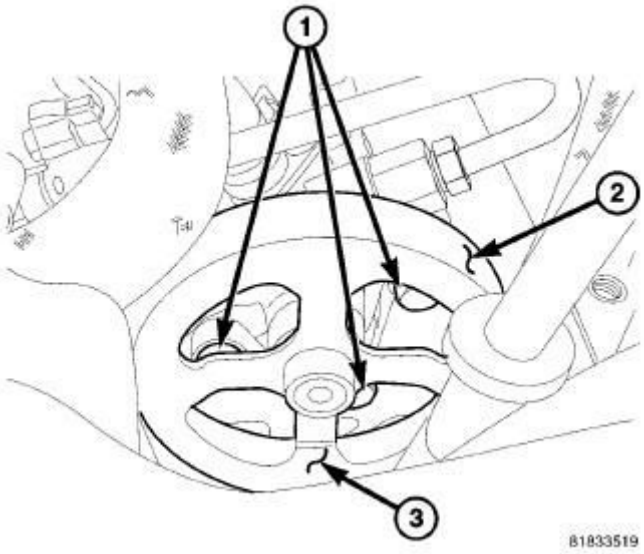

Fig. 74: Power Steering Pump Bolts & Pulley
Courtesy of CHRYSLER GROUP, LLC

17. Remove the three power steering pump mounting bolts (1) through the openings in the pulley (3) and reposition the pump.

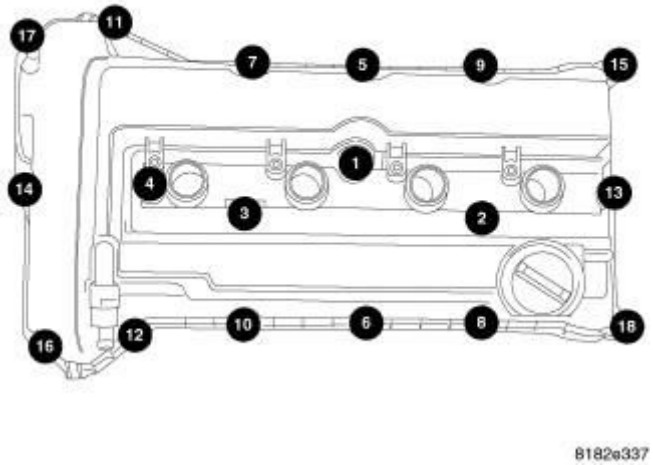

Fig. 75: Removing/Installing Cylinder Head Cover Bolts In Sequence
Courtesy of CHRYSLER GROUP, LLC

18. Remove the cylinder head cover. Refer to **COVER(S), CYLINDER HEAD, REMOVAL**.
19. Remove ignition coils from cylinder head cover.

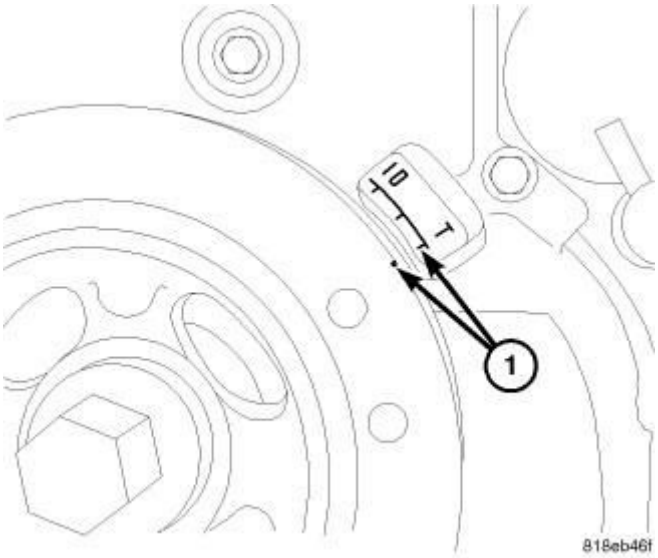

Fig. 76: Setting Engine To Top Dead Center
Courtesy of CHRYSLER GROUP, LLC

20. Raise and support the vehicle. Refer to **HOISTING, STANDARD PROCEDURE** .
21. Remove the right splash shield. Refer to **SHIELD, SPLASH, FRONT WHEELHOUSE, REMOVAL** .
22. Set engine to TDC (1).

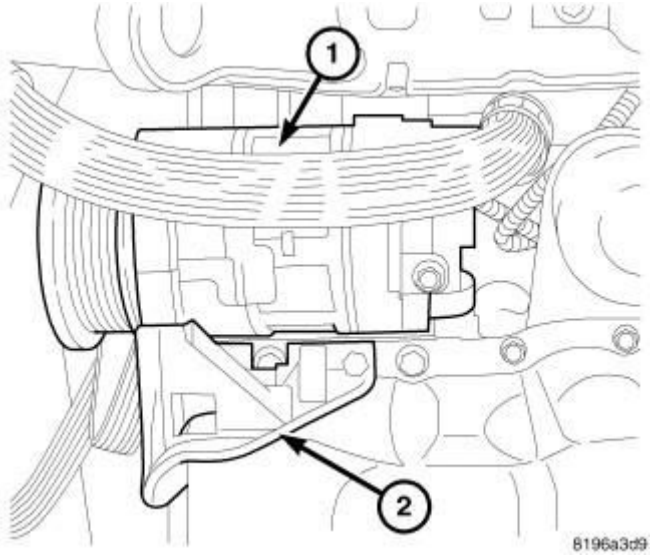

Fig. 77: A/C Compressor
Courtesy of CHRYSLER GROUP, LLC

23. Remove lower A/C compressor bolts if equipped.
24. Remove lower A/C compressor mount (2) if equipped.

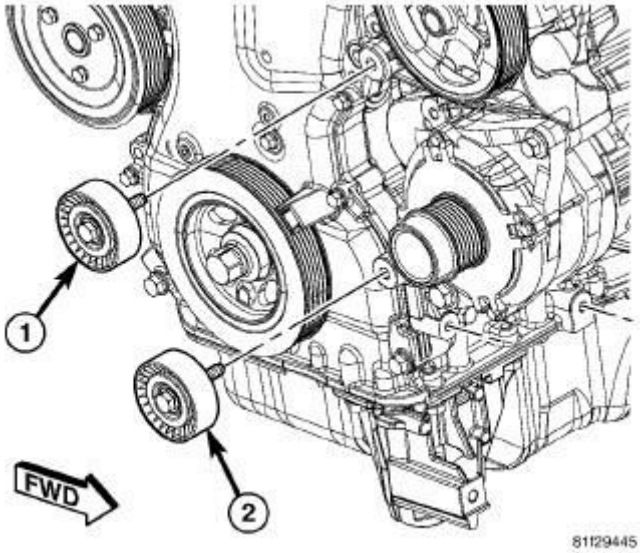

Fig. 78: Removing/Installing Accessory Drive Belt Upper & Lower Idler Pulley
Courtesy of CHRYSLER GROUP, LLC

25. Remove accessory drive belt lower idler pulley (2).

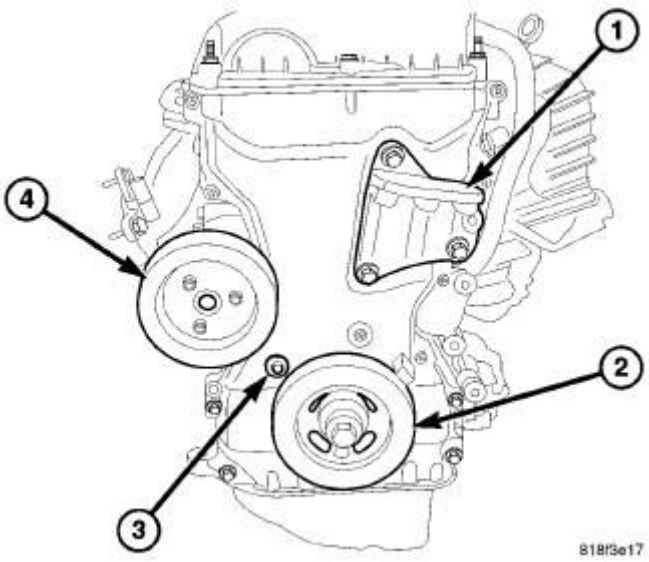

Fig. 79: Engine Front
Courtesy of CHRYSLER GROUP, LLC

26. Remove crankshaft damper (2). Refer to **DAMPER, VIBRATION, REMOVAL**.
27. Remove three bolts and water pump pulley (4) from water pump.
28. Remove lower bolt from right side engine mount bracket (1).

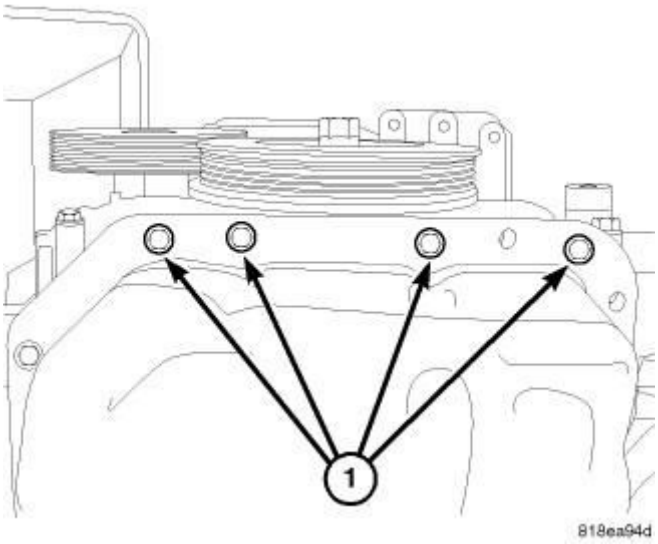

Fig. 80: Timing Chain Cover Lower Bolts
Courtesy of CHRYSLER GROUP, LLC

29. Remove timing chain cover lower bolts (1).

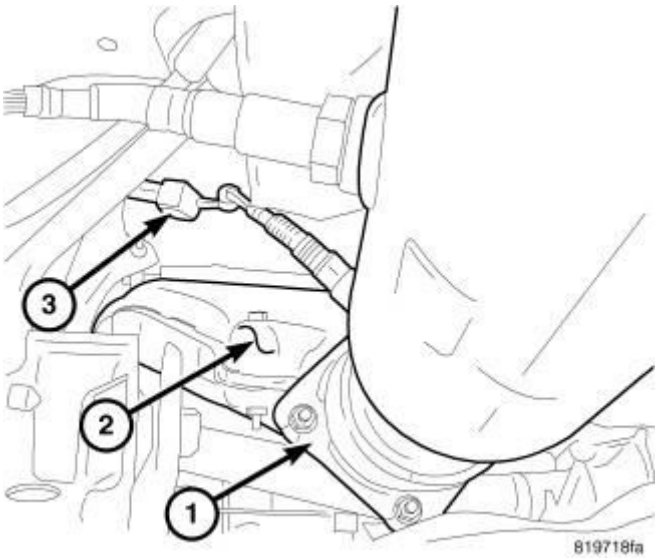

Fig. 81: Removing/Installing Under Floor Catalytic Converter
Courtesy of CHRYSLER GROUP, LLC

30. Remove under floor catalytic converter Refer to **CONVERTER, CATALYTIC, REMOVAL** .
31. Lower vehicle.
32. Support engine with suitable jack.

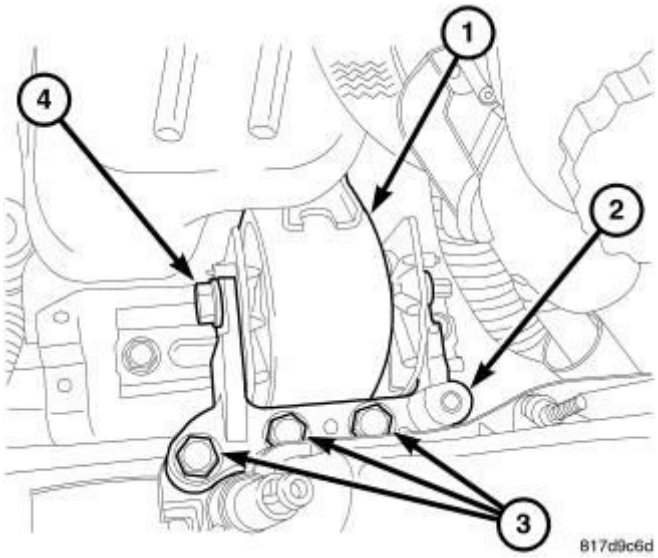

Fig. 82: Right Engine Mount
Courtesy of CHRYSLER GROUP, LLC

33. Remove right engine mount through bolt (4).
34. Remove right engine mount to mount bracket bolts (3).
35. Remove right engine mount adapter (1).

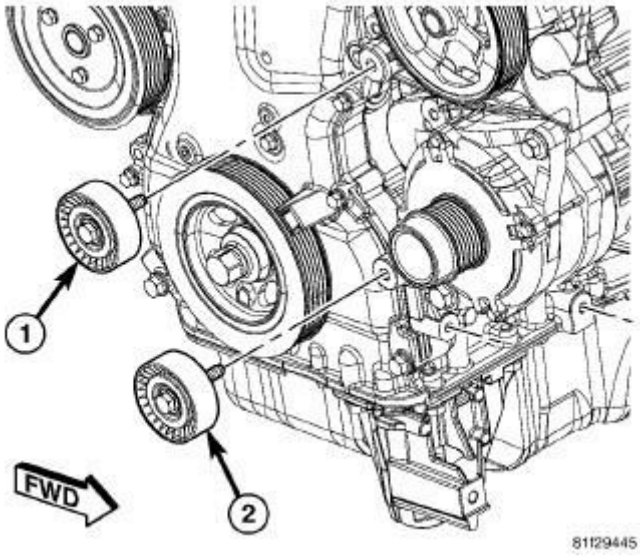

Fig. 83: Removing/Installing Accessory Drive Belt Upper & Lower Idler Pulley
Courtesy of CHRYSLER GROUP, LLC

36. Remove accessory drive upper idler pulley (1).

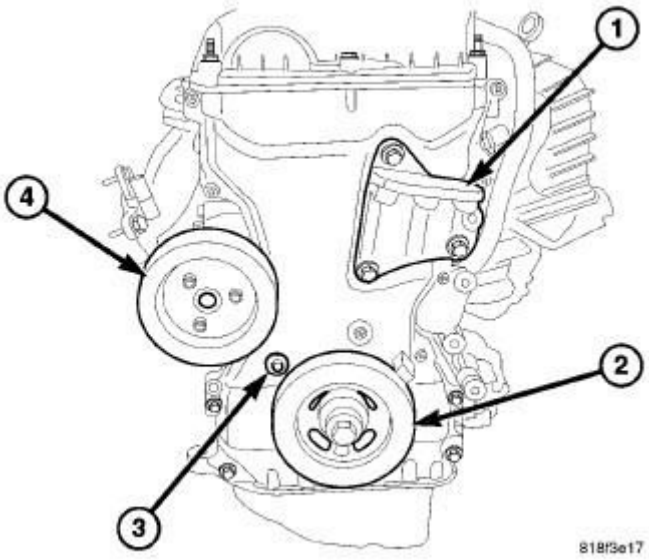

Fig. 84: Engine Front
Courtesy of CHRYSLER GROUP, LLC

37. Remove right upper engine mount bracket (1).
38. Remove accessory drive belt tensioner.
39. Remove upper timing chain cover retaining bolts.

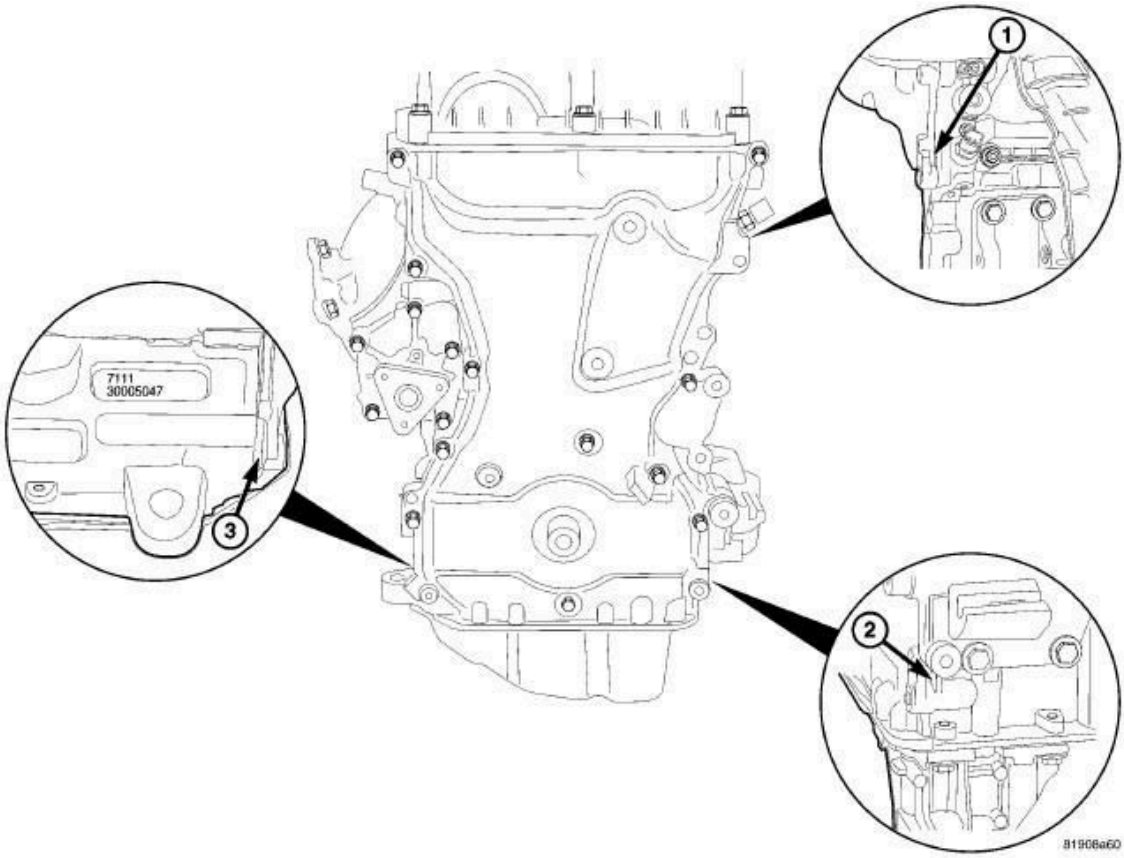

Fig. 85: Timing Chain Cover Pry Points
Courtesy of CHRYSLER GROUP, LLC

40. Remove timing chain cover using pry points (1, 2, 3).

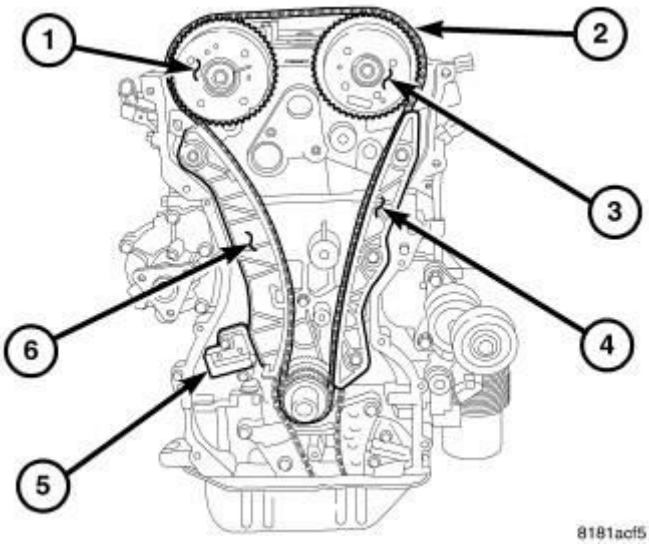

Fig. 86: Removing/Installing Timing Chain, Tensioner, Chain Guide, & Chain Pivot Guide
Courtesy of CHRYSLER GROUP, LLC

41. Remove tensioner (5) and timing chain (2) Refer to **CHAIN AND SPROCKETS, TIMING, REMOVAL**.
42. Remove timing chain guide (4) and timing chain pivot guide (6).

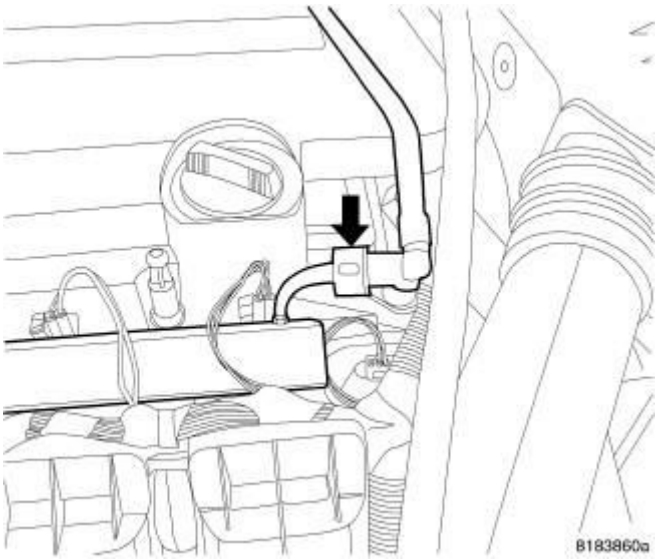

Fig. 87: Fuel Line At Fuel Rail
Courtesy of CHRYSLER GROUP, LLC

43. Disconnect the fuel line from the fuel rail. Refer to **FITTING, QUICK CONNECT** .

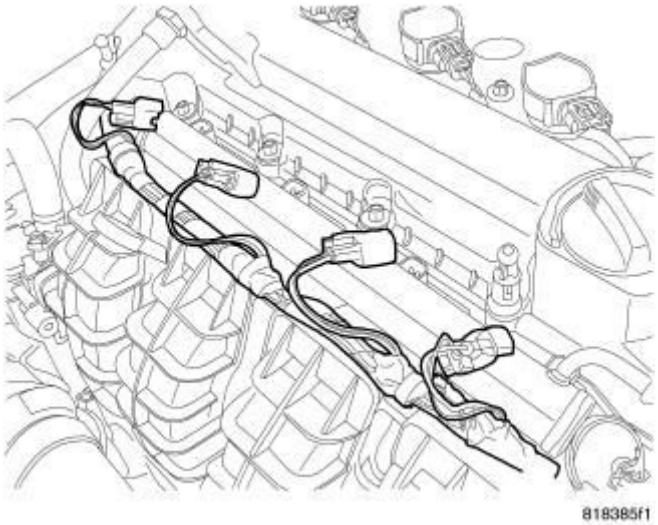

Fig. 88: Fuel Injector Electrical Connectors
Courtesy of CHRYSLER GROUP, LLC

44. Unlock and disconnect the electrical connectors from the fuel injectors.

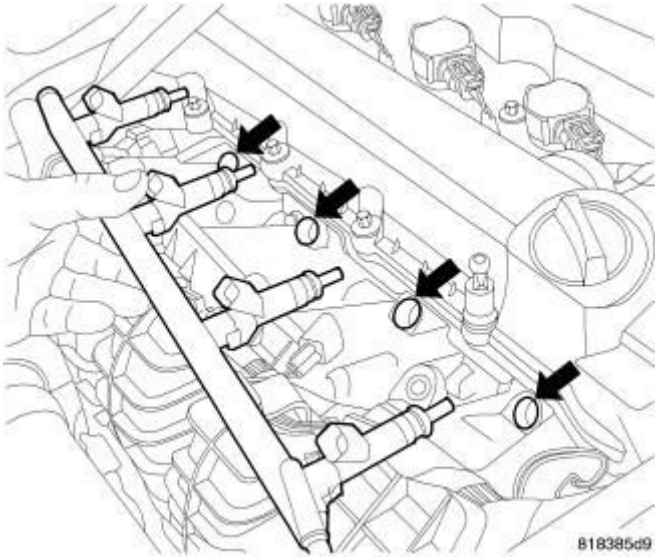

Fig. 89: Rail Removal/Install
Courtesy of CHRYSLER GROUP, LLC

45. Remove two fuel rail retaining bolts and remove fuel rail.

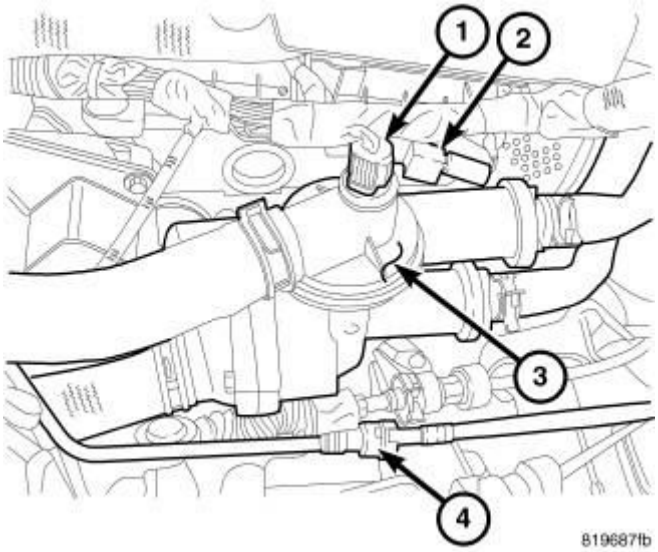

Fig. 90: Coolant Adapter
Courtesy of CHRYSLER GROUP, LLC

46. Disconnect electrical connectors from coolant temperature sensor (1), oil temperature sensor, variable valve timing solenoids, camshaft position sensors, MAP sensor, manifold tuning valve, ignition interference suppressor (2) and electronic throttle control.

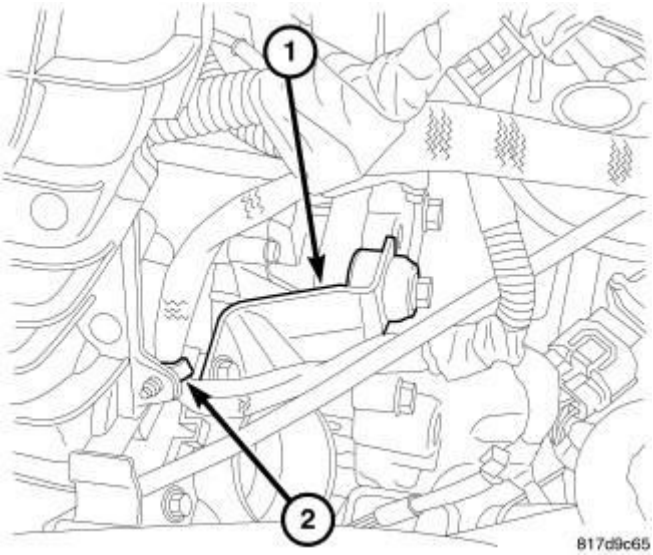

Fig. 91: Throttle Body Support
Courtesy of CHRYSLER GROUP, LLC

47. Remove wiring harness retainer from intake manifold (2) and reposition harness.
48. Remove throttle body support bracket (1).
49. Disconnect vacuum lines at intake.

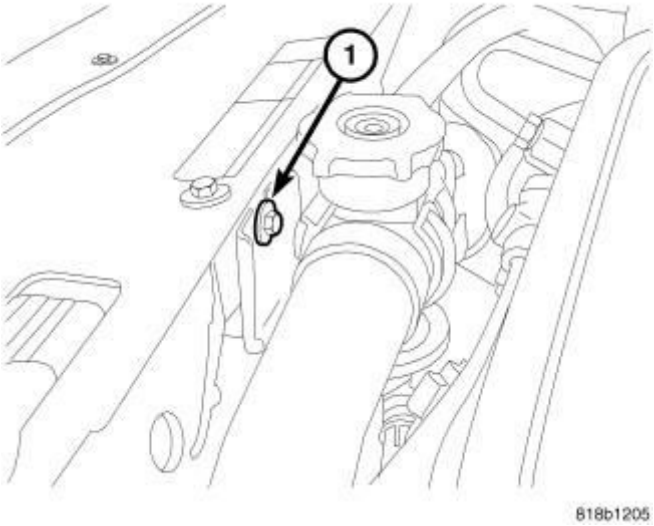

Fig. 92: Radiator Hose Support
Courtesy of CHRYSLER GROUP, LLC

50. Remove upper radiator hose retaining bolt (1).

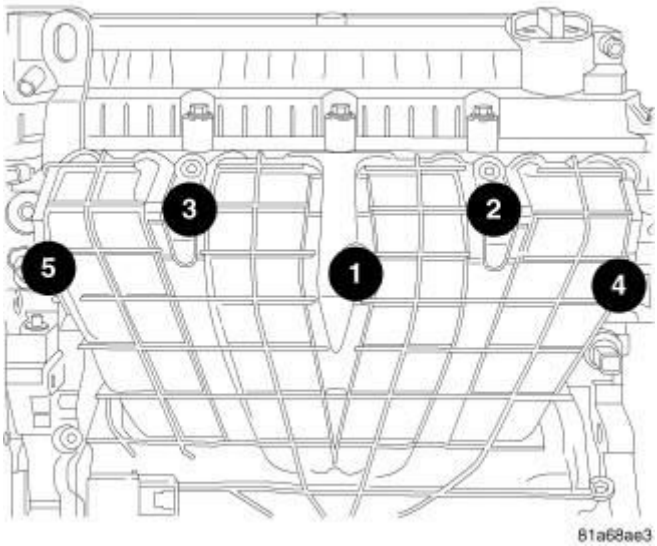

Fig. 93: Intake Manifold Bolt Removal & Tightening Sequence
Courtesy of CHRYSLER GROUP, LLC

51. Remove intake manifold retaining bolts and remove intake manifold.

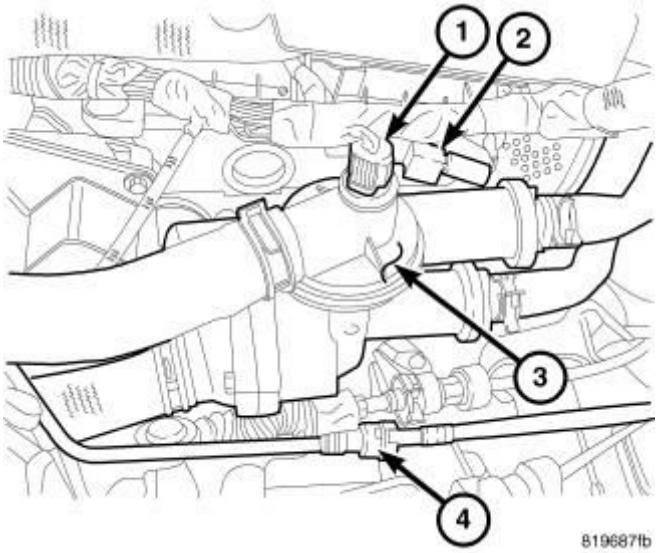

Fig. 94: Coolant Adapter
Courtesy of CHRYSLER GROUP, LLC

52. Remove four bolts and reposition coolant adapter (3).

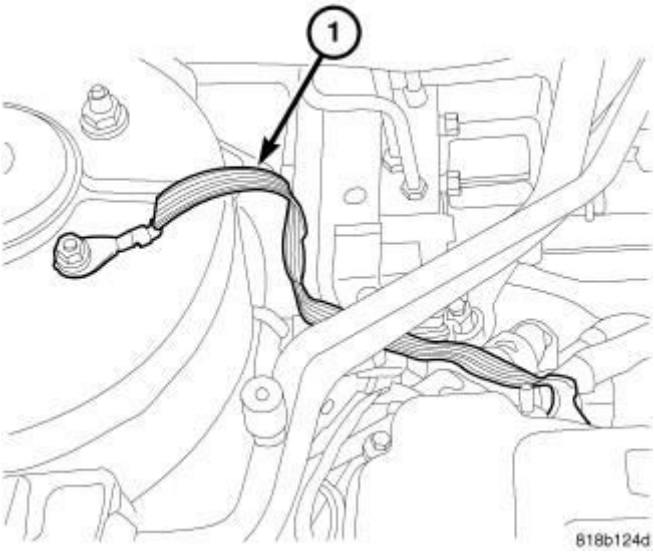

Fig. 95: Ground Strap
Courtesy of CHRYSLER GROUP, LLC

53. Remove ground strap (1) at right rear of cylinder head if equipped.

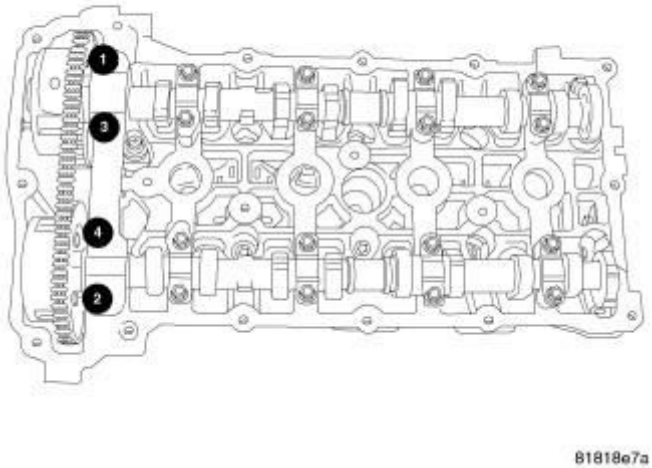

Fig. 96: Front Cam Cap Removal Sequence
Courtesy of CHRYSLER GROUP, LLC

NOTE: Camshaft bearing caps should have been marked during engine manufacturing. For example, number one exhaust camshaft bearing is marked "E1>".

CAUTION: DO NOT use a number stamp or a punch to mark camshaft bearing caps. Damage to bearing caps could occur.

54. Using a permanent ink or paint marker, identify location and position on each camshaft bearing cap.
55. Remove the front camshaft bearing cap.
56. Slowly remove the remaining intake and exhaust camshaft bearing cap bolts one turn at a time.
57. Remove the camshafts.

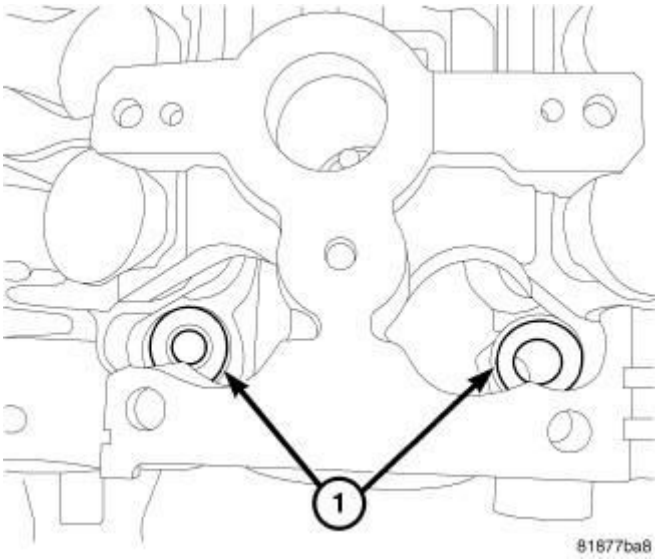

Fig. 97: Front Head Bolt Washers
Courtesy of CHRYSLER GROUP, LLC

NOTE: All of the cylinder head bolts have captured washers EXCEPT the front two (1).

58. Remove cylinder head bolts and two uncaptured washers.
59. Remove cylinder head from engine block.
60. Inspect and clean cylinder head and block sealing surfaces. Refer to **INSPECTION** and **CLEANING**.

NOTE: Ensure cylinder head bolt holes in the block are clean, dry (free of residual oil or coolant), and threads are not damaged.

CLEANING

CLEANING

To ensure engine gasket sealing, proper surface preparation must be performed,

especially with the use of aluminum engine components and multi-layer steel cylinder head gaskets.

NOTE: Multi-Layer Steel (MLS) head gaskets require a scratch free sealing surface.

Remove all gasket material from cylinder head and block. Refer to **ENGINE GASKET SURFACE PREPARATION** . Be careful not to gouge or scratch the aluminum head sealing surface.

Clean all engine oil passages.

INSPECTION

INSPECTION

NOTE: Replacement cylinder heads will come complete with valves, seals, springs, retainers, keepers, tappets, and camshafts.

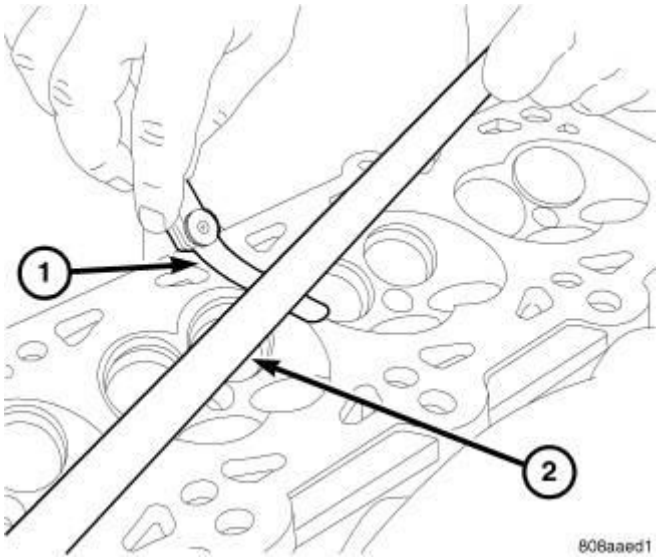

Fig. 98: Checking Cylinder Head Flatness
Courtesy of CHRYSLER GROUP, LLC

1. Check cylinder head warpage with a straight edge (2) and feeler gauge (1).
2. Cylinder head must be flat within 0.1 mm (0.004 in.).
3. Verify that the valve tappets move freely in theirs bores and that they have been rotating.
4. Inspect camshaft bearing journals for scoring.

5. Remove carbon and varnish deposits from inside of valve guides with a reliable guide cleaner.
6. Inspect the following components and verify that they are within specification : Refer to **SPECIFICATIONS** .
   - Camshafts
   - Valve Tappets
   - Springs
   - Valve Seats
   - Valve Guides
   - Valves
7. Prior to installing cylinder head, the cylinder block should be checked for flatness. Refer to **INSPECTION** .

INSTALLATION

INSTALLATION

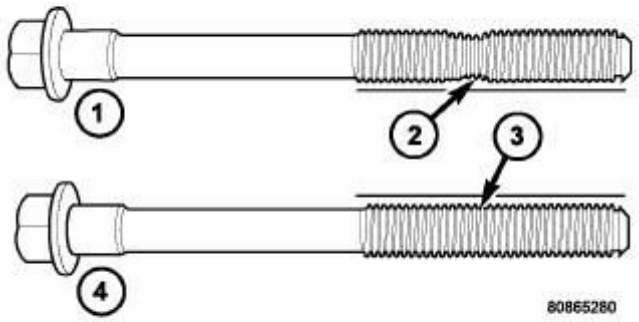

Fig. 99: Checking Cylinder Head Bolts For Stretching (Necking)
Courtesy of CHRYSLER GROUP, LLC

CAUTION: The cylinder head bolts are tightened using a torque plus angle procedure. The bolts must be examined BEFORE reuse. If the threads are necked down the bolts must be replaced.

1. Check cylinder head bolts for necking by holding a scale or straight edge against the threads. If all the threads do not contact the scale (2) the bolt must be replaced.

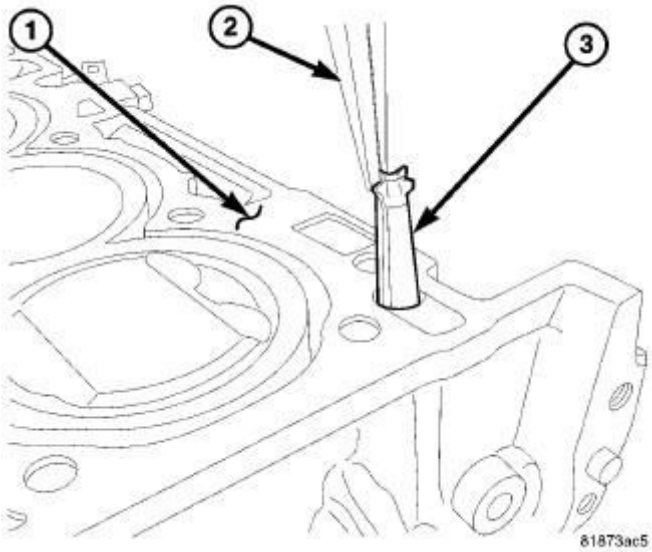

Fig. 100: Variable Valve Timing Filter Screen
Courtesy of CHRYSLER GROUP, LLC

NOTE: Ensure cylinder head bolt holes in the block are clean, dry (free of residual oil or coolant), and threads are not damaged.

CAUTION: Always replace the variable valve timing filter screen (3) when servicing the head gasket or engine damage could result.

2. Replace the variable valve timing filter screen (3).

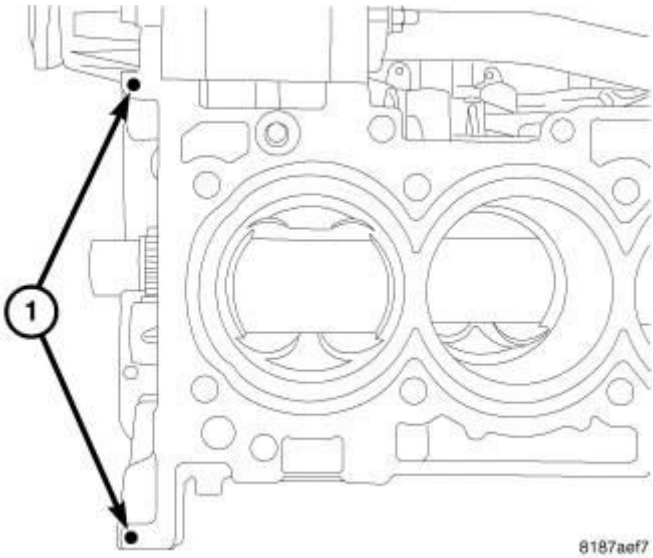

Fig. 101: Engine Sealant RTV Location
Courtesy of CHRYSLER GROUP, LLC

NOTE: When using RTV, the sealing surfaces must be clean and free from grease and oil.

NOTE: When using RTV, parts should be assembled in 10 minutes and tighten to final torque within 45 minutes.

3. Place two pea size dots of Mopar® engine sealant RTV or equivalent (1) on cylinder block as shown in illustration.

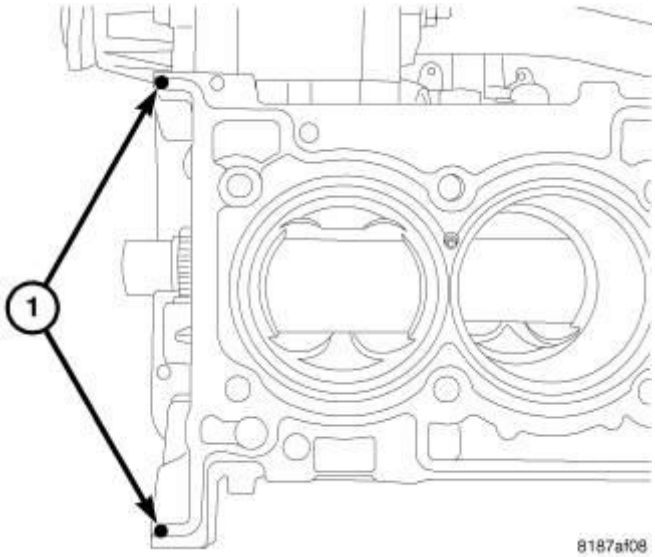

Fig. 102: Cylinder Head Gasket RTV
Courtesy of CHRYSLER GROUP, LLC

4. Position the new cylinder head gasket on engine block with the part number facing up. Ensure gasket is seated over the locating dowels in block.
5. Place two pea size dots of Mopar® engine sealant RTV or equivalent (1) on cylinder head gasket as shown in illustration.

NOTE: The head must be installed within 15 minutes before the RTV skins.

6. Position cylinder head onto engine block.

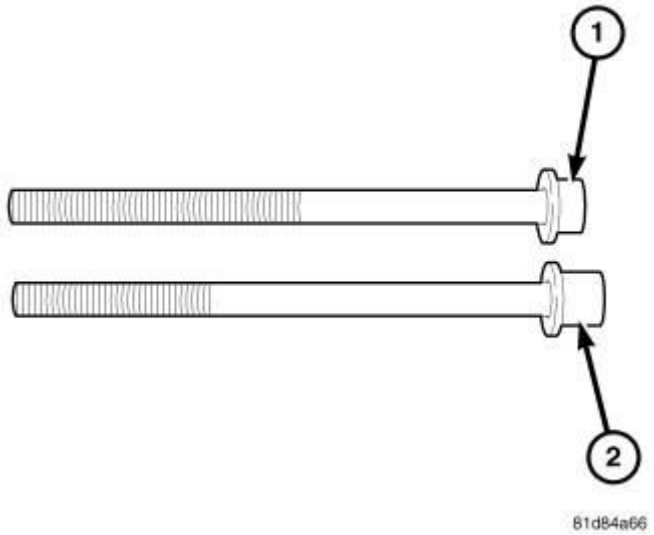

Fig. 103: Cylinder Head Bolt Identification
Courtesy of CHRYSLER GROUP, LLC

CAUTION: This engine was built with 2 different style cylinder head bolts. Each style bolt requires a different torque value. The bolts can be identified by the short bolt head (1) and the long bolt head (2).

7. Measure the bolt head from the washer to the top of the bolt head. The short bolt head (1) measures 8 mm (5/16") and the long bolt head (2) measures 13 mm (1/2").
8. Identify whether your engine has the short head design (1) or the long head design (2).

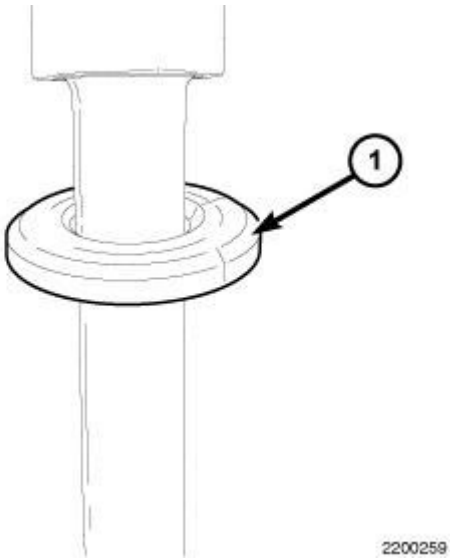

Fig. 104: Washers Must Be Installed With Bevel Edge Up Towards Bolt Head
Courtesy of CHRYSLER GROUP, LLC

NOTE: The front two cylinder head bolts do not have captured washers. The washers must be installed with the bevel edge (1) up towards the bolt head.

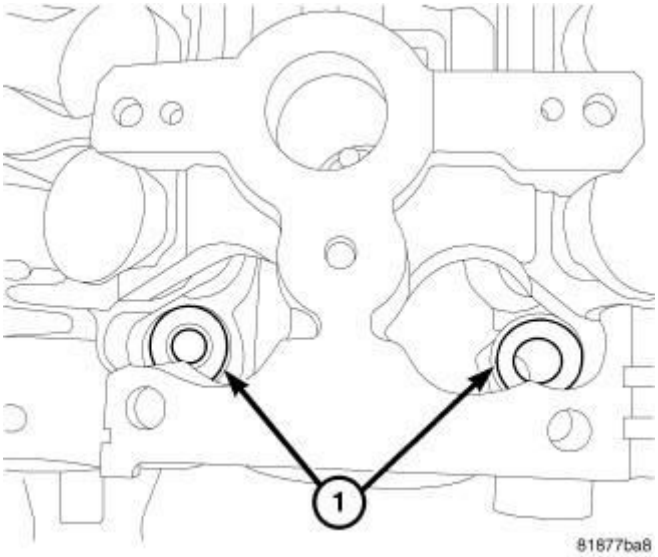

Fig. 105: Front Head Bolt Washers
Courtesy of CHRYSLER GROUP, LLC

9. Install washers (1) for the front two cylinder head bolts with the beveled edge facing up.

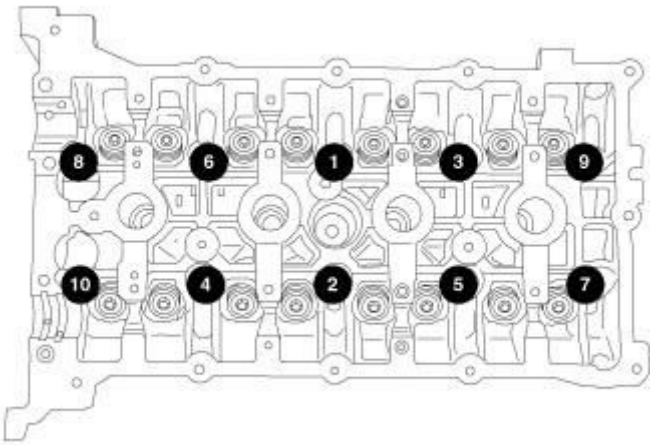

Fig. 106: Cylinder Head Torque Sequence
Courtesy of CHRYSLER GROUP, LLC

NOTE: Before installing the cylinder head bolts, lubricate the threads with clean engine oil.

10. Install the cylinder head bolts and tighten in the sequence shown in illustration.

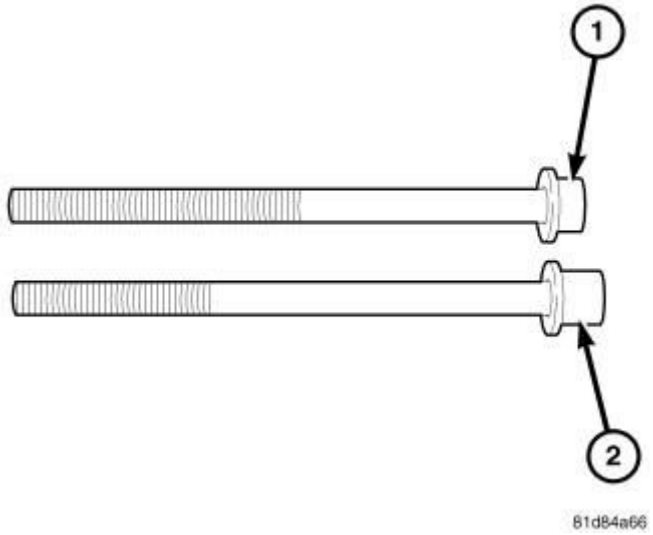

Fig. 107: Cylinder Head Bolt Identification
Courtesy of CHRYSLER GROUP, LLC

11. If your bolt has the short head (1), use the following torque specifications:
    - First: All to 30 N.m (25 ft. lbs.)
    - Second: All to 61 N.m (45 ft. lbs.)

- Third: All to 61 N.m (45 ft. lbs.)
- Fourth: All an additional 90°

CAUTION: Do not use a torque wrench for the Fourth step.

12. If your bolt has the long head (2), use the following torque specifications:
    - First: All to 30 N.m (25 ft. lbs.)
    - Second: All to 73 N.m (54 ft. lbs.)
    - Third: All to 73 N.m (54 ft. lbs.)
    - Fourth: All an additional 90°

CAUTION: Do not use a torque wrench for the Fourth step.

13. Clean excess RTV from the timing chain cover sealing surface.

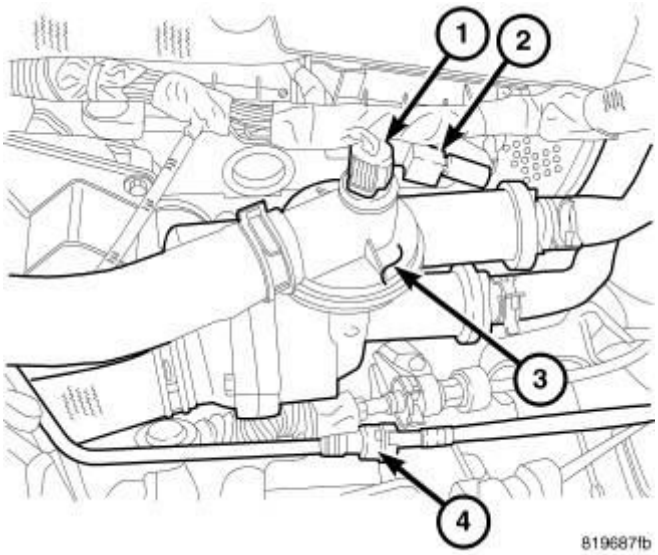

Fig. 108: Coolant Adapter
Courtesy of CHRYSLER GROUP, LLC

14. Install coolant adapter (3) with new seals. Tighten bolts to 18.1 N.m (159 in. lbs.).

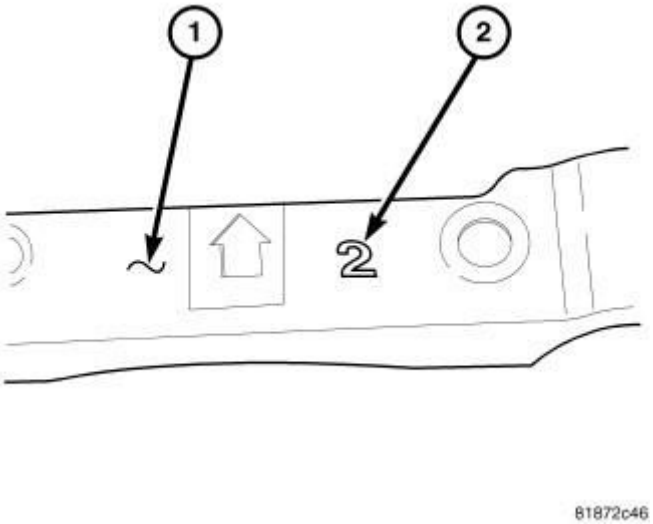

Fig. 109: Cam Cap Bearing Identification
Courtesy of CHRYSLER GROUP, LLC

15. The front camshaft bearing cap (1) is numbered (2) either one, two, or three, this corresponds to the select fit front exhaust camshaft bearing to use.

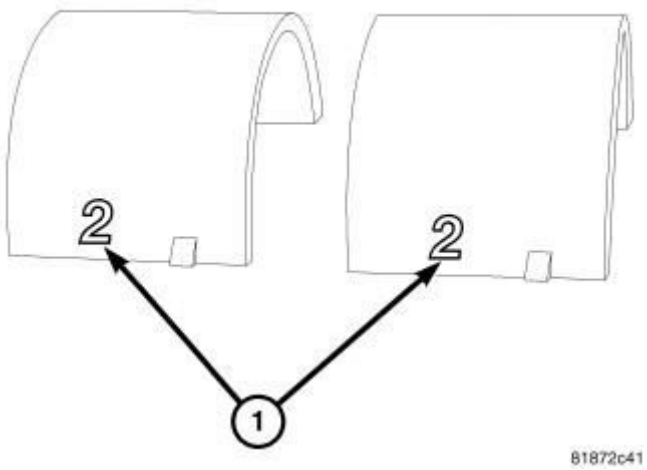

Fig. 110: Cam Bearing Identification
Courtesy of CHRYSLER GROUP, LLC

16. Install the corresponding select fit front exhaust camshaft bearing (1).
17. Oil all of the camshaft journals with clean engine oil.

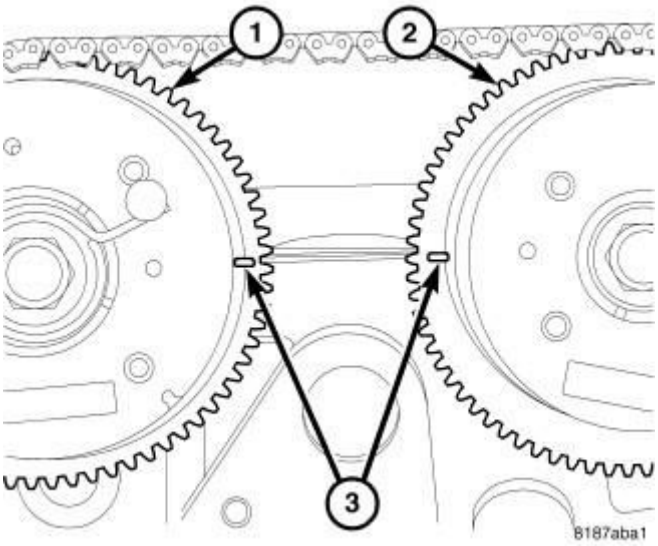

Fig. 111: Camshaft Timing
Courtesy of CHRYSLER GROUP, LLC

18. Position exhaust camshaft (1) and intake camshaft (2) on bearing journals in the cylinder head.
19. Align camshaft timing marks (3) so that they are facing each other and are in line with the cylinder head cover sealing surface.

CAUTION: Install the front intake and exhaust camshaft bearing cap last. Ensure that the dowels are seated and follow torque sequence or damage to engine could result.

NOTE: If the front camshaft bearing cap is broken, the cylinder head MUST be replaced.

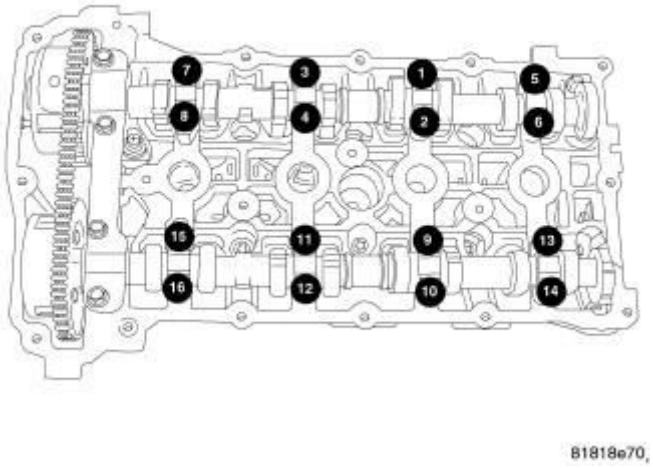

Fig. 112: Cam Cap Torque Sequence
Courtesy of CHRYSLER GROUP, LLC

20. Install intake and exhaust camshaft bearing caps and slowly tighten bolts to 9.5 N.m (85 in. lbs.) in the sequence shown in illustration.

NOTE: Verify that the exhaust bearing shells are correctly installed, and the dowels are seated in the head, prior to torquing bolts.

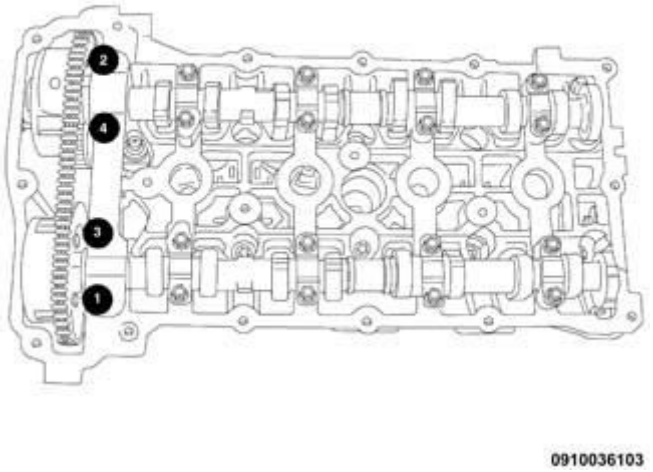

Fig. 113: Front Cam Cap Removal/Tightening Sequence
Courtesy of CHRYSLER GROUP, LLC

NOTE: This torque sequence is for vehicles with the round hole for the Front Cam Cap Dowel located on the

intake side of the cylinder head.

21. Install the front intake and exhaust bearing cap and tighten bolts to 25 N•m (18 ft. lbs.) in the sequence shown in illustration.

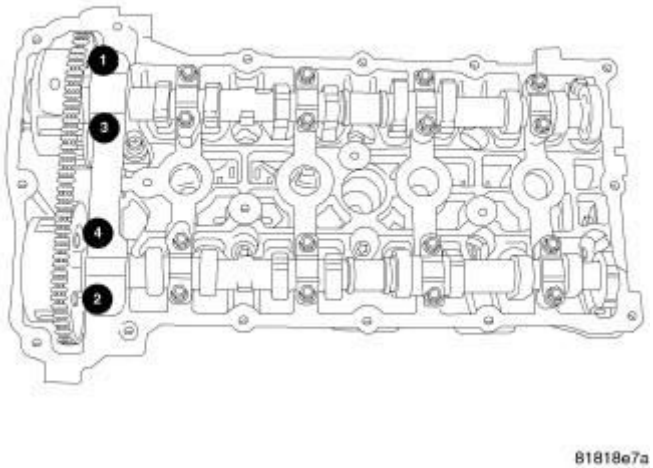

Fig. 114: Front Cam Cap Removal Sequence
Courtesy of CHRYSLER GROUP, LLC

NOTE: This torque sequence is for vehicles with the round hole for the Front Cam Cap Dowel located on the exhaust side of the cylinder head.

22. Install the front intake and exhaust bearing cap and tighten bolts to 25 N.m (18 ft. lbs.) in the sequence shown in illustration.

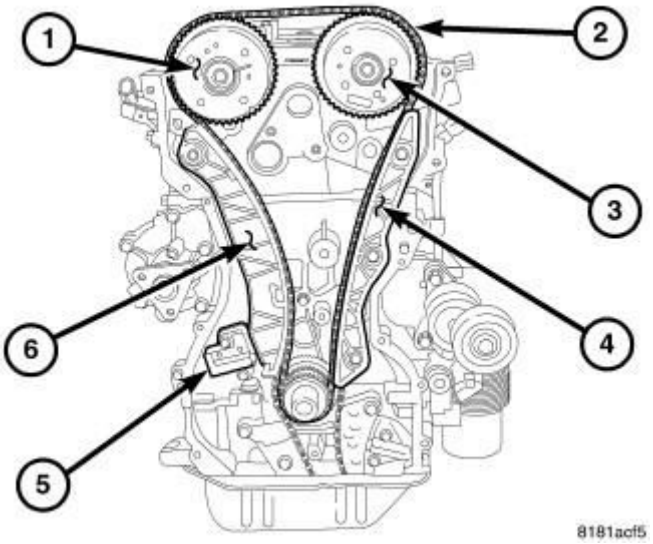

Fig. 115: Timing Drive
Courtesy of CHRYSLER GROUP, LLC

23. Install timing chain guide (4) and tighten bolts to 12 N.m (105 in. lbs.).
24. Install the moveable timing chain pivot guide (6) and tighten bolt to 12 N.m (105 in. lbs.).
25. Install timing chain (2) and tensioner (5). Refer to **CHAIN AND SPROCKETS, TIMING, INSTALLATION**.
26. Install timing chain cover, engine mount, pulleys and accessory drive belt. Refer to **COVER(S), ENGINE TIMING, INSTALLATION**.

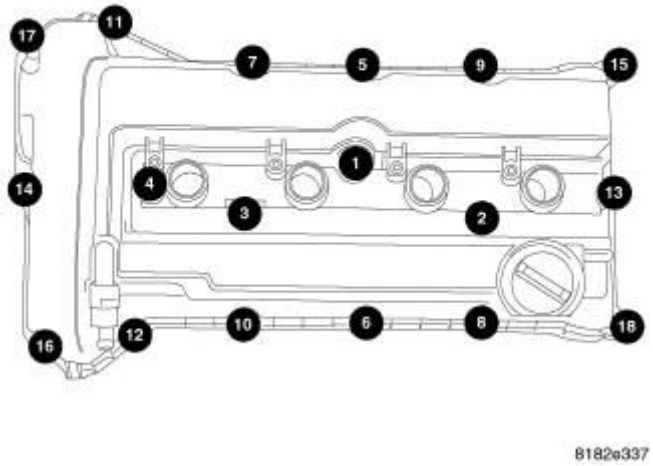

Fig. 116: Removing/Installing Cylinder Head Cover Bolts In Sequence
Courtesy of CHRYSLER GROUP, LLC

27. Install cylinder head cover and ignition coils. Refer to **COVER(S), CYLINDER HEAD, INSTALLATION**.

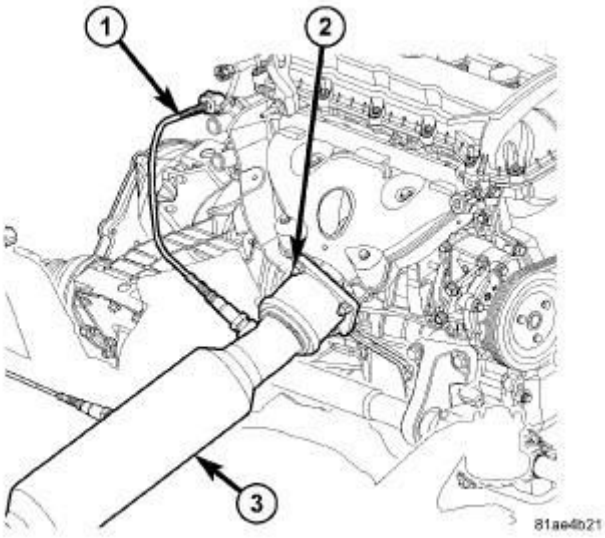

Fig. 117: Oxygen Sensor Connector, Catalytic Converter & Bolts
Courtesy of CHRYSLER GROUP, LLC

28. Install exhaust manifold. Refer to **MANIFOLD, EXHAUST, INSTALLATION**.

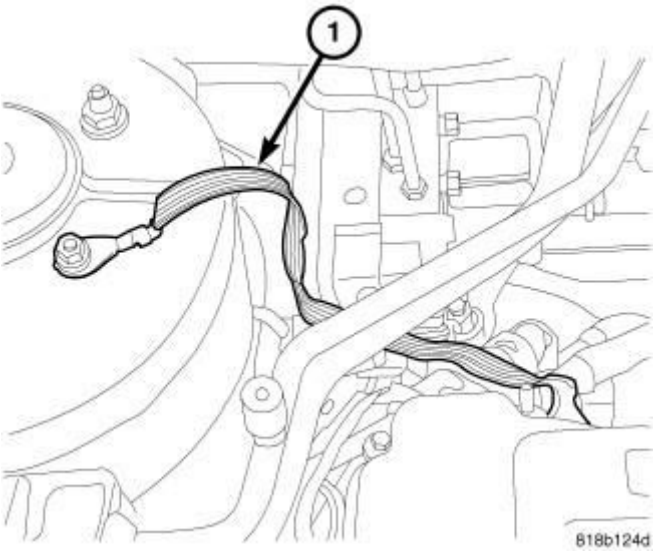

Fig. 118: Ground Strap
Courtesy of CHRYSLER GROUP, LLC

29. Install ground strap (1) at right rear of cylinder head if equipped.

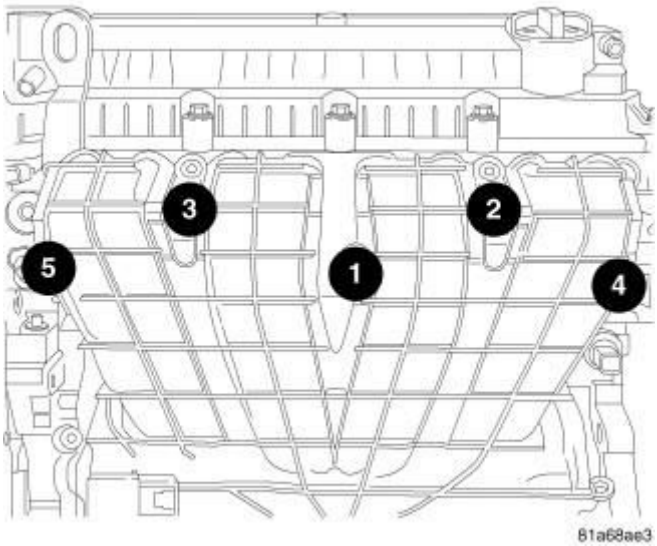

Fig. 119: Intake Bolt Removal/Tightening Sequence
Courtesy of CHRYSLER GROUP, LLC

30. Install intake manifold, vacuum lines and fuel rail. Refer to **MANIFOLD, INTAKE, INSTALLATION**.

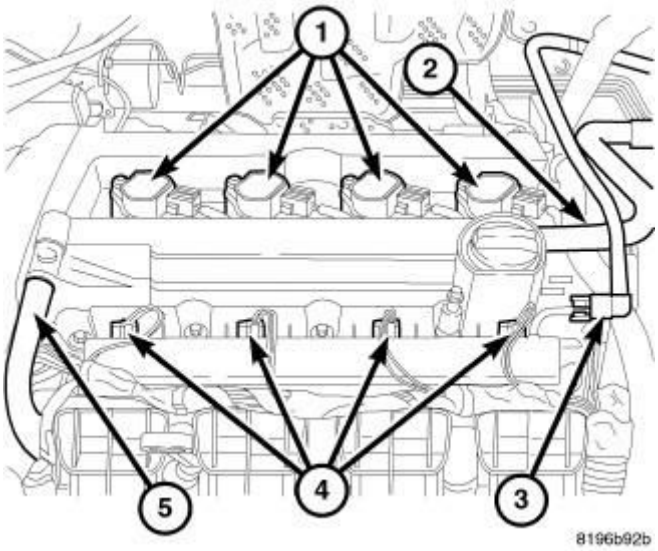

Fig. 120: Identifying Ignition Coil Electrical Connectors, Air Hose, PCV Hose, Fuel Line & Injectors
Courtesy of CHRYSLER GROUP, LLC

31. Connect coil (1) and injector (4) electrical connectors.

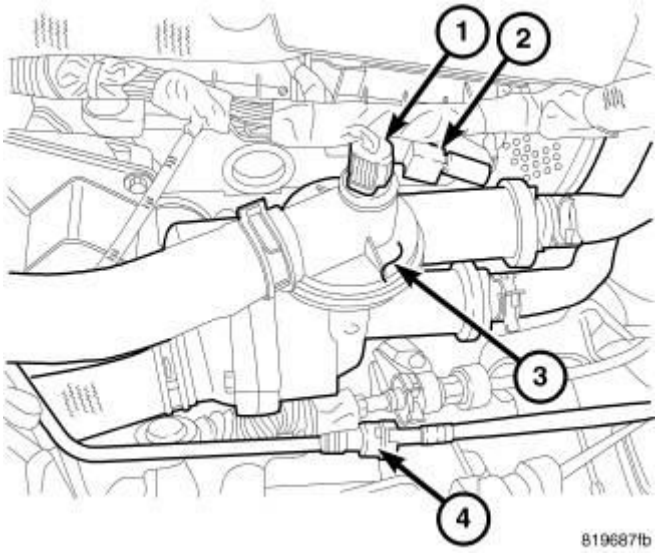

Fig. 121: Coolant Adapter
Courtesy of CHRYSLER GROUP, LLC

32. Connect electrical connectors to coolant temperature sensor (1), camshaft position sensors, oil temperature sensor, variable valve timing solenoids, MAP sensor, manifold tuning valve, ignition interference suppressor (2) and electronic throttle control.

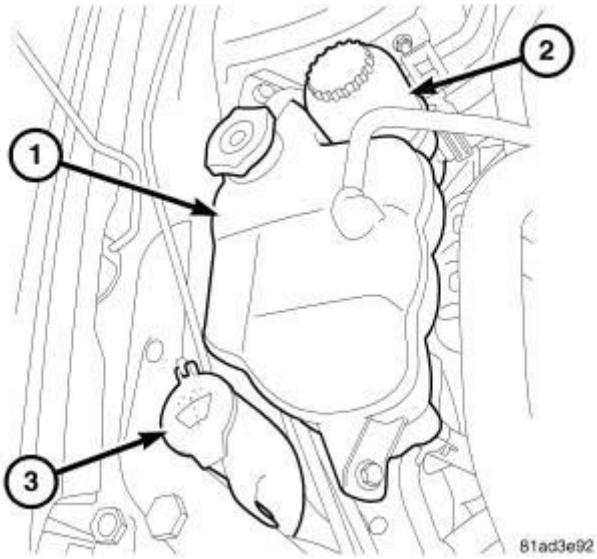

Fig. 122: Coolant Reservoir, Power Steering Reservoir & Windshield Washer Bottle
Courtesy of CHRYSLER GROUP, LLC

33. Install power steering pump reservoir (2). Tighten mounting screw to 12 N.m (106 in. lbs.).
34. Install coolant recovery reservoir (1). Tighten mounting bolts to 10 N.m (89

in. lbs.).

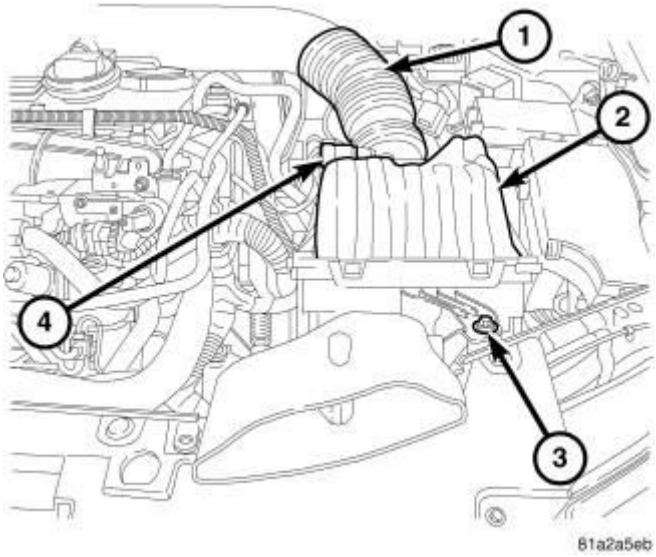

Fig. 123: Air Cleaner Housing & Retaining Bolt
Courtesy of CHRYSLER GROUP, LLC

35. Install clean air hose (1) and air cleaner housing (2). Refer to **BODY, AIR CLEANER, INSTALLATION**.
36. Fill cooling system. Refer to **STANDARD PROCEDURE** .
37. Install new oil filter and fill engine with oil.
38. Connect negative battery cable.

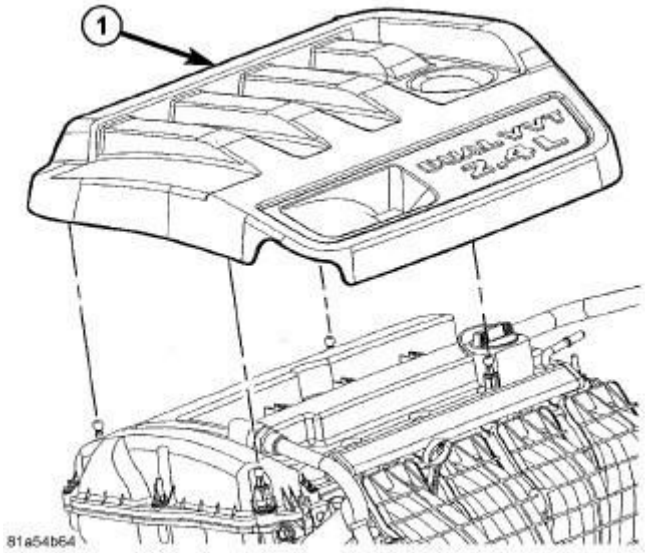

Fig. 124: Engine Cover
Courtesy of CHRYSLER GROUP, LLC

39. Operate engine until it reaches normal operating temperature. Check oil and cooling systems for leaks and correct fluid levels.
40. Install engine cover (1).

ASSEMBLY, VARIABLE VALVE TIMING

DESCRIPTION

DESCRIPTION

The world engine is equipped with Variable Valve Timing (VVT). This system advances and/or retards intake and/or exhaust camshaft timing to improve engine performance, mid-range torque, idle quality, fuel economy, and reduce emissions. The camshaft sprockets are integrated with the VVT assemblies and are serviced as an assembly. VVT assemblies are sometimes referred to as camshaft phasers.

OPERATION

OPERATION

The Variable Valve Timing (VVT) assemblies are actuated with engine oil pressure. The oil flow to the VVT assemblies are controlled by two Oil Control Valves (OCV). There is an OCV and Camshaft Position Sensor (CMP) for each camshaft. The OCV's consist of a Pulse Width Modulated (PWM) solenoid and a spool valve. The PCM actuates the OCV to control oil flow through the spool valve into the VVT assemblies. The VVT assembly consists of a rotor, stator, and sprocket. The stator is connected to the timing chain through the sprocket. The rotor is connected to the camshaft. Oil flow in to the VVT assembly rotates the rotor with respect to the stator, thus rotating the camshaft with respect to the timing chain. Thus, the VVT assemblies change valve timing by changing the relationship between the camshaft and the timing chain. An integral oil pressure activated pin is used to lock base camshaft timing for engine start up. Oil pressure releases the pin and allows the PCM to control cam timing once the engine is running. An infinitely variable valve timing position can be achieved within the limits of the hardware. The CMP monitors the position of the camshaft with respect to the crankshaft and provides feedback to the PCM.

REMOVAL

REMOVAL

NOTE: Camshaft phaser and camshaft sprocket are supplied as an assembly, do not attempt to disassemble.

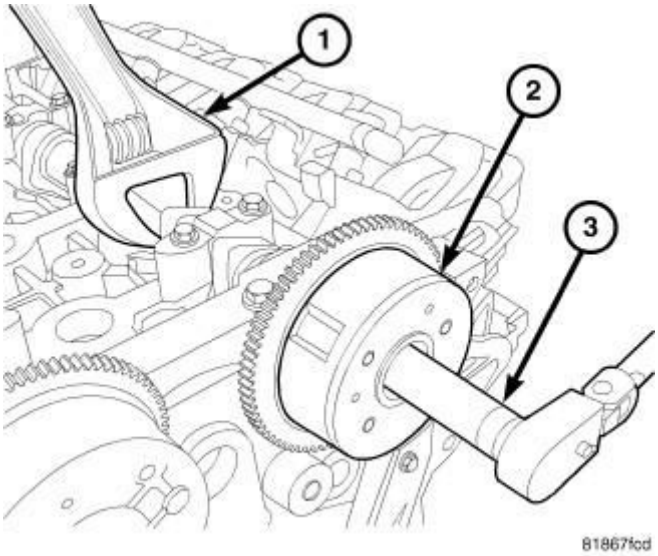

Fig. 125: Removing & Installing Cam Phaser
Courtesy of CHRYSLER GROUP, LLC

1. Remove camshafts . Refer to **CAMSHAFT, ENGINE, REMOVAL**.
2. Remove camshaft phaser (2) retaining bolt while holding the camshaft in place with a wrench (1) on the camshaft flats.
3. Remove phaser (2) assembly from camshaft.

INSTALLATION

INSTALLATION

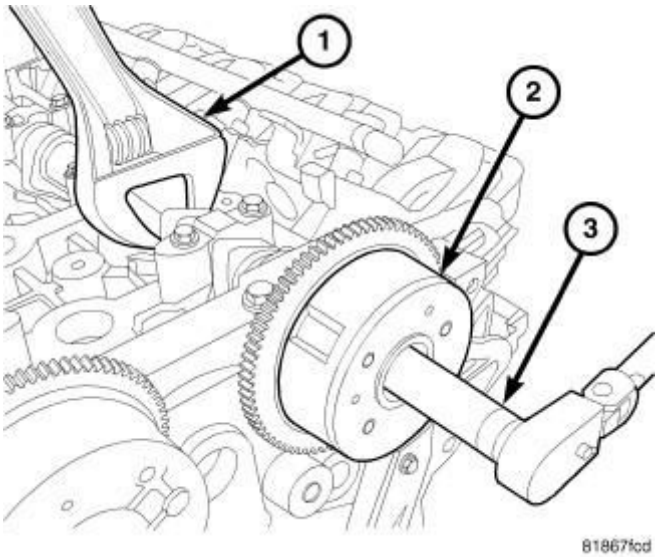

Fig. 126: Removing & Installing Cam Phaser

Courtesy of CHRYSLER GROUP, LLC

CAUTION: Do not use an impact wrench to tighten camshaft sprocket bolts. Damage to the camshaft-to-sprocket locating dowel pin and camshaft phaser may occur.

1. Install phaser (2) assembly on camshaft.

NOTE: Make sure the dowel is seated in the dowel hole and not in an oil feed hole. The dowel hole is larger than the 4 oil feed holes.

2. Install phaser retaining bolt. Hold camshaft in place with a wrench (1) and tighten bolt to 59 N.m (44 ft. lbs.).
3. Install camshafts . Refer to **CAMSHAFT, ENGINE, INSTALLATION**.

BUCKET, TAPPET

DIAGNOSIS AND TESTING

DIAGNOSIS AND TESTING - MECHANICAL VALVE TAPPET NOISE DIAGNOSIS

A tappet-like noise may be produced from incorrect valve lash. Refer to **STANDARD PROCEDURE - MEASURING VALVE LASH** .

STANDARD PROCEDURE

STANDARD PROCEDURE - MEASURING VALVE LASH

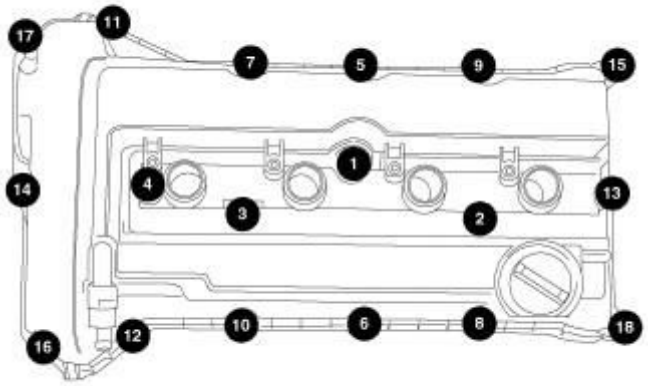

8182e337

Fig. 127: Cylinder Head Cover Bolt Torque Sequence
Courtesy of CHRYSLER GROUP, LLC

NOTE: The engine must be cold to measure valve lash.

1. Remove engine cover.
2. Remove cylinder head cover. Refer to **COVER(S), CYLINDER HEAD, REMOVAL**.

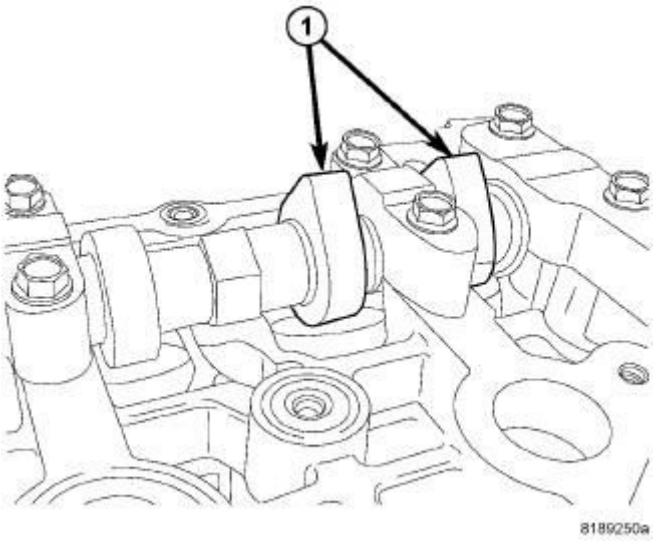

Fig. 128: Identifying Camshaft So Lobes Are Vertical
Courtesy of CHRYSLER GROUP, LLC

3. Rotate camshaft so lobes are vertical (1).
4. Check clearance using feeler gauges.
5. Repeat for all tappets and record readings.
6. If clearance was too small, refer to the **CLEARANCE TOO SMALL** procedure.
7. If clearance was too large, refer to the **CLEARANCE TOO LARGE** procedure.

CLEARANCE TOO SMALL

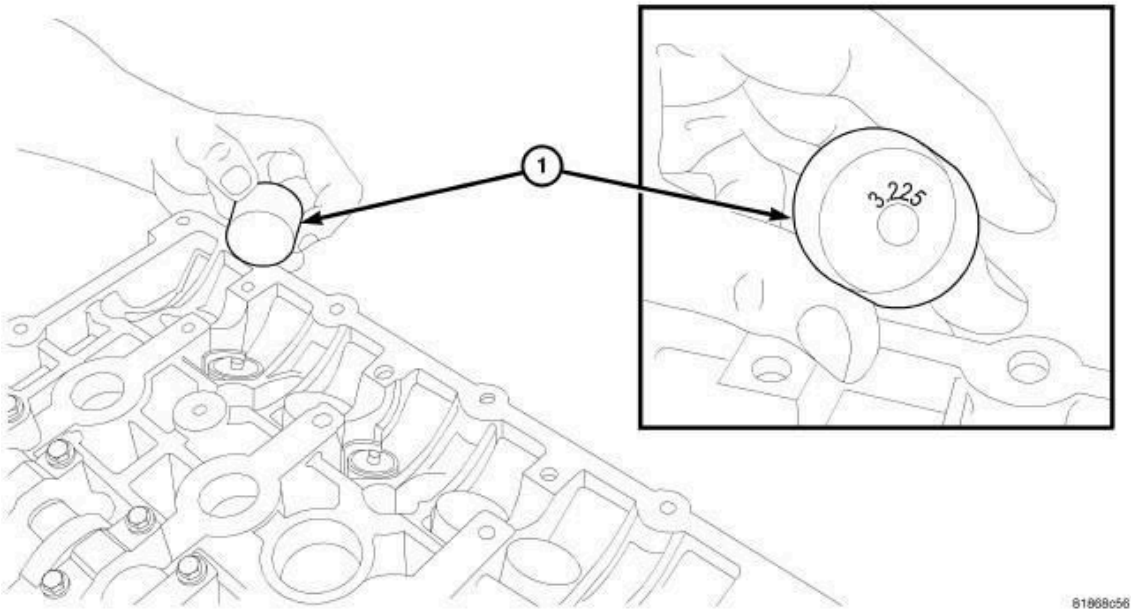

Fig. 129: Tappet Identification
Courtesy of CHRYSLER GROUP, LLC

1. Remove camshafts . Refer to **CAMSHAFT, ENGINE, REMOVAL**.
2. Specification - clearance = change.
3. Decrease tappet thickness by change figure.
4. Install camshafts . Refer to **CAMSHAFT, ENGINE, INSTALLATION**.
5. Verify that valve lash is correct.

CLEARANCE TOO LARGE

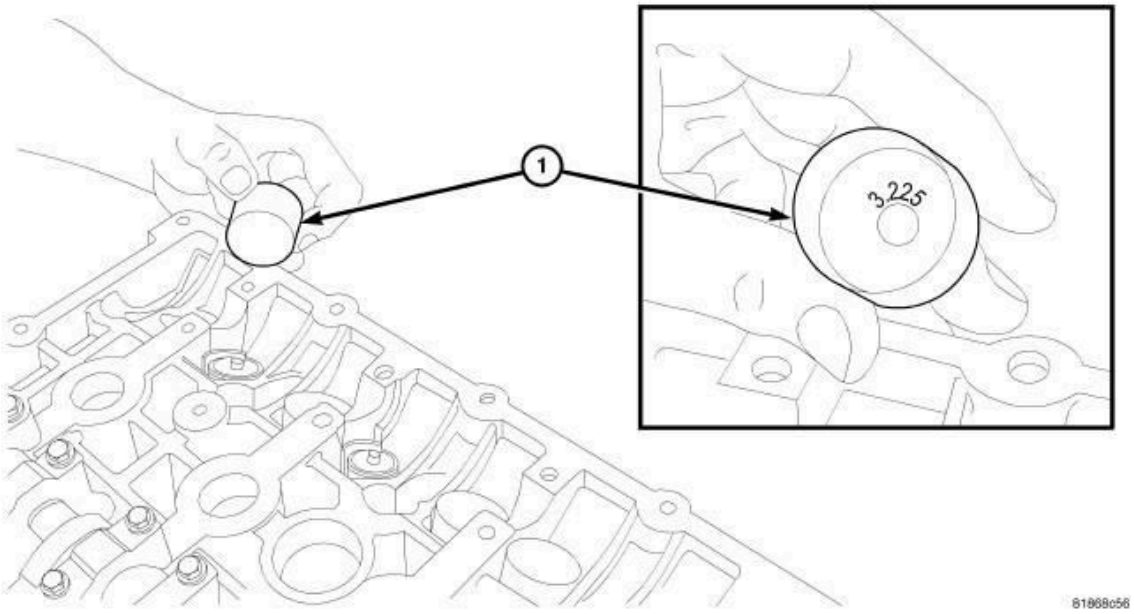

Fig. 130: Tappet Identification

Courtesy of CHRYSLER GROUP, LLC

1. Remove camshafts . Refer to **CAMSHAFT, ENGINE, REMOVAL**.
2. Clearance - specification = change.
3. Increase tappet thickness by change figure.
4. Install camshafts . Refer to **CAMSHAFT, ENGINE, INSTALLATION**.
5. Verify that valve lash is correct.

REMOVAL

REMOVAL

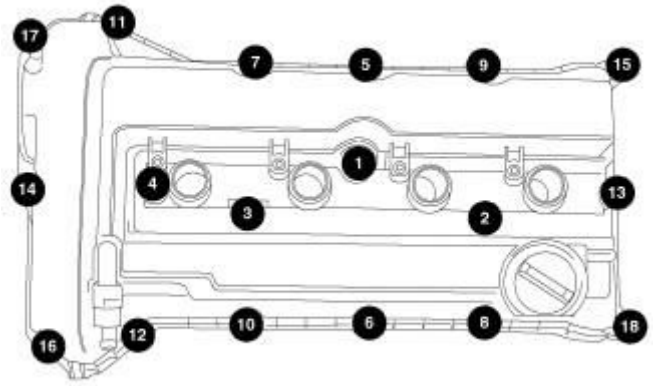

8182e337

Fig. 131: Removing/Installing Cylinder Head Cover Bolts In Sequence
Courtesy of CHRYSLER GROUP, LLC

NOTE: This procedure is for in-vehicle service with camshafts installed.

NOTE: Camshaft tappets must be replaced if cylinder head or camshafts are replaced.

1. Remove cylinder head cover . Refer to **COVER(S), CYLINDER HEAD, REMOVAL**.
2. Remove camshafts . Refer to **CAMSHAFT, ENGINE, REMOVAL**.

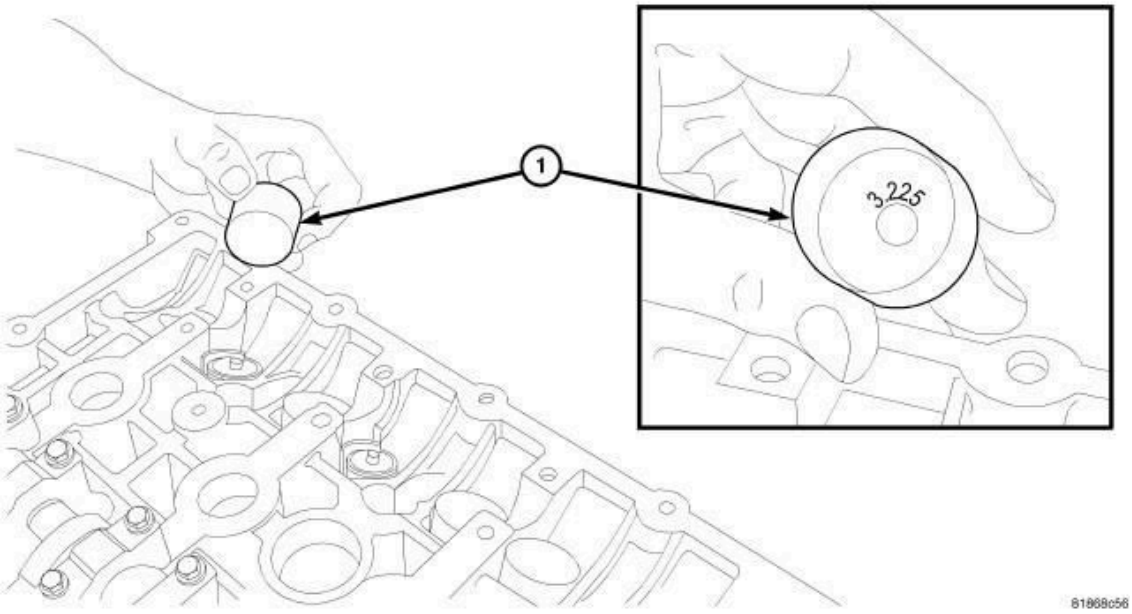

Fig. 132: Tappet Identification
Courtesy of CHRYSLER GROUP, LLC

3. Remove camshaft tappets (1).
4. Repeat removal procedure for each camshaft tappet (1).
5. If reusing, mark each camshaft tappet for reassembly in it's original position.

INSTALLATION

INSTALLATION

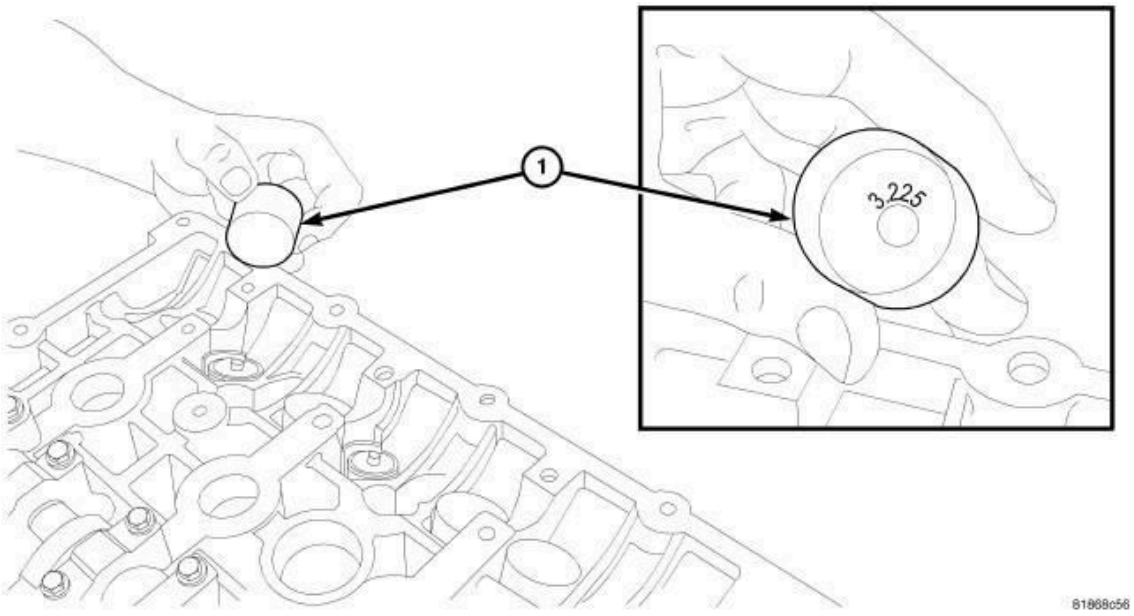

Fig. 133: Tappet Identification
Courtesy of CHRYSLER GROUP, LLC

NOTE: If reinstalling original tappets they must go back in their original location or engine damage could result.

1. Apply a light coat of clean engine oil to camshaft tappets (1) prior to assembly.
2. Install camshaft tappets (1) into cylinder head.
3. Repeat installation procedure for each camshaft tappet.
4. Install camshafts . Refer to **CAMSHAFT, ENGINE, INSTALLATION**.

NOTE: If installing new tappets, the valve lash procedure must be performed.

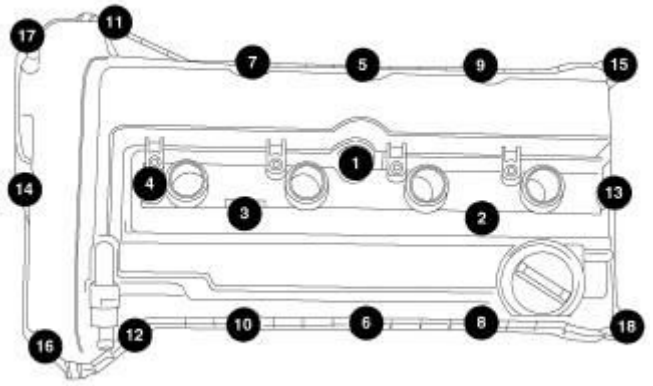

Fig. 134: Removing/Installing Cylinder Head Cover Bolts In Sequence
Courtesy of CHRYSLER GROUP, LLC

5. Install cylinder head cover . Refer to **COVER(S), CYLINDER HEAD, INSTALLATION**.

CAMSHAFT, ENGINE

DESCRIPTION

DESCRIPTION

Both camshafts have five bearing journal surfaces and two cam lobes per cylinder. The two front journals are larger to allow for feeding oil to the variable valve timing (VVT) camshaft phasers. Flanges on the third smaller journal control camshaft end play. At the rear of each camshaft is an integral cam sensor

target.

CAMSHAFT BEARING CAPS

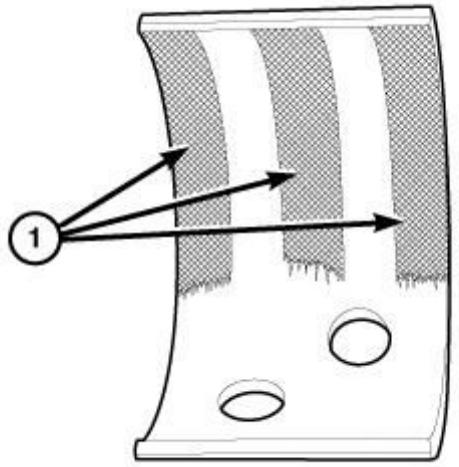

Fig. 135: Uneven Wear Patterns On Cam Bearing
Courtesy of CHRYSLER GROUP, LLC

The front cam bearing cap spans both camshafts, and includes dowels for precise alignment. The front exhaust camshaft journal has a select fit bearing insert. This bearing is required to seal the oil passage to the camshaft phaser, because a portion of the lower bearing saddle is machined away for head bolt access. The select fit is required to minimize bearing clearance and oil leakage. An exhaust bearing grade (1, 2, or 3) is stamped into the front bearing cap adjacent to the exhaust cam journal. The bearings are also marked with the corresponding grade markings. If the bearing is replaced, the same grade must be used. Due to the unique purpose of this bearing, it may appear to have uneven wear patterns (1). Maximum wear of 0.05 mm (.002 in.) is acceptable. Unless the wear is excessive it is no cause for concern and the bearing should not be replaced. Cam bearing inspection should not be the sole reason for removal of the exhaust camshaft. The upper cam bearing may be replaced if the front bearing cap is removed. The lower cam bearing should be replaced if the camshaft is removed due to a failure of a component within the cylinder head.

The front intake cam journal has a full lower bearing saddle, and therefore, no bearing insert is required.

All small bearing caps have a formed-in arrow to assist in assembly. All small bearing cap arrows must point towards the center of the cylinder head. The small

bearing caps are marked for position during the manufacturing process, and must be reinstalled in their original position.

The #1 small cap includes a passage to direct oil from the cylinder head oil gallery to the #1 small bearing journal, and into the camshaft as well. The hollow camshaft then distributes oil to the remainder of the small journals. Oil flowing out of each cam journal lubricates the valve tappets.

The #3 small cap is machined at the front and rear face to control camshaft end-play. This cap has dowels for precise alignment.

OPERATION

OPERATION

The camshaft is driven by the crankshaft via drive sprockets and a chain. The camshaft has precisely machined lobes to provide accurate valve timing and duration.

STANDARD PROCEDURE

STANDARD PROCEDURE - MEASURING CAMSHAFT END PLAY

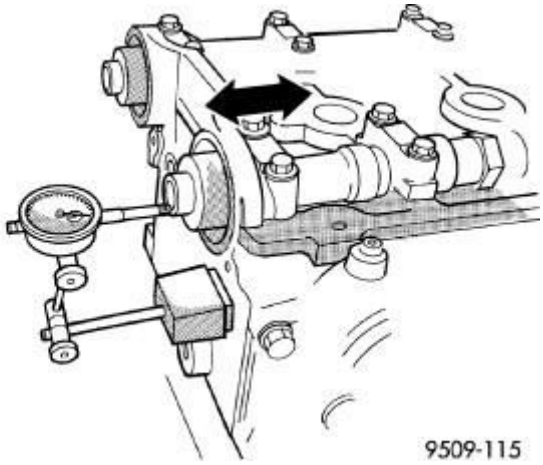

Fig. 136: Camshaft End Play
Courtesy of CHRYSLER GROUP, LLC

1. Using a suitable tool, move camshaft as far rearward as it will go.
2. Zero dial indicator.
3. Move camshaft as far forward as it will go.
4. Record reading on dial indicator. For end play specification, refer to **SPECIFICATIONS** .

5. If end play is excessive, check cylinder head and camshaft for wear; replace as necessary.

REMOVAL

REMOVAL

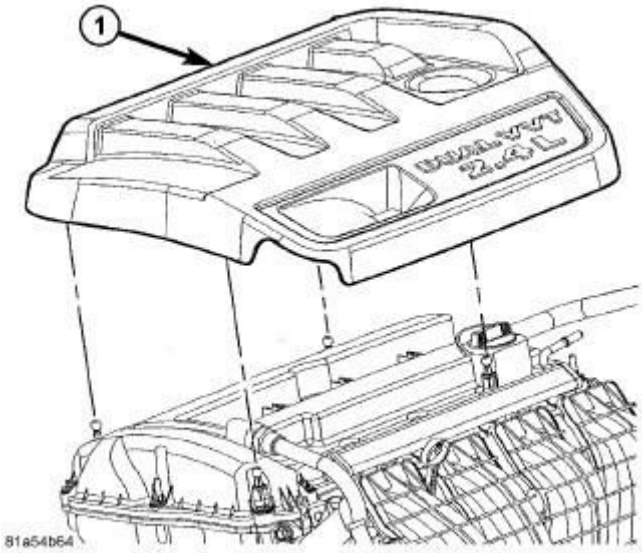

Fig. 137: Engine Cover
Courtesy of CHRYSLER GROUP, LLC

1. Remove engine cover (1) by pulling upward.
2. Disconnect and isolate the negative battery cable.
3. Remove cylinder head cover . Refer to **COVER(S), CYLINDER HEAD, REMOVAL**.

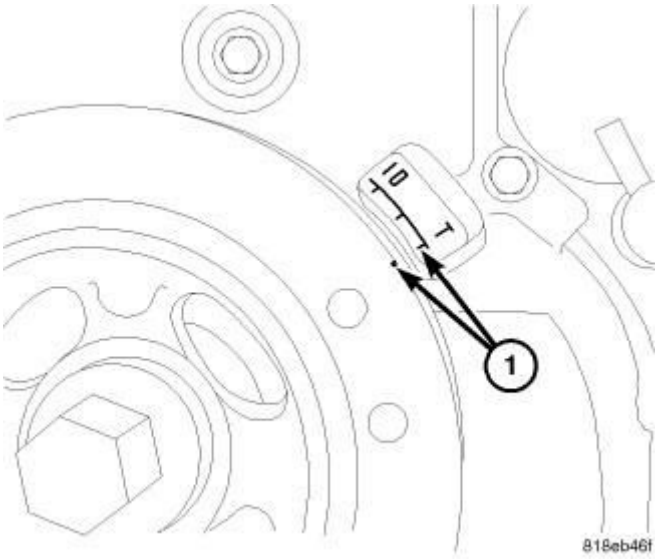

Fig. 138: Setting Engine To Top Dead Center
Courtesy of CHRYSLER GROUP, LLC

4. Raise and support the vehicle. Refer to **HOISTING, STANDARD PROCEDURE** .
5. Remove the frame cover portion of the right splash shield. Refer to **SHIELD, SPLASH, FRONT WHEELHOUSE, REMOVAL** .
6. Rotate engine to TDC (1).

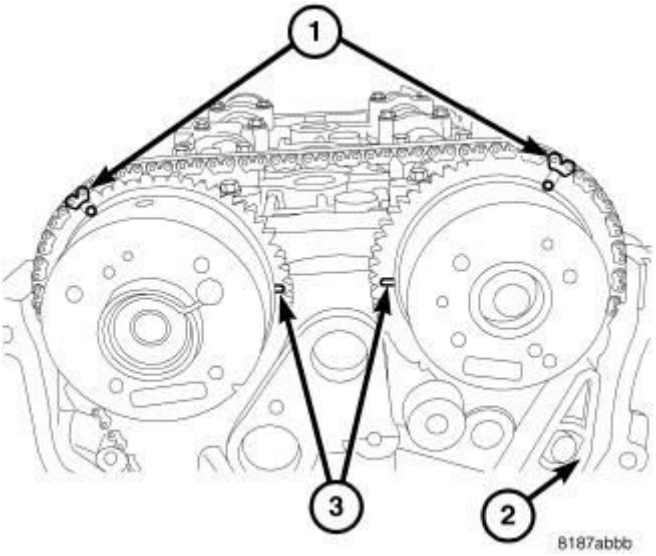

Fig. 139: Timing Chain Timing Marks
Courtesy of CHRYSLER GROUP, LLC

7. Make sure camshaft timing marks (3) are in line with the cylinder head cover sealing surface.
8. Mark the chain link corresponding to timing marks (1) with a paint marker.

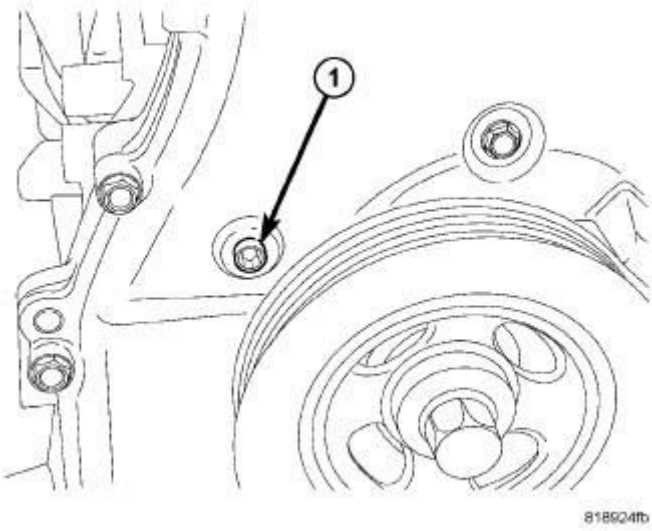

Fig. 140: Tensioner Access Plug
Courtesy of CHRYSLER GROUP, LLC

9. Remove timing tensioner plug (1) from front cover.

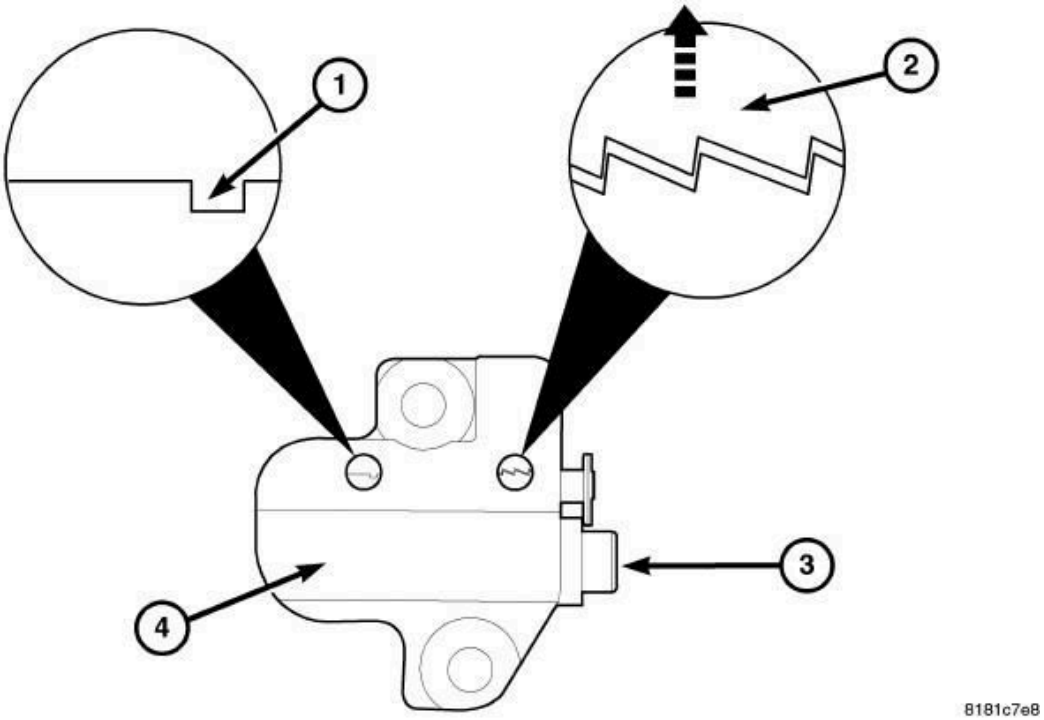

Fig. 141: Tensioner Reset
Courtesy of CHRYSLER GROUP, LLC

10. Insert small Allen wrench through timing tensioner plug hole and lift ratchet (2) upward to release the tensioner and push Allen wrench inward. Leave the Allen wrench installed during the remainder of this procedure.

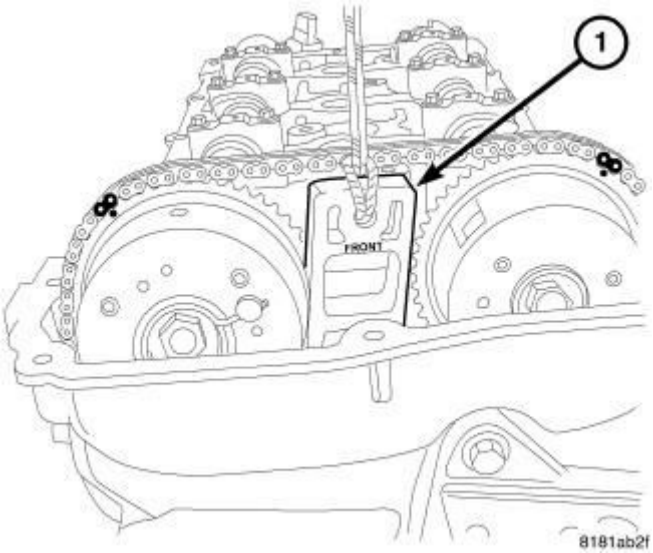

Fig. 142: Inserting Wedge 9701 Between Camshaft Phasers
Courtesy of CHRYSLER GROUP, LLC

11. Insert Locking Wedge (special tool #9701, Wedge, Locking) (1) between camshaft phasers.

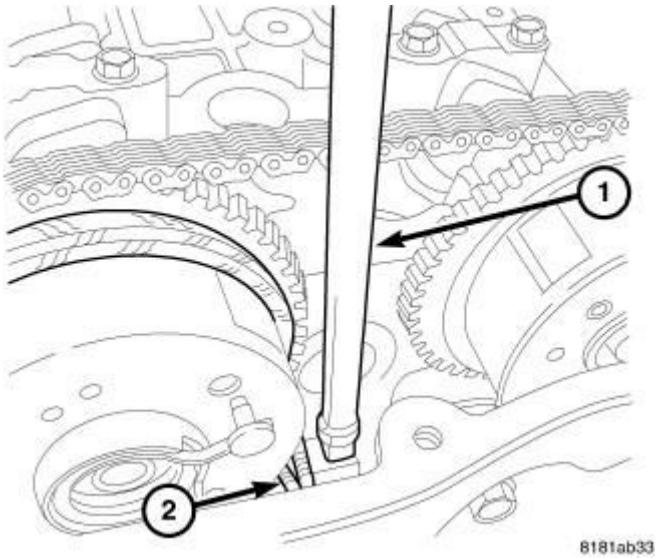

Fig. 143: Seating Wedge Tool 9701
Courtesy of CHRYSLER GROUP, LLC

12. Lightly tap Locking Wedge (special tool #9701, Wedge, Locking) (2) into place until it will no longer sink down.

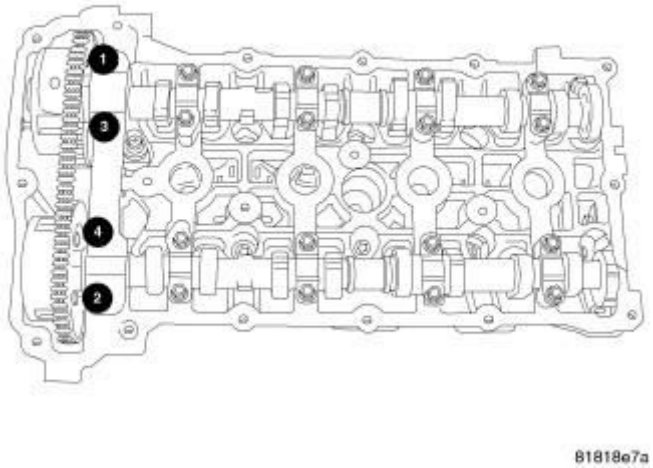

Fig. 144: Front Cam Cap Removal Sequence
Courtesy of CHRYSLER GROUP, LLC

NOTE: Camshaft bearing caps should have been marked during engine manufacturing. For example, number one exhaust camshaft bearing is marked "E1>".

CAUTION: DO NOT use a number stamp or a punch to mark camshaft bearing caps. Damage to bearing caps could occur.

13. Using a permanent ink or paint marker, identify location and position on each camshaft bearing cap.
14. Remove the front camshaft bearing cap.
15. Slowly remove the remaining intake and exhaust camshaft bearing cap bolts one turn at a time.

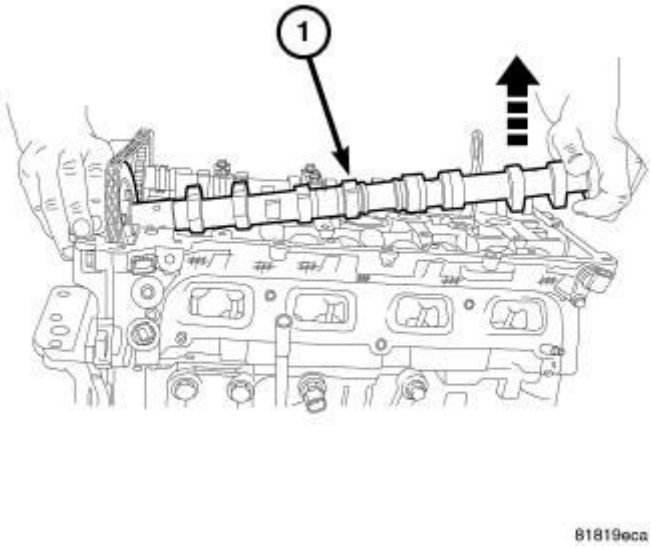

Fig. 145: Raise Intake Cam
Courtesy of CHRYSLER GROUP, LLC

16. Remove intake camshaft (1) by lifting the rear of the camshaft upward.

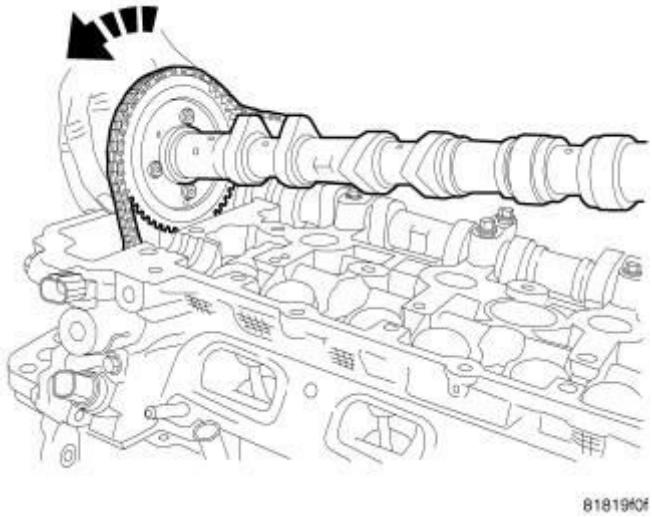

Fig. 146: Roll Camshaft
Courtesy of CHRYSLER GROUP, LLC

17. Rotate the camshaft while lifting out of the front bearing cradle.

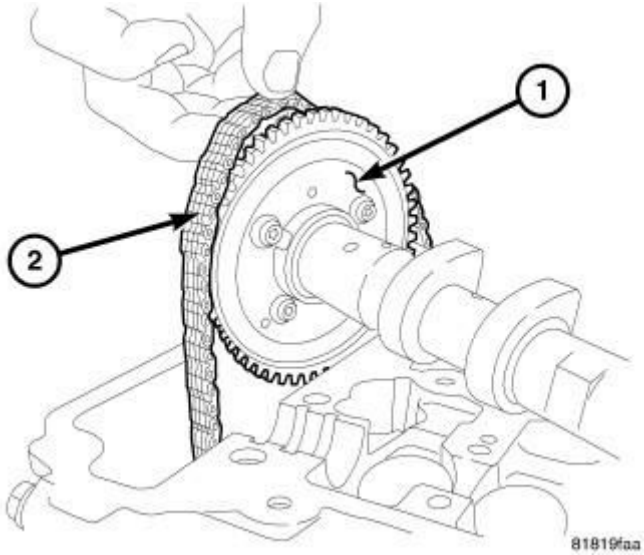

Fig. 147: Chain Removal
Courtesy of CHRYSLER GROUP, LLC

18. Lift the timing chain (2) off the sprocket (1).
19. Remove exhaust camshaft.
20. Secure timing chain with wire so that it does fall into the timing chain cover.

INSPECTION

INSPECTION

1. Inspect camshaft bearing journals for damage. If journals are damaged, check the cylinder head for damage. Also check cylinder head oil holes for clogging.
2. Check the cam lobe and bearing surfaces for abnormal wear and damage. Replace camshaft if defective.

NOTE: If camshaft is replaced due to lobe wear or damage, always replace the lash buckets.

INSTALLATION

INSTALLATION

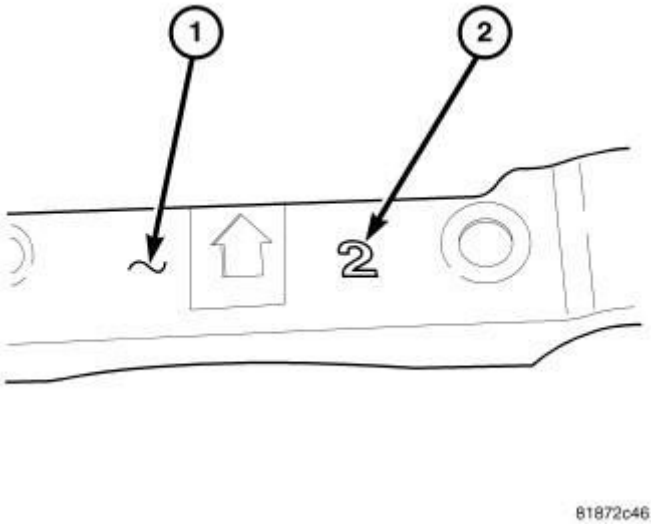

Fig. 148: Cam Cap Bearing Identification
Courtesy of CHRYSLER GROUP, LLC

1. The front camshaft bearing cap (1) is numbered (2) either one, two, or three, this corresponds to the select fit front exhaust camshaft bearing to use.

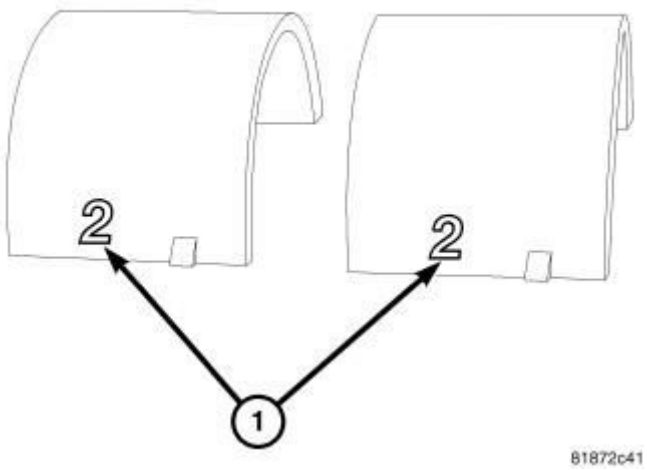

Fig. 149: Cam Bearing Identification
Courtesy of CHRYSLER GROUP, LLC

2. Install the corresponding select fit front exhaust camshaft bearing (1).
3. Oil all of the camshaft journals with clean engine oil.
4. Install camshaft phasers on camshafts if removed. Refer to **ASSEMBLY, VARIABLE VALVE TIMING, INSTALLATION**.

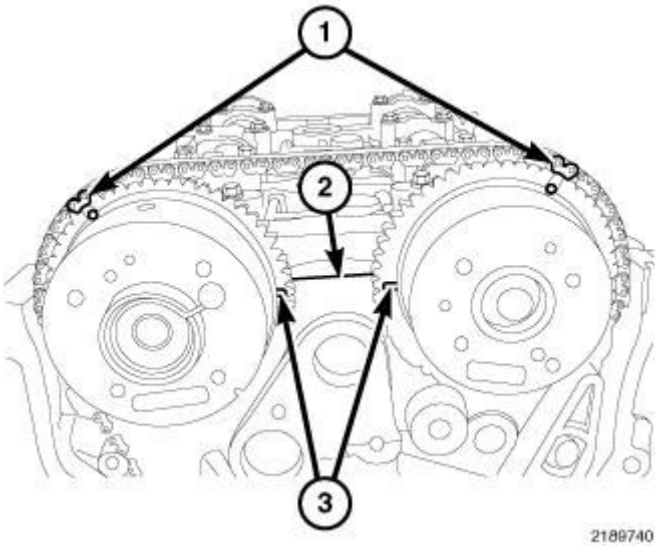

Fig. 150: Timing Chain Timing Marks
Courtesy of CHRYSLER GROUP, LLC

5. Install timing chain onto exhaust cam sprocket making sure that the timing marks (1) on the sprocket and the painted chain link are aligned.
6. Position exhaust camshaft and on bearing journals in the cylinder head.
7. Align exhaust cam timing mark (3) so it is in line with the cylinder head cover sealing surface (2).

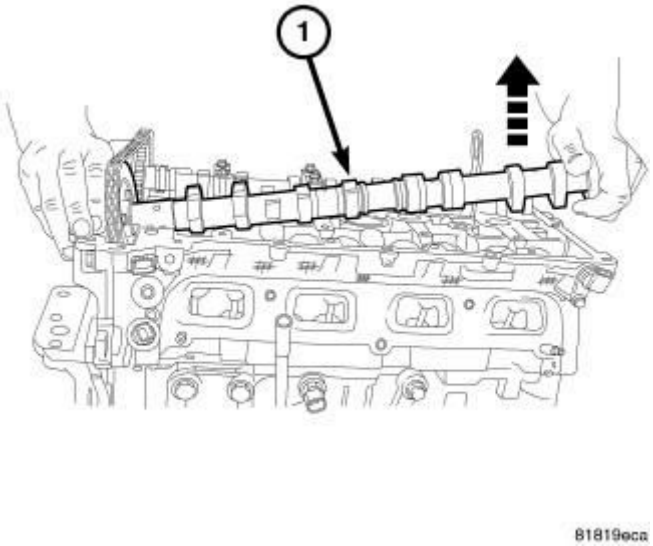

Fig. 151: Removing/Installing Intake Camshaft
Courtesy of CHRYSLER GROUP, LLC

8. Install intake camshaft by raising the rear of the camshaft upward and roll the sprocket into the chain.

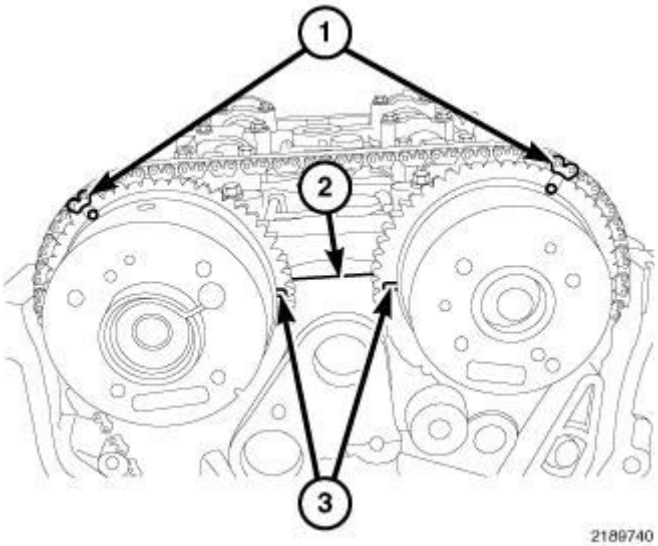

Fig. 152: Timing Chain Timing Marks
Courtesy of CHRYSLER GROUP, LLC

9. Align the timing marks (1) on the intake cam sprocket with the painted chain link.
10. Position the intake camshaft into the bearing journals in the cylinder head.
11. Verify that the timing marks (1) are aligned on both camshafts and that the timing marks (3) are facing each other and are in line with the cylinder head cover sealing surface (2).

CAUTION: Install the front intake and exhaust camshaft bearing cap last. Ensure that the dowels are seated and follow torque sequence or damage to engine could result.

NOTE: If the front camshaft bearing cap is broken, the cylinder head MUST be replaced.

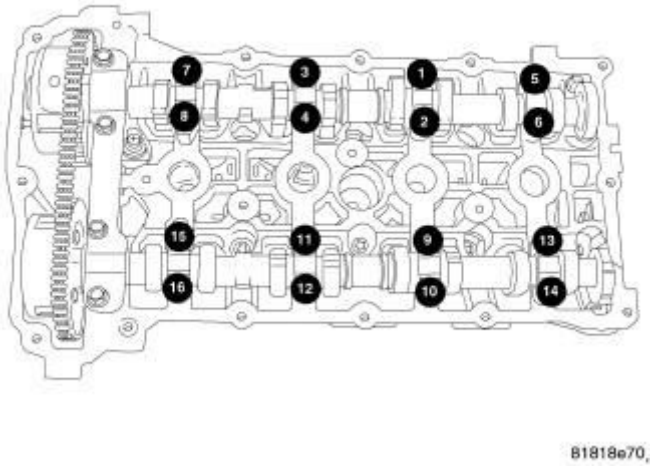

Fig. 153: Cam Cap Torque Sequence
Courtesy of CHRYSLER GROUP, LLC

12. Install intake and exhaust camshaft bearing caps and slowly tighten bolts to 9.5 N.m (85 in. lbs.) in the sequence shown in illustration.

NOTE: Verify that the exhaust bearing shells are correctly installed, and the dowels are seated in the head, prior to torquing bolts.

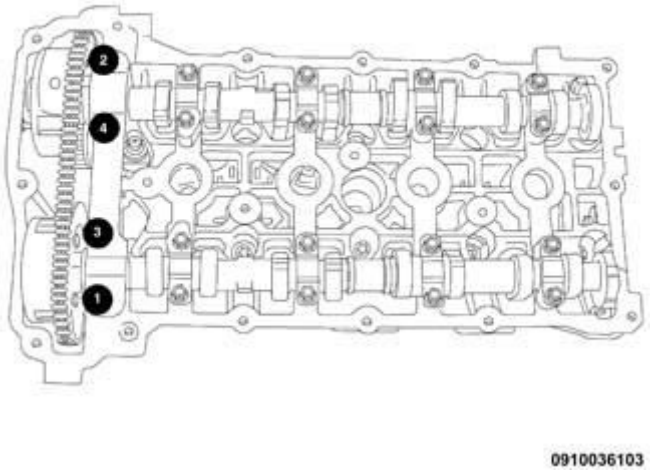

Fig. 154: Front Cam Cap Removal/Tightening Sequence
Courtesy of CHRYSLER GROUP, LLC

NOTE: This torque sequence is for vehicles with the round hole for the Front Cam Cap Dowel located on the

intake side of the cylinder head.

13. Install the front intake and exhaust bearing cap and tighten bolts to 25 N.m (18 ft. lbs.) in the sequence shown in illustration.

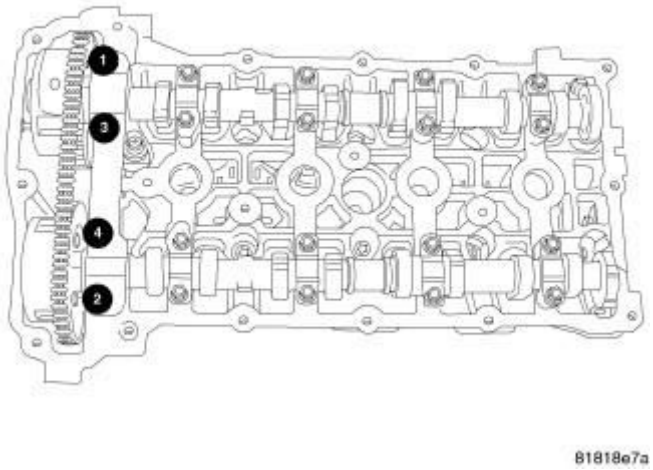

Fig. 155: Front Cam Cap Removal Sequence
Courtesy of CHRYSLER GROUP, LLC

NOTE: This torque sequence is for vehicles with the round hole for the Front Cam Cap Dowel located on the exhaust side of the cylinder head.

14. Install the front intake and exhaust bearing cap and tighten bolts to 25 N.m (18 ft. lbs.) in the sequence shown in illustration.

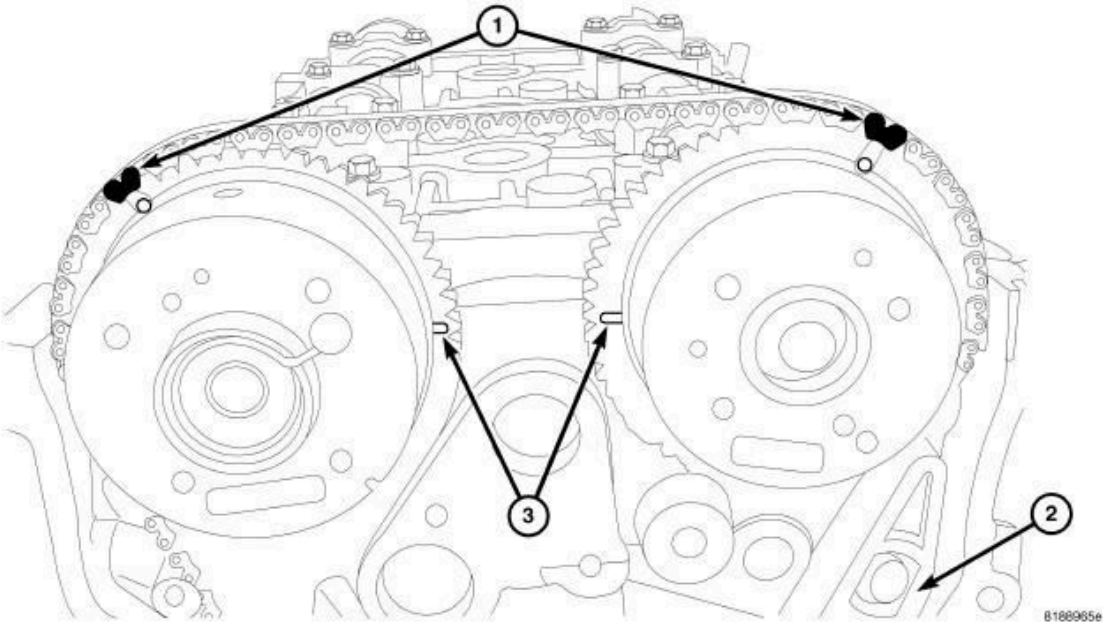

Fig. 156: Timing Chain Timing Marks
Courtesy of CHRYSLER GROUP, LLC

15. Verify that all timing marks (1, 3) are aligned.
16. Remove Allen wrench from timing chain tensioner.

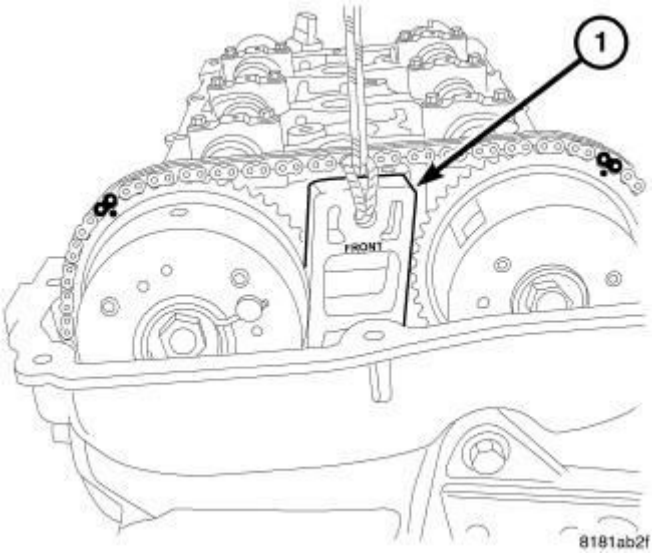

Fig. 157: Inserting Wedge 9701 Between Camshaft Phasers
Courtesy of CHRYSLER GROUP, LLC

17. Remove Locking Wedge (special tool #9701, Wedge, Locking) (1) by pulling straight upward on pull rope.

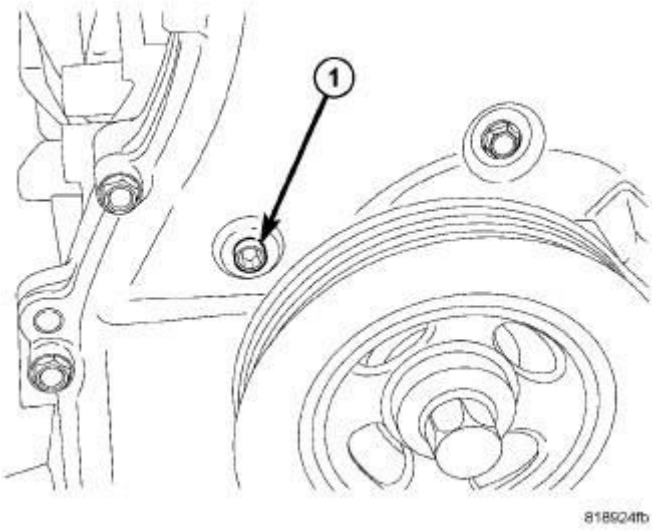

Fig. 158: Tensioner Access Plug
Courtesy of CHRYSLER GROUP, LLC

18. Apply MOPAR® thread sealant to timing tensioner plug (1) and Install.
19. Rotate the crankshaft CLOCKWISE two complete revolutions until the crankshaft is repositioned at the TDC position.

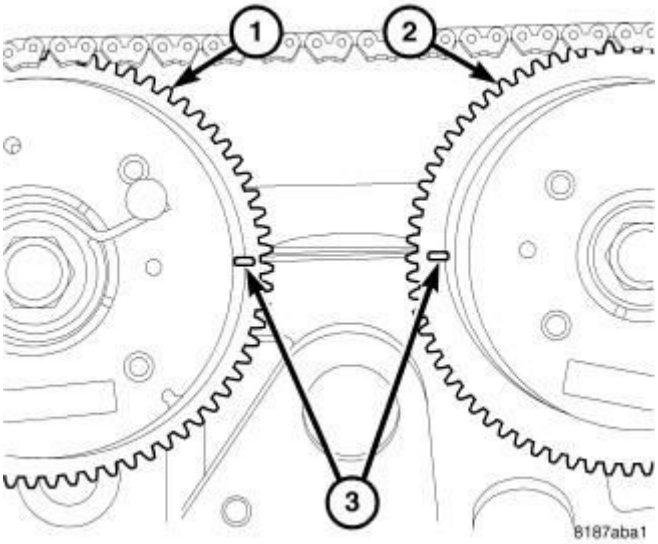

Fig. 159: Camshaft Timing
Courtesy of CHRYSLER GROUP, LLC

20. Verify that the camshafts timing marks (3) are in the proper position and in line with the cylinder head cover sealing surface. If the marks do not line up, the timing chain is not correctly installed.
21. Install right splash shield. Refer to **SHIELD, SPLASH, FRONT**

WHEELHOUSE, INSTALLATION .

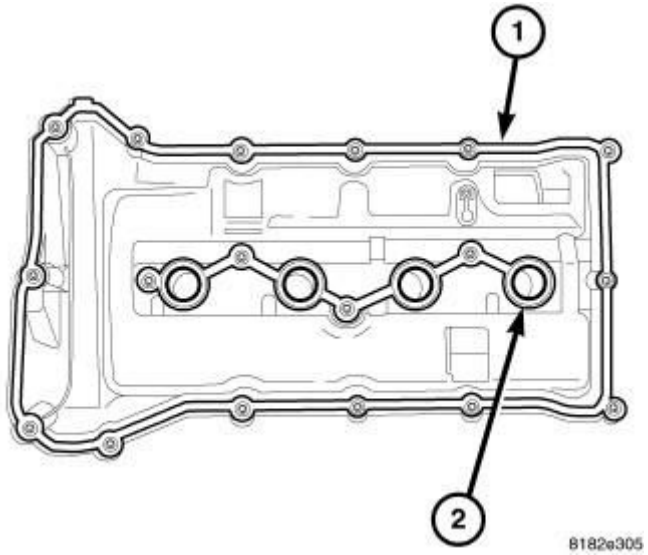

Fig. 160: Cylinder Head Cover Gaskets Location
Courtesy of CHRYSLER GROUP, LLC

22. Remove RTV from gasket (1).
23. Inspect cylinder head cover gaskets (1, 2) for damage. If no damage is present, gaskets can be re-installed.

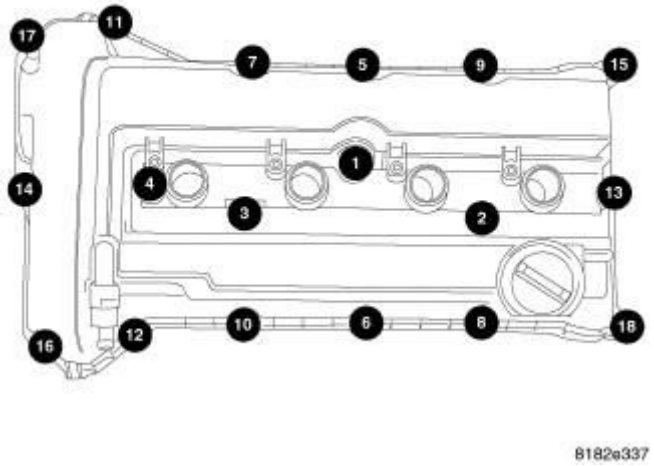

Fig. 161: Removing/Installing Cylinder Head Cover Bolts In Sequence
Courtesy of CHRYSLER GROUP, LLC

24. Install cylinder head cover . Refer to **COVER(S), CYLINDER HEAD, INSTALLATION**.
25. Connect negative battery cable.

26. Fill cooling system. Refer to **STANDARD PROCEDURE** .
27. Fill with oil.

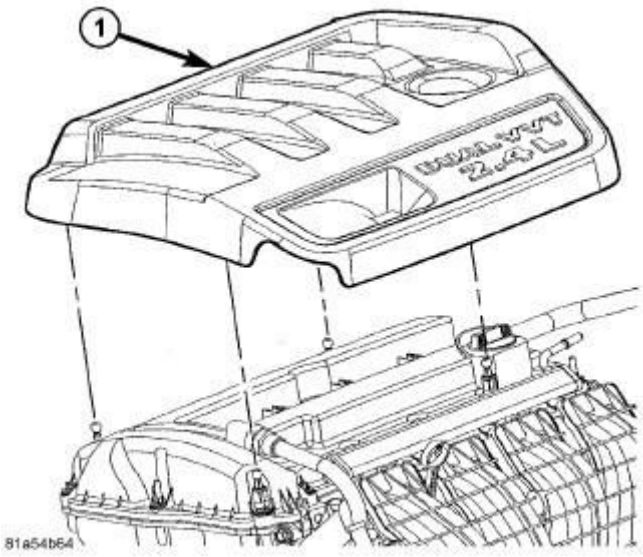

Fig. 162: Engine Cover
Courtesy of CHRYSLER GROUP, LLC

28. Operate engine until it reaches normal operating temperature. Check oil and cooling systems for correct fluid levels.
29. Install engine cover (1).

COVER(S), CYLINDER HEAD

REMOVAL

REMOVAL

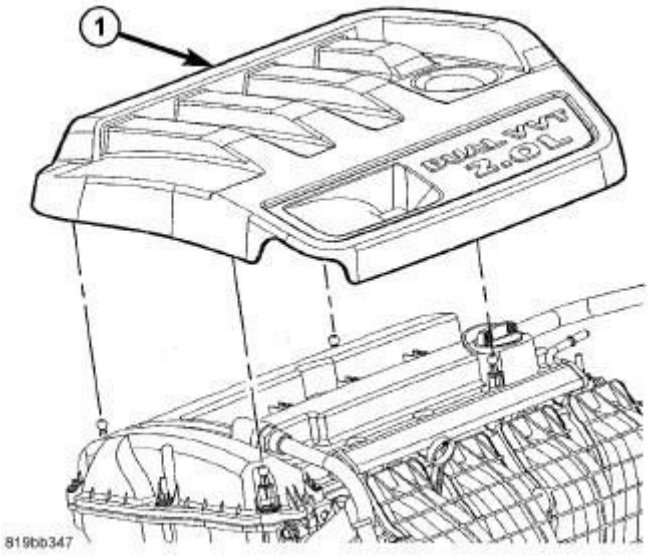

Fig. 163: Engine Cover
Courtesy of CHRYSLER GROUP, LLC

1. Remove engine cover (1) by pulling upward.
2. Disconnect and isolate the negative battery cable.

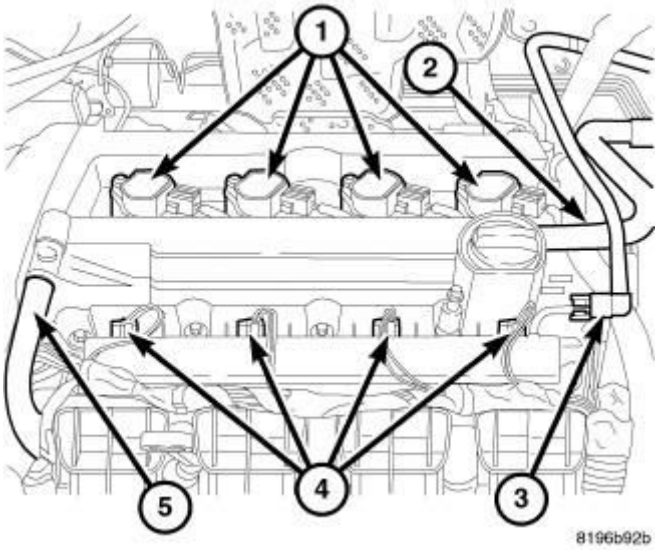

Fig. 164: Ignition Coils, Air Hose, Fuel Line, Injectors & PCV Hose
Courtesy of CHRYSLER GROUP, LLC

3. Remove make up air hose (2).
4. Remove PCV hose (5).
5. Disconnect ignition coil electrical connectors (1).

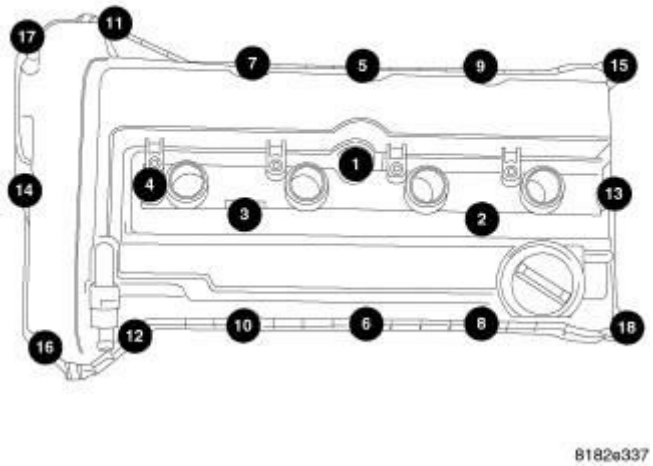

Fig. 165: Removing/Installing Cylinder Head Cover Bolts In Sequence
Courtesy of CHRYSLER GROUP, LLC

6. Use compressed air to blow dirt and debris off the cylinder head cover prior to removal.
7. Remove cylinder head cover bolts.
8. Remove cylinder head cover from cylinder head.

INSTALLATION

INSTALLATION

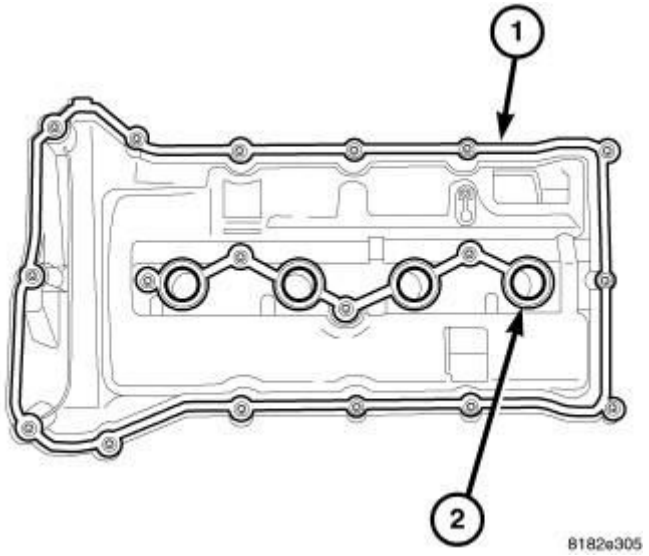

Fig. 166: Cylinder Head Cover Gaskets Location
Courtesy of CHRYSLER GROUP, LLC

1. Install new cylinder head cover gaskets (1, 2).

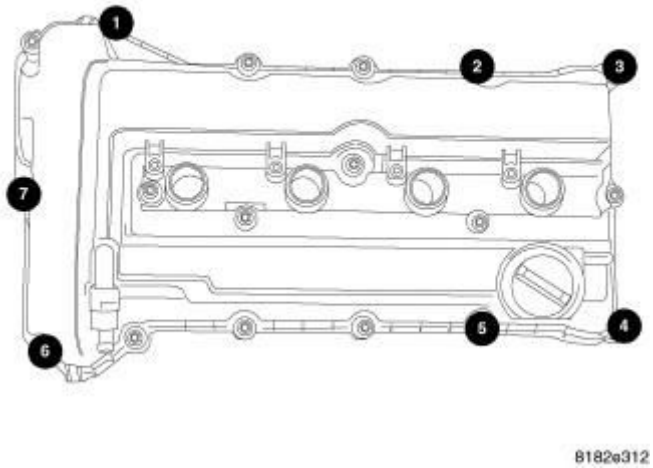

Fig. 167: Cylinder Head Stud Installation Sequence
Courtesy of CHRYSLER GROUP, LLC

2. Install studs in cover as shown in illustration.

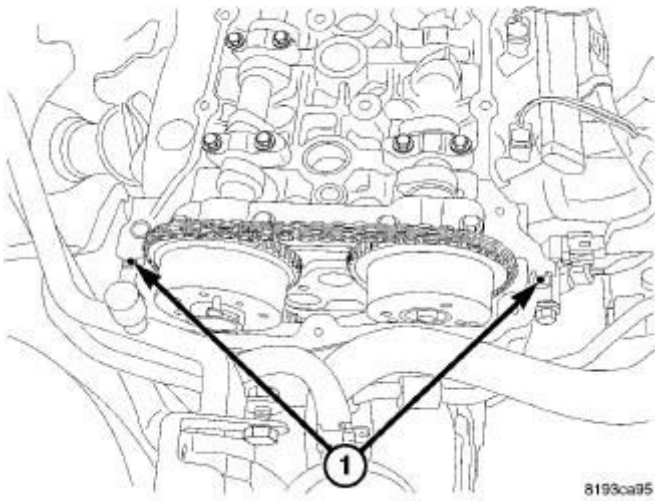

Fig. 168: Head Cover T-Joint
Courtesy of CHRYSLER GROUP, LLC

3. Clean all RTV from cylinder head. Refer to **ENGINE GASKET SURFACE PREPARATION** .

NOTE: When using RTV, the sealing surfaces must be clean and free from grease and oil.

NOTE: When using RTV, parts should be assembled in 10 minutes and tighten to final torque within 45 minutes.

4. Apply a dot of Mopar® engine sealant RTV or equivalent to cylinder head/front cover T-joint (1).

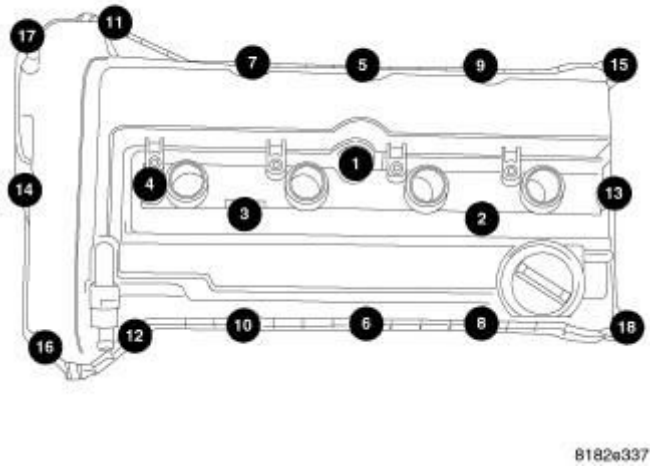

Fig. 169: Remove/Install Cylinder Head Cover Bolts In Sequence
Courtesy of CHRYSLER GROUP, LLC

5. Install cylinder head cover assembly to cylinder head and install all bolts, ensuring the studs are located as shown in illustration.
6. Tighten bolts in sequence shown in illustration using a 2 step torque method as follows:
   a. Tighten all bolts to 5 N.m (44 in. lbs.).
   b. Tighten all bolts to 10 N.m (90 in. lbs.).

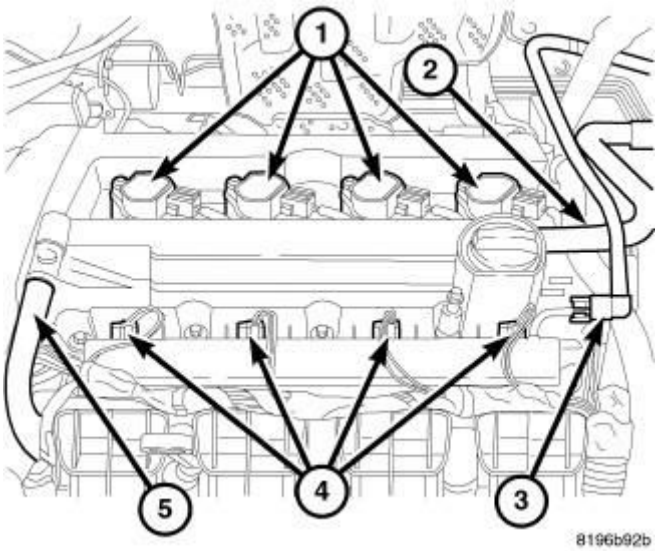

Fig. 170: Ignition Coils, Air Hose, Fuel Line, Injectors & PCV Hose
Courtesy of CHRYSLER GROUP, LLC

7. Install ignition coils. Tighten fasteners to 8 N.m (70 in. lbs.).
8. If the PCV valve was removed, tighten PCV valve to 5 N.m (44 in. lbs.).
9. Connect coil electrical connectors (1).
10. Connect PCV hose (5) to PCV valve.
11. Connect make up air hose (2).

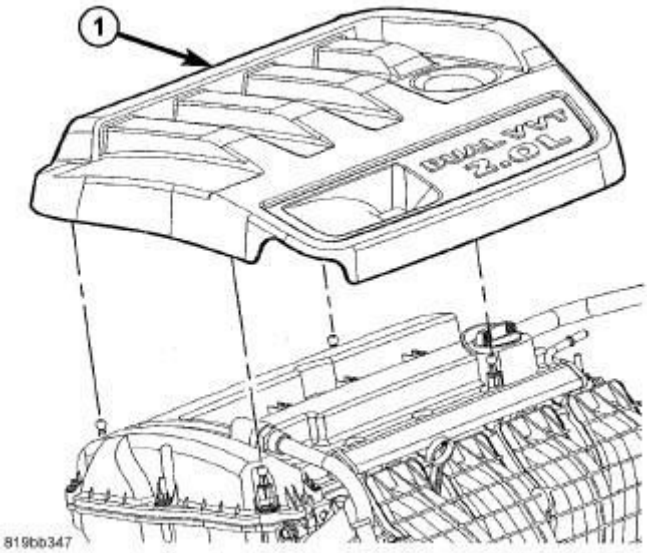

Fig. 171: Engine Cover
Courtesy of CHRYSLER GROUP, LLC

12. Connect negative battery cable.

13. Install engine cover (1) by pressing the rear of the cover down first.

SPRING(S), VALVE

REMOVAL

CYLINDER HEAD ON

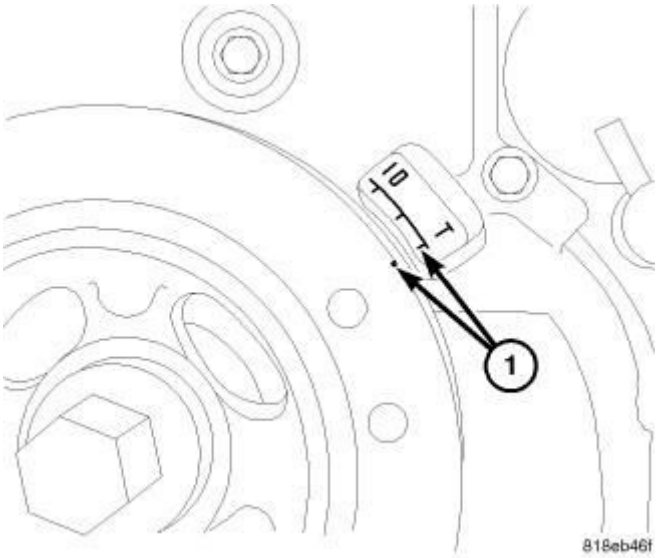

Fig. 172: Setting Crankshaft To Top Dead Center
Courtesy of CHRYSLER GROUP, LLC

1. Rotate crankshaft until piston is at TDC on compression.

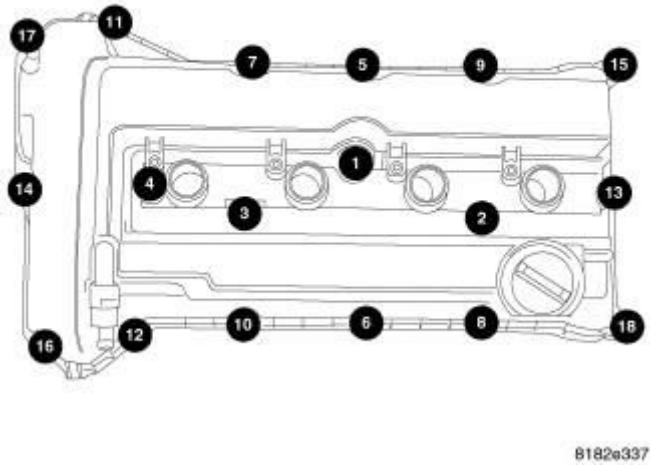

Fig. 173: Removing/Installing Cylinder Head Cover Bolts In Sequence
Courtesy of CHRYSLER GROUP, LLC

2. Remove cylinder head cover . Refer to **COVER(S), CYLINDER HEAD,**

REMOVAL.

3. Remove camshafts . Refer to **CAMSHAFT, ENGINE, REMOVAL**.
4. Mark valve tappet location for assembly.
5. Remove valve tappets.
6. With air hose attached to adapter tool installed in spark plug hole, apply 90-120 psi air pressure.

CAUTION: Care must be taken not to damage the tappet bore or engine damage may result.

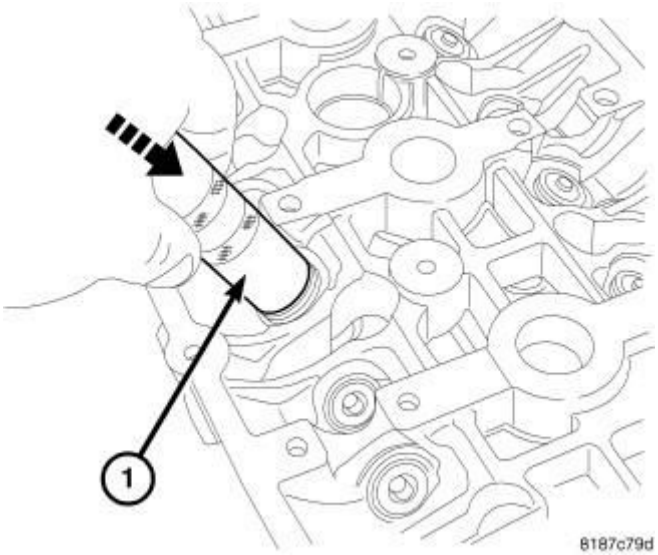

Fig. 174: Valve Removal
Courtesy of CHRYSLER GROUP, LLC

7. Using metric valve keeper tool (1) such as Snap-on® GA317 (or equivalent), and remove valve spring keepers and retainer.
8. Remove valve spring(s).
9. Remove valve stem seal(s) by a using valve stem seal tool.

CYLINDER HEAD OFF

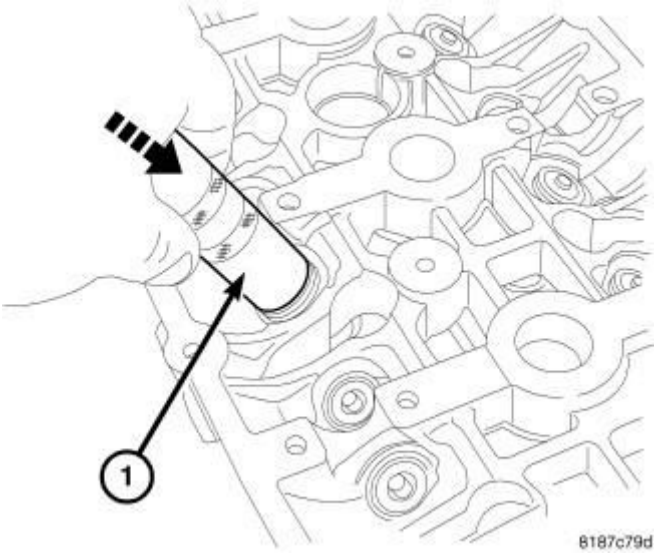

Fig. 175: Valve Removal
Courtesy of CHRYSLER GROUP, LLC

1. With cylinder head removed from cylinder block, place a ball of rags in the combustion chamber.

CAUTION: Care must be taken not to damage the tappet bore or engine damage may result.

2. Mark valve tappet location for assembly.
3. Remove valve tappets.
4. Using metric valve keeper tool such as Snap-on® GA317 (or equivalent) remover (1), remove valve keepers with a downward push.
5. Remove retainer and springs.
6. Before removing valves, **remove any burrs from valve stem lock grooves to prevent damage to the valve guides.** Identify valves, locks and retainers to insure installation in original location.
7. Inspect the valves. Refer to **INSPECTION** .

INSPECTION

INSPECTION

1. Whenever valves have been removed for inspection, reconditioning or replacement, valve springs should be tested for correct load. Discard the springs that do not meet specifications. The following specifications apply to both intake and exhaust valves springs:

- Valve closed nominal load - 179.5 N ± 9 N @ 35.0 mm (40.35 lbs. ± 2 lbs. @ 1.38 in.).
- Valve open nominal load - 364.8 N ± 17 N @ 29.25 mm (82 lbs. ± 3.8 lbs. @ 1.152 in.).

2. Inspect each valve spring for squareness with a steel square and surface plate, test springs from both ends. If the spring is more than 1.5 mm (1/16 inch) out of square, install a new spring.

INSTALLATION

CYLINDER HEAD ON

CAUTION: Care must be taken not to damage the tappet bore or engine damage may result.

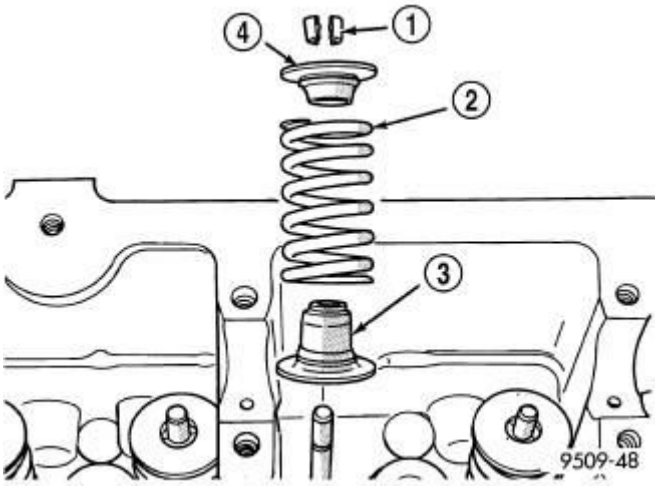

Fig. 176: Valve Spring Assembly
Courtesy of CHRYSLER GROUP, LLC

1 - VALVE RETAINING LOCKS
2 - VALVE SPRING
3 - VALVE SEAL AND VALVE SPRING SEAT ASSEMBLY
4 - VALVE SPRING RETAINER

1. Install valve seal/valve spring seat (3) assembly. Push the assembly down with appropriate size socket to seat it onto the valve guide.
2. Install valve spring (2) and retainer (4) with keepers (1).

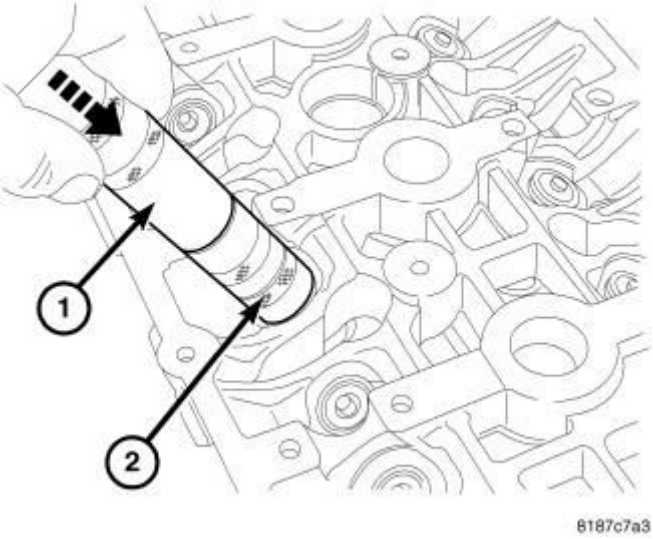

Fig. 177: Valve Installation
Courtesy of CHRYSLER GROUP, LLC

3. Place the valve keepers in the retainer. Using metric valve keeper tool such as Snap-on® GA317 (or equivalent) installer (2) and remover (1) as a handle, install valve keepers with a downward push.
4. Remove air hose and install spark plugs.
5. Install valve tappets.
6. Install camshafts . Refer to **CAMSHAFT, ENGINE, INSTALLATION**.
7. Install cylinder head cover . Refer to **COVER(S), CYLINDER HEAD, INSTALLATION**.

CYLINDER HEAD OFF

CAUTION: Care must be taken not to damage the tappet bore or engine damage may result.

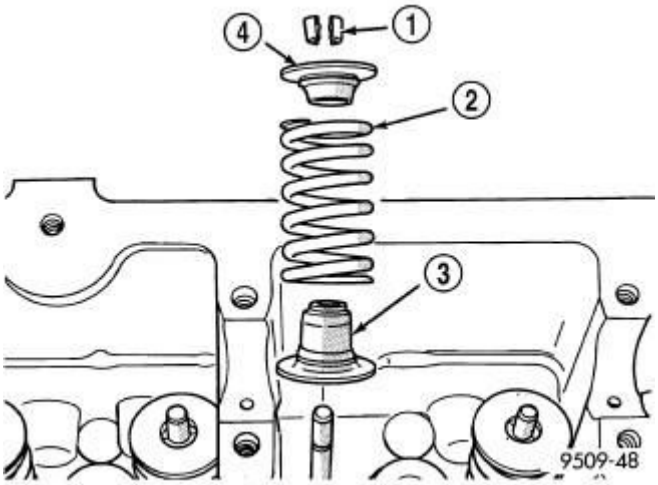

Fig. 178: Valve Spring Assembly
Courtesy of CHRYSLER GROUP, LLC

1. Coat valve stems with clean engine oil and insert in cylinder head.
2. Install new valve stem seals (3) on all valves using an appropriate sized socket to seat the seal/spring seat. The valve stem seals should be pushed firmly and squarely over valve guide.
3. Install valve springs (2).
4. Install keepers in retainer and place on valve spring.

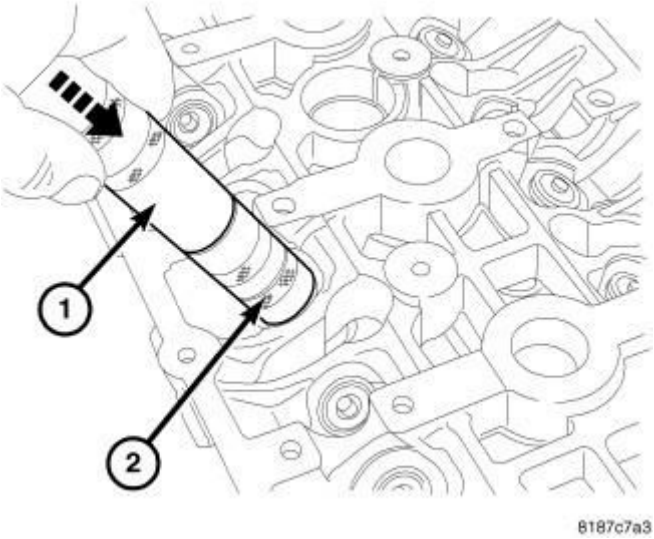

Fig. 179: Valve Installation
Courtesy of CHRYSLER GROUP, LLC

5. Using metric valve keeper tool such as Snap-on® GA317 (or equivalent) installer (2) and remover (1) as a handle, push downward to install keepers.

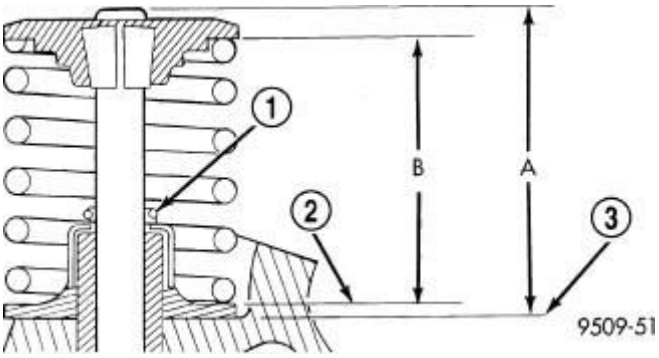

Fig. 180: Spring Installed Height And Valve TIP To Spring Seat Dimensions
Courtesy of CHRYSLER GROUP, LLC

1 - GARTER SPRING
2 - VALVE SPRING SEAT
3 - CYLINDER HEAD SURFACE

6. Check the valve spring installed height B after refacing the valve and seat. Make sure measurements are taken from top of spring seat to the bottom surface of spring retainer. If height is greater than 38.75 mm (1.525 in.), install a 0.762 mm (0.030 in.) spacer under the valve spring seat to bring spring height back within specification.
7. Install valve tappets.

VALVES, INTAKE AND EXHAUST

DESCRIPTION

DESCRIPTION

The valves are made of heat resistant steel. They have nitrided stems to prevent scuffing. Viton rubber valve stem seals are integral with the spring seats. The valves have single bead lock keepers to retain the springs.

OPERATION

OPERATION

The four valves per cylinder (two intake and two exhaust) are opened by using direct acting tappets which are actuated by the camshaft.

CLEANING

CLEANING

Clean all valves thoroughly and discard burned, warped and cracked valves.

CAUTION: Due to the small margin on the valves, grinding is not recommended.

ENGINE BLOCK

DESCRIPTION

DESCRIPTION

The die cast aluminum cylinder block is a two-piece assembly, consisting of the cylinder block and ladder frame. The block is an open deck design with cast in place cast iron cylinder liners. The cast iron cylinder liners are recessed below the aluminum deck surface. The ladder frame bolts to the cylinder block and does not incorporate the main bearing caps. This design offers a much stronger lower end and increased cylinder block and transaxle rigidity. The rear oil seal retainer is integral with the block and ladder frame. The ladder frame and block are serviced as an assembly.

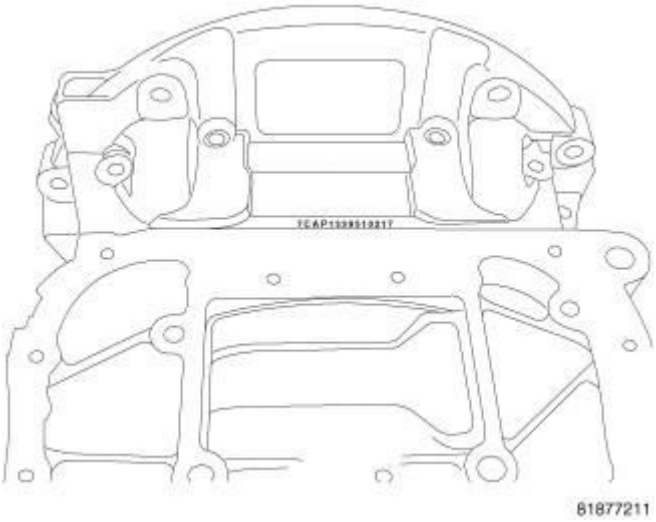

Fig. 181: Engine Serial Number
Courtesy of CHRYSLER GROUP, LLC

The engine serial number is located on the bottom of the ladder frame just behind the oil pan. The date can be seen with the oil pan in place.

STANDARD PROCEDURE

STANDARD PROCEDURE - CYLINDER BORE HONING

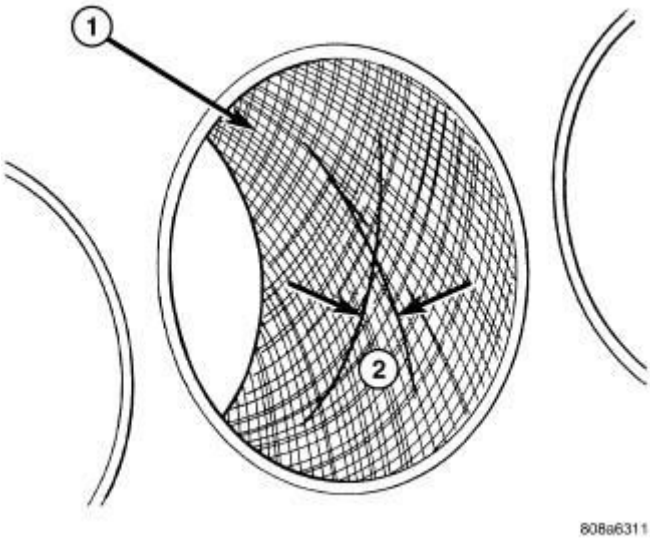

Fig. 182: Cylinder Bore Cross-Hatch Pattern
Courtesy of CHRYSLER GROUP, LLC

1 - CROSS-HATCH PATTERN 2 - 40°-60°

1. Deglazing of the cylinder walls may be done using a quality commercially available flex hone, if the cylinder bore is straight and round. 20-60 strokes depending on the bore condition, will be sufficient to provide a satisfactory surface. Use a light honing oil. **Do not use engine or transmission oil, mineral spirits or kerosene.** Inspect cylinder walls after each 20 strokes.
2. Honing should be done by moving the hone up and down fast enough to get a cross-hatch pattern. When hone marks **intersect** at 30-50 degrees, the cross hatch angle is most satisfactory for proper seating of rings.
3. A controlled hone motor speed between 200-300 RPM is necessary to obtain the proper cross-hatch angle. The number of up and down strokes per minute can be regulated to get the desired 30-50 degree angle. Faster up and down strokes increase the cross-hatch angle.
4. After honing, it is necessary that the block be cleaned again to remove all traces of abrasive.

CAUTION: Ensure all abrasives are removed from engine parts after honing. It is recommended that a solution of soap and hot water be used with a brush and the parts then thoroughly dried. The

bore can be considered clean when it can be wiped clean with a white cloth and cloth remains clean. Oil the bores after cleaning to prevent rusting.

INSPECTION

INSPECTION

ENGINE BLOCK

1. Clean cylinder block thoroughly and check all core hole plugs for evidence of leaking.
2. Examine block and cylinder bores for cracks or fractures.
3. Check block deck surfaces for flatness. Deck surface must be within service limit of 0.050 mm (0.002 in.).

CYLINDER BORE

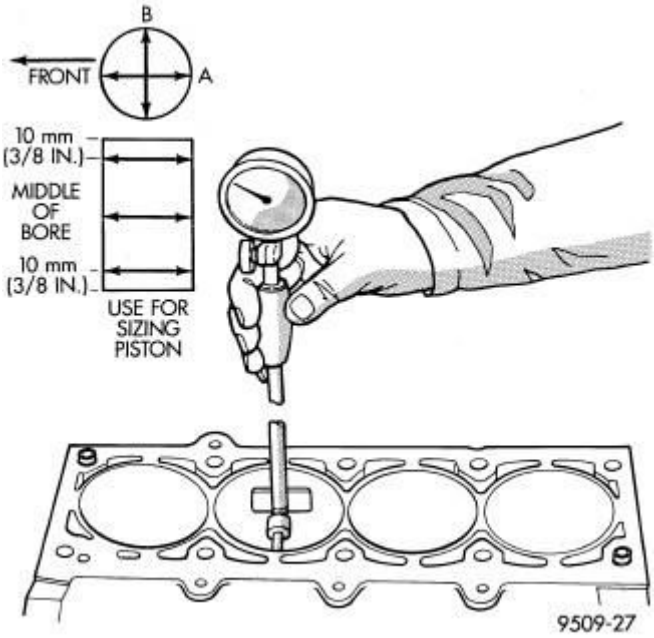

Fig. 183: Checking Cylinder Bore Size
Courtesy of CHRYSLER GROUP, LLC

NOTE: The cylinder bores should be measured at normal room temperature, 21°C (70°F).

The cylinder walls should be checked for out-of-round and taper with Cylinder Indicator C119 or equivalent. Refer to **SPECIFICATIONS** . If the cylinder

walls are badly scuffed or scored, the cylinder block should be replaced, and new pistons and rings fitted.

Measure the cylinder bore at three levels in directions A and B. Top measurement should be 10 mm (3/8 in.) down and bottom measurement should be 10 mm (3/8 in.) up from bottom of bore. Refer to **SPECIFICATIONS** .

BEARING(S), CONNECTING ROD

STANDARD PROCEDURE

STANDARD PROCEDURE - CONNECTING ROD - FITTING

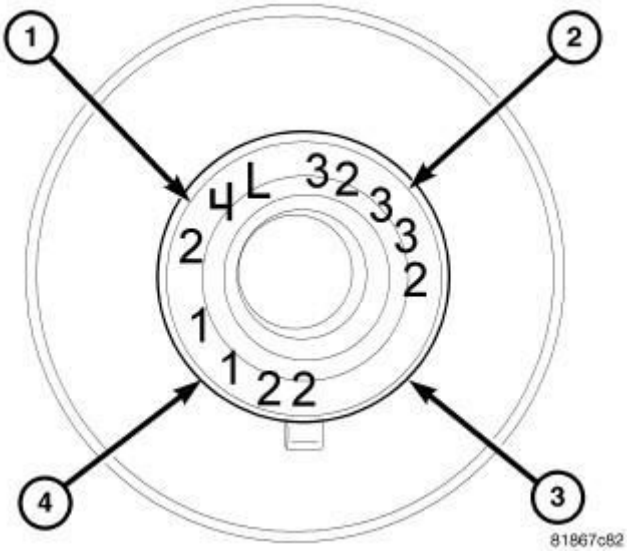

Fig. 184: Bearing Selection
Courtesy of CHRYSLER GROUP, LLC

There are three different sizes of rod bearings available. Connecting rod bearing identification (4) can be found on the nose of the crankshaft (3). Use the table below for proper bearing selection.

CONNECTING ROD BEARING SELECTION

CRANKSHAFT PIN DIAMETER GRADE	CONNECTING ROD BEARING CLASSIFICATION	CONNECTING ROD BEARING THICKNESS
1	1 (Black)	-3 Micron (-.003 mm.)
2	2 (No Color)	Standard
3	3 (Green)	+3 Micron (+.003 mm.)

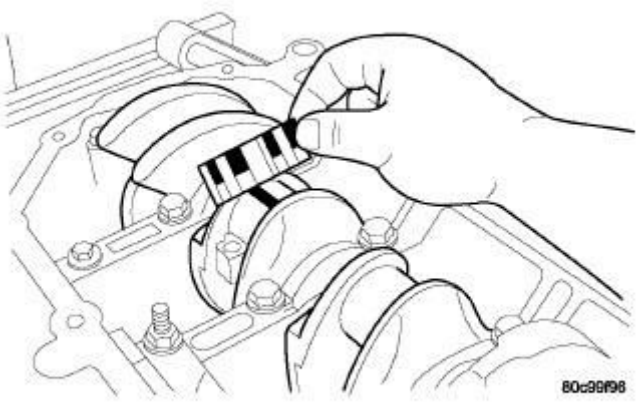

Fig. 185: Measuring Connecting Rod Bearing Clearance Using Plastigage
Courtesy of CHRYSLER GROUP, LLC

1. For measuring connecting rod bearing clearance procedure and use of Plastigage, refer to **MEASURING BEARING CLEARANCE USING PLASTIGAGE** . For bearing clearance, refer to **SPECIFICATIONS** .

NOTE: The rod bolts should not be reused.

2. Before installing the **NEW** rod bolts the threads and under the bolt head should be oiled with clean engine oil.
3. Install each bolt finger tight then alternately tighten each bolt to assemble the cap properly.
4. Tighten the connecting rod bolts using the 2 step torque-turn method. Tighten according to the following values:

CAUTION: Do not use a torque wrench for the second step.

- Tighten the bolts to 20 N.m (15 ft. lbs.).
- Tighten the connecting rod bolts an additional 90°.

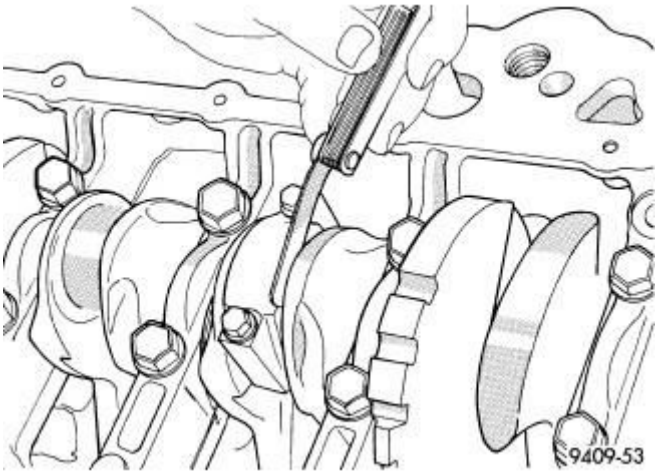

Fig. 186: Connecting Rod Side Clearance
Courtesy of CHRYSLER GROUP, LLC

5. Using a feeler gauge, check connecting rod side clearance. For clearance specifications, refer to **SPECIFICATIONS** .

BEARING(S), CRANKSHAFT, MAIN

STANDARD PROCEDURE

STANDARD PROCEDURE - MAIN BEARING SELECTION

NOTE: There are three different possibilities for the upper main bearings and five different lower main bearings. The upper and lower bearing shells are not interchangeable.

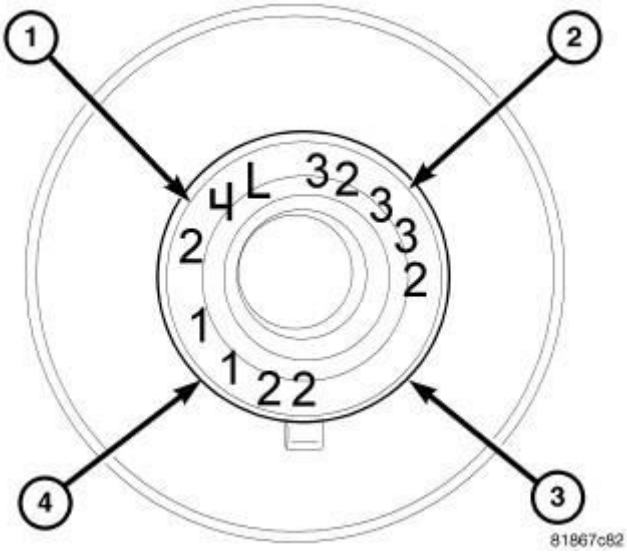

Fig. 187: Bearing Selection
Courtesy of CHRYSLER GROUP, LLC

The lower main bearing identification (2) is stamped in the nose of the crankshaft (3). There are 5 different bearing sizes available 0 through 4.

CRANKSHAFT IDENTIFICATION	LOWER CRANKSHAFT BEARING SELECTION		
JOURNAL DIAMETER GRADE	DIMENSION	LOWER MAIN BEARING SIZE CLASSIFICATION	LOWER MAIN BEARING DIMENSION
0	52 mm, -0.012 to -0.015 mm	0 (Pink or Red)	2 mm, 0 to -0.003 mm
1	52 mm, -0.015 to -0.018 mm	1 (Black)	2 mm, +0.003 to 0 mm
2	52 mm, -0.018 to -0.021 mm	2 (No Color)	2 mm, +0.006 to +0.003 mm
3	52 mm, -0.021 to -0.024 mm	3 (Green)	2 mm, +0.009 to +0.006 mm
4	52 mm, -0.024 to -0.027 mm	4 (Blue)	2 mm, +0.012 to +0.009 mm

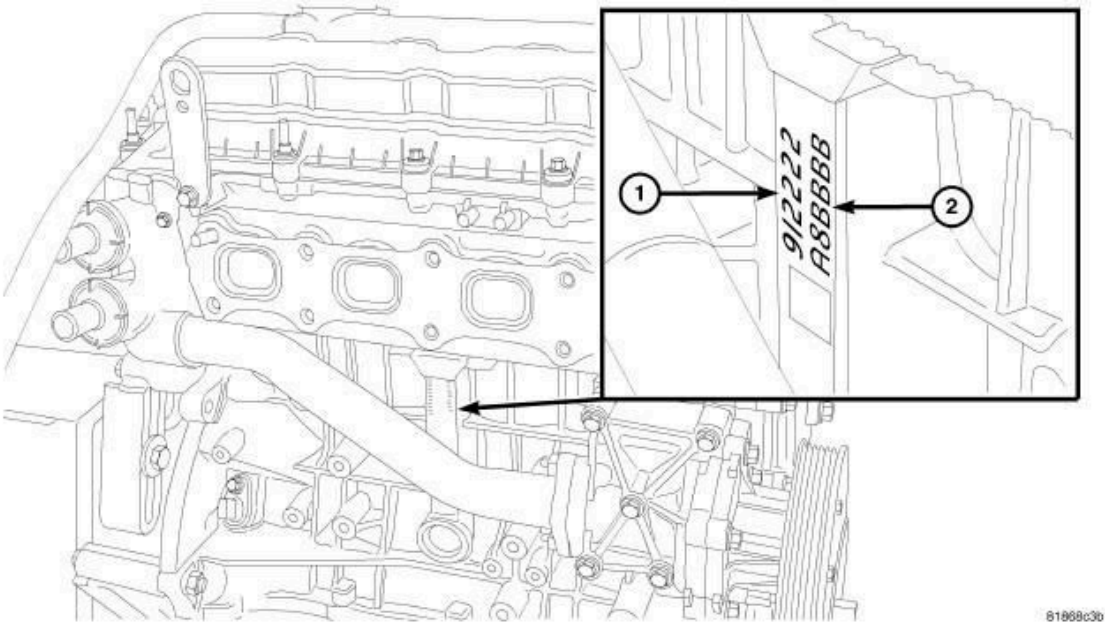

Fig. 188: Upper Main Bearing Shell Identification
Courtesy of CHRYSLER GROUP, LLC

The upper main bearing shell identification (1) is located in the middle of cylinder block on the right side of the engine. There are three different size

bearings available. The bearing class is read downward from top and corresponds to the front journal to the rear journal on the bottom.

UPPER MAIN BEARING SELECTION

CYLINDER BLOCK IDENTIFICATION	UPPER CRANKSHAFT BEARING SELECTION		
MAIN BEARING GRADE	DIMENSION	UPPER MAIN BEARING SIZE CLASSIFICATION	UPPER MAIN BEARING DIMENSION
1	56.000<56.006 mm	1 (Black)	2 mm, 0 to -0.006 mm
2	56.006<56.012 mm	2 (No Color)	2 mm, +0.006 to 0 mm
3	56.012<56.018 mm	3 (Green)	2 mm, +0.012 to +0.006 mm

CRANKSHAFT

STANDARD PROCEDURE

STANDARD PROCEDURE - MEASURING CRANKSHAFT END PLAY

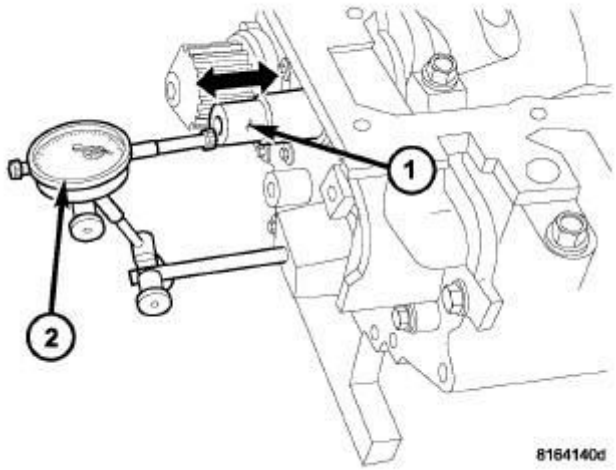

Fig. 189: Checking Crankshaft End Play - Typical
Courtesy of CHRYSLER GROUP, LLC

1 - Crankshaft 2 - DIAL INDICATOR

1. Mount a dial indicator (2) to front of engine with the locating probe on nose of crankshaft (1).
2. Move crankshaft all the way to the rear of its travel.
3. Zero the dial indicator.
4. Move crankshaft all the way to the front and read the dial indicator. For end play specification, refer to **SPECIFICATIONS** .

REMOVAL

REMOVAL

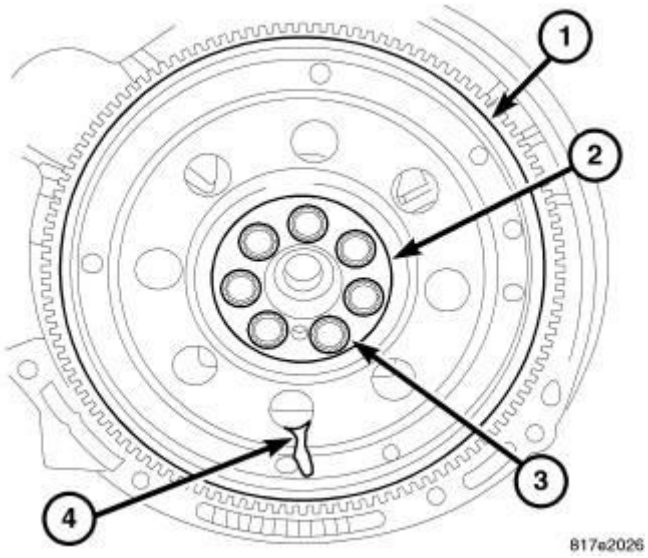

Fig. 190: Flex Plate
Courtesy of CHRYSLER GROUP, LLC

NOTE: Crankshaft can not be removed when engine is in vehicle.

1. Remove engine assembly from vehicle. Refer to **REMOVAL**.
2. Separate transaxle from engine.
3. Remove flex plate/flywheel (1).
4. Remove crankshaft rear oil seal. Refer to **SEAL, CRANKSHAFT OIL, REAR, REMOVAL**.

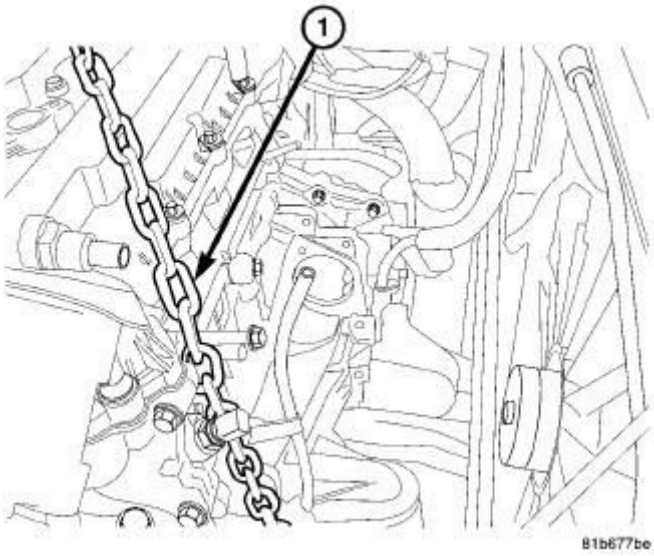

Fig. 191: Identifying Lift Chain
Courtesy of CHRYSLER GROUP, LLC

5. Remove engine from lift chain (1) and mount engine on a suitable repair stand.

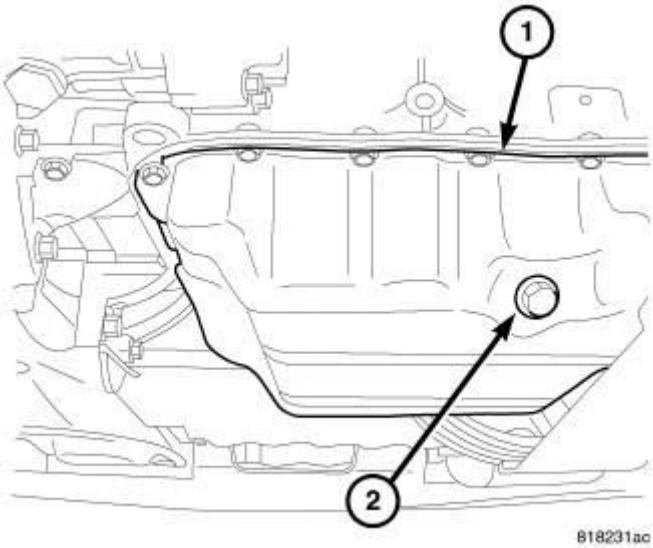

Fig. 192: Oil Drain Plug
Courtesy of CHRYSLER GROUP, LLC

6. Drain engine oil (2).

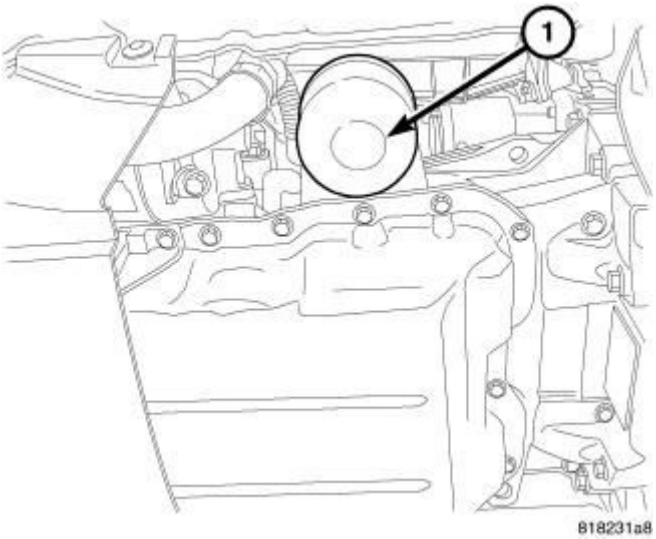

Fig. 193: Oil Filter
Courtesy of CHRYSLER GROUP, LLC

7. Remove oil filter (1).

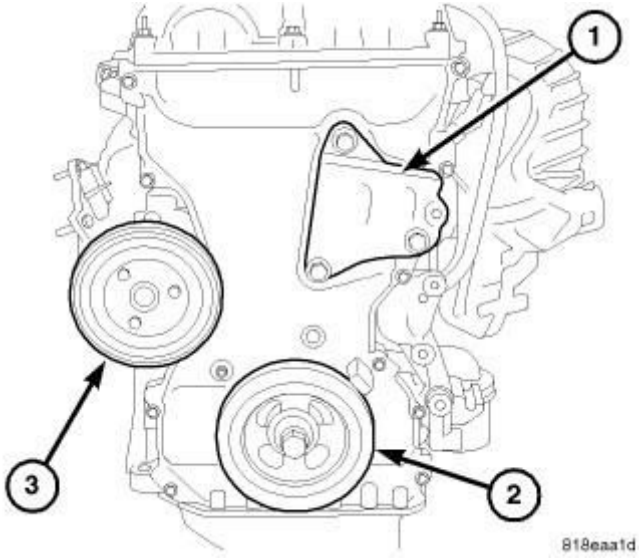

Fig. 194: Right Side Engine Mount Bracket, Crankshaft Damper & Water Pump Pulley
Courtesy of CHRYSLER GROUP, LLC

8. Remove crankshaft vibration damper (2). Refer to **DAMPER, VIBRATION, REMOVAL**.
9. Remove water pump pulley (3).
10. Remove engine mount support bracket (1).

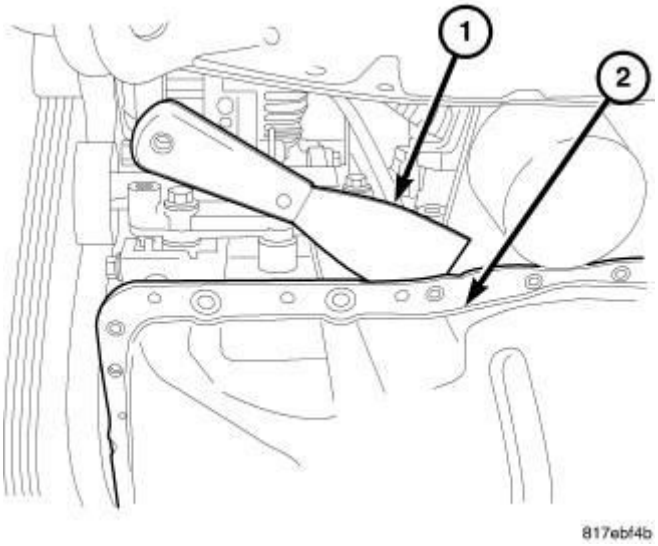

Fig. 195: Oil Pan Removal
Courtesy of CHRYSLER GROUP, LLC

11. Remove the oil pan (2). Refer to **PAN, OIL, REMOVAL**.
12. Remove timing chain cover . Refer to **COVER(S), ENGINE TIMING, REMOVAL**.
13. Remove the timing chain. Refer to **CHAIN AND SPROCKETS, TIMING, REMOVAL**
14. Remove balance shaft module. Refer to **PUMP, ENGINE OIL, REMOVAL**.

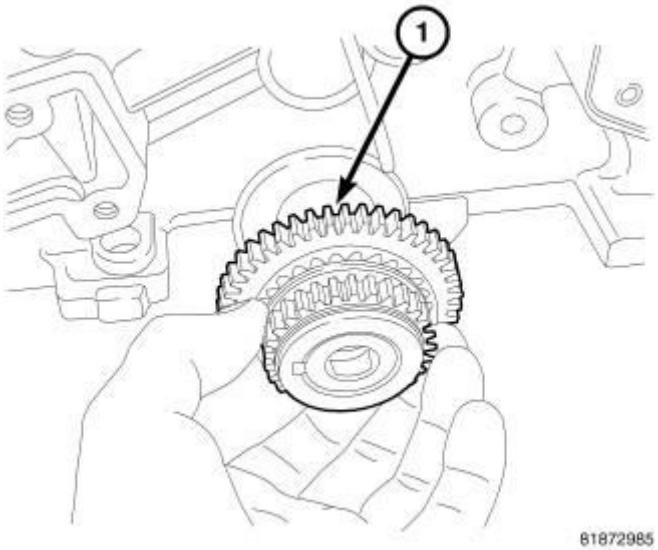

Fig. 196: Crankshaft Sprocket
Courtesy of CHRYSLER GROUP, LLC

15. Remove the crankshaft sprocket (1).

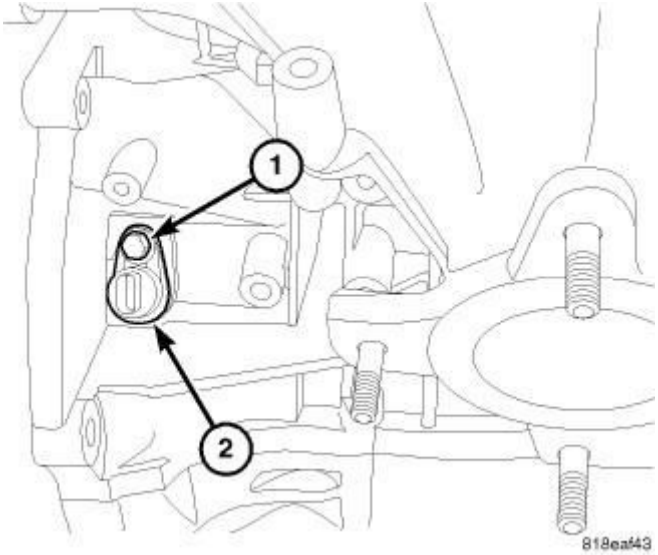

Fig. 197: Crankshaft Position Sensor
Courtesy of CHRYSLER GROUP, LLC

16. Remove crankshaft position sensor retaining bolt (1) and remove sensor (2).
17. Remove ladder frame. Refer to **FRAME, LADDER, REMOVAL**.

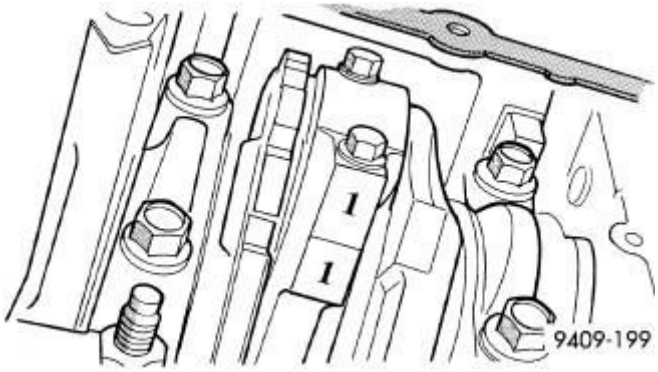

Fig. 198: Identifying Mark On Connecting Rod And Bearing Cap
Courtesy of CHRYSLER GROUP, LLC

NOTE: If piston/connecting rod replacement is necessary, remove cylinder head. Refer to CYLINDER HEAD, REMOVAL.

CAUTION: DO NOT use a number stamp or a punch to mark connecting rods. Damage to connecting rod could occur.

18. Using a permanent ink or paint marker, identify cylinder number on each connecting rod and cap.

19. Remove all connecting rod bolts and caps. Care should be taken not to damage the fracture rod and cap surfaces.

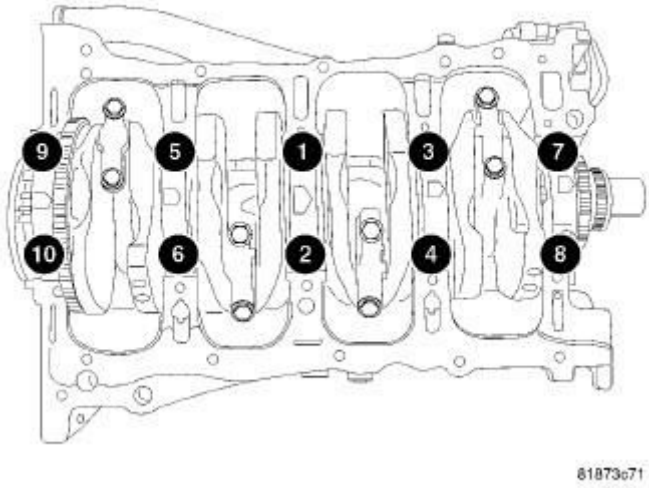

Fig. 199: Main Bearing Cap Torque Sequence
Courtesy of CHRYSLER GROUP, LLC

NOTE: Do not reuse connecting rod bolts.

20. Remove main bearing caps.

CAUTION: Use extreme care when handling crankshaft. Tone wheel damage can occur if crankshaft is mis-handled.

21. Lift out crankshaft from cylinder block. Do not damage the main bearings or journals when removing the crankshaft.

INSPECTION

INSPECTION

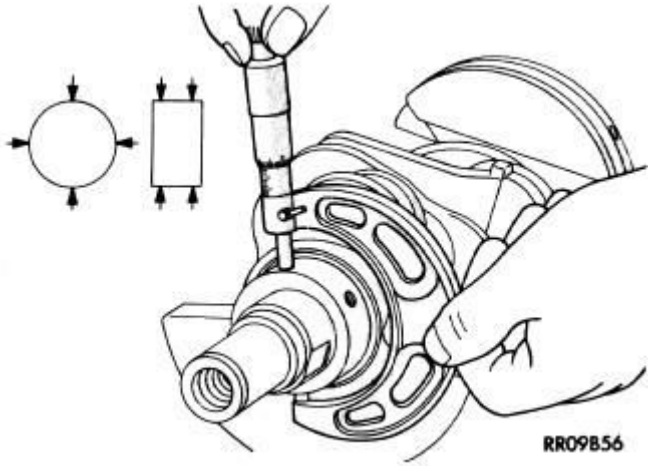

Fig. 200: Crankshaft Journal Measurements - Typical
Courtesy of CHRYSLER GROUP, LLC

The crankshaft main journals should be checked for excessive wear, taper and scoring. Limits of taper on any crankshaft main journals should be held to 0.006 mm (0.00024 in.). Limits of taper on any crankshaft rod journals should be held to 0.005 mm (0.0002 in.). DO NOT nick crank pin or bearing fillets. Limits of out of round on any crankshaft journals should be held to 0.005 mm (0.0002 in). DO NOT nick crank pin or bearing fillets.

INSTALLATION

INSTALLATION

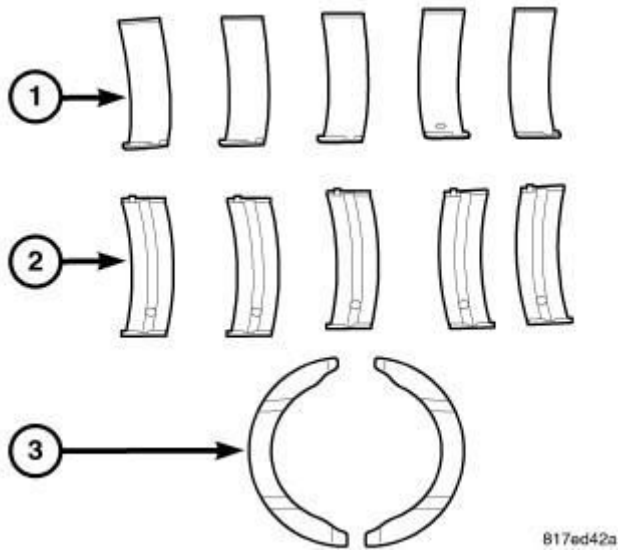

Fig. 201: Bearing Identification
Courtesy of CHRYSLER GROUP, LLC

The crankshaft is supported in five main bearings. All upper bearing shells (2) in

the crankcase have oil grooves and holes. All lower bearing shells (1) are smooth. Crankshaft end play is controlled by a two piece thrust bearing (3) on the number three main bearing journal.

1. Clean main bearing cap bolt holes with Mopar® brake parts cleaner or equivalent and blow out with compressed air.
2. Install the main bearing upper (2) shells with the lubrication groove and oil hole in the engine block.
3. Make certain oil holes in block line up with oil hole in bearings and bearing tabs seat in the block tab slots.

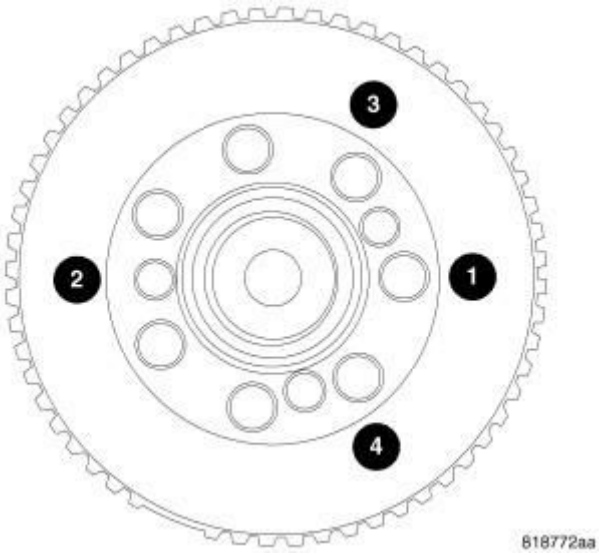

Fig. 202: Target Wheel
Courtesy of CHRYSLER GROUP, LLC

NOTE: If the crankshaft is sent out for machine work, it must be balanced as an assembly with the target ring installed.

4. Clean crankshaft and target ring with Mopar® brake parts cleaner or equivalent and dry with compressed air to ensure that the crankshaft mating surface and target ring mounting holes are free from oil and lock patch debris.

NOTE: Always use NEW mounting screws whether installing original or new target ring.

5. Install **NEW** mounting screws finger tight starting with the #1 location.

Make sure engagement occurs with the shoulder of the screws and mounting hole before starting all other screws.

6. Tighten all mounting screws to 13 N.m (110 in. lbs.) in the sequence shown in illustration.

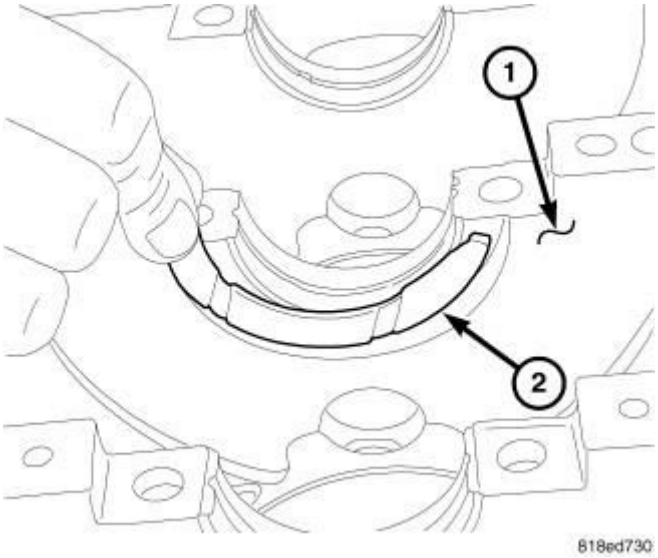

Fig. 203: Installing Thrust Bearing
Courtesy of CHRYSLER GROUP, LLC

NOTE: Lightly apply trans gel to thrust bearings to hold bearings in block.

NOTE: The thrust bearings must be installed with the notches facing the crankshaft.

7. Install thrust bearings (2) in block (1).

CAUTION: Do not get oil on the ladder frame mating surface. It will affect the ability of the RTV to seal the ladder frame to cylinder block.

NOTE: Ensure main bearing cap bolt holes in the block are clean, dry (free of residual oil or coolant), and threads are not damaged.

8. Oil the bearings and journals. Install crankshaft in engine block.

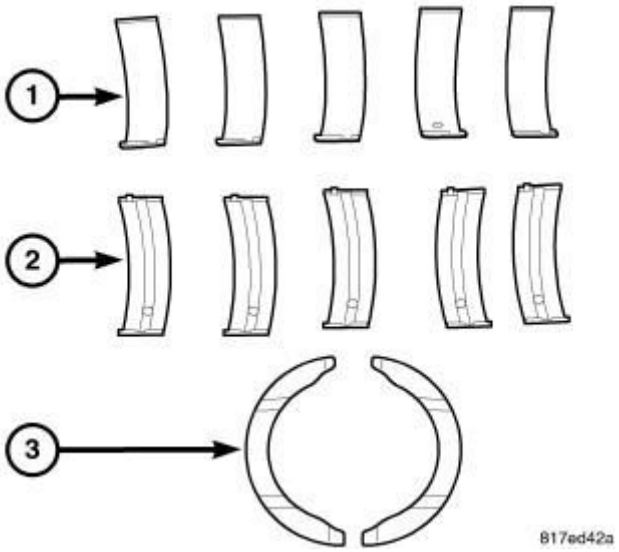

Fig. 204: Bearing Identification
Courtesy of CHRYSLER GROUP, LLC

9. Install lower main bearings (1) into main bearing cap. Make certain the bearing tabs are seated into the bearing cap slots.

NOTE: Main bearing caps are stamped 1 - 5 front to rear. Arrows on the caps must point towards the front of the engine.

10. Install main bearing caps to engine block.
11. Before installing the bolts the threads should be clean and dry.
12. Loosely install main bearing cap bolts.
13. To ensure correct thrust bearing alignment, perform the following steps:
    - Step 1: Rotate crankshaft until number 4 piston is at TDC.
    - Step 2: Move crankshaft rearward to limits of travel.
    - Step 3: Then, move crankshaft forward to limits of travel.
    - Step 4: Wedge an appropriate tool between the rear of the cylinder block and the rear crankshaft counterweight. This will hold the crankshaft in its furthest forward position.

CAUTION: There are different sets main bolts supplied with this engine. Each bolt set has a different torque value and engine damage could result if bolts are not torqued correctly. The bolts are

not interchangeable.

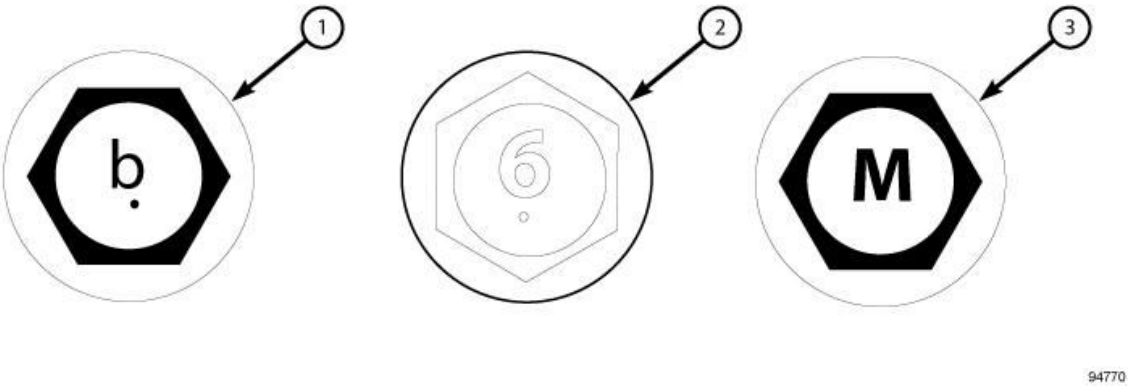

Fig. 205: Main Bolt Identification
Courtesy of CHRYSLER GROUP, LLC

14. If your bolt heads are marked with **b** (1) or **6** (2), go to step 15. If your bolt heads are marked with **M** (3) or any other marking, go to step 16.

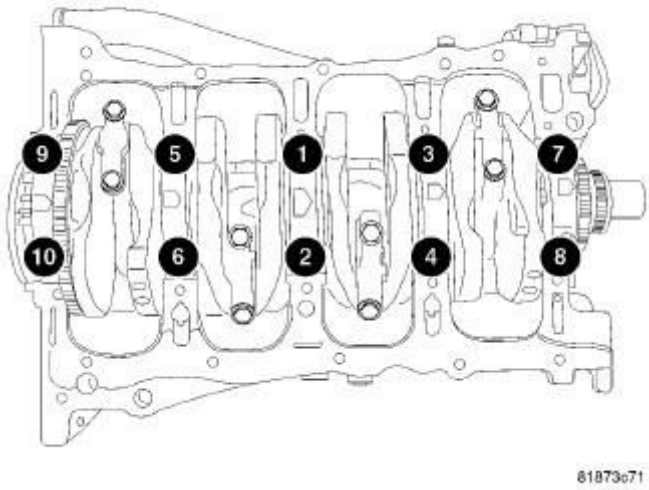

Fig. 206: Main Bearing Cap Torque Sequence
Courtesy of CHRYSLER GROUP, LLC

CAUTION: Before tightening bolts, you must identify the bolt head to obtain the correct torque value. Failure to identify the bolts correctly, could result in improperly tightened bolts which could result in engine damage.

15. Tighten bolts marked with **b** or **6** using the following three step method, in the sequence shown in illustration:
    - Tighten all bolts to 15 N.m (11 ft. lbs.)
    - Tighten all bolts to 27 N.m (20 ft. lbs.)
    - Tighten all bolts an additional 45°.
16. Tighten bolts marked with **M** using the following three step method, in the sequence shown in illustration:
    - Tighten all bolts to 15 N.m (11 ft. lbs.)
    - Tighten all bolts to 45 N.m (33 ft. lbs.)
    - Tighten all bolts an additional 45°.
17. Remove wedge tool used to hold crankshaft.
18. Check the crankshaft turning torque, it should not exceed 5.6 N.m (50 in. lbs.).
19. Check crankshaft end play. Refer to **STANDARD PROCEDURE - MEASURING CRANKSHAFT END PLAY** .
20. Install connecting rod bearings and caps. **Do Not Reuse Connecting Rod Bolts.** Tighten connecting rod bolts to 20 N.m + 90° (15 ft. lbs.) + 90°. Refer to **ROD, PISTON AND CONNECTING, INSTALLATION**.
21. Install the ladder frame assembly. Refer to **FRAME, LADDER, INSTALLATION**.
22. Install the balance shaft module. Refer to **PUMP, ENGINE OIL, INSTALLATION**.

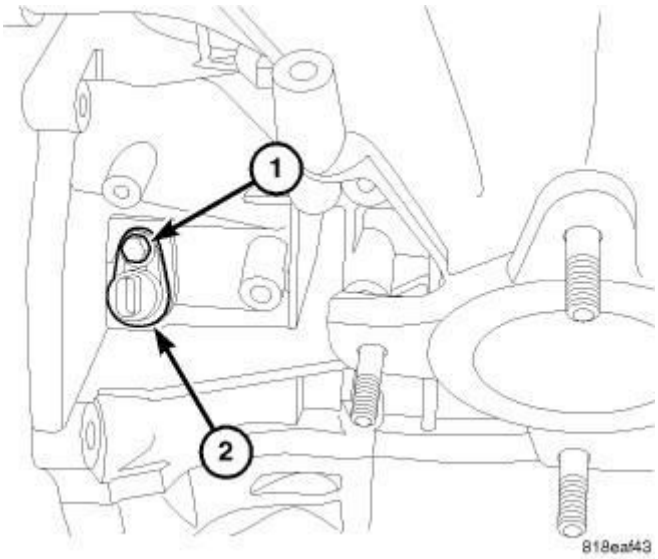

Fig. 207: Crankshaft Position Sensor

Courtesy of CHRYSLER GROUP, LLC

23. Install crankshaft position sensor (2) and tighten bolt (1).
24. Install cylinder head if it was removed. Refer to **CYLINDER HEAD, INSTALLATION**.

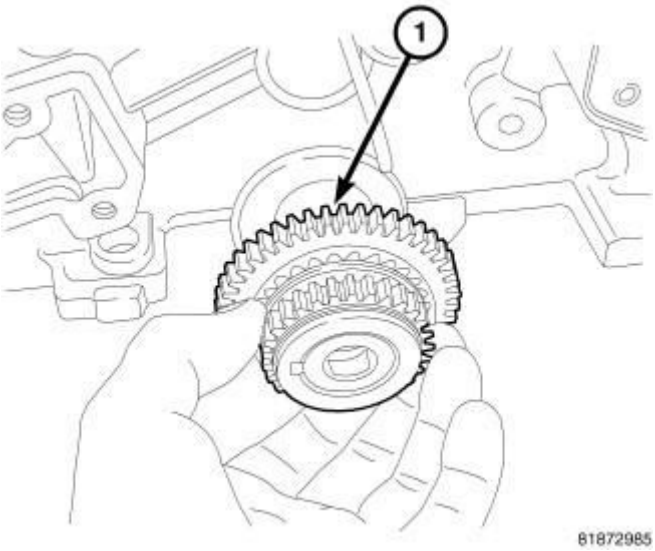

Fig. 208: Crankshaft Sprocket
Courtesy of CHRYSLER GROUP, LLC

25. Install front crankshaft sprocket (1).
26. Install the timing chain. Refer to **CHAIN AND SPROCKETS, TIMING, INSTALLATION**.
27. Install the timing chain front cover . Refer to **COVER(S), ENGINE TIMING, INSTALLATION**.
28. Install the oil pan. Refer to **PAN, OIL, INSTALLATION**.
29. Install rear crankshaft oil seal. Refer to **SEAL, CRANKSHAFT OIL, REAR, INSTALLATION**.
30. Install front crankshaft oil seal. Refer to **SEAL, CRANKSHAFT OIL, FRONT, INSTALLATION**.

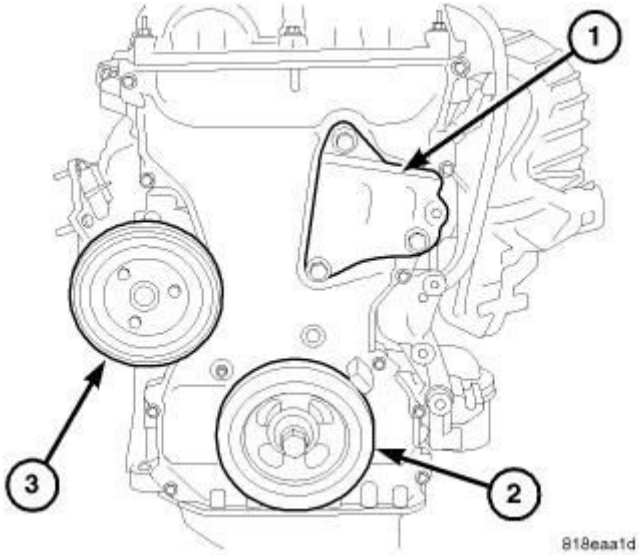

Fig. 209: Right Side Engine Mount Bracket, Crankshaft Damper & Water Pump Pulley
Courtesy of CHRYSLER GROUP, LLC

31. Install engine mount support bracket (1).
32. Install crankshaft vibration damper (2). Refer to **DAMPER, VIBRATION, INSTALLATION**.
33. Install water pump pulley (3).

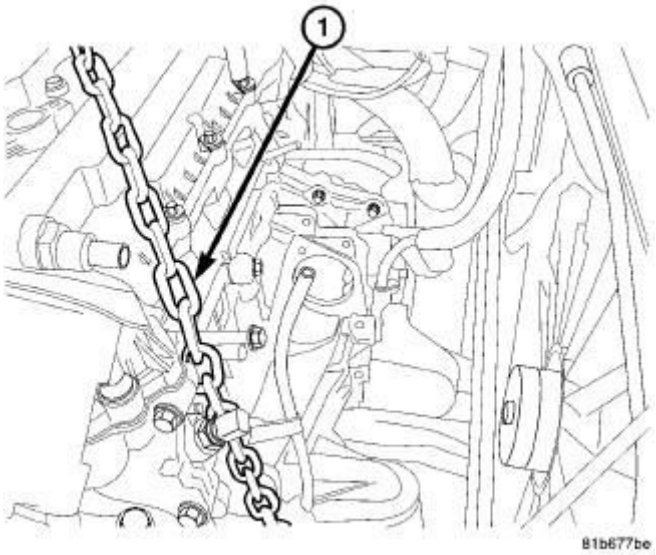

Fig. 210: Lift Chain
Courtesy of CHRYSLER GROUP, LLC

34. Install engine lift chain (1) and remove engine from repair stand.
35. Install crankshaft rear oil seal. Refer to **SEAL, CRANKSHAFT OIL,**

REAR, INSTALLATION.

36. Install drive plate/flex plate using **new** bolts. Tighten bolts to 95 N.m (70 ft. lbs.).
37. Attach transaxle to engine. Tighten bellhousing bolts to 101 N.m (75 ft. lbs.).
38. Install the engine assembly into the vehicle. Refer to **INSTALLATION**.

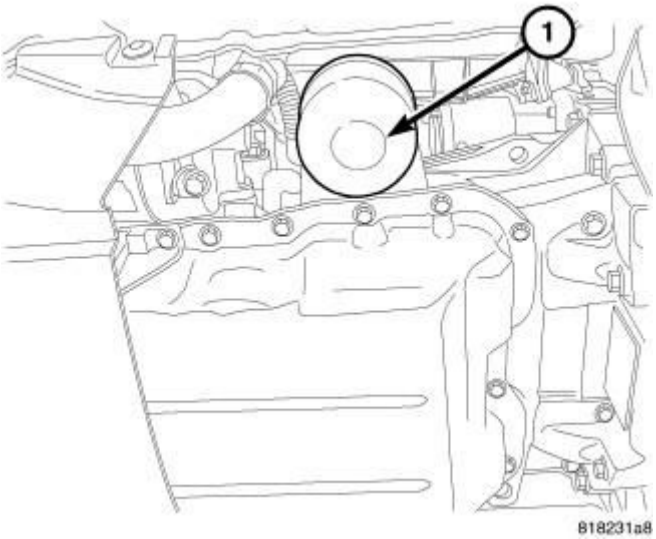

Fig. 211: Oil Filter
Courtesy of CHRYSLER GROUP, LLC

39. Install new oil filter (1) and fill with oil.
40. Fill with coolant. Refer to **STANDARD PROCEDURE** .
41. Start engine and check for leaks.
42. Install engine cover.

DAMPER, VIBRATION

REMOVAL

REMOVAL

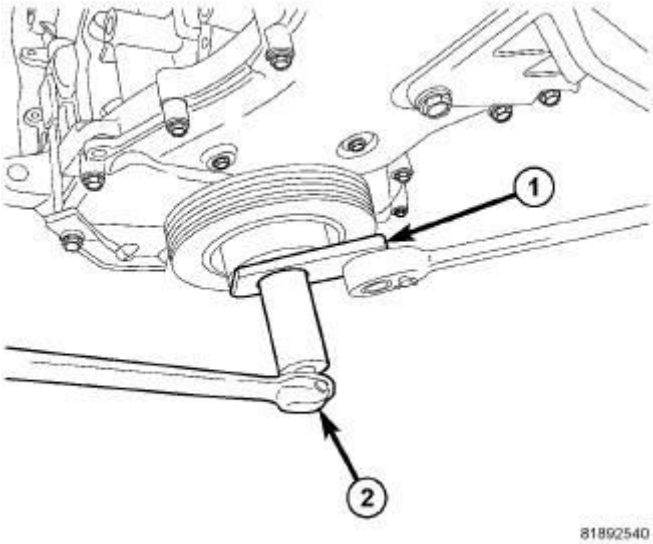

Fig. 212: Damper Removal & Installation
Courtesy of CHRYSLER GROUP, LLC

1. Remove accessory drive belts. Refer to **BELT, SERPENTINE, REMOVAL** .
2. Install Damper holder (special tool #9707, Holder, Vibration Damper) (1).
3. Remove crankshaft damper bolt.
4. Pull damper off crankshaft.

INSTALLATION

INSTALLATION

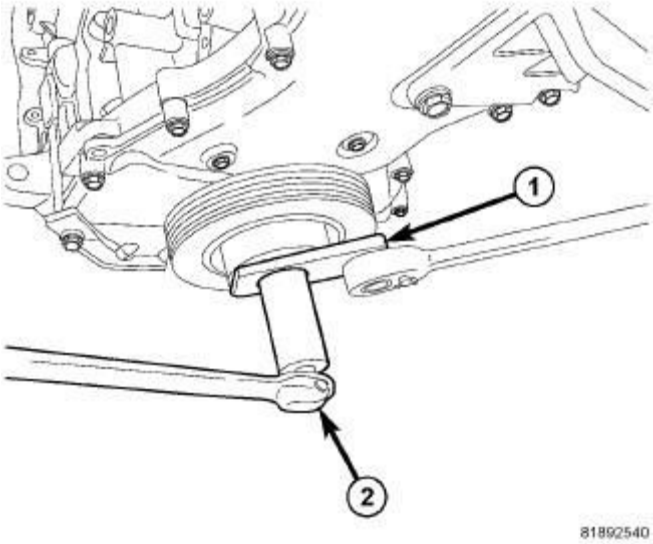

Fig. 213: Damper Removal & Installation

Courtesy of CHRYSLER GROUP, LLC

1. Install crankshaft damper.
2. Apply clean engine oil crankshaft damper bolt threads and between bolt head and washer. Tighten bolt to 210 N.m (155 ft. lbs.).
3. Install accessory drive belts. Refer to **BELT, SERPENTINE, INSTALLATION** .

FLEXPLATE

REMOVAL

REMOVAL

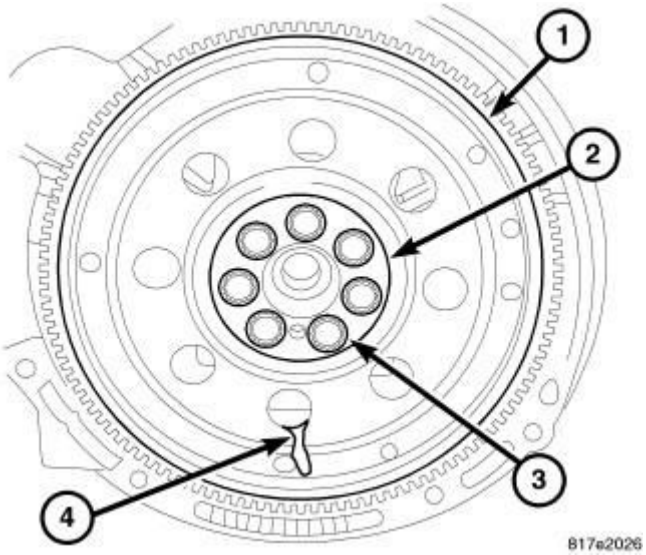

Fig. 214: Flex Plate
Courtesy of CHRYSLER GROUP, LLC

1. Remove transmission. Refer to **BG6, REMOVAL** , **T355, REMOVAL** or **CVT, REMOVAL** .
2. Remove flex plate bolts (3) and discard.
3. Remove washer (2).
4. Remove flex plate (1).

INSTALLATION

INSTALLATION

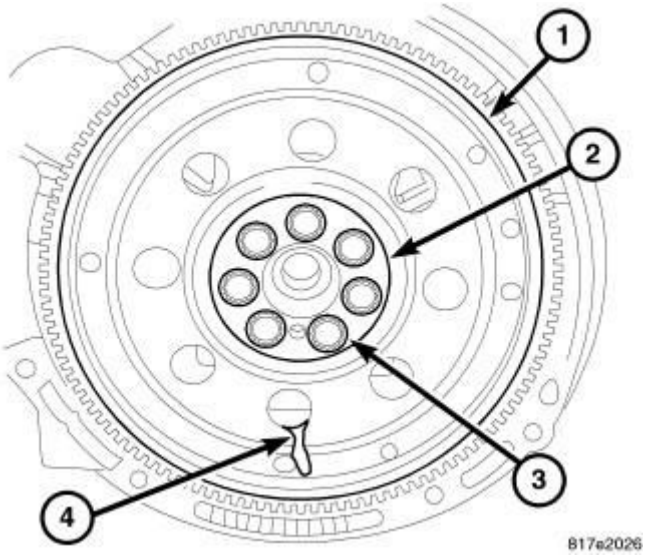

Fig. 215: Flex Plate
Courtesy of CHRYSLER GROUP, LLC

1. Install flex plate (1).
2. Install washer (2).
3. Install **new** flex plate bolts (3) and tighten in a criss-cross pattern to 29 N.m (22 ft. lbs.) plus 51° rotation.
4. Install transaxle. Refer to **BG6, INSTALLATION** , **T355, INSTALLATION** or **CVT, INSTALLATION** .

FRAME, LADDER

REMOVAL

REMOVAL

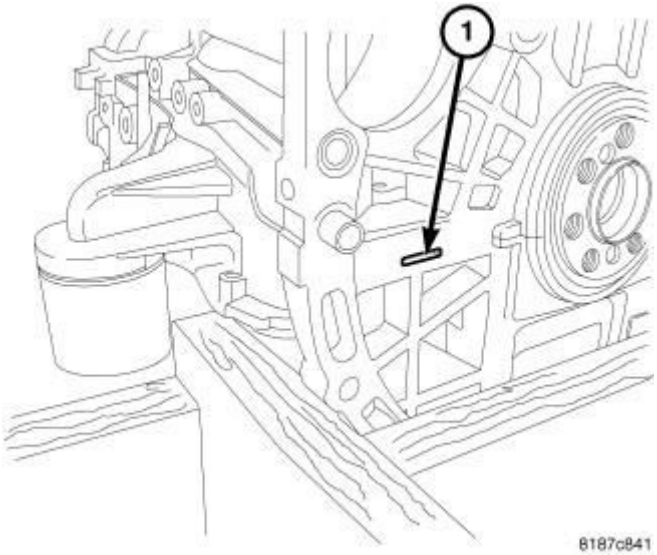

Fig. 216: Pry Point 1
Courtesy of CHRYSLER GROUP, LLC

1. Remove oil pan. Refer to **PAN, OIL, REMOVAL**.
2. Remove balance shaft assembly. Refer to **PUMP, ENGINE OIL, REMOVAL**.
3. Remove ladder frame retaining bolts.
4. Remove ladder frame using pry point cast in the rear of the block (1).

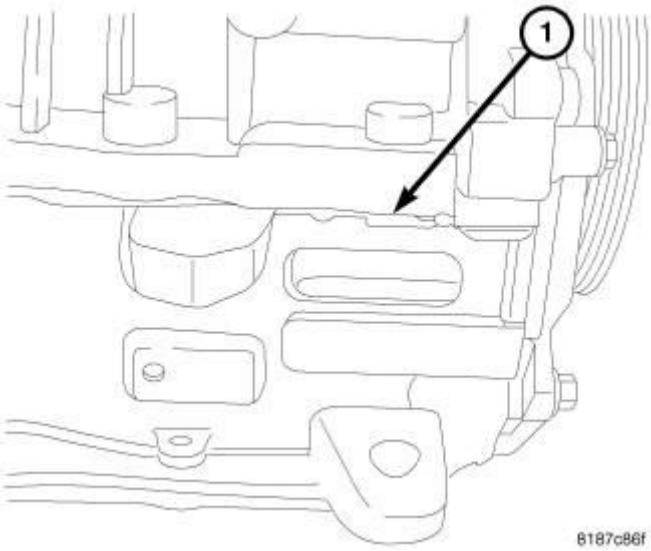

Fig. 217: Pry Point 2
Courtesy of CHRYSLER GROUP, LLC

5. To assist in removing the ladder frame another (1) pry point cast in the right side of the block.

CLEANING

CLEANING

Clean ladder frame with a plastic or wooden scraper and a suitable solvent. Refer to **ENGINE GASKET SURFACE PREPARATION** .

INSTALLATION

INSTALLATION

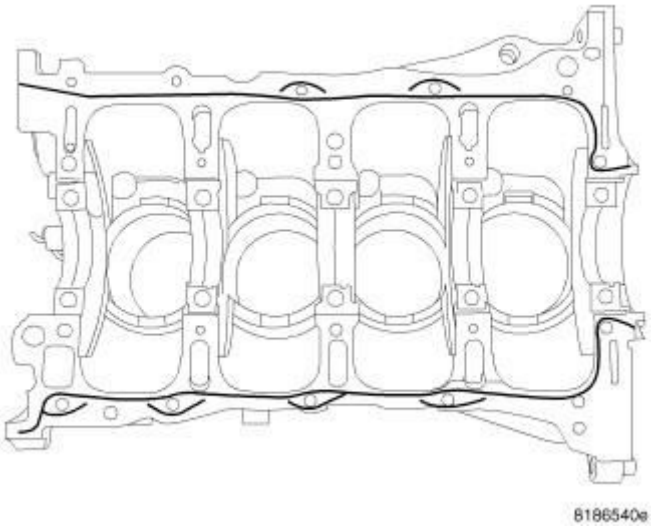

Fig. 218: Sealing Ladder Frame
Courtesy of CHRYSLER GROUP, LLC

NOTE: When using RTV, the sealing surfaces must be clean and free from grease and oil.

NOTE: When using RTV, parts should be assembled in 10 minutes and tighten to final torque within 45 minutes.

1. Apply a 2 mm bead of Mopar® engine sealant RTV or equivalent as shown in illustration.

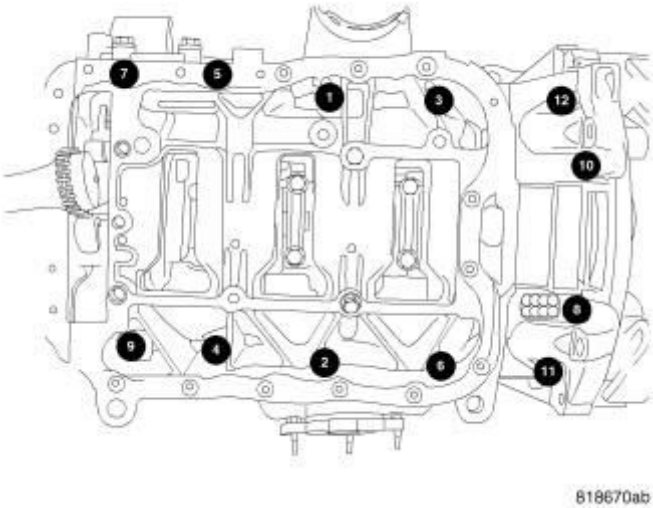

Fig. 219: Ladder Frame Bolts Tightening Sequence
Courtesy of CHRYSLER GROUP, LLC

2. Install bolts and tighten as shown in illustration following a two step method.
   - First: All to 10 N.m (89 in. lbs.).
   - Second: All to 26 N.m (19 ft. lbs.).
3. Install balance shaft module. Refer to **PUMP, ENGINE OIL, INSTALLATION**.
4. Install oil pan. Refer to **PAN, OIL, INSTALLATION**.

RING(S), PISTON

STANDARD PROCEDURE

STANDARD PROCEDURE - PISTON RING - FITTING

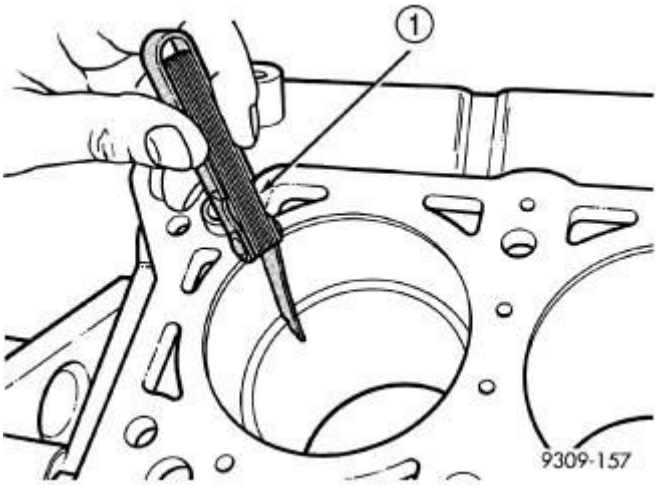

Fig. 220: Check Gap On Piston Rings
Courtesy of CHRYSLER GROUP, LLC

1. Wipe cylinder bore clean. Insert ring and push down with piston to ensure it is square in bore. The ring gap measurement must be made with the ring positioning at least 13 mm (0.50 inch) from bottom of cylinder bore and below the bottom of the oil ring travel where cylinder bore has minimal wear. Check gap with feeler gauge. Refer to Engine **SPECIFICATIONS**.

NOTE: Ring end gap measurements are sensitive to the ring being square in the bore. Care must be used to avoid tilting the rings in cylinder bores when taking measurements.

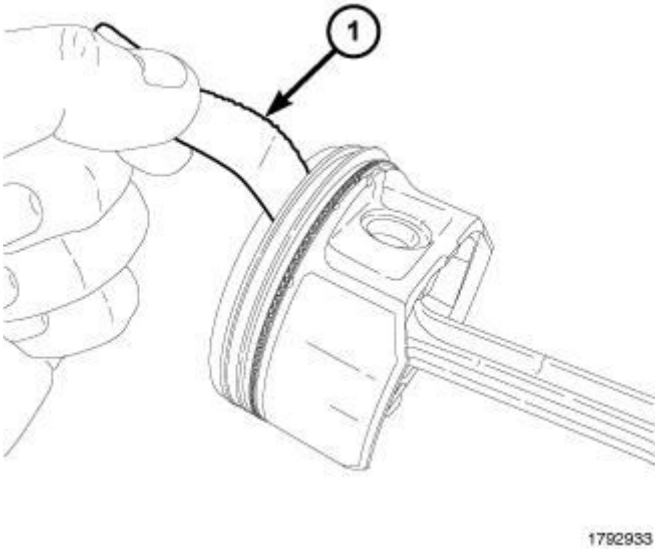

Fig. 221: Piston Ring To Groove Side Clearance
Courtesy of CHRYSLER GROUP, LLC

2. Check piston ring to groove side clearance. Refer to Engine **SPECIFICATIONS**.

CAUTION: Exercise care when using tools on piston. Do not scratch or gouge piston surface or ring grooves as this may cause engine damage.

REMOVAL

REMOVAL

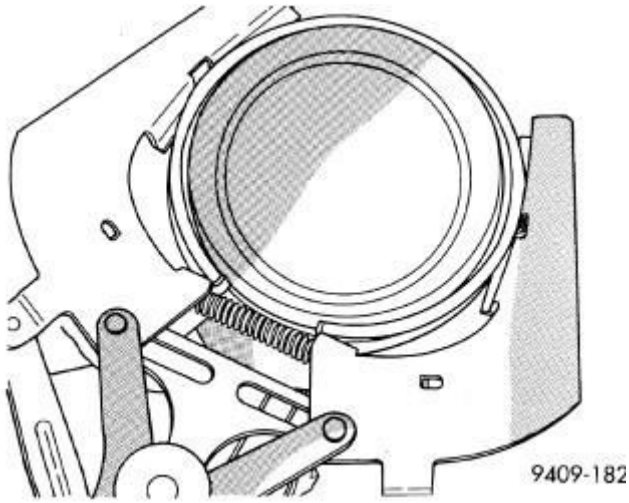

Fig. 222: Piston Rings-Removing And Installing
Courtesy of CHRYSLER GROUP, LLC

1. Using a suitable ring expander, remove upper and intermediate piston rings.

2. Remove the upper oil ring side rail, lower oil ring side rail and then oil ring expander from piston.
3. Clean ring grooves of any carbon deposits.

INSTALLATION

INSTALLATION

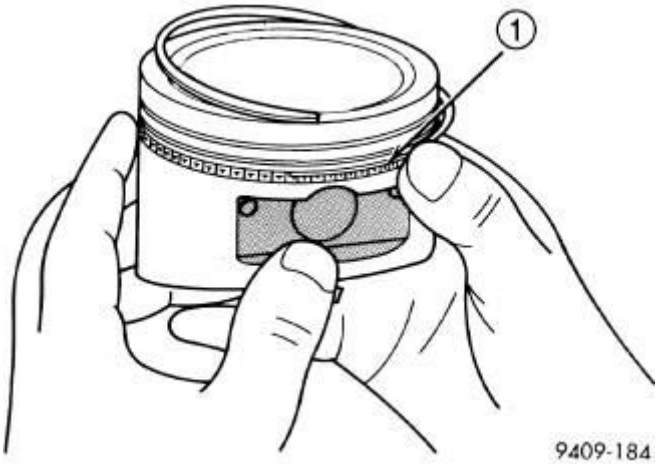

Fig. 223: Installing Side Rail
Courtesy of CHRYSLER GROUP, LLC

NOTE: The identification mark on face of upper and intermediate piston rings must point toward top of piston.

CAUTION: Install piston rings in the following order:

A. Oil ring expander.
B. Upper oil ring side rail.
C. Lower oil ring side rail.
D. No. 2 Intermediate piston ring.
E. No. 1 Upper piston ring.

1. Install oil ring expander.
2. Install upper side rail first and then the lower side rail. Install the side rails by placing one end between the piston ring groove and the oil ring expander. Hold end firmly and press down the portion to be installed until side rail is in position. **Do not use a piston ring expander.**

NOTE: The compression rings are marked Y1 for the upper compression ring and Y2 for the second compression ring. These markings must face upward.

3. Install No. 2 piston ring and then No. 1 piston ring.

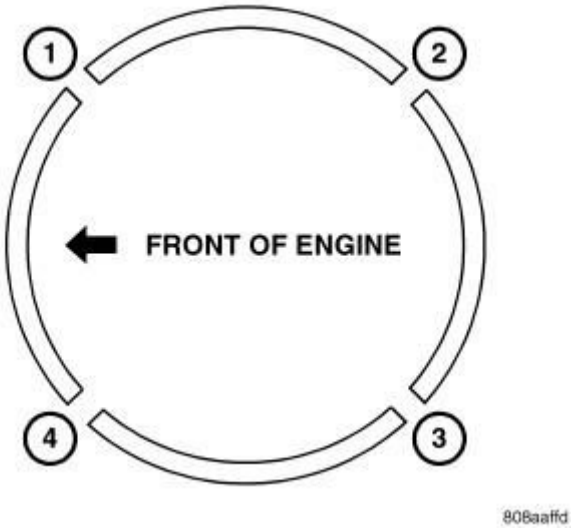

Fig. 224: Identifying Piston Ring End Gap Positions
Courtesy of CHRYSLER GROUP, LLC

4. Position piston ring end gaps as shown in illustration.
5. Position oil ring expander gap at least 45° from the side rail gaps but **not** on the piston pin center or on the thrust direction. Staggering ring gap is important for oil control.

ROD, PISTON AND CONNECTING

DESCRIPTION

DESCRIPTION

The pistons are made of a cast aluminum alloy. The pistons have pressed-in pins attached to forged connecting rods. The piston pin is offset 0.8 mm (0.0314 in.) towards the thrust side of the piston. The connecting rods are a cracked cap design and are not repairable. The piston with rings, connecting rod and piston pin are serviced as an assembly.

STANDARD PROCEDURE

STANDARD PROCEDURE - PISTON TO CYLINDER BORE FITTING

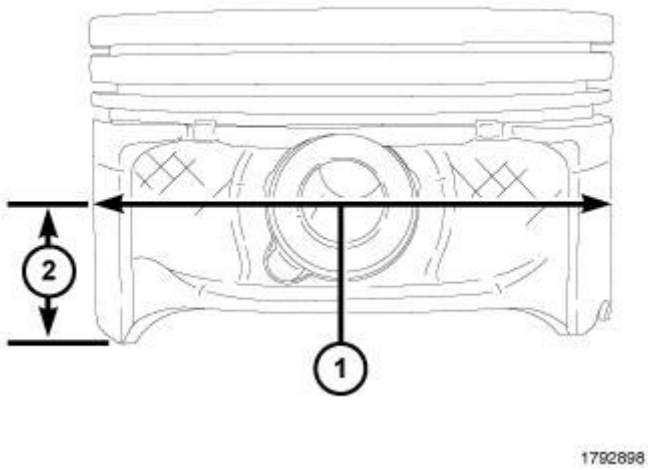

Fig. 225: Identifying Piston Diameter Measurement Location
Courtesy of CHRYSLER GROUP, LLC

NOTE: Pistons and cylinder bores should be measured at normal room temperature, 21°C (70°F).

Piston and cylinder wall must be clean and dry. Piston diameter should be measured 90 degrees to piston pin (1).

1. Measurement should be taken approximately 16 mm (0.629 in.) from the bottom of the skirt (2) as shown in illustration.

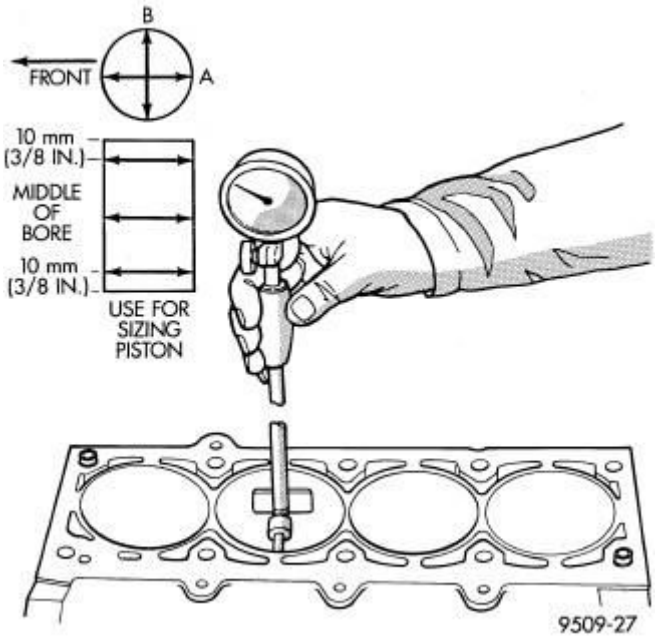

Fig. 226: Checking Cylinder Bore Size
Courtesy of CHRYSLER GROUP, LLC

NOTE: Correct piston to bore clearance must be established in order to assure quiet and economical operation.

2. Cylinder bores should be measured halfway down the cylinder bore and transverse (measurement location B) to the engine crankshaft center line shown in illustration. Refer to **SPECIFICATIONS** .

REMOVAL

REMOVAL

1. Remove the engine. Refer to **REMOVAL**.
2. Remove the cylinder head. Refer to **CYLINDER HEAD, REMOVAL**.
3. Remove the balance shaft module. Refer to **PUMP, ENGINE OIL**.

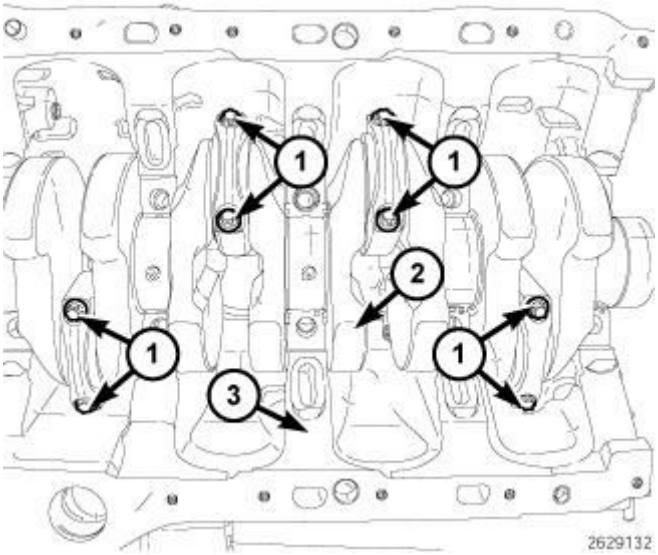

Fig. 227: Identifying Crankshaft, Engine Block, Connecting Rod Bearing Caps & Bolts
Courtesy of CHRYSLER GROUP, LLC

4. Remove bolts (1) and the connecting rod bearing caps.
5. Carefully push the piston through the bore and use care not to damage the oil cooling jet or allow the end of connecting rod to hit the cylinder wall.

INSTALLATION

INSTALLATION

1. Install bearing halves onto the connecting rod and lubricate bearing with clean engine oil.
2. Using a commercially available ring compressor, install the pistons into the cylinder bore. Use care and don't allow the connecting rod to hit the cylinder wall or damage the piston oil cooler jet.

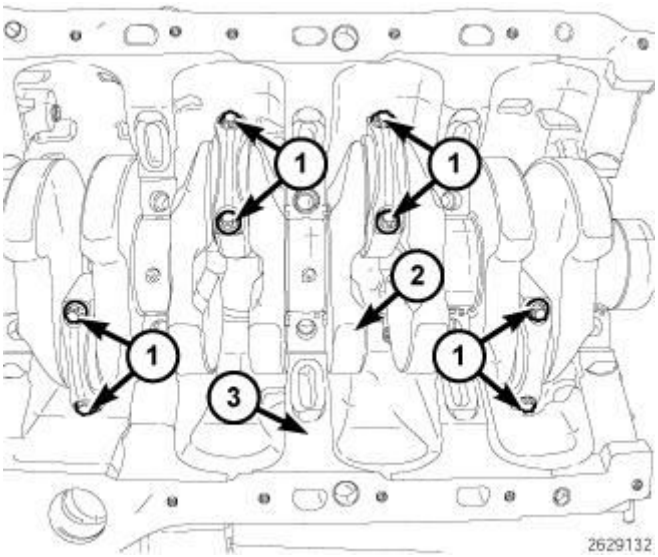

Fig. 228: Identifying Crankshaft, Engine Block, Connecting Rod Bearing Caps & Bolts
Courtesy of CHRYSLER GROUP, LLC

3. Install new rod bearings and check bearing clearance.
4. Install the connecting rod bearing caps.
5. For new connecting rods, tighten bolts to:
   - 5 N.m (44 in. lbs.).
   - 25 N.m (18 ft. lbs.).
   - plus an additional 180°.
6. For used connecting rods, tighten bolts to:
   - 5 N.m (44 in. lbs.).
   - 25 N.m (18 ft. lbs.).
   - plus an additional 90°.

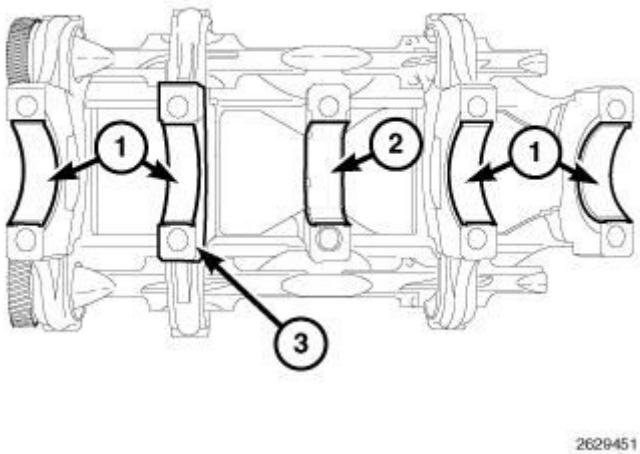

Fig. 229: Installing Bearing Halves Into Bearing Caps
Courtesy of CHRYSLER GROUP, LLC

7. If required, install bearing halves (1 and 2) into bearing caps and lubricate bearing with clean engine oil.
8. Install the balance shaft module and check bearing clearance. Refer to **PUMP, ENGINE OIL**.
9. Install the cylinder head. Refer to **CYLINDER HEAD, INSTALLATION**.
10. Install the engine. Refer to **INSTALLATION**.

SEAL, CRANKSHAFT OIL, FRONT

REMOVAL

REMOVAL

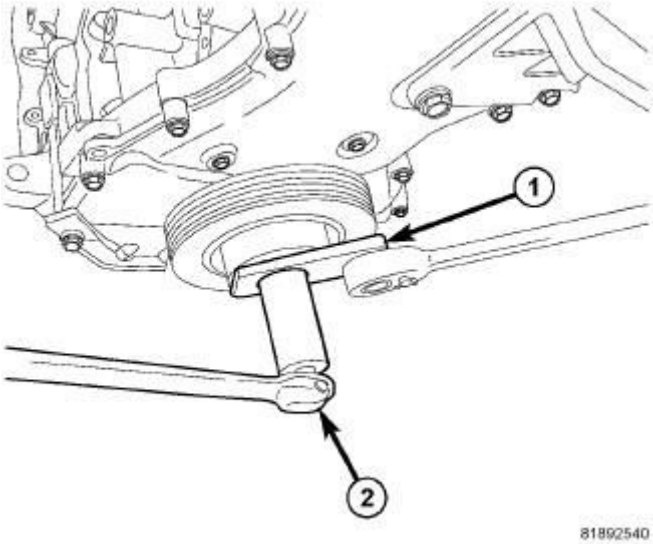

Fig. 230: Damper Removal & Installation
Courtesy of CHRYSLER GROUP, LLC

1. Remove accessory drive belt.
2. Install Damper Holder (special tool #9707, Holder, Vibration Damper) (1) and remove damper retaining bolt.
3. Pull damper off crankshaft.

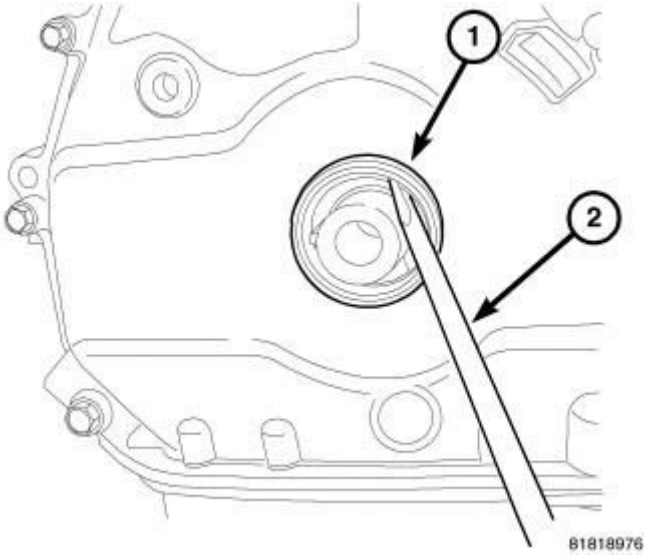

Fig. 231: Front Crankshaft Seal Removal
Courtesy of CHRYSLER GROUP, LLC

4. Remove front crankshaft oil seal (1) by prying out with a screw driver (2). Be careful not to damage the cover seal surface.

INSTALLATION

INSTALLATION

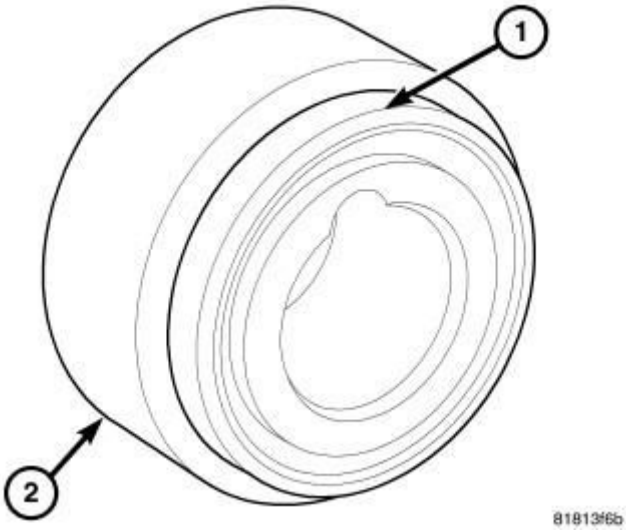

Fig. 232: Crankshaft Oil Seal & Seal Installer 9506
Courtesy of CHRYSLER GROUP, LLC

1. Place seal (1) onto Front Crankshaft Seal Installer (special tool #9506, Installer, Oil Seal) (2) with seal spring towards the inside of engine.

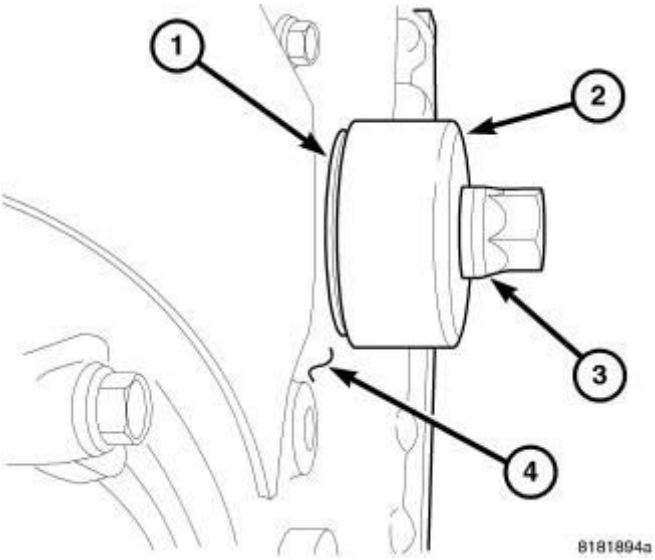

Fig. 233: Installing Front Seal
Courtesy of CHRYSLER GROUP, LLC

2. Install new seal (1) by using Front Crankshaft Seal Installer (special tool #9506, Installer, Oil Seal) (2) and crankshaft damper bolt (3).

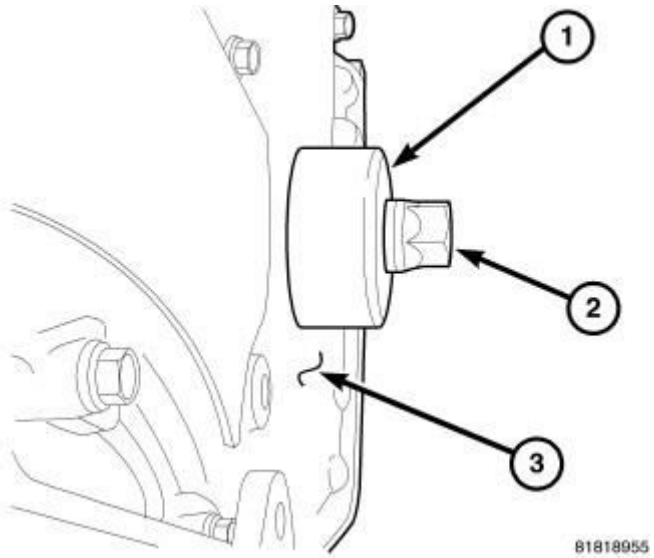

Fig. 234: Front Seal Installed
Courtesy of CHRYSLER GROUP, LLC

3. Press seal into front cover until Front Crankshaft Seal Installer (special tool #9506, Installer, Oil Seal) (1) seats against timing chain cover (3).
4. Remove Front Crankshaft Seal Installer (special tool #9506, Installer, Oil Seal) (1).

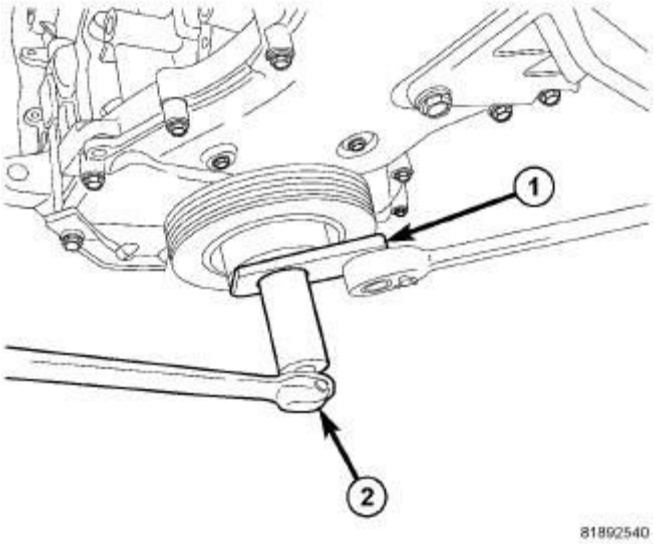

Fig. 235: Damper Removal & Installation
Courtesy of CHRYSLER GROUP, LLC

5. Install crankshaft vibration damper.
6. Oil the bolt threads and between the bolt head and washer.
7. Install damper retaining bolt and Damper Holder (special tool #9707,

Holder, Vibration Damper) (1). Tighten bolt to 210 N.m (155 ft. lbs.).

SEAL, CRANKSHAFT OIL, REAR

REMOVAL

REMOVAL

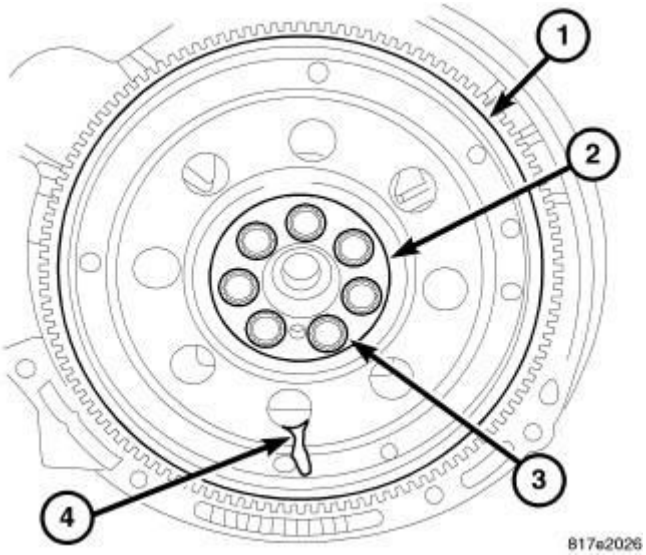

Fig. 236: Flex Plate
Courtesy of CHRYSLER GROUP, LLC

1. Remove transmission and flexplate (1). Refer to **FLEXPLATE, REMOVAL**.

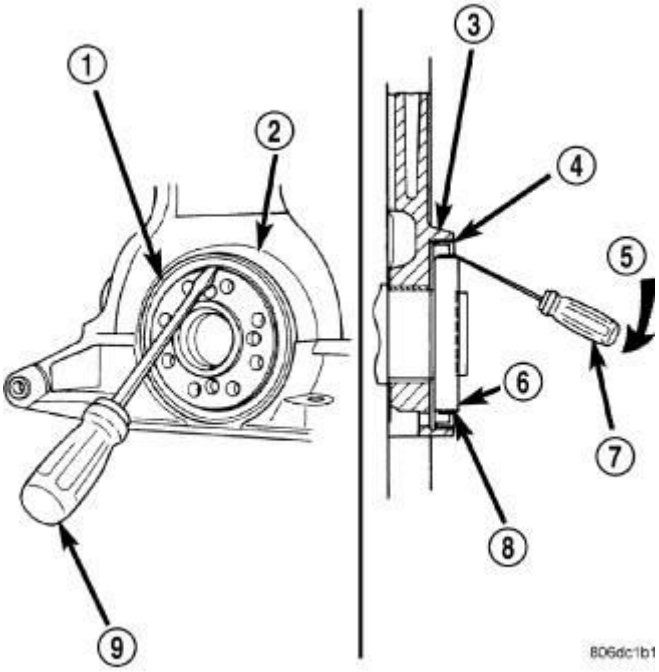

Fig. 237: Rear Crankshaft Oil Seal - Removal
Courtesy of CHRYSLER GROUP, LLC

2. Insert a 3/16 flat bladed screwdriver (7) between the dust lip (8) and the metal case (4) of the crankshaft seal (1). Angle the screwdriver through the dust lip against metal case of the seal. Pry out seal.

CAUTION: Do not permit the screwdriver blade to contact crankshaft seal surface. Contact of the screwdriver blade against crankshaft edge (chamfer) is permitted.

3. Check to make sure the seals garter spring is not on the crankshaft.

INSTALLATION

INSTALLATION

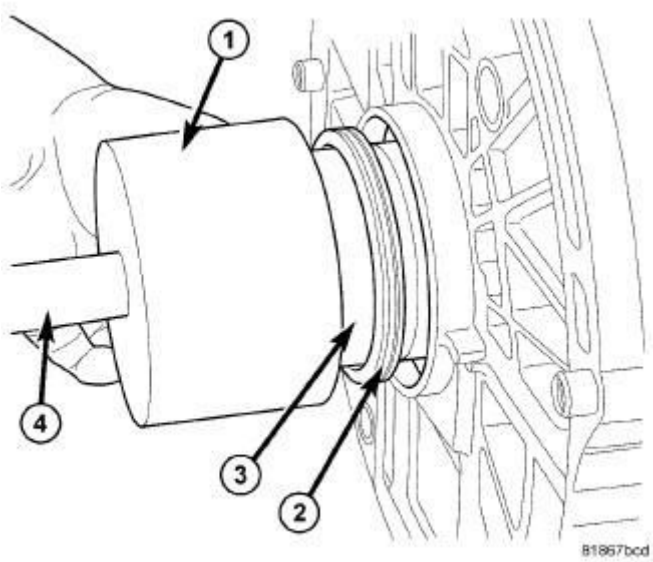

Fig. 238: Driving Seal Into Block Using Seal Driver 9706 And Driver Handle C-4171 Until Seal Driver 9706 Bottoms Out Against Block
Courtesy of CHRYSLER GROUP, LLC

CAUTION: If a burr or scratch is present on the crankshaft edge (chamfer), cleanup with 800 emery cloth to prevent seal damage during installation of new seal. If emery cloth is used, the crankshaft must be cleaned off Mopar® brake parts cleaner.

NOTE: When installing seal, lubricate Seal Guide (special tool #9509, Installer, Oil Seal) with clean engine oil.

1. Place Seal Guide (special tool #9509, Installer, Oil Seal) (3) on crankshaft.
2. Position seal (2) over guide tool. Guide tool should remain on crankshaft during installation of seal. Ensure that the lip of the seal is facing towards the crankcase during installation.
3. Drive the seal into the block using Seal Driver (special tool #9706, Installer, Crankshaft Rear Oil Seal) (1) and Driver Handle (special tool #C-4171, Driver Handle, Universal) (4) until Seal Driver (special tool #9706, Installer, Crankshaft Rear Oil Seal) bottoms out against the block.

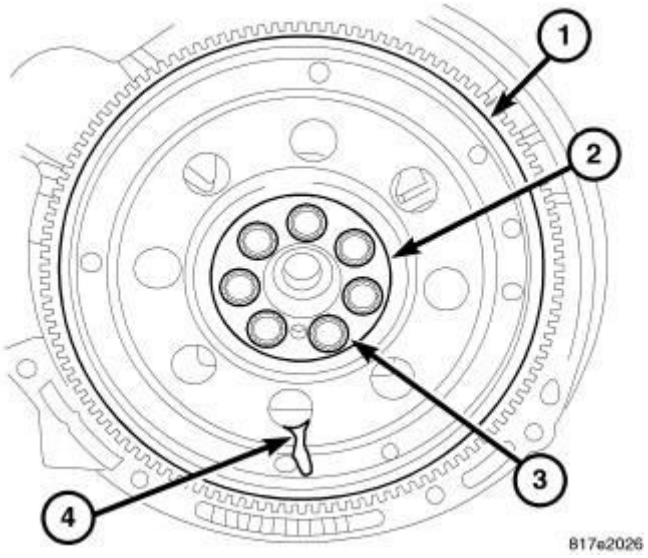

Fig. 239: Flex Plate
Courtesy of CHRYSLER GROUP, LLC

4. Install the flexplate (1) and transmission. Refer to **FLEXPLATE, INSTALLATION**.

ENGINE MOUNTING

DESCRIPTION

DESCRIPTION

The engine mounting system consists of a four-point system utilizing two load-carrying mounts and two torque controlling mounts. The load-carrying mounts are located on each frame rail. The right and left mounts are hydro-elastic mounts. The two torque controlling mounts are attached to a fore/aft member and

the front and rear of the engine.

OPERATION

OPERATION

The four-point engine mounting system minimizes the transmission of structure-borne engine noise to the passenger compartment. The load-carrying right and left mounts dampen and isolate vertical motion and vibration. The front and rear mount absorb torque reaction forces and torsional vibrations.

INSULATOR, ENGINE MOUNT, FRONT

REMOVAL

REMOVAL

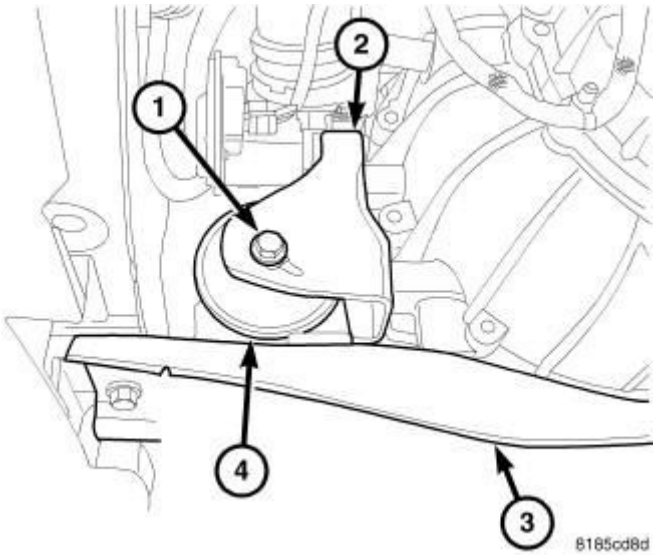

Fig. 240: Through Bolt, Fore Aft Member & Front Mount
Courtesy of CHRYSLER GROUP, LLC

1. Raise vehicle.
2. Remove fore aft member (3) to mount (4) bolts.
3. Remove mount through bolt (1).
4. Remove fore aft member (3) mounting bolts and remove.
5. Remove front mount (4).

INSTALLATION

INSTALLATION

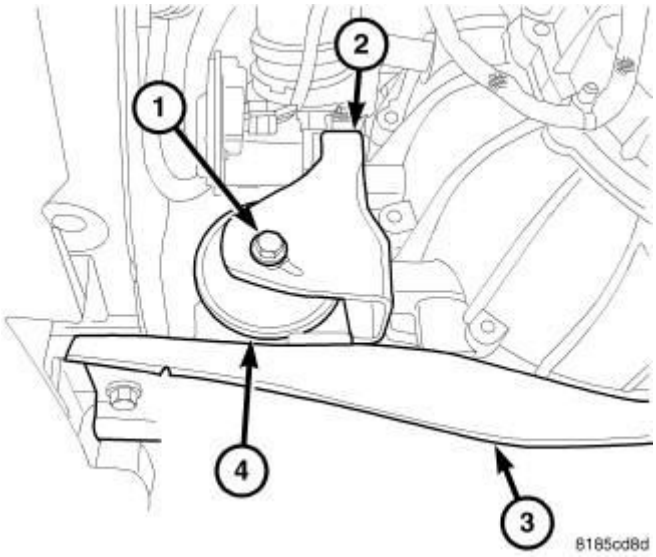

Fig. 241: Through Bolt, Fore Aft Member & Front Mount
Courtesy of CHRYSLER GROUP, LLC

1. Position mount (4) and tighten bolts to 47 N.m (35 ft. lbs.).
2. Install fore aft member (3) and tighten bolts to 100 N.m (74 ft. lbs.).
3. Install mount through bolt (1) and tighten to 47 N.m (35 ft. lbs.).
4. Lower vehicle.

INSULATOR, ENGINE MOUNT, LEFT

REMOVAL

REMOVAL

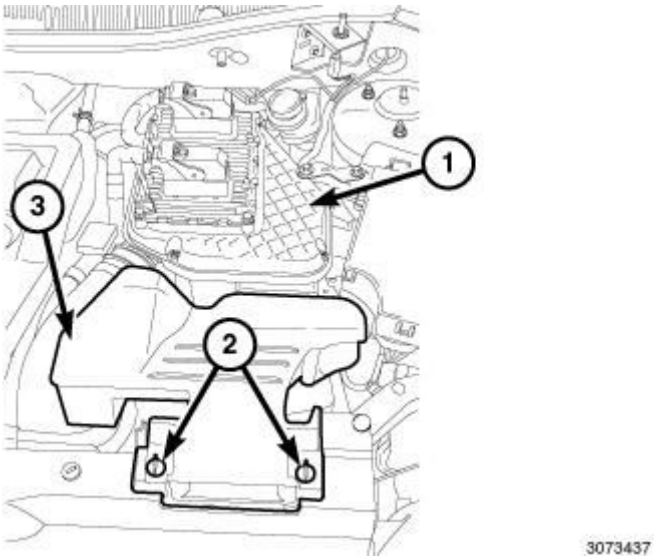

Fig. 242: Retainers, Fresh Air Inlet Duct & Air Cleaner Body
Courtesy of CHRYSLER GROUP, LLC

1. Unlock the retainers (2) and remove the fresh air inlet duct (3) from air cleaner body (1).

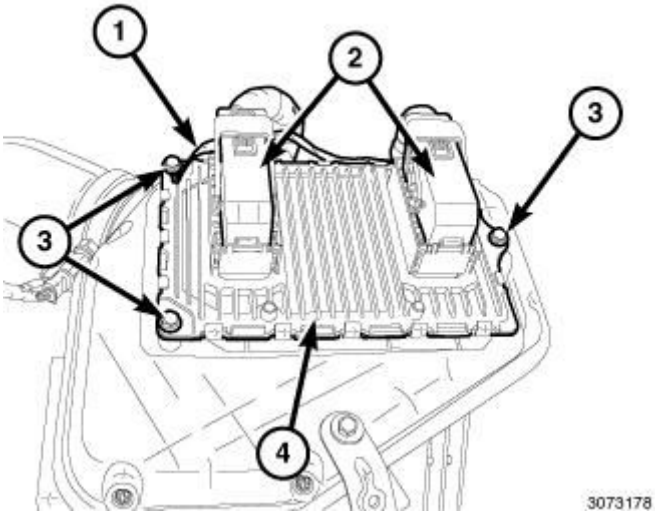

Fig. 243: Electrical Connectors, PCM, Three Mounting Bolts & Ground Wire
Courtesy of CHRYSLER GROUP, LLC

2. Disconnect and isolate the negative battery cable.
3. Unlock and disconnect the electrical connectors (2) from the PCM (4).
4. Remove the mounting bolt (3) and ground wire (1).

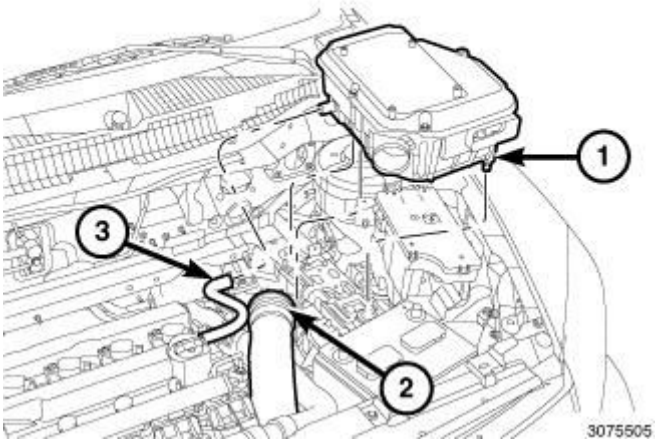

Fig. 244: Air Cleaner Body, Air Inlet Tube & Make-Up Air Hose
Courtesy of CHRYSLER GROUP, LLC

5. Remove the air inlet tube (2) from the air cleaner body (1).

6. Disconnect the make-up air hose (3) from the air cleaner body.
7. Remove the support bracket bolt from the strut tower.
8. Pull upward to disengage the pins from the rubber grommets and remove the air cleaner body (1).

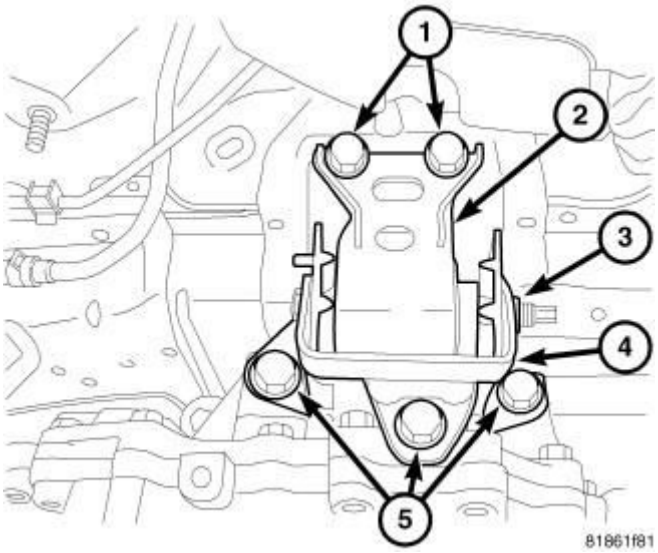

Fig. 245: Left Engine Mount Assembly
Courtesy of CHRYSLER GROUP, LLC

9. Support the transaxle with a suitable jack.
10. Remove the left mount through bolt (3).
11. Remove the left mount bracket to body frame rail fasteners (1).
12. Remove the mount (2).

INSTALLATION

INSTALLATION

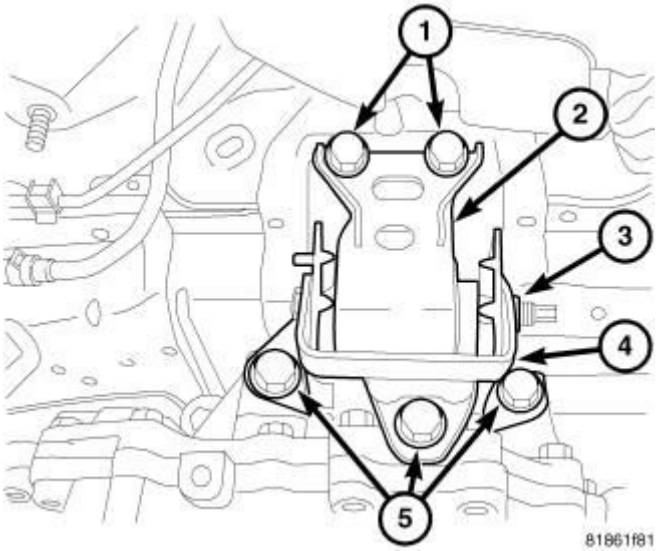

Fig. 246: Left Engine Mount Assembly
Courtesy of CHRYSLER GROUP, LLC

1. Position mount (2) in place.
2. Install left mount to frame rail bolts (1) and torque to 75 N.m (55 ft. lbs.).
3. Install mount through bolt (3) and torque to 100 N.m (74 ft.lbs.).
4. Remove jack.

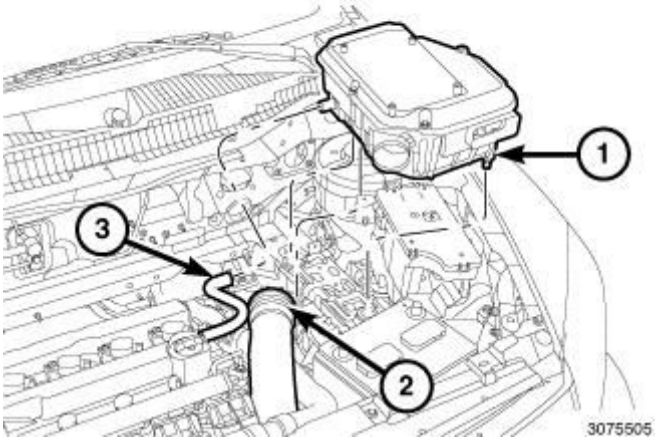

Fig. 247: Air Cleaner Body, Air Inlet Tube & Make-Up Air Hose
Courtesy of CHRYSLER GROUP, LLC

5. Push down on the air cleaner body (1) to engage the pins into the grommets.
6. Install the support bracket bolt to the strut tower and tighten to 10 N.m (89 in. lbs.).

7. Install the air inlet tube (2) to the air cleaner body (1).
8. Connect the make-up air hose (3) to the air cleaner body.

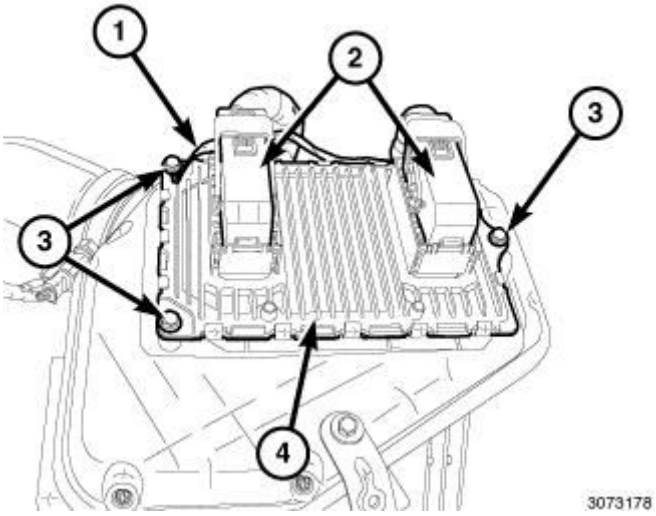

Fig. 248: Electrical Connectors, PCM, Three Mounting Bolts & Ground Wire
Courtesy of CHRYSLER GROUP, LLC

9. Install the mounting bolt (3) with ground wire (1) and tighten to 12 N.m (106 in. lbs.).
10. Connect and lock the electrical connectors (2).

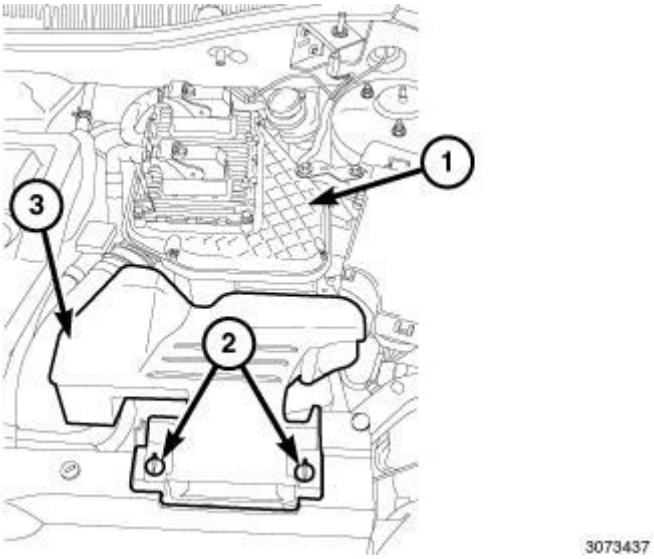

Fig. 249: Retainers, Fresh Air Inlet Duct & Air Cleaner Body
Courtesy of CHRYSLER GROUP, LLC

11. Connect the negative battery cable and tighten nut to 5 N.m (45 in. lbs.).

12. Install the fresh air inlet duct (3) on the air cleaner body (1) and lock the retainers (2).

INSULATOR, ENGINE MOUNT, REAR

REMOVAL

REMOVAL

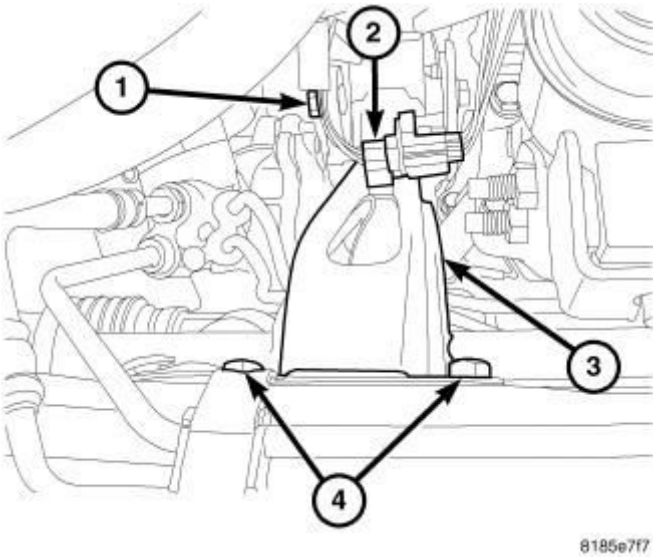

Fig. 250: Rear Mount Through Bolt, Oxygen Sensor Connector, Rear Mount & Rear Mount Retaining Bolts
Courtesy of CHRYSLER GROUP, LLC

1. Remove rear mount retaining bolts (4).
2. Remove rear mount through bolt (1).
3. Remove oxygen sensor connector (2) from mount.
4. Remove rear mount (3).

INSTALLATION

INSTALLATION

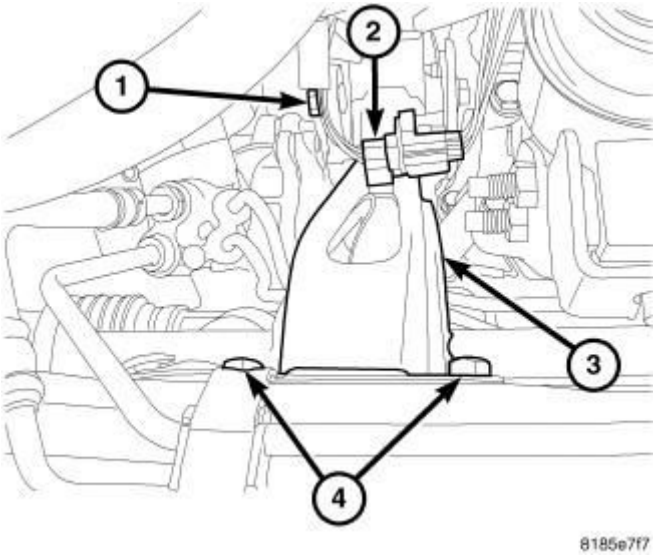

Fig. 251: Rear Mount Through Bolt, Oxygen Sensor Connector, Rear Mount & Rear Mount Retaining Bolts
Courtesy of CHRYSLER GROUP, LLC

1. Position rear mount (3).
2. Install rear mount retaining bolts (4) and tighten to 50 N.m (37 ft. lbs.).
3. Install rear mount through bolt (1) and tighten to 47 N.m (35 ft. lbs.).
4. Install oxygen sensor connector (2) retainer to mount (3).

INSULATOR, ENGINE MOUNT, RIGHT

REMOVAL

REMOVAL

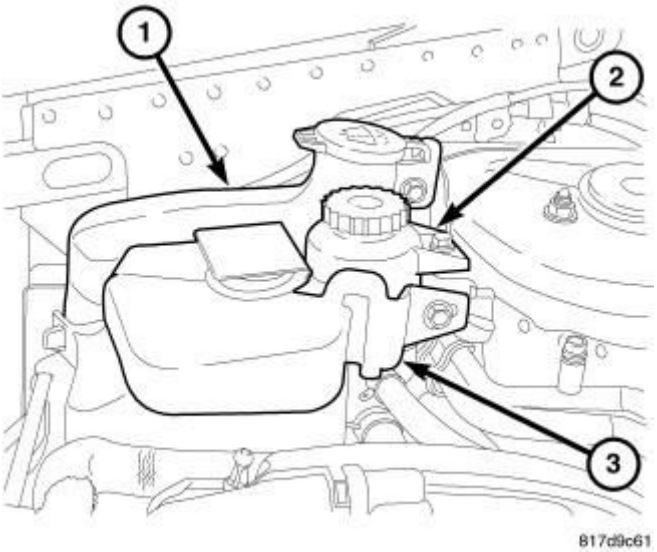

Fig. 252: Windshield Washer Reservoir, Power Steering Reservoir &

Coolant Reservoir
Courtesy of CHRYSLER GROUP, LLC

1. Remove coolant reservoir (3) and set aside.
2. Remove power steering reservoir (2) and set aside.
3. Remove windshield washer bottle (1).

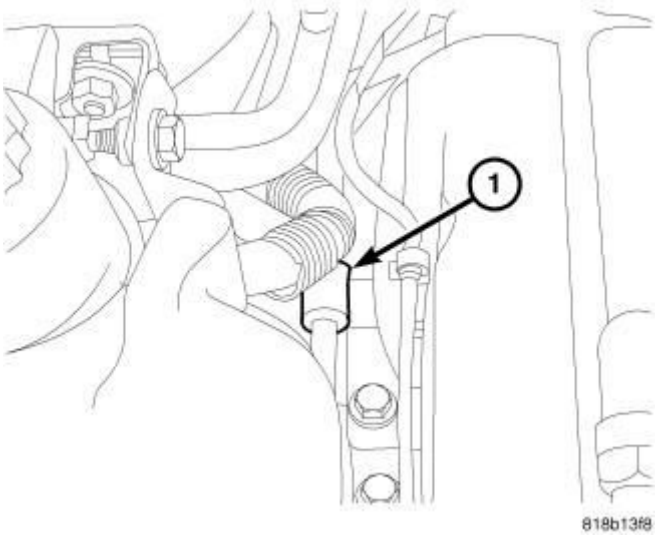

Fig. 253: Power Steering Line Support
Courtesy of CHRYSLER GROUP, LLC

4. Remove power steering line support bracket (1) from engine mount.

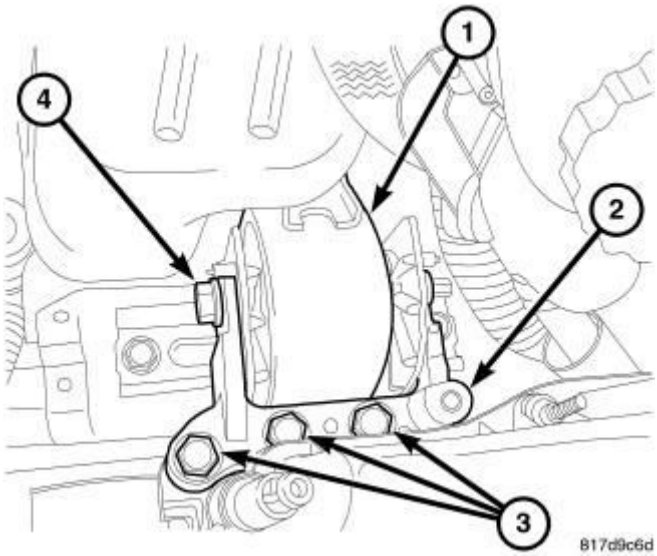

Fig. 254: Right Engine Mount Assembly
Courtesy of CHRYSLER GROUP, LLC

5. Support transaxle with a block of wood and a suitable jack.
6. Remove engine mount through bolt (4).
7. Remove engine mount bracket bolts (3).
8. Remove engine mount retaining bolts.
9. Remove engine mount.

INSTALLATION

INSTALLATION

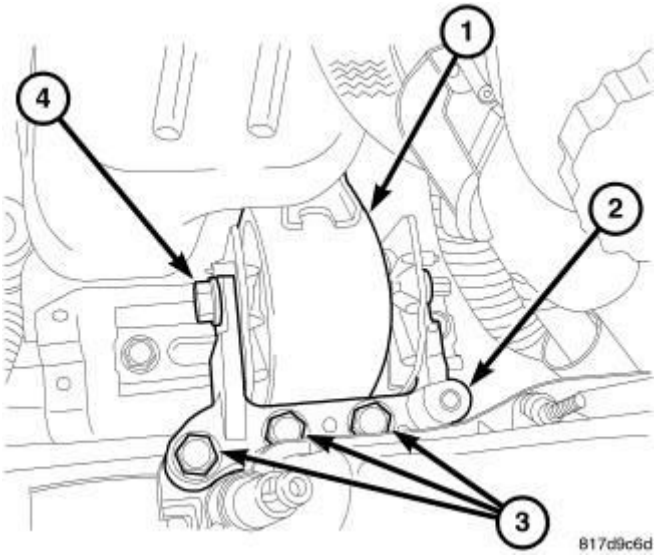

Fig. 255: Right Engine Mount Assembly
Courtesy of CHRYSLER GROUP, LLC

1. Position right engine mount (1).
2. Install engine mount retaining bolts and tighten to 75 N.m (55 ft. lbs.).
3. Install engine mount adapter (2) and tighten bolts (3) to 68 N.m (50 ft. lbs.).
4. Install engine mount through bolt (4) and tighten to 88 N.m (65 ft. lbs.).

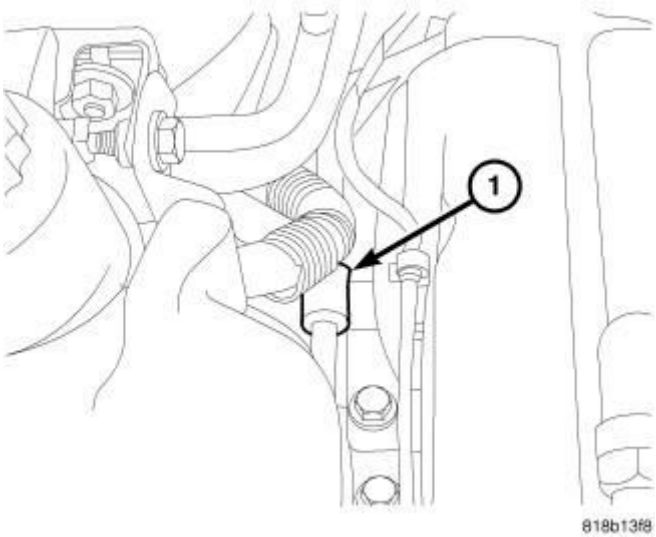

Fig. 256: Power Steering Line Support
Courtesy of CHRYSLER GROUP, LLC

5. Remove jack.
6. Install power steering line support bracket (1) at engine mount.

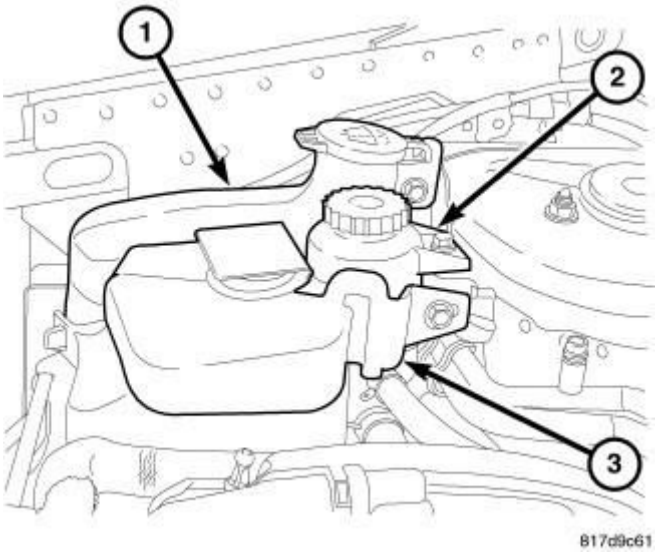

Fig. 257: Windshield Washer Reservoir, Power Steering Reservoir & Coolant Reservoir
Courtesy of CHRYSLER GROUP, LLC

7. Install windshield washer bottle (1).
8. Install power steering reservoir (2).
9. Install coolant reservoir (3).
10. Install engine cover.

LUBRICATION

DESCRIPTION

DESCRIPTION

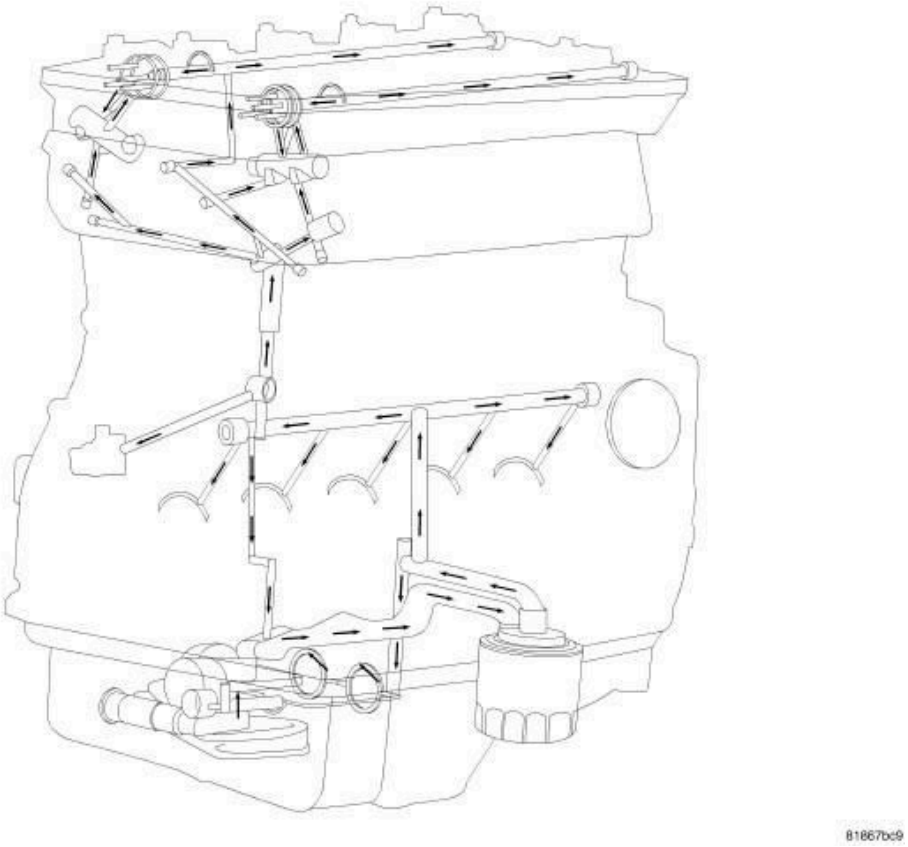

Fig. 258: Oil Flow Diagram
Courtesy of CHRYSLER GROUP, LLC

The lubrication system is a full-flow filtration, pressure feed type. The balance shaft module (BSM) is mounted below the ladder frame and chain driven by the crankshaft. The BSM consists of a non-serviceable pump, oil pressure relief valve, and a non-serviceable balance assembly.

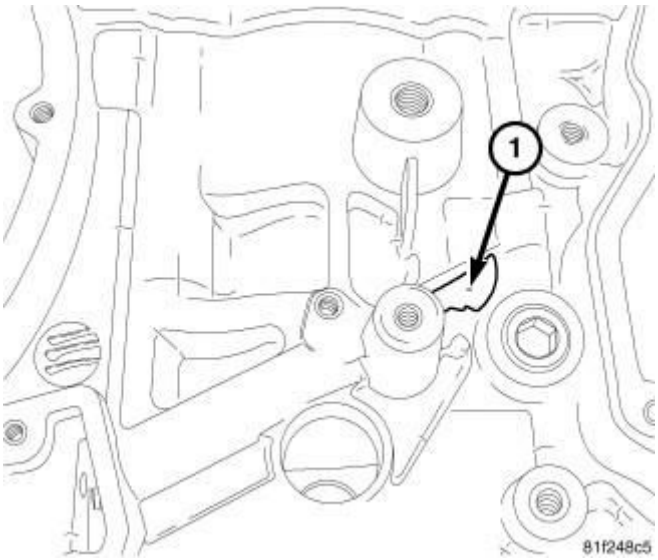

Fig. 259: Oil Hole
Courtesy of CHRYSLER GROUP, LLC

NOTE: Not all blocks have the bolt on timing chain oil squirter. Engine blocks either have a bolt-on oil squirter or a 1.0 mm hole (1) drilled into the oil gallery passage. Engine blocks with the 1.0 mm hole no longer use an oil squirter even though the threaded mounting hole may still be present.

OPERATION

OPERATION

Engine oil is drawn up through the pickup tube and is pressurized by the oil pump and routed through the full-flow filter to the main oil gallery running the length of the cylinder block. A diagonal hole in each bulkhead feeds oil to each main bearing. Drilled passages within the crankshaft route oil from main bearing journals to connecting rod journals. Balance shaft lubrication is provided through an internal oil passage at the #3 bearing location around the BSM mounting bolt. A vertical hole at the number one bulkhead routes pressurized oil through a filter screen and head gasket up to the cylinder head. The oil then divides into three passages; one to the intake cam phaser, one to the exhaust cam phaser and one to the camshafts. The passage to the camshafts divides to feed both of the hollow camshafts at the second cam journal. The rest of cam journals are feed oil through the hollow camshafts. The #1 cam journals are fed oil through the VVT oil passages. Oil passages to the phasers are directed through the OCV (oil control valves) to the #1 journals. The oil then flows through the camshafts then

to the cam phasers. Oil returning to the pan from pressurized components supplies lubrication to the valve stems, cam lobes, and tappets. Cylinder bores and wrist pins are splash lubricated from directed slots on the connecting rod thrust collars.

DIAGNOSIS AND TESTING

CHECKING ENGINE OIL PRESSURE

NOTE: Due to restricted access to the oil pressure switch, it is recommended to first check VVT oil pressure at the oil temperature sensor. Refer to DIAGNOSIS AND TESTING .

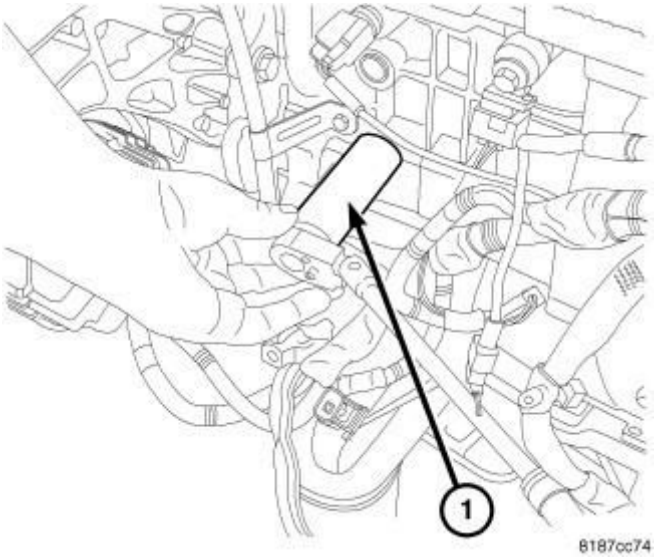

Fig. 260: Oil Sender
Courtesy of CHRYSLER GROUP, LLC

1. Remove the oil pressure switch (1). Refer to **SWITCH, OIL PRESSURE, REMOVAL**.

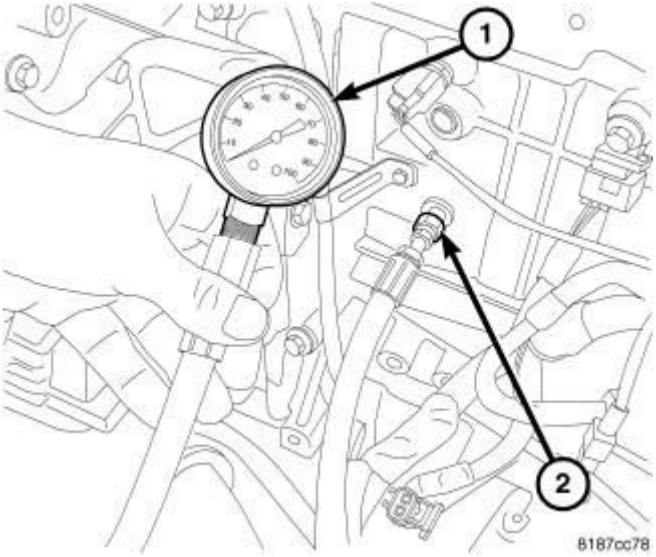

Fig. 261: Oil Pressure Gauge
Courtesy of CHRYSLER GROUP, LLC

CAUTION: Threads in block are 1/8"-28 British Standard Pipe (BSP). Do not install a National Pipe Thread (NPT) threaded adapter, this could crack the cylinder block.

2. Install an 1/8-28 BSP male to 1/8-27 female threaded adapter (2).
3. Install an oil pressure gauge (1).
4. Start engine and record oil pressure.

CAUTION: If oil pressure is 0 at idle, do not perform the 3000 RPM test

5. If oil pressure is 0 at idle, shut off engine. No oil pressure or low oil pressure at the oil pressure switch can be due to the following:
   - Pressure relief valve stuck open.
   - Clogged oil pump pick-up screen.
6. Remove the oil pan and inspect for debris. Refer to **PAN, OIL, REMOVAL**.
7. Remove the oil pressure relief valve. Refer to **VALVE, OIL PRESSURE RELIEF, REMOVAL**.
8. Inspect the oil pressure relief valve. Refer to **INSPECTION** .
9. If pressure relief valve is OK, replace the balance shaft module assembly.

Refer to **PUMP, ENGINE OIL, REMOVAL**.

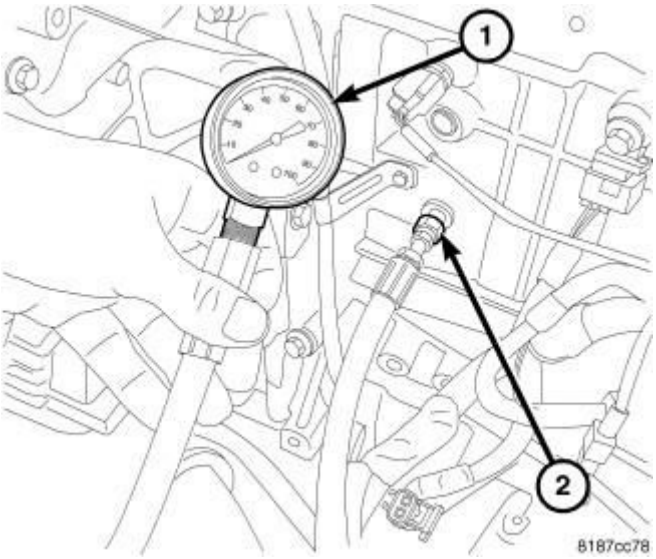

Fig. 262: Oil Pressure Gauge
Courtesy of CHRYSLER GROUP, LLC

10. After test is complete, remove test gauge (1) and fitting (2).

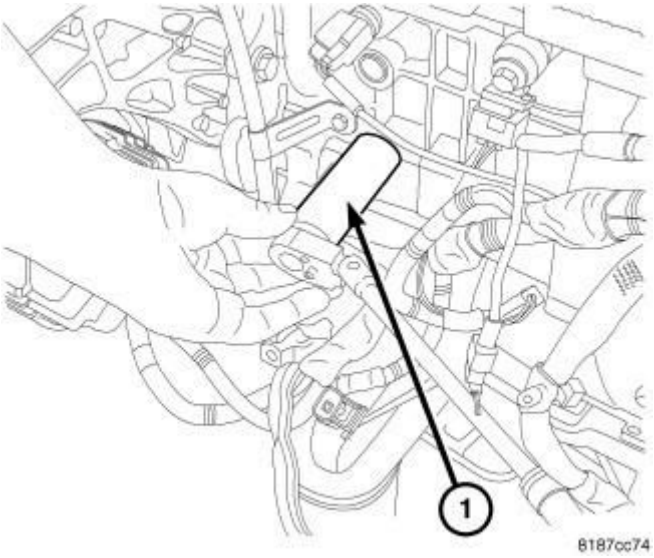

Fig. 263: Oil Sender
Courtesy of CHRYSLER GROUP, LLC

CAUTION: The oil pressure switch has tapered threads, over tightening could crack the engine block.

NOTE: If the oil pressure switch is removed, it must be replaced with a new switch.

11. Install the oil pressure switch and electrical connector. Refer to **SWITCH, OIL PRESSURE, INSTALLATION**.

CHECKING VVT OIL PRESSURE

NOTE: This test can be used to help diagnose VVT faults. Due to restricted access to the oil pressure switch, it is recommended to first perform this procedure to check VVT oil pressure at the oil temperature sensor.

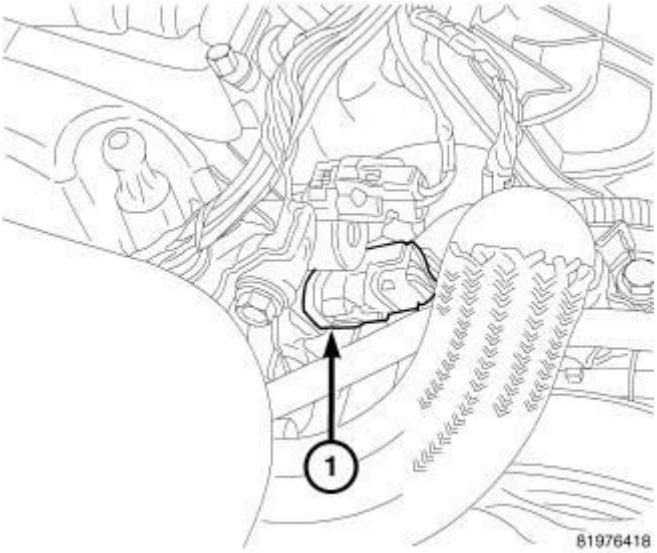

Fig. 264: Oil Temperature Sensor
Courtesy of CHRYSLER GROUP, LLC

NOTE: Anytime the oil temperature sensor is removed, it should be replaced with a new sensor.

1. Disconnect and remove the oil temperature sensor (1). Refer to **SENSOR, OIL TEMPERATURE, REMOVAL**.

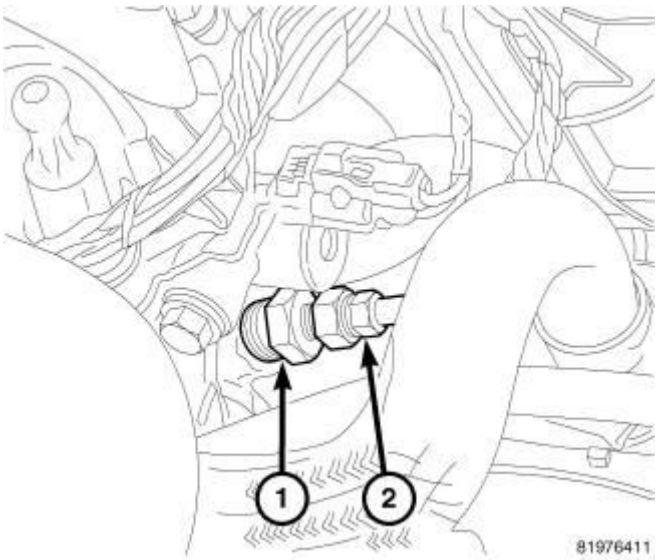

Fig. 265: Oil Pressure Adapter 9879
Courtesy of CHRYSLER GROUP, LLC

CAUTION: Threads in cylinder head are British Standard Pipe (BSP). Do not install a NPT threaded adapter, this could crack the cylinder head.

2. Install threaded adapter (special tool #9879, Adapter, Oil Pressure Test) (1).
3. Install an oil pressure gauge (2).

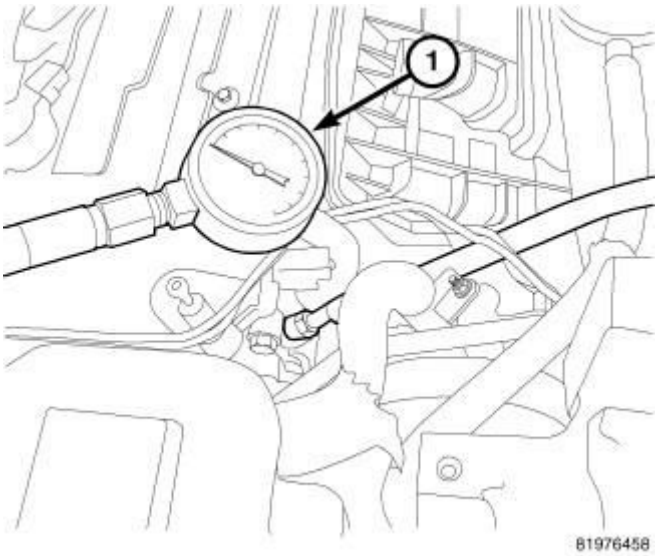

Fig. 266: Oil PSI Gauge
Courtesy of CHRYSLER GROUP, LLC

4. Start engine and record reading on oil pressure gauge (1).

CAUTION: If oil pressure is 0 at idle, do not perform the 3000 RPM test

5. If oil pressure is 0 at idle, shut off engine. No oil pressure or low oil pressure at the oil temperature sensor can be due to the following:
   - Clogged variable valve timing filter screen
   - Pressure relief valve stuck open
   - Clogged oil pump pick-up screen

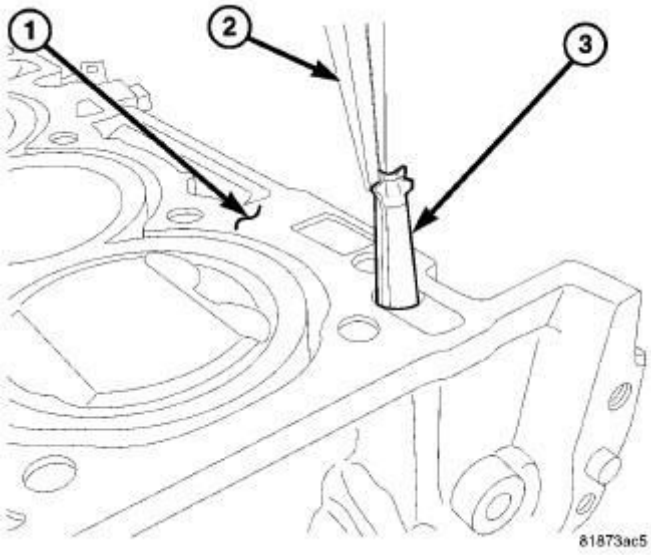

Fig. 267: Variable Valve Timing Filter Screen
Courtesy of CHRYSLER GROUP, LLC

6. To determine if the variable valve timing filter screen is clogged, check engine oil pressure at the oil pressure switch. Refer to **LUBRICATION - DIAGNOSIS AND TESTING** .
7. If oil pressure is acceptable at the oil pressure switch, but low at the oil temperature sensor, remove the cylinder head (1) and inspect the variable valve timing filter screen (3). Refer to **CYLINDER HEAD, REMOVAL**.

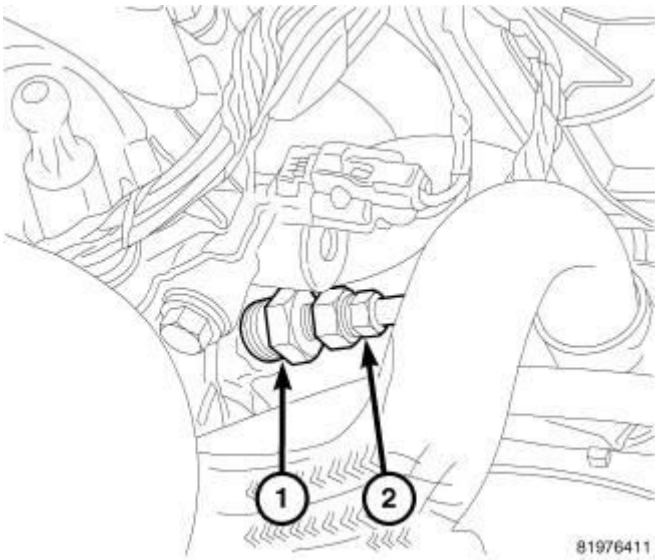

Fig. 268: Oil Pressure Adapter 9879
Courtesy of CHRYSLER GROUP, LLC

8. After test is complete, remove oil pressure gauge (2) and adapter (special tool #9879, Adapter, Oil Pressure Test) (1).

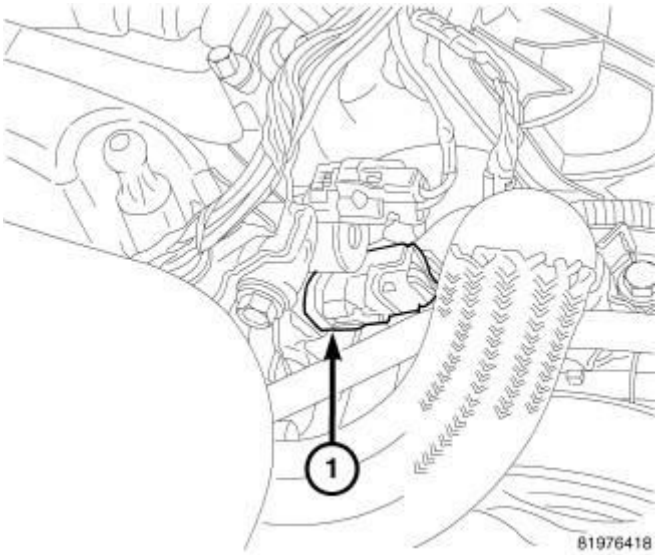

Fig. 269: Oil Temperature Sensor
Courtesy of CHRYSLER GROUP, LLC

9. Install a new oil temperature sensor (1) and connect the electrical connector. Refer to **SENSOR, OIL TEMPERATURE, INSTALLATION**.

CONTROL VALVE, OIL INTAKE

DESCRIPTION

DESCRIPTION

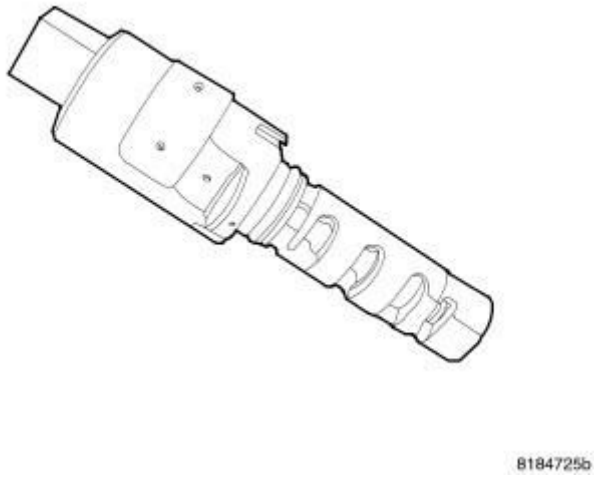

Fig. 270: Solenoid Assembly
Courtesy of CHRYSLER GROUP, LLC

Variable valve timing solenoid assembly. The solenoid receives pulse width modulation signal and the current is controlled within 0 ma to 1000 ma. The spool position is controllable at any position to control supply of oil between the advance and retard ports.

OPERATION

OPERATION

There is both an Intake and an exhaust camshaft sensor on vehicles equipped with a World Engine. The variable valve timing system used on World Engines requires the exact position of both the intake and exhaust camshaft. The GPEC1 uses camshaft sensor data along with crankshaft data to determine the actual position of the camshafts. Intake and exhaust phaser oil control valves are required on World Engine vehicles using variable valve timing. The oil valves direct oil to the Intake and exhaust phasers. Oil pressure in the phasers moves the camshafts to an advanced or retarded position.

To resolve this inherent conflict between optimum high and low speed valve timing, the GPEC1 controlled engine uses a variable valve timing system. The variable valve timing system advances and retards valve timing by rotating the position of both the intake and exhaust camshafts. With this system, the intake valve opening can range from 80 to 120 crankshaft degrees after Top Dead Center. Likewise, the exhaust valve opening can range from 85 to 120 crankshaft degrees before Top Dead Center. This degree of flexibility provides many

benefits, including: Improved Engine Performance, Increased Fuel Economy, Improved Idle Stability and Decreased Engine Emissions. In non operating condition, the camshaft stays in lockpin position of cam phases. This is 120 degrees ATDC for intake camshaft and 120 degrees BTDC for exhaust camshaft.

The variable valve timing system is electronically controlled and hydraulically operated. The GPEC1 receives information from many sensors to determine the optimum valve timing. It then pulse-width modulates oil control valves which direct oil to the cam phasers. The cam phasers use oil pressure to rotate the intake and exhaust camshafts. The rotation of the camshafts is referred to as cam phasing. Before the GPEC1 can begin commanding the camshaft phasing, several enabling conditions must be met:

- The engine oil temperature must be at least -6.6°C (20°F)
- The oil control valve coil temperature must be less than 140°C (284°F)
- Engine speed must be at least 600 to 1000 RPM to achieve minimum oil pressure.
- Battery voltage must be at least 10 volts
- And there must be no camshaft or crankshaft sensor faults, engine timing faults, or oil control valve faults

First we will examine variable valve timing enabling conditions, and then we will take a closer look at the inputs and outputs of the system:

- Accelerator pedal position sensor
- Oil temperature sensor
- Map sensor
- Intake cam sensor
- Exhaust cam sensor
- Crankshaft sensor
- GPEC1
- Exhaust phaser oil control valve
- Intake phaser oil control valve
- Inputs
- Engine control module
- Outputs

- Sensed battery voltage

A minimum oil temperature is required to enable variable valve timing operation. Oil temperature and viscosity also have an impact on the operation of variable valve timing after start-up. Oil is used to control the movement of the camshafts. An incorrect oil viscosity could adversely affect the operation of the system or even render the system inoperative. It may even set a fault code.

The accelerator pedal position sensor indicates how far the driver wants to open the throttle plate. The GPEC1 calculates an initial camshaft set point based on whether the accelerator pedal is at part throttle or wide open throttle.

The MAP sensor provides information regarding engine load.

Sensed battery voltage provides information regarding current system voltage. Sensed battery voltage must be at least 10 volts in order for the oil control valves to function properly.

This information allows the GPEC1 to adjust camshaft timing to achieve the best fuel economy, the best engine performance or a combination of both. The hall-effect crankshaft sensor provides RPM information and determines when the number one piston is approaching Top Dead Center. The sensor generates a signal as the tone wheel, attached to the crankshaft, rotates. The tone wheel has 60 teeth minus two. When the gap, created by the missing teeth passes by the sensor, a signal is produced that indicates the number one piston is at Top Dead Center. The GPEC1 uses crankshaft sensor data along with camshaft data to determine the actual position of the camshaft. There are two hall-effect camshaft sensors on engines equipped with variable valve timing. The GPEC1 uses camshaft sensor data along with crankshaft data to determine the actual position of the camshaft.

The GPEC1 individually controls each valve. It sends a pulse width modulated signal to move a spool within the outer casing of the valve. Depending upon spool movement, oil is directed through the passages to advance or retard cam timing. The oil control valve also has a special cleaning strategy at key-on. The cleaning strategy is known as "debris crush mode". At key-on the GPEC1 cycles the oil control valve on and off several (5) times to crush any debris in the oil control valve and prevent the spool valve from sticking. In non operating condition, the camshaft stays in lockpin position of cam phases. This is 120

degrees ATDC for intake camshaft and 120 degrees BTDC for exhaust camshaft.

There are two oil control valves. One valve directs oil to the intake cam phaser, the other valve directs oil to the exhaust cam phaser. The valves are designed and function in the same manner. The outer casing of each oil valve has five oil passages. A passage for pressurized supply oil. A passage to the advance chamber of the cam phaser. A passage to the retard chamber of the cam phaser. A passage for oil return from the advance chamber of the cam phaser. A passage for oil return from the retard chamber of the cam phaser. Oil flows through the passages and applies pressure to the cam phasers to change cam timing.

There are two cam phasers. One phaser controls the position of the intake camshaft. The other phaser controls the position of the exhaust camshaft. The phasers consist of a sprocket, a rotor vane, and a housing or stator. The exhaust cam phaser also consists of a front bushing and spring. We will discuss the purpose and function of the bushing and spring later. The housing is bolted and permanently fixed to the camshaft sprocket, while the rotor vane is bolted and permanently fixed to the camshaft. With this design, any movement of the rotor vane in relation to the housing will also move the camshaft. The phaser and sprocket are serviced as an assembly.

Camshaft and crankshaft sensors provide feedback to the GPEC1 regarding the actual position of the camshafts. The GPEC1 then compares the actual camshaft positioning with desired positioning. If the desired positioning is not achieved within a specified time, during the second key cycle a trouble code is set.

There are six new diagnostic trouble codes available to help you determine if the control circuit from the GPEC1 to the oil control valve is intact and operating properly. The codes identify whether the control circuit is open, shorted to ground, or shorted to power. Three trouble codes are related to intake camshaft positioning, the other three codes are specific to exhaust camshaft positioning.

The oil control valve contains both electrical and mechanical components. It is electrically controlled by the GPEC1. The electrical current that energizes the coil results in mechanical motion of the spool valve. It is possible to verify both the electrical and mechanical operation of the valve. The oil control valve consists of a coil that is energized to move a spool within an outer casing. The condition of the coil can be tested with a Digital Volt Ohmmeter or DVOM. With the DVOM set to measure resistance, check the coil for an open, a short to

ground, or excessive resistance. The correct resistance value of the coil is between 6 and 8 ohms. The mechanical operation of the oil control valve can be tested using actuator commands on the scan tool. Remove the oil control valve, then navigate to the actuator menu and select the oil control valve. Use commands to activate the valve and watch as the spool valve moves back and forth inside the casing.

Because the cam phasers are hydraulically operated by engine oil, the condition of the oil is very important. The oil must be of the correct viscosity, not obstructed by debris, to maintain correct pressure. Maintaining the correct oil viscosity is critical to the operation of the variable valve timing system. The wrong oil viscosity may cause the variable valve timing to malfunction and trouble codes to set. The correct oil viscosity for this system is 5W20. Oil must be clean, unobstructed and free to flow through the variable valve timing system. Oil could become obstructed in oil passages located in the cylinder head, cylinder block, or even in the oil screen. In the event oil flow is obstructed, further diagnosis or disassembly may be required to pin point the source of the obstruction. The variable valve timing system relies on oil pressure to advance or retard the position of the camshaft. Insufficient oil pressure will adversely affect the operation of variable valve timing. The minimum oil pressure for this system is 15 psi at normal operating temperature.

Though not directly used to change camshaft positioning, the oil screen is an important component of the variable valve timing system. It helps to remove debris going to the variable valve timing components. The oil screen is located in the cylinder block, immediately below the cylinder head. Oil must pass through the oil screen before entering the oil control valve. The cylinder head must be removed to service the oil screen. The intention is not to service the oil screen during vehicle life.

How the cam phaser works. The cam phaser assembly has eight separate chambers; four advance chambers and four retard chambers. When camshaft advance is requested, oil enters all four advance chambers and exerts force on the rotor vane. Because the rotor vane is bolted to the camshaft, the entire camshaft profile moves along with the rotor vane. At the same time, oil is forced out of the retard chambers. When camshaft retard is requested oil enters the retard chambers to move the camshaft in the opposite direction. There is a lock pin on one side of the rotor vane that fits inside a recessed area in the housing. The lock pin ensures that the default position of the intake cam phaser is 120 crankshaft

degrees full retard and the default position of the exhaust cam phaser is 120 crankshaft degrees full advance. When the engine is turned off, rotational force and inertia move the intake camshaft and rotor vane toward the retard position. The exhaust cam phaser includes a spring and bushing to work against the rotational force of the engine, allowing the exhaust cam phaser to lock in the fully advanced position. Under most conditions the cam phasers are returned to lock pin position when the engine is turned off. In the unique condition of an engine stall, which abruptly shuts off the engine, the cam phasers may not return to the lock pin position. In this case, the phasers will return to the lock pin position at the next start-up. Lock pin position is the most ideal cam timing for idle stability. When engine RPM exceeds approximately 600 to 1000 RPM, oil pressure unlocks the pins and variable valve timing resumes. Once enabling conditions are met, the GPEC1 uses input from sensors to calculate optimum valve timing.

There are four preprogrammed modes from which the GPEC1 bases initial valve timing.

- Starting
- Idle or Part throttle
- Wide open throttle
- Limp-in or Default

From each preprogrammed mode, the GPEC1 adjusts valve timing based on operating conditions.

GPEC1 has calculated optimum intake valve timing of 112 degrees after Top Dead Center and optimum exhaust valve timing of 97 degrees before Top Dead Center. The GPEC1 pulse width modulates the oil control valves to advance or retard the camshaft to their desired location. The spool valve inside the intake oil control valve is energized and moves to allow pressurized oil into the advance chambers of the intake cam phaser. At the same time, the spool valve inside the exhaust oil control valve is energized and moves to allow pressurized oil into the retard chambers of the exhaust cam phaser. Oil enters the advance chambers of the intake phaser and the retard chambers of the exhaust phaser. Oil pressure releases the lock pin from its locked position and pushes against the rotor vane. Both the rotor vanes are moved, advancing the intake camshaft and retarding the exhaust camshaft.

REMOVAL

FRONT SOLENOID 1/1

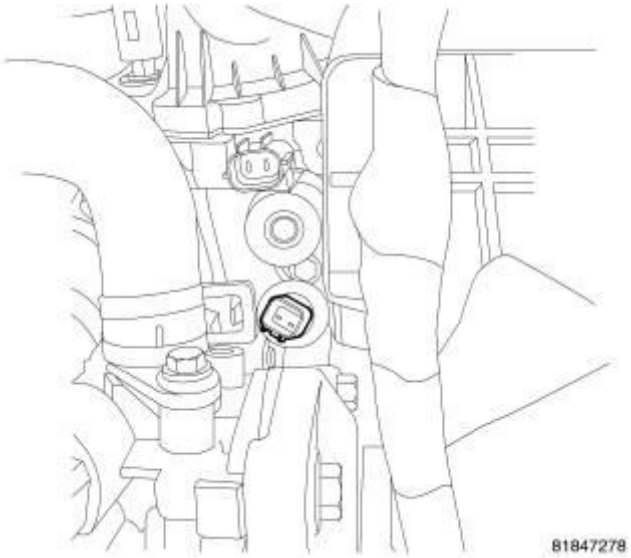

Fig. 271: Oil Pressure Sensor
Courtesy of CHRYSLER GROUP, LLC

1. Disconnect negative battery cable.
2. Remove engine cover.
3. Rotate hose clamp out of way.
4. Disconnect oil pressure sensor electrical connector.
5. Remove oil pressure sensor.
6. Disconnect variable valve timing solenoid electrical connector.

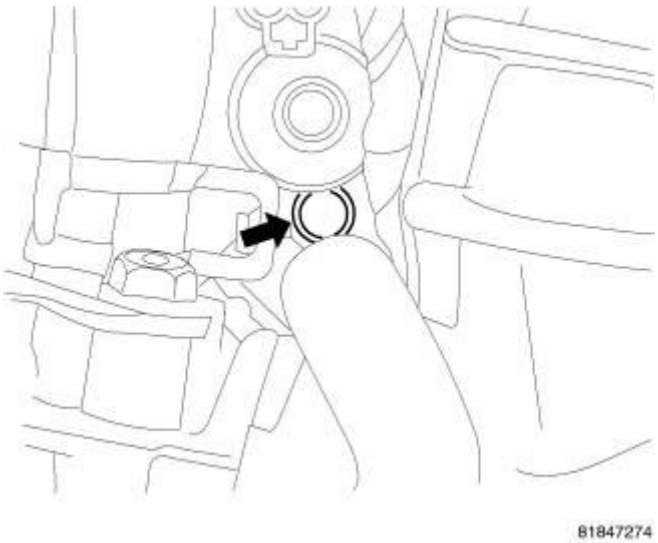

Fig. 272: Solenoid Mounting Bolt

Courtesy of CHRYSLER GROUP, LLC

7. Remove variable valve timing solenoid mounting bolt.

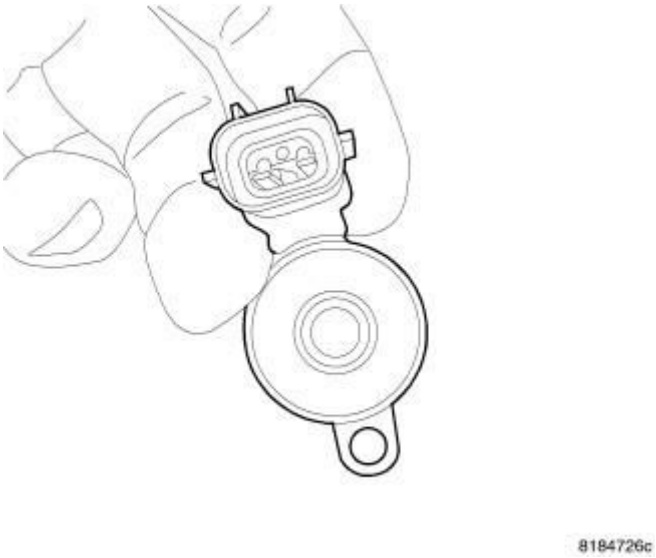

Fig. 273: Solenoid Mounting Tab 1/1
Courtesy of CHRYSLER GROUP, LLC

8. Pull solenoid straight out of cylinder head.

REAR SOLENOID 1/2

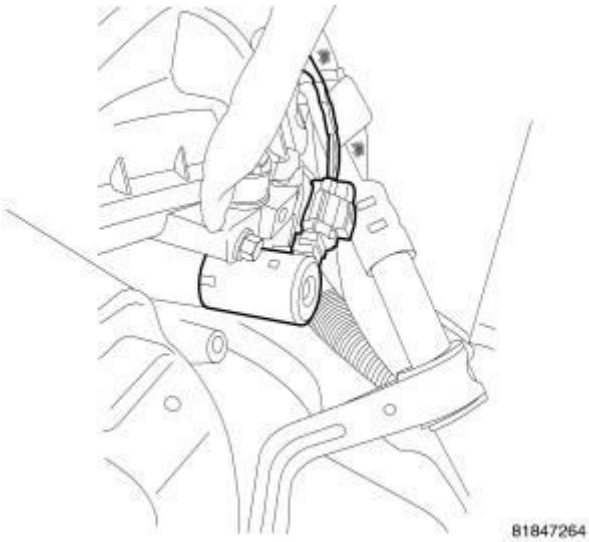

Fig. 274: Solenoid Location 1/2
Courtesy of CHRYSLER GROUP, LLC

1. Disconnect negative battery cable.
2. Remove engine cover.

3. Disconnect variable valve timing solenoid electrical connector.
4. Remove variable valve timing solenoid mounting bolt.

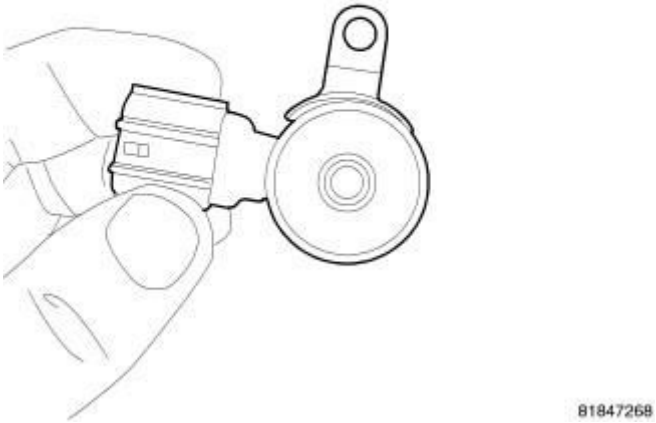

Fig. 275: Solenoid Mounting Tab 1/2
Courtesy of CHRYSLER GROUP, LLC

5. Pull solenoid straight out of cylinder head.

INSTALLATION

FRONT SOLENOID 1/1

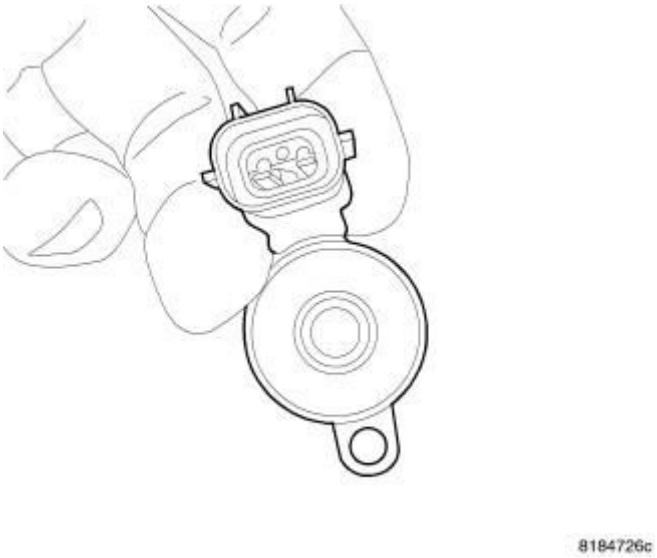

Fig. 276: Solenoid Mounting Tab 1/1
Courtesy of CHRYSLER GROUP, LLC

1. Solenoid for front location 1/1. Note mounting tab location is different

between front and rear solenoids.

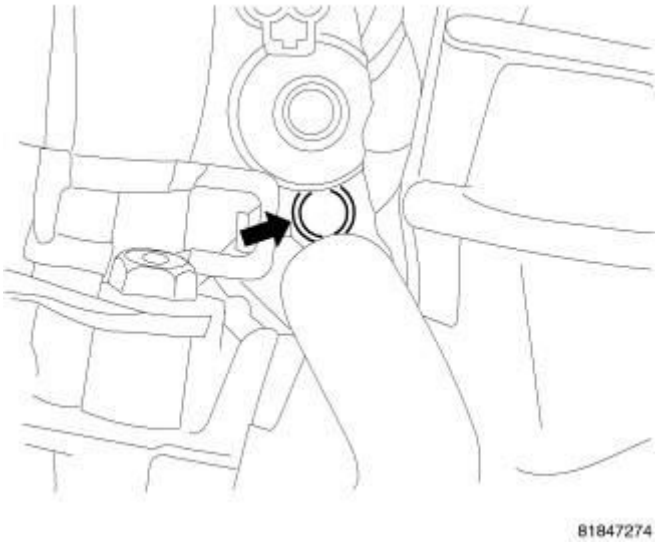

Fig. 277: Solenoid Mounting Bolt
Courtesy of CHRYSLER GROUP, LLC

2. Install solenoid into cylinder head.
3. Install mounting bolt and tighten to 12 N.m (9 ft. lbs.).

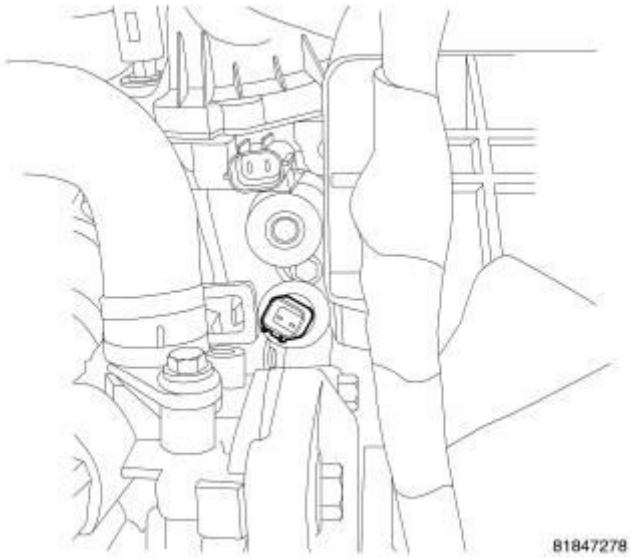

Fig. 278: Oil Pressure Sensor
Courtesy of CHRYSLER GROUP, LLC

4. Install oil pressure sensor.
5. Connect electrical connector to oil pressure sensor.
6. Connect electrical connector to Variable valve timing solenoid.
7. Connect negative battery cable.

8. Install engine cover.

REAR SOLENOID 1/2

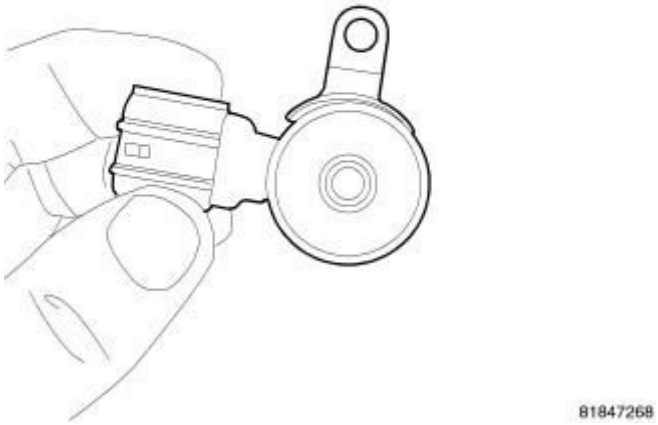

Fig. 279: Solenoid Mounting Tab 1/2
Courtesy of CHRYSLER GROUP, LLC

1. Rear variable valve timing solenoid. Note mounting tab location is different between front and rear solenoids.
2. Install solenoid into cylinder head.
3. Install mounting bolt and tighten to 12 N.m (9 ft. lbs.).
4. Connect electrical connector to Variable valve timing solenoid.

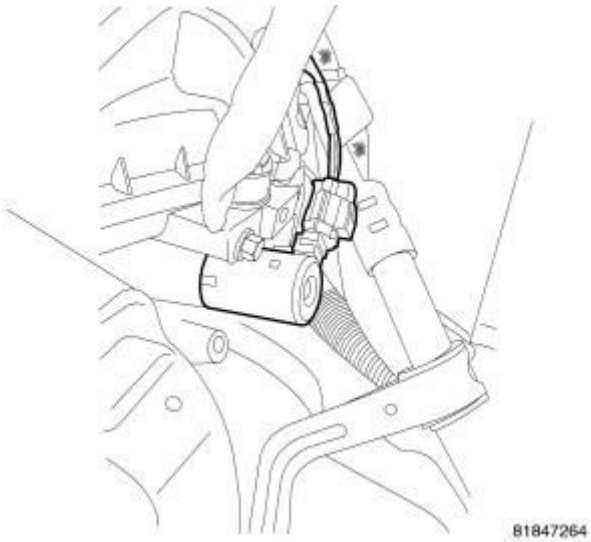

Fig. 280: Solenoid Location 1/2
Courtesy of CHRYSLER GROUP, LLC

5. Connect negative battery cable.
6. Install engine cover.

COOLER, OIL

DESCRIPTION

DESCRIPTION

An engine oil cooler is used on some engine packages. The cooler is a coolant-to-oil type and mounted between the oil filter and oil filter adapter.

REMOVAL

REMOVAL

NOTE: The oil cooler can not be cleaned out. In the event that the engine requires rebuilding or replacement, the oil cooler should be replaced.

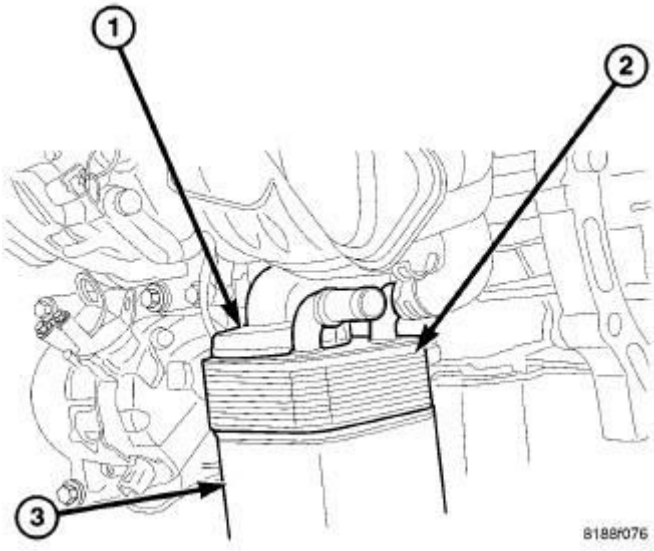

Fig. 281: Oil Cooler
Courtesy of CHRYSLER GROUP, LLC

1. Raise vehicle on hoist.
2. Drain cooling system. Refer to **STANDARD PROCEDURE** .
3. Disconnect oil cooler coolant hoses.
4. Remove oil filter (3).

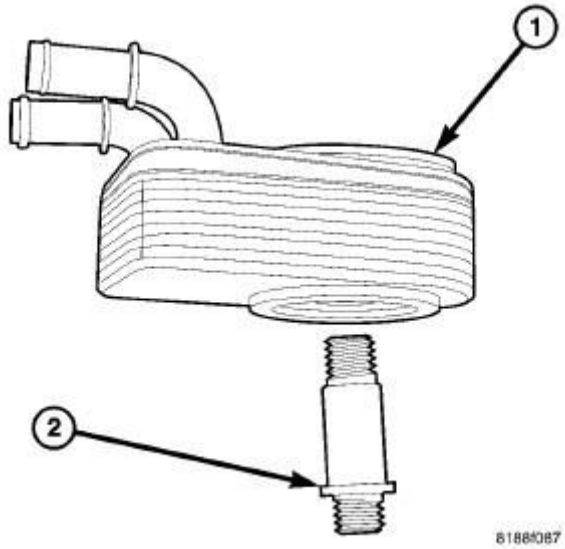

Fig. 282: Oil Cooler & Oil Cooler Connector Bolt
Courtesy of CHRYSLER GROUP, LLC

5. Remove oil cooler connector bolt (2).
6. Remove oil cooler (1).

INSTALLATION

INSTALLATION

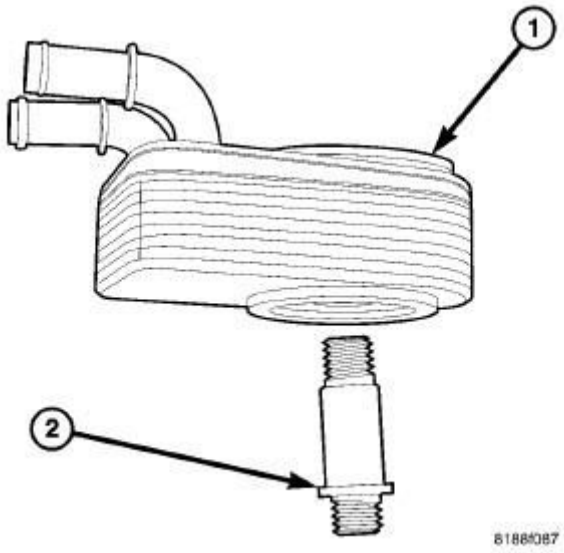

Fig. 283: Oil Cooler & Oil Cooler Connector Bolt
Courtesy of CHRYSLER GROUP, LLC

1. Replace oil cooler seal (1).

2. Lubricate seal and position oil cooler to oil filter adapter, aligning notch to tab.
3. Install oil cooler connector bolt (2). Tighten connector bolt to 49 N.m (36 ft. lbs.).

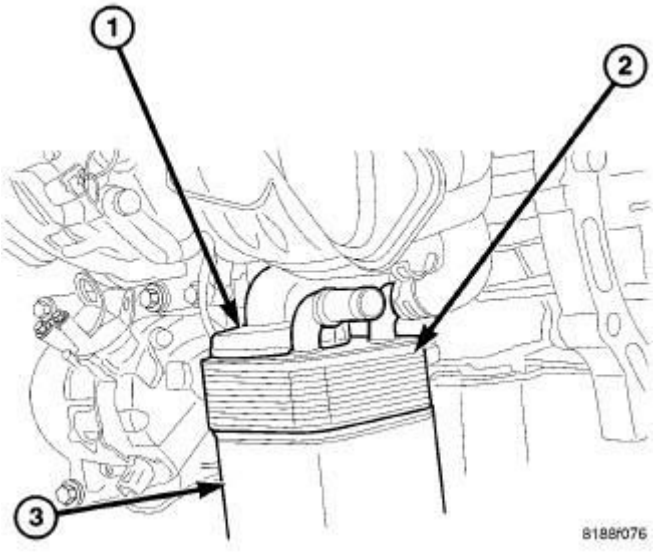

Fig. 284: Oil Cooler
Courtesy of CHRYSLER GROUP, LLC

4. Install oil filter (3).
5. Connect oil cooler coolant hose.
6. Lower vehicle.
7. Fill cooling system. Refer to **STANDARD PROCEDURE** .

FILTER, ENGINE OIL

REMOVAL

REMOVAL

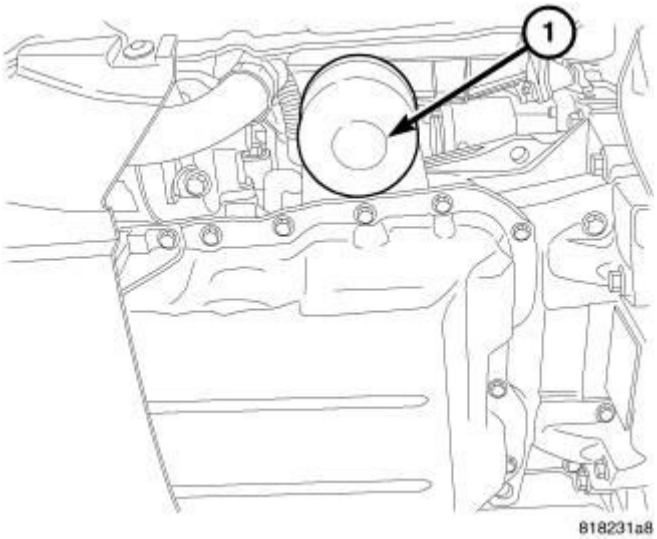

Fig. 285: Oil Filter
Courtesy of CHRYSLER GROUP, LLC

CAUTION: When servicing the oil filter, avoid deforming the filter can by installing the remove/install tool band strap against the can to base lock seam. The lock seam joining the can to the base is reinforced by the base plate.

1. Using a suitable filter wrench, turn oil filter (1) counterclockwise to remove.

INSTALLATION

INSTALLATION

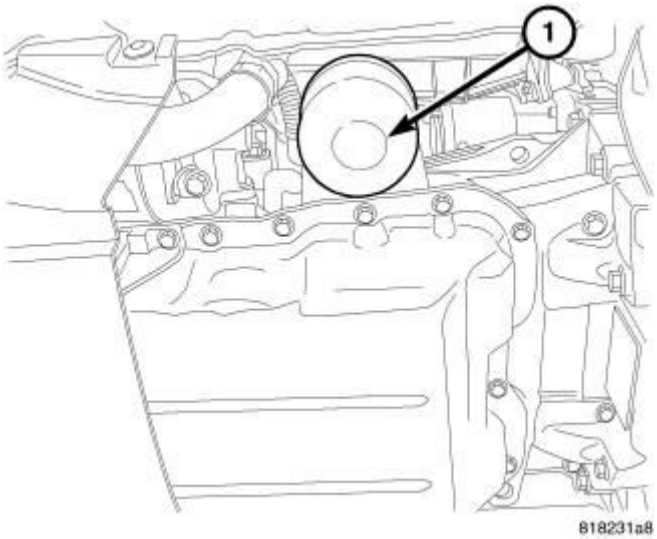

Fig. 286: Oil Filter

Courtesy of CHRYSLER GROUP, LLC

1. Clean and check filter mounting surface. The surface must be smooth, flat and free of debris or pieces of gasket.
2. Lubricate new oil filter gasket.
3. Screw oil filter (1) on until the gasket contacts base. Tighten to 14 N.m (124 in. lbs.).

OIL

STANDARD PROCEDURE

ENGINE OIL AND FILTER CHANGE

WARNING: **New or used engine oil can be irritating to the skin. Avoid prolonged or repeated skin contact with engine oil. Contaminants in used engine oil, caused by internal combustion, can be hazardous to your health. Thoroughly wash exposed skin with soap and water. Do not wash skin with gasoline, diesel fuel, thinner, or solvents, health problems can result. Do not pollute, dispose of used engine oil properly. Contact your dealer or government agency for location of collection center in your area.**

Change engine oil at mileage and time intervals described in the Maintenance Schedule. Refer to **MAINTENANCE SCHEDULES, DESCRIPTION** .

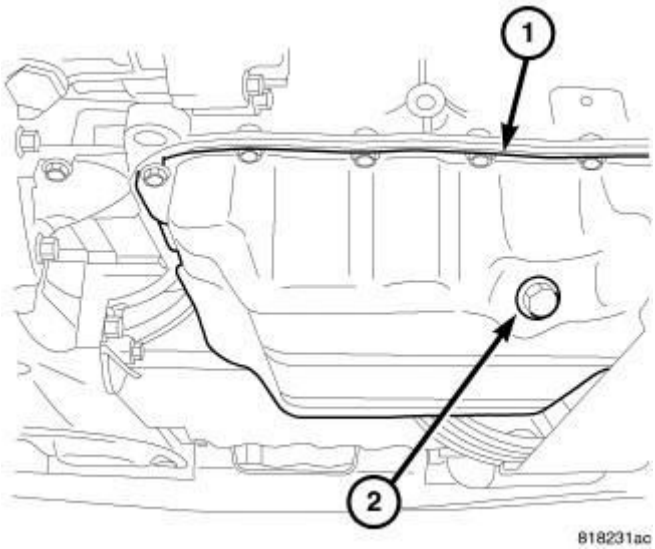

Fig. 287: Oil Drain Plug
Courtesy of CHRYSLER GROUP, LLC

1. Run engine until achieving normal operating temperature.
2. Position the vehicle on a level surface and turn engine off.
3. Remove oil fill cap.
4. Raise vehicle on hoist.
5. Place a suitable oil collecting container under oil pan drain plug (2).
6. Remove oil pan drain plug (2) or and allow oil to drain into collecting container. Inspect drain plug threads for stretching or other damage. Replace drain plug and gasket if damaged.

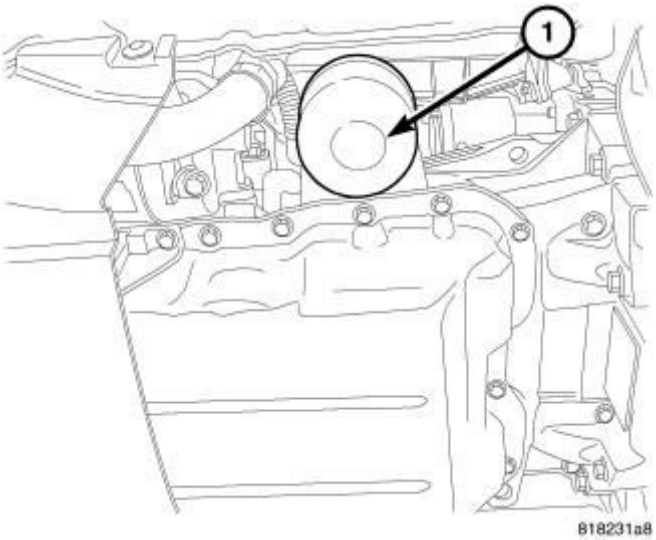

Fig. 288: Oil Filter
Courtesy of CHRYSLER GROUP, LLC

7. Remove oil filter (1). Refer to **FILTER, ENGINE OIL, REMOVAL**.

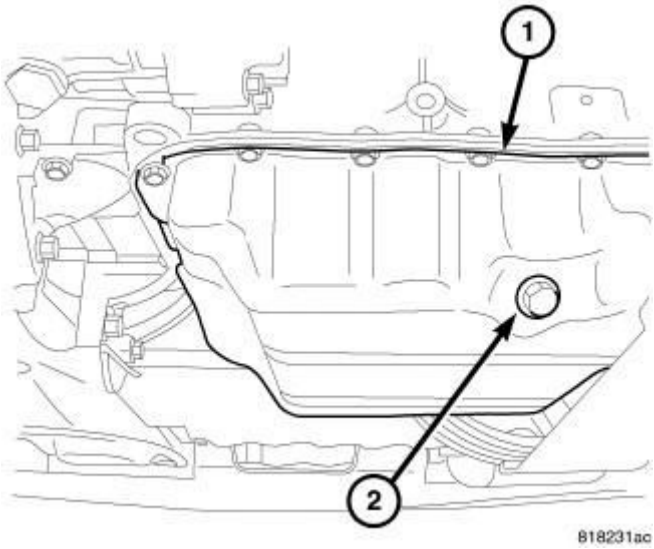

Fig. 289: Oil Drain Plug
Courtesy of CHRYSLER GROUP, LLC

8. Install oil pan drain plug (2) and tighten drain plug to 40 N.m (30 ft. lbs.).

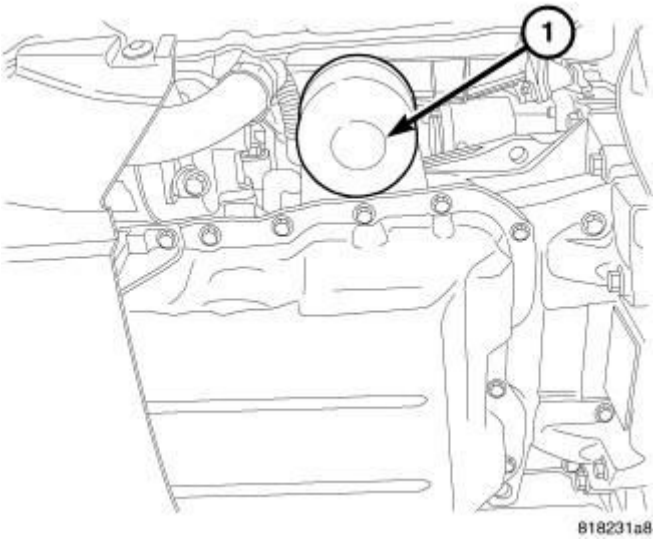

Fig. 290: Oil Filter
Courtesy of CHRYSLER GROUP, LLC

9. Install new oil filter (1). Refer to **FILTER, ENGINE OIL, INSTALLATION**.
10. Lower vehicle and fill crankcase with specified type and amount of engine oil. Refer to **CAPACITIES AND RECOMMENDED FLUIDS, DESCRIPTION** and **CAPACITIES AND RECOMMENDED FLUIDS,**

SPECIFICATIONS .

11. Install oil fill cap.
12. Start engine and inspect for leaks.
13. Stop engine and inspect oil level.

OIL FILTER SPECIFICATION

All engines are equipped with a high quality full-flow, disposable type oil filter. Replace oil filter with a Mopar® or the equivalent.

USED ENGINE OIL DISPOSAL

Care should be exercised when disposing used engine oil after it has been drained from a vehicle engine. Refer to the WARNING listed above under **ENGINE OIL AND FILTER CHANGE**.

PAN, OIL

REMOVAL

REMOVAL

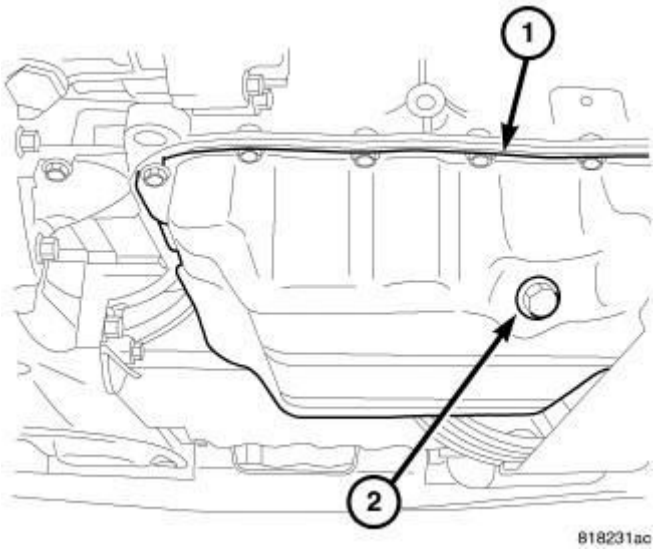

Fig. 291: Oil Drain Plug
Courtesy of CHRYSLER GROUP, LLC

1. Raise vehicle on hoist.
2. Remove oil drain plug (2) and drain the engine oil.
3. Remove accessory drive belt splash shield.

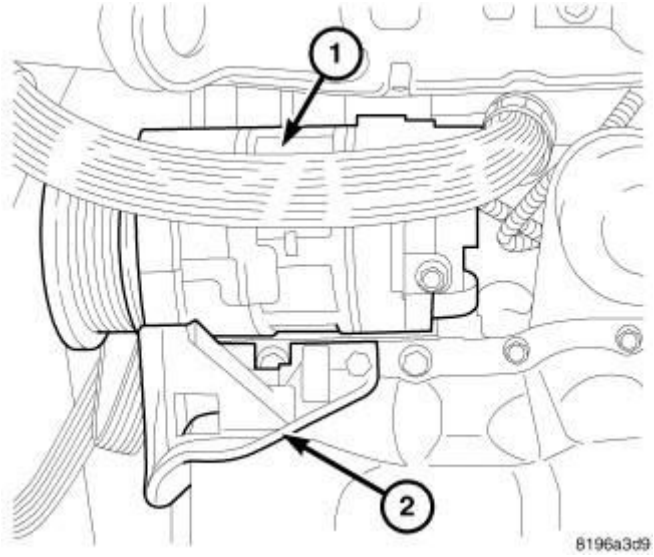

Fig. 292: A/C Compressor
Courtesy of CHRYSLER GROUP, LLC

4. Remove lower A/C compressor mounting bolt (if equipped).
5. Remove A/C mounting bracket (2).

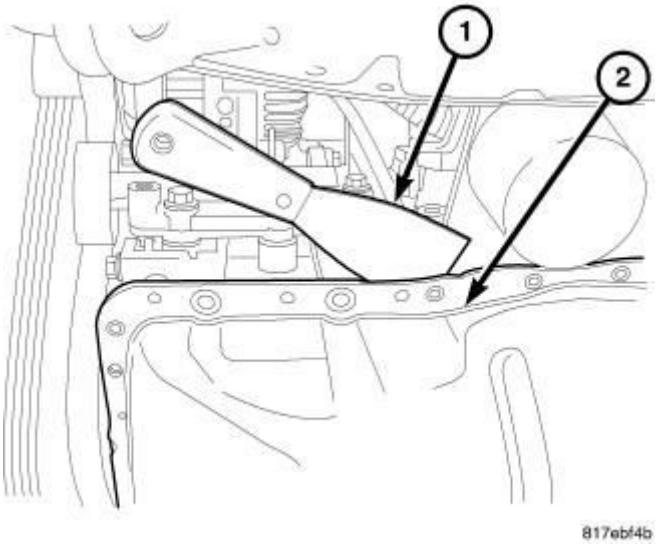

Fig. 293: Oil Pan Removal
Courtesy of CHRYSLER GROUP, LLC

NOTE: Do not use pry points in block to remove oil pan.

6. Remove oil pan retaining bolts.
7. Using a putty knife (1), loosen seal around oil pan (2).
8. Remove oil pan (2).

INSTALLATION

INSTALLATION

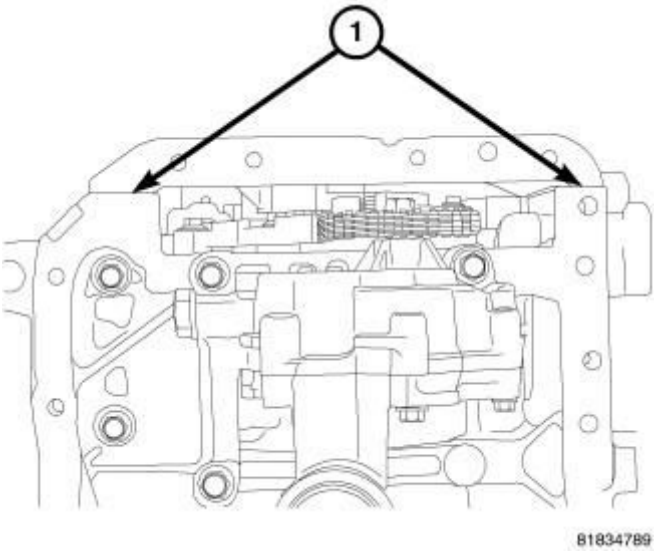

Fig. 294: Sealer Location
Courtesy of CHRYSLER GROUP, LLC

NOTE: Oil pan sealing surfaces must be free of grease or oil.

NOTE: Parts must be assembled within 10 minutes of applying RTV.

1. Apply Mopar® Engine RTV GEN II at the front cover to engine block parting lines (1).

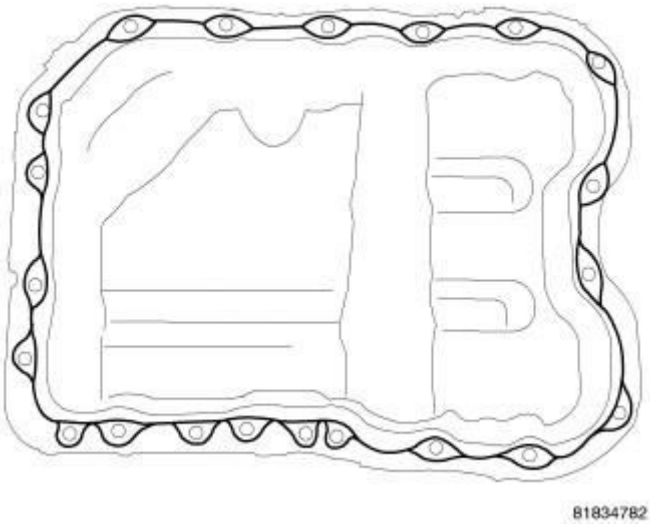

Fig. 295: Sealing Oil Pan

Courtesy of CHRYSLER GROUP, LLC

2. Apply a 2 mm bead of Mopar® Engine RTV GEN II around the oil pan as shown in illustration.
3. Position oil pan and install bolts. Tighten bolts to 12 N.m (105 in. lbs.).

NOTE: The 2 long bolts must be tightened to 22 N.m (195 in.lbs.).

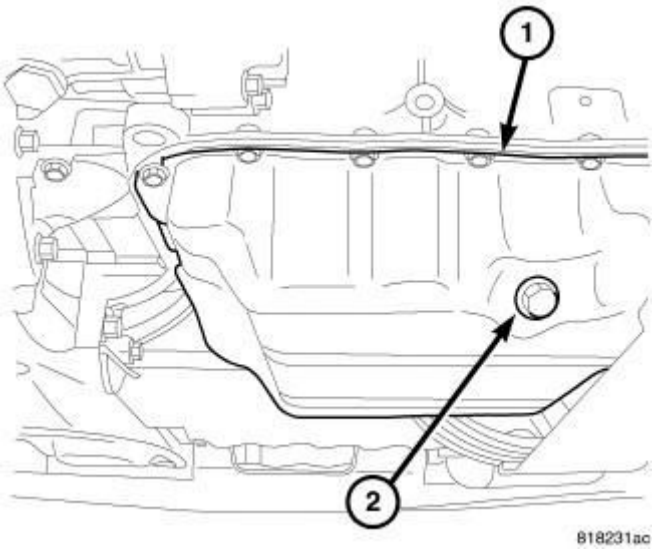

Fig. 296: Oil Drain Plug
Courtesy of CHRYSLER GROUP, LLC

4. Install oil drain plug (2).
5. Lower vehicle and fill engine crankcase with proper oil to correct level.
6. Start engine and check for leaks.

PLUG, OIL

DESCRIPTION

DESCRIPTION

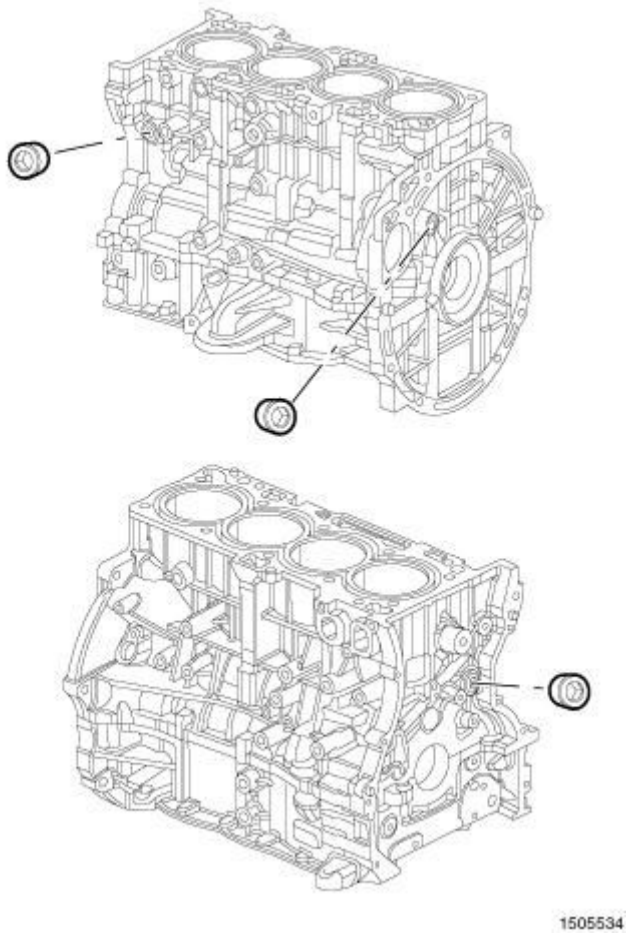

Fig. 297: Tapered Plugs
Courtesy of CHRYSLER GROUP, LLC

The engine block has three tapered plugs sealing the high pressure oil gallery. These threaded plugs do not have a torque specification but instead are installed to a specific depth. Do not attempt to further tighten these plugs, damage to the engine block could result. Whenever these plugs are removed they must be replaced. Service plugs have a lock patch and do not require the application of additional sealant.

REMOVAL

REMOVAL

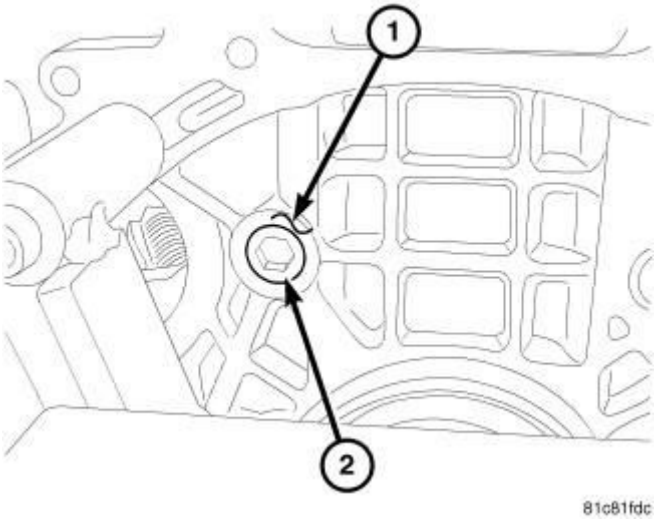

Fig. 298: Gallery Plug
Courtesy of CHRYSLER GROUP, LLC

CAUTION: Excessive use of brake parts cleaner to clean threads in block could cause #5 main bearing failure.

NOTE: Rear plug shown in illustration, other plugs are similar.

1. Remove the plug (2) from the engine block.
2. Use Mopar® Brake Parts Cleaner (or equivalent) sparingly to clean the block.

INSTALLATION

INSTALLATION

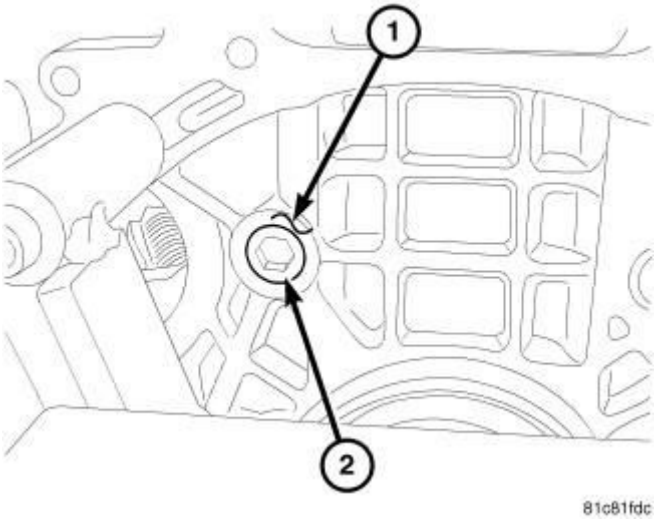

Fig. 299: Gallery Plug
Courtesy of CHRYSLER GROUP, LLC

CAUTION: Excessive use of brake parts cleaner to clean threads in block could cause #5 main bearing failure.

NOTE: Rear plug shown in illustration, other plugs are similar.

1. Use Mopar® Brake Parts Cleaner (or equivalent) sparingly to clean the block.
2. Install the plug (2) flush with the block boss face (1). The plug (2) is correctly installed when it is flush or protruding no more than 1 mm from the block boss face (1).

PUMP, ENGINE OIL

DESCRIPTION

DESCRIPTION

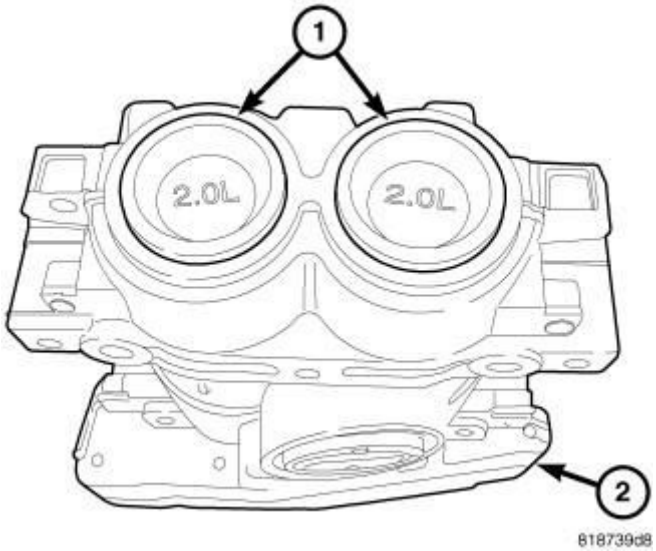

Fig. 300: Balance Shaft Module (BSM) Identification
Courtesy of CHRYSLER GROUP, LLC

The oil pump is integral to the balance shaft module (BSM) (2). The oil pump cannot be disassembled for inspection. The pressure relief valve is serviceable and can be removed and inspected. The BSM can be identified by the plastic end caps (1).

REMOVAL

REMOVAL

YouTube	A multimedia supplement to the instructions contained in this article is available. To view the multimedia example of the condition described go to; **http://www.youtube.com/user/Mitchell1Tips** **then type "A00612695.vid1" into the "Search Channel" box.**

When removing and installing the Balance Shaft/Oil Pump assembly in the vehicle, it is not necessary to align the plated links on the drive chain as long as the reference marks are created during the procedure.

1. Remove the oil pan

   Refer to **PAN, OIL, REMOVAL**.

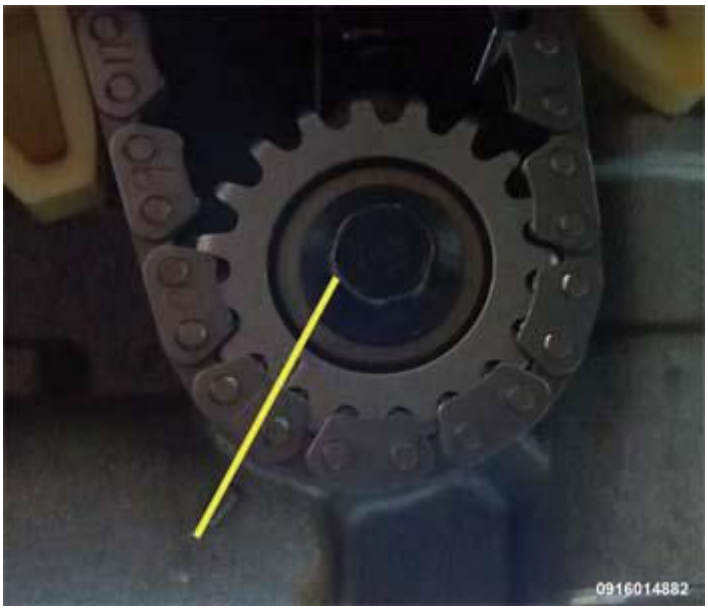

Fig. 301: Aligning Balance Shaft/Oil Pump Drive Gear And Housing Indicator
Courtesy of CHRYSLER GROUP, LLC

2. Rotate the engine clockwise until the balance shaft/oil pump drive gear and the housing indicator are aligned.

NOTE: IT IS VERY IMPORTANT THAT THE CRANKSHAFT STAYS STATIONARY DURING THE FOLLOWING STEPS. DO NOT MOVE THE CRANKSHAFT UNTIL THE INSTALLATION PROCEDURE IS COMPLETED.

3. Clean the balance shaft/oil pump assembly drive gear with Mopar® brake cleaner or similar.

NOTE: Make sure the gear is clear of any oil to allow for marking.

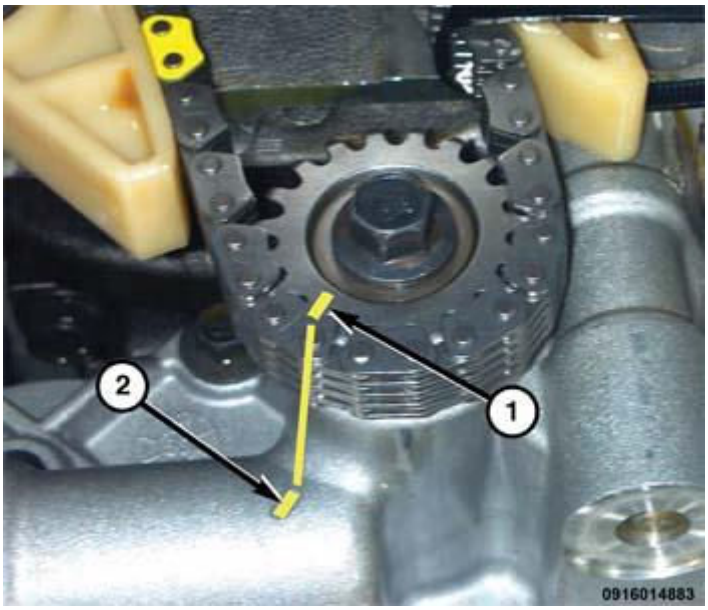

Fig. 302: Oil Pump Chain And Sprocket To Module Body Marks
Courtesy of CHRYSLER GROUP, LLC

4. If the balance shaft/oil pump assembly is being reused, mark the oil pump chain and the sprocket (1) to the module body (2) for reassembly.
5. Install one air-conditioning compressor bracket bolt into the left forward corner thread boss.

NOTE: The bolt will provide a sturdy point to secure a tie strap to hold the tensioner in the compressed position.

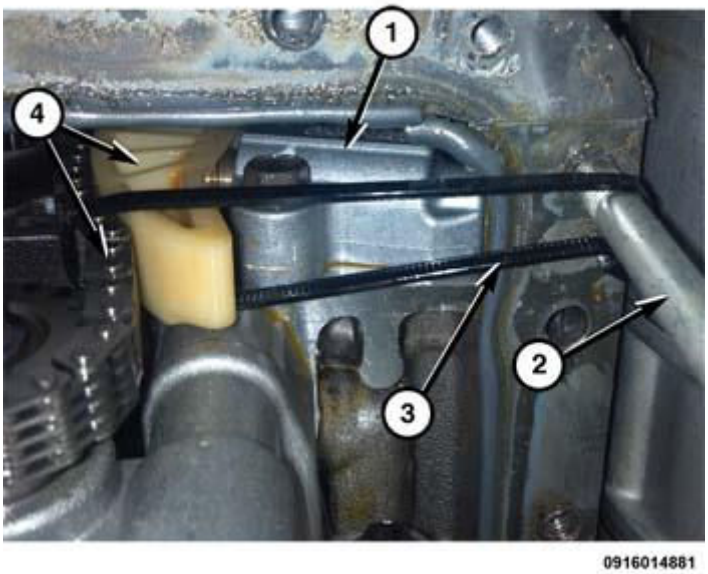

Fig. 303: Positioning Plastic Tie Strap

Courtesy of CHRYSLER GROUP, LLC

6. Position a plastic tie strap (3) around the chain, tensioner (4) and bolt (2) that was previously installed.
7. Push the chain, guide and tensioner (1) to the compressed position.
8. Tighten the tie strap to hold the components together.

NOTE: The tighter the strap, the more room for removal and installation.

9. Remove the balance shaft/oil pump assembly mounting bolts.
10. Remove assembly from the engine by tilting the rear of the balance shaft/oil pump assembly downward while lifting the drive gear out of the chain links.

INSPECTION

INSPECTION

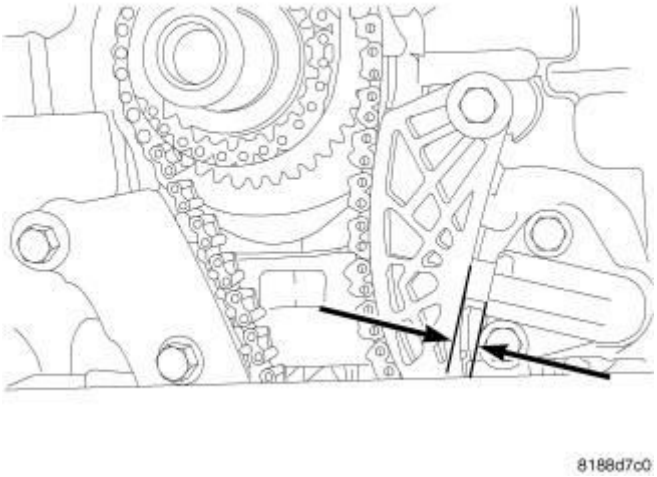

Fig. 304: Oil Pump Chain Stretch
Courtesy of CHRYSLER GROUP, LLC

1. Remove timing chain cover . Refer to **COVER(S), ENGINE TIMING, REMOVAL**.
2. Remove oil pan. Refer to **PAN, OIL, REMOVAL**.
3. Measure the distance between the tensioner body and the guide shoe as shown in illustration.
4. If the distance is 10.1 mm (0.397 in.) or greater, replace the chain.

INSTALLATION

INSTALLATION

YouTube	A multimedia supplement to the instructions contained in this article is available. To view the multimedia example of the condition described go to; **http://www.youtube.com/user/Mitchell1Tips** **then type "A00612695.vid2" into the "Search Channel" box.**

CAUTION: There are two different Balance Shaft Module (BSM) to engine block bolts used. 180 mm bolts with a lock-patch on the threads or 185 mm bolts without lock-patch. Do not reuse the 180 mm bolts. Always discard 180 mm bolts after removing. Failure to replace these bolts can result in engine damage. The 185 mm bolts are reusable. Install the same length bolts that were removed and use either four new 180 mm bolts or four 185 mm bolts.

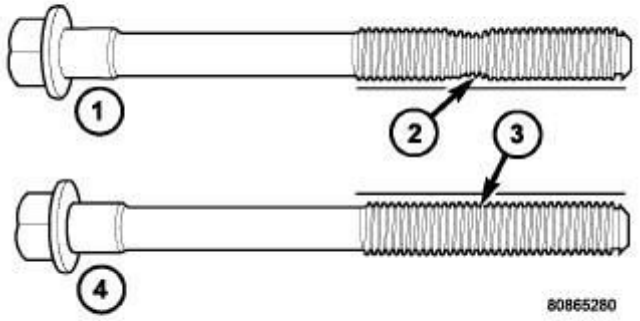

Fig. 305: Checking Cylinder Head Bolts For Stretching (Necking)
Courtesy of CHRYSLER GROUP, LLC

1. The 185 mm (7.283 in.) length bolts must be checked for stretching. Check the bolts with a straight edge for necking (2). If the bolts are necked down,

they must be replaced.

2. Clean the balance shaft/oil pump assembly mounting holes with Mopar® brake parts cleaner.
3. Align the marks on the balance shaft/oil pump assembly and drive sprocket.

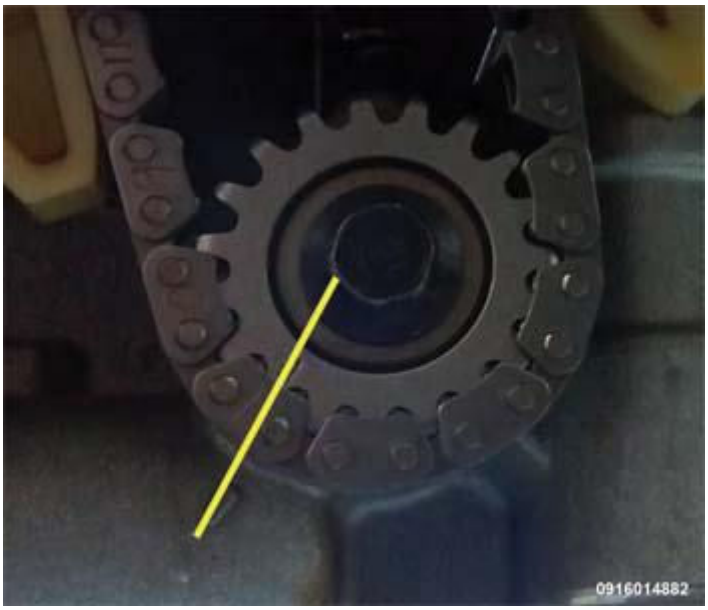

Fig. 306: Aligning Balance Shaft/Oil Pump Drive Gear And Housing Indicator
Courtesy of CHRYSLER GROUP, LLC

4. With the rear of the balance shaft/oil pump assembly on a slight downward angle, position the gear into the chain links. Make sure the paint marks are aligned.
5. Pivot balance shaft/oil pump assembly upwards and position on ladder frame.

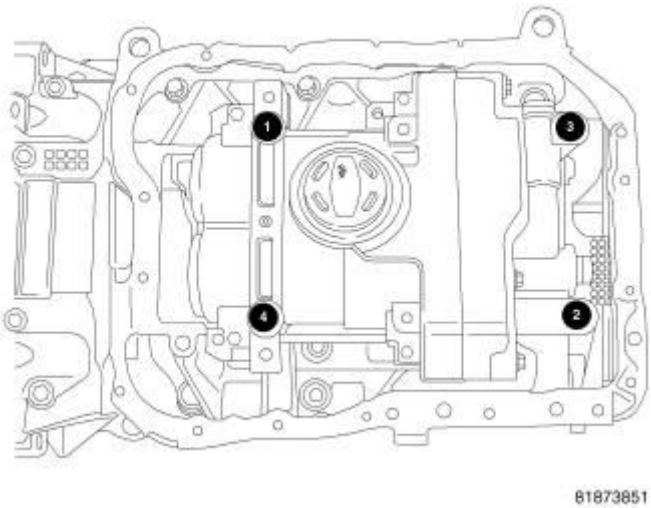

Fig. 307: Balance Shaft Module Torque Sequence
Courtesy of CHRYSLER GROUP, LLC

6. Start balance shaft/oil pump assembly mounting bolts by hand.

NOTE: Use a three step procedure when tightening balance shaft/oil pump assembly mounting bolts. For new 180 mm bolts, go to step 7. For 185 mm bolts, go to step 8.

7. Tighten new 180 mm balance shaft/oil pump assembly mounting bolts as follows:
   a. Tighten to 15 N.m (11 ft. lbs.) in the sequence shown in illustration.
   b. Tighten to 33 N.m (24 ft. lbs.) in the sequence shown in illustration.
   c. Rotate bolts an additional 90° in the sequence shown in illustration.
8. Tighten 185 mm balance shaft/oil pump assembly mounting bolts as follows:
   1. Tighten to 15 N.m (11 ft. lbs.) in the sequence shown in illustration.
   2. Tighten to 29 N.m (22 ft. lbs.) in the sequence shown in illustration.
   3. Rotate bolts an additional 90° in the sequence shown in illustration.

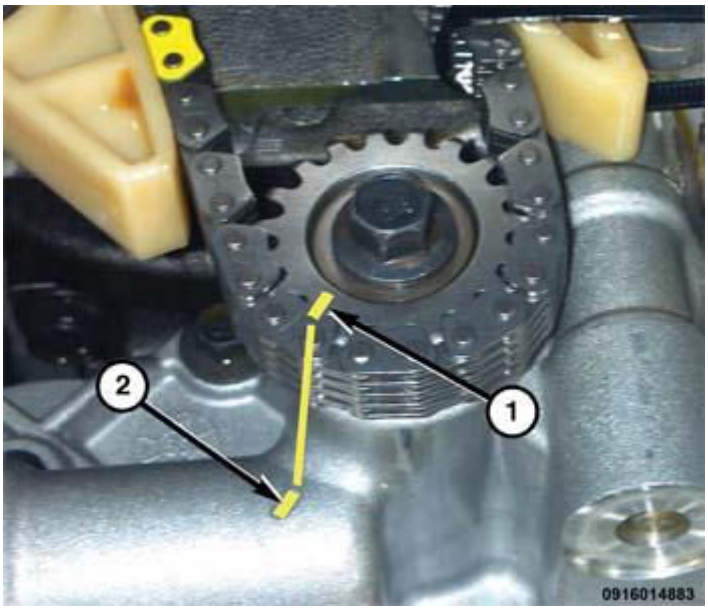

Fig. 308: Oil Pump Chain And Sprocket To Module Body Marks
Courtesy of CHRYSLER GROUP, LLC

9. Double check the alignment marks to ensure the gear (1) and balance shaft/oil pump assembly indicator (2) is aligned.

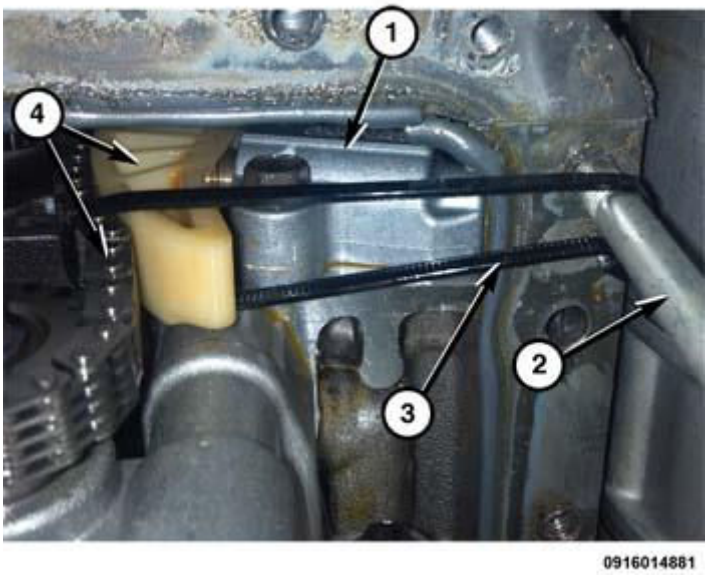

Fig. 309: Positioning Plastic Tie Strap
Courtesy of CHRYSLER GROUP, LLC

10. Remove the tie strap (3).
11. Remove the bracket bolt (2).
12. Inspect that the tensioner (1) has fully extended and applied pressure to the guide and chain (4).

13. Install the oil pan

    Refer to **PAN, OIL, INSTALLATION**.

14. Fill engine with oil.
15. Start engine and check for leaks.

SENSOR, OIL TEMPERATURE

REMOVAL

REMOVAL

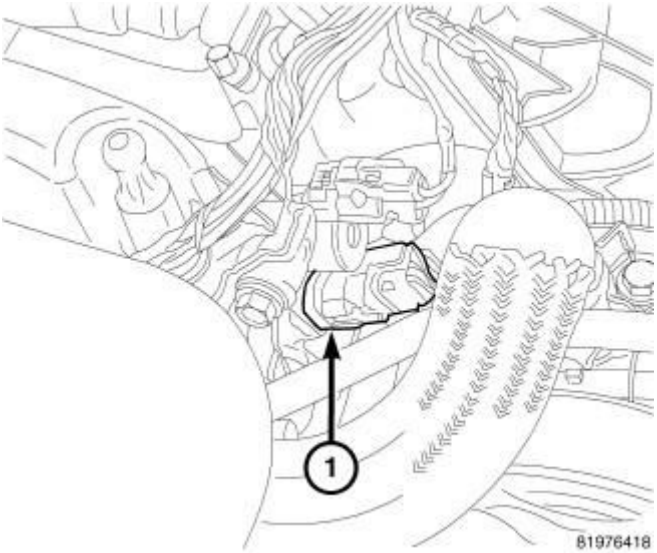

Fig. 310: Oil Temperature Sensor
Courtesy of CHRYSLER GROUP, LLC

1. Disconnect oil temperature sensor (1) electrical connector.
2. Remove sensor (1).

INSTALLATION

INSTALLATION

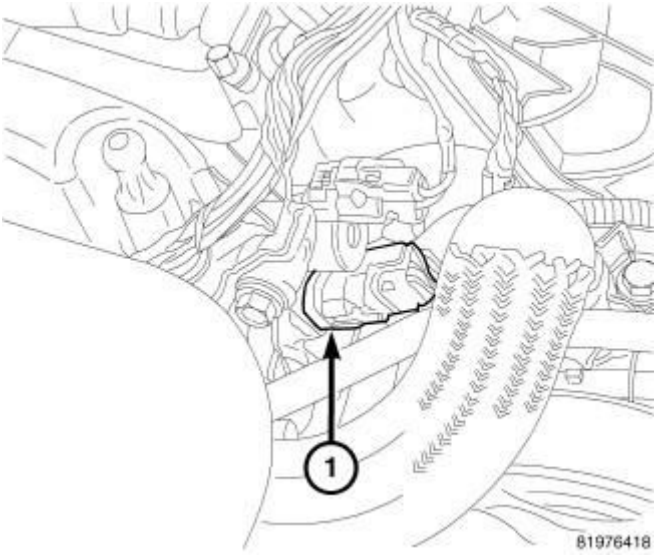

Fig. 311: Oil Temperature Sensor
Courtesy of CHRYSLER GROUP, LLC

1. If re-using the oil temperature sensor, coat the threads with Mopar® thread sealant.
2. Install oil temperature sensor (1). Tighten to 18 N.m (160 in. lbs.).
3. Connect electrical connector.

SWITCH, OIL PRESSURE

DESCRIPTION

DESCRIPTION

The oil pressure switch is located on the left front side of the engine block. The oil pressure switch is a pressure sensitive switch that is activated by the engine's oil pressure (in the main oil gallery). The switch is a two terminal device (one terminal is provided to the wiring harness and the other terminal is the switch's metal housing that screws into the engine block).

OPERATION

OPERATION

The oil pressure switch is normally "Closed." The switch changes from a "Closed" circuit to an "Open" circuit, on increasing pressure of 7 psig. The oil pressure switch changes from an "Open" circuit to a "Closed" circuit, on decreasing pressure, between 2 psig and 4 psig.

REMOVAL

REMOVAL

NOTE: If the oil pressure switch is removed, it must be replaced with a new switch.

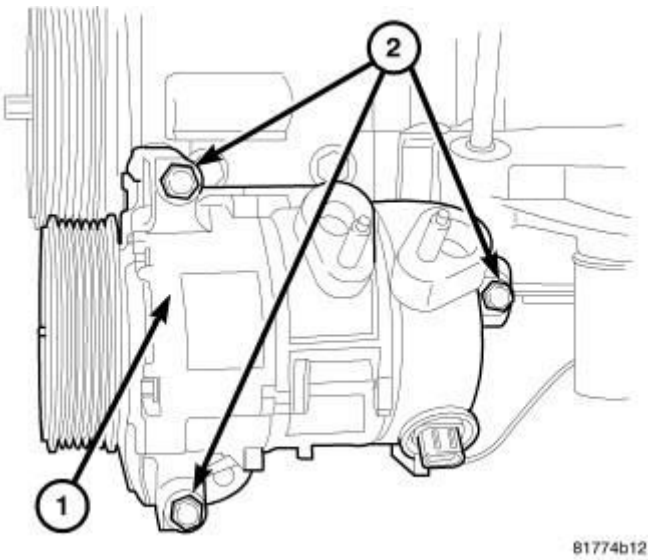

Fig. 312: Removing/Installing A/C Compressor
Courtesy of CHRYSLER GROUP, LLC

1. Disconnect and isolate the negative battery cable.
2. Raise and support the vehicle.
3. Remove the front skid plate, if equipped.
4. Remove the splash shield from the right side frame rail. Refer to **SHIELD, SPLASH, FRONT WHEELHOUSE, REMOVAL** .
5. Remove the accessory drive belt. Refer to **BELT, SERPENTINE, REMOVAL** .
6. Remove the three bolts (2) and reposition the A/C compressor (1).

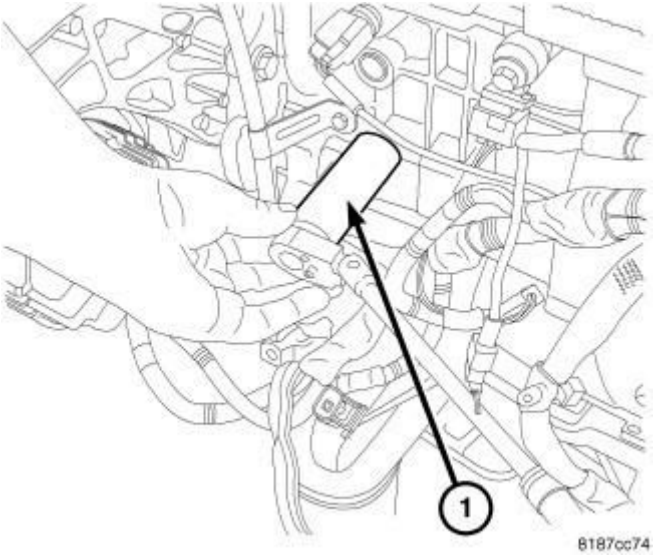

Fig. 313: Oil Sender
Courtesy of CHRYSLER GROUP, LLC

7. Disconnect the oil pressure switch electrical connector.
8. Remove the oil pressure switch using Oil Pressure Socket (special tool #C-4597, Socket, Oil Pressure) (1) or equivalent and discard the switch.

INSTALLATION

INSTALLATION

CAUTION: The oil pressure switch has tapered threads, over tightening could crack the engine block.

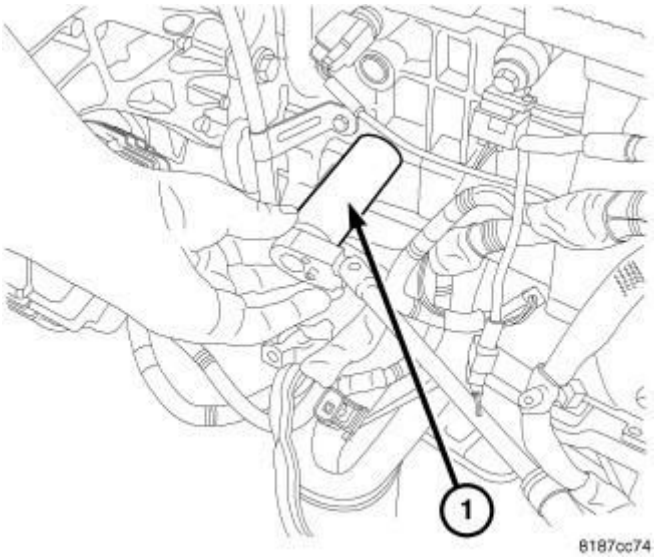

Fig. 314: Oil Sender
Courtesy of CHRYSLER GROUP, LLC

1. Install a new oil pressure switch using Oil Pressure Socket (special tool #C-4597, Socket, Oil Pressure) (1) or equivalent. Tighten switch to 8 N.m (71 in. lbs.).
2. Connect the oil pressure switch electrical connector.

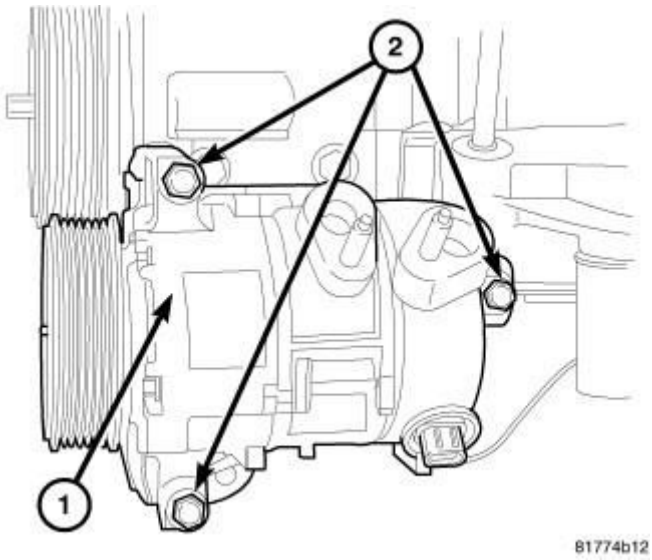

Fig. 315: Removing/Installing A/C Compressor
Courtesy of CHRYSLER GROUP, LLC

3. Position the A/C compressor (1) and install three mounting bolts (2). Tighten bolts to 25 N.m (18 ft. lbs.).
4. Install the accessory drive belt. Refer to **BELT, SERPENTINE, INSTALLATION** .
5. Install the splash shield to the right side frame rail. Refer to **SHIELD, SPLASH, FRONT WHEELHOUSE, INSTALLATION** .
6. Install the front skid plate, if equipped.
7. Reconnect the negative battery cable.

VALVE, OIL PRESSURE RELIEF

REMOVAL

REMOVAL

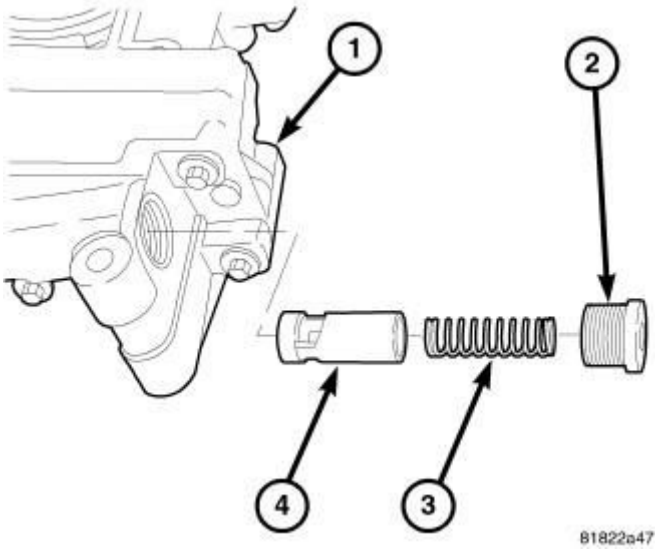

Fig. 316: Oil Pressure Relief Valve
Courtesy of CHRYSLER GROUP, LLC

1. Remove oil pan Refer to **PAN, OIL, REMOVAL**.
2. Remove pressure regulating valve cap (2).
3. Remove pressure regulating valve spring (3) and valve (4).

INSPECTION

INSPECTION

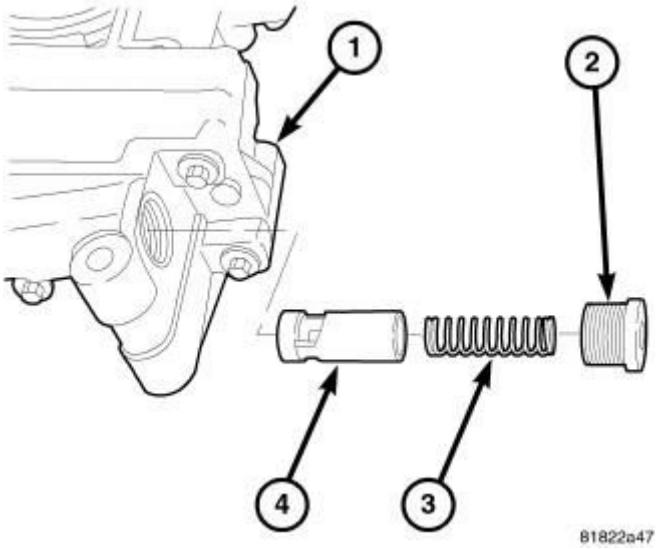

Fig. 317: Oil Pressure Relief Valve
Courtesy of CHRYSLER GROUP, LLC

NOTE: Pressure regulating valve (4) can be serviced separately from the oil pump assembly.

1. Inspect pressure relief valve (4) scoring, gouging, or debris. Replace as needed.
2. Inspect the pressure relief valve bore in the pump for scoring, gouging, or debris.
3. If pump bore is damaged, replace balance shaft module.

INSTALLATION

INSTALLATION

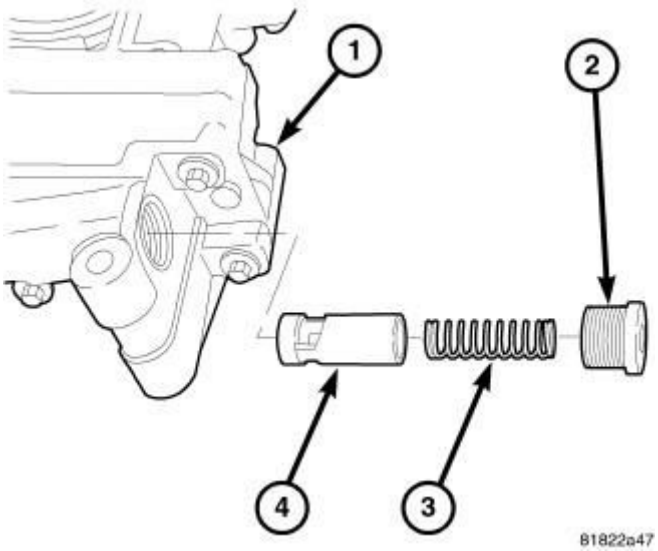

Fig. 318: Oil Pressure Relief Valve
Courtesy of CHRYSLER GROUP, LLC

1. Lightly coat pressure regulating valve with clean engine oil and install valve (4).
2. Install spring (3) and cap (2).
3. Tighten cap to 44 N.m (32 lbs.ft.).

MANIFOLDS

MANIFOLD, EXHAUST

REMOVAL

REMOVAL

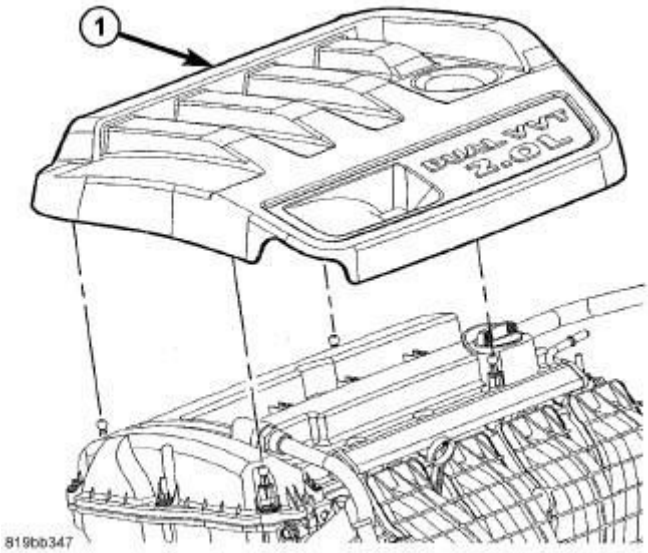

Fig. 319: Engine Cover
Courtesy of CHRYSLER GROUP, LLC

1. Remove engine cover (1).
2. Disconnect negative cable from battery.

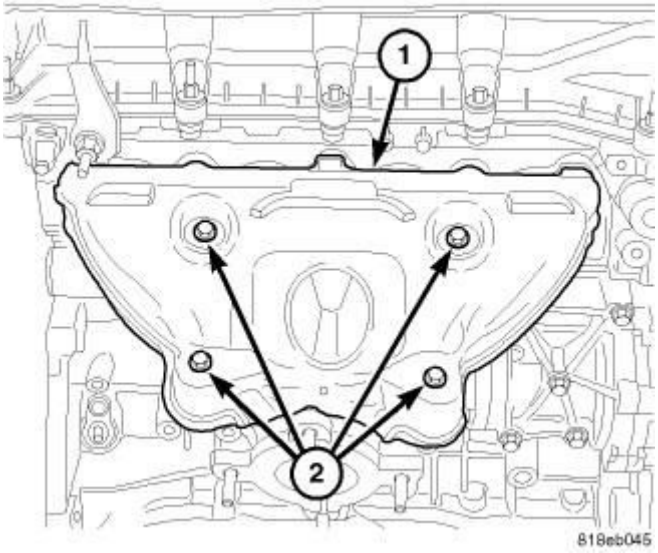

Fig. 320: Exhaust Manifold Heat Shield
Courtesy of CHRYSLER GROUP, LLC

3. Remove bolts attaching upper heat shield.
4. Remove upper heat shield (1).
5. Disconnect exhaust pipe from manifold.

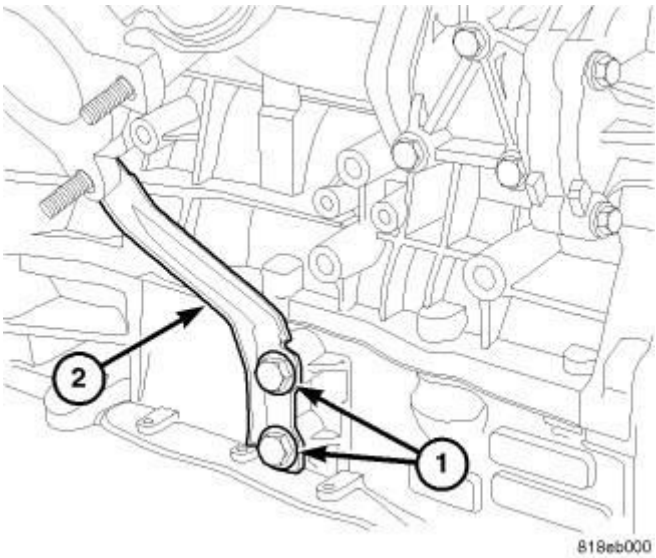

Fig. 321: Exhaust Manifold Support Bracket
Courtesy of CHRYSLER GROUP, LLC

6. Remove manifold support bracket (2).

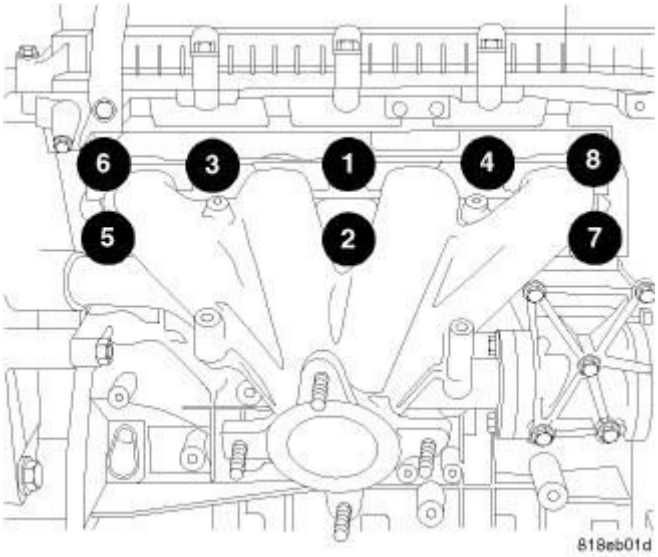

Fig. 322: Exhaust Manifold Retaining Fasteners Tightening Sequence
Courtesy of CHRYSLER GROUP, LLC

7. Disconnect oxygen sensor electrical connector.
8. Remove exhaust manifold retaining fasteners.
9. Remove and discard manifold gasket.

CLEANING

CLEANING

1. Discard gasket (if equipped) and clean all surfaces of manifold and cylinder head.

INSPECTION

INSPECTION

1. Inspect manifold gasket surfaces for flatness with straight edge. Surface must be flat within 0.15 mm per 300 mm (0.006 in. per foot) of manifold length.
2. Inspect manifolds for cracks or distortion. Replace manifold as necessary.

INSTALLATION

INSTALLATION

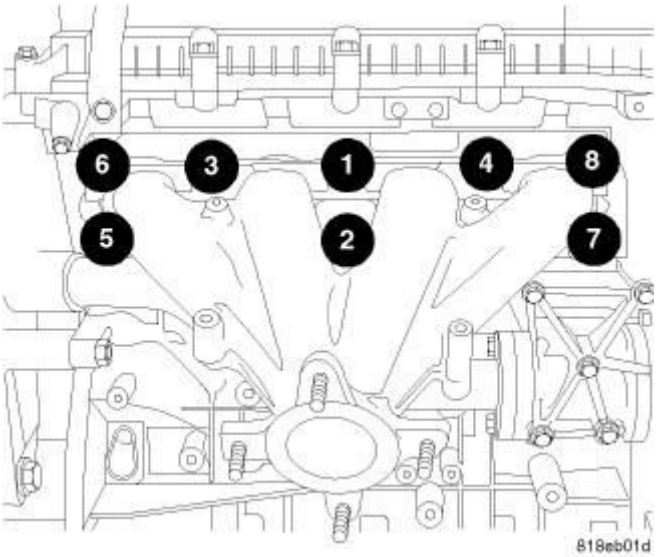

Fig. 323: Exhaust Manifold Retaining Fasteners Tightening Sequence
Courtesy of CHRYSLER GROUP, LLC

1. Install a new exhaust manifold gasket **DO NOT APPLY SEALER** .
2. Tighten the exhaust manifold bolts to 34 N.m (25 ft. lbs.).

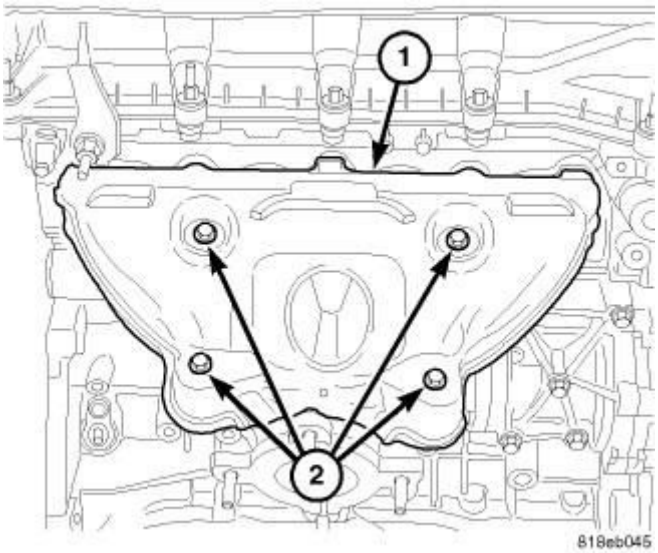

Fig. 324: Exhaust Manifold Heat Shield
Courtesy of CHRYSLER GROUP, LLC

3. Install exhaust manifold heat shields. Tighten bolts to 12 N.m (105 in. lbs.).

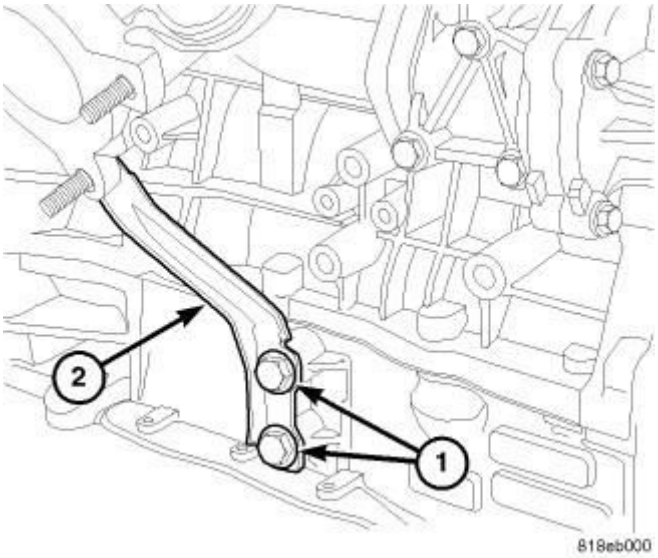

Fig. 325: Exhaust Manifold Support Bracket
Courtesy of CHRYSLER GROUP, LLC

4. Install exhaust manifold support bracket (2).

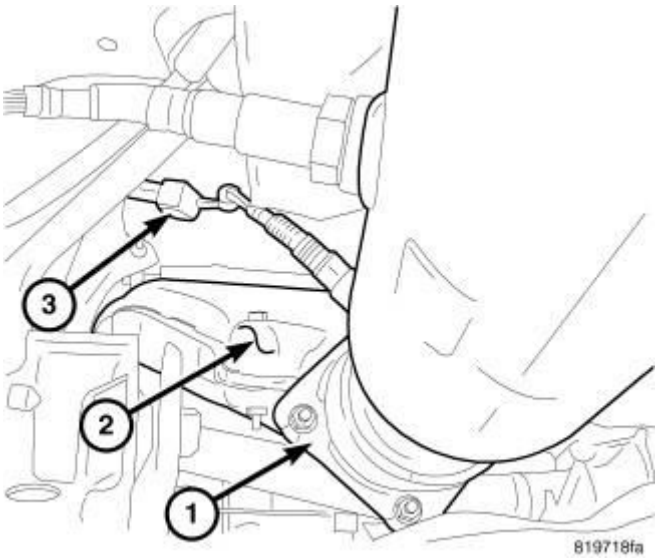

Fig. 326: Exhaust Pipe To Manifold, Heat Shield & Oxygen Sensor Electrical Connector
Courtesy of CHRYSLER GROUP, LLC

5. Install new catalytic converter gasket.
6. Install exhaust pipe to manifold (1). Tighten fasteners to 28 N.m (250 in. lbs.).
7. Connect oxygen sensor electrical connector (3).

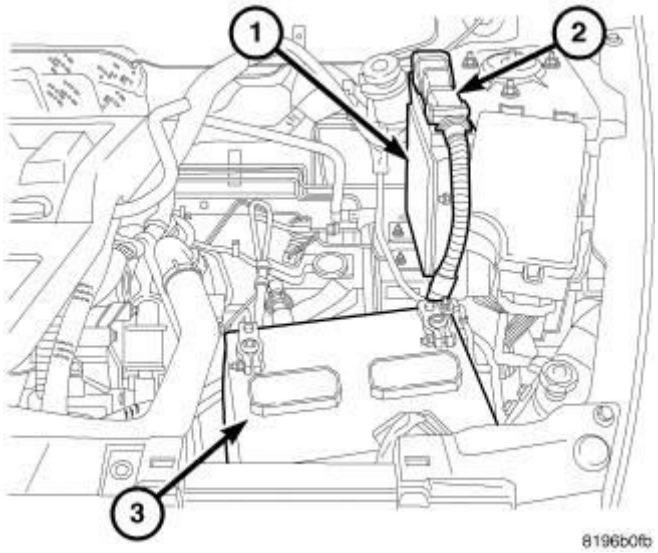

Fig. 327: Battery
Courtesy of CHRYSLER GROUP, LLC

8. Connect negative cable to battery (3).
9. Install engine cover.

MANIFOLD, INTAKE

REMOVAL

REMOVAL

WARNING: Release fuel system pressure before servicing system components. Service vehicles in well ventilated areas and avoid ignition sources. Never smoke while servicing the vehicle.

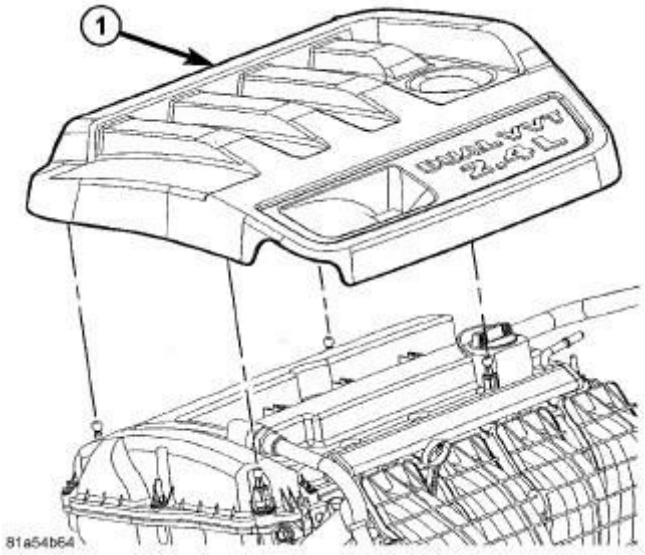

Fig. 328: Engine Cover
Courtesy of CHRYSLER GROUP, LLC

1. Remove the engine cover (1).
2. Perform the fuel system pressure release procedure **before attempting any repairs. Refer to FUEL SYSTEM PRESSURE RELEASE PROCEDURE .**

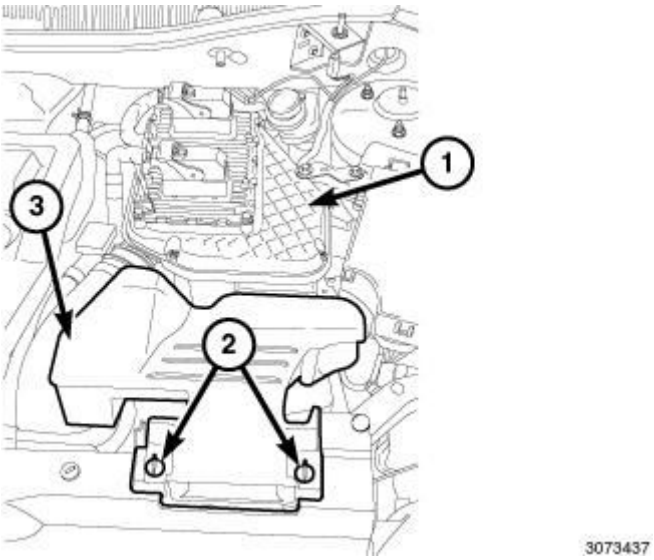

Fig. 329: Retainers, Fresh Air Inlet Duct & Air Cleaner Body
Courtesy of CHRYSLER GROUP, LLC

3. Unlock the retainers (2) and remove the fresh air inlet duct (3) from air cleaner body (1).

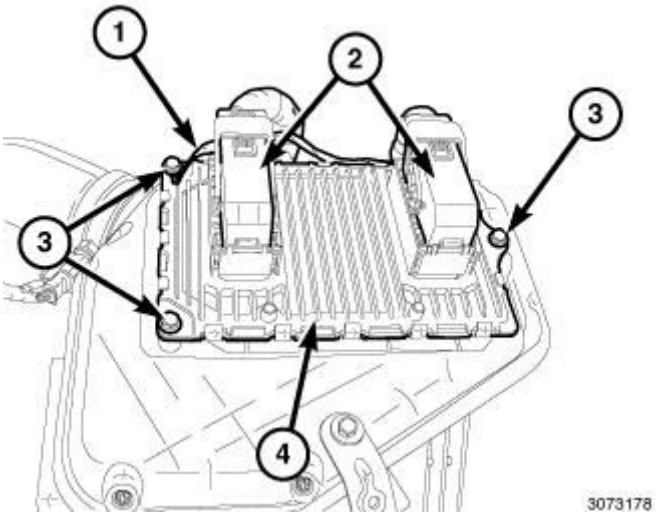

Fig. 330: Electrical Connectors, PCM, Three Mounting Bolts & Ground Wire
Courtesy of CHRYSLER GROUP, LLC

4. Disconnect and isolate the negative battery cable.
5. Unlock and disconnect the electrical connectors (2) from the PCM (4).
6. Remove the mounting bolt (3) and ground wire (1).

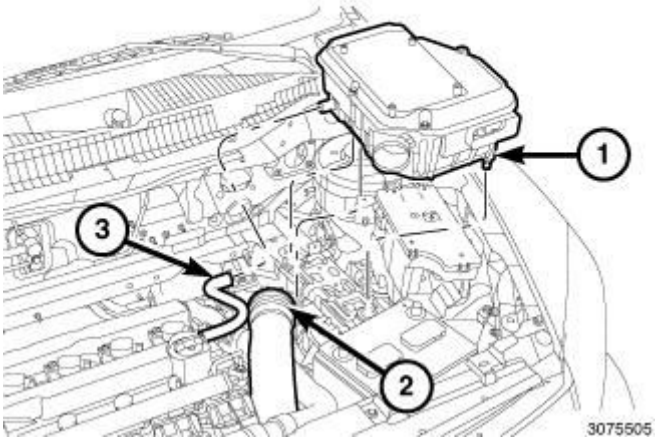

Fig. 331: Air Cleaner Body, Air Inlet Tube & Make-Up Air Hose
Courtesy of CHRYSLER GROUP, LLC

7. Remove the air inlet tube (2) from the air cleaner body (1).
8. Disconnect the make-up air hose (3) from the air cleaner body.
9. Remove the support bracket bolt from the strut tower.
10. Pull upward to disengage the pins from the rubber grommets and remove the air cleaner body (1).

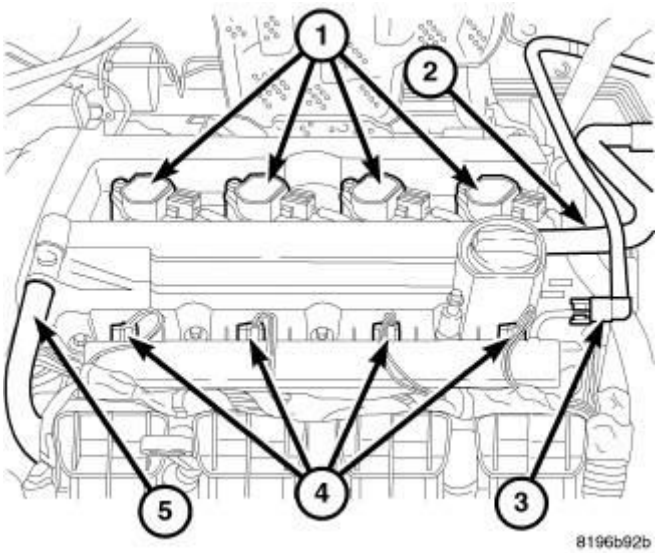

Fig. 332: Ignition Coils, Air Hose, Fuel Line, Injectors & PCV Hose
Courtesy of CHRYSLER GROUP, LLC

11. Disconnect the fuel line (3) from the fuel rail. Refer to **FITTING, QUICK CONNECT** .
12. Remove fuel injector electrical connectors (4).

13. Remove fuel rail retaining bolts and remove fuel rail.

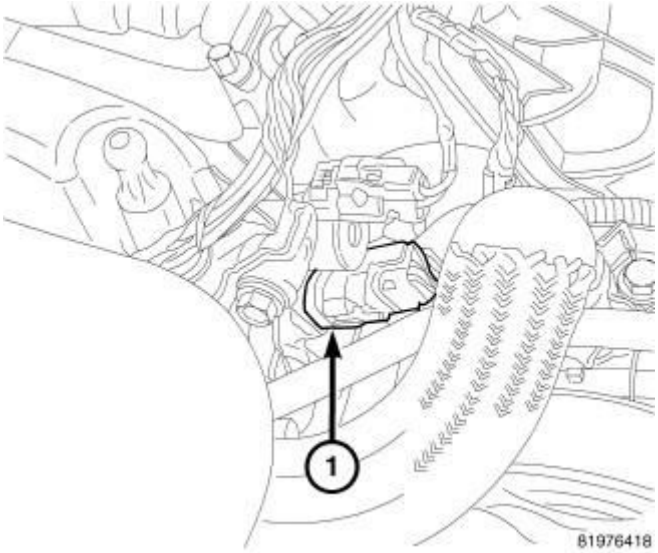

Fig. 333: Oil Temperature Sensor
Courtesy of CHRYSLER GROUP, LLC

14. Disconnect the oil temperature sensor (1).
15. Disconnect the variable valve timing solenoid electrical connector.
16. Disconnect the intake camshaft position sensor electrical connector.
17. Position the harness out of the way.

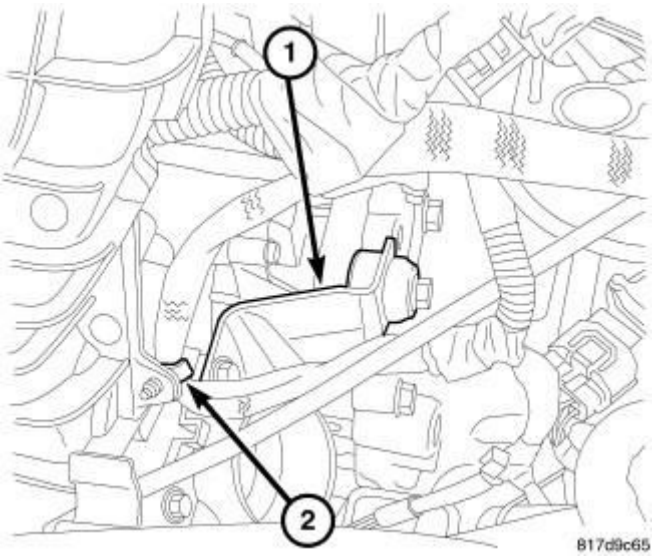

Fig. 334: Throttle Body Support
Courtesy of CHRYSLER GROUP, LLC

18. Remove the throttle body support bracket (1).
19. Disconnect the electronic throttle control electrical connector.

20. Remove the wiring harness retainer from the intake manifold (2).
21. Disconnect the MAP sensor electrical connector.
22. Disconnect the vacuum lines from the intake manifold.

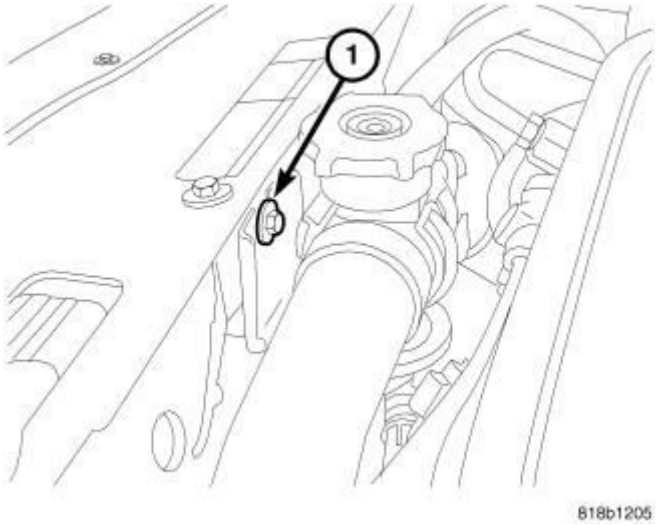

Fig. 335: Radiator Hose Support
Courtesy of CHRYSLER GROUP, LLC

23. Remove the upper radiator hose retaining bracket (1).

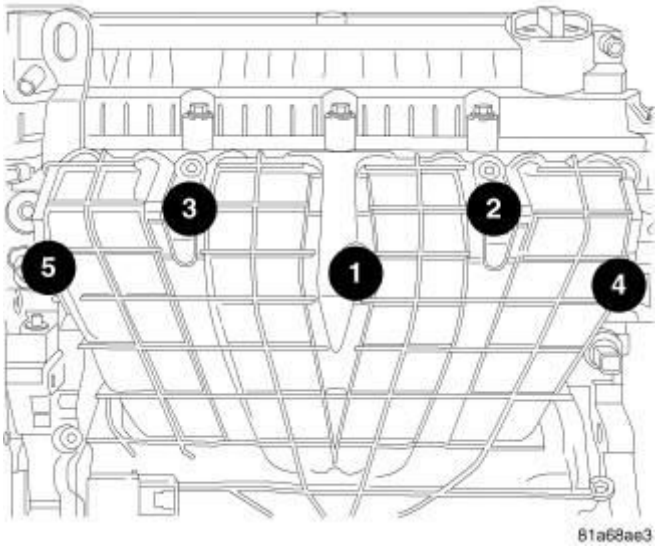

Fig. 336: Intake Manifold Bolt Removal & Tightening Sequence
Courtesy of CHRYSLER GROUP, LLC

24. Remove intake manifold retaining bolts.
25. Remove intake manifold.

INSPECTION

INSPECTION

1. Inspect manifold for cracks, distortion, or mounting surface warpage. Replace manifold if necessary.
2. Inspect manifold gasket for surface damage or excessive swelling. Replace gaskets as necessary.

INSTALLATION

INSTALLATION

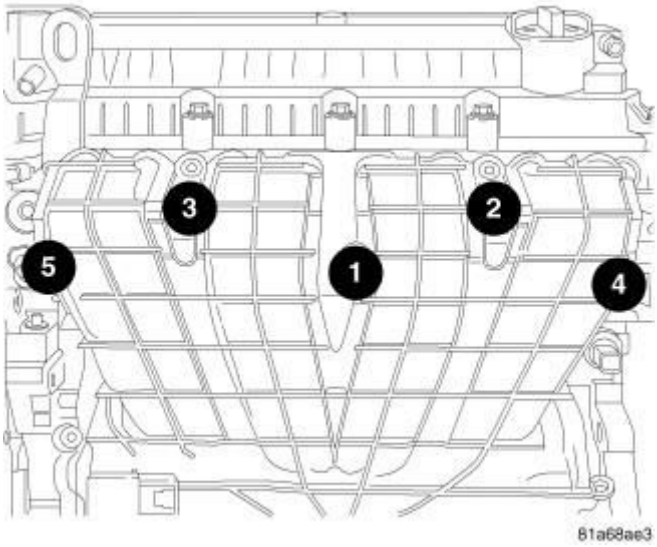

Fig. 337: Intake Manifold Bolt Removal & Tightening Sequence
Courtesy of CHRYSLER GROUP, LLC

1. Clean all gasket surfaces.
2. Replace intake manifold gasket.
3. Install intake manifold, tighten bolts to 25 N.m (220 in. lbs.).

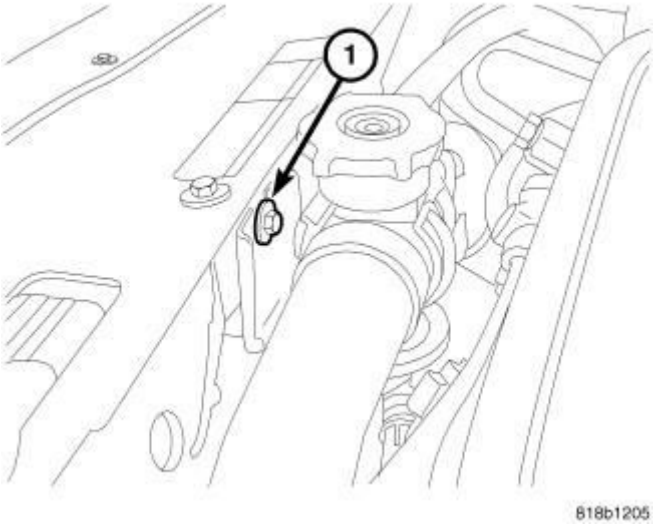

Fig. 338: Radiator Hose Support
Courtesy of CHRYSLER GROUP, LLC

4. Install the upper radiator hose retaining bracket (1).

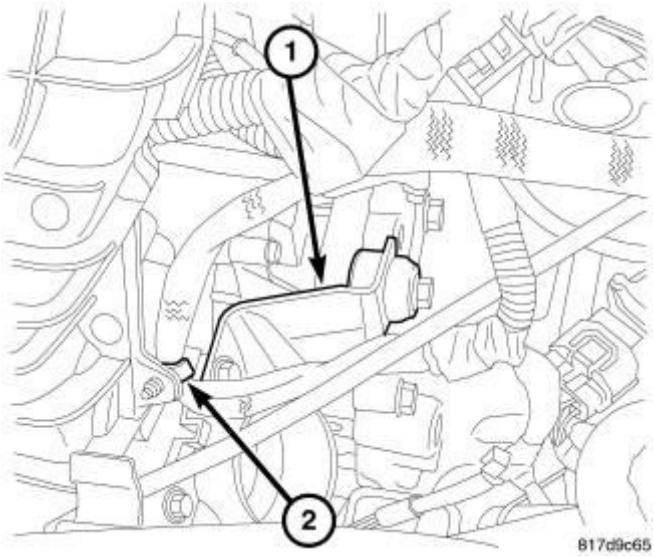

Fig. 339: Throttle Body Support
Courtesy of CHRYSLER GROUP, LLC

5. Install the throttle body support bracket (1).
6. Connect the electronic throttle control electrical connector.
7. Install the wiring harness retainer to the intake manifold (2).
8. Connect the MAP sensor electrical connector.
9. Connect the vacuum lines to the intake manifold.

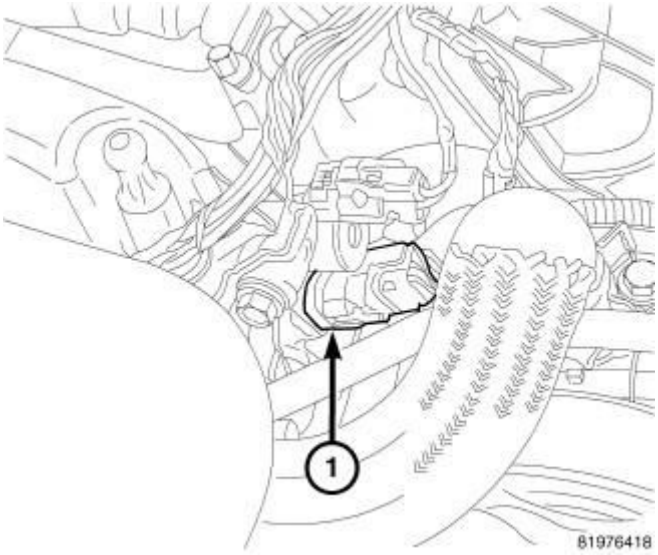

Fig. 340: Oil Temperature Sensor
Courtesy of CHRYSLER GROUP, LLC

10. Connect the oil temperature sensor (1).
11. Connect the variable valve timing solenoid electrical connector.
12. Connect the intake camshaft position sensor electrical connector.

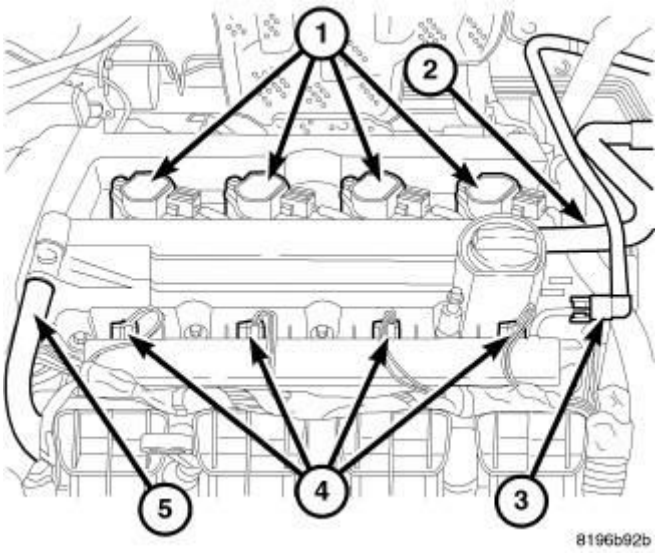

Fig. 341: Ignition Coils, Air Hose, Fuel Line, Injectors & PCV Hose
Courtesy of CHRYSLER GROUP, LLC

13. Install the fuel rail assembly to intake manifold. Tighten bolts to 23 N.m (200 in. lbs.).
14. Connect fuel injector electrical connectors (4).
15. Inspect quick connect fittings for damage, replace if necessary. Refer to **FITTING, QUICK CONNECT** . Connect fuel supply hose (3) to fuel rail

assembly. Check connection by pulling on connector to insure it locked into position.

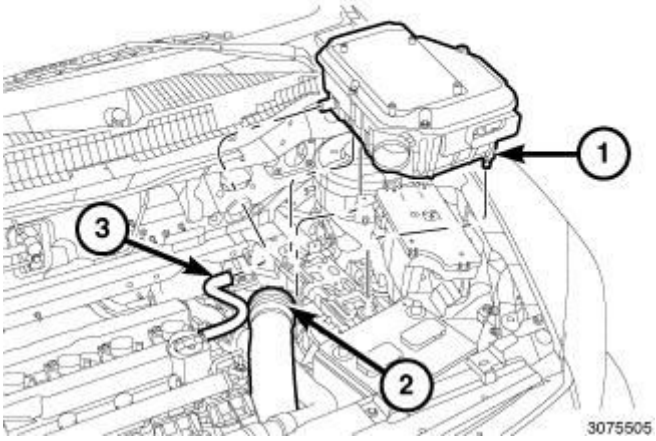

Fig. 342: Air Cleaner Body, Air Inlet Tube & Make-Up Air Hose
Courtesy of CHRYSLER GROUP, LLC

16. Push down on the air cleaner body (1) to engage the pins into the grommets.
17. Install the support bracket bolt to the strut tower and tighten to 10 N.m (89 in. lbs.).
18. Install the air inlet tube (2) to the air cleaner body (1).
19. Connect the make-up air hose (3) to the air cleaner body.

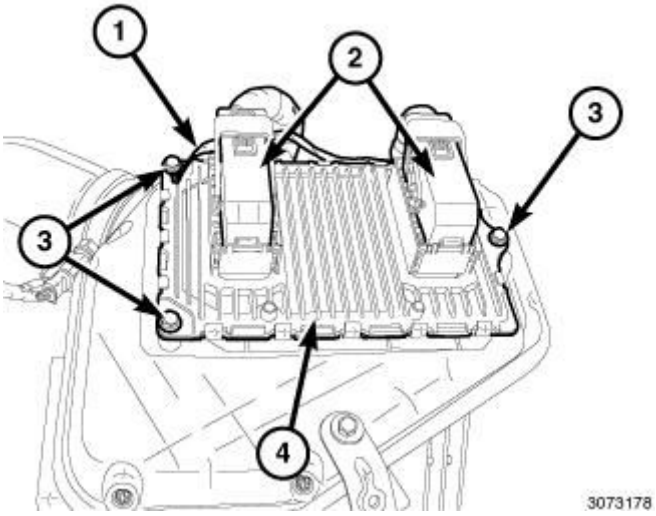

Fig. 343: Electrical Connectors, PCM, Three Mounting Bolts & Ground Wire
Courtesy of CHRYSLER GROUP, LLC

20. Install the mounting bolt (3) with ground wire (1) and tighten to 12 N.m (106 in. lbs.).
21. Connect and lock the electrical connectors (2).

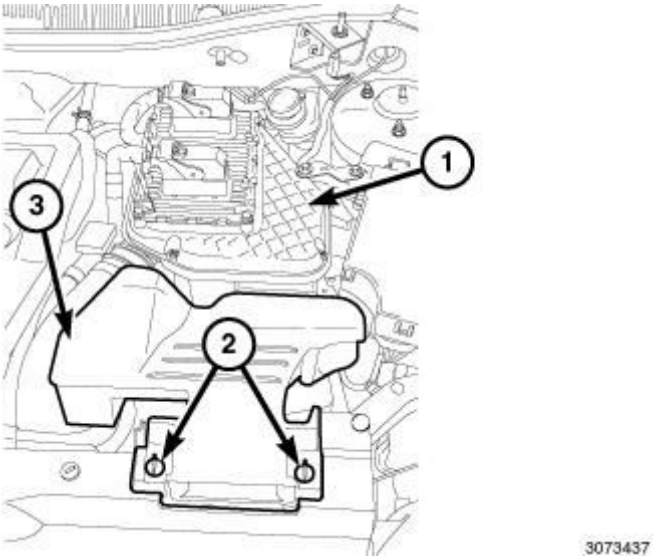

Fig. 344: Retainers, Fresh Air Inlet Duct & Air Cleaner Body
Courtesy of CHRYSLER GROUP, LLC

22. Connect the negative battery cable and tighten nut to 5 N.m (45 in. lbs.).
23. Install the fresh air inlet duct (3) on the air cleaner body (1) and lock the retainers (2).

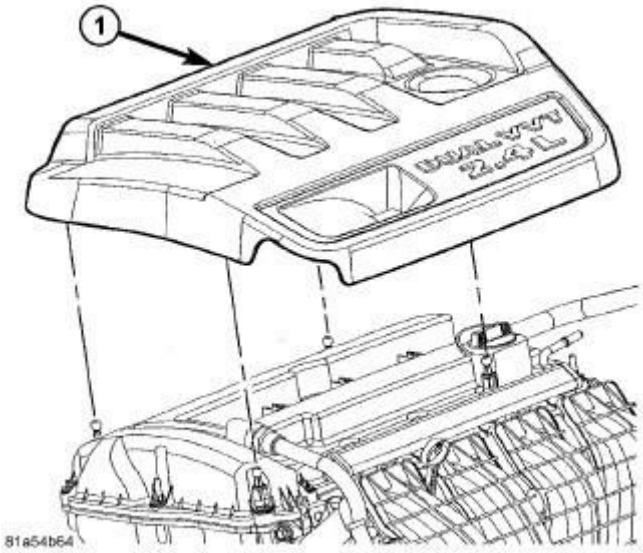

Fig. 345: Engine Cover
Courtesy of CHRYSLER GROUP, LLC

24. Install the engine cover (1).

VALVE TIMING

DESCRIPTION

DESCRIPTION

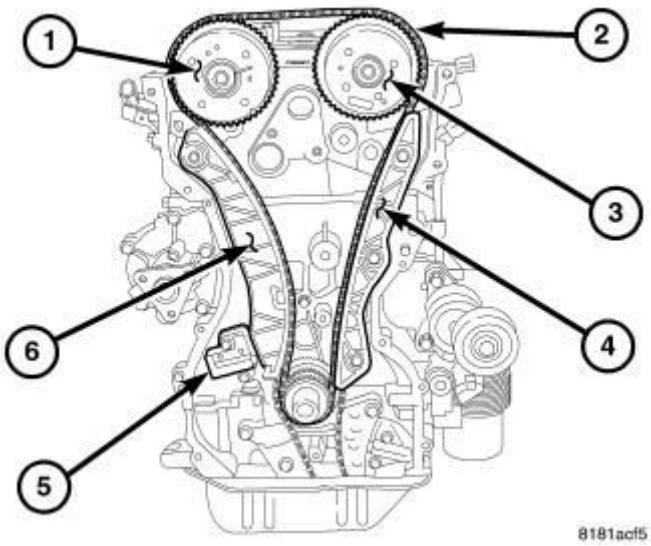

Fig. 346: Timing Drive System
Courtesy of CHRYSLER GROUP, LLC

The timing drive system consists of the following:

- Timing Chain (2)
- Camshaft Sprockets (1, 3)
- Crankshaft Sprocket
- Right Timing Chain Guide (Moveable) (6)
- Left Timing Chain Guide (Fixed) (4)
- Timing Chain Tensioner (5)

The camshaft sprockets are attached to the cam phasers which are attached to the front of the camshafts and are used with the timing chain and crankshaft sprocket to turn the camshafts. The camshaft position sensors target is part of the camshafts and is used with the camshaft position sensors to provide the PCM with valvetrain position information.

The timing chain tensioner is installed in the right side of the engine block. Using engine oil pressure, the tensioner applies constant pressure to the right side

(movable) timing chain guide, which in turn applies pressure to the timing chain. Also as the tensioner extends, it rachet locks in position to provide constant timing chain tension.

STANDARD PROCEDURE

STANDARD PROCEDURE - VALVE TIMING VERIFICATION

CAUTION: Painted or colored chain links are used during initial engine assembly and can not be relied upon for valve timing verification. These markings are in different locations for early production, late production and service parts. Only use TDC marks, cylinder head cover sealing surface and camshaft sprocket marks to verify valve timing or engine damage may result.

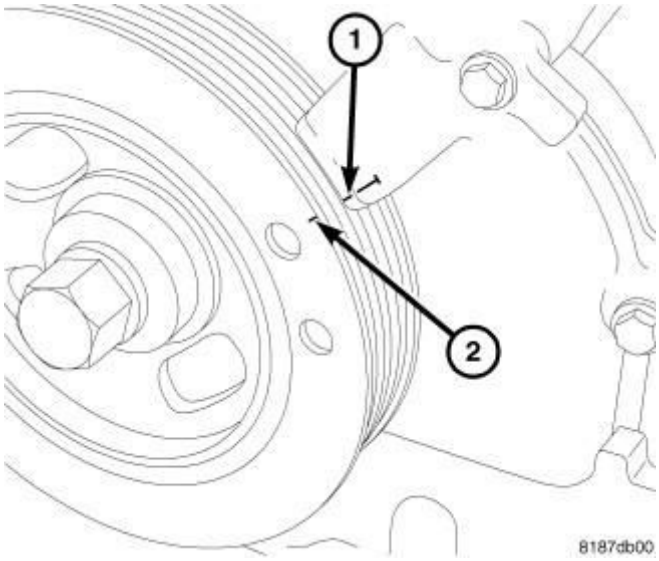

Fig. 347: Setting Engine To Top Dead Center
Courtesy of CHRYSLER GROUP, LLC

1. Remove engine cover.
2. Remove cylinder head cover. Refer to **COVER(S), CYLINDER HEAD, REMOVAL**.
3. Set engine to TDC (1, 2).

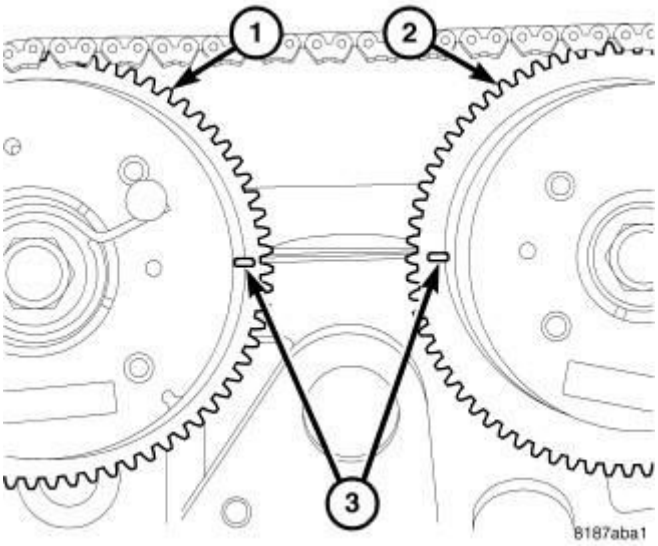

Fig. 348: Camshaft Timing
Courtesy of CHRYSLER GROUP, LLC

4. The marks on the camshaft sprockets (3) should be in line with the cylinder head cover sealing surface.
5. Install cylinder head cover . Refer to **COVER(S), CYLINDER HEAD, INSTALLATION**.
6. Install the engine cover.

CHAIN AND SPROCKETS, TIMING

REMOVAL

TIMING CHAIN

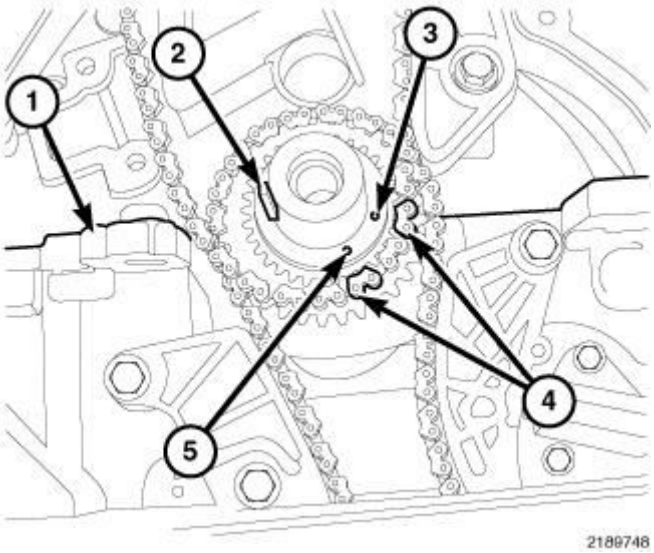

Fig. 349: Crankshaft Timing Marks

Courtesy of CHRYSLER GROUP, LLC

1. Remove timing chain cover . Refer to **COVER(S), ENGINE TIMING, REMOVAL**.

   NOTE: The crankshaft timing mark (3) or (5) can be in one of two locations depending on whether the engine is early production (5), late production (3) or assembled with service parts (3). In all cases the keyway (2) will always be in the 9:00 position, in line with the ladder frame mounting surface (1) when the engine is at TDC.

2. Verify that the engine is still set to TDC.

   NOTE: If the timing chain plated links can no longer be seen, the timing chain links corresponding to the timing marks must be marked prior to removal if the chain is to be reused.

3. Mark chain link (4) corresponding to crankshaft timing mark (3) or (5).

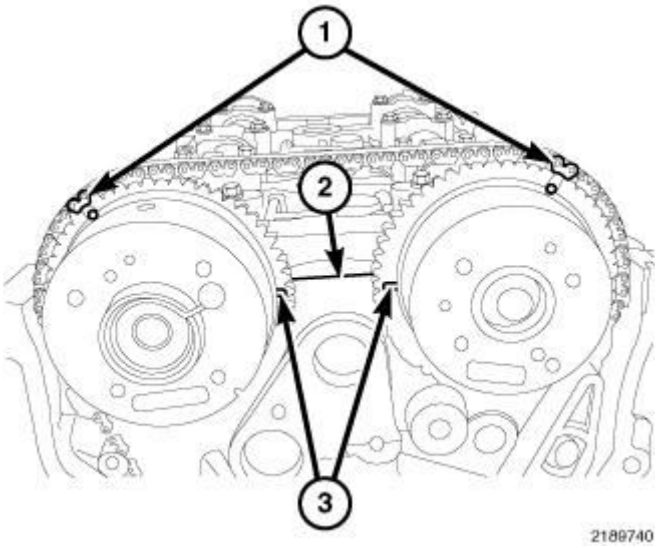

Fig. 350: Timing Chain Timing Marks
Courtesy of CHRYSLER GROUP, LLC

4. With the engine still set to TDC, verify that the marks on the camshaft sprockets (3) are in line with the cylinder head cover sealing surface (2). If

the marks do not line up, the timing chain is not correctly installed.

5. Mark chain link (1) corresponding to camshaft timing mark.

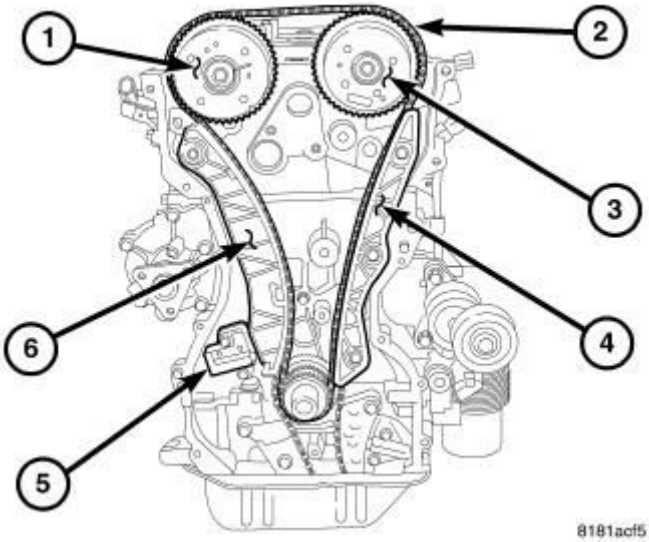

Fig. 351: Timing Drive System
Courtesy of CHRYSLER GROUP, LLC

6. Remove timing chain tensioner (5). Refer to **TENSIONER, ENGINE TIMING, REMOVAL**.
7. Remove timing chain (2).

CAMSHAFT SPROCKET(S)

NOTE: Camshaft phasers and camshaft sprockets are supplied as an assembly, do not attempt to disassemble.

Refer to camshaft phaser removal . Refer to **CAMSHAFT, ENGINE, REMOVAL**.

CRANKSHAFT SPROCKET

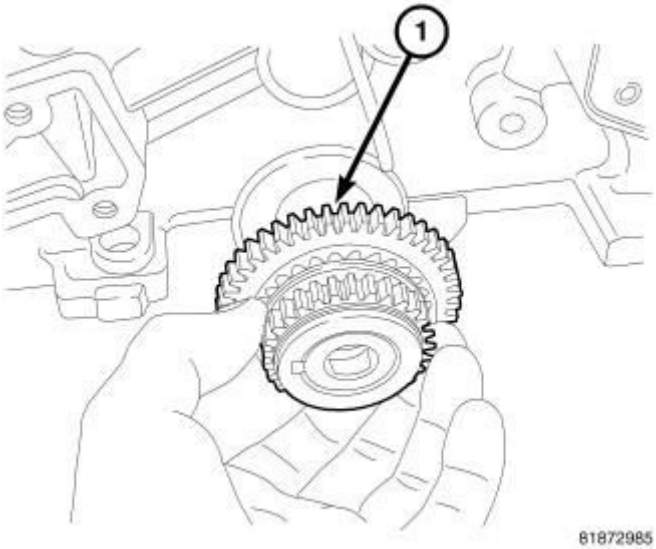

Fig. 352: Crankshaft Sprocket
Courtesy of CHRYSLER GROUP, LLC

1. Remove timing chain. Refer to **CHAIN AND SPROCKETS, TIMING, REMOVAL**.
2. Remove oil pan. Refer to **PAN, OIL, REMOVAL**.
3. Remove oil pump drive chain tensioner.
4. Remove oil pump drive chain.
5. Remove crankshaft sprocket (1).

INSPECTION

INSPECTION

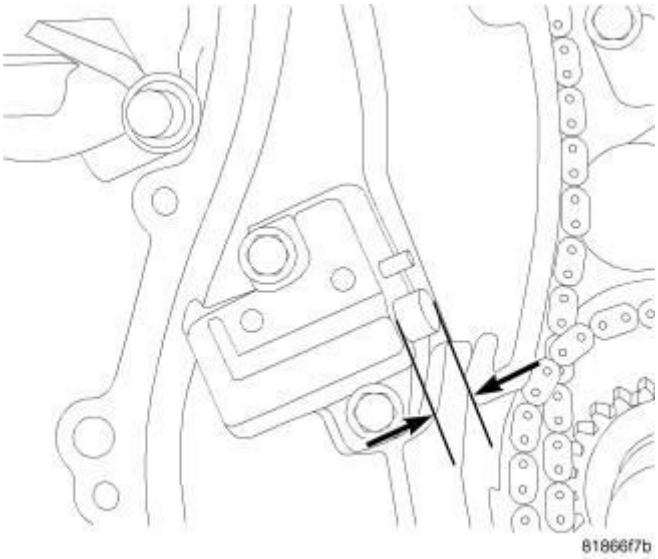

Fig. 353: Checking Timing Chain Stretch

Courtesy of CHRYSLER GROUP, LLC

Inspect timing chain for stretching prior to removal.

1. Rotate engine while watching timing chain tensioner plunger. When the plunger reaches its maximum travel stop rotating engine.
2. Measure the distance from the tensioner body and the edge of the chain guide as shown in illustration.
3. If the distance is greater than 20.5 mm (0.81 in.) inspect guide shoes for excessive wear.
4. If guides are okay, replace timing chain.

INSTALLATION

CRANKSHAFT SPROCKET

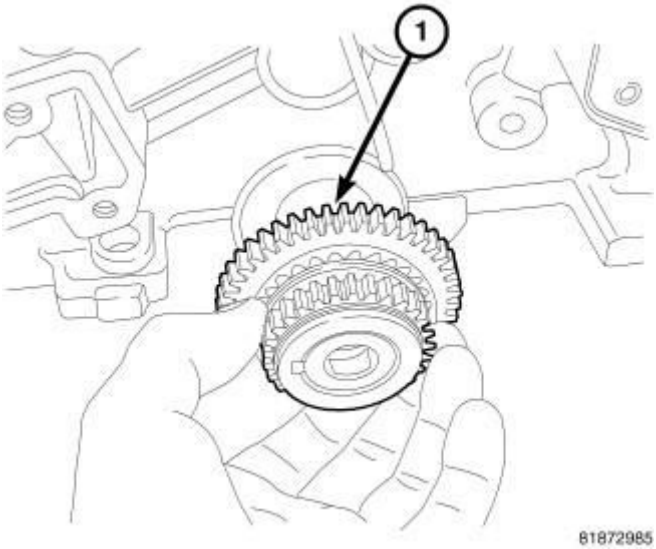

Fig. 354: Crankshaft Sprocket
Courtesy of CHRYSLER GROUP, LLC

1. Install crankshaft sprocket (1) onto crankshaft.

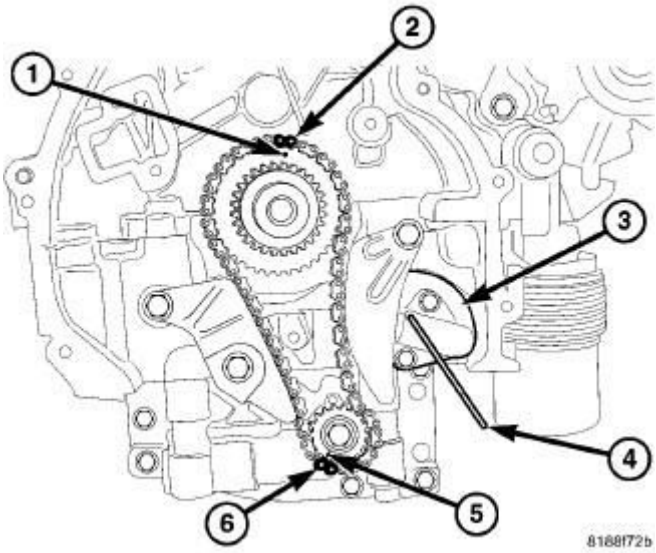

Fig. 355: BSM Tensioner
Courtesy of CHRYSLER GROUP, LLC

2. Install oil pump drive chain. Verify that Oil pump is correctly timed (1, 2, 5, 6).

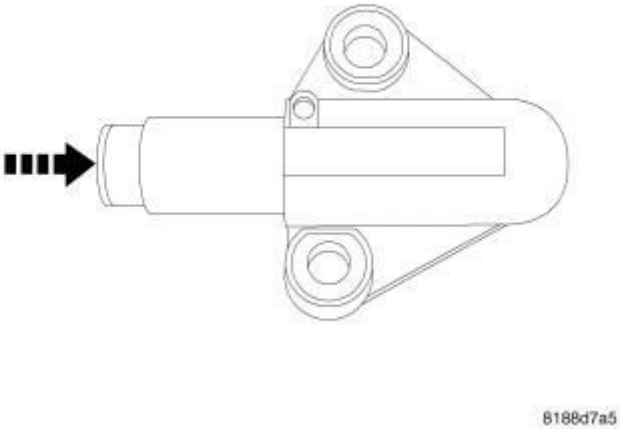

Fig. 356: Oil Pump Tensioner Reset
Courtesy of CHRYSLER GROUP, LLC

3. Reset oil pump drive chain tensioner by pushing plunger inward and install tensioner pin (special tool #8514, Pins, Tensioner).

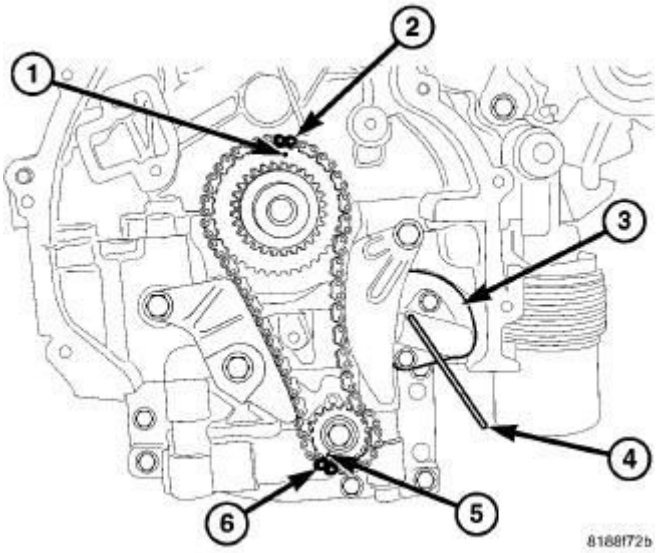

Fig. 357: BSM Tensioner
Courtesy of CHRYSLER GROUP, LLC

4. Install oil pump drive chain tensioner (3) and remove Tensioner Pin (special tool #8514, Pins, Tensioner) (4).
5. Install timing chain. Refer to **CHAIN AND SPROCKETS, TIMING, INSTALLATION**.
6. Install oil pan. Refer to **PAN, OIL, INSTALLATION**.
7. Fill engine with oil. Refer to **OIL, STANDARD PROCEDURE** .
8. Start engine and check for leaks.

CAMSHAFT SPROCKET(S)

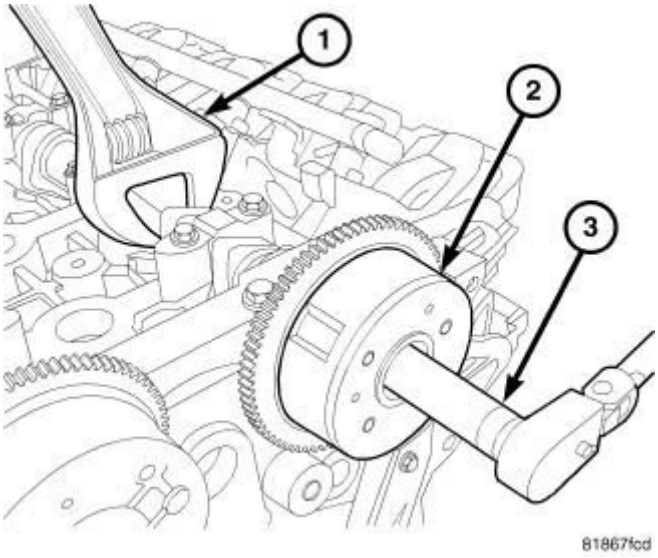

Fig. 358: Removing & Installing Cam Phaser

Courtesy of CHRYSLER GROUP, LLC

NOTE: The camshaft sprockets and the camshaft phasers are an assembly and cannot be serviced separately.

CAUTION: Do not use an impact wrench to tighten camshaft sprocket bolts. Damage to the camshaft-to-sprocket locating dowel pin and camshaft phaser may occur.

1. Refer to Camshaft phaser (2) installation . Refer to **CAMSHAFT, ENGINE, INSTALLATION**.

TIMING CHAIN

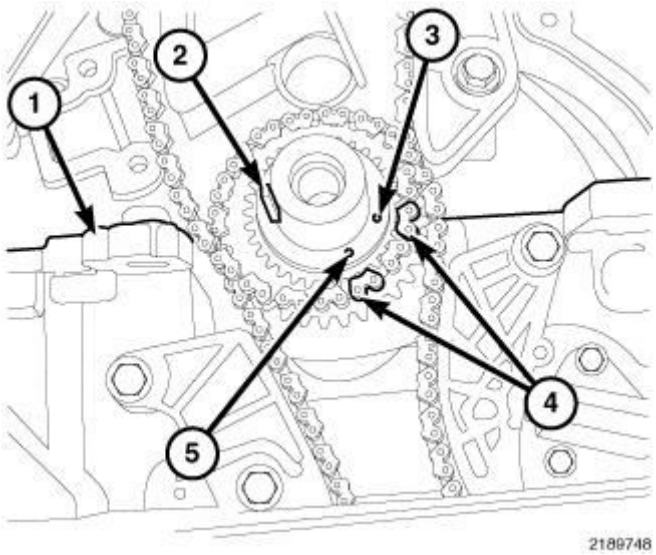

Fig. 359: Crankshaft Timing Marks
Courtesy of CHRYSLER GROUP, LLC

NOTE: The crankshaft timing mark (3) or (5) can be in one of two locations depending on whether the engine is early production (5), late production (3) or assembled with service parts (3). In all cases the keyway (2) will always be in the 9:00 position, in line with the ladder frame mounting surface (1) when the engine is at TDC.

1. Verify that the engine is still set to TDC.

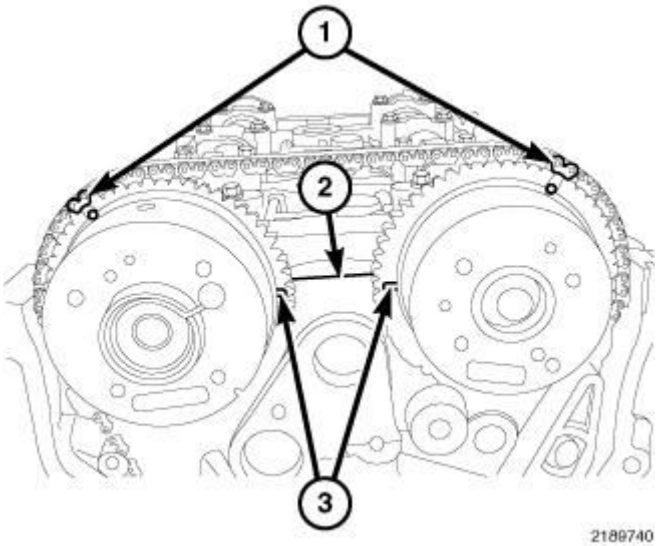

Fig. 360: Timing Chain Timing Marks
Courtesy of CHRYSLER GROUP, LLC

2. Align camshaft timing marks (3) so they are facing each other and in line with the cylinder head cover sealing surface (2).
3. Install timing chain so plated (or marked) links on chain align with timing marks on camshaft sprockets (1).

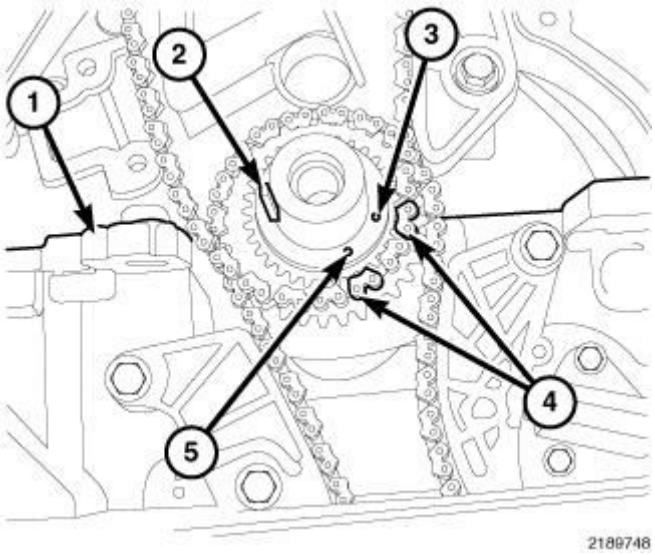

Fig. 361: Crankshaft Timing Marks
Courtesy of CHRYSLER GROUP, LLC

4. Align timing mark on the crankshaft sprocket (3) or (5) with the plated (or marked) link (4) on the timing chain. Position chain so slack will be on the tensioner side.

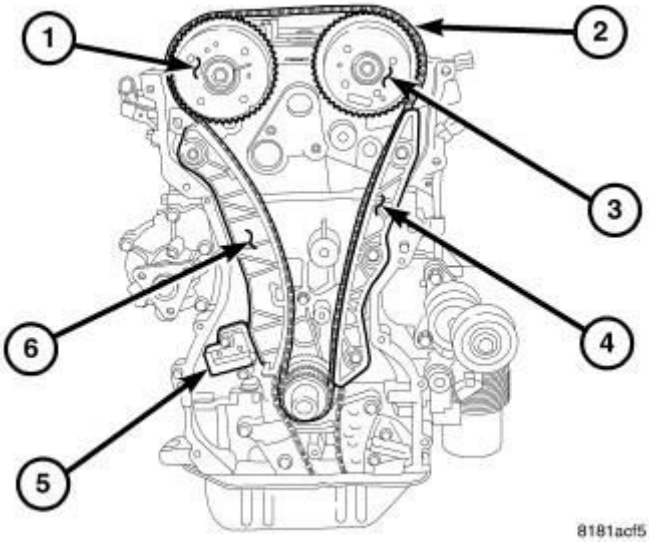

Fig. 362: Timing Drive
Courtesy of CHRYSLER GROUP, LLC

NOTE: Keep the slack in the timing chain on the tensioner side.

5. Install the timing chain tensioner (5) Refer to **TENSIONER, ENGINE TIMING, INSTALLATION**.

   Rotate the crankshaft CLOCKWISE two complete revolutions until the crankshaft is repositioned at the TDC position with the key way at the 9 o'clock position.

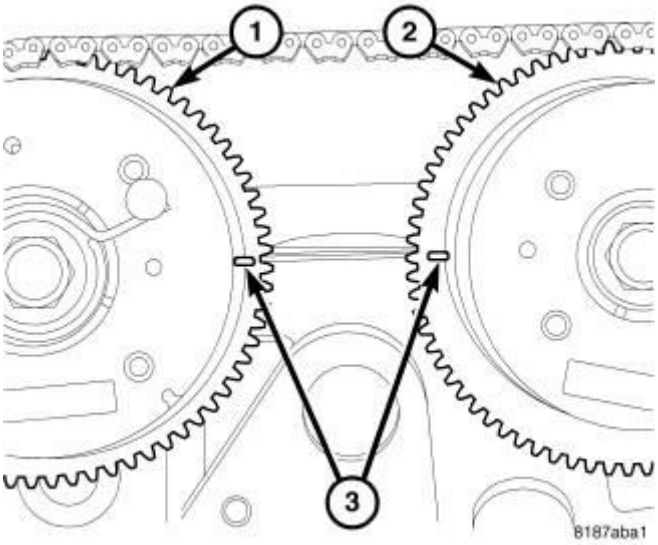

Fig. 363: Camshaft Timing
Courtesy of CHRYSLER GROUP, LLC

6. Verify that the camshafts timing marks (3) are in the proper position and in line with the cylinder head cover sealing surface. If the marks do not line up, the timing chain is not correctly installed.
7. Install front timing chain cover . Refer to **COVER(S), ENGINE TIMING, INSTALLATION**.
8. Connect negative battery cable.
9. Operate engine until it reaches normal operating temperature. Check oil and cooling systems for correct fluid levels.

COVER(S), ENGINE TIMING

REMOVAL

REMOVAL

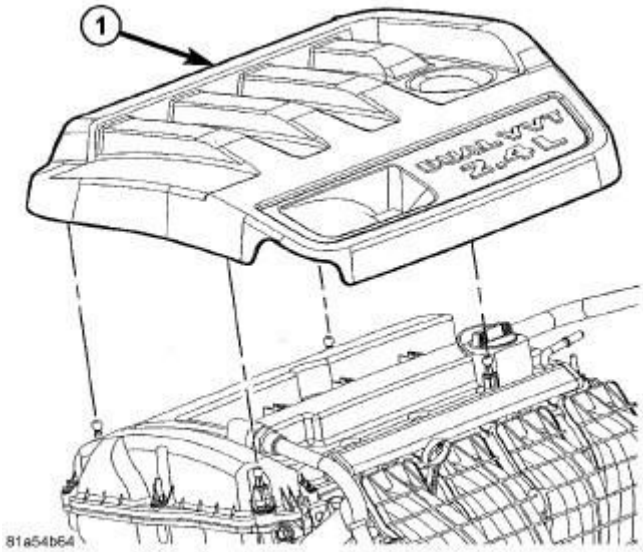

Fig. 364: Engine Cover
Courtesy of CHRYSLER GROUP, LLC

1. Remove engine cover (1) by pulling upward.
2. Perform fuel pressure bleed procedure. Refer to **FUEL SYSTEM PRESSURE RELEASE PROCEDURE** .
3. Disconnect and isolate the negative battery cable.

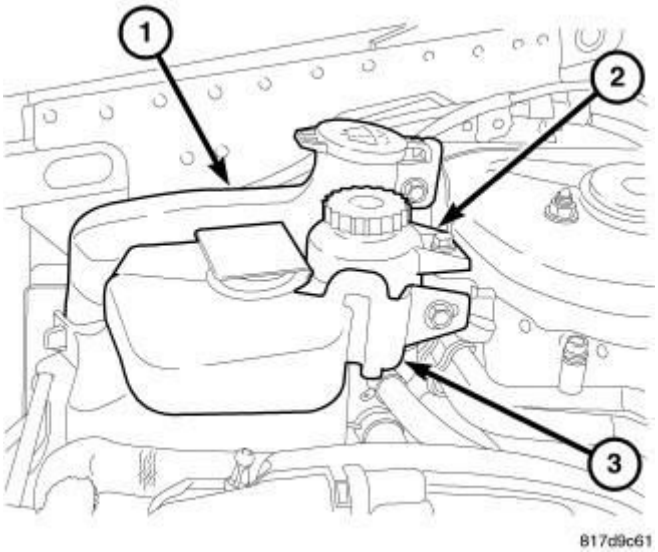

Fig. 365: Windshield Washer Bottle, Power Steering Reservoir & Coolant Reservoir
Courtesy of CHRYSLER GROUP, LLC

4. Remove coolant recovery bottle (3). Refer to **BOTTLE, COOLANT RECOVERY, REMOVAL** .
5. Remove and reposition power steering reservoir (2).
6. Remove windshield washer bottle (1). Refer to **RESERVOIR, WINDSHIELD WASHER, REMOVAL** .
7. Remove accessory drive belt. Refer to **BELT, SERPENTINE, REMOVAL** .

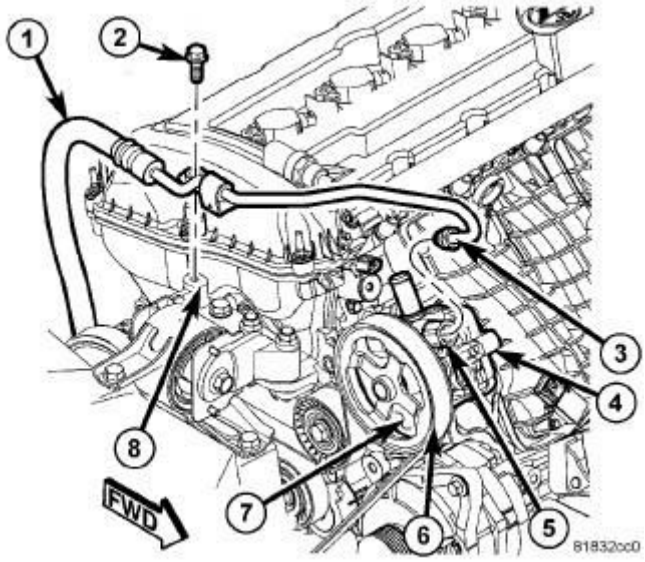

Fig. 366: Power Steering Pressure Hose
Courtesy of CHRYSLER GROUP, LLC

8. Remove power steering hose hold down (2).

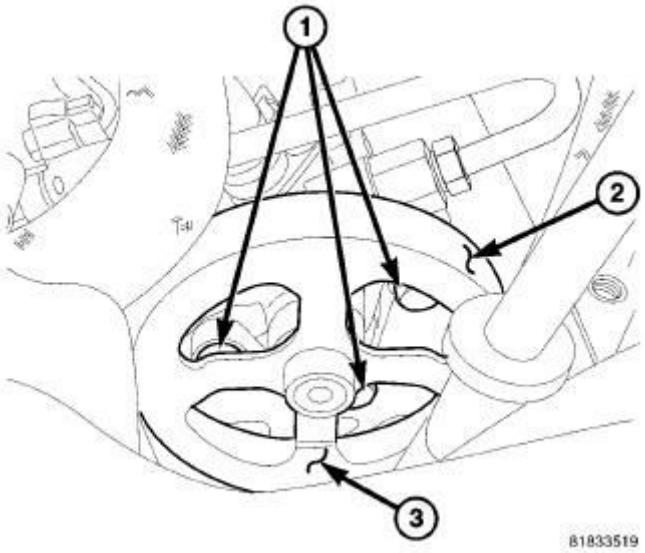

Fig. 367: Power Steering Pump Bolts & Pulley
Courtesy of CHRYSLER GROUP, LLC

9. Remove the three power steering pump mounting bolts (1) through the openings in the pulley (3) and reposition the pump.

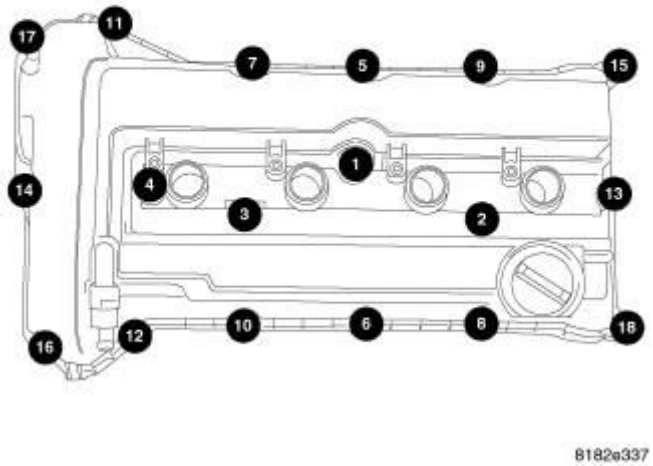

Fig. 368: Removing/Installing Cylinder Head Cover Bolts In Sequence
Courtesy of CHRYSLER GROUP, LLC

10. Remove the cylinder head cover. Refer to **COVER(S), CYLINDER HEAD, REMOVAL**.
11. Remove ignition coils from cylinder head cover.

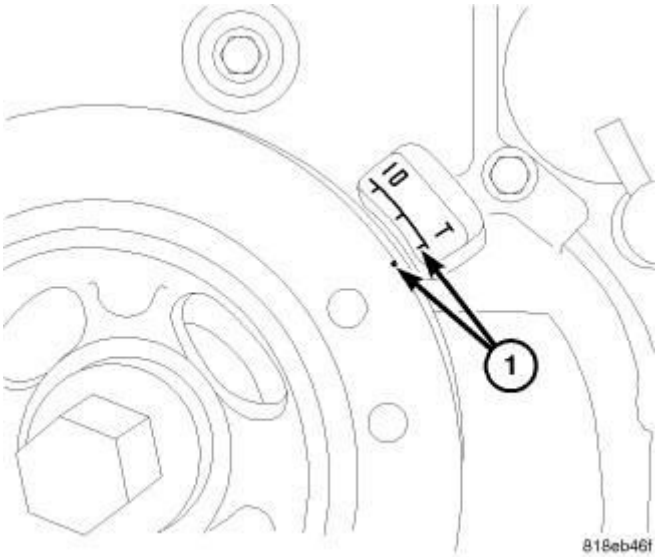

Fig. 369: Setting Engine To Top Dead Center
Courtesy of CHRYSLER GROUP, LLC

12. Raise and support the vehicle. Refer to **HOISTING, STANDARD PROCEDURE** .
13. Remove the right lower splash shield. Refer to **SHIELD, SPLASH, FRONT WHEELHOUSE, REMOVAL** .
14. Set engine to TDC (1).

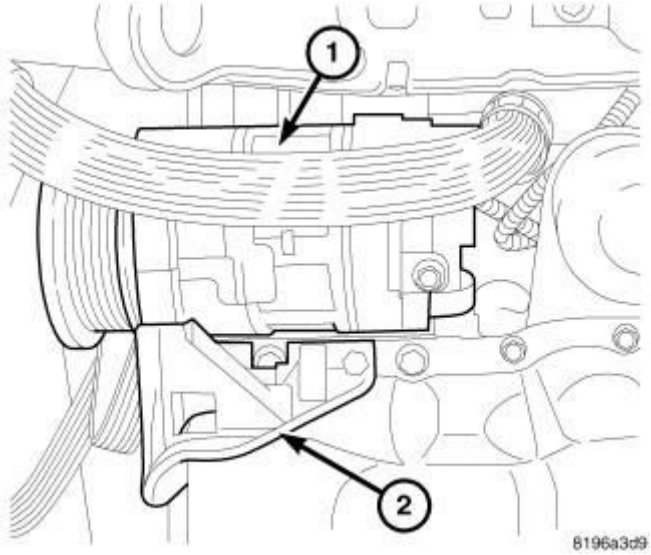

Fig. 370: A/C Compressor
Courtesy of CHRYSLER GROUP, LLC

15. Remove lower A/C compressor bolts if equipped.
16. Remove lower A/C compressor mount (2) if equipped.

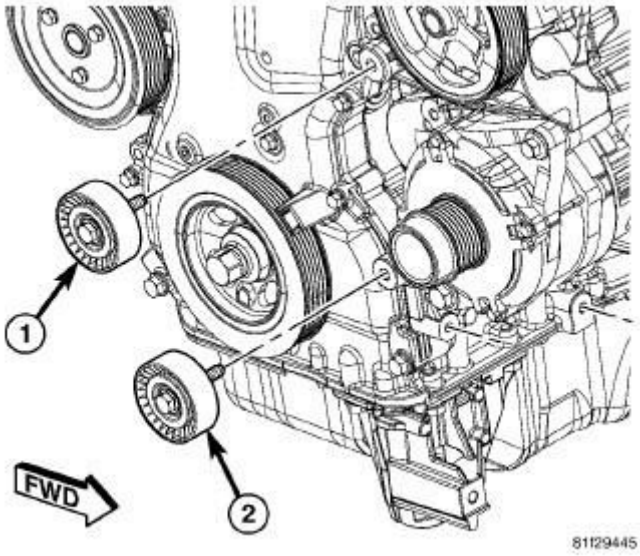

Fig. 371: Removing/Installing Accessory Drive Belt Upper & Lower Idler Pulley
Courtesy of CHRYSLER GROUP, LLC

17. Remove accessory drive belt lower idler pulley (2).

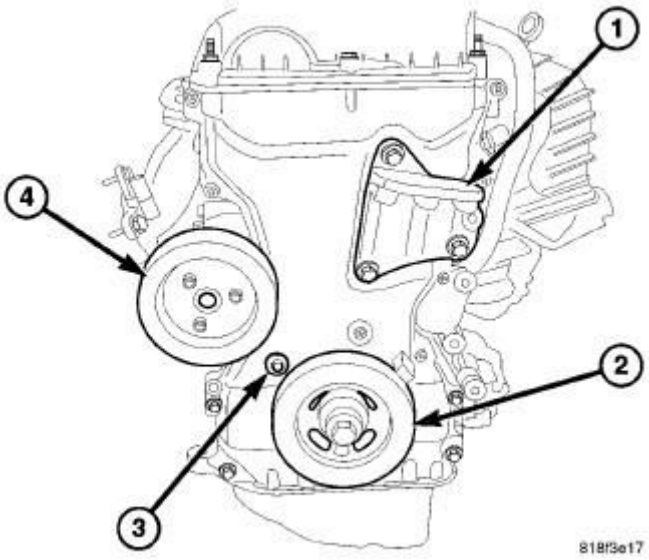

Fig. 372: Engine Front
Courtesy of CHRYSLER GROUP, LLC

18. Remove crankshaft damper (2). Refer to **DAMPER, VIBRATION, REMOVAL**.
19. Remove three bolts and water pump pulley (4) from water pump.
20. Remove lower bolt from right side engine mount bracket (1).

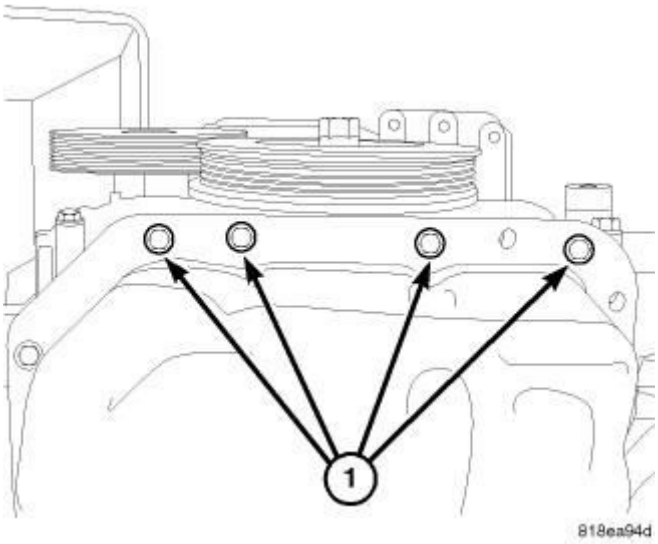

Fig. 373: Timing Chain Cover Lower Bolts
Courtesy of CHRYSLER GROUP, LLC

21. Remove timing chain cover lower bolts (1).
22. Lower vehicle.
23. Support engine with suitable jack.

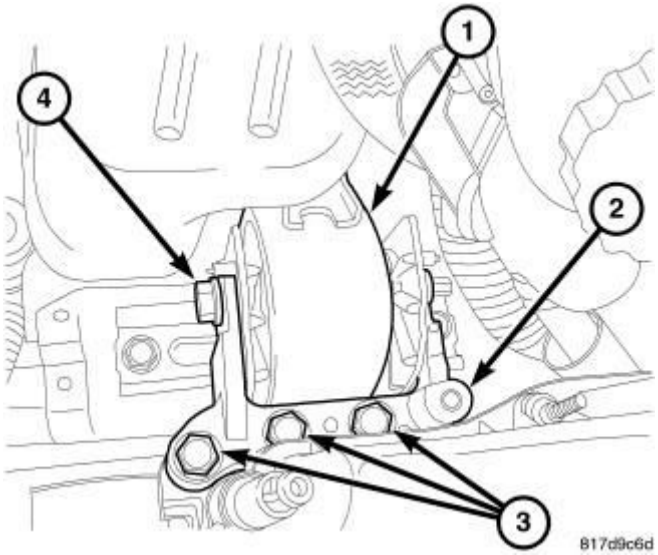

Fig. 374: Right Engine Mount Assembly
Courtesy of CHRYSLER GROUP, LLC

24. Remove right engine mount through bolt (4).
25. Remove right engine mount to mount bracket bolts (3).
26. Remove right engine mount adapter (2).

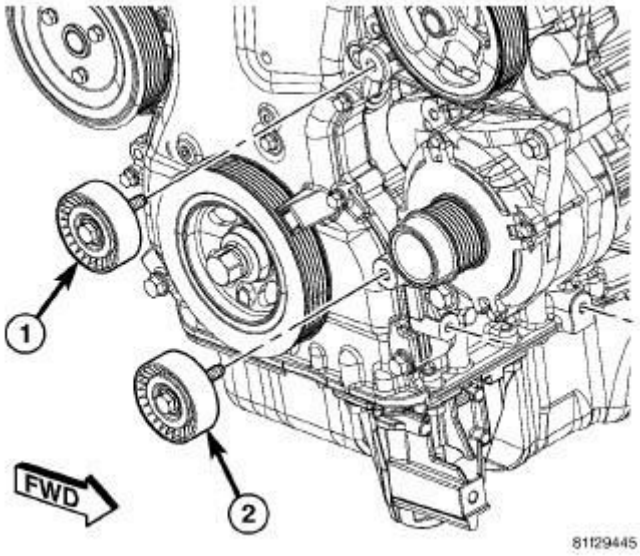

Fig. 375: Removing/Installing Accessory Drive Belt Upper & Lower Idler Pulley
Courtesy of CHRYSLER GROUP, LLC

27. Remove accessory drive upper idler pulley (1).

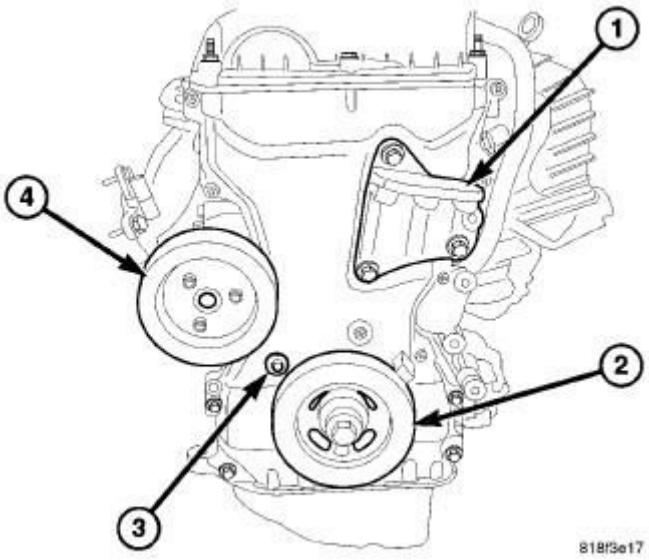

Fig. 376: Right Side Engine Mount Bracket, Crankshaft Damper & Water Pump Pulley
Courtesy of CHRYSLER GROUP, LLC

28. Remove right upper engine mount bracket (1).
29. Remove accessory drive belt tensioner.
30. Remove timing chain cover retaining bolts.

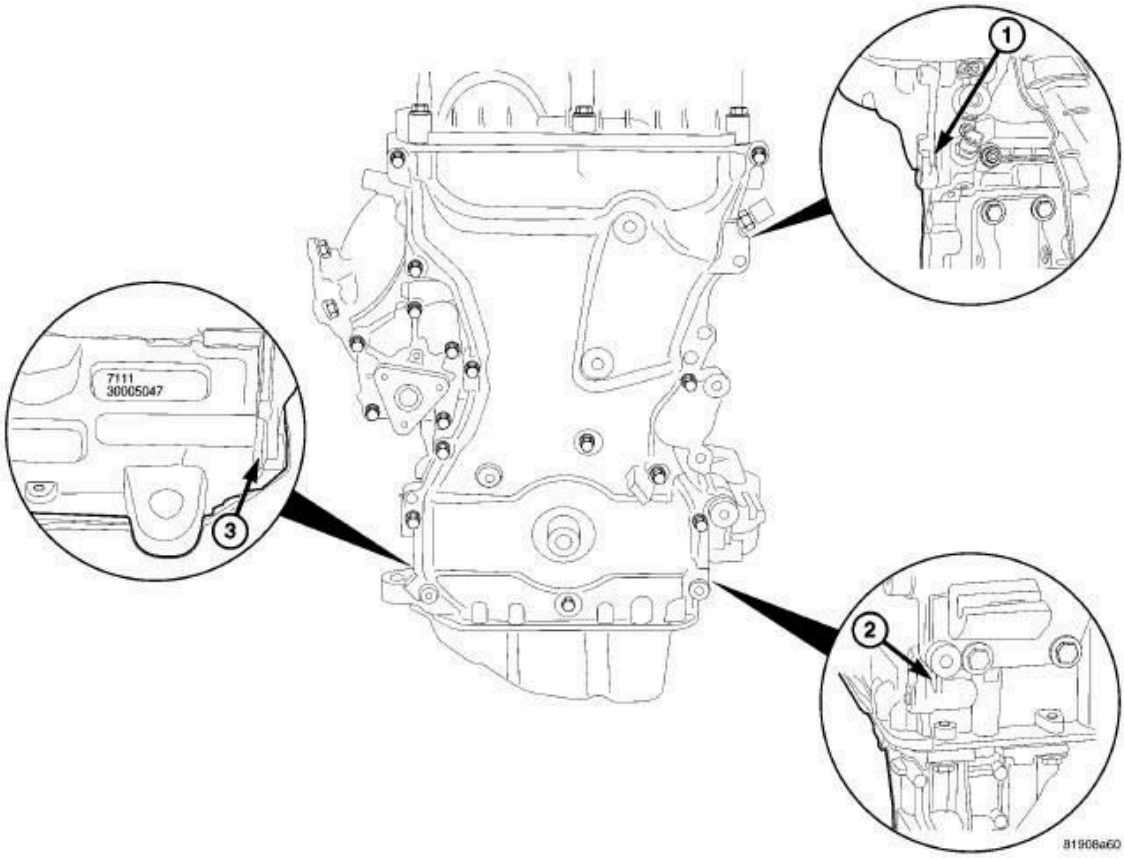

Fig. 377: Timing Chain Cover Pry Points
Courtesy of CHRYSLER GROUP, LLC

31. Remove timing chain cover using pry points (1, 2, 3).

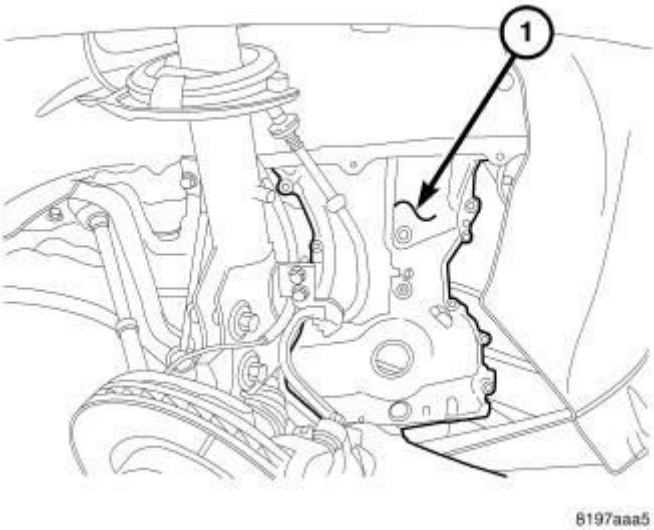

Fig. 378: Timing Chain Cover Removal & Installation
Courtesy of CHRYSLER GROUP, LLC

32. Remove timing chain cover (1) out through the bottom of the vehicle.

INSTALLATION

INSTALLATION

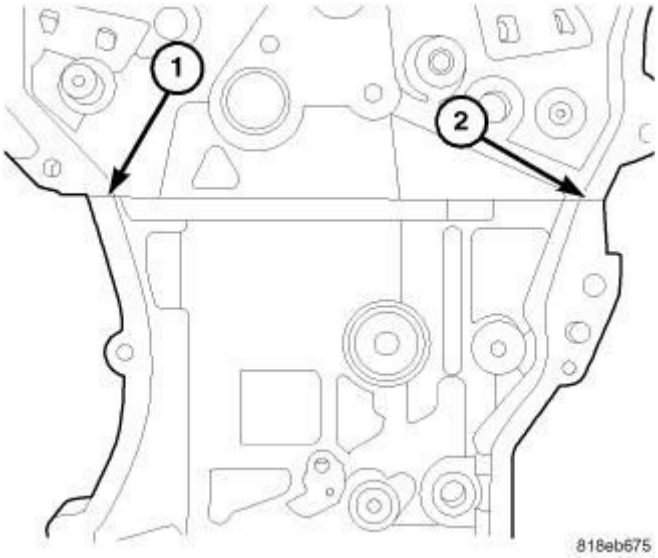

Fig. 379: Front Cover Upper T-Joints
Courtesy of CHRYSLER GROUP, LLC

NOTE: When using RTV, the sealing surfaces must be clean and free from grease and oil.

NOTE: When using RTV, parts should be assembled in 10 minutes and tighten to final torque within 45 minutes.

1. Clean all sealing surfaces. Refer to **ENGINE GASKET SURFACE PREPARATION** .
2. Apply Mopar® engine sealant RTV (or equivalent) as shown in illustration at the cylinder head to block parting line (1, 2).

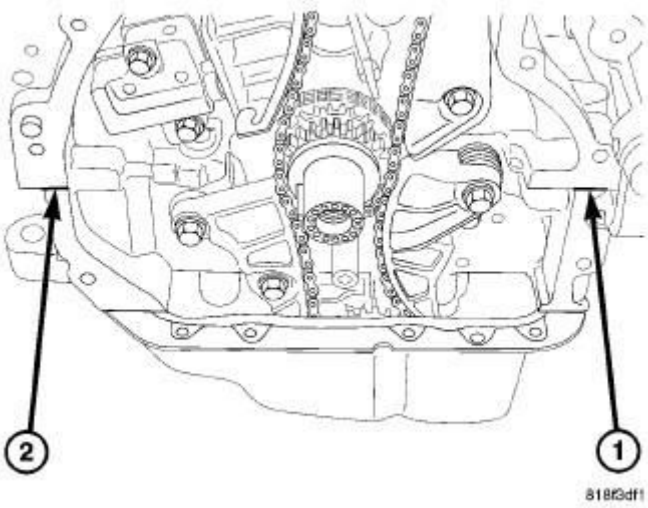

Fig. 380: Lower T-Joints
Courtesy of CHRYSLER GROUP, LLC

3. Apply Mopar® engine sealant RTV (or equivalent) as shown in illustration at the ladder frame to block parting line (1, 2).

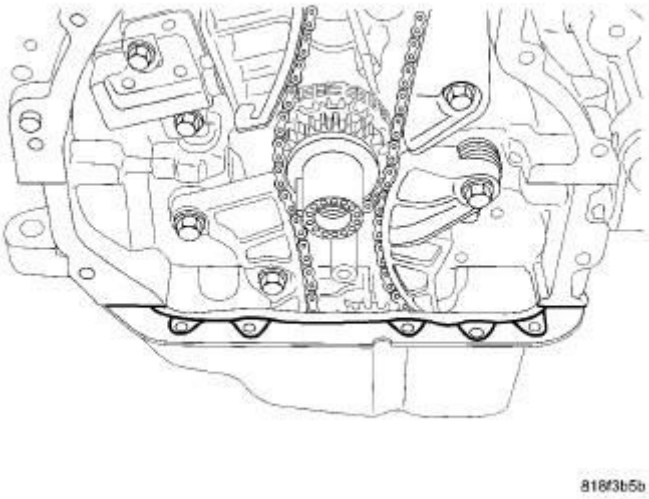

Fig. 381: Sealing Oil Pan
Courtesy of CHRYSLER GROUP, LLC

4. Apply Mopar® engine sealant RTV (or equivalent) as shown in illustration in the corner of the oil pan and block.
5. Apply 2 mm bead of Mopar® engine sealant RTV (or equivalent) to the oil pan as shown in illustration.

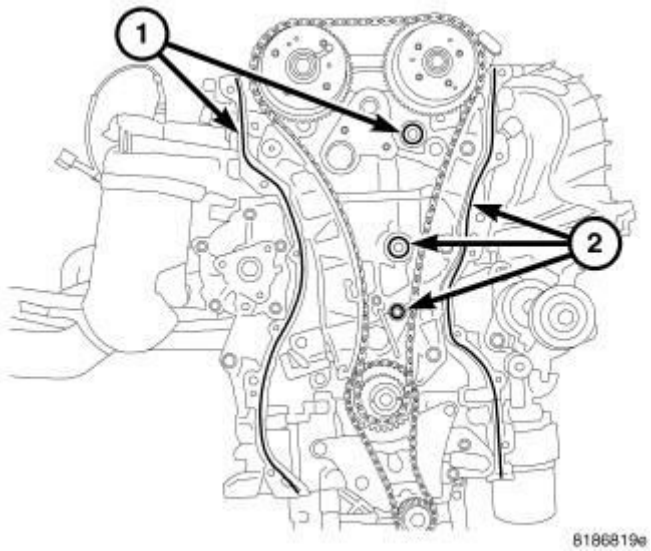

Fig. 382: Timing Chain Cover Sealing
Courtesy of CHRYSLER GROUP, LLC

6. Apply 2 mm bead of Mopar® engine sealant RTV (or equivalent) to the engine block (1, 2) as shown in illustration.

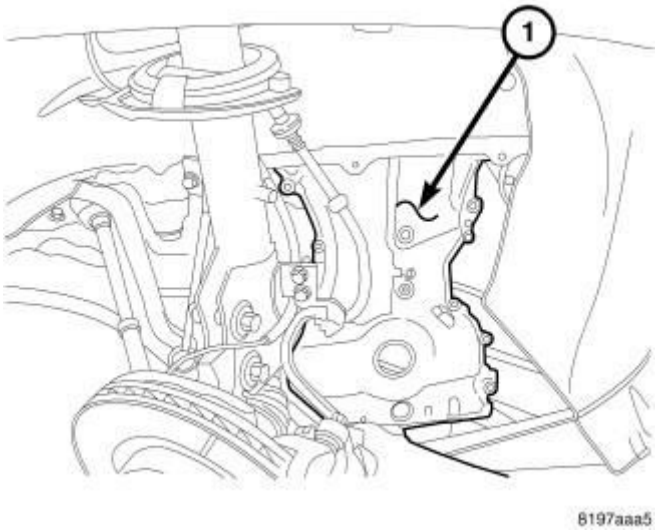

Fig. 383: Timing Chain Cover Removal & Installation
Courtesy of CHRYSLER GROUP, LLC

7. Install timing chain cover (1) upwards from under the vehicle.
8. Install timing chain cover upper retaining bolts and tighten M6 bolts to 9 N.m (80 in. lbs.) and M8 bolts to 26 N.m (230 in. lbs.).
9. Install accessory drive belt tensioner. Tighten bolt to 24 N.m (212 in. lbs.).

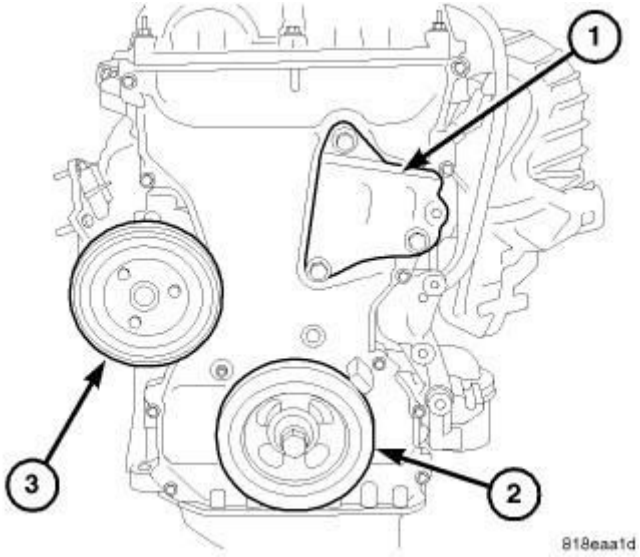

Fig. 384: Engine Mount Support Bracket, Crankshaft Vibration Damper & Water Pump Pulley
Courtesy of CHRYSLER GROUP, LLC

10. Install right engine mount bracket (1). Tighten bolts to 50 N.m (37 ft. lbs.).

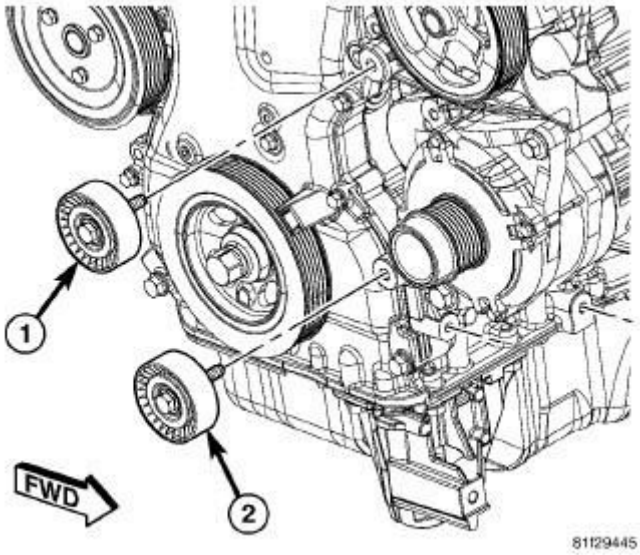

Fig. 385: Removing/Installing Accessory Drive Belt Upper & Lower Idler Pulley
Courtesy of CHRYSLER GROUP, LLC

11. Install accessory drive belt upper idler pulley (1). Tighten bolt to 48 N.m (35 ft. lbs.).

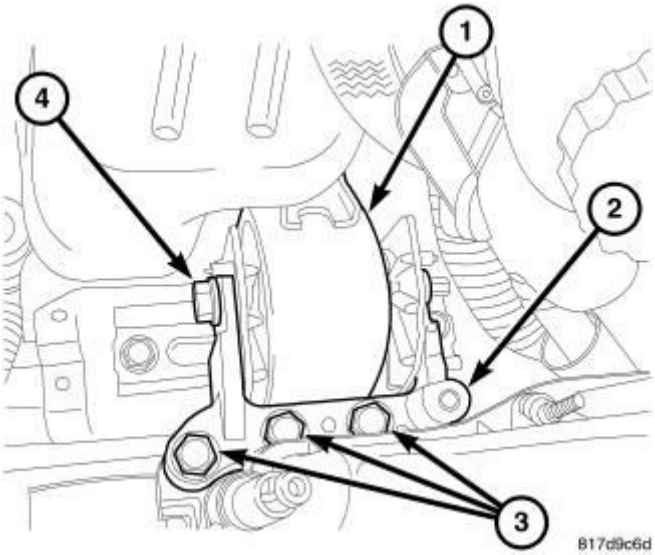

Fig. 386: Right Engine Mount Assembly
Courtesy of CHRYSLER GROUP, LLC

12. Install engine mount adapter (2) and tighten bolts (3) to 68 N.m (50 ft. lbs.).
13. Install engine mount through bolt (4) and tighten to 88 N.m (65 ft. lbs.).
14. Remove jack from under engine.

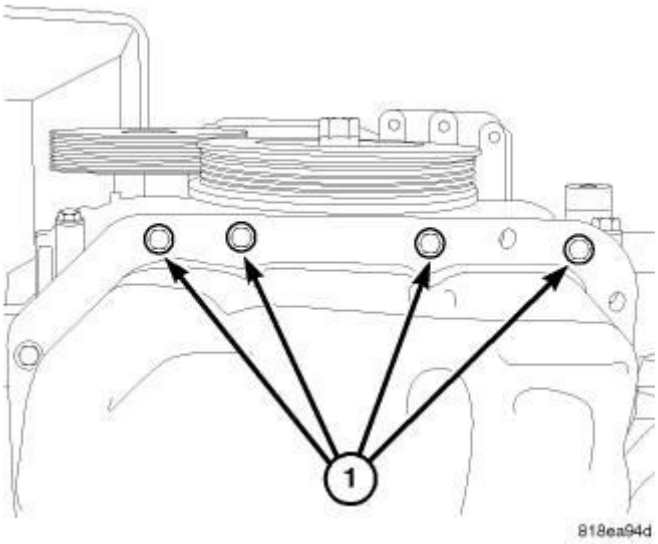

Fig. 387: Timing Chain Cover Lower Bolts
Courtesy of CHRYSLER GROUP, LLC

15. Raise and support the vehicle. Refer to **HOISTING, STANDARD PROCEDURE** .
16. Install oil pan to timing chain cover lower retaining bolts (1) and tighten M6 bolts to 9 N.m (80 in. lbs.).

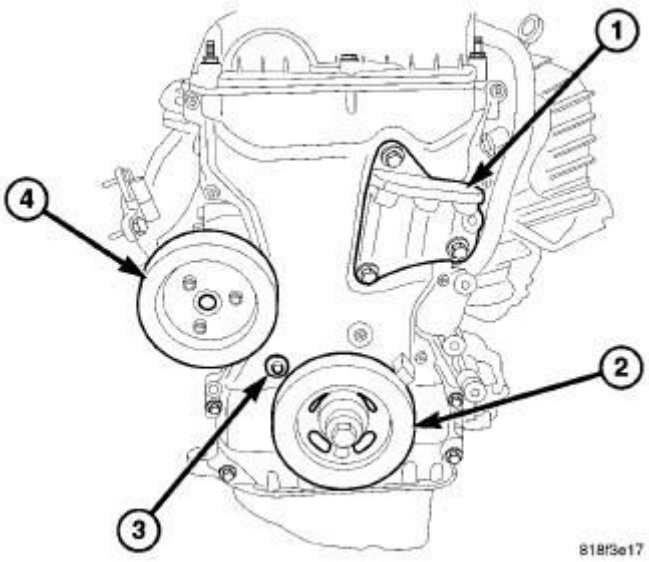

Fig. 388: Right Side Engine Mount Bracket, Crankshaft Damper & Water Pump Pulley
Courtesy of CHRYSLER GROUP, LLC

17. Install water pump pulley (4) and tighten three bolts to 9 N.m (80 in. lbs.).
18. Install crankshaft damper (2) Refer to **DAMPER, VIBRATION, INSTALLATION**.

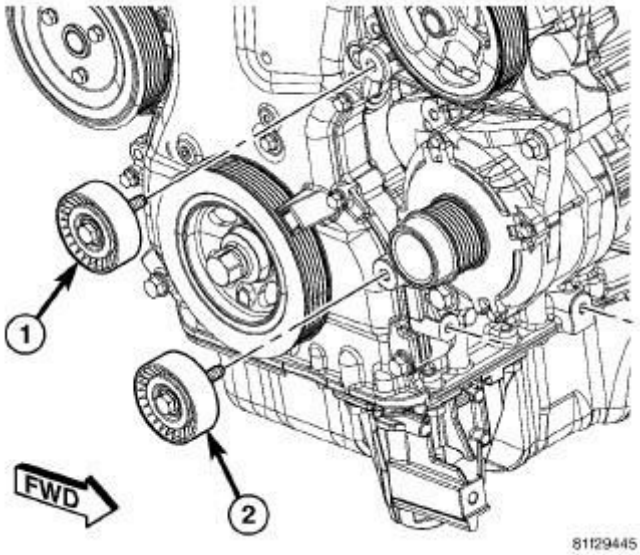

Fig. 389: Removing/Installing Accessory Drive Belt Upper & Lower Idler Pulley
Courtesy of CHRYSLER GROUP, LLC

19. Install accessory drive belt lower idler pulley (2). Tighten bolt to 48 N.m (35

ft. lbs.).

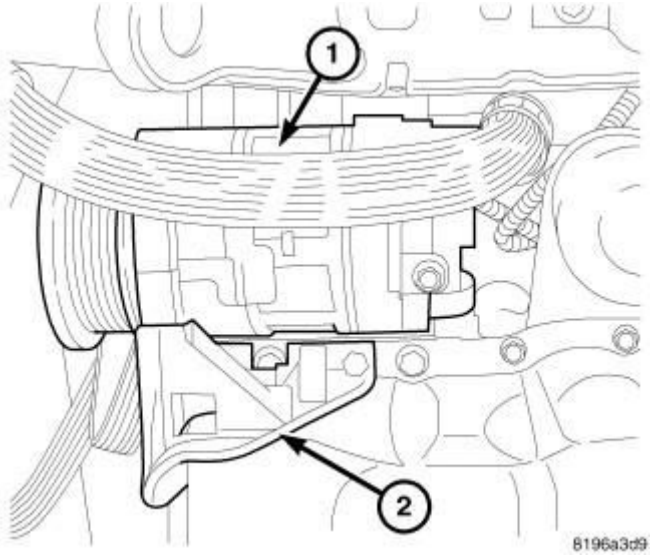

Fig. 390: A/C Compressor
Courtesy of CHRYSLER GROUP, LLC

20. Install lower A/C compressor mounting bracket (2). Tighten the bolts to 24 N.m (18 ft. lbs.).
21. Install A/C compressor (1). Tighten the bolts to 25 N.m (18 ft. lbs.).
22. Install right lower splash shield. Refer to **SHIELD, SPLASH, FRONT WHEELHOUSE, INSTALLATION** .
23. Lower vehicle.

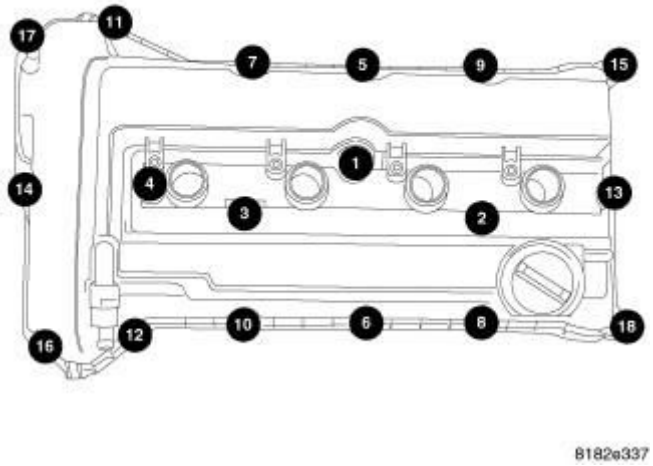

Fig. 391: Remove/Install Cylinder Head Cover Bolts In Sequence
Courtesy of CHRYSLER GROUP, LLC

24. Install cylinder head cover and ignition coils . Refer to **COVER(S), CYLINDER HEAD, INSTALLATION**.

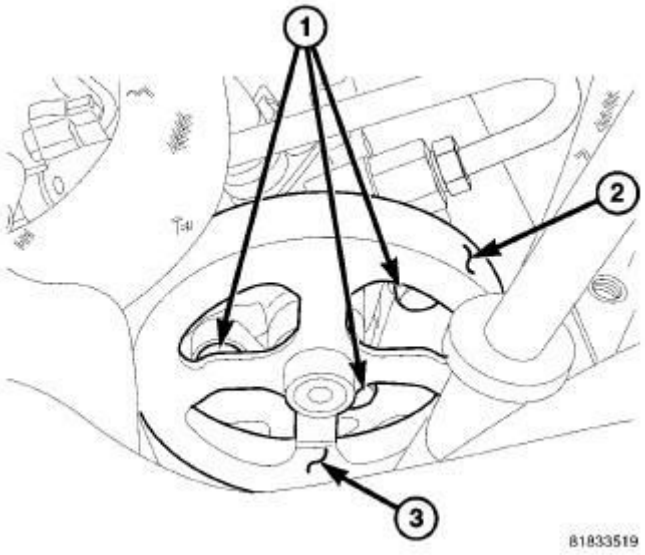

Fig. 392: Power Steering Pump Bolts & Pulley
Courtesy of CHRYSLER GROUP, LLC

25. Place the power steering pump in mounting position. Install the three bolts (1) through openings in the pulley (3). Tighten the mounting bolts (1) to 26 N.m (19 ft. lbs.).

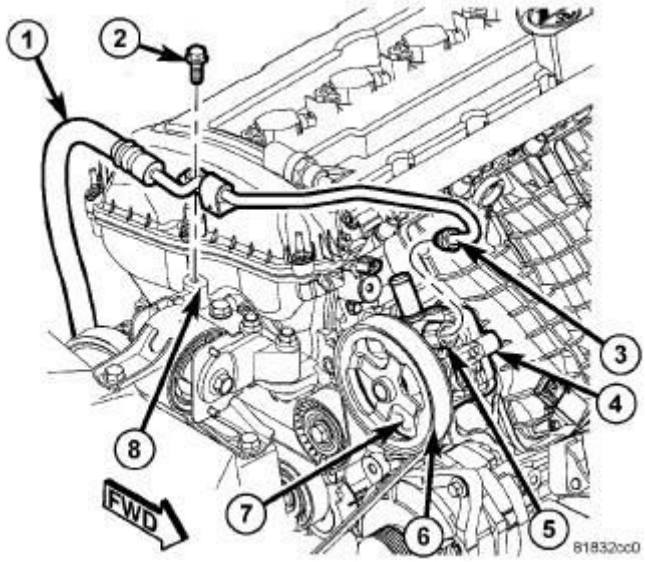

Fig. 393: Power Steering Pressure Hose
Courtesy of CHRYSLER GROUP, LLC

26. Install the power steering hose hold down (2).
27. Install accessory drive belt. Refer to **BELT, SERPENTINE, INSTALLATION** .

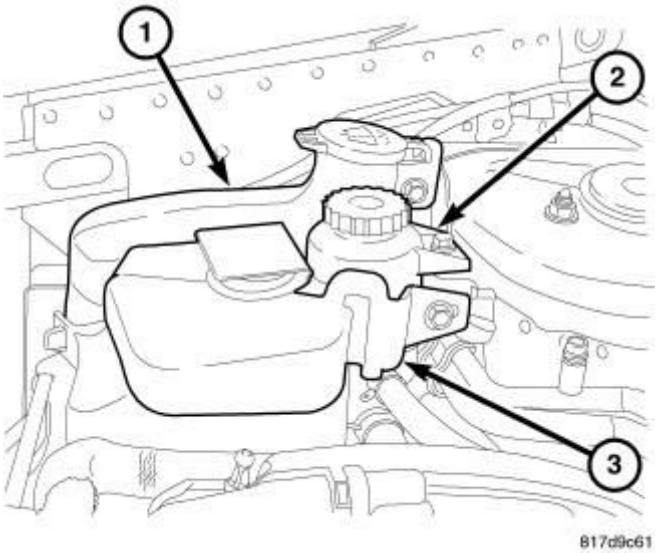

Fig. 394: Windshield Washer Reservoir, Power Steering Reservoir & Coolant Reservoir
Courtesy of CHRYSLER GROUP, LLC

28. Install power steering pump reservoir (2). Tighten mounting screw to 12 N.m (106 in. lbs.).
29. Install windshield washer reservoir (1).
30. Install coolant recovery reservoir (3). Tighten mounting bolts to 4 N.m (35 in. lbs.).

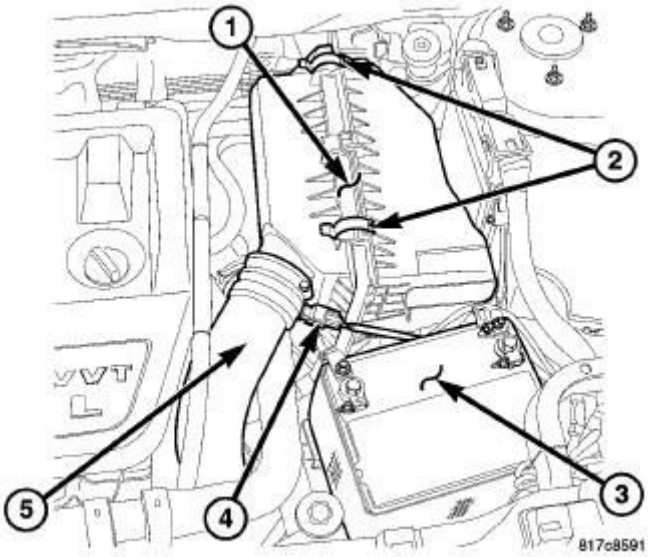

Fig. 395: Air Cleaner Housing
Courtesy of CHRYSLER GROUP, LLC

31. Install clean air hose (5) and air cleaner housing (1). Refer to **BODY, AIR CLEANER, INSTALLATION**.
32. Install air cleaner housing inlet.
33. Connect negative battery cable.

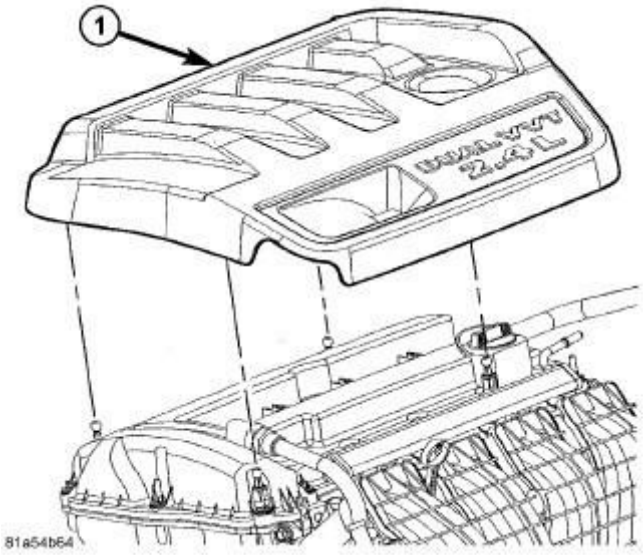

Fig. 396: Engine Cover
Courtesy of CHRYSLER GROUP, LLC

34. Operate engine until it reaches normal operating temperature. Check oil system for leaks and correct fluid level.
35. Install engine cover (1).

TENSIONER, ENGINE TIMING

REMOVAL

REMOVAL

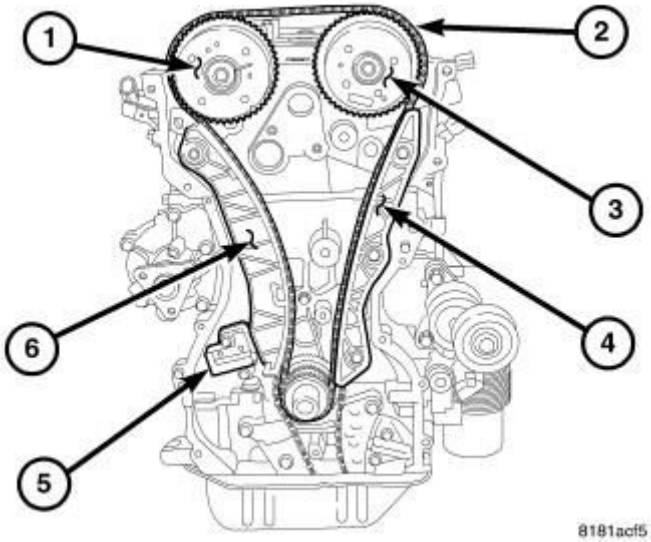

Fig. 397: Timing Drive System
Courtesy of CHRYSLER GROUP, LLC

1. Remove the engine timing cover. Refer to **COVER(S), ENGINE TIMING, REMOVAL**.

NOTE: Tensioner will not come apart during removal.

2. Remove timing chain tensioner retaining bolts and remove tensioner (5).

INSTALLATION

INSTALLATION

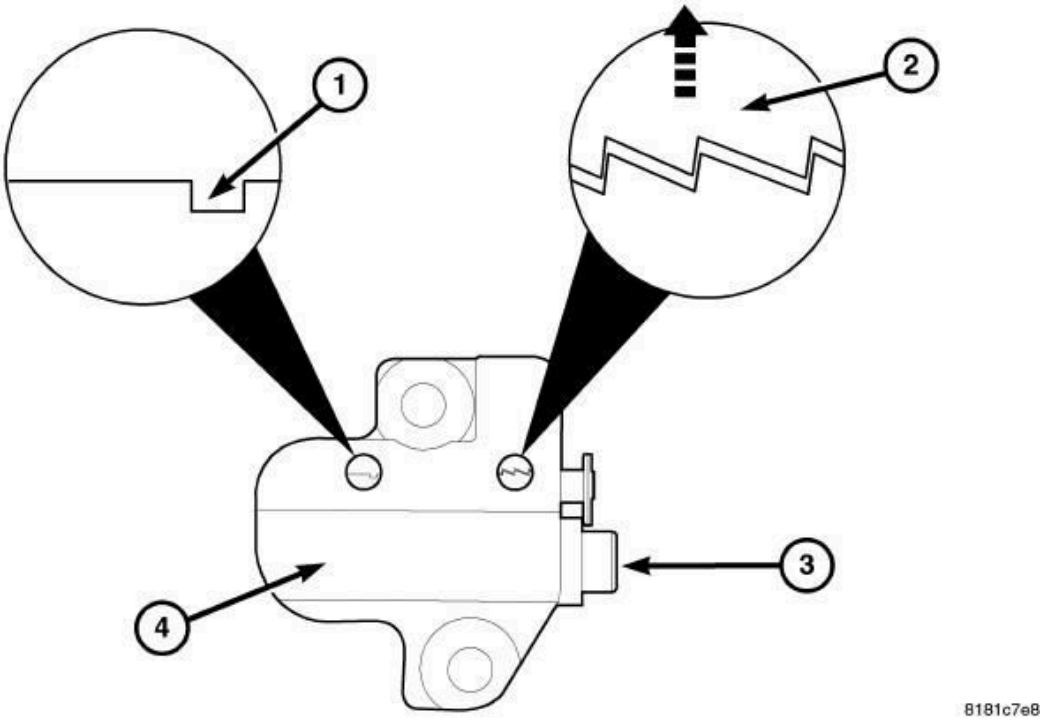

Fig. 398: Tensioner Reset
Courtesy of CHRYSLER GROUP, LLC

1. Reset timing chain tensioner (4) by lifting up on ratchet (2) and pushing plunger (3) inward towards the tensioner body (4). Insert Tensioner Pin (special tool #8514, Pins, Tensioner) into slot (1) to hold tensioner plunger in the retracted position.

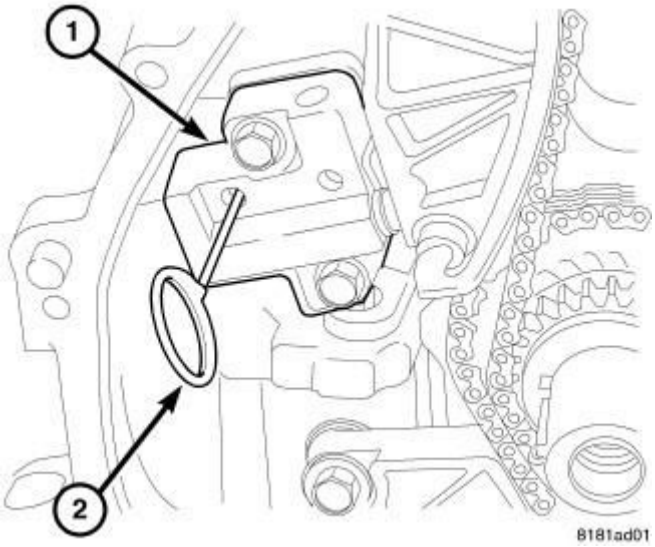

Fig. 399: Timing Chain Tensioner
Courtesy of CHRYSLER GROUP, LLC

NOTE: Keep the slack in the timing chain on the tensioner side.

2. Install timing chain tensioner (1) and tighten bolts to 12 N.m (105 in. lbs.).
3. Remove timing Tensioner Pin (special tool #8514, Pins, Tensioner) (2).
4. Install the engine timing cover Refer to **COVER(S), ENGINE TIMING, INSTALLATION**.

2014 ENGINE

2.2L Diesel - Service Information - Compass & Patriot

DESCRIPTION

DESCRIPTION

This 2.2 Liter four-cylinder Common Rail Diesel Injection (CDI) engine is an in-line overhead valve diesel engine. This engine utilizes a cast iron cylinder block and an aluminum cylinder head. The engine is turbocharged and intercooled. This engine also has four valve per cylinder and dual overhead camshafts.

STANDARD PROCEDURE

DUST COVERS AND CAPS

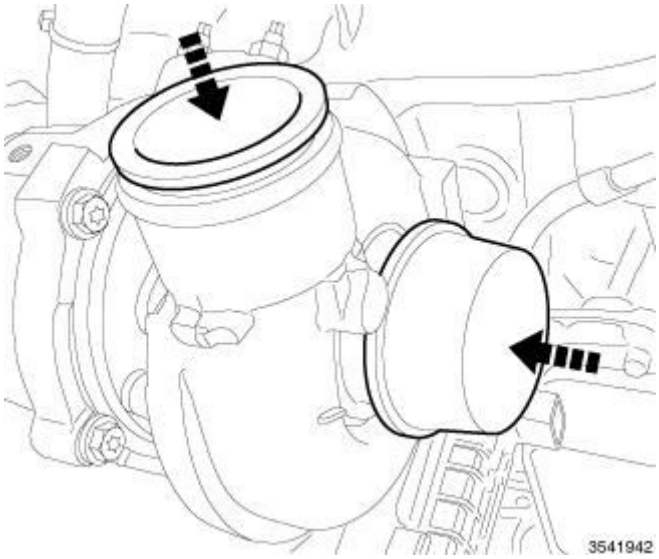

Fig. 1: Covers/Caps
Courtesy of CHRYSLER GROUP, LLC

Due to the high amounts of failures caused by dust, dirt, moisture and other foreign debris being introduced to the engine during service. Covers or caps are needed to reduce the possible damage that can be caused or created.

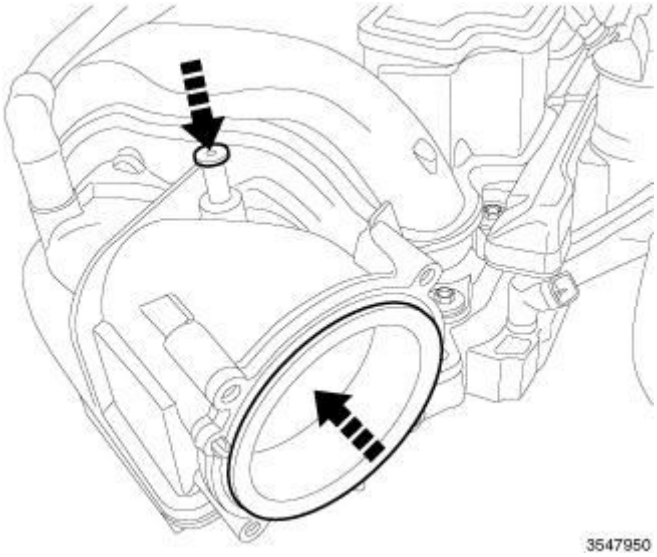

Fig. 2: Opening Cover
Courtesy of CHRYSLER GROUP, LLC

Covers over openings will reduce any possibilities for foreign materials to enter the engine systems. Using miller tool (special tool #10368, Set, Universal Protective Cap), Select the appropriated cover needed to the procedure.

ENGINE GASKET SURFACE PREPARATION

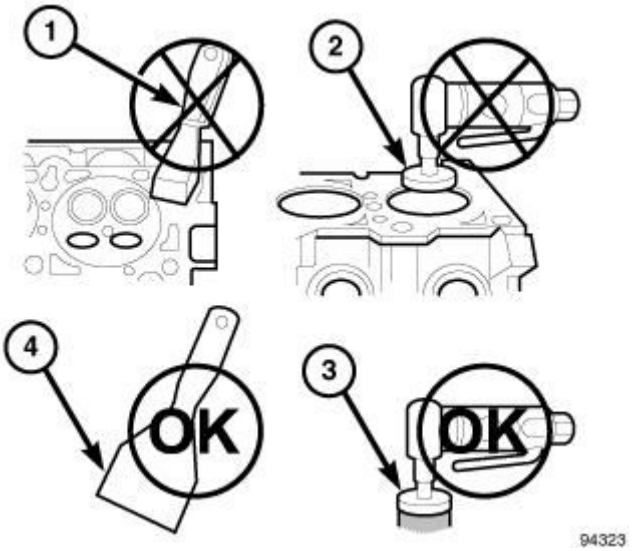

Fig. 3: Proper Tool Usage For Surface Preparation
Courtesy of CHRYSLER GROUP, LLC

To ensure engine gasket sealing, proper surface preparation must be performed, especially with the use of aluminum engine components and multi-layer steel cylinder head gaskets.

Never use the following to clean gasket surfaces:

- Metal scraper (1).
- Abrasive pad or paper to clean cylinder block and head.
- High speed power tool with an abrasive pad or a wire brush (2).

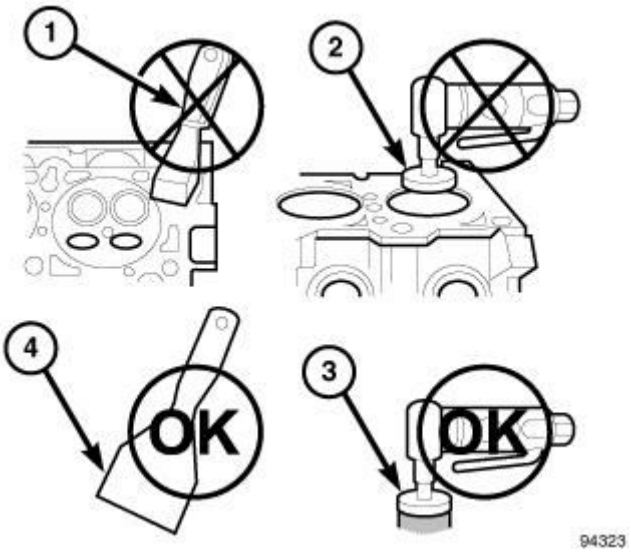

Fig. 4: Proper Tool Usage For Surface Preparation
Courtesy of CHRYSLER GROUP, LLC

NOTE: Multi-Layer Steel (MLS) head gaskets require a scratch free sealing surface.

Only use the following for cleaning gasket surfaces:

- Solvent or a commercially available gasket remover
- Plastic or wood scraper (4).
- High speed power tool with a plastic bristle brush style disc (3).

Sealing surfaces must be free of grease or oil residue. Clean surfaces with Mopar® brake parts cleaner (or equivalent).

COMPRESSION TESTING ENGINE

1. Warm up engine to operating temperature (approximately 80°C, 176°F).
2. Shut off engine.
3. Remove engine cover.
4. Disable the fuel pump to prevent fuel from being pumped.

5. Remove injectors. Refer to **INJECTOR(S), FUEL, REMOVAL** .
6. Crank engine several times with the starter to eliminate combustion residues in the cylinders.

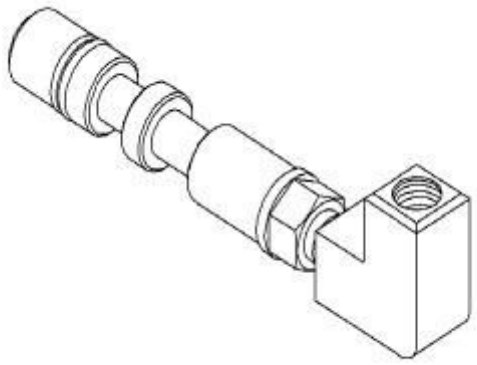

Fig. 5: #9543 Adapter
Courtesy of CHRYSLER GROUP, LLC

7. Insert Adapter (special tool #9543, Adapter, Compression Test) into injector hole of cylinder to be tested. Install injector retainer.
8. Test compression pressure by cranking engine with starter for at least 8 revolutions.
9. Carry out test procedure at the remaining cylinders in the same way.
10. Compare pressure readings obtained with the specified pressures. Refer to **2.2L COMPRESSION SPECIFICATION** table. If the pressure reading is below the minimum compression pressure or if the permissible difference between the individual cylinders is exceeded. Refer to ENGINE - **STANDARD PROCEDURE** .

2.2L COMPRESSION SPECIFICATION

COMPRESSION SPECIFICATION	
Minimum Allowable	18 bar (261 psi.)
Maximum Allowable Difference Between Cylinders	3 bar (44 psi.)
Average Compression Ratio	24 - 30 bar (348 - 435 psi)

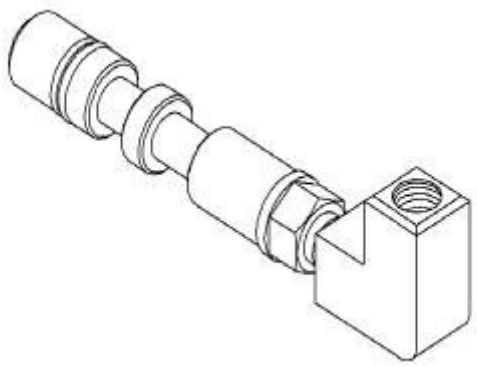

Fig. 6: #9543 Adapter
Courtesy of CHRYSLER GROUP, LLC

11. Remove Adapter (special tool #9543, Adapter, Compression Test) from cylinder head.
12. Install injectors. Refer to **INJECTOR(S), FUEL, INSTALLATION** .
13. Install engine cover. Refer to **INSTALLATION**.

CYLINDER LEAK DOWN TEST

1. Warm engine to operating temperature.

WARNING: Do not open cooling system unless coolant temperature is below 90°C (194°F). Risk of injury to skin and eyes as a result of scalding with hot coolant which splashes out. Risk of poisoning from swallowing coolant. Open cap slowly and release pressure. Store coolant in proper containers only. Wear protective gloves, clothing and eye protection.

NOTE: Turn cap carefully as far as first detent, release pressure, then unscrew cap.

2. Open cooling system cap at coolant recover pressure container.
3. Remove engine cover.
4. Unscrew oil filler cap.
5. Remove glow plugs. Refer to **PLUG, GLOW, REMOVAL** .

NOTE: Crank engine at crankshaft in direction of rotation of the engine (clockwise).

6. Position cylinder to be tested to ignition Top Dead Center (DTC).

NOTE: Calibrate cylinder leak down tester and remove check valve in screw-in fitting.

7. Connect cylinder leak down tester and follow INSPECTING Instruction.

INSPECTING

NOTE: If crankshaft rotates, install retaining lock for crankshaft/ring gear.

1. Pressurize cylinder with compressed air and read off pressure loss at cylinder leak tester. If excessive pressure loss exists, determine cause by viewing the paragraph below.

NOTE: If the retaining lock is installed, remove it, rotate engine and install lock once again.

2. Carry out test of other cylinders in the firing order of engine.

DETERMINING PRESSURE LOSS

If a great pressure loss was detected, listen using a stethoscope around suspected areas, such as the cylinder head gasket through the air suction area, the exhaust system, the oil filler neck, the pre-chamber, the bore wholes of the cylinder effected or neighboring cylinders. Observe the coolant in the expansion tank, looking for traces of bubbles.

The possible causes of pressure loss are:

- If air leak is detected through the prechamber, cylinder bore hole, from a neighboring cylinder or air bubbles in the coolant expansion tank, pressure loss may be caused by the cylinder head gasket.
- If the air leak occurs in the air suction area, the pressure loss may be caused by the intake valve(s).

- Air leak through the exhaust system, may be caused by the exhaust valve(s).
- Air leak through the oil filler neck, may be caused by piston, ring, or cylinder sleeve.

If none of the above evidence supports a failure, the engine may be assembled and run until operating temperature is reached. Reconnect engine leak down tester on a warm engine with a few drops of clean engine oil in the cylinder being tested. Engine oil seals the clearance between the piston and cylinder for a short length of time. If under this condition a smaller pressure loss occurs for a shorter length of time, it is possible that the cause is piston, ring or cylinder sleeve related.

CHECKING OIL PRESSURE

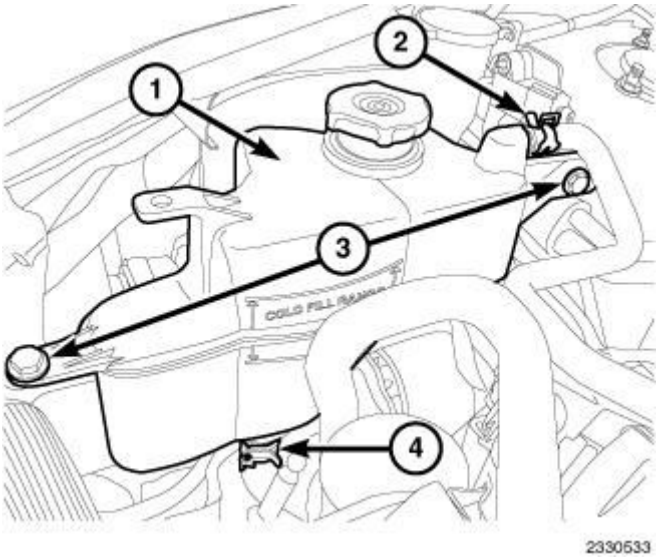

Fig. 7: Coolant Recovery Reservoir, Clamps & Bolts
Courtesy of CHRYSLER GROUP, LLC

1. Remove engine cover.
2. Remove the bolts (3) and position aside the coolant recovery reservoir (1).

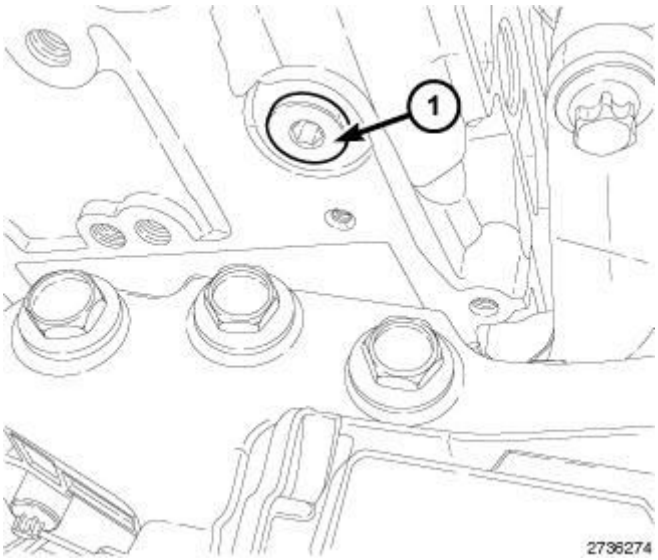

Fig. 8: Oil Galley Plug
Courtesy of CHRYSLER GROUP, LLC

3. Remove oil galley plug (1) from the cylinder head.

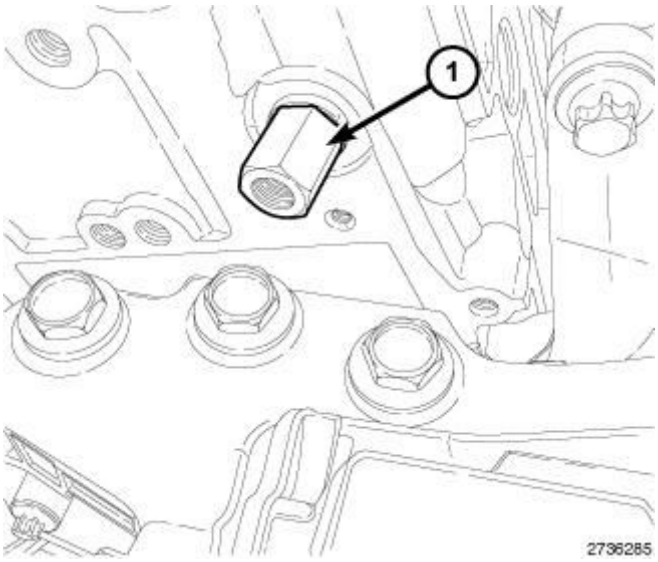

Fig. 9: Test Adaptor Fitting
Courtesy of CHRYSLER GROUP, LLC

4. Install the Test Adaptor Fitting (special tool #10239, Adapter, Tester) (1) with seal onto cylinder head.
5. Install oil pressure gauge into Test Adaptor Fitting (special tool #10239, Adapter, Tester) (1).
6. Check oil level, adjust with correct engine oil if necessary.
7. Insert temperature probe or a remote thermometer into oil level indicator tube.

WARNING: Use extreme caution when engine is operating. Do not stand in a direct line with fan. Do not put your hands near pulleys, belts or fan. Do not wear loose clothes.

CAUTION: Ensure that fan and accessory drive belt DO NOT damage oil pressure gauge hose.

8. Start engine and bring to operating temperature 90°C (194°F).
9. Record engine oil pressure at idle.
10. Raise engine speed to 3000 RPM and record oil pressure.
11. At normal operating temperature the oil pressure must not drop below 3 bar (44 psi.). When engine speed is raised, oil pressure must rise with out delay and be no less than 3 bar (44 psi.) at 3000 RPM.
12. If oil pressure is out of range, determine cause.

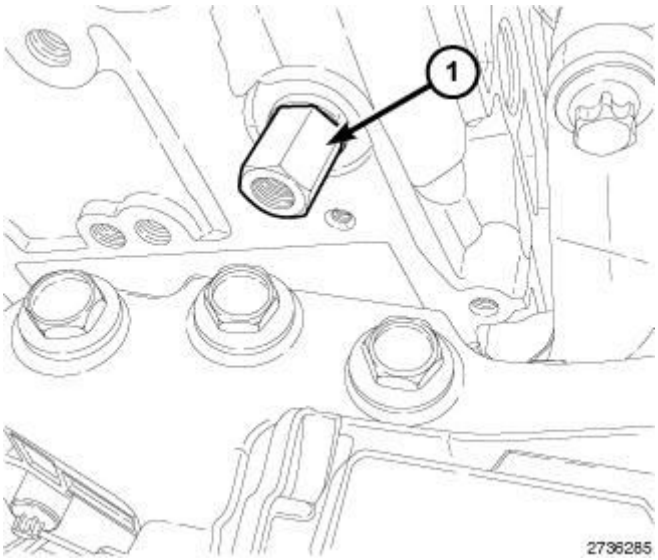

Fig. 10: Test Adaptor Fitting
Courtesy of CHRYSLER GROUP, LLC

13. Remove oil pressure gauge from Test Adaptor Fitting (special tool #10239, Adapter, Tester) (1).
14. Remove the Test Adaptor Fitting (special tool #10239, Adapter, Tester) (1) with seal from the cylinder head.

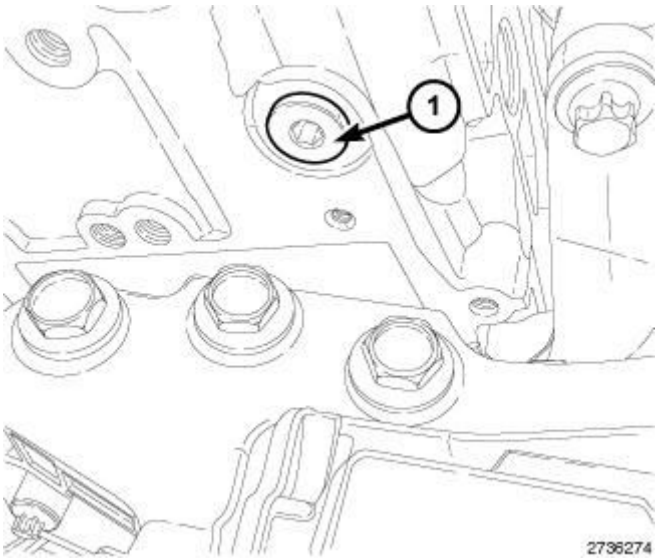

Fig. 11: Oil Galley Plug
Courtesy of CHRYSLER GROUP, LLC

15. Install the oil galley plug (1) into the cylinder head and securely tighten plug.

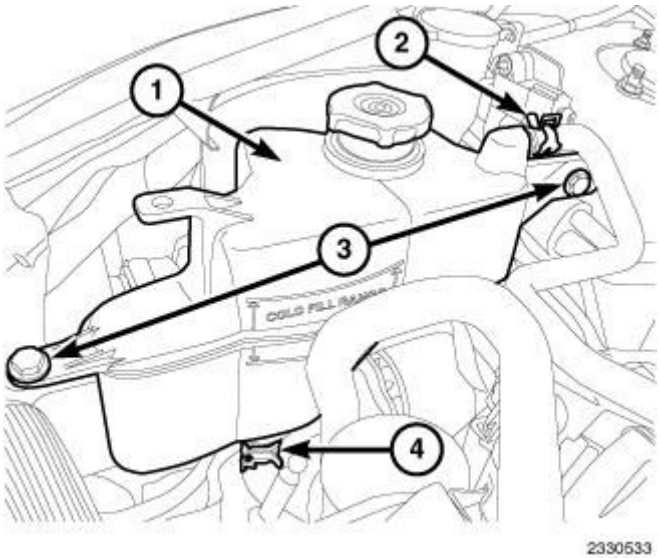

Fig. 12: Coolant Recovery Reservoir, Clamps & Bolts
Courtesy of CHRYSLER GROUP, LLC

16. Install coolant recovery bottle (1). Tighten bolts to 4 N.m (35 lbs. in.).
17. Install the engine cover.

SPECIFICATIONS

SPECIFICATION

GENERAL SPECIFICATIONS

DESCRIPTION	SPECIFICATION
Engine	2.2L CDI
Engine Description	4 Cylinder In-Line Engine With 4-Valve Technology
Fuel Injection System	Common Rail Diesel Injection (CDI)
Fuel	Diesel
Rated Output	85/4200 kW at RPM
Torque	250/1400-2600 N.m at RPM
Maximum Speed	4600 RPM
Compression Ratio	18:0
Bore/Stroke	88.0/88.3 mm
Eff. Displacement	2148 cm3

CRANKSHAFT BEARINGS		
Description	**Metric**	**Standard**
Basic Bore Diameter	64.000 mm - 64.019 mm	2.519 - 2.520 in.
Basic Bore With Fitted Bearing	21.447 mm - 21.480 mm	0.8443 - 0.8456 in.
Permissible Out-of-Roundness	0.007 mm	0.0003 in.

CRANKSHAFT MAIN BEARING SHELLS		
Description	**Metric**	**Standard**
Replacement Part Number	Bearing Shell Thickness	
52 Blue Color Coding	2.000 mm - 2.007 mm	0.087 - 0.0790 in.
54 Yellow Color Coding	2.007 mm - 2.014 mm	0.0790 - 0.0792 in.
56 Red Color Coding	2.014 mm - 2.021 mm	0.0792 - 0.0795 in.

CRANKSHAFT BEARING CLEARANCE (WHEN NEW)		
Description	**Metric**	**Standard**
Radial	0.028 mm - 0.063 mm	0.0011 - 0.0024 in.
Axial	0.110 mm - 0.300 mm	0.0043 - 0.0118 in.

PISTON RING VERTICAL CLEARANCE		
Description	**Metric**	**Standard**
Piston Ring Groove 1	0.12 mm - 0.16 mm	0.0047 - 0.0062 in.
Piston Ring Groove 2	0.035 mm - 0.08 mm	0.0013 - 0.0031 in.
Piston Ring Groove 3	0.03 mm - 0.07 mm	0.0011 - 0.0027 in.

PISTON RING END GAP		
Description	**Metric**	**Standard**
Piston Ring Groove 1	0.27 mm - 0.37 mm	0.0106 - 0.0145 in.
Piston Ring Groove 2	0.8 mm- 1.0 mm	0.0031 - 0.039 in.
Piston Ring Groove 3	0.2 mm - 0.4 mm	0.0078 - 0.0157 in.

TORQUE

DESCRIPTION	N.m	Ft. Lbs.	In. Lbs.
A/C Compressor Bolts	32	24	-
A/C Compressor Bracket Bolts	45	33	-
A/C Compressor Lines at Compressor	20	-	177
Accessory Drive Belt Tensioner			
M8 Bolt	20	-	177
M10 Bolt	45	33	-
Accessory Drive Idler Pulley Bolt	45	33	-
Accessory Carrier			
M6	9	-	80
M8	20	-	177
Air Cleaner Bracket Bolt	9	-	80
Air Cleaner Mounting Bracket Bolt	11	-	97
Air Cleaner Mounting Bracket Nut	11	-	97
Air Temp/Pressure Sensor	8	-	70
Balance Shaft/Crankshaft Bearing Cap Bolts	60 + 90°	44 + 90°	-

Balance Shaft Drive Gear Bolts	50 + 90°	37 + 90°	-
Battery Clamp Bolt	7	-	62
Battery Tray Bolts	11	-	97
Battery Tray Nut	11	-	97
Boost Pressure Sensor Bolts	8	-	71
Camshaft Bearing Cap Bolts	Refer to **CAMSHAFT, ENGINE, INSTALLATION**.		
Camshaft Position (CMP) Sensor	9	-	80
Camshaft Sprocket Bolt	55 + 90°	41 + 90°	-
Charge Air Cooler (CAC) Clamp - Intercooler Side	25	18	-
Charge Air Cooler (CAC) Clamp - Turbocharger Side	5	-	44
Charge Air Muffler Bracket Bolt	9	-	80
Charge Air Cooler Tube Bolt	9	-	80
Coolant Recovery Bottle	4	-	35
Connecting Rod Caps Bolts	Refer to **ROD, PISTON AND CONNECTING, INSTALLATION**.		
Crankshaft Position (CKP) Sensor	8	-	71
Cylinder Head Bolts	Refer to **CYLINDER HEAD, INSTALLATION**.		
Cylinder Head Cover Bolts	9	-	80
Cylinder Head to Timing Chain Cover Bolts	20	-	177
DRV Valve	Refer to **RAIL, FUEL, INSTALLATION** .		
EGR Air Flow Control Valve	9	-	80
EGR Back Pressure Transducer	25	18	-
EGR Bypass Vacuum Diaphragm Bolts	12	-	106
EGR Bypass Valve Bolts	9	-	80
EGR Cooler Bolts	9	-	80
EGR Cooler Support Bracket Bolts	9	-	80

EGR Crossover Pipe to Exhaust Manifold Bolts	12 + 90°	-	106 + 90°
EGR Crossover Pipe Heat Shield Bolts	8	-	71
EGR Crossover Pipe to Upper Chain Case Cover Bolts	9	-	80
EGR Cooler Manifold Bolts	9	-	80
EGR Support Bracket Bolts	9	-	80
EGR Temperature Sensor	45	33	-
EGR Tube Bolts	9	-	80
EGR Vacuum Solenoid Bolts	9	-	80
EGR Valve Bolts	15	-	133
Engine Lifting Bracket Front	9	-	80
Engine Lifting Bracket Rear	9	-	80
Engine Carrier Mount at Engine Block Bolts	25	18	-
Engine Mount Bracket Bolt	68	50	-
Engine Mount to Frame Rail Bolts	75	55	-
Engine Mount Through Bolt	88	65	-
Exhaust Flex Coupler to Catalytic Converter Nuts	29	21	-
Exhaust Manifold Nuts	30	22	-
Exhaust Manifold Heat Shield Bolts	8	-	71
Flywheel Bolts	45 + 100°	33 + 100°	-
Front Coolant Tube Bolts	9	-	80
Front Fore/aft Member Bolts	78	58	-
Front Roll Mount Through Bolt	65	48	-
Front Roll Mount to Fore/aft Member	63	46	-
Front Oil Seal Carrier	9	-	80
Fuel Injector Tensioning Claw Bolt	15 + 90°	-	133 + 90°
Stage 2	+ 90°	-	+ 90°

Fuel Injector Pressure Lines at Injector Union Nut			
Stage 1	7	-	62
Stage 2	33	24	-
Fuel Injector Pressure Lines at Fuel Rail Union Nut			
Stage 1	7	-	62
Stage 2	33	24	-
Fuel Line Bracket Bolts	9	-	80
Fuel Line Heat Shield Bolts	9	-	80
Fuel Rail Bolts	14	-	124
Fuel Return Line Banjo Bolt	32	24	-
Generator Bolts	20	-	177
Generator B+ Nut	18	-	159
Generator Bracket	54	40	-
Generator D+ Nut	4	-	35
Glow Plugs	11	-	97
Glow Plugs Module Bolts	9	-	80
Glow Plugs Module Ground Wire Bolts	9	-	80
High Pressure Fuel Feed Line at High Pressure Pump Union Nut			
Stage 1	7	-	62
Stage 2	33	24	-
High Pressure Fuel Feed Line at Fuel Rail Union Nut			
Stage 1	7	-	62
Stage 2	33	24	-
High Pressure Fuel Line P-clamp Bolts	9	-	80
Idler Pulley Bolt	45	33	-
Intake Manifold Bolts	14	-	124
Intermediate Gear to Engine Block Bolt	80	59	-
Knock Sensor	20	-	177

Main Bearing Caps Bolts	Refer to **CRANKSHAFT, INSTALLATION**.		
Mixing Chamber Bolts	9	-	80
Mixing Chamber Support Bracket Bolts	9	-	80
Oil Control Valve	20	-	177
Oil Cooler Bolts	10	-	89
Oil Cooler Adapter to Engine Block Bolts	20	-	177
Oil Dipstick Tube Bolt	9	-	80
Oil Drain Plug	27	20	-
Oil Filter Cap	25	18	-
Oil Filter Housing Bolts			
M6 Bolt	10	-	89
M8 Bolt	20	-	177
Oil Jet	5	-	44
Oil Level Sensor	9	-	80
Oil Pan Bolts	Refer to **PAN, OIL, INSTALLATION**.		
Oil Pump Bolts	6 + 90°	-	53 + 90°
Oil Pump Suction Tube Bolts	6 + 90°	-	53 + 90°
Oil Temperature Sensor	18	13	-
Power Steering Pressure Hose at Steering Gear	32	24	-
Power Steering Pressure Hose at Pump	32	24	-
Power Steering Pressure Hose Support Bracket Bolt	9	-	80
Power Steering Pump/Water Pump to Oil Pan Bolts	20	-	177
Power Steering Pump Bracket at Pump	14	-	124
Power Steering Pump Bracket at Engine Block Bolts	9	-	80
Rear Fore/aft Member Bolt	129	95	-
Rear Roll Mount to	153	112	-

Crossmember Bolts			
Rear Roll Mount Through Bolt	65	48	-
Starter Motor Bolts	40	30	-
Starter Motor B+ Cable Nut	14	-	124
Starter Motor Relay Cable Nut	6	-	53
Swirl Valve Actuator Bolts	9	-	80
Thermostat Housing to Engine Block Bolts	9	-	80
Timing Chain Press Thrust Spindle	32	24	-
Timing Chain Tensioner	70	52	-
Timing Cover to Engine Block Bolts	20	-	177
Transmission to Engine Bolts	48	35	-
Transmission Mount Bolts	61	45	-
Transmission Mount to Frame Rail Bolts	75	55	-
Transmission Mount Through Bolt	100	74	-
Turbocharger to Engine Block Support Bracket	20	-	177
Turbocharger Support Bracket at Turbocharger Bolts	20	-	177
Turbocharger to Exhaust Manifold Nuts	20 + 90°	-	177 + 90°
Turbocharger Oil Feed Line Banjo Bolt at Turbocharger	24	18	-
Turbocharger Oil Feed Line Bolts at Engine Block	9	-	80
Turbocharger Oil Return Line at Turbocharger Bolts	9	-	80
Turbocharger Oil Return Line at Engine Block Bolts	9	-	80
Upper Timing Chain Cover	9	-	80
Vacuum Pump Bolts	9	-	80

Vacuum Tube Bolt	9	-	80
Vibration Damper Bolts	80 + 90°	59 + 90°	-
Wire Harness Support Bracket Bolts	9	-	80

REMOVAL

REMOVAL

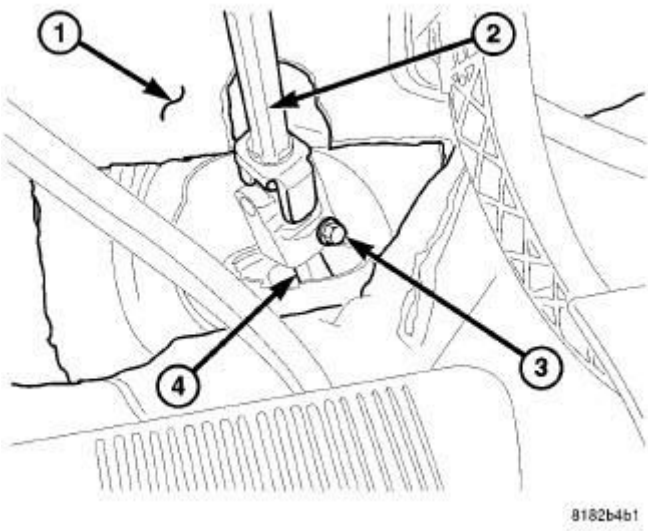

Fig. 13: Lower Coupling Bolt
Courtesy of CHRYSLER GROUP, LLC

CAUTION: When removing ancillary components, plug all inlet/outlet and fluid lines to prevent residual leakage and contamination.

1. Reposition the floor carpeting to access the intermediate shaft coupling at the base of the column.
2. Position the front wheels of vehicle in the STRAIGHT-AHEAD position, then turn the steering wheel to the right until the intermediate shaft coupling bolt (3) at the base of the column can be accessed.
3. Remove the intermediate shaft coupling bolt (3). Do not separate the intermediate shaft (2) from the steering gear pinion shaft (4) at this time.

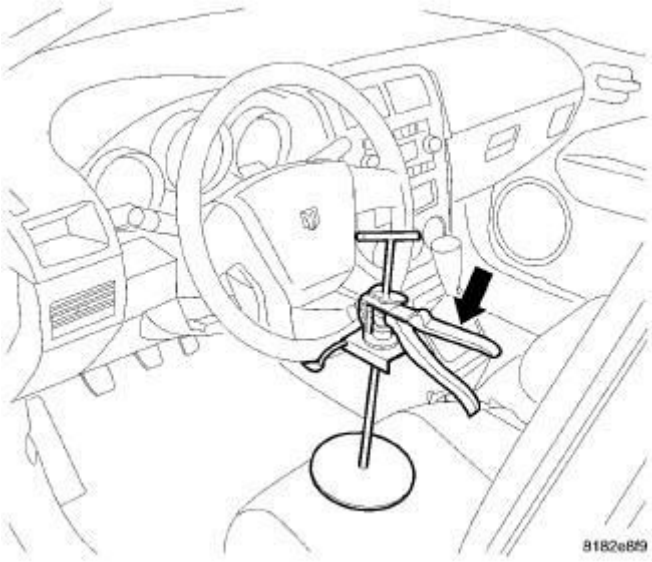

Fig. 14: Steering Wheel Holding Tool
Courtesy of CHRYSLER GROUP, LLC

4. Return the front wheels of vehicle (and steering wheel) to the STRAIGHT-AHEAD position. Using a steering wheel holder, lock the steering wheel in place to keep it from rotating. This keeps the clockspring in the proper
5. Position the steering wheel in the straight ahead position and lock wheel.
6. Remove engine cover.
7. Remove the belly pan.
8. Drain cooling system. Refer to **STANDARD PROCEDURE** .
9. Recover the air conditioning refrigerant. Refer to **PLUMBING, STANDARD PROCEDURE** .

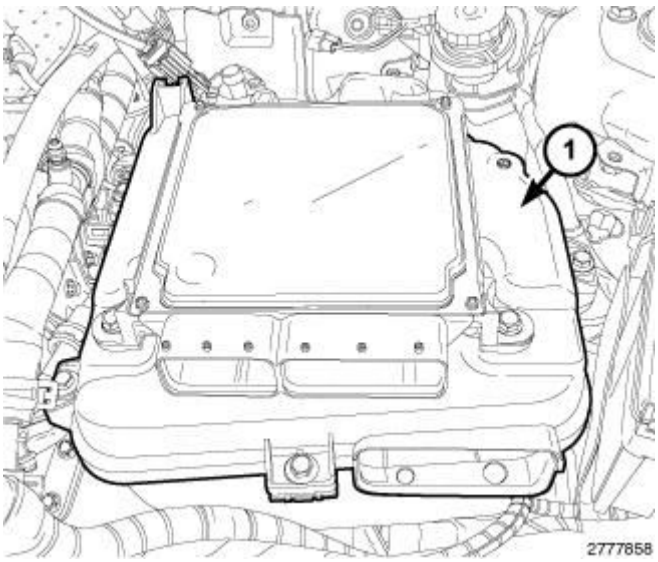

Fig. 15: Air Cleaner Assembly
Courtesy of CHRYSLER GROUP, LLC

10. Remove air cleaner body (1). Refer to **AIR CLEANER, REMOVAL**.

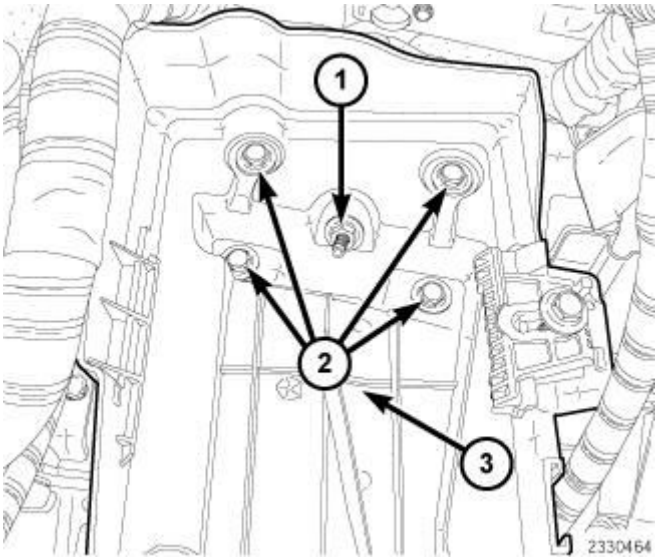

Fig. 16: Battery Tray, Nut & Retaining Bolts
Courtesy of CHRYSLER GROUP, LLC

11. Disconnect the positive and negative battery cable.
12. Remove the battery.
13. Remove the nut (1), retaining bolts (2) and the battery tray (3).

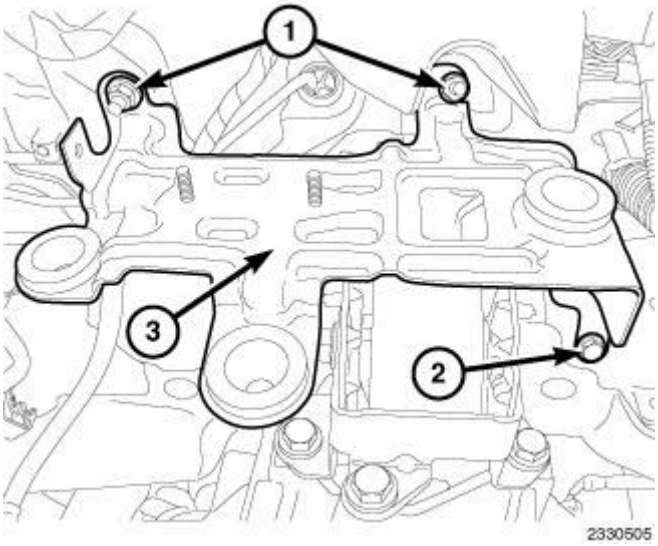

Fig. 17: Air Cleaner Mounting Bracket, Nuts & Bolt
Courtesy of CHRYSLER GROUP, LLC

14. Remove the two nuts, bolt (2), and the air cleaner mounting bracket (3).

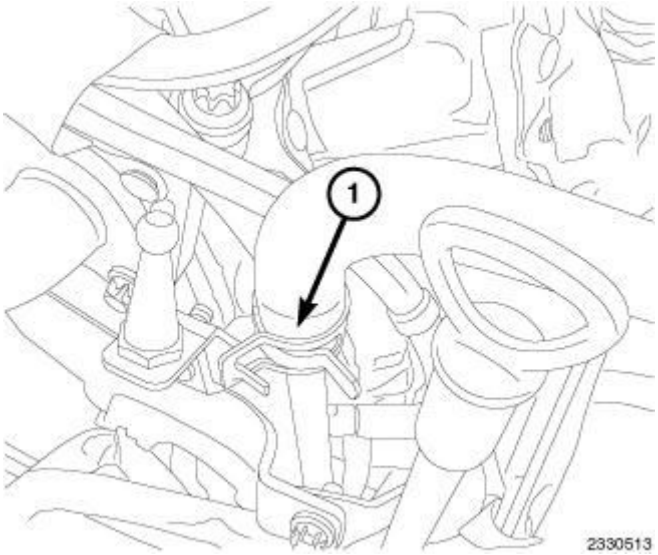

Fig. 18: Brake Booster Vacuum Hose
Courtesy of CHRYSLER GROUP, LLC

15. Disconnect the brake booster vacuum hose.
16. Remove cooling fan assembly. Refer to **FAN, COOLING, REMOVAL** .

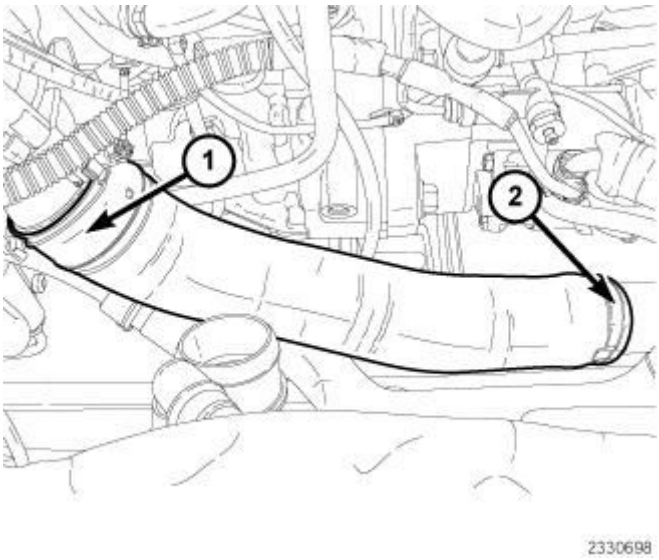

Fig. 19: EGR Air Flow Control Valve & Clamp
Courtesy of CHRYSLER GROUP, LLC

17. Loosen the clamp and disconnect the charge air outlet tube from the charge air cooler (CAC).
18. Remove air inlet tube to EGR air flow control valve (1).

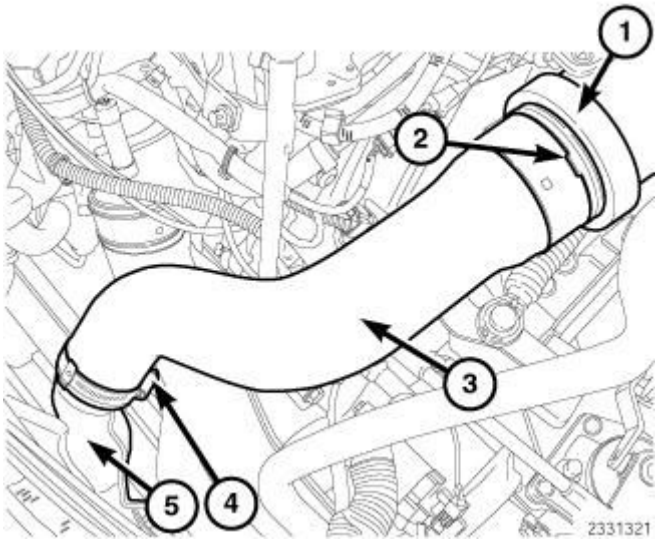

Fig. 20: Upper Charge Air Tube, Lock Ring, Lower Charge Air Tube, Clamp & Charge Air Cooler (CAC) Inlet
Courtesy of CHRYSLER GROUP, LLC

19. Loosen the clamp (4) and disconnect the lower charge air tube (3) from the charge air cooler (CAC) inlet (5).
20. Release the lock ring (2) and remove the lower charge air tube from upper charge air tube (1) to turbocharger.

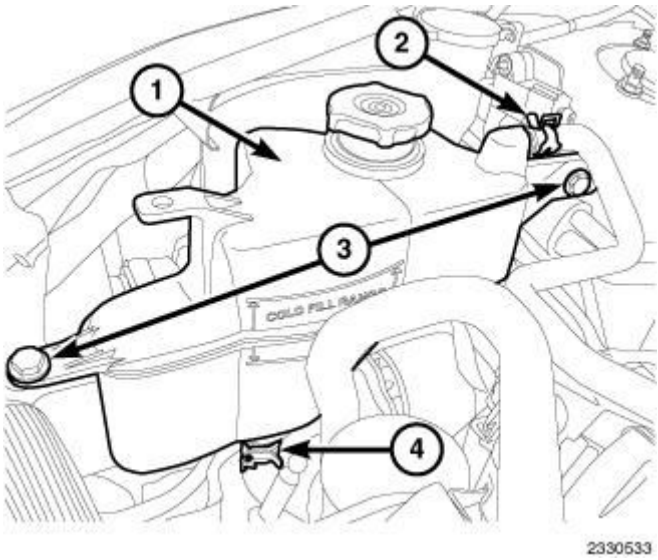

Fig. 21: Coolant Recovery Reservoir, Clamps & Bolts
Courtesy of CHRYSLER GROUP, LLC

21. Disconnect the coolant hoses (2) and (4).
22. Remove the bolts (3) and the coolant recovery reservoir (1).

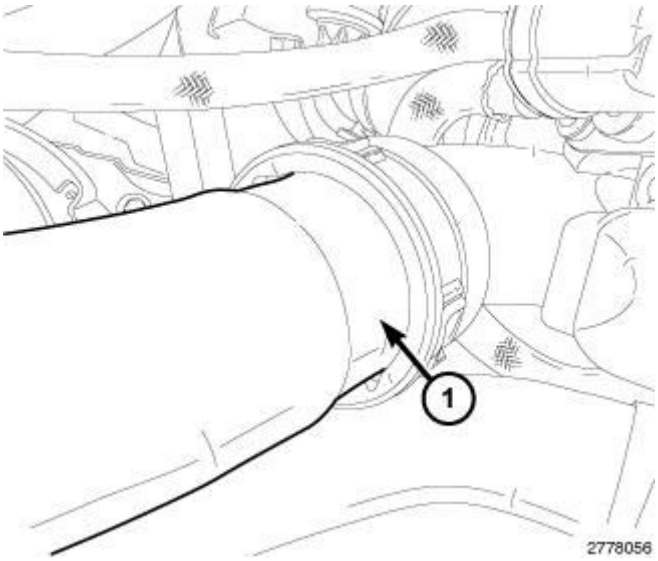

Fig. 22: Lower Radiator Hose
Courtesy of CHRYSLER GROUP, LLC

23. Remove the lower radiator hose (2).

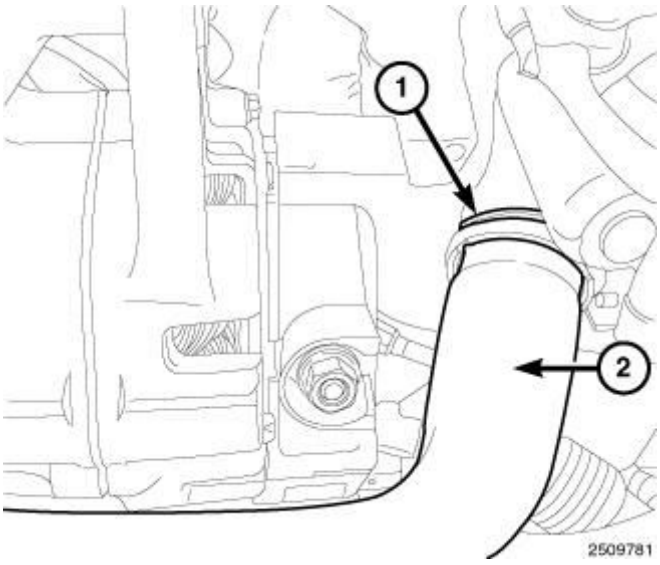

Fig. 23: Upper Radiator Hose
Courtesy of CHRYSLER GROUP, LLC

24. Disconnect the upper radiator hose (2) at engine (1).
25. Disconnect and remove the upper radiator hose (2) at radiator.

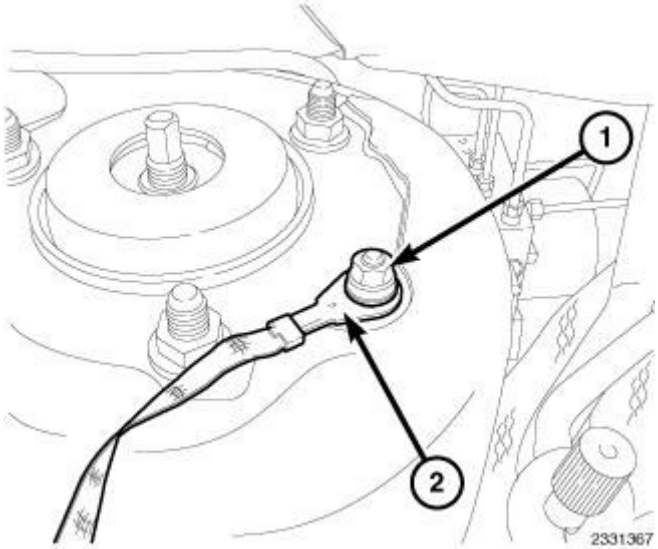

Fig. 24: Engine Ground Strap & Retaining Nut
Courtesy of CHRYSLER GROUP, LLC

26. Remove the retaining nut (1) and the engine ground strap (2) from right strut tower.

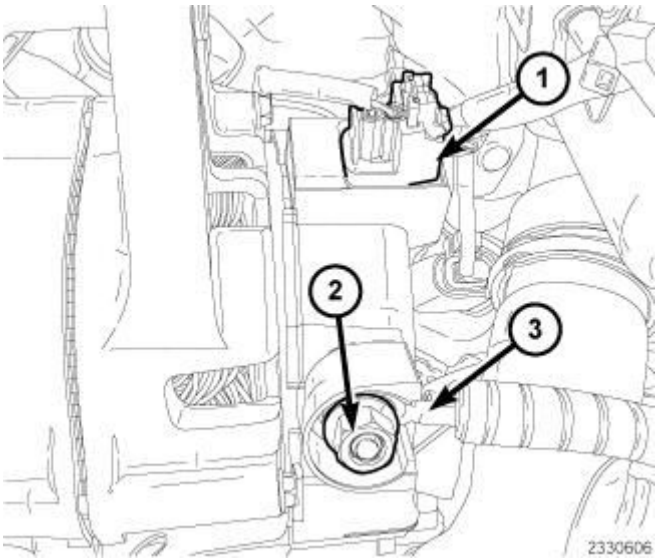

Fig. 25: Battery Feed Wire, Generator Harness Connectors & Nut
Courtesy of CHRYSLER GROUP, LLC

27. Remove nut (2) and the battery feed wire (3) to generator.
28. Disconnect the generator harness connectors (1).

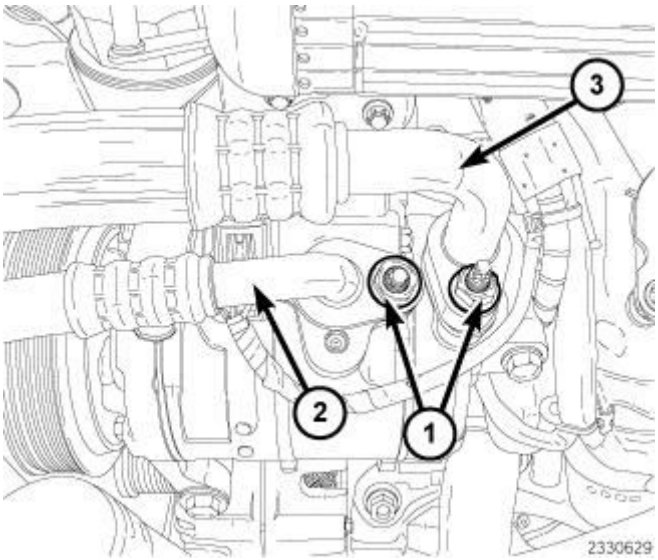

Fig. 26: A/C Lines & Retaining Nuts
Courtesy of CHRYSLER GROUP, LLC

29. Remove the retaining nuts (1) and disconnect A/C lines (2) and (3) at the compressor.

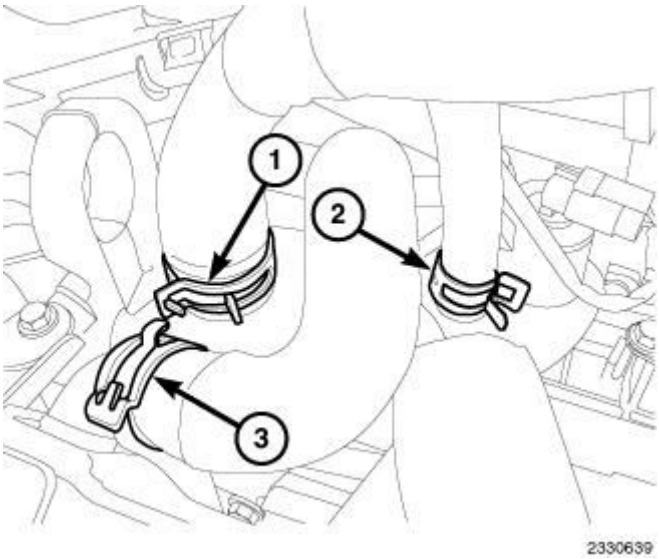

Fig. 27: Heater Hoses At Engine
Courtesy of CHRYSLER GROUP, LLC

30. Disconnect heater hoses at engine.

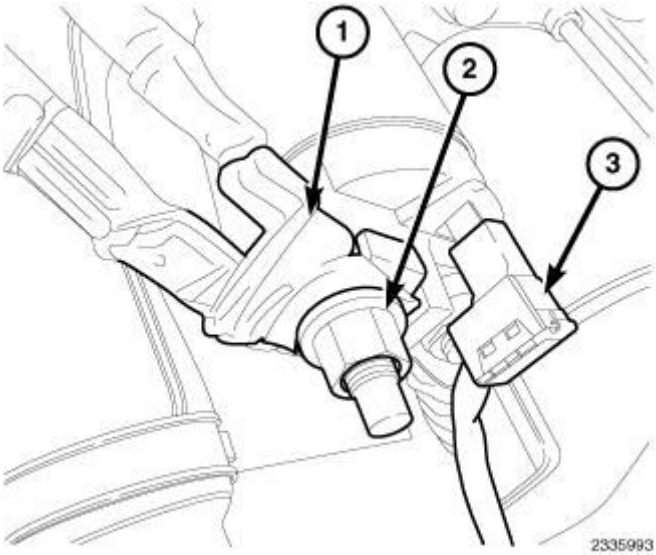

Fig. 28: Battery Feed Wire To Starter, Starter Harness Connectors & Nut
Courtesy of CHRYSLER GROUP, LLC

31. Remove nut (2) and battery feed wire (2) to starter.
32. Disconnect the starter harness connections (3).

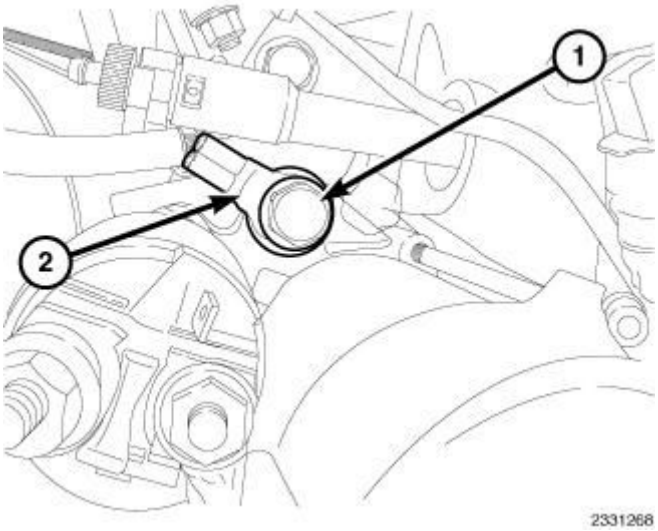

Fig. 29: Battery Ground Cable At Engine Block
Courtesy of CHRYSLER GROUP, LLC

33. Remove the battery ground cable (2) from the engine block.
34. Remove lower bolt and the starter motor.

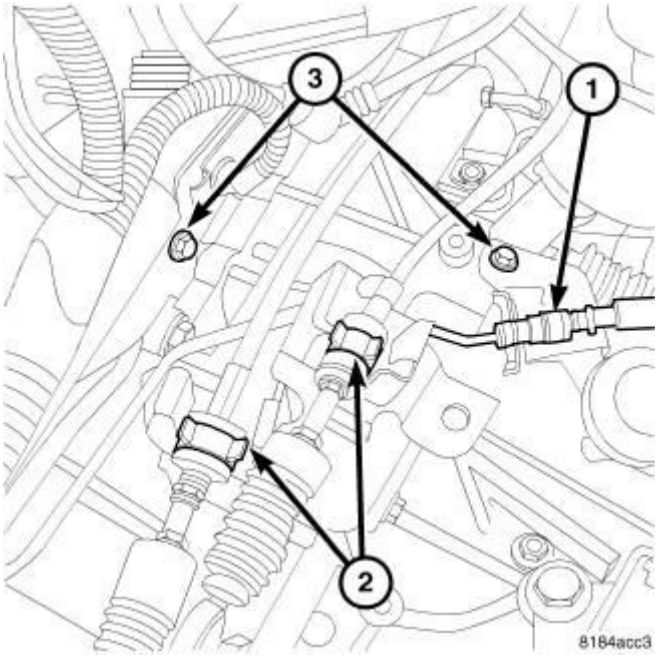

Fig. 30: Hydraulic Line & Shift Cables
Courtesy of CHRYSLER GROUP, LLC

35. Remove shift cables (2) from transaxle.
36. Disconnect hydraulic clutch line (1).

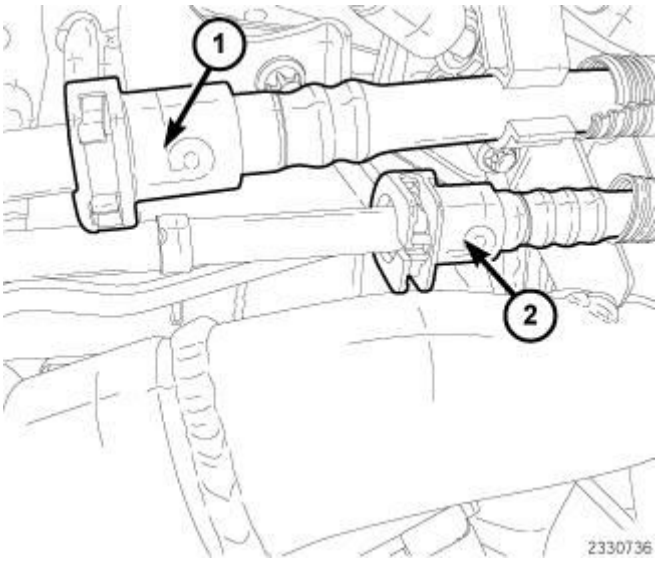

Fig. 31: Fuel Feed & Return Lines
Courtesy of CHRYSLER GROUP, LLC

37. Disconnect the fuel feed and return lines.

NOTE: When removing tripod joint, DO NOT let spline or snap ring drag across transaxle oil seal lip.

38. Remove the left and right axle half shafts. Refer to **REMOVAL** .

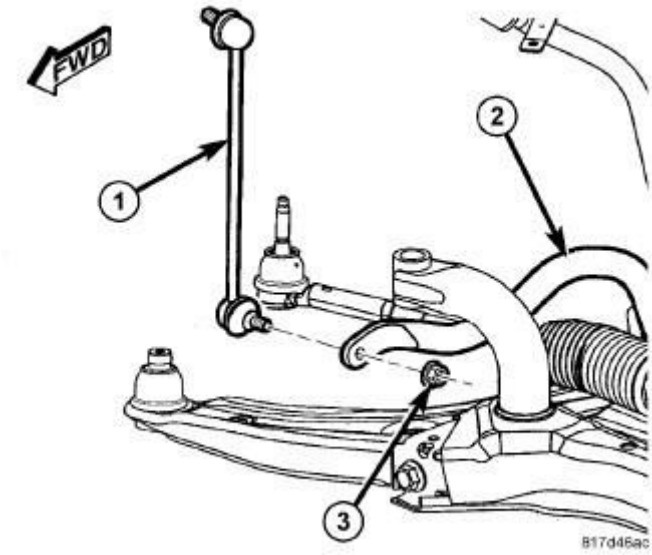

Fig. 32: Stabilizer Link Mounting To Bar
Courtesy of CHRYSLER GROUP, LLC

39. At each end of the stabilizer bar, while holding the stabilizer bar link (1) lower stud stationary, remove the nut (3) securing the link to the stabilizer bar (2).

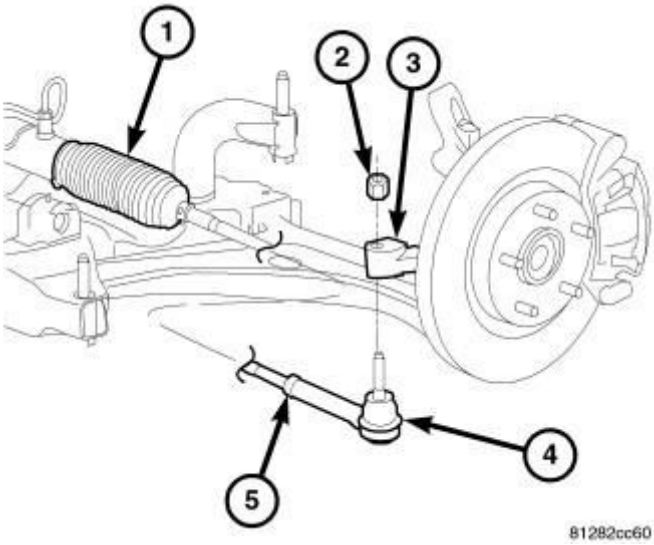

Fig. 33: Removing/Installing Tie Rod Nut
Courtesy of CHRYSLER GROUP, LLC

NOTE: Right side shown in illustration, left side similar.

40. On both sides, remove the nut (2) attaching the outer tie rod (4) to the knuckle (3).

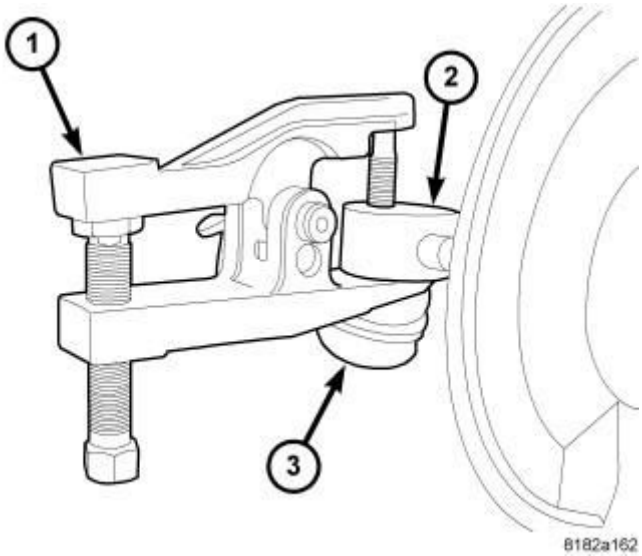

Fig. 34: Separating Tie Rod End From Knuckle Using Ball Joint Remover 9360
Courtesy of CHRYSLER GROUP, LLC

41. On both sides, release the tie rod end (3) from the knuckle (2) using Remover, Special Tool (special tool #9360, Remover, Ball Joint) (1).

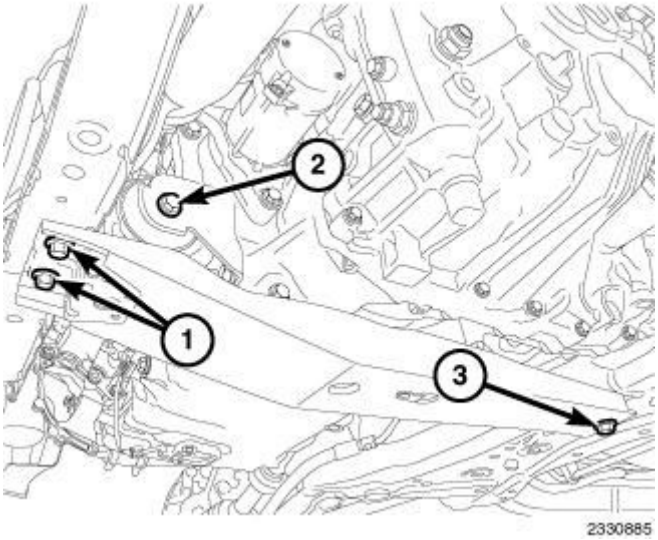

Fig. 35: Fore/Aft Crossmember
Courtesy of CHRYSLER GROUP, LLC

42. Remove front transaxle mount through bolt (2).
43. Remove fore/aft member retaining bolts (1, 3) and fore/aft member.

44. On AWD models, remove the driveline propeller shaft.
45. Remove the Diesel Particulate Filter (DEF). Refer to **FILTER, DIESEL PARTICULATE, REMOVAL** .

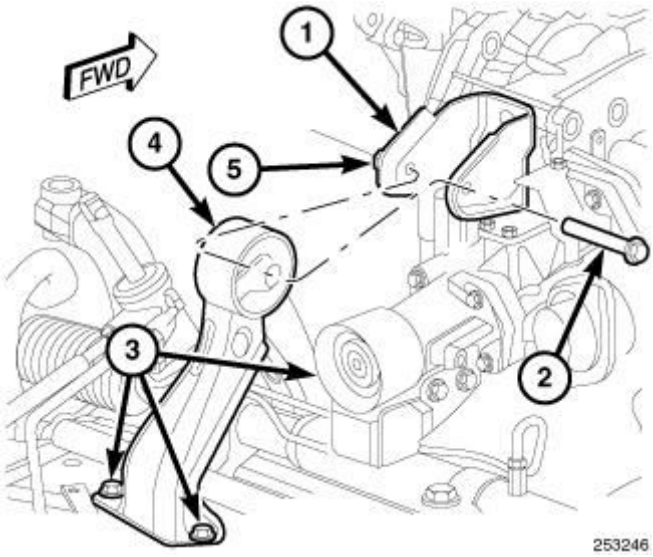

Fig. 36: Rear Roll Mount
Courtesy of CHRYSLER GROUP, LLC

NOTE: AWD shown in illustration, FWD similar.

46. Remove the rear roll mount (4) through bolt (2).

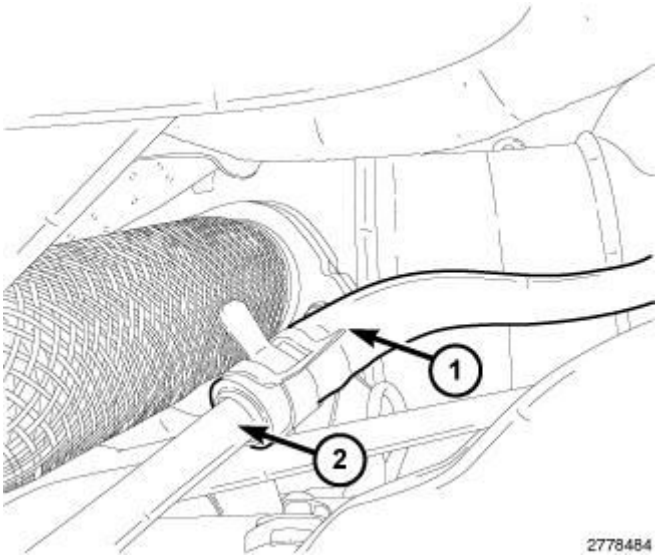

Fig. 37: Power Steering Return Hose At Tube
Courtesy of CHRYSLER GROUP, LLC

47. Remove the power steering return hose from tube.

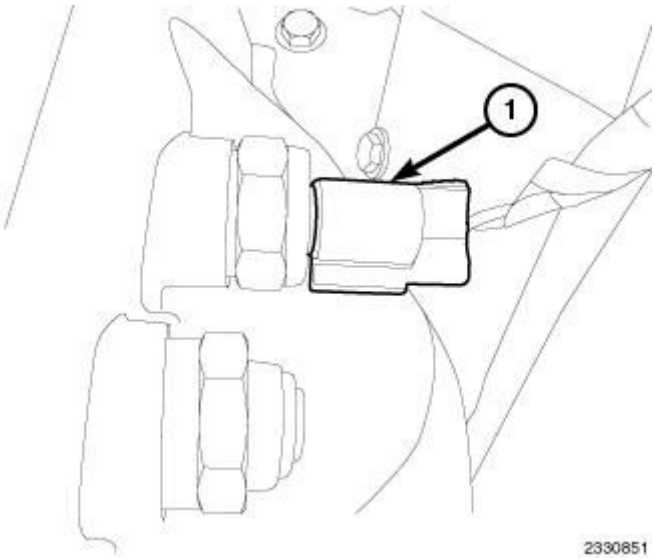

Fig. 38: Reverse Lamp Switch Harness Connector
Courtesy of CHRYSLER GROUP, LLC

48. Disconnect the reverse lamp switch harness connector (1).
49. Remove the reverse lamp switch wire harness clip at transmission.

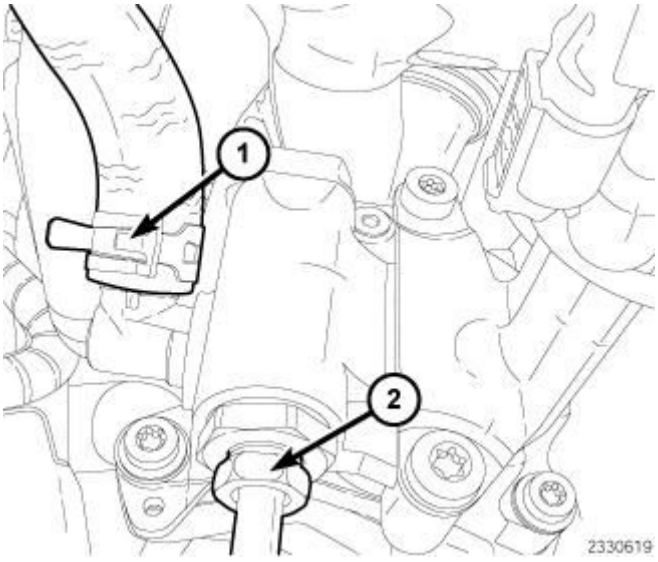

Fig. 39: Power Steering Supply Line & Feed Line
Courtesy of CHRYSLER GROUP, LLC

50. Disconnect the power steering supply line (1) from pump.
51. Remove the power steering feed line (2) from pump.

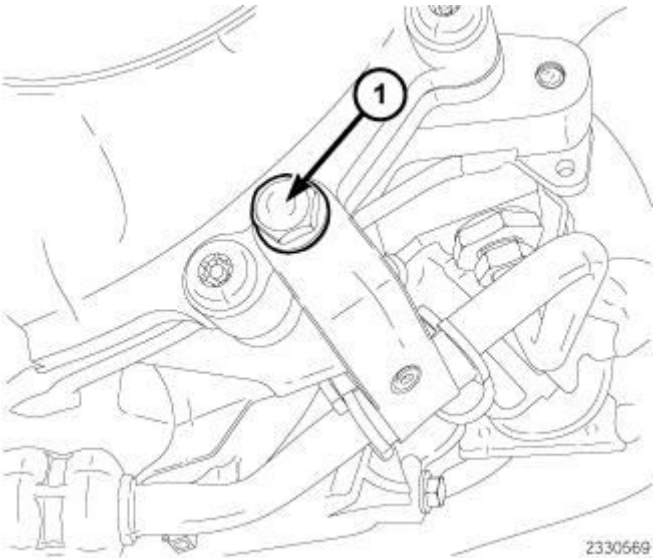

Fig. 40: Power Steering Line Support Bracket Retaining Bolt
Courtesy of CHRYSLER GROUP, LLC

52. Remove power steering line support bracket retaining bolt (2).

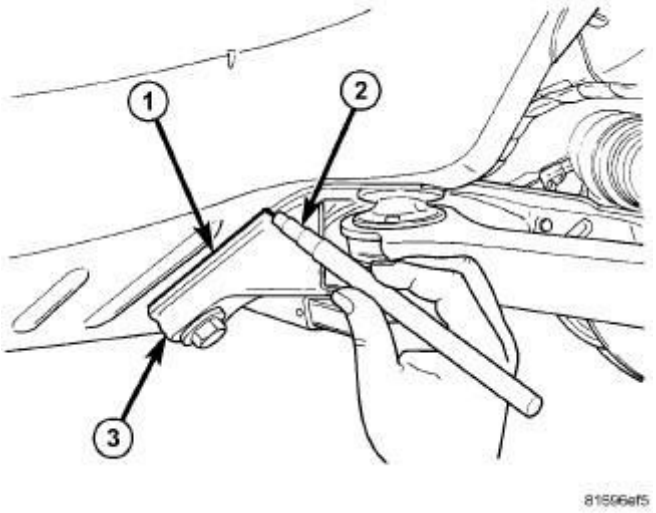

Fig. 41: Marking Crossmember Location
Courtesy of CHRYSLER GROUP, LLC

53. Mark the crossmember (3) to body location (1) using a grease pencil (2) or equivalent.

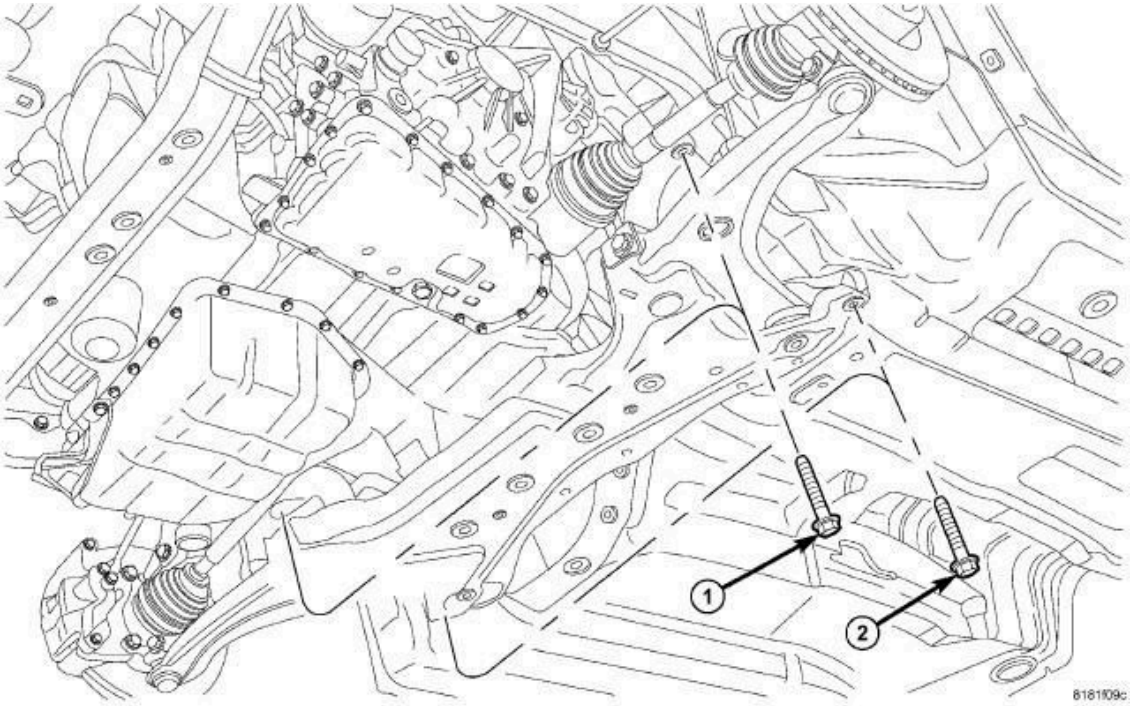

Fig. 42: Front Crossmember
Courtesy of CHRYSLER GROUP, LLC

54. Support the crossmember with a suitable lifting device.
55. Remove the crossmember bolts (1 and 2) and lower the crossmember from the vehicle.

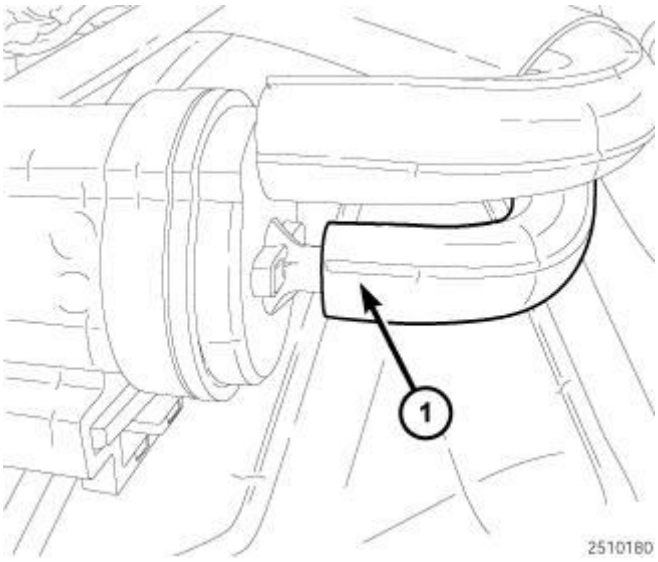

Fig. 43: Coolant Pump Actuator Vacuum Line
Courtesy of CHRYSLER GROUP, LLC

56. Remove the serpentine belt. Refer to **BELT, SERPENTINE, REMOVAL** .
57. Disconnect the coolant pump actuator vacuum line (1).

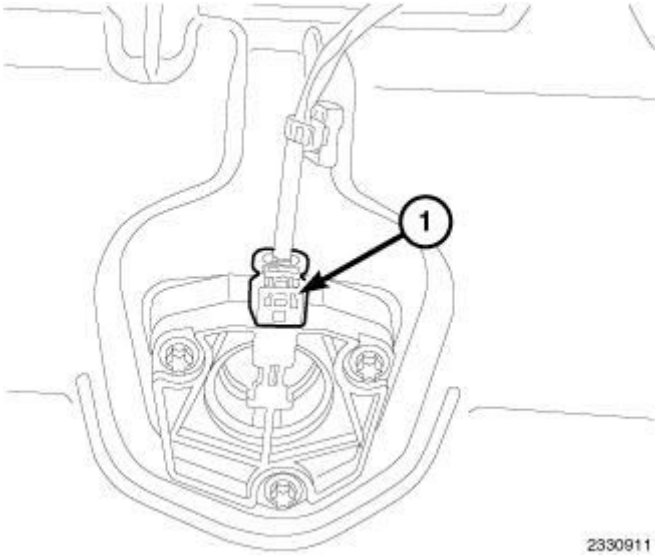

Fig. 44: Oil Level Switch Wire Harness Connector
Courtesy of CHRYSLER GROUP, LLC

58. Disconnect the oil level switch wire harness connector (1) and wire harness retainers.
59. Remove the coolant/power steering pump assembly. Refer to **PUMP, WATER, REMOVAL** .

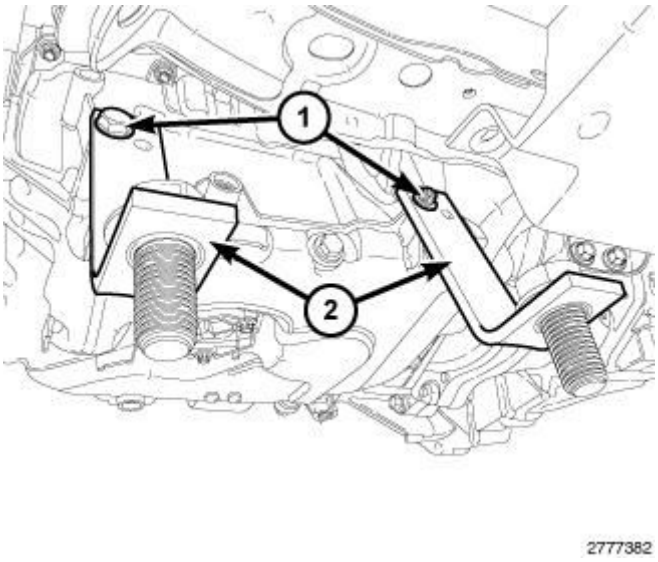

Fig. 45: Engine Cradle Post Kit Adapter Brackets & Bolts
Courtesy of CHRYSLER GROUP, LLC

60. Install the (special tool #10205, Fixtures, Power Train Dolly Engine Support) (2) to oil pan and tighten bolts finger tight (1).

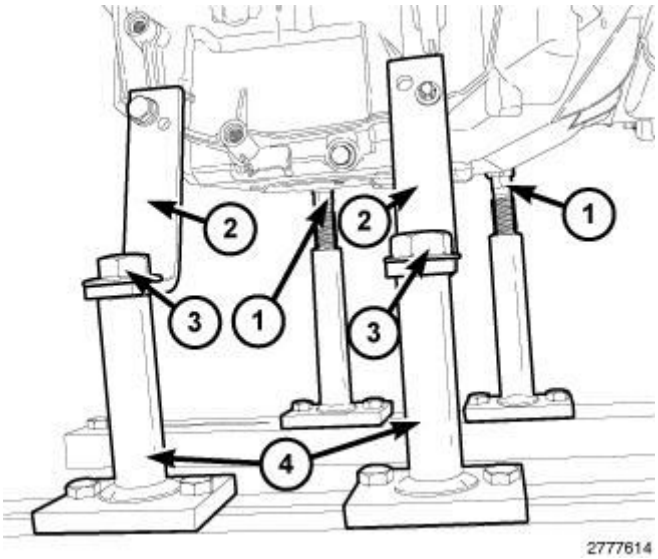

Fig. 46: Dolly, Cradle & Engine Cradle Post Kit Components
Courtesy of CHRYSLER GROUP, LLC

61. Assemble the (special tool #6135, Dolly, Power Train), (special tool #6710A, Cradle, Engine Support) and (special tool #6848, Posts, Cradle).
62. Carefully lower the vehicle and position the (special tool #6135, Dolly, Power Train), (special tool #6710A, Cradle, Engine Support) under engine.
63. Align the back posts (1) and adjust the height to the bosses in the oil pan.
64. Position (special tool #10205, Fixtures, Power Train Dolly Engine Support) (2) to the front posts (4) and install bolts (3).
65. Tighten the support posts and cradle fasteners.

WARNING: Safety straps must be use to secure engine to the dolly fixture.

66. Install, tighten and lock safety straps around engine and attach them to the cradle.
67. Lower vehicle so that only the weight of the engine and transmission assembly is on dolly fixture.

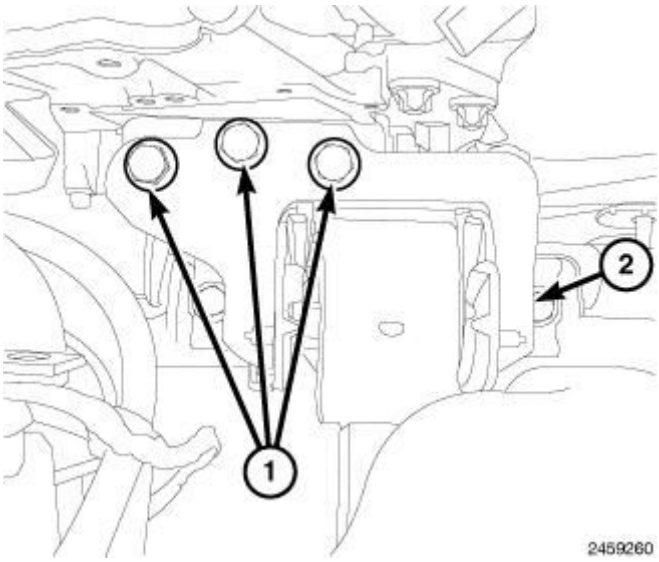

Fig. 47: Engine Mount Through Bolt & Right Engine Mount Bolts
Courtesy of CHRYSLER GROUP, LLC

68. Remove the engine mount through bolt (2).
69. Remove bolts (1) and the right engine mount.

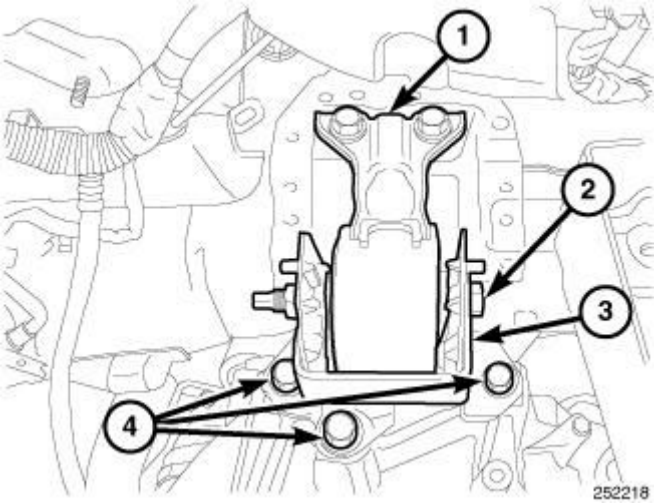

Fig. 48: Left Engine Mount & Fasteners
Courtesy of CHRYSLER GROUP, LLC

70. Remove left mount (3) to transaxle retaining bolts (4).

CAUTION: It may be necessary to adjust the engine and transmission assembly, with the dolly fixture attached, to successfully clear the engine compartment.

71. While watching for obstructions, slowly raise the vehicle until the engine and transmission assembly clear the engine compartment.

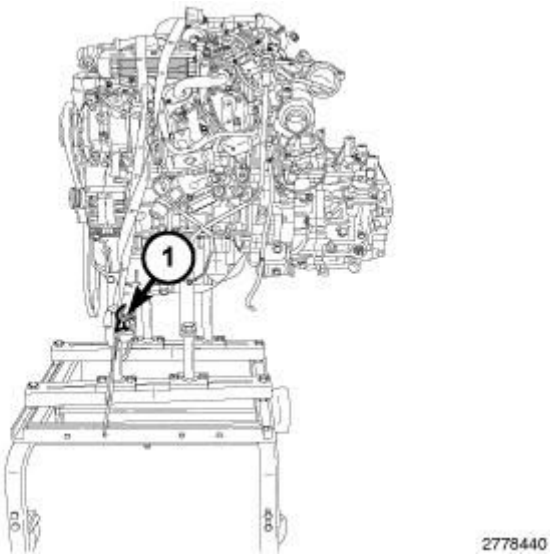

Fig. 49: Safety Straps & Dolly Fixture
Courtesy of CHRYSLER GROUP, LLC

72. On AWD models, remove the PTU.
73. Separate the transmission from the engine.

INSTALLATION

INSTALLATION

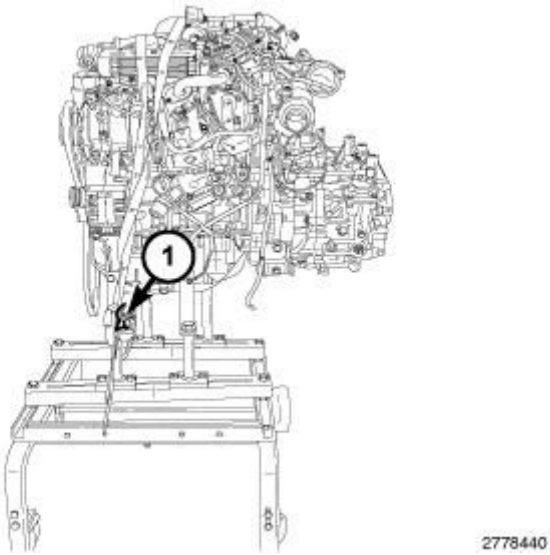

Fig. 50: Safety Straps & Dolly Fixture
Courtesy of CHRYSLER GROUP, LLC

WARNING: Safety straps must be used to secure engine to the dolly fixture.

1. Seat engine onto fixture support posts then install, tighten and lock safety straps (1) around engine, securing it to the cradle.
2. Install the transmission to the engine. Tighten bolts to 48 N.m (35 ft. lbs.).
3. On AWD models, install the Power Transfer Unit (PTU).
4. Position the engine and transmission assemblies below vehicle engine compartment.

CAUTION: It may be necessary to adjust the engine and transmission assembly, with the dolly fixture attached, to successfully clear the engine compartment.

5. While watching for obstructions, slowly lower the vehicle until the engine and transmission assembly clearly fit the engine compartment.

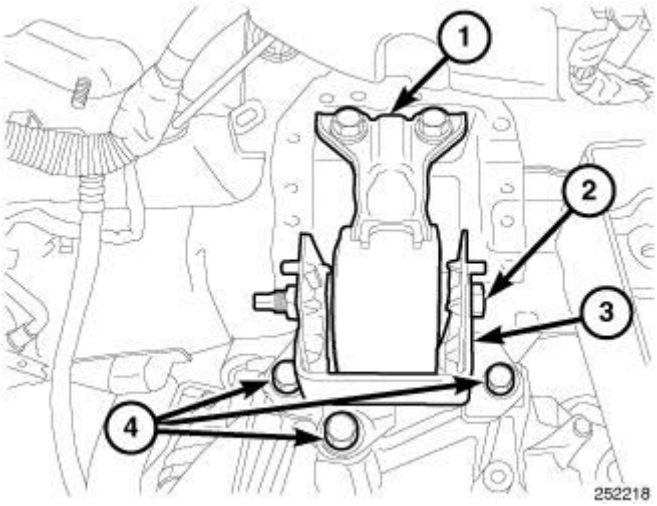

Fig. 51: Left Engine Mount & Fasteners
Courtesy of CHRYSLER GROUP, LLC

6. Install left mount bracket (3) to transaxle retaining bolts and tighten to 61 N.m (45 ft. lbs.).

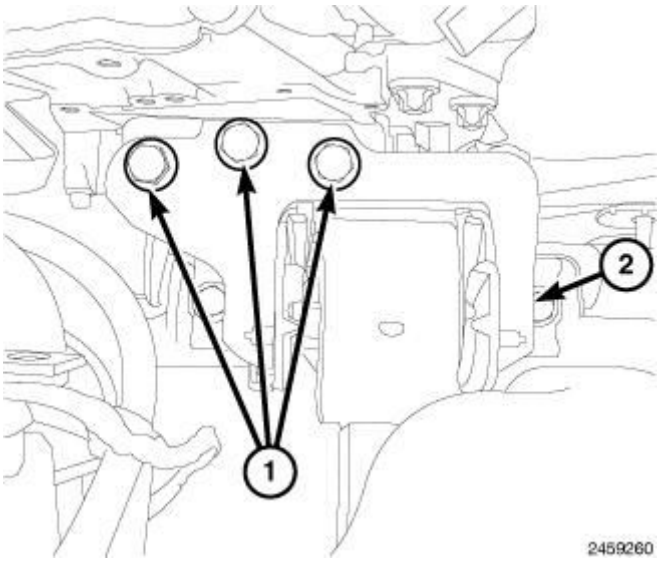

Fig. 52: Engine Mount Through Bolt & Right Engine Mount Bolts
Courtesy of CHRYSLER GROUP, LLC

7. Install right engine mount. Tighten bolts (1) to 65 N.m (50 ft. lbs.).
8. Install the engine mount through bolt and tighten bolt (2) to 65 N.m (50 ft. lbs.).

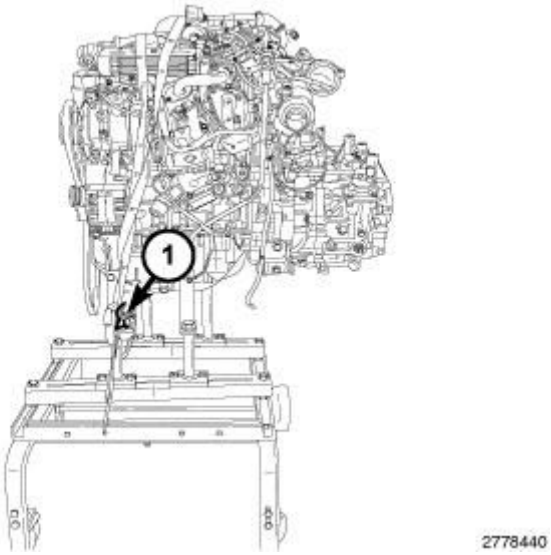

Fig. 53: Safety Straps & Dolly Fixture
Courtesy of CHRYSLER GROUP, LLC

9. Remove safety straps (1).

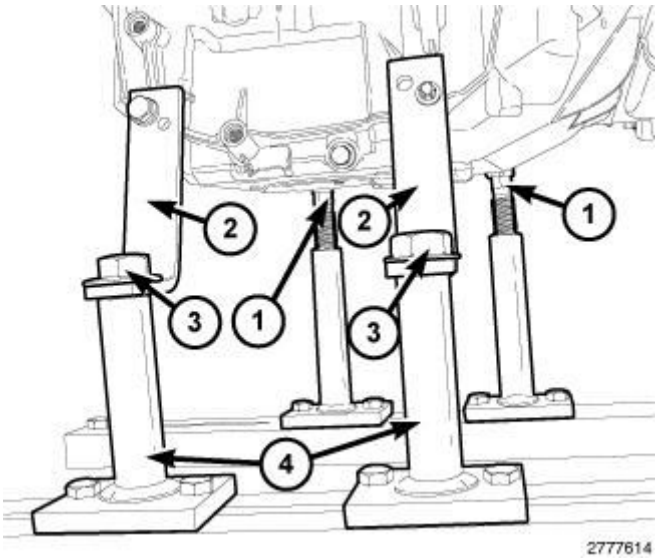

Fig. 54: Dolly, Cradle & Engine Cradle Post Kit Components
Courtesy of CHRYSLER GROUP, LLC

10. Remove bolts (3) securing (special tool #10205, Fixtures, Power Train Dolly Engine Support) (2) from the front post (4).
11. Carefully raise the vehicle enough to clear the cradle and support post and remove the cradle.

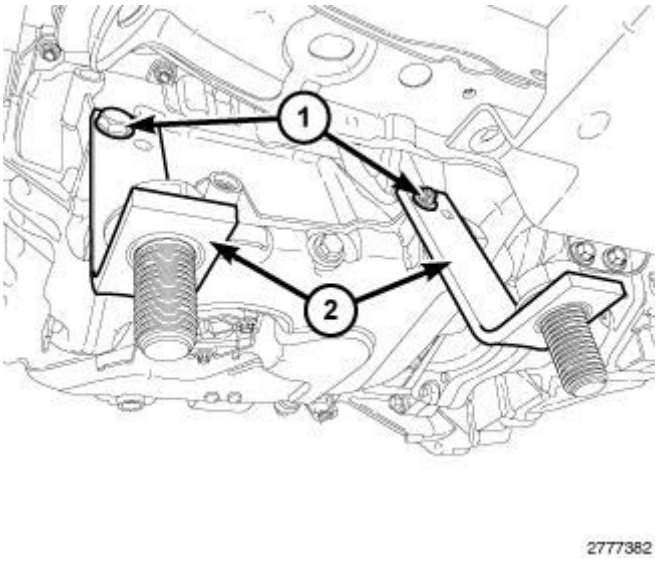

Fig. 55: Engine Cradle Post Kit Adapter Brackets & Bolts
Courtesy of CHRYSLER GROUP, LLC

12. Remove bolts (2) the (special tool #10205, Fixtures, Power Train Dolly Engine Support) (1) from the oil pan.
13. Install the coolant/power steering pump assembly. Refer to **PUMP, WATER, INSTALLATION** .

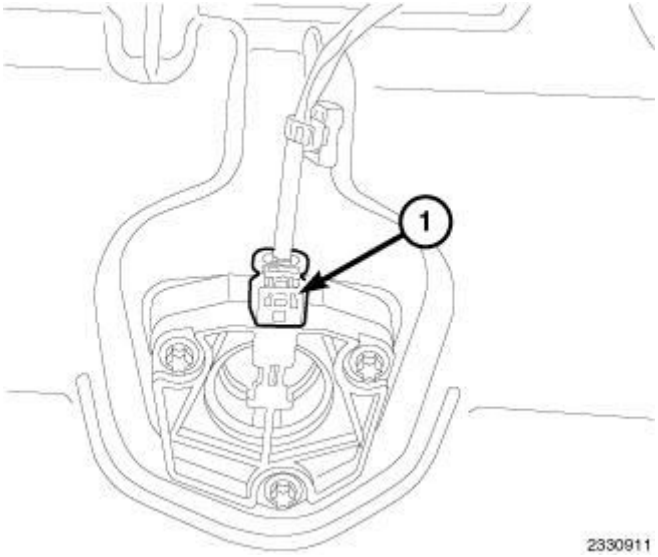

Fig. 56: Oil Level Switch Wire Harness Connector
Courtesy of CHRYSLER GROUP, LLC

14. Connect the oil level switch wire harness connector and wire harness retainers (1).

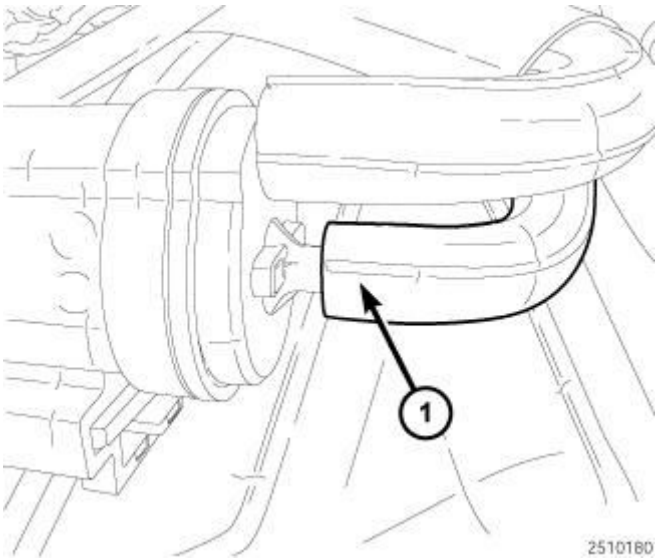

Fig. 57: Coolant Pump Actuator Vacuum Line
Courtesy of CHRYSLER GROUP, LLC

15. Connect the coolant pump actuator vacuum line (1).
16. Install the serpentine belt. Refer to **BELT, SERPENTINE, INSTALLATION** .

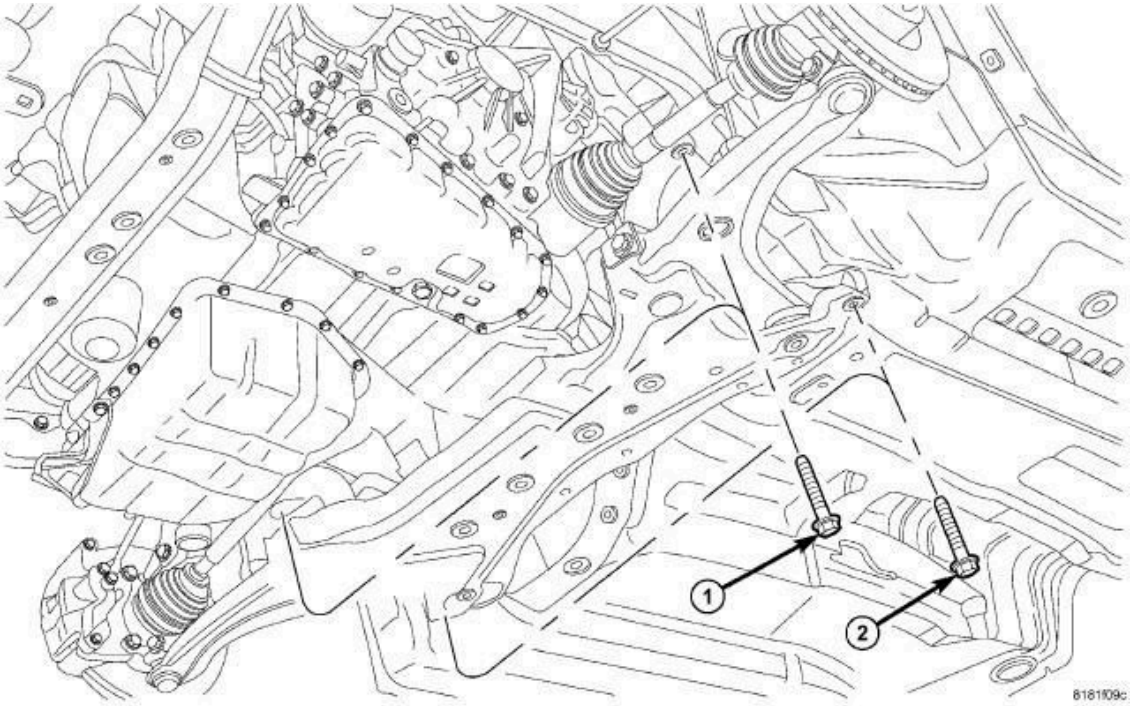

Fig. 58: Front Crossmember
Courtesy of CHRYSLER GROUP, LLC

17. Support the crossmember on a suitable lifting device.
18. Raise the crossmember into position onto the vehicle.
19. Install the bolts (1 and 2) and align the engine cradle to the marks made during removal.
20. Tighten the bolts to 150 N.m (111 ft. lbs.).

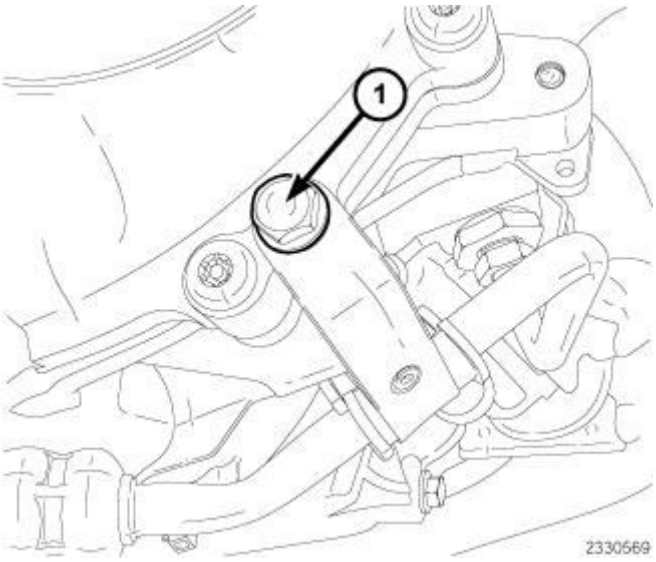

Fig. 59: Power Steering Line Support Bracket Retaining Bolt
Courtesy of CHRYSLER GROUP, LLC

21. Install the power steering line support bracket Tighten bolt (1) to 9 N.m (80 in. lbs).

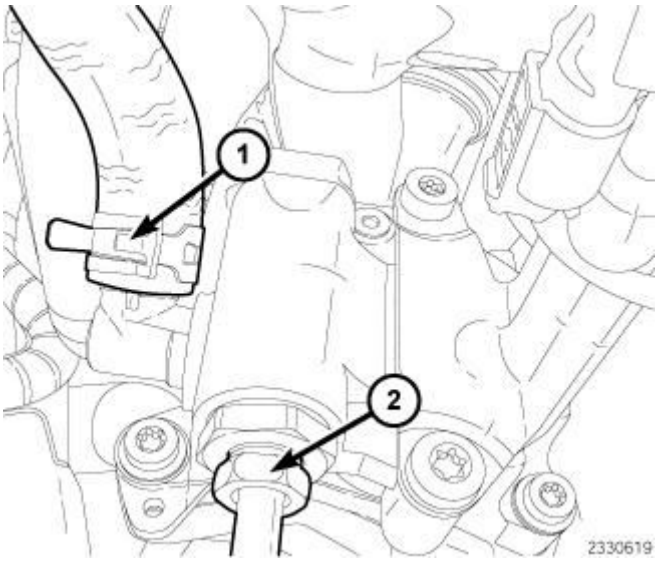

Fig. 60: Power Steering Supply Line & Feed Line
Courtesy of CHRYSLER GROUP, LLC

22. Install the power steering pressure line from pump. Tighten pressure line fitting to 32 N.m (24 ft. lbs.).
23. Connect the power steering return line from pump.

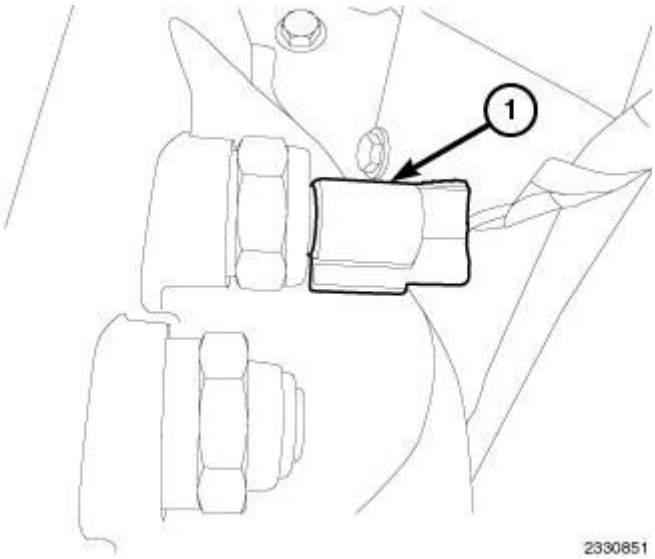

Fig. 61: Reverse Lamp Switch Harness Connector
Courtesy of CHRYSLER GROUP, LLC

24. Install the reverse lamp switch wire harness clip at transmission.
25. Connect the reverse switch harness connector (1).

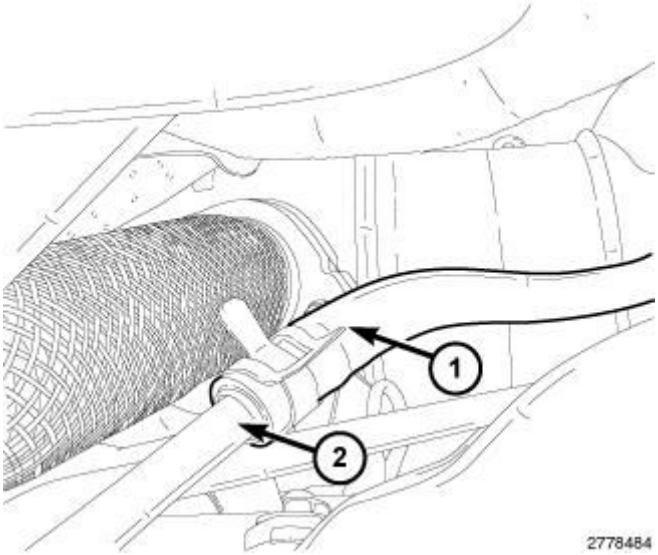

Fig. 62: Power Steering Return Hose At Tube
Courtesy of CHRYSLER GROUP, LLC

26. Install the power steering return hose at tube.

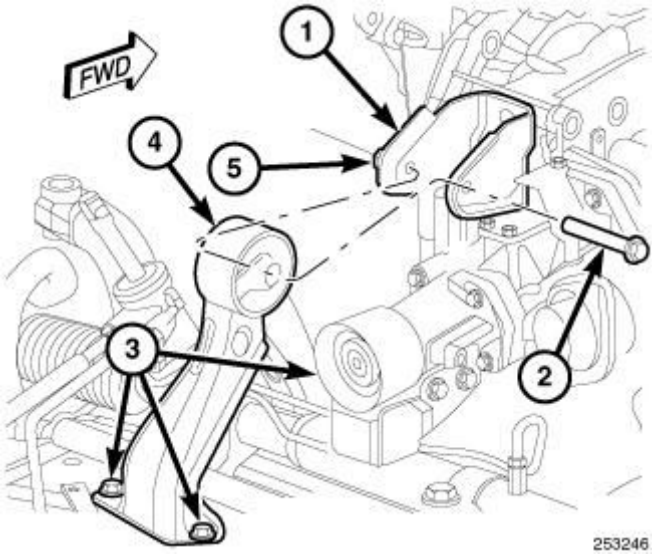

Fig. 63: Rear Roll Mount
Courtesy of CHRYSLER GROUP, LLC

NOTE: AWD shown in illustration, FWD similar.

27. Install the through bolt (2) and tighten to 65 N.m (48 ft. lbs.).

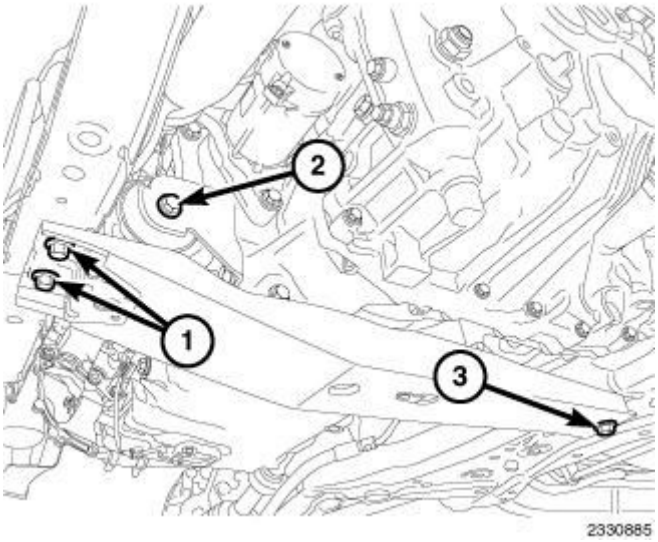

Fig. 64: Fore/Aft Crossmember
Courtesy of CHRYSLER GROUP, LLC

28. Install the Diesel Particulate Filter (DEF). Refer to **FILTER, DIESEL PARTICULATE, INSTALLATION** .
29. On AWD models, Install the driveline propeller shaft.
30. Install the fore/aft member and tighten using the following sequence:
    a. Tighten the bolts (1) to 78 N.m (58 ft. lbs.).
    b. Tighten the bolt (3) to 129 N.m (95 ft. lbs.).
    c. Tighten the bolt (2) to 65 N.m (48 ft. lbs.).

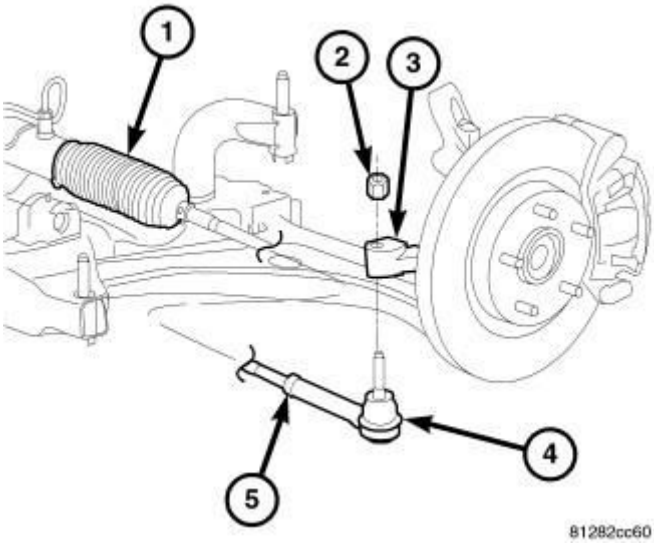

Fig. 65: Removing/Installing Tie Rod Nut
Courtesy of CHRYSLER GROUP, LLC

NOTE: Right side shown in illustration, left side similar.

31. Install the outer tie rod ball stud into the hole in the knuckle arm (3). Tighten the nut to 132 N.m (97 ft. lbs.).

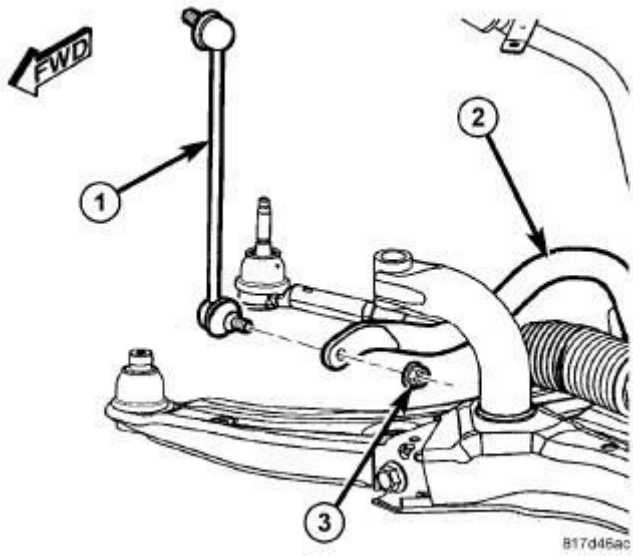

Fig. 66: Stabilizer Link Mounting To Bar
Courtesy of CHRYSLER GROUP, LLC

32. Attach the stabilizer bar link (1) at each end of the stabilizer bar (2). At each link, install and tighten the nut (3) while holding the stabilizer bar link lower stud stationary. Tighten the nuts to 58 N.m (43 ft. lbs.).

NOTE: When removing tripod joint, DO NOT let spline or snap ring drag across transaxle oil seal lip.

33. Install the right and left axle half shafts. Refer to **INSTALLATION** .

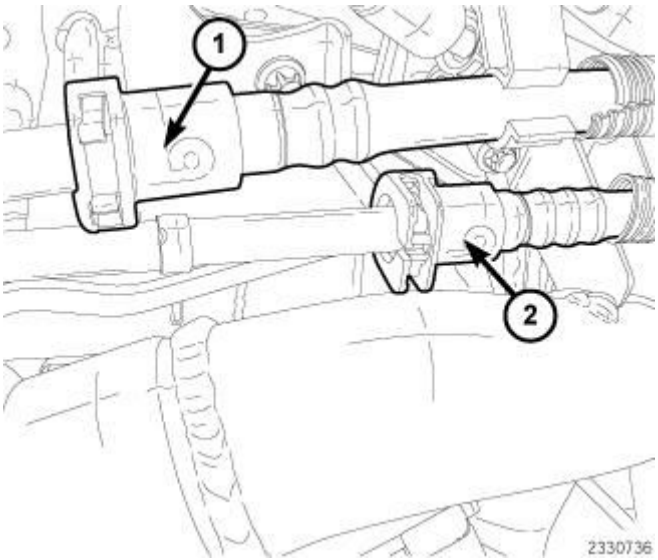

Fig. 67: Fuel Feed & Return Lines
Courtesy of CHRYSLER GROUP, LLC

34. Connect the fuel feed and return lines.

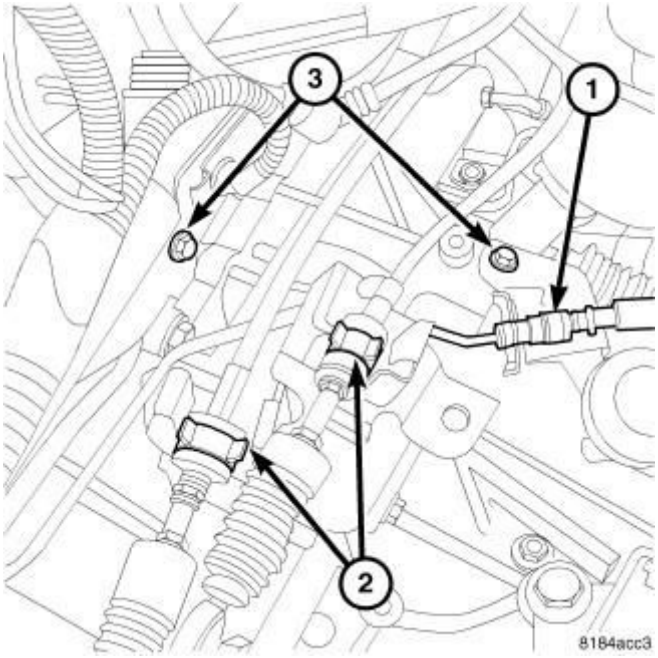

Fig. 68: Hydraulic Line, Shift Cables & Bolts
Courtesy of CHRYSLER GROUP, LLC

35. Connect hydraulic clutch line (1).
36. Install shift cables (2) to transaxle.

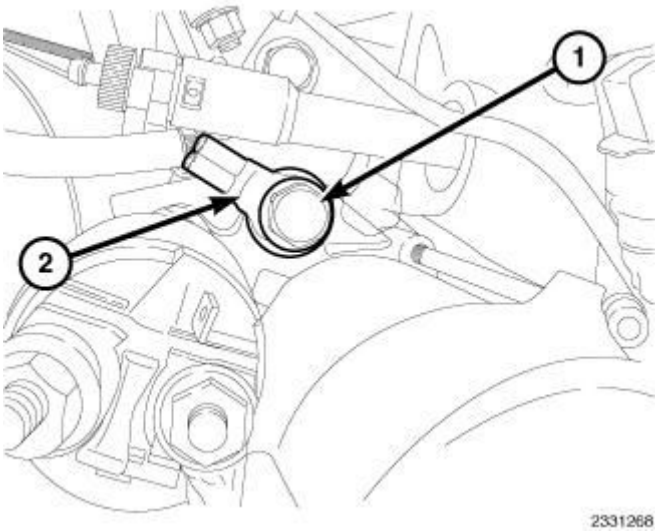

Fig. 69: Battery Ground Cable At Engine Block
Courtesy of CHRYSLER GROUP, LLC

37. Install the starter motor. Tighten bolt to 40 N.m (30 ft. lbs.).
38. Install the battery ground cable to the engine block (2). Tighten bolt (1) to 40 N.m (30 ft. lbs.).

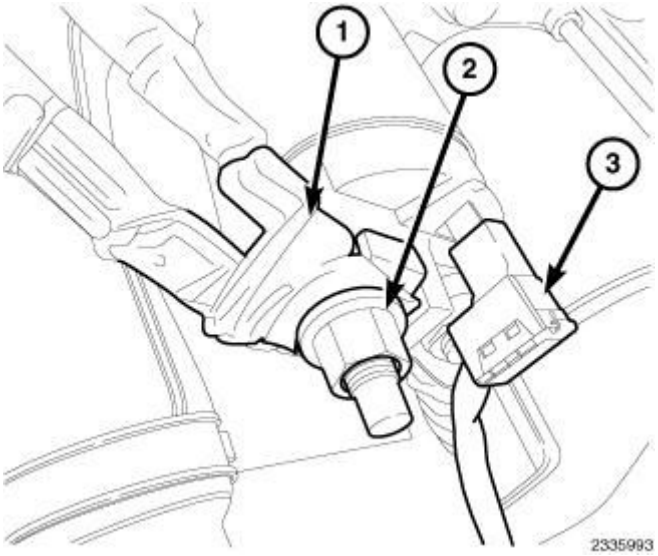

Fig. 70: Battery Feed Wire To Starter, Starter Harness Connectors & Nut
Courtesy of CHRYSLER GROUP, LLC

39. Connect the starter harness connectors (3).
40. Install the battery feed wire (1) to starter. Tighten nut (2) to 10 N.m (89 In. lbs.).

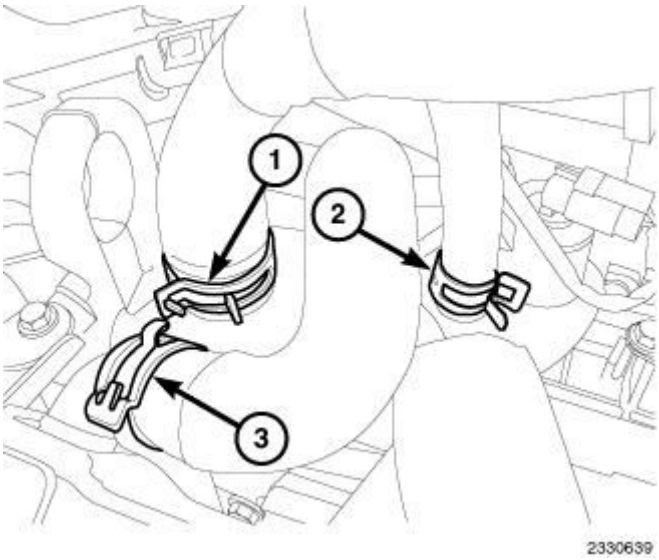

Fig. 71: Heater Hoses At Engine
Courtesy of CHRYSLER GROUP, LLC

41. Connect heater hoses at engine.

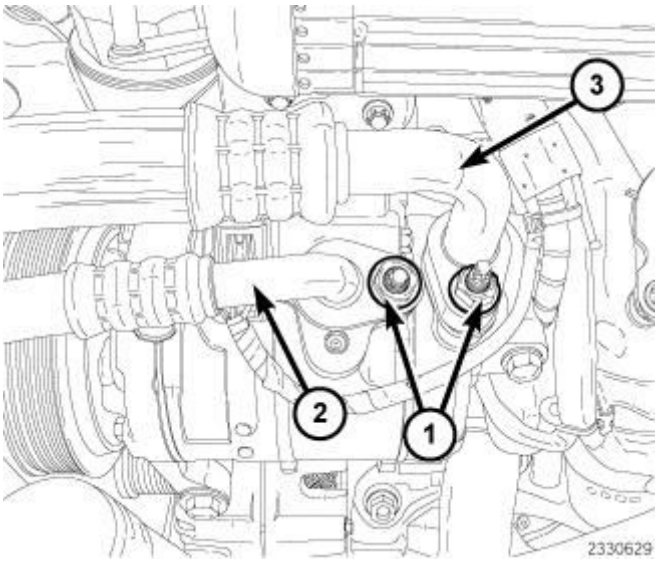

Fig. 72: A/C Lines & Retaining Nuts
Courtesy of CHRYSLER GROUP, LLC

42. Lubricate new rubber O-ring seals with clean refrigerant oil and install them and new gaskets onto the refrigerant line fittings. Use only the specified O-rings as they are made of a special material for the R-134a system. Use only refrigerant oil of the type recommended for the A/C compressor in the vehicle.
43. Install A/C compressor lines. Tighten nuts to 20 N.m (177 In. lbs.).

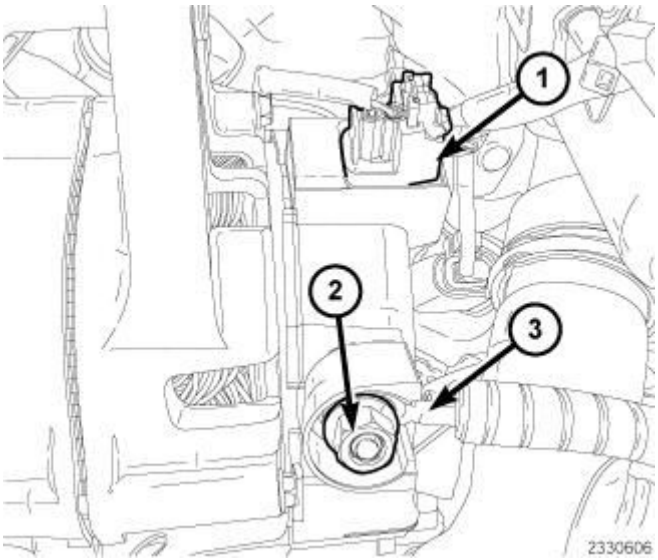

Fig. 73: Battery Feed Wire, Generator Harness Connectors & Nut
Courtesy of CHRYSLER GROUP, LLC

44. Connect the generator harness connectors (1).
45. Install the battery feed wire (3) to generator. Tighten nut (2) to 18 N.m (159 in. lbs.).

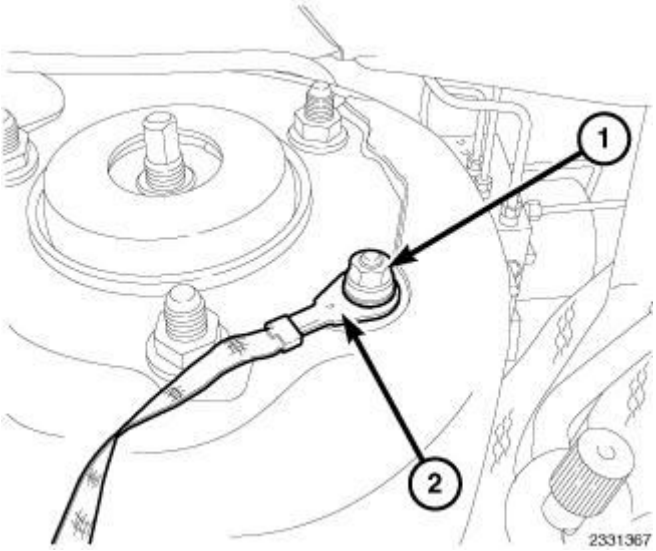

Fig. 74: Engine Ground Strap & Retaining Nut
Courtesy of CHRYSLER GROUP, LLC

46. Install the engine ground strap (2) to the right strut tower and securely tighten nut (1).

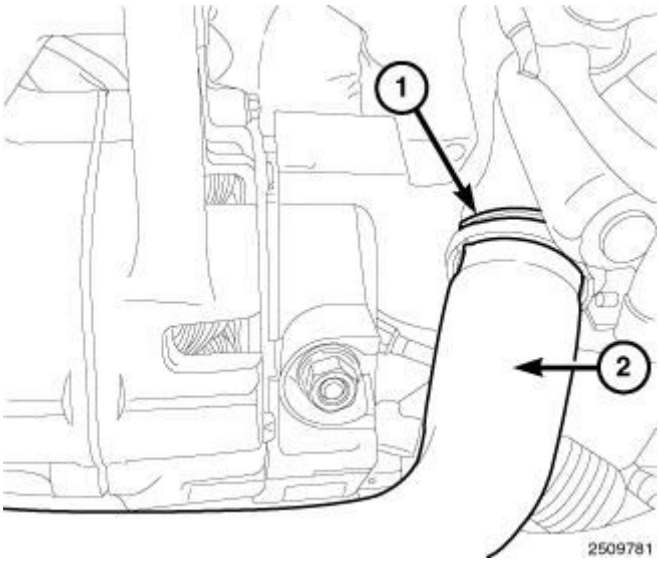

Fig. 75: Upper Radiator Hose
Courtesy of CHRYSLER GROUP, LLC

47. Install the upper radiator hose (2) at radiator.
48. Connect the upper radiator hose (2) at engine (1).

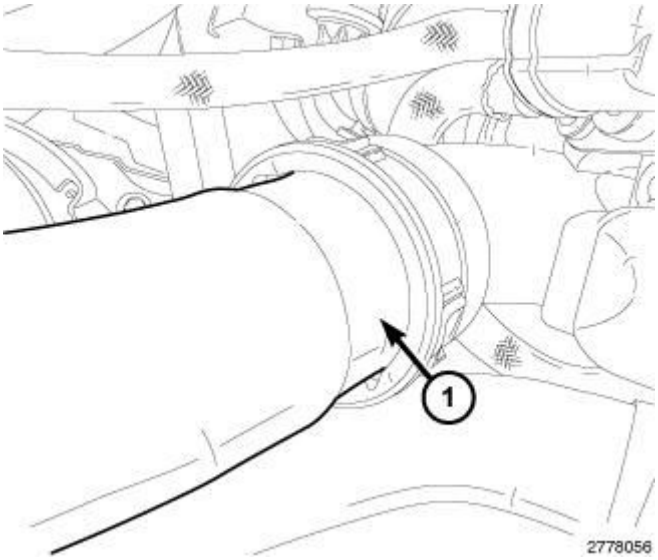

Fig. 76: Lower Radiator Hose
Courtesy of CHRYSLER GROUP, LLC

49. Install the lower radiator hose (2).

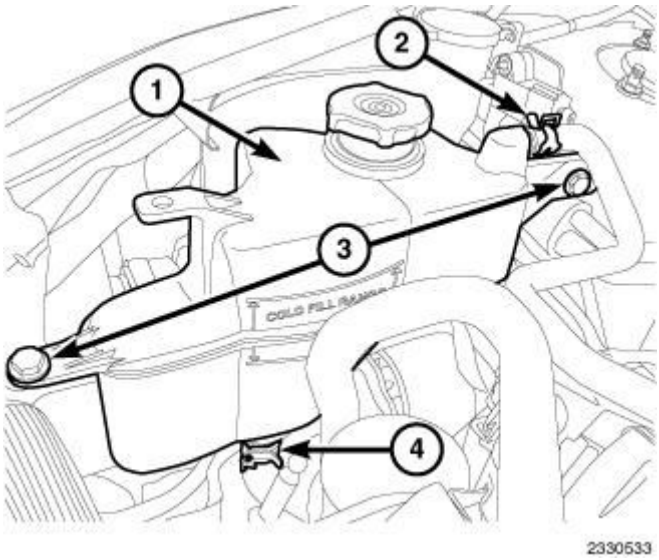

Fig. 77: Coolant Recovery Reservoir, Clamps & Bolts
Courtesy of CHRYSLER GROUP, LLC

50. Install coolant recovery bottle (1). Tighten the mounting bolts to 4 N.m (35 in. lbs.).
51. Connect the coolant hoses (2 and 4).

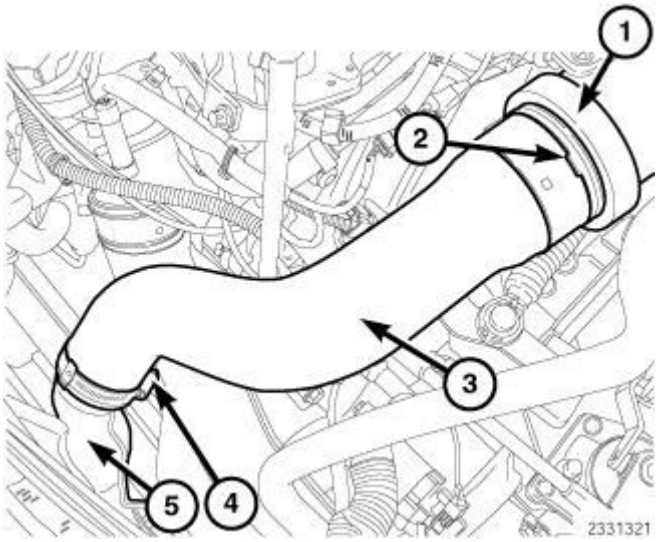

Fig. 78: Upper Charge Air Tube, Lock Ring, Lower Charge Air Tube, Clamp & Charge Air Cooler (CAC) Inlet
Courtesy of CHRYSLER GROUP, LLC

52. Connect the lower charge air tube (3) from the charge air cooler (CAC) inlet (5). Tighten clamp (4) to 5 N.m (44 in. lbs.).
53. Install the lower charge air tube (3) to the upper charge air tube (1) to turbocharger and lock the lock ring in place.

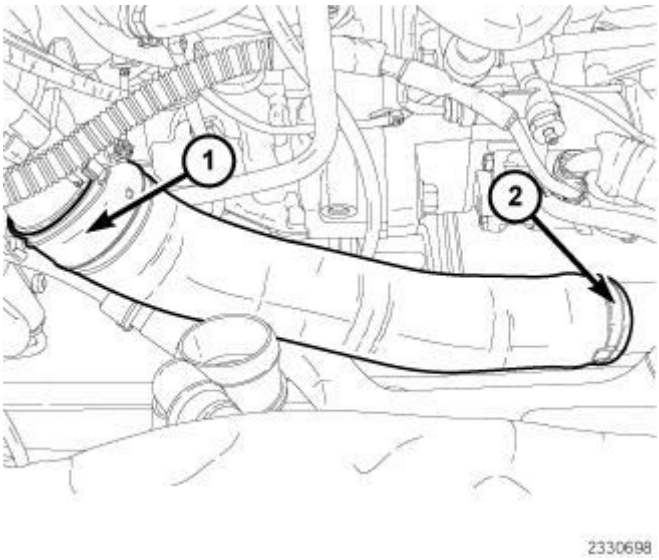

Fig. 79: EGR Air Flow Control Valve & Clamp
Courtesy of CHRYSLER GROUP, LLC

54. Install charge air inlet tube to the charge air cooler (CAC) and the EGR air control valve.
55. Install coolant fan assembly. Refer to **FAN, COOLING, INSTALLATION** .

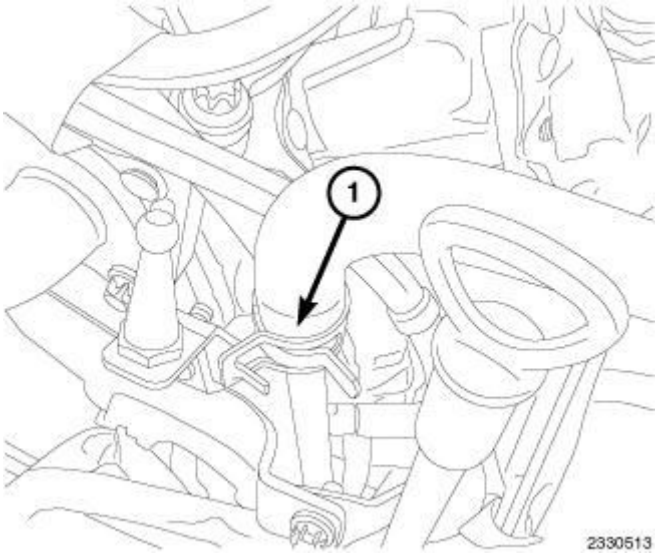

Fig. 80: Brake Booster Vacuum Hose
Courtesy of CHRYSLER GROUP, LLC

56. Connect the brake booster vacuum hose.

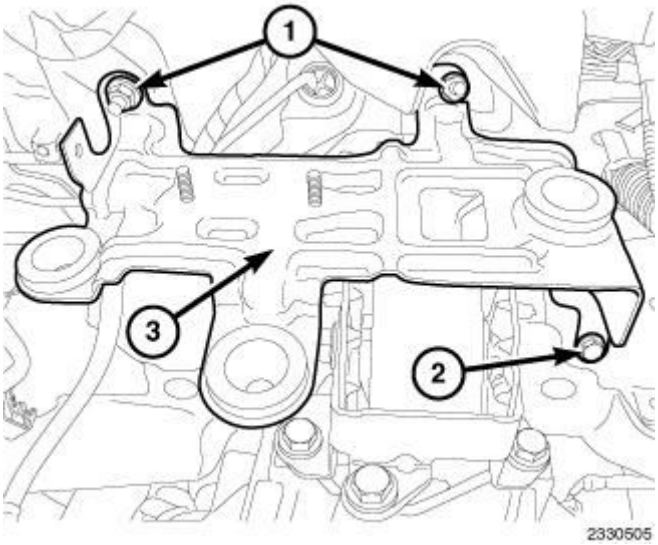

Fig. 81: Air Cleaner Mounting Bracket, Nuts & Bolt
Courtesy of CHRYSLER GROUP, LLC

57. Install the air cleaner mounting bracket (3):
    a. Tighten bolt (2) to 11 N.m (97 in. lbs.).
    b. Tighten nuts (1) to 11 N.m (97 in. lbs.).

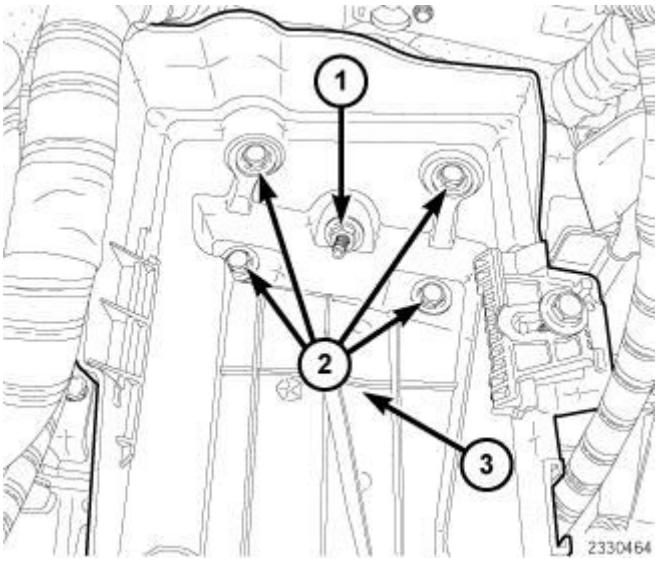

Fig. 82: Battery Tray, Nut & Retaining Bolts
Courtesy of CHRYSLER GROUP, LLC

58. Install the battery tray (3):
    a. Tighten bolt (2) to 11 N.m (97 in. lbs.).
    b. Tighten nuts (1) to 11 N.m (97 in. lbs.).

NOTE: Do not connect the battery cables at this time.

59. Install the battery. Tighten bolt to 7 N.m (62 in. lbs.).

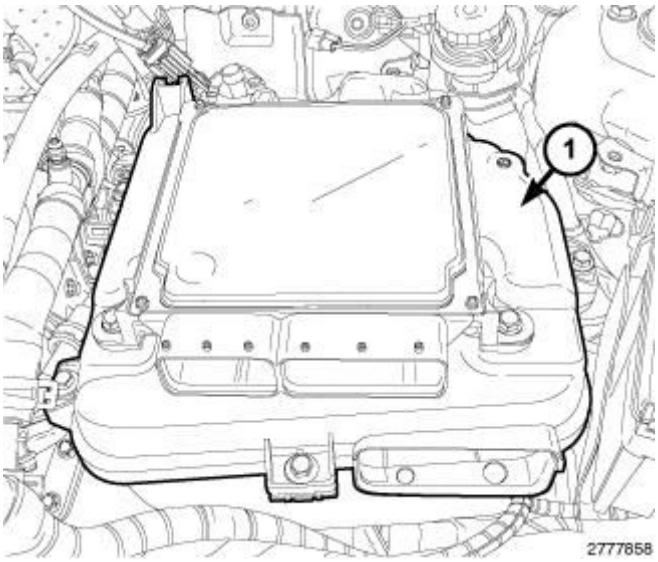

Fig. 83: Air Cleaner Assembly
Courtesy of CHRYSLER GROUP, LLC

60. Install the air cleaner assembly (1).

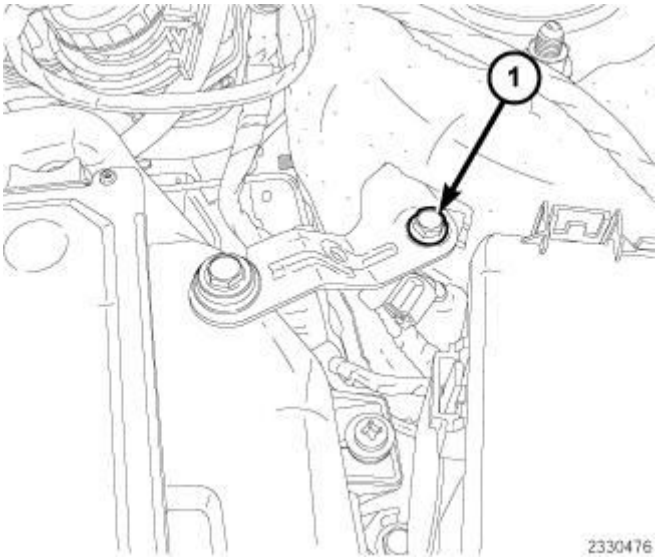

Fig. 84: Air Cleaner Upper Support Bracket Retaining Bolt
Courtesy of CHRYSLER GROUP, LLC

61. Install the air cleaner upper support bracket retaining bolt (1). Tighten bolt to (9 N.m 80 in. lbs.).

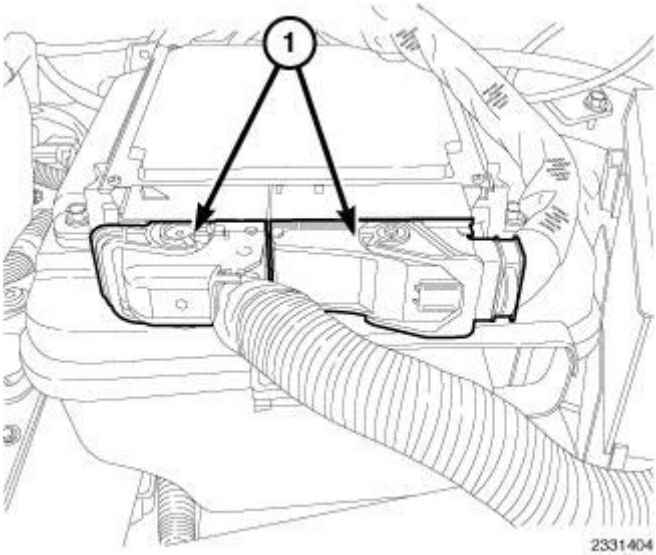

Fig. 85: PCM Harness Connectors
Courtesy of CHRYSLER GROUP, LLC

62. Connect Powertrain Control Module (PCM) wire harness connectors (1).

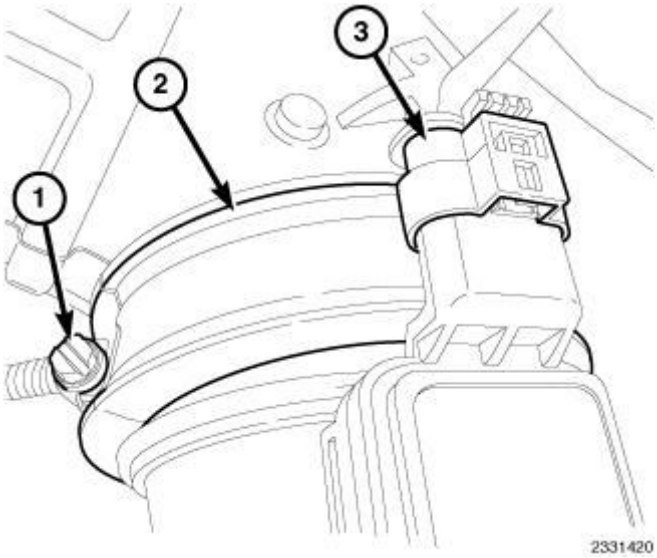

Fig. 86: Mass Air Flow Sensor Harness Connector, Air Cleaner-To-Turbocharger Inlet Tube & Clamp
Courtesy of CHRYSLER GROUP, LLC

63. Connect the air cleaner-to-turbocharger inlet tube (2) and tighten the clamp (1).
64. Connect the Mass Air Flow (MAF) sensor wire harness connector (3).

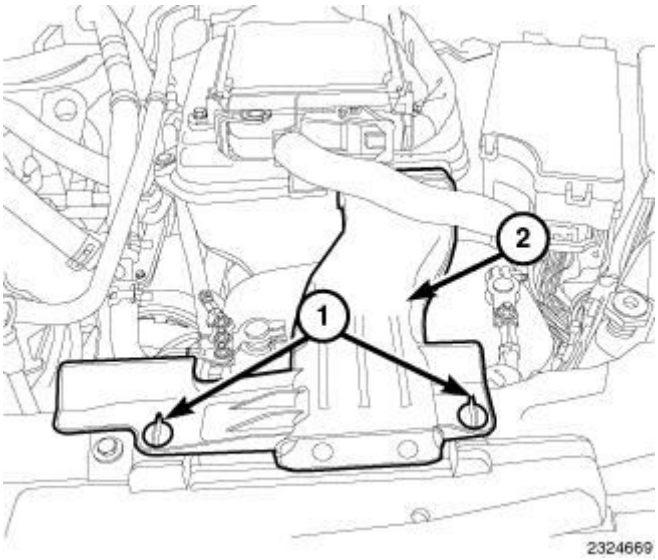

Fig. 87: Quarter Turn Lock Tabs & Air Inlet Duct
Courtesy of CHRYSLER GROUP, LLC

65. Install the air inlet duct (1).

CAUTION: Do NOT run the engine with a vacuum pump in operation or with a vacuum present within the A/C system. Failure to follow this caution will result in serious A/C compressor damage.

66. Evacuate the refrigerant system. Refer to **PLUMBING, STANDARD PROCEDURE** .
67. Charge the refrigerant system. Refer to **PLUMBING, STANDARD PROCEDURE** .
68. Fill engine with coolant.
69. Install new oil filter and fill engine with oil.

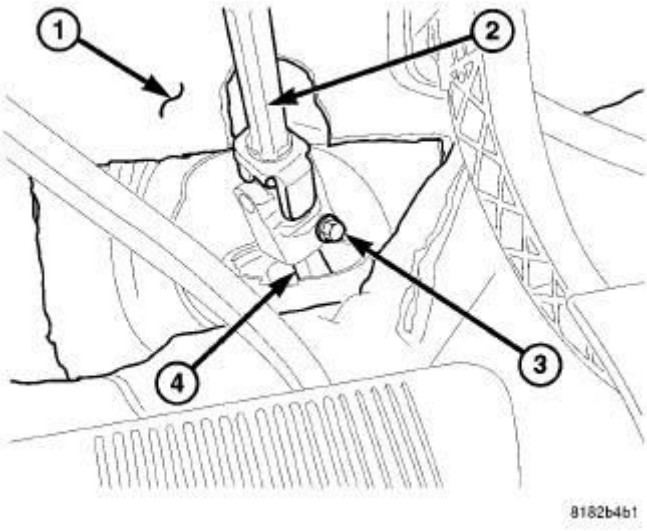

Fig. 88: Lower Coupling Bolt
Courtesy of CHRYSLER GROUP, LLC

70. Verify the front wheels of vehicle are in the STRAIGHT-AHEAD position.
71. Center the intermediate shaft (2) over the steering gear pinion shaft (4), lining up the ends, then slide the intermediate shaft onto the steering gear pinion shaft.
72. From center, rotate the steering wheel to the right approximately 90° or until the intermediate shaft coupling bolt (3) can be easily installed.
73. Install the intermediate shaft coupling bolt (3). Tighten the bolt to 42 N.m (31 ft. lbs.).
74. Reposition the floor carpet (1) in place.

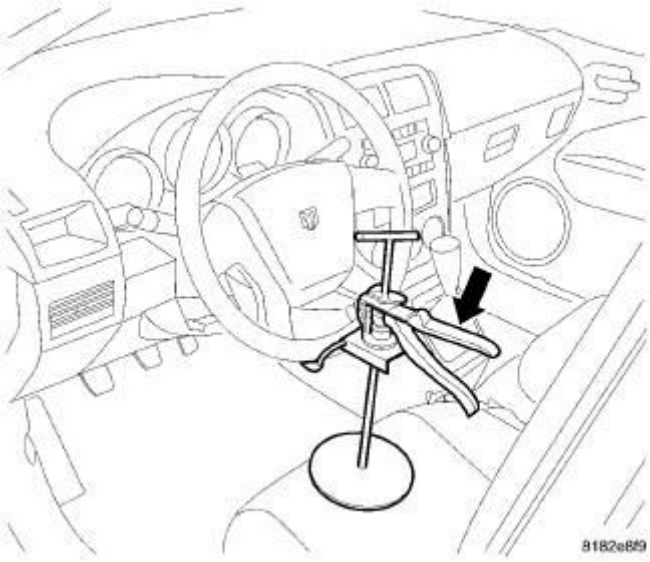

Fig. 89: Steering Wheel Holding Tool
Courtesy of CHRYSLER GROUP, LLC

75. Remove the steering wheel holder.
76. Connect the positive and negative battery cables.
77. Start engine and check for leaks.
78. Install engine cover (1).

SPECIAL TOOLS

SPECIAL TOOLS

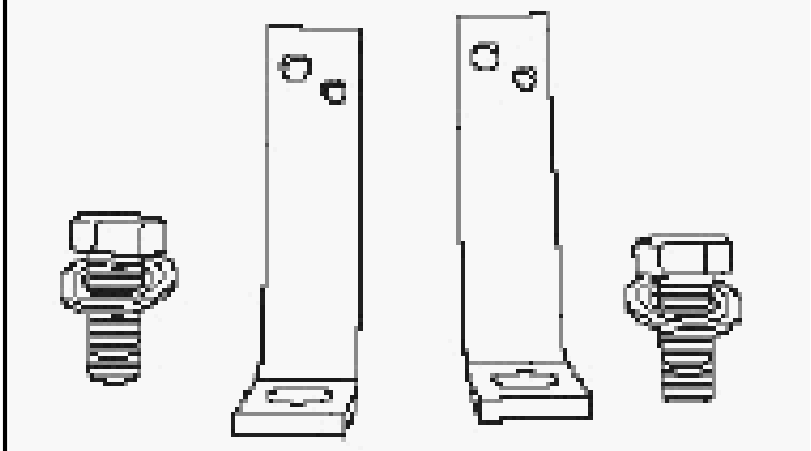	10205 - Fixtures, Power Train Dolly Engine Support
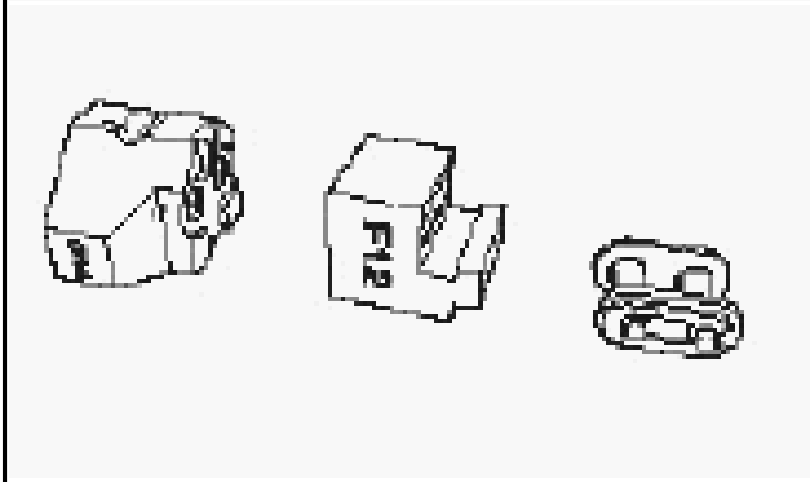	10228 - Assembly, Inserts Timing Chain

10228-D14 - Thrust Piece

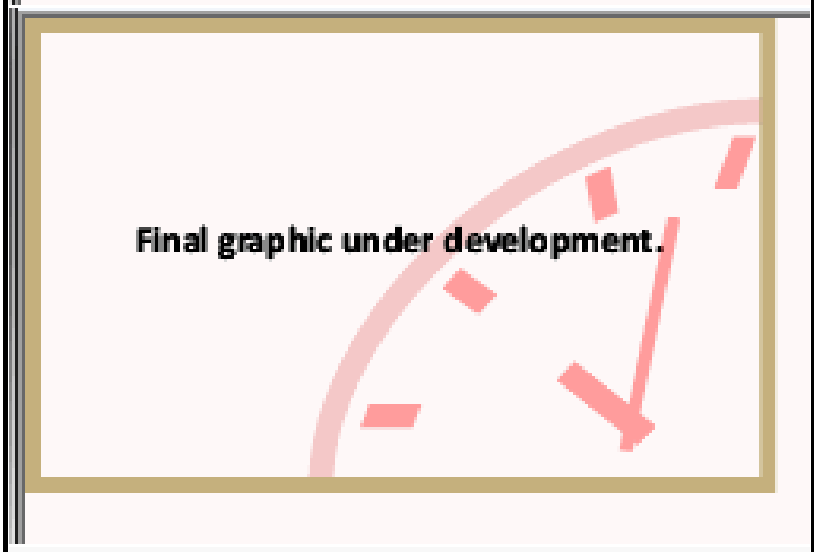

10228-F12 - Guide Piece

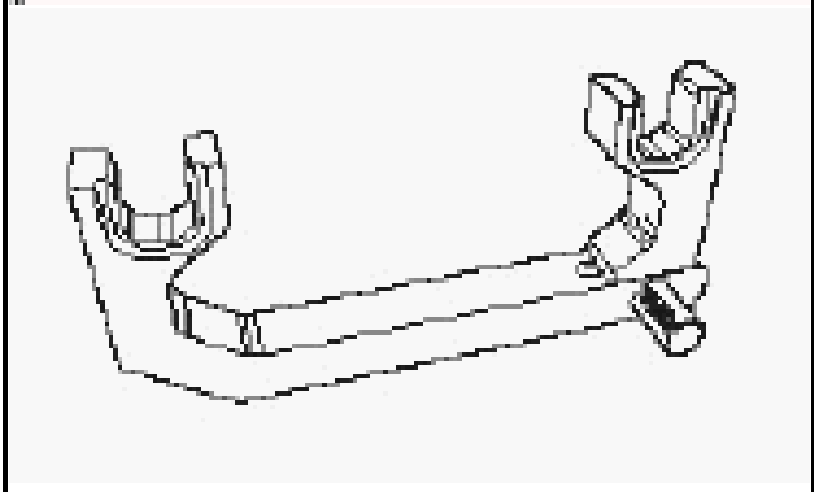

10231 - Lock, Balance Shaft

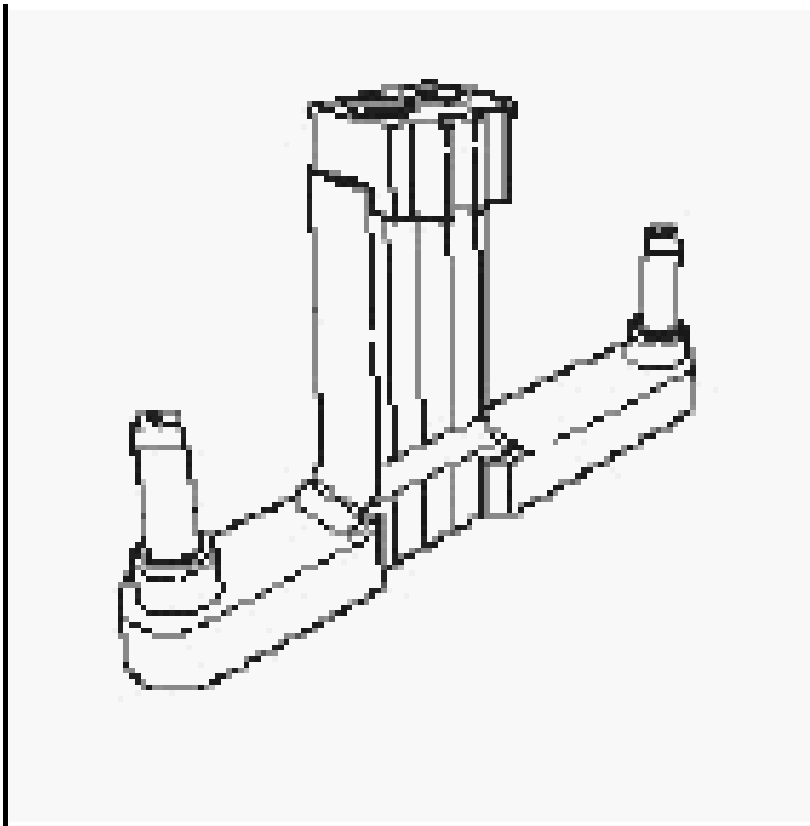

10232 - Lock, Flywheel/Clutch Plate

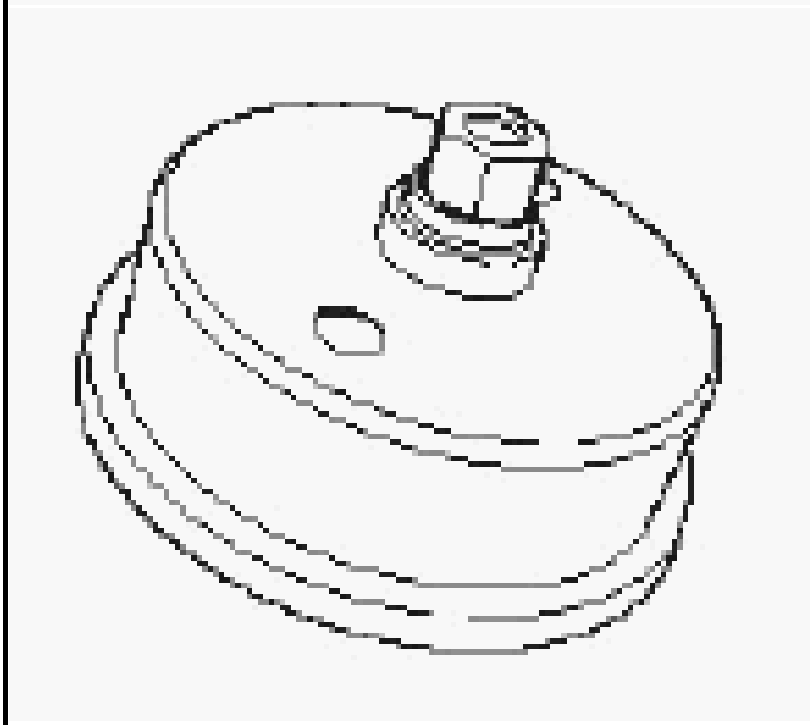

10233 - Install, Rear Crankshaft Seal

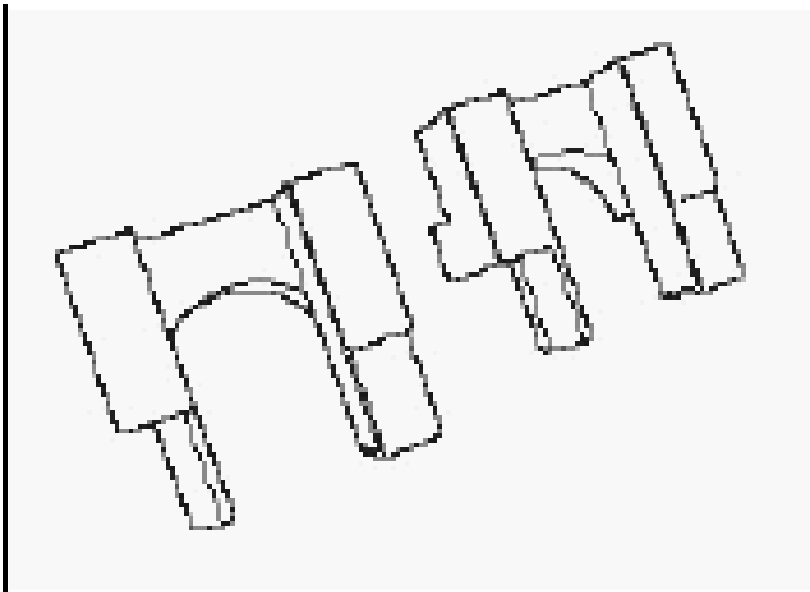

10234 - Lock, Camshaft

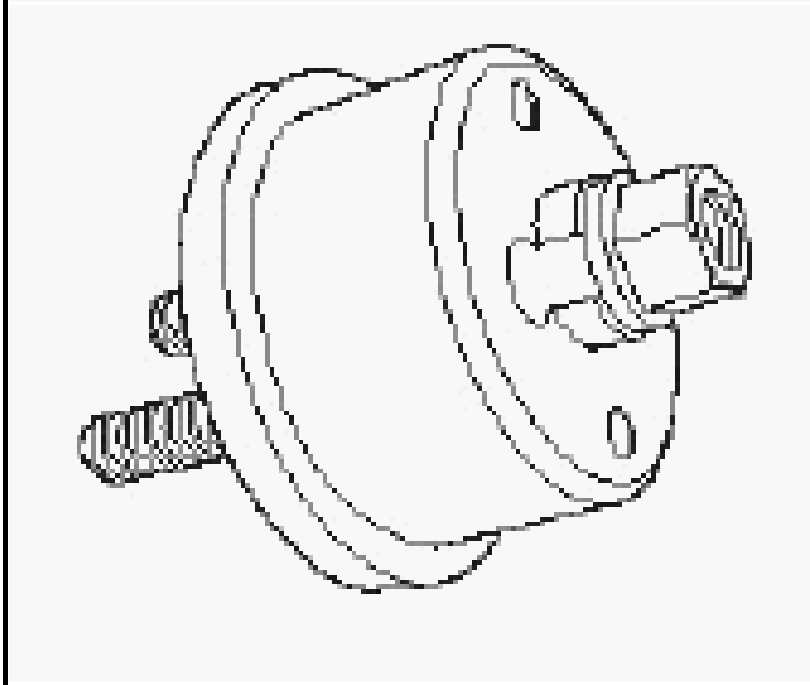

10235 - Install, Front Crankshaft Seal Ring

10236 - Holder, Vibration Damper

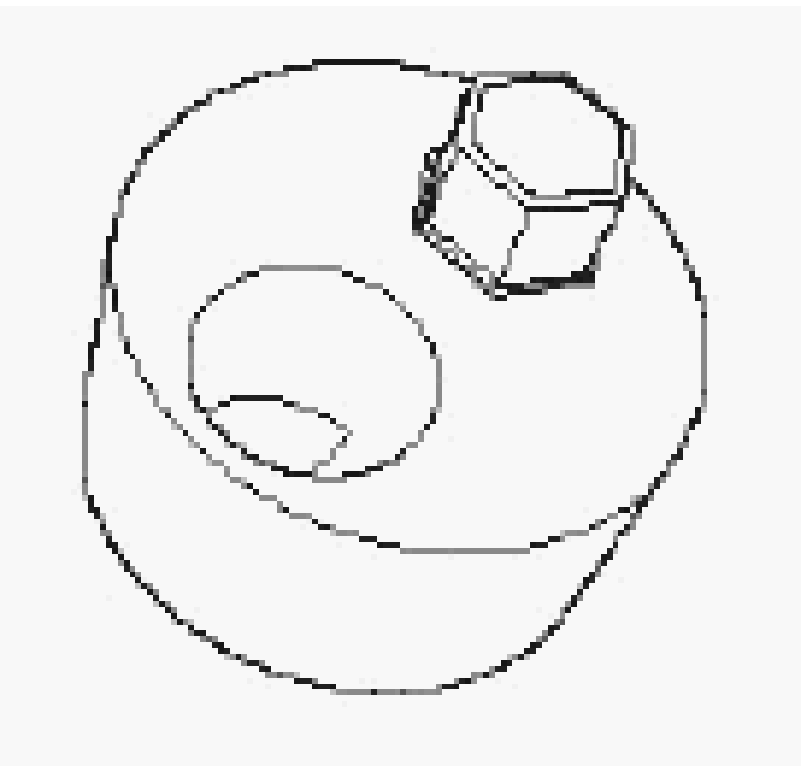

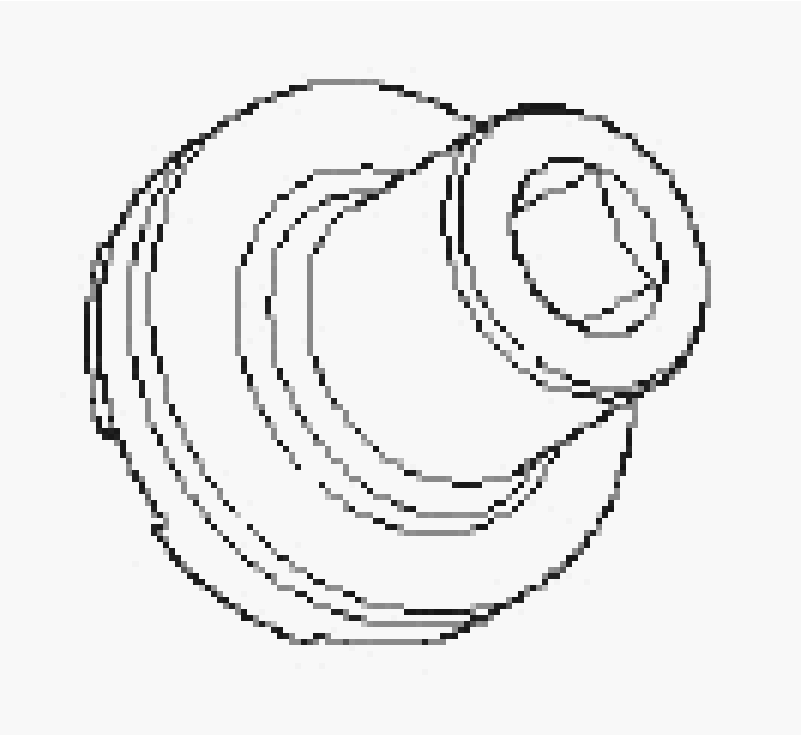

10237 - Socket, Shift Valve

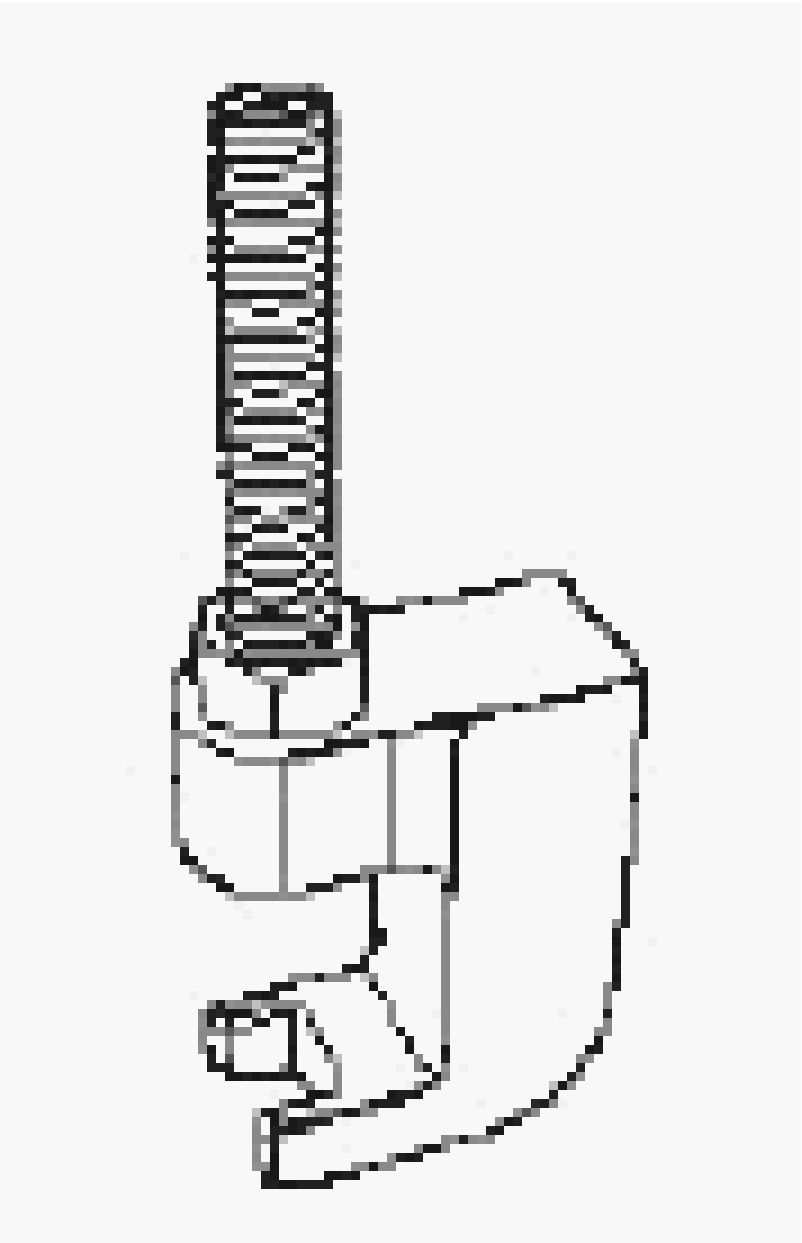

10238 - Claw, Extraction

10239 - Adapter, Tester

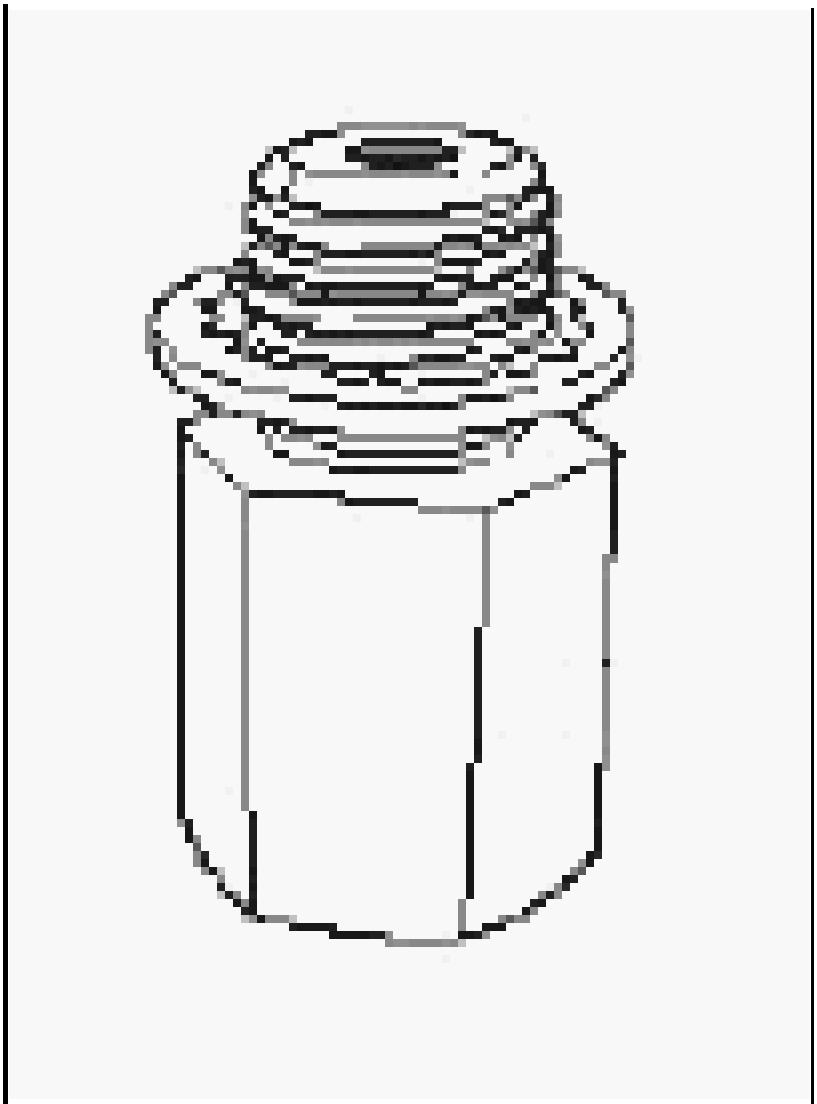

10240 - Bolt, Extractor

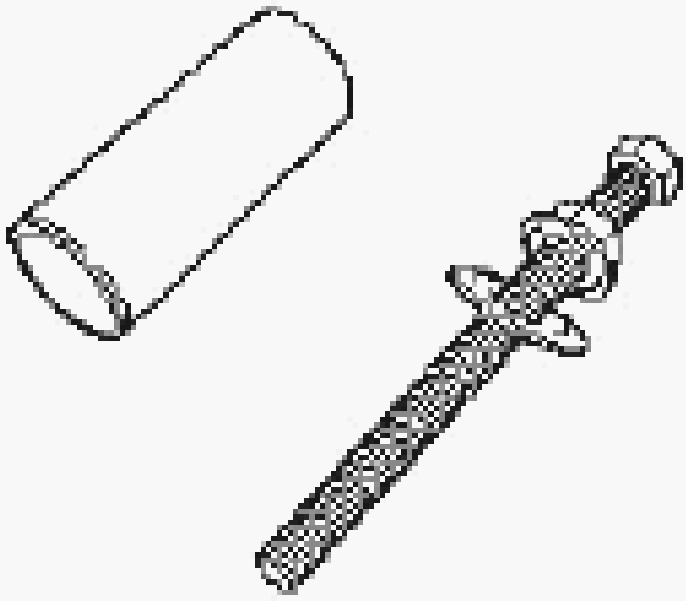	
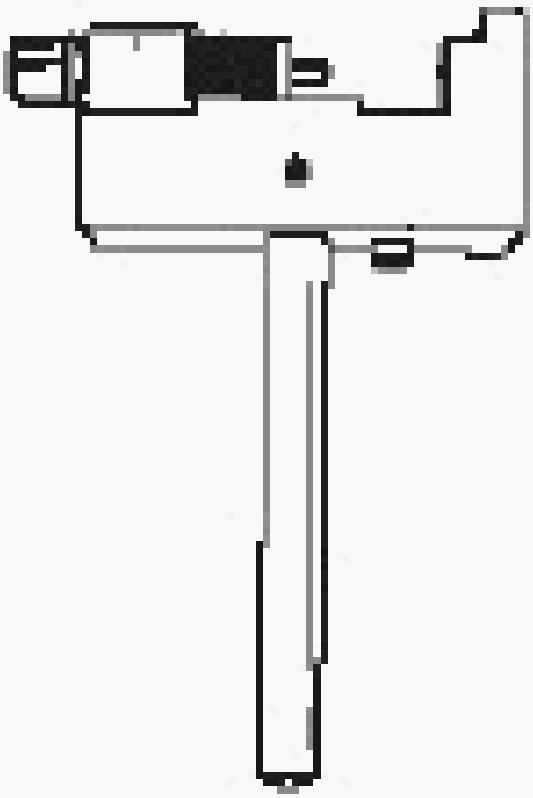	10241 - Screw, Forcing

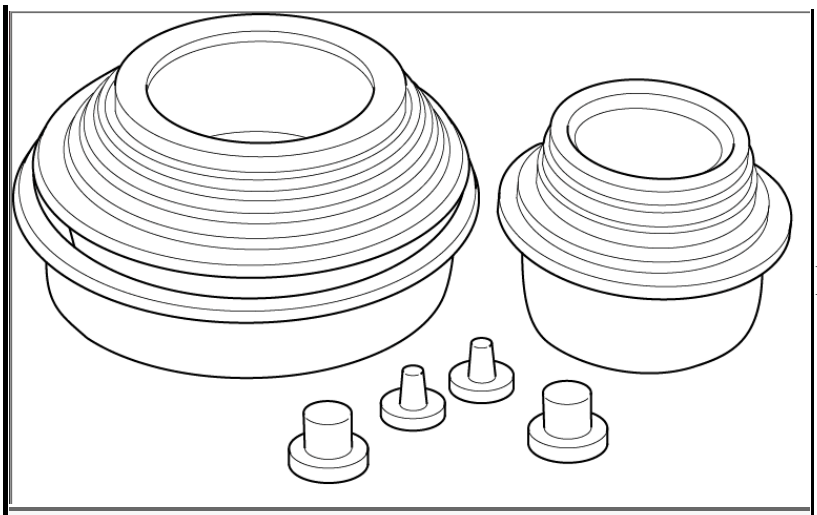

10368 - Set, Universal Protective Cap

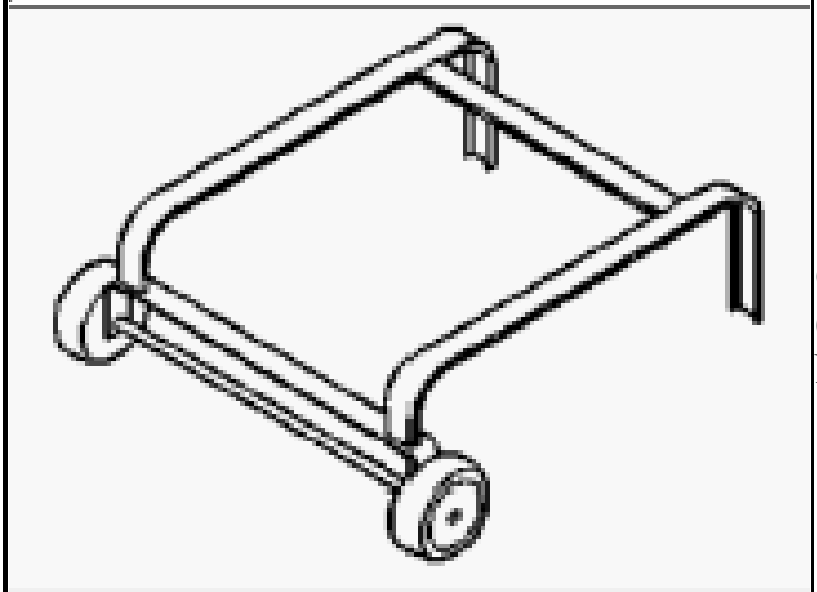

6135 - Dolly, Power Train (Originally Shipped In Kit Number(s) 6784C.)

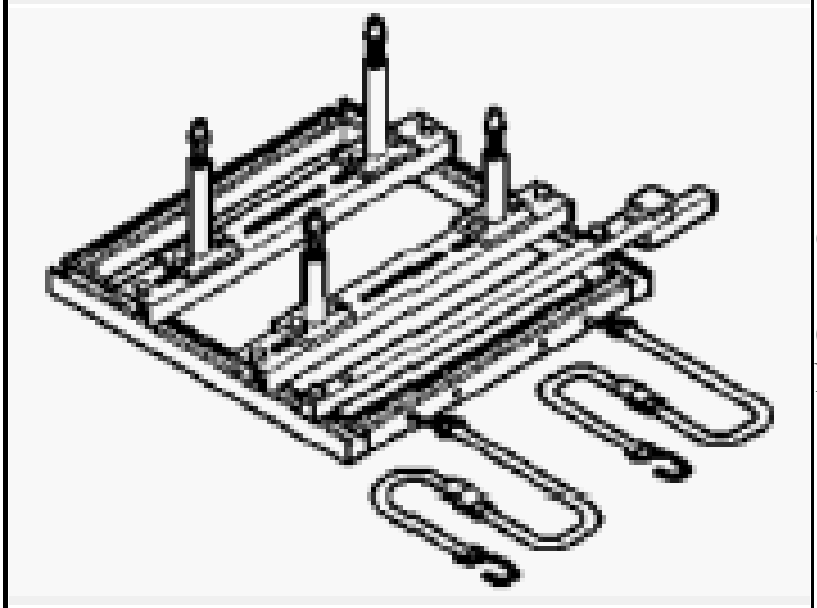

6710A - Cradle, Engine Support
(Originally Shipped In Kit Number(s) 6784, 6809.)

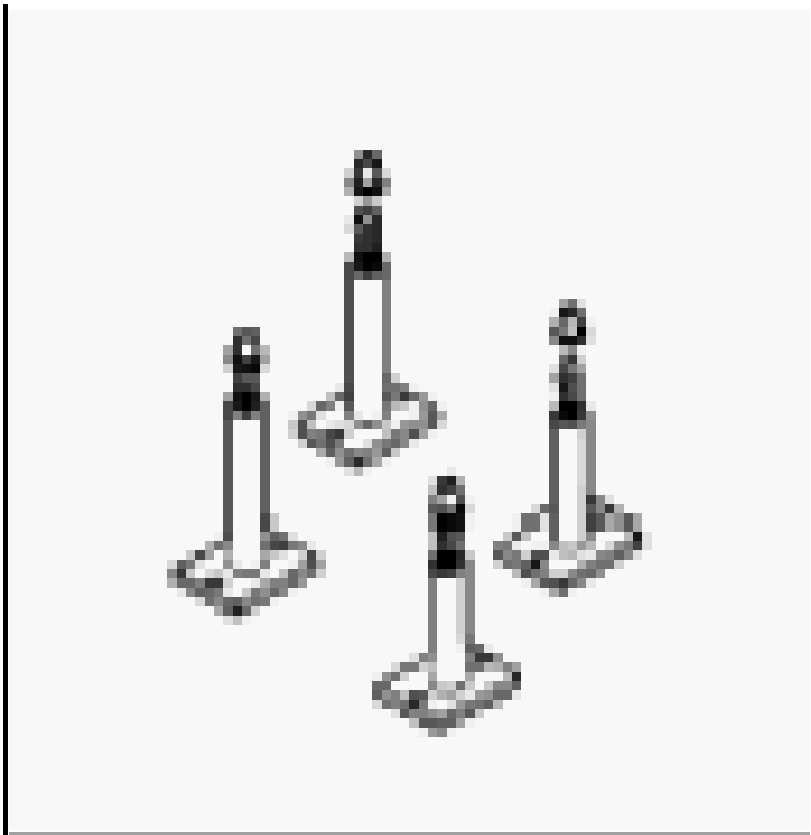

6848 - Posts, Cradle
(Originally Shipped In Kit Number(s) 6880, 6881, 6882, 6883.)

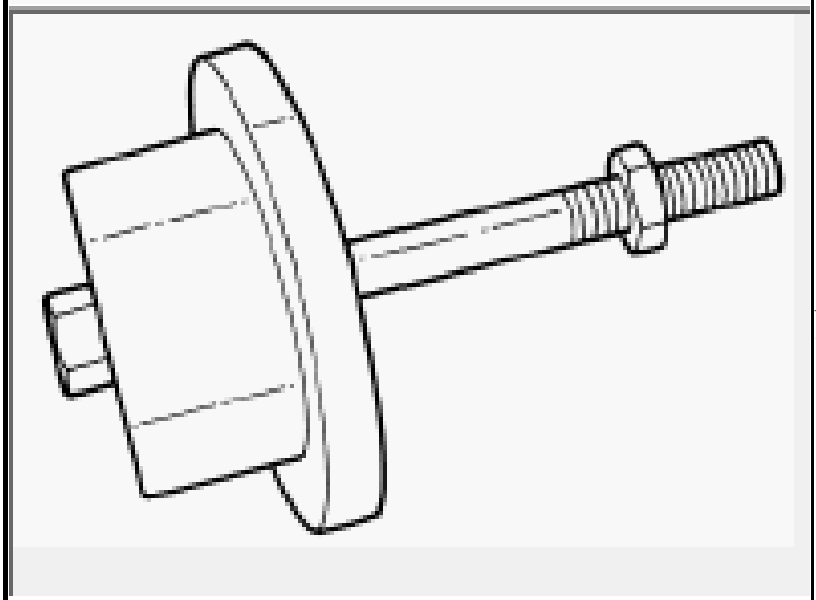

8941 - Puller
(Originally Shipped In Kit Number(s) 9299, 9299CC, 9300A-CAN, 9550, 9560.)

8951 - Assembly Links
(Originally Shipped In Kit Number(s) 9550, 9560, 9566.)

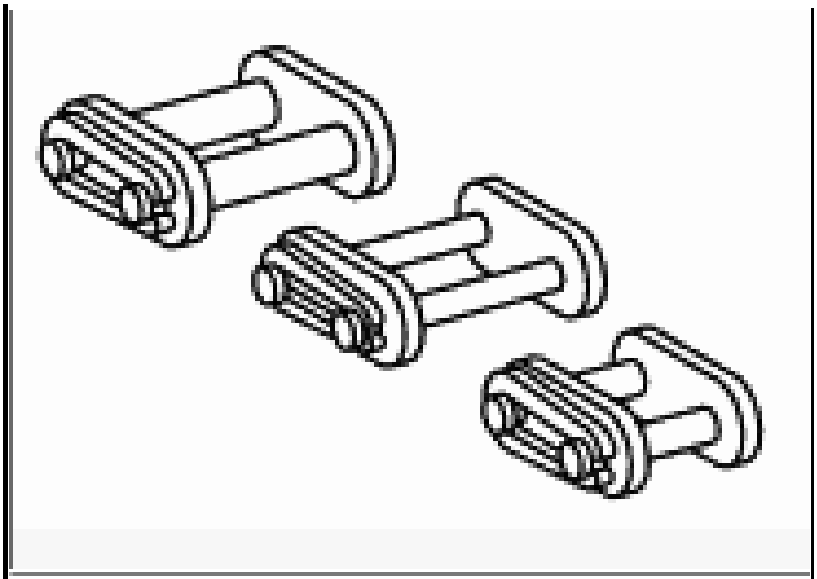

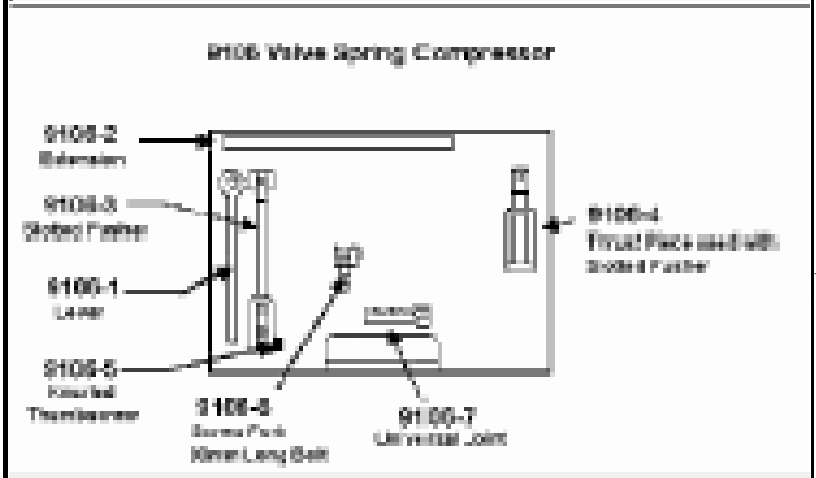

9307 - Compressor, Valve Spring
(Originally Shipped In Kit Number(s) 9300, 9300A-CAN, 9300-CAN, 9300-CAN.)

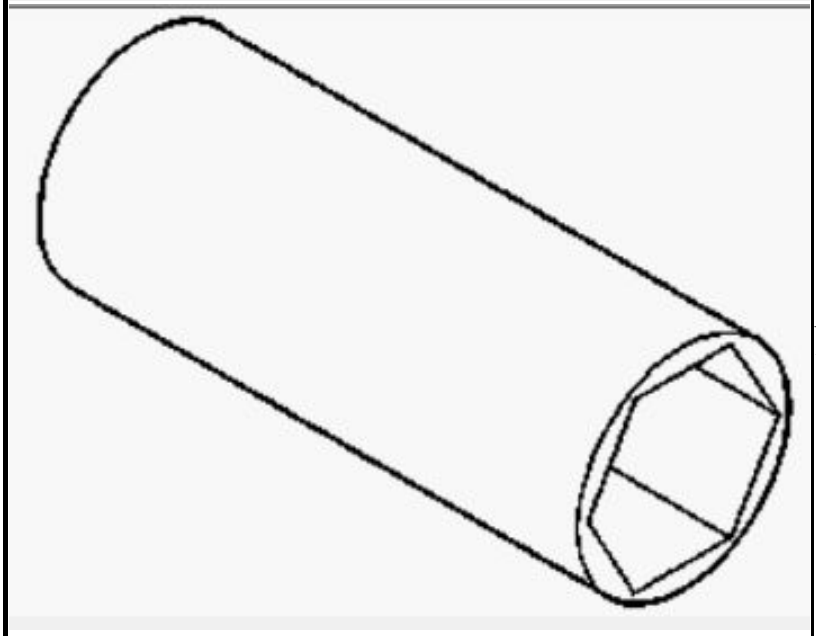

9312-1 - Block, Pressing
(Originally Shipped In Kit Number(s) 9550, 9560, 9580.)

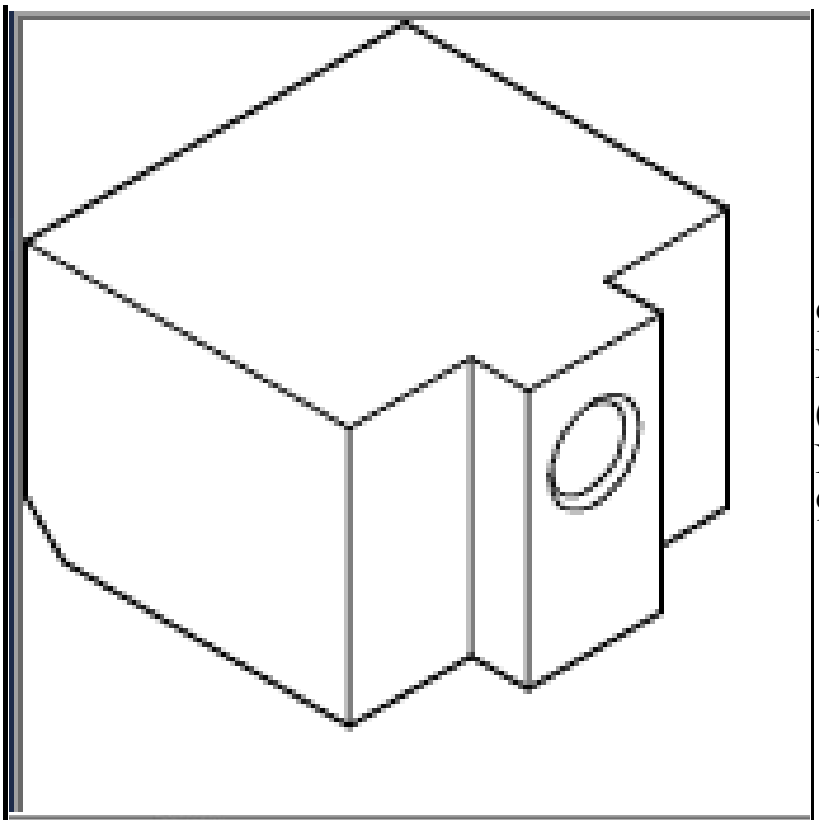

9312-13 - Guide, Pin Removal
(Originally Shipped In Kit Number(s) 9550, 9560, 9580.)

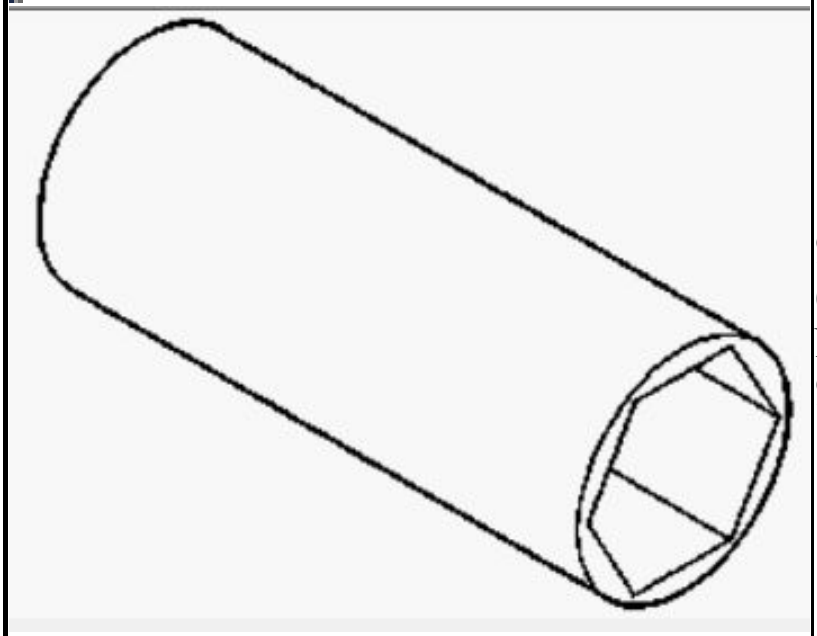

9312-2 - Handle
(Originally Shipped In Kit Number(s) 9550, 9560, 9580.)

9312-4 - Assembly, Screw, Forcing
(Originally Shipped In Kit Number(s) 9550, 9560,

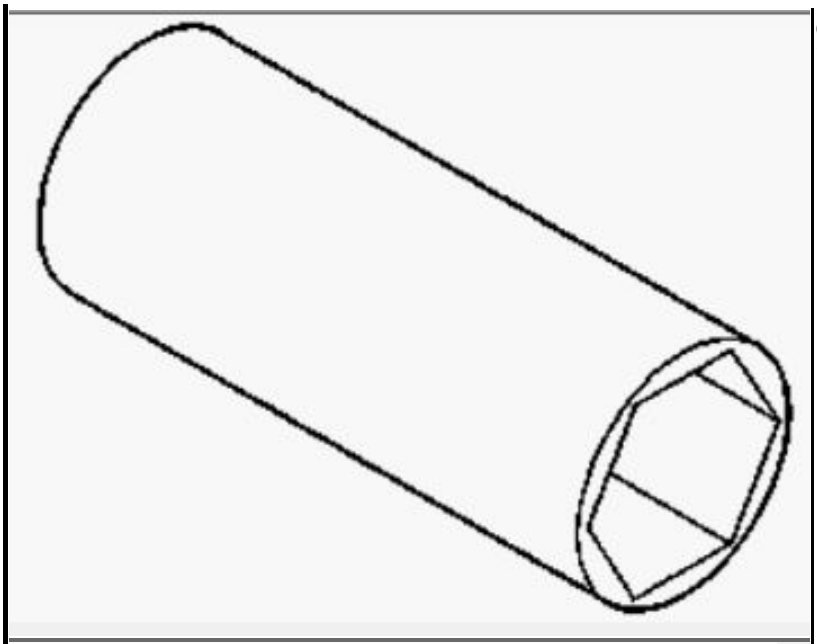	9580.)
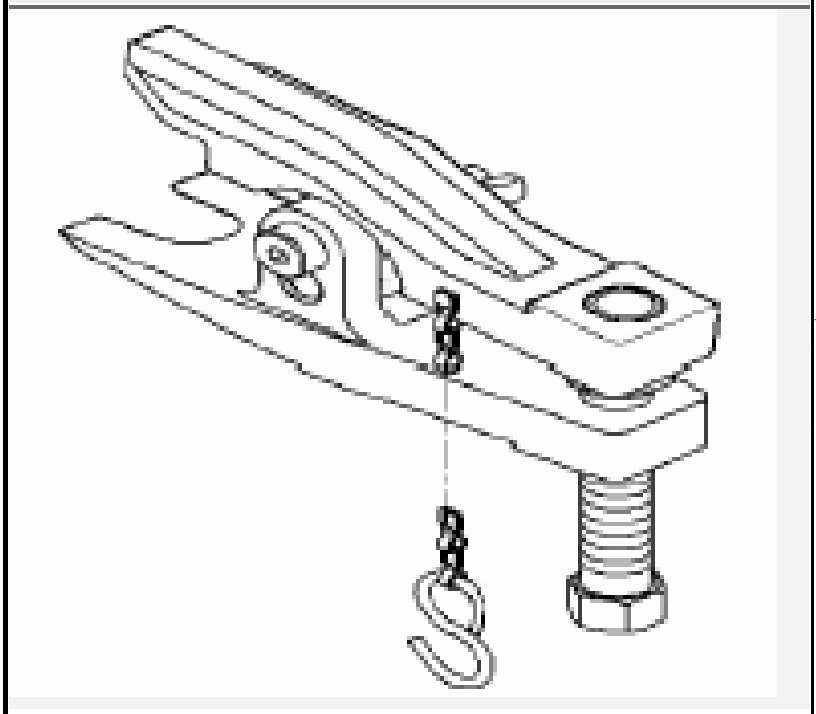	9360 - Remover, Ball Joint (Originally Shipped In Kit Number(s) 9329, 9515, 9516, 9516-CAN, 9517, 9517-CAN, 9518, 9519, 9540, 9541.)
	9543 - Adapter, Compression Test (Originally Shipped In Kit Number(s) 9300A-CAN, 9550, 9560, 9580.)

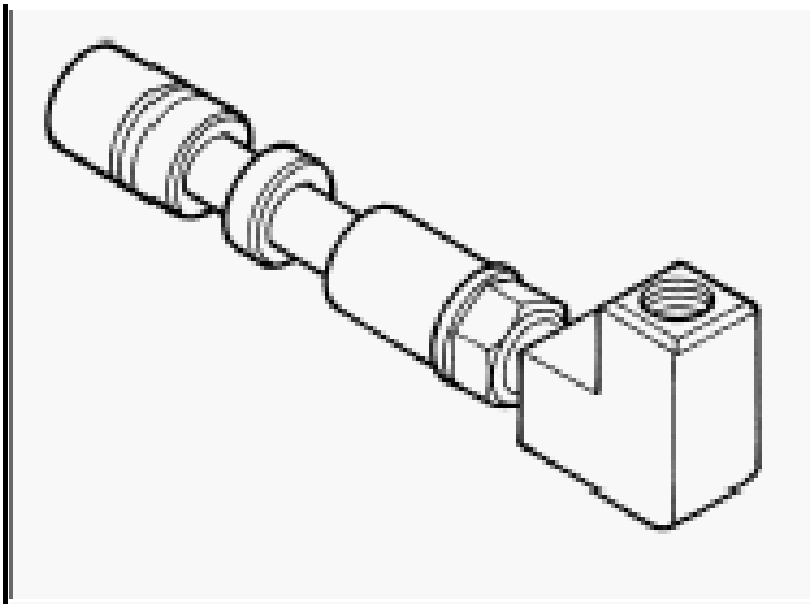

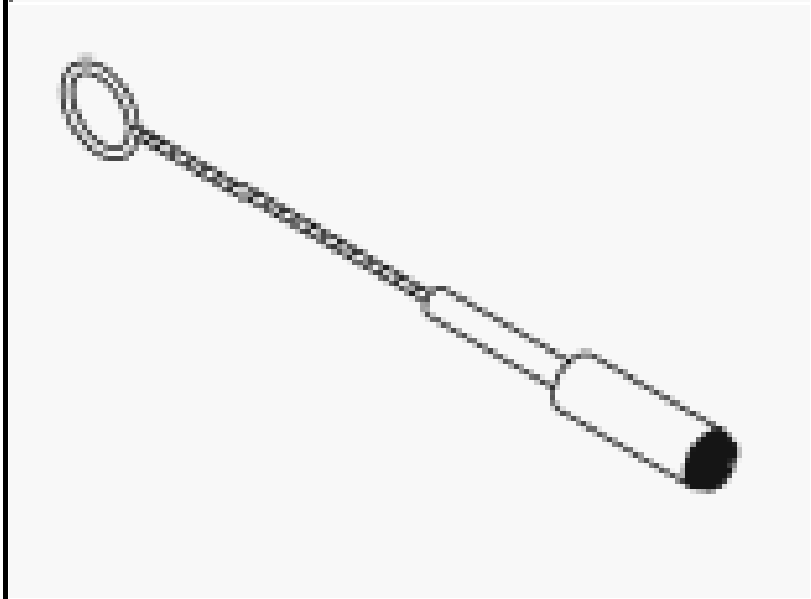

9717 - Brush, Injector Bore (Originally Shipped In Kit Number(s) 9910.)

9723 - Installer, Bearing (Originally Shipped In Kit Number(s) 9720, 9967.)

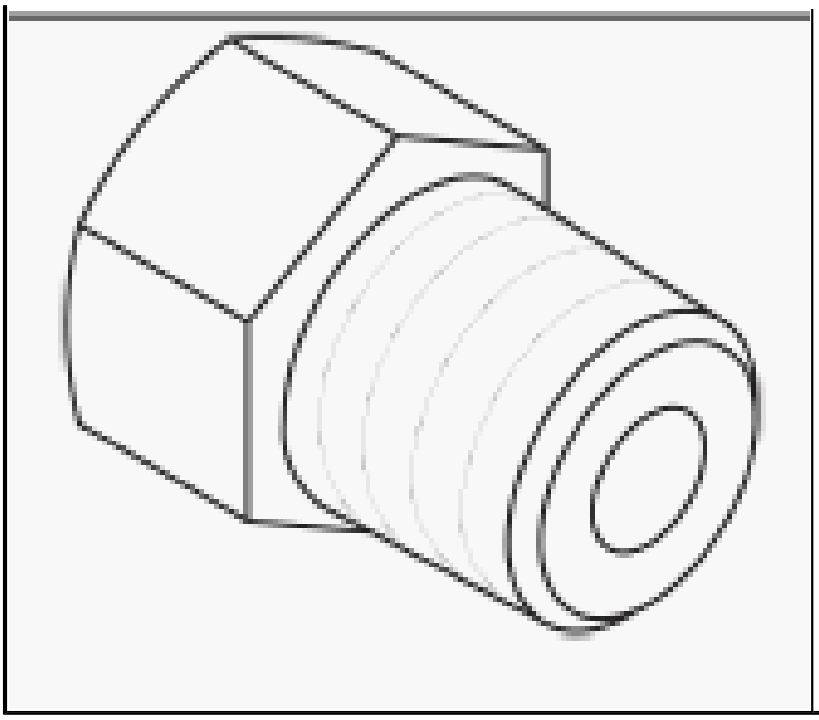

COVER, ENGINE

REMOVAL

REMOVAL

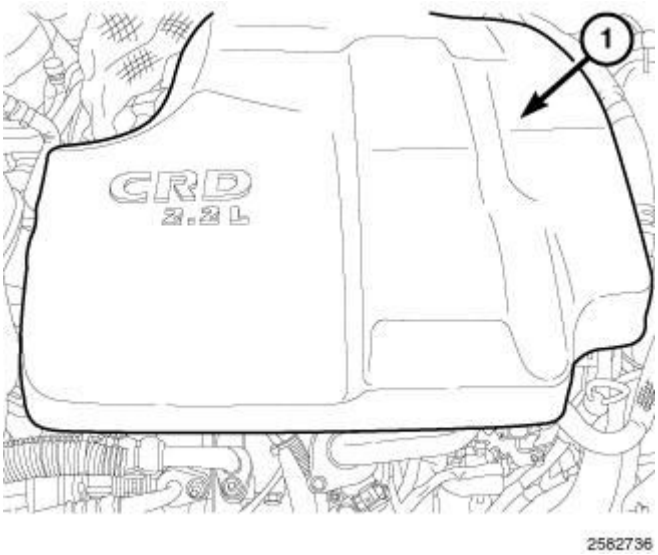

Fig. 90: Engine Cover
Courtesy of CHRYSLER GROUP, LLC

1. Lift up to release engine cover (1) from engine cover mounts and remove the engine cover from engine.

INSTALLATION

INSTALLATION

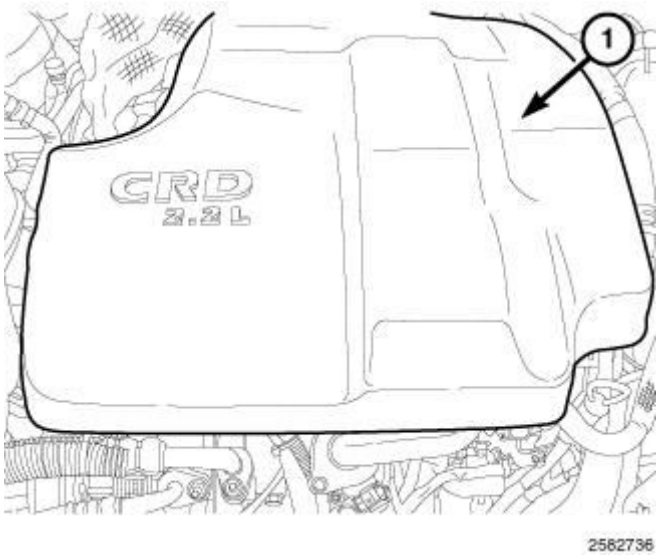

Fig. 91: Engine Cover
Courtesy of CHRYSLER GROUP, LLC

1. Align engine cover (1) to mounting studs and firmly press down to lock in place.

AIR INTAKE SYSTEM

AIR CLEANER

REMOVAL

REMOVAL

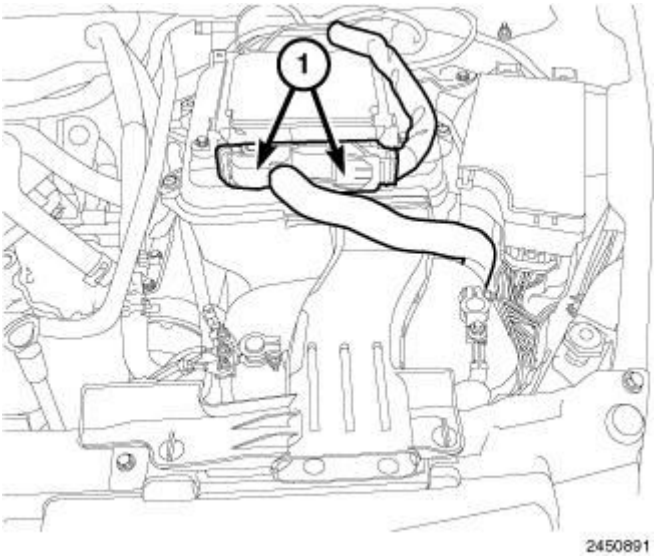

Fig. 92: PCM Harness Connectors
Courtesy of CHRYSLER GROUP, LLC

1. Disconnect the negative battery cable.
2. Disconnect the Powertrain Control Module (PCM) harness connectors (1).

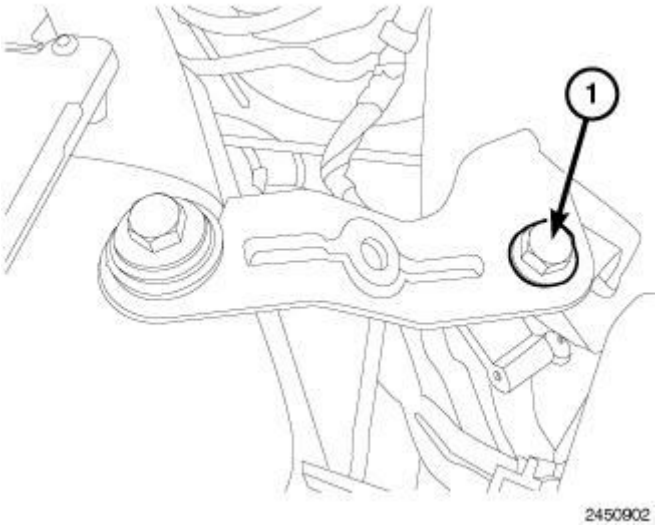

Fig. 93: Air Cleaner Support Bracket Bolt
Courtesy of CHRYSLER GROUP, LLC

3. Remove bolt (1) from the air cleaner support bracket.

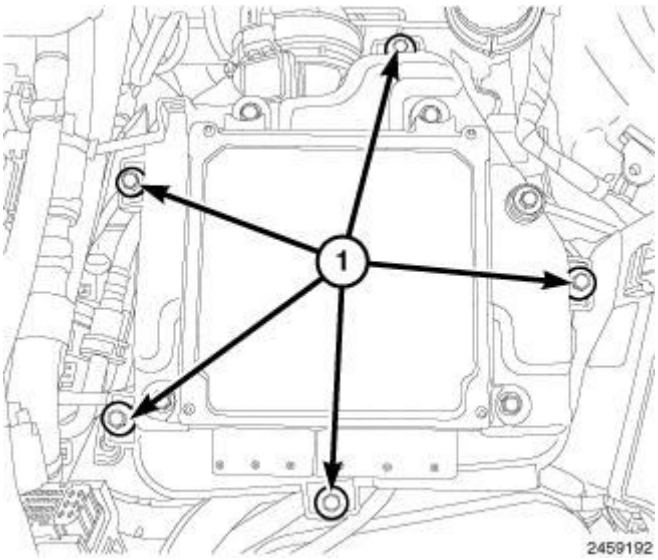

Fig. 94: Air Cleaner Cover Screws
Courtesy of CHRYSLER GROUP, LLC

4. Loosen the five screws (1) securing the air cleaner cover and remove the air cleaner cover.

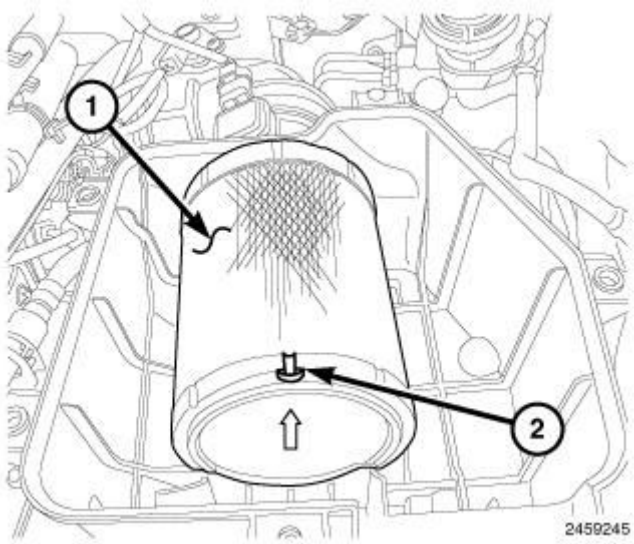

Fig. 95: Air Filter Element
Courtesy of CHRYSLER GROUP, LLC

5. Remove air filter element (1).
6. If necessary, clean the inside of the air cleaner housing.

INSTALLATION

INSTALLATION

CAUTION: Only use Chrysler/Mopar Air Cleaner Filter. Failure to use the recommended Air Cleaner Filter may result in MIL illumination along with the following DTC P2073, P2074, and P2279 being set.

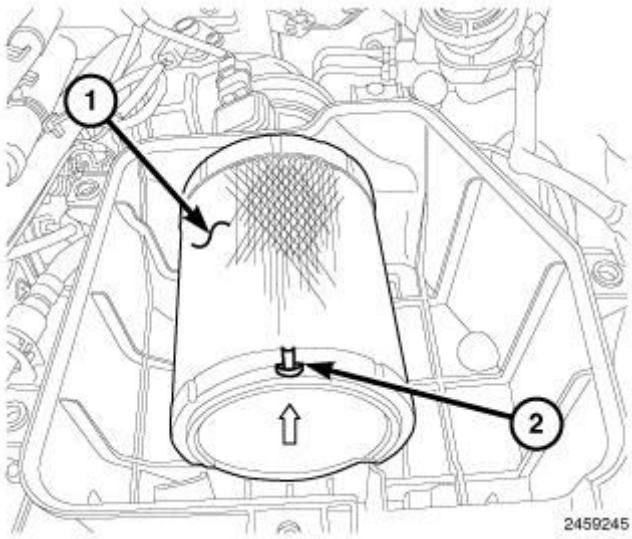

Fig. 96: Air Filter Element

Courtesy of CHRYSLER GROUP, LLC

NOTE: Proper installing and orientation for the air cleaner is with the arrows pointing up.

1. Install new air cleaner filter element (1) with the directional arrow and notch (2) pointing up.

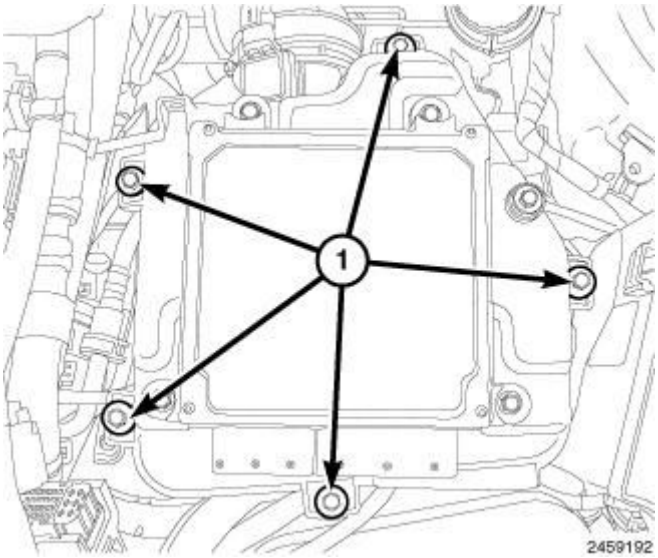

Fig. 97: Air Cleaner Cover Screws
Courtesy of CHRYSLER GROUP, LLC

2. Install the air cleaner cover and tighten the five screws (1) securing the air cleaner cover.

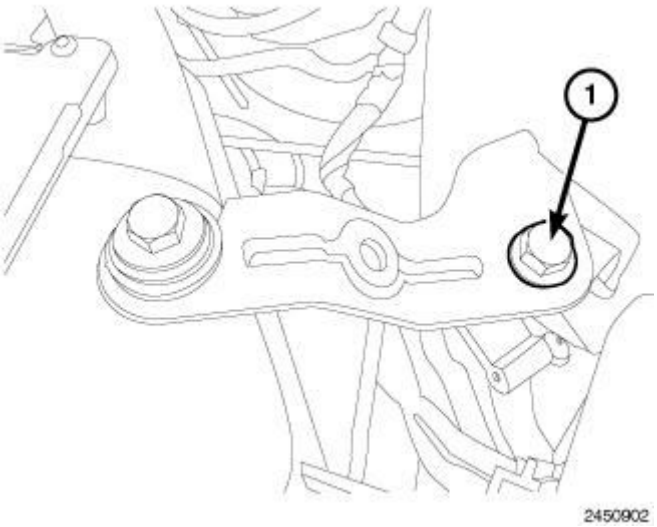

Fig. 98: Air Cleaner Support Bracket Bolt

Courtesy of CHRYSLER GROUP, LLC

3. Install the air cleaner support bracket bolt (1).

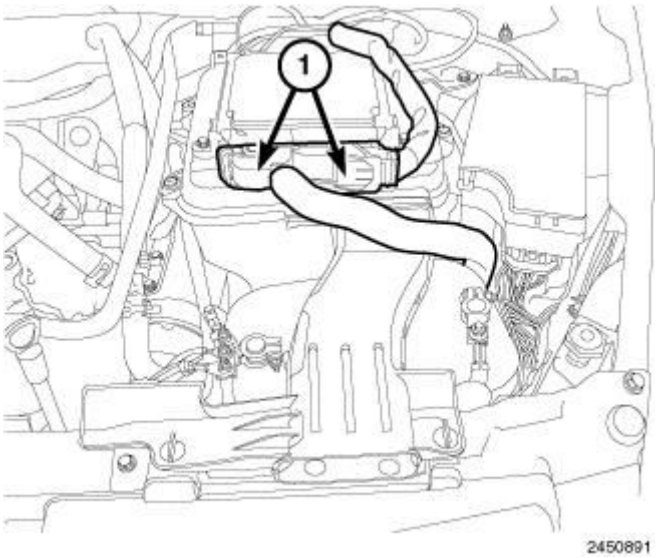

Fig. 99: PCM Harness Connectors
Courtesy of CHRYSLER GROUP, LLC

4. Connect the Powertrain Control Module (PCM) harness connectors (1).
5. Connect the negative battery cable.
6. With the scan tool, navigate to Miscellaneous Functions and perform the MAF Sensor Replacement Initialization routine.

BODY, AIR CLEANER

REMOVAL

REMOVAL

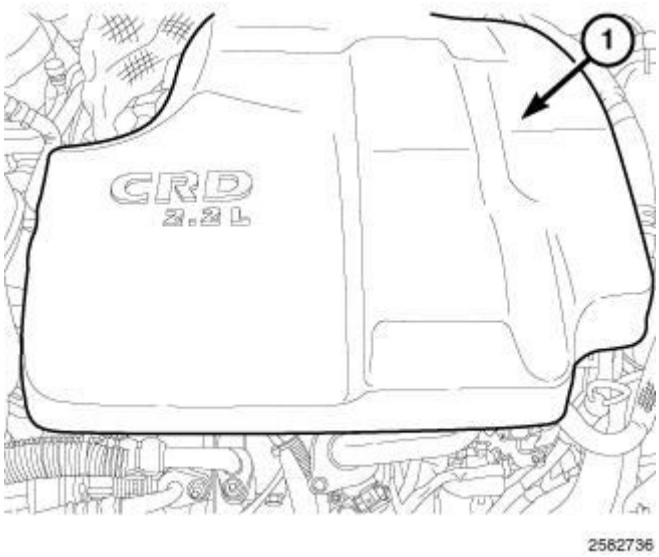

Fig. 100: Engine Cover
Courtesy of CHRYSLER GROUP, LLC

1. Remove the engine cover (1).

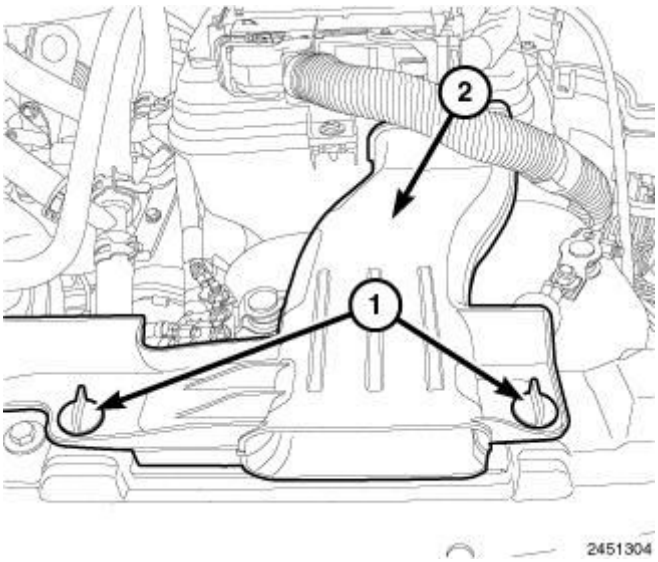

Fig. 101: Air Inlet Duct & Fasteners
Courtesy of CHRYSLER GROUP, LLC

2. Turn the fasteners (1) a quarter turn to release the lock tabs and remove the air inlet duct (2).
3. Disconnect the negative battery cable.

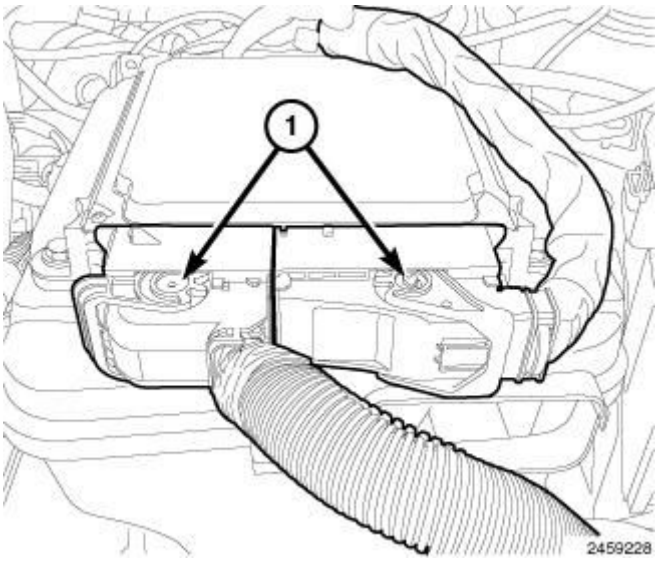

Fig. 102: PCM Harness Connectors
Courtesy of CHRYSLER GROUP, LLC

4. Disconnect the Powertrain Control Module (PCM) harness connectors (1).

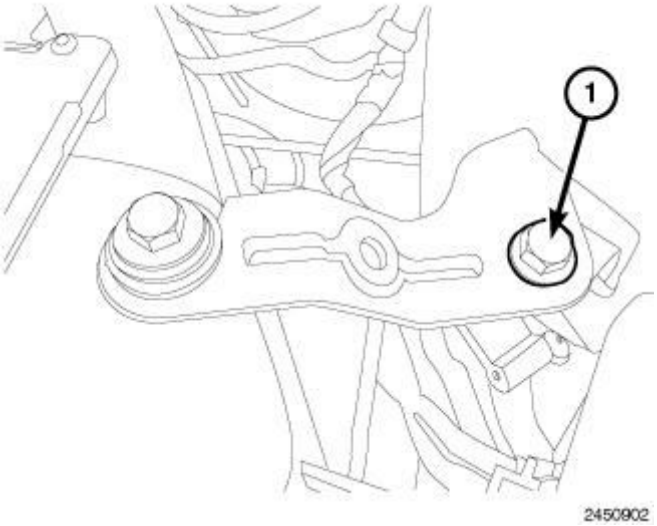

Fig. 103: Air Cleaner Support Bracket Bolt
Courtesy of CHRYSLER GROUP, LLC

5. Remove the bolt from air cleaner support bracket (1).

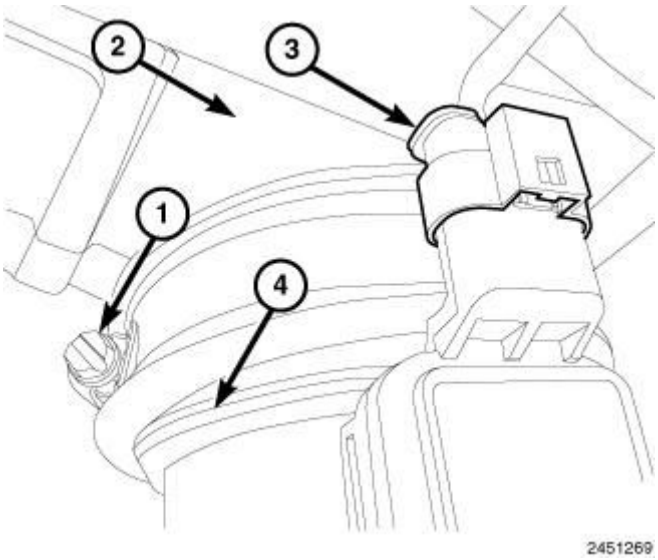

Fig. 104: Mass Air Flow Sensor, Harness Connector, Turbocharger Inlet Tube & Clamp
Courtesy of CHRYSLER GROUP, LLC

6. Disconnect the Mass Air Flow (MAF) sensor (3) harness connector.
7. Loosen the clamp (1) and disconnect the turbocharger inlet tube (2) from MAF sensor (4).

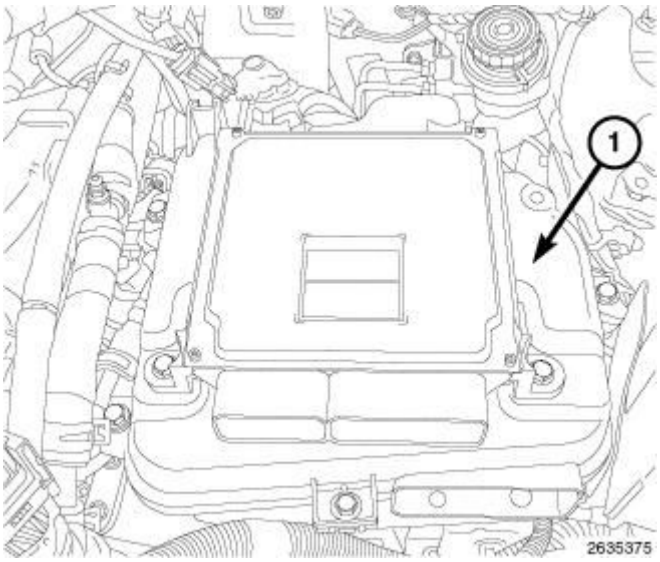

Fig. 105: Air Cleaner Housing Assembly
Courtesy of CHRYSLER GROUP, LLC

8. Lift up and remove the air cleaner body.

TURBOCHARGER AIR INLET TUBE

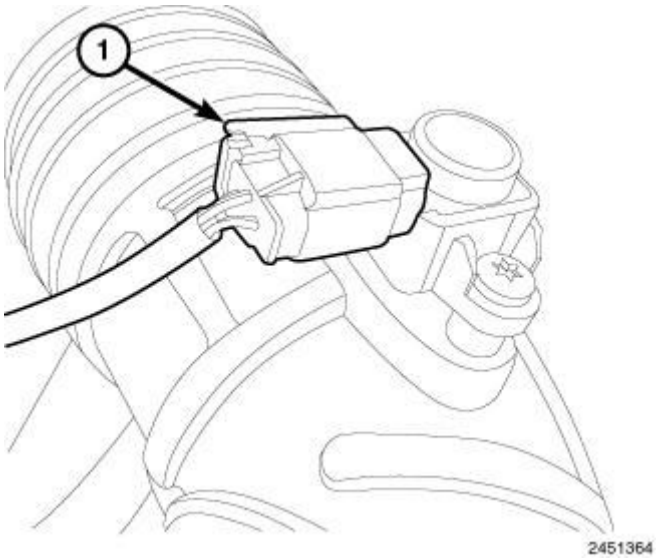

Fig. 106: Intake Air Temperature/Boost Pressure Sensor
Courtesy of CHRYSLER GROUP, LLC

1. Disconnect the intake air temperature/boost pressure sensor (1).

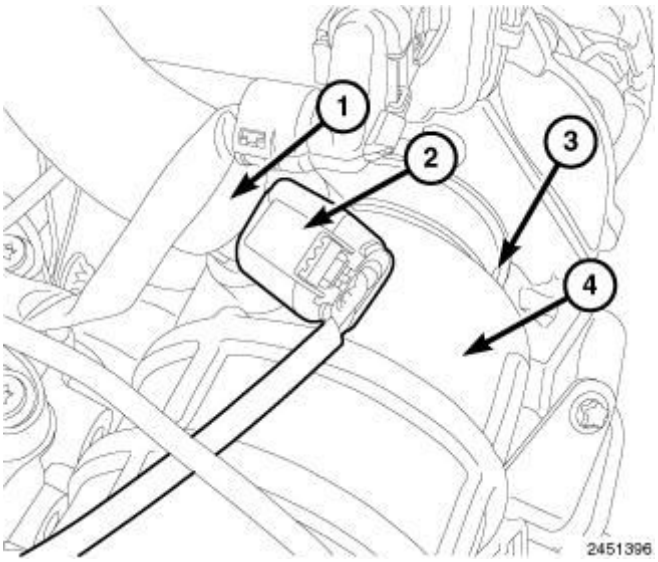

Fig. 107: CCV Hose, Heater Harness Connector, Turbocharger Inlet Tube & Clamp
Courtesy of CHRYSLER GROUP, LLC

2. Disconnect the crankcase vent heater wire harness connector (2).
3. Remove the crankcase vent hose (1) from the turbocharger inlet tube (4).
4. Loosen the clamp (3) and remove the turbocharger air inlet tube (4) from the turbocharger.

INSTALLATION

INSTALLATION

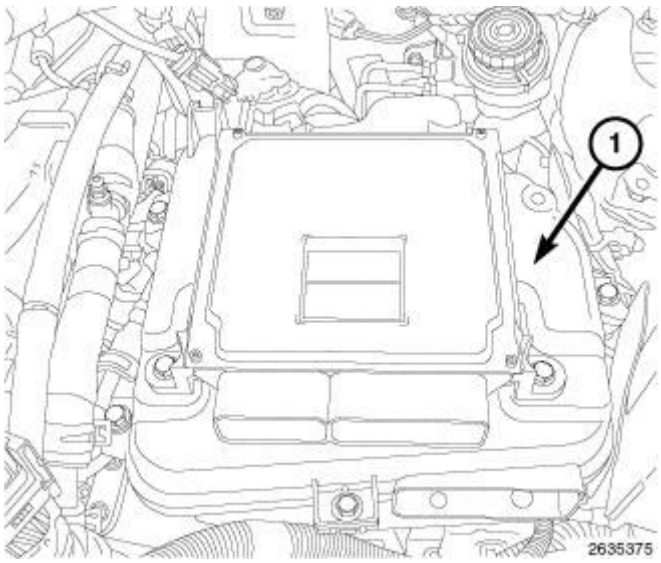

Fig. 108: Air Cleaner Housing Assembly
Courtesy of CHRYSLER GROUP, LLC

1. Position the air cleaner housing assembly and push down to lock in place.

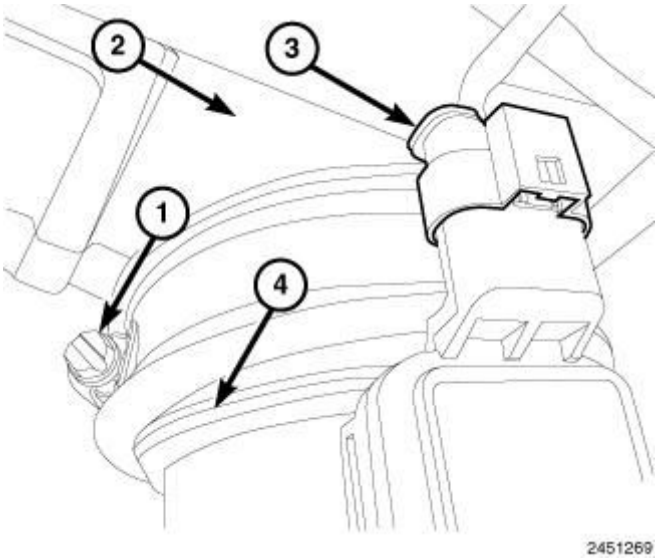

Fig. 109: Mass Air Flow Sensor, Harness Connector, Turbocharger Inlet Tube & Clamp
Courtesy of CHRYSLER GROUP, LLC

2. Connect the turbocharger inlet tube (2) to the Mass Air Flow (MAF) sensor (4) and securely tighten the clamp (1).
3. Connect the MAF sensor (3) harness connector.

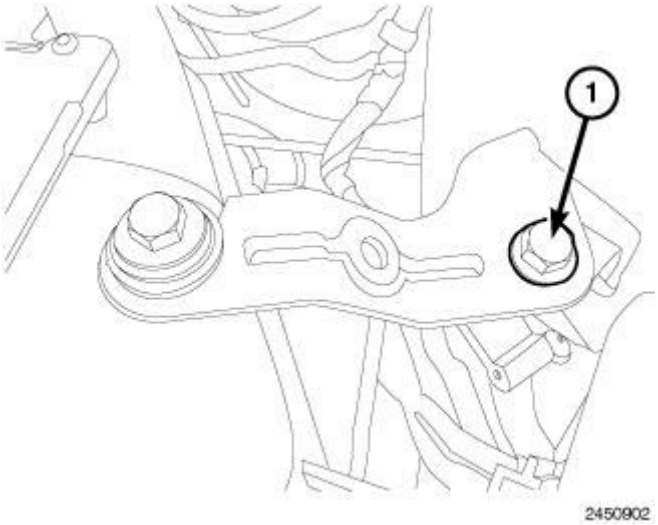

Fig. 110: Air Cleaner Support Bracket Bolt
Courtesy of CHRYSLER GROUP, LLC

4. Install the air cleaner support bracket bolt (1).

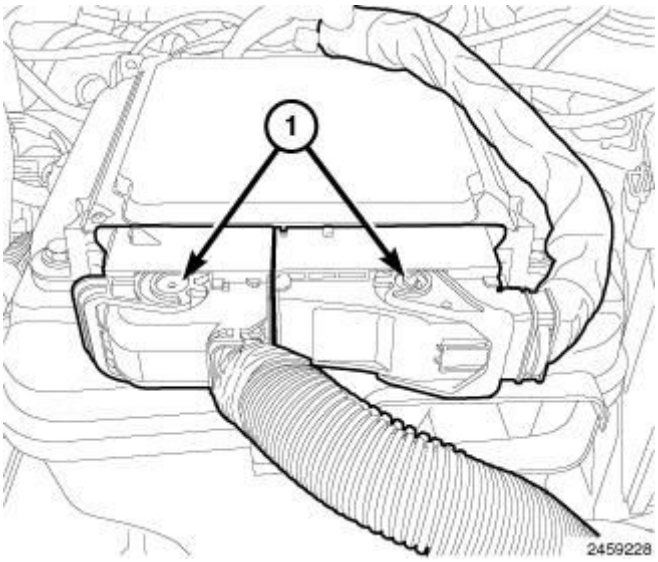

Fig. 111: PCM Harness Connectors
Courtesy of CHRYSLER GROUP, LLC

5. Connect the Powertrain Control Module (PCM) harness connectors (1).

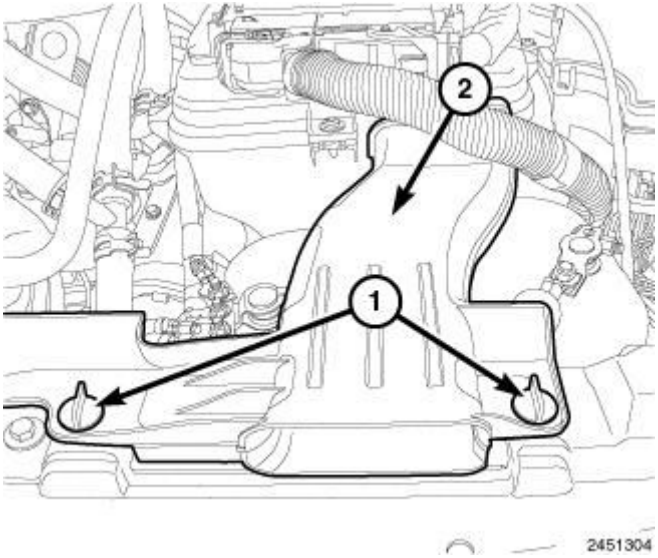

Fig. 112: Air Inlet Duct & Fasteners
Courtesy of CHRYSLER GROUP, LLC

6. Disconnect the negative battery cable.
7. Install the air inlet duct (2) and turn the fasteners (1) a quarter turn to lock the lock tabs.

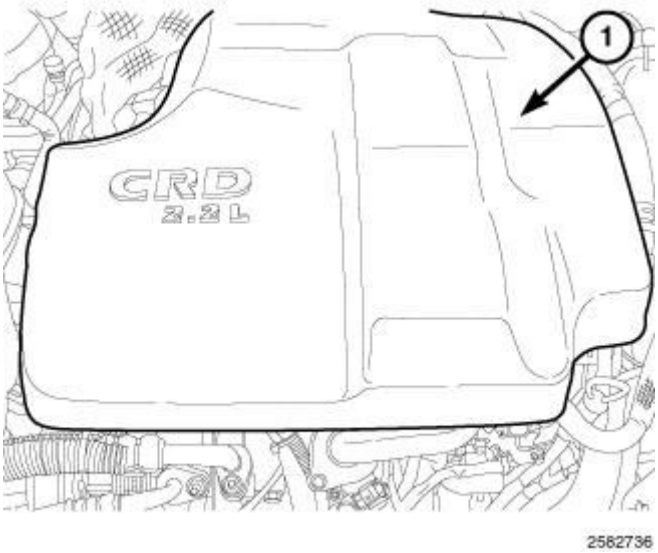

Fig. 113: Engine Cover
Courtesy of CHRYSLER GROUP, LLC

8. Install the engine cover.
9. Connect turbocharger inlet hose (4) to the turbocharger and securely tighten clamp (3).
10. Connect the CCV hose (1) to the turbocharger inlet tube (4).
11. Connect the Crankcase Vent (CCV) heater harness connector (2).

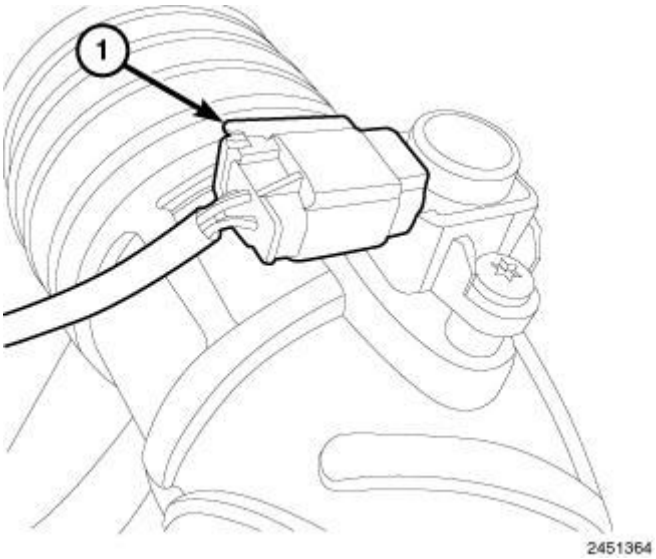

Fig. 114: Intake Air Temperature/Boost Pressure Sensor
Courtesy of CHRYSLER GROUP, LLC

12. Connect the intake air temperature sensor (1).

TURBOCHARGER AIR INLET TUBE

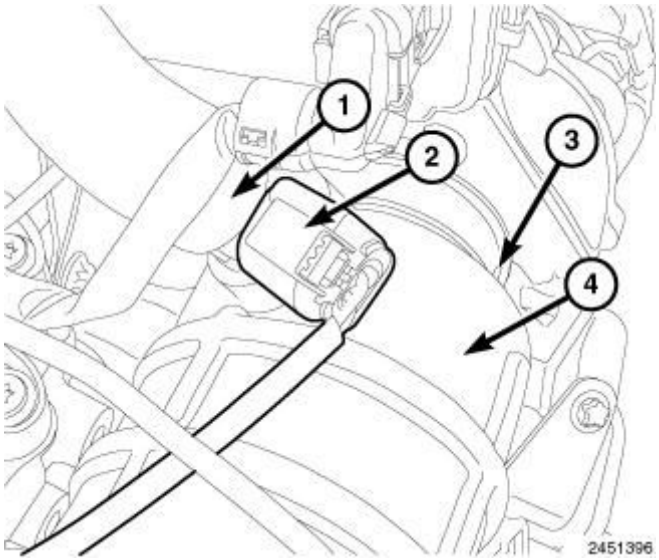

Fig. 115: CCV Hose, Heater Harness Connector, Turbocharger Inlet Tube & Clamp
Courtesy of CHRYSLER GROUP, LLC

1. Install the turbocharger air inlet tube (4) to the turbocharger and tighten the clamp (3).
2. Install the crankcase vent hose (1) to the turbocharger inlet tube (4).
3. Connect the crankcase vent heater wire harness connector (2).

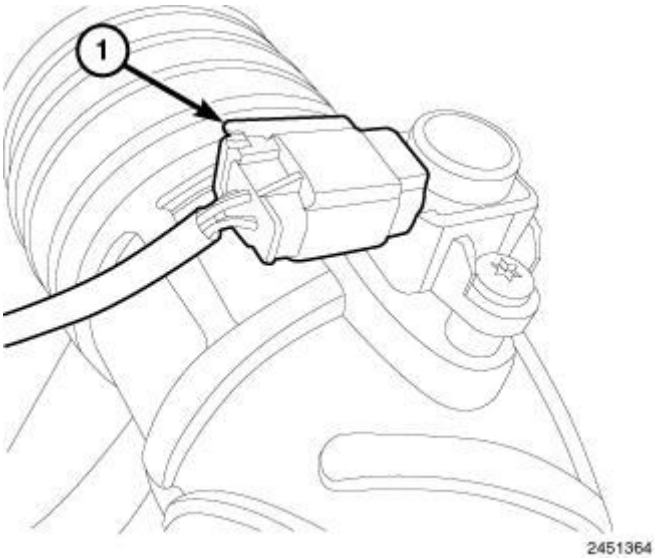

Fig. 116: Intake Air Temperature/Boost Pressure Sensor
Courtesy of CHRYSLER GROUP, LLC

4. Connect the intake air temperature/boost pressure sensor (1).

CYLINDER HEAD

STANDARD PROCEDURE

CYLINDER HEAD BOLT INSPECTION

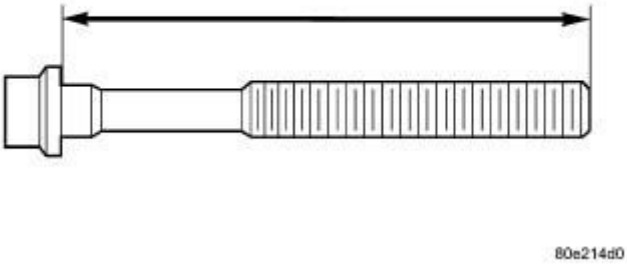

Fig. 117: Measuring Cylinder Head Bolts
Courtesy of CHRYSLER GROUP, LLC

1. Measure cylinder head bolts between points shown in illustration.

Cylinder Head Bolts Dimensions	
Thread Diameter	M 12
Length When New	226 mm (±0.5)

Maximum Length	227.5 mm

2. If the cylinder head bolt length is greater than the maximum allowable measurement, replace the cylinder head bolts.

MEASURE CYLINDER HEAD SURFACE

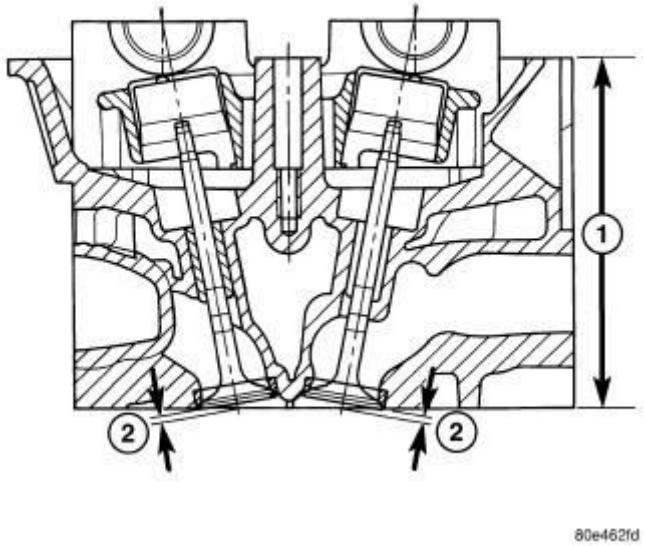

Fig. 118: Cylinder Head Measurements
Courtesy of CHRYSLER GROUP, LLC

1 - CYLINDER HEAD HEIGHT 2 - VALVE SETBACK

NOTE: Only resurface cylinder head contact surface if porous or damaged. IT IS NOT necessary to rework minor variations in flatness in the longitudinal direction.

1. Disconnect negative battery cable.
2. Remove cylinder head. Refer to **CYLINDER HEAD, REMOVAL**.
3. Remove valves.
4. Inspect cylinder head contact surface for flatness, porous and damage.
5. Using a straight edge, measure cylinder head and cylinder block flatness.
6. Measure cylinder head height at point (1) indicated and retain reading.

NOTE: The camshaft housing Must Not be machined. Basic bore of the camshaft bearings will be altered.

7. Machine cylinder head contact surface, if necessary.
8. Measure cylinder head height (1) at point indicated, record stock removal.
9. Measure valve setback at points (2) indicated.

NOTE: If measurement is less than dimension "2" no further correct valve clearance compensation is possible; replace valve seat ring or cylinder head if measurement is greater than specification.

CYLINDER-HEAD-SPECIFICATIONS

CYLINDER HEAD SPECIFICATIONS

Description	Specification
Height of Cylinder Head (1), With Out Camshaft Housing	134.35 mm to 134.65 mm
Valve Set Back (2) With New Valves and New Valve Seat Rings	Exhaust Valve: 7 mm - 1.1 mm Intake Valve: 1.0 mm - 1.4 mm
Wear Limit After Machining	134.15 mm

REMOVAL

REMOVAL

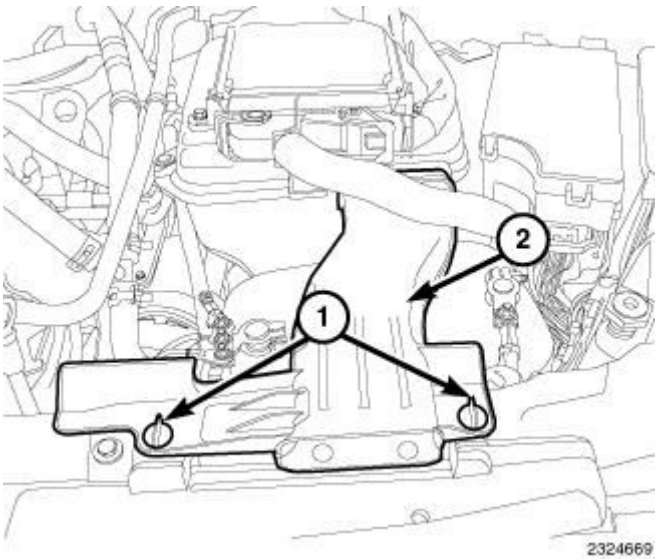

Fig. 119: Quarter Turn Lock Tabs & Air Inlet Duct

Courtesy of CHRYSLER GROUP, LLC

1. Release quarter turn lock tabs (1) and remove air inlet duct (2).
2. Disconnect the negative battery cable.

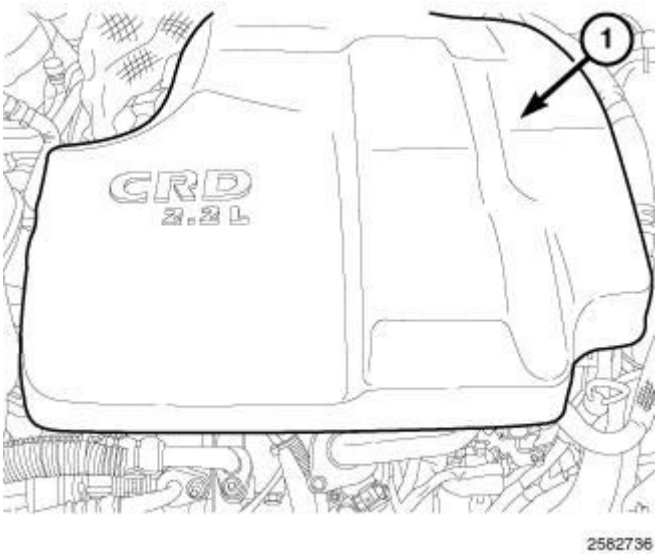

Fig. 120: Engine Cover
Courtesy of CHRYSLER GROUP, LLC

3. Remove the engine cover (1).
4. Remove air cleaner housing assembly. Refer to **BODY, AIR CLEANER, REMOVAL**.
5. Remove air inlet tube to the turbocharger.
6. Remove the belly pan.
7. Drain cooling system. Refer to **STANDARD PROCEDURE** .

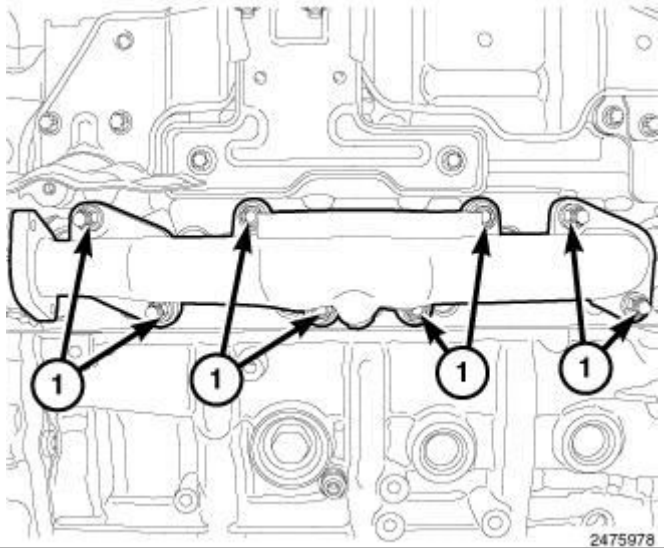

Fig. 121: Exhaust Manifold Retaining Nuts
Courtesy of CHRYSLER GROUP, LLC

8. Remove exhaust manifold. Refer to **MANIFOLD, EXHAUST, REMOVAL**.
9. Remove the intake manifold. Refer to **MANIFOLD, INTAKE, REMOVAL**.

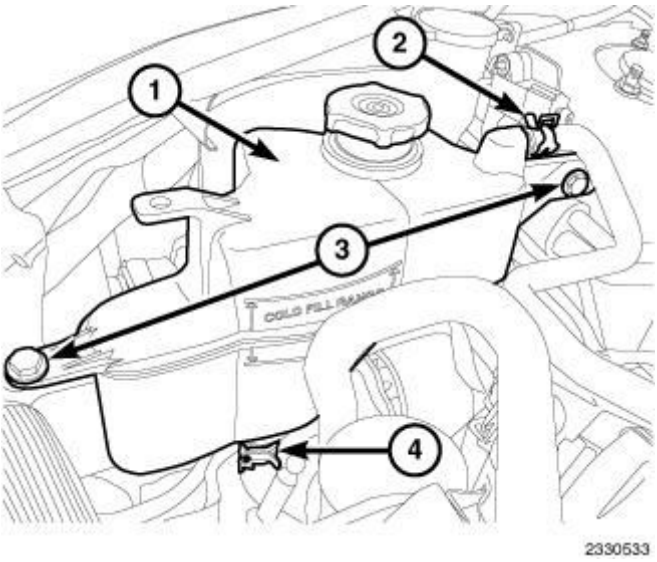

Fig. 122: Coolant Recovery Reservoir, Clamps & Bolts
Courtesy of CHRYSLER GROUP, LLC

10. Disconnect the coolant hoses (2 and 4).
11. Remove the bolts (3) and the coolant recovery reservoir (1).

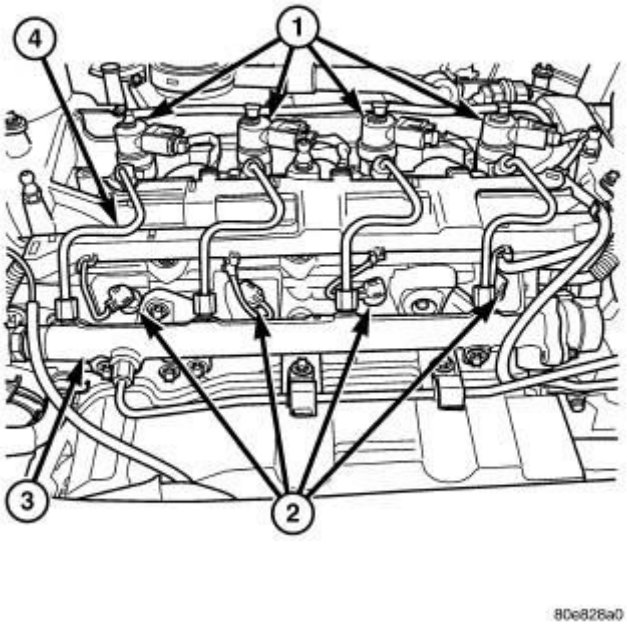

Fig. 123: Fuel Injector And Glow Plug Locations
Courtesy of CHRYSLER GROUP, LLC

12. Disconnect the glow plug (2) harness connectors.

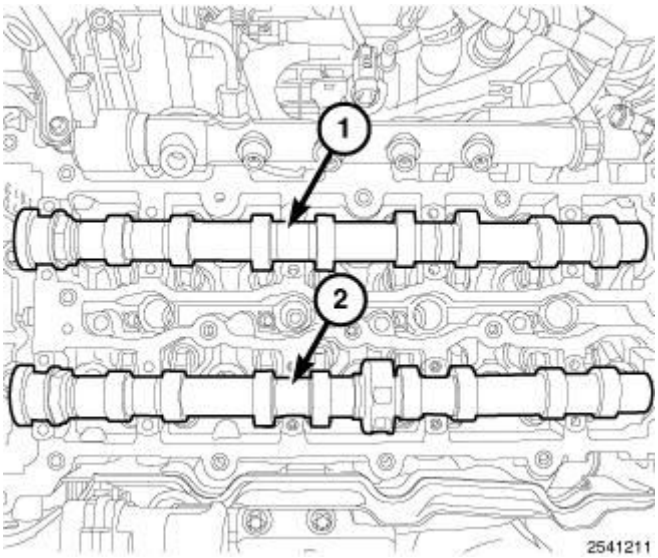

Fig. 124: Camshafts
Courtesy of CHRYSLER GROUP, LLC

13. Remove the camshafts. Refer to **CAMSHAFT, ENGINE, REMOVAL**.

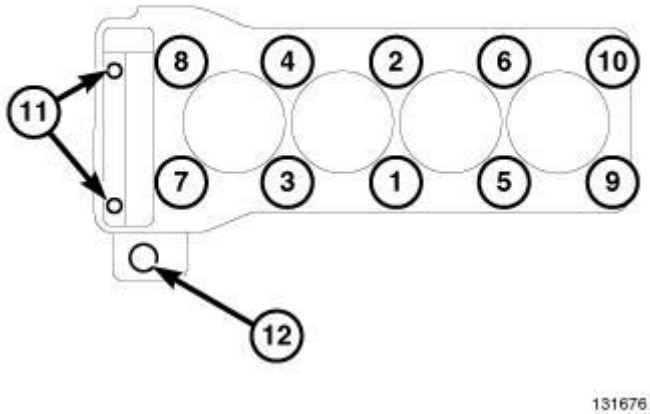

Fig. 125: Cylinder Head Bolt Torque Sequence
Courtesy of CHRYSLER GROUP, LLC

14. Remove the rocker arms from cylinder head.
15. Remove the hydraulic lifters from cylinder head.
16. Remove cylinder head bolts in reverse order of the tightening sequence and inspect bolts. Refer to **CYLINDER HEAD, STANDARD PROCEDURE**.
17. Remove cylinder head assembly from engine.
18. Remove and discard cylinder head gasket.
19. Disassemble cylinder head assembly as necessary for service.

CLEANING

CLEANING

To ensure engine gasket sealing, proper surface preparation must be performed, especially with the use of aluminum engine components and multi-layer steel cylinder head gaskets.

NOTE: Multi-Layer Steel (MLS) head gaskets require a scratch free sealing surface.

Remove all gasket material from cylinder head and block. Refer to **ENGINE GASKET SURFACE PREPARATION** . Be careful not to gouge or scratch the aluminum head sealing surface.

Clean all engine oil passages.

INSTALLATION

INSTALLATION

WARNING: NO FIRE, OPEN FLAMES OR SMOKING. SERVICE VEHICLES IN WELL VENTILATED AREAS. RISK OF POISONING FROM INHALING OR SWALLOWING FUEL. RISK OF INJURY FROM SKIN AND EYE CONTACT WITH FUEL. WEAR PROTECTIVE CLOTHING.

NOTE: Thoroughly clean all mating surfaces with appropriate solvents and blow out bolt holes, to assure that no grease or oil is present during reassembly.

NOTE: If piston or connecting rods have been replaced, measure piston projection.

NOTE: Check facing on cylinder head contact surface.

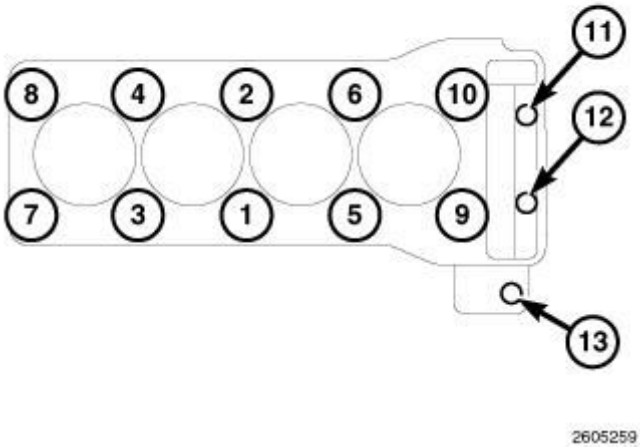

Fig. 126: Cylinder Head Bolts Tightening Sequence
Courtesy of CHRYSLER GROUP, LLC

1. Position the cylinder head gasket properly on engine using the dowel pins as guide.

NOTE: Inspect all cylinder head bolts for defects and

stretching before installation. Refer to CYLINDER HEAD, STANDARD PROCEDURE.

2. Install cylinder head assembly on engine block.

NOTE: The M12 cylinder head bolts must be tightened in 5 stages.

NOTE: M12 bolts are (1 - 10) and M8 bolts are (11 - 13).

3. Install M12 cylinder head bolts. Tighten bolts in numeric order starting with number 1 to 10 N.m (89 in. lbs.).
4. Install M8 cylinder head-to-timing chain cover bolts. Tighten bolts (11, 12, and 13) to 20 N.m (177 in. lbs.).
5. Tighten M12 cylinder head bolts in numeric order starting with number 1 to:
   - 50 N.m (37 ft. lbs.).
   - Plus an additional 90 °
   - Plus an additional 90 °
   - Plus an additional 90 °
   - Plus an additional 90 °
6. Install the hydraulic lifters into cylinder head.
7. Install the rocker arms into cylinder head.

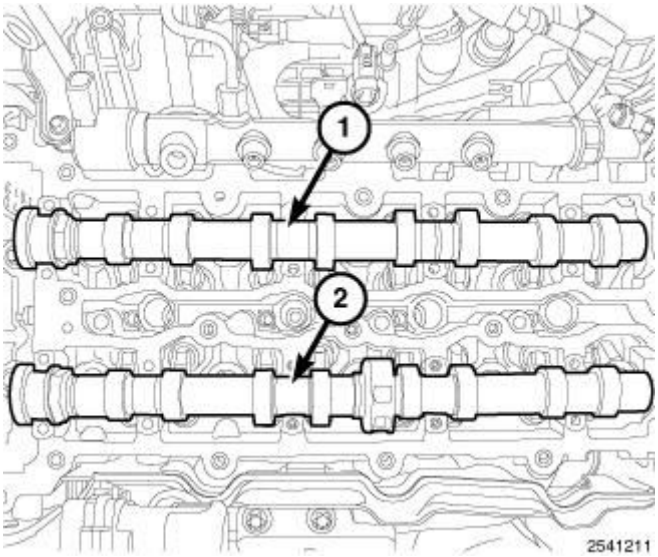

Fig. 127: Camshafts
Courtesy of CHRYSLER GROUP, LLC

8. Install the camshafts. Refer to **CAMSHAFT, ENGINE, INSTALLATION**.

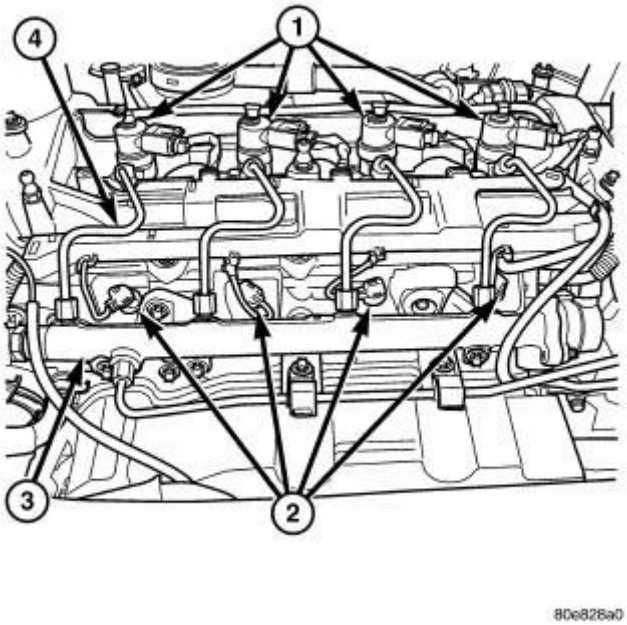

Fig. 128: Fuel Injector And Glow Plug Locations
Courtesy of CHRYSLER GROUP, LLC

9. Connect the glow plug (2) harness connectors.

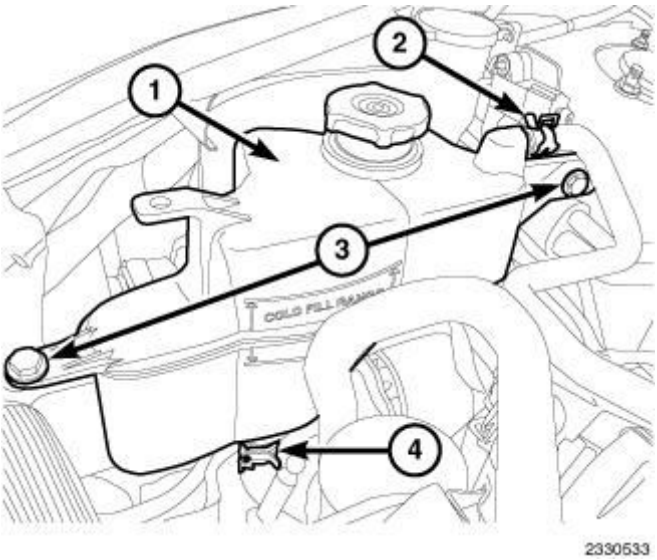

Fig. 129: Coolant Recovery Reservoir, Clamps & Bolts
Courtesy of CHRYSLER GROUP, LLC

10. Install the coolant recovery reservoir (1). Tighten bolts (3) to 4 N.m (35 in. lbs.).
11. Connect the coolant hoses (2 and 4).
12. Install the intake manifold. Refer to **MANIFOLD, INTAKE, INSTALLATION**.

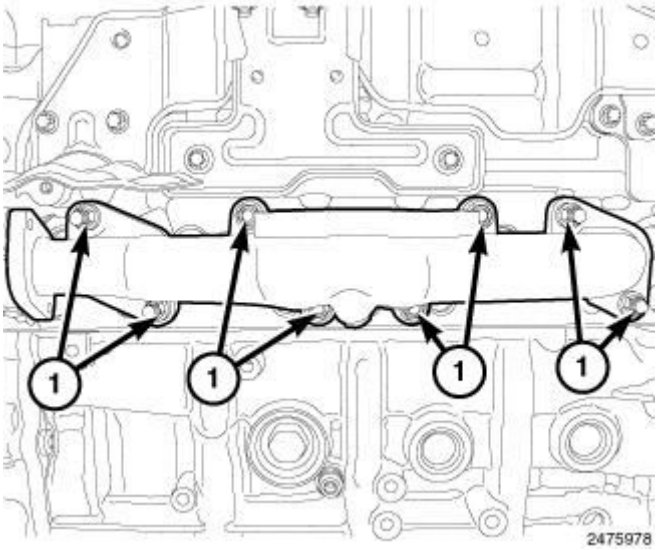

Fig. 130: Exhaust Manifold Retaining Nuts
Courtesy of CHRYSLER GROUP, LLC

13. Install the exhaust manifold. Refer to **MANIFOLD, EXHAUST, INSTALLATION**.

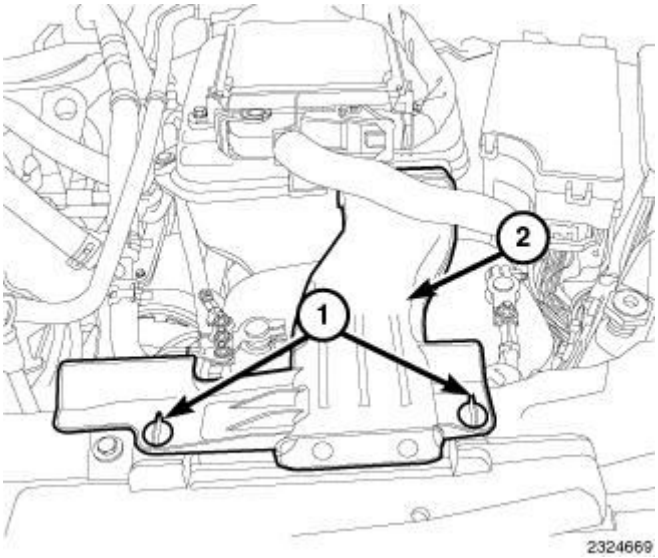

Fig. 131: Quarter Turn Lock Tabs & Air Inlet Duct
Courtesy of CHRYSLER GROUP, LLC

14. Fill the cooling system. Refer to **STANDARD PROCEDURE** .
15. Install the belly pan.
16. Install the air inlet tube to the turbocharger.
17. Install the air cleaner housing assembly. Refer to **BODY, AIR CLEANER, INSTALLATION**.
18. Connect the negative battery cable.
19. Start engine and check for leaks.

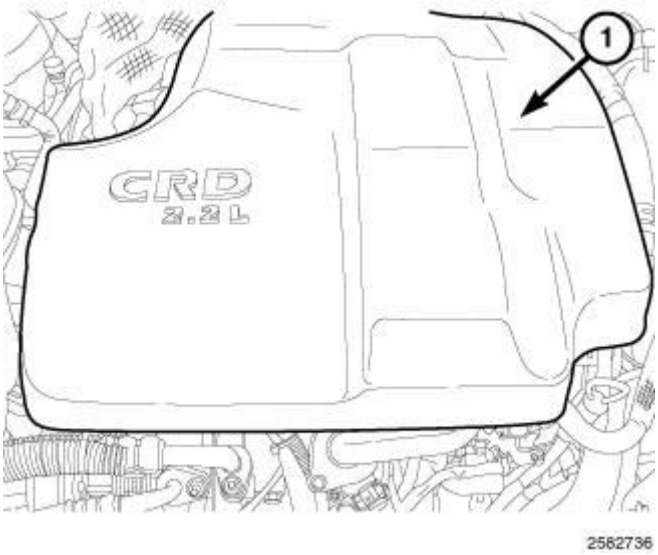

Fig. 132: Engine Cover
Courtesy of CHRYSLER GROUP, LLC

20. Install engine cover (1).
21. Install the air inlet duct (2) and lock the quarter turn lock tabs (1).

CAMSHAFT, ENGINE

STANDARD PROCEDURE

STANDARD PROCEDURE - CHECKING CAMSHAFT POSITION

1. Disconnect the negative battery cable.

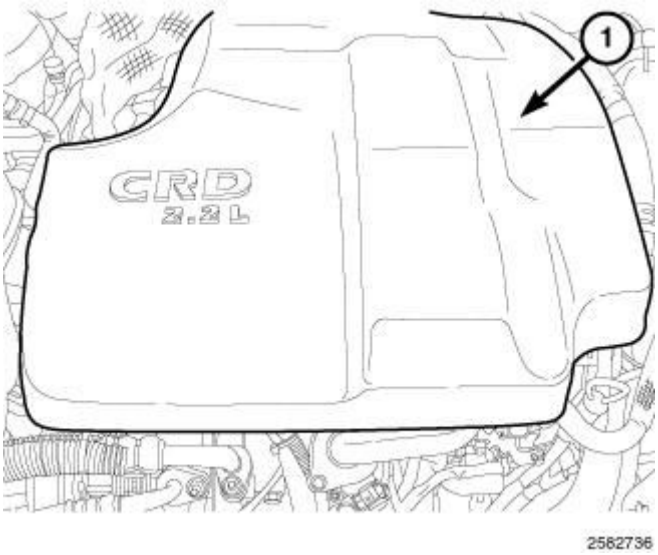

Fig. 133: Engine Cover
Courtesy of CHRYSLER GROUP, LLC

2. Remove the engine cover (1).
3. Remove the cylinder head cover. Refer to **COVER(S), CYLINDER HEAD, REMOVAL**.
4. Clean the injectors and recesses. Refer to FUEL INJECTION/INJECTOR (S), FUEL - **STANDARD PROCEDURE** .

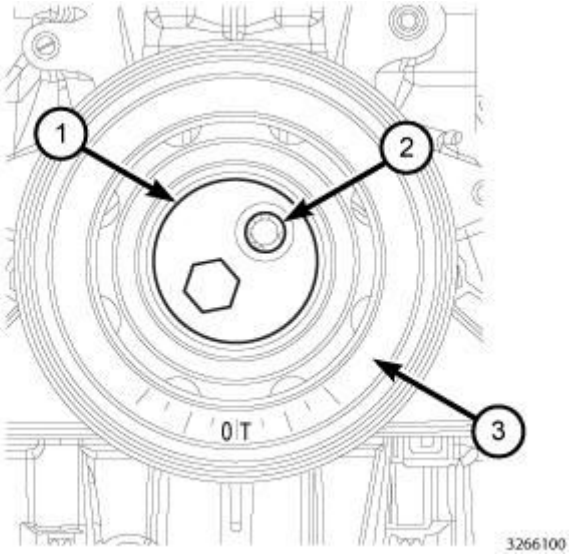

Fig. 134: Vibration Damper Holder Tool, Vibration Damper & Bolts
Courtesy of CHRYSLER GROUP, LLC

NOTE: Rotate engine at crankshaft only. DO NOT crank engine at the camshaft and DO NOT rotate the engine backward.

5. Using Vibration Damper Holder (special tool #10236, Holder, Vibration Damper) (1), to rotate engine.

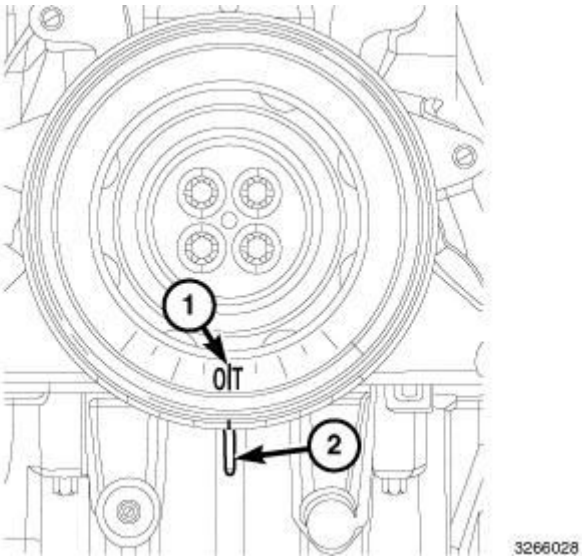

Fig. 135: Crankshaft Alignment Timing Marks
Courtesy of CHRYSLER GROUP, LLC

6. Rotate engine to position cylinder No. 1 piston to ignition TDC.

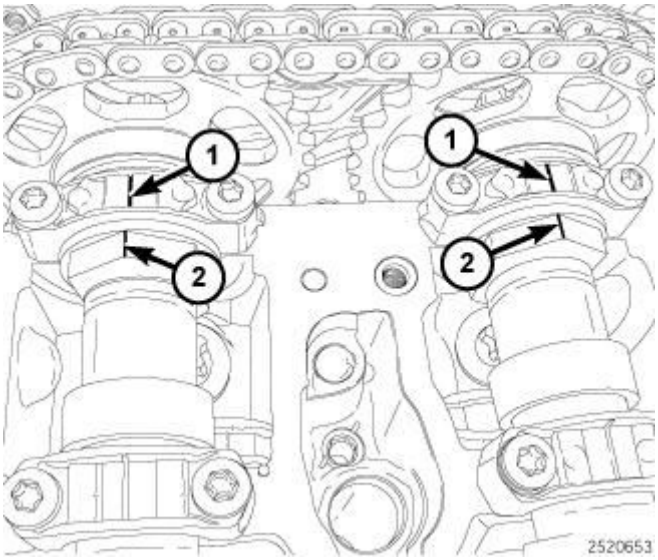

Fig. 136: Ensuring Camshaft Mark Is Aligned With Bearing Cap Mark
Courtesy of CHRYSLER GROUP, LLC

7. Verify the alignment of the camshaft mark (2) is aligned with the bearing cap mark (1) is at (TDC).
8. Install cylinder head cover. Refer to **COVER(S), CYLINDER HEAD, INSTALLATION**.

9. Connect the negative battery cable.
10. Start the engine and inspect for leaks.

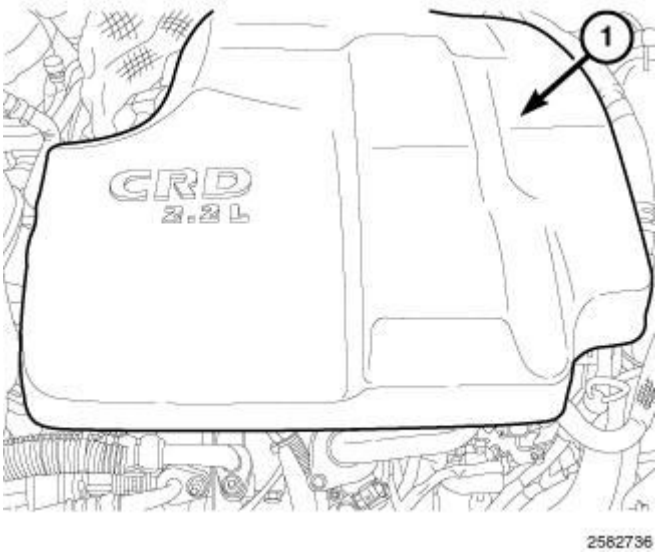

Fig. 137: Engine Cover
Courtesy of CHRYSLER GROUP, LLC

11. Install the engine cover (1).

REMOVAL

REMOVAL

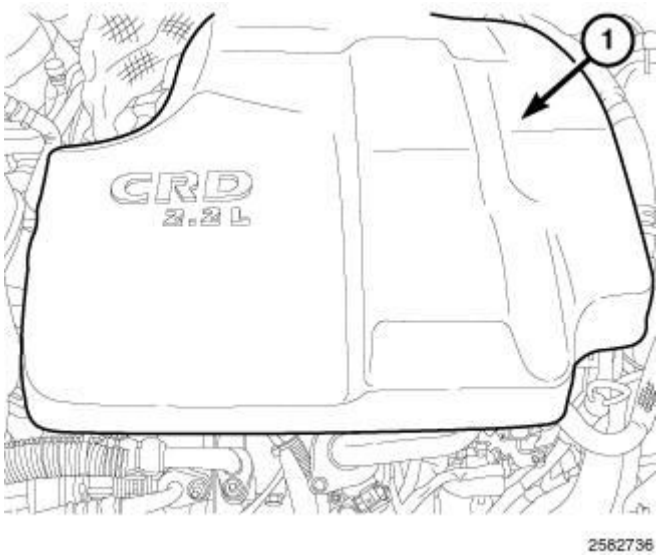

Fig. 138: Engine Cover
Courtesy of CHRYSLER GROUP, LLC

1. Disconnect the negative battery cable.

2. Remove the engine cover (1).
3. Remove the belly pan.
4. Remove the upper timing chain cover. Refer to **COVER(S), ENGINE TIMING, REMOVAL**.

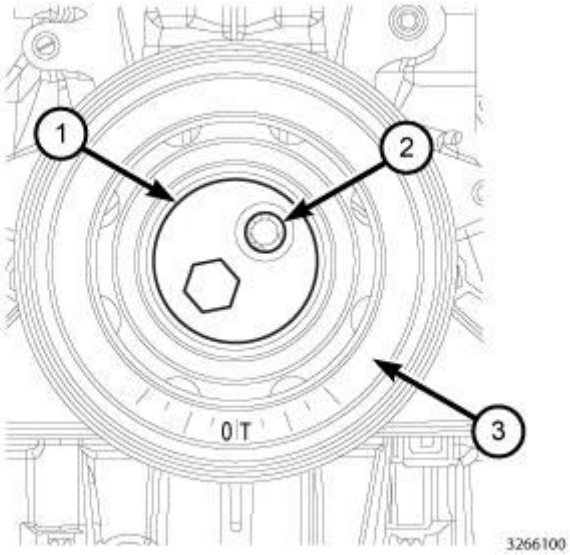

Fig. 139: Vibration Damper Holder Tool, Vibration Damper & Bolts
Courtesy of CHRYSLER GROUP, LLC

NOTE: Rotate engine at crankshaft only. DO NOT crank engine at the camshaft and DO NOT rotate the engine backward.

5. Using Vibration Damper Holder (special tool #10236, Holder, Vibration Damper) (1), to rotate engine.

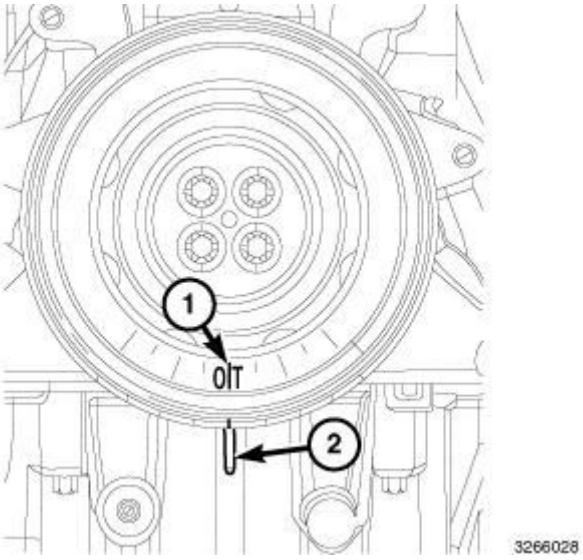

Fig. 140: Crankshaft Alignment Timing Marks
Courtesy of CHRYSLER GROUP, LLC

6. Rotate the crankshaft to align the timing mark (1) with mark (2) to set cylinder No. 1 at Top Dead Center (TDC).

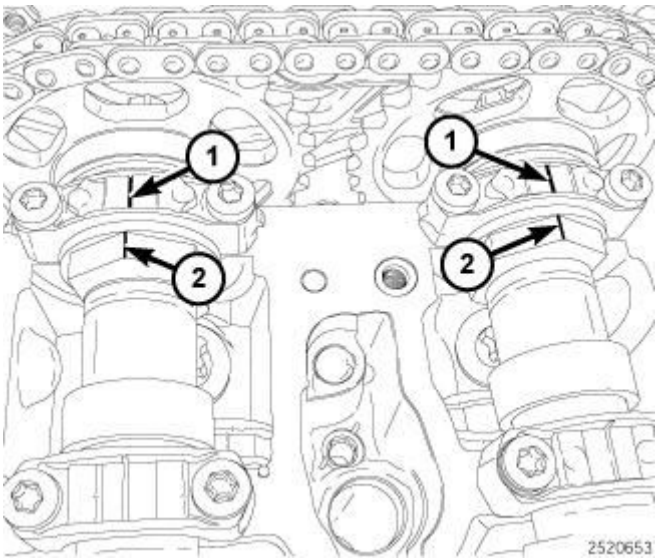

Fig. 141: Ensuring Camshaft Mark Is Aligned With Bearing Cap Mark
Courtesy of CHRYSLER GROUP, LLC

7. Verify the alignment of the camshaft mark (2) is aligned with the bearing cap mark (1) is at (TDC).

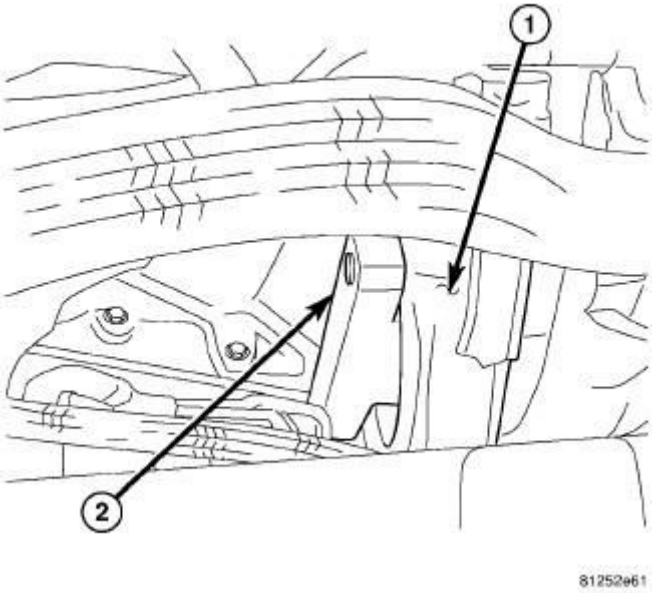

Fig. 142: Flywheel/Clutch Plate Lock

Courtesy of CHRYSLER GROUP, LLC

8. Remove the starter. Refer to **STARTER, REMOVAL** .
9. Install the Flywheel/Clutch Plate Lock (special tool #10232, Lock, Flywheel/Clutch Plate) (2).

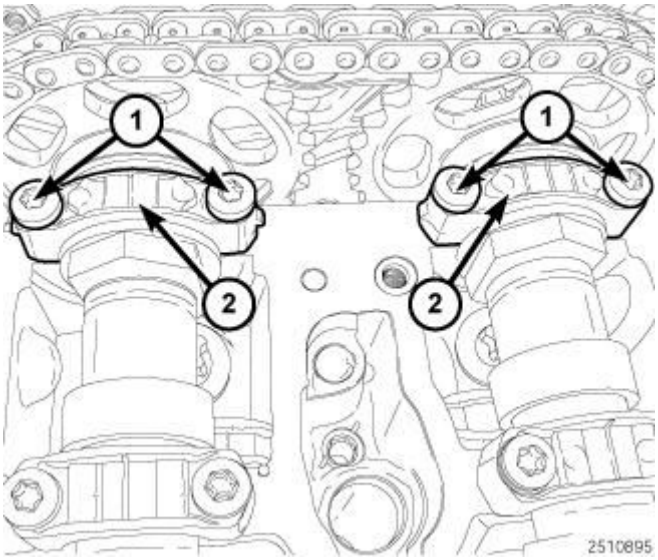

Fig. 143: No. 1 Camshaft Bearing Caps & Bolts
Courtesy of CHRYSLER GROUP, LLC

10. Remove bolts (1) and the number one camshaft bearing caps (2).

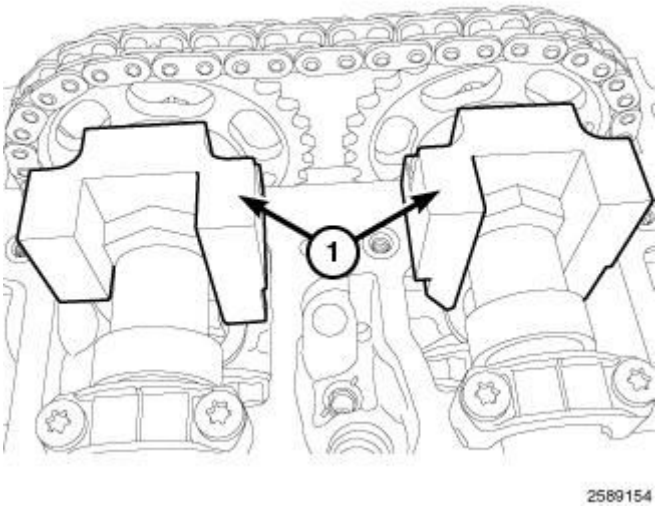

Fig. 144: Camshaft Lock Tools
Courtesy of CHRYSLER GROUP, LLC

11. Install the Camshaft Lock Tools (1) (special tool #10234, Lock, Camshaft) and tighten bolts finger tight.

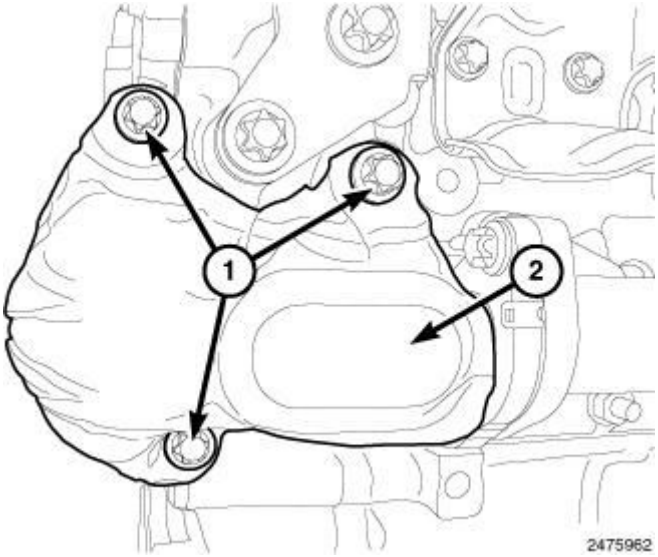

Fig. 145: EGR Pipe Heat Shield & Bolts
Courtesy of CHRYSLER GROUP, LLC

12. Remove bolts (1) and the EGR pipe heat shield (2).

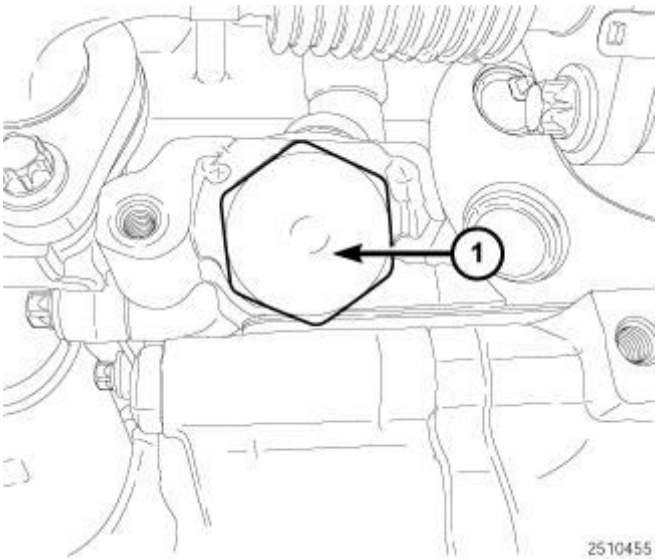

Fig. 146: Timing Chain Tensioner
Courtesy of CHRYSLER GROUP, LLC

13. Remove timing chain tensioner (1).

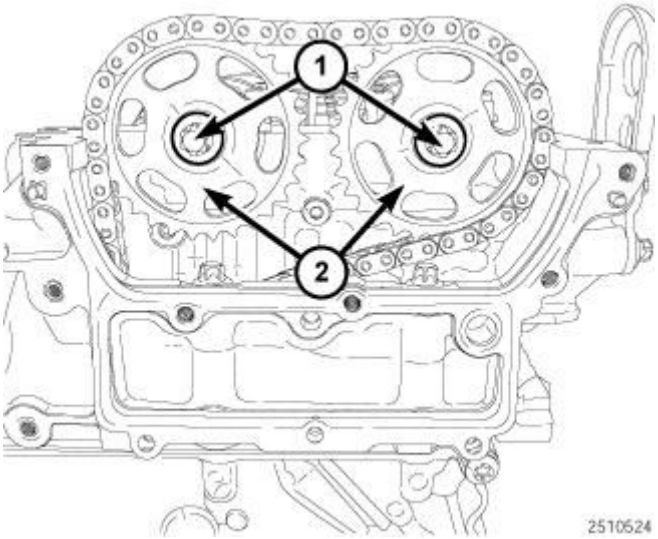

Fig. 147: Camshaft Sprockets & Bolts
Courtesy of CHRYSLER GROUP, LLC

NOTE: Camshaft sprocket bolts (1) are left hand thread.

14. Remove bolts (1) and the camshaft sprockets (2) and secure the timing chain from falling down.

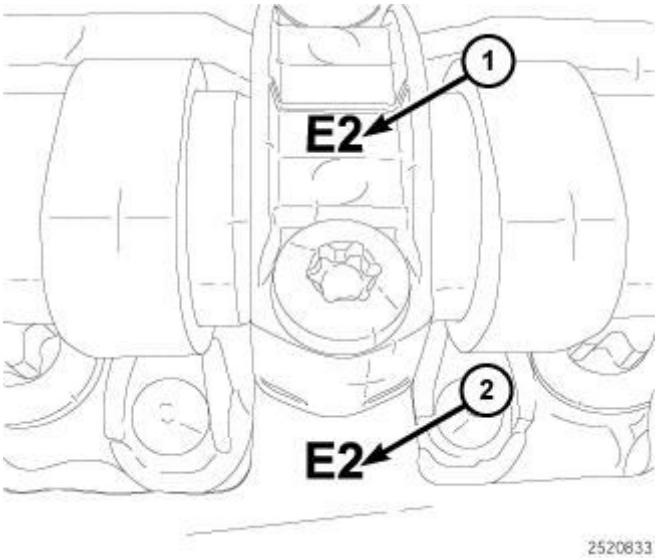

Fig. 148: Mark And Number Camshaft Caps & Cylinder Head
Courtesy of CHRYSLER GROUP, LLC

NOTE: Intake camshaft "E" shown in illustration, exhaust similar.

NOTE: Verify that the intake and exhaust camshaft caps (1)

along with cylinder head (2) are marked. "A" exhaust and "E" intake and are numbered.

15. If there are no mark on the camshafts bearing caps, mark each bearing cap to it location.
16. Remove the intake and exhaust camshaft bearing caps in the following order (E 1, E 3, E 5) and (A 1, A 3, A 5).
17. Remove the intake and exhaust camshaft bearing caps the following order (E 2, E 4) and (A 2, A 4) in half turn increments.

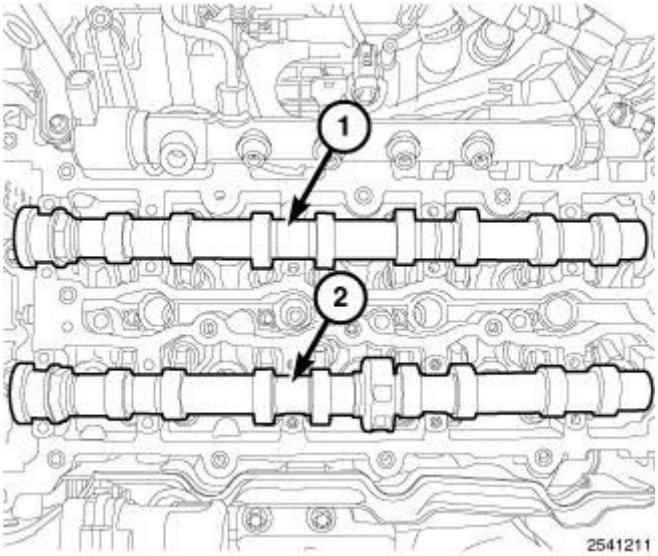

Fig. 149: Camshafts
Courtesy of CHRYSLER GROUP, LLC

18. Remove the intake (1) and exhaust (2) camshafts.

NOTE: Number the location of each rocker arm.

19. Remove the rocker arm assembly from the cylinder head.

INSTALLATION

INSTALLATION

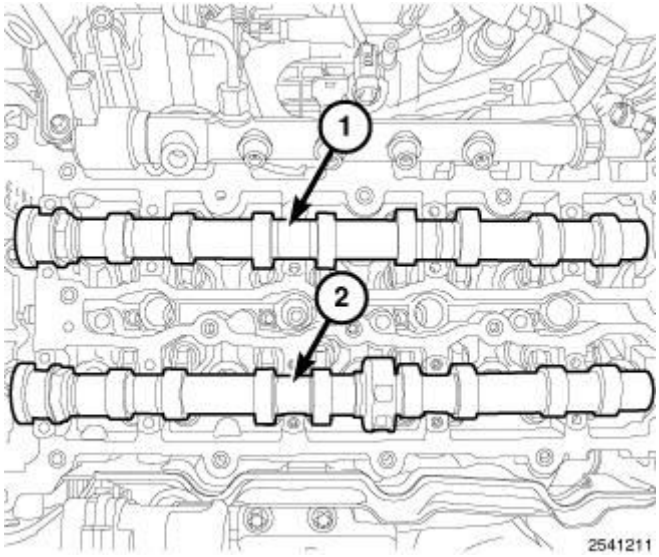

Fig. 150: Camshafts
Courtesy of CHRYSLER GROUP, LLC

CAUTION: The camshafts are sensitive to fracturing. Ensure they are installed free of stress.

1. Inspect rocker arms for wear or damage and replace as necessary.
2. Inspect the hydraulic lifters for wear or damage and replace as necessary.
3. Install the intake (1) and exhaust (2) camshafts.

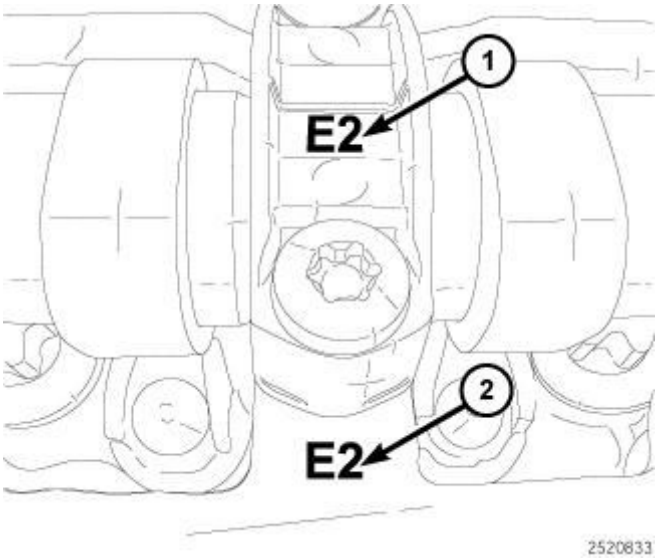

Fig. 151: Mark And Number Camshaft Caps & Cylinder Head
Courtesy of CHRYSLER GROUP, LLC

NOTE: Pay attention to markings on camshaft bearing caps (1) to cylinder head (2).

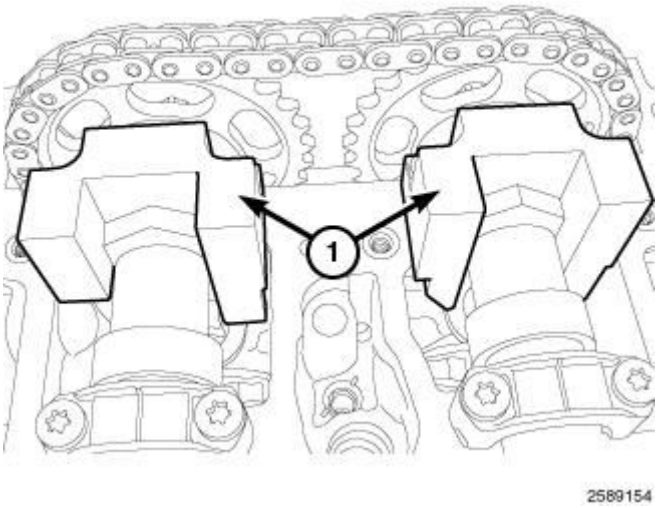

Fig. 152: Camshaft Lock Tools
Courtesy of CHRYSLER GROUP, LLC

4. Using new bolts, install camshaft bearing caps the following order (A 2, A 4) and (E 2, E 4) and tighten bolts finger tight.
5. Using new bolts, install and the remaining intake and exhaust camshaft bearing caps in the following order (E 3, E 5) and (A 3, A 5). Tighten bolts finger tight.
6. Using the old bolts, install the Camshaft Lock Tool (1) (special tool #10234, Lock, Camshaft).
7. Tighten the camshaft bolts to:
   - 5 N.m (44 in. lbs.).
   - 9 N.m (80 in. lbs.).

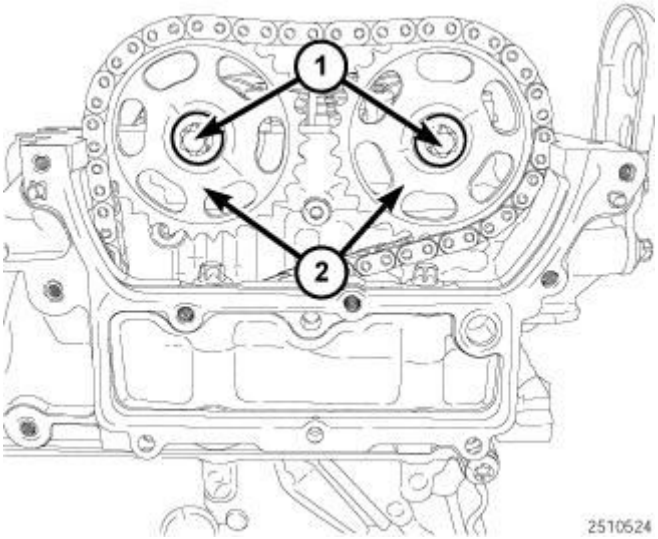

Fig. 153: Camshaft Sprockets & Bolts
Courtesy of CHRYSLER GROUP, LLC

8. Position the timing chain unto the camshaft sprockets (2) and install onto camshaft. Using new bolts, tighten the camshaft bolts (1) finger tight.

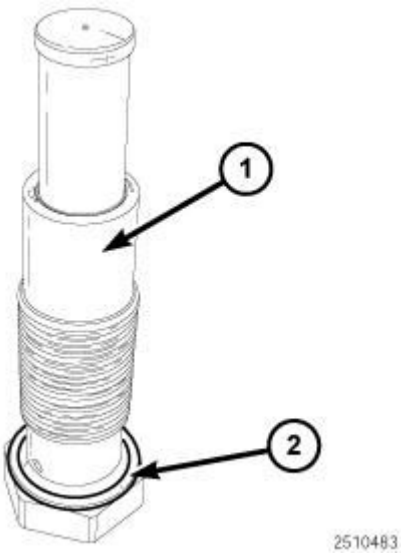

Fig. 154: Sealing Washer & Timing Chain Tensioner
Courtesy of CHRYSLER GROUP, LLC

9. Install a new sealing washer (2) onto the timing chain tensioner (1).

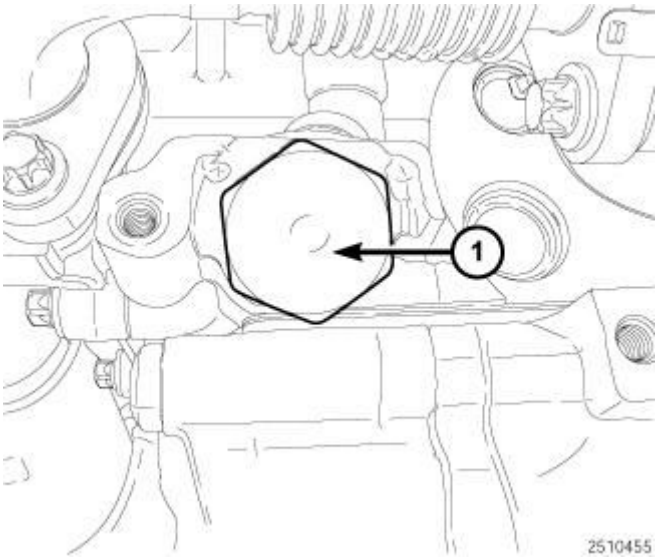

Fig. 155: Timing Chain Tensioner
Courtesy of CHRYSLER GROUP, LLC

10. Install timing chain tensioner (1) and tighten to 80 N.m (59 ft. lbs.).
11. Tighten the camshaft bolts (1) to 55 N.m (41 ft. lbs.) plus an additional 90°.

12. Install the upper timing chain cover. Refer to **COVER(S), ENGINE TIMING, INSTALLATION**.

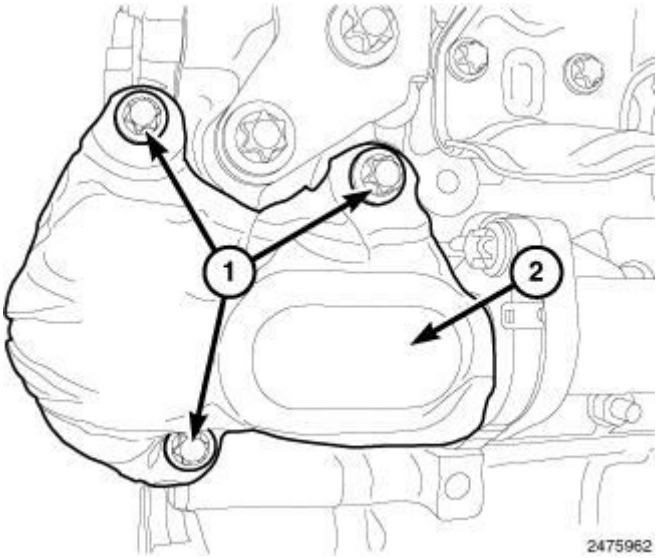

Fig. 156: EGR Pipe Heat Shield & Bolts
Courtesy of CHRYSLER GROUP, LLC

13. Install the EGR pipe heat shield. Tighten bolts to 9 N.m (80 in. lbs.).

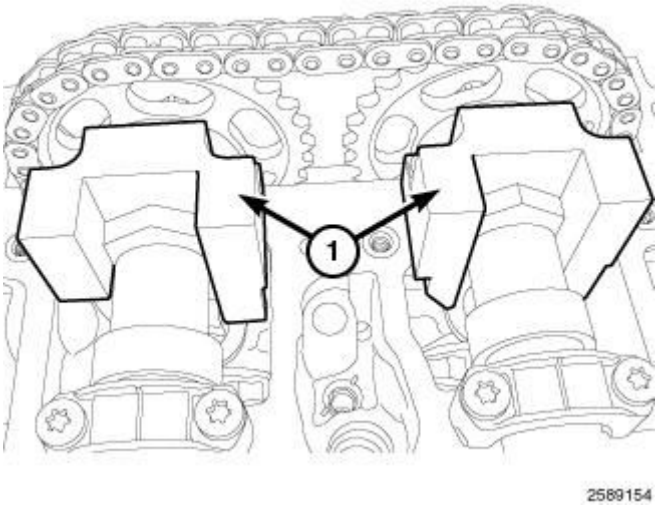

Fig. 157: Camshaft Lock Tools
Courtesy of CHRYSLER GROUP, LLC

14. Remove bolts and the Camshaft Lock Tool (1) (special tool #10234, Lock, Camshaft).

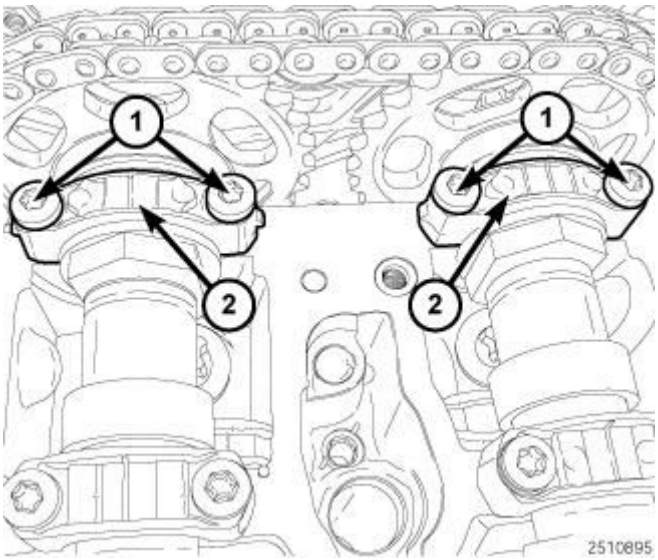

Fig. 158: No. 1 Camshaft Bearing Caps & Bolts
Courtesy of CHRYSLER GROUP, LLC

15. Using new bolts (1), install the camshaft bearing caps (2). Tighten bolts (1) to 9 N.m (80 in. lbs.).

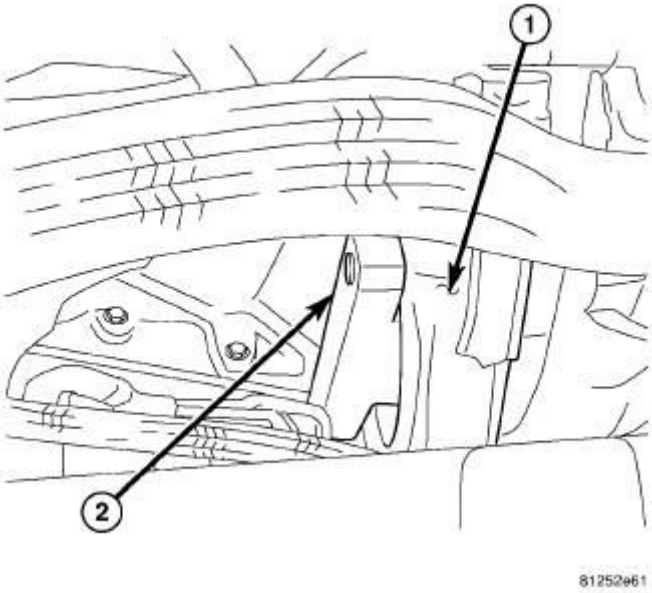

Fig. 159: Flywheel/Clutch Plate Lock
Courtesy of CHRYSLER GROUP, LLC

16. Remove the Flywheel/Clutch Plate Lock (special tool #10232, Lock, Flywheel/Clutch Plate) (2).
17. Install the starter. Refer to **STARTER, INSTALLATION** .

18. Connect negative battery cable.
19. Start engine and inspect for leaks.
20. Install the belly pan.

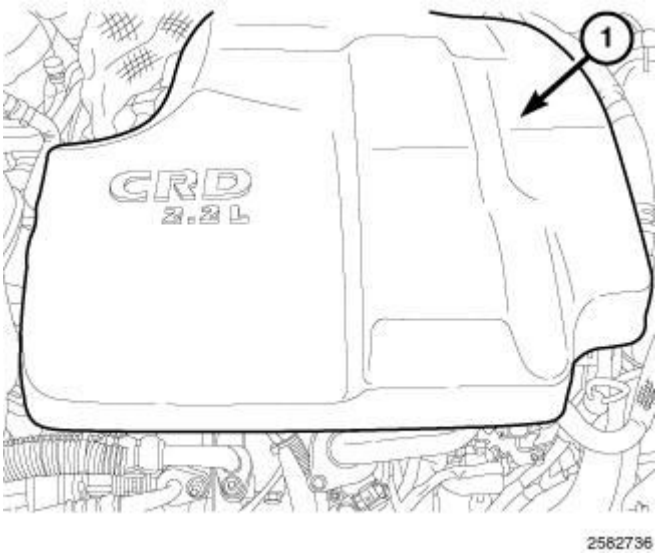

Fig. 160: Engine Cover
Courtesy of CHRYSLER GROUP, LLC

21. Install engine cover (1).

COVER(S), CYLINDER HEAD

REMOVAL

REMOVAL

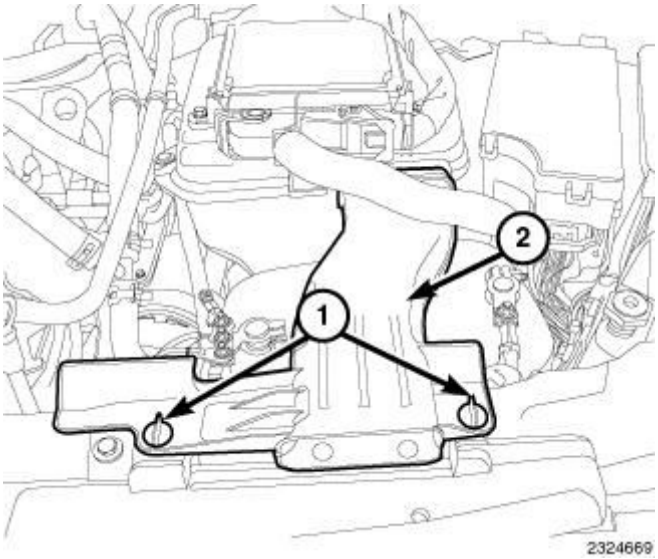

Fig. 161: Quarter Turn Lock Tabs & Air Inlet Duct

Courtesy of CHRYSLER GROUP, LLC

1. Release quarter turn lock tabs (1) and remove air inlet duct (2).
2. Disconnect the negative battery cable.

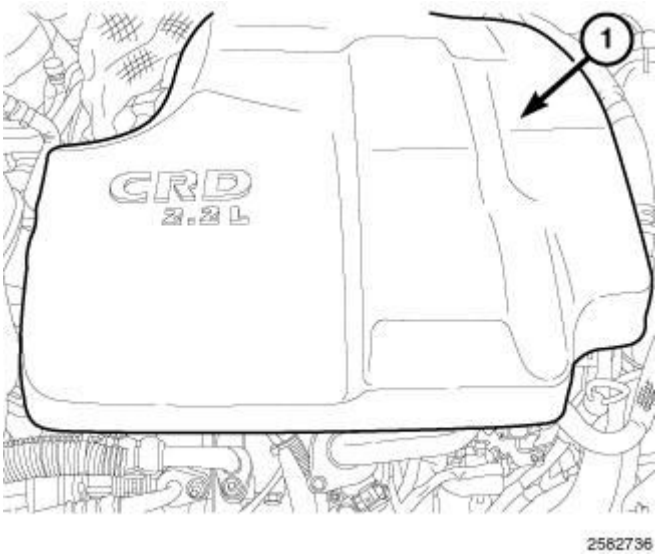

Fig. 162: Engine Cover
Courtesy of CHRYSLER GROUP, LLC

3. Remove the engine cover (1).

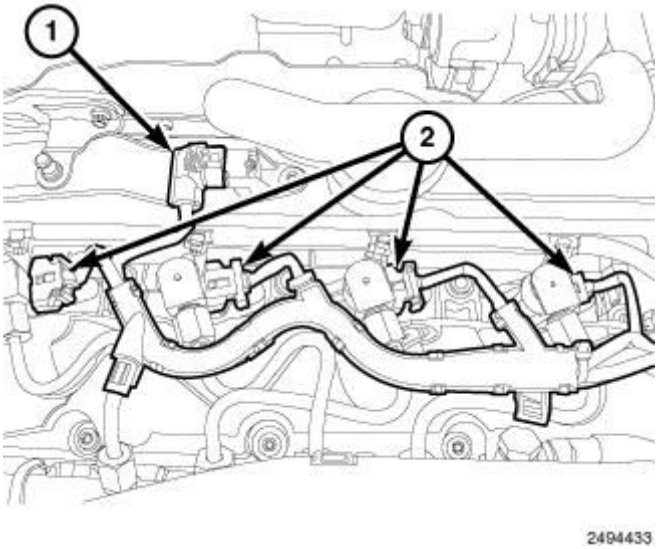

Fig. 163: Identifying Camshaft Position Sensor (CMP) Harness Connector & Fuel Injector Harness Connectors
Courtesy of CHRYSLER GROUP, LLC

4. Disconnect the Camshaft Position (CMP) sensor (1) wire harness connector.

5. Disconnect the fuel injector wire harness connector (2).
6. Lift up on fuel injector wire harness and position aside.

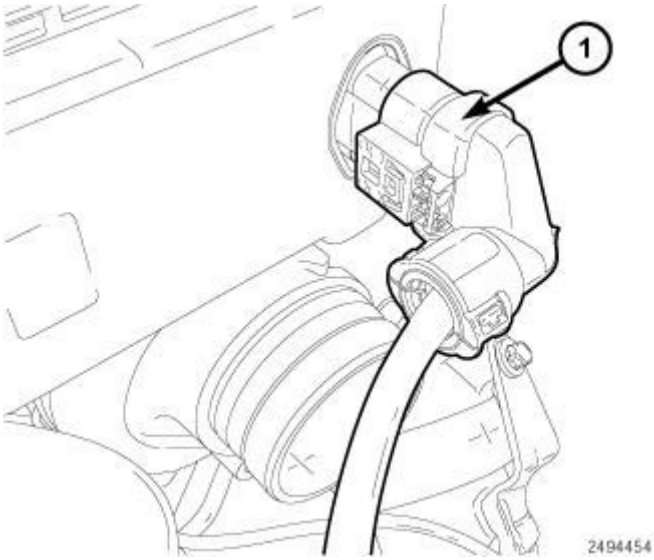

Fig. 164: Turbocharger Actuator Harness Connector
Courtesy of CHRYSLER GROUP, LLC

7. Disconnect the turbocharger actuator (1) wire harness connector.
8. Remove the air cleaner body. Refer to **BODY, AIR CLEANER, REMOVAL**.

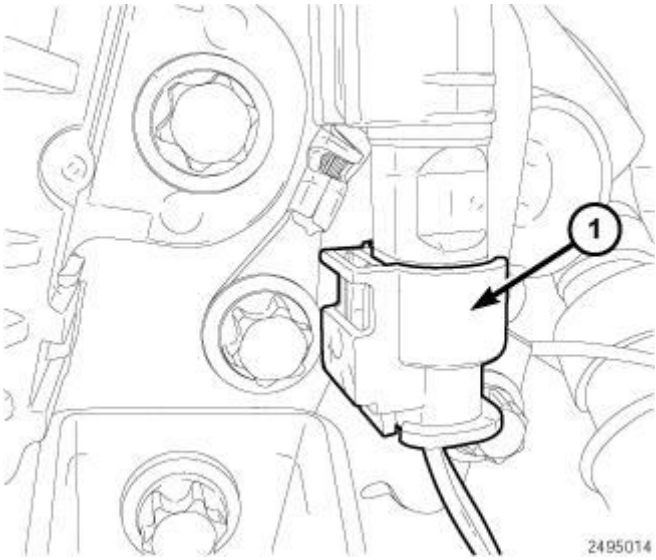

Fig. 165: Turbocharger Exhaust Temperature Sensor Harness Connector
Courtesy of CHRYSLER GROUP, LLC

9. Disconnect the turbocharger exhaust temperature sensor wire harness

connector (1).

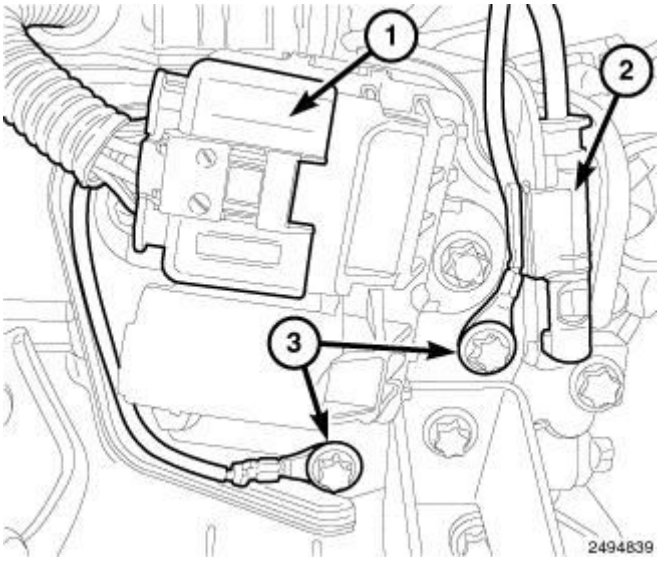

Fig. 166: Identifying Glow Plug Module Harness Connector, Bolts & Turbocharger Exhaust Temperature Sensor Harness Connector
Courtesy of CHRYSLER GROUP, LLC

10. Disconnect the turbocharger exhaust temperature sensor wire harness connector (2) from bracket.
11. Remove the two bolts (3) and position aside the ground wires.
12. Disconnect the glow plug module wire harness connector (1).

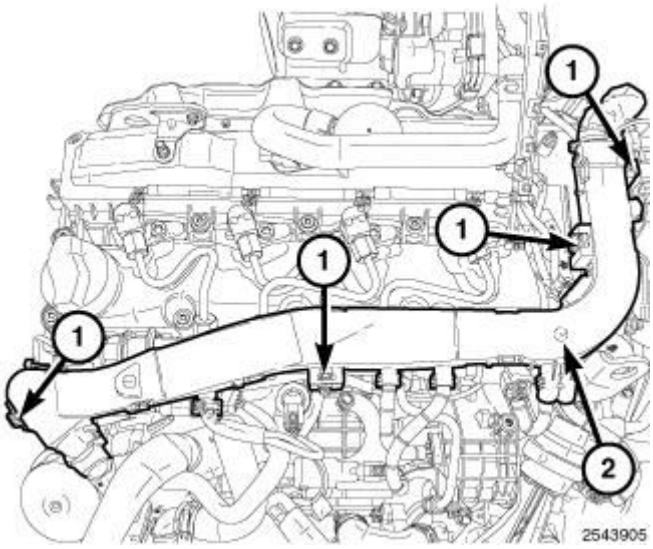

Fig. 167: Lock Tabs & Engine Wire Harness
Courtesy of CHRYSLER GROUP, LLC

13. Disconnect the fuel rail pressure sensor wire harness connector.

14. Release the four lock tabs (1) position aside engine wire harness (2).

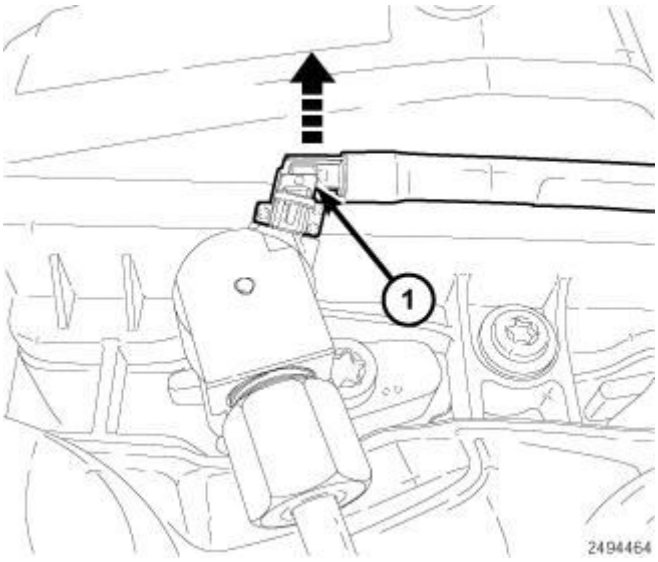

Fig. 168: Releasing Lock Tab
Courtesy of CHRYSLER GROUP, LLC

15. Release the lock tab (1) and disconnect the four fuel injector return lines and position aside.

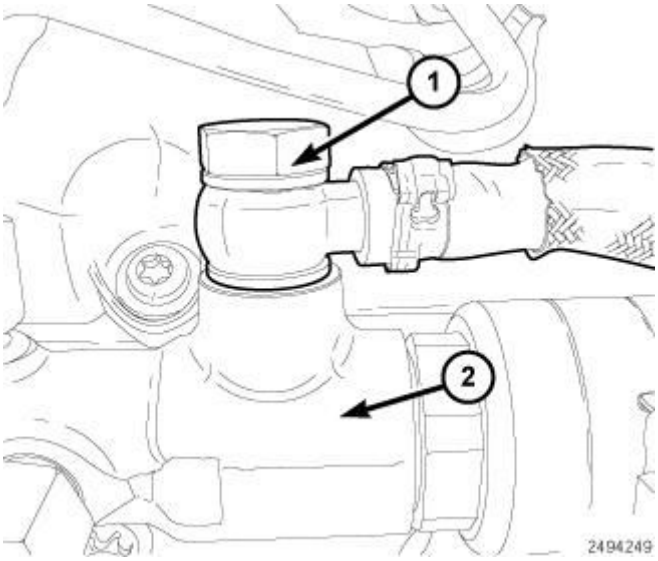

Fig. 169: Identifying Banjo Bolt & Rail
Courtesy of CHRYSLER GROUP, LLC

16. Remove the fuel return line banjo bolt (1) at fuel rail (2).

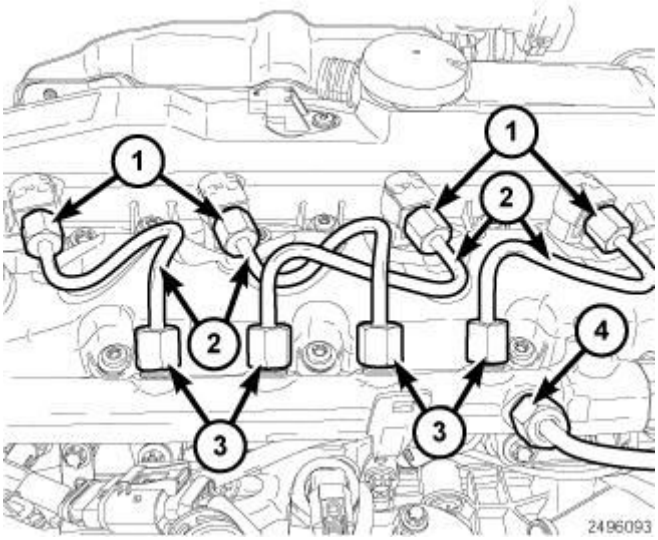

Fig. 170: Identifying Fuel Injectors, High Pressure Fuel Tubes, Fuel Rail & High Pressure Feed Line
Courtesy of CHRYSLER GROUP, LLC

17. Remove high pressure fuel lines (2) at fuel injectors (1) and fuel rail (3).
18. Install protective caps onto fuel rail and fuel injectors.

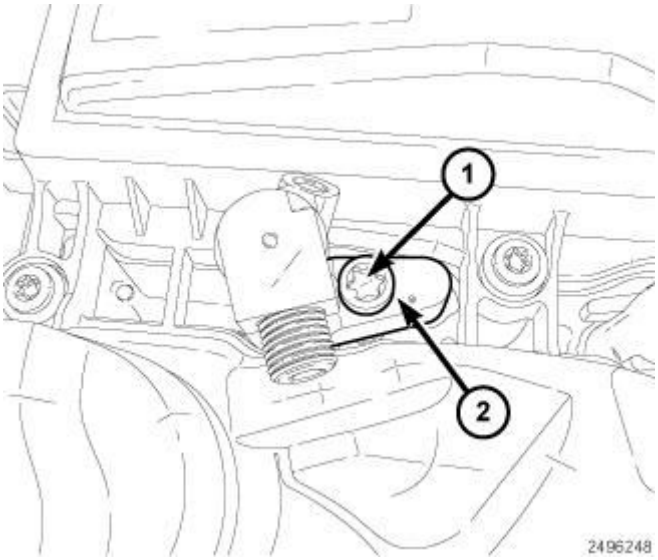

Fig. 171: Identifying Bolt & Clamping Claw
Courtesy of CHRYSLER GROUP, LLC

NOTE: Mark the location of each injector.

19. Remove bolt (1) and fuel injector clamping claw (2).

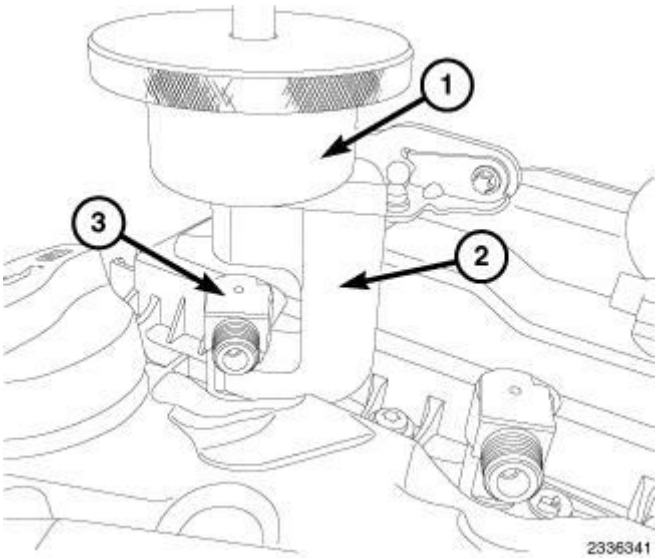

Fig. 172: Puller, Extraction Claw & Fuel Injector
Courtesy of CHRYSLER GROUP, LLC

20. Using Puller (special tool #8941, Puller) (1) and Extraction Claw (special tool #10238, Claw, Extraction) (2) remove the fuel injectors (3).

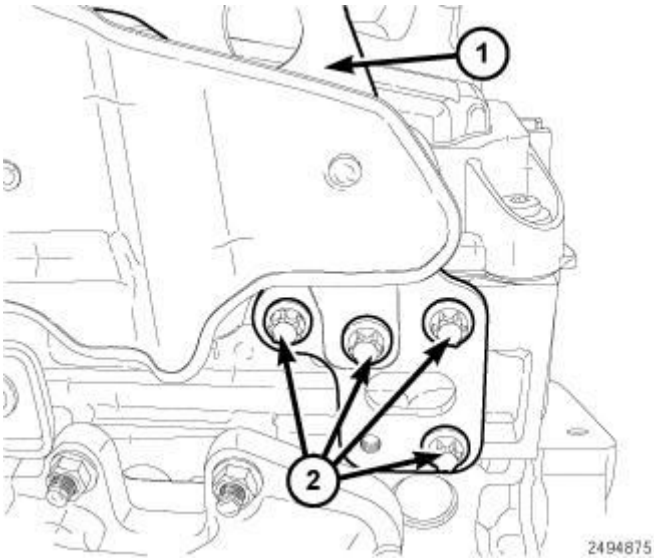

Fig. 173: Engine Lifting Eye & Bolts
Courtesy of CHRYSLER GROUP, LLC

21. Remove bolts (2) and the engine lifting eye (1).

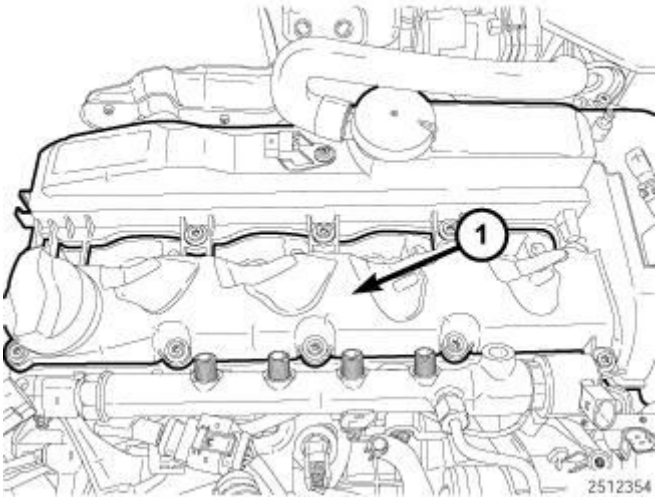

Fig. 174: Cylinder Head Cover
Courtesy of CHRYSLER GROUP, LLC

22. Remove the 18 bolts and the cylinder head cover (1) and detach the breather hose.

INSTALLATION

INSTALLATION

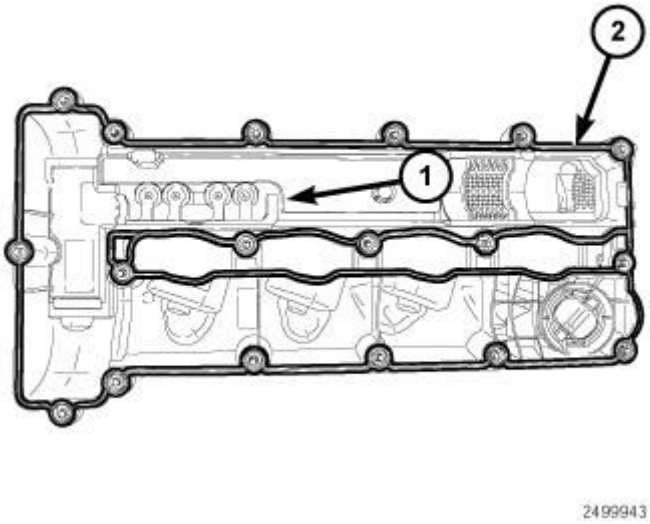

Fig. 175: Cylinder Head Cover & Gasket
Courtesy of CHRYSLER GROUP, LLC

1. Clean the gasket mating surfaces.
2. Install new gasket (2) on to the cylinder head cover (1).
3. Attach breather hose and install the cylinder head cover (1). Tighten bolts 9

N.m (80 lbs. in.).

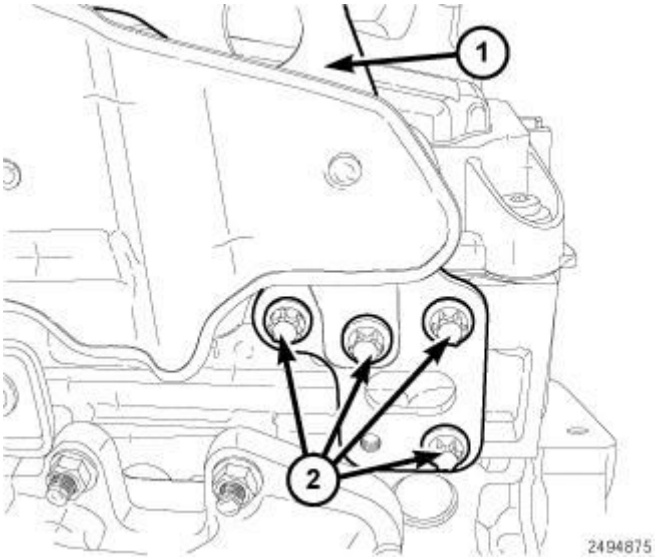

Fig. 176: Engine Lifting Eye & Bolts
Courtesy of CHRYSLER GROUP, LLC

4. Install the engine lifting eye (1). Tighten bolts (2) to 9 N.m (80 in. lbs.).
5. Clean the fuel injectors with a non-fibrous cloth.
6. Clean the fuel injector bore using Injector Bore Brush Tool (special tool #9717, Brush, Injector Bore).

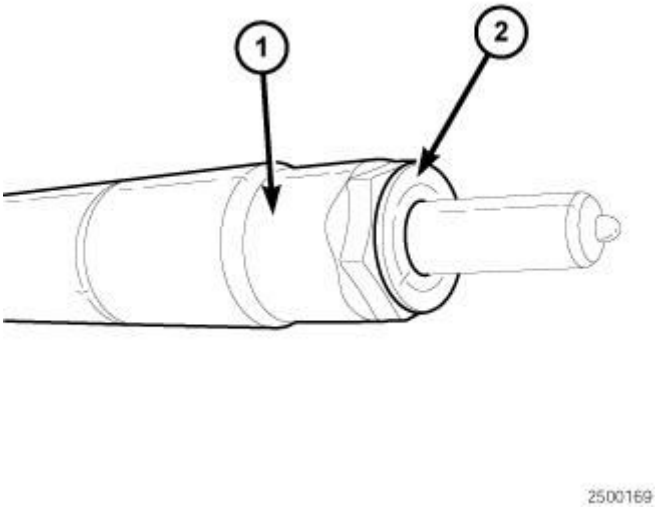

Fig. 177: Injector & Sealing Ring
Courtesy of CHRYSLER GROUP, LLC

7. Using Mopar® White Lithium Grease, coat the shaft of the injectors (1).
8. Using new sealing rings (2), install fuel injectors (1) into cylinder head as

numbered.

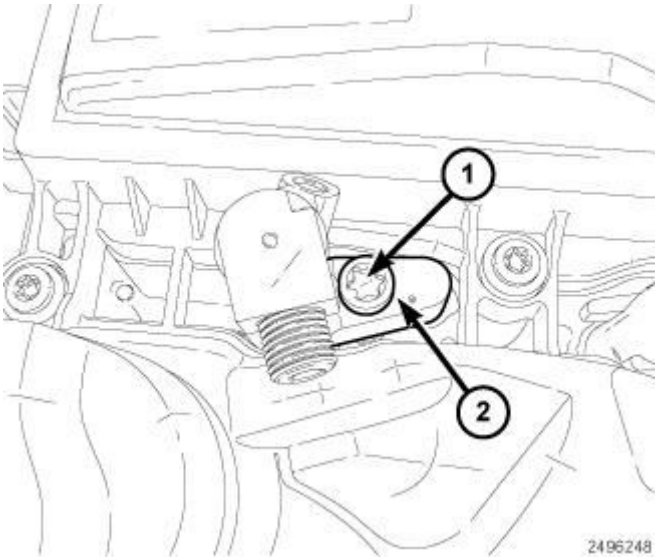

Fig. 178: Identifying Bolt & Clamping Claw
Courtesy of CHRYSLER GROUP, LLC

9. Install the fuel clamping claw (2) and a new bolts (1).
10. Tighten bolts (1) to 15 N.m (133 in. lbs.):
    a. Plus an additional 90 degrees.
    b. Plus an additional 90 degrees.

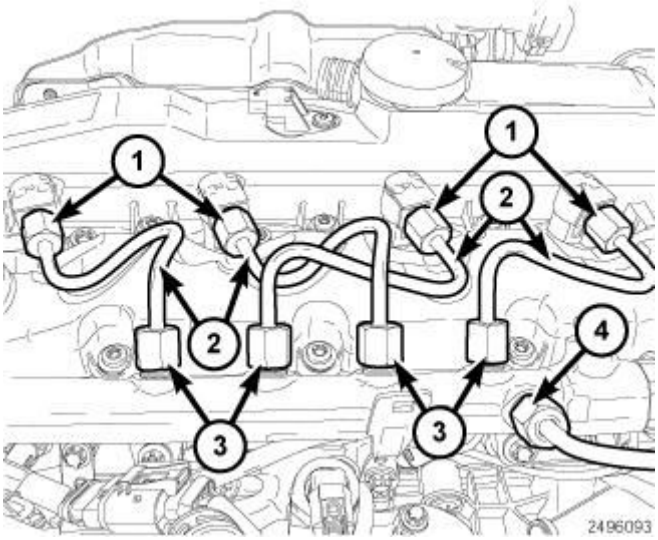

Fig. 179: Identifying Fuel Injectors, High Pressure Fuel Tubes, Fuel Rail & High Pressure Feed Line
Courtesy of CHRYSLER GROUP, LLC

11. Remove protective caps from fuel rail and fuel injectors.

12. Install the new high pressure fuel lines (2) at fuel injectors (1) and fuel rail (3).
13. Tighten the high pressure fuel lines (2) at fuel injectors (1) to 7 N.m (62 in. lbs.).
14. Tighten the high pressure fuel lines (2) and fuel rail (3) to 7 N.m (62 in. lbs.).
15. Tighten the high pressure fuel lines (2) at fuel injectors (1) to 33 N.m (24 ft. lbs.).
16. Tighten the high pressure fuel lines (2) and fuel rail (3) to 33 N.m (24 ft. lbs.).

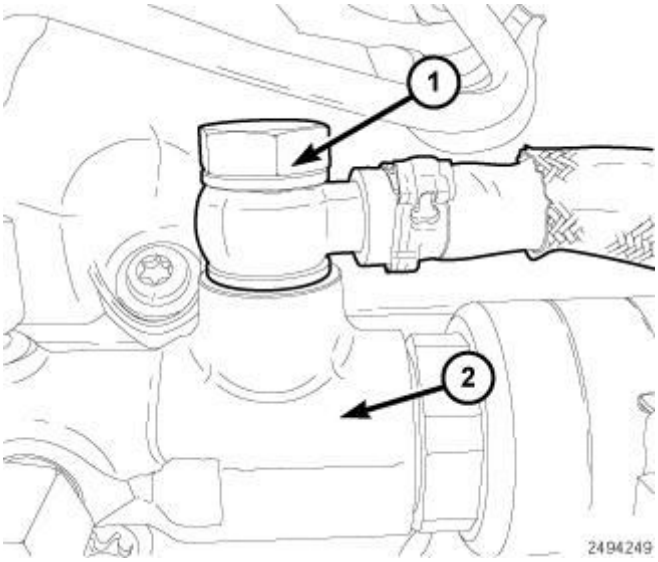

Fig. 180: Identifying Banjo Bolt & Rail
Courtesy of CHRYSLER GROUP, LLC

17. Using new sealing washers, install fuel return line at to fuel rail (2). Tighten the banjo bolt (1) to 32 N.m (24 ft. lbs.).

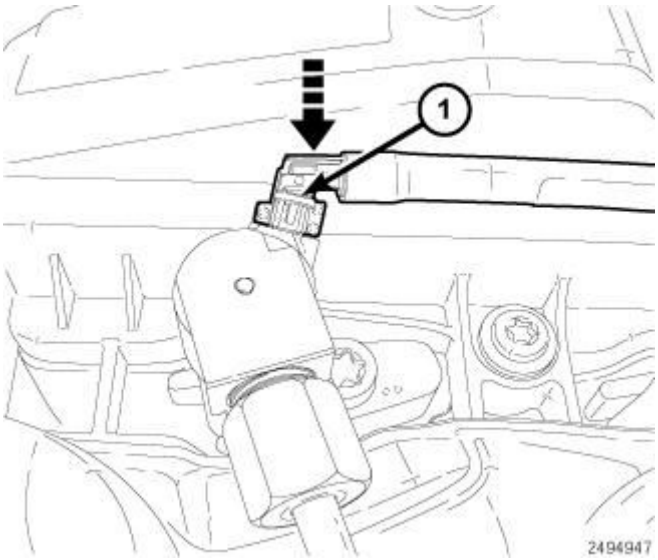

Fig. 181: Installing Lock Tab
Courtesy of CHRYSLER GROUP, LLC

18. Reposition and install the fuel injector return line and set the lock tab (1).

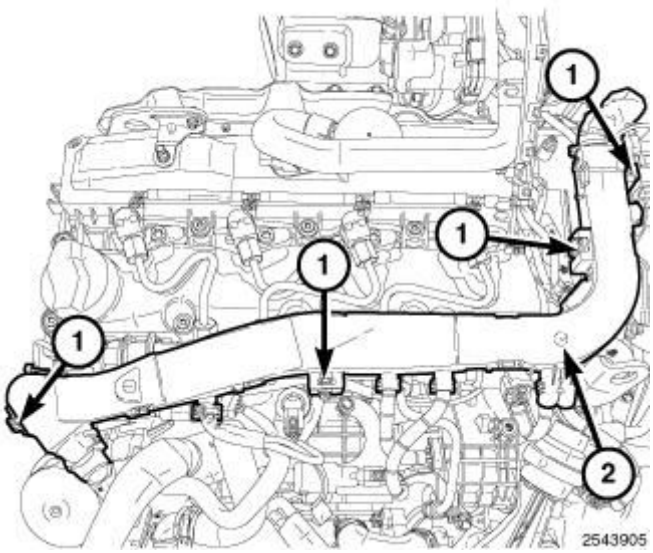

Fig. 182: Lock Tabs & Engine Wire Harness
Courtesy of CHRYSLER GROUP, LLC

19. Reposition the engine wire harness (2) and push down to lock tabs (1).
20. Connect the fuel rail pressure sensor wire harness connector.

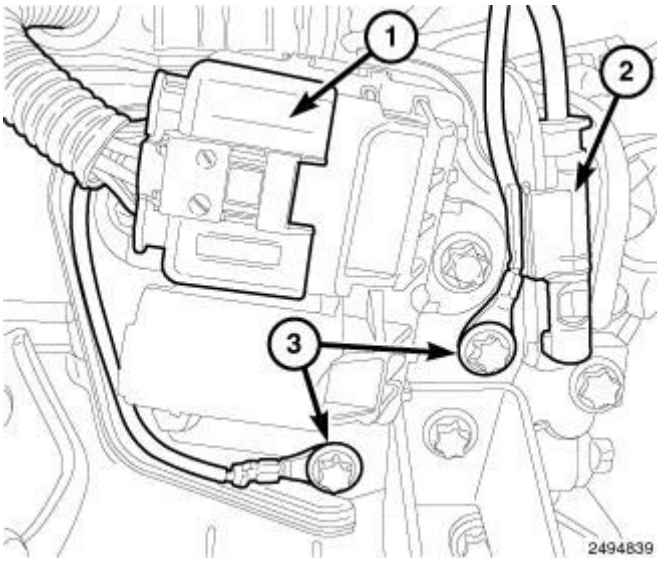

Fig. 183: Identifying Glow Plug Module Harness Connector, Bolts & Turbocharger Exhaust Temperature Sensor Harness Connector
Courtesy of CHRYSLER GROUP, LLC

21. Connect the glow plug module wire harness connector (1).
22. Reposition ground wires and tighten bolts (3) to 9 N.m (80 in. lbs.).
23. Connect the turbocharger exhaust temperature sensor wire harness connector (2) to bracket.

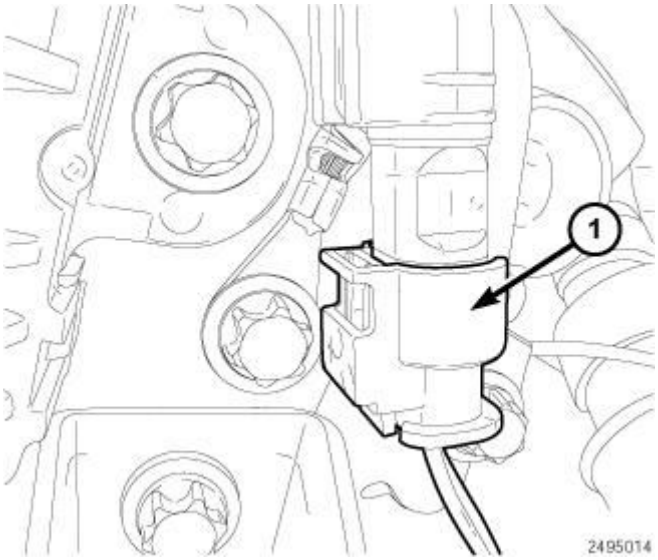

Fig. 184: Turbocharger Exhaust Temperature Sensor Harness Connector
Courtesy of CHRYSLER GROUP, LLC

24. Connect the turbocharger exhaust temperature sensor (1) wire harness connector.

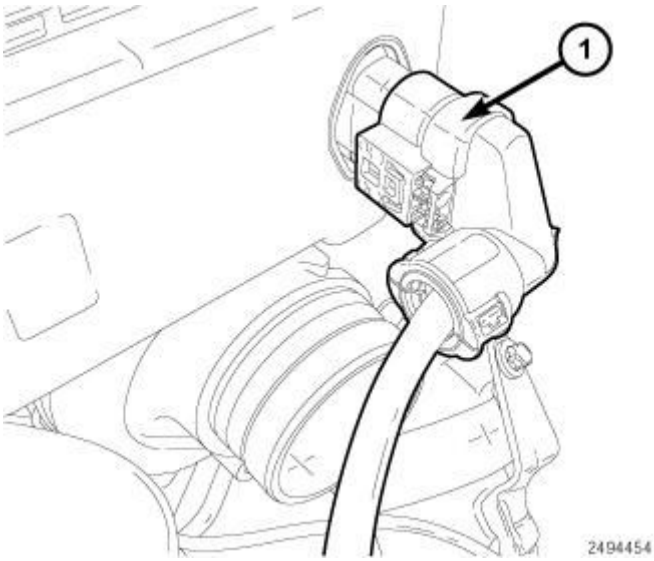

Fig. 185: Turbocharger Actuator Harness Connector
Courtesy of CHRYSLER GROUP, LLC

25. Install the air cleaner body. Refer to **BODY, AIR CLEANER, INSTALLATION**.
26. Connect the turbocharger actuator (1) wire harness connector.

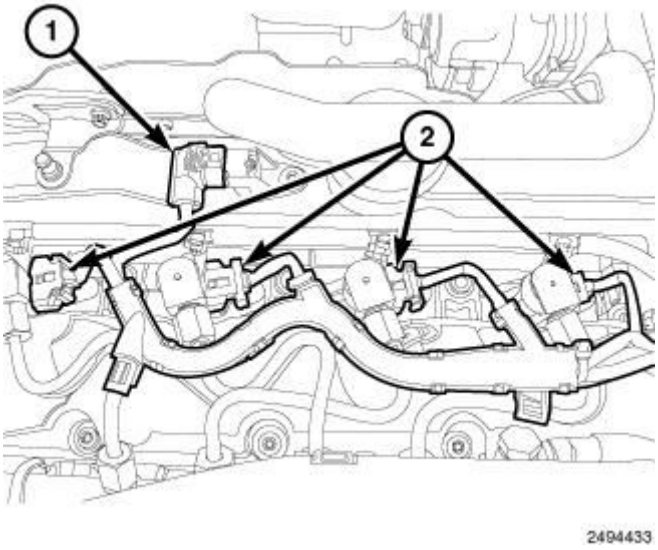

Fig. 186: Identifying Camshaft Position Sensor (CMP) Harness Connector & Fuel Injector Harness Connectors
Courtesy of CHRYSLER GROUP, LLC

27. Position the fuel injector wire harness and push down to lock in place.
28. Connect the fuel injector (2) wire harness connector.
29. Connect the Camshaft Position (CMP) sensor (1) wire harness connector.

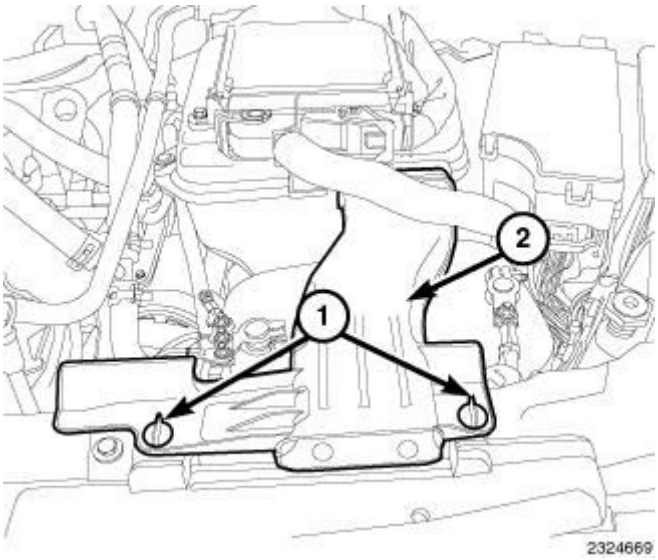

Fig. 187: Quarter Turn Lock Tabs & Air Inlet Duct
Courtesy of CHRYSLER GROUP, LLC

30. Connect the negative battery cable.
31. Start engine and inspect for leaks.

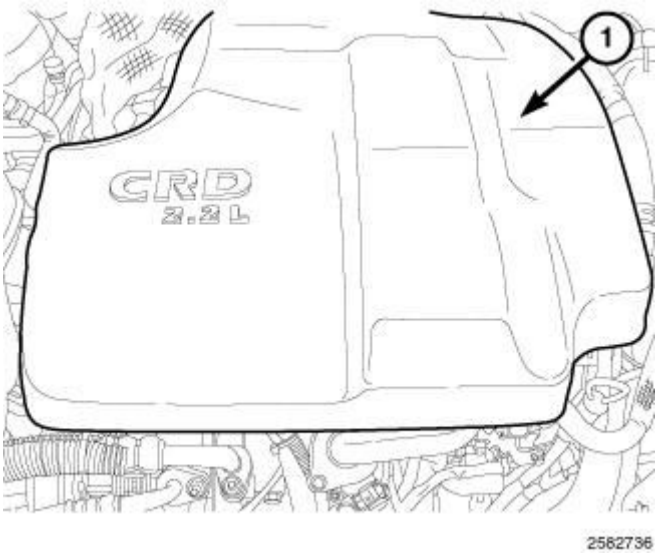

Fig. 188: Engine Cover
Courtesy of CHRYSLER GROUP, LLC

32. Install the engine cover (1).
33. Install the air inlet duct (2) and lock the quarter turn lock tabs (1).

LIFTER(S), HYDRAULIC

DESCRIPTION

DESCRIPTION

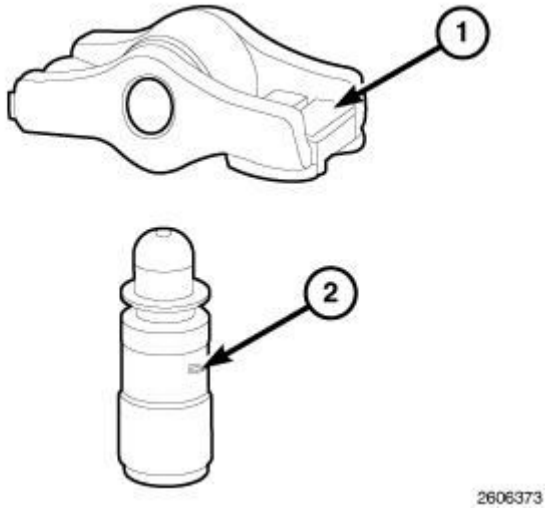

Fig. 189: Hydraulic Lifter & Rocker Arm
Courtesy of CHRYSLER GROUP, LLC

Valve lash is controlled by hydraulic lifters (2) located inside the cylinder head, in tappet bores below the camshafts.

REMOVAL

REMOVAL

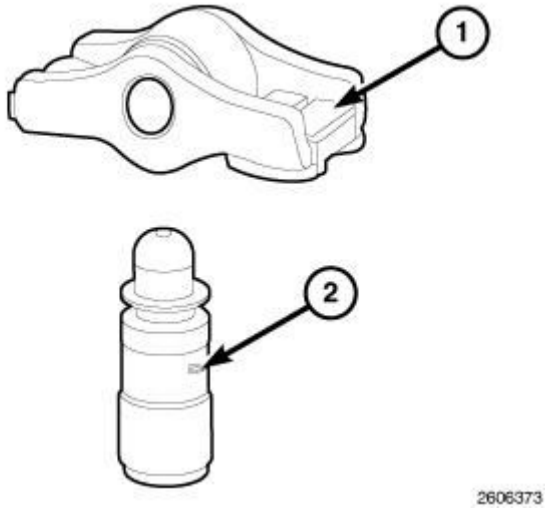

Fig. 190: Hydraulic Lifter & Rocker Arm
Courtesy of CHRYSLER GROUP, LLC

1. Remove the camshafts. Refer to **CAMSHAFT, ENGINE, REMOVAL**.
2. Remove the rocker arm (1) from cylinder head.

NOTE: When the hydraulic lifters are removed from the engine, they must be stored upright and in clean conditions.

3. Remove the hydraulic lifter (2) from cylinder head.

INSPECTION

INSPECTION

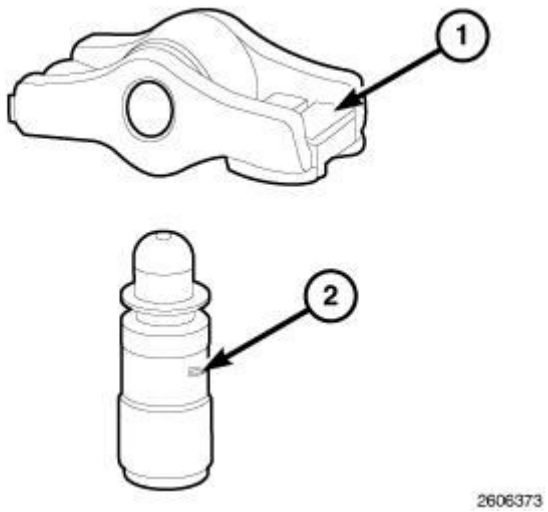

Fig. 191: Hydraulic Lifter & Rocker Arm
Courtesy of CHRYSLER GROUP, LLC

1. Clean each lifter assembly (2) in cleaning solvent to remove all varnish and sludge deposits. Inspect for indications of scuffing on the side and base of each lifter body (2).
2. Squeeze the lifter (2) and be sure that the spring returns the lifter to its correct position.
3. Inspect the and rocker arm (1) roller for damage or excessive wear.
4. Replace any worn or damaged components.

INSTALLATION

INSTALLATION

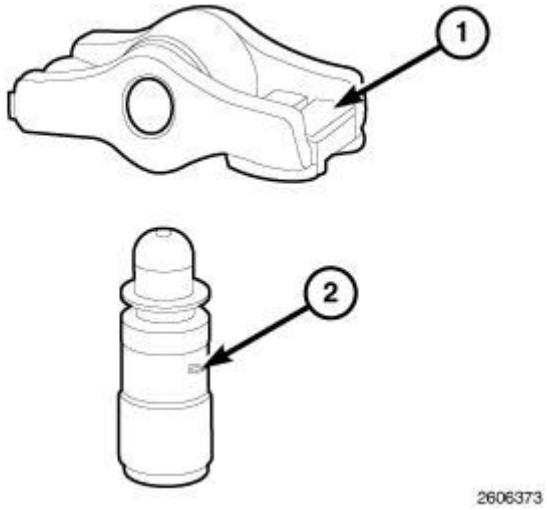

Fig. 192: Hydraulic Lifter & Rocker Arm
Courtesy of CHRYSLER GROUP, LLC

NOTE: Install the rocker arms and hydraulic lifters in the same location as removed.

NOTE: Replacement of the camshaft will also require replacement of the finger followers and hydraulic lifters.

1. Install the hydraulic lifter (2) into the cylinder head.
2. Install the rocker arm.
3. Install the camshaft(s). Refer to **CAMSHAFT, ENGINE, INSTALLATION**.

ROCKER ARM, VALVE

DESCRIPTION

DESCRIPTION

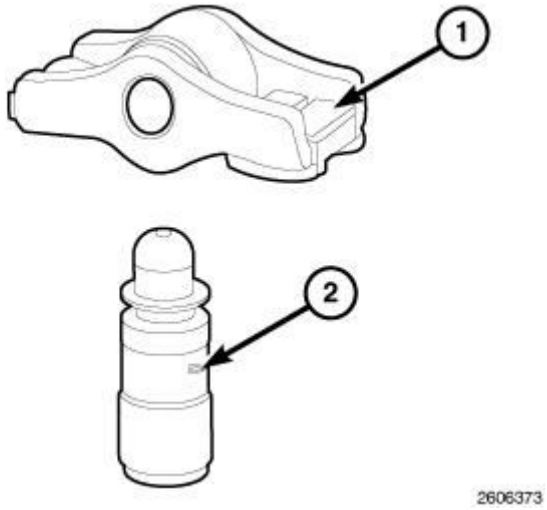

Fig. 193: Hydraulic Lifter & Rocker Arm
Courtesy of CHRYSLER GROUP, LLC

The rocker arms (1) are located on the top of the hydraulic lifters (2) and the valves. The rocker arms are not held rigidly into position; instead they are held in position by resting on top of the valve stem and the hydraulic lifter pivoting ball. The camshaft applies downward pressure holding the rocker arm in position.

OPERATION

OPERATION

The rocker arms are used as a link between the camshaft and valves. As the camshaft rotates, the lobes of the camshafts apply downward pressure on the rocker arms. This pressure is then transmitted to the valves which causes the valves to open.

REMOVAL

REMOVAL

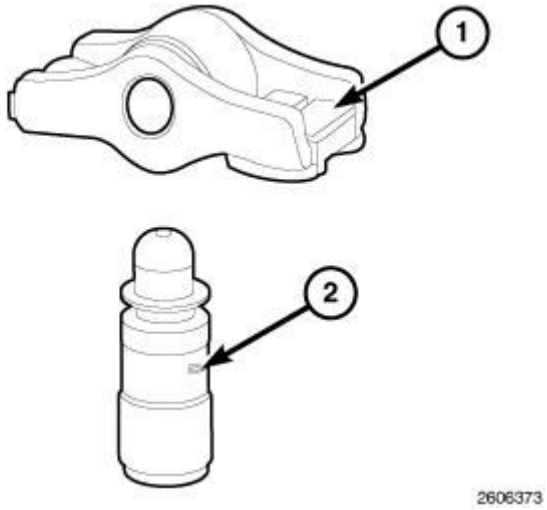

Fig. 194: Hydraulic Lifter & Rocker Arm
Courtesy of CHRYSLER GROUP, LLC

1. Remove the appropriate camshafts. Refer to **CAMSHAFT, ENGINE, REMOVAL**.

NOTE: Keep the rocker arm in a numerical order as they were removed.

2. Remove the rocker arm (1) assembly from the cylinder head and inspect for wear or damage.

INSTALLATION

INSTALLATION

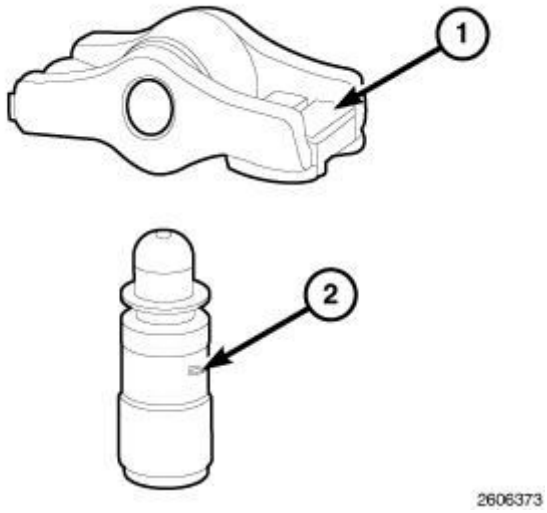

Fig. 195: Hydraulic Lifter & Rocker Arm
Courtesy of CHRYSLER GROUP, LLC

NOTE: Replacement of the camshaft will also require replacement of the rocker arms and hydraulic lifters.

1. Install the rocker arm assembly in the same location as removed.
2. Install the camshaft(s). Refer to **CAMSHAFT, ENGINE, INSTALLATION**.

SPRING(S), VALVE

REMOVAL

REMOVAL

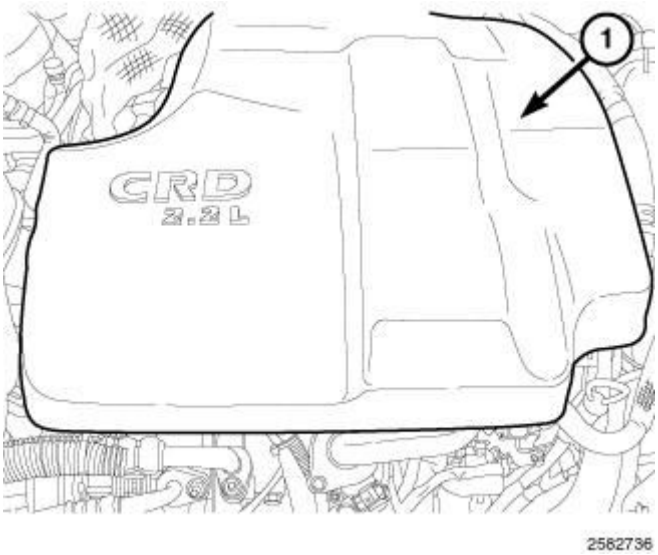

Fig. 196: Engine Cover
Courtesy of CHRYSLER GROUP, LLC

1. Disconnect the negative battery cable.
2. Remove engine cover (1).
3. Remove the intake and exhaust camshafts. Refer to **CAMSHAFT, ENGINE, REMOVAL**.
4. Position the cylinder being worked on at Top Dead Center (TDC).
5. Remove the Starter. Refer to **STARTER, REMOVAL** .
6. Install the Flywheel/Clutch Plate Locking Tool (special tool #10232, Lock, Flywheel/Clutch Plate).

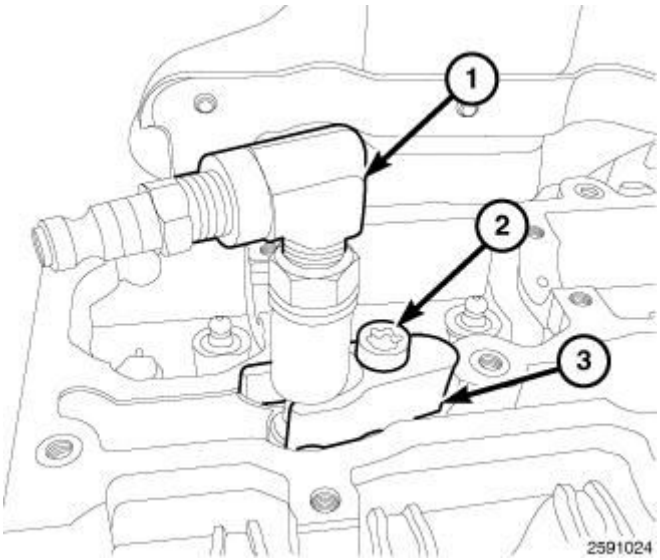

Fig. 197: Compression Test Adapter, Tensioning Claw & Bolt
Courtesy of CHRYSLER GROUP, LLC

7. Install the Compression Test Adapter (special tool #9543, Adapter, Compression Test) (1) into fuel injector hole along with the tensioning claw (3) and securely tighten bolt (2).
8. Connect air supply to the Compression Test Adapter (1) and pressurize the cylinder to 5 bar (73 psi).

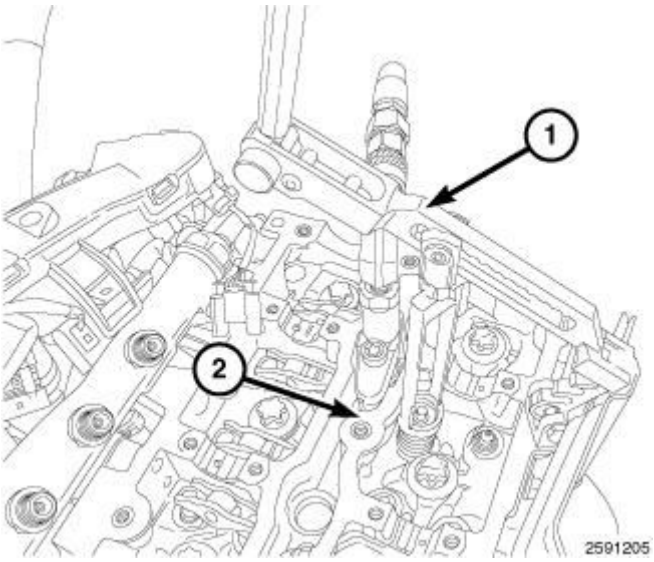

Fig. 198: Valve Spring Compressor & Cylinder Head
Courtesy of CHRYSLER GROUP, LLC

NOTE: Valve springs and retainers must be kept in order of the cylinder they were removed.

9. Install the valve spring compressor (special tool #9307, Compressor, Valve Spring) (1) onto cylinder head (2).
10. Compress valve spring and remove the keepers.
11. Remove valve spring retainer and valve spring.
12. Remove valve stem seals.
13. Remove valve spring seat.
14. Inspect all cylinder head components for wear or damage.
15. Repeat procedure for each cylinder as necessary.

INSTALLATION

INSTALLATION

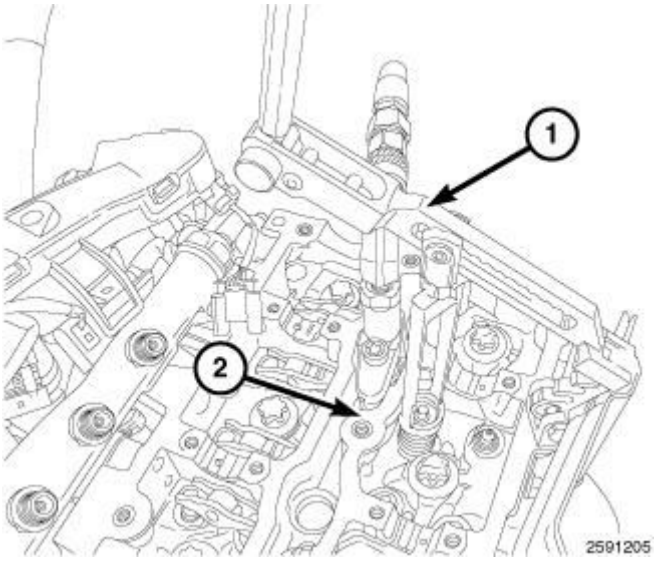

Fig. 199: Valve Spring Compressor & Cylinder Head
Courtesy of CHRYSLER GROUP, LLC

NOTE: Ensure that the valve keepers are seated properly.

1. Install lower valve spring seat.
2. Install valve stem seal.
3. Install valve spring.
4. Install valve spring retainer.
5. Position the Valve Spring Compressor (special tool #9307, Compressor, Valve Spring) (1) on to valve spring retainer. Now compress the valve spring and install valve keepers.
6. Repeat procedure for each cylinder as necessary.

7. Remove the Valve Spring Compressor (special tool #9307, Compressor, Valve Spring) (1) from cylinder head (2).

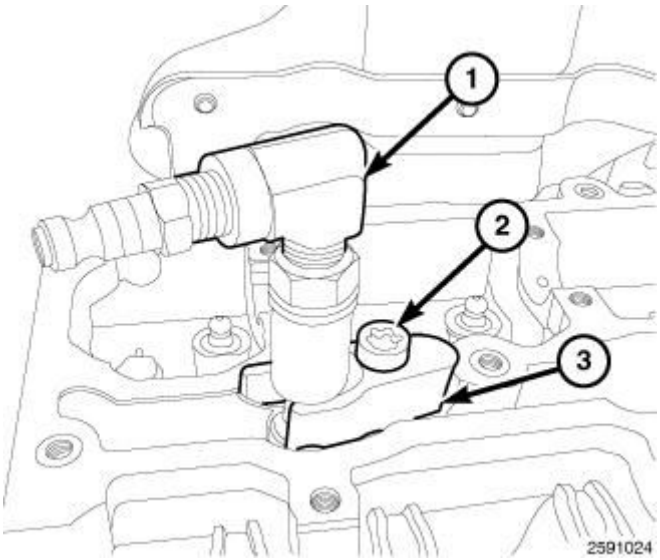

Fig. 200: Compression Test Adapter, Tensioning Claw & Bolt
Courtesy of CHRYSLER GROUP, LLC

8. Disconnect air supply from the Compression Test Adapter (special tool #9543, Adapter, Compression Test) (1).
9. Remove the bolt, tensioning claw, and Compression Test Adapter (special tool #9543, Adapter, Compression Test) (1).
10. Remove the Flywheel/Clutch Plate Locking Tool (special tool #10232, Lock, Flywheel/Clutch Plate).
11. Install the Starter. Refer to **STARTER, INSTALLATION** .
12. Install the intake and exhaust camshafts. Refer to **CAMSHAFT, ENGINE, INSTALLATION**.
13. Connect the negative battery cable.
14. Start the engine and inspect for leaks.

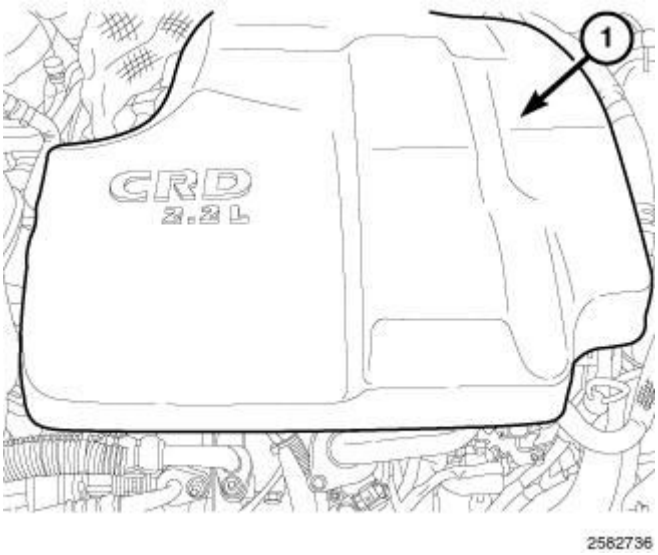

Fig. 201: Engine Cover
Courtesy of CHRYSLER GROUP, LLC

15. Install the engine cover (1).

VALVES, INTAKE AND EXHAUST

REMOVAL

REMOVAL

1. Remove cylinder head. Refer to **CYLINDER HEAD, REMOVAL**.

CAUTION: Suitably mark the valve and the position in the cylinder head before removal. Failure to do so will result in improperly seated valves and possible engine damage after reassembly.

CAUTION: Valves, springs and retainers must be kept in order of the cylinder they were removed.

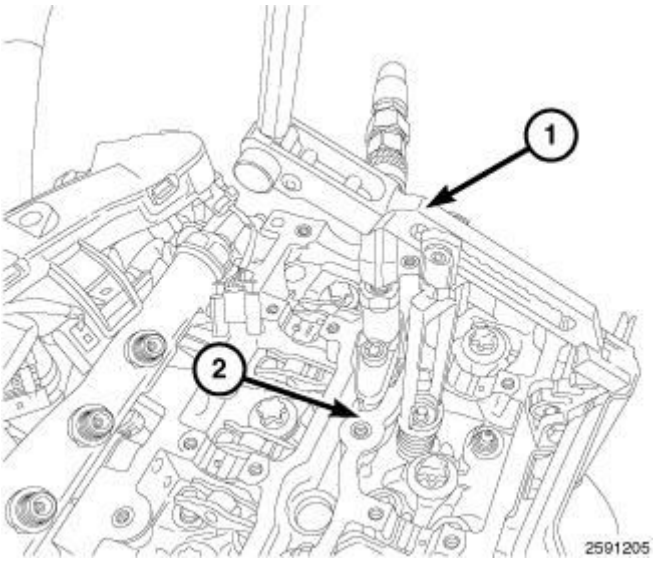

Fig. 202: Valve Spring Compressor & Cylinder Head
Courtesy of CHRYSLER GROUP, LLC

2. Install the Valve Spring Compressor (special tool #9307, Compressor, Valve Spring) (1) onto cylinder head (2).

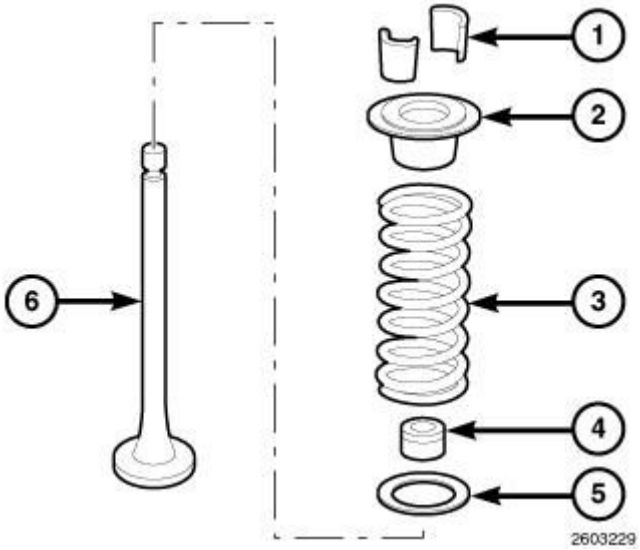

Fig. 203: Valve Spring, Keeper, Retainer, Spring Seat, Valve Stem Seals & Valve
Courtesy of CHRYSLER GROUP, LLC

3. Compress the valve spring (3) and remove valve keepers (1).
4. Remove valve spring retainer (2) and valve spring (3) and spring seat (5).
5. Remove valve stem seals (4).
6. Remove valves (6).
7. Repeat steps 5 through 9 for each valve as necessary.

INSTALLATION

INSTALLATION

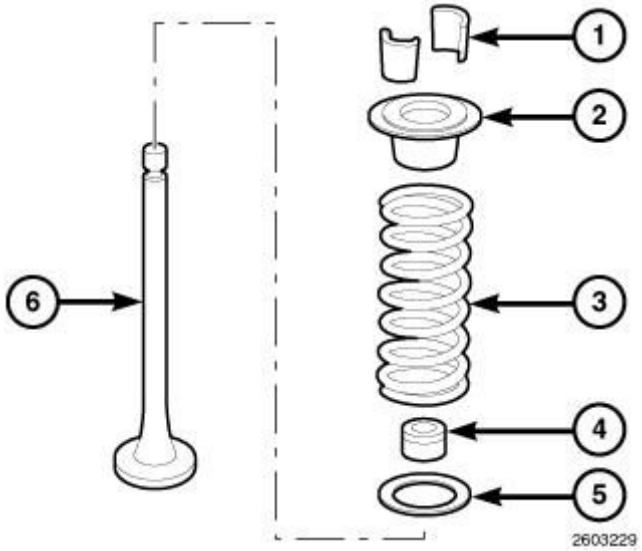

Fig. 204: Valve Spring, Keeper, Retainer, Spring Seat, Valve Stem Seals & Valve
Courtesy of CHRYSLER GROUP, LLC

CAUTION: Valves must be kept in their original positions in cylinder head. Failure to do so will result in engine damage.

NOTE: Inspect all valves, springs and retainers for wear or damage. Replace as necessary.

1. Install valves (6) in their original position in the cylinder head.
2. Install valve spring seat (5).
3. Install valve stem seal (4).
4. Install valve spring (3).
5. Install valve spring retainer (2).

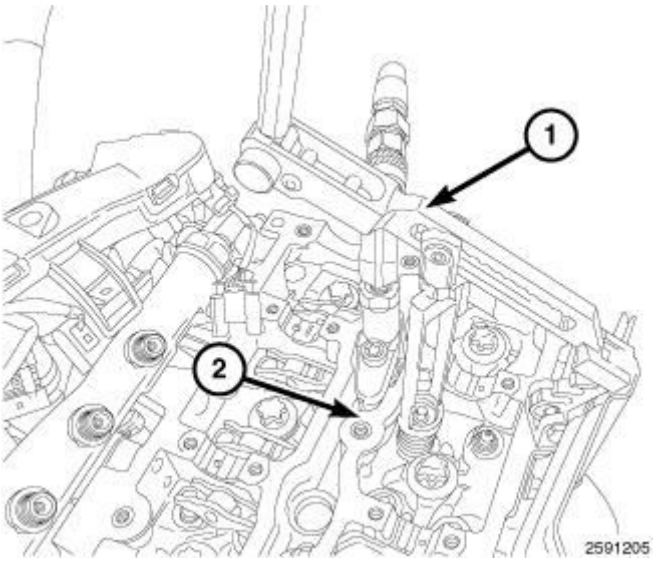

Fig. 205: Valve Spring Compressor & Cylinder Head
Courtesy of CHRYSLER GROUP, LLC

NOTE: Ensure that the valve keepers are seated properly.

6. Using Valve Spring Compressor (special tool #9307, Compressor, Valve Spring), compress valve spring (3) and install valve keepers (1).
7. Repeat steps 3 through 7 for each valve as necessary.
8. Install cylinder head. Refer to **CYLINDER HEAD, INSTALLATION**.

ENGINE BLOCK

STANDARD PROCEDURE

REPLACING ENGINE CORE AND OIL GALLERY PLUGS

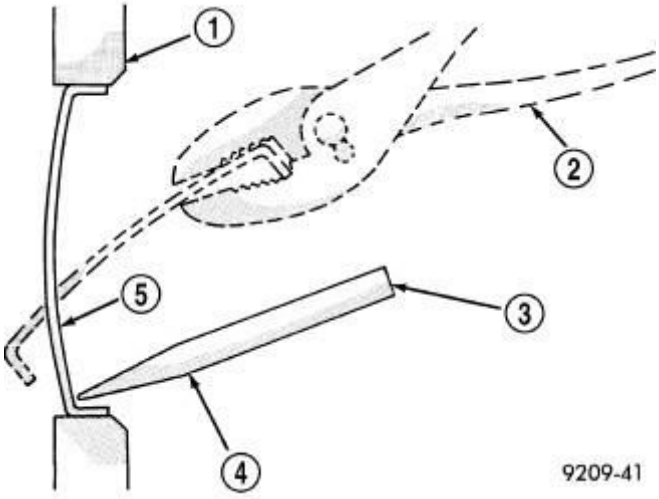

Fig. 206: Core Hole Plug Removal

Courtesy of CHRYSLER GROUP, LLC

1 - CYLINDER BLOCK
2 - REMOVE PLUG WITH PLIERS
3 - STRIKE HERE WITH HAMMER
4 - DRIFT PUNCH
5 - CUP PLUG

Using a blunt tool such as a drift (4) and a hammer, strike the bottom edge of the cup plug (5). With the cup plug (5) rotated, grasp firmly with pliers (2) or other suitable tool and remove plug .

CAUTION: Do not drive cup plug into the casting as restricted cooling can result and cause serious engine problems.

Thoroughly clean inside of cup plug hole in cylinder block or head. Be sure to remove old sealer. Lightly coat inside of cup plug hole with Mopar® Stud and Bearing Mount. Make certain the new plug is cleaned of all oil or grease. Using proper drive plug, drive plug into hole so that the sharp edge of the plug is at least 0.5 mm (0.020 in.) inside the lead-in chamfer.

It is not necessary to wait for curing of the sealant. The cooling system can be refilled and the vehicle placed in service immediately.

MEASURING CYLINDER BORES

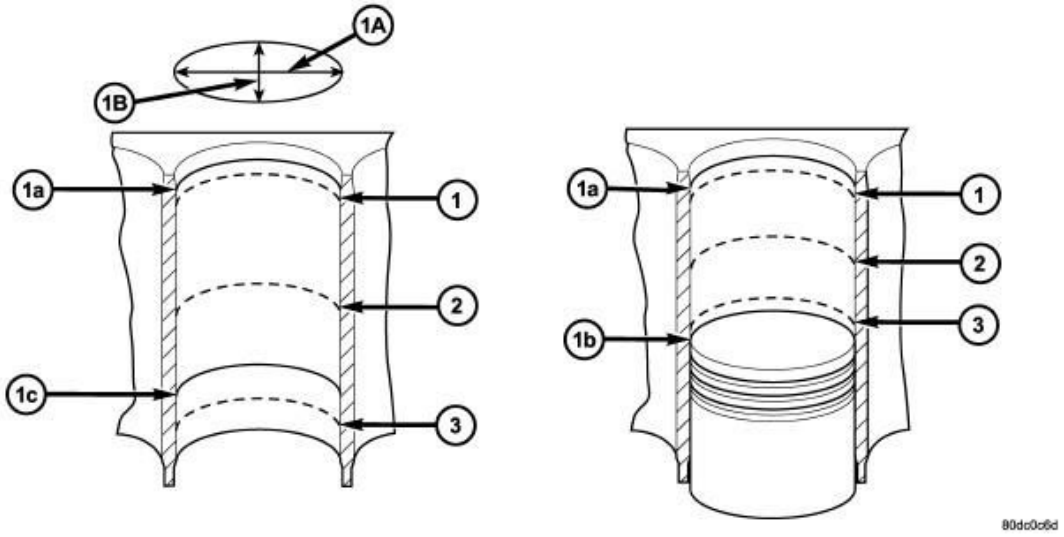

Fig. 207: Measuring Cylinder Bores

Courtesy of CHRYSLER GROUP, LLC

1 - MEASURING POINT OF CYLINDER BORE
2 - MEASURING POINT OF CYLINDER BORE
3 - MEASURING POINT OF CYLINDER BORE
1a - UPPER REVERSAL POINT OF #1 PISTON RING
1b - BOTTOM DEAD CENTER OF PISTON
1c - BOTTOM REVERSAL POINT OF OIL SCRAPER RING
1A - LONGITUDINAL DIRECTION
1B - TRANSVERSE DIRECTION

NOTE: This must be done with engine completely disassembled.

1. Thoroughly clean all cylinder bores with appropriate cleaning solvent.
2. Measure each cylinder at the three measuring points shown in illustration (1, 2, 3).
3. Using the three measurement points, measure cylinder in the longitudinal and in the transverse direction.

Cylinder Bore Measurement	
Standard size	88.0 mm
Group code letter A	88.000-88.006 mm
Group code letter X	88.006-88.012 mm
Group code letter B	88.012-88.018 mm
Wear limit in longitudinal in transverse direction	0.020 mm
Permissible variation of cylinder shape (when new)	0.000-0.014 mm

4. Use the measurement and table above to group cylinder bores.

BEARING(S), CRANKSHAFT

REMOVAL

REMOVAL

1. Remove the engine. Refer to **REMOVAL**.

2. Remove the cylinder head. Refer to **CYLINDER HEAD, REMOVAL**.
3. Remove the balance shaft module. Refer to **MODULE, BALANCE SHAFT, REMOVAL**.
4. Remove crankshaft bearings one at a time.

INSTALLATION

INSTALLATION

NOTE: Oil bearing shells before inserting crankshaft.

NOTE: Oil grooves in thrust washers must point toward the thrust collars of the crankshaft.

NOTE: Thrust washers in bearing cap each have one retaining lugs as a anti-twist lock.

NOTE: Oil thread and head contact surfaces of bolts that retain crankshaft bearing caps; tighten bolts from inside to outside, beginning at fit bearing. Rotate crankshaft to check clearance.

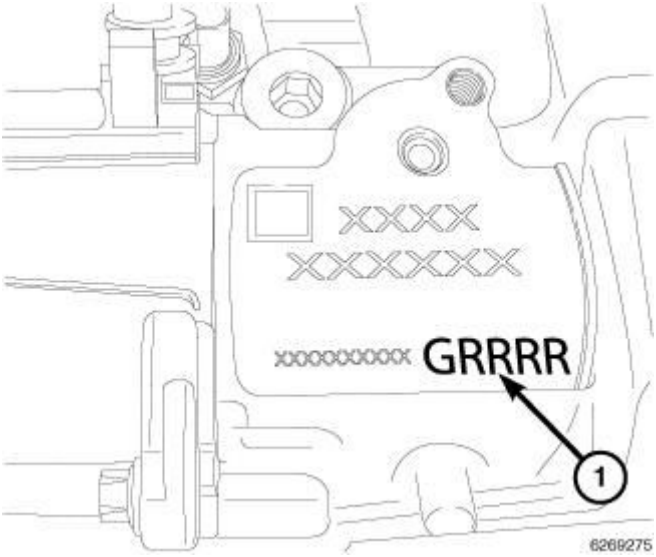

Fig. 208: Bearing Selection Letters On Engine Block
Courtesy of CHRYSLER GROUP, LLC

NOTE: The engine block is marked for main bearing shell selection located by the vacuum pump.

1. Using the bearing selection letters (1) on engine block, install bearing halves into engine block and lubricate bearing with clean engine oil.
   - B = blue bearing
   - G = yellow bearing
   - R = red bearing

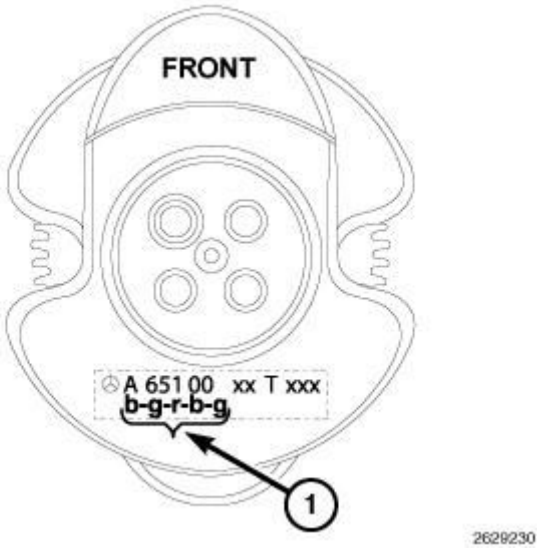

Fig. 209: Letters Stamped On Crankshaft
Courtesy of CHRYSLER GROUP, LLC

2. The letters stamped on crankshaft (1) are the bearing halves which are to be selected for the crankshaft bearing caps.
   - B = blue bearing
   - G = yellow bearing
   - R = red bearing

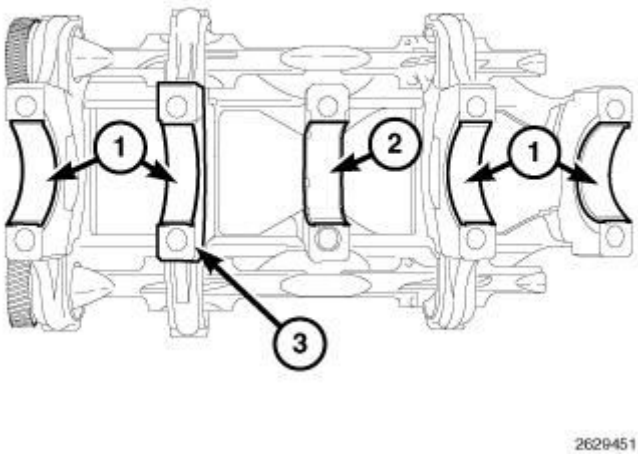

Fig. 210: Installing Bearing Halves Into Bearing Caps
Courtesy of CHRYSLER GROUP, LLC

3. Install bearing halves (1 and 2) into bearing caps and lubricate bearing with clean engine oil.
4. Install the balance shaft module and check bearing clearance. Refer to **MODULE, BALANCE SHAFT, INSTALLATION**.
5. Check crankshaft endplay.
6. Install the balance shaft module. Refer to **MODULE, BALANCE SHAFT, INSTALLATION**.
7. Install the cylinder head. Refer to **CYLINDER HEAD, INSTALLATION**.
8. Install the engine. Refer to **INSTALLATION**.

CRANKSHAFT

STANDARD PROCEDURE

STANDARD PROCEDURE - CRANKSHAFT BOLT INSPECTION

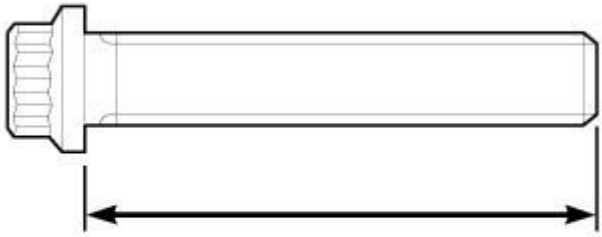

Fig. 211: Measuring Crankshaft Bolt
Courtesy of CHRYSLER GROUP, LLC

1. Measure crankshaft bolt between points shown in illustration.

Crankshaft Bearing Cap Bolt Dimensions	
Thread Diameter	M 12
Length When New	104.7 mm to 103.5 mm
Maximum Length	106.5 mm

2. If the bolt length is greater than the maximum allowable measurement, replace the bolts.

REMOVAL

REMOVAL

1. Remove the engine. Refer to **REMOVAL**.
2. Remove the cylinder head. Refer to **CYLINDER HEAD, REMOVAL**.
3. Remove the balance shaft module. Refer to **MODULE, BALANCE SHAFT, REMOVAL**.

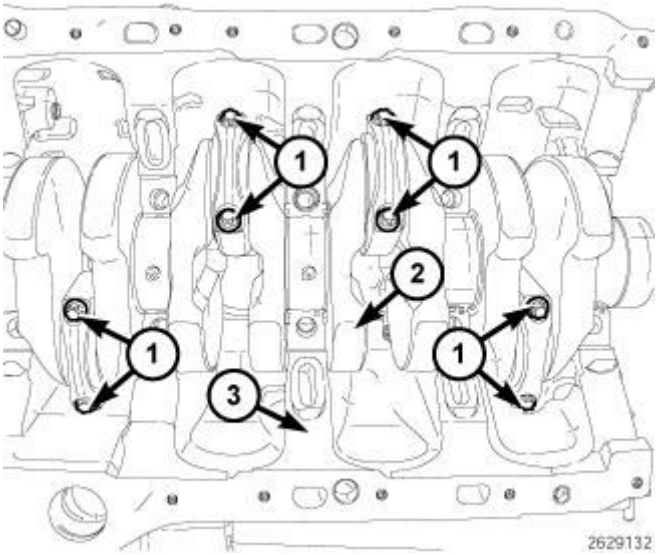

Fig. 212: Identifying Crankshaft, Engine Block, Connecting Rod Bearing Caps & Bolts
Courtesy of CHRYSLER GROUP, LLC

4. Remove bolts (1) and the connecting rod bearing caps.
5. Remove the crankshaft (2) from engine block (3).

INSTALLATION

INSTALLATION

NOTE: Oil bearing shells before inserting crankshaft.

NOTE: Oil grooves in thrust washers must point toward the thrust collars of the crankshaft.

NOTE: Thrust washers in bearing cap each have one retaining lugs as a anti-twist lock.

NOTE: Oil thread and head contact surfaces of bolts that retain crankshaft bearing caps; tighten bolts from inside to outside, beginning at fit bearing. Rotate crankshaft to check clearance.

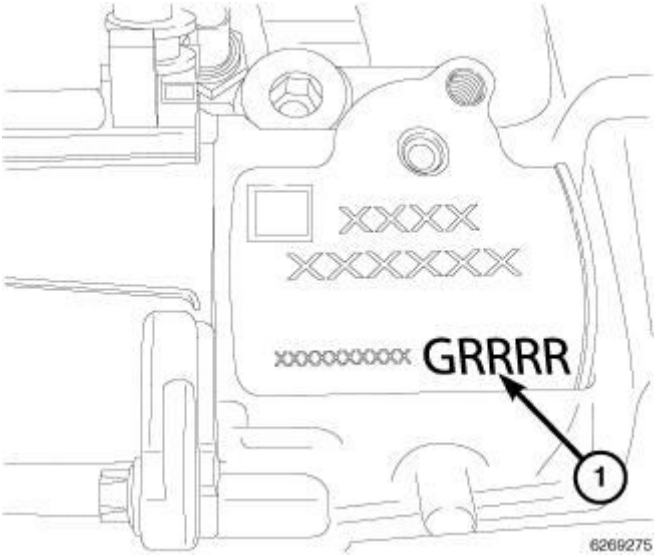

Fig. 213: Bearing Selection Letters On Engine Block
Courtesy of CHRYSLER GROUP, LLC

NOTE: The engine block is marked for main bearing shell selection located by the vacuum pump.

1. Using the bearing selection letters (1) on engine block, install bearing halves into engine block and lubricate bearing with clean engine oil.
   - B = blue bearing
   - G = yellow bearing
   - R = red bearing

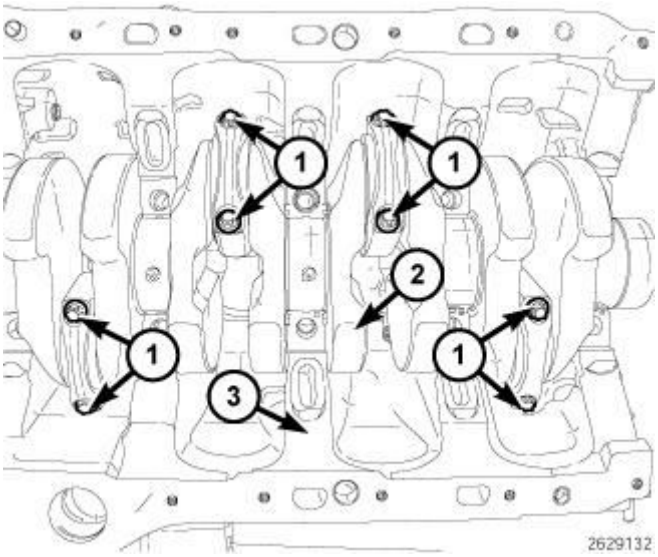

Fig. 214: Identifying Crankshaft, Engine Block, Connecting Rod Bearing Caps & Bolts

Courtesy of CHRYSLER GROUP, LLC

2. Install crankshaft (2) into engine block (3).
3. Install new rod bearings and check bearing clearance.
4. Install the connecting rod bearing caps.
5. For new connecting rods, tighten bolts to:
   - 5 N.m (44 in. lbs.)
   - 25 N.m (18 ft. lbs.)
   - plus an additional 180°
6. For used connecting rods, tighten bolts to:
   - 5 N.m (44 in. lbs.)
   - 25 N.m (18 ft. lbs.)
   - plus an additional 90°

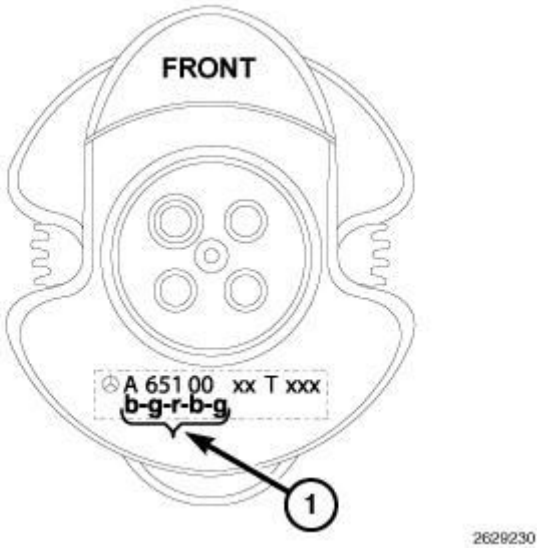

Fig. 215: Letters Stamped On Crankshaft
Courtesy of CHRYSLER GROUP, LLC

7. The letters stamped on crankshaft (1) are the bearing halves which are to be selected for the crankshaft bearing caps.
   - B = blue bearing
   - G = yellow bearing
   - R = red bearing

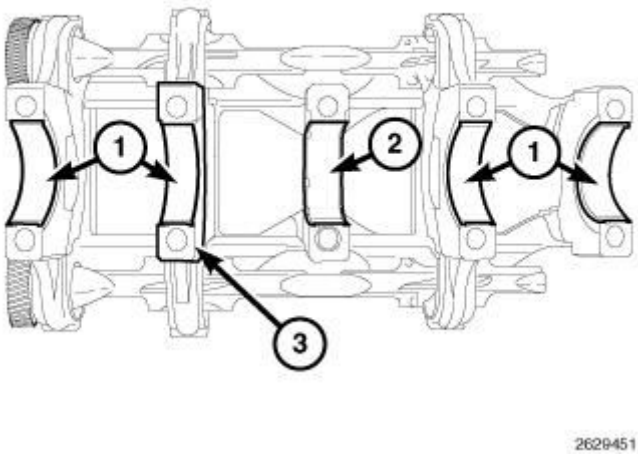

Fig. 216: Installing Bearing Halves Into Bearing Caps
Courtesy of CHRYSLER GROUP, LLC

8. Install bearing halves (1 and 2) into bearing caps and lubricate bearing with clean engine oil.
9. Install the balance shaft module and check bearing clearance. Refer to **MODULE, BALANCE SHAFT, INSTALLATION**.
10. Check crankshaft endplay.
11. Install the cylinder head. Refer to **CYLINDER HEAD, INSTALLATION**.
12. Install the engine. Refer to **INSTALLATION**.

DAMPER, VIBRATION

REMOVAL

REMOVAL

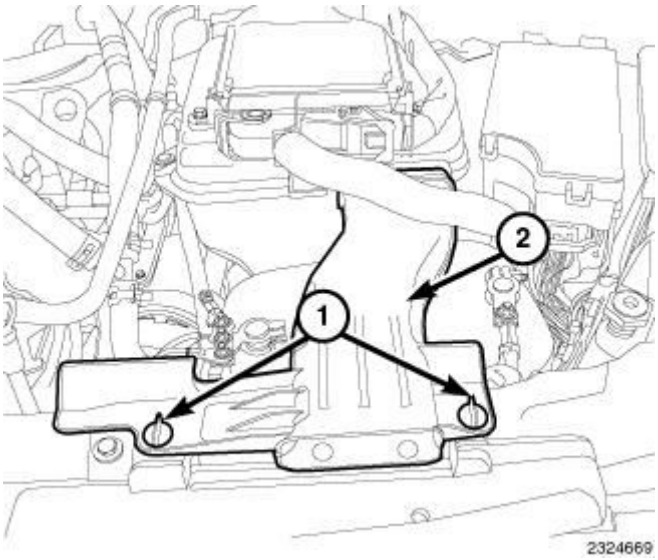

Fig. 217: Quarter Turn Lock Tabs & Air Inlet Duct
Courtesy of CHRYSLER GROUP, LLC

1. Remove air inlet duct (2).
2. Disconnect the negative battery cable.
3. Remove the right front tire. Refer to **REMOVAL** .
4. Remove the belly pan.
5. Remove the serpentine belt. Refer to **BELT, SERPENTINE, REMOVAL** .

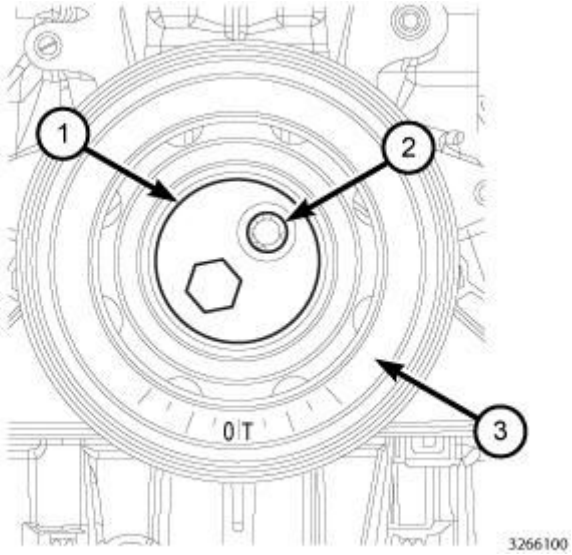

Fig. 218: Vibration Damper Holder Tool, Vibration Damper & Bolts
Courtesy of CHRYSLER GROUP, LLC

6. Using the Vibration Damper Holder (special tool #10236, Holder, Vibration Damper) (1), remove bolts (2) and the vibration damper (3).

INSTALLATION

INSTALLATION

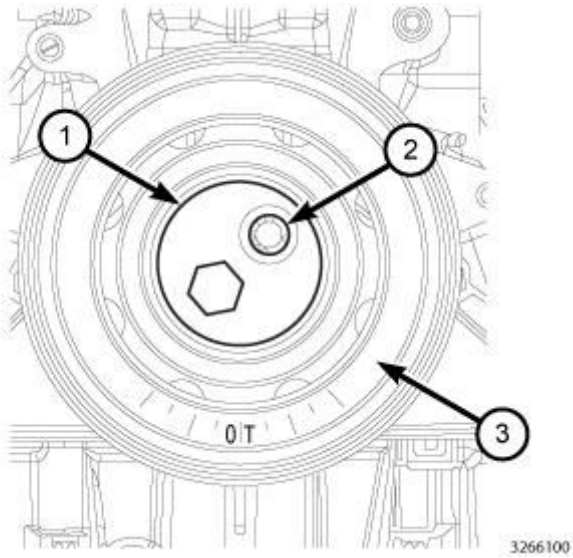

Fig. 219: Vibration Damper Holder Tool, Vibration Damper & Bolts
Courtesy of CHRYSLER GROUP, LLC

1. Install the vibration damper (3) and bolts (2).
2. Using Vibration Damper Holder Tool (special tool #10236, Holder, Vibration Damper) (1), tighten bolts to 80 N.m (59 ft. lbs.) plus additional 90°.

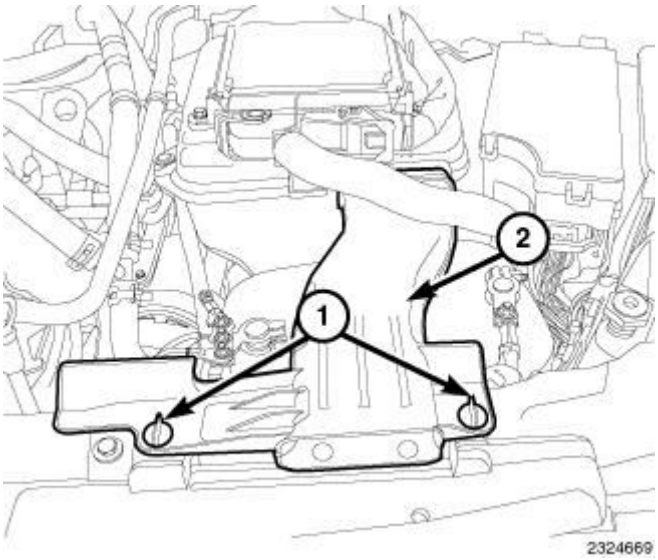

Fig. 220: Quarter Turn Lock Tabs & Air Inlet Duct
Courtesy of CHRYSLER GROUP, LLC

3. Install the serpentine belt. Refer to **BELT, SERPENTINE,**

INSTALLATION .

4. Install the belly pan.
5. Install the right front tire. Refer to **INSTALLATION** .
6. Connect the negative battery cable.
7. Install air inlet duct (2).

MODULE, BALANCE SHAFT

DESCRIPTION

DESCRIPTION

The 2.2L engine is equipped with two cast iron balance shafts and is installed in a cast iron carrier. The cast iron carrier also incorporates the crankshaft bearing caps used to hold the crankshaft to the engine block.

OPERATION

OPERATION

The balance shafts are driven by the crankshaft via two helical gears. The balance shafts are connected to the helical gears. The dual counter rotating shafts decrease second order vertical shaking forces caused by component movement.

REMOVAL

REMOVAL

1. Disconnect the negative battery cable.
2. Set the engine to Top Dead Center (TDC).
3. Remove the lower timing chain cover. Refer to **COVER(S), ENGINE TIMING, REMOVAL**.

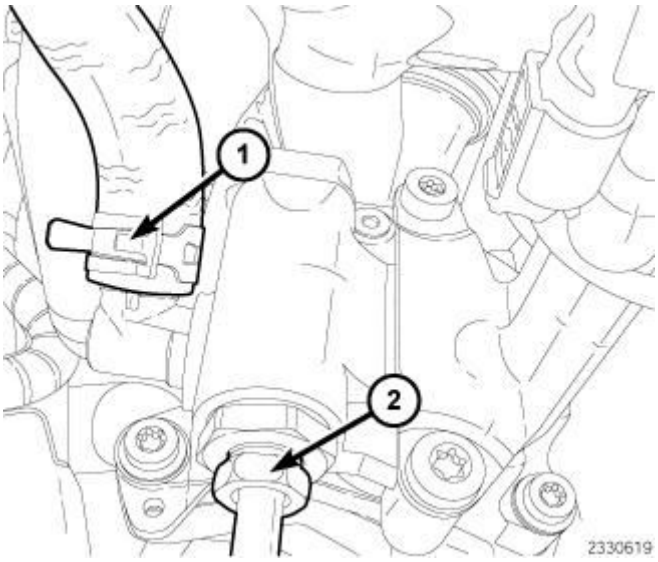

Fig. 221: Power Steering Supply Line & Feed Line
Courtesy of CHRYSLER GROUP, LLC

4. Remove the bolts and the oil dipstick tube.
5. Disconnect the power steering return line (1) from pump.
6. Remove the power steering feed line (2) from pump.

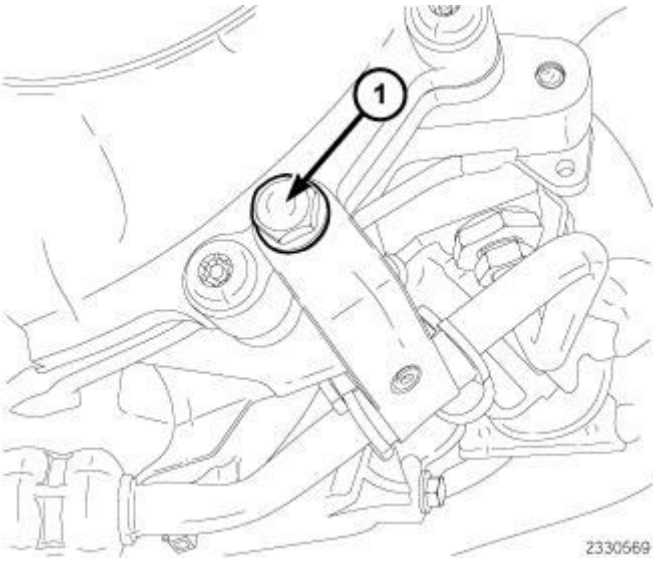

Fig. 222: Power Steering Line Support Bracket Retaining Bolt
Courtesy of CHRYSLER GROUP, LLC

7. Remove power steering line support bracket bolt (2).
8. Disconnect power steering line from steering gear and reposition out of way.

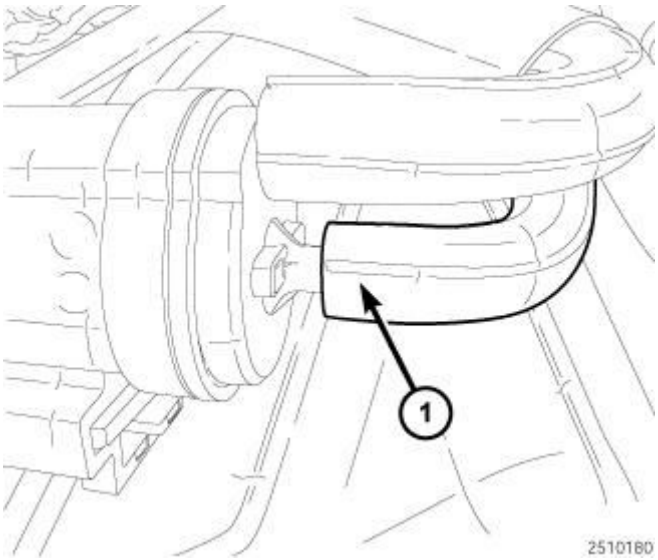

Fig. 223: Coolant Pump Actuator Vacuum Line
Courtesy of CHRYSLER GROUP, LLC

9. Disconnect the coolant pump actuator vacuum line (1).
10. Remove the water pump/power steering assembly.

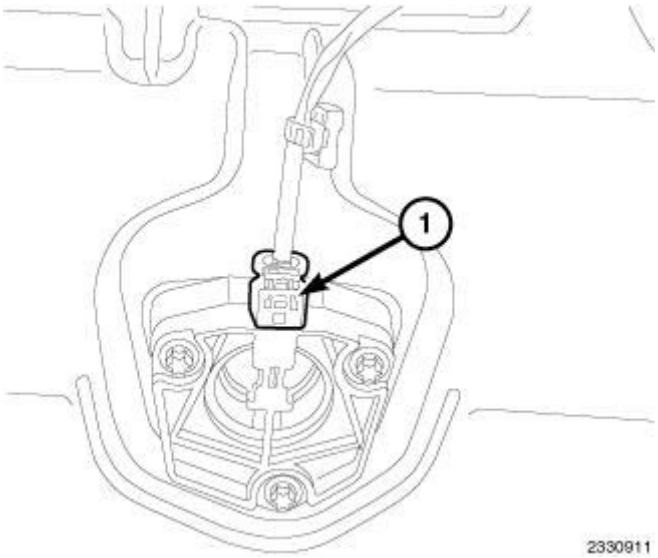

Fig. 224: Oil Level Switch Wire Harness Connector
Courtesy of CHRYSLER GROUP, LLC

11. Disconnect the oil life monitor harness connector (1).
12. Remove bolts and the oil pan from engine.

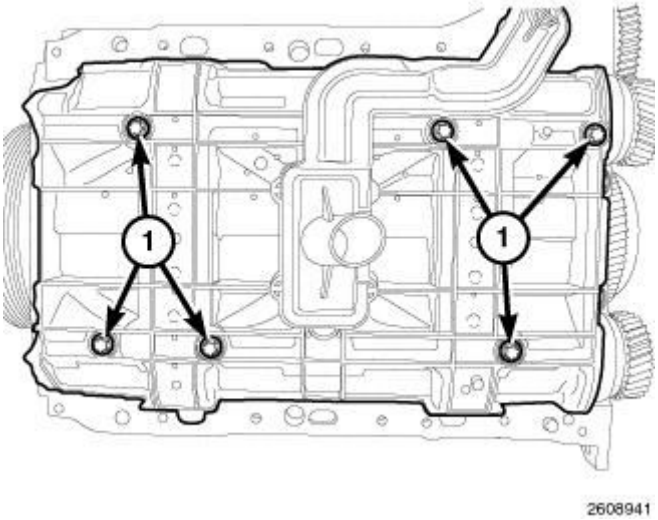

Fig. 225: Oil Pump Pickup Bolts
Courtesy of CHRYSLER GROUP, LLC

13. Remove bolts and the oil pump pickup.
14. Remove the front oil seal carrier. Refer to **SEAL, CRANKSHAFT OIL, FRONT, REMOVAL**.

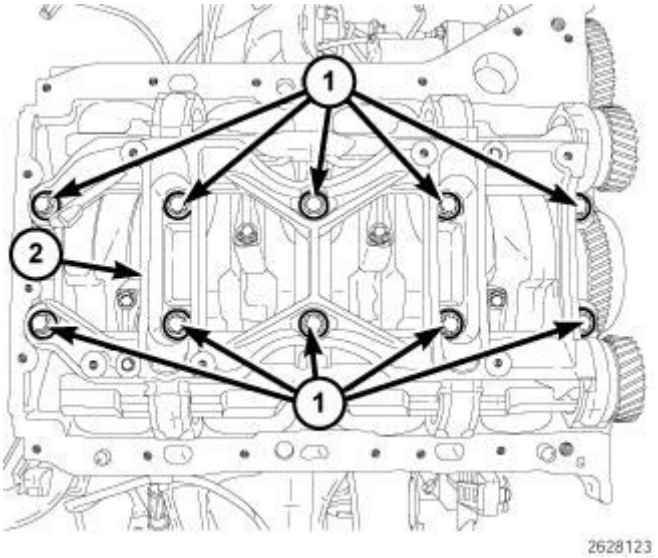

Fig. 226: Crankshaft Main Bearing Cap/Balance Shaft Assembly Bolts
Courtesy of CHRYSLER GROUP, LLC

15. Remove bolts (1) and the crankshaft main bearing cap/balance shaft assembly (2) from engine block.
16. Inspect crankshaft bearing caps (2) for wear.
17. Inspect the crankshaft bearing caps bolts (1) for stretching. Refer to CRANKSHAFT - **STANDARD PROCEDURE** .

INSTALLATION

INSTALLATION

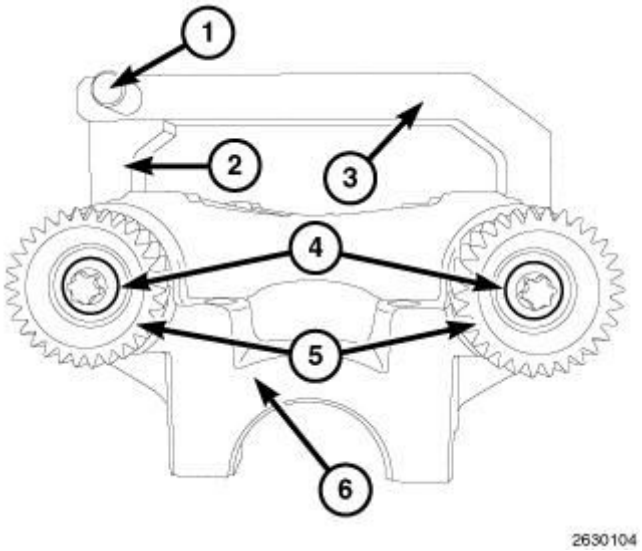

Fig. 227: Balance Shaft Drive Gears Installation
Courtesy of CHRYSLER GROUP, LLC

1. Clean all gasket mating surfaces.
2. Install into the Balance Shaft Lock Tool (special tool #10231, Lock, Balance Shaft) and rotate halves (2 and 3) into the locked position and insert the locking pin (1).
3. Loosen the bolts (4) securing balance shaft drive gears (5).
4. Install crankshaft main bearing cap/balance shaft onto engine block while ensuring the balance shaft drive gears are meshed properly and install crankshaft main bearing cap bolts finger tight.
5. Tighten balance shaft drive gear bolts to 50 N.m (37 ft. lbs.) plus an additional 90 degrees.
6. Remove Balance Shaft Locking Tool (special tool #10231, Lock, Balance Shaft).

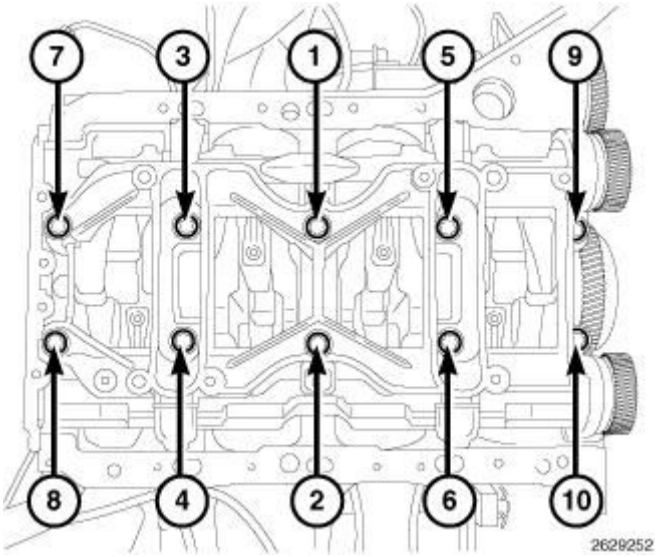

Fig. 228: Crankshaft Main Bearing Cap Bolts Torque Sequence
Courtesy of CHRYSLER GROUP, LLC

7. Using the sequence shown in illustration, tighten bolts to 60 N.m (44 ft. lbs.) plus an additional 90 degrees.
8. Install the front oil seal carrier. Refer to **SEAL, CRANKSHAFT OIL, FRONT, INSTALLATION**.

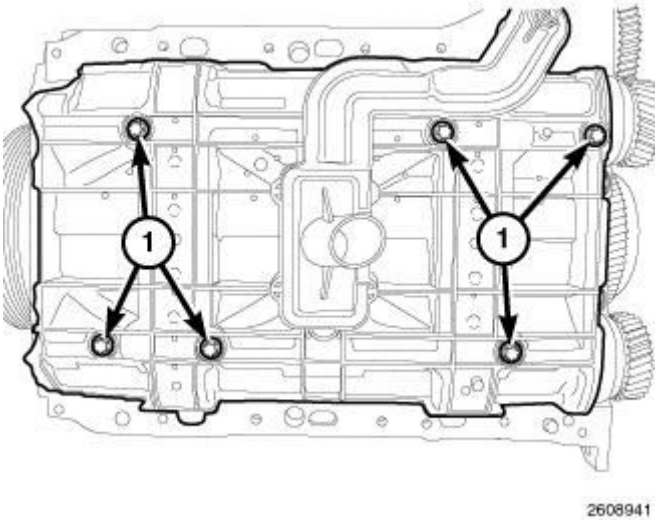

Fig. 229: Oil Pump Pickup Bolts
Courtesy of CHRYSLER GROUP, LLC

9. Install the oil pump pickup. Tighten bolts to 6 N.m (53 in. lbs.) plus additional 90 degrees.

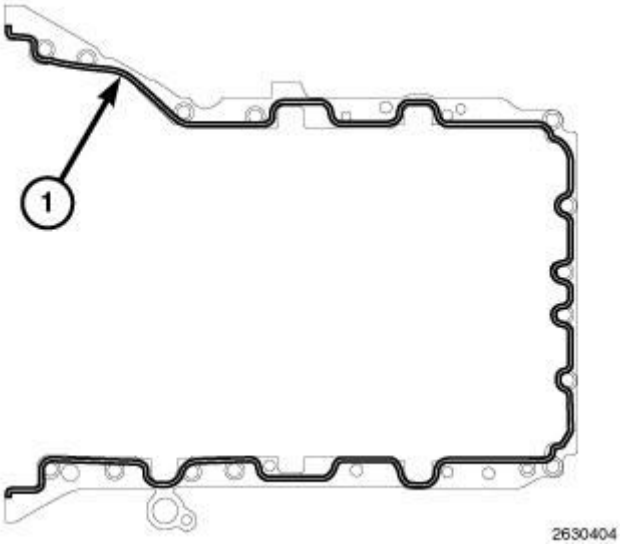

Fig. 230: Applying Engine Sealant RTV Onto Oil Pan Mating Surface
Courtesy of CHRYSLER GROUP, LLC

10. Apply a 2 mm bead of Engine Sealant RTV onto the oil pan mating surface (1).

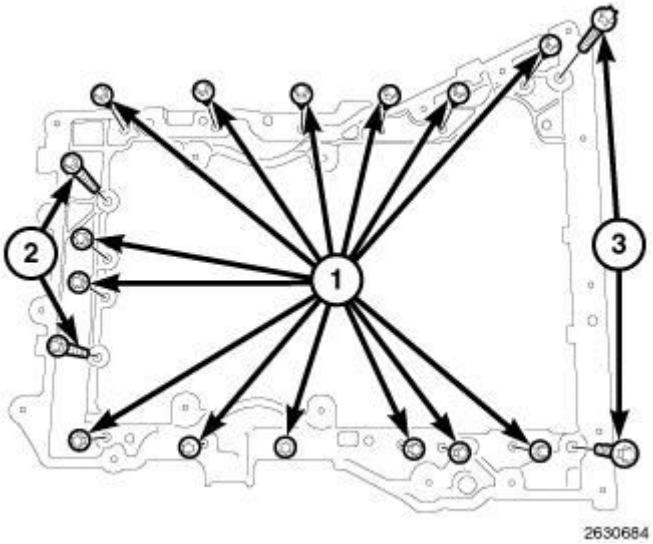

Fig. 231: Oil Pan Bolts
Courtesy of CHRYSLER GROUP, LLC

11. Install oil pan.
    - Tighten M6 bolts to 9 N.m (80 in. lbs.).
    - Tighten M8 bolts to 20 N.m (177 in. lbs.).
    - Tighten transmission-to-oil pan bolts to 40 N.m (30 ft. lbs.).

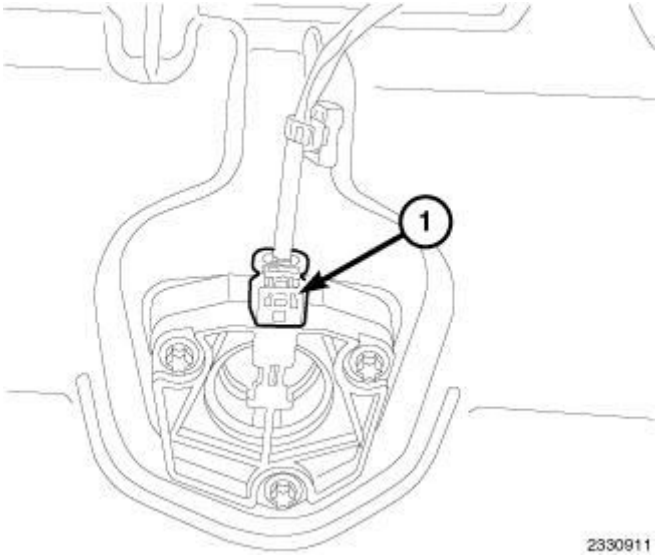

Fig. 232: Oil Level Switch Wire Harness Connector
Courtesy of CHRYSLER GROUP, LLC

12. Connect the oil life monitor harness connector.

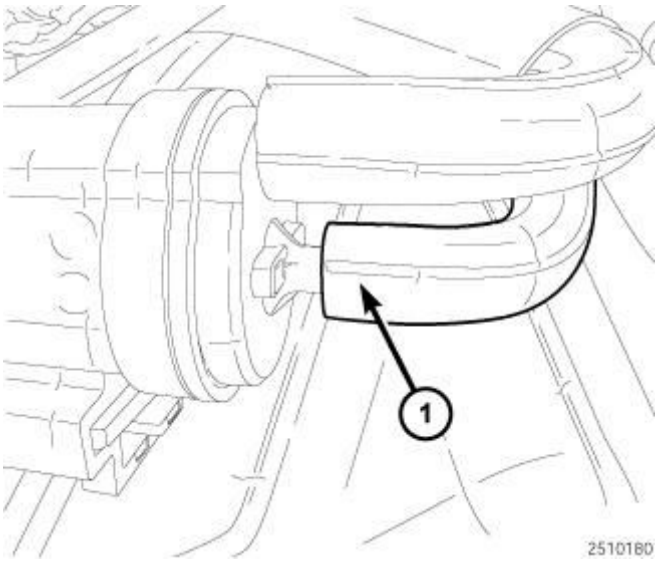

Fig. 233: Coolant Pump Actuator Vacuum Line
Courtesy of CHRYSLER GROUP, LLC

13. Install the water pump/power steering pump assembly.
14. Connect the coolant pump actuator vacuum line (1).

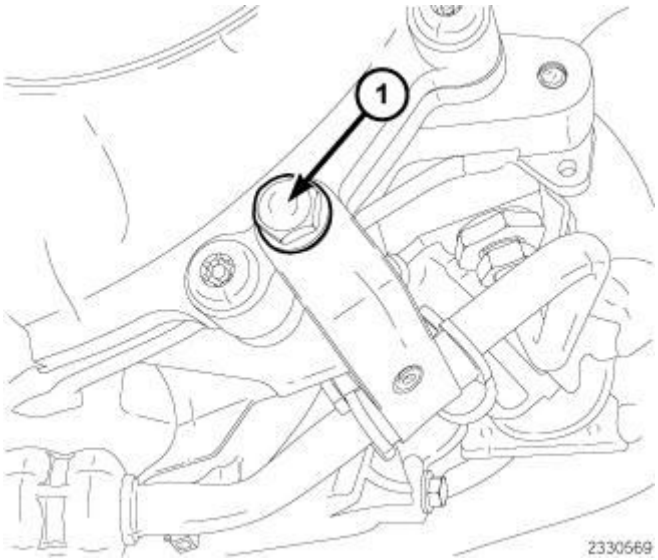

Fig. 234: Power Steering Line Support Bracket Retaining Bolt
Courtesy of CHRYSLER GROUP, LLC

15. Install the power steering line to steering gear. Tighten the tube nut to 32 N.m (24 ft. lbs.).
16. Install the power steering line support bracket bolt (2) and tighten bolt to 11 N.m (97 in. lbs.).

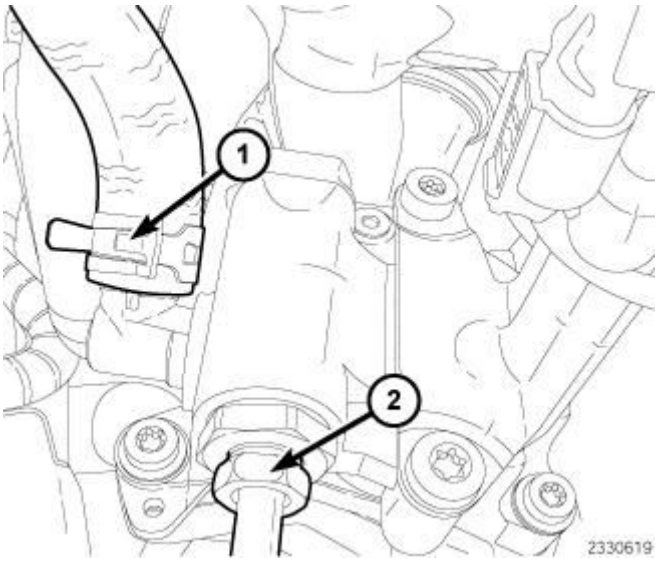

Fig. 235: Power Steering Supply Line & Feed Line
Courtesy of CHRYSLER GROUP, LLC

17. Install the power steering feed line (2) to pump. Tighten the tube nut to 32 N.m (24 ft. lbs.).
18. Connect the power steering return line (1) to pump.
19. Install the oil dipstick tube. Tighten bolts to 9 N.m. 80 in. lbs.).

20. Install the lower timing chain cover. Refer to **COVER(S), ENGINE TIMING, INSTALLATION**.
21. Connect the negative battery cable.

PUMP, VACUUM

DESCRIPTION

DESCRIPTION

The vacuum pump (1) is mounted to the rear of the oil pump. The vacuum pump is of the vane-type pump that is driven by a hex drive on the rear of the oil pump. The vacuum pump supplies vacuum to the brake booster, EGR system, coolant pump solenoid.

DIAGNOSIS AND TESTING

DIAGNOSIS AND TESTING - VACUUM PUMP

1. Connect a vacuum gauge to the booster check valve with a short length of hose and T-fitting.
2. Start the engine allowing the engine to run for 30 seconds. Vacuum should be 18 inches HG (609 millibars). Verify the vacuum line is not leaking. If no leak is present replace vacuum pump.

REMOVAL

REMOVAL

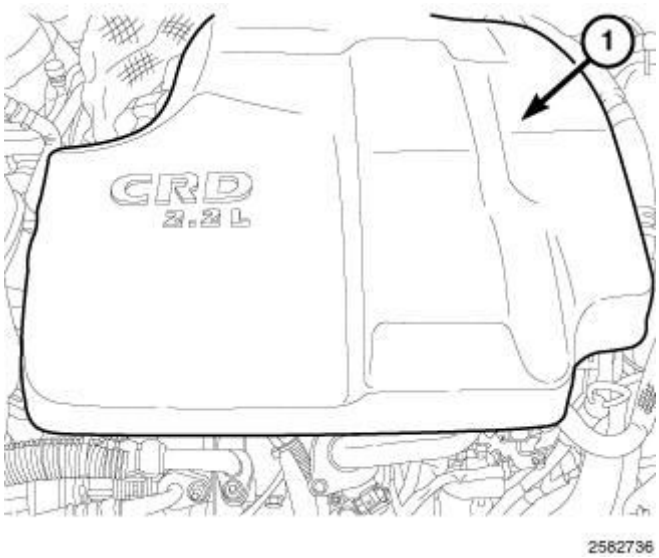

Fig. 236: Engine Cover

Courtesy of CHRYSLER GROUP, LLC

1. Disconnect the negative battery cable.
2. Remove the engine cover (1).
3. Remove the thermostat housing. Refer to **THERMOSTAT, REMOVAL** .

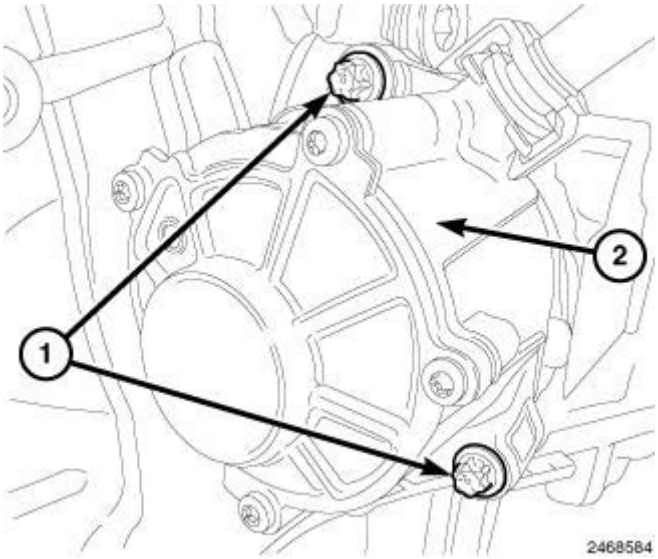

Fig. 237: Vacuum Pump & Bolts
Courtesy of CHRYSLER GROUP, LLC

4. Remove bolts (1) and remove the vacuum pump (2).

INSTALLATION

INSTALLATION

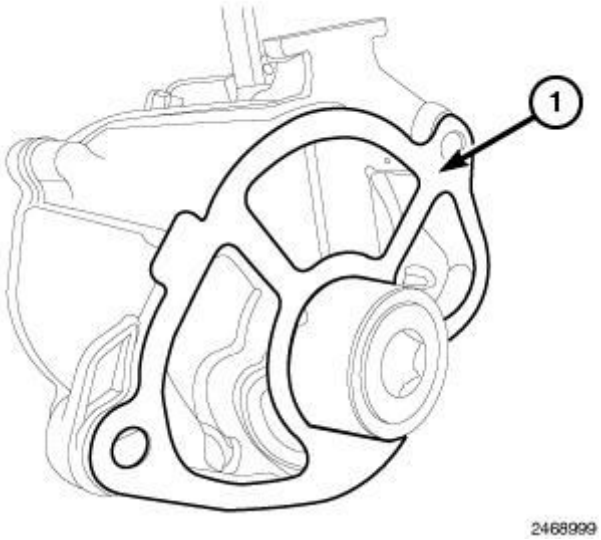

Fig. 238: Vacuum Pump Gasket

Courtesy of CHRYSLER GROUP, LLC

1. Position a new gasket onto the vacuum pump (1).

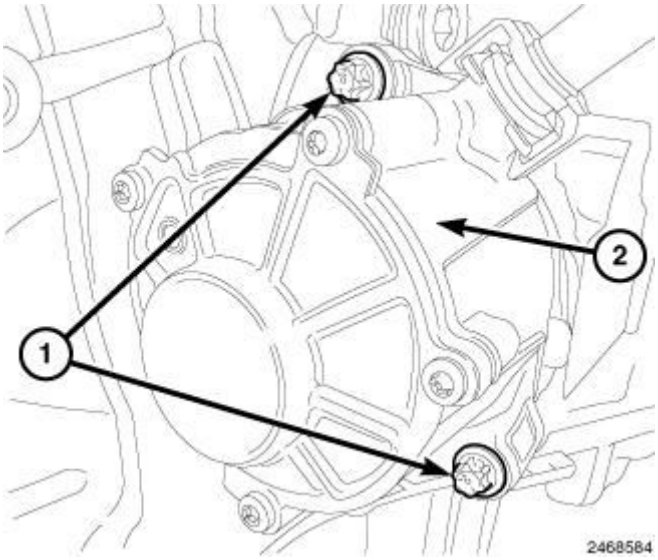

Fig. 239: Vacuum Pump & Bolts
Courtesy of CHRYSLER GROUP, LLC

2. Slide vacuum pump (2) onto oil pump hex drive and seat against the block. Tighten bolts (1) to 9 N.m (80 in. lbs.).
3. Install the thermostat housing. Refer to **THERMOSTAT, INSTALLATION** .

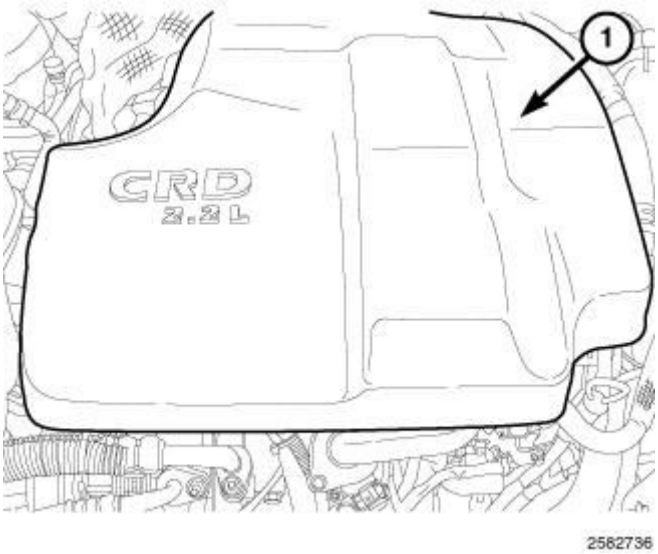

Fig. 240: Engine Cover
Courtesy of CHRYSLER GROUP, LLC

4. Install the engine cover (1).

5. Connect the negative battery cable.

ROD, PISTON AND CONNECTING

DESCRIPTION

DESCRIPTION

The pistons are made of a cast aluminum alloy. The pistons have pressed-in pins attached to forged connecting rods. The piston pin is offset 0.8 mm (0.0314 in.) towards the thrust side of the piston. The connecting rods are a cracked cap design and are not repairable. The piston with rings, connecting rod and piston pin are serviced as an assembly.

STANDARD PROCEDURE

STANDARD PROCEDURE - PISTON TO CYLINDER BORE FITTING

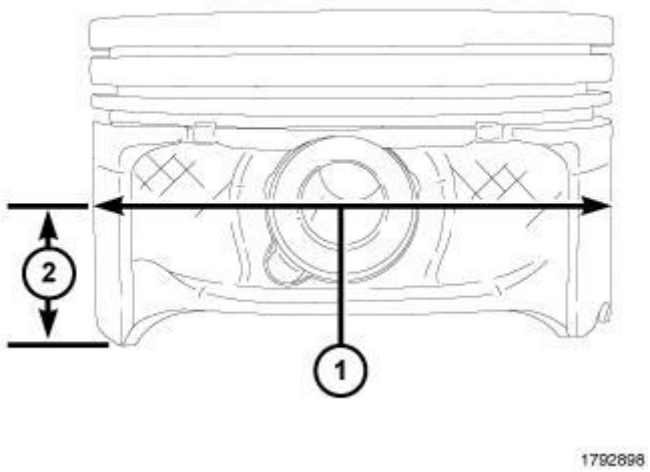

Fig. 241: Piston Pin Measurements
Courtesy of CHRYSLER GROUP, LLC

NOTE: Pistons and cylinder bores should be measured at normal room temperature, 21°C (70°F).

Piston and cylinder wall must be clean and dry. Piston diameter should be measured 90 degrees to piston pin (1).

1. Measurement should be taken approximately 16 mm (0.629 in.) from the bottom of the skirt (2) as shown in illustration.

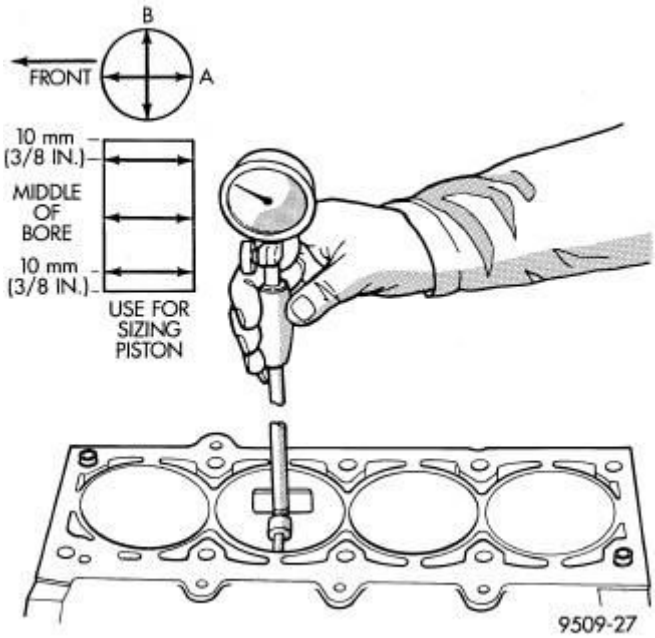

Fig. 242: Checking Cylinder Bore Size
Courtesy of CHRYSLER GROUP, LLC

NOTE: Correct piston to bore clearance must be established in order to assure quiet and economical operation.

2. Cylinder bores should be measured halfway down the cylinder bore and transverse (measurement location B) to the engine crankshaft center line shown in illustration. Refer to **SPECIFICATIONS** .

REMOVAL

REMOVAL

1. Remove the engine. Refer to **REMOVAL**.
2. Remove the cylinder head. Refer to **CYLINDER HEAD, REMOVAL**.
3. Remove the balance shaft module. Refer to **MODULE, BALANCE SHAFT, REMOVAL**.

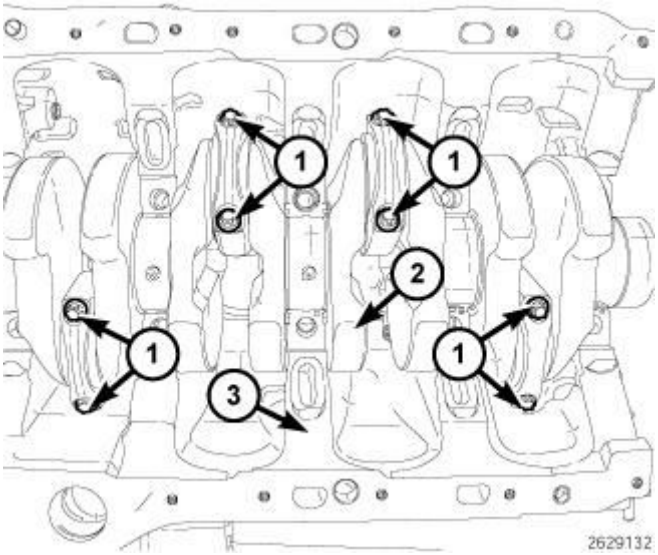

Fig. 243: Identifying Crankshaft, Engine Block, Connecting Rod Bearing Caps & Bolts
Courtesy of CHRYSLER GROUP, LLC

4. Remove bolts (1) and the connecting rod bearing caps.
5. Carefully push the piston through the bore and use care not to damage the oil cooling jet or allow the end of connecting rod to hit the cylinder wall.

INSTALLATION

INSTALLATION

1. Install bearing halves onto the connecting rod and lubricate bearing with clean engine oil.
2. Using a commercially available ring compressor, install the pistons into the cylinder bore. Use care and don't allow the connecting rod to hit the cylinder wall or damage the piston oil cooler jet.

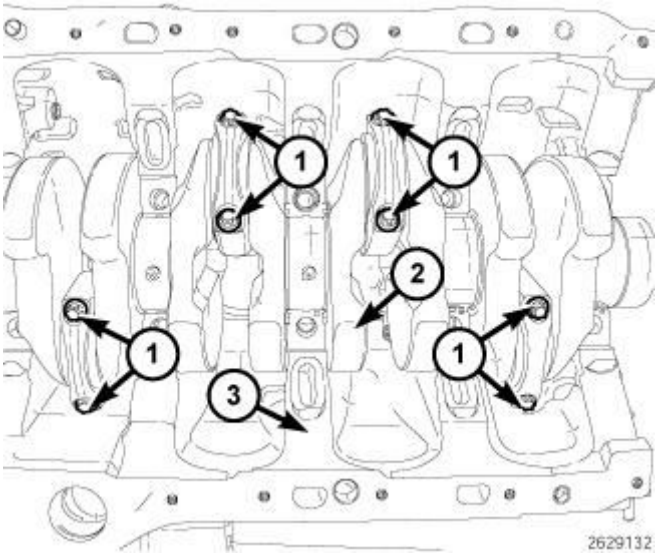

Fig. 244: Identifying Crankshaft, Engine Block, Connecting Rod Bearing Caps & Bolts
Courtesy of CHRYSLER GROUP, LLC

3. Install new rod bearings and check bearing clearance.
4. Install the connecting rod bearing caps.
5. For new connecting rods, tighten bolts to:
   - 5 N.m (44 in. lbs.).
   - 25 N.m (18 ft. lbs.).
   - plus an additional 180°.
6. For used connecting rods, tighten bolts to:
   - 5 N.m (44 in. lbs.).
   - 25 N.m (18 ft. lbs.).
   - plus an additional 90°.

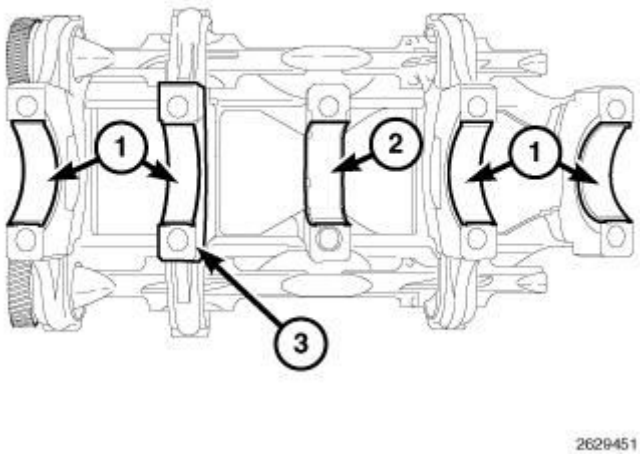

Fig. 245: Installing Bearing Halves Into Bearing Caps
Courtesy of CHRYSLER GROUP, LLC

7. If required, install bearing halves (1 and 2) into bearing caps and lubricate bearing with clean engine oil.
8. Install the balance shaft module and check bearing clearance. Refer to **MODULE, BALANCE SHAFT, INSTALLATION**.
9. Install the cylinder head. Refer to **CYLINDER HEAD, INSTALLATION**.
10. Install the engine. Refer to **INSTALLATION**.

SEAL, CRANKSHAFT OIL, FRONT

REMOVAL

FRONT SEAL

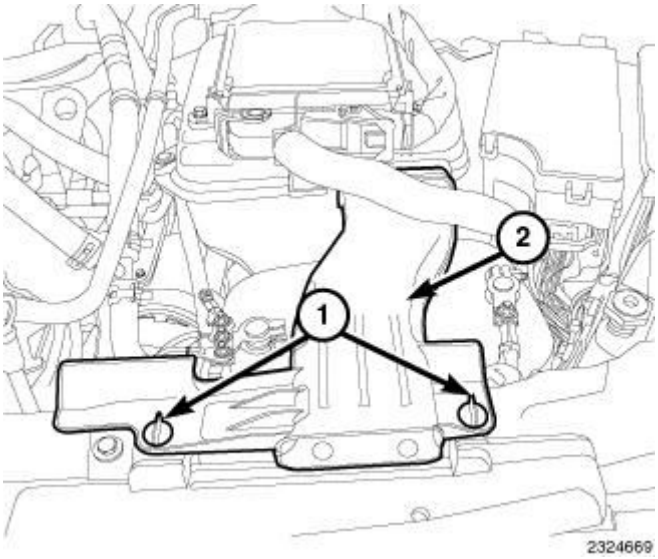

Fig. 246: Quarter Turn Lock Tabs & Air Inlet Duct
Courtesy of CHRYSLER GROUP, LLC

1. Release quarter turn lock tabs (1) and remove air inlet duct (2).
2. Disconnect the negative battery cable.
3. Remove the right front tire. Refer to **REMOVAL** .
4. Remove the belly pan.
5. Partially remove the serpentine belt. Refer to **BELT, SERPENTINE, REMOVAL** .

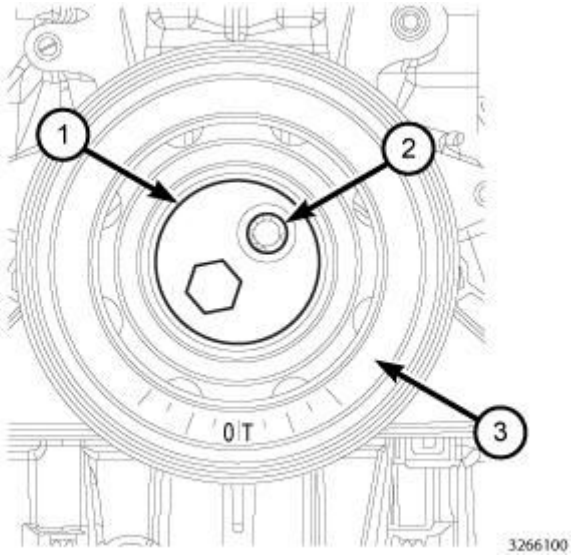

Fig. 247: Vibration Damper Holder Tool, Vibration Damper & Bolts
Courtesy of CHRYSLER GROUP, LLC

NOTE: DO NOT rotate the engine backward.

6. Using Vibration Damper Holder (special tool #10236, Holder, Vibration Damper) (1), remove bolts (2) and the vibration damper (3).
7. Place a suitable tool behind the lip of the oil seal to pry the oil seal outward. Be careful not to damage the crankshaft seal bore of cover.

FRONT SEAL CARRIER

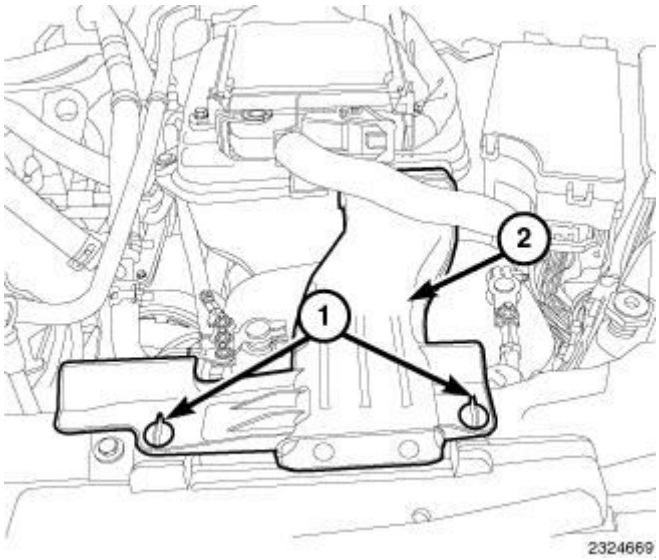

Fig. 248: Quarter Turn Lock Tabs & Air Inlet Duct
Courtesy of CHRYSLER GROUP, LLC

1. Release quarter turn lock tabs (1) and remove air inlet duct (2).
2. Disconnect the negative battery cable.
3. Remove the right front tire. Refer to **REMOVAL** .
4. Remove the belly pan.
5. Partially remove the serpentine belt. Refer to **BELT, SERPENTINE, REMOVAL** .

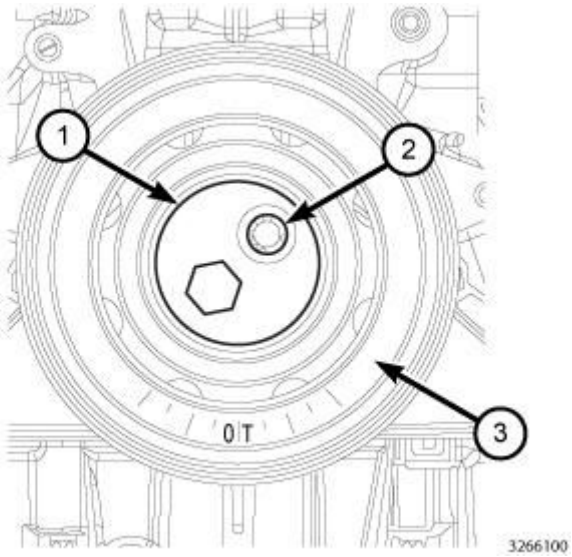

Fig. 249: Vibration Damper Holder Tool, Vibration Damper & Bolts
Courtesy of CHRYSLER GROUP, LLC

NOTE: DO NOT rotate the engine backward.

6. Using Vibration Damper Holder (special tool #10236, Holder, Vibration Damper) (1), remove bolts (2) and the vibration damper (3).

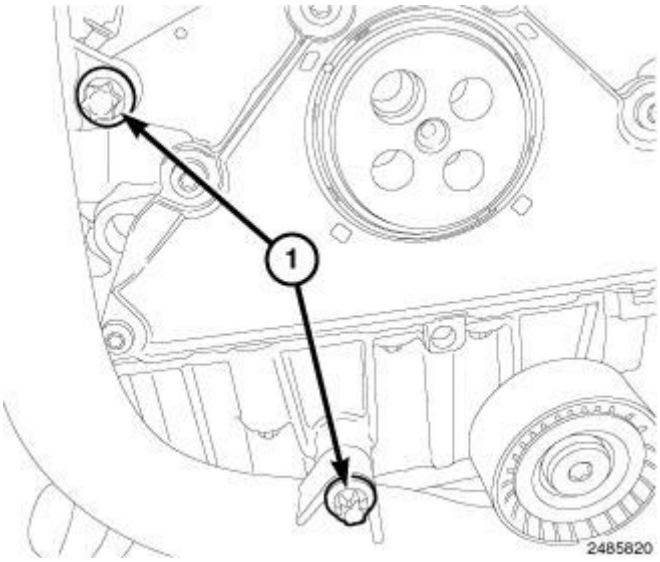

Fig. 250: Coolant Tube Bolts
Courtesy of CHRYSLER GROUP, LLC

7. Remove the bolts (1) from the coolant tube.

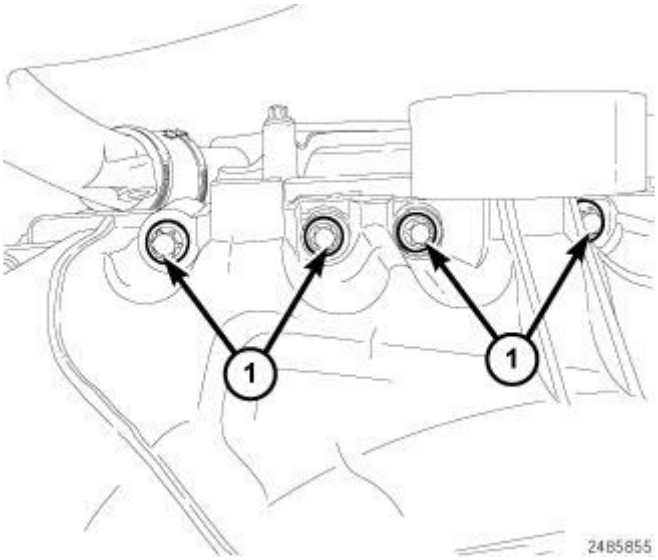

Fig. 251: Front Oil Pan Bolts
Courtesy of CHRYSLER GROUP, LLC

8. Remove the front oil pan bolts (1).

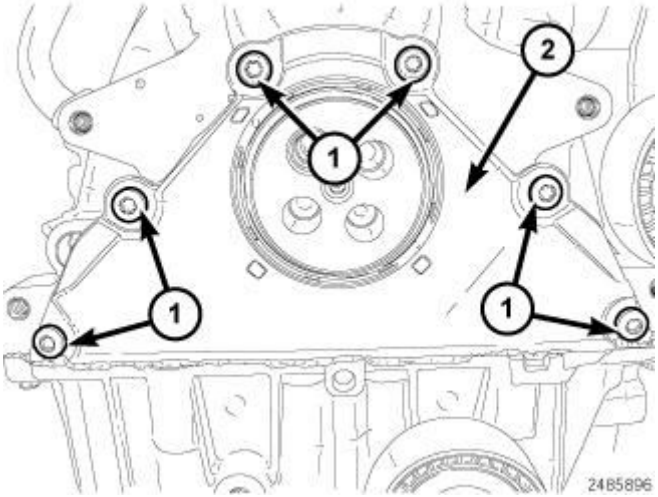

Fig. 252: Front Oil Seal Carrier & Bolts
Courtesy of CHRYSLER GROUP, LLC

9. Remove bolts (1) and the front oil seal carrier (2).

INSTALLATION

FRONT SEAL CARRIER

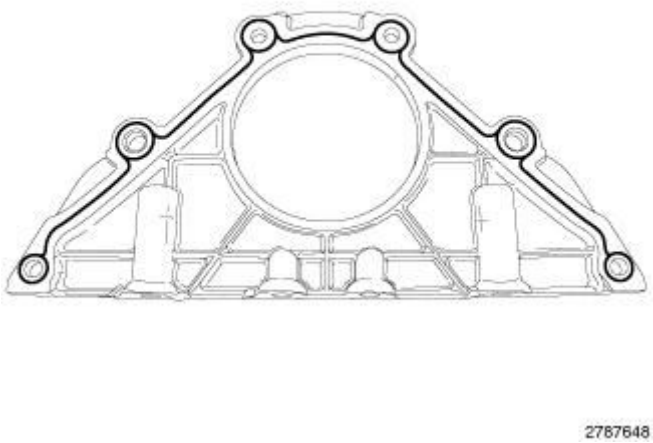

Fig. 253: Applying Bead Of Engine Sealant RTV To Front Seal Carrier
Courtesy of CHRYSLER GROUP, LLC

1. Clean the gasket mating surfaces.
2. Apply a 2 mm bead of engine sealant RTV to the front seal carrier as illustrated and to the front of oil pan.

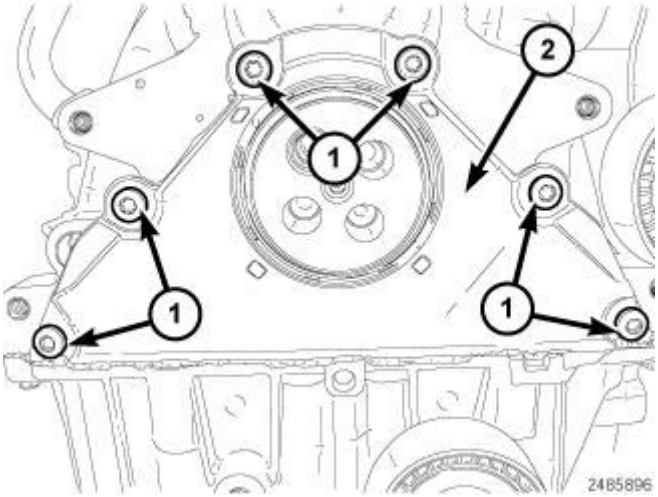

Fig. 254: Front Oil Seal Carrier & Bolts
Courtesy of CHRYSLER GROUP, LLC

3. Install the front oil seal carrier (2). Tighten bolts (1) to 9 N.m (80 in. lbs.).

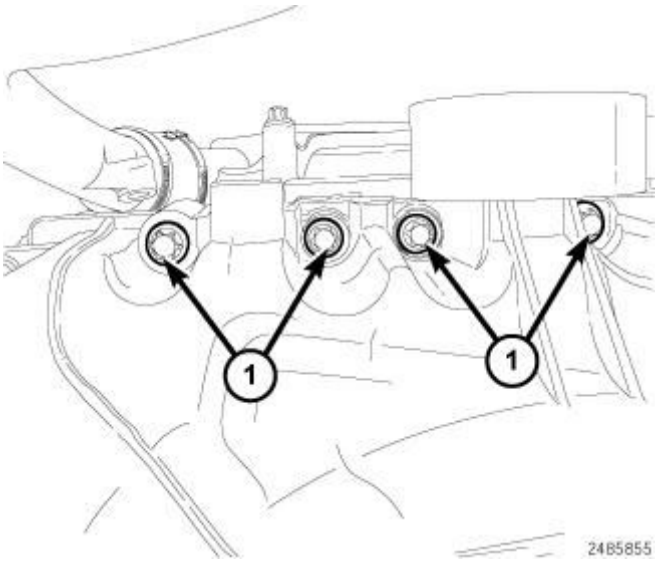

Fig. 255: Front Oil Pan Bolts
Courtesy of CHRYSLER GROUP, LLC

4. Install the front oil pan bolts. Tighten bolts to 9 N.m (80 in. lbs.).

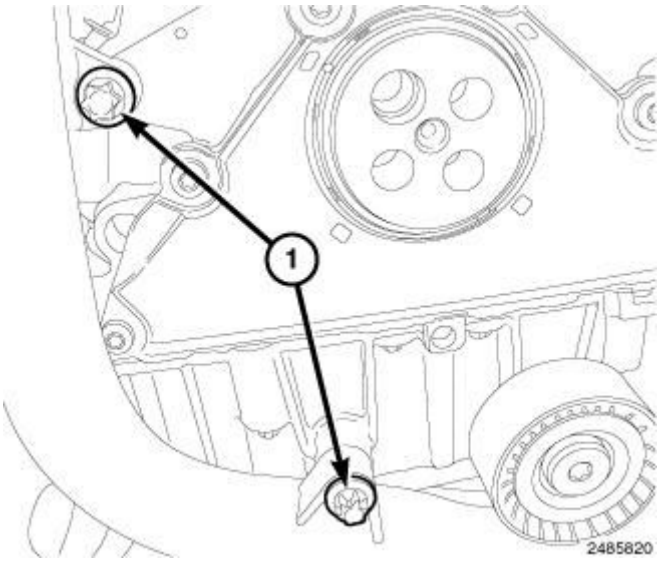

Fig. 256: Coolant Tube Bolts
Courtesy of CHRYSLER GROUP, LLC

5. Install the bolts to the coolant tube. Tighten bolts to 9 N.m (80 in. lbs.).

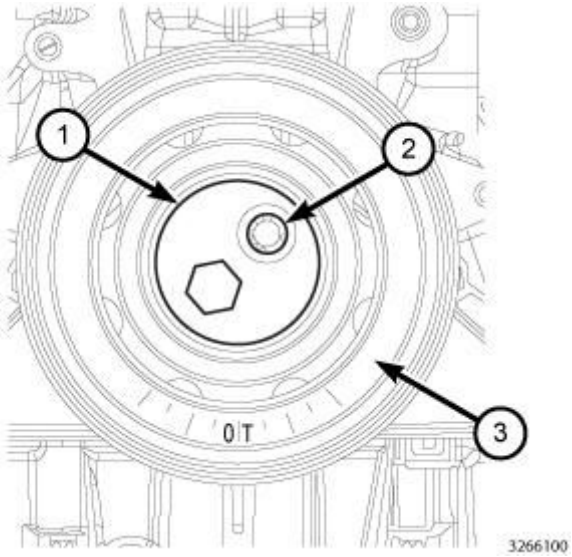

Fig. 257: Vibration Damper Holder Tool, Vibration Damper & Bolts
Courtesy of CHRYSLER GROUP, LLC

6. Install the vibration damper and bolts.
7. Using Vibration Damper Holder Tool (special tool #10236, Holder, Vibration Damper), tighten bolts to 80 N.m (59 ft. lbs.) plus additional 90 degrees.

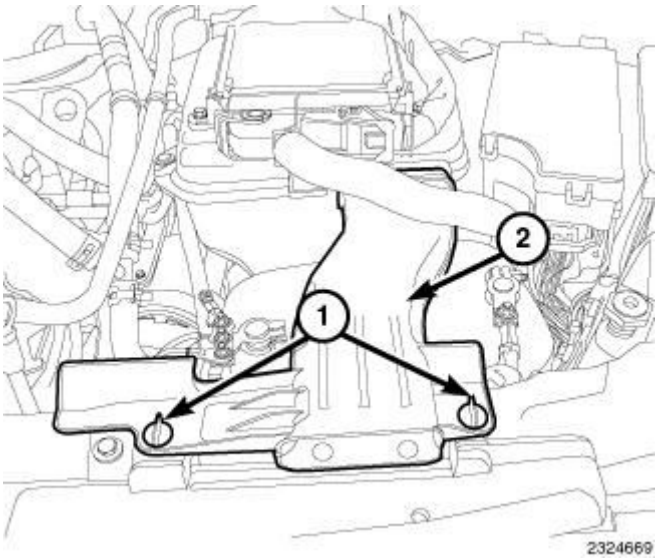

Fig. 258: Quarter Turn Lock Tabs & Air Inlet Duct
Courtesy of CHRYSLER GROUP, LLC

8. Install the serpentine belt. Refer to **BELT, SERPENTINE, INSTALLATION** .
9. Install the belly pan.
10. Install the right front tire. Refer to **INSTALLATION** .
11. Connect the negative battery cable.
12. Install air inlet duct (2) and lock the quarter turn lock tabs (1).

FRONT SEAL

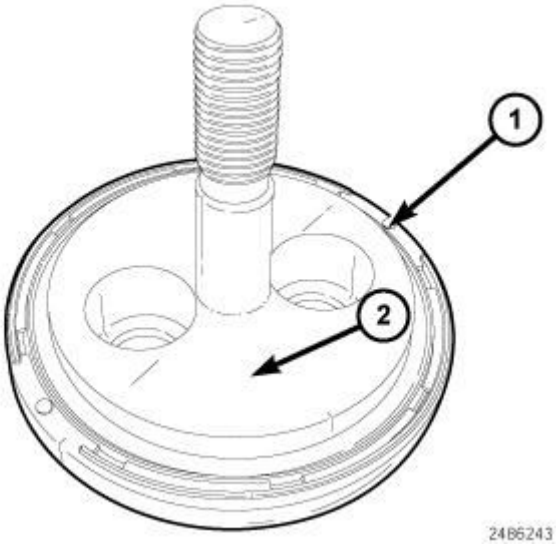

Fig. 259: Front Crankshaft Oil Seal & Front Crankshaft Seal Adapter
Courtesy of CHRYSLER GROUP, LLC

1. Position the front crankshaft oil seal (1) onto the Front Crankshaft Seal adapter (special tool #10235, Install, Front Crankshaft Seal Ring) (2).

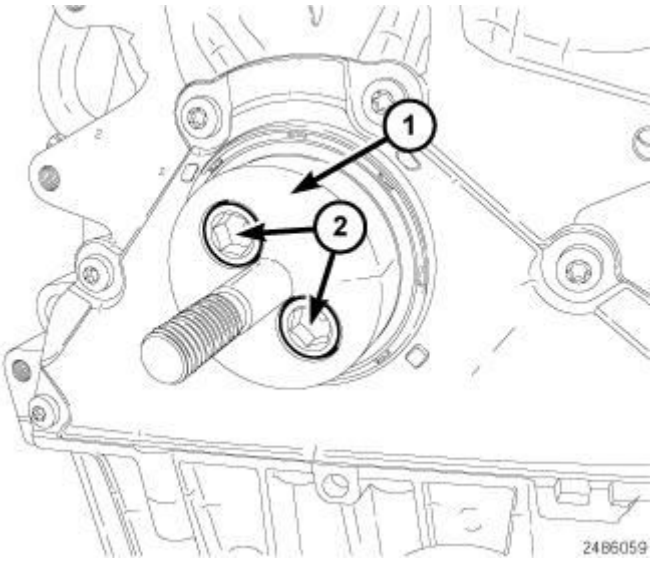

Fig. 260: Front Crankshaft Seal Adapter & Bolts
Courtesy of CHRYSLER GROUP, LLC

2. Position the Front Crankshaft Seal Installer Adapter (special tool #10235, Install, Front Crankshaft Seal Ring) (1) to crankshaft and install the bolts (2).

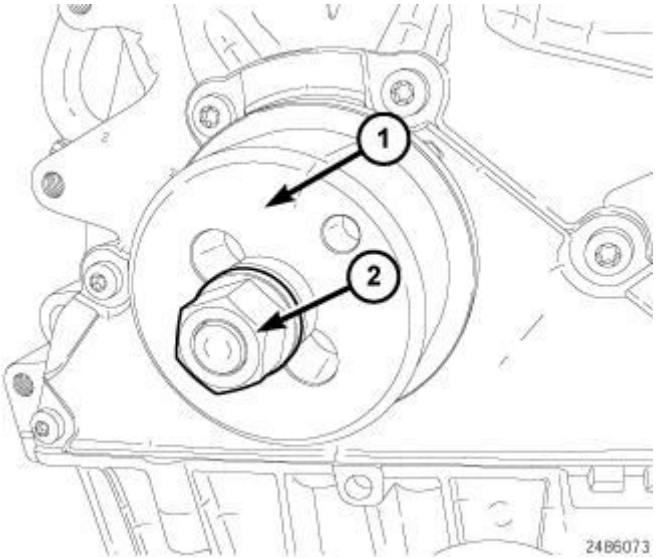

Fig. 261: Front Crankshaft Seal Adapter & Nut
Courtesy of CHRYSLER GROUP, LLC

3. Position the Front Crankshaft Seal Installer (special tool #10235, Install, Front Crankshaft Seal Ring) (1) onto the seal/adaptor and install the nut (2).

4. Turn the nut (2) to draw the seal in. When the nut (2) can no longer turn the seal is fully installed.
5. Remove the rear seal installer assembly (1).

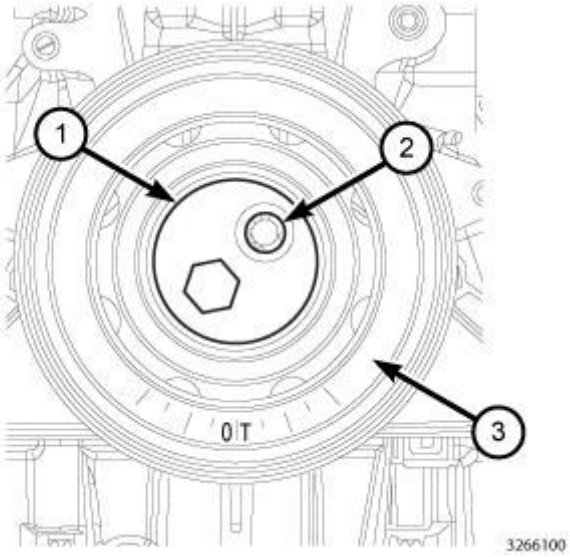

Fig. 262: Vibration Damper Holder Tool, Vibration Damper & Bolts
Courtesy of CHRYSLER GROUP, LLC

6. Install the vibration damper (3) and bolts (2).
7. Using Vibration Damper Holder tool (1) (special tool #10236, Holder, Vibration Damper), tighten bolts (2) to 80 N.m (59 ft. lbs.) plus additional 90 degrees.

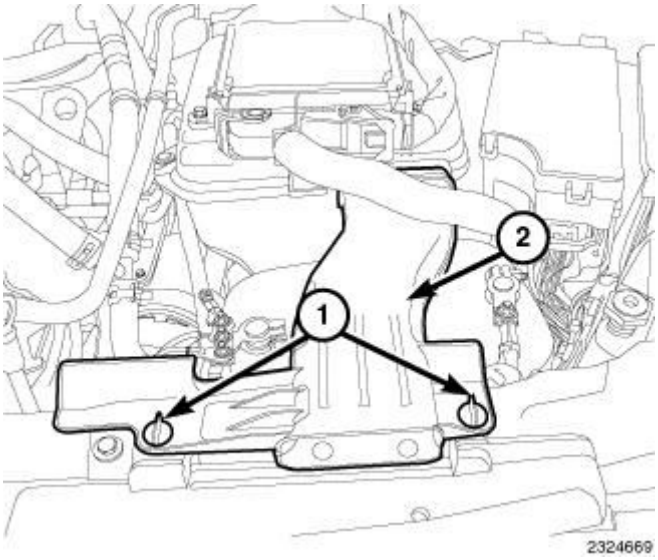

Fig. 263: Quarter Turn Lock Tabs & Air Inlet Duct
Courtesy of CHRYSLER GROUP, LLC

8. Install the serpentine belt. Refer to **BELT, SERPENTINE, INSTALLATION** .
9. Install the belly pan.
10. Install the right front tire. Refer to **INSTALLATION** .
11. Connect the negative battery cable.
12. Install air inlet duct (2) and lock the quarter turn lock tabs (1).

SEAL, CRANKSHAFT OIL, REAR

REMOVAL

REMOVAL

1. Disconnect the negative battery cable.
2. Remove the clutch assembly. Refer to **DISC, CLUTCH, REMOVAL** .

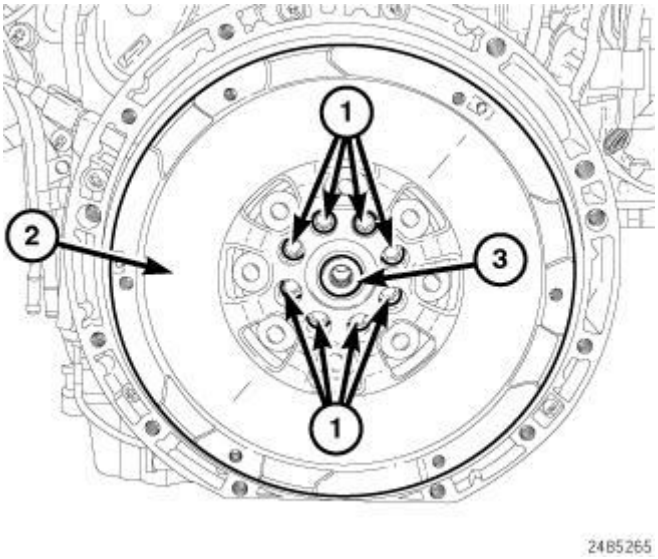

Fig. 264: Flywheel & Bolts
Courtesy of CHRYSLER GROUP, LLC

3. Remove bolts (1) and the flywheel (2).

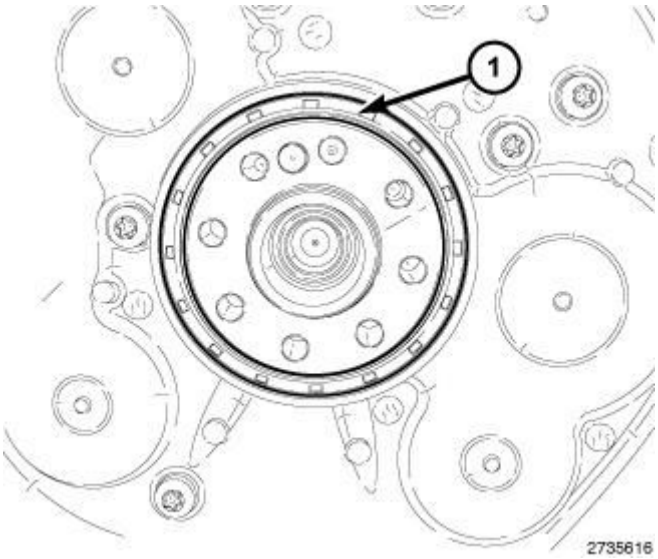

Fig. 265: Rear Crankshaft Oil Seal
Courtesy of CHRYSLER GROUP, LLC

4. Place a suitable tool behind the lips of the oil seal to pry the oil seal outward. Be careful not to damage the crankshaft seal bore of cover.

INSTALLATION

INSTALLATION

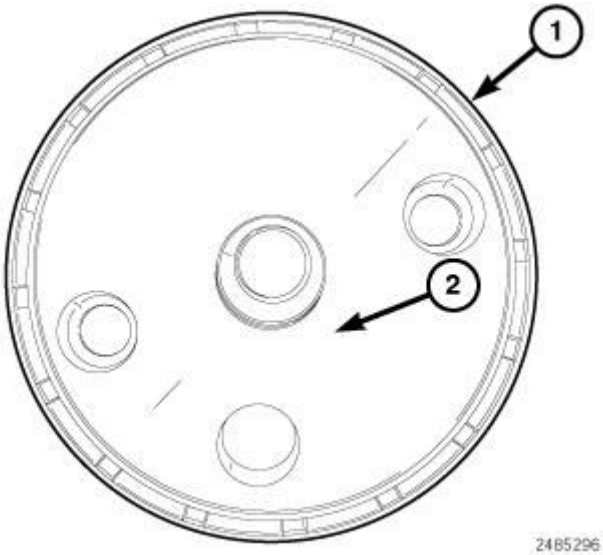

Fig. 266: Rear Crankshaft Oil Seal & Rear Main Seal Ring Installer Adaptor
Courtesy of CHRYSLER GROUP, LLC

1. Position the rear crankshaft oil seal (1) onto the Rear Main Seal Ring Installer Adaptor (special tool #10233, Install, Rear Crankshaft Seal) (2).

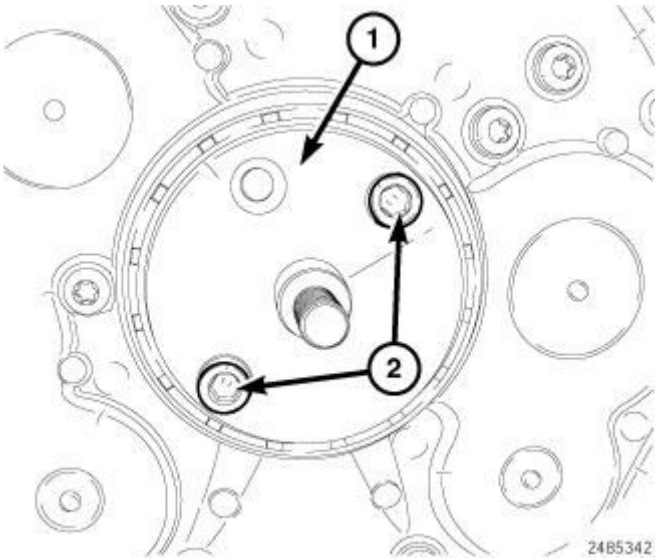

Fig. 267: Rear Main Seal Ring Adaptor & Bolts
Courtesy of CHRYSLER GROUP, LLC

2. Position the Rear Main Seal Ring Adaptor (special tool #10233, Install, Rear Crankshaft Seal) (1) to crankshaft and install the bolts (2).

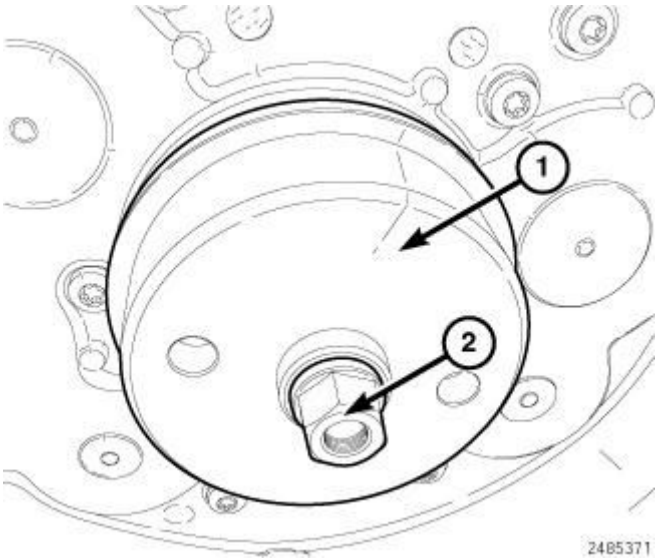

Fig. 268: Seal Installer & Nut
Courtesy of CHRYSLER GROUP, LLC

3. Position the Seal Installer (special tool #10233, Install, Rear Crankshaft Seal) (1) onto the seal/adaptor (special tool #10233, Install, Rear Crankshaft Seal) and install the nut (2).
4. Turn the nut (2) to draw the seal in. When the nut (2) can no longer turn the seal is fully installed.
5. Remove the rear seal installer assembly.

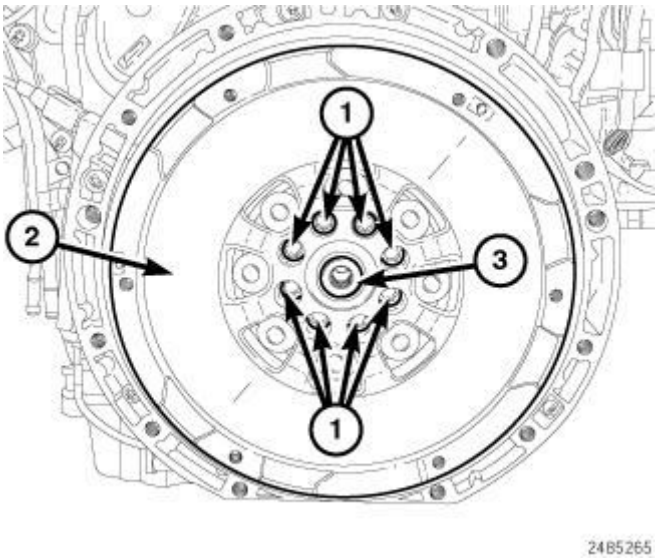

Fig. 269: Flywheel & Bolts
Courtesy of CHRYSLER GROUP, LLC

6. Install dual mass flywheel (2) and the bolts (1). Tighten bolts to 45 N.m (33 ft. lbs.) plus an additional 90 degrees.
7. Install the clutch assembly. Refer to **DISC, CLUTCH, INSTALLATION** .
8. Connect the negative battery cable.

ENGINE MOUNTING

DESCRIPTION

DESCRIPTION

The engine mounting system consists of a four-point system utilizing two load-carrying mounts and two torque struts. The load-carrying mounts are located on each frame rail. The right mount is a hydro-elastic mount and left mount is a conventional elastomeric isolator. The two torque controlling struts are attached at the front of the engine, straddling the right side load-carrying mount. The upper strut connects to the suspension strut tower and the lower to the suspension crossmember.

OPERATION

OPERATION

The four-point engine mounting system minimizes the transmission of structure-borne engine noise to the passenger compartment. The load-carrying right and left mounts dampen and isolate vertical motion and vibration. The two struts

absorbs torque reaction forces and torsional vibrations.

INSULATOR, ENGINE MOUNT, FRONT MOUNT

REMOVAL

REMOVAL

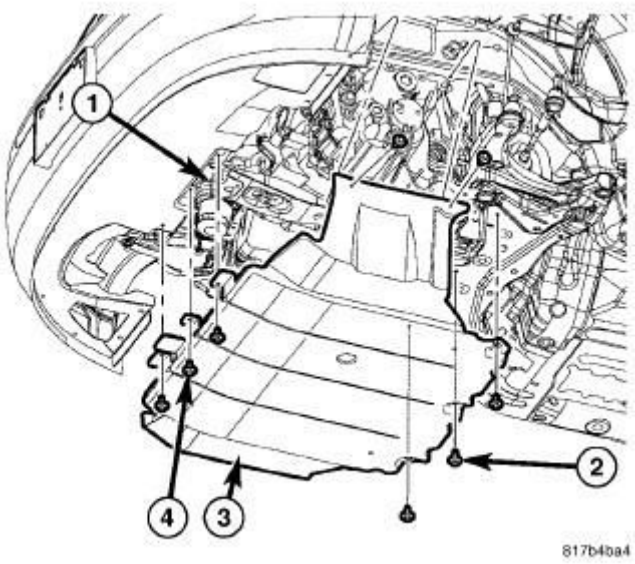

Fig. 270: Belly Pan
Courtesy of CHRYSLER GROUP, LLC

1. Raise and support the vehicle. Refer to **HOISTING, STANDARD PROCEDURE** .
2. Remove the four wheel well push pin retainers.
3. Remove the three front screws (4), the three rear screws (2) the center bolt and the belly pan.

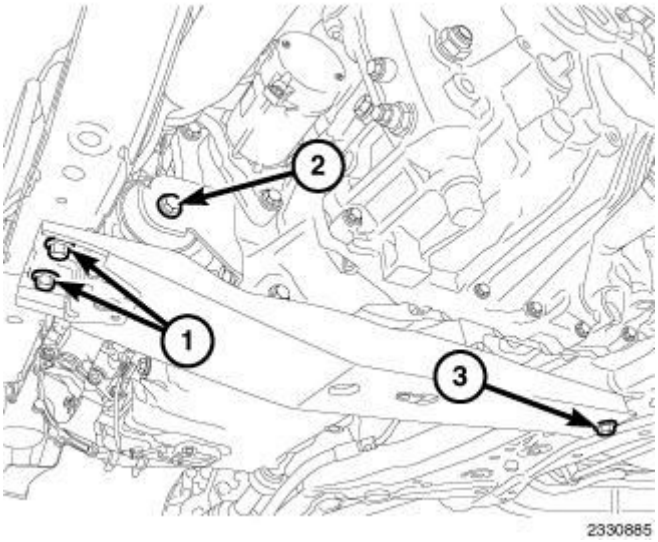

Fig. 271: Fore/Aft Crossmember
Courtesy of CHRYSLER GROUP, LLC

4. Remove front mount through bolt (2).
5. Remove fore/aft member retaining bolts (1 and 3) and remove fore/aft member.
6. Remove the bolts and the front engine mount from the fore/aft member.

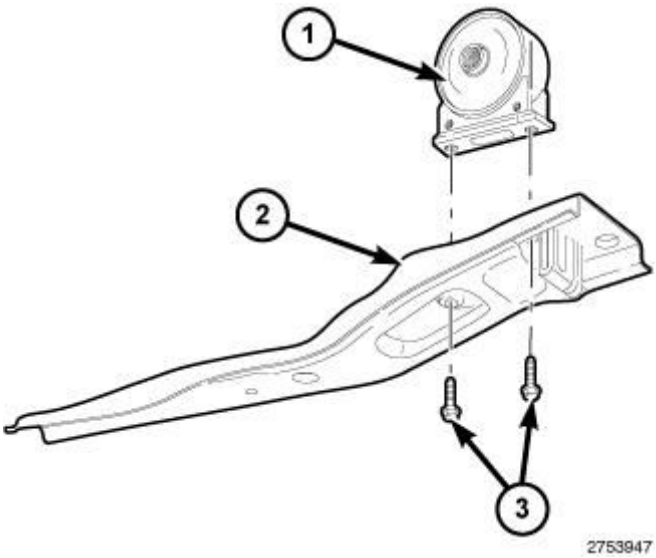

Fig. 272: Front Engine Mount
Courtesy of CHRYSLER GROUP, LLC

7. Remove bolts (2) and the front engine mount (1).

INSTALLATION

INSTALLATION

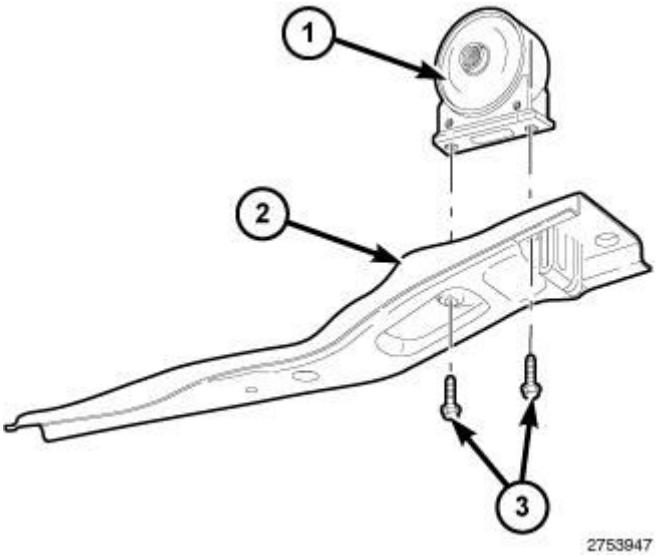

Fig. 273: Front Engine Mount
Courtesy of CHRYSLER GROUP, LLC

1. Install the front engine mount (1) to the fore/aft member (2). Tighten bolts (3) to 60 N.m (44 ft. lbs.).

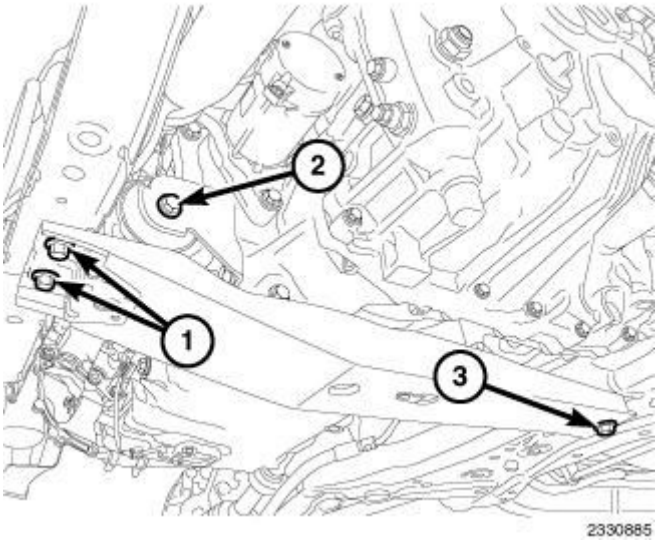

Fig. 274: Fore/Aft Crossmember
Courtesy of CHRYSLER GROUP, LLC

2. Install the front mount to the crossmember.
3. Install the fore/aft member and tighten bolts (1 and 3) finger tight.
4. Install the front mount through bolt (2) finger tight.
5. Tighten bolts in the following sequence:
   - Tighten the bolt (1) to 78 N.m (58 ft. lbs.).

- Tighten the bolt (3) to 129 N.m (95 ft. lbs.).
- Tighten the bolt (2) to 65 N.m (48 ft. lbs.).

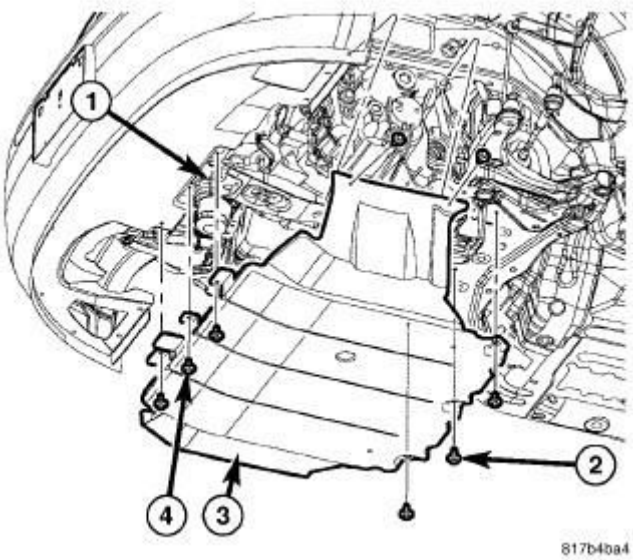

Fig. 275: Belly Pan
Courtesy of CHRYSLER GROUP, LLC

6. Position the belly pan and install the three front bolts (4), the three rear bolts (2) and the center belly pan bolt.
7. Install the four wheel well push pin retainers.
8. Lower the vehicle.

INSULATOR, ENGINE MOUNT, REAR MOUNT

REMOVAL

REMOVAL

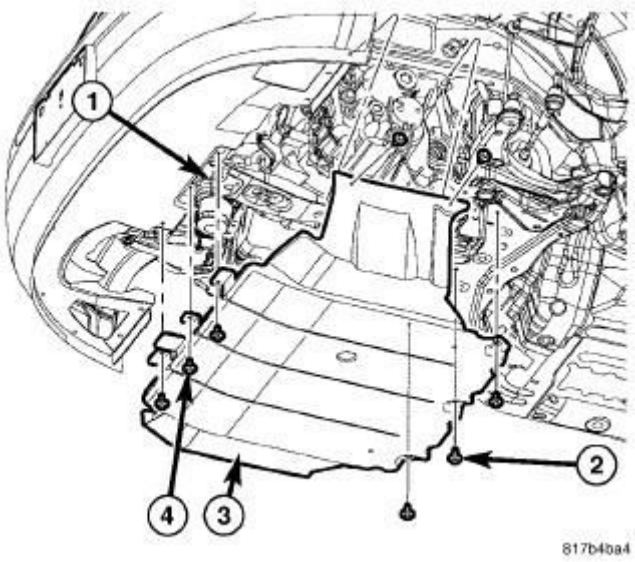

Fig. 276: Belly Pan
Courtesy of CHRYSLER GROUP, LLC

1. Raise and support the vehicle.
2. Remove the four wheel well push pin retainers.
3. Remove the three front screws (4), the three rear screws (2) the center bolt and the belly pan.
4. Position a transmission jack under transmission and slightly raise.

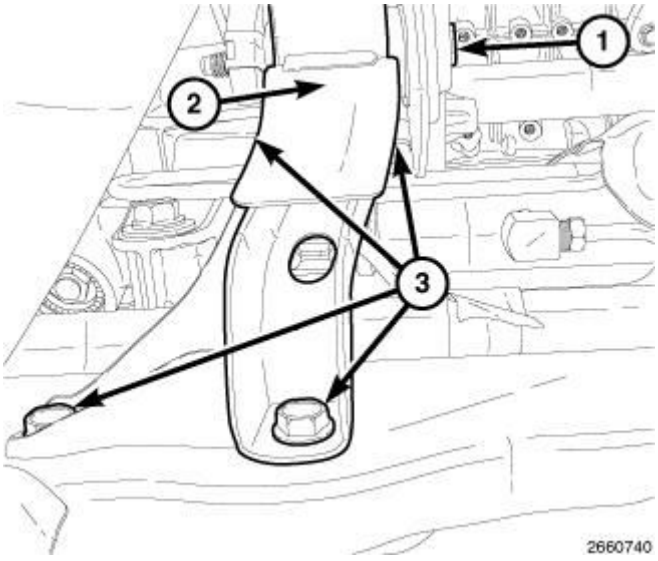

Fig. 277: Rear Roll Mount
Courtesy of CHRYSLER GROUP, LLC

5. Remove the rear roll mount (2) through bolt (1).
6. Remove the four bolts (3) attaching the rear roll mount (5) to the

crossmember and remove the mount.

INSTALLATION

INSTALLATION

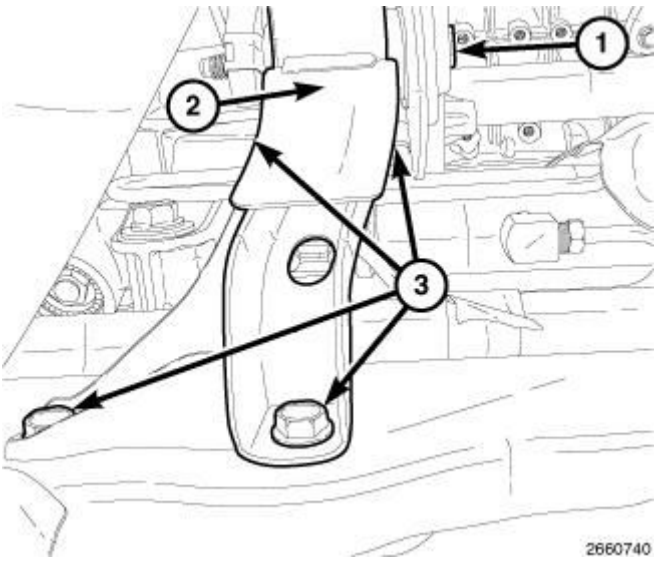

Fig. 278: Rear Roll Mount
Courtesy of CHRYSLER GROUP, LLC

1. Install the rear roll mount (2) to the crossmember. Tighten the bolts (3) to 153 N.m (112 ft. lbs.).
2. Install the rear roll mount through bolt (1) and tighten to 65 N.m (48 ft. lbs.).

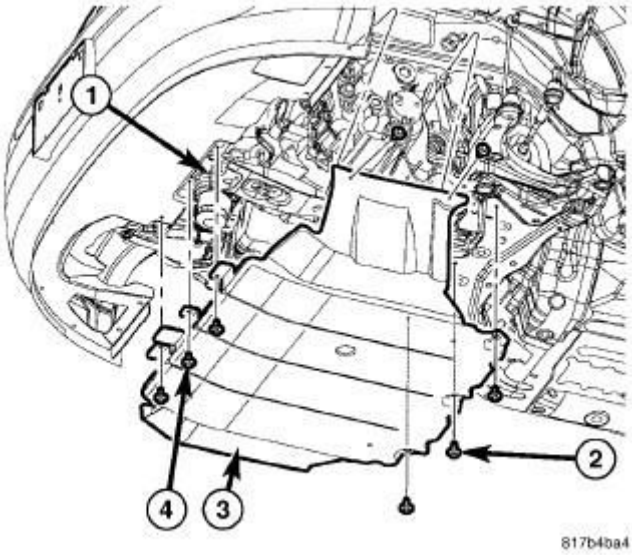

Fig. 279: Belly Pan
Courtesy of CHRYSLER GROUP, LLC

3. Lower the transmission and remove the transmission jack.
4. Position the belly pan and install the three front bolts (4), the three rear bolts (2) and the center belly pan bolt.
5. Install the four wheel well push pin retainers.
6. Lower the vehicle.

INSULATOR, ENGINE MOUNT, LEFT

REMOVAL

REMOVAL

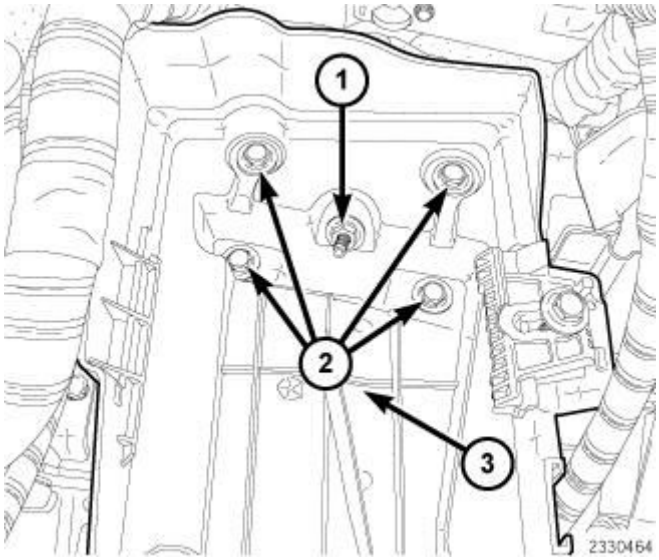

Fig. 280: Battery Tray, Nut & Retaining Bolts
Courtesy of CHRYSLER GROUP, LLC

1. Disconnect the positive and negative battery cables.
2. Remove air cleaner assembly. Refer to **BODY, AIR CLEANER, REMOVAL**.
3. Remove the battery.
4. Release the lock tabs, lift up and position aside the TIPM.
5. Remove the nut (1), retaining bolts (2) and the battery tray (3).

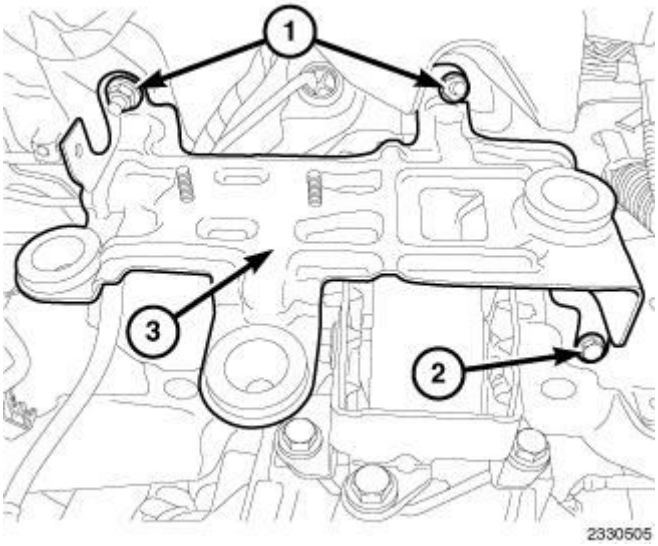

Fig. 281: Air Cleaner Mounting Bracket, Nuts & Bolt
Courtesy of CHRYSLER GROUP, LLC

6. Remove the two nuts (1), bolt (2), and the air cleaner mounting bracket (3).

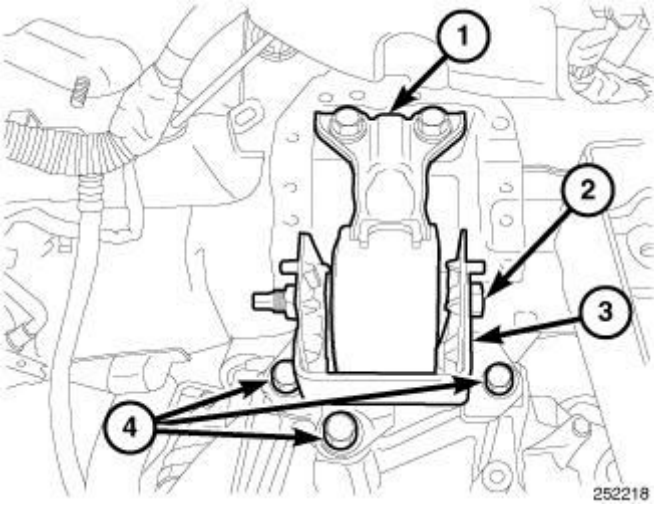

Fig. 282: Left Engine Mount & Fasteners
Courtesy of CHRYSLER GROUP, LLC

7. Support transaxle with floor jack.
8. Remove mount to transaxle through bolt (2).
9. Remove the three bolts (4) and the left mount bracket (3).

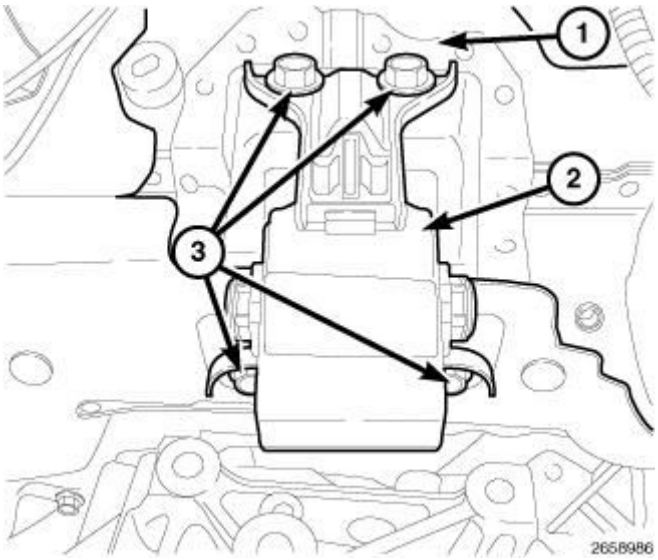

Fig. 283: Left Side Engine Mount & Bolts
Courtesy of CHRYSLER GROUP, LLC

10. Remove four bolts (3) and the left side engine mount (2).

INSTALLATION

INSTALLATION

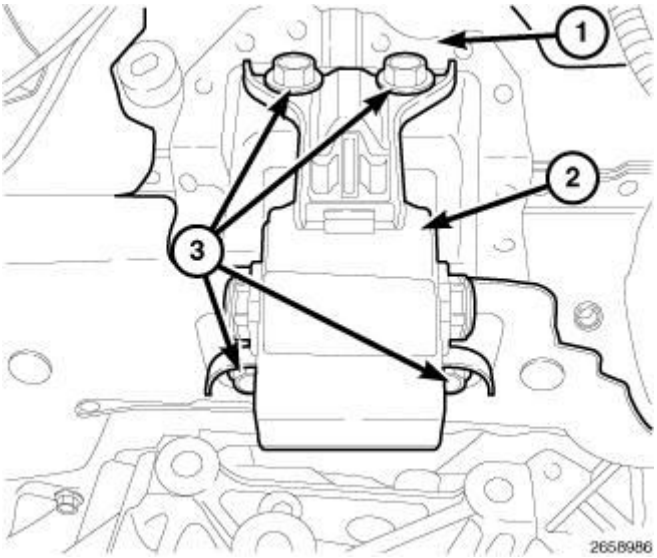

Fig. 284: Left Side Engine Mount & Bolts
Courtesy of CHRYSLER GROUP, LLC

1. Install the left transmission mount (2) to body frame rail. Tighten Bolts (3) 75 N.m (55 ft. lbs.).

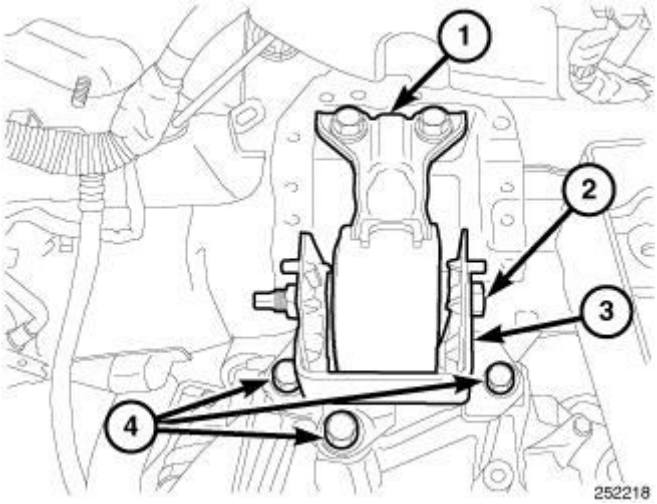

Fig. 285: Left Engine Mount & Fasteners
Courtesy of CHRYSLER GROUP, LLC

2. Raise the transaxle with a floor jack.
3. Install the left mount bracket (3). Tighten bolts (4) to 61 N.m (45 ft. lbs.).
4. Install the left transmission mount through bolt (2) and tighten to 100 N.m (74 ft. lbs.).
5. Remove the floor jack.

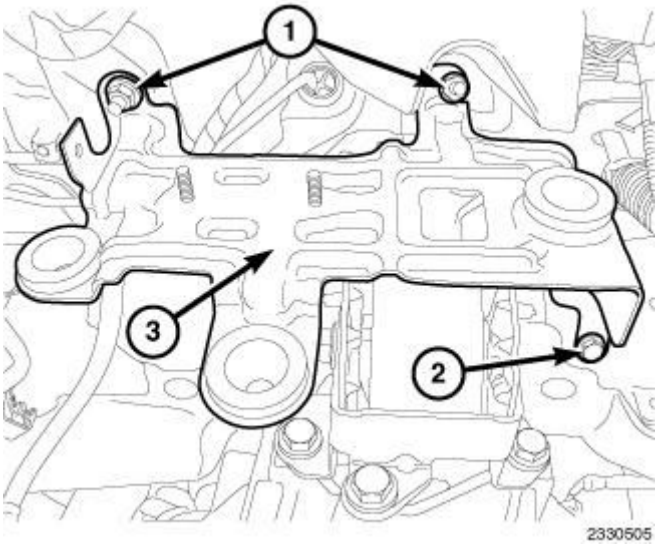

Fig. 286: Air Cleaner Mounting Bracket, Nuts & Bolt
Courtesy of CHRYSLER GROUP, LLC

6. Install the air cleaner mounting bracket (3):
   - Tighten nuts (1) to 11 N.m (97 in. lbs.).
   - Tighten bolt (2) to 11 N.m (97 in. lbs.).

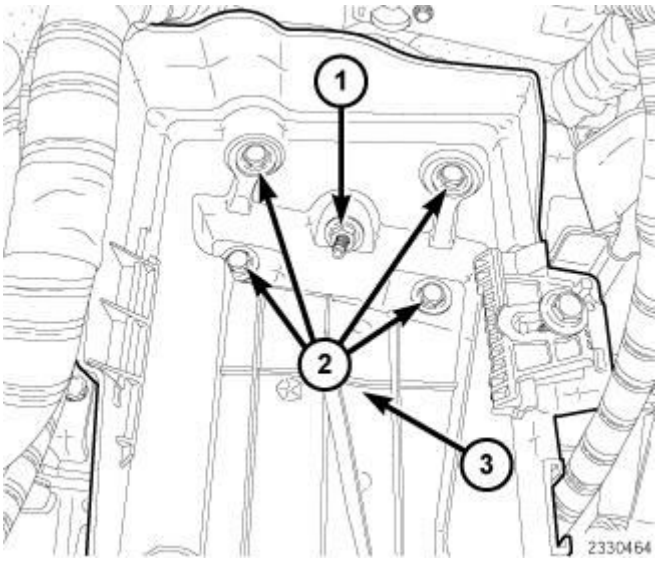

Fig. 287: Battery Tray, Nut & Retaining Bolts
Courtesy of CHRYSLER GROUP, LLC

7. Install the battery tray (3):
   - Tighten bolts (2) to 11 N.m (97 in. lbs.).
   - Tighten Nut (1) to 11 N.m (97 in. lbs.).
8. Position TIPM the into bracket and push down to lock in place.
9. Install the battery. Tighten bolt to 7 N.m (62 in. lbs.).
10. Install air cleaner assembly. Refer to **BODY, AIR CLEANER, INSTALLATION**.
11. Connect negative and positive battery cables.

INSULATOR, ENGINE MOUNT, RIGHT

REMOVAL

ENGINE MOUNT CARRIER BRACKET

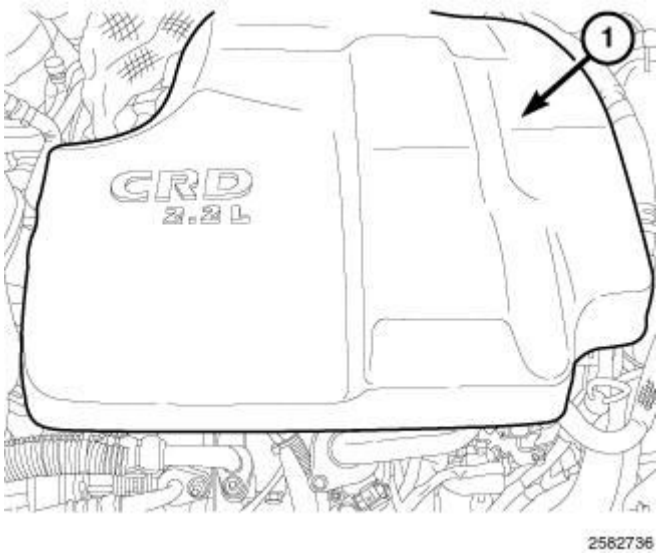

Fig. 288: Engine Cover
Courtesy of CHRYSLER GROUP, LLC

1. Disconnect the negative battery cable.
2. Remove the engine cover (1).
3. Remove the belly pan.
4. Drain the cooling system. Refer to **STANDARD PROCEDURE** .

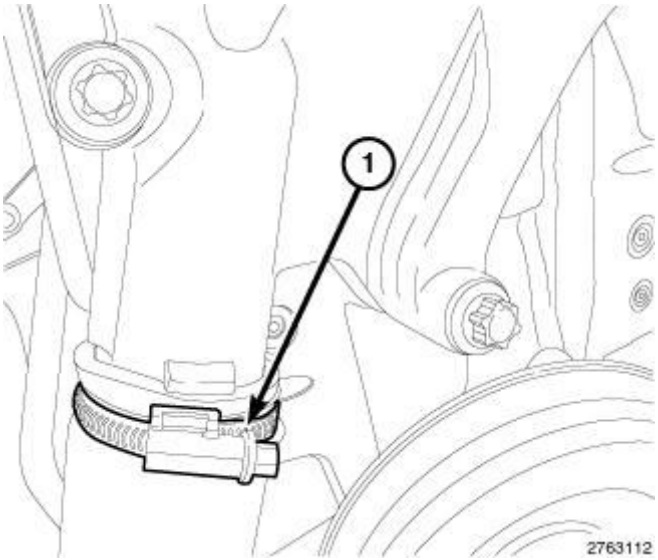

Fig. 289: Hose Clamp
Courtesy of CHRYSLER GROUP, LLC

5. Loosen hose clamp (1) and position it aside.

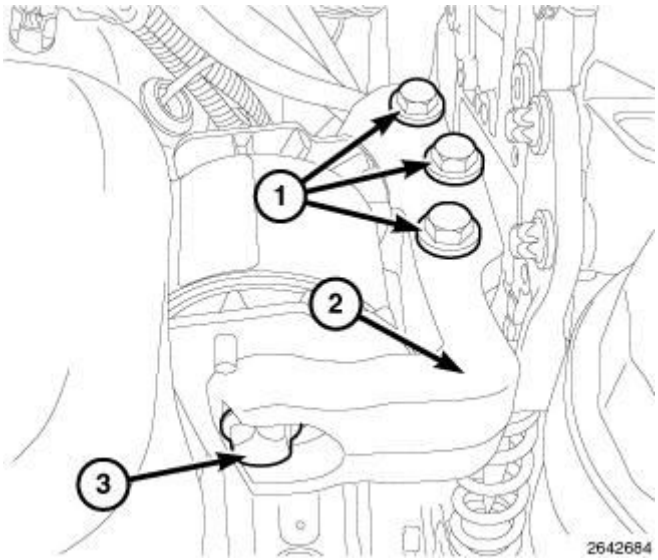

Fig. 290: Engine Mount, Bracket & Through Bolt
Courtesy of CHRYSLER GROUP, LLC

NOTE: Use care in positioning the floor jack to oil pan.

6. Position a floor jack under the oil pan.
7. Remove the engine mount through bolt (3).
8. Remove bolts (1) and the engine mount bracket (2).

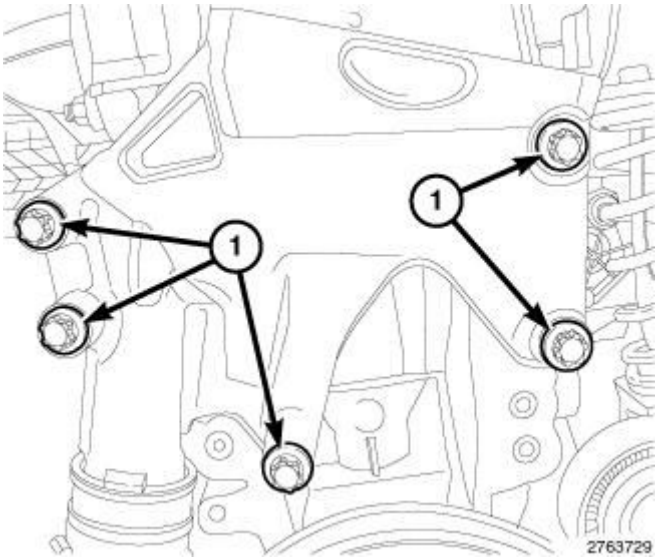

Fig. 291: Engine Mount Carrier Bracket & Bolts
Courtesy of CHRYSLER GROUP, LLC

9. Remove bolts (1) and the engine mount carrier bracket.
10. Remove and discard gasket.

ENGINE MOUNT

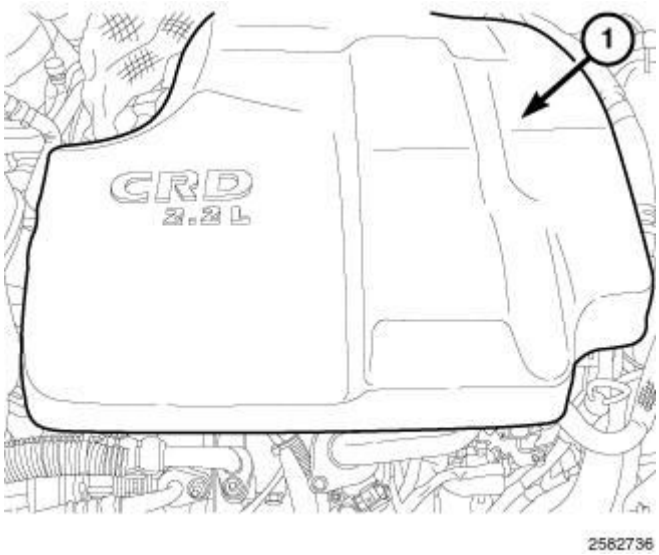

Fig. 292: Engine Cover
Courtesy of CHRYSLER GROUP, LLC

1. Disconnect the negative battery cable.
2. Remove the engine cover (1).
3. Remove the windshield washer reservoir. Refer to **RESERVOIR, WINDSHIELD WASHER, REMOVAL** .

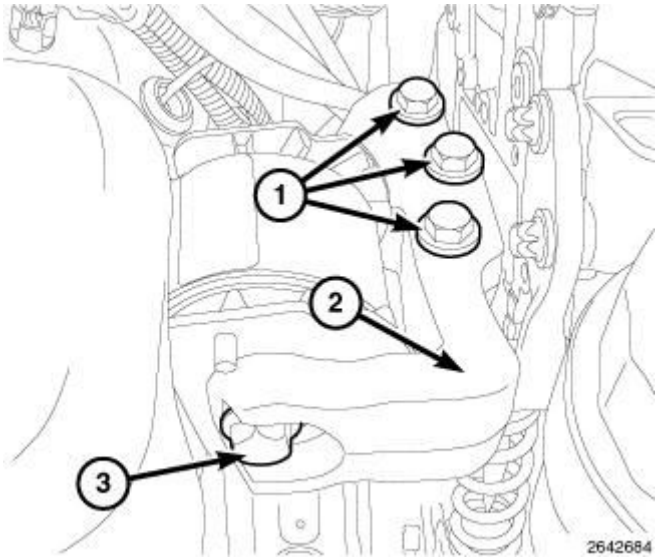

Fig. 293: Engine Mount, Bracket & Through Bolt
Courtesy of CHRYSLER GROUP, LLC

NOTE: Use care in positioning the floor jack to oil pan.

4. Position a floor jack under the oil pan.
5. Remove the engine mount through bolt (3).
6. Remove bolts (1) and the engine mount bracket (2).

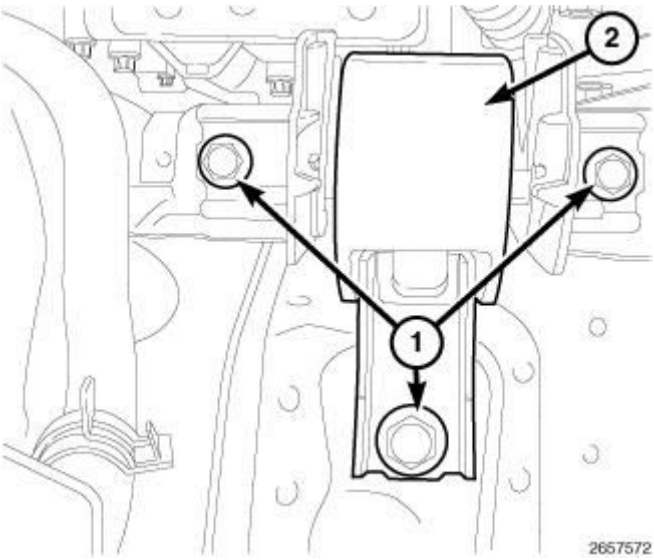

Fig. 294: Engine Mount At Body Frame Rail & Bolts
Courtesy of CHRYSLER GROUP, LLC

7. Using a permanent ink marker or equivalent, mark the position of engine mount (2) to the body frame rail.
8. Remove bolts (1) and engine mount (2) from body frame rail.

INSTALLATION

ENGINE MOUNT CARRIER BRACKET

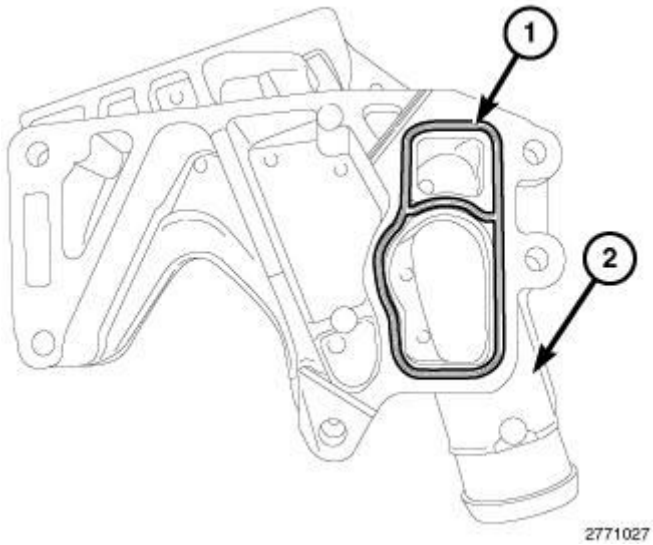

Fig. 295: Engine Mount Carrier Bracket & Gasket

Courtesy of CHRYSLER GROUP, LLC

1. Clean the gasket mating surfaces.
2. Install a new gasket (1) onto the engine mount carrier bracket (2).

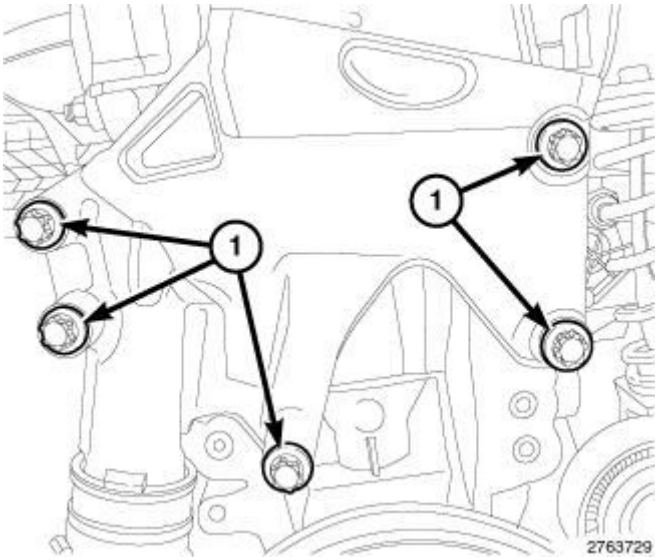

Fig. 296: Engine Mount Carrier Bracket & Bolts
Courtesy of CHRYSLER GROUP, LLC

3. Install the engine mount carrier bracket. Tighten bolts (1) to 25 N.m (18 ft. lbs.).

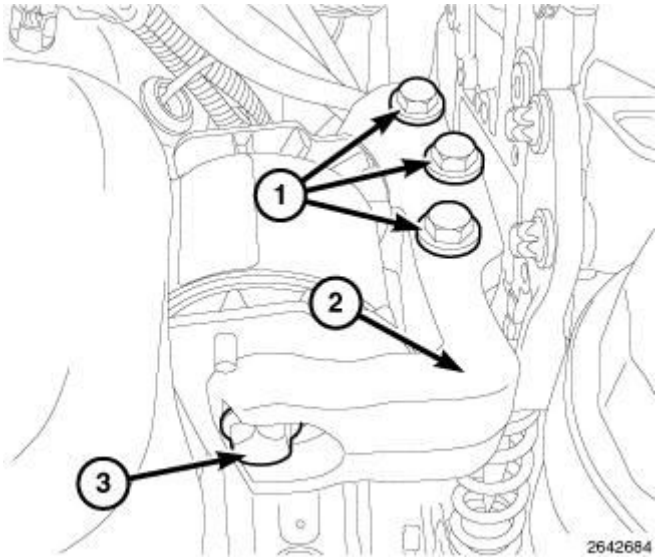

Fig. 297: Engine Mount, Bracket & Through Bolt
Courtesy of CHRYSLER GROUP, LLC

4. Install the engine mount bracket (2) and tighten bolts (1) finger tight.

5. Install engine mount through bolt (3) and tighten to 88 N.m (65 ft. lbs.):
   - Tighten engine mount bracket bolts (1) to 68 N.m (50 ft. lbs.).
6. Remove the floor jack.

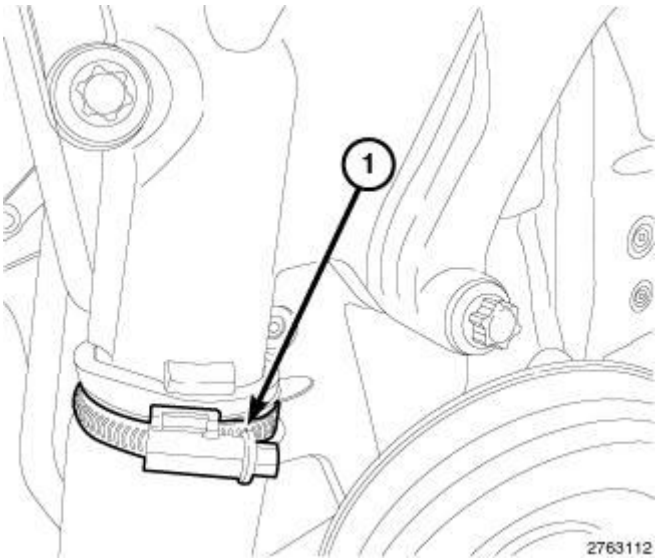

Fig. 298: Hose Clamp
Courtesy of CHRYSLER GROUP, LLC

7. Position hose clamp (1) and securely tighten.
8. Install the belly pan.
9. Fill the cooling system. Refer to **STANDARD PROCEDURE** .

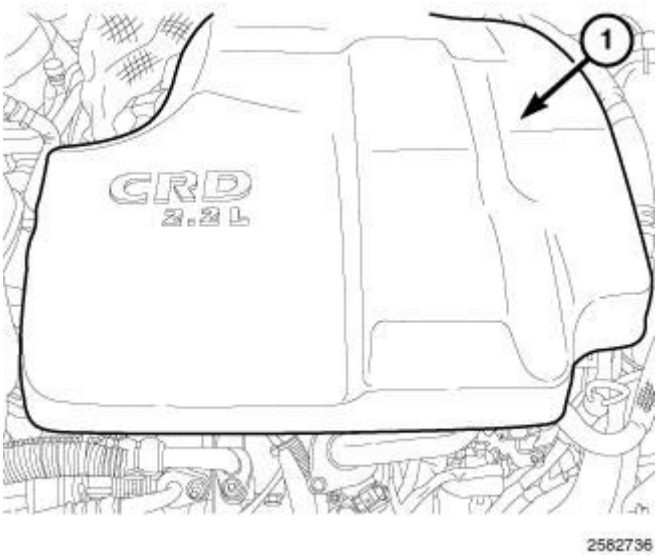

Fig. 299: Engine Cover
Courtesy of CHRYSLER GROUP, LLC

10. Install the engine cover (1).

11. Connect the negative battery cable.
12. Start the engine and check for leaks.

ENGINE MOUNT

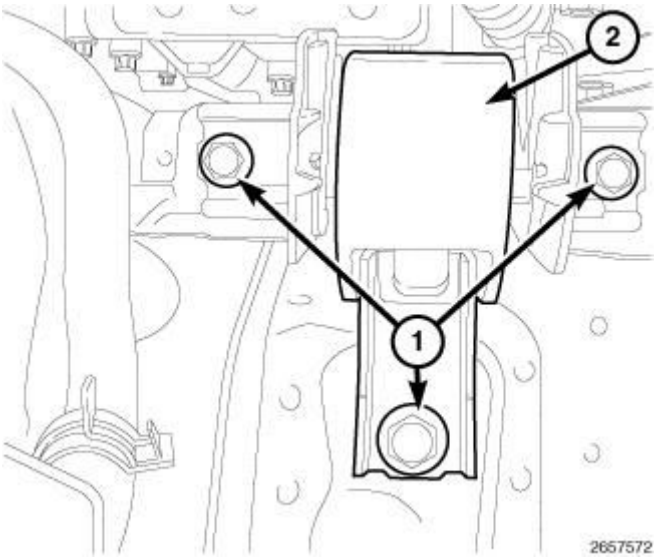

Fig. 300: Engine Mount At Body Frame Rail & Bolts
Courtesy of CHRYSLER GROUP, LLC

1. Install the engine mount (2) onto the body frame rail. Tighten bolts (1) 75 N.m (55 ft. lbs.).

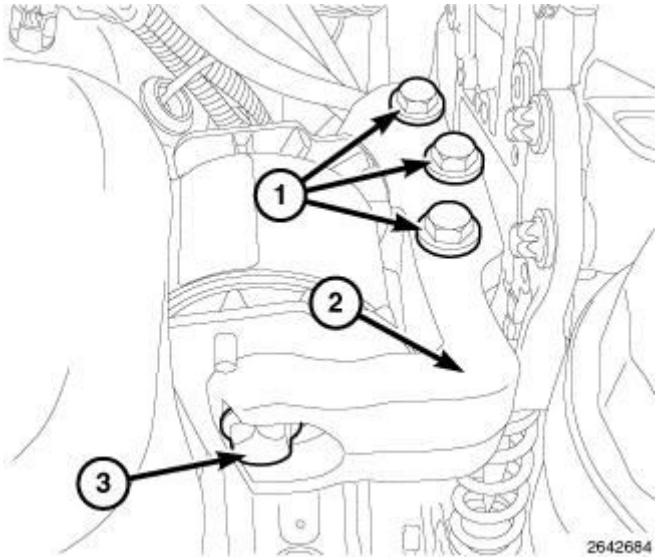

Fig. 301: Engine Mount, Bracket & Through Bolt
Courtesy of CHRYSLER GROUP, LLC

2. Install the engine mount bracket (2) and tighten bolts (1) finger tight.
3. Install engine mount through bolt (3) and tighten to 88 N.m (65 ft. lbs.).

- Tighten engine mount bracket bolts (1) to 68 N.m (50 ft. lbs.).

4. Remove the floor jack.
5. Install the windshield reservoir. Refer to **RESERVOIR, WINDSHIELD WASHER, INSTALLATION** .

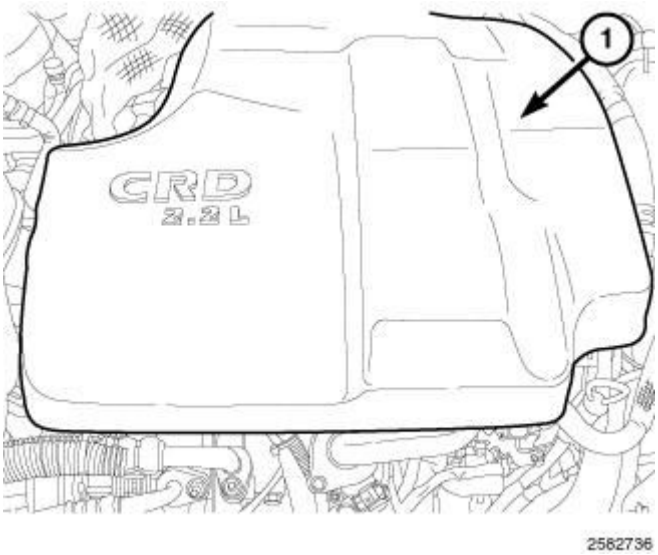

Fig. 302: Engine Cover
Courtesy of CHRYSLER GROUP, LLC

6. Install the engine cover (1).
7. Connect the negative battery cable.

LUBRICATION

CONTROL VALVE, OIL INTAKE

REMOVAL

REMOVAL

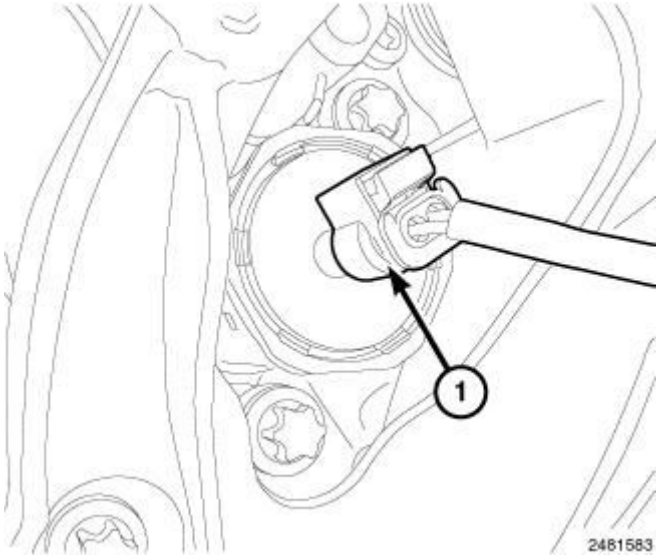

Fig. 303: Piston Cooling Oil Control Valve Harness Connector
Courtesy of CHRYSLER GROUP, LLC

1. Disconnect the negative battery cable.
2. Disconnect the piston cooling oil control valve harness connector (1).

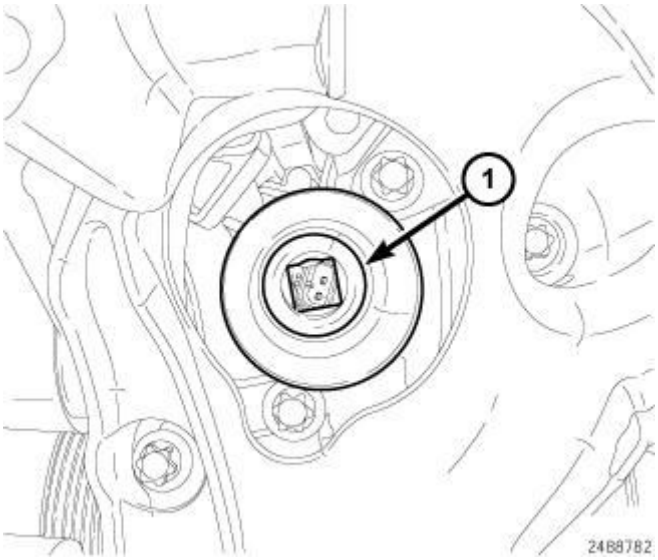

Fig. 304: Removing/Installing Piston Cooling Oil Control Valve Using Shift Valve Socket
Courtesy of CHRYSLER GROUP, LLC

3. Using Shift Valve Socket (special tool #10237, Socket, Shift Valve) (1), remove the piston cooling oil control valve.

INSTALLATION

INSTALLATION

Fig. 305: O-Ring Seal
Courtesy of CHRYSLER GROUP, LLC

1. Replace the O-ring seal.

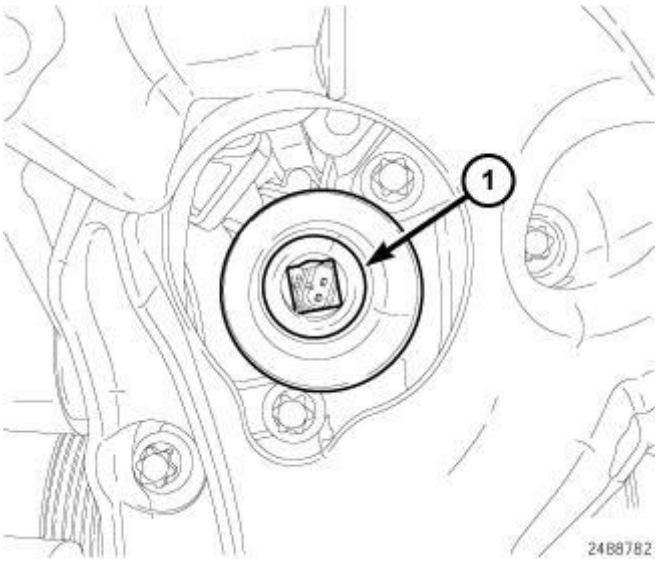

Fig. 306: Removing/Installing Piston Cooling Oil Control Valve Using Shift Valve Socket
Courtesy of CHRYSLER GROUP, LLC

2. Using the Shift Valve Socket (special tool #10237, Socket, Shift Valve) (1), install the piston cooling oil control valve. Tighten to 20 N.m (177 in. lbs.).

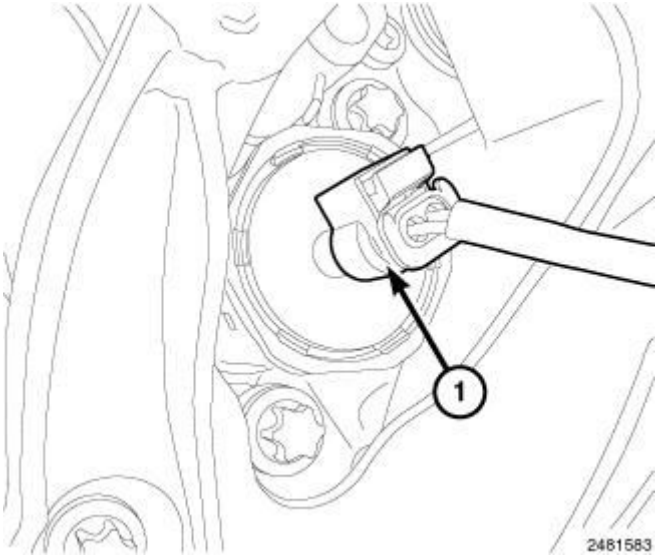

Fig. 307: Piston Cooling Oil Control Valve Harness Connector
Courtesy of CHRYSLER GROUP, LLC

3. Connect the piston cooling oil control valve harness connector.
4. Connect the negative battery cable.
5. Start the engine and check for leaks.

COOLER, OIL

REMOVAL

REMOVAL

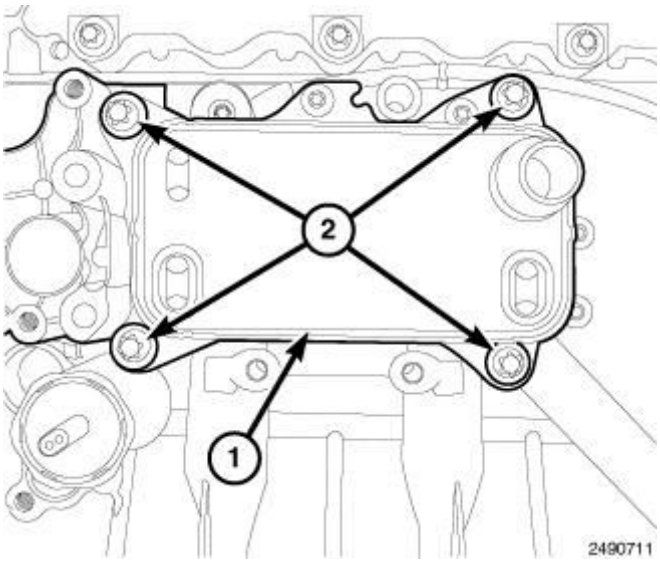

Fig. 308: Oil Cooler Adapter & Bolts
Courtesy of CHRYSLER GROUP, LLC

1. Disconnect the negative battery cable.

2. Drain the engine oil.
3. Remove the oil filter housing. Refer to **HOUSING, OIL FILTER, REMOVAL**.
4. Remove bolts (2) and the oil cooler adapter (1).

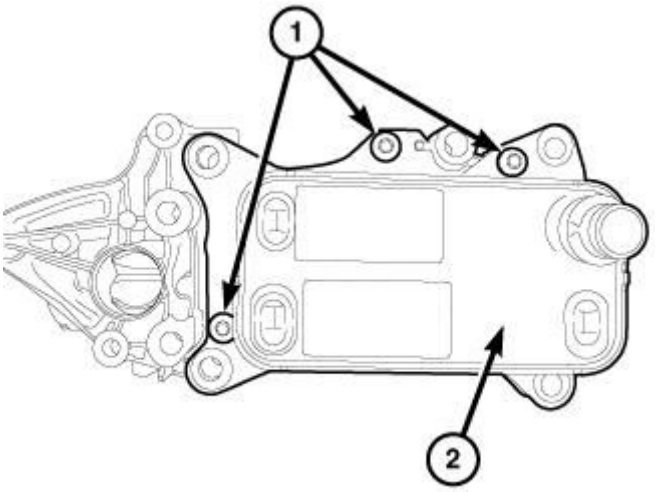

2490732

Fig. 309: Oil Cooler & Bolts
Courtesy of CHRYSLER GROUP, LLC

5. Remove bolts (1) and the oil cooler (2).

INSTALLATION

INSTALLATION

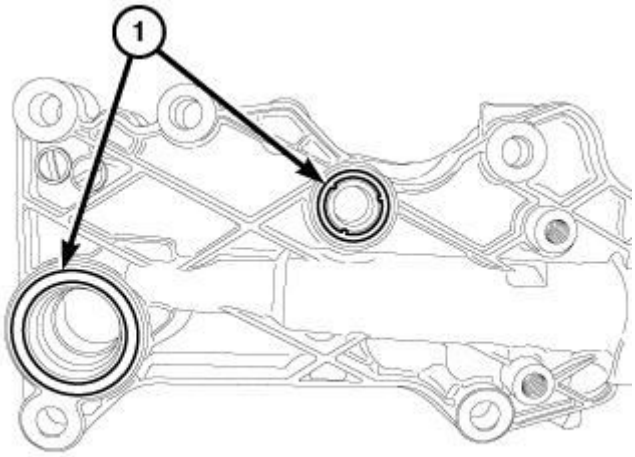

2491723

Fig. 310: O-Ring Seals On Back Side Of Adapter
Courtesy of CHRYSLER GROUP, LLC

1. Clean the sealing surfaces and install new O-ring seals (1) on the back side of adapter.

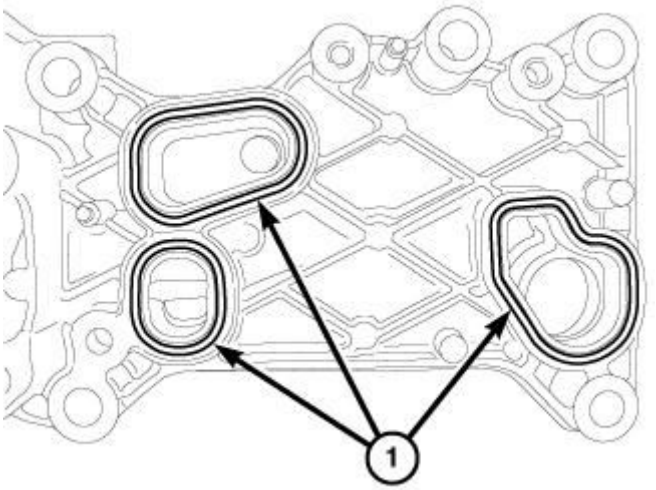

Fig. 311: O-Ring Seals On Front Side Of Adapter
Courtesy of CHRYSLER GROUP, LLC

2. Clean the sealing surfaces and install new O-ring seals (1) on the front side of adapter.

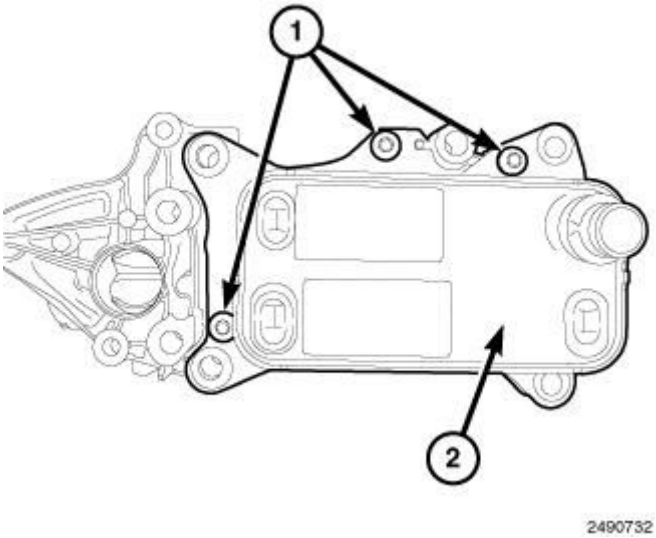

Fig. 312: Oil Cooler & Bolts
Courtesy of CHRYSLER GROUP, LLC

3. Install the oil cooler (1) onto the oil cooler adapter. Tighten bolts (1) to 10 N.m (89 in. lbs.).

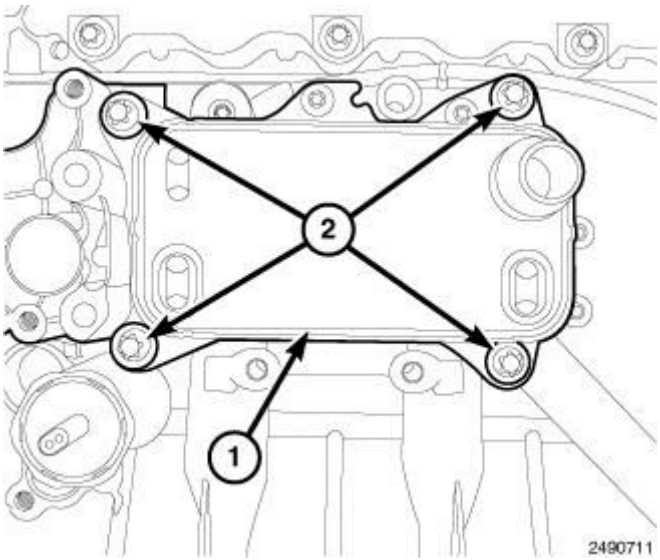

Fig. 313: Oil Cooler Adapter & Bolts
Courtesy of CHRYSLER GROUP, LLC

4. Install the oil cooler adapter (1) to the engine block. Tighten bolts (2) to 20 N.m (177 in. lbs.).
5. Install the oil filter housing (1). Refer to **HOUSING, OIL FILTER, INSTALLATION**.
6. Fill the engine with the recommended oil. Refer to **CAPACITIES AND RECOMMENDED FLUIDS, SPECIFICATIONS** .
7. Connect the negative battery cable.
8. Start the engine and check for leaks.

HOUSING, OIL FILTER

REMOVAL

REMOVAL

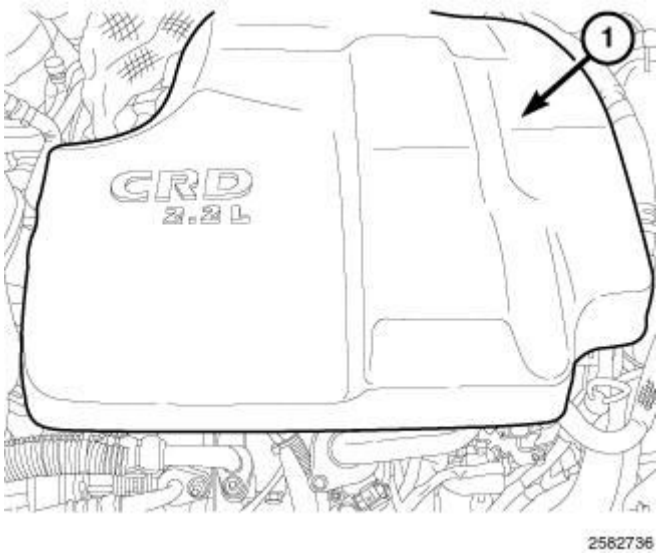

Fig. 314: Engine Cover
Courtesy of CHRYSLER GROUP, LLC

1. Disconnect the negative battery cable.
2. Remove the engine cover (1).

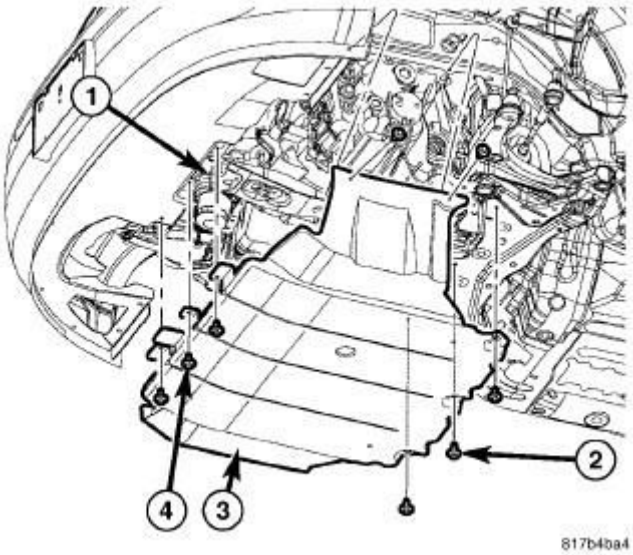

Fig. 315: Belly Pan
Courtesy of CHRYSLER GROUP, LLC

3. Remove fasteners (2, 4) and the underbody belly pan (3).
4. Recover the refrigerant from the refrigerant system. Refer to **PLUMBING, STANDARD PROCEDURE** .
5. Drain the cooling system. Refer to **STANDARD PROCEDURE** .
6. Disconnect upper radiator hose from radiator.

7. Disconnect lower radiator hose at radiator.
8. Disconnect cooling fan wire harness connector.
9. Disconnect both A/C lines at condenser.
10. Remove A/C condenser to radiator mounting screws and remove condenser.
11. Unclip charge air cooler from radiator.
12. Lift radiator and cooling fan assembly from vehicle.
13. Remove the A/C compressor. Refer to **COMPRESSOR, A/C, INSTALLATION** .
14. Remove the generator. Refer to **GENERATOR, REMOVAL** .
15. Remove the mixing chamber (3). Refer to **MANIFOLD, INTAKE, REMOVAL**.

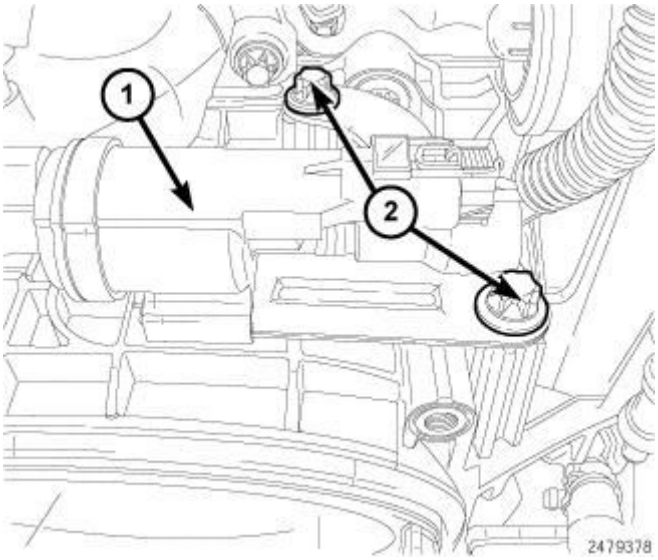

Fig. 316: EGR Vacuum Solenoid & Bolts
Courtesy of CHRYSLER GROUP, LLC

16. Remove bolts (2) and the EGR vacuum solenoid (1).

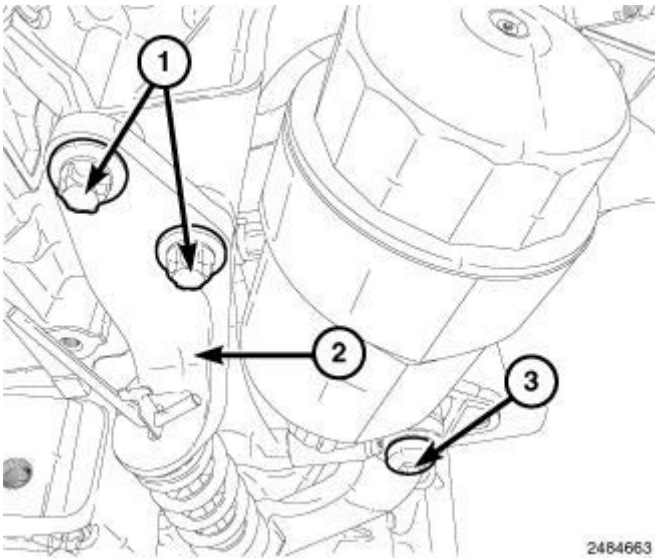

Fig. 317: Accessory Drive Belt Tensioner & Bolts
Courtesy of CHRYSLER GROUP, LLC

17. Remove the bolts (1, 3) and accessory drive belt tensioner (2).

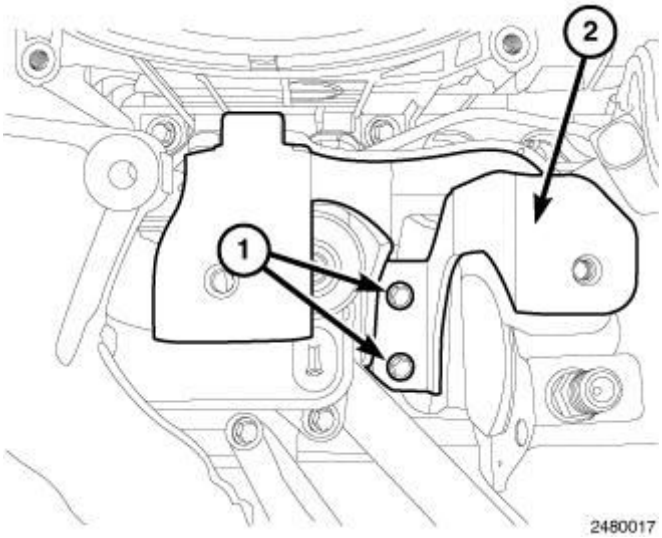

Fig. 318: Intake Manifold Support Bracket & Bolts
Courtesy of CHRYSLER GROUP, LLC

18. Remove bolts (1) and the intake manifold support bracket (2).

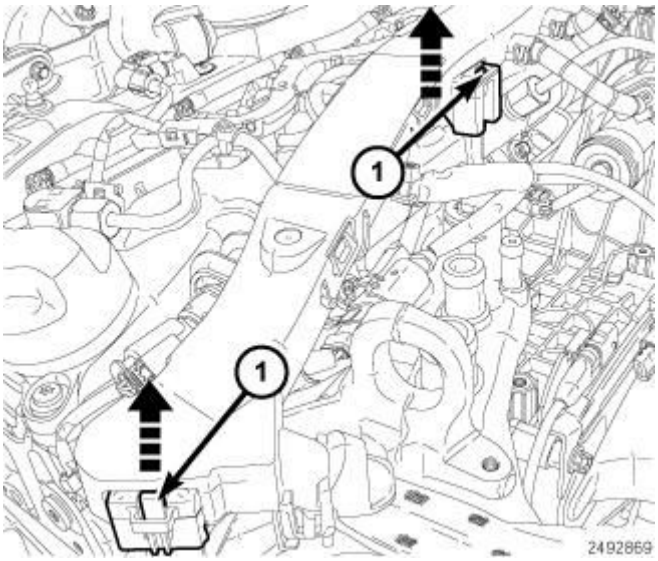

Fig. 319: Locating Lock Tabs And Lifting Up On Wire Harness
Courtesy of CHRYSLER GROUP, LLC

19. Release the lock tabs (1) and lift up on wire harness.

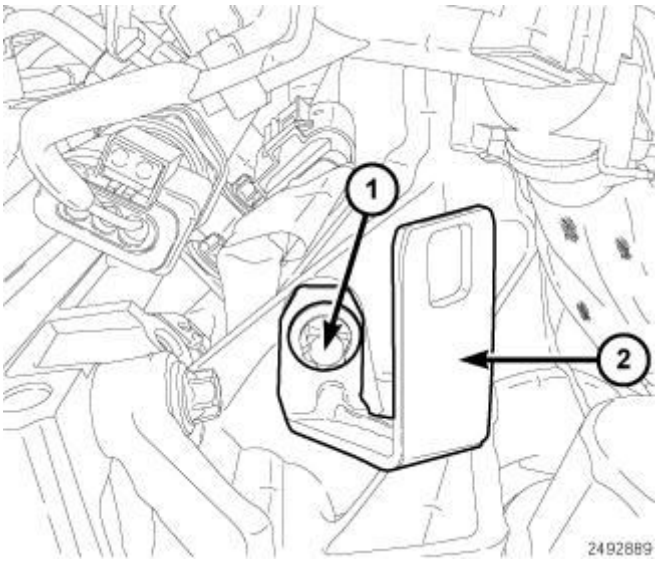

Fig. 320: Wire Harness Support Bracket & Bolts
Courtesy of CHRYSLER GROUP, LLC

20. Remove bolt (1) and wire harness support bracket (2).

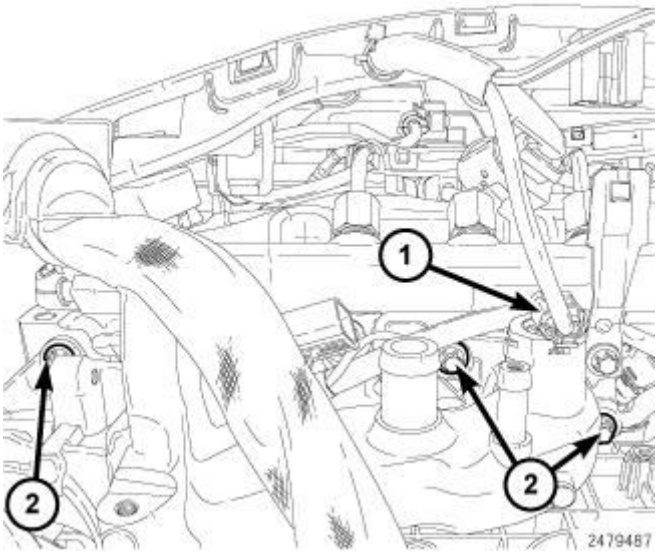

Fig. 321: Coolant Temp Sensor & Cooling Manifold Bolts
Courtesy of CHRYSLER GROUP, LLC

21. Disconnect the upper coolant temp sensor wire harness connector (1).
22. Remove the three upper bolts (2).

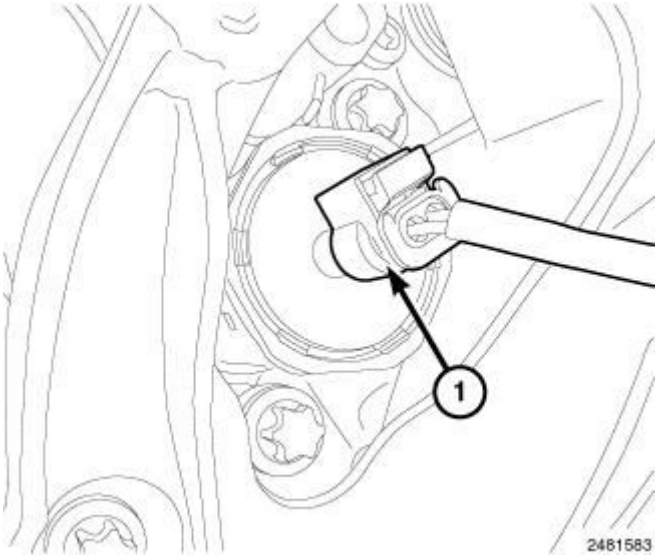

Fig. 322: Piston Cooling Oil Control Valve Harness Connector
Courtesy of CHRYSLER GROUP, LLC

23. Disconnect the piston cooling oil control valve harness connector (1).

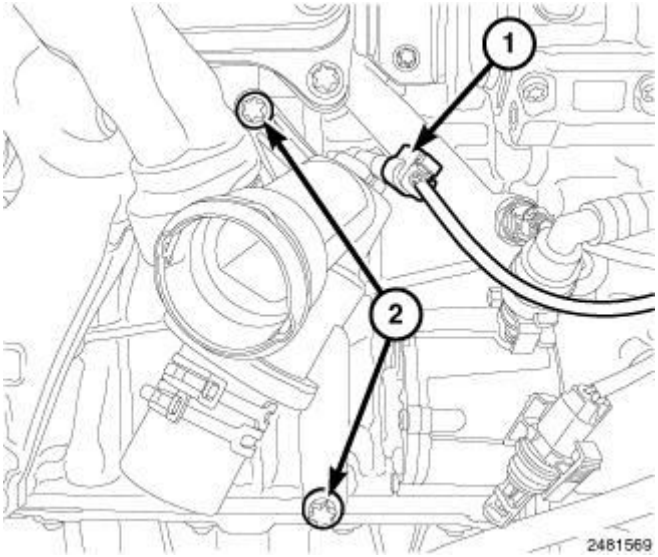

Fig. 323: Identifying Thermostat Heater Connector & Upper Thermostat Housing Bolt
Courtesy of CHRYSLER GROUP, LLC

24. Disconnect the coolant temperature sensor (1) wire harness connector.
25. Remove the two bolt (2) securing the thermostat housing.

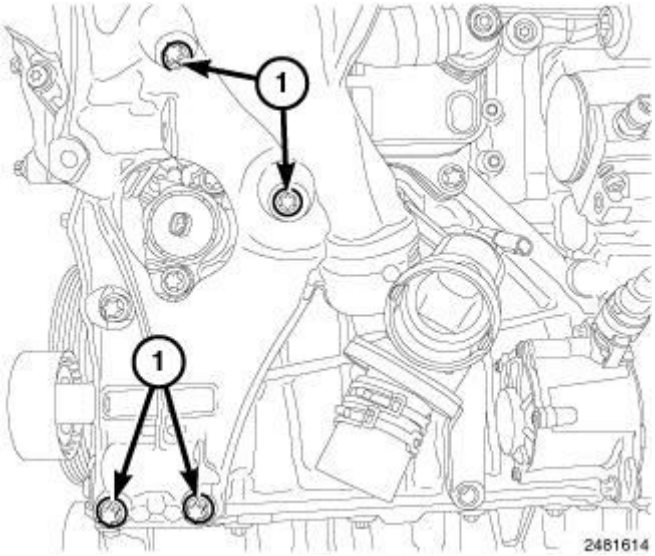

Fig. 324: Accessory Carrier Bolts
Courtesy of CHRYSLER GROUP, LLC

26. Remove the bolts (1) from the accessory carrier.

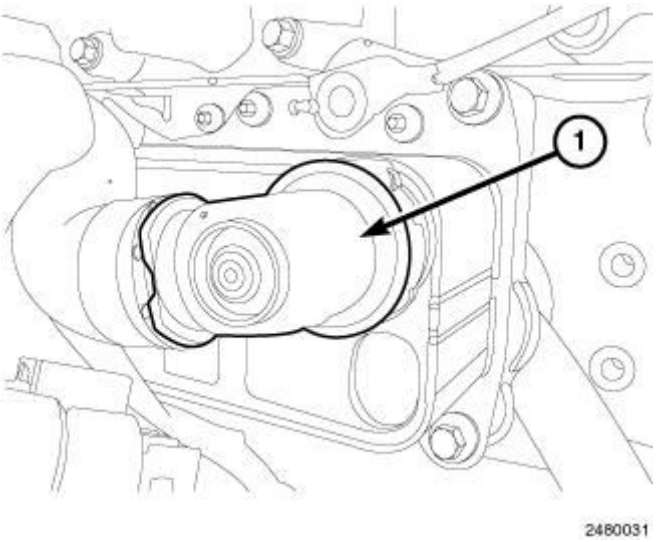

Fig. 325: Identifying Coolant Hose
Courtesy of CHRYSLER GROUP, LLC

27. Disconnect the coolant hose (1) to the oil cooler and remove the accessory carrier.

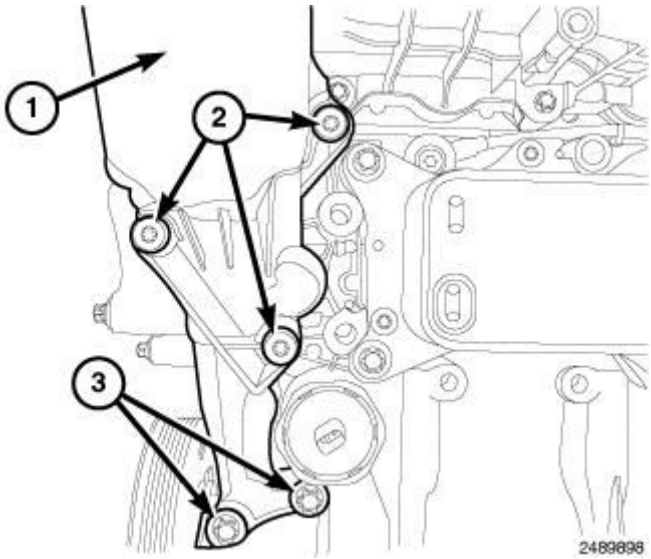

Fig. 326: Oil Filter Housing & Bolts
Courtesy of CHRYSLER GROUP, LLC

28. Remove the upper bolts (2).
29. Remove the lower bolts (3) and the oil filter housing (1).
30. Remove and discard the O-ring seals.

INSTALLATION

INSTALLATION

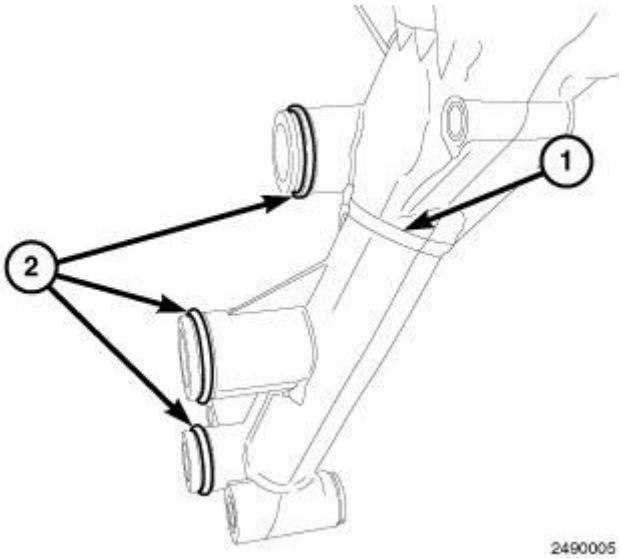

Fig. 327: Oil Filter Housing & O-Ring Seals
Courtesy of CHRYSLER GROUP, LLC

1. Install new O-ring seals (2) onto the oil filter housing (1).

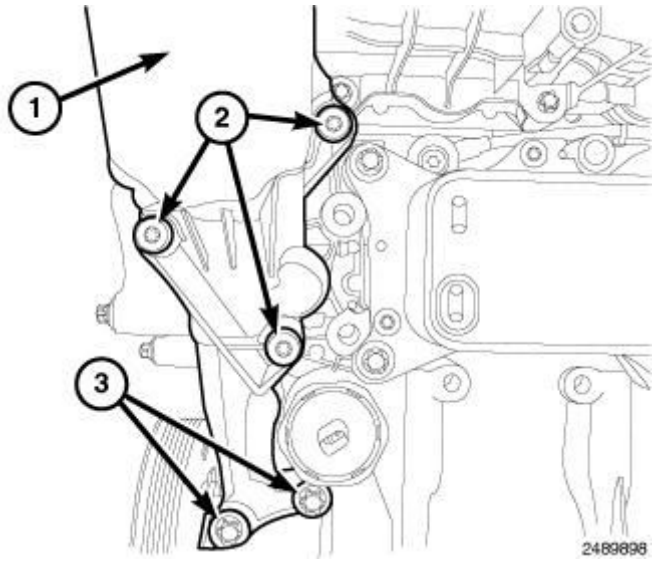

Fig. 328: Oil Filter Housing & Bolts
Courtesy of CHRYSLER GROUP, LLC

2. Install the oil filter housing (1).
   - Tighten the M6 bolts (2) to 10 N.m (89 in. lbs.).
   - Tighten the M8 bolts (3) to 20 N.m (177 in. lbs.).

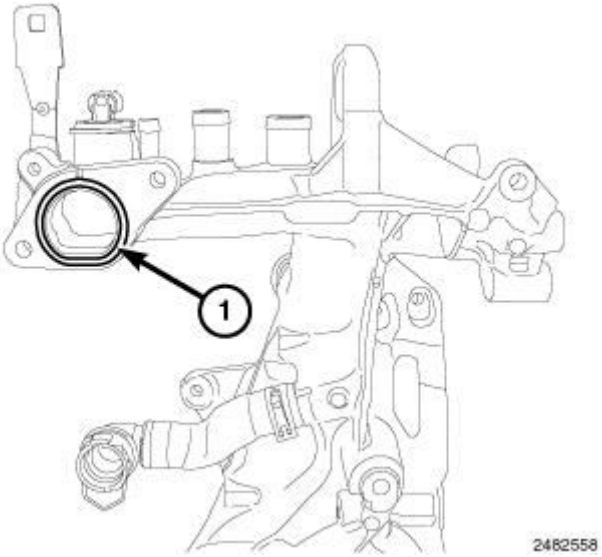

Fig. 329: Identifying Gasket
Courtesy of CHRYSLER GROUP, LLC

3. Clean the gasket surfaces and install a new O-ring gasket (1) onto the accessory carrier.
4. Position the accessory carrier to the engine and install bolts finger tight.

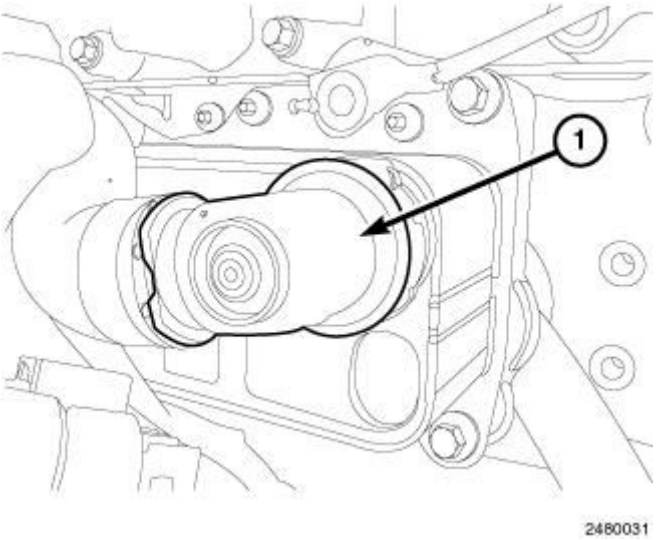

Fig. 330: Identifying Coolant Hose
Courtesy of CHRYSLER GROUP, LLC

5. Connect the coolant hose (1) to the oil cooler and set the lock tab.

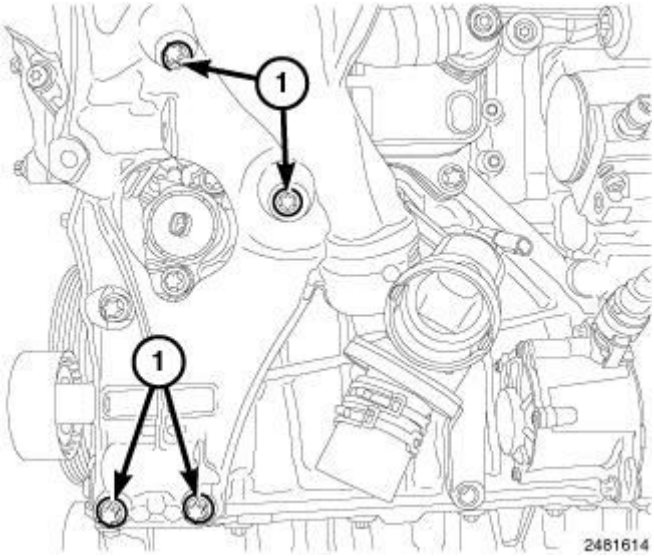

Fig. 331: Accessory Carrier Bolts
Courtesy of CHRYSLER GROUP, LLC

6. Tighten the accessory carrier bolts (1) to 20 N.m (177 in. lbs.).

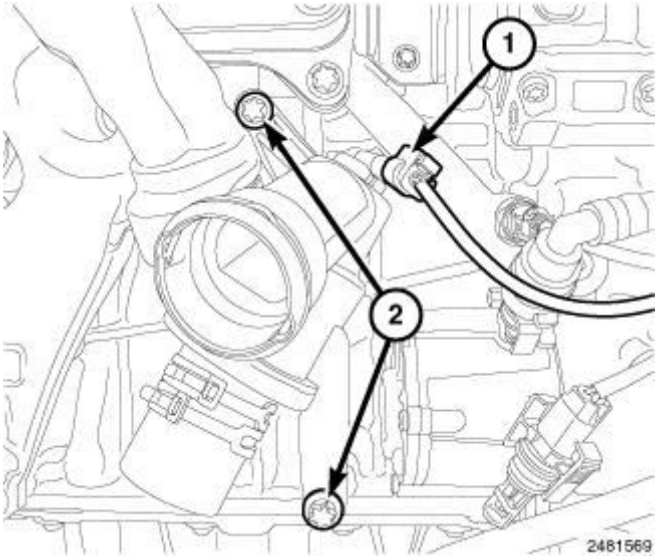

Fig. 332: Identifying Thermostat Heater Connector & Upper Thermostat Housing Bolt
Courtesy of CHRYSLER GROUP, LLC

7. Install the two bolt (2) securing the thermostat housing to engine block. Tighten bolts to 9 N.m (80 in. lbs.).
8. Connect the coolant temperature sensor wire harness connector (1).

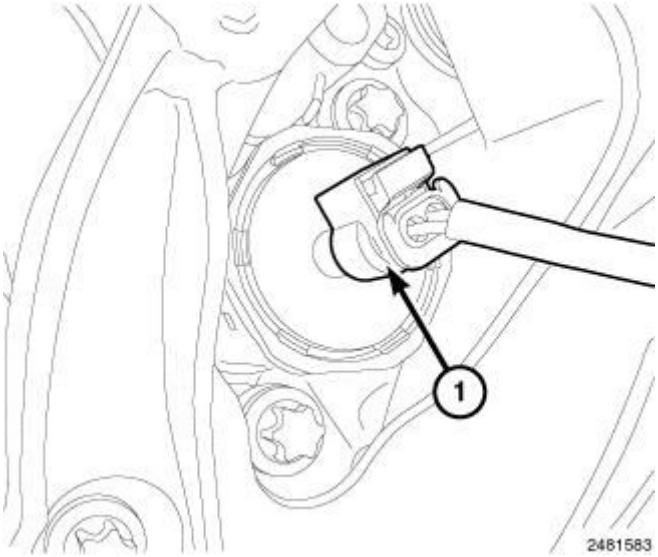

Fig. 333: Piston Cooling Oil Control Valve Harness Connector
Courtesy of CHRYSLER GROUP, LLC

9. Connect the piston cooling oil control valve wire harness connector (1).

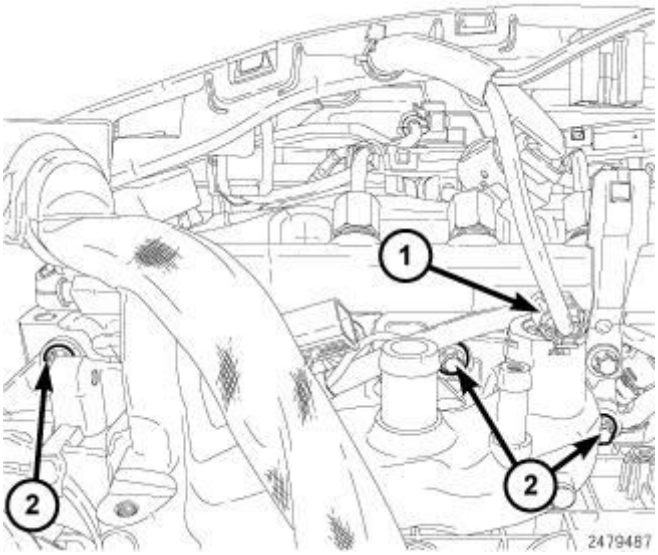

Fig. 334: Coolant Temp Sensor & Cooling Manifold Bolts
Courtesy of CHRYSLER GROUP, LLC

10. Install the three accessory carrier upper bolts (2). Tighten bolts to 9 N.m (80 in. lbs.).
11. Connect the upper coolant temp sensor wire harness connector (1).

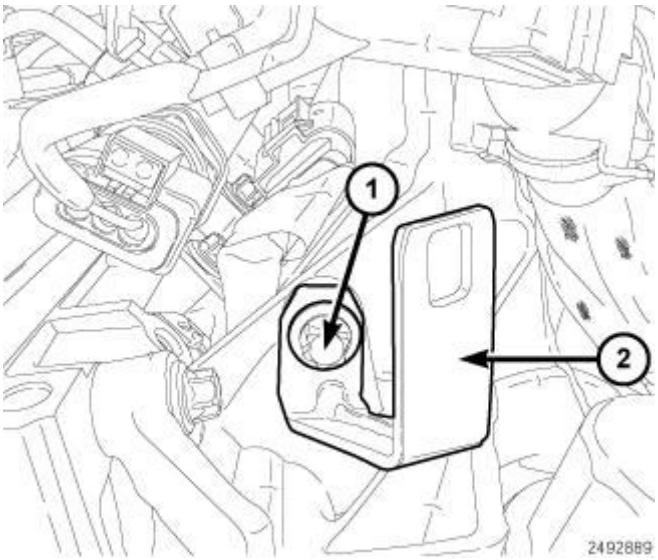

Fig. 335: Wire Harness Support Bracket & Bolts
Courtesy of CHRYSLER GROUP, LLC

12. Install the wire harness support bracket (2). Tighten bolt (1) to 9 N.m (80 in. lbs.).

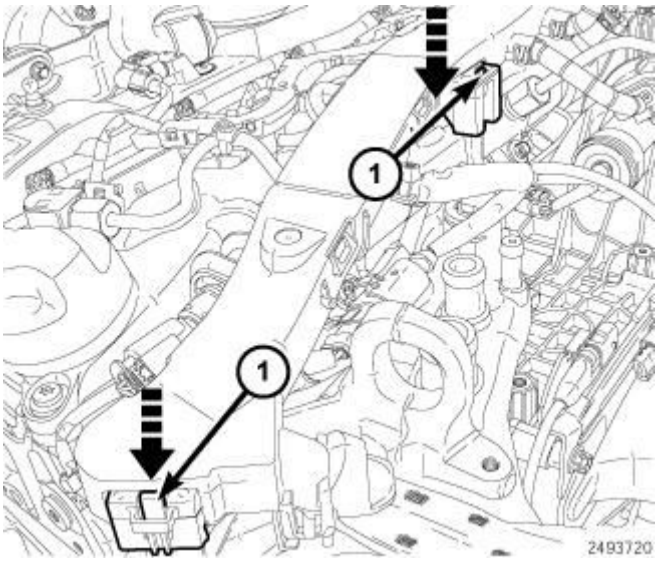

Fig. 336: Positioning Wire Harness And Pushing Down To Lock Tabs
Courtesy of CHRYSLER GROUP, LLC

13. Position the wire harness and push down to lock tabs (1).

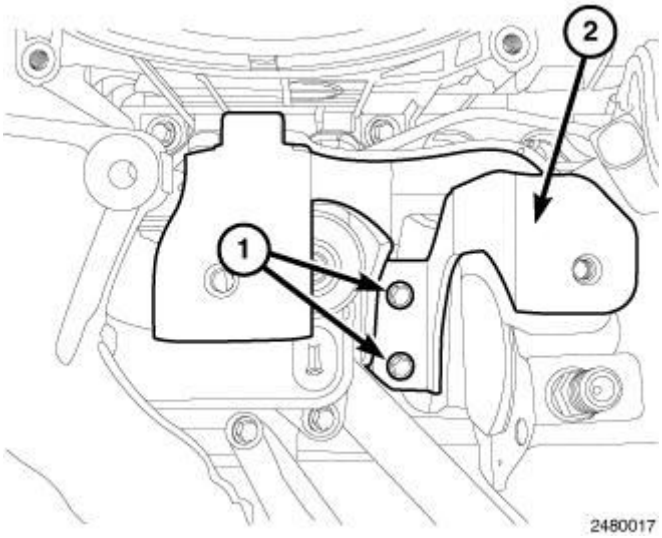

Fig. 337: Intake Manifold Support Bracket & Bolts
Courtesy of CHRYSLER GROUP, LLC

14. Install the mixing chamber support bracket (2). Tighten bolts to 9 N.m (80 in. lbs.).

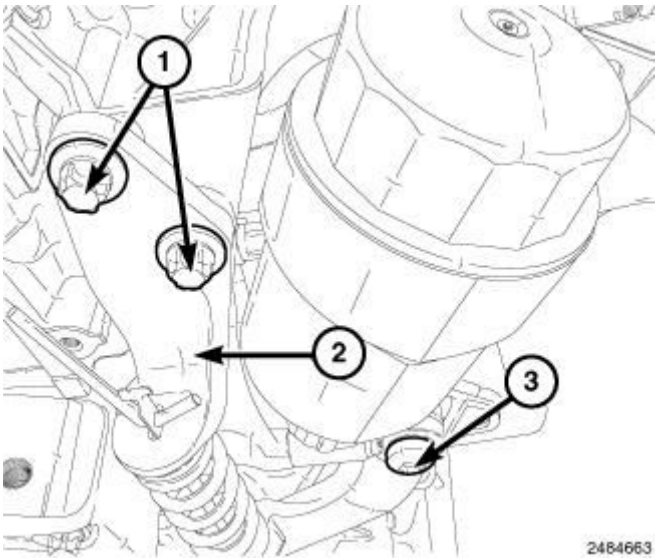

Fig. 338: Accessory Drive Belt Tensioner & Bolts
Courtesy of CHRYSLER GROUP, LLC

15. Install the accessory drive belt tensioner (2).
    - Tighten M8 bolts (1) to 20 N.m (177 in. lbs.).
    - Tighten M10 bolt (3) to 45 N.m (33 ft. lbs.).

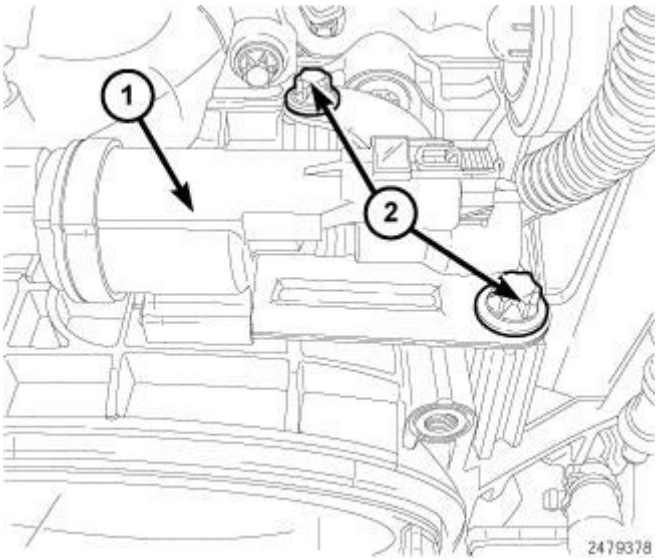

Fig. 339: EGR Vacuum Solenoid & Bolts
Courtesy of CHRYSLER GROUP, LLC

16. Install the EGR vacuum solenoid (1). Tighten bolts (2) to 9 N.m (80 in. lbs.).
17. Install the mixing chamber (3). Refer to **MANIFOLD, INTAKE, INSTALLATION**.
18. Install the generator. Refer to **GENERATOR, INSTALLATION** .
19. Install the A/C compressor. Refer to **COMPRESSOR, A/C, INSTALLATION** .
20. Connect the air inlet hose at intake manifold.
21. Lower the radiator and cooling fan assembly in vehicle. Attach charge air cooler to radiator.
22. Attach the A/C condenser to radiator. Tighten the bolts to 5 N.m (44 in. lbs.).
23. Remove the tape or plug from the condenser ports.
24. Lubricate the new rubber O-ring seal with clean refrigerant oil and install it and a new gasket onto the liquid line fitting. Use only the specified O-ring as it is made of a special material for the R-134a system. Use only refrigerant oil of the type recommended for the A/C compressor in the vehicle.
25. Connect both A/C lines to the condenser. Tighten the nuts to 5 N.m (44 in. lbs.).
26. Connect the cooling fan electrical connector.

27. Connect the lower radiator hose at radiator.
28. Connect the upper radiator hose at radiator.
29. Install the underbody belly pan.
30. Fill the cooling system. Refer to **STANDARD PROCEDURE** .
31. Fill the engine with recommended engine oil. Refer to **CAPACITIES AND RECOMMENDED FLUIDS, SPECIFICATIONS** .

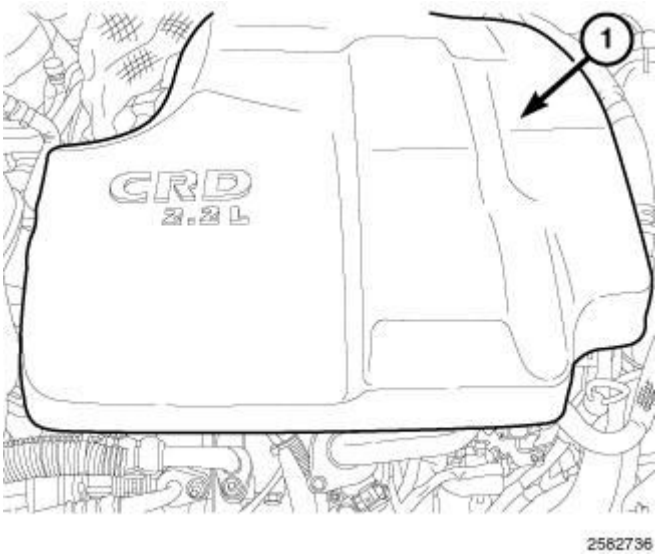

Fig. 340: Engine Cover
Courtesy of CHRYSLER GROUP, LLC

32. Install the engine cover (1).
33. Connect the negative battery cable.
34. Start the engine and check for leaks.

JET, PISTON OIL COOLER

DESCRIPTION

DESCRIPTION

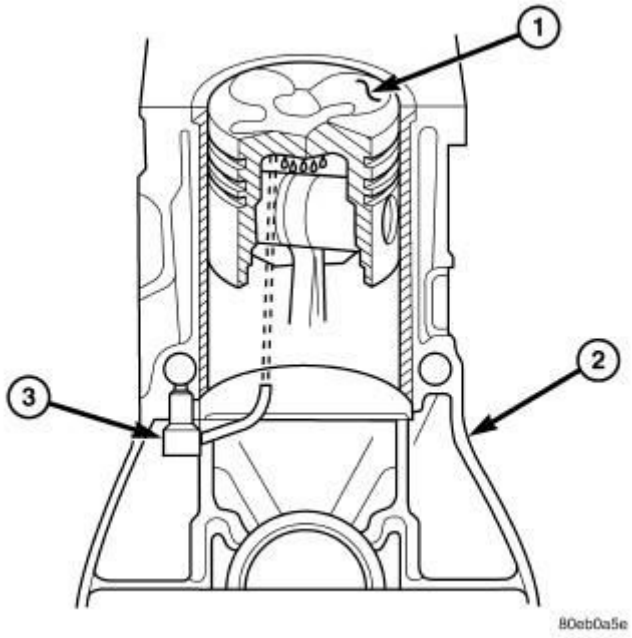

Fig. 341: Oil Jet Location
Courtesy of CHRYSLER GROUP, LLC

1 - PISTON ASSEMBLY
2 - ENGINE BLOCK
3 - OIL JET

There are four oil jets (3) installed in the engine block (2). These oil jets are used to cool and lubricate the piston assemblies.

REMOVAL

REMOVAL

The engine must be removed from the vehicle and completely disassembled to replace the oil jets (2).

1. Remove the engine from vehicle. Refer to **REMOVAL**.
2. Remove the crankshaft. Refer to **CRANKSHAFT, REMOVAL**.

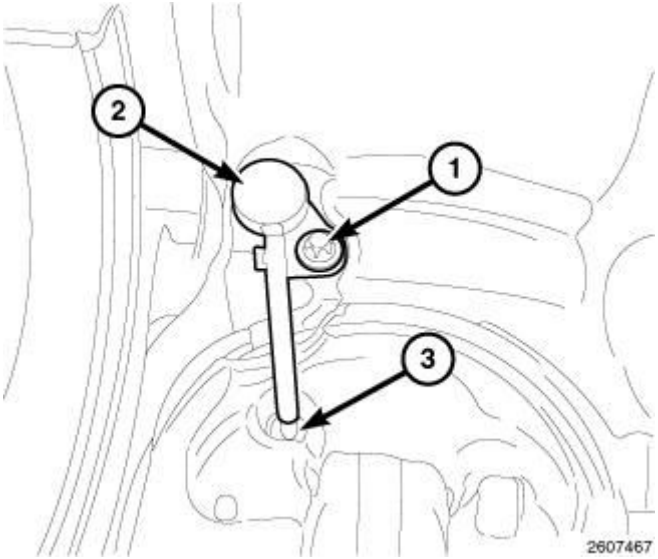

Fig. 342: Removing & Installing Oil Jets
Courtesy of CHRYSLER GROUP, LLC

3. Remove bolt (1) and the oil jets (2) from the engine block.

INSTALLATION

INSTALLATION

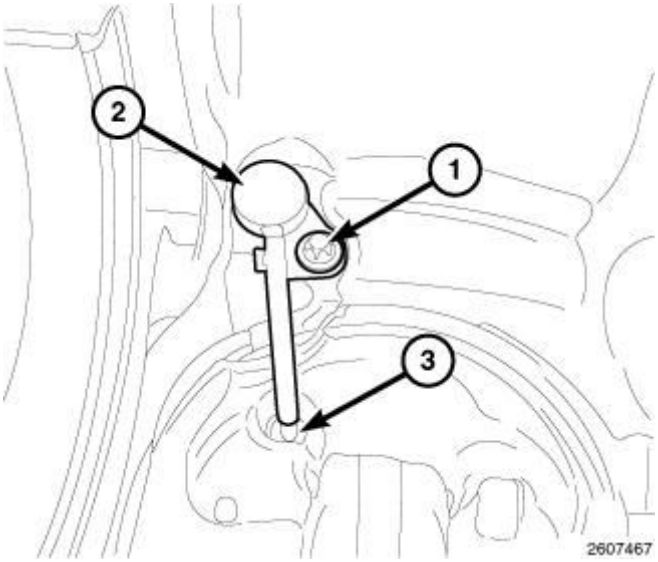

Fig. 343: Removing & Installing Oil Jets
Courtesy of CHRYSLER GROUP, LLC

1. Install the oil jet (2) into the engine block. Tighten bolt to 5 N.m (44 in. lbs.).
2. Install the crankshaft. Refer to **CRANKSHAFT, INSTALLATION**.
3. Install the engine into vehicle. Refer to **INSTALLATION**.

PAN, OIL

REMOVAL

REMOVAL

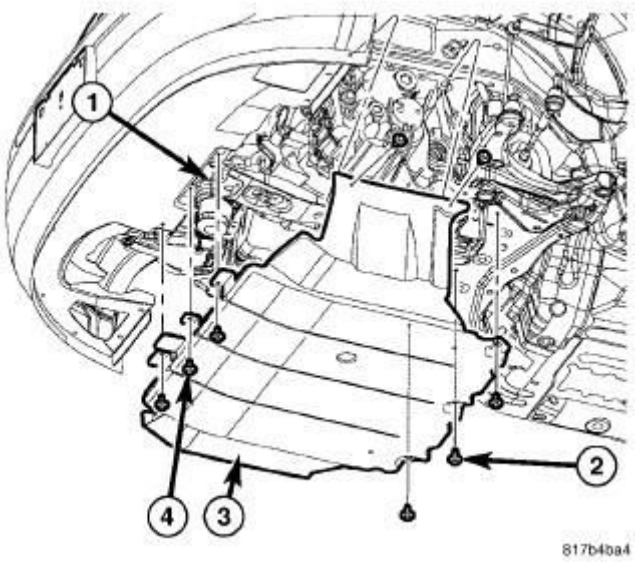

Fig. 344: Belly Pan
Courtesy of CHRYSLER GROUP, LLC

1. Disconnect the negative battery cable.
2. Remove fasteners (2, 4) and the belly pan (3).
3. Drain the engine oil. Tighten drain plug to 27 N.m (20 ft. lbs.).
4. Remove the flywheel. Refer to **FLYWHEEL, REMOVAL** .
5. Remove the oil dipstick tube.
6. Remove the water pump/power steering assembly. Refer to **PUMP, WATER, REMOVAL** .

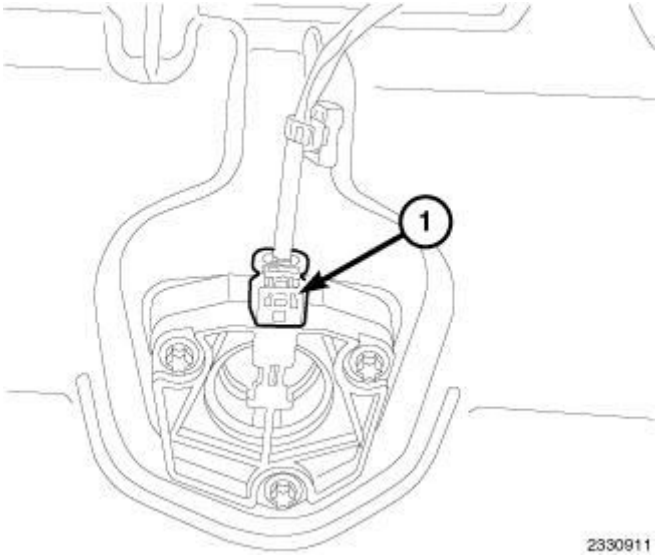

Fig. 345: Oil Level Switch Wire Harness Connector
Courtesy of CHRYSLER GROUP, LLC

7. Disconnect the oil level switch wire harness connector (1).
8. Remove bolts and remove oil pan.

INSTALLATION

INSTALLATION

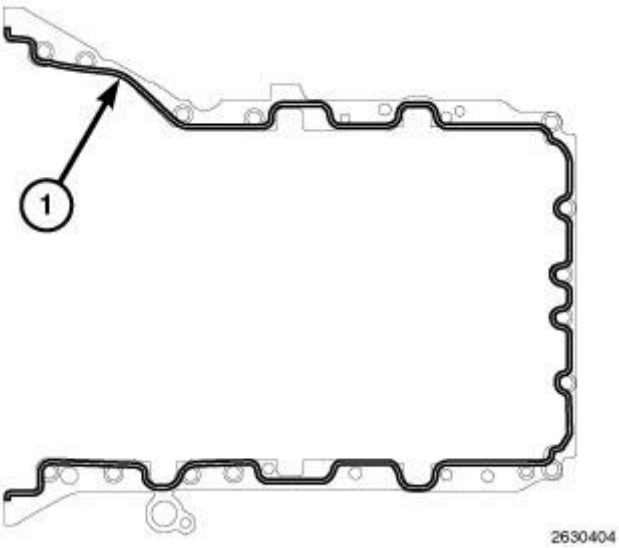

Fig. 346: Applying Engine Sealant RTV Onto Oil Pan Mating Surface
Courtesy of CHRYSLER GROUP, LLC

1. Thoroughly clean oil pan and all sealing surfaces to be free of any oil residue.
2. Apply a 3 mm bead of Locktite® 5970 RTV or equivalent onto the oil pan

mating surface (1).

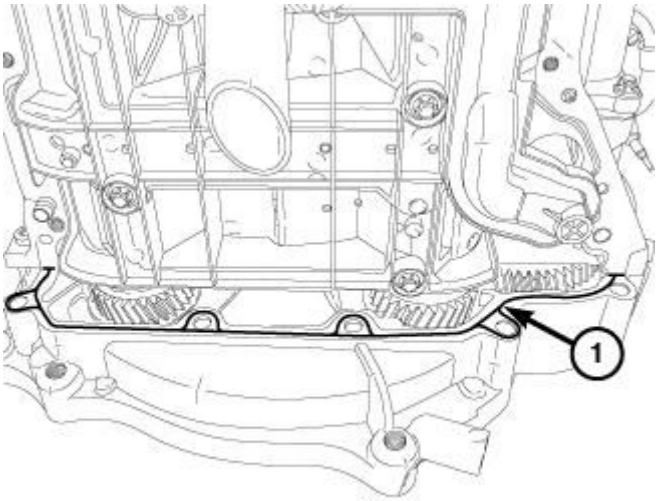

Fig. 347: Applying A 2-mm Bead Of Loctite® Onto Timing Cover Mating Surface
Courtesy of CHRYSLER GROUP, LLC

3. Apply a 3 mm bead of Locktite® 5970 RTV or equivalent onto timing cover mating surface as illustrated (1).

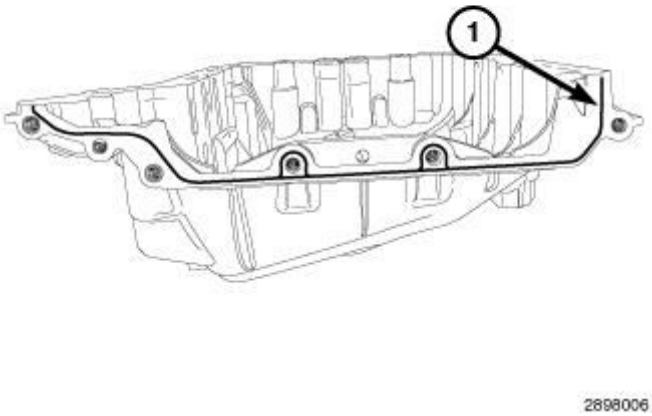

Fig. 348: Applying Small Amount Of Loctite® Onto Timing Cover Mating Surface
Courtesy of CHRYSLER GROUP, LLC

4. Apply a small amount of Locktite® 5970 RTV or equivalent onto timing cover mating surface.

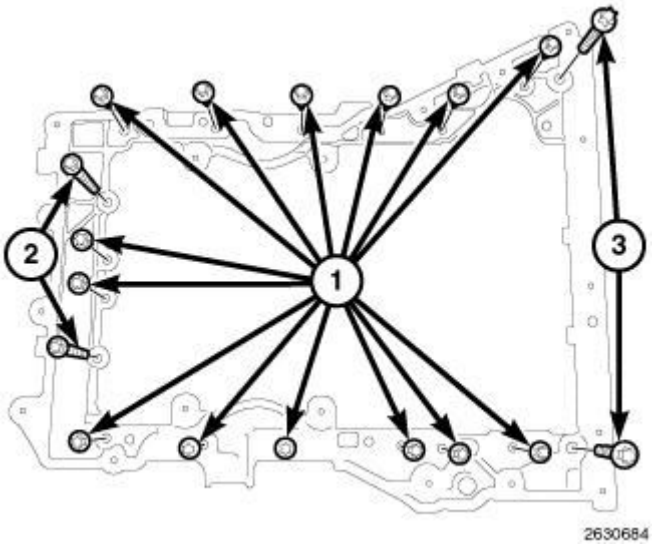

Fig. 349: Oil Pan Bolts
Courtesy of CHRYSLER GROUP, LLC

5. Install oil pan. Tighten bolts to:
   - M6 bolts to 9 N.m (80 in. lbs.).
   - M8 bolts to 20 N.m (177 in. lbs.)
   - M8 bolts timing cover to oil pan 20 N.m (177 in. lbs.).

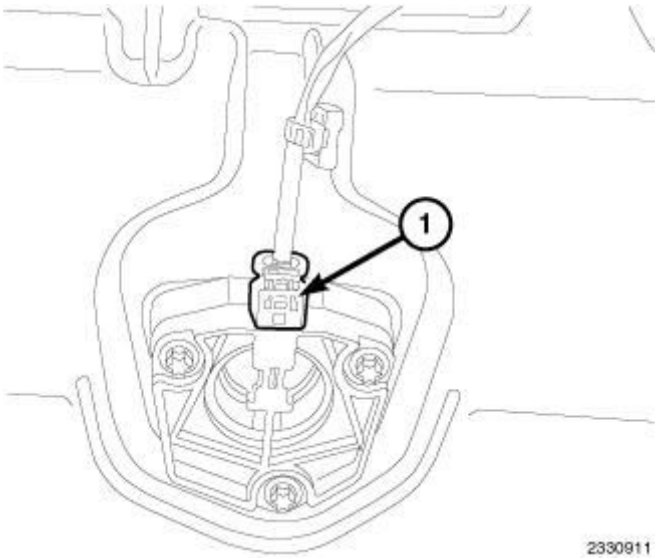

Fig. 350: Oil Level Switch Wire Harness Connector
Courtesy of CHRYSLER GROUP, LLC

6. Connect the oil level switch wire harness connector (1).
7. Install the water pump/power steering pump assembly. Refer to **PUMP, WATER, INSTALLATION** .

8. Install the oil dip stick tube. Tighten bolt to 9 N.m. 80 in. lbs.).
9. Install the flywheel. Refer to **FLYWHEEL, INSTALLATION** .
10. Fill engine with recommended engine oil. Refer to **CAPACITIES AND RECOMMENDED FLUIDS, SPECIFICATIONS** .
11. Connect the negative battery cable.
12. Start engine and check for leaks.

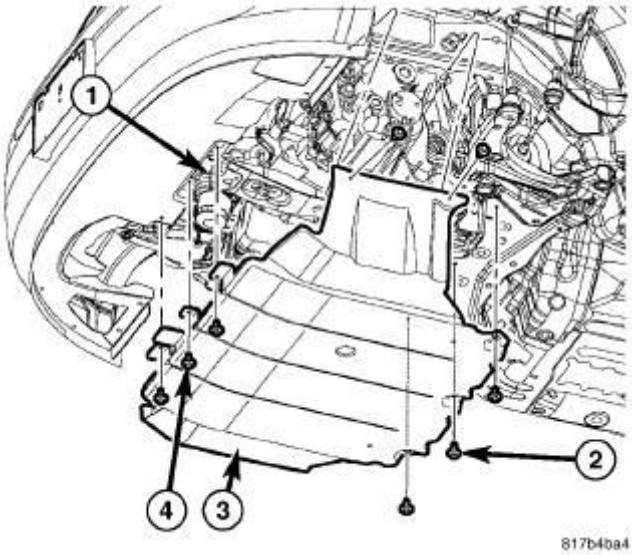

Fig. 351: Belly Pan
Courtesy of CHRYSLER GROUP, LLC

13. Install the belly pan (3) and fasteners (2, 4).

PUMP, ENGINE OIL

REMOVAL

REMOVAL

1. Disconnect the negative battery cable.
2. Raise and support the vehicle. Refer to **HOISTING, STANDARD PROCEDURE** .
3. Remove the lower timing cover. Refer to **COVER(S), ENGINE TIMING, REMOVAL**.
4. Remove the oil pan. Refer to **PAN, OIL, REMOVAL**.

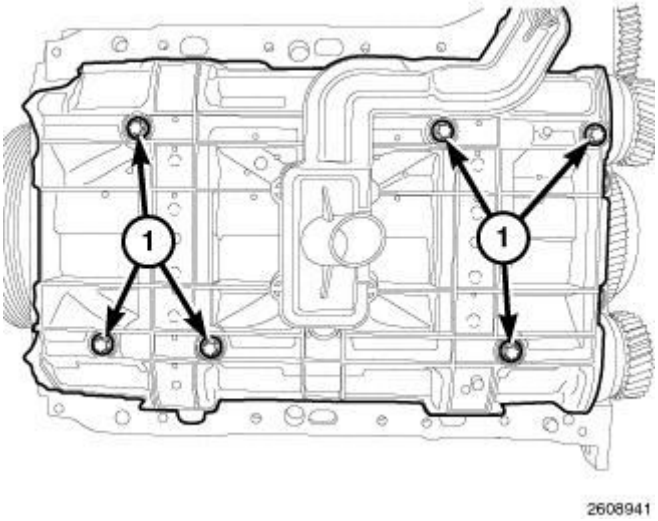

Fig. 352: Oil Pump Pickup Bolts
Courtesy of CHRYSLER GROUP, LLC

5. Remove the bolts (1) and the oil pump pickup.

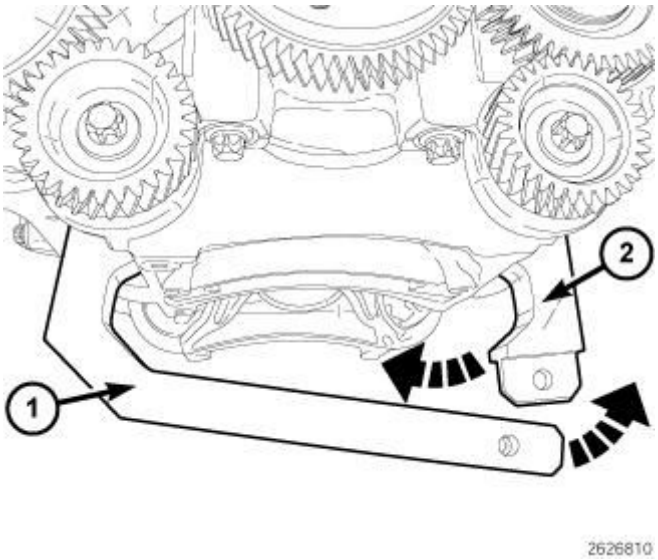

Fig. 353: Installing Balance Shaft Lock Tool Halves & Rotating Into Locked Position
Courtesy of CHRYSLER GROUP, LLC

6. Install the Balance Shaft Lock Tool (special tool #10231, Lock, Balance Shaft) halves (1 and 2) and rotate halves into the locked position.

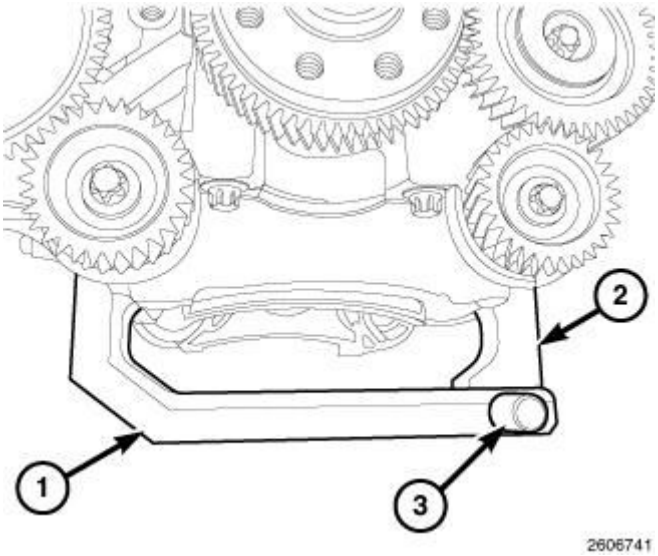

Fig. 354: Removing/Installing Locking Pin At Balance Shaft Lock Tool Halves
Courtesy of CHRYSLER GROUP, LLC

7. Install locking pin (3) into the Balance Shaft Lock Tool (special tool #10231, Lock, Balance Shaft) halves (1 and 2) together.

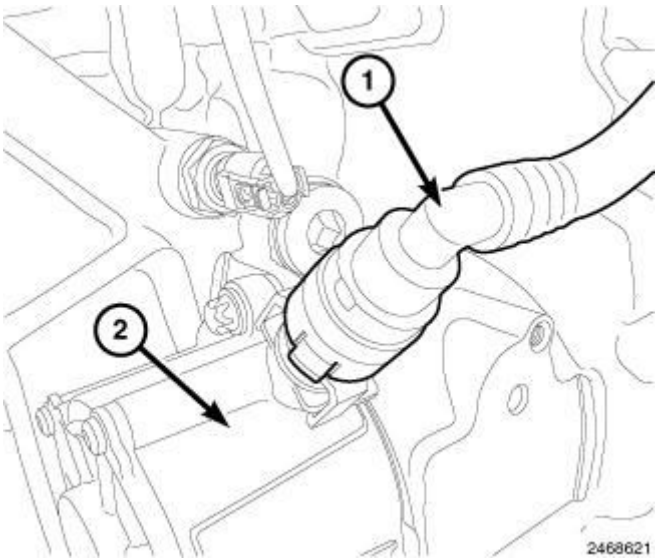

Fig. 355: Vacuum Hose At Vacuum Pump
Courtesy of CHRYSLER GROUP, LLC

8. Disconnect vacuum hose from vacuum pump (1).

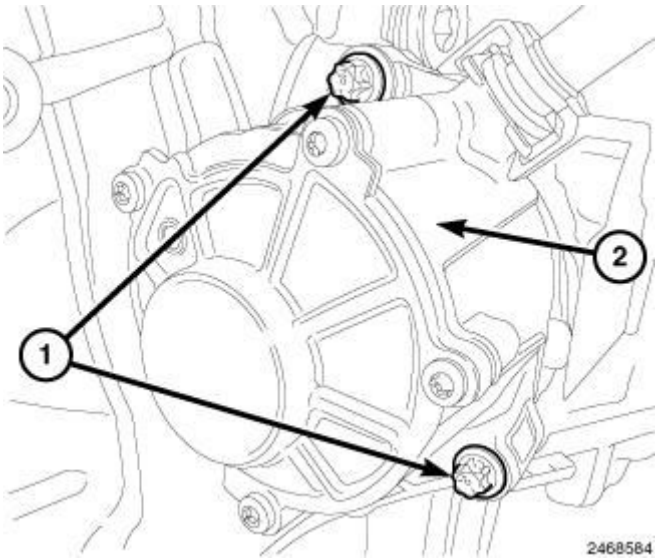

Fig. 356: Vacuum Pump & Bolts
Courtesy of CHRYSLER GROUP, LLC

9. Remove bolts (1) and the vacuum pump (2).

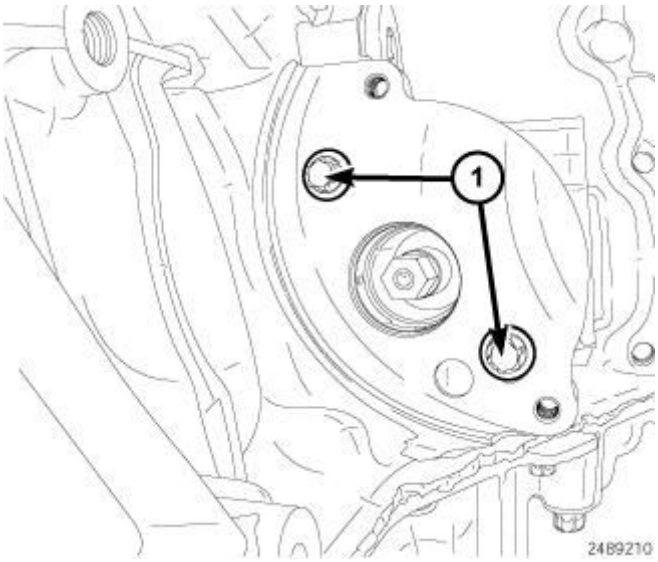

Fig. 357: Oil Pump Retaining Bolts
Courtesy of CHRYSLER GROUP, LLC

10. Remove oil pump retaining bolts (1).

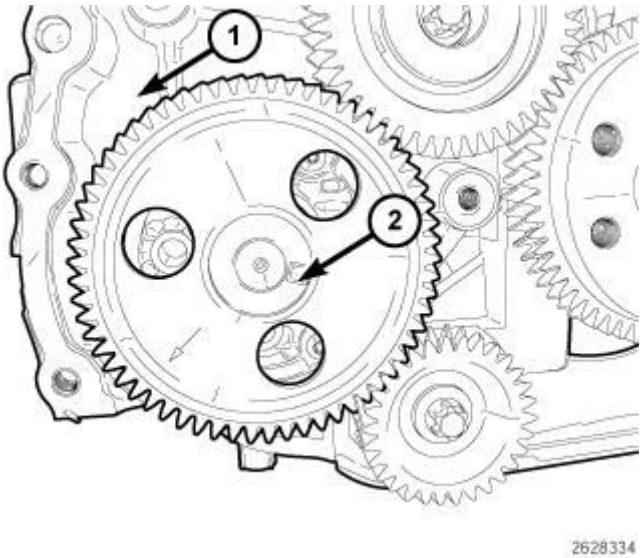

Fig. 358: Removing & Installing Oil Pump And Drive Gear Assembly At Engine Block
Courtesy of CHRYSLER GROUP, LLC

11. Carefully pull forward on pump gear (2) while rotating gear clockwise and remove the oil pump and gear assembly (2).

INSTALLATION

INSTALLATION

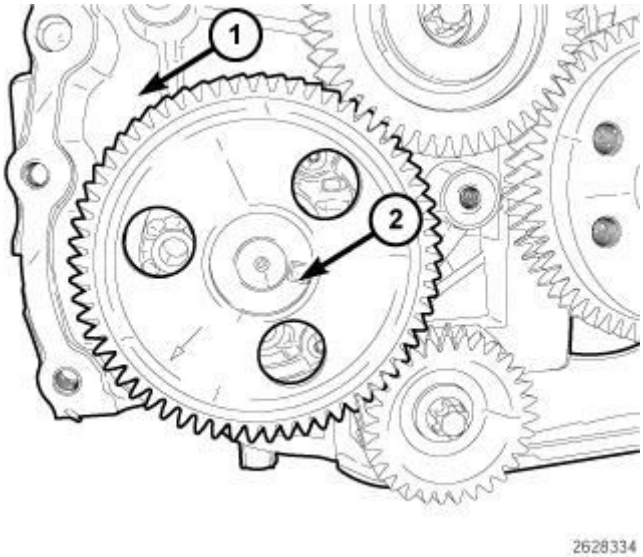

Fig. 359: Removing & Installing Oil Pump And Drive Gear Assembly At Engine Block
Courtesy of CHRYSLER GROUP, LLC

NOTE: Carefully turn pump gear counter clockwise while

installing pump to get gears to mesh together.

1. Install the oil pump and drive gear assembly (2) onto engine block (1).

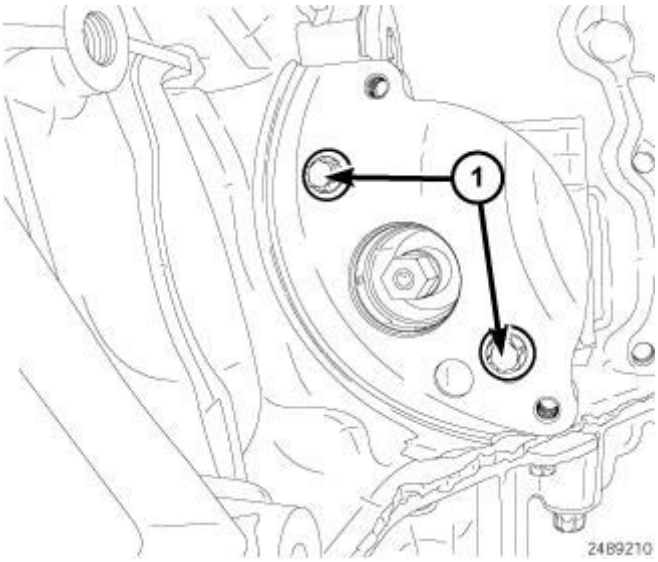

Fig. 360: Oil Pump Retaining Bolts
Courtesy of CHRYSLER GROUP, LLC

2. Install the oil pump bolts (1). Tighten bolts to 6 N.m (53 in. lbs.) plus additional 90°.

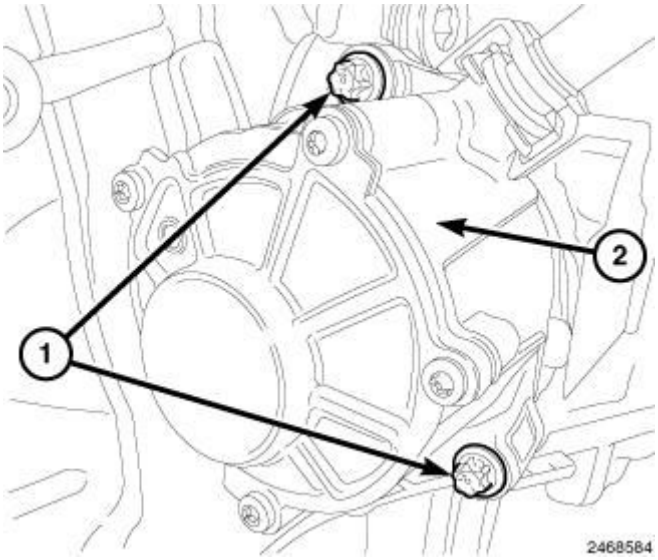

Fig. 361: Vacuum Pump & Bolts
Courtesy of CHRYSLER GROUP, LLC

3. Install the vacuum pump (2). Tighten bolts to 9 N.m (80 in. lbs.).

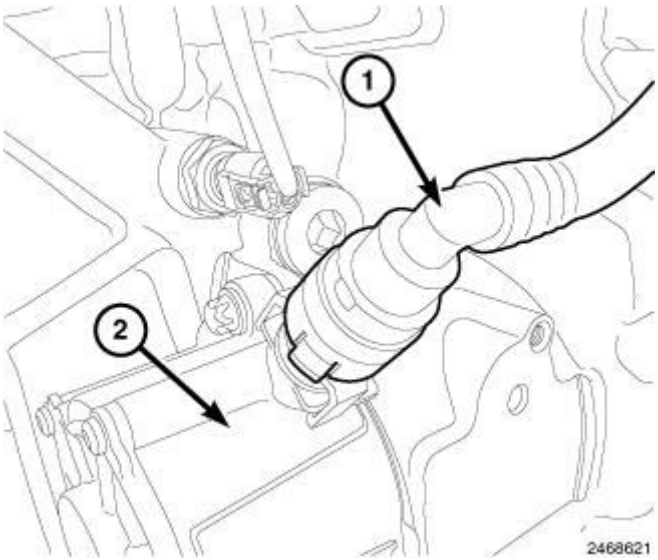

Fig. 362: Vacuum Hose At Vacuum Pump
Courtesy of CHRYSLER GROUP, LLC

4. Connect the vacuum hose from vacuum pump (1).

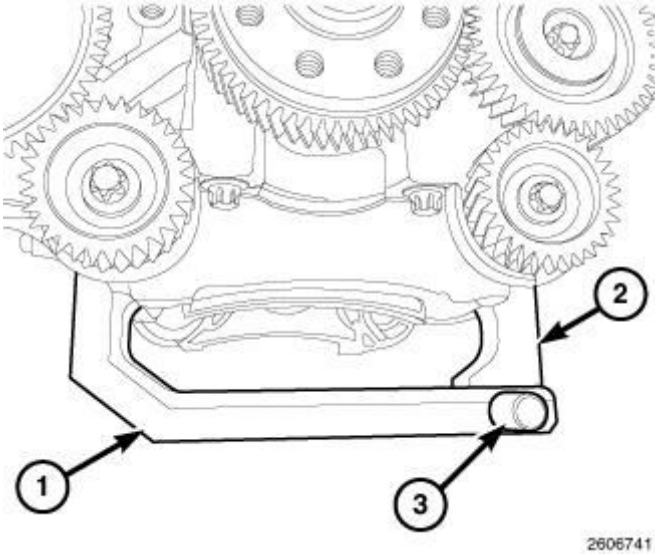

Fig. 363: Removing/Installing Locking Pin At Balance Shaft Lock Tool Halves
Courtesy of CHRYSLER GROUP, LLC

5. Remove the locking pin (3) and the Balance Shaft Lock Tool (special tool #10231, Lock, Balance Shaft) halves (1 and 2).

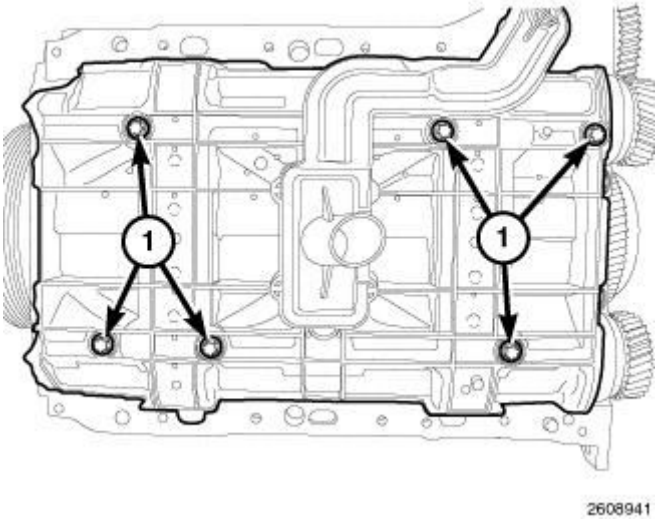

Fig. 364: Oil Pump Pickup Bolts
Courtesy of CHRYSLER GROUP, LLC

6. Install the oil pump pickup. Tighten bolts to 6 N.m (53 in. lbs.) plus additional 90 degrees.
7. Install the oil pan. Refer to **PAN, OIL, INSTALLATION**.
8. Install the timing cover. Refer to **COVER(S), ENGINE TIMING, INSTALLATION**.
9. Lower he vehicle.
10. Refill the engine with recommended oil. Refer to **CAPACITIES AND RECOMMENDED FLUIDS, SPECIFICATIONS** .
11. Connect the negative battery cable.
12. Start the engine and check for leaks.

SENSOR, OIL TEMPERATURE

REMOVAL

REMOVAL

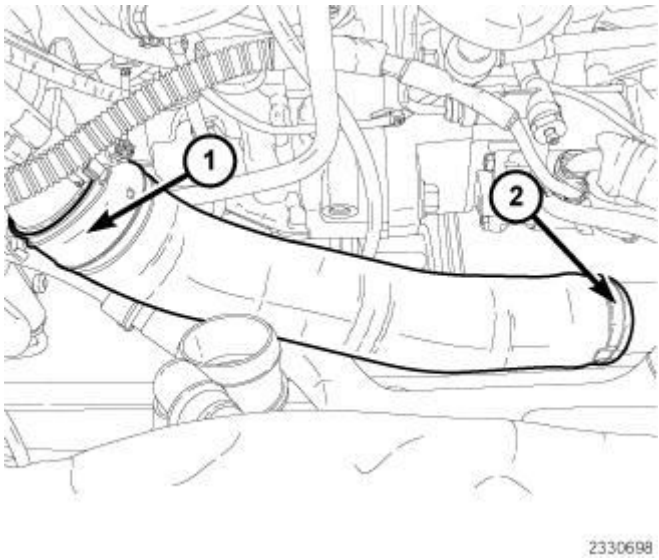

Fig. 365: EGR Air Flow Control Valve & Clamp
Courtesy of CHRYSLER GROUP, LLC

1. Disconnect the negative battery cable.
2. Loosen the clamp and disconnect the charge air outlet tube from the charge air cooler (CAC).
3. Remove air inlet tube to EGR air flow control valve (1).

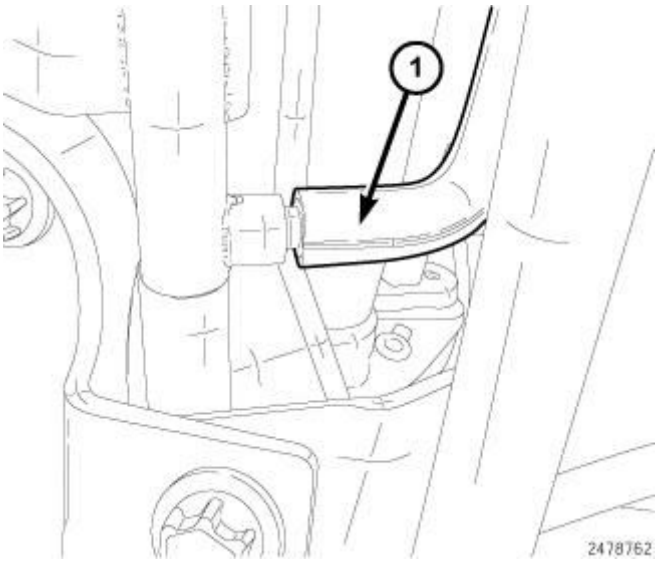

Fig. 366: Vacuum Supply Line At EGR Solenoid
Courtesy of CHRYSLER GROUP, LLC

4. Disconnect the vacuum supply line (1) to the EGR solenoid.

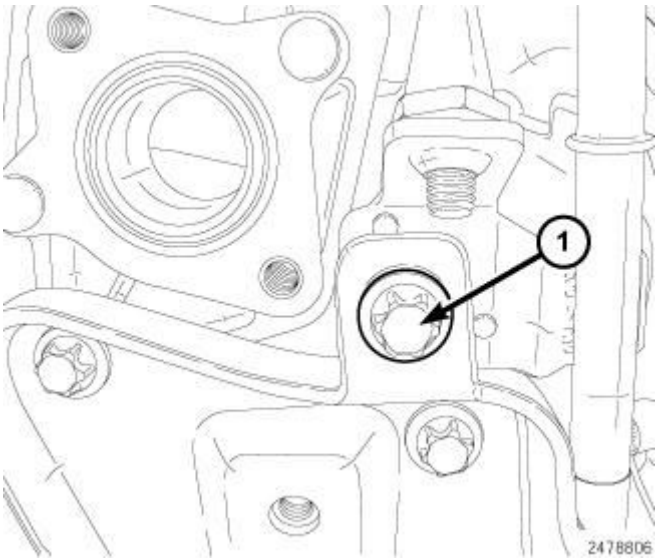

Fig. 367: Vacuum Tube Bolt
Courtesy of CHRYSLER GROUP, LLC

5. Remove the bolt (1) securing the vacuum tube.

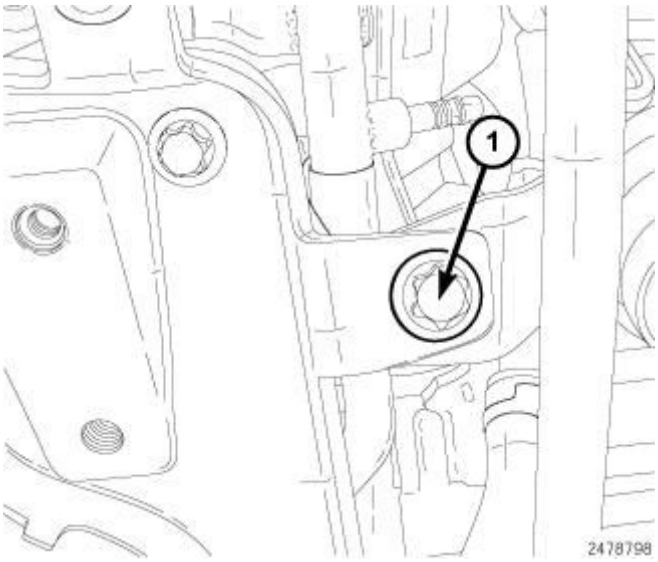

Fig. 368: Oil Dip Stick Bolt
Courtesy of CHRYSLER GROUP, LLC

6. Remove the bolt (1) securing the oil dip stick tube.

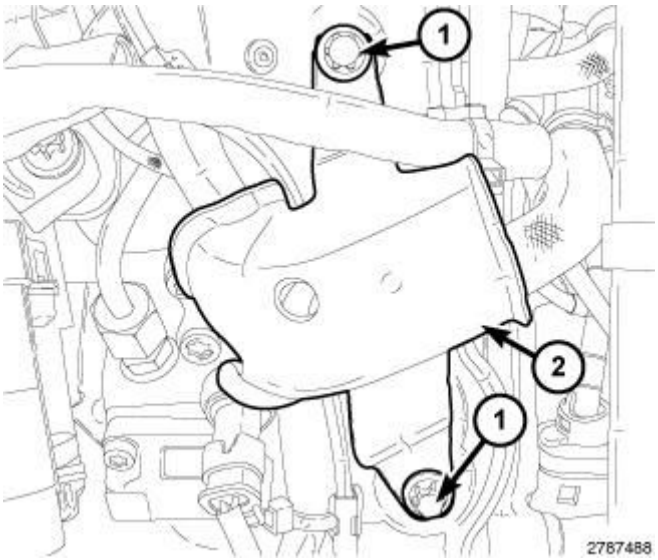

Fig. 369: Identifying Bolts & Heat Shield
Courtesy of CHRYSLER GROUP, LLC

7. Remove bolts (1) and the heat shield (2).

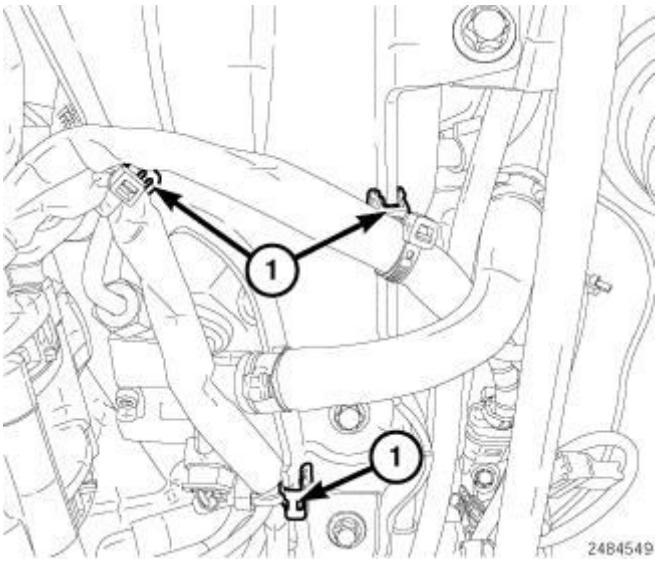

Fig. 370: Wire Harness Retainers
Courtesy of CHRYSLER GROUP, LLC

8. Disconnect the wire harness retainers (1).

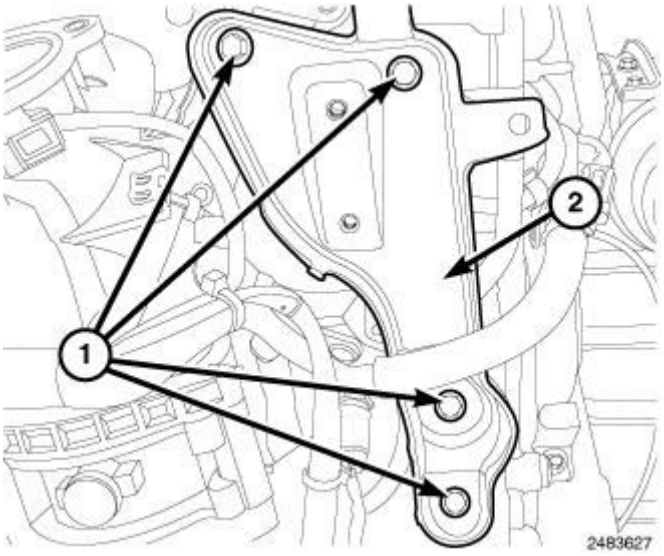

Fig. 371: Identifying Bolts & EGR Support Bracket
Courtesy of CHRYSLER GROUP, LLC

9. Remove bolts (1) and position aside the EGR support bracket (2).

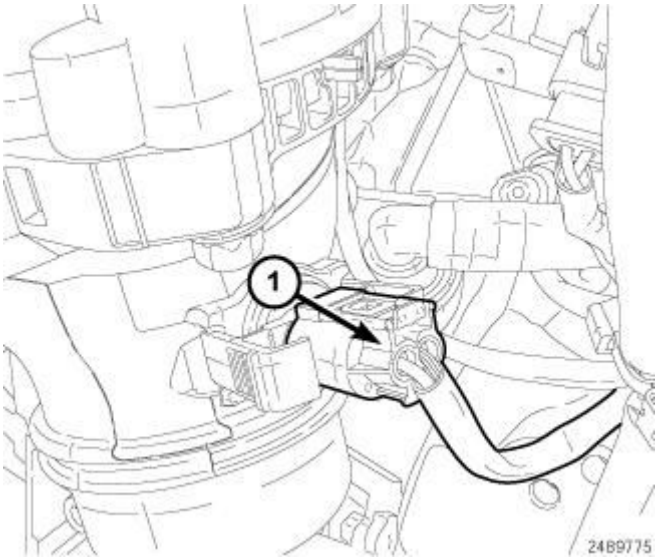

Fig. 372: Identifying Charge Air Temperature Sensor Connectors
Courtesy of CHRYSLER GROUP, LLC

10. Disconnect the charge air inlet temperature sensor (1) harness connector.

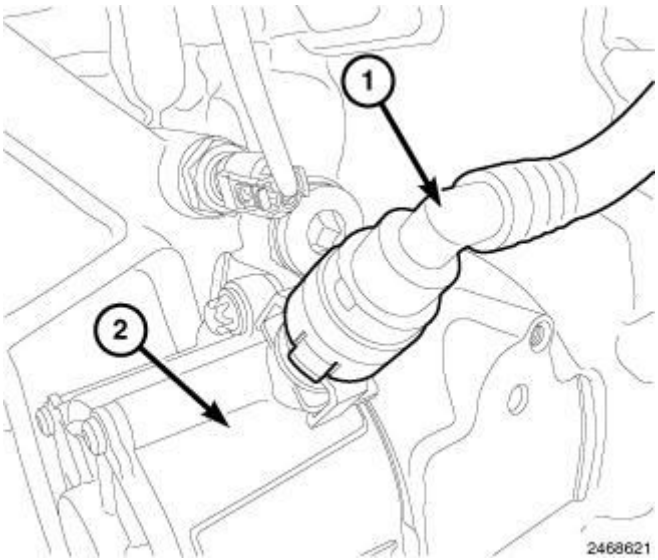

Fig. 373: Vacuum Hose At Vacuum Pump
Courtesy of CHRYSLER GROUP, LLC

11. Disconnect vacuum hose (1) from vacuum pump (2).

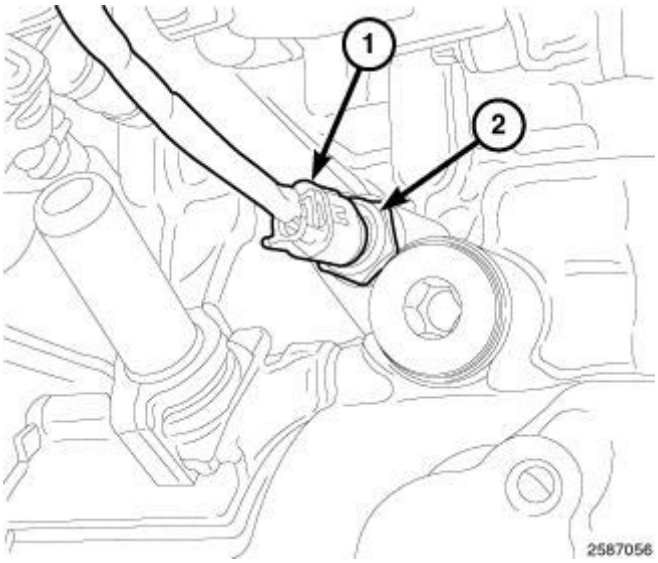

Fig. 374: Oil Temperature Sensor Harness Connector & Sensor
Courtesy of CHRYSLER GROUP, LLC

12. Disconnect the oil temperature sensor harness connector (1).
13. Remove the oil temperature sensor (2).

INSTALLATION

INSTALLATION

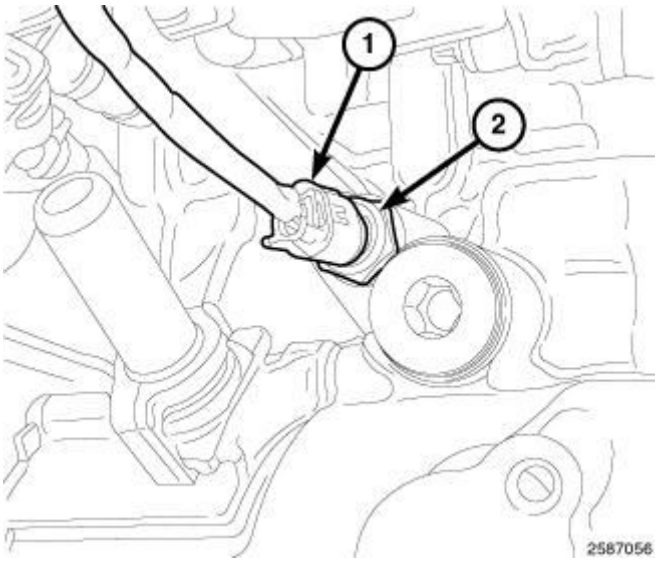

Fig. 375: Oil Temperature Sensor Harness Connector & Sensor
Courtesy of CHRYSLER GROUP, LLC

1. Install the oil temperature sensor (2). Tighten sensor (2) to 26 N.m (19 ft. lbs.).
2. Connect the oil temperature sensor harness connector (1).

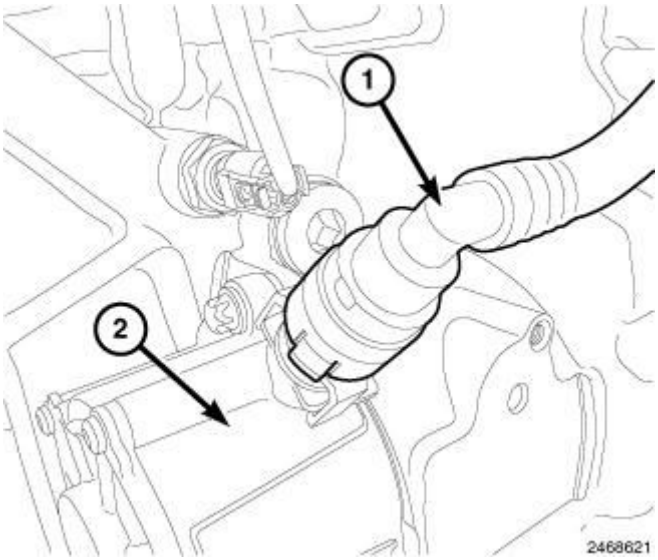

Fig. 376: Vacuum Hose At Vacuum Pump
Courtesy of CHRYSLER GROUP, LLC

3. Connect vacuum hose (1) to the vacuum pump (2).

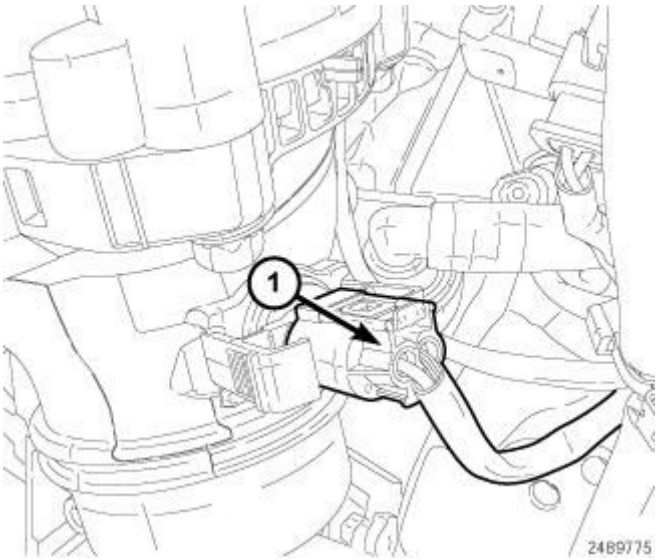

Fig. 377: Identifying Charge Air Temperature Sensor Connectors
Courtesy of CHRYSLER GROUP, LLC

4. Connect the charge air inlet temperature sensor (1) harness connector.

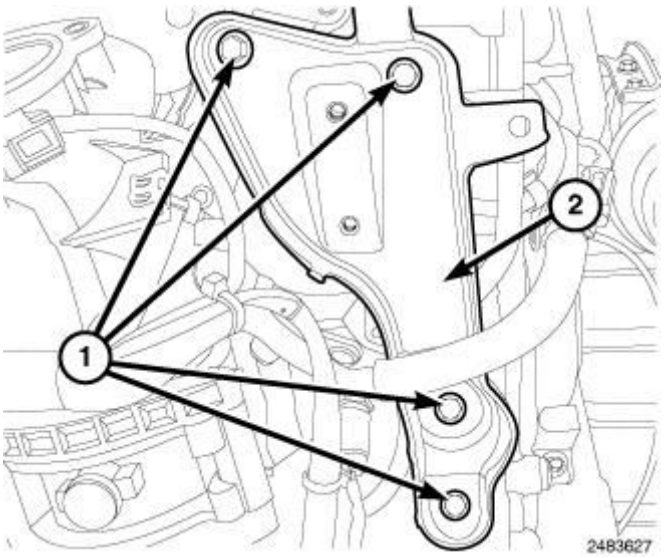

Fig. 378: Identifying Bolts & EGR Support Bracket
Courtesy of CHRYSLER GROUP, LLC

5. Install the EGR support bracket (2). Tighten bolts (1) to 9 N.m (80 in. lbs.).

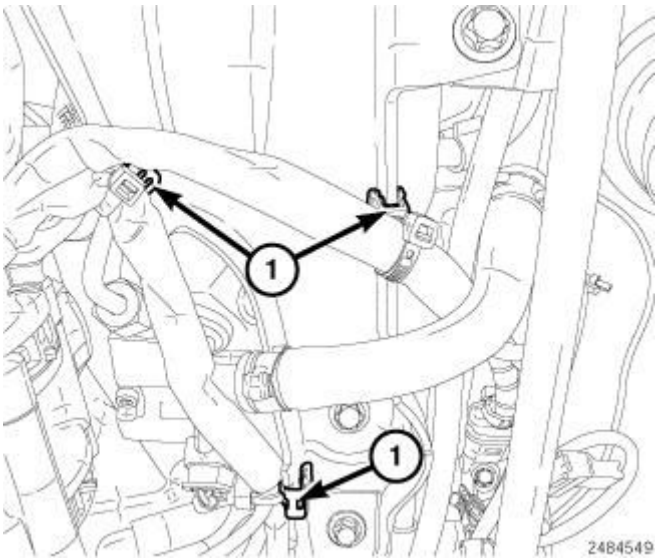

Fig. 379: Wire Harness Retainers
Courtesy of CHRYSLER GROUP, LLC

6. Connect the wire harness retainers (1).

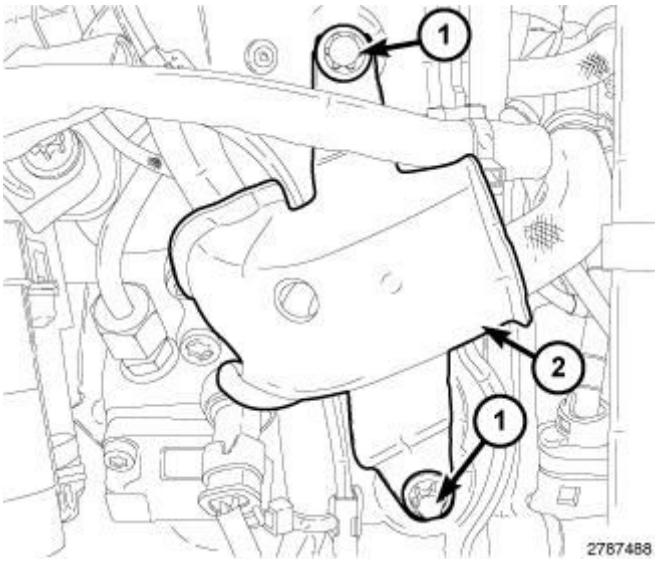

Fig. 380: Identifying Bolts & Heat Shield
Courtesy of CHRYSLER GROUP, LLC

7. Install the heat shield (2). Tighten bolts (1) to 9 N.m (80 in. lbs.).

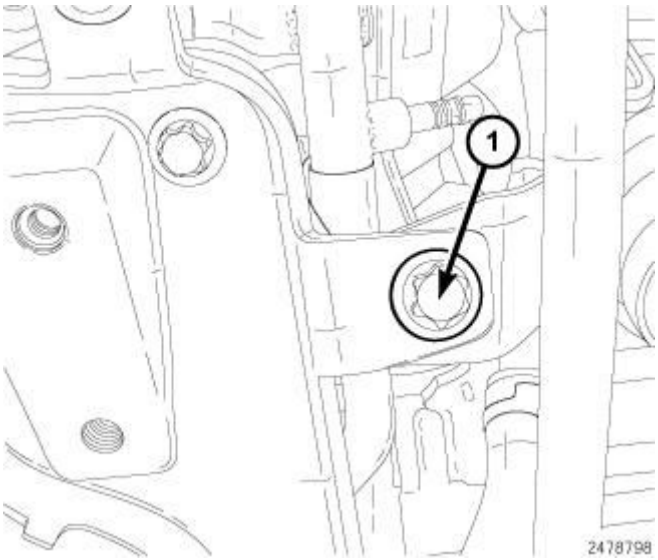

Fig. 381: Oil Dip Stick Bolt
Courtesy of CHRYSLER GROUP, LLC

8. Install the bolt securing the oil dip stick tube. Tighten bolt to 9 N.m (80 in. lbs.).

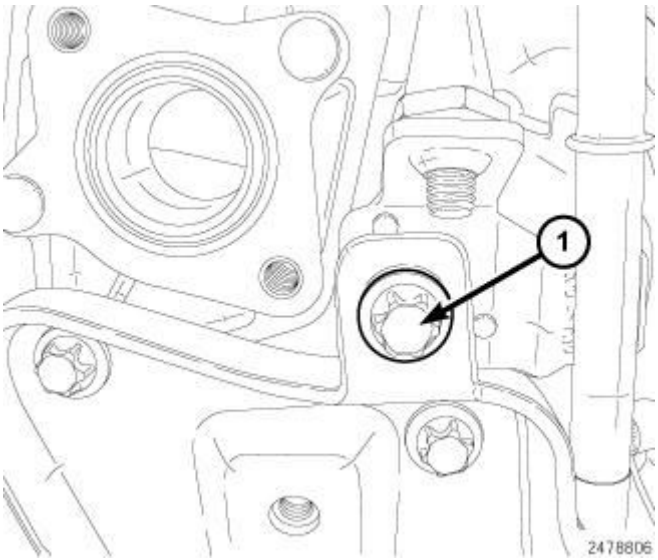

Fig. 382: Vacuum Tube Bolt
Courtesy of CHRYSLER GROUP, LLC

9. Install the bolt securing the vacuum tube (1). Tighten bolt to 9 N.m (80 in. lbs.).

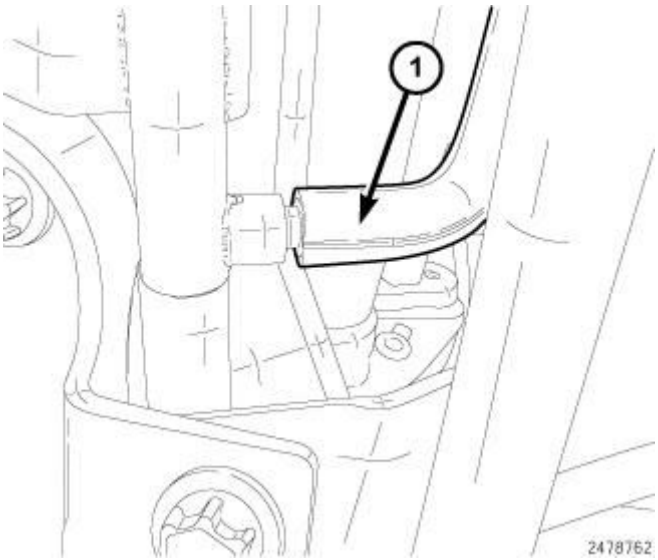

Fig. 383: Vacuum Supply Line At EGR Solenoid
Courtesy of CHRYSLER GROUP, LLC

10. Connect the vacuum supply line (1) to the EGR solenoid.

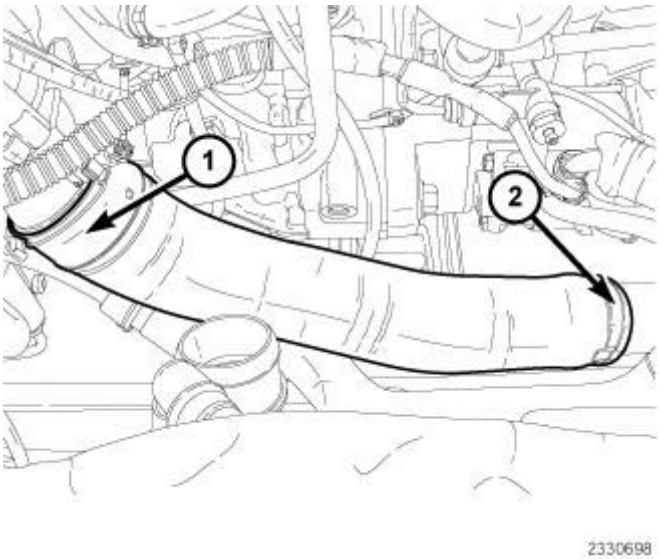

Fig. 384: EGR Air Flow Control Valve & Clamp
Courtesy of CHRYSLER GROUP, LLC

11. Install charge air inlet tube to the charge air cooler (CAC) and the EGR air control valve.
12. Connect the negative battery cable.

SWITCH, OIL LEVEL

DESCRIPTION

DESCRIPTION

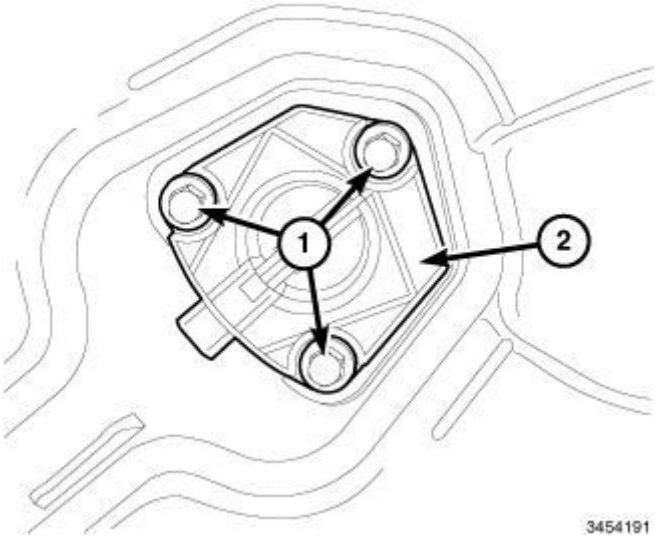

Fig. 385: Oil Level Switch & Bolts
Courtesy of CHRYSLER GROUP, LLC

The oil level (2) switch is located on the bottom of the oil pan. The oil level switch is sends a signal to the Powertrain Control Module (PCM) which turns the oil light on in the cluster when oil level is below its threshold.

If the engine oil light is on while engine is running, perform the DIAGNOSING AN OIL LIGHT ON test procedure. Refer to **DIAGNOSIS AND TESTING** .

REMOVAL

REMOVAL

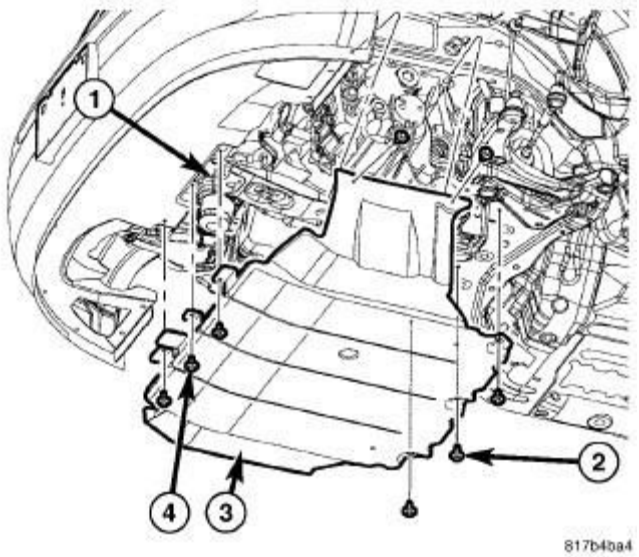

Fig. 386: Belly Pan
Courtesy of CHRYSLER GROUP, LLC

1. Disconnect the negative battery cable.
2. Raise and support the vehicle. Refer to **HOISTING, STANDARD PROCEDURE** .
3. Remove fasteners (2, 4) and the belly pan (3).
4. Drain engine oil. Tighten drain plug to 25 N.m (18 ft. lbs.).

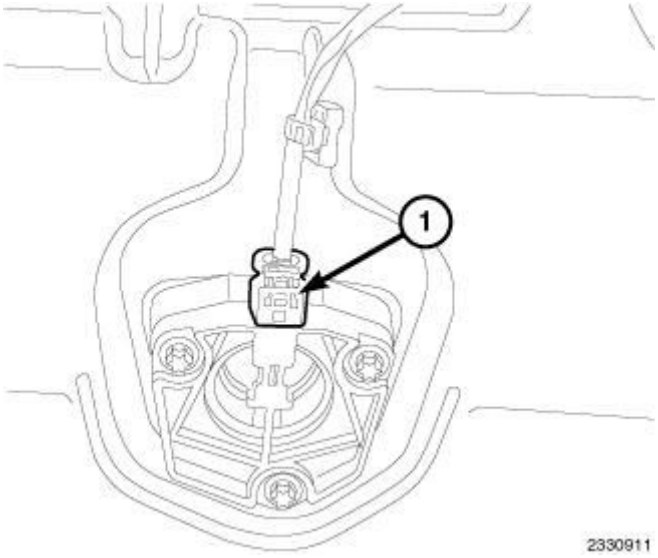

Fig. 387: Oil Level Switch Wire Harness Connector
Courtesy of CHRYSLER GROUP, LLC

5. Disconnect oil level switch harness connector (1).

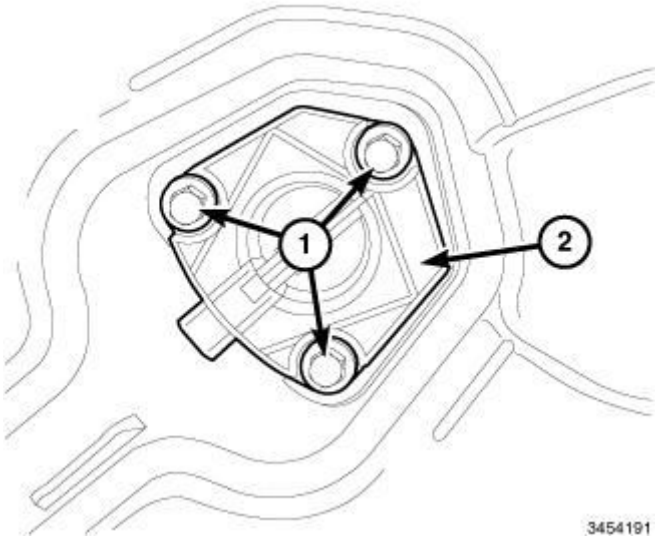

Fig. 388: Oil Level Switch & Bolts
Courtesy of CHRYSLER GROUP, LLC

6. Remove bolts (1) and the oil level switch (2).

INSTALLATION

INSTALLATION

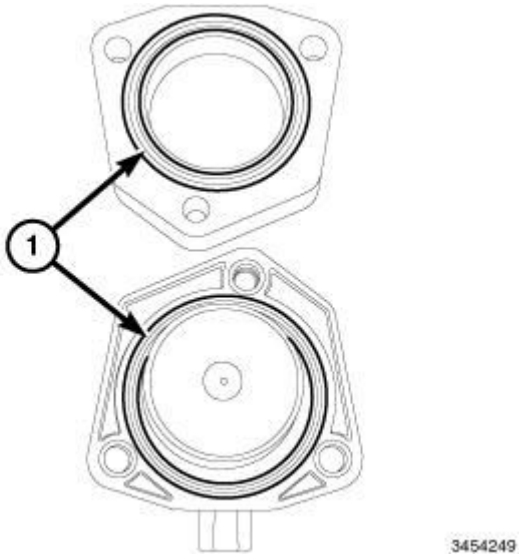

Fig. 389: O-Ring Seals
Courtesy of CHRYSLER GROUP, LLC

1. Clean the gasket sealing area on oil pan.
2. Inspect the O-ring seals (1) and replace as necessary.

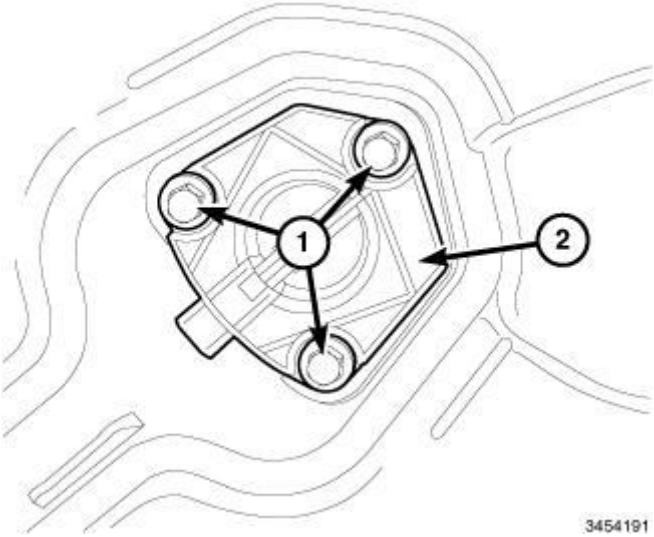

Fig. 390: Oil Level Switch & Bolts
Courtesy of CHRYSLER GROUP, LLC

3. Install the oil level switch. Tighten bolts to 9 N.m (80 in. lbs.).

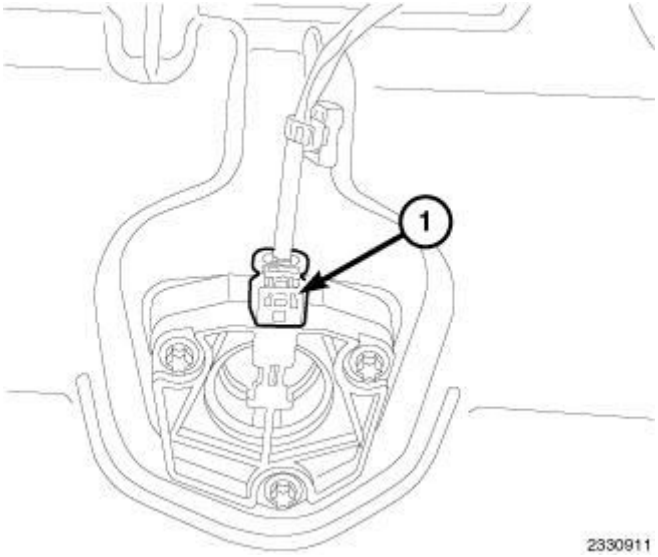

Fig. 391: Oil Level Switch Wire Harness Connector
Courtesy of CHRYSLER GROUP, LLC

4. Connect oil level switch harness connector (1).

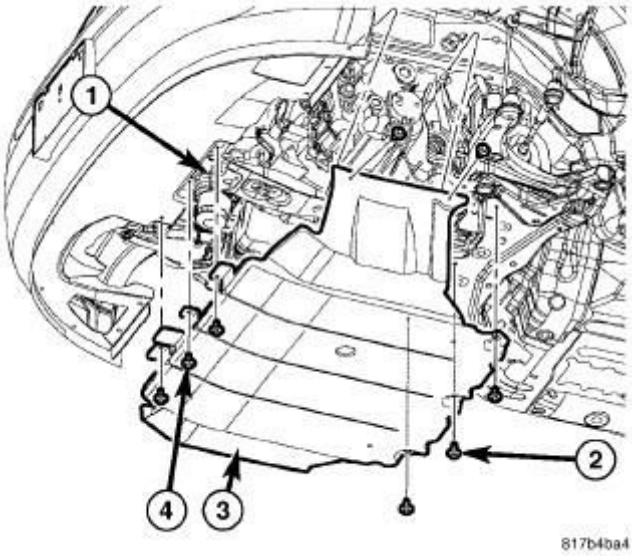

Fig. 392: Belly Pan
Courtesy of CHRYSLER GROUP, LLC

5. Install the belly pan and fasteners (2, 4).
6. Lower the vehicle
7. Fill the engine with recommended engine oil. Refer to **CAPACITIES AND RECOMMENDED FLUIDS, SPECIFICATIONS** .
8. Connect the negative battery cable.

MANIFOLDS

ACTUATOR, SWIRL VALVE

DESCRIPTION

DESCRIPTION

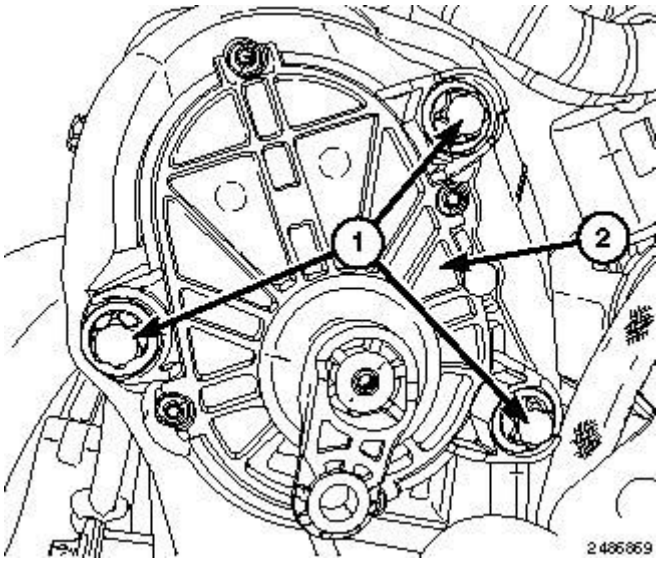

Fig. 393: Swirl Valve Actuator & Bolts
Courtesy of CHRYSLER GROUP, LLC

The intake manifold swirl valve (2) is located inside the intake manifold. The swirl valve actuator is mounted on top of the intake manifold.

OPERATION

OPERATION

The swirl and charge inlet port are provided in the intake manifold for each cylinder. The charge inlet port can be closed by means of flaps. The flaps are connected to each other by means of a shaft, which is operated by the swirl valve actuator. They are held in the open position by means of spring force.

At lower engine speed and load range, all the charge inlet ports are sealed off by the flaps. The entire air flows is through the swirl inlet ports only. This results in high air swirling which in turn produces more effective mixing of the fuel with the air, which improves combustion and reduces the amount of soot particulants in the exhaust.

As engine speed and load increases, the charge inlet ports are continuously

opened to obtain the best possible ratio between air swirling and air mass for each engine operating point, which will optimize exhaust characteristics and engine power output.

The position of the flaps in the charge inlet ports is determined by the map stored in the Powertrain Control Module (PCM).

REMOVAL

REMOVAL

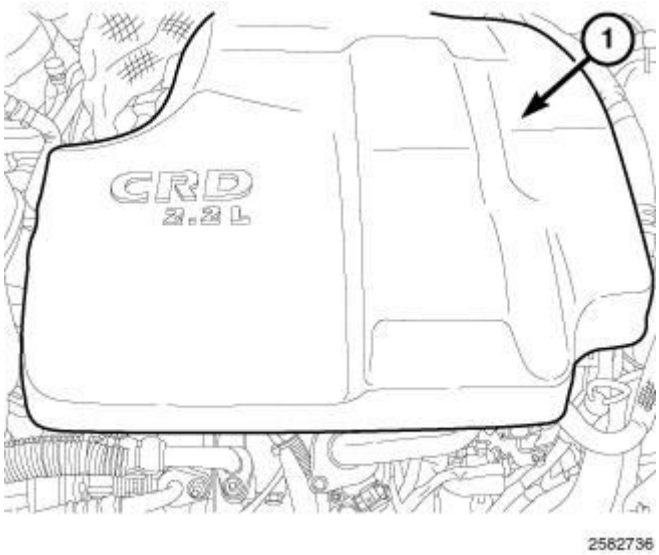

Fig. 394: Engine Cover
Courtesy of CHRYSLER GROUP, LLC

1. Disconnect the negative battery cable.
2. Remove the engine cover (1).
3. Drain the cooling system. Refer to **STANDARD PROCEDURE** .

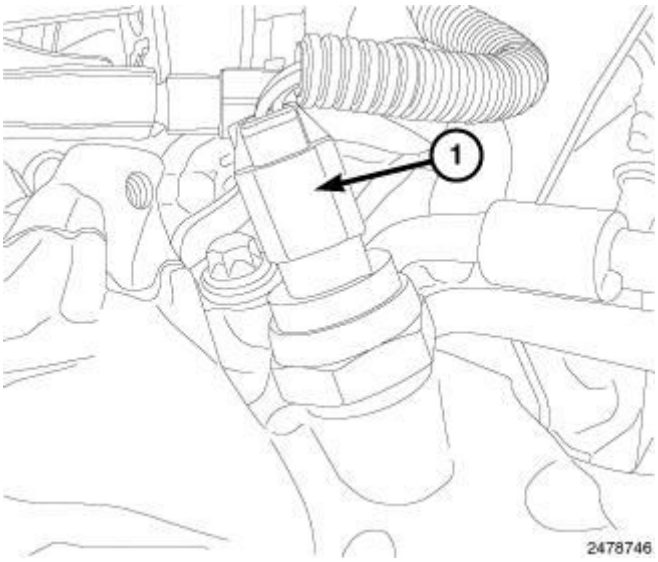

Fig. 395: Identifying EGR Back Pressure Transducer Harness Connector
Courtesy of CHRYSLER GROUP, LLC

4. Disconnect the EGR back pressure transducer harness connector (1).

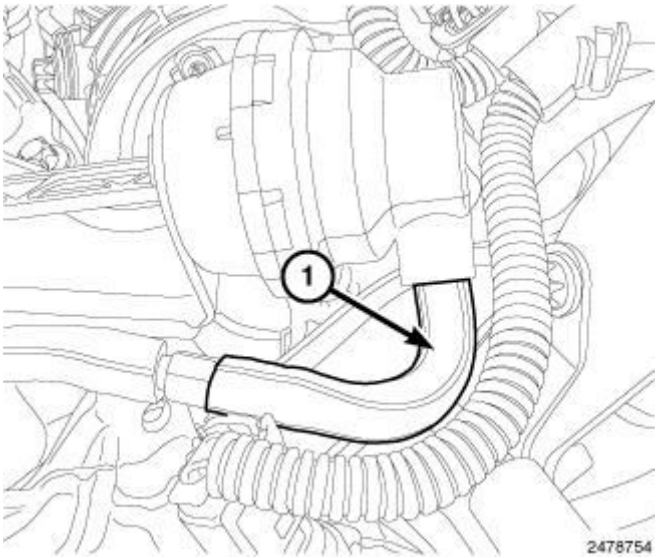

Fig. 396: Identifying Vacuum Line
Courtesy of CHRYSLER GROUP, LLC

5. Disconnect the vacuum line (1) from the EGR control valve actuator.

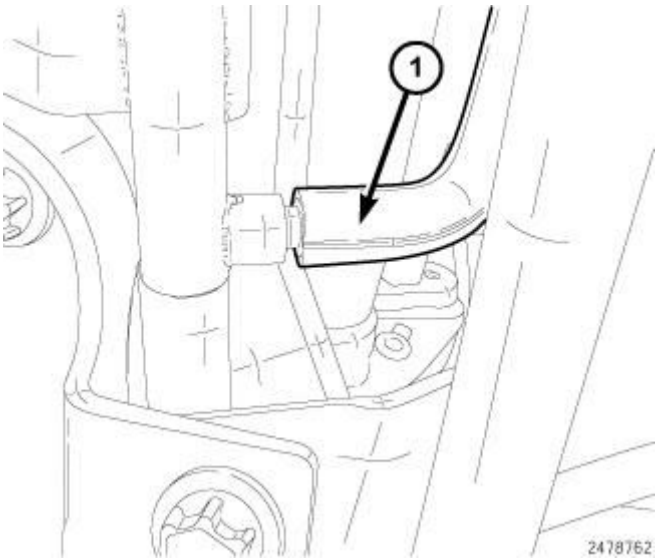

Fig. 397: Vacuum Supply Line At EGR Solenoid
Courtesy of CHRYSLER GROUP, LLC

6. Disconnect the vacuum supply line (1) to the EGR solenoid.

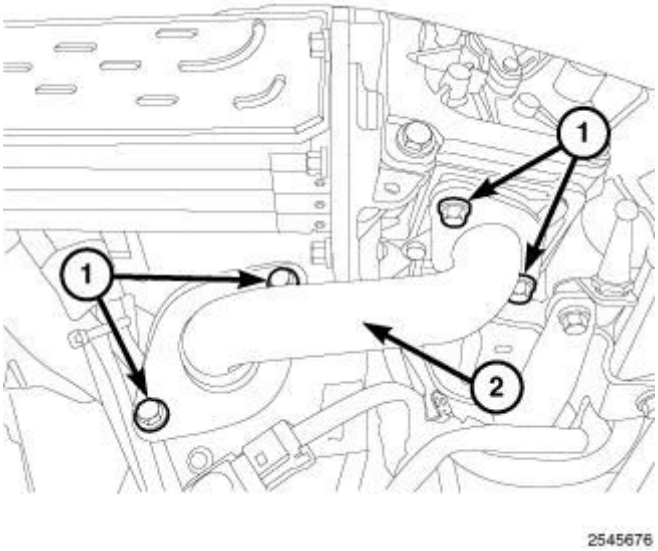

Fig. 398: EGR Tube & Bolts
Courtesy of CHRYSLER GROUP, LLC

7. Remove bolts (1) and the EGR tube (2).

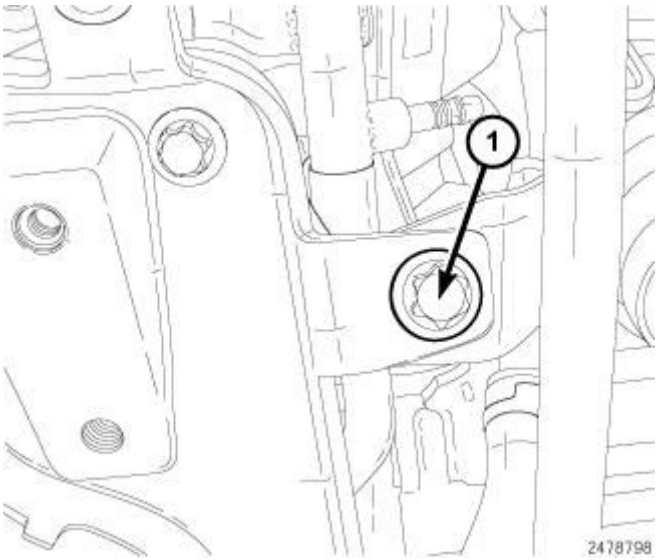

Fig. 399: Oil Dip Stick Bolt
Courtesy of CHRYSLER GROUP, LLC

8. Remove the bolt (1) securing the oil dip stick tube.

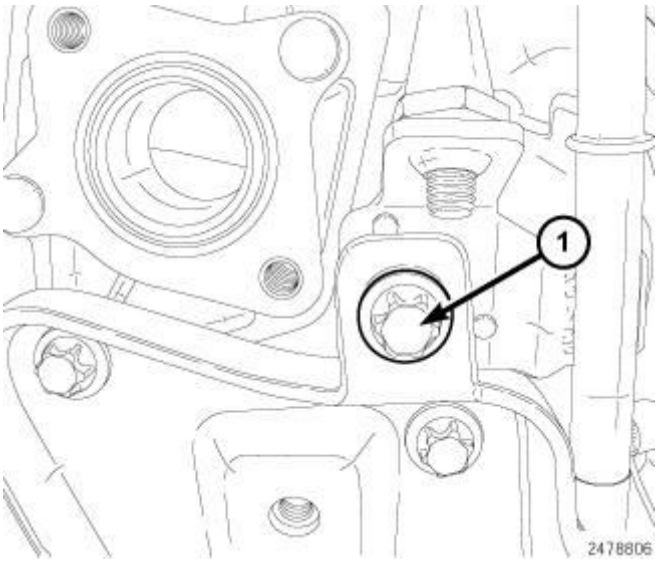

Fig. 400: Vacuum Tube Bolt
Courtesy of CHRYSLER GROUP, LLC

9. Remove bolt (1) securing the vacuum tube.

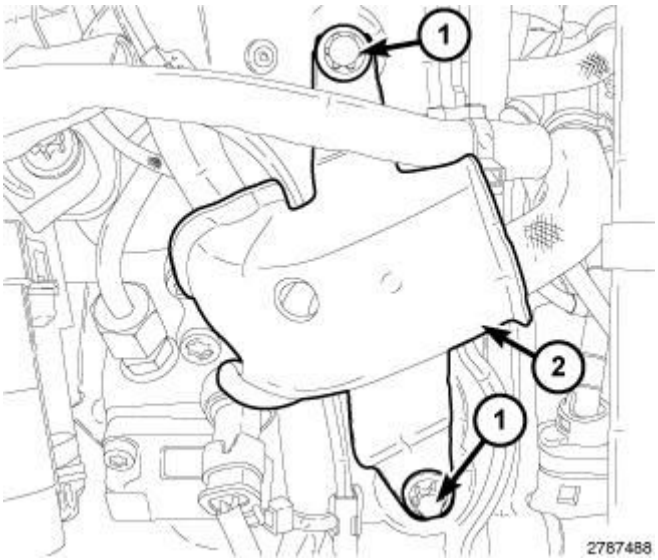

Fig. 401: Identifying Bolts & Heat Shield
Courtesy of CHRYSLER GROUP, LLC

10. Remove bolts (1) and the heat shield (2).

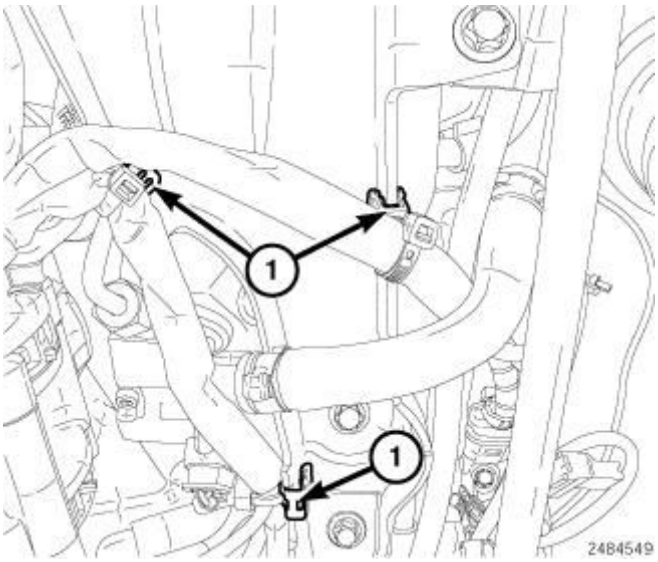

Fig. 402: Wire Harness Retainers
Courtesy of CHRYSLER GROUP, LLC

11. Disconnect the wire harness retainers (1).

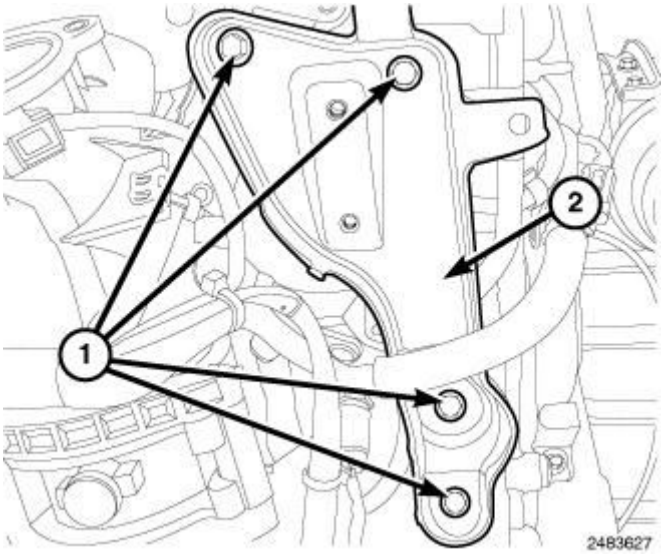

Fig. 403: Identifying Bolts & EGR Support Bracket
Courtesy of CHRYSLER GROUP, LLC

12. Remove bolts (1) and the EGR support bracket (2).

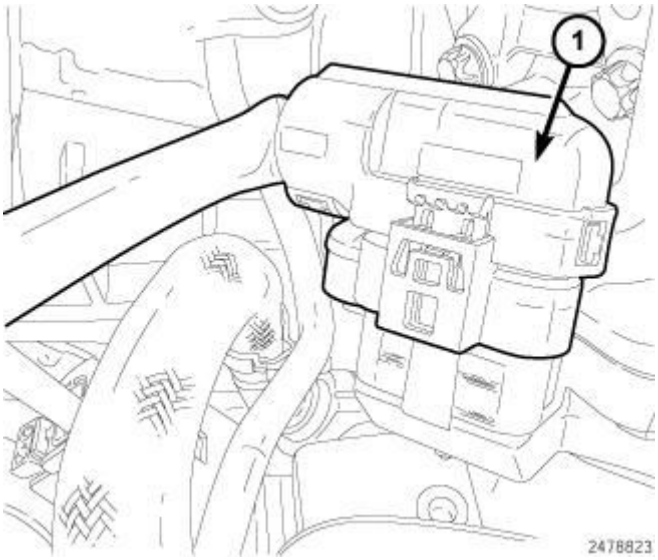

Fig. 404: Identifying EGR Valve Harness Connector
Courtesy of CHRYSLER GROUP, LLC

13. Disconnect the EGR valve wire harness connector (1).

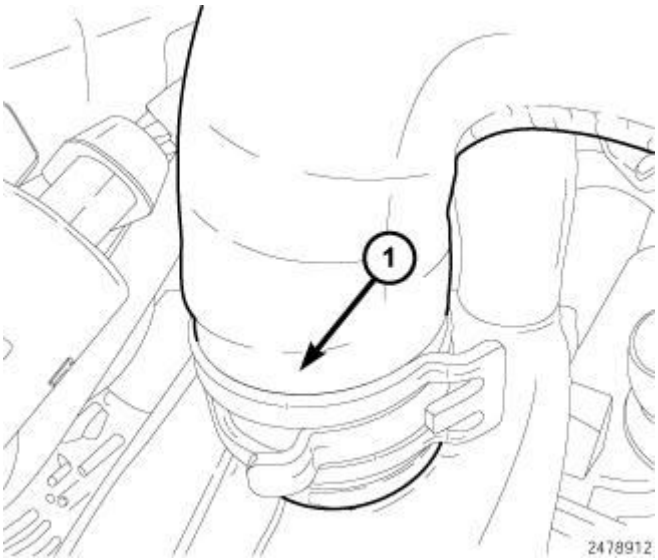

Fig. 405: EGR Coolant Hose
Courtesy of CHRYSLER GROUP, LLC

14. Disconnect the EGR coolant hose (1).

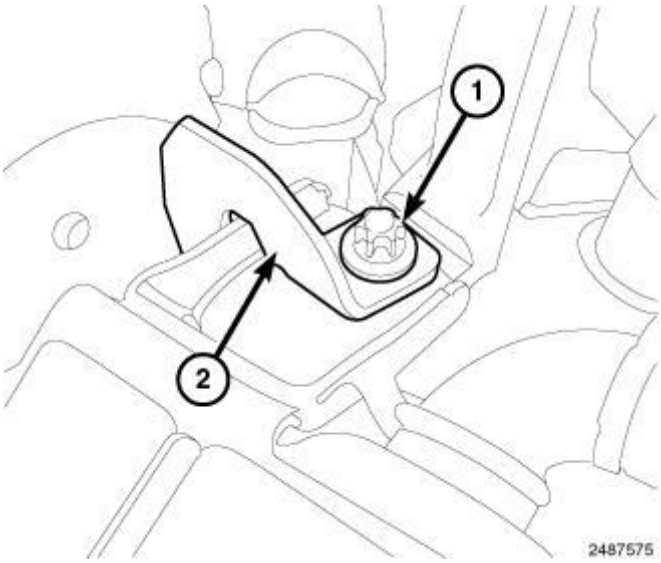

Fig. 406: Upper EGR Cooler Bolt & Bracket
Courtesy of CHRYSLER GROUP, LLC

15. Remove the upper EGR cooler bolt (1) and bracket (2).

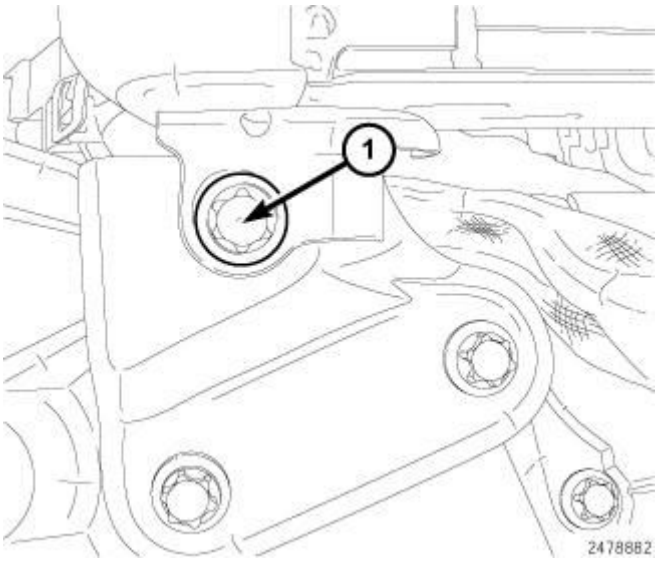

Fig. 407: Lower EGR Cooler Bolt
Courtesy of CHRYSLER GROUP, LLC

16. Remove the lower EGR cooler bolt (1).

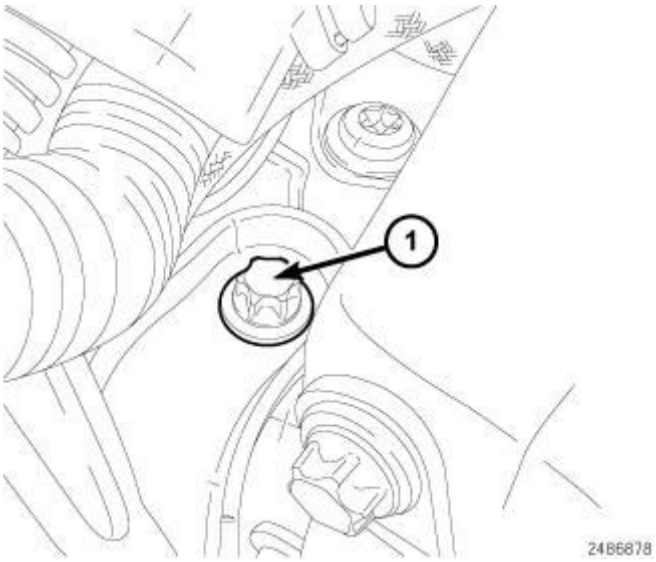

Fig. 408: Support Bracket Bolt
Courtesy of CHRYSLER GROUP, LLC

17. Remove the support bracket bolt (1).

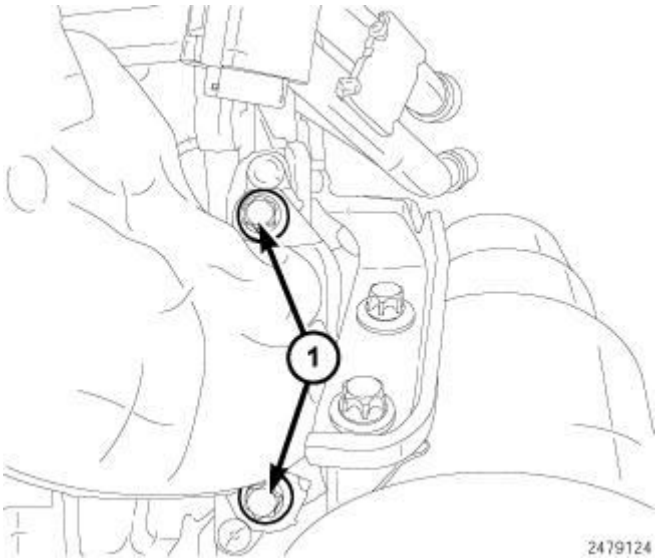

Fig. 409: Identifying EGR Cooler Manifold Bolts
Courtesy of CHRYSLER GROUP, LLC

18. Remove two bolts (1) and the EGR cooler manifold.

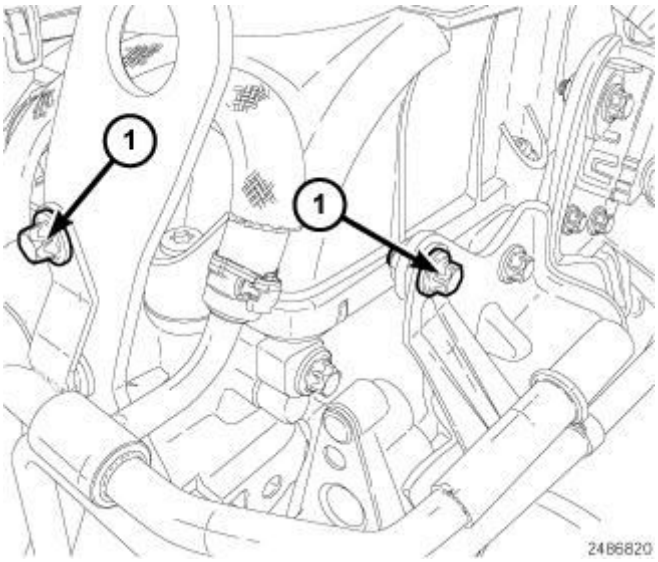

Fig. 410: Upper Fuel Line Bracket Bolts
Courtesy of CHRYSLER GROUP, LLC

19. Remove the two upper fuel line bracket bolts (1).

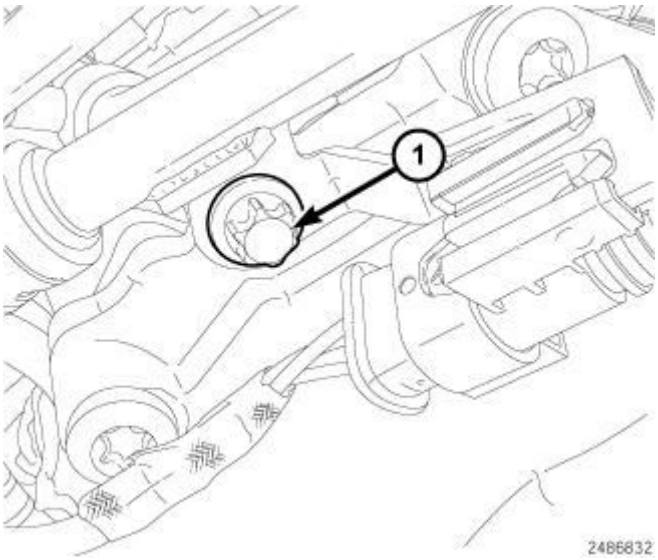

Fig. 411: Lower Fuel Line Bracket Bolt
Courtesy of CHRYSLER GROUP, LLC

20. Remove the lower fuel line bracket bolt (1).

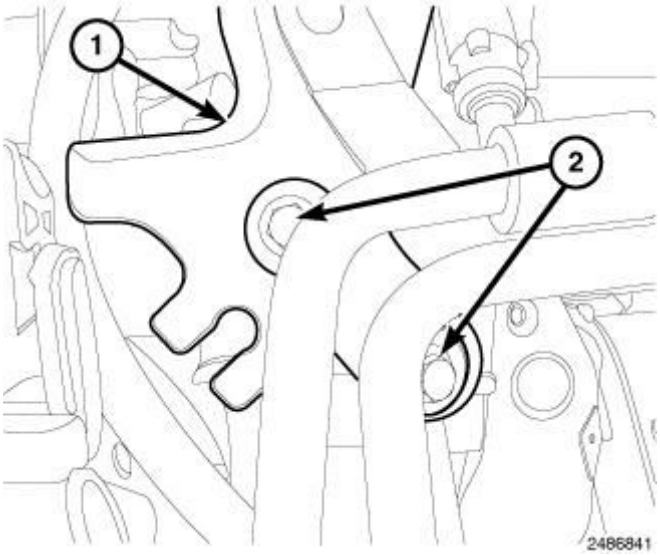

Fig. 412: Engine Lifting Eye & Bolts
Courtesy of CHRYSLER GROUP, LLC

21. Remove bolts (2) and the engine lifting eye (1).

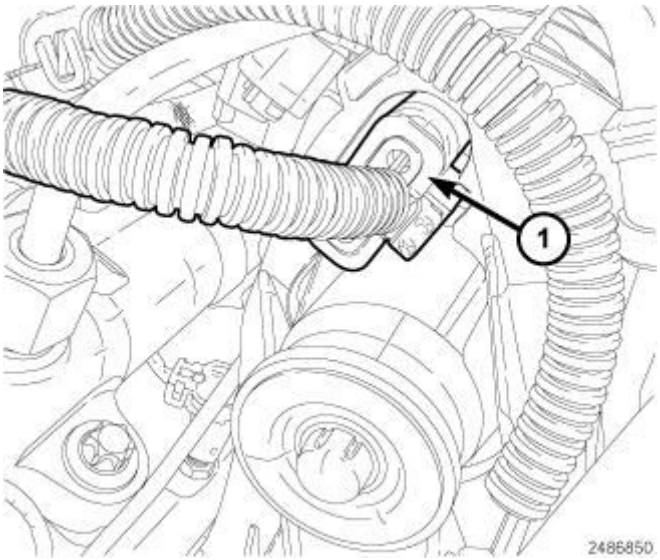

Fig. 413: Swirl Valve Actuator Harness Connector
Courtesy of CHRYSLER GROUP, LLC

22. Disconnect the swirl valve actuator wire harness connector (1).

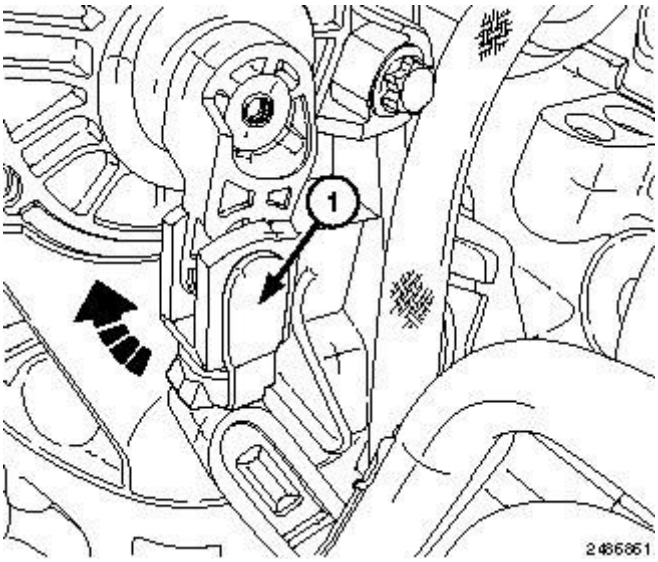

Fig. 414: Releasing Lock Clip At Swirl Valve Linkage
Courtesy of CHRYSLER GROUP, LLC

23. Release the lock clip (1) and disconnect the swirl valve linkage.

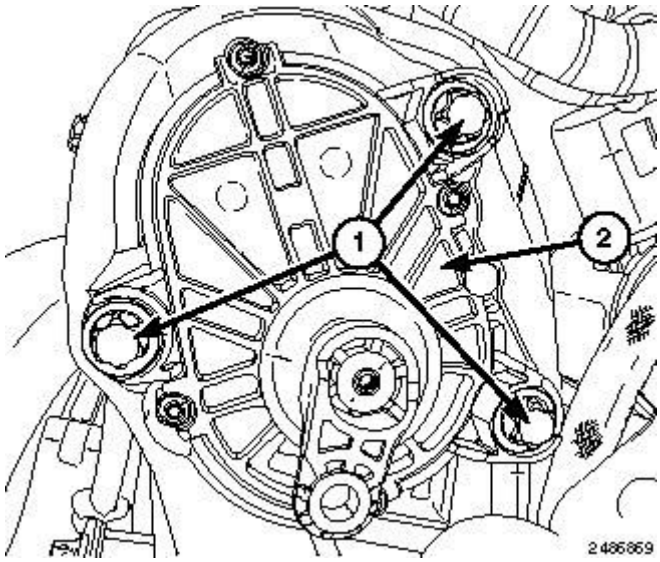

Fig. 415: Swirl Valve Actuator & Bolts
Courtesy of CHRYSLER GROUP, LLC

24. Remove the bolts (1) and the swirl valve actuator (2).

INSTALLATION

INSTALLATION

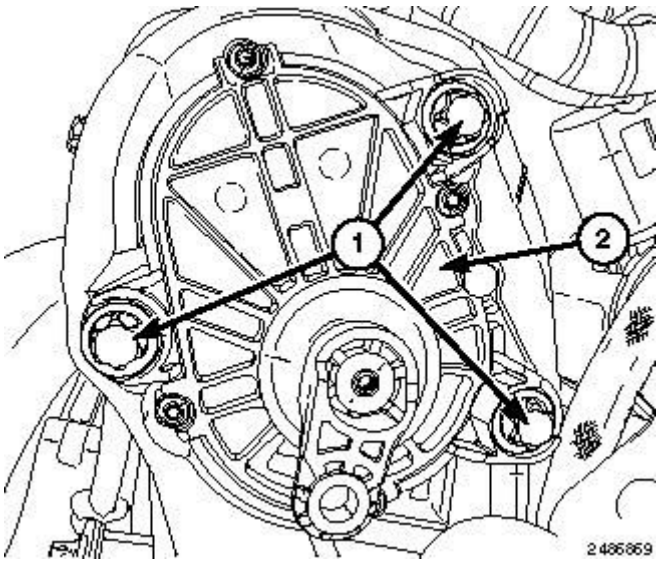

Fig. 416: Swirl Valve Actuator & Bolts
Courtesy of CHRYSLER GROUP, LLC

1. Install swirl valve motor (2). Tighten bolts (1) to 9 N.m 80 (in. lbs.).

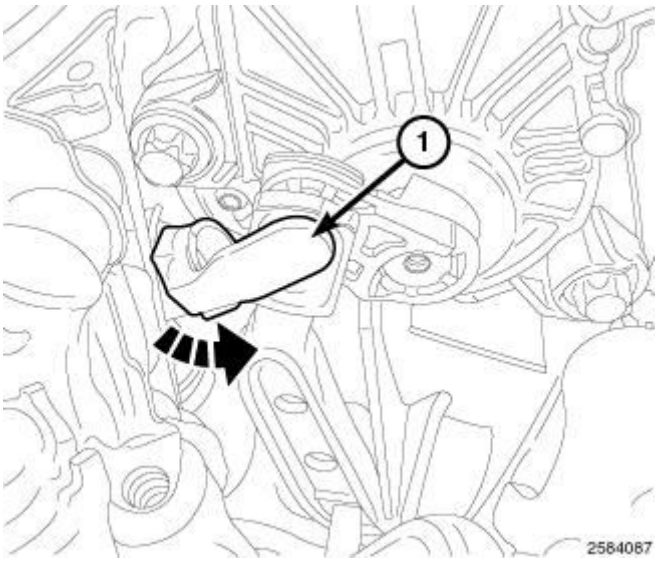

Fig. 417: Installing Lock Clip On Swirl Valve Linkage
Courtesy of CHRYSLER GROUP, LLC

2. Position the swirl valve linkage and install the lock clip (1).

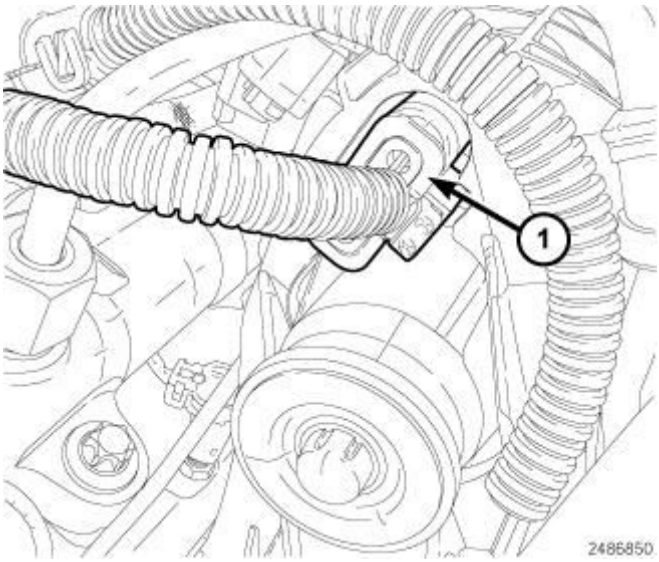

Fig. 418: Swirl Valve Actuator Harness Connector
Courtesy of CHRYSLER GROUP, LLC

3. Connect the swirl valve motor harness connector (1).

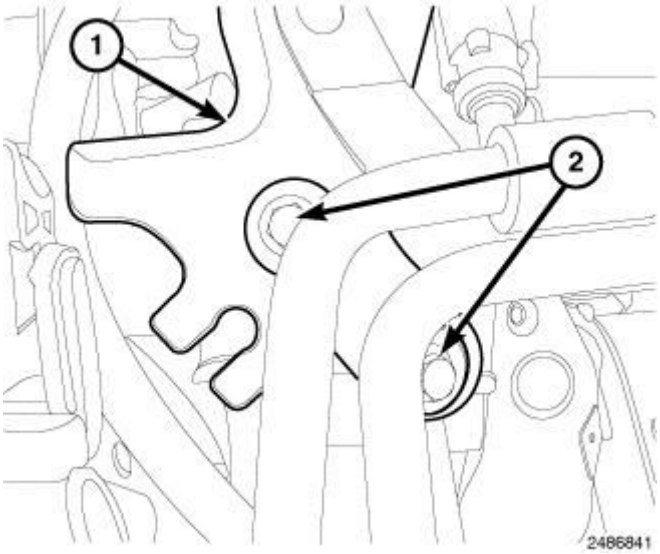

Fig. 419: Engine Lifting Eye & Bolts
Courtesy of CHRYSLER GROUP, LLC

4. Install the engine lifting bracket (1). Tighten bolts (2) to 9 N.m 80 (in. lbs.).

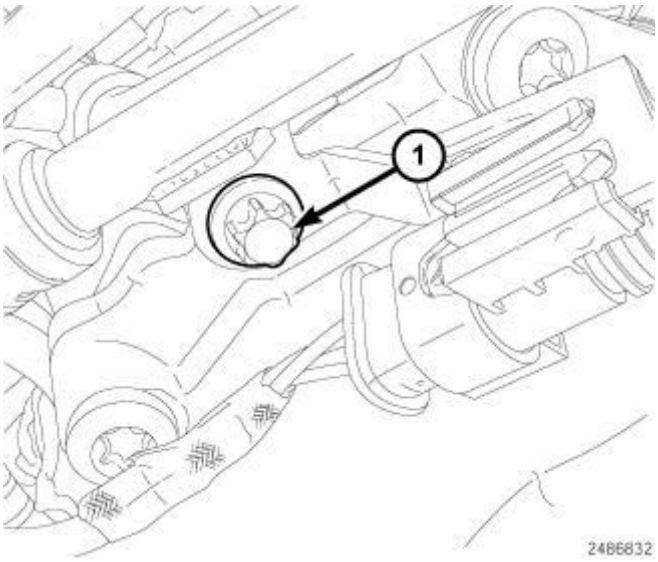

Fig. 420: Lower Fuel Line Bracket Bolt
Courtesy of CHRYSLER GROUP, LLC

5. Install the lower fuel line bracket bolt (1). Tighten bolt to 9 N.m 80 (in. lbs.).

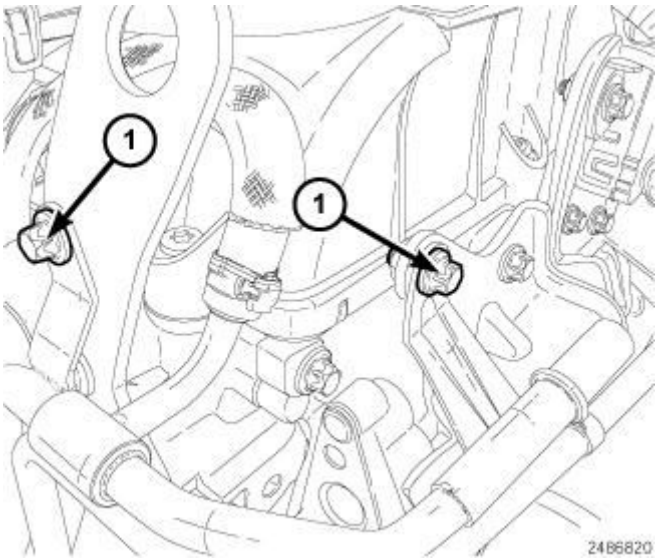

Fig. 421: Upper Fuel Line Bracket Bolts
Courtesy of CHRYSLER GROUP, LLC

6. Install the two upper fuel line bracket bolts. Tighten bolts to 9 N.m 80 (in. lbs.).

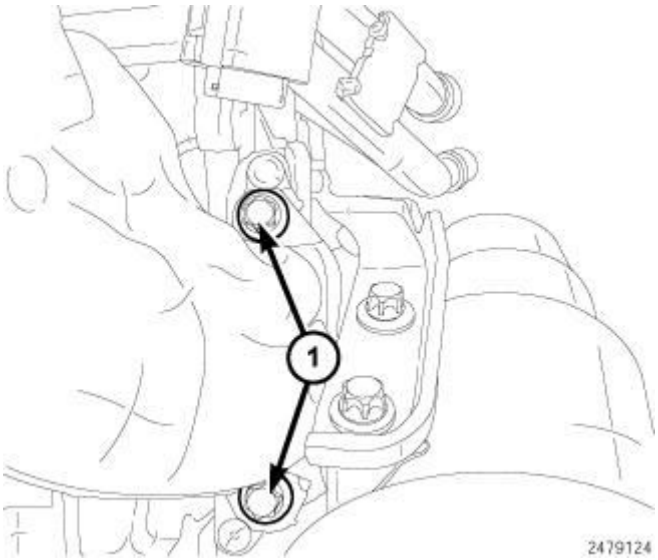

Fig. 422: Identifying EGR Cooler Manifold Bolts
Courtesy of CHRYSLER GROUP, LLC

7. Install the EGR cooler manifold. Tighten bolts (1) to 9 N.m 80 (in. lbs.).

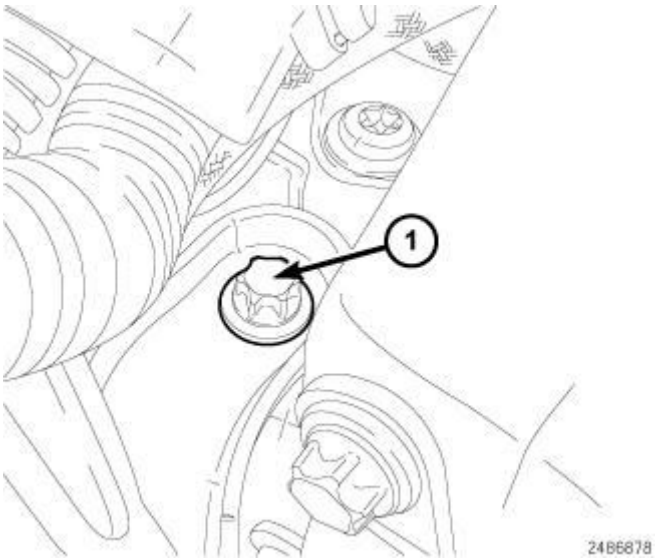

Fig. 423: Support Bracket Bolt
Courtesy of CHRYSLER GROUP, LLC

8. Install the upper EGR cooler support bracket bolt (1). Tighten bolt (1) to 9 N.m 80 (in. lbs.).

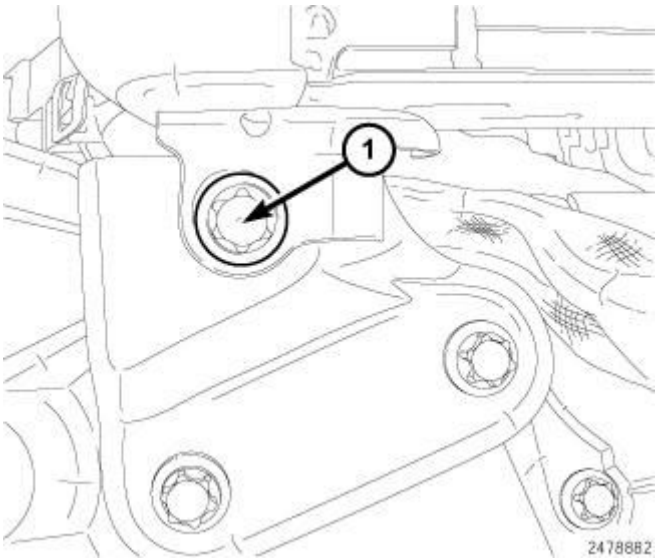

Fig. 424: Lower EGR Cooler Bolt
Courtesy of CHRYSLER GROUP, LLC

9. Install the lower EGR cooler support bracket bolt (1). Tighten bolt (1) to 9 N.m 80 (in. lbs.).

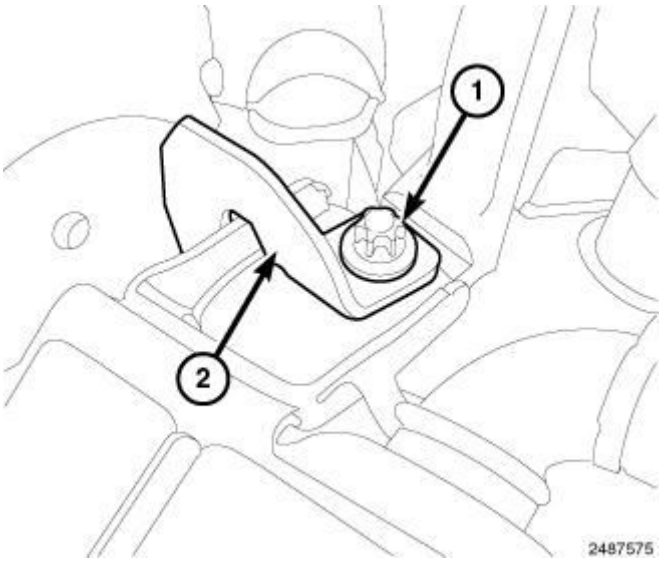

Fig. 425: Upper EGR Cooler Bolt & Bracket
Courtesy of CHRYSLER GROUP, LLC

10. Install the upper EGR cooler bracket (2) and bolt (1). Tighten bolt (1) to 9 N.m 80 (in. lbs.).

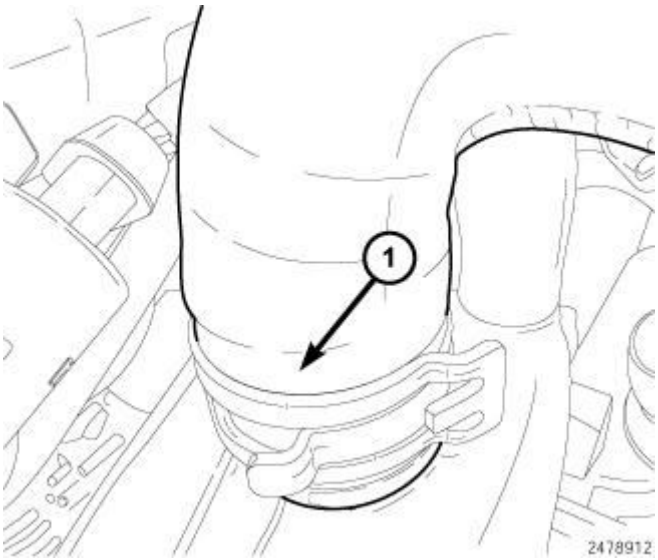

Fig. 426: EGR Coolant Hose
Courtesy of CHRYSLER GROUP, LLC

11. Connect the EGR coolant hose (1).

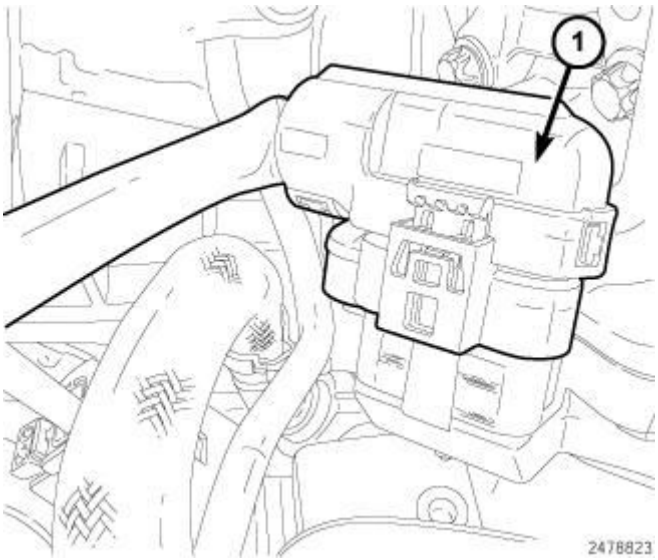

Fig. 427: Identifying EGR Valve Harness Connector
Courtesy of CHRYSLER GROUP, LLC

12. Connect the EGR valve electrical connector (1).

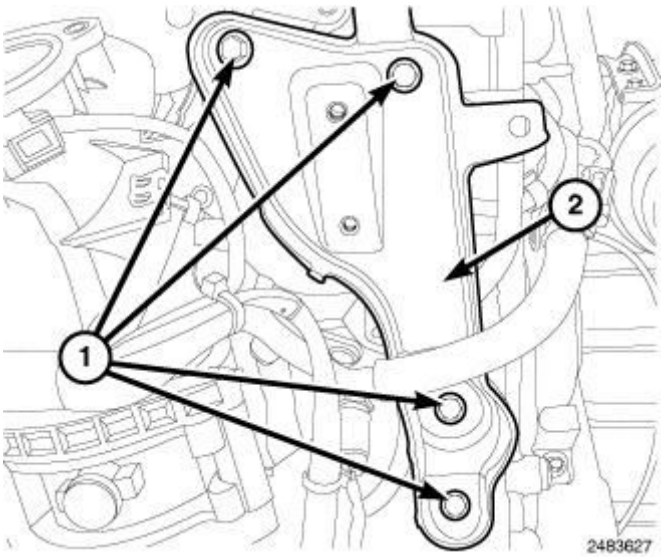

Fig. 428: Identifying Bolts & EGR Support Bracket
Courtesy of CHRYSLER GROUP, LLC

13. Install the EGR support bracket (2). Tighten bolts (1) to 9 N.m 80 (in. lbs.).

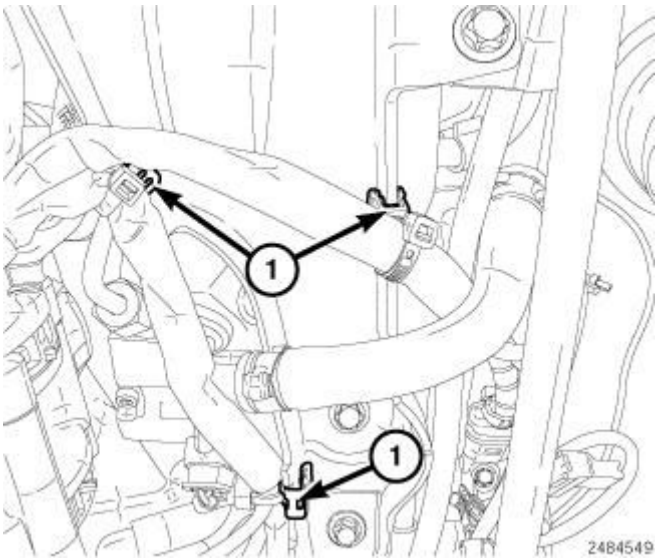

Fig. 429: Wire Harness Retainers
Courtesy of CHRYSLER GROUP, LLC

14. Connect the wire harness retainers (1).

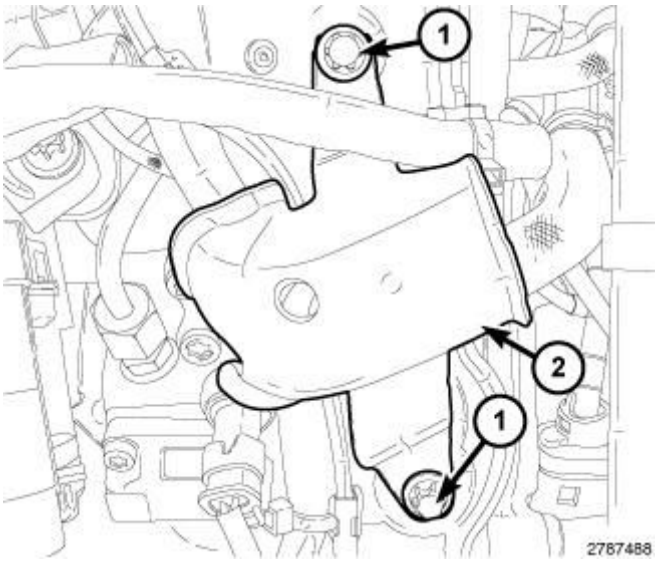

Fig. 430: Identifying Bolts & Heat Shield
Courtesy of CHRYSLER GROUP, LLC

15. Install the heat shield (2). Tighten bolts (1) to 9 N.m (80 in. lbs.).

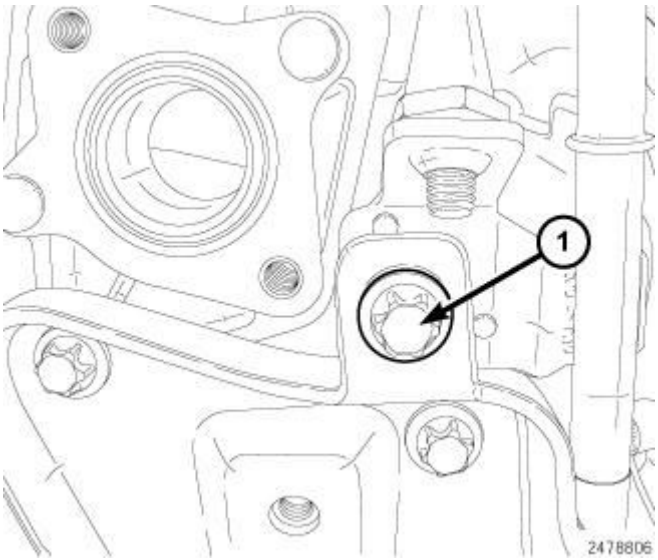

Fig. 431: Vacuum Tube Bolt
Courtesy of CHRYSLER GROUP, LLC

16. Install the bolt (1) securing the vacuum tube. Tighten bolt (1) to 9 N.m 80 (in. lbs.).

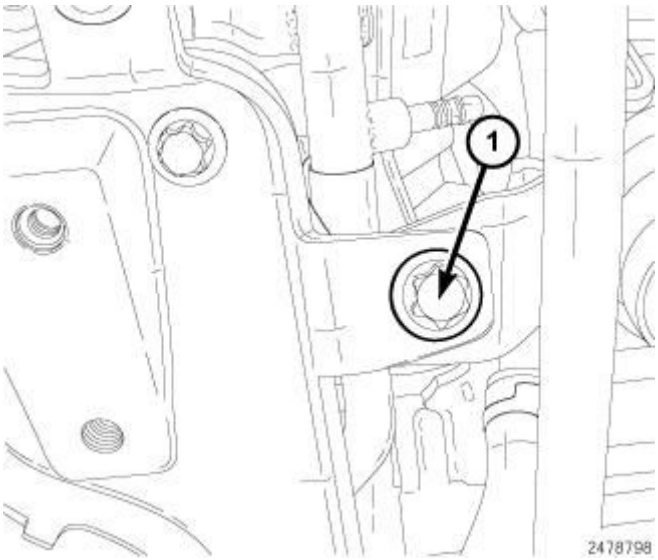

Fig. 432: Oil Dip Stick Bolt
Courtesy of CHRYSLER GROUP, LLC

17. Install the bolt (1) securing the oil dip stick tube. Tighten bolt (1) to 9 N.m 80 (in. lbs.).

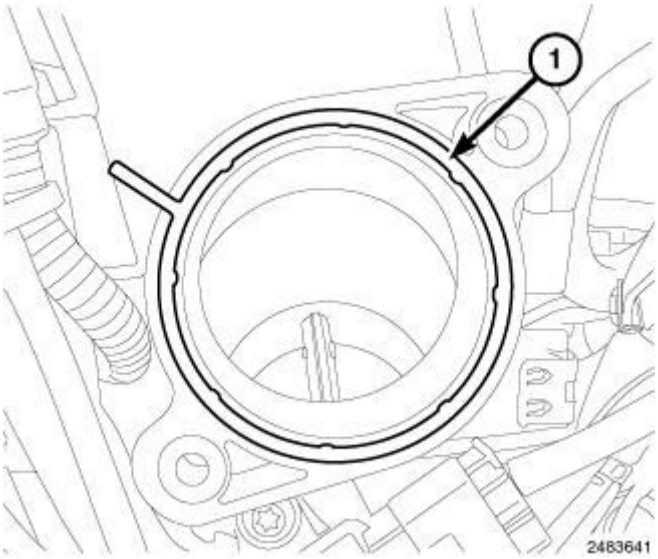

Fig. 433: Installing/Removing EGR Tube Gasket Onto Mixing Chamber
Courtesy of CHRYSLER GROUP, LLC

18. Clean the gasket surfaces and install a new gasket (1).

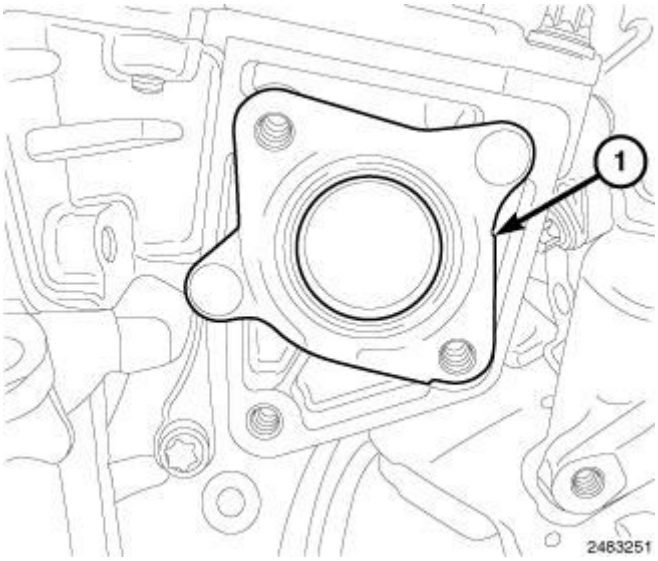

Fig. 434: Installing/Removing EGR Tube Gasket Onto EGR Actuator
Courtesy of CHRYSLER GROUP, LLC

19. Clean the gasket surfaces and install a new gasket (1).

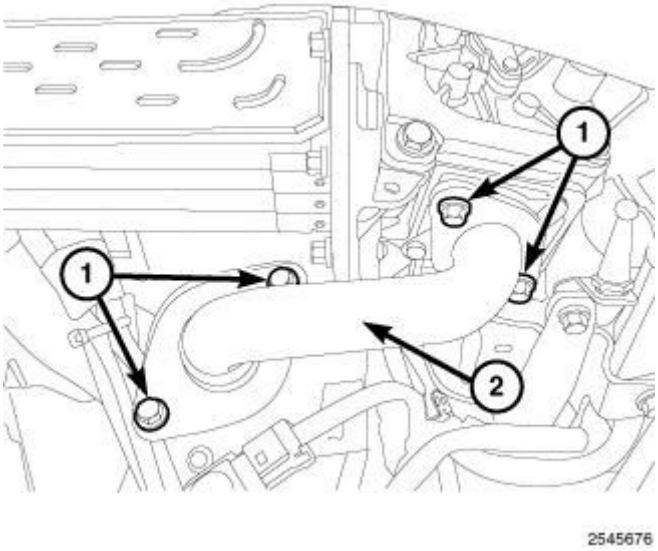

Fig. 435: EGR Tube & Bolts
Courtesy of CHRYSLER GROUP, LLC

20. Install the EGR tube (2). Tighten bolts (1) to 9 N.m 80 (in. lbs.).

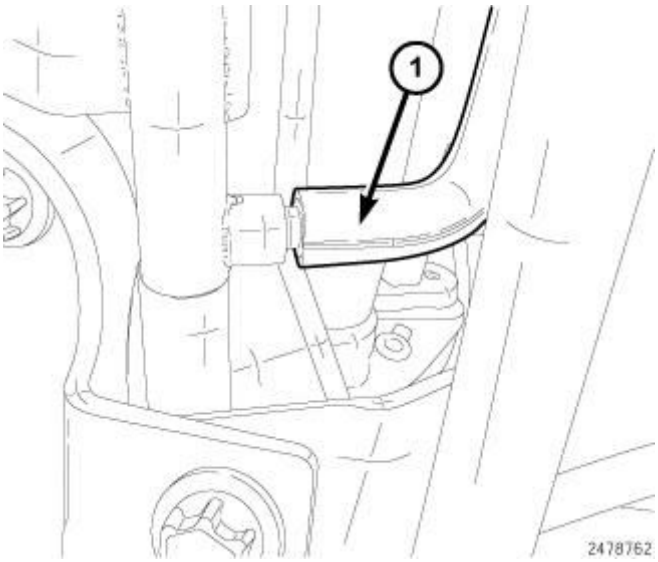

Fig. 436: Vacuum Supply Line At EGR Solenoid
Courtesy of CHRYSLER GROUP, LLC

21. Connect the vacuum supply line (1) to the EGR solenoid.

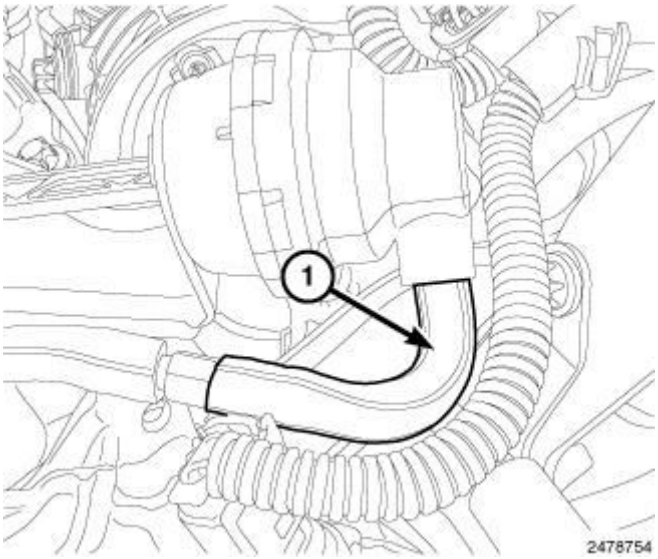

Fig. 437: Identifying Vacuum Line
Courtesy of CHRYSLER GROUP, LLC

22. Connect the vacuum line (1) from the EGR control valve actuator.

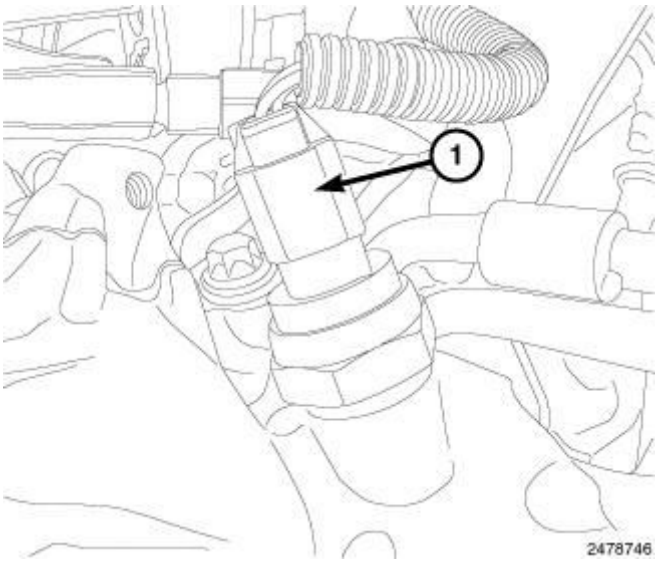

Fig. 438: Identifying EGR Back Pressure Transducer Harness Connector
Courtesy of CHRYSLER GROUP, LLC

23. Connect the EGR back pressure transducer harness connector (1).
24. Fill cooling system. Refer to **STANDARD PROCEDURE** .

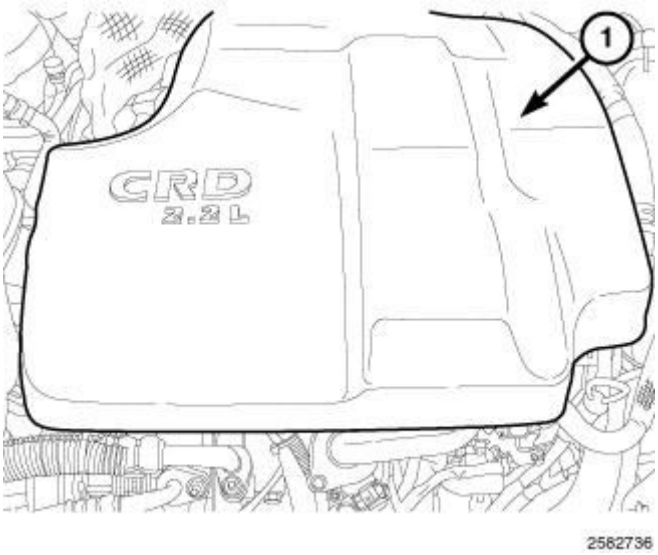

Fig. 439: Engine Cover
Courtesy of CHRYSLER GROUP, LLC

25. Install the engine cover (1).
26. Connect the negative battery cable.

MANIFOLD, EXHAUST

REMOVAL

REMOVAL

1. Disconnect the negative battery cable.
2. Remove the turbocharger. Refer to **TURBOCHARGER, REMOVAL**.

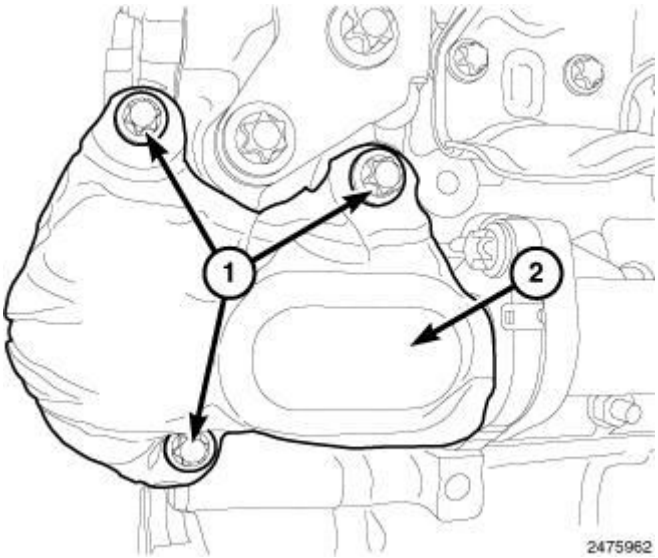

Fig. 440: EGR Pipe Heat Shield & Bolts
Courtesy of CHRYSLER GROUP, LLC

3. Remove bolts (1) and the EGR pipe heat shield (2).

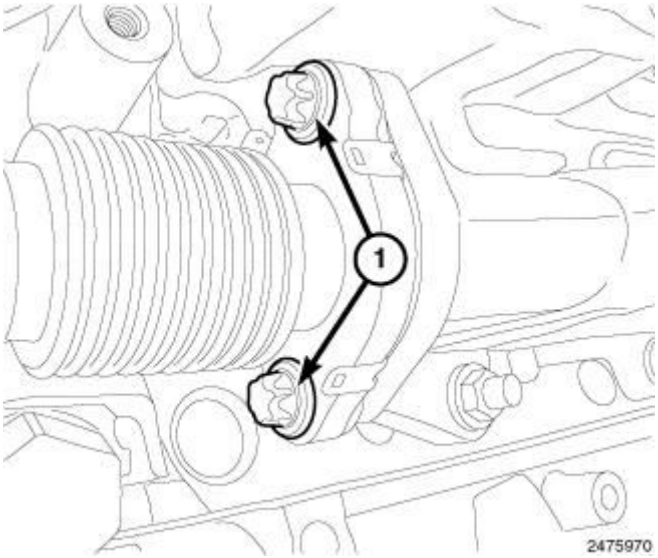

Fig. 441: EGR Crossover Pipe Bolts
Courtesy of CHRYSLER GROUP, LLC

4. Remove the two bolts (1) from the EGR crossover pipe.

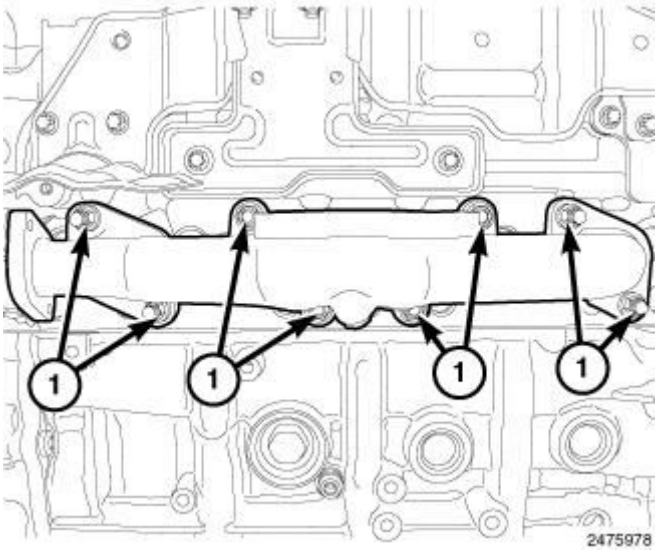

Fig. 442: Exhaust Manifold Retaining Nuts
Courtesy of CHRYSLER GROUP, LLC

5. Remove nuts (1) and the remove manifold.

INSPECTION

INSPECTION

1. Inspect manifold gasket surfaces for flatness with straight edge. Surface

must be flat within 0.15 mm per 300 mm (0.006 in. per foot) of manifold length.

2. Inspect manifolds for cracks or distortion. Replace manifold as necessary.

INSTALLATION

INSTALLATION

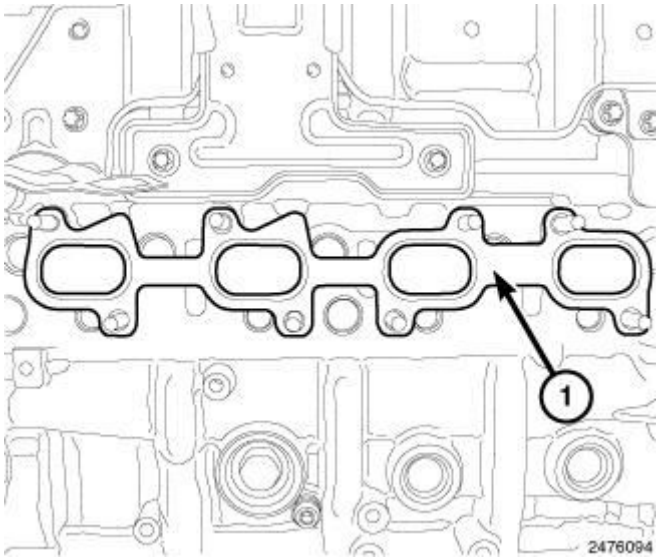

Fig. 443: Exhaust Manifold Gasket
Courtesy of CHRYSLER GROUP, LLC

1. Clean the gasket surfaces and install a new gasket (1).

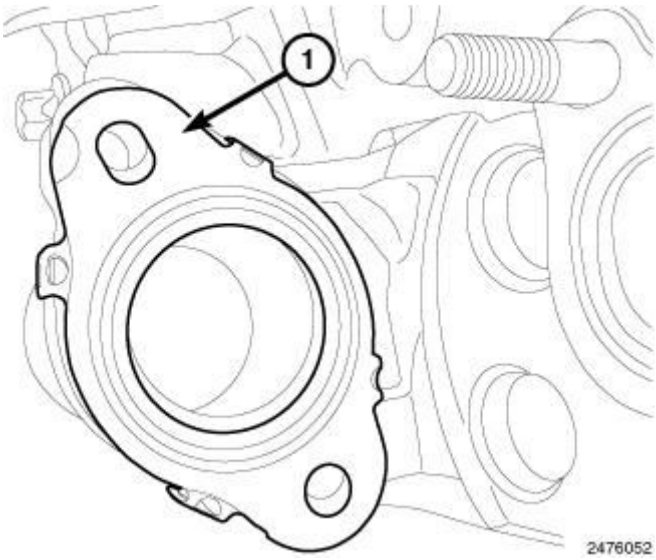

Fig. 444: EGR Pipe Gasket
Courtesy of CHRYSLER GROUP, LLC

2. Clean the gasket surface and install a new gasket (1) onto the EGR pipe.

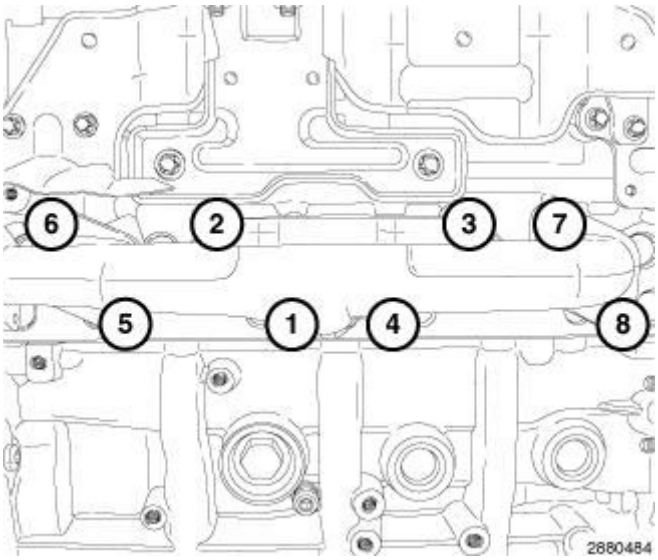

Fig. 445: Exhaust Manifold Bolt Torque Sequence
Courtesy of CHRYSLER GROUP, LLC

3. Install exhaust manifold and tighten nuts finger tight.
4. Using the sequence shown in illustration, tighten nuts to 30 N.m (22 ft. lbs.).

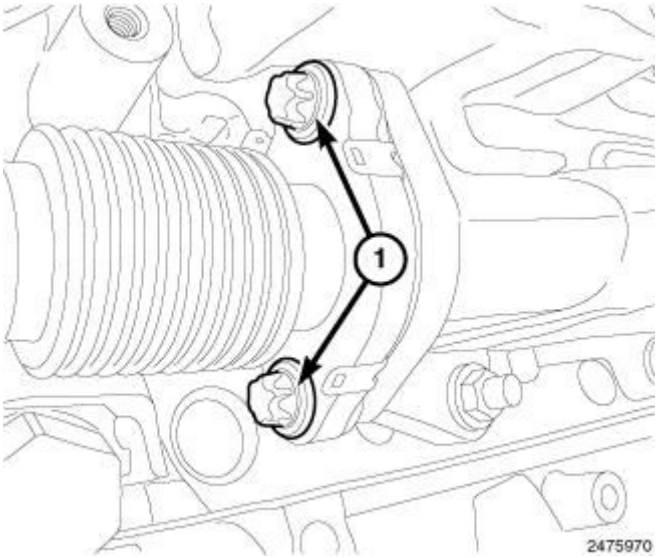

Fig. 446: EGR Crossover Pipe Bolts
Courtesy of CHRYSLER GROUP, LLC

5. Install the two bolts (1) into the EGR crossover pipe. Tighten bolts (1) to 12 N.m (106 in. lbs.) plus an additional 90 degrees.

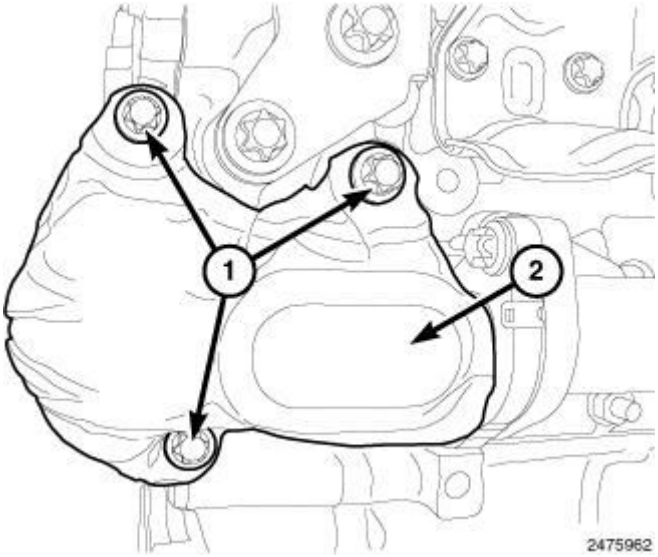

Fig. 447: EGR Pipe Heat Shield & Bolts
Courtesy of CHRYSLER GROUP, LLC

6. Install the heat shield (2). Tighten bolts (1) to 8 N.m (71 in. lbs.).
7. Install the turbocharger. Refer to **TURBOCHARGER, INSTALLATION**.
8. Connect the negative battery cable.

MANIFOLD, INTAKE

DESCRIPTION

DESCRIPTION

The intake manifold is two-piece design and is made of a composite material.

REMOVAL

MIXING CHAMBER

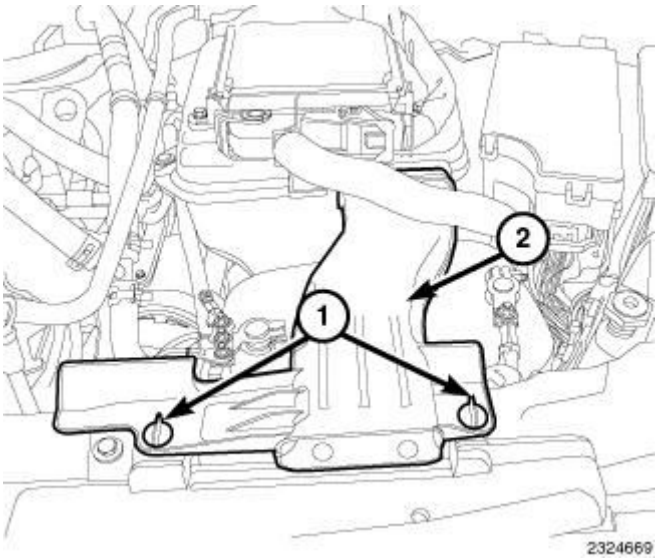

Fig. 448: Quarter Turn Lock Tabs & Air Inlet Duct
Courtesy of CHRYSLER GROUP, LLC

1. Release quarter turn lock tabs (1) and remove air inlet duct (2).
2. Disconnect the negative battery cable.

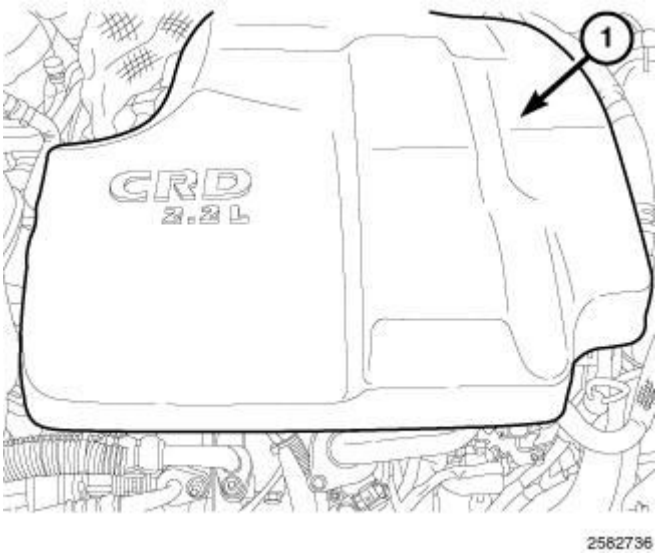

Fig. 449: Engine Cover
Courtesy of CHRYSLER GROUP, LLC

3. Remove the engine cover (1).

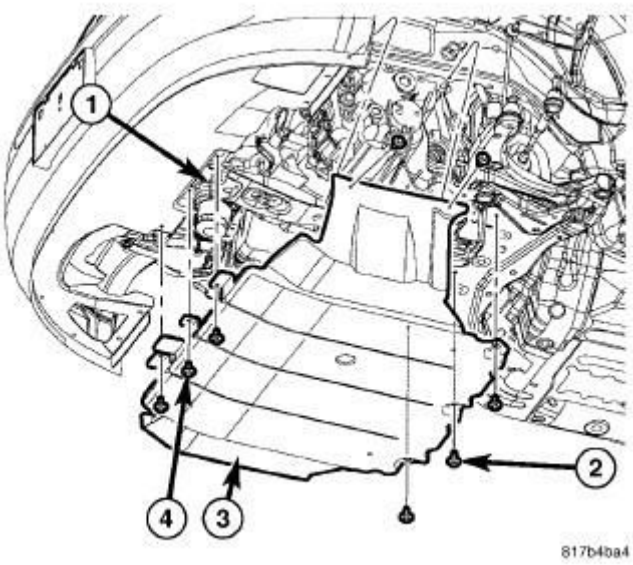

Fig. 450: Belly Pan
Courtesy of CHRYSLER GROUP, LLC

4. Remove fasteners (2, 4) and the belly pan.
5. Remove the EGR Cooler. Refer to **COOLER, EGR, REMOVAL** .

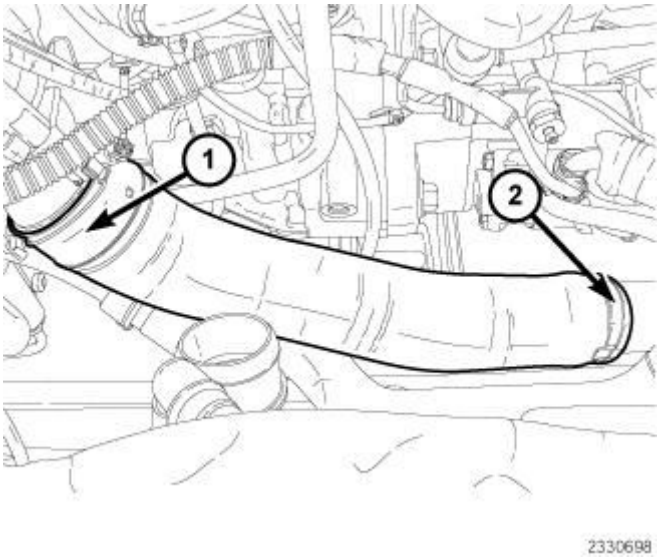

Fig. 451: EGR Air Flow Control Valve & Clamp
Courtesy of CHRYSLER GROUP, LLC

6. Loosen the clamp and disconnect the charge air outlet tube from the charge air cooler (CAC).
7. Remove air inlet tube to EGR air flow control valve (1).
8. Remove the cooling fan module. Refer to **FAN, COOLING, REMOVAL** .

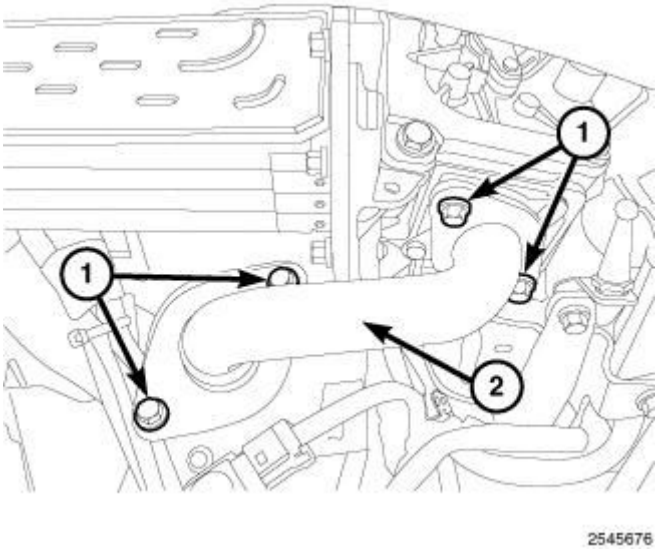

Fig. 452: EGR Tube & Bolts
Courtesy of CHRYSLER GROUP, LLC

9. Remove EGR tube bolts (1) and the EGR tube (2).

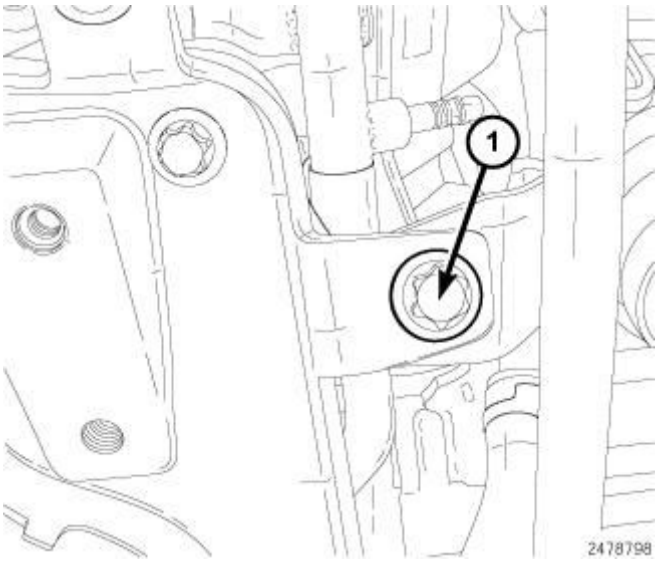

Fig. 453: Oil Dip Stick Bolt
Courtesy of CHRYSLER GROUP, LLC

10. Remove the bolt (1) securing the oil dip stick tube.

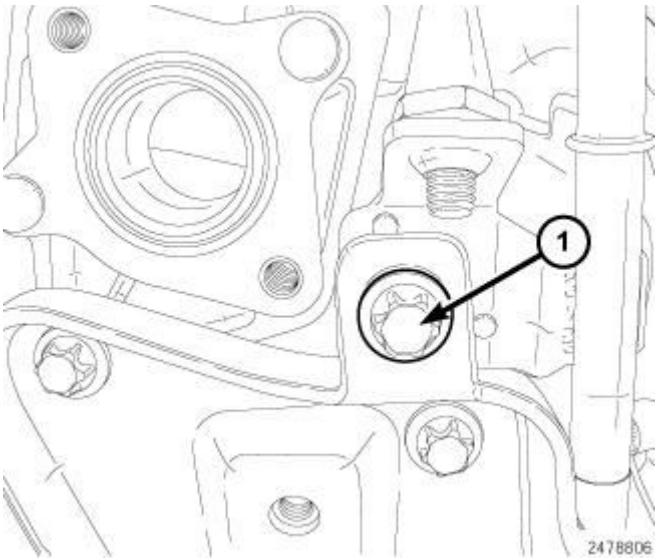

Fig. 454: Vacuum Tube Bolt
Courtesy of CHRYSLER GROUP, LLC

11. Remove the bolt (1) securing the vacuum tube.

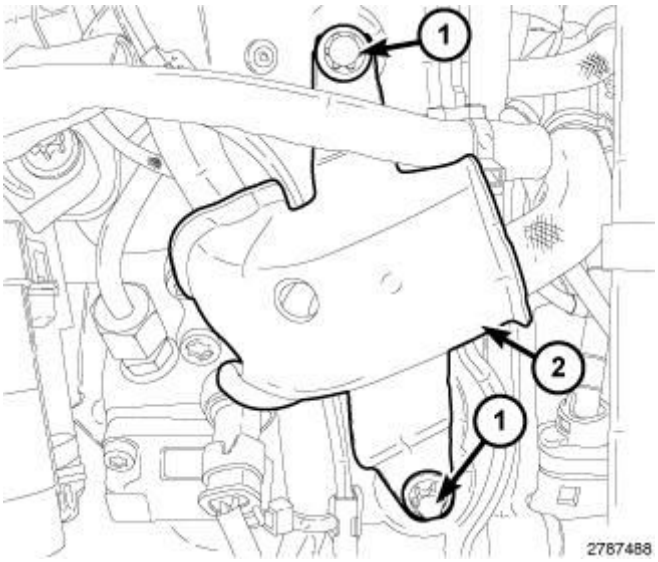

Fig. 455: Identifying Bolts & Heat Shield
Courtesy of CHRYSLER GROUP, LLC

12. Remove bolts (1) and the heat shield (2).

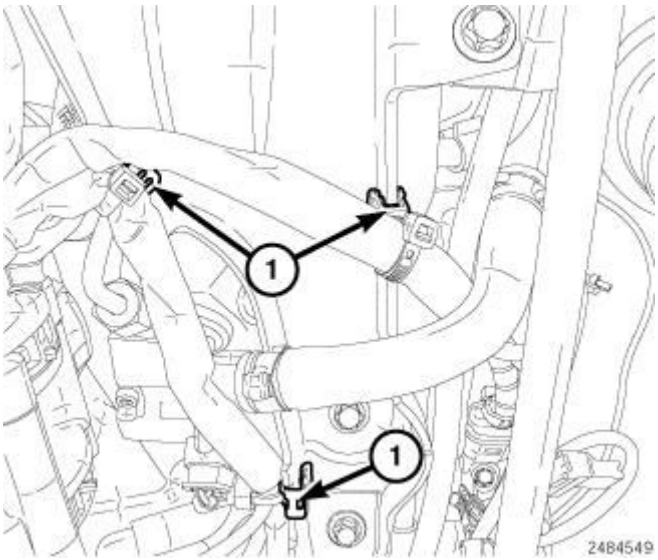

Fig. 456: Wire Harness Retainers
Courtesy of CHRYSLER GROUP, LLC

13. Disconnect the wire harness retainers (1).

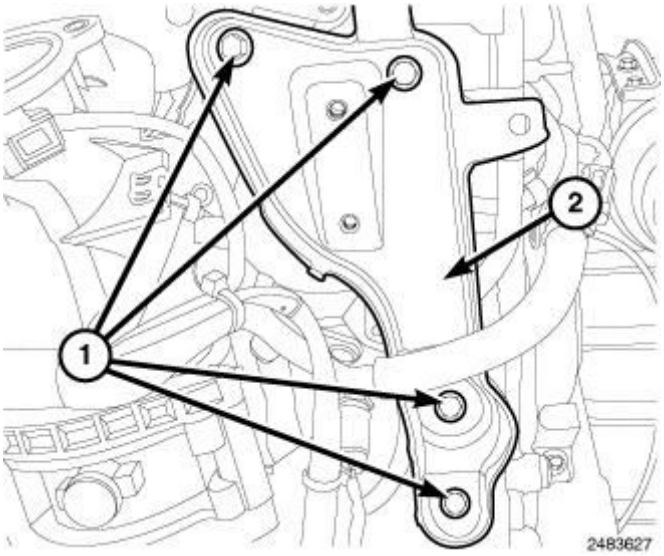

Fig. 457: Identifying Bolts & EGR Support Bracket
Courtesy of CHRYSLER GROUP, LLC

14. Remove bolts (1) and the EGR support bracket (2).

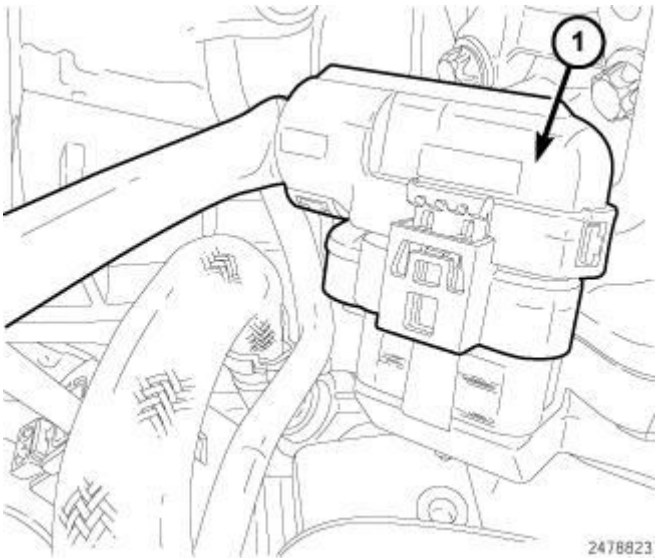

Fig. 458: Identifying EGR Valve Harness Connector
Courtesy of CHRYSLER GROUP, LLC

15. Disconnect the EGR valve wire harness connector (1).

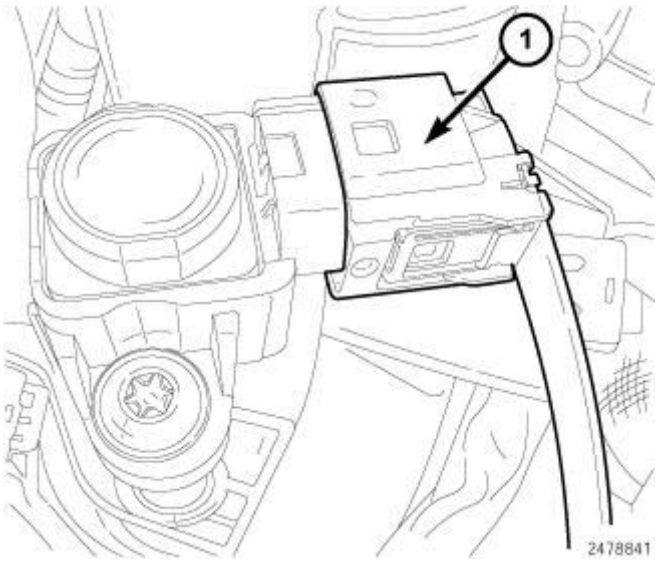

Fig. 459: Boost Pressure Sensor Harness Connector
Courtesy of CHRYSLER GROUP, LLC

16. Disconnect the boost pressure sensor wire harness connector (1).

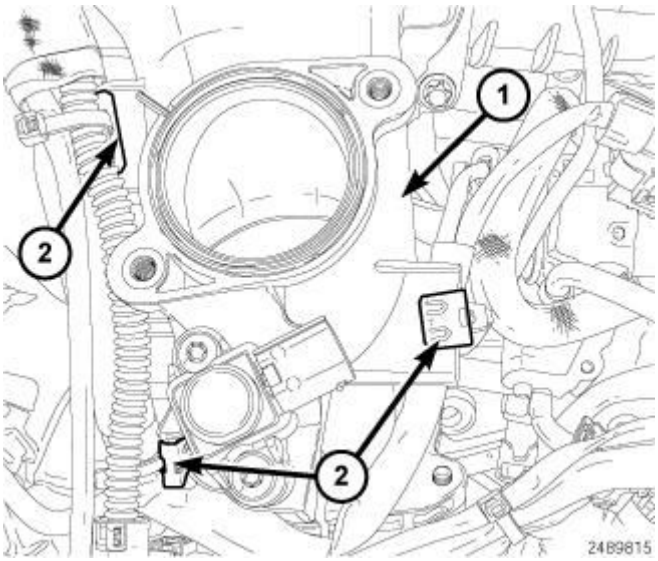

Fig. 460: Mixing Chamber & Wire Harness Retainer Clips
Courtesy of CHRYSLER GROUP, LLC

17. Disconnect the wire harness retainer clips (2) from the mixing chamber (1).

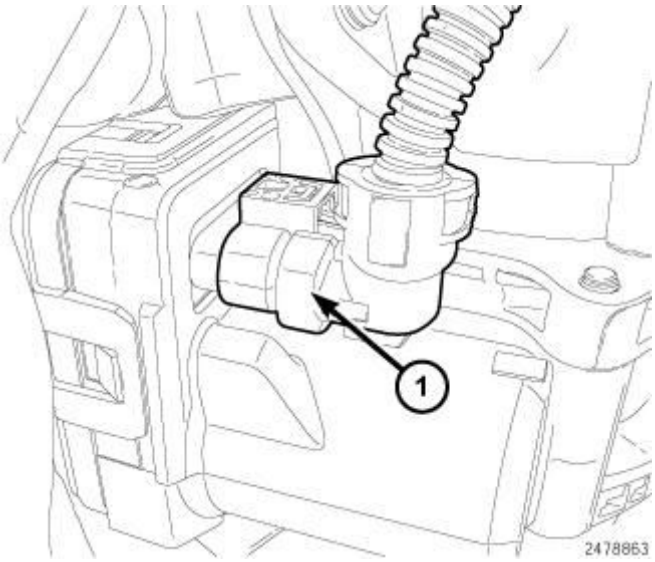

Fig. 461: EGR Air Flow Control Valve Harness Connector
Courtesy of CHRYSLER GROUP, LLC

18. Disconnect the EGR air flow control valve wire harness connector (1).

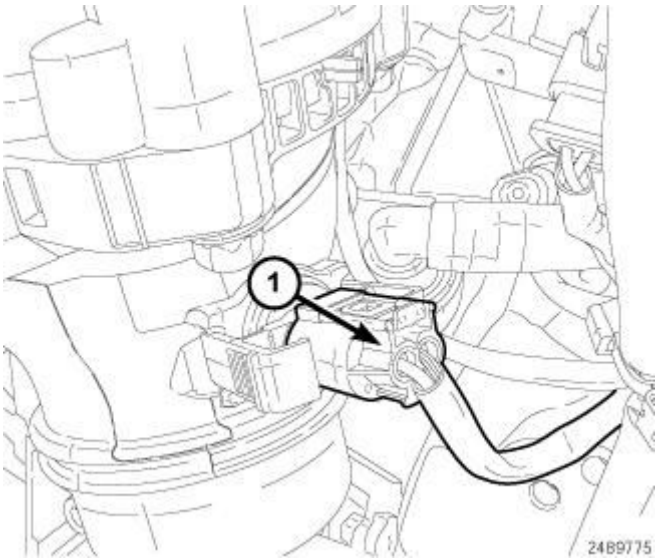

Fig. 462: Identifying Charge Air Temperature Sensor Connectors
Courtesy of CHRYSLER GROUP, LLC

19. Disconnect the charge air inlet temperature sensor wire harness connector (1).

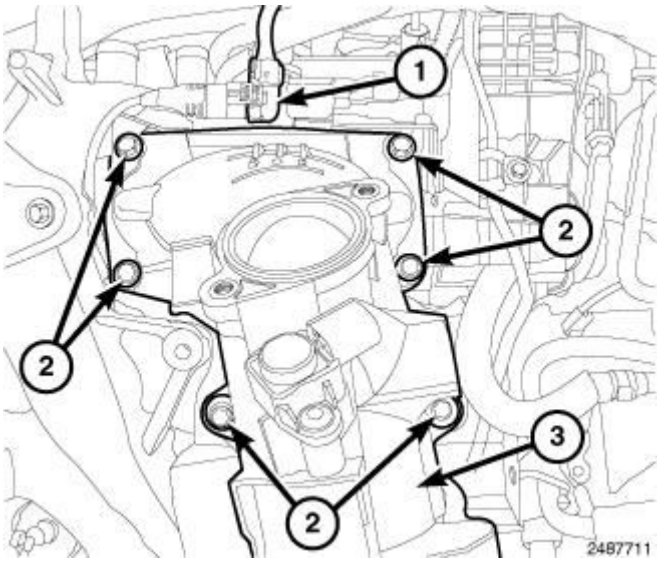

Fig. 463: Knock Sensor Electrical Connector, Mixing Chamber & Bolts
Courtesy of CHRYSLER GROUP, LLC

20. Disconnect the knock sensor wire harness connector (1).
21. Remove bolts (2) and the mixing chamber (3).

INTAKE MANIFOLD

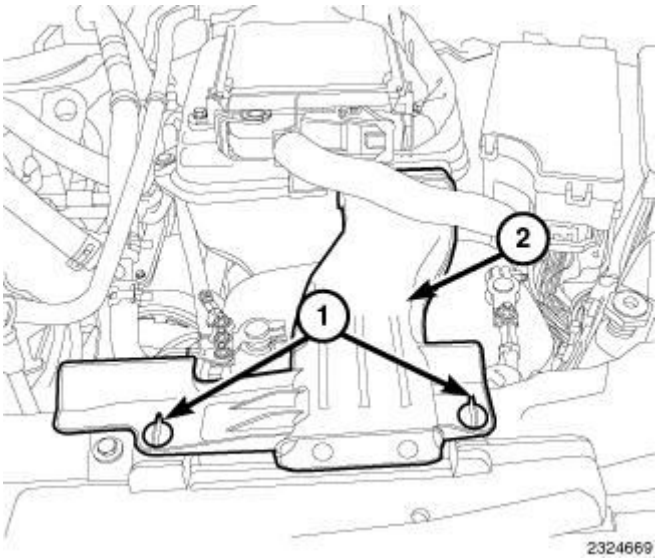

Fig. 464: Quarter Turn Lock Tabs & Air Inlet Duct
Courtesy of CHRYSLER GROUP, LLC

1. Release quarter turn lock tabs (1) and remove air inlet duct (2).
2. Disconnect the negative battery cable.

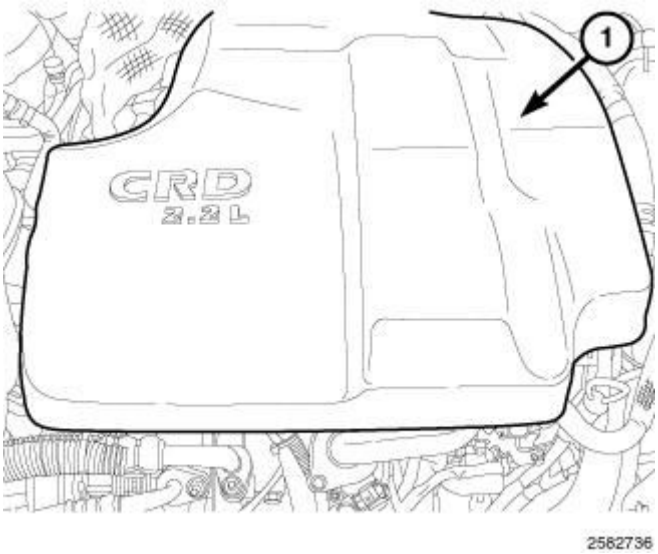

Fig. 465: Engine Cover
Courtesy of CHRYSLER GROUP, LLC

3. Remove the engine cover (1).

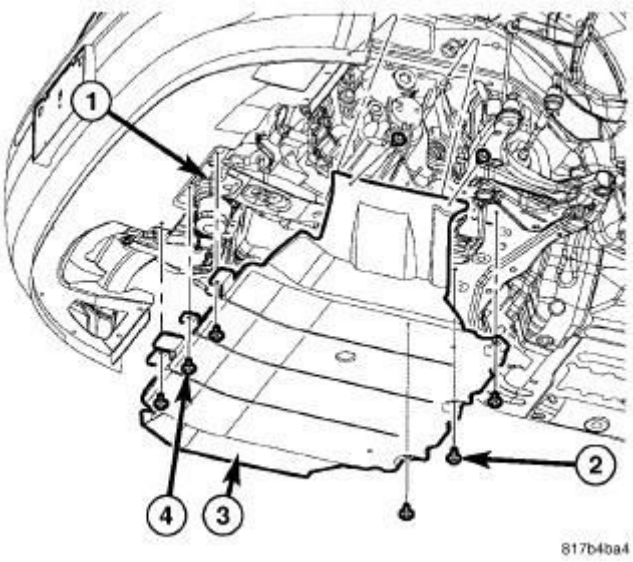

Fig. 466: Belly Pan
Courtesy of CHRYSLER GROUP, LLC

4. Remove fasteners (2, 4) and the belly pan.
5. Drain cooling system. Refer to **STANDARD PROCEDURE** .
6. Disconnect upper radiator hose from radiator.
7. Remove the cooling fan module. Refer to **FAN, COOLING, REMOVAL** .
8. Remove the coolant pump. Refer to **PUMP, WATER, REMOVAL** .
9. Remove the A/C compressor. Refer to **COMPRESSOR, A/C, REMOVAL** .

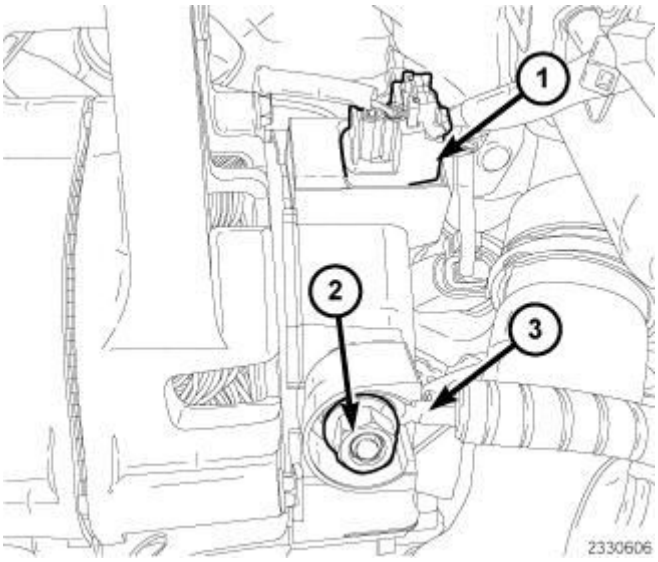

Fig. 467: Battery Feed Wire, Generator Harness Connectors & Nut
Courtesy of CHRYSLER GROUP, LLC

10. Remove nut (2) and the B+ wire (3) to generator.
11. Disconnect the generator wire harness connectors (1).
12. Remove bolts and the generator.

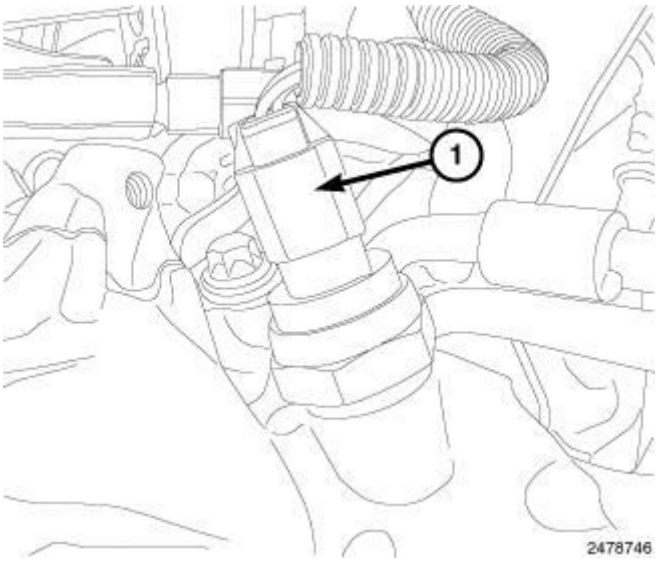

Fig. 468: Identifying EGR Back Pressure Transducer Harness Connector
Courtesy of CHRYSLER GROUP, LLC

13. Disconnect the EGR back pressure transducer wire harness connector (1).

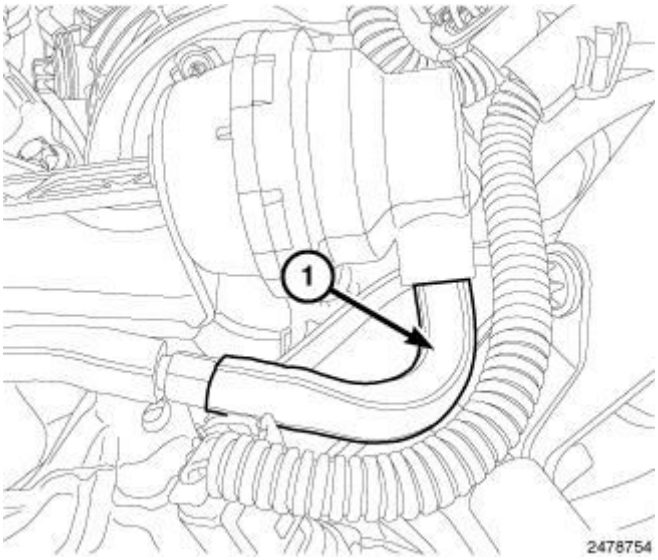

Fig. 469: Identifying Vacuum Line
Courtesy of CHRYSLER GROUP, LLC

14. Disconnect the vacuum line (1) from the EGR control valve actuator.

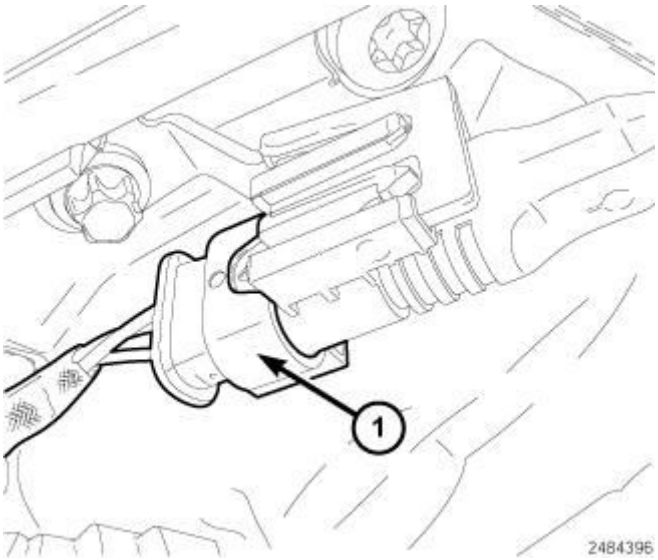

Fig. 470: Knock Sensor Harness Connector
Courtesy of CHRYSLER GROUP, LLC

15. Disconnect the knock sensor (1) wire harness connector.

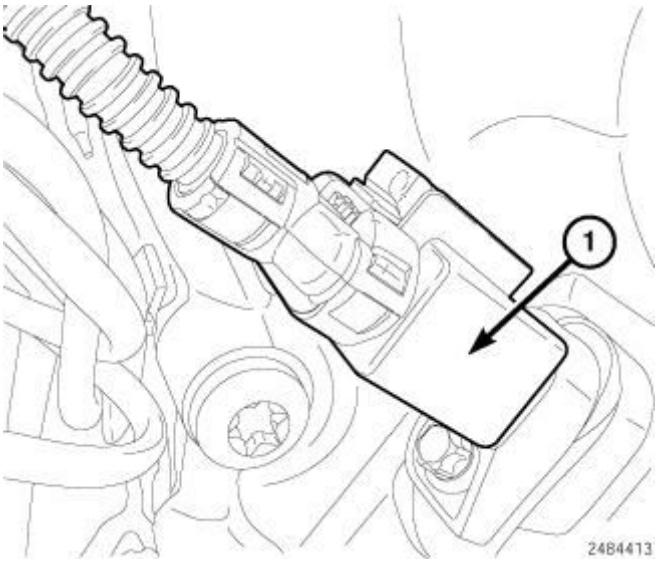

Fig. 471: Crankshaft Position Sensor Harness Connector
Courtesy of CHRYSLER GROUP, LLC

16. Disconnect the Crankshaft Position Sensor (CKP) (1) wire harness connector.

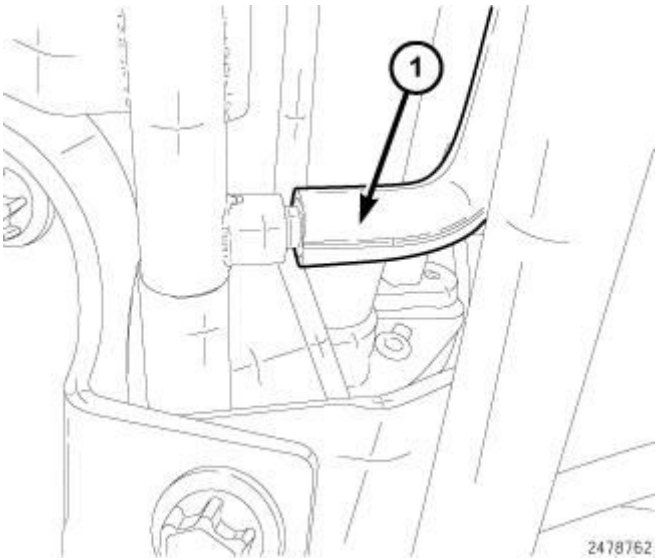

Fig. 472: Vacuum Supply Line At EGR Solenoid
Courtesy of CHRYSLER GROUP, LLC

17. Disconnect the vacuum supply line (1) to the EGR solenoid.

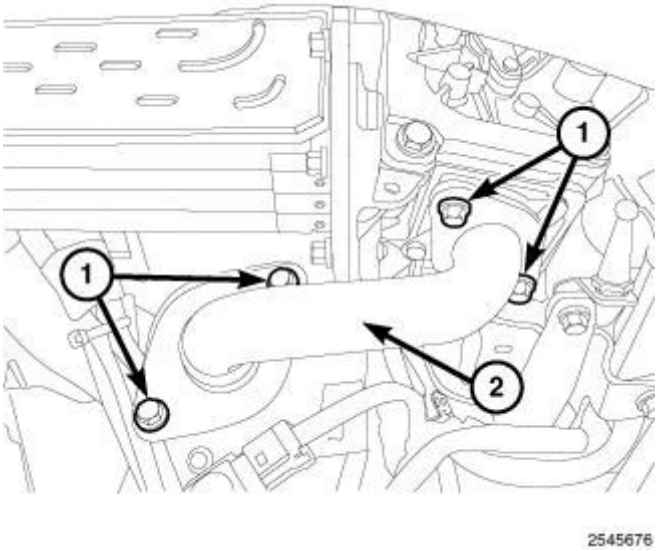

Fig. 473: EGR Tube & Bolts
Courtesy of CHRYSLER GROUP, LLC

18. Remove bolts (1) and the EGR tube (2).

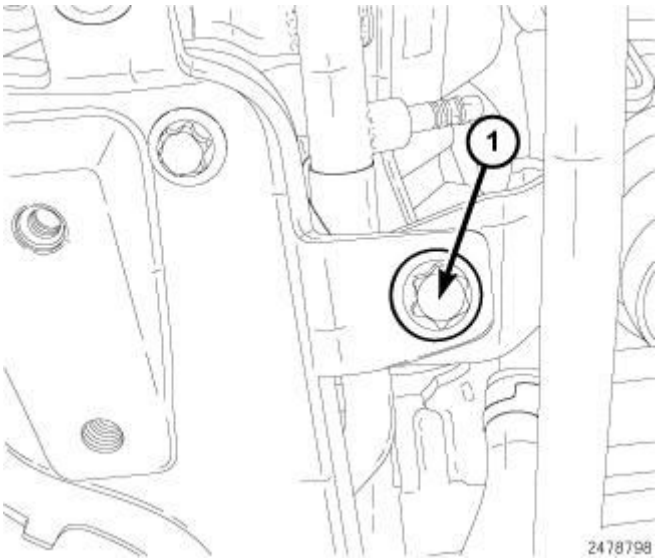

Fig. 474: Oil Dip Stick Bolt
Courtesy of CHRYSLER GROUP, LLC

19. Remove the bolt (1) securing the oil dip stick tube.

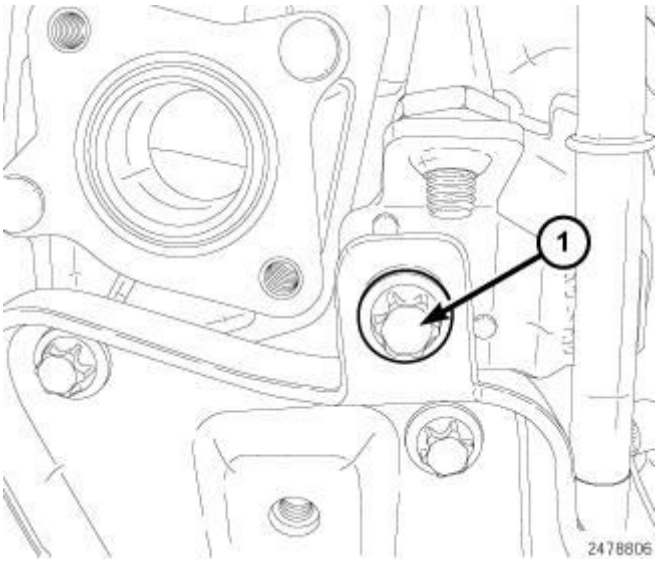

Fig. 475: Vacuum Tube Bolt
Courtesy of CHRYSLER GROUP, LLC

20. Remove the bolt (1) securing the vacuum tube.

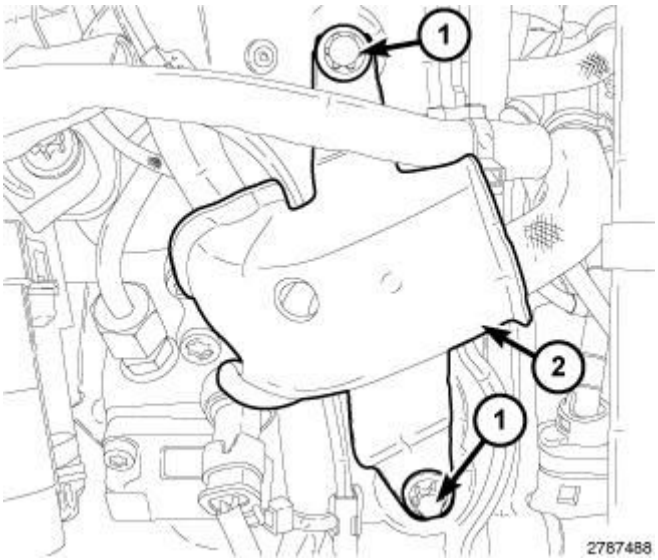

Fig. 476: Identifying Bolts & Heat Shield
Courtesy of CHRYSLER GROUP, LLC

21. Remove bolts (1) and the heat shield (2).

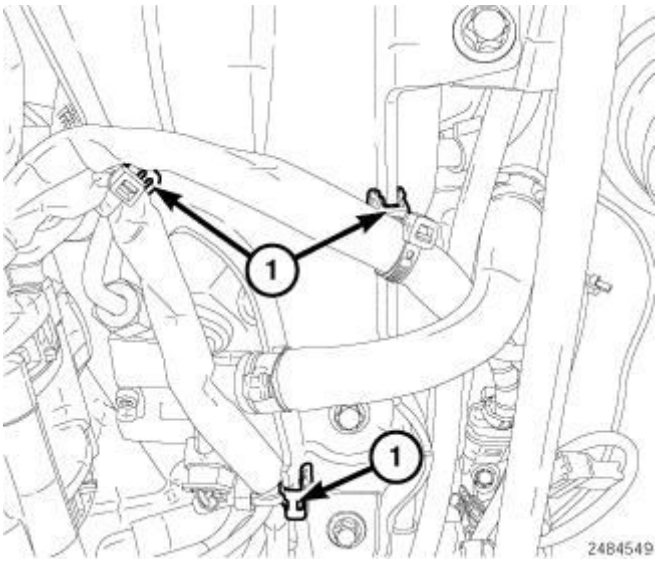

Fig. 477: Wire Harness Retainers
Courtesy of CHRYSLER GROUP, LLC

22. Disconnect the wire harness retainers (1).

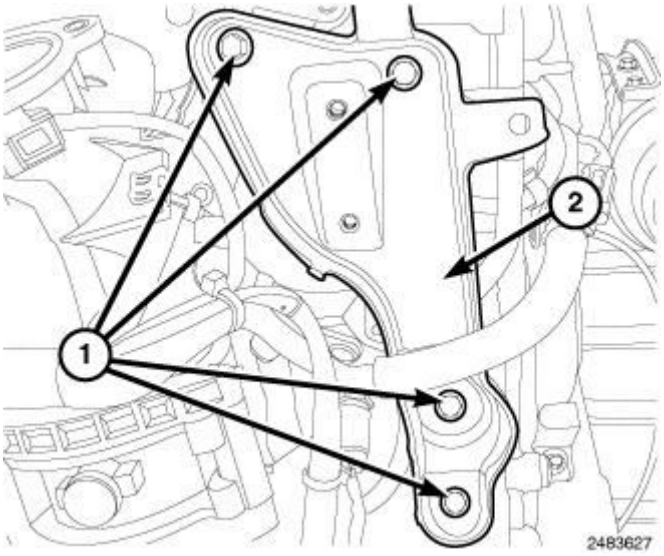

Fig. 478: Identifying Bolts & EGR Support Bracket
Courtesy of CHRYSLER GROUP, LLC

23. Remove bolts (1) and the EGR support bracket (2).

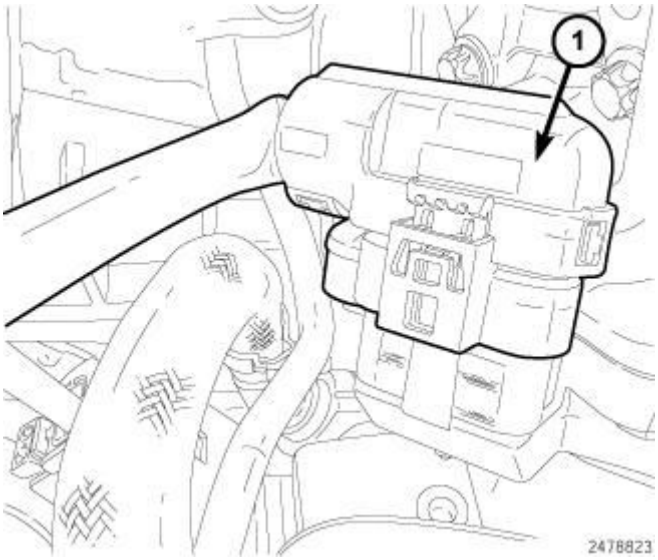

Fig. 479: Identifying EGR Valve Harness Connector
Courtesy of CHRYSLER GROUP, LLC

24. Disconnect the EGR valve wire harness connector (1).

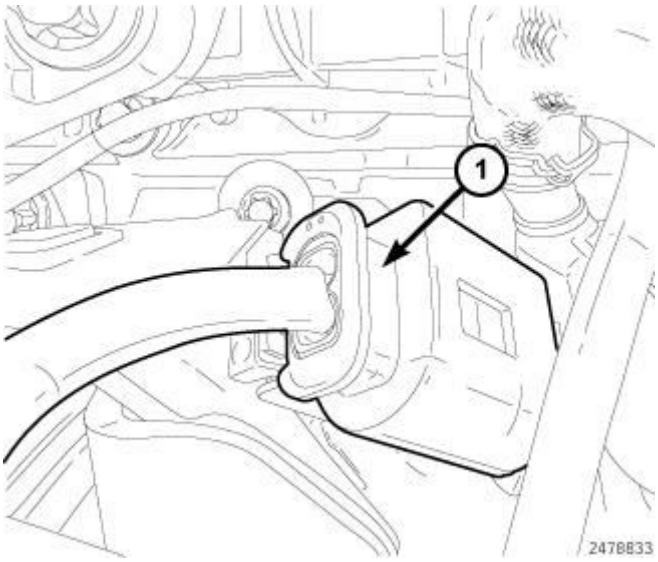

Fig. 480: Identifying Fuel Quantity Control Valve Harness Connector
Courtesy of CHRYSLER GROUP, LLC

25. Disconnect the fuel quality sensor wire harness connector (1).

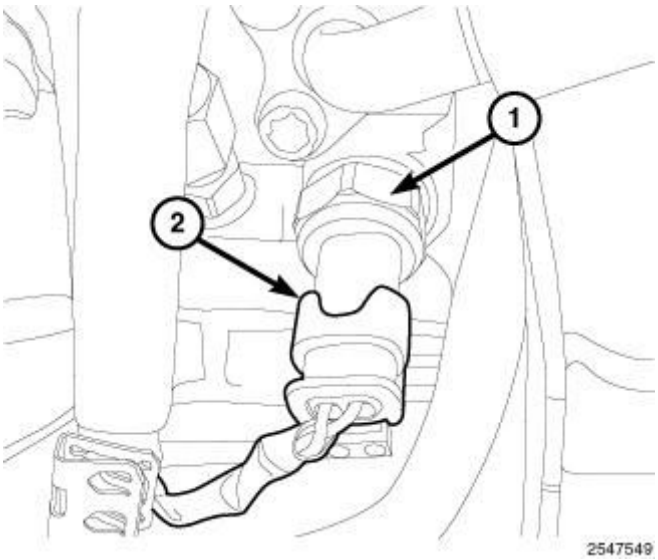

Fig. 481: Identifying Fuel Temperature Sensor Harness Connector
Courtesy of CHRYSLER GROUP, LLC

26. Disconnect the fuel temperature sensor wire harness connector (2).

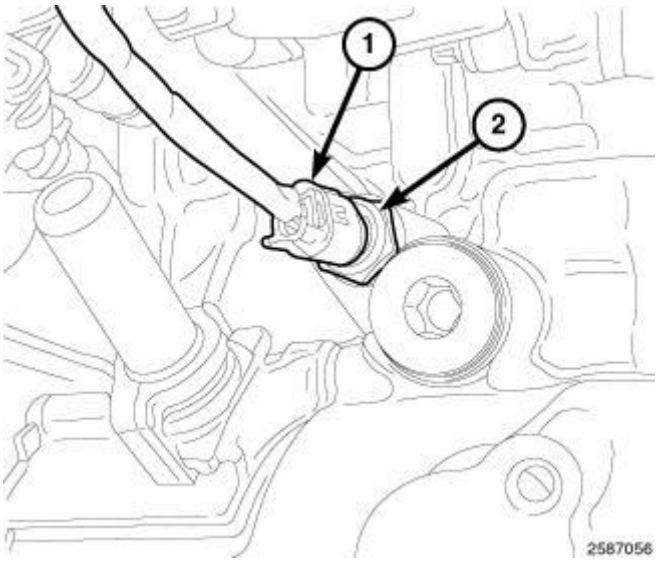

Fig. 482: Oil Temperature Sensor Harness Connector & Sensor
Courtesy of CHRYSLER GROUP, LLC

27. Disconnect the oil temperature sensor wire harness connector.

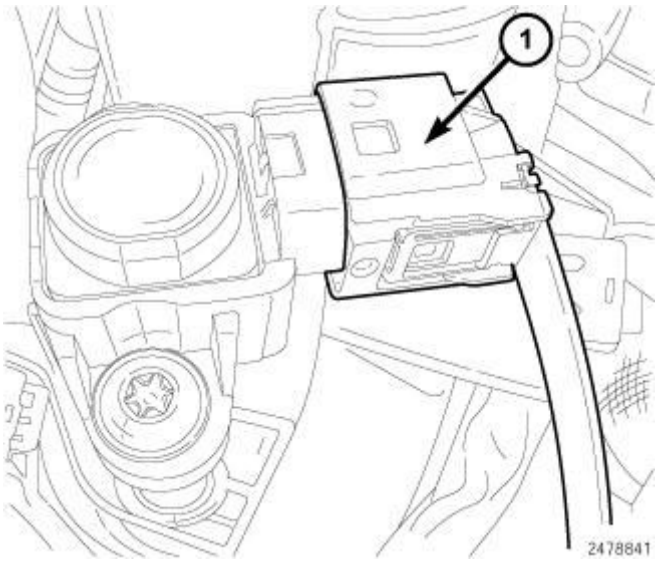

Fig. 483: Boost Pressure Sensor Harness Connector
Courtesy of CHRYSLER GROUP, LLC

28. Disconnect the boost pressure sensor wire harness connector (1).

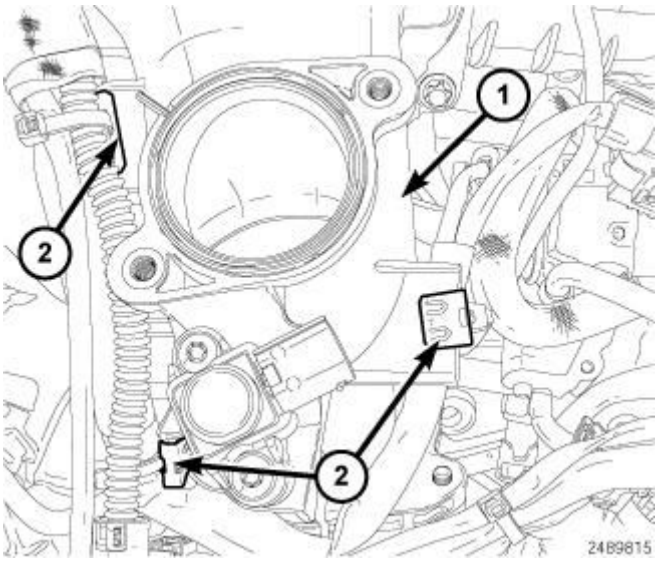

Fig. 484: Mixing Chamber & Wire Harness Retainer Clips
Courtesy of CHRYSLER GROUP, LLC

29. Disconnect the wire harness retainer clips (2) from the mixing chamber (1).

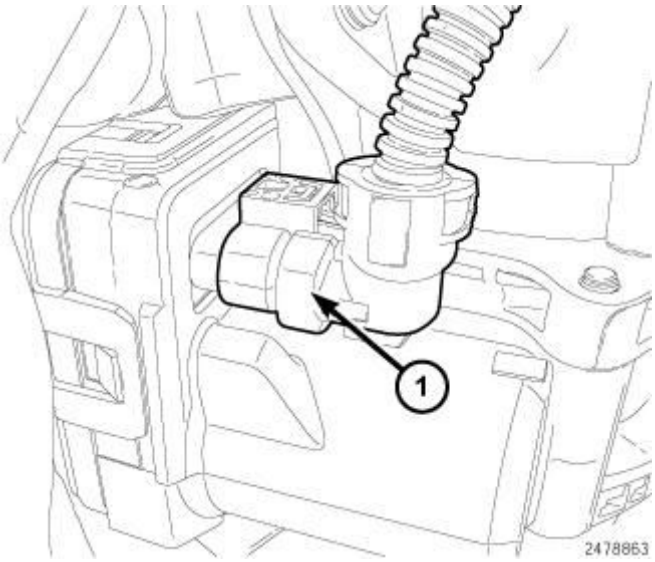

Fig. 485: EGR Air Flow Control Valve Harness Connector
Courtesy of CHRYSLER GROUP, LLC

30. Disconnect the EGR air flow control valve wire harness connector (1).

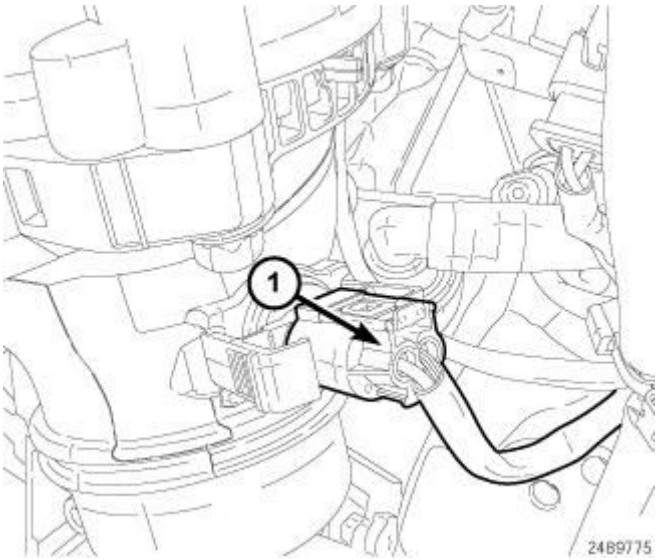

Fig. 486: Identifying Charge Air Temperature Sensor Connectors
Courtesy of CHRYSLER GROUP, LLC

31. Disconnect the charge air inlet temperature sensor wire harness connector (1).

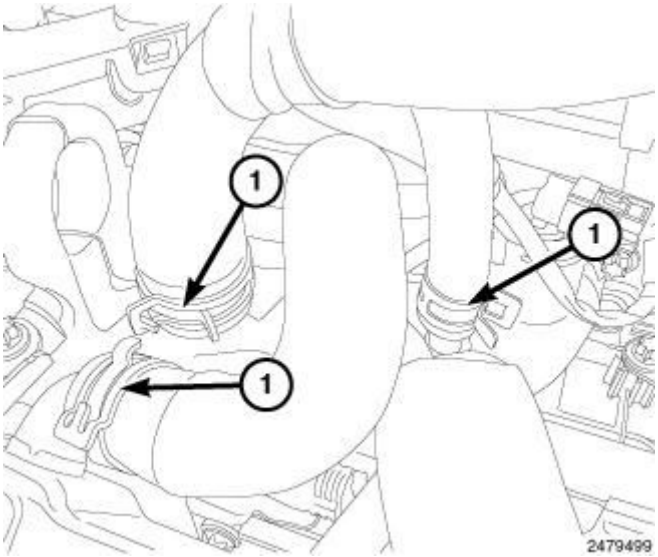

Fig. 487: Locating Coolant Hoses
Courtesy of CHRYSLER GROUP, LLC

32. Disconnect the coolant hoses (1).

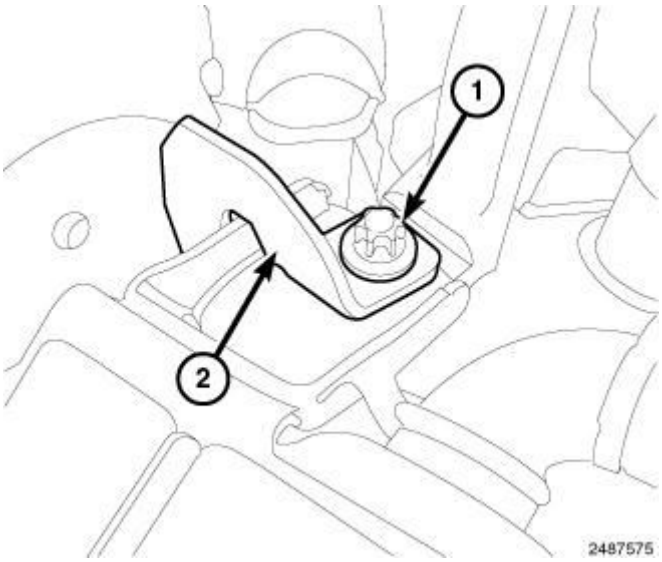

Fig. 488: Upper EGR Cooler Bolt & Bracket
Courtesy of CHRYSLER GROUP, LLC

33. Remove the upper EGR cooler bolt (1) and bracket (2).

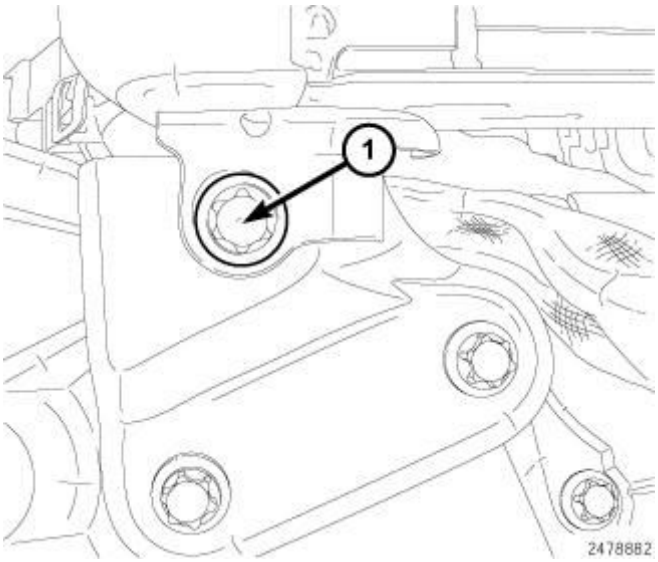

Fig. 489: Lower EGR Cooler Bolt
Courtesy of CHRYSLER GROUP, LLC

34. Remove the lower EGR cooler bolt (1).

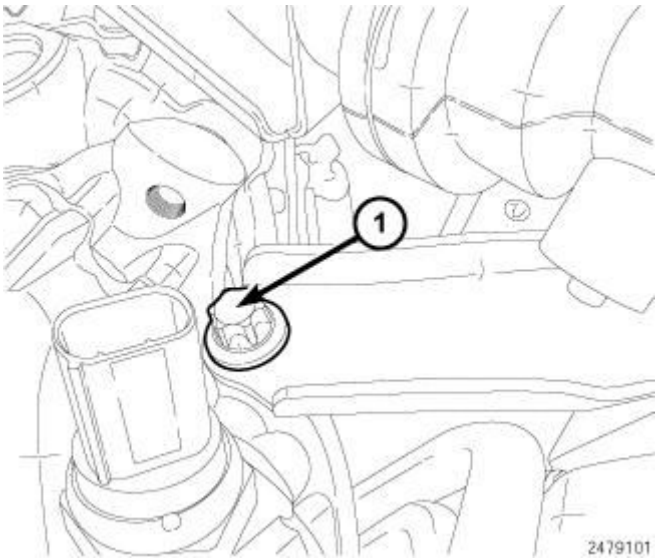

Fig. 490: Support Bracket Bolt
Courtesy of CHRYSLER GROUP, LLC

35. Remove the support bracket bolt (1).

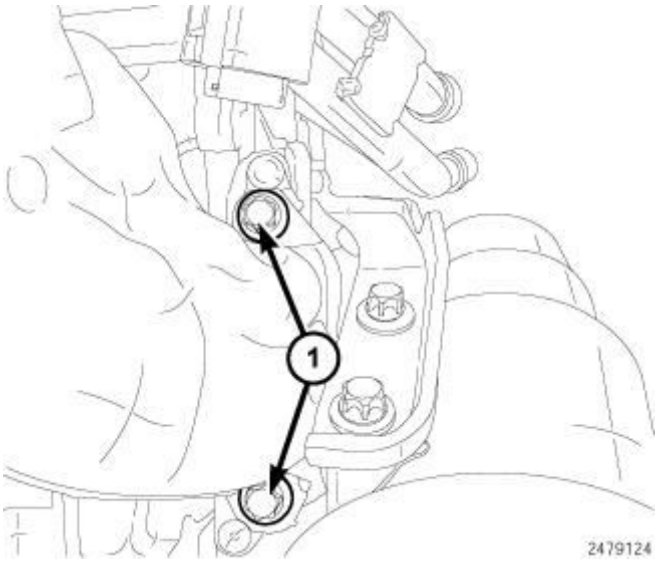

Fig. 491: Identifying EGR Cooler Manifold Bolts
Courtesy of CHRYSLER GROUP, LLC

36. Remove two bolts (1) and the EGR cooler manifold.

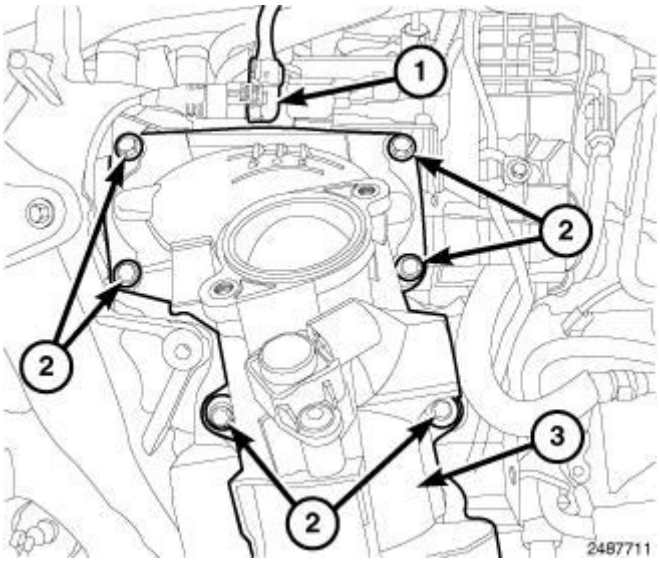

Fig. 492: Knock Sensor Electrical Connector, Mixing Chamber & Bolts
Courtesy of CHRYSLER GROUP, LLC

37. Disconnect the knock sensor wire harness connector (1).
38. Remove bolts (2) and the mixing chamber (3).

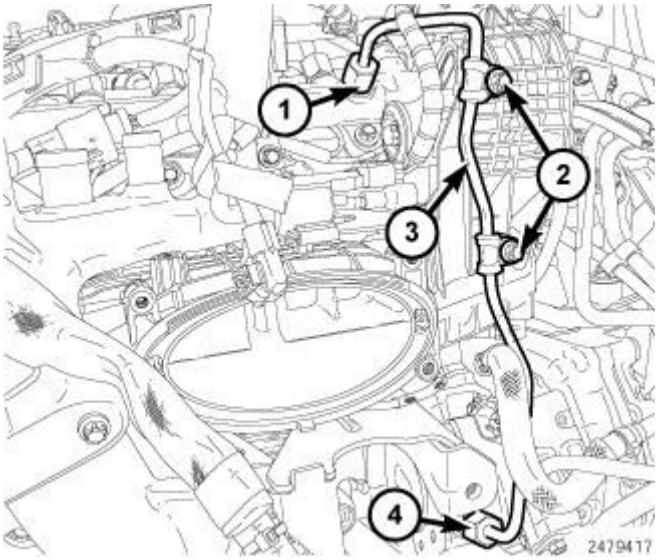

Fig. 493: Identifying Fuel Rail, Bolts, High Pressure Fuel Tube & Pump
Courtesy of CHRYSLER GROUP, LLC

39. Remove the two bolts (2) securing the high pressure fuel line (3).
40. Disconnect the high pressure fuel line at pump (4).
41. Disconnect the high pressure line at fuel rail (1) and remove the high pressure fuel line (3).

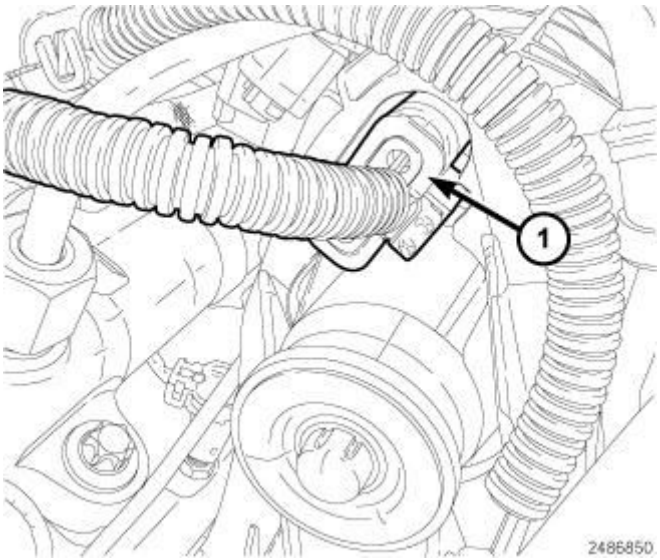

Fig. 494: Swirl Valve Actuator Harness Connector
Courtesy of CHRYSLER GROUP, LLC

42. Disconnect the swirl valve actuator wire harness connector (1).

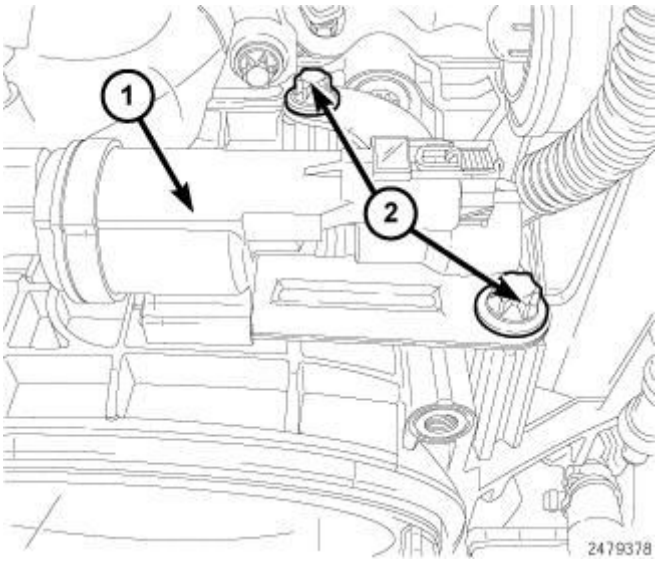

Fig. 495: EGR Vacuum Solenoid & Bolts
Courtesy of CHRYSLER GROUP, LLC

43. Remove bolts (2) and the EGR vacuum solenoid (1).

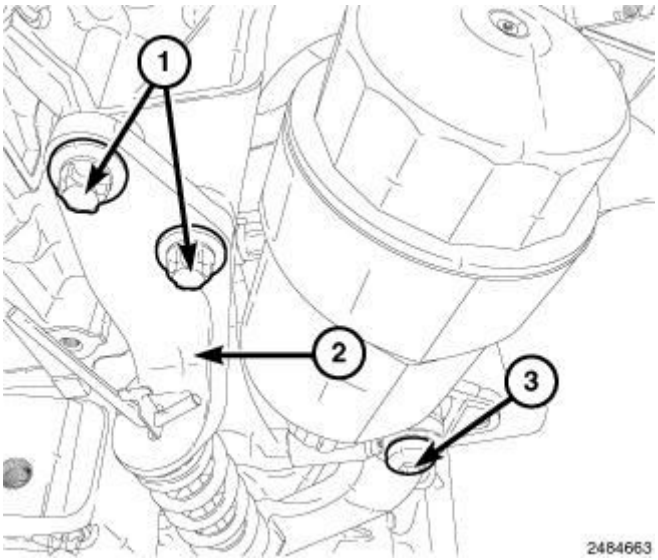

Fig. 496: Accessory Drive Belt Tensioner & Bolts
Courtesy of CHRYSLER GROUP, LLC

44. Remove the bolts (1, 3) and accessory drive belt tensioner (2).

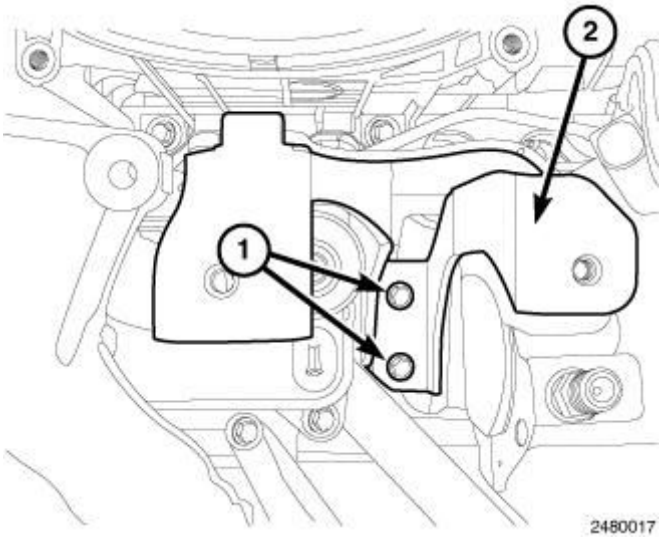

Fig. 497: Intake Manifold Support Bracket & Bolts
Courtesy of CHRYSLER GROUP, LLC

45. Remove bolts (1) and the intake manifold support bracket (2).

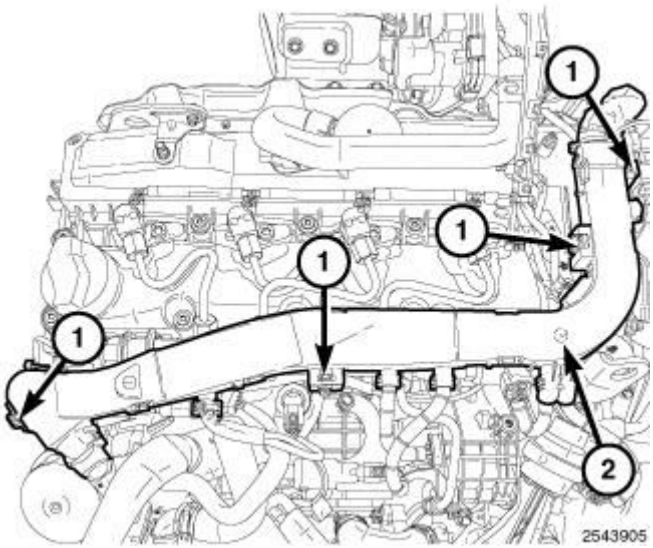

Fig. 498: Lock Tabs & Engine Wire Harness
Courtesy of CHRYSLER GROUP, LLC

46. Disconnect the fuel rail pressure sensor wire harness connector.
47. Release the lock tabs (1) and lift up on the wire harness (2) and position aside.

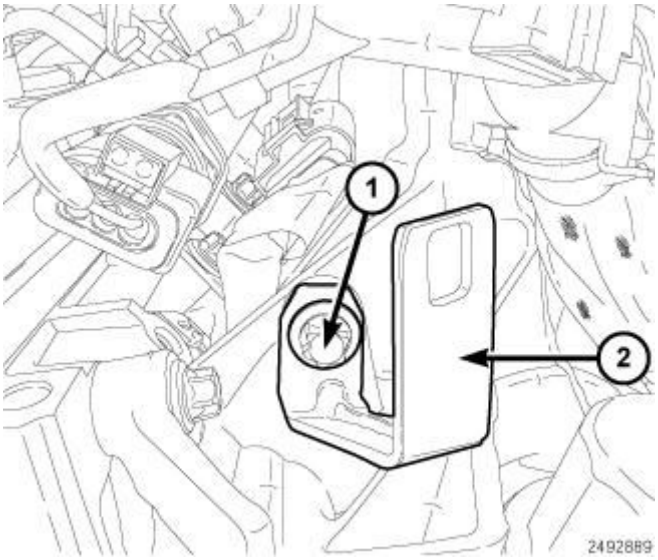

Fig. 499: Wire Harness Support Bracket & Bolts
Courtesy of CHRYSLER GROUP, LLC

48. Remove bolt (1) and wire harness support bracket (2).

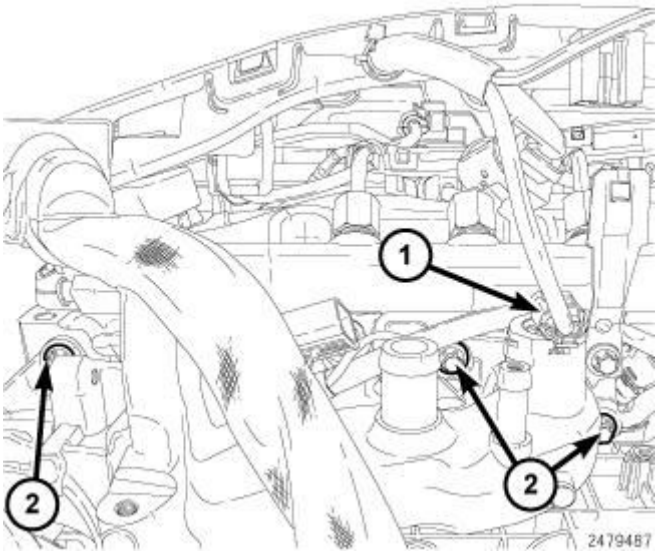

Fig. 500: Coolant Temp Sensor & Cooling Manifold Bolts
Courtesy of CHRYSLER GROUP, LLC

49. Disconnect the coolant temp sensor wire harness connector (1).
50. Remove the three accessory carrier bracket bolts (2).

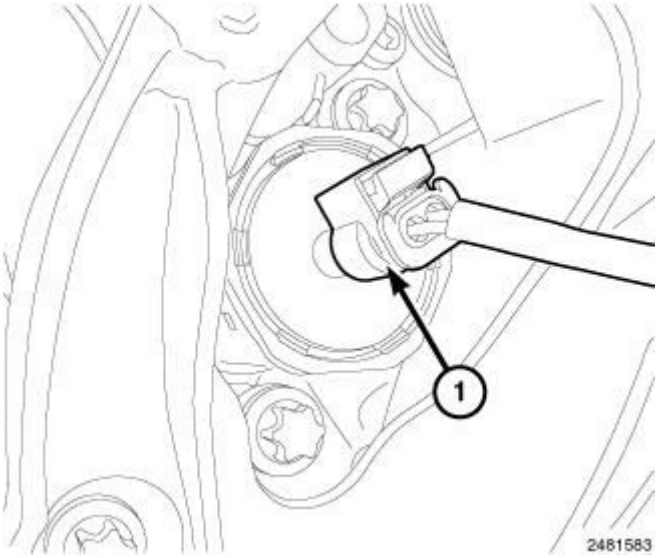

Fig. 501: Piston Cooling Oil Control Valve Harness Connector
Courtesy of CHRYSLER GROUP, LLC

51. Disconnect the oil jet control valve wire harness connector (1).

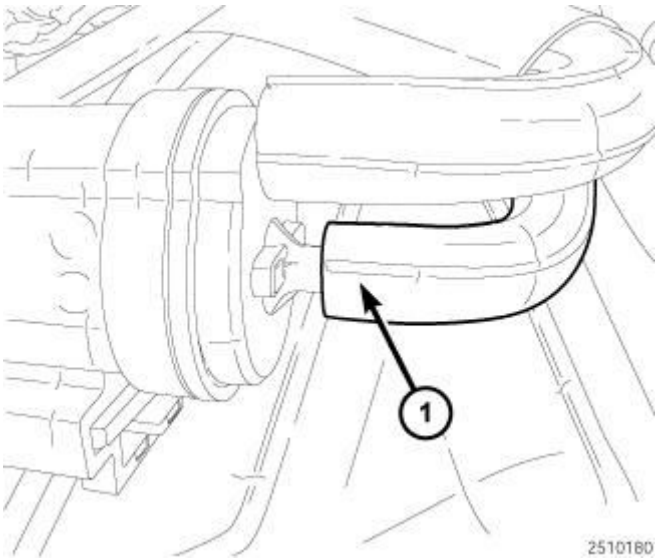

Fig. 502: Coolant Pump Actuator Vacuum Line
Courtesy of CHRYSLER GROUP, LLC

52. Disconnect the coolant pump actuator vacuum line (1).

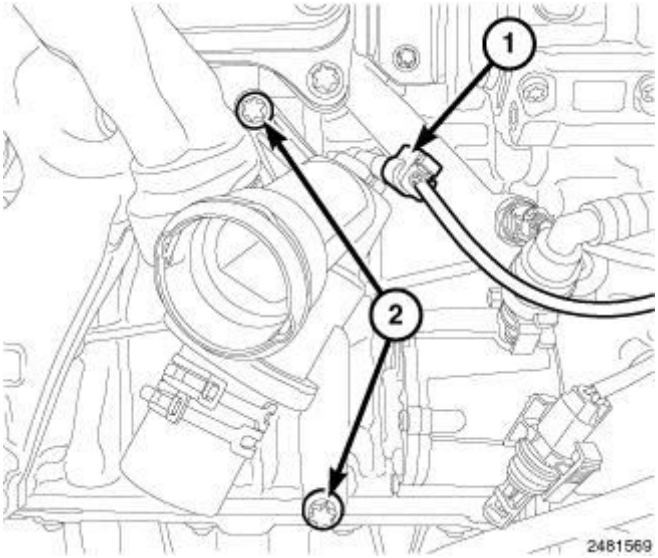

Fig. 503: Identifying Thermostat Heater Connector & Upper Thermostat Housing Bolt
Courtesy of CHRYSLER GROUP, LLC

53. Disconnect the coolant temperature sensor wire harness connector (1).
54. Remove the two bolt (2) from thermostat housing.

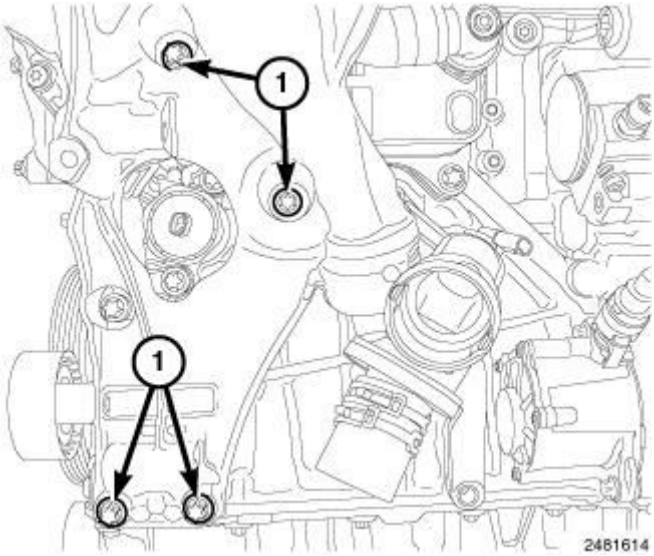

Fig. 504: Accessory Carrier Bolts
Courtesy of CHRYSLER GROUP, LLC

55. Remove oil filter cap.
56. Remove the bolts (1) from the accessory carrier.

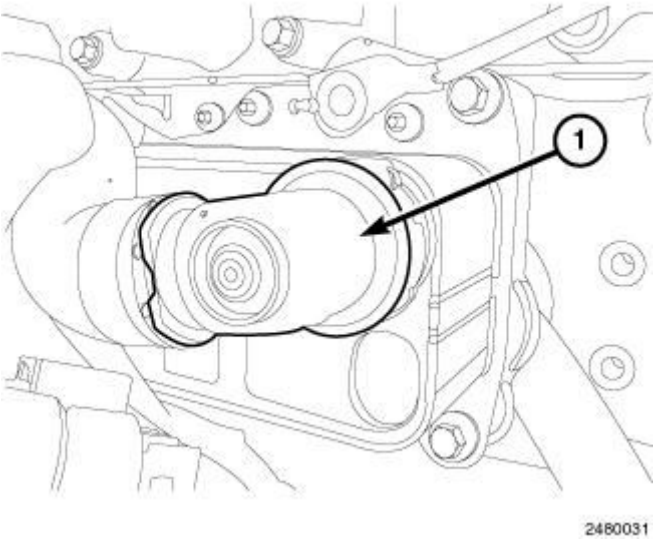

Fig. 505: Identifying Coolant Hose
Courtesy of CHRYSLER GROUP, LLC

57. Disconnect coolant hose (1) to the oil cooler and remove the accessory carrier.

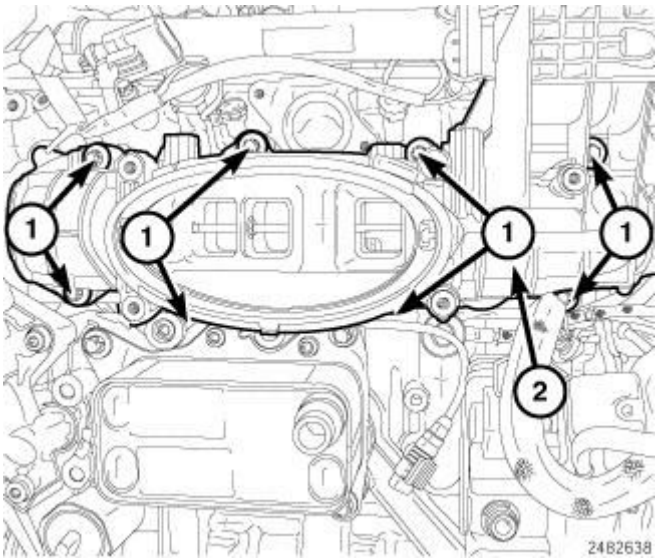

Fig. 506: Intake Manifold & Bolts
Courtesy of CHRYSLER GROUP, LLC

58. Remove the bolts (1) and the intake manifold (2).
59. Inspect intake manifold for cracks or distortion. Replace manifold if necessary.
60. Inspect manifold for gasket surface damage or warpage. Replace manifold if necessary.

INSTALLATION

MIXING CHAMBER

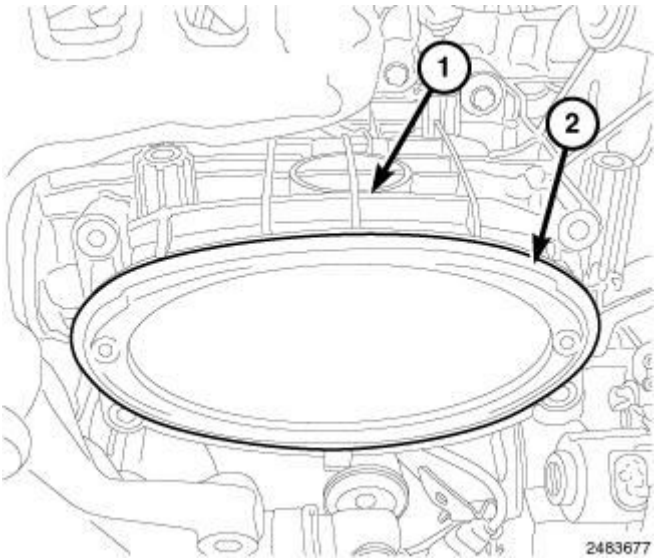

Fig. 507: Intake Manifold & O-Ring Seal
Courtesy of CHRYSLER GROUP, LLC

1. Clean all gasket mating surfaces.
2. Install a new O-ring seal (2) onto the intake manifold (1).

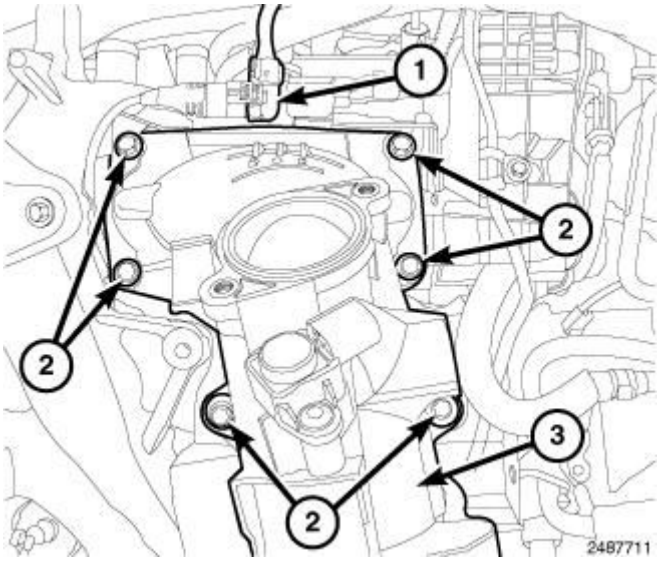

Fig. 508: Knock Sensor Electrical Connector, Mixing Chamber & Bolts
Courtesy of CHRYSLER GROUP, LLC

3. Install the mixing chamber (3). Tighten bolts (2) to 9 N.m (80 in. lbs.).
4. Connect the knock sensor wire harness connector (1).

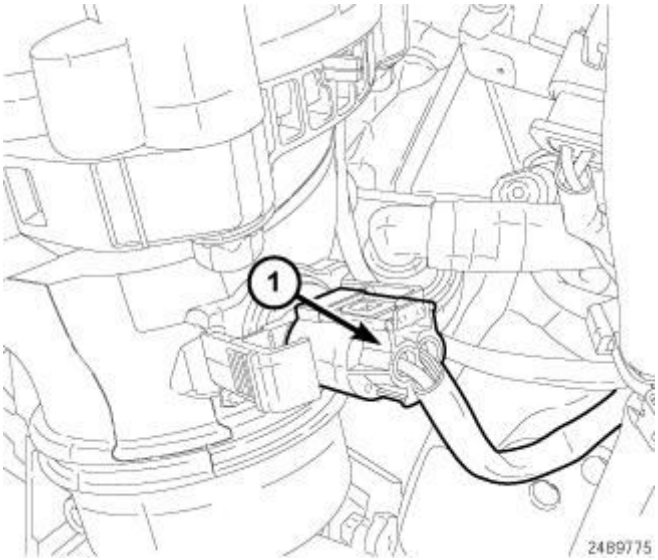

Fig. 509: Identifying Charge Air Temperature Sensor Connectors
Courtesy of CHRYSLER GROUP, LLC

5. Connect the Charge Air inlet temperature sensor wire harness connector (1).

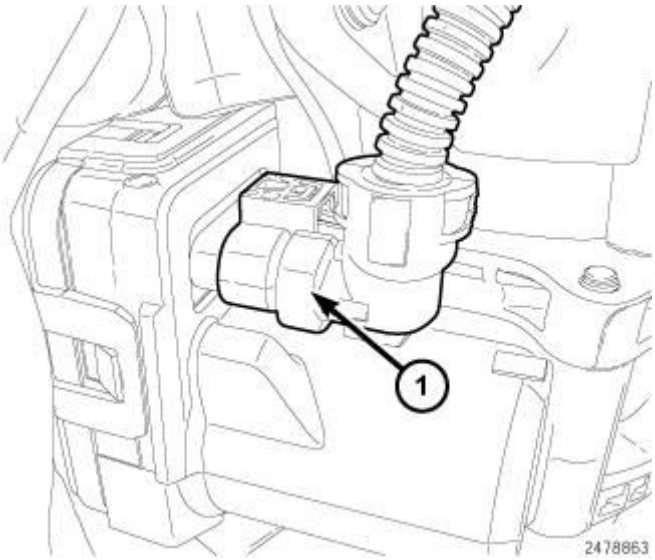

Fig. 510: EGR Air Flow Control Valve Harness Connector
Courtesy of CHRYSLER GROUP, LLC

6. Connect the EGR air control valve wire harness connector (1).

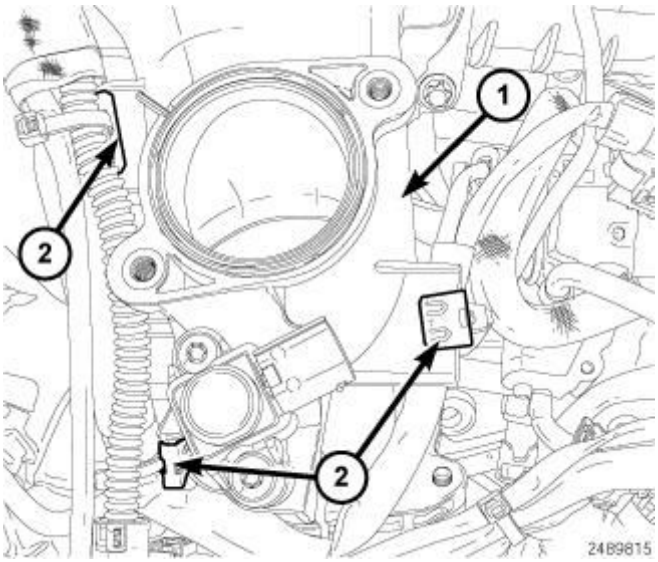

Fig. 511: Mixing Chamber & Wire Harness Retainer Clips
Courtesy of CHRYSLER GROUP, LLC

7. Connect the wire harness retainer clips (2) to the mixing chamber (1).

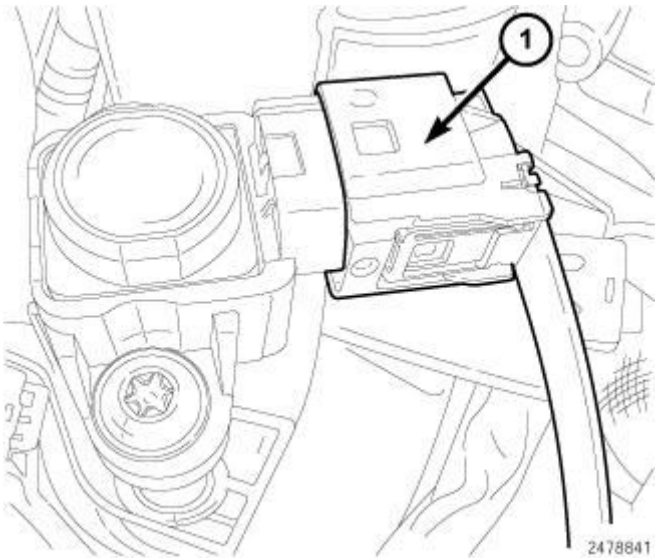

Fig. 512: Boost Pressure Sensor Harness Connector
Courtesy of CHRYSLER GROUP, LLC

8. Connect the boost pressure sensor wire harness connector (1).

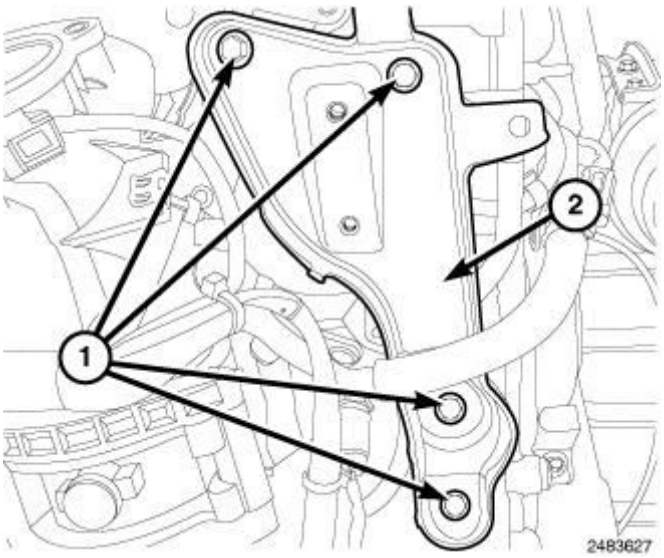

Fig. 513: Identifying Bolts & EGR Support Bracket
Courtesy of CHRYSLER GROUP, LLC

9. Install the EGR support bracket (2). Tighten bolts (1) to 9 N.m (80 in. lbs.).

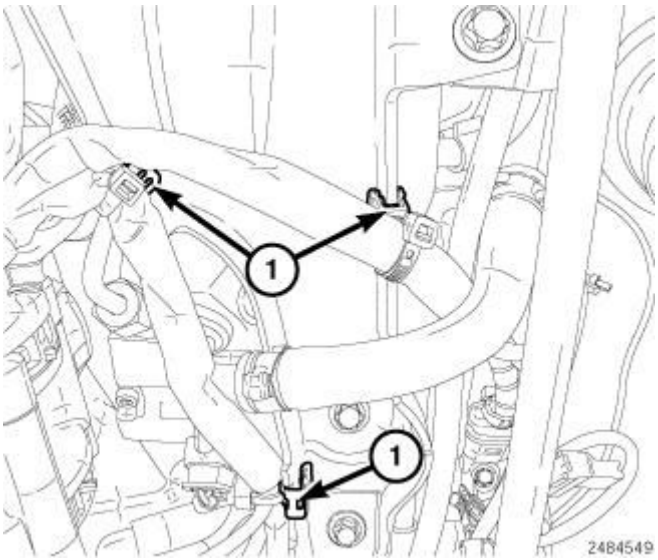

Fig. 514: Wire Harness Retainers
Courtesy of CHRYSLER GROUP, LLC

10. Connect the wire harness retainers (1).

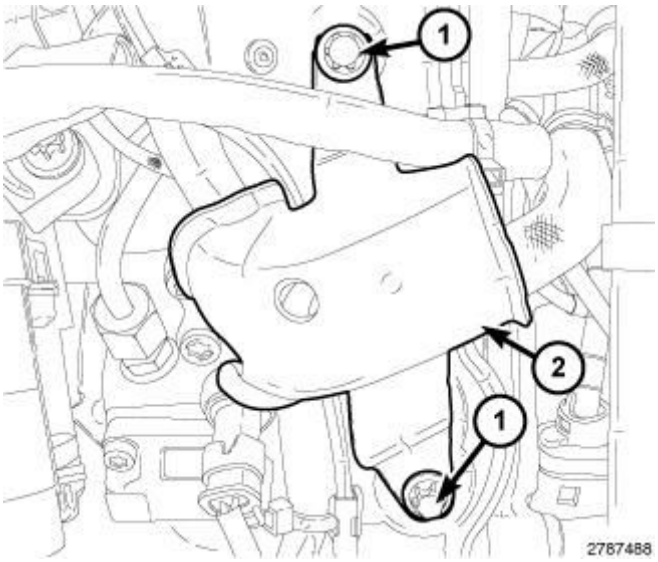

Fig. 515: Identifying Bolts & Heat Shield
Courtesy of CHRYSLER GROUP, LLC

11. Install the heat shield (2). Tighten bolts (1) to 9 N.m (80 in. lbs.).

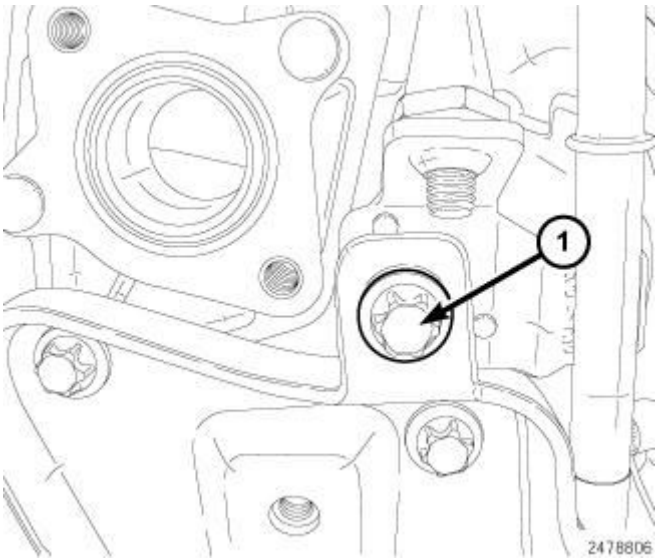

Fig. 516: Vacuum Tube Bolt
Courtesy of CHRYSLER GROUP, LLC

12. Install the bolt securing the vacuum tube (1). Tighten bolt to 9 N.m (80 in. lbs.).

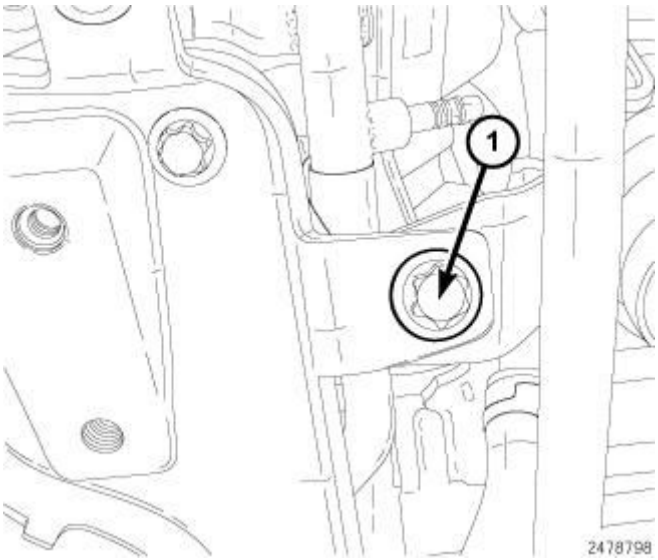

Fig. 517: Oil Dip Stick Bolt
Courtesy of CHRYSLER GROUP, LLC

13. Install the bolt securing the oil dip stick tube. Tighten bolt to 9 N.m (80 in. lbs.).

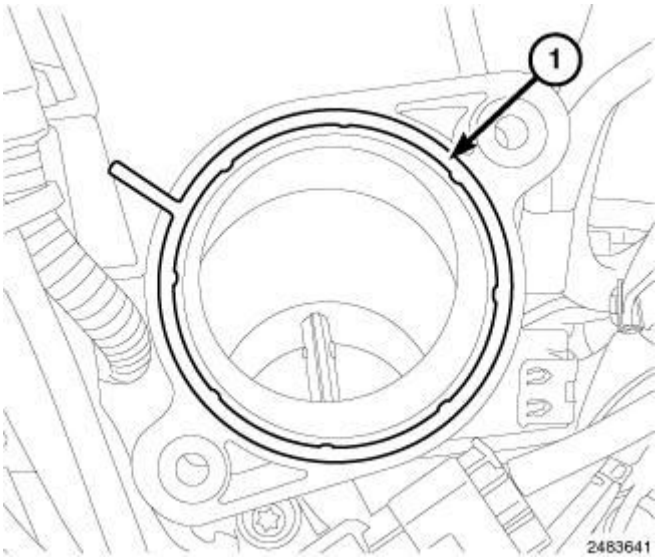

Fig. 518: Installing/Removing EGR Tube Gasket Onto Mixing Chamber
Courtesy of CHRYSLER GROUP, LLC

14. Clean the gasket surfaces and install a new gasket (1).

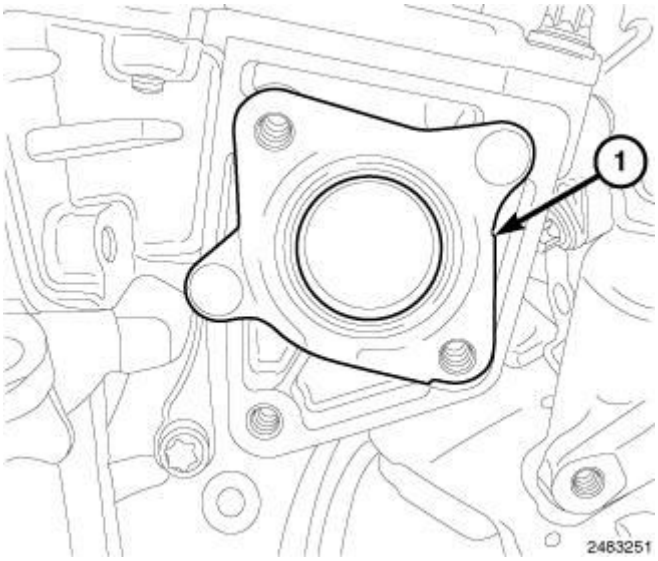

Fig. 519: Installing/Removing EGR Tube Gasket Onto EGR Actuator
Courtesy of CHRYSLER GROUP, LLC

15. Clean the gasket surfaces and install a new gasket (1).

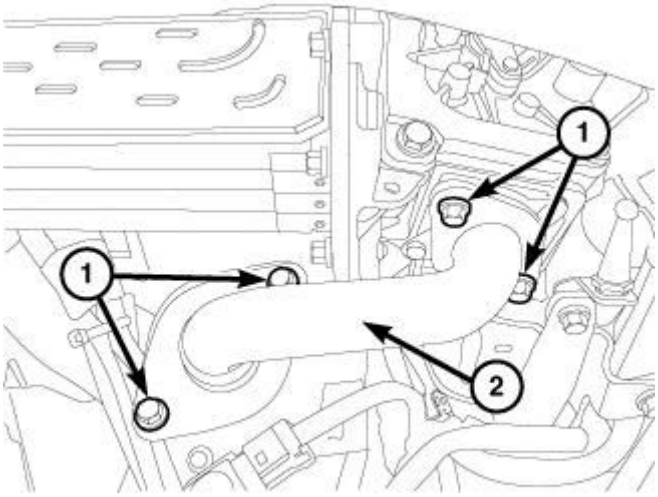

2545676

Fig. 520: EGR Tube & Bolts
Courtesy of CHRYSLER GROUP, LLC

16. Install the EGR tube (2). Tighten bolts (1) to 9 N.m (80 in. lbs.).

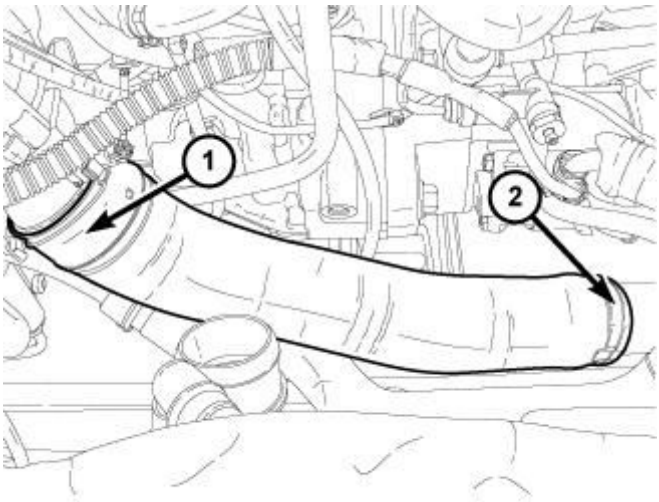

2330698

Fig. 521: EGR Air Flow Control Valve & Clamp
Courtesy of CHRYSLER GROUP, LLC

17. Install the cooling fan module. Refer to **FAN, COOLING, INSTALLATION** .
18. Install air inlet tube to EGR air flow control valve (1).
19. Connect the charge air outlet tube from the Charge Air Cooler (CAC) and tighten clamp.
20. Install the EGR cooler. Refer to **COOLER, EGR, INSTALLATION** .

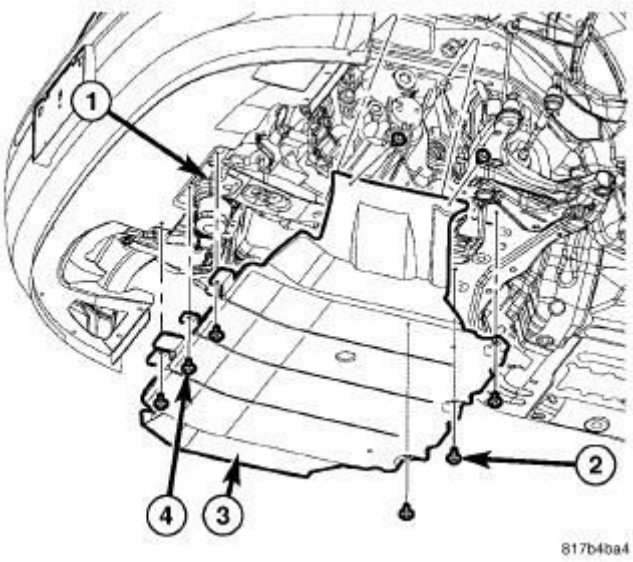

Fig. 522: Belly Pan
Courtesy of CHRYSLER GROUP, LLC

21. Install the belly pan (3) and fasteners (2, 4).

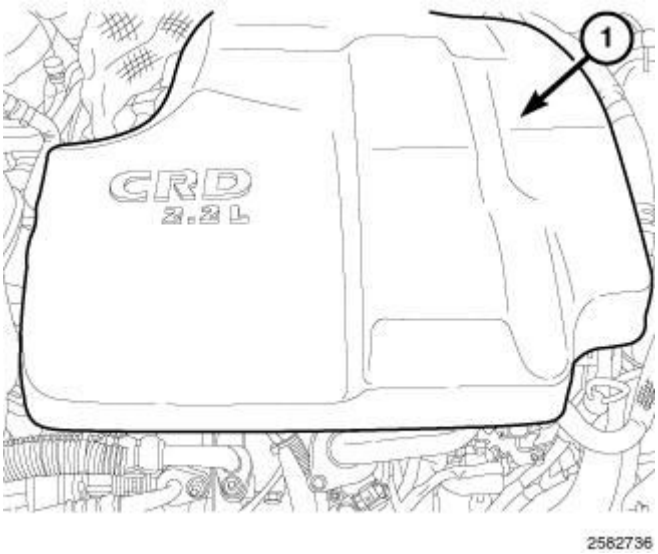

Fig. 523: Engine Cover
Courtesy of CHRYSLER GROUP, LLC

22. Install the engine cover (1).

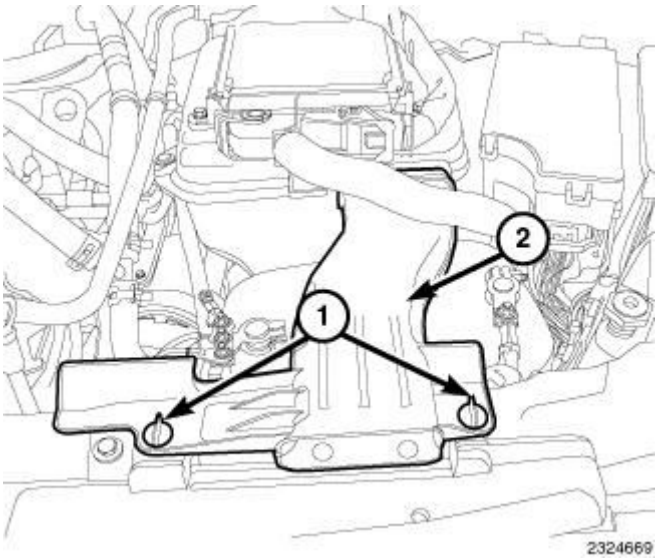

Fig. 524: Quarter Turn Lock Tabs & Air Inlet Duct
Courtesy of CHRYSLER GROUP, LLC

23. Connect the negative battery cable.
24. Install the air inlet duct (2) and lock the quarter turn lock tabs (1).

INTAKE MANIFOLD

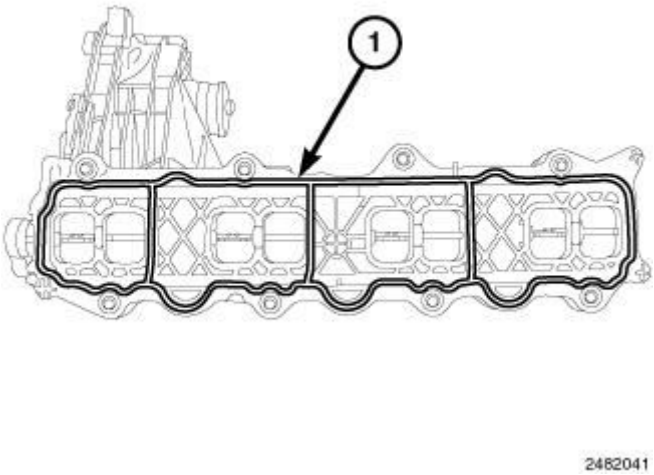

Fig. 525: Intake Manifold Gasket
Courtesy of CHRYSLER GROUP, LLC

1. Clean gasket mating surfaces.
2. Install new intake manifold gasket (1) on intake manifold.

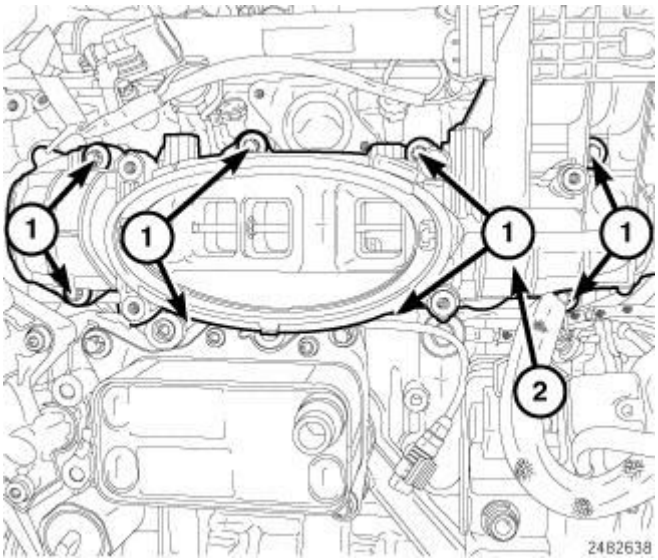

Fig. 526: Intake Manifold & Bolts
Courtesy of CHRYSLER GROUP, LLC

3. Install the intake manifold (2) and tighten bolts (1) finger tight.

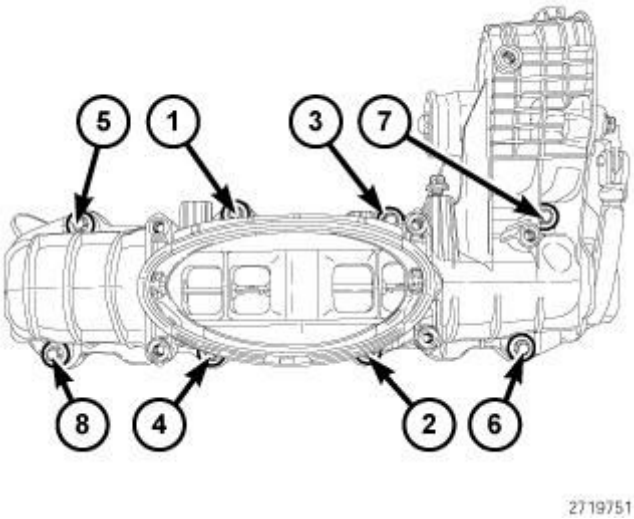

Fig. 527: Intake Manifold Bolt Torque Sequence
Courtesy of CHRYSLER GROUP, LLC

4. Using the sequence shown in illustration, tighten bolts to 14 N.m (124 in. lbs.).

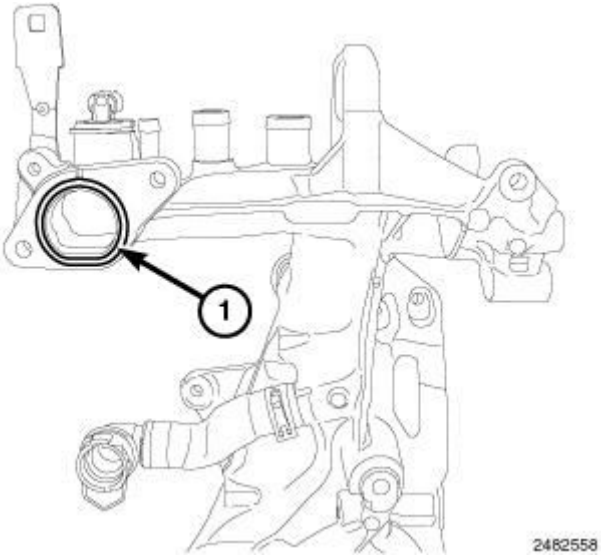

Fig. 528: Identifying Gasket
Courtesy of CHRYSLER GROUP, LLC

5. Clean the gasket surfaces and install a new O-ring (1) and gasket.
6. Position the accessory carrier to the engine and install bolts finger tight.

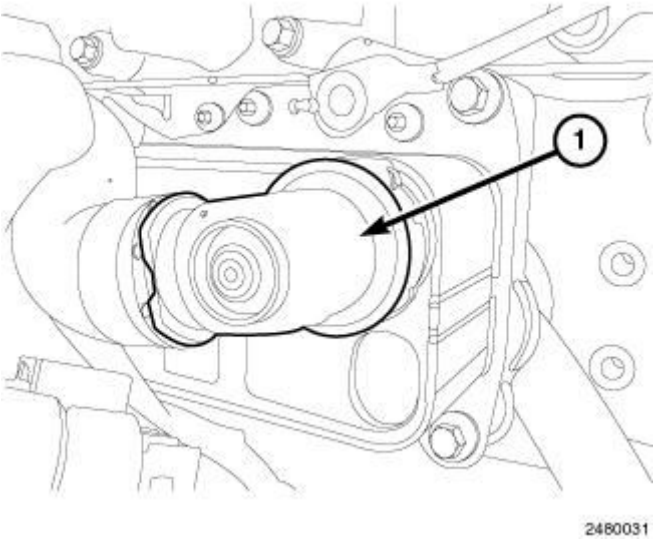

Fig. 529: Identifying Coolant Hose
Courtesy of CHRYSLER GROUP, LLC

7. Connect the coolant hose (1) to the oil cooler.

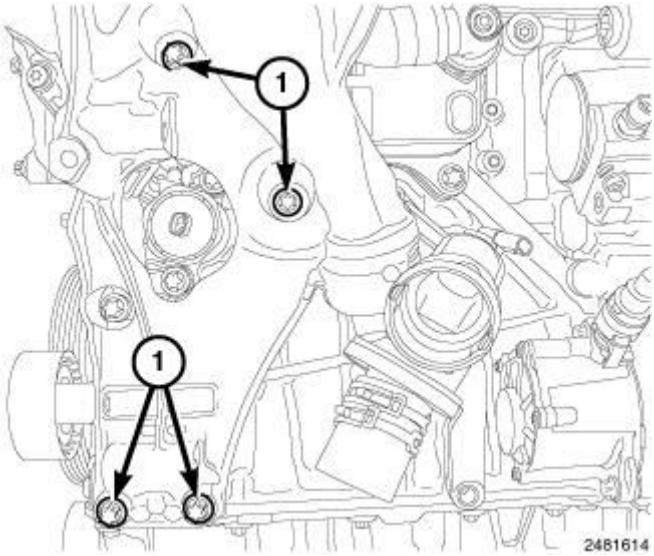

Fig. 530: Accessory Carrier Bolts
Courtesy of CHRYSLER GROUP, LLC

8. Tighten the lower accessory carrier bolts (1) to 20 N.m (177 in. lbs.).
9. Install the oil filter cap. Tighten cap to 25 N.m (18 ft. lbs.).

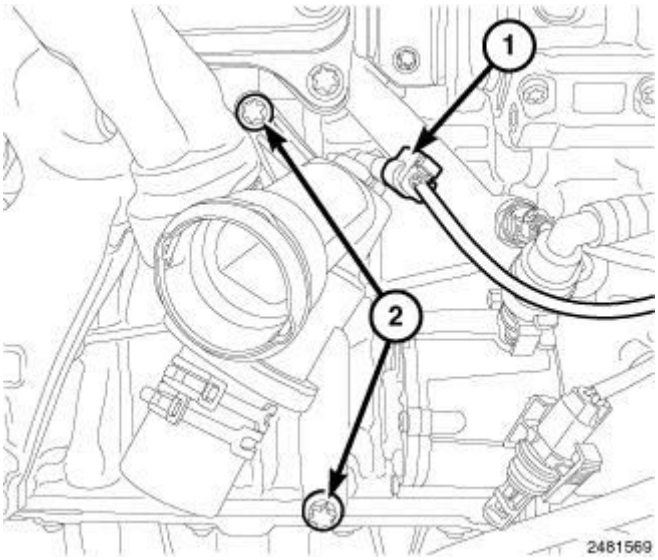

Fig. 531: Identifying Thermostat Heater Connector & Upper Thermostat Housing Bolt
Courtesy of CHRYSLER GROUP, LLC

10. Install the two bolt securing the thermostat housing to engine block and tighten bolts to 9 N.m (80 in. lbs.).
11. Connect the coolant temperature sensor wire harness connector (1).

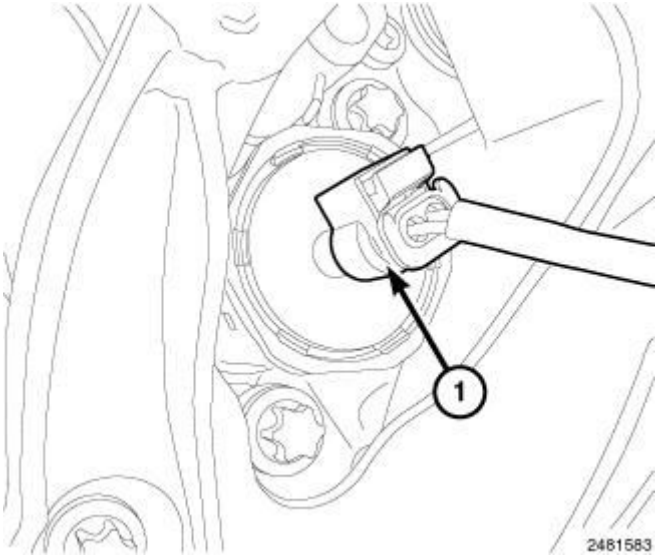

Fig. 532: Piston Cooling Oil Control Valve Harness Connector
Courtesy of CHRYSLER GROUP, LLC

12. Connect the oil control valve wire harness connector.

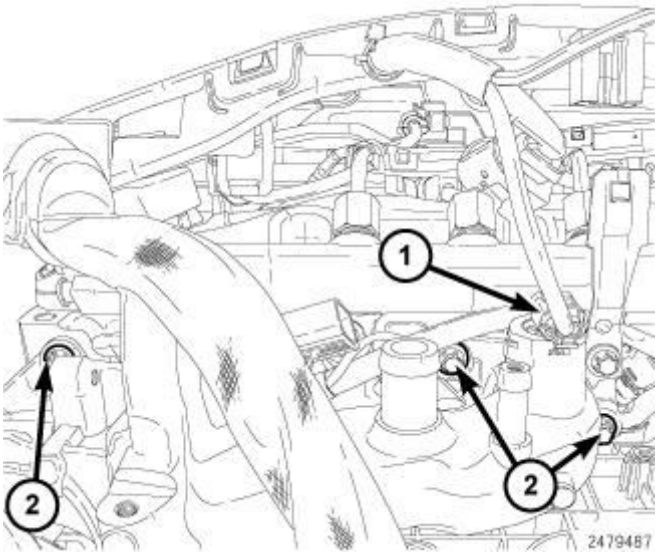

Fig. 533: Coolant Temp Sensor & Cooling Manifold Bolts
Courtesy of CHRYSLER GROUP, LLC

13. Tighten the three upper accessory carrier bolts (2) to 9 N.m (80 in. lbs.).
14. Connect the coolant temp sensor (1) wire harness connector.

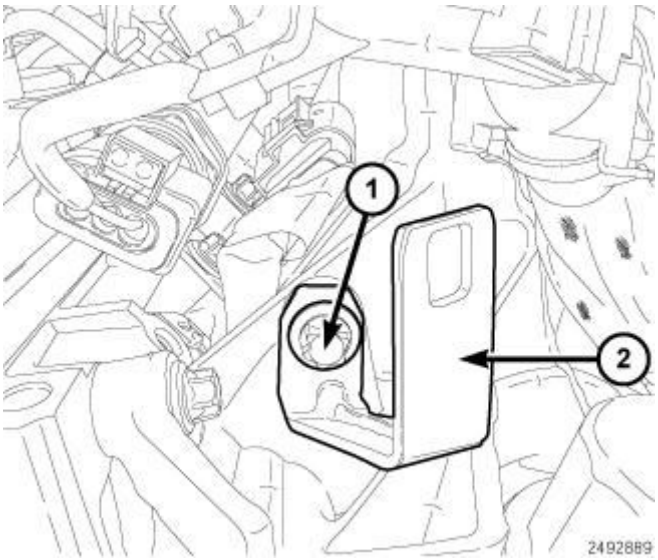

Fig. 534: Wire Harness Support Bracket & Bolts
Courtesy of CHRYSLER GROUP, LLC

15. Install the wire harness support bracket. Tighten bolt to 9 N.m (80 in. lbs.).

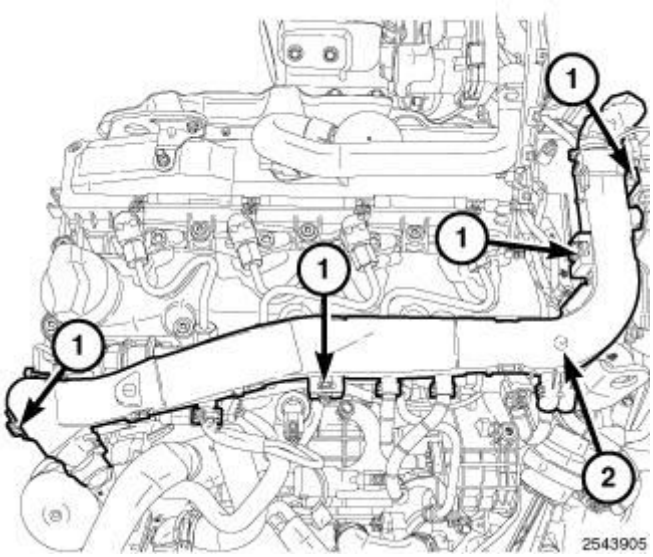

Fig. 535: Lock Tabs & Engine Wire Harness
Courtesy of CHRYSLER GROUP, LLC

16. Position the wire harness (2) and push down to lock tabs (1).

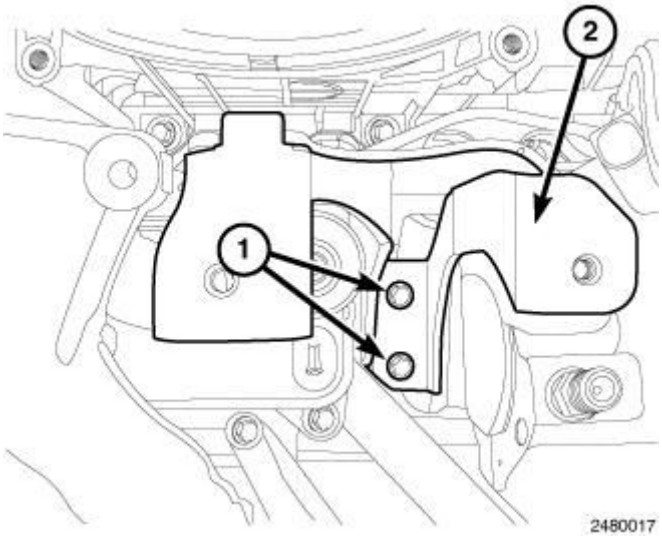

Fig. 536: Intake Manifold Support Bracket & Bolts
Courtesy of CHRYSLER GROUP, LLC

17. Install the mixing chamber support bracket (2). Tighten bolts (1) to 9 N.m (80 in. lbs.).

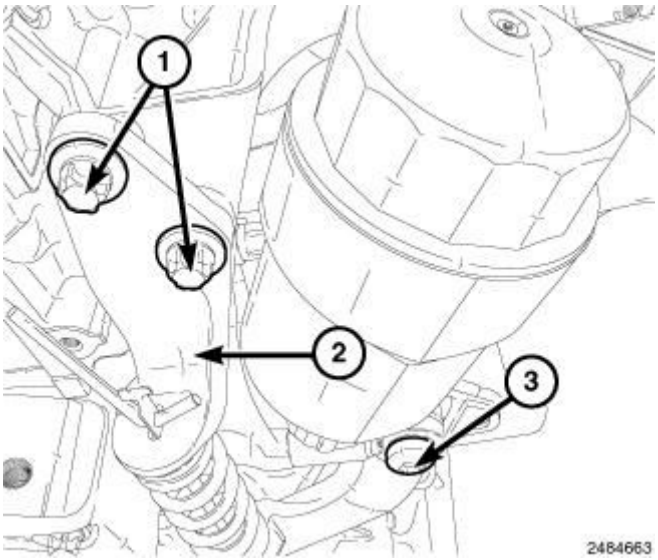

Fig. 537: Accessory Drive Belt Tensioner & Bolts
Courtesy of CHRYSLER GROUP, LLC

18. Install the accessory drive belt tensioner.
    - Tighten bolts (1) to 20 N.m (177 in. lbs.).
    - Tighten bolt (3) to 45 N.m (33 ft. lbs.).

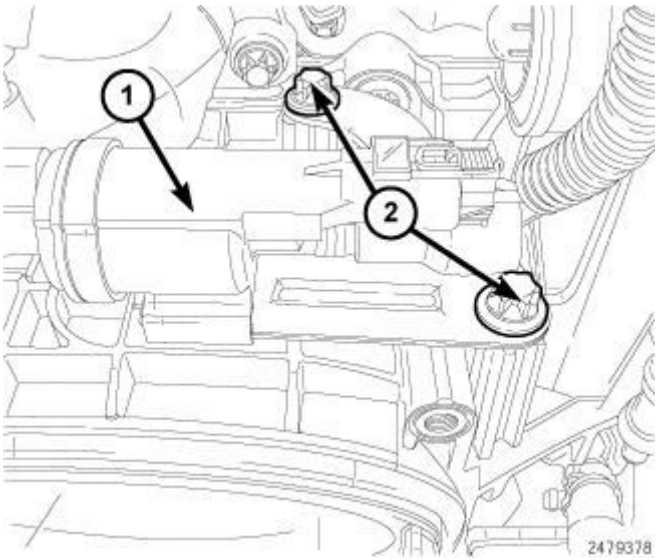

Fig. 538: EGR Vacuum Solenoid & Bolts
Courtesy of CHRYSLER GROUP, LLC

19. Install the EGR vacuum solenoid (1). Tighten bolts (2) to 9 N.m (80 in. lbs.).

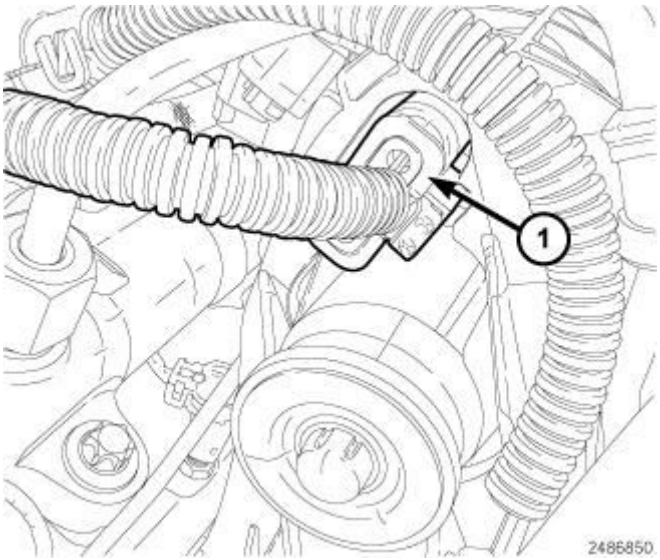

Fig. 539: Swirl Valve Actuator Harness Connector
Courtesy of CHRYSLER GROUP, LLC

20. Connect the swirl valve actuator wire harness connector (1).

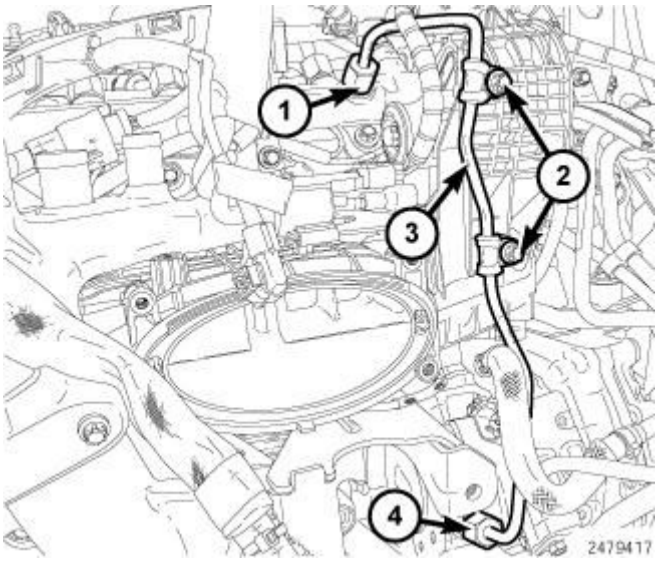

Fig. 540: Identifying Fuel Rail, Bolts, High Pressure Fuel Tube & Pump
Courtesy of CHRYSLER GROUP, LLC

21. Install the new high pressure fuel line (3) at fuel rail (1) and high pressure pump (4).
22. Tighten the high pressure fuel line (3) at fuel rail (1) and high pressure pump (4) to 7 N.m (62 in. lbs.).
23. Tighten the high pressure fuel line (3) at fuel rail (1) and high pressure pump (4) to 33 N.m (24 ft. lbs.).
24. Install the two bolts (2) securing the high pressure fuel line and tighten to 9 N.m (80 in. lbs.).

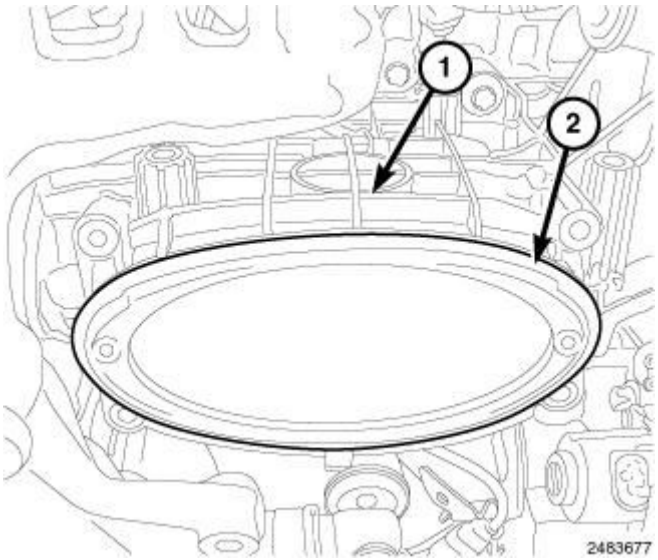

Fig. 541: Intake Manifold & O-Ring Seal
Courtesy of CHRYSLER GROUP, LLC

25. Install a new O-ring seal (2) onto the intake manifold (1).

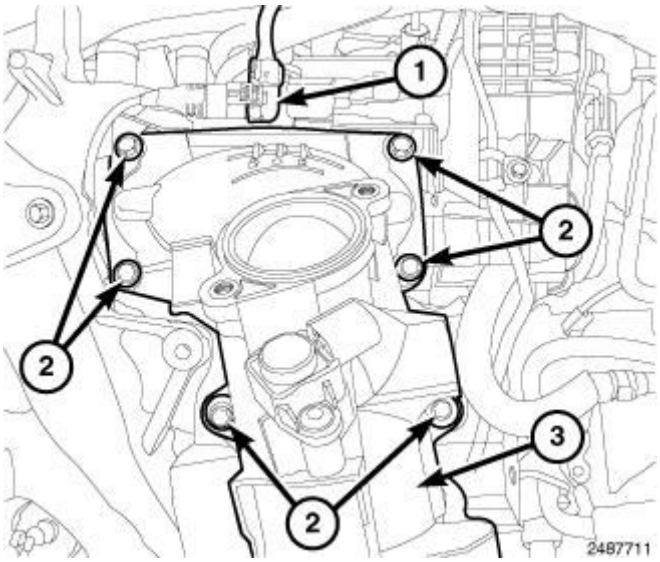

Fig. 542: Knock Sensor Electrical Connector, Mixing Chamber & Bolts
Courtesy of CHRYSLER GROUP, LLC

26. Install the mixing chamber (3). Tighten bolts (2) to 9 N.m (80 in. lbs.).
27. Connect the knock sensor wire harness connector (1).

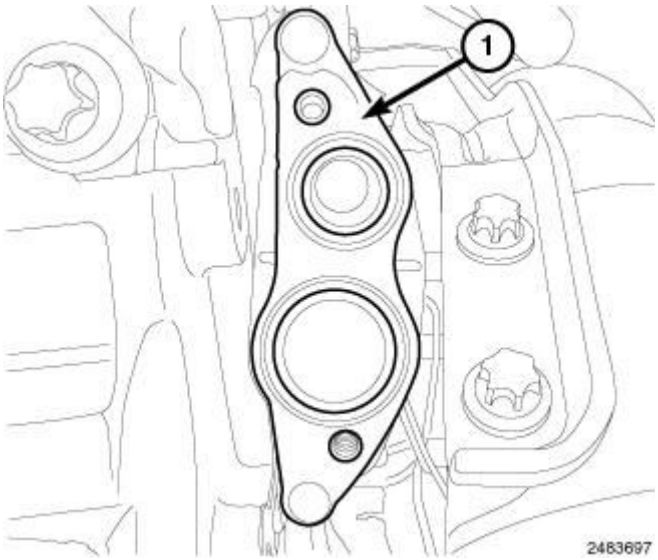

Fig. 543: Identifying EGR Manifold Gasket
Courtesy of CHRYSLER GROUP, LLC

28. Clean the gasket surfaces and install a new EGR manifold gasket.

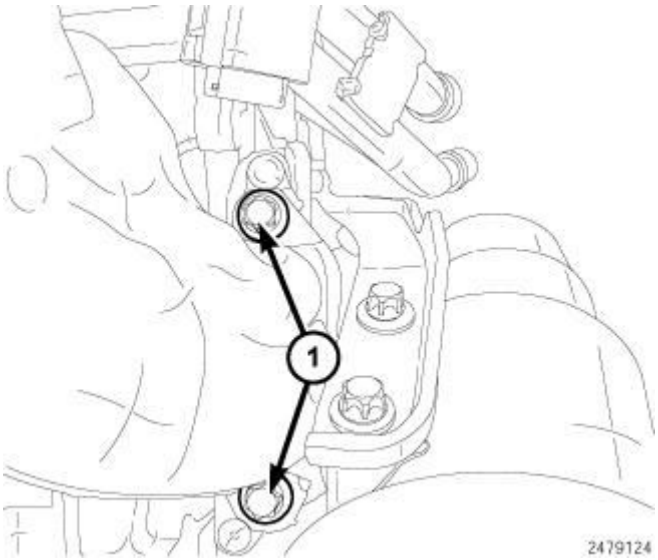

Fig. 544: Identifying EGR Cooler Manifold Bolts
Courtesy of CHRYSLER GROUP, LLC

29. Install the EGR manifold. Tighten bolts (1) to 9 N.m (80 in. lbs.).

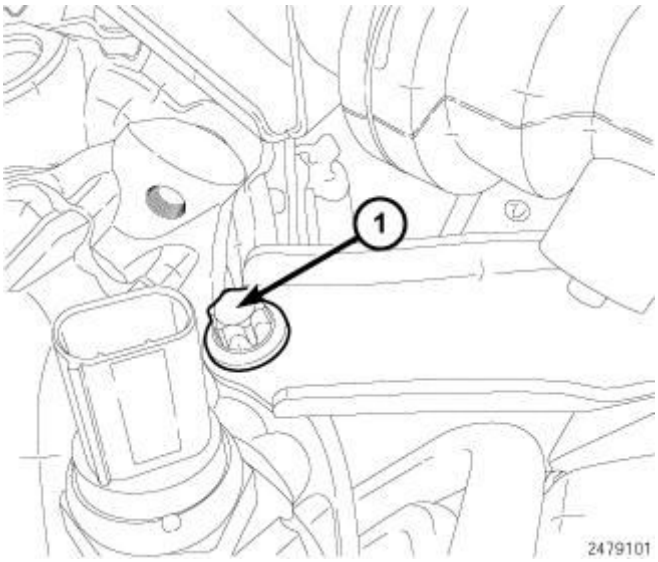

Fig. 545: Support Bracket Bolt
Courtesy of CHRYSLER GROUP, LLC

30. Install the EGR support bracket bolt (1). Tighten to 9 N.m (80 in. lbs.).

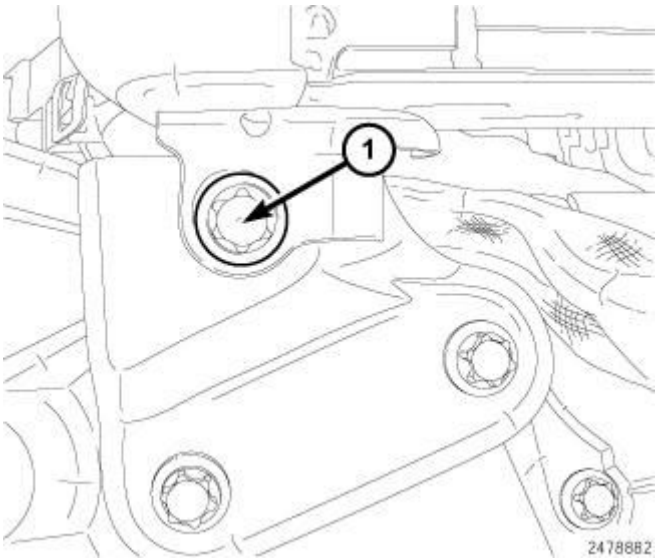

Fig. 546: Lower EGR Cooler Bolt
Courtesy of CHRYSLER GROUP, LLC

31. Install the lower EGR cooler bracket bolt (1). Tighten to 9 N.m (80 in. lbs.).

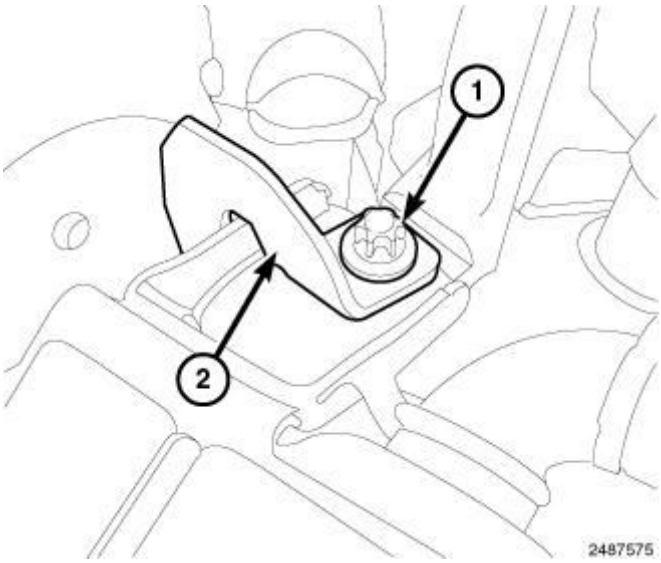

Fig. 547: Upper EGR Cooler Bolt & Bracket
Courtesy of CHRYSLER GROUP, LLC

32. Install the upper EGR cooler bolt. Tighten bolt to 9 N.m (80 in. lbs.).

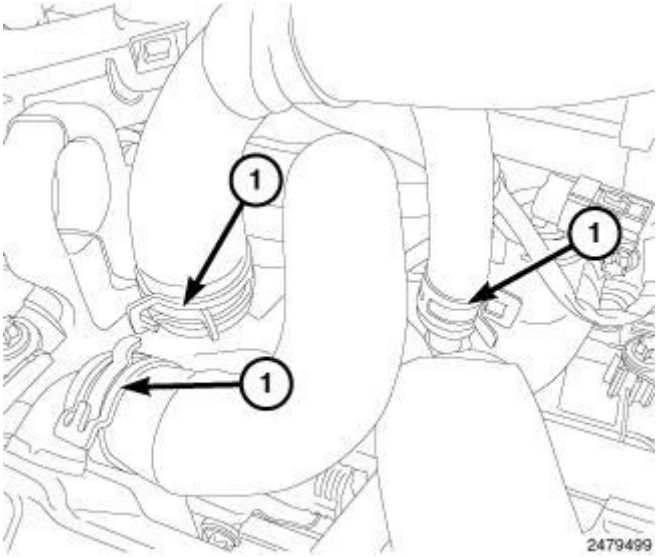

Fig. 548: Locating Coolant Hoses
Courtesy of CHRYSLER GROUP, LLC

33. Connect the coolant hoses (1).

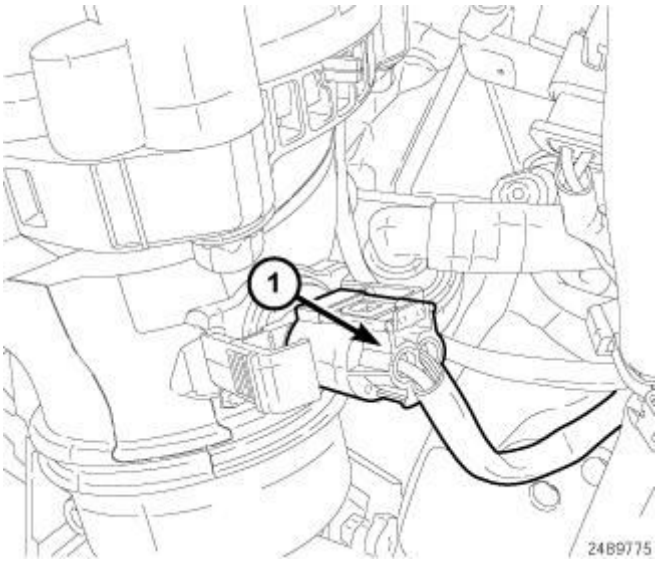

Fig. 549: Identifying Charge Air Temperature Sensor Connectors
Courtesy of CHRYSLER GROUP, LLC

34. Connect the Charge Air inlet temperature sensor wire harness connector.

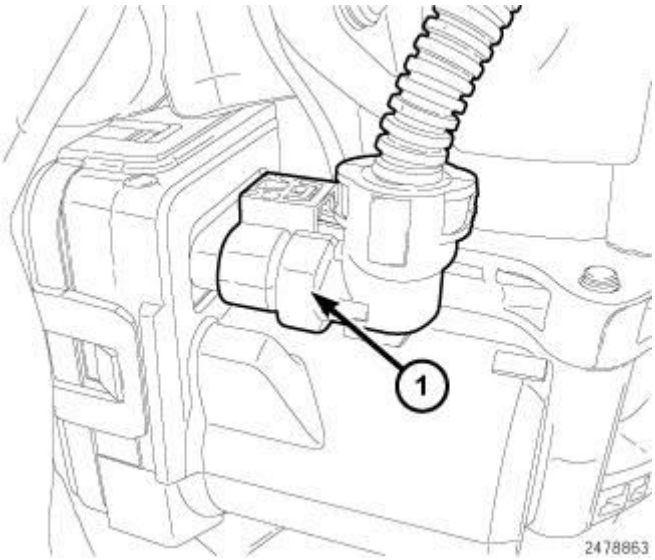

Fig. 550: EGR Air Flow Control Valve Harness Connector
Courtesy of CHRYSLER GROUP, LLC

35. Connect the EGR air control valve wire harness connector.

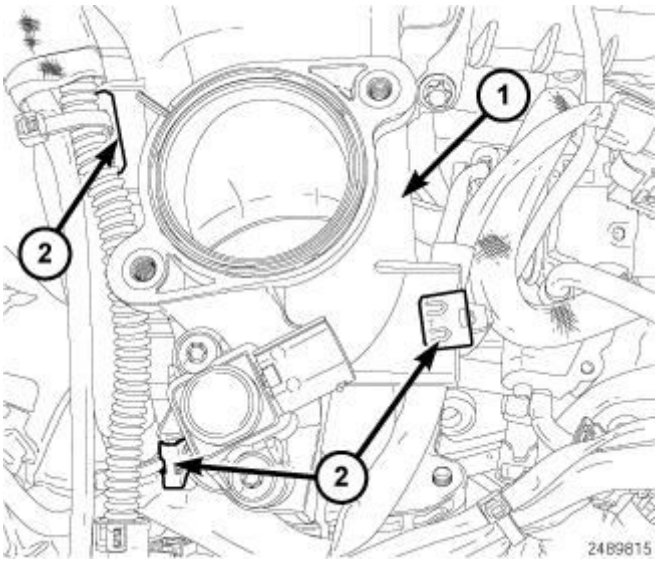

Fig. 551: Mixing Chamber & Wire Harness Retainer Clips
Courtesy of CHRYSLER GROUP, LLC

36. Connect the wire harness retainer clips (2) to the mixing chamber (1).

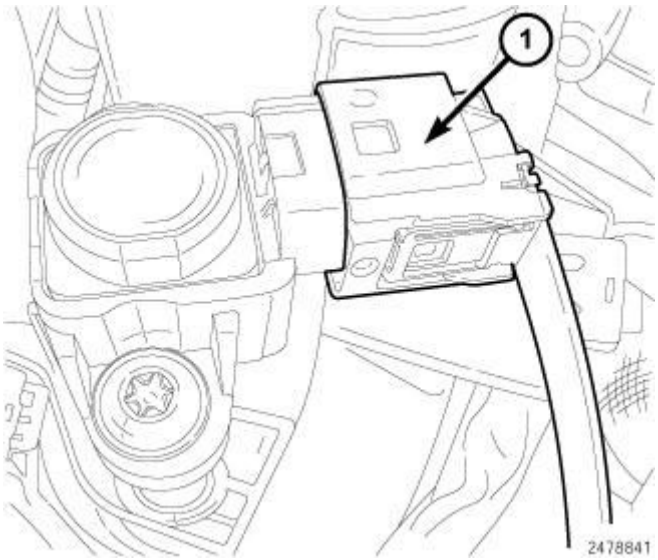

Fig. 552: Boost Pressure Sensor Harness Connector
Courtesy of CHRYSLER GROUP, LLC

37. Connect the boost pressure sensor wire harness connector (1).

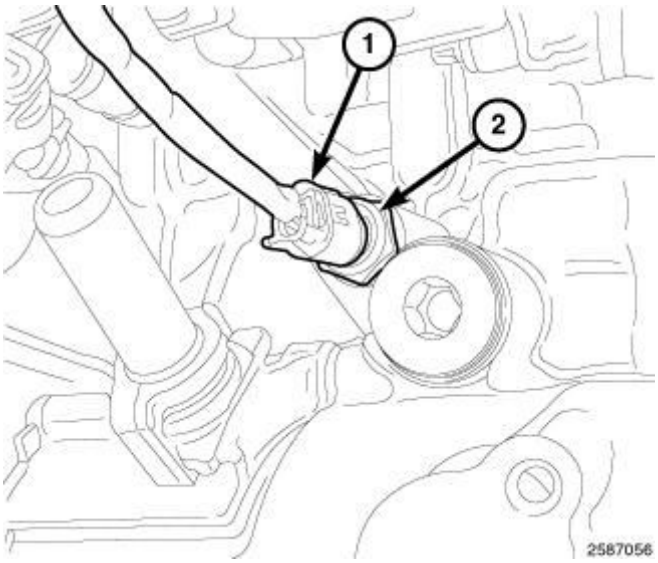

Fig. 553: Oil Temperature Sensor Harness Connector & Sensor
Courtesy of CHRYSLER GROUP, LLC

38. Connect the oil temperature sensor wire harness connector.

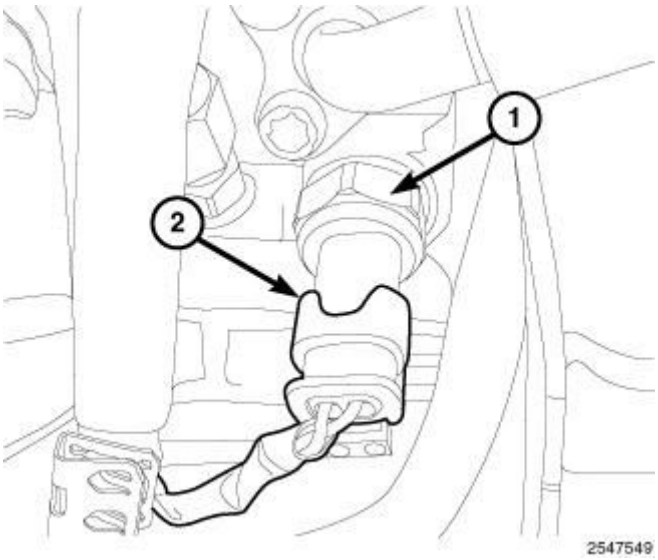

Fig. 554: Identifying Fuel Temperature Sensor Harness Connector
Courtesy of CHRYSLER GROUP, LLC

39. Connect the fuel temperature sensor wire harness connector (2).

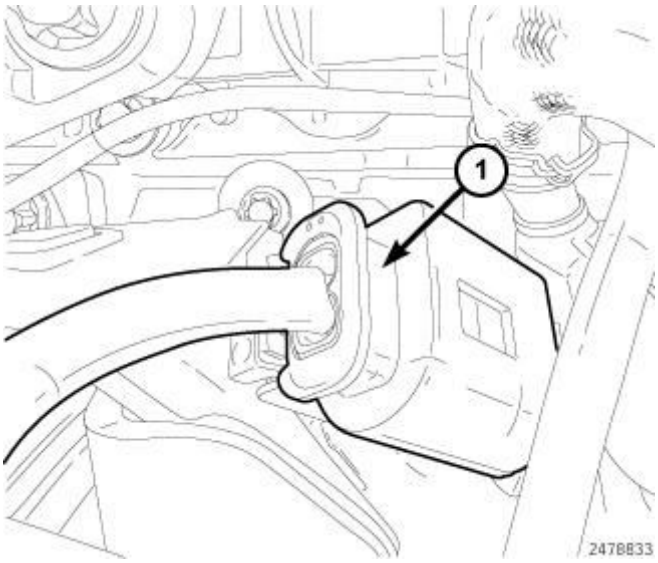

Fig. 555: Identifying Fuel Quantity Control Valve Harness Connector
Courtesy of CHRYSLER GROUP, LLC

40. Connect the fuel quality sensor wire harness connector (1).

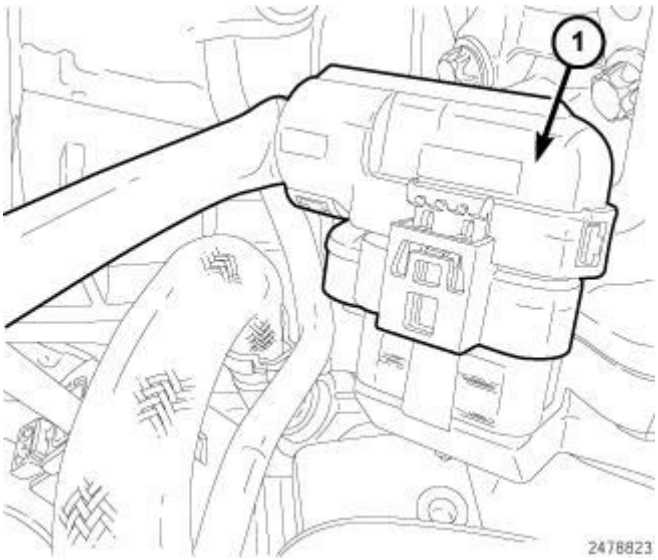

Fig. 556: Identifying EGR Valve Harness Connector
Courtesy of CHRYSLER GROUP, LLC

41. Connect the EGR valve wire harness connector (1).

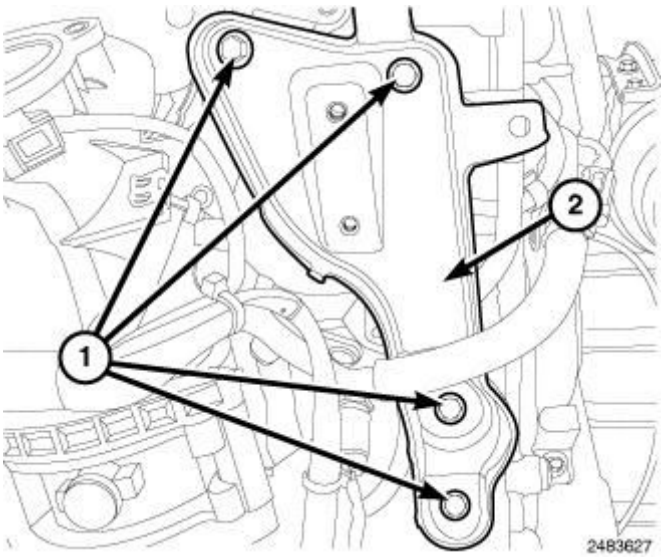

Fig. 557: Identifying Bolts & EGR Support Bracket
Courtesy of CHRYSLER GROUP, LLC

42. Install the EGR support bracket (2). Tighten bolts (1) to 9 N.m (80 in. lbs.).

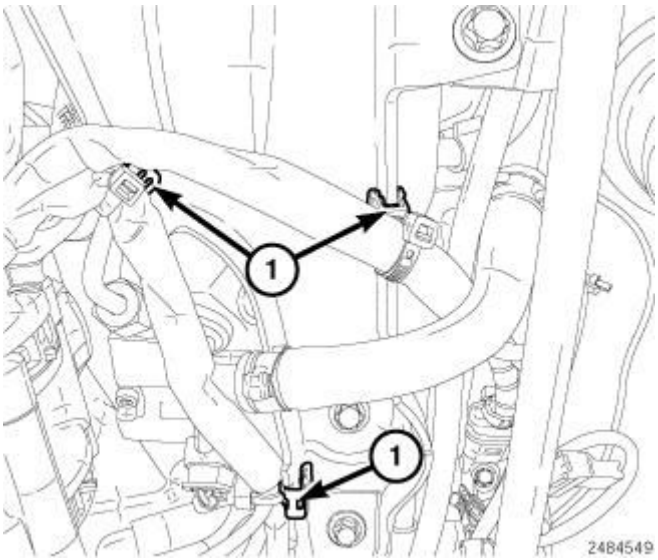

Fig. 558: Wire Harness Retainers
Courtesy of CHRYSLER GROUP, LLC

43. Connect the wire harness retainers (1).

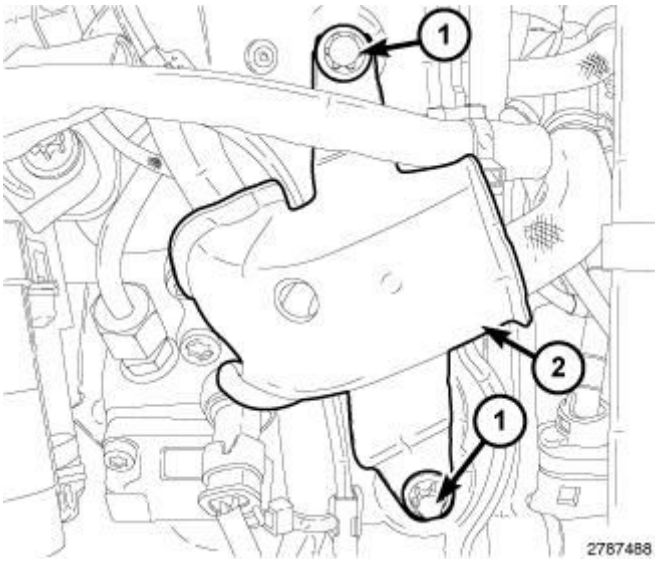

Fig. 559: Identifying Bolts & Heat Shield
Courtesy of CHRYSLER GROUP, LLC

44. Install the heat shield (2). Tighten bolts (1) to 9 N.m (80 in. lbs.).

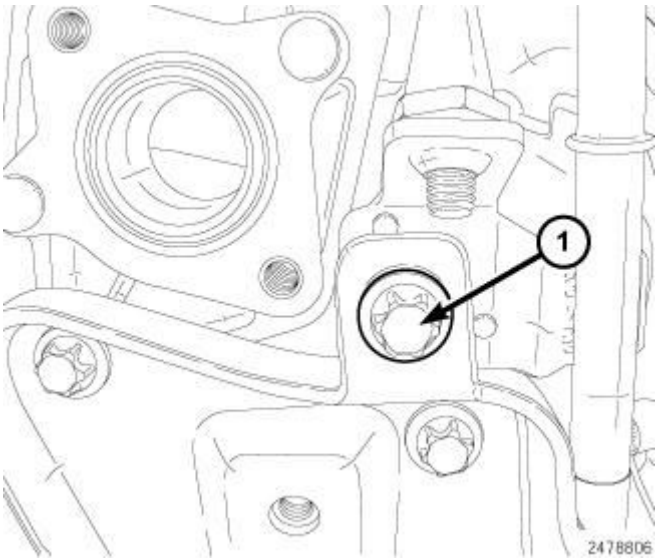

Fig. 560: Vacuum Tube Bolt
Courtesy of CHRYSLER GROUP, LLC

45. Install the bolt securing the vacuum tube (1). Tighten bolt to 9 N.m (80 in. lbs.).

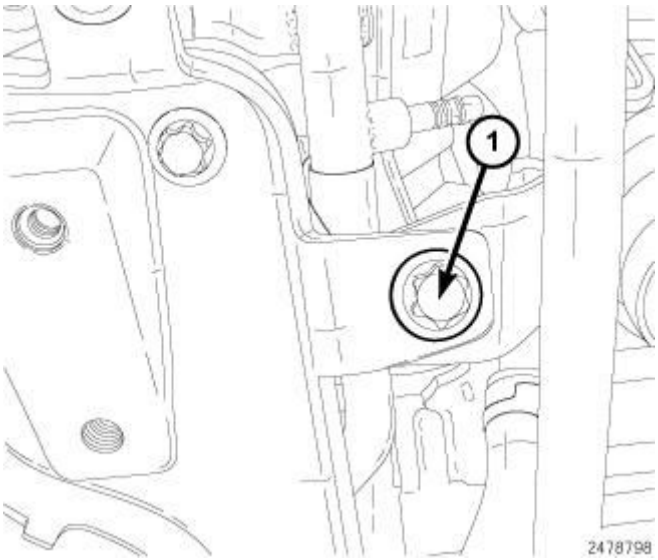

Fig. 561: Oil Dip Stick Bolt
Courtesy of CHRYSLER GROUP, LLC

46. Install the bolt securing the oil dip stick tube. Tighten bolt to 9 N.m (80 in. lbs.).

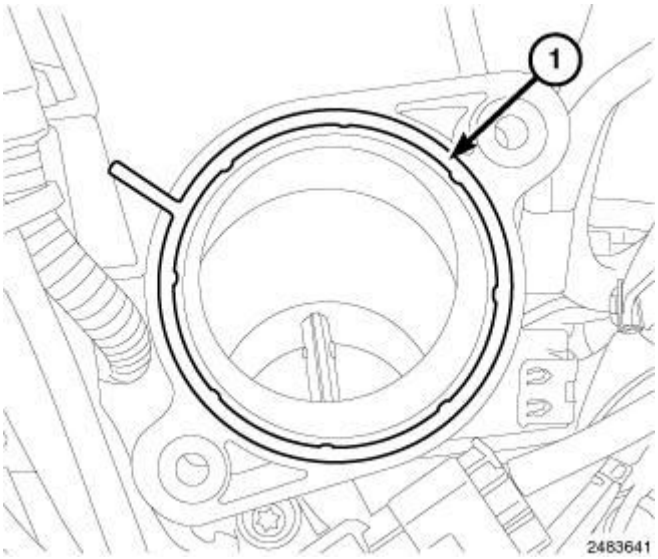

Fig. 562: Installing/Removing EGR Tube Gasket Onto Mixing Chamber
Courtesy of CHRYSLER GROUP, LLC

47. Clean the gasket surfaces and install a new gasket (1).

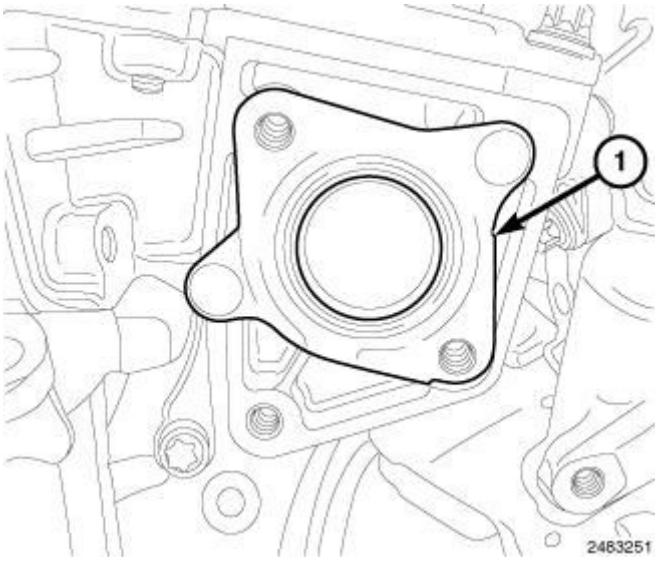

Fig. 563: Installing/Removing EGR Tube Gasket Onto EGR Actuator
Courtesy of CHRYSLER GROUP, LLC

48. Clean the gasket surfaces and install a new gasket (1).

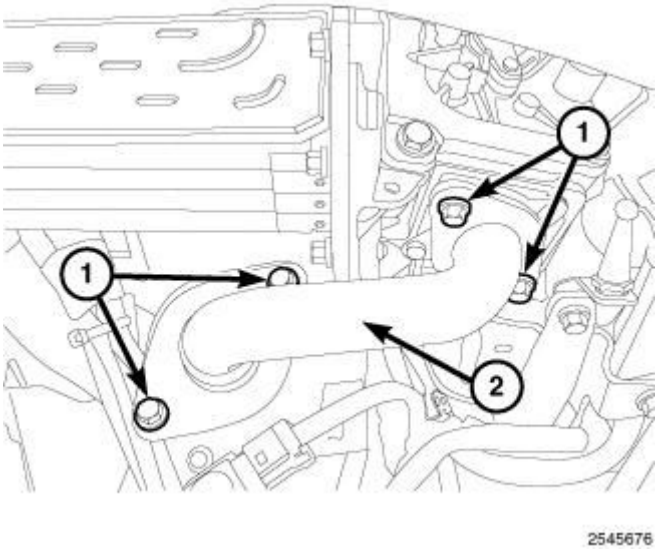

Fig. 564: EGR Tube & Bolts
Courtesy of CHRYSLER GROUP, LLC

49. Install the EGR tube (2). Tighten bolt (1) to 9 N.m (80 in. lbs.).

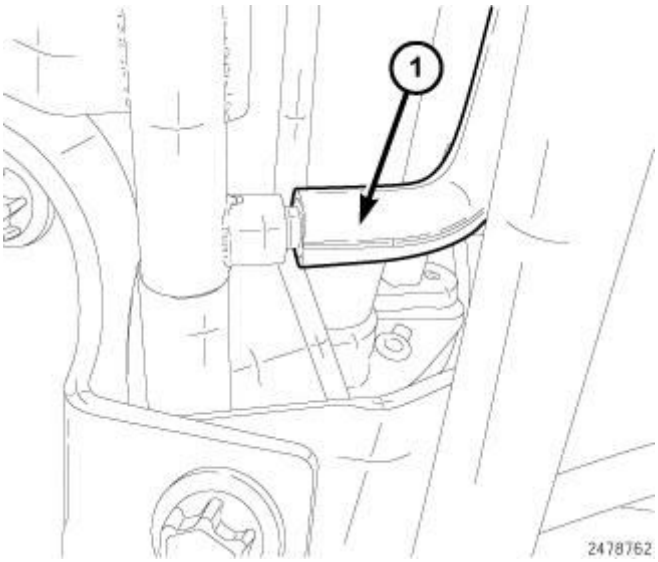

Fig. 565: Vacuum Supply Line At EGR Solenoid
Courtesy of CHRYSLER GROUP, LLC

50. Connect the vacuum supply line to the EGR solenoid (1).

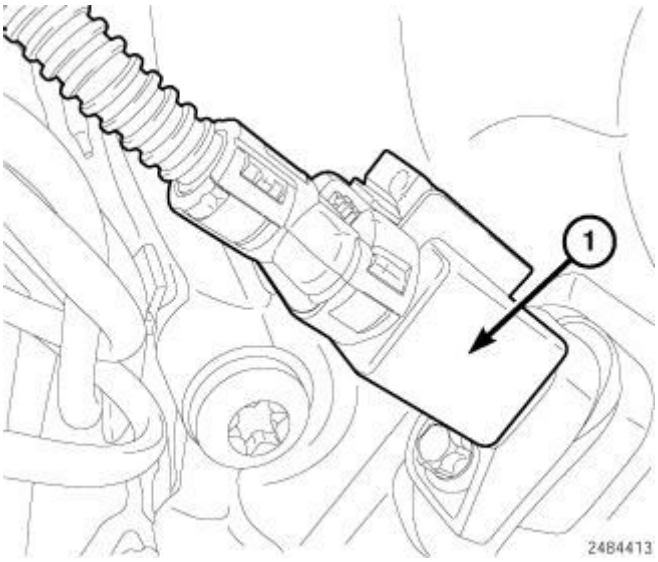

Fig. 566: Crankshaft Position Sensor Harness Connector
Courtesy of CHRYSLER GROUP, LLC

51. Connect the Crankshaft Position Sensor (CKP) wire harness connector (1).

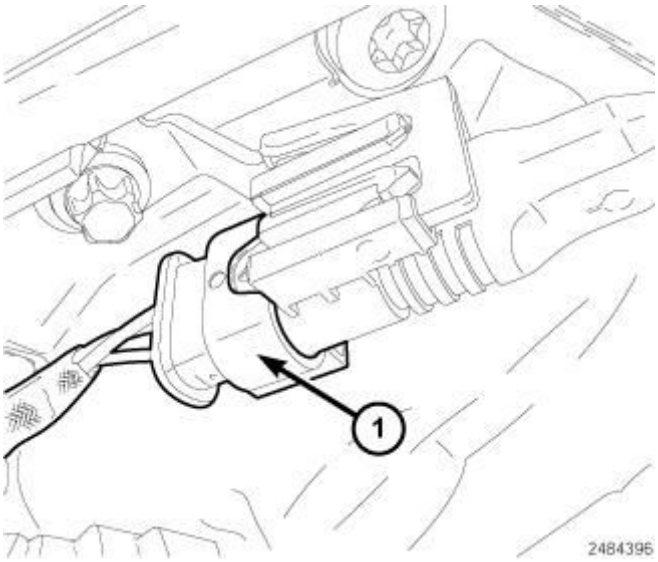

Fig. 567: Knock Sensor Harness Connector
Courtesy of CHRYSLER GROUP, LLC

52. Connect the knock sensor (1) wire harness connector.

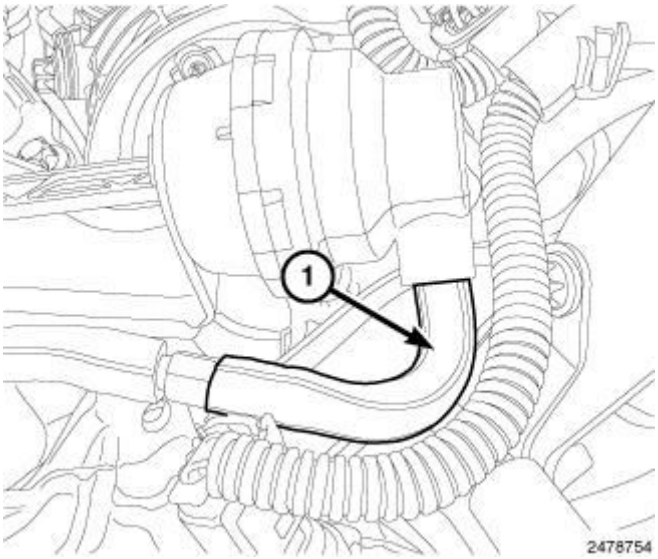

Fig. 568: Identifying Vacuum Line
Courtesy of CHRYSLER GROUP, LLC

53. Connect the vacuum line from the EGR control valve actuator.

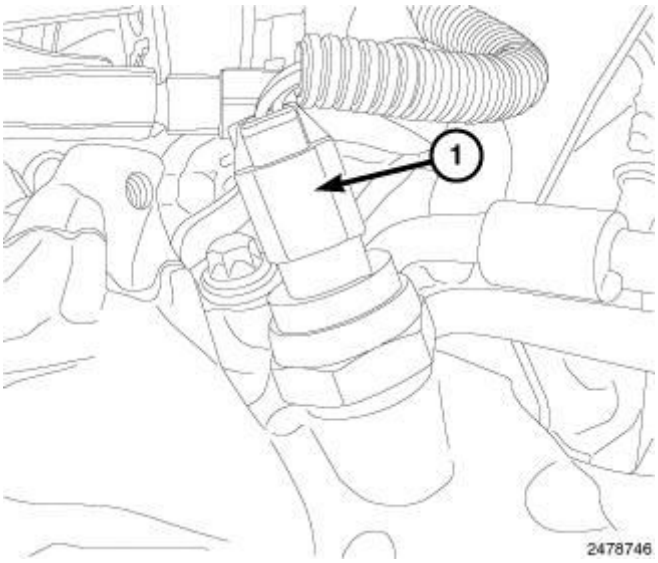

Fig. 569: Identifying EGR Back Pressure Transducer Harness Connector
Courtesy of CHRYSLER GROUP, LLC

54. Connect the EGR back pressure transducer wire harness connector.

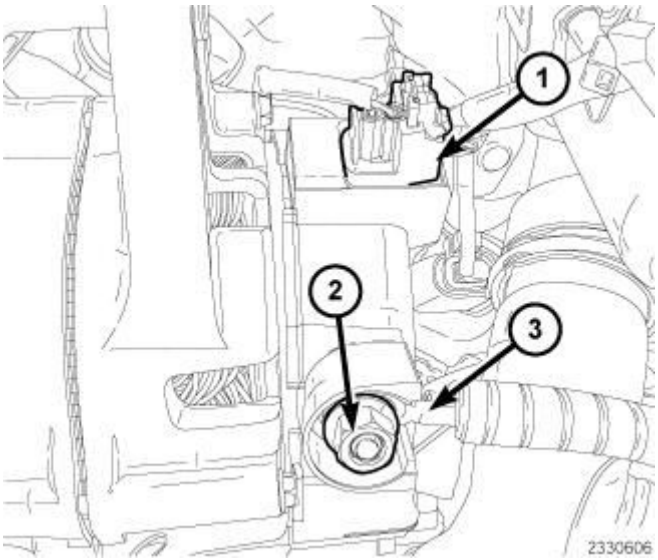

Fig. 570: Battery Feed Wire, Generator Harness Connectors & Nut
Courtesy of CHRYSLER GROUP, LLC

55. Install the generator. Tighten bolts to 20 N.m (177 in. lbs.).
56. Connect the generator wire harness connectors (1).
57. Install the B+ wire (3) to generator. Tighten nut (2) to 18 N.m (159 in. lbs.).
58. Install the A/C compressor. Refer to **COMPRESSOR, A/C, INSTALLATION** .
59. Install the coolant pump. Refer to **PUMP, WATER, INSTALLATION** .
60. Install cooling fan module. Refer to **FAN, COOLING, INSTALLATION** .
61. Connect upper radiator hose at radiator.
62. Refill cooling system. Refer to **STANDARD PROCEDURE** .

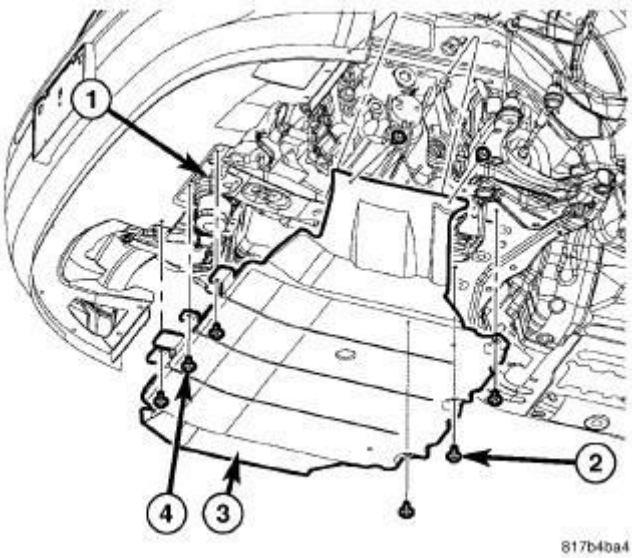

Fig. 571: Belly Pan
Courtesy of CHRYSLER GROUP, LLC

63. Install the belly pan (3) and fasteners (2, 4).
64. Install engine cover (1).

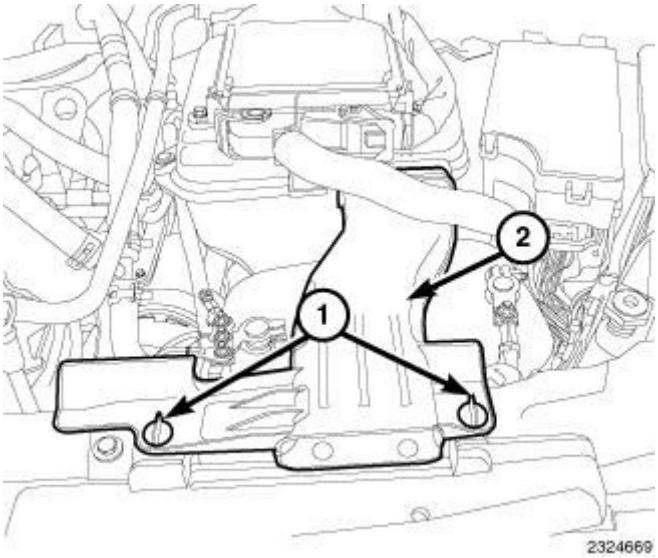

Fig. 572: Quarter Turn Lock Tabs & Air Inlet Duct
Courtesy of CHRYSLER GROUP, LLC

65. Connect the negative battery cable.
66. Install the air inlet duct (2) and lock the quarter turn lock tabs (1).

TURBOCHARGER SYSTEM

DIAGNOSIS AND TESTING

DIAGNOSIS AND TESTING - TURBOCHARGER

Check for Diagnostic Trouble Codes (DTCs) stored in PCM memory. If any DTCs are present, refer to the appropriate Powertrain Diagnostic Information.

TURBOCHARGER DIAGNOSIS

CONDITION	POSSIBLE CAUSES
Low boost pressure, lack of power	Clogged air filter Leaks between engine and turbocharger
	Exhaust restriction
	Restriction in charge air cooler hose(s)
	Wastegate stuck open

	Wastegate actuator malfunction
	Seized turbocharger shaft
Overboost	Wastegate stuck shut Wastegate actuator malfunction
Noisy operation or vibration	Leak(s) in charge air cooler hose(s) Intake or exhaust leaks
	Oil starvation
	Worn turbocharger bearings
	Damaged turbine/compressor fins
Blue smoke from exhaust	Oil return line blocked
	Engine breather clogged
	Turbocharger shaft seals damaged

LEAK TESTING

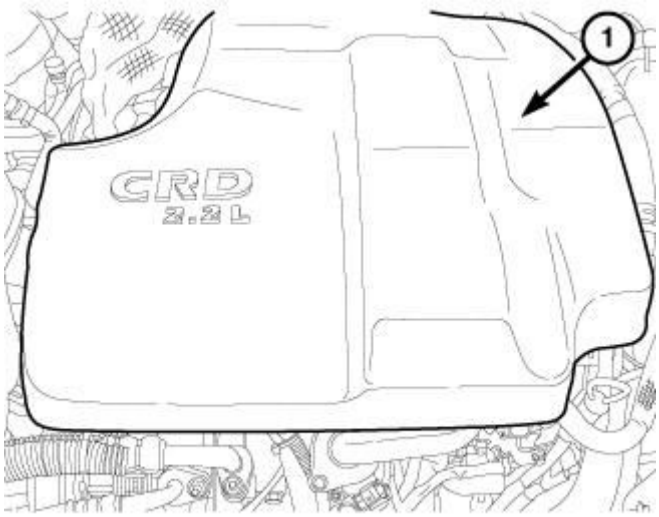

Fig. 573: Engine Cover
Courtesy of CHRYSLER GROUP, LLC

1. Remove lower engine cover (1).

NOTE: Slight engine oil pooling in the charge air inlet hose IS NOT premature turbocharger failure. Slight pooling is the normal result of the breather system.

2. Remove the air cleaner body and the turbocharger air inlet hose. Refer to **BODY, AIR CLEANER, REMOVAL**.

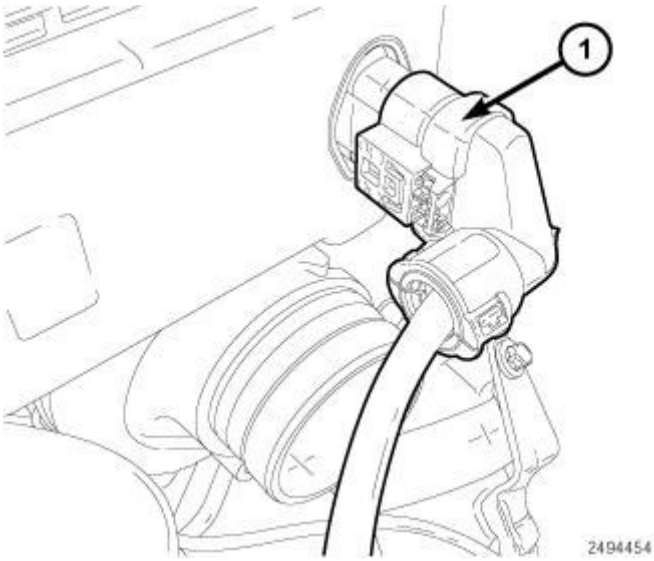

Fig. 574: Turbocharger Actuator Harness Connector
Courtesy of CHRYSLER GROUP, LLC

3. Disconnect the turbocharger actuator wire harness connector (1).

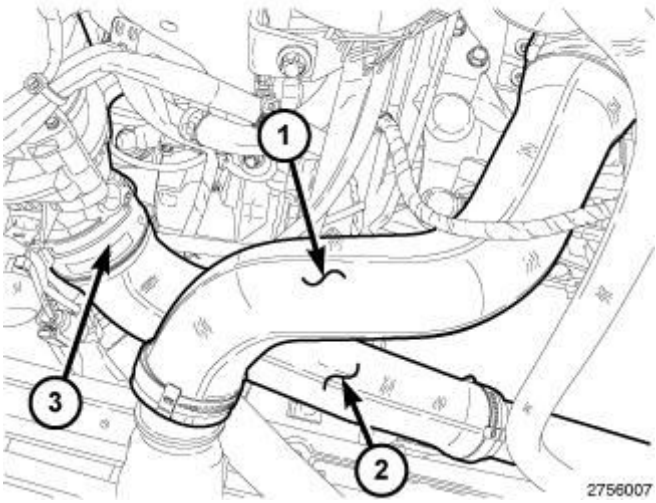

Fig. 575: Identifying Front Upper & Lower Air Charge Hose
Courtesy of CHRYSLER GROUP, LLC

4. Raise and support the vehicle. Refer to **HOISTING, STANDARD PROCEDURE** .
5. Remove the front lower Charge Air Cooler tube (2) from the intercooler outlet tube and position aside.
6. Plug the bore on the intercooler outlet tube. Refer to ENGINE - **STANDARD PROCEDURE** .
7. Lower the vehicle.

8. Remove the oil fill hole cap.
9. Apply no more than 28 kPa (4 psi) of air pressure to the intercooler system through the turbocharger.
10. Using soapy water. Check the air inlet ducts, rubber sleeves, and intercooler for leaks.

COOLER AND HOSES, CHARGE AIR

REMOVAL

CHARGE AIR COOLER HOSES

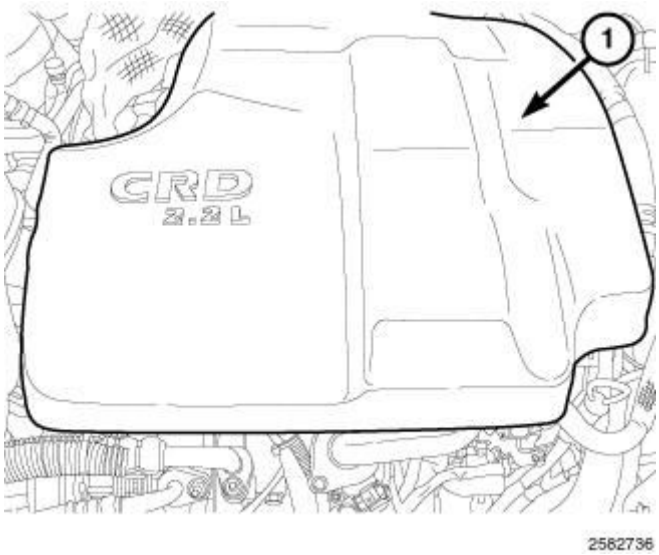

Fig. 576: Engine Cover
Courtesy of CHRYSLER GROUP, LLC

1. Remove the engine cover (1).
2. Remove the fan module. Refer to **FAN, COOLING, REMOVAL** .

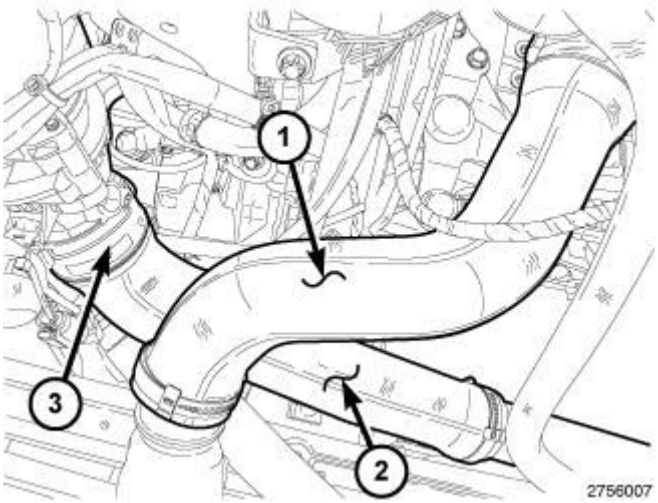

Fig. 577: Identifying Front Upper & Lower Air Charge Hose
Courtesy of CHRYSLER GROUP, LLC

3. Remove the front Charge Air Cooler (CAC) inlet tube (1).
4. Remove the lower CAC outlet tube (2).

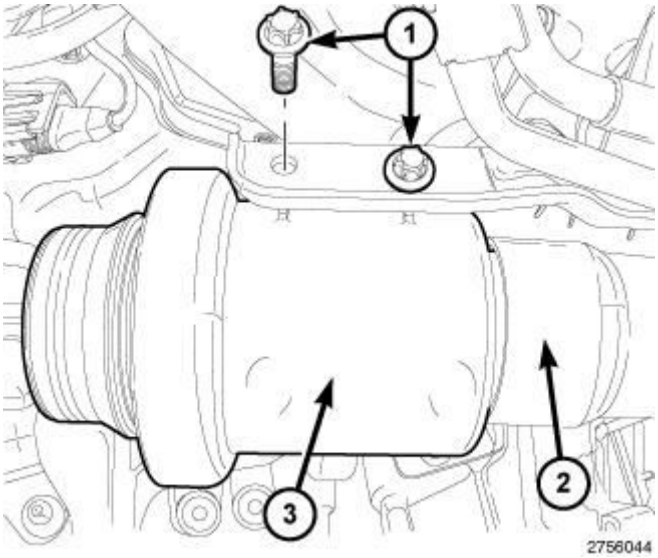

Fig. 578: Air Charge Resonator, Rear Air Charge Tube & Mounting Bolts
Courtesy of CHRYSLER GROUP, LLC

5. Remove the air cleaner body. Refer to **BODY, AIR CLEANER, REMOVAL**.
6. Remove the two bolts (1) securing the charge air resonator (3).
7. Separate the resonator (3) from the rear charge air tube (2).

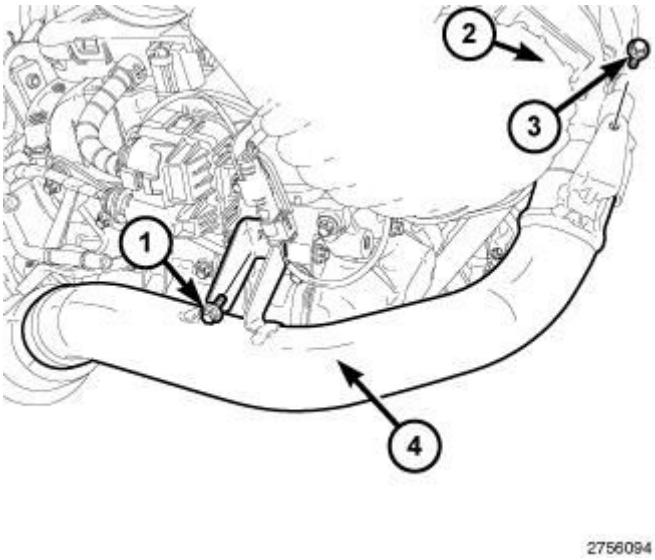

Fig. 579: Rear Air Charge Tube & Bolts
Courtesy of CHRYSLER GROUP, LLC

8. Remove bolt (1) securing the front of the rear charge air tube (4) to the cylinder head.
9. Remove bolt (3) securing the charge air tube (4) to the turbocharger.
10. Remove the rear charge air tube (4).

INSTALLATION

CHARGE AIR COOLER HOSES

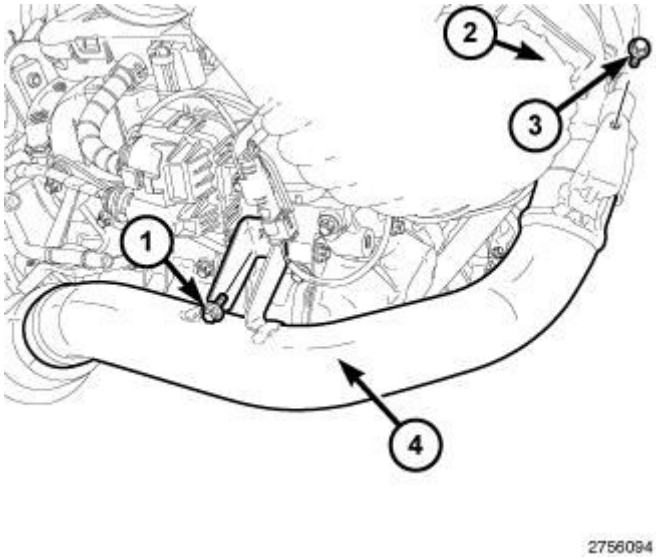

Fig. 580: Rear Air Charge Tube & Bolts
Courtesy of CHRYSLER GROUP, LLC

1. Install the rear charge air tube (4).

2. Install bolt securing the charge air tube (4) to turbocharger and tighten to 16 N.m (142 in. lbs.).
3. Install bolt (1) securing the front of the rear charge air tube (4) to the cylinder head and tighten to 16 N.m (142 in. lbs.).

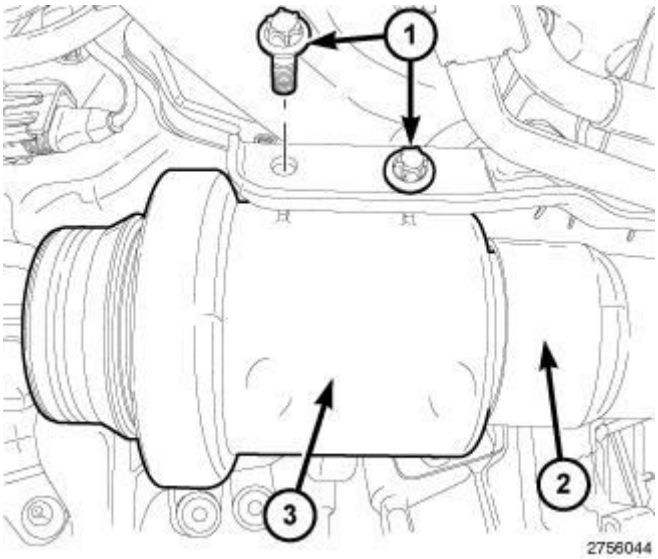

Fig. 581: Air Charge Resonator, Rear Air Charge Tube & Mounting Bolts
Courtesy of CHRYSLER GROUP, LLC

4. Lubricate the O-ring seal and connect resonator (3) to the rear charge air cooler tube (2).
5. Install the bolts (1) securing the resonator (3). Tighten bolts (1) to 8 N.m (70 in. lbs.).
6. Install air cleaner body. Refer to **BODY, AIR CLEANER, INSTALLATION**.

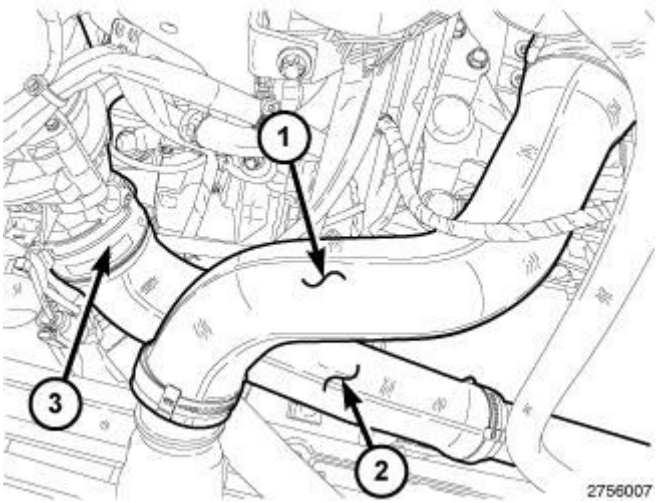

Fig. 582: Identifying Front Upper & Lower Air Charge Hose
Courtesy of CHRYSLER GROUP, LLC

7. Install the lower Charge Air Cooler (CAC) outlet tube (2). Tighten hose clamps to 6 N.m (53 in. lbs.).
8. Install the front CAC inlet tube (1).
9. Install the fan module. Refer to **FAN, COOLING, INSTALLATION** .

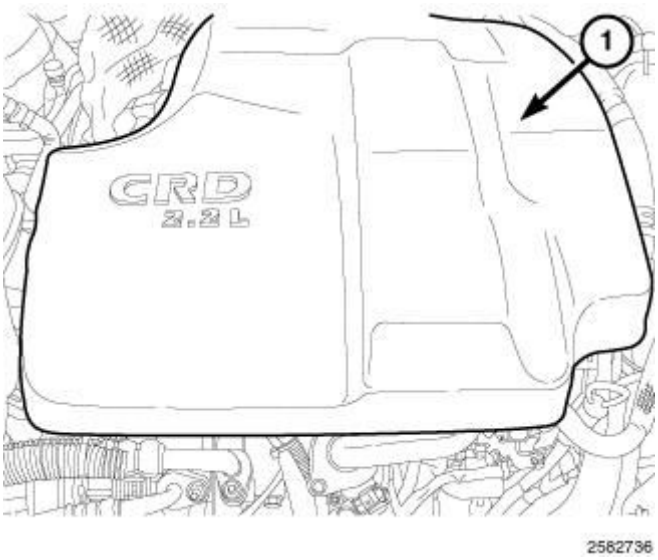

Fig. 583: Engine Cover
Courtesy of CHRYSLER GROUP, LLC

10. Install the engine cover (1).

LINES AND HOSES, TURBOCHARGER, OIL AND COOLANT

REMOVAL

REMOVAL

COOLANT SUPPLY LINE

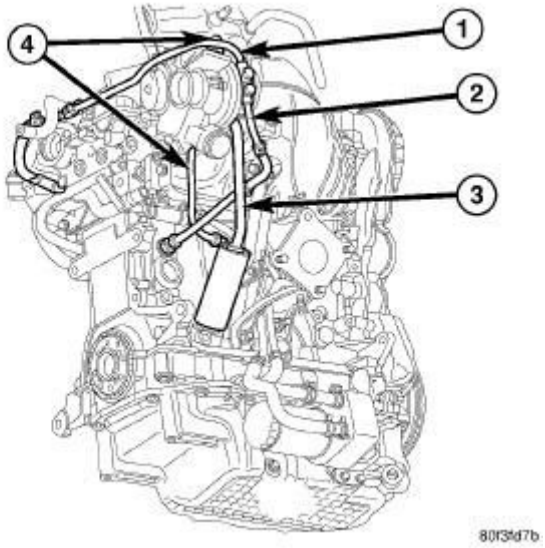

Fig. 584: Turbocharger Lines And Hoses
Courtesy of CHRYSLER GROUP, LLC

1. Raise and support the vehicle. Refer to **HOISTING, STANDARD PROCEDURE** .

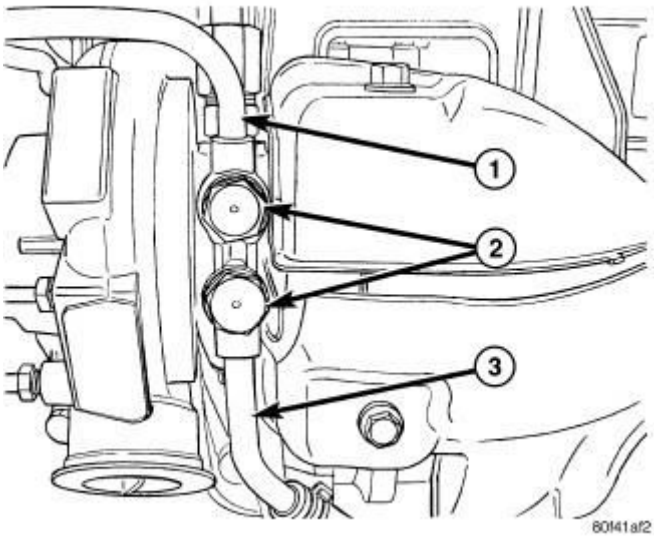

Fig. 585: Coolant Lines - Banjo Fittings
Courtesy of CHRYSLER GROUP, LLC

1 - COOLANT RETURN LINE

2 - BANJO BOLTS - 30 N.m (22 ft. lbs.)
3 - COOLANT SUPPLY LINE

2. Drain the cooling system. Refer to **STANDARD PROCEDURE** .
3. Remove banjo bolt (2) from coolant supply line (3) at turbocharger.

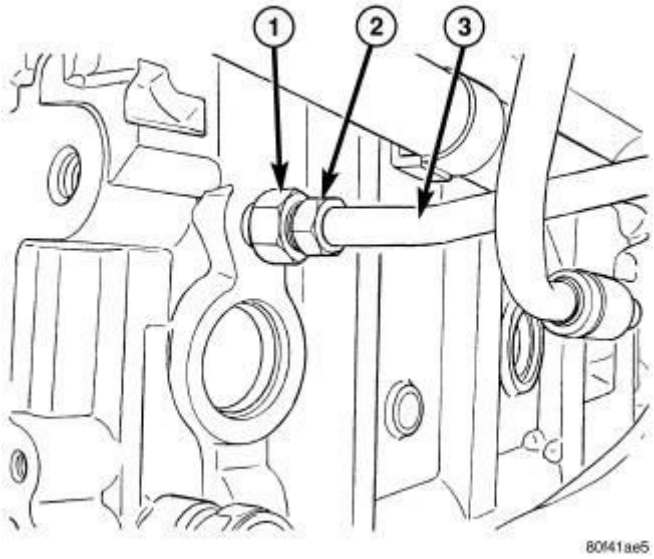

Fig. 586: Coolant Supply Line - Engine Block Fitting
Courtesy of CHRYSLER GROUP, LLC

1 - BRASS FITTING - 41 N.m (30 ft. lbs.)
2 - FLARED FITTING - 31 N.m (23 ft. lbs.)
3 - COOLANT SUPPLY LINE

4. Disconnect the coolant supply line (3) flared fitting (2) from brass fitting (1) at engine block.
5. Remove the coolant supply line (3).

COOLANT RETURN LINE

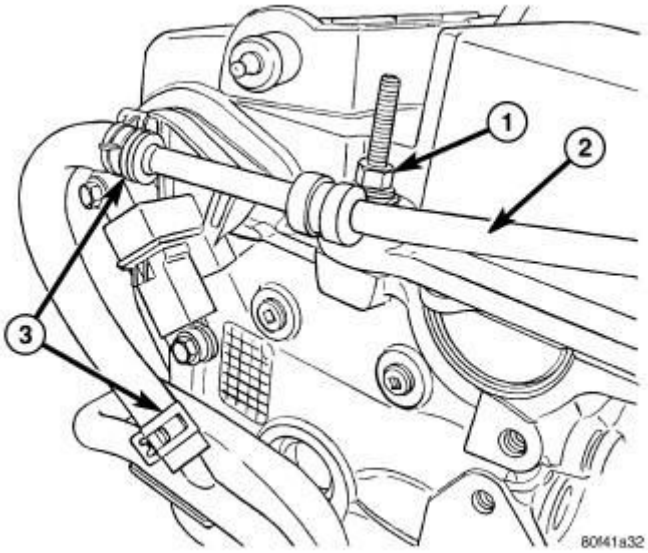

Fig. 587: View Of Coolant Return Line Bracket
Courtesy of CHRYSLER GROUP, LLC

1 - NUT
2 - COOLANT RETURN LINE
3 - HOSE CLAMPS

1. Drain cooling system. Refer to **STANDARD PROCEDURE** .
2. Remove air cleaner housing. Refer to **BODY, AIR CLEANER, REMOVAL**.
3. Disconnect Inlet Air Temperature (IAT) sensor connector.
4. Disconnect Throttle Inlet Pressure (TIP) hose from charge air cooler hose.
5. Loosen hose clamp at throttle body.
6. Disconnect charge air cooler hose from throttle body. Reposition charge air cooler hose.
7. Remove fastener securing coolant return line bracket to cylinder head cover stud.
8. Remove hose clamp from coolant return line (2) at heater tube. Disconnect hose from heater tube.
9. Remove banjo bolt from coolant return line at turbocharger.
10. Remove coolant return line.

OIL SUPPLY LINE

1. Raise and support the vehicle. Refer to **HOISTING, STANDARD PROCEDURE** .

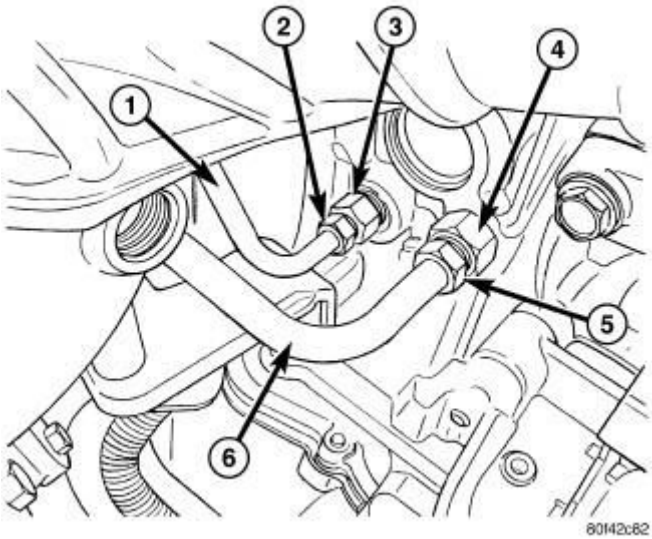

Fig. 588: Oil Supply Line - Engine Block Fitting
Courtesy of CHRYSLER GROUP, LLC

1 - OIL SUPPLY LINE
2 - FLARED FITTING - 31 N.m (23 ft. lbs.)
3 - BRASS FITTING - 41 N.m (30 ft. lbs.)
4 - BRASS FITTING - 41 N.m (30 ft. lbs.)
5 - FLARED FITTING - 31 N.m (23 ft. lbs.)
6 - OIL COOLER COOLANT LINE

2. Disconnect the oil supply line flared fitting (2) from brass fitting (3) at engine block.
3. Lower the vehicle.
4. Disconnect the oil supply line flared fitting (2) from brass fitting (3) at turbocharger.

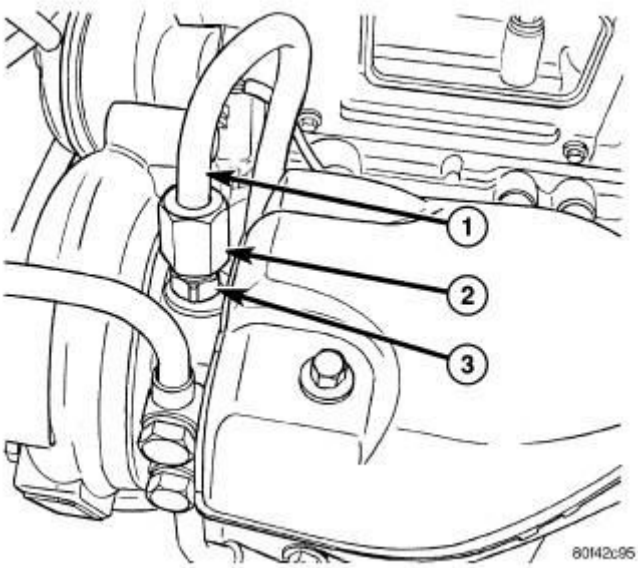

Fig. 589: Oil Supply Line - Turbocharger Fitting
Courtesy of CHRYSLER GROUP, LLC

1 - OIL SUPPLY LINE
2 - FLARED FITTING - 31 N.m (23 ft. lbs.)
3 - BRASS FITTING - 41 N.m (30 ft. lbs.)

5. Remove the oil supply line (1).

OIL RETURN LINE

1. Raise and support the vehicle. Refer to **HOISTING, STANDARD PROCEDURE** .
2. Remove the two fasteners securing the oil return line to the turbocharger.
3. Remove the hose clamp from oil return line.
4. Remove the oil return line from crankcase nipple.

INSTALLATION

INSTALLATION

COOLANT SUPPLY LINE

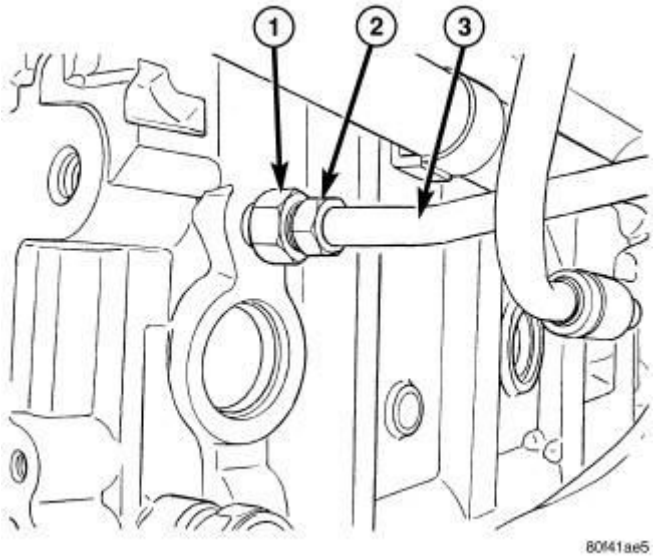

Fig. 590: Coolant Supply Line - Engine Block Fitting
Courtesy of CHRYSLER GROUP, LLC

1 - BRASS FITTING - 41 N.m (30 ft. lbs.)
2 - FLARED FITTING - 31 N.m (23 ft. lbs.)
3 - COOLANT SUPPLY LINE

1. If the brass fitting (1) was removed from the engine block, apply thread sealer to the threads and install into the engine block. Tighten the brass fitting (1) to 41 N.m (30 ft. lbs.).
2. Position the coolant supply line tube (3) onto the brass fitting (1) at the engine block.
3. Install the after run pump hoses to the after run pump.
4. Install **NEW** washers on the banjo fitting of coolant supply line. Hand start the banjo bolt.
5. Tighten the flared fitting (2) to 31 N.m (23 ft. lbs.).

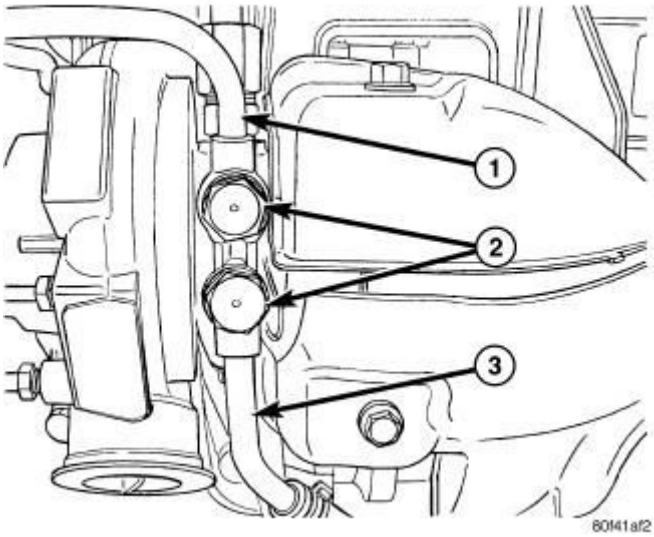

Fig. 591: Coolant Lines - Banjo Fittings
Courtesy of CHRYSLER GROUP, LLC

1 - COOLANT RETURN LINE
2 - BANJO BOLTS - 30 N.m (22 ft. lbs.)
3 - COOLANT SUPPLY LINE

6. Tighten the banjo fitting bolts (2) to 30 N.m (22 ft. lbs.).
7. Lower the vehicle.
8. Fill the cooling system. Refer to **STANDARD PROCEDURE** .

COOLANT RETURN LINE

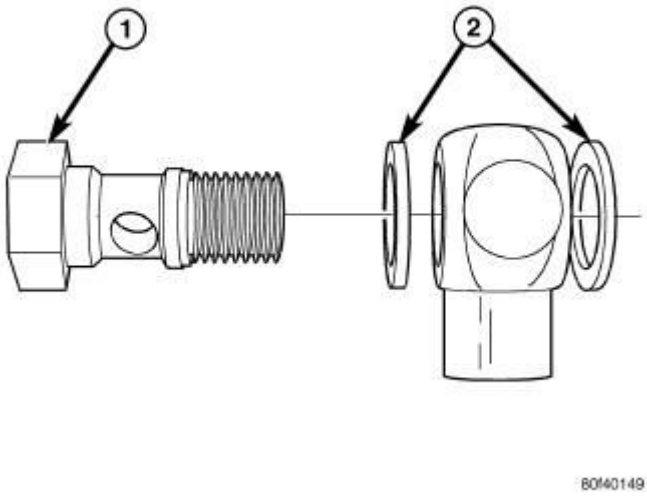

Fig. 592: Banjo Bolt & Washers
Courtesy of CHRYSLER GROUP, LLC

1 - BANJO BOLT 2 - WASHERS

1. Position the coolant return line on the turbocharger.
2. Install **NEW** washers (2) onto the banjo fitting of the coolant return line. Hand start the banjo bolt.
3. Install the hose onto the thermostat housing.
4. Tighten the banjo bolt to 40 N.m (30 ft. lbs.).
5. Secure the coolant return line bracket to the turbocharger housing tighten to 12 N.m (106 in. lbs.).
6. Fill the cooling system. Refer to **STANDARD PROCEDURE** .

OIL SUPPLY LINE

1. If the engine block brass fitting (3) or turbocharger brass fitting was removed, apply thread sealer to threads and install. Tighten the brass fittings (3) to 41 N.m (30 ft. lbs.).
2. Position the oil supply line (1) to the mounting location.

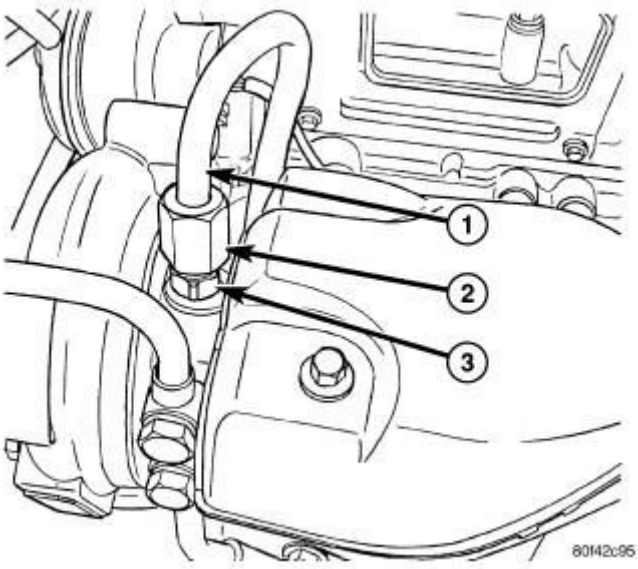

Fig. 593: Oil Supply Line - Turbocharger Fitting
Courtesy of CHRYSLER GROUP, LLC

1 - OIL SUPPLY LINE
2 - FLARED FITTING - 31 N.m (23 ft. lbs.)
3 - BRASS FITTING - 41 N.m (30 ft. lbs.)

3. Hand start the flared fitting (2) at turbocharger.
4. Raise the vehicle on hoist.
5. Hand start the flared fitting (2) on the line to the engine block brass fitting (3).

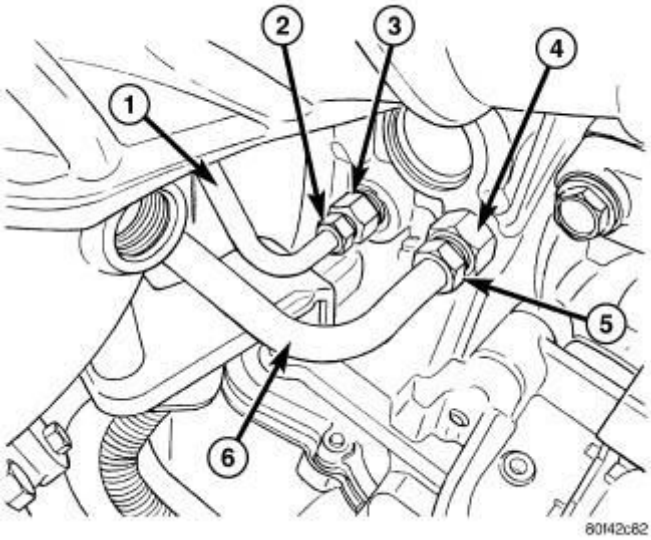

Fig. 594: Oil Supply Line - Engine Block Fitting
Courtesy of CHRYSLER GROUP, LLC

1 - OIL SUPPLY LINE
2 - FLARED FITTING - 31 N.m (23 ft. lbs.)
3 - BRASS FITTING - 41 N.m (30 ft. lbs.)
4 - BRASS FITTING - 41 N.m (30 ft. lbs.)
5 - FLARED FITTING - 31 N.m (23 ft. lbs.)
6 - OIL COOLER COOLANT LINE

6. Tighten the flared fittings to 31 N.m (23 ft. lbs.).
7. Lower the vehicle.

OIL RETURN LINE

NOTE: If drain back nipple is not damaged or showing signs of

leakage, steps 2, 3, 4, and 9 can be skipped.

1. Clean gasket surfaces.
2. Using a paint pen, mark the new drain back nipple to a depth of 17 mm (0.669in.) from the end to be installed in block.
3. Apply MOPAR® Stud'n Bearing mount and adhesive to the drain back nipple.
4. Using Bearing Installer (special tool #9723, Installer, Bearing), install the drainback nipple.
5. Install the oil return line hose over the drain back nipple.
6. Install a new gasket.
7. Install the two fasteners securing the oil return tube to the turbocharger. Tighten the fasteners to 12 N.m (105 in. lbs.).
8. Perform oil change. .
9. Lower the vehicle.

SOLENOID, WASTEGATE

DESCRIPTION

DESCRIPTION

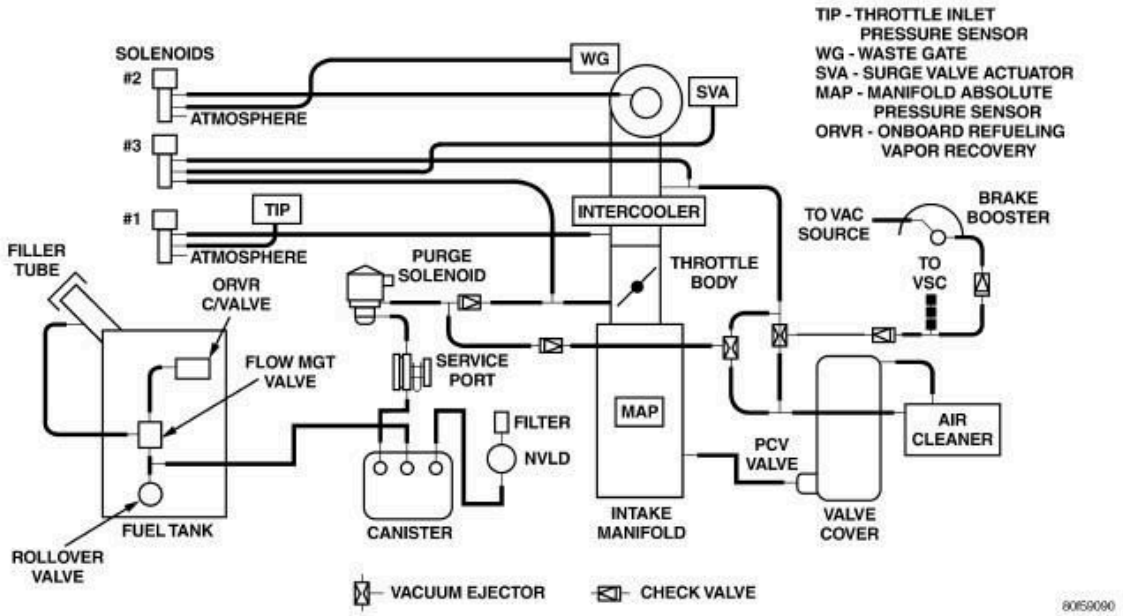

Fig. 595: Vacuum Harness Schematic
Courtesy of CHRYSLER GROUP, LLC

Turbocharged vehicles are equipped with three solenoids that are PCM controlled. They are mounted to the right shock tower. A vacuum harness connects the solenoids to their respective component.

- Wastegate Actuator Solenoid
- Surge Valve Actuator Solenoid
- Throttle Inlet Pressure (TIP) Solenoid

REMOVAL

REMOVAL

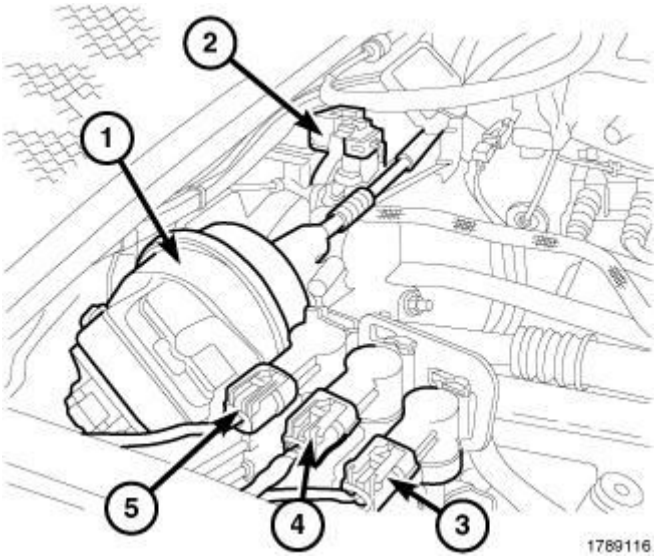

Fig. 596: Wastegate Solenoid & Electrical Connectors
Courtesy of CHRYSLER GROUP, LLC

1. Disconnect the electrical connectors (3, 4 and 5).
2. Remove the nuts (1) the securing the solenoid mounting bracket to the shock tower.

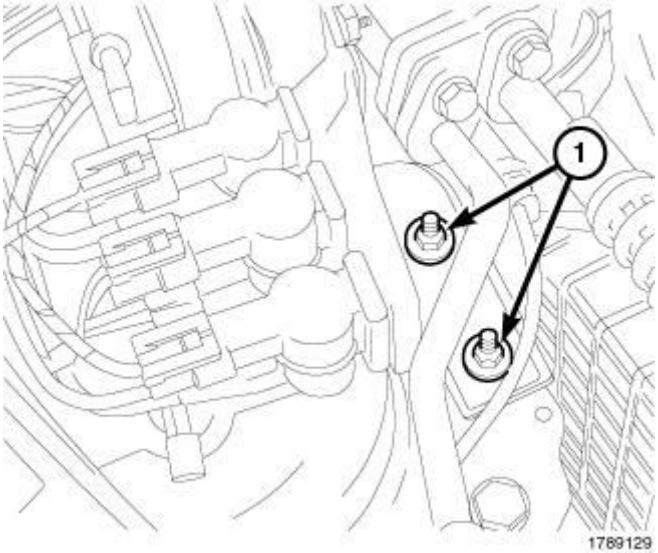

Fig. 597: Nuts Securing Solenoid Mounting Bracket
Courtesy of CHRYSLER GROUP, LLC

3. Disconnect vacuum harness connector from solenoid.
4. Push on the solenoid lock tab and slide solenoid off the bracket.

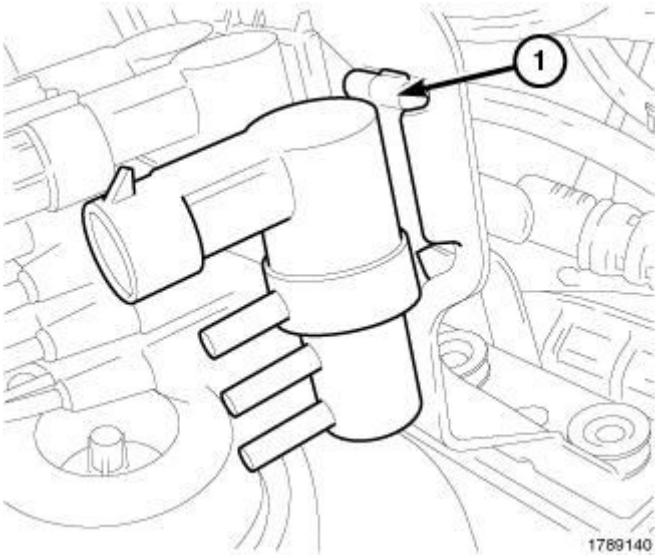

Fig. 598: Solenoid Mounting Bracket
Courtesy of CHRYSLER GROUP, LLC

5. If necessary, remove the solenoid mounting bracket.

INSTALLATION

INSTALLATION

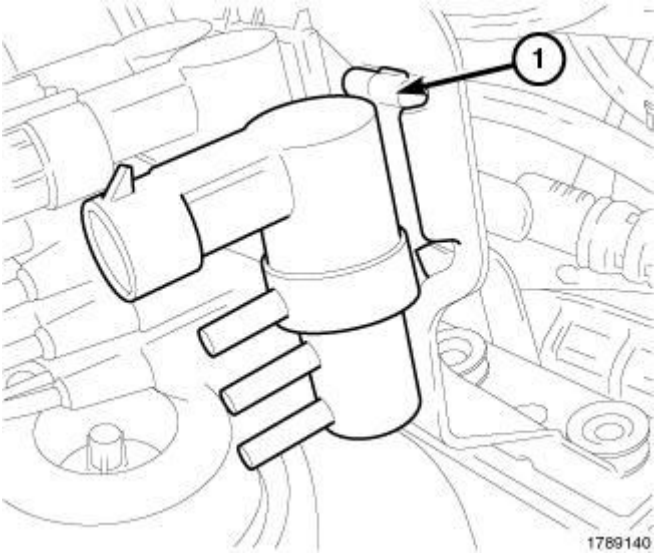

Fig. 599: Solenoid Mounting Bracket
Courtesy of CHRYSLER GROUP, LLC

1. If removed, install the solenoid mounting bracket.
2. Slide the solenoids onto the mounting tab until the lock tab (1) engages.
3. Connect vacuum harness connector to solenoid.

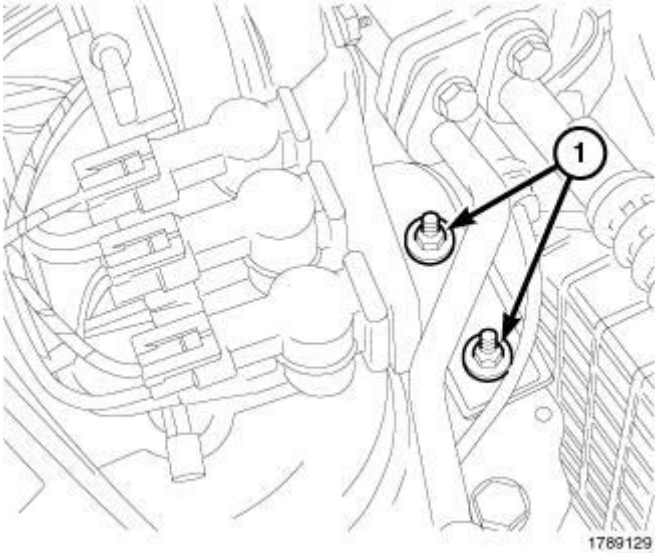

Fig. 600: Nuts Securing Solenoid Mounting Bracket
Courtesy of CHRYSLER GROUP, LLC

4. Install the nuts securing the solenoid mounting bracket to the shock tower (1).

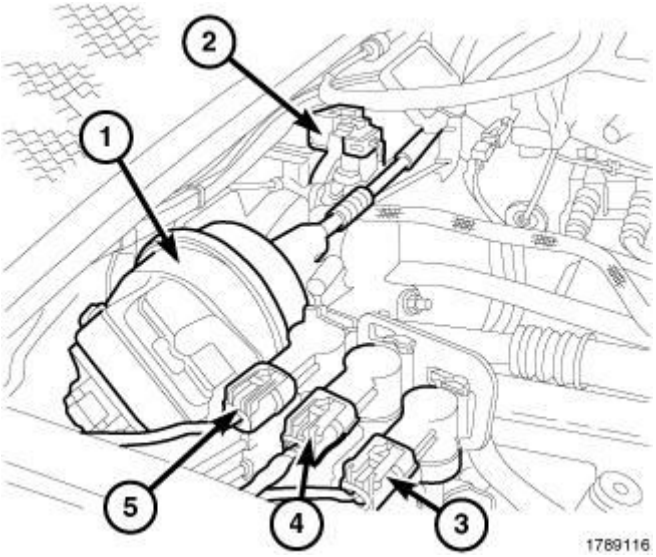

Fig. 601: Wastegate Solenoid & Electrical Connectors
Courtesy of CHRYSLER GROUP, LLC

5. Connect solenoid electrical connectors (3, 4 and 5).

TURBOCHARGER

DESCRIPTION

DESCRIPTION

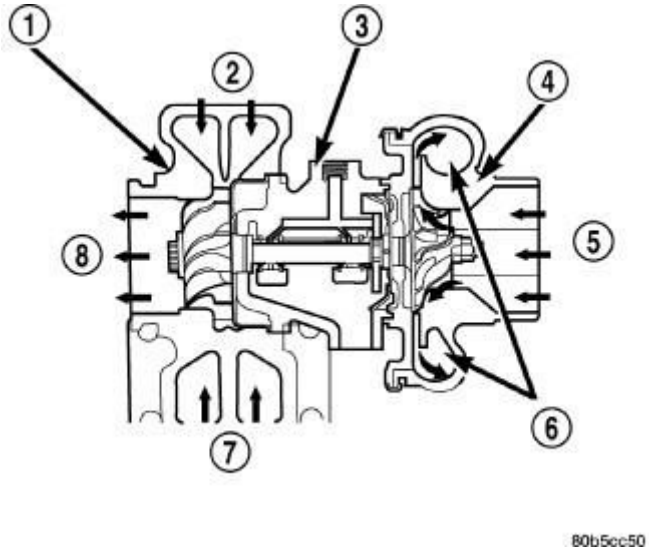

Fig. 602: Turbocharger - Typical
Courtesy of CHRYSLER GROUP, LLC

1 - TURBINE SECTION 2 - EXHAUST GAS 3 - BEARING HOUSING

4 - COMPRESSOR SECTION
5 - INLET AIR
6 - COMPRESSED AIR TO ENGINE
7 - EXHAUST GAS
8 - EXHAUST GAS TO EXHAUST PIPE

CAUTION: The turbocharger is a performance part and must not be tampered with. Tampering with the variable vane components can reduce durability by increasing cylinder pressure and thermal loading due to incorrect inlet and exhaust manifold pressure. Poor fuel economy and failure to meet regulatory emissions laws may result. Increasing the turbocharger boost WILL NOT increase engine power.

The turbocharger is an exhaust-driven supercharger which increases the pressure and density of the air entering the engine. With the increase of air entering the engine, more fuel can be injected into the cylinders, which creates more power during combustion.

The turbocharger assembly consists of four (4) major component systems:

- Turbine section (1)
- Compressor section (4)
- Bearing housing (3)
- Wastegate

OPERATION

OPERATION

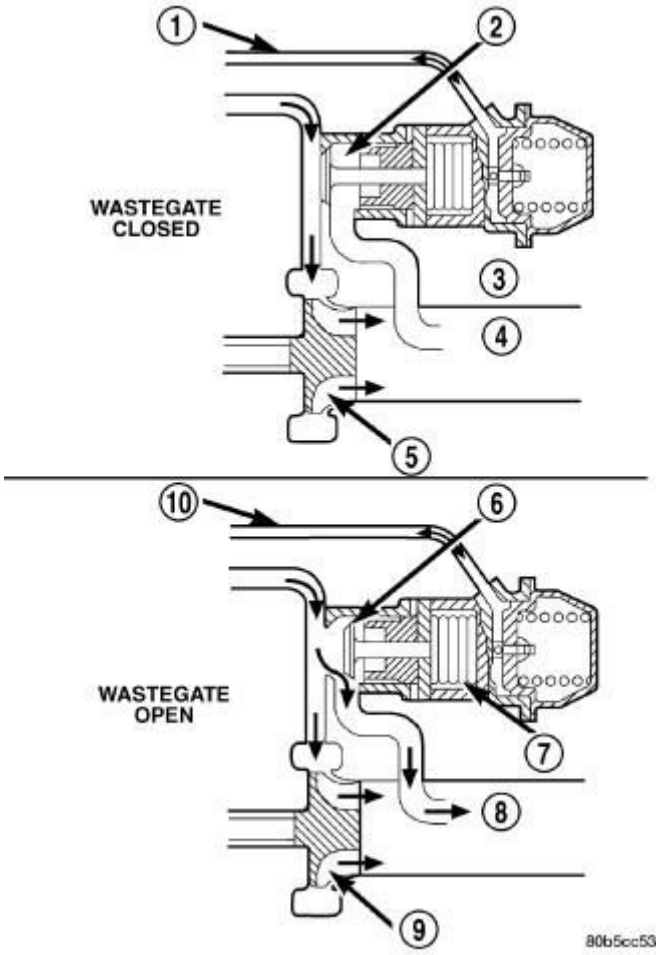

Fig. 603: Wastegate Operation
Courtesy of CHRYSLER GROUP, LLC

1 - SIGNAL LINE
2 - EXHAUST BYPASS VALVE
3 - WASTEGATE
4 - EXHAUST
5 - TURBINE
6 - EXHAUST BYPASS VALVE
7 - WASTEGATE
8 - EXHAUST
9 - TURBINE
10 - SIGNAL LINE

Exhaust gas pressure and energy drive the turbine, which in turn drives a centrifugal compressor that compresses the inlet air, and forces the air into the engine through the charge air cooler and plumbing. Since heat is a by-product of

this compression, the air must pass through a charge air cooler to cool the incoming air and maintain power and efficiency.

Increasing air flow to the engine provides:

- Improved engine performance
- Improved operating economy
- Altitude compensation

The turbocharger also uses a wastegate (3), which regulates intake manifold air pressure and prevents over boosting at high engine speeds. When the wastegate valve is closed, all of the exhaust gases flow through the turbine wheel. As the intake manifold pressure increases, the wastegate actuator opens the valve, diverting some of the exhaust gases away from the turbine wheel. This limits turbine shaft speed and air output from the impeller.

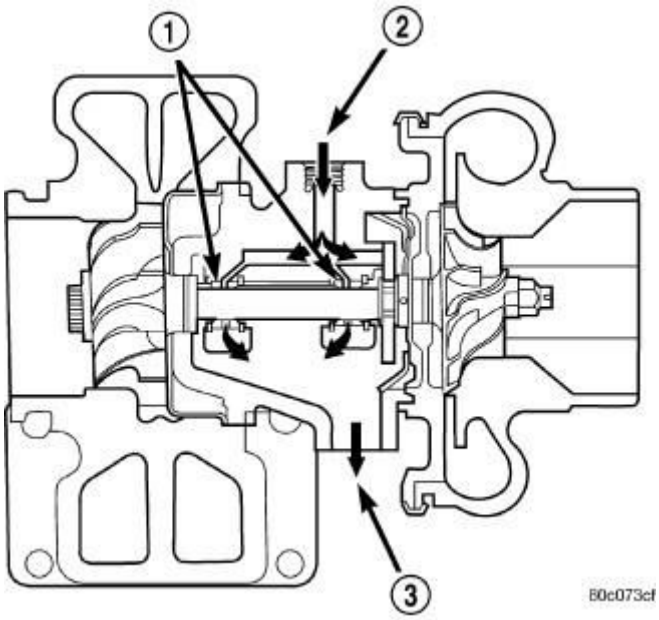

Fig. 604: Turbocharger Oil Supply And Drain
Courtesy of CHRYSLER GROUP, LLC

1 - BEARINGS
2 - OIL SUPPLY (FROM ENGINE BLOCK)
3 - OIL RETURN (TO OIL PAN)

The turbocharger is cooled by engine coolant. The coolant is delivered to the turbocharger by a supply line that connects from engine block to the turbocharger. A coolant return line connects the turbocharger to heater tubes.

The turbocharger is lubricated by engine oil that is pressurized, cooled, and filtered. The oil is delivered to the turbocharger by a supply line that is tapped into the cylinder block. The oil travels into the bearing housing, where it lubricates the shaft and bearings (1). A return pipe at the bottom of the bearing housing, routes the engine oil back to the crankcase.

The most common turbocharger failure is bearing failure related to repeated hot shutdowns with inadequate "cool-down" periods. A sudden engine shut down after prolonged operation will result in the transfer of heat from the turbine section of the turbocharger to the bearing housing. This causes the oil to overheat and break down, which causes bearing and shaft damage the next time the vehicle is started.

Letting the engine idle after extended operation allows the turbine housing to cool to normal operating temperature. The following chart should be used as a guide in determining the amount of engine idle time required to sufficiently cool down the turbocharger before shut down, depending upon the type of driving and the amount of cargo.

TURBOCHARGER "COOL DOWN" CHART	
Driving Conditions	Idle Time (in minutes) Before Shut Down
Normal Driving	Not required
Aggressive Driving or Heavily Loaded	3
Trailer Tow	5

REMOVAL

REMOVAL

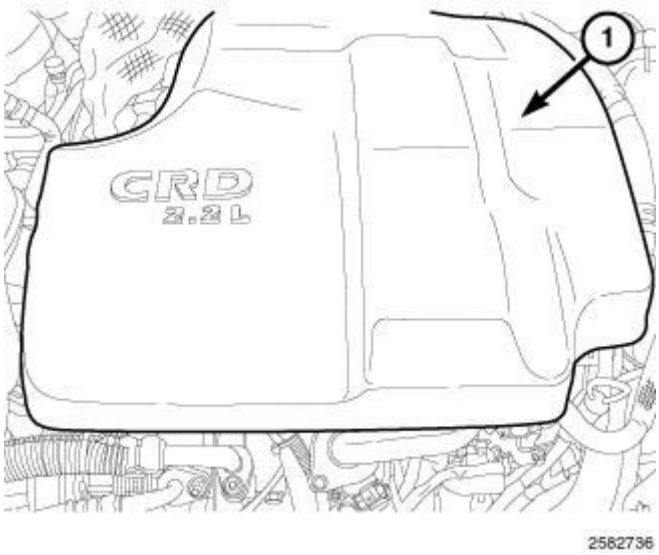

Fig. 605: Engine Cover
Courtesy of CHRYSLER GROUP, LLC

1. Disconnect the negative battery cable.
2. Remove the engine cover (1).
3. Remove the air cleaner assembly. Refer to **BODY, AIR CLEANER, REMOVAL**.

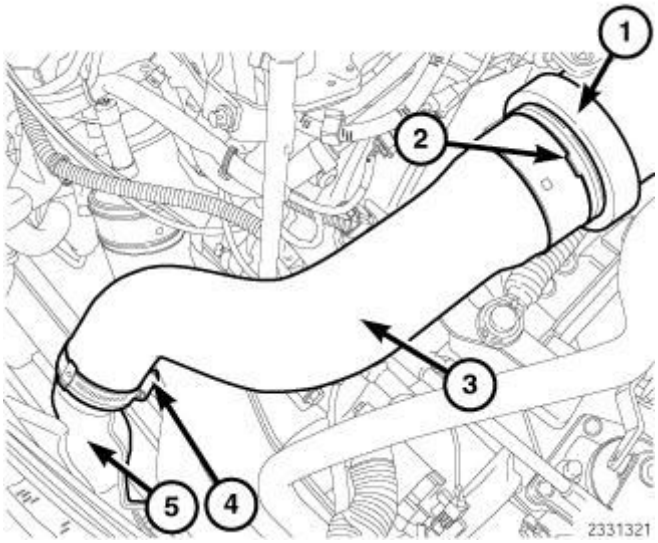

Fig. 606: Upper Charge Air Tube, Lock Ring, Lower Charge Air Tube, Clamp & Charge Air Cooler (CAC) Inlet
Courtesy of CHRYSLER GROUP, LLC

4. Release the lock ring (2) and remove the lower charge air tube (3) from the upper charge air to turbocharger tube (1).
5. Remove the upper charge air to turbocharger tube (1).

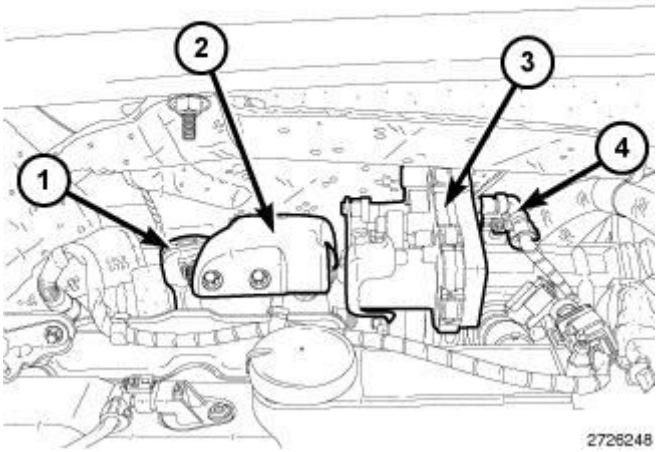

Fig. 607: Identifying Catalytic Converter, Turbocharger Heat Shield, Catalytic Converter Band Clamp & Upstream Temperature Sensor
Courtesy of CHRYSLER GROUP, LLC

6. Disconnect the turbocharger actuator wire harness connector (4).
7. Remove the catalytic converter. Refer to **CONVERTER, CATALYTIC, REMOVAL** .

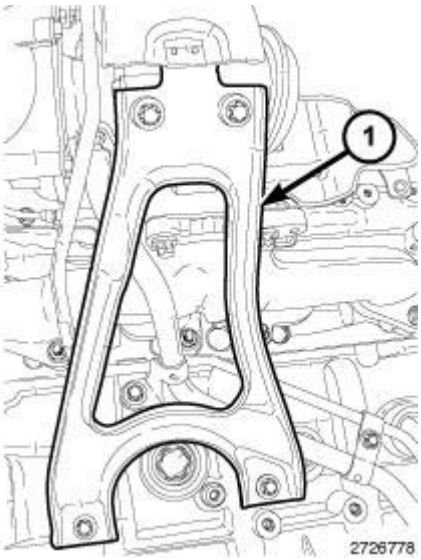

Fig. 608: Turbocharger Bracket
Courtesy of CHRYSLER GROUP, LLC

8. Remove bolts and the turbocharger bracket (1).

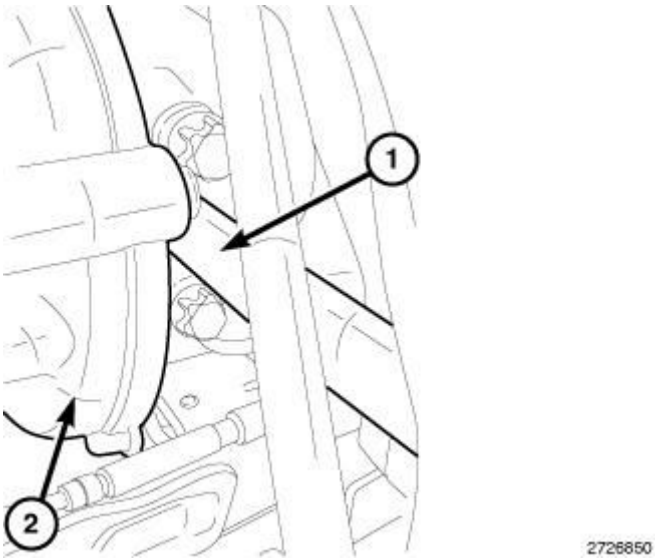

Fig. 609: Oil Return Line At Turbocharger
Courtesy of CHRYSLER GROUP, LLC

9. Disconnect the turbocharger temperature sensor wire harness connector.
10. Remove the turbocharger oil return line (1) from the turbocharger (2).

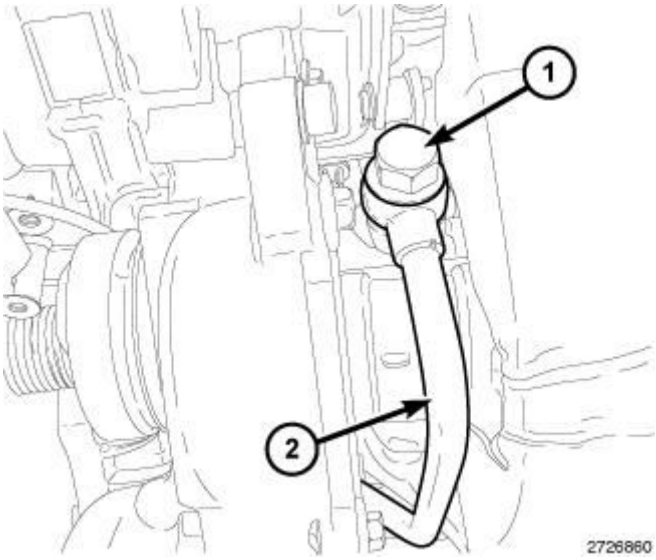

Fig. 610: Oil Supply Line & Banjo Bolt At Turbocharger
Courtesy of CHRYSLER GROUP, LLC

11. Remove the turbocharger oil supply line (2) banjo bolt (1) from the turbocharger.

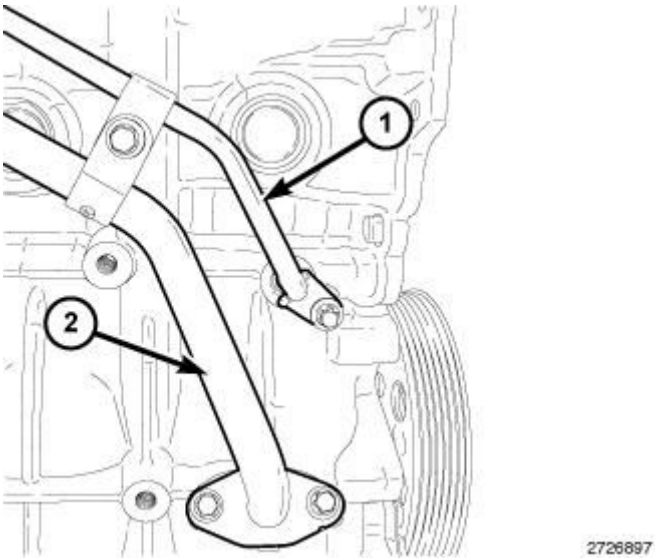

Fig. 611: Oil Supply & Return Lines
Courtesy of CHRYSLER GROUP, LLC

12. Remove the turbocharger oil supply (1) and oil return lines (2) from the engine block and position aside.

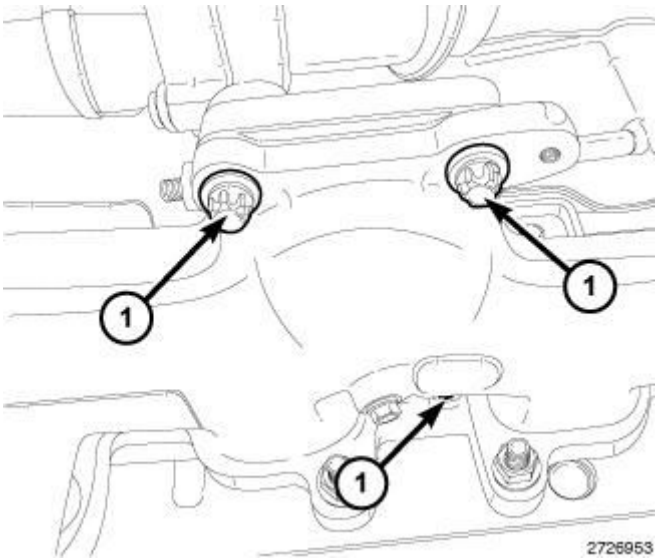

Fig. 612: Turbocharger-To-Exhaust Manifold Mounting Bolts
Courtesy of CHRYSLER GROUP, LLC

13. Remove bolts (1) and the turbocharger from underneath the vehicle.

INSPECTION

INSPECTION

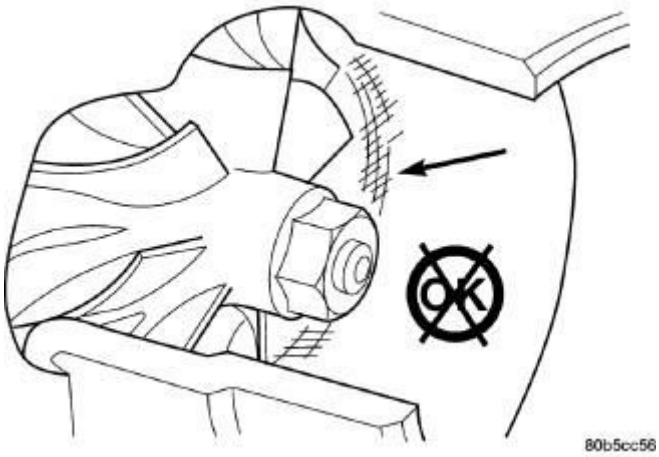

Fig. 613: Inspect Compressor Housing For Impeller Rubbing Condition
Courtesy of CHRYSLER GROUP, LLC

Visually inspect the turbocharger and exhaust manifold gasket surfaces. Replace stripped or eroded mounting studs.

1. Visually inspect the turbocharger for cracks. The following cracks are NOT acceptable:
   - Cracks in the turbine and compressor housing that go completely through.
   - Cracks in the mounting flange that are longer than 15 mm (0.6 in.).
   - Cracks in the mounting flange that intersect bolt through-holes.
   - Two (2) Cracks in the mounting flange that are closer than 6.4 mm (0.25 in.) together.
2. Visually inspect the impeller and compressor wheel fins for nicks, cracks, or chips.
3. Visually inspect the turbocharger compressor housing for an impeller rubbing condition. Replace the turbocharger if the condition exists.

INSTALLATION

INSTALLATION

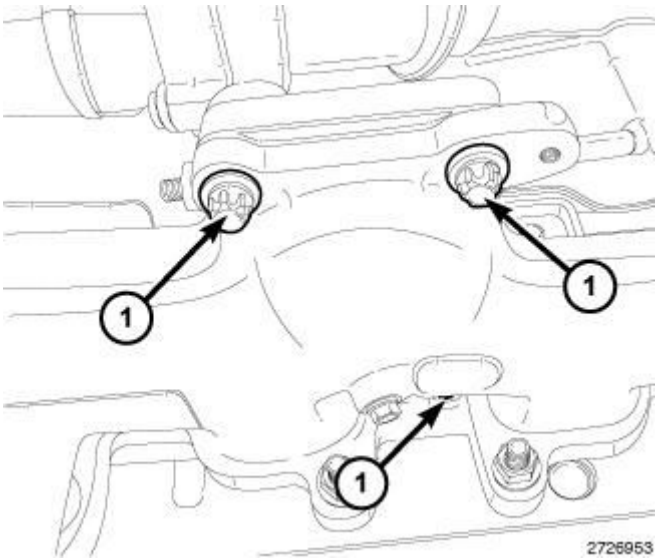

Fig. 614: Turbocharger-To-Exhaust Manifold Mounting Bolts
Courtesy of CHRYSLER GROUP, LLC

1. From under the vehicle, position the turbocharger assembly to the exhaust manifold.
2. Install the turbocharger to exhaust manifold mounting bolts (1). Tighten the bolts to 20 N.m + 90° (177 ft.lbs + 90°)

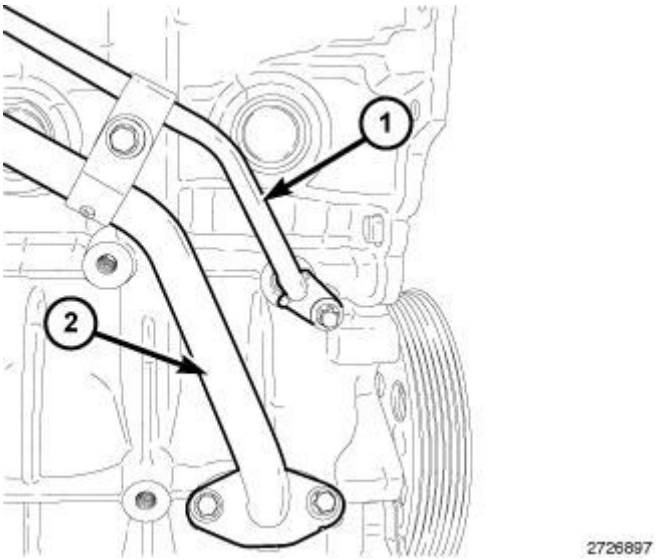

Fig. 615: Oil Supply & Return Lines
Courtesy of CHRYSLER GROUP, LLC

3. Install the turbocharger oil send and return lines (1, 2) to the engine block. Tighten the bolts to 9 N.m (80 in. lbs.).

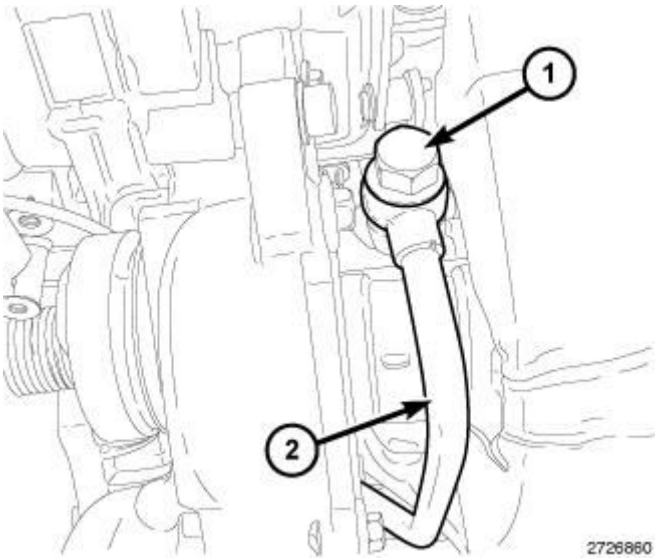

Fig. 616: Oil Supply Line & Banjo Bolt At Turbocharger
Courtesy of CHRYSLER GROUP, LLC

4. Install the turbocharger oil feed line (2) to the turbocharger. Tighten the banjo bolt (1) to 24 N.m (18 ft.lbs.).

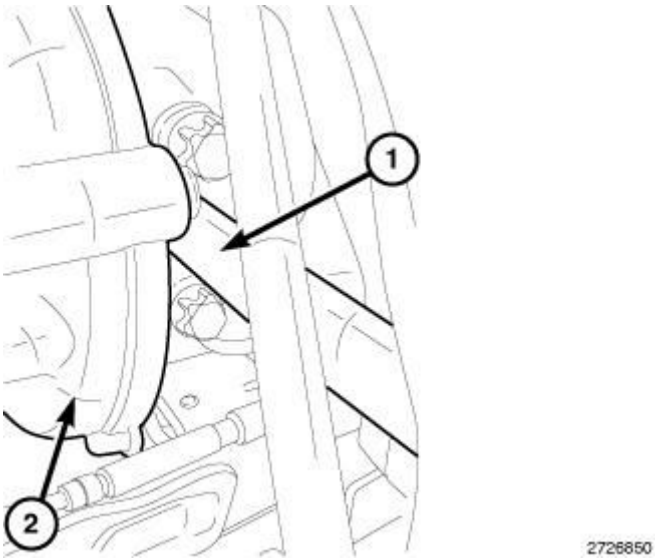

Fig. 617: Oil Return Line At Turbocharger
Courtesy of CHRYSLER GROUP, LLC

5. Install the turbocharger oil return line to the turbocharger assembly. Tighten the fasteners to 9 N.m (80 in. lbs.).
6. Connect the turbocharger temperature sensor to the engine wiring harness.

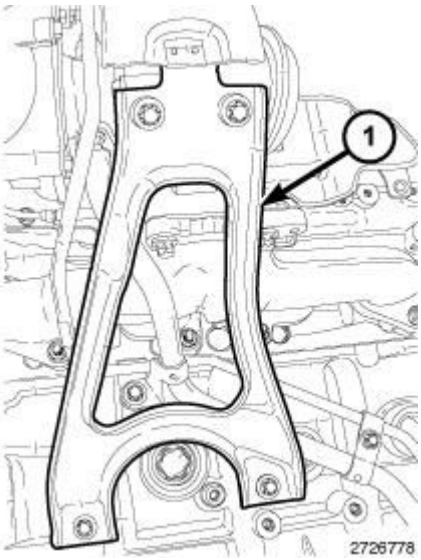

Fig. 618: Turbocharger Bracket
Courtesy of CHRYSLER GROUP, LLC

7. Install the turbocharger bracket (1). Tighten the fasteners to 20 N.m (15 ft. lbs.).

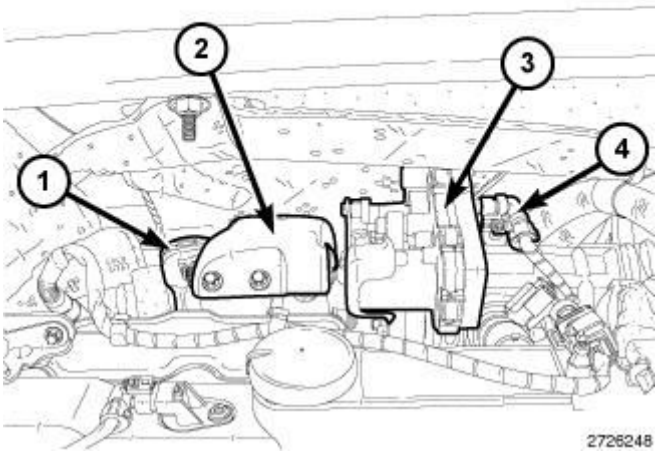

Fig. 619: Identifying Catalytic Converter, Turbocharger Heat Shield, Catalytic Converter Band Clamp & Upstream Temperature Sensor
Courtesy of CHRYSLER GROUP, LLC

8. Install the catalytic converter. Refer to **CONVERTER, CATALYTIC, INSTALLATION** .
9. Connect the electrical connector (4) to the turbocharger actuator (3).

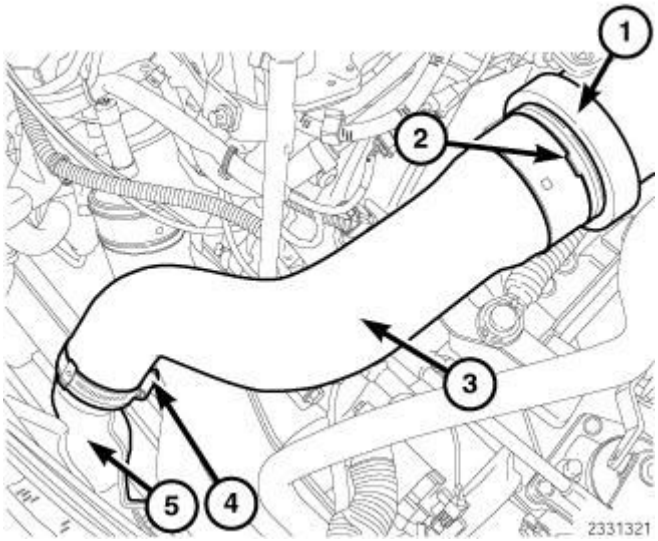

Fig. 620: Upper Charge Air Tube, Lock Ring, Lower Charge Air Tube, Clamp & Charge Air Cooler (CAC) Inlet
Courtesy of CHRYSLER GROUP, LLC

10. Install the upper charge air to turbocharger tube.
11. Install the upper charge air tube (1) to the lower charge air tube (3). Connect the lock ring (2).
12. Install the air cleaner assembly. Refer to **BODY, AIR CLEANER, INSTALLATION**.
13. Install the engine trim cover.
14. Connect negative battery cable.

VALVE TIMING

CHAIN, TIMING

REMOVAL

REMOVAL

1. Disconnect the negative battery cable.
2. Remove cylinder head cover. Refer to **COVER(S), CYLINDER HEAD, REMOVAL**.

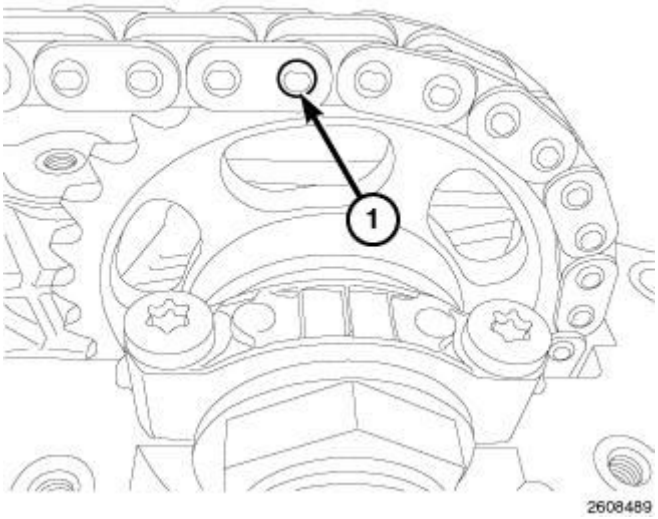

Fig. 621: Timing Chain Pin At Chain Link
Courtesy of CHRYSLER GROUP, LLC

CAUTION: Be sure that the thrust pin is centered on the chain link before attempting to remove pin or damage to chain or tools may result

3. When fitting the Chain Link Tool (special tool #9312-1, Block, Pressing) thrust spindle, ensure that the thrust pin is positioned at the left timing chain pin of a chain link (1) and is centered or damage to chain result.

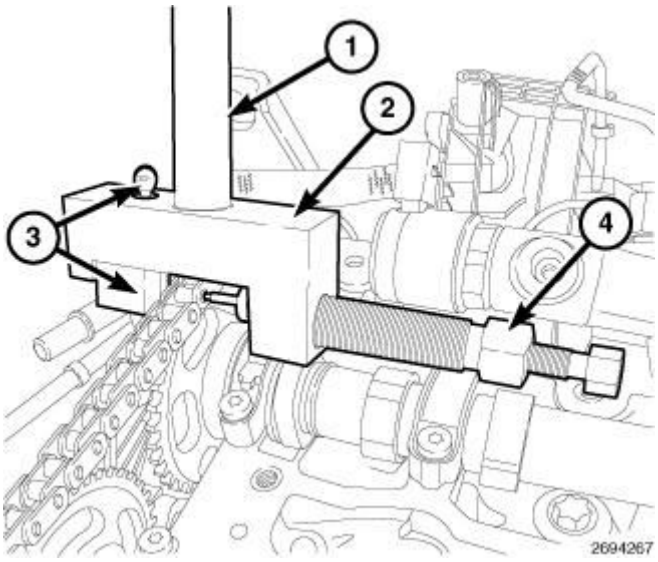

Fig. 622: Chain Link Tool, Handle, Insert & Thrust Screw/Pin
Courtesy of CHRYSLER GROUP, LLC

CAUTION: Cover timing chain cover recess to prevent

foreign material from entering engine.

4. Assemble Chain Link Tool (special tool #9312-1, Block, Pressing) (2) using (special tool #9312-2, Handle) handle (1), and (special tool #9312-4, Assembly, Screw, Forcing) (4) thrust screw/pin. Install insert (special tool #9312-13, Guide, Pin Removal) (3) and retain with screw provided and install into timing chain.

CAUTION: Care must be taken not to drop timing chain plates into the engine once the timing chain is separated.

NOTE: when installing Chain Link Tool (special tool #9312-1, Block, Pressing) onto timing chain link, be sure to back off the smaller nut of the thrust pin (special tool #9312-4, Assembly, Screw, Forcing) so tool can be installed on timing chain. Screw the thrust spindle # (special tool #9312-4, Assembly, Screw, Forcing) in until it is seated and aligned properly over the left timing chain pin of a chain link, as viewed.

5. Screw the thrust pin in and separate the timing chain.
6. Unscrew the thrust spindle and remove the tool.
7. Remove pressed - out timing chain pin from chain separation tool.
8. Remove the camshaft. Refer to **CAMSHAFT, ENGINE, REMOVAL**.

INSTALLATION

INSTALLATION

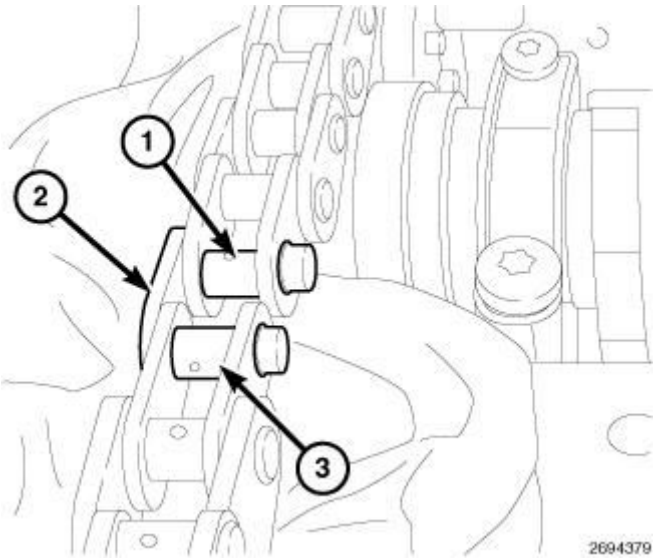

Fig. 623: Connecting New Timing Chain With Old Timing Chain With Assembly Link
Courtesy of CHRYSLER GROUP, LLC

CAUTION: IT IS ESSENTIAL that the installation procedure is followed exactly. Failure to do so will result in severe engine damage.

CAUTION: Cover timing case recesses to prevent foreign material from entering engine.

1. Connect new timing chain (3) and old timing chain (1) with assembly link (special tool #8951, Assembly Links) (2), assembly plate and locking element, and secure.

NOTE: Rotate engine at crankshaft only. DO NOT rotate engine backward.

NOTE: Draw out the end of old timing chain evenly as it becomes free, to the same extent that new timing chain is drawn in.

2. Using the Vibration Damper Holder (special tool #10236, Holder, Vibration Damper), draw in new timing chain by rotating the crankshaft slowly in direction of rotation of engine until the ends of the new timing chain meet and can be connected.

3. Verify that the engine is at TDC.

NOTE: Install the camshafts and stop at step 8. Now continue with the timing chain installation procedure and then resume with camshaft installation procedure.

4. Install the camshafts. Refer to **CAMSHAFT, ENGINE, INSTALLATION**.

NOTE: Assembly link is only an assembly aid and NOT designed for engine running.

5. Remove assembly link (special tool #8951, Assembly Links) locking element, outer plate, and link (2).
6. Engage both halves of the new timing chain into the timing chain gear.
7. Install the new chain center link plate (2).

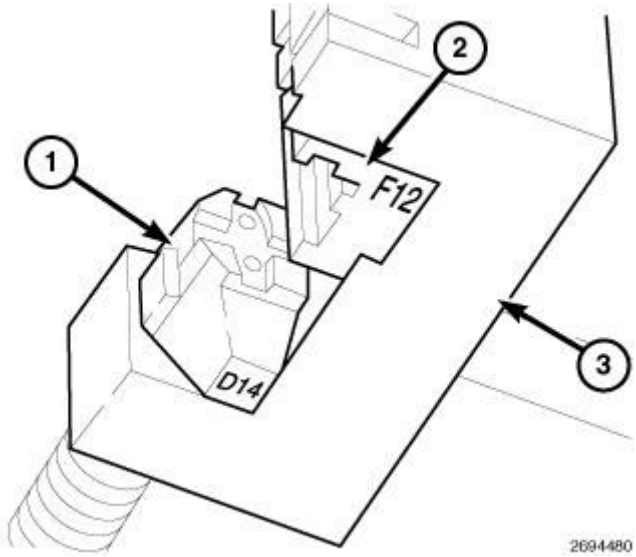

Fig. 624: Rivet Press Tool, Anvil & Thrust Piece
Courtesy of CHRYSLER GROUP, LLC

CAUTION: Cover voids in timing chain cover. Be careful not to allow the guide link to fall into the timing chain cover as the new link is pressed in.

NOTE: The outer plate is held magnetically by link plate

installation tool.

8. Assemble the Rivet Press Tool (special tool #10241, Screw, Forcing) (3), with the anvil (special tool #10228-F12, Guide Piece) (2), and thrust piece (special tool #10228-D14, Thrust Piece) (1).

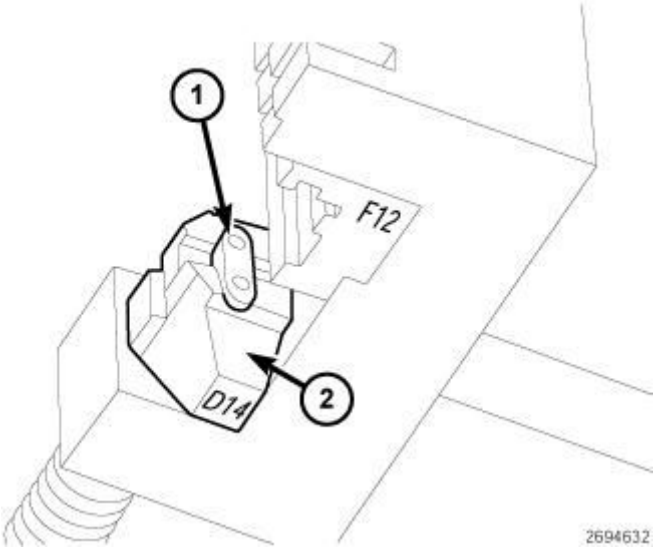

Fig. 625: Placing Outer Plate Into Thrust Piece With Digit D14
Courtesy of CHRYSLER GROUP, LLC

NOTE: The outer plate (1) is retained magnetically.

9. Place outer plate (1) into thrust piece (special tool #10228, Assembly, Inserts Timing Chain) with digit D14 (2).

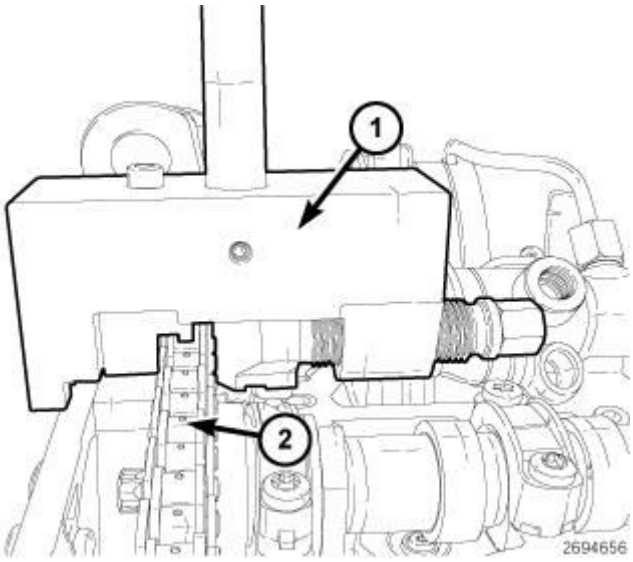

Fig. 626: Installing Rivet Press Tool Onto Timing Chain

Courtesy of CHRYSLER GROUP, LLC

10. Install Rivet Press Tool (special tool #10241, Screw, Forcing) (1) onto the timing chain (2) and tighten spindle until link plate is fully seated and remove tool (1).

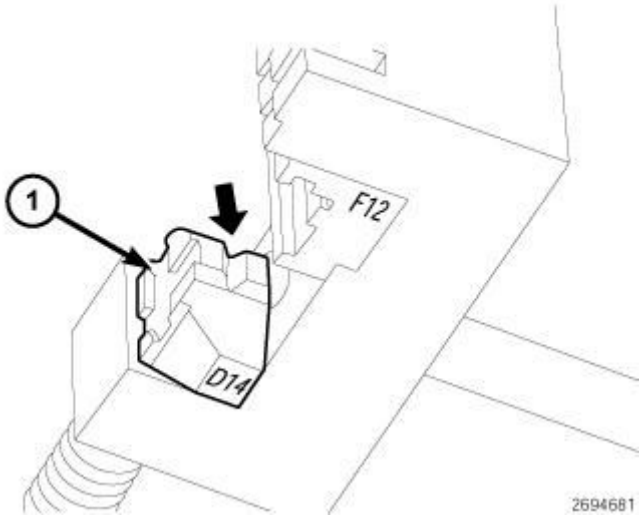

Fig. 627: Turning Over Thrust Piece With Digit D14
Courtesy of CHRYSLER GROUP, LLC

11. Turn over thrust piece (special tool #10228, Assembly, Inserts Timing Chain) (1) with digit D14 on the riveted profile as indicated by arrow.

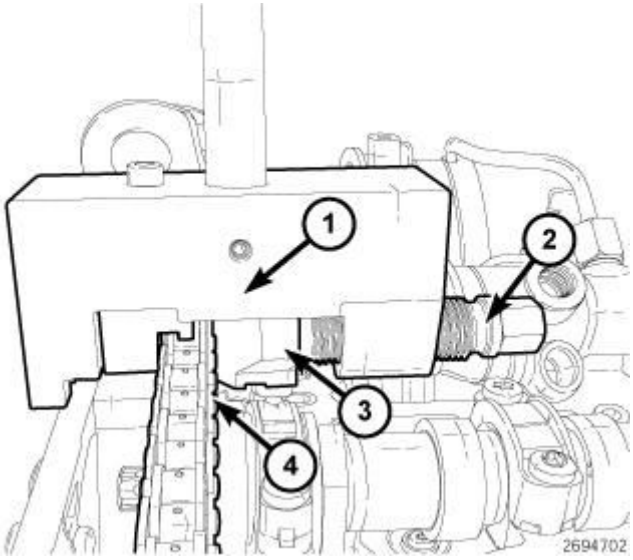

Fig. 628: Riveting Press Tool, Timing Chain Thrust Spindle, Thrust Piece & Timing Chain
Courtesy of CHRYSLER GROUP, LLC

NOTE: Ensure that the riveted link and riveting tool are aligned.

12. Position Riveting Press Tool (special tool #10241, Screw, Forcing) (1) exactly over middle of pin.
13. Tighten the timing chain thrust spindle (2) until thrust piece (3) is fully seated against the timing chain (4) to 32 N.m (24 ft. lbs.). Repeat process for both link rivets.

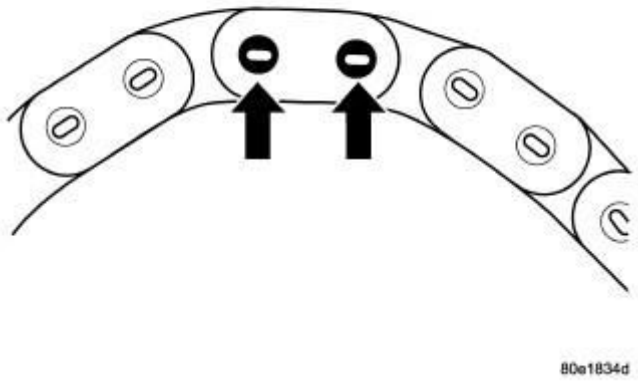

Fig. 629: Rivet Inspection
Courtesy of CHRYSLER GROUP, LLC

14. Remove Riveting Press Tool (special tool #10241, Screw, Forcing) and inspect rivets to ensure they have been properly peened as indicated. Repeat process if necessary.
15. Install the cylinder head cover. Refer to **COVER(S), CYLINDER HEAD, INSTALLATION**.
16. Connect the negative battery cable.

COVER(S), ENGINE TIMING

REMOVAL

UPPER TIMING CHAIN COVER

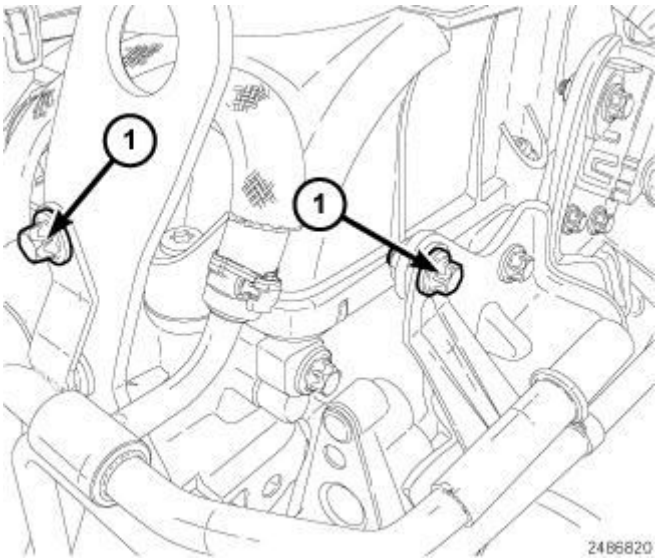

Fig. 630: Upper Fuel Line Bracket Bolts
Courtesy of CHRYSLER GROUP, LLC

1. Disconnect the negative battery cable.
2. Remove the cylinder head cover. Refer to **COVER(S), CYLINDER HEAD, REMOVAL**.
3. Remove the two upper fuel line bracket bolts (1).

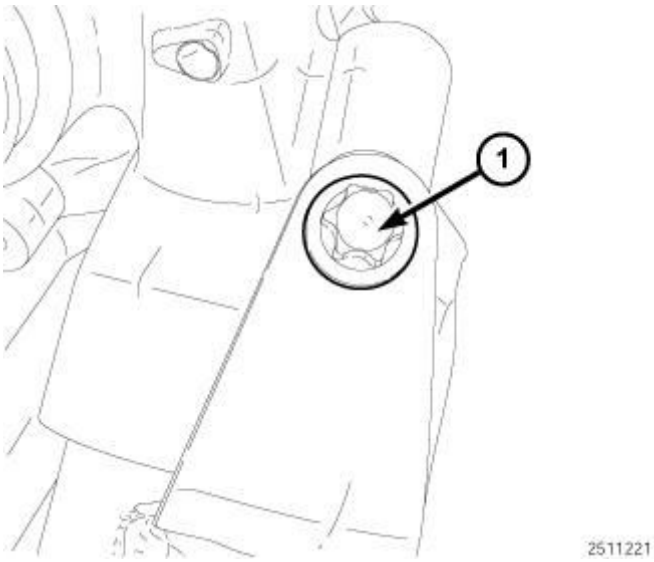

Fig. 631: Charge Air Cooler CAC Tube Bolt
Courtesy of CHRYSLER GROUP, LLC

4. Remove the bolt (1) securing the Charge Air Cooler (CAC) tube to turbocharger.

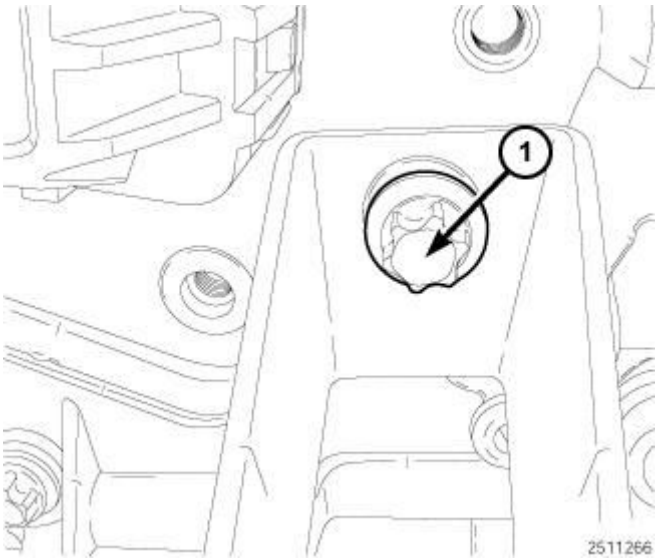

Fig. 632: Bolt Securing CAC Tube To Glow Plug Module
Courtesy of CHRYSLER GROUP, LLC

5. Remove bolt (1) securing the (CAC) tube to glow plug module.

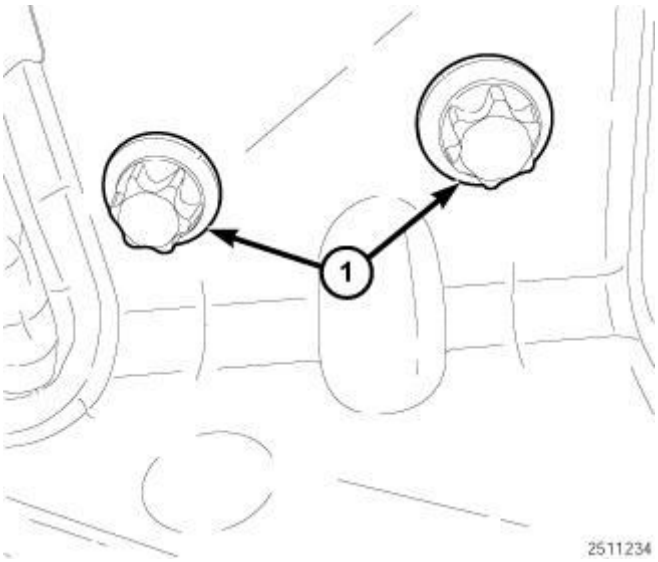

Fig. 633: CAC Tube And Bracket Assembly Bolts
Courtesy of CHRYSLER GROUP, LLC

6. Remove bolts (1) and the (CAC) tube and bracket assembly.

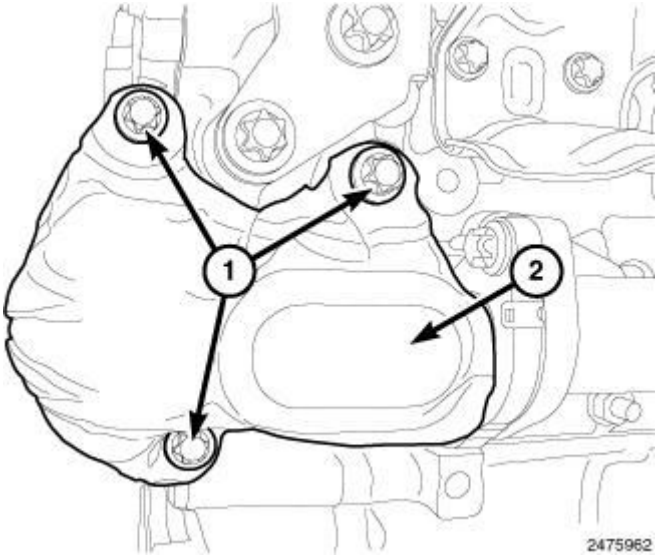

Fig. 634: EGR Pipe Heat Shield & Bolts
Courtesy of CHRYSLER GROUP, LLC

7. Remove bolts (1) and the EGR pipe heat shield (2).

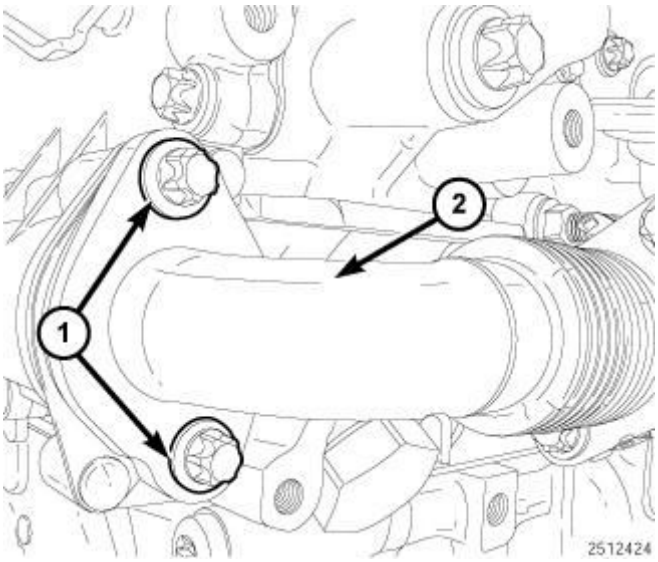

Fig. 635: EGR Pipe & Bolts
Courtesy of CHRYSLER GROUP, LLC

8. Remove bolts (1) from the EGR pipe (2).
9. Remove the cooling fan module. Refer to **FAN, COOLING, REMOVAL** .

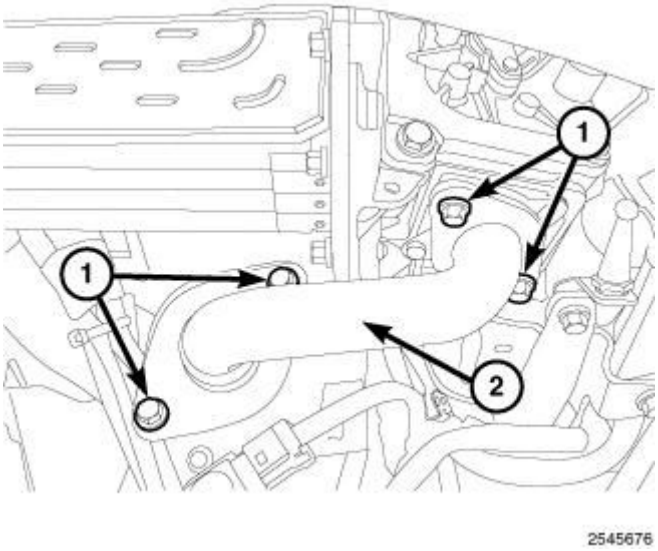

Fig. 636: EGR Tube & Bolts
Courtesy of CHRYSLER GROUP, LLC

10. Remove bolts (1) and the EGR tube (2).

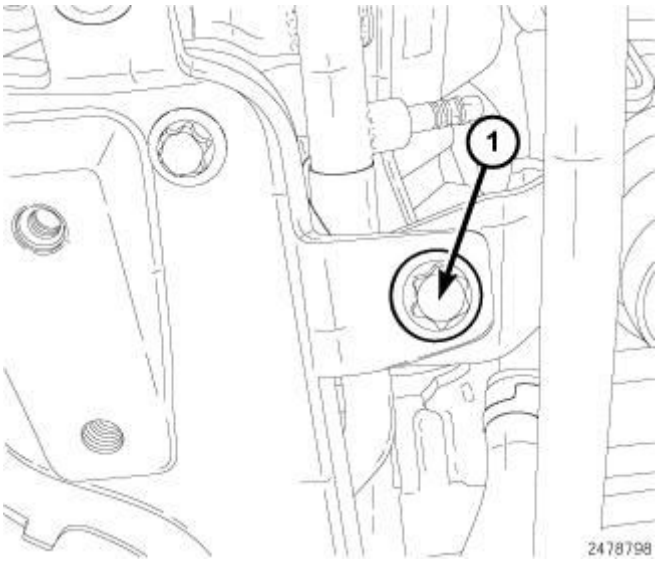

Fig. 637: Oil Dip Stick Bolt
Courtesy of CHRYSLER GROUP, LLC

11. Remove bolt (1) securing the oil dip stick tube.

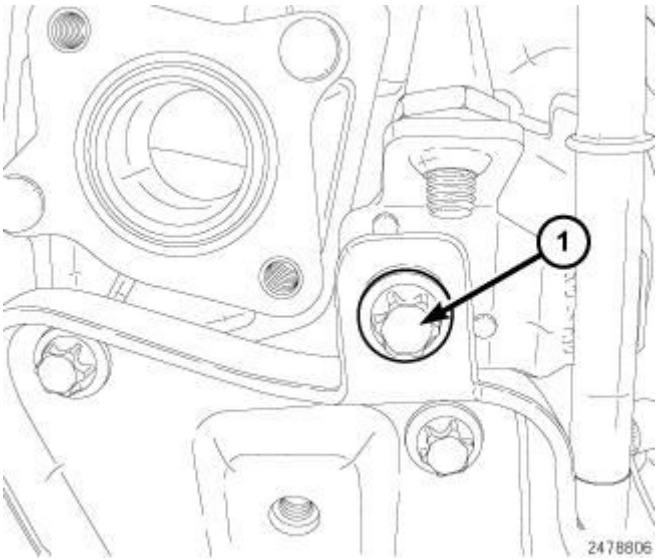

Fig. 638: Vacuum Tube Bolt
Courtesy of CHRYSLER GROUP, LLC

12. Remove bolt (1) securing the vacuum tube.

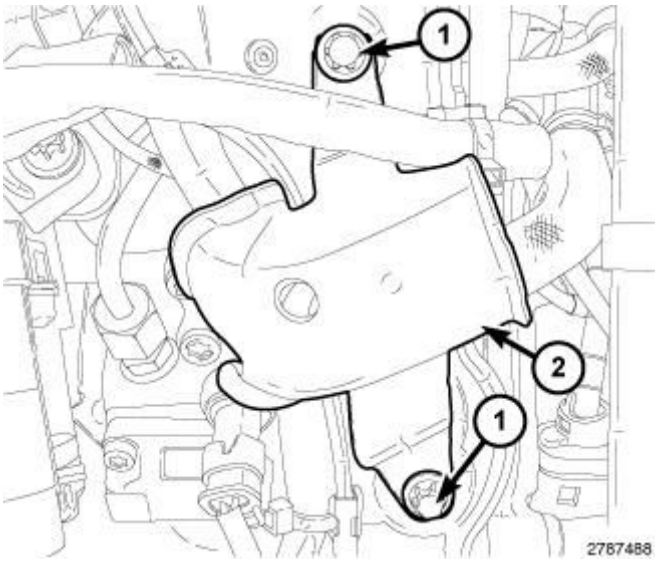

Fig. 639: Identifying Bolts & Heat Shield
Courtesy of CHRYSLER GROUP, LLC

13. Remove bolts (1) and the heat shield (2).

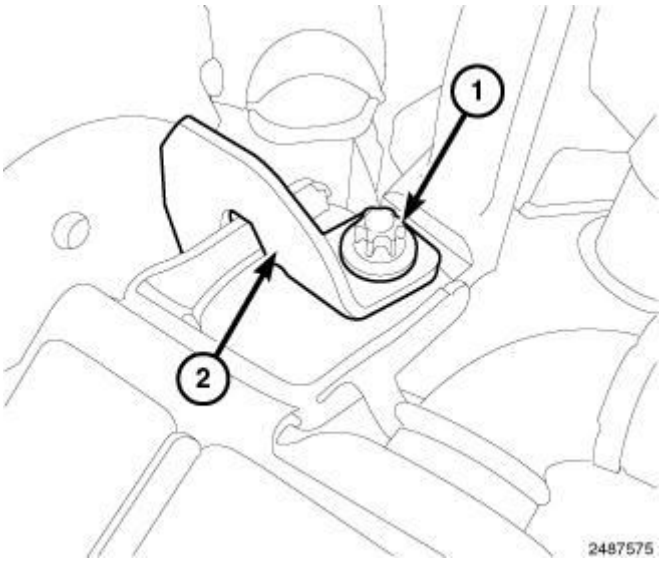

Fig. 640: Upper EGR Cooler Bolt & Bracket
Courtesy of CHRYSLER GROUP, LLC

14. Loosen the upper EGR cooler bolt (1).

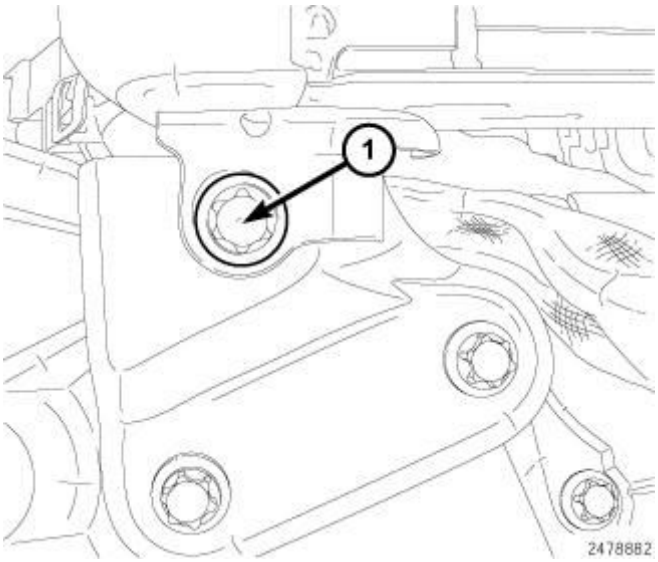

Fig. 641: Lower EGR Cooler Bolt
Courtesy of CHRYSLER GROUP, LLC

15. Loosen the lower EGR cooler bolt (1).

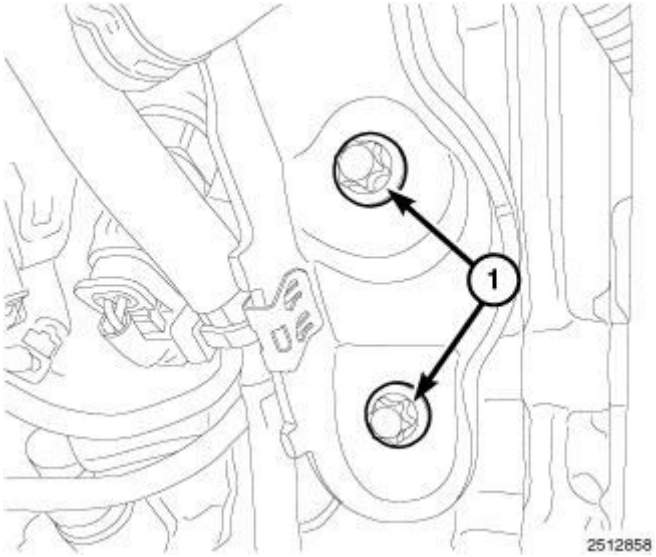

Fig. 642: EGR Support Bracket Bolts
Courtesy of CHRYSLER GROUP, LLC

16. Loosen the EGR support bracket bolts (1).

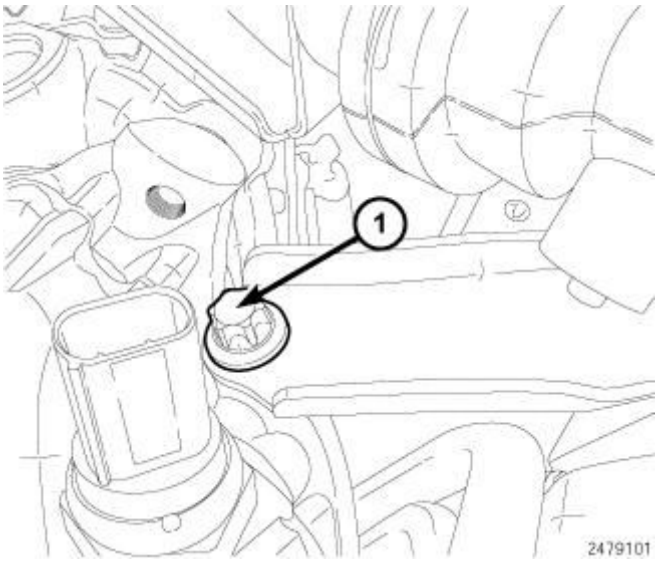

Fig. 643: Support Bracket Bolt
Courtesy of CHRYSLER GROUP, LLC

17. Remove the support bracket bolt (1).

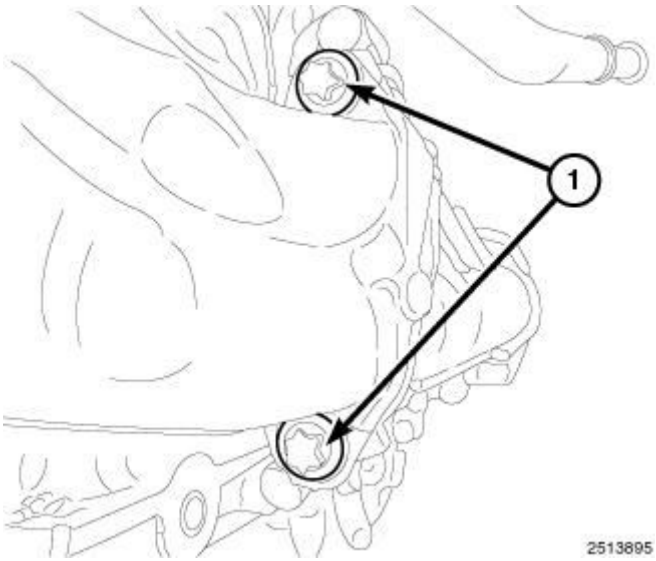

Fig. 644: EGR Assembly Bolts
Courtesy of CHRYSLER GROUP, LLC

18. Remove two bolts (1) and pull back on the EGR assembly.

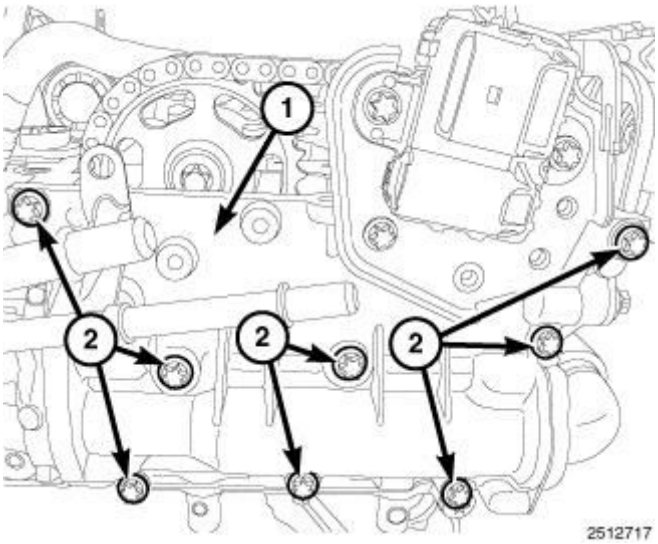

Fig. 645: Timing Chain Upper Cover & Bolts
Courtesy of CHRYSLER GROUP, LLC

19. Remove bolts (2) and the timing chain upper cover (1).

LOWER TIMING CHAIN COVER

NOTE: The engine must be removed from the vehicle to remove the timing chain cover.

1. Remove the engine. Refer to **REMOVAL**.

2. Remove the cylinder head. Refer to **CYLINDER HEAD, REMOVAL**.
3. Remove the flywheel assembly. Refer to **FLYWHEEL, REMOVAL** .

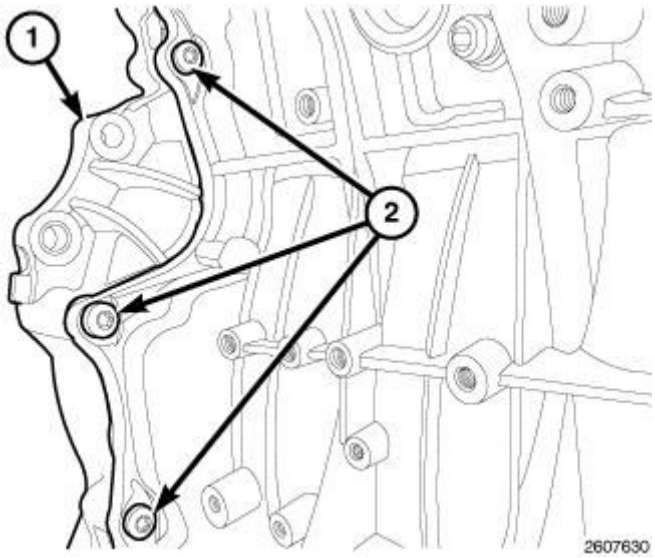

Fig. 646: Locating Bolts At Backside Of Timing Cover
Courtesy of CHRYSLER GROUP, LLC

4. Remove the bolts (2) from backside of timing cover.

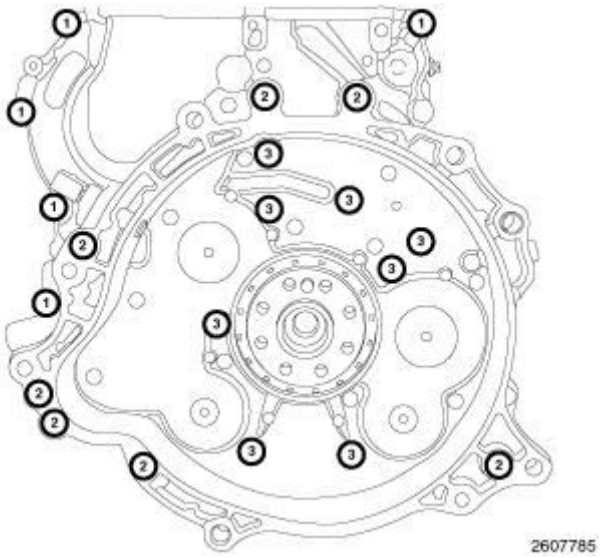

Fig. 647: Timing Chain Cover At Engine Bolts
Courtesy of CHRYSLER GROUP, LLC

5. Remove bolts (1, 2, and 3) and the timing chain cover from engine.

INSTALLATION

UPPER TIMING CHAIN COVER

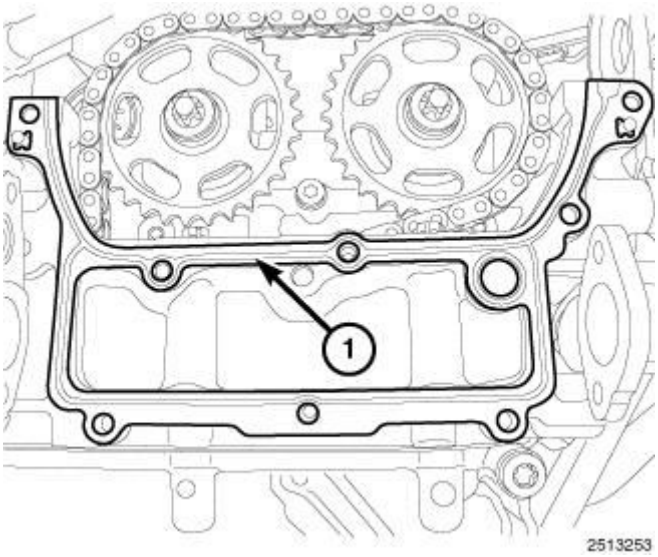

Fig. 648: Upper Timing Cover Gasket
Courtesy of CHRYSLER GROUP, LLC

1. Clean the gasket mating surfaces install a new upper timing cover gasket (1).

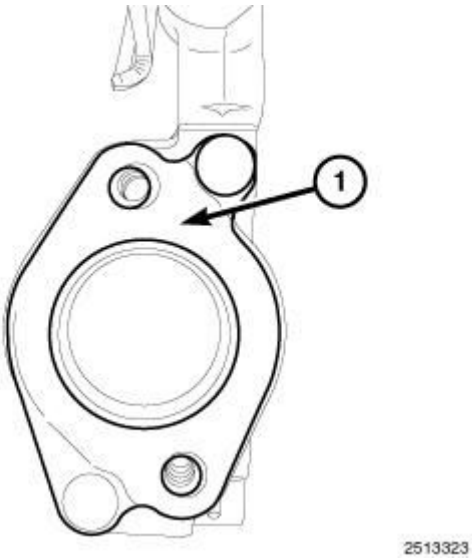

Fig. 649: Upper Timing Cover-To-EGR Pipe Gasket
Courtesy of CHRYSLER GROUP, LLC

2. Install a new gasket (1) onto upper timing cover to EGR pipe.

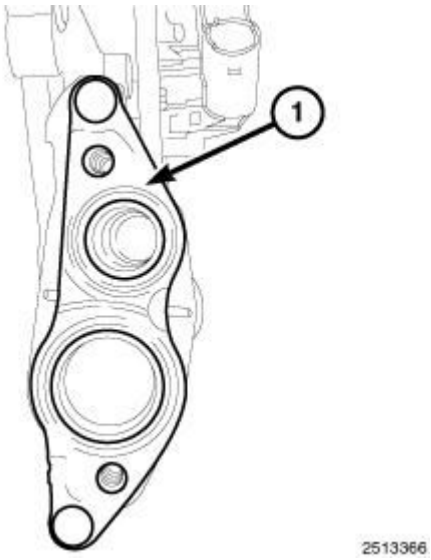

Fig. 650: Cylinder Head Rear Cover-To-EGR Gasket
Courtesy of CHRYSLER GROUP, LLC

3. Install a new gasket (1) onto cylinder head rear cover to EGR.

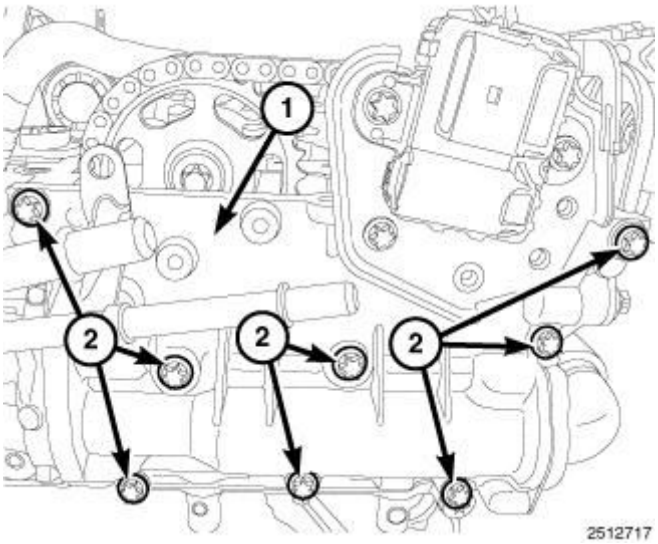

Fig. 651: Timing Chain Upper Cover & Bolts
Courtesy of CHRYSLER GROUP, LLC

4. Install the cylinder head rear cover (1). Tighten bolts (2) to 9 N.m (80 in. lbs.).

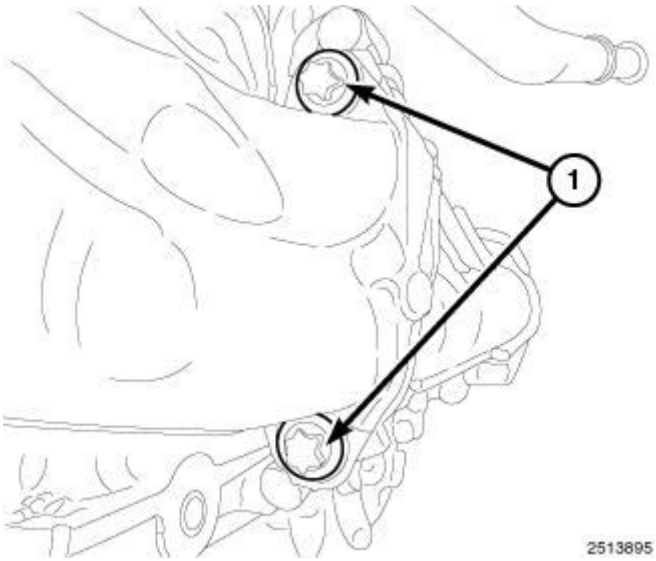

Fig. 652: EGR Assembly Bolts
Courtesy of CHRYSLER GROUP, LLC

5. Install the EGR cooler manifold. Tighten bolts (1) to 9 N.m (80 in. lbs.).

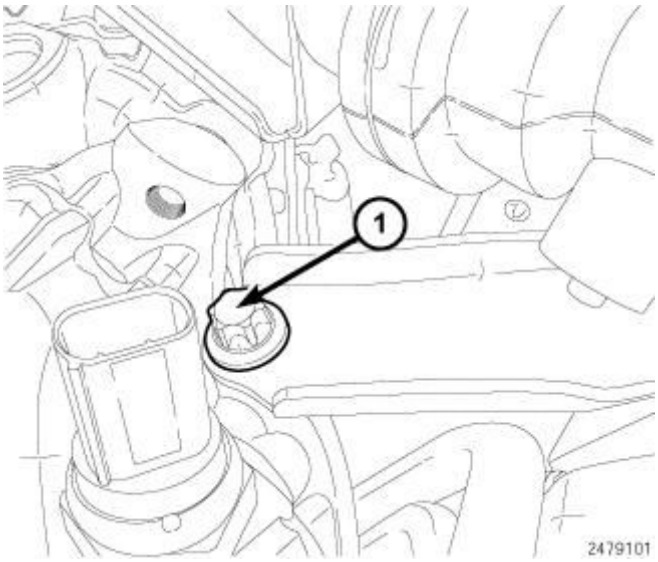

Fig. 653: Support Bracket Bolt
Courtesy of CHRYSLER GROUP, LLC

6. Install the support bracket bolt (1). Tighten bolts (1) to 9 N.m (80 in. lbs.).

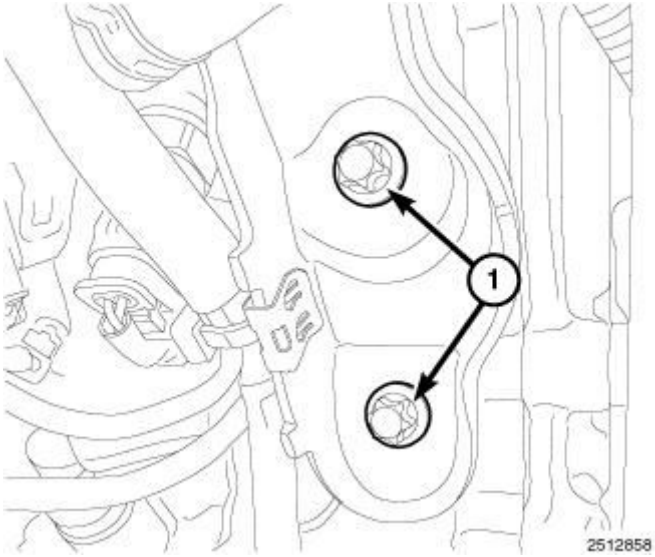

Fig. 654: EGR Support Bracket Bolts
Courtesy of CHRYSLER GROUP, LLC

7. Tighten the EGR support bracket bolts (1) to 9 N.m (80 in. lbs.).

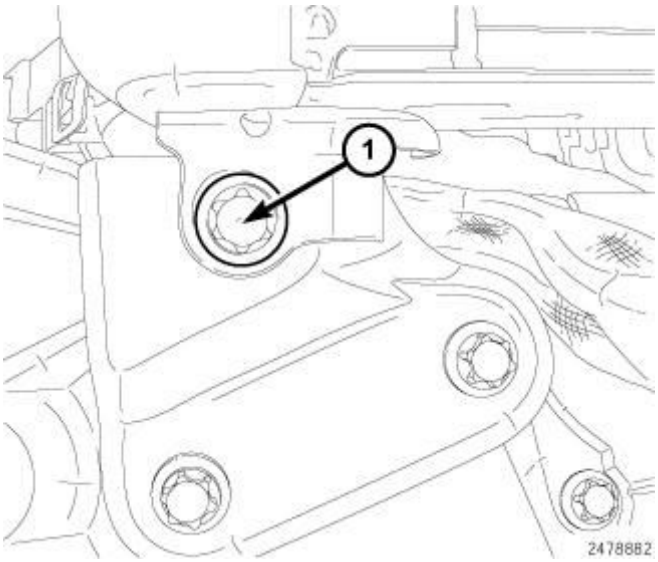

Fig. 655: Lower EGR Cooler Bolt
Courtesy of CHRYSLER GROUP, LLC

8. Tighten the lower EGR cooler bolt (1) to 9 N.m (80 in. lbs.).

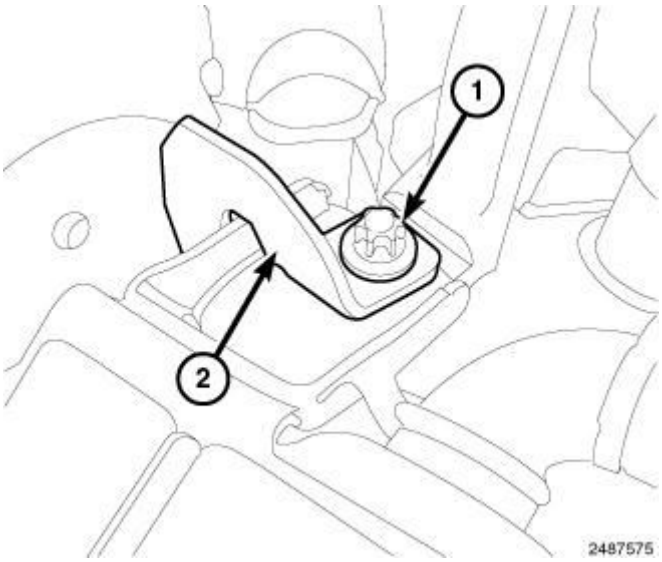

Fig. 656: Upper EGR Cooler Bolt & Bracket
Courtesy of CHRYSLER GROUP, LLC

9. Tighten the upper EGR cooler bolt (1) to 9 N.m (80 in. lbs.).

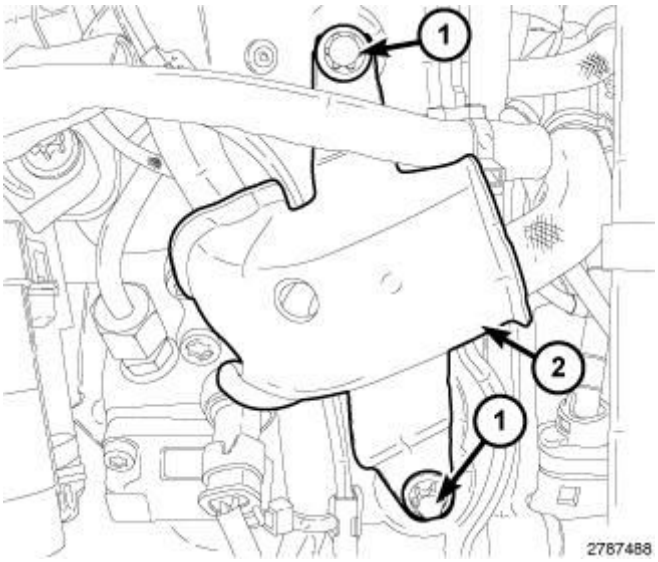

Fig. 657: Identifying Bolts & Heat Shield
Courtesy of CHRYSLER GROUP, LLC

10. Install the heat shield (2). Tighten bolts (1) to 9 N.m (80 in. lbs.).

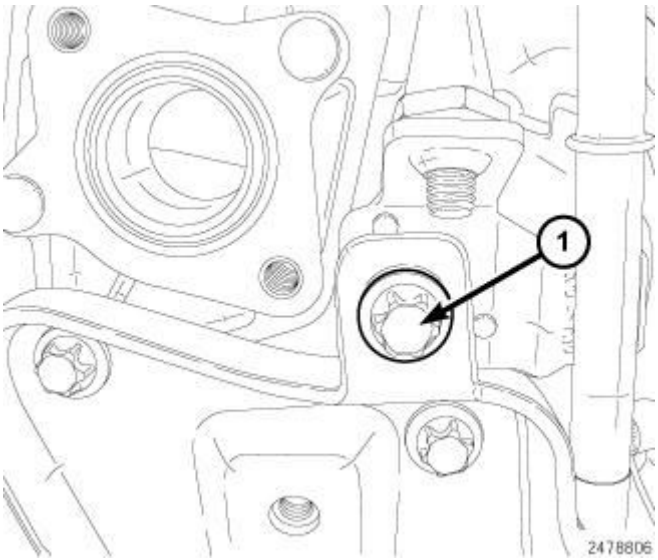

Fig. 658: Vacuum Tube Bolt
Courtesy of CHRYSLER GROUP, LLC

11. Install the bolt (1) securing the vacuum tube. Tighten bolt (1) to 9 N.m (80 in. lbs.).

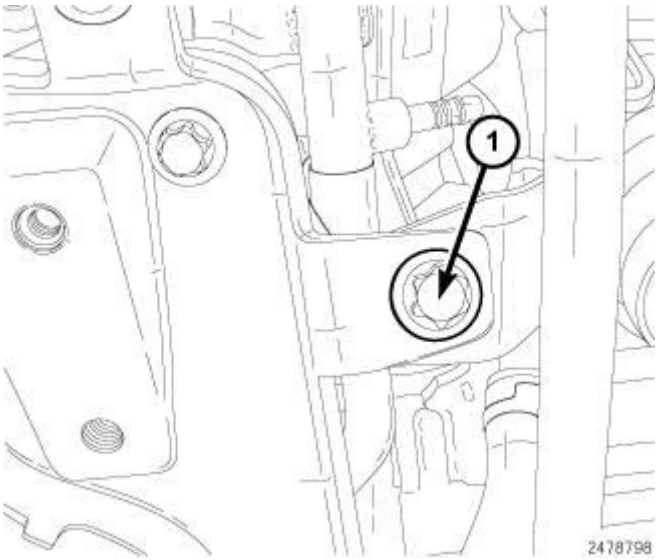

Fig. 659: Oil Dip Stick Bolt
Courtesy of CHRYSLER GROUP, LLC

12. Install the bolt (1) securing the oil dip stick tube. Tighten bolt (1) to 9 N.m (80 in. lbs.).

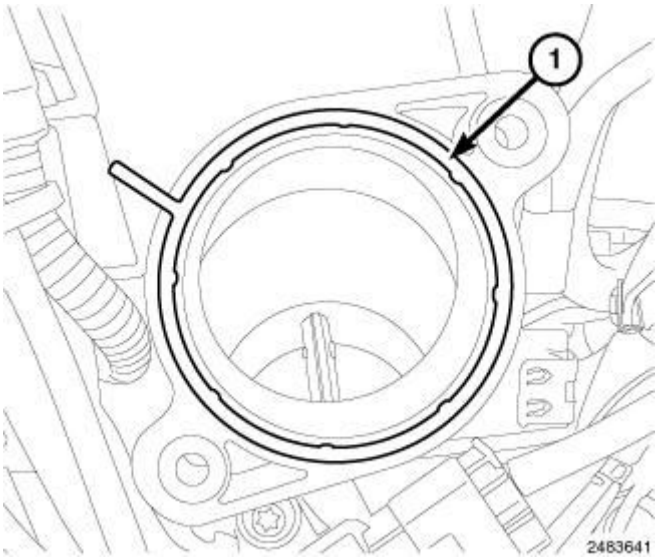

Fig. 660: Installing/Removing EGR Tube Gasket Onto Mixing Chamber
Courtesy of CHRYSLER GROUP, LLC

13. Clean the gasket surfaces and install a new gasket (1).

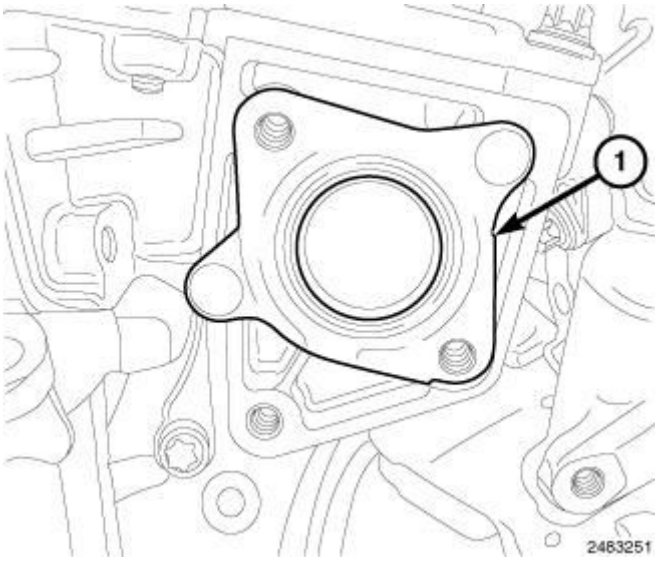

Fig. 661: Installing/Removing EGR Tube Gasket Onto EGR Actuator
Courtesy of CHRYSLER GROUP, LLC

14. Clean the gasket surfaces and install a new gasket (1).

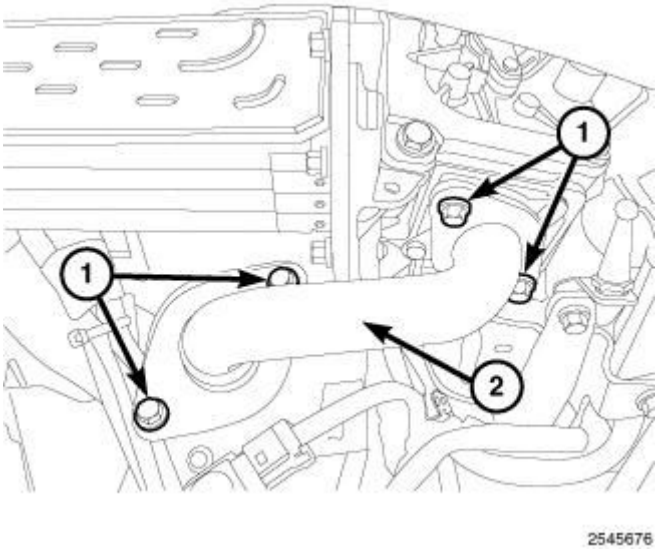

Fig. 662: EGR Tube & Bolts
Courtesy of CHRYSLER GROUP, LLC

15. Install the EGR tube (2). Tighten bolt (1) to 9 N.m (80 in. lbs.).

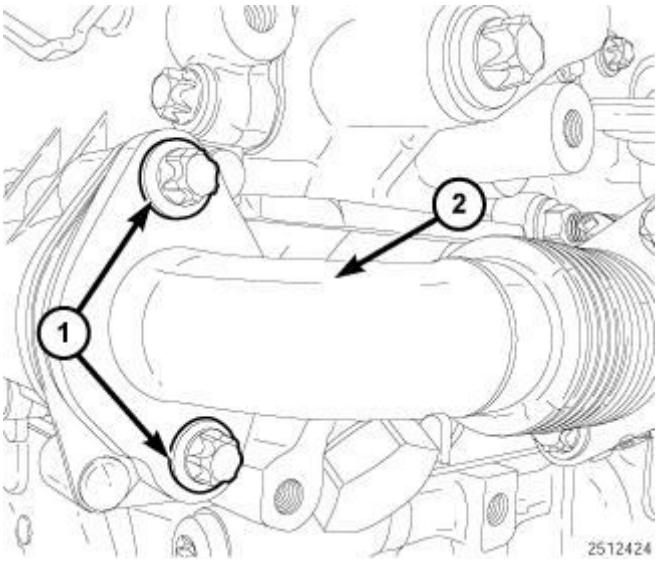

Fig. 663: EGR Pipe & Bolts
Courtesy of CHRYSLER GROUP, LLC

16. Install bolts (1) to the EGR pipe (2). Tighten bolts (1) to 9 N.m (80 in. lbs.).

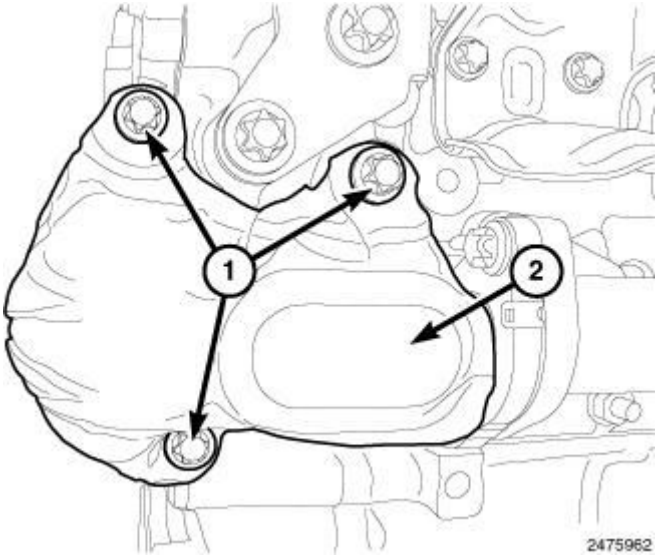

Fig. 664: EGR Pipe Heat Shield & Bolts
Courtesy of CHRYSLER GROUP, LLC

17. Install the heat shield (2). Tighten bolts (1) to 9 N.m (80 in. lbs.).

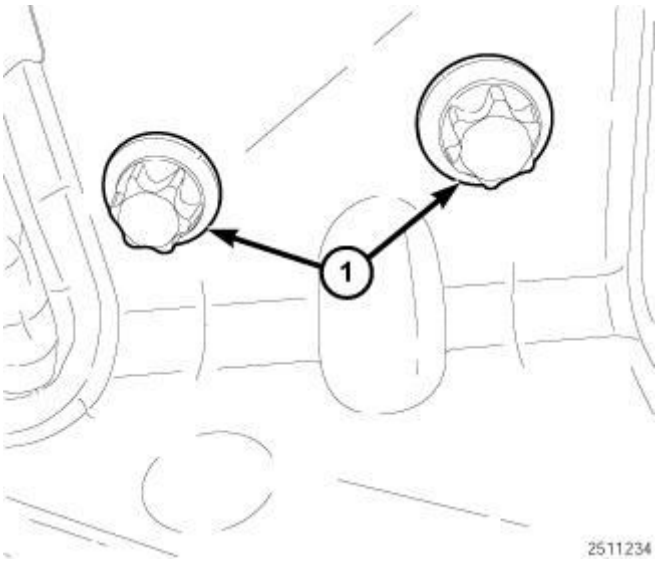

Fig. 665: CAC Tube And Bracket Assembly Bolts
Courtesy of CHRYSLER GROUP, LLC

18. Install the (CAC) tube and bracket assembly. Tighten bolts (1) to 9 N.m (80 in. lbs.).

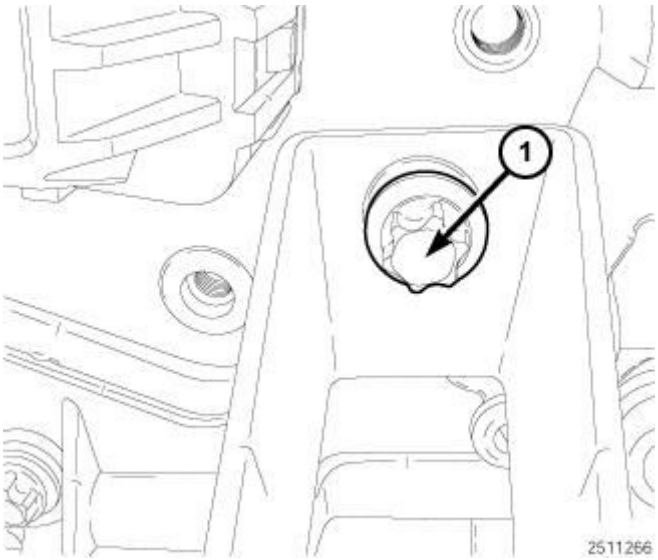

Fig. 666: Bolt Securing CAC Tube To Glow Plug Module
Courtesy of CHRYSLER GROUP, LLC

19. Install bolt (1) securing the (CAC) tube to glow plug module bracket. Tighten bolt (1) to 9 N.m (80 in. lbs.).

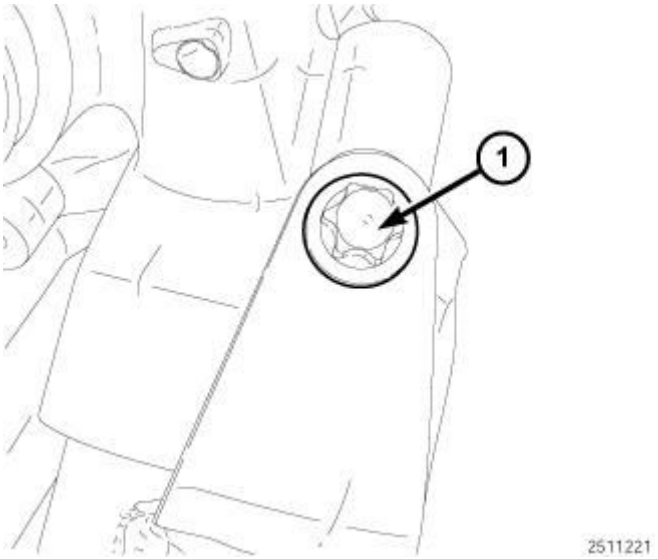

Fig. 667: Charge Air Cooler CAC Tube Bolt
Courtesy of CHRYSLER GROUP, LLC

20. Tighten bolt (1) securing the Charge Air Cooler (CAC) tube to turbocharger to 9 N.m (80 in. lbs.).

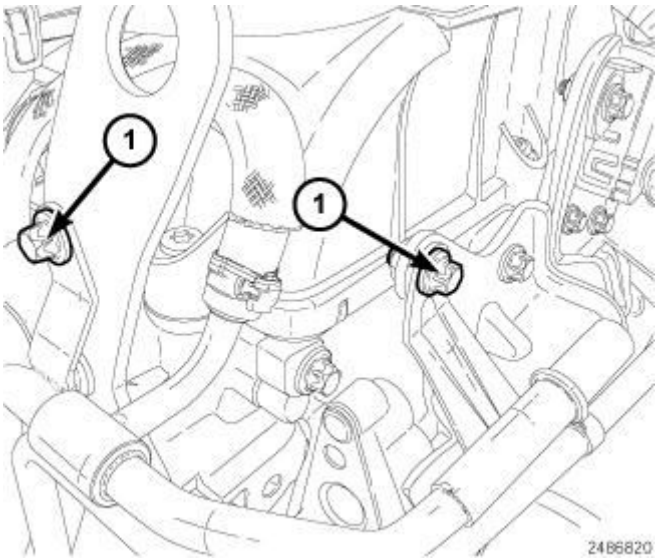

Fig. 668: Upper Fuel Line Bracket Bolts
Courtesy of CHRYSLER GROUP, LLC

21. Install the two upper fuel line bracket bolts (1) and tighten to 9 N.m (80 in. lbs.).
22. Install the cylinder head cover. Refer to **COVER(S), CYLINDER HEAD, INSTALLATION**.
23. Connect negative battery cable.
24. Start the engine and inspect for leaks.

LOWER TIMING CHAIN COVER

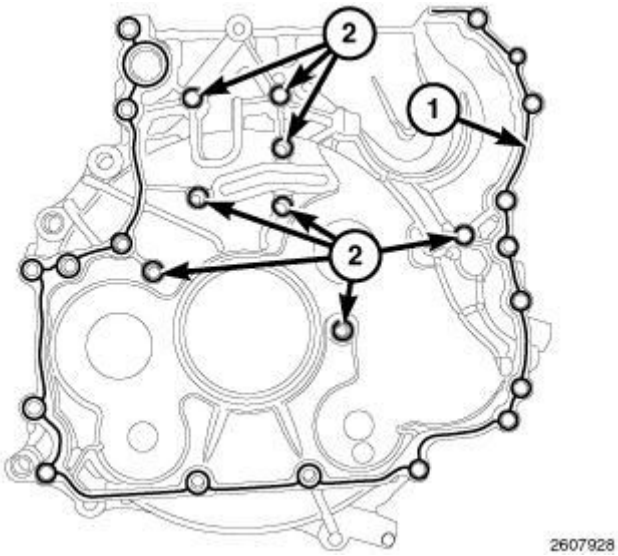

Fig. 669: Sealant To Lower Timing Chain Cover Mating Surfaces
Courtesy of CHRYSLER GROUP, LLC

1. Thoroughly clean all gasket mating surfaces.

NOTE: Install timing cover within 10 minutes after applying sealant. Do not spread sealant bead.

2. Apply a 2 mm bead of Engine Sealant RTV to the mating surfaces (1 and 2).

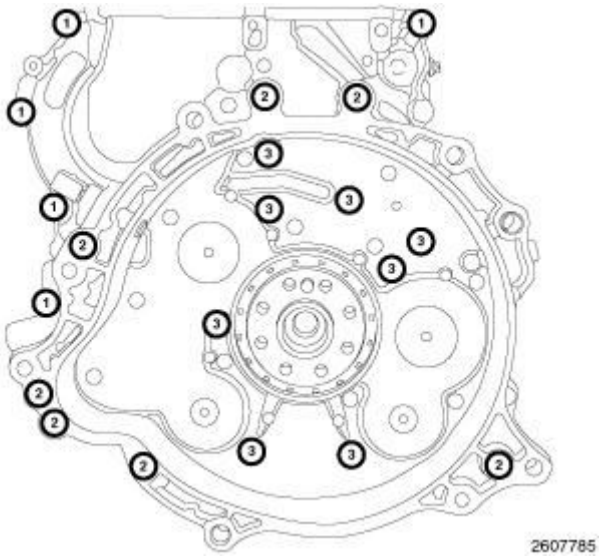

Fig. 670: Timing Chain Cover At Engine Bolts
Courtesy of CHRYSLER GROUP, LLC

NOTE: Bolts (1 and 3) are M8 x 30. Bolts (2) are M8 x 60.

3. Install timing chain cover. Tighten bolts (1, 2, and 3) to 20 N.m (177 in. lbs.).

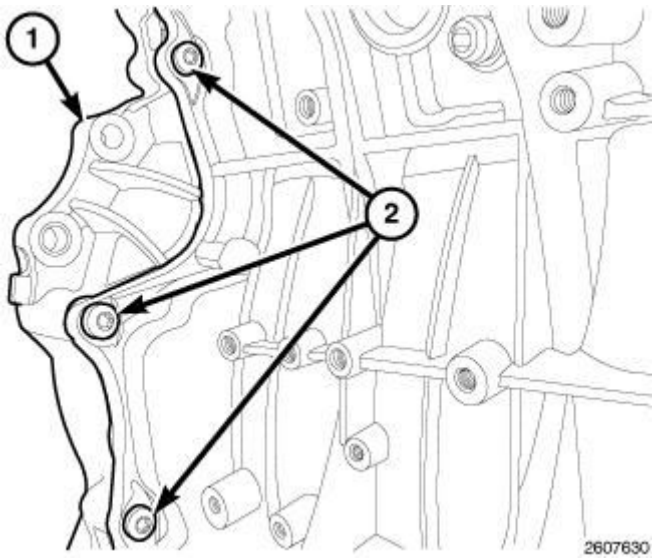

Fig. 671: Locating Bolts At Backside Of Timing Cover
Courtesy of CHRYSLER GROUP, LLC

4. Install the M8 X 30 bolts (2) to the backside of timing cover and tighten to 20 N.m (177 in. lbs.).
5. Install the cylinder head. Refer to **CYLINDER HEAD, INSTALLATION**.
6. Install the engine. Refer to **INSTALLATION**.

GUIDES, TIMING CHAIN

REMOVAL

TIMING CHAIN GUIDE - CYLINDER HEAD

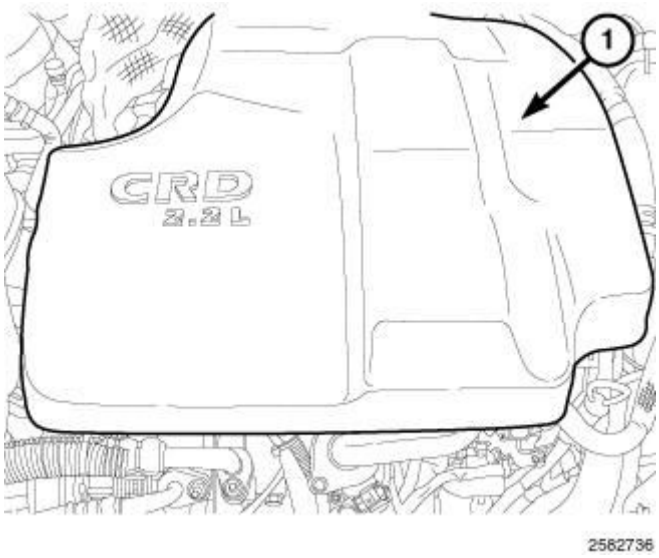

Fig. 672: Engine Cover
Courtesy of CHRYSLER GROUP, LLC

1. Disconnect the negative battery cable.
2. Remove the engine cover (1).
3. Remove the belly pan.

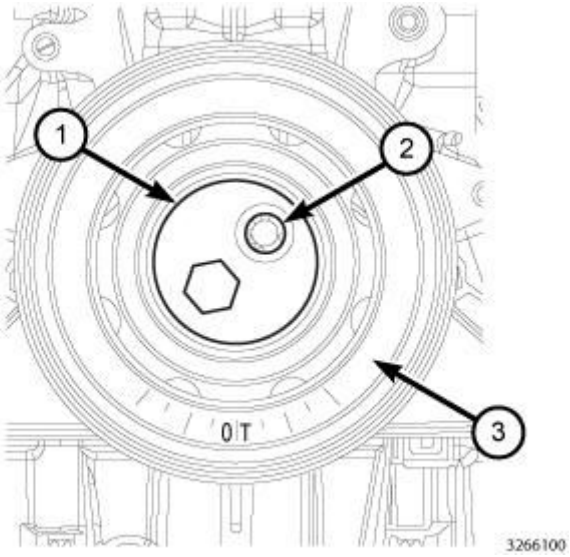

Fig. 673: Vibration Damper Holder Tool, Vibration Damper & Bolts
Courtesy of CHRYSLER GROUP, LLC

NOTE: Rotate engine at crankshaft only. DO NOT crank engine at the camshaft and DO NOT rotate the engine backward.

4. Using Vibration Damper Holder (special tool #10236, Holder, Vibration Damper) (1), to rotate engine.

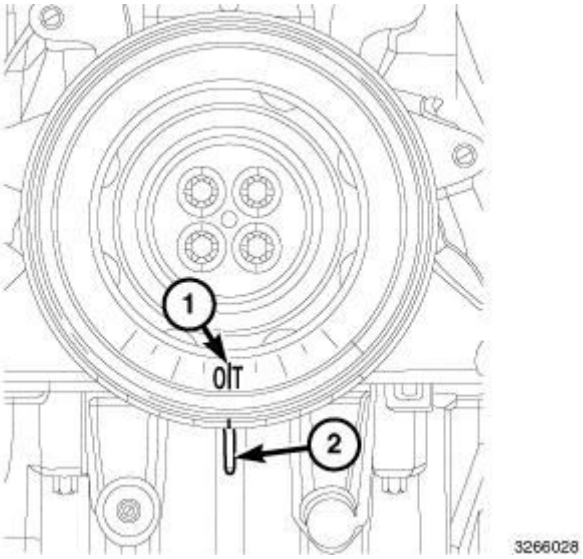

Fig. 674: Crankshaft Alignment Timing Marks
Courtesy of CHRYSLER GROUP, LLC

5. Rotate the crankshaft to align the timing mark (1) with mark (2) to set cylinder No. 1 at Top Dead Center (TDC).

6. Remove the upper timing chain cover. Refer to **COVER(S), ENGINE TIMING, REMOVAL**.

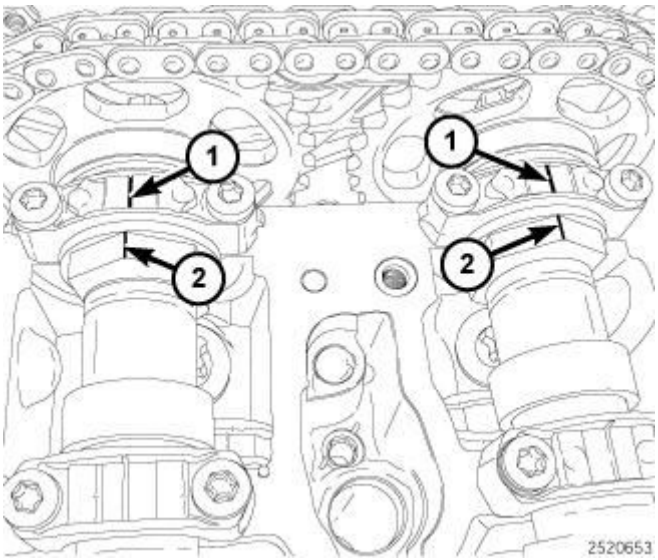

Fig. 675: Ensuring Camshaft Mark Is Aligned With Bearing Cap Mark
Courtesy of CHRYSLER GROUP, LLC

7. Verify the alignment of the camshaft mark (2) is aligned with the bearing cap mark (1) is at (TDC).

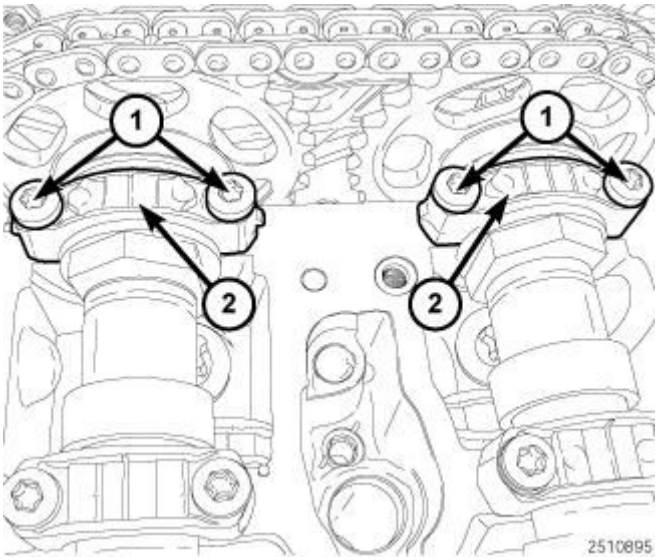

Fig. 676: No. 1 Camshaft Bearing Caps & Bolts
Courtesy of CHRYSLER GROUP, LLC

8. Remove bolts (1) and the number one camshaft bearing caps (2).

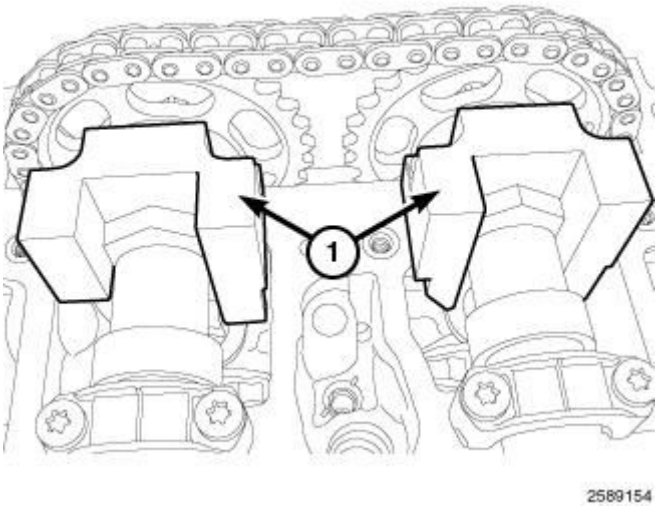

Fig. 677: Camshaft Lock Tools
Courtesy of CHRYSLER GROUP, LLC

9. Install the Camshaft Lock Tools (special tool #10234, Lock, Camshaft) (1) and tighten bolts finger tight.

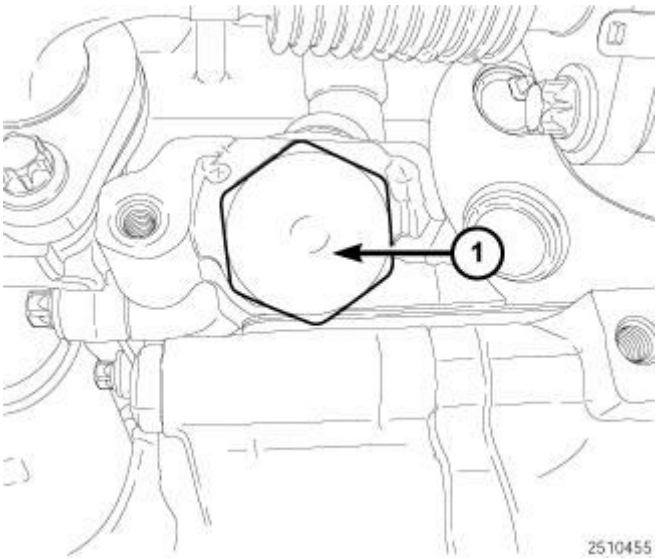

Fig. 678: Timing Chain Tensioner
Courtesy of CHRYSLER GROUP, LLC

10. Remove timing chain tensioner (1).

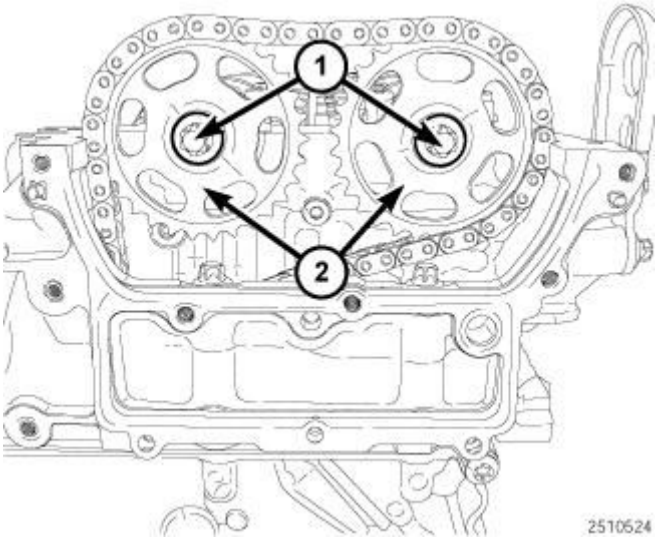

Fig. 679: Camshaft Sprockets & Bolts
Courtesy of CHRYSLER GROUP, LLC

NOTE: Camshaft sprocket bolts (1) are left hand thread.

11. Remove bolts (1) and the camshaft sprockets (2) and secure the timing chain from falling into the engine.

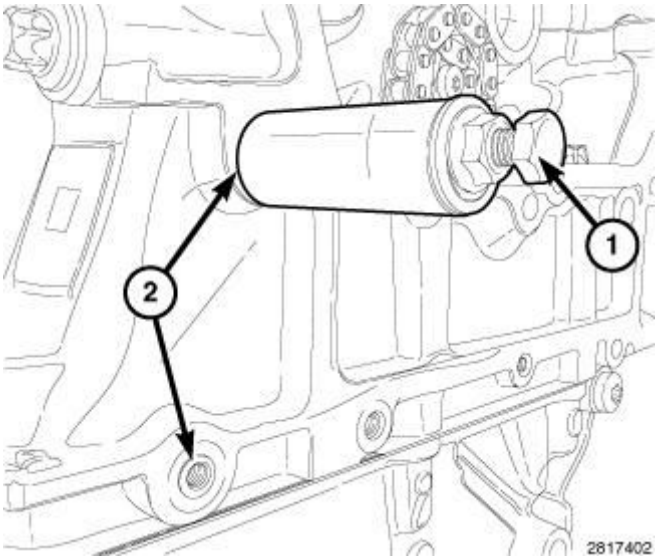

Fig. 680: Extractor Bolt Tool & Timing Guide Pin
Courtesy of CHRYSLER GROUP, LLC

NOTE: Care should be given not to drop the timing chain guide into the cylinder head.

12. Using Extractor Bolt Tool (special tool #10240, Bolt, Extractor) (1), remove

the timing guide pins (2) and guide from cylinder head.

TIMING CHAIN TENSIONING RAIL

1. Disconnect the negative battery cable.
2. Remove the timing chain cover. Refer to **COVER(S), ENGINE TIMING, REMOVAL**.

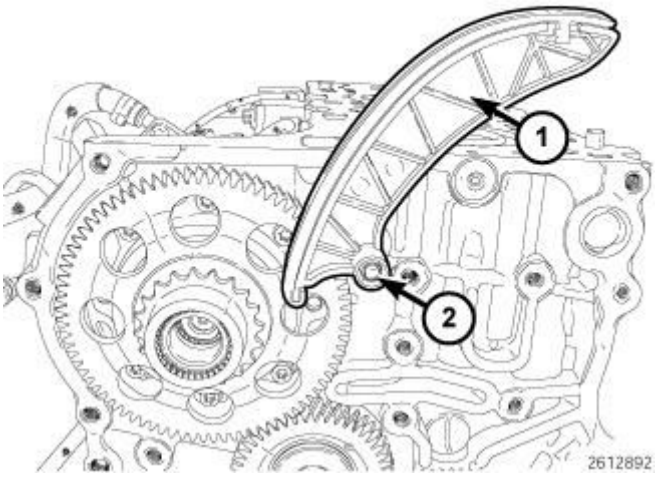

Fig. 681: Tensioning Rail & Pin
Courtesy of CHRYSLER GROUP, LLC

3. Remove the tensioning rail (1) from pin (2).

INSTALLATION

TIMING CHAIN GUIDE - CYLINDER HEAD

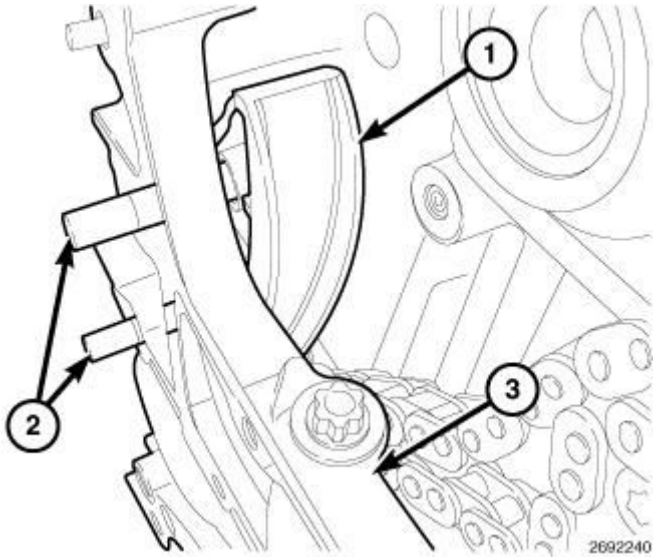

Fig. 682: Timing Chain Guide, Guide Pins & Cylinder Head
Courtesy of CHRYSLER GROUP, LLC

NOTE: Care should be given not to drop the timing chain guide into the cylinder head.

1. Install the timing chain guide (1) and guide pins (2) into the cylinder head (3).
2. Using a small brass hammer gently tap in the guide pins (2) into the cylinder head (3).

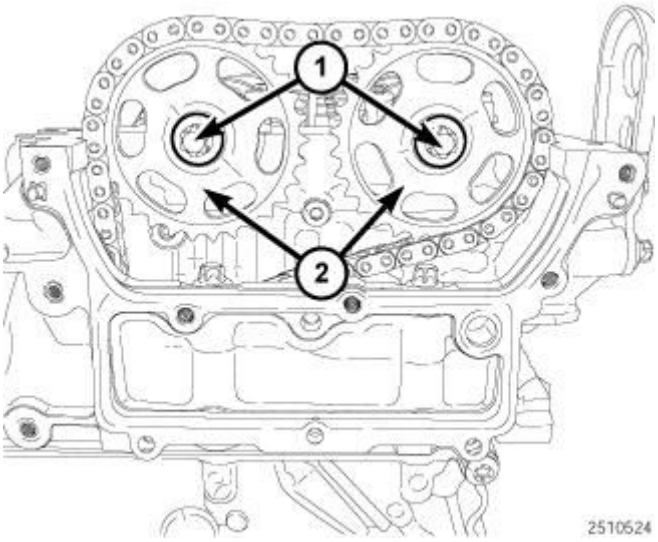

Fig. 683: Camshaft Sprockets & Bolts
Courtesy of CHRYSLER GROUP, LLC

NOTE: Camshaft sprocket bolts (1) are left hand thread.

3. Position the timing chain onto the camshaft sprockets (2) and install onto camshaft. Using new bolts (1), tighten to 55 N.m (41 ft. lbs.) plus an additional 90 degrees.

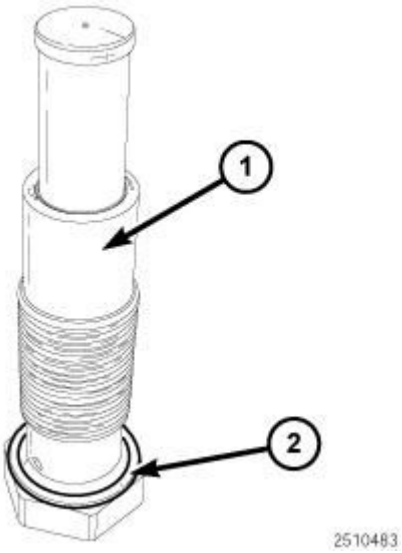

Fig. 684: Sealing Washer & Timing Chain Tensioner
Courtesy of CHRYSLER GROUP, LLC

4. Install a new sealing washer (2) onto the timing chain tensioner (1).

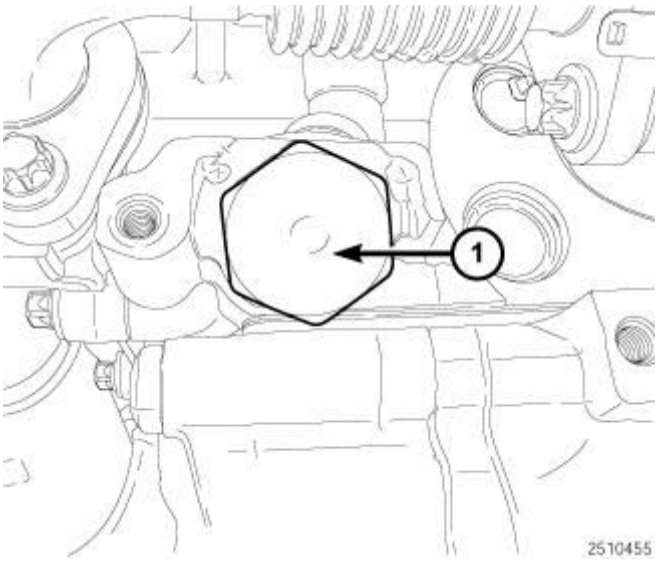

Fig. 685: Timing Chain Tensioner
Courtesy of CHRYSLER GROUP, LLC

5. Install timing chain tensioner (1). Tighten to 70 N.m (52 ft. lbs.).

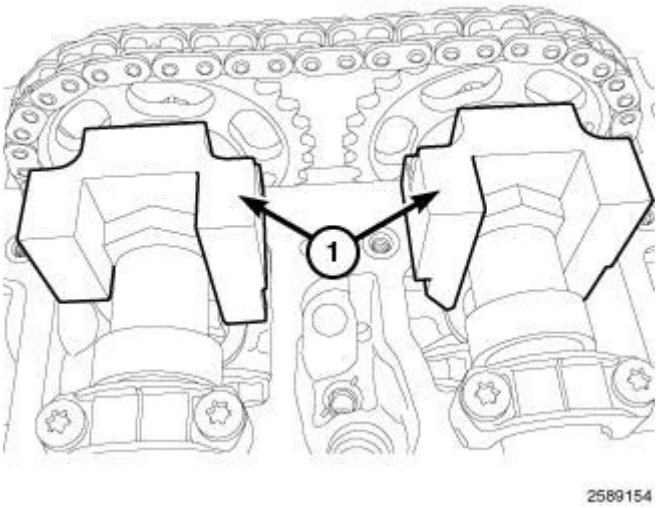

Fig. 686: Camshaft Lock Tools
Courtesy of CHRYSLER GROUP, LLC

6. Remove bolts and the Camshaft Lock Tool (1) (special tool #10234, Lock, Camshaft).

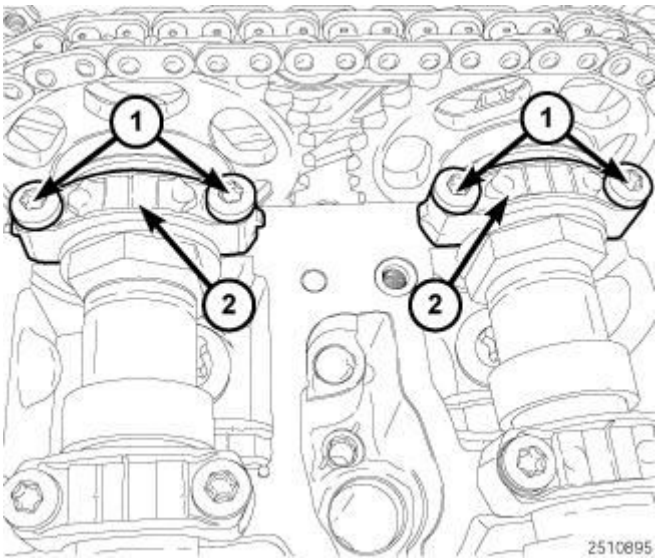

Fig. 687: No. 1 Camshaft Bearing Caps & Bolts
Courtesy of CHRYSLER GROUP, LLC

7. Using new bolts (1), install the camshaft bearing caps (2). Tighten bolts (1) in two stages,
   - Stage 1: 5 N.m (44 in. lbs.).
   - Stage 2: 9 N.m (80 in. lbs.).
8. Install the upper timing chain cover. Refer to **COVER(S), ENGINE TIMING, INSTALLATION**.

9. Install the belly pan.

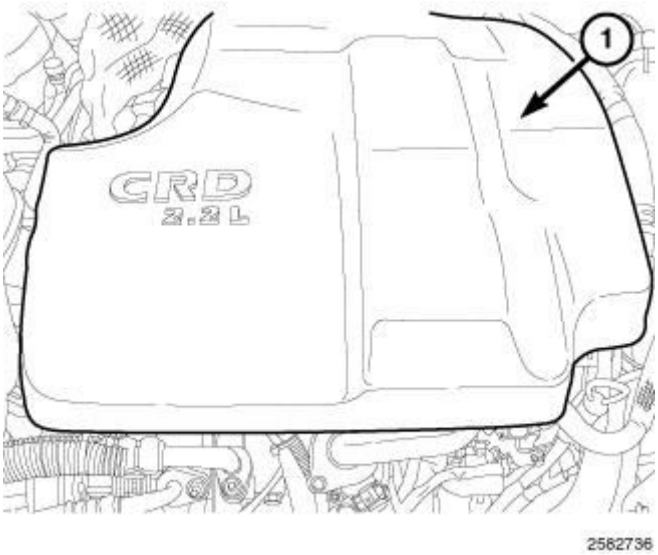

Fig. 688: Engine Cover
Courtesy of CHRYSLER GROUP, LLC

10. Install the engine cover (1).
11. Connect the negative battery cable.

TIMING CHAIN TENSIONING RAIL

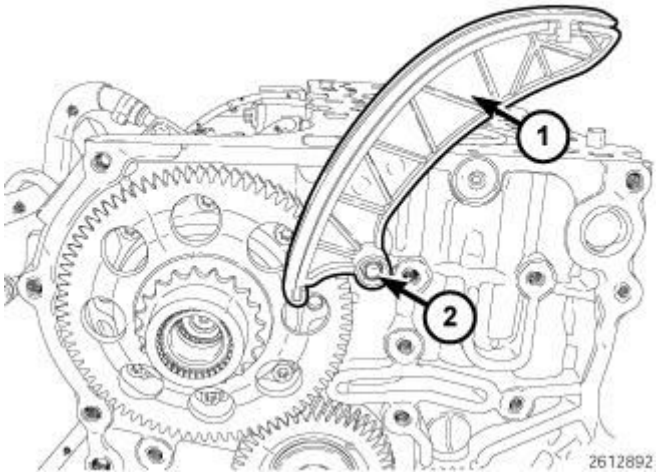

Fig. 689: Tensioning Rail & Pin
Courtesy of CHRYSLER GROUP, LLC

1. Install the tensioning rail (1) on dowel pin (2).
2. Install the timing chain cover. Refer to **COVER(S), ENGINE TIMING, INSTALLATION**.

3. Connect the negative battery cable.
4. Start the engine and inspect for leaks.

TENSIONER, ENGINE TIMING

REMOVAL

REMOVAL

1. Disconnect the negative battery cable.
2. Remove the cylinder head cover. Refer to **COVER(S), CYLINDER HEAD, REMOVAL**.

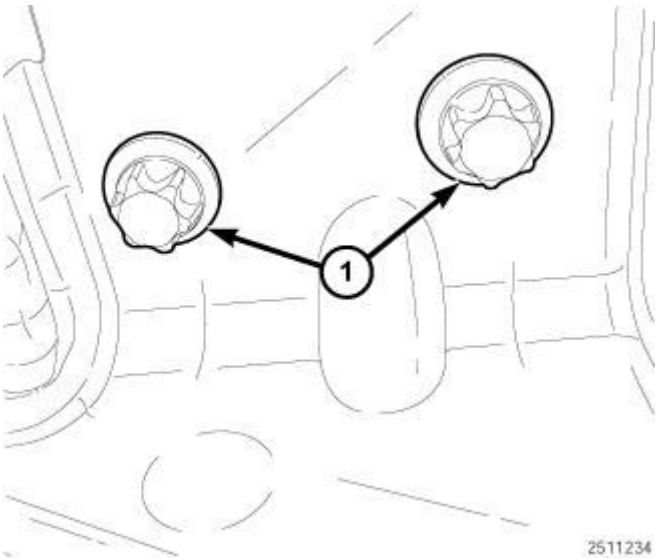

Fig. 690: CAC Tube And Bracket Assembly Bolts
Courtesy of CHRYSLER GROUP, LLC

3. Remove bolts (1) and the (CAC) tube and bracket assembly.

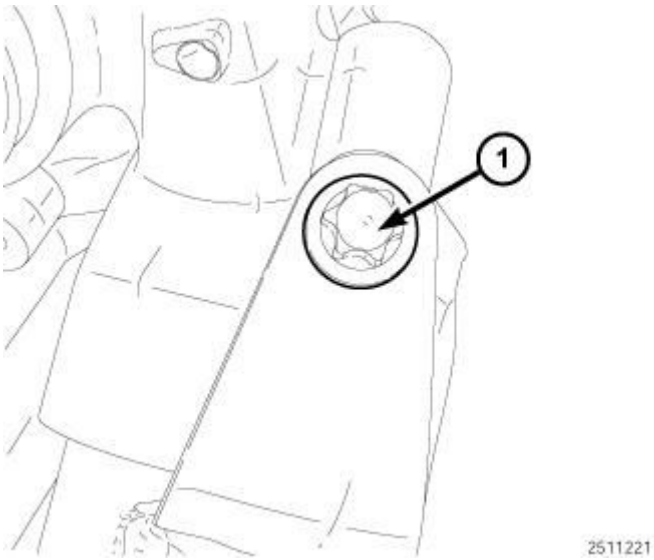

Fig. 691: Charge Air Cooler CAC Tube Bolt
Courtesy of CHRYSLER GROUP, LLC

4. Remove the bolt (1) securing the Charge Air Cooler (CAC) tube to turbocharger.

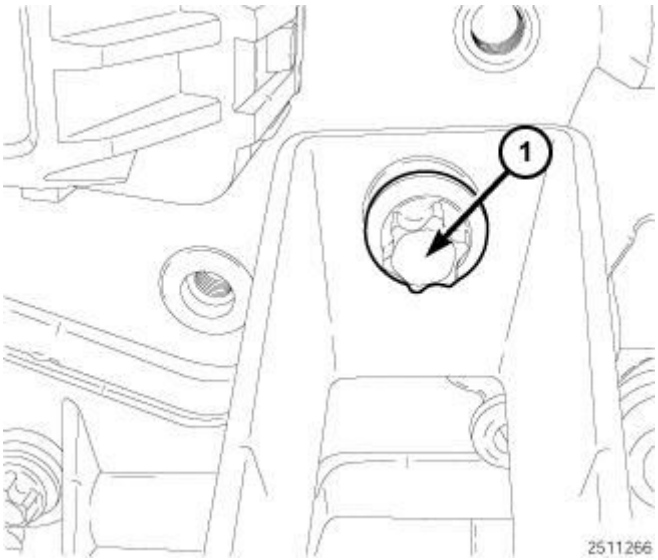

Fig. 692: Bolt Securing CAC Tube To Glow Plug Module
Courtesy of CHRYSLER GROUP, LLC

5. Remove bolt (1) securing the (CAC) tube to glow plug module.

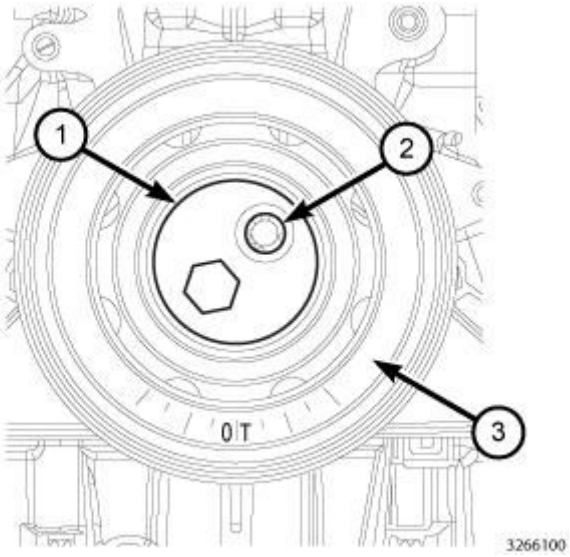

Fig. 693: Vibration Damper Holder Tool, Vibration Damper & Bolts
Courtesy of CHRYSLER GROUP, LLC

CAUTION: Rotate engine at crankshaft only. DO NOT rotate the engine with the bolt of the camshaft sprocket. DO NOT rotate the engine counter clockwise.

6. Remove the belly pan.
7. Install Vibration Damper Holder (special tool #10236, Holder, Vibration Damper) (1), to rotate the engine.

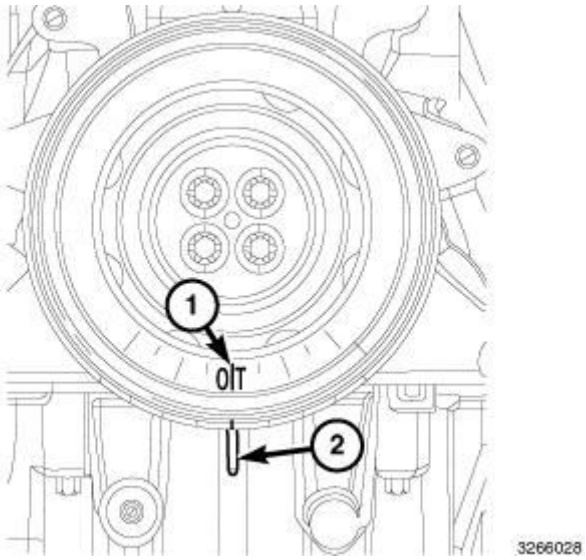

Fig. 694: Crankshaft Alignment Timing Marks
Courtesy of CHRYSLER GROUP, LLC

8. Rotate the engine clockwise to align the timing mark (1) with mark (2) to set cylinder No. 1 at Top Dead Center (TDC).

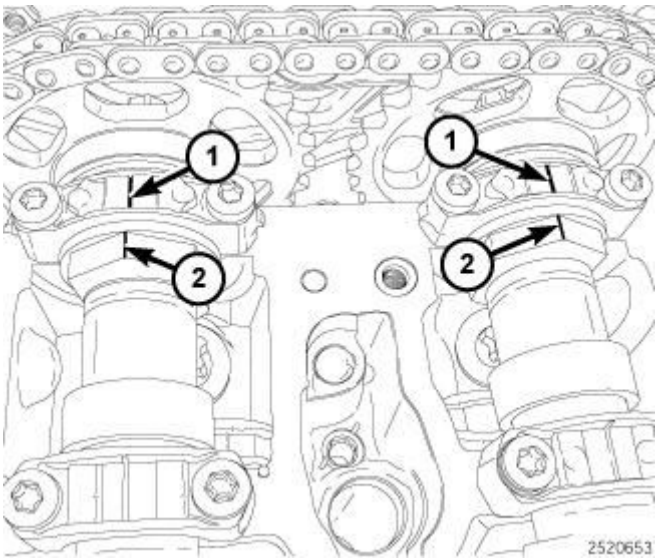

Fig. 695: Ensuring Camshaft Mark Is Aligned With Bearing Cap Mark
Courtesy of CHRYSLER GROUP, LLC

9. Verify the alignment of the camshaft mark (2) is aligned with the bearing cap mark (1) is at (TDC).

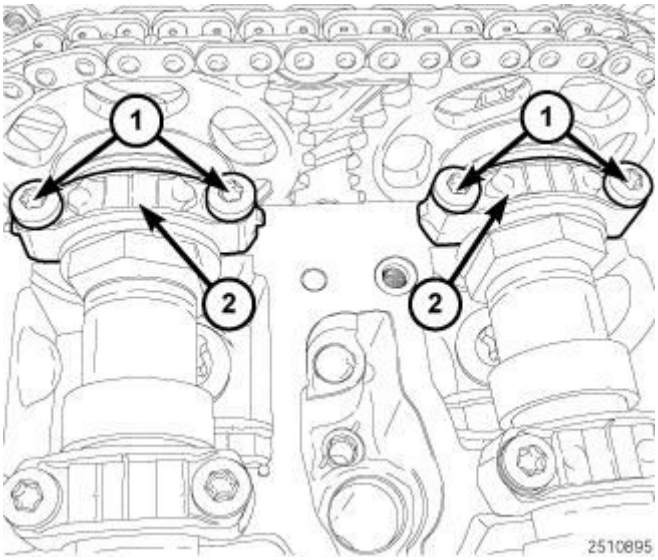

Fig. 696: No. 1 Camshaft Bearing Caps & Bolts
Courtesy of CHRYSLER GROUP, LLC

10. Remove bolts (1) and the number one camshaft bearing caps (2).

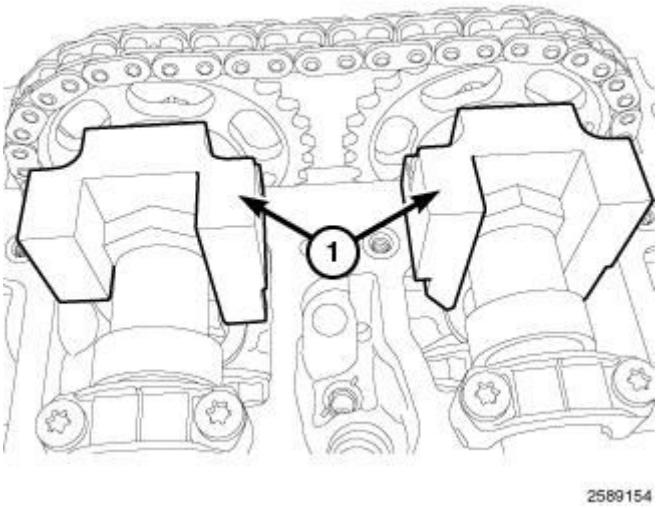

Fig. 697: Camshaft Lock Tools
Courtesy of CHRYSLER GROUP, LLC

11. Install the Camshaft Lock Tools (1) (special tool #10234, Lock, Camshaft) and tighten bolts finger tight.

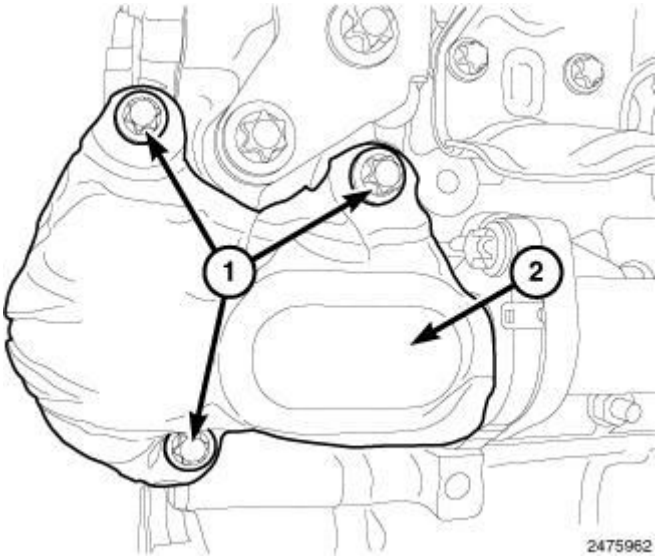

Fig. 698: EGR Pipe Heat Shield & Bolts
Courtesy of CHRYSLER GROUP, LLC

12. Remove bolts (1) and the EGR pipe heat shield (2).

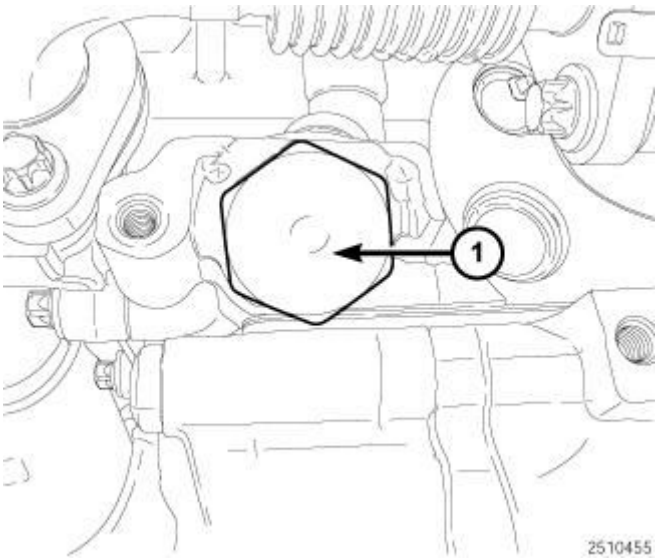

Fig. 699: Timing Chain Tensioner
Courtesy of CHRYSLER GROUP, LLC

13. Remove timing chain tensioner (1).

INSTALLATION

INSTALLATION

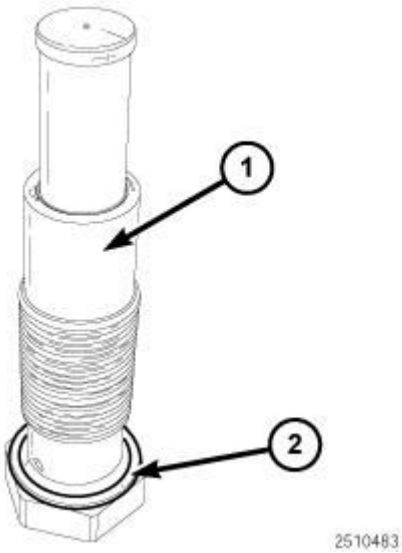

Fig. 700: Sealing Washer & Timing Chain Tensioner
Courtesy of CHRYSLER GROUP, LLC

1. Install a new timing chain tensioner (1) seal washer (2).

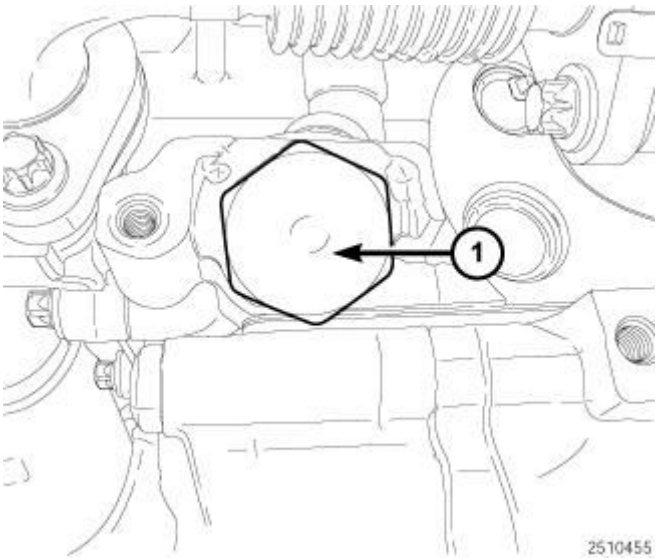

Fig. 701: Timing Chain Tensioner
Courtesy of CHRYSLER GROUP, LLC

NOTE: Carefully clean all mating surfaces with appropriate solvents to assure that no grease or oil is present during reassembly.

2. Install timing chain tensioner (1). Tighten to 70 N.m (52 ft. lbs.).

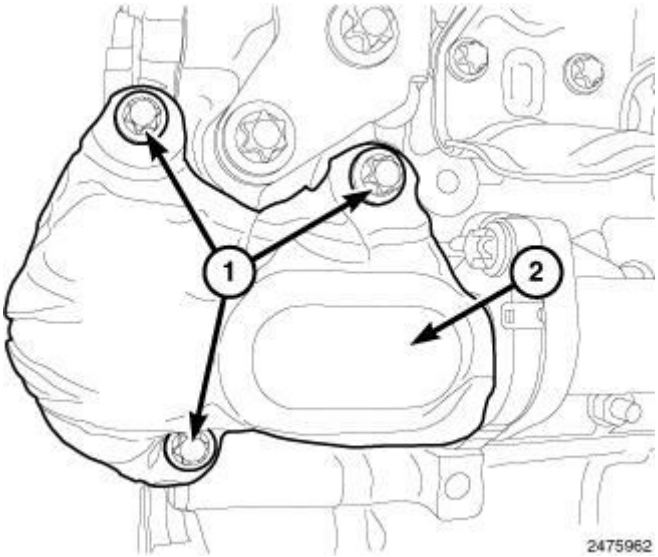

Fig. 702: EGR Pipe Heat Shield & Bolts
Courtesy of CHRYSLER GROUP, LLC

3. Install the EGR pipe heat shield (2). Tighten bolts (1) to 9 N.m (80 in. lbs.).

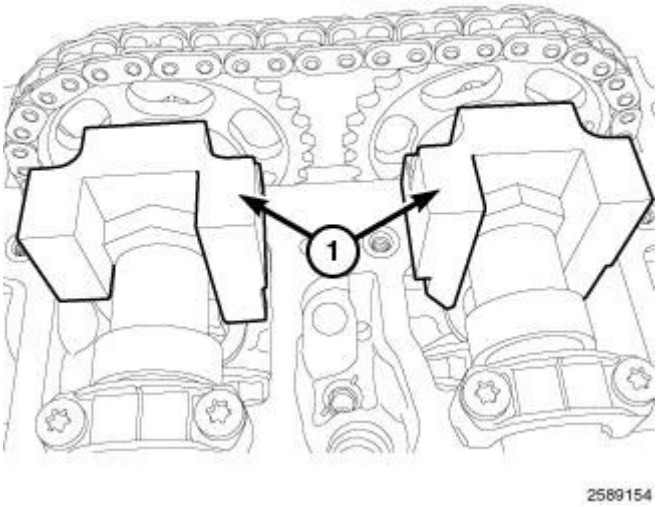

Fig. 703: Camshaft Lock Tools
Courtesy of CHRYSLER GROUP, LLC

4. Remove bolts and the Camshaft Lock Tool (1) (special tool #10234, Lock, Camshaft).

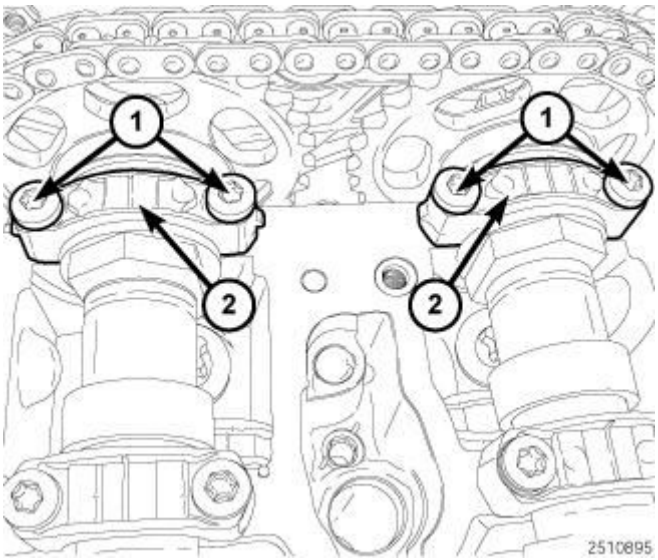

Fig. 704: No. 1 Camshaft Bearing Caps & Bolts
Courtesy of CHRYSLER GROUP, LLC

5. Using new bolts (1), install the camshaft bearing caps (2). Tighten bolts (1) to 9 N.m (80 in. lbs.).

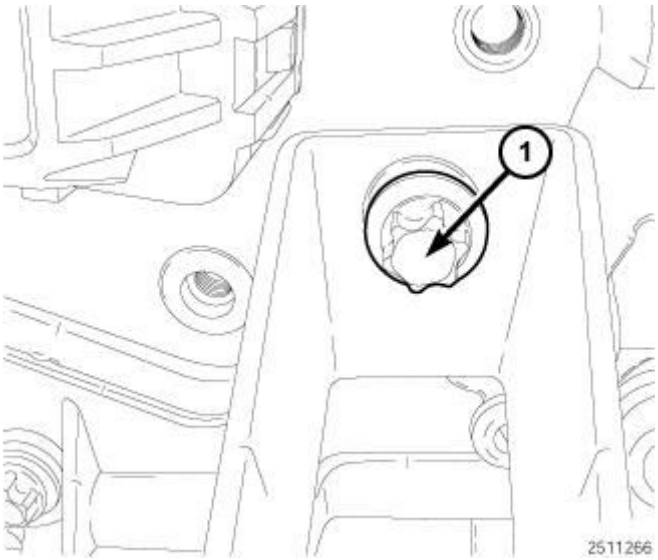

Fig. 705: Bolt Securing CAC Tube To Glow Plug Module
Courtesy of CHRYSLER GROUP, LLC

6. Install bolt (1) securing the (CAC) tube to glow plug module bracket. Tighten bolt (1) to 9 N.m (80 in. lbs.).

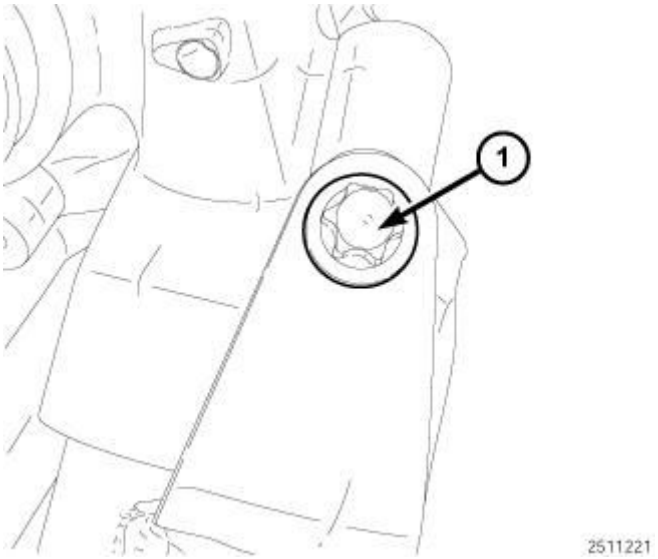

Fig. 706: Charge Air Cooler CAC Tube Bolt
Courtesy of CHRYSLER GROUP, LLC

7. Tighten bolt (1) securing the Charge Air Cooler (CAC) tube to turbocharger to 9 N.m (80 in. lbs.).

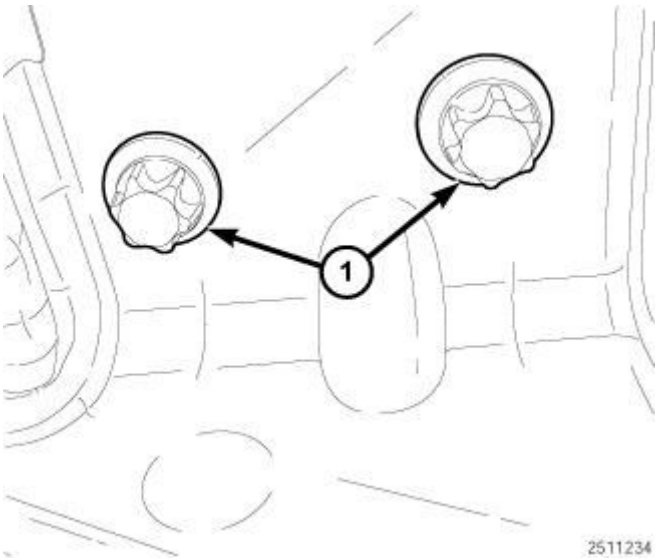

Fig. 707: CAC Tube And Bracket Assembly Bolts
Courtesy of CHRYSLER GROUP, LLC

8. Install the charge air muffler bracket. Tighten bolts (1) to 9 N.m (80 in. lbs.).
9. Install the cylinder head cover. Refer to **COVER(S), CYLINDER HEAD, INSTALLATION**.
10. Connect the negative battery cable.

2014 ENGINE

2.4L - Service Information - Compass & Patriot

DESCRIPTION

DESCRIPTION

The 2.4 Liter (148 cu. in.) in-line four cylinder engine is a double over head camshaft design with mechanical lash tappets and four valves per cylinder design. This engine is NOT free-wheeling; meaning that the pistons will contact the valves in the event of a timing chain failure.

The cylinders are numbered from front of the engine to the rear. The firing order is 1-3-4-2.

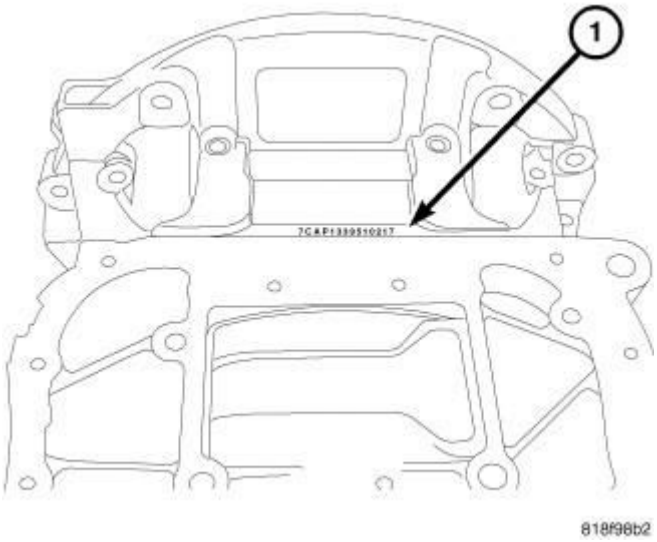

Fig. 1: Locating Engine Serial Number
Courtesy of CHRYSLER GROUP, LLC

The engine serial number (1) is located on the rear of the cylinder block behind the oil pan. The serial number is visible with the oil pan in place. The serial number contains engine build date information.

DIAGNOSIS AND TESTING

INTRODUCTION

Engine diagnosis is helpful in determining the causes of malfunctions not detected and remedied by routine maintenance.

These malfunctions may be classified as either mechanical (e.g., a strange noise), or performance (e.g., engine idles rough and stalls).

Refer to the Engine Mechanical and the Engine Performance diagnostic charts, for possible causes and corrections of malfunctions. Refer to **MECHANICAL** and **PERFORMANCE** .

For fuel system diagnosis. Refer to **FUEL SYSTEM** .

Additional tests and diagnostic procedures may be necessary for specific engine malfunctions that cannot be isolated with the Service Diagnosis charts. Information concerning additional tests and diagnosis is provided within the following:

- Cylinder Compression Pressure Test: Refer to **CYLINDER COMPRESSION PRESSURE TEST**.
- Cylinder Combustion Pressure Leakage Test: Refer to **CYLINDER COMBUSTION PRESSURE LEAKAGE TEST**.
- Engine Cylinder Head Gasket Failure Diagnosis: Refer to **DIAGNOSIS AND TESTING - CYLINDER HEAD GASKET**.
- Intake Manifold Leakage Diagnosis: Refer to **DIAGNOSIS AND TESTING - INTAKE MANIFOLD LEAKS**.
- Mechanical Valve Tappet Noise Diagnosis: Refer to **DIAGNOSIS AND TESTING - MECHANICAL VALVE TAPPET NOISE DIAGNOSIS**.
- Engine Oil Leak Inspection: Refer to **ENGINE OIL LEAK INSPECTION**.

PERFORMANCE

CONDITION	POSSIBLE CAUSE	CORRECTION
ENGINE WILL NOT START	1. Weak battery.	1. Test battery. Charge or replace as necessary. Refer to **DIAGNOSIS AND TESTING** .
	2. Corroded or loose battery connections.	2. Clean and tighten battery connections. Apply a coat of light mineral grease to terminals.

	3. Faulty starter.	3. Test starting system. Check for codes. (Refer to **DIAGNOSIS AND TESTING**)
	4. Faulty coil(s) or control unit.	4. Test and replace as needed. (Refer to **CHECKING THE IGNITION COIL OPERATION**)
	5. Incorrect spark plug gap.	5. Set gap. Refer to **SPECIFICATIONS** .
	6. Contamination in fuel system.	6. Clean system and replace fuel filter.
	7. Faulty fuel pump.	7. Test fuel pump and replace as needed. (Refer to **FUEL SYSTEM**)
	8. Incorrect engine timing.	8. Check for a skipped timing belt/chain.
ENGINE STALLS OR IDLES ROUGH	1. Idle speed too low.	1. Test minimum air flow. (Refer to Appropriate Diagnostic Information)
	2. Incorrect fuel mixture.	2. (Refer to Appropriate Diagnostic Information)
	3. Intake manifold leakage.	3. Inspect intake manifold, manifold gasket, and vacuum hoses.
	4. Faulty ignition coil (s).	4. Test and replace as necessary. (Refer to Appropriate Diagnostic Information)
	5. Contamination in Oil Control Valve (OCV).	5. Remove OCV and inspect for contamination. Replace OCV if contaminated.
ENGINE LOSS OF POWER	1. Dirty or incorrectly gapped plugs.	1. Clean plugs and set gap.

	2. Contamination in fuel system.	2. Clean system and replace fuel filter.
	3. Faulty fuel pump.	3. Test and replace as necessary. (Refer to Appropriate Diagnostic Information)
	4. Incorrect valve timing.	4. Correct valve timing.
	5. Leaking cylinder head gasket.	5. Replace cylinder head gasket.
	6. Low compression.	6. Test compression of each cylinder.
	7. Burned, warped, or pitted valves.	7. Replace valves.
	8. Plugged or restricted exhaust system.	8. Perform exhaust restriction test. Install new parts, as necessary. Refer to **DIAGNOSIS AND TESTING** .
	9. Faulty ignition coil (s).	9. Test and replace as necessary. (Refer to **CHECKING THE IGNITION COIL OPERATION**)
ENGINE MISSES ON ACCELERATION	1. Dirty or incorrectly gapped spark plugs.	1. Clean spark plugs and set gap.
	2. Contamination in Fuel System.	2. Clean fuel system and replace fuel filter.
	3. Burned, warped, or pitted valves.	3. Replace valves.
	4. Faulty ignition coil (s).	4. Test and replace as necessary. (Refer to **CHECKING THE IGNITION COIL OPERATION**)
ENGINE MISSES AT	1. Dirty or incorrect	1. Clean spark plugs and set

HIGH SPEED	spark plug gap.	gap.
	2. Faulty ignition coil (s).	2. Test and replace as necessary. (Refer to **CHECKING THE IGNITION COIL OPERATION**
	3. Dirty fuel injector (s).	3. Test and replace as necessary. (Refer to **FUEL SYSTEM**)
	4. Contamination in fuel system.	4. Clean system and replace fuel filter.

MECHANICAL

CONDITION	POSSIBLE CAUSES	CORRECTION
VALVETRAIN NOISE	1. High or low oil level in crankcase.	1. Check and correct engine oil level.
	2. Thin or diluted oil.	2. Change oil to correct viscosity.
	3. Thick oil	3. (a) Change engine oil and filter.
		(b) Run engine to operating temperature.
		(c) Change engine oil and filter again.
	4. Low oil pressure.	4. (a) Check and correct engine oil level.
		(b) Check pressure regulating valve.
	5. Worn cam lobe.	5. Install new camshaft.
	6. Worn tappet bucket.	6. Install new select fit tappet bucket.
	7. Worn valve guides.	7. Replace cylinder head.
	8. Excessive runout of valve seats on valve faces.	8. Grind valve seats and replace valves.

CONNECTING ROD NOISE	1. Insufficient oil supply.	1. Check engine oil level.
	2. Low oil pressure.	2. Check engine oil level. Inspect oil pump relief valve and spring.
	3. Thin or diluted oil.	3. Change oil to correct viscosity.
	4. Thick oil	4. (a) Change engine oil and filter.
		(b) Run engine to operating temperature.
		(c) Change engine oil and filter again.
	5. Excessive bearing clearance.	5. Measure bearings for correct clearance. Repair as necessary.
	6. Connecting rod journal out-of-round.	6. Replace crankshaft or grind surface.
	7. Connecting rod out-of-round.	7. Replace connecting rod.
	8. Misaligned connecting rods.	8. Replace bent connecting rods.
MAIN BEARING NOISE	1. Insufficient oil supply.	1. Check engine oil level.
	2. Low oil pressure.	2. Check engine oil level. Inspect oil pump relief valve and spring.
	3. Thin or diluted oil.	3. Change oil to correct viscosity.
	4. Thick oil	4. (a) Change engine oil and filter.
		(b) Run engine to operating temperature.
		(c) Change engine oil and filter again.
	5. Excessive bearing	5. Measure bearings for

	clearance.	correct clearance. Repair as necessary.
	6. Excessive end play.	6. Check thrust bearing for wear on flanges.
	7. Crankshaft journal out-of-round or worn.	7. Replace crankshaft or grind journals.
	8. Loose flywheel or torque converter.	8. Tighten to correct torque.
OIL PRESSURE DROP	1. Low oil level.	1. Check engine oil level.
	2. Faulty oil pressure sending unit.	2. Install new sending unit.
	3. Low oil pressure.	3. Check sending unit and main bearing oil clearance.
	4. Clogged oil filter.	4. Install new oil filter.
	5. Worn parts in oil pump.	5. Replace balance shaft module.
	6. Thin or diluted oil.	6. Change oil to correct viscosity.
	7. Oil pump relief valve stuck.	7. Remove valve and inspect, clean, or replace.
	8. Excessive bearing clearance.	8. Measure bearings for correct clearance.
OIL LEAKS	1. Misaligned or deteriorated gaskets.	1. Replace gasket(s).
	2. Loose fastener, broken or porous metal part.	2. Tighten, repair or replace the part.
	3. Misaligned or deteriorated cup or threaded plug.	3. Replace as necessary.
OIL CONSUMPTION OR SPARK PLUGS FOULED	1. PCV system malfunction.	1. Check system and repair as necessary. Refer to **VALVE, POSITIVE CRANKCASE VENTILATION (PCV),**

		DIAGNOSIS AND TESTING .
	2. Worn, scuffed or broken rings.	2. Hone cylinder bores. Install new rings.
	3. Carbon in oil ring slots.	3. Install new rings.
	4. Rings fitted too tightly in grooves.	4. Remove rings and check grooves. If groove is not proper width, replace piston.
	5. Worn valve guide (s).	5. Replace cylinder head.
	6. Valve stem seal(s) worn or damaged.	6. Replace seal(s).

CYLINDER COMBUSTION PRESSURE LEAKAGE TEST

The combustion pressure leakage test provides an accurate means for determining engine condition.

Combustion pressure leakage testing will detect:

- Exhaust and intake valve leaks (improper seating).
- Leaks between adjacent cylinders or into water jacket.
- Any causes for combustion/compression pressure loss.

WARNING: Do not remove the pressure cap with the system hot and under pressure because serious burns from coolant can occur.

1. Check the coolant level and fill as required. DO NOT install the pressure cap.
2. Start and operate the engine until it attains normal operating temperature, then turn the engine OFF.
3. Clean spark plug recesses with compressed air.
4. Remove the spark plugs.
5. Remove the oil filler cap.

6. Remove the air cleaner.
7. Calibrate the tester according to the manufacturer's instructions. The shop air source for testing should maintain 483 kPa (70 psi) minimum, 1, 379 kPa (200 psi) maximum, with 552 kPa (80 psi) recommended.
8. Perform the test procedures on each cylinder according to the tester manufacturer's instructions. While testing, listen for pressurized air escaping through the throttle body, tailpipe and oil filler cap opening. Check for bubbles in the coolant.
9. All gauge pressure indications should be equal, with no more than 25% leakage per cylinder.
10. **FOR EXAMPLE:** At 552 kPa (80 psi) input pressure, a minimum of 414 kPa (60 psi) should be maintained in the cylinder.

CYLINDER COMPRESSION PRESSURE TEST

The results of a cylinder compression pressure test can be utilized to diagnose several engine malfunctions.

Ensure the battery is completely charged and the engine starter motor is in good operating condition. Otherwise the indicated compression pressures may not be valid for diagnosis purposes.

1. Check engine oil level and add oil if necessary.
2. Drive the vehicle until engine reaches normal operating temperature. Select a route free from traffic and other forms of congestion, observe all traffic laws, and accelerate through the gears several times briskly.
3. Remove engine cover.
4. Disconnect coil electrical connectors and remove coils.
5. Remove all spark plugs from engine. As spark plugs are being removed, check electrodes for abnormal firing indicators such as fouled, hot, oily, etc. Record cylinder number of spark plug for future reference.
6. Disconnect injector electrical connectors.
7. Insert compression gauge adaptor (special tool #8116, Adapter, Pressure PEP) or the equivalent, into the #1 spark plug hole in cylinder head. Connect the 0-500 psi (Blue) pressure transducer CH7059 with cable adaptors to the DRBIII®. For Special Tool identification, Refer to **SPECIAL TOOLS** .
8. Crank engine until maximum pressure is reached on gauge. Record this

pressure as #1 cylinder pressure.

9. Repeat the previous step for all remaining cylinders.
10. Compression should not be less than 689 kPa (100 psi) and not vary more than 25 percent from cylinder to cylinder.
11. If one or more cylinders have abnormally low compression pressures, repeat the compression test.
12. If the same cylinder or cylinders repeat an abnormally low reading on the second compression test, it could indicate the existence of a problem in the cylinder in question. **The recommended compression pressures are to be used only as a guide to diagnosing engine problems. An engine should not be disassembled to determine the cause of low compression unless some malfunction is present.**

OIL CONSUMPTION TEST AND DIAGNOSIS

The following diagnostic procedures are used to determine the source of excessive internal oil consumption, these procedures and tests apply to vehicles with 50, 000 miles or less.

NOTE: Engine oil consumption may be greater than normal during engine break-in. Repairs should be delayed until vehicle has been driven at least 7, 500 miles.

Severe service (high ambient temperature, short trips, heavy loading, trailer towing, taxi, off-road, or law enforcement use) may result in greater oil consumption than normal.

Sustained high speed driving and high engine RPM operation may result in increased oil consumption.

Failure to comply with the recommended oil type and viscosity rating, as outlined in the owner's manual, may impact oil economy as well as fuel economy.

Oil consumption may increase with vehicle age and mileage due to normal engine wear.

NOTE: Because a few drops of external oil leakage per mile can quickly account for the loss of one quart of oil in a few

hundred miles, be certain there is no external engine oil leaks present.

- **Oil leakage is not the same as oil consumption and all external leakage must be eliminated before any action can be taken to verify and/or correct oil consumption complaints.**
- **Verify that the engine has the correct oil level dipstick and dipstick tube installed.**
- **Verify that the engine is not being run in an overfilled condition. Check the oil level 15 minutes after a hot shutdown with the vehicle parked on a level surface. In no case should the level be above MAX or the FULL mark on the dipstick.**

OIL CONSUMPTION TEST

1. Check the oil level at least 15 minutes after a hot shutdown.
2. If the oil level is low, top off with the proper viscosity and API service level engine oil. Add one bottle of MOPAR® 4-In-1 Leak Detection Dye into the engine oil.
3. Tamper proof the oil pan drain plug, oil filter, dipstick and oil fill cap.
4. Record the vehicle mileage.
5. Instruct the customer to drive the vehicle as usual.
6. Ask the customer to return to the servicing dealer after accumulating 500 miles, Check the oil level at least 15 minutes after a hot shutdown. If the oil level is half way between the "FULL" and "ADD" mark continue with the next step.
7. Using a black light, re-check for any external engine oil leaks, repair as necessary, if no external engine oil leaks are present, continue with oil consumption diagnosis.

OIL CONSUMPTION DIAGNOSIS

1. Check the positive crankcase ventilation (PCV) system. Make sure the system is not restricted and the PCV valve has the correct part number and correct vacuum source (18-20 in. Hg at idle below 3000 ft. above sea level is considered normal).
2. Perform a cylinder compression test and cylinder leak down test using the standard leak down gauge following manufacturers suggested best practices.

NOTE: Verify the spark plugs are not oil saturated. If the spark plugs are oil saturated and compression is good it can be assumed the valve seals or valve guides are at fault.

3. If one or more cylinders have more than 15% leak down further engine tear down and inspection will be required.

TOP 19 REASONS THAT MAY LEAD TO ENGINE OIL CONSUMPTION

1. **Tapered and Out-of-Round Cylinders**

   The increased piston clearances permit the pistons to rock in the worn cylinders. While tilted momentarily, an abnormally large volume of oil is permitted to enter on one side of the piston. The rings, also tilted in the cylinder, permit oil to enter on one side. Upon reversal of the piston on each stroke, some of this oil is passed into the combustion chamber.

2. **Distorted Cylinders**

   This may be caused by unequal heat distribution or unequal tightening of cylinder head bolts. This condition presents a surface which the rings may not be able to follow completely. In this case, there may be areas where the rings will not remove all of the excess oil. When combustion takes place, this oil will be burned and cause high oil consumption.

3. **Improper operation of "PCV "system**

   The main purpose of the Positive Crankcase Ventilation (PCV) valve is to recirculate blow-by gases back from the crankcase area through the engine to consume unburned hydrocarbons. The PCV system usually has a one way check valve and a make up air source. The system uses rubber hoses that route crankcase blow by gases to the intake manifold. Vacuum within the engine intake manifold pulls the blow by gases out of the crankcase into the combustion chamber along with the regular intake air and fuel mixture.

   The PCV system can become clogged with sludge and varnish deposits and trap blow by gases in the crankcase. This degrades the oil, promoting additional formation of deposit material. If left uncorrected, the result is plugged oil rings, oil consumption, rapid ring wear due to sludge buildup,

ruptured gaskets and seals due to crankcase pressurization.

4. **Worn Piston Ring Grooves**

   For piston rings to form a good seal, the sides of the ring grooves must be true and flat - not flared or shouldered. Piston rings in tapered or irregular grooves will not seal properly and, consequently, oil will pass around behind the rings into the combustion chamber.

5. **Worn, Broken or Stuck Piston Rings**

   When piston rings are broken, worn or stuck to such an extent that the correct tension and clearances are not maintained, this will allow oil to be drawn into the combustion chamber on the intake stroke and hot gases of combustion to be blown down the cylinder past the piston on the power stroke. All of these conditions will result in burning and carbon build up of the oil on the cylinders, pistons and rings.

6. **Cracked or Broken Ring Lands**

   Cracked or broken ring lands prevent the rings from seating completely on their sides and cause oil pumping. This condition will lead to serious damage to the cylinders as well as complete destruction of the pistons and rings. Cracked or broken ring lands cannot be corrected by any means other than piston replacement.

7. **Worn Valve Stems and Guides**

   When wear has taken place on valve stems and valve guides, the vacuum in the intake manifold will draw oil and oil vapor between the intake valve stems and guides into the intake manifold and then into the cylinder where it will be burned.

8. **Bent or Misaligned Connecting Rods**

   Bent or misaligned connecting rods will not allow the pistons to ride straight in the cylinders. This will prevent the pistons and rings from forming a proper seal with the cylinder walls and promote oil consumption. In addition, it is possible that a bearing in a bent connect rod will not have uniform clearance on the connecting rod wrist pin. Under these conditions,

the bearing will wear rapidly and throw off an excessive amount of oil into the cylinder.

9. **Fuel Dilution**

   If raw fuel is allowed to enter the lubrication system, the oil will become thinner and more volatile and will result in higher oil consumption. The following conditions will lead to higher oil consumption;

   - Excess fuel can enter and mix with the oil via a leaking fuel injector
   - Gasoline contaminated with diesel fuel
   - Restricted air intake
   - Excessive idling

10. **Contaminated Cooling Systems**

    Corrosion, rust, scale, sediment or other formations in the water jacket and radiator will prevent a cooling system from extracting heat efficiently. This is likely to cause cylinder distortion thus leading to higher oil consumption.

11. **Oil Viscosity**

    The use of oil with a viscosity that is too light may result in high oil consumption. Refer to the vehicle owner's manual for the proper oil viscosity to be used under specific driving conditions and/or ambient temperatures.

12. **Dirty Engine Oil**

    Failure to change the oil and filter at proper intervals may cause the oil to be so dirty that it will promote accumulation of sludge and varnish and restrict oil passages in the piston rings and pistons. This will increase oil consumption; dirty oil by nature is also consumed at a higher rate than clean oil.

13. **Crankcase Overfull**

    Due to an error in inserting the oil dip stick so that it does not come to a seat on its shoulder, a low reading may be obtained. Additional oil may be added to make the reading appear normal with the stick in this incorrect position which will actually make the oil level too high. If the oil level is so high that

the lower ends of the connecting rods touch the oil in the oil pan excessive quantities of oil will be thrown on the cylinder walls and some of it will work its way up into the combustion chamber.

14. **Excessively High Oil Pressure**

    A faulty oil pressure relief valve may cause the oil pressure to be too high. The result will be that the engine will be flooded with an abnormally large amount of oil in a manner similar to that which occurs with worn bearings. This condition may also cause the oil filter to burst.

15. **Aftermarket Performance Chips and Modification**

    Increasing performance through the use of performance/power enhancement products to a stock or factory engine will increase the chance of excessive oil consumption.

16. **Lugging Engine**

    Lugging is running the engine at a lower RPM in a condition where a higher RPM (more power/torque) should be implemented. Especially susceptible on vehicles equipped with a manual transmission. This driving habit causes more stress loading on the piston and can lead to increases in engine oil consumption.

17. **Turbocharged Engines**

    There is a possibility for PCV "push-over" due to higher crankcase pressure (as compared to naturally aspirated engines) which is normal for turbocharged engines. This condition causes varying amounts of engine oil to enter the intake manifold, charge air cooler and associated plumbing to and from the charge air cooler, also a leaking turbocharger seal will draw oil into the combustion chamber where it will burn (blue smoke from tail pipe may be present) and form carbon deposits which contribute to further oil consumption as they interfere with proper engine function.

18. **Restricted Air Intake**

    Excessive restriction in the air intake system will increase engine vacuum and can increase oil consumption, an extremely dirty air filter would be one

example of this situation.

19. **Intake Manifold port seals**

    Engines that have a "V" configuration and a "wet valley" (3.3/3.8L) could draw oil into the intake ports due to improper sealing between the intake manifold ports and cylinder head. Causes may include improper torque of intake manifold bolts, corrosion (aluminum intake manifold) and or warped sealing surface.

ENGINE OIL LEAK INSPECTION

Begin with a thorough visual inspection of the engine, particularly at the area of the suspected leak. If an oil leak source is not readily identifiable, the following steps should be followed:

1. Do not clean or degrease the engine at this time because some solvents may cause rubber to swell, temporarily stopping the leak.
2. Add an oil soluble dye (use as recommended by manufacturer). Start the engine and let idle for approximately 15 minutes. Check the oil dipstick to make sure the dye is thoroughly mixed as indicated with a bright yellow color under a black light.
3. Using a black light, inspect the entire engine for fluorescent dye, particularly at the suspected area of oil leak. If the oil leak is found and identified, repair as necessary.
4. If dye is not observed, drive the vehicle at various speeds for approximately 24 km (15 miles), and repeat inspection.
5. **If the oil leak source is not positively identified at this time** , proceed with the air leak detection test method as follows:
    - Disconnect the fresh air hose (make-up air) at the cylinder head cover and plug or cap the nipple on the cover.
    - Remove the PCV valve hose from the cylinder head cover. Cap or plug the PCV valve nipple on the cover.
    - Attach an air hose with pressure gauge and regulator to the dipstick tube.

CAUTION: Do not subject the engine assembly to more than 20.6 kPa (3 PSI) of test pressure.

- Gradually apply air pressure from 1 psi to 2.5 psi maximum while applying soapy water at the suspected source. Adjust the regulator to the suitable test pressure that provides the best bubbles which will pinpoint the leak source. If the oil leak is detected and identified, repair per service information procedures.
- If the leakage occurs at the crankshaft rear oil seal area, refer to **INSPECTION FOR REAR SEAL AREA LEAKS** .

6. If no leaks are detected, turn off the air supply. Remove the air hose, all plugs, and caps. Install the PCV valve and fresh air hose (make-up air). Proceed to next step.
7. Clean the oil off the suspect oil leak area using a suitable solvent. Drive the vehicle at various speeds approximately 24 km (15 miles). Inspect the engine for signs of an oil leak by using a black light.

NOTE: If oil leakage is observed at the dipstick tube to block location; remove the tube, clean and reseal using Mopar® Stud AND Bearing Mount (press fit tube applications only), and for O-ring style tubes, remove tube and replace the O-ring seal.

INSPECTION FOR REAR SEAL AREA LEAKS

Since it is sometimes difficult to determine the source of an oil leak in the rear seal area of the engine, a more involved inspection is necessary. The following steps should be followed to help pinpoint the source of the leak.

If the leakage occurs at the crankshaft rear oil seal area:

1. Disconnect the battery.
2. Raise the vehicle.
3. Remove torque converter or clutch housing cover and inspect rear of block for evidence of oil. Use a black light to check for the oil leak. If a leak is present in this area, remove transmission for further inspection.
   a. Circular spray pattern generally indicates seal leakage or crankshaft damage.
   b. Where leakage tends to run straight down, possible causes are a porous block, oil gallery cup plug, bedplate to cylinder block mating surfaces and seal bore. See appropriate repair procedures for these items.

4. If no leaks are detected, pressurize the crankcase as previously described.

CAUTION: Do not exceed 20.6 kPa (3 psi).

5. If the leak is not detected, very slowly turn the crankshaft and watch for leakage. If a leak is detected between the crankshaft and seal while slowly turning the crankshaft, it is possible the crankshaft seal surface is damaged. The seal area on the crankshaft could have minor nicks or scratches that can be polished out with emery cloth.

CAUTION: Use extreme caution when crankshaft polishing is necessary to remove minor nicks and scratches. The crankshaft seal flange is especially machined to complement the function of the rear oil seal.

6. For bubbles that remain steady with shaft rotation, no further inspection can be done until disassembled.
7. After the oil leak root cause and appropriate corrective action have been identified, replace component(s) as necessary.

STANDARD PROCEDURE

DUST COVERS AND CAPS

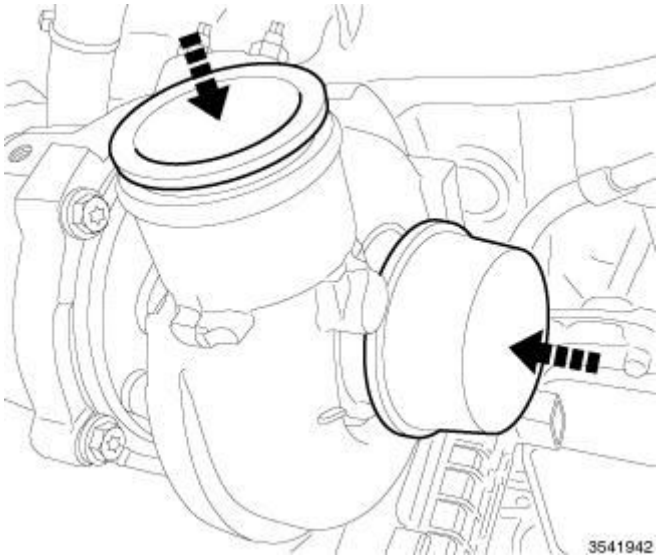

Fig. 2: Covers/Caps
Courtesy of CHRYSLER GROUP, LLC

Due to the high amounts of failures caused by dust, dirt, moisture and other foreign debris being introduced to the engine during service. Covers or caps are needed to reduce the possible damage that can be caused or created.

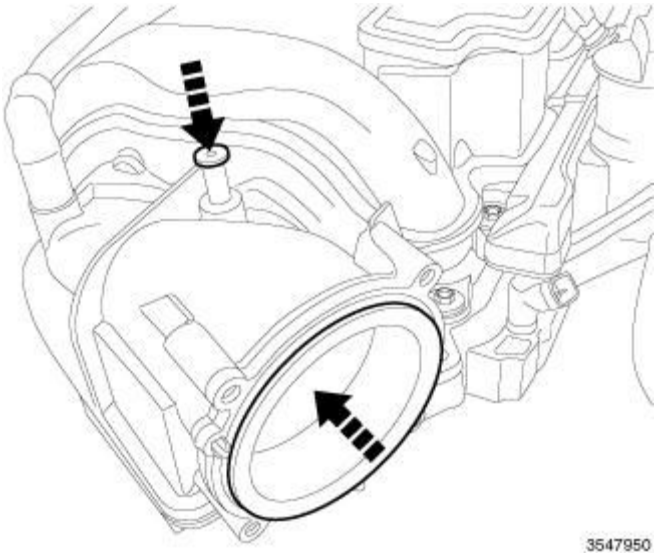

Fig. 3: Opening Cover
Courtesy of CHRYSLER GROUP, LLC

Covers over openings will reduce any possibilities for foreign materials to enter the engine systems. Using miller tool (special tool #10368, Set, Universal Protective Cap), Select the appropriated cover needed to the procedure.

ENGINE GASKET SURFACE PREPARATION

Fig. 4: Proper Tool Usage For Surface Preparation
Courtesy of CHRYSLER GROUP, LLC

To ensure engine gasket sealing, proper surface preparation must be performed, especially with the use of aluminum engine components and multi-layer steel cylinder head gaskets.

Never use the following to clean gasket surfaces:

- Metal scraper (1).
- Abrasive pad or paper to clean cylinder block and head.
- High speed power tool with an abrasive pad or a wire brush (2).

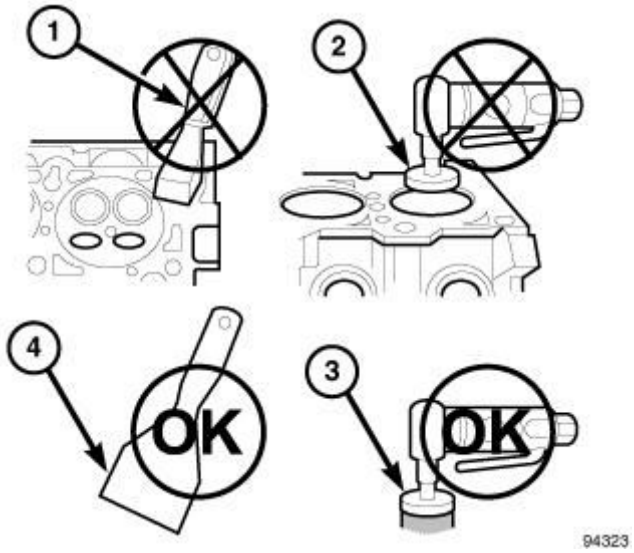

Fig. 5: Proper Tool Usage For Surface Preparation
Courtesy of CHRYSLER GROUP, LLC

NOTE: Multi-Layer Steel (MLS) head gaskets require a scratch free sealing surface.

Only use the following for cleaning gasket surfaces:

- Solvent or a commercially available gasket remover
- Plastic or wood scraper (4).
- High speed power tool with a plastic bristle brush style disc (3).

Sealing surfaces must be free of grease or oil residue. Clean surfaces with Mopar® brake parts cleaner (or equivalent).

REPAIR OF DAMAGED OR WORN THREADS

Damaged or worn threads (excluding spark plug and camshaft bearing cap

attaching threads) can be repaired. Essentially, this repair consists of drilling out worn or damaged threads, tapping the hole with a special Heli-Coil Tap, (or equivalent) and installing an insert into the tapped hole. This brings the hole back to its original thread size.

CAUTION: Be sure that the tapped holes maintain the original center line.

Heli-Coil tools and inserts are readily available from automotive parts jobbers.

HYDROSTATIC LOCKED ENGINE

When an engine is suspected to be hydrostatically locked, regardless of what caused the problem, the following steps should be used.

CAUTION: DO NOT use starter motor to rotate the engine, severe damage may occur.

1. Inspect air cleaner, induction system and intake manifold to insure system is dry and clear of foreign material.
2. Remove negative battery cable.
3. Place a shop towel around the spark plugs when removing them from the engine. This will catch any fluid that may possibly be in the cylinder under pressure.
4. With all spark plugs removed, rotate engine crankshaft using a breaker bar and socket.
5. Identify the fluid in the cylinder(s) (i.e., coolant, fuel, oil or other).
6. Make sure all fluid has been removed from the cylinders. Inspect engine for damage (i.e., connecting rods, pistons, valves, etc.)
7. Repair engine or components as necessary to prevent this problem from re-occurring.

CAUTION: Squirt approximately one teaspoon of oil into the cylinders, rotate engine to lubricate the cylinder walls to prevent damage on restart.

8. Install new spark plugs.
9. Drain engine oil and remove oil filter.

10. Install a new oil filter.
11. Fill engine with specified amount of approved oil.
12. Connect negative battery cable.
13. Start engine and check for any leaks.

FORM-IN-PLACE GASKETS AND SEALERS

NOTE: All of the sealants mentioned below are not used on every engine, they are listed as general reference guide. See appropriate service information for specific sealer usage.

There are numerous places where form-in-place gaskets are used on the engine. Care must be taken when applying form-in-place gaskets to assure obtaining the desired results.**Do not use form-in-place gasket material unless specified.** Bead size, continuity, and location are of great importance. Too thin a bead can result in leakage while too much can result in spill-over which can break off and obstruct fluid feed lines. A continuous bead of the proper width is essential to obtain a leak-free gasket. All sealing surfaces that use form-in-place gaskets and sealers **must** free of grease or oil. Surfaces should be cleaned with Mopar® brake parts cleaner prior to sealer application. After the sealer is applied, the parts should be assembled in no more than 10 minutes.

There are numerous types of form-in-place gasket materials that are used in the engine area. Mopar® Engine RTV GEN II, Mopar® ATF-RTV, and Mopar® Gasket Maker gasket materials, each have different properties and can not be used in place of the other.

MOPAR® ENGINE RTV GEN II is used to seal components exposed to engine oil. This material is a specially designed black silicone rubber RTV that retains adhesion and sealing properties when exposed to engine oil. Moisture in the air causes the material to cure. This material is available in three ounce tubes and has a shelf life of one year. After one year this material will not properly cure. Always inspect the package for the expiration date before use.

MOPAR® ATF RTV is a specifically designed black silicone rubber RTV that retains adhesion and sealing properties to seal components exposed to automatic transmission fluid, engine coolants, and moisture. This material is available in three ounce tubes and has a shelf life of one year. After one year this material

will not properly cure. Always inspect the package for the expiration date before use.

MOPAR® GASKET MAKER is an anaerobic type gasket material. The material cures in the absence of air when squeezed between two metallic surfaces. It will not cure if left in the uncovered tube. The anaerobic material is for use between two machined surfaces. Do not use on flexible metal flanges.

MOPAR® BED PLATE SEALANT is a unique (green-in-color) anaerobic type gasket material that is specially made to seal the area between the bed plate and cylinder block without disturbing the bearing clearance or alignment of these components. The material cures slowly in the absence of air when torqued between two metallic surfaces, and will rapidly cure when heat is applied.

MOPAR® GASKET SEALANT is a slow drying, permanently soft sealer. This material is recommended for sealing threaded fittings and gaskets against leakage of oil and coolant. Can be used on threaded and machined parts under all temperatures. This material also will prevent corrosion. Mopar® Gasket Sealant is available in a 13 oz. aerosol can or 4oz./16 oz. can w/applicator.

SEALER APPLICATION

Mopar® Gasket Maker material should be applied sparingly 1 mm (0.040 in.) diameter or less of sealant to one gasket surface. Be certain the material surrounds each mounting hole. Excess material can easily be wiped off. Components should be torqued in place within 15 minutes. The use of a locating dowel is recommended during assembly to prevent smearing material off the location.

Mopar® Engine RTV GEN II or ATF RTV gasket material should be applied in a continuous bead approximately 3 mm (0.120 in.) in diameter. All mounting holes must be circled. For corner sealing and "T" joint locations, a 3.17 or 6.35 mm (1/8 or 1/4 in.) drop is placed in the center of the gasket contact area. Uncured sealant may be removed with a shop towel. Components should be torqued in place while the sealant is still wet to the touch (within 10 minutes). The usage of a locating dowel is recommended during assembly to prevent smearing material off the location.

Mopar® Gasket Sealant in an aerosol can should be applied using a thin, even coat sprayed completely over both surfaces to be joined, and both sides of a

gasket. Then proceed with assembly. Material in a can w/applicator can be brushed on evenly over the sealing surfaces.

CORE/GALLERY PLUGS

CYLINDER HEAD CORE PLUGS

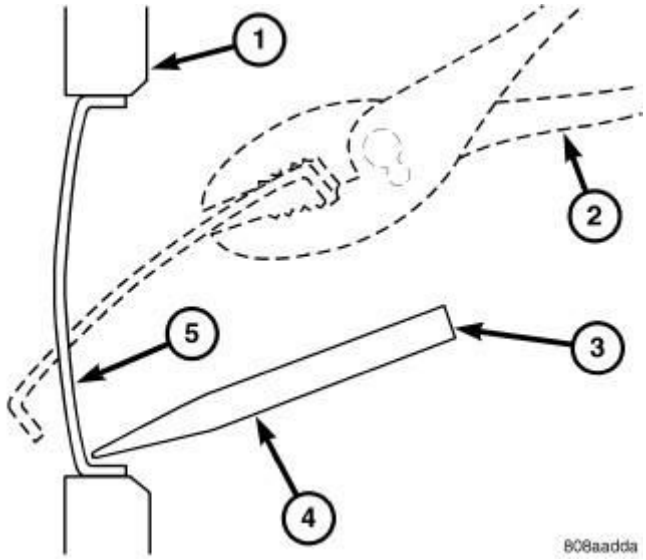

Fig. 6: Core Hole Plug Removal
Courtesy of CHRYSLER GROUP, LLC

Using a blunt tool (3) such as a drift and a hammer, strike the bottom edge of the cup plug (5). With the cup plug rotated, grasp firmly with pliers or other suitable tool (2) and remove plug (5).

CAUTION: Do not drive cup plug into the casting as restricted cooling can result and cause serious engine problems.

Thoroughly clean inside of cup plug hole in cylinder head. Be sure to remove old sealer. Lightly coat inside of cup plug hole with Mopar® Stud and Bearing Mount (or equivalent). Make certain the new plug is cleaned of all oil or grease. Using proper drive plug, drive plug into hole so that the sharp edge of the plug is at least 0.5 mm (0.020 in.) inside the lead-in chamfer.

It is not necessary to wait for curing of the sealant. The cooling system can be refilled and the vehicle placed in service immediately.

MEASURING BEARING CLEARANCE USING PLASTIGAGE

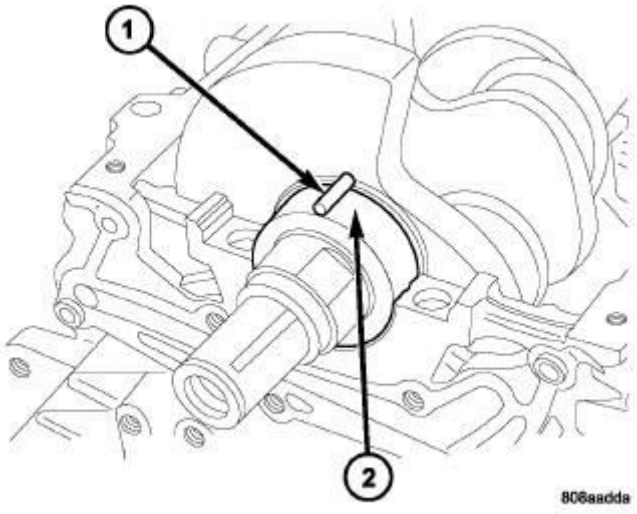

Fig. 7: Plastigage Placed In Lower Shell-Typical
Courtesy of CHRYSLER GROUP, LLC

Engine crankshaft bearing clearances can be determined by use of Plastigage or equivalent. The following is the recommended procedure for the use of Plastigage:

1. Remove oil film from surface to be checked. Plastigage is soluble in oil.
2. Place a piece of Plastigage (1) across the entire width of the journal. (In addition, suspected areas can be checked by placing the Plastigage in the suspected area). Torque the bearing cap bolts of the bearing being checked to the proper specifications.
3. Remove the bearing cap and compare the width of the flattened Plastigage with the scale provided on the package. Locate the band closest to the same width. This band shows the amount of clearance. Differences in readings between the ends indicate the amount of taper present. Record all readings taken. Compare clearance measurements to specs found in engine specifications. Refer to **SPECIFICATIONS** . **Plastigage generally is accompanied by two scales. One scale is in inches, the other is a metric scale.**

   NOTE: Plastigage is available in a variety of clearance ranges. Use the most appropriate range for the specifications you are checking.

4. Install the proper crankshaft bearings to achieve the specified bearing

clearances.

SPECIFICATIONS

2.4L ENGINE

GENERAL SPECIFICATIONS

DESCRIPTION	SPECIFICATION	
	Metric	Standard
Type	In-Line OHV, DOHC	
Number of Cylinders	4	
Firing Order	1-3-4-2	
Compression Ratio	10.5:1	
Displacement	2.4 Liters	146.5 cu. in.
Bore	88 mm	3.465 in.
Stroke	97 mm	3.819 in.
Compression Pressure	1172 - 1551 kPa	170 - 225 psi
Max. Variation Between Cylinders	25%	

CYLINDER BLOCK

DESCRIPTION	SPECIFICATION	
	Metric	Standard
Material	Cast Aluminum	
Cylinder Bore Diameter		
A	88.000 - 88.010 mm	3.4645 - 3.4649 in.
B	88.010 - 88.020 mm	3.4649 - 3.4653 in.
C	88.020 - 88.030 mm	3.4653 - 3.4657 in.
Cylinder Bore Out-of-Round (Max.)	0.020 mm	0.0008 in.
Cylinder Bore Diameter Taper (Max.)	0.028 mm	0.001 in.
Main Bearing Bore Diameter		
1	56.000 - 56.006 mm	2.2047 - 2.2049 in.
2	56.006 - 56.012 mm	2.2049 - 2.2051 in.
3	56.012 - 56.018 mm	2.2051 - 2.2054 in.

Main Bearing Bore Diameter Taper (Max.)	0.0082 mm	0.0003 in.

PISTONS

DESCRIPTION	SPECIFICATION	
	Metric	Standard
Piston Diameter		
A	87.995 - 88.015 mm	3.4644 - 3.4652 in.
B	88.005 - 88.025 mm	3.4648 - 3.4656 in.
C	88.015 - 88.035 mm	3.4652 - 3.4659 in.
Clearance to Bore	(-0.015) - 0.015 mm	(-0.0006) - 0.0006 in.
Weight	302 - 312 grams	10.65 - 11.00 oz.
Land Clearance (Diametrical)	0.60 - 0.73 mm	0.0236 - 0.0287 in.
Piston Length	51.5 mm	2.028 in.
Piston Ring Groove Depth No. 1	3.51 - 3.68 mm	0.1382 - 0.0256 in.
Piston Ring Groove Depth No. 2	4.05 - 4.25 mm	0.1594 - 0.1673 in.
Piston Ring Groove Depth No. 3	2.70 - 2.90 mm	0.1063 - 0.1142 in.

PISTON RINGS

DESCRIPTION	SPECIFICATION	
	Metric	Standard
Ring Gap-Top Compression Ring	0.15 - 0.30 mm	0.0059 - 0.0118 in.
Wear Limit	0.8 mm	0.031 in.
Ring Gap-2nd Compression Ring	0.30 - 0.45 mm	0.0118 - 0.0177 in.
Wear Limit	0.8 mm	0.031 in.
Ring Gap-Oil Control Steel Rails	0.20 - 0.70 mm	0.0079 - 0.0276 in.
Wear Limit	1.0 mm	0.039 in.
Ring Side Clearance-Compression Rings	0.03 - 0.07 mm	0.1182 - 0.0028 in.

Wear Limit	0.10 mm	0.004 in.
Ring Side Clearance-Oil Ring Pack	0.06 - 0.15 mm	0.0024 - 0.0059 in.
Ring Width-Top Compression Ring	2.95 - 3.25 mm	0.1161 - 0.1280 in.
Ring Width-2nd Compression Ring	3.45 - 3.75 mm	0.1358 - 0.1476 in.
Ring Width-Oil Ring Pack	2.30 - 2.60 mm	0.0906 - 0.1024 in.
Ring Thickness-Top Compression Ring	1.17 - 1.19 mm	0.0461 - 0.0469 in.
Ring Thickness-2nd Compression Ring	1.17 - 1.19 mm	0.0461 - 0.0469 in.
Ring Thickness-Oil Ring Pack	1.88 - 1.95 mm	0.0740 - 0.0768 in.

CONNECTING ROD

DESCRIPTION	SPECIFICATION	
	Metric	Standard
Bearing Clearance	0.032 - 0.060 mm	0.0012 - 0.0023 in.
Wear Limit	0.070 mm	0.0027 in.
Bore Diameter-Piston Pin	20.974 - 20.985 mm	0.8257 - 0.8261 in.
Bore Diameter-Crankshaft End	51 - 51.015 mm	2.0078 - 2.0084 in.
Side Clearance	0.1 - 0.25 mm	0.0039 - 0.00098 in.
Wear Limit	0.27 mm	0.0106 in.
Weight-Total (Less Bearing)	484 grams	17.07 oz.

CRANKSHAFT

DESCRIPTION	SPECIFICATION	
	Metric	Standard
Connecting Rod Journal Diameter		
Journal Grade		
1	47.966 - 47.972 mm	1.8884 - 1.8886 in.
2	47.960 - 47.966 mm	1.8884 - 1.8881 in.
3	47.954 - 47.960 mm	1.8879 - 1.8881 in.

Rod Journal- Taper (Max)	0.005 mm	0.0001 in.
Main Bearing Journal Diameter		
Journal Grade		
0	51.985 - 51.988 mm	2.0466 - 2.0467 in.
1	51.982 - 51.985 mm	2.0465 - 2.0466 in.
2	51.979 - 51.982 mm	2.0464 - 2.0465 in.
3	51.976 - 51.979 mm	2.0462 - 2.0464 in.
4	51.973 - 51.976 mm	2.0461 - 2.0462 in.
Journal Out-of-Round (Max.)	0.005 mm	0.0001 in.
Journal Taper (Max.)	0.006 mm	0.0002 in.
End Play	0.05 - 0.25 mm	0.0019 - 0.0098 in.
Wear Limit	0.30 mm	0.0118 in.
Main Bearing Diametrical Clearance	0.028 - 0.048 mm	0.0011 - 0.0018 in.
Main Bearing Diametrical Clearance (Max)	0.058 mm	0.0022 in.

CYLINDER HEAD CAMSHAFT BEARING BORE DIAMETER

DESCRIPTION	SPECIFICATION	
	Metric	**Standard**
Cam Bearing Bore		
Front Intake	30.000 - 30.021 mm	1.1810 - 1.1819 in.
Front Exhaust	40.000 - 40.024 mm	1.5747 - 1.5756 in.
Cam Bearing Bore No. 1-4	24.000 - 24.021 mm	0.9448 - 0.9457 in.

CAMSHAFT

DESCRIPTION	SPECIFICATION	
	Metric	**Standard**
Cam Journal Diameter		
Front Intake Cam	29.964 - 29.980 mm	1.1797 - 1.1803 in.
Front Exhaust Cam	35.984 - 36.000 mm	1.4166 - 1.4173 in.
Cam Journal Diameter No. 1-4	23.954 - 23.970 mm	0.943 - 0.944 in.
Bearing Clearance - Diametrical		

Front Intake Journal	0.020 - 0.057 mm	0.0008 - 0.0022 in.
Front Exhaust Journal	0.019 - 0.051 mm	0.0007 - 0.0020 in.
All Others	0.020 - 0.067 mm	0.0008 - 0.0026 in.
End Play	0.11 - 0.25 mm	0.004 - 0.009 in.
Max Lift @ 0.2mm (0.007 in.) lash		
Intake	9.2 mm	0.362 in.
Max Lift @ 0.28mm (0.011 in.) lash		
Exhaust	8.42 mm	0.331 in.
Intake Valve Timing w/ VVT in lock-pin position*		
Closes (ABDC)	49.3°	
Opens (ATDC)	10.3°	
Duration	219°	
Exhaust Valve Timing w/ VVT in lock-pin position*		
Closes (BTDC)	8.45°	
Opens (BBDC)	45°	
Duration	216.55°	
Valve Overlap @ 0.5mm (0.019 in.) w/ VVT in lock-pin position	18.75°	
* All reading in crankshaft degrees at 0.5 mm (0.019 in.) valve lift.		

CYLINDER HEAD

DESCRIPTION	SPECIFICATION	
	Metric	**Standard**
Material	Cast Aluminum - Heat treated	
Gasket Thickness (Compressed)	0.54 mm	0.021 in.
Valve Tappet Bore I.D.	32.000 - 32.025 mm	1.2598 - 1.2608 in.
Valve Tappet O.D.	31.964 - 31.980 mm	1.2584 - 1.2590 in.

VALVE SEAT

DESCRIPTION	SPECIFICATION	
	Metric	**Standard**
Angle	44.75° - 45.10°	
Seat Outer Diameter - Intake	34.45 - 34.61 mm	1.3562 - 1.3625 in.

Seat Outer Diameter - Exhaust	28.04 - 28.20 mm	1.1039 - 1.1102 in.
Runout (Max.)	0.05 mm	0.002 in.
Valve Seat Width		
Intake	1.16 - 1.46 mm	0.0456 - 0.0574 in.
Service Limit	2.0 mm	0.079 in.
Exhaust	1.35 - 1.65 mm	0.0531 - 0.0649 in.
Service Limit	2.5 mm	0.098 in.

VALVE GUIDE

DESCRIPTION	SPECIFICATION	
	Metric	Standard
Diameter I.D.	5.500 - 5.518 mm	0.2165 - 0.2172 in.
Guide Bore Diameter	10.983 - 11.001 mm	0.432 - 0.4331 in.
Guide Height (spring seat to guide tip)	14.6 - 15.2 mm	0.5748 - 0.5984 in.

VALVES

DESCRIPTION	SPECIFICATION	
	Metric	Standard
Face Angle - Intake and Exhaust	45.25° - 45.75°	
Head Diameter - Intake	34.9 - 35.1 mm	1.374 - 1.3818 in.
Head Diameter - Exhaust	28.9 - 29.1 mm	1.1377 - 1.1456 in.
Valve Lash		
Intake	0.17 - 0.23 mm	0.006 - 0.009 in.
Exhaust	0.27 - 0.33 mm	0.010 - 0.012 in.
Valve Length (Overall)		
Intake	113.18 mm	4.455 in.
Exhaust	105.887 mm	4.168 in.
Valve Stem Diameter		
Intake	5.465 - 5.480 mm	0.2151 - 0.2157 in.
Exhaust	5.458 - 5.470 mm	0.2148 - 0.2153 in.

VALVE MARGIN

DESCRIPTION	SPECIFICATION	
	Metric	Standard
Intake	0.672 mm	0.0264 in.
Exhaust	0.744 mm	0.02929 in.

VALVE STEM TIP

DESCRIPTION	SPECIFICATION	
	Metric	Standard
Intake	48.04 mm	1.891 in.
Exhaust	47.99 mm	1.889 in.

VALVE STEM TO GUIDE CLEARANCE

DESCRIPTION	SPECIFICATION	
	Metric	Standard
Intake	0.020 - 0.053 mm	0.0008 - 0.0021 in.
Max. Allowable	0.076 mm	0.003 in.
Exhaust	0.030 - 0.060 mm	0.0012 - 0.0024 in.
Max. Allowable	0.101 mm	0.004 in.

VALVE SPRINGS

DESCRIPTION	SPECIFICATION	
	Metric	Standard
Free Length (Approx.)	47.0 mm	1.850 in.
Nominal Force (Valve Closed)	179.5 N ± 9 @ 35.0 mm	40.35 lbs. @ 1.38 in.
Nominal Force (Valve Open)	364.8 N ± 17 N @ 29.25 mm	82.01 lbs. ± 3.82 lbs. @ 1.152 in.
Installed Height	35.00 mm	1.378 in.
Number of Coils	8.5 ± 0.1	
Wire Diameter	2.90 mm ± 0.03	0.114 in ± 0.001 in.

OIL PRESSURE

DESCRIPTION	SPECIFICATION	
	Metric	Standard
At Curb Idle Speed*	25 kPa	4 psi min.

At 3000 RPM	170 - 550 kPa	25 - 80 psi

CAUTION:
***If pressure is ZERO at curb idle, DO NOT run engine at 3000 RPM.**

TORQUE

DESCRIPTION	N.m	Ft. Lbs.	In. Lbs.
Balance Shaft Module	Refer to **PUMP, ENGINE OIL, INSTALLATION**		
Bell Housing-Bolts	48	35	-
Camshaft Bearing Cap-Bolts			
M6 Bolts	12	-	106
M8 Bolts	30	22	-
Coils	8	-	71
Connecting Rod Cap-Bolts	20 + 90°	15 + 90°	-
Coolant Temperature Sender	18	13	-
Crankshaft Main Bearing Cap-Bolts	Refer to **INSTALLATION**		
Crankshaft Damper-Bolt	210	155	-
Cylinder Head-Bolts	Refer to **INSTALLATION**		
Cylinder Head Cover-Bolts	Refer to **COVER(S), CYLINDER HEAD, INSTALLATION**		
Engine Support Bracket-Bolts	48	36	-
Exhaust Manifold-Bolts	34	25	-
Exhaust Manifold Heat Shield-Bolts			
M6x25mm Bolts	7	-	62
M6x70mm Bolts	9	-	80
Flex Plate to Crankshaft-Bolts	29 + 51°	22 + 51°	-
Intake Manifold-Bolts	24	18	-
Ladder Frame	22	16	-
Oil Cooler Connector Bolt	49	36	-
Oil Filter	14	10	-
Oil Filter Nipple	49	36	-
Oil Jet Fastener	12	-	106
Oil Pan-Bolts			
M6 Bolts	9	-	80

M8 Bolts	24	18	-
Oil Pan Drain-Plug	27	20	-
Oil Pressure Switch	8	-	71
PCV Valve	5	-	44
Phaser to Camshaft-Bolt	75	55	-
Spark Plugs	27	20	239
Timing Chain Cover			
M6 Bolts	9	-	80
M8 Bolts	26	19	-
Timing Chain Tensioner Assembly-Bolts	10	-	89
Timing Chain Guides	12	-	106

REMOVAL

ENGINE COVER

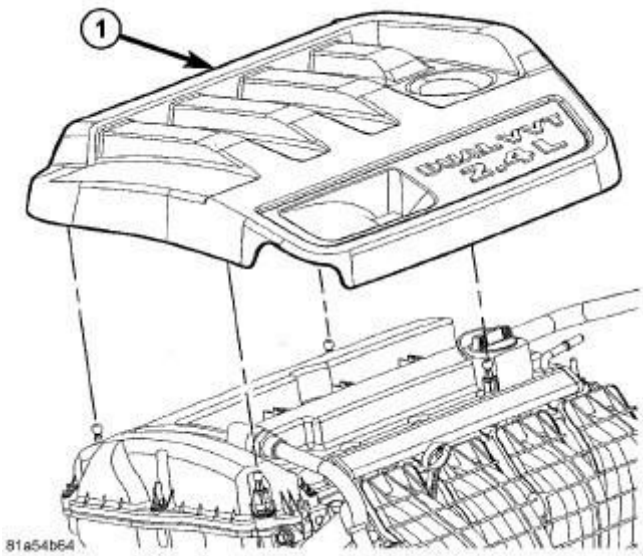

Fig. 8: Engine Cover - 2.4L
Courtesy of CHRYSLER GROUP, LLC

1. Remove engine cover (1) by pulling upwards.

REMOVAL - ENGINE

CAUTION: If the original engine has experienced a catastrophic failure or an individual failure with the

piston, cylinder bore, engine block, valve or valve seat, the intake manifold MUST be replaced with a new manifold.

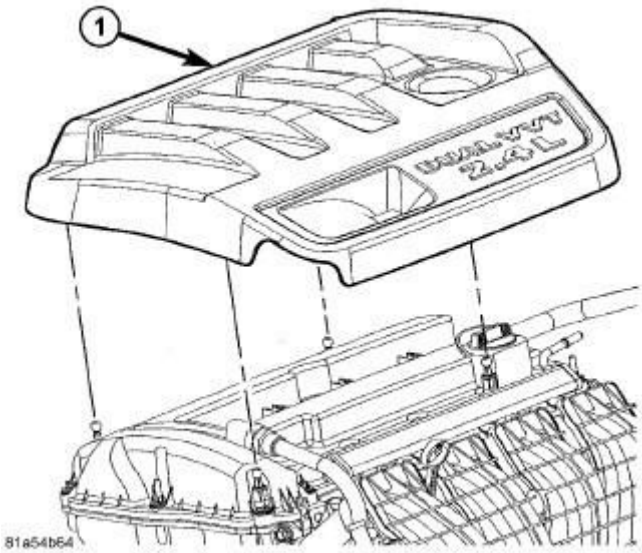

Fig. 9: Engine Cover - 2.4L
Courtesy of CHRYSLER GROUP, LLC

1. Remove the hood. Refer to **HOOD, REMOVAL** .
2. Remove the engine cover (1).

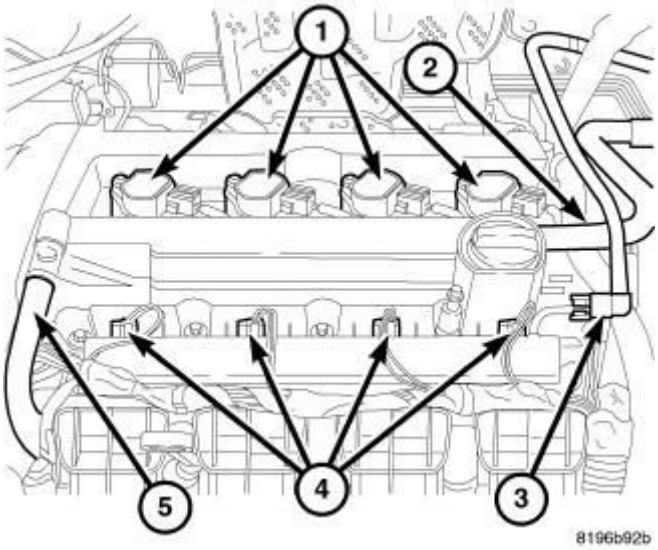

Fig. 10: Ignition Coils, Air Hose, Fuel Line, Injectors & PCV Hose
Courtesy of CHRYSLER GROUP, LLC

3. Perform the fuel pressure release procedure. Refer to **FUEL SYSTEM**

PRESSURE RELEASE PROCEDURE .

4. Disconnect the fuel line (3) from the fuel rail. Refer to **FITTING, QUICK CONNECT** .

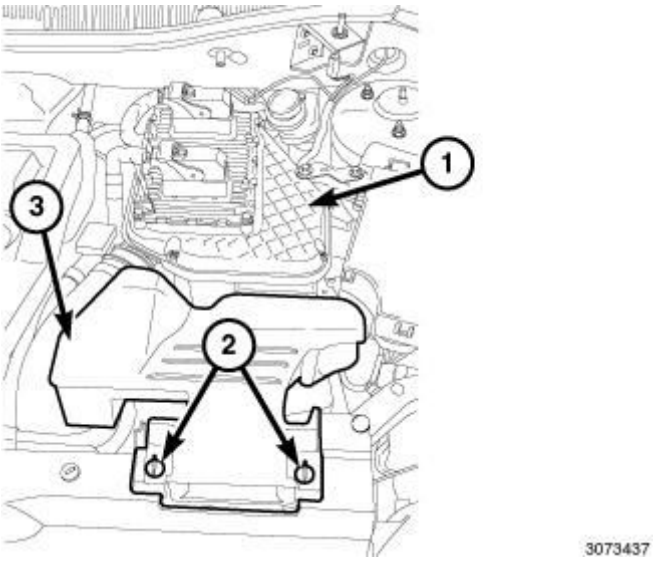

Fig. 11: Retainers, Fresh Air Inlet Duct & Air Cleaner Body
Courtesy of CHRYSLER GROUP, LLC

5. Unlock the retainers (2) and remove the fresh air inlet duct (3) from air cleaner body (1).

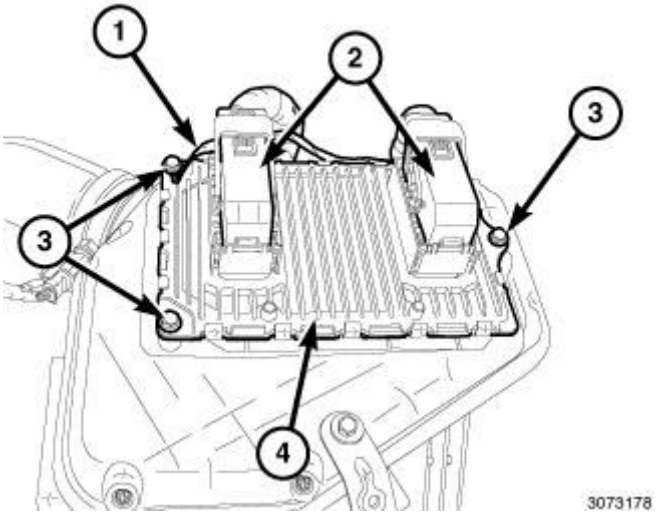

Fig. 12: Electrical Connectors, PCM, Three Mounting Bolts & Ground Wire
Courtesy of CHRYSLER GROUP, LLC

6. Disconnect and isolate the negative battery cable.

7. Unlock and disconnect the electrical connectors (2) from the PCM (4).
8. Remove the mounting bolt (3) and ground wire (1).

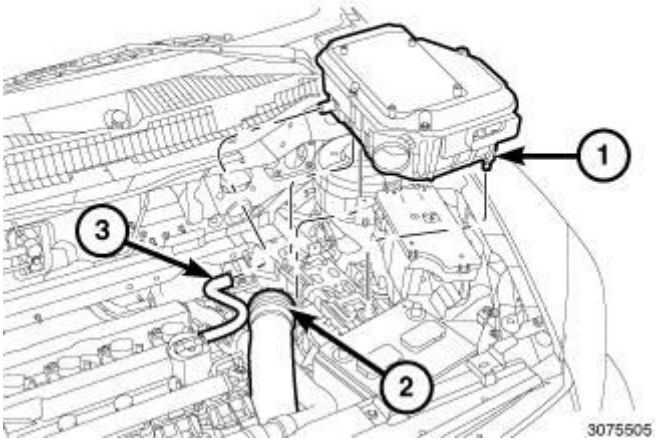

Fig. 13: Air Cleaner Body, Air Inlet Tube & Make-Up Air Hose
Courtesy of CHRYSLER GROUP, LLC

9. Remove the air inlet tube (2) from the air cleaner body (1).
10. Disconnect the make-up air hose (3) from the air cleaner body.
11. Remove the support bracket bolt from the strut tower.
12. Pull upward to disengage the pins from the rubber grommets and remove the air cleaner body (1).

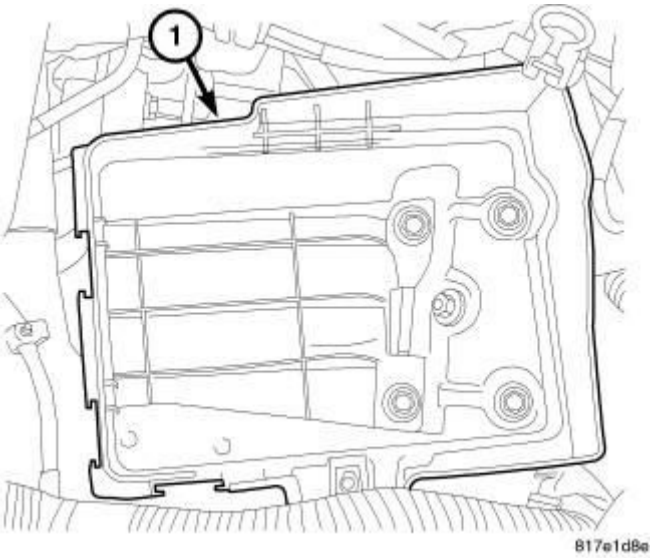

Fig. 14: Battery Tray
Courtesy of CHRYSLER GROUP, LLC

13. Remove the battery and the battery tray (1). Refer to **TRAY, BATTERY, REMOVAL** .
14. Discharge air conditioning system, if equipped. Refer to **PLUMBING, STANDARD PROCEDURE** .
15. Drain cooling system. Refer to **STANDARD PROCEDURE** .

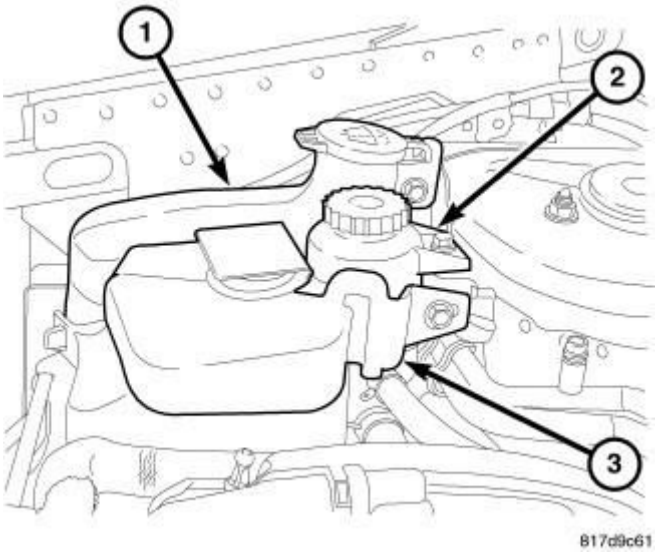

Fig. 15: Windshield Washer Reservoir, Power Steering Reservoir & Coolant Reservoir
Courtesy of CHRYSLER GROUP, LLC

16. Remove the coolant reservoir (3).
17. Remove the power steering reservoir (2).
18. Remove the windshield washer reservoir (1).

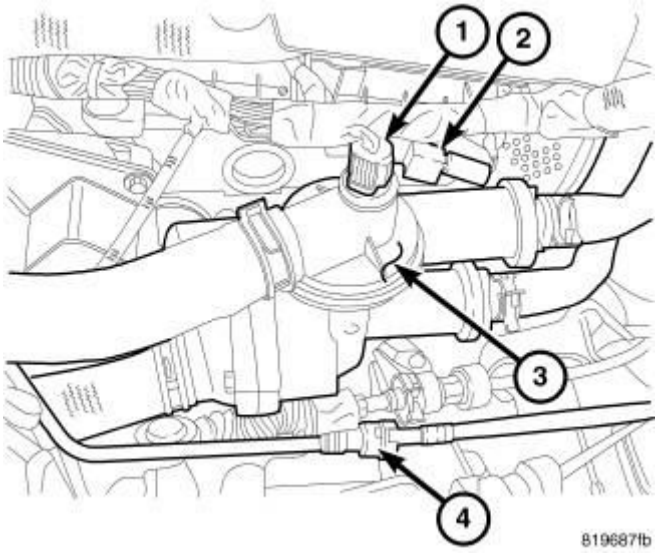

Fig. 16: Coolant Temperature Sensor, Capacitor Electrical Connector & Coolant Adapter
Courtesy of CHRYSLER GROUP, LLC

19. Remove coolant hoses from coolant adapter (3).
20. Disconnect coolant temperature sensor connector (1) and capacitor connector (2).

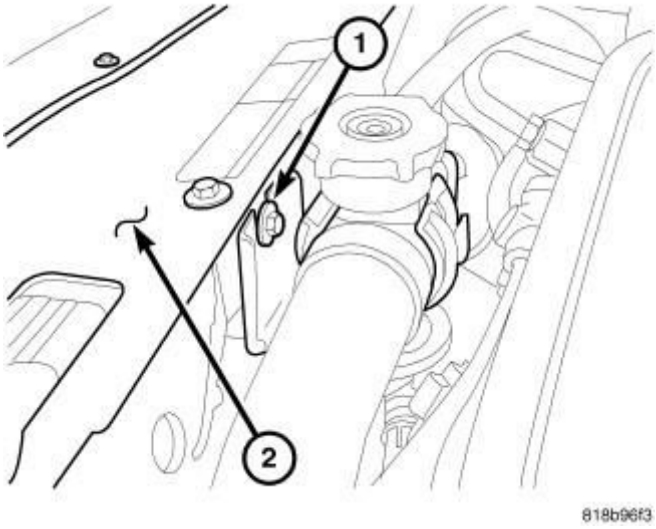

Fig. 17: Radiator Hose Support
Courtesy of CHRYSLER GROUP, LLC

21. Remove upper radiator hose support (1).

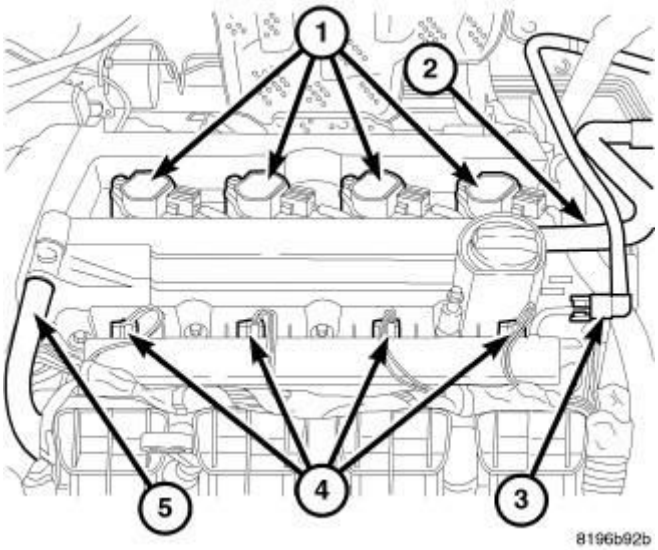

Fig. 18: Ignition Coils, Air Hose, Fuel Line, Injectors & PCV Hose
Courtesy of CHRYSLER GROUP, LLC

22. Disconnect coils (1), injectors (4), cam sensors, oil temperature sensor, and oil control valve electrical connectors and reposition harness.
23. Remove PCV hose (5) from valve cover.

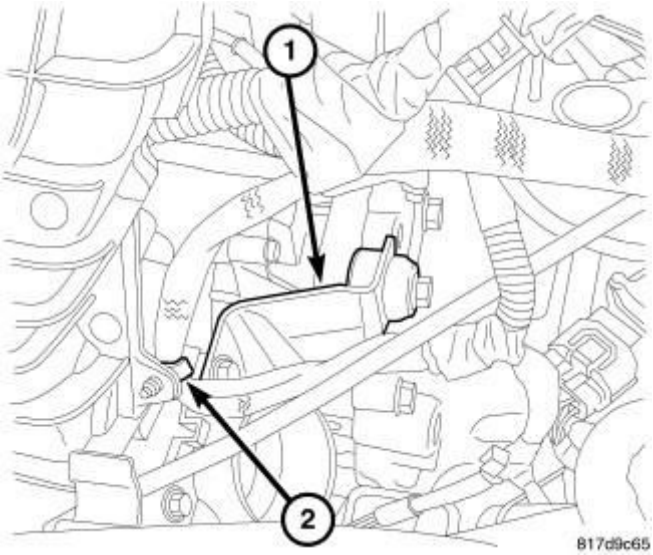

Fig. 19: Throttle Body Support
Courtesy of CHRYSLER GROUP, LLC

24. Remove harness from intake (2).
25. Remove throttle body support bracket (1).
26. Remove vacuum lines from intake manifold.
27. Disconnect electronic throttle control and manifold flow control valve electrical connectors.

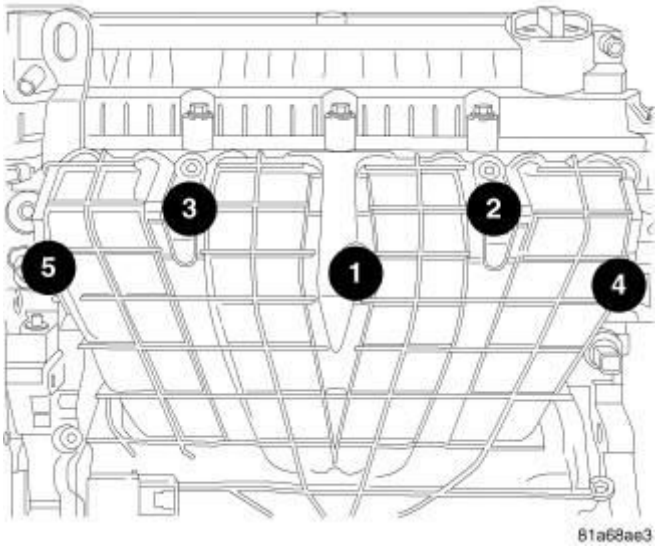

Fig. 20: Intake Manifold Bolt Removal & Tightening Sequence

Courtesy of CHRYSLER GROUP, LLC

28. Remove dipstick.
29. Remove intake bolts (1 - 5) and remove intake.
30. Disconnect coolant temperature sensor at block, knock sensor, oil pressure sensor, generator, starter, block heater (if equipped), A/C compressor (if equipped), and block ground.
31. Remove accessory drive belt.

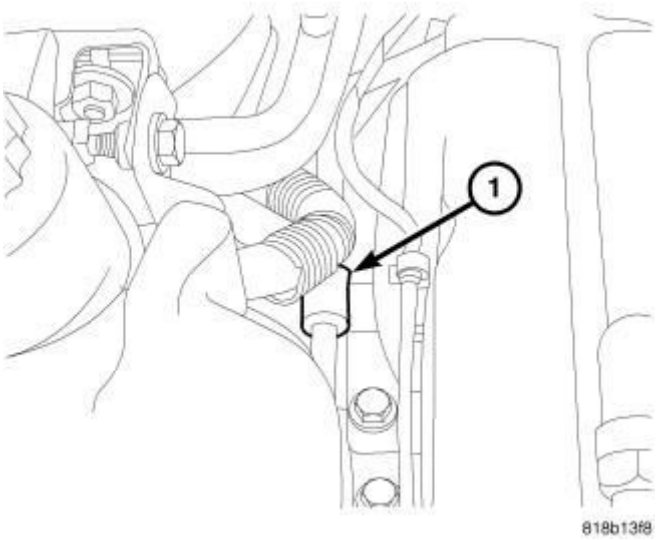

Fig. 21: Power Steering Line Support
Courtesy of CHRYSLER GROUP, LLC

32. Remove power steering line support at engine mount (1).

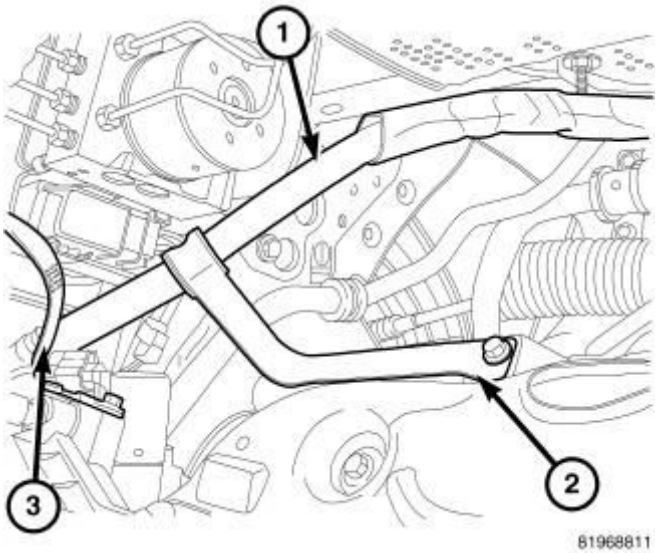

Fig. 22: P/S Hose Support - FWD

Courtesy of CHRYSLER GROUP, LLC

33. On FWD vehicles, remove power steering hose support from exhaust manifold (2).
34. Remove power steering pump and set aside.

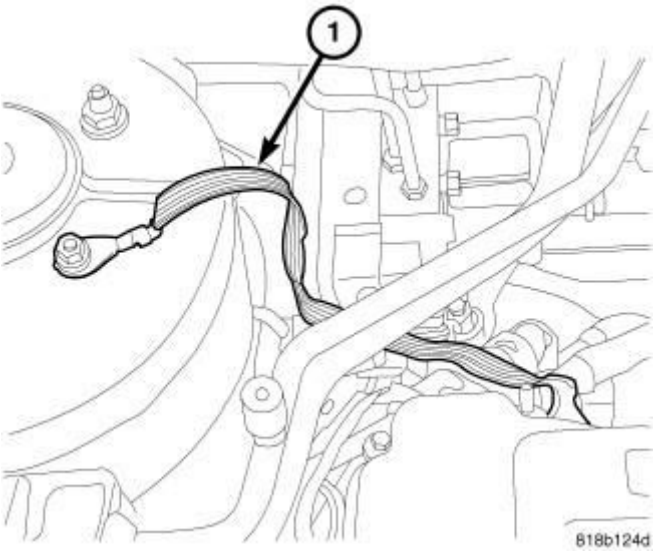

Fig. 23: Ground Strap
Courtesy of CHRYSLER GROUP, LLC

35. Remove ground strap (1) at right strut tower.
36. Raise vehicle.

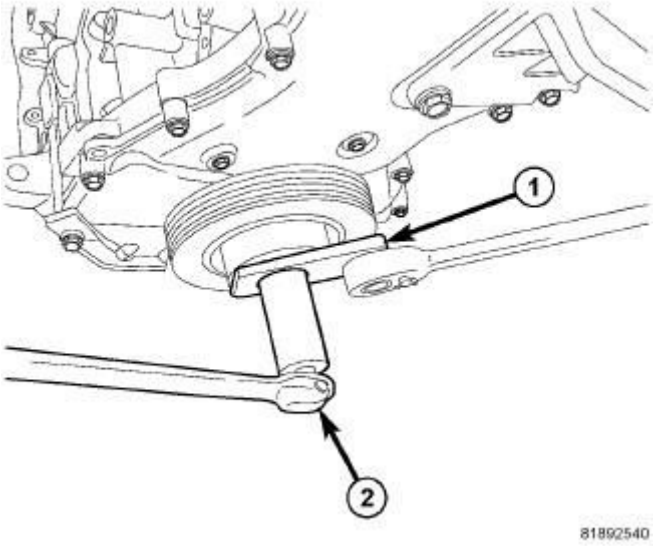

Fig. 24: Damper Removal
Courtesy of CHRYSLER GROUP, LLC

37. Install Damper holder (special tool #9707, Holder, Vibration Damper) (1).
38. Remove crankshaft damper bolt and remove damper.
39. Remove right wheel.
40. Remove right splash shield.

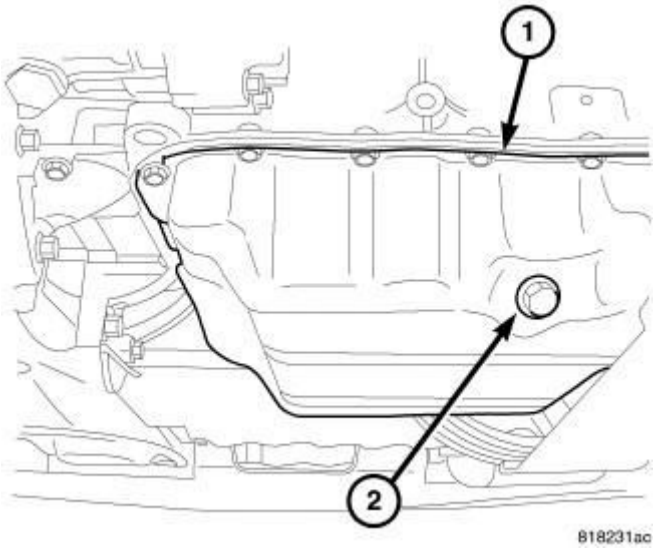

Fig. 25: Oil Drain Plug
Courtesy of CHRYSLER GROUP, LLC

41. Drain oil (2).

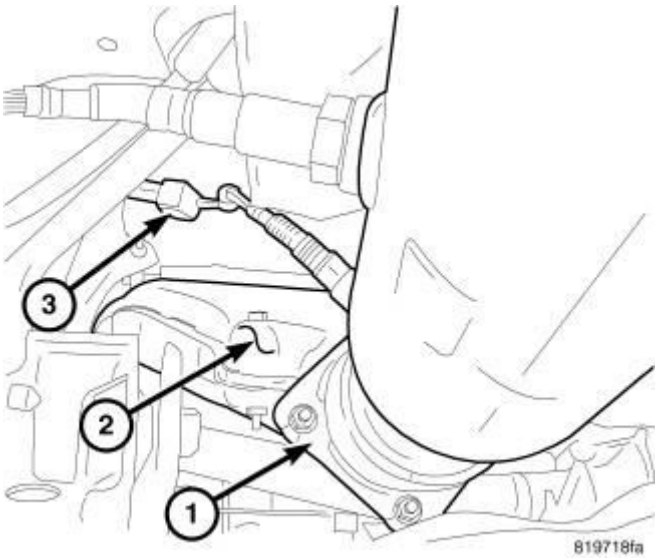

Fig. 26: Exhaust Pipe To Manifold, Heat Shield & Oxygen Sensor Electrical Connector
Courtesy of CHRYSLER GROUP, LLC

42. On AWD vehicles, remove maniveter. Refer to **MANIFOLD, EXHAUST,**

REMOVAL.

43. Remove exhaust pipe to exhaust manifold bolts (1).
44. Disconnect oxygen sensor connector (3).

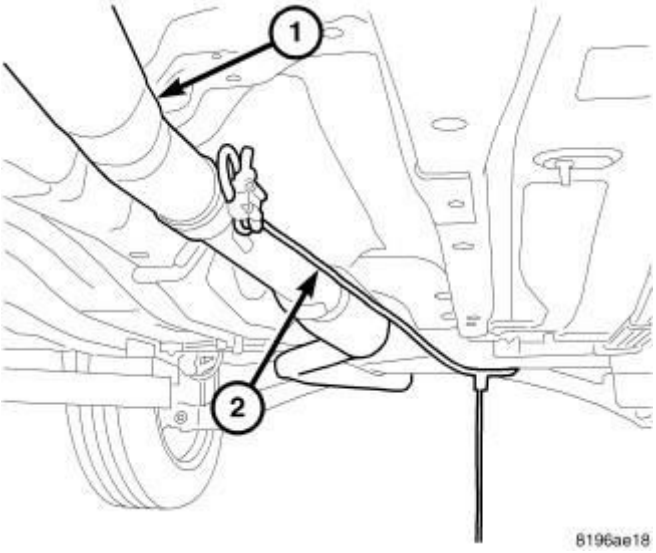

Fig. 27: Exhaust Pipe & Suitable Strap
Courtesy of CHRYSLER GROUP, LLC

45. On FWD vehicles, pull the exhaust pipe (1) rearward with a suitable strap (2).

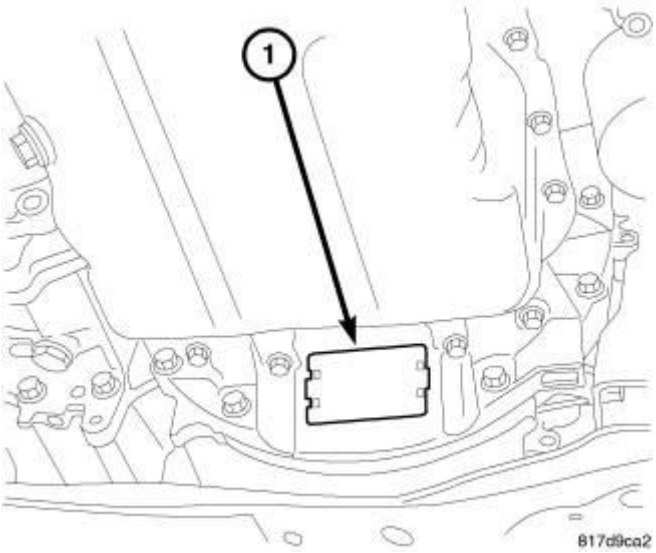

Fig. 28: Inspection Cover
Courtesy of CHRYSLER GROUP, LLC

46. Remove inspection cover (1) and mark torque converter to flywheel.

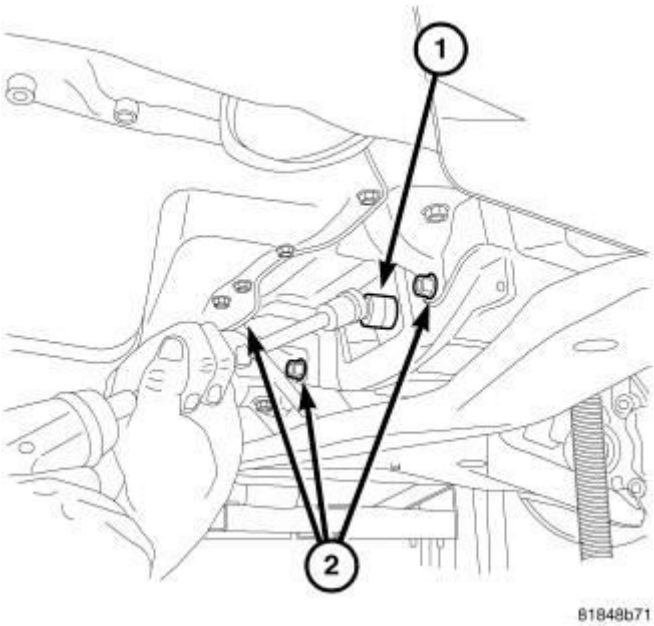

Fig. 29: Modular Clutch To Flex Plate Bolts
Courtesy of CHRYSLER GROUP, LLC

47. On vehicles equipped with an automatic transaxle, remove torque converter bolts (1).
48. On vehicles equipped with an manual transaxle, remove modular clutch bolts (1).
49. Remove lower bellhousing bolts (2).

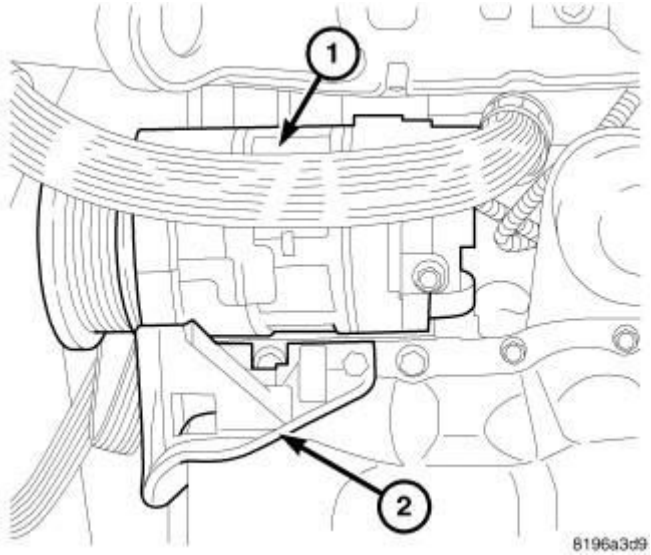

Fig. 30: A/C Compressor
Courtesy of CHRYSLER GROUP, LLC

50. Remove A/C compressor (1).

51. Remove generator and lower idler pulley.

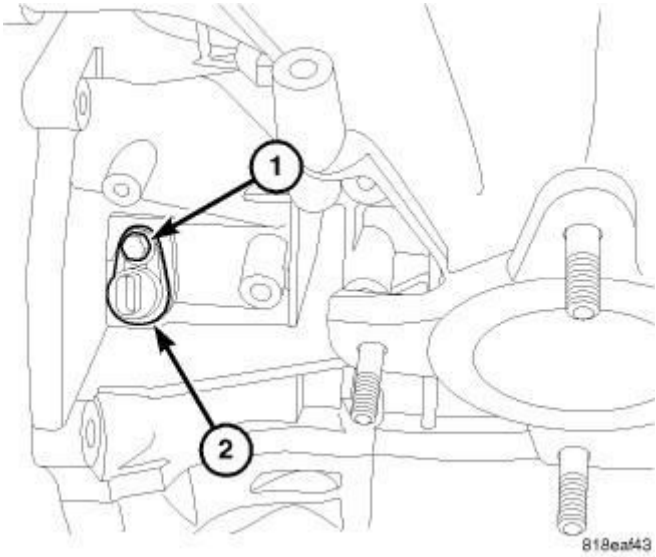

Fig. 31: Crankshaft Position Sensor
Courtesy of CHRYSLER GROUP, LLC

52. Disconnect crankshaft position sensor (2) electrical connector.
53. Remove crankshaft position sensor (2).

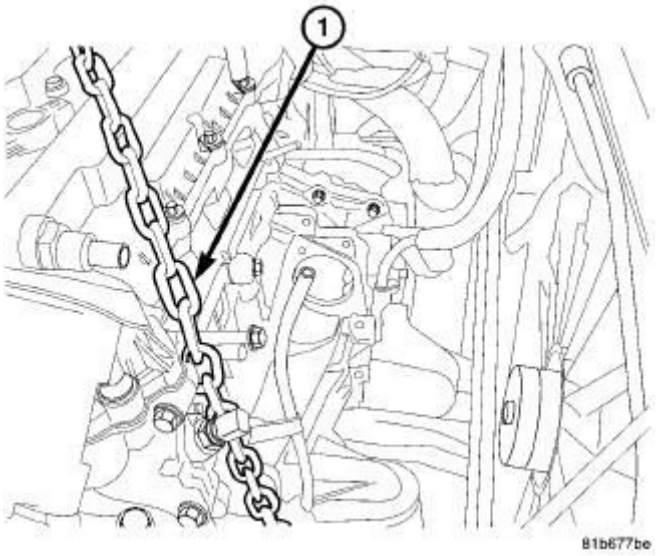

Fig. 32: Identifying Lift Chain
Courtesy of CHRYSLER GROUP, LLC

54. Remove exhaust variable valve timing solenoid.
55. Install engine lift chain (1).
56. Install engine lift chain to rear lift hook.

57. Install appropriate engine lifting crane.

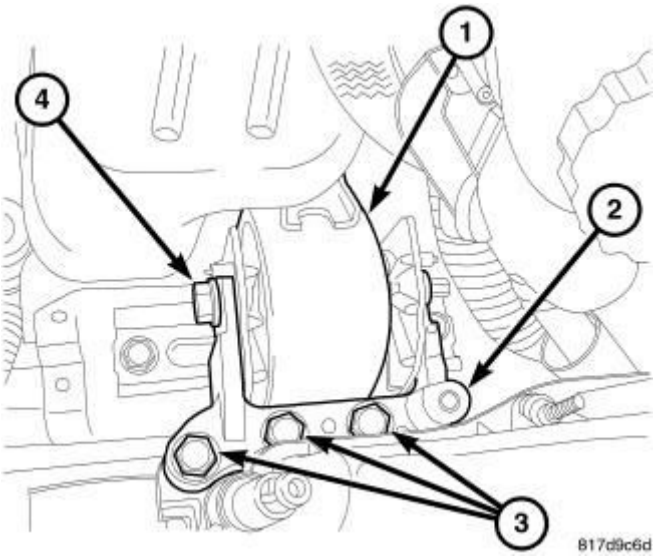

Fig. 33: Right Engine Mount
Courtesy of CHRYSLER GROUP, LLC

58. Remove engine mount through bolt (4).
59. Remove right engine mount bracket retaining bolts (3).
60. Remove engine mount adapter (2).
61. Raise engine away from vehicle.

INSTALLATION

ENGINE COVER

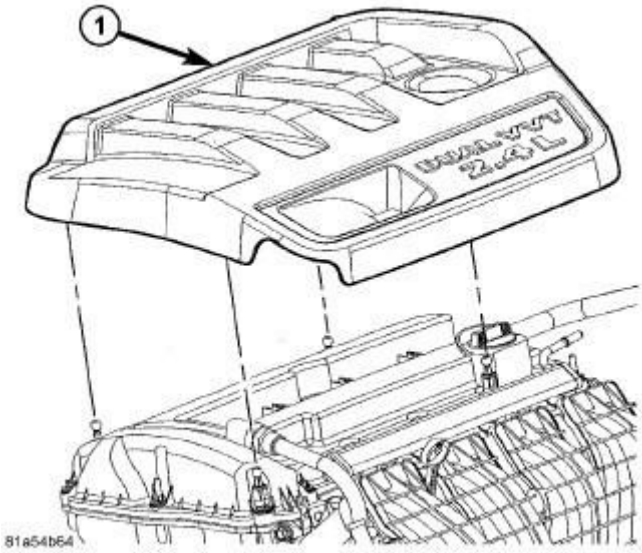

Fig. 34: Engine Cover - 2.4L
Courtesy of CHRYSLER GROUP, LLC

1. Position engine cover (1) over mounting studs.
2. Seat the cover on the rear studs by pushing downwards.
3. Push downward on the front of the cover to seat the front studs.

INSTALLATION - ENGINE

CAUTION: If the original engine has experienced a catastrophic failure or an individual failure with the piston, cylinder bore, engine block, valve or valve seat, the intake manifold MUST be replaced with a new manifold.

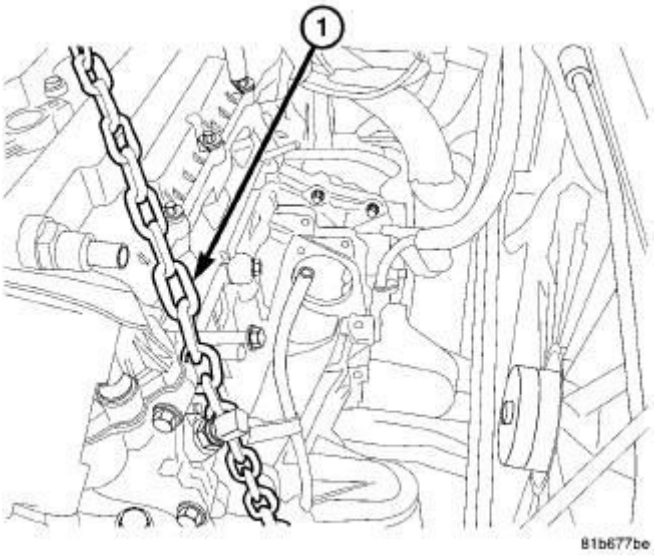

Fig. 35: Identifying Lift Chain
Courtesy of CHRYSLER GROUP, LLC

1. Position engine over engine compartment and slowly lower into place.
2. Align engine and transaxle.
3. Install upper bellhousing bolts and tighten.

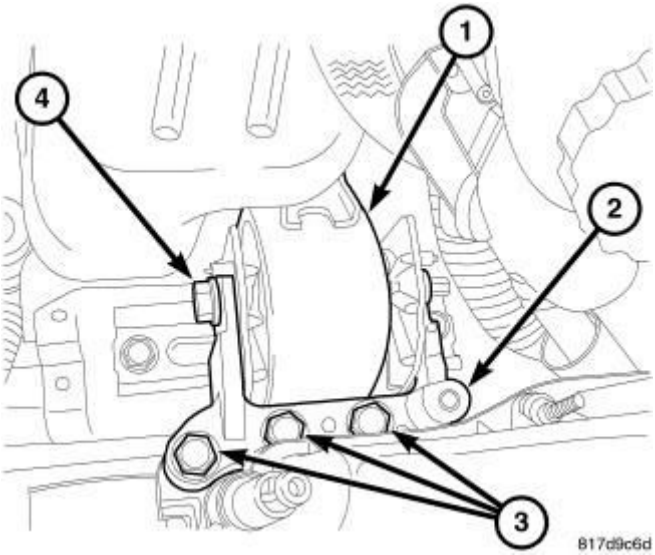

Fig. 36: Right Engine Mount
Courtesy of CHRYSLER GROUP, LLC

4. Install mounting bolts (3) at the right mount bolts and tighten bolts to 118 N.m (87 ft. lbs.).

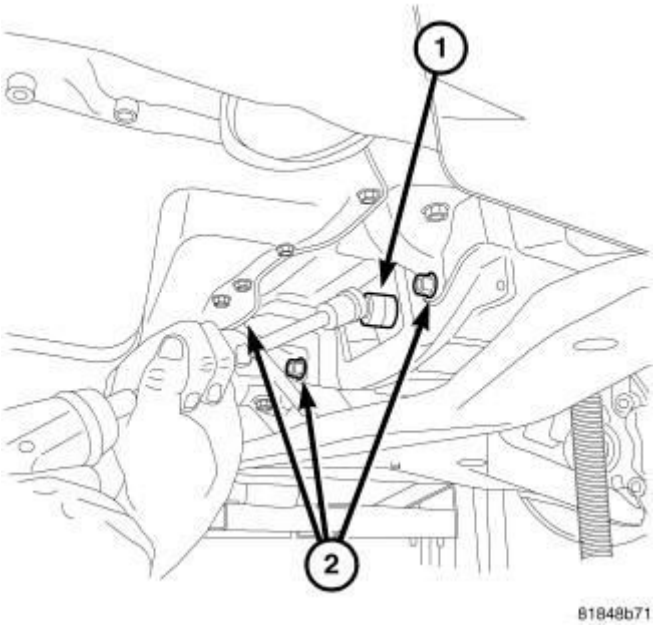

Fig. 37: Modular Clutch To Flex Plate Bolts
Courtesy of CHRYSLER GROUP, LLC

5. Install clutch to flex plate bolts (1).
6. Install lower bell housing bolts (2) and tighten.

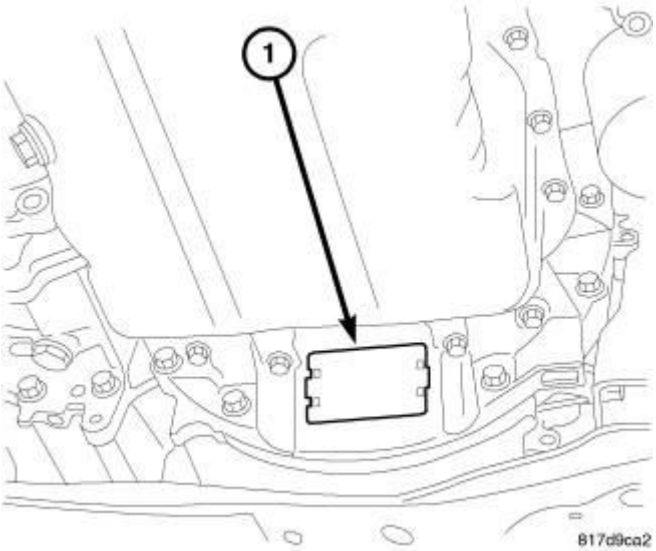

Fig. 38: Inspection Cover
Courtesy of CHRYSLER GROUP, LLC

7. Install inspection cover (1).

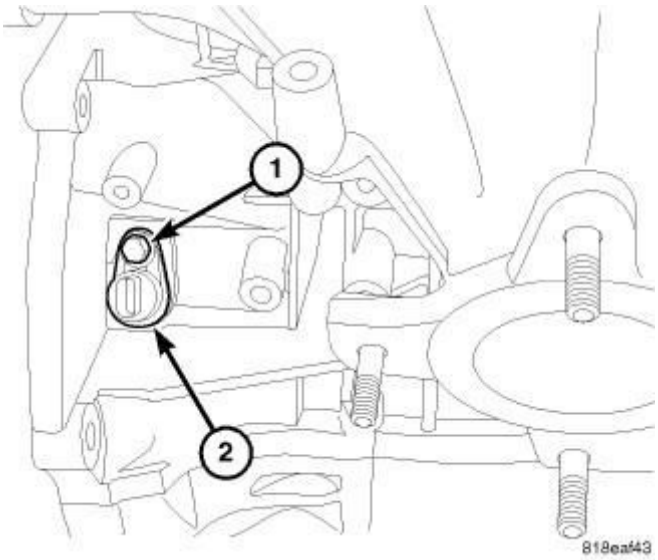

Fig. 39: Crankshaft Position Sensor
Courtesy of CHRYSLER GROUP, LLC

8. Connect crankshaft position sensor (2). Connect crankshaft position sensor electrical connector.
9. On AWD vehicles, install maniverter. Refer to **MANIFOLD, EXHAUST, INSTALLATION**.

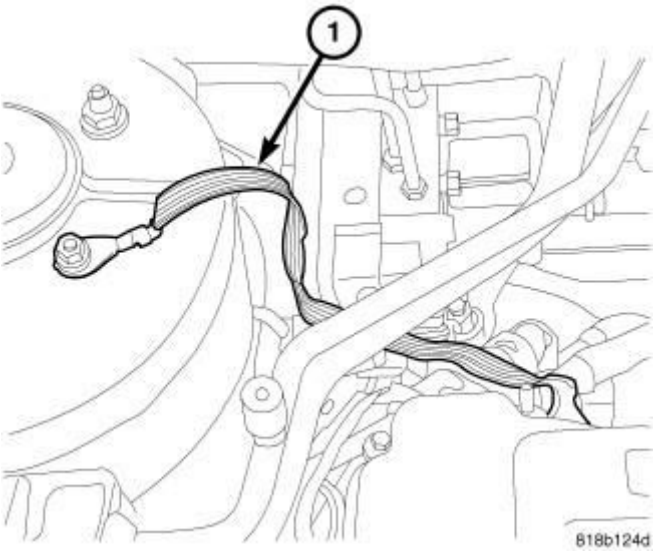

Fig. 40: Ground Strap
Courtesy of CHRYSLER GROUP, LLC

10. Install Ground strap (1).
11. Raise vehicle.

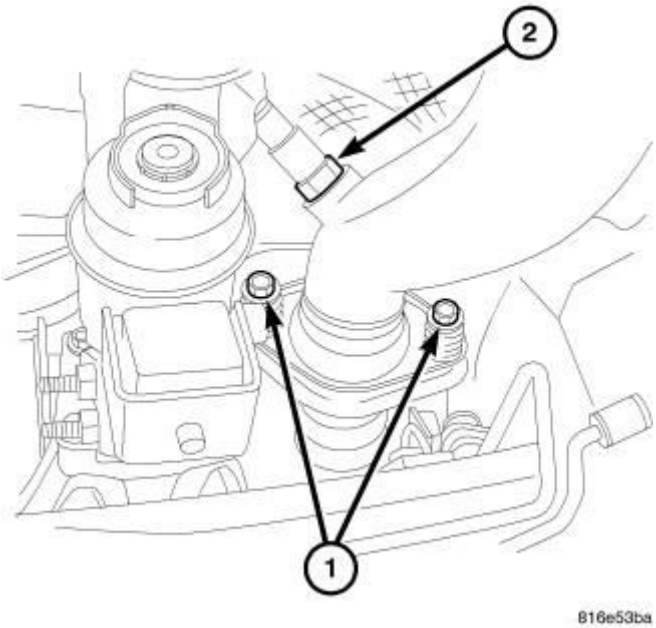

Fig. 41: Exhaust To Maniverter Bolts
Courtesy of CHRYSLER GROUP, LLC

12. On AWD vehicles, install maniverter to exhaust pipe bolts (1) and tighten bolts.

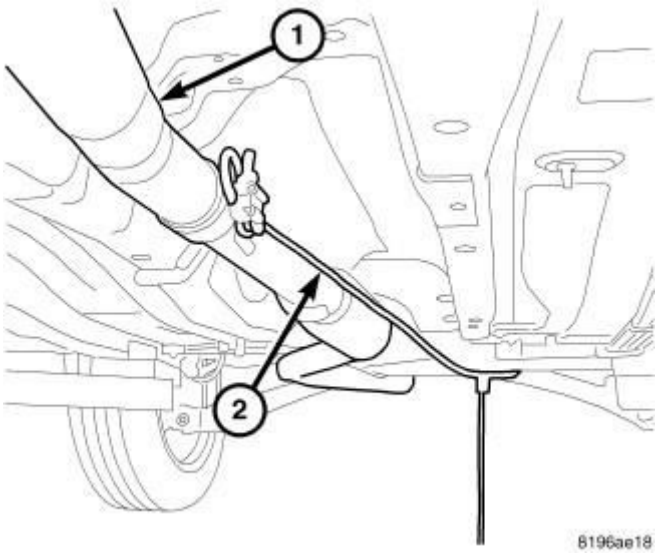

Fig. 42: Exhaust Pipe & Suitable Strap
Courtesy of CHRYSLER GROUP, LLC

13. On FWD vehicles, remove strap (2) from exhaust pipe (1).

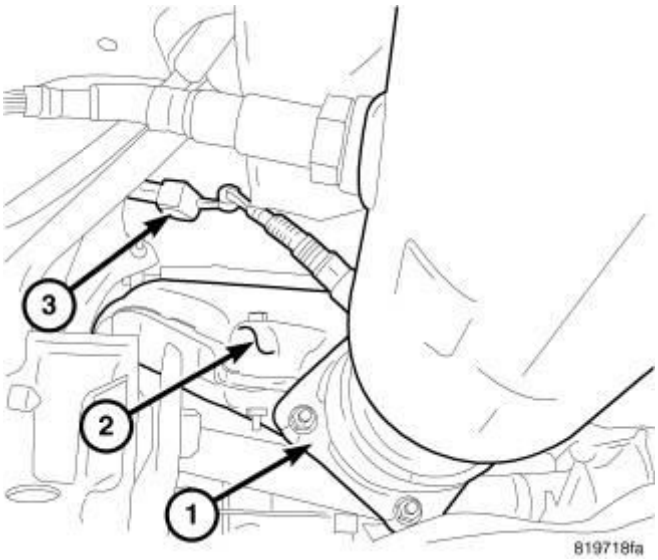

Fig. 43: Exhaust Pipe To Manifold, Heat Shield & Oxygen Sensor Electrical Connector
Courtesy of CHRYSLER GROUP, LLC

14. On FWD vehicles, install new manifold to catalytic converter gasket (1) and install catalytic converter to exhaust manifold and tighten.
15. Connect oxygen sensor electrical connector (3).
16. Install generator.

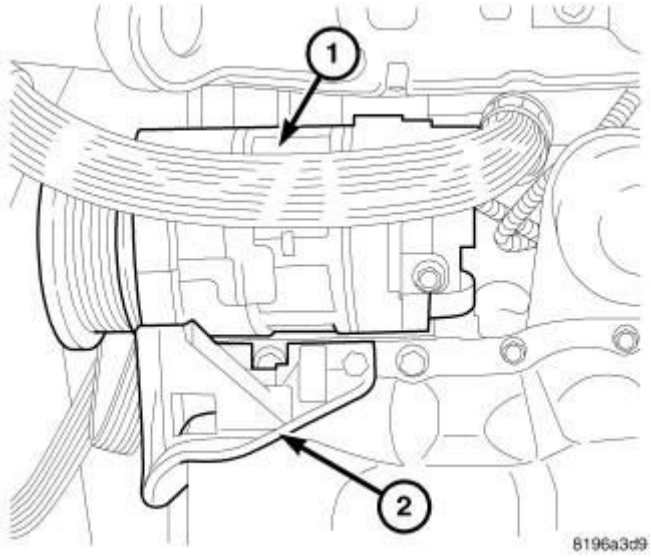

Fig. 44: A/C Compressor
Courtesy of CHRYSLER GROUP, LLC

17. Install A/C compressor (1).

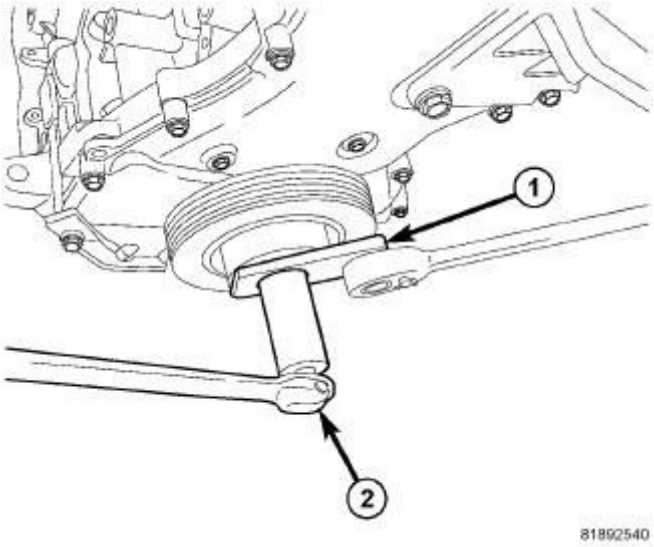

Fig. 45: Damper Removal
Courtesy of CHRYSLER GROUP, LLC

18. Install crankshaft damper.
19. Apply clean engine oil crankshaft damper bolt threads and between bolt head and washer. Tighten bolt to 210 N.m (155 ft. lbs.).
20. Install right splash shield.
21. Install right tire.

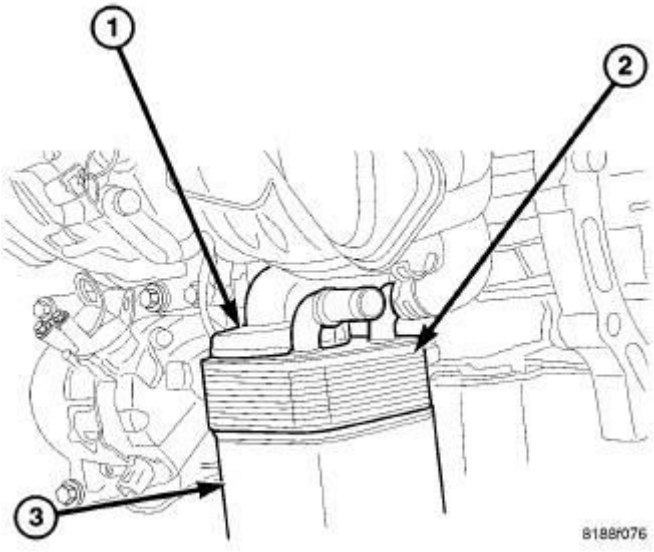

Fig. 46: Oil Cooler
Courtesy of CHRYSLER GROUP, LLC

22. Install oil cooler if equipped (2). Refer to **COOLER, OIL, INSTALLATION**.
23. Connect coolant hoses to oil cooler (2), if equipped.
24. Install new oil filter (3).
25. Lower vehicle.
26. Install upper idler pulley.

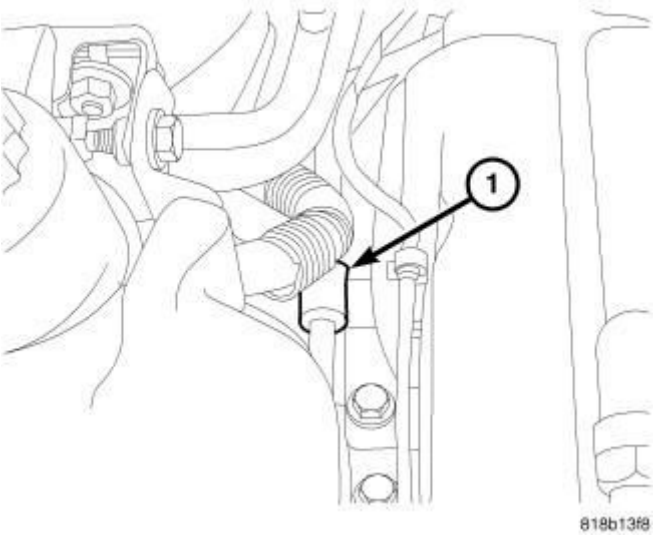

Fig. 47: Power Steering Line Support
Courtesy of CHRYSLER GROUP, LLC

27. Install power steering pump.

28. Install power steering line support bracket at engine mount (1).

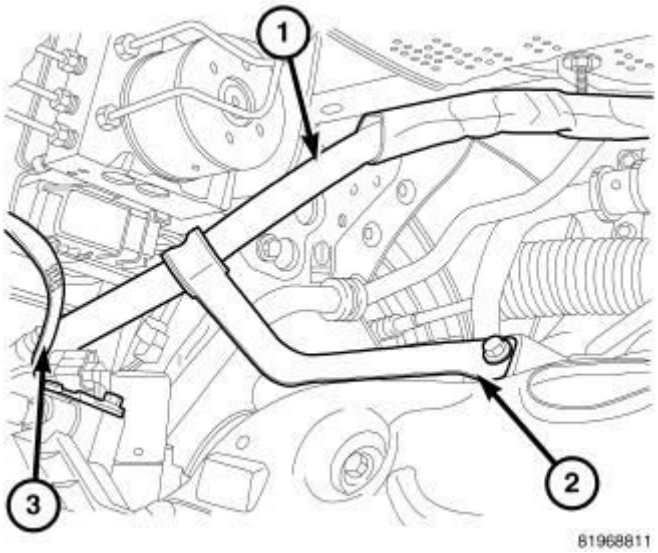

Fig. 48: P/S Hose Support - FWD
Courtesy of CHRYSLER GROUP, LLC

29. On FWD vehicles, install power steering hose support (2) at exhaust manifold.
30. Install accessory drive belt.

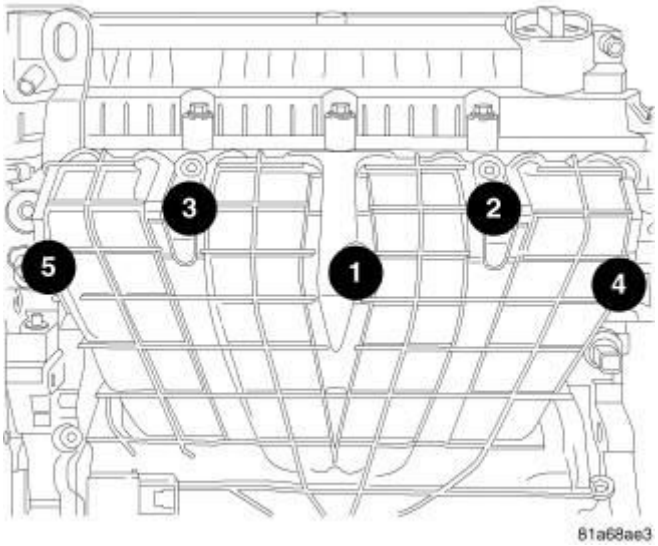

Fig. 49: Intake Manifold Bolt Removal & Tightening Sequence
Courtesy of CHRYSLER GROUP, LLC

31. Connect electrical connectors at block ground, starter, A/C compressor, knock sensor, Oil pressure sensor, generator, Coolant temperature sensor at block, and block heater.

32. Install intake manifold and tighten bolts as shown in illustration.

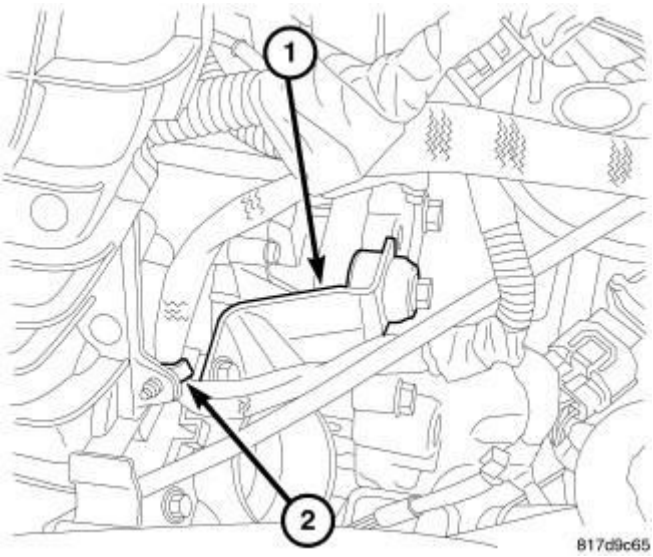

Fig. 50: Throttle Body Support
Courtesy of CHRYSLER GROUP, LLC

33. Install throttle body support bracket (1).
34. Install engine oil dip stick.
35. Install vacuum lines at throttle body and intake manifold.
36. Connect manifold flow control valve and electronic throttle control electrical connectors and fasten harness to intake.

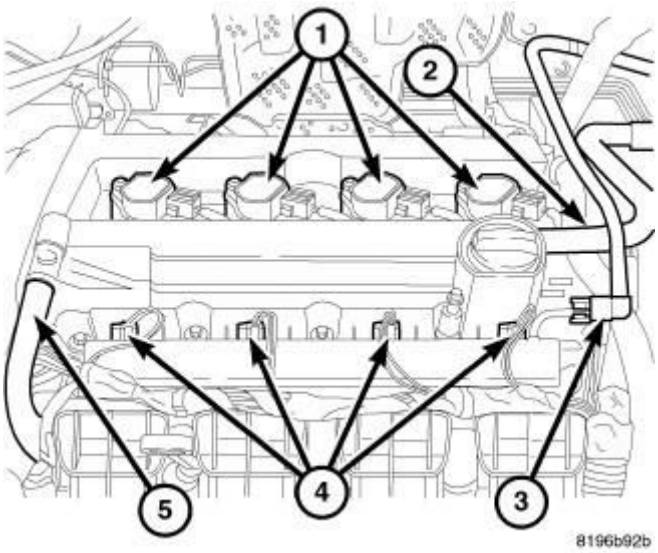

Fig. 51: Ignition Coils, Air Hose, Fuel Line, Injectors & PCV Hose
Courtesy of CHRYSLER GROUP, LLC

37. Install intake air tube on throttle body.

38. Install PCV hose (5) to valve cover.
39. Connect the fuel line (3) to the fuel rail.
40. Connect coils (1), injectors (4), oil temperature sensor and cam position sensors.

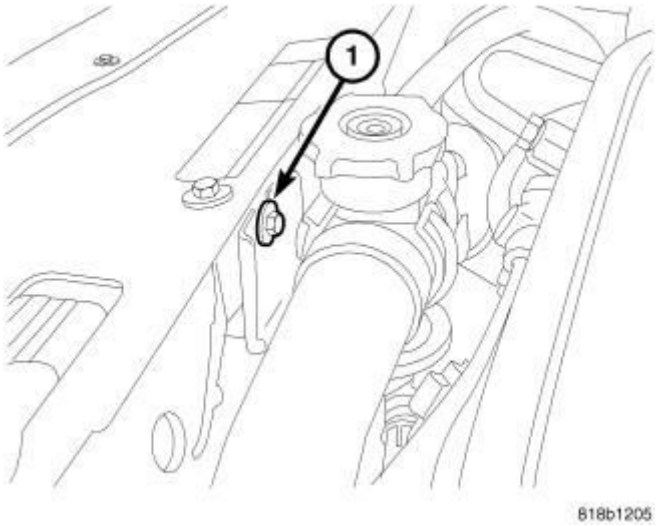

Fig. 52: Radiator Hose Support
Courtesy of CHRYSLER GROUP, LLC

41. Install upper radiator support bracket (1).

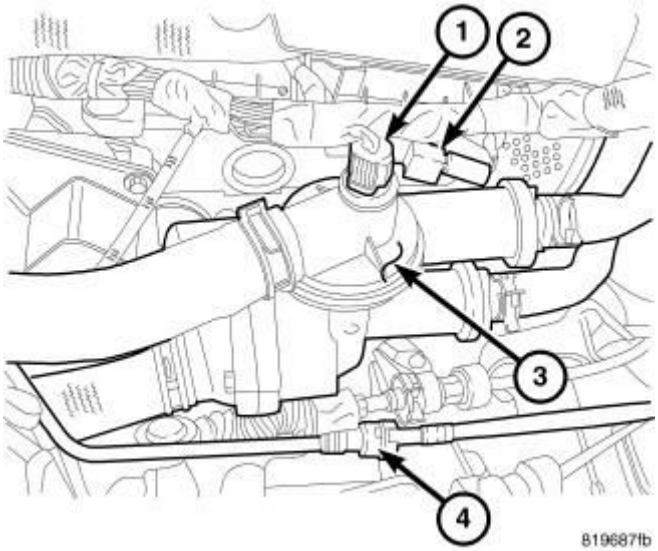

Fig. 53: Coolant Temperature Sensor, Capacitor Electrical Connector & Coolant Adapter
Courtesy of CHRYSLER GROUP, LLC

42. Connect engine coolant temperature sensor (1), and capacitor (2).

43. Install coolant hoses at coolant adapter (3).
44. Connect purge hose (4).

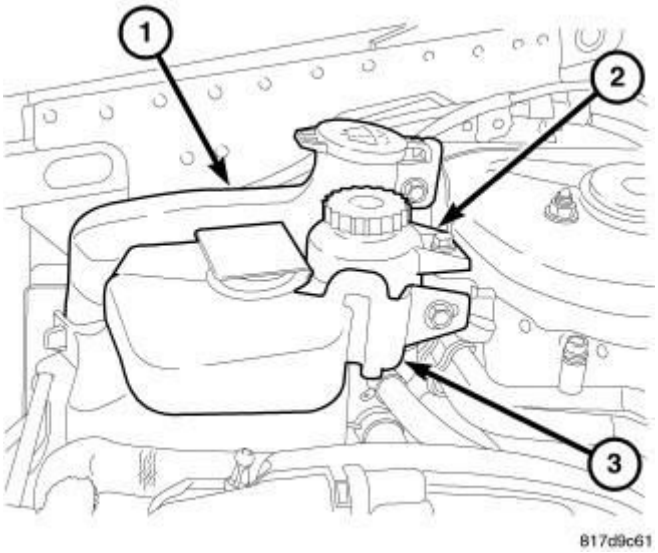

Fig. 54: Windshield Washer Reservoir, Power Steering Reservoir & Coolant Reservoir
Courtesy of CHRYSLER GROUP, LLC

45. Install coolant reservoir (3) and connect hose.

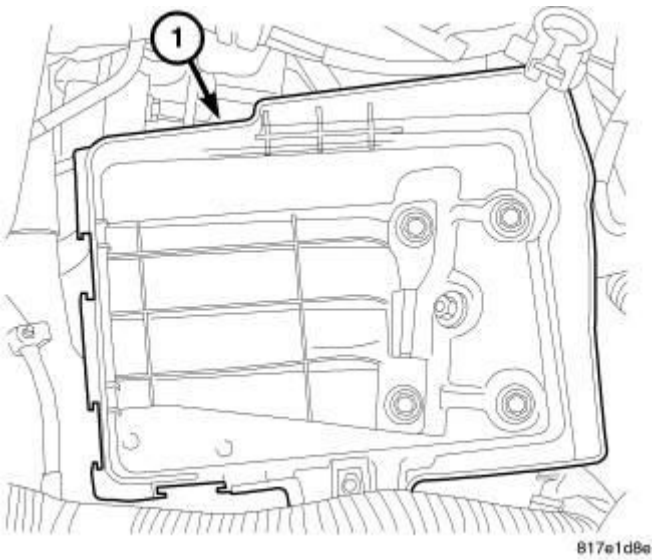

Fig. 55: Battery Tray
Courtesy of CHRYSLER GROUP, LLC

46. Install the battery tray (1). Refer to **TRAY, BATTERY, INSTALLATION** .

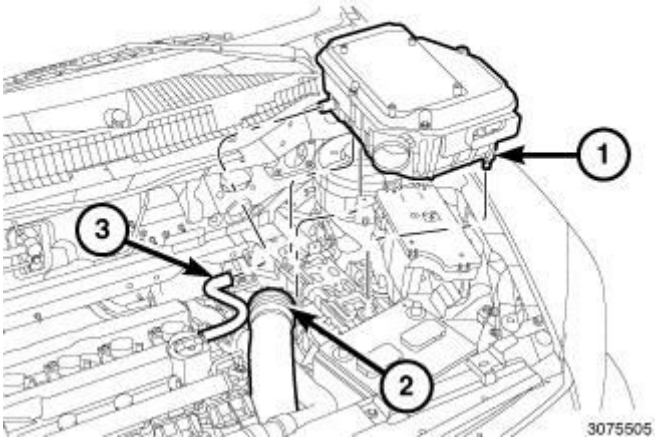

Fig. 56: Air Cleaner Body, Air Inlet Tube & Make-Up Air Hose
Courtesy of CHRYSLER GROUP, LLC

47. Push down on the air cleaner body (1) to engage the pins into the grommets.
48. Install the support bracket bolt to the strut tower and tighten to 10 N.m (89 in. lbs.).
49. Install the air inlet tube (2) to the air cleaner body (1).
50. Connect the make-up air hose (3) to the air cleaner body.

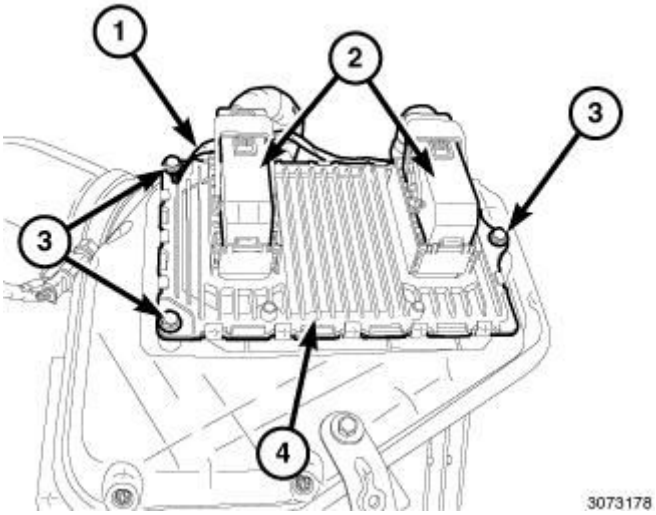

Fig. 57: Electrical Connectors, PCM, Three Mounting Bolts & Ground Wire
Courtesy of CHRYSLER GROUP, LLC

51. Install the mounting bolt (3) with ground wire (1) and tighten to 12 N.m (106 in. lbs.).

52. Connect and lock the electrical connectors (2).

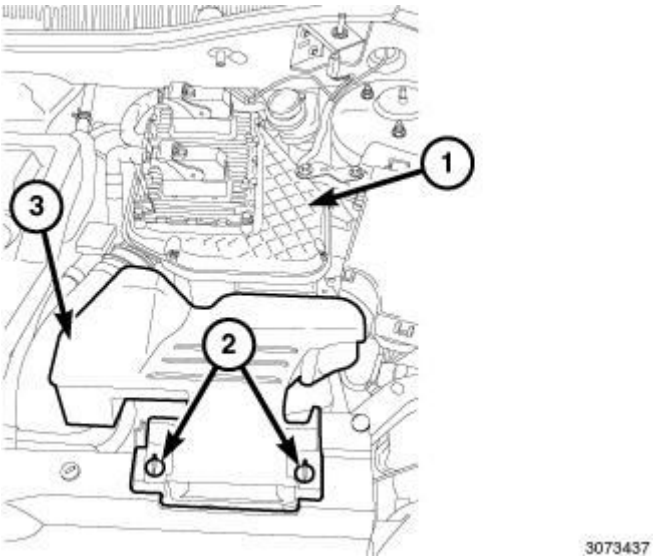

Fig. 58: Retainers, Fresh Air Inlet Duct & Air Cleaner Body
Courtesy of CHRYSLER GROUP, LLC

53. Install the battery and connect the battery cables. Refer to **BATTERY, INSTALLATION** .
54. Install the fresh air inlet duct (3) on the air cleaner body (1) and lock the retainers (2).

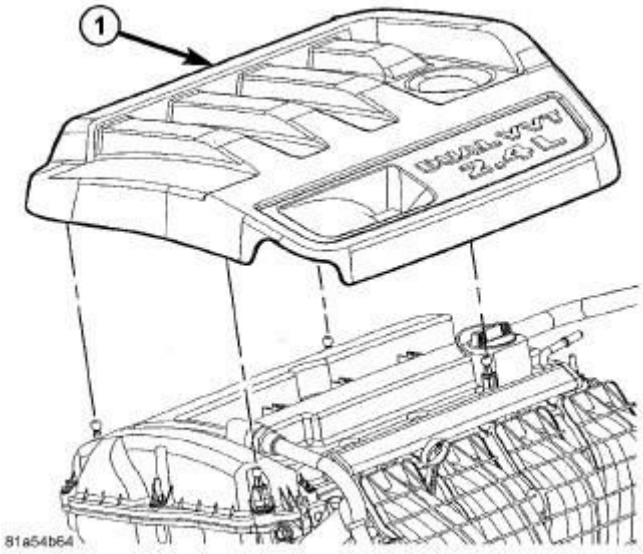

Fig. 59: Engine Cover - 2.4L
Courtesy of CHRYSLER GROUP, LLC

55. Install the hood. Refer to **HOOD, INSTALLATION** .

56. Fill with coolant. Refer to **STANDARD PROCEDURE** .
57. Fill with oil.
58. Start engine and check for leaks.
59. Install engine cover (1).

SPECIAL TOOLS

SPECIAL TOOLS

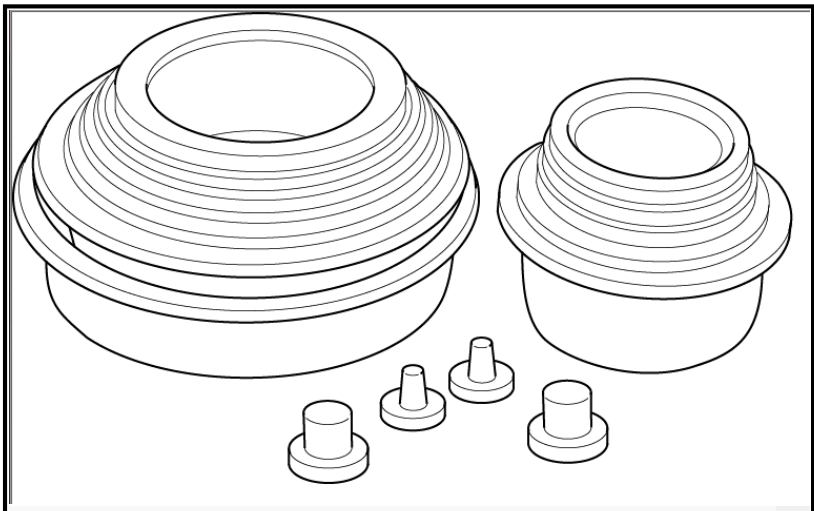	10368 - Set, Universal Protective Cap
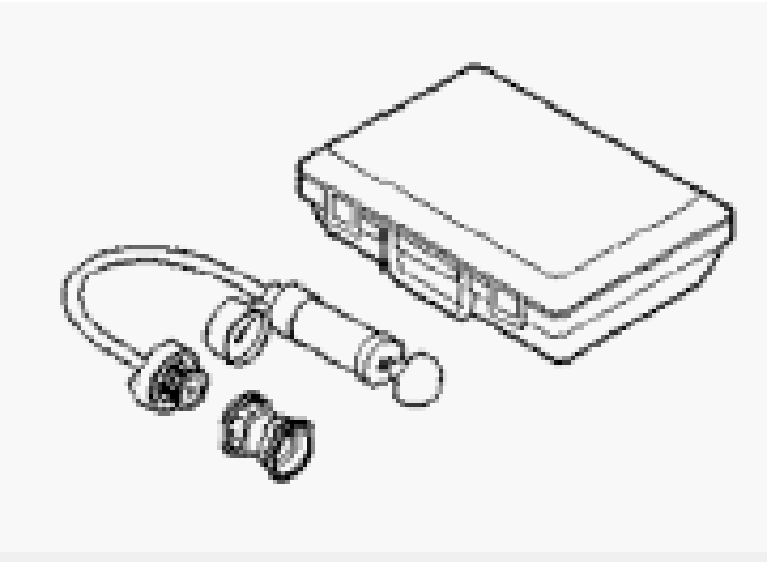	7700 - Tester, Cooling System (Originally Shipped In Kit Number(s) 7700-A.)
	8116 - Adapter, Pressure PEP (Originally Shipped In Kit

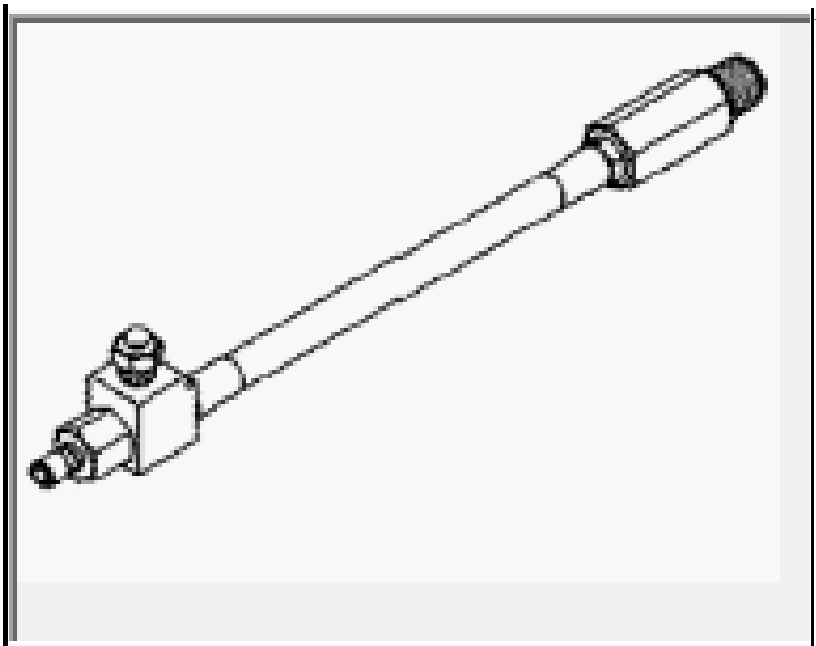	Number(s) 8201, 8201CC, 8204, 8204CC.)
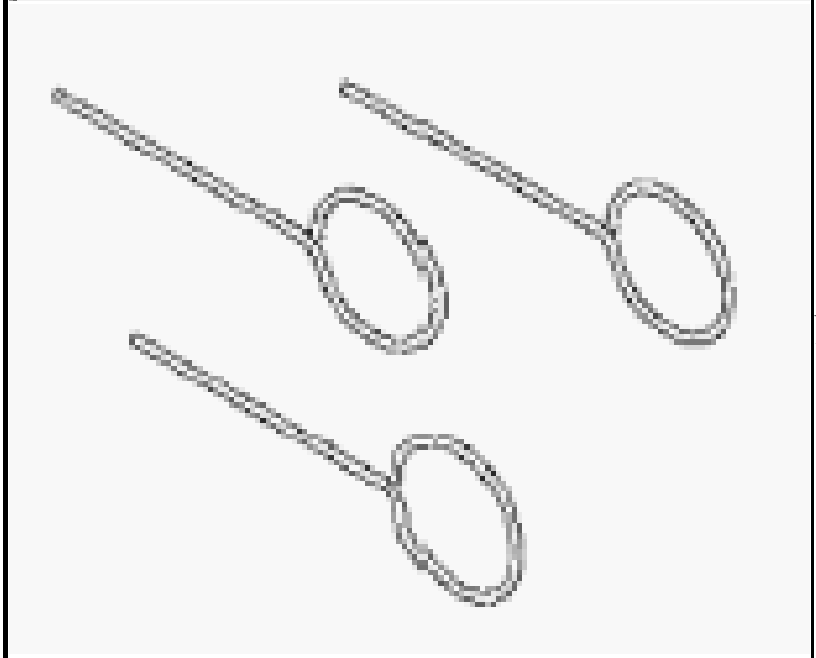	8514 - Pins, Tensioner (Originally Shipped In Kit Number(s) 8283, 8283CC, 8527, 8527CC, 8575, 8575CC, 9975.)
	9506 - Installer, Oil Seal (Originally Shipped In Kit Number(s) 9610, 9970.)

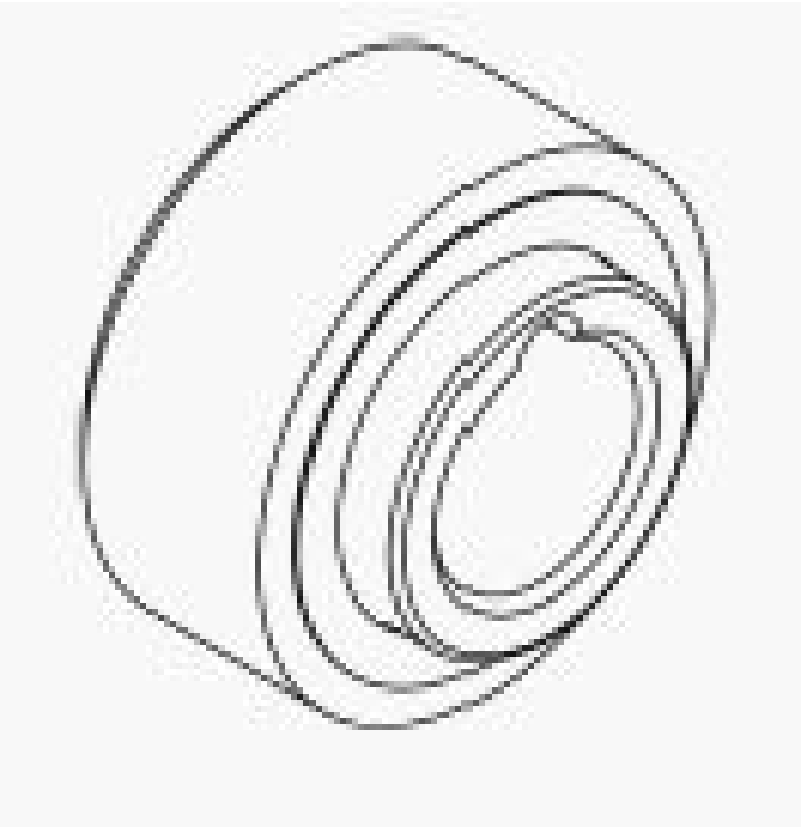

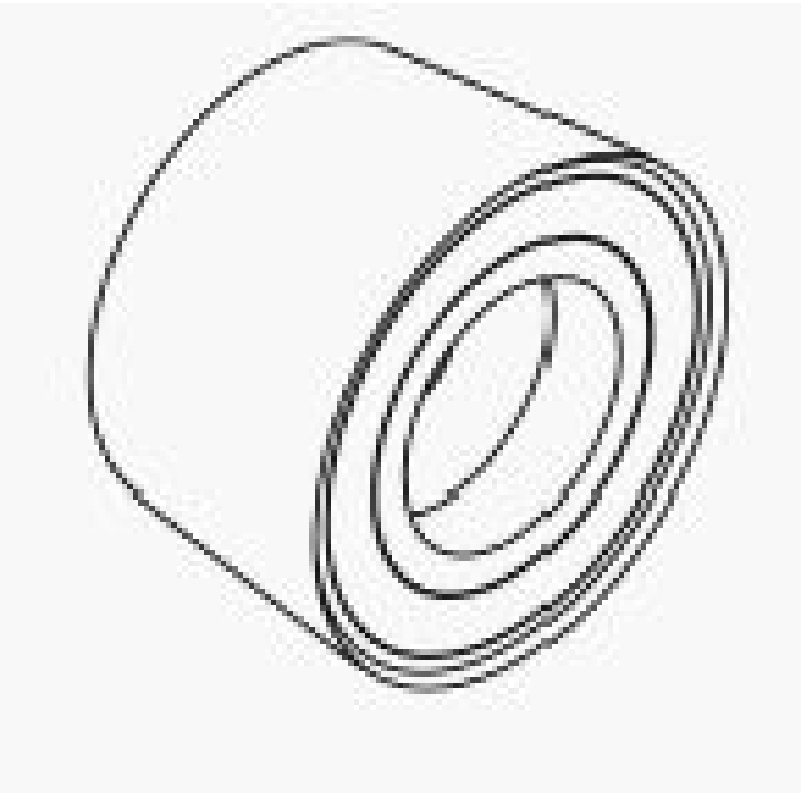

9509 - Installer, Oil Seal (Originally Shipped In Kit Number(s) 9610, 9970.)

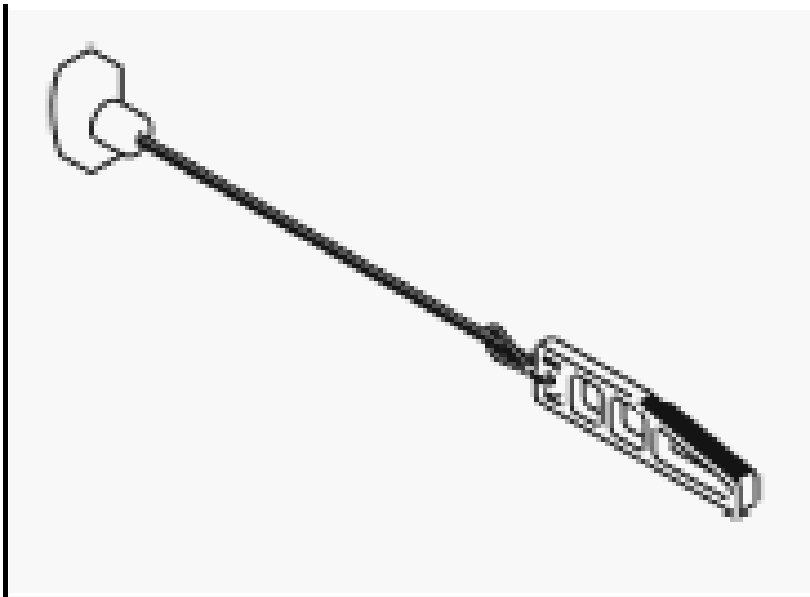	9701 - Wedge, Locking (Originally Shipped In Kit Number(s) 9610, 9970.)
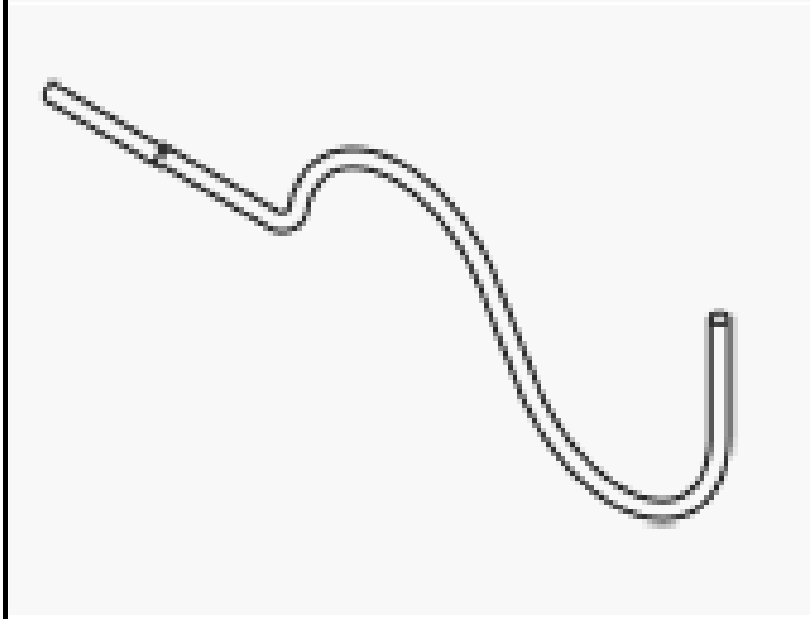	9703 - Pin, Tensioner (Originally Shipped In Kit Number(s) 9610, 9970.)
	9706 - Installer, Crankshaft Rear Oil Seal (Originally Shipped In Kit Number(s) 9610, 9970.)

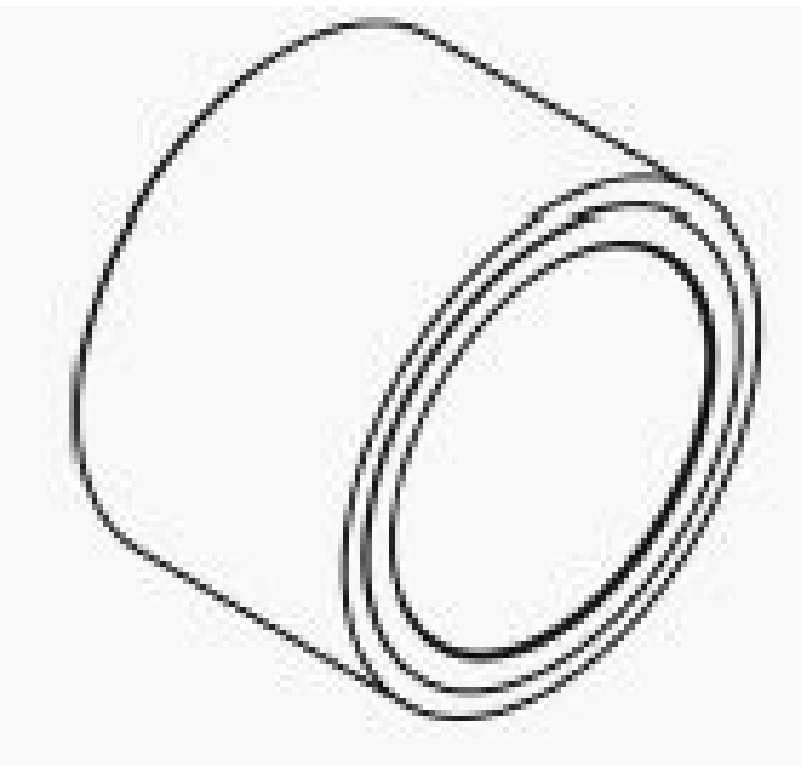

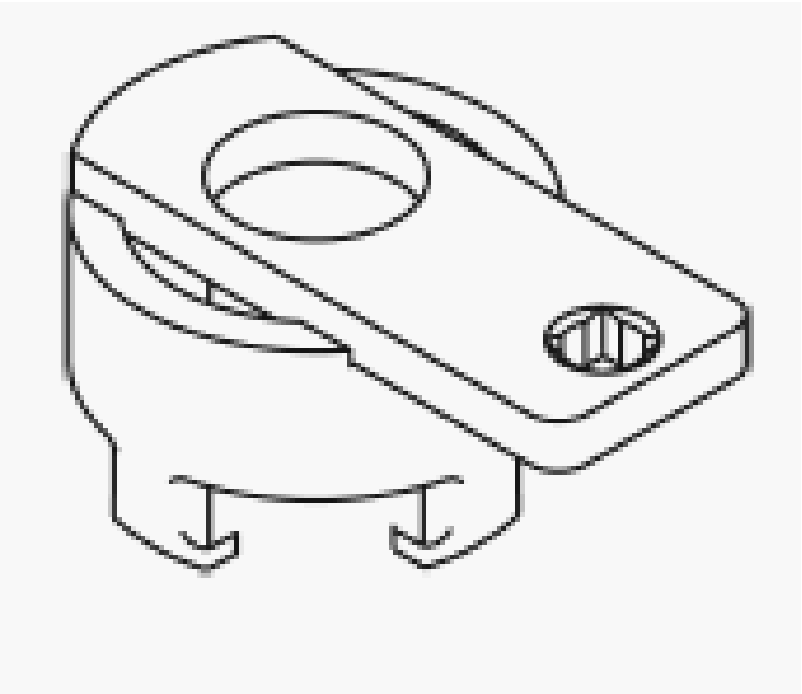

9707 - Holder, Vibration Damper
(Originally Shipped In Kit Number(s) 9610, 9970.)

9879 - Adapter, Oil Pressure Test

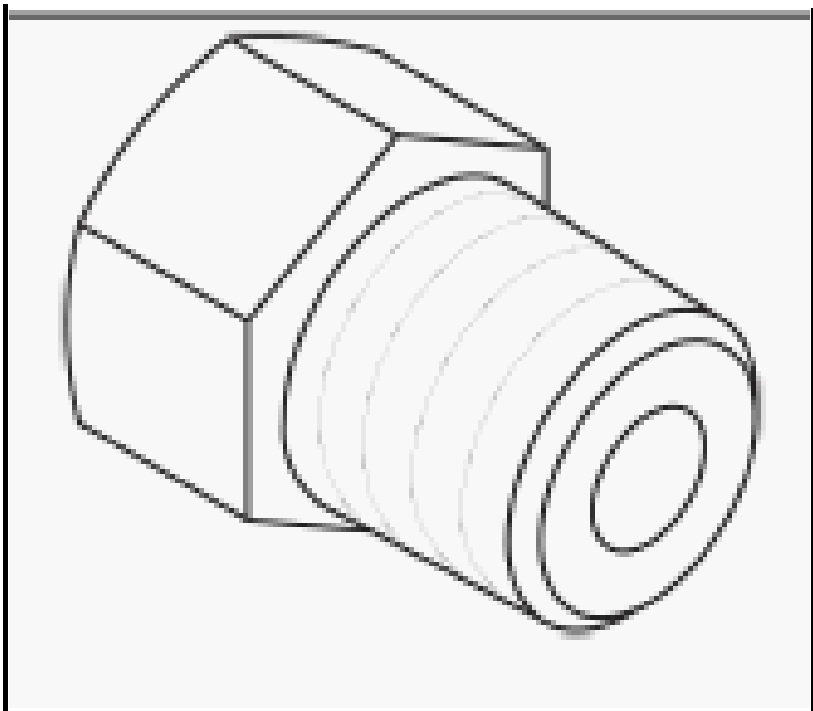	(Originally Shipped In Kit Number(s) 9998.)
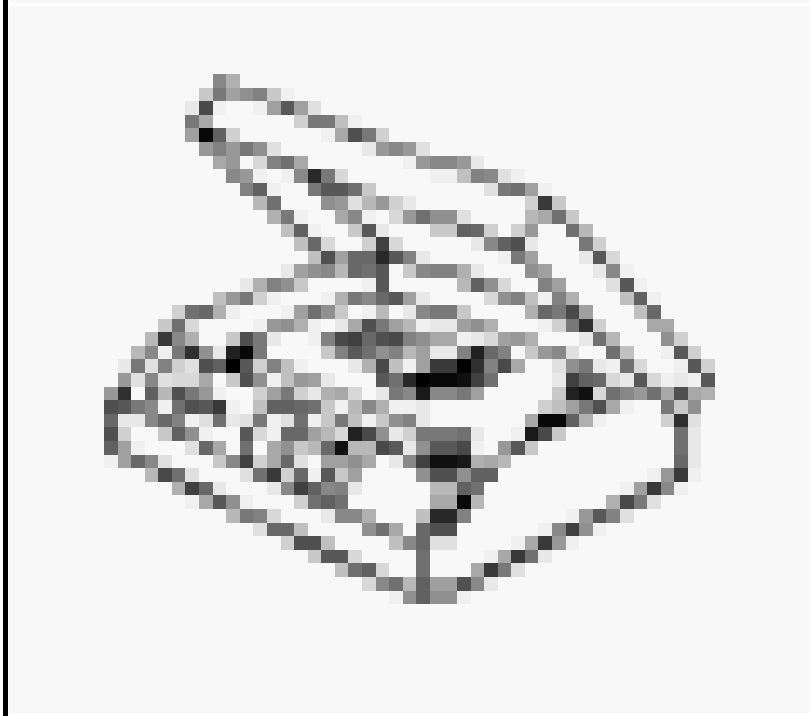	C-3685-A - Bloc-Chek Kit
	C-4171 - Driver Handle, Universal (Originally Shipped In Kit Number(s) 9202, 9202A-CAN, 9202CC, 9299,

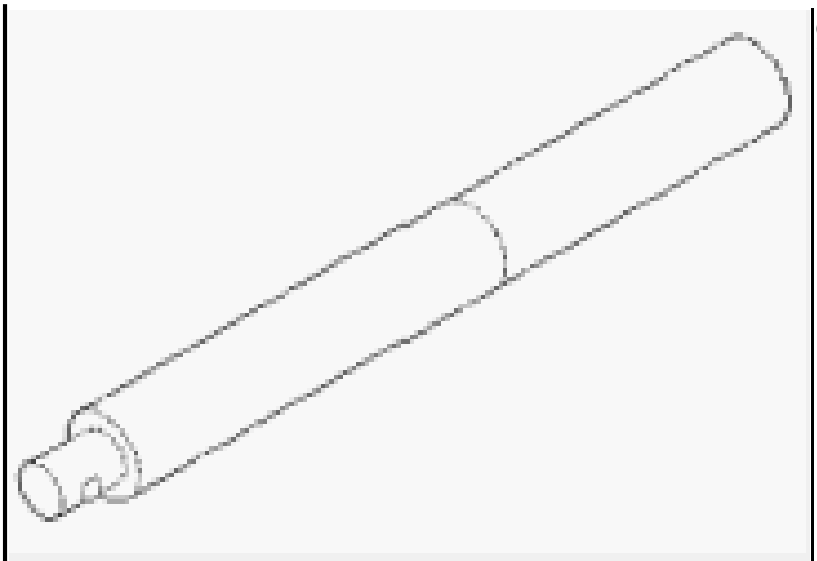	9299CC, 9300A-CAN.)
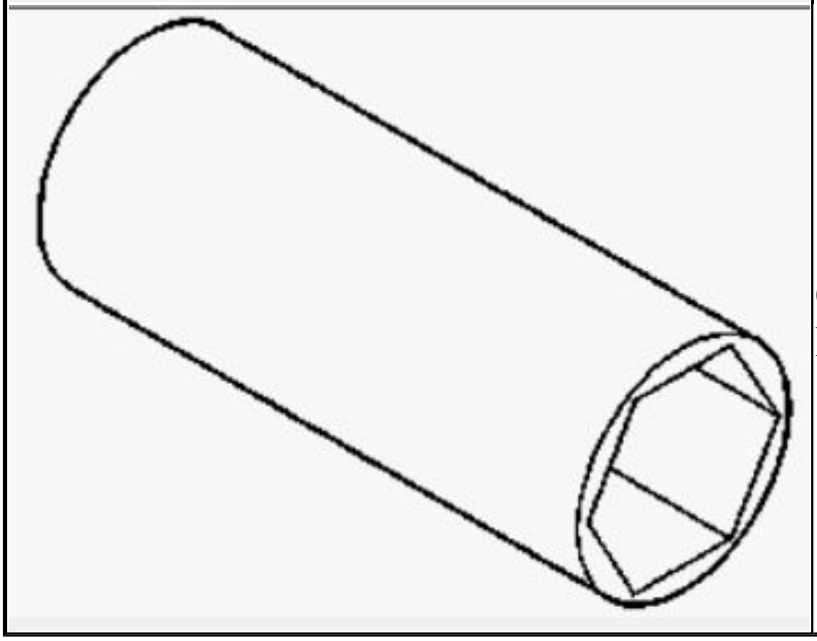	C-4597 - Socket, Oil Pressure

PLATE, IDENTIFICATION

DESCRIPTION

DESCRIPTION

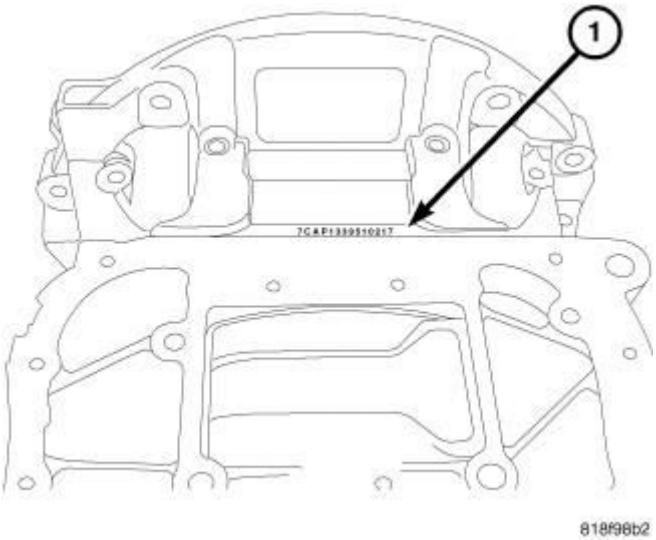

Fig. 60: Locating Engine Serial Number
Courtesy of CHRYSLER GROUP, LLC

The engine serial number (1) is located between the oil pan and the bellhousing. The serial number contains engine build date, build location, and displacement.

Example: 8CAP1339710217

WORLD ENGINE							
8	C	A	P1	339	7	1	0217
Model Year	Engine Displacement	Engine Build Variation (with oil cooler, turbo, for MMNA)	Engine Plant	Julian Day of Year	Julian Year 2007	Shift	Build Sequence Number
2008	A = 1.8L		P1 = GEMA North				
	B = 2.0L		P2 = GEMA South				
	C = 2.4L						

AIR INTAKE SYSTEM

AIR CLEANER

REMOVAL

REMOVAL

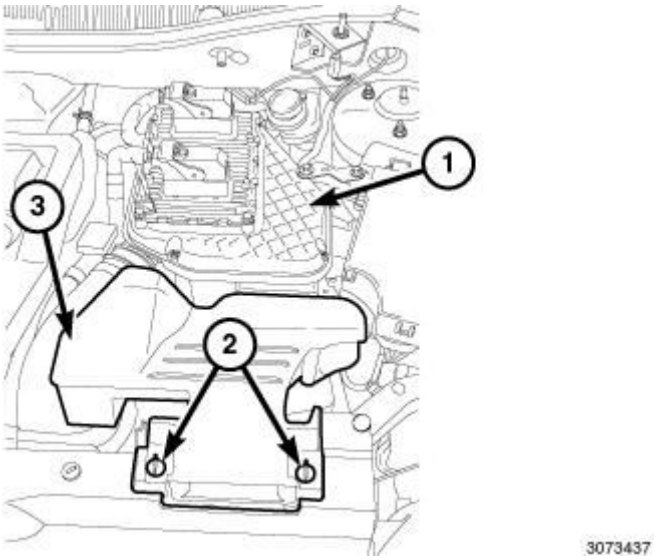

Fig. 61: Retainers, Fresh Air Inlet Duct & Air Cleaner Body
Courtesy of CHRYSLER GROUP, LLC

1. Unlock the retainers (2) and remove the fresh air inlet duct (3) from air cleaner housing (1).
2. Remove the support bracket bolt from the strut tower.
3. Remove the screws that hold the cover on the air cleaner housing.

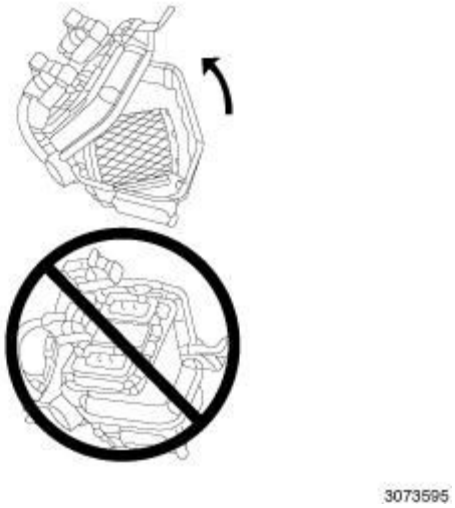

Fig. 62: Electrical Connectors At Powertrain Control Module (PCM) - DO NOT Unplug
Courtesy of CHRYSLER GROUP, LLC

CAUTION: Do Not unplug the electrical connectors from the Powertrain Control Module (PCM). A possible voltage spike can erase and damage

the PCM.

4. Position the air cleaner housing cover aside.

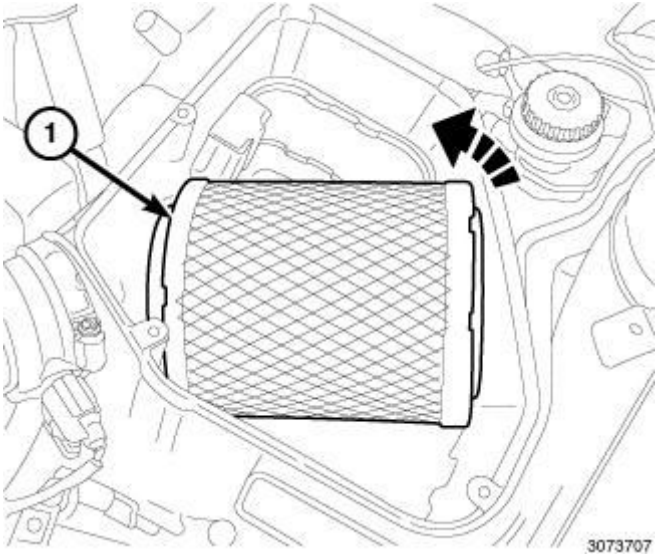

Fig. 63: Air Cleaner Element
Courtesy of CHRYSLER GROUP, LLC

5. Remove the air cleaner element (1).
6. If necessary, clean the inside of the air cleaner housing.

INSTALLATION

INSTALLATION

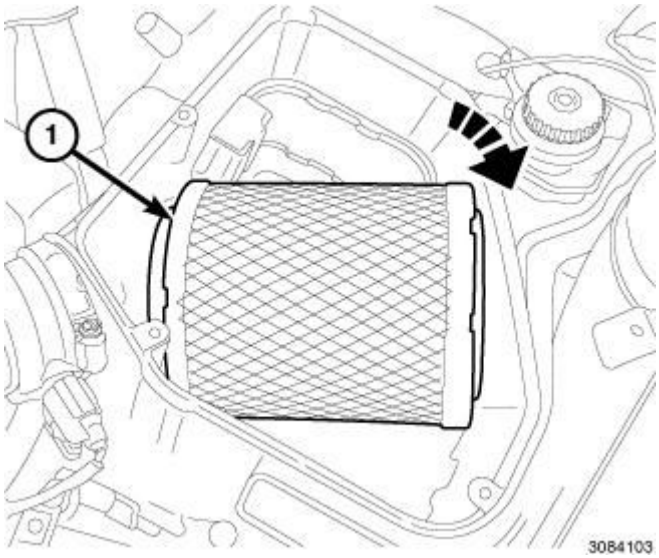

Fig. 64: Air Cleaner Element
Courtesy of CHRYSLER GROUP, LLC

1. Install the new cleaner element (1).

Fig. 65: Electrical Connectors At Powertrain Control Module (PCM) - DO NOT Unplug
Courtesy of CHRYSLER GROUP, LLC

CAUTION: Do Not unplug the electrical connectors from the Powertrain Control Module (PCM). A possible voltage spike can erase and damage the PCM.

2. Place the cover over the air cleaner housing. Hand tighten the cover screws.

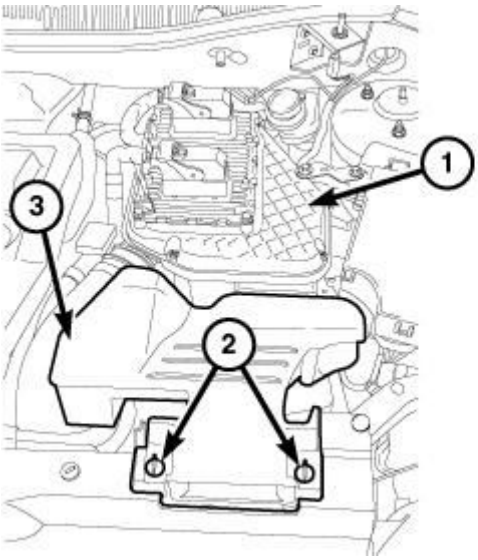

Fig. 66: Retainers, Fresh Air Inlet Duct & Air Cleaner Body
Courtesy of CHRYSLER GROUP, LLC

3. Install the support bracket bolt to the strut tower and tighten to 10 N.m (89 in. lbs.).
4. Install the fresh air inlet duct (3) on the air cleaner housing (1) and lock the retainers (2).

BODY, AIR CLEANER

REMOVAL

REMOVAL

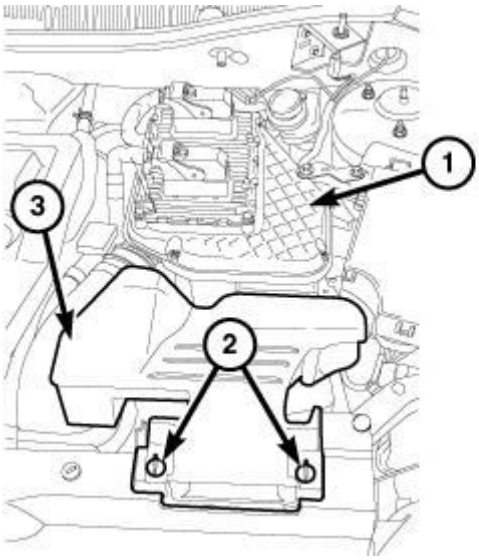

Fig. 67: Retainers, Fresh Air Inlet Duct & Air Cleaner Body
Courtesy of CHRYSLER GROUP, LLC

1. Unlock the retainers (2) and remove the fresh air inlet duct (3) from air cleaner body (1).

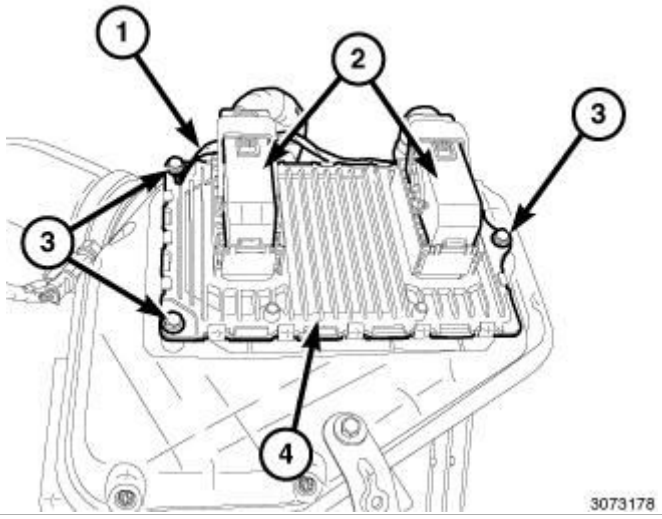

Fig. 68: Electrical Connectors, PCM, Three Mounting Bolts & Ground Wire
Courtesy of CHRYSLER GROUP, LLC

2. Remove the bolts (3) that secure the PCM (4) to the air cleaner body cover and position aside.

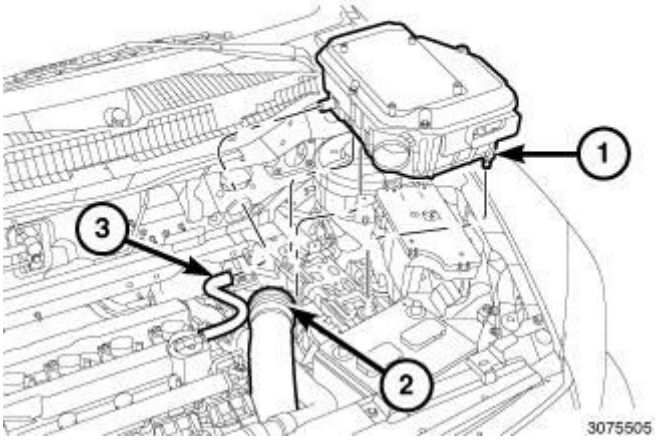

Fig. 69: Air Cleaner Body, Air Inlet Tube & Make-Up Air Hose
Courtesy of CHRYSLER GROUP, LLC

3. Remove the air inlet tube (2) from the air cleaner body (1).
4. Disconnect the make-up air hose (3) from the air cleaner body.
5. Remove the support bracket bolt from the strut tower.
6. Pull upward to disengage the pins from the rubber grommets and remove the air cleaner body (1).

INSTALLATION

INSTALLATION

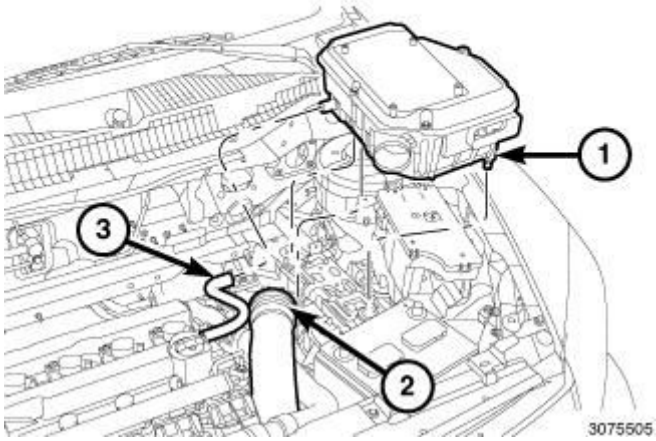

Fig. 70: Air Cleaner Body, Air Inlet Tube & Make-Up Air Hose
Courtesy of CHRYSLER GROUP, LLC

1. Make sure the rubber grommets, for the air cleaner body lower pins, are in place when reinstalling the air cleaner body.
2. Push down on the air cleaner body (1) to engage the pins into the grommets.
3. Install the support bracket bolt to the strut tower and tighten to 10 N.m (89 in. lbs.).
4. Install the air inlet tube (2) to the air cleaner body (1).
5. Connect the make-up air hose (3) to the air cleaner body.

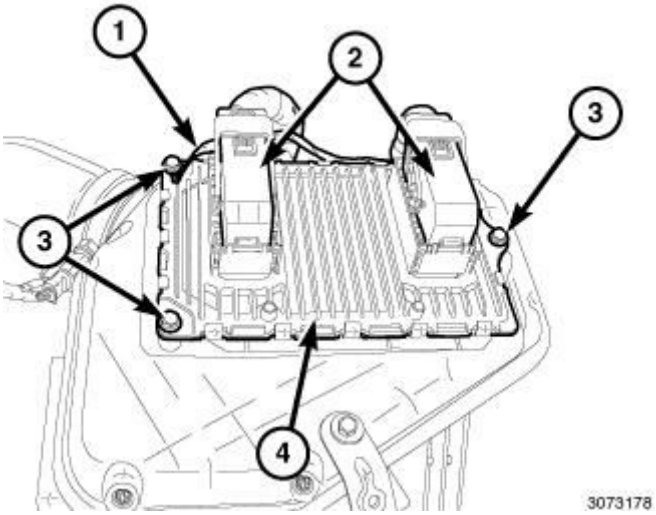

Fig. 71: Electrical Connectors, PCM, Three Mounting Bolts & Ground Wire
Courtesy of CHRYSLER GROUP, LLC

6. Position the PCM (4) on the air cleaner body cover.
7. Install three mounting bolts (3) with one ground wire (1) and tighten to 10 N.m (89 in. lbs.).

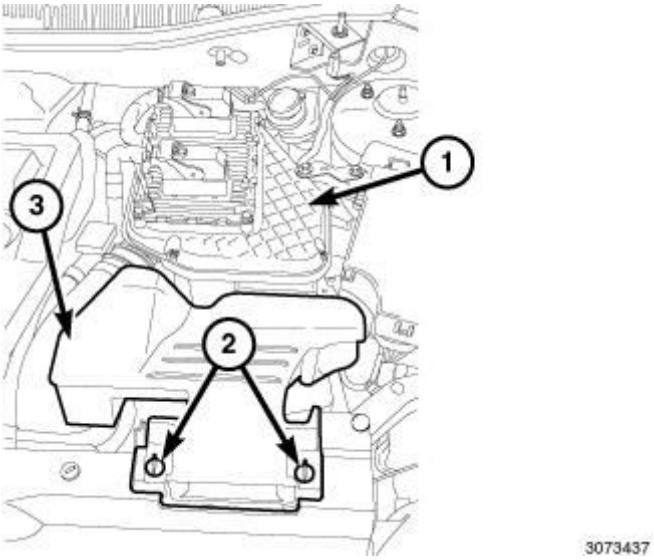

Fig. 72: Retainers, Fresh Air Inlet Duct & Air Cleaner Body
Courtesy of CHRYSLER GROUP, LLC

8. Install the fresh air inlet duct (3) on the air cleaner body (1) and lock the retainers (2).

CYLINDER HEAD

DESCRIPTION

DESCRIPTION

The cross flow designed, aluminum cylinder head contains dual over-head camshafts with four valves per cylinder. The valves are arranged in two in-line banks. The intake valves face toward the front of the vehicle. The exhaust valves face the dash panel. The cylinder head incorporates powdered metal valve guides and seats. The cylinder head is sealed to the block using a multi-layer steel head gasket and retaining bolts.

Integral oil galleries provide lubrication passages to the variable camshaft timing phasers, camshafts, and valve mechanisms.

NOTE: Replacement cylinder heads will come complete with valves, seals, springs, retainers, keepers, lash buckets,

and camshafts.

DIAGNOSIS AND TESTING

DIAGNOSIS AND TESTING - CYLINDER HEAD GASKET

A cylinder head gasket leak can be located between adjacent cylinders, between a cylinder and the adjacent water jacket or from an oil passage to the exterior of the engine.

Possible indications of the cylinder head gasket leaking between adjacent cylinders are:

- Loss of engine power
- Engine misfiring
- Poor fuel economy

Possible indications of the cylinder head gasket leaking between a cylinder and an adjacent water jacket are:

- Engine overheating
- Loss of coolant
- Excessive steam (white smoke) emitting from exhaust
- Coolant foaming

CYLINDER-TO-CYLINDER LEAKAGE TEST

To determine if an engine cylinder head gasket is leaking between adjacent cylinders, follow the procedures in Cylinder Compression Pressure Test. Refer to **CYLINDER COMPRESSION PRESSURE TEST** . An engine cylinder head gasket leaking between adjacent cylinders will result in approximately a 50-70% reduction in compression pressure.

CYLINDER-TO-WATER JACKET LEAKAGE TEST

WARNING: USE EXTREME CAUTION WHEN THE ENGINE IS OPERATING WITH COOLANT PRESSURE CAP REMOVED.

VISUAL TEST METHOD

With the engine cool, remove the coolant pressure cap. Start the engine and allow it to warm up until thermostat opens.

If a large combustion/compression pressure leak exists, bubbles will be visible in the coolant.

COOLING SYSTEM TESTER METHOD

WARNING: WITH THE COOLING SYSTEM TESTER IN PLACE, PRESSURE WILL BUILD UP FAST. EXCESSIVE PRESSURE BUILT UP BY CONTINUOUS ENGINE OPERATION MUST BE RELEASED TO A SAFE PRESSURE POINT. NEVER PERMIT THE PRESSURE TO EXCEED 138 kPa (20 psi).

Install Cooling System Tester (special tool #7700, Tester, Cooling System) or equivalent to pressure cap neck. Start the engine and observe the tester's pressure gauge. If gauge pulsates with every power stroke of a cylinder a combustion pressure leak is evident.

CHEMICAL TEST METHOD

Combustion leaks into the cooling system can also be checked by using combustion leak tester (special tool #C-3685-A, Bloc-Chek Kit) or equivalent. Perform test following the procedures supplied with the tool kit.

REMOVAL

REMOVAL

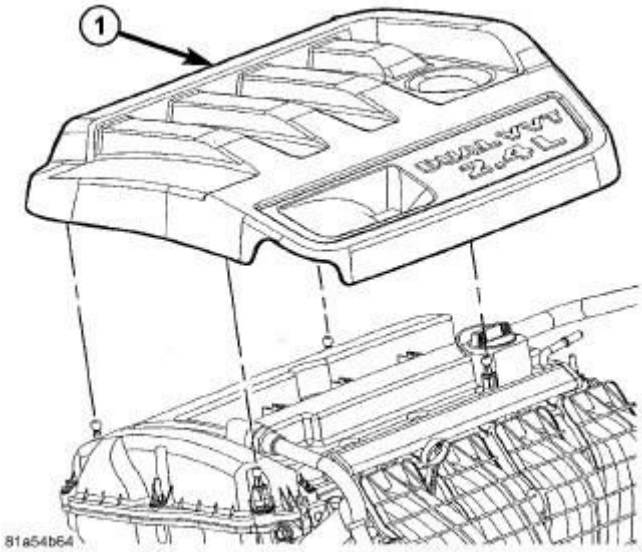

Fig. 73: Engine Cover - 2.4L
Courtesy of CHRYSLER GROUP, LLC

1. Remove the engine cover (1) by pulling upward.
2. Perform the fuel system pressure release procedure. Refer to **FUEL SYSTEM PRESSURE RELEASE PROCEDURE** .

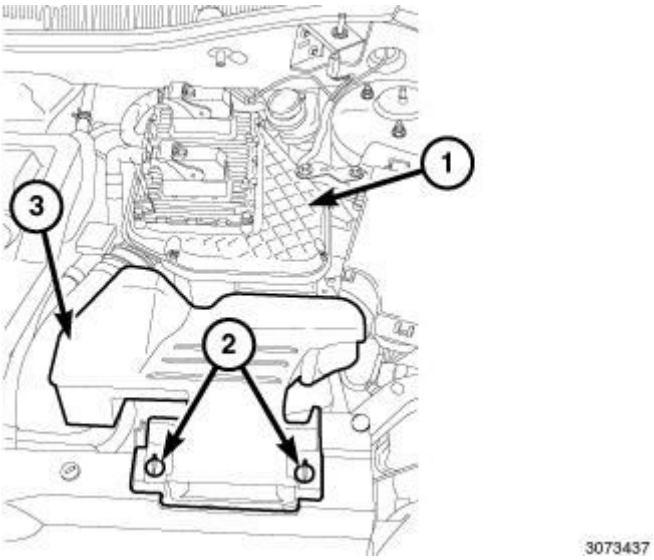

Fig. 74: Retainers, Fresh Air Inlet Duct & Air Cleaner Body
Courtesy of CHRYSLER GROUP, LLC

3. Unlock the retainers (2) and remove the fresh air inlet duct (3) from air cleaner body (1).

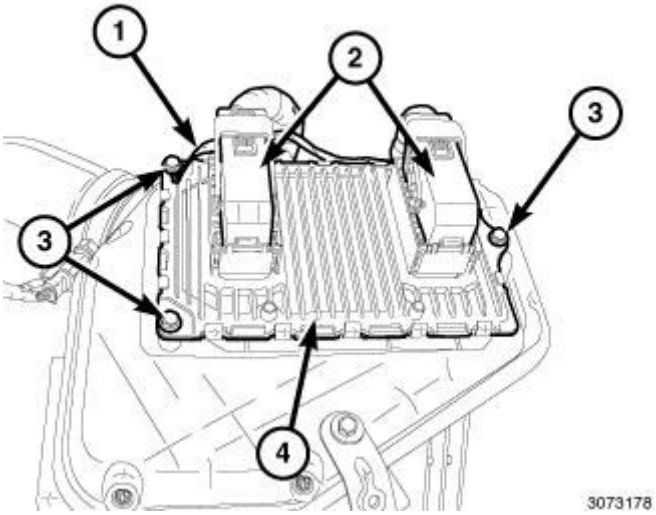

Fig. 75: Electrical Connectors, PCM, Three Mounting Bolts & Ground Wire
Courtesy of CHRYSLER GROUP, LLC

4. Disconnect and isolate the negative battery cable.
5. Unlock and disconnect the electrical connectors (2) from the PCM (4).
6. Remove the mounting bolt (3) and ground wire (1).

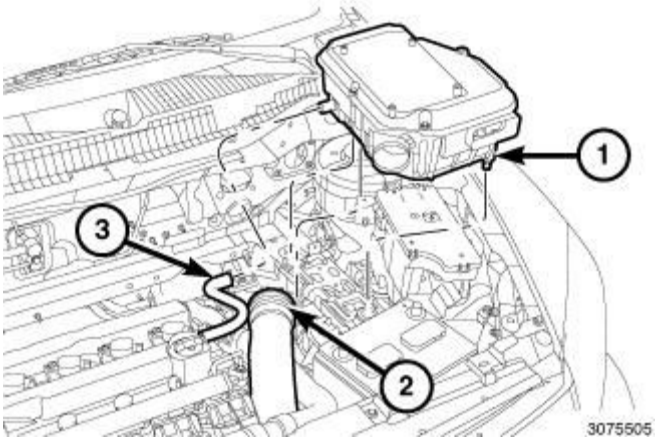

Fig. 76: Air Cleaner Body, Air Inlet Tube & Make-Up Air Hose
Courtesy of CHRYSLER GROUP, LLC

7. Remove the air inlet tube (2) from the air cleaner body (1).
8. Disconnect the make-up air hose (3) from the air cleaner body.
9. Remove the support bracket bolt from the strut tower.

10. Pull upward to disengage the pins from the rubber grommets and remove the air cleaner body (1).

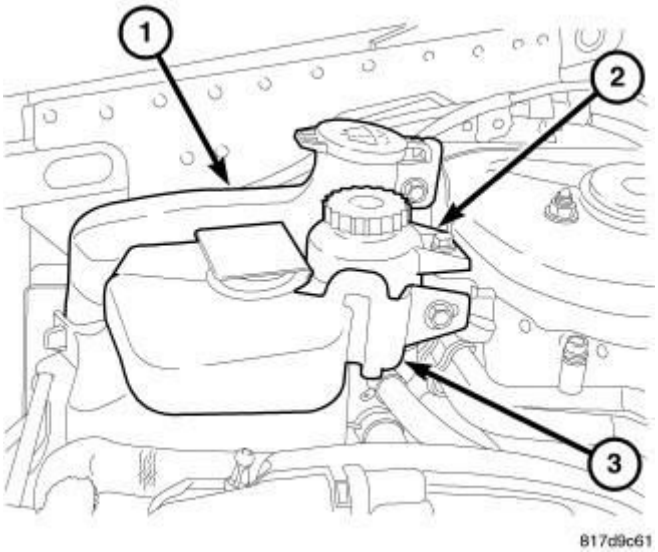

Fig. 77: Windshield Washer Reservoir, Power Steering Reservoir & Coolant Reservoir
Courtesy of CHRYSLER GROUP, LLC

11. Drain the cooling system. Refer to **STANDARD PROCEDURE** .
12. Remove the coolant recovery bottle (3). Refer to **BOTTLE, COOLANT RECOVERY, REMOVAL** .
13. Remove and reposition power steering reservoir (2).
14. Remove windshield washer bottle (1). Refer to **RESERVOIR, WINDSHIELD WASHER, REMOVAL** .
15. Remove accessory drive belt. Refer to **BELT, SERPENTINE, REMOVAL** .

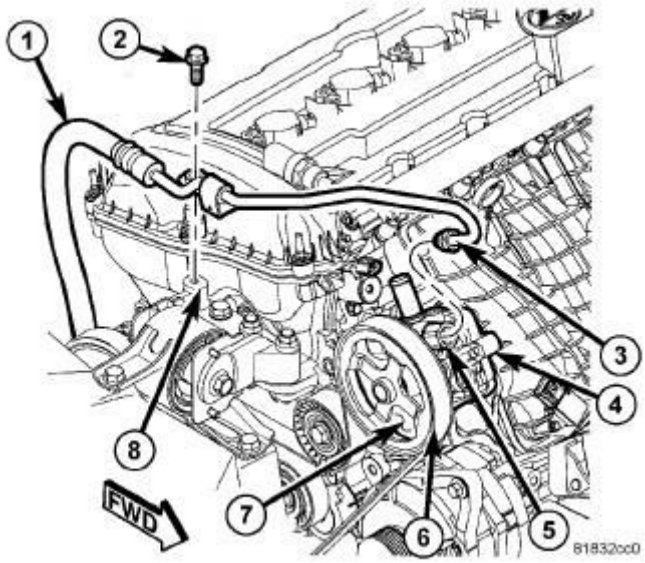

Fig. 78: Removing/Installing Power Steering Hose Hold Down
Courtesy of CHRYSLER GROUP, LLC

16. Remove power steering hose hold down (2).

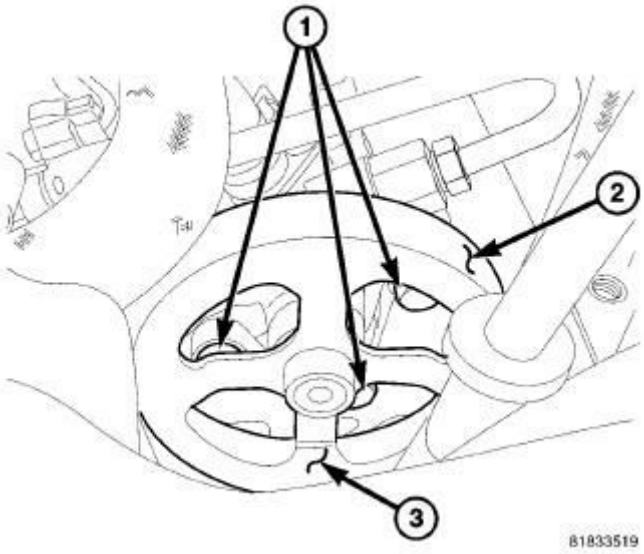

Fig. 79: Removing/Installing Power Steering Pump Mounting Bolts Through Pulley Openings
Courtesy of CHRYSLER GROUP, LLC

17. Remove the three power steering pump mounting bolts (1) through the openings in the pulley (3) and reposition the pump.

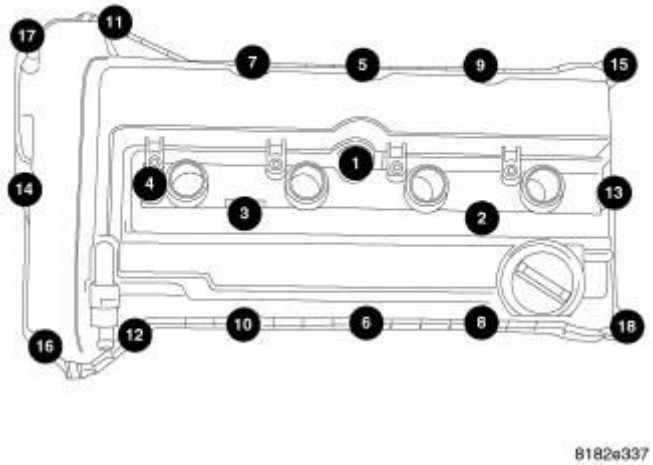

Fig. 80: Removing/Installing Cylinder Head Cover Bolts - Torque Sequence
Courtesy of CHRYSLER GROUP, LLC

18. Remove the cylinder head cover. Refer to **COVER(S), CYLINDER HEAD, REMOVAL**.
19. Remove ignition coils from cylinder head cover.

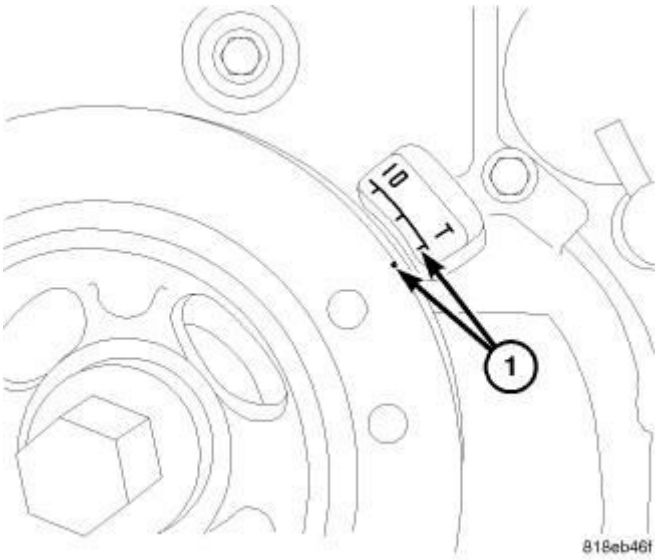

Fig. 81: Setting Engine To Top Dead Center
Courtesy of CHRYSLER GROUP, LLC

20. Raise and support the vehicle. Refer to **HOISTING, STANDARD PROCEDURE** .
21. Remove the right splash shield. Refer to **SHIELD, SPLASH, FRONT WHEELHOUSE, REMOVAL** .

22. Set engine to TDC (1).

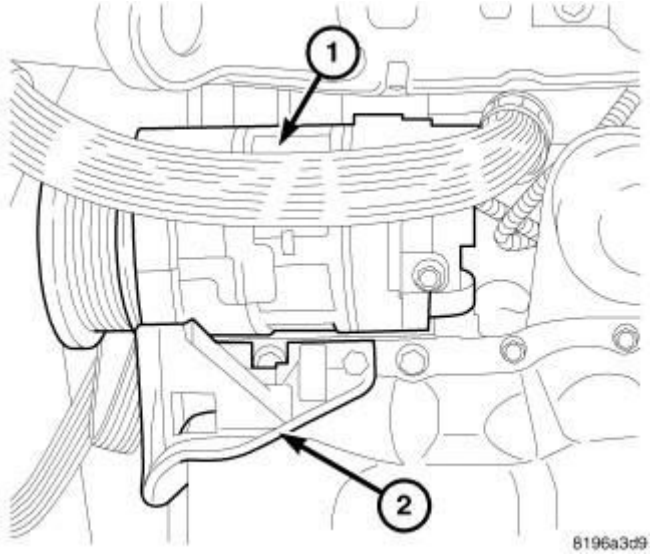

Fig. 82: A/C Compressor
Courtesy of CHRYSLER GROUP, LLC

23. Remove lower A/C compressor bolts if equipped.
24. Remove lower A/C compressor mount (2) if equipped.

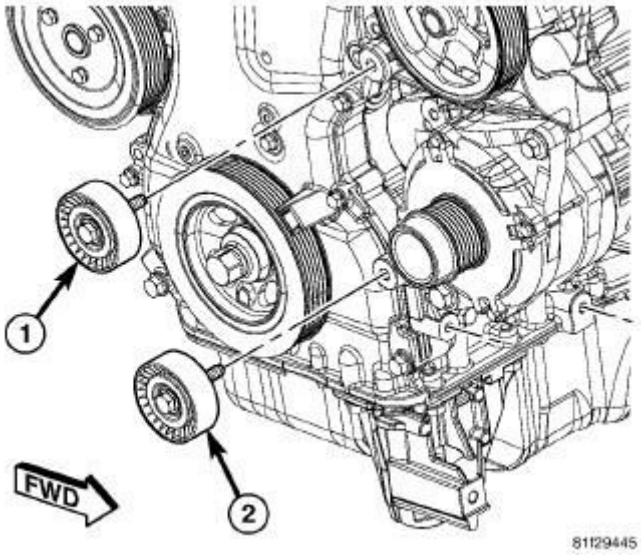

Fig. 83: Removing/Installing Accessory Drive Belt Upper & Lower Idler Pulley
Courtesy of CHRYSLER GROUP, LLC

25. Remove accessory drive belt lower idler pulley (2).

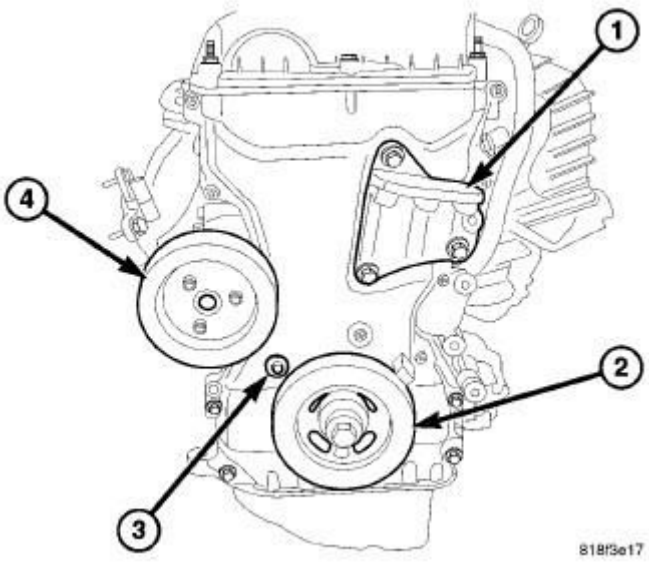

Fig. 84: Right Side Engine Mount Bracket, Crankshaft Damper & Water Pump Pulley
Courtesy of CHRYSLER GROUP, LLC

26. Remove crankshaft damper (2). Refer to **DAMPER, VIBRATION, REMOVAL**.
27. Remove three bolts and water pump pulley (4) from water pump.
28. Remove lower bolt from right side engine mount bracket (1).

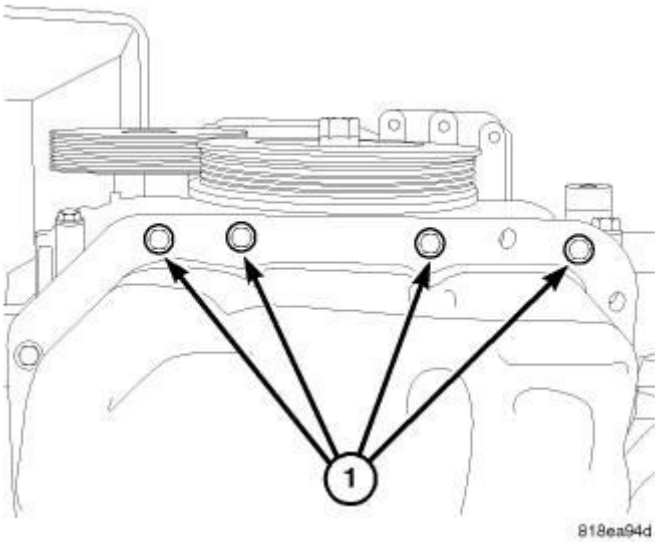

Fig. 85: Timing Chain Cover Lower Bolts
Courtesy of CHRYSLER GROUP, LLC

29. Remove timing chain cover lower bolts (1).

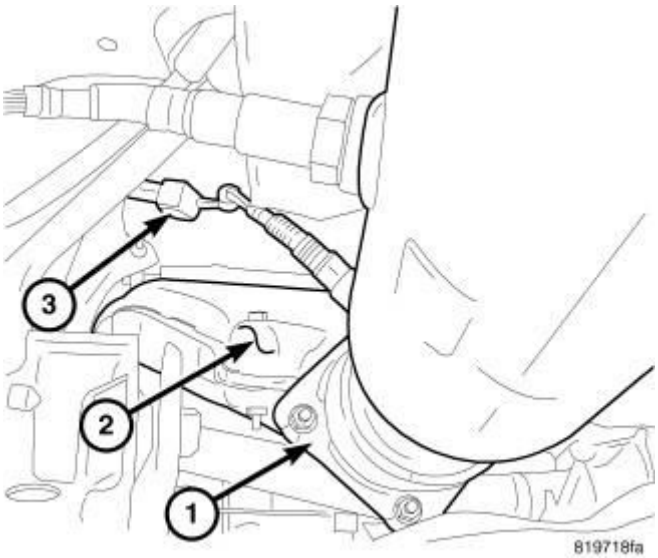

Fig. 86: Exhaust Pipe To Manifold, Heat Shield & Oxygen Sensor Electrical Connector
Courtesy of CHRYSLER GROUP, LLC

30. Remove under floor catalytic converter Refer to **CONVERTER, CATALYTIC, REMOVAL** .
31. Lower vehicle.
32. Support engine with suitable jack.

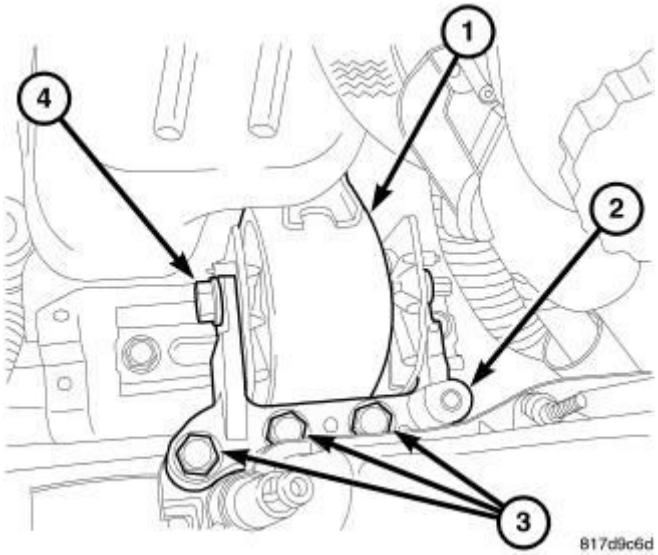

Fig. 87: Right Engine Mount Assembly
Courtesy of CHRYSLER GROUP, LLC

33. Remove right engine mount through bolt (4).
34. Remove right engine mount to mount bracket bolts (3).
35. Remove right engine mount adapter (1).

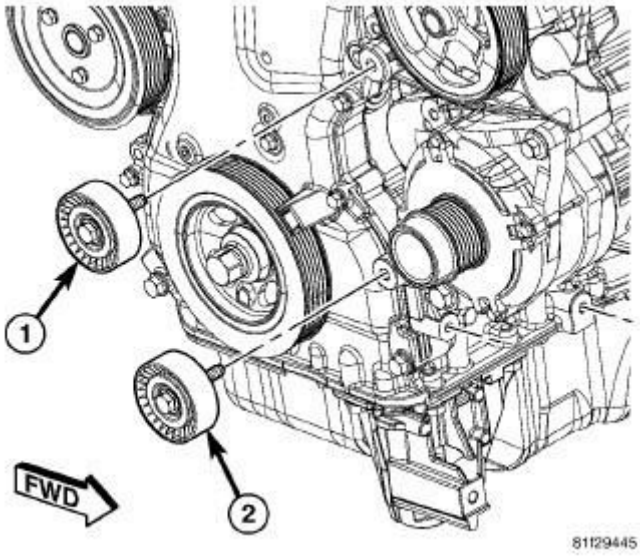

Fig. 88: Removing/Installing Accessory Drive Belt Upper & Lower Idler Pulley
Courtesy of CHRYSLER GROUP, LLC

36. Remove accessory drive upper idler pulley (1).

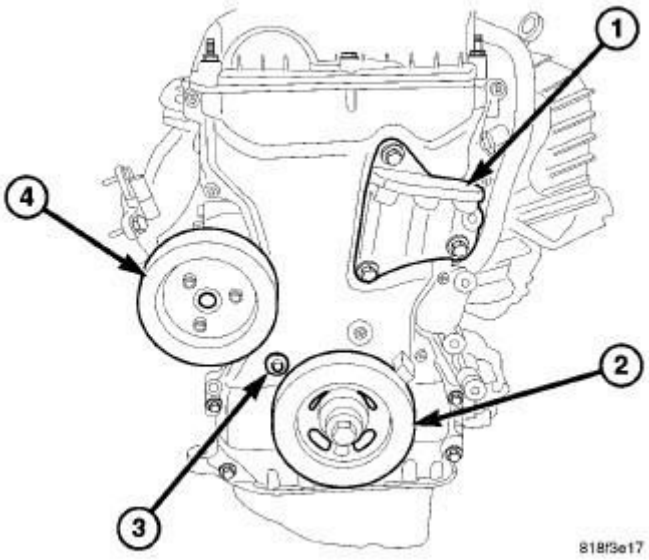

Fig. 89: Right Side Engine Mount Bracket, Crankshaft Damper & Water Pump Pulley
Courtesy of CHRYSLER GROUP, LLC

37. Remove right upper engine mount bracket (1).
38. Remove accessory drive belt tensioner.
39. Remove upper timing chain cover retaining bolts.

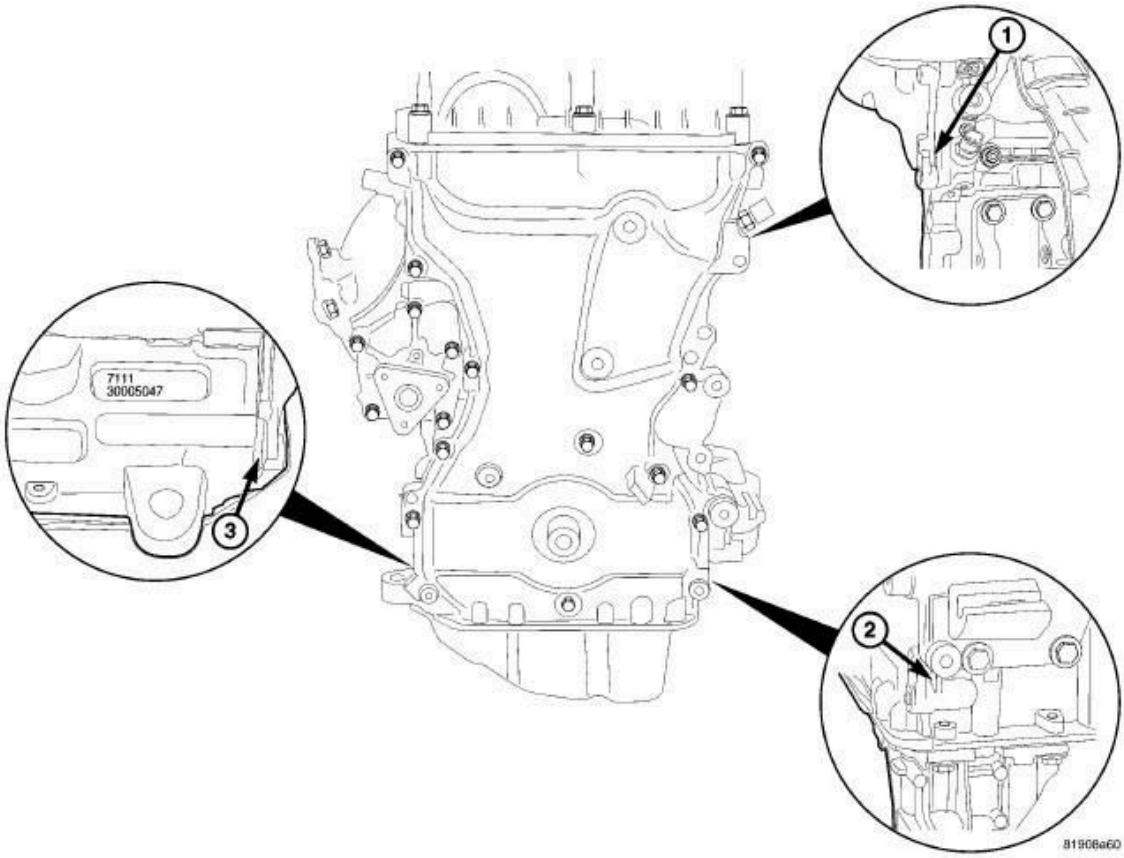

Fig. 90: Timing Chain Cover Pry Points
Courtesy of CHRYSLER GROUP, LLC

40. Remove timing chain cover using pry points (1, 2, 3).

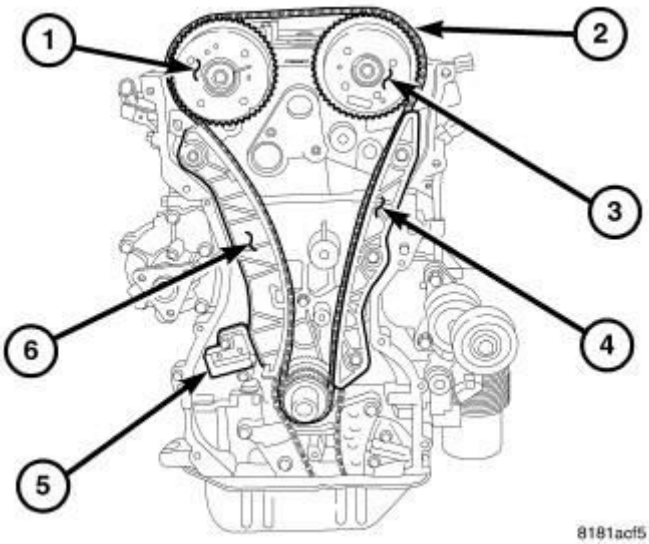

Fig. 91: Timing Drive System
Courtesy of CHRYSLER GROUP, LLC

41. Remove tensioner (5) and timing chain (2) Refer to **CHAIN AND**

SPROCKETS, TIMING, REMOVAL.

42. Remove timing chain guide (4) and timing chain pivot guide (6).

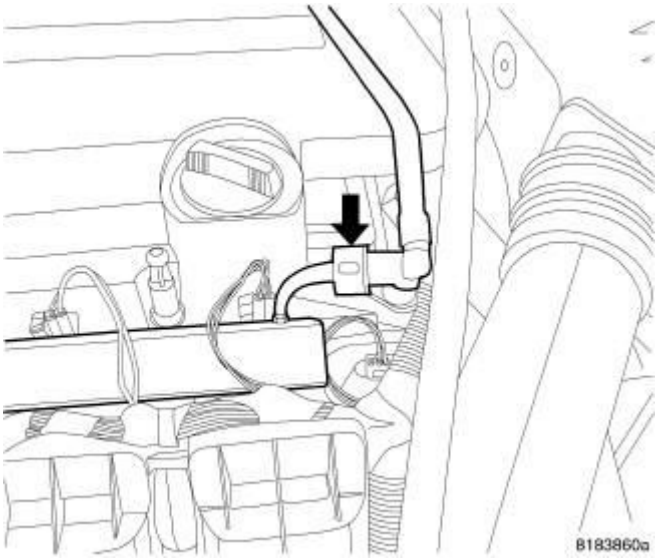

Fig. 92: Disconnecting/Connecting Fuel Line At Fuel Rail
Courtesy of CHRYSLER GROUP, LLC

43. Disconnect the fuel line from the fuel rail. Refer to **FITTING, QUICK CONNECT** .

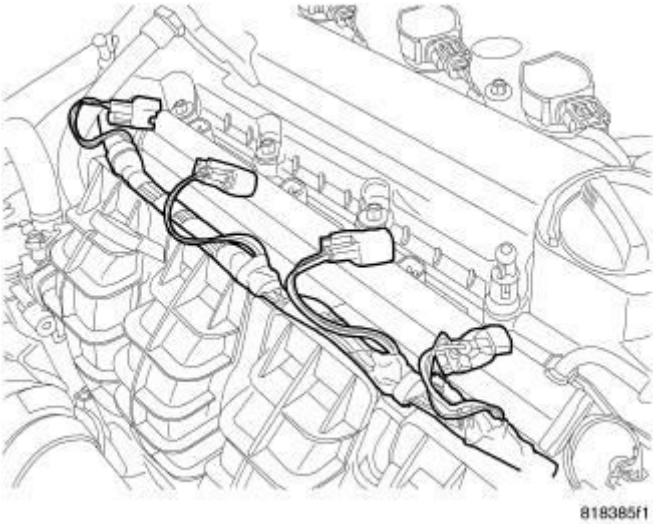

Fig. 93: Fuel Injector Electrical Connectors
Courtesy of CHRYSLER GROUP, LLC

44. Unlock and disconnect the electrical connectors from the fuel injectors.

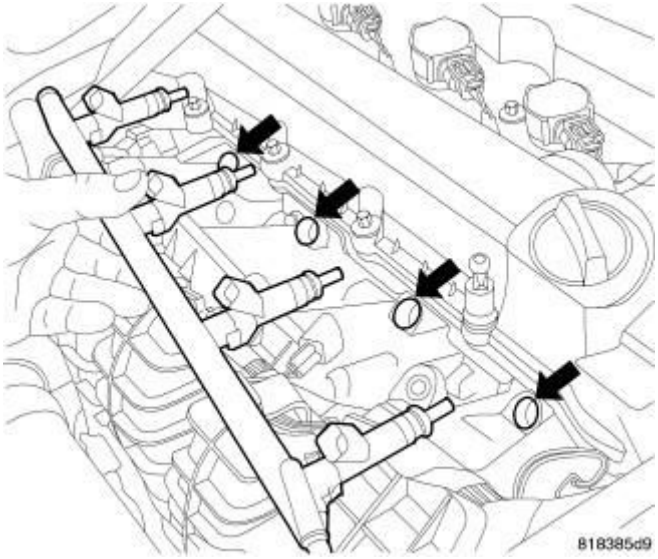

Fig. 94: Removing/Installing Fuel Rail
Courtesy of CHRYSLER GROUP, LLC

45. Remove two fuel rail retaining bolts and remove fuel rail.

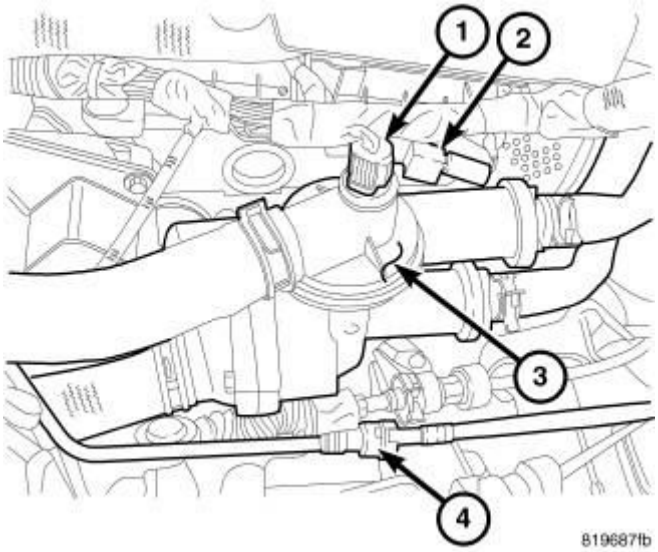

Fig. 95: Coolant Temperature Sensor, Capacitor Electrical Connector & Coolant Adapter
Courtesy of CHRYSLER GROUP, LLC

46. Disconnect electrical connectors from coolant temperature sensor (1), oil temperature sensor, variable valve timing solenoids, camshaft position sensors, MAP sensor, manifold tuning valve, ignition interference suppressor (2) and electronic throttle control.

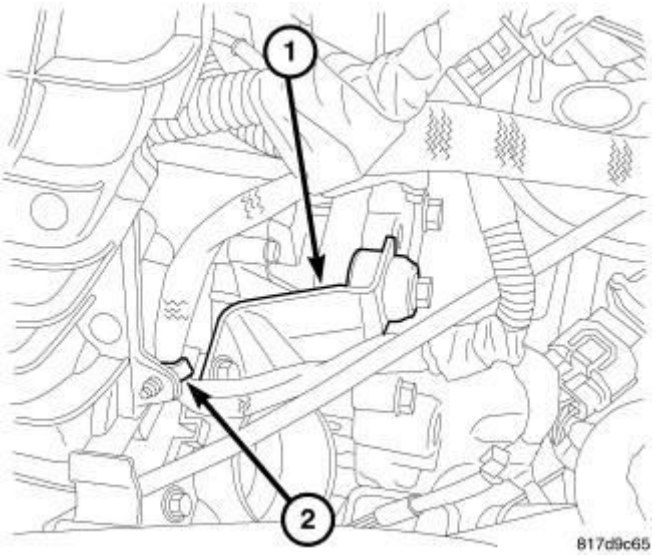

Fig. 96: Throttle Body Support
Courtesy of CHRYSLER GROUP, LLC

47. Remove wiring harness retainer from intake manifold (2) and reposition harness.
48. Remove throttle body support bracket (1).
49. Disconnect vacuum lines at intake.

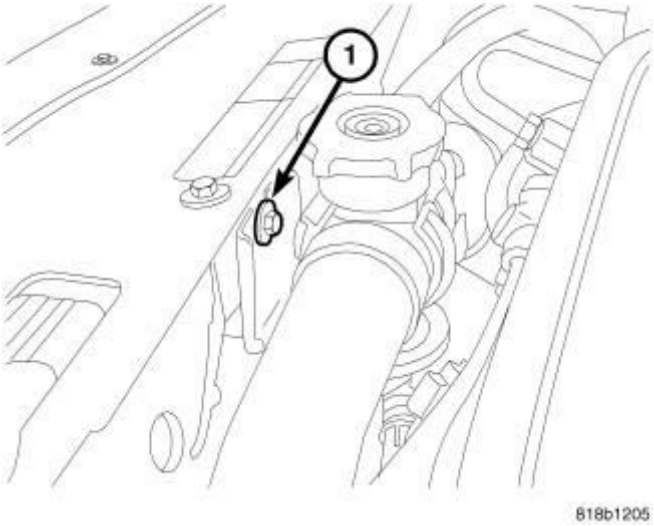

Fig. 97: Radiator Hose Support
Courtesy of CHRYSLER GROUP, LLC

50. Remove upper radiator hose retaining bolt (1).

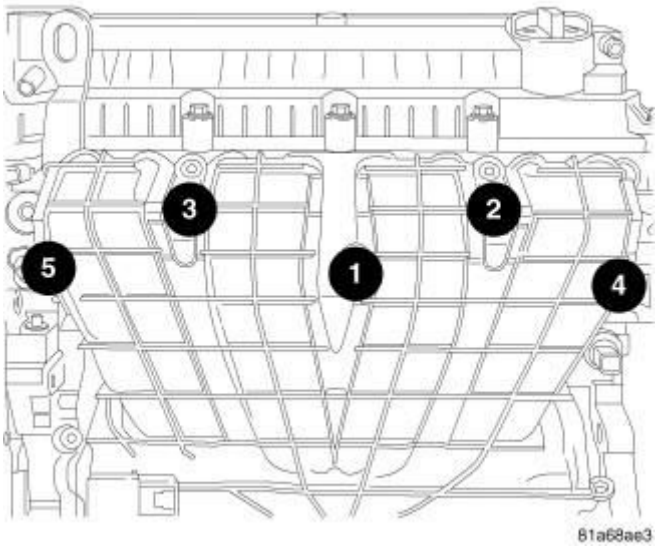

Fig. 98: Intake Manifold Bolt Removal & Tightening Sequence
Courtesy of CHRYSLER GROUP, LLC

51. Remove intake manifold retaining bolts and remove intake manifold.

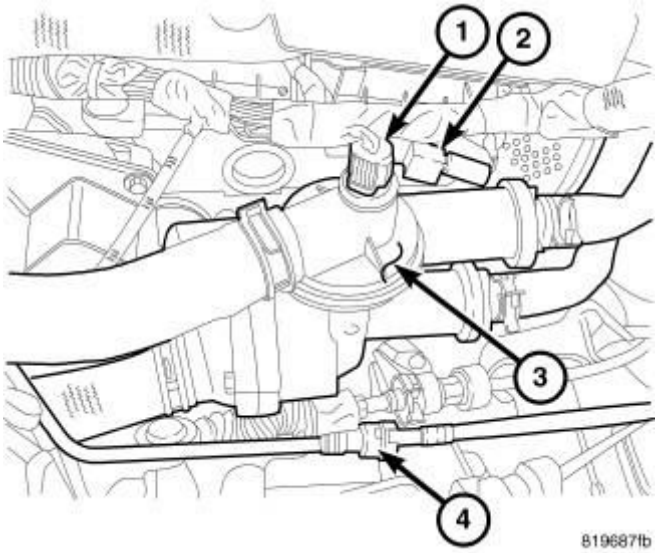

Fig. 99: Coolant Temperature Sensor, Capacitor Electrical Connector & Coolant Adapter
Courtesy of CHRYSLER GROUP, LLC

52. Remove four bolts and reposition coolant adapter (3).

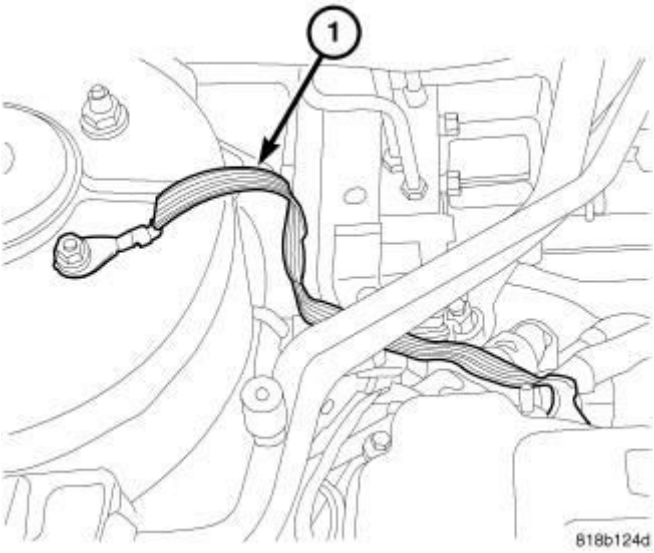

Fig. 100: Ground Strap
Courtesy of CHRYSLER GROUP, LLC

53. Remove ground strap (1) at right rear of cylinder head if equipped.

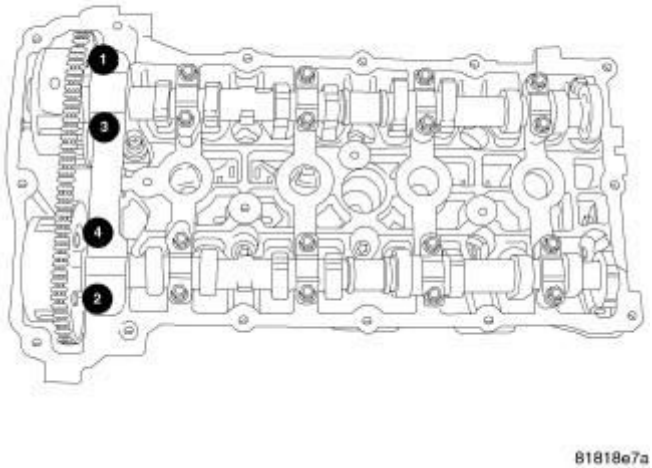

Fig. 101: Front Cam Cap Removal/Tightening Sequence
Courtesy of CHRYSLER GROUP, LLC

NOTE: Camshaft bearing caps should have been marked during engine manufacturing. For example, number one exhaust camshaft bearing is marked "E1>".

CAUTION: DO NOT use a number stamp or a punch to mark camshaft bearing caps. Damage to bearing caps could occur.

54. Using a permanent ink or paint marker, identify location and position on each camshaft bearing cap.
55. Remove the front camshaft bearing cap.
56. Slowly remove the remaining intake and exhaust camshaft bearing cap bolts one turn at a time.
57. Remove the camshafts.

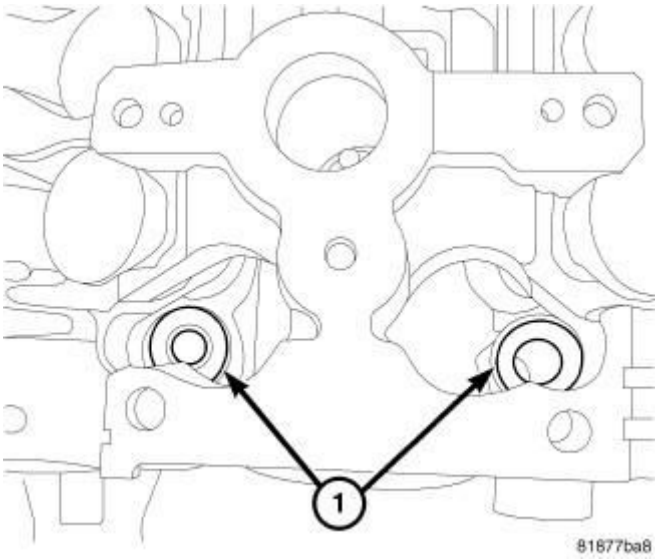

Fig. 102: Front Head Bolt Washers
Courtesy of CHRYSLER GROUP, LLC

NOTE: All of the cylinder head bolts have captured washers EXCEPT the front two (1).

58. Remove cylinder head bolts and two uncaptured washers.
59. Remove cylinder head from engine block.
60. Inspect and clean cylinder head and block sealing surfaces. Refer to **CLEANING** and **INSPECTION** .

NOTE: Ensure cylinder head bolt holes in the block are clean, dry (free of residual oil or coolant), and threads are not damaged.

CLEANING

CLEANING

Fig. 103: Proper Tool Usage For Surface Preparation
Courtesy of CHRYSLER GROUP, LLC

To ensure engine gasket sealing, proper surface preparation must be performed, especially with the use of aluminum engine components and multi-layer steel cylinder head gaskets.

NOTE: Multi-Layer Steel (MLS) head gaskets require a scratch free sealing surface.

Remove all gasket material from cylinder head and block. Refer to **ENGINE GASKET SURFACE PREPARATION** . Be careful not to gouge or scratch the aluminum head sealing surface.

Clean all engine oil passages.

INSPECTION

INSPECTION

NOTE: Replacement cylinder heads will come complete with valves, seals, springs, retainers, keepers, tappets, and camshafts.

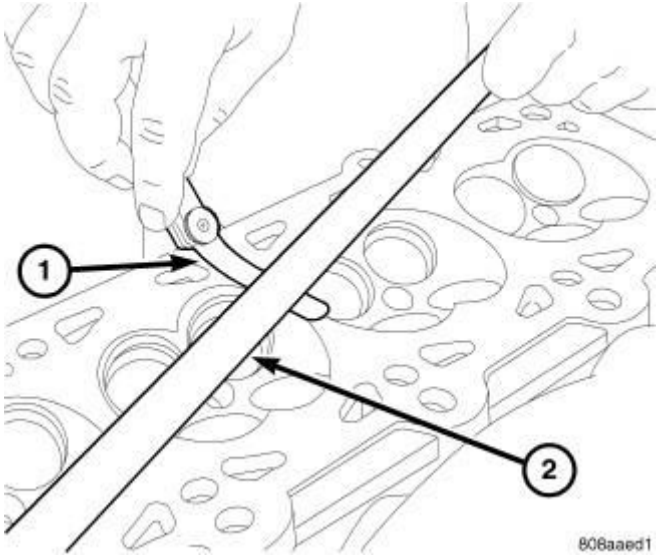

Fig. 104: Checking Cylinder Head Flatness
Courtesy of CHRYSLER GROUP, LLC

1. Check cylinder head warpage with a straight edge (2) and feeler gauge (1).
2. Cylinder head must be flat within 0.1 mm (0.004 in.).
3. Verify that the valve tappets move freely in theirs bores and that they have been rotating.
4. Inspect camshaft bearing journals for scoring.
5. Remove carbon and varnish deposits from inside of valve guides with a reliable guide cleaner.
6. Inspect the following components and verify that they are within specification. Refer to **SPECIFICATIONS** .
   - Camshafts
   - Valve Tappets
   - Springs
   - Valve Seats
   - Valve Guides
   - Valves
7. Prior to installing cylinder head, the cylinder block should be checked for flatness. Refer to Engine Block - **INSPECTION** .

INSTALLATION

INSTALLATION

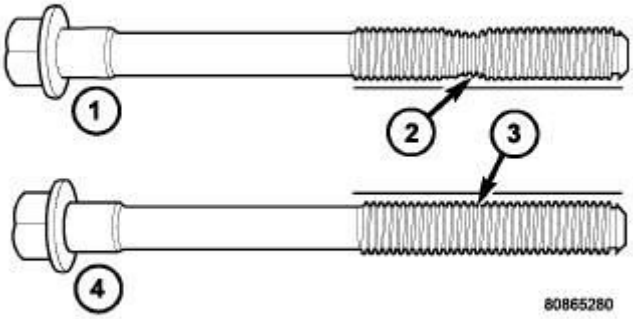

Fig. 105: Checking Cylinder Head Bolts For Stretching (Necking)
Courtesy of CHRYSLER GROUP, LLC

CAUTION: The cylinder head bolts are tightened using a torque plus angle procedure. The bolts must be examined BEFORE reuse. If the threads are necked down the bolts must be replaced.

1. Check cylinder head bolts for necking by holding a scale or straight edge against the threads. If all the threads do not contact the scale (2) the bolt must be replaced.

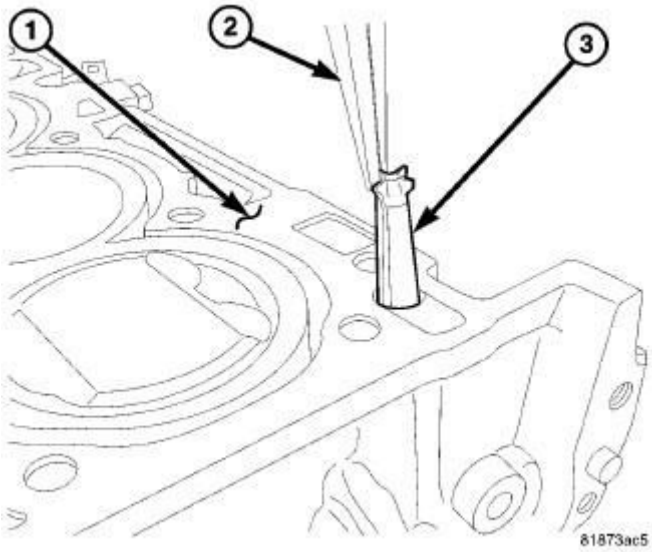

Fig. 106: Variable Valve Timing Filter Screen

Courtesy of CHRYSLER GROUP, LLC

NOTE: Ensure cylinder head bolt holes in the block are clean, dry (free of residual oil or coolant), and threads are not damaged.

CAUTION: Always replace the variable valve timing filter screen (3) when servicing the head gasket or engine damage could result.

2. Replace the variable valve timing filter screen (3).

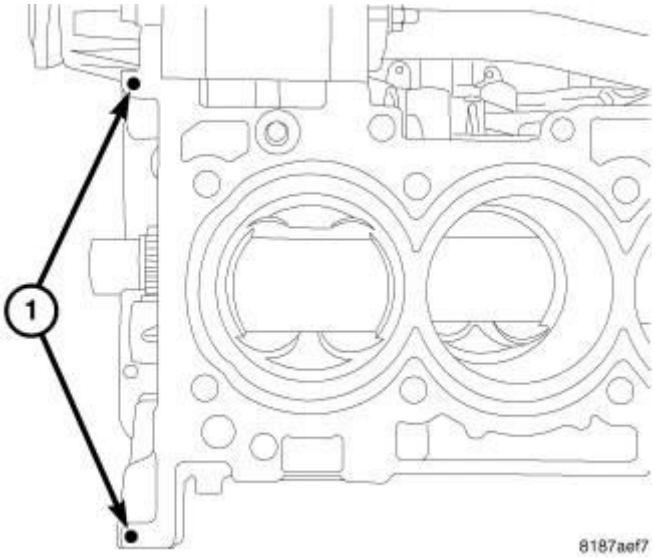

Fig. 107: Engine Sealant RTV Location
Courtesy of CHRYSLER GROUP, LLC

NOTE: When using RTV, the sealing surfaces must be clean and free from grease and oil.

NOTE: When using RTV, parts should be assembled in 10 minutes and tighten to final torque within 45 minutes.

3. Place two pea size dots of Mopar® engine sealant RTV or equivalent (1) on cylinder block as shown in illustration.

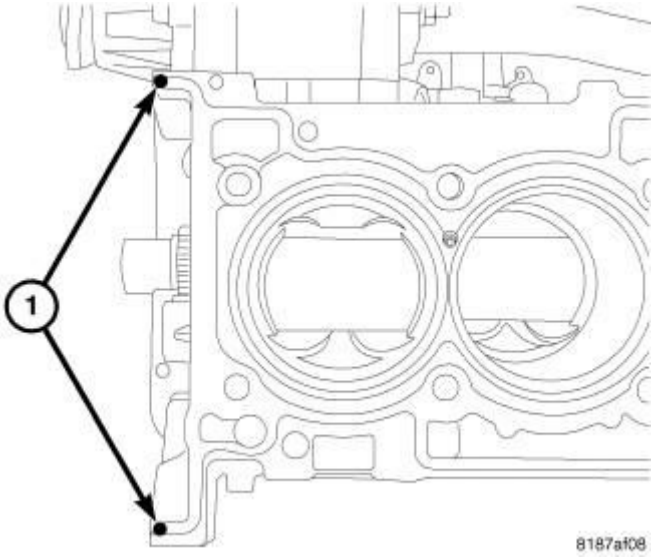

Fig. 108: Cylinder Head Gasket RTV
Courtesy of CHRYSLER GROUP, LLC

4. Position the new cylinder head gasket on engine block with the part number facing up. Ensure gasket is seated over the locating dowels in block.
5. Place two pea size dots of Mopar® engine sealant RTV or equivalent (1) on cylinder head gasket as shown in illustration.

NOTE: The head must be installed within 15 minutes before the RTV skins.

6. Position cylinder head onto engine block.

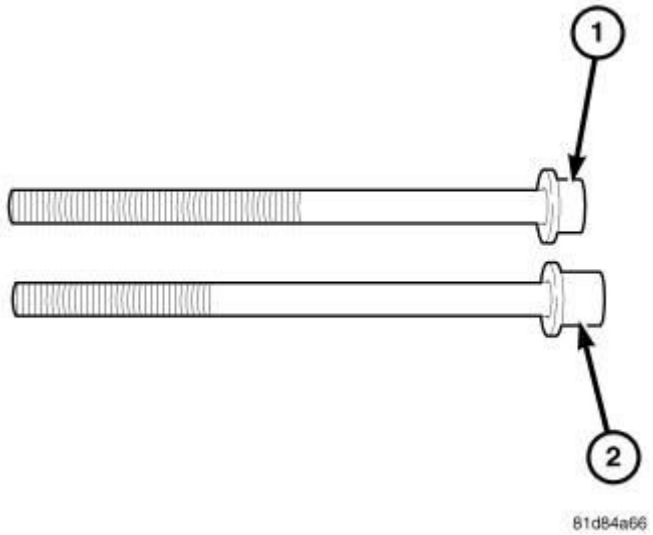

Fig. 109: Cylinder Head Bolt Identification
Courtesy of CHRYSLER GROUP, LLC

CAUTION: This engine was built with 2 different style cylinder head bolts. Each style bolt requires a different torque value. The bolts can be identified by the short bolt head (1) and the long bolt head (2).

7. Measure the bolt head from the washer to the top of the bolt head. The short bolt head (1) measures 8 mm (5/16") and the long bolt head (2) measures 13 mm (1/2").
8. Identify whether your engine has the short head design (1) or the long head design (2).

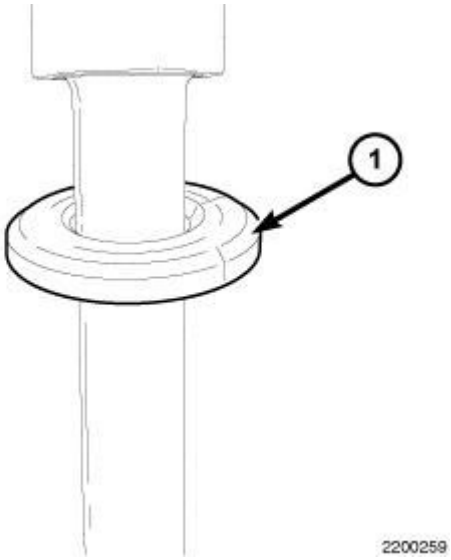

Fig. 110: Washers Must Be Installed With Bevel Edge Up Towards Bolt Head
Courtesy of CHRYSLER GROUP, LLC

NOTE: The front two cylinder head bolts do not have captured washers. The washers must be installed with the bevel edge (1) up towards the bolt head.

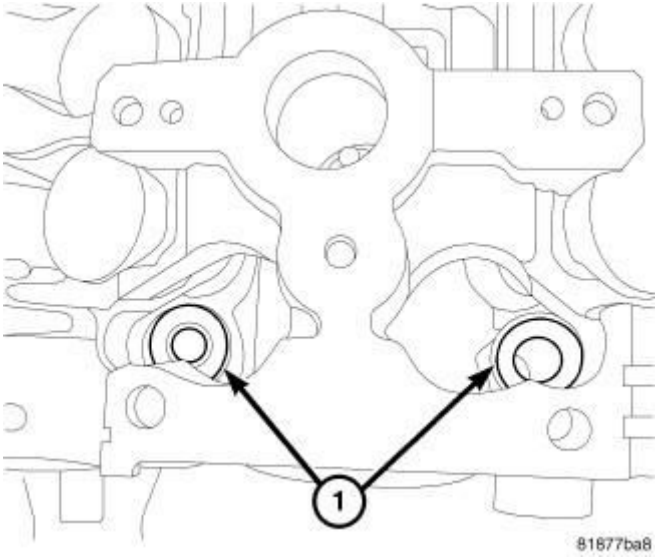

Fig. 111: Front Head Bolt Washers
Courtesy of CHRYSLER GROUP, LLC

9. Install washers (1) for the front two cylinder head bolts with the beveled edge facing up.

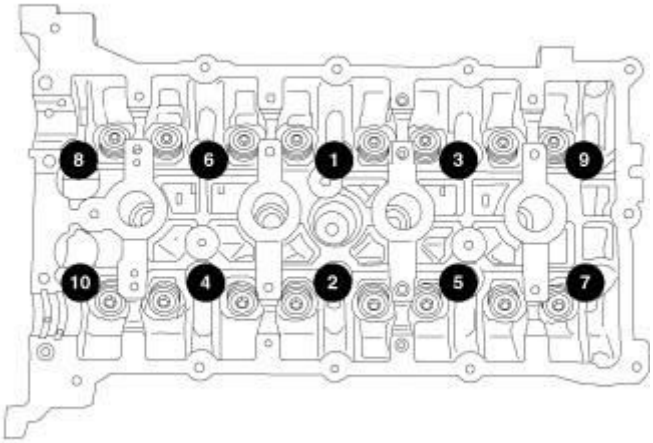

Fig. 112: Cylinder Head Torque Sequence
Courtesy of CHRYSLER GROUP, LLC

NOTE: Before installing the cylinder head bolts, lubricate the threads with clean engine oil.

10. Install the cylinder head bolts and tighten in the sequence shown in illustration.

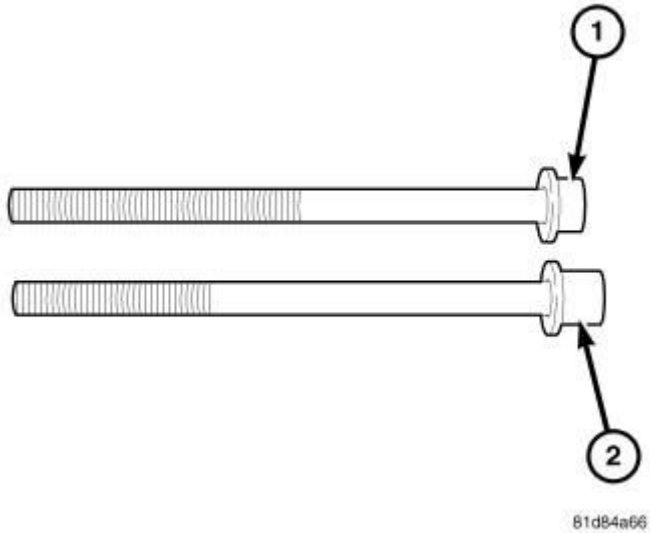

Fig. 113: Cylinder Head Bolt Identification
Courtesy of CHRYSLER GROUP, LLC

11. If your bolt has the short head (1), use the following torque specifications:
    - First: All to 30 N.m (25 ft. lbs.)
    - Second: All to 61 N.m (45 ft. lbs.)
    - Third: All to 61 N.m (45 ft. lbs.)
    - Fourth: All an additional 90°

    CAUTION: Do not use a torque wrench for the Fourth step.

12. If your bolt has the long head (2), use the following torque specifications:
    - First: All to 30 N.m (25 ft. lbs.)
    - Second: All to 73 N.m (54 ft. lbs.)
    - Third: All to 73 N.m (54 ft. lbs.)
    - Fourth: All an additional 90°

    CAUTION: Do not use a torque wrench for the Fourth step.

13. Clean excess RTV from the timing chain cover sealing surface.

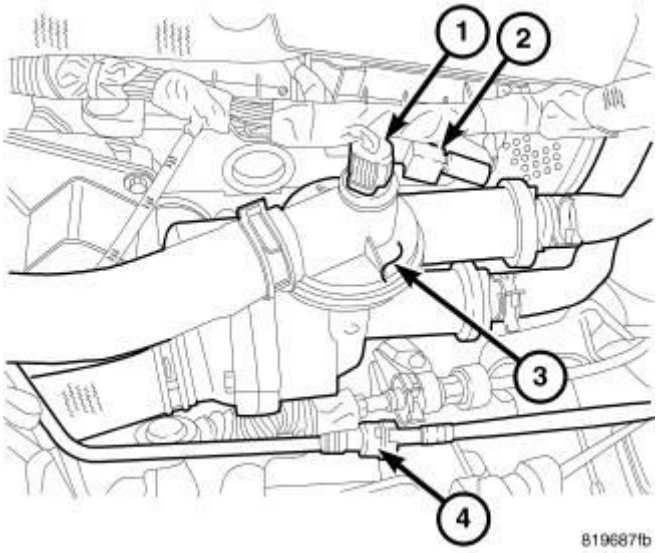

Fig. 114: Coolant Temperature Sensor, Capacitor Electrical Connector & Coolant Adapter
Courtesy of CHRYSLER GROUP, LLC

14. Install coolant adapter (3) with new seals. Tighten bolts to 18.1 N.m (159 in. lbs.).

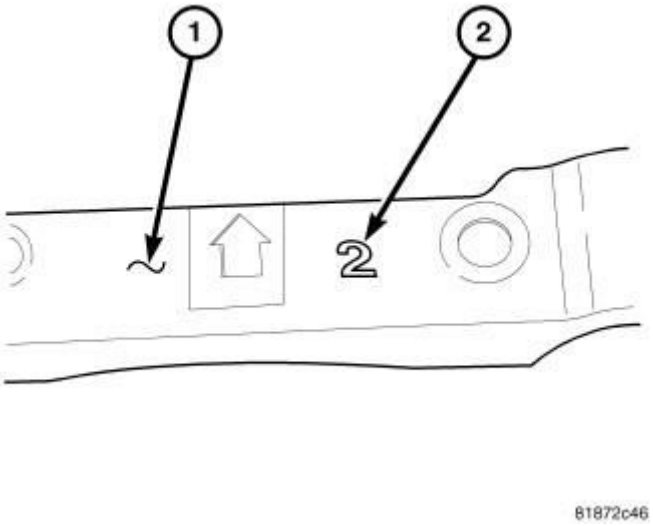

Fig. 115: Cam Cap Bearing Identification
Courtesy of CHRYSLER GROUP, LLC

15. The front camshaft bearing cap (1) is numbered (2) either one, two, or three, this corresponds to the select fit front exhaust camshaft bearing to use.

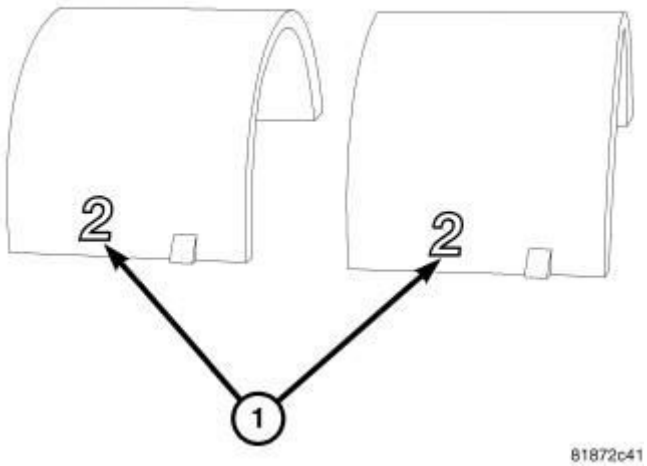

Fig. 116: Cam Bearing Identification
Courtesy of CHRYSLER GROUP, LLC

16. Install the corresponding select fit front exhaust camshaft bearing (1).
17. Oil all of the camshaft journals with clean engine oil.

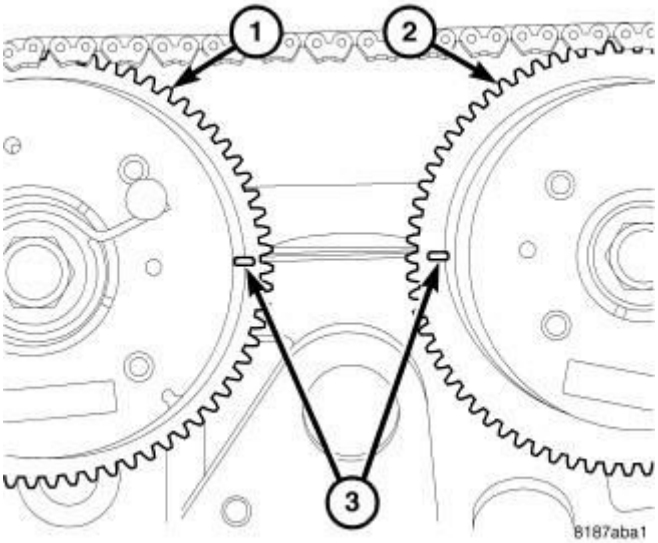

Fig. 117: Camshaft Timing
Courtesy of CHRYSLER GROUP, LLC

18. Position exhaust camshaft (1) and intake camshaft (2) on bearing journals in the cylinder head.
19. Align camshaft timing marks (3) so that they are facing each other and are in line with the cylinder head cover sealing surface.

CAUTION: Install the front intake and exhaust camshaft

bearing cap last. Ensure that the dowels are seated and follow torque sequence or damage to engine could result.

NOTE: If the front camshaft bearing cap is broken, the cylinder head MUST be replaced.

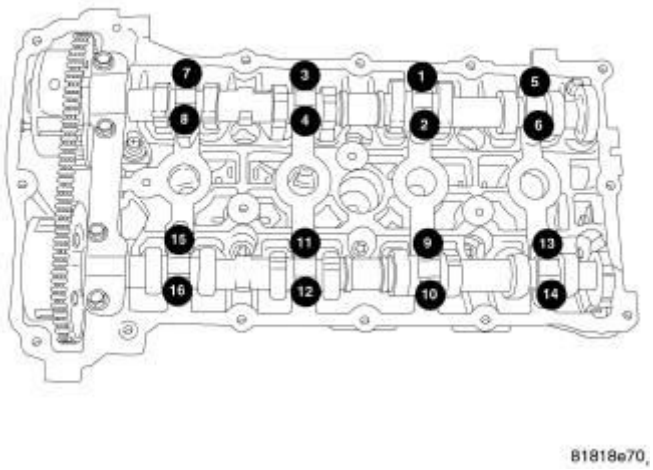

Fig. 118: Cam Cap Torque Sequence
Courtesy of CHRYSLER GROUP, LLC

20. Install intake and exhaust camshaft bearing caps and slowly tighten bolts to 9.5 N.m (85 in. lbs.) in the sequence shown in illustration.

NOTE: Verify that the exhaust bearing shells are correctly installed, and the dowels are seated in the head, prior to torquing bolts.

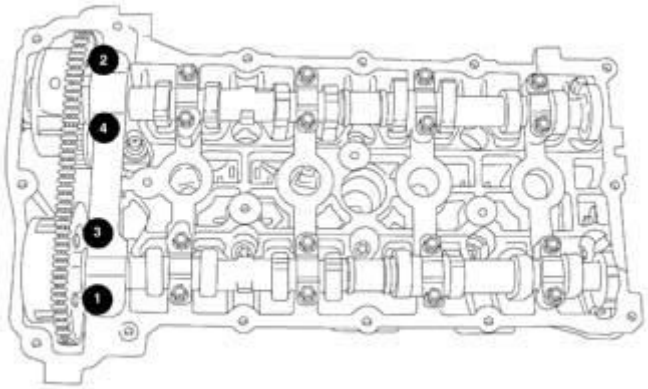

0910036103

Fig. 119: Front Cam Cap Removal/Tightening Sequence
Courtesy of CHRYSLER GROUP, LLC

NOTE: This torque sequence is for vehicles with the round hole for the Front Cam Cap Dowel located on the intake side of the cylinder head.

21. Install the front intake and exhaust bearing cap and tighten bolts to 25 N•m (18 ft. lbs.) in the sequence shown in illustration.

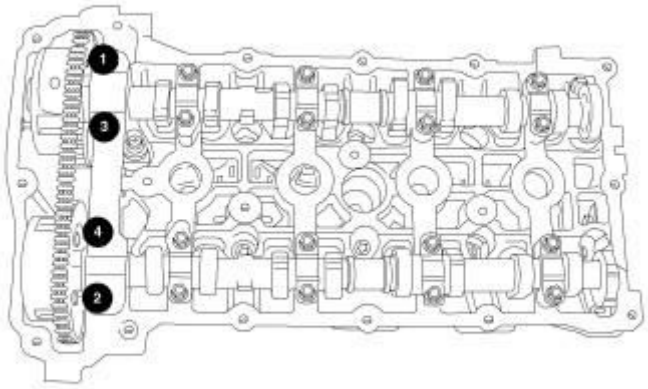

81818e7a

Fig. 120: Front Cam Cap Removal/Tightening Sequence
Courtesy of CHRYSLER GROUP, LLC

NOTE: This torque sequence is for vehicles with the round hole for the Front Cam Cap Dowel located on the

exhaust side of the cylinder head.

22. Install the front intake and exhaust bearing cap and tighten bolts to 25 N.m (18 ft. lbs.) in the sequence shown in illustration.

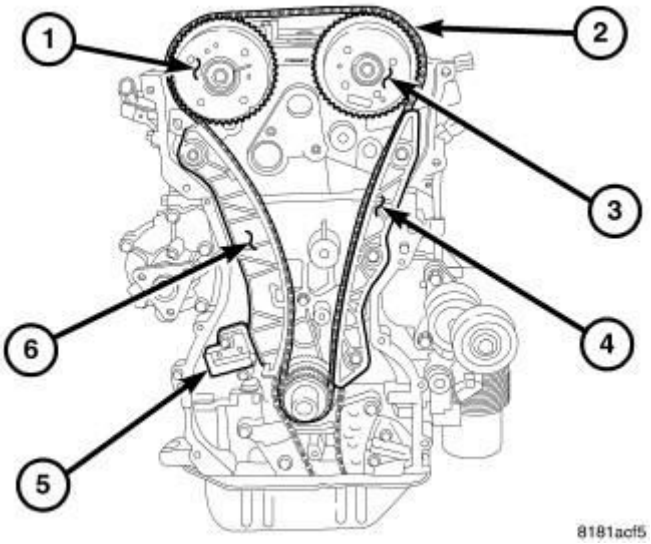

Fig. 121: Timing Drive System
Courtesy of CHRYSLER GROUP, LLC

23. Install timing chain guide (4) and tighten bolts to 12 N.m (105 in. lbs.).
24. Install the moveable timing chain pivot guide (6) and tighten bolt to 12 N.m (105 in. lbs.).
25. Install timing chain (2) and tensioner (5). Refer to **CHAIN AND SPROCKETS, TIMING, INSTALLATION**.
26. Install timing chain cover, engine mount, pulleys and accessory drive belt. Refer to **COVER(S), ENGINE TIMING, INSTALLATION**.

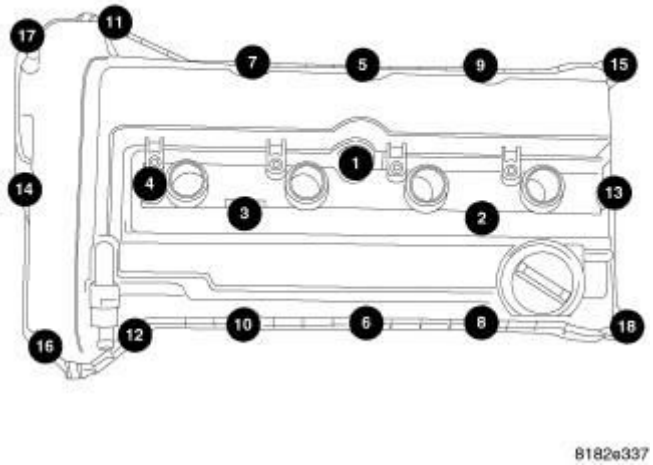

Fig. 122: Cylinder Head Cover Bolt Torque Sequence
Courtesy of CHRYSLER GROUP, LLC

27. Install cylinder head cover and ignition coils. Refer to **COVER(S), CYLINDER HEAD, INSTALLATION**.

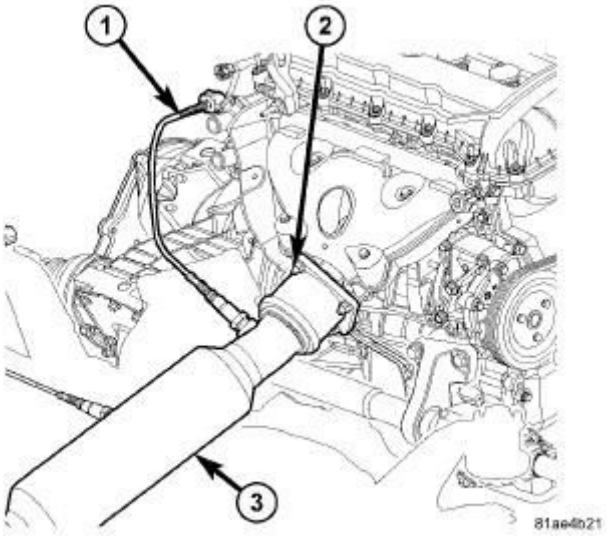

Fig. 123: Oxygen Sensor Connector, Catalytic Converter & Bolts
Courtesy of CHRYSLER GROUP, LLC

28. Install exhaust manifold. Refer to **MANIFOLD, EXHAUST, INSTALLATION**.

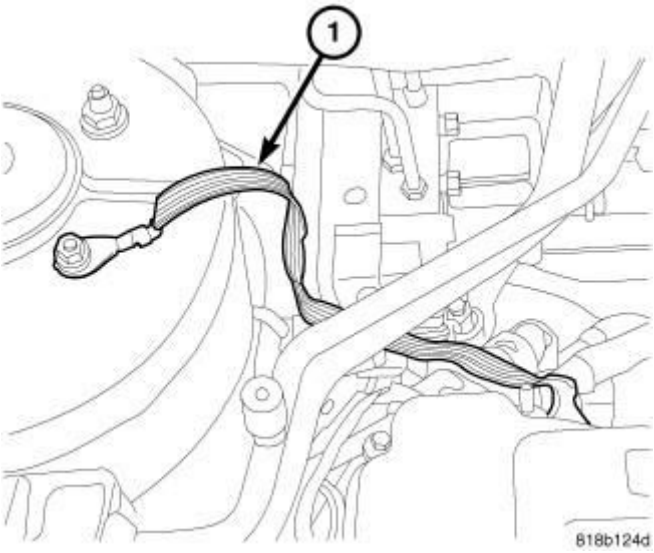

Fig. 124: Ground Strap
Courtesy of CHRYSLER GROUP, LLC

29. Install ground strap (1) at right rear of cylinder head if equipped.

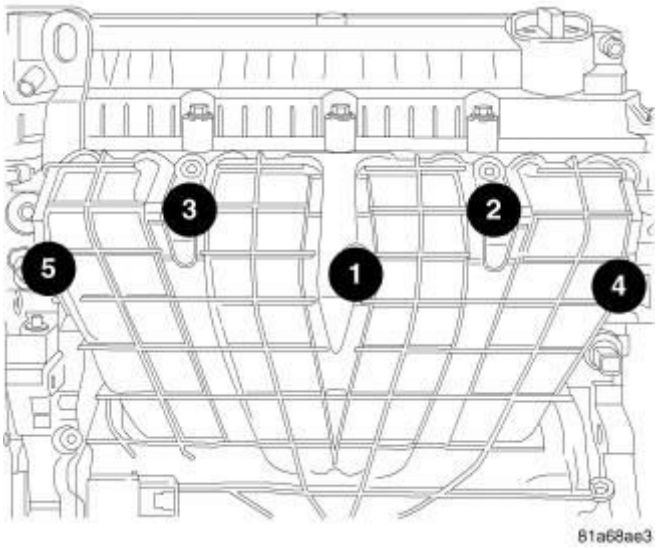

Fig. 125: Intake Bolt Removal/Tightening Sequence
Courtesy of CHRYSLER GROUP, LLC

30. Install intake manifold, vacuum lines and fuel rail. Refer to **MANIFOLD, INTAKE, INSTALLATION**.

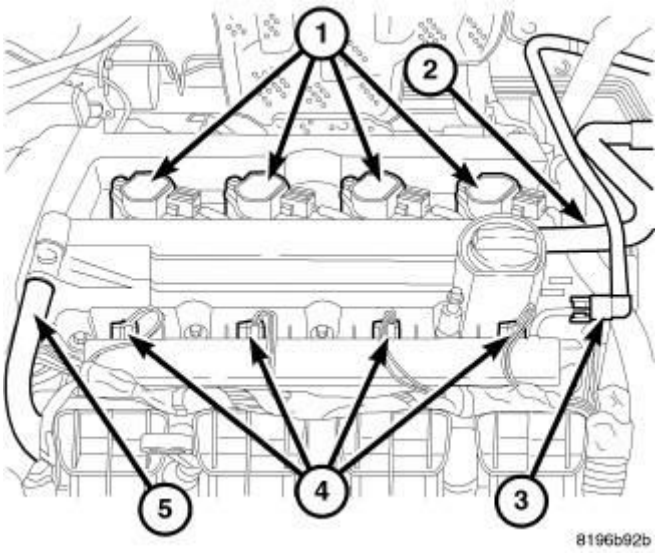

Fig. 126: Ignition Coils, Air Hose, Fuel Line, Injectors & PCV Hose
Courtesy of CHRYSLER GROUP, LLC

31. Connect coil (1) and injector (4) electrical connectors.

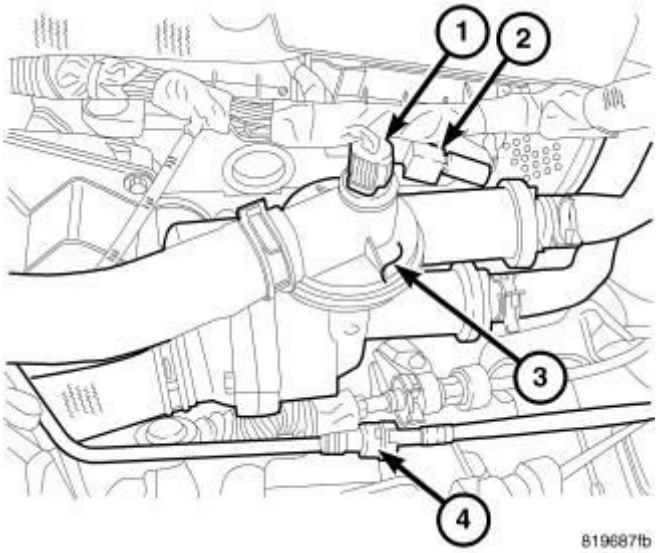

Fig. 127: Coolant Temperature Sensor, Capacitor Electrical Connector & Coolant Adapter
Courtesy of CHRYSLER GROUP, LLC

32. Connect electrical connectors to coolant temperature sensor (1), camshaft position sensors, oil temperature sensor, variable valve timing solenoids, MAP sensor, manifold tuning valve, ignition interference suppressor (2) and electronic throttle control.

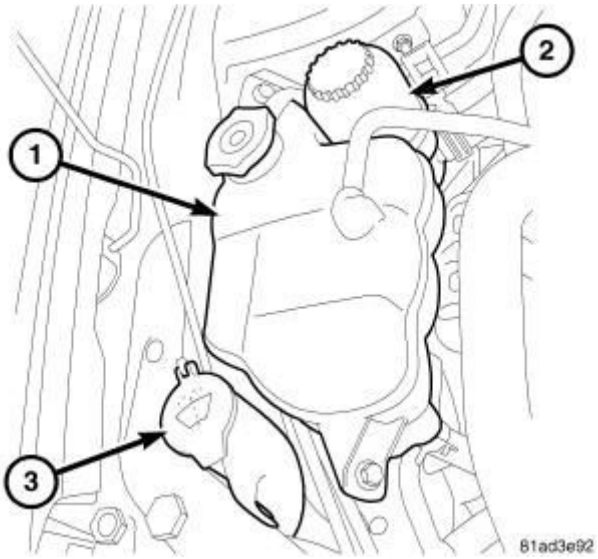

Fig. 128: Windshield Washer Reservoir, Power Steering Reservoir & Coolant Reservoir
Courtesy of CHRYSLER GROUP, LLC

33. Install power steering pump reservoir (2). Tighten mounting screw to 12 N.m (106 in. lbs.).
34. Install coolant recovery reservoir (1). Tighten mounting bolts to 10 N.m (89 in. lbs.).

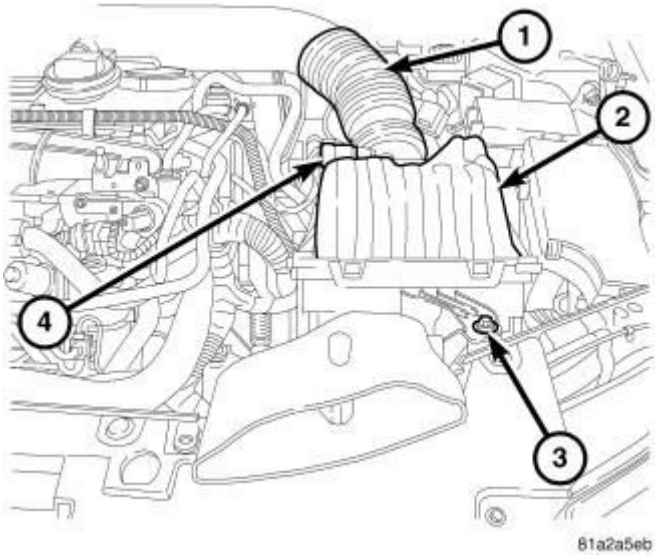

Fig. 129: Air Cleaner Housing & Retaining Bolt
Courtesy of CHRYSLER GROUP, LLC

35. Install clean air hose (1) and air cleaner housing (2). Refer to **BODY, AIR CLEANER, INSTALLATION**.
36. Fill cooling system. Refer to **STANDARD PROCEDURE** .

37. Install new oil filter and fill engine with oil.
38. Connect negative battery cable.

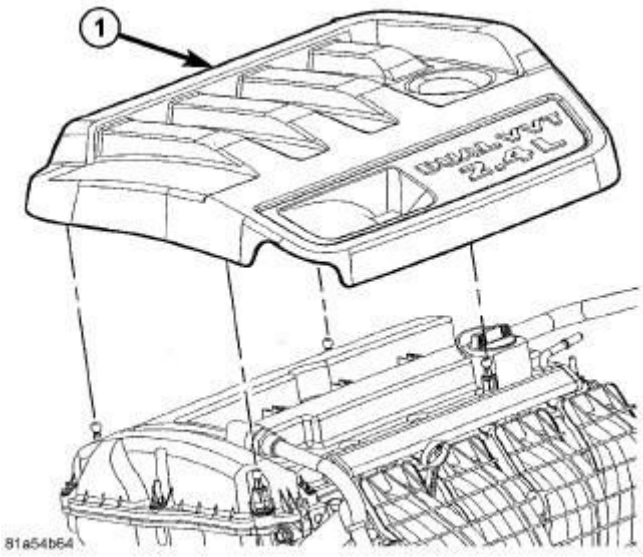

Fig. 130: Engine Cover - 2.4L
Courtesy of CHRYSLER GROUP, LLC

39. Operate engine until it reaches normal operating temperature. Check oil and cooling systems for leaks and correct fluid levels.
40. Install engine cover (1).

ASSEMBLY, VARIABLE VALVE TIMING

DESCRIPTION

DESCRIPTION

The world engine is equipped with Variable Valve Timing (VVT). This system advances and/or retards intake and/or exhaust camshaft timing to improve engine performance, mid-range torque, idle quality, fuel economy, and reduce emissions. The camshaft sprockets are integrated with the VVT assemblies and are serviced as an assembly. VVT assemblies are sometimes referred to as camshaft phasers.

OPERATION

OPERATION

The Variable Valve Timing (VVT) assemblies are actuated with engine oil pressure. The oil flow to the VVT assemblies are controlled by two Oil Control

Valves (OCV). There is an OCV and Camshaft Position Sensor (CMP) for each camshaft. The OCV's consist of a Pulse Width Modulated (PWM) solenoid and a spool valve. The PCM actuates the OCV to control oil flow through the spool valve into the VVT assemblies. The VVT assembly consists of a rotor, stator, and sprocket. The stator is connected to the timing chain through the sprocket. The rotor is connected to the camshaft. Oil flow in to the VVT assembly rotates the rotor with respect to the stator, thus rotating the camshaft with respect to the timing chain. Thus, the VVT assemblies change valve timing by changing the relationship between the camshaft and the timing chain. An integral oil pressure activated pin is used to lock base camshaft timing for engine start up. Oil pressure releases the pin and allows the PCM to control cam timing once the engine is running. An infinitely variable valve timing position can be achieved within the limits of the hardware. The CMP monitors the position of the camshaft with respect to the crankshaft and provides feedback to the PCM.

REMOVAL

REMOVAL

NOTE: Camshaft phaser and camshaft sprocket are supplied as an assembly, do not attempt to disassemble.

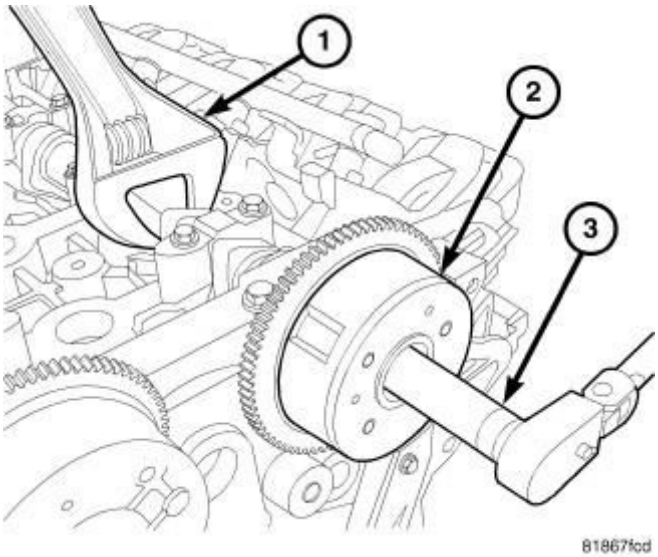

Fig. 131: Camshaft Phaser Removal & Installation
Courtesy of CHRYSLER GROUP, LLC

1. Remove camshafts. Refer to **CAMSHAFT, ENGINE, REMOVAL**.
2. Remove camshaft phaser (2) retaining bolt while holding the camshaft in place with a wrench (1) on the camshaft flats.

3. Remove phaser (2) assembly from camshaft.

INSTALLATION

INSTALLATION

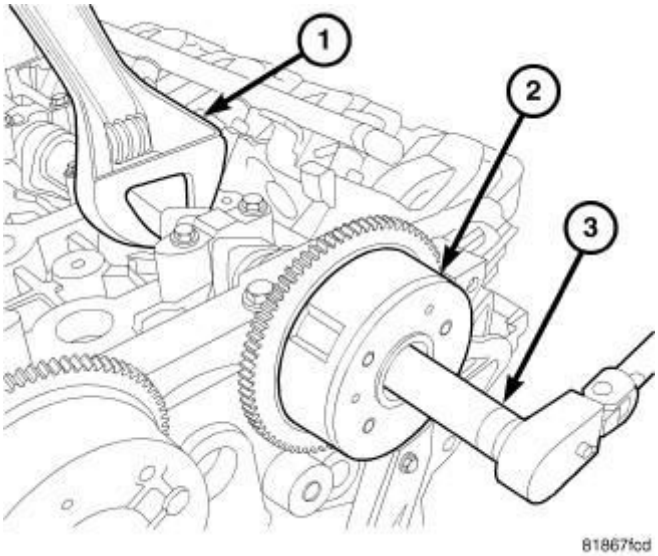

Fig. 132: Camshaft Phaser Removal & Installation
Courtesy of CHRYSLER GROUP, LLC

CAUTION: Do not use an impact wrench to tighten camshaft sprocket bolts. Damage to the camshaft-to-sprocket locating dowel pin and camshaft phaser may occur.

1. Install phaser (2) assembly on camshaft.

NOTE: Make sure the dowel is seated in the dowel hole and not in a oil feed hole. The dowel hole is larger than the 4 oil feed holes.

2. Install phaser retaining bolt. Hold camshaft in place with a wrench (1) and tighten bolt to 59 N.m (44 ft. lbs.).
3. Install camshafts. Refer to **CAMSHAFT, ENGINE, INSTALLATION**.

BUCKET, TAPPET

DIAGNOSIS AND TESTING

DIAGNOSIS AND TESTING - MECHANICAL VALVE TAPPET NOISE DIAGNOSIS

A tappet-like noise may be produced from incorrect valve lash. Refer to **STANDARD PROCEDURE** .

STANDARD PROCEDURE

STANDARD PROCEDURE - MEASURING VALVE LASH

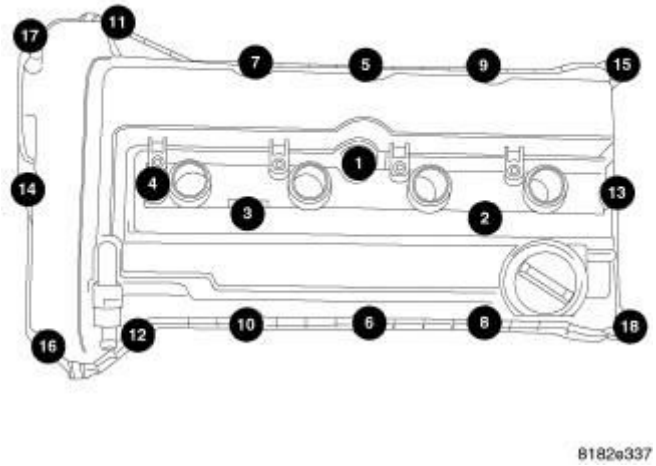

Fig. 133: Removing/Installing Cylinder Head Cover Bolts In Sequence
Courtesy of CHRYSLER GROUP, LLC

NOTE: The engine must be cold to measure valve lash.

1. Remove engine cover.
2. Remove cylinder head cover. Refer to **COVER(S), CYLINDER HEAD, REMOVAL**.

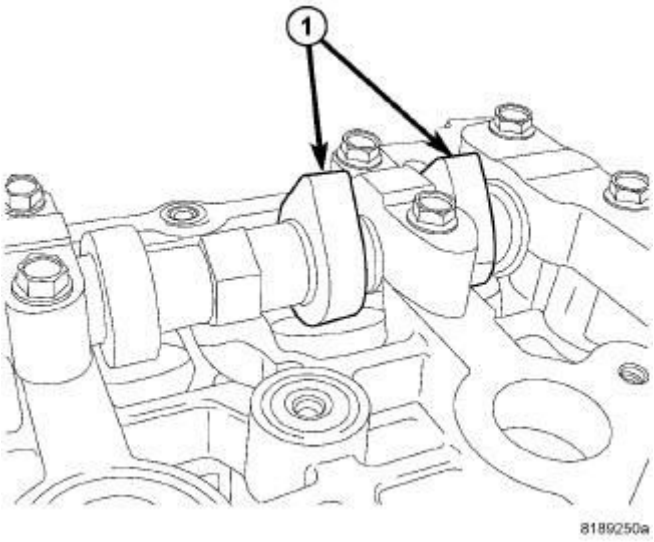

Fig. 134: Identifying Camshaft So Lobes Are Vertical
Courtesy of CHRYSLER GROUP, LLC

3. Rotate camshaft so lobes are vertical (1).
4. Check clearance using feeler gauges.
5. Repeat for all tappets and record readings.
6. If clearance was too small, refer to **CLEARANCE TOO SMALL** procedure.
7. If clearance was too large, refer to **CLEARANCE TOO LARGE** procedure.

CLEARANCE TOO SMALL

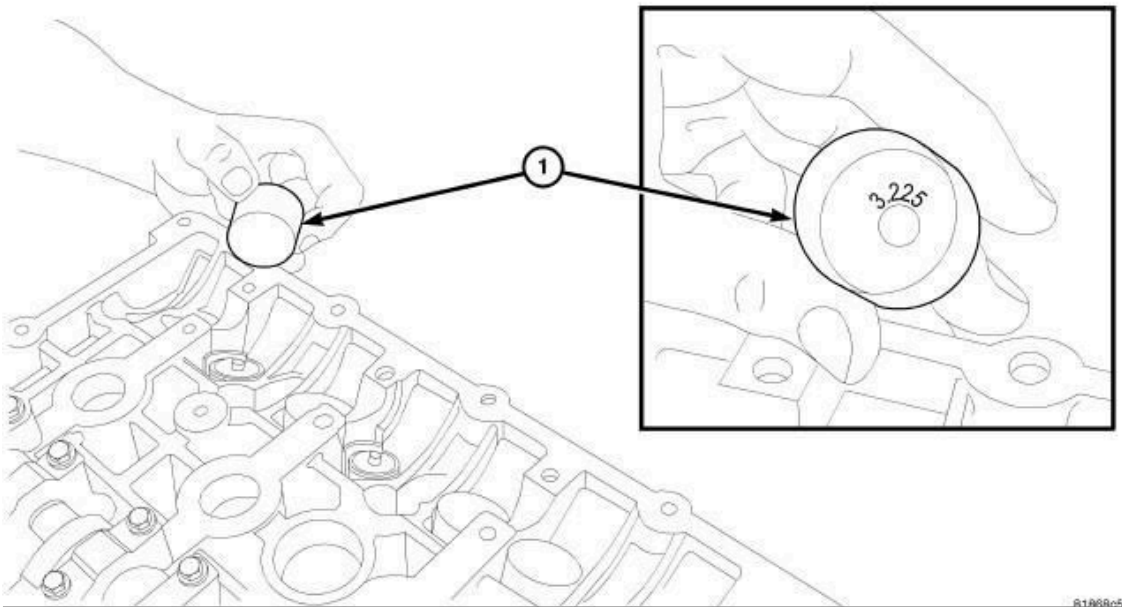

Fig. 135: Tappet Identification
Courtesy of CHRYSLER GROUP, LLC

1. Remove camshafts. Refer to **CAMSHAFT, ENGINE, REMOVAL**.
2. Specification - clearance = change.
3. Decrease tappet thickness by change figure.
4. Install camshafts. Refer to **CAMSHAFT, ENGINE, INSTALLATION**.
5. Verify that valve lash is correct.

CLEARANCE TOO LARGE

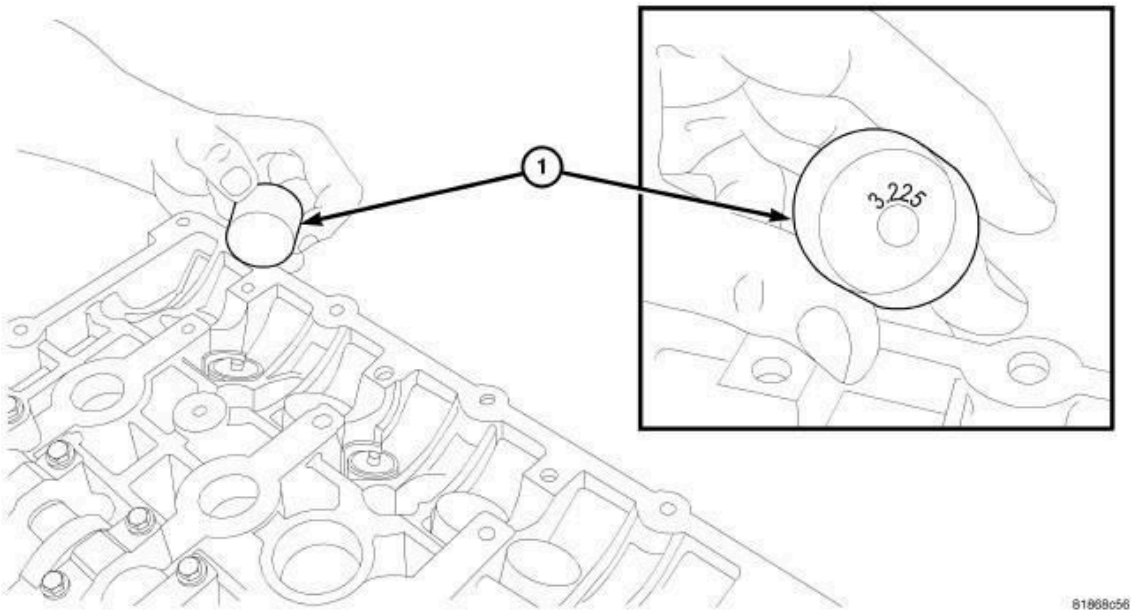

Fig. 136: Tappet Identification
Courtesy of CHRYSLER GROUP, LLC

1. Remove camshafts. Refer to **CAMSHAFT, ENGINE, REMOVAL**.
2. Clearance - specification = change.
3. Increase tappet thickness by change figure.
4. Install camshafts. Refer to **CAMSHAFT, ENGINE, INSTALLATION**.
5. Verify that valve lash is correct.

REMOVAL

REMOVAL

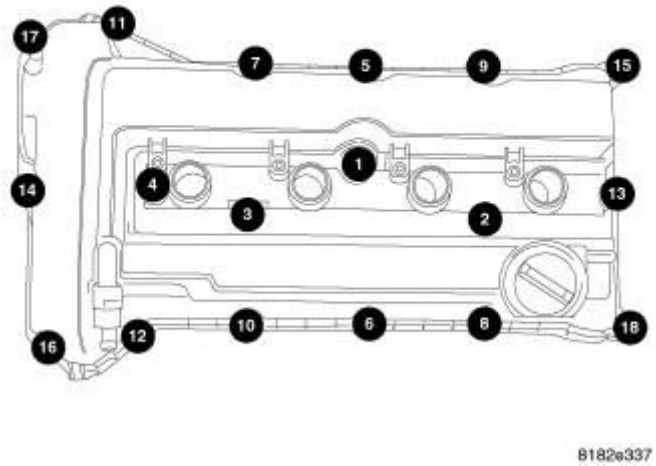

Fig. 137: Cylinder Head Cover Bolts Torque Sequence
Courtesy of CHRYSLER GROUP, LLC

NOTE: This procedure is for in-vehicle service with camshafts installed.

NOTE: Camshaft tappets must be replaced if cylinder head or camshafts are replaced.

1. Remove cylinder head cover. Refer to **COVER(S), CYLINDER HEAD, REMOVAL**.
2. Remove camshafts. Refer to **CAMSHAFT, ENGINE, REMOVAL**.

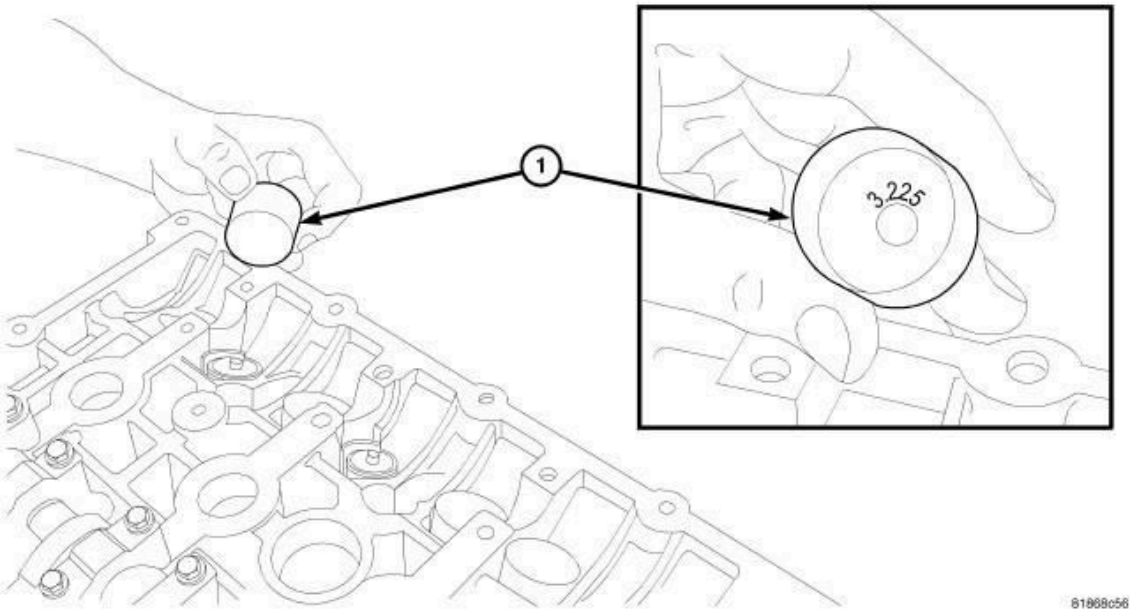

Fig. 138: Tappet Identification
Courtesy of CHRYSLER GROUP, LLC

3. Remove camshaft tappets (1).
4. Repeat removal procedure for each camshaft tappet (1).
5. If reusing, mark each tappet for reassembly in original position.

INSTALLATION

INSTALLATION

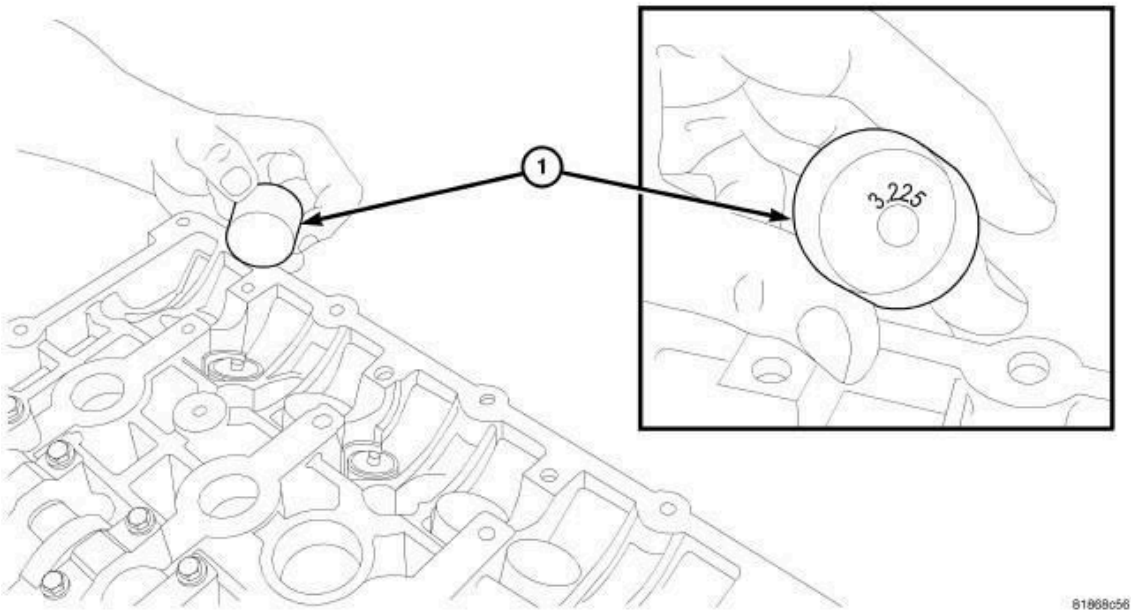

Fig. 139: Tappet Identification
Courtesy of CHRYSLER GROUP, LLC

NOTE: If reinstalling original tappets they must go back in their original location or engine damage could result.

1. Apply a light coat of clean engine oil to camshafts tappets (1) prior to assembly.
2. Install camshaft tappets (1) into cylinder head.
3. Repeat installation procedure for each camshaft tappet.
4. Install camshafts. Refer to **CAMSHAFT, ENGINE, INSTALLATION**.

NOTE: If installing new tappets, the valve lash procedure must be performed.

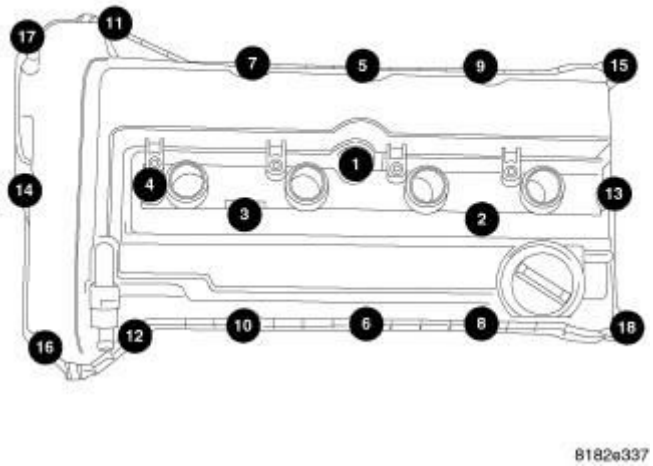

Fig. 140: Cylinder Head Cover Bolts Torque Sequence
Courtesy of CHRYSLER GROUP, LLC

5. Install cylinder head cover. Refer to **COVER(S), CYLINDER HEAD, INSTALLATION**.

CAMSHAFT, ENGINE

DESCRIPTION

DESCRIPTION

Both camshafts have five bearing journal surfaces and two cam lobes per cylinder. The two front journals are larger to allow for feeding oil to the variable valve timing (VVT) camshaft phasers. Flanges on the third smaller journal control camshaft end play. At the rear of each camshaft is an integral cam sensor target.

CAMSHAFT BEARING CAPS

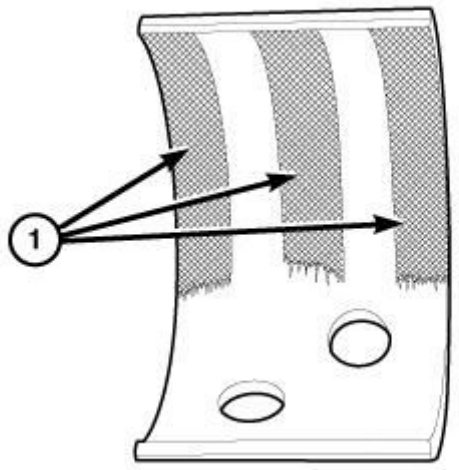

1528424

Fig. 141: Uneven Wear Patterns On Cam Bearing
Courtesy of CHRYSLER GROUP, LLC

The front cam bearing cap spans both camshafts, and includes dowels for precise alignment. The front exhaust camshaft journal has a select fit bearing insert. This bearing is required to seal the oil passage to the camshaft phaser, because a portion of the lower bearing saddle is machined away for head bolt access. The select fit is required to minimize bearing clearance and oil leakage. An exhaust bearing grade (1, 2, or 3) is stamped into the front bearing cap adjacent to the exhaust cam journal. The bearings are also marked with the corresponding grade markings. If the bearing is replaced, the same grade must be used. Due to the unique purpose of this bearing, it may appear to have uneven wear patterns (1). Maximum wear of 0.05 mm (.002 in.) is acceptable. Unless the wear is excessive it is no cause for concern and the bearing should not be replaced. Cam bearing inspection should not be the sole reason for removal of the exhaust camshaft. The upper cam bearing may be replaced if the front bearing cap is removed. The lower cam bearing should be replaced if the camshaft is removed due to a failure of a component within the cylinder head.

The front intake cam journal has a full lower bearing saddle, and therefore, no bearing insert is required.

All small bearing caps have a formed-in arrow to assist in assembly. All small bearing cap arrows must point towards the center of the cylinder head. The small bearing caps are marked for position during the manufacturing process, and must be reinstalled in their original position.

The #1 small cap includes a passage to direct oil from the cylinder head oil gallery to the #1 small bearing journal, and into the camshaft as well. The hollow camshaft then distributes oil to the remainder of the small journals. Oil flowing out of each cam journal lubricates the valve tappets.

The #3 small cap is machined at the front and rear face to control camshaft end-play. This cap has dowels for precise alignment.

OPERATION

OPERATION

The camshaft is driven by the crankshaft via drive sprockets and a chain. The camshaft has precisely machined lobes to provide accurate valve timing and duration.

STANDARD PROCEDURE

STANDARD PROCEDURE - MEASURING CAMSHAFT END PLAY

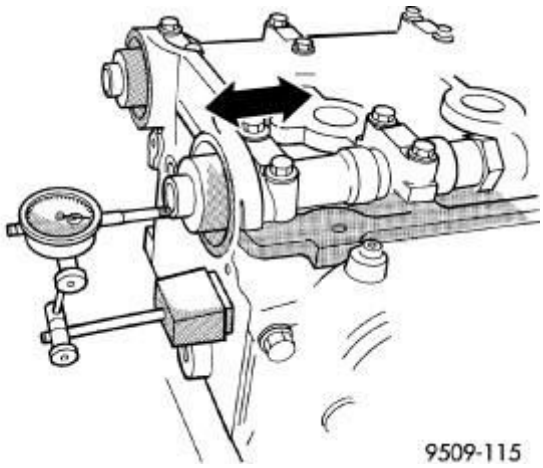

Fig. 142: Camshaft End Play
Courtesy of CHRYSLER GROUP, LLC

1. Using a suitable tool, move camshaft as far rearward as it will go.
2. Zero dial indicator.
3. Move camshaft as far forward as it will go.
4. Record reading on dial indicator. For end play specification, refer to **SPECIFICATIONS** .
5. If end play is excessive, check cylinder head and camshaft for wear; replace as necessary.

REMOVAL

REMOVAL

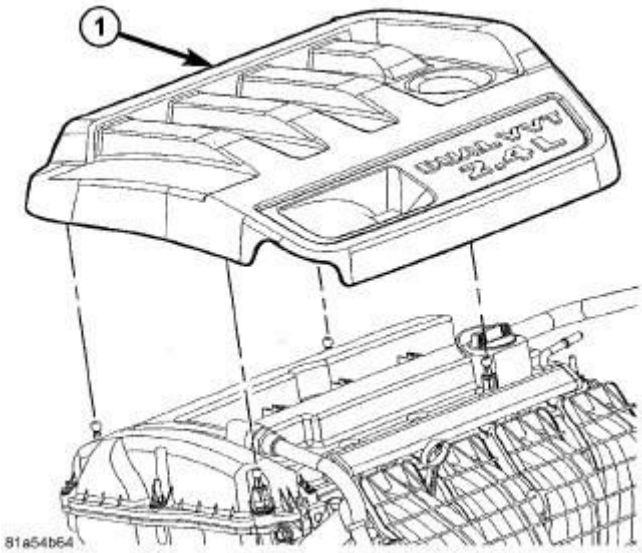

Fig. 143: Engine Cover - 2.4L
Courtesy of CHRYSLER GROUP, LLC

1. Remove engine cover (1) by pulling upward.
2. Disconnect and isolate the negative battery cable.
3. Remove cylinder head cover. Refer to **COVER(S), CYLINDER HEAD, REMOVAL**.

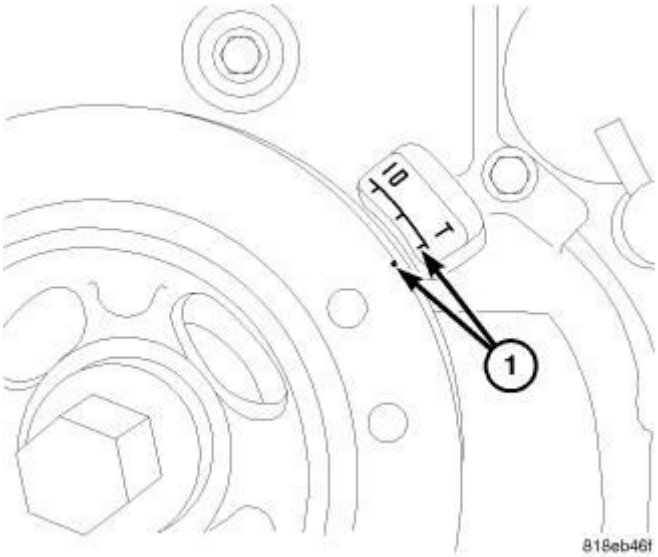

Fig. 144: Setting Engine To Top Dead Center
Courtesy of CHRYSLER GROUP, LLC

4. Raise and support the vehicle. Refer to **HOISTING, STANDARD PROCEDURE** .
5. Remove the frame cover portion of the right splash shield. Refer to **SHIELD, SPLASH, FRONT WHEELHOUSE, REMOVAL** .
6. Rotate engine to TDC (1).

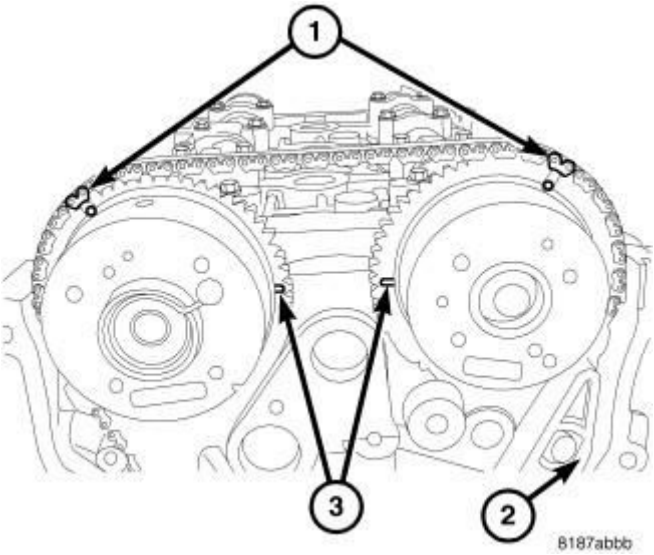

Fig. 145: Timing Chain Timing Marks
Courtesy of CHRYSLER GROUP, LLC

7. Make sure camshaft timing marks (3) are in line with the cylinder head cover sealing surface.
8. Mark the chain link corresponding to timing marks (1) with a paint marker.

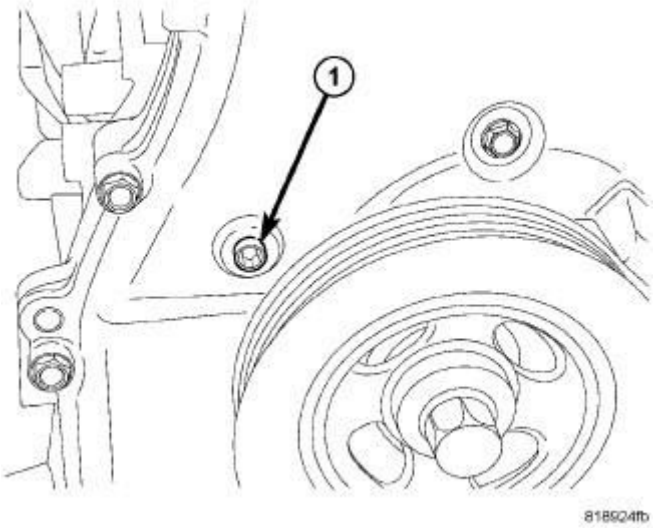

Fig. 146: Tensioner Access Plug

Courtesy of CHRYSLER GROUP, LLC

9. Remove timing tensioner plug (1) from front cover.

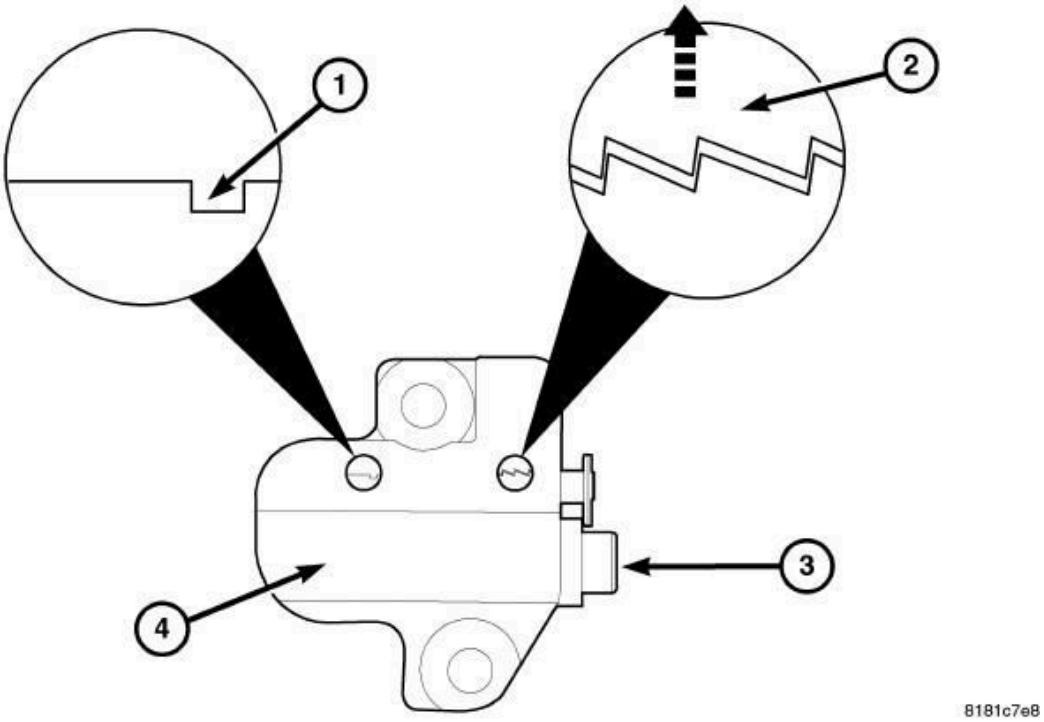

Fig. 147: Tensioner Reset
Courtesy of CHRYSLER GROUP, LLC

10. Insert small Allen wrench through timing tensioner plug hole and lift ratchet (2) upward to release the tensioner and push Allen wrench inward. Leave the Allen wrench installed during the remainder of this procedure.

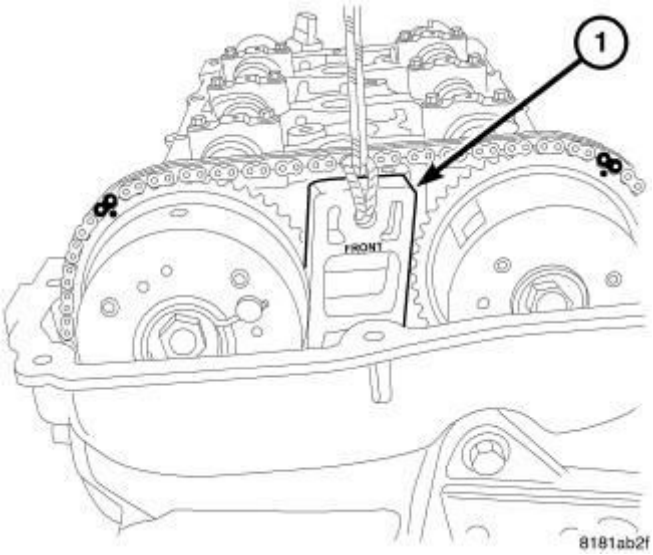

Fig. 148: Inserting Wedge 9701 Between Camshaft Phasers

Courtesy of CHRYSLER GROUP, LLC

11. Insert Locking Wedge (special tool #9701, Wedge, Locking) (1) between camshaft phasers.

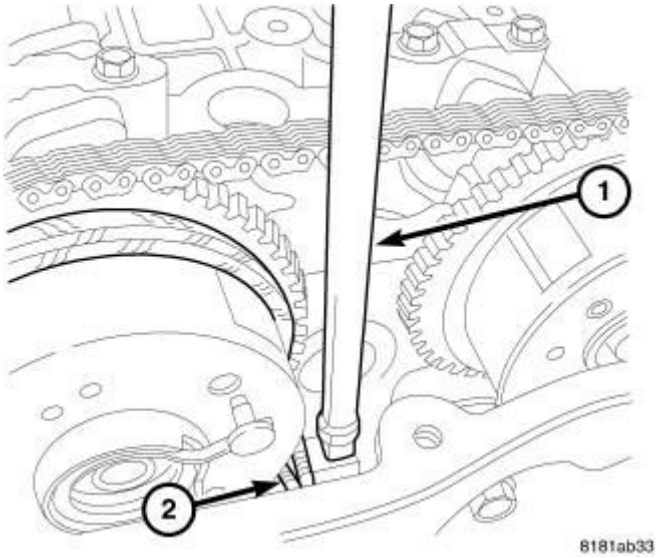

Fig. 149: Seating Wedge Tool 9701
Courtesy of CHRYSLER GROUP, LLC

12. Lightly tap Locking Wedge (special tool #9701, Wedge, Locking) (2) into place until it will no longer sink down.

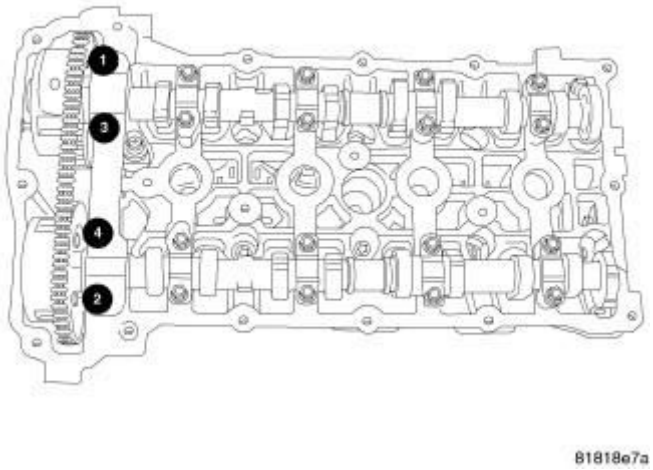

Fig. 150: Front Cam Cap Removal/Tightening Sequence
Courtesy of CHRYSLER GROUP, LLC

NOTE: Camshaft bearing caps should have been marked

during engine manufacturing. For example, number one exhaust camshaft bearing is marked "E1>".

CAUTION: DO NOT use a number stamp or a punch to mark camshaft bearing caps. Damage to bearing caps could occur.

13. Using a permanent ink or paint marker, identify location and position on each camshaft bearing cap.
14. Remove the front camshaft bearing cap.
15. Slowly remove the remaining intake and exhaust camshaft bearing cap bolts one turn at a time.

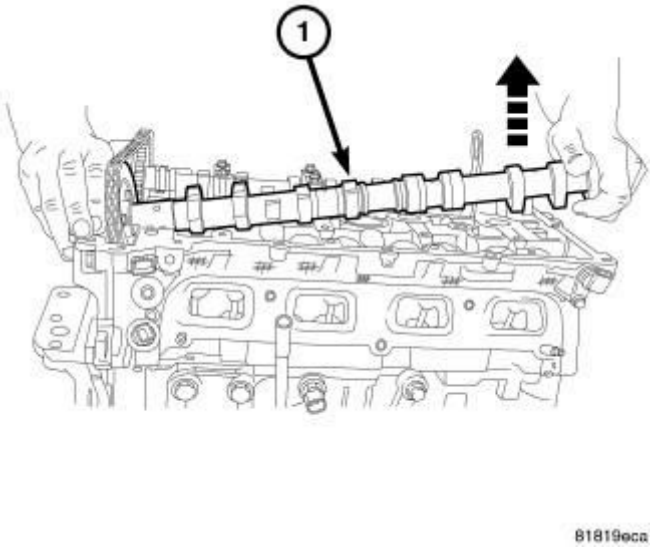

Fig. 151: Raise Intake Cam
Courtesy of CHRYSLER GROUP, LLC

16. Remove intake camshaft (1) by lifting the rear of the camshaft upward.

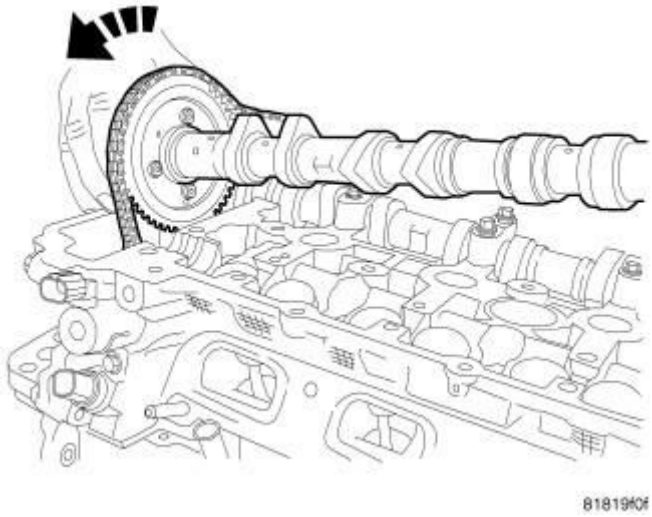

Fig. 152: Roll Camshaft
Courtesy of CHRYSLER GROUP, LLC

17. Rotate the camshaft while lifting out of the front bearing cradle.

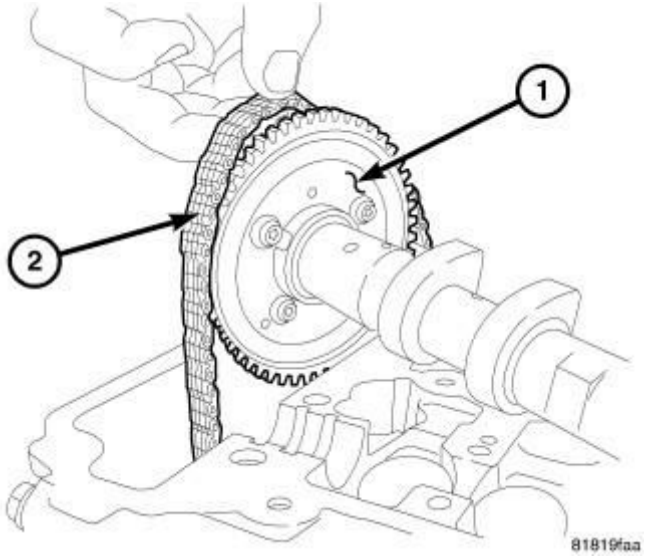

Fig. 153: Chain Removal
Courtesy of CHRYSLER GROUP, LLC

18. Lift the timing chain (2) off the sprocket (1).
19. Remove exhaust camshaft.
20. Secure timing chain with wire so that it does fall into the timing chain cover.

INSPECTION

INSPECTION

1. Inspect camshaft bearing journals for damage. If journals are damaged, check the cylinder head for damage. Also check cylinder head oil holes for clogging.
2. Check the cam lobe and bearing surfaces for abnormal wear and damage. Replace camshaft if defective.

NOTE: If camshaft is replaced due to lobe wear or damage, always replace the lash buckets.

INSTALLATION

INSTALLATION

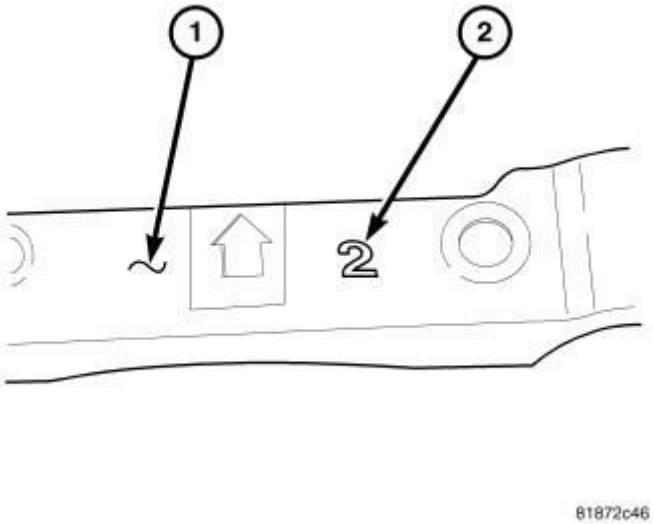

Fig. 154: Cam Cap Bearing Identification
Courtesy of CHRYSLER GROUP, LLC

1. The front camshaft bearing cap (1) is numbered (2) either one, two, or three, this corresponds to the select fit front exhaust camshaft bearing to use.

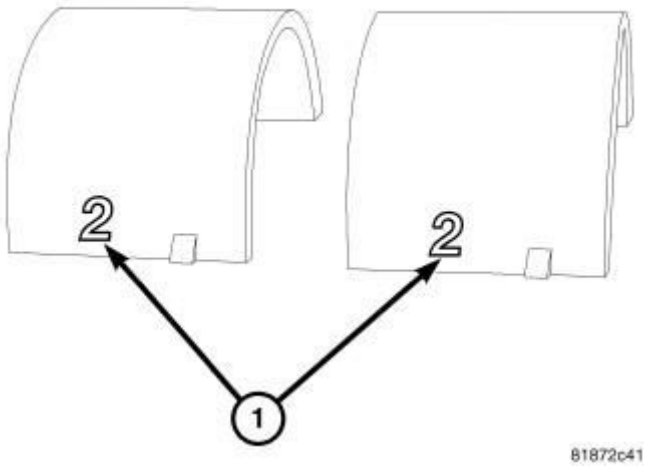

Fig. 155: Cam Bearing Identification
Courtesy of CHRYSLER GROUP, LLC

2. Install the corresponding select fit front exhaust camshaft bearing (1).
3. Oil all of the camshaft journals with clean engine oil.
4. Install camshaft phasers on camshafts if removed. Refer to **ASSEMBLY, VARIABLE VALVE TIMING, INSTALLATION**.

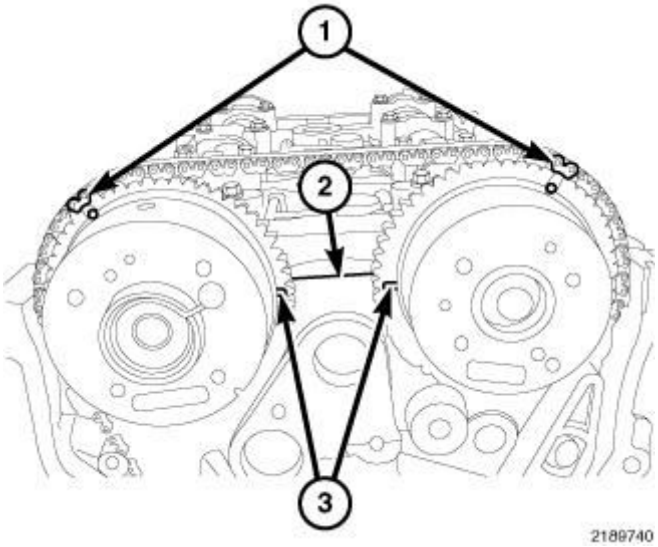

Fig. 156: Timing Chain Timing Marks
Courtesy of CHRYSLER GROUP, LLC

5. Install timing chain onto exhaust cam sprocket making sure that the timing marks (1) on the sprocket and the painted chain link are aligned.
6. Position exhaust camshaft and on bearing journals in the cylinder head.
7. Align exhaust cam timing mark (3) so it is in line with the cylinder head

cover sealing surface (2).

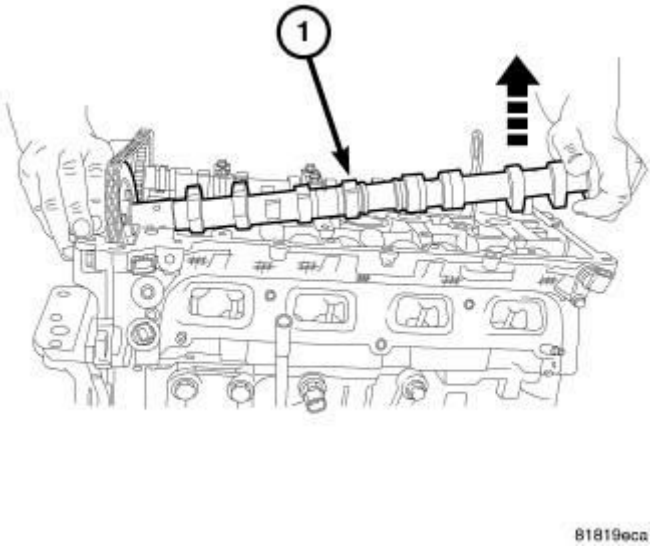

Fig. 157: Removing/Installing Intake Camshaft
Courtesy of CHRYSLER GROUP, LLC

8. Install intake camshaft by raising the rear of the camshaft upward and roll the sprocket into the chain.

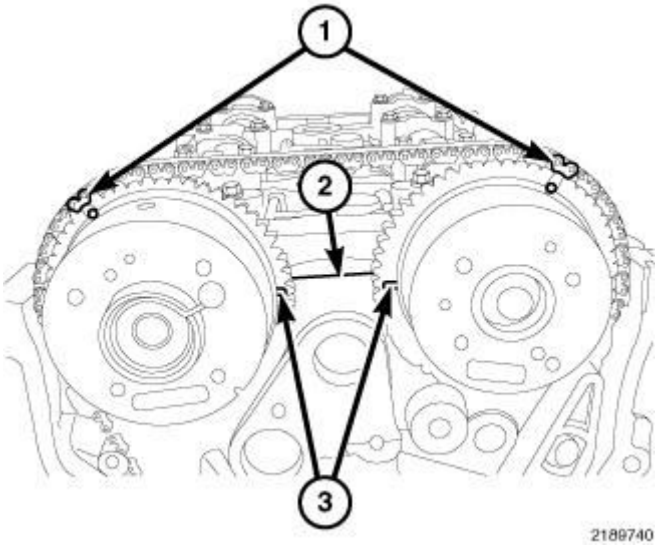

Fig. 158: Timing Chain Timing Marks
Courtesy of CHRYSLER GROUP, LLC

9. Align the timing marks (1) on the intake cam sprocket with the painted chain link.
10. Position the intake camshaft into the bearing journals in the cylinder head.
11. Verify that the timing marks (1) are aligned on both camshafts and that the

timing marks (3) are facing each other and are in line with the cylinder head cover sealing surface (2).

CAUTION: Install the front intake and exhaust camshaft bearing cap last. Ensure that the dowels are seated and follow torque sequence or damage to engine could result.

NOTE: If the front camshaft bearing cap is broken, the cylinder head MUST be replaced.

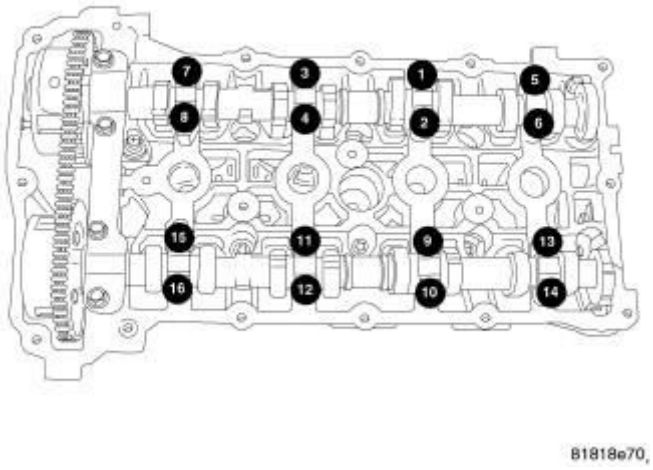

Fig. 159: Cam Cap Torque Sequence
Courtesy of CHRYSLER GROUP, LLC

12. Install intake and exhaust camshaft bearing caps and slowly tighten bolts to 9.5 N.m (85 in. lbs.) in the sequence shown in illustration.

NOTE: Verify that the exhaust bearing shells are correctly installed, and the dowels are seated in the head, prior to torquing bolts.

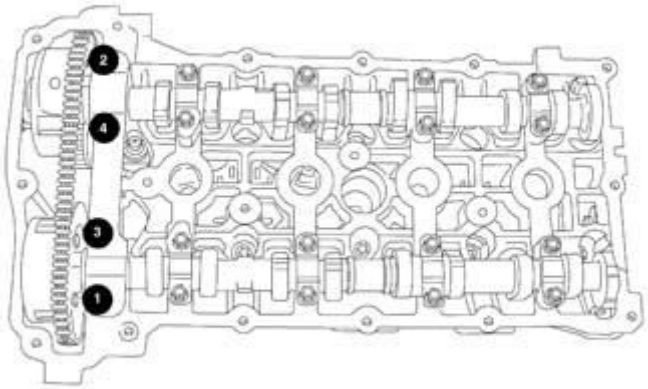

0910036103

Fig. 160: Front Cam Cap Removal/Tightening Sequence
Courtesy of CHRYSLER GROUP, LLC

NOTE: This torque sequence is for vehicles with the round hole for the Front Cam Cap Dowel located on the intake side of the cylinder head.

13. Install the front intake and exhaust bearing cap and tighten bolts to 25 N.m (18 ft. lbs.) in the sequence shown in illustration.

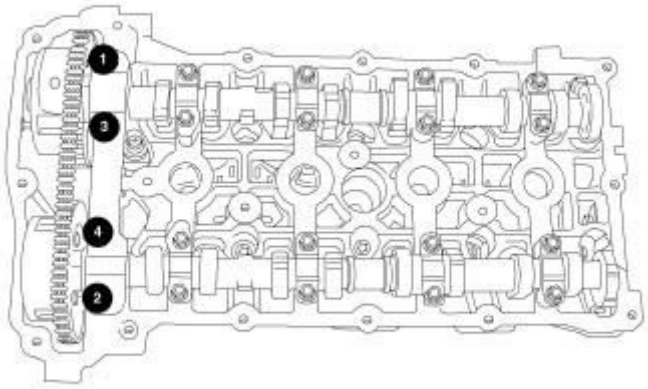

81818e7a

Fig. 161: Front Cam Cap Removal/Tightening Sequence
Courtesy of CHRYSLER GROUP, LLC

NOTE: This torque sequence is for vehicles with the round hole for the Front Cam Cap Dowel located on the

exhaust side of the cylinder head.

14. Install the front intake and exhaust bearing cap and tighten bolts to 25 N.m (18 ft. lbs.) in the sequence shown in illustration.

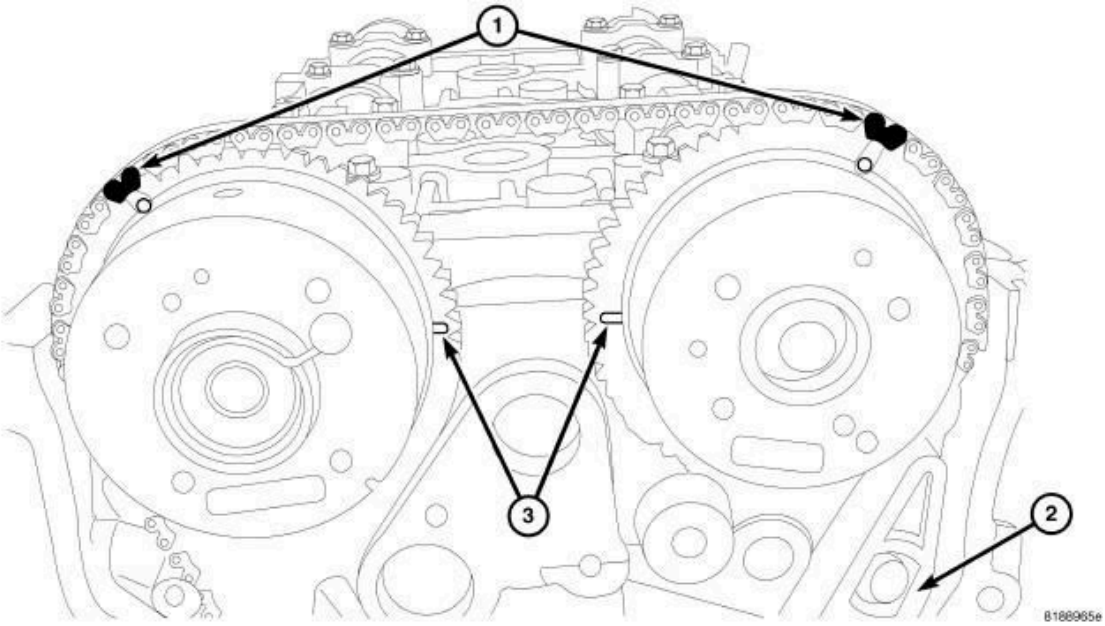

Fig. 162: Timing Chain Timing Marks
Courtesy of CHRYSLER GROUP, LLC

15. Verify that all timing marks (1, 3) are aligned.
16. Remove Allen wrench from timing chain tensioner.

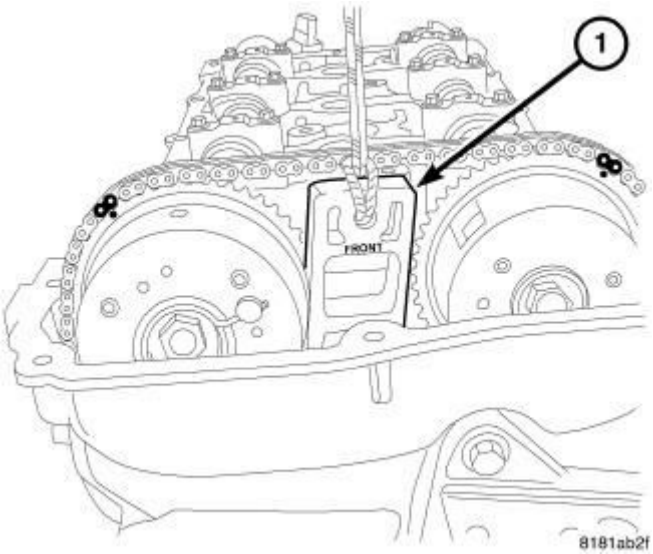

Fig. 163: Inserting Wedge 9701 Between Camshaft Phasers
Courtesy of CHRYSLER GROUP, LLC

17. Remove Locking Wedge (special tool #9701, Wedge, Locking) (1) by pulling straight upward on pull rope.

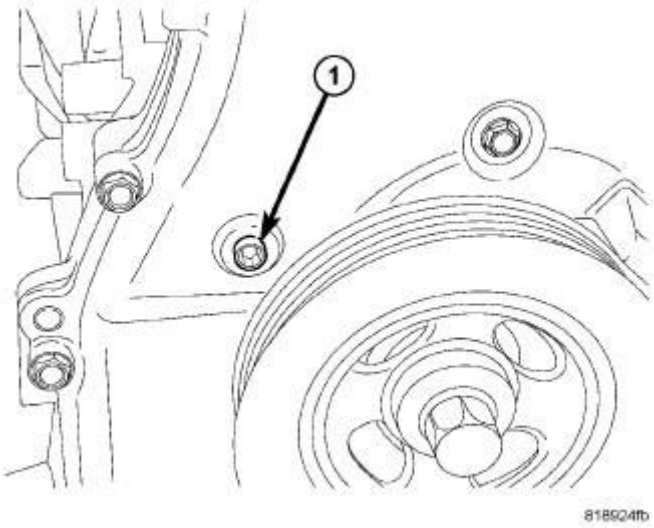

Fig. 164: Tensioner Access Plug
Courtesy of CHRYSLER GROUP, LLC

18. Apply MOPAR® thread sealant to timing tensioner plug (1) and Install.
19. Rotate the crankshaft CLOCKWISE two complete revolutions until the crankshaft is repositioned at the TDC position.

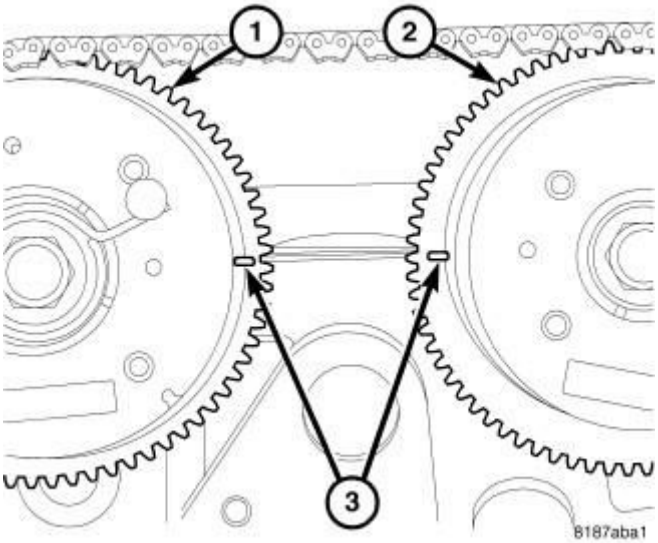

Fig. 165: Camshaft Timing
Courtesy of CHRYSLER GROUP, LLC

20. Verify that the camshafts timing marks (3) are in the proper position and in

line with the cylinder head cover sealing surface. If the marks do not line up, the timing chain is not correctly installed.

21. Install right splash shield. Refer to **SHIELD, SPLASH, FRONT WHEELHOUSE, INSTALLATION** .

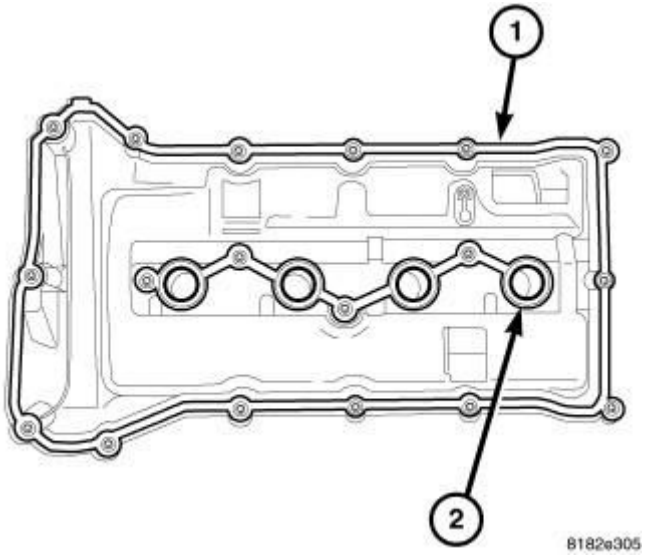

Fig. 166: Cylinder Head Cover Gaskets Location
Courtesy of CHRYSLER GROUP, LLC

22. Remove RTV from gasket (1).
23. Inspect cylinder head cover gaskets (1, 2) for damage. If no damage is present, gaskets can be re-installed.

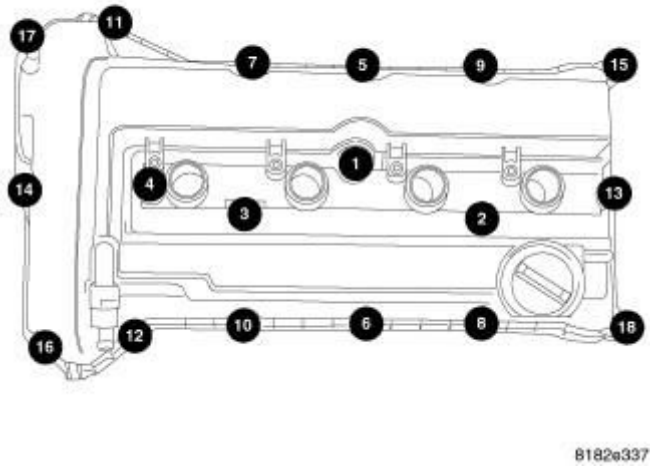

Fig. 167: Cylinder Head Cover Bolt Torque Sequence
Courtesy of CHRYSLER GROUP, LLC

24. Install cylinder head cover. Refer to **COVER(S), CYLINDER HEAD, INSTALLATION**.
25. Connect negative battery cable.
26. Fill cooling system. Refer to **STANDARD PROCEDURE** .
27. Fill with oil.

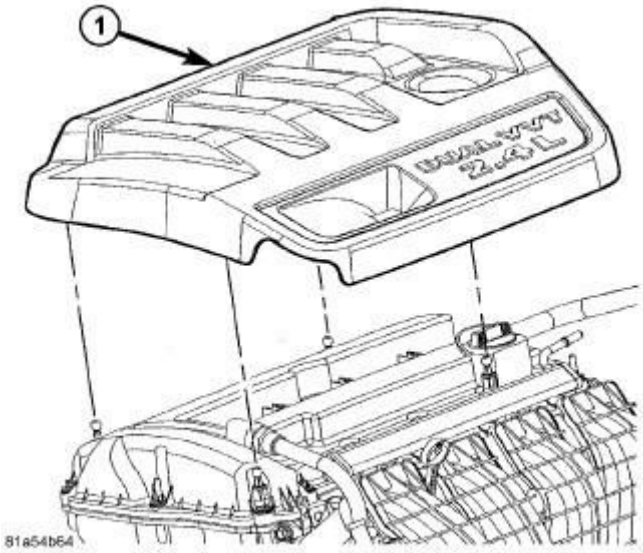

Fig. 168: Engine Cover - 2.4L
Courtesy of CHRYSLER GROUP, LLC

28. Operate engine until it reaches normal operating temperature. Check oil and cooling systems for correct fluid levels.
29. Install engine cover (1).

COVER(S), CYLINDER HEAD

REMOVAL

REMOVAL

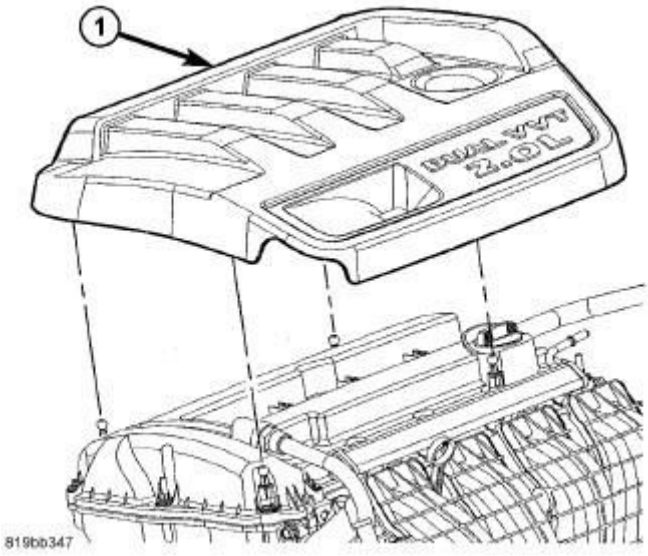

Fig. 169: Engine Cover
Courtesy of CHRYSLER GROUP, LLC

1. Remove engine cover (1) by pulling upward.
2. Disconnect and isolate the negative battery cable.

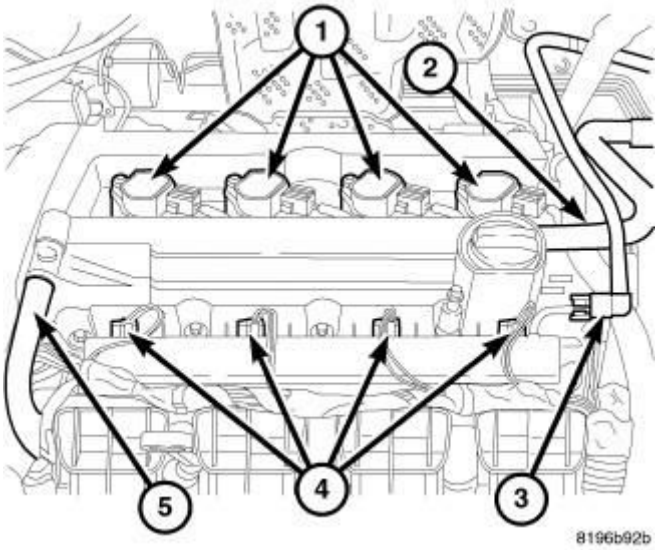

Fig. 170: Ignition Coils, Air Hose, Fuel Line, Injectors & PCV Hose
Courtesy of CHRYSLER GROUP, LLC

3. Remove make up air hose (2).
4. Remove PCV hose (5).
5. Disconnect ignition coil electrical connectors (1).

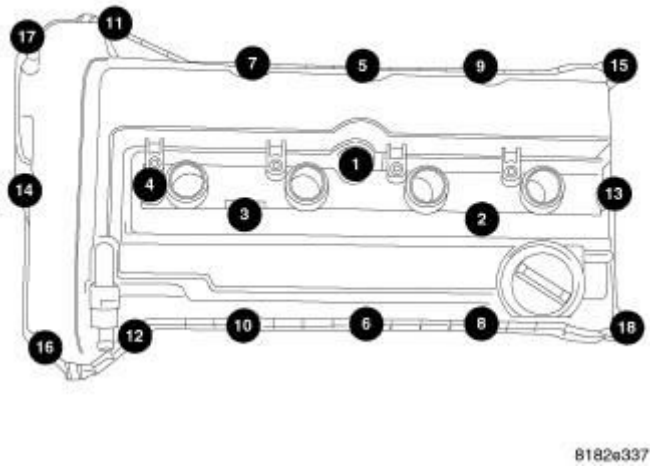

Fig. 171: Removing/Installing Cylinder Head Cover Bolts - Torque Sequence
Courtesy of CHRYSLER GROUP, LLC

6. Use compressed air to blow dirt and debris off the cylinder head cover prior to removal.
7. Remove cylinder head cover bolts.
8. Remove cylinder head cover from cylinder head.

INSTALLATION

INSTALLATION

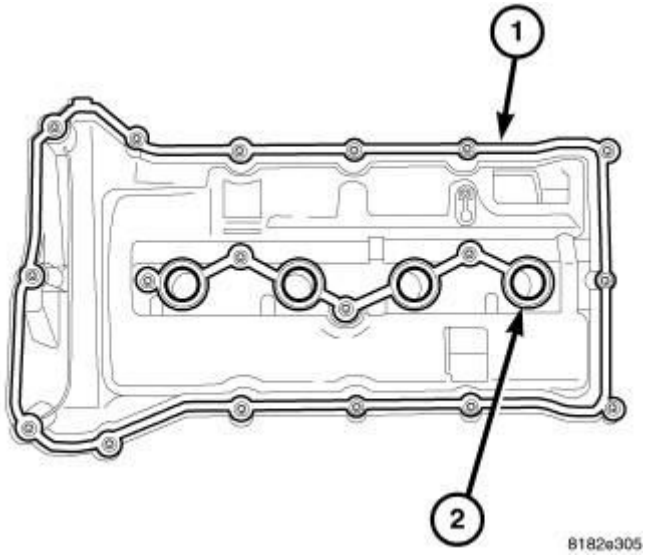

Fig. 172: Cylinder Head Cover Gaskets Location
Courtesy of CHRYSLER GROUP, LLC

1. Install new cylinder head cover gaskets (1, 2).

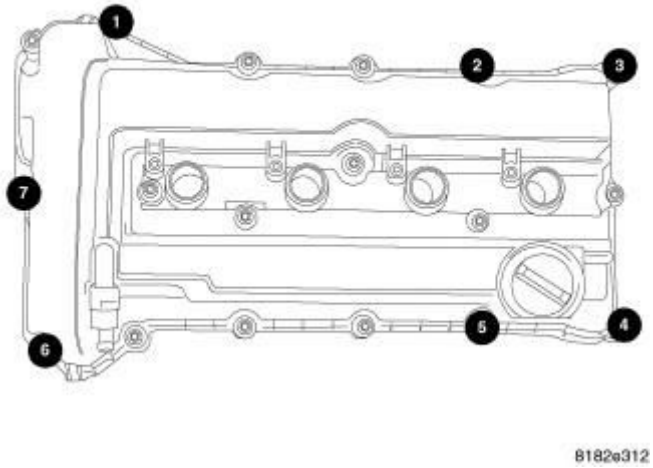

Fig. 173: Cylinder Head Stud Installation Sequence
Courtesy of CHRYSLER GROUP, LLC

2. Install studs in cover as shown in illustration.

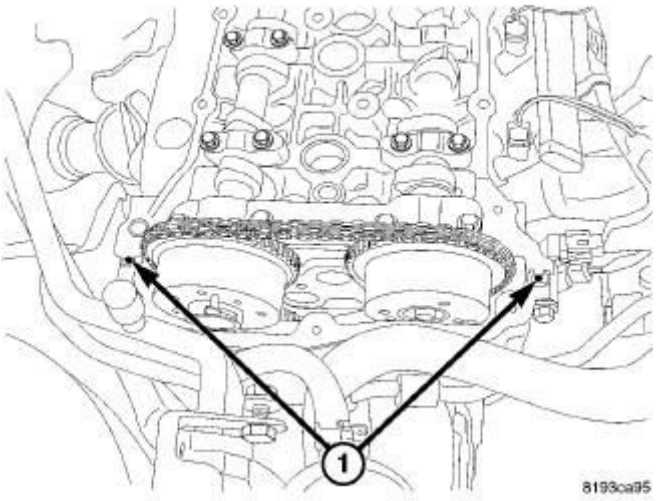

Fig. 174: Head Cover T-Joint
Courtesy of CHRYSLER GROUP, LLC

3. Clean all RTV from cylinder head. Refer to **ENGINE GASKET SURFACE PREPARATION** .

NOTE: When using RTV, the sealing surfaces must be clean

and free from grease and oil.

NOTE: When using RTV, parts should be assembled in 10 minutes and tighten to final torque within 45 minutes.

4. Apply a dot of Mopar® engine sealant RTV or equivalent to cylinder head/front cover T-joint (1).

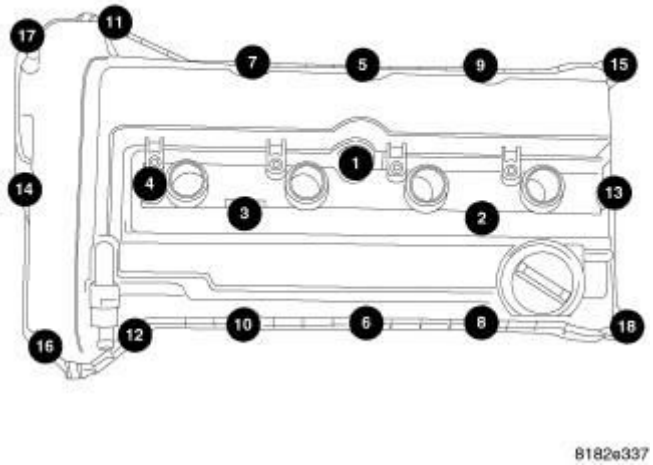

Fig. 175: Remove/Install Cylinder Head Cover Bolts In Sequence
Courtesy of CHRYSLER GROUP, LLC

5. Install cylinder head cover assembly to cylinder head and install all bolts, ensuring the studs are located as shown in illustration.
6. Tighten bolts in sequence shown in illustration using a 2 step torque method as follows:
   a. Tighten all bolts to 5 N.m (44 in. lbs.).
   b. Tighten all bolts to 10 N.m (90 in. lbs.).

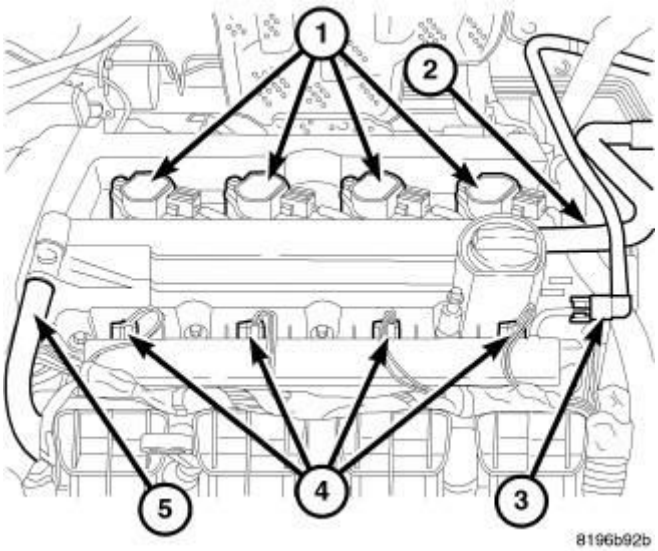

Fig. 176: Ignition Coils, Air Hose, Fuel Line, Injectors & PCV Hose
Courtesy of CHRYSLER GROUP, LLC

7. Install ignition coils. Tighten fasteners to 8 N.m (70 in. lbs.).
8. If the PCV valve was removed, tighten PCV valve to 5 N.m (44 in. lbs.).
9. Connect coil electrical connectors (1).
10. Connect PCV hose (5) to PCV valve.
11. Connect make up air hose (2).

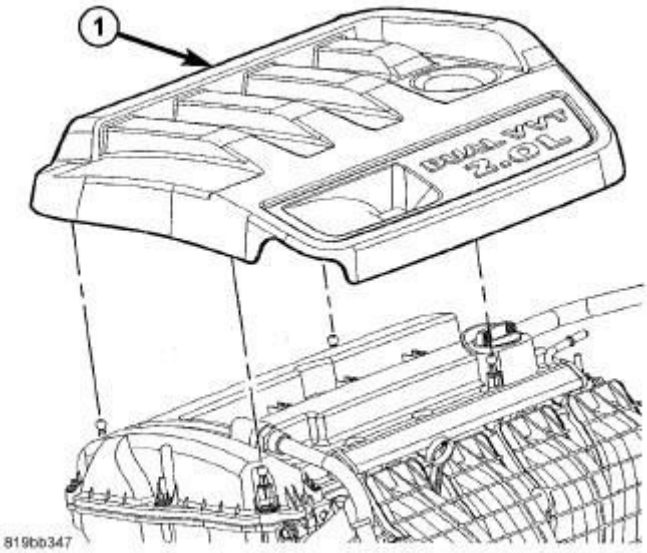

Fig. 177: Engine Cover
Courtesy of CHRYSLER GROUP, LLC

12. Connect negative battery cable.

13. Install engine cover (1) by pressing the rear of the cover down first.

SPRING(S), VALVE

REMOVAL

CYLINDER HEAD ON

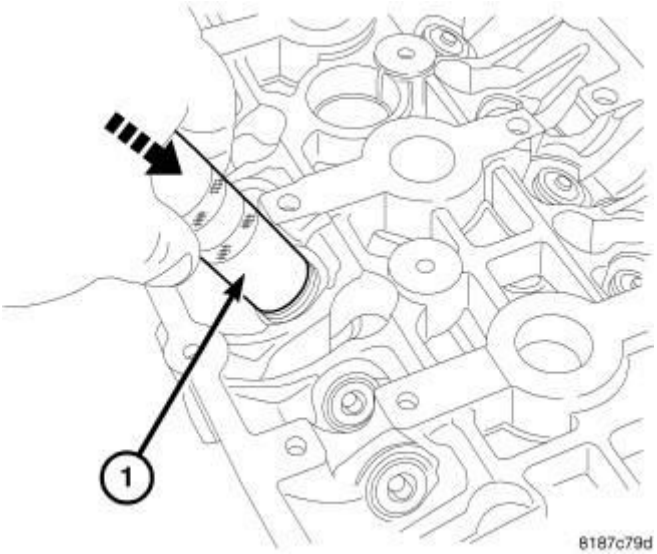

Fig. 178: Valve Removal
Courtesy of CHRYSLER GROUP, LLC

1. Remove cylinder head cover. Refer to **COVER(S), CYLINDER HEAD, REMOVAL**.
2. Remove camshafts. Refer to **CAMSHAFT, ENGINE, REMOVAL**.
3. Mark valve tappet location for assembly.
4. Remove valve tappets.
5. Rotate crankshaft until piston is at TDC on compression.
6. With air hose attached to adapter tool installed in spark plug hole, apply 90-120 psi air pressure.

CAUTION: Care must be taken not to damage the tappet bore or engine damage may result.

7. Using metric valve keeper tool (1) such as Snap-on® GA317 (or equivalent), and remove valve spring keepers and retainer.
8. Remove valve spring(s).
9. Remove valve stem seal(s) by a using valve stem seal tool.

CYLINDER HEAD OFF

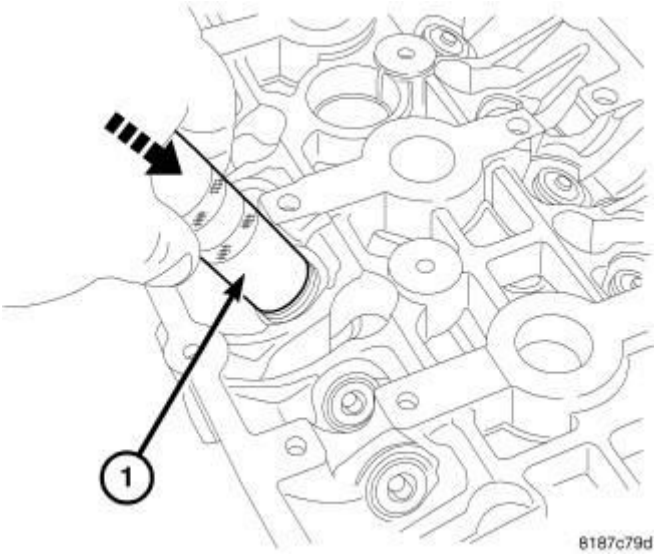

Fig. 179: Valve Removal
Courtesy of CHRYSLER GROUP, LLC

1. With cylinder head removed from cylinder block, place a ball of rags in the combustion chamber.

CAUTION: Care must be taken not to damage the tappet bore or engine damage may result.

2. Mark valve tappet location for assembly.
3. Remove valve tappets.
4. Using metric valve keeper tool such as Snap-on® GA317 (or equivalent) remover (1), remove valve keepers with a downward push.
5. Remove retainer and springs.
6. Before removing valves, **remove any burrs from valve stem lock grooves to prevent damage to the valve guides.** Identify valves, locks and retainers to insure installation in original location.
7. Inspect the valves. Refer to Valve - **INSPECTION** .

INSPECTION

INSPECTION

1. Whenever valves have been removed for inspection, reconditioning or replacement, valve springs should be tested for correct load. Discard the springs that do not meet specifications. The following specifications apply

to both intake and exhaust valves springs:

- Valve closed nominal load - 179.5 N ± 9 N @ 35.0 mm (40.35 lbs. ± 2 lbs. @ 1.38 in.).
- Valve open nominal load - 364.8 N ± 17 N @ 29.25 mm (82 lbs. ± 3.8 lbs. @ 1.152 in.).

2. Inspect each valve spring for squareness with a steel square and surface plate, test springs from both ends. If the spring is more than 1.5 mm (1/16 inch) out of square, install a new spring.

INSTALLATION

CYLINDER HEAD ON

CAUTION: Care must be taken not to damage the tappet bore or engine damage may result.

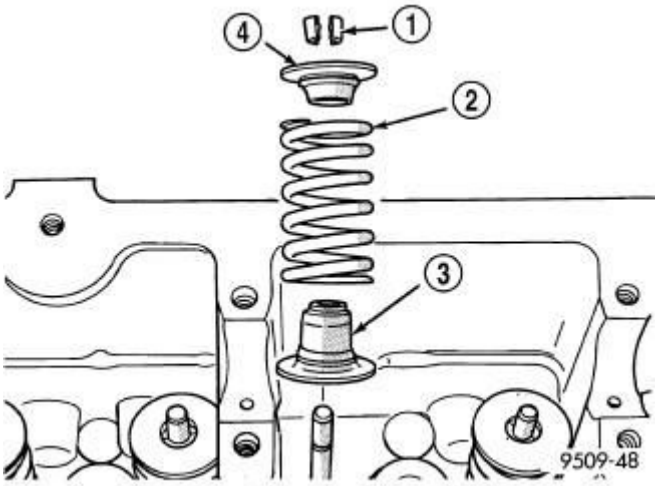

Fig. 180: Valve Spring Assembly
Courtesy of CHRYSLER GROUP, LLC

1. Install valve seal/valve spring seat (3) assembly. Push the assembly down with appropriate size socket to seat it onto the valve guide.
2. Install valve spring (2) and retainer (4) with keepers (1).

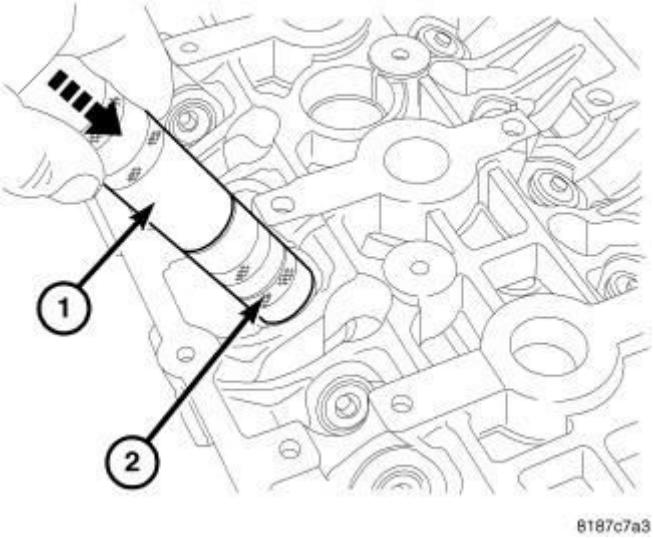

Fig. 181: Valve Installation
Courtesy of CHRYSLER GROUP, LLC

3. Place the valve keepers in the retainer. Using metric valve keeper tool such as Snap-on® GA317 (or equivalent) installer (2) and remover (1) as a handle, install valve keepers with a downward push.
4. Remove air hose and install spark plugs.
5. Install valve tappets.
6. Install camshafts. Refer to **CAMSHAFT, ENGINE, INSTALLATION**.
7. Install cylinder head cover. Refer to **COVER(S), CYLINDER HEAD, INSTALLATION**.

CYLINDER HEAD OFF

CAUTION: Care must be taken not to damage the tappet bore or engine damage may result.

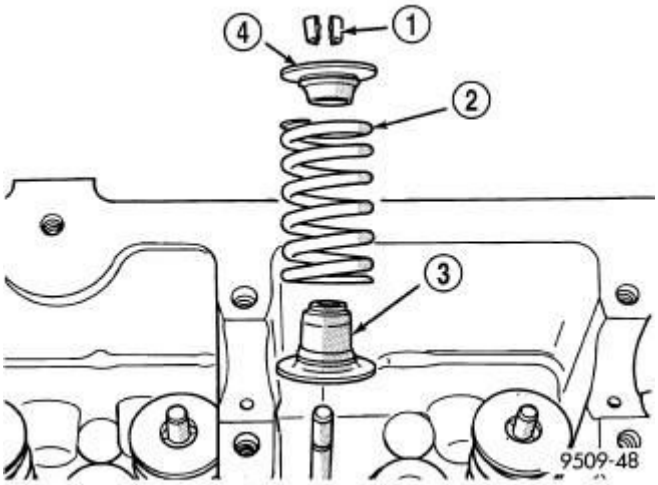

Fig. 182: Valve Spring Assembly
Courtesy of CHRYSLER GROUP, LLC

1. Coat valve stems with clean engine oil and insert in cylinder head.
2. Install new valve stem seals (3) on all valves using an appropriate sized socket to seat the seal/spring seat. The valve stem seals should be pushed firmly and squarely over valve guide.
3. Install valve springs (2).
4. Install keepers in retainer and place on valve spring.

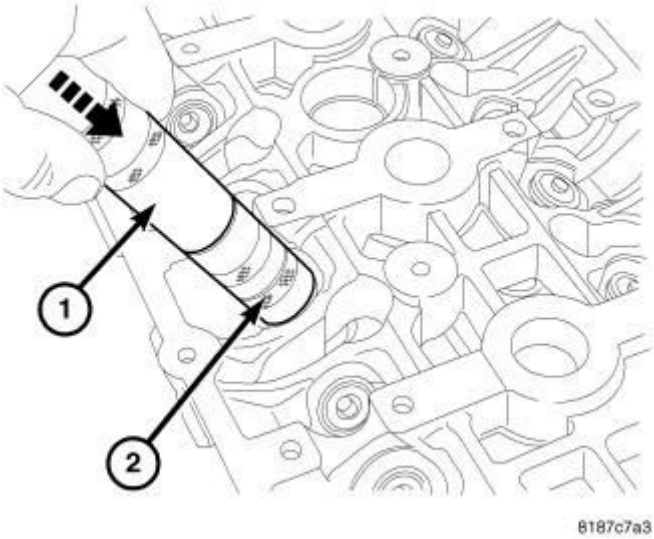

Fig. 183: Valve Installation
Courtesy of CHRYSLER GROUP, LLC

5. Using metric valve keeper tool such as Snap-on® GA317 (or equivalent) installer (2) and remover (1) as a handle, push downward to install keepers.

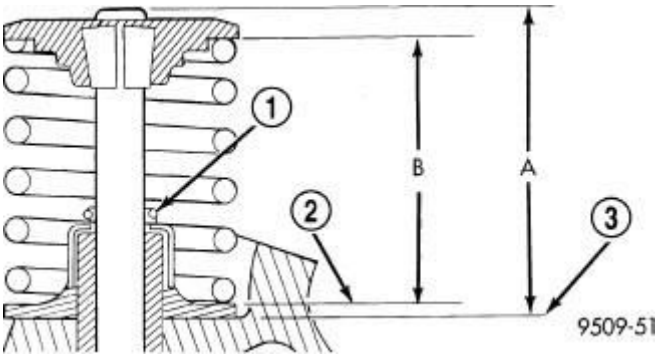

Fig. 184: Spring Installed Height And Valve TIP To Spring Seat Dimensions
Courtesy of CHRYSLER GROUP, LLC

6. Check the valve spring installed height B after refacing the valve and seat. Make sure measurements are taken from top of spring seat to the bottom surface of spring retainer. If height is greater than 38.75 mm (1.525 in.), install a 0.762 mm (0.030 in.) spacer under the valve spring seat to bring spring height back within specification.
7. Install valve tappets.

VALVES, INTAKE AND EXHAUST

DESCRIPTION

DESCRIPTION

The valves are made of heat resistant steel. They have nitrided stems to prevent scuffing. Viton rubber valve stem seals are integral with the spring seats. The valves have a single bead lock keepers to retain the springs.

OPERATION

OPERATION

The four valves per cylinder (two intake and two exhaust) are opened by using direct acting tappets which are actuated by the camshaft.

CLEANING

CLEANING

Clean all valves thoroughly and discard burned, warped and cracked valves.

CAUTION: Due to the small margin on the valves, grinding is

not recommended.

ENGINE MOUNTING

DESCRIPTION

DESCRIPTION

The engine mounting system consists of a four-point system utilizing two load-carrying mounts and two torque controlling mounts. The load-carrying mounts are located on each frame rail. The right and left mounts are hydro-elastic mounts. The two torque controlling mounts are attached to a fore/aft member and the front and rear of the engine.

OPERATION

OPERATION

The four-point engine mounting system minimizes the transmission of structure-borne engine noise to the passenger compartment. The load-carrying right and left mounts dampen and isolate vertical motion and vibration. The front and rear mount absorb torque reaction forces and torsional vibrations.

INSULATOR, ENGINE MOUNT, FRONT

REMOVAL

REMOVAL

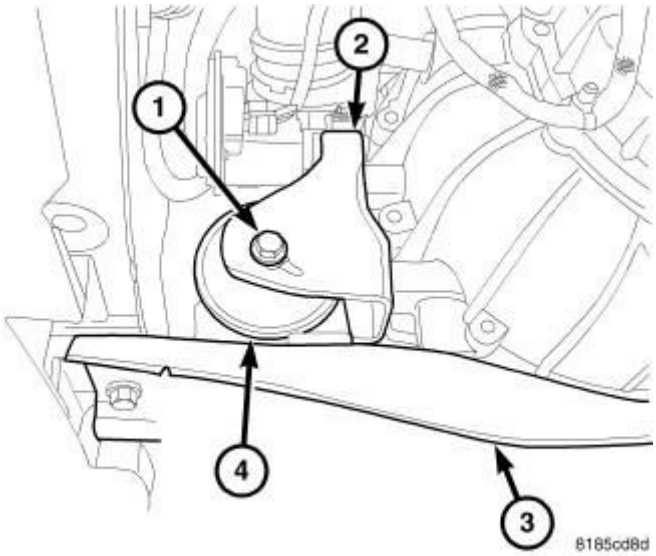

Fig. 185: Front Mount Through Bolt
Courtesy of CHRYSLER GROUP, LLC

1. Raise vehicle.
2. Remove fore aft member (3) to mount (4) bolts.
3. Remove mount through bolt (1).
4. Remove fore aft member (3) mounting bolts and remove.
5. Remove front mount (4).

INSTALLATION

INSTALLATION

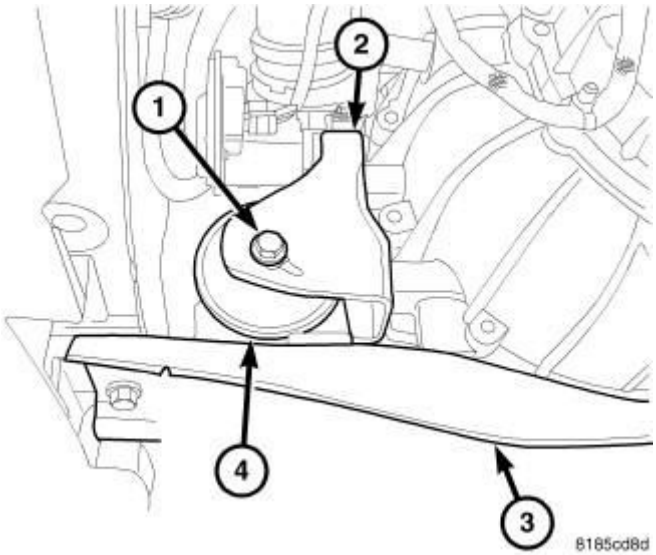

Fig. 186: Front Mount Through Bolt
Courtesy of CHRYSLER GROUP, LLC

1. Position mount (4) and torque bolts to 47 N.m (35 ft. lbs.).
2. Install fore aft member (3) and torque bolts to 100 N.m (74 ft. lbs.).

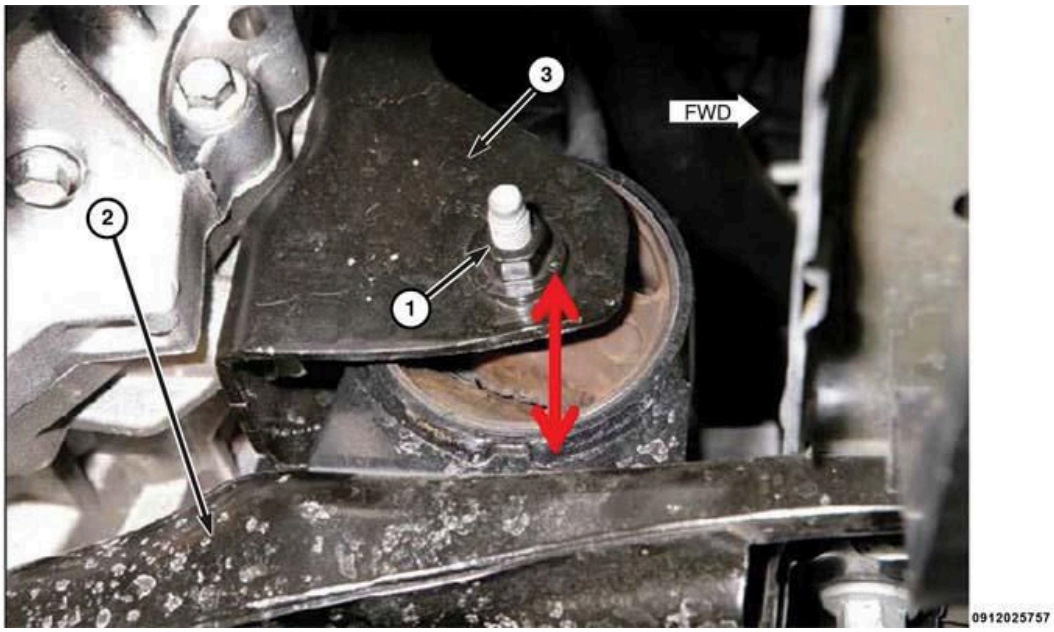

Fig. 187: Front Mount Through Bolt
Courtesy of CHRYSLER GROUP, LLC

3. Install the mount through bolt (1) finger tight.

NOTE: It will be necessary to adjust the mount to set the proper air gap at the base of the isolator. With the through bolt in place, pulling downward on the front (left bank) will increase the air gap. To reduce the air gap, raise the front (left bank) of the engine.

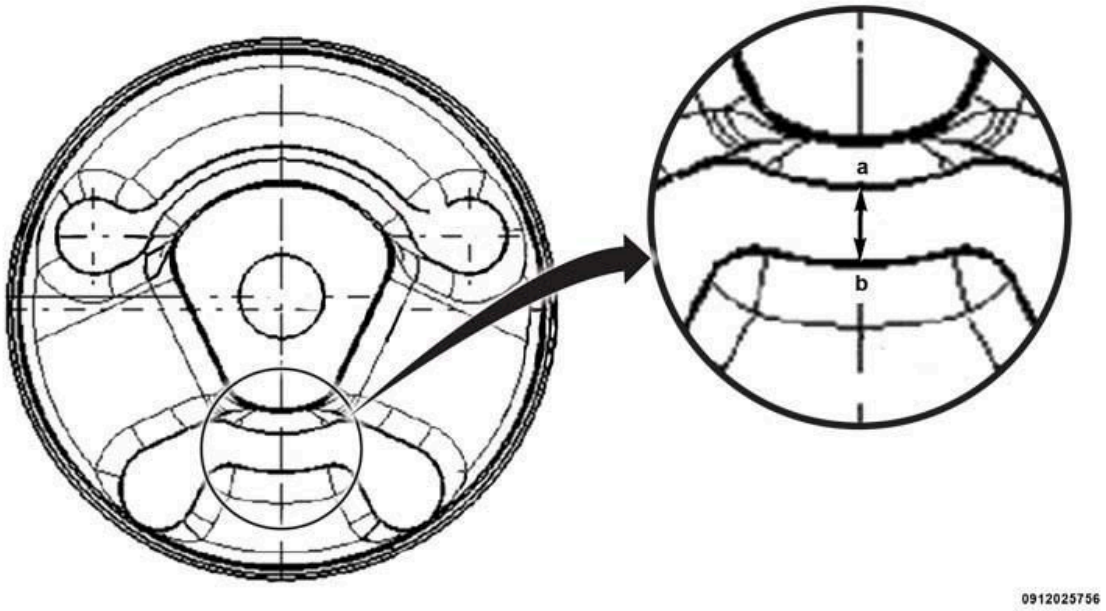

Fig. 188: Achieving Proper Clearance Between Points A And B

Courtesy of CHRYSLER GROUP, LLC

4. Raise or lower the engine to achieve the proper clearance between points a and b. There **MUST** be 5 millimeters airspace between the two points.

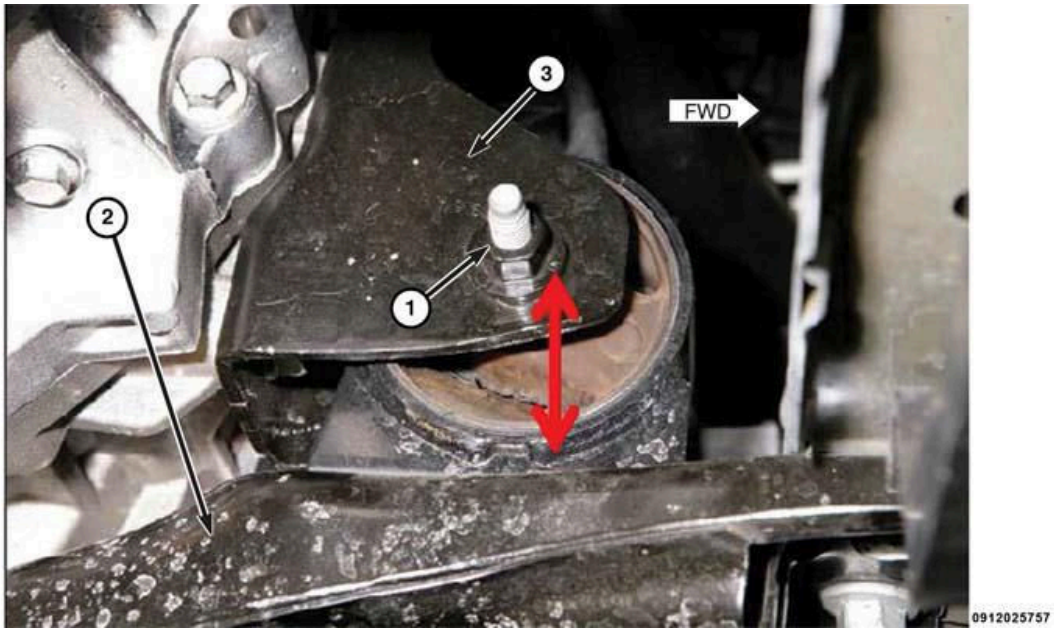

Fig. 189: Front Mount Through Bolt
Courtesy of CHRYSLER GROUP, LLC

5. Once the clearance is set, torque the through bolt (1) to 47 N.m (35 ft. lbs.).
6. Relax the engine and verify the clearance is still set.
7. Lower the vehicle.
8. Start the engine, check for vibrations.

INSULATOR, ENGINE MOUNT, LEFT

REMOVAL

REMOVAL

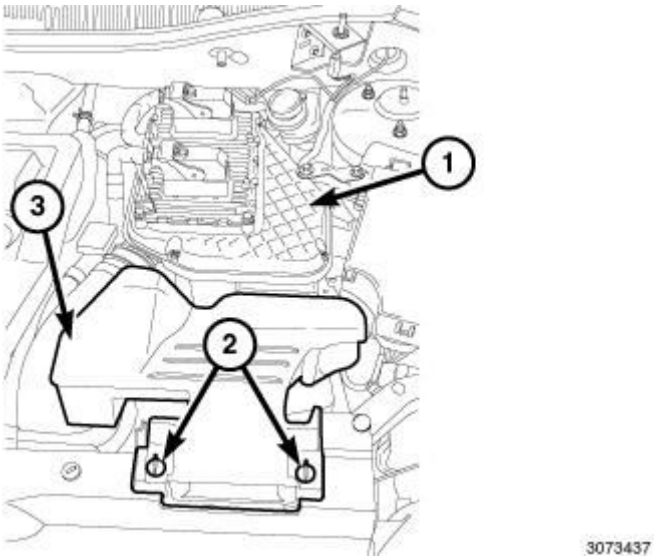

Fig. 190: Retainers, Fresh Air Inlet Duct & Air Cleaner Body
Courtesy of CHRYSLER GROUP, LLC

1. Unlock the retainers (2) and remove the fresh air inlet duct (3) from air cleaner body (1).

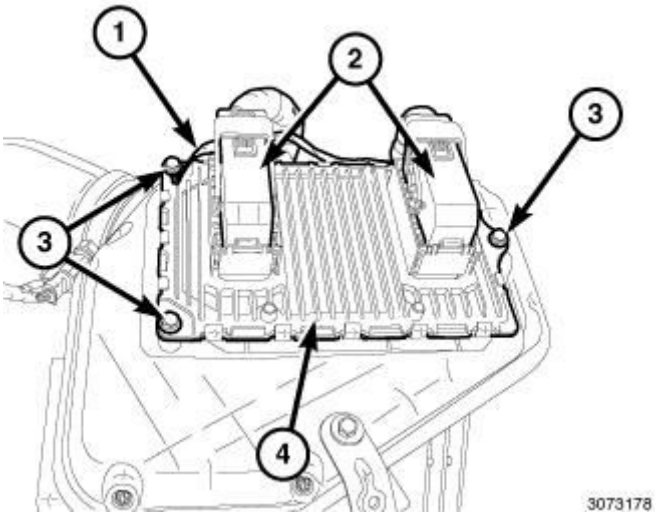

Fig. 191: Electrical Connectors, PCM, Three Mounting Bolts & Ground Wire
Courtesy of CHRYSLER GROUP, LLC

2. Disconnect and isolate the negative battery cable.
3. Unlock and disconnect the electrical connectors (2) from the PCM (4).
4. Remove the mounting bolt (3) and ground wire (1).

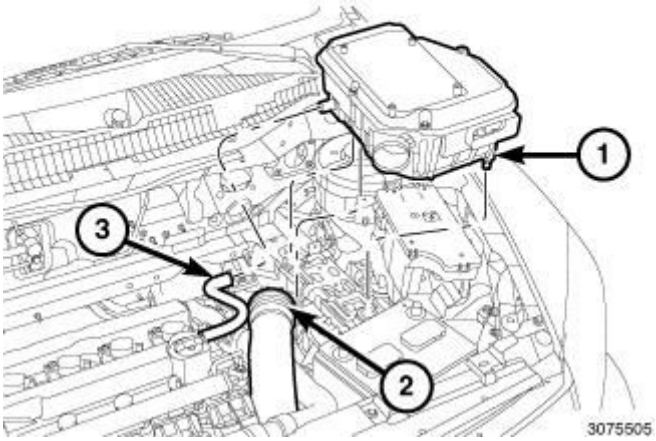

Fig. 192: Air Cleaner Body, Air Inlet Tube & Make-Up Air Hose
Courtesy of CHRYSLER GROUP, LLC

5. Remove the air inlet tube (2) from the air cleaner body (1).
6. Disconnect the make-up air hose (3) from the air cleaner body.
7. Remove the support bracket bolt from the strut tower.
8. Pull upward to disengage the pins from the rubber grommets and remove the air cleaner body (1).

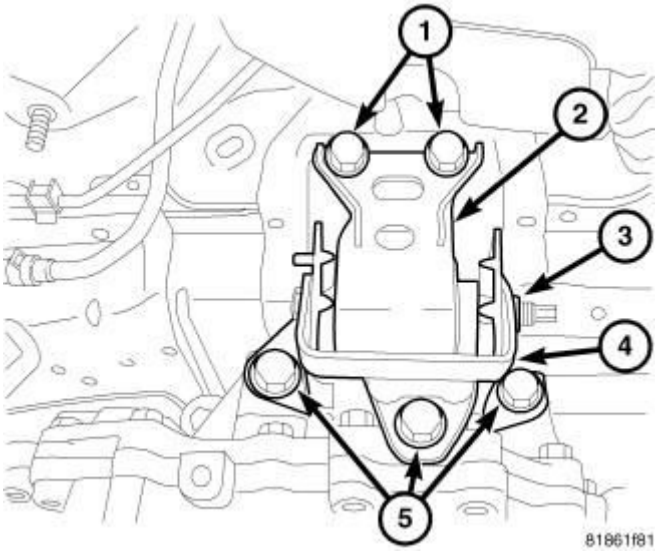

Fig. 193: Left Engine Mount Assembly
Courtesy of CHRYSLER GROUP, LLC

9. Support the transaxle with a suitable jack.
10. Remove the left mount through bolt (3).

11. Remove the left mount bracket to body frame rail fasteners (1).
12. Remove the mount (2).

INSTALLATION

INSTALLATION

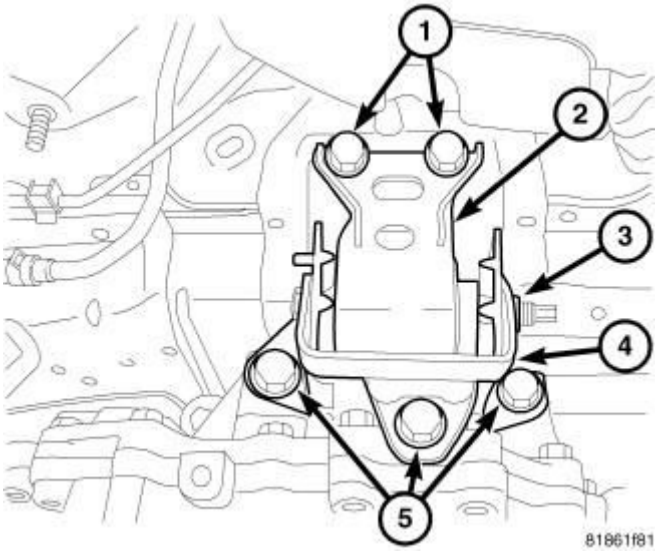

Fig. 194: Left Engine Mount Assembly
Courtesy of CHRYSLER GROUP, LLC

1. Position mount (2) in place.
2. Install left mount to frame rail bolts (1) and torque to 75 N.m (55 ft. lbs.).
3. Install mount through bolt (3) and torque to 100 N.m (74 ft. lbs.).
4. Remove jack.

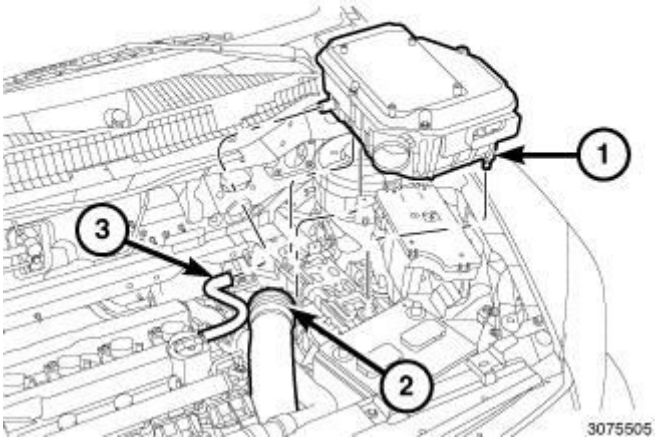

Fig. 195: Air Cleaner Body, Air Inlet Tube & Make-Up Air Hose
Courtesy of CHRYSLER GROUP, LLC

5. Push down on the air cleaner body (1) to engage the pins into the grommets.
6. Install the support bracket bolt to the strut tower and tighten to 10 N.m (89 in. lbs.).
7. Install the air inlet tube (2) to the air cleaner body (1).
8. Connect the make-up air hose (3) to the air cleaner body.

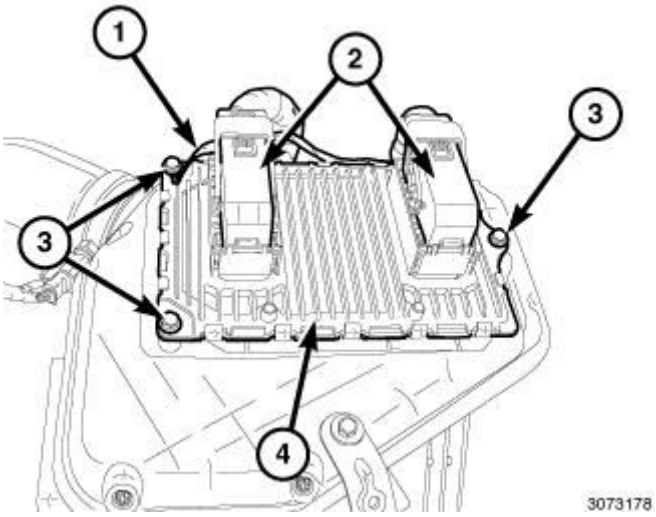

Fig. 196: Electrical Connectors, PCM, Three Mounting Bolts & Ground Wire
Courtesy of CHRYSLER GROUP, LLC

9. Install the mounting bolt (3) with ground wire (1) and tighten to 12 N.m (106 in. lbs.).
10. Connect and lock the electrical connectors (2).

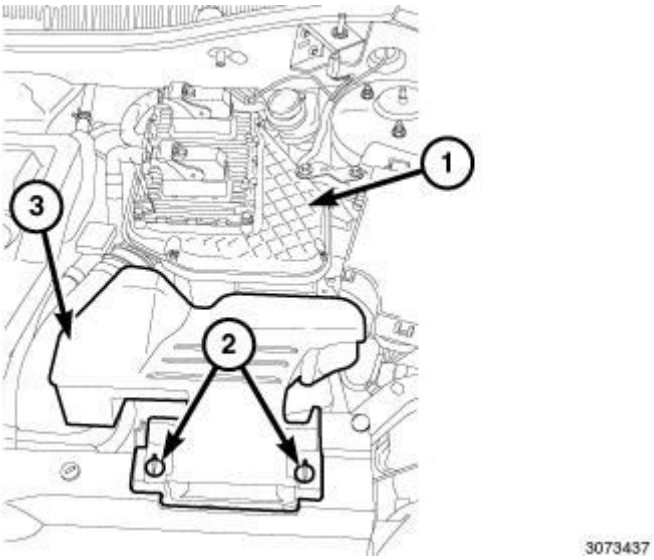

Fig. 197: Retainers, Fresh Air Inlet Duct & Air Cleaner Body
Courtesy of CHRYSLER GROUP, LLC

11. Connect the negative battery cable and tighten nut to 5 N.m (45 in. lbs.).
12. Install the fresh air inlet duct (3) on the air cleaner body (1) and lock the retainers (2).

INSULATOR, ENGINE MOUNT, REAR

REMOVAL

REMOVAL

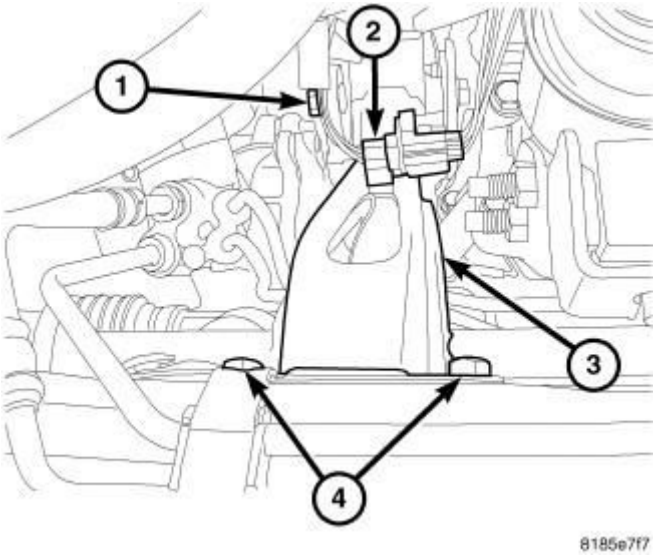

Fig. 198: Rear Mount Through Bolt, Oxygen Sensor Connector, Rear Mount & Rear Mount Retaining Bolts
Courtesy of CHRYSLER GROUP, LLC

1. Remove rear mount retaining bolts (4).
2. Remove rear mount through bolt (1).
3. Remove oxygen sensor connector (2) from mount.
4. Remove rear mount (3).

INSTALLATION

INSTALLATION

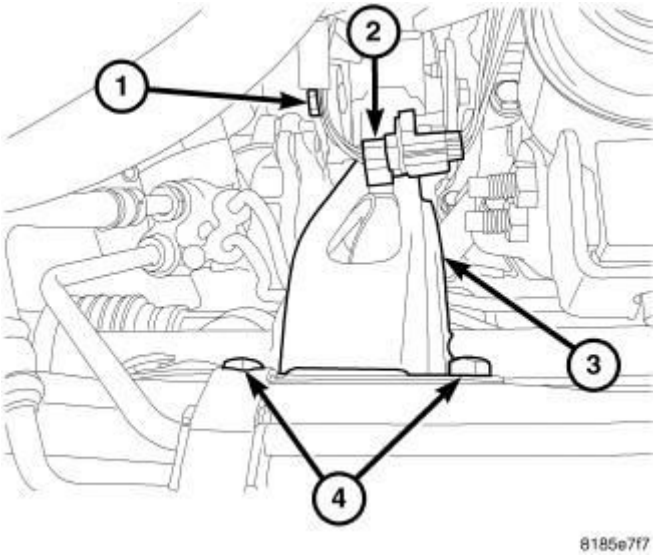

Fig. 199: Rear Mount Through Bolt, Oxygen Sensor Connector, Rear Mount & Rear Mount Retaining Bolts
Courtesy of CHRYSLER GROUP, LLC

1. Position rear mount (3).
2. Install rear mount retaining bolts (4) and tighten to 50 N.m (37 ft. lbs.).
3. Install rear mount through bolt (1) and tighten to 47 N.m (35 ft. lbs.).
4. Install oxygen sensor connector (2) retainer to mount (3).

INSULATOR, ENGINE MOUNT, RIGHT

REMOVAL

REMOVAL

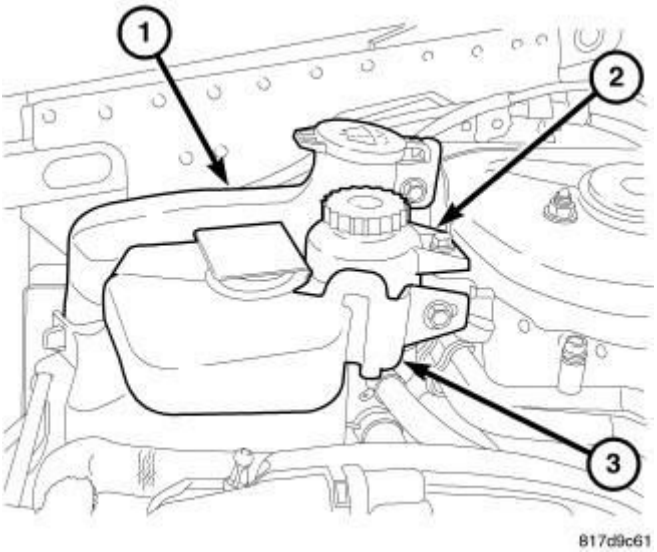

Fig. 200: Windshield Washer Reservoir, Power Steering Reservoir & Coolant Reservoir
Courtesy of CHRYSLER GROUP, LLC

1. Remove coolant reservoir (3) and set aside.
2. Remove power steering reservoir (2) and set aside.
3. Remove windshield washer bottle (1).

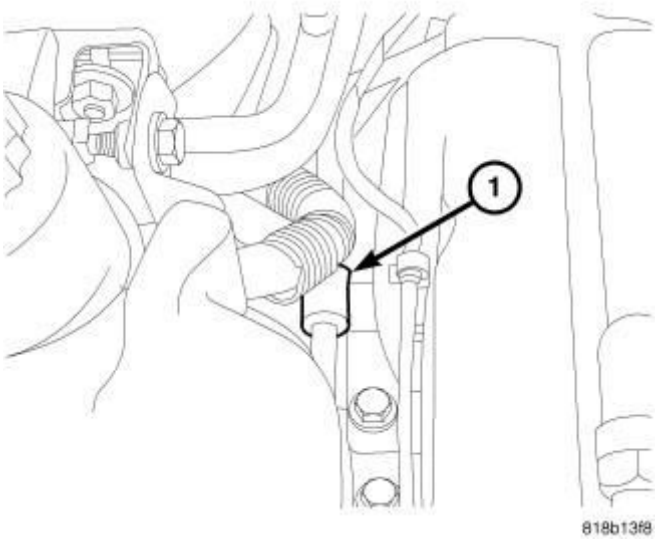

Fig. 201: Power Steering Line Support
Courtesy of CHRYSLER GROUP, LLC

4. Remove power steering line support bracket (1) from engine mount.

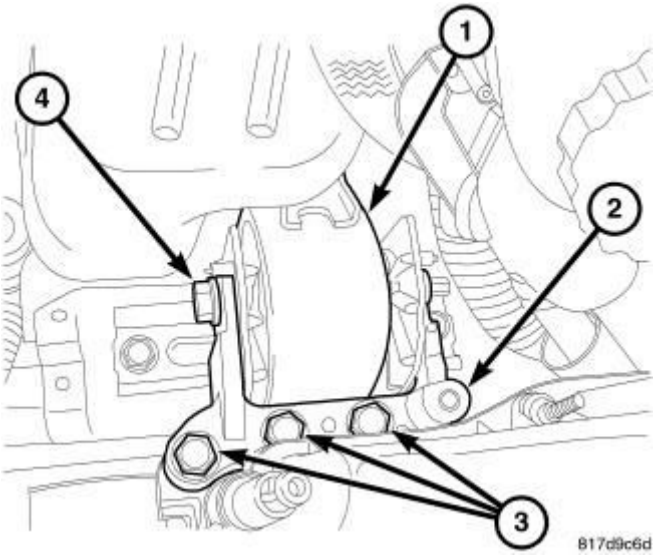

Fig. 202: Right Engine Mount Assembly
Courtesy of CHRYSLER GROUP, LLC

5. Support transaxle with a block of wood and a suitable jack.
6. Remove engine mount through bolt (4).
7. Remove engine mount bracket bolts (3).
8. Remove engine mount retaining bolts.
9. Remove engine mount.

INSTALLATION

INSTALLATION

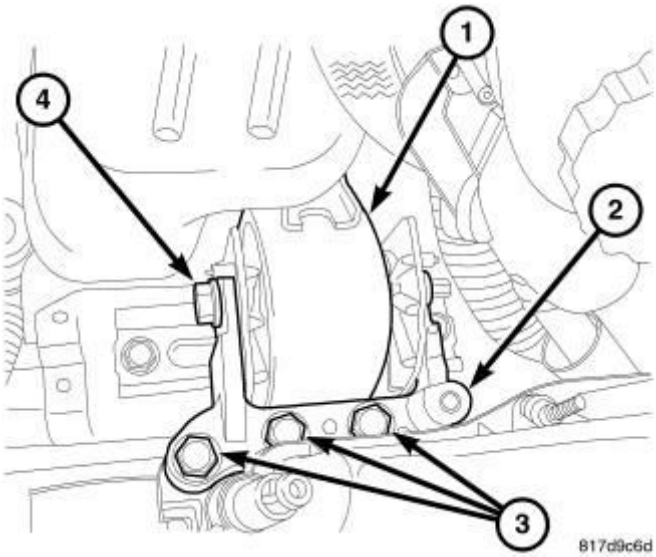

Fig. 203: Right Engine Mount Assembly
Courtesy of CHRYSLER GROUP, LLC

1. Position right engine mount (1).
2. Install engine mount retaining bolts and tighten to 75 N.m (55 ft. lbs.).
3. Install engine mount adapter (2) and tighten bolts (3) to 68 N.m (50 ft. lbs.).
4. Install engine mount through bolt (4) and tighten to 88 N.m (65 ft. lbs.).

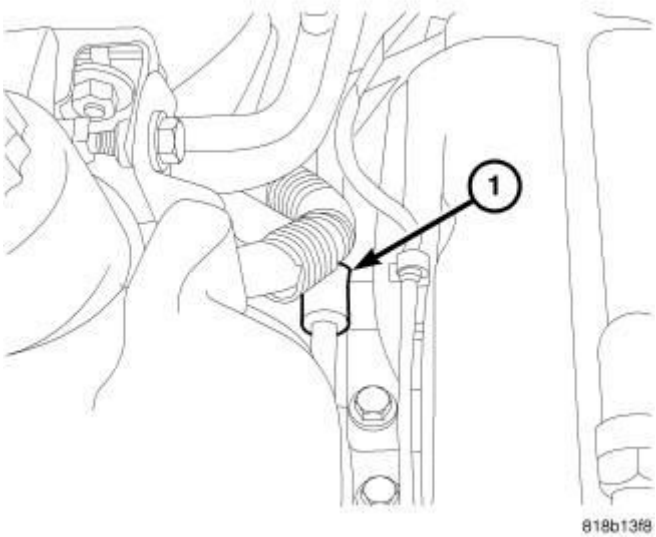

Fig. 204: Power Steering Line Support
Courtesy of CHRYSLER GROUP, LLC

5. Remove jack.
6. Install power steering line support bracket (1) at engine mount.

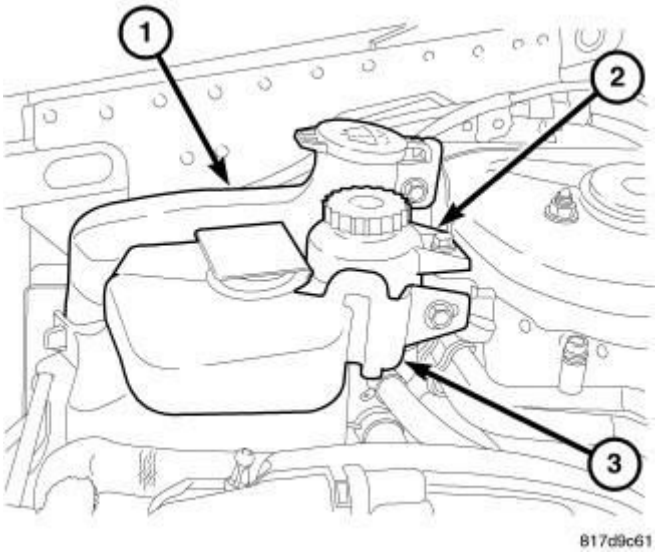

Fig. 205: Windshield Washer Reservoir, Power Steering Reservoir & Coolant Reservoir
Courtesy of CHRYSLER GROUP, LLC

7. Install windshield washer bottle (1).
8. Install power steering reservoir (2).
9. Install coolant reservoir (3).
10. Install engine cover.

ENGINE BLOCK

DESCRIPTION

DESCRIPTION

The die cast aluminum cylinder block is a two-piece assembly, consisting of the cylinder block and ladder frame. The block is an open deck design with cast in place cast iron cylinder liners. The cast iron cylinder liners are recessed below the aluminum deck surface. The ladder frame bolts to the cylinder block and does not incorporate the main bearing caps. This design offers a much stronger lower end and increased cylinder block and transaxle rigidity. The rear oil seal retainer is integral with the block and ladder frame. The ladder frame and block are serviced as an assembly.

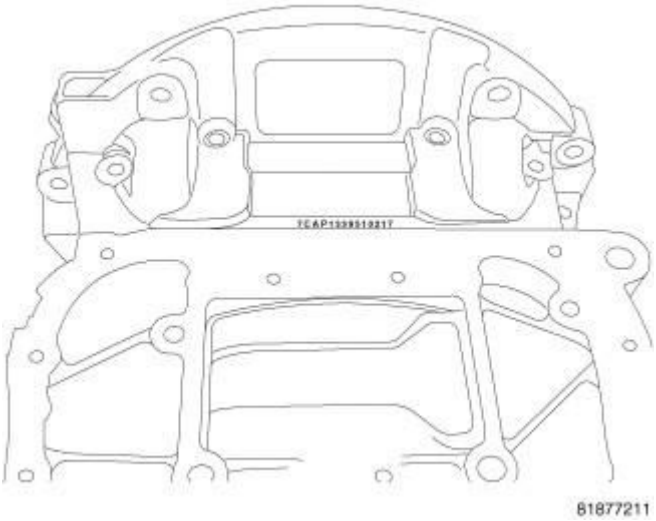

Fig. 206: Engine Serial Number
Courtesy of CHRYSLER GROUP, LLC

The engine serial number is located on the bottom of the ladder frame just behind the oil pan. The date can be seen with the oil pan in place.

STANDARD PROCEDURE

STANDARD PROCEDURE - CYLINDER BORE HONING

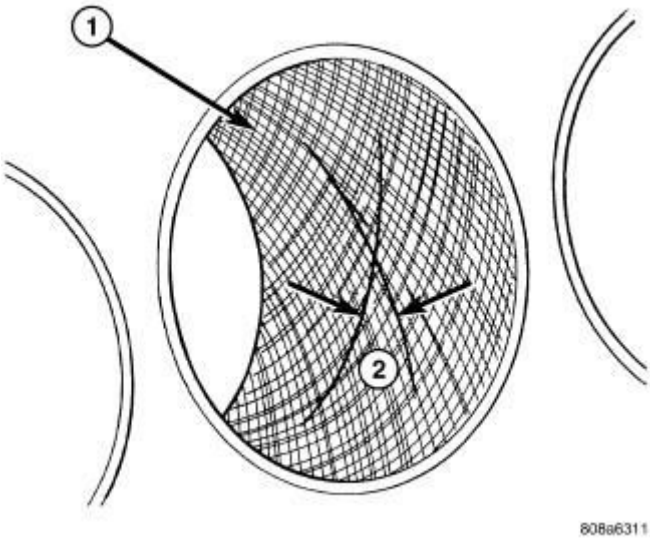

Fig. 207: Cylinder Bore Cross-Hatch Pattern
Courtesy of CHRYSLER GROUP, LLC

1 - CROSS-HATCH PATTERN 2 - 40°-60°

1. Deglazing of the cylinder walls may be done using a quality commercially available flex hone, if the cylinder bore is straight and round. 20-60 strokes depending on the bore condition, will be sufficient to provide a satisfactory surface. Use a light honing oil. **Do not use engine or transmission oil, mineral spirits or kerosene.** Inspect cylinder walls after each 20 strokes.
2. Honing should be done by moving the hone up and down fast enough to get a cross-hatch pattern. When hone marks **intersect** at 30-50 degrees, the cross hatch angle is most satisfactory for proper seating of rings.
3. A controlled hone motor speed between 200-300 RPM is necessary to obtain the proper cross-hatch angle. The number of up and down strokes per minute can be regulated to get the desired 30-50 degree angle. Faster up and down strokes increase the cross-hatch angle.
4. After honing, it is necessary that the block be cleaned again to remove all traces of abrasive.

CAUTION: Ensure all abrasives are removed from engine parts after honing. It is recommended that a solution of soap and hot water be used with a brush and the parts then thoroughly dried. The

bore can be considered clean when it can be wiped clean with a white cloth and cloth remains clean. Oil the bores after cleaning to prevent rusting.

INSPECTION

INSPECTION

ENGINE BLOCK

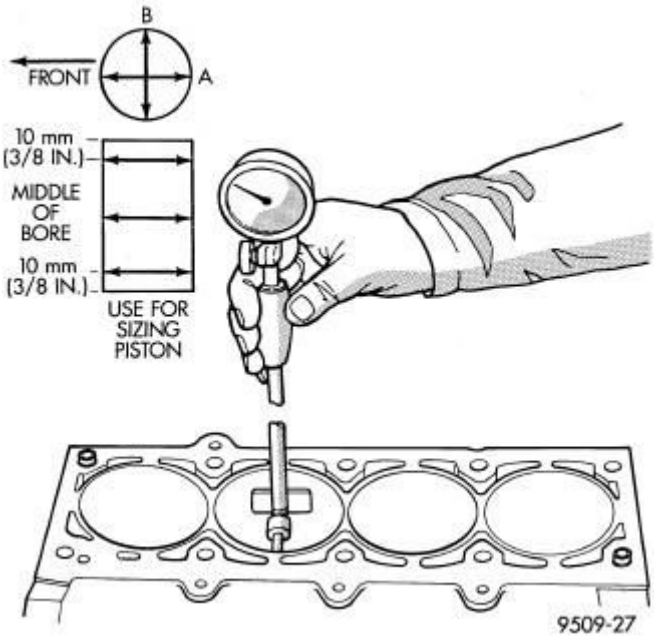

Fig. 208: Checking Cylinder Bore Size
Courtesy of CHRYSLER GROUP, LLC

1. Clean cylinder block thoroughly and check all core hole plugs for evidence of leaking.
2. Examine block and cylinder bores for cracks or fractures.
3. Check block deck surfaces for flatness. Deck surface must be within service limit of 0.050 mm (0.002 in.).

CYLINDER BORE

NOTE: The cylinder bores should be measured at normal room temperature, 21°C (70°F).

The cylinder walls should be checked for out-of-round and taper with Tool C119 or equivalent . Refer to **SPECIFICATIONS** . If the cylinder walls are badly

scuffed or scored, the cylinder block should be replaced, and new pistons and rings fitted.

Measure the cylinder bore at three levels in directions A and B . Top measurement should be 10 mm (3/8 in.) down and bottom measurement should be 10 mm (3/8 in.) up from bottom of bore. Refer to **SPECIFICATIONS** .

BEARING(S), CONNECTING ROD

STANDARD PROCEDURE

STANDARD PROCEDURE - CONNECTING ROD - FITTING

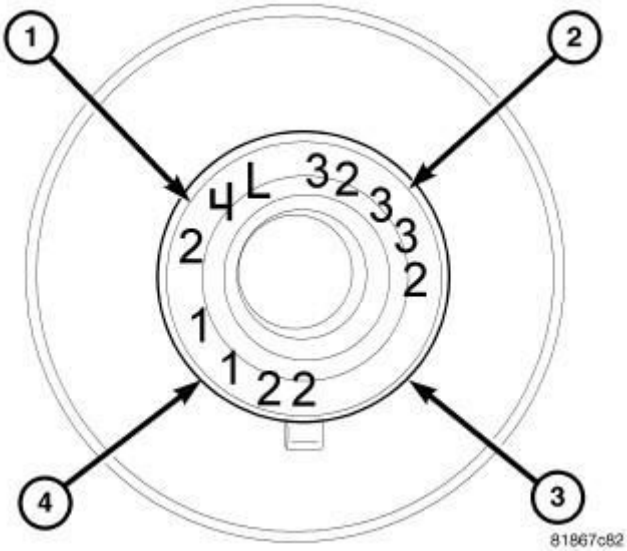

Fig. 209: Bearing Selection
Courtesy of CHRYSLER GROUP, LLC

There are three different sizes of rod bearings available. Connecting rod bearing identification (4) can be found on the nose of the crankshaft (3). Use the table below for proper bearing selection.

CONNECTING ROD BEARING SELECTION

CRANKSHAFT PIN DIAMETER GRADE	CONNECTING ROD BEARING CLASSIFICATION	CONNECTING ROD BEARING THICKNESS
1	1 (Black)	-3 Micron (-.003 mm.)
2	2 (No Color)	Standard
3	3 (Green)	+3 Micron (+.003 mm.)

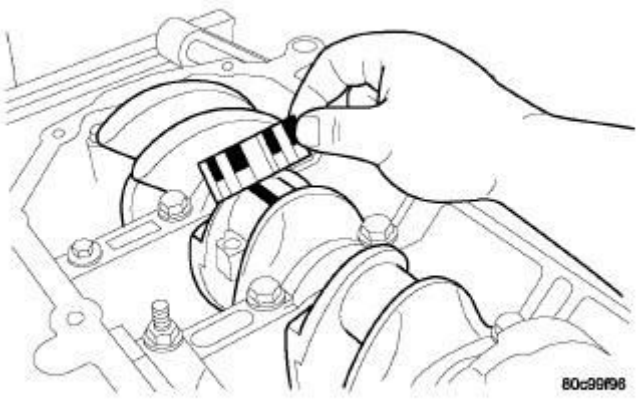

Fig. 210: Connecting Rod Bearing Clearance - Typical
Courtesy of CHRYSLER GROUP, LLC

1. For measuring connecting rod bearing clearance procedure and use of Plastigage. Refer to **MEASURING BEARING CLEARANCE USING PLASTIGAGE** . For bearing clearance refer to Engine Specifications. Refer to **SPECIFICATIONS** .

NOTE: The rod bolts should not be reused.

2. Before installing the **NEW** rod bolts the threads and under the bolt head should be oiled with clean engine oil.
3. Install each bolt finger tight then alternately torque each bolt to assemble the cap properly.
4. Tighten the connecting rod bolts using the 2 step torque-turn method. Tighten according to the following values:

CAUTION: Do not use a torque wrench for the second step.

1. Tighten the bolts to 20 N.m (15 ft. lbs.).
2. Tighten the connecting rod bolts an additional 90°.

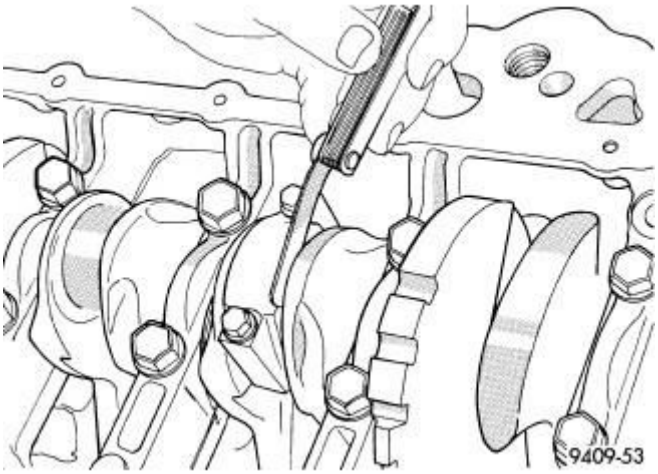

Fig. 211: Connecting Rod Side Clearance
Courtesy of CHRYSLER GROUP, LLC

5. Using a feeler gauge, check connecting rod side clearance. Refer to clearance specifications. Refer to **SPECIFICATIONS** .

BEARING(S), CRANKSHAFT, MAIN

STANDARD PROCEDURE

STANDARD PROCEDURE - MAIN BEARING SELECTION

NOTE: There are three different possibilities for the upper main bearings and five different lower main bearings. The upper and lower bearing shells are not interchangeable.

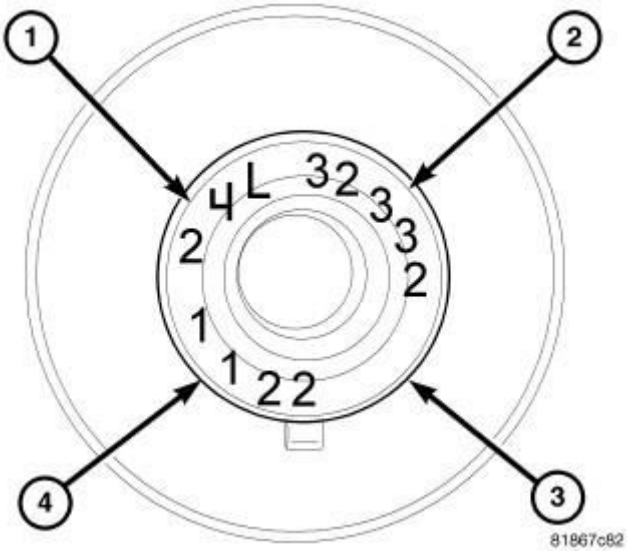

Fig. 212: Bearing Selection
Courtesy of CHRYSLER GROUP, LLC

The lower main bearing identification (2) is stamped in the nose of the crankshaft (3). There are 5 different bearing sizes available 0 through 4.

CRANKSHAFT IDENTIFICATION		LOWER CRANKSHAFT BEARING SELECTION	
JOURNAL DIAMETER GRADE	DIMENSION	LOWER MAIN BEARING SIZE CLASSIFICATION	LOWER MAIN BEARING DIMENSION
0	52 mm, -0.012 to -0.015 mm	0 (Pink or Red)	2 mm, 0 to -0.003 mm
1	52 mm, -0.015 to -0.018 mm	1 (Black)	2 mm, +0.003 to 0 mm
2	52 mm, -0.018 to -0.021 mm	2 (No Color)	2 mm, +0.006 to +0.003 mm
3	52 mm, -0.021 to -0.024 mm	3 (Green)	2 mm, +0.009 to +0.006 mm
4	52 mm, -0.024 to -0.027 mm	4 (Blue)	2 mm, +0.012 to +0.009 mm

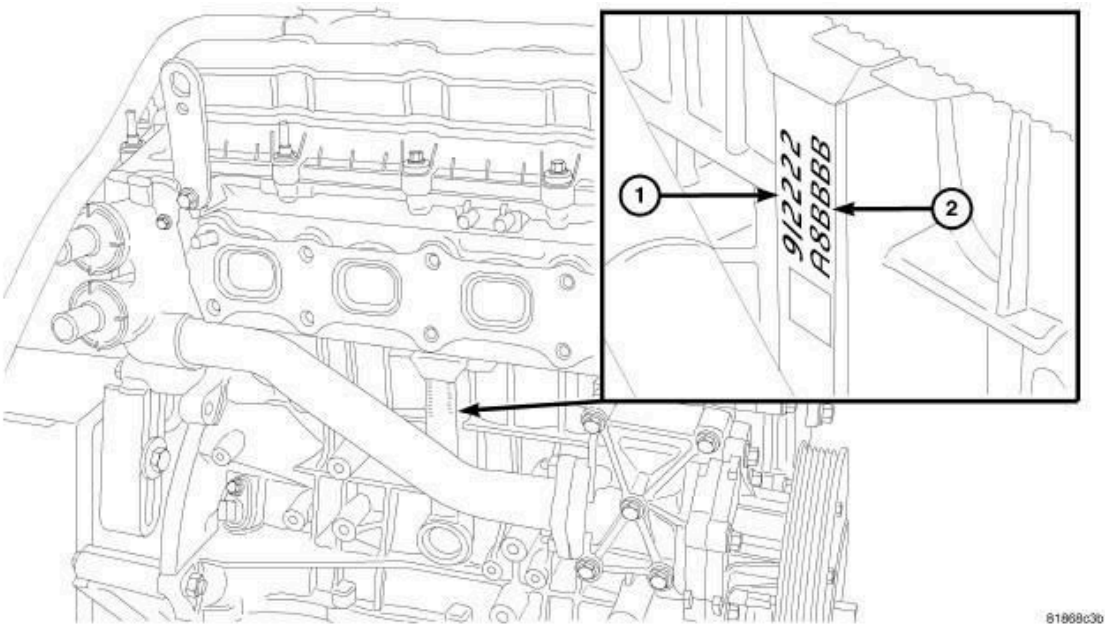

Fig. 213: Upper Main Bearing Shell Identification & Piston Identification
Courtesy of CHRYSLER GROUP, LLC

The upper main bearing shell identification (1) is located in the middle of cylinder block on the right side of the engine. There are three different size bearings available. The bearing class is read downward from top and corresponds

to the front journal to the rear journal on the bottom.

UPPER MAIN BEARING SELECTION

CYLINDER BLOCK IDENTIFICATION		UPPER CRANKSHAFT BEARING SELECTION	
MAIN BEARING GRADE	DIMENSION	UPPER MAIN BEARING SIZE CLASSIFICATION	UPPER MAIN BEARING DIMENSION
1	56.000<56.006 mm	1 (Black)	2 mm, 0 to -0.006 mm
2	56.006<56.012 mm	2 (No Color)	2 mm, +0.006 to 0 mm
3	56.012<56.018 mm	3 (Green)	2 mm, +0.012 to +0.006 mm

CRANKSHAFT

STANDARD PROCEDURE

STANDARD PROCEDURE - MEASURING CRANKSHAFT END PLAY

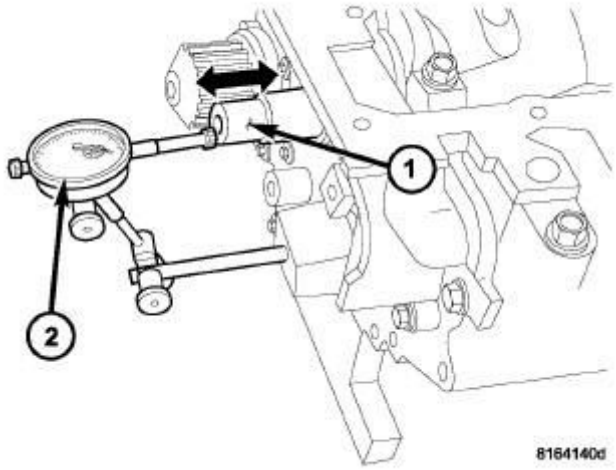

Fig. 214: Checking Crankshaft End Play - Typical
Courtesy of CHRYSLER GROUP, LLC

1 - Crankshaft 2 - DIAL INDICATOR

1. Mount a dial indicator (2) to front of engine with the locating probe on nose of crankshaft (1).
2. Move crankshaft all the way to the rear of its travel.
3. Zero the dial indicator.
4. Move crankshaft all the way to the front and read the dial indicator. For end play specification, refer to **SPECIFICATIONS** .

REMOVAL

REMOVAL

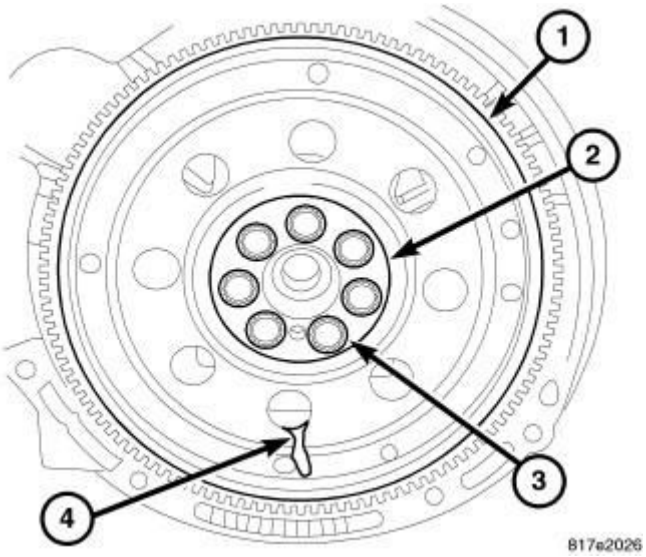

Fig. 215: Flex Plate
Courtesy of CHRYSLER GROUP, LLC

NOTE: Crankshaft can not be removed when engine is in vehicle.

1. Remove engine assembly from vehicle. Refer to **REMOVAL**.
2. Separate transaxle from engine.
3. Remove flex plate/flywheel (1).
4. Remove crankshaft rear oil seal. Refer to **SEAL, CRANKSHAFT OIL, REAR, REMOVAL**.

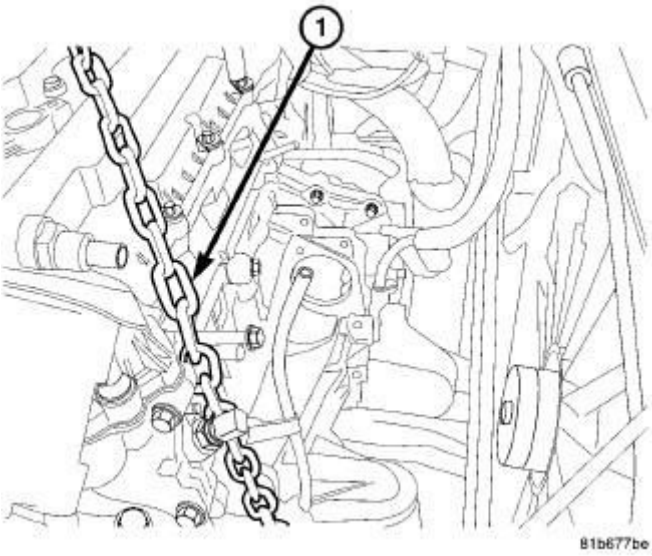

Fig. 216: Identifying Lift Chain
Courtesy of CHRYSLER GROUP, LLC

5. Remove engine from lift chain (1) and mount engine on a suitable repair stand.

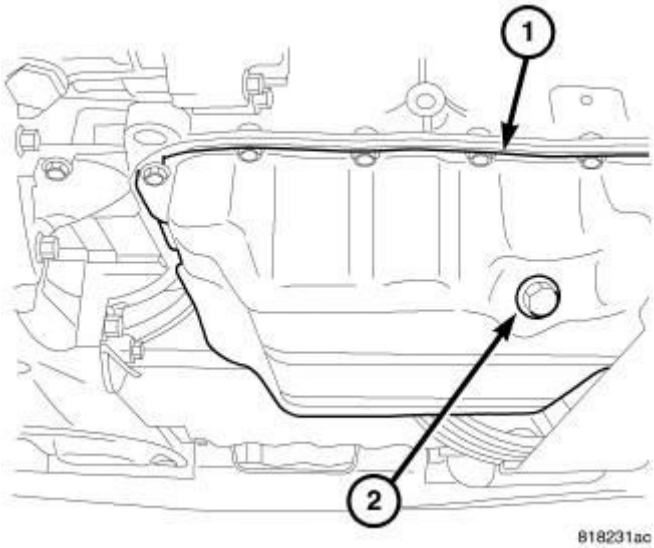

Fig. 217: Oil Drain Plug
Courtesy of CHRYSLER GROUP, LLC

6. Drain engine oil (2).

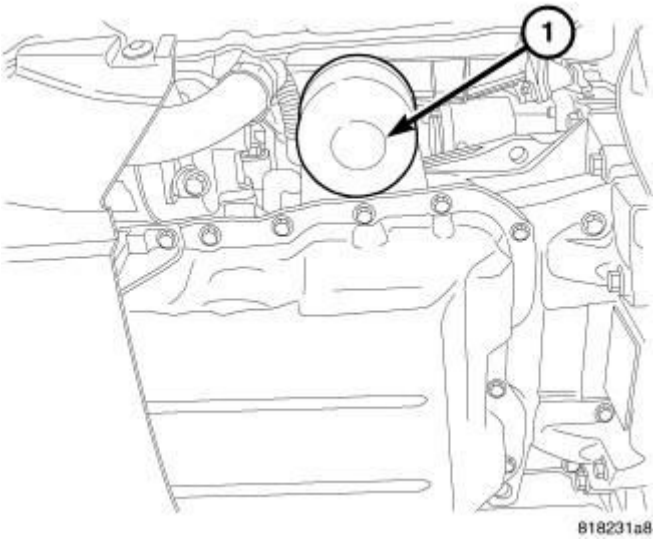

Fig. 218: Oil Filter
Courtesy of CHRYSLER GROUP, LLC

7. Remove oil filter (1).

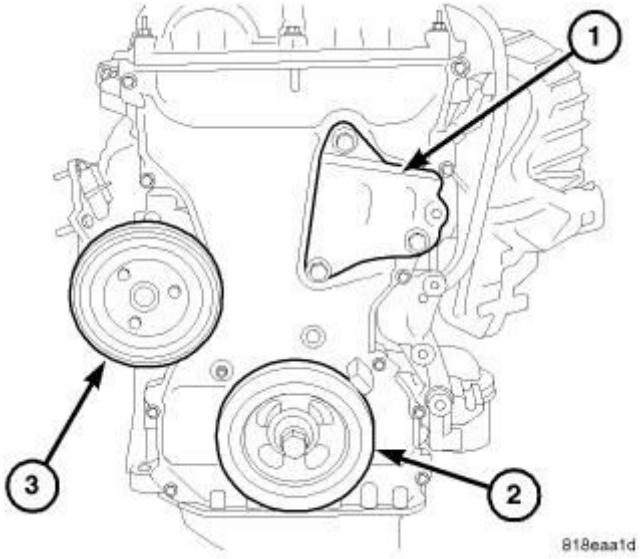

Fig. 219: Right Side Engine Mount Bracket, Crankshaft Damper & Water Pump Pulley
Courtesy of CHRYSLER GROUP, LLC

8. Remove crankshaft vibration damper (2). Refer to **DAMPER, VIBRATION, REMOVAL**.
9. Remove water pump pulley (3).
10. Remove engine mount support bracket (1).

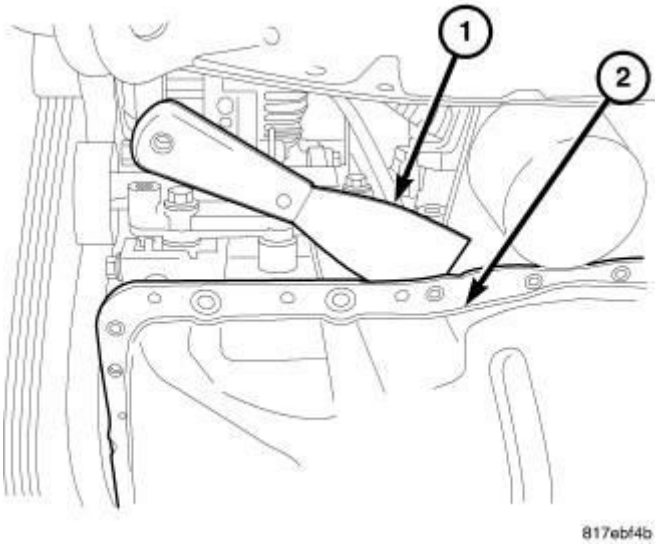

Fig. 220: Oil Pan Removal
Courtesy of CHRYSLER GROUP, LLC

11. Remove the oil pan (2). Refer to **PAN, OIL, REMOVAL**.
12. Remove timing chain cover. Refer to **COVER(S), ENGINE TIMING, REMOVAL**.
13. Remove the timing chain. Refer to **CHAIN AND SPROCKETS, TIMING, REMOVAL**.
14. Remove balance shaft module.

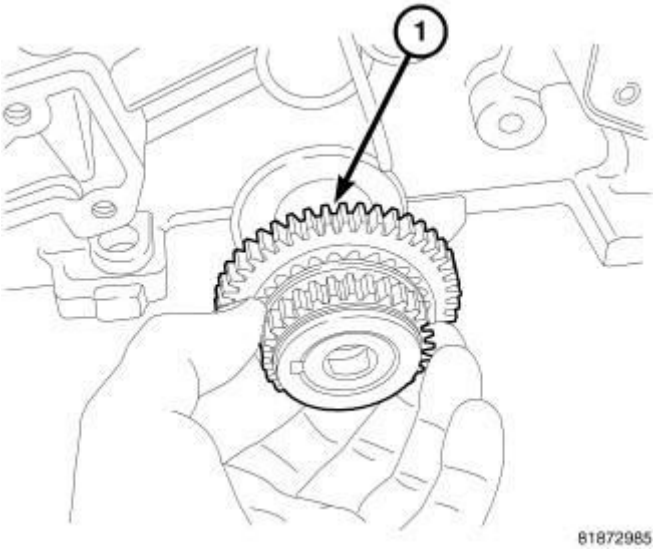

Fig. 221: Crankshaft Sprocket
Courtesy of CHRYSLER GROUP, LLC

15. Remove the crankshaft sprocket (1).

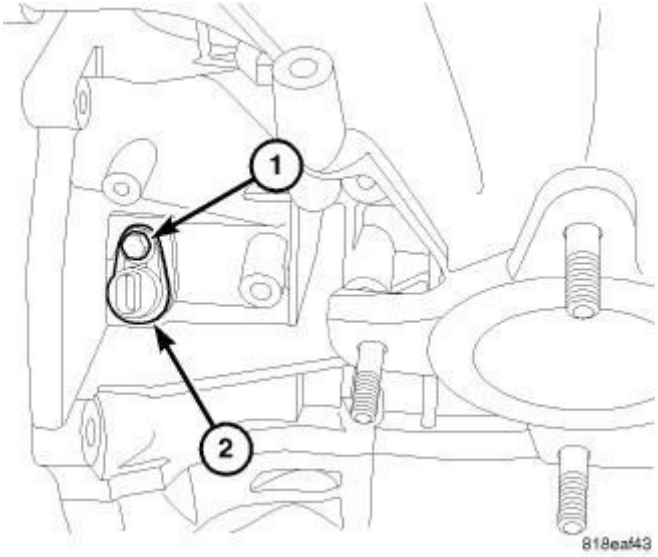

Fig. 222: Crankshaft Position Sensor
Courtesy of CHRYSLER GROUP, LLC

16. Remove crankshaft position sensor retaining bolt (1) and remove sensor (2).
17. Remove ladder frame. Refer to **FRAME, LADDER, REMOVAL**.

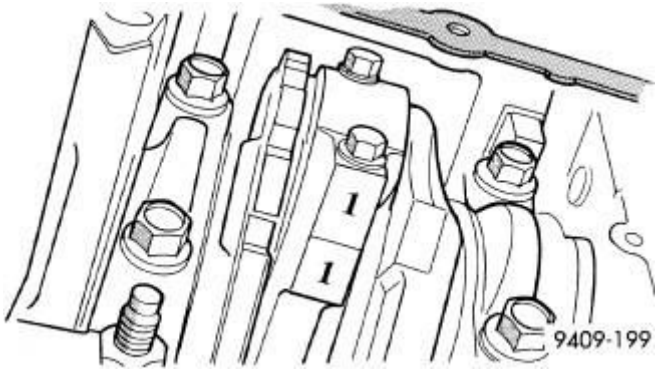

Fig. 223: Identifying Mark On Connecting Rod And Bearing Cap
Courtesy of CHRYSLER GROUP, LLC

NOTE: If piston/connecting rod replacement is necessary, remove cylinder head. Refer to CYLINDER HEAD, REMOVAL.

CAUTION: DO NOT use a number stamp or a punch to mark connecting rods. Damage to connecting rod could occur.

18. Using a permanent ink or paint marker, identify cylinder number on each connecting rod and cap.

19. Remove all connecting rod bolts and caps. Care should be taken not to damage the fracture rod and cap surfaces.

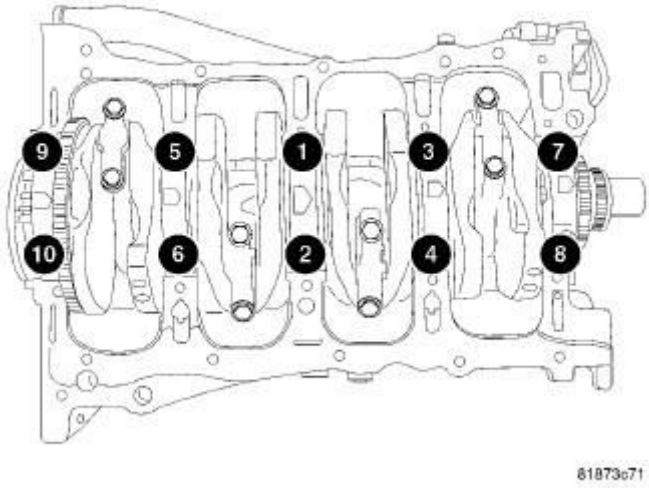

Fig. 224: Main Bearing Cap Torque Sequence
Courtesy of CHRYSLER GROUP, LLC

NOTE: Do not reuse connecting rod bolts.

20. Remove main bearing caps.

CAUTION: Use extreme care when handling crankshaft. Tone wheel damage can occur if crankshaft is mis-handled.

21. Lift out crankshaft from cylinder block. Do not damage the main bearings or journals when removing the crankshaft.

INSPECTION

INSPECTION

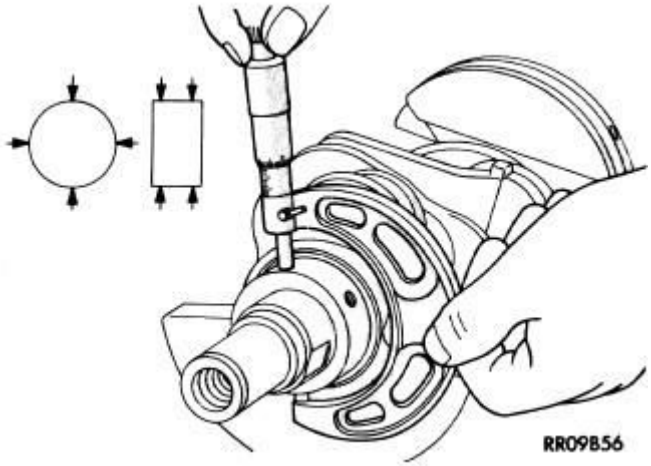

Fig. 225: Crankshaft Journal Measurements - Typical
Courtesy of CHRYSLER GROUP, LLC

The crankshaft main journals should be checked for excessive wear, taper and scoring. Limits of taper on any crankshaft main journals should be held to 0.006 mm (0.00024 in.). Limits of taper on any crankshaft rod journals should be held to 0.005 mm (0.0002 in.). DO NOT nick crank pin or bearing fillets. Limits of out of round on any crankshaft journals should be held to 0.005 mm (0.0002 in). DO NOT nick crank pin or bearing fillets.

INSTALLATION

INSTALLATION

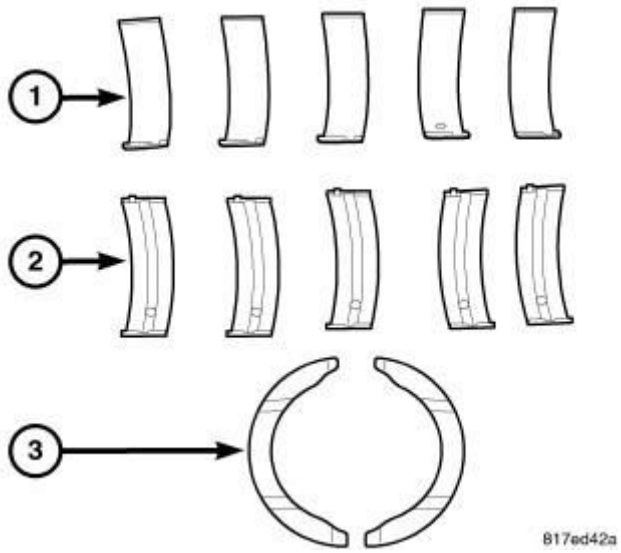

Fig. 226: Bearing Identification
Courtesy of CHRYSLER GROUP, LLC

The crankshaft is supported in five main bearings. All upper bearing shells (2) in

the crankcase have oil grooves and holes. All lower bearing shells (1) are smooth. Crankshaft end play is controlled by a two piece thrust bearing (3) on the number three main bearing journal.

1. Clean main bearing cap bolt holes with Mopar® brake parts cleaner or equivalent and blow out with compressed air.
2. Install the main bearing upper (2) shells with the lubrication groove and oil hole in the engine block.
3. Make certain oil holes in block line up with oil hole in bearings and bearing tabs seat in the block tab slots.

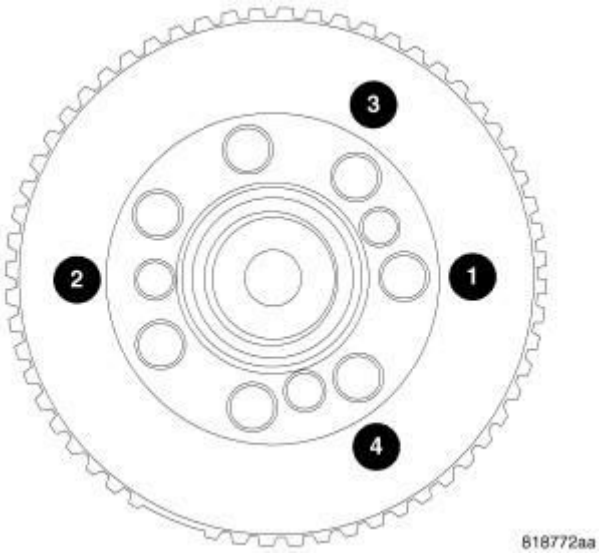

Fig. 227: Target Wheel
Courtesy of CHRYSLER GROUP, LLC

NOTE: If the crankshaft is sent out for machine work, it must be balanced as an assembly with the target ring installed.

4. Clean crankshaft and target ring with Mopar® brake parts cleaner or equivalent and dry with compressed air to ensure that the crankshaft mating surface and target ring mounting holes are free from oil and lock patch debris.

NOTE: Always use NEW mounting screws whether installing original or new target ring.

5. Install **NEW** mounting screws finger tight starting with the #1 location.

Make sure engagement occurs with the shoulder of the screws and mounting hole before starting all other screws.

6. Tighten all mounting screws to 13 N.m (110 in. lbs.) in the sequence shown in illustration.

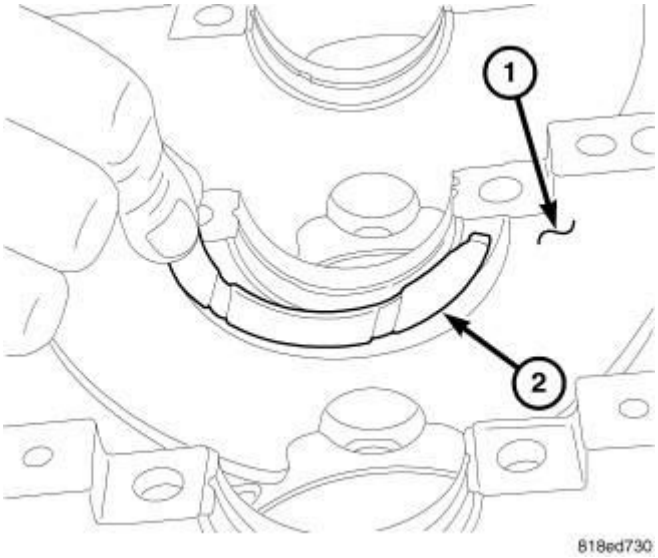

Fig. 228: Installing Thrust Bearing
Courtesy of CHRYSLER GROUP, LLC

NOTE: Lightly apply trans gel to thrust bearings to hold bearings in block.

NOTE: The thrust bearings must be installed with the notches facing the crankshaft.

7. Install thrust bearings (2) in block (1).

CAUTION: Do not get oil on the ladder frame mating surface. It will affect the ability of the RTV to seal the ladder frame to cylinder block.

NOTE: Ensure main bearing cap bolt holes in the block are clean, dry (free of residual oil or coolant), and threads are not damaged.

8. Oil the bearings and journals. Install crankshaft in engine block.

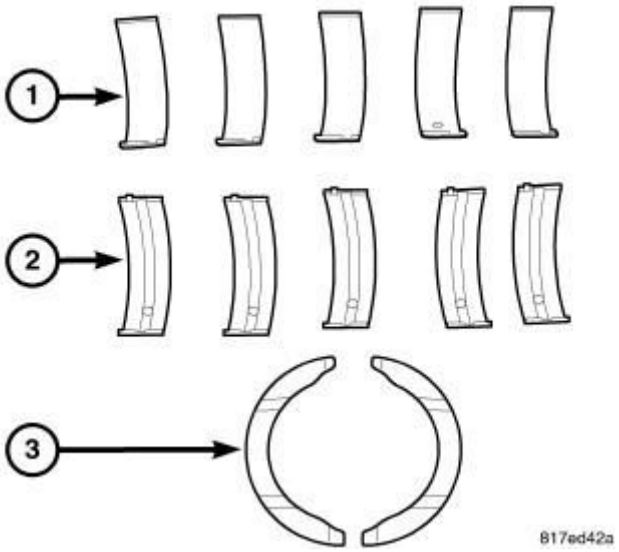

Fig. 229: Bearing Identification
Courtesy of CHRYSLER GROUP, LLC

9. Install lower main bearings (1) into main bearing cap. Make certain the bearing tabs are seated into the bearing cap slots.

NOTE: Main bearing caps are stamped 1 - 5 front to rear. Arrows on the caps must point towards the front of the engine.

10. Install main bearing caps to engine block.
11. Before installing the bolts the threads should be clean and dry.
12. Loosely install main bearing cap bolts.
13. To ensure correct thrust bearing alignment, perform the following steps:
    - Step 1: Rotate crankshaft until number 4 piston is at TDC.
    - Step 2: Move crankshaft rearward to limits of travel.
    - Step 3: Then, move crankshaft forward to limits of travel.
    - Step 4: Wedge an appropriate tool between the rear of the cylinder block and the rear crankshaft counterweight. This will hold the crankshaft in its furthest forward position.

CAUTION: There are different sets main bolts supplied with this engine. Each bolt set has a different torque value and engine damage could result if bolts are not torqued correctly. The bolts are

not interchangeable.

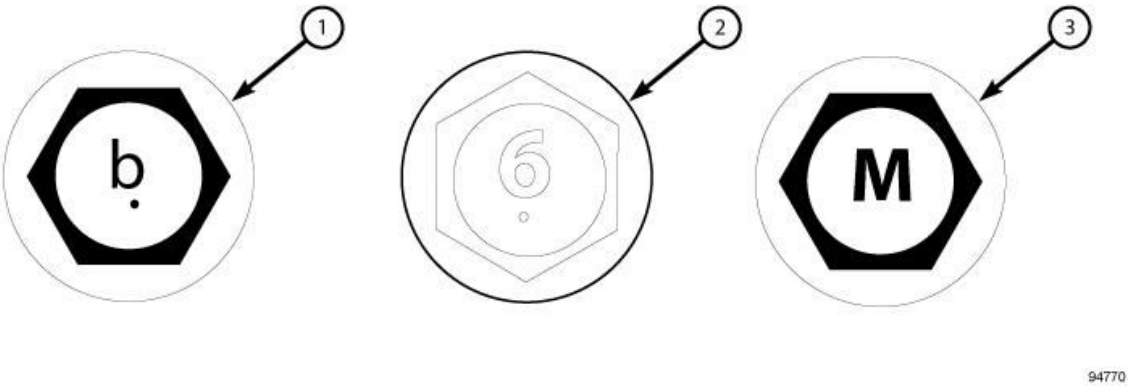

Fig. 230: Main Bolt Identification
Courtesy of CHRYSLER GROUP, LLC

14. If your bolt heads are marked with **b** (1) or **6** (2), go to step 15. If your bolt heads are marked with **M** (3) or any other marking, go to step 16.

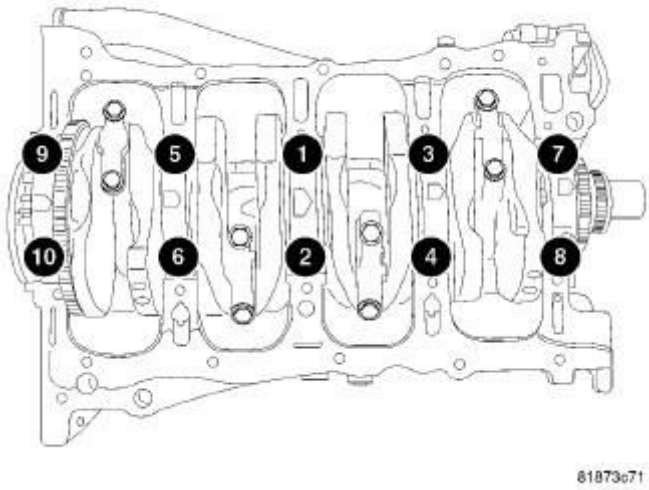

Fig. 231: Main Bearing Cap Torque Sequence
Courtesy of CHRYSLER GROUP, LLC

CAUTION: Before tightening bolts, you must identify the bolt head to obtain the correct torque value. Failure to identify the bolts correctly, could result in improperly tightened bolts which could result in engine damage.

15. Tighten bolts marked with **b** or **6** using the following three step method, in the sequence shown in illustration:
    - Tighten all bolts to 15 N.m (11 ft. lbs.)
    - Tighten all bolts to 27 N.m (20 ft. lbs.)
    - Tighten all bolts an additional 45°.
16. Tighten bolts marked with **M** using the following three step method, in the sequence shown in illustration:
    - Tighten all bolts to 15 N.m (11 ft. lbs.)
    - Tighten all bolts to 45 N.m (33 ft. lbs.)
    - Tighten all bolts an additional 45°.
17. Remove wedge tool used to hold crankshaft.
18. Check the crankshaft turning torque, it should not exceed 5.6 N.m (50 in. lbs.).
19. Check crankshaft end play. Refer to CRANKSHAFT - **STANDARD PROCEDURE** .
20. Install connecting rod bearings and caps. **Do Not Reuse Connecting Rod Bolts.** Tighten connecting rod bolts to 20 N.m + 90° (15 ft. lbs.) + 90°. Refer to **ROD, PISTON AND CONNECTING, INSTALLATION**.
21. Install the ladder frame assembly. Refer to **FRAME, LADDER, INSTALLATION**.
22. Install the balance shaft module. Refer to **PUMP, ENGINE OIL, INSTALLATION**.

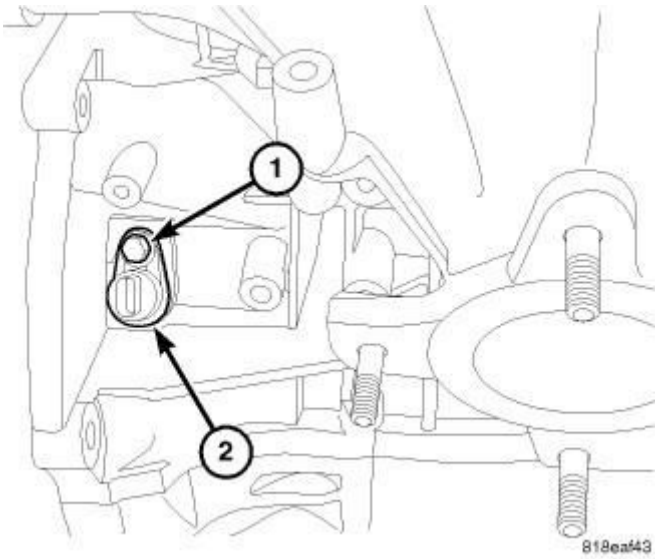

Fig. 232: Crankshaft Position Sensor

Courtesy of CHRYSLER GROUP, LLC

23. Install crankshaft position sensor (2) and tighten bolt (1).
24. Install cylinder head if it was removed. Refer to **CYLINDER HEAD, INSTALLATION**.

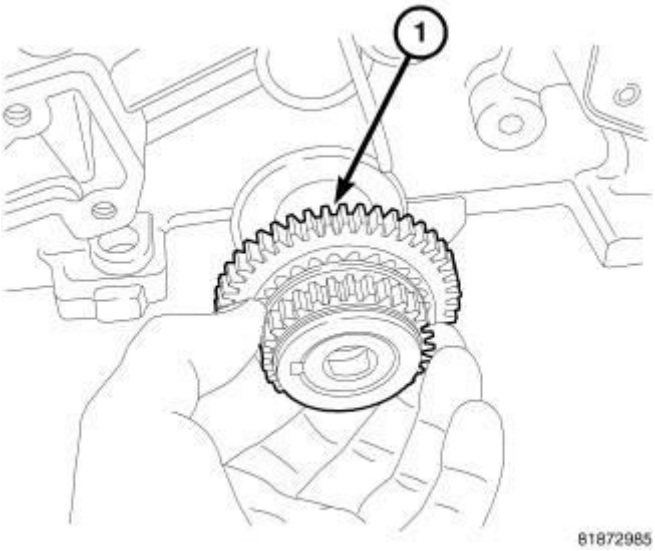

Fig. 233: Crankshaft Sprocket
Courtesy of CHRYSLER GROUP, LLC

25. Install front crankshaft sprocket (1).
26. Install the timing chain. Refer to **CHAIN AND SPROCKETS, TIMING, INSTALLATION**.
27. Install the timing chain front cover. Refer to **COVER(S), ENGINE TIMING, INSTALLATION**.
28. Install the oil pan. Refer to **PAN, OIL, INSTALLATION**.
29. Install rear crankshaft oil seal. Refer to **SEAL, CRANKSHAFT OIL, REAR, INSTALLATION**.
30. Install front crankshaft oil seal. Refer to **SEAL, CRANKSHAFT OIL, FRONT, INSTALLATION**.

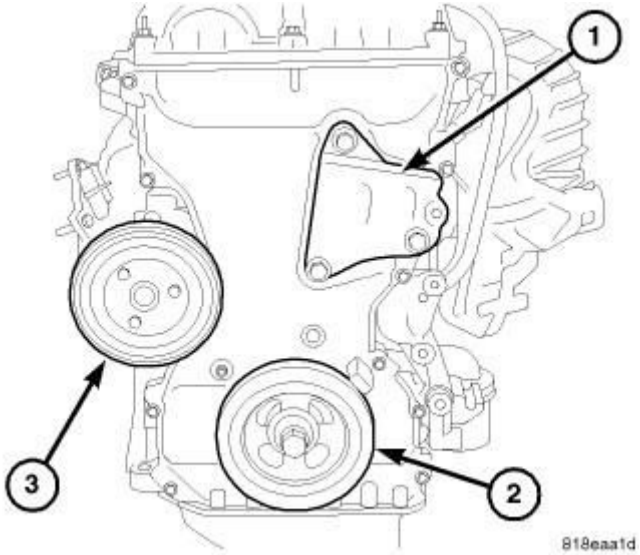

Fig. 234: Right Side Engine Mount Bracket, Crankshaft Damper & Water Pump Pulley
Courtesy of CHRYSLER GROUP, LLC

31. Install engine mount support bracket (1).
32. Install crankshaft vibration damper (2). Refer to **DAMPER, VIBRATION, INSTALLATION**.
33. Install water pump pulley (3).

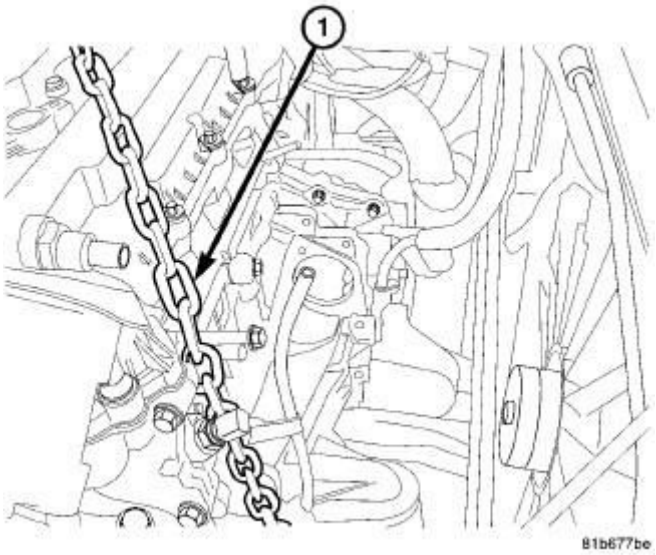

Fig. 235: Lift Chain
Courtesy of CHRYSLER GROUP, LLC

34. Install engine lift chain (1) and remove engine from repair stand.
35. Install crankshaft rear oil seal. Refer to **SEAL, CRANKSHAFT OIL,**

REAR, INSTALLATION.

36. Install drive plate/flex plate using **new** bolts. Tighten bolts to 95 N.m (70 ft. lbs.).
37. Attach transaxle to engine. Tighten bellhousing bolts to 101 N.m (75 ft. lbs.).
38. Install the engine assembly into the vehicle. Refer to **INSTALLATION**.

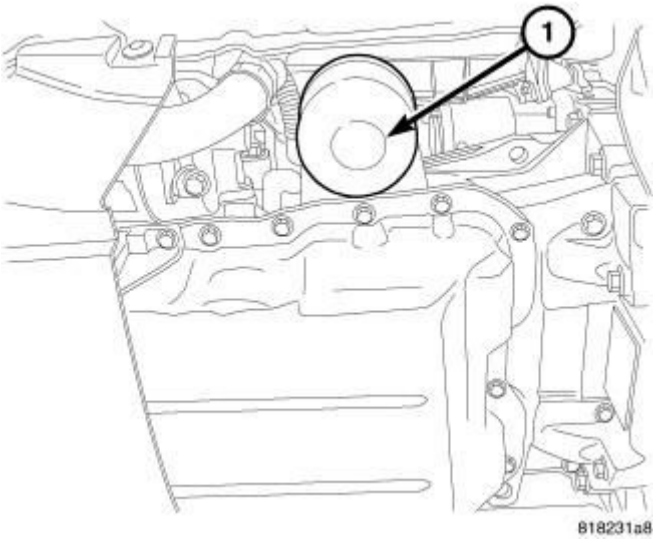

Fig. 236: Oil Filter
Courtesy of CHRYSLER GROUP, LLC

39. Install new oil filter (1) and fill with oil.
40. Fill with coolant. Refer to **STANDARD PROCEDURE** .
41. Start engine and check for leaks.
42. Install engine cover.

DAMPER, VIBRATION

REMOVAL

REMOVAL

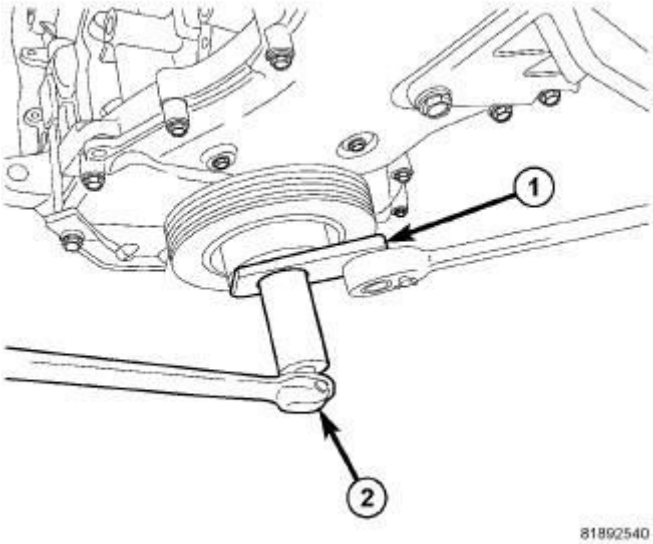

Fig. 237: Damper Removal & Installation
Courtesy of CHRYSLER GROUP, LLC

1. Remove accessory drive belts. Refer to **BELT, SERPENTINE, REMOVAL** .
2. Install Damper holder (special tool #9707, Holder, Vibration Damper) (1).
3. Remove crankshaft damper bolt.
4. Pull damper off crankshaft.

INSTALLATION

INSTALLATION

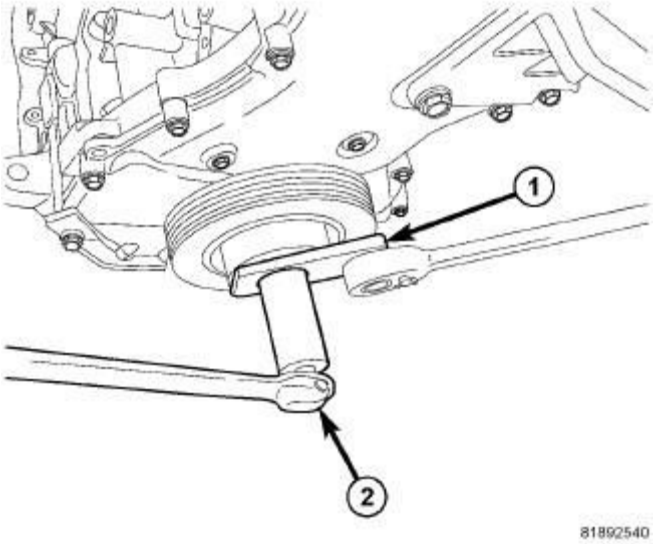

Fig. 238: Damper Removal & Installation

Courtesy of CHRYSLER GROUP, LLC

1. Install crankshaft damper.
2. Apply clean engine oil crankshaft damper bolt threads and between bolt head and washer. Tighten bolt to 210 N.m (155 ft. lbs.).
3. Install accessory drive belts. Refer to **BELT, SERPENTINE, INSTALLATION** .

FLEXPLATE

REMOVAL

REMOVAL

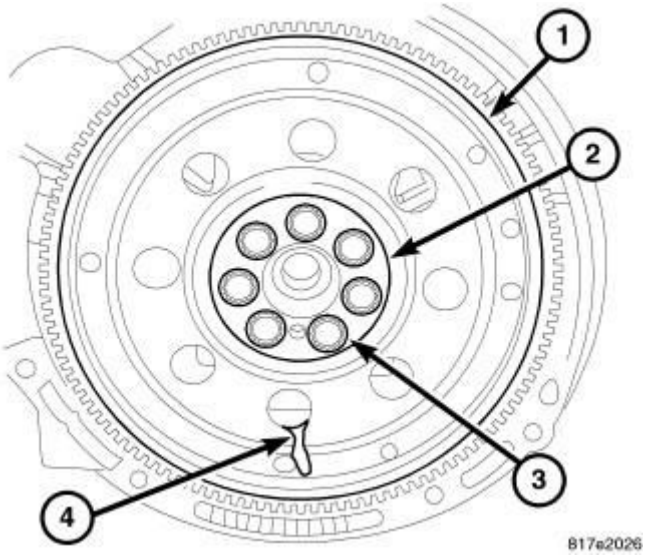

Fig. 239: Flex Plate
Courtesy of CHRYSLER GROUP, LLC

1. Remove transmission Refer to **BG6, REMOVAL** , **T355, REMOVAL** or **CVT, REMOVAL** .
2. Remove flex plate bolts (3) and discard.
3. Remove washer (2).
4. Remove flex plate (1).

INSTALLATION

INSTALLATION

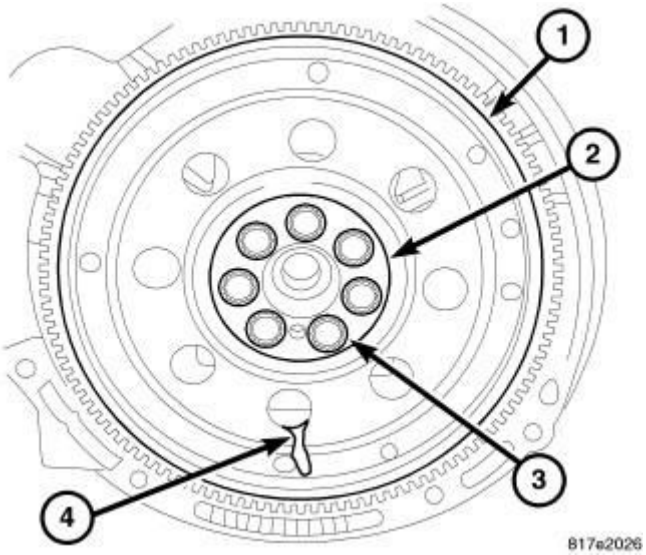

Fig. 240: Flex Plate
Courtesy of CHRYSLER GROUP, LLC

1. Install flex plate (1).
2. Install washer (2).
3. Install **new** flex plate bolts (3) and tighten in a criss-cross pattern to 29 N.m (22 ft. lbs.) plus 51° rotation.
4. Install transaxle. Refer to **BG6, INSTALLATION** , **T355, INSTALLATION** or **CVT, INSTALLATION** .

FRAME, LADDER

REMOVAL

REMOVAL

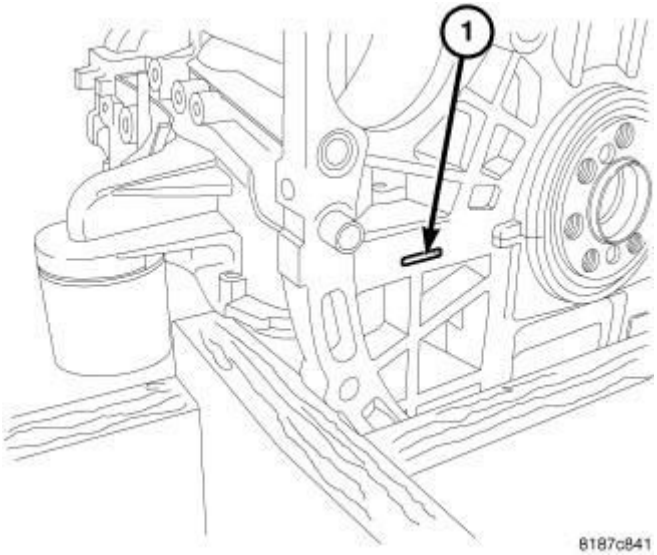

Fig. 241: Pry Point 1
Courtesy of CHRYSLER GROUP, LLC

1. Remove oil pan. Refer to **PAN, OIL, REMOVAL**.
2. Remove balance shaft assembly. Refer to **PUMP, ENGINE OIL, REMOVAL**.
3. Remove ladder frame retaining bolts.
4. Remove ladder frame using pry point cast in the rear of the block (1).

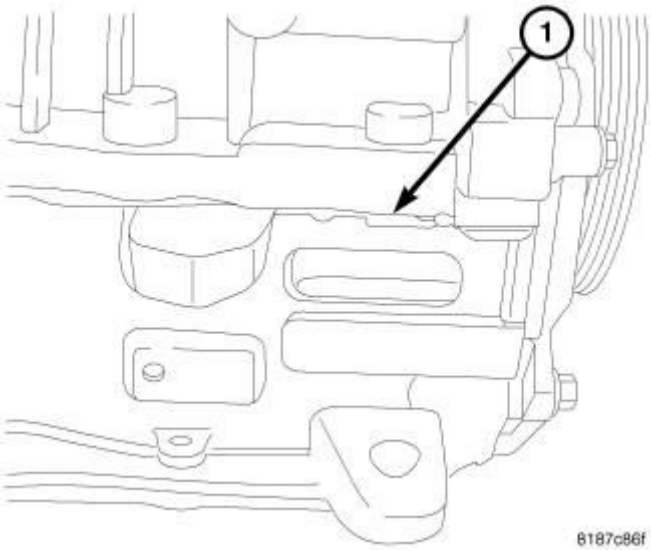

Fig. 242: Pry Point 2
Courtesy of CHRYSLER GROUP, LLC

5. To assist in removing the ladder frame another (1) pry point cast in the right side of the block.

CLEANING

CLEANING

Clean ladder frame with a plastic or wooden scraper and a suitable solvent. Refer to **ENGINE GASKET SURFACE PREPARATION** .

INSTALLATION

INSTALLATION

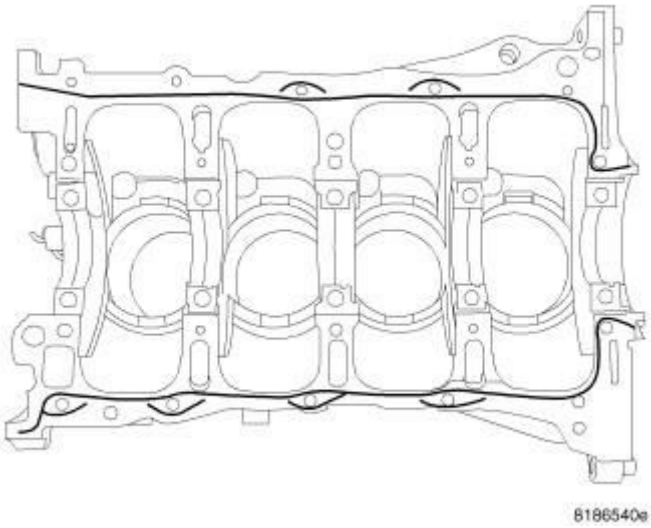

Fig. 243: Sealing Ladder Frame
Courtesy of CHRYSLER GROUP, LLC

NOTE: When using RTV, the sealing surfaces must be clean and free from grease and oil.

NOTE: When using RTV, parts should be assembled in 10 minutes and tighten to final torque within 45 minutes.

1. Apply a 2 mm bead of Mopar® engine sealant RTV or equivalent as shown in illustration.

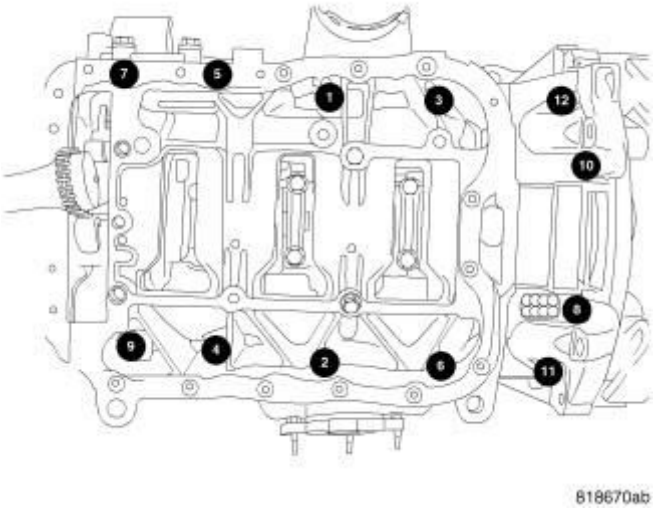

Fig. 244: Ladder Frame Bolts Tightening Sequence
Courtesy of CHRYSLER GROUP, LLC

2. Install bolts and tighten as shown in illustration following a two step method.
   - First: All to 10 N.m (89 in. lbs.).
   - Second: All to 26 N.m (19 ft. lbs.).
3. Install balance shaft module. Refer to **PUMP, ENGINE OIL, INSTALLATION**.
4. Install oil pan. Refer to **PAN, OIL, INSTALLATION**.

RING(S), PISTON

STANDARD PROCEDURE

STANDARD PROCEDURE - PISTON RING - FITTING

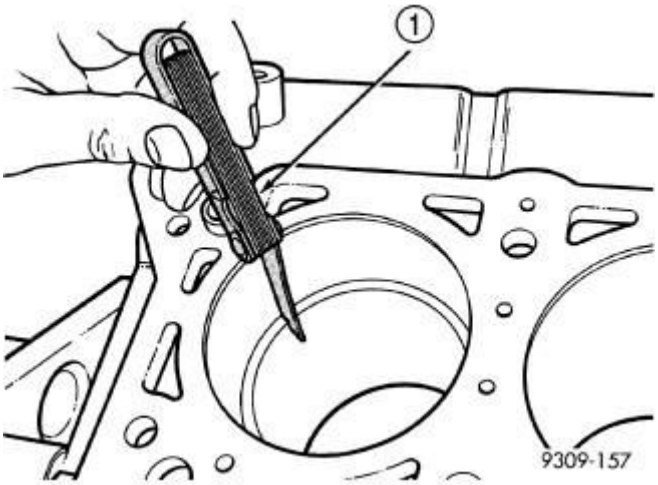

Fig. 245: Check Gap On Piston Rings
Courtesy of CHRYSLER GROUP, LLC

1. Wipe cylinder bore clean. Insert ring and push down with piston to ensure it is square in bore. The ring gap measurement must be made with the ring positioning at least 13 mm (0.50 inch) from bottom of cylinder bore and below the bottom of the oil ring travel where cylinder bore has minimal wear. Check gap with feeler gauge. Refer to Engine **SPECIFICATIONS** s.

NOTE: Ring end gap measurements are sensitive to the ring being square in the bore. Care must be used to avoid tilting the rings in cylinder bores when taking measurements.

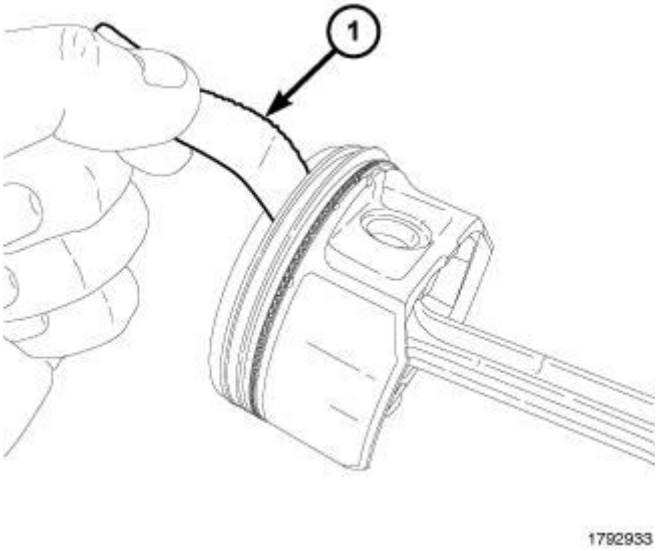

Fig. 246: Piston Ring To Groove Side Clearance
Courtesy of CHRYSLER GROUP, LLC

2. Check piston ring to groove side clearance. Refer to Engine **SPECIFICATIONS** .

CAUTION: Exercise care when using tools on piston. Do not scratch or gouge piston surface or ring grooves as this may cause engine damage.

REMOVAL

REMOVAL

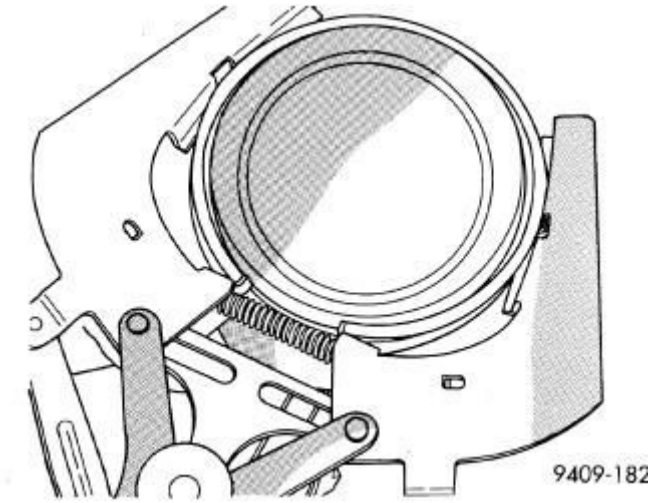

Fig. 247: Piston Rings-Removing And Installing
Courtesy of CHRYSLER GROUP, LLC

1. Using a suitable ring expander, remove upper and intermediate piston rings.

2. Remove the upper oil ring side rail, lower oil ring side rail and then oil ring expander from piston.
3. Clean ring grooves of any carbon deposits.

INSTALLATION

INSTALLATION

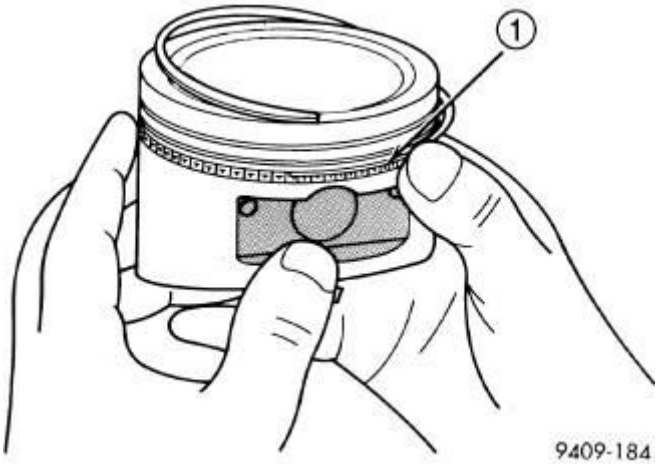

Fig. 248: Installing Side Rail
Courtesy of CHRYSLER GROUP, LLC

NOTE: The identification mark on face of upper and intermediate piston rings must point toward top of piston.

CAUTION: Install piston rings in the following order:

- Oil ring expander.
- Upper oil ring side rail.
- Lower oil ring side rail.
- No. 2 Intermediate piston ring.
- No. 1 Upper piston ring.

1. Install oil ring expander.
2. Install upper side rail first and then the lower side rail. Install the side rails by placing one end between the piston ring groove and the oil ring expander. Hold end firmly and press down the portion to be installed until side rail is in position. **Do not use a piston ring expander.**

NOTE: The compression rings are marked Y1 for the upper compression ring and Y2 for the second compression ring. These markings must face upward.

3. Install No. 2 piston ring and then No. 1 piston ring.

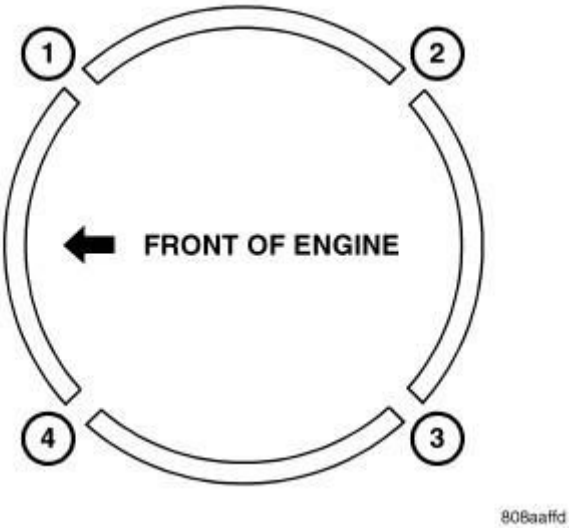

Fig. 249: Identifying Piston Ring End Gap Positions
Courtesy of CHRYSLER GROUP, LLC

4. Position piston ring end gaps as shown in illustration.
5. Position oil ring expander gap at least 45° from the side rail gaps but **not** on the piston pin center or on the thrust direction. Staggering ring gap is important for oil control.

ROD, PISTON AND CONNECTING

DESCRIPTION

DESCRIPTION

The pistons are made of a cast aluminum alloy. The pistons have pressed-in pins attached to forged connecting rods. The piston pin is offset 0.8 mm (0.0314 in.) towards the thrust side of the piston. The connecting rods are a cracked cap design and are not repairable. The piston with rings, connecting rod and piston pin are serviced as an assembly.

STANDARD PROCEDURE

PISTON AND BORE MEASUREMENT

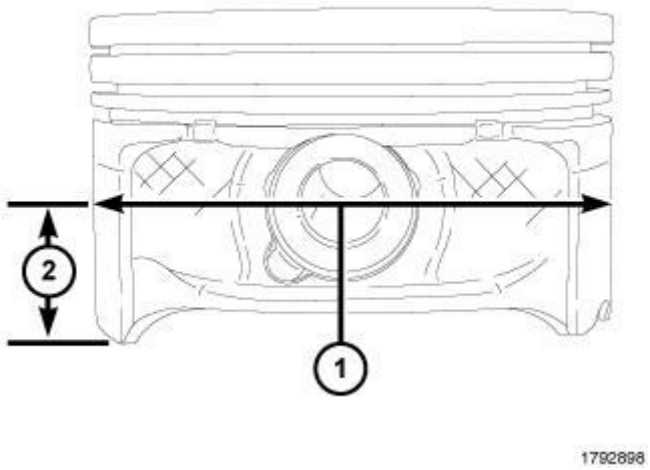

Fig. 250: Piston Pin Measurements
Courtesy of CHRYSLER GROUP, LLC

NOTE: Pistons and cylinder bores should be measured at normal room temperature, 21°C (70°F).

Piston and cylinder wall must be clean and dry. Piston diameter should be measured 90 degrees to piston pin (1).

1. Measurement should be taken approximately 17 mm (0.669 in.) from the bottom of the skirt (2) as shown in illustration.

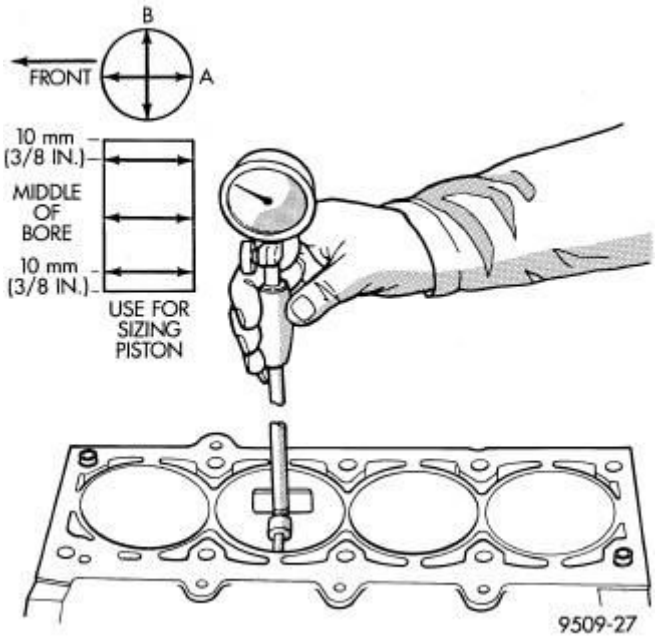

Fig. 251: Checking Cylinder Bore Size
Courtesy of CHRYSLER GROUP, LLC

NOTE: Correct piston to bore clearance must be established in order to assure quiet and economical operation.

2. Cylinder bores should be measured halfway down the cylinder bore and transverse (measurement location B) to the engine crankshaft center line shown in illustration. Refer to **SPECIFICATIONS** .

PISTON SELECTION

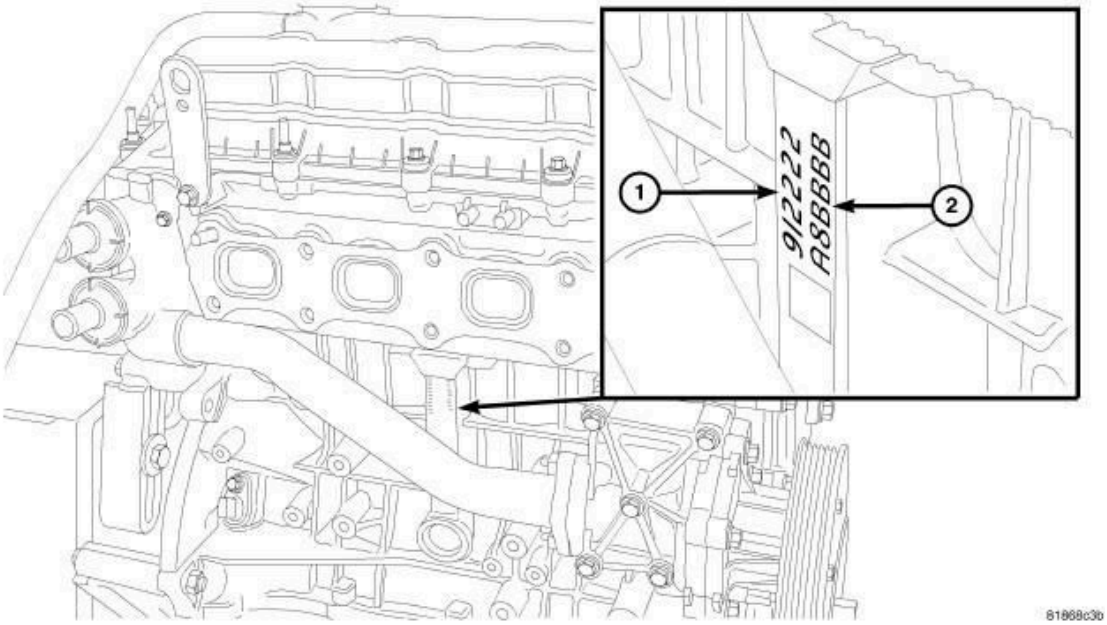

Fig. 252: Upper Main Bearing Shell Identification & Piston Identification
Courtesy of CHRYSLER GROUP, LLC

The pistons are select fit to each bore. There are three different grades of pistons available; A, B, and C. The piston identification (2) is located in the middle of the block on the right side of the engine. The bore identification starts at the top and reads downward. Bore #1 is at the top and bore #4 is at the bottom.

The piston, rings and rod are serviced as an assembly, after determining what size piston is needed, to determine correct rod bearing size. Refer to BEARING (S), CONNECTING ROD - **STANDARD PROCEDURE** .

REMOVAL

REMOVAL

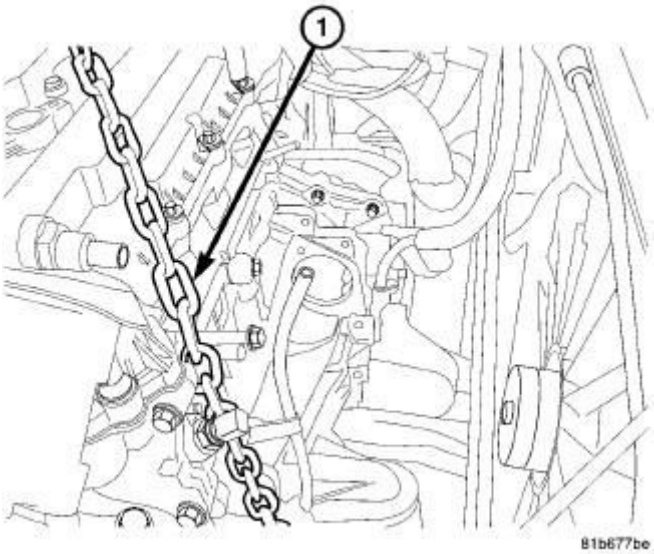

Fig. 253: Lift Chain
Courtesy of CHRYSLER GROUP, LLC

NOTE: Pistons, rings, and rods are serviced as an assembly.

CAUTION: To maintain engine balance, 1, 3, or 4 pistons can be replaced. If 2 pistons are replaced, engine will be out of balance.

1. Remove engine. Refer to **REMOVAL**.
2. Remove engine from lift chain (1) and place on a suitable engine stand.
3. Remove cylinder head. Refer to **CYLINDER HEAD, REMOVAL**.

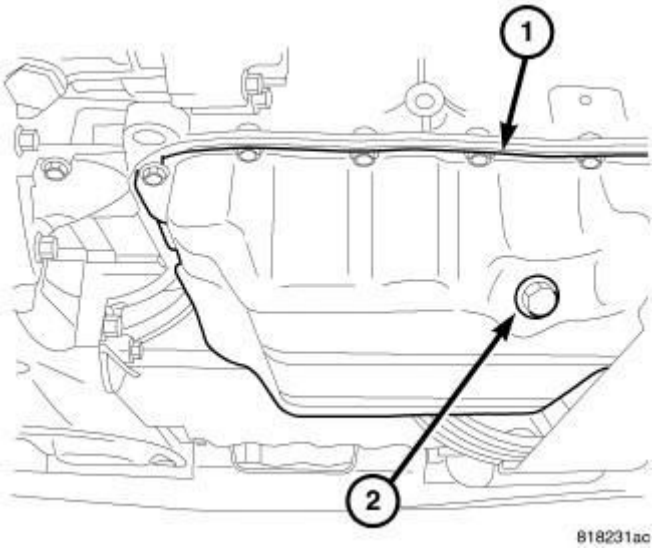

Fig. 254: Oil Drain Plug

Courtesy of CHRYSLER GROUP, LLC

4. Drain engine oil (2).
5. Remove oil pan (1). Refer to **PAN, OIL, REMOVAL**.

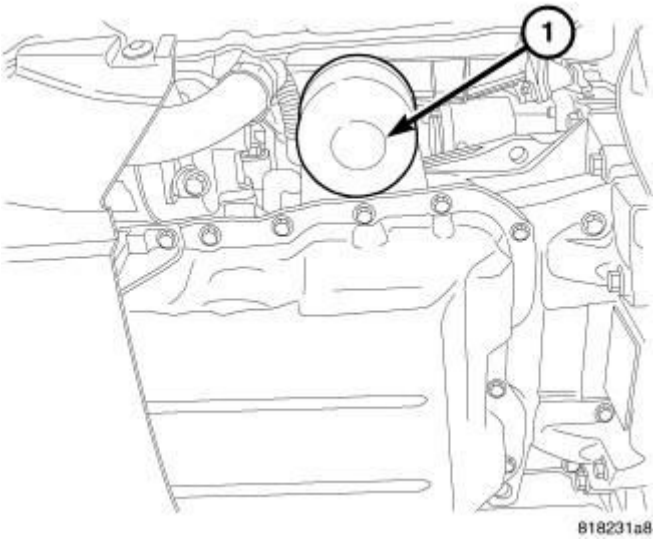

Fig. 255: Oil Filter
Courtesy of CHRYSLER GROUP, LLC

6. Remove oil filter (1).
7. Remove balance shaft assembly.
8. Remove ladder frame.

NOTE: Remove any carbon build up and clean debris from cylinder prior to piston removal to avoid scratching piston skirts.

9. Remove top ridge of cylinder bores with a reliable ridge reamer before removing pistons from cylinder block. **Be sure to keep tops of pistons covered during this operation** .

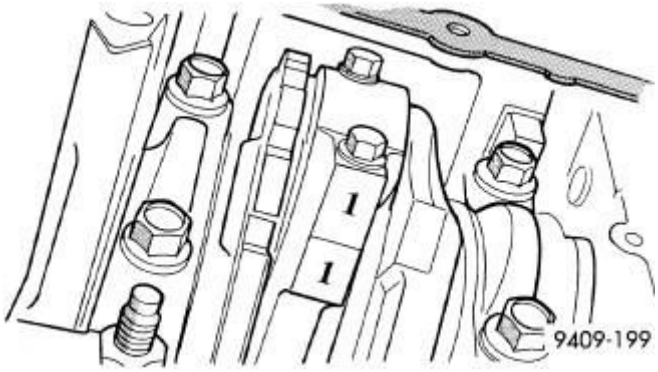

Fig. 256: Identifying Mark On Connecting Rod And Bearing Cap
Courtesy of CHRYSLER GROUP, LLC

10. Rotate crankshaft so that each connecting rod is centered in cylinder bore.
11. Using a permanent ink or paint marker, identify cylinder number on each connecting rod cap.

CAUTION: DO NOT use a number stamp or a punch to mark connecting rods, as damage to connecting rod could occur.

CAUTION: Care must be taken not to damage the fractured rod and cap joint surfaces, as engine damage may occur.

12. Remove connecting rod bolts and cap.

CAUTION: Do not reuse connecting rod bolts. These are one-time-use bolts and reuse could result in engine failure.

13. Carefully push each piston and rod assembly out of cylinder bore. Re-install bearing cap on the mating rod.
14. Repeat procedure for each piston and connecting rod assembly.

INSTALLATION

INSTALLATION

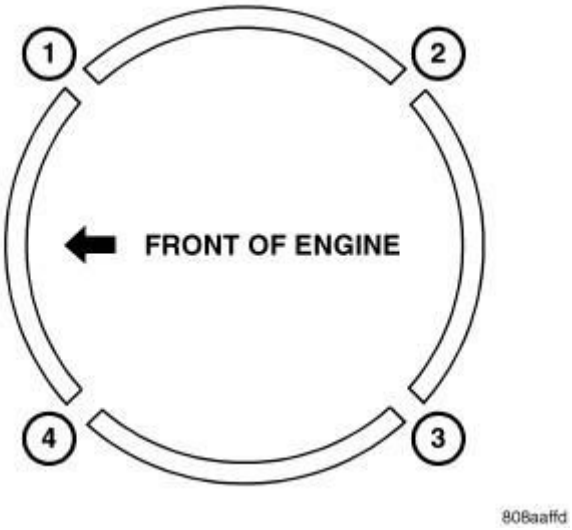

Fig. 257: Identifying Piston Ring End Gap Positions
Courtesy of CHRYSLER GROUP, LLC

1. Install piston rings on piston. Refer to **RING(S), PISTON, INSTALLATION**.
2. Before installing pistons and connecting rod assemblies into the bore, be sure that top compression ring gap (1) and the second compression ring gap (3) are staggered so that neither is in line with oil ring rail gap.
3. Before installing the ring compressor, make sure the oil ring expander ends are butted (1) and the rail gaps (2, 4) located as shown in illustration above. As viewed from the top of the piston.
4. Immerse the piston head and rings in clean engine oil, slide the ring compressor, over the piston. **Be sure position of rings does not change during this operation** .

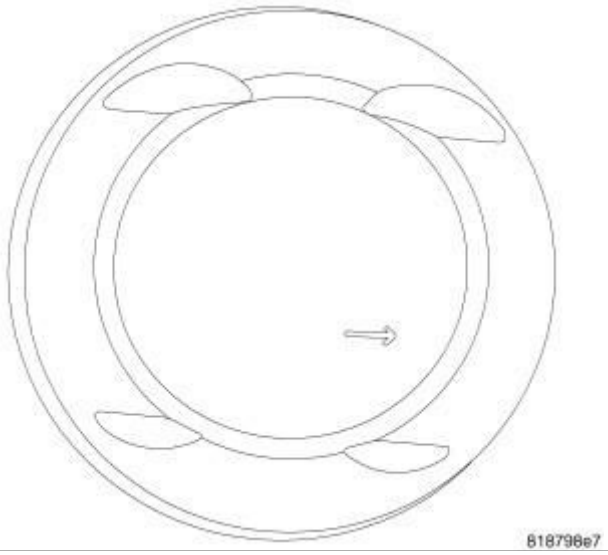

Fig. 258: Piston Installation
Courtesy of CHRYSLER GROUP, LLC

5. The directional arrow stamped on the piston should face toward the front of the engine.
6. Rotate crankshaft so that the connecting rod journal is on the center of the cylinder bore. Lubricate connecting rod journal with clean engine oil.

NOTE: There are three different size rod bearings, perform STANDARD PROCEDURE - CONNECTING ROD - FITTING n procedure.

NOTE: The rod bearing sizes are indicated on the nose of the crankshaft.

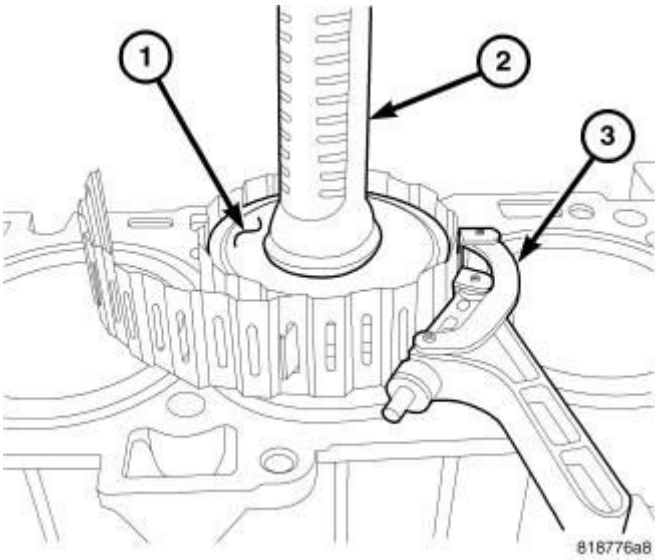

Fig. 259: Piston, Hammer Handle & Ring Compressor
Courtesy of CHRYSLER GROUP, LLC

7. Install connecting rod upper bearing half into connecting rod.
8. Install ring compressor (3).
9. Tap the piston (1) down in cylinder bore, using a hammer handle (2). At the same time, guide connecting rod into position on connecting rod journal.

NOTE: The connecting rod cap bolts should NOT be reused.

10. Before installing the **NEW** bolts, the threads should be coated with clean engine oil.

11. Install connecting rod lower bearing half into connecting rod cap. Install connecting rod cap.
12. Install each bolt finger tight then alternately torque each bolt to assemble the cap properly.
13. Tighten the connecting rod bolts using the 2 step torque-turn method. Tighten according to the following values:

CAUTION: Do not use a torque wrench for the second step.

1. Tighten the bolts to 20 N.m (15 ft. lbs.).
2. Tighten the connecting rod bolts an additional 90°.

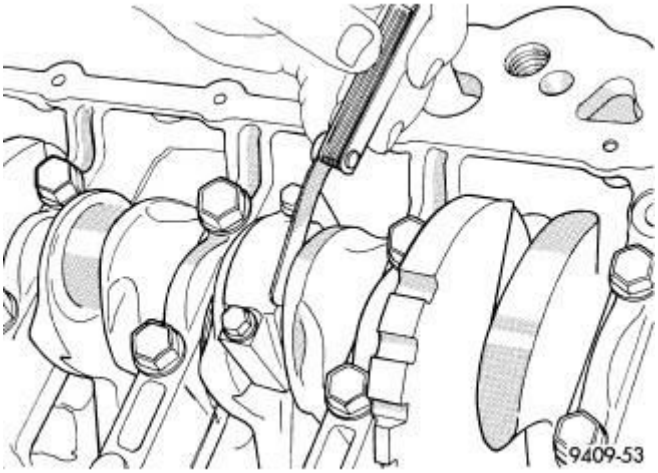

Fig. 260: Connecting Rod Side Clearance
Courtesy of CHRYSLER GROUP, LLC

14. Using a feeler gauge, check connecting rod side clearance. for connecting rod side clearance. Refer to **SPECIFICATIONS** .
15. Install the ladder frame. Refer to **FRAME, LADDER, INSTALLATION**.
16. Install oil pump/balance shaft carrier assembly. Refer to **PUMP, ENGINE OIL, INSTALLATION**.
17. Install oil pan. Refer to **PAN, OIL, INSTALLATION**.
18. Install cylinder head. Refer to **CYLINDER HEAD, INSTALLATION**.

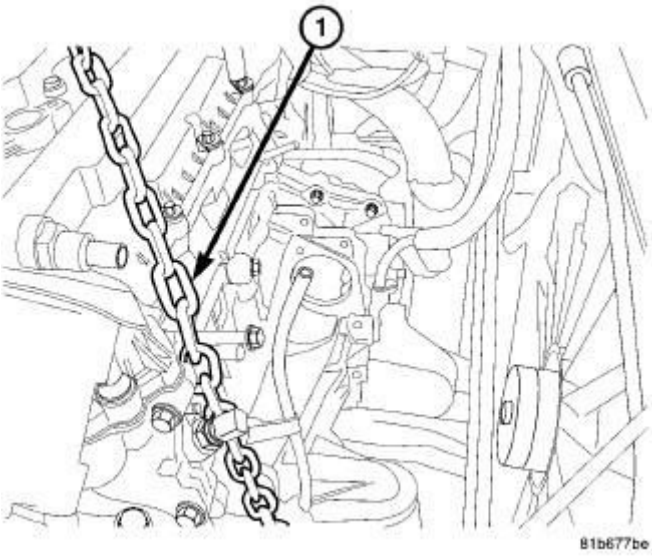

Fig. 261: Lift Chain
Courtesy of CHRYSLER GROUP, LLC

19. Install engine on lift chain (1).
20. Install engine. Refer to **INSTALLATION**.

SEAL, CRANKSHAFT OIL, FRONT

REMOVAL

REMOVAL

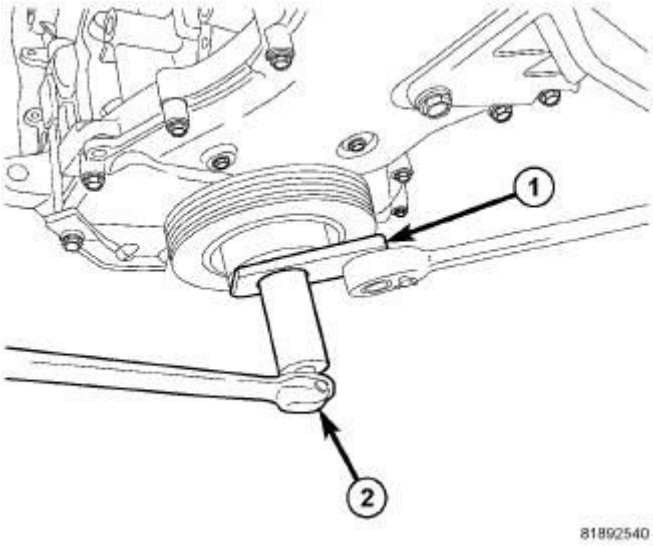

Fig. 262: Damper Removal & Installation
Courtesy of CHRYSLER GROUP, LLC

1. Remove accessory drive belt.
2. Install damper holder (special tool #9707, Holder, Vibration Damper) (1) and remove damper retaining bolt.
3. Pull damper off crankshaft.

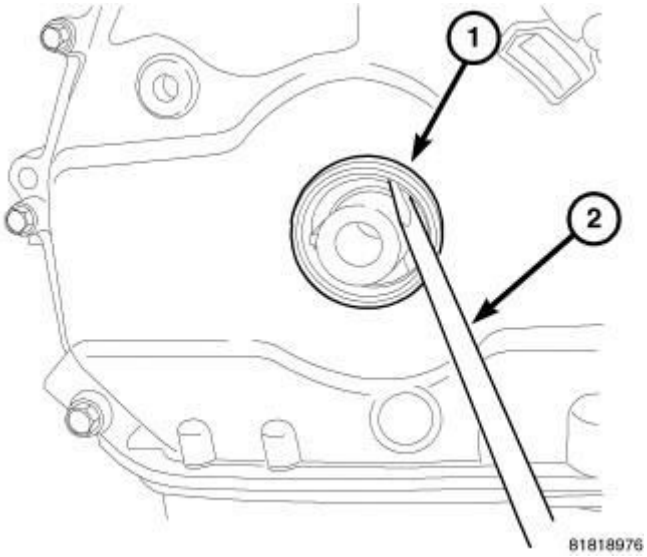

Fig. 263: Front Crankshaft Seal Removal
Courtesy of CHRYSLER GROUP, LLC

4. Remove front crankshaft oil seal (1) by prying out with a screw driver (2). Be careful not to damage the cover seal surface.

INSTALLATION

INSTALLATION

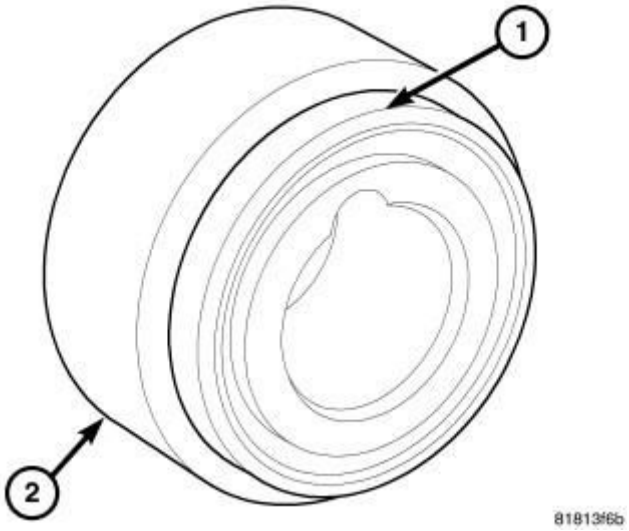

Fig. 264: Crankshaft Oil Seal & Seal Installer 9506

Courtesy of CHRYSLER GROUP, LLC

1. Place seal (1) onto Seal installer (special tool #9506, Installer, Oil Seal) (2) with seal spring towards the inside of engine.

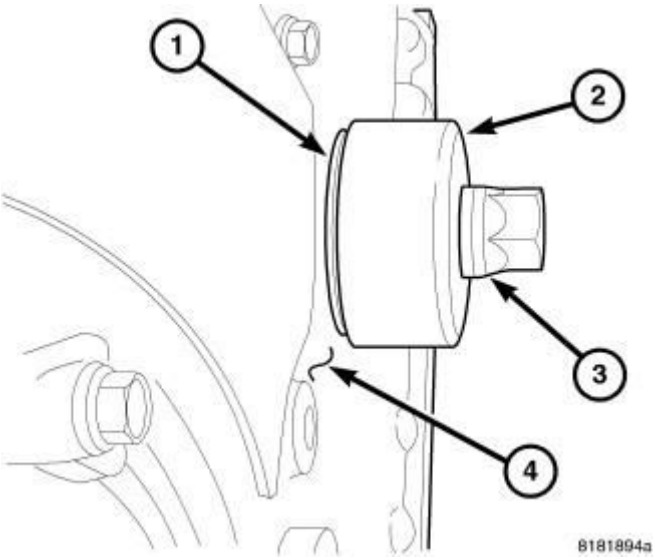

Fig. 265: Installing Front Seal
Courtesy of CHRYSLER GROUP, LLC

2. Install new seal (1) by using Seal installer (special tool #9506, Installer, Oil Seal) (2) and crankshaft damper bolt (3).

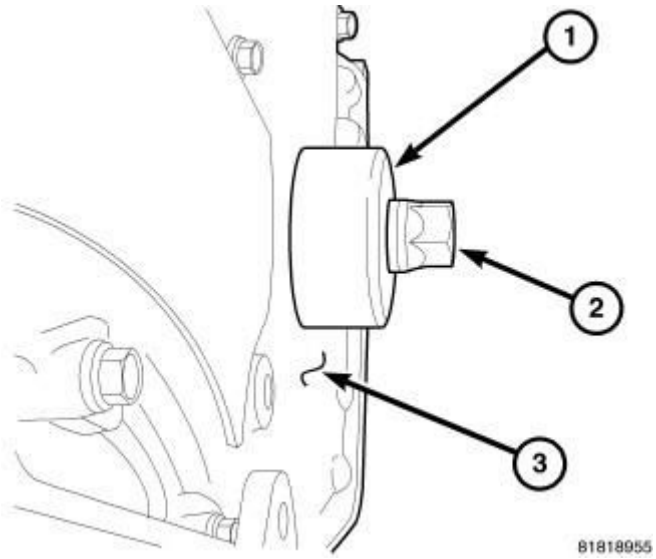

Fig. 266: Front Seal Installed
Courtesy of CHRYSLER GROUP, LLC

3. Press seal into front cover until Seal Installer (special tool #9506, Installer, Oil Seal) (1) seats against timing chain cover (3).

4. Remove seal installer (special tool #9506, Installer, Oil Seal) (1).

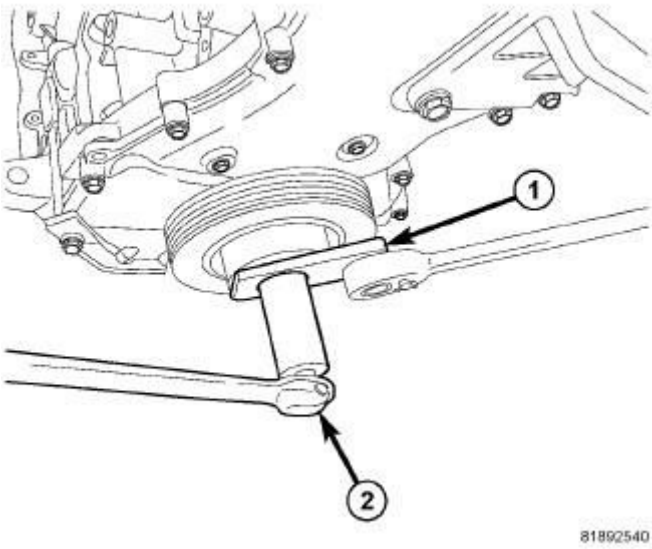

Fig. 267: Damper Removal & Installation
Courtesy of CHRYSLER GROUP, LLC

5. Install crankshaft vibration damper.
6. Oil the bolt threads and between the bolt head and washer.
7. Install damper retaining bolt and damper holder (special tool #9707, Holder, Vibration Damper) (1). Tighten bolt to 210 N.m (155 ft. lbs.).

SEAL, CRANKSHAFT OIL, REAR

REMOVAL

REMOVAL

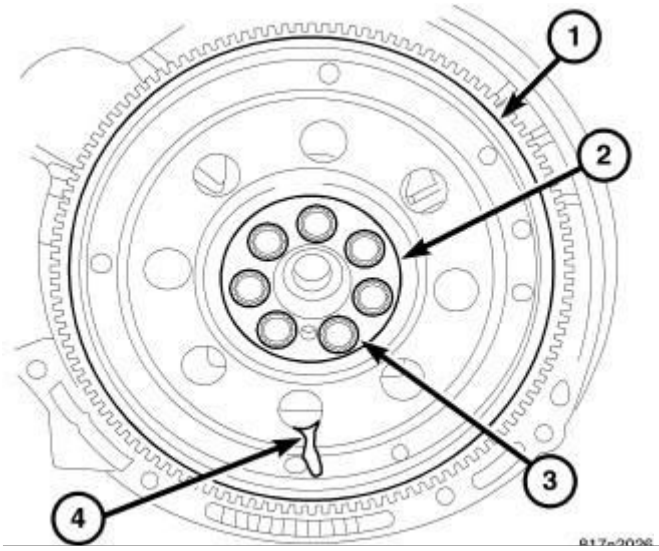

Fig. 268: Flex Plate
Courtesy of CHRYSLER GROUP, LLC

1. Remove transmission and flexplate (1). Refer to **FLEXPLATE, REMOVAL**.

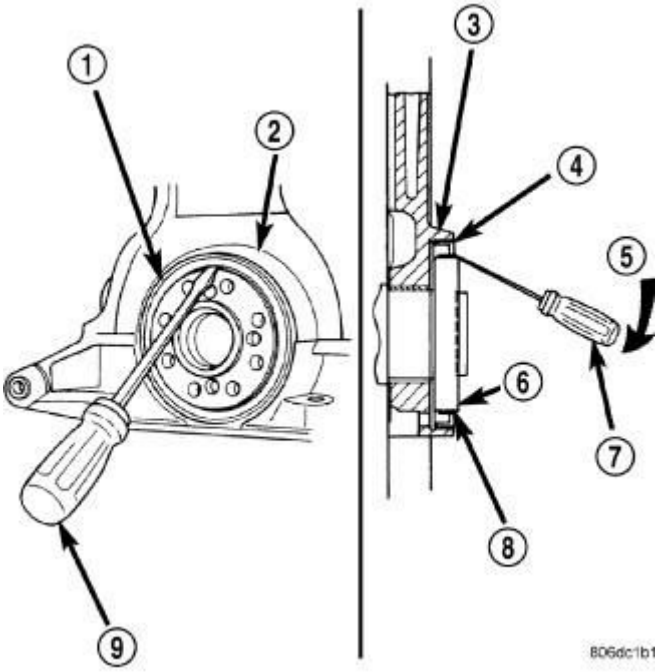

Fig. 269: Rear Crankshaft Oil Seal - Removal
Courtesy of CHRYSLER GROUP, LLC

2. Insert a 3/16 flat bladed screwdriver (7) between the dust lip (8) and the metal case (4) of the crankshaft seal (1). Angle the screwdriver through the dust lip against metal case of the seal. Pry out seal.

CAUTION: Do not permit the screwdriver blade to contact crankshaft seal surface. Contact of the screwdriver blade against crankshaft edge (chamfer) is permitted.

3. Check to make sure the seals garter spring is not on the crankshaft.

INSTALLATION

INSTALLATION

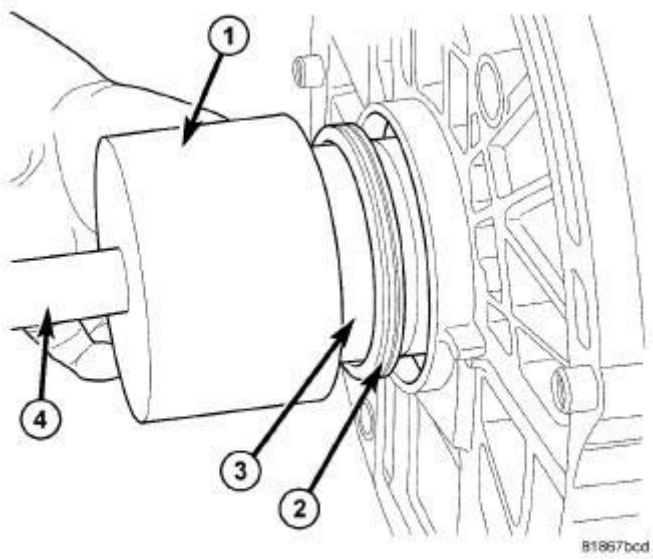

Fig. 270: Driving Seal Into Block Using Seal Driver 9706 And Driver Handle C-4171 Until Seal Driver 9706 Bottoms Out Against Block
Courtesy of CHRYSLER GROUP, LLC

CAUTION: If a burr or scratch is present on the crankshaft edge (chamfer), cleanup with 800 emery cloth to prevent seal damage during installation of new seal. If emery cloth is used, the crankshaft must be cleaned off Mopar® brake parts cleaner.

NOTE: When installing seal, lubricate Seal Guide (special tool #9509, Installer, Oil Seal) with clean engine oil.

1. Place Seal Guide (special tool #9509, Installer, Oil Seal) (3) on crankshaft.
2. Position seal (2) over guide tool. Guide tool should remain on crankshaft during installation of seal. Ensure that the lip of the seal is facing towards the crankcase during installation.
3. Drive the seal into the block using Seal Driver (special tool #9706, Installer, Crankshaft Rear Oil Seal) (1) and Driver Handle (special tool #C-4171, Driver Handle, Universal) (4) until Seal Driver (special tool #9706, Installer, Crankshaft Rear Oil Seal) bottoms out against the block.

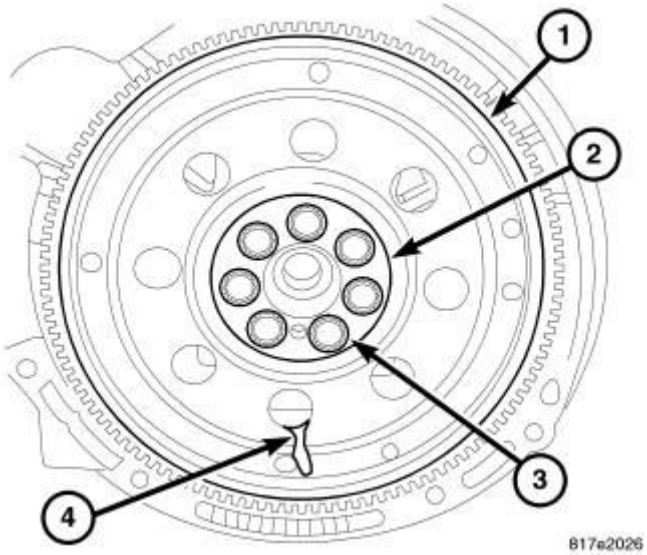

Fig. 271: Flex Plate
Courtesy of CHRYSLER GROUP, LLC

4. Install the flexplate (1) and transmission. Refer to **FLEXPLATE, INSTALLATION**.

LUBRICATION

DESCRIPTION

DESCRIPTION

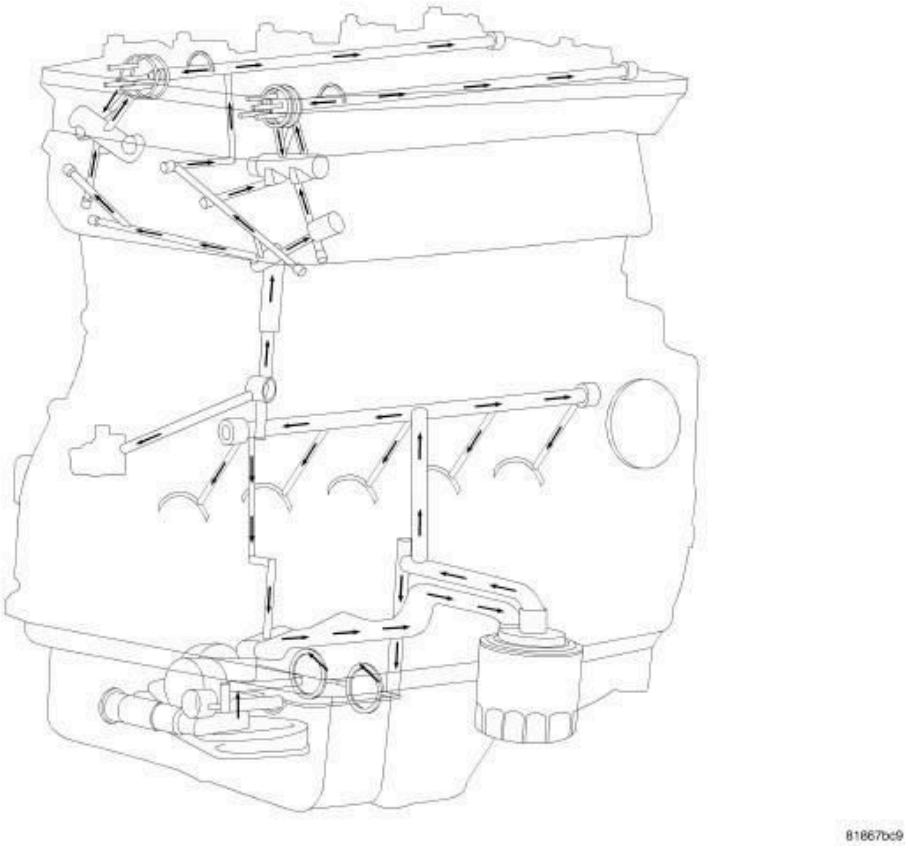

Fig. 272: Oil Flow Diagram
Courtesy of CHRYSLER GROUP, LLC

The lubrication system is a full-flow filtration, pressure feed type. The Balance Shaft Module (BSM) is mounted below the ladder frame and chain driven by the crankshaft. The BSM consists of a non-serviceable pump, oil pressure relief valve, and a non-serviceable balance assembly.

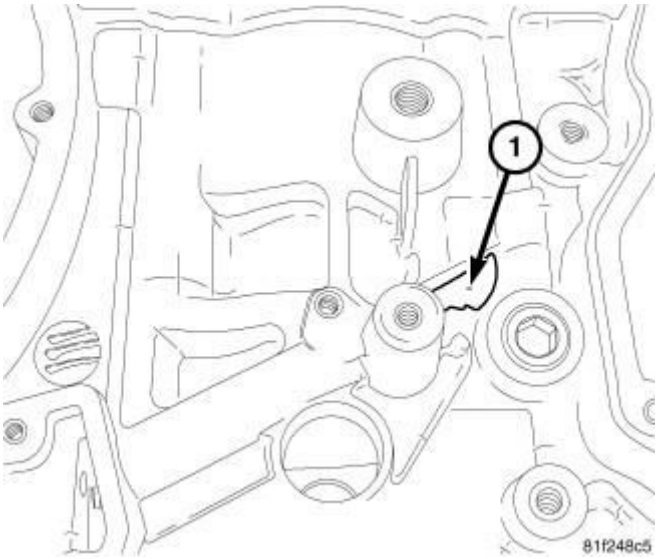

Fig. 273: Oil Hole

Courtesy of CHRYSLER GROUP, LLC

NOTE: Not all blocks have the bolt on timing chain oil squirter. Engine blocks either have a bolt-on oil squirter or a 1.0 mm hole (1) drilled into the oil gallery passage. Engine blocks with the 1.0 mm hole no longer use an oil squirter even though the threaded mounting hole may still be present.

OPERATION

OPERATION

Engine oil is drawn up through the pickup tube and is pressurized by the oil pump and routed through the full-flow filter to the main oil gallery running the length of the cylinder block. A diagonal hole in each bulkhead feeds oil to each main bearing. Drilled passages within the crankshaft route oil from main bearing journals to connecting rod journals. Balance shaft lubrication is provided through an internal oil passage at the #3 bearing location around the BSM mounting bolt. A vertical hole at the number one bulkhead routes pressurized oil through a filter screen and head gasket up to the cylinder head. The oil then divides into three passages; one to the intake cam phaser, one to the exhaust cam phaser and one to the camshafts. The passage to the camshafts divides to feed both of the hollow camshafts at the second cam journal. The rest of cam journals are feed oil through the hollow camshafts. The #1 cam journals are fed oil through the VVT oil passages. Oil passages to the phasers are directed through the OCV (oil control valves) to the #1 journals. The oil then flows through the camshafts then to the cam phasers. Oil returning to the pan from pressurized components supplies lubrication to the valve stems, cam lobes, and tappets. Cylinder bores and wrist pins are splash lubricated from directed slots on the connecting rod thrust collars.

DIAGNOSIS AND TESTING

CHECKING ENGINE OIL PRESSURE

NOTE: Due to restricted access to the oil pressure switch, it is recommended to first check VVT oil pressure at the oil temperature sensor. Refer to CHECKING VVT OIL PRESSURE .

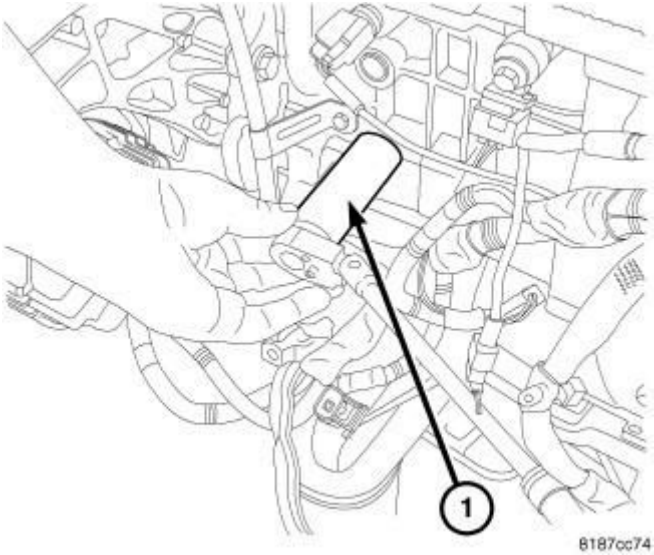

Fig. 274: Oil Sender
Courtesy of CHRYSLER GROUP, LLC

1. Remove the oil pressure switch (1). Refer to **SWITCH, OIL PRESSURE, REMOVAL**.

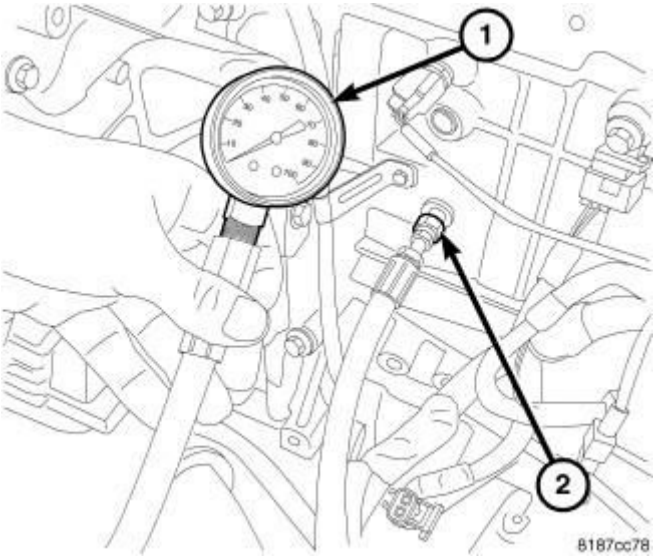

Fig. 275: Oil Pressure Gauge
Courtesy of CHRYSLER GROUP, LLC

CAUTION: Threads in block are 1/8"-28 British Standard Pipe (BSP). Do not install a National Pipe Thread (NPT) threaded adapter, this could crack the cylinder block.

2. Install an 1/8-28 BSP male to 1/8-27 female threaded adapter (2).

3. Install an oil pressure gauge (1).
4. Start engine and record oil pressure.

CAUTION: If oil pressure is 0 at idle, do not perform the 3000 RPM test

5. If oil pressure is 0 at idle, shut off engine. No oil pressure or low oil pressure at the oil pressure switch can be due to the following:
   - Pressure relief valve stuck open.
   - Clogged oil pump pick-up screen.
6. Remove the oil pan and inspect for debris. Refer to **PAN, OIL, REMOVAL**.
7. Remove the oil pressure relief valve. Refer to **VALVE, OIL PRESSURE RELIEF, REMOVAL**.
8. Inspect the oil pressure relief valve. Refer to VALVE, OIL PRESSURE RELIEF - **INSPECTION** .
9. If pressure relief valve is OK, replace the balance shaft module assembly. Refer to **PUMP, ENGINE OIL, REMOVAL**.

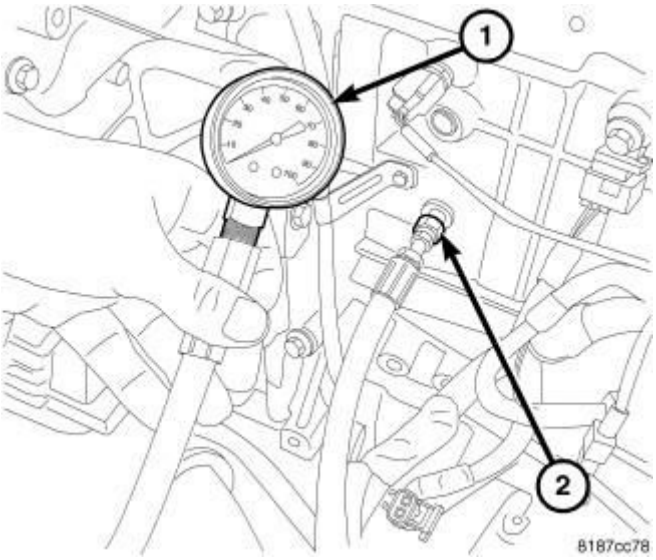

Fig. 276: Oil Pressure Gauge
Courtesy of CHRYSLER GROUP, LLC

10. After test is complete, remove test gauge (1) and fitting (2).

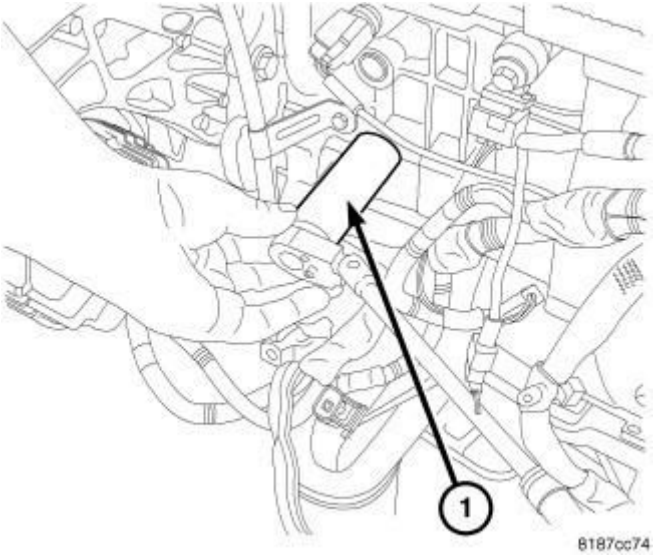

Fig. 277: Oil Sender
Courtesy of CHRYSLER GROUP, LLC

CAUTION: The oil pressure switch has tapered threads, over tightening could crack the engine block.

NOTE: If the oil pressure switch is removed, it must be replaced with a new switch.

11. Install the oil pressure switch and electrical connector. Refer to **SWITCH, OIL PRESSURE, INSTALLATION**.

CHECKING VVT OIL PRESSURE

NOTE: This test can be used to help diagnose VVT faults. Due to restricted access to the oil pressure switch, it is recommended to first perform this procedure to check VVT oil pressure at the oil temperature sensor.

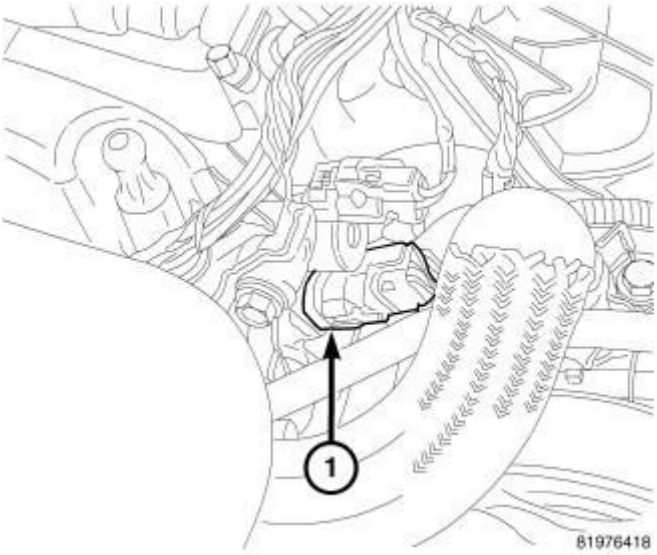

Fig. 278: Oil Temperature Sensor
Courtesy of CHRYSLER GROUP, LLC

NOTE: Anytime the oil temperature sensor is removed, it should be replaced with a new sensor.

1. Disconnect and remove the oil temperature sensor (1). Refer to **SENSOR, OIL TEMPERATURE, REMOVAL**.

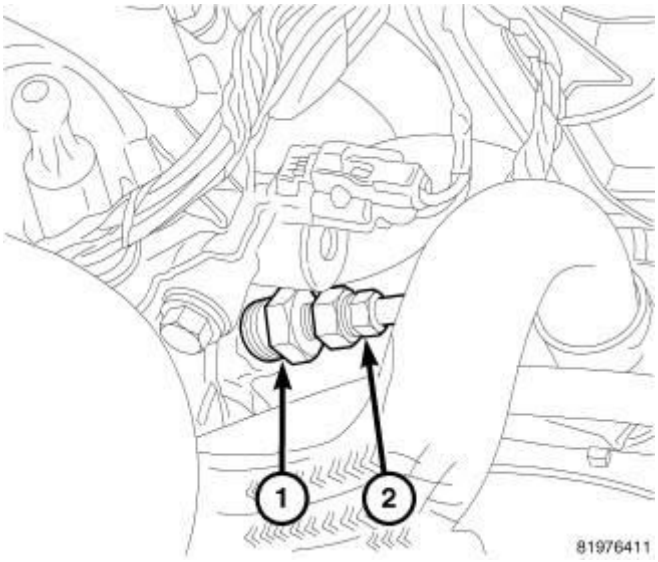

Fig. 279: Oil Pressure Adapter 9879
Courtesy of CHRYSLER GROUP, LLC

CAUTION: Threads in cylinder head are British Standard Pipe (BSP). Do not install a NPT threaded adapter, this could crack the cylinder head.

2. Install threaded adapter (special tool #9879, Adapter, Oil Pressure Test) (1).
3. Install an oil pressure gauge (2).

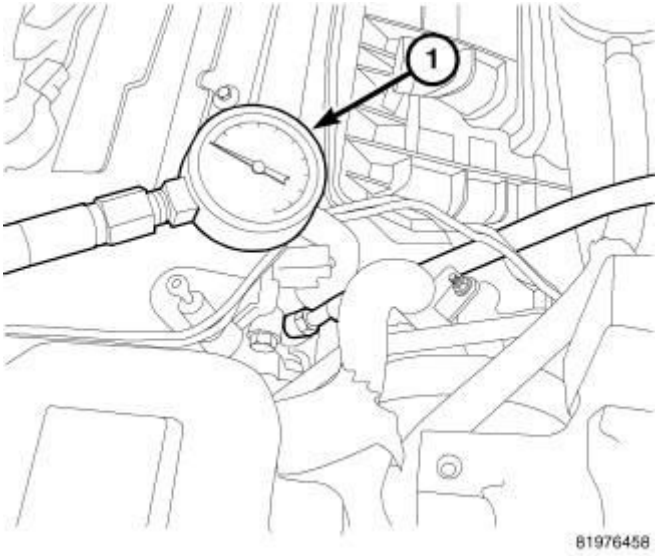

Fig. 280: Oil PSI Gauge
Courtesy of CHRYSLER GROUP, LLC

4. Start engine and record reading on oil pressure gauge (1).

CAUTION: If oil pressure is 0 at idle, do not perform the 3000 RPM test

5. If oil pressure is 0 at idle, shut off engine. No oil pressure or low oil pressure at the oil temperature sensor can be due to the following:
   - Clogged variable valve timing filter screen
   - Pressure relief valve stuck open
   - Clogged oil pump pick-up screen

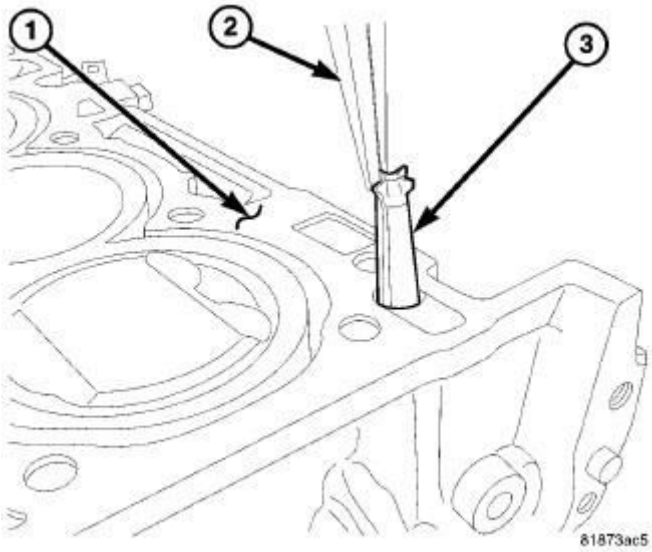

Fig. 281: VVT Filter
Courtesy of CHRYSLER GROUP, LLC

6. To determine if the variable valve timing filter screen is clogged, check engine oil pressure at the oil pressure switch. Refer to **CHECKING ENGINE OIL PRESSURE** .
7. If oil pressure is acceptable at the oil pressure switch, but low at the oil temperature sensor, remove the cylinder head (1) and inspect the variable valve timing filter screen (3). Refer to **CYLINDER HEAD, REMOVAL**.

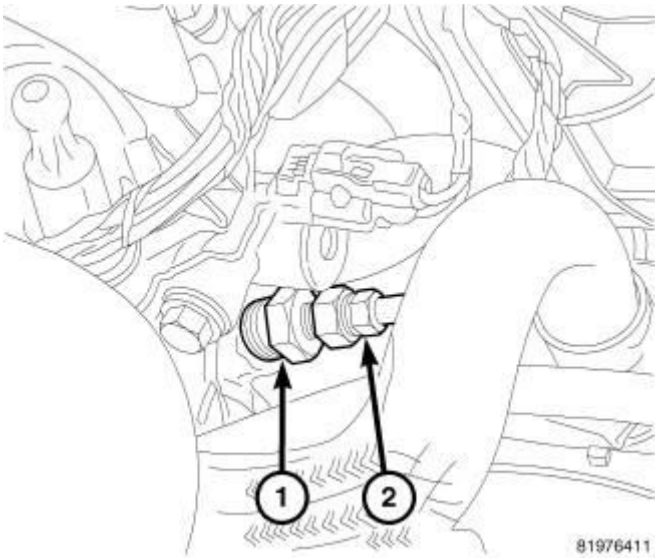

Fig. 282: Oil Pressure Adapter 9879
Courtesy of CHRYSLER GROUP, LLC

8. After test is complete, remove oil pressure gauge (2) and adapter (special

tool #9879, Adapter, Oil Pressure Test) (1).

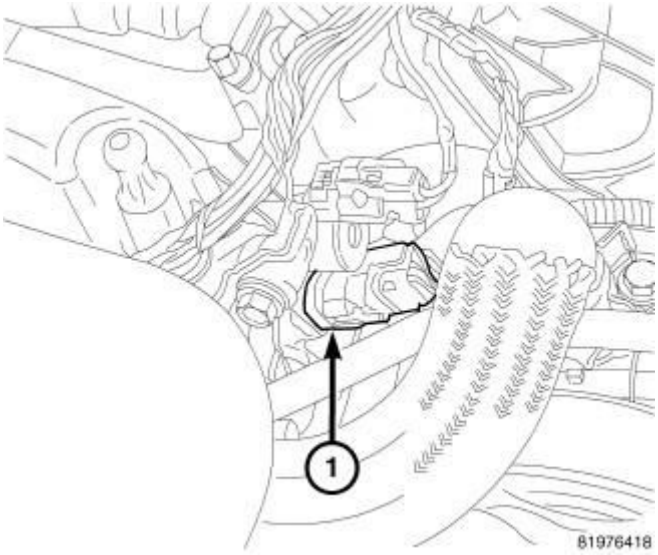

Fig. 283: Oil Temperature Sensor
Courtesy of CHRYSLER GROUP, LLC

9. Install a new oil temperature sensor (1) and connect the electrical connector. Refer to **SENSOR, OIL TEMPERATURE, INSTALLATION**.

CONTROL VALVE, OIL INTAKE

DESCRIPTION

DESCRIPTION

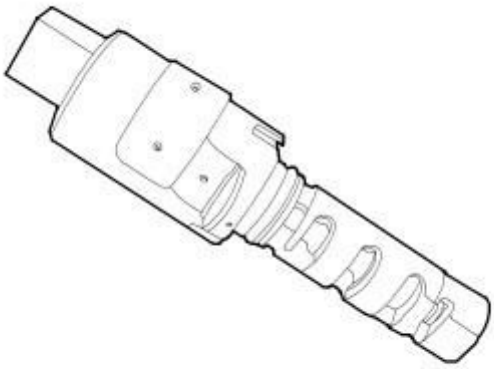

Fig. 284: Solenoid Assembly
Courtesy of CHRYSLER GROUP, LLC

Variable valve timing solenoid assembly. The solenoid receives pulse width modulation signal and the current is controlled within 0 ma to 1000 ma. The spool position is controllable at any position to control supply of oil between the advance and retard ports.

OPERATION

OPERATION

There is both an Intake and an exhaust camshaft sensor on vehicles equipped with a World Engine. The variable valve timing system used on World Engines requires the exact position of both the intake and exhaust camshaft. The GPEC1 uses camshaft sensor data along with crankshaft data to determine the actual position of the camshafts. Intake and exhaust phaser oil control valves are required on World Engine vehicles using variable valve timing. The oil valves direct oil to the Intake and exhaust phasers. Oil pressure in the phasers moves the camshafts to an advanced or retarded position.

To resolve this inherent conflict between optimum high and low speed valve timing, the GPEC1 controlled engine uses a variable valve timing system. The variable valve timing system advances and retards valve timing by rotating the position of both the intake and exhaust camshafts. With this system, the intake valve opening can range from 80 to 120 crankshaft degrees after Top Dead Center. Likewise, the exhaust valve opening can range from 85 to 120 crankshaft degrees before Top Dead Center. This degree of flexibility provides many benefits, including: Improved Engine Performance, Increased Fuel Economy, Improved Idle Stability and Decreased Engine Emissions. In non operating condition, the camshaft stays in lockpin position of cam phases. This is 120 degrees ATDC for intake camshaft and 120 degrees BTDC for exhaust camshaft.

The variable valve timing system is electronically controlled and hydraulically operated. The GPEC1 receives information from many sensors to determine the optimum valve timing. It then pulse-width modulates oil control valves which direct oil to the cam phasers. The cam phasers use oil pressure to rotate the intake and exhaust camshafts. The rotation of the camshafts is referred to as cam phasing. Before the GPEC1 can begin commanding the camshaft phasing, several enabling conditions must be met:

- The engine oil temperature must be at least -6.6°C (20°F)
- The oil control valve coil temperature must be less than 140°C (284°F)

- Engine speed must be at least 600 to 1000 RPM to achieve minimum oil pressure.
- Battery voltage must be at least 10 volts
- And there must be no camshaft or crankshaft sensor faults, engine timing faults, or oil control valve faults

First we will examine variable valve timing enabling conditions, and then we will take a closer look at the inputs and outputs of the system:

- Accelerator pedal position sensor
- Oil temperature sensor
- Map sensor
- Intake cam sensor
- Exhaust cam sensor
- Crankshaft sensor
- GPEC1
- Exhaust phaser oil control valve
- Intake phaser oil control valve
- Inputs
- Engine control module
- Outputs
- Sensed battery voltage

A minimum oil temperature is required to enable variable valve timing operation. Oil temperature and viscosity also have an impact on the operation of variable valve timing after start-up. Oil is used to control the movement of the camshafts. An incorrect oil viscosity could adversely affect the operation of the system or even render the system inoperative. It may even set a fault code.

The accelerator pedal position sensor indicates how far the driver wants to open the throttle plate. The GPEC1 calculates an initial camshaft set point based on whether the accelerator pedal is at part throttle or wide open throttle.

The MAP sensor provides information regarding engine load.

Sensed battery voltage provides information regarding current system voltage.

Sensed battery voltage must be at least 10 volts in order for the oil control valves to function properly.

This information allows the GPEC1 to adjust camshaft timing to achieve the best fuel economy, the best engine performance or a combination of both. The hall-effect crankshaft sensor provides RPM information and determines when the number one piston is approaching Top Dead Center. The sensor generates a signal as the tone wheel, attached to the crankshaft, rotates. The tone wheel has 60 teeth minus two. When the gap, created by the missing teeth passes by the sensor, a signal is produced that indicates the number one piston is at Top Dead Center. The GPEC1 uses crankshaft sensor data along with camshaft data to determine the actual position of the camshaft. There are two hall-effect camshaft sensors on engines equipped with variable valve timing. The GPEC1 uses camshaft sensor data along with crankshaft data to determine the actual position of the camshaft.

The GPEC1 individually controls each valve. It sends a pulse width modulated signal to move a spool within the outer casing of the valve. Depending upon spool movement, oil is directed through the passages to advance or retard cam timing. The oil control valve also has a special cleaning strategy at key-on. The cleaning strategy is known as "debris crush mode". At key-on the GPEC1 cycles the oil control valve on and off several (5) times to crush any debris in the oil control valve and prevent the spool valve from sticking. In non operating condition, the camshaft stays in lockpin position of cam phases. This is 120 degrees ATDC for intake camshaft and 120 degrees BTDC for exhaust camshaft.

There are two oil control valves. One valve directs oil to the intake cam phaser, the other valve directs oil to the exhaust cam phaser. The valves are designed and function in the same manner. The outer casing of each oil valve has five oil passages. A passage for pressurized supply oil. A passage to the advance chamber of the cam phaser. A passage to the retard chamber of the cam phaser. A passage for oil return from the advance chamber of the cam phaser. A passage for oil return from the retard chamber of the cam phaser. Oil flows through the passages and applies pressure to the cam phasers to change cam timing.

There are two cam phasers. One phaser controls the position of the intake camshaft. The other phaser controls the position of the exhaust camshaft. The phasers consist of a sprocket, a rotor vane, and a housing or stator. The exhaust cam phaser also consists of a front bushing and spring. We will discuss the

purpose and function of the bushing and spring later. The housing is bolted and permanently fixed to the camshaft sprocket, while the rotor vane is bolted and permanently fixed to the camshaft. With this design, any movement of the rotor vane in relation to the housing will also move the camshaft. The phaser and sprocket are serviced as an assembly.

Camshaft and crankshaft sensors provide feedback to the GPEC1 regarding the actual position of the camshafts. The GPEC1 then compares the actual camshaft positioning with desired positioning. If the desired positioning is not achieved within a specified time, during the second key cycle a trouble code is set.

There are six new diagnostic trouble codes available to help you determine if the control circuit from the GPEC1 to the oil control valve is intact and operating properly. The codes identify whether the control circuit is open, shorted to ground, or shorted to power. Three trouble codes are related to intake camshaft positioning, the other three codes are specific to exhaust camshaft positioning.

The oil control valve contains both electrical and mechanical components. It is electrically controlled by the GPEC1. The electrical current that energizes the coil results in mechanical motion of the spool valve. It is possible to verify both the electrical and mechanical operation of the valve. The oil control valve consists of a coil that is energized to move a spool within an outer casing. The condition of the coil can be tested with a Digital Volt Ohmmeter or DVOM. With the DVOM set to measure resistance, check the coil for an open, a short to ground, or excessive resistance. The correct resistance value of the coil is between 6 and 8 ohms. The mechanical operation of the oil control valve can be tested using actuator commands on the scan tool. Remove the oil control valve, then navigate to the actuator menu and select the oil control valve. Use commands to activate the valve and watch as the spool valve moves back and forth inside the casing.

Because the cam phasers are hydraulically operated by engine oil, the condition of the oil is very important. The oil must be of the correct viscosity, not obstructed by debris, to maintain correct pressure. Maintaining the correct oil viscosity is critical to the operation of the variable valve timing system. The wrong oil viscosity may cause the variable valve timing to malfunction and trouble codes to set. The correct oil viscosity for this system is 5W20. Oil must be clean, unobstructed and free to flow through the variable valve timing system. Oil could become obstructed in oil passages located in the cylinder head,

cylinder block, or even in the oil screen. In the event oil flow is obstructed, further diagnosis or disassembly may be required to pin point the source of the obstruction. The variable valve timing system relies on oil pressure to advance or retard the position of the camshaft. Insufficient oil pressure will adversely affect the operation of variable valve timing. The minimum oil pressure for this system is 15 psi at normal operating temperature.

Though not directly used to change camshaft positioning, the oil screen is an important component of the variable valve timing system. It helps to remove debris going to the variable valve timing components. The oil screen is located in the cylinder block, immediately below the cylinder head. Oil must pass through the oil screen before entering the oil control valve. The cylinder head must be removed to service the oil screen. The intention is not to service the oil screen during vehicle life.

How the cam phaser works. The cam phaser assembly has eight separate chambers; four advance chambers and four retard chambers. When camshaft advance is requested, oil enters all four advance chambers and exerts force on the rotor vane. Because the rotor vane is bolted to the camshaft, the entire camshaft profile moves along with the rotor vane. At the same time, oil is forced out of the retard chambers. When camshaft retard is requested oil enters the retard chambers to move the camshaft in the opposite direction. There is a lock pin on one side of the rotor vane that fits inside a recessed area in the housing. The lock pin ensures that the default position of the intake cam phaser is 120 crankshaft degrees full retard and the default position of the exhaust cam phaser is 120 crankshaft degrees full advance. When the engine is turned off, rotational force and inertia move the intake camshaft and rotor vane toward the retard position. The exhaust cam phaser includes a spring and bushing to work against the rotational force of the engine, allowing the exhaust cam phaser to lock in the fully advanced position. Under most conditions the cam phasers are returned to lock pin position when the engine is turned off. In the unique condition of an engine stall, which abruptly shuts off the engine, the cam phasers may not return to the lock pin position. In this case, the phasers will return to the lock pin position at the next start-up. Lock pin position is the most ideal cam timing for idle stability. When engine RPM exceeds approximately 600 to 1000 RPM, oil pressure unlocks the pins and variable valve timing resumes. Once enabling conditions are met, the GPEC1 uses input from sensors to calculate optimum valve timing.

There are four preprogrammed modes from which the GPEC1 bases initial valve timing.

- Starting
- Idle or Part throttle
- Wide open throttle
- Limp-in or Default

From each preprogrammed mode, the GPEC1 adjusts valve timing based on operating conditions.

GPEC1 has calculated optimum intake valve timing of 112 degrees after Top Dead Center and optimum exhaust valve timing of 97 degrees before Top Dead Center. The GPEC1 pulse width modulates the oil control valves to advance or retard the camshaft to their desired location. The spool valve inside the intake oil control valve is energized and moves to allow pressurized oil into the advance chambers of the intake cam phaser. At the same time, the spool valve inside the exhaust oil control valve is energized and moves to allow pressurized oil into the retard chambers of the exhaust cam phaser. Oil enters the advance chambers of the intake phaser and the retard chambers of the exhaust phaser. Oil pressure releases the lock pin from its locked position and pushes against the rotor vane. Both the rotor vanes are moved, advancing the intake camshaft and retarding the exhaust camshaft.

REMOVAL

FRONT SOLENOID 1/1

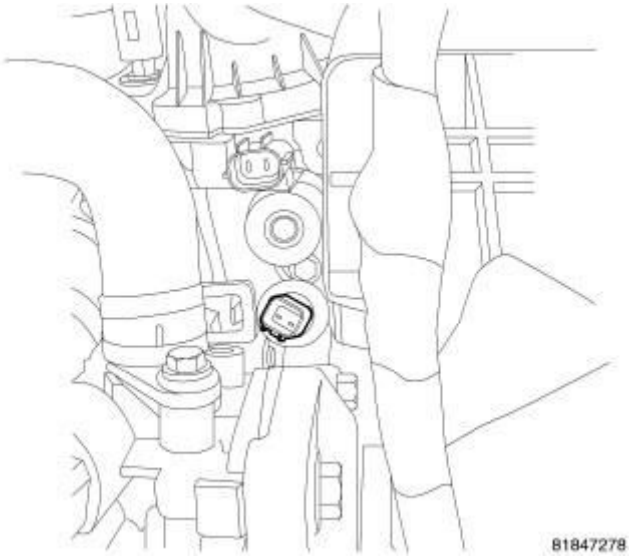

Fig. 285: Oil Pressure Sensor
Courtesy of CHRYSLER GROUP, LLC

1. Disconnect negative battery cable.
2. Remove engine cover.
3. Rotate hose clamp out of way.
4. Disconnect oil pressure sensor electrical connector.
5. Remove oil pressure sensor.
6. Disconnect variable valve timing solenoid electrical connector.

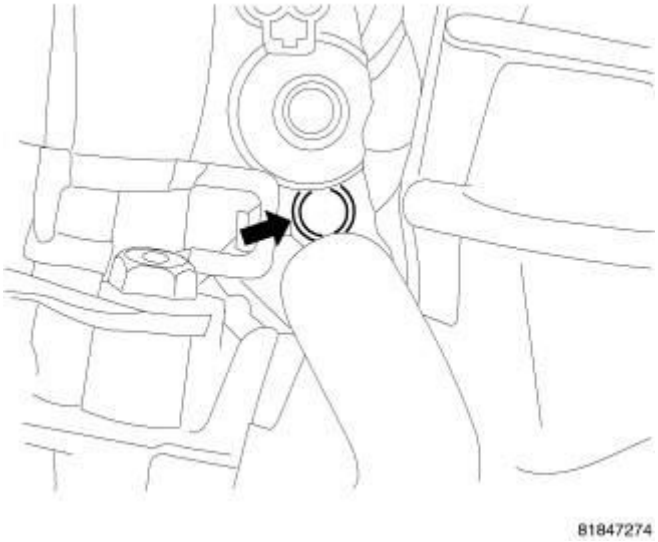

Fig. 286: Solenoid Mounting Bolt
Courtesy of CHRYSLER GROUP, LLC

7. Remove variable valve timing solenoid mounting bolt.

Fig. 287: Solenoid Mounting Tab 1/1
Courtesy of CHRYSLER GROUP, LLC

8. Pull solenoid straight out of cylinder head.

REAR SOLENOID 1/2

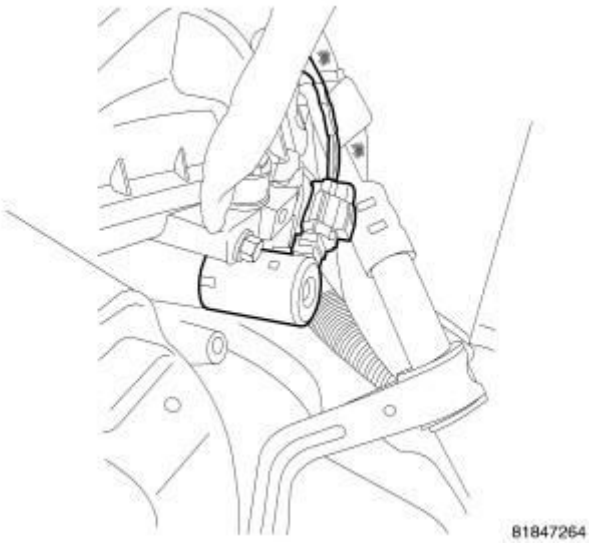

Fig. 288: Solenoid Location 1/2
Courtesy of CHRYSLER GROUP, LLC

1. Disconnect negative battery cable.
2. Remove engine cover.
3. Disconnect variable valve timing solenoid electrical connector.
4. Remove variable valve timing solenoid mounting bolt.

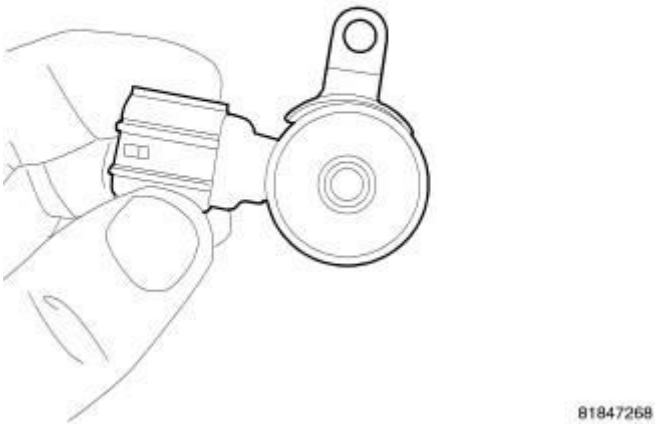

Fig. 289: Solenoid Mounting Tab 1/2

Courtesy of CHRYSLER GROUP, LLC

5. Pull solenoid straight out of cylinder head.

INSTALLATION

FRONT SOLENOID 1/1

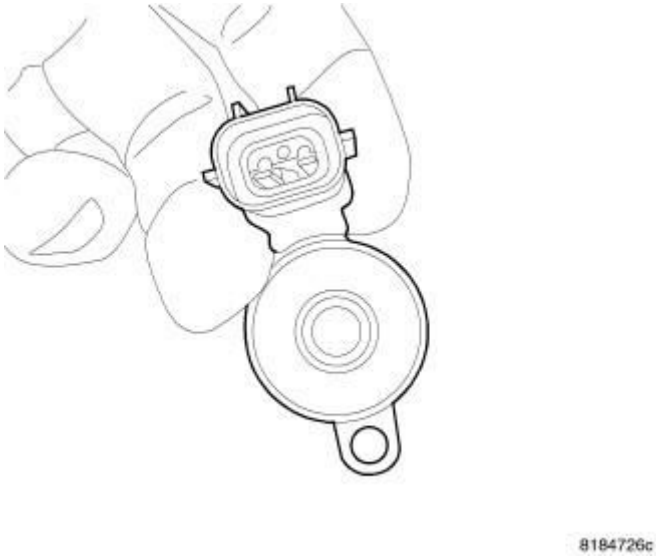

Fig. 290: Solenoid Mounting Tab 1/1
Courtesy of CHRYSLER GROUP, LLC

1. Solenoid for front location 1/1. Note mounting tab location is different between front and rear solenoids.

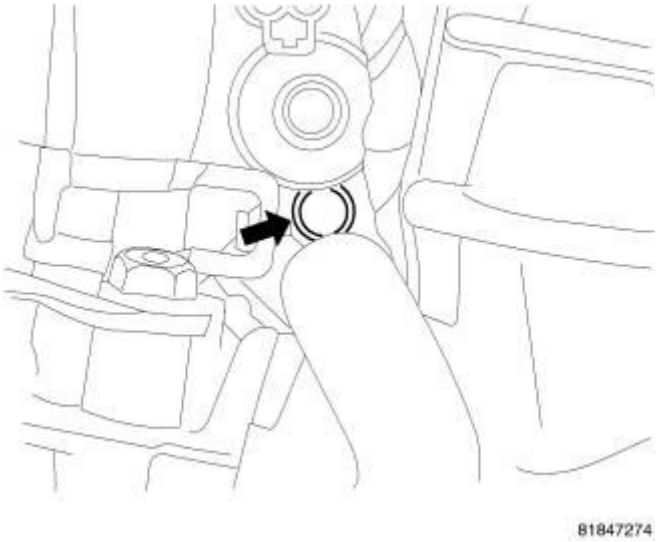

Fig. 291: Solenoid Mounting Bolt
Courtesy of CHRYSLER GROUP, LLC

2. Install solenoid into cylinder head.
3. Install mounting bolt and tighten to 12 N.m (9 ft. lbs.).

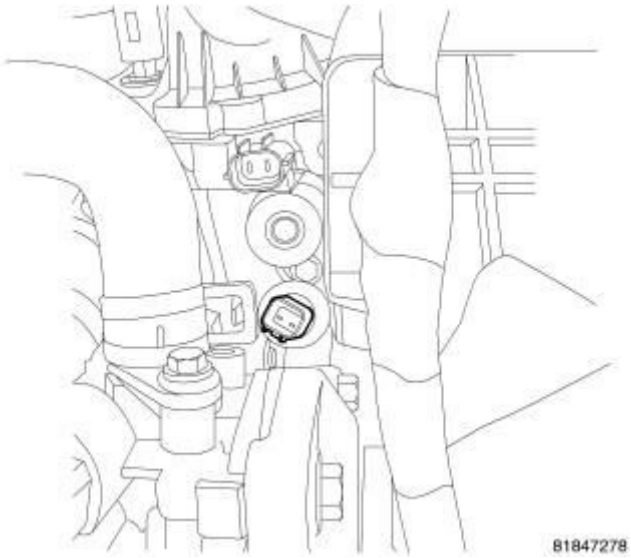

Fig. 292: Oil Pressure Sensor
Courtesy of CHRYSLER GROUP, LLC

4. Install oil pressure sensor.
5. Connect electrical connector to oil pressure sensor.
6. Connect electrical connector to Variable valve timing solenoid.
7. Connect negative battery cable.
8. Install engine cover.

REAR SOLENOID 1/2

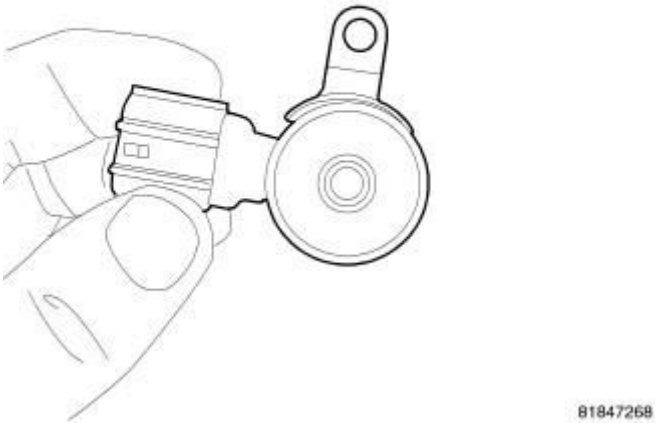

Fig. 293: Solenoid Mounting Tab 1/2

Courtesy of CHRYSLER GROUP, LLC

1. Rear variable valve timing solenoid. Note mounting tab location is different between front and rear solenoids.
2. Install solenoid into cylinder head.
3. Install mounting bolt and tighten to 12 N.m (9 ft. lbs.).
4. Connect electrical connector to Variable valve timing solenoid.

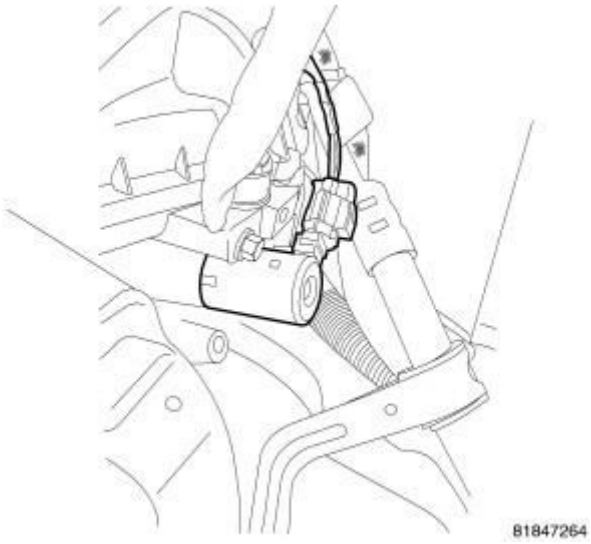

Fig. 294: Solenoid Location 1/2
Courtesy of CHRYSLER GROUP, LLC

5. Connect negative battery cable.
6. Install engine cover.

COOLER, OIL

DESCRIPTION

DESCRIPTION

An engine oil cooler is used on some engine packages. The cooler is a coolant-to-oil type and mounted between the oil filter and oil filter adapter.

REMOVAL

REMOVAL

NOTE: The oil cooler can not be cleaned out. In the event that the engine requires rebuilding or replacement, the oil

cooler should be replaced.

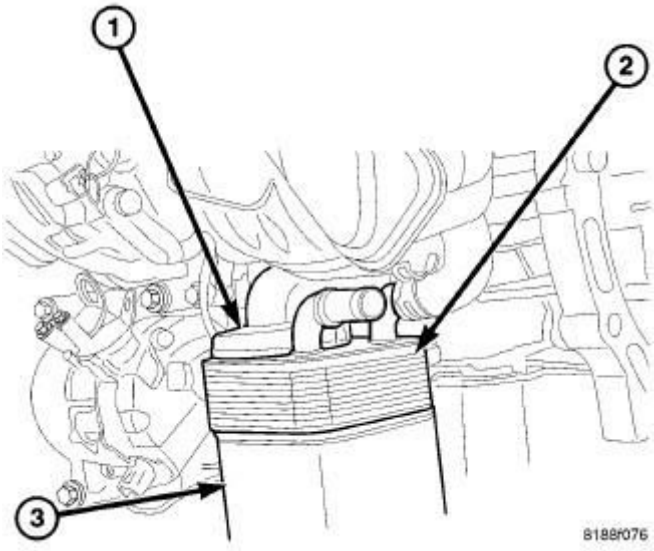

Fig. 295: Oil Cooler
Courtesy of CHRYSLER GROUP, LLC

1. Raise vehicle on hoist.
2. Drain cooling system. Refer to **STANDARD PROCEDURE** .
3. Disconnect oil cooler coolant hoses.
4. Remove oil filter (3).

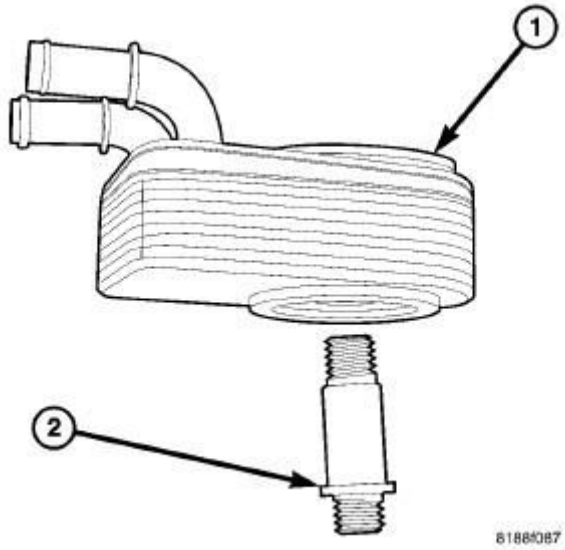

Fig. 296: Oil Cooler & Oil Cooler Connector Bolt
Courtesy of CHRYSLER GROUP, LLC

5. Remove oil cooler connector bolt (2).
6. Remove oil cooler (1).

INSTALLATION

INSTALLATION

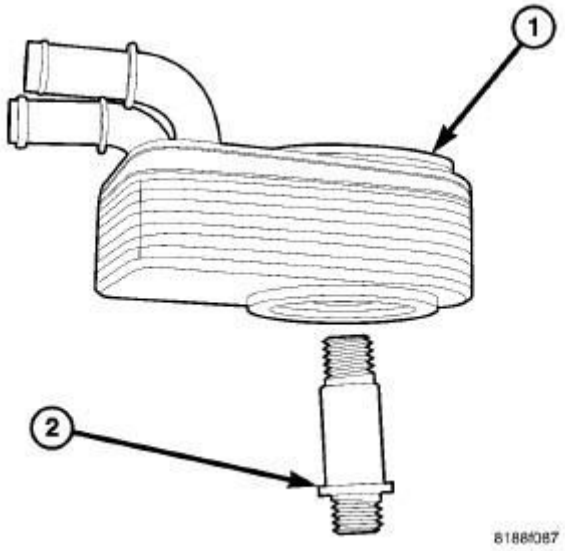

Fig. 297: Oil Cooler & Oil Cooler Connector Bolt
Courtesy of CHRYSLER GROUP, LLC

1. Replace oil cooler seal (1).
2. Lubricate seal and position oil cooler to oil filter adapter, aligning notch to tab.
3. Install oil cooler connector bolt (2). Tighten connector bolt to 49 N.m (36 ft. lbs.).

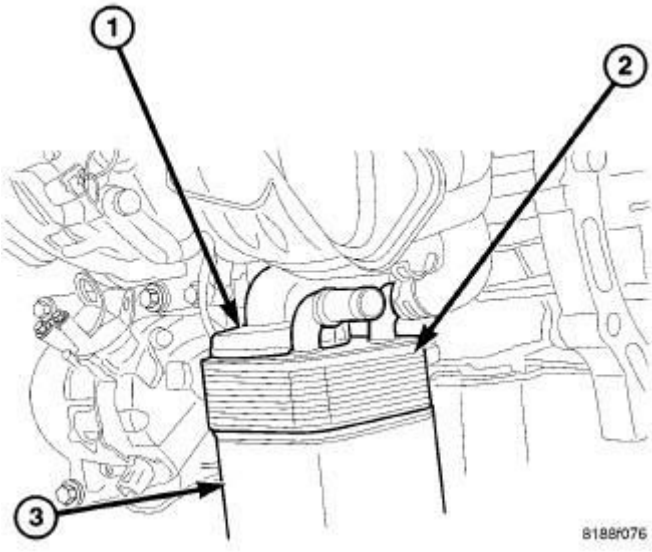

Fig. 298: Oil Cooler
Courtesy of CHRYSLER GROUP, LLC

4. Install oil filter (3).
5. Connect oil cooler coolant hose.
6. Lower vehicle.
7. Fill cooling system. Refer to **STANDARD PROCEDURE** .

FILTER, ENGINE OIL

REMOVAL

REMOVAL

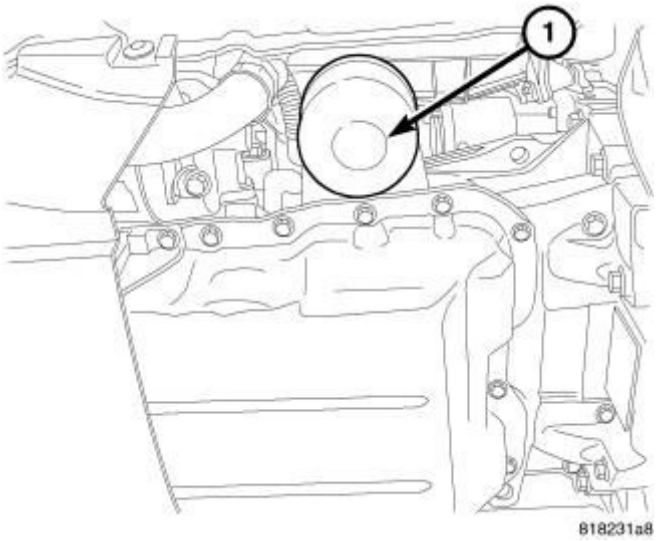

Fig. 299: Oil Filter

Courtesy of CHRYSLER GROUP, LLC

CAUTION: When servicing the oil filter, avoid deforming the filter can by installing the remove/install tool band strap against the can to base lock seam. The lock seam joining the can to the base is reinforced by the base plate.

1. Using a suitable filter wrench, turn oil filter (1) counterclockwise to remove.

INSTALLATION

INSTALLATION

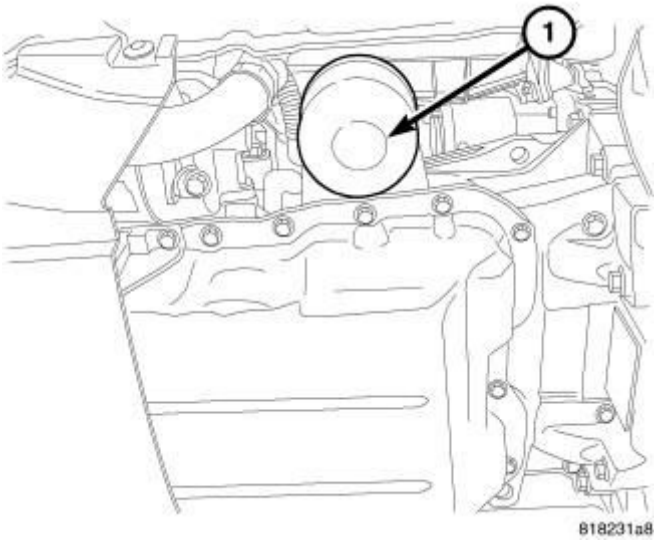

Fig. 300: Oil Filter
Courtesy of CHRYSLER GROUP, LLC

1. Clean and check filter mounting surface. The surface must be smooth, flat and free of debris or pieces of gasket.
2. Lubricate new oil filter gasket.
3. Screw oil filter (1) on until the gasket contacts base. Tighten to 14 N.m (10 ft. lbs.).

OIL

STANDARD PROCEDURE

ENGINE OIL AND FILTER CHANGE

WARNING: New or used engine oil can be irritating to the skin. Avoid prolonged or repeated skin contact with engine oil. Contaminants in used engine oil, caused by internal combustion, can be hazardous to your health. Thoroughly wash exposed skin with soap and water. Do not wash skin with gasoline, diesel fuel, thinner, or solvents, health problems can result. Do not pollute, dispose of used engine oil properly. Contact your dealer or government agency for location of collection center in your area.

Change engine oil at mileage and time intervals described in the Maintenance Schedule. Refer to **MAINTENANCE SCHEDULES, DESCRIPTION** .

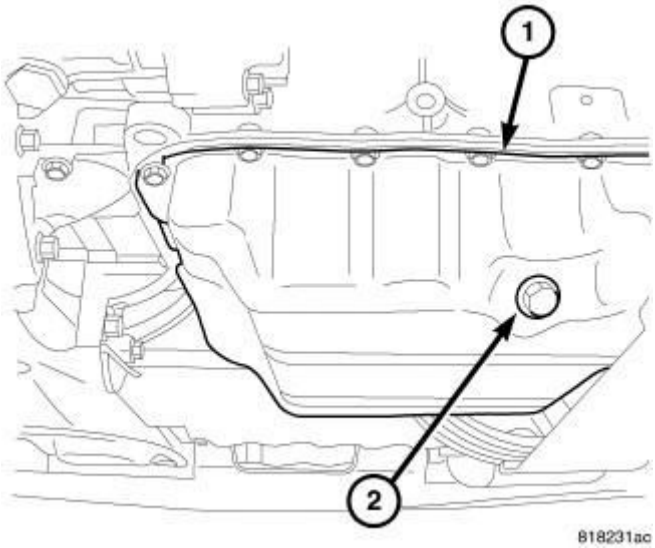

Fig. 301: Oil Drain Plug
Courtesy of CHRYSLER GROUP, LLC

1. Run engine until achieving normal operating temperature.
2. Position the vehicle on a level surface and turn engine off.
3. Remove oil fill cap.
4. Raise vehicle on hoist.
5. Place a suitable oil collecting container under oil pan drain plug (2).
6. Remove oil pan drain plug (2) or and allow oil to drain into collecting container. Inspect drain plug threads for stretching or other damage. Replace drain plug and gasket if damaged.

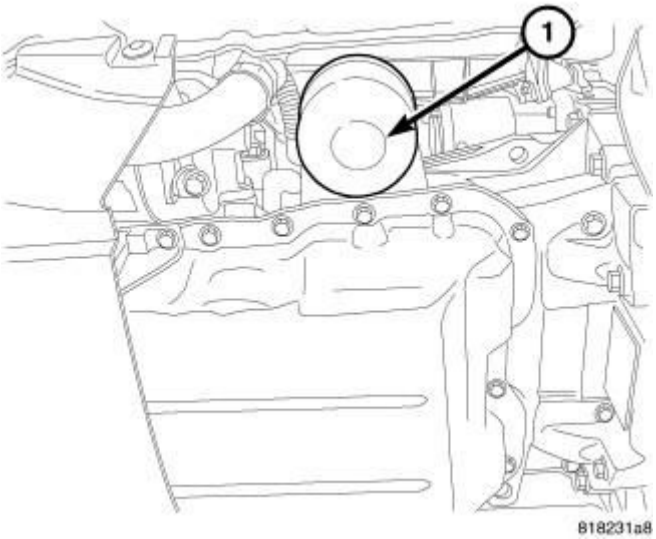

Fig. 302: Oil Filter
Courtesy of CHRYSLER GROUP, LLC

7. Remove oil filter (1). Refer to **FILTER, ENGINE OIL, REMOVAL**.

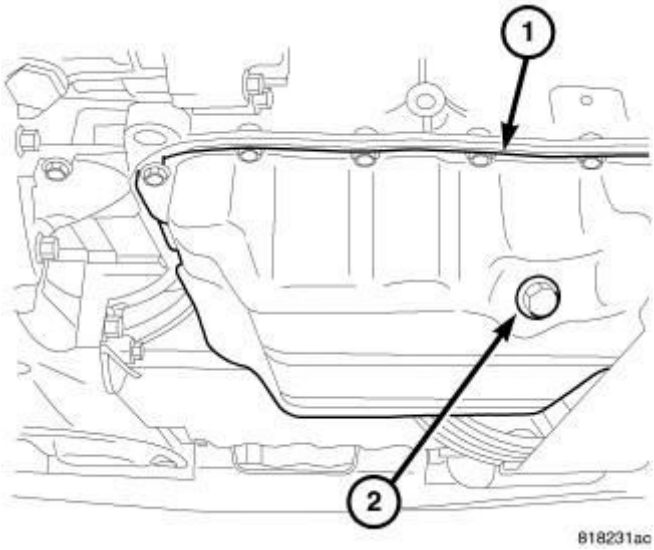

Fig. 303: Oil Drain Plug
Courtesy of CHRYSLER GROUP, LLC

8. Install oil pan drain plug (2) and tighten drain plug to 40 N.m (30 ft. lbs.).

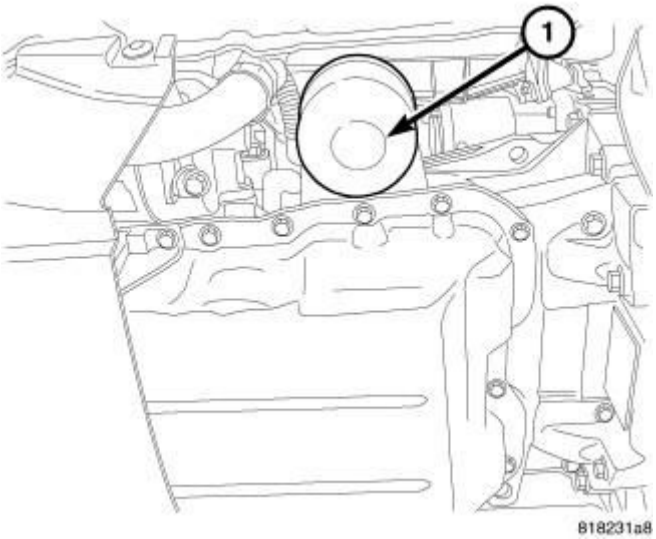

Fig. 304: Oil Filter
Courtesy of CHRYSLER GROUP, LLC

9. Install new oil filter (1), tighten to 14 Nm (10 ft. lbs.). Refer to **FILTER, ENGINE OIL, INSTALLATION**.
10. Lower vehicle and fill crankcase with specified type and amount of engine oil. Refer to **CAPACITIES AND RECOMMENDED FLUIDS, DESCRIPTION** and **CAPACITIES AND RECOMMENDED FLUIDS, SPECIFICATIONS** .
11. Install oil fill cap.
12. Start engine and inspect for leaks.
13. Stop engine and inspect oil level.

OIL FILTER SPECIFICATION

All engines are equipped with a high quality full-flow, disposable type oil filter. Replace oil filter with a Mopar® or the equivalent.

USED ENGINE OIL DISPOSAL

Care should be exercised when disposing used engine oil after it has been drained from a vehicle engine. Refer to the WARNING listed above under **ENGINE OIL AND FILTER CHANGE**.

PAN, OIL

REMOVAL

REMOVAL

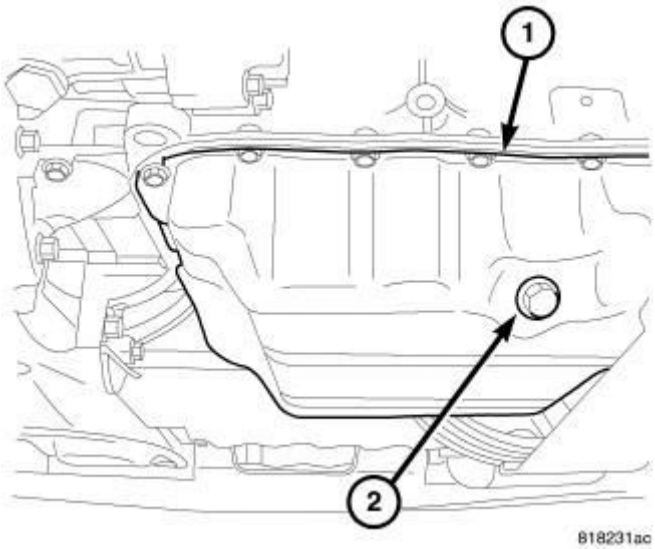

Fig. 305: Oil Drain Plug
Courtesy of CHRYSLER GROUP, LLC

1. Raise vehicle on hoist.
2. Remove oil drain plug (2) and drain the engine oil.
3. Remove accessory drive belt splash shield.

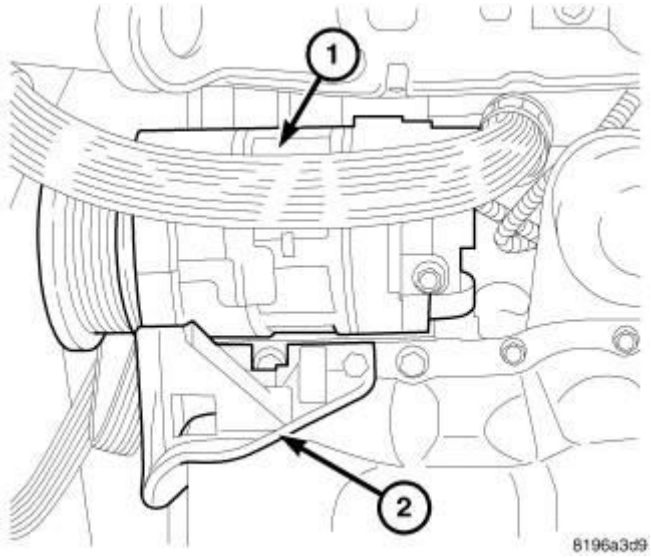

Fig. 306: A/C Compressor
Courtesy of CHRYSLER GROUP, LLC

4. Remove lower A/C compressor mounting bolt (if equipped).
5. Remove A/C mounting bracket (2).

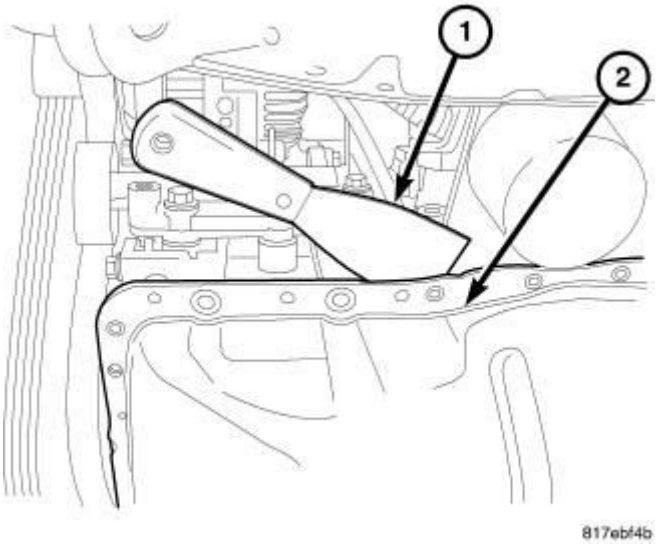

Fig. 307: Oil Pan Removal
Courtesy of CHRYSLER GROUP, LLC

NOTE: Do not use pry points in block to remove oil pan.

6. Remove oil pan retaining bolts.
7. Using a putty knife (1), loosen seal around oil pan (2).
8. Remove oil pan (2).

INSTALLATION

INSTALLATION

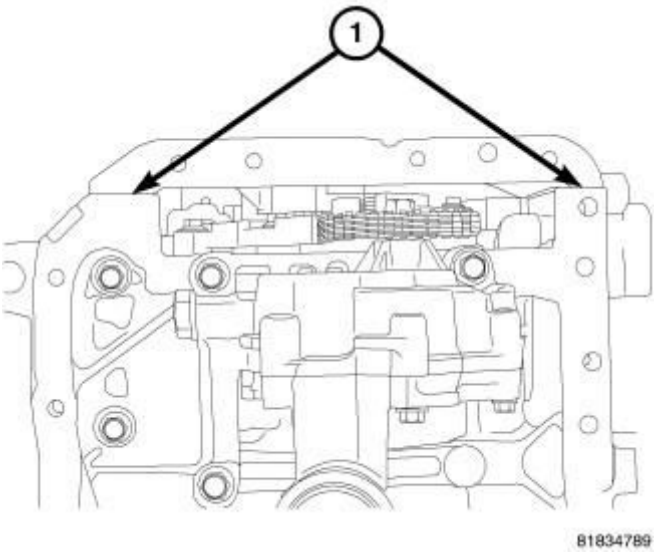

Fig. 308: Sealer Location
Courtesy of CHRYSLER GROUP, LLC

NOTE: Oil pan sealing surfaces must be free of grease or oil.

NOTE: Parts must be assembled within 10 minutes of applying RTV.

1. Apply Mopar® Engine RTV GEN II at the front cover to engine block parting lines (1).

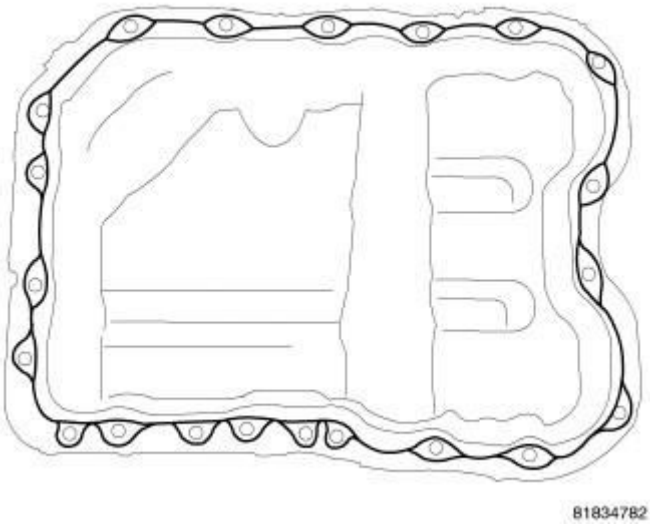

Fig. 309: Sealing Oil Pan
Courtesy of CHRYSLER GROUP, LLC

2. Apply a 2 mm bead of Mopar® Engine RTV GEN II around the oil pan as shown in illustration.
3. Position oil pan and install bolts. Tighten bolts to 12 N.m (105 in. lbs.).

NOTE: The 2 long bolts must be tightened to 22 N.m (195 in. lbs.).

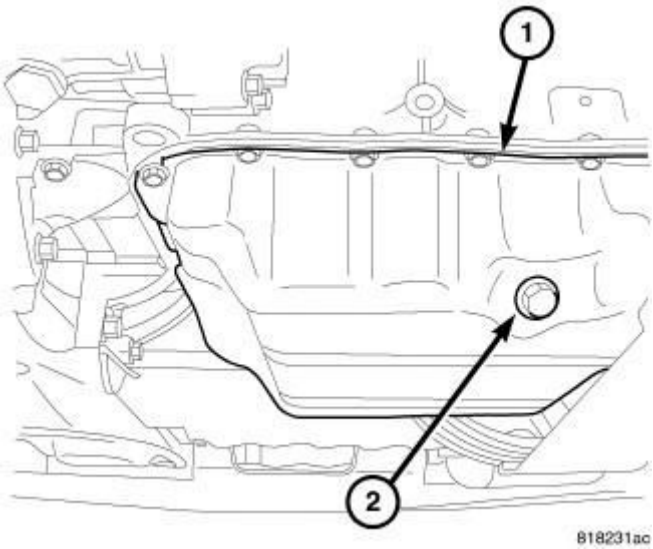

Fig. 310: Oil Drain Plug
Courtesy of CHRYSLER GROUP, LLC

4. Install oil drain plug (2).
5. Lower vehicle and fill engine crankcase with proper oil to correct level.
6. Start engine and check for leaks.

PLUG, OIL

DESCRIPTION

DESCRIPTION

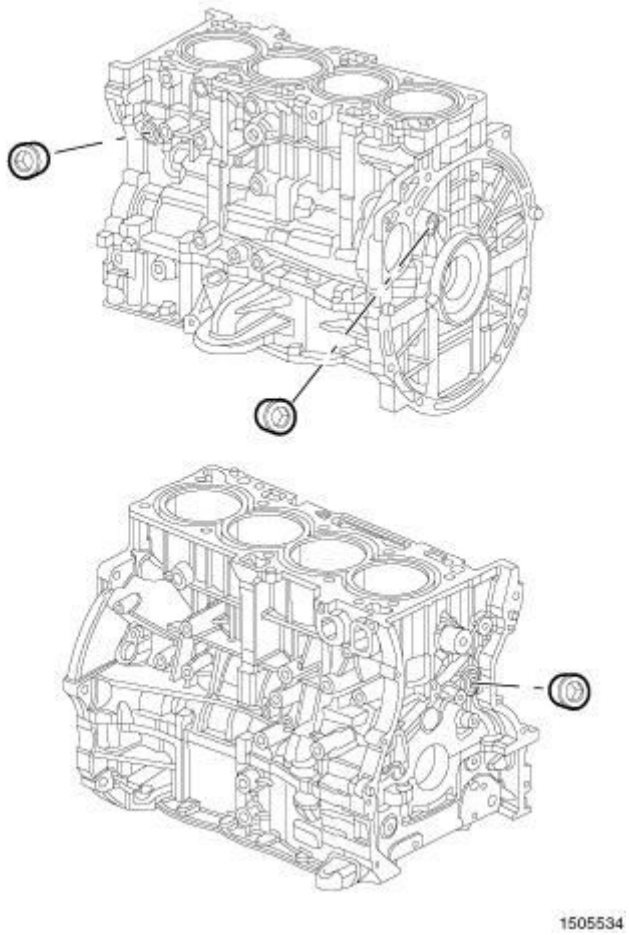

Fig. 311: Tapered Plugs
Courtesy of CHRYSLER GROUP, LLC

The engine block has three tapered plugs sealing the high pressure oil gallery. These threaded plugs do not have a torque specification but instead are installed to a specific depth. Do not attempt to further tighten these plugs, damage to the engine block could result. Whenever these plugs are removed they must be replaced. Service plugs have a lock patch and do not require the application of additional sealant.

REMOVAL

REMOVAL

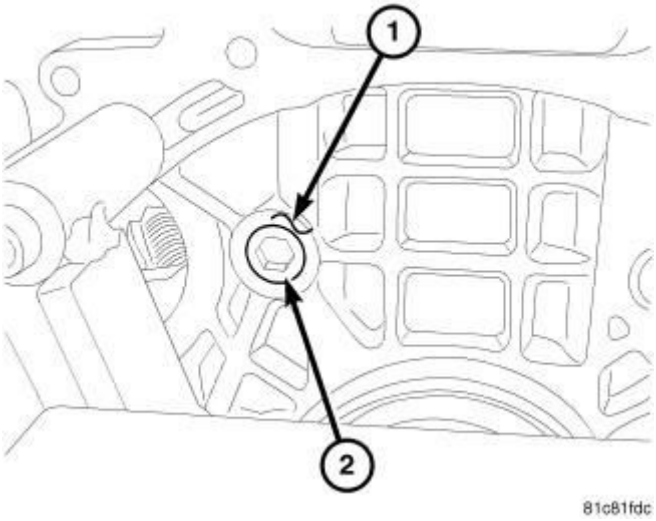

Fig. 312: Gallery Plug
Courtesy of CHRYSLER GROUP, LLC

CAUTION: Excessive use of brake parts cleaner to clean threads in block could cause #5 main bearing failure.

NOTE: Rear plug shown in illustration, other plugs are similar.

1. Remove the plug (2) from the engine block.
2. Use Mopar® Brake Parts Cleaner (or equivalent) sparingly to clean the block.

INSTALLATION

INSTALLATION

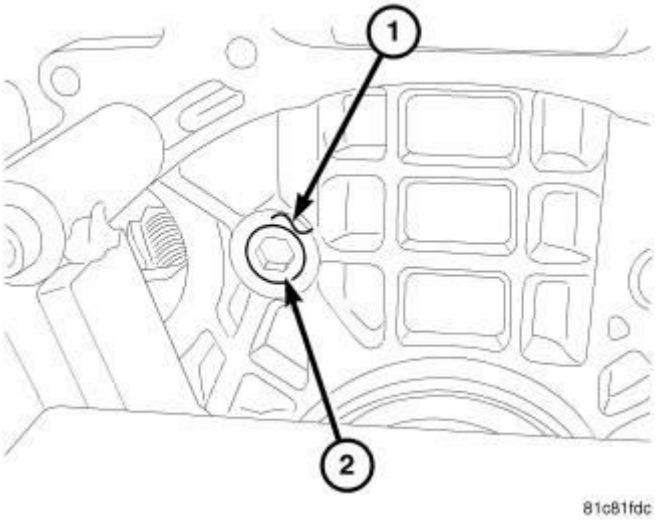

Fig. 313: Gallery Plug
Courtesy of CHRYSLER GROUP, LLC

CAUTION: Excessive use of brake parts cleaner to clean threads in block could cause #5 main bearing failure.

NOTE: Rear plug shown in illustration, other plugs are similar.

1. Use Mopar® Brake Parts Cleaner (or equivalent) sparingly to clean the block.
2. Install the plug (2) flush with the block boss face (1). The plug (2) is correctly installed when it is flush or protruding no more than 1 mm from the block boss face (1).

PUMP, ENGINE OIL

DESCRIPTION

DESCRIPTION

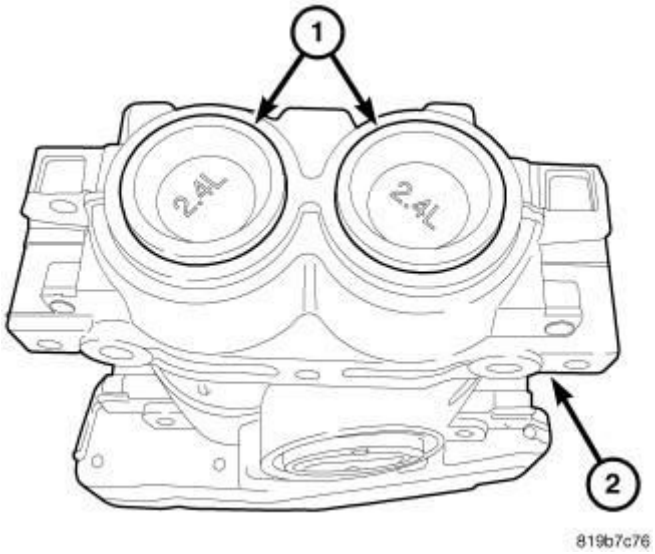

Fig. 314: Balance Shaft Module (BSM) Identification
Courtesy of CHRYSLER GROUP, LLC

The oil pump is integral to the balance shaft module (BSM) (2). The oil pump cannot be disassembled for inspection. The pressure relief valve is serviceable and can be removed and inspected. The BSM can be identified by the plastic end caps (1).

REMOVAL

REMOVAL

YouTube	A multimedia supplement to the instructions contained in this article is available. To view the multimedia example of the condition described go to; **http://www.youtube.com/user/Mitchell1Tips** **then type "A00612697.vid1" into the "Search Channel" box.**

When removing and installing the Balance Shaft/Oil Pump assembly in the vehicle, it is not necessary to align the plated links on the drive chain as long as the reference marks are created during the procedure.

1. Remove the oil pan

   Refer to **PAN, OIL, REMOVAL**.

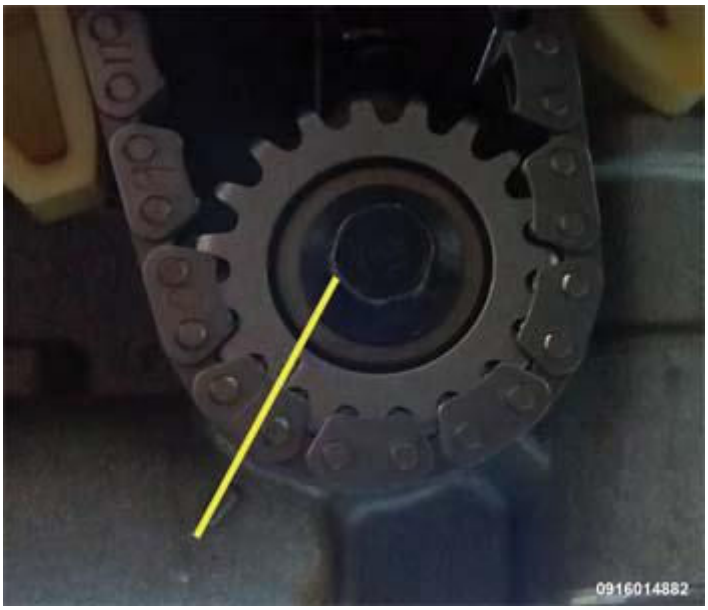

Fig. 315: Aligning Balance Shaft/Oil Pump Drive Gear And Housing Indicator
Courtesy of CHRYSLER GROUP, LLC

2. Rotate the engine clockwise until the balance shaft/oil pump drive gear and the housing indicator are aligned.

NOTE: IT IS VERY IMPORTANT THAT THE CRANKSHAFT STAYS STATIONARY DURING THE FOLLOWING STEPS. DO NOT MOVE THE CRANKSHAFT UNTIL THE INSTALLATION PROCEDURE IS COMPLETED.

3. Clean the balance shaft/oil pump assembly drive gear with Mopar® brake cleaner or similar.

NOTE: Make sure the gear is clear of any oil to allow for marking.

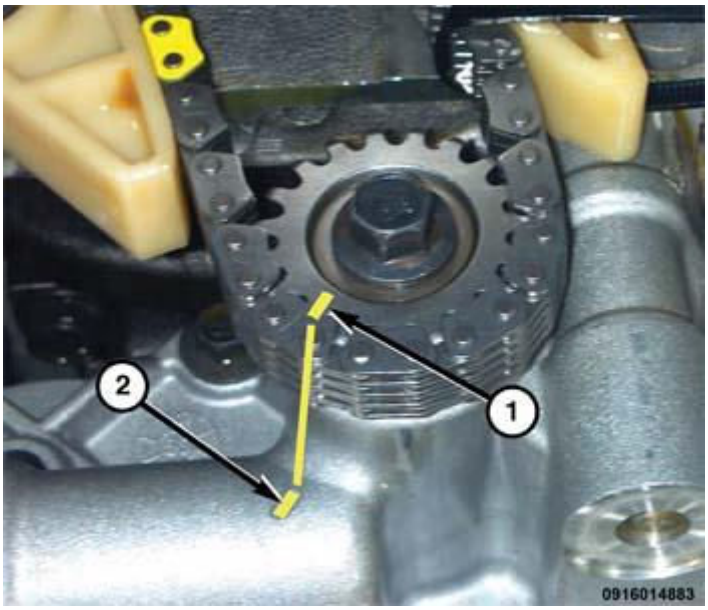

Fig. 316: Oil Pump Chain And Sprocket To Module Body Marks
Courtesy of CHRYSLER GROUP, LLC

4. If the balance shaft/oil pump assembly is being reused, mark the oil pump chain and the sprocket (1) to the module body (2) for reassembly.
5. Install one air-conditioning compressor bracket bolt into the left forward corner thread boss.

NOTE: The bolt will provide a sturdy point to secure a tie strap to hold the tensioner in the compressed position.

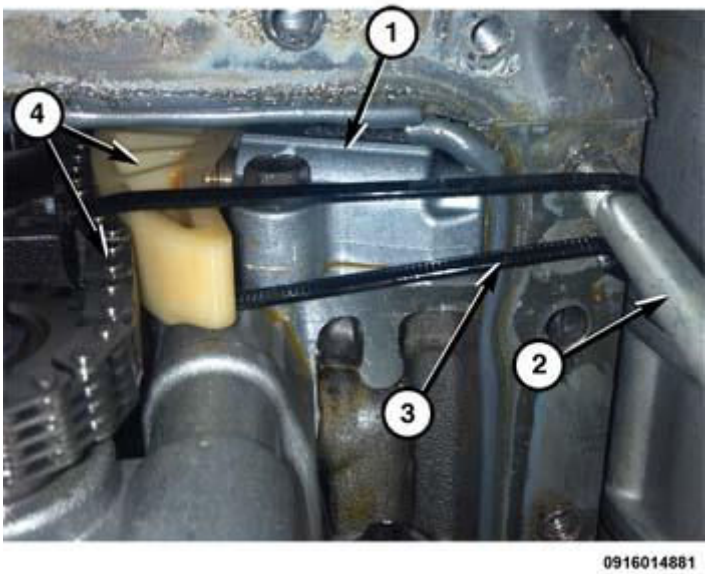

Fig. 317: Positioning Plastic Tie Strap

Courtesy of CHRYSLER GROUP, LLC

6. Position a plastic tie strap (3) around the chain, tensioner (4) and bolt (2) that was previously installed.
7. Push the chain, guide and tensioner (1) to the compressed position.
8. Tighten the tie strap to hold the components together.

NOTE: The tighter the strap, the more room for removal and installation.

9. Remove the balance shaft/oil pump assembly mounting bolts.
10. Remove assembly from the engine by tilting the rear of the balance shaft/oil pump assembly downward while lifting the drive gear out of the chain links.

INSPECTION

INSPECTION

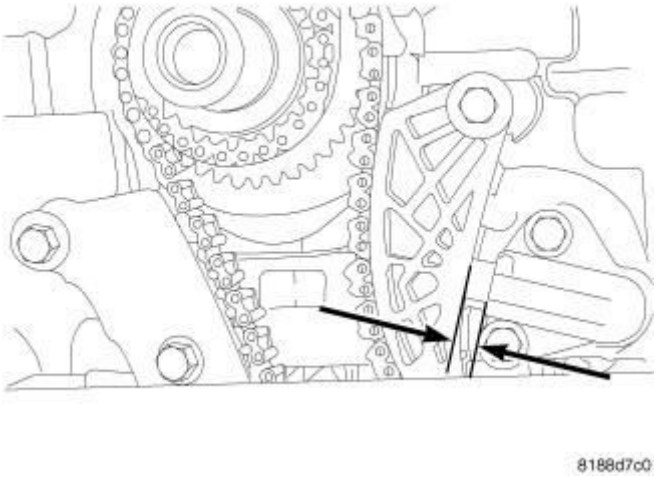

Fig. 318: Oil Pump Chain Stretch
Courtesy of CHRYSLER GROUP, LLC

1. Remove timing chain cover. Refer to **COVER(S), ENGINE TIMING, REMOVAL**.
2. Remove oil pan. Refer to **PAN, OIL, REMOVAL**.
3. Measure the distance between the tensioner body and the guide shoe as shown in illustration.
4. If the distance is 10.1 mm (0.397 in.) or greater, replace the chain.

INSTALLATION

INSTALLATION

YouTube	A multimedia supplement to the instructions contained in this article is available. To view the multimedia example of the condition described go to; **http://www.youtube.com/user/Mitchell1Tips then type "A00612697.vid2" into the "Search Channel" box.**

CAUTION: There are two different Balance Shaft Module (BSM) to engine block bolts used. 180 mm bolts with a lock-patch on the threads or 185 mm bolts without lock-patch. Do not reuse the 180 mm bolts. Always discard 180 mm bolts after removing. Failure to replace these bolts can result in engine damage. The 185 mm bolts are reusable. Install the same length bolts that were removed and use either four new 180 mm bolts or four 185 mm bolts.

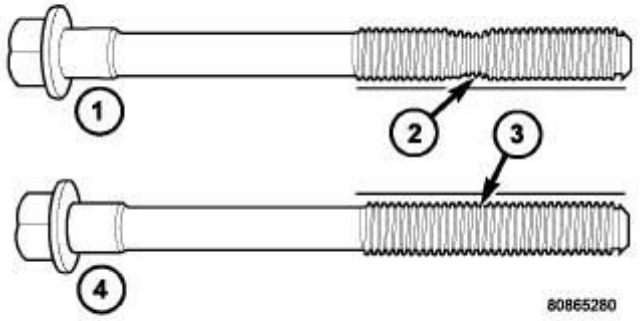

Fig. 319: Checking Cylinder Head Bolts For Stretching (Necking)
Courtesy of CHRYSLER GROUP, LLC

1. The 185 mm (7.283 in.) length bolts must be checked for stretching. Check the bolts with a straight edge for necking (2). If the bolts are necked down,

they must be replaced.

2. Clean the balance shaft/oil pump assembly mounting holes with Mopar® brake parts cleaner.
3. Align the marks on the balance shaft/oil pump assembly and drive sprocket.

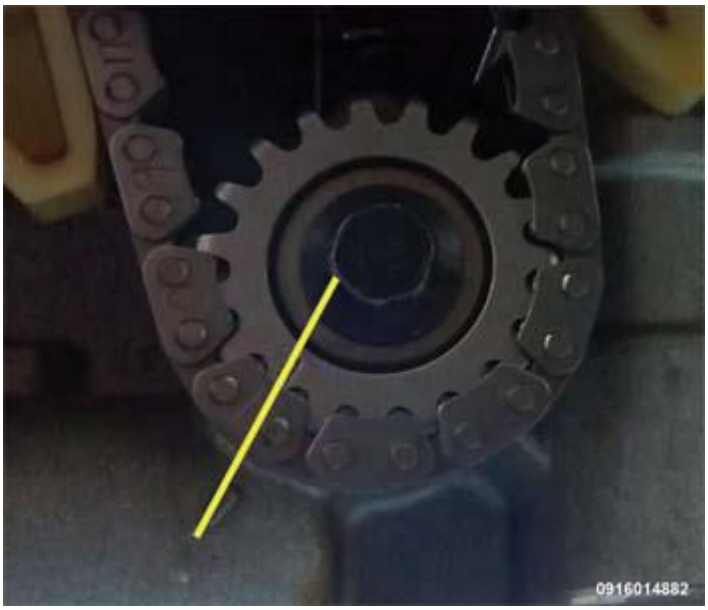

Fig. 320: Aligning Balance Shaft/Oil Pump Drive Gear And Housing Indicator
Courtesy of CHRYSLER GROUP, LLC

4. With the rear of the balance shaft/oil pump assembly on a slight downward angle, position the gear into the chain links. Make sure the paint marks are aligned.
5. Pivot balance shaft/oil pump assembly upwards and position on ladder frame.

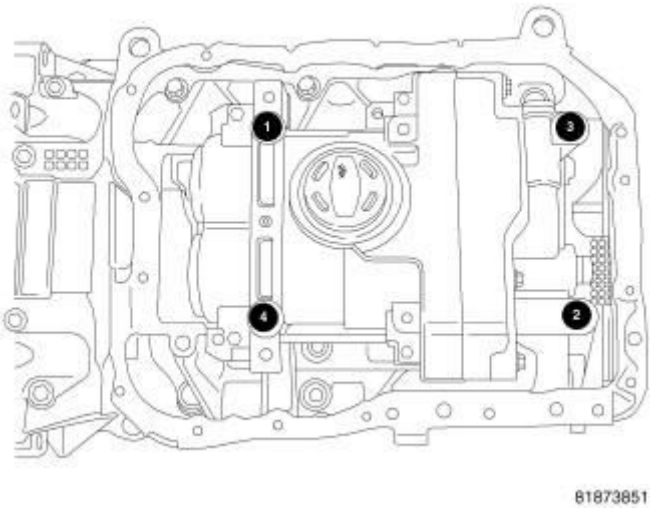

Fig. 321: Balance Shaft Module Torque Sequence
Courtesy of CHRYSLER GROUP, LLC

6. Start balance shaft/oil pump assembly mounting bolts by hand.

NOTE: Use a three step procedure when tightening balance shaft/oil pump assembly mounting bolts. For new 180 mm bolts, go to step 7. For 185 mm bolts, go to step 8.

7. Tighten new 180 mm balance shaft/oil pump assembly mounting bolts as follows:
   a. Tighten to 15 N.m (11 ft. lbs.) in the sequence shown in illustration.
   b. Tighten to 33 N.m (24 ft. lbs.) in the sequence shown in illustration.
   c. Rotate bolts an additional 90° in the sequence shown in illustration.
8. Tighten 185 mm balance shaft/oil pump assembly mounting bolts as follows:
   1. Tighten to 15 N.m (11 ft. lbs.) in the sequence shown in illustration.
   2. Tighten to 29 N.m (22 ft. lbs.) in the sequence shown in illustration.
   3. Rotate bolts an additional 90° in the sequence shown in illustration.

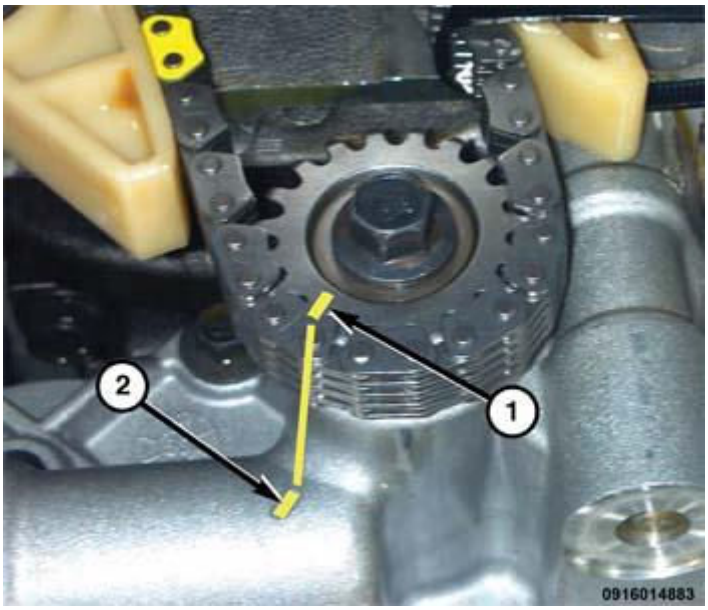

Fig. 322: Oil Pump Chain And Sprocket To Module Body Marks
Courtesy of CHRYSLER GROUP, LLC

9. Double check the alignment marks to ensure the gear (1) and balance shaft/oil pump assembly indicator (2) is aligned.

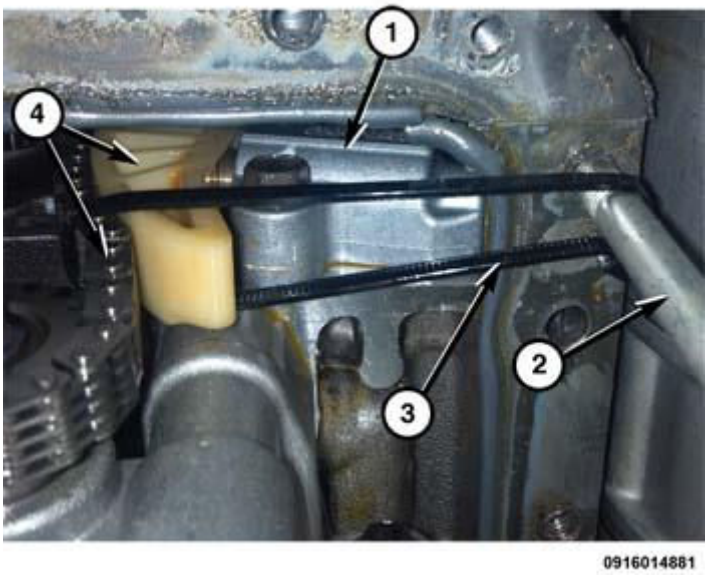

Fig. 323: Positioning Plastic Tie Strap
Courtesy of CHRYSLER GROUP, LLC

10. Remove the tie strap (3).
11. Remove the bracket bolt (2).
12. Inspect that the tensioner (1) has fully extended and applied pressure to the guide and chain (4).

13. Install the oil pan

    Refer to **PAN, OIL, INSTALLATION**.

14. Fill engine with oil.
15. Start engine and check for leaks.

SENSOR, OIL TEMPERATURE

REMOVAL

REMOVAL

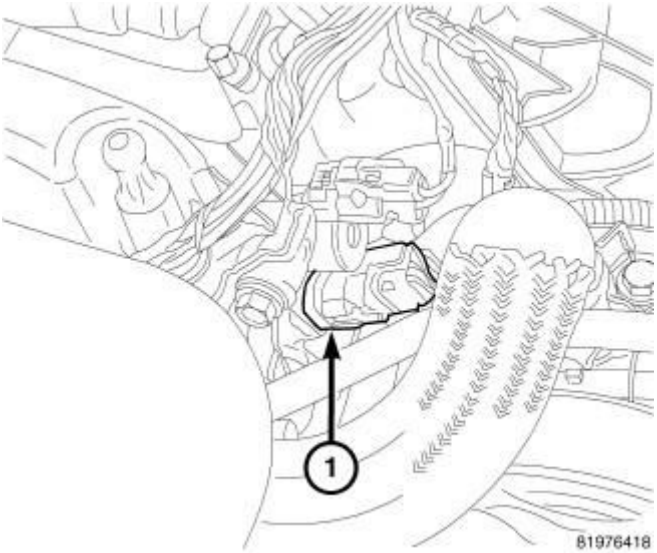

Fig. 324: Oil Temperature Sensor
Courtesy of CHRYSLER GROUP, LLC

1. Disconnect oil temperature sensor (1) electrical connector.
2. Remove sensor (1).

INSTALLATION

INSTALLATION

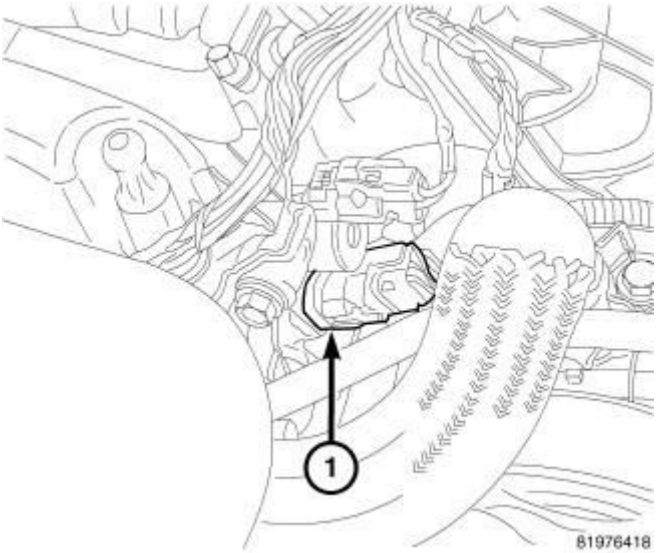

Fig. 325: Oil Temperature Sensor
Courtesy of CHRYSLER GROUP, LLC

1. If re-using the oil temperature sensor, coat the threads with Mopar® thread sealant.
2. Install oil temperature sensor (1). Tighten to 18 N.m (160 in. lbs.).
3. Connect electrical connector.

SWITCH, OIL PRESSURE

DESCRIPTION

DESCRIPTION

The oil pressure switch is located on the left front side of the engine block. The oil pressure switch is a pressure sensitive switch that is activated by the engine's oil pressure (in the main oil gallery). The switch is a two terminal device (one terminal is provided to the wiring harness and the other terminal is the switch's metal housing that screws into the engine block).

OPERATION

OPERATION

The oil pressure switch is normally "Closed." The switch changes from a "Closed" circuit to an "Open" circuit, on increasing pressure of 7 psig. The oil pressure switch changes from an "Open" circuit to a "Closed" circuit, on decreasing pressure, between 2 psig and 4 psig.

REMOVAL

REMOVAL

NOTE: If the oil pressure switch is removed, it must be replaced with a new switch.

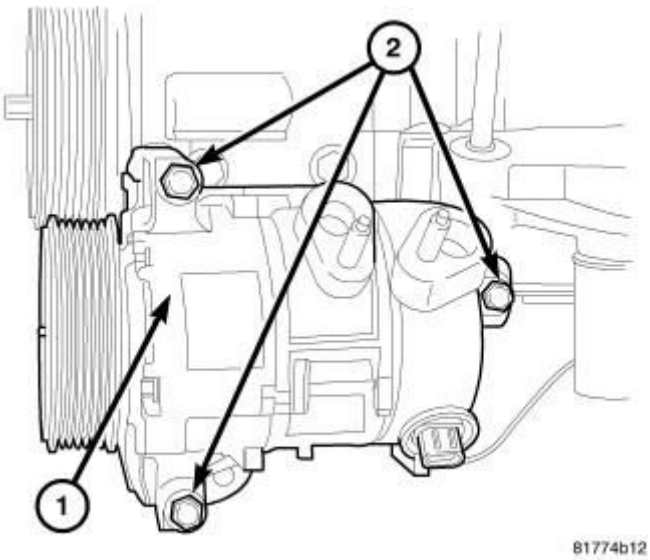

Fig. 326: A/C Compressor Removal/Installation
Courtesy of CHRYSLER GROUP, LLC

1. Disconnect and isolate the negative battery cable.
2. Raise and support the vehicle.
3. Remove the front skid plate, if equipped.
4. Remove the splash shield from the right side frame rail. Refer to **SHIELD, SPLASH, FRONT WHEELHOUSE, REMOVAL** .
5. Remove the accessory drive belt. Refer to **BELT, SERPENTINE, REMOVAL** .
6. Remove the three bolts (2) and reposition the A/C compressor (1).

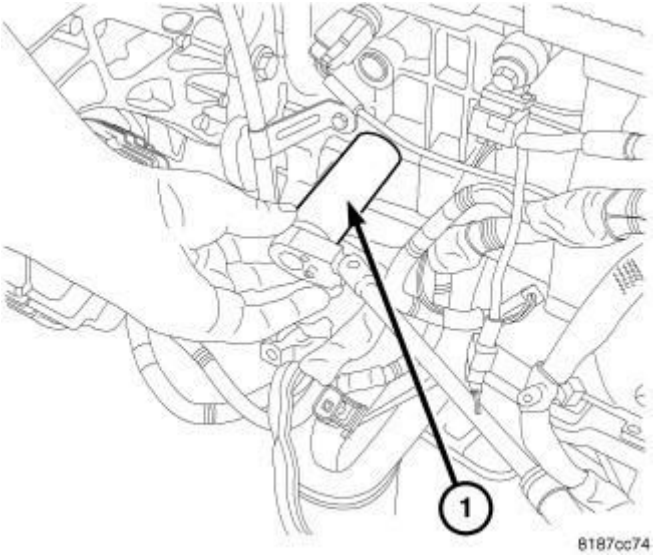

Fig. 327: Oil Sender
Courtesy of CHRYSLER GROUP, LLC

7. Disconnect the oil pressure switch electrical connector.
8. Remove the oil pressure switch using Oil Pressure Socket (special tool #C-4597, Socket, Oil Pressure) (1) or equivalent and discard the switch.

INSTALLATION

INSTALLATION

CAUTION: The oil pressure switch has tapered threads, over tightening could crack the engine block.

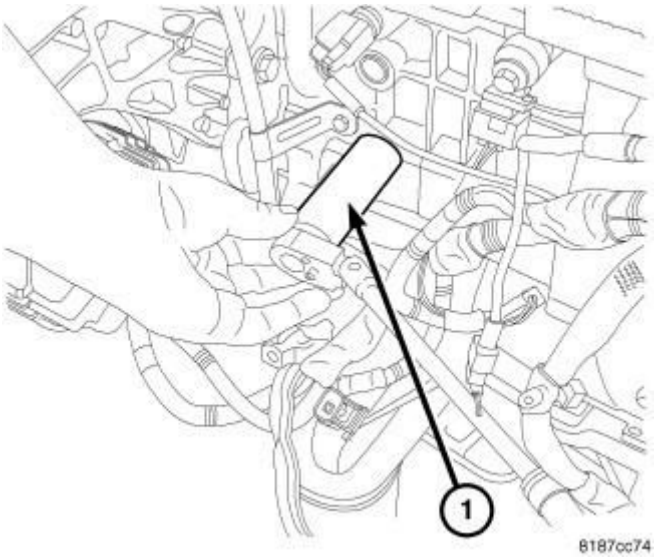

Fig. 328: Oil Sender
Courtesy of CHRYSLER GROUP, LLC

1. Install a new oil pressure switch using Oil Pressure Socket (special tool #C-4597, Socket, Oil Pressure) (1) or equivalent. Tighten switch to 8 N.m (71 in. lbs.).
2. Connect the oil pressure switch electrical connector.

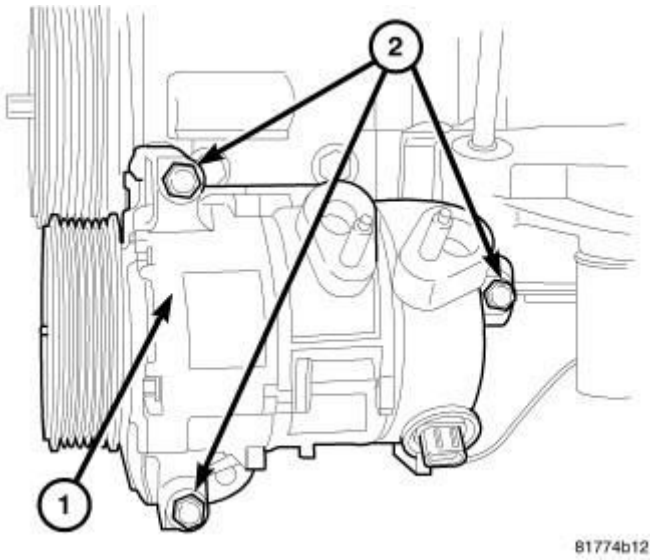

Fig. 329: A/C Compressor Removal/Installation
Courtesy of CHRYSLER GROUP, LLC

3. Position the A/C compressor (1) and install three mounting bolts (2). Tighten bolts to 25 N.m (18 ft. lbs.).
4. Install the accessory drive belt. Refer to **BELT, SERPENTINE, INSTALLATION** .
5. Install the splash shield to the right side frame rail. Refer to **SHIELD, SPLASH, FRONT WHEELHOUSE, INSTALLATION** .
6. Install the front skid plate, if equipped.
7. Reconnect the negative battery cable.

VALVE, OIL PRESSURE RELIEF

REMOVAL

REMOVAL

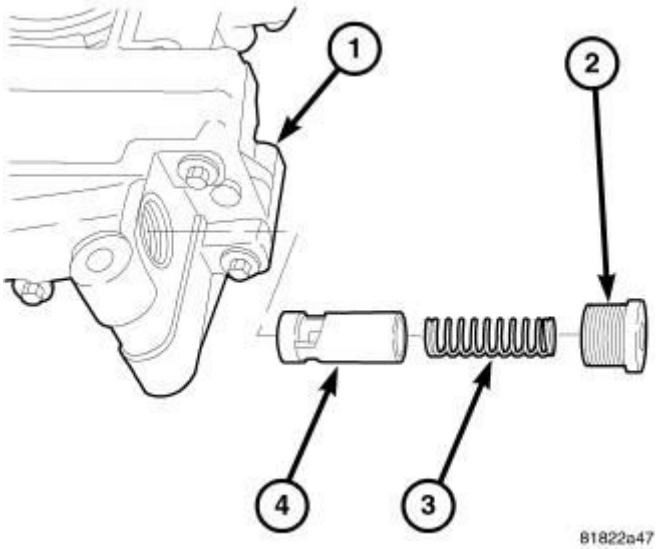

Fig. 330: Oil Pressure Relief Valve
Courtesy of CHRYSLER GROUP, LLC

1. Remove oil pan Refer to **PAN, OIL, REMOVAL**.
2. Remove pressure regulating valve cap (2).
3. Remove pressure regulating valve spring (3) and valve (4).

INSPECTION

INSPECTION

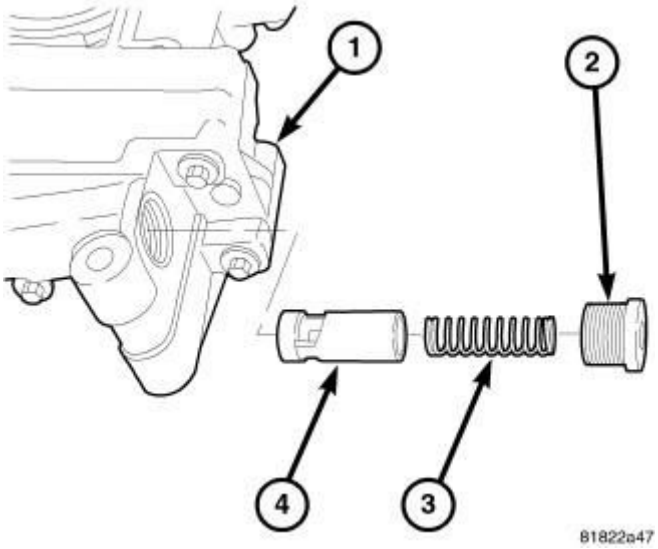

Fig. 331: Oil Pressure Relief Valve
Courtesy of CHRYSLER GROUP, LLC

NOTE: Pressure regulating valve (4) can be service separately from the oil pump assembly.

1. Inspect pressure relief valve (4) scoring, gouging, or debris. Replace as needed.
2. Inspect the pressure relief valve bore in the pump for scoring, gouging, or debris.
3. If pump bore is damaged, replace balance shaft module.

INSTALLATION

INSTALLATION

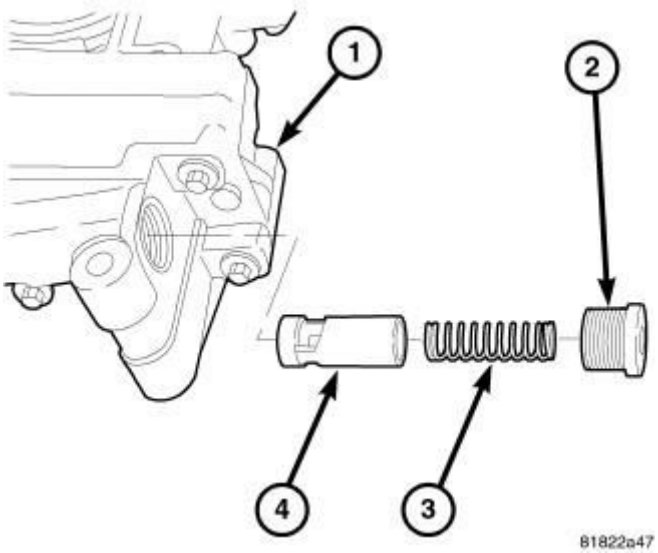

Fig. 332: Oil Pressure Relief Valve
Courtesy of CHRYSLER GROUP, LLC

1. Lightly coat pressure regulating valve with clean engine oil and install valve (4).
2. Install spring (3) and cap (2).
3. Tighten cap to 44 N.m (32 lbs. ft.).

MANIFOLDS

MANIFOLD, EXHAUST

REMOVAL

REMOVAL - MANIVERTER (AWD)

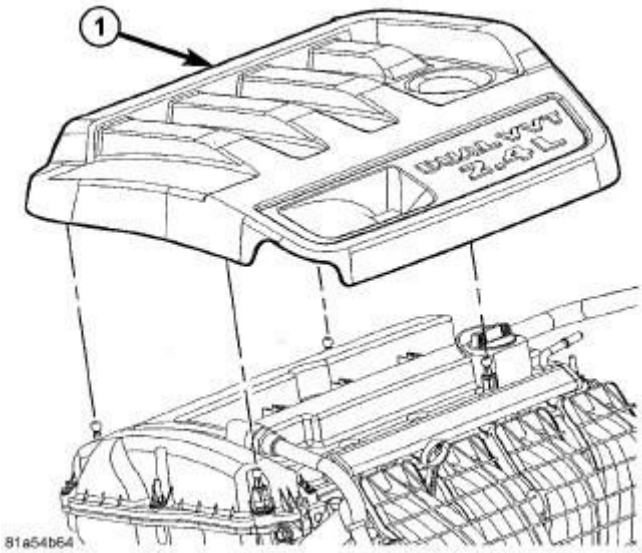

Fig. 333: Engine Cover
Courtesy of CHRYSLER GROUP, LLC

1. Remove the engine cover (1).

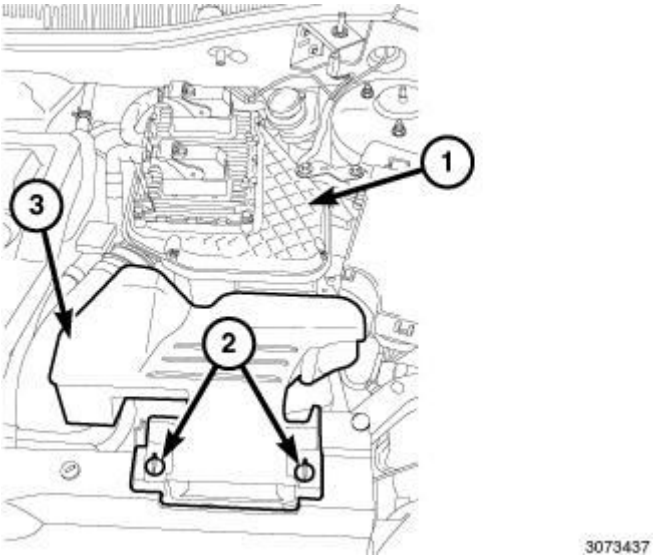

Fig. 334: Retainers, Fresh Air Inlet Duct & Air Cleaner Body
Courtesy of CHRYSLER GROUP, LLC

2. Unlock the retainers (2) and remove the fresh air inlet duct (3) from air cleaner body (1).
3. Disconnect and isolate the negative battery cable.

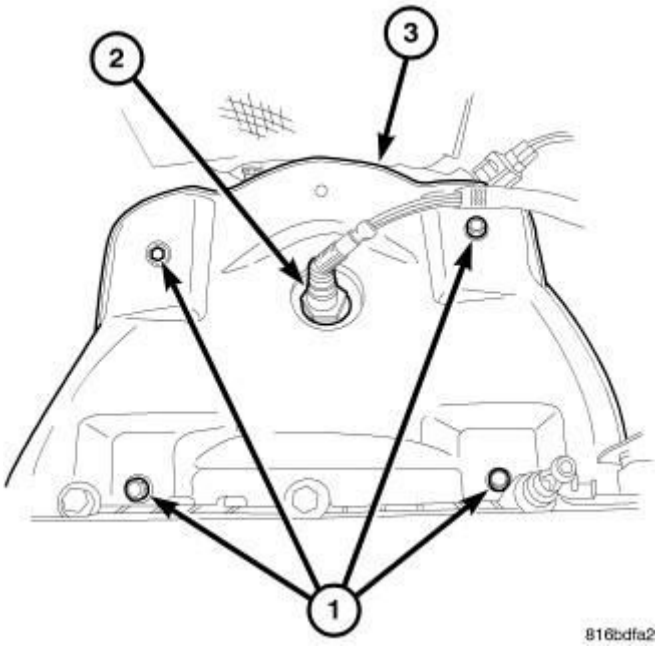

Fig. 335: Maniverter Heat Shield And Bolts
Courtesy of CHRYSLER GROUP, LLC

4. Remove the upstream oxygen sensor (2) Refer to **SENSOR, OXYGEN, REMOVAL** .
5. Remove the upper heat shield attaching bolts (1) and the upper heat shield (3).

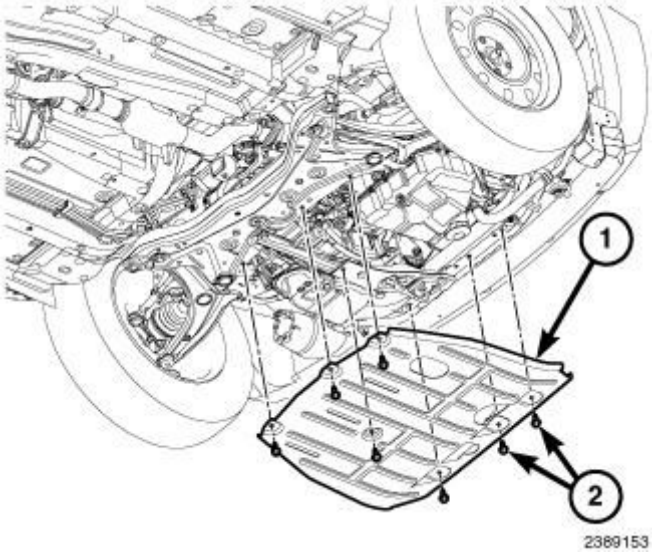

Fig. 336: Removal/Installation Front Skid Plate And Bolts
Courtesy of CHRYSLER GROUP, LLC

6. Raise and support the vehicle. Refer to **HOISTING, STANDARD PROCEDURE** .

7. If equipped, remove seven bolts (2) and the front skid plate (1).

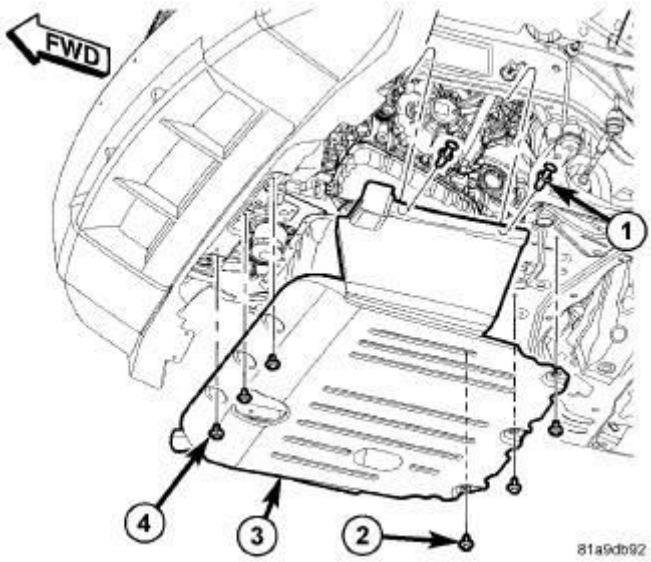

Fig. 337: Belly Pan & Fasteners
Courtesy of CHRYSLER GROUP, LLC

8. If equipped, remove the side push pin fasteners (1), three rear screws (2), three front screws (4) and the belly pan (3).

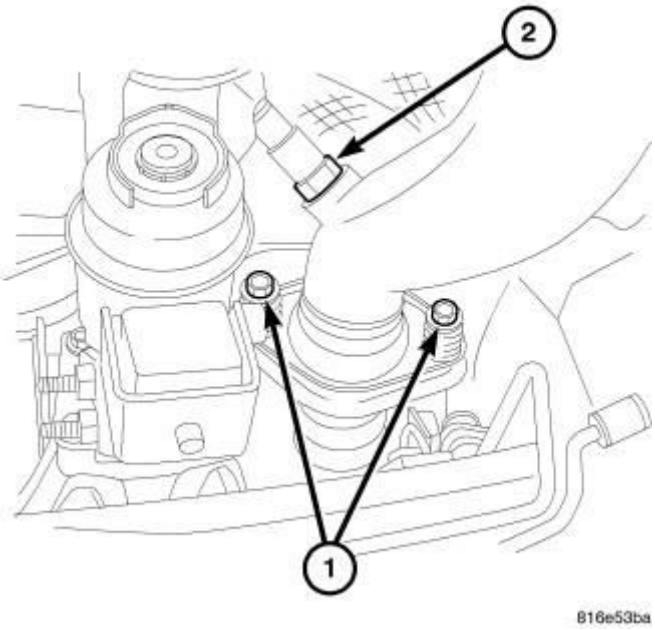

Fig. 338: Exhaust To Maniverter Bolts
Courtesy of CHRYSLER GROUP, LLC

9. Partially drain the cooling system Refer to **STANDARD PROCEDURE** .

10. Disconnect the wire harness connector from the downstream oxygen sensor (2).
11. Remove the exhaust pipe to maniverter bolts (1) and reposition the exhaust pipe.

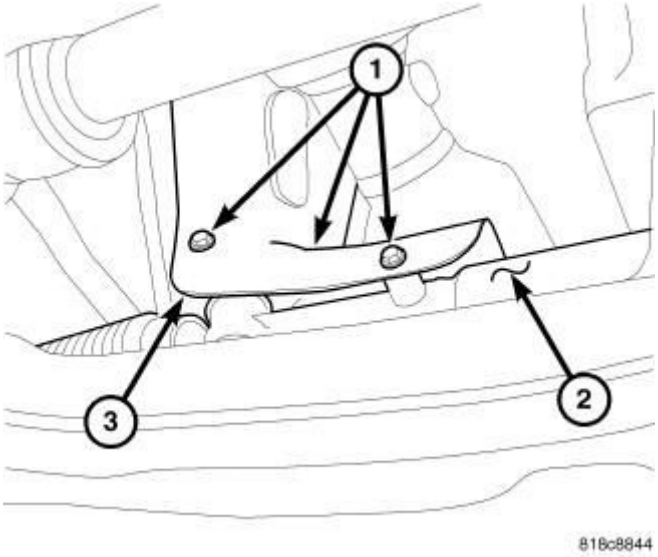

Fig. 339: Steering Gear Heat Shield Bolts
Courtesy of CHRYSLER GROUP, LLC

12. Remove three bolts (1) and the steering gear heat shield (3).

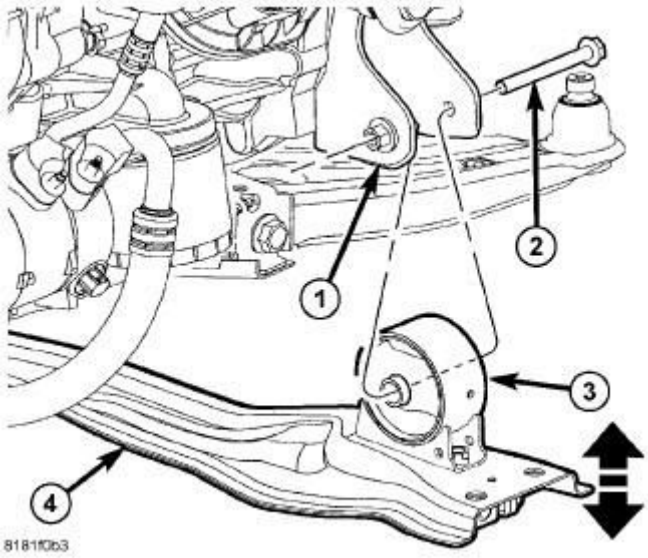

Fig. 340: Removing/Installing Fore/Aft Crossmember
Courtesy of CHRYSLER GROUP, LLC

13. Remove the front engine mount bolt (2) and the front fore and aft

crossmember (4). Refer to **CROSSMEMBER, FRONT FORE AND AFT, REMOVAL** .

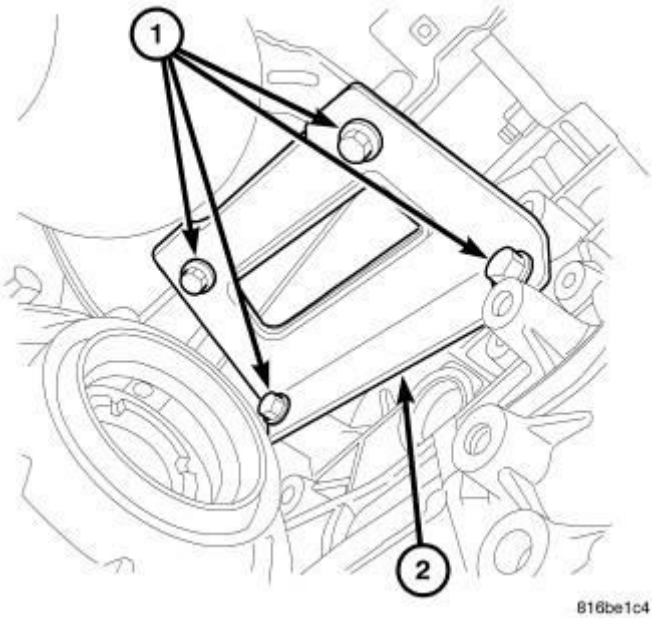

Fig. 341: Maniverter To Block Support Bracket
Courtesy of CHRYSLER GROUP, LLC

14. Remove the four bolts (1) and the maniverter support bracket (2).
15. Remove exhaust maniverter lower retaining fasteners.

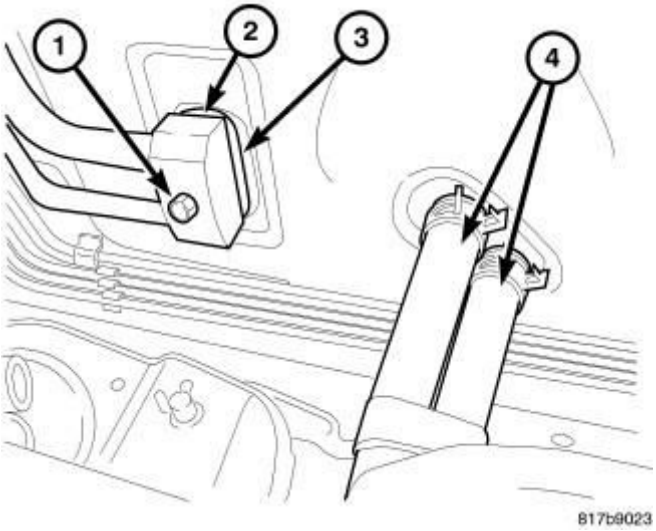

Fig. 342: Refrigerant Lines To Evaporator Bolt
Courtesy of CHRYSLER GROUP, LLC

16. Lower the vehicle.

17. Remove the heater hoses (4) and installed plugs or caps to the heater core tubes.

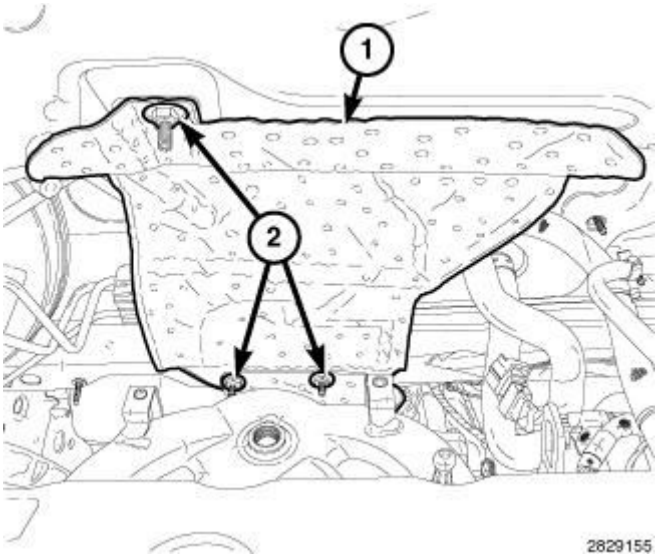

Fig. 343: Dash Panel Heatshield & Nuts
Courtesy of CHRYSLER GROUP, LLC

18. Remove three speed-nuts (2) and the dash panel heatshield (1).

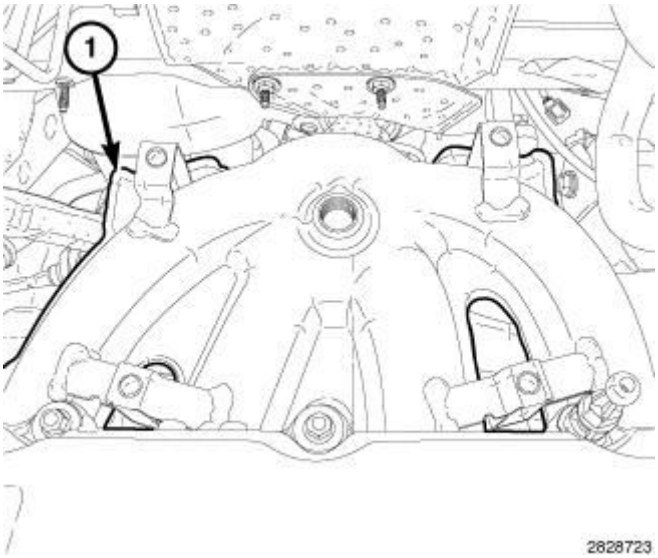

Fig. 344: Lower Maniverter Heatshield
Courtesy of CHRYSLER GROUP, LLC

19. Remove the upper exhaust maniverter retaining fasteners and reposition the maniverter.

NOTE: The lower maniverter heatshield (1) must be removed

from the maniverter before the maniverter is removed from the vehicle.

20. Remove the lower heat shield (1) from the maniverter.

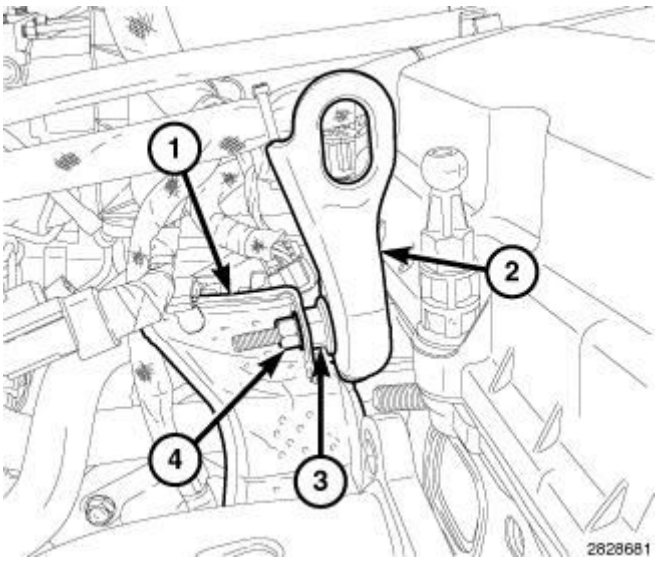

Fig. 345: Heatshield, Stud Bolt, Engine Lift Bracket & Nut
Courtesy of CHRYSLER GROUP, LLC

21. Remove the nut (4) and repositioned the heatshield (1).
22. Remove the stud bolt (3) and the engine lift bracket (2).

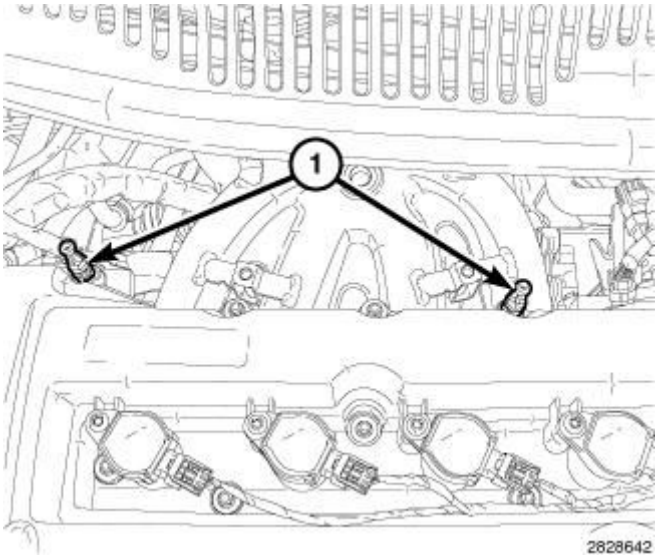

Fig. 346: Engine Cover Mounting Posts
Courtesy of CHRYSLER GROUP, LLC

23. Remove two engine cover mounting posts (1).

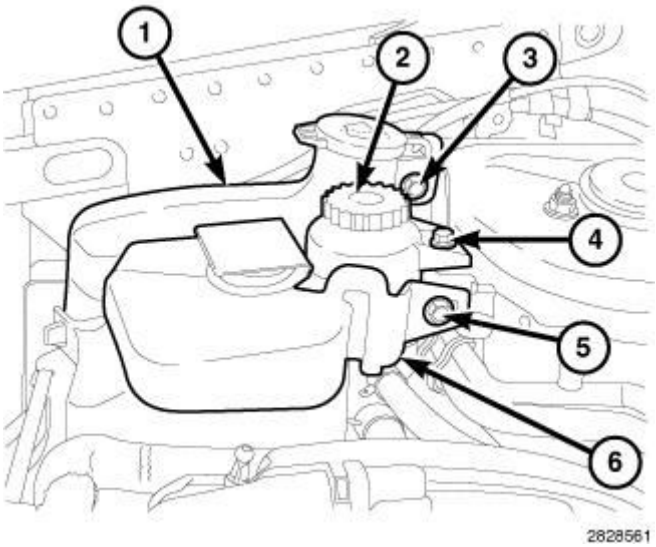

Fig. 347: Windshield Washer Reservoir, Power Steering Reservoir, Coolant Reservoir & Bolts
Courtesy of CHRYSLER GROUP, LLC

24. Remove the bolt (5) and reposition the engine coolant reservoir (6).
25. Remove the bolt (4) and reposition the power steering fluid reservoir (2).
26. Remove the bolt (3) and reposition the washer fluid reservoir (1).

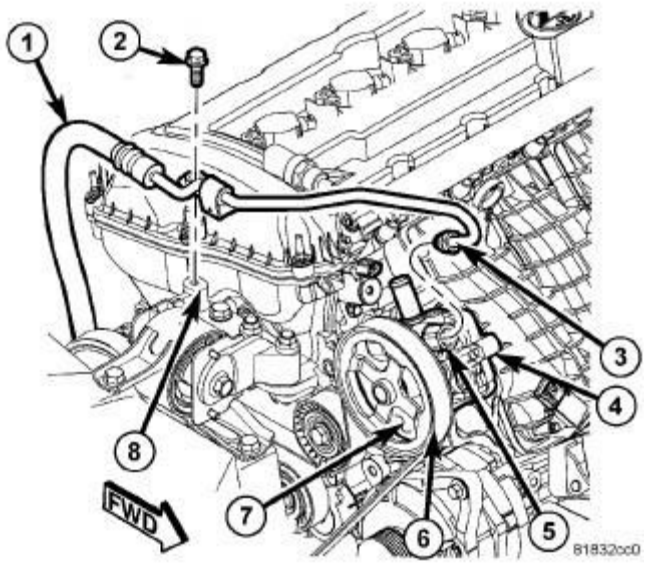

Fig. 348: Removing/Installing Power Steering Hose Hold Down
Courtesy of CHRYSLER GROUP, LLC

27. Remove the bolt (2) from the power steering pressure hose support bracket.

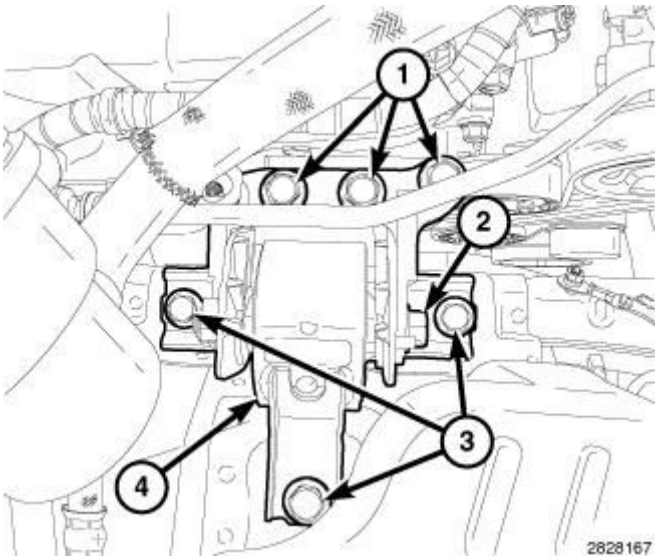

Fig. 349: Engine Mount Isolator, Right Engine Mount & Engine Mount Bracket Retaining Bolts
Courtesy of CHRYSLER GROUP, LLC

28. Support the engine with a block of wood on a suitable jack.
29. Remove the engine mount isolator retaining bolts (3).
30. Remove the engine mount bracket retaining bolts (1) and remove the right engine mount (4).

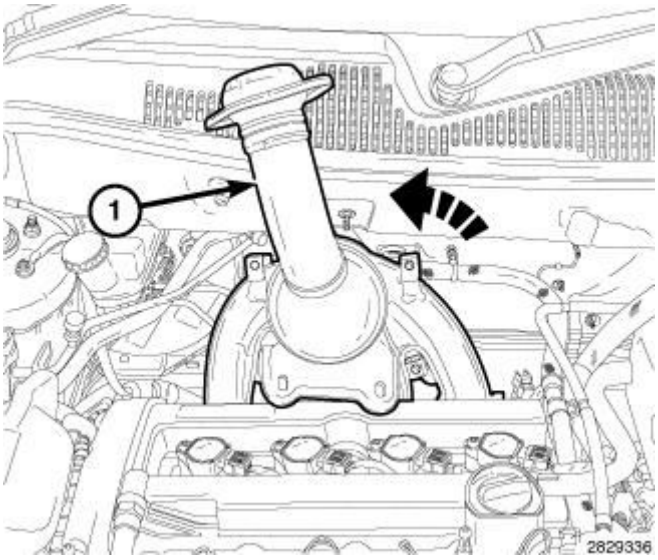

Fig. 350: Rotating Maniverter Counterclockwise
Courtesy of CHRYSLER GROUP, LLC

31. Adjust the jack to lower the engine.
32. Rotate the maniverter (1) counterclockwise 180° and remove it from above/between the engine and dash panel.

33. Remove and discard the maniverter gasket.

REMOVAL

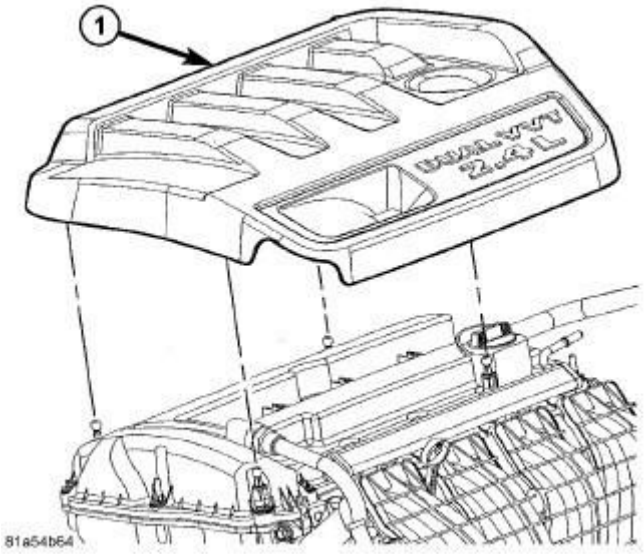

Fig. 351: Engine Cover - 2.4L
Courtesy of CHRYSLER GROUP, LLC

1. Remove engine cover (1).
2. Disconnect negative cable from battery.

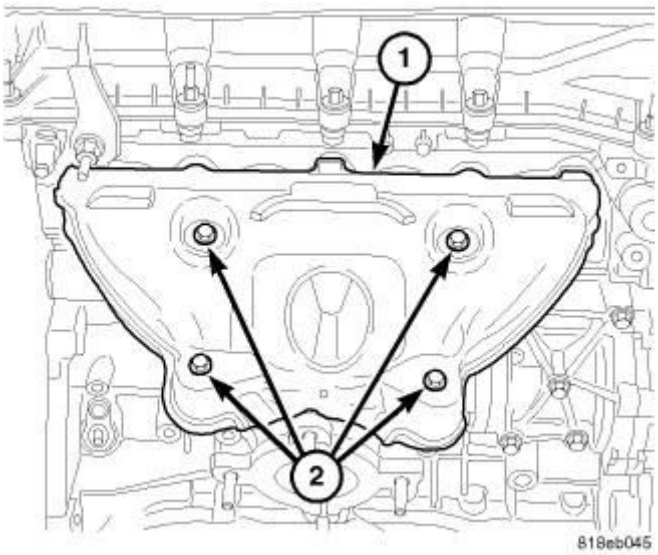

Fig. 352: Exhaust Manifold Heat Shield
Courtesy of CHRYSLER GROUP, LLC

3. Remove bolts (2) attaching upper heat shield.

4. Remove upper heat shield (1).

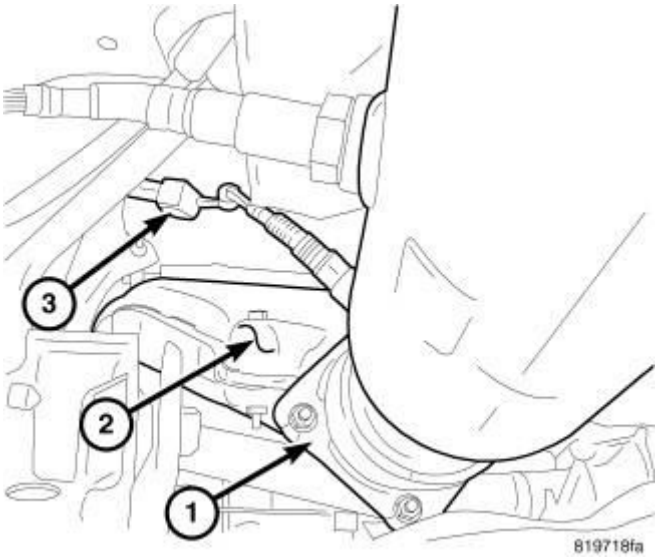

Fig. 353: Exhaust Manifold Bolts, Heat Shield & Oxygen Sensor Connector
Courtesy of CHRYSLER GROUP, LLC

5. Disconnect exhaust pipe (1) from manifold.
6. Disconnect oxygen sensor electrical connector (3).

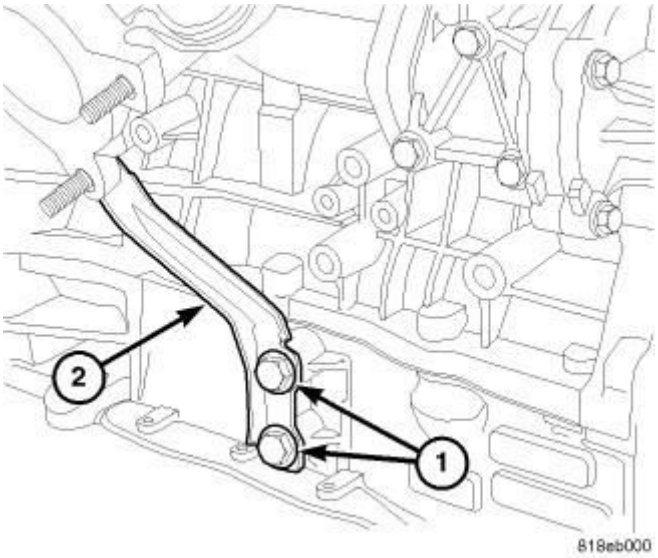

Fig. 354: Exhaust Manifold Support Bracket
Courtesy of CHRYSLER GROUP, LLC

7. Remove manifold support bracket (2).
8. Remove lower exhaust manifold heat shield.

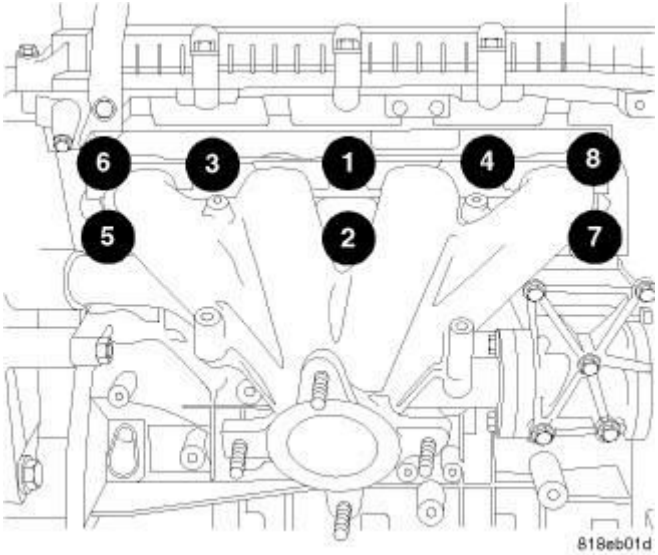

Fig. 355: Exhaust Manifold Retaining Fasteners Tightening Sequence
Courtesy of CHRYSLER GROUP, LLC

9. Remove exhaust manifold retaining fasteners.
10. Remove and discard manifold gasket.

CLEANING

CLEANING

1. Discard gasket (if equipped) and clean all surfaces of manifold and cylinder head.

INSPECTION

INSPECTION

1. Inspect manifold gasket surfaces for flatness with straight edge. Surface must be flat within 0.15 mm per 300 mm (0.006 in. per foot) of manifold length.
2. Inspect manifolds for cracks or distortion. Replace manifold as necessary.

INSTALLATION

INSTALLATION - MANIVERTER (AWD)

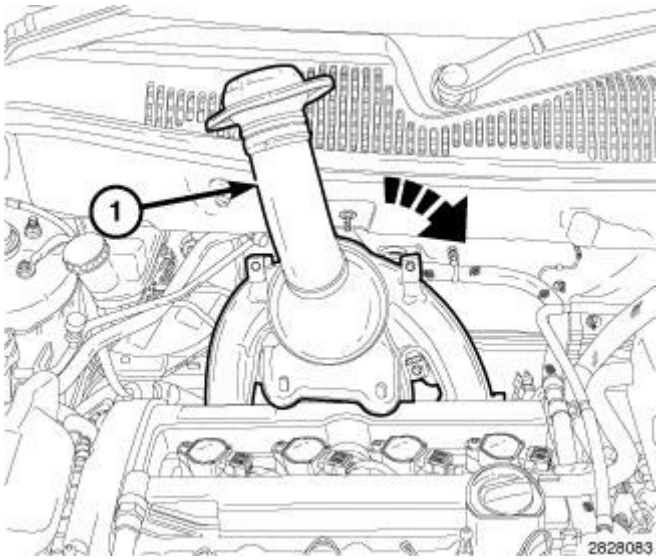

Fig. 356: Rotating Maniverter Clockwise
Courtesy of CHRYSLER GROUP, LLC

1. Install a new maniverter gasket on the cylinder head. **DO NOT APPLY SEALER** .
2. Position the maniverter (1) in the engine compartment as shown in illustration. Rotate the maniverter 180° clockwise into position.

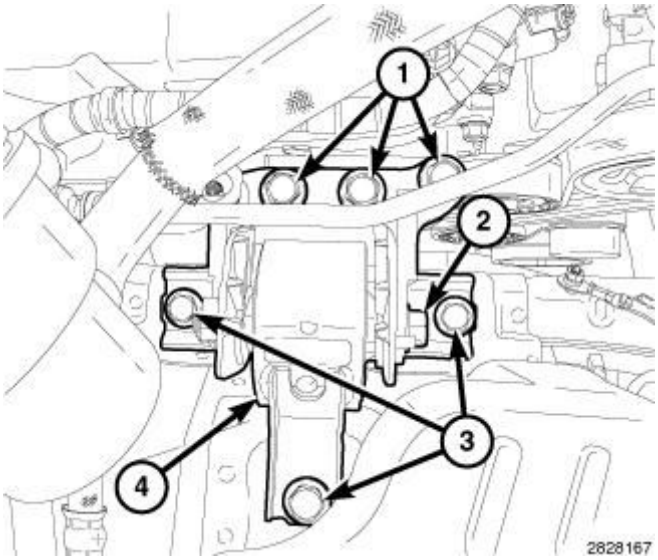

Fig. 357: Engine Mount Isolator, Right Engine Mount & Engine Mount Bracket Retaining Bolts
Courtesy of CHRYSLER GROUP, LLC

3. Raise the engine and position the right engine mount (4) in place.
4. Install the engine mount bracket retaining bolts (1) and tighten to 68 N.m (50 ft. lbs.).

5. Install engine mount isolator retaining bolts (3) and tighten to 75 N.m (55 ft. lbs.).
6. If removed, install the engine mount through bolt (2) and tighten to 88 N.m (65 ft. lbs.).

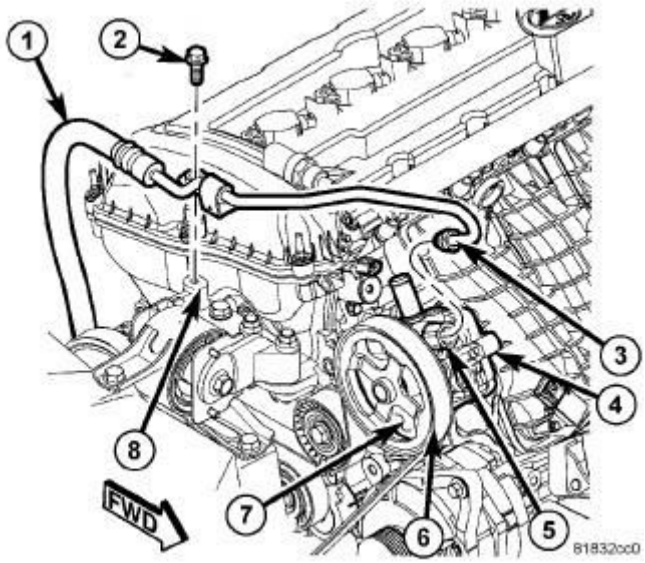

Fig. 358: Removing/Installing Power Steering Hose Hold Down
Courtesy of CHRYSLER GROUP, LLC

7. Install the power steering pressure hose support bracket to the engine mount bracket (8) with the bolt (2) tightened to 18 N.m (14 ft. lbs.).

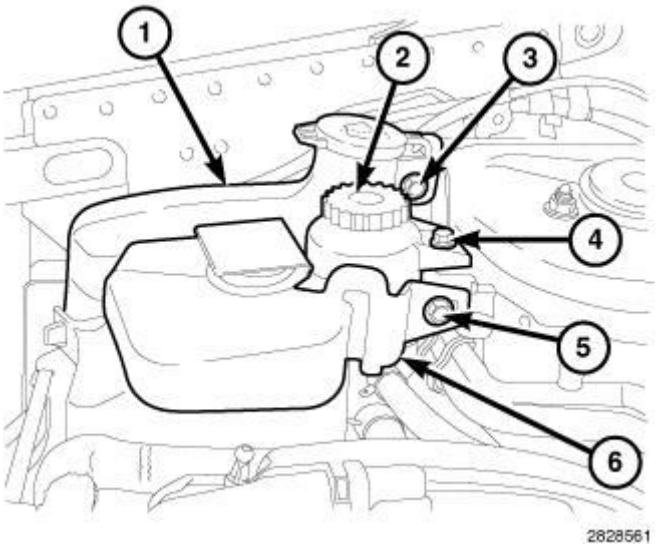

Fig. 359: Windshield Washer Reservoir, Power Steering Reservoir, Coolant Reservoir & Bolts
Courtesy of CHRYSLER GROUP, LLC

8. Install the washer fluid reservoir (1) with the bolt (3) tightened to 9 N.m (79 in. lbs.).
9. Install the power steering fluid reservoir (2) with the bolt (4) tightened to 12 N.m (106 in. lbs.).
10. Install the engine coolant reservoir (6) with the bolt (5) tightened to 4 N.m (35 in. lbs.).

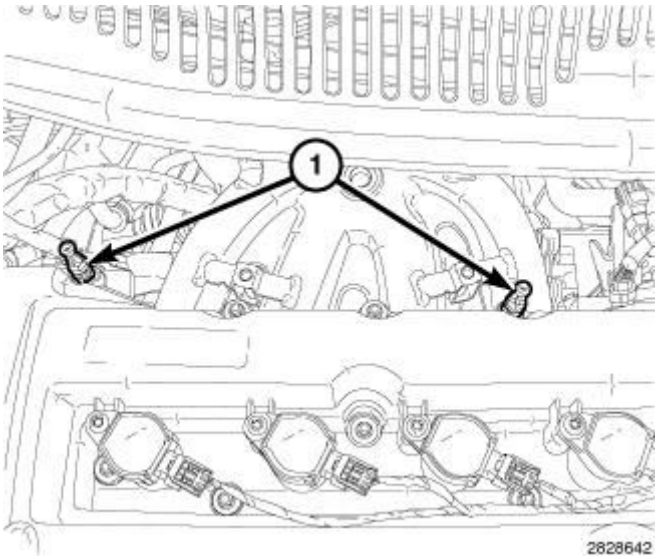

Fig. 360: Engine Cover Mounting Posts
Courtesy of CHRYSLER GROUP, LLC

11. Install two engine cover mounting posts (1) and tighten to 4 N.m (35 in. lbs.).

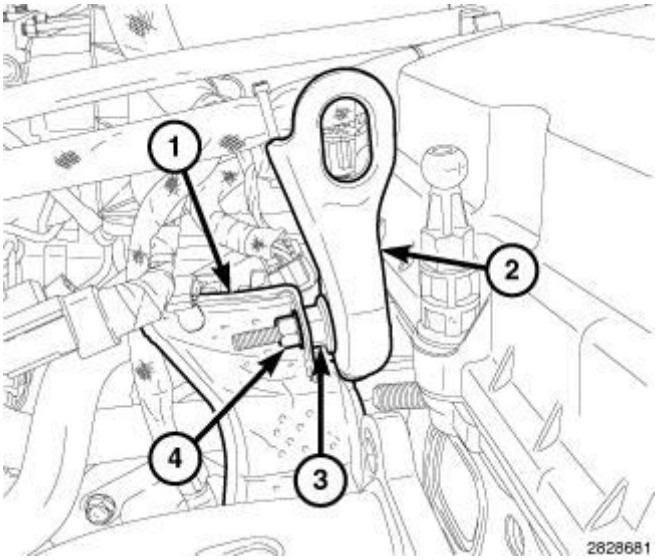

Fig. 361: Heatshield, Stud Bolt, Engine Lift Bracket & Nut
Courtesy of CHRYSLER GROUP, LLC

12. Install the engine lift bracket (2) with the stud bolt (3) tightened to 25 N.m (18 ft. lbs.).
13. Install the repositioned heatshield (1) to the stud bolt (3) with the nut (4) tightened to 9 N.m (79 in. lbs.).

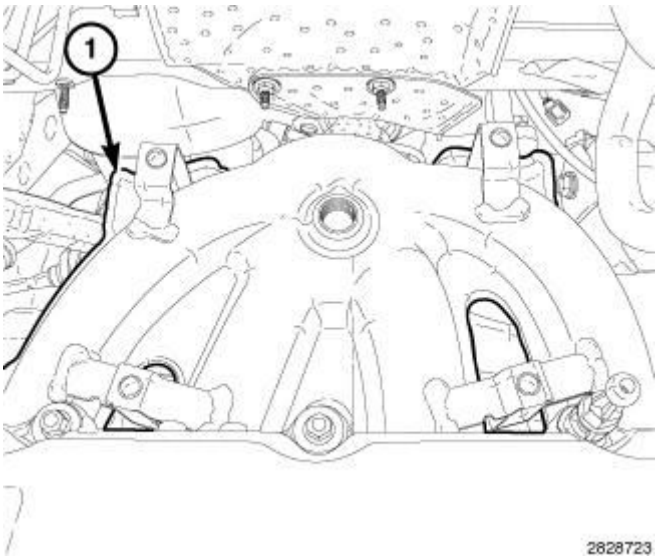

Fig. 362: Lower Maniverter Heatshield
Courtesy of CHRYSLER GROUP, LLC

NOTE: The lower maniverter heatshield (1) must be placed in position before the maniverter is installed to the cylinder head.

14. Position the lower heat shield (1) in its installed position on the maniverter.

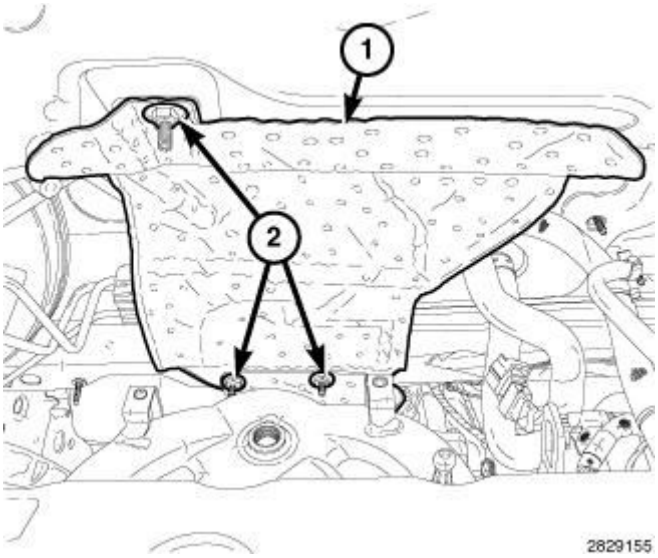

Fig. 363: Dash Panel Heatshield & Nuts

Courtesy of CHRYSLER GROUP, LLC

15. Install the dash panel heatshield (1) with three speed-nuts (2) tightened to 1 N.m (10 in. lbs.).

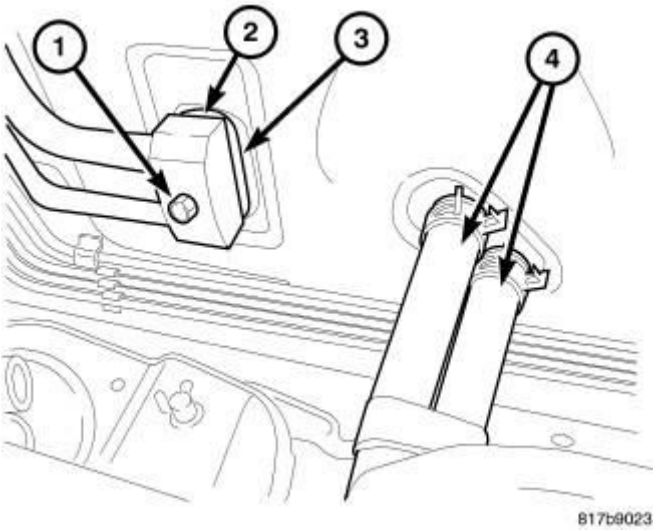

Fig. 364: Refrigerant Lines To Evaporator Bolt
Courtesy of CHRYSLER GROUP, LLC

16. Remove the previously installed plugs or caps and connect the heater hoses (4) to the heater core tubes.

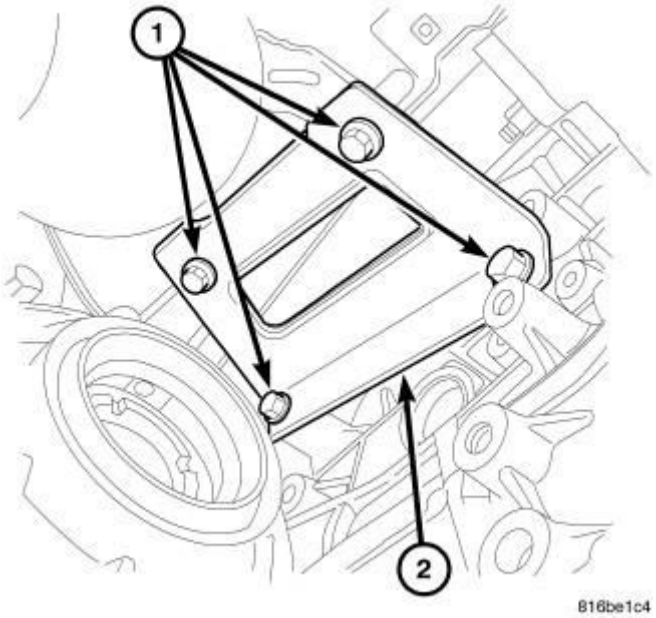

Fig. 365: Maniverter To Block Support Bracket
Courtesy of CHRYSLER GROUP, LLC

17. Raise and support the vehicle. Refer to **HOISTING, STANDARD PROCEDURE** .
18. Tighten the maniverter to cylinder head fasteners, starting at the center and progressing outward in both directions to 34 N.m (300 in. lbs.). Raise and lower the vehicle for fastener access as necessary.
19. Install the maniverter support bracket (2) with four bolts (1) tightened to 25 N.m (18 ft. lbs.).

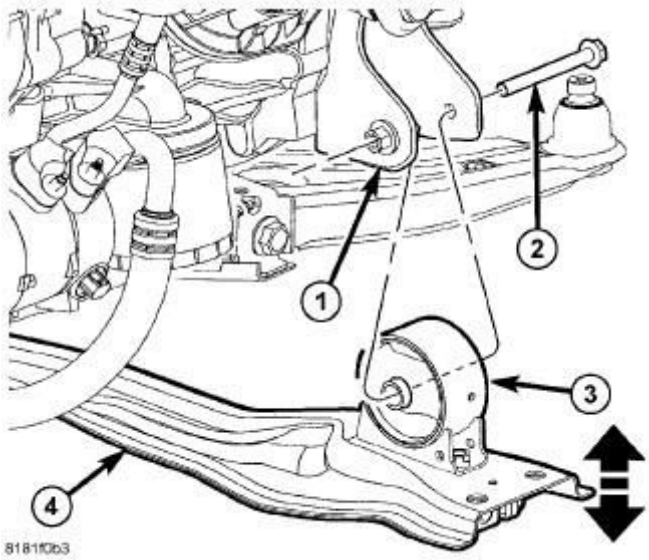

Fig. 366: Removing/Installing Fore/Aft Crossmember
Courtesy of CHRYSLER GROUP, LLC

20. Install the front fore and aft crossmember (4) and front engine mount bolt (2). Refer to **CROSSMEMBER, FRONT FORE AND AFT, INSTALLATION** .

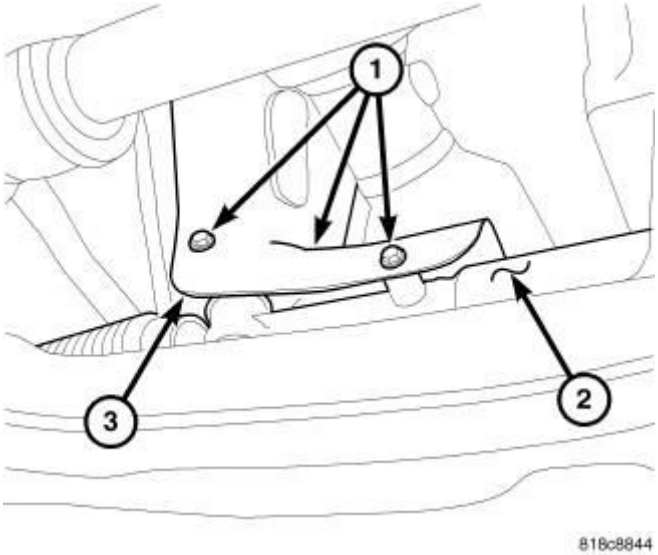

Fig. 367: Steering Gear Heat Shield Bolts
Courtesy of CHRYSLER GROUP, LLC

21. Install the steering gear heat shield (3) with three bolts (1) tightened to 8 N.m (71 in. lbs.).

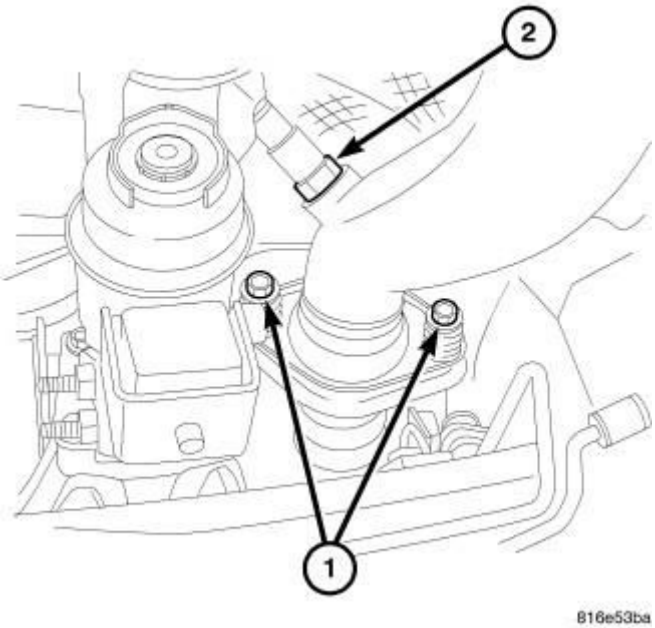

Fig. 368: Exhaust To Maniverter Bolts
Courtesy of CHRYSLER GROUP, LLC

22. Install the exhaust pipe to maniverter bolts (1) and tighten to 28 N.m (250 in. lbs.).
23. Connect the wire harness connector to the downstream oxygen sensor (2).

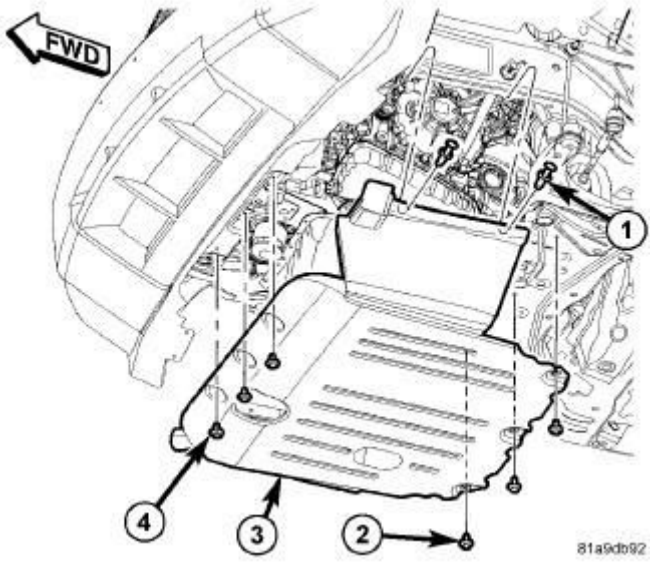

Fig. 369: Belly Pan & Fasteners
Courtesy of CHRYSLER GROUP, LLC

24. If removed, install the belly pan (3) with three front screws (4), three rear screws (2) and side push pin fasteners (1).

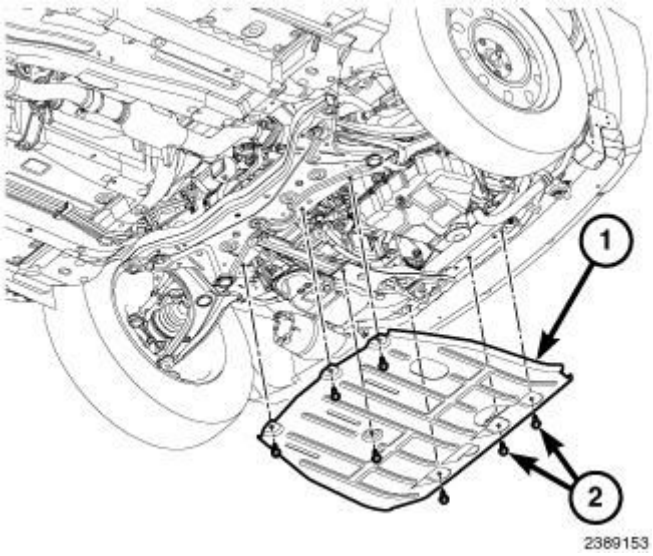

Fig. 370: Removal/Installation Front Skid Plate And Bolts
Courtesy of CHRYSLER GROUP, LLC

25. If removed, install the front skid plate (1) with seven bolts (2) tightened to 30 N.m (22 ft. lbs.).

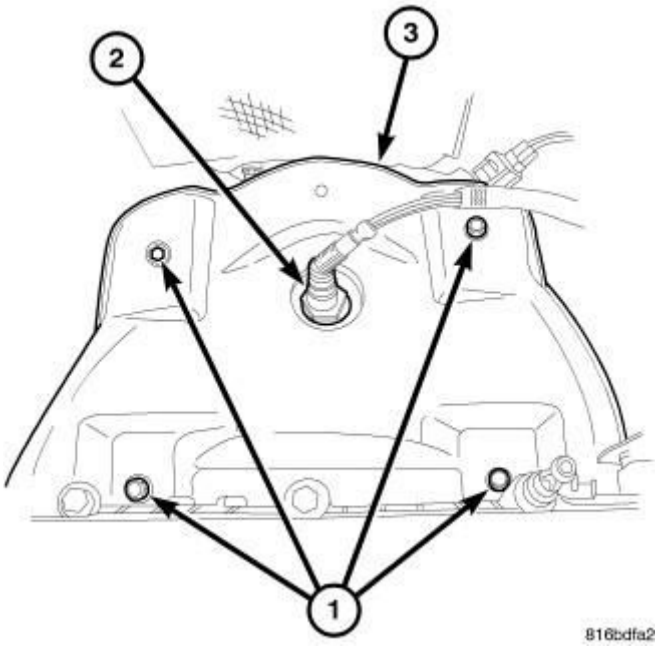

Fig. 371: Maniverter Heat Shield And Bolts
Courtesy of CHRYSLER GROUP, LLC

26. Lower the vehicle.
27. Install the maniverter heat shields (3) with four bolts (1) tightened to 12 N.m (106 in. lbs.).
28. Install the upstream oxygen sensor (2) and connect the electrical connector. Refer to **SENSOR, OXYGEN, INSTALLATION** .

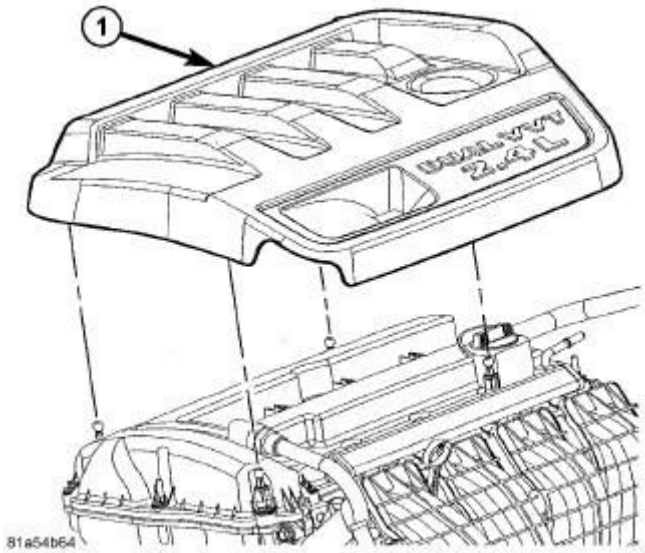

Fig. 372: Engine Cover - 2.4L
Courtesy of CHRYSLER GROUP, LLC

29. Install the engine cover (1).

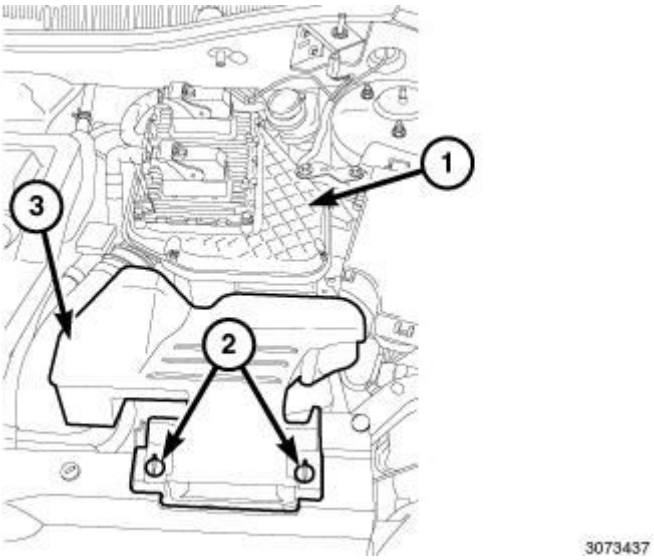

Fig. 373: Retainers, Fresh Air Inlet Duct & Air Cleaner Body
Courtesy of CHRYSLER GROUP, LLC

30. Connect the negative battery cable and tighten nut to 5 N.m (45 in. lbs.).
31. Install the fresh air inlet duct (3) on the air cleaner body (1) and lock the retainers (2).
32. Fill the cooling system. Refer to **STANDARD PROCEDURE** .
33. Run the engine until it reaches normal operating temperature. Check cooling system for correct fluid level Refer to **STANDARD PROCEDURE** .

INSTALLATION

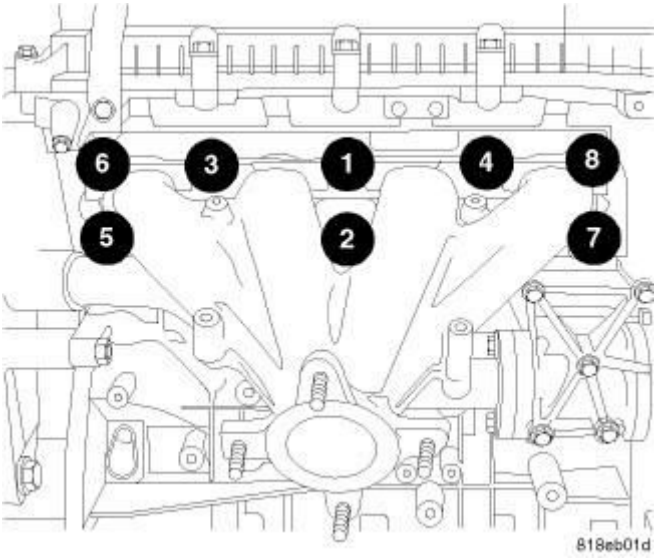

Fig. 374: Exhaust Manifold Retaining Fasteners Tightening Sequence

Courtesy of CHRYSLER GROUP, LLC

1. Install a new exhaust manifold gasket **DO NOT APPLY SEALER** .
2. Position exhaust manifold in place.
3. Tighten the exhaust manifold bolts to 34 N.m (25 ft. lbs.).

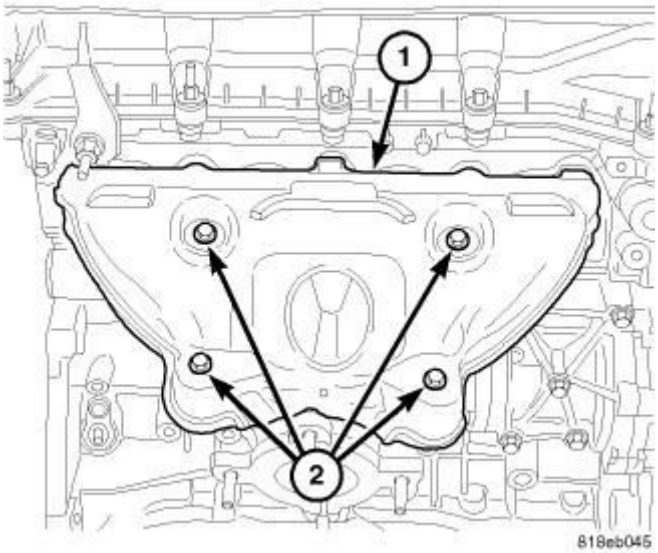

Fig. 375: Exhaust Manifold Heat Shield
Courtesy of CHRYSLER GROUP, LLC

4. Install exhaust manifold heat shields (1). Tighten bolts (2) to 12 N.m (105 in. lbs.).

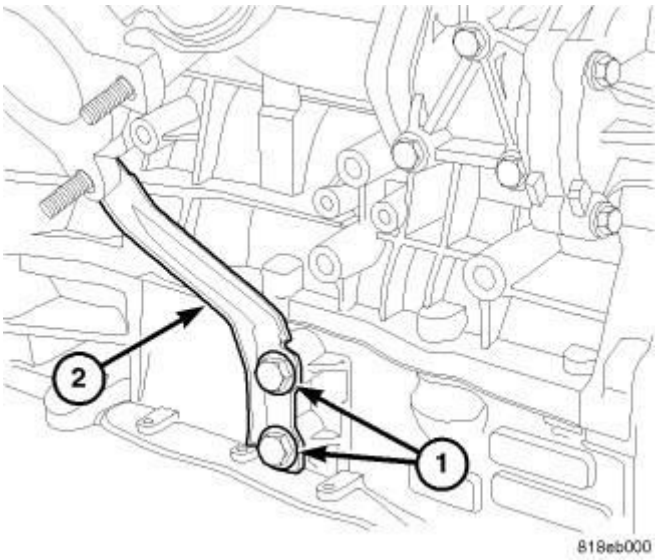

Fig. 376: Exhaust Manifold Support Bracket
Courtesy of CHRYSLER GROUP, LLC

5. Install exhaust manifold support bracket (2).

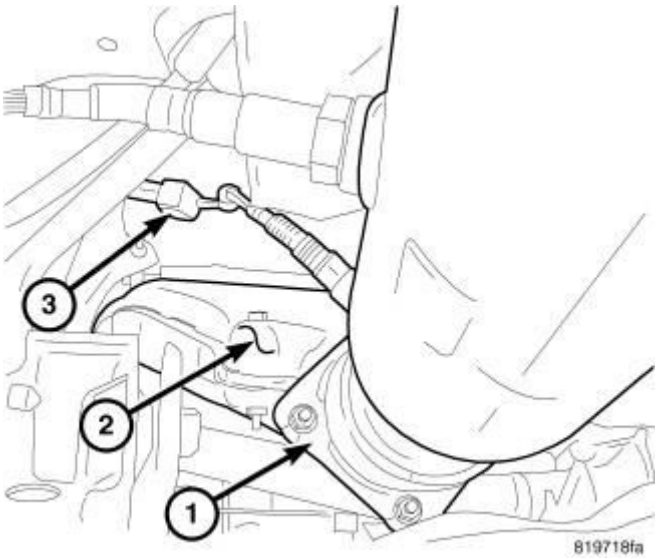

Fig. 377: Exhaust Manifold Bolts, Heat Shield & Oxygen Sensor Connector
Courtesy of CHRYSLER GROUP, LLC

6. Install new catalytic converter gasket.
7. Install exhaust pipe to manifold (1). Tighten fasteners to 28 N.m (250 in. lbs.).
8. Connect oxygen sensor electrical connector (3).

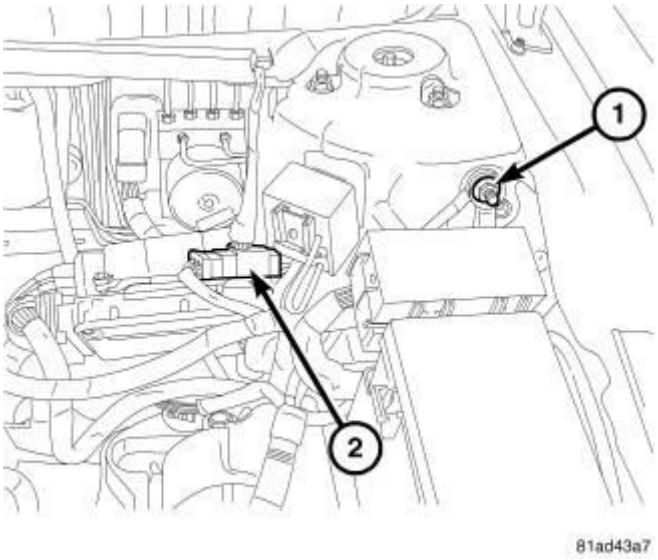

Fig. 378: Identifying Battery Cables
Courtesy of CHRYSLER GROUP, LLC

9. Connect negative battery cable (1).

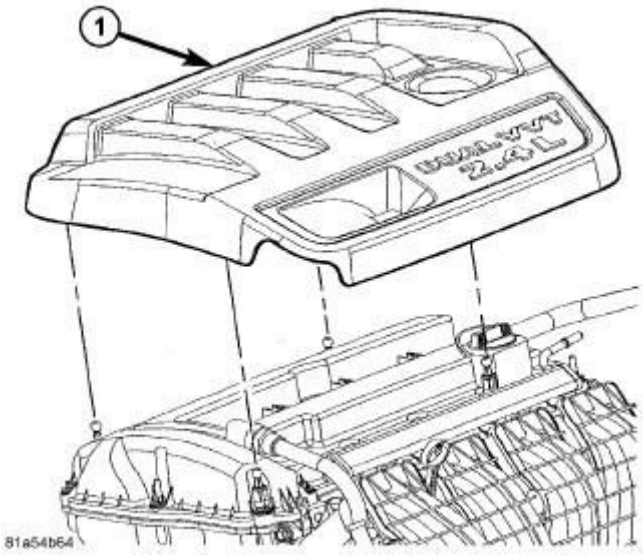

Fig. 379: Engine Cover - 2.4L
Courtesy of CHRYSLER GROUP, LLC

10. Install engine cover (1).

MANIFOLD, INTAKE

DIAGNOSIS AND TESTING

DIAGNOSIS AND TESTING - INTAKE MANIFOLD LEAKS

An intake manifold air leak is characterized by lower than normal manifold vacuum. Also, one or more cylinders may not be functioning.

> **WARNING: Use extreme caution when the engine is operating. Do not stand in a direct line with the fan. Do not put your hands near the pulleys, belts or the fan. Do not wear loose clothing.**

1. Start the engine.
2. Spray a small stream of water (Spray Bottle) at the suspected leak area.
3. If engine RPM'S change, the area of the suspected leak has been found.
4. Repair as required.

REMOVAL

REMOVAL

WARNING: Release fuel system pressure before servicing system components. Service vehicles in well ventilated areas and avoid ignition sources. Never smoke while servicing the vehicle.

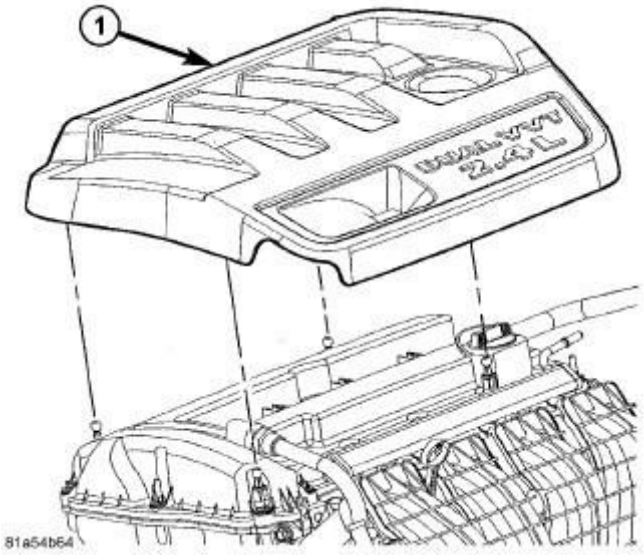

Fig. 380: Engine Cover - 2.4l
Courtesy of CHRYSLER GROUP, LLC

1. Remove the engine cover (1).
2. Perform the fuel system pressure release procedure **before attempting any repairs. Refer to FUEL SYSTEM PRESSURE RELEASE PROCEDURE .**

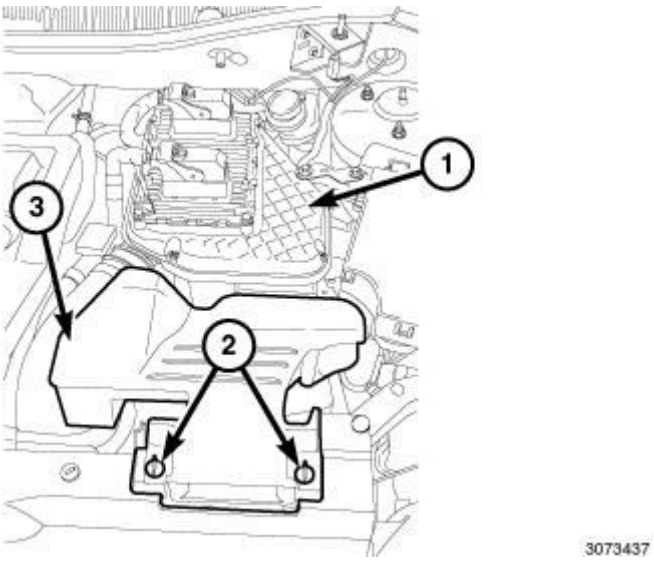

Fig. 381: Retainers, Fresh Air Inlet Duct & Air Cleaner Body

Courtesy of CHRYSLER GROUP, LLC

3. Unlock the retainers (2) and remove the fresh air inlet duct (3) from air cleaner body (1).

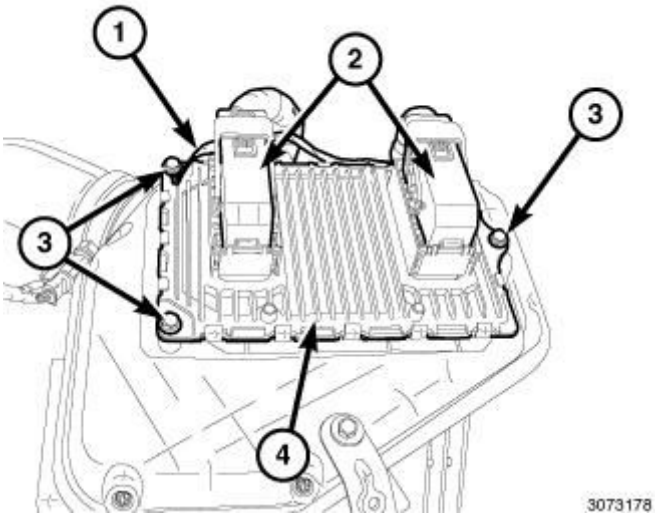

Fig. 382: Electrical Connectors, PCM, Three Mounting Bolts & Ground Wire
Courtesy of CHRYSLER GROUP, LLC

4. Disconnect and isolate the negative battery cable.
5. Unlock and disconnect the electrical connectors (2) from the PCM (4).
6. Remove the mounting bolt (3) and ground wire (1).

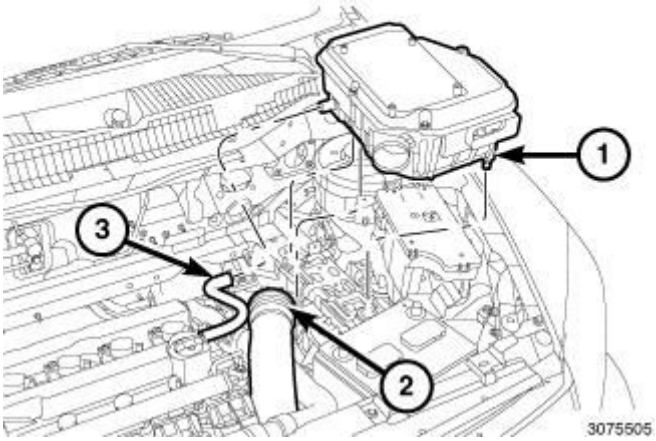

Fig. 383: Air Cleaner Body, Air Inlet Tube & Make-Up Air Hose
Courtesy of CHRYSLER GROUP, LLC

7. Remove the air inlet tube (2) from the air cleaner body (1).
8. Disconnect the make-up air hose (3) from the air cleaner body.
9. Remove the support bracket bolt from the strut tower.
10. Pull upward to disengage the pins from the rubber grommets and remove the air cleaner body (1).

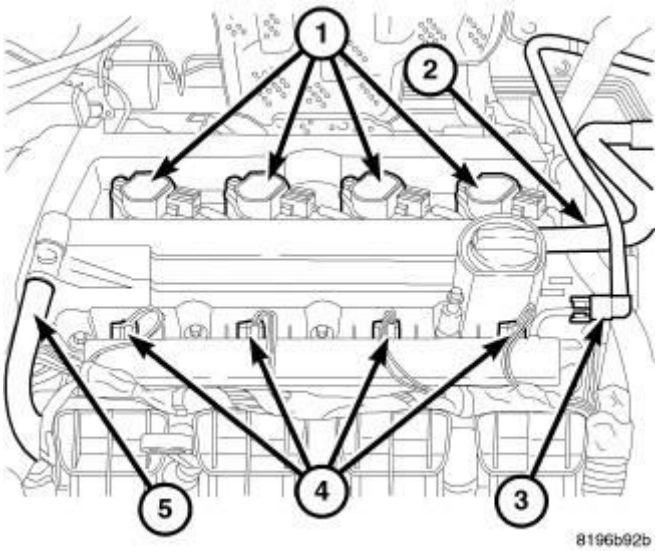

Fig. 384: Ignition Coils, Air Hose, Fuel Line, Injectors & PCV Hose
Courtesy of CHRYSLER GROUP, LLC

11. Disconnect the fuel line (3) from the fuel rail. Refer to **FITTING, QUICK CONNECT** .
12. Remove fuel injector electrical connectors (4).
13. Remove fuel rail retaining bolts and remove fuel rail.

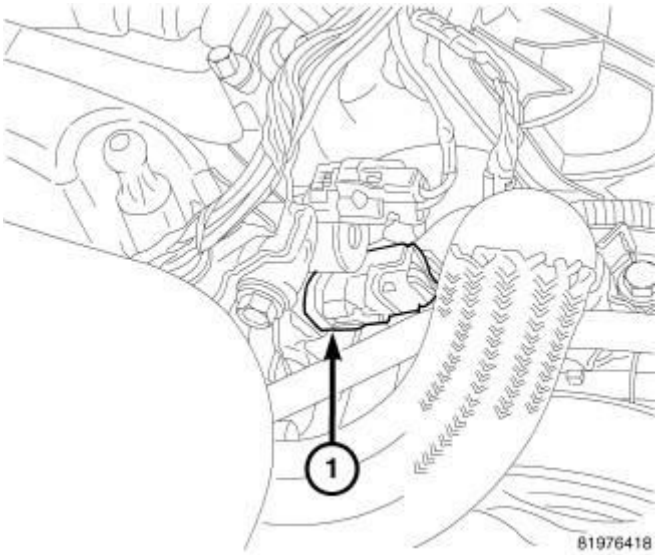

Fig. 385: Oil Temperature Sensor
Courtesy of CHRYSLER GROUP, LLC

14. Disconnect the oil temperature sensor (1).
15. Disconnect the variable valve timing solenoid electrical connector.
16. Disconnect the intake camshaft position sensor electrical connector.
17. Position the harness out of the way.

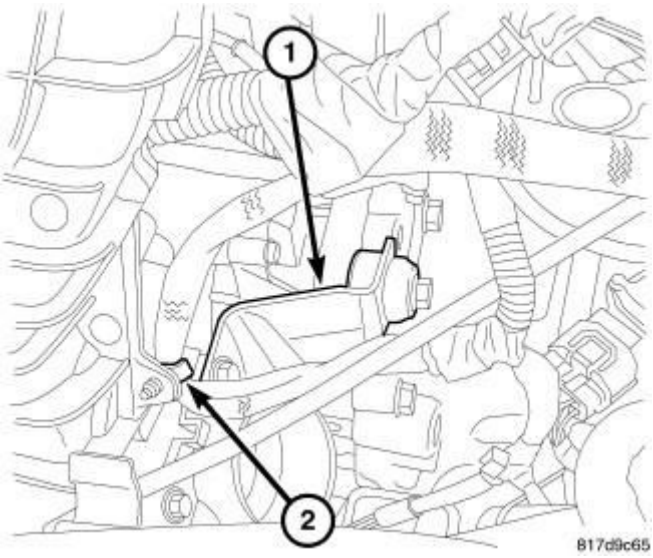

Fig. 386: Throttle Body Support
Courtesy of CHRYSLER GROUP, LLC

18. Remove the throttle body support bracket (1).
19. Disconnect the electronic throttle control electrical connector.
20. Remove the wiring harness retainer from the intake manifold (2).
21. Disconnect the MAP sensor electrical connector.
22. Disconnect the vacuum lines from the intake manifold.

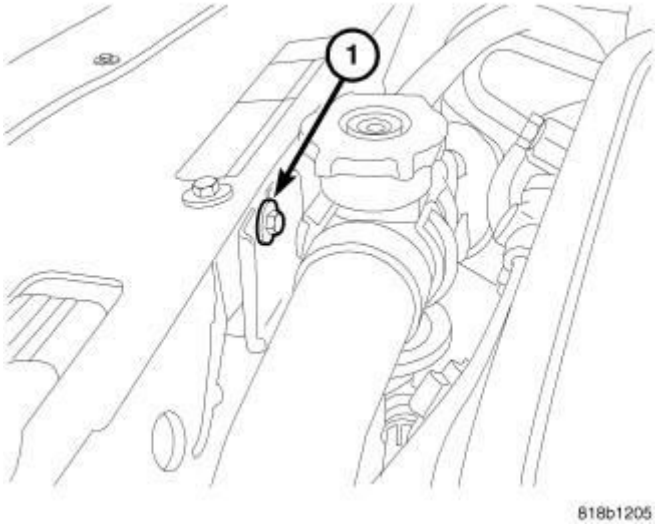

Fig. 387: Radiator Hose Support
Courtesy of CHRYSLER GROUP, LLC

23. Remove the upper radiator hose retaining bracket (1).

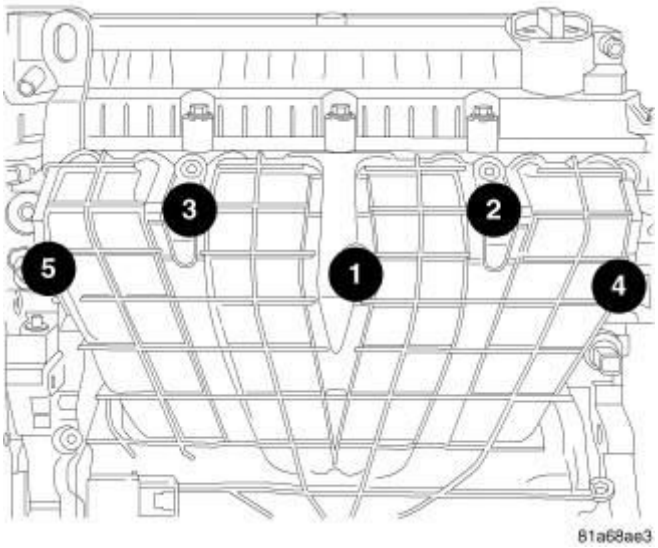

Fig. 388: Intake Manifold Bolt Removal & Tightening Sequence
Courtesy of CHRYSLER GROUP, LLC

24. Remove intake manifold retaining bolts.
25. Remove intake manifold.

CLEANING

CLEANING

1. Discard gasket(s).

2. Clean all sealing surfaces.

INSTALLATION

INSTALLATION

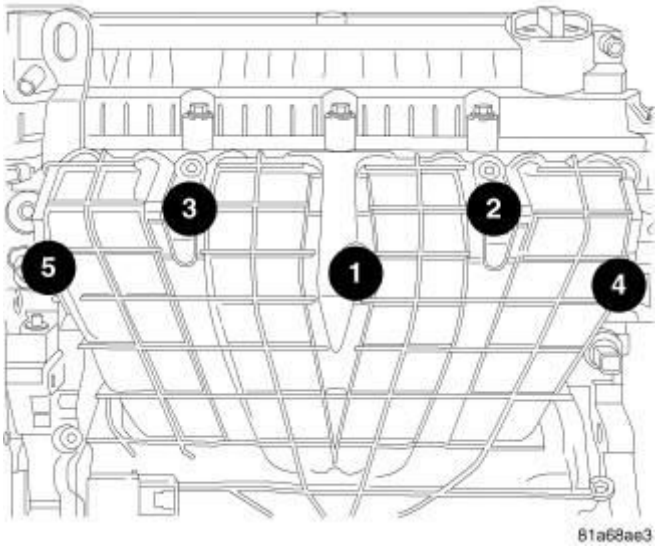

Fig. 389: Intake Manifold Bolt Removal & Tightening Sequence
Courtesy of CHRYSLER GROUP, LLC

1. Clean all gasket surfaces.
2. Replace intake manifold gasket.
3. Install intake manifold, tighten bolts to 25 N.m (220 in. lbs.).

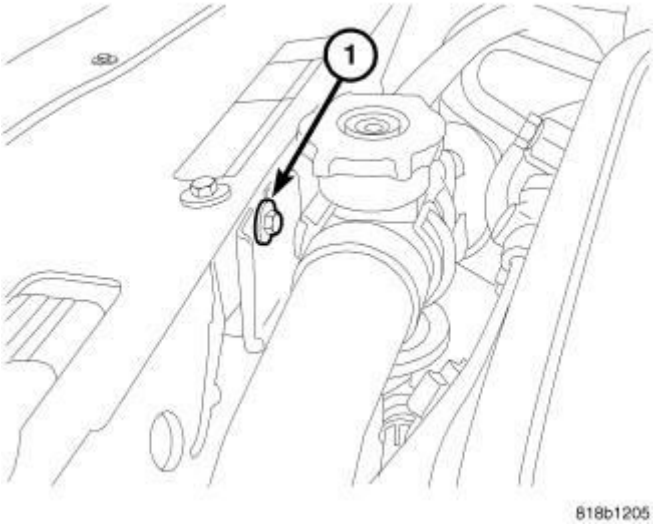

Fig. 390: Radiator Hose Support
Courtesy of CHRYSLER GROUP, LLC

4. Install the upper radiator hose retaining bracket (1).

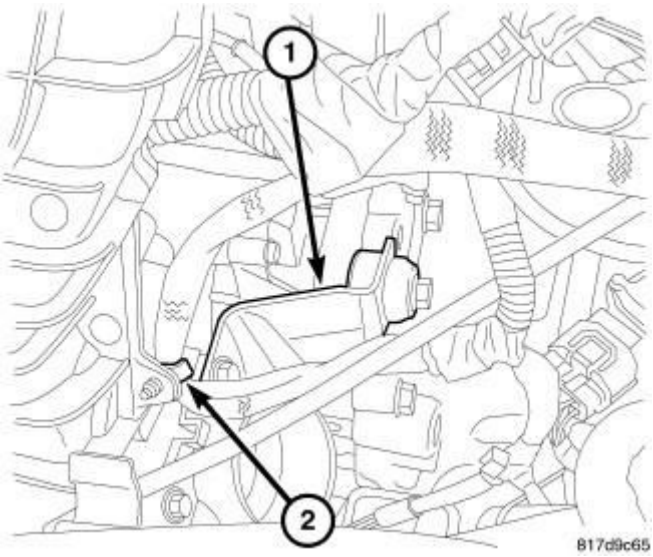

Fig. 391: Throttle Body Support
Courtesy of CHRYSLER GROUP, LLC

5. Install the throttle body support bracket (1).
6. Connect the electronic throttle control electrical connector.
7. Install the wiring harness retainer to the intake manifold (2).
8. Connect the MAP sensor electrical connector.
9. Connect the vacuum lines to the intake manifold.

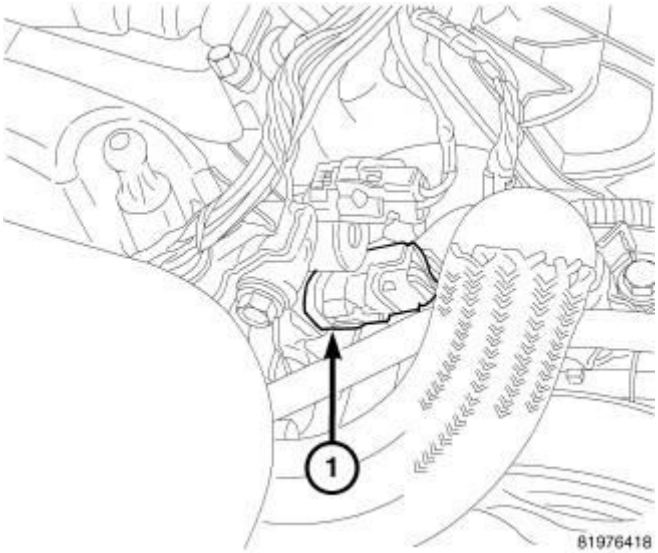

Fig. 392: Oil Temperature Sensor
Courtesy of CHRYSLER GROUP, LLC

10. Connect the oil temperature sensor (1).

11. Connect the variable valve timing solenoid electrical connector.
12. Connect the intake camshaft position sensor electrical connector.

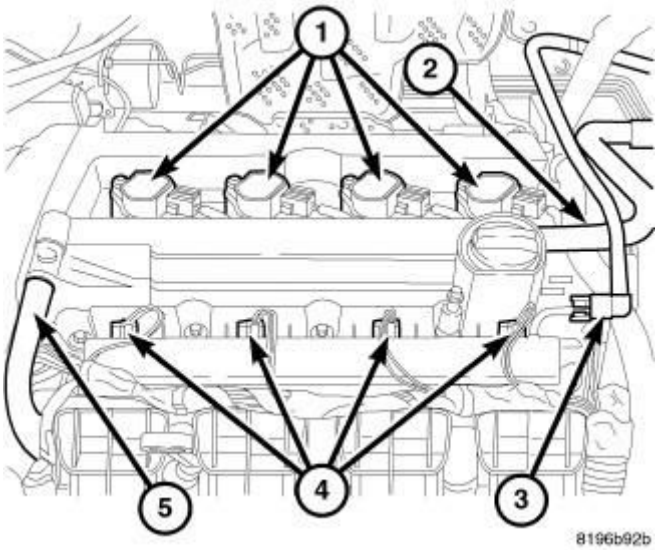

Fig. 393: Ignition Coils, Air Hose, Fuel Line, Injectors & PCV Hose
Courtesy of CHRYSLER GROUP, LLC

13. Install the fuel rail assembly to intake manifold. Tighten bolts to 23 N.m (200 in. lbs.).
14. Connect fuel injector electrical connectors (4).
15. Inspect quick connect fittings for damage, replace if necessary. Refer to **FITTING, QUICK CONNECT** . Connect fuel supply hose (3) to fuel rail assembly. Check connection by pulling on connector to insure it locked into position.

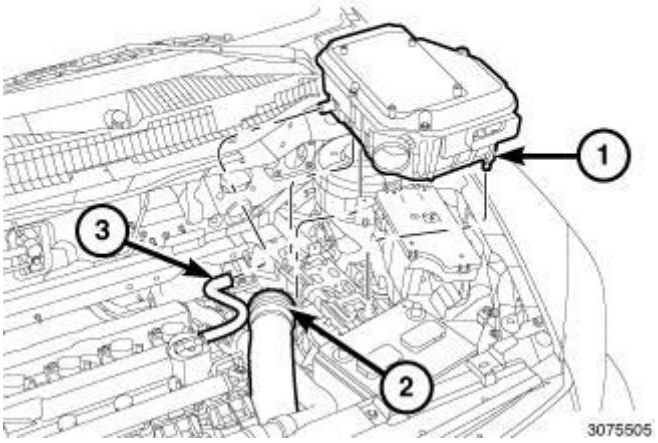

Fig. 394: Air Cleaner Body, Air Inlet Tube & Make-Up Air Hose

Courtesy of CHRYSLER GROUP, LLC

16. Push down on the air cleaner body (1) to engage the pins into the grommets.
17. Install the support bracket bolt to the strut tower and tighten to 10 N.m (89 in. lbs.).
18. Install the air inlet tube (2) to the air cleaner body (1).
19. Connect the make-up air hose (3) to the air cleaner body.

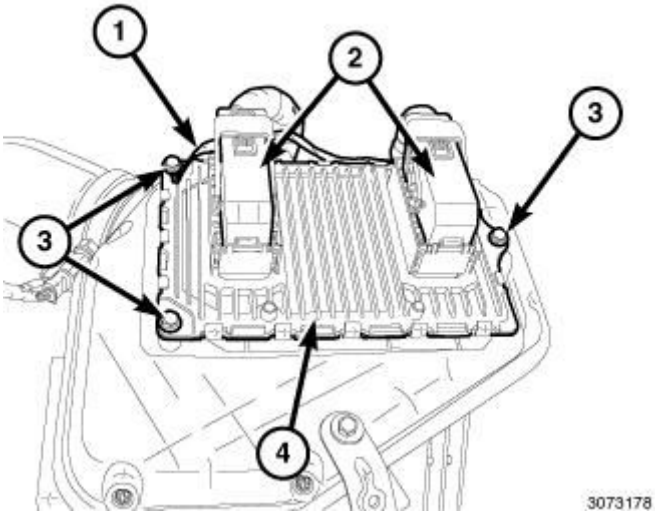

Fig. 395: Electrical Connectors, PCM, Three Mounting Bolts & Ground Wire
Courtesy of CHRYSLER GROUP, LLC

20. Install the mounting bolt (3) with ground wire (1) and tighten to 12 N.m (106 in. lbs.).
21. Connect and lock the electrical connectors (2).

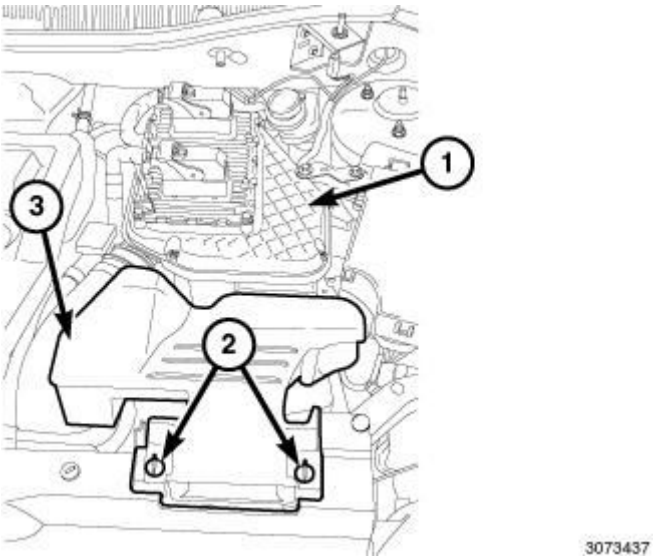

Fig. 396: Retainers, Fresh Air Inlet Duct & Air Cleaner Body
Courtesy of CHRYSLER GROUP, LLC

22. Connect the negative battery cable and tighten nut to 5 N.m (45 in. lbs.).
23. Install the fresh air inlet duct (3) on the air cleaner body (1) and lock the retainers (2).

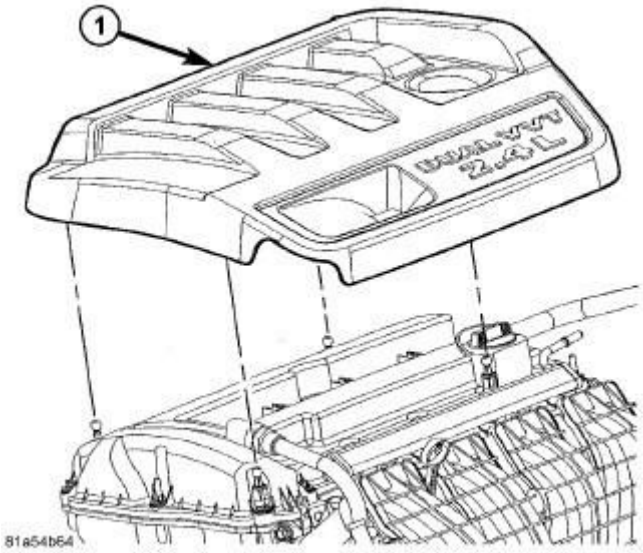

Fig. 397: Engine Cover - 2.4l
Courtesy of CHRYSLER GROUP, LLC

24. Install the engine cover (1).

VALVE TIMING

DESCRIPTION

DESCRIPTION

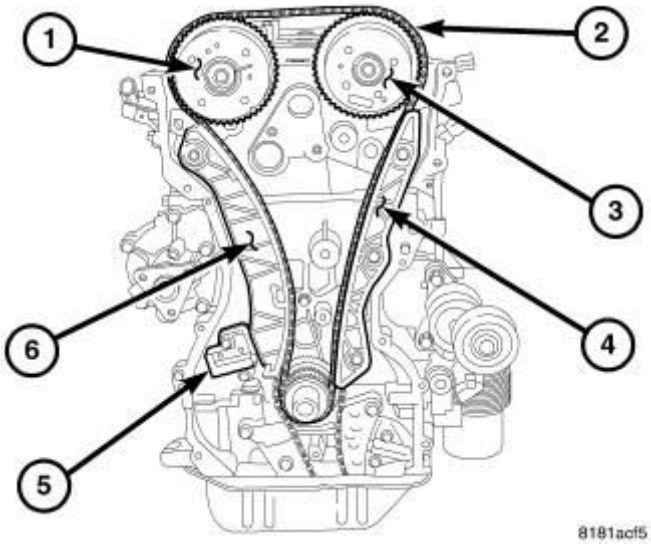

Fig. 398: Timing Drive System
Courtesy of CHRYSLER GROUP, LLC

The timing drive system consists of the following:

- Timing Chain (2)
- Camshaft Sprockets (1, 3)
- Crankshaft Sprocket
- Right Timing Chain Guide (Moveable) (6)
- Left Timing Chain Guide (Fixed) (4)
- Timing Chain Tensioner (5)

The camshaft sprockets are attached to the cam phasers which are attached to the front of the camshafts and are used with the timing chain and crankshaft sprocket to turn the camshafts. The camshaft position sensors target is part of the camshafts and is used with the camshaft position sensors to provide the PCM with valvetrain position information.

The timing chain tensioner is installed in the right side of the engine block. Using engine oil pressure, the tensioner applies constant pressure to the right side (movable) timing chain guide, which in turn applies pressure to the timing chain. Also as the tensioner extends, it rachet locks in position to provide constant timing chain tension.

STANDARD PROCEDURE

STANDARD PROCEDURE - VALVE TIMING VERIFICATION

CAUTION: Painted or colored chain links are used during initial engine assembly and can not be relied upon for valve timing verification. These markings are in different locations for early production, late production and service parts. Only use TDC marks, cylinder head cover sealing surface and camshaft sprocket marks to verify valve timing or engine damage may result.

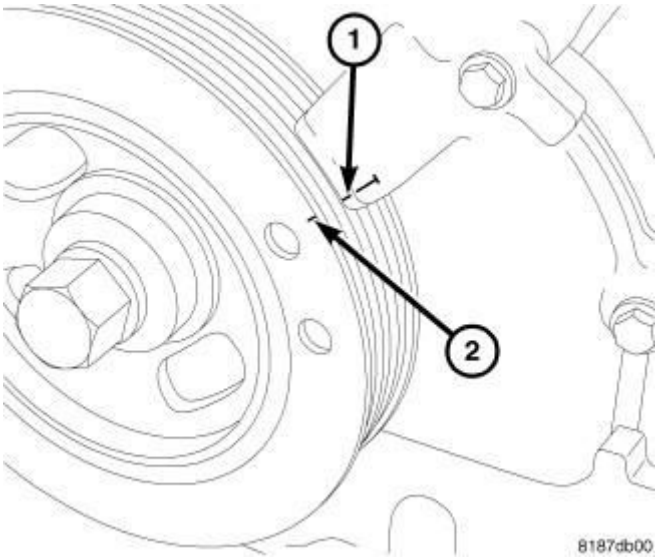

Fig. 399: Setting Engine To Top Dead Center
Courtesy of CHRYSLER GROUP, LLC

1. Remove engine cover.
2. Remove cylinder head cover. Refer to **COVER(S), CYLINDER HEAD, REMOVAL**.
3. Set engine to TDC (1, 2).

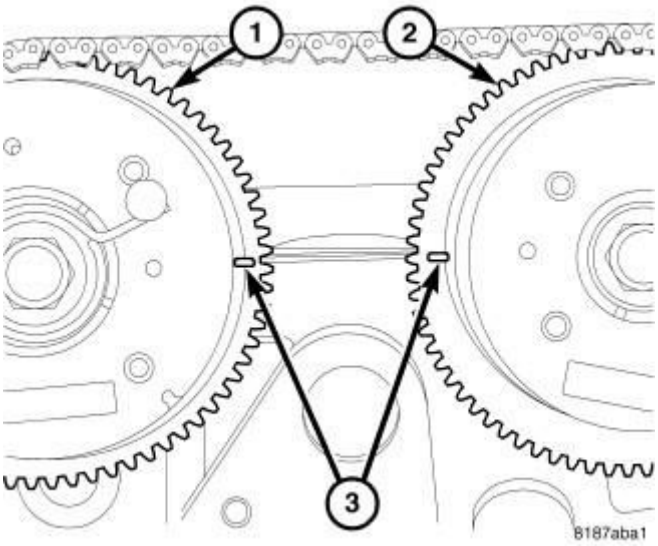

Fig. 400: Camshaft Timing
Courtesy of CHRYSLER GROUP, LLC

4. The marks on the camshaft sprockets (3) should be in line with the cylinder head cover sealing surface.
5. Install cylinder head cover. Refer to **COVER(S), CYLINDER HEAD, INSTALLATION**.
6. Install the engine cover.

CHAIN AND SPROCKETS, TIMING

REMOVAL

TIMING CHAIN

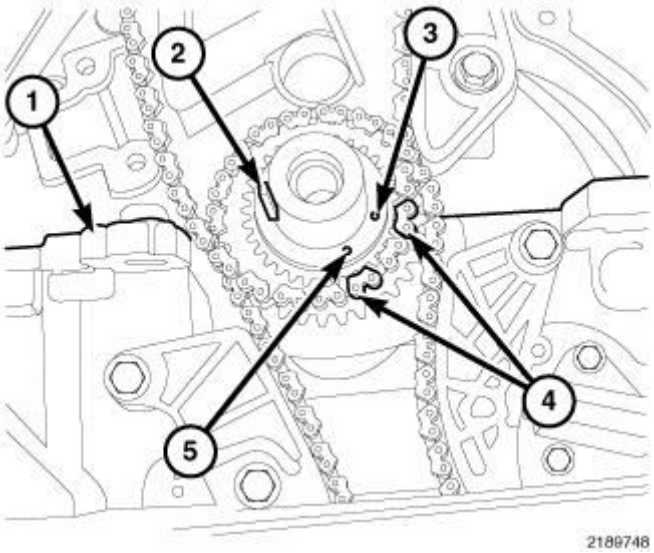

Fig. 401: Crankshaft Timing Marks

Courtesy of CHRYSLER GROUP, LLC

1. Remove timing chain cover. Refer to **COVER(S), ENGINE TIMING, REMOVAL**.

   NOTE: The crankshaft timing mark (3) or (5) can be in one of two locations depending on whether the engine is early production (5), late production (3) or assembled with service parts (3). In all cases the keyway (2) will always be in the 9:00 position, in line with the ladder frame mounting surface (1) when the engine is at TDC.

2. Verify that the engine is still set to TDC.

   NOTE: If the timing chain plated links can no longer be seen, the timing chain links corresponding to the timing marks must be marked prior to removal if the chain is to be reused.

3. Mark chain link (4) corresponding to crankshaft timing mark (3) or (5).

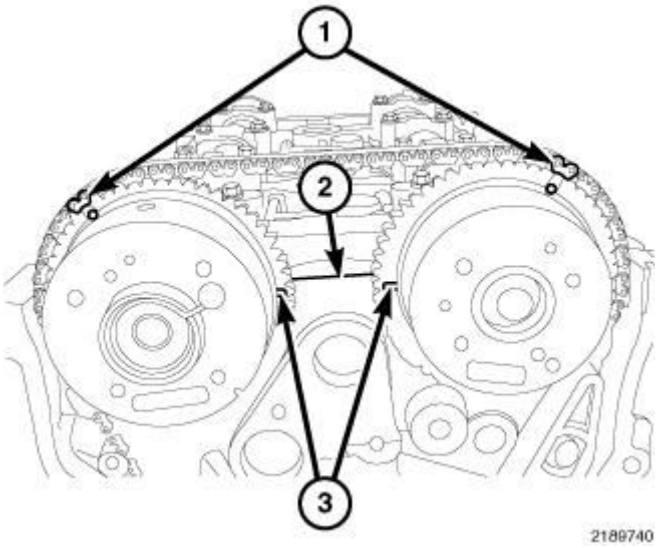

Fig. 402: Timing Chain Timing Marks
Courtesy of CHRYSLER GROUP, LLC

4. With the engine still set to TDC, verify that the marks on the camshaft sprockets (3) are in line with the cylinder head cover sealing surface (2). If

the marks do not line up, the timing chain is not correctly installed.

5. Mark chain link (1) corresponding to camshaft timing mark.

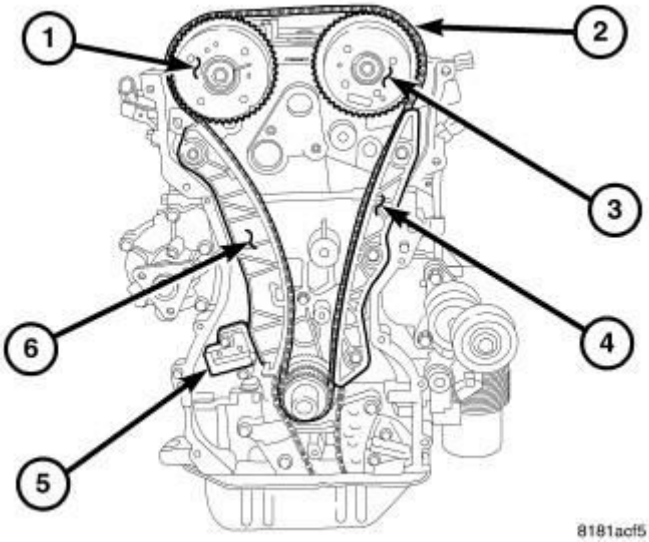

Fig. 403: Timing Drive System
Courtesy of CHRYSLER GROUP, LLC

6. Remove timing chain tensioner (5). Refer to **TENSIONER, ENGINE TIMING, REMOVAL**.
7. Remove timing chain (2).

CAMSHAFT SPROCKET(S)

NOTE: Camshaft phasers and camshaft sprockets are supplied as an assembly, do not attempt to disassemble.

Refer to camshaft phaser removal. Refer to **CAMSHAFT, ENGINE, REMOVAL**.

CRANKSHAFT SPROCKET

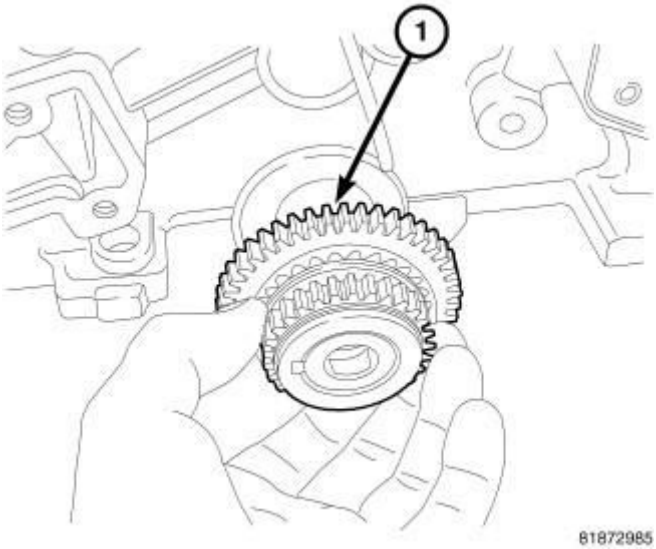

Fig. 404: Crankshaft Sprocket
Courtesy of CHRYSLER GROUP, LLC

1. Remove timing chain. Refer to **CHAIN AND SPROCKETS, TIMING, REMOVAL**.
2. Remove oil pan. Refer to **PAN, OIL, REMOVAL**.
3. Remove oil pump drive chain tensioner.
4. Remove oil pump drive chain.
5. Remove crankshaft sprocket (1).

INSPECTION

INSPECTION

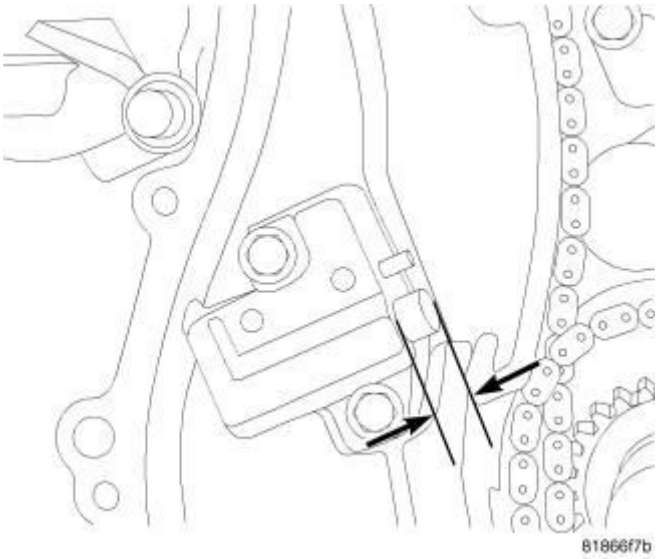

Fig. 405: Checking Timing Chain Stretch

Courtesy of CHRYSLER GROUP, LLC

Inspect timing chain for stretching prior to removal.

1. Rotate engine while watching timing chain tensioner plunger. When the plunger reaches its maximum travel stop rotating engine.
2. Measure the distance from the tensioner body and the edge of the chain guide as shown in illustration.
3. If the distance is greater than 20.5 mm (0.81 in.) inspect guide shoes for excessive wear.
4. If guides are okay, replace timing chain.

INSTALLATION

CRANKSHAFT SPROCKET

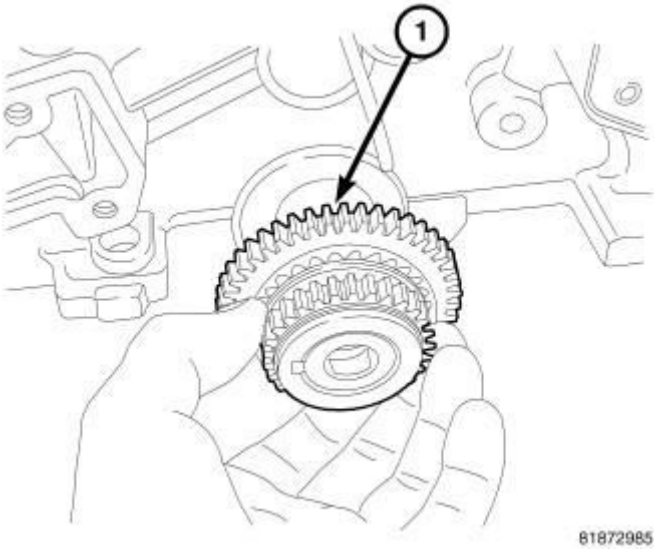

Fig. 406: Crankshaft Sprocket
Courtesy of CHRYSLER GROUP, LLC

1. Install crankshaft sprocket (1) onto crankshaft.

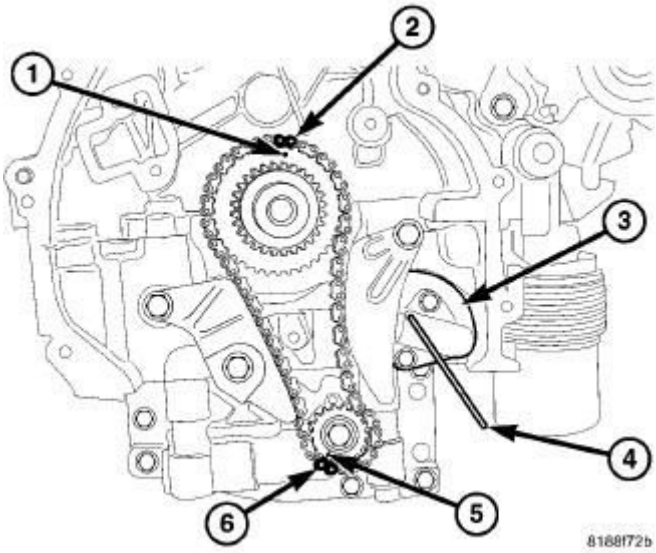

Fig. 407: Oil Pump Drive Chain, Oil Pump Drive Chain Tensioner & Timing Marks On Chain
Courtesy of CHRYSLER GROUP, LLC

2. Install oil pump drive chain. Verify that Oil pump is correctly timed (1, 2, 5, 6).

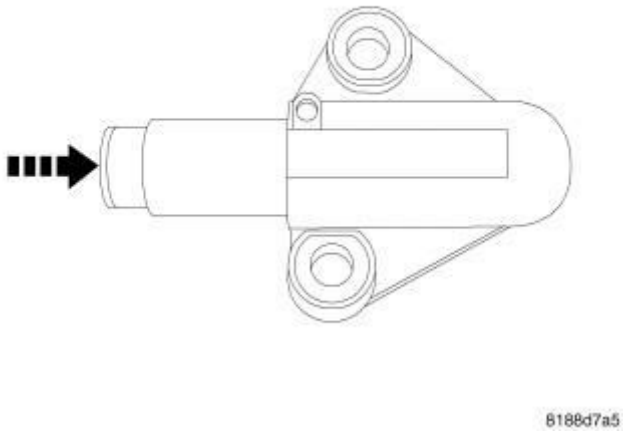

Fig. 408: Oil Pump Tensioner Reset
Courtesy of CHRYSLER GROUP, LLC

3. Reset oil pump drive chain tensioner by pushing plunger inward and install tensioner pin (special tool #8514, Pins, Tensioner).

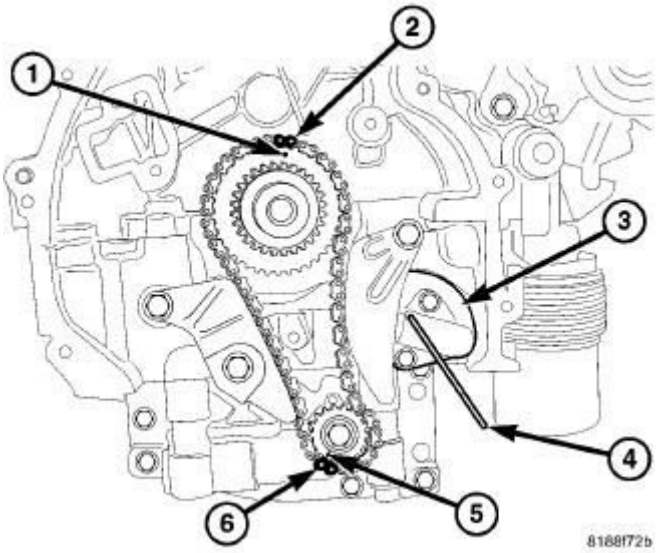

Fig. 409: Oil Pump Drive Chain, Oil Pump Drive Chain Tensioner & Timing Marks On Chain
Courtesy of CHRYSLER GROUP, LLC

4. Install oil pump drive chain tensioner (3) and remove Tensioner Pin (special tool #8514, Pins, Tensioner) (4).
5. Install timing chain. Refer to **CHAIN AND SPROCKETS, TIMING, INSTALLATION**.
6. Install oil pan. Refer to **PAN, OIL, INSTALLATION**.
7. Fill engine with oil. Refer to OIL - **STANDARD PROCEDURE** .
8. Start engine and check for leaks.

CAMSHAFT SPROCKET(S)

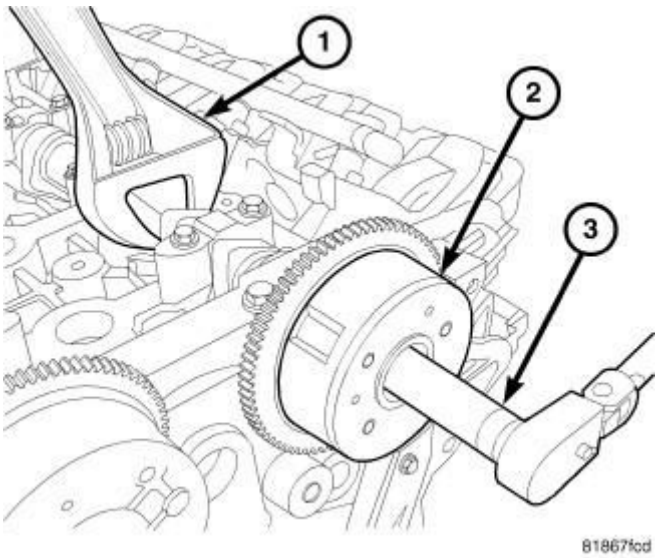

Fig. 410: Removing/Installing Camshaft Phaser
Courtesy of CHRYSLER GROUP, LLC

NOTE: The camshaft sprockets and the camshaft phasers are an assembly and cannot be serviced separately.

CAUTION: Do not use an impact wrench to tighten camshaft sprocket bolts. Damage to the camshaft-to-sprocket locating dowel pin and camshaft phaser may occur.

1. Refer to Camshaft phaser (2) installation. Refer to **CAMSHAFT, ENGINE, INSTALLATION**.

TIMING CHAIN

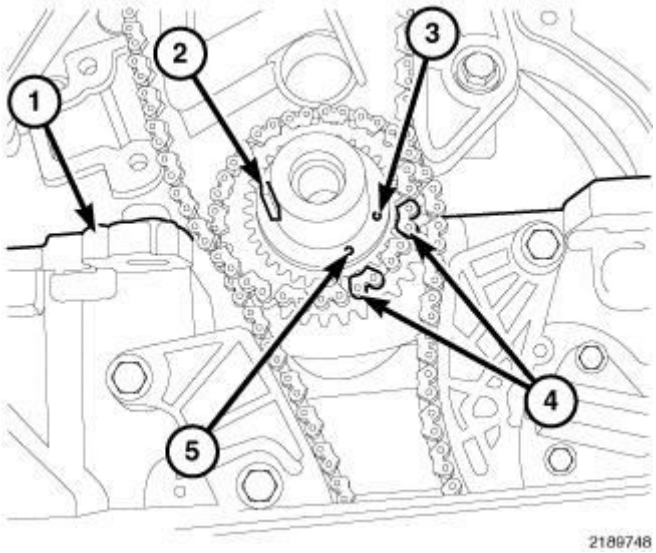

Fig. 411: Crankshaft Timing Marks
Courtesy of CHRYSLER GROUP, LLC

NOTE: The crankshaft timing mark (3) or (5) can be in one of two locations depending on whether the engine is early production (5), late production (3) or assembled with service parts (3). In all cases the keyway (2) will always be in the 9:00 position, in line with the ladder frame mounting surface (1) when the engine is at TDC.

1. Verify that the engine is still set to TDC.

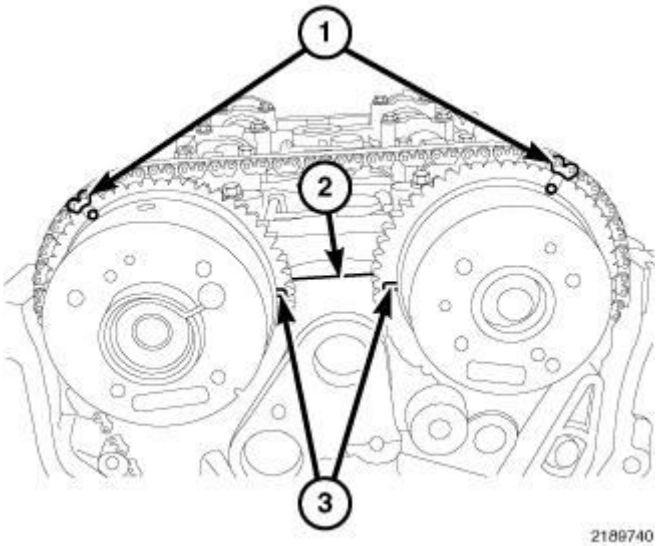

Fig. 412: Timing Chain Timing Marks
Courtesy of CHRYSLER GROUP, LLC

2. Align camshaft timing marks (3) so they are facing each other and in line with the cylinder head cover sealing surface (2).
3. Install timing chain so plated (or marked) links on chain align with timing marks on camshaft sprockets (1).

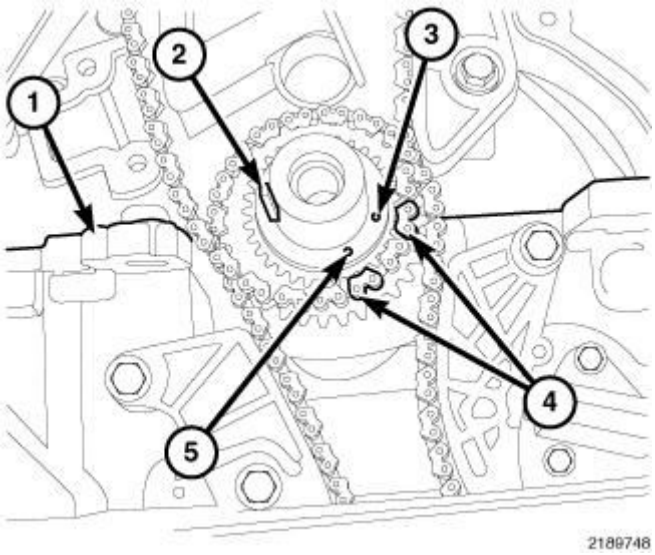

Fig. 413: Crankshaft Timing Marks
Courtesy of CHRYSLER GROUP, LLC

4. Align timing mark on the crankshaft sprocket (3) or (5) with the plated (or marked) link (4) on the timing chain. Position chain so slack will be on the tensioner side.

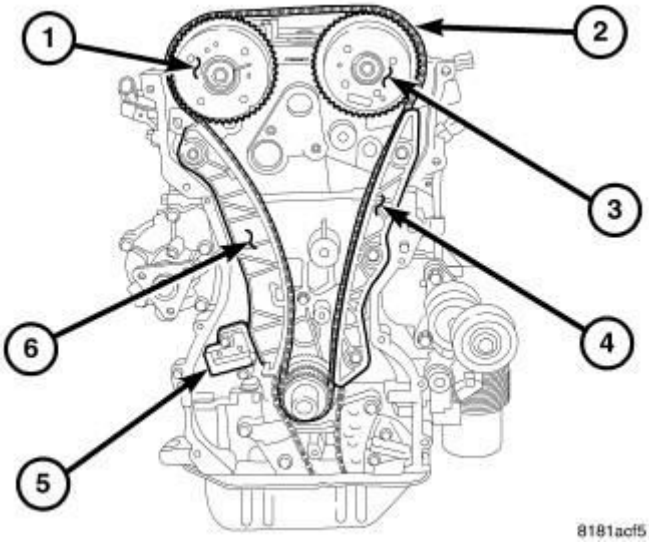

Fig. 414: Timing Drive System
Courtesy of CHRYSLER GROUP, LLC

NOTE: Keep the slack in the timing chain on the tensioner side.

5. Install the timing chain tensioner (5) Refer to **TENSIONER, ENGINE TIMING, INSTALLATION**.

   Rotate the crankshaft CLOCKWISE two complete revolutions until the crankshaft is repositioned at the TDC position with the key way at the 9 o'clock position.

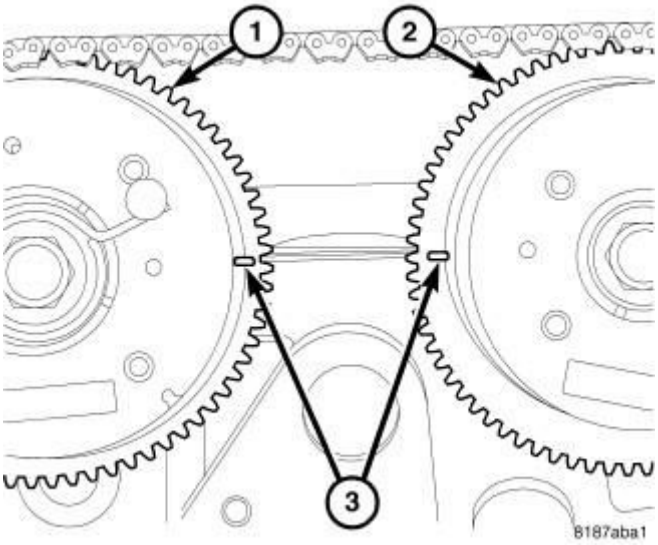

Fig. 415: Camshaft Timing
Courtesy of CHRYSLER GROUP, LLC

6. Verify that the camshafts timing marks (3) are in the proper position and in line with the cylinder head cover sealing surface. If the marks do not line up, the timing chain is not correctly installed.
7. Install front timing chain cover. Refer to **COVER(S), ENGINE TIMING, INSTALLATION**.
8. Connect negative battery cable.
9. Operate engine until it reaches normal operating temperature. Check oil and cooling systems for correct fluid levels.

COVER(S), ENGINE TIMING

REMOVAL

REMOVAL

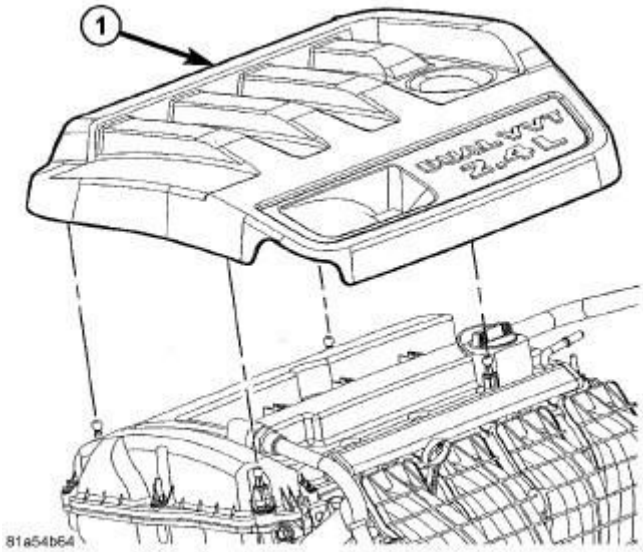

Fig. 416: Engine Cover - 2.4L
Courtesy of CHRYSLER GROUP, LLC

1. Remove engine cover (1) by pulling upward.
2. Perform fuel pressure bleed procedure. Refer to **FUEL SYSTEM PRESSURE RELEASE PROCEDURE** .
3. Disconnect and isolate the negative battery cable.

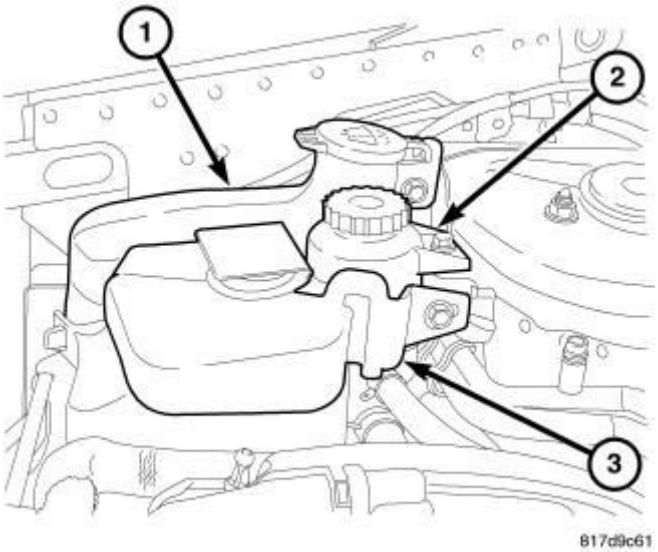

Fig. 417: Windshield Washer Reservoir, Power Steering Reservoir & Coolant Reservoir
Courtesy of CHRYSLER GROUP, LLC

4. Remove coolant recovery bottle (3). Refer to **BOTTLE, COOLANT RECOVERY, REMOVAL** .
5. Remove and reposition power steering reservoir (2).
6. Remove windshield washer bottle (1). Refer to **RESERVOIR, WINDSHIELD WASHER, REMOVAL** .
7. Remove accessory drive belt. Refer to **BELT, SERPENTINE, REMOVAL** .

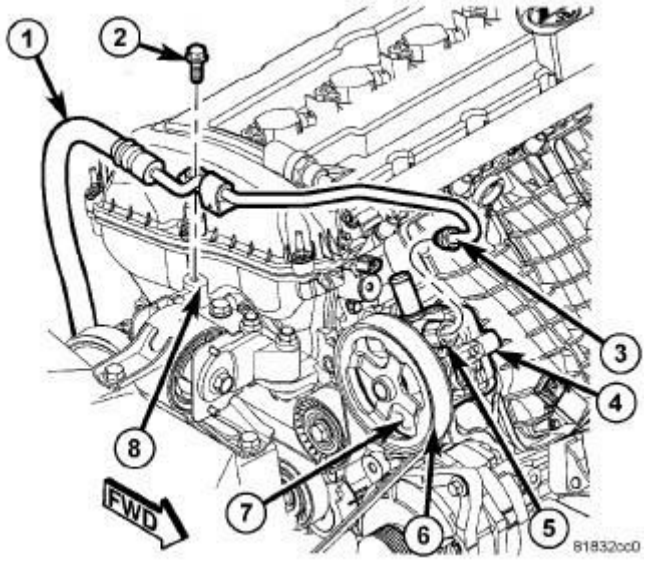

Fig. 418: Removing/Installing Power Steering Hose Hold Down
Courtesy of CHRYSLER GROUP, LLC

8. Remove power steering hose hold down (2).

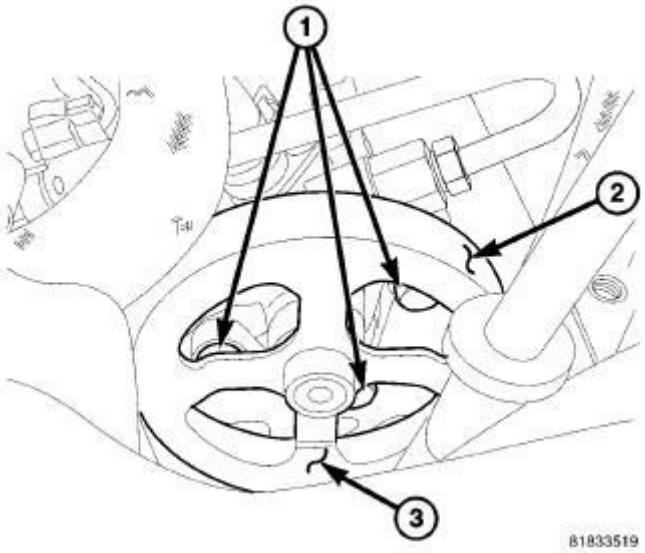

Fig. 419: Removing/Installing Power Steering Pump Mounting Bolts Through Pulley Openings
Courtesy of CHRYSLER GROUP, LLC

9. Remove the three power steering pump mounting bolts (1) through the openings in the pulley (3) and reposition the pump.

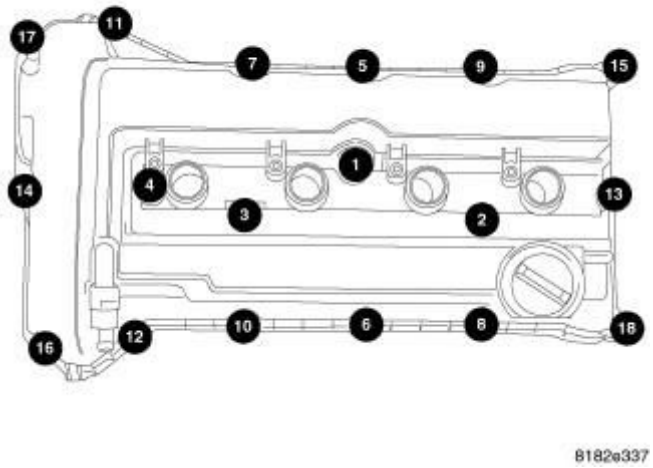

Fig. 420: Removing/Installing Cylinder Head Cover Bolts - Torque Sequence
Courtesy of CHRYSLER GROUP, LLC

10. Remove the cylinder head cover. Refer to **COVER(S), CYLINDER**

HEAD, REMOVAL.

11. Remove ignition coils from cylinder head cover.

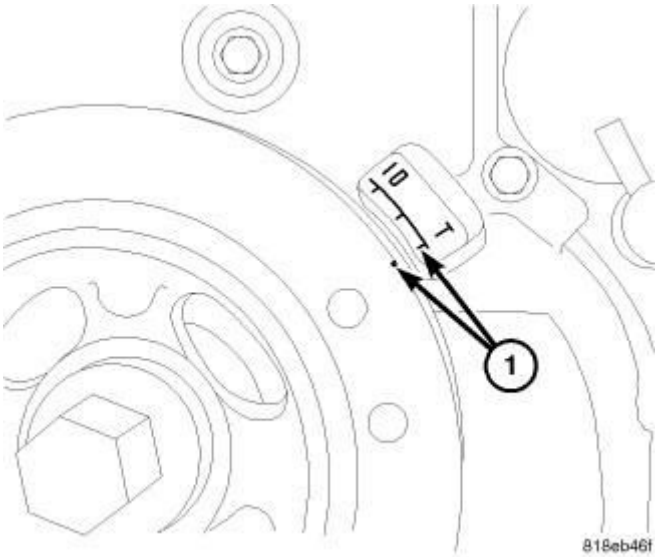

Fig. 421: Setting Engine To Top Dead Center
Courtesy of CHRYSLER GROUP, LLC

12. Raise and support the vehicle. Refer to **HOISTING, STANDARD PROCEDURE** .
13. Remove the right lower splash shield. Refer to **SHIELD, SPLASH, FRONT WHEELHOUSE, REMOVAL** .
14. Set engine to TDC (1).

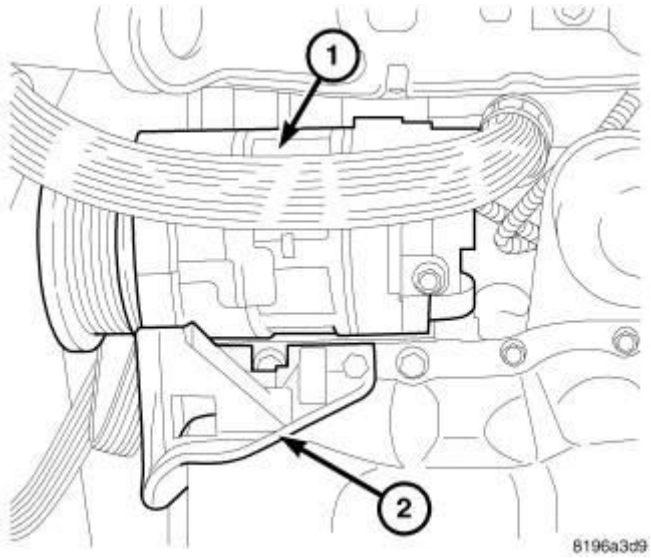

Fig. 422: A/C Compressor
Courtesy of CHRYSLER GROUP, LLC

15. Remove lower A/C compressor bolts if equipped.
16. Remove lower A/C compressor mount (2) if equipped.

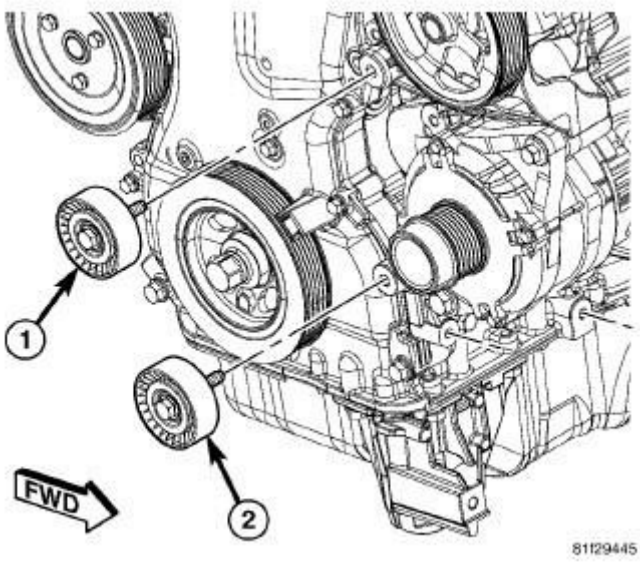

Fig. 423: Removing/Installing Accessory Drive Belt Upper & Lower Idler Pulley
Courtesy of CHRYSLER GROUP, LLC

17. Remove accessory drive belt lower idler pulley (2).

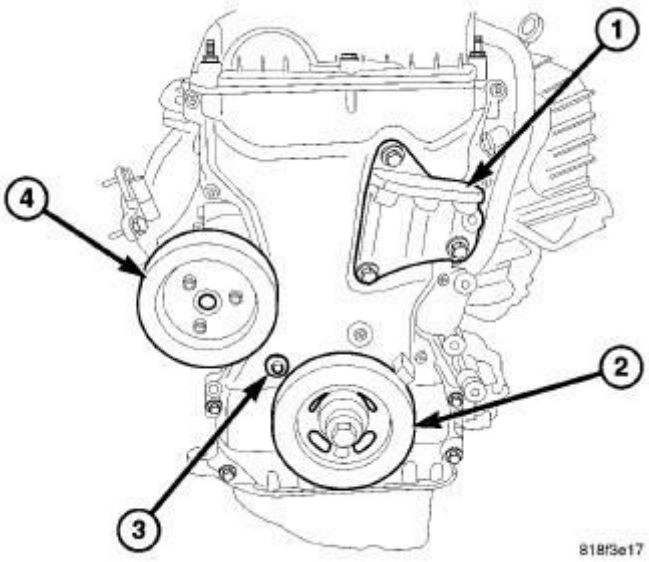

Fig. 424: Right Side Engine Mount Bracket, Crankshaft Damper & Water Pump Pulley
Courtesy of CHRYSLER GROUP, LLC

18. Remove crankshaft damper (2). Refer to **DAMPER, VIBRATION, REMOVAL**.
19. Remove three bolts and water pump pulley (4) from water pump.
20. Remove lower bolt from right side engine mount bracket (1).

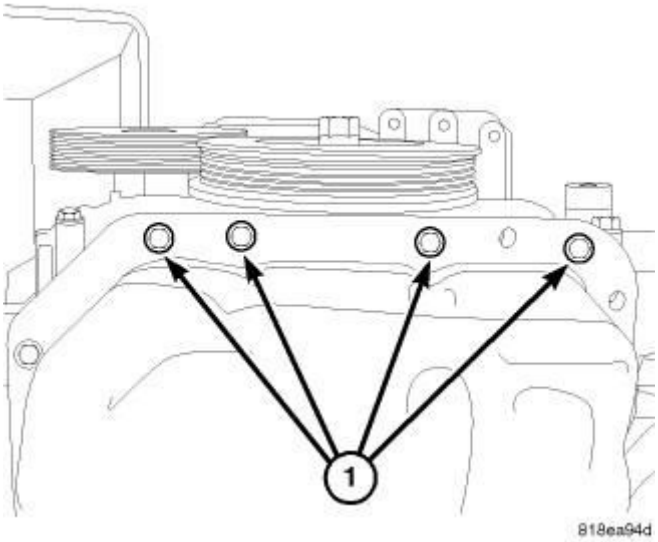

Fig. 425: Timing Chain Cover Lower Bolts
Courtesy of CHRYSLER GROUP, LLC

21. Remove timing chain cover lower bolts (1).
22. Lower vehicle.
23. Support engine with suitable jack.

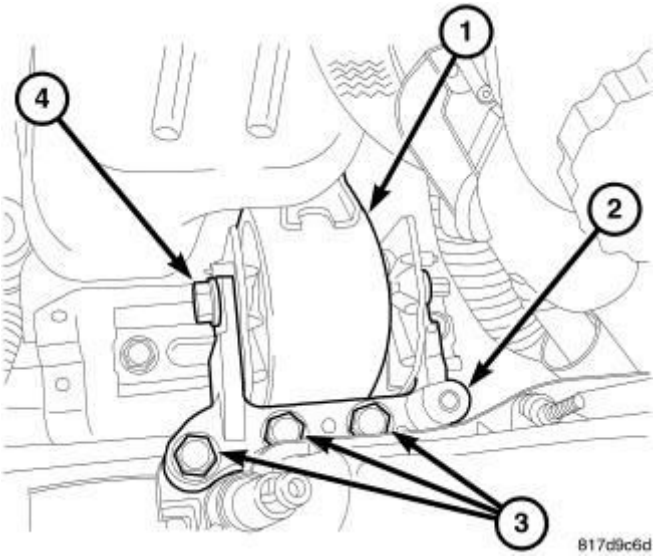

Fig. 426: Right Engine Mount Assembly
Courtesy of CHRYSLER GROUP, LLC

24. Remove right engine mount through bolt (4).
25. Remove right engine mount to mount bracket bolts (3).
26. Remove right engine mount adapter (2).

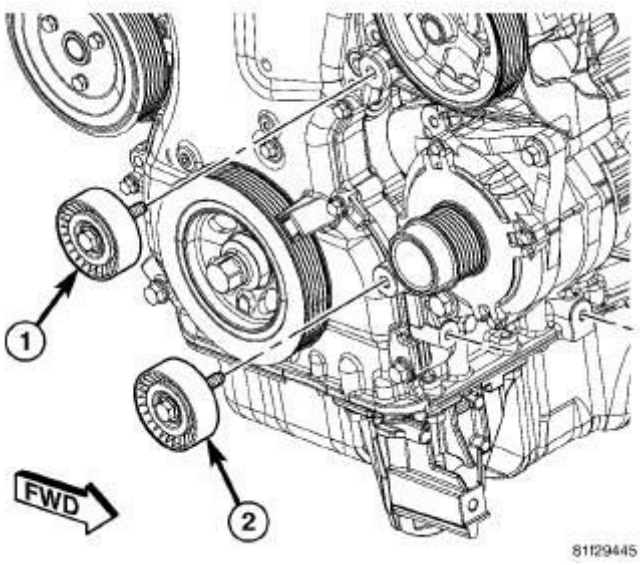

Fig. 427: Removing/Installing Accessory Drive Belt Upper & Lower Idler Pulley
Courtesy of CHRYSLER GROUP, LLC

27. Remove accessory drive upper idler pulley (1).

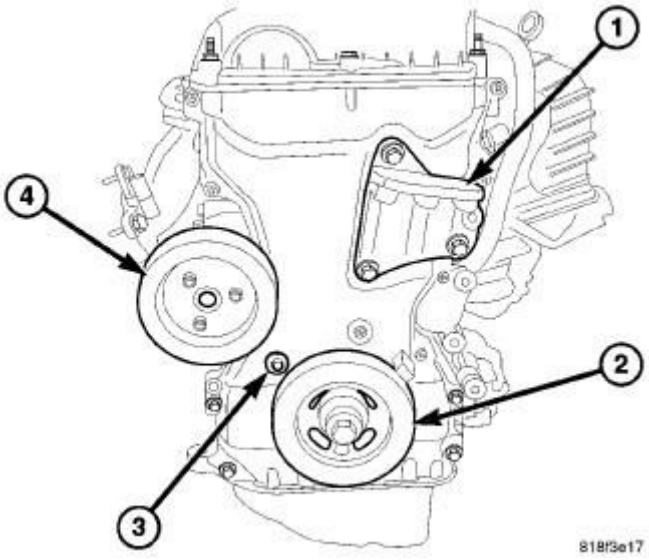

Fig. 428: Right Side Engine Mount Bracket, Crankshaft Damper & Water Pump Pulley
Courtesy of CHRYSLER GROUP, LLC

28. Remove right upper engine mount bracket (1).
29. Remove accessory drive belt tensioner.
30. Remove timing chain cover retaining bolts.

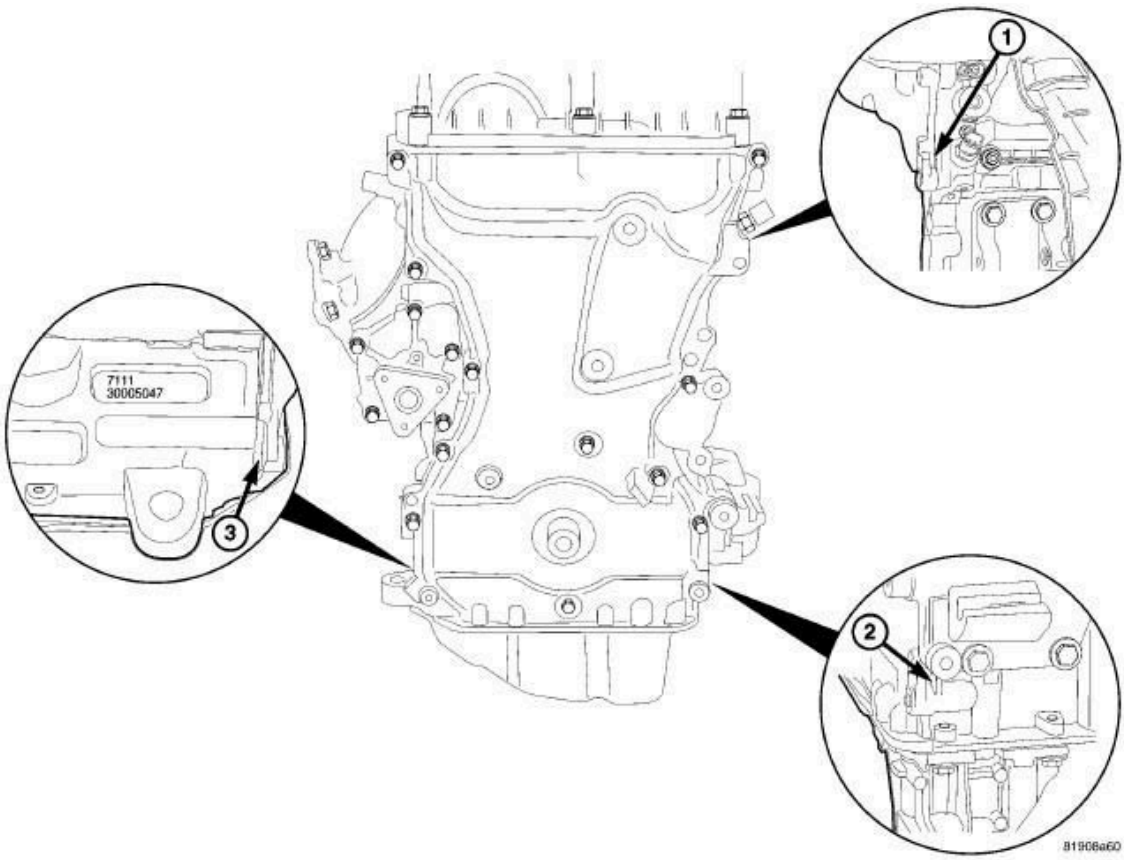

Fig. 429: Timing Chain Cover Pry Points
Courtesy of CHRYSLER GROUP, LLC

31. Remove timing chain cover using pry points (1, 2, 3).

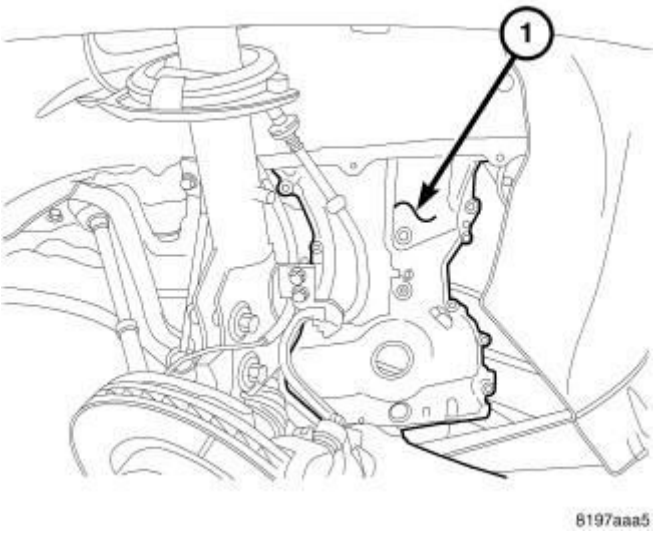

Fig. 430: Removing/Installing Timing Chain Cover
Courtesy of CHRYSLER GROUP, LLC

32. Remove timing chain cover (1) out through the bottom of the vehicle.

INSTALLATION

INSTALLATION

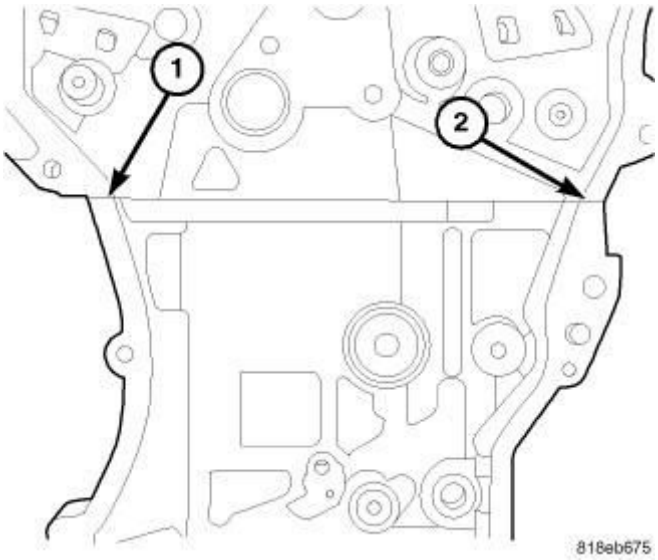

Fig. 431: Front Cover Upper T-Joints
Courtesy of CHRYSLER GROUP, LLC

NOTE: When using RTV, the sealing surfaces must be clean and free from grease and oil.

NOTE: When using RTV, parts should be assembled in 10

minutes and tighten to final torque within 45 minutes.

1. Clean all sealing surfaces. Refer to **ENGINE GASKET SURFACE PREPARATION** .
2. Apply Mopar® engine sealant RTV (or equivalent) as shown in illustration at the cylinder head to block parting line (1, 2).

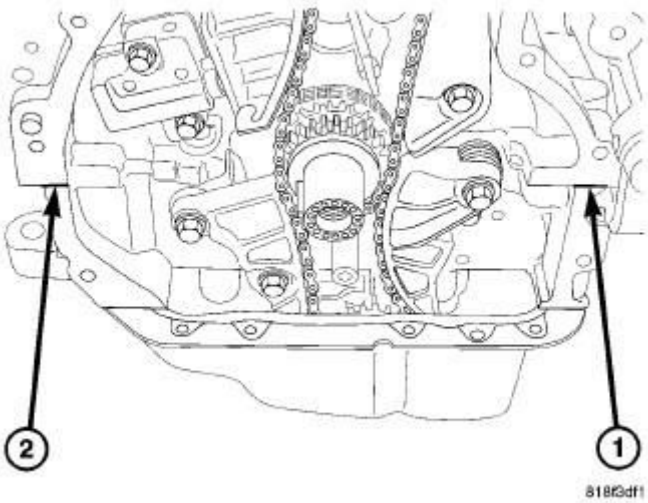

Fig. 432: Lower T-Joints
Courtesy of CHRYSLER GROUP, LLC

3. Apply Mopar® engine sealant RTV (or equivalent) as shown in illustration at the ladder frame to block parting line (1, 2).

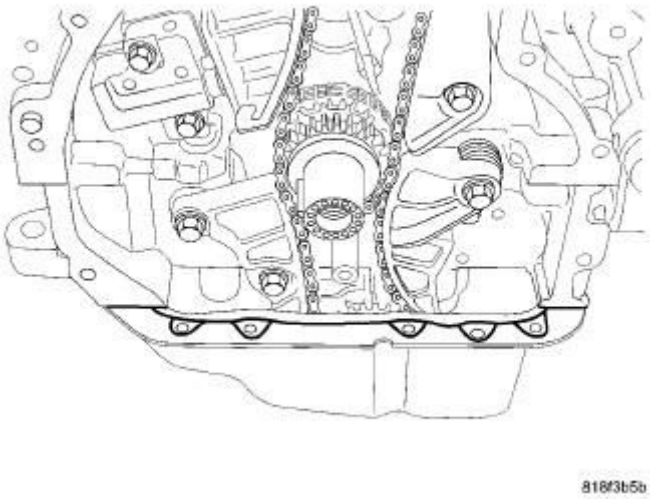

Fig. 433: Sealing Oil Pan
Courtesy of CHRYSLER GROUP, LLC

4. Apply Mopar® engine sealant RTV (or equivalent) as shown in illustration in the corner of the oil pan and block.
5. Apply 2 mm bead of Mopar® engine sealant RTV (or equivalent) to the oil pan as shown in illustration.

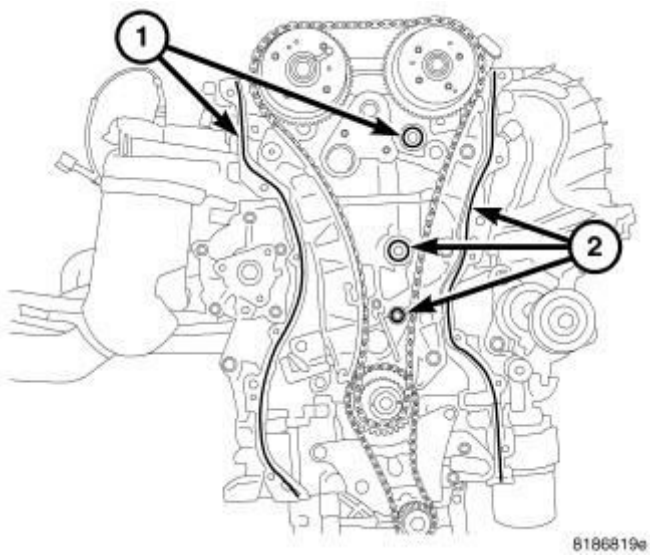

Fig. 434: Timing Chain Cover Sealing
Courtesy of CHRYSLER GROUP, LLC

6. Apply 2 mm bead of Mopar® engine sealant RTV (or equivalent) to the engine block (1, 2) as shown in illustration.

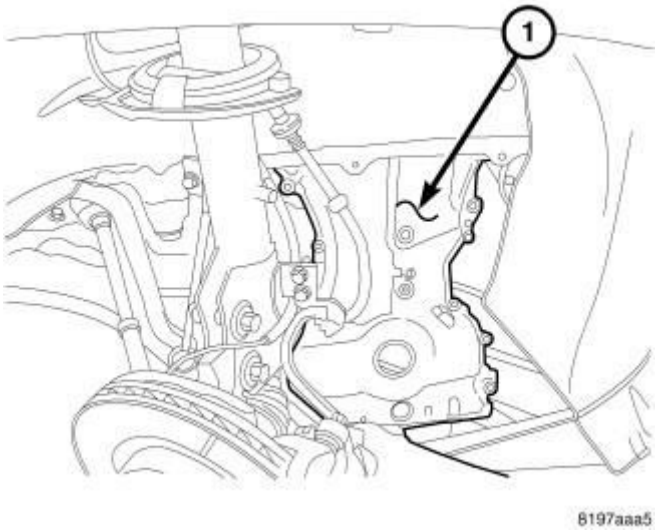

Fig. 435: Removing/Installing Timing Chain Cover

Courtesy of CHRYSLER GROUP, LLC

7. Install timing chain cover (1) upwards from under the vehicle.
8. Install timing chain cover upper retaining bolts and tighten M6 bolts to 9 N.m (80 in. lbs.) and M8 bolts to 26 N.m (230 in. lbs.).
9. Install accessory drive belt tensioner. Tighten bolt to 24 N.m (212 in. lbs.).

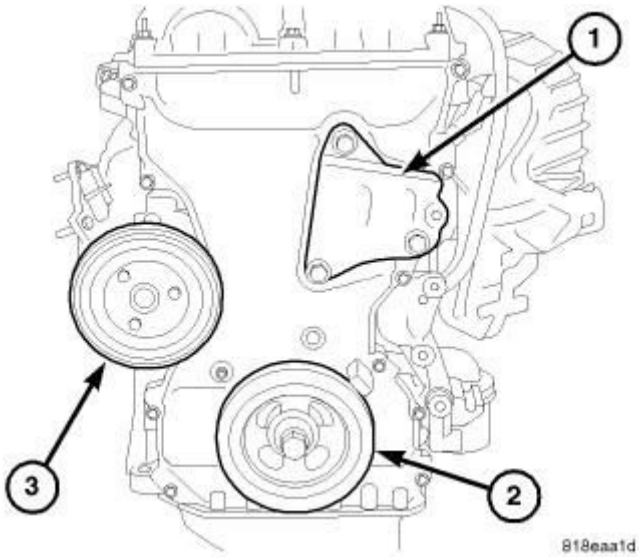

Fig. 436: Right Side Engine Mount Bracket, Crankshaft Damper & Water Pump Pulley
Courtesy of CHRYSLER GROUP, LLC

10. Install right engine mount bracket (1). Tighten bolts to 50 N.m (37 ft. lbs.).

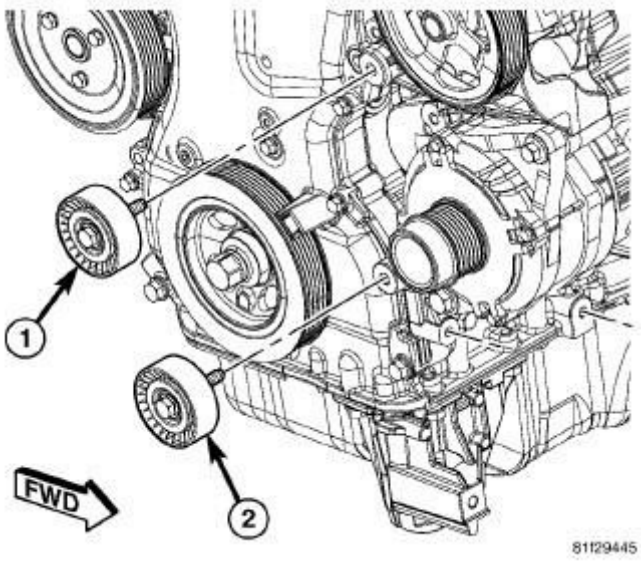

Fig. 437: Removing/Installing Accessory Drive Belt Upper & Lower

Idler Pulley
Courtesy of CHRYSLER GROUP, LLC

11. Install accessory drive belt upper idler pulley (1). Tighten bolt to 48 N.m (35 ft. lbs.).

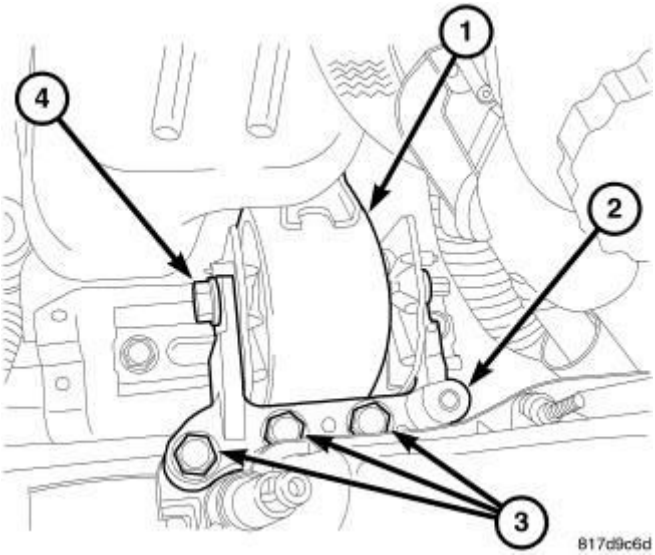

Fig. 438: Right Engine Mount Assembly
Courtesy of CHRYSLER GROUP, LLC

12. Install engine mount adapter (2) and tighten bolts (3) to 68 N.m (50 ft. lbs.).
13. Install engine mount through bolt (4) and tighten to 88 N.m (65 ft. lbs.).
14. Remove jack from under engine.

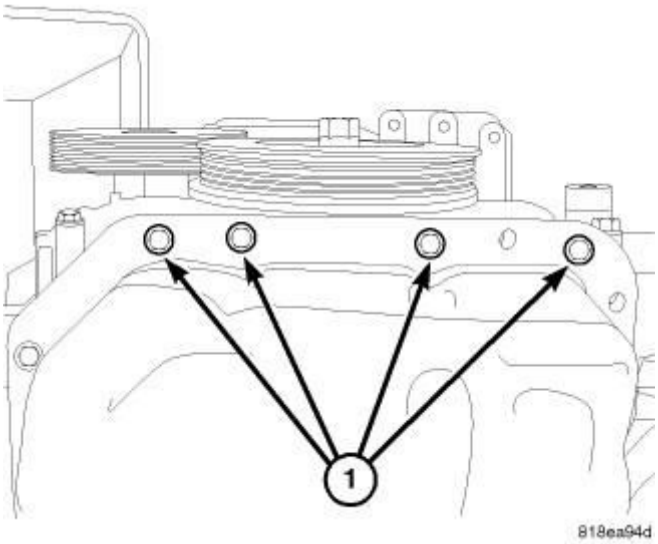

Fig. 439: Timing Chain Cover Lower Bolts
Courtesy of CHRYSLER GROUP, LLC

15. Raise and support the vehicle. Refer to **HOISTING, STANDARD PROCEDURE** .
16. Install oil pan to timing chain cover lower retaining bolts (1) and tighten M6 bolts to 9 N.m (80 in. lbs.).

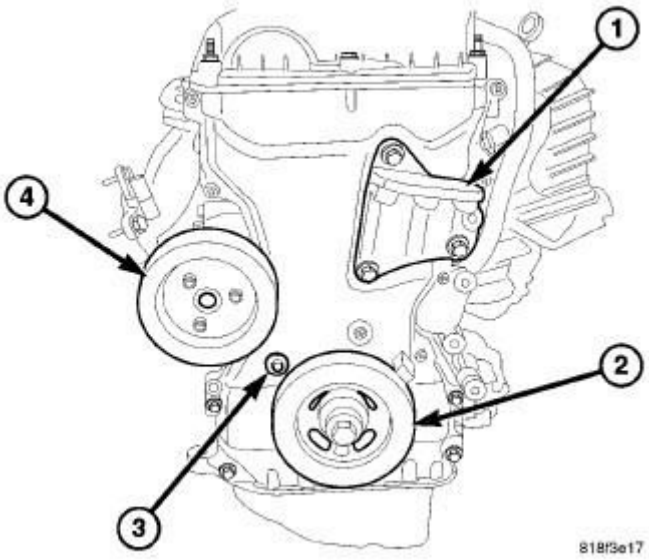

Fig. 440: Right Side Engine Mount Bracket, Crankshaft Damper & Water Pump Pulley
Courtesy of CHRYSLER GROUP, LLC

17. Install water pump pulley (4) and tighten three bolts to 9 N.m (80 in. lbs.).
18. Install crankshaft damper (2) Refer to **DAMPER, VIBRATION, INSTALLATION**.

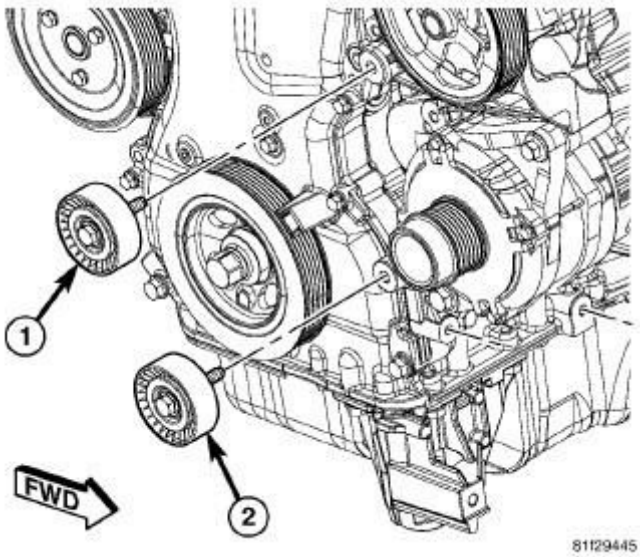

Fig. 441: Removing/Installing Accessory Drive Belt Upper & Lower Idler Pulley
Courtesy of CHRYSLER GROUP, LLC

19. Install accessory drive belt lower idler pulley (2). Tighten bolt to 48 N.m (35 ft. lbs.).

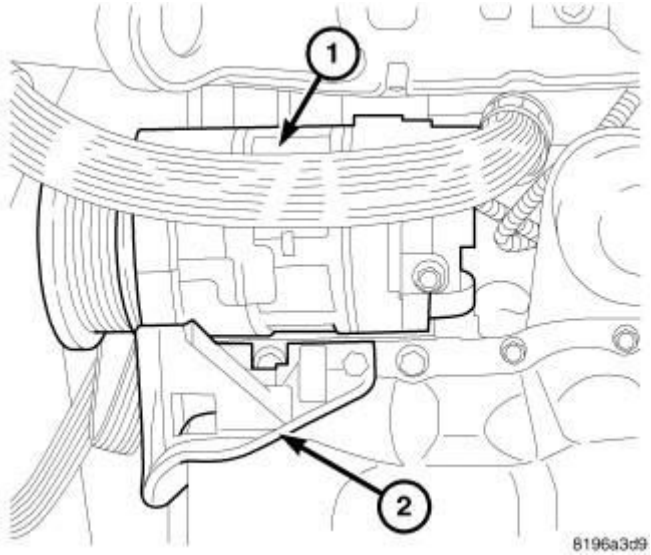

Fig. 442: A/C Compressor
Courtesy of CHRYSLER GROUP, LLC

20. Install lower A/C compressor mounting bracket (2). Tighten the bolts to 24 N.m (18 ft. lbs.).
21. Install A/C compressor (1). Tighten the bolts to 25 N.m (18 ft. lbs.).
22. Install right lower splash shield. Refer to **SHIELD, SPLASH, FRONT WHEELHOUSE, INSTALLATION** .
23. Lower vehicle.

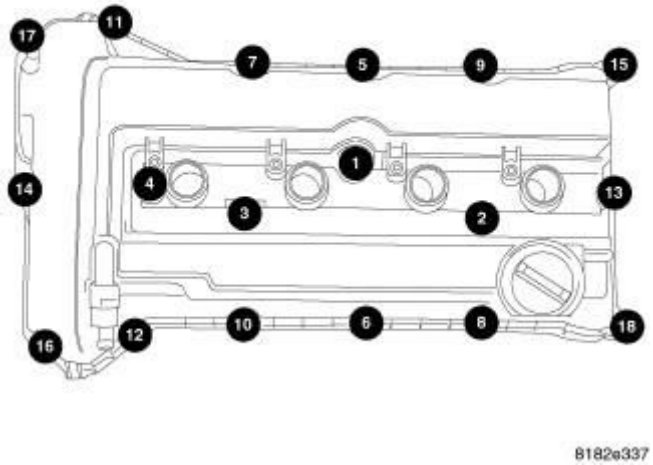

Fig. 443: Remove/Install Cylinder Head Cover Bolts In Sequence
Courtesy of CHRYSLER GROUP, LLC

24. Install cylinder head cover and ignition coils. Refer to **COVER(S), CYLINDER HEAD, INSTALLATION**.

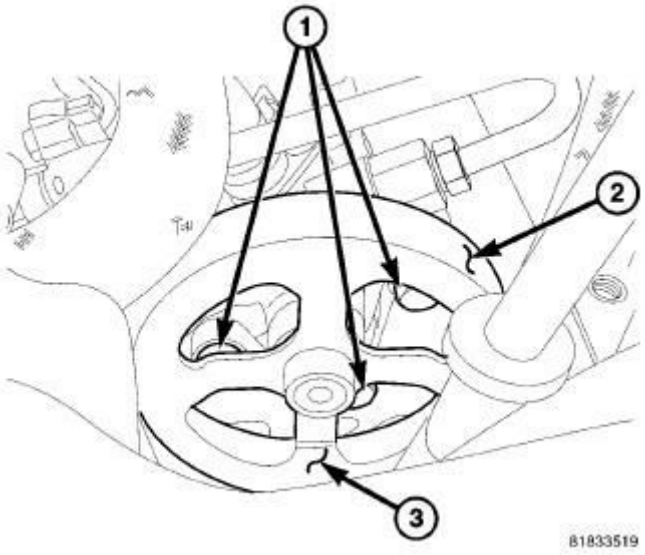

Fig. 444: Removing/Installing Power Steering Pump Mounting Bolts Through Pulley Openings
Courtesy of CHRYSLER GROUP, LLC

25. Place the power steering pump in mounting position. Install the three bolts (1) through openings in the pulley (3). Tighten the mounting bolts (1) to 26 N.m (19 ft. lbs.).

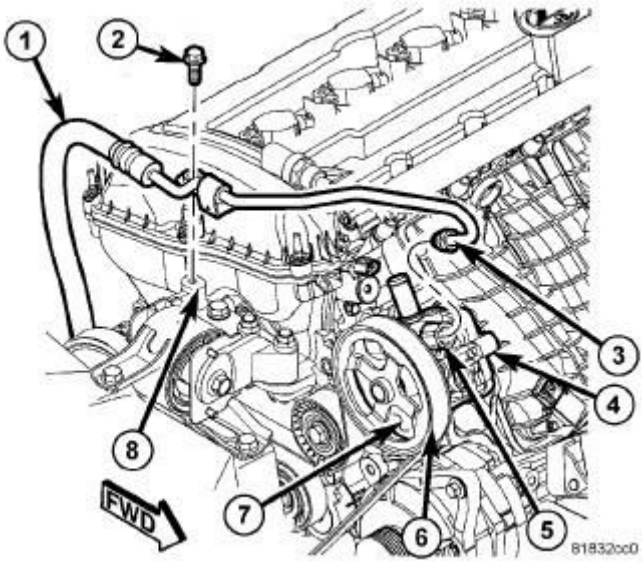

Fig. 445: Removing/Installing Power Steering Hose Hold Down
Courtesy of CHRYSLER GROUP, LLC

26. Install the power steering hose hold down (2).
27. Install accessory drive belt. Refer to **BELT, SERPENTINE, INSTALLATION** .

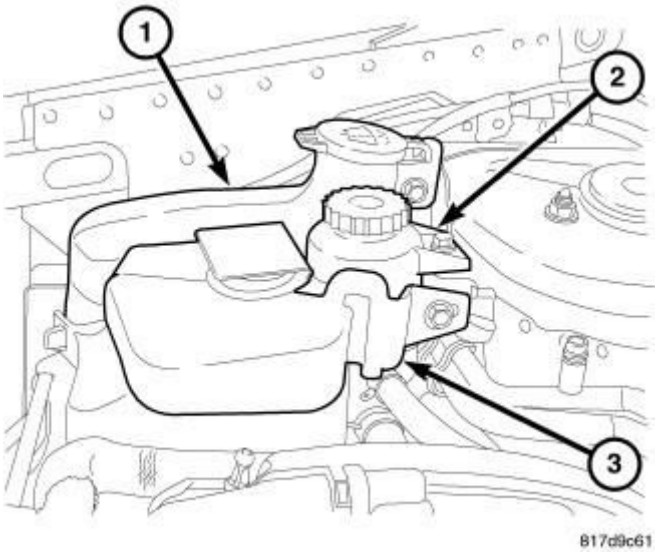

Fig. 446: Windshield Washer Reservoir, Power Steering Reservoir & Coolant Reservoir
Courtesy of CHRYSLER GROUP, LLC

28. Install power steering pump reservoir (2). Tighten mounting screw to 12 N.m (106 in. lbs.).
29. Install windshield washer reservoir (1).

30. Install coolant recovery reservoir (3). Tighten mounting bolts to 4 N.m (35 in. lbs.).

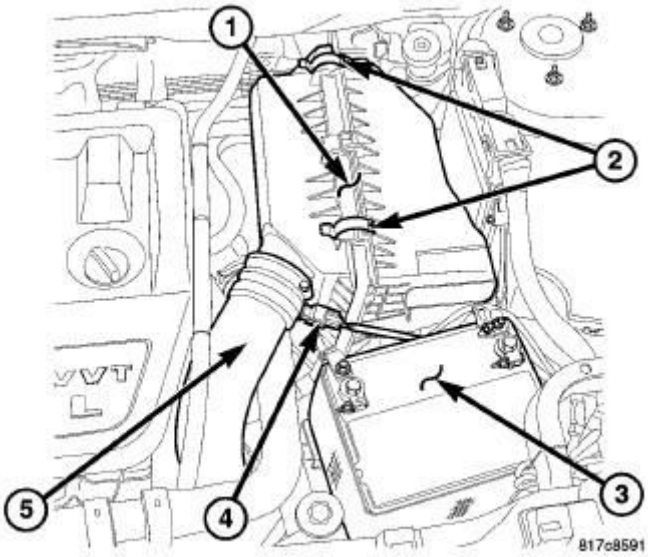

Fig. 447: Air Cleaner Housing, Fasteners, Battery, Intake Air Temperature Sensor & Clean Air Tube
Courtesy of CHRYSLER GROUP, LLC

31. Install clean air hose (5) and air cleaner housing (1). Refer to **BODY, AIR CLEANER, INSTALLATION**.
32. Install air cleaner housing inlet.
33. Connect negative battery cable.

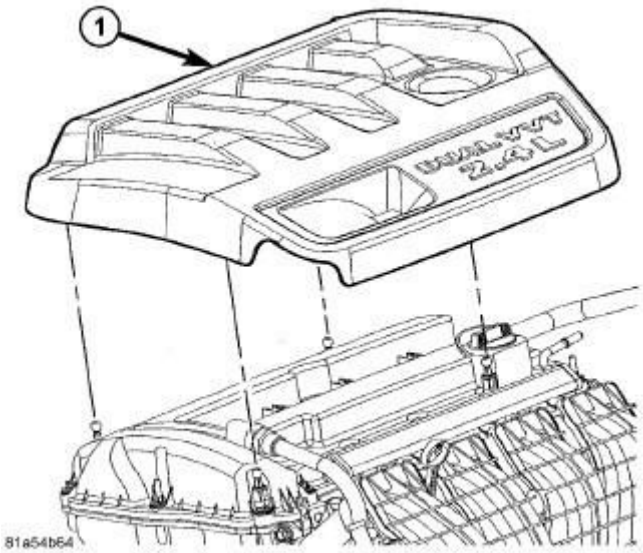

Fig. 448: Engine Cover - 2.4L

Courtesy of CHRYSLER GROUP, LLC

34. Operate engine until it reaches normal operating temperature. Check oil system for leaks and correct fluid level.
35. Install engine cover (1).

TENSIONER, ENGINE TIMING

REMOVAL

REMOVAL

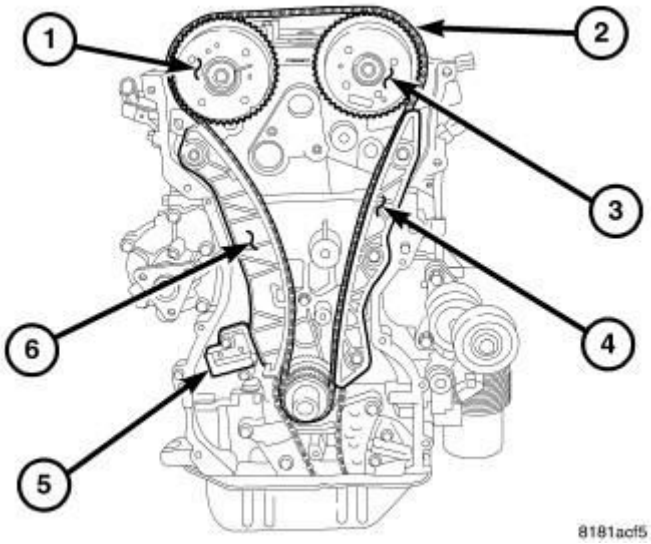

Fig. 449: Timing Drive System
Courtesy of CHRYSLER GROUP, LLC

1. Remove the engine timing cover. Refer to **COVER(S), ENGINE TIMING, REMOVAL**.

NOTE: Tensioner will not come apart during removal.

2. Remove timing chain tensioner retaining bolts and remove tensioner (5).

INSTALLATION

INSTALLATION

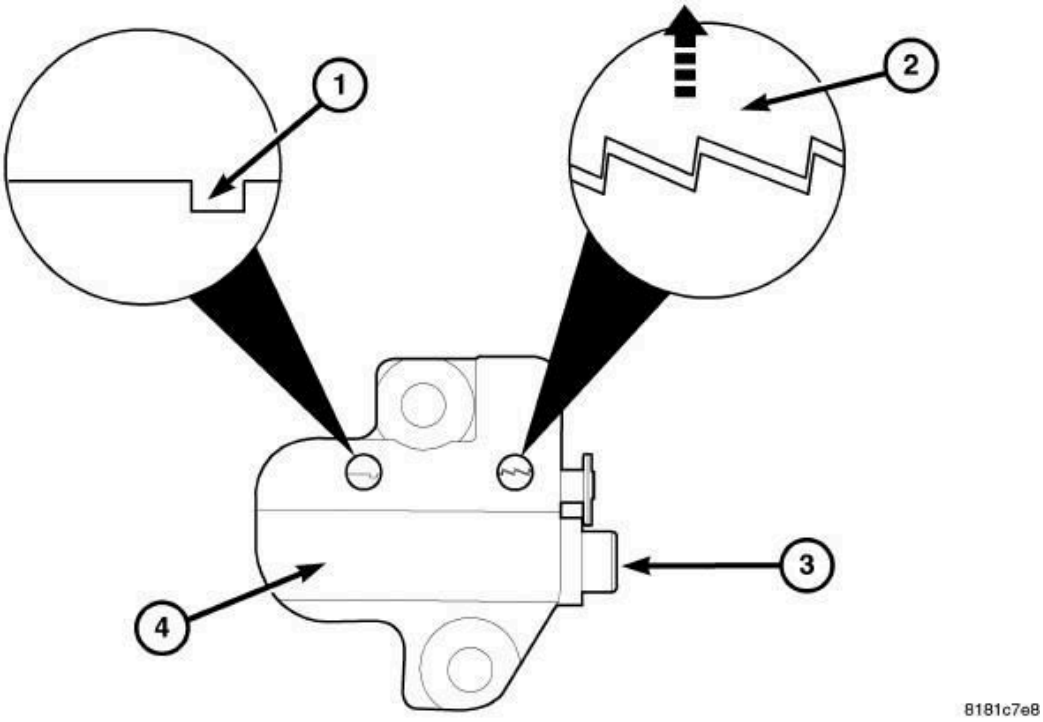

Fig. 450: Tensioner Reset
Courtesy of CHRYSLER GROUP, LLC

1. Reset timing chain tensioner (4) by lifting up on ratchet (2) and pushing plunger (3) inward towards the tensioner body (4). Insert Tensioner Pin (special tool #8514, Pins, Tensioner) into slot (1) to hold tensioner plunger in the retracted position.

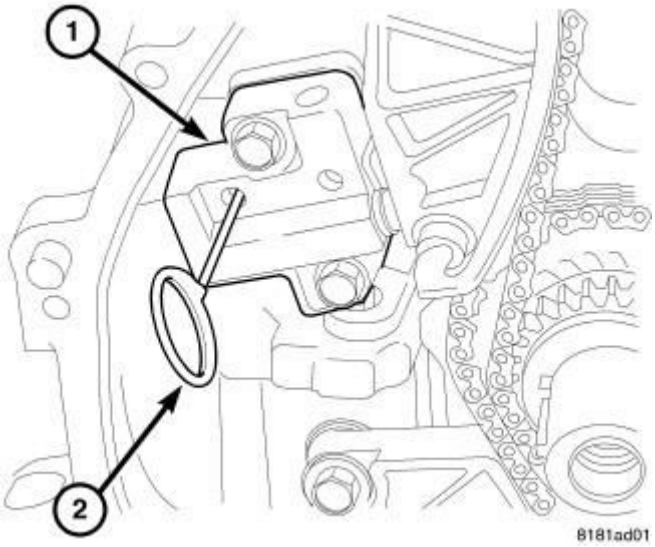

Fig. 451: Timing Chain Tensioner
Courtesy of CHRYSLER GROUP, LLC

NOTE: Keep the slack in the timing chain on the tensioner side.

2. Install timing chain tensioner (1) and tighten bolts to 12 N.m (105 in. lbs.).
3. Remove timing Tensioner Pin (special tool #8514, Pins, Tensioner) (2).
4. Install the engine timing cover Refer to **COVER(S), ENGINE TIMING, INSTALLATION**.

2014 ENGINE

Engine Cooling System - Compass & Patriot

DESCRIPTION

GAS ENGINE

The cooling system regulates engine operating temperature. It allows the engine to reach normal operating temperature as quickly as possible. It also maintains normal operating temperature and prevents overheating.

The cooling system also provides a means of heating the passenger compartment. The cooling system is pressurized and uses a centrifugal water pump to circulate coolant throughout the system. A separate and remotely mounted, coolant bottle is used.

The cooling system consists of:

- Radiator
- Coolant
- Cooling Fan(s)
- Water pump
- Thermostat
- Hoses and clamps
- Coolant pressure bottle/overflow system

OPERATION

GAS ENGINE

The primary purpose of a cooling system is to maintain engine temperature in a range that will provide satisfactory engine performance and emission levels under all expected driving conditions. It also provides hot water (coolant) for heater performance and cooling for automatic transmission oil. It does this by transferring heat from engine metal to coolant, moving this heated coolant to the radiator, and then transferring this heat to the ambient air.

- When the engine is cold and both the primary and secondary thermostats are closed. The coolant will circulate through the engine, heater system, and the

bypass. The cooling system has no flow through the radiator

- As the engine warms up, the primary thermostat will start to open at 77 °C (170 °F). Coolant will start to flow through the radiator and the internal transmission cooler. The primary thermostat will fully open at 95 °C (203 ° F).
- The secondary thermostat will start to open at 95 °C (203 °F). This will increase the coolant flow through the cylinder block and cylinder head and the radiator. The secondary thermostat will fully open at 104 °C (220 °F).
- **TURBOCHARGED ENGINE ONLY:** the turbocharged engine has a single thermostat that starts to open at 90.5 °C (195 °F) and is fully open at 100 °C (212 °F). This is done to reduce resistance and increase flow.

DIESEL

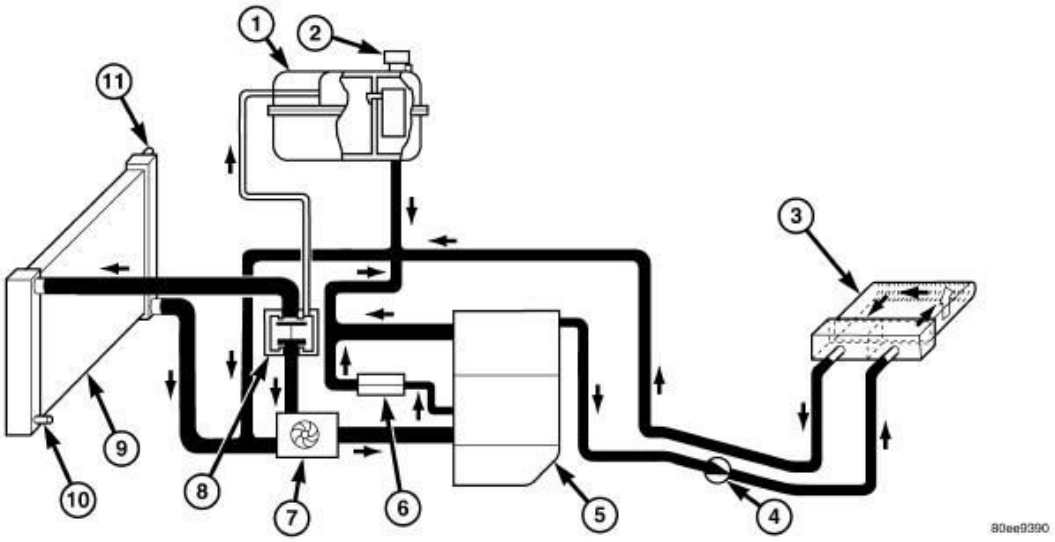

Fig. 1: Cooling System Flow
Courtesy of CHRYSLER GROUP, LLC

1 - COOLANT RECOVERY PRESSURE CONTAINER
2 - PRESSURE CAP
3 - HEATER CORE
4 - AUXILIARY HEATER
5 - ENGINE
6 - OIL COOLER
7 - WATER PUMP
8 - THERMOSTAT HOUSING
9 - RADIATOR

10 - COOLANT DRAIN VALVE
11 - SERVICE FILL VENT VALVE

The water pump draws coolant from the radiator and delivers it to the engine block. The coolant travels through the engine block into the cylinder head. Coolant exits the engine at the thermostat. If the coolant temperature is less than 87°C (189°F) the thermostat directs all of the coolant back to the water pump. If the coolant temperature is between 87°C (189°F) and 102°C (216°F) the thermostat is in the mix mode and directs the coolant to the radiator and the water pump. If the coolant is greater than 102°C (216°F), the thermostat directs all of the coolant to the radiator.

The thermostat also feeds excess coolant and bleeds air from the system through a hose leading to the coolant reservoir. The reservoir returns coolant to the inlet side of the water pump. A port and hose at the rear of the engine block provides coolant to the heater core. This coolant is returned to the engine at the intake side of the water pump.

The oil cooler receives coolant directly from the engine block. A hose returns this coolant to the inlet side of the water pump.

DIAGNOSIS AND TESTING

AERATION

If coolant level drops below a certain point, aeration will occur drawing air into the water pump resulting in the following:

- High reading shown on the temperature gauge.
- Loss of coolant flow through the heater core.
- Corrosion in the cooling system.
- Transmission oil will become hotter (automatic transmission equipped vehicles).
- Water pump seal may run dry, increasing the risk of premature seal failure.
- Combustion gas leaks into the coolant can also cause the above problems.

DEAERATION

As air is removed from the cooling system, it gathers in the coolant recovery

container. This pressure is released into the atmosphere through the pressure valve located in the radiator pressure cap when pressure reaches 96 - 124 kPa (14 - 18 psi). This air is replaced with coolant from the coolant recovery container.

NOTE: Deaeration does not occur at engine idle, higher engine speeds are required. Normal driving will deaerate cooling system.

To effectively deaerate the system, multiple thermal cycles of the system may be required.

FLOW CHECK

WARNING: DO NOT REMOVE THE COOLING SYSTEM PRESSURE CAP WITH THE SYSTEM HOT AND UNDER PRESSURE BECAUSE SERIOUS BURNS FROM COOLANT CAN OCCUR.

To determine whether coolant is flowing through the cooling system, use one of the following procedures:

- If engine is cold, idle engine until normal operating temperature is reached. Then feel the upper radiator hose. If it is hot, coolant is circulating.
- Remove pressure cap when engine is cold, remove small amount of coolant. Idle engine until thermostat opens, you should observe coolant flow while looking down the filler neck. Once flow is detected install the pressure cap.

LEAK TESTING

WARNING: If vehicle has been run recently, wait 15 minutes before removing pressure cap. Place a shop towel over the cap, and without pushing down, rotate it counterclockwise to the first stop. Allow fluids to escape through the overflow tube. When the system stops pushing coolant and steam into the coolant recovery container and pressure drops, push down on the cap and remove it completely. Squeezing the radiator inlet hose with a shop towel (to check pressure) before and after turning

to the first stop is recommended.

With engine not running, wipe the coolant filler neck sealing seat clean. The radiator should be full.

Attach Tool (special tool #7700, Tester, Cooling System) or equivalent cooling system pressure tester to the coolant filler neck. Apply 104 kPa (15 psi) pressure. If the pressure drops more than 13 kPa (2 psi) in 2 minutes inspect all points for external leaks.

All hoses, radiator and heater, should be moved while at 104 kPa (15 psi) since some leaks occur while driving due to engine movement, etc.

If there are no external leaks after the gauge dial shows a drop in pressure, detach the tester. Start engine and run the engine to normal operating temperature in order to open the thermostat and allow the coolant to expand. Reattach the tester. If the needle on the dial fluctuates, it indicates a combustion leak and is usually a head gasket leak.

WARNING: **With tool in place pressure builds up fast. Any excessive amount of pressure built up by continuous engine operation must be released to a safe pressure point. never permit pressure to exceed 138 kPa (20 psi).**

If the needle on the dial does not fluctuate, race the engine a few times. If an abnormal amount of coolant or steam is emitted from the tailpipe, it may indicate a damaged head gasket, cracked engine block or cylinder head.

There may be internal leaks which can be determined by removing the oil dipstick. If water globules appear intermixed with the oil, it will indicate an internal leak in the engine. If there is an internal leak, the engine must be disassembled for repair.

COOLING SYSTEM

CONDITION	POSSIBLE CAUSE	CORRECTION
TEMPERATURE GAUGE READS LOW	1. Diagnostic Trouble Code (DTC) has been set indicating a stuck	1. Replace thermostat, if necessary. If a (DTC) has not been set, the

	open engine thermostat.	problem may be with the temperature gauge.
	2. Engine Coolant Temperature Sensor.	2. Check connector at Engine Coolant Temperature Sensor. Repair as necessary.
	3. Inoperative temperature gauge.	3. Check gauge operation. Refer to **DIAGNOSIS AND TESTING** .
	4. Coolant level low during cold ambient temperature, accompanied by poor heater performance.	4. Check coolant level in the coolant recovery/reserve container and the radiator. Inspect the system for leaks. Repair as necessary. Refer to WARNINGS in **LEAK TESTING** before removing pressure cap.
TEMPERATURE GAUGE READS HIGH OR ENGINE COOLANT WARNING LAMP ILLUMINATES. COOLANT MAY OR MAY NOT BE LOST FROM SYSTEM.	1. Trailer being towed, a steep hill being climbed, vehicle being operated in slow moving traffic, or engine idling during high ambient (outside) temperatures with air conditioning on. High altitudes could also cause these conditions.	1. This may be a temporary condition and repair is not necessary. Turn off the air conditioning and drive the vehicle without any of the previous conditions. Observe the temperature gauge. The gauge should return to the normal range. If the gauge does not return to the normal range, determine the cause of the overheating and repair.

	2. Inoperative temperature gauge.	2. Check gauge operation. Refer to **DIAGNOSIS AND TESTING** .
	3. Is temperature warning lamp (if equipped) illuminating unnecessarily?	3. Check warning lamp operation. Refer to **DIAGNOSIS AND TESTING** .
	4. Coolant low in recovery/reserve bottle and radiator?	4. Check for coolant leaks and repair as necessary.
	5. Pressure cap not installed tightly. If cap is loose, boiling point of coolant will be lowered. Also refer to the following step 6.	5. Tighten cap.
	6. Poor seals at pressure cap.	6. (a) Check condition of cap and cap seals. Refer to **CAP, RADIATOR, DIAGNOSIS AND TESTING**. Replace cap if necessary.
		(b) Check condition of filler neck. If neck is warped or damaged, replace neck.
	7. Coolant level low in radiator, but not in coolant recovery/reserve bottle. This indicates the radiator is not drawing coolant from	7. (a) Check condition of pressure cap and cap seals. Replace cap if necessary.
		(b) Check condition of filler neck. Replace if damaged.

	the coolant recovery/reserve bottle as the engine cools. As the engine cools, a vacuum is formed inside the cooling system. If the pressure cap seals are defective, or the cooling system has a leak, a vacuum cannot be formed.	(c) Check condition of hose from filler neck to coolant container. It should be tight at both ends without any kinks or tears. Replace hose as necessary.
		(d) Check coolant recovery/reserve bottle and hose for blockage. Repair as necessary.
	8. Freeze point of coolant not correct. Mixture ratio may be too rich.	8. Check coolant concentration. Refer to **COOLANT, DIAGNOSIS AND TESTING**. Adjust glycol-to-water ratio as required.
	9. Coolant not flowing through system.	9. Check for coolant flow at filler neck with some coolant removed, engine warm, and thermostat open. Coolant should be observed flowing through filler neck. If flow is not observed, determine reason for lack of flow and repair as necessary.
	10. Radiator air seals missing or improperly installed.	10. Inspect air seals. Correct as necessary.
	11. Radiator or A/C condenser fins are dirty or clogged.	11. Clean obstruction from fins.
	12. Radiator core is	12. Replace or clean

	plugged or corroded.	radiator.
	13. Fuel or ignition system problems.	13. Refer to the appropriate Powertrain Diagnostic Procedure information.
	14. Dragging Brakes.	14. Inspect brake system and repair as necessary. Refer to **DIAGNOSIS AND TESTING** .
	15. Bug screen or other aftermarket accessory is being used causing reduced air flow.	15. Remove bug screen or accessory.
	16. Thermostat partially or completely closed.	16. Check thermostat operation and replace as necessary. Refer to **THERMOSTAT, DIAGNOSIS AND TESTING**.
	17. Cooling fan not operating properly.	17. Check electric fan operation and repair as necessary.
	18. Cylinder head gasket leaking.	18. Check cylinder head gasket for leaks. Refer to **DIAGNOSIS AND TESTING**.
	19. Heater core leaking.	19. Check heater core for leaks.
TEMPERATURE GAUGE READING IS INCONSISTENT (FLUCTUATES, CYCLES OR IS ERRATIC)	1. The gauge may cycle up and down. This is due to the cycling of the electric radiator fan.	1. A normal condition. No correction is necessary. If gauge cycling is the hot zone, check electric fan operation and repair as necessary.

	2. During cold weather operation with the heater blower in the high position, the gauge reading may drop slightly.	2. A normal condition. No correction is necessary.
	3. Temperature gauge or Engine Coolant Temperature Sensor is defective or shorted.	3. Check gauge operation. Refer to **DIAGNOSIS AND TESTING** .
	4. Gauge reading rises when vehicle is brought to a stop after heavy use (engine still running).	4. A normal condition. No correction is necessary. The gauge should return to normal range after vehicle is driven.
	5. Gauge reading high after restarting a warmed-up (hot) engine.	5. A normal condition. No correction is necessary. The gauge should return to normal range after a few minutes of engine operation.
	6. Coolant level low in radiator (air will build up in the cooling system causing the thermostat to open late).	6. Check and correct coolant leaks.
	7. Cylinder head gasket leaking allowing exhaust gas to enter cooling system. This will cause thermostat to open late.	7. (a) Check for cylinder head gasket leaks using Tool C-3685-A Block Leak Tester or the equivalent. Repair as necessary.
		(b) Check for coolant in

		the engine oil. Inspect for white steam emitting from exhaust system. Repair as necessary.
	8. Water pump impeller loose on shaft.	8. Check water pump and replace as necessary.
	9. Air leak on the suction side of water pump allows air to build up in cooling system. This will cause the thermostat to open late.	9. Locate leak and repair as necessary.
PRESSURE CAP IS BLOWING OFF STEAM AND/OR COOLANT FLOWING INTO RECOVERY BOTTLE. TEMPERATURE GAUGE READING MAY BE ABOVE NORMAL, BUT NOT HIGH. COOLANT LEVEL MAY BE HIGH IN RECOVERY BOTTLE.	1. Pressure relief valve in pressure cap is defective.	1. Check condition of pressure cap and seals. Refer to **CAP, RADIATOR, DIAGNOSIS AND TESTING**. Replace as necessary.
COOLANT LOSS TO THE GROUND WITHOUT PRESSURE CAP BLOWOFF. GAUGE IS READING HIGH OR HOT.	1. Coolant leaks in radiator, cooling system hoses, water pump or engine.	1. Pressure test cooling system and repair as necessary.
DETONATION OR PRE-IGNITION (NOT CAUSED BY IGNITION SYSTEM). GAUGE MAY OR MAY NOT BE READING HIGH.	1. Engine overheating.	1. Check reason for overheating and repair as necessary.
	2. Freeze point of	2. Check the freeze

	coolant not correct.	point of the coolant. Refer to **COOLANT, DIAGNOSIS AND TESTING**. Adjust glycol-to-water ratio as required.
HOSE OR HOSES COLLAPSE WHEN ENGINE IS COOLING	1. Vacuum created in cooling system on engine cool-down is not being relieved through coolant recovery/reserve system.	1. (a) Pressure cap relief valve stuck. Refer to **CAP, RADIATOR, DIAGNOSIS AND TESTING**. Replace as necessary. (b) Hose between coolant recovery/reserve bottle and outlet connector is kinked. Repair as necessary.
		(c) Vent at coolant recovery/reserve bottle is plugged. Clean vent and repair as necessary.
		(d) Recovery/reserve bottle is internally blocked or plugged. Check for blockage and repair as necessary.
RADIATOR FAN OPERATES ALL THE TIME	1. Malfunctioning electrical component or circuit.	1. Refer to appropriate Powertrain Diagnostic Procedures information. Repair as necessary.
	2. Check for low coolant level.	2. Repair as necessary.
RADIATOR FAN WILL NOT OPERATE, GAUGE	1. Fan motor defective.	1. Refer to appropriate Powertrain Diagnostic

READING HIGH OR HOT		Procedures information for operation of the scan tool. Repair as necessary.
	2. Fan relay, powertrain control module (PCM) or engine coolant temperature sensor defective.	2. Refer to appropriate Powertrain Diagnostic Procedures information for operation of the scan tool. Repair as necessary.
	3. Blown fuse in power distribution center (PDC).	3. Determine cause for blown fuse and repair as necessary.
NOISY FAN	1. Fan blade loose.	1. Replace radiator fan assembly.
	2. Fan blade striking a surrounding object.	2. Locate point of fan blade contact and repair as necessary.
	3. Air obstructions at radiator or A/C condenser.	3. Remove obstructions and/or clean debris from radiator and/or A/C condenser.
	4. Electric fan motor defective.	4. Replace radiator fan assembly.
INADEQUATE AIR CONDITIONER PERFORMANCE (COOLING SYSTEM SUSPECTED)	1. Electric radiator fan not operating when A/C is on.	1. Refer to appropriate Powertrain Diagnostic Procedures information for operation of the scan tool. Repair as necessary.
	2. Radiator and/or air conditioning condenser is restricted, obstructed or dirty.	2. Remove restriction and/or clean as necessary.
	3. Radiator air seals missing or improperly	3. Inspect air seals. Repair as necessary.

	installed.	
	4. Engine is overheating (heat may be transferred from radiator to A/C condenser). High underhood temperature due to engine overheating may also transfer heat to A/C components.	4. Correct overheating condition. Refer to **DIAGNOSIS AND TESTING** .
INADEQUATE HEATER PERFORMANCE	1. Has a diagnostic trouble code (DTC) been set?	1. Refer to appropriate Powertrain Diagnostic Procedures information.
	2. Coolant level low.	2. Check cooling system for leaks. Repair as necessary.
	3. Obstructions in heater hose fittings at engine.	3. Remove heater hoses at both ends and check for obstructions. Repair as necessary.
	4. Heater hose kinked.	4. Locate kinked area and repair as necessary.
	5. Water pump is not pumping coolant to heater core. When the engine is fully warmed up, both heater hoses should be hot to the touch.	5. Refer to **PUMP, WATER, DIAGNOSIS AND TESTING**. Repair as necessary.
HEAT ODOR	1. Various heat shields are used at certain components. One or more of these shields may be missing.	1. Locate missing shields and replace or repair as necessary.

	2. Is temperature gauge reading above the normal range?	2. Refer to the previous TEMPERATURE GAUGE READS HIGH in these Diagnostic Charts. Repair as necessary.
	3. Is cooling fan operating correctly?	3. Repair as necessary.
	4. Has undercoating been applied to any unnecessary component.	4. Clean undercoating as necessary.
	5. Engine may be running rich causing the catalytic converter to overheat.	5. Refer to appropriate Powertrain Diagnostic Procedures information for operation of the scan tool. Repair as necessary.
POOR DRIVEABILITY (THERMOSTAT POSSIBLY STUCK OPEN). GAUGE MAY BE READING LOW	1. Has a diagnostic trouble code (DTC) been set?	1. Refer to the appropriate Powertrain Diagnostic Procedure information for checking a DTC related to the thermostat.
STEAM IS COMING FROM FRONT OF VEHICLE NEAR GRILLE AREA WHEN WEATHER IS WET, ENGINE IS WARMED UP, RUNNING, AND VEHICLE IS STATIONARY. TEMPERATURE GAUGE IS IN NORMAL RANGE.	1. During wet weather, moisture (snow, ice or rain condensation) on the radiator will evaporate when the thermostat opens. This opening allows heated water into the radiator. When the moisture contacts the hot radiator, steam may be emitted. This usually occurs in cold	1. Occasional steam emitting from this area is normal. No repair is necessary.

	weather with no fan or airflow to blow it away.	
COOLANT COLOR	1. Coolant color is not necessarily an indication of adequate corrosion or temperature protection. Do not rely on coolant color for determining condition of coolant.	1. Check the freeze point of the coolant. Refer to **COOLANT, DIAGNOSIS AND TESTING**. Adjust the glycol-to-water ratio as required.
COOLANT LEVEL CHANGES IN COOLANT RECOVERY/RESERVE BOTTLE	1. Level changes are to be expected as coolant volume fluctuates with engine temperature. If the level in the bottle was between the FULL HOT and ADD marks at normal engine operating temperature, the level should return to within that range after operation at elevated temperatures.	1. A normal condition. No repair is necessary.

STANDARD PROCEDURE

COOLANT LEVEL CHECK

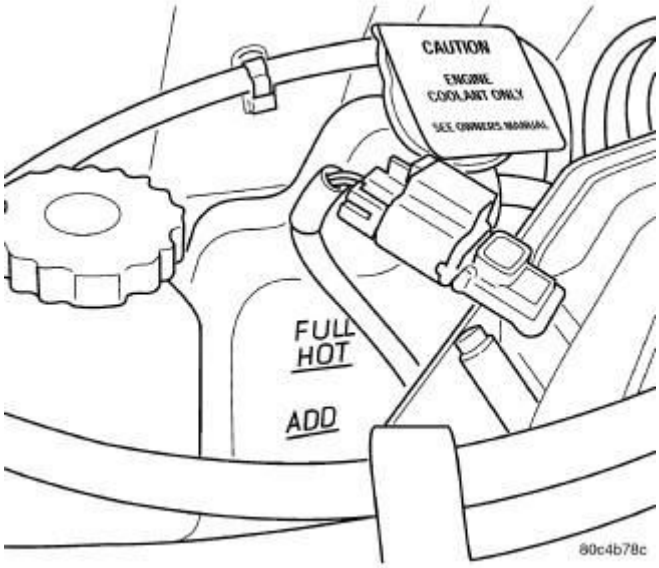

Fig. 2: Coolant Level
Courtesy of CHRYSLER GROUP, LLC

NOTE: Do not remove pressure cap for routine coolant level inspections.

The coolant recovery/reserve system provides a quick visual method for determining the coolant level without removing the pressure cap. Simply observe, with the engine idling and warmed up to normal operating temperature, that the level of the coolant in the recovery/reserve bottle is between the FULL HOT and ADD marks.

COOLING SYSTEM DRAINING

WARNING: Do not open the radiator draincock with the system hot and under pressure. Serious burns from coolant can occur.

NOTE: Drain, flush, and fill the cooling system at the mileage or time intervals specified in the MAINTENANCE SCHEDULE. Refer to MAINTENANCE SCHEDULES, DESCRIPTION . If the solution is dirty, rusty, or contains a considerable amount of sediment; clean and flush with a reliable cooling system cleaner. Care should be taken in disposing of the used engine coolant from your vehicle. Check governmental regulations for disposal of used

engine coolant.

1. Position a clean collecting container under draincock location.
2. Without removing the pressure cap and with system not under pressure, turn draincock counterclockwise to open.
3. The coolant reserve bottle should empty first, then remove the pressure cap.
4. If coolant reserve bottle does not empty first:
   a. Check condition of the pressure cap and cap seals.
   b. Check for kinked or torn overflow hose from filler neck to reserve bottle.
5. Allow cooling system to drain completely.

STANDARD PROCEDURE - COOLANT AIR EVACUATION

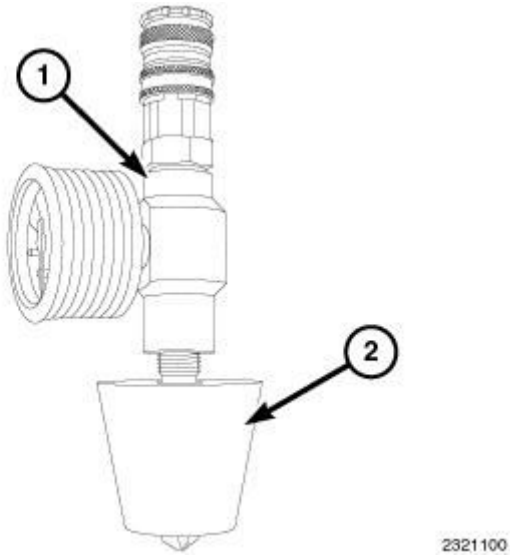

Fig. 3: Pressurized Air Operated Vacuum Generator
Courtesy of CHRYSLER GROUP, LLC

Evacuating or purging air from the cooling system involves the use of a pressurized air operated vacuum generator. The vacuum created allows for a quick and complete coolant refilling while removing any airlocks present in the system components.

NOTE: To avoid damage to the cooling system, ensure that no component would be susceptible to damage when a vacuum is drawn on the system.

WARNING: ANTIFREEZE IS AN ETHYLENE GLYCOL BASE COOLANT AND IS HARMFUL IF SWALLOWED OR INHALED. IF SWALLOWED, DRINK TWO GLASSES OF WATER AND INDUCE VOMITING. IF INHALED, MOVE TO FRESH AIR AREA. SEEK MEDICAL ATTENTION IMMEDIATELY. DO NOT STORE IN OPEN OR UNMARKED CONTAINERS. WASH SKIN AND CLOTHING THOROUGHLY AFTER COMING IN CONTACT WITH ETHYLENE GLYCOL. KEEP OUT OF REACH OF CHILDREN. DISPOSE OF GLYCOL BASED COOLANT PROPERLY. CONTACT YOUR DEALER OR GOVERNMENT AGENCY FOR LOCATION OF COLLECTION CENTER IN YOUR AREA. DO NOT OPEN A COOLING SYSTEM WHEN THE ENGINE IS AT OPERATING TEMPERATURE OR HOT UNDER PRESSURE; PERSONAL INJURY CAN RESULT. AVOID RADIATOR COOLING FAN WHEN ENGINE COMPARTMENT RELATED SERVICE IS PERFORMED; PERSONAL INJURY CAN RESULT.

WARNING: WEAR APPROPRIATE EYE AND HAND PROTECTION WHEN PERFORMING THIS PROCEDURE.

NOTE: The service area where this procedure is performed should have a minimum shop air requirement of 80 PSI (5.5 bar) and should be equipped with an air dryer system.

NOTE: For best results, the radiator should be empty. The vehicle's heater control should be set to the heat position (ignition may need to be turned to the on position but do not start the motor).

1. Refer to the Chrysler Pentastar Service Equipment (Chrysler PSE) Coolant Refiller #85-15-0650 or equivalent tool's operating manual for specific assembly steps.

2. Choose an appropriate adapter cone that will fit the vehicle's radiator filler neck or reservoir tank.
3. Attach the adapter cone (2) to the vacuum gauge (1).

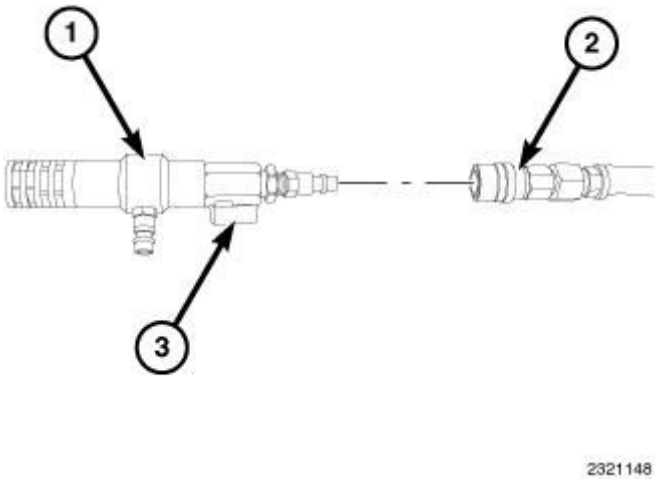

Fig. 4: Vacuum Generator/Venturi Ball Valve
Courtesy of CHRYSLER GROUP, LLC

4. Make sure the vacuum generator/venturi ball valve (3) is closed and attach an airline hose (2) (minimum shop air requirement of 80 PSI/5.5 bar) to the vacuum generator/venturi (1).
5. Position the adaptor cone/vacuum gauge assembly into the radiator filler neck or reservoir tank. Ensure that the adapter cone is sealed properly.

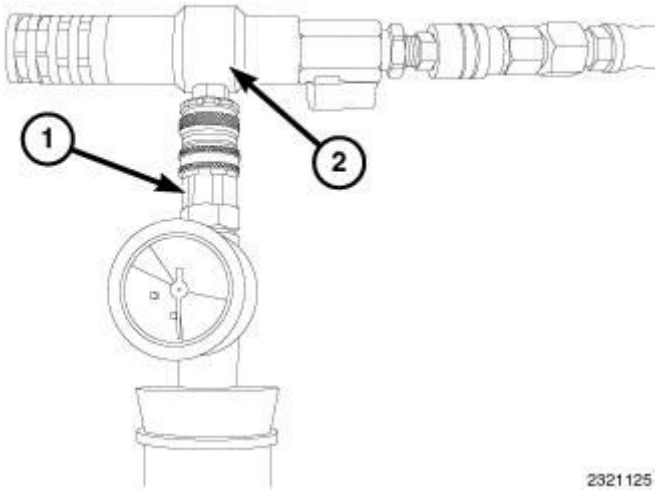

Fig. 5: Vacuum Generator/Venturi
Courtesy of CHRYSLER GROUP, LLC

6. Connect the vacuum generator/venturi (2) to the positioned adaptor cone/vacuum gauge assembly (1).
7. Open the vacuum generator/venturi ball valve.

NOTE: Do not bump or move the assembly as it may result in loss of vacuum. Some radiator overflow hoses may need to be clamped off to obtain vacuum.

8. Let the system run until the vacuum gauge shows a good vacuum through the cooling system. Refer to the tool's operating manual for appropriate pressure readings.

NOTE: If a strong vacuum is being created in the system, it is normal to see the radiator hoses to collapse.

9. Close the vacuum generator/venturi ball valve.

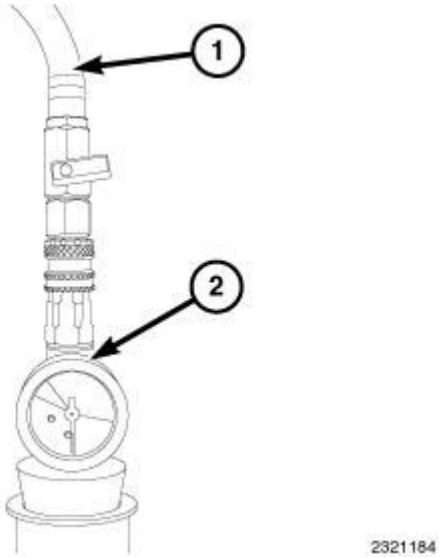

Fig. 6: Vacuum Generator/Venturi And Air Line
Courtesy of CHRYSLER GROUP, LLC

10. Disconnect the vacuum generator/venturi and airline from the adaptor cone/vacuum gauge assembly.
11. Wait approximately 20 seconds, if the pressure readings do not move, the system has no leaks. If the pressure readings move, a leak could be present in the system and the cooling system should be checked for leaks and the procedure should be repeated.

12. Place the tool's suction hose into the coolant's container.

NOTE: Ensure there is a sufficient amount of coolant, mixed to the required strength/protection level available for use. For best results and to assist the refilling procedure, place the coolant container at the same height as the radiator filler neck. Always draw more coolant than required. If the coolant level is too low, it will pull air into the cooling system which could result in airlocks in the system.

13. Connect the tool's suction hose (1) to the adaptor cone/vacuum gauge assembly (2).

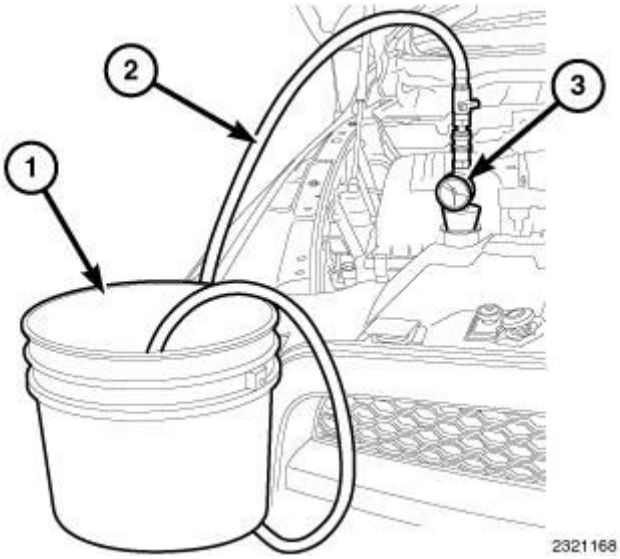

Fig. 7: Suction Hose Ball Valve
Courtesy of CHRYSLER GROUP, LLC

NOTE: View typical

14. Open the suction hose's ball valve to begin refilling the cooling system.
15. When the vacuum gauge reads zero, the system is filled.

NOTE: On some remote pressurized tanks, it is recommended to stop filling when the proper level is reached.

16. Close the suction hose's ball valve and remove the suction hose from the

adaptor cone/vacuum gauge assembly.

17. Remove the adaptor cone/vacuum gauge assembly from the radiator filler neck or reservoir tank.
18. With heater control unit in the HEAT position, operate engine with container cap in place.
19. After engine has reached normal operating temperature, shut engine off and allow it to cool. When engine is cooling down, coolant will be drawn into the radiator from the pressure container.
20. Add coolant to the recovery bottle/container as necessary. **Only add coolant to the container when the engine is cold. Coolant level in a warm engine will be higher due to thermal expansion.** Add necessary coolant to raise container level to the COLD MINIMUM mark after each cool down period.
21. Once the appropriate coolant level is achieved, attach the radiator cap or reservoir tank cap.

CLEANING/REVERSE FLUSHING

CLEANING

Drain the cooling system and refill with water. Run the engine with the radiator cap installed until the upper radiator hose is hot. Stop the engine and drain the water from system. If the water is dirty, fill the system with water, run the engine and drain the system. Repeat this procedure until the water drains clean.

REVERSE FLUSHING

Reverse flushing of the cooling system is the forcing of water through the cooling system. This is done using air pressure in the opposite direction of normal coolant flow. It is usually only necessary with very dirty systems with evidence of partial plugging.

REVERSE FLUSHING RADIATOR

Disconnect the radiator hoses from the radiator inlet and outlet. Attach a section of the radiator hose to the radiator bottom outlet fitting and insert the flushing gun. Connect a water supply hose and air supply hose to the flushing gun.

CAUTION: Internal radiator pressure must not exceed 138 kPa (20 psi) as damage to radiator may result.

Allow the radiator to fill with water. When the radiator is filled, apply air in short blasts. Allow the radiator to refill between blasts. Continue this reverse flushing until clean water flows out through the rear of the radiator cooling tube passages.

REVERSE FLUSHING ENGINE

Drain the cooling system. Remove the thermostat housing and thermostat. Install the thermostat housing. Disconnect the radiator upper hose from the radiator and attach the flushing gun to the hose. Disconnect the radiator lower hose from the water pump and attach a lead-away hose to the water pump inlet fitting.

CAUTION: On vehicles equipped with a heater water control valve, be sure the heater control valve is closed (heat off). This will prevent coolant flow with scale and other deposits from entering the heater core.

Connect the water supply hose and air supply hose to flushing gun. Allow the engine to fill with water. When the engine is filled, apply air in short blasts, allowing the system to fill between air blasts. Continue until clean water flows through the lead away hose.

Remove the lead away hose, flushing gun, water supply hose and air supply hose. Remove the thermostat housing and install the thermostat. Install the thermostat housing with a replacement gasket. Refer to Thermostat Replacement. Refer to appropriate procedures in this service information. Connect the radiator hoses. Refill the cooling system with the correct antifreeze/water mixture. Refer to **CAPACITIES AND RECOMMENDED FLUIDS, DESCRIPTION** . Refer to Refilling the Cooling System. Refer to **STANDARD PROCEDURE**.

CHEMICAL CLEANING

In some instances, use a radiator cleaner (Mopar® Radiator Kleen or equivalent) before flushing. This will soften scale and other deposits and aid flushing operation.

CAUTION: Follow manufacturers instructions when using these products.

SPECIFICATIONS

SPECIFICATIONS

DESCRIPTION	SPECIFICATIONS	
	METRIC	US
2.0L Engine*	6.8L	7.2 qts.
2.4L Engine*	6.8L	7.2 qts.
2.2L Diesel Engine*	9.5L	10.0 qts.
*(Includes heater and coolant recovery bottle filled to MAX level.)		

TORQUE

DESCRIPTION	N.m	Ft. Lbs.	In. Lbs.
Bolts, A/C Condenser to Radiator	5	-	44
Bolt, Automatic Belt Tensioner Pulley - Gas Engine	24	18	-
Bolt Automatic Belt Tension Assembly	54	40	-
Bolts, Charge Air Cooler to Radiator (Turbo Equipped)	5	-	44
Bolt, Coolant Recovery Bottle	4	-	35
Bolts, Coolant Adapter	18	13	-
Bolts, Inlet Housing to Coolant Adapter	11	8	97
Screw, Bypass Valve to Radiator	5	-	44
Screw, Bypass Tube to EGR Cooler	10	7	89
Screw, Transmission Cooler to Radiator	5	-	44
Engine Coolant Temperature Sensor	17	13	-
Pivot Bolt, Generator Mounting	54	40	-
Locking Nut, Generator Mounting	54	40	-
Screws, Transmission Cooler to Radiator	8	-	71
Bolts, Water Pump to Engine Block	24	18	-
EGR Cooler to Exhaust Manifold Tube Nuts	20	15	-
EGR Cooler to Exhaust Manifold Tube Bolts	20	15	-
EGR to EGR Valve Tube Bolts	20	15	-
Bolts, Water Pump Inlet Tube to Water Pump Housing - Gas Engine	24	18	-
Bolts, Water Pump to Water Pump Adapter	22	16	-

- Gas Engine			
Bolts, Water Pump Pulley to Water Pump - Gas Engine	9	-	80

INSPECTION

INSPECTION

After performing a cleaning/flush procedure, inspect all hoses, clamps and connections for deterioration and leaks. Inspect radiator and heater core for leaks.

SPECIAL TOOLS

SPECIAL TOOLS

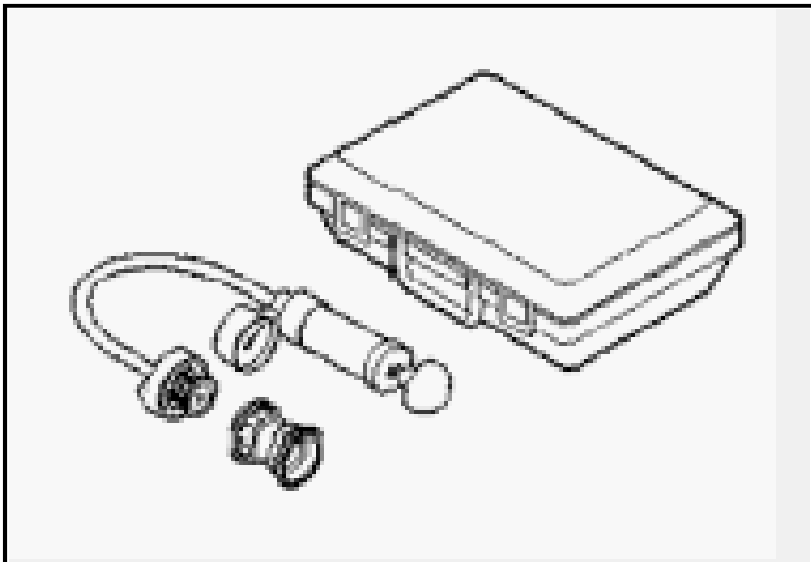	7700 - Tester, Cooling System (Originally Shipped In Kit Number(s) 7700-A.)
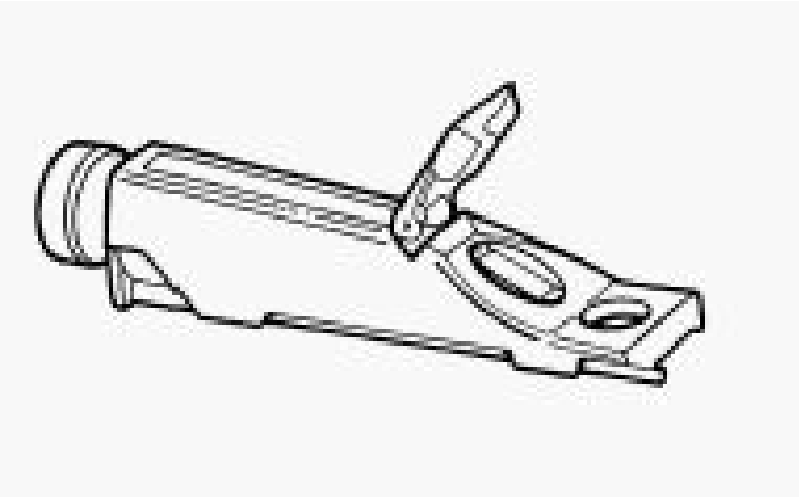	8286 - Refractometer

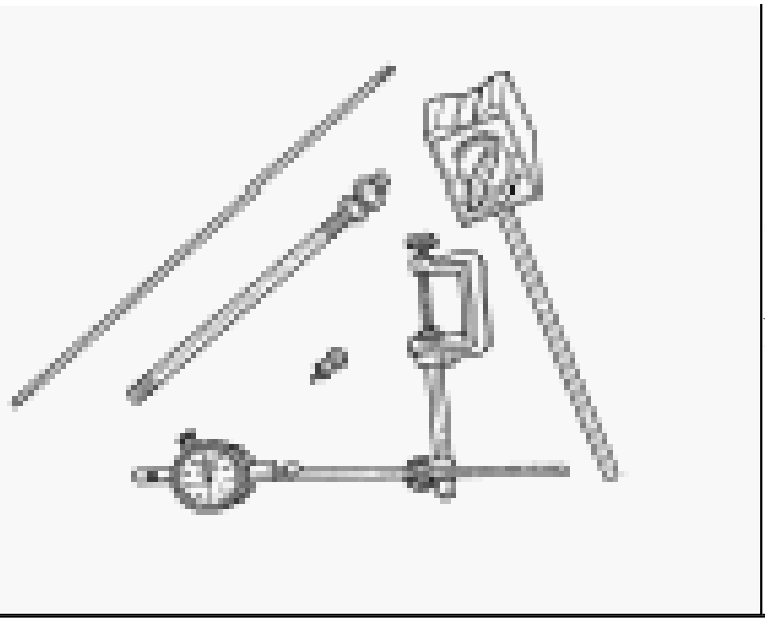	8875A - Disconnect, Transmission Cooler Line (Originally Shipped In Kit Number(s) 9202, 9328, 9328-CAN, 9329, 9516, 9575.)

ACCESSORY DRIVE

BELT, SERPENTINE

DESCRIPTION

GAS ENGINE

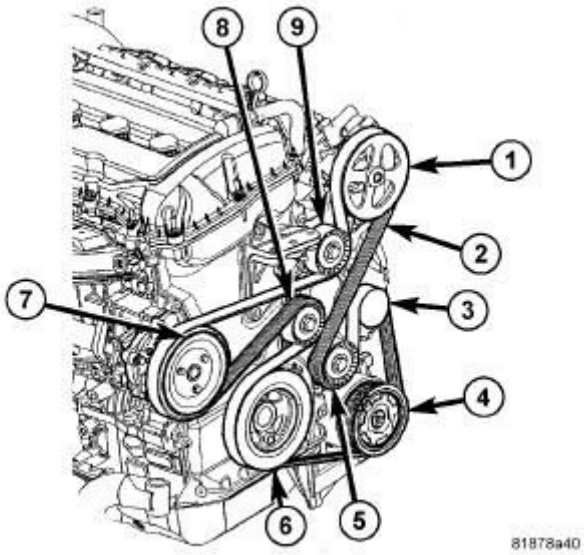

Fig. 8: Accessory Drive Belt - World Engine
Courtesy of CHRYSLER GROUP, LLC

The accessory drive belt (2) is a serpentine type belt that is driven by the crankshaft pulley (6).

The belt drives the A/C compressor, generator (3), power steering pump (1) and water pump (7). Belt tension is maintained by an automatic belt tensioner (8).

DIESEL ENGINE

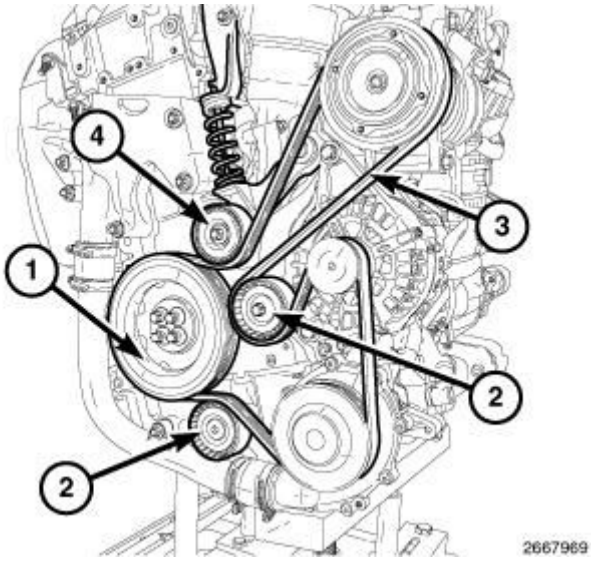

Fig. 9: Identifying Main Drive Belt
Courtesy of CHRYSLER GROUP, LLC

The accessory drive belt on the 2.2L Diesel engine is of the serpentine style. This belt is used to drive the generator, power steering pump, and the A/C compressor.

DIAGNOSIS AND TESTING

DIAGNOSIS AND TESTING - ACCESSORY DRIVE BELT

ACCESSORY DRIVE BELT DIAGNOSIS CHART

CONDITION	POSSIBLE CAUSES	CORRECTION
RIB CHUNKING (One or more ribs has separated from belt body)	1. Foreign objects imbedded in pulley grooves.	1. Remove foreign objects from pulley grooves. Replace belt.
	2. Installation damage	2. Replace belt
RIB OR BELT WEAR	1. Pulley misaligned	1. Align pulley(s)
	2. Abrasive environment	2. Clean pulley(s). Replace belt if necessary
	3. Rusted pulley(s)	3. Clean rust from pulley (s)
	4. Sharp or jagged	4. Replace pulley. Inspect

	pulley groove tips	belt.
	5. Belt rubber deteriorated	5. Replace belt
BELT SLIPS	1. Belt slipping because of insufficient tension	1. Inspect/Replace tensioner if necessary
	2. Belt or pulley exposed to substance that has reduced friction (belt dressing, oil, ethylene glycol)	2. Replace belt and clean pulleys
	3. Driven component bearing failure (seizure)	3. Replace component or bearing
	4. Belt glazed or hardened from heat and excessive slippage	4. Replace belt.
LONGITUDINAL BELT CRACKING	1. Belt has mistracked from pulley groove	1. Replace belt
	2. Pulley groove tip has worn away rubber to tensile member	2. Replace belt
GROOVE JUMPING (Belt does not maintain correct position on pulley)	1. Incorrect belt tension	1. Inspect/Replace tensioner if necessary
	2. Pulley(s) not within design tolerance	2. Replace pulley(s)
	3. Foreign object(s) in grooves	3. Remove foreign objects from grooves
	4. Pulley misalignment	4. Align component
	5. Belt cordline is broken	5. Replace belt
BELT BROKEN (Note: Identify and correct problem before new belt is installed)	1. Incorrect belt tension	1. Replace Inspect/Replace tensioner if necessary
	2. Tensile member	2. Replace belt

	damaged during belt installation	
	3. Severe misalignment	3. Align pulley(s)
	4. Bracket, pulley, or bearing failure	4. Replace defective component and belt
NOISE (Objectionable squeal, squeak, or rumble is heard or felt while drive belt is in operation)	1. Incorrect belt tension	1. Inspect/Replace tensioner if necessary
	2. Bearing noise	2. Locate and repair
	3. Belt misalignment	3. Align belt/pulley(s)
	4. Belt to pulley mismatch	4. Install correct belt
	5. Driven component induced vibration	5. Locate defective driven component and repair
	6. System resonant frequency induced vibration	6. Vary belt tension within specifications
TENSION SHEETING FABRIC FAILURE (Woven fabric on outside, circumference of belt has cracked or separated from body of belt)	1. Tension sheeting contacting stationary object	1. Correct rubbing condition
	2. Excessive heat causing woven fabric to age	2. Replace belt
	3. Tension sheeting splice has fractured	3. Replace belt
CORD EDGE FAILURE (Tensile member exposed at edges of belt or separated from belt body)	1. Incorrect belt tension	1. Inspect/Replace tensioner if necessary
	2. Belt contacting stationary object	2. Replace belt
	3. Pulley(s) out of tolerance	3. Replace pulley
	4. Insufficient adhesion between tensile member and rubber matrix	4. Replace belt

VISUAL DIAGNOSIS

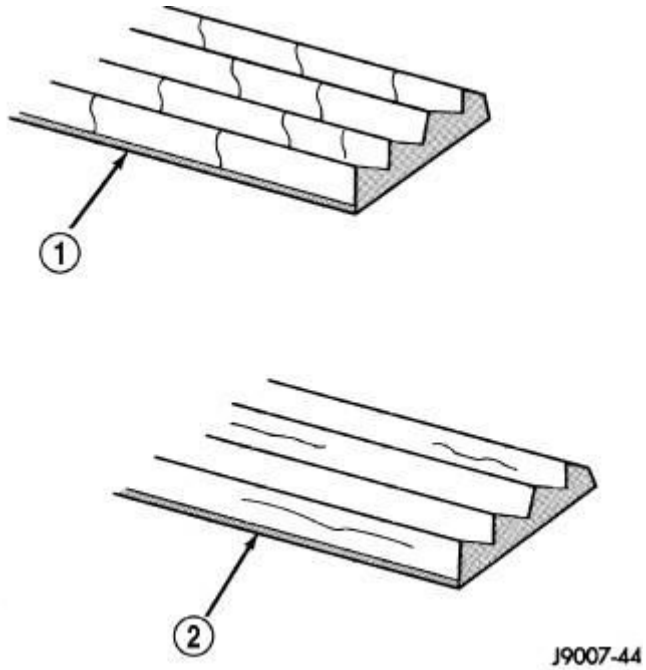

Fig. 10: Belt Wear Patterns
Courtesy of CHRYSLER GROUP, LLC

1 - NORMAL CRACKS ON BELT
2 - NOT NORMAL CRACKS ON BELT

When diagnosing serpentine accessory drive belts, small cracks that run across the ribbed surface of the belt from rib to rib (1), are considered normal. These are not a reason to replace the belt. However, cracks running along a rib (not across) (2) are **not** normal. Any belt with cracks running along a rib must be replaced. Also replace the belt if it has excessive wear, frayed cords or severe glazing.

Refer to **ACCESSORY DRIVE BELT DIAGNOSIS CHART** for further belt diagnosis.

NOISE DIAGNOSIS

Noises generated by the accessory drive belt are most noticeable at idle. Before replacing a belt to resolve a noise condition, inspect all of the accessory drive pulleys for contamination, alignment, glazing, or excessive end play.

REMOVAL

GAS ENGINE

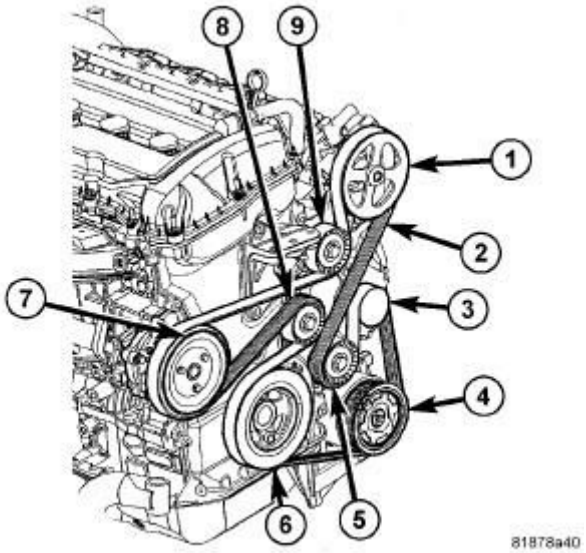

Fig. 11: Accessory Drive Belt - World Engine
Courtesy of CHRYSLER GROUP, LLC

1. Using a wrench, rotate accessory drive belt tensioner (8) counterclockwise until accessory drive belt (2) can be removed from pulleys (5 and 9).
2. Remove accessory drive belt (2).

DIESEL

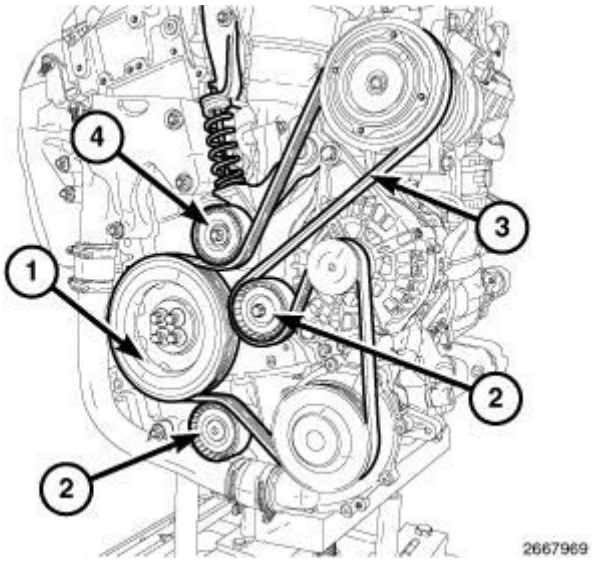

Fig. 12: Identifying Main Drive Belt
Courtesy of CHRYSLER GROUP, LLC

1. Raise and support the vehicle.

CAUTION: Do not let the tensioner arm snap back to the

freearm position, severe damage may occur to the tensioner.

2. Using a wrench, rotate the belt tensioner (4) until the belt (3) can be removed from the pulleys (1, 2). Gently, release spring tension on tensioner (4).
3. Remove the accessory drive belt (3).

INSTALLATION

GAS ENGINE

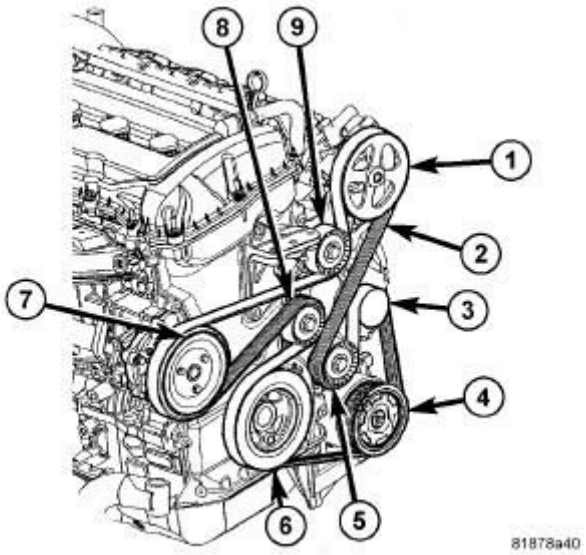

Fig. 13: Accessory Drive Belt - World Engine
Courtesy of CHRYSLER GROUP, LLC

NOTE: When installing drive belt on the pulleys, make sure that belt is properly routed and all V-grooves make proper contact with pulley grooves.

1. Install the accessory drive belt (2) around all the pulleys except for the generator pulley (3).
2. Using a wrench, rotate accessory drive belt tensioner (8) counterclockwise until accessory drive belt (2) can be installed on the generator pulley (3). Release spring tension onto accessory drive belt (2).

DIESEL

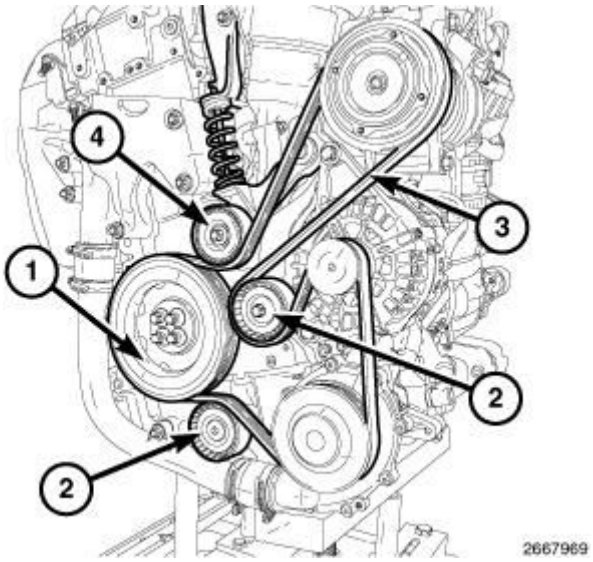

Fig. 14: Identifying Main Drive Belt
Courtesy of CHRYSLER GROUP, LLC

NOTE: When installing accessory drive belt, be sure belt is routed around all accessories correctly.

1. Install belt over all pulleys except for the power steering pump pulley.

CAUTION: Do not let the tensioner arm snap back to the freearm position, severe damage may occur to the tensioner.

2. Using a wrench, rotate belt tensioner (4) clockwise until belt can be installed onto power steering pump pulley. Release spring tension onto belt.
3. Lower vehicle from hoist.

PULLEY, IDLER

REMOVAL

REMOVAL

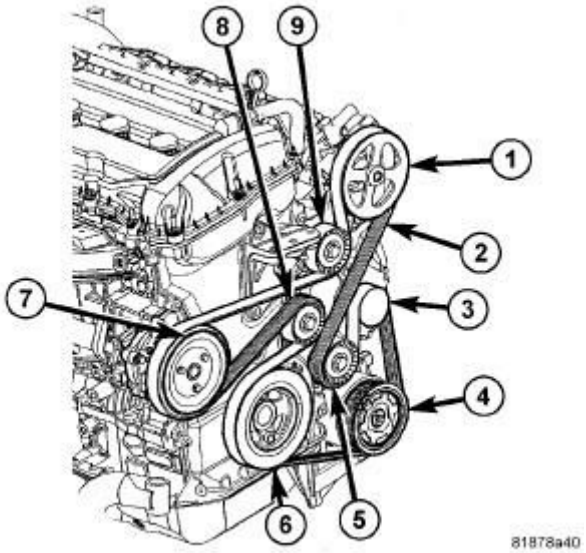

Fig. 15: Accessory Drive Belt - World Engine
Courtesy of CHRYSLER GROUP, LLC

1. Raise vehicle on hoist.
2. Remove belt splash shield.
3. Remove accessory drive belt (2). Refer to **BELT, SERPENTINE, REMOVAL**.
4. Remove idler pulley mounting bolt. Remove idler pulley (5 or 9).

DIESEL ENGINE

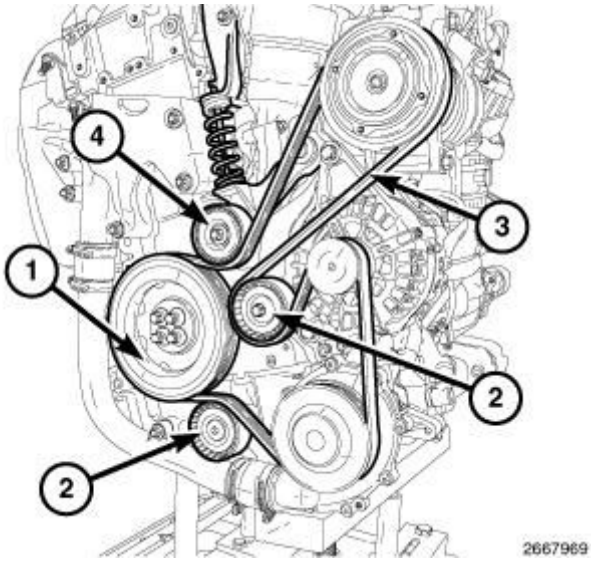

Fig. 16: Identifying Main Drive Belt
Courtesy of CHRYSLER GROUP, LLC

1. Remove the accessory drive belt (3). Refer to **BELT, SERPENTINE, REMOVAL**.
2. From under the vehicle, remove the idler pulley mounting bolt. Remove idler pulley (2).

INSTALLATION

INSTALLATION

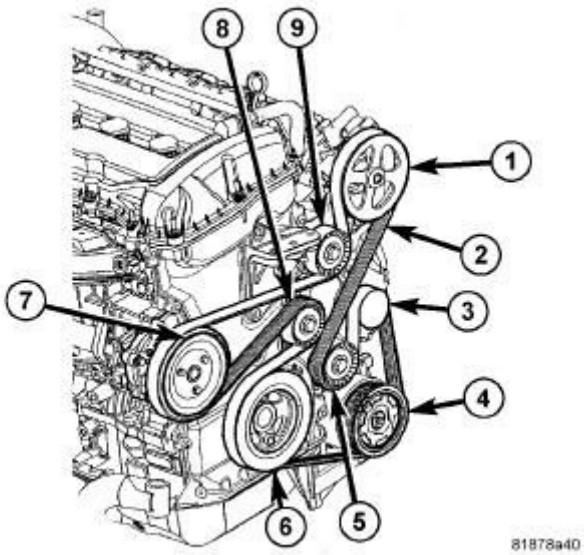

Fig. 17: Accessory Drive Belt - World Engine
Courtesy of CHRYSLER GROUP, LLC

1. Position pulley (5 or 9) in mounting position. Install idler pulley mounting bolt. Tighten bolt to 48 N.m (35 ft. lbs.).
2. Install accessory drive belt (2). Refer to **BELT, SERPENTINE, INSTALLATION**.
3. Install belt splash shield.
4. Lower vehicle.

DIESEL ENGINE

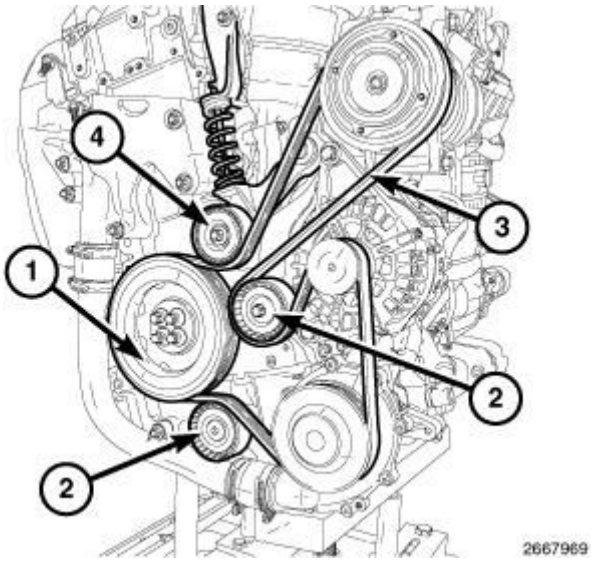

Fig. 18: Identifying Main Drive Belt
Courtesy of CHRYSLER GROUP, LLC

1. Remove the accessory drive belt (3). Refer to **BELT, SERPENTINE, REMOVAL**.
2. From under the vehicle, remove the idler pulley mounting bolt. Remove idler pulley (2).

TENSIONER, BELT

DESCRIPTION

DESCRIPTION

The automatic belt tensioner maintains proper tension on the accessory drive belt. The tensioner pulley can be serviced separately.

REMOVAL

GAS ENGINE

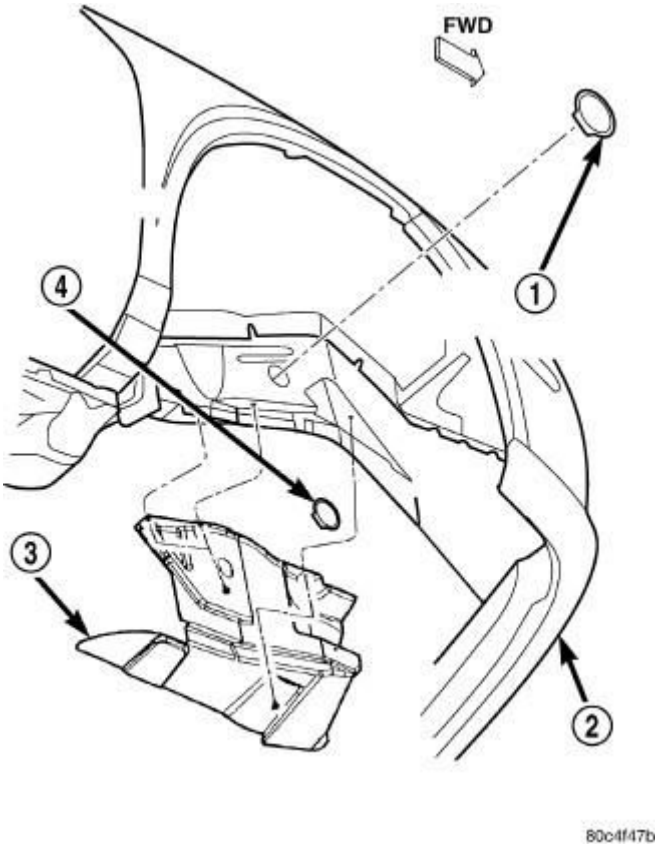

Fig. 19: Splash Shield
Courtesy of CHRYSLER GROUP, LLC

1. Raise vehicle on hoist.
2. Remove belt splash shield (3).

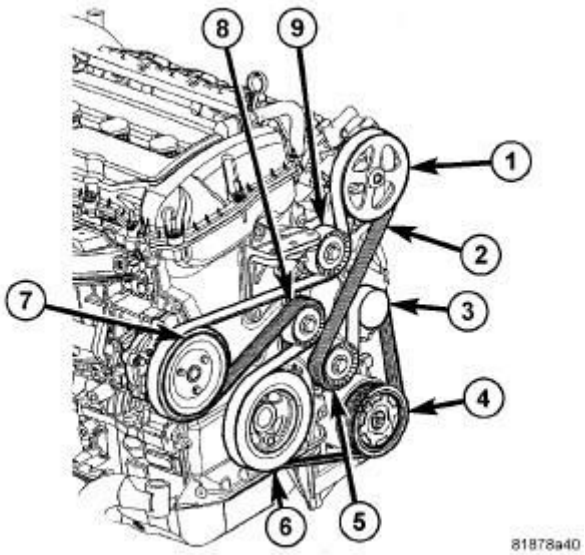

Fig. 20: Accessory Drive Belt - World Engine
Courtesy of CHRYSLER GROUP, LLC

1 - POWER STEERING PUMP
2 - ACCESSORY DRIVE BELT
3 - GENERATOR
4 - CRANKSHAFT PULLEY
5 - LOWER IDLER PULLEY
6 - CRANKSHAFT PULLEY
7 - WATER PUMP PULLEY
8 - ACCESSORY DRIVE BELT TENSIONER
9 - UPPER IDLER PULLEY

3. Remove accessory drive belt. Refer to **BELT, SERPENTINE, REMOVAL**.
4. Remove accessory drive belt tensioner mounting bolt. Remove accessory drive belt tensioner (8).

DIESEL ENGINE

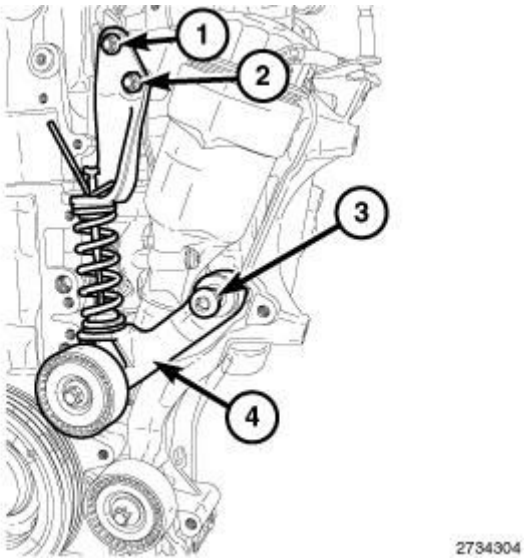

Fig. 21: Tensioner Bracket Mounting Bolts
Courtesy of CHRYSLER GROUP, LLC

1. Remove the accessory drive belt. Refer to **BELT, SERPENTINE, REMOVAL**.
2. Lower the vehicle.
3. Remove the tensioner bracket mounting bolts (1, 2 3).
4. Raise and support the vehicle.
5. Remove the tensioner assembly (4) from underneath the vehicle.

6. If idler pulley is to be replaced, remove pulley from tensioner (4).

ACCESSORY CARRIER BRACKET REMOVAL - DIESEL ENGINE

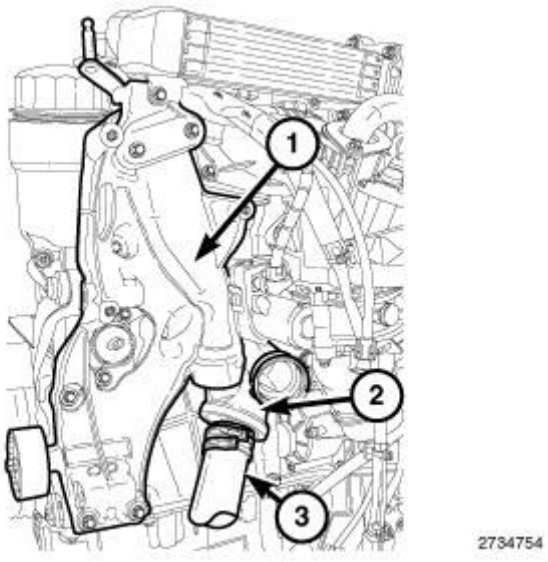

Fig. 22: Identifying Thermostat Housing & Accessory Carrier Bracket
Courtesy of CHRYSLER GROUP, LLC

1. Disconnect the negative battery cable.
2. Remove the water/power steering/vacuum pump assembly. Refer to **PUMP, WATER, REMOVAL**.
3. Lower the vehicle.
4. Remove the coolant recovery bottle. Refer to **BOTTLE, COOLANT RECOVERY, REMOVAL**.
5. Remove the charge air cooler.
6. Remove the A/C condenser. Refer to **CONDENSER, A/C, REMOVAL** .
7. Remove the A/C compressor. Refer to **COMPRESSOR, A/C, REMOVAL** .
8. Remove the generator. Refer to **GENERATOR, REMOVAL** .
9. Remove the EGR cooler. Refer to **COOLER, EGR, REMOVAL**.
10. Remove the accessory drive belt tensioner. Refer to **TENSIONER, BELT, REMOVAL**.
11. Remove the coolant bypass hose from the thermostat housing (2).
12. Remove the radiator hose (3) from the thermostat housing (2).
13. Remove the thermostat housing mounting bolts.

14. Remove the accessory drive bracket mounting bolts.
15. Remove the accessory drive bracket (1).
16. If necessary, separate the thermostat (2) from the accessory drive bracket (1).

INSTALLATION

GAS ENGINE

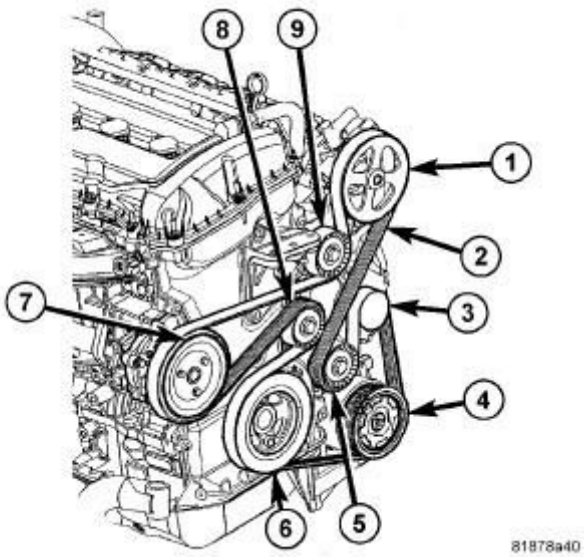

Fig. 23: Accessory Drive Belt - World Engine
Courtesy of CHRYSLER GROUP, LLC

1. Position accessory drive belt tensioner (8) and install mounting bolt (1). Tighten bolt (1) to 24 N.m (212 in. lbs.).
2. Install accessory drive belt (2). Refer to **BELT, SERPENTINE, INSTALLATION**.

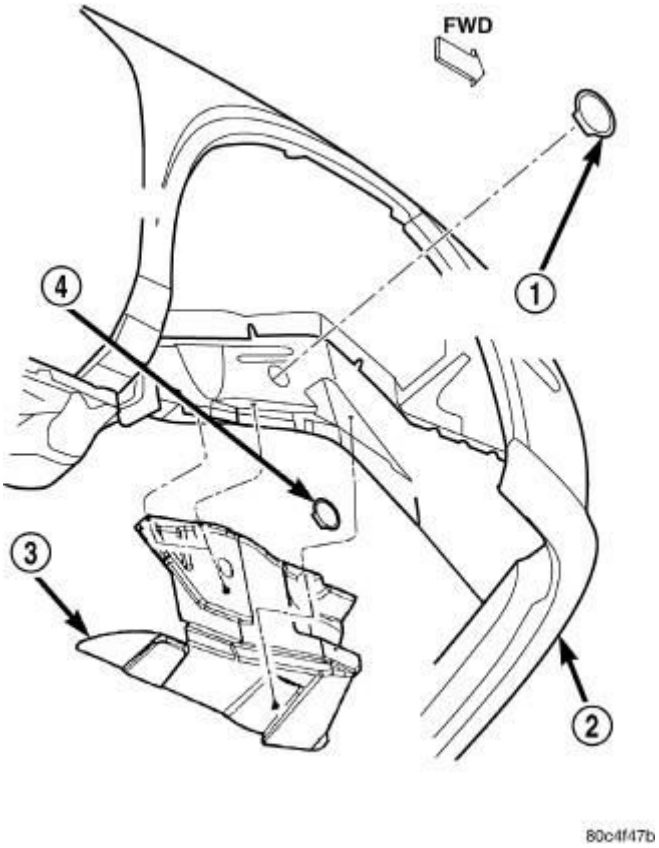

Fig. 24: Splash Shield
Courtesy of CHRYSLER GROUP, LLC

3. Install belt splash shield (3).
4. Lower vehicle.

DIESEL ENGINE

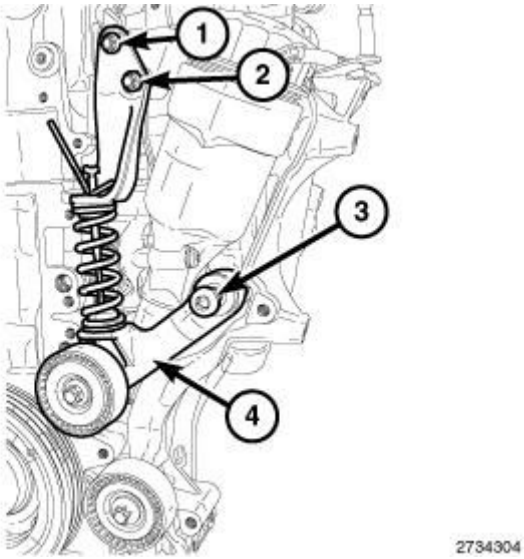

Fig. 25: Tensioner Bracket Mounting Bolts

Courtesy of CHRYSLER GROUP, LLC

1. Install tensioner pulley and bolt, if removed. Tighten bolt to 25 N.m (18 ft. lbs.).
2. From underneath the vehicle, position the belt tensioner assembly (4) onto the engine.
3. Install the lower bolt (3) into the accessory drive bracket to assist in holding the tensioner assembly (4) in place. Hand tighten the bolt.
4. Lower the vehicle.
5. Install the upper belt tensioner bolts (1, 2) to the accessory drive bracket. Tighten the bolts to 20 N.m (15 ft. lbs.).
6. Tighten the lower belt tensioner bolt to 45 N.m (33 ft. lbs.).
7. Install the accessory drive belt. Refer to **BELT, SERPENTINE, INSTALLATION**.

ACCESSORY DRIVE BRACKET INSTALLATION - DIESEL ENGINE

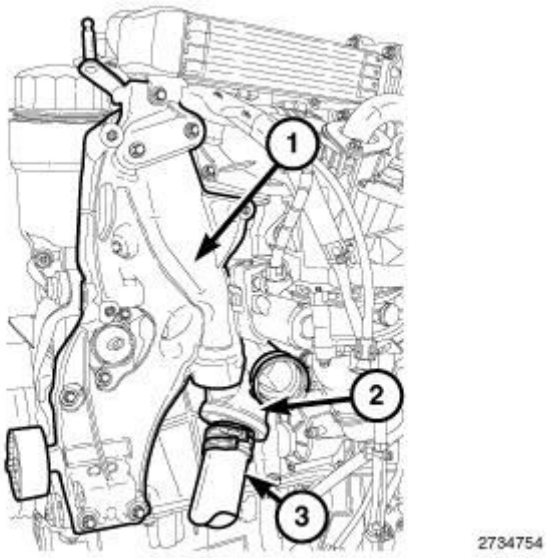

Fig. 26: Identifying Thermostat Housing & Accessory Carrier Bracket
Courtesy of CHRYSLER GROUP, LLC

1. If necessary, install the thermostat (2) to the accessory drive bracket (1).
2. Position the accessory drive bracket (1) to the engine.
3. Install the accessory drive bracket mounting bolts. Tighten the bolts to 9 N.m (80 in. lbs.).
4. Install the thermostat housing mounting bolts. Tighten the bolts to 9 N.m (80

in. lbs.).
5. Install the radiator hose (3) to the thermostat housing (2).
6. Install the coolant bypass hose to the thermostat housing (2).
7. Install the accessory drive belt tensioner. Refer to **TENSIONER, BELT, INSTALLATION**.
8. Install the EGR cooler. Refer to **COOLER, EGR, INSTALLATION**.
9. Install the generator. Refer to **GENERATOR, INSTALLATION** .
10. Install the A/C compressor. Refer to **COMPRESSOR, A/C, INSTALLATION** .
11. Install the A/C condenser. Refer to **CONDENSER, A/C, INSTALLATION** .
12. Install the charge air cooler.
13. Install the coolant recovery bottle. Refer to **BOTTLE, COOLANT RECOVERY, INSTALLATION**.
14. Install the water/power steering/vacuum pump assembly. Refer to **PUMP, WATER, INSTALLATION**.
15. Install the negative battery cable.

ENGINE

BOTTLE, COOLANT RECOVERY

DESCRIPTION

GAS ENGINE

The coolant recovery system consists of a coolant recovery container mounted to the RH inner wheel housing, a vent hose for the coolant recovery container, a hose connecting the container to the radiator neck, and a pressure cap.

DIESEL ENGINE

The coolant recovery system consists of a coolant recovery container mounted to the RH inner wheel housing, a vent hose for the coolant recovery container, a hose connecting the container to the radiator neck, and a pressure cap.

OPERATION

GAS ENGINE

The system works in conjunction with the cooling system pressure cap to utilize thermal expansion and contraction of the coolant to keep the coolant free of trapped air. The system provides space for expansion and contraction. Also, the system provides a convenient and safe method for checking and adjusting the coolant level at atmospheric pressure without removing the pressure cap. It also provides some reserve coolant to compensate for minor leaks and evaporation or boiling losses.

DIESEL ENGINE

The location of the container allows any air or vapor exceeding the pressure/vent cap rating to escape through the cap. Coolant flows through the container at all times during engine operation whether the engine is cold or at normal operating temperature. The coolant container is equipped with a pressure/vent cap. For more information. Refer to **CAP, RADIATOR, DESCRIPTION**.

REMOVAL

GAS ENGINE

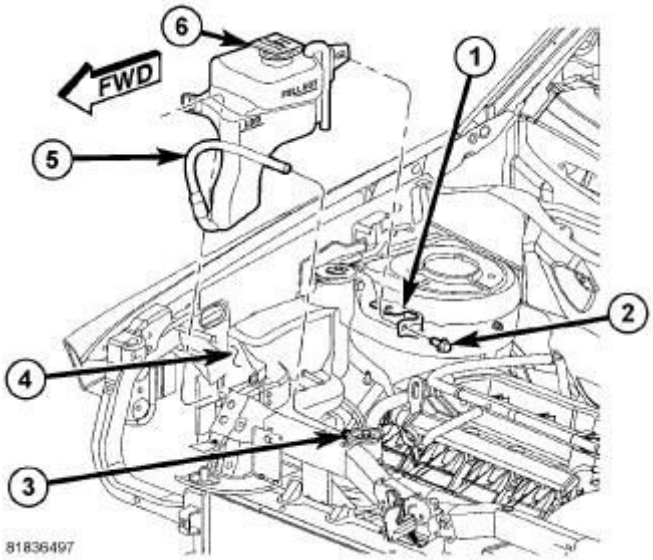

Fig. 27: Coolant Recovery Container
Courtesy of CHRYSLER GROUP, LLC

1 - MOUNTING BRACKET
2 - BOLT
3 - RADIATOR HOSE TEE
4 - WASHER RESERVOIR

5 - HOSE
6 - COOLANT RECOVERY CONTAINER

1. Partially drain cooling system using the draincock only. Refer to **STANDARD PROCEDURE**. Drain system below level of the coolant recovery pressure container.
2. Remove the return hose (5) from the upper radiator hose tee (3).
3. Remove the coolant recovery bottle mount bolt (2) from the mounting bracket (1).
4. Disengage the coolant recovery container (6) from the washer reservoir bottle (4).
5. Remove the coolant recovery container (6).

DIESEL ENGINE

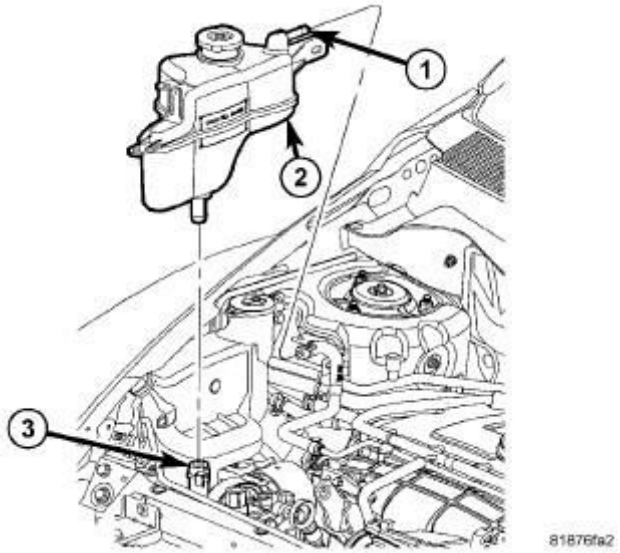

Fig. 28: Coolant Container - Diesel Engine
Courtesy of CHRYSLER GROUP, LLC

1 - RETURN FITTING
2 - PRESSURE CONTAINER
3 - COOLANT HOSE

1. Partially drain the cooling system using the draincock only. Refer to **STANDARD PROCEDURE**. Drain the system below the level of the coolant recovery pressure container (2).

2. Disconnect the return hose at the coolant recovery pressure container (2).
3. Remove the coolant recovery pressure container bolts.
4. Lift container up and disconnect the coolant hose (3) from the bottom of the pressure container (2).
5. Remove the pressure container (2) from engine compartment.

INSTALLATION

GAS ENGINE

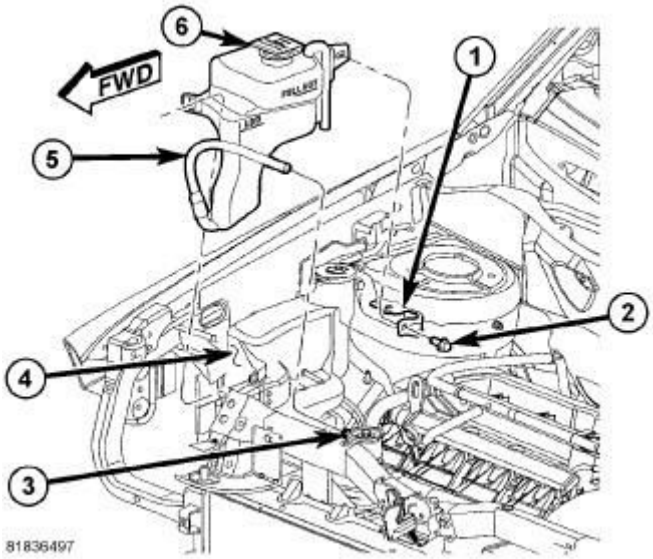

Fig. 29: Coolant Recovery Container
Courtesy of CHRYSLER GROUP, LLC

1 - MOUNTING BRACKET
2 - BOLT
3 - RADIATOR HOSE TEE
4 - WASHER RESERVOIR
5 - HOSE
6 - COOLANT RECOVERY CONTAINER

1. Position the coolant recovery container (6) into the washer fluid reservoir (4).
2. Install the coolant recovery container mounting bolt (2). Tighten the mounting bolt to 4 N.m (35 in. lbs.).
3. Connect the hose (5) at the upper radiator tee (3).

4. Fill coolant recovery container to proper level. Refer to **STANDARD PROCEDURE**.

DIESEL ENGINE

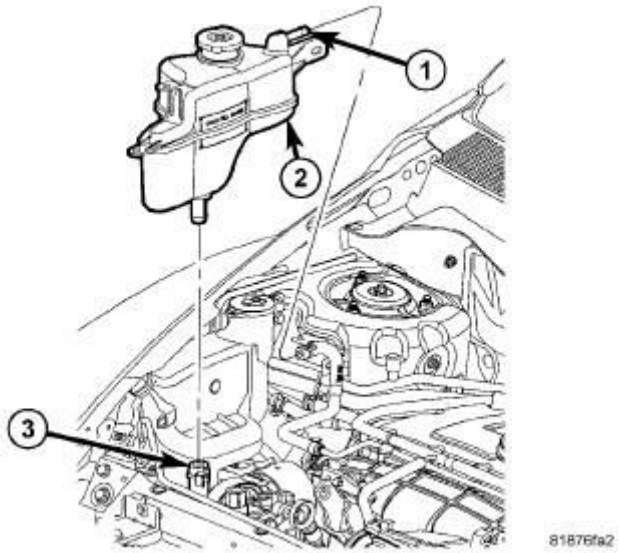

Fig. 30: Coolant Container - Diesel Engine
Courtesy of CHRYSLER GROUP, LLC

1 - RETURN FITTING
2 - PRESSURE CONTAINER
3 - COOLANT HOSE

1. Lower the pressure container (2) into the engine compartment and connect the coolant hose (3) at bottom of the pressure container (2).
2. Position the pressure container (2) and install the mounting bolts. Tighten the mounting bolts to 4 N.m (35 lbs. in.).
3. Connect the coolant return hose to the coolant recovery container (2).
4. Refill the cooling system. Refer to **STANDARD PROCEDURE**.

CAP, RADIATOR

DESCRIPTION

GAS ENGINE

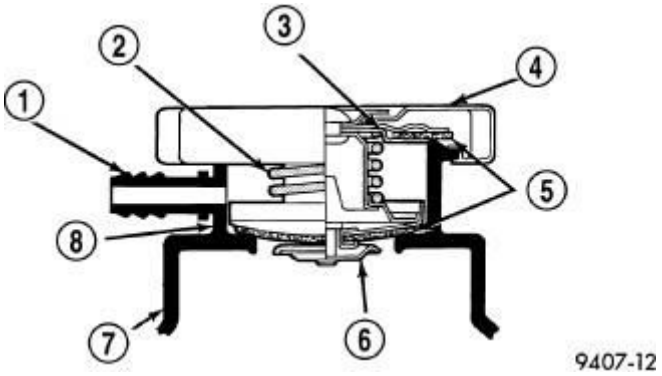

Fig. 31: Cooling System Pressure Cap
Courtesy of CHRYSLER GROUP, LLC

1 - OVERFLOW NIPPLE
2 - MAIN SPRING
3 - GASKET RETAINER
4 - STAINLESS-STEEL SWIVEL TOP
5 - RUBBER SEALS
6 - VENT VALVE
7 - RADIATOR
8 - FILLER NECK

The cooling system is equipped with a pressure cap that releases built up pressure, maintaining a range of 97-124 kPa (14-18 psi).

There is also a vent valve (6) in the center of the cap. This valve also opens when coolant is cooling and contracting, allowing coolant to return to radiator from coolant recovery container by vacuum through connecting hose.**If valve is stuck shut, the radiator hoses will be collapsed on cool down. Clean the vent valve to ensure proper sealing when boiling point is reached.**

DIESEL ENGINE

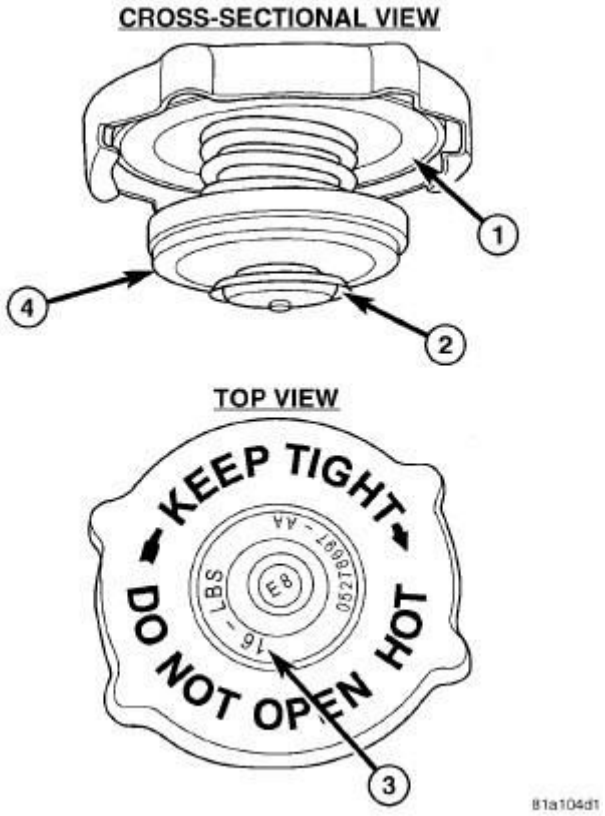

Fig. 32: Radiator Pressure Cap
Courtesy of CHRYSLER GROUP, LLC

1 - NECK SEAL
2 - VACUUM VENT
3 - PRESSURE RATING
4 - PRESSURE VALVE

All vehicles are equipped with a pressure cap. This cap releases pressure at some point within approximately 110 kPa (16 psi). The pressure relief point (in pounds) is engraved on top of the cap.

The cooling system will operate at pressures slightly above atmospheric pressure. This results in a higher coolant boiling point allowing increased radiator cooling capacity. The cap contains a spring-loaded pressure relief valve. This valve opens when system pressure reaches the release range of approximately 110 kPa (16 psi).

A rubber gasket seals the radiator filler neck. This is done to maintain vacuum during coolant cool-down and to prevent leakage when system is under pressure.

DIAGNOSIS AND TESTING

PRESSURE TESTING

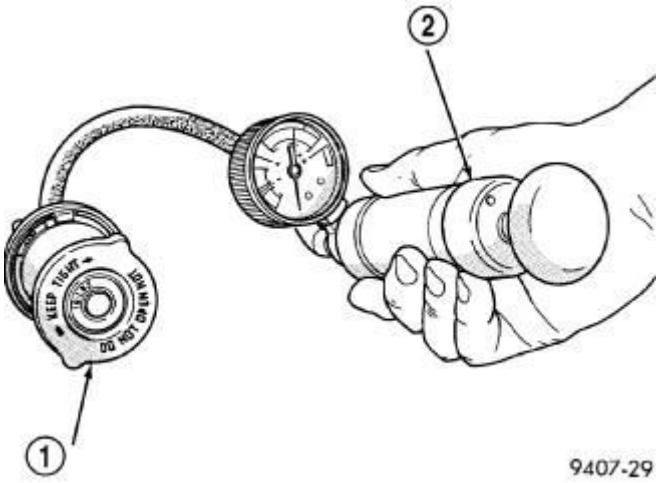

Fig. 33: Pressure Testing Radiator Cap
Courtesy of CHRYSLER GROUP, LLC

1 - PRESSURE CAP
2 - PRESSURE TESTER

Dip the pressure cap in water. Clean any deposits off the vent valve or its seat and apply cap to end of the Pressure Cap Test Adaptor that is included with the Cooling System Tester (special tool #7700, Tester, Cooling System). Working the plunger, bring the pressure to 104 kPa (15 psi) on the gauge. If the pressure cap fails to hold pressure of at least 97 kPa (14 psi), replace the pressure cap.

CAUTION: The Cooling System Tester Tool is very sensitive to small air leaks that will not cause cooling system problems. A pressure cap that does not have a history of coolant loss should not be replaced just because it leaks slowly when tested with this tool. Add water to the tool. Turn tool upside down and recheck pressure cap to confirm that cap is bad.

If the pressure cap tests properly while positioned on Cooling System Tester (special tool #7700, Tester, Cooling System), but will not hold pressure or vacuum when positioned on the filler neck. Inspect the filler neck and cap top gasket for irregularities that may prevent the cap from sealing properly.

PRESSURE RELIEF TESTING

WARNING: If vehicle has been run recently, wait 15 minutes before removing cap. Place a shop towel over the cap, and without pushing down, rotate it counterclockwise to the first stop. Allow fluids to escape through the overflow tube. When the system stops pushing coolant and steam into the coolant recovery container and pressure drops, push down on the cap and remove it completely. Squeezing the radiator inlet hose with a shop towel (to check pressure) before and after turning to the first stop is recommended.

WARNING: The warning words "DO NOT OPEN HOT" on the pressure cap is a safety precaution. When hot, the cooling system builds up pressure. To prevent scalding or other injury, the pressure cap should not be removed while the system is hot and/or under pressure.

The pressure cap upper gasket to filler neck seal can be checked by removing the overflow hose at the radiator filler neck overflow nipple. Attach the radiator pressure tester to the **filler neck overflow nipple,** and pump air into the system. The pressure cap upper gasket should relieve pressure at 69-124 kPa (10-18 psi), and hold pressure at 55 kPa (8 psi) minimum.

There is no need to remove the pressure cap at any time **except** for the following purposes:

- Check and adjust coolant freeze point
- Refill system with new coolant
- Conducting service procedures
- Checking for leaks

INSPECTION

INSPECTION

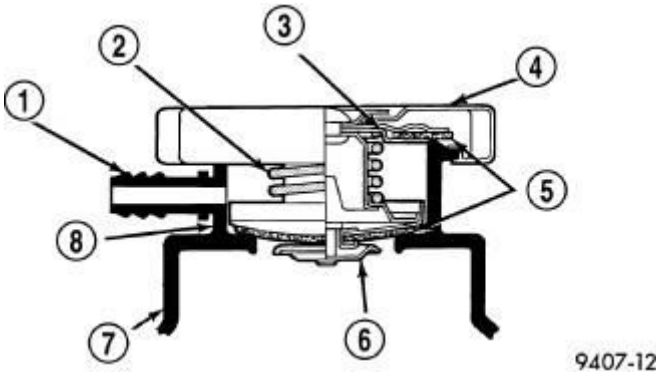

Fig. 34: Cooling System Pressure Cap
Courtesy of CHRYSLER GROUP, LLC

1 - OVERFLOW NIPPLE
2 - MAIN SPRING
3 - GASKET RETAINER
4 - STAINLESS-STEEL SWIVEL TOP
5 - RUBBER SEALS
6 - VENT VALVE
7 - THERMOSTAT HOUSING/ENGINE OUTLET CONNECTOR
8 - FILLER NECK

Hold the cap in your hand, **top side up** . The vent valve (6) at the bottom of the cap should not open. If the valve opens, replace the cap. If the rubber seal (5) has swollen, preventing the valve from opening, replace the cap.

Hold the cleaned cap in your hand, **upside down.** If any light can be seen between vent valve (6) and the rubber seal (5), replace the cap.

A replacement cap must be of the type designed for a full pressure coolant systems. This design ensures coolant return to the radiator.

COOLANT

DESCRIPTION

DESCRIPTION

GAS ENGINES

WARNING: Antifreeze is an ethylene-glycol base coolant and is harmful if swallowed or inhaled. If swallowed, drink two glasses of water and induce vomiting. If

inhaled, move to fresh air area. Seek medical attention immediately. Do not store in open or unmarked containers. Wash skin and clothing thoroughly after coming in contact with ethylene-glycol. Keep out of reach of children. Dispose of glycol base coolant properly, contact your dealer or government agency for location of collection center in your area. Do not open a cooling system when the engine is at operating temperature or hot under pressure, personal injury can result. Avoid radiator cooling fan when engine compartment related service is performed, personal injury can result.

CAUTION: Mixing of engine coolant (antifreeze) other than specified Organic Additive Technology (OAT) engine coolant (antifreeze), may result in engine damage and may decrease corrosion protection. Organic Additive Technology (OAT) engine coolant is different and should not be mixed with Hybrid Organic Additive Technology (HOAT) engine coolant (antifreeze). If a non-OAT engine coolant (antifreeze) is introduced into the cooling system in an emergency, it should be replaced with the specified engine coolant (antifreeze) as soon as possible.

YouTube	A multimedia supplement to the instructions contained in this article is available. To view the multimedia example of the condition described go to; **http://www.youtube.com/user/Mitchell1Tips then type, "A00610914.vid1" into the "Search Channel" box.**

To find the coolant needed. Refer to **CAPACITIES AND RECOMMENDED FLUIDS, SPECIFICATIONS** .

The cooling system is designed around the coolant. The coolant must accept heat from engine metal, in the cylinder head area near the exhaust valves and engine block. Then coolant carries the heat to the radiator where the tube/fin radiator can transfer the heat to the air.

The use of aluminum cylinder blocks, cylinder heads, and water pumps requires special corrosion protection. Mopar® Antifreeze/Coolant, or the equivalent ethylene-glycol base coolant with organic corrosion inhibitors (called OAT, for Organic Additive Technology) is recommended. This coolant offers the best engine cooling without corrosion when mixed with 50% ethylene-glycol and 50% distilled water to obtain a freeze point of -37°C (-35°F). If it loses color or becomes contaminated, drain, flush, and replace with fresh properly mixed coolant solution.

DIESEL ENGINES

WARNING: Antifreeze is an ethylene glycol based coolant and is harmful if swallowed or inhaled. If swallowed, drink two glasses of water and induce vomiting. If inhaled, move to fresh air area. Seek medical attention immediately. Do not store in open or unmarked containers. Wash skin and clothing thoroughly after coming in contact with ethylene glycol. Keep out of reach of children. Dispose of glycol based coolant properly, contact your government agency for location of collection center in your area. Do not open a cooling system when the engine is at operating temperature or hot under pressure, personal injury can result. Avoid radiator cooling fan when engine compartment related service is performed, personal injury can result.

CAUTION: Use of Propylene Glycol based coolants is not recommended, as they provide less freeze protection and less boiling protection.

The cooling system is designed around the coolant. The coolant must accept heat from engine metal, in the cylinder head area near the exhaust valves and engine

block. Then coolant carries the heat to the radiator where the tube/fin radiator can transfer the heat to the air.

The use of aluminum cylinder blocks, cylinder heads, and water pumps requires special corrosion protection. Mopar® Antifreeze/Coolant, 5 Year/100, 000 Mile Formula (MS-9769), or the equivalent ethylene glycol based coolant with hybrid organic corrosion inhibitors (called HOAT, for Hybrid Organic Additive Technology) is recommended. This coolant offers the best engine cooling without corrosion when mixed with 50% Ethylene Glycol and 50% distilled water to obtain a freeze point of -37°C (-35°F). If it loses color or becomes contaminated, drain, flush, and replace with fresh properly mixed coolant solution.

The green coolant **MUST NOT BE MIXED** with the orange or magenta coolants. When replacing coolant the complete system flush must be performed before using the replacement coolant.

CAUTION: Mopar® Antifreeze/Coolant, 5 Year/100, 000 Mile Formula (MS-9769) may not be mixed with any other type of antifreeze. Doing so will reduce the corrosion protection and may result in premature water pump seal failure. If non-HOAT coolant is introduced into the cooling system in an emergency, it should be replaced with the specified coolant as soon as possible.

DIAGNOSIS AND TESTING

DIAGNOSIS AND TESTING - COOLANT CONCENTRATION TESTING

Coolant concentration should be checked when any additional coolant was added to system or after a coolant drain, flush and refill. The coolant mixture offers optimum engine cooling and protection against corrosion when mixed to a freeze point of -37°C (-34°F) to -46°C (-50°F). The use of a hydrometer or a refractometer can be used to test coolant concentration.

A hydrometer will test the amount of glycol in a mixture by measuring the specific gravity of the mixture. The higher the concentration of ethylene glycol, the larger the number of balls that will float, and higher the freeze protection (up to a maximum of 60% by volume glycol).

A refractometer Tool (special tool #8286, Refractometer) will test the amount of glycol in a coolant mixture by measuring the amount a beam of light bends as it passes through the fluid. Refer to **SPECIAL TOOLS**.

Some coolant manufactures use other types of glycols into their coolant formulations. Propylene glycol is the most common new coolant. However, propylene glycol based coolants do not provide the same freezing protection and corrosion protection and is not recommended.

CAUTION: Do not mix types of coolant. Corrosion protection will be severely reduced.

COOLER, EGR

DESCRIPTION

DESCRIPTION

The EGR cooler cools recirculated exhaust gasses to reduce combustion temperature which results in less NOx gases.

REMOVAL

REMOVAL

1. Disconnect the negative battery cable.
2. Remove engine cover.
3. Drain cooling system. Refer to **STANDARD PROCEDURE**.

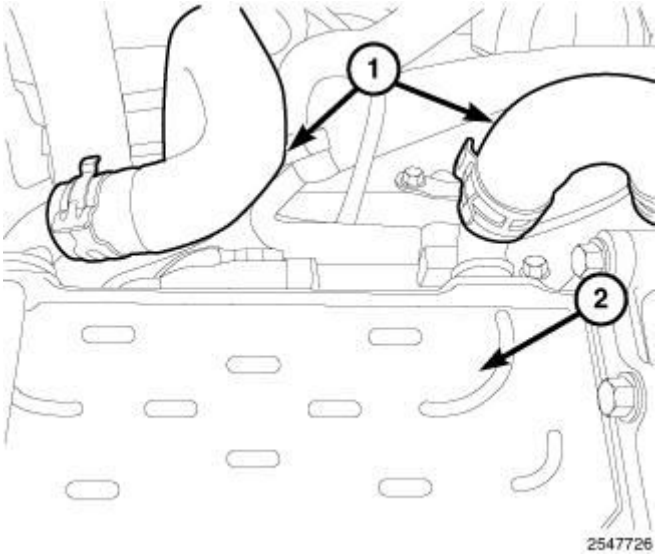

Fig. 35: Identifying Coolant Hoses & EGR Cooler

Courtesy of CHRYSLER GROUP, LLC

4. Disconnect coolant hoses (1) from the EGR cooler (2).

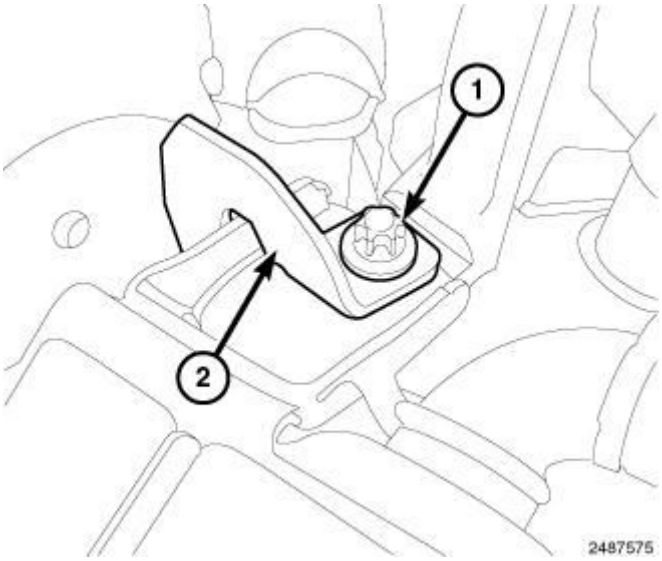

Fig. 36: Upper EGR Cooler Bolt & Bracket
Courtesy of CHRYSLER GROUP, LLC

5. Remove the upper EGR cooler bolt (1) and bracket (2).

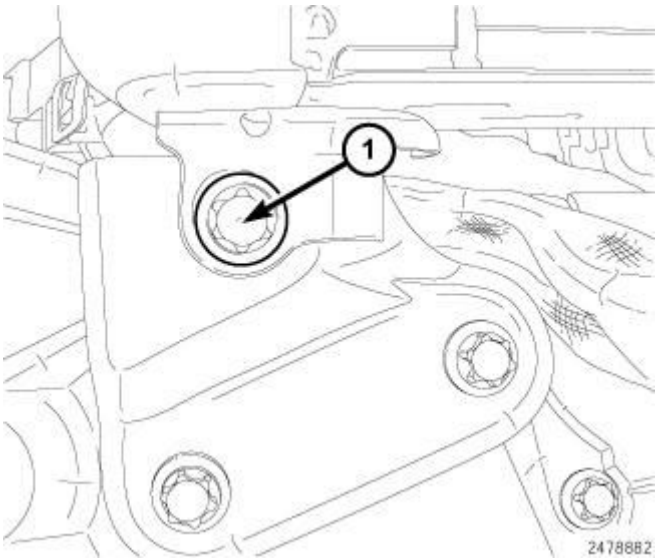

Fig. 37: Lower EGR Cooler Bolt
Courtesy of CHRYSLER GROUP, LLC

6. Remove the A/C wiring connector bracket and position aside.
7. Remove the lower EGR cooler bolt (1).

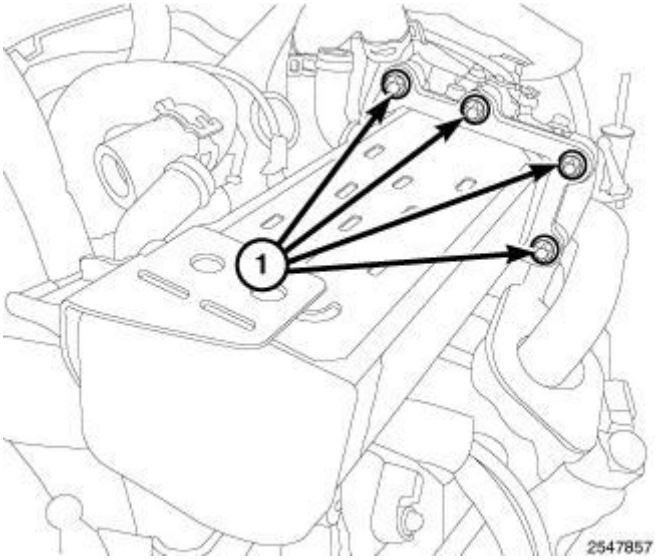

Fig. 38: EGR Cooler & Bolts
Courtesy of CHRYSLER GROUP, LLC

NOTE: Two bolts hidden under cooler.

8. Remove six bolts (1) and the EGR cooler (2).

INSTALLATION

INSTALLATION

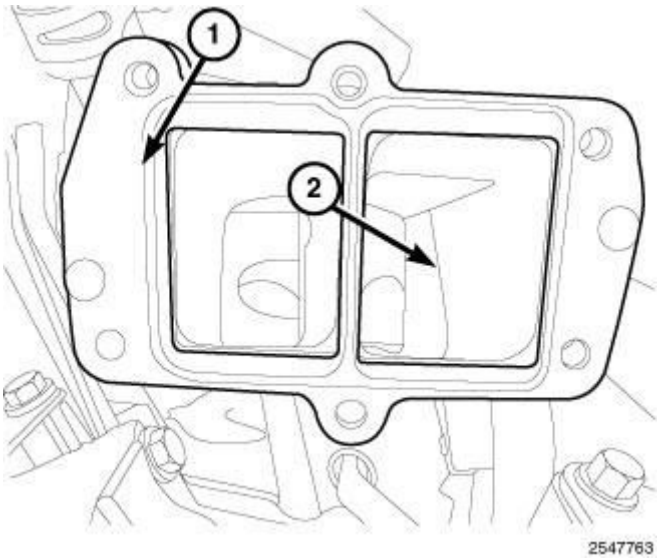

Fig. 39: EGR Body & Gasket
Courtesy of CHRYSLER GROUP, LLC

1. Clean all gasket mating surfaces.
2. Install a new gasket (1) onto the EGR body (2).

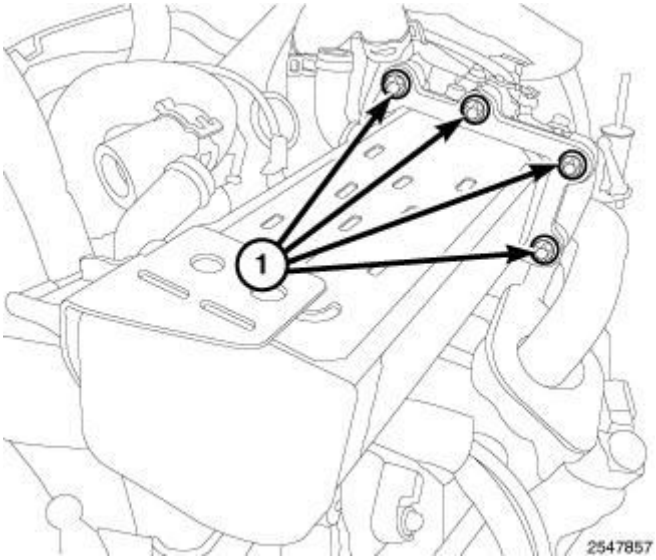

Fig. 40: EGR Cooler & Bolts
Courtesy of CHRYSLER GROUP, LLC

3. Install EGR cooler. Tighten bolts (1) to 9 N.m (80 in. lbs.).

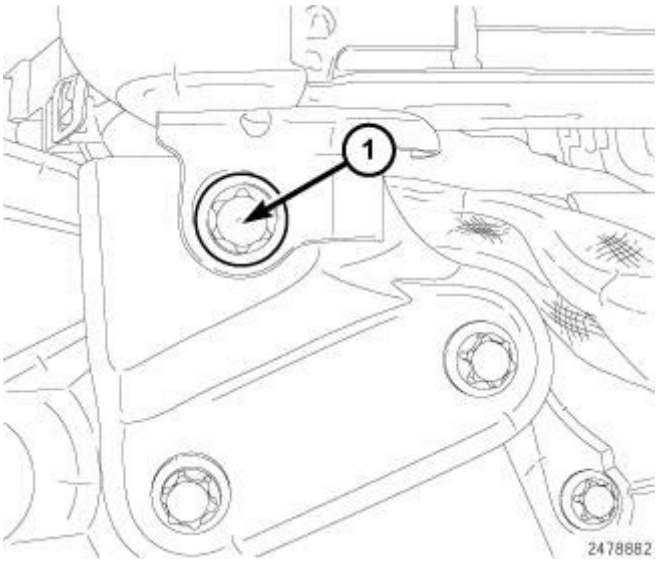

Fig. 41: Lower EGR Cooler Bolt
Courtesy of CHRYSLER GROUP, LLC

4. Install the lower EGR cooler bolt (1). Tighten to 9 N.m (80 in. lbs.).
5. Install the A/C connector mounting bracket.

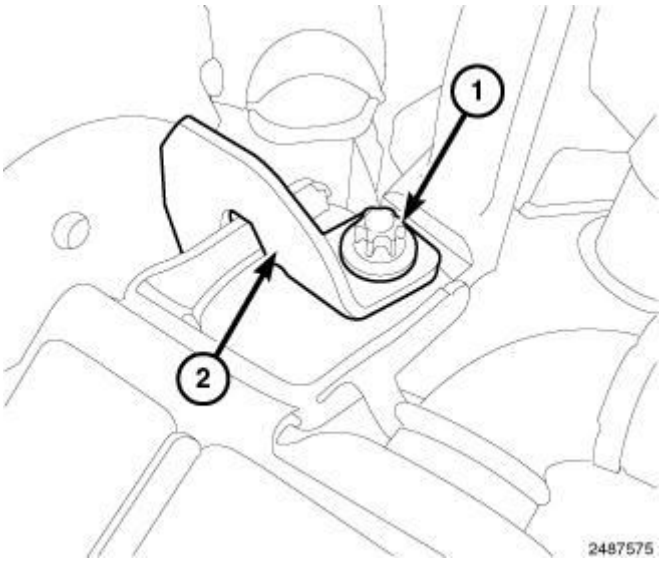

Fig. 42: Upper EGR Cooler Bolt & Bracket
Courtesy of CHRYSLER GROUP, LLC

6. Install the upper EGR cooler bolt. Tighten bolt to 9 N.m (80 in. lbs.).

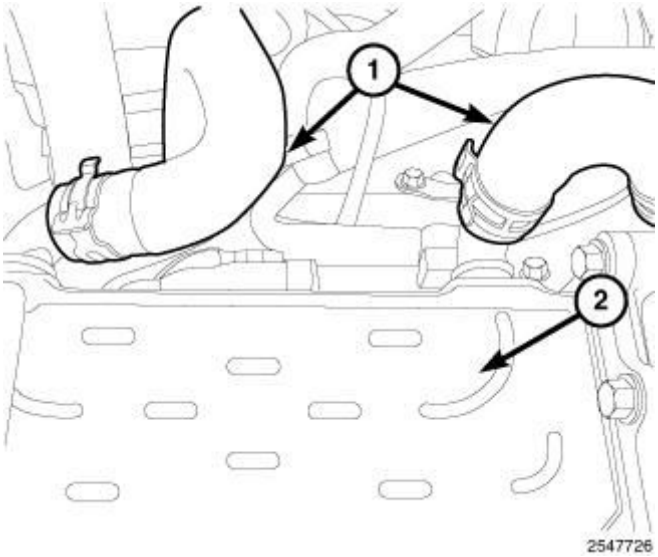

Fig. 43: Identifying Coolant Hoses & EGR Cooler
Courtesy of CHRYSLER GROUP, LLC

7. Connect coolant hoses (1) to the EGR cooler (2).
8. Fill cooling system. Refer to **STANDARD PROCEDURE**.
9. Install engine cover.
10. Connect the negative battery cable.

DRAINCOCK, RADIATOR

REMOVAL

REMOVAL

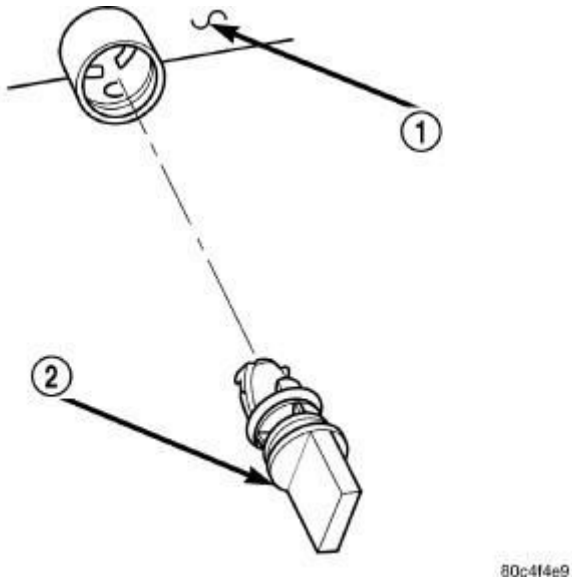

Fig. 44: Draincock
Courtesy of CHRYSLER GROUP, LLC

1 - RADIATOR TANK
2 - DRAINCOCK

CAUTION: Use of pliers on draincock is not recommended. Damage may occur to radiator or draincock.

NOTE: It is not necessary to remove draincock during a routine coolant drain.

1. Remove the front passenger side wheel. Refer to **REMOVAL** .
2. Remove the front passenger side splash shield assembly from the wheelhouse. Refer to **SHIELD, SPLASH, FRONT WHEELHOUSE, REMOVAL** .
3. Drain the cooling system. Refer to **STANDARD PROCEDURE**.
4. Open the draincock (2) by turning it counterclockwise until it stops.
5. Turn the draincock (2) back (clockwise) 1/8 turn.
6. Pull the draincock (2) from the radiator tank (1).

INSTALLATION

INSTALLATION

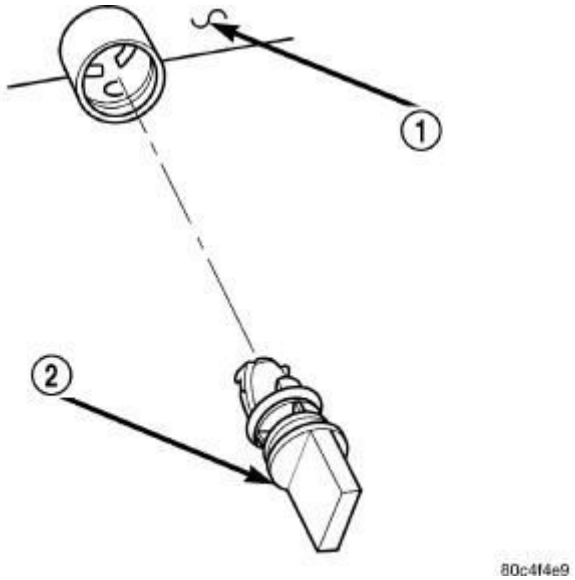

Fig. 45: Draincock
Courtesy of CHRYSLER GROUP, LLC

1 - RADIATOR TANK 2 - DRAINCOCK

1. Align draincock stem to radiator tank opening.
2. Push draincock (2) into the radiator tank opening.
3. Tighten the draincock (2) by turning clockwise until it stops.
4. Fill the cooling system. Refer to **STANDARD PROCEDURE**.
5. Install front passenger side splash shield assembly to the wheelhouse area. Refer to **SHIELD, SPLASH, FRONT WHEELHOUSE, INSTALLATION** N.
6. Install the front passenger side wheel. Refer to **INSTALLATION** .

FAN, COOLING

DESCRIPTION

DESCRIPTION

The radiator cooling fans are dual-speed electric motor driven fans. The radiator fan assembly includes two electric motors, two five blade fans, and a support shroud that is attached to the radiator. The radiator fans are serviced as an assembly.

OPERATION

GAS ENGINE

Radiator fan operation is controlled by the Totally Integrated Power Module (TIPM), with inputs from the engine coolant temperature sensor, continuously variable transmission (CVT) oil temperature, and A/C head pressure. The (TIPM) turns on the fan through either the high or low speed fan relay. The PCM provides a ground to the relay's control circuit. The fan relays are located in the (TIPM). Refer to the label beneath the (TIPM) cover for location of fan relays.

If the cooling fan is inoperative or a Diagnostic Trouble Code (DTC) related to fan control has been set, for diagnostic procedures, refer to **DTC INDEX** .

DIESEL ENGINE

Radiator fan operation is controlled by the Powertrain Control Module (PCM) with inputs from the temperature of the coolant, which is sensed by the coolant temperature sensor, and vehicle speed which is measured by the vehicle speed sensor. The PCM turns on the fan through either the high or low speed fan relay. The PCM provides a ground to the relay's control circuit. The fan relays are located on the back of the fan shroud.

If the cooling fan is inoperative or a Diagnostic Trouble Code (DTC) related to fan control has been set, for diagnostic procedures. Refer to **DTC INDEX** .

REMOVAL

COOLING FAN - REMOVAL

WARNING: Do not open the radiator draincock with the system hot and under pressure because serious burns from coolant can occur.

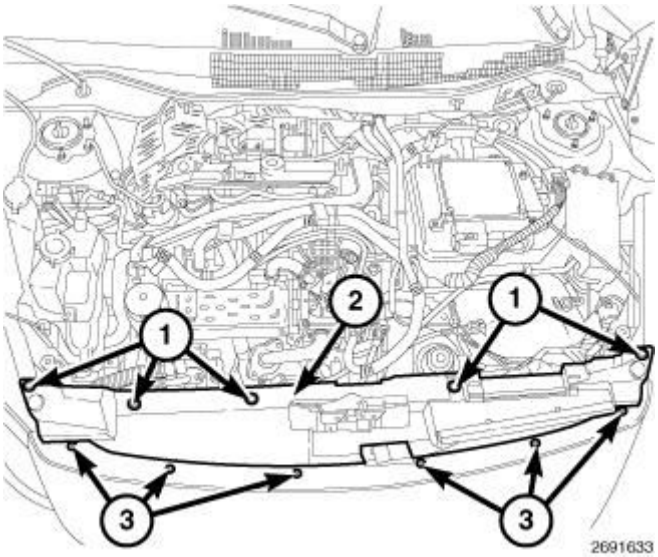

Fig. 46: Upper Radiator Closure Panel
Courtesy of CHRYSLER GROUP, LLC

1. Remove the air intake duct.
2. Disconnect negative cable from battery.
3. Drain the coolant just below the upper radiator hose.
4. Remove the upper radiator closure panel (2). Refer to **PANEL, CLOSURE, UPPER, REMOVAL** .
5. Remove the hood latch cable.

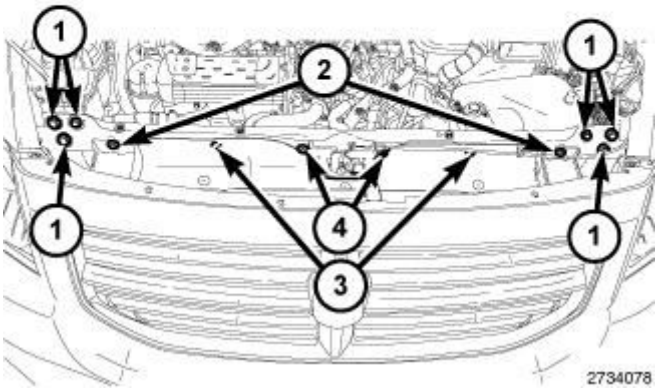

Fig. 47: Upper Core Support Seal Push Pins & Radiator Core Support Bolts
Courtesy of CHRYSLER GROUP, LLC

6. Remove the upper core support seal push pins (3).

7. Remove radiator core support bolts (1).

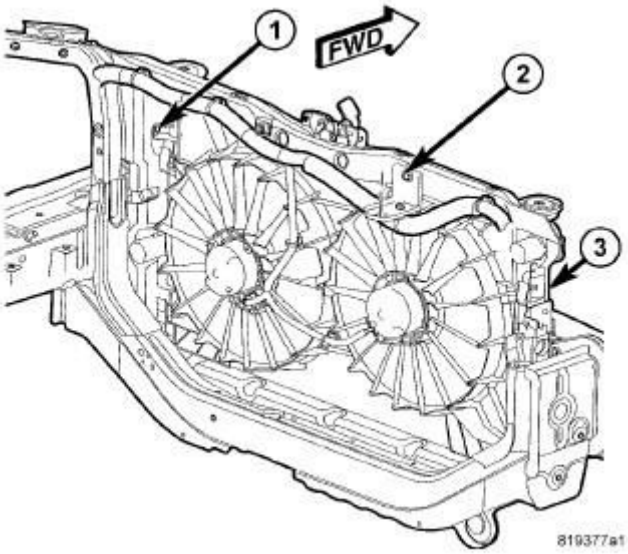

Fig. 48: Radiator Fan Assembly
Courtesy of CHRYSLER GROUP, LLC

8. Remove the upper radiator hose support bracket (2).
9. Remove the upper radiator hose from the radiator and position aside.
10. Remove the wiring harness from the fan shroud.
11. Disconnect radiator fan electrical connectors.
12. Remove radiator fan module (1) by lifting up from the engine compartment.

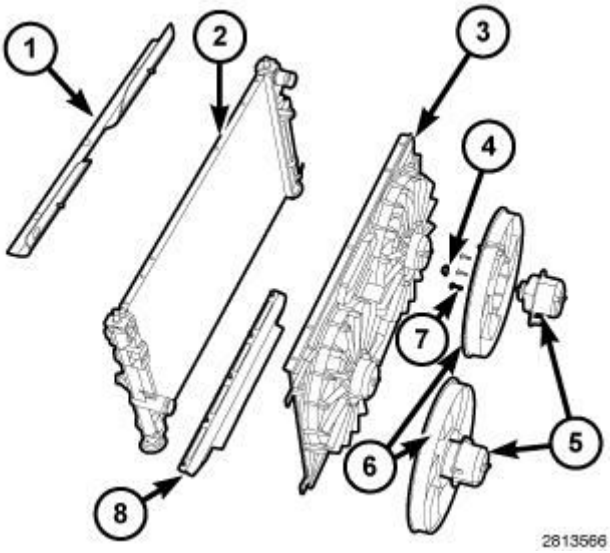

Fig. 49: Lower, Fan Blade Retaining Nut & Fan Motor
Courtesy of CHRYSLER GROUP, LLC

13. Remove the lower (8) shroud seal.
14. Remove the fan blade retaining nut (4) from the fan motor.
15. Remove the fan motor (5) assembly from the shroud.

DIESEL 2.2L - REMOVAL

WARNING: Do not open the radiator draincock with the system hot and under pressure because serious burns from coolant can occur.

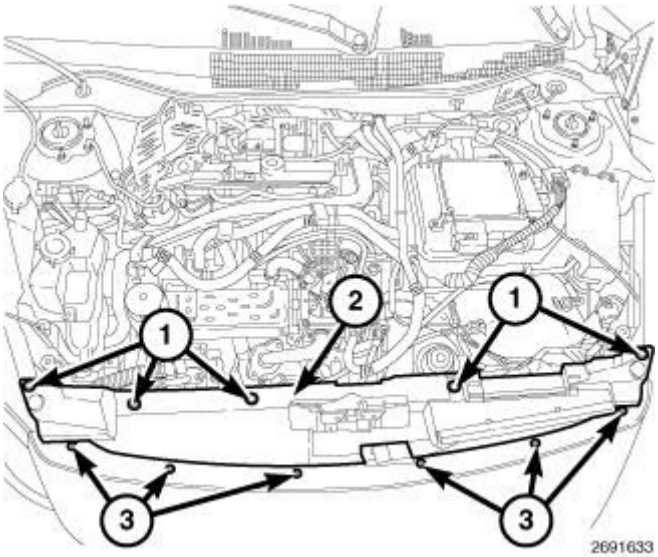

Fig. 50: Upper Radiator Closure Panel
Courtesy of CHRYSLER GROUP, LLC

1. Remove the air intake duct.
2. Disconnect the negative battery cable.
3. Raise and support the vehicle. Refer to **HOISTING, STANDARD PROCEDURE** .
4. Remove belly pan bolts.
5. Drain cooling system below upper radiator hose level.
6. Close off cooling system when the desired level is reached.
7. Install the belly pan.
8. Lower the vehicle.
9. Remove the upper radiator closure panel (2). Refer to **PANEL, CLOSURE, UPPER, REMOVAL** .
10. Remove the hood latch cable.

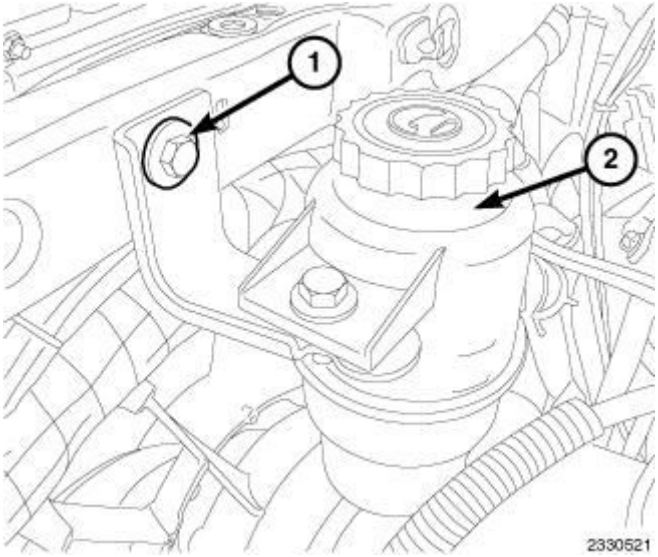

Fig. 51: Power Steering Fluid Reservoir & Mounting Bolt
Courtesy of CHRYSLER GROUP, LLC

11. Remove the power steering fluid reservoir (2) mounting bolt (1) and position aside.

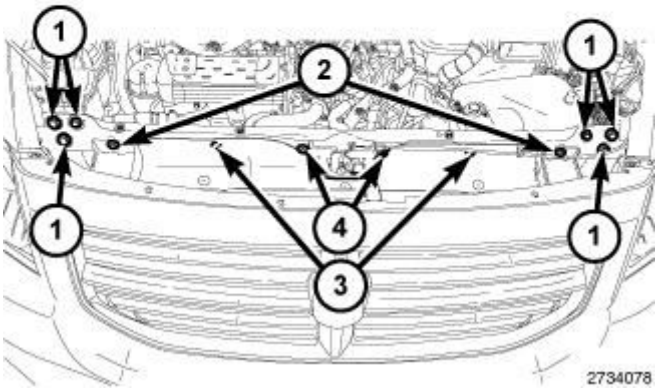

Fig. 52: Upper Core Support Seal Push Pins & Radiator Core Support Bolts
Courtesy of CHRYSLER GROUP, LLC

12. Remove the upper core support seal push pins (3).
13. Remove radiator core support bolts (1).

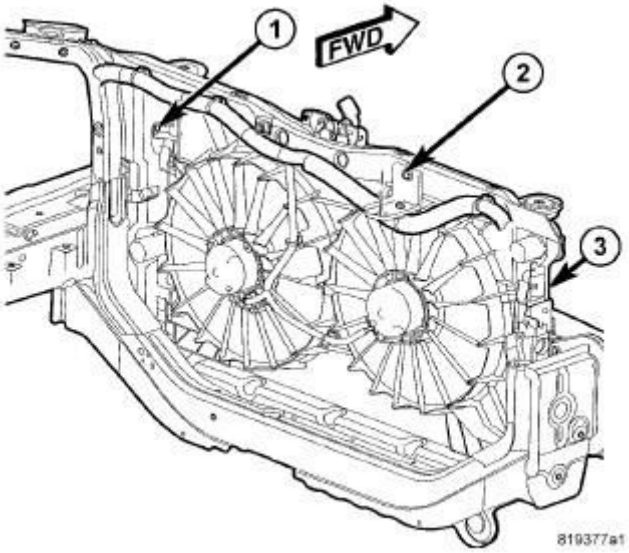

Fig. 53: Radiator Fan Assembly
Courtesy of CHRYSLER GROUP, LLC

14. Disconnect upper radiator hose from radiator.
15. Remove the wiring harness from the fan shroud.
16. Disconnect radiator fan wire harness connectors.
17. Remove radiator fan module (1) by lifting up from the engine compartment.

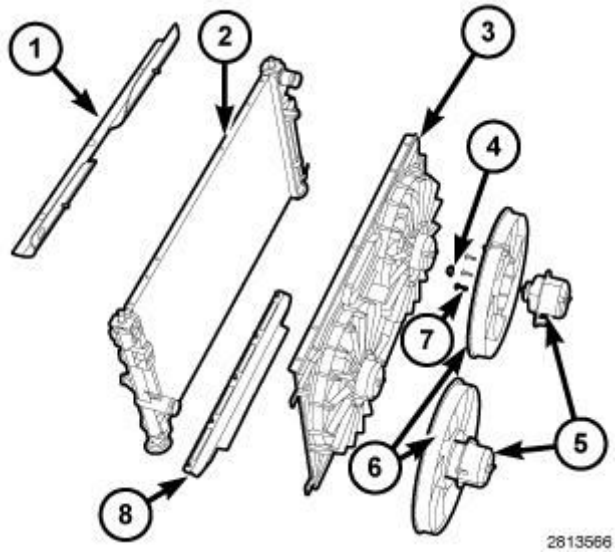

Fig. 54: Lower, Fan Blade Retaining Nut & Fan Motor
Courtesy of CHRYSLER GROUP, LLC

18. Remove the lower (8) shroud seal.
19. Remove the fan blade retaining nut (4) from the fan motor.

20. Remove the fan motor (5) assembly from the shroud.

INSTALLATION

COOLING FAN - INSTALLATION

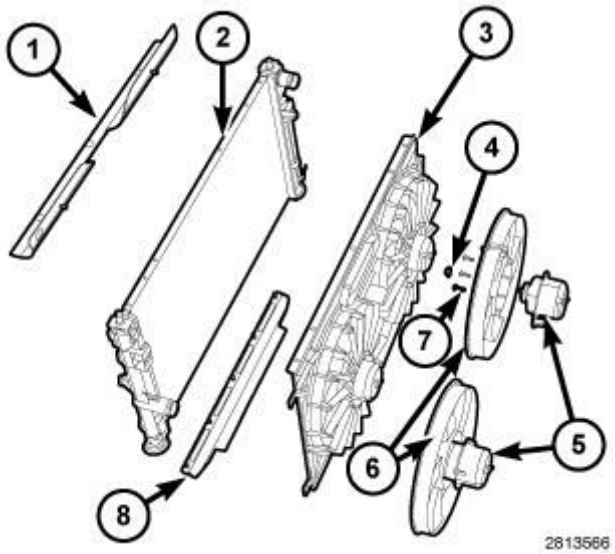

Fig. 55: Lower, Fan Blade Retaining Nut & Fan Motor
Courtesy of CHRYSLER GROUP, LLC

1. Install the fan motor (5) onto shroud (3).
2. Install the fan (6) onto the motor.
3. Install the lower (8) shroud seal.

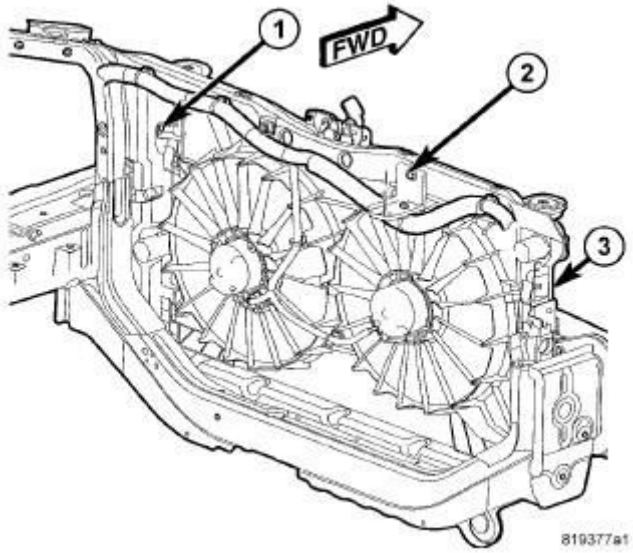

Fig. 56: Radiator Fan Assembly
Courtesy of CHRYSLER GROUP, LLC

4. Install radiator fan module (1).
5. Connect the electrical connectors.
6. Install the wiring harness mounting retainers into fan shroud.
7. Install the upper radiator hose support bracket (2).
8. Install upper radiator hose to the radiator.

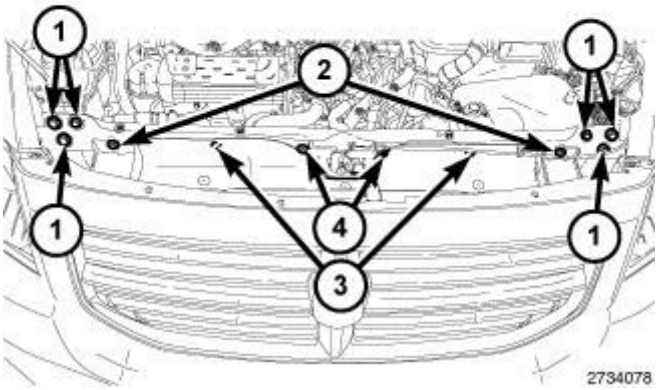

Fig. 57: Upper Core Support Seal Push Pins & Radiator Core Support Bolts
Courtesy of CHRYSLER GROUP, LLC

9. Install the upper radiator core support. Tighten outer bolts (1) to 23 N.m (17 ft. lbs.). Tighten the inner support bolts to 8 N.m (6 ft. lbs.).
10. Install the hood latch cable.
11. Install the core support seal (3).

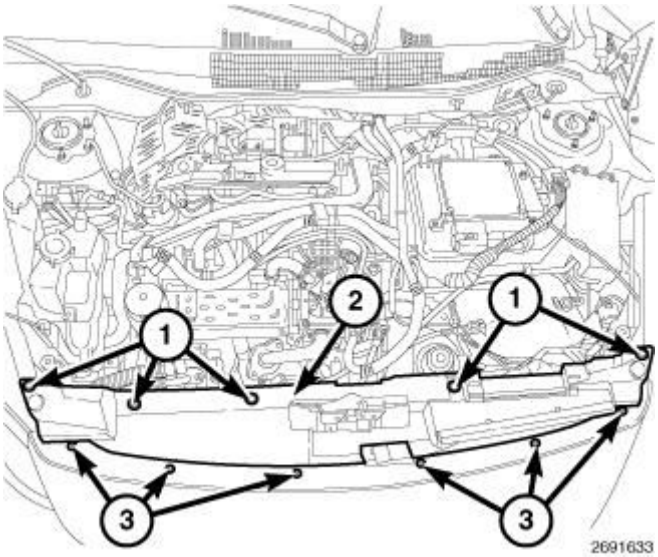

Fig. 58: Upper Radiator Closure Panel
Courtesy of CHRYSLER GROUP, LLC

12. Install radiator closure panel (2). Refer to **PANEL, CLOSURE, UPPER, INSTALLATION** .
13. Connect the negative battery cable.
14. Fill the coolant to the proper level.
15. Run vehicle. Check for proper fan operation and coolant level.
16. Install the air intake duct.

DIESEL 2.2L - INSTALLATION

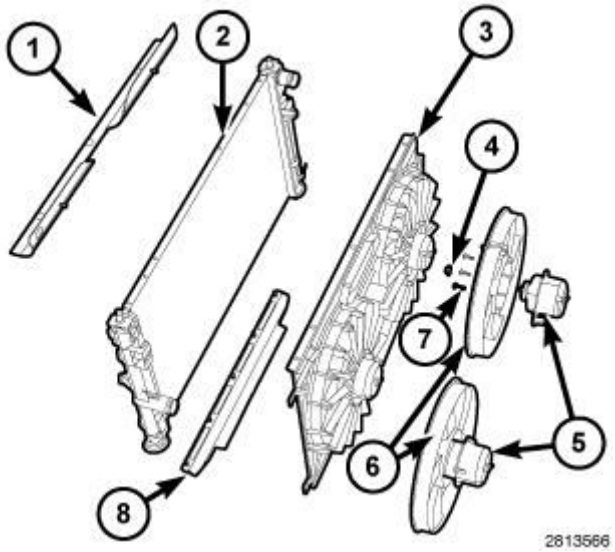

Fig. 59: Lower, Fan Blade Retaining Nut & Fan Motor
Courtesy of CHRYSLER GROUP, LLC

1. Install the fan motor (5) onto shroud (3).
2. Install the fan (6) onto the motor (5).
3. Install the lower shroud seal (8).

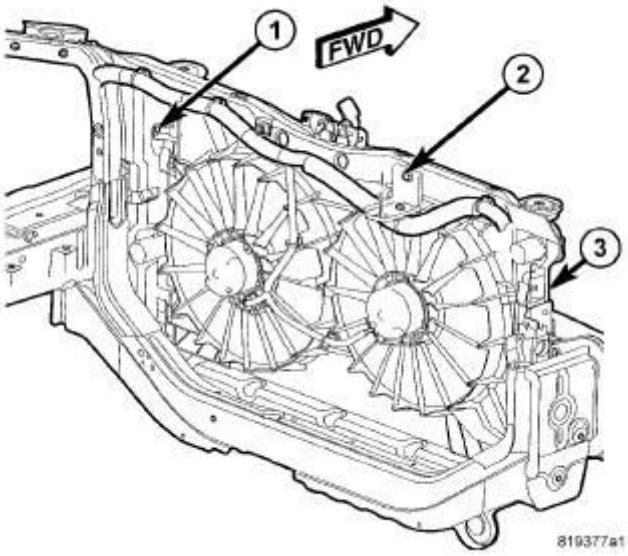

Fig. 60: Radiator Fan Assembly
Courtesy of CHRYSLER GROUP, LLC

4. Install the radiator fan module (1).
5. Connect the radiator fan wire harness connectors.
6. Install upper radiator hose.
7. Install the wiring harness mounting retainers into fan shroud.

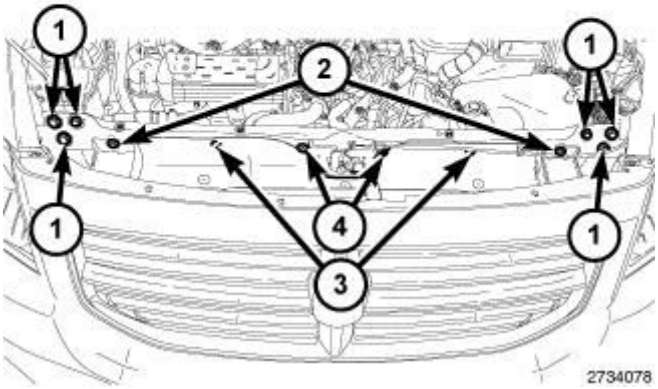

Fig. 61: Upper Core Support Seal Push Pins & Radiator Core Support

Bolts
Courtesy of CHRYSLER GROUP, LLC

8. Install the upper radiator core support. Tighten outer bolts (1) to 23 N.m (17 ft. lbs.). Tighten the inner support bolts (1) to 8 N.m (6 ft. lbs.).
9. Install the hood latch cable.
10. Install the core support seal (3).

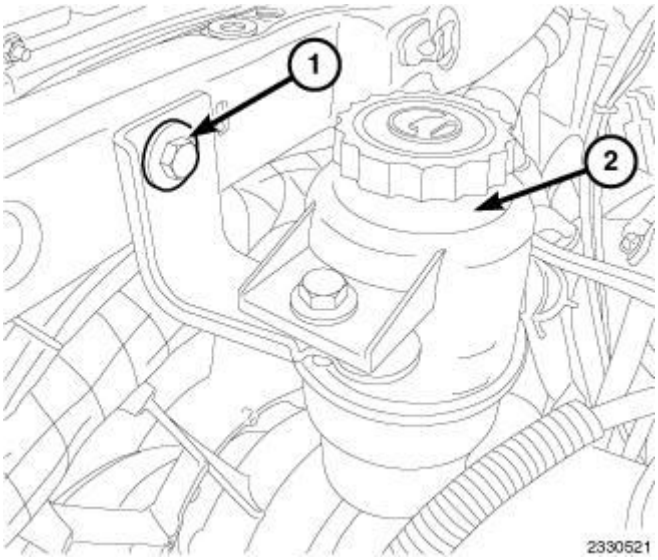

Fig. 62: Power Steering Fluid Reservoir & Mounting Bolt
Courtesy of CHRYSLER GROUP, LLC

11. Install the power steering reservoir (2). Tighten bolt (1) to 12 N.m (9 in. lbs.).

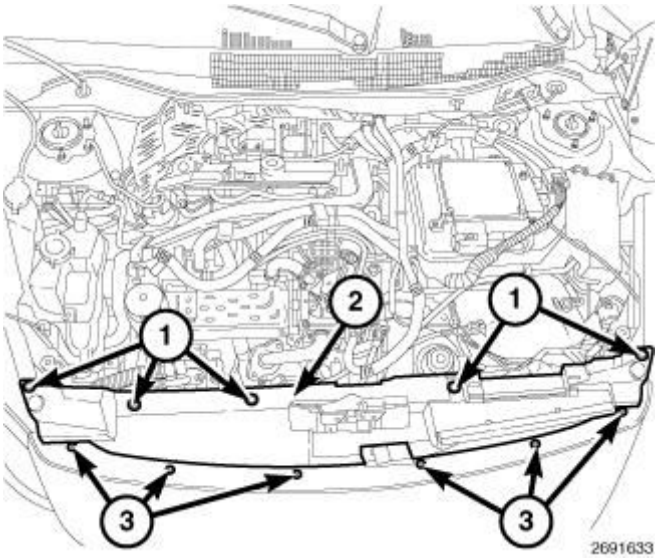

Fig. 63: Upper Radiator Closure Panel

Courtesy of CHRYSLER GROUP, LLC

12. Install radiator closure panel (2). Refer to **PANEL, CLOSURE, UPPER, INSTALLATION** .
13. Top coolant off. Refer to **STANDARD PROCEDURE**.

HEATER, ENGINE BLOCK

DESCRIPTION

DESCRIPTION

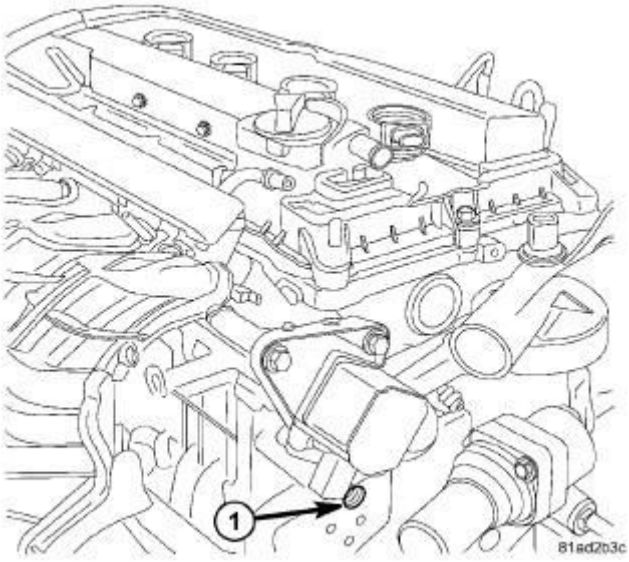

Fig. 64: Block Heater - Gas Engine
Courtesy of CHRYSLER GROUP, LLC

1 - Item_1 2 - Item _2

The cartridge type block heater is mounted in a bore at the rear of the block under the coolant adapter. The block heater does not directly contact coolant. It heads the aluminum block.

The heater is powered by 110 Volt AC through a power cord and connector.

DIAGNOSIS AND TESTING

DIAGNOSIS AND TESTING - ENGINE BLOCK HEATER TESTING

If unit does not operate, trouble can be in either the power cord or the heater

element. Test power cord for continuity with a 110-volt voltmeter or 110-volt test light; test heater element continuity with an ohmmeter or 12-volt test light.

REMOVAL

REMOVAL

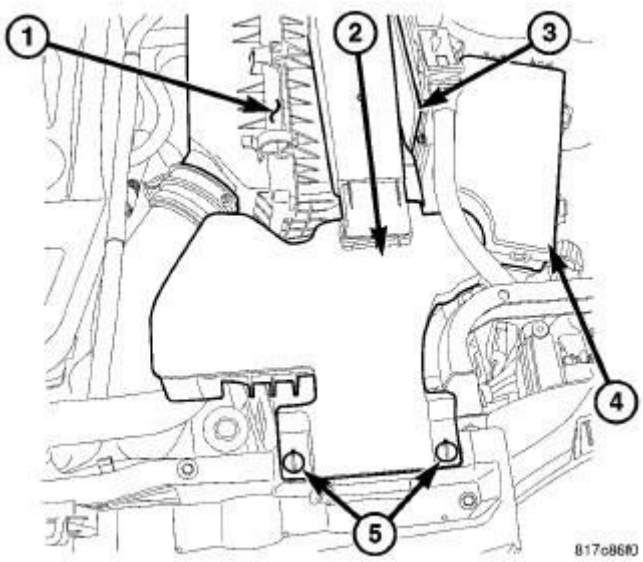

Fig. 65: Air Cleaner Inlet
Courtesy of CHRYSLER GROUP, LLC

1. Remove engine cover.
2. Remove air cleaner inlet.

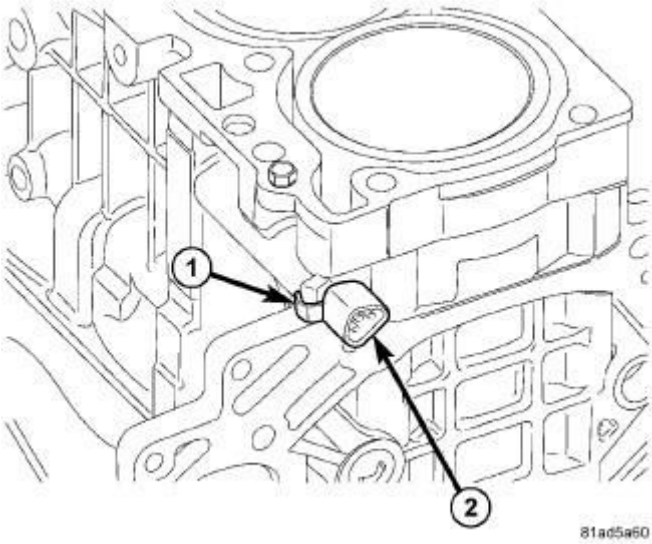

Fig. 66: Block Heater 2.0/2.4l Engine

Courtesy of CHRYSLER GROUP, LLC

1 - RETAINING CLIP 2 - BLOCK HEATER

3. Detach power cord plug from heater.
4. Remove retaining clip (1). Remove block heater assembly (2).

INSTALLATION

INSTALLATION

1. Thoroughly clean bore hole.
2. Insert block heater assembly into bore.
3. Install retaining clip.
4. Connect power cord to block heater.

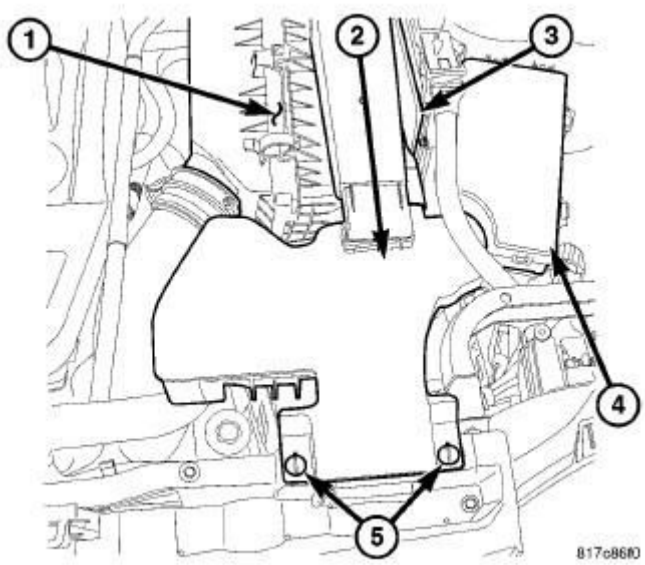

Fig. 67: Air Cleaner Inlet
Courtesy of CHRYSLER GROUP, LLC

5. Install air intake inlet.
6. Install engine cover.

PUMP, WATER

DESCRIPTION

GAS ENGINE

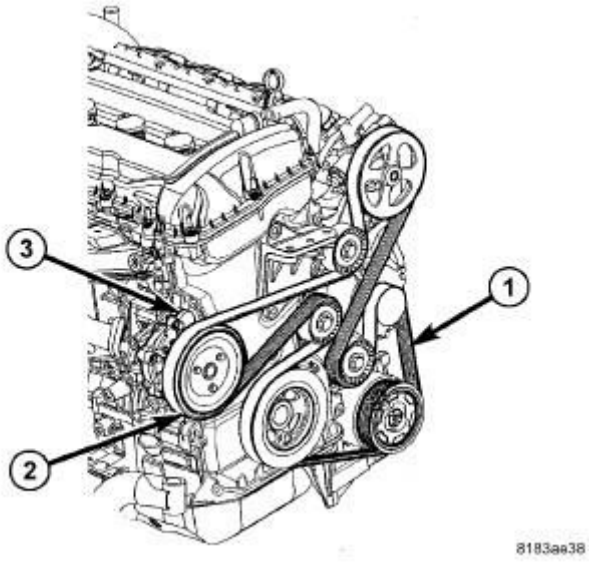

Fig. 68: Water Pump - World Engine
Courtesy of CHRYSLER GROUP, LLC

1 - ACCESSORY DRIVE BELT
2 - WATER PUMP PULLEY
3 - WATER PUMP

The water pump (3) on the world engine is attached to the water pump adapter on the front of the cylinder block.

The water pump is driven by the accessory drive belt. The water pump is connected to the water plenum by the return tube.

Turbocharger equipped engines use a smaller diameter water pump pulley then the naturally asperated engine. This allows increased coolant flow without pump cavation.

DIESEL ENGINE

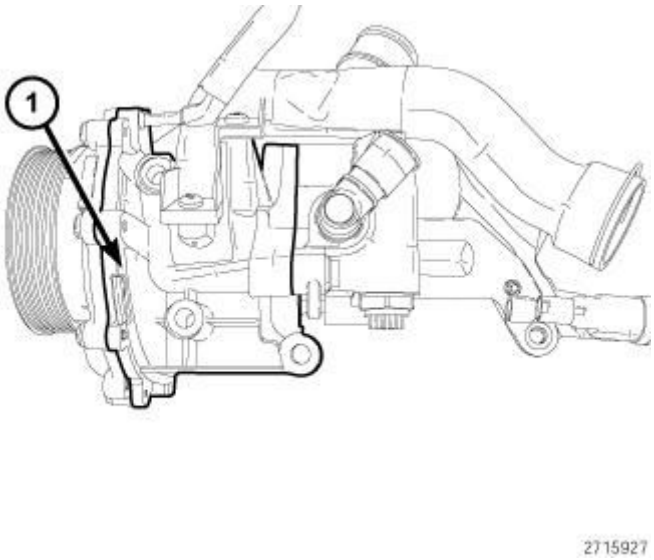

Fig. 69: Water/Power Steering Pump
Courtesy of CHRYSLER GROUP, LLC

The combination water/power steering pump (1) on this vehicle is attached to the lower corner of the cylinder block on the left hand side.

The water/power steering pump (1) cannot be disassembled or serviced separately.

The water/power steering pump (1) is driven by the accessory drive's serpentine belt.

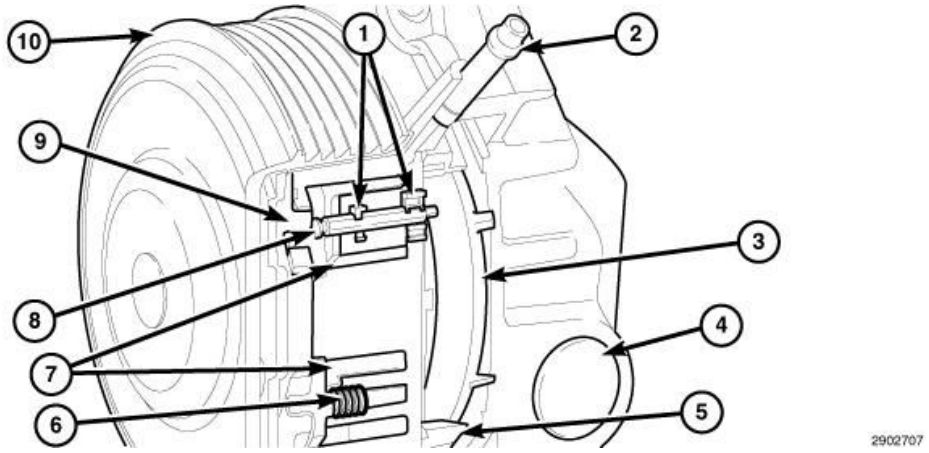

Fig. 70: Water Pump Components
Courtesy of CHRYSLER GROUP, LLC

1-CONTROL ROD SEALS 2-VACUUM SUPPLY FITTING 3-IMPELLER

4-COOLANT RETURN
5-REGULATING VALVE
6-RETURN SPRINGS
7-EVACUATION ROOMS
8-CONTROL RODS
9-POWER DIAPHRAGM
10-WATER PUMP PULLEY

The water pump is turned on or off by vacuum. The Powertrain Control Module (PCM) actuates a switchover valve that turns vacuum supply to the water pump piston. A piston slides back and forth covering and uncovering a port used for coolant flow.

The controlling of the coolant flow helps manage temperature throughout the cooling system.

The water pump can be shut off if the following conditions exist:

- Engine speed is not achieved
- The fuel injection quantity in not achieved
- Intake air temperature is not reached
- Coolant temperature is not reached
- The A/C control unit does not request the heating mode

DIAGNOSIS AND TESTING

DIAGNOSIS AND TESTING - WATER PUMP

A quick flow test to determine if the water pump is working effectively is to check heater system for proper operation. A defective pump will not provide an adequate flow of heated coolant through the system.

WARNING: DO NOT REMOVE THE COOLING SYSTEM PRESSURE CAP WITH THE SYSTEM HOT AND UNDER PRESSURE BECAUSE SERIOUS BURNS FROM COOLANT CAN OCCUR.

Another flow test to help determine water pump operation is as follows:

1. Remove cooling system pressure cap.
2. Remove a small amount of coolant from the system.
3. Start the engine and warm up until thermostat opens.
4. With the thermostat open and coolant level low, visually inspect for coolant flow. If flow is present, the water pump is pumping coolant through the system.

WATER PUMP TESTING - OM 651

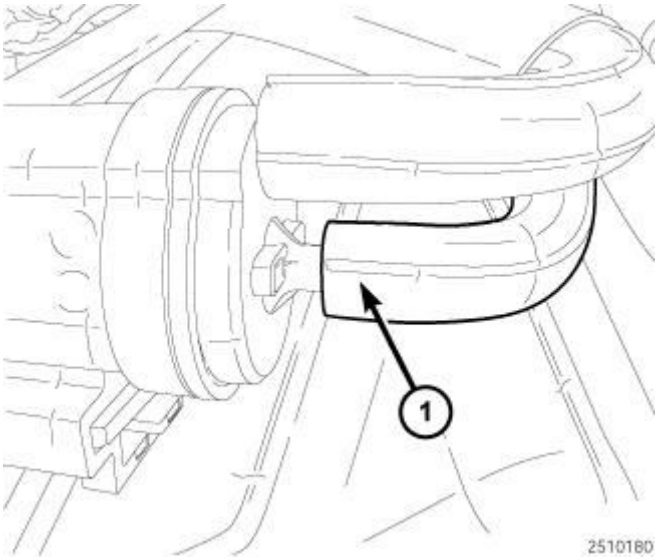

Fig. 71: Water Pump Valve
Courtesy of CHRYSLER GROUP, LLC

1. A water pump slide valve test is use to ensure valve movement and proper flow from the water pump. The water pump valve is controlled by a switch that receives a signal from the Powertrain Control Module (PCM). When the switch is turned on. Vacuum is supplied to the water pump that actuates a valve that controls the flow of coolant on or off. Using a vacuum pump on the port located on the water pump. When vacuum is applied, the piston should be heard by means of a clunk. It is possible to see movement of the valve through the weep holes located around the housing of the pump. A return spring will slowly return the valve.

   Once the water pump is verified of proper operation. The vacuum supply can be checked by means of a vacuum gauge installed on the supply line before and after the switch. This will verify if the vacuum pump or if the switch is working properly. Vacuum should be 18 inches HG (609 millibars).

Once vacuum has been verified. While manually applying and releasing vacuum. Perform the **WATER PUMP** test.

REMOVAL

GAS ENGINE

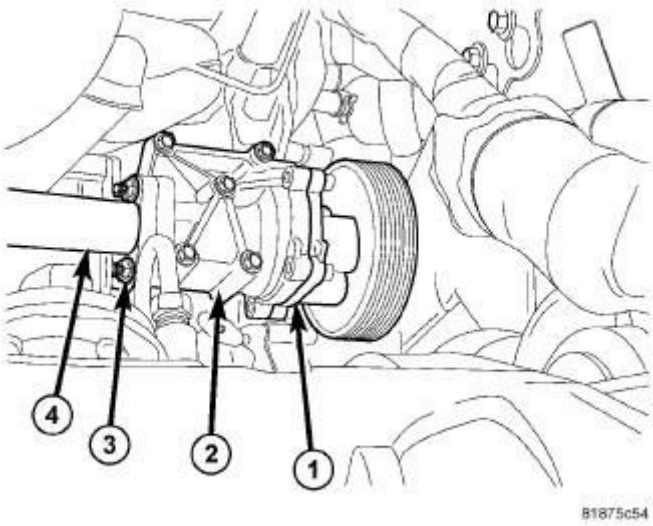

Fig. 72: Water Pump - Gas Engine
Courtesy of CHRYSLER GROUP, LLC

1 - WATER PUMP
2 - MOUNTING BOLT
3 - WATER INLET TUBE NUTS
4 - INLET WATER TUBE

1. Remove the accessory drive belt. Refer to **BELT, SERPENTINE, REMOVAL**.
2. Raise vehicle. Refer to **HOISTING, STANDARD PROCEDURE** .
3. Remove accessory drive belt splash shield.
4. Drain cooling system. Refer to **STANDARD PROCEDURE**.
5. Remove screws attaching water pump pulley (1). Remove pulley (1).
6. Remove water pump mounting bolts (2).
7. Remove water pump (3).

DIESEL

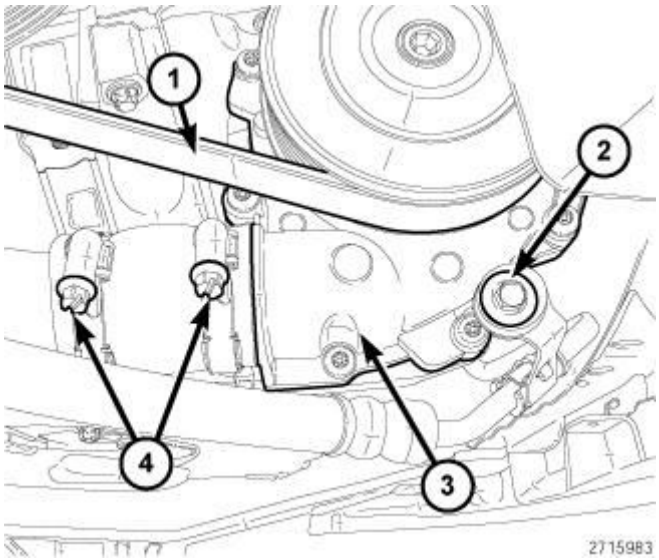

Fig. 73: Power Steering Pressure Line Retaining Bracket Bolt
Courtesy of CHRYSLER GROUP, LLC

1. Disconnect and isolate the negative battery cable.
2. Drain the power steering fluid.
3. Raise and support the vehicle.

NOTE: Drain the fluid in a clean container, free of debris. Save the fluid for re-use.

4. Drain the cooling system. Refer to **STANDARD PROCEDURE**.
5. Remove the accessory drive belt (1). Refer to **BELT, SERPENTINE, REMOVAL**.
6. Loosen the band clamps (4) and disconnect the coolant return hose from the water pump (3).
7. Remove the power steering line retaining bracket bolt (2).

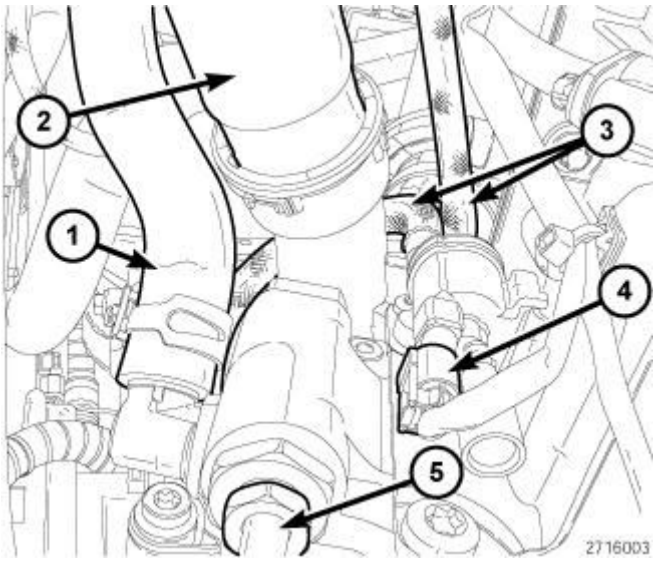

Fig. 74: Vacuum Lines, Coolant Inlet Hose, Power Steering Pump Supply Hose & Vacuum Switch Connector
Courtesy of CHRYSLER GROUP, LLC

8. Remove the coolant inlet hose (2) at the pump.
9. Remove the thermostat bypass hose at the pump.
10. Remove the power steering pump supply hose (1) at the pump.
11. Remove the power steering vacuum lines (3).
12. Disconnect the electronically controlled vacuum switch connector (4).

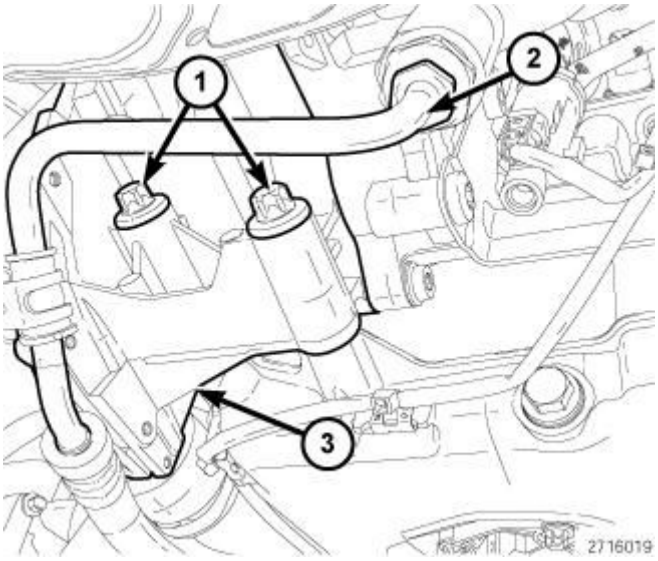

Fig. 75: Pressure Line At Pump
Courtesy of CHRYSLER GROUP, LLC

13. Remove the power steering pressure line (2).

14. Remove the water/power steering pump support bracket bolt.
15. Remove the water/power steering pump mounting bolts (1).
16. Remove the water/power steering pump (3).

DIESEL COOLING MANIFOLD

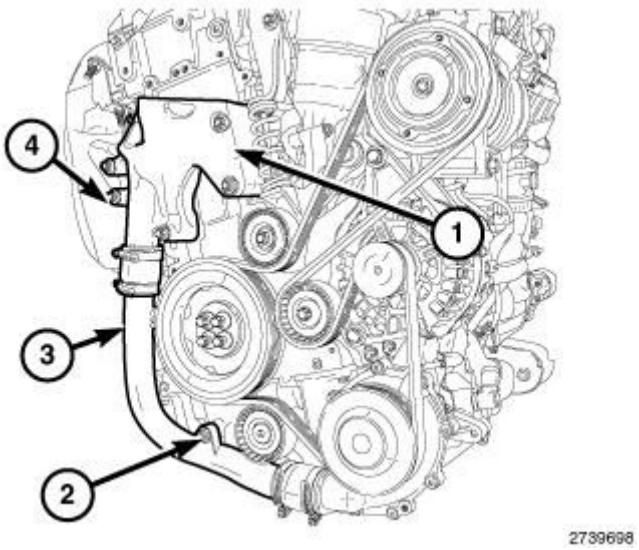

Fig. 76: Identifying Cooling Manifold, Engine Block Bolt, Coolant Return Hose & Cooling Manifold Mounting Bolts
Courtesy of CHRYSLER GROUP, LLC

1. Disconnect and isolate the negative battery cable.
2. Raise and support the vehicle.
3. If equipped, remove the belly pan.

NOTE: Drain the fluid in a clean container, free of debris. Save the fluid for re-use.

4. Drain the cooling system. Refer to **STANDARD PROCEDURE**.
5. Remove the coolant return hose to engine block bolt (2).
6. Loosen the band clamps and disconnect the coolant return hose from the water pump.
7. Loosen the band clamps and disconnect the coolant return hose from the cooling manifold (1).
8. Remove the coolant return hose.
9. Lower the vehicle.

10. Support the engine from underneath.
11. Remove the coolant recovery bottle. Refer to **BOTTLE, COOLANT RECOVERY, REMOVAL**.
12. Remove the right side engine mount. Refer to **INSULATOR, ENGINE MOUNT, RIGHT, REMOVAL** .
13. Raise the engine slightly on the right side enough to gain clearance to the cooling manifold mounting bolts (4).
14. Remove bolts (4) the cooling manifold (1).
15. Remove and discard gasket.

DISASSEMBLY

DISASSEMBLY

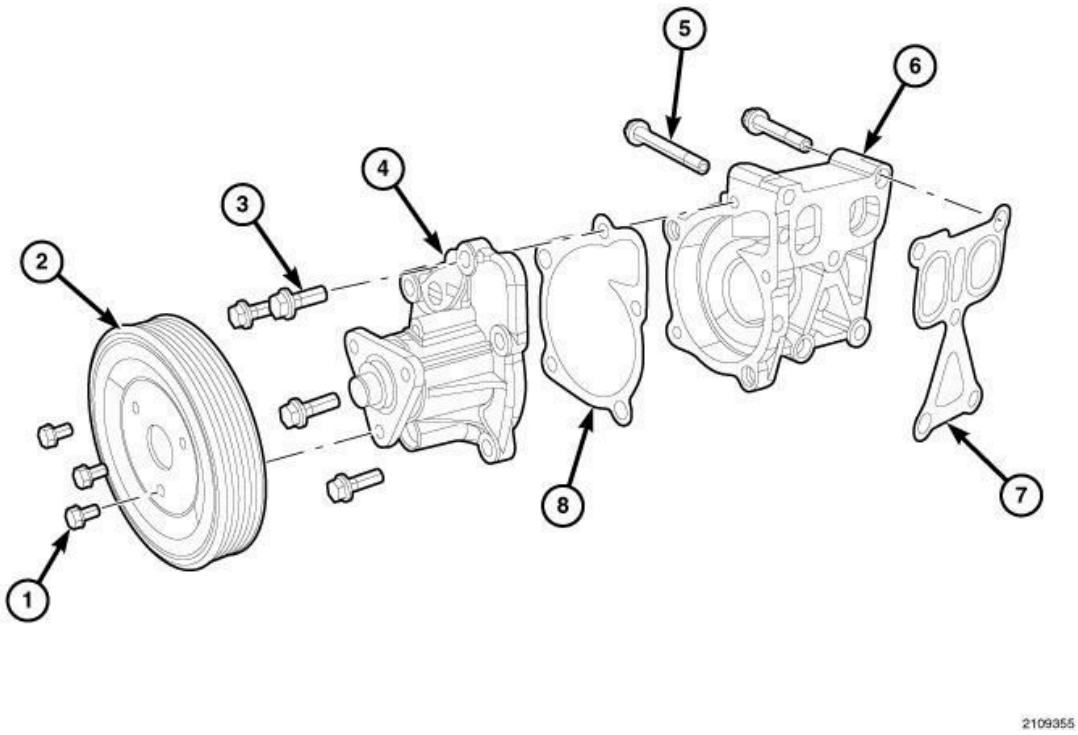

Fig. 77: Water Pump Pulley, Adapter And Gasket
Courtesy of CHRYSLER GROUP, LLC

1. Remove the water pump assembly from the vehicle. Refer to **PUMP, WATER, REMOVAL**.
2. Discard the water pump outlet gasket (7).
3. Remove the three bolts (1) attaching the water pump pulley (2) to the water pump (4).

4. Remove the water pump pulley (2).
5. Remove the five bolts (3) attaching the water pump (4) to the water pump adapter (6).
6. Remove and discard the gasket (8).
7. Remove the water pump (4) and inspect carefully for any damage. Refer to **PUMP, WATER, INSPECTION**.

INSPECTION

WATER PUMP

Replace water pump body assembly if it has any of these defects:

- Cracks or damage on the body.
- Coolant leaks from the shaft seal, evident by wet coolant traces on the pump body.
- Loose or rough turning bearing.
- Impeller rubs either the pump body or the engine block.
- Impeller loose or damaged.
- Sprocket or sprocket flange loose or damaged.

ASSEMBLY

ASSEMBLY

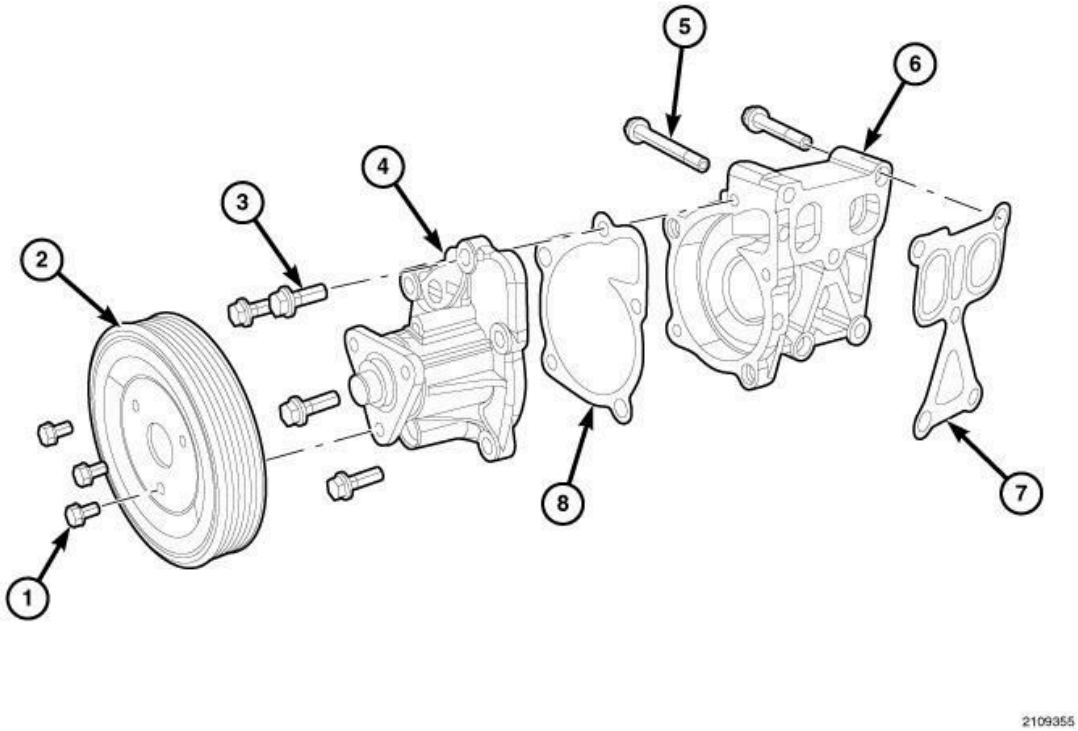

Fig. 78: Water Pump Pulley, Adapter And Gasket
Courtesy of CHRYSLER GROUP, LLC

1. Thoroughly clean all gasket mating surfaces before assembling.
2. Inspect water pump and components for any damage. Refer to **PUMP, WATER, INSPECTION**.
3. Using bolts (3), install the water pump (4) and gasket (8) to the water pump adapter (6). Tighten the bolts (3) to 22 N.m (16 lbs. ft.)
4. Using bolts (1), install the water pump pulley (2) to the water pump (4). Tighten the bolts (1) to 9 N.m (80 lbs. in.)
5. Using bolts (5), install the water pump assembly and gasket to the engine block. Tighten the bolts to 24 N.m (18 lbs. ft.). Refer to **PUMP, WATER, INSTALLATION**.
6. Start the engine and check for leaks. Refer to **DIAGNOSIS AND TESTING**.

INSTALLATION

GAS ENGINE

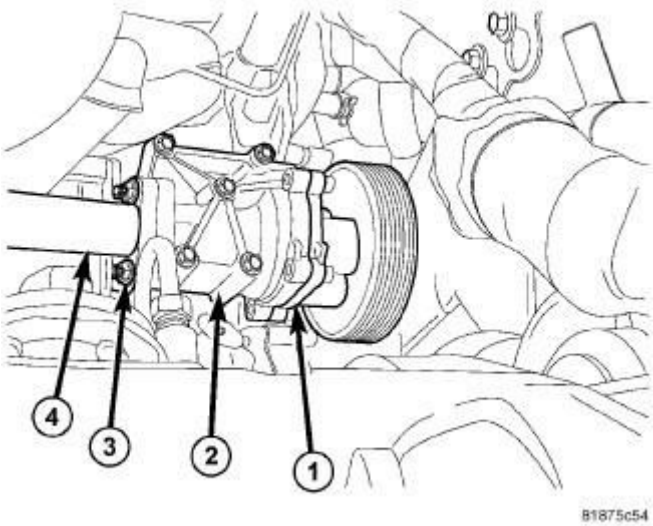

Fig. 79: Water Pump - Gas Engine
Courtesy of CHRYSLER GROUP, LLC

1 - WATER PUMP
2 - MOUNTING BOLT
3 - WATER INLET TUBE NUTS
4 - INLET WATER TUBE

1. Position water pump assembly (1) and gasket onto cylinder block.
2. Position water inlet tube (4) and gasket onto water pump (1).
3. Install mounting bolts (2). Tighten bolts to 24 N.m (18 ft. lbs.).
4. Install drive belt splash shield.
5. Lower vehicle.
6. Install accessory drive belt. Refer to **BELT, SERPENTINE, INSTALLATION**.
7. Evacuate air and refill cooling system. Refer to **STANDARD PROCEDURE**.
8. Check cooling system for leaks. Refer to **DIAGNOSIS AND TESTING**.

DIESEL

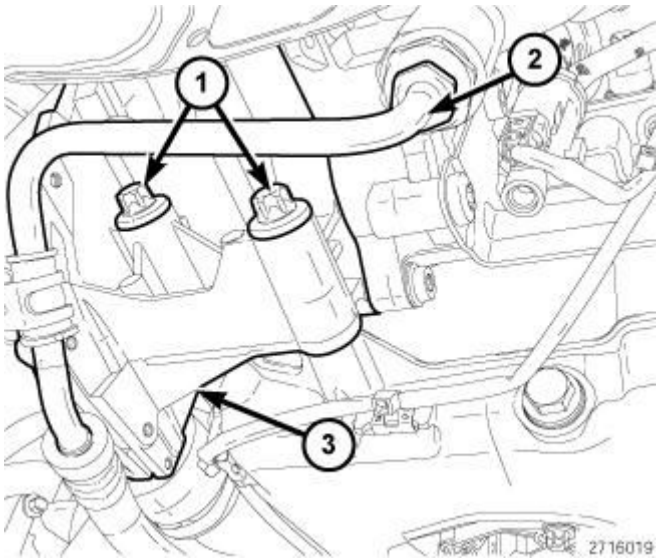

Fig. 80: Pressure Line At Pump
Courtesy of CHRYSLER GROUP, LLC

1. Position the water/power steering pump (3) onto the engine block while guiding the thermostat bypass hose onto pump assembly.
2. Install the water/power steering pump mounting bolts (1). Tighten the bolts (1) to 20 N.m (15 ft. lbs.).
3. Install the water/power steering support bracket bolt. Tighten the bolt to 12 N.m (9 ft. lbs.).
4. Install the power steering pressure line (2). Tighten the nut to 32 N.m (24 ft. lbs.).

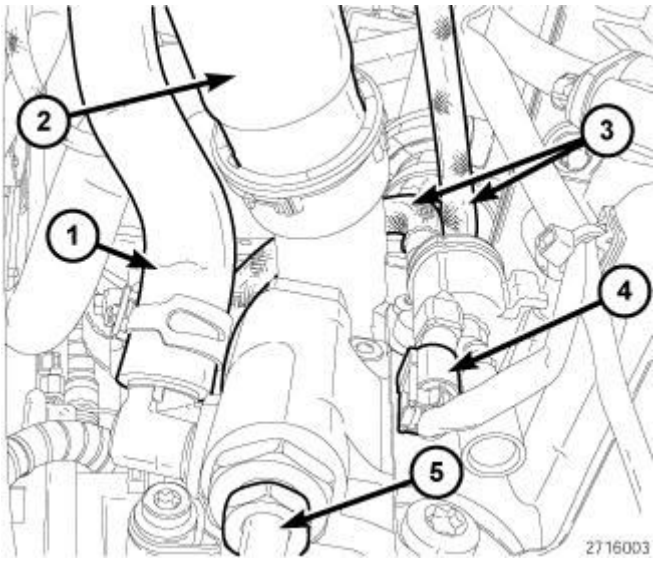

Fig. 81: Vacuum Lines, Coolant Inlet Hose, Power Steering Pump Supply Hose & Vacuum Switch Connector
Courtesy of CHRYSLER GROUP, LLC

5. Connect the electronically controlled vacuum switch connector (4).
6. Connect the vacuum lines (3) to the electronically controlled vacuum switch.
7. Connect the coolant inlet hose (2) at the pump.
8. Connect the power steering pump supply hose (1) at the pump.

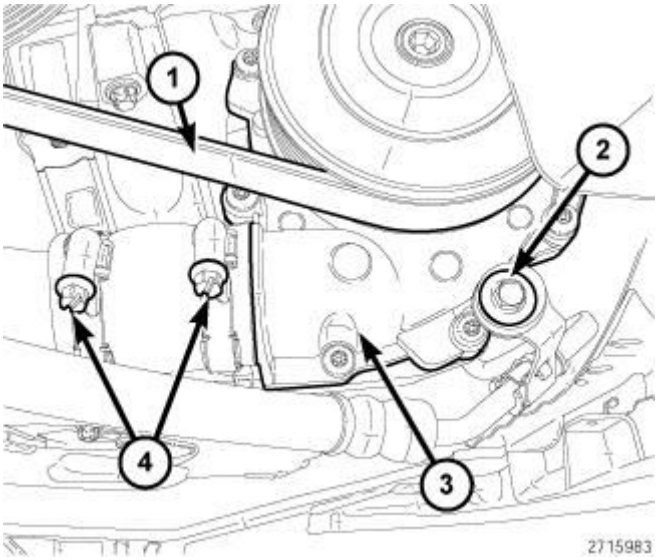

Fig. 82: Power Steering Pressure Line Retaining Bracket Bolt
Courtesy of CHRYSLER GROUP, LLC

9. Connect the power steering pressure line retaining bracket bolt (2). Tighten the bolt to 12 N.m (9 ft. lbs.).
10. Connect the coolant return hose to the water pump (3). Tighten the band clamps (4) to 1.7 N.m (15 in. lbs.).
11. Install accessory drive belt (1). Refer to **BELT, SERPENTINE, INSTALLATION**.
12. Lower the vehicle.
13. Evacuate air and refill cooling system. Refer to **STANDARD PROCEDURE**.
14. Fill and bleed the power steering system. Refer to **STANDARD PROCEDURE** .
15. Connect the negative battery cable.
16. Check cooling system for leaks. Refer to **DIAGNOSIS AND TESTING**.
17. Check the power steering system for leaks.

DIESEL COOLING MANIFOLD

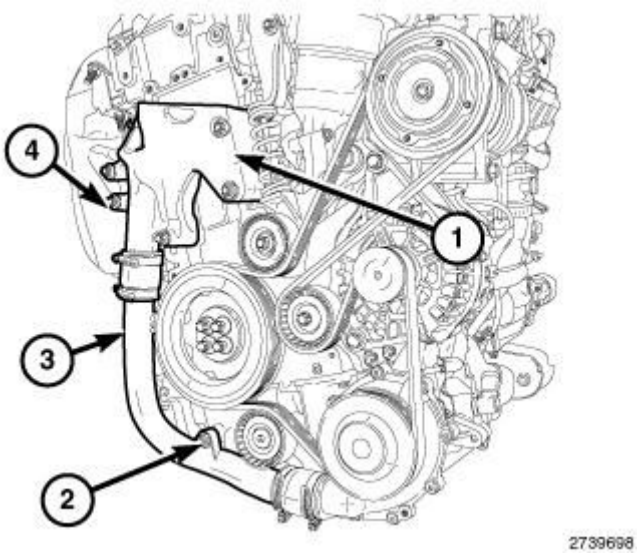

Fig. 83: Identifying Cooling Manifold, Engine Block Bolt, Coolant Return Hose & Cooling Manifold Mounting Bolts
Courtesy of CHRYSLER GROUP, LLC

1. Using a new gasket, install the cooling manifold (1). Tighten bolts (4) to 25 N.m (18 ft. lbs.).
2. Lower the engine.
3. Install the right side engine mount. Refer to **INSULATOR, ENGINE MOUNT, RIGHT, INSTALLATION** .
4. Install the coolant recovery bottle. Refer to **BOTTLE, COOLANT RECOVERY, INSTALLATION**.
5. Remove the support from underneath.
6. Lower the vehicle.
7. Install the coolant return hose.
8. Connect the coolant return hose to the cooling manifold (1) and tighten the band clamps.
9. Connect the coolant return hose to the water pump and tighten band clamps.
10. Install the coolant return hose to engine block bolt and securely tighten.
11. Raise and support the vehicle.
12. If equipped, install the belly pan.
13. Lower the vehicle.
14. Evacuate air and refill cooling system. Refer to **STANDARD PROCEDURE**.
15. Connect the negative battery cable.

16. Check cooling system for leaks. Refer to **DIAGNOSIS AND TESTING**.

RADIATOR, ENGINE COOLING

DESCRIPTION

DESCRIPTION

The radiator is a cross-flow type (horizontal tubes) with design features that provide greater strength, as well as sufficient heat transfer capabilities to keep the engine coolant within operating temperatures.

The radiator has an aluminum core with plastic tanks. Although stronger than brass, plastic tanks are subject to damage by impact. Always handle radiator with care.

OPERATION

OPERATION

The radiator functions as a heat exchanger, using air flow across the exterior of the radiator tubes. This heat is then transferred from the coolant and into the passing air.

REMOVAL

GAS ENGINE

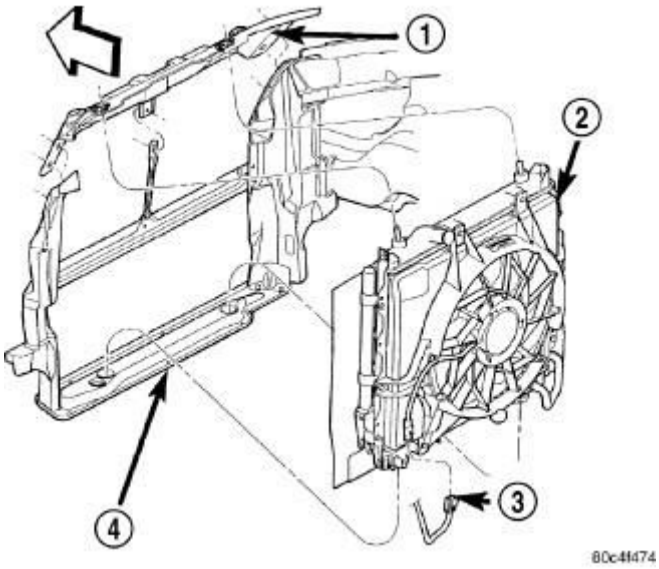

Fig. 84: Cooling Module Assembly
Courtesy of CHRYSLER GROUP, LLC

1 - UPPER RADIATOR CLOSURE PANEL
2 - COOLING MODULE
3 - RADIATOR FAN CONNECTOR
4 - LOWER RADIATOR CROSSMEMBER

WARNING: Do not open the radiator draincock with the system hot and under pressure because serious burns from coolant can occur.

1. Drain cooling system. Refer to **STANDARD PROCEDURE**.
2. Remove radiator fan. Refer to **FAN, COOLING, REMOVAL**.
3. Disconnect lower radiator hose.
4. Remove fasteners attaching AC condenser to radiator. Reposition AC condenser.
5. Remove radiator assembly by lifting it up from the engine compartment. **Care should be taken not to damage the cooling fins and tubes during removal.**

DIESEL

WARNING: Do not open the radiator draincock with the system hot and under pressure because serious burns from coolant can occur.

NOTE: It is not necessary to discharge the air conditioning system to remove the radiator.

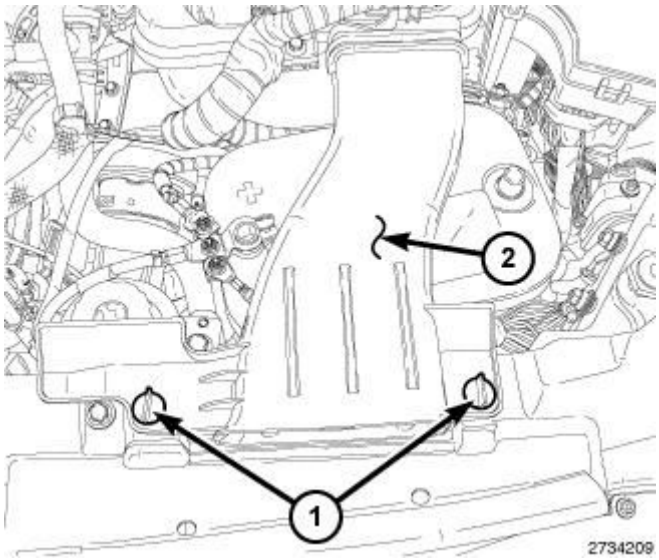

Fig. 85: Identifying Air Inlet Tube
Courtesy of CHRYSLER GROUP, LLC

1. Remove air intake duct (2).
2. Disconnect the negative battery cable.
3. Remove engine cover.
4. Raise and support the vehicle. Refer to **HOISTING, STANDARD PROCEDURE** .

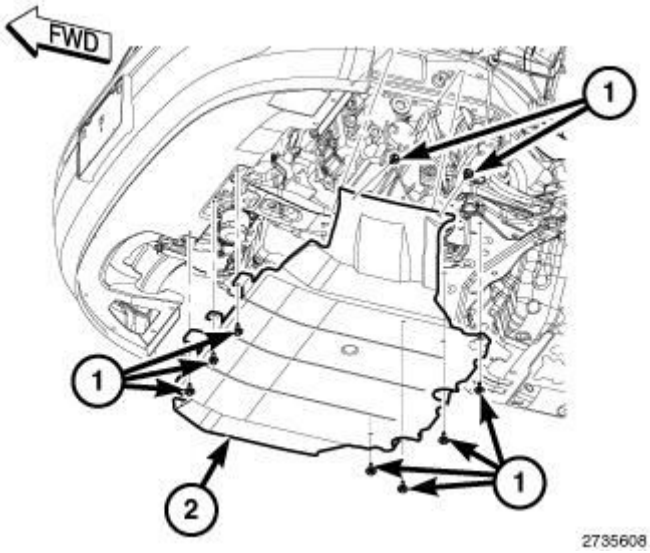

Fig. 86: Belly Pan & Bolts
Courtesy of CHRYSLER GROUP, LLC

NOTE: Belly pan removal is necessary for draining the cooling system.

5. Remove lower belly pan (2).
6. Drain cooling system. Refer to **STANDARD PROCEDURE**.

NOTE: Removal of the lower radiator hose can only be accessed from the top of vehicle when the cooling fan module has been removed.

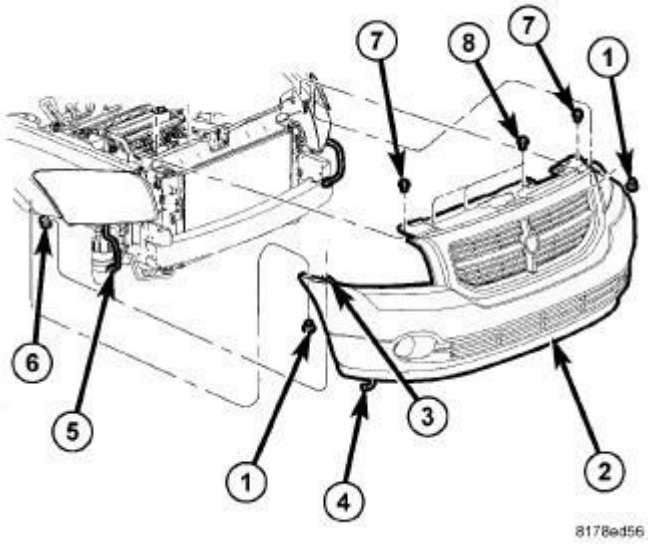

Fig. 87: Front Bumper Fascia Components
Courtesy of CHRYSLER GROUP, LLC

7. Partially lower the vehicle.
8. Remove the front wheel and tires.
9. Remove the inner splash shields.
10. Remove the front bumper fascia/grille (2) assembly. Refer to **FASCIA, FRONT, REMOVAL** .

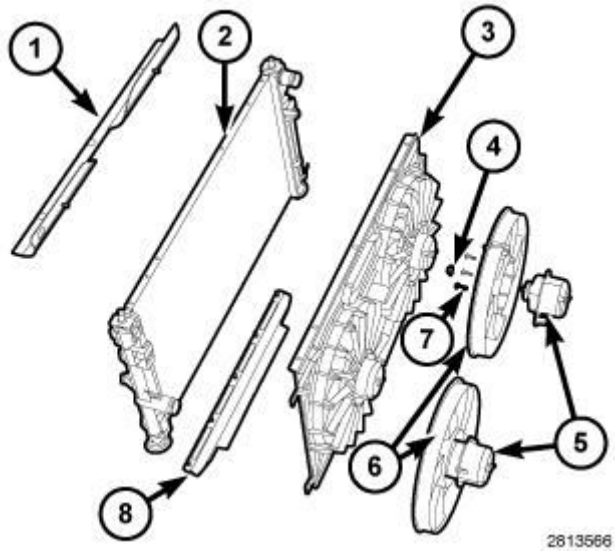

Fig. 88: Lower, Fan Blade Retaining Nut & Fan Motor
Courtesy of CHRYSLER GROUP, LLC

11. Lower the vehicle.
12. Remove radiator fan module assembly (8). Refer to **FAN, COOLING, REMOVAL**.
13. Disconnect the lower radiator hose.

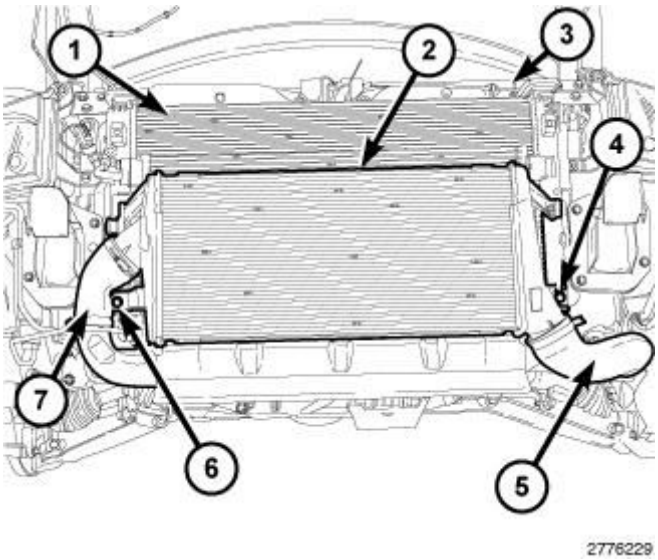

Fig. 89: Radiator, Charge Air Cooler, Hose & Fasteners
Courtesy of CHRYSLER GROUP, LLC

14. Disconnect the charge air hoses (5, 7) from the charge air cooler (2).
15. Remove the bolts (4, 6) and the charge air cooler from the radiator (3).
16. Remove remaining fasteners attaching A/C condenser (1) to radiator. Position A/C condenser aside.

17. Lift the radiator up and out of engine compartment.

INSPECTION

INSPECTION

Inspect the radiator tanks for cracks, broken or missing fittings also inspect the joint where the tanks seam up to the radiator core for signs of leakage and/or deteriorating seals.

Inspect radiator core for corroded, bent or missing cooling fins. Inspect the core for bent or damaged cooling tubes.

INSTALLATION

GAS ENGINE

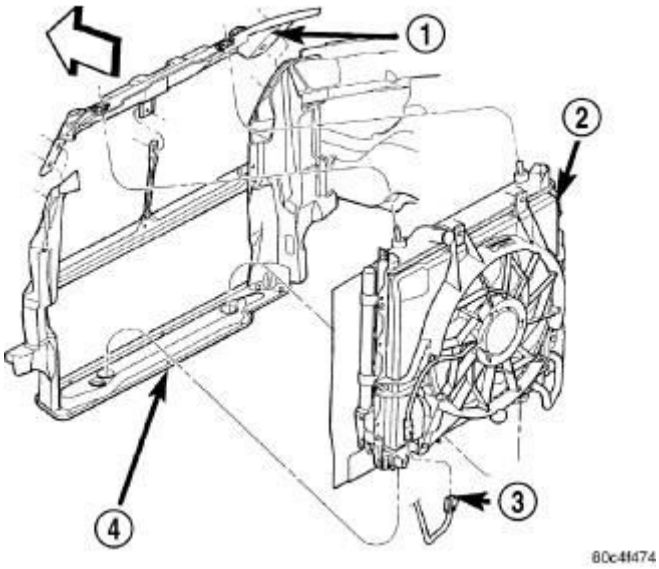

Fig. 90: Cooling Module Assembly
Courtesy of CHRYSLER GROUP, LLC

1 - UPPER RADIATOR CLOSURE PANEL
2 - COOLING MODULE
3 - RADIATOR FAN CONNECTOR
4 - LOWER RADIATOR CROSSMEMBER

1. Install the lower air seal to radiator.
2. Position radiator into mounting position.
3. Position A/C condenser against radiator. Hand start fasteners.

4. Install radiator fan/shroud assembly. Hand start fasteners.
5. Tighten all condenser fasteners to 8 N.m (70 in. lbs.).
6. Tighten all radiator fan fasteners to 6 N.m (55 in. lbs.).
7. Install fasteners attaching transmission oil cooler to radiator. Tighten fasteners to 8 N.m (70 in. lbs.).
8. Raise vehicle on hoist.
9. Connect the lower air seal to the side air seals.
10. Connect lower radiator hose. Align the hose and position the clamp so it will not interfere with engine components.
11. Connect the radiator fan electrical connector.
12. Connect the power steering hoses.
13. Close radiator draincock.
14. Lower vehicle.
15. Connect upper radiator hose. Align the hose and position the clamp to prevent interference with the engine or hood.
16. Install upper radiator closure panel and center brace Refer to **PANEL, CLOSURE, UPPER, INSTALLATION** .
17. Install grille.
18. Install battery tray and battery.
19. Connect positive battery cable. Connect negative battery cable.
20. Install air cleaner housing assembly.
21. Fill cooling system with coolant. Refer to **STANDARD PROCEDURE**.
22. Operate engine until it reaches normal operating temperature. Check cooling system for correct fluid level.

DIESEL

NOTE: Care must be taken not to damage the radiator cooling fins and tubes during installation.

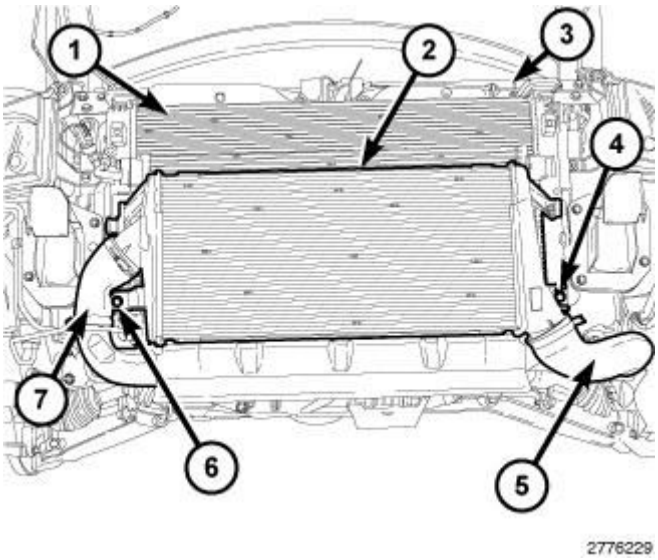

Fig. 91: Radiator, Charge Air Cooler, Hose & Fasteners
Courtesy of CHRYSLER GROUP, LLC

1. Lower radiator (1) into mounting position.
2. Install the A/C condenser onto radiator mounts.
3. Position charge air cooler to radiator. Tighten bolts (4, 6) to 8 N.m (70 in. lbs.).
4. Connect charge air cooler hoses (5, 7).

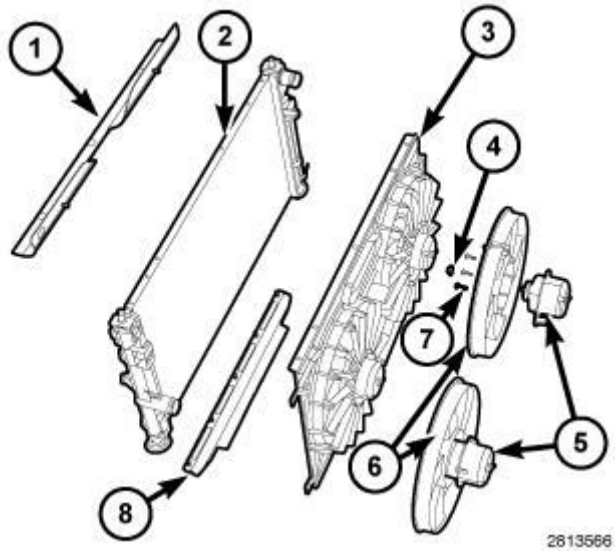

Fig. 92: Lower, Fan Blade Retaining Nut & Fan Motor
Courtesy of CHRYSLER GROUP, LLC

5. Install the lower radiator hose. Align the hose and position the clamp so it will not interfere with engine components.
6. Install radiator cooling module (8). Refer to **FAN, COOLING.**

INSTALLATION.

7. Raise the vehicle.

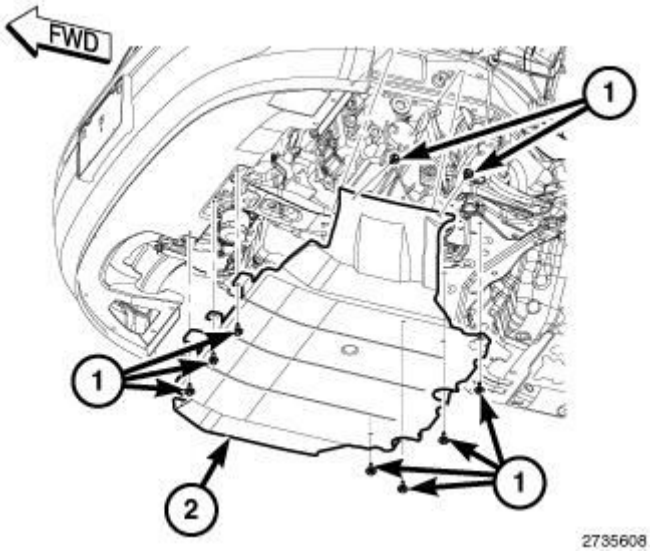

Fig. 93: Belly Pan & Bolts
Courtesy of CHRYSLER GROUP, LLC

8. Install the lower belly pan (2).
9. Partially lower the vehicle.

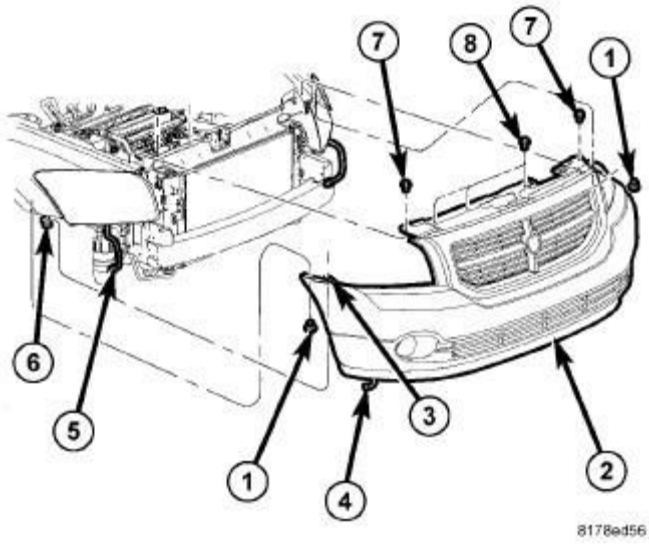

Fig. 94: Front Bumper Fascia Components
Courtesy of CHRYSLER GROUP, LLC

10. Install the front bumper/grille fascia (2). Refer to **FASCIA, FRONT, INSTALLATION** .

11. Install inner well splash shields.
12. Install the front tires. Refer to **INSTALLATION** .
13. Lower the vehicle.

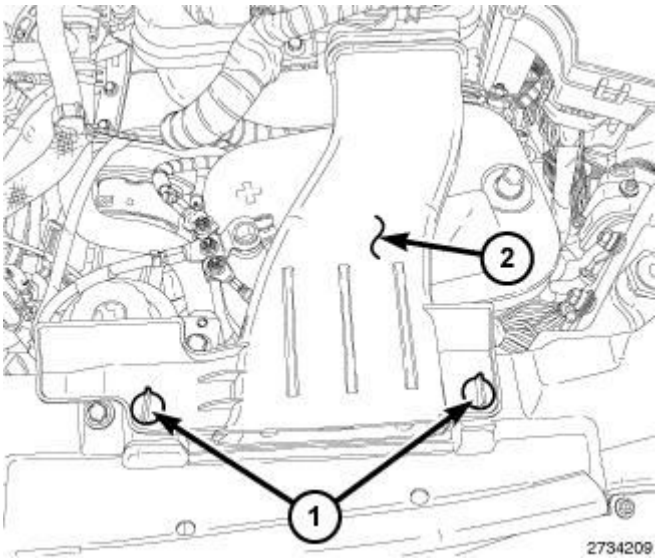

Fig. 95: Identifying Air Inlet Tube
Courtesy of CHRYSLER GROUP, LLC

14. Fill cooling system with appropriate coolant. Refer to **STANDARD PROCEDURE**.
15. Connect the negative battery cable.
16. Install engine cover.
17. Install air cleaner intake duct (2).
18. Operate engine until it reaches normal operating temperature. Check cooling system for correct fluid level.

SENSOR, COOLANT TEMPERATURE

DESCRIPTION

DESCRIPTION

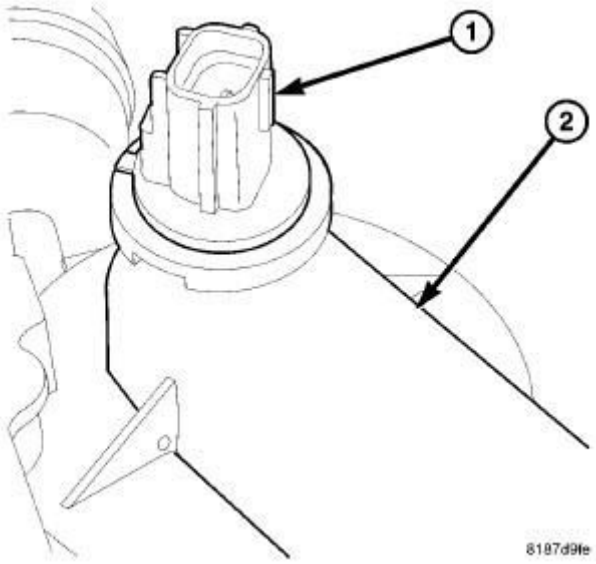

Fig. 96: ECT - World Engine - Coolant Adapter
Courtesy of CHRYSLER GROUP, LLC

1 - ETC 2 - COOLANT ADAPTER

There are two engine coolant sensors (ECT). One ECT (1) is located in the coolant adapter and one is (ECT) sensor (1) threads into the cylinder block. New sensors have sealant applied to the threads.

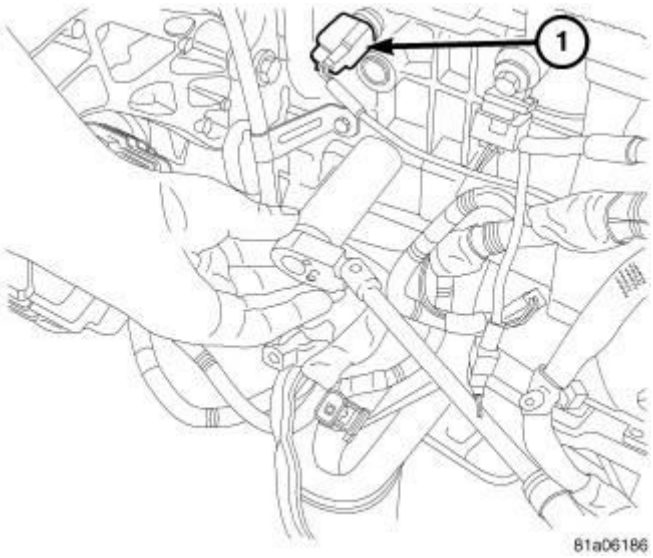

Fig. 97: ECT Sensor
Courtesy of CHRYSLER GROUP, LLC

1 - ECT

The ECT Sensor is a Negative Thermal Coefficient (NTC) Sensor. The resistance of the ECT Sensor changes as coolant temperature changes. This results in different input voltages to the PCM. The PCM also uses the ECT Sensor input to operate the radiator cooling fan(s), and send a message over the PCI bus to the instrument cluster for temperature gauge operation.

DIESEL ENGINE

The Engine Coolant Temperature (ECT) sensor is used to sense engine coolant temperature. The sensor protrudes into an engine water jacket. The ECT sensor is located on the top of the thermostat housing.

The ECT sensor is a two-wire Negative Thermal Coefficient (NTC) sensor. Meaning, as engine coolant temperature increases, resistance (voltage) in the sensor decreases. As temperature decreases, resistance (voltage) in the sensor increases.

OPERATION

OPERATION

The ECT sensor provides an input to the PCM. As temperature increases, resistance of the sensor decreases. As coolant temperature varies, the ECT sensor resistance changes resulting in a different voltage value at the PCM ECT sensor signal circuit. The ECT sensor provides input for various PCM operations. The PCM uses the input to control air-fuel mixture, timing, and radiator fan on/off times.

REMOVAL

GAS ENGINE

COOLANT ADAPTER MOUNTED

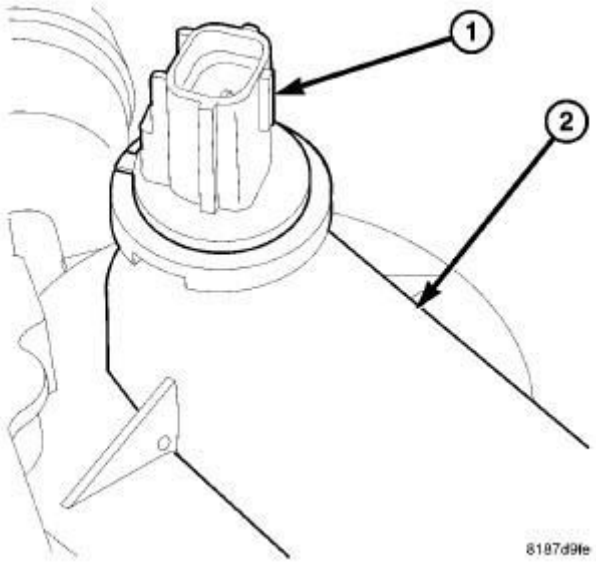

Fig. 98: ECT - World Engine - Coolant Adapter
Courtesy of CHRYSLER GROUP, LLC

1 - ETC 2 - COOLANT ADAPTER

1. Disconnect negative battery cable.
2. Partially drain cooling system below level of ECT Sensor (1). Refer to **STANDARD PROCEDURE**.
3. Disconnect ECT Sensor electrical connector.
4. Remove ECT Sensor (1) By pressing the locking tab down and turning the sensor counterclockwise.

DIESEL ENGINE

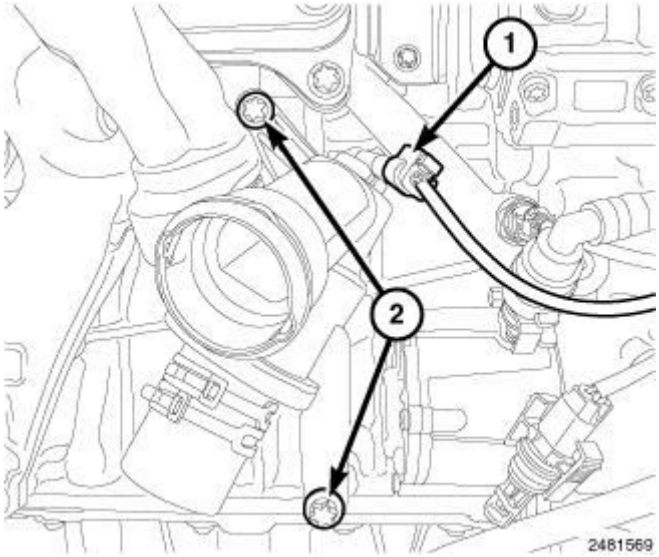

Fig. 99: Identifying Thermostat Heater Connector & Upper Thermostat Housing Bolt
Courtesy of CHRYSLER GROUP, LLC

1. Disconnect the negative battery cable.
2. Remove the thermostat housing. Refer to **THERMOSTAT, REMOVAL**.
3. Remove retaining clip and the coolant temperature sensor (1).
4. Remove and discard the O-ring seal.

INSTALLATION

GAS ENGINE

COOLANT ADAPTER MOUNTED

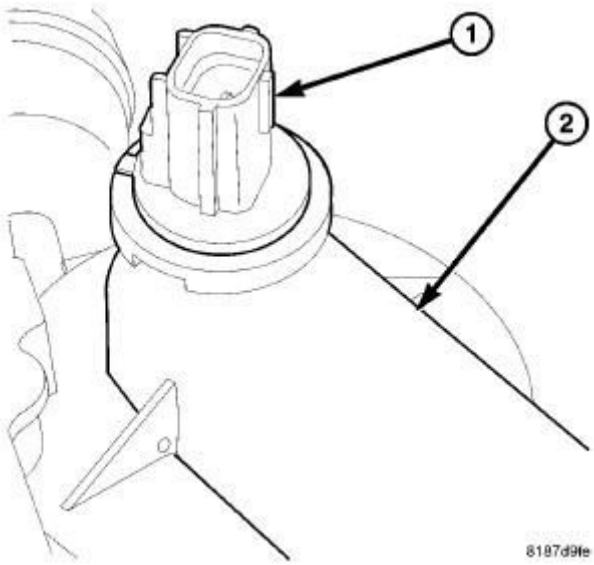

Fig. 100: ECT - World Engine - Coolant Adapter
Courtesy of CHRYSLER GROUP, LLC

1 - ETC 2 - COOLANT ADAPTER

1. Lubricate the ECT sensor O-ring with coolant.
2. Install the ECT Sensor (1). Make sure the coolant sensor is locked in place.
3. Connect the ECT Sensor electrical connector.
4. Fill the cooling system. Refer to **STANDARD PROCEDURE**.
5. Connect the negative battery cable.

DIESEL ENGINE

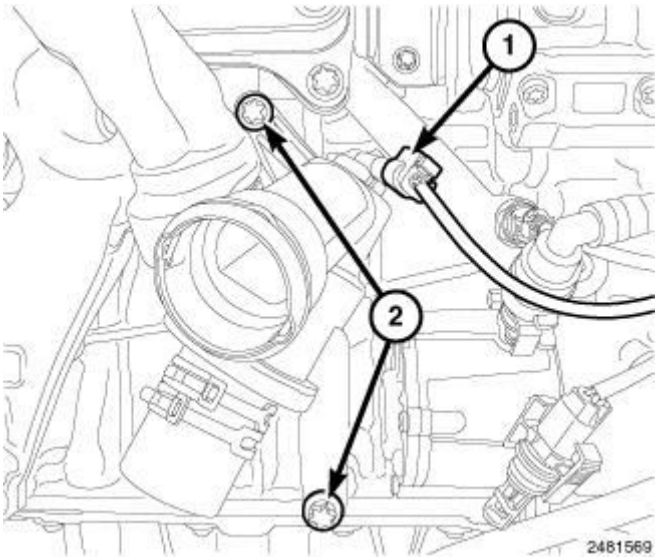

Fig. 101: Identifying Thermostat Heater Connector & Upper Thermostat Housing Bolt
Courtesy of CHRYSLER GROUP, LLC

1.
2. Clean the O-ring sealing surfaces.
3. Using a new O-ring seal, install coolant temperature sensor (1) and retaining clip.
4. Install the thermostat housing. Refer to **THERMOSTAT, INSTALLATION**.
5. Connect the negative battery cable.
6. Start engine and inspect for leaks.

THERMOSTAT

DESCRIPTION

DESCRIPTION

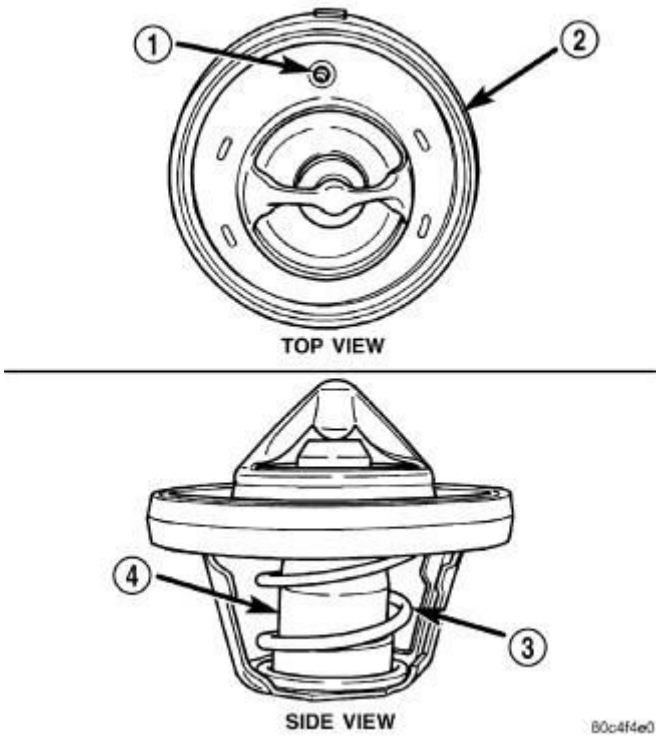

Fig. 102: Thermostat
Courtesy of CHRYSLER GROUP, LLC

1 - AIR BLEED
2 - SEAL
3 - RETURN SPRING
4 - PELLET CHAMBER

The primary thermostat is located on the front of the water plenum in the thermostat housing/coolant inlet. The thermostat has an air bleed vent located on its flange. The air bleed vent (1) and the locator dimple on thermostat seal provide for proper positioning of thermostat in inlet housing.

The secondary thermostat is located in the cylinder head under the water plenum.

OPERATION

OPERATION

When the Engine is cold and both the primary and secondary thermostats are closed. The coolant will circulate through the engine, heater system, and the bypass. The cooling system has no flow through the radiator

As the engine warms up, the primary thermostat will start to open at 82 °C (179 ° F). Coolant will start to flow through the radiator oil cooler and transmission cooler. Coolant will flow through the transmission oil cooler only when the primary thermostat is fully open. The primary thermostat will fully open at 95 °C (203 °F).

The secondary thermostat will start to open at 95 °C (203 °F). This will increase the coolant flow through the cylinder block and cylinder head and the radiator. The secondary thermostat will fully open at 110 °C (230 °F).

If the thermostat is stuck open or allows coolant leakage through it, the engine will not operate at the proper temperature for obtaining engine fuel efficiency, performance and emissions levels. If this condition occurs, a diagnostic trouble code will be set and a MIL light will be turned on. Refer to the appropriate Powertrain Diagnostic Procedures information for further information and diagnostics provided.

DIAGNOSIS AND TESTING

DIAGNOSIS AND TESTING - ENGINE COOLANT THERMOSTAT

The thermostat is operated by a wax filled chamber (pellet) which is sealed. When heated coolant reaches a predetermined temperature the wax pellet expands enough to overcome the closing spring and water pump pressure, which forces the valve to open. Coolant leakage into the pellet will cause a thermostat to fail open. Do not attempt to free up a thermostat with a screwdriver.

Thermostat diagnostics is included in Totally Integrated Power Module's (TIPM) programming for on-board diagnosis. The malfunction indicator light (MIL) will illuminate and a diagnostic trouble code (DTC) will be set when an "open too soon" condition occurs. Do not change a thermostat for lack of heater performance or temperature gauge position, unless a DTC is present. For other probable causes. Refer to **DIAGNOSIS AND TESTING**. Thermostat failing shut is the normal long term mode of failure, and normally, only on high mileage vehicles. The temperature gauge will indicate this.

REMOVAL

PRIMARY THERMOSTAT - GAS ENGINE

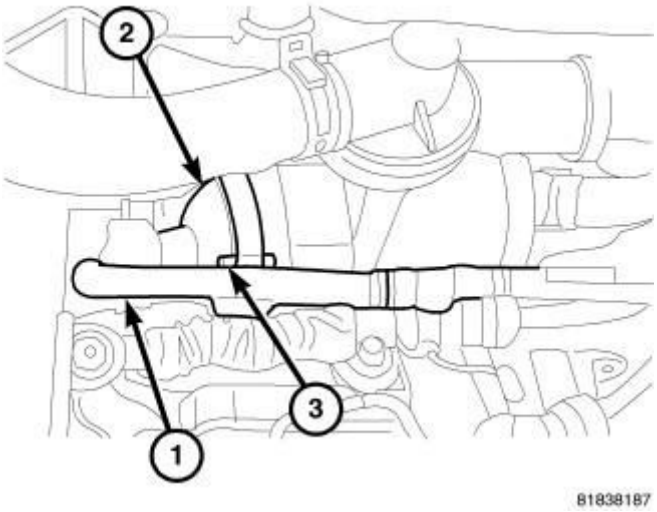

Fig. 103: Primary Thermostat
Courtesy of CHRYSLER GROUP, LLC

1 - COOLANT HOSE
2 - INLET HOUSING
3 - BOLT

1. Partially drain THE cooling system. Refer to **STANDARD PROCEDURE**.
2. Remove THE air filter housing Refer to **STANDARD PROCEDURE**.
3. Disconnect the coolant hose (1) from the inlet housing (2).
4. Remove inlet housing bolts (3).
5. Remove the thermostat assembly, and clean the sealing surfaces.

SECONDARY THERMOSTAT - GAS ENGINE

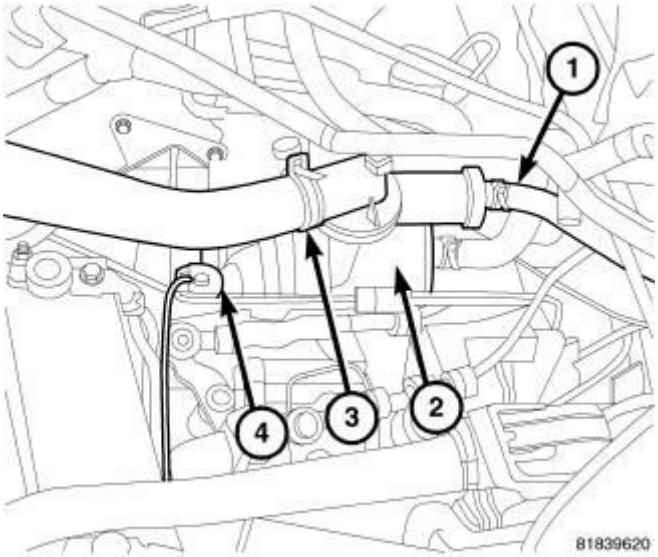

Fig. 104: Secondary Thermostat
Courtesy of CHRYSLER GROUP, LLC

1 - COOLANT HOSE (REAR)
2 - COOLANT ADAPTER
3 - RADIATOR HOSE
4 - RADIATOR HOSE (FRONT)

1. Partially drain cooling system. Refer to **STANDARD PROCEDURE**.
2. Remove the air filter housing. Refer to **2.0L BODY, AIR CLEANER, REMOVAL** or **2.4L BODY, AIR CLEANER, REMOVAL** .
3. Disconnect coolant hoses (1) from rear of the coolant adapter (2).
4. Remove the radiator hose (3).
5. Remove the radiator hose (4) from the front of the coolant adapter (2).
6. Remove the coolant adapter mounting bolts.
7. Carefully slide the coolant adapter off the water pump inlet tube and remove the coolant adapter (2) and the secondary thermostat.

DIESEL ENGINE

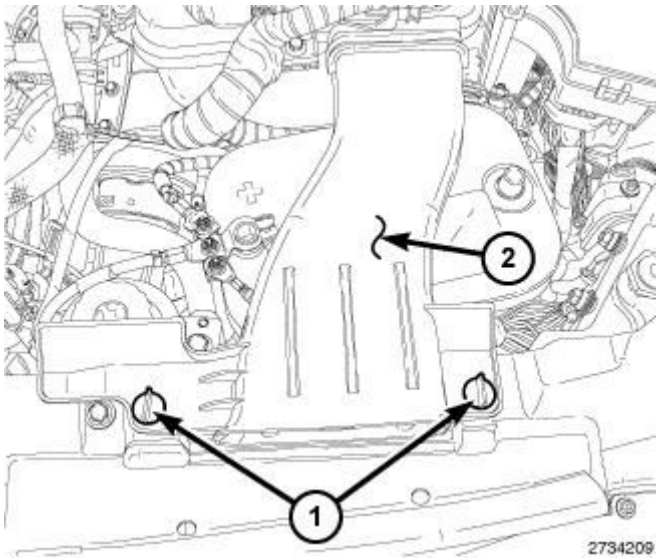

Fig. 105: Identifying Air Inlet Tube
Courtesy of CHRYSLER GROUP, LLC

1. Disconnect the negative battery cable.
2. Remove the air intake duct (2).
3. Siphon the power steering fluid from the reservoir.
4. Remove the fan module assembly. Refer to **FAN, COOLING, REMOVAL**.

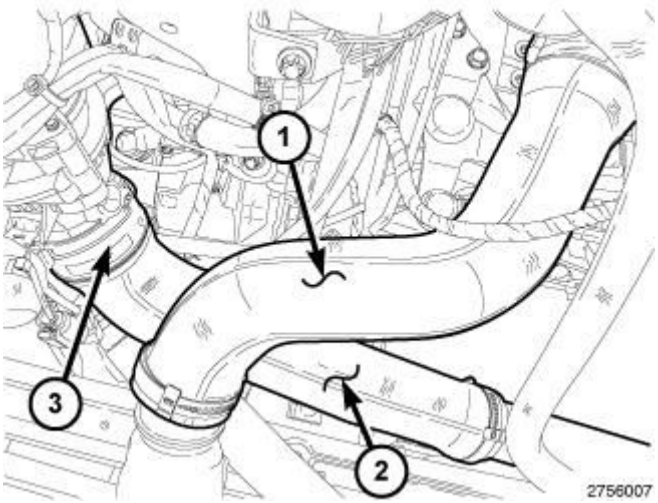

Fig. 106: Identifying Front Upper & Lower Air Charge Hose
Courtesy of CHRYSLER GROUP, LLC

5. Remove the front upper air charge hose (1).
6. Remove the front lower air charge hose (2) to the EGR throttle control housing.

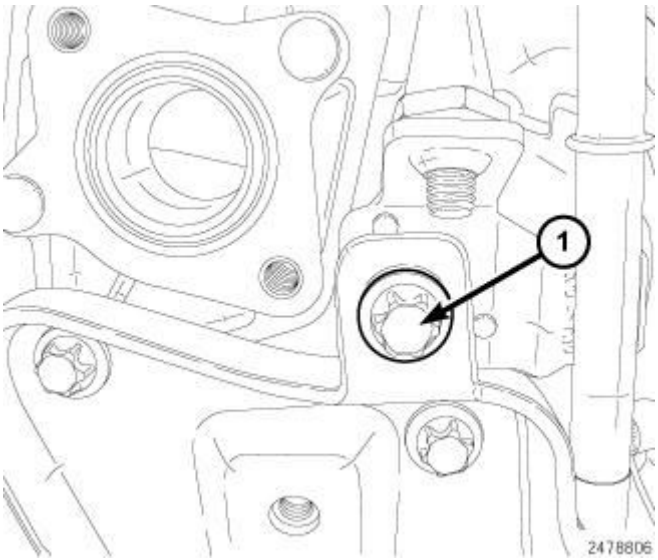

Fig. 107: Vacuum Tube Bolt
Courtesy of CHRYSLER GROUP, LLC

7. Remove the brake booster vacuum line support bracket (1).

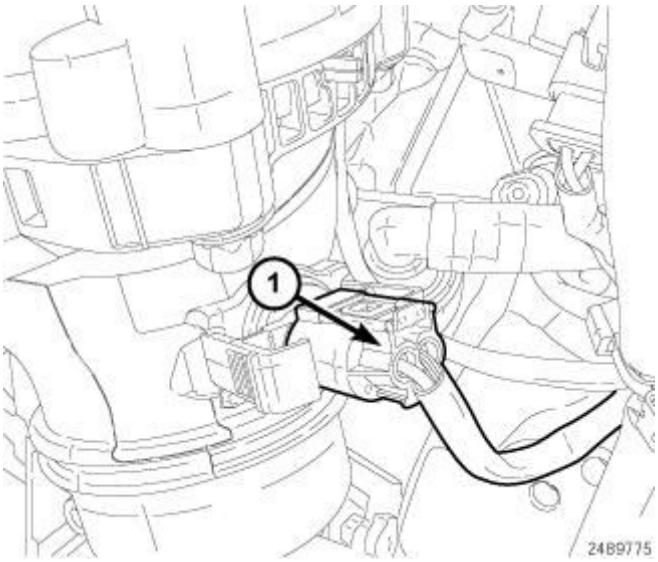

Fig. 108: Identifying Charge Air Temperature Sensor Connectors
Courtesy of CHRYSLER GROUP, LLC

8. Disconnect the wire harness connector to the EGR air flow control valve and charge air temperature sensor (1).
9. Loosen the lower hose clamp from the thermostat housing to the combination water/power steering pump.

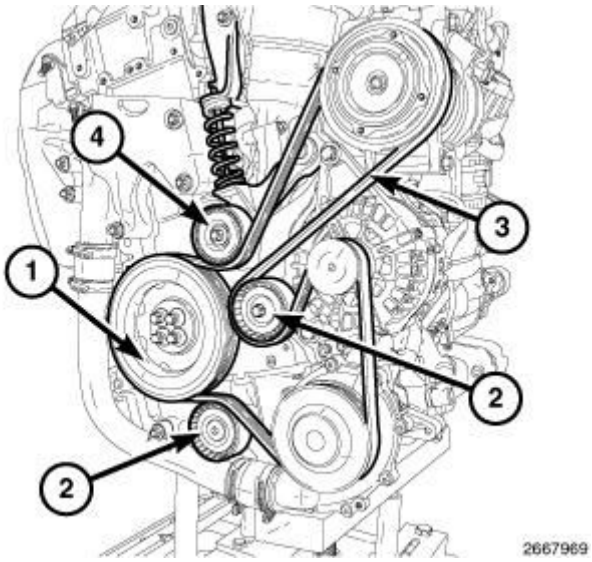

Fig. 109: Identifying Main Drive Belt
Courtesy of CHRYSLER GROUP, LLC

10. Raise the vehicle.
11. Remove main drive belt (3). Refer to **BELT, SERPENTINE, REMOVAL**.

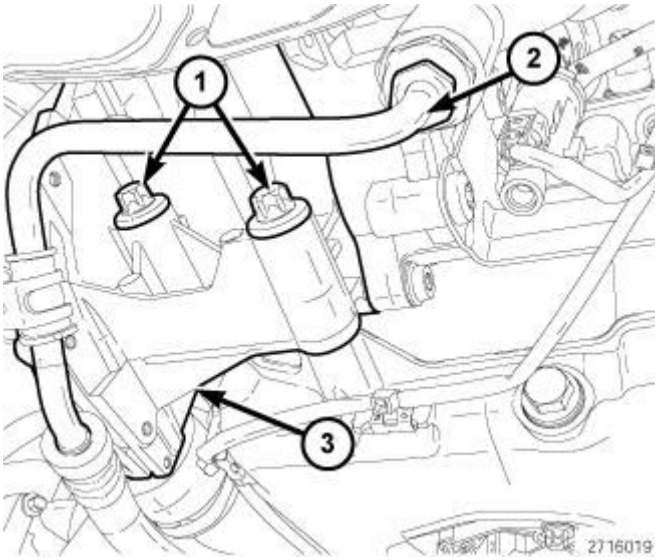

Fig. 110: Pressure Line At Pump
Courtesy of CHRYSLER GROUP, LLC

12. Remove the water/power steering pump assembly. Refer to **PUMP, WATER, REMOVAL**.

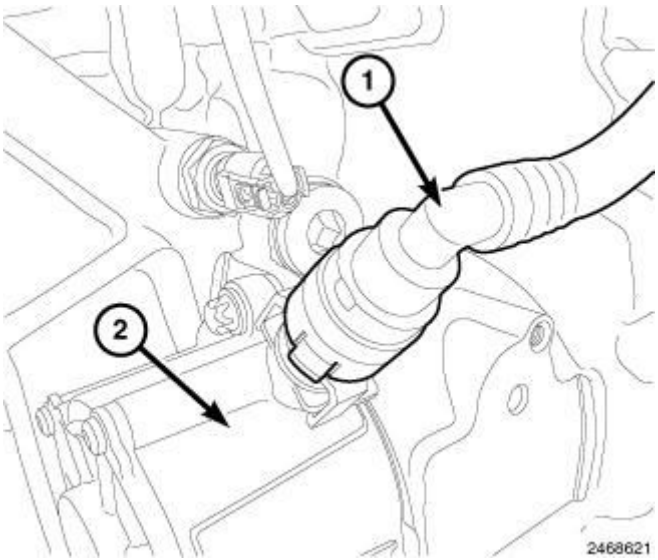

Fig. 111: Vacuum Hose At Vacuum Pump
Courtesy of CHRYSLER GROUP, LLC

13. Remove the brake booster vacuum line check valve (1) from the vacuum pump.

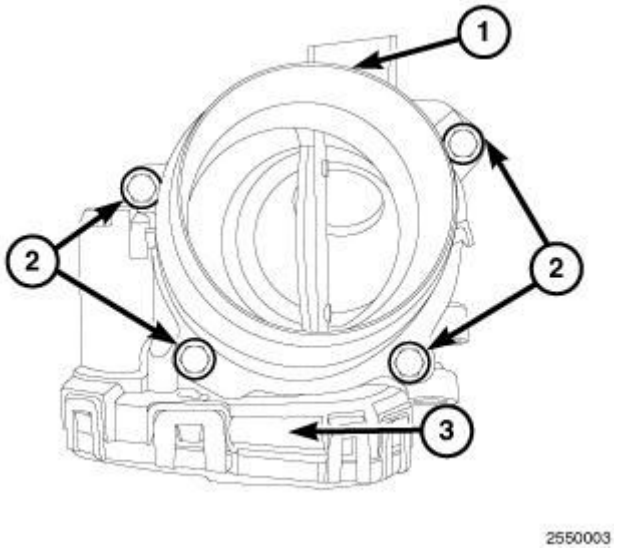

Fig. 112: EGR Air Flow Control Valve & Bolts
Courtesy of CHRYSLER GROUP, LLC

14. Remove the four mounting screws (2) from the EGR throttle control (3) to the mixing tank.
15. Position the inlet nozzle (1) aside, to be removed from the top side of vehicle.
16. Remove the EGR throttle control assembly (3).

NOTE: The thermostat must be replaced with the housing. Trying to remove the thermostat from the housing will damage the housing and the thermostat.

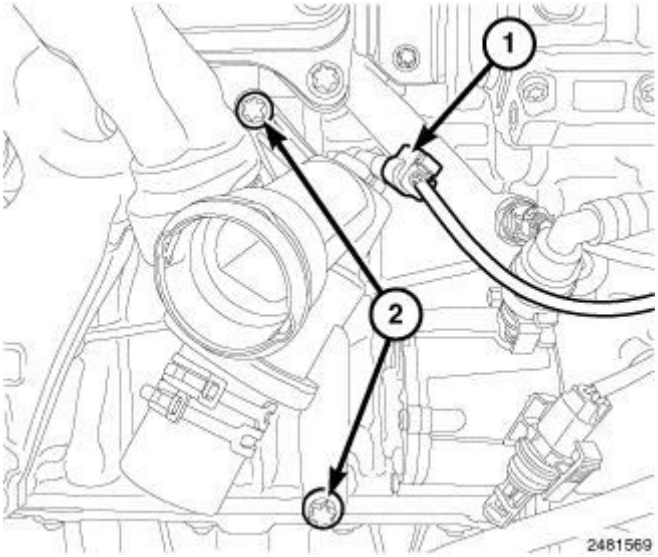

Fig. 113: Identifying Thermostat Heater Connector & Upper Thermostat Housing Bolt
Courtesy of CHRYSLER GROUP, LLC

17. Remove the lower thermostat housing mounting bolt (2).
18. Lower vehicle.
19. Remove the intake nozzle.
20. Disconnect the thermostat heater connector (1).
21. Remove the upper thermostat housing bolt (2).
22. Remove the thermostat housing by moving the housing in a side to side motion.

INSTALLATION

PRIMARY THERMOSTAT - GAS ENGINE

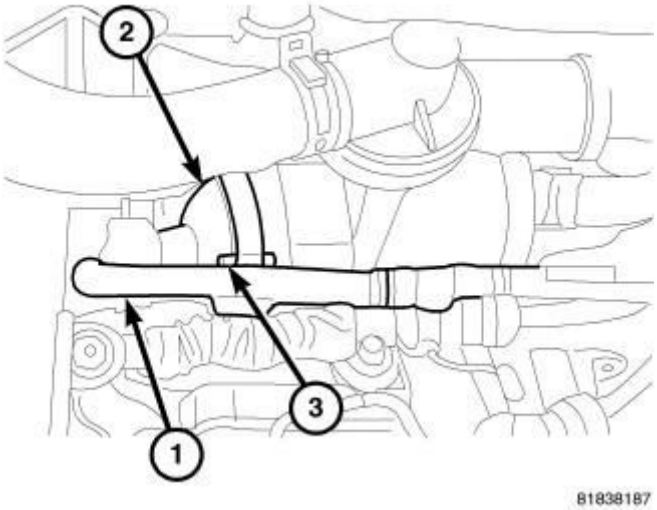

Fig. 114: Primary Thermostat
Courtesy of CHRYSLER GROUP, LLC

1 - COOLANT HOSE
2 - INLET HOUSING
3 - BOLT

1. Position thermostat into the water plenum, aligning air bleed with the location notch on inlet housing (2).
2. Install inlet housing (2) onto coolant adapter. Tighten bolts to 9 N.m (79 in. lbs.).
3. Connect coolant hose (1).
4. Install air filter housing.
5. Fill cooling system. Refer to **STANDARD PROCEDURE**.

SECONDARY THERMOSTAT - GAS ENGINE

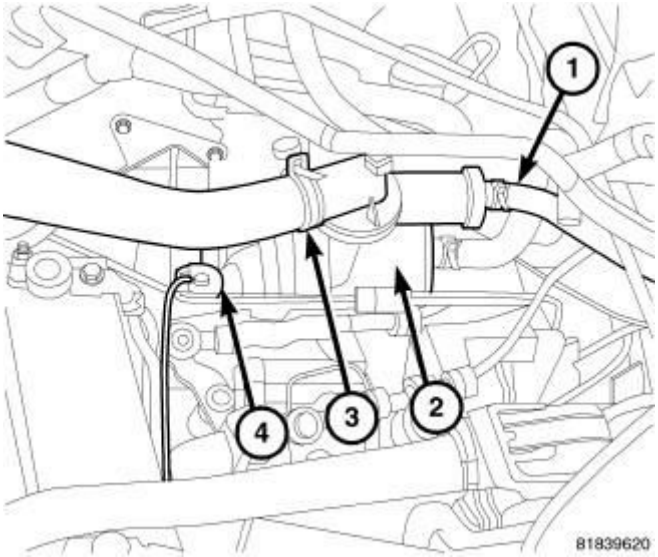

Fig. 115: Secondary Thermostat
Courtesy of CHRYSLER GROUP, LLC

1 - COOLANT HOSE (REAR)
2 - COOLANT ADAPTER
3 - RADIATOR HOSE
4 - RADIATOR HOSE (FRONT)

1. Position the thermostat into the cylinder head.
2. Inspect the water pump inlet tube O-rings for damage before installing the tube in the coolant adapter. Replace O-ring as necessary.
3. Lubricate the O-rings with soapy water.
4. Position the coolant adapter on the water pump inlet tube and the cylinder head.
5. Install the coolant adapter mounting bolts. Tighten the bolts to 18 N.m (159 in. lbs.).
6. Connect the front coolant hose (1).
7. Connect the two rear coolant hoses (1).
8. Connect the radiator hose (3).
9. Install the air filter housing Refer to **2.0L BODY, AIR CLEANER, INSTALLATION** or **2.4L BODY, AIR CLEANER, INSTALLATION** .
10. Fill the cooling system. Refer to **STANDARD PROCEDURE**.

DIESEL ENGINE

NOTE: Use coolant on the seals of the thermostat housing so the seals wont become damaged and to help aid in installation.

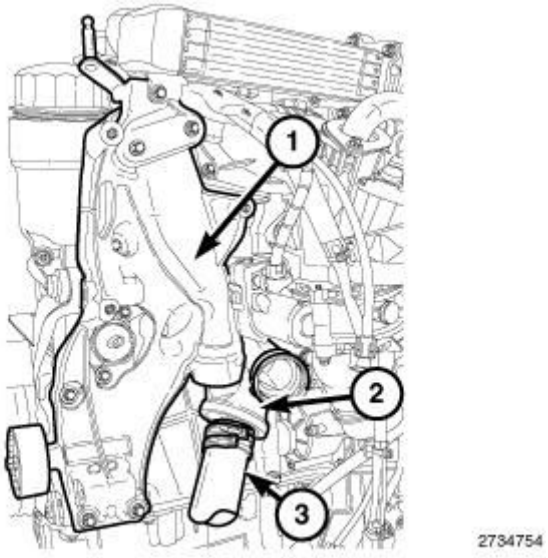

Fig. 116: Identifying Thermostat Housing & Accessory Carrier Bracket
Courtesy of CHRYSLER GROUP, LLC

1. Install the thermostat housing (2) into the accessory carrier bracket (1) by using hand pressure and twisting motion to seat the housing into place.

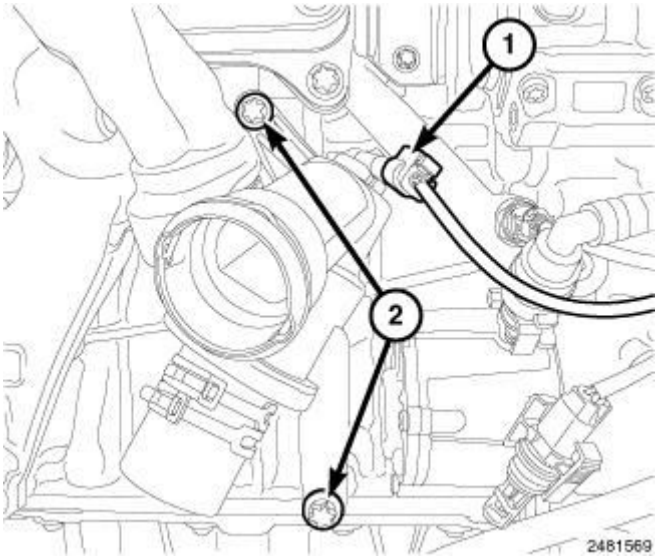

Fig. 117: Identifying Thermostat Heater Connector & Upper Thermostat Housing Bolt
Courtesy of CHRYSLER GROUP, LLC

2. Install the two thermostat housing mounting bolts (2). Tighten the bolts to 9

N.m (80 in. lbs.).

3. Connect the thermostat heater connector (1).

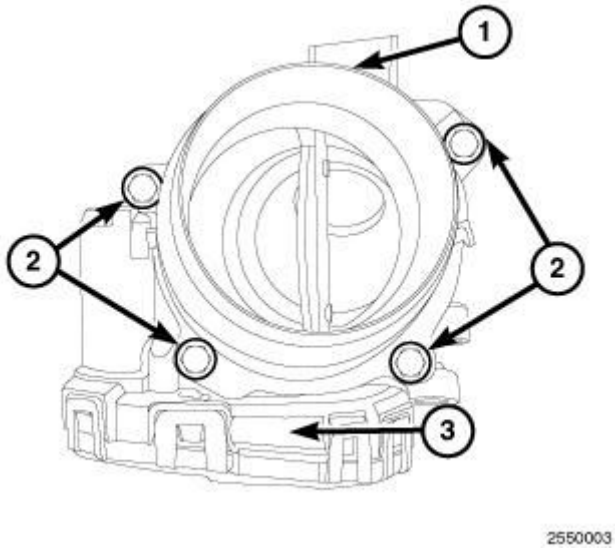

Fig. 118: EGR Air Flow Control Valve & Bolts
Courtesy of CHRYSLER GROUP, LLC

4. Install the EGR (3) and the inlet nozzle (1). Install two bolts (2) to support nozzle and EGR in place. Do not tighten.
5. Raise vehicle.
6. Install all mounting screws (2) for the EGR throttle control housing and the inlet nozzle, to the mixing tank. Tighten bolts (2) to 9 N.m (80 in. lbs.).
7. Install the brake booster check valve vacuum line at the pump.

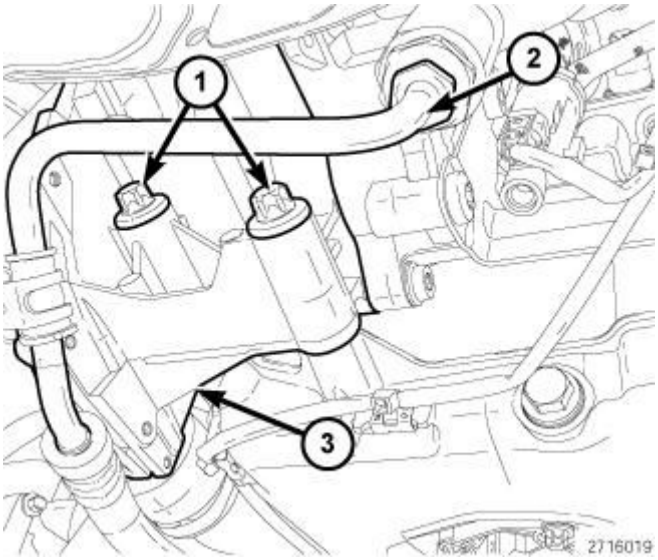

Fig. 119: Pressure Line At Pump
Courtesy of CHRYSLER GROUP, LLC

8. Install the water/power steering pump assembly. Refer to **PUMP, WATER, INSTALLATION**.

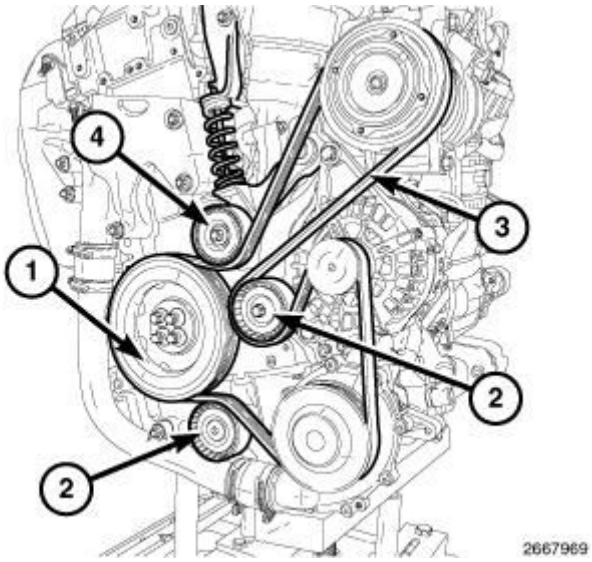

Fig. 120: Identifying Main Drive Belt
Courtesy of CHRYSLER GROUP, LLC

9. Install the main drive belt (3).

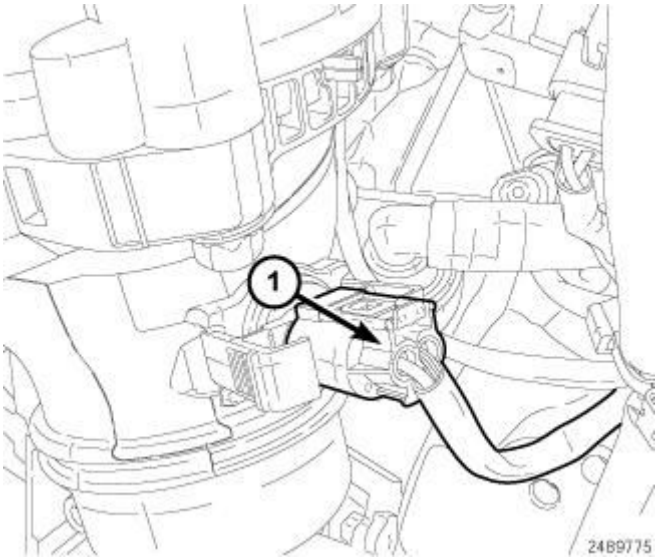

Fig. 121: Identifying Charge Air Temperature Sensor Connectors
Courtesy of CHRYSLER GROUP, LLC

10. Lower vehicle.
11. Install lower thermostat housing hose clamp onto combination water/power steering pump.
12. Connect the EGR throttle control and charge air temperature sensor

connectors (1).

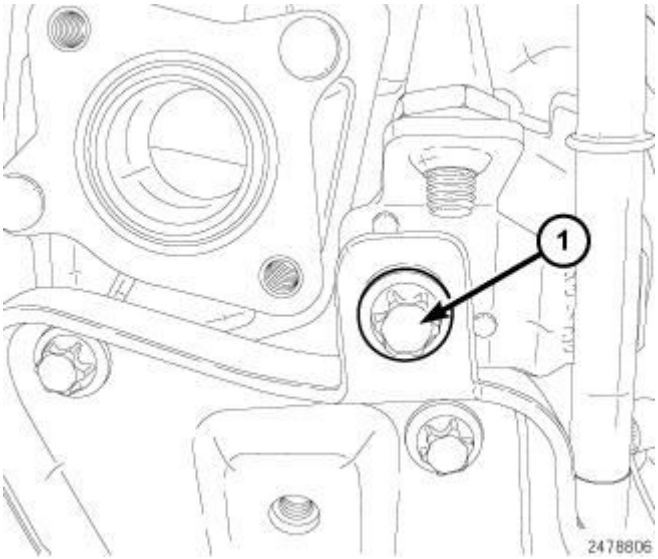

Fig. 122: Vacuum Tube Bolt
Courtesy of CHRYSLER GROUP, LLC

13. Install the upper brake booster vacuum line bracket bolt (1).

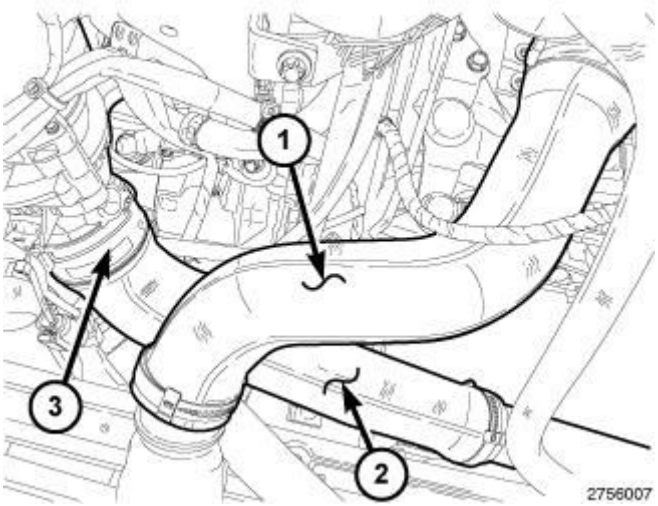

Fig. 123: Identifying Front Upper & Lower Air Charge Hose
Courtesy of CHRYSLER GROUP, LLC

14. Install the front lower air charge hose (2). Tighten hose clamps to 2 N.m (18 in. lbs.).
15. Install the front upper air charge hose (1). Tighten hose clamps to 2 N.m (18 in. lbs.).
16. Install the fan module assembly. Refer to **FAN, COOLING,**

INSTALLATION.

17. Add coolant. Refer to **STANDARD PROCEDURE**.
18. Add power steering fluid. Refer to **STANDARD PROCEDURE** .
19. Connect the negative battery cable.
20. Run engine to operating temperature and check for leaks.

TUBE, WATER INLET, GAS ENGINE

REMOVAL

REMOVAL

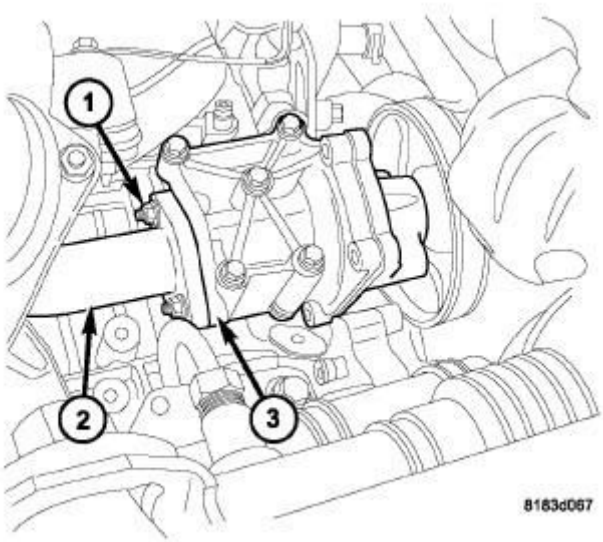

Fig. 124: Water Pump Inlet Tube - Gas Engine
Courtesy of CHRYSLER GROUP, LLC

1 - NUTS
2 - WATER PUMP INLET TUBE
3 - WATER PUMP HOUSING

The water pump inlet tube (2) connects the water pump to the coolant adapter. This tube is sealed by an O-ring and held in place by fasteners to the water pump housing.

1. Drain cooling system. Refer to **STANDARD PROCEDURE**.
2. Remove the coolant adapter and secondary thermostat. Refer to **THERMOSTAT, REMOVAL**.

3. Raise and support vehicle.
4. Remove inlet tube mounting nuts (1).
5. Remove inlet tube (2).

INSTALLATION

INSTALLATION

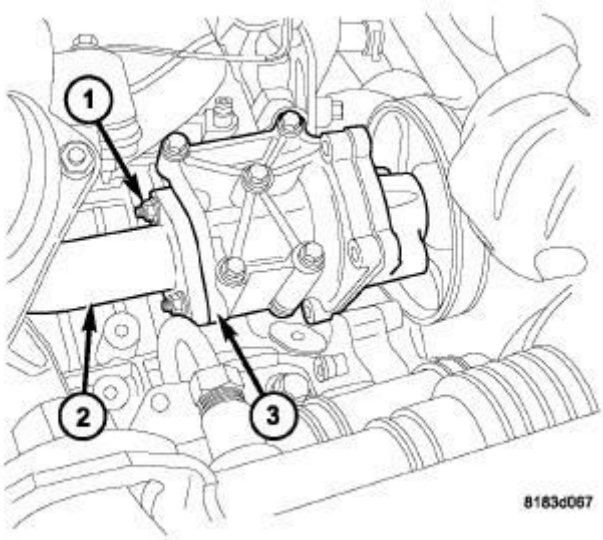

Fig. 125: Water Pump Inlet Tube - Gas Engine
Courtesy of CHRYSLER GROUP, LLC

1 - NUTS
2 - WATER PUMP INLET TUBE
3 - WATER PUMP HOUSING

1. Inspect the O-ring for damage before installing the tube. Replace O-ring as necessary.
2. Lubricate O-rings with soapy water.
3. Install new water inlet gasket between tube and water pump housing (2).
4. Position water pump inlet tube (3) on water pump housing (2). Hand tighten nuts to aide in tube alignment.
5. Install secondary thermostat and coolant adapter. Refer to **THERMOSTAT, INSTALLATION**.
6. Tighten coolant tube nuts (1) to 24 N.m (212 in. lbs.).
7. Fill cooling system. Refer to **STANDARD PROCEDURE**.

TRANSMISSION

COOLER, TRANSMISSION OIL

DESCRIPTION

DESCRIPTION

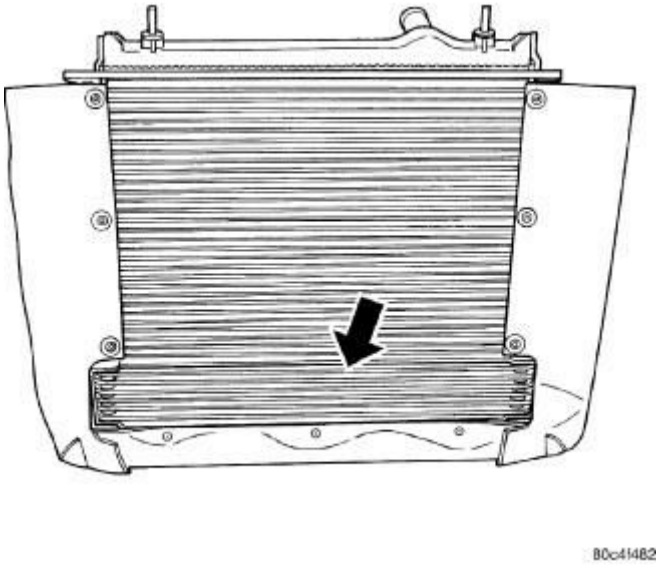

Fig. 126: Automatic Transmission Oil Cooler
Courtesy of CHRYSLER GROUP, LLC

The automatic transmission cooler is located in the front of the radiator and behind the front fascia and is combined with the A/C condenser. The transmission cooler is a heat exchanger that allows heat in the transmission fluid to be transferred to the air passing over the cooler fins.

The Transmission oil cooler/A/C condenser assembly is equipped with quick connect fitting for the transmission oil cooler lines.

REMOVAL

REMOVAL

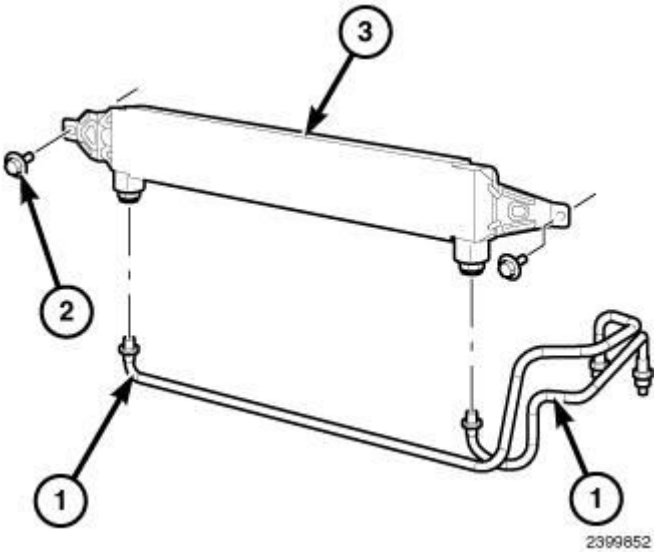

Fig. 127: Transmission Cooler Lines And Transmission Oil Cooler
Courtesy of CHRYSLER GROUP, LLC

1. On models equipped with A/C, refer to the A/C Condenser removal procedures. Refer to **CONDENSER, A/C, REMOVAL** .
2. On non A/C equipped models, lift the vehicle and remove the lower closeout panel.
3. Using Tool (special tool #8875A, Disconnect, Transmission Cooler Line) disconnect the transmission cooler lines (1) from the transmission oil cooler (3). Refer to **TUBES AND HOSES, TRANSMISSION OIL COOLER, STANDARD PROCEDURE**.
4. Remove the transmission oil cooler mounting bolts (2).
5. Remove the transmission oil cooler (3).

CLEANING

CLEANING

Check the external cooler for debris on the cooling fin surfaces. Clean as necessary.

INSPECTION

INSPECTION

Inspect all hoses, tubes, clamps and connections for leaks, cracks, or damage. Replace as necessary. Use only approved transmission oil cooler hoses that are molded to fit the space available.

Inspect external coolers for leaks, loose mounts, or damage. Replace as necessary.

INSTALLATION

INSTALLATION

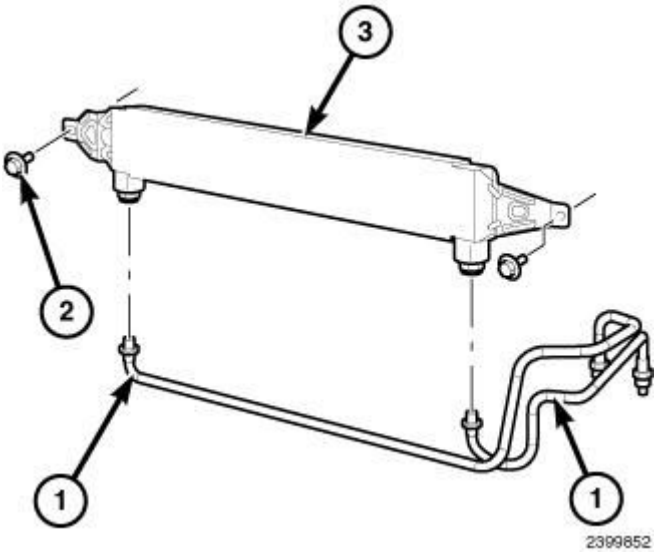

Fig. 128: Transmission Cooler Lines And Transmission Oil Cooler
Courtesy of CHRYSLER GROUP, LLC

1. On models equipped with A/C, refer to the A/C Condenser installation procedure. Refer to **CONDENSER, A/C, INSTALLATION** .
2. On non A/C equipped models, position the transmission oil cooler (3) to the radiator.
3. Install the transmission oil cooler mounting bolts (2). Tighten the bolts to 8 N.m (70 in. lbs.).
4. Connect the transmission cooler lines to the transmission oil cooler (1). Refer to **TUBES AND HOSES, TRANSMISSION OIL COOLER, STANDARD PROCEDURE**.
5. Install the lower closeout panel.
6. Lower the vehicle.
7. Start engine and check transmission fluid level. Adjust level as necessary.

TUBES AND HOSES, TRANSMISSION OIL COOLER

STANDARD PROCEDURE

STANDARD PROCEDURE - QUICK CONNECT FITTING DISASSEMBLY/ASSEMBLY

DISCONNECT

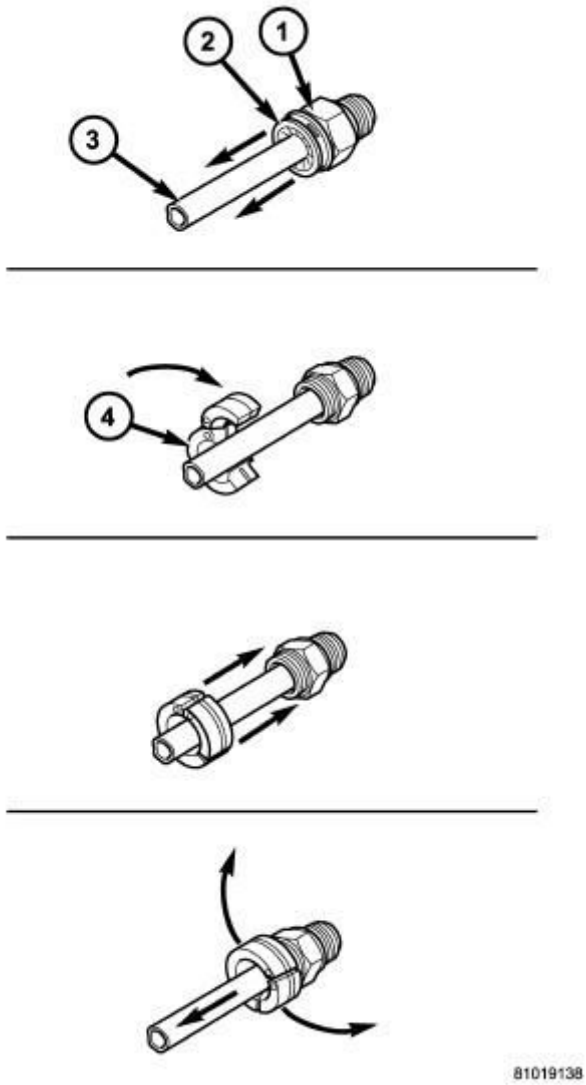

Fig. 129: Oil Cooler Line Quick Connect Fitting - Disassembly
Courtesy of CHRYSLER GROUP, LLC

1 - QUICK CONNECT FITTING
2 - DUST CAP
3 - OIL COOLER LINE
4 - SPECIAL TOOL 8875A for 3/8" Line or 9546 for 1/2" Line.

1. Remove dust cap by pulling it straight back off of quick connect fitting
2. Place disconnect Special Tool (special tool #8875A, Disconnect, Transmission Cooler Line) onto a 3/8 inch transmission cooler lines or

Special Tool (special tool #9546, Disconnect Tool) onto a 1/2 inch transmission cooler lines with the fingers of the tool facing the quick connect fitting.

3. Slide disconnect tool down the transmission line and engage the fingers of the tool into the retaining clip. When properly engaged in the clip, the tool will fit flush against the quick connect fitting.
4. Rotate the disconnect tool 60° to expand the retaining clip.
5. While holding the disconnect tool against the quick connect fitting, pull back on the transmission cooler line to remove.

CONNECT

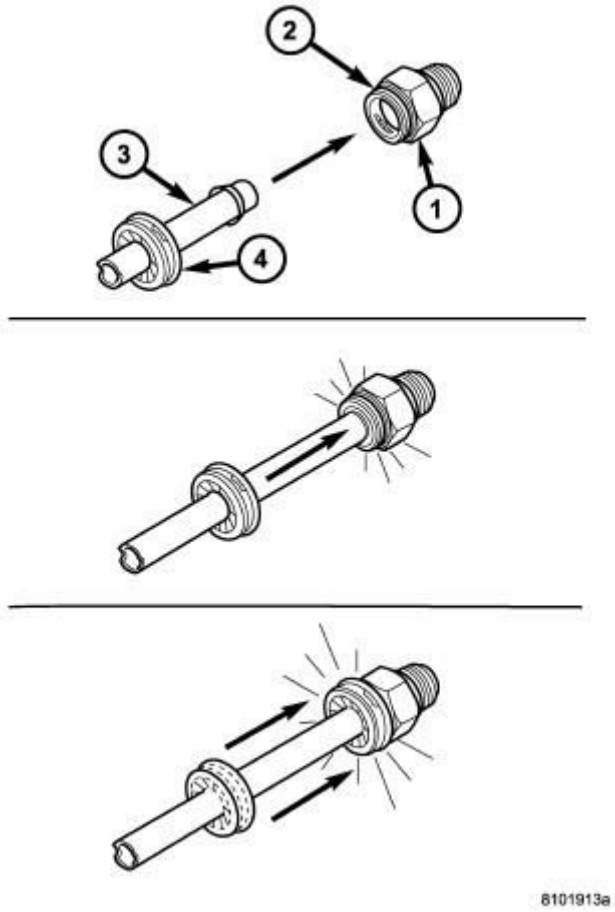

Fig. 130: Oil Cooler Line Quick Connect Fitting - Assembly
Courtesy of CHRYSLER GROUP, LLC

1 - QUICK CONNECT FITTING 2 - CLIP

3 - OIL COOLER LINE
4 - DUST CAP

1. If removed, install the quick connect fitting into the transmission oil cooler or the transmission. Tighten the fitting to 15 N.m (132 in. lbs.).
2. Align the cooler line (3) with the quick connect fitting while pushing straight into the fitting.
3. Push in on the transmission cooler line until a click is heard or felt.
4. Slide the dust cap (4) down the transmission cooler line and snap it over the quick connect fitting until it is fully seated and rotates freely. The dust cap will only snap over the quick connect fitting when the transmission cooler line is properly installed.

NOTE: If the dust cap will not snap into place, repeat step 2.

2014 ENGINE

Exhaust System - Compass & Patriot

DESCRIPTION

GAS ENGINE

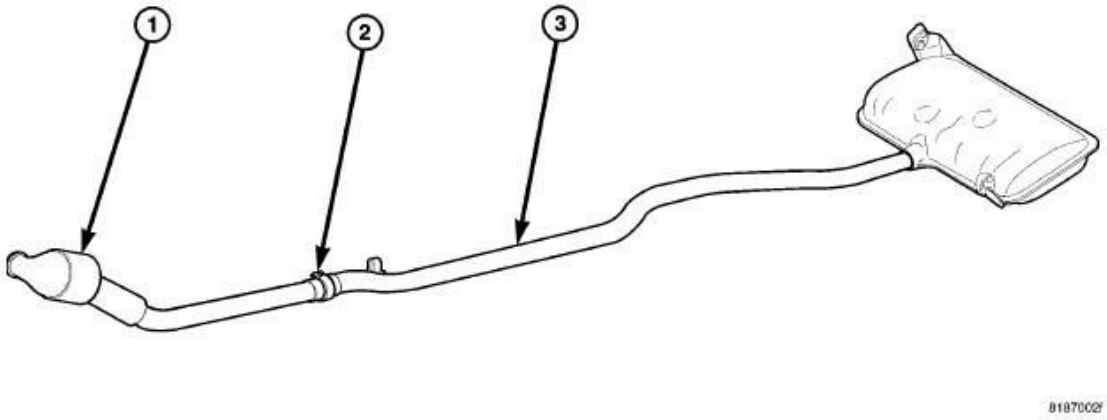

Fig. 1: FWD Exhaust System - Gas Engine
Courtesy of CHRYSLER GROUP, LLC

1 - CATALYTIC CONVERTER
2 - CLAMP
3 - I-PIPE/MUFFLER ASSEMBLY

The FWD gas engine exhaust system components consist of a catalytic converter, intermediate pipe, muffler, clamps and support isolators.

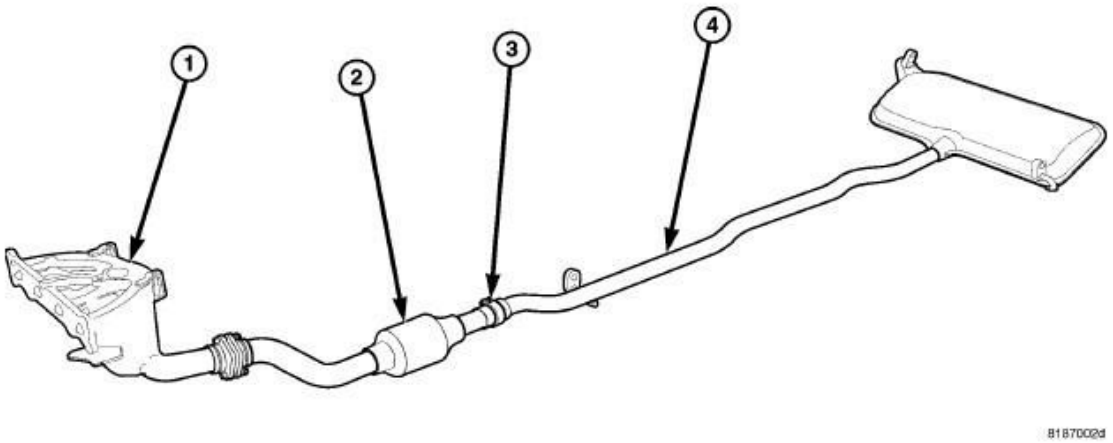

Fig. 2: AWD Exhaust - Gas Engine
Courtesy of CHRYSLER GROUP, LLC

1 - MANIVERTER
2 - UNDER FLOOR CATALYTIC CONVERTER
3 - CLAMP
4 - I PIPE/MUFFLER ASSEMBLY

The AWD gas engine exhaust system components consist of a maniverter, under floor catalytic converter, intermediate pipe, muffler, clamps and support isolators.

DIESEL ENGINE

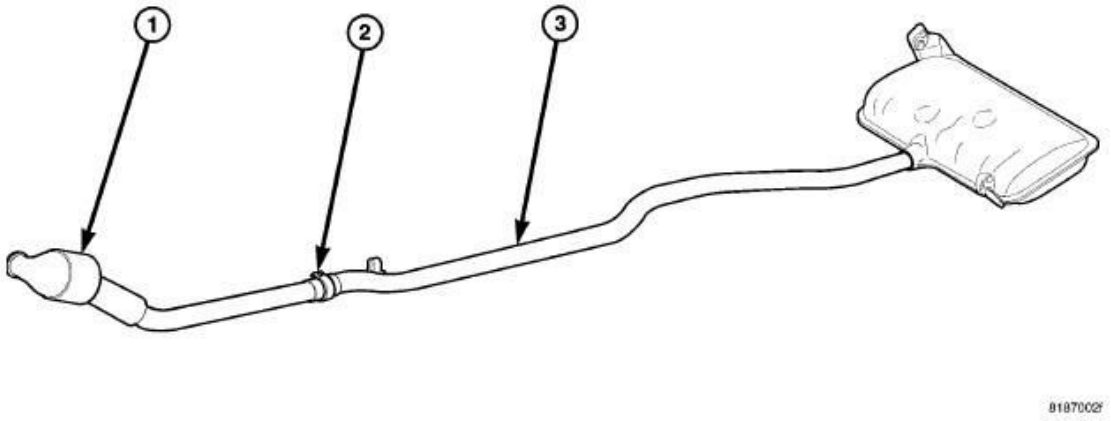

Fig. 3: FWD Exhaust System - Gas Engine
Courtesy of CHRYSLER GROUP, LLC

1 - CATALYTIC CONVERTER
2 - CLAMP
3 - I-PIPE/MUFFLER ASSEMBLY

The basic exhaust system consists of an engine exhaust manifold, turbocharger, exhaust down pipe, exhaust pipe, exhaust heat shield(s), muffler and exhaust tailpipe.

The exhaust system uses a single muffler.

The exhaust system must be properly aligned to prevent stress, leakage and body contact. If the system contacts any body panel, it will transfer objectionable noises originating from the engine to the body.

When inspecting an exhaust system, critically inspect for cracked or loose joints,

stripped screw or bolt threads, corrosion damage and worn, cracked or broken hangers. Replace all components that are badly corroded or damaged. DO NOT attempt to repair.

When replacement is required, use original equipment parts (or equivalent). This will assure proper alignment and provide acceptable exhaust noise levels.

CAUTION: Avoid application of rust prevention compounds or undercoating materials to exhaust system floor pan exhaust heat shields. Light overspray near the edges is permitted. Application of coating will result in excessive floor pan temperatures and objectionable fumes.

DIAGNOSIS AND TESTING

EXHAUST SYSTEM DIAGNOSIS

YouTube	A multimedia supplement to the instructions contained in this article is available. To view the multimedia example of the condition described go to; **http://www.youtube.com/user/Mitchell1Tips then type, Checking Exhaust System For Leaks into the "Search Channel" box.**

CONDITION	POSSIBLE CAUSES	CORRECTION
EXCESSIVE EXHAUST NOISE (UNDER HOOD)	1. Exhaust manifold cracked or broken.	1. Replace manifold.
	2. Manifold to cylinder head leak.	2. Tighten manifold and/or replace gasket.
	3. Exhaust flex joint to manifold leak.	3. Tighten fasteners or replace gasket.
	4. Exhaust flex joint.	4. Replace catalytic converter assembly.
	5. Pipe and shell noise from front exhaust pipe.	5. Characteristic of single wall pipes.

EXCESSIVE EXHAUST NOISE	1. Leaks at pipe joints.	1. Tighten or replace clamps at leaking joints.
	2. Burned, blown, or rusted out exhaust pipe or muffler.	2. Replace muffler or exhaust pipes.
	3. Restriction in muffler or tailpipe.	3. Remove restriction, if possible or replace as necessary.
	4. Catalytic converter material in muffler.	4. Replace muffler and converter assembly. Check fuel injection and ignition systems for proper operation.

RESTRICTION TEST

Exhaust system restriction can be checked by measuring back pressure using the scan tool and PEP module pressure tester.

WARNING: The normal operating temperature of the exhaust system is very high. Therefore, never work around or attempt to service any part of the exhaust system until it is cooled. Special care should be taken when working near the catalytic converter. The temperature of the converter rises to a high level after a short period of engine operation time.

NOTE: For Special Tool identification, refer to SPECIAL TOOLS.

1. Disconnect and remove the upstream (before catalytic converter) oxygen sensor. Refer to **SENSOR, OXYGEN, REMOVAL** .
2. Install the Back Pressure Test Adaptor (special tool #CH8519, Hose, Exhaust Back Pressure).
3. Connect the Pressure Transducer CH7063 to the back pressure fitting.
4. Following the PEP module instruction manual, connect all required cables to the scan tool and PEP module. Select the available menu options on the scan tool display screen for using the digital pressure gauge function.
5. Apply the park brake and start the engine.

6. With transmission in Park or Neutral, raise engine speed to 2000 RPM. Monitor the pressure readings on the scan tool. Back pressure should not exceed specified limit. Refer to specification in table below. Refer to **EXHAUST BACK PRESSURE LIMITS**.
7. If pressure exceeds maximum limits, inspect exhaust system for restricted component. For further catalytic converter inspection procedures. Refer to **CONVERTER, CATALYTIC, INSPECTION**. Replace component(s) as necessary.

EXHAUST BACK PRESSURE LIMITS

Exhaust Back Pressure Limit (Max)	
Vehicle in Park/Neutral (no load) @2000 RPM	3.45 kPa (0.5 psi)

ADJUSTMENTS

ADJUSTMENTS

A misaligned exhaust system is usually indicated by a vibration, rattling noise, or binding of exhaust system components. These noises are sometimes hard to distinguish from other chassis noises. Inspect exhaust system for broken or loose clamps, heat shields, insulators, and brackets. Replace or tighten as necessary. It is important that exhaust system clearances and alignment be maintained.

Perform the following procedures to align the exhaust system:

1. Loosen clamps and support brackets.
2. Align the exhaust system starting at the front, working rearward.
3. Tighten all clamps and brackets once alignment and clearances are achieved.

SPECIFICATIONS

SPECIFICATIONS

DESCRIPTION	N.m	Ft. Lbs.	In. Lbs.
Fastener, Band Clamps	55	41	-
Fasteners, Catalytic Converter to Exhaust Manifold Flange	28	21	-
Fastener, under floor catalytic converter to			

maniverter - AWD	33	24	-
Fasteners, Intermediate Pipe Heat Shield	3.7	-	33
Fasteners, Charge Air Cooler	8	-	70
Hose Clamps, Charge Air Cooler	1.7	-	15
Elbow Support Bracket			
M8 Fasteners	28	-	250
M10 Fasteners	58	44	-
Fasteners, Heat Shield	28	-	250
Turbocharger to Catalytic Converter Bolt (Diesel)	20	-	177

INSPECTION

INSPECTION

Inspect the exhaust pipes, catalytic converters, muffler, and resonators for cracked joints, broken welds and corrosion damage that would result in a leaking exhaust system. Inspect the clamps, support brackets, and insulators for cracks and corrosion damage.

SPECIAL TOOLS

SPECIAL TOOLS

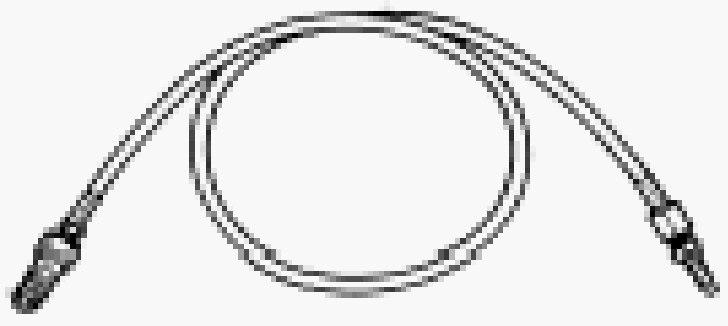	CH8519 - Hose, Exhaust Back Pressure

BRACKETS, SUPPORT AND ISOLATORS

REMOVAL

REMOVAL

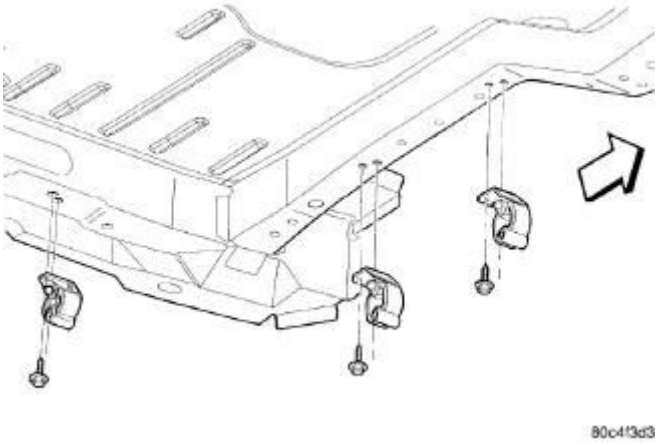

Fig. 4: Exhaust System Isolator And Bracket
Courtesy of CHRYSLER GROUP, LLC

1. Disconnect isolator from exhaust system component.
2. Remove screws attaching isolator bracket to underbody.
3. Remove isolator assembly.

INSTALLATION

INSTALLATION

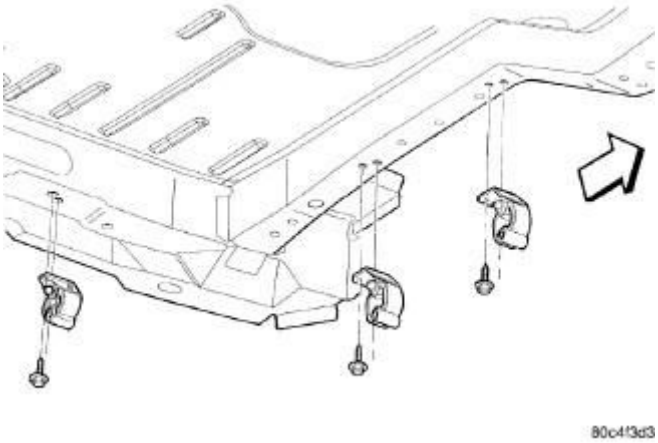

Fig. 5: Exhaust System Isolator And Bracket
Courtesy of CHRYSLER GROUP, LLC

1. Position isolator bracket to underbody and install attaching screws. Tighten bracket screws to frame rail to 8.5 N.m (75 in. lbs.) and bracket screws to the rear panel to 3.7 N.m (33 in. lbs.).
2. Connect isolator to exhaust system component.
3. Start the engine and inspect for exhaust leaks. Repair exhaust leaks as

necessary.

4. Check the exhaust system for contact with the body panels. Make the necessary adjustments, if needed.

CONVERTER, CATALYTIC

DESCRIPTION

DESCRIPTION

The combination exhaust manifold/catalytic converter is attached to the intermediate pipe using fasteners and a gasket for sealing.

WARNING: The normal operating temperature of the exhaust system is very high. Therefore, never work around or attempt to service any part of the exhaust system until it is cooled. Special care should be taken when working near the catalytic converter. The temperature of the converter rises to a high level after a short period of engine operation time.

CAUTION: Do not remove spark plug wires from plugs or by any other means short out cylinders. Failure of the catalytic converter can occur due to a temperature increase caused by unburned fuel passing through the converter.

The stainless steel catalytic converter body is designed to last the life of the vehicle. Excessive heat can result in bulging or other distortion, but excessive heat will not be the fault of the converter. If unburned fuel enters the converter, overheating may occur. If a converter is heat-damaged, correct the cause of the damage at the same time the converter is replaced. Also, inspect all other components of the exhaust system for heat damage.

Unleaded gasoline must be used to avoid contaminating the catalyst core.

FWD vehicles use a catalytic converter located after the exhaust manifold and before the I-Pipe/Muffler assembly.

AWD vehicles use a maniverter and an under floor catalytic converter. The under

floor catalytic converter is located between the maniverter and the I-Pipe/muffler assembly.

Diesel engine vehicles use a catalytic converter located between the turbocharger and the I-Pipe/Muffler assembly.

OPERATION

OPERATION

The three-way catalytic converter simultaneously converts three exhaust emissions into harmless gases. Specifically, HC and CO emissions are converted into water (H2O) and carbon dioxide (CO2). Oxides of Nitrogen (NOx) are converted into Nitrogen (N) and Oxygen. The three-way catalyst is most efficient in converting HC, CO and NOx at the stoichiometric air fuel ratio of 14.7:1.

The oxygen content in a catalyst is important for efficient conversion of exhaust gases. When a high oxygen content (lean) air/fuel ratio is present for an extended period, oxygen content in a catalyst can reach a maximum. When a rich air/fuel ratio is present for an extended period, the oxygen content in the catalyst can become totally depleted. When this occurs, the catalyst fails to convert the gases. This is known as catalyst "punch through."

Catalyst operation is dependent on its ability to store and release the oxygen needed to complete the emissions-reducing chemical reactions. As a catalyst deteriorates, its ability to store oxygen is reduced. Since the catalyst's ability to store oxygen is somewhat related to proper operation, oxygen storage can be used as an indicator of catalyst performance. Refer to the appropriate Diagnostic Information for diagnosis of a catalyst related Diagnostic Trouble Code (DTC).

The combustion reaction caused by the catalyst releases additional heat in the exhaust system, causing temperature increases in the area of the reactor under severe operating conditions. Such conditions can exist when the engine misfires or otherwise does not operate at peak efficiency. **Do not** remove spark plug wires from plugs or by any other means short out cylinders. Failure of the catalytic converter can occur due to temperature increases caused by unburned fuel passing through the converter. This deterioration of the catalyst core can result in excessively high emission levels, noise complaints, and exhaust restrictions.

Unleaded gasoline must be used to avoid ruining the catalyst core. Do not allow engine to operate above 1200 RPM in neutral for extended periods over 5

minutes. This condition may result in excessive exhaust system/floor pan temperatures because of no air movement under the vehicle.

The flex joint allows flexing as the engine moves, preventing breakage that could occur from the back-and-forth motion of a transverse mounted engine.

CAUTION: Due to exterior physical similarities of some catalytic converters with pipe assemblies, extreme care should be taken with replacement parts. There are internal converter differences required in some parts of the country (particularly vehicles built for States with strict emission requirements) and between model years.

REMOVAL

UNDER FLOOR CATALYTIC CONVERTER - 2.4L AWD

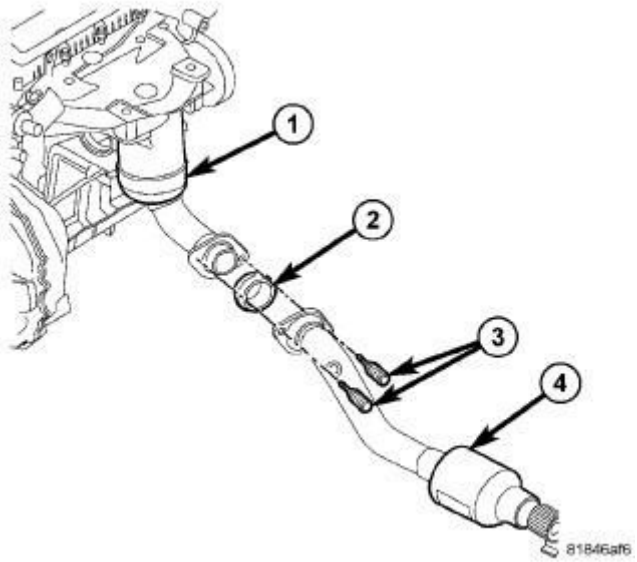

Fig. 6: Under Floor Catalytic Converter
Courtesy of CHRYSLER GROUP, LLC

1 - COMBINATION MANIFOLD/CATALYTIC CONVERTER
2 - SPHERICAL GASKET
3 - BOLT AND SPRING
3 - UNDER FLOOR CATALYTIC CONVERTER

WARNING: The normal operating temperature of the exhaust

system is very high. Therefore, never work around or attempt to service any part of the exhaust system until it is cooled. Special care should be taken when working near the catalytic converter. The temperature of the converter rises to a high level after a short period of engine operating time.

1. Raise vehicle on hoist and apply penetrating oil to band clamp fastener of component being removed.

NOTE: Do not use petroleum-based lubricants when removing/installing muffler or exhaust pipe isolators as it may compromise the life of the part. A suitable substitute is a mixture of liquid dish soap and water.

2. Remove I-Pipe/Muffler assembly. Refer to **MUFFLER, EXHAUST, REMOVAL**.
3. Disconnect oxygen sensor electrical connectors.

NOTE: If spherical gasket is to be reused, mark orientation.

4. Remove flange bolts (3), springs and spherical gasket.
5. Remove under floor catalytic converter (4) from maniverter or catalytic converter assembly (1).
6. Clean ends of pipes to assure mating of all parts. Discard broken or worn isolators, rusted or overused clamps, supports, and attaching parts.

NOTE: When replacement is required on any component of the exhaust system, you must use original equipment parts (or their equivalent).

FWD

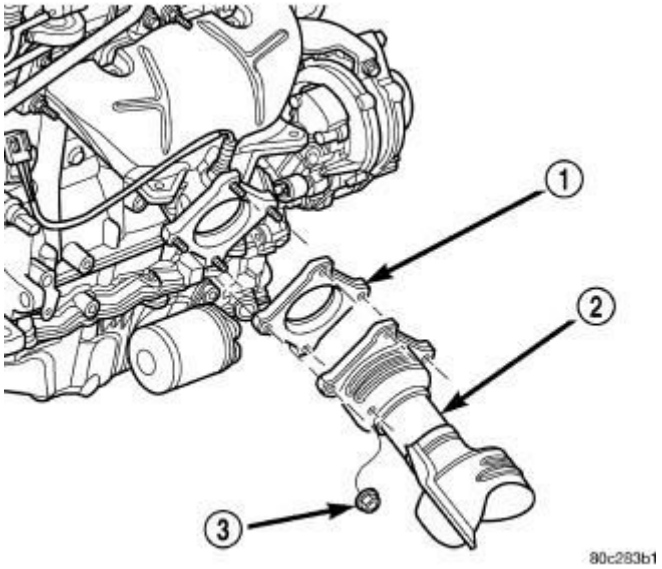

Fig. 7: Removing/Installing Catalytic Converter
Courtesy of CHRYSLER GROUP, LLC

1 - GASKET
2 - CATALYTIC CONVERTER
3 - NUT

WARNING: The normal operating temperature of the exhaust system is very high. Therefore, never attempt to service any part of the exhaust system until it is cooled. Special care should be taken when working near the catalytic converter. The temperature of the converter rises to a high level after a short period of engine operation time.

1. Loosen intermediate pipe-to catalytic converter clamp.

NOTE: Do not use petroleum-based lubricants when removing/installing muffler or exhaust pipe isolators as it may compromise the life of the part. A suitable substitute is a mixture of liquid dish soap and water.

2. Remove catalytic converter to exhaust manifold mounting nuts and gasket Discard gasket.
3. Remove I-Pipe/Muffler assembly insulators as necessary to slide catalytic

converter out of I-Pipe/Muffler.

NOTE: When replacement is required on any component of the exhaust system, original equipment parts (or equivalent) must be used.

DIESEL ENGINE

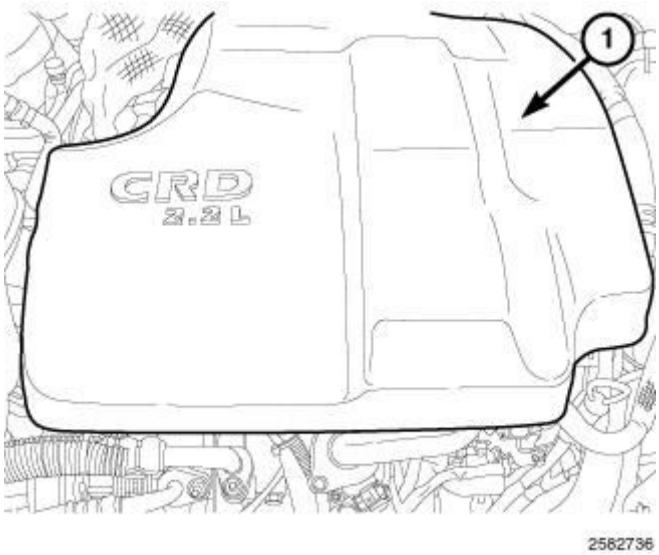

Fig. 8: Engine Cover
Courtesy of CHRYSLER GROUP, LLC

WARNING: The normal operating temperature of the exhaust system is very high. Therefore, never attempt to service any part of the exhaust system until it is cooled. Special care should be taken when working near the catalytic converter. The temperature of the converter rises to a high level after a short period of engine operation time.

1. Remove engine trim cover (1).
2. Disconnect and isolate the negative battery cable.

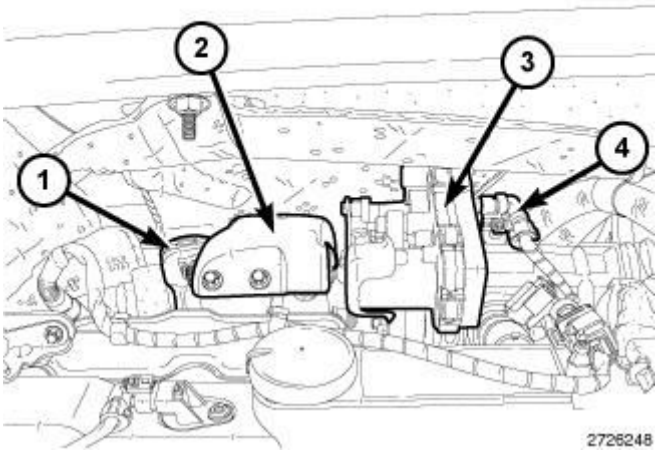

Fig. 9: Identifying Catalytic Converter, Turbocharger Heat Shield, Catalytic Converter Band Clamp & Upstream Temperature Sensor
Courtesy of CHRYSLER GROUP, LLC

3. Remove the turbocharger heat shield (2).
4. Remove the upstream temperature sensor from the catalytic converter.
5. Remove the catalytic converter to steady rest bracket bolt.
6. Loosen the turbocharger to catalytic converter band clamp (1).

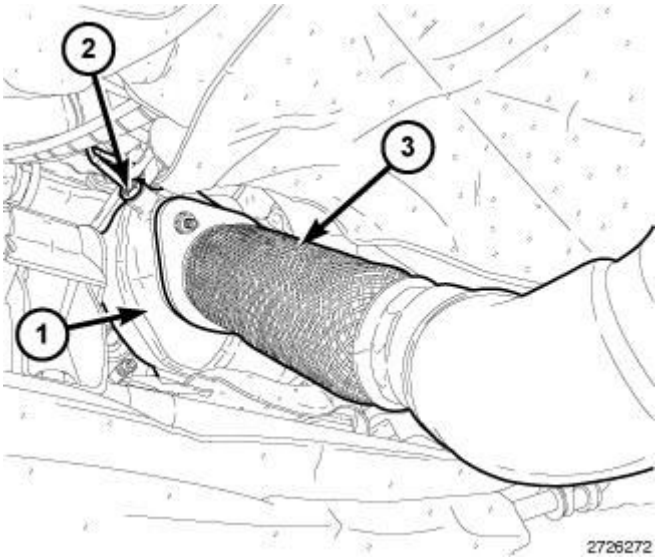

Fig. 10: Identifying Downstream Temperature Sensor
Courtesy of CHRYSLER GROUP, LLC

7. Raise and support the vehicle. Refer to **HOISTING, STANDARD PROCEDURE** .
8. Remove the belly pan from the vehicle. Refer to **BELLY PAN.**

REMOVAL .

9. Remove the right side half shaft and axle. Refer to **HALF SHAFT, FRONT - REMOVAL** and **HALF SHAFT, RIGHT REAR - REMOVAL** .
10. Remove the downstream temperature sensor (2) from the catalytic converter.
11. Remove the catalytic converter to diesel particulate filter (DPF) flange mounting nuts and gasket. Discard the gasket.

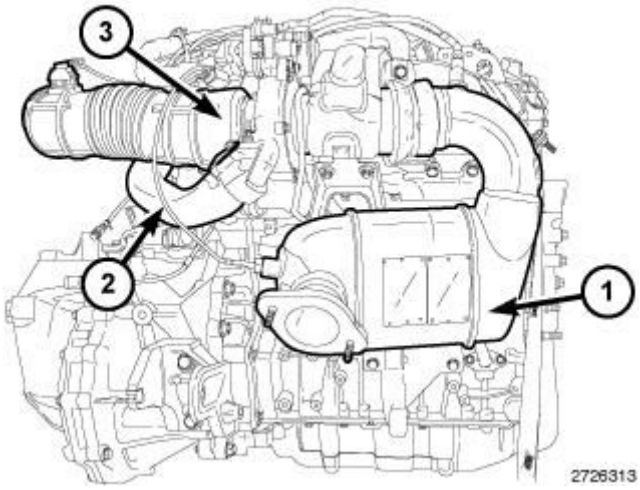

Fig. 11: Identifying Maniverter (Exhaust Manifold/Catalytic Converter)
Courtesy of CHRYSLER GROUP, LLC

12. Remove the catalytic converter from underneath the vehicle.

NOTE: When replacement is required on any component of the exhaust system, original equipment parts (or equivalent) must be used.

INSPECTION

INSPECTION

WARNING: The normal operating temperature of the exhaust system is very high. Therefore, never attempt to service any part of the exhaust system until it is cooled. Special care should be taken when working near the catalytic converter. The temperature of the converter rises to a high level after a short period of engine operation time.

Check catalytic converter for a flow restriction. Exhaust System Restriction Check for procedure. Refer to **DIAGNOSIS AND TESTING**.

Visually inspect the catalytic converter element by using a borescope or equivalent. Remove oxygen sensor(s) and insert borescope. If borescope is not available, remove converter and inspect element using a flashlight. Inspect element for cracked or melted substrate.

NOTE: Before replacing a catalytic converter, determine the root cause of failure. Most catalytic converter failures are caused by air, fuel or ignition problems. Refer to Appropriate Diagnostic Information for test procedures.

INSTALLATION

UNDER FLOOR CATALYTIC CONVERTER

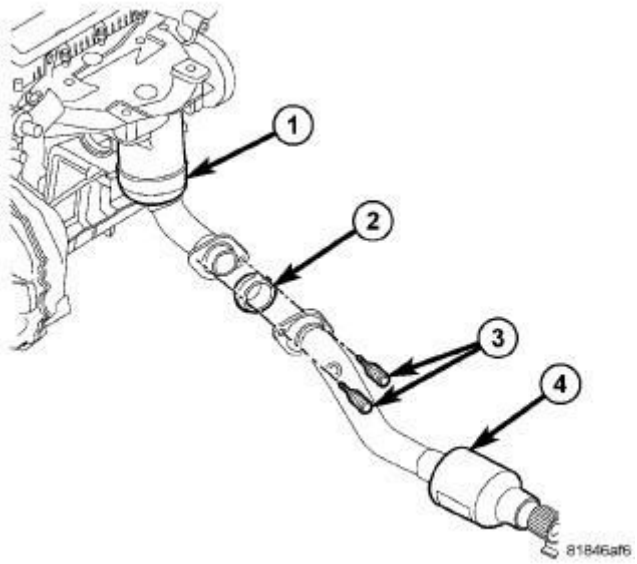

Fig. 12: Under Floor Catalytic Converter
Courtesy of CHRYSLER GROUP, LLC

1 - COMBINATION MANIFOLD/CATALYTIC CONVERTER
2 - SPHERICAL GASKET
3 - BOLT AND SPRING
3 - UNDER FLOOR CATALYTIC CONVERTER

When assembling exhaust system **do not** tighten clamps until components are aligned and clearances are checked.

1. Install under floor catalytic converter and the isolator supports to the underbody.
2. Position spherical gasket (2) with white side facing rear of vehicle, install springs, and bolts (3). Tighten bolts to 33 N.m (24 ft. lbs.).
3. Install I-Pipe/muffler assembly Refer to **MUFFLER, EXHAUST, INSTALLATION**.
4. Working from the front of system; align each component to maintain position and proper clearance with underbody parts.
5. Tighten band clamps to 55 N.m (40 ft. lbs.).

CAUTION: Band clamps should never be tightened such that the two sides of the clamps are bottomed out against the center hourglass shaped center block. Once this occurs, the clamp band has been stretched and has lost its clamping force and must be replaced.

NOTE: Maintain proper clamp orientation when replacing with new clamp.

6. Start the engine and inspect for exhaust leaks. Repair exhaust leaks as necessary.
7. Check the exhaust system for contact with the body panels. Make the necessary adjustments, if needed.

FWD

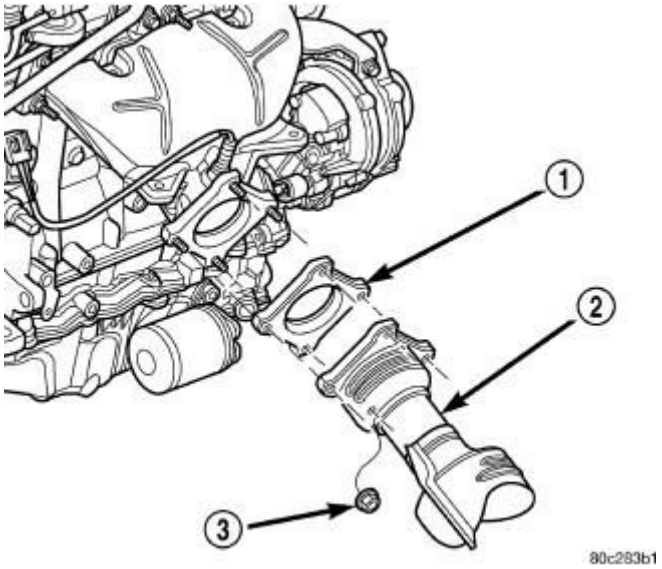

Fig. 13: Removing/Installing Catalytic Converter
Courtesy of CHRYSLER GROUP, LLC

1 - GASKET
2 - CATALYTIC CONVERTER
3 - NUT

1. Position catalytic converter into I-Pipe/muffler assembly.
2. Using new gasket, position catalytic converter against exhaust manifold.
3. Install flange nuts. Tighten to 29 N.m (21 ft. lbs.).
4. Working from the front of system; align each component to maintain position and proper clearance with underbody parts.
5. Tighten band clamps to 55 N.m (40 ft. lbs.).

CAUTION: Band clamps should never be tightened such that the two sides of the clamps are bottomed out against the center hourglass shaped center block. Once this occurs, the clamp has lost clamping force and must be replaced.

6. Start the engine and inspect for exhaust leaks. Repair exhaust leaks as necessary.
7. Check the exhaust system for contact with the body panels. Make the necessary adjustments, if needed.

DIESEL ENGINE

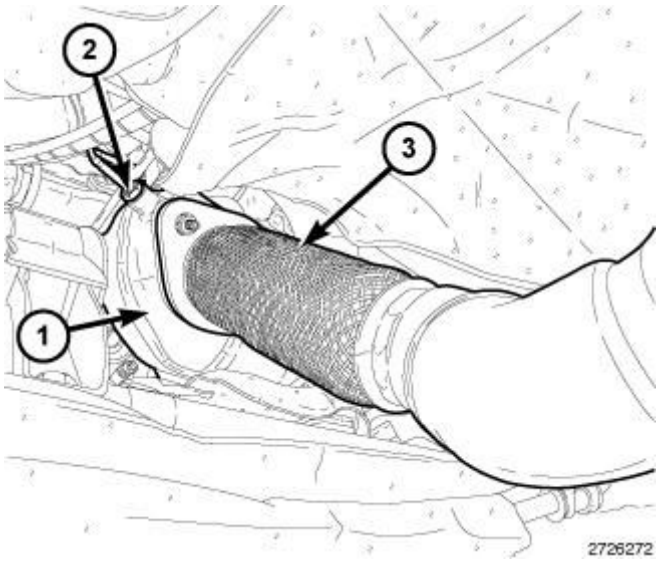

Fig. 14: Identifying Downstream Temperature Sensor
Courtesy of CHRYSLER GROUP, LLC

NOTE: When replacement is required on any component of the exhaust system, original equipment parts (or equivalent) must be used.

1. Position the catalytic converter (1) into the vehicle from underneath.
2. Using a new gasket, position the catalytic converter (1) against the diesel particulate filter (DPF) (3) mounting flange.
3. Install the flange nuts (4). Tighten to 29 N.m (21 ft. lbs.).
4. Install the downstream temperature sensor.
5. Install the right side half shaft and axle. Refer to **HALF SHAFT, FRONT - INSTALLATION** and **HALF SHAFT, RIGHT REAR - INSTALLATION** .
6. Install the belly pan to the vehicle. Refer to **BELLY PAN, INSTALLATION** .

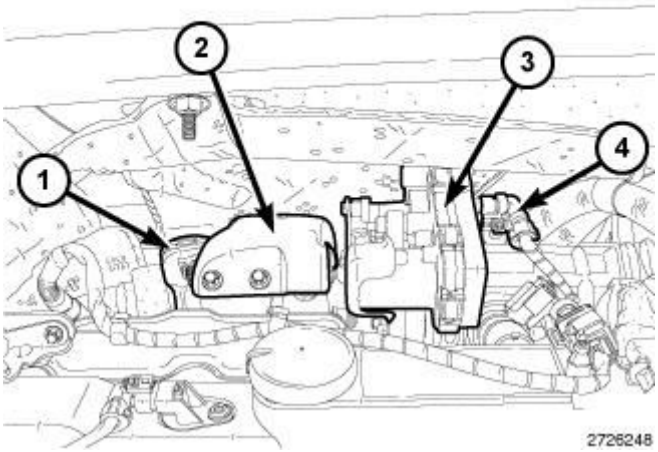

Fig. 15: Identifying Catalytic Converter, Turbocharger Heat Shield, Catalytic Converter Band Clamp & Upstream Temperature Sensor
Courtesy of CHRYSLER GROUP, LLC

7. Lower the vehicle.

CAUTION: Band clamps should never be tightened such that the two sides of the clamps are bottomed out against the center hourglass shaped center block. Once this occurs, the clamp has lost clamping force and must be replaced.

8. Tighten the turbocharger to catalytic converter band clamp bolt to 20 N.m (177 in. lbs.).
9. Install the upstream temperature sensor to the catalytic converter.
10. Install the turbocharger heat shield (2).
11. Connect the negative battery cable.

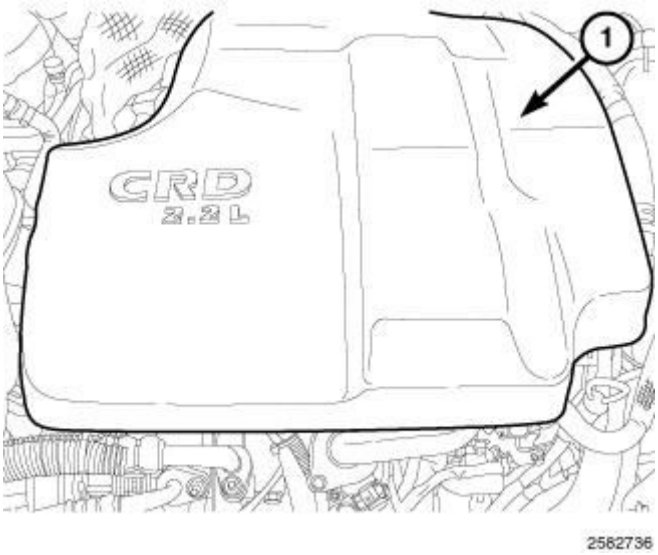

Fig. 16: Engine Cover
Courtesy of CHRYSLER GROUP, LLC

12. Install the engine trim cover (1).
13. Start the engine and inspect for exhaust leaks. Repair exhaust leaks as necessary.
14. Check the exhaust system for contact with the body panels. Make the necessary adjustments, if needed.

FILTER, DIESEL PARTICULATE

DESCRIPTION

DESCRIPTION

A diesel particulate filter DPF is installed for exhaust gas after-treatment. The DPF is located downstream of the main oxidation catalyst. The DPF filters, stores and burns particulate matter (soot) that is generated during the combustion process. The soot is oxidized to carbon dioxide CO2 at exhaust temperatures over 600° C (1, 112° F).

OPERATION

OPERATION

The oxidation catalysts raise the exhaust gas temperatures to regenerate the DPF, which is passive regeneration. If the passive regeneration cannot keep up with the build up of soot in the DPF, the Powertrain Control Module (PCM) will actively regenerate the DPF to burn off the soot. Residue remains inside the DPF

in the form of non burnable ash. Ash comes from the oils and other materials that are trapped in the oils and are present in the soot. Ash is not eliminated by the regeneration cycle. Excessive ash accumulation requires the replacement of the DPF. The DPF uses a silicon carbide wall-flow monolith with a platinum coating to trap particulates. The monolith contains a large number of square parallel channels, which run in the axial direction and are separated by thin porous walls. The channels are alternatively open at one end, but plugged at the other. The exhaust gases flow through the walls and escape through the pores in the wall material. Particulates, however, are too large to escape and are trapped in the monolith walls. The PCM starts the regeneration of the DPF if the soot load exceeds a performance map value. The PCM determines the load condition of the DPF based upon the exhaust gas pressure upstream and downstream of the DPF. A pressure differential sensor provides the pressure input to the PCM. During the regeneration process, the PCM raises the temperature in the DPF to burn off the soot accumulated. Under normal operation, the engine does not produce enough heat to oxidize the soot inside the DPF. This process requires temperatures above 550 °C (1, 022 °F). After regeneration, the PCM reads the actual pressure difference at the DPF and compares it with a reference value. From this comparison, the PCM determines the ash quantity inside the DPF.

REMOVAL

REMOVAL

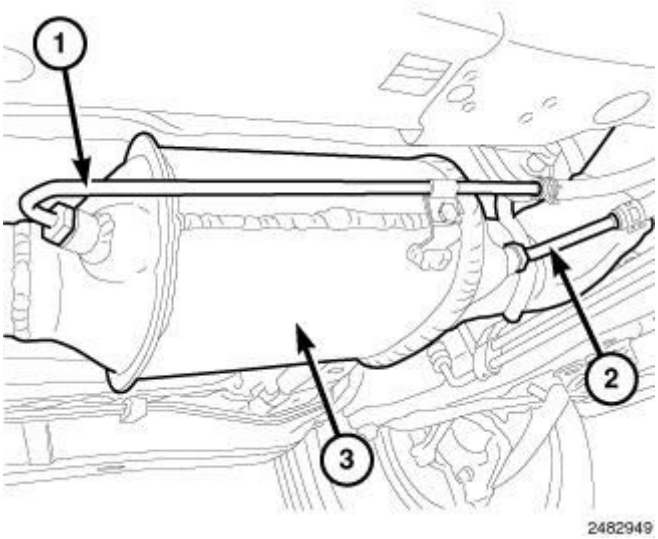

Fig. 17: Identifying Diesel Particulate Filter (DPF)
Courtesy of CHRYSLER GROUP, LLC

1. Disconnect the negative battery cable.

2. Raise and support the vehicle. Refer to **HOISTING, STANDARD PROCEDURE** .
3. Remove the lower splash shield.
4. If equipped, remove the skid plate(s).
5. Saturate the Diesel Particulate Filter (DPF) (3) to catalytic converter flange bolts with heat valve lubricant. Allow 5 minutes for penetration.
6. If necessary, saturate the DPF (3) to muffler clamp with heat valve lubricant. Allow 5 minutes for penetration.
7. Remove the front differential pressure sensor tube (2).
8. Remove the rear differential pressure sensor tube (1).
9. Remove the DPF (3) from the front exhaust hanger.
10. Remove the DPF (3) to catalytic converter flange bolts.
11. Remove the DPF to muffler clamp.
12. Remove the DPF (3) from the vehicle.

INSTALLATION

INSTALLATION

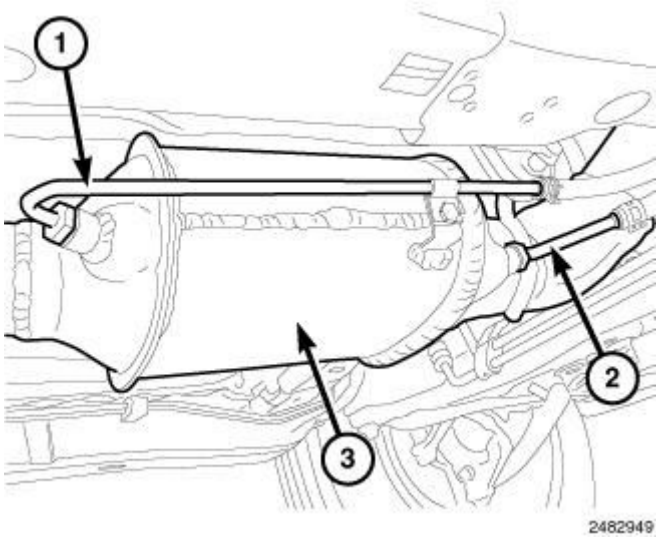

Fig. 18: Identifying Diesel Particulate Filter (DPF)
Courtesy of CHRYSLER GROUP, LLC

1. Position the diesel particulate filter (DPF) (3) into the vehicle.
2. Install the DPF (3) to the muffler. Do not tighten the clamp at this time.
3. Install the DPF (3) to the catalytic converter. Do not tighten the flange bolts

at this time

4. Install the DPF (3) to the front exhaust hanger.
5. Install the rear differential pressure sensor tube (1). Tighten the fitting to 45 N.m (33 ft. lbs.).
6. Install the front differential pressure tube (2). Tighten the fitting to 45 N.m (33 ft. lbs.).
7. Check the DPF (3) and the exhaust system components for contact with the body panels. A minimum of 25 mm (1.0 in.) is required between the exhaust system components and body/frame parts. Make the necessary adjustments, if needed.
8. Tighten the catalytic converter flange bolts to 35 N.m (25 ft. lbs.).
9. Tighten the DPF (3) to muffler clamp bolt (2) to 35 N.m (25 ft. lbs.).
10. Install the lower engine splash shield.
11. If equipped, install the skid plate(s).
12. Lower the vehicle.
13. Connect the negative battery cable.
14. Start the vehicle and check for any leaks. Repair as necessary.

MUFFLER, EXHAUST

REMOVAL

REMOVAL

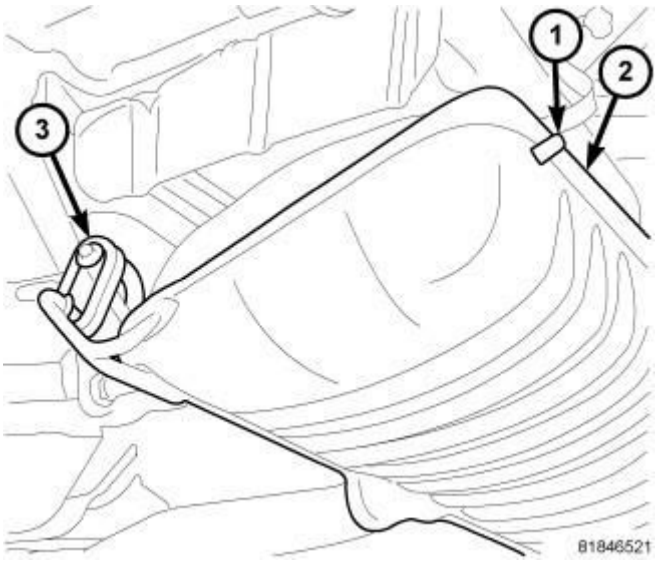

Fig. 19: Muffler Assembly
Courtesy of CHRYSLER GROUP, LLC

1 - GROUND STRAP
2 - I-PIPE/MUFFLER ASSEMBLY
3 - ISOLATOR

WARNING: The normal operating temperature of the exhaust system is very high. Therefore, never work around or attempt to service any part of the exhaust system until it is cooled. Special care should be taken when working near the catalytic converter. The temperature of the converter rises to a high level after a short period of engine operating time.

NOTE: When replacement is required on any component of the exhaust system, you must use original equipment parts (or their equivalent).

1. Raise vehicle on hoist and apply penetrating oil to band clamp nut and bolt of component being removed.

NOTE: Do not use petroleum-based lubricants when removing/installing muffler or exhaust pipe isolators (3) as it may compromise the life of the part. A suitable substitute is a mixture of liquid dish soap and water.

2. Remove exhaust system ground strap (1) at rear of I-Pipe/Muffler assembly (2).
3. Loosen band clamp and remove support isolators (3) at I-Pipe/Muffler assembly (2). Remove I-Pipe/Muffler assembly (2) from catalytic converter.
4. Clean ends of pipes and muffler to assure mating of all parts. Discard broken or worn isolators, rusted or overused clamps, supports, and attaching parts.

INSTALLATION

INSTALLATION

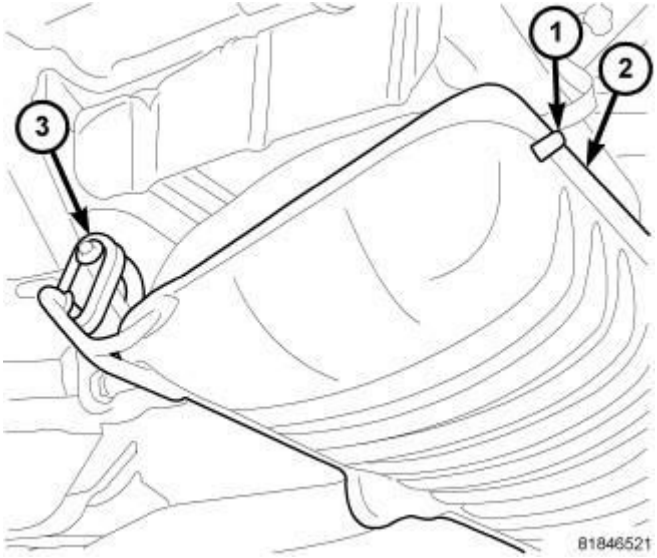

Fig. 20: Muffler Assembly
Courtesy of CHRYSLER GROUP, LLC

1 - GROUND STRAP
2 - I-PIPE/MUFFLER ASSEMBLY
3 - ISOLATOR

When assembling exhaust system **do not** tighten clamp until components are aligned and clearances are checked.

1. Install the I-Pipe/Muffler assembly to catalytic converter and the isolator supports to the underbody.
2. Working from the front of system; align each component to maintain position and proper clearance with underbody parts. Tighten band clamp to 55 N.m (40 ft. lbs.).

CAUTION: Band clamps should never be tightened such that the two sides of the clamps are bottomed out against the center hourglass shaped center block. Once this occurs, the clamp band has been stretched and has lost its clamping force and must be replaced.

To replace the band clamp; remove the nut and peel back the ends of the clamp until spot weld breaks. File or grind remaining weld material until pipe surface is smooth.

NOTE: Maintain proper clamp orientation when replacing with new clamp.

3. Connect the exhaust system ground strap.
4. Start the engine and inspect for exhaust leaks. Repair exhaust leaks as necessary.
5. Check the exhaust system for contact with the body panels. Make the necessary adjustments, if needed.

SENSOR, DIFFERENTIAL PRESSURE

DESCRIPTION

DESCRIPTION

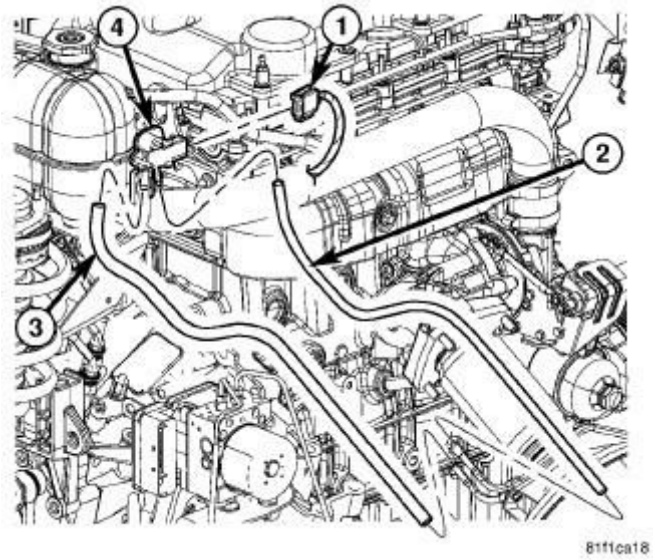

Fig. 21: Differential Pressure Sensor
Courtesy of CHRYSLER GROUP, LLC

The differential pressure sensor (4) is mounted to a bracket located near the coolant overflow bottle. The differential pressure sensor generates a signal based on the flow rate of exhaust gas through the diesel particulate filter. As diesel soot accumulates in the diesel particulate filter, a higher pressure will be present in the particulate filter inlet. A lower pressure will be present at the particulate outlet. The Powertrain Control Module (PCM) uses the differential pressure sensor to detect the pressure difference between the diesel particulate inlet and outlet. When the PCM senses that the soot level in the particulate filter has reached a specified threshold, the PCM performs a particulate filter regeneration cycle to

clear soot from the diesel particulate filter.

REMOVAL

REMOVAL

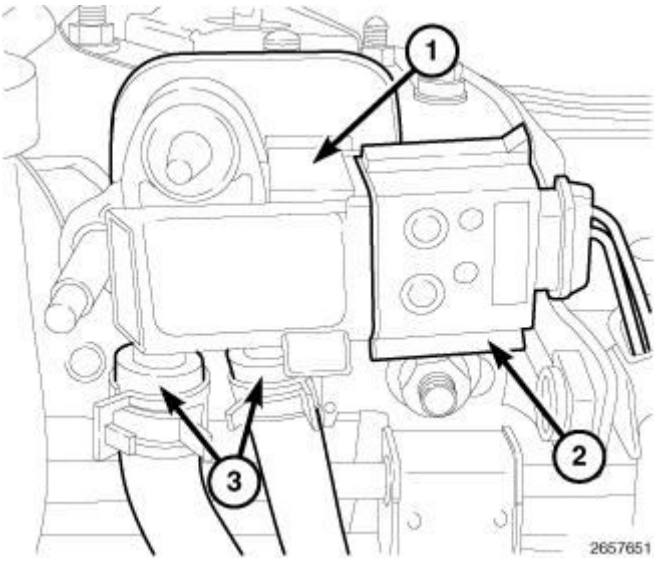

Fig. 22: Identifying Pressure Differential Sensor, Harness Connector & Vacuum Lines
Courtesy of CHRYSLER GROUP, LLC

1. Disconnect and isolate the negative battery cable.
2. Disconnect the pressure differential sensor (1) harness connector (2).
3. Disconnect the pressure differential sensor (1) vacuum lines (3).

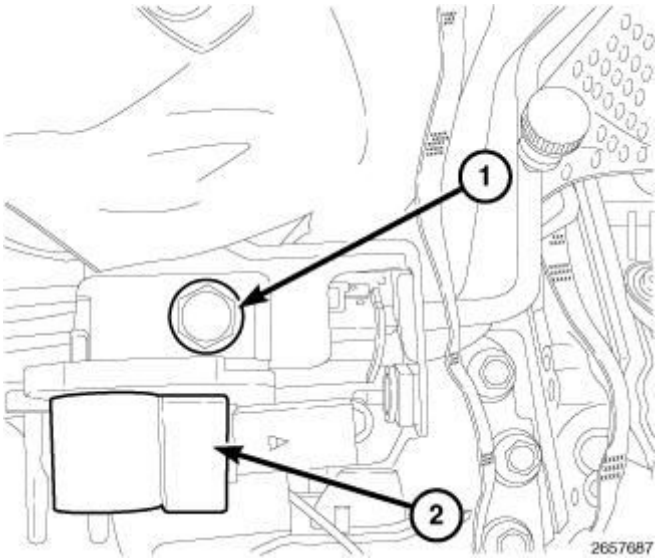

Fig. 23: Identifying Bolt & Pressure Differential Sensor
Courtesy of CHRYSLER GROUP, LLC

4. Remove bolt (1) and the pressure differential sensor (2).

INSTALLATION

INSTALLATION

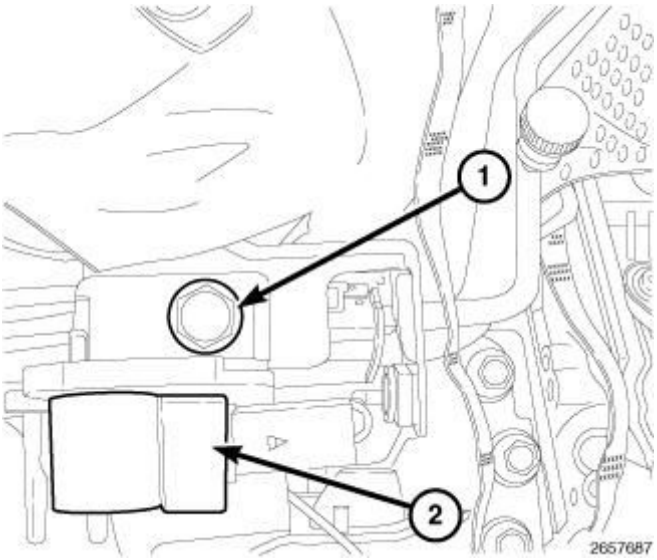

Fig. 24: Identifying Bolt & Pressure Differential Sensor
Courtesy of CHRYSLER GROUP, LLC

1. Install pressure differential sensor (2). Tighten bolt (1) to 10 N.m (89 in. lbs.).

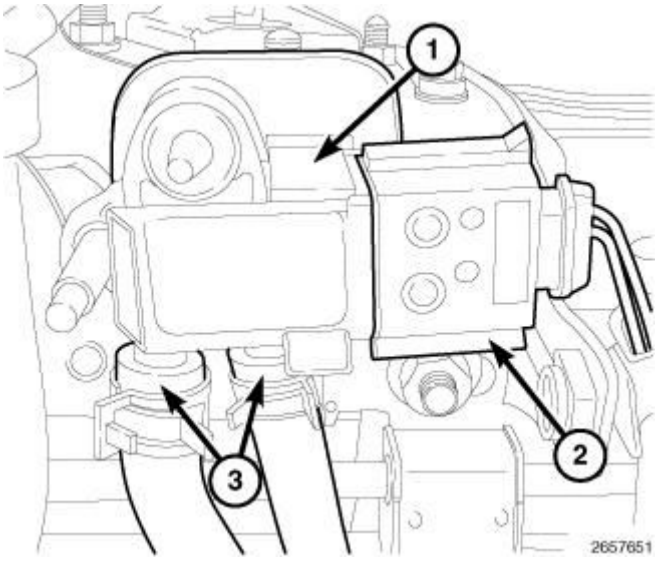

Fig. 25: Identifying Pressure Differential Sensor, Harness Connector & Vacuum Lines
Courtesy of CHRYSLER GROUP, LLC

2. Connect the pressure differential sensor (1) vacuum lines (3).
3. Connect the pressure differential sensor (1) harness connector (2).
4. Connect the negative battery cable.

SENSOR, EXHAUST TEMPERATURE

REMOVAL

REMOVAL

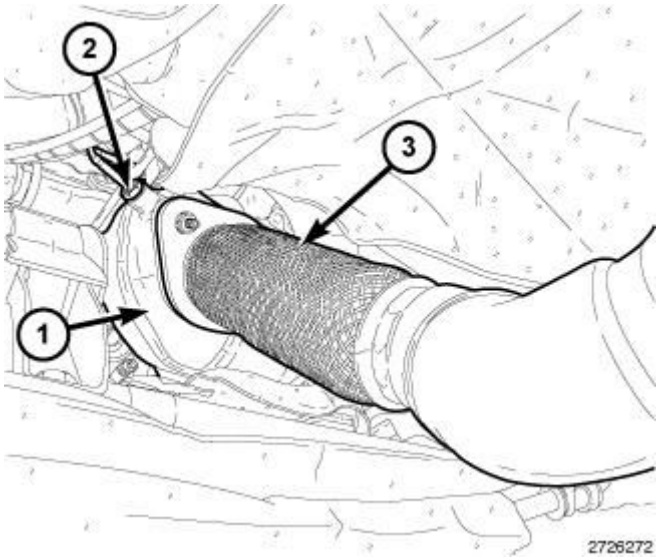

Fig. 26: Identifying Downstream Temperature Sensor
Courtesy of CHRYSLER GROUP, LLC

1. Remove the engine cover.
2. Disconnect and isolate negative batter cable.
3. Disconnect the Exhaust Gas Temperature (EGT) sensor wire harness connector.
4. Raise and support the vehicle. Refer to **HOISTING, STANDARD PROCEDURE** .
5. Remove the EGT sensor (2).

INSTALLATION

INSTALLATION

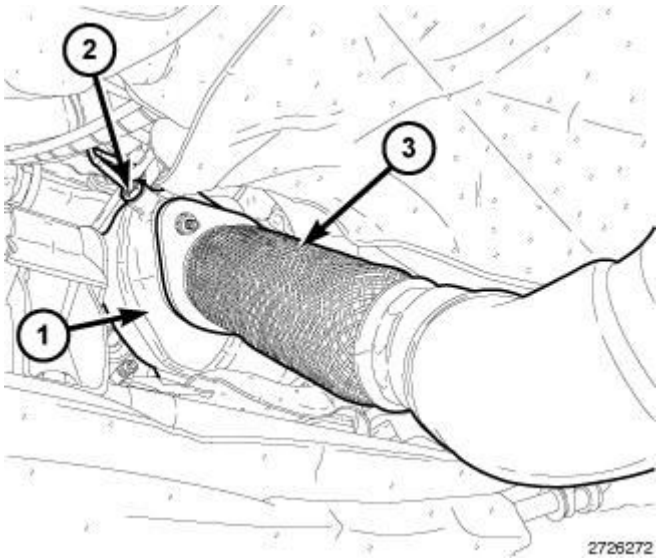

Fig. 27: Identifying Downstream Temperature Sensor
Courtesy of CHRYSLER GROUP, LLC

1. Install the Exhaust Gas Temperature (EGT) sensor (2). Tighten sensor to 25 N.m (221 in. lbs.).
2. Connect the EGT sensor wire harness connector.
3. Install the engine cover.
4. Connect the negative battery cable.

SHIELD, HEAT

DESCRIPTION

DESCRIPTION

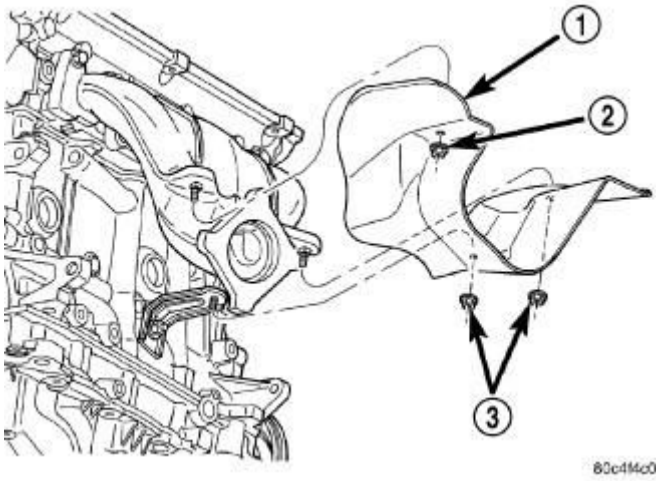

Fig. 28: Heat Shield
Courtesy of CHRYSLER GROUP, LLC

1 - HEAT SHIELD 2 - NUT 3 - NUT

Heat shields (1), are needed to protect both the vehicle and the environment from the high temperatures developed in the vicinity of the catalytic converter.

CAUTION: Avoid application of rust prevention compounds or undercoating materials to exhaust system floor pan heat shield. Light overspray near the edges is permitted. Application of coating will greatly reduce the efficiency of the heat shields resulting in excessive floor pan temperatures and objectionable fumes.

REMOVAL

REMOVAL

1. Raise vehicle on hoist.
2. Remove fasteners attaching heat shield.
3. Remove heat shield(s)

INSTALLATION

INSTALLATION

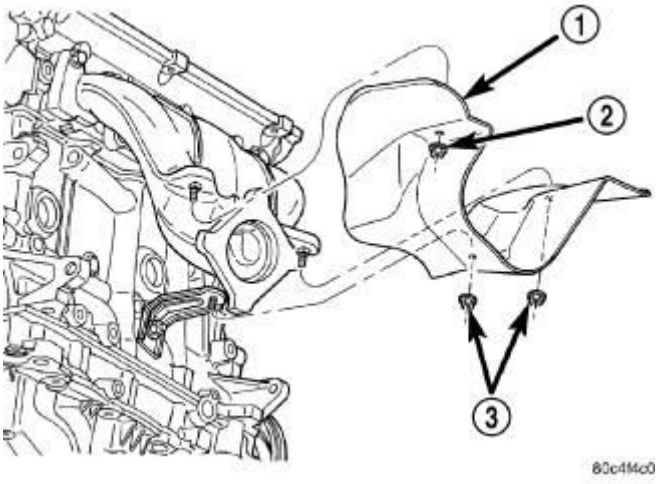

Fig. 29: Heat Shield
Courtesy of CHRYSLER GROUP, LLC

1 - HEAT SHIELD
2 - NUT
3 - NUT

1. Position heat shield(s) to underbody.
2. Install heat shield fasteners.
3. Inspect heat shield to exhaust system clearances and adjust as necessary.
4. Lower vehicle.
5. Start the engine and inspect for exhaust leaks. Repair exhaust leaks as necessary.
6. Check the exhaust system for contact with the body panels. Make the necessary adjustments, if needed.

2014 ENGINE

Fuel System - Compass & Patriot

FUEL DELIVERY, GAS

DESCRIPTION

DESCRIPTION

The Fuel Delivery System consists of the following components:

- Fuel tank
- Fuel tank filler tube
- Tubes/lines/hoses
- Fuel rail

FUEL TANK

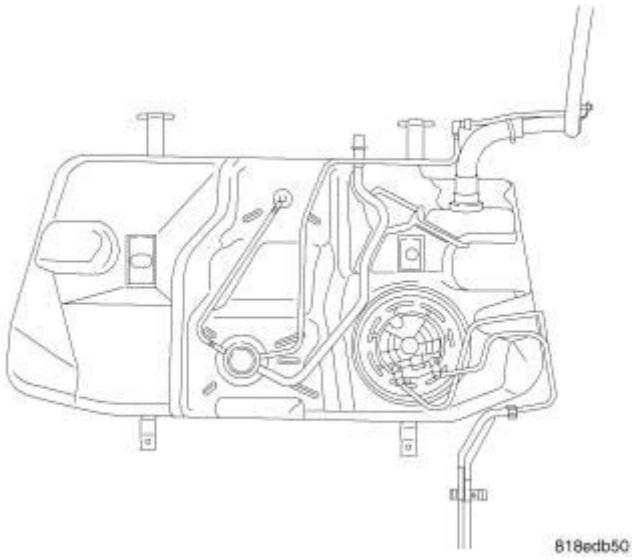

Fig. 1: Fuel Tank
Courtesy of CHRYSLER GROUP, LLC

NOTE: Front Wheel Drive (FWD) fuel tank shown in illustration, All Wheel Drive (AWD) fuel tank similar.

The fuel tank is made from High Density Polyethylene (HDPE) material and is located near the rear center of the vehicle. The primary fuel pump module is located on the top left side of the fuel tank. All Wheel Drive (AWD) vehicles have a saddle style fuel tank that has a reservoir on both sides of the driveshaft

and a secondary fuel pump module on the top right side of the fuel tank. The fuel tank contains the following components:

- Primary fuel pump module
- Secondary fuel pump module (AWD)
- Fuel tank vent (check valve)
- Control valve
- Inlet check valve

The primary and secondary (AWD) fuel pump modules are the only serviceable components of the fuel tank. If the fuel tank vent, control valve or inlet check valve requires service, the fuel tank must be replaced as an assembly.

The fuel tank vent, control valve and inlet check valve are components of the evaporative emissions system. (Refer to **EVAPORATIVE EMISSIONS** /Description).

PRIMARY FUEL PUMP MODULE

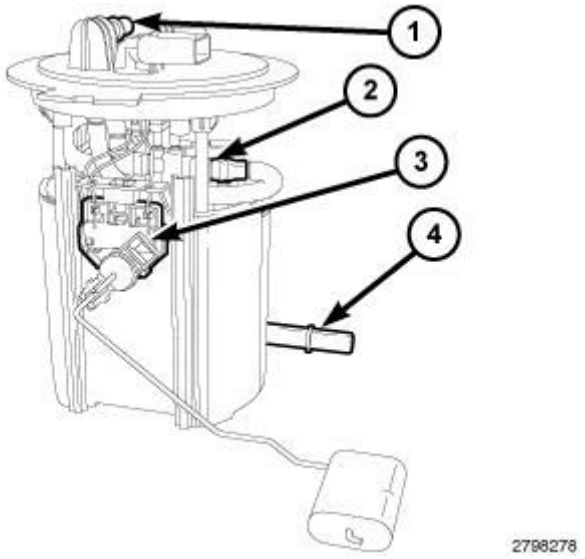

Fig. 2: Electric Fuel Pump, Quick-Connect Fittings & Fuel Level Sending Unit
Courtesy of CHRYSLER GROUP, LLC

The primary fuel pump module is mounted on the top of the fuel tank and contains the following components:

- Mounting flange

- Electric fuel pump
- Venturi jet pump (AWD)
- Fuel pump reservoir
- Inlet strainer
- Fuel pressure regulator
- Fuel level sending unit
- Fuel filter

The electric fuel pump (2) is a positive displacement, immersible pump with a permanent magnet electric motor capable of creating 860 kPa (125 psi) of operating pressure. The fuel pressure regulator limits fuel pressure to 400 kPa (58 psi).

If equipped with All Wheel Drive (AWD), the primary fuel pump module will also contain a venturi jet pump. The primary fuel pump module is joined to the secondary fuel pump module (AWD) by an internal nylon fuel transfer line equipped with quick-connect fittings (4). Fuel is constantly being siphoned from the secondary side of the fuel tank to the primary side of the fuel tank whenever the fuel pump is operating. This is accomplished within the primary fuel pump module by diverting fuel from the electric fuel pump through the venturi jet pump creating a vacuum that pulls fuel from the secondary fuel pump module through the fuel transfer line and into the primary fuel module reservoir. When the secondary side of the fuel tank is empty, the venturi jet pump continues to fill the primary fuel pump reservoir with fuel from the primary side of the fuel tank.

The fuel level sending unit (3) is the only serviceable component of the primary fuel pump module. If the electric fuel pump, fuel pressure regulator or fuel filter requires service, the primary fuel pump module must be replaced as an assembly.

SECONDARY FUEL PUMP MODULE (AWD)

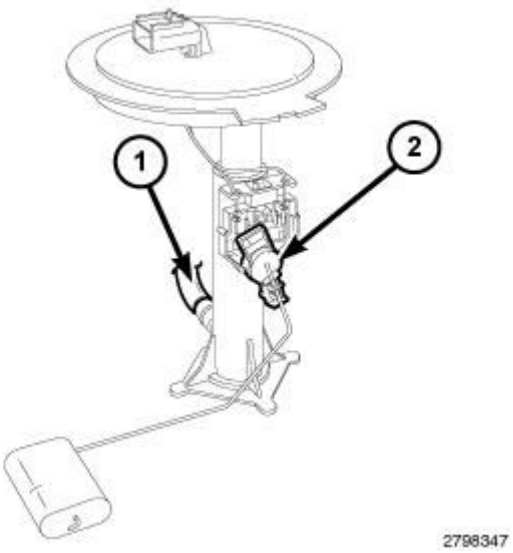

Fig. 3: Nylon Fuel Transfer Line & Fuel Level Sending Unit
Courtesy of CHRYSLER GROUP, LLC

The secondary fuel pump module (AWD) is mounted on the top of the fuel tank and contains the following components:

- Mounting flange
- Fuel pick-up
- Fuel level sending unit

The secondary fuel pump module (AWD) does not pump fuel. It is joined to the primary fuel pump module by an internal nylon fuel transfer line (1) equipped with quick-connect fittings. Fuel is constantly being siphoned from the secondary side of the fuel tank to the primary side of the fuel tank whenever the fuel pump is operating.

The fuel level sending unit (2) on the secondary fuel pump module is not serviceable. If any component of the secondary fuel pump module requires service, the secondary fuel pump module must be replaced as an assembly.

DIAGNOSIS AND TESTING

DIAGNOSIS AND TESTING - FUEL DELIVERY SYSTEM

For the fuel system DTC diagnostics, refer to **DTC INDEX** .

For the symptom based Non-DTC diagnostics, refer to **DIAGNOSIS AND TESTING** .

STANDARD PROCEDURE

FUEL CONTAMINATION

If an engine's fuel supply has been contaminated, the following procedure must be followed:

NOTE: Dispose of Petroleum based products in a manner consistent with State, Federal and Provincial Regulations.

1. Use an appropriate fuel container and remove all fuel from fuel tank. Dispose of contaminated fuel through the proper procedure of disposal.
2. Remove, clean, reinstall and refill fuel tank (Refer to **TANK, FUEL**).
3. Check for DTC's and clear DTC's.
4. Start vehicle and run engine for 15 minutes and turn off vehicle.
5. Check for DTC's and clear DTC's.
6. Road test vehicle.
7. Check for DTC's.

NOTE: If any of the following conditions are exhibited after cleaning the fuel system, proceed to the appropriate fuel system information and repair fuel system or engine as necessary.

The engine should then be evaluated to determine if the contaminated fuel has caused any damage to the fuel system and or engine. Indicators that the fuel system and or engine has been damaged are the following:

- Unstable fuel rail pressure. This can manifest itself as instability at idle speeds, excessive undershoot/overshoot at engine start, or excessive undershoot/overshoot when the engine operating conditions change. A typical engine response to a large rail pressure undershoot would be a decrease in engine speed or engine stall.
- Excessive noise from the engine. This could indicate poor rail pressure control or the inability of the injection system to inject the proper amount of fuel.
- Excessive smoke (black or white). This could indicate inability of the fuel system to inject the proper amount of fuel.

FUEL SYSTEM PRESSURE RELEASE PROCEDURE

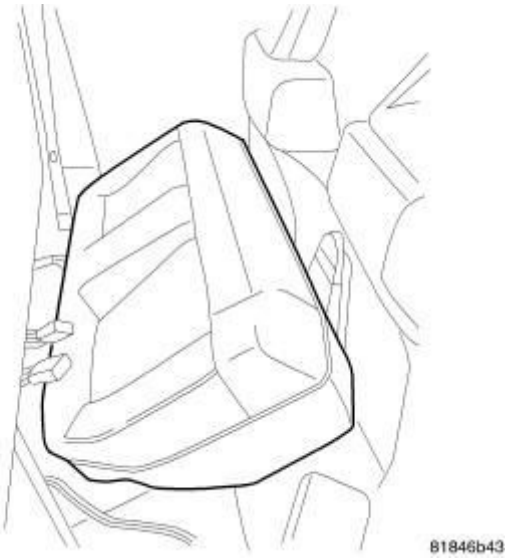

Fig. 4: Lower Rear Seat Cushion
Courtesy of CHRYSLER GROUP, LLC

1. Remove lower rear seat cushion.

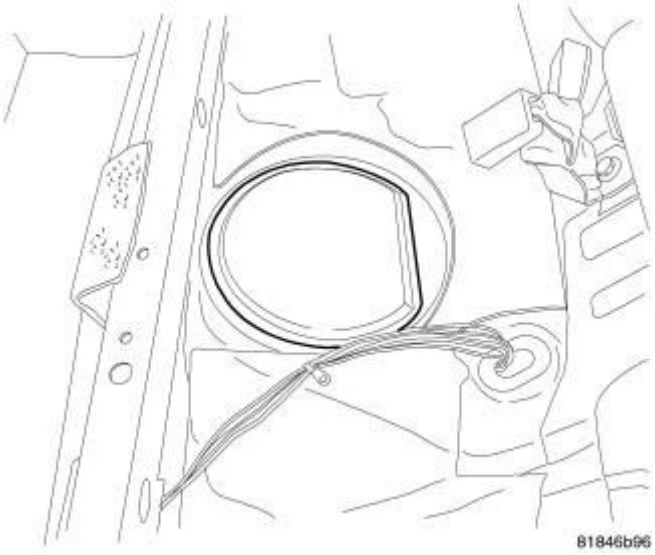

Fig. 5: Fuel Pump Module Cover
Courtesy of CHRYSLER GROUP, LLC

2. Remove the fuel pump module cover.

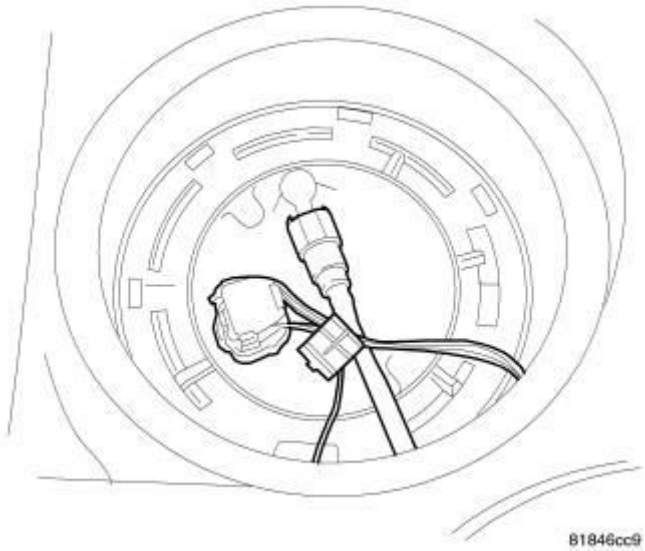

Fig. 6: Fuel And Electrical Connections
Courtesy of CHRYSLER GROUP, LLC

3. Disconnect the electrical connector for fuel pump module.
4. Start and run engine until it stalls.
5. Attempt restarting engine until it will no longer run.
6. Turn ignition key to OFF position.
7. Disconnect negative battery cable.
8. One or more Diagnostic Trouble Codes (DTC's) may have been stored in PCM memory. The scan tool must be used to erase a DTC.

SPECIFICATIONS

TORQUE

DESCRIPTION	N.m	Ft. Lbs.	In. Lbs.
Fuel Tank Strap Bolts	47	34.5	-
Fuel Rail Bolts	27	20	-
Fuel Filler Tube Hose Clamp	4	-	35
Filler Tube Mounting Bolt	9	-	79.5

FUEL SYSTEM PRESSURE

Gas Engines	400 kPa ±34 kPa (58 psi ± 5 psi)

SPECIAL TOOLS

SPECIAL TOOLS

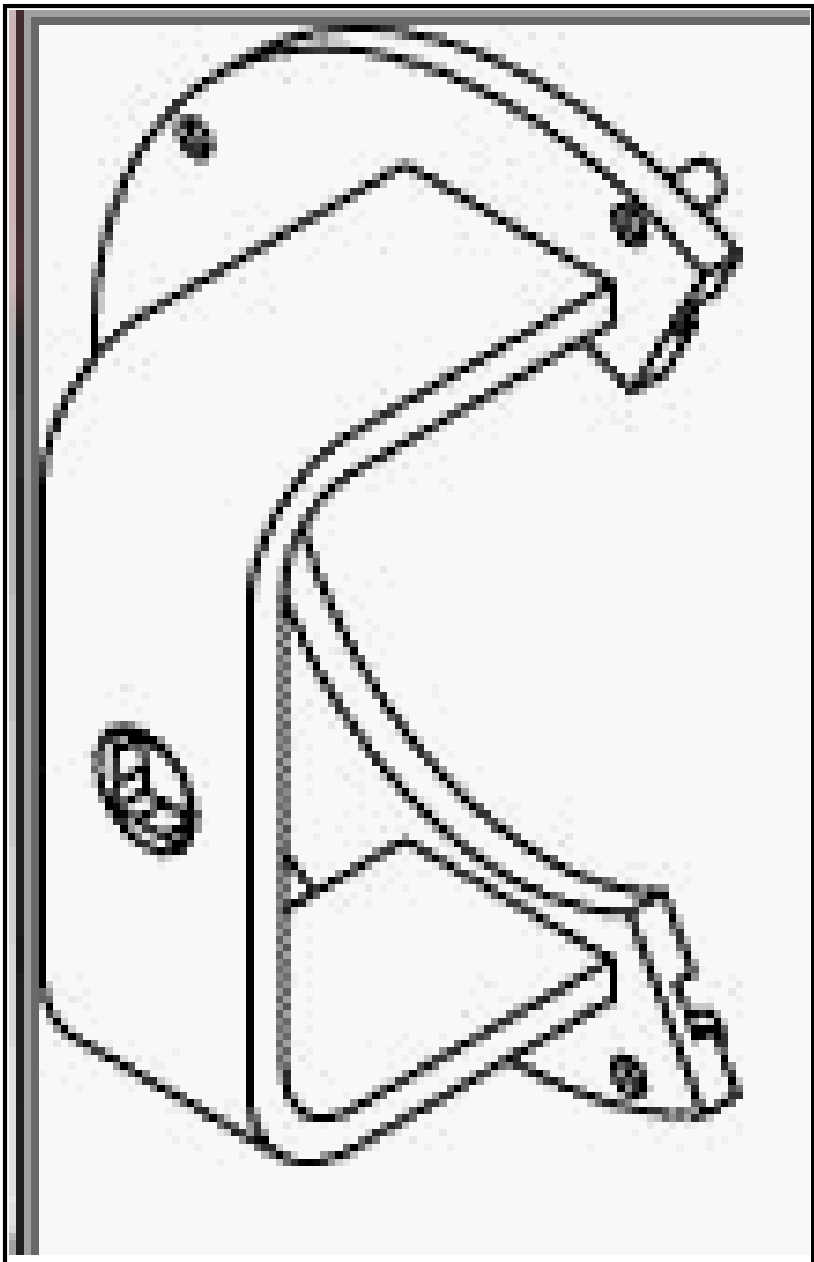	10189 - Wrench, DEF Module Lock Ring (Originally Shipped In Kit Number(s) 10189, 9896.)
	9340 - SAE Fuel Pump Lock Ring Wrench

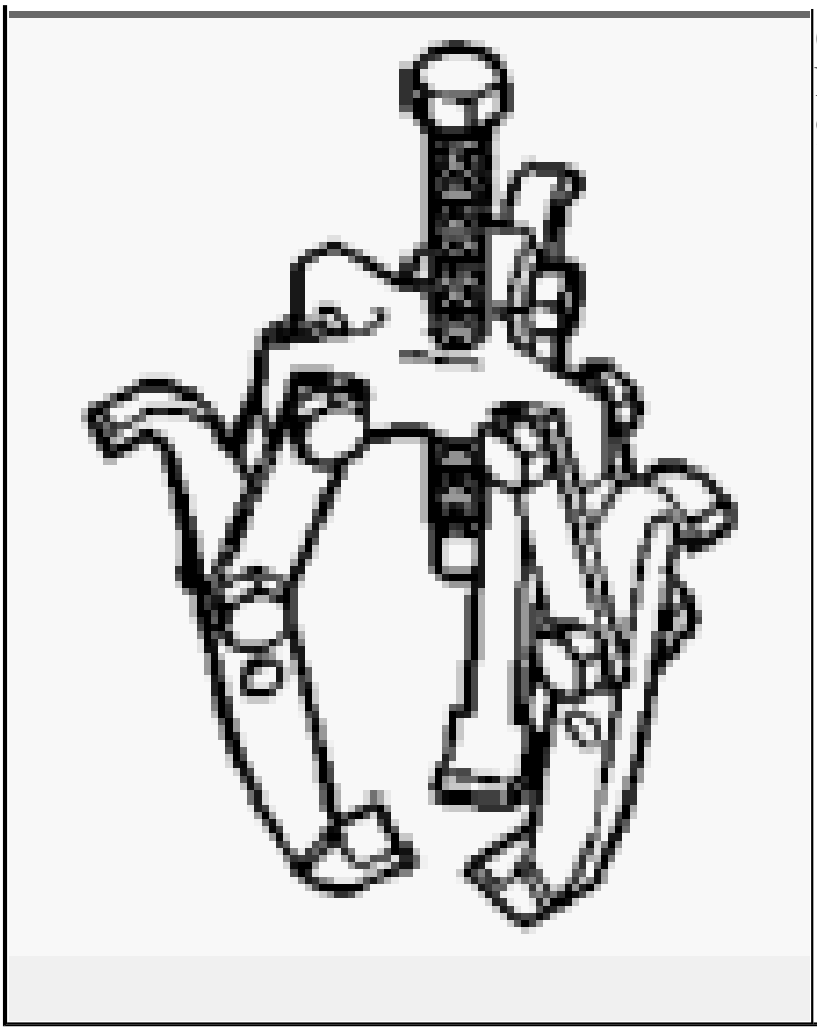	(Originally Shipped In Kit Number(s) 9327, 9327CC, 9397, 9575.)

FITTING, QUICK CONNECT

STANDARD PROCEDURE

STANDARD PROCEDURE - QUICK-CONNECT FITTINGS

TWO-TAB IN WINDOW TYPE FITTING

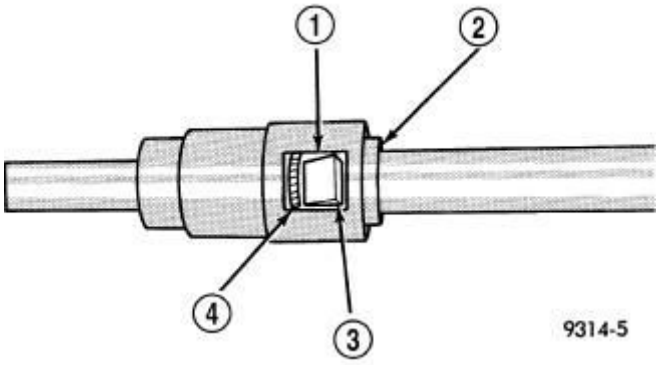

Fig. 7: Plastic Quick-Connect Fitting/Fuel Tube Connection
Courtesy of CHRYSLER GROUP, LLC

1 - WINDOW
2 - TAB (2)
3 - EAR
4 - SHOULDER (ON TUBE)

When disconnecting a quick-connect fitting, the retainer will remain on the fuel tube nipple.

WARNING: Release fuel system pressure before disconnecting a quick-connect fittings. Refer to FUEL SYSTEM PRESSURE RELEASE PROCEDURE. This may result in personal injury or death.

1. Perform Fuel Pressure Release Procedure. Refer to the **FUEL SYSTEM PRESSURE RELEASE PROCEDURE**.
2. Disconnect negative cable from battery or auxiliary jumper terminal.
3. Squeeze retainer tabs (2) together and pull fuel tube/quick-connect fitting assembly off of fuel tube nipple.

CAUTION: Make sure that the O-ring in installed in fitting. Never install a quick-connect fitting without the retainer being either on the fuel tube or already in the quick-connect fitting. In either case, ensure the retainer locks securely into the quick-connect fitting by firmly push-pulling-push on fuel tube and fitting to ensure it is secured.

4. Using a clean lint free cloth, clean the fuel tube nipple and retainer.
5. Prior to connecting the fitting to the fuel tube, coat the fuel tube nipple with clean engine oil.
6. Push the quick-connect fitting over the fuel tube until the **retainer seats and a click is heard.**
7. The plastic quick-connect fitting has windows in the sides of the casing. When the fitting completely attaches to the fuel tube, the retainer locking ears (2) and the fuel tube shoulder are visible in the windows (1). If they are

not visible, the retainer was not properly installed. **Do not rely upon the audible click to confirm a secure connection.**

8. Connect negative cable to battery or auxiliary jumper terminal.
9. Use the scan tool Fuel System Test to pressurize the fuel system. Check for leaks.

DISCONNECTION/CONNECTION

1. Perform fuel pressure release procedure. Refer to **FUEL SYSTEM PRESSURE RELEASE PROCEDURE**.
2. Disconnect negative battery cable from battery or auxiliary jumper terminal.
3. Clean fitting of any foreign material before disassembly.
4. To disconnect quick-connect fitting, squeeze plastic retainer tabs (1) against sides of quick-connect fitting with your fingers. Tool use is not required for removal and may damage plastic retainer. Pull fitting from fuel system component being serviced. The plastic retainer will remain on component being serviced after fitting is disconnected. The O-rings and spacer will remain in quick-connect fitting connector body.
5. Inspect quick-connect fitting body and component for damage. Replace as necessary.

CAUTION: When the quick-connect fitting was disconnected, the plastic retainer will remain on the component being serviced. If this retainer must be removed, very carefully release the retainer from the component with two small screwdrivers. After removal, inspect the retainer for cracks or any damage.

6. Prior to connecting quick-connect fitting to component being serviced, check condition of fitting and component. Clean parts with a lint-free cloth. Lubricate with clean engine oil.
7. Insert quick-connect fitting to component being serviced and into plastic retainer. When a connection is made, a click will be heard.
8. Verify a locked condition by firmly push-pulling-push on fuel tube and fitting (15-30 lbs.).
9. Connect negative cable to battery or auxiliary jumper terminal.

10. Use the scan tool Fuel System Test to pressurize the fuel system. Check for leaks.

TWO-TAB TYPE FITTING

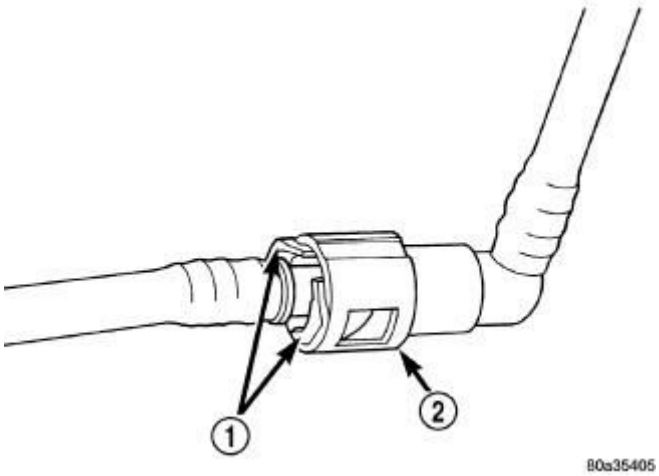

Fig. 8: Typical Two-Tab Type Quick-Connect Fitting
Courtesy of CHRYSLER GROUP, LLC

1 - TAB(S)
2 - QUICK-CONNECT FITTING

This type of fitting is equipped with tabs located on both sides of the fitting. These tabs are supplied for disconnecting the quick-connect fitting from component being serviced.

CAUTION: The interior components (O-rings, spacers) of this type of quick-connect fitting are not serviced separately, but new plastic retainers are available. Do not attempt to repair damaged fittings or fuel lines/tubes. If repair is necessary, replace the complete fuel tube assembly.

WARNING: The fuel system is under a constant pressure (even with the engine off). Before servicing any fuel system hoses, fittings or lines, the fuel system pressure must be released. Refer to FUEL SYSTEM PRESSURE RELEASE PROCEDURE. This may result in personal injury or death.

DISCONNECTION/CONNECTION

1. Perform fuel pressure release procedure. Refer to **FUEL SYSTEM PRESSURE RELEASE PROCEDURE**.
2. Disconnect negative battery cable from battery or auxiliary jumper terminal.
3. Clean fitting of any foreign material before disassembly.
4. To release fuel system component from quick-connect fitting, firmly push fitting towards component being serviced while firmly pushing plastic retainer ring into fitting. With plastic ring depressed, pull fitting from component. **The plastic retainer ring must be pressed squarely into fitting body. If this retainer is cocked during removal, it may be difficult to disconnect fitting. Use an open-end wrench on shoulder of plastic retainer ring to aid in disconnection.**
5. After disconnection, plastic retainer ring will remain with quick-connect fitting connector body.
6. Inspect fitting connector body, plastic retainer ring and fuel system component for damage. Replace as necessary.
7. Prior to connecting quick-connect fitting to component being serviced, check condition of fitting and component. Clean parts with a lint-free cloth. Lubricate with clean engine oil.
8. Insert quick-connect fitting into component being serviced until a click is felt.
9. Verify a locked condition by firmly push-pulling-push on fuel tube and fitting (15-30 lbs.).
10. Connect negative battery cable to battery or auxiliary jumper terminal.
11. Use the scan tool Fuel System Test to pressurize the fuel system. Check for leaks.

PLASTIC RETAINER RING TYPE FITTING

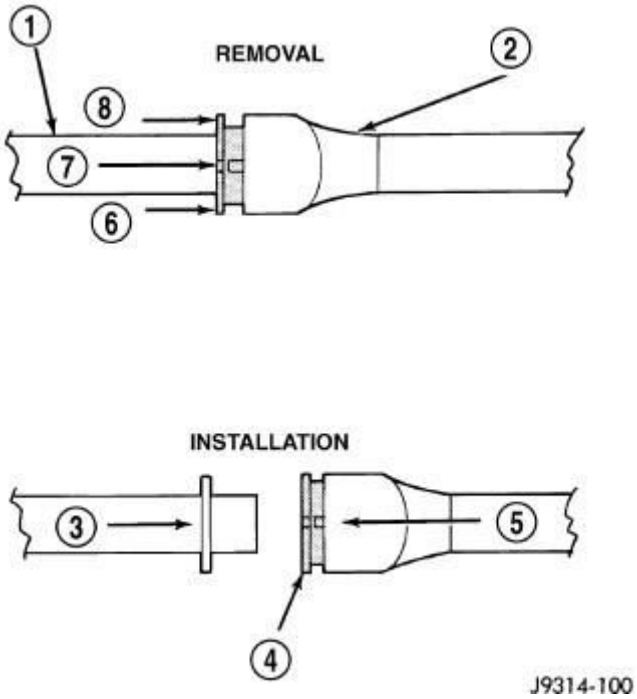

Fig. 9: Plastic Retainer Ring Type Fitting
Courtesy of CHRYSLER GROUP, LLC

1 - FUEL TUBE
2 - QUICK CONNECT FITTING
3 - PUSH
4 - PLASTIC RETAINER
5 - PUSH
6 - PUSH
7 - PUSH
8 - PUSH

This type of fitting can be identified by the use of a full-round plastic retainer ring usually black in color.

CAUTION: The interior components (O-rings, spacers, retainers) of this type of quick-connect fitting are not serviced separately. Do not attempt to repair damaged fittings or fuel lines/tubes. If repair is necessary, replace the complete fuel tube assembly.

WARNING: The fuel system is under a constant pressure

(even with the engine off). Before servicing any fuel system hoses, fittings or lines, the fuel system pressure must be released. Refer to FUEL SYSTEM PRESSURE RELEASE PROCEDURE. This may result in personal injury or death.

MODULE, FUEL PUMP

DESCRIPTION

DESCRIPTION

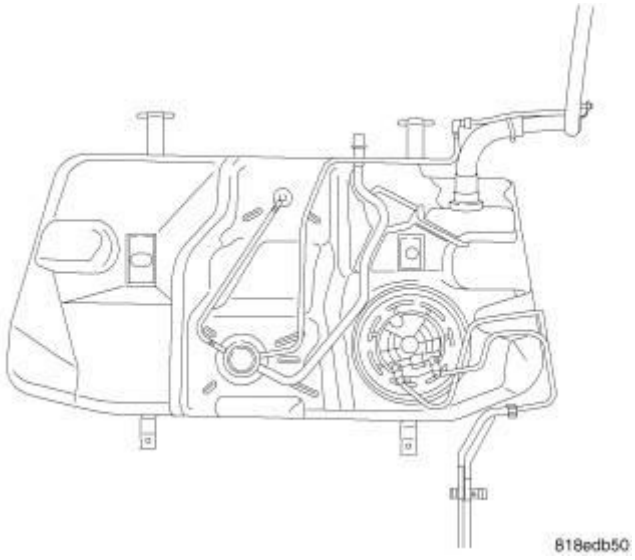

Fig. 10: Fuel Tank
Courtesy of CHRYSLER GROUP, LLC

NOTE: Front Wheel Drive (FWD) fuel tank shown in illustration, All Wheel Drive (AWD) fuel tank similar.

On Front Wheel Drive (FWD) vehicles the fuel pump module is located on the top left side of the fuel tank. All Wheel Drive (AWD) vehicles have a saddle style fuel tank that has a reservoir on both sides of the driveshaft. The primary fuel pump module is located on the top left side of the fuel tank and the secondary fuel pump module is located on the top right side of the fuel tank.

PRIMARY FUEL PUMP MODULE

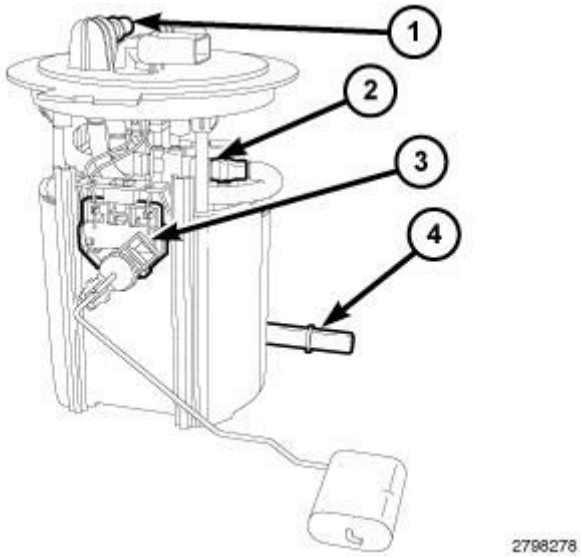

Fig. 11: Electric Fuel Pump, Quick-Connect Fittings & Fuel Level Sending Unit
Courtesy of CHRYSLER GROUP, LLC

The primary fuel pump module is mounted on the top of the fuel tank and contains the following components:

- Mounting flange
- Electric fuel pump
- Venturi jet pump (AWD)
- Fuel pump reservoir
- Inlet strainer
- Fuel pressure regulator
- Fuel level sending unit
- Fuel filter

If equipped with All Wheel Drive (AWD), the primary fuel pump module will also contain a venturi jet pump. The primary fuel pump module is joined to the secondary fuel pump module (AWD) by an internal nylon fuel transfer line equipped with quick-connect fittings (4).

The fuel level sending unit (3) is the only serviceable component of the primary fuel pump module. If the electric fuel pump, fuel pressure regulator or fuel filter requires service, the primary fuel pump module must be replaced as an assembly.

SECONDARY FUEL PUMP MODULE (AWD)

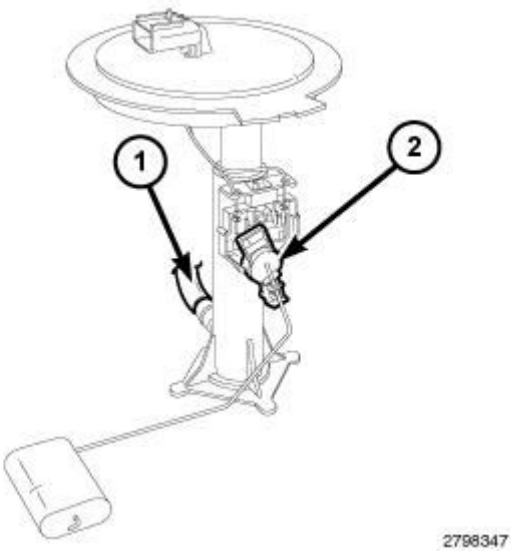

Fig. 12: Nylon Fuel Transfer Line & Fuel Level Sending Unit
Courtesy of CHRYSLER GROUP, LLC

The secondary fuel pump module (AWD) is mounted on the top of the fuel tank and contains the following components:

- Mounting flange
- Fuel pick-up
- Fuel level sending unit

The secondary fuel pump module (AWD) does not pump fuel. It is joined to the primary fuel pump module by an internal nylon fuel transfer line (1) equipped with quick-connect fittings. Fuel is constantly being siphoned from the secondary side of the fuel tank to the primary side of the fuel tank whenever the fuel pump is operating.

The fuel level sending unit (2) on the secondary fuel pump module is not serviceable. If any component of the secondary fuel pump module requires service, the secondary fuel pump module must be replaced as an assembly.

OPERATION

OPERATION

An electric fuel pump is located within the primary fuel pump module. The electric fuel pump is a positive displacement, immersible pump with a permanent magnet electric motor capable of creating 860 kPa (125 psi) of operating pressure. The fuel pressure regulator limits fuel pressure to 400 kPa (58 psi).

On All Wheel Drive (AWD) vehicles, fuel is constantly being siphoned from the secondary side of the fuel tank to the primary side of the fuel tank whenever the fuel pump is operating. This is accomplished within the primary fuel pump module by diverting fuel from the electric fuel pump through the venturi jet pump creating a vacuum that pulls fuel from the secondary fuel pump module through the fuel transfer line and into the primary fuel module reservoir. When the secondary side of the fuel tank is empty, the venturi jet pump continues to fill the primary fuel pump reservoir with fuel from the primary side of the fuel tank.

All Wheel Drive (AWD) vehicles have two fuel level senders, the fuel gauge reading is an averaged of these two sensors. When diagnosing a sender concern the secondary fuel pump module reading should never be higher than the primary fuel pump module reading. It is possible, depending on fuel level and driving habits before diagnosing, to spill fuel over to the secondary side that might indeed show a lower resistance value than the primary side.

The fuel gauge is controlled by the instrument cluster circuit board based upon cluster programming and a hard wired input received by the cluster from the fuel level sending units on the modules in the fuel tank.

The instrument cluster continually monitors the fuel tank sending units to determine the level of fuel in the fuel tank. This information is available to other vehicle control modules via the Controller Area Network (CAN) data bus. Fuel gauge diagnosis is conducted as part of the instrument cluster circuitry. Refer to **DIAGNOSIS AND TESTING** .

REMOVAL

ALL WHEEL DRIVE

MAIN FUEL PUMP MODULE

WARNING: Risk of injury to eyes and skin from contact with fuel. Wear protective clothing and eye protection. Risk of poisoning from inhaling and swallowing fuel. Pour fuel only into appropriately marked and approved containers. Failure to follow these instructions may result in possible serious or fatal injury.

WARNING: The fuel system is under constant high pressure

even with engine OFF. Until the fuel pressure has been properly released from the system, do not attempt to open the fuel system. Do not smoke or use open flames/sparks when servicing the fuel system. Make sure the area in which the vehicle is being serviced is in a well ventilated area. Failure to comply may result in serious or fatal injury.

NOTE: It is necessary to remove the primary and secondary pumps to remove and install the pump transfer tube.

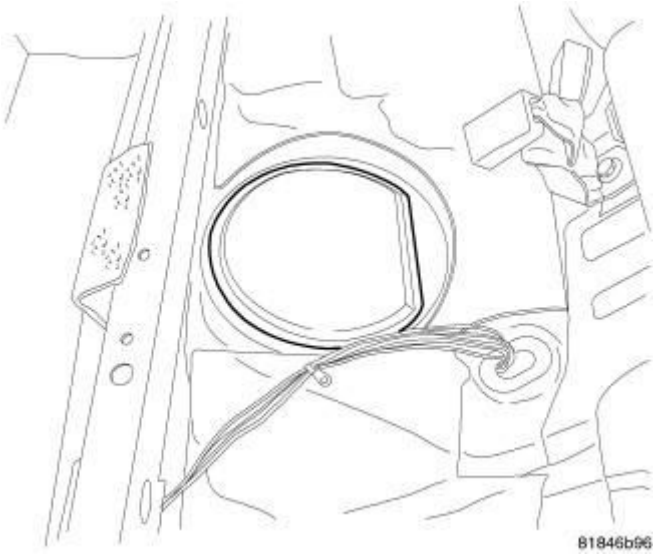

Fig. 13: Fuel Pump Module Cover
Courtesy of CHRYSLER GROUP, LLC

1. Perform the fuel system pressure release procedure. Refer to **FUEL SYSTEM PRESSURE RELEASE PROCEDURE** .
2. Remove the battery negative cable.
3. Remove the rear seat.
4. Remove the main fuel pump module access cover.

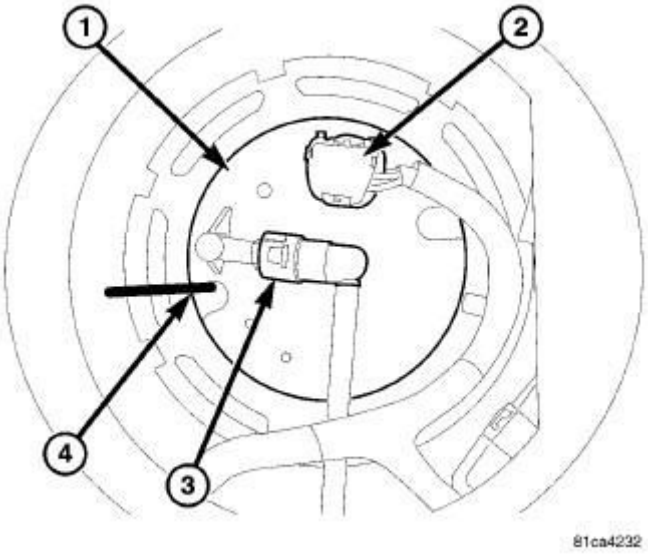

Fig. 14: Fuel Pump Module Connection
Courtesy of CHRYSLER GROUP, LLC

5. Disconnect the electrical connector (2) from the main fuel pump module (1).
6. Disconnect the fuel line (3) from the main fuel pump module.

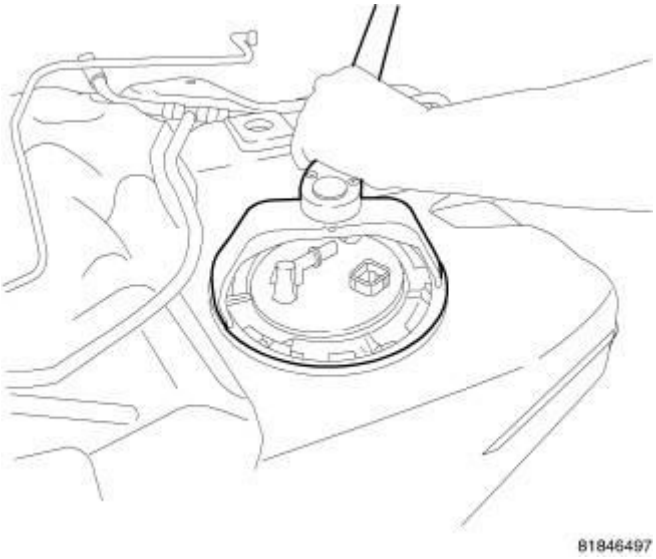

Fig. 15: Lock Ring Tool
Courtesy of CHRYSLER GROUP, LLC

NOTE: Prior to removing the main fuel pump module, use compressed air to remove any accumulated dirt and debris from around fuel tank opening.

7. Position the lock-ring remover/installer (special tool #9340, SAE Fuel Pump

Lock Ring Wrench) into the notches on the outside edge of the lock-ring.

8. Install a 1/2 inch drive breaker bar into the lock-ring remover/installer (special tool #9340, SAE Fuel Pump Lock Ring Wrench).
9. Rotate the breaker bar counterclockwise and remove the lock-ring.

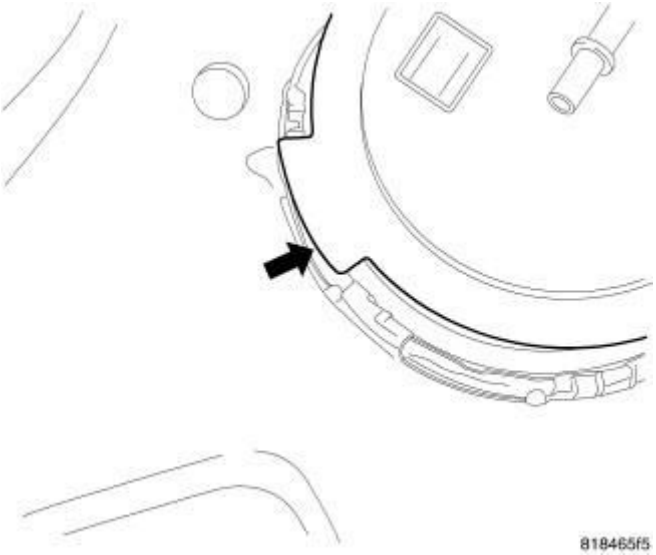

Fig. 16: Location Tab
Courtesy of CHRYSLER GROUP, LLC

NOTE: The main fuel pump module has to be properly located in the fuel tank for the fuel level gauge to work properly.

10. Mark the main fuel pump module orientation.

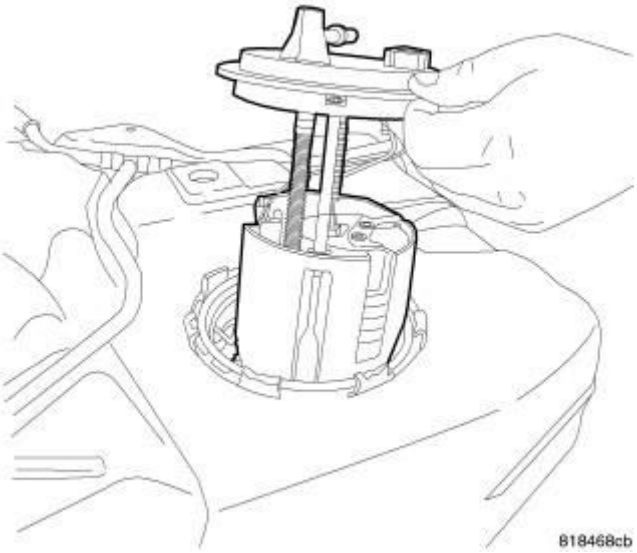

Fig. 17: Main Fuel Pump Module

Courtesy of CHRYSLER GROUP, LLC

WARNING: The fuel pump module reservoir does not empty out when the tank is drained. The fuel in the reservoir will spill out when the module is removed.

NOTE: Do not spill fuel into the interior of the vehicle.

11. Raise the main fuel pump module out of fuel tank using caution not spill fuel inside the vehicle.

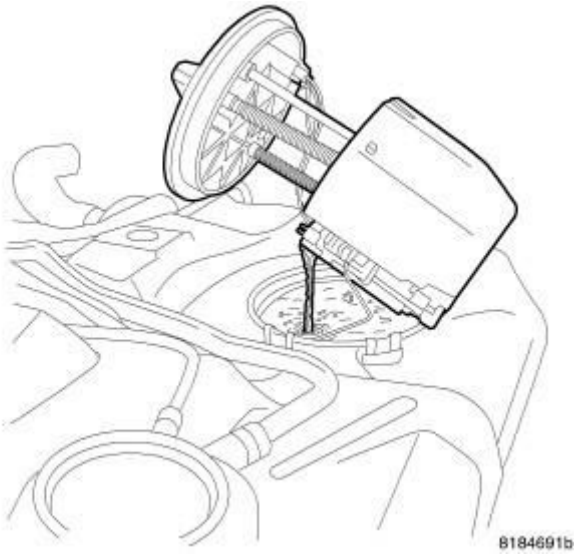

Fig. 18: Draining Fuel
Courtesy of CHRYSLER GROUP, LLC

12. Tip the main fuel pump module and drain enough fuel from the main fuel pump module reservoir to gain access to the transfer tube without spilling fuel into the interior of the vehicle.

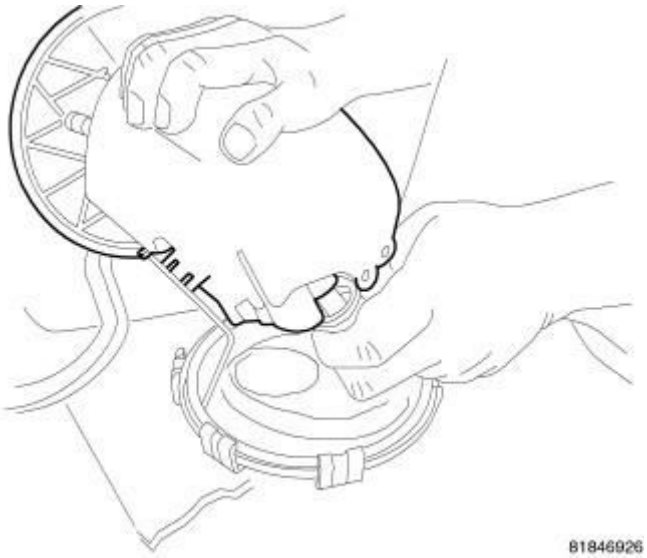

Fig. 19: Main Fuel Pump Module Internal Fuel Line
Courtesy of CHRYSLER GROUP, LLC

13. Disconnect the fuel transfer tube from the main fuel pump module.

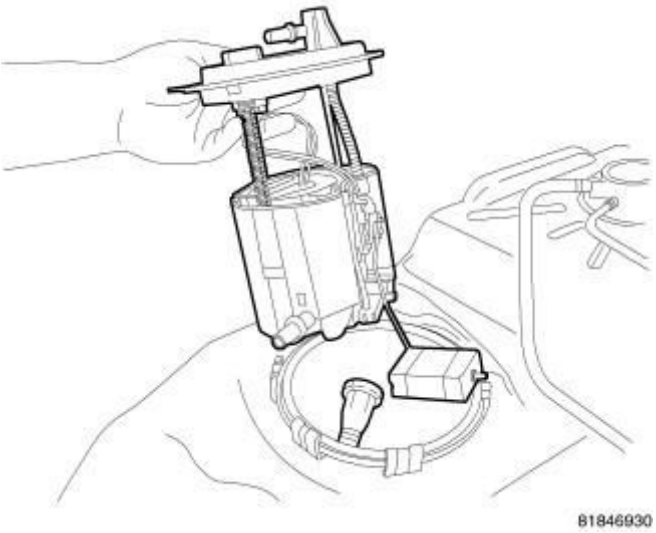

Fig. 20: Main Fuel Pump Module
Courtesy of CHRYSLER GROUP, LLC

14. Remove the main fuel pump module from the fuel tank using caution not to bend the float arm.

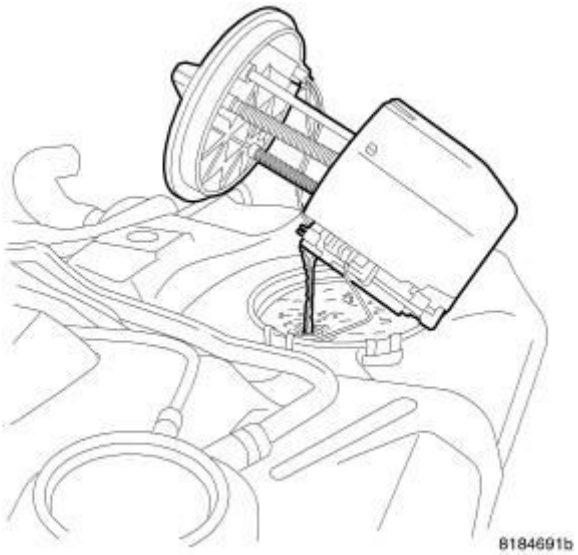

Fig. 21: Draining Fuel
Courtesy of CHRYSLER GROUP, LLC

15. Tip the main fuel pump module on its side to drain all remaining fuel from reservoir.
16. Lift the pump out of the opening in the fuel tank.

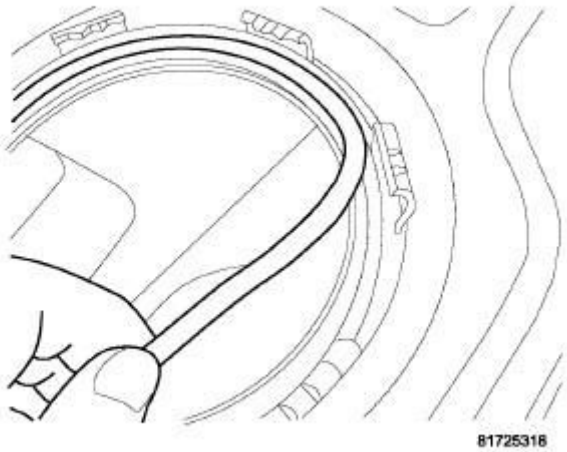

Fig. 22: Fuel Pump Module Seal
Courtesy of CHRYSLER GROUP, LLC

17. Remove and discard the rubber O-ring seal.

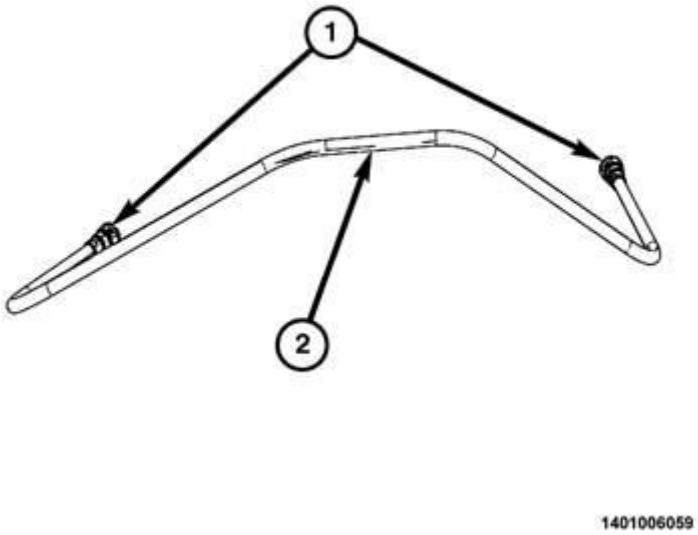

Fig. 23: Quick Connect & Transfer Tube
Courtesy of CHRYSLER GROUP, LLC

18. Pull the transfer tube (2) from the main fuel pump opening. Inspect the tube and each quick connect (1) for twists, cracks, distorted portions, stress marks, split O-rings, proper function of the quick connects, etc.

AUXILIARY FUEL PUMP MODULE

WARNING: **Risk of injury to eyes and skin from contact with fuel. Wear protective clothing and eye protection. Risk of poisoning from inhaling and swallowing fuel. Pour fuel only into appropriately marked and approved containers. Failure to follow these instructions may result in possible serious or fatal injury.**

WARNING: **The fuel system is under constant high pressure even with engine OFF. Until the fuel pressure has been properly released from the system, do not attempt to open the fuel system. Do not smoke or use open flames/sparks when servicing the fuel system. Make sure the area in which the vehicle is being serviced is in a well ventilated area. Failure to comply may result in serious or fatal injury.**

NOTE: It is necessary to remove the Main Fuel Pump and the Auxiliary Fuel Pump to remove and install the Fuel Pump Transfer tube.

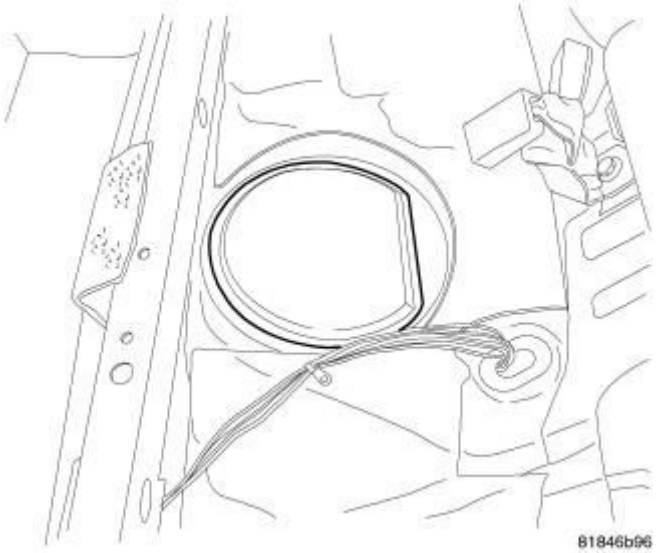

Fig. 24: Fuel Pump Module Cover
Courtesy of CHRYSLER GROUP, LLC

1. Perform the fuel system pressure release procedure. Refer to **FUEL SYSTEM PRESSURE RELEASE PROCEDURE** .
2. Remove the battery negative cable.
3. Remove the rear seat.
4. Remove the auxiliary fuel pump module access cover.

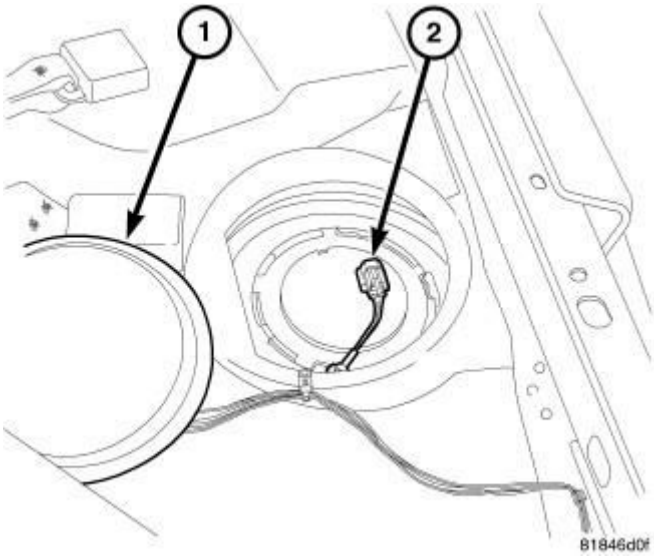

Fig. 25: Auxiliary Fuel Pump Module Access Cover & Electrical

Connector
Courtesy of CHRYSLER GROUP, LLC

5. Disconnect the electrical connector (2) from the auxiliary fuel pump module.

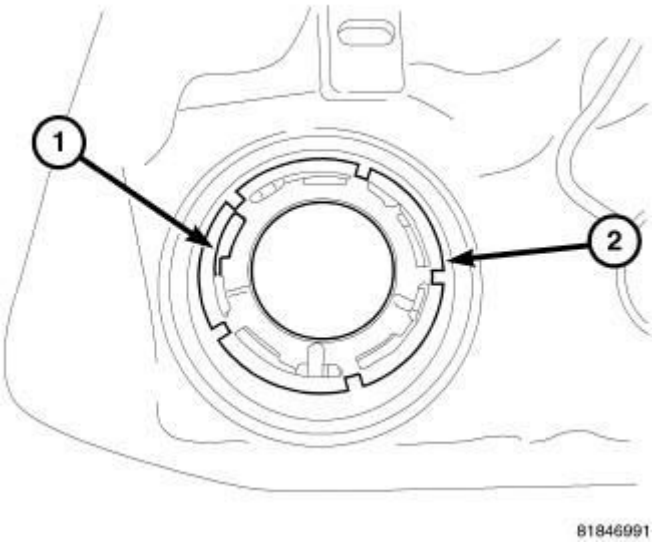

Fig. 26: Auxiliary Fuel Pump Module Lock Ring
Courtesy of CHRYSLER GROUP, LLC

NOTE: The auxiliary fuel pump module has to be properly located in the fuel tank for the fuel level gauge to work properly.

6. Mark the auxiliary fuel pump module orientation (1).

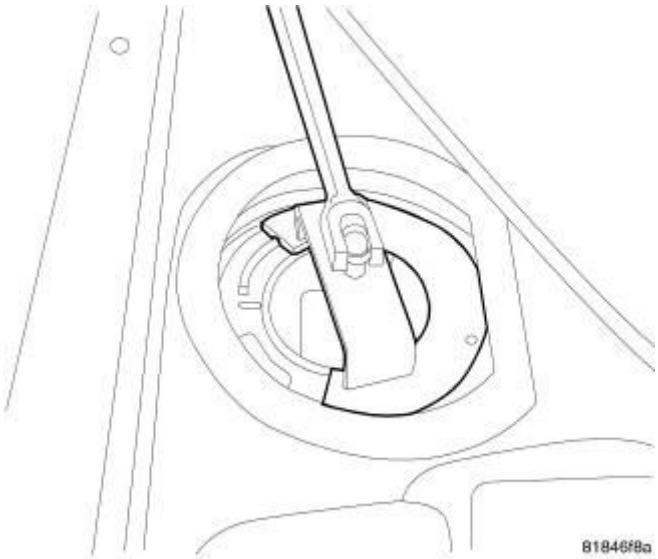

Fig. 27: Small Lock Ring Tool
Courtesy of CHRYSLER GROUP, LLC

NOTE: Prior to removing the auxiliary fuel pump module, use compressed air to remove any accumulated dirt and debris from around fuel tank opening.

7. Position the Fuel Tank Module Wrench (special tool #10189, Wrench, DEF Module Lock Ring) into the notches on the outside edge of the lock-ring.
8. Install a 1/2 inch drive breaker bar into the Fuel Tank Module Wrench (special tool #10189, Wrench, DEF Module Lock Ring).
9. Rotate the breaker bar counterclockwise and remove the lock-ring.

Fig. 28: Auxiliary Fuel Pump Module Internal Fuel Line
Courtesy of CHRYSLER GROUP, LLC

10. Raise the auxiliary fuel pump module and disconnect the internal fuel line.
11. Remove the auxiliary fuel pump module from the fuel tank.

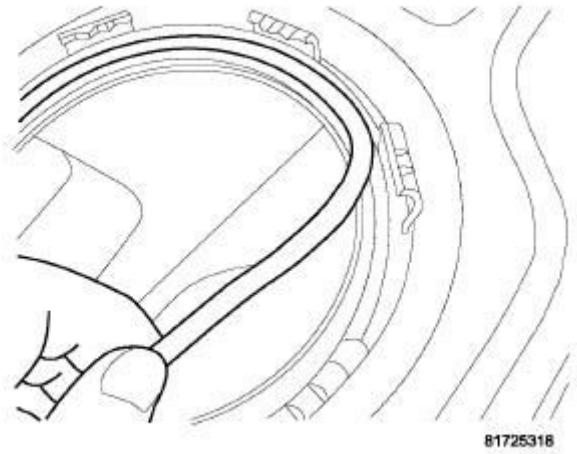

Fig. 29: Fuel Pump Module Seal
Courtesy of CHRYSLER GROUP, LLC

12. Remove and discard the rubber O-ring seal.

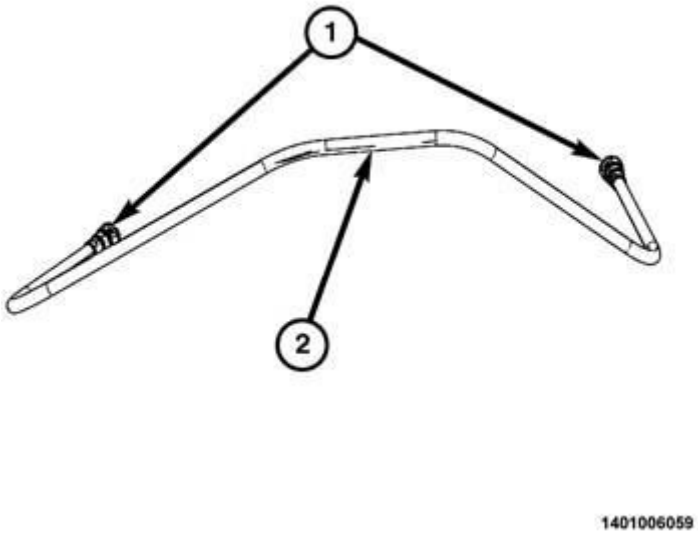

Fig. 30: Quick Connect & Transfer Tube
Courtesy of CHRYSLER GROUP, LLC

13. Pull the transfer tube (2) from the main fuel pump opening. Inspect the tube and each quick connect (1) for twists, cracks, distorted portions, stress marks, split O-rings, proper function of the quick connects, etc.

FRONT WHEEL DRIVE

WARNING: Risk of injury to eyes and skin from contact with fuel. Wear protective clothing and eye protection. Risk of poisoning from inhaling and swallowing fuel. Pour fuel only into appropriately marked and approved containers. Failure to follow these instructions may result in possible serious or fatal injury.

WARNING: The fuel system is under constant high pressure even with engine OFF. Until the fuel pressure has been properly released from the system, do not attempt to open the fuel system. Do not smoke or use open flames/sparks when servicing the fuel system. Make sure the area in which the vehicle is being serviced is in a well ventilated area. Failure to comply may result in serious or fatal injury.

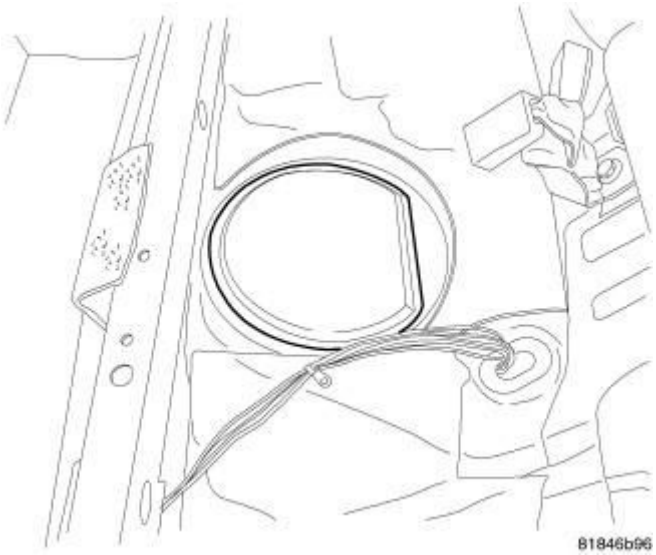

Fig. 31: Fuel Pump Module Cover
Courtesy of CHRYSLER GROUP, LLC

1. Perform the fuel system pressure release procedure. Refer to **FUEL SYSTEM PRESSURE RELEASE PROCEDURE** .
2. Remove the negative battery cable.
3. Remove the rear seat.
4. Remove the fuel pump module access cover.

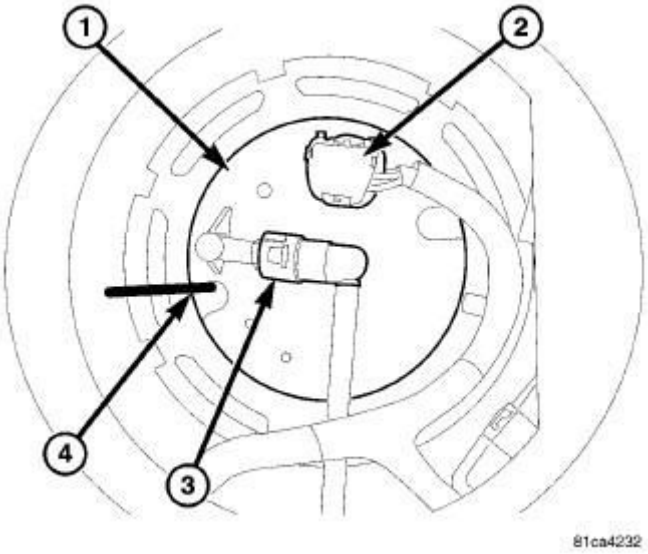

Fig. 32: Fuel Pump Module Connection
Courtesy of CHRYSLER GROUP, LLC

5. Disconnect the electrical connector (2) to the fuel pump module (1).
6. Disconnect the fuel line (3) to the fuel pump module.

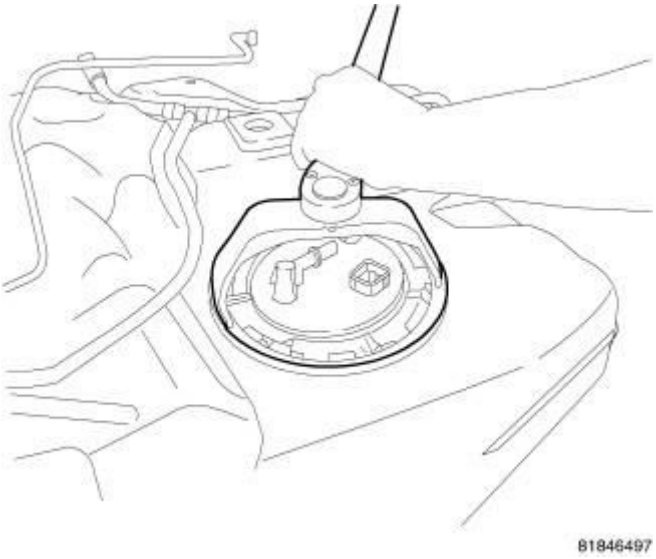

Fig. 33: Lock Ring Tool
Courtesy of CHRYSLER GROUP, LLC

NOTE: Prior to removing the fuel pump module, use compressed air to remove any accumulated dirt and debris from around fuel tank opening.

7. Position the lock-ring remover/installer (special tool #9340, SAE Fuel Pump

Lock Ring Wrench) into the notches on the outside edge of the lock-ring.

8. Install a 1/2 inch drive breaker bar into the lock-ring remover/installer (special tool #9340, SAE Fuel Pump Lock Ring Wrench).
9. Rotate the breaker bar counterclockwise and remove the lock-ring.

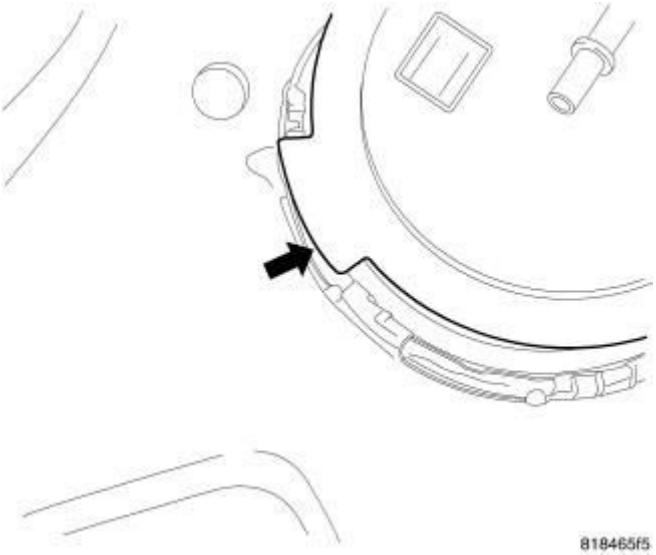

Fig. 34: Location Tab
Courtesy of CHRYSLER GROUP, LLC

NOTE: The fuel pump module has to be properly located in the tank for the fuel level gauge to work properly.

10. Mark the fuel pump module orientation.

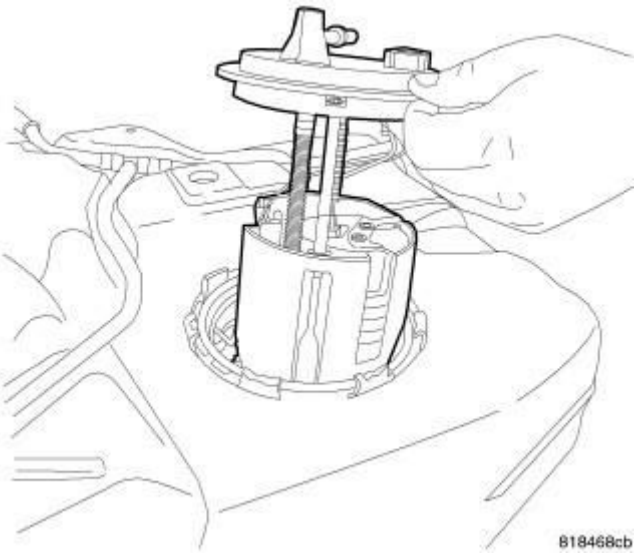

Fig. 35: Main Fuel Pump Module
Courtesy of CHRYSLER GROUP, LLC

NOTE: Do not spill fuel into the interior of the vehicle.

11. Raise the fuel pump module out of the fuel tank using caution not spill fuel inside the vehicle.

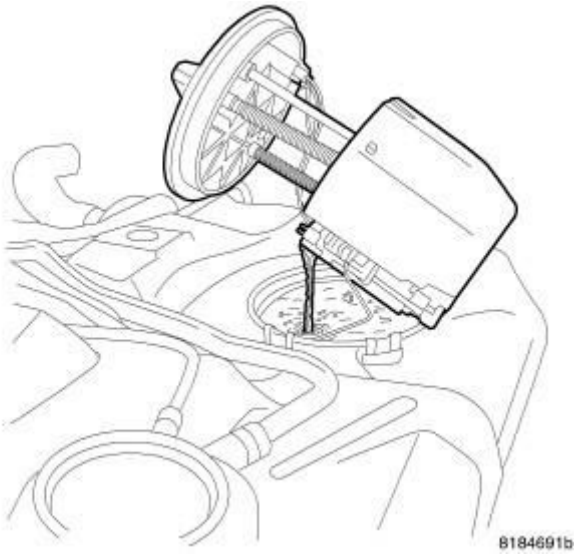

Fig. 36: Draining Fuel
Courtesy of CHRYSLER GROUP, LLC

12. Tip the fuel pump module on its side and drain all fuel from the reservoir.

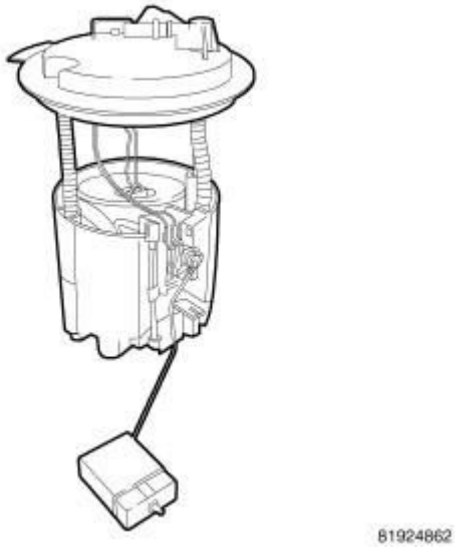

Fig. 37: Fuel Pump Module
Courtesy of CHRYSLER GROUP, LLC

13. Remove the fuel pump module from the fuel tank using caution not to bend the float arm.

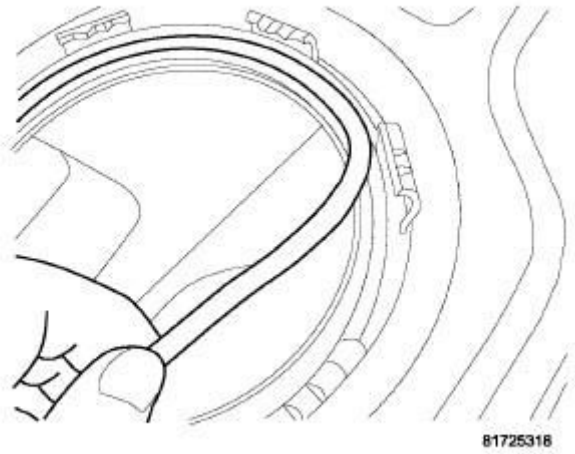

Fig. 38: Fuel Pump Module Seal
Courtesy of CHRYSLER GROUP, LLC

14. Remove and discard the rubber O-ring seal.

INSTALLATION

ALL WHEEL DRIVE

MAIN FUEL PUMP MODULE

WARNING: Risk of injury to eyes and skin from contact with fuel. Wear protective clothing and eye protection. Risk of poisoning from inhaling and swallowing fuel. Pour fuel only into appropriately marked and approved containers. Failure to follow these instructions may result in possible serious or fatal injury.

CAUTION: Whenever the fuel pump module is serviced, the rubber O-ring seal must be replaced.

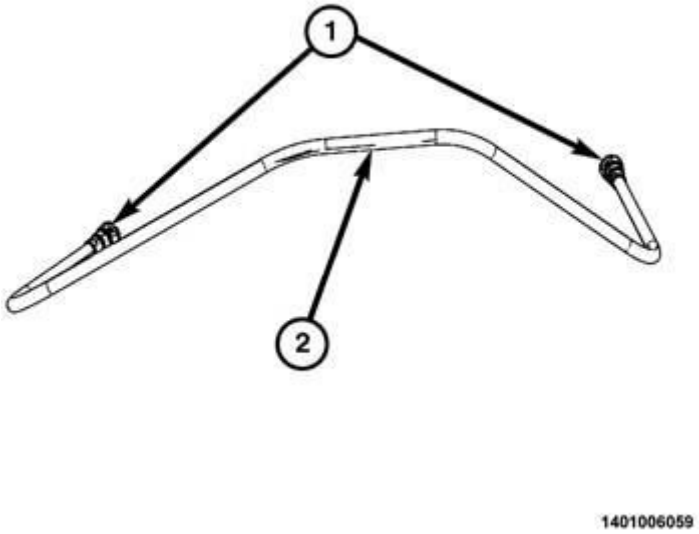

Fig. 39: Quick Connect & Transfer Tube
Courtesy of CHRYSLER GROUP, LLC

1. Feed the fuel transfer tube (1) through the opening of the fuel tank.

NOTE: Make sure the transfer tube sits in the tank in the correct position.

DO NOT TWIST THE FUEL TRANSFER TUBE TO ALLOW CONNECTION TO EITHER PUMP.

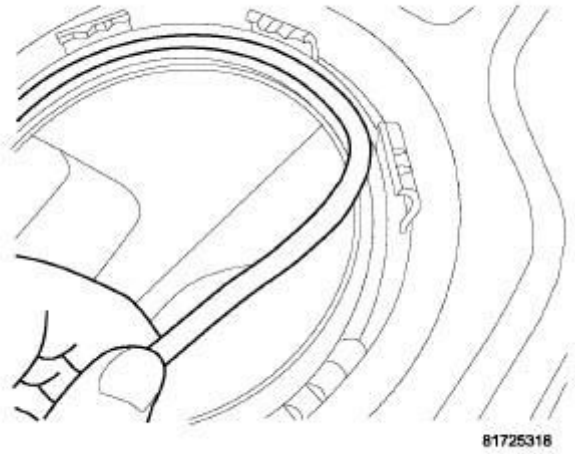

Fig. 40: Fuel Pump Module Seal
Courtesy of CHRYSLER GROUP, LLC

2. Clean the rubber O-ring seal area of the fuel tank and install a new rubber O-ring seal.

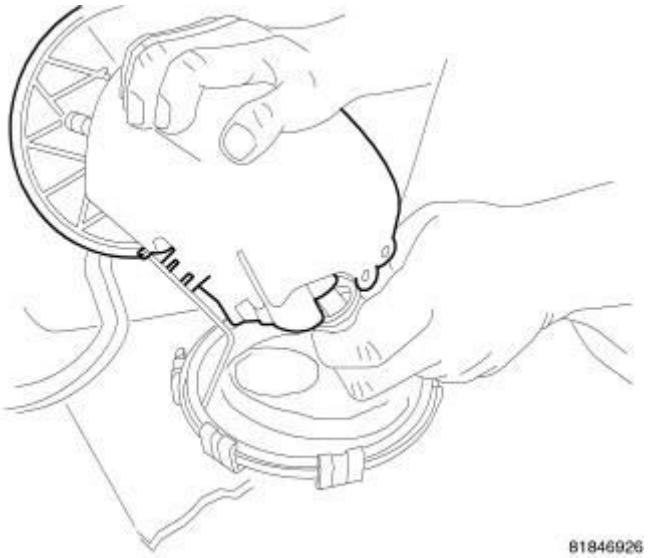

Fig. 41: Main Fuel Pump Module Internal Fuel Line
Courtesy of CHRYSLER GROUP, LLC

3. Connect the fuel pump transfer tube to the main fuel pump module. Make sure the line is not twisted or stressed when connected.

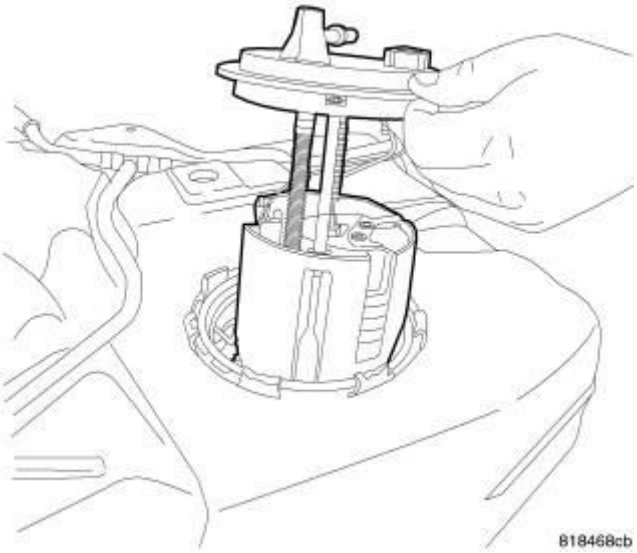

Fig. 42: Main Fuel Pump Module
Courtesy of CHRYSLER GROUP, LLC

4. Lower the main fuel pump module into the fuel tank using caution not to bend the float arm.

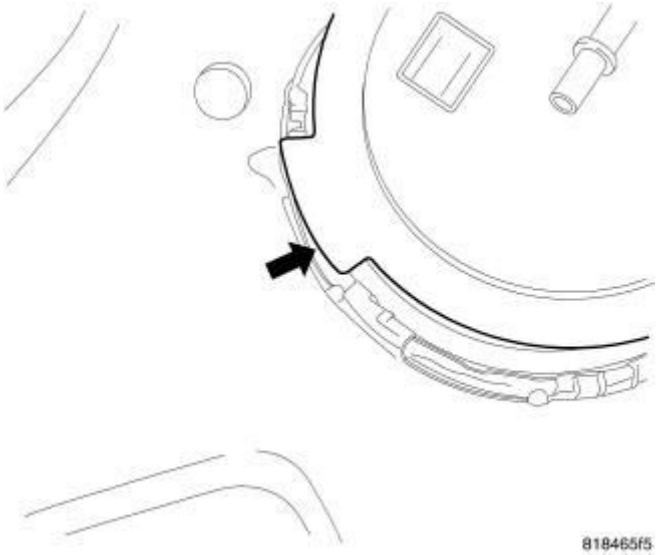

Fig. 43: Location Tab
Courtesy of CHRYSLER GROUP, LLC

NOTE: The main fuel pump module must be properly located in the fuel tank for the fuel level gauge to work properly.

5. Align the rubber O-ring seal and rotate the main fuel pump module to the orientation marks noted during removal. This step must be performed for the fuel level gauge to work properly.

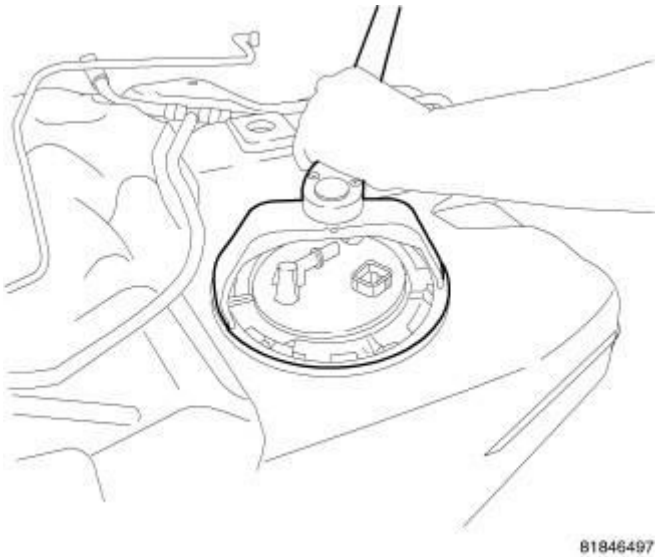

Fig. 44: Lock Ring Tool
Courtesy of CHRYSLER GROUP, LLC

6. Position the lock-ring over top of the main fuel pump module.

7. Position the lock-ring remover/installer (special tool #9340, SAE Fuel Pump Lock Ring Wrench) into the notches on the outside edge of the lock-ring.
8. Install a 1/2 inch drive breaker bar into the lock-ring remover/installer (special tool #9340, SAE Fuel Pump Lock Ring Wrench).
9. Rotate the breaker bar clockwise until all seven notches of the lock-ring have engaged.

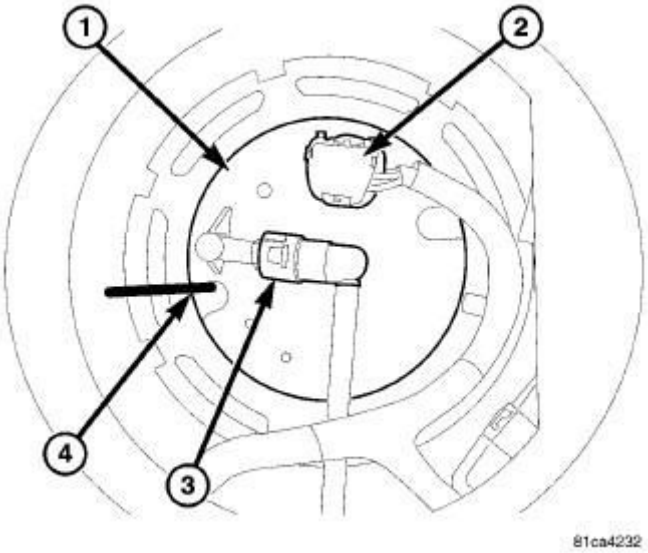

Fig. 45: Fuel Pump Module Connection
Courtesy of CHRYSLER GROUP, LLC

10. Connect the fuel line (3) to the main fuel pump module.
11. Connect the electrical connector (2) to the main fuel pump module (1).

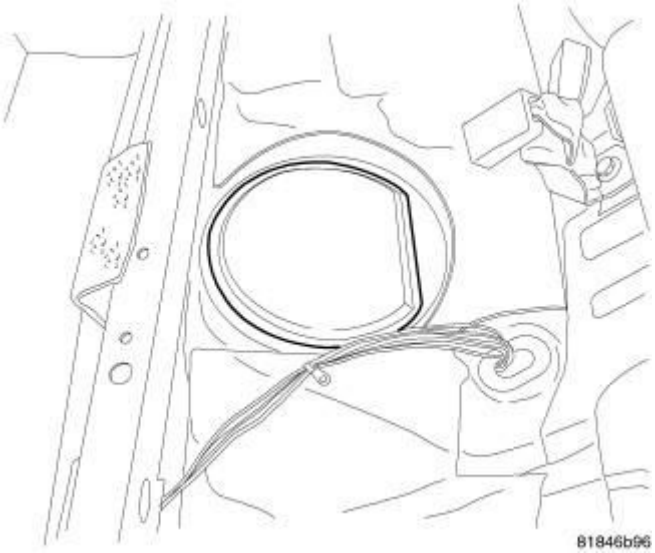

Fig. 46: Fuel Pump Module Cover

Courtesy of CHRYSLER GROUP, LLC

12. Install the main fuel pump module access cover.
13. Install the rear seat.
14. Install the battery negative cable.
15. Use the Scan Tool to pressurize the system and check for leaks.

AUXILIARY FUEL PUMP MODULE

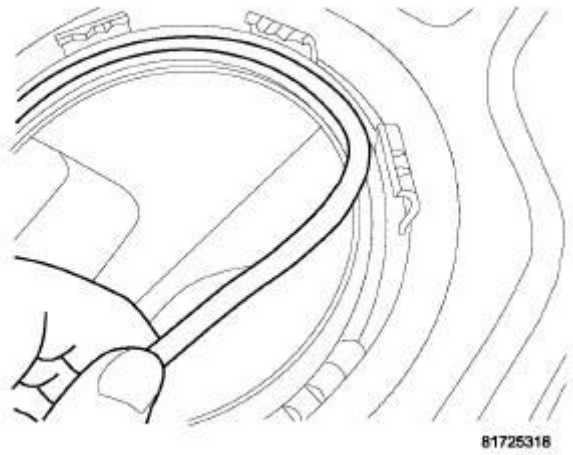

Fig. 47: Fuel Pump Module Seal
Courtesy of CHRYSLER GROUP, LLC

WARNING: Risk of injury to eyes and skin from contact with fuel. Wear protective clothing and eye protection. Risk of poisoning from inhaling and swallowing fuel. Pour fuel only into appropriately marked and approved containers. Failure to follow these instructions may result in possible serious or fatal injury.

CAUTION: Whenever the fuel pump module is serviced, the rubber O-ring seal must be replaced.

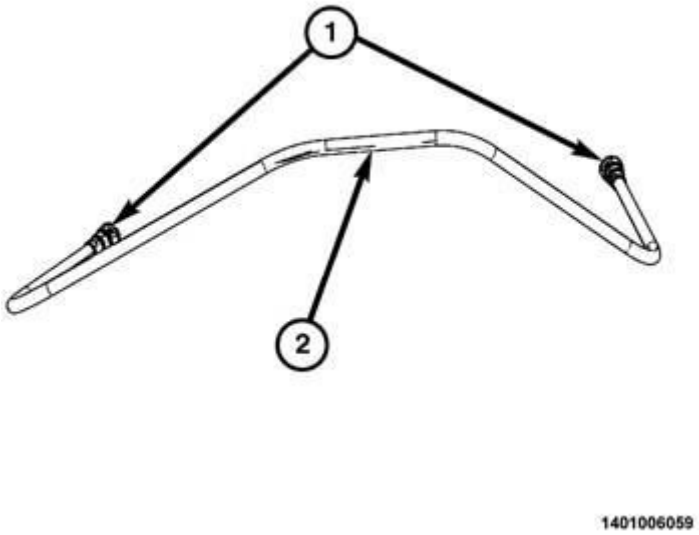

Fig. 48: Quick Connect & Transfer Tube
Courtesy of CHRYSLER GROUP, LLC

1. Feed the fuel transfer tube (1) through the opening of the fuel tank.

NOTE: Make sure the transfer tube sits in the tank in the correct position.

DO NOT TWIST THE FUEL TRANSFER TUBE TO ALLOW CONNECTION TO EITHER PUMP.

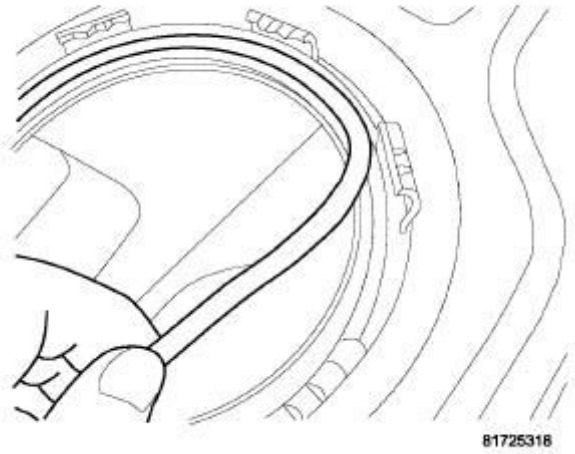

Fig. 49: Fuel Pump Module Seal
Courtesy of CHRYSLER GROUP, LLC

2. Clean the rubber O-ring seal area of the fuel tank and install a new rubber O-ring seal.

Fig. 50: Auxiliary Fuel Pump Module Internal Fuel Line
Courtesy of CHRYSLER GROUP, LLC

3. Connect the internal fuel line to the auxiliary fuel pump module. Make sure the line is not twisted or stressed when connected.
4. Lower the auxiliary fuel pump module into the fuel tank using caution not to bend the float arm.

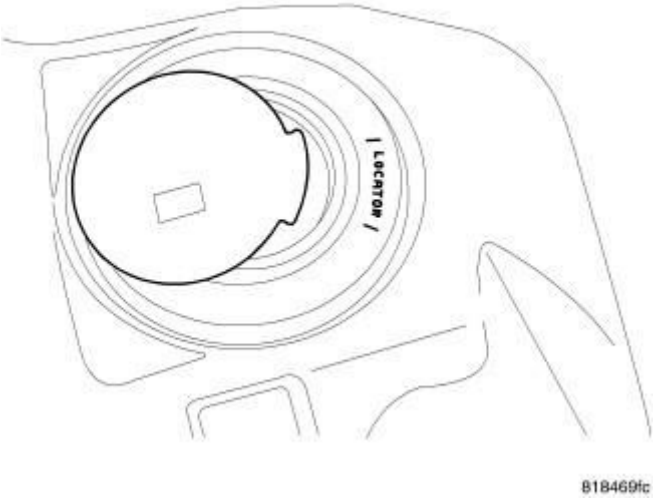

Fig. 51: Tab Location Small Module
Courtesy of CHRYSLER GROUP, LLC

NOTE: The auxiliary fuel pump module must be properly

located in the fuel tank for the fuel level gauge to work properly.

5. Align the rubber O-ring seal and rotate the auxiliary fuel pump module to the orientation marks noted during removal. This step must be performed for the fuel level gauge to work properly.

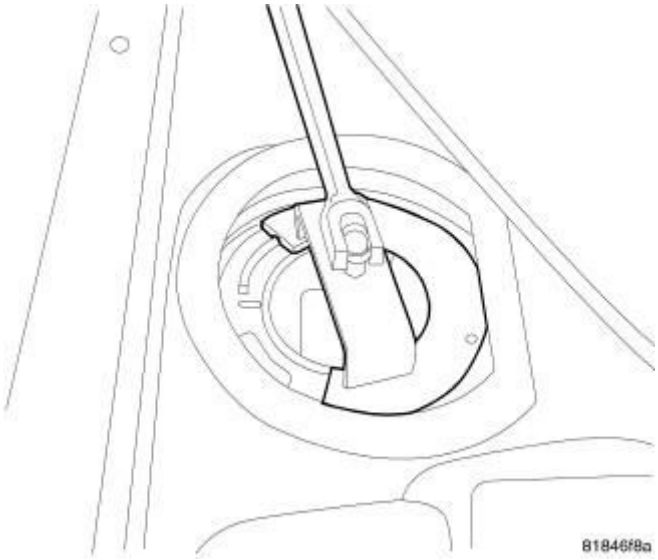

Fig. 52: Small Lock Ring Tool
Courtesy of CHRYSLER GROUP, LLC

6. Position the lock-ring over top of the auxiliary fuel pump module.
7. Position the Fuel Tank Module Wrench (special tool #10189, Wrench, DEF Module Lock Ring) into the notches on the outside edge of the lock-ring.
8. Install a 1/2 inch drive breaker bar into the Fuel Tank Module Wrench (special tool #10189, Wrench, DEF Module Lock Ring).
9. Rotate the breaker bar clockwise until all seven notches of the lock-ring have engaged.

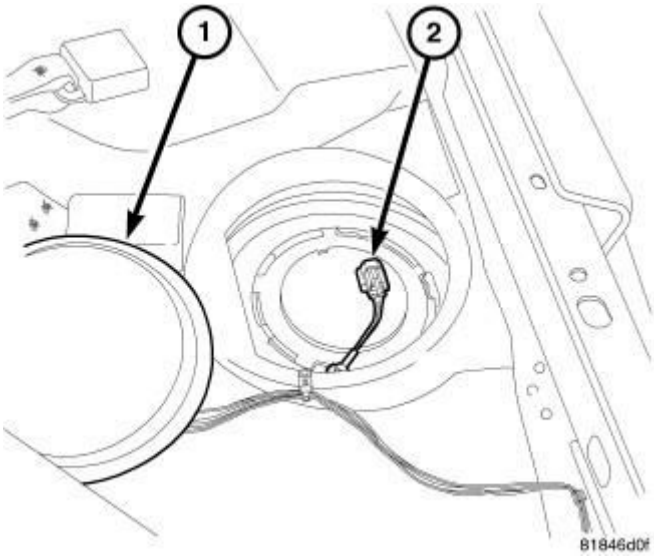

Fig. 53: Auxiliary Fuel Pump Module Access Cover & Electrical Connector
Courtesy of CHRYSLER GROUP, LLC

10. Connect the auxiliary fuel pump module electrical connector (2).

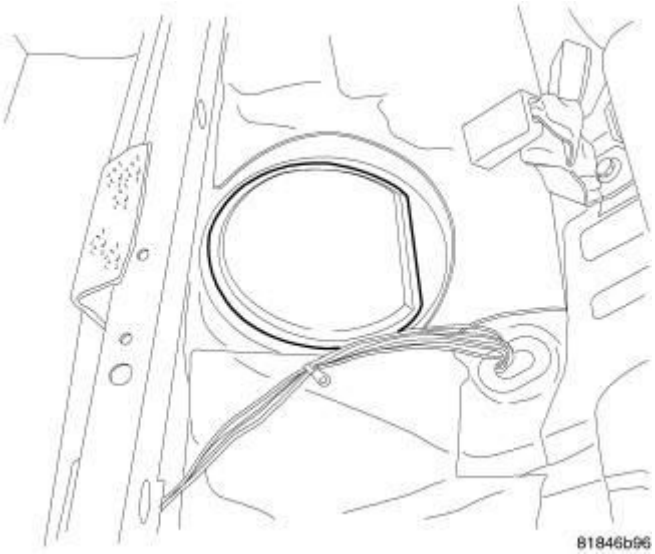

Fig. 54: Fuel Pump Module Cover
Courtesy of CHRYSLER GROUP, LLC

11. Install the auxiliary fuel pump module access cover.
12. Install the rear seat.
13. Install the negative battery cable.
14. Use the Scan Tool to pressurize the system and check for leaks.

FRONT WHEEL DRIVE

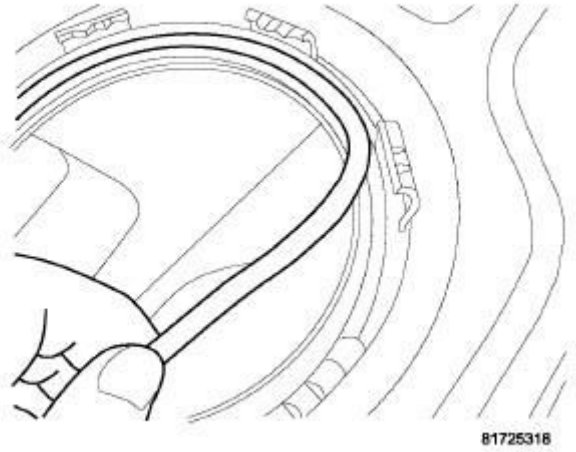

Fig. 55: Fuel Pump Module Seal
Courtesy of CHRYSLER GROUP, LLC

WARNING: Risk of injury to eyes and skin from contact with fuel. Wear protective clothing and eye protection. Risk of poisoning from inhaling and swallowing fuel. Pour fuel only into appropriately marked and approved containers. Failure to follow these instructions may result in possible serious or fatal injury.

CAUTION: Whenever the fuel pump module is serviced, the rubber O-ring seal must be replaced.

1. Clean the rubber O-ring seal area of the fuel tank and install a new rubber O-ring seal.

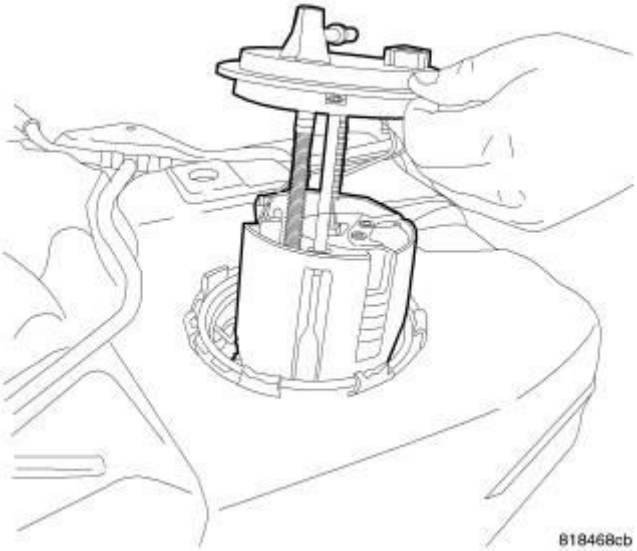

Fig. 56: Main Fuel Pump Module
Courtesy of CHRYSLER GROUP, LLC

2. Lower the fuel pump module into the fuel tank using caution not to bend the float arm.

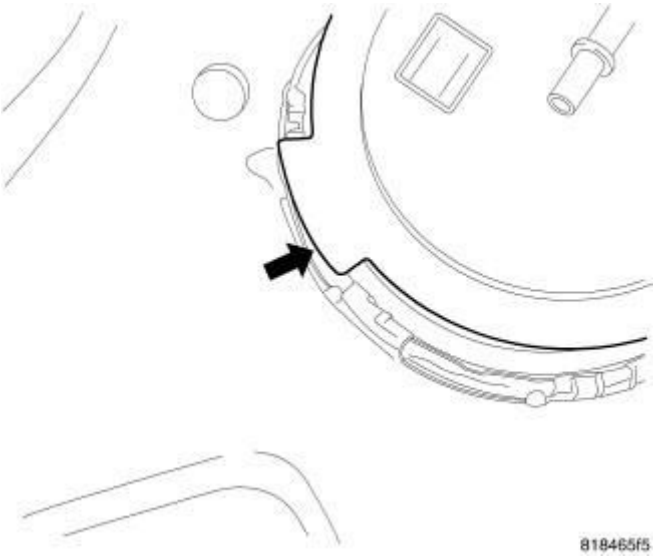

Fig. 57: Location Tab
Courtesy of CHRYSLER GROUP, LLC

NOTE: The fuel pump module must be properly located in the fuel tank for the fuel level gauge to work properly.

3. Align the rubber O-ring seal and rotate the fuel pump module to the orientation marks noted during removal. This step must be performed for the fuel level gauge to work properly.

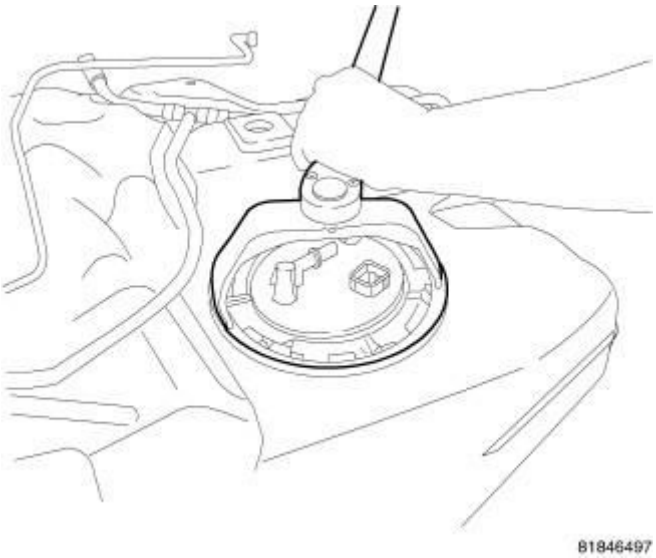

Fig. 58: Lock Ring Tool
Courtesy of CHRYSLER GROUP, LLC

4. Position the lock-ring over top of the fuel pump module.
5. Position the lock-ring remover/installer (special tool #9340, SAE Fuel Pump Lock Ring Wrench) into the notches on the outside edge of the lock-ring.
6. Install a 1/2 inch drive breaker bar into the lock-ring remover/installer (special tool #9340, SAE Fuel Pump Lock Ring Wrench).
7. Rotate the breaker bar clockwise until all seven notches of the lock-ring have engaged.

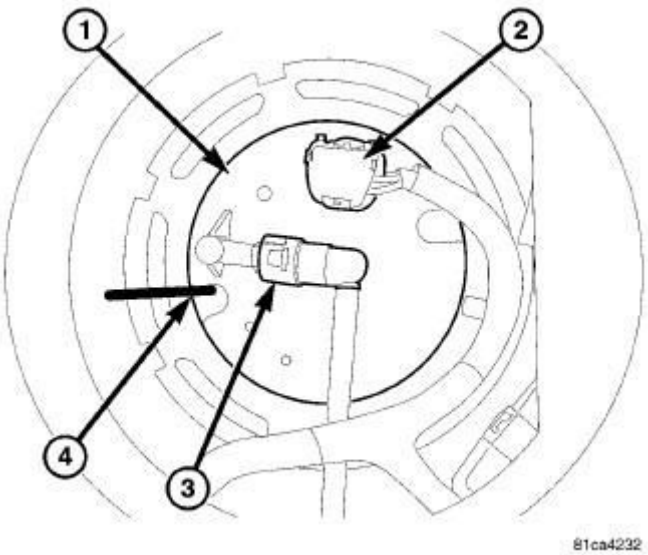

Fig. 59: Fuel Pump Module Connection
Courtesy of CHRYSLER GROUP, LLC

8. Connect the fuel line (3) to the fuel pump module (1).
9. Connect the electrical connector (2) to the fuel pump module (1).

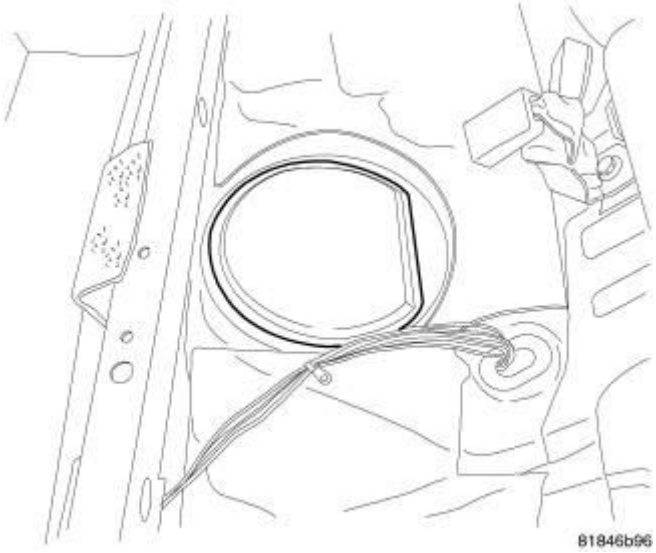

Fig. 60: Fuel Pump Module Cover
Courtesy of CHRYSLER GROUP, LLC

10. Install the fuel pump module access cover.
11. Install the rear seat.
12. Install the negative battery cable.
13. Use the Scan Tool to pressurize the system and check for leaks.

RAIL, FUEL

DESCRIPTION

DESCRIPTION

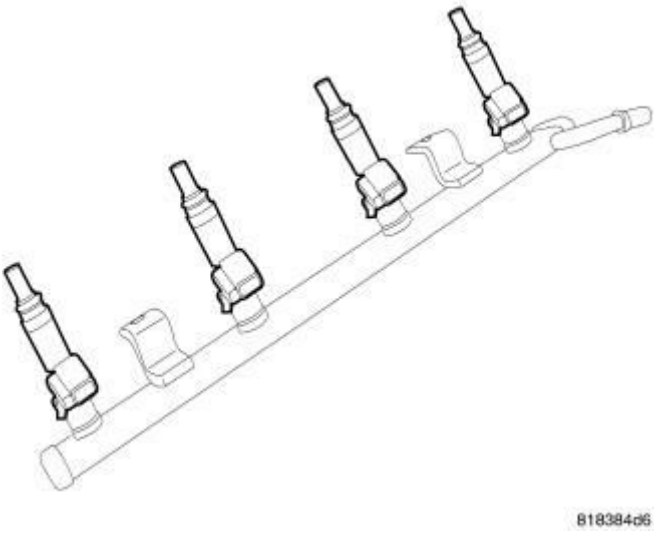

Fig. 61: Fuel Rail & Injectors
Courtesy of CHRYSLER GROUP, LLC

The fuel rail supplies the necessary fuel to each individual fuel injector and is mounted to the intake manifold.

OPERATION

OPERATION

The fuel pressure regulator is no longer mounted to the fuel rail on any engine. It is now located on the fuel tank mounted fuel pump module. Refer to **MODULE, FUEL PUMP** for information. The fuel rail is not repairable.

REMOVAL

REMOVAL

WARNING: **Risk of injury to eyes and skin from contact with fuel. Wear protective clothing and eye protection. Risk of poisoning from inhaling and swallowing fuel. Pour fuel only into appropriately marked and approved containers. Failure to follow these instructions may result in possible serious or fatal injury.**

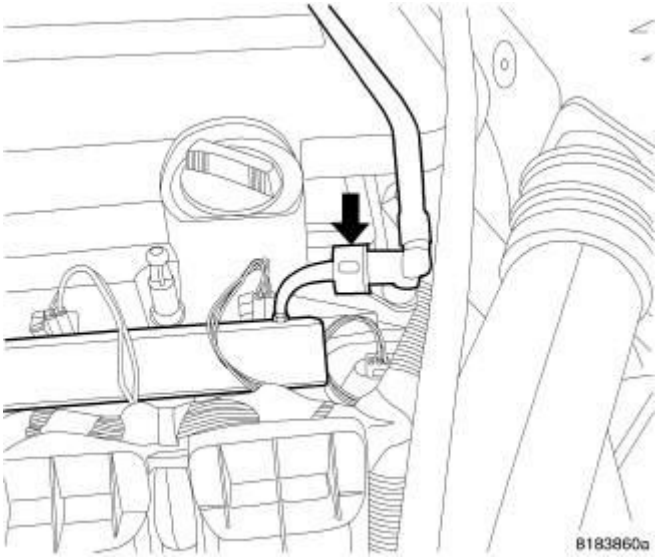

Fig. 62: Fuel Line At Rail
Courtesy of CHRYSLER GROUP, LLC

NOTE: Wrap shop towels around hose to catch any gasoline spillage.

1. Release the fuel system pressure.
2. Disconnect the negative battery cable.
3. Disconnect the fuel line from the fuel rail. Refer to **FITTING, QUICK CONNECT**.

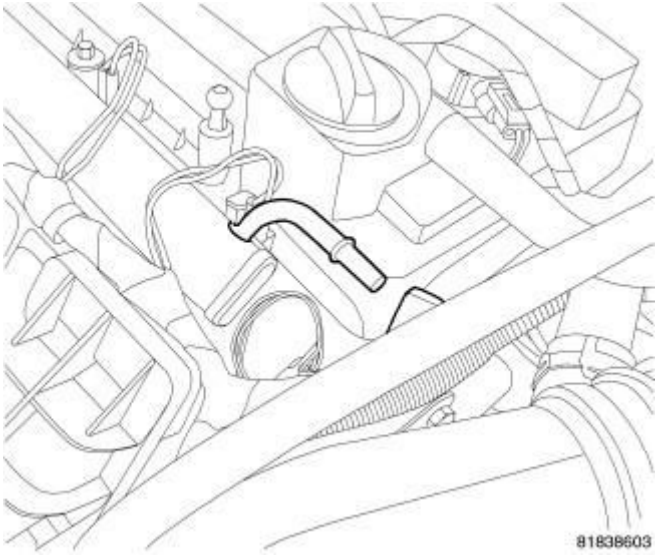

Fig. 63: Fuel Line Connection
Courtesy of CHRYSLER GROUP, LLC

4. Fuel line removed from the fuel rail.

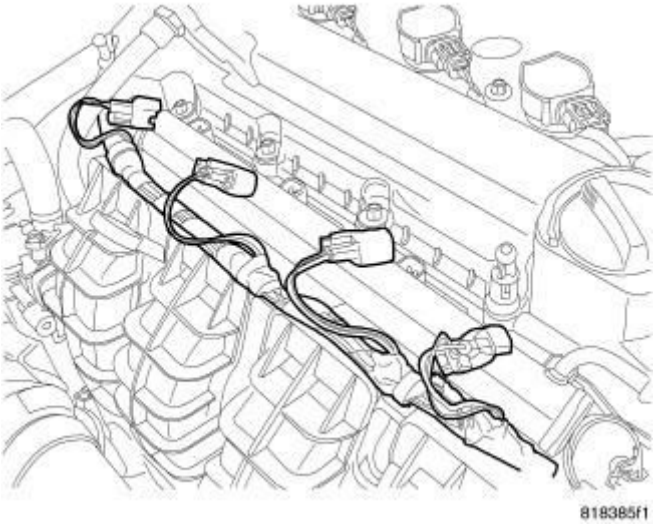

Fig. 64: Electrical Connectors
Courtesy of CHRYSLER GROUP, LLC

5. Unlock and disconnect the electrical connectors from the fuel injectors.

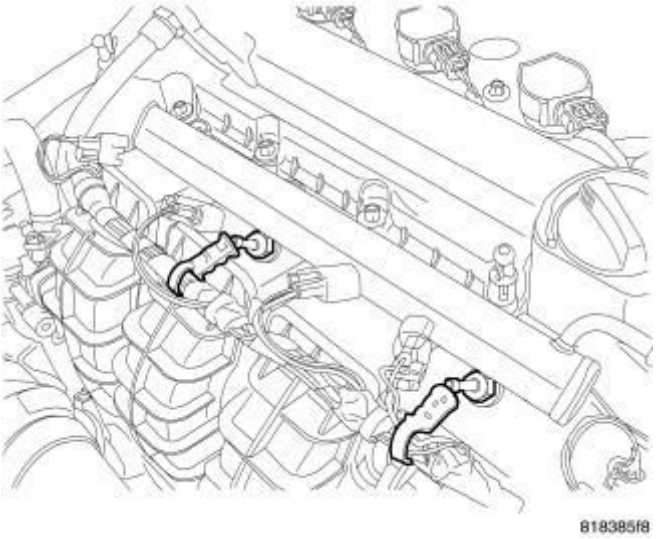

Fig. 65: Harness Clips
Courtesy of CHRYSLER GROUP, LLC

6. Remove the wiring harness from the fuel rail studs.

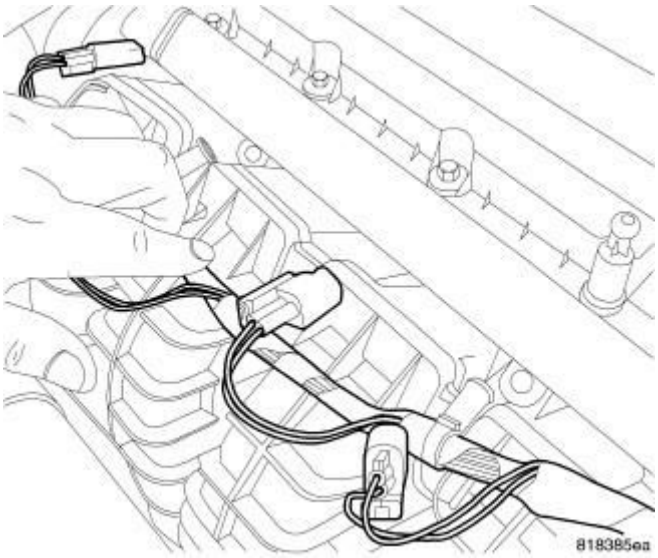

Fig. 66: Electrical Harness Removed
Courtesy of CHRYSLER GROUP, LLC

7. Remove the 2 bolts from the fuel rail.

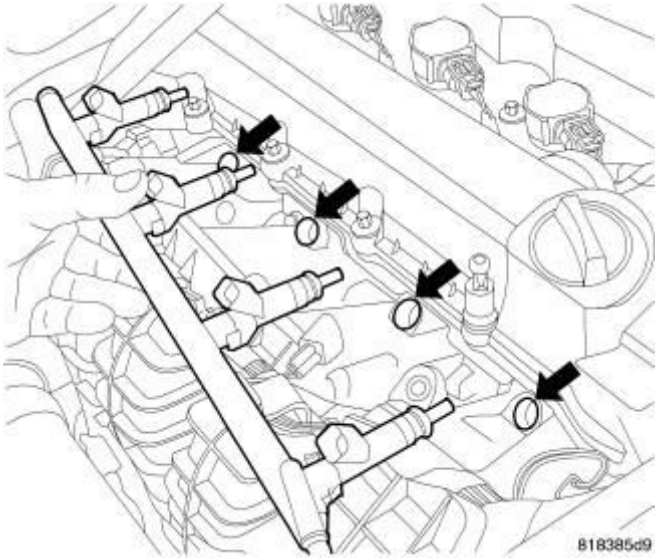

Fig. 67: Fuel Rail & Injectors
Courtesy of CHRYSLER GROUP, LLC

8. Remove the fuel rail and injectors from the intake manifold.

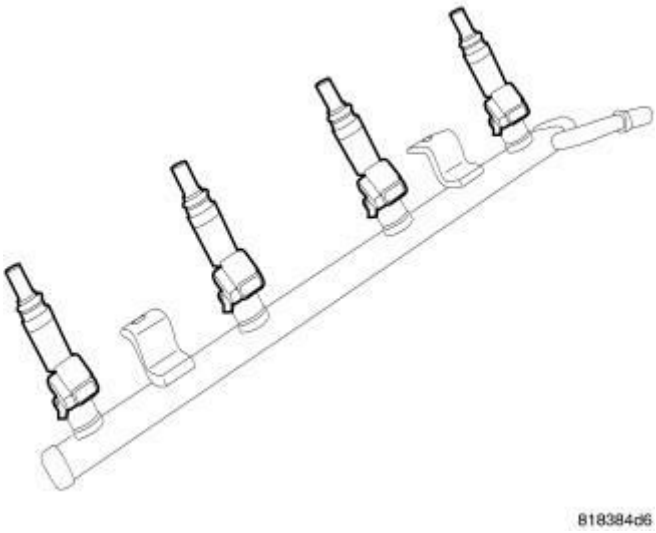

Fig. 68: Fuel Rail & Injectors
Courtesy of CHRYSLER GROUP, LLC

9. Fuel rail removed from intake manifold.

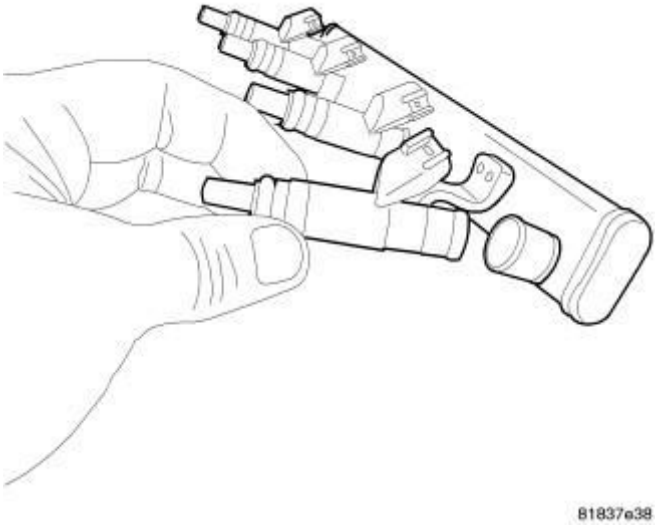

Fig. 69: Fuel Injector And Rail
Courtesy of CHRYSLER GROUP, LLC

10. Remove fuel injectors from fuel rail.

INSTALLATION

INSTALLATION

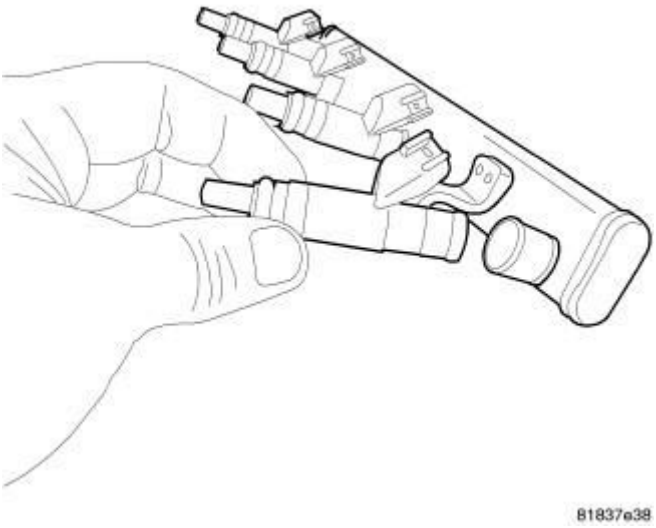

Fig. 70: Fuel Injector And Rail
Courtesy of CHRYSLER GROUP, LLC

1. Apply a light coating of clean engine oil to the O-ring on the nozzle end of each injector.
2. Install the fuel injectors to the fuel rail.
3. Install injector into cup of fuel rail.
4. Install retaining clip and check to ensure fuel injector is properly seated.

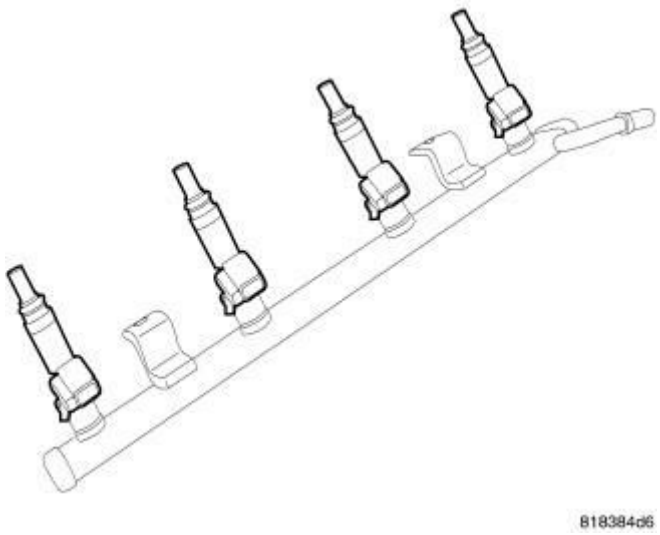

Fig. 71: Fuel Rail & Injectors
Courtesy of CHRYSLER GROUP, LLC

Fuel rail assembly.

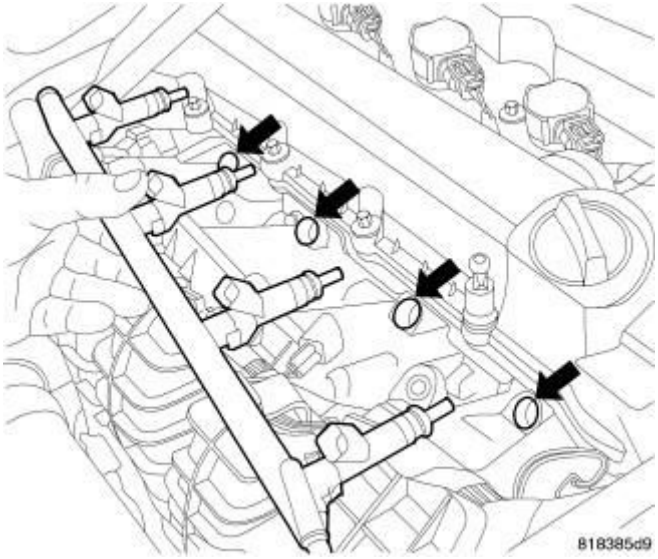

Fig. 72: Fuel Rail & Injectors
Courtesy of CHRYSLER GROUP, LLC

5. Insert fuel injector nozzles into openings in intake manifold. Seat the injectors in place.

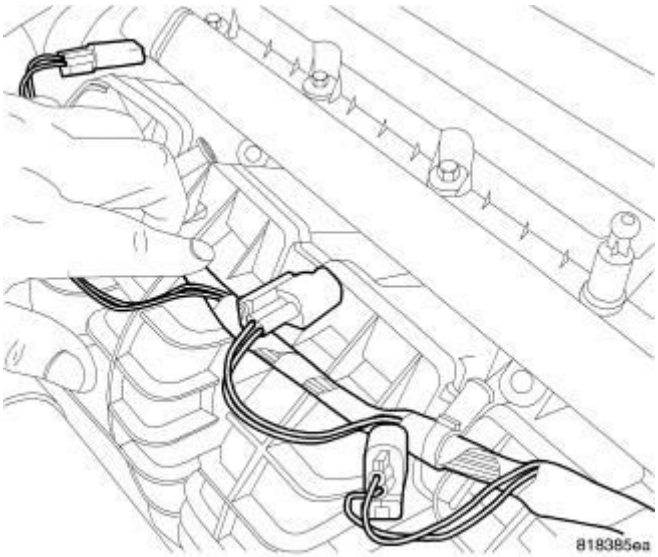

Fig. 73: Electrical Harness Removed
Courtesy of CHRYSLER GROUP, LLC

6. Install the 2 bolts to the fuel rail. Tighten fuel rail bolts to 27 N.m (20 ft. lbs.).

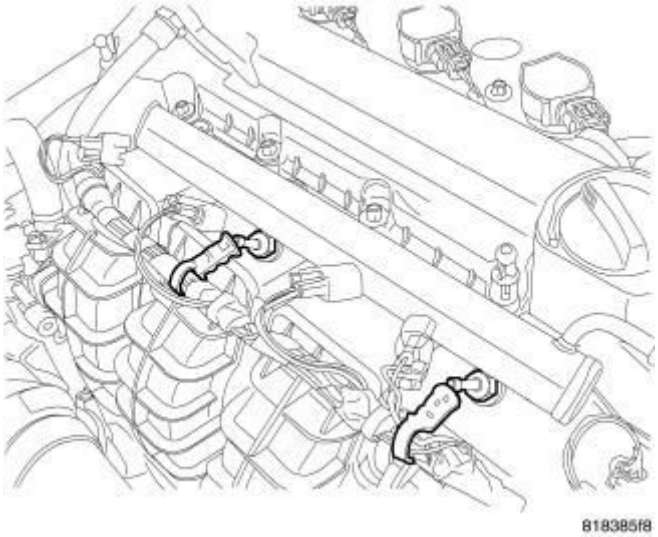

Fig. 74: Harness Clips
Courtesy of CHRYSLER GROUP, LLC

7. Install the wiring harness to the fuel rail.

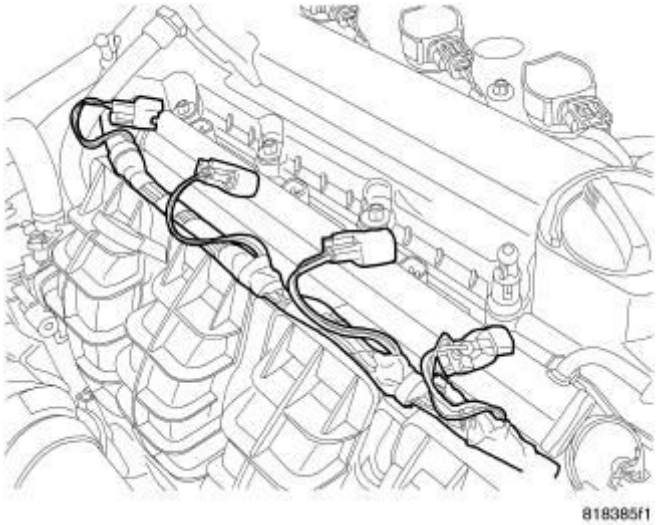

Fig. 75: Electrical Connectors
Courtesy of CHRYSLER GROUP, LLC

8. Connect and lock the electrical connectors to the fuel injectors.

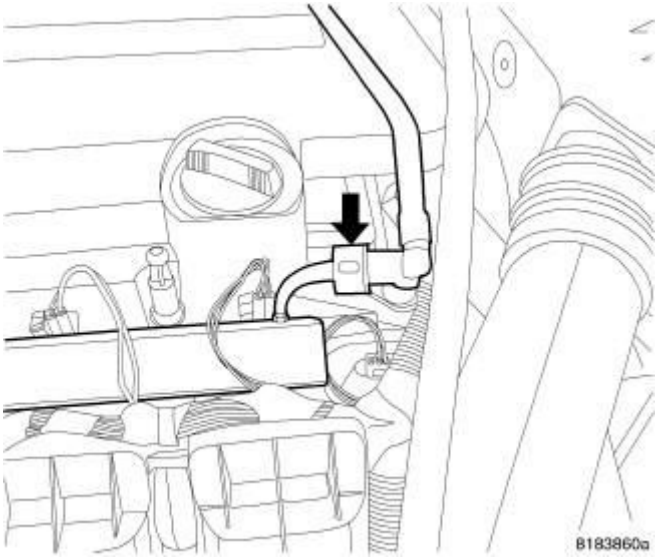

Fig. 76: Fuel Line At Rail
Courtesy of CHRYSLER GROUP, LLC

9. Connect the fuel line to the fuel rail. Refer to **FITTING, QUICK CONNECT**
10. Connect the negative battery cable.
11. Use the Scan Tool Fuel System Test to pressurize the fuel system. Check for leaks.

SENDING UNIT AND SENSOR, FUEL LEVEL

DESCRIPTION

DESCRIPTION

FWD

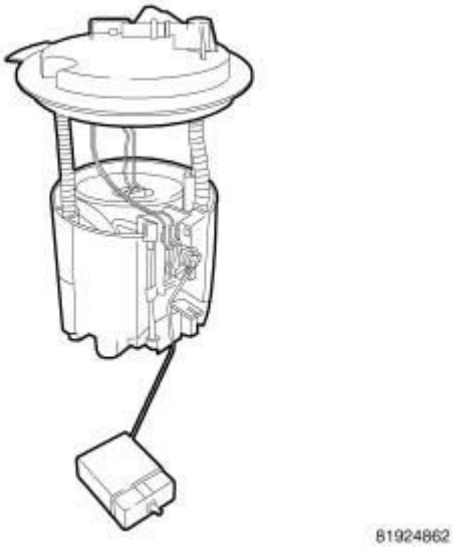

Fig. 77: Fuel Pump Module
Courtesy of CHRYSLER GROUP, LLC

The front wheel drive (FWD) vehicles have a serviceable fuel level sending unit located on the fuel pump reservoir. Refer to **SENDING UNIT AND SENSOR, FUEL LEVEL, REMOVAL**.

AWD

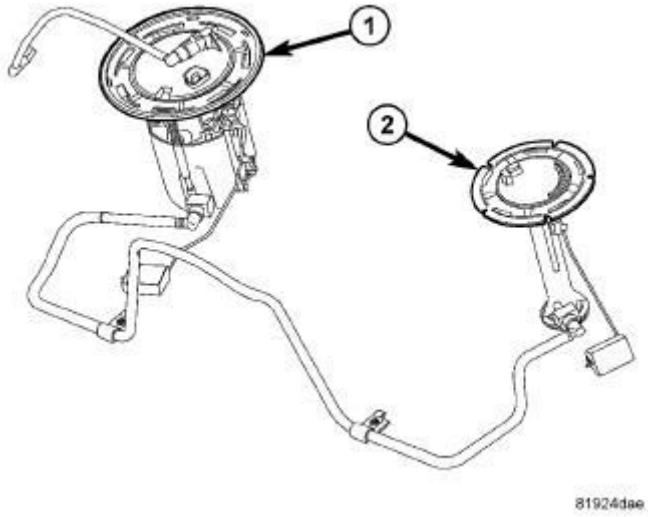

Fig. 78: Main Fuel Pump Module & Auxiliary Fuel Pump Module
Courtesy of CHRYSLER GROUP, LLC

The all wheel drive (AWD) vehicles with the saddle fuel tank configurations have a main (1) and auxiliary (2) fuel level sending units.

The main fuel level sending unit located on the main fuel pump reservoir (1) is serviceable. Refer to **SENDING UNIT AND SENSOR, FUEL LEVEL, REMOVAL**.

The auxiliary fuel level sending unit (2) is integrated with the auxiliary fuel pump module. The auxiliary fuel pump module and the fuel level sending unit is serviced as an assembly. Refer to **MODULE, FUEL PUMP, REMOVAL**.

REMOVAL

REMOVAL

WARNING: Risk of injury to eyes and skin from contact with

fuel. Wear protective clothing and eye protection. Risk of poisoning from inhaling and swallowing fuel. Pour fuel only into appropriately marked and approved containers. Failure to follow these instructions may result in possible serious or fatal injury.

WARNING: The fuel system is under constant high pressure even with engine OFF. Until the fuel pressure has been properly released from the system, do not attempt to open the fuel system. Do not smoke or use open flames/sparks when servicing the fuel system. Make sure the area in which the vehicle is being serviced is in a well ventilated area. Failure to comply may result in serious or fatal injury.

1. Remove the fuel pump module. Refer to **MODULE, FUEL PUMP, REMOVAL**.

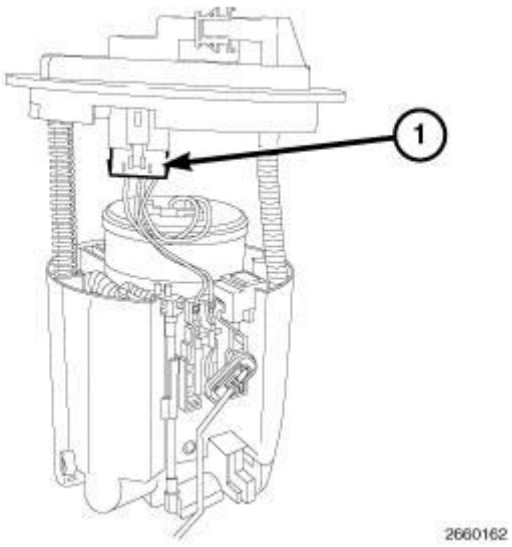

Fig. 79: Fuel Level Sending Unit Electrical Connector
Courtesy of CHRYSLER GROUP, LLC

2. Disconnect the fuel level sending unit electrical connector (1).

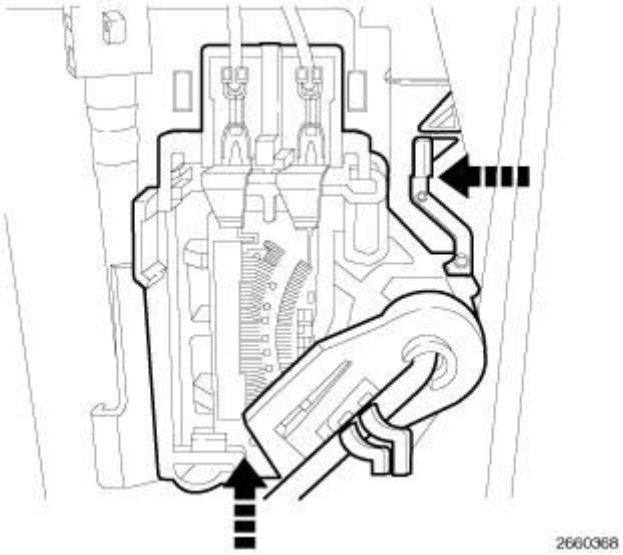

Fig. 80: Pressing Fuel Level Sending Unit Snap Tab To Left
Courtesy of CHRYSLER GROUP, LLC

CAUTION: Do not touch the terminals or the resistor card.

CAUTION: Do not pull the fuel level sending unit by the wires or the float arm.

3. Using your finger, press the fuel level sending unit snap tab to the left while gently pushing up on the bottom of the fuel level sending unit and remove.

INSTALLATION

INSTALLATION

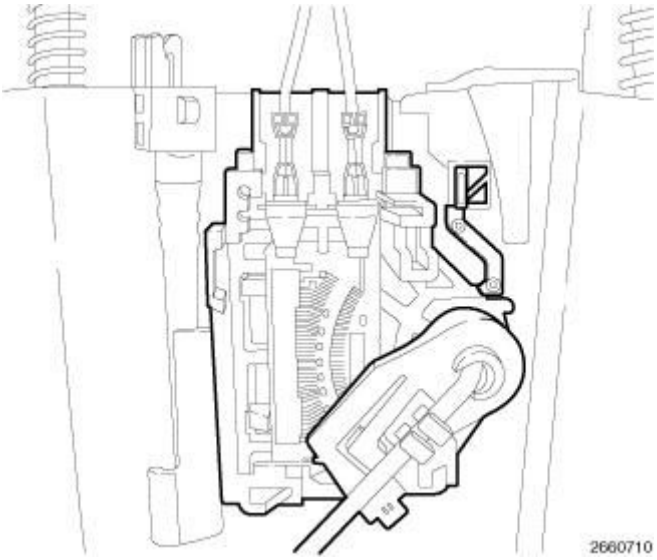

Fig. 81: Resistor Card
Courtesy of CHRYSLER GROUP, LLC

CAUTION: Do not touch the terminals or the resistor card.

CAUTION: Do not handle the new fuel level sending unit by the float arm.

1. Position the new fuel level sending unit to the fuel pump module reservoir.

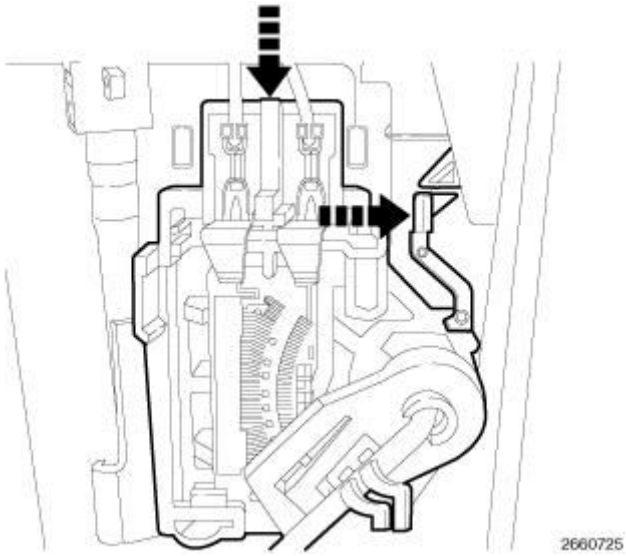

Fig. 82: Pushing Fuel Level Sending Unit Down Until Snap Tab Engages
Courtesy of CHRYSLER GROUP, LLC

2. Gently push the fuel level sending unit down until the snap tab (2) engages.

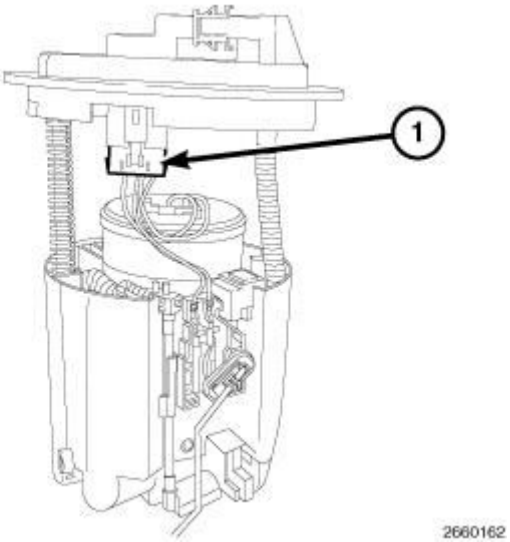

Fig. 83: Fuel Level Sending Unit Electrical Connector
Courtesy of CHRYSLER GROUP, LLC

CAUTION: Ensure the fuel level sending unit wires are routed so they do not get pinched between the coils of the spring when the module is completely compressed.

3. Connect the fuel level sending unit electrical connector.
4. Install the fuel pump module. Refer to **MODULE, FUEL PUMP, INSTALLATION**.

TANK, FUEL

DESCRIPTION

DESCRIPTION

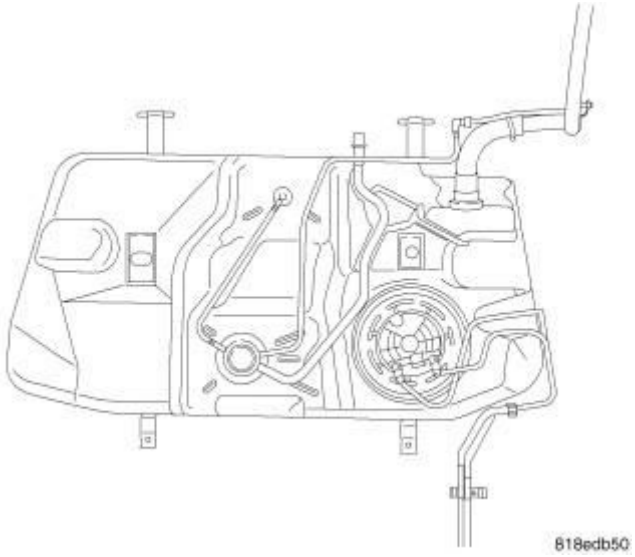

Fig. 84: Fuel Tank
Courtesy of CHRYSLER GROUP, LLC

NOTE: Front Wheel Drive (FWD) fuel tank shown in illustration, All Wheel Drive (AWD) fuel tank similar.

The fuel tank is made from High Density Polyethylene (HDPE) material and is located near the rear center of the vehicle. The primary fuel pump module is located on the top left side of the fuel tank. All Wheel Drive (AWD) vehicles have a saddle style fuel tank that has a reservoir on both sides of the driveshaft and a secondary fuel pump module on the top right side of the fuel tank. The fuel tank contains the following components:

- Primary fuel pump module
- Secondary fuel pump module (AWD)
- Fuel tank vent (check valve)
- Control valve
- Inlet check valve

The primary and secondary (AWD) fuel pump modules are the only serviceable components of the fuel tank. If the fuel tank vent, control valve or inlet check valve requires service, the fuel tank must be replaced as an assembly.

The fuel tank vent, control valve and inlet check valve are components of the evaporative emissions system (Refer to **EVAPORATIVE EMISSIONS** /Description).

OPERATION

OPERATION

All vehicles are designed to pass a full 360 degree rollover test without fuel leakage. To accomplish this, fuel and vapor flow controls are required for all fuel tank connections. Check and control valves are mounted into the top of the fuel tank. These valves are components of the evaporative emissions system.

The evaporative emissions system is designed to control the release of fuel vapors into the atmosphere. The fuel tank check valve and control valve are used to reduce emissions due to the venting of vapor expansion within the fuel tank. When fuel evaporates from the fuel tank, vapors pass through a vent hose to the evaporative charcoal canister where they are temporarily held. When the engine is running, the vapors are drawn into the intake manifold. In addition, fuel vapors produced during vehicle refueling are allowed to pass through the vent hose to the evaporative charcoal canister for temporary storage (prior to being drawn into the intake manifold). The fuel tank check valve and control valve are non-serviceable components of the fuel tank assembly.

An inlet check valve prevents fuel from splashing back on the customer during vehicle refueling. This valve is also a non-serviceable component of the fuel tank assembly.

REMOVAL

REMOVAL

WARNING: **Risk of injury to eyes and skin from contact with fuel. Wear protective clothing and eye protection. Risk of poisoning from inhaling and swallowing fuel. Pour fuel only into appropriately marked and approved containers. Failure to follow these instructions may result in possible serious or fatal injury.**

Fig. 85: Rear Seat In Place
Courtesy of CHRYSLER GROUP, LLC

1. Release fuel system pressure (refer to **FUEL SYSTEM PRESSURE RELEASE PROCEDURE**).
2. Remove the air cleaner lid, disconnect the inlet air temperature sensor and makeup air hose.
3. Disconnect and isolate the negative battery cable.
4. Remove the rear seat cushion.

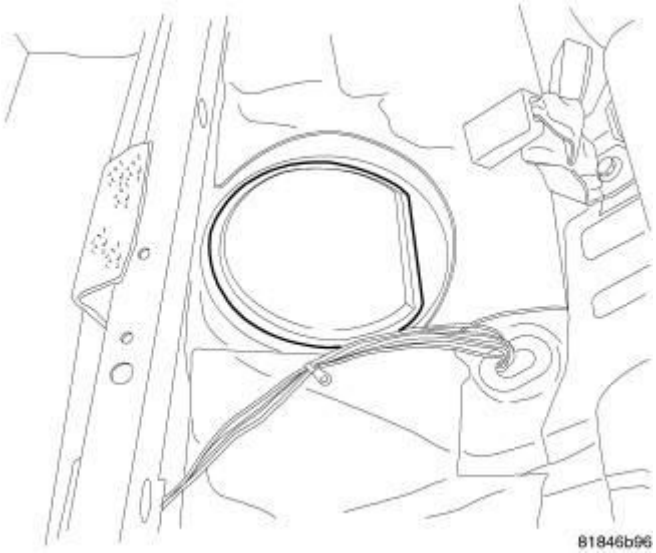

Fig. 86: Fuel Pump Module Cover
Courtesy of CHRYSLER GROUP, LLC

5. Remove plastic cover.

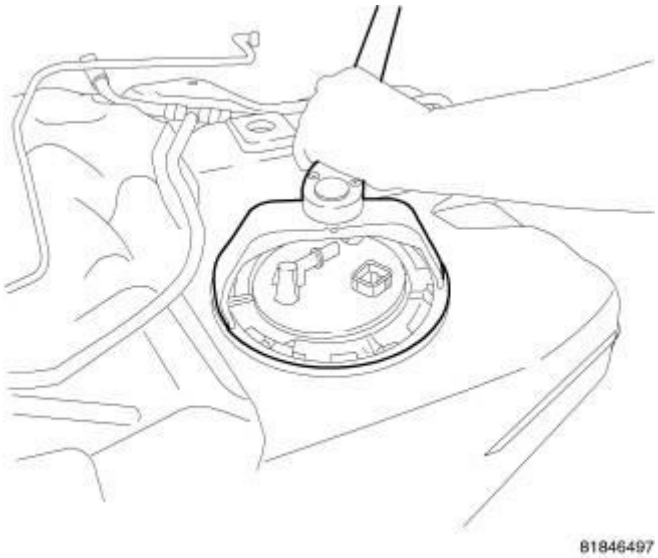

Fig. 87: Lock Ring Tool
Courtesy of CHRYSLER GROUP, LLC

6. Clean top of tank to remove loose dirt and debris.
7. Use Fuel Pump Lock Ring Wrench (special tool #9340, SAE Fuel Pump Lock Ring Wrench) or equivalent to remove left side fuel pump module lock ring.

NOTE: wrap shop towels around hoses to catch any gasoline spillage.

8. Disconnect electrical and fuel lines from module.
9. Drain fuel from tank.
10. Raise and support the vehicle.

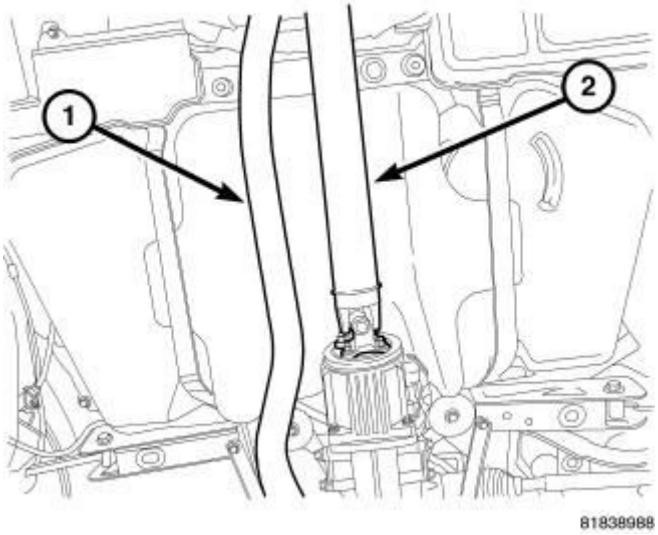

Fig. 88: Driveshaft And Exhaust Pipe
Courtesy of CHRYSLER GROUP, LLC

11. Remove the fuel tank skid plates, if equipped.
12. Remove exhaust system.
13. For All Wheel Drive vehicles, remove drive shaft.

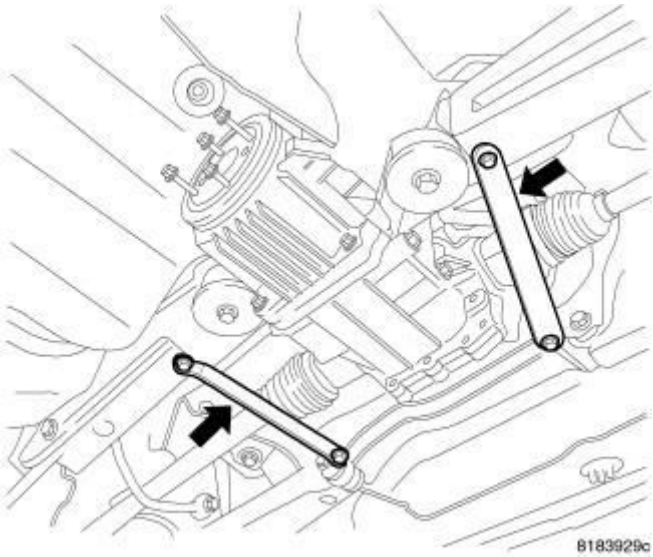

Fig. 89: Stay Bars (4WD)
Courtesy of CHRYSLER GROUP, LLC

14. Remove stay bars.

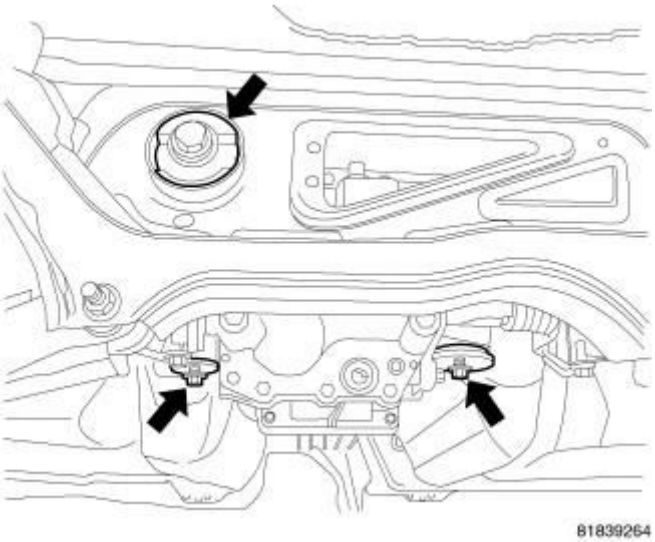

Fig. 90: Rear Differential Mounting
Courtesy of CHRYSLER GROUP, LLC

NOTE: For All Wheel Drive vehicles the rear driveline module must be lowered to remove fuel tank assembly.

15. Tie rear driveline module to suspension crossmember.
16. Support rear driveline module.
17. Remove 3 mounting bolts and lower rear drive line module from suspension crossmember.

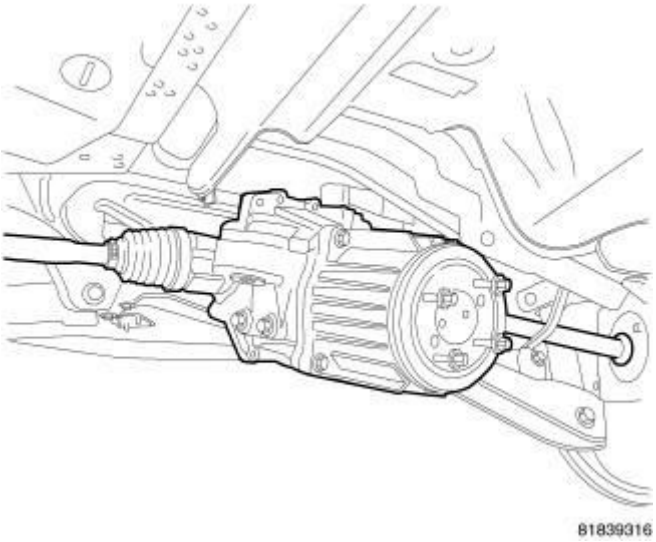

Fig. 91: Hanging Differential
Courtesy of CHRYSLER GROUP, LLC

18. Module lowered.

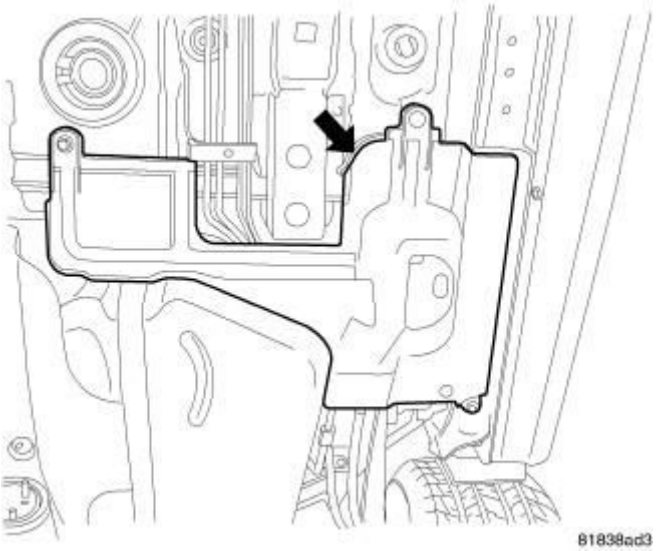

Fig. 92: Left Side Splash Shield
Courtesy of CHRYSLER GROUP, LLC

19. Remove splash shield.

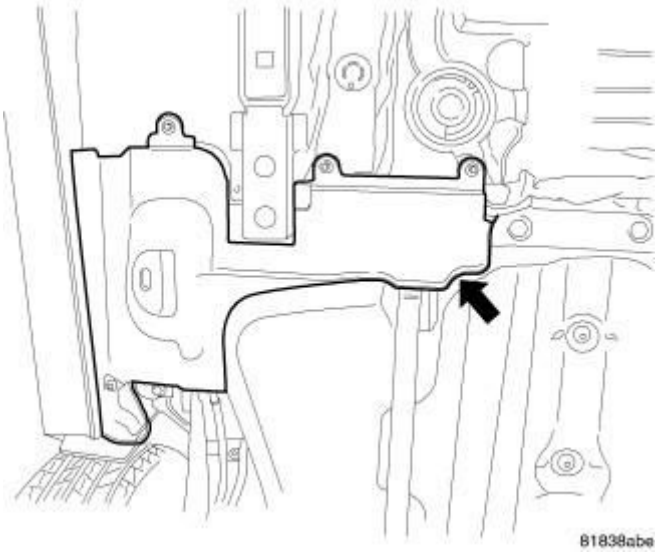

Fig. 93: Right Side Splash Shield
Courtesy of CHRYSLER GROUP, LLC

20. Remove splash shield.

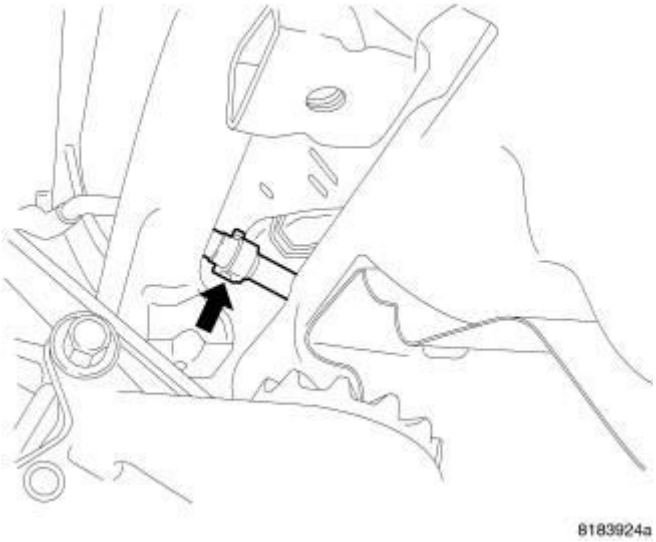

Fig. 94: EVAP Line
Courtesy of CHRYSLER GROUP, LLC

21. Disconnect vapor canister line.

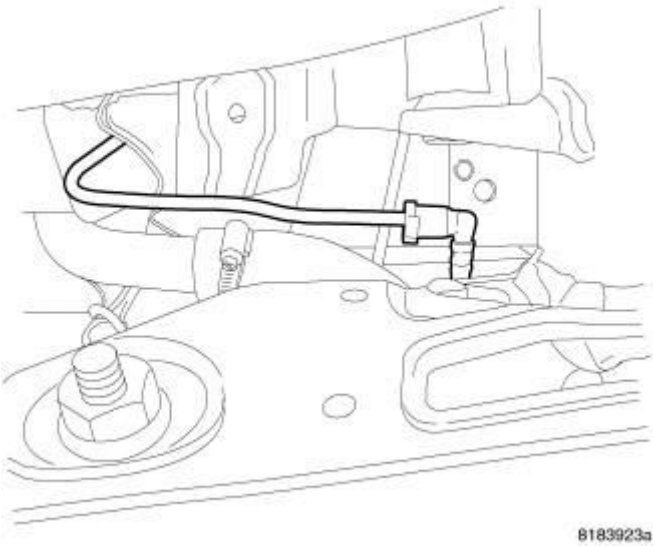

Fig. 95: Filler Tube Vent Line
Courtesy of CHRYSLER GROUP, LLC

22. Disconnect filler tube recirculation vent line and purge line.

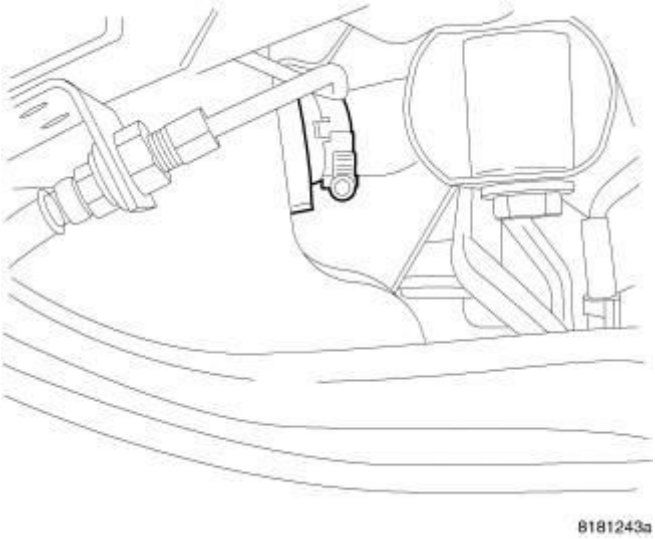

Fig. 96: Filler Tube Tank Connection
Courtesy of CHRYSLER GROUP, LLC

CAUTION: There may be fuel in the fill tube. Remove hose carefully to reduce fuel splash.

23. Disconnect fuel tank from rubber fill hose.

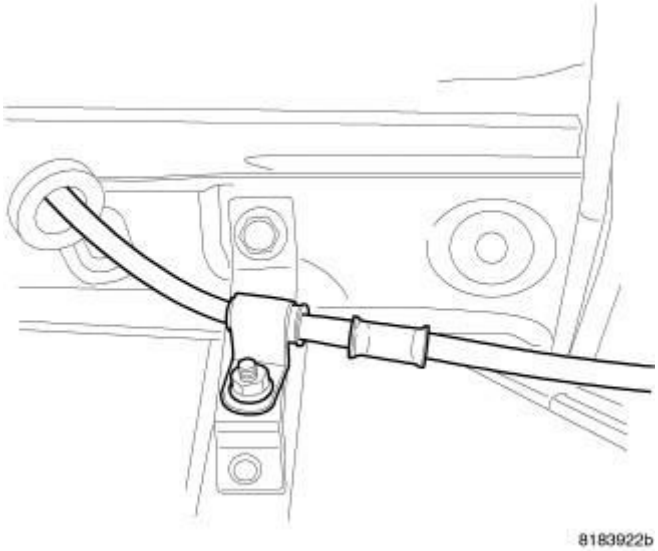

Fig. 97: Park Brake Cable
Courtesy of CHRYSLER GROUP, LLC

24. Remove parking brake cable mounting from fuel tank strap.

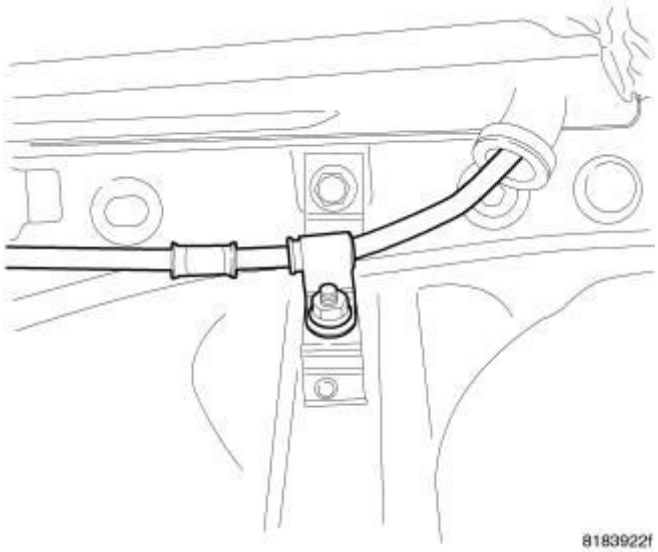

Fig. 98: Park Brake Cable
Courtesy of CHRYSLER GROUP, LLC

25. Remove parking brake cable mounting from fuel tank strap.

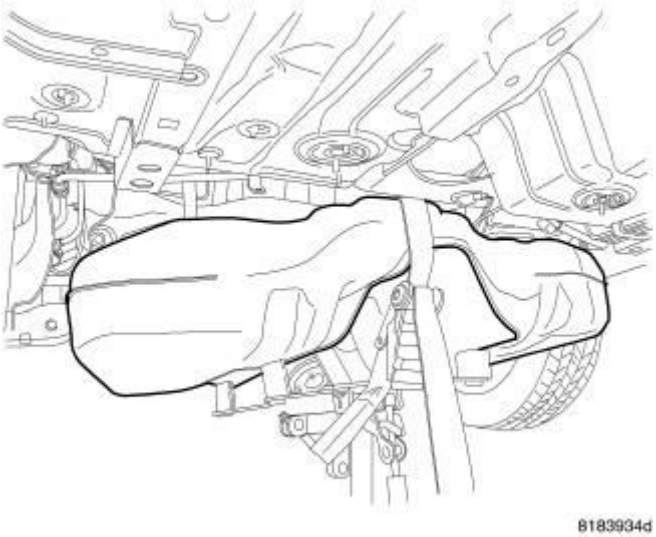

Fig. 99: Removing/Installing Fuel Tank
Courtesy of CHRYSLER GROUP, LLC

26. Support fuel tank.
27. Remove bolts from the fuel tank straps.
28. Remove fuel tank from vehicle.

INSTALLATION

INSTALLATION

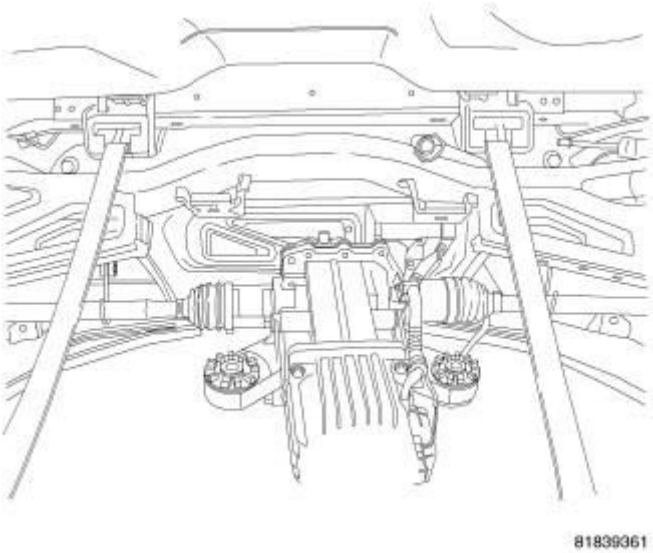

Fig. 100: Fuel Tank Straps
Courtesy of CHRYSLER GROUP, LLC

1. Install fuel tank straps.

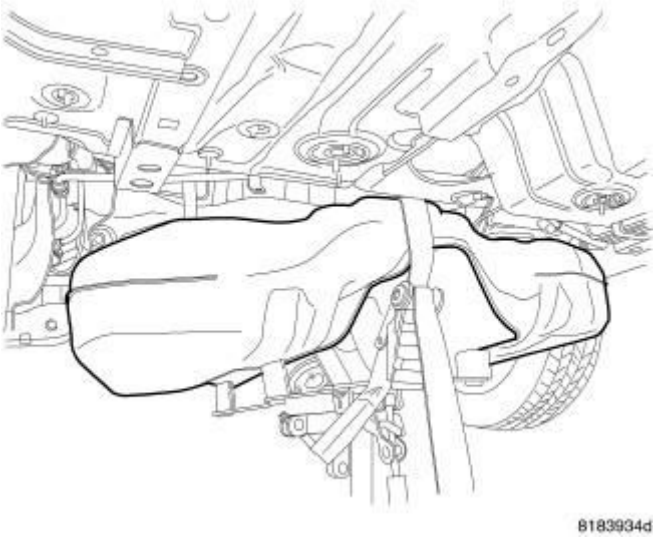

Fig. 101: Removing/Installing Fuel Tank
Courtesy of CHRYSLER GROUP, LLC

2. Raise fuel tank into position.
3. Position fuel tank straps. Tighten fuel tank strap bolts to 47 N.m (34.5 ft. lbs.). Remove transmission jack. Ensure straps are not twisted or bent.

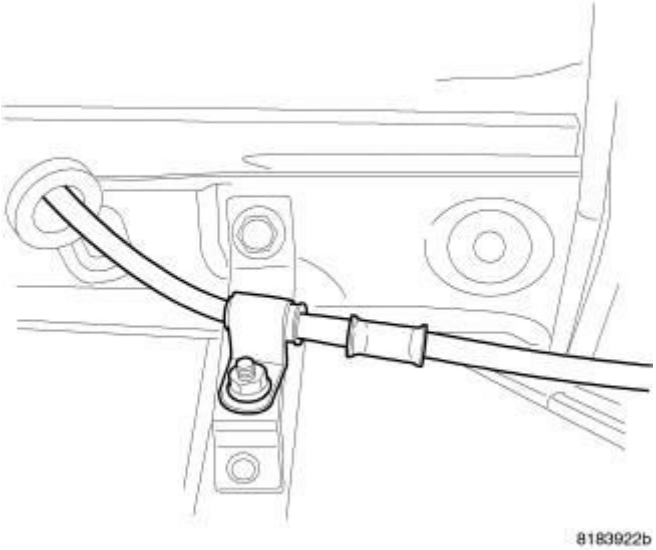

Fig. 102: Park Brake Cable
Courtesy of CHRYSLER GROUP, LLC

4. Install parking brake cable.

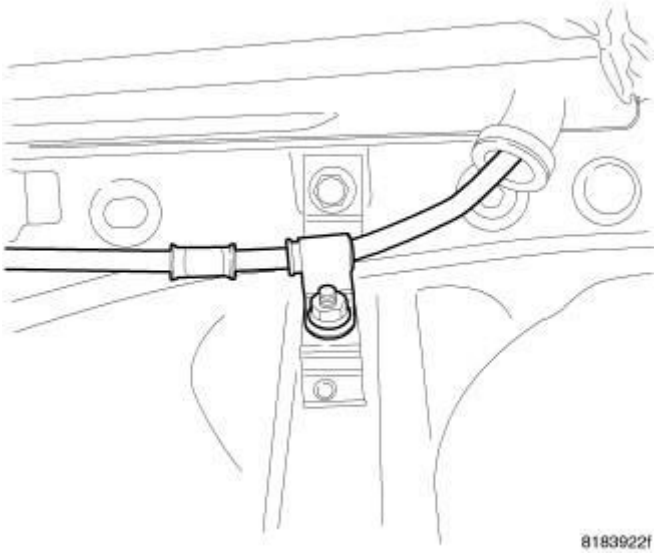

Fig. 103: Park Brake Cable
Courtesy of CHRYSLER GROUP, LLC

5. Install parking brake cable.

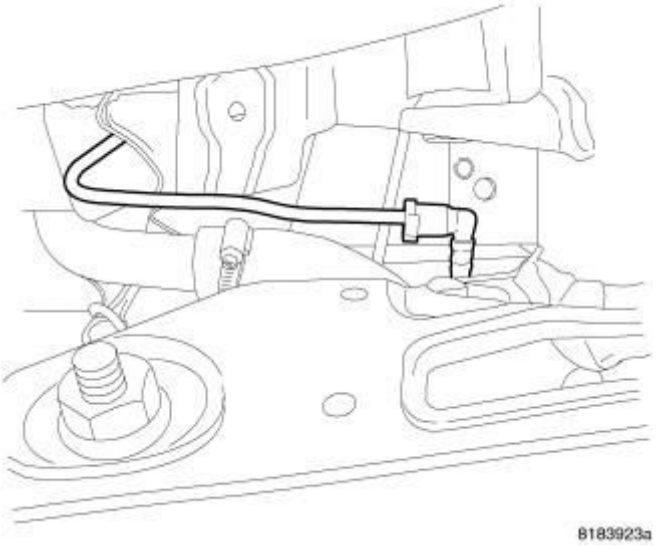

Fig. 104: Filler Tube Vent Line
Courtesy of CHRYSLER GROUP, LLC

6. Connect filler tube recirculation vent line and purge line.

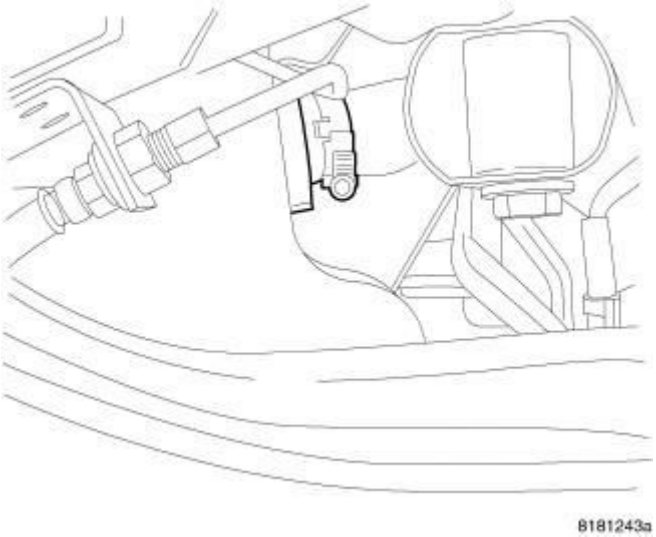

Fig. 105: Filler Tube Tank Connection
Courtesy of CHRYSLER GROUP, LLC

7. Connect fuel fill tube to tank inlet. Tighten hose clamp to 4 N.m (35 in. lbs.).

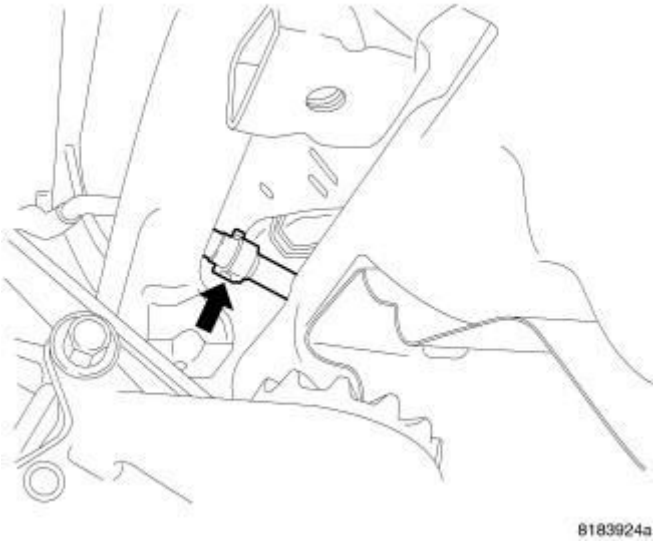

Fig. 106: EVAP Line
Courtesy of CHRYSLER GROUP, LLC

8. Connect vapor canister line.

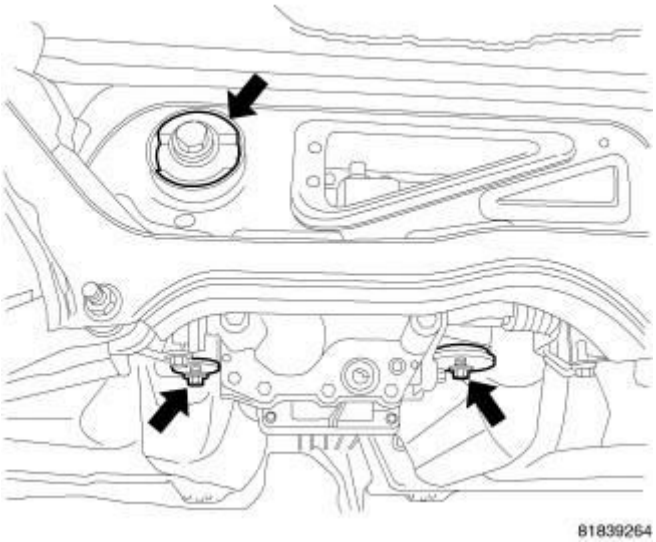

Fig. 107: Rear Differential Mounting
Courtesy of CHRYSLER GROUP, LLC

9. Install rear driveline module. Refer to **INSTALLATION** .

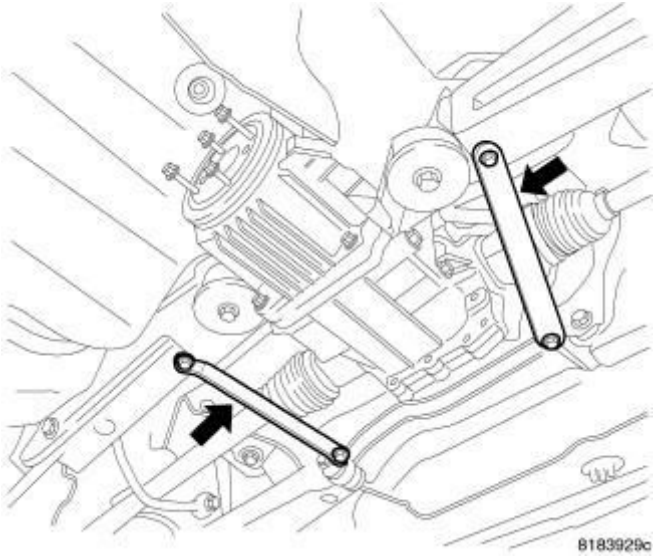

Fig. 108: Stay Bars (4WD)
Courtesy of CHRYSLER GROUP, LLC

10. Install stay bars. Refer to **INSTALLATION** .

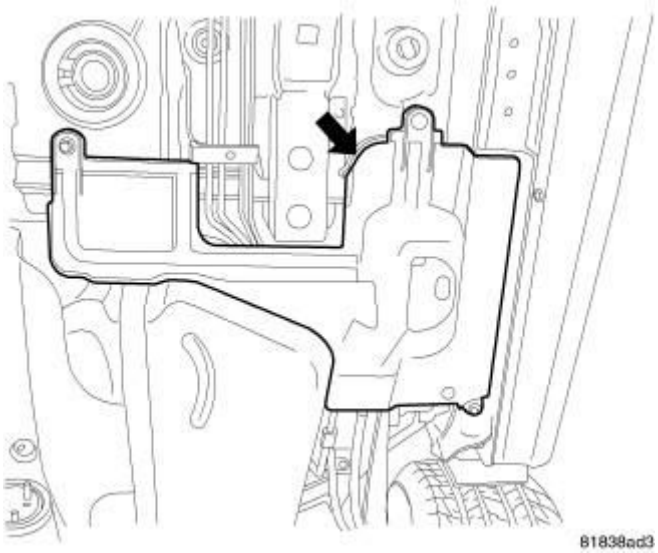

Fig. 109: Left Side Splash Shield
Courtesy of CHRYSLER GROUP, LLC

11. Install splash shield.

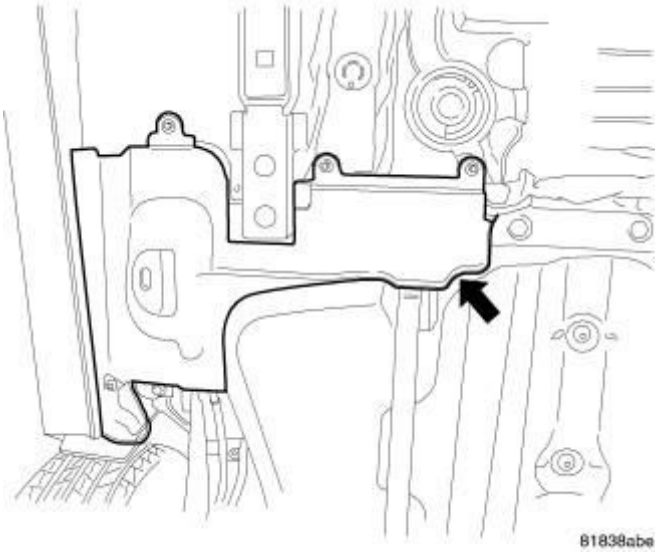

Fig. 110: Right Side Splash Shield
Courtesy of CHRYSLER GROUP, LLC

12. Install splash shield.

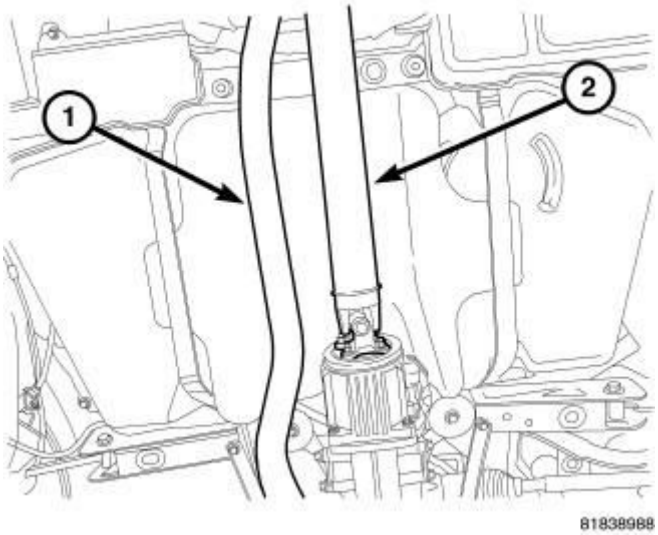

Fig. 111: Driveshaft And Exhaust Pipe
Courtesy of CHRYSLER GROUP, LLC

13. Install exhaust system (1).
14. Install drive shaft (2). Refer to **INSTALLATION** .
15. Install the fuel tank skid plates, if equipped.

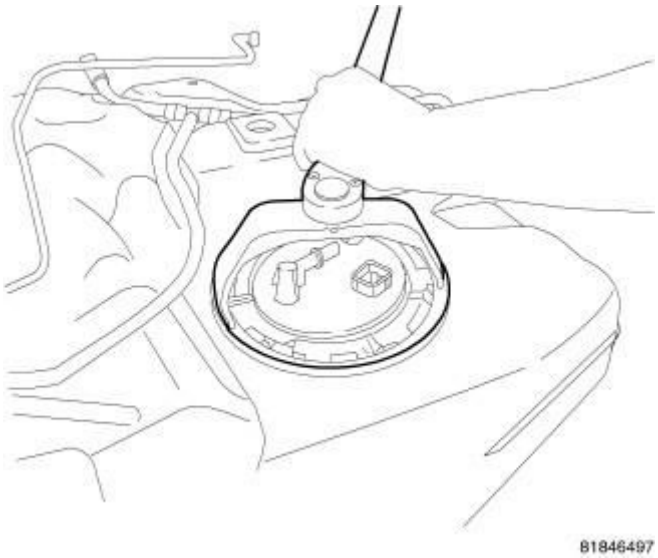

Fig. 112: Lock Ring Tool
Courtesy of CHRYSLER GROUP, LLC

16. While holding the pump module in position, install lock ring and use Fuel Pump Lock Ring Wrench (special tool #9340, SAE Fuel Pump Lock Ring Wrench) or equivalent to tighten lock ring.
17. Connect electrical connector and lock the connector.
18. Connect the fuel line (refer to **FITTING, QUICK CONNECT**).

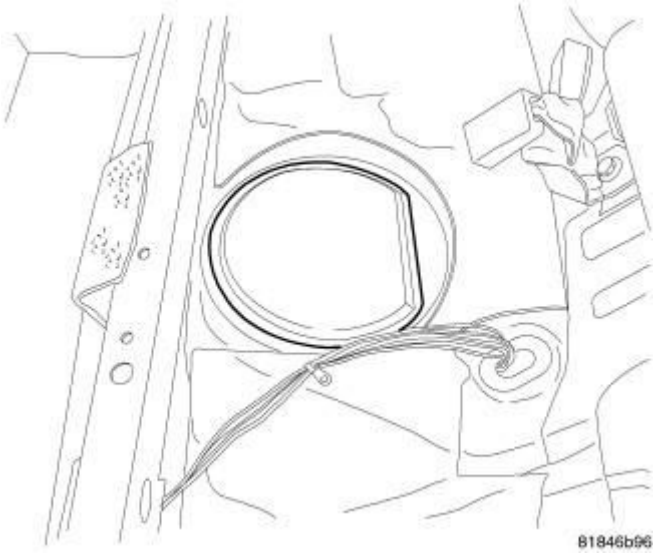

Fig. 113: Fuel Pump Module Cover
Courtesy of CHRYSLER GROUP, LLC

19. Install plastic cover.

Fig. 114: Rear Seat In Place
Courtesy of CHRYSLER GROUP, LLC

20. Install rear seat cushion.
21. Reconnect the negative battery cable.
22. Install the air cleaner lid, connect the inlet air temperature sensor and makeup air hose.
23. Fill fuel tank with clean fuel. Use a scan tool to pressurize the system and check for leaks.

TUBE(S), FUEL

DESCRIPTION

DESCRIPTION

Also refer to **FITTING, QUICK CONNECT**.

> **WARNING: The fuel system is under a constant pressure (even with the engine off). Before servicing any fuel system hoses, fittings or lines, the fuel system pressure must be released. Refer to FUEL SYSTEM PRESSURE RELEASE PROCEDURE. This may result in personal injury or death.**

The lines/tubes/hoses used on fuel injected vehicles are of a special construction. This is due to the higher fuel pressures and the possibility of contaminated fuel in this system. If it is necessary to replace these lines/tubes/hoses, use new original equipment lines/tubes/hoses.

If equipped: The hose clamps used to secure rubber hoses on vehicles are of a special rolled edge construction. This construction is used to prevent the edge of the clamp from cutting into the hose. Only these rolled edge type clamps may be used in this system. All other types of clamps may cut into the hoses and cause leaks.

Use new original equipment type hose clamps.

STANDARD PROCEDURE

STANDARD PROCEDURE - HOSES AND CLAMP

Inspect all hose connections (clamps and quick connect fittings) for completeness and leaks. Replace cracked, scuffed, or swelled hoses. Replace hoses that rub against other vehicle components or show sign of wear.

Fuel injected vehicles use specially constructed hoses. When replacing hoses, only use hoses marked EFM/EFI.

When installing hoses, ensure that they are routed away from contact with other vehicle components that could rub against them and cause failure. Avoid contact with clamps or other components that cause abrasions or scuffing. Ensure that

rubber hoses are properly routed and avoid heat sources.

The hose clamps have rolled edges to prevent the clamp from cutting into the hose. Only use clamps that are original equipment or equivalent. Other types of clamps may cut into the hoses and cause high pressure fuel leaks. Tighten hose clamps to 1 N.m (9 in. lbs.).

Inspect all hose connections such as clamps, couplings and fittings to make sure they are secure and leaks are not present. The component should be replaced immediately if there is any evidence of degradation that could result in failure.

Never attempt to repair a plastic fuel line/tube. Replace as necessary.

Avoid contact of any fuel tubes/hoses with other vehicle components that could cause abrasions or scuffing. Be sure that the plastic fuel lines/tubes are properly routed to prevent pinching and to avoid heat sources.

TUBE, FUEL TANK FILLER

REMOVAL

REMOVAL

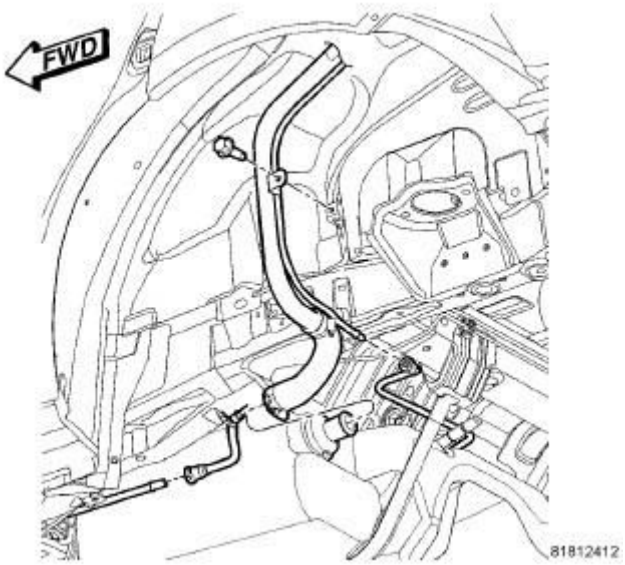

Fig. 115: Exploded View Of Fuel Filler Tube
Courtesy of CHRYSLER GROUP, LLC

NOTE: Drain fuel tank if it is more than half full.

1. Remove the negative battery cable.
2. Loosen fuel filler tube cap.
3. Raise vehicle and support.

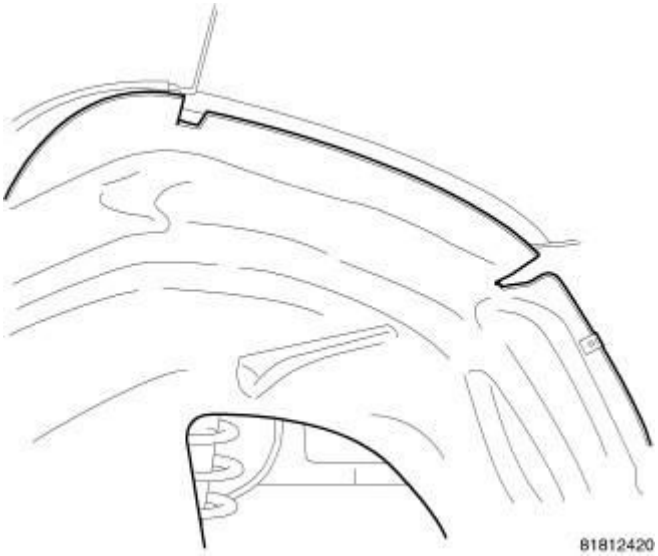

Fig. 116: Splash Shield
Courtesy of CHRYSLER GROUP, LLC

4. Remove the left rear wheel.
5. Remove the inner splash shield.

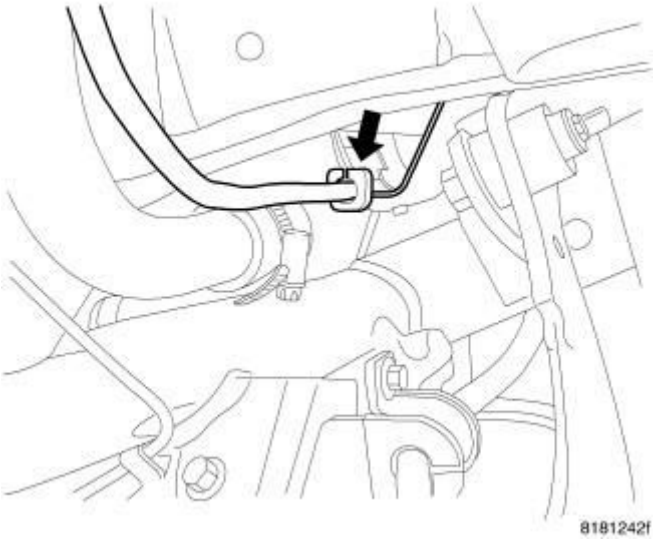

Fig. 117: Vent Line Connection
Courtesy of CHRYSLER GROUP, LLC

6. Disconnect filler tube recirculation vent line.

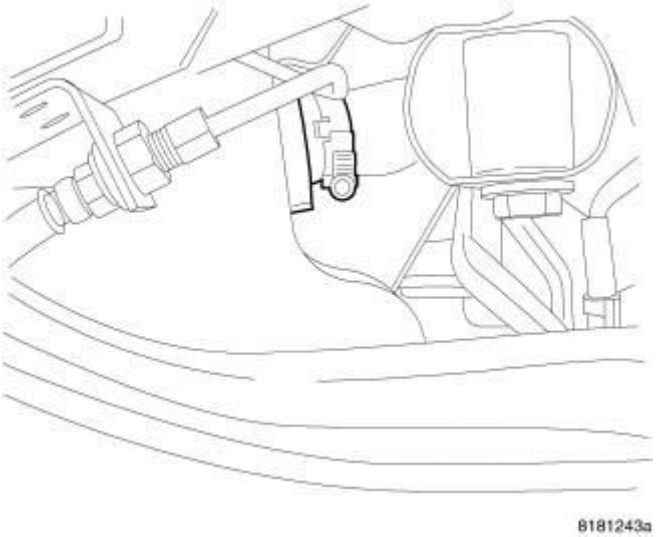

Fig. 118: Filler Tube Tank Connection
Courtesy of CHRYSLER GROUP, LLC

7. Disconnect fuel filler tube hose from fuel tank neck.

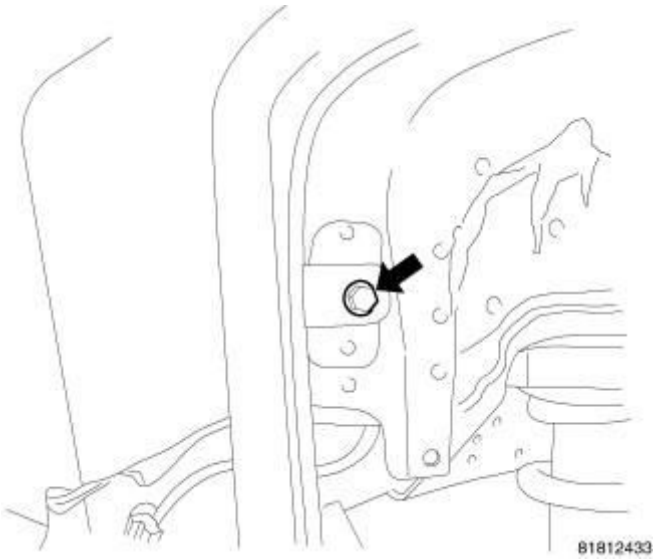

Fig. 119: Filler Tube Mounting Bolt
Courtesy of CHRYSLER GROUP, LLC

8. Remove filler tube mounting screw.
9. Remove fuel filler tube assembly.

INSTALLATION

INSTALLATION

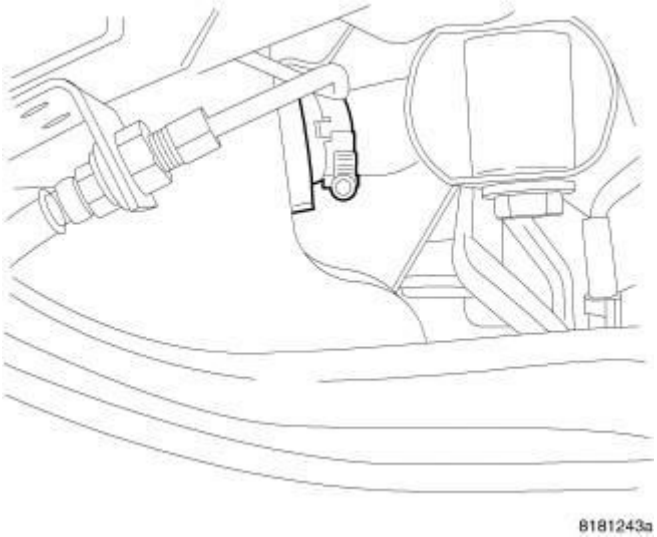

Fig. 120: Filler Tube Tank Connection
Courtesy of CHRYSLER GROUP, LLC

1. Install fuel filler tube. Connect fuel filler tube hose to fuel tank neck and tighten clamp to 4 N.m (35 in. lbs.).

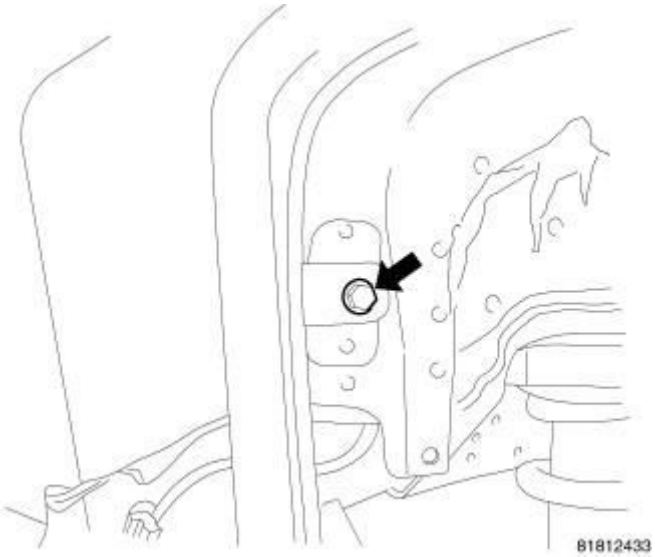

Fig. 121: Filler Tube Mounting Bolt
Courtesy of CHRYSLER GROUP, LLC

2. Install fuel filler tube mounting screw and tighten to 9 N.m (79.5 in. lbs.).

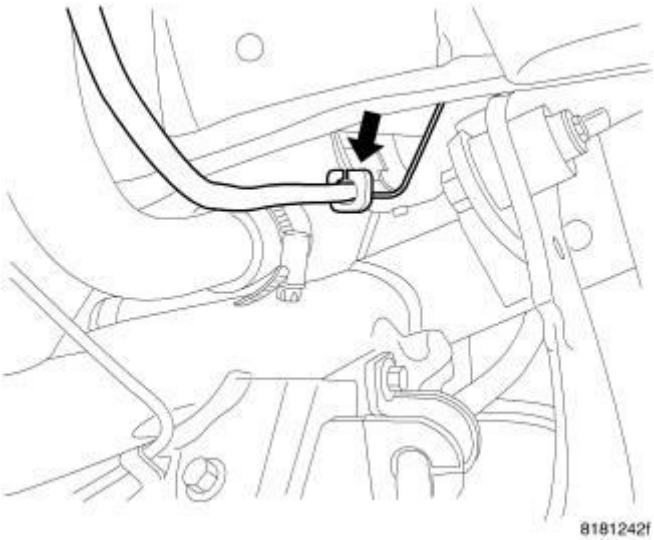

Fig. 122: Vent Line Connection
Courtesy of CHRYSLER GROUP, LLC

3. Connect filler tube vent line.

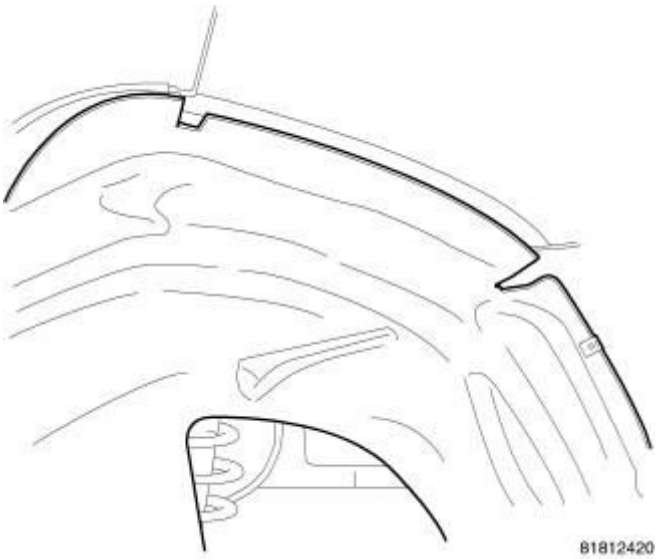

Fig. 123: Splash Shield
Courtesy of CHRYSLER GROUP, LLC

4. Install the inner splash shield.
5. Install rear tire.
6. Lower vehicle.
7. Install fuel filler tube cap.
8. Install the negative battery cable.
9. Install the air cleaner lid and makeup air hose.

TUBE, FUEL TRANSFER

DESCRIPTION

DESCRIPTION

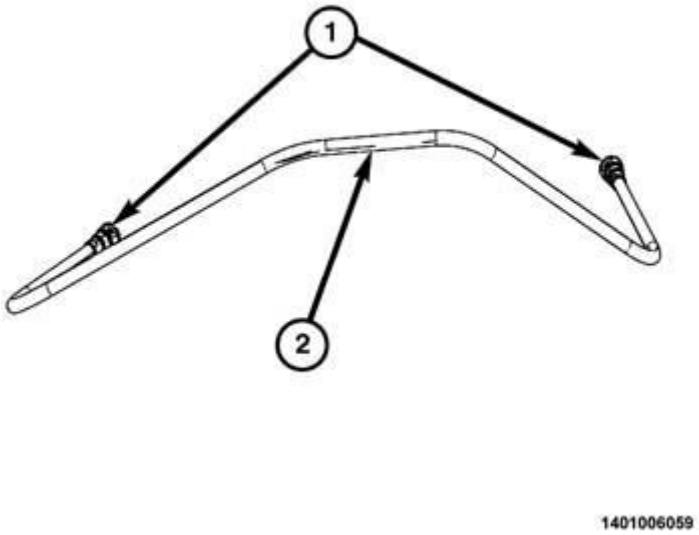

Fig. 124: Quick Connect & Transfer Tube
Courtesy of CHRYSLER GROUP, LLC

NOTE: Do not handle the fuel transfer tube in a way that would cause distortions to the tube or damage to the fittings.

All Wheel Drive (AWD) vehicles have a saddle style fuel tank that has a reservoir on both sides of the driveshaft. The primary fuel pump module is located on the top left side of the fuel tank and the secondary fuel pump module is located on the top right side of the fuel tank. The primary pump is fed fuel by the secondary pump through a fuel transfer tube (2). The tube is made of a semi-flexible plastic material with quick connects (1) at both ends.

REMOVAL

REMOVAL

WARNING: Risk of injury to eyes and skin from contact with fuel. Wear protective clothing and eye protection. Risk of poisoning from inhaling and swallowing fuel. Pour fuel only into appropriately marked and approved containers. Failure to follow these

instructions may result in possible serious or fatal injury.

WARNING: The fuel system is under constant high pressure even with engine OFF. Until the fuel pressure has been properly released from the system, do not attempt to open the fuel system. Do not smoke or use open flames/sparks when servicing the fuel system. Make sure the area in which the vehicle is being serviced is in a well ventilated area. Failure to comply may result in serious or fatal injury.

NOTE: It is necessary to remove the primary and secondary pumps to remove and install the pump transfer tube.

1. Remove the Primary Fuel Pump Module

   Refer to **MODULE, FUEL PUMP, REMOVAL**.

2. Remove the Secondary Fuel Pump Module

   Refer to **MODULE, FUEL PUMP, REMOVAL**.

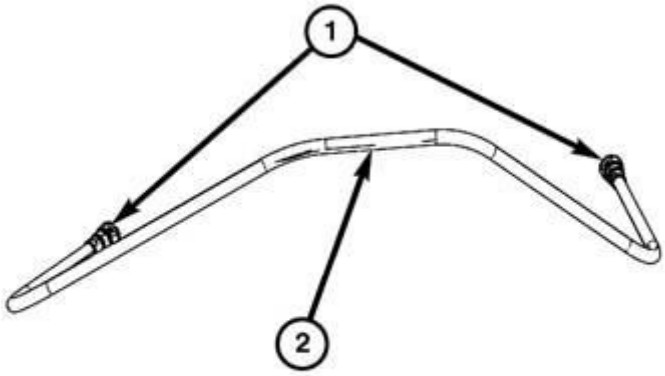

1401006059

Fig. 125: Quick Connect & Transfer Tube
Courtesy of CHRYSLER GROUP, LLC

3. Remove the fuel pump transfer tube (2) from the fuel tank.

INSTALLATION

INSTALLATION

WARNING: Risk of injury to eyes and skin from contact with fuel. Wear protective clothing and eye protection. Risk of poisoning from inhaling and swallowing fuel. Pour fuel only into appropriately marked and approved containers. Failure to follow these instructions may result in possible serious or fatal injury.

WARNING: The fuel system is under constant high pressure even with engine OFF. Until the fuel pressure has been properly released from the system, do not attempt to open the fuel system. Do not smoke or use open flames/sparks when servicing the fuel system. Make sure the area in which the vehicle is being serviced is in a well ventilated area. Failure to comply may result in serious or fatal injury.

NOTE: It is necessary to remove the primary and secondary pumps to remove and install the pump transfer tube.

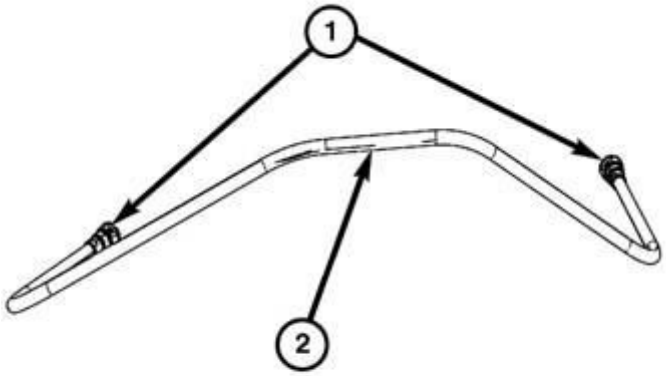

1401006059

Fig. 126: Quick Connect & Transfer Tube
Courtesy of CHRYSLER GROUP, LLC

1. Position the fuel pump transfer tube (2) into the fuel tank.

   NOTE: Make sure the tube is not twisted while aligning the fittings (1) to the tank openings.

2. Install the Primary Fuel Pump Module

   Refer to **MODULE, FUEL PUMP, INSTALLATION**.

3. Install the Secondary Fuel Pump Module

   Refer to **MODULE, FUEL PUMP, INSTALLATION**.

FUEL INJECTION, GAS

OPERATION

INJECTION SYSTEM

All engines used in this service information have a sequential Multi-Port Electronic Fuel Injection system. The MPI system is computer regulated and provides precise air/fuel ratios for all driving conditions. The Powertrain Control Module (PCM) operates the fuel injection system.

The PCM regulates:

- Ignition timing
- Air/fuel ratio
- Emission control devices
- Cooling fan
- Charging system
- Idle speed
- Vehicle speed control

Various sensors provide the inputs necessary for the PCM to correctly operate these systems. In addition to the sensors, various switches also provide inputs to the PCM.

The PCM can adapt its programming to meet changing operating conditions.

Fuel is injected into the intake port above the intake valve in precise metered amounts through electrically operated injectors. The PCM fires the injectors in a specific sequence. Under most operating conditions, the PCM maintains an air fuel ratio of 14.7 parts air to 1 part fuel by constantly adjusting injector pulse width. Injector pulse width is the length of time the injector is open.

The PCM adjusts injector pulse width by opening and closing the ground path to the injector. Engine RPM (speed) and manifold absolute pressure (air density) are the **primary** inputs that determine injector pulse width.

MODES OF OPERATION

As input signals to the PCM change, the PCM adjusts its response to output devices. For example, the PCM must calculate a different injector pulse width and ignition timing for idle than it does for Wide Open Throttle (WOT). There are several different modes of operation that determine how the PCM responds to the various input signals.

There are two different areas of operation, OPEN LOOP and CLOSED LOOP.

During OPEN LOOP modes the PCM receives input signals and responds according to preset PCM programming. Inputs from the upstream and downstream heated oxygen sensors are not monitored during OPEN LOOP modes, except for heated oxygen sensor diagnostics (they are checked for shorted conditions at all times).

During CLOSED LOOP modes the PCM monitors the inputs from the upstream and downstream heated oxygen sensors. The upstream heated oxygen sensor input tells the PCM if the calculated injector pulse width resulted in the ideal air-fuel ratio of 14.7 to one. By monitoring the exhaust oxygen content through the upstream heated oxygen sensor, the PCM can fine tune injector pulse width. Fine tuning injector pulse width allows the PCM to achieve optimum fuel economy combined with low emissions.

For the PCM to enter CLOSED LOOP operation, the following must occur:

1. Engine coolant temperature must be over 1.6°C (35°F).
    - If the coolant is over 1.6°C (35°F) the PCM will wait 38 seconds.

- If the coolant is over 10°C (50°F) the PCM will wait 15 seconds.
- If the coolant is over 75°C (167°F) the PCM will wait 3 seconds.

2. For other temperatures the PCM will interpolate the correct waiting time.
3. O2 sensor must read either greater than 0.745 volts or less than 0.29 volt.
4. The multi-port fuel injection system has the following modes of operation:
   - Ignition switch ON (Zero RPM)
   - Engine start-up
   - Engine warm-up
   - Cruise
   - Idle
   - Acceleration
   - Deceleration
   - Wide Open Throttle
   - Ignition switch OFF
5. The engine start-up (crank), engine warm-up, deceleration with fuel shutoff and wide open throttle modes are OPEN LOOP modes. Under most operating conditions, the acceleration, deceleration (with A/C on), idle and cruise modes, **with the engine at operating temperature** are CLOSED LOOP modes.

IGNITION SWITCH ON (ZERO RPM) MODE

When the ignition switch activates the fuel injection system, the following actions occur:

- The PCM monitors the engine coolant temperature sensor and throttle position sensor input. The PCM determines basic fuel injector pulse width from this input.
- The PCM determines atmospheric air pressure from the MAP sensor input to modify injector pulse width.

When the key is in the ON position and the engine is not running (zero RPM), the Auto Shutdown (ASD) and fuel pump relays de-energize after approximately 1 second. Therefore, battery voltage is not supplied to the fuel pump, ignition coil, fuel injectors and heated oxygen sensors.

ENGINE START-UP MODE

This is an OPEN LOOP mode. If the vehicle is in park or neutral (automatic transaxles) or the clutch pedal is depressed (manual transaxles) the ignition switch energizes the starter relay when the engine is not running. The following actions occur when the starter motor is engaged:

- If the PCM receives the camshaft position sensor and crankshaft position sensor signals, it energizes the fuel pump. If the PCM does not receive both signals within approximately one second, it will not energize the fuel pump. The PCM supplies voltage to the fuel pump, fuel injectors, ignition coil, (EGR solenoid and PCV heater if equipped) and heated oxygen sensors.
- The PCM energizes the injectors (on the 69 degree falling edge) for a calculated pulse width until it determines crankshaft position from the camshaft position sensor and crankshaft position sensor signals. The PCM determines crankshaft position within 1 engine revolution.
- After determining crankshaft position, the PCM begins energizing the injectors in sequence. It adjusts injector pulse width and controls injector synchronization by turning the individual ground paths to the injectors On and Off.
- When the engine idles within ±64 RPM of its target RPM, the PCM compares current MAP sensor value with the atmospheric pressure value received during the Ignition Switch On (zero RPM) mode.

Once the fuel pump relay has been energized, the PCM determines injector pulse width based on the following:

- MAP
- Engine RPM
- Battery voltage
- Engine coolant temperature
- Inlet/Intake air temperature (IAT)
- Throttle position
- The number of engine revolutions since cranking was initiated

During Start-up the PCM maintains ignition timing at 9 degrees BTDC.

ENGINE WARM-UP MODE

This is an OPEN LOOP mode. The following inputs are received by the PCM:

- Manifold Absolute Pressure (MAP)
- Crankshaft position (engine speed)
- Engine coolant temperature
- Inlet/Intake air temperature (IAT)
- Camshaft position
- Knock sensor
- Throttle position
- A/C switch status
- Battery voltage
- Vehicle speed
- Speed control
- O2 sensors

The PCM adjusts injector pulse width and controls injector synchronization by turning the individual ground paths to the injectors On and Off.

The PCM adjusts ignition timing and engine idle speed. Engine idle speed is adjusted through the idle air control motor.

CRUISE OR IDLE MODE

When the engine is at operating temperature this is a CLOSED LOOP mode. During cruising or idle the following inputs are received by the PCM:

- Manifold absolute pressure
- Crankshaft position (engine speed)
- Inlet/Intake air temperature
- Engine coolant temperature
- Camshaft position
- Knock sensor
- Throttle position
- Exhaust gas oxygen content (O2 sensors)
- A/C switch status
- Battery voltage
- Vehicle speed

The PCM adjusts injector pulse width and controls injector synchronization by turning the individual ground paths to the injectors On and Off.

The PCM adjusts engine idle speed and ignition timing. The PCM adjusts the air/fuel ratio according to the oxygen content in the exhaust gas (measured by the upstream and downstream heated oxygen sensor).

The PCM monitors for engine misfire. During active misfire and depending on the severity, the PCM either continuously illuminates or flashes the malfunction indicator lamp (Check Engine light on instrument panel). Also, the PCM stores an engine misfire DTC in memory, if 2nd trip with fault.

The PCM performs several diagnostic routines. They include:

- Oxygen sensor monitor
- Downstream heated oxygen sensor diagnostics during open loop operation (except for shorted)
- Fuel system monitor
- EGR monitor (if equipped)
- Purge system monitor
- Catalyst efficiency monitor
- All inputs monitored for proper voltage range, rationality.
- All monitored components (refer to **EVAPORATIVE EMISSIONS** for On-Board Diagnostics).

The PCM compares the upstream and downstream heated oxygen sensor inputs to measure catalytic converter efficiency. If the catalyst efficiency drops below the minimum acceptable percentage, the PCM stores a diagnostic trouble code in memory, after 2 trips.

During certain idle conditions, the PCM may enter a variable idle speed strategy. During variable idle speed strategy the PCM adjusts engine speed based on the following inputs.

- A/C status
- Battery voltage
- Battery temperature or Calculated Battery Temperature
- Engine coolant temperature

- Engine run time
- Inlet/Intake air temperature
- Vehicle mileage

ACCELERATION MODE

This is a CLOSED LOOP mode. The PCM recognizes an abrupt increase in Throttle Position sensor output voltage or MAP sensor output voltage as a demand for increased engine output and vehicle acceleration. The PCM increases injector pulse width in response to increased fuel demand.

- Wide Open Throttle-open loop

DECELERATION MODE

This is a CLOSED LOOP mode. During deceleration the following inputs are received by the PCM:

- A/C status
- Battery voltage
- Inlet/Intake air temperature
- Engine coolant temperature
- Crankshaft position (engine speed)
- Exhaust gas oxygen content (upstream heated oxygen sensor)
- Knock sensor
- Manifold absolute pressure
- Throttle position sensor

The PCM may receive a closed throttle input from the APPS when it senses an abrupt decrease in manifold pressure. This indicates a hard deceleration (Open Loop). In response, the PCM may momentarily turn off the injectors. This helps improve fuel economy, emissions and engine braking.

WIDE-OPEN-THROTTLE MODE

This is an OPEN LOOP mode. During wide-open-throttle operation, the following inputs are used by the PCM:

- Inlet/Intake air temperature

- Engine coolant temperature
- Engine speed
- Knock sensor
- Manifold absolute pressure
- Throttle position

When the PCM senses a wide-open-throttle condition through the APPS it de-energizes the A/C compressor clutch relay. This disables the air conditioning system and disables EGR (if equipped).

The PCM adjusts injector pulse width to supply a predetermined amount of additional fuel, based on MAP and RPM.

IGNITION SWITCH OFF MODE

When the operator turns the ignition switch to the OFF position, the following occurs:

- All outputs are turned off, unless 02 Heater Monitor test is being run. Refer to **EVAPORATIVE EMISSIONS** for On-Board Diagnostics.
- No inputs are monitored except for the heated oxygen sensors. The PCM monitors the heating elements in the oxygen sensors and then shuts down.

FUEL ECONOMY AND MAINTENANCE

A vehicle that is not properly tuned and maintained cannot be expected to perform at its maximum efficiency and can have an adverse effect on fuel economy. The following recommendations will ensure that the vehicle is performing at its maximum efficiency:

- **Use the recommended motor oil grade.** Using the manufacturer's recommended grade of Mopar® motor oil can improve fuel mileage by 1-2%. Mopar® motor oil labeled "Energy Conserving" contains friction-reducing additives.
- **Check and replace air filters.** Replacing a clogged air filter with a new Mopar® air filter can improve fuel mileage by as much as 10%.
- **Keep the engine tuned.** Repairing a vehicle that is noticeably out of tune can improve fuel mileage by an average of 4%. Maintaining a vehicle and repairing problems, such as a faulty oxygen sensor, can improve mileage by

as much as 40%.

- **Keep tires properly inflated.** Underinflated tires can lower fuel mileage by 0.4% for every 1 psi drop in pressure of all four tires.

FUEL CORRECTION OR ADAPTIVE MEMORIES

DESCRIPTION

In Open Loop, the PCM changes pulse width without feedback from the O2 Sensors. Once the engine warms up to approximately -1.1° to 1.6°C (30° to 35° F), the PCM goes into closed loop **Short Term Correction** and utilizes feedback from the O2 Sensors. Closed loop **Long Term Adaptive Memory** is maintained above 77° to 88°C (170° to 190°F) unless the PCM senses wide open throttle. At that time the PCM returns to Open Loop operation.

OPERATION

SHORT TERM

The first fuel correction program that begins functioning is the short term fuel correction. This system corrects fuel delivery in direct proportion to the readings from the Upstream O2 Sensor.

The PCM monitors the air/fuel ratio by using the input voltage from the O2 Sensor. When the voltage reaches its preset high or low limit, the PCM begins to add or remove fuel until the sensor reaches its switch point. The short term corrections then begin.

The PCM makes a series of quick changes in the injector pulse-width until the O2 Sensor reaches its opposite preset limit or switch point. The process then repeats itself in the opposite direction.

Short term fuel correction will keep increasing or decreasing injector pulse-width based upon the upstream O2 Sensor input. The maximum range of authority for short term memory is 25% (+/-) of base pulse-width. Short term is violated and is lost when ignition is turned OFF.

LONG TERM

The second fuel correction program is the long term adaptive memory. In order to maintain correct emission throughout all operating ranges of the engine, a cell structure based on engine RPM and load (MAP) is used.

The number of cells varies upon the driving conditions. Two cells are used only during idle, based upon TPS and Park/Neutral switch inputs. There may be two other cells used for deceleration, based on TPS, engine RPM, and vehicle speed. The other twelve cells represent a manifold pressure and an RPM range. Six of the cells are high RPM and the other six are low RPM. Each of these cells has a specific MAP voltage range.

As the engine enters one of these cells the PCM looks at the amount of short term correction being used. Because the goal is to keep short term at 0 (O2 Sensor switching at 0.5 volt), long term will update in the same direction as short term correction is moving to bring the short term back to 0. Once short term is back at 0, this long term correction factor is stored in memory.

The values stored in long term adaptive memory are used for all operating conditions, including open loop and cold starting. However, the updating of the long term memory occurs after the engine has exceeded approximately 77° to 88°C (170° to 190°F), with fuel control in closed loop and two minutes of engine run time. This is done to prevent any transitional temperature or start-up compensations from corrupting long term fuel correction.

Long term adaptive memory can change the pulse-width by as much as 25%, which means it can correct for all of short term. It is possible to have a problem that would drive long term to 25% and short term to another 25% for a total change of 50% away from base pulse-width calculation.

TYPICAL ADAPTIVE MEMORY FUEL CELLS

	Open Throttle	**Open Throttle**	**Open Throttle**	**Open Throttle**	**Open Throttle**	**Open Throttle**	**Idle**	**Decel**
Vacuum	20	17	13	9	5	0		
Above 1, 984 RPM	1	3	5	7	9	11	13 Drive	15
Below 1, 984 RPM	0	2	4	6	8	10	12 Neutral	14
MAP volt =	0	1.4	2.0	2.6	3.3	3.9		

FUEL CORRECTION DIAGNOSTICS

There are two fuel correction diagnostic routines:

- Fuel System Rich
- Fuel System Lean

A DTC is set and the MIL is illuminated if the PCM detects either of these conditions. This is determined based on total fuel correction, short term times long term.

SYSTEM DIAGNOSIS

OPERATION

The PCM can test many of its own input and output circuits. If the PCM senses a fault in a major system, the PCM stores a Diagnostic Trouble Code (DTC) in memory.

For DTC information, refer to **DTC INDEX** .

SPECIFICATIONS

TORQUE

DESCRIPTION	N.m	Ft. Lbs.	In. Lbs.
Accelerator Pedal Nut	29	21	-
Battery Negative Cable Nut	5	-	45
Clean Air Hose Clamps 2.0, 2.4L Engines	4	-	35
Crankshaft Position Sensor Bolt	9	-	79.5
Fuel Rail Bolts 2.0, 2.4L Engine	27	20	-
Manifold Tune Valve Bolts	6	-	53
MAP Sensor Bolt	8	-	71
Oxygen Sensor	41	30	-
Throttle Body Bolts 2.0, 2.4L Engines	9	-	8
Throttle Body Bracket			

Bolt 2.0, 2.4L Engines	25	18	-

INJECTOR(S), FUEL

DESCRIPTION

DESCRIPTION

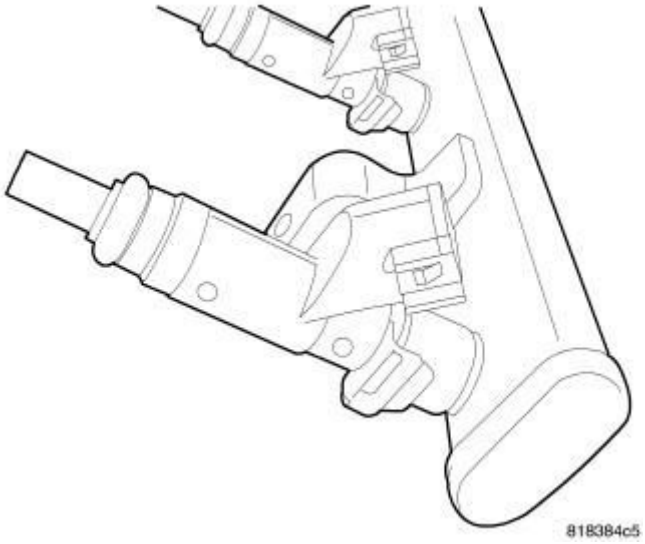

Fig. 127: Fuel Injector On Rail
Courtesy of CHRYSLER GROUP, LLC

The injectors are positioned in the intake manifold with the nozzle ends directly above the intake valve port.

OPERATION

OPERATION

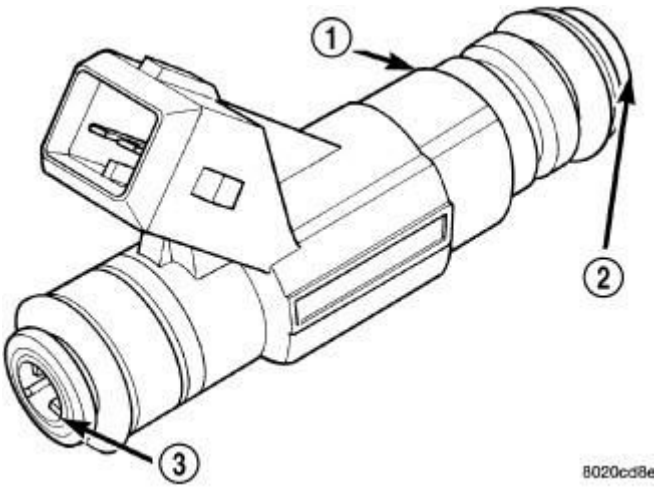

Fig. 128: Fuel Injector - Typical

Courtesy of CHRYSLER GROUP, LLC

1 - FUEL INJECTOR 2 - NOZZLE 3 - TOP (FUEL ENTRY)

The fuel injectors are 12 volt electrical solenoids. The injector contains a pintle that closes off an orifice at the nozzle end. When electric current is supplied to the injector, the armature and needle move a short distance against a spring, allowing fuel to flow out the orifice. Because the fuel is under high pressure, a fine spray is developed in the shape of a hollow cone or two streams. The spraying action atomizes the fuel, adding it to the air entering the combustion chamber. Fuel injectors are not interchangeable between engines.

Injector operation is controlled by a ground path provided for each injector by the PCM. Injector on-time (pulse-width) is variable, and is determined by the PCM processing all the data previously discussed to obtain the optimum injector pulse width for each operating condition. The pulse width is controlled by the duration of the ground path provided.

STANDARD PROCEDURE

STANDARD PROCEDURE - INJECTOR CONNECTOR

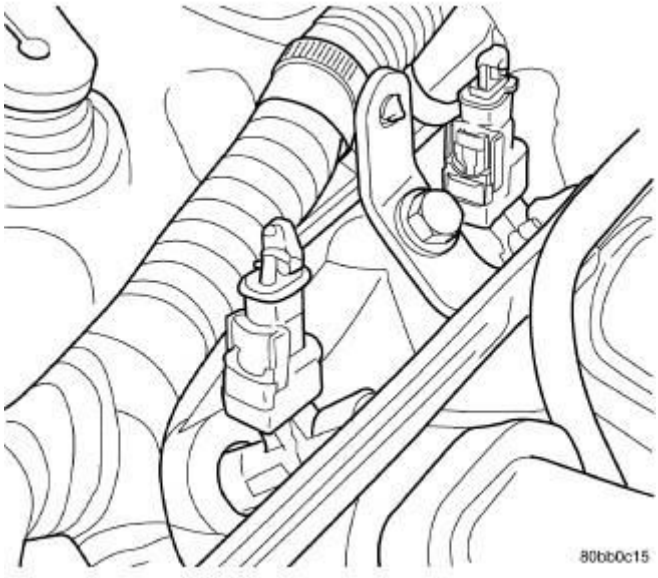

Fig. 129: Fuel Injectors
Courtesy of CHRYSLER GROUP, LLC

1. Disconnect electrical connectors at the fuel injectors.

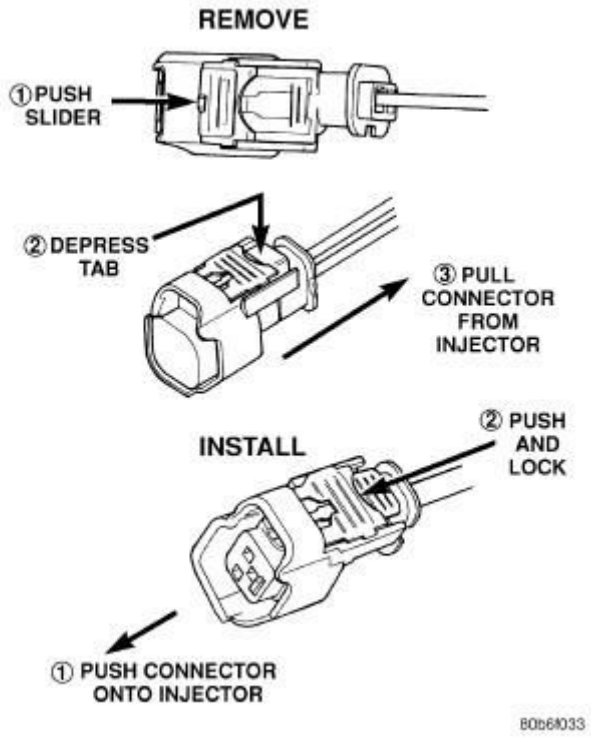

Fig. 130: Removing/Installing Fuel Injector Connector
Courtesy of CHRYSLER GROUP, LLC

2. To remove connector pull the red colored slider away from injector (1). While pulling the slider, depress tab (2) and remove connector (3) from injector. The factory fuel injection wiring harness is numerically tagged (INJ 1, INJ 2, etc.) for injector position identification. If harness is not tagged, make note of wiring location before removal.

REMOVAL

REMOVAL

WARNING: **Risk of injury to eyes and skin from contact with fuel. Wear protective clothing and eye protection. Risk of poisoning from inhaling and swallowing fuel. Pour fuel only into appropriately marked and approved containers. Failure to follow these instructions may result in possible serious or fatal injury.**

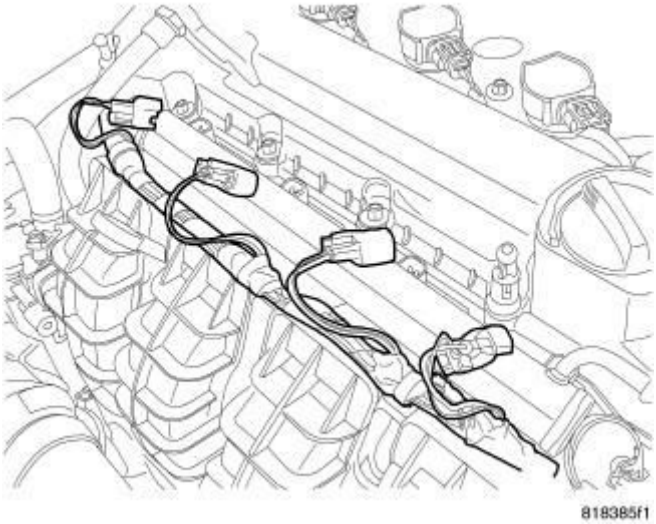

Fig. 131: Electrical Connectors
Courtesy of CHRYSLER GROUP, LLC

1. Release the fuel pressure. Refer to **FUEL SYSTEM PRESSURE RELEASE PROCEDURE**.
2. Disconnect the negative battery cable.
3. Disconnect the electrical connectors from the fuel injectors.

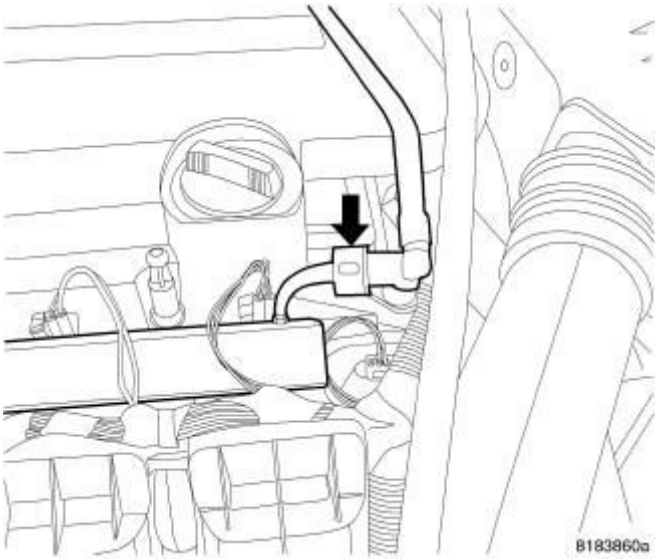

Fig. 132: Fuel Line At Rail
Courtesy of CHRYSLER GROUP, LLC

4. Fuel line connection at fuel rail.

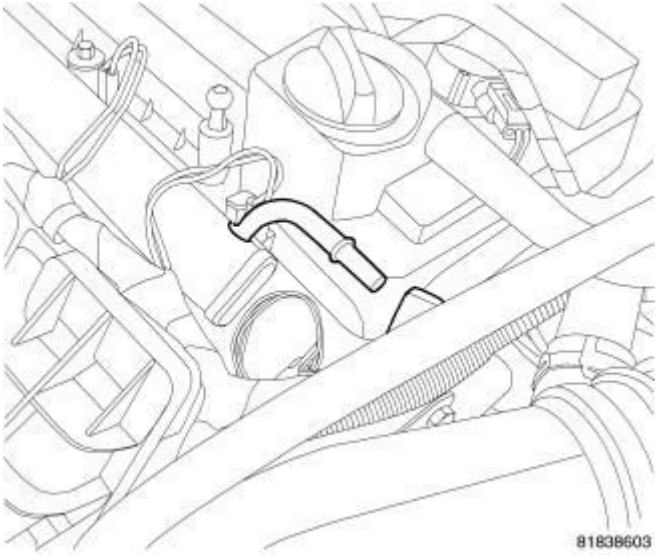

Fig. 133: Fuel Line Connection
Courtesy of CHRYSLER GROUP, LLC

5. Remove the fuel line from the fuel rail.

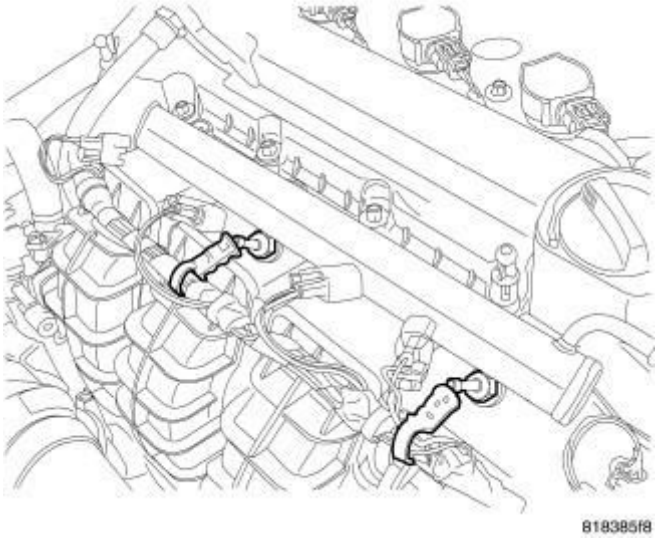

Fig. 134: Harness Clips
Courtesy of CHRYSLER GROUP, LLC

6. Remove wire harness from fuel rail mounting studs.

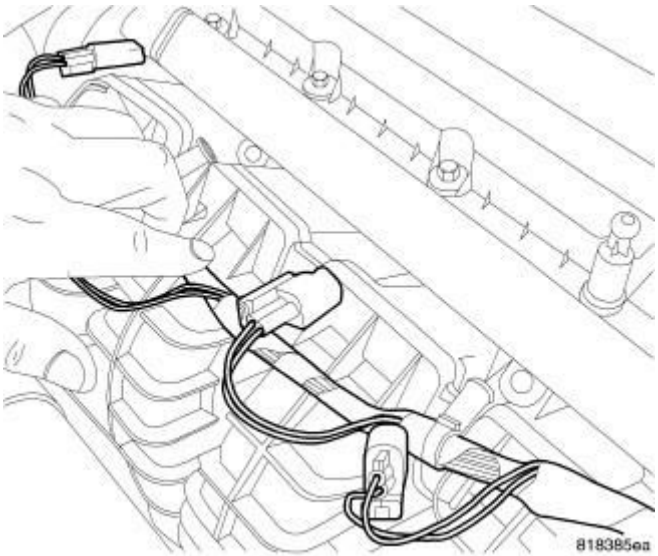

Fig. 135: Electrical Harness Removed
Courtesy of CHRYSLER GROUP, LLC

7. Remove the 2 bolts to the fuel rail at the lower manifold.

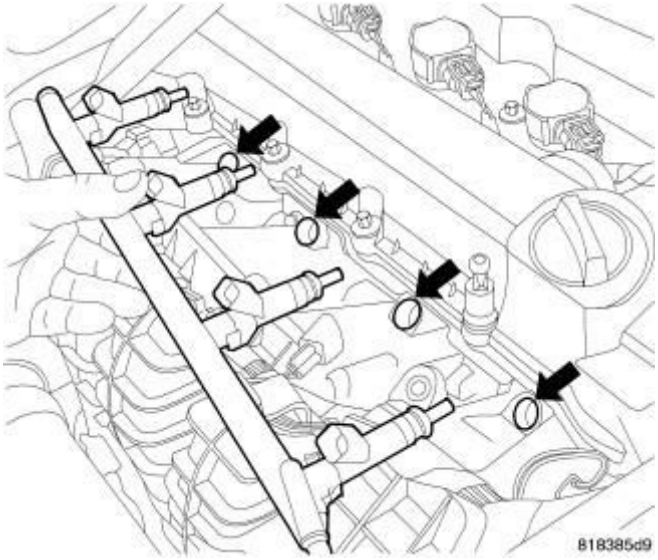

Fig. 136: Fuel Rail & Injectors
Courtesy of CHRYSLER GROUP, LLC

8. Remove the fuel rail.

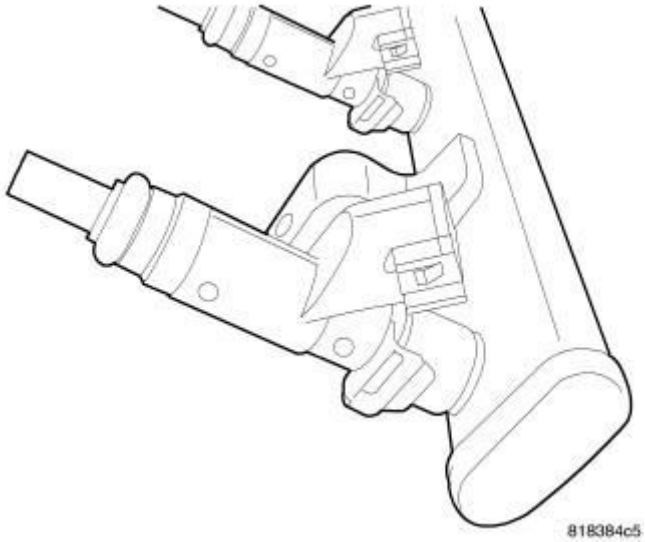

Fig. 137: Fuel Injector On Rail
Courtesy of CHRYSLER GROUP, LLC

9. Remove clip holding fuel injector to fuel rail.

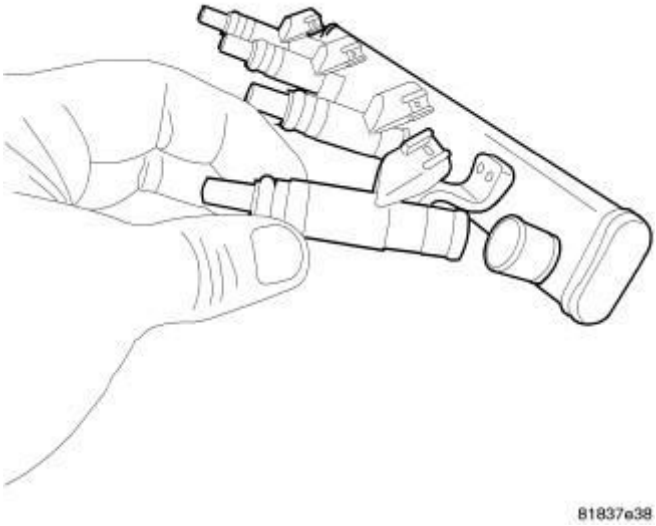

Fig. 138: Fuel Injector And Rail
Courtesy of CHRYSLER GROUP, LLC

10. Remove fuel injector clip and fuel injector from fuel rail.

INSTALLATION

INSTALLATION

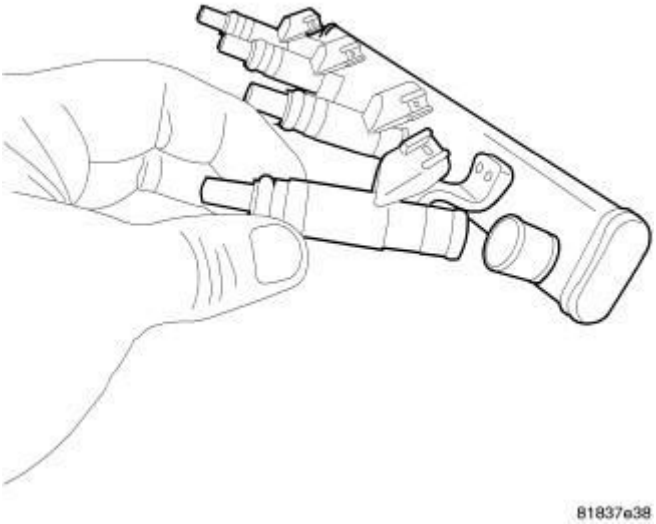

Fig. 139: Fuel Injector And Rail
Courtesy of CHRYSLER GROUP, LLC

1. Apply a light coating of clean engine oil to the upper O-ring.
2. Install injector in cup on fuel rail.
3. Install retaining clip.

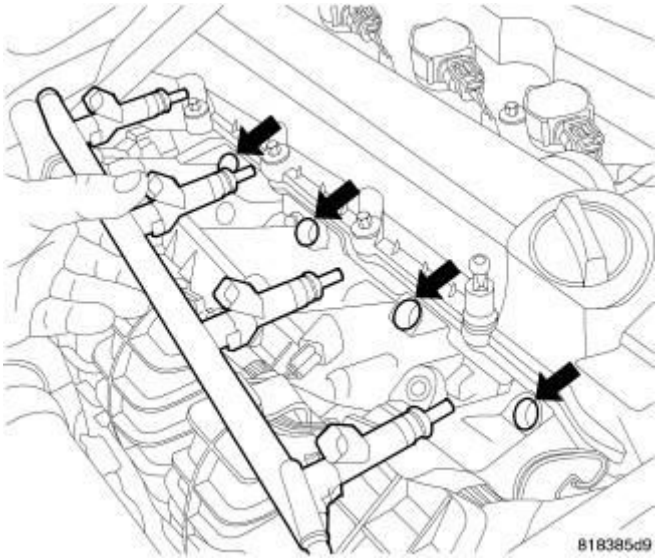

Fig. 140: Fuel Rail & Injectors
Courtesy of CHRYSLER GROUP, LLC

4. Apply a light coating of clean engine oil to the O-ring on the nozzle end of each injector.
5. Insert fuel injector nozzles into openings in lower intake manifold. Seat the injectors in place.

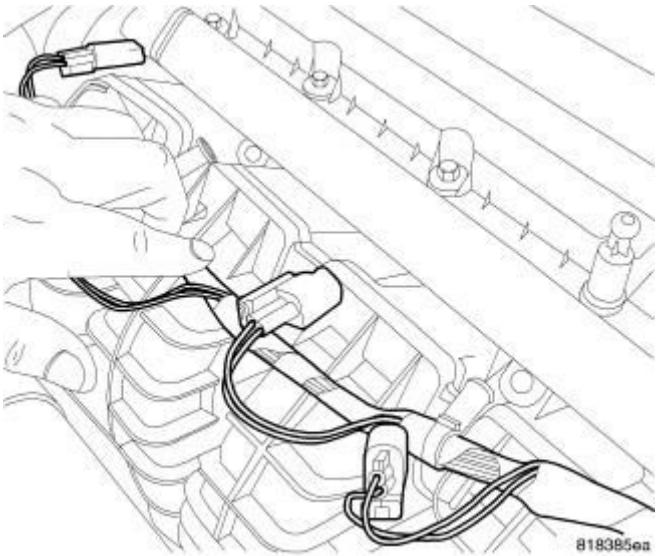

Fig. 141: Electrical Harness Removed
Courtesy of CHRYSLER GROUP, LLC

6. Tighten fuel rail mounting screws to 27 N.m (20 ft. lbs.).

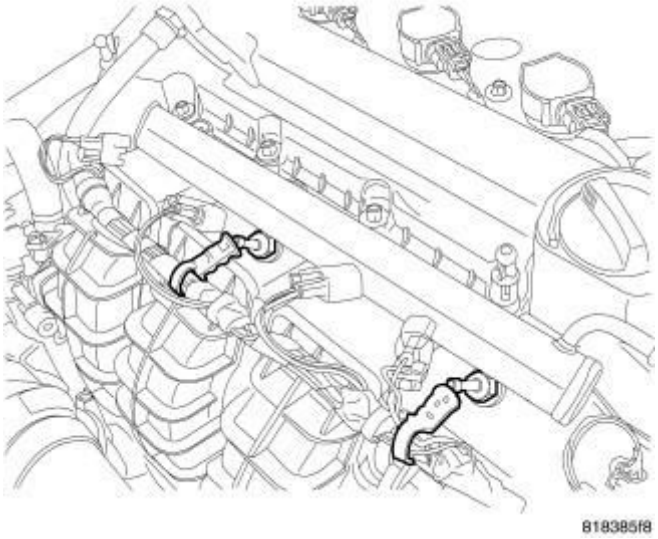

Fig. 142: Harness Clips
Courtesy of CHRYSLER GROUP, LLC

7. Install wiring harness clips to the fuel rail mounting studs.

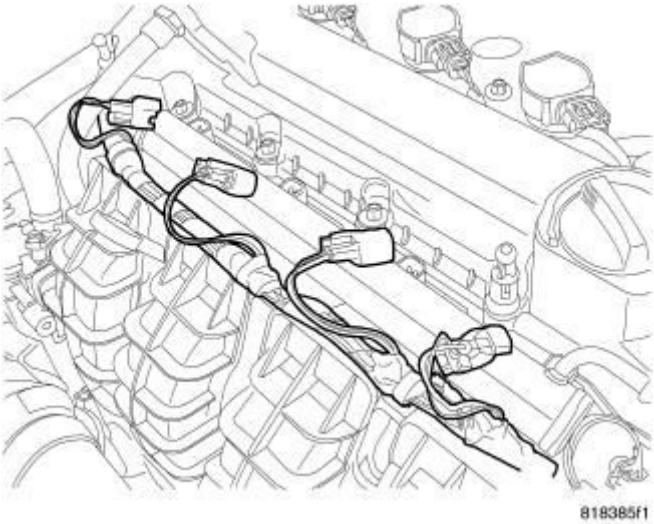

Fig. 143: Electrical Connectors
Courtesy of CHRYSLER GROUP, LLC

8. Attach electrical connectors to fuel injectors, refer to **STANDARD PROCEDURE - INJECTOR CONNECTOR** for electrical connector installation.

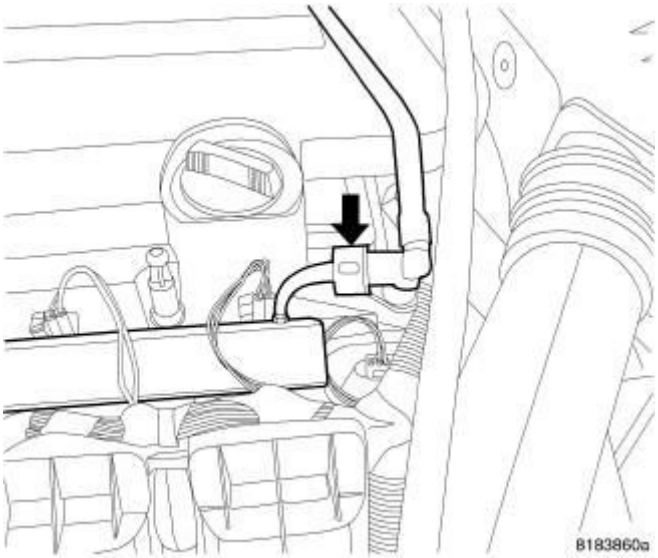

Fig. 144: Fuel Line At Rail
Courtesy of CHRYSLER GROUP, LLC

9. Connect fuel supply tube to fuel rail.
10. Connect the negative battery cable.
11. Use the scan tool to pressurize the fuel system. Check for leaks.

PEDAL, ACCELERATOR

REMOVAL

REMOVAL

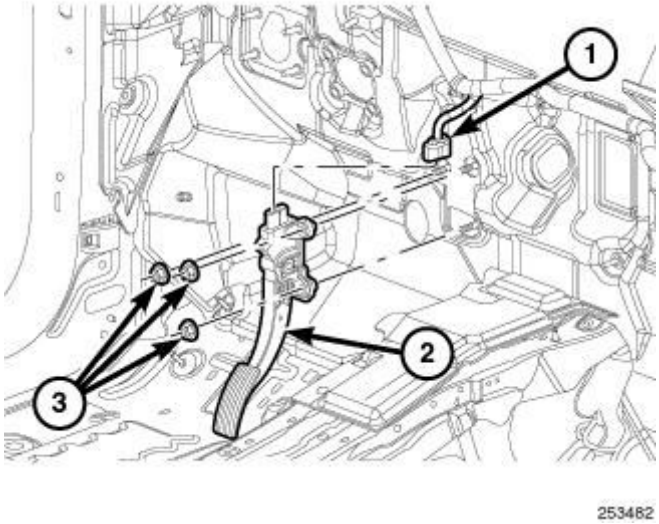

Fig. 145: Pedal And APPS Sensor
Courtesy of CHRYSLER GROUP, LLC

1. Disconnect and isolate negative battery cable at battery.
2. Disconnect the electrical connector from accelerator pedal.
3. Remove mounting nuts and remove accelerator pedal from the mounting studs.

INSTALLATION

INSTALLATION

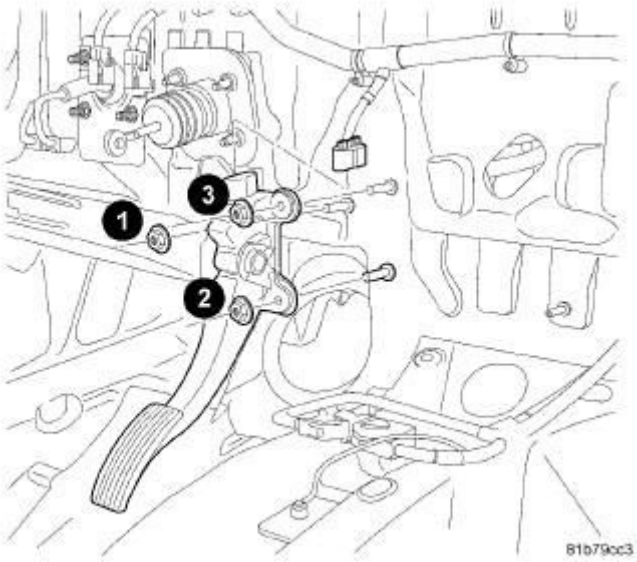

Fig. 146: Accelerator Pedal - LHD
Courtesy of CHRYSLER GROUP, LLC

CAUTION: The accelerator pedal and mounting nuts need to be torque in a mandatory torque sequence or damage could result to the pedal assembly.

1. Install the accelerator pedal and mounting nuts to the mounting studs. Tighten the nuts in a mandatory torque sequence to 29 N.m (21 ft. lbs.).
2. Connect the electrical connector from accelerator pedal.
3. Connect negative battery cable, tighten nut to 5 N.m (45 in. lbs.).
4. Use a scan tool and perform the APPS RELEARN function.

SENSOR, AIR TEMPERATURE, INLET

DESCRIPTION

DESCRIPTION

The IAT Sensor is a Negative Temperature Coefficient (NTC) Sensor that provides information to the PCM regarding the temperature of the air entering the intake manifold.

REMOVAL

REMOVAL

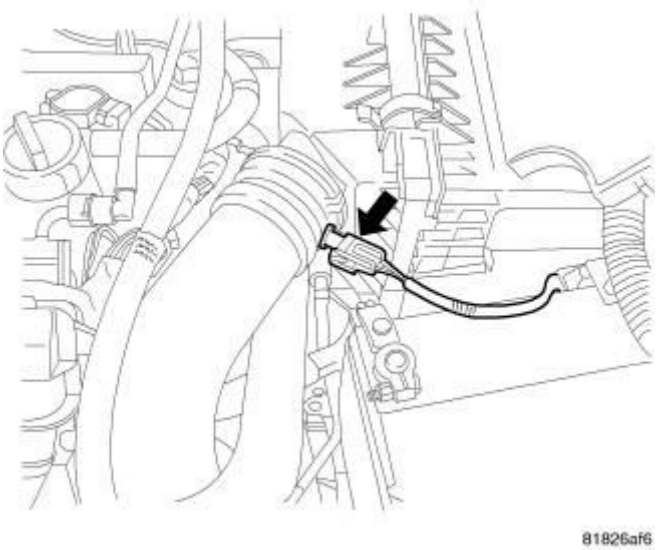

Fig. 147: Inlet Air Temperature Sensor
Courtesy of CHRYSLER GROUP, LLC

1. Disconnect the negative battery cable.
2. Disconnect electrical connector from sensor.
3. Remove the sensor clean air duct.

INSTALLATION

INSTALLATION

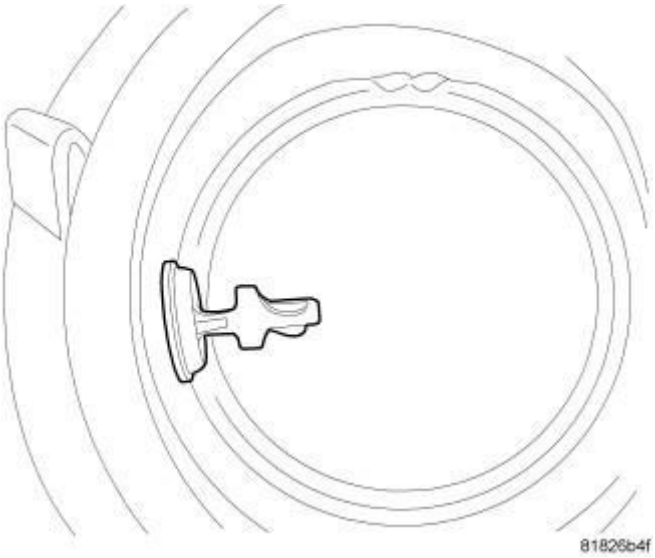

Fig. 148: Sensor Orientation
Courtesy of CHRYSLER GROUP, LLC

1. Install inlet air temperature sensor into the clean air duct.

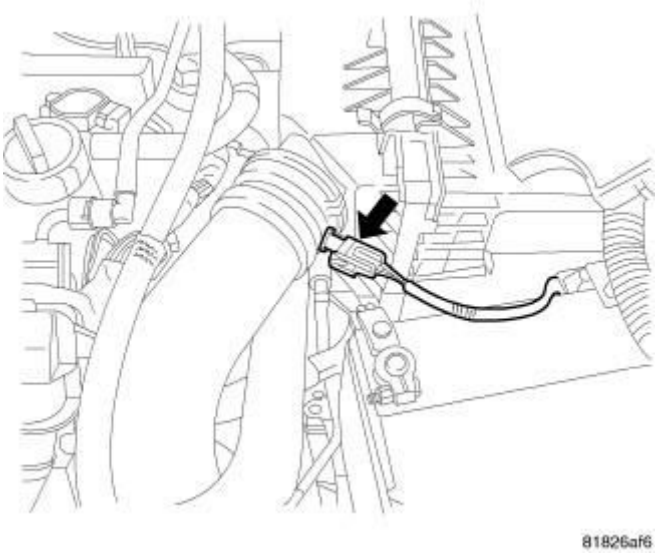

Fig. 149: Inlet Air Temperature Sensor
Courtesy of CHRYSLER GROUP, LLC

2. Connect electrical connector to sensor.
3. Connect the negative battery cable.

SENSOR, CRANKSHAFT POSITION

DESCRIPTION

DESCRIPTION

The crankshaft position sensor mounts to the rear of the engine block near the transmission.

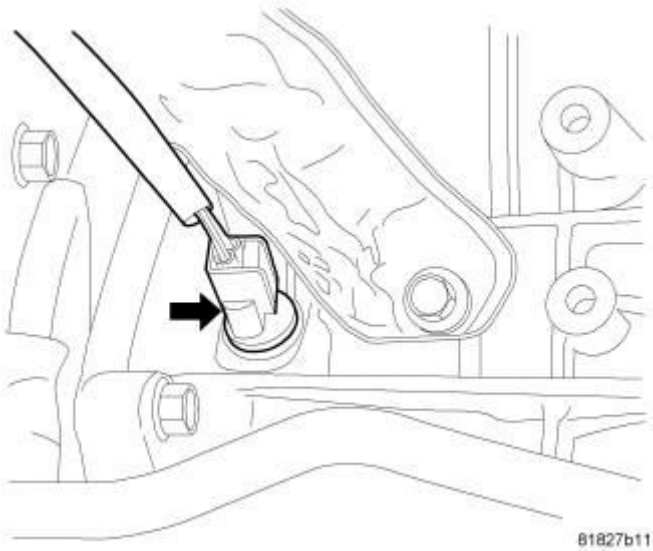

Fig. 150: Crankshaft Position Sensor
Courtesy of CHRYSLER GROUP, LLC

The PCM uses the Crankshaft Position sensor to calculate the following:

- Engine RPM
- TDC number 1 and 4
- Ignition coil synchronization
- Injector synchronization
- Camshaft-to-crankshaft misalignment (Timing belt skipped 1 tooth or more diagnostic trouble code).

OPERATION

OPERATION

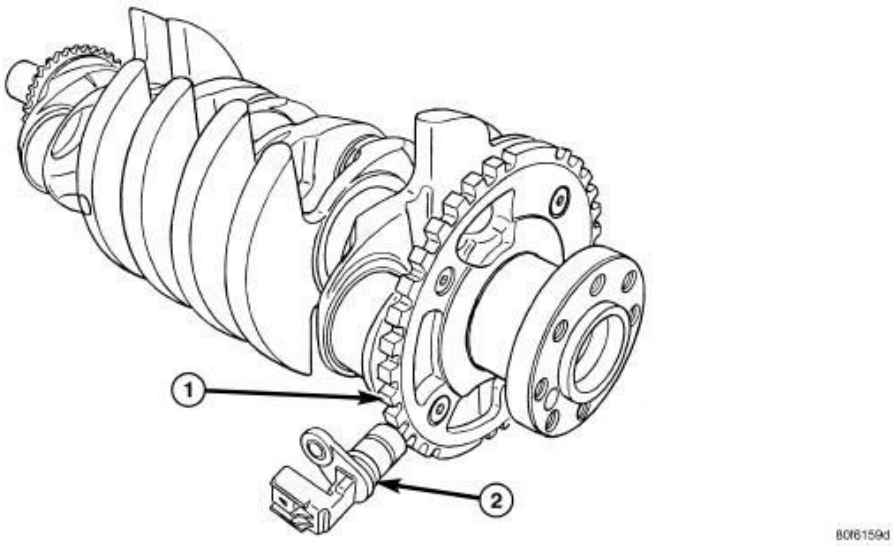

Fig. 151: Timing Reference Notches (NGC)
Courtesy of CHRYSLER GROUP, LLC

1 - Crankshaft
2 - Crankshaft Position Sensor

The PCM sends approximately 5 volts to the Hall-effect sensor. This voltage is required to operate the Hall-effect chip and the electronics inside the sensor. A ground for the sensor is provided through the sensor return circuit. The input to the PCM occurs on a 5 volt output reference circuit that operates as follows: The Hall-effect sensor contains a powerful magnet. As the magnetic field passes over the dense portion of the counterweight, the 5-volt signal is pulled to ground (0.3 volts) through a transistor in the sensor. When the magnetic field passes over the notches in the crankshaft counterweight, the magnetic field turns off the transistor in the sensor, causing the PCM to register the 5-volt signal. The PCM identifies crankshaft position by registering the change from 5 to 0 volts, as signaled from the Crankshaft Position sensor (2).

The PCM determines which cylinder to fire from the crankshaft position sensor input and the camshaft position sensor input. The #8 crankshaft counterweight has a target ring with 32 teeth and notches (1), including one long reference tooth and notch. From the crankshaft position sensor input the PCM determines engine speed and crankshaft angle (position).

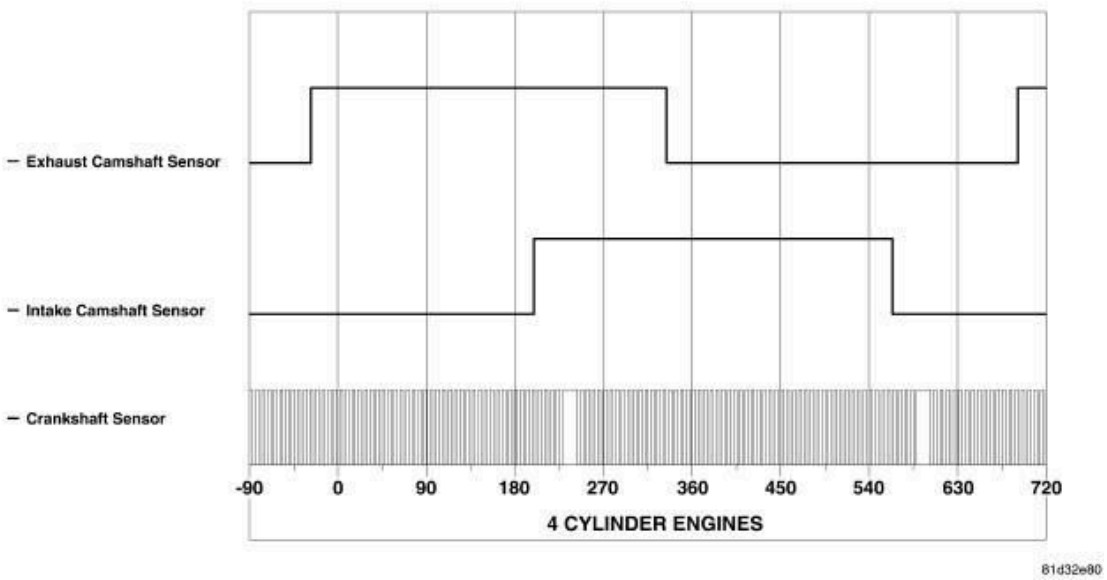

Fig. 152: 4 Cylinder Cam & Crank Signals
Courtesy of CHRYSLER GROUP, LLC

NOTE: The graphic represents the relationship between camshaft and crankshaft sensors edges with camshafts in "lock pin" position (cam shafts are not "phasing"). This is normally seen during idle.

Depiction of good camshaft and crankshaft square wave signals for 4 cylinder engines.

REMOVAL

REMOVAL

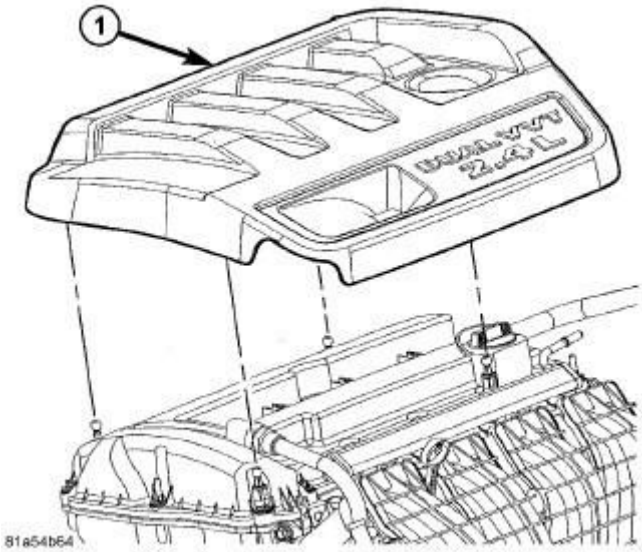

Fig. 153: Engine Cover
Courtesy of CHRYSLER GROUP, LLC

The Crankshaft Position Sensor is in the rear of the engine block near the transmission.

1. Remove the engine cover (1).

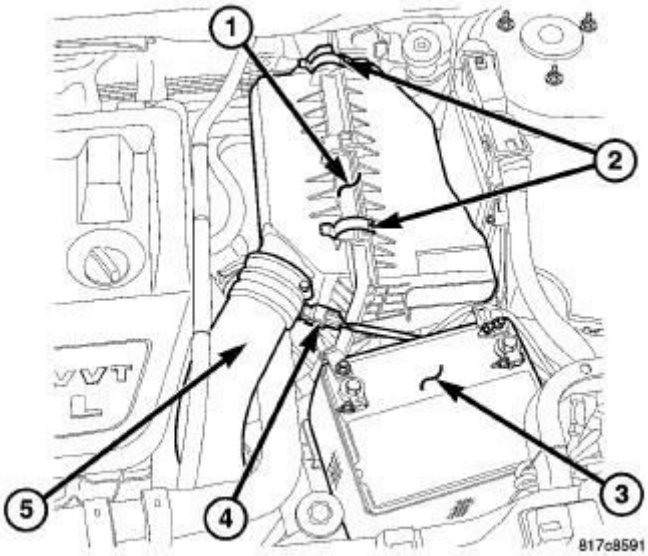

Fig. 154: Air Cleaner Housing
Courtesy of CHRYSLER GROUP, LLC

2. Disconnect and isolate the negative battery cable.
3. Remove the air cleaner body (1). Refer to **2.0L, BODY, AIR CLEANER,**

REMOVAL or **2.4L, BODY, AIR CLEANER, REMOVAL** .

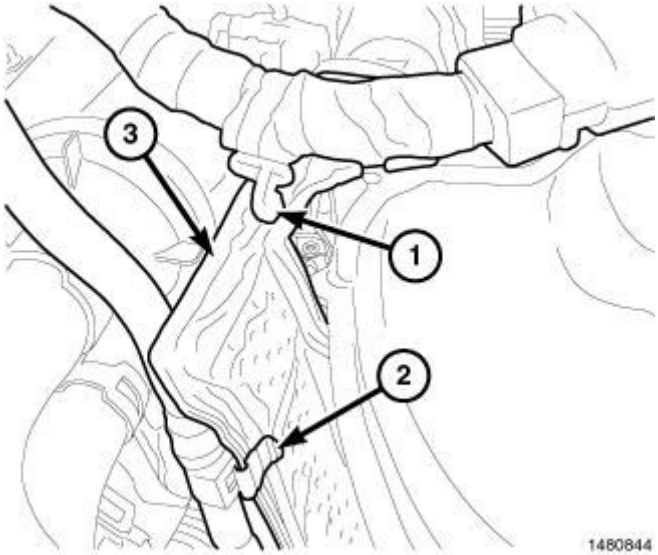

Fig. 155: Upstream O2 Sensor Wire Harness Retainer
Courtesy of CHRYSLER GROUP, LLC

4. Disengage the upstream O2 sensor wire harness retainer (1) and crankshaft position sensor wire harness retainer (2) from the heat shield (3).

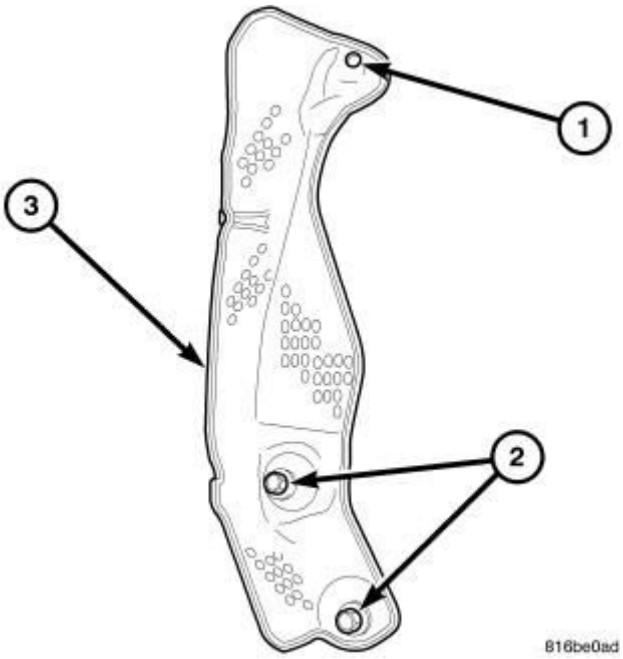

Fig. 156: Maniverter Side Heat Shield
Courtesy of CHRYSLER GROUP, LLC

5. Remove one nut (1) and two heat shield retaining bolts (2).
6. Remove heat shield (3).

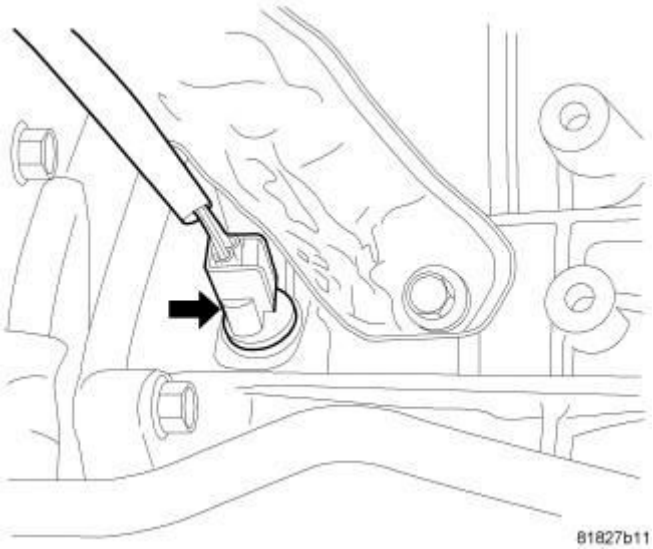

Fig. 157: Crankshaft Position Sensor
Courtesy of CHRYSLER GROUP, LLC

7. Remove the crankshaft position sensor mounting bolt.
8. Remove sensor with the wire harness attached.
9. Unlock and disconnect the electrical connector from the crankshaft position sensor.

INSTALLATION

INSTALLATION

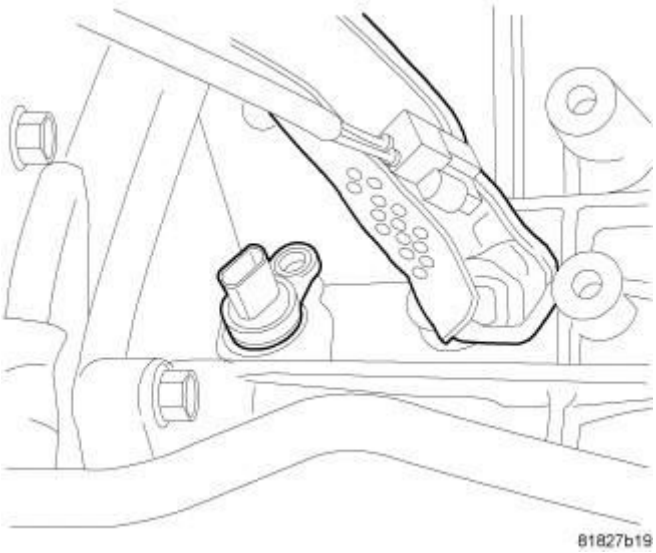

Fig. 158: Crankshaft Position Sensor
Courtesy of CHRYSLER GROUP, LLC

1. Check O-ring for damage and lubricate the O-ring with engine oil before

installing sensor.

2. Using a twisting motion, install the crankshaft position sensor.
3. Install the crankshaft position sensor bolt. Tighten the bolt to 9 N.m (80 in. lbs.).

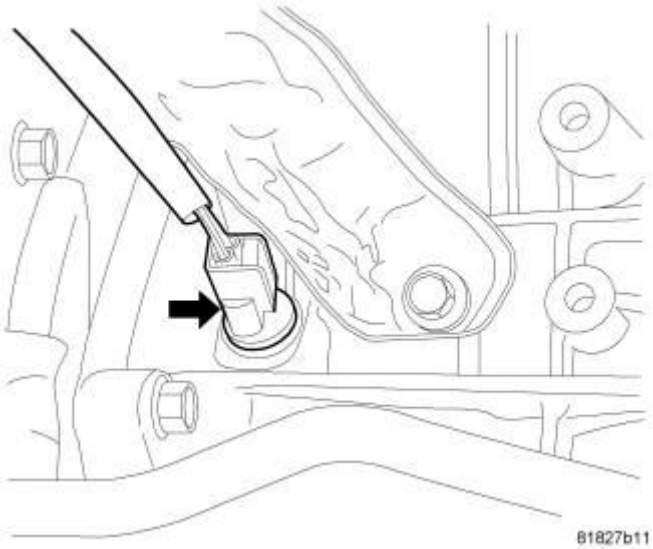

Fig. 159: Crankshaft Position Sensor
Courtesy of CHRYSLER GROUP, LLC

4. Connect and lock the electrical connector to the crankshaft position sensor.

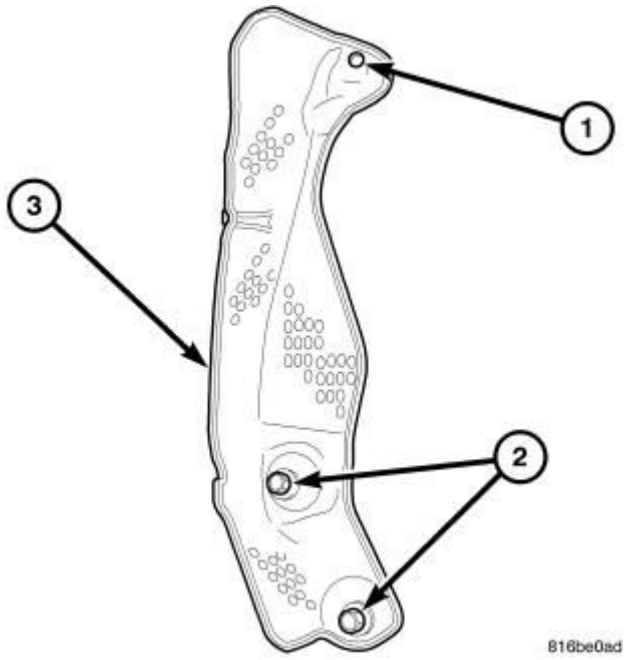

Fig. 160: Maniverter Side Heat Shield
Courtesy of CHRYSLER GROUP, LLC

5. Install the heat shield (3) with one nut (1) and two heat shield retaining bolts (2).

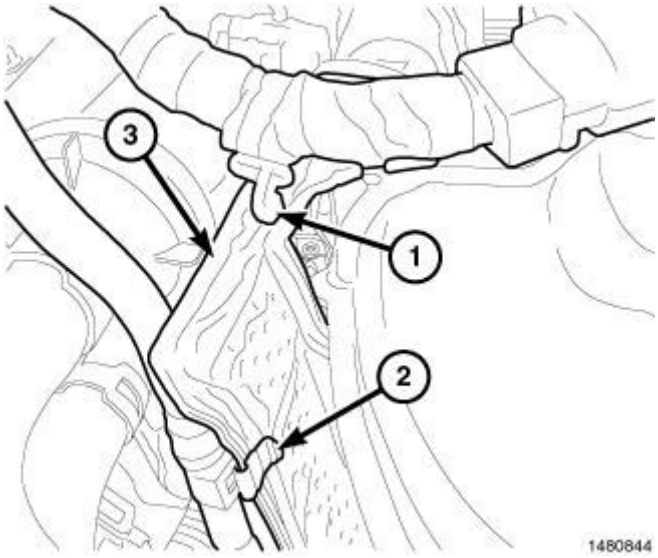

Fig. 161: Upstream O2 Sensor Wire Harness Retainer
Courtesy of CHRYSLER GROUP, LLC

6. Install the upstream O2 sensor wire harness retainer (1) and crankshaft position sensor wire harness retainer (2) to the heat shield (3).

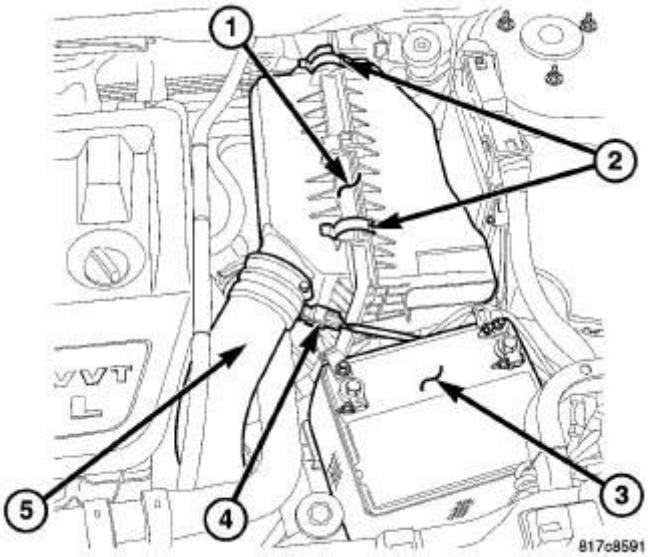

Fig. 162: Air Cleaner Housing
Courtesy of CHRYSLER GROUP, LLC

7. Install the air cleaner body (1) Refer to **2.0L, BODY, AIR CLEANER, INSTALLATION** or **2.4L, BODY, AIR CLEANER, INSTALLATION** .

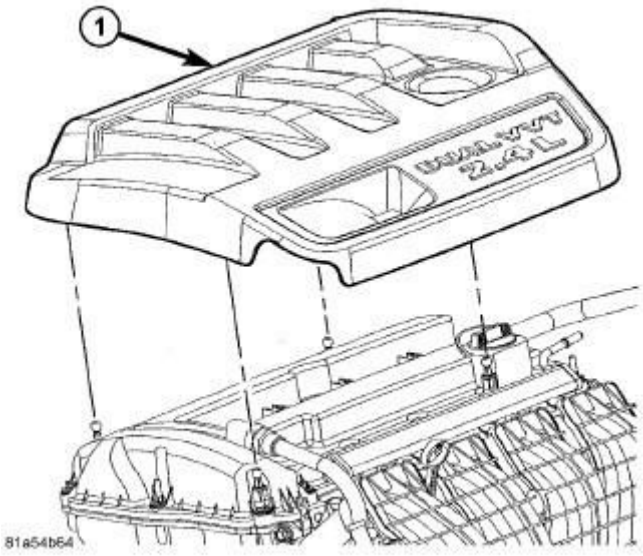

Fig. 163: Engine Cover
Courtesy of CHRYSLER GROUP, LLC

8. Connect the negative battery cable.
9. Install the engine cover (1).

SENSOR, MANIFOLD AIR PRESSURE (MAP)

DESCRIPTION

DESCRIPTION

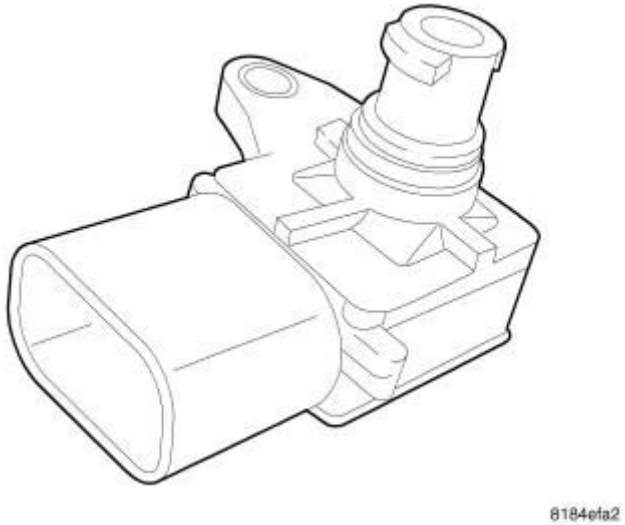

Fig. 164: MAP Sensor
Courtesy of CHRYSLER GROUP, LLC

The MAP sensor mounts to the intake manifold.

OPERATION

OPERATION

The MAP serves as a PCM input, using a silicon based sensing unit, to provide data on the manifold vacuum that draws the air/fuel mixture into the combustion chamber. The PCM requires this information to determine injector pulse width and spark advance. When MAP equals Barometric pressure, the pulse width will be at maximum.

Also like the cam and crank sensors, a 5 volt reference is supplied from the PCM and returns a voltage signal to the PCM that reflects manifold pressure. The zero pressure reading is 0.5 volt and full scale is 4.5 volt. For a pressure swing of 0 - 15 psi the voltage changes 4.0 volt. The sensor is supplied a regulated 4.8 to 5.1 volts to operate the sensor. Like the cam and crank sensors ground is provided through the sensor return circuit.

The MAP sensor input is the number one contributor to pulse width. The most important function of the MAP sensor is to determine barometric pressure. The PCM needs to know if the vehicle is at sea level or is it in Denver at 5000 feet above sea level, because the air density changes with altitude. It will also help to correct for varying weather conditions. If a hurricane was coming through the pressure would be very, very low or there could be a real fair weather, high pressure area. This is important because as air pressure changes the barometric pressure changes. Barometric pressure and altitude have a direct inverse correlation, as altitude goes up barometric goes down. The first thing that happens as the key is rolled on, before reaching the crank position, the PCM powers up, comes around and looks at the MAP voltage, and based upon the voltage it sees, it knows the current barometric pressure relative to altitude. Once the engine starts, the PCM looks at the voltage again, continuously every 12 milliseconds, and compares the current voltage to what it was at key on. The difference between current and what it was at key on is manifold vacuum.

During key On (engine not running) the sensor reads (updates) barometric pressure. A normal range can be obtained by monitoring known good sensor in your work area.

As the altitude increases the air becomes thinner (less oxygen). If a vehicle is started and driven to a very different altitude than where it was at key On the barometric pressure needs to be updated. Any time the PCM sees Wide Open

throttle, based upon TPS angle and RPM it will update barometric pressure in the MAP memory cell. With periodic updates, the PCM can make its calculations more effectively.

The PCM uses the MAP sensor to aid in calculating the following:

- Barometric pressure
- Engine load
- Manifold pressure
- Injector pulse-width
- Spark-advance programs
- Shift-point strategies (F4AC1 transmissions only, via the PCI bus)
- Idle speed
- Decel fuel shutoff

The PCM recognizes a decrease in manifold pressure by monitoring a decrease in voltage from the reading stored in the barometric pressure memory cell. The MAP sensor is a linear sensor; as pressure changes, voltage changes proportionately. The range of voltage output from the sensor is usually between 4.6 volts at sea level to as low as 0.3 volts at 88 kPa (26 in. Hg). Barometric pressure is the pressure exerted by the atmosphere upon an object. At sea level on a standard day, no storm, barometric pressure is 101 kPa (29.92 in. Hg). For every 30.5 meters (100 feet) of altitude barometric pressure drops.33 kPa (0.10 in. Hg). If a storm goes through it can either add, high pressure, or decrease, low pressure, from what should be present for that altitude. You should make a habit of knowing what the average pressure and corresponding barometric pressure is for your area.

REMOVAL

REMOVAL

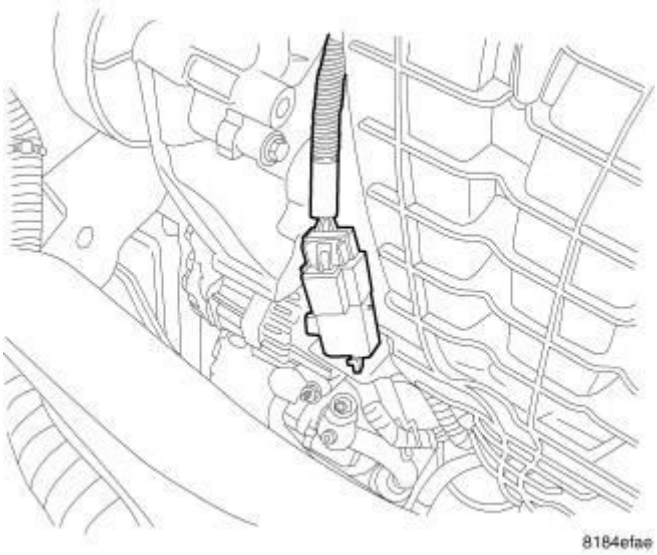

Fig. 165: MAP Sensor Location
Courtesy of CHRYSLER GROUP, LLC

1. Disconnect the negative battery cable.
2. Disconnect electrical connector from manifold absolute pressure (MAP) sensor.
3. Remove screw from MAP sensor.

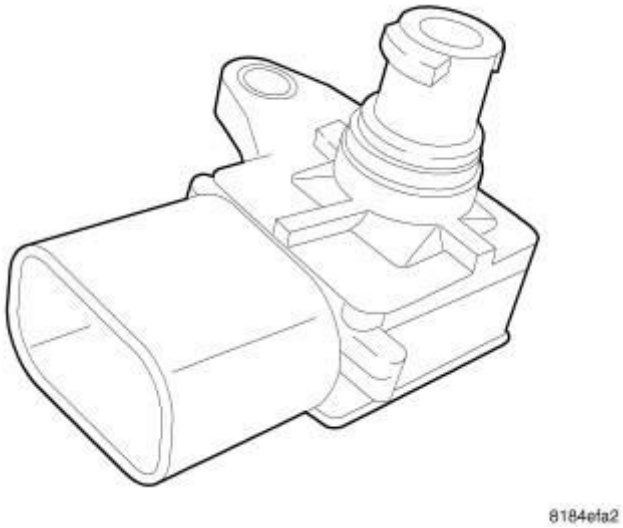

Fig. 166: MAP Sensor
Courtesy of CHRYSLER GROUP, LLC

4. Remove MAP sensor.

INSTALLATION

INSTALLATION

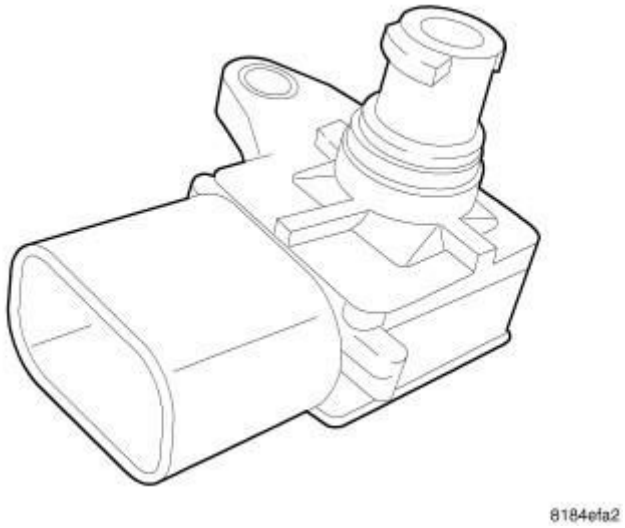

Fig. 167: MAP Sensor
Courtesy of CHRYSLER GROUP, LLC

1. Install manifold absolute pressure (MAP) sensor to intake manifold.

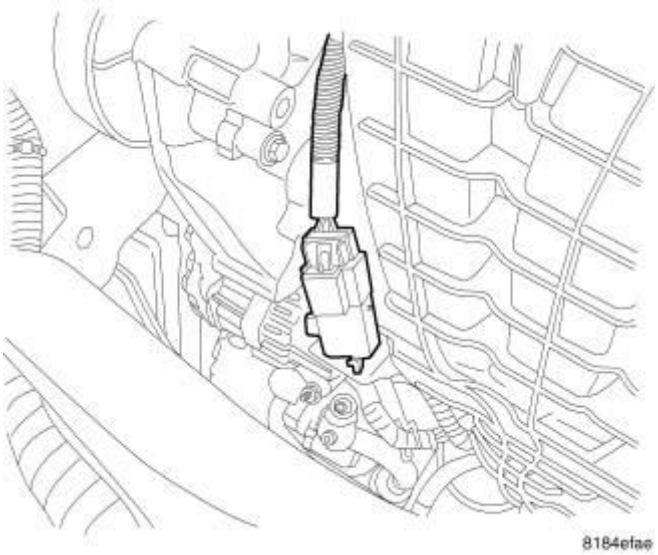

Fig. 168: MAP Sensor Location
Courtesy of CHRYSLER GROUP, LLC

2. Tighten screw to 8 N.m (71 in. lbs.).
3. Connect electrical connector to sensor.
4. Connect the negative battery cable.

SENSOR, OXYGEN

DESCRIPTION

DESCRIPTION

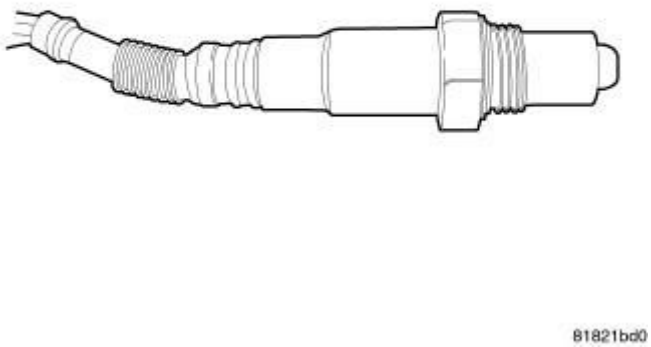

Fig. 169: Oxygen Sensor
Courtesy of CHRYSLER GROUP, LLC

The upstream oxygen sensor threads into the outlet flange of the exhaust manifold.

The downstream heated oxygen sensor threads into the system depending on emission package.

OPERATION

OPERATION

Separate upstream and downstream grounds are used on the NGC vehicles (4 Cyl.).

As vehicles accumulate mileage, the catalytic convertor deteriorates. The deterioration results in a less efficient catalyst. To monitor catalytic convertor deterioration, the fuel injection system uses two heated oxygen sensors. One sensor upstream of the catalytic convertor, one downstream of the convertor. The PCM compares the reading from the sensors to calculate the catalytic convertor oxygen storage capacity and converter efficiency. Also, the PCM uses the upstream heated oxygen sensor input when adjusting injector pulse width.

When the catalytic converter efficiency drops below emission standards, the PCM stores a diagnostic trouble code and illuminates the malfunction indicator lamp (MIL).

The O2 sensors produce a constant 2.5 volts on NGC vehicles, depending upon

the oxygen content of the exhaust gas. When a large amount of oxygen is present (caused by a lean air/fuel mixture, can be caused by misfire and exhaust leaks), the sensors produce a low voltage. When there is a lesser amount of oxygen present (caused by a rich air/fuel mixture, which can be caused by internal engine problems) it produces a higher voltage. By monitoring the oxygen content and converting it to electrical voltage, the sensors act as a rich-lean switch.

The oxygen sensors are equipped with a heating element that keeps the sensors at proper operating temperature during all operating modes. Maintaining correct sensor temperature at all times allows the system to enter into closed loop operation sooner. Also, it allows the system to remain in closed loop operation during periods of extended idle.

In Closed Loop operation the PCM monitors the O2 sensor's input (along with other inputs) and adjusts the injector pulse width accordingly. During Open Loop operation the PCM ignores the O2 sensor input. The PCM adjusts injector pulse width based on preprogrammed (fixed) values and inputs from other sensors.

The NGC Controller has a common ground for the heater in the O2S. 12 volts is supplied to the heater in the O2S by the NGC controller. Both the upstream and downstream O2 sensors for NGC are pulse width modulation (PWM). **NOTE** : When replacing an O2 Sensor, the PCM RAM memory must be cleared, either by disconnecting the PCM C-1 connector or momentarily disconnecting the Battery negative terminal. The NGC learns the characteristics of each O2 heater element and these old values should be cleared when installing a new O2 sensor. The customer may experience driveability issues if this is not performed.

UPSTREAM OXYGEN SENSOR

The input from the upstream heated oxygen sensor tells the PCM the oxygen content of the exhaust gas. Based on this input, the PCM fine tunes the air-fuel ratio by adjusting injector pulse width.

The sensor input switches from 2.5 to 3.5 volt, depending upon the oxygen content of the exhaust gas in the exhaust manifold. When a large amount of oxygen is present (caused by a lean air-fuel mixture), the sensor produces voltage as low as 2.5 volt. When there is a lesser amount of oxygen present (rich air-fuel mixture) the sensor produces a voltage as high as 3.5 volt. By monitoring the oxygen content and converting it to electrical voltage, the sensor acts as a rich-lean switch.

The heating element in the sensor provides heat to the sensor ceramic element. Heating the sensor allows the system to enter into closed loop operation sooner. Also, it allows the system to remain in closed loop operation during periods of extended idle.

In Closed Loop, the PCM adjusts injector pulse width based on the upstream heated oxygen sensor input along with other inputs. In Open Loop, the PCM adjusts injector pulse width based on preprogrammed (fixed) values and inputs from other sensors.

DOWNSTREAM OXYGEN SENSOR

The downstream heated oxygen sensor input is used to detect catalytic convertor deterioration. As the convertor deteriorates, the input from the downstream sensor begins to match the upstream sensor input except for a slight time delay. By comparing the downstream heated oxygen sensor input to the input from the upstream sensor, the PCM calculates catalytic convertor efficiency. This is also used to establish the upstream O2 goal voltage (switching point).

REMOVAL

2.0, 2.4L AWD

DOWNSTREAM OXYGEN SENSOR (1/2)

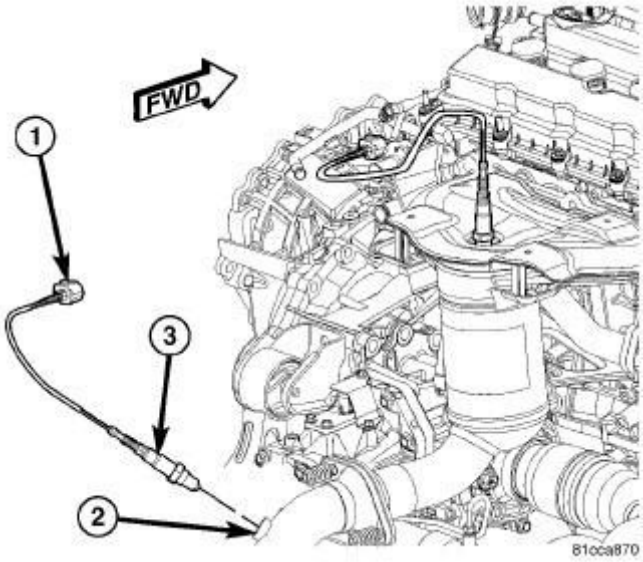

Fig. 170: Downstream O2 Sensor (AWD)
Courtesy of CHRYSLER GROUP, LLC

WARNING: The exhaust manifold, exhaust pipes and catalytic converter(s) become very hot during engine operation. Allow engine to cool before removing oxygen sensor. Failure to allow engine to cool before removal may result in personal injury caused by burns.

CAUTION: When disconnecting sensor electrical connector, do not pull directly on wires going into oxygen sensor. Damage to the oxygen sensor may occur.

NOTE: Use an oxygen sensor (O2S) removal tool for this procedure.

1. Raise and support vehicle.
2. Disconnect O2S wire harness mounting clips from engine or body, if equipped.
3. Disconnect O2S pigtail harness connector (1) from engine wiring harness.
4. Remove O2S (3) from exhaust pipe (2).

UPSTREAM OXYGEN SENSOR (1/1)

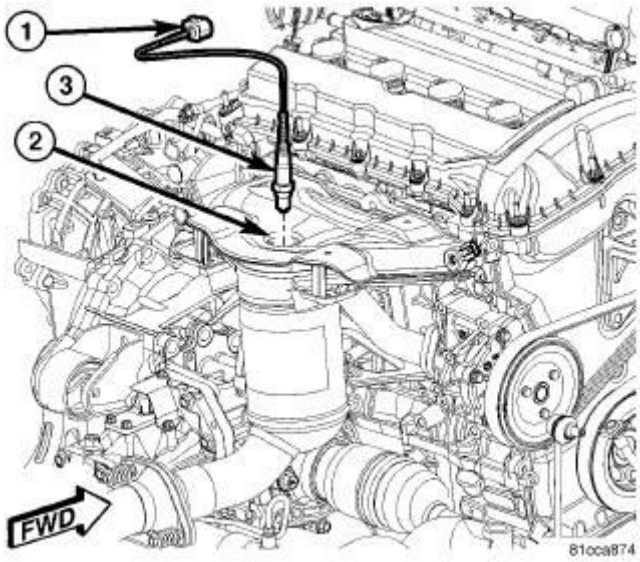

Fig. 171: Upstream O2 Sensor (AWD)
Courtesy of CHRYSLER GROUP, LLC

WARNING: The exhaust manifold, exhaust pipes and catalytic converter(s) become very hot during engine operation. Allow engine to cool before removing oxygen sensor. Failure to allow engine to cool before removal may result in personal injury caused by burns.

CAUTION: When disconnecting sensor electrical connector, do not pull directly on wires going into oxygen sensor. Damage to the oxygen sensor may occur.

NOTE: Use an oxygen sensor (O2S) removal tool for this procedure.

1. Raise and support vehicle.
2. Disconnect O2S wire harness mounting clips from engine or body, if equipped.
3. Disconnect O2S pigtail harness connector (1) from engine wiring harness.
4. Remove O2S (3) from maniverter (2).

2.0, 2.4L FWD

DOWNSTREAM OXYGEN SENSOR (1/2)

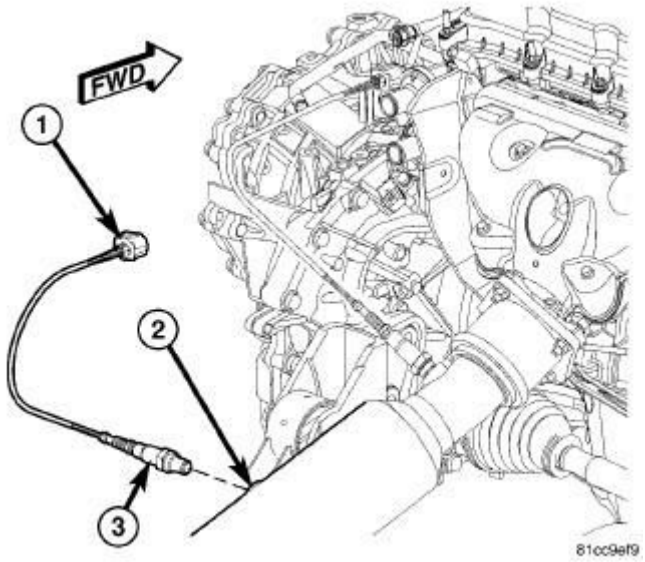

Fig. 172: Downstream O2 Sensor
Courtesy of CHRYSLER GROUP, LLC

WARNING: The exhaust manifold, exhaust pipes and catalytic converter(s) become very hot during engine operation. Allow engine to cool before removing oxygen sensor. Failure to allow engine to cool before removal may result in personal injury caused by burns.

CAUTION: When disconnecting sensor electrical connector, do not pull directly on wires going into oxygen sensor. Damage to the oxygen sensor may occur.

NOTE: Use an oxygen sensor (O2S) removal tool for this procedure.

1. Raise and support vehicle.
2. Disconnect O2S wire harness mounting clips from engine or body, if equipped.
3. Disconnect O2S pigtail harness connector (1) from engine wiring harness.
4. Remove the O2S (3) from catalytic converter (2).

UPSTREAM OXYGEN SENSOR (1/1)

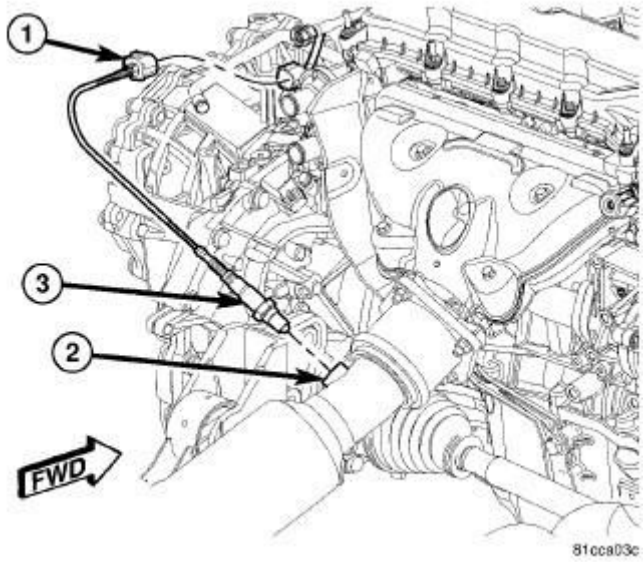

Fig. 173: Upstream O2 Sensor
Courtesy of CHRYSLER GROUP, LLC

WARNING: The exhaust manifold, exhaust pipes and catalytic converter(s) become very hot during engine operation. Allow engine to cool before removing oxygen sensor. Failure to allow engine to cool before removal may result in personal injury caused by burns.

CAUTION: When disconnecting sensor electrical connector, do not pull directly on wires going into oxygen sensor. Damage to the oxygen sensor may occur.

NOTE: Use an oxygen sensor (O2S) removal tool for this procedure.

1. Raise and support vehicle.
2. Disconnect O2S wire harness mounting clips from engine or body, if equipped.
3. Disconnect O2S pigtail harness connector (1) from engine wiring harness.
4. Remove the O2S (3) from exhaust pipe (2).

INSTALLATION

2.0, 2.4L AWD

DOWNSTREAM OXYGEN SENSOR (1/2)

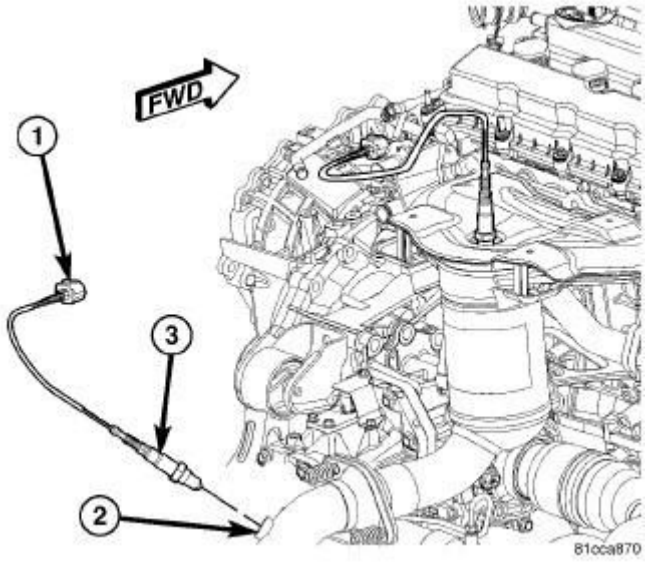

Fig. 174: Downstream O2 Sensor (AWD)

Courtesy of CHRYSLER GROUP, LLC

WARNING: The exhaust manifold, exhaust pipes and catalytic converter(s) become very hot during engine operation. Allow engine to cool before removing oxygen sensor. Failure to allow engine to cool before removal may result in personal injury caused by burns.

CAUTION: When Equipped: The oxygen sensor (O2S) pigtail harness must be clipped and/or bolted back to their original positions on engine or body to prevent mechanical damage to wiring.

NOTE: Use an O2S removal tool for this procedure.

Threads of new oxygen sensors are factory coated with anti-seize compound to aid in removal.**DO NOT add any additional anti-seize compound to threads of a new O2S.**

1. Install O2 sensor (3) to exhaust pipe (2). Tighten to 41 N.m (30 ft. lbs.).
2. Connect O2 sensor pigtail harness connector (1) to engine wiring harness.
3. Connect O2S wire harness mounting clips to engine or body, if equipped.

UPSTREAM OXYGEN SENSOR (1/1)

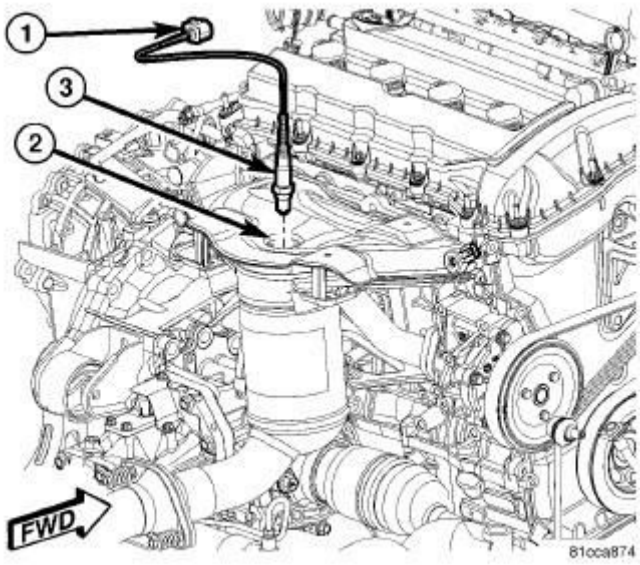

Fig. 175: Upstream O2 Sensor (AWD)
Courtesy of CHRYSLER GROUP, LLC

WARNING: The exhaust manifold, exhaust pipes and catalytic converter(s) become very hot during engine operation. Allow engine to cool before removing oxygen sensor. Failure to allow engine to cool before removal may result in personal injury caused by burns.

CAUTION: When Equipped: The oxygen sensor (O2S) pigtail harness must be clipped and/or bolted back to their original positions on engine or body to prevent mechanical damage to wiring.

NOTE: Use an O2S removal tool for this procedure.

Threads of new oxygen sensors are factory coated with anti-seize compound to aid in removal.**DO NOT add any additional anti-seize compound to threads of a new O2S.**

1. Install O2 sensor (3) to maniverter (2). Tighten to 41 N.m (30 ft. lbs.).
2. Connect O2 sensor pigtail harness connector (1) to engine wiring harness.
3. Connect O2S wire harness mounting clips to engine or body, if equipped.

2.0, 2.4L FWD

DOWNSTREAM OXYGEN SENSOR (1/2)

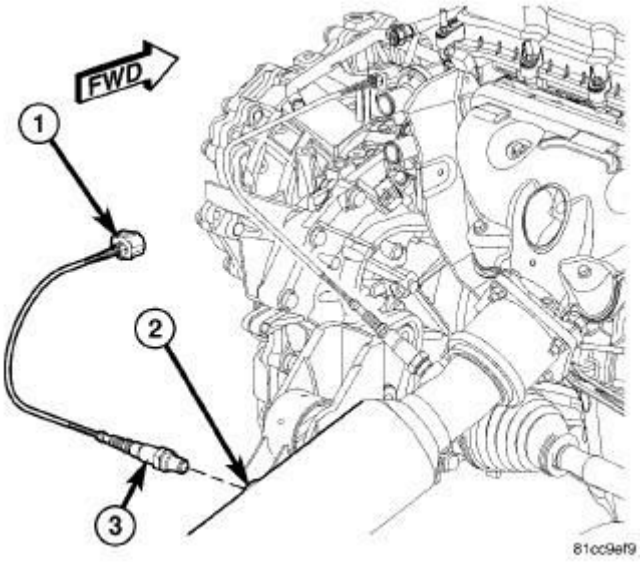

Fig. 176: Downstream O2 Sensor
Courtesy of CHRYSLER GROUP, LLC

WARNING: The exhaust manifold, exhaust pipes and catalytic converter(s) become very hot during engine operation. Allow engine to cool before removing oxygen sensor. Failure to allow engine to cool before removal may result in personal injury caused by burns.

CAUTION: When Equipped: The oxygen sensor (O2S) pigtail harness must be clipped and/or bolted back to their original positions on engine or body to prevent mechanical damage to wiring.

NOTE: Use an O2S removal tool for this procedure.

Threads of new oxygen sensors are factory coated with anti-seize compound to aid in removal.**DO NOT add any additional anti-seize compound to threads of a new O2S.**

1. Install O2 sensor (3) to catalytic converter (2). Tighten to 41 N.m (30 ft. lbs.).
2. Connect O2 sensor pigtail harness connector (1) to engine wiring harness.
3. Connect O2S wire harness mounting clips to engine or body, if equipped.

UPSTREAM OXYGEN SENSOR (1/1)

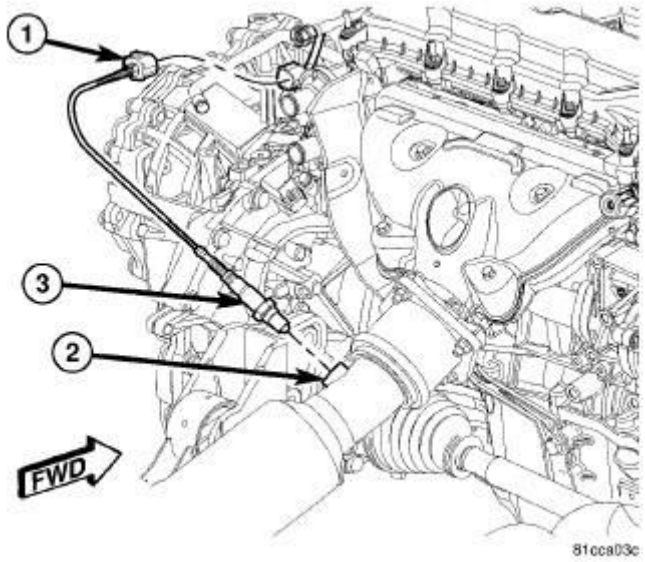

Fig. 177: Upstream O2 Sensor
Courtesy of CHRYSLER GROUP, LLC

WARNING: The exhaust manifold, exhaust pipes and catalytic converter(s) become very hot during engine operation. Allow engine to cool before removing oxygen sensor. Failure to allow engine to cool before removal may result in personal injury caused by burns.

CAUTION: When Equipped: The oxygen sensor (O2S) pigtail harness must be clipped and/or bolted back to their original positions on engine or body to prevent mechanical damage to wiring.

NOTE: Use an O2S removal tool for this procedure.

Threads of new oxygen sensors are factory coated with anti-seize compound to aid in removal.**DO NOT add any additional anti-seize compound to threads of a new O2S.**

1. Install O2 sensor (3) to exhaust pipe (2). Tighten to 41 N.m (30 ft. lbs.).
2. Connect O2 sensor pigtail harness connector (1) to engine wiring harness.
3. Connect O2S wire harness mounting clips to engine or body, if equipped.

THROTTLE BODY

DESCRIPTION

DESCRIPTION

The throttle body mounts to the intake manifold. The throttle position sensor and throttle actuating DC motor are integral to the throttle body. The throttle body is a non serviceable component, replace the throttle body as an assembly.

The throttle blade will not close completely when engine is shut down. This engine off blade position is for start up. The electric throttle body will adjust the throttle blade for idle control as the idle air control valve adjusted idle speed previously on cable actuated throttle bodies. The electric throttle body will also adjust the throttle blade for normal driving operation. The throttle blade will move to the engine off blade position if throttle body codes are set to provide air for limp-in mode.

OPERATION

OPERATION

Filtered air from the air cleaner enters the intake manifold through the throttle body. A throttle valve (plate) is used to supply air for all conditions from idle to wide open throttle.

REMOVAL

REMOVAL

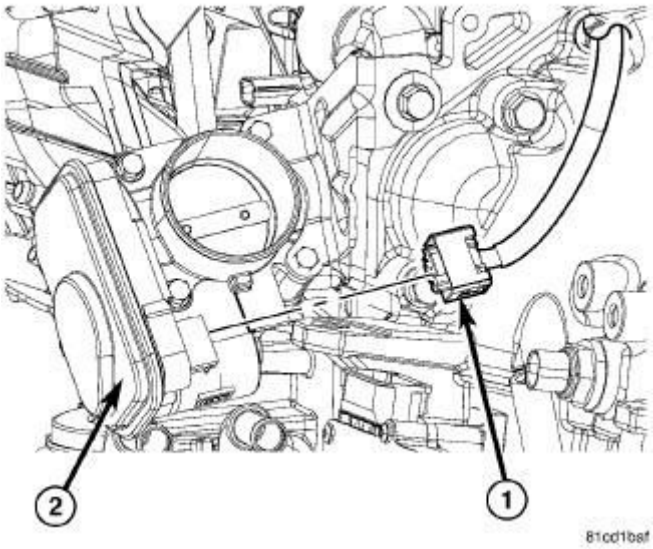

Fig. 178: Throttle Body Electrical Connector
Courtesy of CHRYSLER GROUP, LLC

WARNING: DO NOT place fingers in or around the throttle body plate. If the throttle body is energized, the throttle plate could move causing personal injury. Always disconnect the negative battery cable prior to servicing the throttle body.

CAUTION: DO NOT move the throttle plate while power is connected to the throttle body. This may cause fault codes to set.

1. Disconnect and isolate negative battery cable at battery.
2. Remove throttle body air intake hose.
3. Disconnect throttle body electrical connector (1) from throttle body (2).

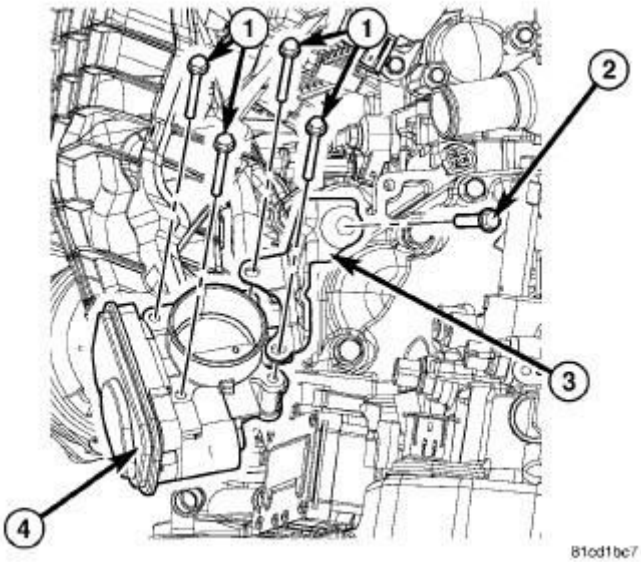

Fig. 179: Throttle Body Bracket And Throttle Body Bolts
Courtesy of CHRYSLER GROUP, LLC

4. Remove throttle body support bracket bolt (2).
5. Remove four bolts (1), throttle body bracket (3) and throttle body (4) from the intake manifold.

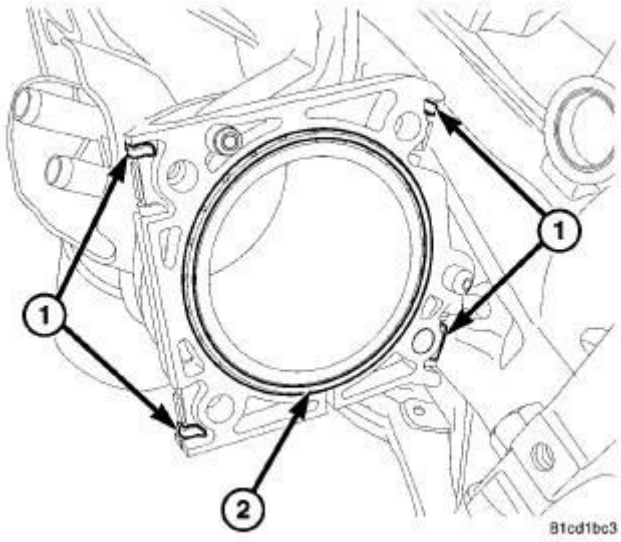

Fig. 180: Throttle Body Gasket
Courtesy of CHRYSLER GROUP, LLC

NOTE: Inspect intake manifold to throttle body gasket (2) for damage. Inspect the j-nuts for damage or excessive wear. Replace as necessary.

6. Inspect the four j-nuts (1) for damage or excessive wear, remove if necessary.
7. Inspect intake manifold to throttle body gasket (2) for damage, remove if necessary.

INSTALLATION

INSTALLATION

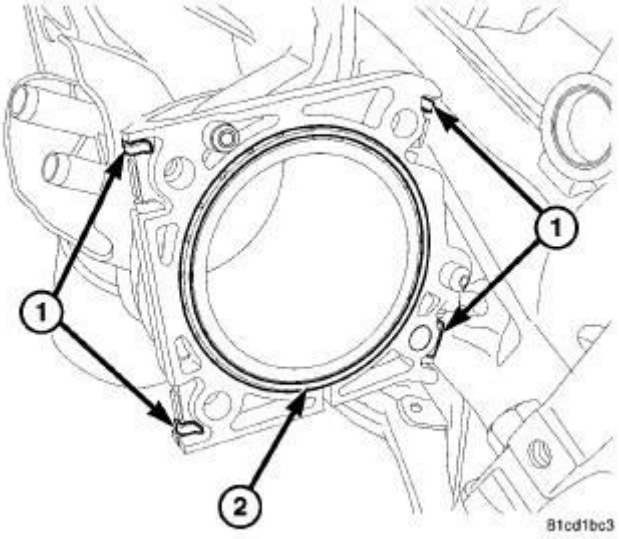

Fig. 181: Throttle Body Gasket
Courtesy of CHRYSLER GROUP, LLC

1. Install a new intake manifold to throttle body gasket (2), if replacement was necessary.
2. Install four new four j-nuts (1), if replacement was necessary.

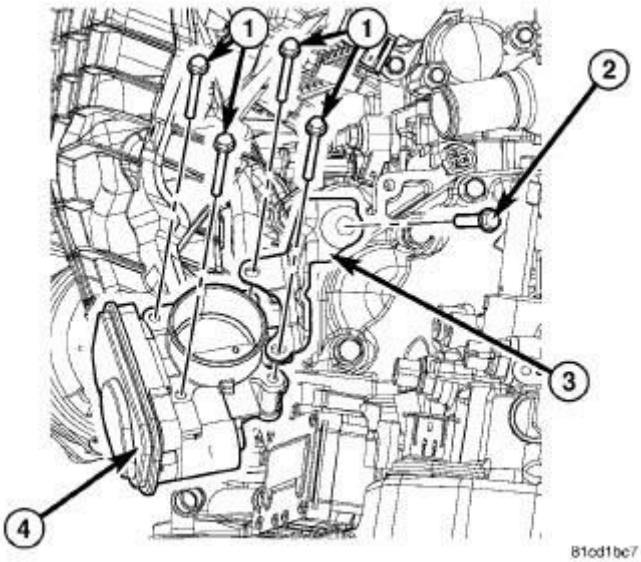

Fig. 182: Throttle Body Bracket And Throttle Body Bolts
Courtesy of CHRYSLER GROUP, LLC

CAUTION: DO NOT OVER TORQUE. Over tightening can cause damage to the throttle body, gaskets, bolts and/or the intake manifold.

3. Install throttle body (4) to intake manifold.
4. Install throttle body support bracket (3), bolt (2) and tighten bracket bolt to 25 N.m (18 ft. lbs.).
5. Install four bolts (1) and hand tighten.

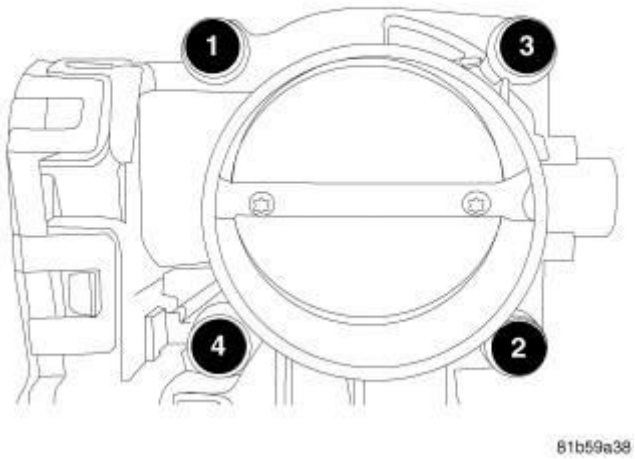

Fig. 183: Throttle Body Bolts Torque Sequence
Courtesy of CHRYSLER GROUP, LLC

CAUTION: The throttle body must be torqued in a mandatory torque sequence. Tighten in a criss - cross pattern to specification.

6. Tighten the bolts in a mandatory torque criss - cross pattern sequence to 9 N.m (80 in. lbs.).

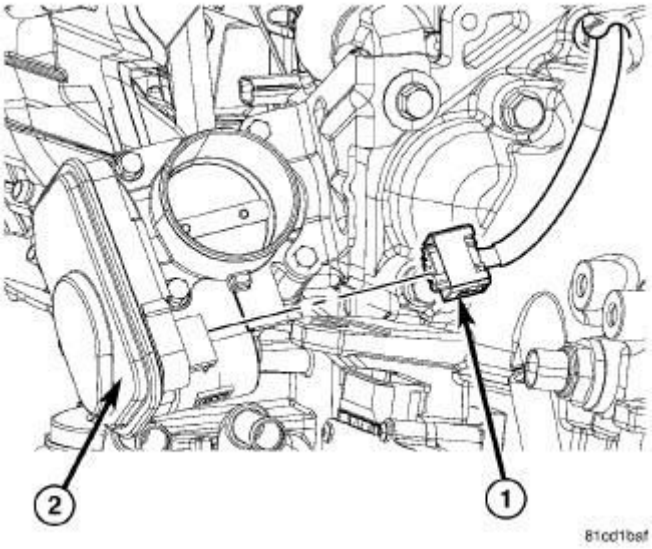

Fig. 184: Throttle Body Electrical Connector
Courtesy of CHRYSLER GROUP, LLC

7. Connect electrical connector (1) to throttle body (2).
8. Install clean air hose and tighten clamps to 4 N.m (35 in. lbs.).
9. Connect negative battery cable, tighten nut to 5 N.m (45 in. lbs.).
10. Use a scan tool and clear all fault codes then perform the ETC RELEARN function.

VALVE, MANIFOLD FLOW

OPERATION

OPERATION

The World Engine is equipped with an intake manifold flow control valve to promote maximum air/fuel atomization. The valve restricts airflow, causing it to tumble or swirl. The tumbling action helps ensure that the fuel and air mix thoroughly and burn faster. The intake manifold flow control valve and variable valve timing work together to improve fuel economy, idle stability, and emissions.

The electrically controlled intake manifold flow control valve is located in the intake manifold at the cylinder head. The intake manifold is constructed of composite material and divided into equal length runners. At the end of each runner is an intake manifold flow control valve flap. The intake manifold flow control valve actuator controls the flaps through a common shaft.

The intake manifold flow control valve actuator is a two-position torque motor that is pulse-width driven by the GPEC2. The actuator is either energized to move the flaps out of the way to the wide-open position or de-energized to move the flaps up, to a restricted position.

The intake manifold flow control valve actuator also contains a potentiometer feedback system to aid in diagnosis. The potentiometer circuit reports the actual position of the intake manifold flow control valve flaps. The GPEC2 compares the actual position with the desired position to ensure that the system is functioning correctly. The intake manifold flow control valve flaps are the mechanical components that restrict airflow to the intake ports. When the valves are moved upward, airflow is restricted and tumble occurs. When the valves are flat against the manifold, the full, unrestricted air charge flows to the intake ports.

It is energized under specific operating conditions: At high engine speeds (greater than 3600 RPM on the 2.0 liter or greater than 4000 RPM on the 2.4 liter) or at wide-open throttle, the intake manifold flow control valve actuator is energized and the flaps move to the wide-open position, at lower engine speeds (less than 3600 RPM on the 2.0 liter or less than 4000 RPM on the 2.4 liter), the actuator is de-energized allowing the flaps to remain in the restricted position. The flap is held at that position by the return spring.

REMOVAL

REMOVAL

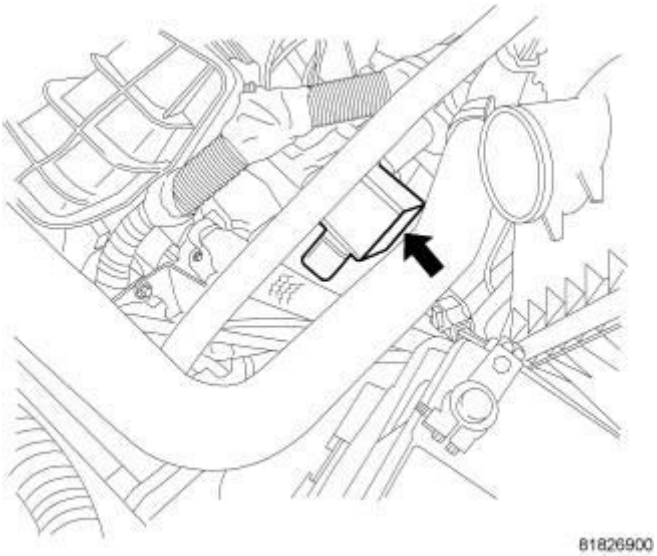

Fig. 185: Manifold Flow Valve

Courtesy of CHRYSLER GROUP, LLC

1. Disconnect negative battery cable.
2. Remove air tube.

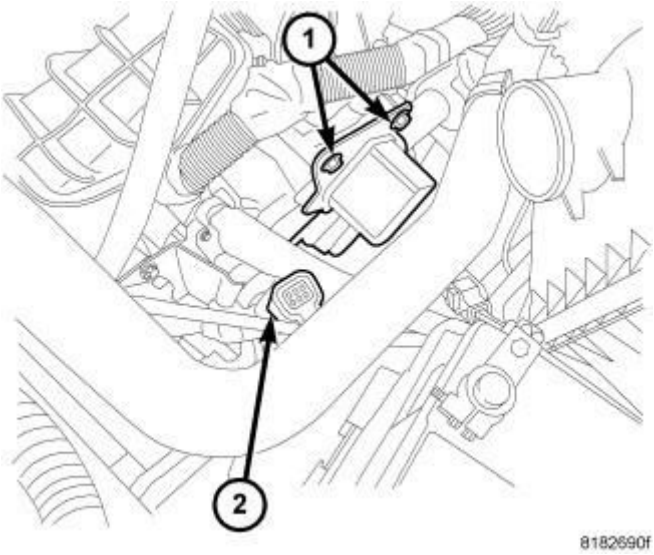

Fig. 186: Manifold Flow Valve Electrical Connector
Courtesy of CHRYSLER GROUP, LLC

3. Disconnect electrical connector (2).
4. Remove mounting bolts (1).

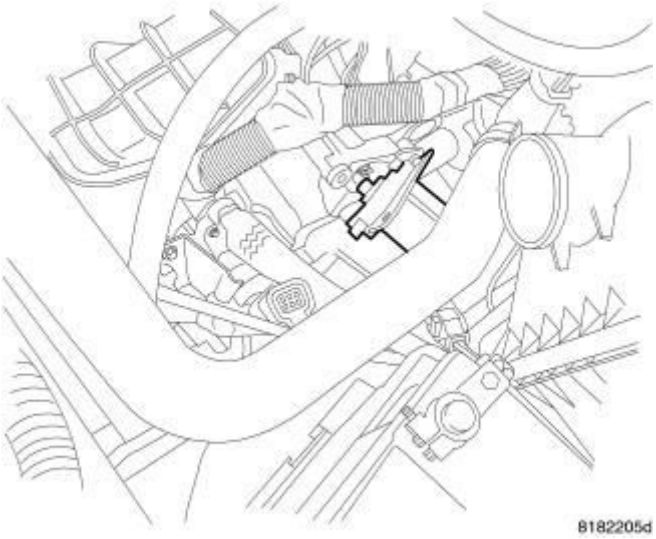

Fig. 187: Valve Location
Courtesy of CHRYSLER GROUP, LLC

5. Remove valve.

INSTALLATION

INSTALLATION

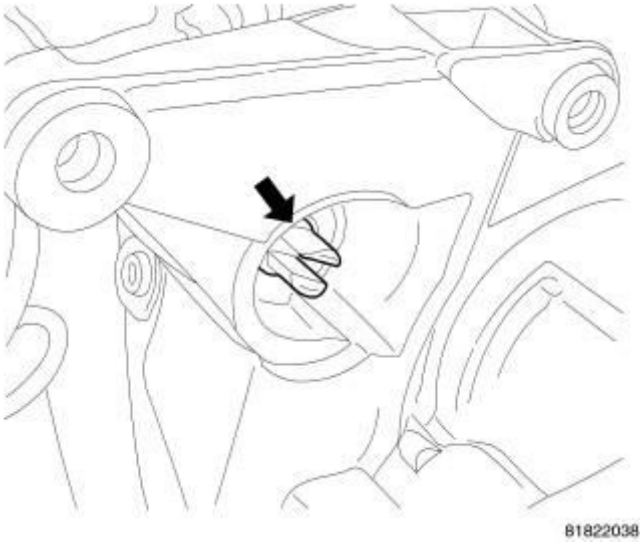

Fig. 188: Flow Management Shaft Slot
Courtesy of CHRYSLER GROUP, LLC

1. Make sure that slot in shaft is not damaged.

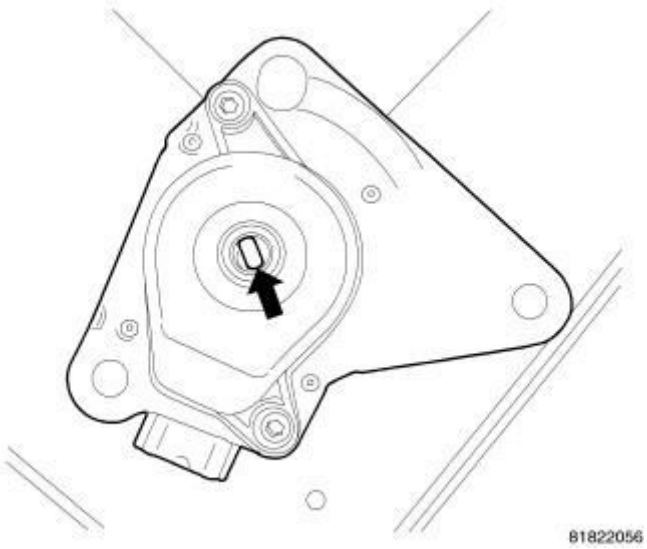

Fig. 189: Flow Management Valve Shaft
Courtesy of CHRYSLER GROUP, LLC

2. Make sure that tab in valve is not damaged.

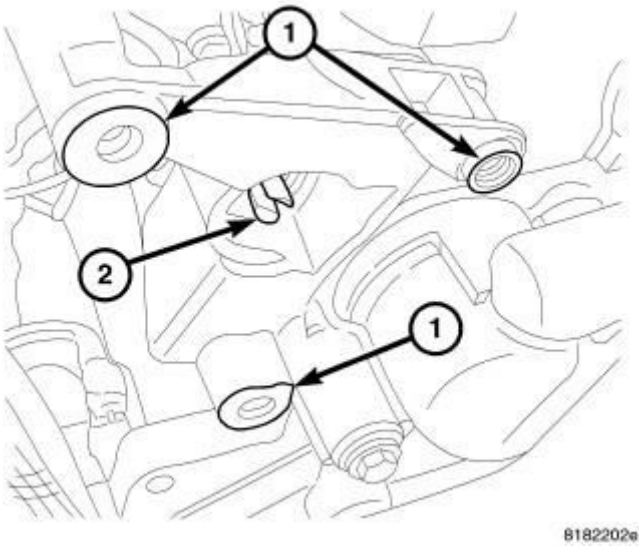

Fig. 190: Flow Valve Shaft & Mount
Courtesy of CHRYSLER GROUP, LLC

3. Align tab in valve with slot in intake manifold shaft (2) and rotate valve counterclockwise until valve drops onto location pin mounting (1).

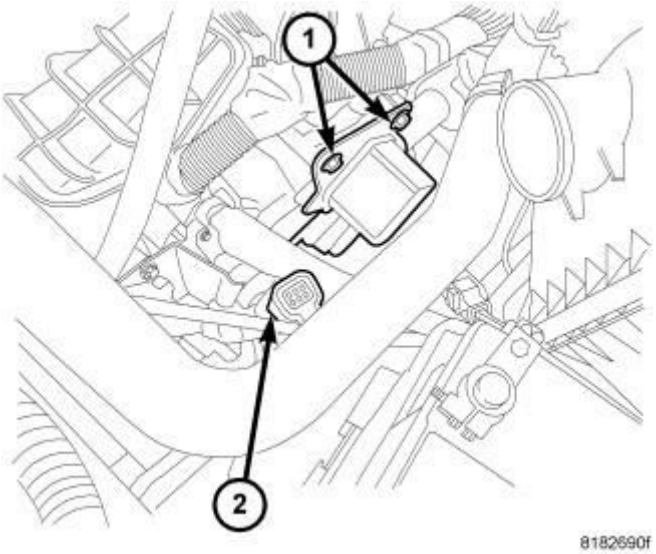

Fig. 191: Manifold Flow Valve Electrical Connector
Courtesy of CHRYSLER GROUP, LLC

4. Install mounting bolts (1) and tighten to 6 N.m (53 in. lbs.).
5. Connect electrical connector (2).
6. Install air tube.
7. Connect negative battery cable.

FUEL DELIVERY, DIESEL

WARNING

WARNING

WARNING: Under no circumstances should gasoline be mixed with diesel fuel (not even during winter). The high pressure pump is lubricated by diesel fuel. Immediate fuel system damage may occur causing replacement and flushing of the complete diesel fuel system. High pressure pump seizure will cause metal particles to spread through out the fuel circuit. All Common-rail Diesel Injection (CDI) fuel system components connected to the fuel circuit will have to be exchanged and the lines replaced.

DIAGNOSIS AND TESTING

FUEL DELIVERY SYSTEM

WARNING: High-pressure fuel tubes deliver fuel under extreme pressure from the injection pump to the injectors. This maybe as high as 1800 bar (26, 106 psi). Use extreme caution when inspecting for high-pressure fuel leaks. Fuel under this amount of pressure can penetrate skin causing serious or fatal injury. Inspect high-pressure fuel leaks with a sheet of cardboard. Wear safety goggles and adequate protective clothing when servicing fuel system.

CONDITION	POSSIBLE CAUSES	CORRECTION
No Start/Hard Start/Start and Stall	Contaminated Fuel	Drain, Flush and Refill Fuel System
	Low Fuel Pressure to Fuel Filter	Test Fuel Pump Pressure
	Restricted Fuel Filter	Replace Fuel Filter
	Fuel Heater Inoperative	Test Fuel Heater and circuitry

	Restricted or Leaking Fuel Lines	Inspect / Replace necessary fuel line(s)
	Stored Diagnostic Trouble Codes	Refer to the **DTC INDEX**
Stalls Under Aggressive Maneuvers/Loss Of Fuel Pressure	Restricted or Damaged Fuel Pump Lower Filter	Test Fuel Pump Pressure
	Contaminated Fuel	Drain, Flush and Refill Fuel System
	Damaged Fuel Tank	Replace Fuel Tank
	Restricted Fuel Filter	Replace Fuel Filter
Cannot Refill Fuel Tank/Excessive Pressure in Fuel Tank When Cap Is Removed	Sticking or Damaged Fuel Tank Fill/Vent Valve	Replace Fuel Tank
	Restricted or Damaged Fuel Tank Fill/Vent Valve Filter or Hose	Replace Fuel Tank Vent Filter

AIR IN FUEL SYSTEM

Air will enter the fuel system whenever fuel supply lines, separator filters, injection pump, high-pressure lines or injectors are removed or disconnected. Air trapped in the fuel system can result in hard starting, a rough running engine, engine misfire, low power, excessive smoke and fuel knock.

Inspect the fuel system from the fuel tank to the injectors for loose connections. Refer to **FUEL DELIVERY, DIESEL , WARNING**. Leaking fuel is an indicator of loose connections or defective seals. Air can also enter the fuel system between the fuel tank and the fuel pump. Inspect the fuel tank module and fuel lines for damage that might allow air into the system.

With the scan tool connected to the vehicle, select Engine and the select Sensor Display. Page down to view Fuel Pressure Set Point and Actual Fuel Pressure. Start the engine and observe the Fuel Pressure Set Point and the Actual Fuel Pressure. If the Actual Fuel Pressure Oscillates above and below the Fuel Pressure Set Point in a regular cycle, inspect the fuel system for air intrusion.

HIGH PRESSURE FUEL TUBES

WARNING: High-pressure fuel tubes deliver fuel under

extreme pressure from the injection pump to the injectors. This maybe as high as 1800 bar (26, 106 psi). Use extreme caution when inspecting for high-pressure fuel leaks. Fuel under this amount of pressure can penetrate skin causing personal injury. Inspect for high-pressure fuel leaks with a sheet of cardboard placed in the suspected area while the engine is not running. Start the vehicle and allow the engine to run for a short period. Turn the engine off and inspect the piece of cardboard. Wear safety goggles and adequate protective clothing when servicing fuel system.

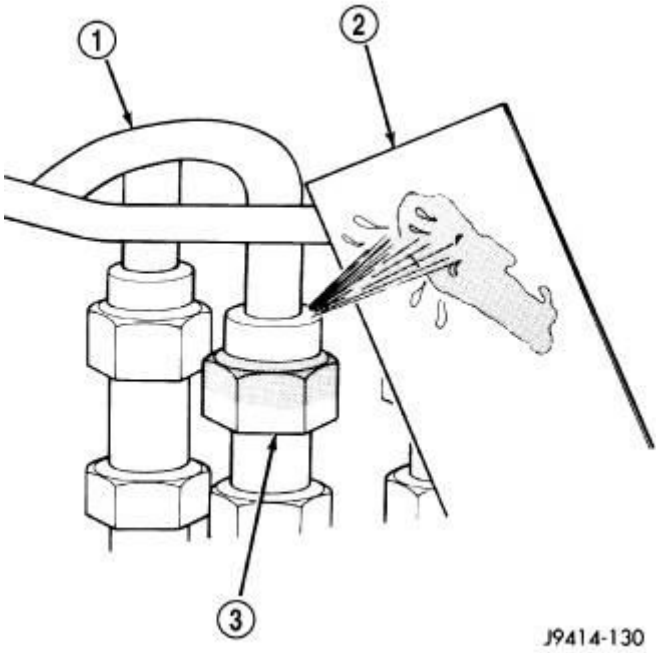

Fig. 192: Typical Test For Leaks With Cardboard
Courtesy of CHRYSLER GROUP, LLC

1 - HIGH-PRESSURE LINE
2 - CARDBOARD
3 - FITTING

High-pressure fuel line (1) leaks can cause starting problems and poor engine performance.

- Turn the engine off.

- Place a piece for cardboard (2) in the suspected area.
- Start the engine and allow to run for a short period.
- Turn the engine off.
- Inspect the cardboard.

If a high-pressure line connection is leaking, counterhold and tighten the connection to specification then perform this procedure again. Replace any damaged, restricted or leaking high-pressure fuel lines with the correct replacement line. Refer to **TUBE(S), FUEL, REMOVAL** and **TUBE(S), FUEL, INSTALLATION**

CAUTION: The high-pressure fuel lines cannot contact each other or other components. Do not attempt to weld high-pressure fuel lines or to repair lines that are damaged. Only use the recommended lines when replacement of high-pressure fuel line is necessary.

STANDARD PROCEDURE

CLEANING FUEL SYSTEM COMPONENTS

CAUTION: Cleanliness cannot be overemphasized when handling or replacing diesel fuel system components. This especially includes the fuel injectors, high-pressure fuel lines, fuel rail, and fuel injection pump. Very tight tolerances are used with these parts. Dirt contamination could cause rapid part wear and possible plugging of fuel injector nozzle tip holes. This in turn could lead to possible engine misfire. Always wash/clean any fuel system component thoroughly before disassembly and then air dry. DO NOT wire brush injector nozzles when cleaning. Cap or cover any open part after disassembly. Before assembly, examine each part for dirt, grease or other contaminants and clean if necessary. When installing new parts, lubricate them with clean

engine oil or clean diesel fuel only. When installing the fuel injectors lubricate the body of fuel injector with Mopar® White Lithium Grease or equivalent. Also, install new sealing ring between fuel injector and combustion chamber.

DRAINING FUEL TANK

NOTE: Two different procedures may be used to drain fuel tank: using a diagnostic scan tool to activate the fuel pump relay and drain the fuel tank, or remove the fuel pump. Due to a one-way check valve installed into the fuel fill opening fitting at the tank, the tank cannot be drained conventionally at the fill cap.

CONVENTIONAL PROCEDURE

1. Disconnect the fuel supply line quick-connect fitting at the fuel filter. Refer to **FITTING, QUICK CONNECT** .
2. Install the appropriate Fuel Line Adapters / Fitting from the (special tool #8978A, Decay Tool, Fuel). Route the opposite end of this hose to an diesel fuel draining station. Using a scan tool, activate the fuel pump and drain the tank until empty.

ALTERNATIVE PROCEDURE

NOTE: If electric fuel pump is not operating, fuel must be drained through fuel fill fitting at tank. Refer to following procedures:

1. Disconnect the negative battery cable.
2. Remove the fuel pump module. Refer to **MODULE, FUEL PUMP, REMOVAL**.
3. After the fuel pump module has been removed, drain fuel tank into an approved diesel fuel draining station.

DIESEL FUEL SYSTEM CONTAMINATION

NOTE: Fuel system damage that was caused by incorrect or contaminated fuel that was introduced into the fuel

system by the customer is not covered under warranty.

IF THE ENGINE WAS NOT STARTED AFTER INCORRECT OR CONTAMINATED FUEL WAS USED DURING REFUELING

If the fuel system has been contaminated (with gasoline, water, etc.) AND the engine WAS NOT STARTED, the following procedure must be followed:

1. Drain the fuel from the fuel tank. Refer to **DRAINING FUEL TANK** . Use an appropriate fuel container. Dispose of the contaminated fuel using the proper procedures.

CAUTION: Dispose of petroleum based products in a manner consistent with all applicable Local, State, Federal, and Provincial regulations.

2. Remove the fuel tank. Refer to **TANK, FUEL, REMOVAL**.
3. Ensure the swirl pot indentation below the in the fuel tank electric fuel pump inlet is completely drained of any contaminated fuel.
4. Completely drain the low pressure fuel lines, and install a new fuel filter.
5. Install the fuel tank, and fill with clean diesel fuel.
6. Road test the vehicle to verify normal operation.

IF THE ENGINE WAS STARTED AFTER INCORRECT OR CONTAMINATED FUEL WAS USED DURING REFUELING

If the fuel system has been contaminated (with gasoline, water, etc.) AND the engine WAS STARTED, the following procedure must be followed:

1. Remove all fuel from the fuel tank. Refer to **DRAINING FUEL TANK** . Use an appropriate fuel container. Dispose of the contaminated fuel using the proper procedures.

CAUTION: Dispose of petroleum based products in a manner consistent with all applicable Local, State, Federal, and Provincial regulations.

2. Remove the fuel tank. Refer to **TANK, FUEL, REMOVAL**.
3. Ensure the swirl pot indentation below the in the fuel tank electric fuel pump inlet is completely drained of any contaminated fuel.

4. Completely drain the low pressure fuel lines, and install a new fuel filter.
5. Install the fuel tank, and fill with clean diesel fuel.
6. Lift up on locking retaining tab to unlock the lock the fuel injector return line from injector
7. Disconnect the low pressure fuel injector return line T-Fitting from fuel injector.
8. Connect a clean hose to the T-Fitting orifice, and place the other end in a suitable clean container.
9. Turn the ignition ON, and collect the fuel escaping from the T-Fitting orifice in a clean container. Check the fuel sample for metal chips, dirt, or other foreign matter.
10. If any dirt or metal chips are present in the fuel sample, completely clean the high pressure side of the fuel injection system, then install new the fuel injectors, and the high pressure fuel pump.
11. If there are no metal chips or dirt present in the fuel sample, the fuel system is OK. Reconnect the T-Fitting orifice, and road test the vehicle to verify normal operation.

SPECIFICATIONS

FUEL SYSTEM PRESSURE

Diesel Engines (Fuel Tank pump)	10 kPa to 90 kPa (1.5 psi to 13 psi.)
Diesel Engine (Tandem pump)	1050 kPa (min. 152 psi)

TORQUE

Description	N.m	Ft. Lbs	In. Lbs
Accelerator Pedal Nuts	29	21	-
Boost Pressure Sensor Bolts	8	-	71
Camshaft Position Sensor (CMP)	9	-	80
Crankshaft Position Sensor (CKP)	9	-	80
Fuel Filter Bracket Nuts	6	-	53
Fuel Filter Shield Bolts	6	-	53
Fuel Injector Clamping Claw	15 + 90°	-	133 + 90°

Bolt			
Stage 1	+ 90°	-	+ 90°
Fuel Injector Pressure Tubes at Injector Union Nut			
Stage 1	7	-	62
Stage 2	33	24	-
Fuel Injector Pressure Tubes at Injector Union Nut			
Stage 1	7	-	62
Stage 2	33	24	-
Fuel Tube Bracket Bolts	9	-	80
Fuel Quantity Control Valve Bolts	7	-	62
Fuel Rail Bolts	14	-	124
Fuel Rail Pressure Sensor	35	26	-
Fuel Return Line Banjo Bolt	32	24	-
Fuel Temperature Sensor	15	-	133
High Pressure Fuel Tube Bolts	9	-	80
High Pressure Fuel Tubes Union Nut at Fuel Rail			
Stage 1	7	-	62
Stage 2	33	24	-
High Pressure Fuel Tubes Union Nut at High Pressure Pump			
Stage 1	7	-	62
Stage 2	33	24	-
High Pressure Pump Drive Wheel Bolts	19	-	168
High Pressure Fuel Pump Bolts	20	-	177
High Pressure Fuel Pump Gear Nut	70	52	-
Mass Air Flow Sensor	6	-	53

SPECIAL TOOLS

SPECIAL TOOLS

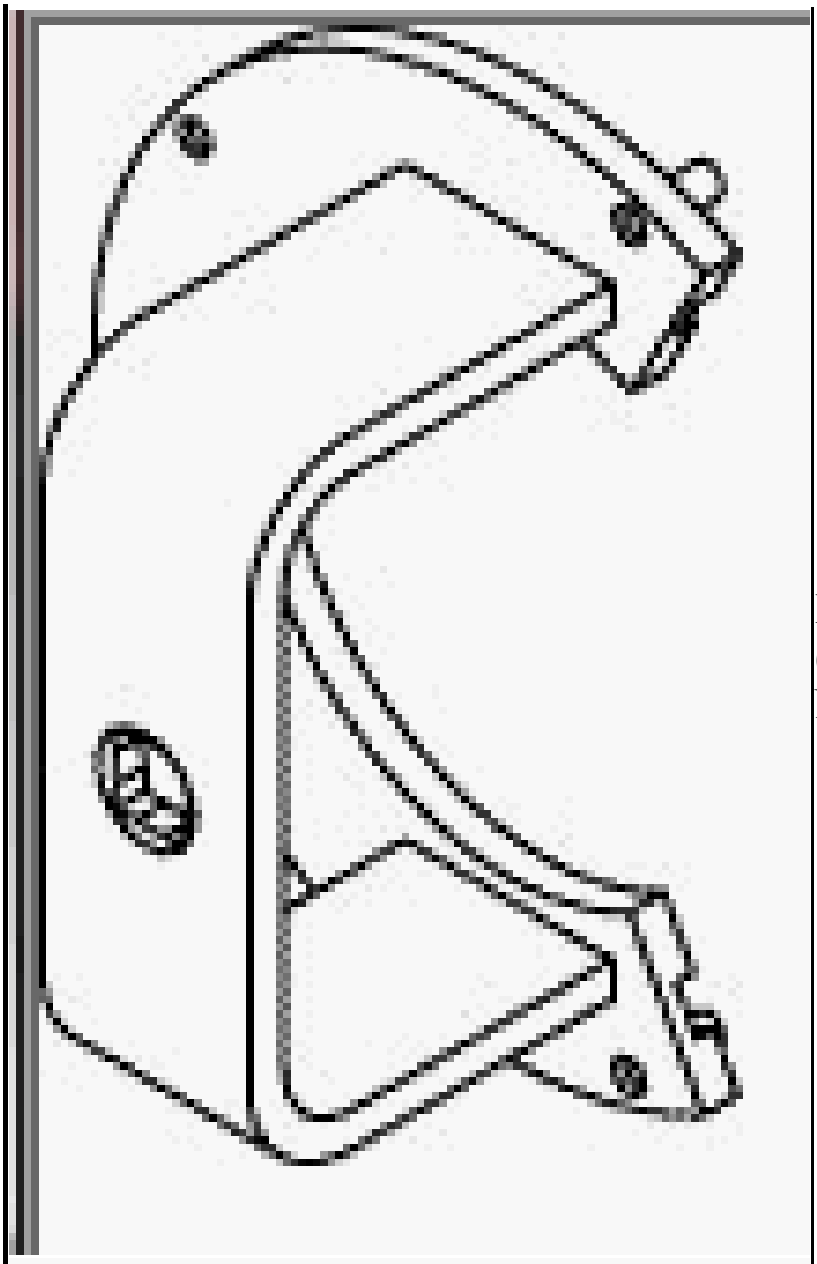

10189 - Wrench, DEF Module Lock Ring (Originally Shipped In Kit Number(s) 10189, 9896.)

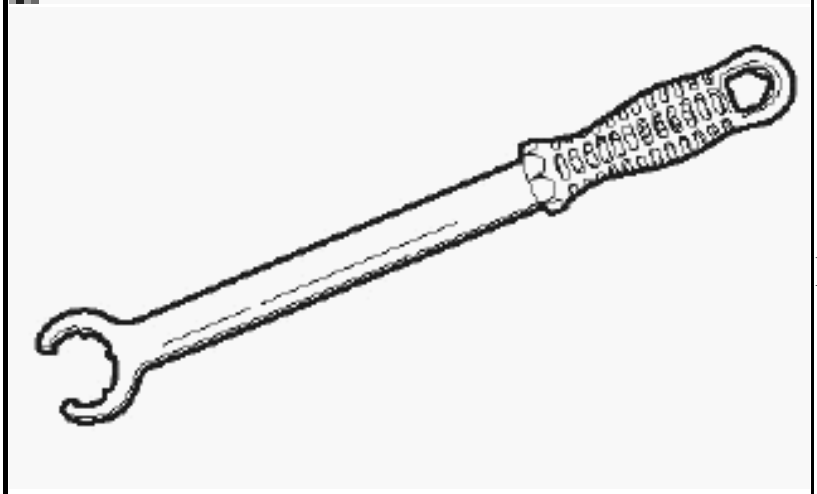

10229 - Holder, Pinion High Pressure Pump

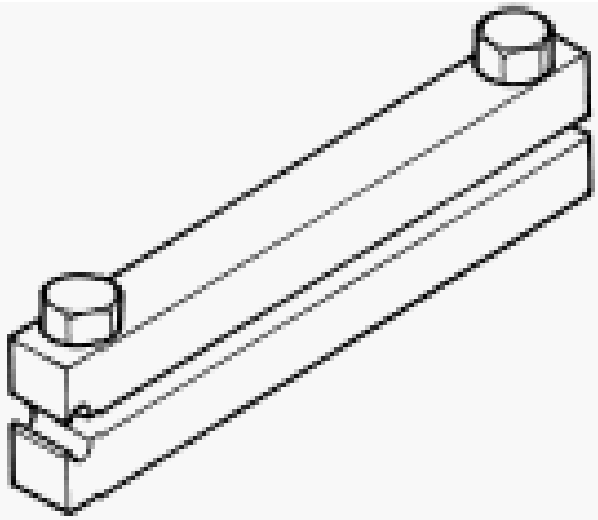	8978A - Decay Tool, Fuel
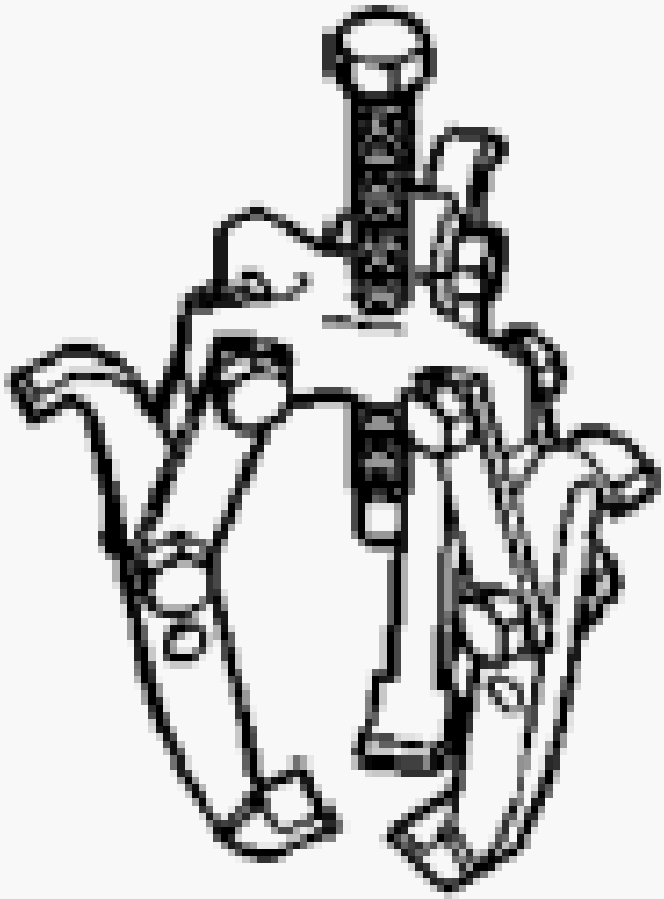	9340 - SAE Fuel Pump Lock Ring Wrench (Originally Shipped In Kit Number(s) 9327, 9327CC, 9397, 9575.)

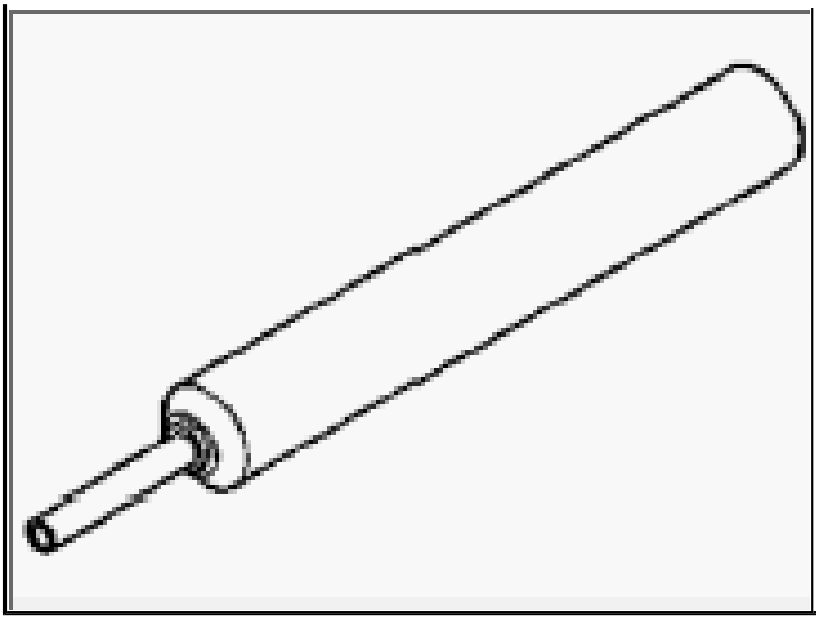	C-4334 - Extractor

FILTER, FUEL

DESCRIPTION

DESCRIPTION

The fuel filter assembly is mounted to the cowl near the brake booster. The fuel filter is made up of a paper element housed in a disposable canister which has a drain on the bottom. The fuel filter protects the fuel injection pump by removing contaminates from the fuel.

DIAGNOSIS AND TESTING

DIAGNOSIS AND TESTING

WARNING: **No sparks, open flames or smoking. Risk of poisoning from inhaling and swallowing fuel. Risk of injury to eyes and skin from contact with fuel. Pour fuels only into suitable and appropriately marked containers. Wear protective clothing.**

This diagnostic will test for a failing fuel pump or restricted fuel filter checking the fuel delivery system, start at step 11. Refer to **DIAGNOSIS AND TESTING** .

REMOVAL

REMOVAL

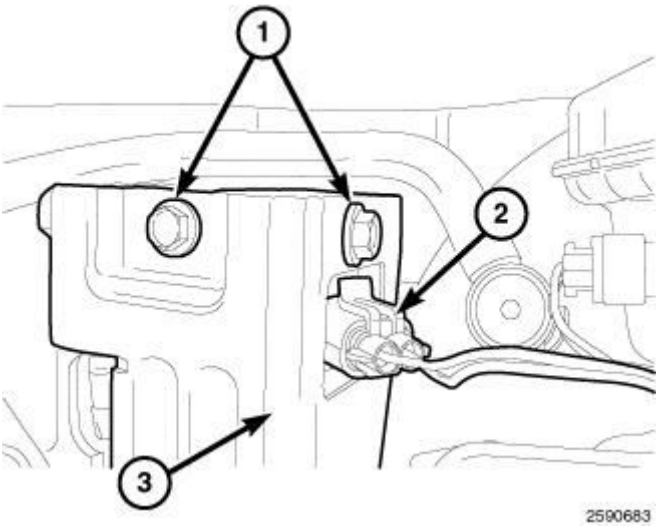

Fig. 193: Bolts, Fuel Heater Harness Connector & Fuel Filter Shield
Courtesy of CHRYSLER GROUP, LLC

1. Disconnect the negative battery cable.
2. Remove air cleaner housing. Refer to **BODY, AIR CLEANER, REMOVAL** .
3. Disconnect the fuel heater harness connector (2).
4. Remove bolts (1) and the fuel filter shield (3).

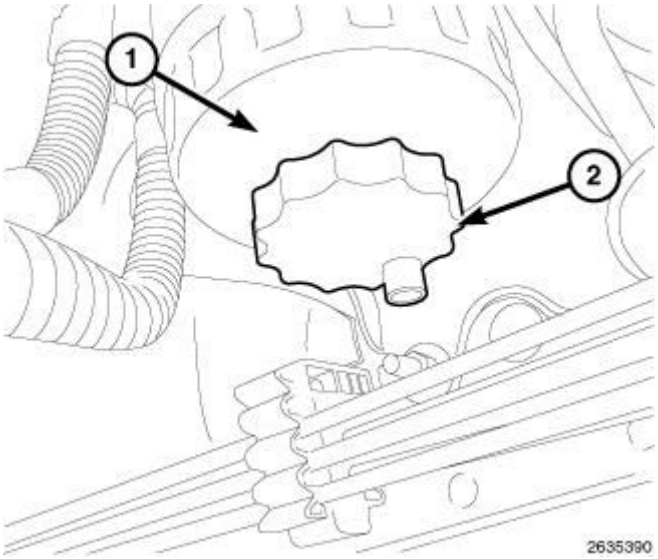

Fig. 194: Fuel Filter Drain Valve
Courtesy of CHRYSLER GROUP, LLC

NOTE: Use a shop towel to capture any residual fuel spillage during this procedure and check for water.

5. Open the drain valve and drain the fuel into a suitable container.

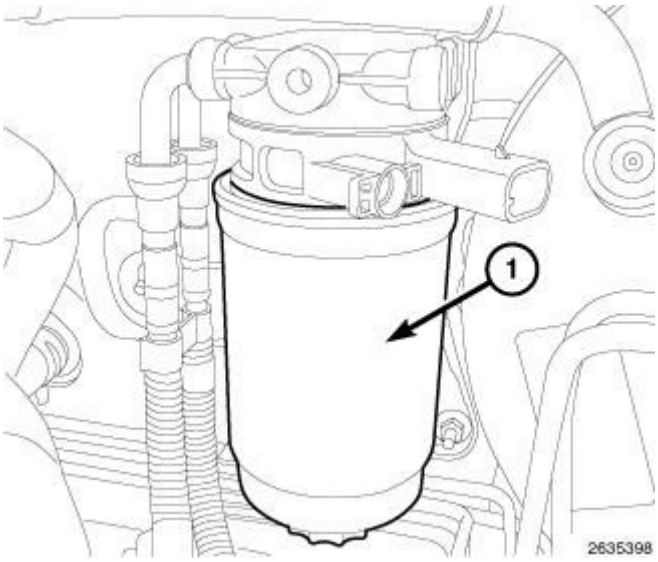

Fig. 195: Fuel Filter Assembly
Courtesy of CHRYSLER GROUP, LLC

6. Using a suitable filter wrench, remove filter assembly (1).

INSTALLATION

INSTALLATION

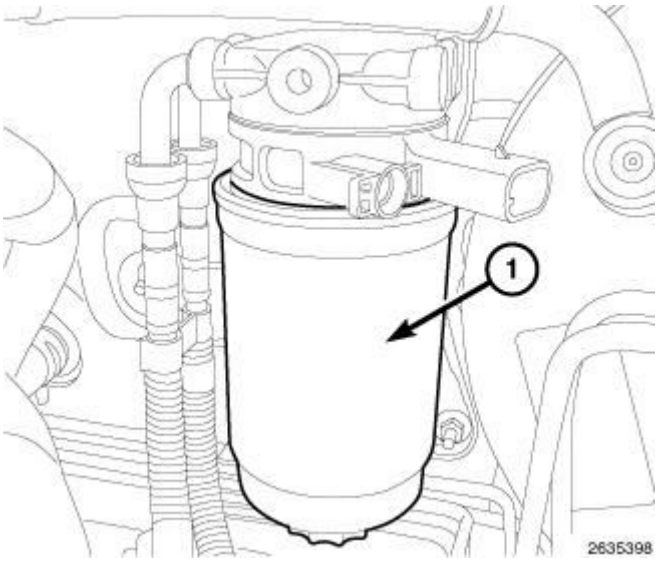

Fig. 196: Fuel Filter Assembly
Courtesy of CHRYSLER GROUP, LLC

NOTE: Pre-fill the fuel filter with clean diesel fuel.

1. Install the fuel filter and securely tighten.

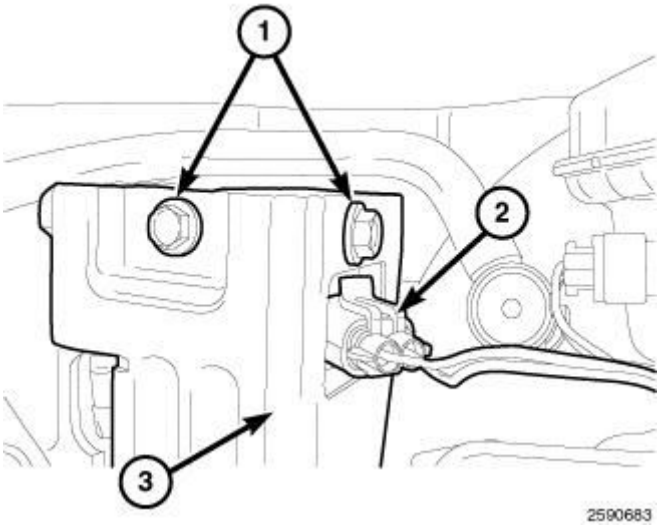

Fig. 197: Bolts, Fuel Heater Harness Connector & Fuel Filter Shield
Courtesy of CHRYSLER GROUP, LLC

2. Install the fuel filter shield (3). Tighten bolts (1) to 6 N.m (53 in. lbs.).
3. Connect the fuel heater harness connector (2).
4. Install air cleaner housing.
5. Connect the negative battery cable.
6. Start engine and inspect for leaks.

FITTING, QUICK CONNECT

DESCRIPTION

DESCRIPTION

Different types of quick-connect fittings are used to attach the various fuel system components, lines and tubes. These are: a single-button type shown in illustration above, a two-button type, a pinch type, a single-tab type, a two-tab type or a plastic retainer ring type. Some are equipped with safety latch clips. Some may require the use of a special tool for disconnection and removal. Refer to **STANDARD PROCEDURE - QUICK-CONNECT FITTINGS** for more information.

CAUTION: Before separating a Quick-Connect fitting, pay attention to what type of fitting is being used. This will prevent unnecessary fitting or fitting latch

breakage.

CAUTION: The interior components (O-rings, clips and latches) of Quick-Connect fittings are not serviced separately, but new plastic spacers and latches are available for some types. If service parts are not available, do not attempt to repair the damaged fitting or fuel line (tube). If repair is necessary, replace the complete fuel line (tube) assembly.

STANDARD PROCEDURE

STANDARD PROCEDURE - QUICK-CONNECT FITTINGS

Different types of quick-connect fittings are used to attach the various fuel system components, lines and tubes. Some quick-connect fittings require the use of a special tool for disconnection and removal.

NOTE: Care must be used when separating fittings. Over-flexing may cause the tube to become deformed or damaged.

These are the quick-connect fittings:

- Redundant Latch Single Button Type Fitting
- Single Button Type Fitting
- Pinch Type Fitting
- Single Tab Type Fitting
- Two Tab Type Fitting
- Plastic Retainer Ring Type Fitting
- Latch Clip Type 1 Fitting
- Latch Clip Type 2 Fitting
- Wing Type Fitting

DISCONNECTING

WARNING: On vehicles equipped with gasoline engines, the fuel system is under a constant pressure (even with engine off). Before servicing any fuel system hose, fitting or line, fuel system pressure must be

released.

CAUTION: Before separating a Quick-Connect fitting, pay attention to what type of fitting is being used. This will prevent unnecessary fitting or fitting latch breakage.

CAUTION: The interior components (O-rings, clips) of quick-connect fittings are not serviced separately, but new plastic spacers and latches are available for some types. If service parts are not available, do not attempt to repair the damaged fitting or fuel line (tube). If repair is necessary, replace the complete fuel line (tube) assembly.

REDUNDANT LATCH SINGLE BUTTON TYPE FITTING:

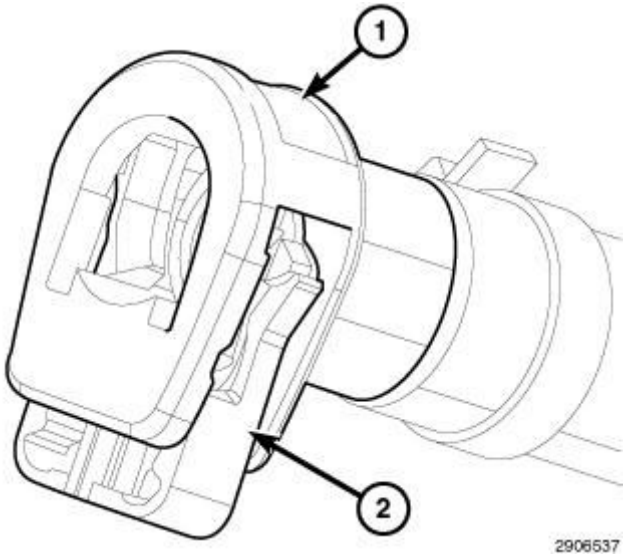

Fig. 198: Redundant Latch & Push Button
Courtesy of CHRYSLER GROUP, LLC

This type of quick-connect fitting is equipped with a redundant latch (2) and a single push button (1) that releases two internal latches located in the quick-connect fitting. Special tools are not required for removal.

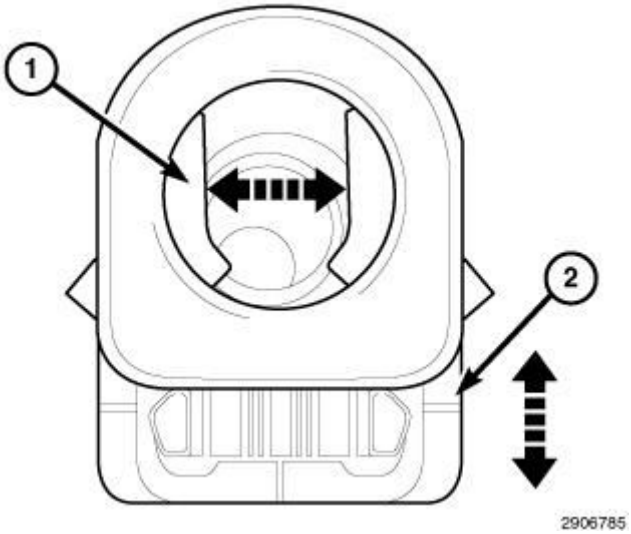

Fig. 199: Redundant Latch & Internal Latches
Courtesy of CHRYSLER GROUP, LLC

CAUTION: Do not pry or pull up on the push button as damage to the latches of the quick-connect fitting will occur.

1. Pull the redundant latch (2) out away from the quick-connect fitting.
2. Press on the push button with your thumb, release the internal latches (1) and remove the quick-connect fitting from the fuel system component.

SINGLE BUTTON TYPE FITTING:

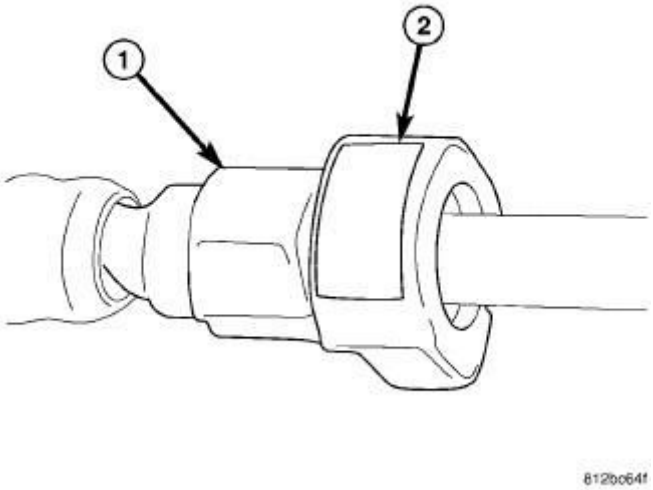

Fig. 200: Single Button Fitting
Courtesy of CHRYSLER GROUP, LLC

CAUTION: Do not pry or pull up on the push button as damage to the latches of the quick-connect fitting will occur.

This type of quick-connect fitting is equipped with a single push button (2) that releases two internal latches located in the quick-connect fitting. Special tools are not required for removal.

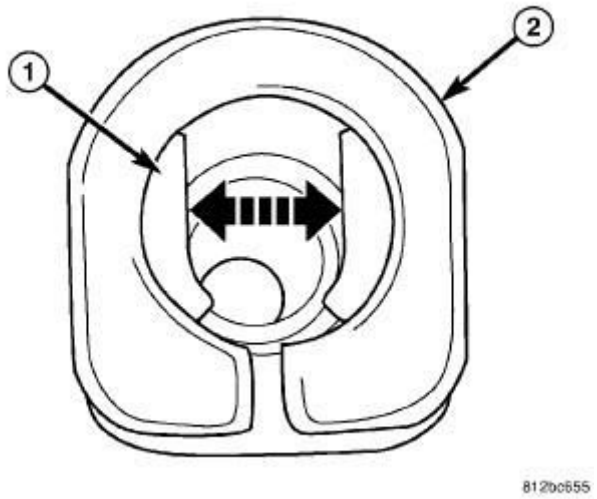

Fig. 201: Ouick-Connect Fitting Latches
Courtesy of CHRYSLER GROUP, LLC

1. Press on the push button with your thumb, release the internal latches (1).
2. Remove the quick-connect fitting from the fuel system component.

2 BUTTON TYPE FITTING

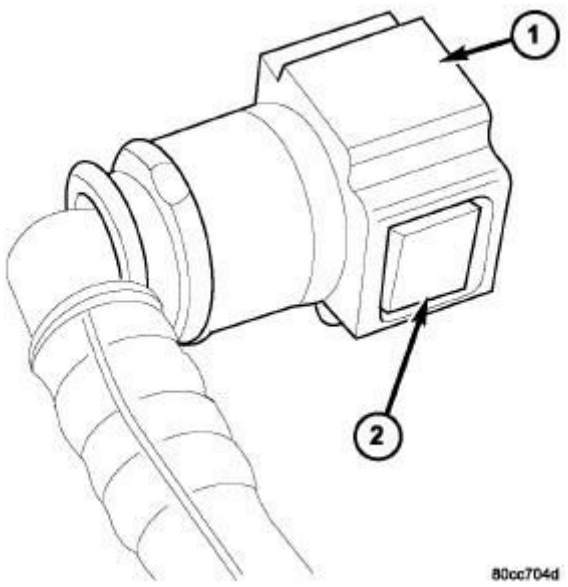

Fig. 202: 2-Button Type Fitting
Courtesy of CHRYSLER GROUP, LLC

This type of quick-connect fitting (1) is equipped with two push buttons (2) that releases two internal latches located in the quick-connect fitting. Special tools are not required for removal.

1. Press on both push buttons with your thumb, release the internal latches.
2. While holding the two push buttons simultaneously, remove the quick-connect fitting from the fuel system component.

PINCH TYPE FITTING

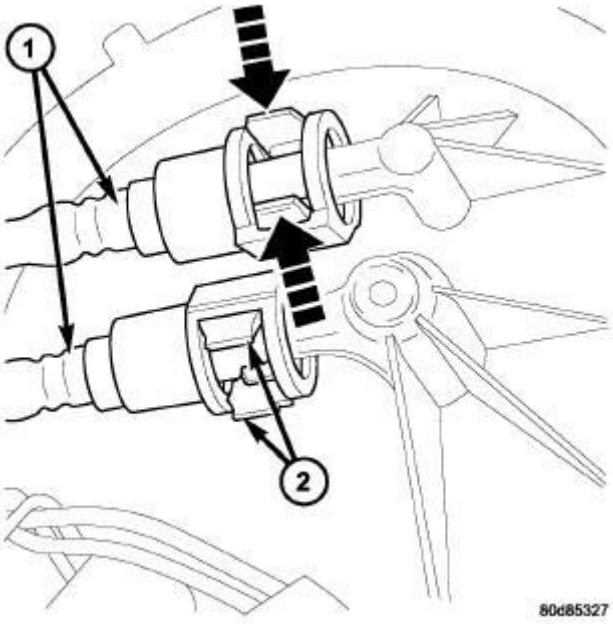

Fig. 203: Pinch Type Quick-Connect Fitting
Courtesy of CHRYSLER GROUP, LLC

This type of quick-connect fitting (1) is equipped with two finger tabs (2). Special tools are not required for removal.

1. Pinch both tabs (2) together and release the quick-connect fitting.
2. Remove the quick-connect fitting from the fuel system component.

SINGLE TAB TYPE FITTING

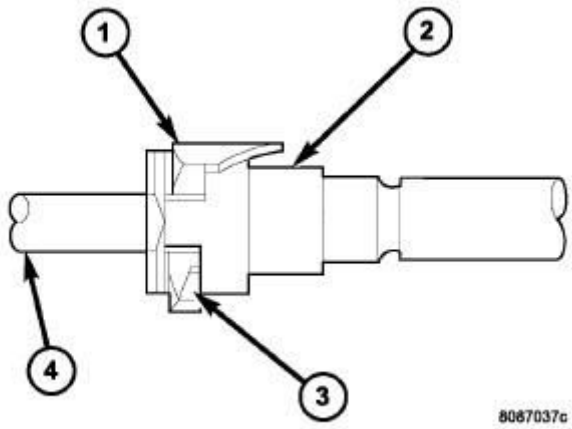

Fig. 204: Single-Tab Type Fitting
Courtesy of CHRYSLER GROUP, LLC

This type of quick-connect fitting (3) is equipped with a single pull tab (1). The tab is removable. After tab is removed the quick-connect fitting can be separated from the fuel system component. Special tools are not required for removal.

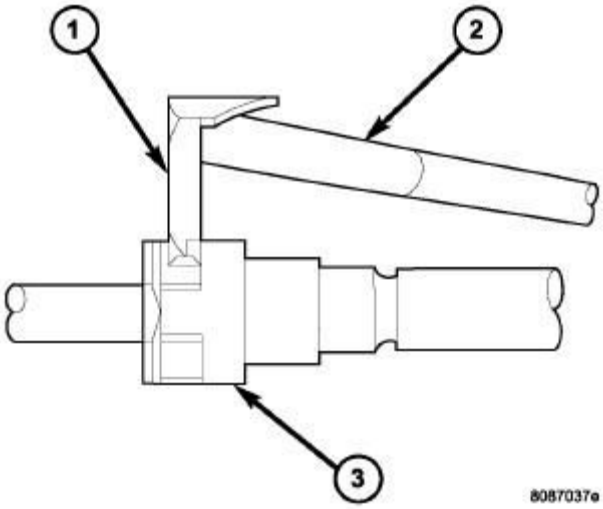

Fig. 205: Disconnecting Single-Tab Type Fitting
Courtesy of CHRYSLER GROUP, LLC

1. Press release tab on side of fitting to release pull tab (1). **If release tab is not pressed prior to releasing pull tab, pull tab will be damaged.**
2. While pressing the release tab on the side of the quick-connect fitting use a screwdriver (2) to pry up the pull tab.
3. Raise the pull tab until it separates from the quick-connect fitting.
4. Remove the quick-connect fitting from the fuel system component.

TWO TAB TYPE FITTING

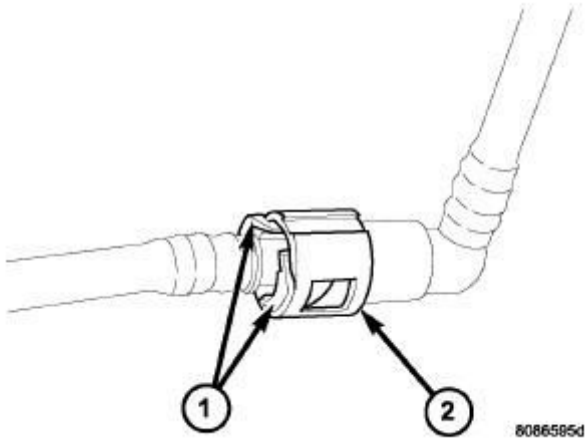

Fig. 206: Two-Tab Type Fitting
Courtesy of CHRYSLER GROUP, LLC

This type of quick-connect fitting (2) is equipped with tabs located on both sides of the fitting (1). These tabs are integral to the fuel system component. The plastic tabs will remain on the component being serviced after the quick-connect fitting is removed. The O-ring and spacer will remain in the quick-connect fitting. Special tools are not required for removal.

1. Squeeze the plastic tabs (1) against the sides of component being serviced with your fingers.
2. Remove the quick-connect fitting from the fuel system component.

PLASTIC RETAINER RING TYPE FITTING

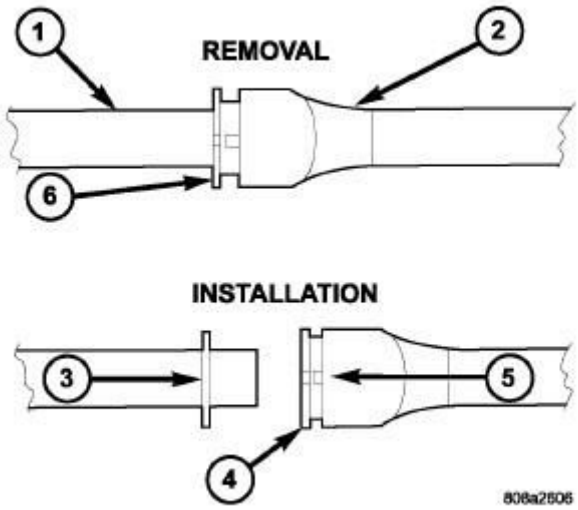

Fig. 207: Plastic Retainer Ring Type Fitting
Courtesy of CHRYSLER GROUP, LLC

This type of fitting can be identified by the use of a round plastic retainer ring (4) usually black in color. Special tools are not required for removal.

NOTE: The round plastic retainer ring must be pressed squarely into the quick-connect fitting body. If this retainer is cocked during removal it will be difficult to disconnect the quick-connect fitting. Use an open-end wrench on the shoulder of the plastic retainer ring to aid in disconnection.

1. Firmly push the quick-connect fitting (5) towards the component being serviced while firmly pushing the round plastic retainer ring into the quick-connect fitting (6). With the round plastic ring depressed, remove the quick-connect fitting from the fuel system component.
2. After removal the plastic retainer ring will remain with the quick-connect fitting.

LATCH CLIP TYPE 1 FITTING

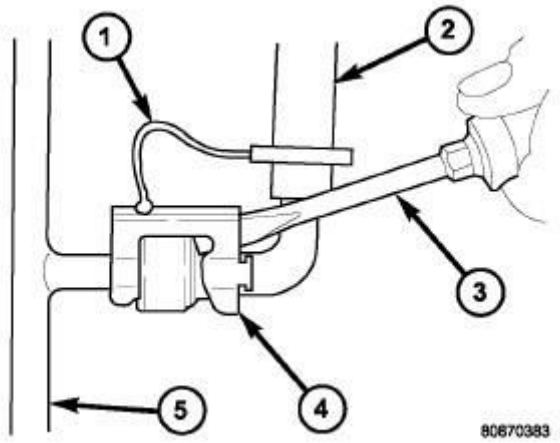

Fig. 208: Latch Clip Type 1
Courtesy of CHRYSLER GROUP, LLC

Depending on vehicle model and engine, 2 different types of safety latch clips are used. One is tethered (1) to fuel line and the other is not. A special tool will be necessary to disconnect the fuel line after latch clip is removed. The latch clip may be used on certain fuel line and fuel rail connections or to join fuel lines together.

1. Pry up on the latch clip (4) with a screwdriver (3).
2. Slide the latch clip away from the quick-connect fitting while lifting the screwdriver and position aside.

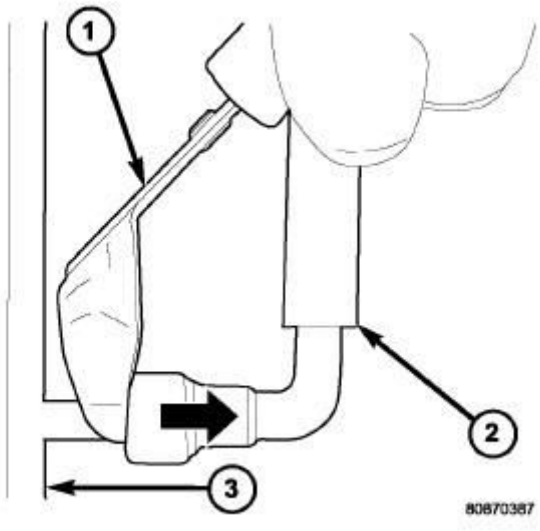

Fig. 209: Fuel Line Disconnection Using Special Tool
Courtesy of CHRYSLER GROUP, LLC

3. Insert the commercially available fuel line removal tool (1) into the quick-connect fitting and release the internal latches.

NOTE: After removal the internal latches will remain in the quick-connect fitting.

4. With the commercially available fuel line removal tool (1) still inserted, remove the quick-connect fitting from the fuel system component.

LATCH CLIP TYPE 2 FITTING

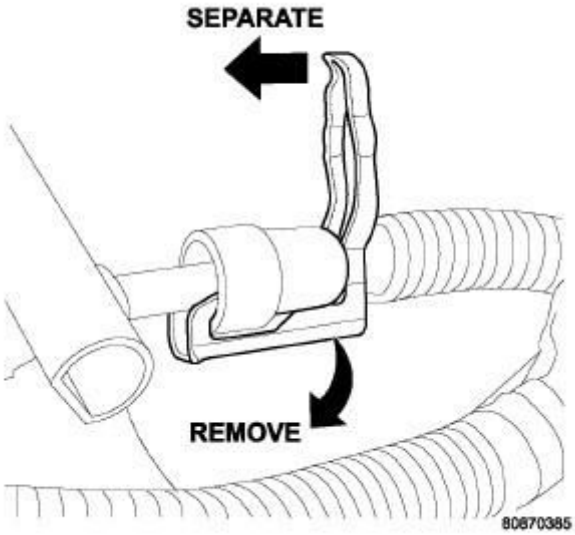

Fig. 210: Latch Clip Type 2
Courtesy of CHRYSLER GROUP, LLC

Depending on vehicle model and engine, 2 different types of safety latch clips are used. One is tethered to the fuel line and the other is not. A special tool will be necessary to disconnect the fuel line after the latch clip is removed. The latch clip may be used on certain fuel line and fuel rail connections or to join fuel lines together.

1. Unlatch the small arms on the end of clip, swing away and separate from the fuel system component.
2. Slide the latch clip away from the quick-connect fitting while lifting with a screwdriver and position aside.

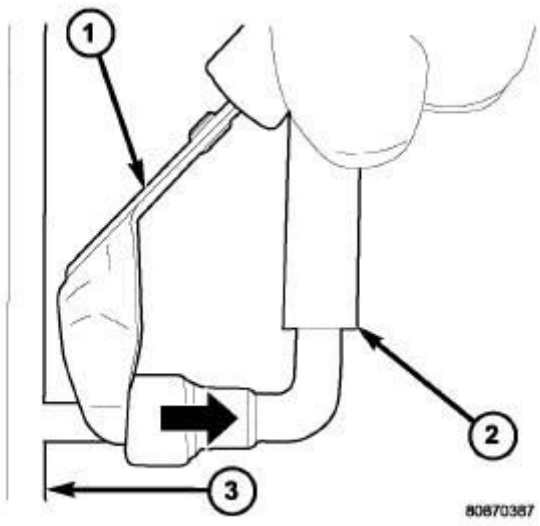

Fig. 211: Fuel Line Disconnection Using Special Tool
Courtesy of CHRYSLER GROUP, LLC

3. Insert the commercially available fuel line removal tool (1) into the quick-connect fitting and release the internal latches.

NOTE: After removal the internal latches will remain in the quick-connect fitting.

4. With the commercially available fuel line removal tool (1) inserted, remove the quick-connect fitting from the fuel system component.

WING TYPE FITTING

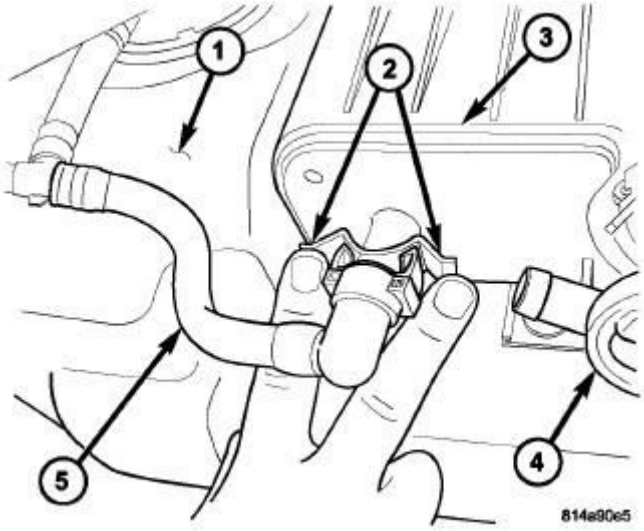

Fig. 212: Wing Type Fitting
Courtesy of CHRYSLER GROUP, LLC

The wing type fitting is used on fuel system and emission components. The wing type fitting is most commonly used on the EVAP canister (3). Special tools are not required for removal.

1. Using two fingers, press both wings (2) and release the locking tabs.

NOTE: After removal the locking tabs will remain with the quick-connect fitting.

2. While holding the wings, remove the quick-connect fitting from the fuel system component.

CONNECTING

1. Inspect the quick-connect fitting body and fuel system components for damage. Replace as necessary.
2. Prior to connecting any quick-connect fitting to components, check condition of fitting and components. Clean parts with a lint-free cloth. Lubricate with clean engine oil.
3. Insert the quick-connect fitting onto the fuel tube or fuel system component until the built-in stop on the fuel tube or component rests against the back of fitting.
4. Continue pushing until a click is felt.

5. If Equipped:
   - **Redundant Latch Single Button Type Fitting:** Push redundant latch until it locks into position in the quick-connect fitting.
   - **Single Tab Type Fitting:** Push new tab down until it locks into position in the quick-connect fitting.
   - **Latch Clip Type Fitting:** Install latch clip (snaps into position). **If latch clip will not snap into position, this indicates the quick-connect fitting is not properly installed onto fuel system component, recheck the connection.**
6. Verify a locked condition by firmly pulling on the quick-connect fitting connection of the fuel system component.

MODULE, FUEL PUMP

DESCRIPTION

DESCRIPTION

The fuel pump module is located in the fuel tank and consists of a fuel pump, fuel contaminant filtering screen, fuel reservoir and fuel tank level monitoring devise. The in tank fuel pump is low pressure and is to maintain an adequate supply of fuel to the high pressure injection pump.

OPERATION

OPERATION

When the PCM senses the ignition switch in the On, Crank or Run mode, battery positive voltage is supplied from the ASD relay and the TIPM to the fuel pump relay. The PCM will also ground the fuel pump relay driver at this time, closing the fuel pump relay contacts, completing the fuel pump circuit to chassis ground. If the PCM senses the ignition in the ON position, without a engine crank signal for more than 30 seconds, it will open the fuel pump driver circuit, turning off the fuel pump.

The regulated fuel lift pump, in On and Crank mode will produce approximately 4 bar (58 psi) to maintain constant fuel pressure to the high pressure injection pump.

REMOVAL

FRONT WHEEL DRIVE

WARNING: Risk of injury to eyes and skin from contact with fuel. Wear protective clothing and eye protection. Risk of poisoning from inhaling and swallowing fuel. Pour fuel only into appropriately marked and approved containers. Failure to follow these instructions may result in possible serious or fatal injury.

WARNING: The fuel system is under constant high pressure even with engine OFF. Until the fuel pressure has been properly released from the system, do not attempt to open the fuel system. Do not smoke or use open flames/sparks when servicing the fuel system. Make sure the area in which the vehicle is being serviced is in a well ventilated area. Failure to comply may result in serious or fatal injury.

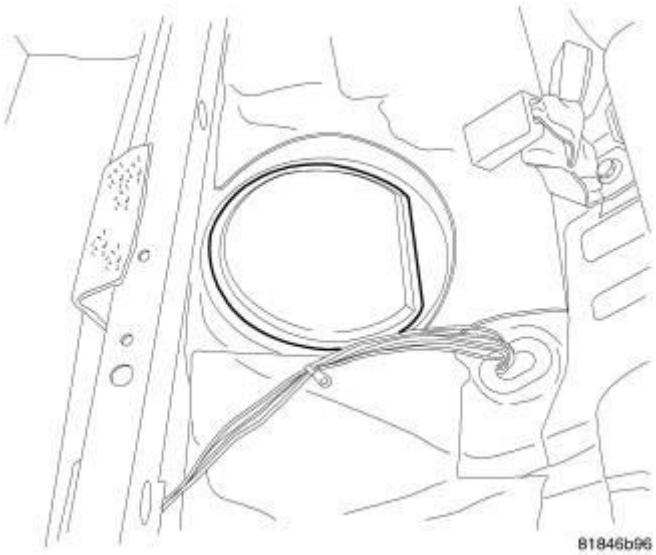

Fig. 213: Fuel Pump Module Cover
Courtesy of CHRYSLER GROUP, LLC

1. Remove the negative battery cable.
2. Remove the rear seat. Refer to **SEATS** .
3. Remove the fuel pump module access cover.

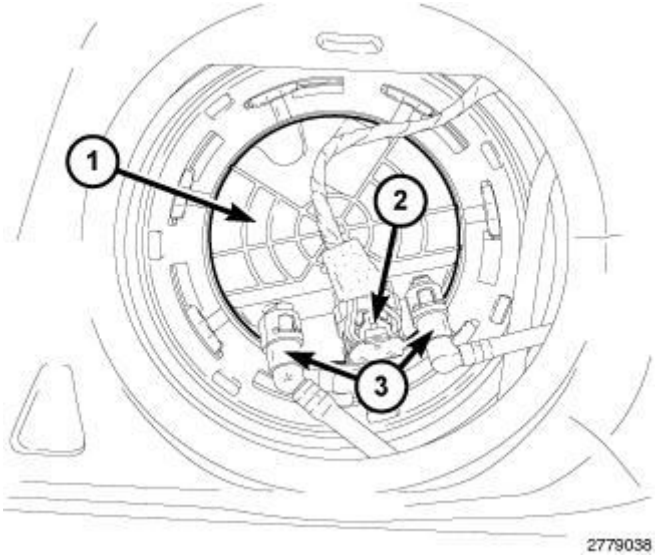

Fig. 214: Fuel Pump Module, Harness Connector & Fuel Line
Courtesy of CHRYSLER GROUP, LLC

4. Disconnect the fuel pump module (1) harness connector (2).
5. Disconnect the fuel line (3) to the fuel pump module.

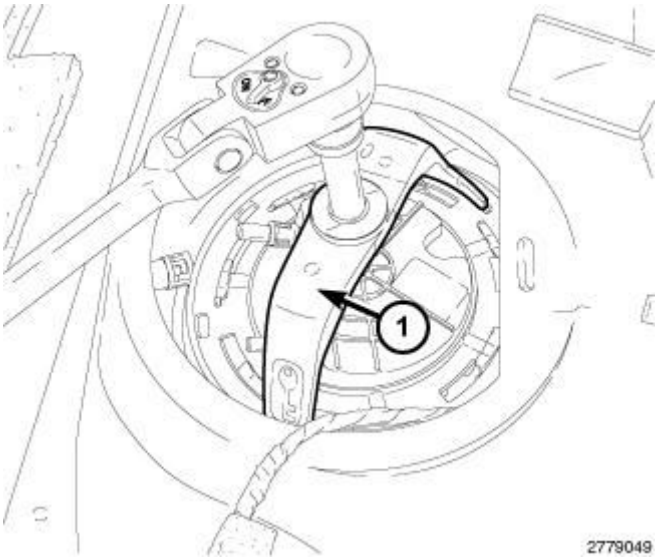

Fig. 215: Lock-Ring Remover/Installer 9340
Courtesy of CHRYSLER GROUP, LLC

NOTE: Prior to removing the fuel pump module, use compressed air to remove any accumulated dirt and debris from around fuel tank opening.

6. Position the (special tool #9340, SAE Fuel Pump Lock Ring Wrench) (1) into the notches on the outside edge of the lock-ring.

7. Install a 1/2 inch drive breaker bar into the (special tool #9340, SAE Fuel Pump Lock Ring Wrench) (1).
8. Rotate the breaker bar counterclockwise and remove the lock-ring.

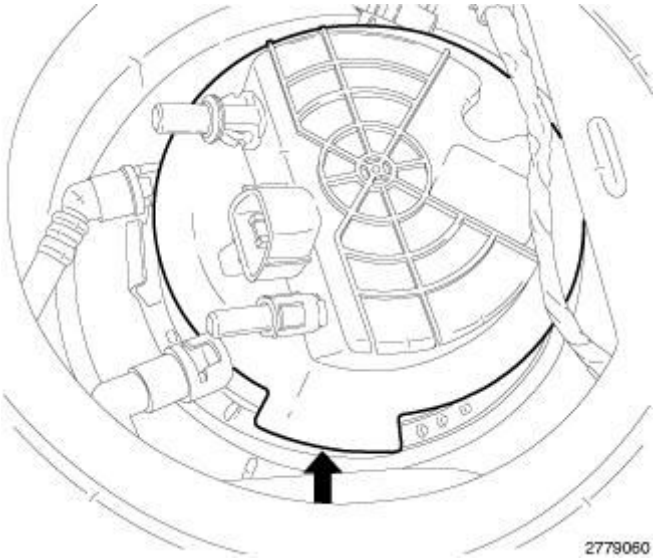

Fig. 216: Mark Fuel Pump Module Orientation
Courtesy of CHRYSLER GROUP, LLC

NOTE: The fuel pump module has to be properly located in the tank for the fuel level gauge to work properly.

9. Mark the fuel pump module orientation.

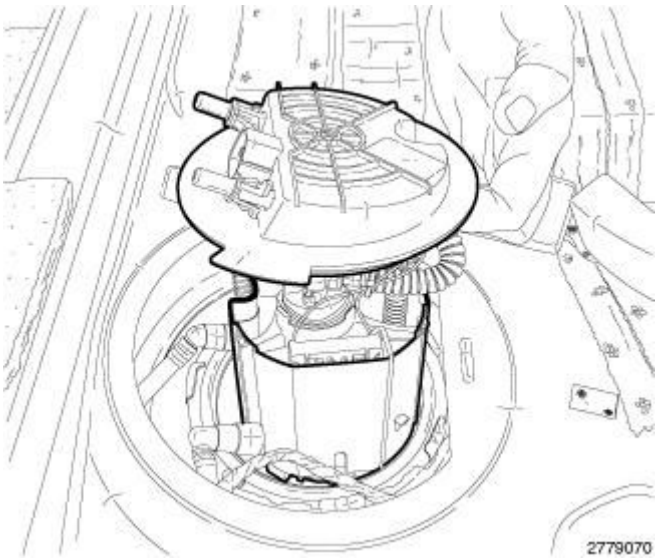

Fig. 217: Fuel Pump Module Assembly
Courtesy of CHRYSLER GROUP, LLC

NOTE: Do not spill fuel into the interior of the vehicle.

10. Raise the fuel pump module out of the fuel tank using caution not spill fuel inside the vehicle.

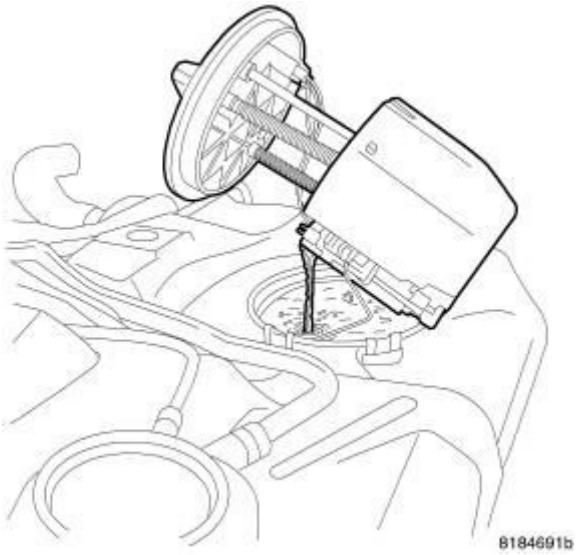

Fig. 218: Draining Fuel
Courtesy of CHRYSLER GROUP, LLC

11. Tip the fuel pump module on its side and drain all fuel from the reservoir.

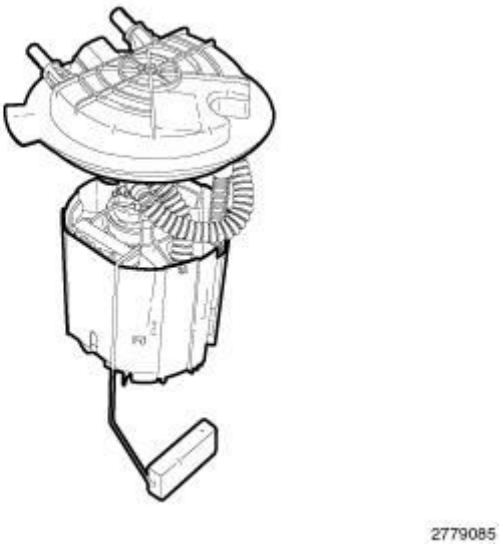

Fig. 219: Fuel Pump Module
Courtesy of CHRYSLER GROUP, LLC

12. Remove the fuel pump module from the fuel tank using caution not to bend the float arm.

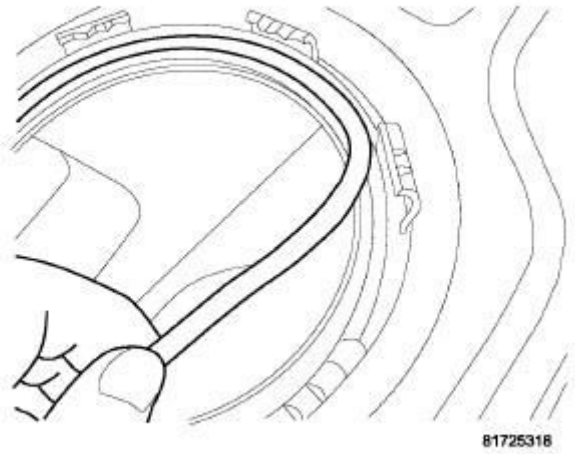

Fig. 220: Fuel Pump Module Seal
Courtesy of CHRYSLER GROUP, LLC

13. Remove and discard the rubber O-ring seal.

ALL WHEEL DRIVE

MAIN FUEL PUMP MODULE

WARNING: Risk of injury to eyes and skin from contact with fuel. Wear protective clothing and eye protection. Risk of poisoning from inhaling and swallowing fuel. Pour fuel only into appropriately marked and approved containers. Failure to follow these instructions may result in possible serious or fatal injury.

WARNING: The fuel system is under constant high pressure even with engine OFF. Until the fuel pressure has been properly released from the system, do not attempt to open the fuel system. Do not smoke or use open flames/sparks when servicing the fuel system. Make sure the area in which the vehicle is being serviced is in a well ventilated area. Failure to comply may result in serious or fatal injury.

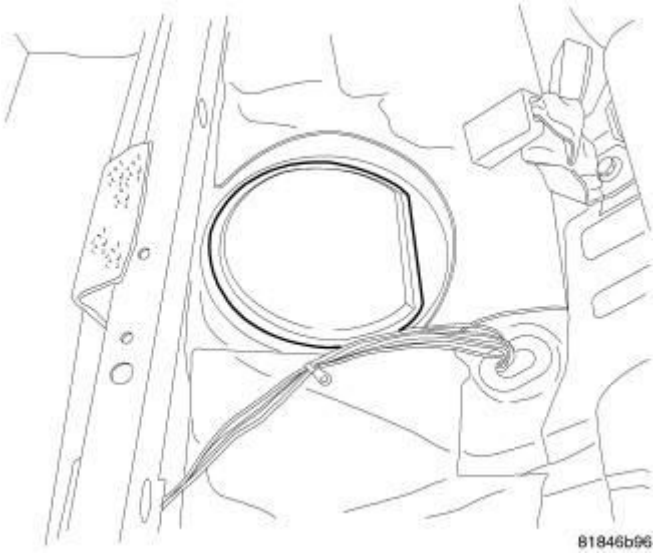

Fig. 221: Fuel Pump Module Cover
Courtesy of CHRYSLER GROUP, LLC

1. Perform the fuel system pressure release procedure. Refer to **FUEL SYSTEM PRESSURE RELEASE PROCEDURE** .
2. Remove the negative battery cable.
3. Remove the rear seat.
4. Remove the main fuel pump module access cover.

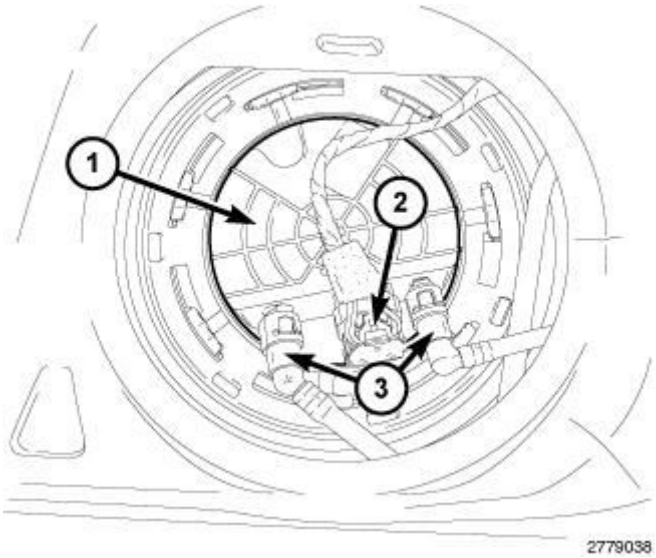

Fig. 222: Fuel Pump Module, Harness Connector & Fuel Line
Courtesy of CHRYSLER GROUP, LLC

5. Disconnect the electrical connector (2) from the main fuel pump module (1).
6. Disconnect the fuel line (3) from the main fuel pump module.

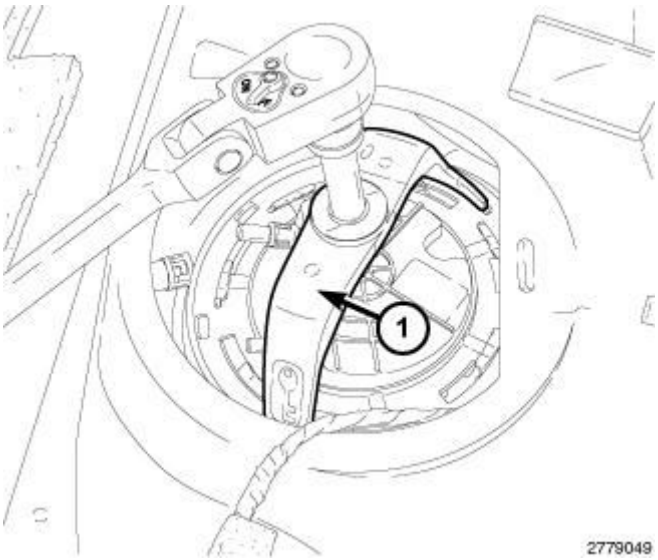

Fig. 223: Lock-Ring Remover/Installer 9340
Courtesy of CHRYSLER GROUP, LLC

NOTE: Prior to removing the main fuel pump module, use compressed air to remove any accumulated dirt and debris from around fuel tank opening.

7. Position the (special tool #9340, SAE Fuel Pump Lock Ring Wrench) into the notches on the outside edge of the lock-ring.
8. Install a 1/2 inch drive breaker bar into the (special tool #9340, SAE Fuel Pump Lock Ring Wrench).
9. Rotate the breaker bar counterclockwise and remove the lock-ring.

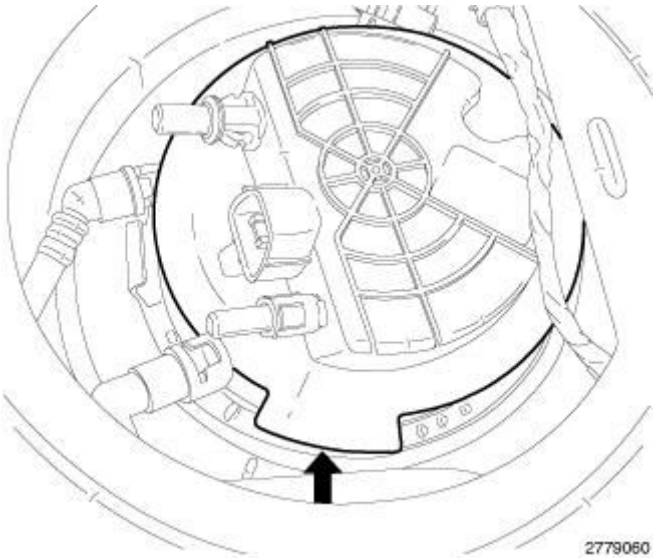

Fig. 224: Mark Fuel Pump Module Orientation
Courtesy of CHRYSLER GROUP, LLC

NOTE: The main fuel pump module has to be properly located in the fuel tank for the fuel level gauge to work properly.

10. Mark the main fuel pump module orientation.

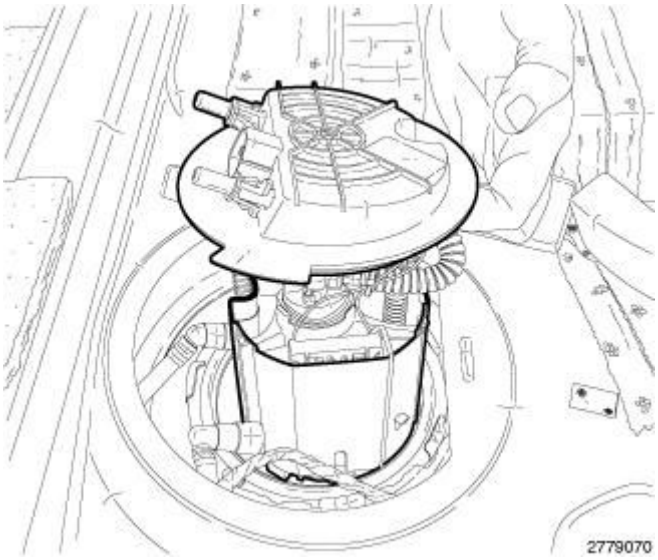

Fig. 225: Fuel Pump Module Assembly
Courtesy of CHRYSLER GROUP, LLC

WARNING: The fuel pump module reservoir does not empty out when the tank is drained. The fuel in the reservoir will spill out when the module is removed.

NOTE: Do not spill fuel into the interior of the vehicle.

11. Raise the main fuel pump module out of fuel tank using caution not spill fuel inside the vehicle.

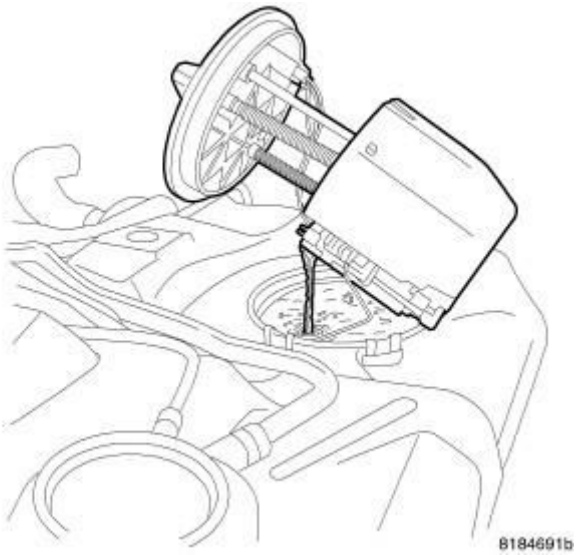

Fig. 226: Draining Fuel
Courtesy of CHRYSLER GROUP, LLC

12. Tip the main fuel pump module and drain enough fuel from the main fuel pump module reservoir to gain access to the internal fuel line without spilling fuel into the interior of the vehicle.

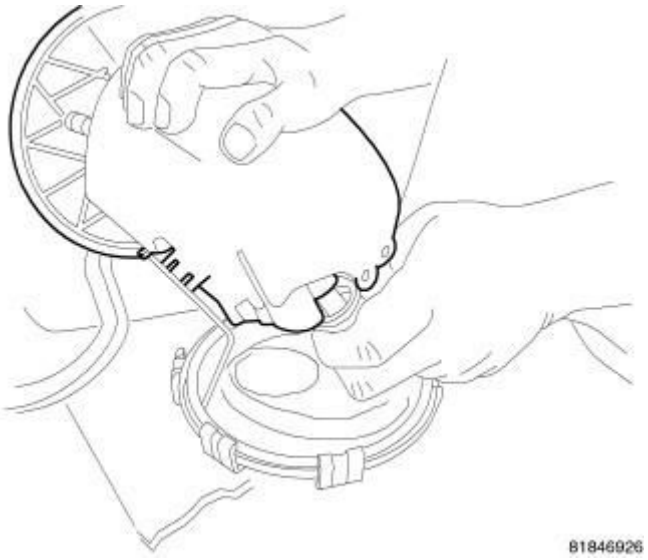

Fig. 227: Main Fuel Pump Module Internal Fuel Line
Courtesy of CHRYSLER GROUP, LLC

13. Disconnect the internal fuel line from the main fuel pump module.

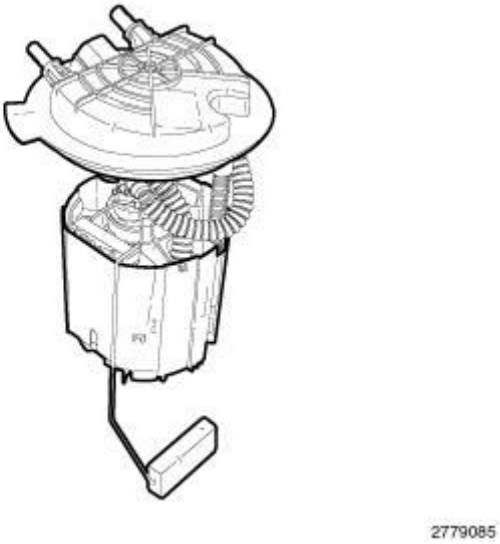

Fig. 228: Fuel Pump Module
Courtesy of CHRYSLER GROUP, LLC

14. Remove the main fuel pump module from the fuel tank using caution not to bend the float arm.

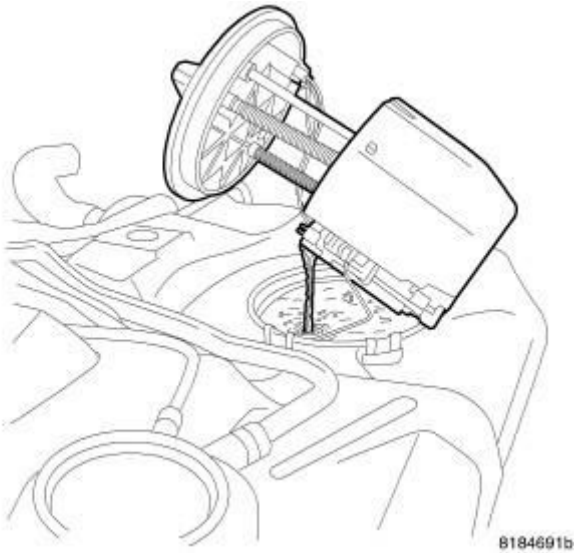

Fig. 229: Draining Fuel
Courtesy of CHRYSLER GROUP, LLC

15. Tip the main fuel pump module on its side to drain all remaining fuel from reservoir.

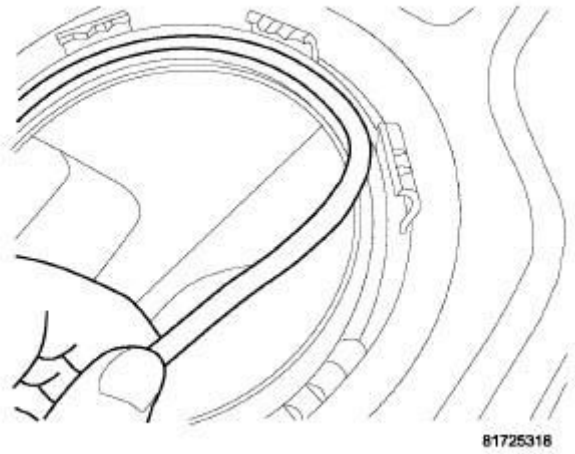

Fig. 230: Fuel Pump Module Seal
Courtesy of CHRYSLER GROUP, LLC

16. Remove and discard the rubber O-ring seal.

AUXILIARY FUEL PUMP MODULE

WARNING: Risk of injury to eyes and skin from contact with fuel. Wear protective clothing and eye protection. Risk of poisoning from inhaling and swallowing fuel. Pour fuel only into appropriately marked and approved containers. Failure to follow these instructions may result in possible serious or fatal injury.

WARNING: The fuel system is under constant high pressure even with engine OFF. Until the fuel pressure has been properly released from the system, do not attempt to open the fuel system. Do not smoke or use open flames/sparks when servicing the fuel system. Make sure the area in which the vehicle is being serviced is in a well ventilated area. Failure to comply may result in serious or fatal injury.

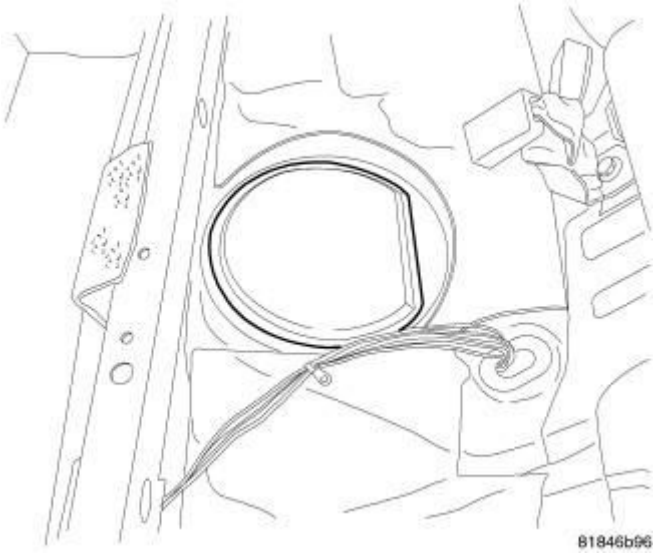

Fig. 231: Fuel Pump Module Cover
Courtesy of CHRYSLER GROUP, LLC

1. Perform the fuel system pressure release procedure. Refer to **FUEL SYSTEM PRESSURE RELEASE PROCEDURE** .
2. Remove the negative battery cable.
3. Remove the rear seat.
4. Remove the auxiliary fuel pump module access cover.

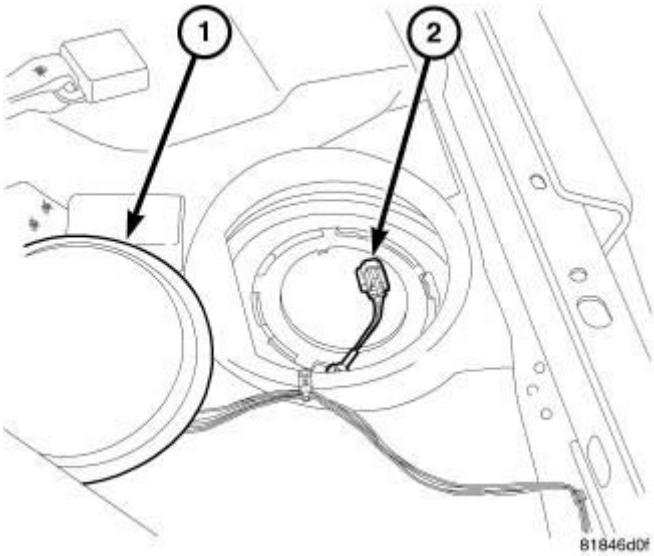

Fig. 232: Auxiliary Fuel Pump Module Access Cover & Electrical Connector
Courtesy of CHRYSLER GROUP, LLC

5. Disconnect the electrical connector (2) from the auxiliary fuel pump module.

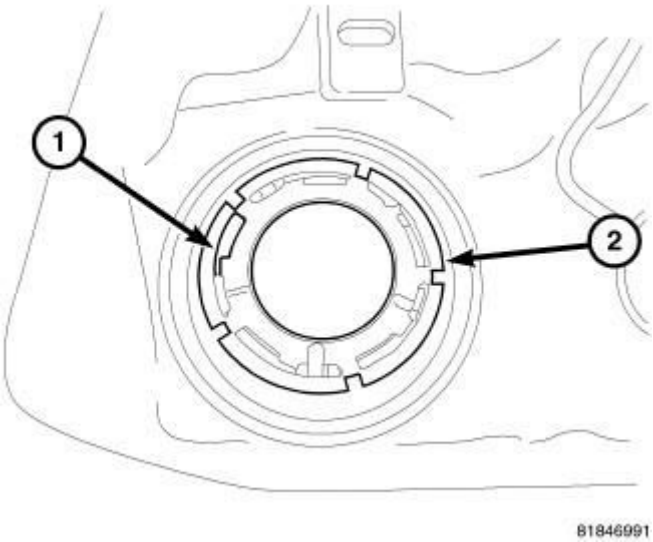

Fig. 233: Auxiliary Fuel Pump Module Lock Ring
Courtesy of CHRYSLER GROUP, LLC

NOTE: The auxiliary fuel pump module has to be properly located in the fuel tank for the fuel level gauge to work properly.

6. Mark the auxiliary fuel pump module orientation (1).

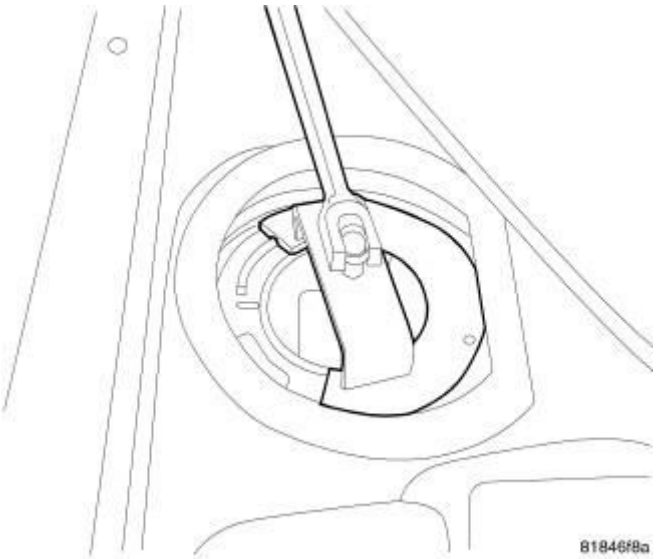

Fig. 234: Small Lock Ring Tool
Courtesy of CHRYSLER GROUP, LLC

NOTE: Prior to removing the auxiliary fuel pump module, use compressed air to remove any accumulated dirt and debris from around fuel tank opening.

7. Position the (special tool #10189, Wrench, DEF Module Lock Ring) Fuel Tank Module Wrench into the notches on the outside edge of the lock-ring.
8. Install a 1/2 inch drive breaker bar into the (special tool #10189, Wrench, DEF Module Lock Ring).
9. Rotate the breaker bar counterclockwise and remove the lock-ring.

Fig. 235: Auxiliary Fuel Pump Module Internal Fuel Line
Courtesy of CHRYSLER GROUP, LLC

10. Raise the auxiliary fuel pump module and disconnect the internal fuel line.
11. Remove the auxiliary fuel pump module from the fuel tank.

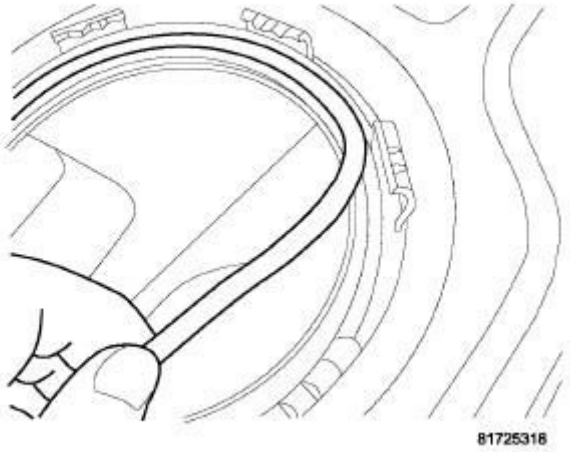

Fig. 236: Fuel Pump Module Seal
Courtesy of CHRYSLER GROUP, LLC

12. Remove and discard the rubber O-ring seal.

INSTALLATION

FRONT WHEEL DRIVE

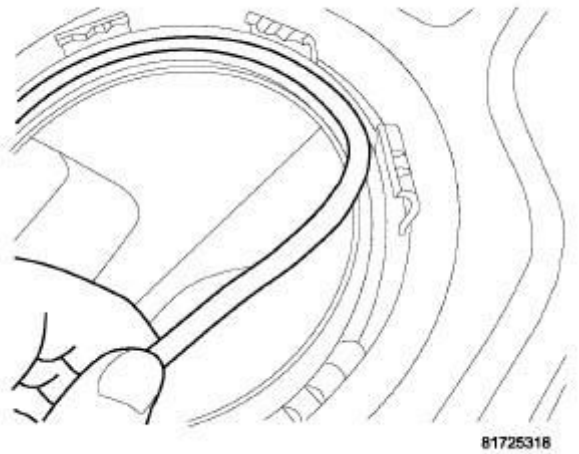

Fig. 237: Fuel Pump Module Seal
Courtesy of CHRYSLER GROUP, LLC

WARNING: Risk of injury to eyes and skin from contact with fuel. Wear protective clothing and eye protection. Risk of poisoning from inhaling and swallowing fuel. Pour fuel only into appropriately marked and approved containers. Failure to follow these instructions may result in possible serious or fatal injury.

CAUTION: Whenever the fuel pump module is serviced, the rubber O-ring seal must be replaced.

1. Clean the rubber O-ring seal area of the fuel tank and install a new rubber O-ring seal.

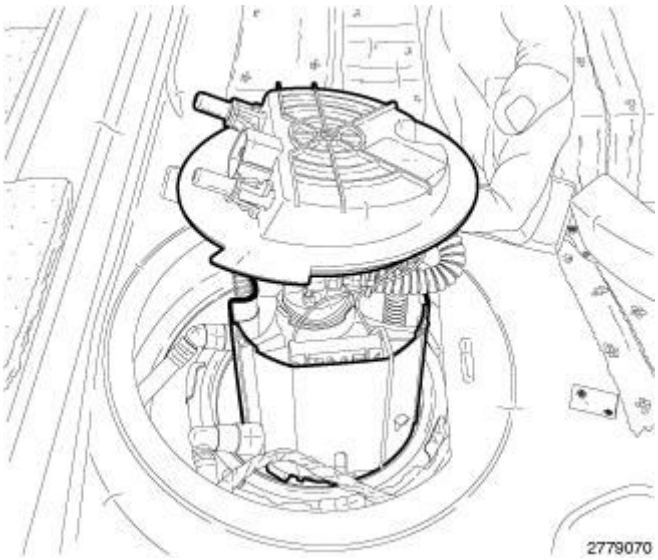

Fig. 238: Fuel Pump Module Assembly
Courtesy of CHRYSLER GROUP, LLC

2. Lower the fuel pump module into the fuel tank using caution not to bend the float arm.

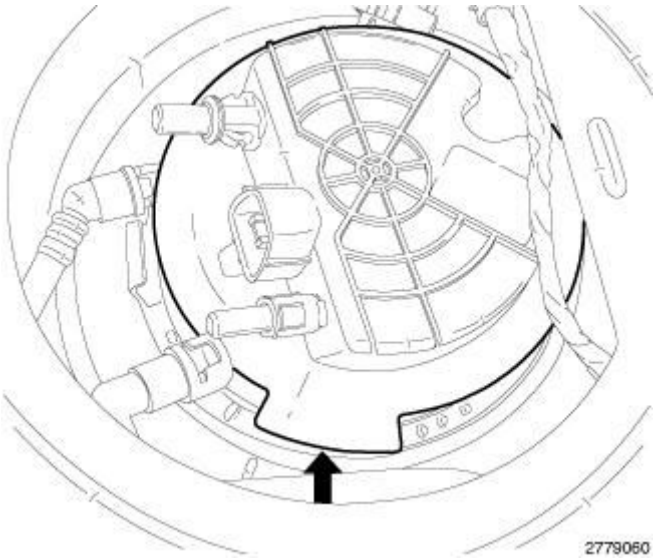

Fig. 239: Mark Fuel Pump Module Orientation
Courtesy of CHRYSLER GROUP, LLC

NOTE: The fuel pump module must be properly located in the fuel tank for the fuel level gauge to work properly.

3. Position and rotate the fuel pump module to the orientation marks noted during removal. This step must be performed for the fuel level gauge to work properly.

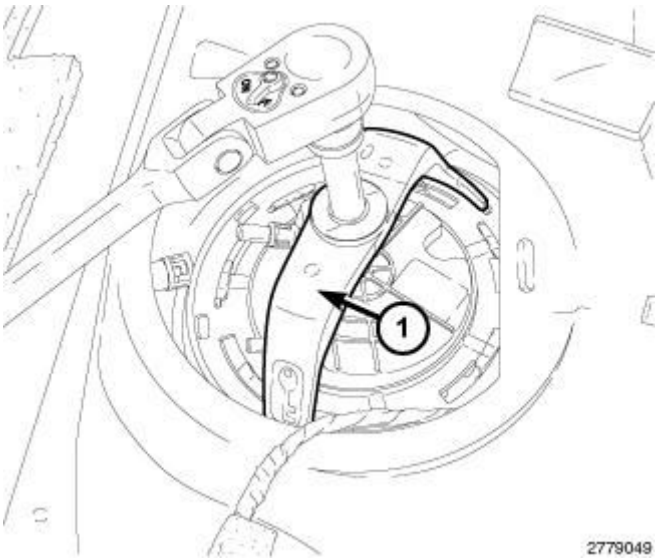

Fig. 240: Lock-Ring Remover/Installer 9340
Courtesy of CHRYSLER GROUP, LLC

4. Position the lock-ring over top of the fuel pump module.
5. Position the (special tool #9340, SAE Fuel Pump Lock Ring Wrench) (1) into the notches on the outside edge of the lock-ring.
6. Install a 1/2 inch drive breaker bar into the (special tool #9340, SAE Fuel Pump Lock Ring Wrench) (1).
7. Rotate the breaker bar clockwise until all seven notches of the lock-ring have engaged.

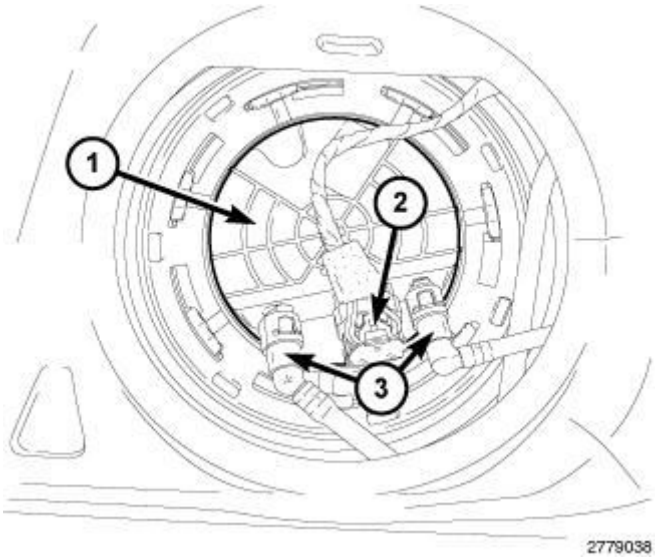

Fig. 241: Fuel Pump Module, Harness Connector & Fuel Line
Courtesy of CHRYSLER GROUP, LLC

8. Connect the fuel line (3) to the fuel pump module (1).

9. Connect the fuel pump module (1) harness connector (2).

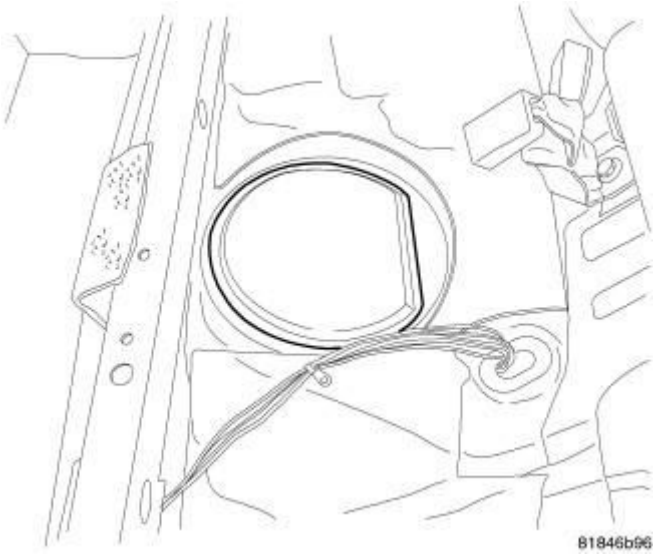

Fig. 242: Fuel Pump Module Cover
Courtesy of CHRYSLER GROUP, LLC

10. Install the fuel pump module access cover.
11. Install the rear seat.
12. Install the negative battery cable.
13. Use the Scan Tool to pressurize the system and check for leaks.

ALL WHEEL DRIVE

MAIN FUEL PUMP MODULE

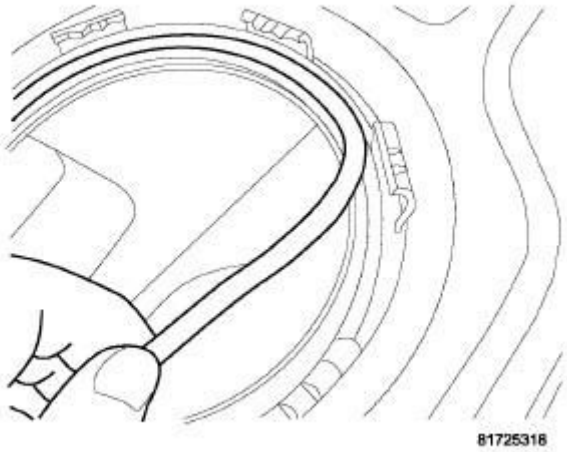

Fig. 243: Fuel Pump Module Seal

Courtesy of CHRYSLER GROUP, LLC

WARNING: Risk of injury to eyes and skin from contact with fuel. Wear protective clothing and eye protection. Risk of poisoning from inhaling and swallowing fuel. Pour fuel only into appropriately marked and approved containers. Failure to follow these instructions may result in possible serious or fatal injury.

CAUTION: Whenever the fuel pump module is serviced, the rubber O-ring seal must be replaced.

1. Clean the rubber O-ring seal area of the fuel tank and install a new rubber O-ring seal.

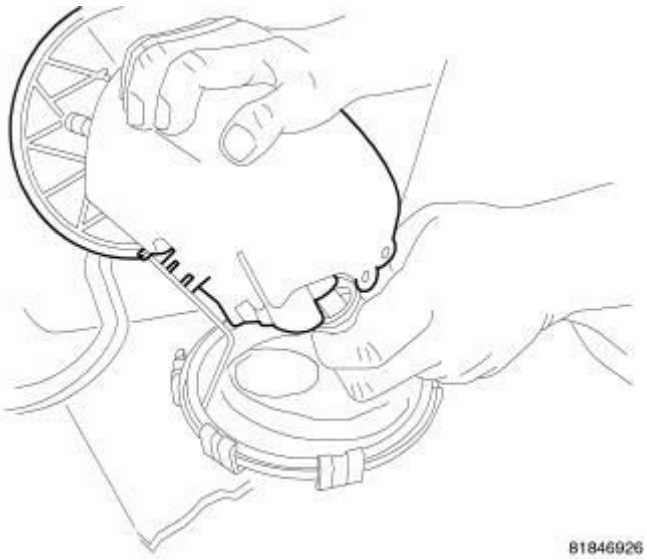

Fig. 244: Main Fuel Pump Module Internal Fuel Line
Courtesy of CHRYSLER GROUP, LLC

2. Connect the internal fuel line to the main fuel pump module.

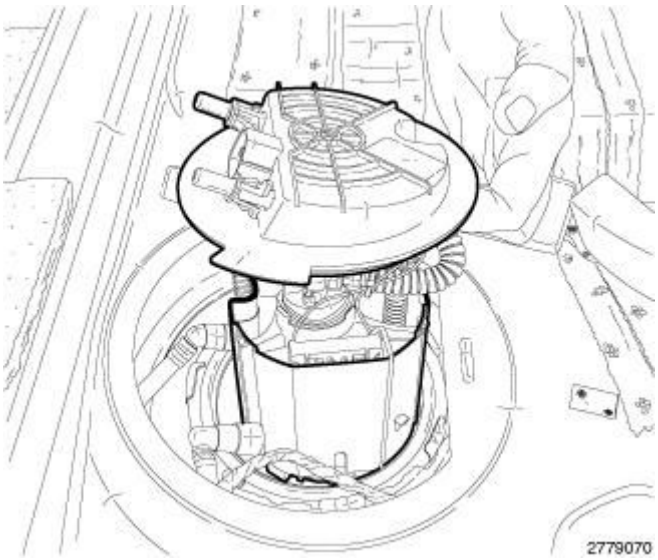

Fig. 245: Fuel Pump Module Assembly
Courtesy of CHRYSLER GROUP, LLC

3. Lower the main fuel pump module into the fuel tank using caution not to bend the float arm.

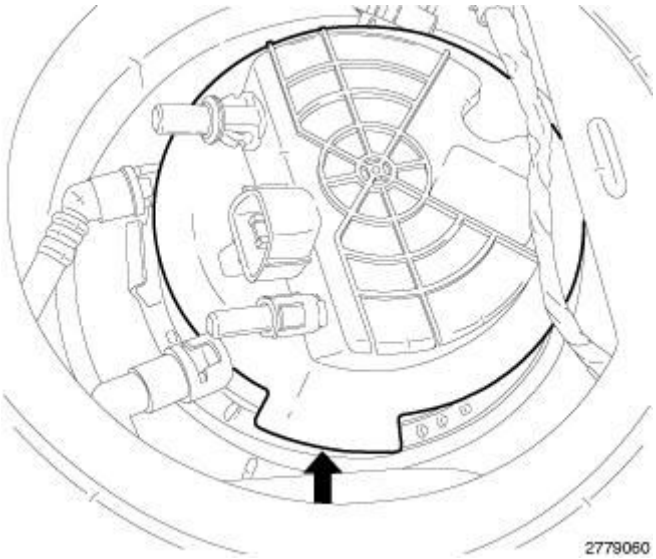

Fig. 246: Mark Fuel Pump Module Orientation
Courtesy of CHRYSLER GROUP, LLC

NOTE: The main fuel pump module must be properly located in the fuel tank for the fuel level gauge to work properly.

4. Align the rubber O-ring seal and rotate the main fuel pump module to the orientation marks noted during removal. This step must be performed for the

fuel level gauge to work properly.

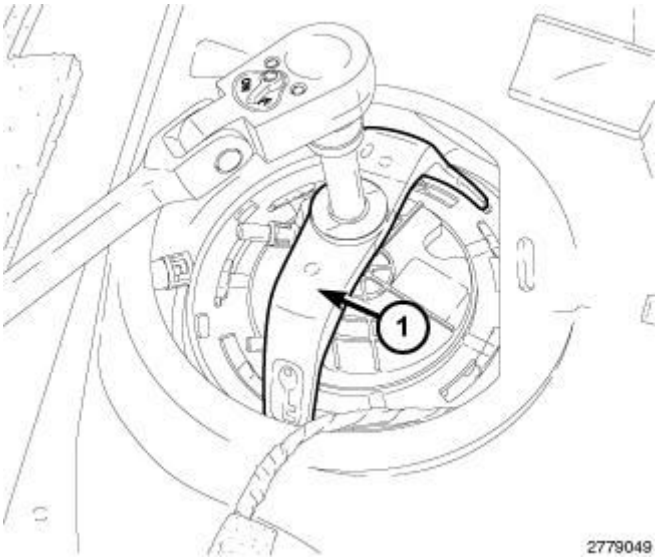

Fig. 247: Lock-Ring Remover/Installer 9340
Courtesy of CHRYSLER GROUP, LLC

5. Position the (special tool #9340, SAE Fuel Pump Lock Ring Wrench) over top of the main fuel pump module.
6. Position the (special tool #9340, SAE Fuel Pump Lock Ring Wrench) into the notches on the outside edge of the lock-ring.
7. Install a 1/2 inch drive breaker bar into the (special tool #9340, SAE Fuel Pump Lock Ring Wrench).
8. Rotate the breaker bar clockwise until all seven notches of the lock-ring have engaged.

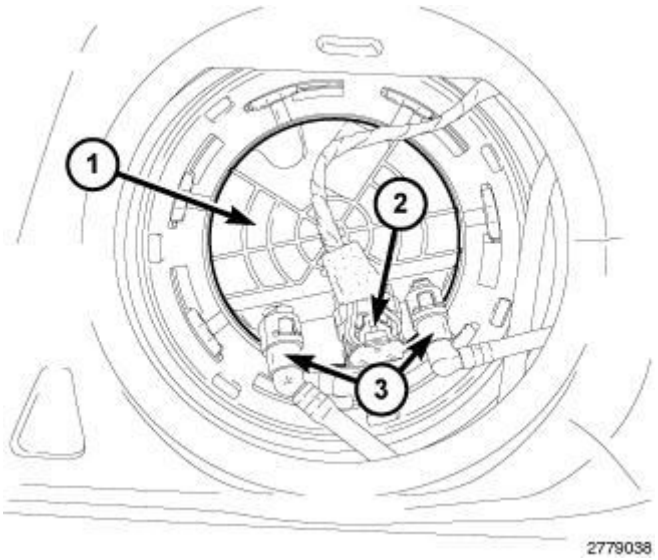

Fig. 248: Fuel Pump Module, Harness Connector & Fuel Line

Courtesy of CHRYSLER GROUP, LLC

9. Connect the fuel line (3) to the main fuel pump module.
10. Connect the electrical connector (2) to the main fuel pump module (1).

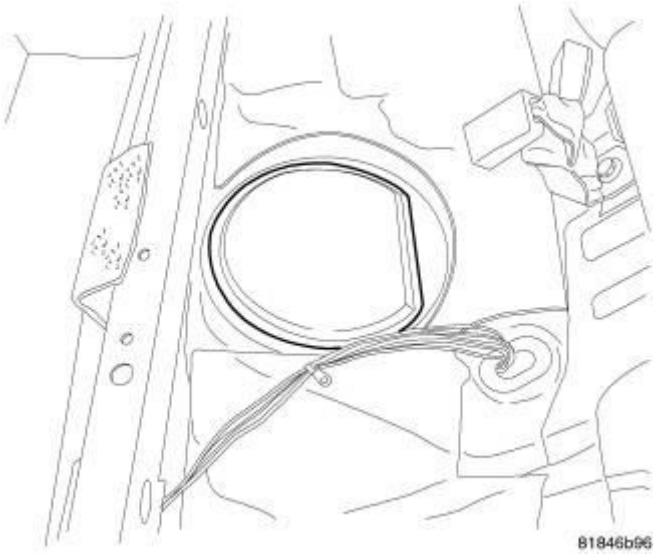

Fig. 249: Fuel Pump Module Cover
Courtesy of CHRYSLER GROUP, LLC

11. Install the main fuel pump module access cover.
12. Install the rear seat.
13. Install the negative battery cable.
14. Use the Scan Tool to pressurize the system and check for leaks.

AUXILIARY FUEL PUMP MODULE

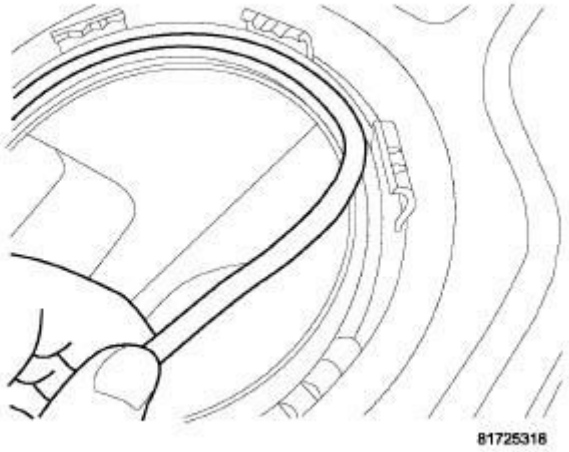

Fig. 250: Fuel Pump Module Seal
Courtesy of CHRYSLER GROUP, LLC

WARNING: Risk of injury to eyes and skin from contact with fuel. Wear protective clothing and eye protection. Risk of poisoning from inhaling and swallowing fuel. Pour fuel only into appropriately marked and approved containers. Failure to follow these instructions may result in possible serious or fatal injury.

CAUTION: Whenever the fuel pump module is serviced, the rubber O-ring seal must be replaced.

1. Clean the rubber O-ring seal area of the fuel tank and install a new rubber O-ring seal.

Fig. 251: Auxiliary Fuel Pump Module Internal Fuel Line
Courtesy of CHRYSLER GROUP, LLC

2. Connect the internal fuel line to the auxiliary fuel pump module.
3. Lower the auxiliary fuel pump module into the fuel tank using caution not to bend the float arm.

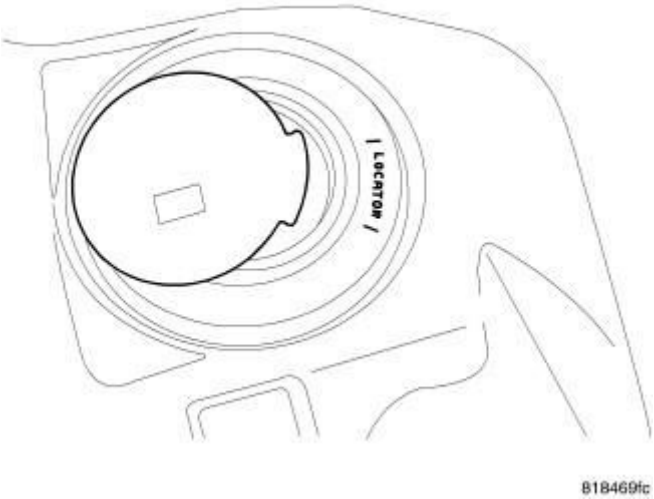

Fig. 252: Tab Location Small Module
Courtesy of CHRYSLER GROUP, LLC

NOTE: The auxiliary fuel pump module must be properly located in the fuel tank for the fuel level gauge to work properly.

4. Align the rubber O-ring seal and rotate the auxiliary fuel pump module to the orientation marks noted during removal. This step must be performed for the fuel level gauge to work properly.

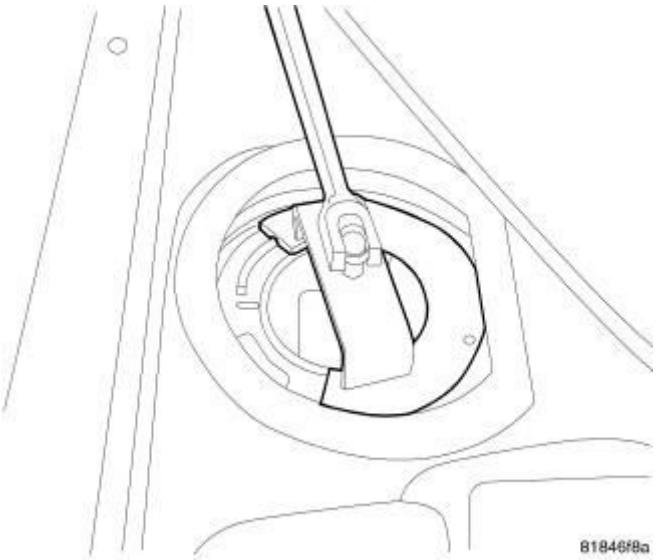

Fig. 253: Small Lock Ring Tool
Courtesy of CHRYSLER GROUP, LLC

5. Position the lock-ring over top of the auxiliary fuel pump module.

6. Position the (special tool #10189, Wrench, DEF Module Lock Ring) into the notches on the outside edge of the lock-ring.
7. Install a 1/2 inch drive breaker bar into the (special tool #10189, Wrench, DEF Module Lock Ring).
8. Rotate the breaker bar clockwise until all seven notches of the lock-ring have engaged.

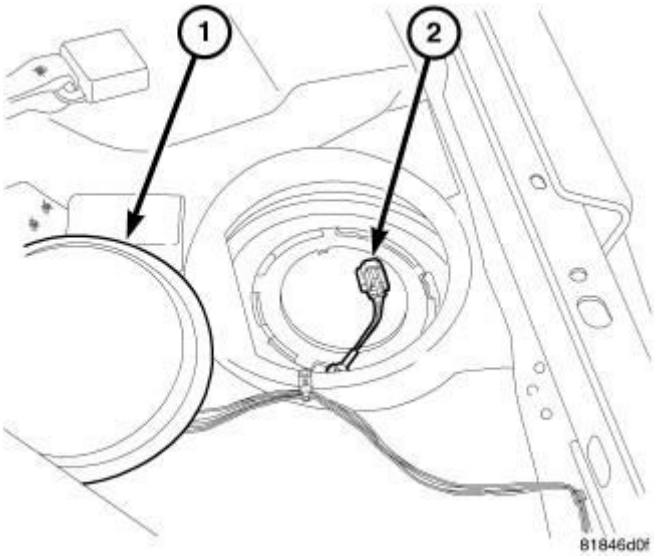

Fig. 254: Auxiliary Fuel Pump Module Access Cover & Electrical Connector
Courtesy of CHRYSLER GROUP, LLC

9. Connect the auxiliary fuel pump module electrical connector (2).

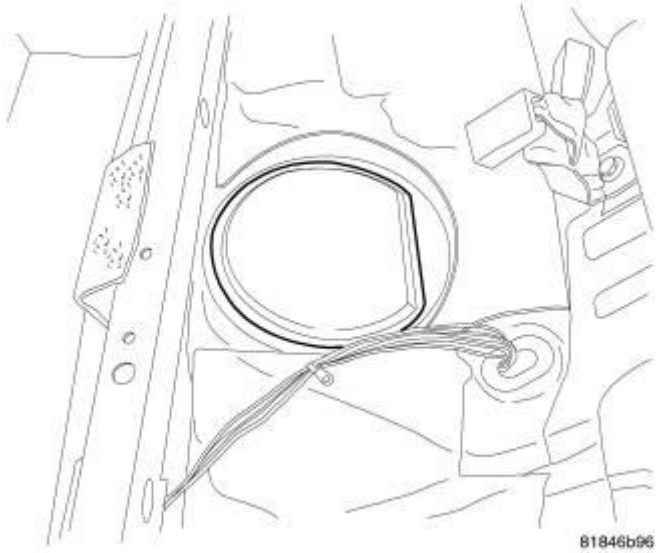

Fig. 255: Fuel Pump Module Cover
Courtesy of CHRYSLER GROUP, LLC

10. Install the auxiliary fuel pump module access cover.
11. Install the rear seat.
12. Install the negative battery cable.
13. Use the Scan Tool to pressurize the system and check for leaks.

PUMP, FUEL INJECTION

DESCRIPTION

DESCRIPTION

WARNING: High pressure fuel lines deliver diesel fuel under extreme pressure from the injection pump to the fuel injectors. This may be as high as 1800 bar (26, 106 psi). Use extreme caution when inspecting for high pressure fuel leaks. Fuel under this amount of pressure can penetrate skin causing personal injury or death. Inspect for high pressure fuel leaks with a sheet of cardboard. Wear safety goggles and adequate protective clothing when servicing fuel system.

CAUTION: Cranking the engine for an extended time without a fuel supply may damage the high pressure pump.

NOTE: The high pressure pump must not be disassembled or opened. The only serviceable components are the temperature sensor and the fuel quantity solenoid.

The high pressure pump is mounted to the engine block next to mixing chamber.

OPERATION

OPERATION

The high pressure pump is gear driven and requires no timing. Fuel that enters the high pressure pump is pressurized between 200-1800 bar (2, 900 - 26, 106 psi). The pressurized fuel is then supplied to the fuel rail. The high pressure pump and flange located behind the pump are supplied as an assembly. Fuel passages and control elements in the flange regulate the flow of fuel to the high

pressure pumping chambers, and control the lubrication of the pump.

REMOVAL

REMOVAL

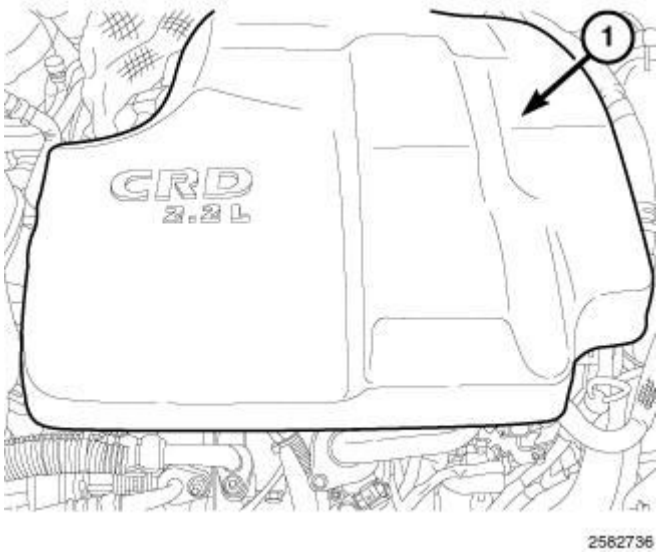

Fig. 256: Engine Cover
Courtesy of CHRYSLER GROUP, LLC

1. Remove the engine cover (1).

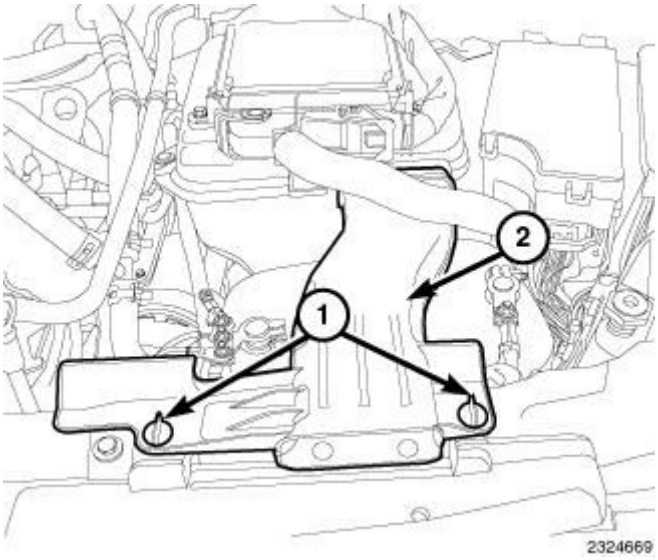

Fig. 257: Quarter Turn Lock Tabs & Air Inlet Duct
Courtesy of CHRYSLER GROUP, LLC

2. Release quarter turn lock tabs (1) and remove air inlet duct (2).
3. Disconnect the negative battery cable.

4. Remove the mixing chamber. Refer to **MANIFOLD, INTAKE, REMOVAL** .

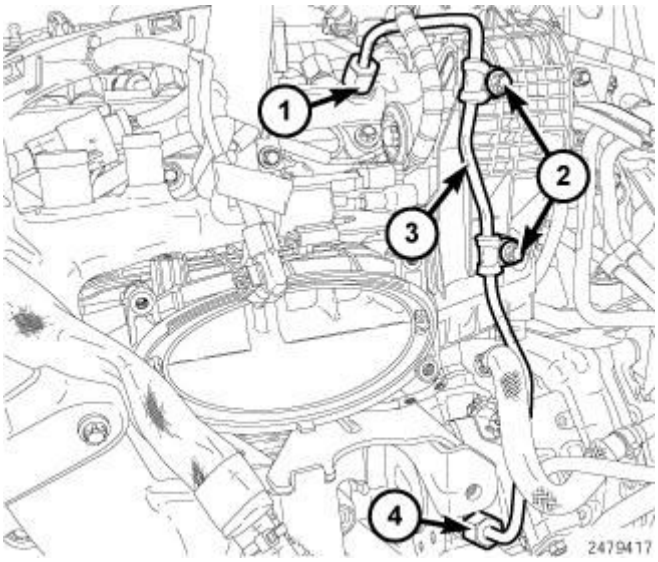

Fig. 258: Fuel Rail, Bolts, High Pressure Fuel Tube & Pump
Courtesy of CHRYSLER GROUP, LLC

5. Remove the two bolts (2) securing the high pressure fuel tube (3).
6. Disconnect the high pressure fuel tube at pump (4).
7. Disconnect the high pressure tube at fuel rail (1) and remove the high pressure fuel tube (3).
8. Install protective cap onto fuel rail.

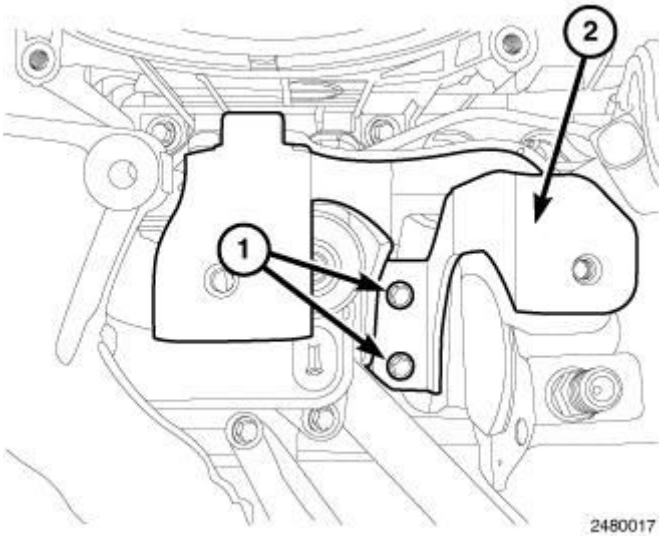

Fig. 259: Intake Manifold Support Bracket & Bolts
Courtesy of CHRYSLER GROUP, LLC

9. Remove bolts (1) and the intake manifold support bracket (2).

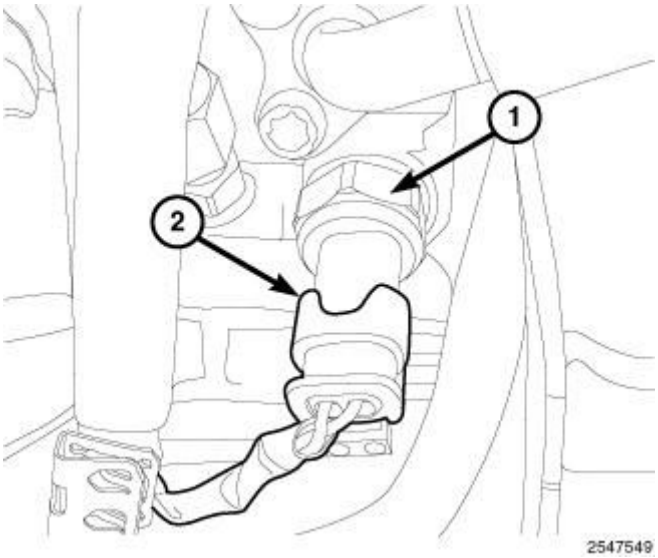

Fig. 260: Fuel Temperature Sensor Harness Connector
Courtesy of CHRYSLER GROUP, LLC

10. Disconnect the fuel temperature sensor harness connector (2).

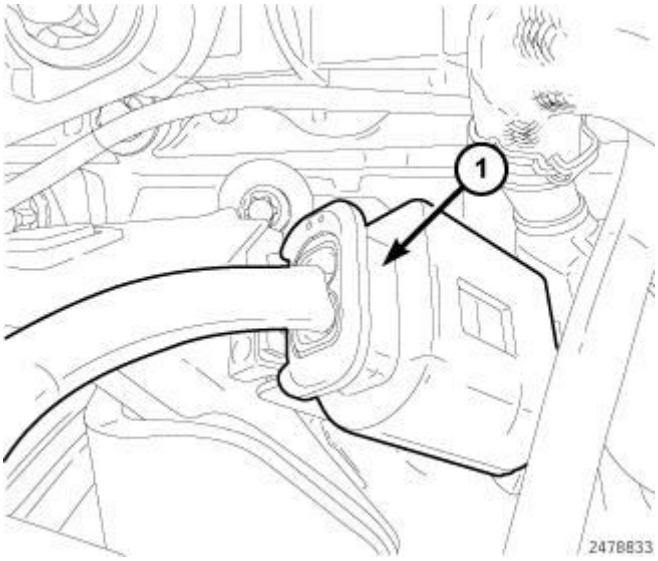

Fig. 261: Fuel Quantity Control Valve Harness Connector
Courtesy of CHRYSLER GROUP, LLC

11. Disconnect the fuel quantity control valve harness connector (1).
12. Disconnect the vacuum hose at the high pressure pump.
13. Remove the fuel supply and return hose from the high pressure pump.

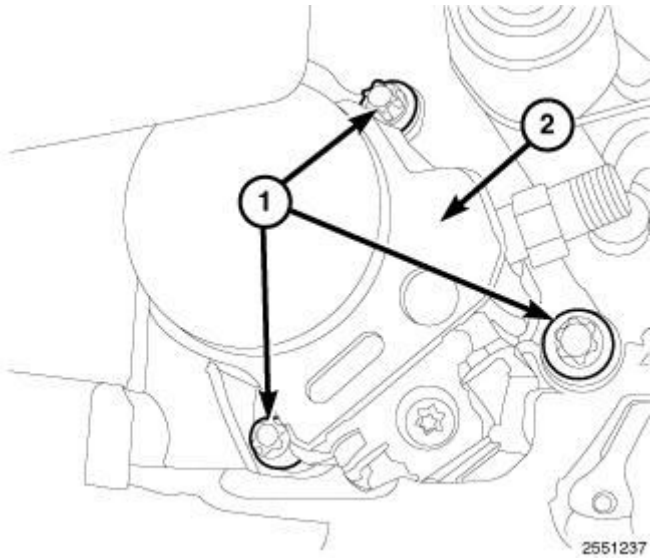

Fig. 262: Bolts & High Pressure Fuel Pump
Courtesy of CHRYSLER GROUP, LLC

14. Remove bolts (1) and the high pressure fuel pump (2).

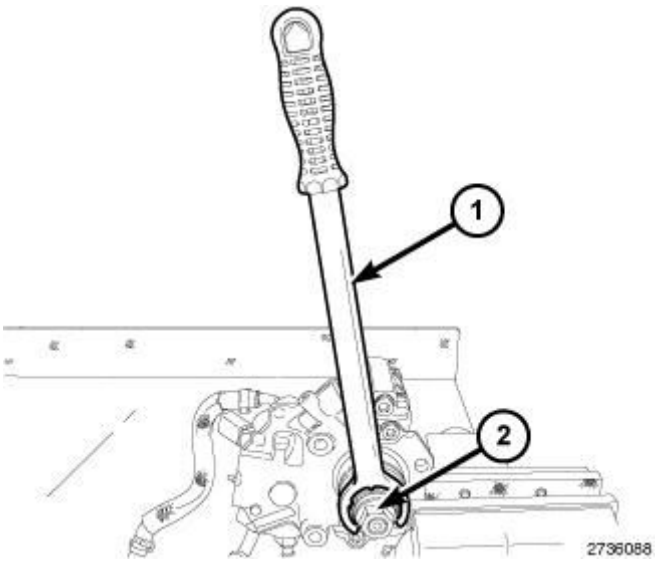

Fig. 263: High Pressure Pinion Holder 10229 & Nut
Courtesy of CHRYSLER GROUP, LLC

15. Using High Pressure Pump Pinion Holder (special tool #10229, Holder, Pinion High Pressure Pump) (1) remove the nut (2) and gear.

INSTALLATION

INSTALLATION

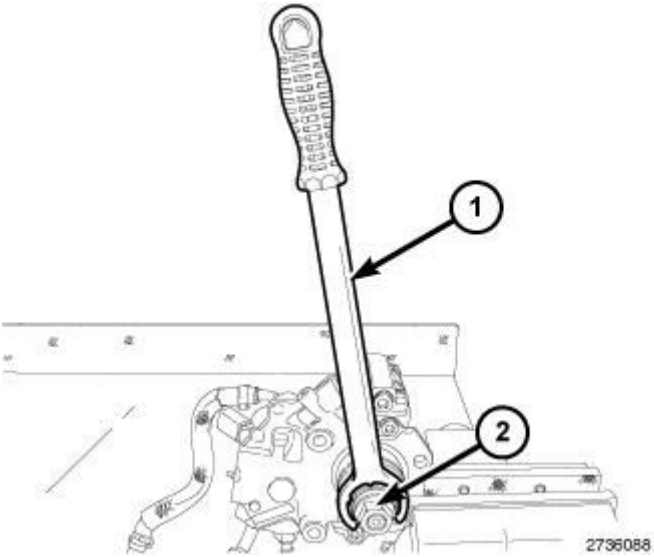

Fig. 264: High Pressure Pinion Holder 10229 & Nut
Courtesy of CHRYSLER GROUP, LLC

1. Install the high pressure fuel pump gear (2). Tighten nut (1) to 70 N.m (52 ft. lbs.).

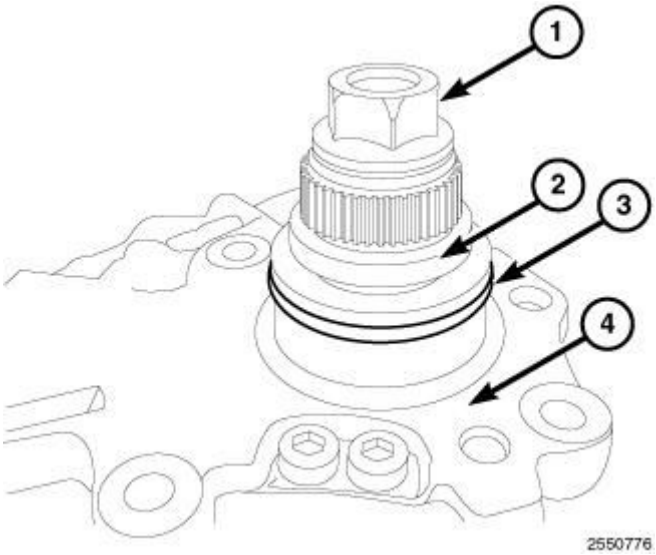

Fig. 265: High Pressure Fuel Pump & O-Ring
Courtesy of CHRYSLER GROUP, LLC

2. Install a new O-ring (3) on the high pressure fuel pump (4).

Fig. 266: Drive Gear
Courtesy of CHRYSLER GROUP, LLC

3. If removed, install the drive gear (1).

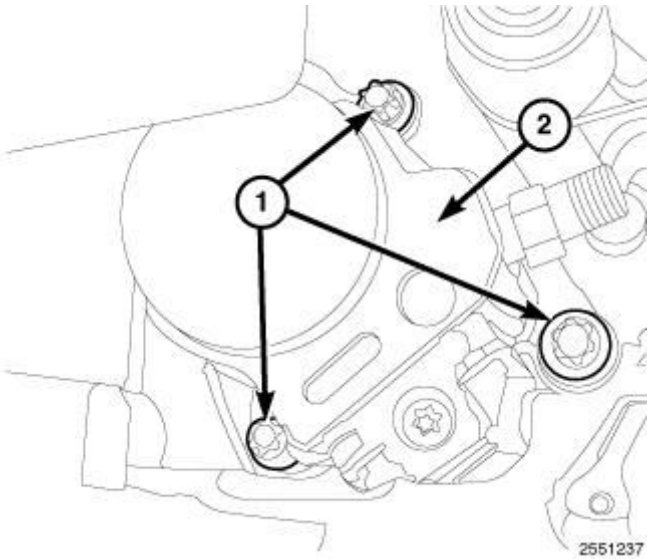

Fig. 267: Bolts & High Pressure Fuel Pump
Courtesy of CHRYSLER GROUP, LLC

4. Install the high pressure fuel pump. Tighten bolts to 20 N.m (177 in. lbs.).

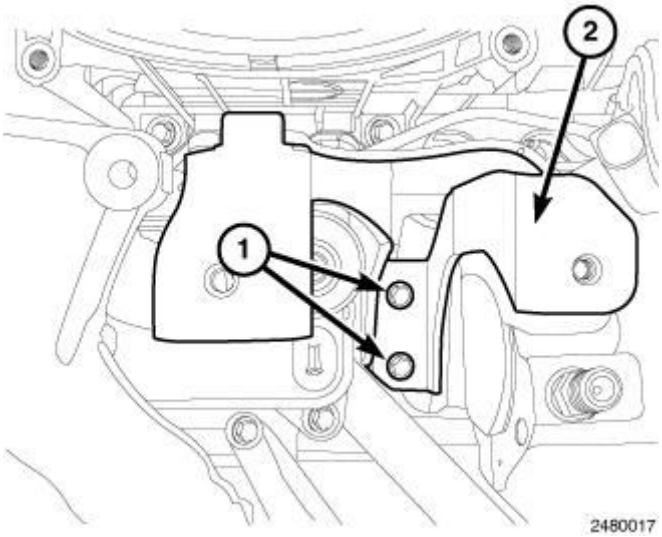

Fig. 268: Intake Manifold Support Bracket & Bolts
Courtesy of CHRYSLER GROUP, LLC

5. Install the intake manifold support bracket (2). Tighten bolts (1) to 9 N.m (80 in. lbs.).

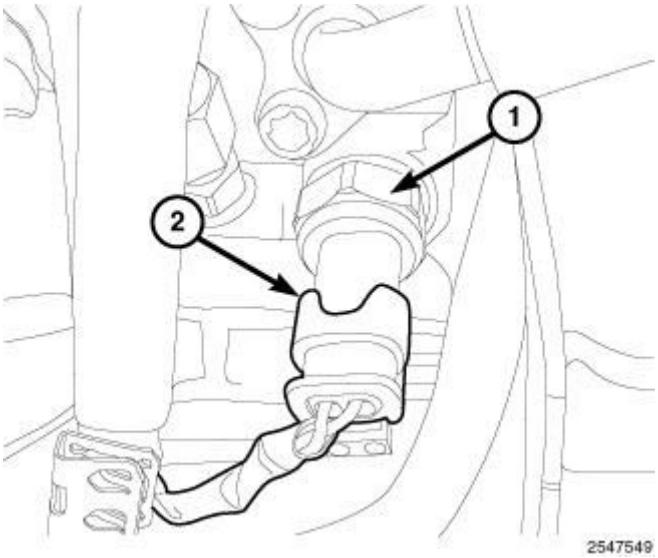

Fig. 269: Fuel Temperature Sensor Harness Connector
Courtesy of CHRYSLER GROUP, LLC

6. Connect the fuel temperature sensor harness connector (2).

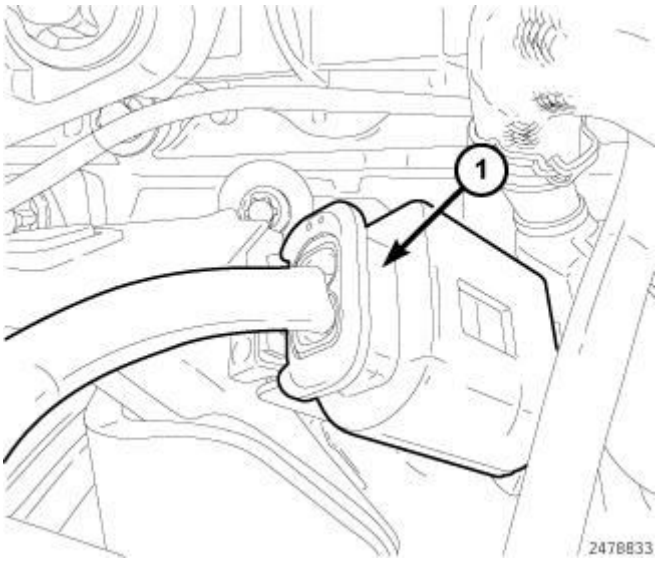

Fig. 270: Fuel Quantity Control Valve Harness Connector
Courtesy of CHRYSLER GROUP, LLC

7. Connect the fuel quantity control valve harness connector (1).
8. Connect the vacuum hose at the high pressure pump.
9. Install the fuel supply and return hose to the high pressure pump.

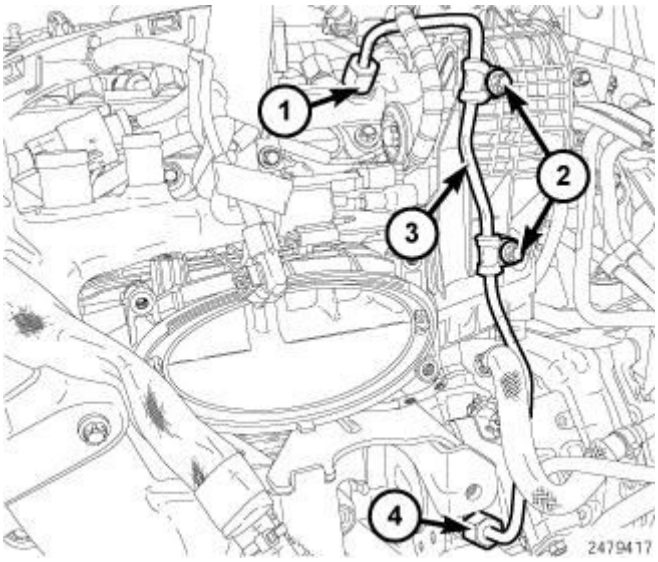

Fig. 271: Fuel Rail, Bolts, High Pressure Fuel Tube & Pump
Courtesy of CHRYSLER GROUP, LLC

NOTE: Any time a high pressure fuel tube has been loosened or disconnected, that high pressure fuel tube must be replaced.

10. Install a new high pressure tube (3) at fuel rail (1) and high pressure pump

(4).

11. Tighten the high pressure tube (3) at fuel rail (1) and high pressure pump (4) to 7 N.m (62 in. lbs.).
12. Tighten the high pressure tube (3) at fuel rail (1) and high pressure pump (4) to 33 N.m (24 ft. lbs.).
13. Install the two bolts (2) securing the high pressure fuel tube and tighten to 9 N.m (80 in. lbs.).
14. Install the mixing chamber. Refer to **MANIFOLD, INTAKE, INSTALLATION** .

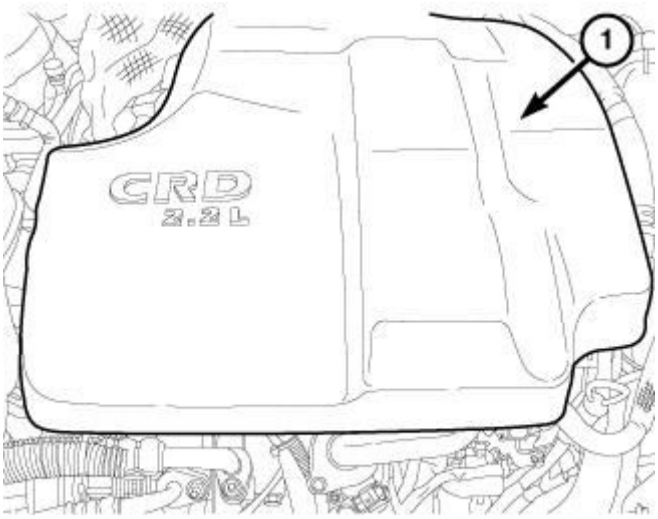

2562736

Fig. 272: Engine Cover
Courtesy of CHRYSLER GROUP, LLC

15. Install the engine cover (1).
16. Connect the negative battery cable.

RAIL, FUEL

REMOVAL

REMOVAL

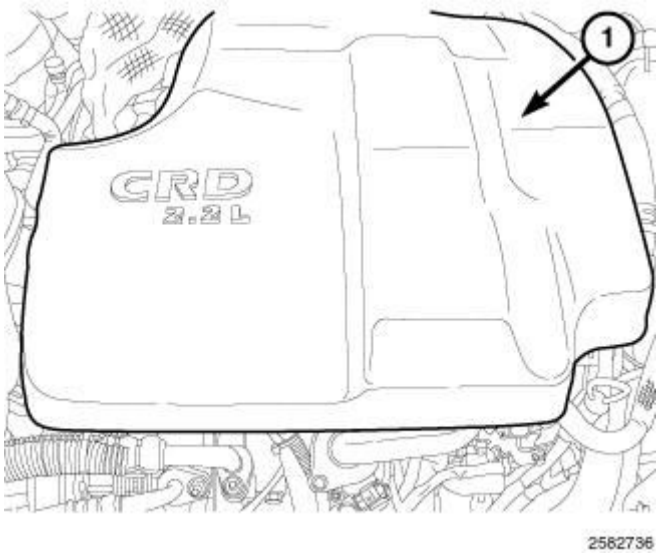

Fig. 273: Engine Cover
Courtesy of CHRYSLER GROUP, LLC

1. Disconnect the negative battery cable.
2. Remove the engine cover (1).

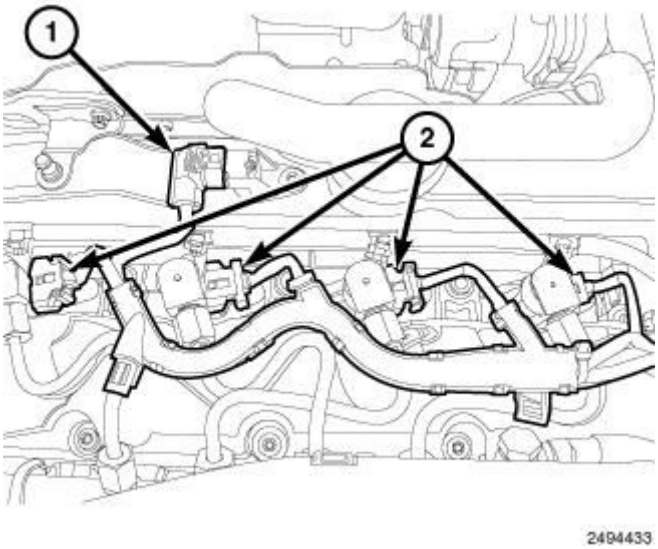

Fig. 274: Camshaft Position Sensor (CMP) Harness Connector & Fuel Injector Harness Connectors
Courtesy of CHRYSLER GROUP, LLC

3. Disconnect the Camshaft Position Sensor (CMP) (1) harness connector.
4. Disconnect the fuel injector harness connectors (2).
5. Lift up on fuel injector wire harness and position aside.

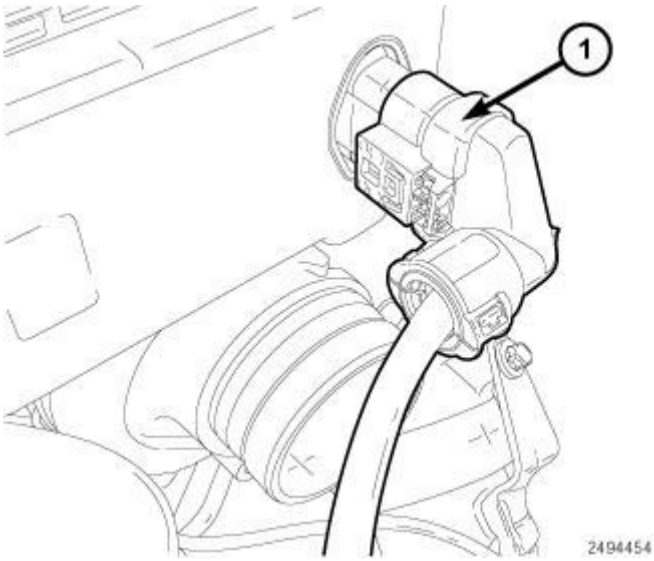

Fig. 275: Turbocharger Actuator Harness Connector
Courtesy of CHRYSLER GROUP, LLC

6. Disconnect the turbocharger actuator (1) harness connector.

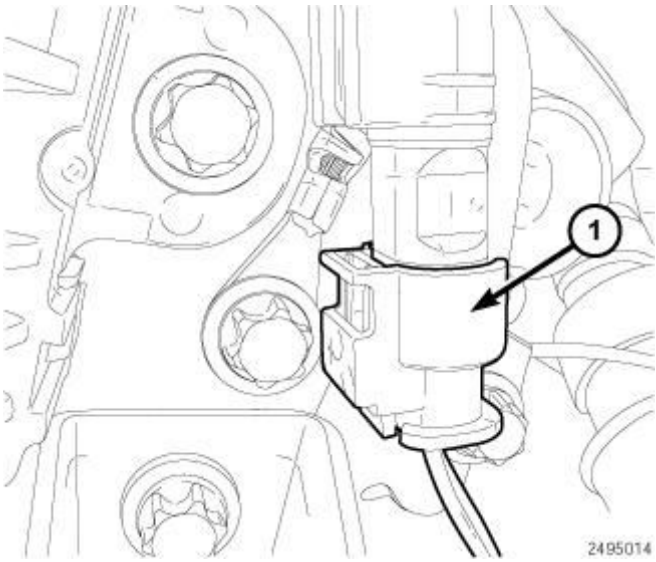

Fig. 276: Turbocharger Exhaust Temperature Sensor Harness Connector
Courtesy of CHRYSLER GROUP, LLC

7. Disconnect the turbocharger exhaust temperature sensor (1) harness connector.

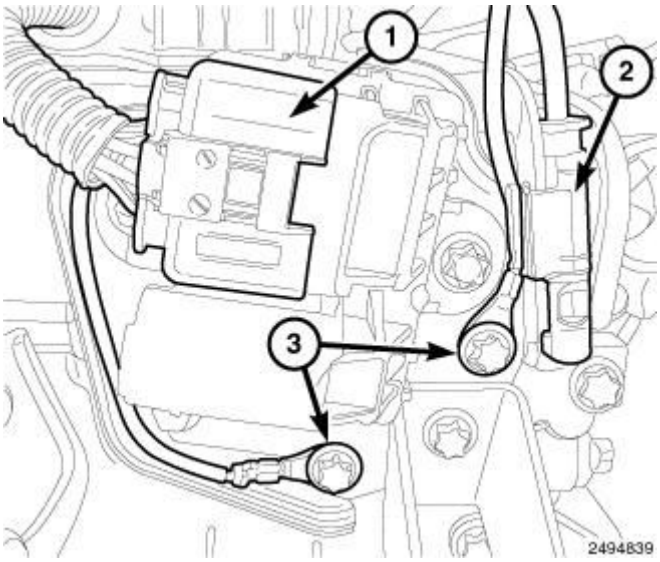

Fig. 277: Glow Plug Module Harness Connector, Bolts & Turbocharger Exhaust Temperature Sensor Harness Connector
Courtesy of CHRYSLER GROUP, LLC

8. Disconnect the turbocharger exhaust temperature sensor harness connector (2) from bracket.
9. Remove the two bolts (3) and position aside the ground wires.
10. Disconnect the glow plug module harness connector (1).

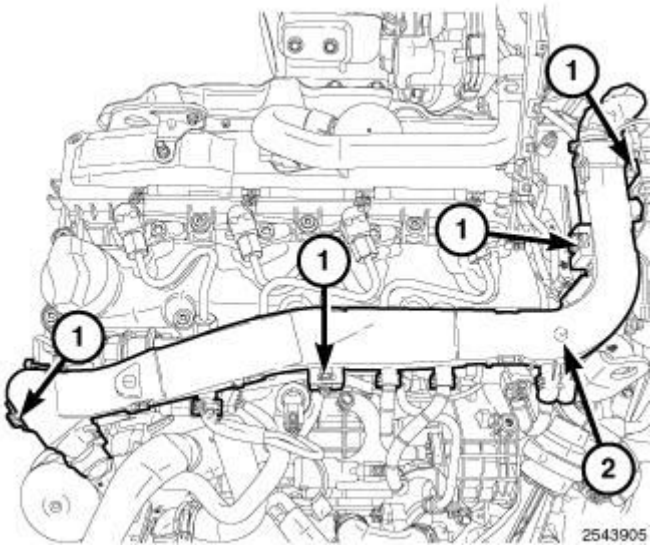

Fig. 278: Lock Tabs & Engine Wire Harness
Courtesy of CHRYSLER GROUP, LLC

11. Release the four lock tabs (1) lift up and position aside engine wire harness (2).

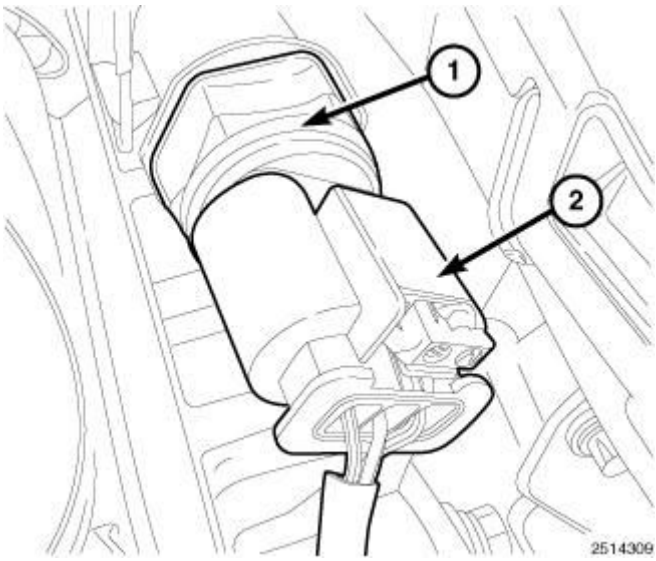

Fig. 279: Fuel Rail Pressure Regulator Harness Connector
Courtesy of CHRYSLER GROUP, LLC

12. Disconnect the fuel rail pressure regulator harness connector (2).

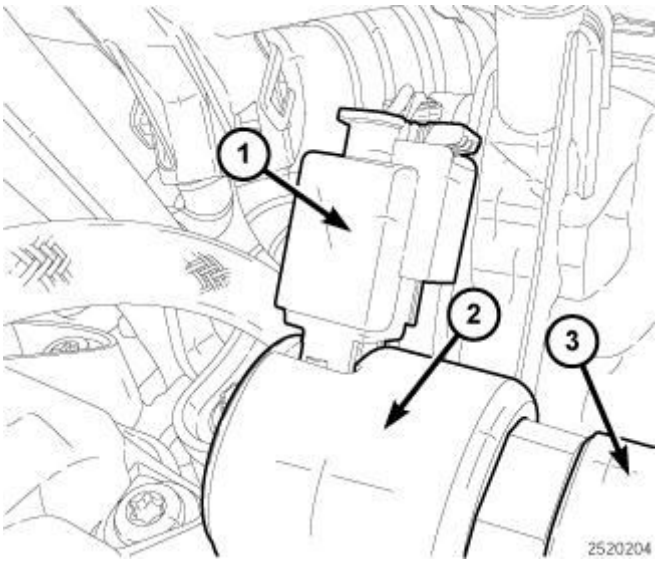

Fig. 280: Fuel Rail Pressure Sensor Harness Connector
Courtesy of CHRYSLER GROUP, LLC

13. Disconnect the fuel rail pressure sensor harness connector (1).

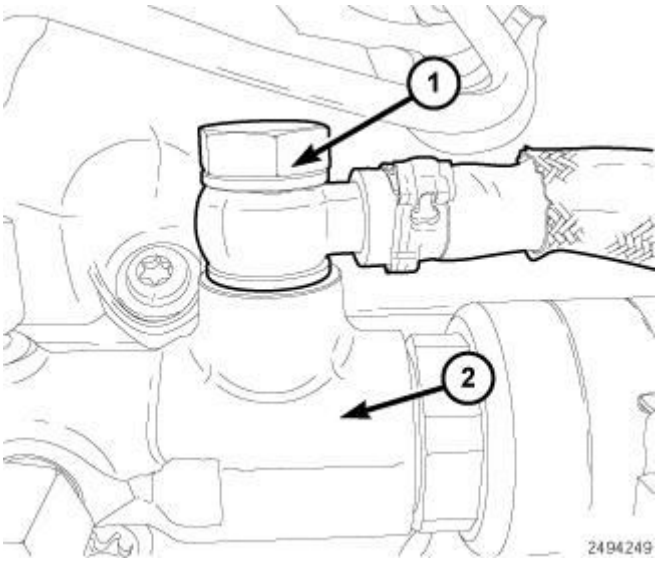

Fig. 281: Banjo Bolt & Rail
Courtesy of CHRYSLER GROUP, LLC

14. Remove the banjo bolt (1) and the fuel rail return line from rail (2).

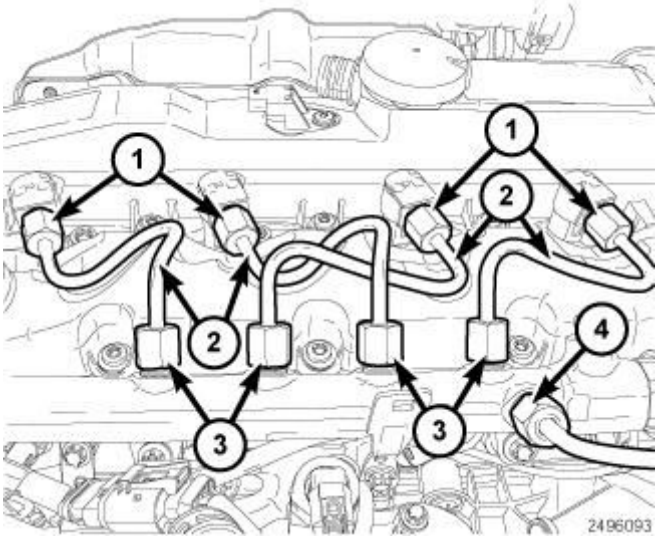

Fig. 282: Fuel Injectors, High Pressure Fuel Tubes, Fuel Rail & High Pressure Feed Line
Courtesy of CHRYSLER GROUP, LLC

15. Remove the high pressure fuel tubes (2) at fuel injectors (1) and fuel rail (3) and discard fuel tubes.
16. Install protective caps onto the fuel injectors.
17. Remove the high pressure feed line (4) from fuel rail.

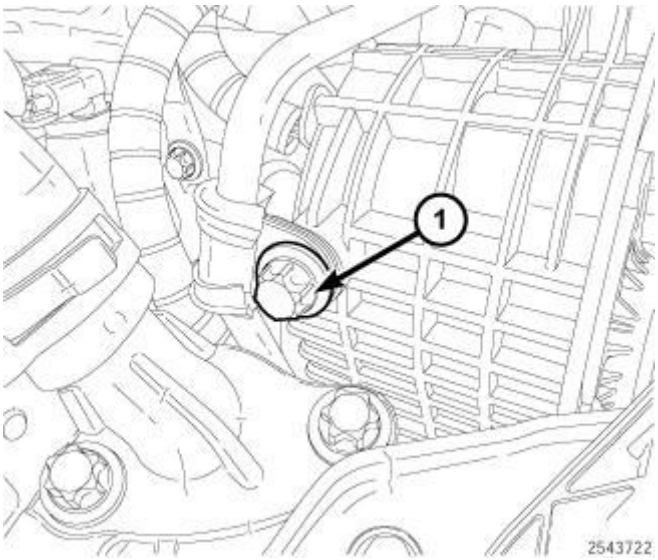

Fig. 283: High Pressure Feed Line Bolt
Courtesy of CHRYSLER GROUP, LLC

18. Remove bolt (1) securing the high pressure feed line.

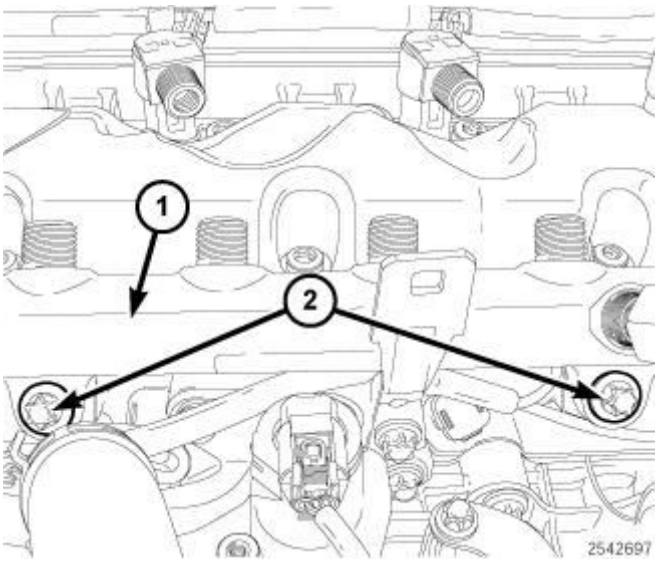

Fig. 284: Fuel Rail & Bolts
Courtesy of CHRYSLER GROUP, LLC

19. Remove the bolts (2) and the fuel rail (1).

INSTALLATION

INSTALLATION

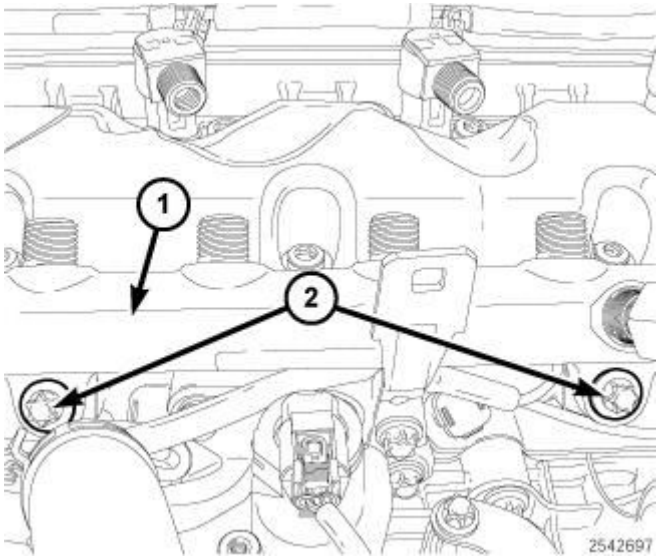

Fig. 285: Fuel Rail & Bolts
Courtesy of CHRYSLER GROUP, LLC

1. Install the fuel rail (1). Tighten bolts (2) to 9 N.m (80 in. lbs.).

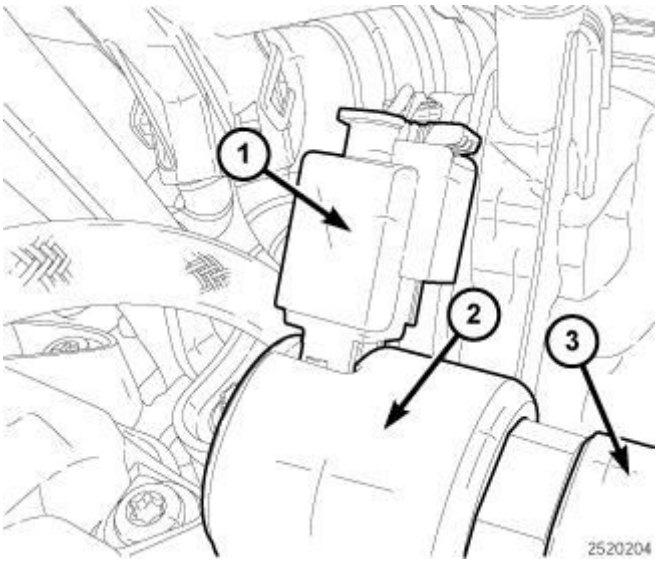

Fig. 286: Fuel Rail Pressure Sensor Harness Connector
Courtesy of CHRYSLER GROUP, LLC

2. Connect the fuel rail pressure sensor wire harness connector (1).

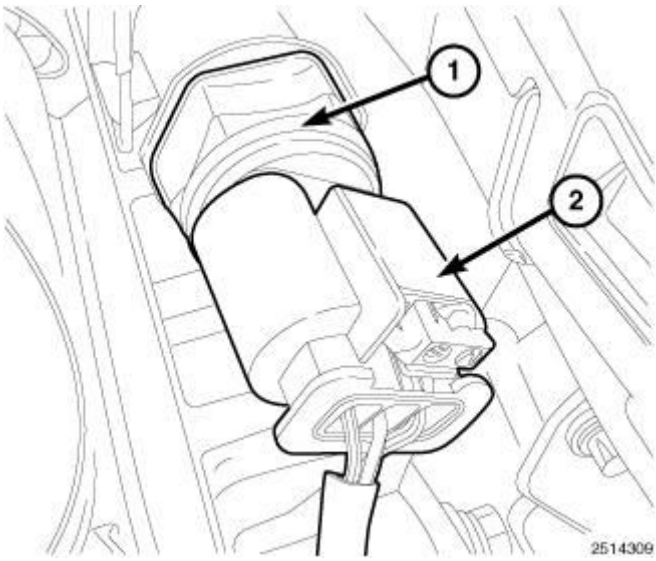

Fig. 287: Fuel Rail Pressure Regulator Harness Connector
Courtesy of CHRYSLER GROUP, LLC

3. Connect the fuel rail pressure regulator wire harness connector (2).

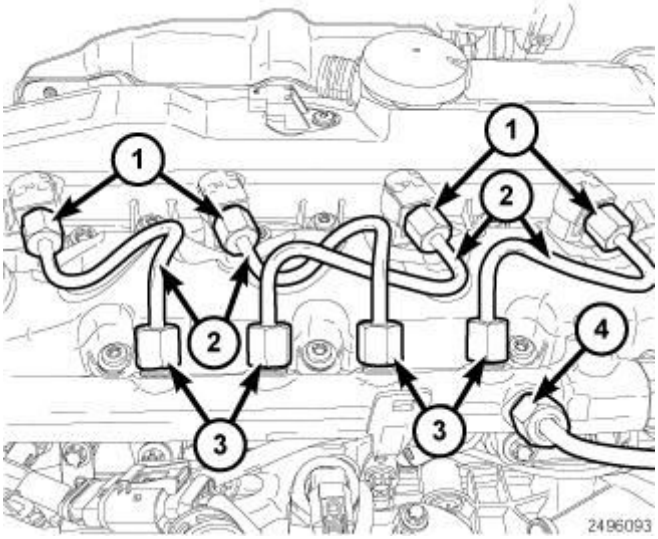

Fig. 288: Fuel Injectors, High Pressure Fuel Tubes, Fuel Rail & High Pressure Feed Line
Courtesy of CHRYSLER GROUP, LLC

NOTE: Any time a high pressure fuel tube has been loosened or disconnected, that high pressure fuel tube must be replaced.

4. Install the new high pressure feed tube (4) to fuel rail. Tighten fuel tube (4) to 33 N.m (24 ft. lbs.).

5. Install the new high pressure fuel tubes (2) at fuel injectors (1) and fuel rail (3).
6. Tighten the high pressure fuel tubes (2) at fuel injectors (1) and fuel rail (3) to 7 N.m (62 in. lbs.).
7. Tighten the high pressure fuel tubes (2) at fuel injectors (1) and fuel rail (3) to 33 N.m (24 ft. lbs.).

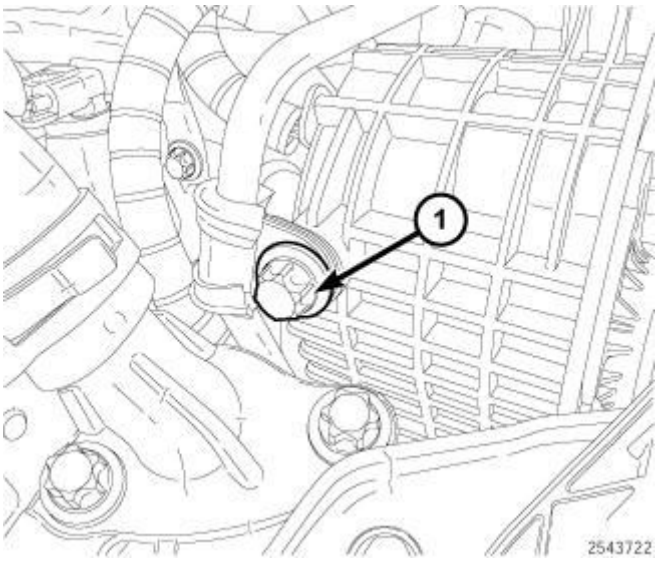

Fig. 289: High Pressure Feed Line Bolt
Courtesy of CHRYSLER GROUP, LLC

8. Install bolt (1) securing the high pressure feed tube. Tighten bolt (1) to 9 N.m (80 in. lbs.).

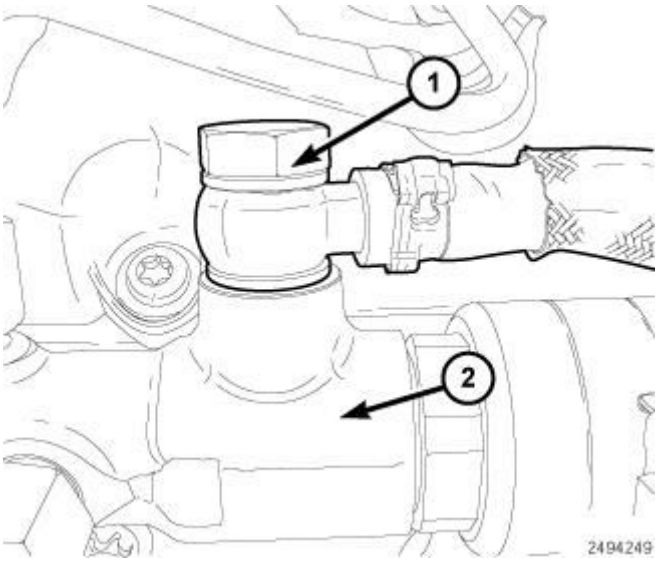

Fig. 290: Banjo Bolt & Rail
Courtesy of CHRYSLER GROUP, LLC

9. Using new sealing washers, position fuel rail return line to the rail (2). Tighten banjo bolt (1) to 32 N.m (24 ft. lbs.).

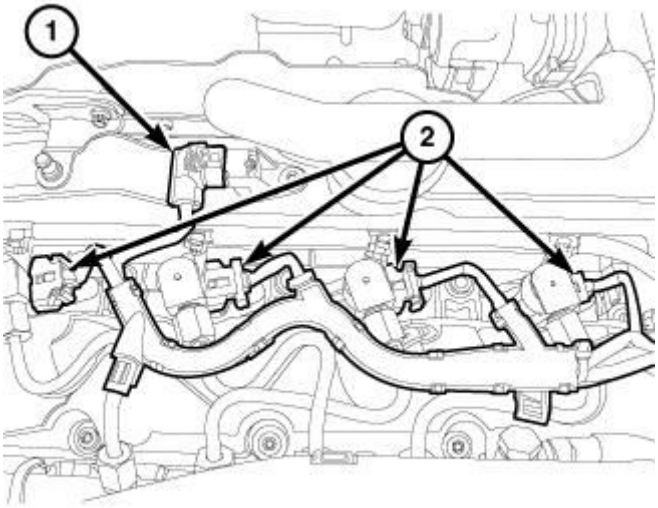

2494433

Fig. 291: Camshaft Position Sensor (CMP) Harness Connector & Fuel Injector Harness Connectors
Courtesy of CHRYSLER GROUP, LLC

10. Position fuel injector wire harness and push down to lock in place.
11. Connect the fuel injector wire harness connector (2).
12. Connect the Camshaft Position Sensor (CMP) sensor (1) wire harness connector.

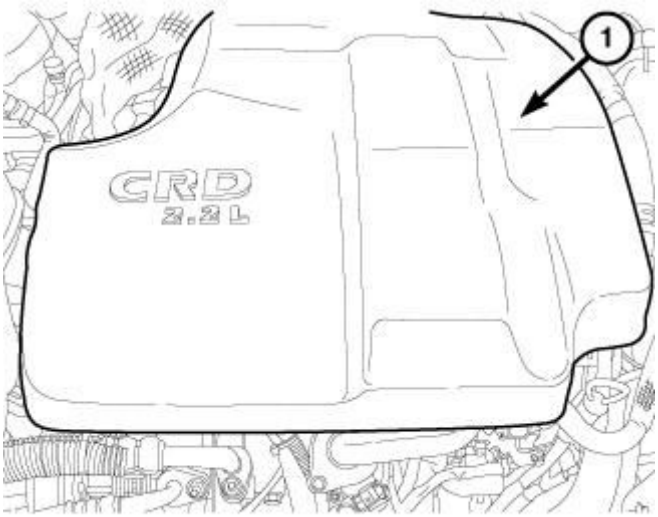

2562736

Fig. 292: Engine Cover
Courtesy of CHRYSLER GROUP, LLC

13. Install the engine cover (1).
14. Connect the negative battery cable.

REGULATOR, FUEL PRESSURE

REMOVAL

REMOVAL

NOTE: The fuel rail pressure regulator is not serviceable component. If diagnosis has lead you to replace the fuel rail pressure regulator, then the fuel rail has to be replaced.

1. To remove the fuel rail. Refer to **RAIL, FUEL, REMOVAL**.

INSTALLATION

INSTALLATION

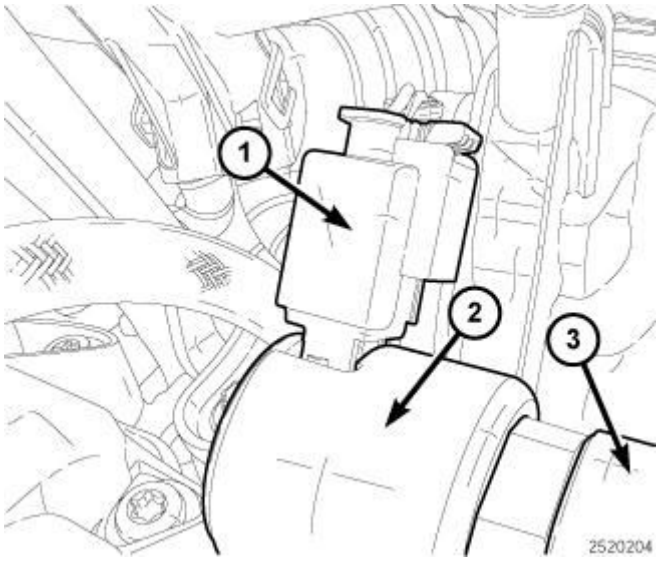

Fig. 293: Fuel Rail Pressure Sensor Harness Connector
Courtesy of CHRYSLER GROUP, LLC

1. Install the fuel rail pressure sensor (2) onto fuel rail (3). Tighten to 35 N.m (26 ft. lbs.).
2. Connect the fuel rail pressure sensor harness connector (1).
3. Connect the negative battery cable.

SENDING UNIT AND SENSOR, FUEL LEVEL

REMOVAL

REMOVAL

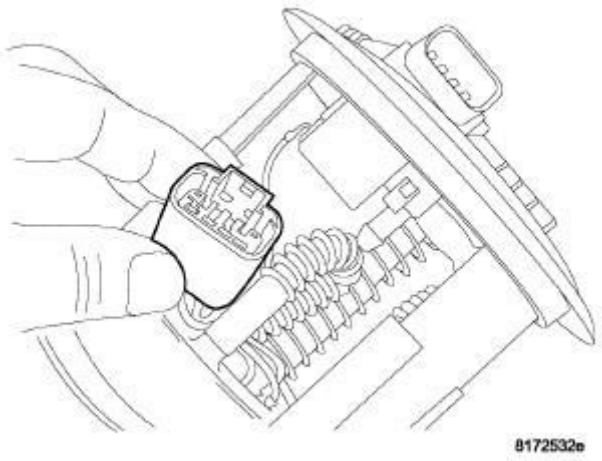

Fig. 294: Fuel Pump/Level Sensor Connector
Courtesy of CHRYSLER GROUP, LLC

1. Remove fuel pump module. Refer to **MODULE, FUEL PUMP, REMOVAL**.
2. Depress retaining tab and remove the fuel pump/level sensor connector from the **BOTTOM** of the fuel pump module wire harness connector.

NOTE: The pump module harness on TOP of flange is not serviceable or removable.

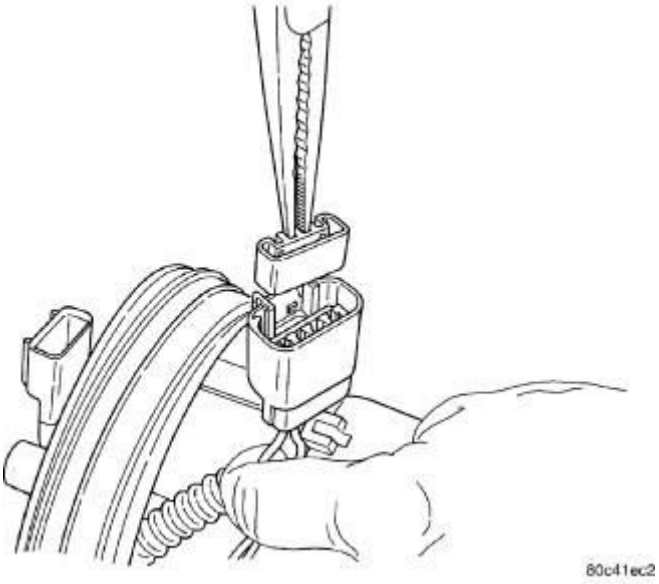

Fig. 295: Wedge Lock
Courtesy of CHRYSLER GROUP, LLC

3. Remove the wedge lock from the wire harness connector.

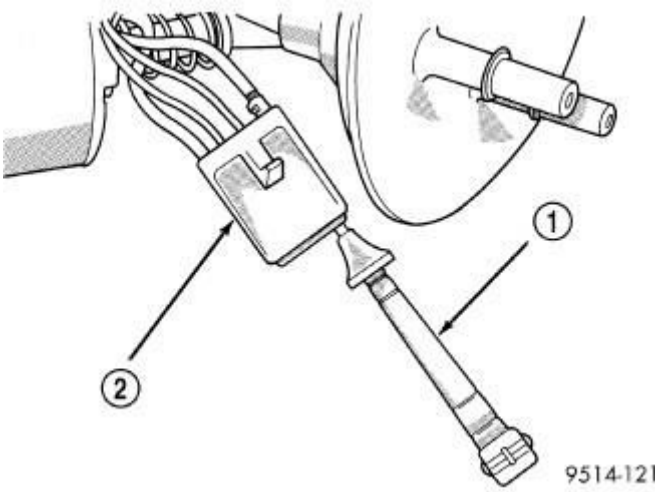

Fig. 296: Terminal Removal Tool
Courtesy of CHRYSLER GROUP, LLC

1 - TERMINAL REMOVAL TOOL 2 - FUEL LEVEL SENSOR CONNECTOR

4. Using the (special tool #C-4334, Extractor) tool (1) terminal remover or equivalent, remove terminals from level sensor harness connector (2).

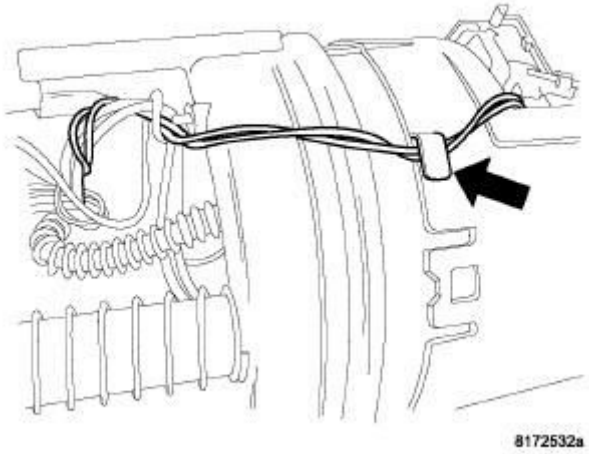

Fig. 297: Fuel Level Sensor Wire Retainer
Courtesy of CHRYSLER GROUP, LLC

1 - FUEL LEVER SENSOR

5. Remove wire from wire retainer.

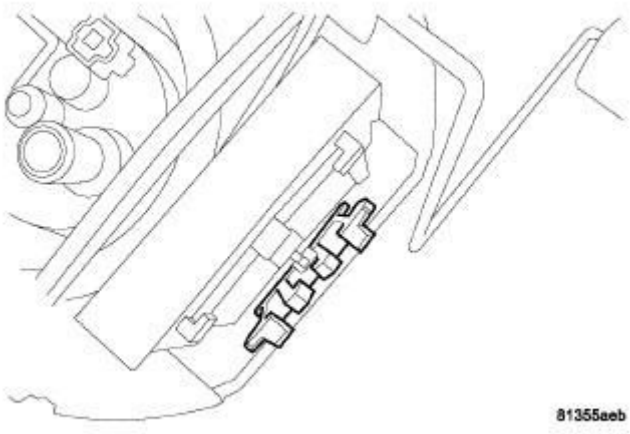

Fig. 298: Level Sensor Tabs
Courtesy of CHRYSLER GROUP, LLC

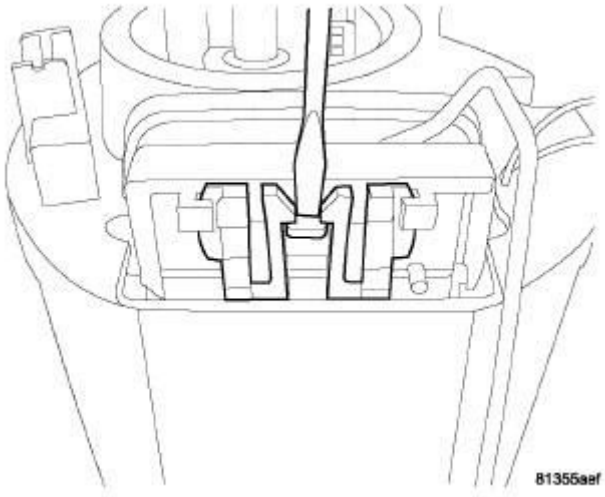

Fig. 299: Releasing Tabs From Level Sensor
Courtesy of CHRYSLER GROUP, LLC

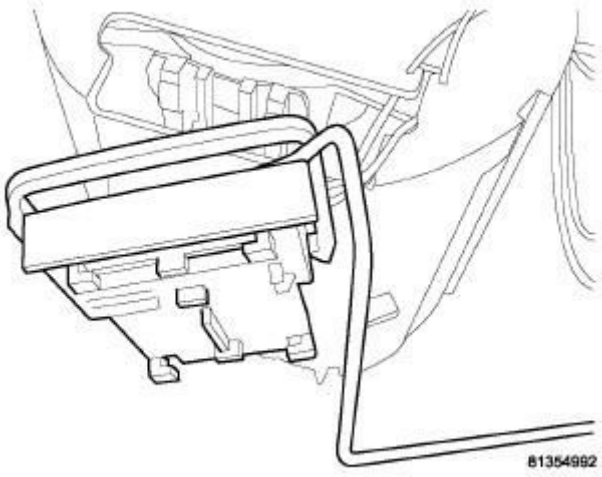

Fig. 300: Level Sensor
Courtesy of CHRYSLER GROUP, LLC

6. Depress the tab and unlock the sender card.
7. Slide level sensor out of channel in module.

INSTALLATION

INSTALLATION

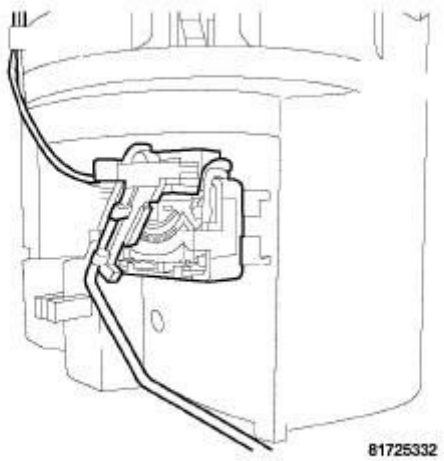

Fig. 301: Groove In Back Side Of Level Sensor
Courtesy of CHRYSLER GROUP, LLC

1 - WIRING GROOVE

1. Wrap wires into groove in back of level sensor.
2. While feeding wires into guide grooves (1).

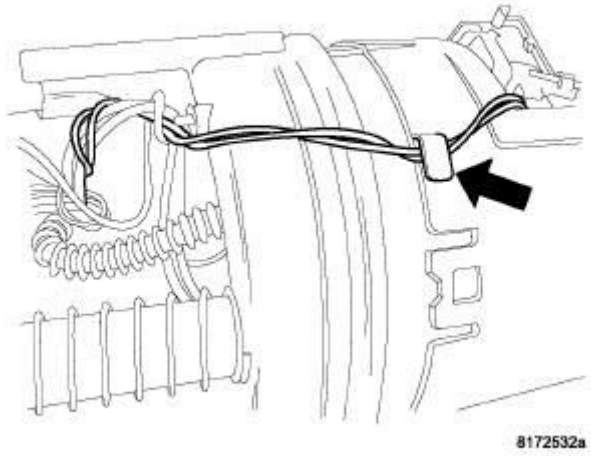

Fig. 302: Fuel Level Sensor Wire Retainer
Courtesy of CHRYSLER GROUP, LLC

1 - FUEL LEVER SENSOR

3. Slide level sensor up into channel until it snaps into place. Ensure tab at bottom of sensor locks in place.
4. Install wire into wire retainer.

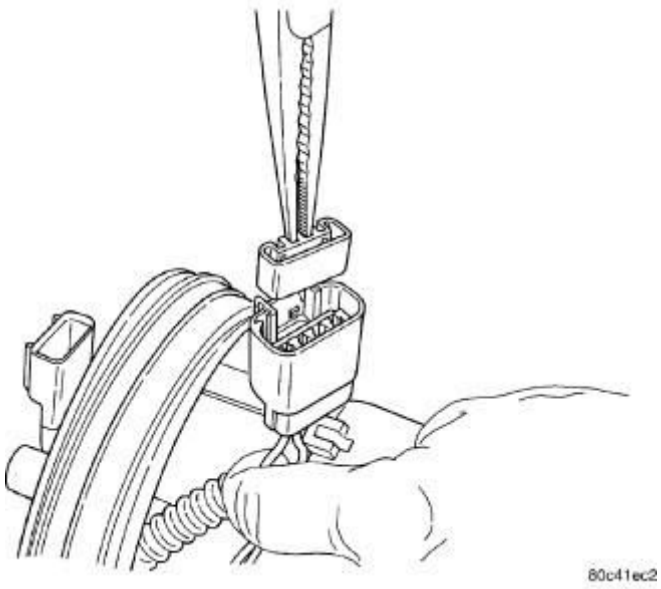

Fig. 303: Wedge Lock
Courtesy of CHRYSLER GROUP, LLC

5. Install level sensor wires in connector. Push the wires up through the connector and then pull them down until they lock in place. Ensure signal and ground wires are installed in the correct position refer to the appropriate Wiring information.
6. Install locking wedge on connector.

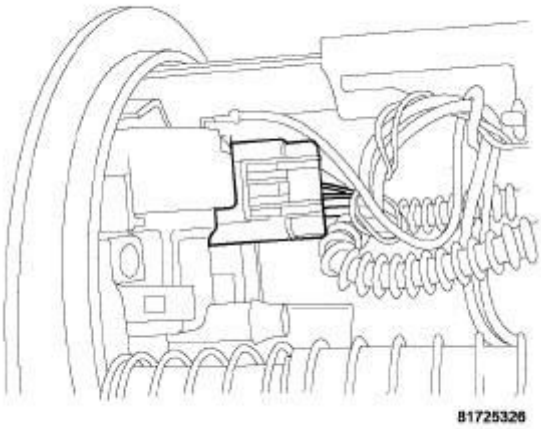

Fig. 304: Fuel Pump/Level Sensor Electrical Connector
Courtesy of CHRYSLER GROUP, LLC

1 - ELECTRICAL CONNECTOR

7. Push connector up into bottom of fuel pump module electrical connector (1).
8. Install fuel pump module. Refer to **MODULE, FUEL PUMP, INSTALLATION**.

SENSOR, FUEL PRESSURE

REMOVAL

REMOVAL

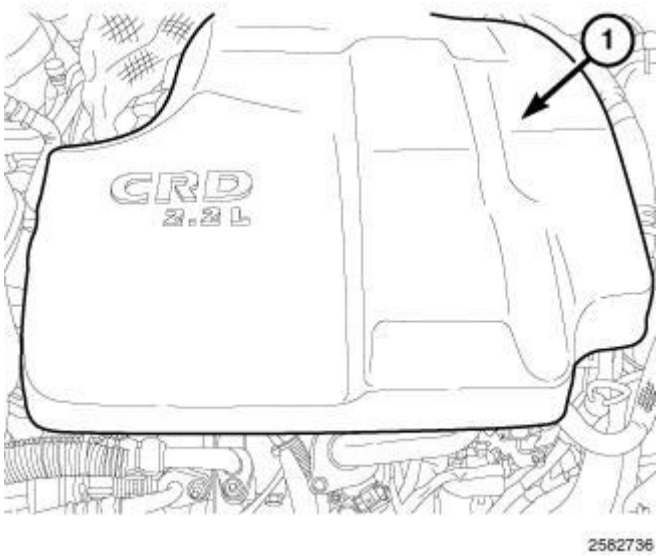

Fig. 305: Engine Cover
Courtesy of CHRYSLER GROUP, LLC

1. Disconnect the negative battery cable.
2. Remove the engine cover (1).

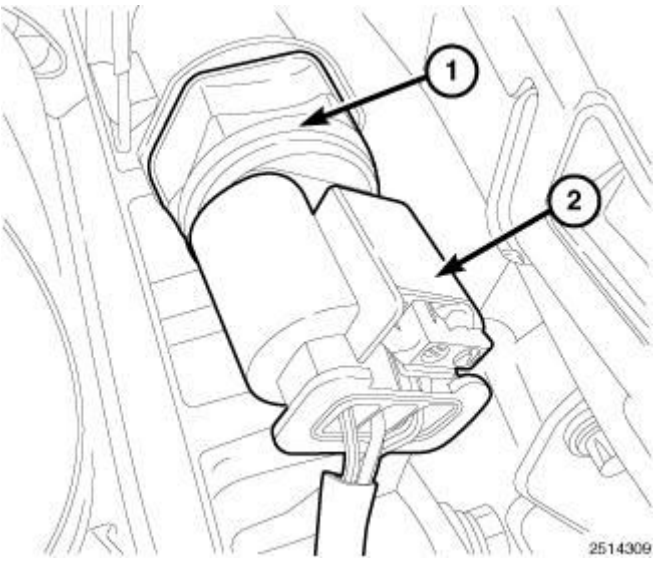

Fig. 306: Fuel Rail Pressure Regulator Harness Connector
Courtesy of CHRYSLER GROUP, LLC

3. Disconnect the fuel rail pressure sensor wire harness connector (2).

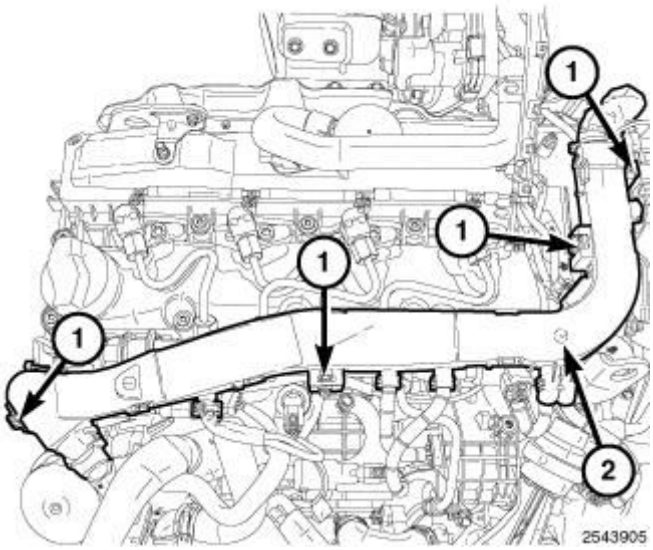

Fig. 307: Lock Tabs & Engine Wire Harness
Courtesy of CHRYSLER GROUP, LLC

4. Release the four lock tabs (1) lift up and position aside engine wire harness (2).

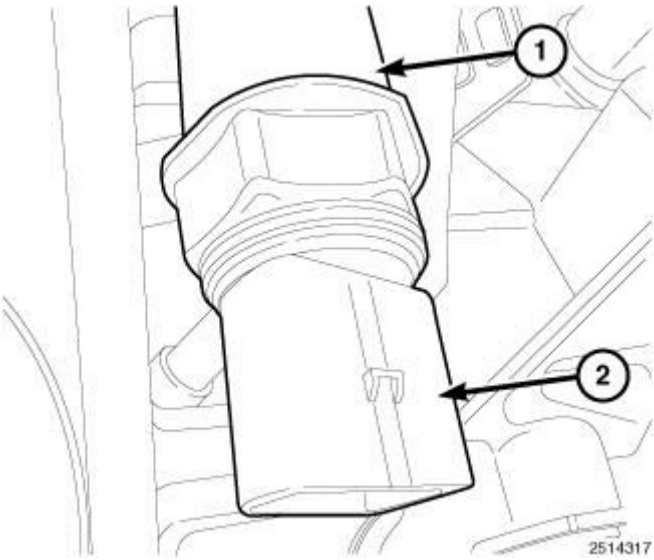

Fig. 308: Fuel Rail & Fuel Rail Pressure Sensor
Courtesy of CHRYSLER GROUP, LLC

5. Remove the fuel rail pressure sensor (2) from fuel rail (1).

INSTALLATION

INSTALLATION

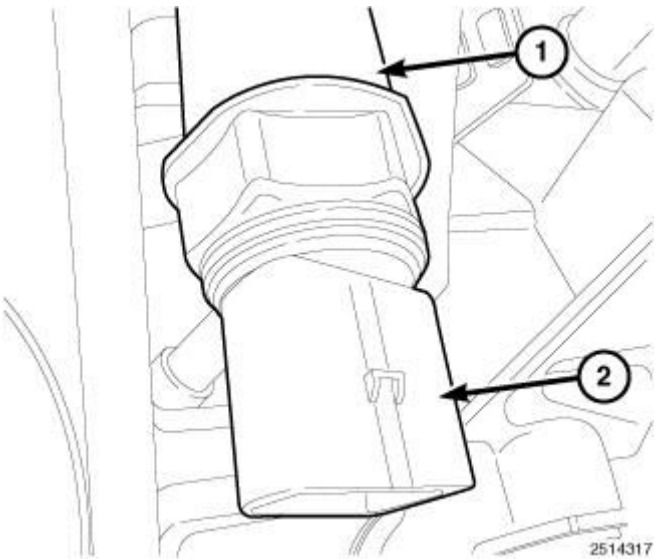

Fig. 309: Fuel Rail & Fuel Rail Pressure Sensor
Courtesy of CHRYSLER GROUP, LLC

1. Install the fuel rail pressure sensor (2) onto fuel rail (1). Tighten sensor (2) to 35 N.m (26 ft. lbs.).

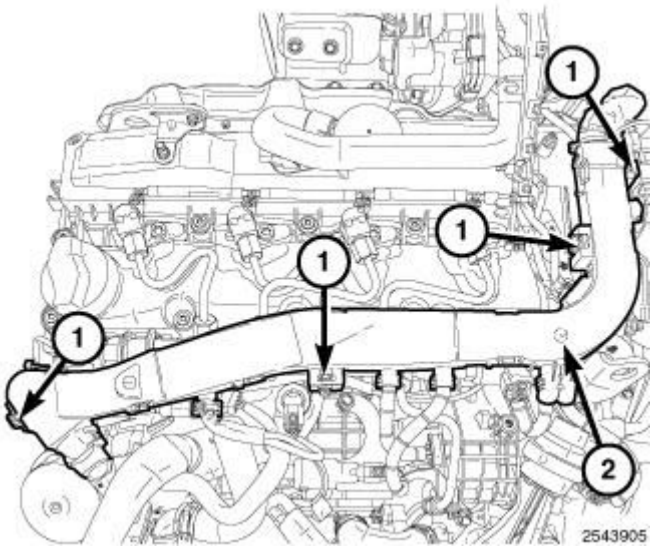

Fig. 310: Lock Tabs & Engine Wire Harness
Courtesy of CHRYSLER GROUP, LLC

2. Position the wire harness (2) and push down to lock tabs (1).

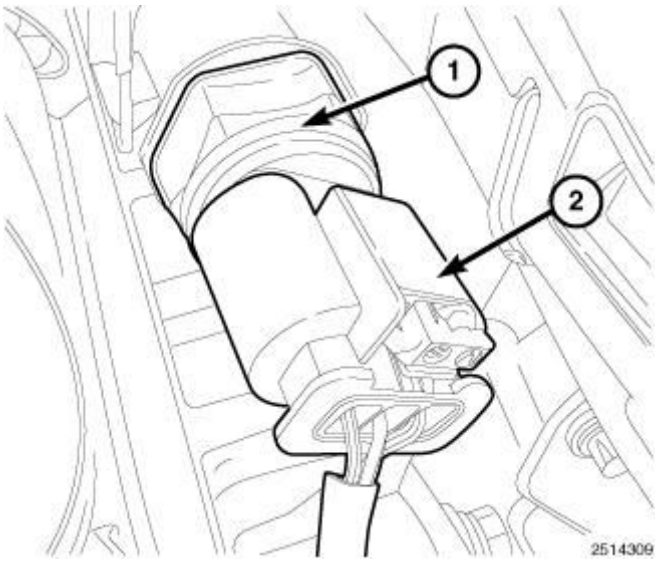

Fig. 311: Fuel Rail Pressure Regulator Harness Connector
Courtesy of CHRYSLER GROUP, LLC

3. Connect the fuel rail pressure sensor wire harness connector (2).

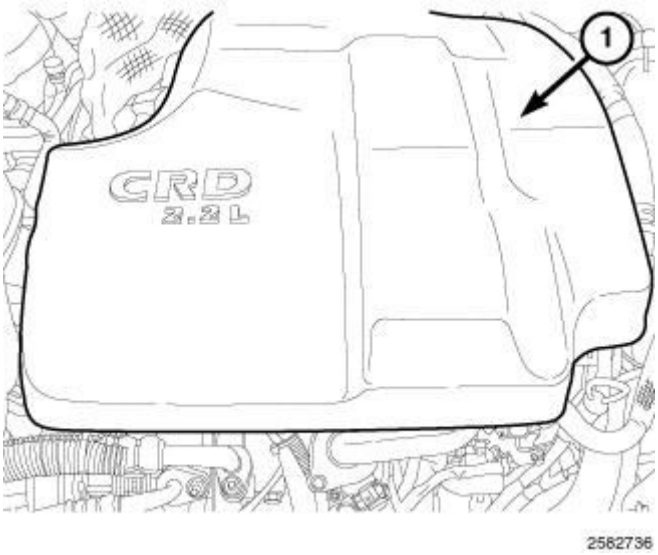

Fig. 312: Engine Cover
Courtesy of CHRYSLER GROUP, LLC

4. Install the engine cover (1).
5. Connect the negative battery cable.

TUBE(S), FUEL

REMOVAL

REMOVAL

WARNING: HIGH-PRESSURE FUEL LINES DELIVER FUEL UNDER EXTREME PRESSURE FROM THE INJECTION PUMP TO THE INJECTORS. THIS MAYBE AS HIGH AS 1800 BAR (26, 106 PSI). USE EXTREME CAUTION WHEN INSPECTING FOR HIGH-PRESSURE FUEL LEAKS. FUEL UNDER THIS AMOUNT OF PRESSURE CAN PENETRATE SKIN CAUSING PERSONAL INJURY OR DEATH. INSPECT HIGH-PRESSURE FUEL LEAKS WITH A SHEET OF CARDBOARD. WEAR SAFETY GOGGLES AND ADEQUATE PROTECTIVE CLOTHING WHEN SERVICING FUEL SYSTEM.

WARNING: No sparks, open flames or smoking. Risk of poisoning from inhaling and swallowing fuel. Risk of injury to eyes and skin from contact with fuel.

Pour fuels only into suitable and appropriately marked containers. Wear protective clothing.

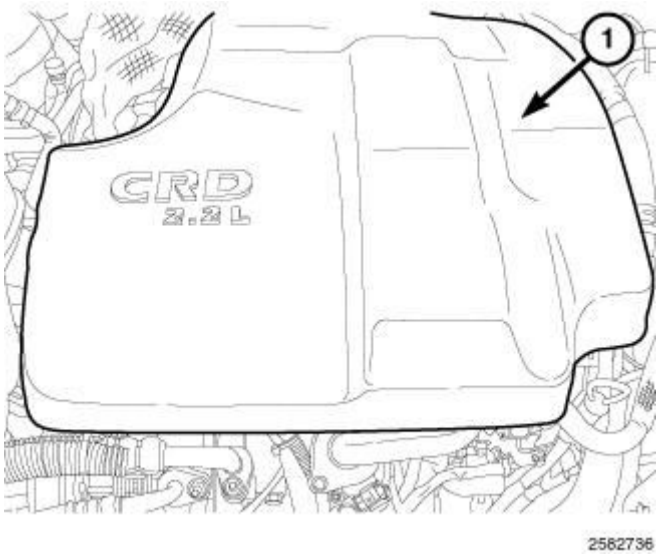

Fig. 313: Engine Cover
Courtesy of CHRYSLER GROUP, LLC

1. Disconnect the negative battery cable.
2. Remove the engine cover (1).

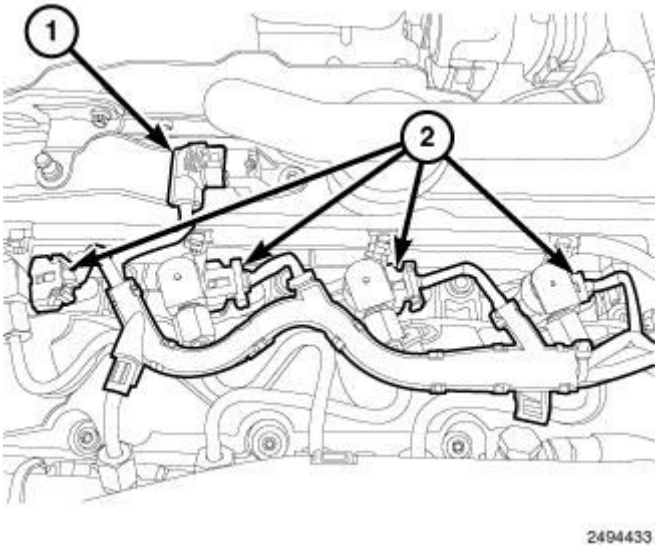

Fig. 314: Camshaft Position Sensor (CMP) Harness Connector & Fuel Injector Harness Connectors
Courtesy of CHRYSLER GROUP, LLC

3. Disconnect the Camshaft Position Sensor (CMP) (1) wire harness connector.
4. Disconnect the fuel injector wire harness connector (2).

5. Lift up on fuel injector wire harness and position aside.

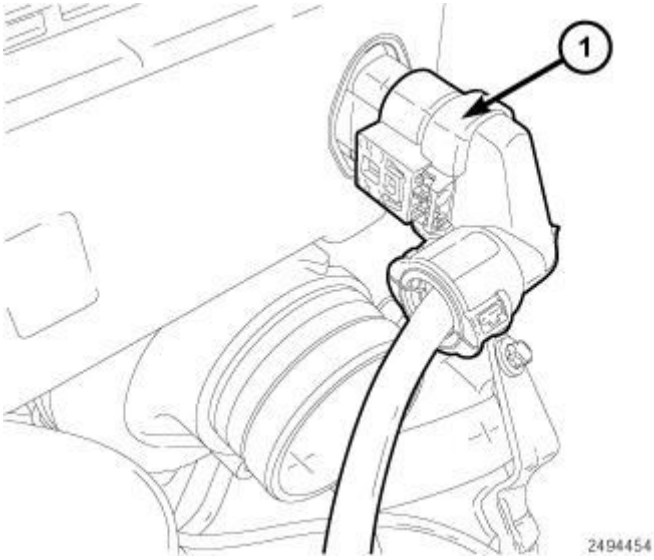

Fig. 315: Turbocharger Actuator Harness Connector
Courtesy of CHRYSLER GROUP, LLC

6. Disconnect the turbocharger actuator (1) wire harness connector.

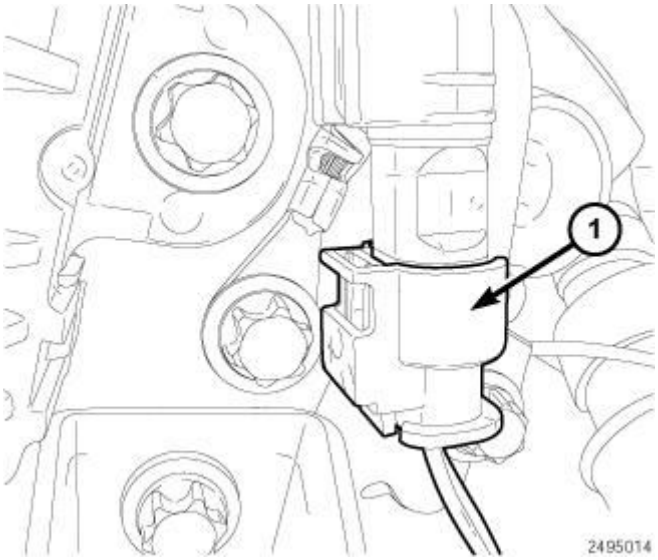

Fig. 316: Turbocharger Exhaust Temperature Sensor Harness Connector
Courtesy of CHRYSLER GROUP, LLC

7. Disconnect the turbocharger exhaust temperature sensor (1) wire harness connector.

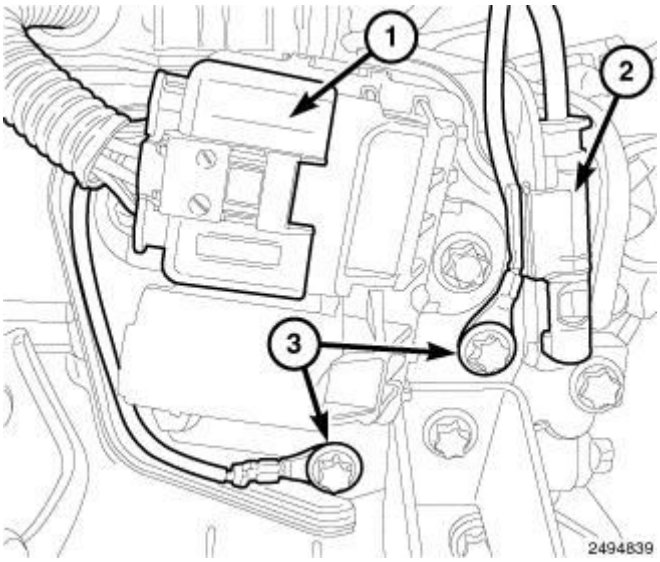

Fig. 317: Glow Plug Module Harness Connector, Bolts & Turbocharger Exhaust Temperature Sensor Harness Connector
Courtesy of CHRYSLER GROUP, LLC

8. Disconnect the turbocharger exhaust temperature sensor wire harness connector (2) from bracket.
9. Remove the two bolts (3) and position aside the ground wires.
10. Disconnect the glow plug module wire harness connector (1).

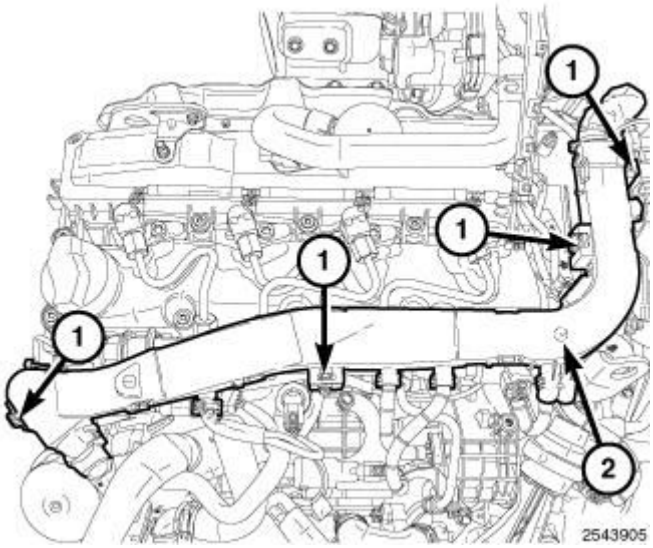

Fig. 318: Lock Tabs & Engine Wire Harness
Courtesy of CHRYSLER GROUP, LLC

11. Release the four lock tabs (1) lift up and position aside engine wire harness

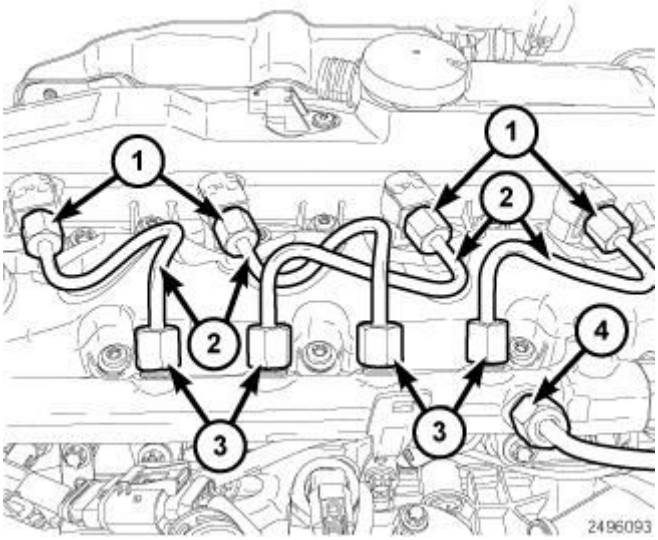

Fig. 319: Fuel Injectors, High Pressure Fuel Tubes, Fuel Rail & High Pressure Feed Line
Courtesy of CHRYSLER GROUP, LLC

NOTE: After removing high pressure fuel tubes, seal off fuel injectors and fuel rail with protective caps to ensure cleanliness.

12. Remove high pressure fuel tubes (2) at fuel injectors (1) and fuel rail (3) and discard high pressure fuel tubes.
13. Install protective caps onto the fuel injector and fuel rail.

INSTALLATION

INSTALLATION

WARNING: HIGH-PRESSURE FUEL LINES DELIVER FUEL UNDER EXTREME PRESSURE FROM THE INJECTION PUMP TO THE INJECTORS. THIS MAYBE AS HIGH AS 1800 BAR (26, 106 PSI). USE EXTREME CAUTION WHEN INSPECTING FOR HIGH-PRESSURE FUEL LEAKS. FUEL UNDER THIS AMOUNT OF PRESSURE CAN PENETRATE SKIN CAUSING PERSONAL INJURY OR DEATH. INSPECT HIGH-PRESSURE FUEL LEAKS WITH A SHEET OF CARDBOARD. WEAR SAFETY GOGGLES AND ADEQUATE PROTECTIVE

CLOTHING WHEN SERVICING FUEL SYSTEM.

WARNING: No sparks, open flames or smoking. Risk of poisoning from inhaling and swallowing fuel. Risk of injury to eyes and skin from contact with fuel. Pour fuels only into suitable and appropriately marked containers. Wear protective clothing.

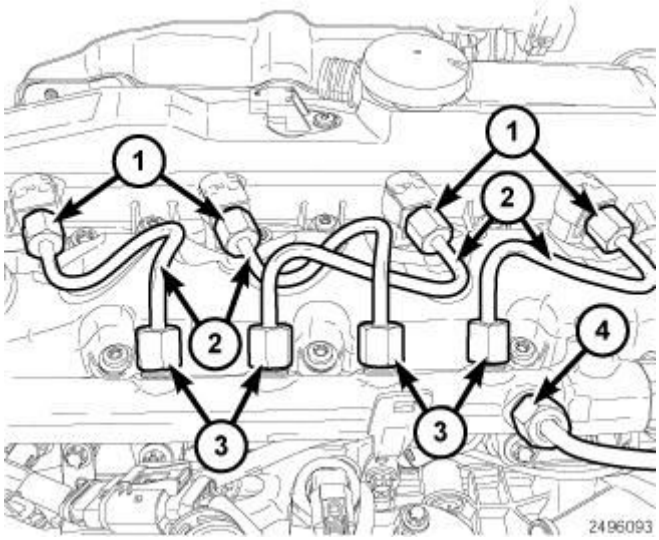

Fig. 320: Fuel Injectors, High Pressure Fuel Tubes, Fuel Rail & High Pressure Feed Line
Courtesy of CHRYSLER GROUP, LLC

NOTE: Any time a high pressure fuel tube has been loosened or disconnected, that high pressure fuel tube must be replaced.

1. Remove the protective caps from the fuel rail and fuel injectors.
2. Install a new high pressure fuel tubes (2) at fuel injectors (1) and fuel rail (3).
3. Tighten the high pressure fuel tubes (2) at fuel injectors (1) to 7 N.m (62 in. lbs.).
4. Tighten the high pressure fuel tubes (2) and fuel rail (3) to 7 N.m (62 in. lbs.).
5. Tighten the high pressure fuel tubes (2) at fuel injectors (1) to 33 N.m (24 ft. lbs.).
6. Tighten the high pressure fuel tubes (2) and fuel rail (3) to 33 N.m (24 ft.

lbs.).

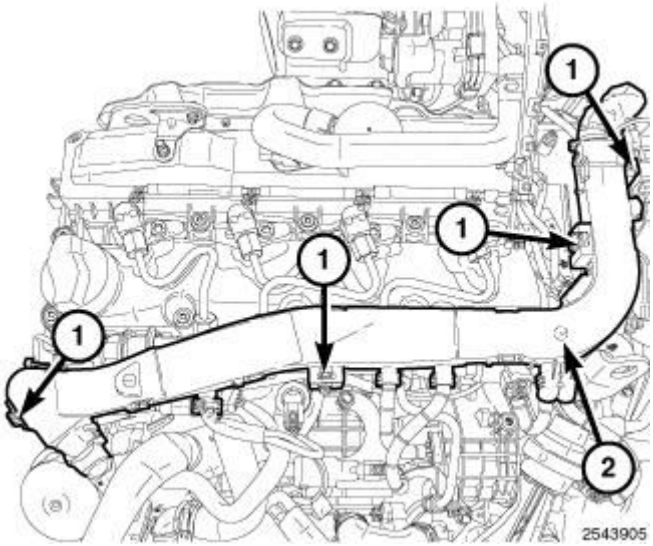

Fig. 321: Lock Tabs & Engine Wire Harness
Courtesy of CHRYSLER GROUP, LLC

7. Reposition the engine wire harness and push down to lock tabs.

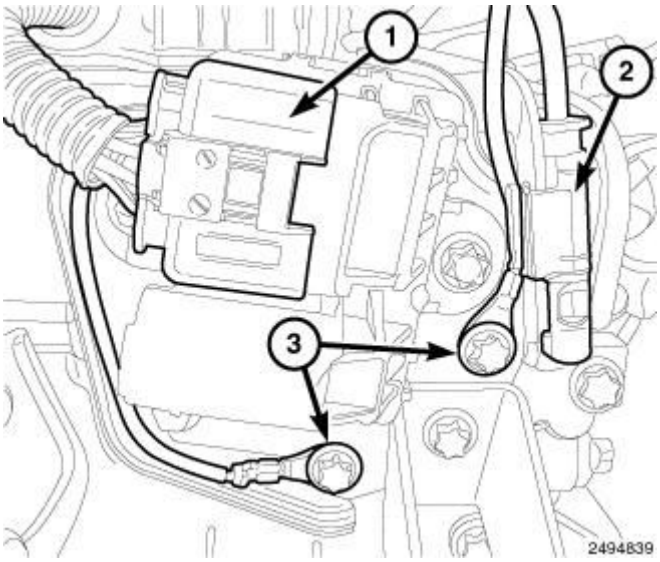

Fig. 322: Glow Plug Module Harness Connector, Bolts & Turbocharger Exhaust Temperature Sensor Harness Connector
Courtesy of CHRYSLER GROUP, LLC

8. Connect the glow plug module wire harness connector (1).
9. Reposition ground wires and tighten bolts (3) to 9 N.m (80 in. lbs.).
10. Connect the turbocharger exhaust temperature sensor wire harness connector (2) to bracket.

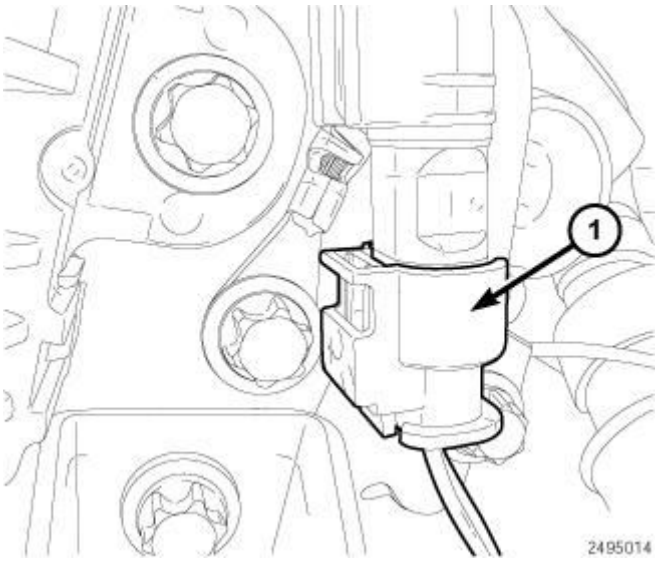

Fig. 323: Turbocharger Exhaust Temperature Sensor Harness Connector
Courtesy of CHRYSLER GROUP, LLC

11. Connect the turbocharger exhaust temperature sensor (1) wire harness connector.

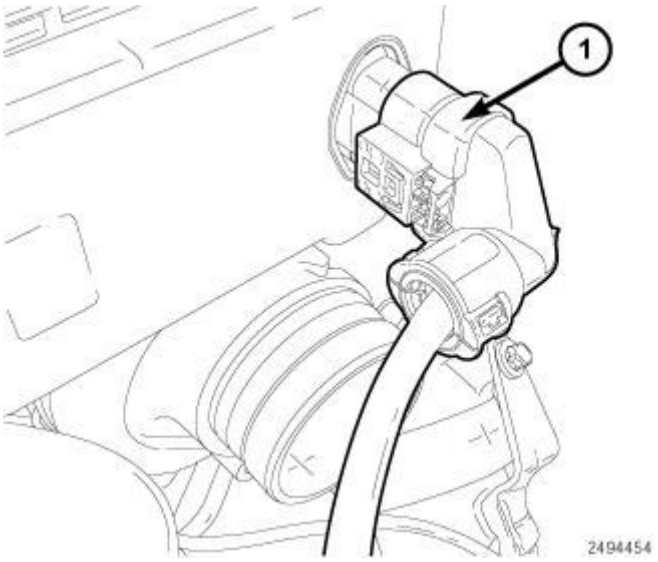

Fig. 324: Turbocharger Actuator Harness Connector
Courtesy of CHRYSLER GROUP, LLC

12. Connect the turbocharger actuator (1) wire harness connector.

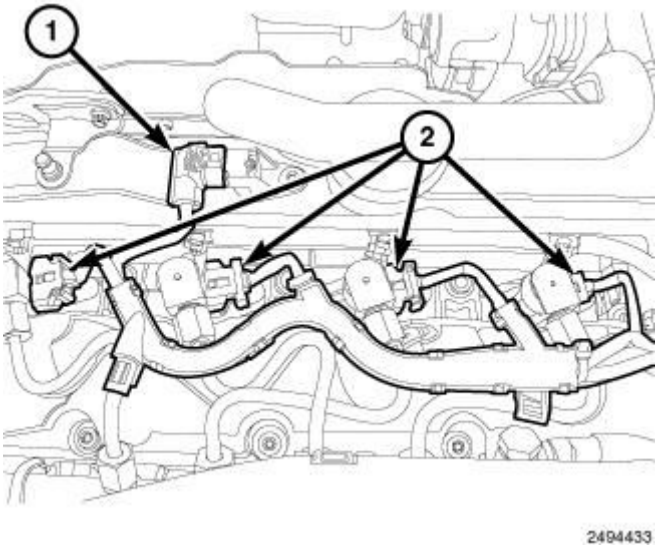

Fig. 325: Camshaft Position Sensor (CMP) Harness Connector & Fuel Injector Harness Connectors
Courtesy of CHRYSLER GROUP, LLC

13. Position the fuel injector wire harness and push down to lock in place.
14. Connect the fuel injector (2) wire harness connector.
15. Connect the Camshaft Position Sensor (CMP) (1) wire harness connector.
16. Connect the negative battery cable.
17. Start engine and inspect for leaks.

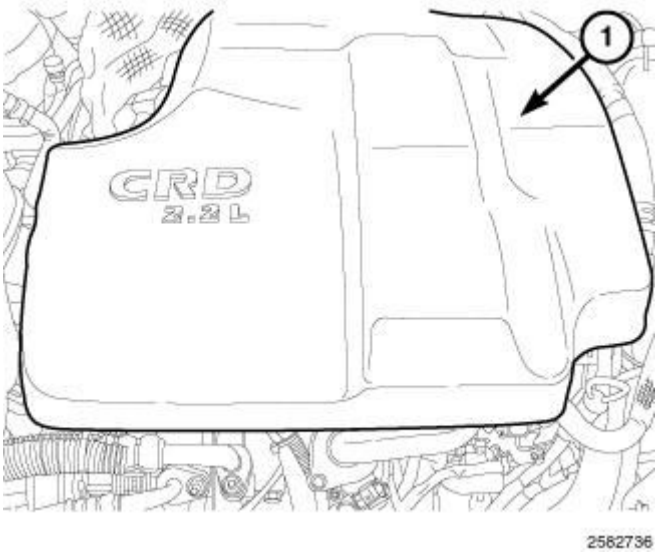

Fig. 326: Engine Cover
Courtesy of CHRYSLER GROUP, LLC

18. Install the engine cover (1).

TUBES, FUEL DRAIN

DESCRIPTION

DESCRIPTION

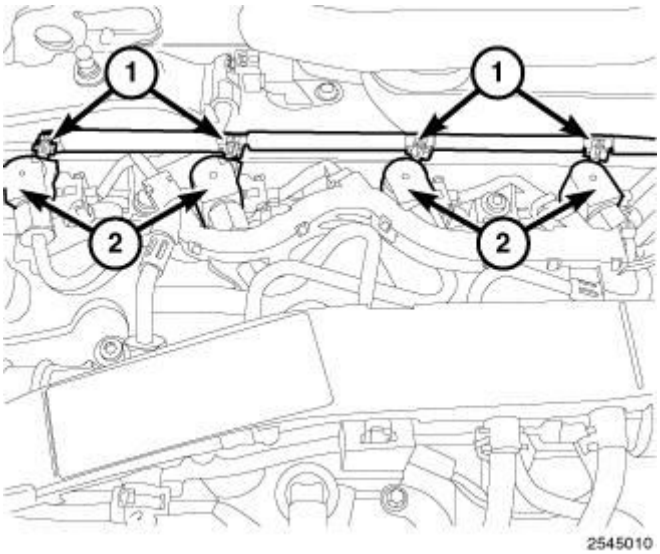

Fig. 327: Fuel Drain Tubes & Injectors
Courtesy of CHRYSLER GROUP, LLC

1. The fuel drain tubes (1) connect to the back of all four injectors (2). These tubes are used to return unused fuel from the fuel injectors (2) to the tank.

REMOVAL

REMOVAL

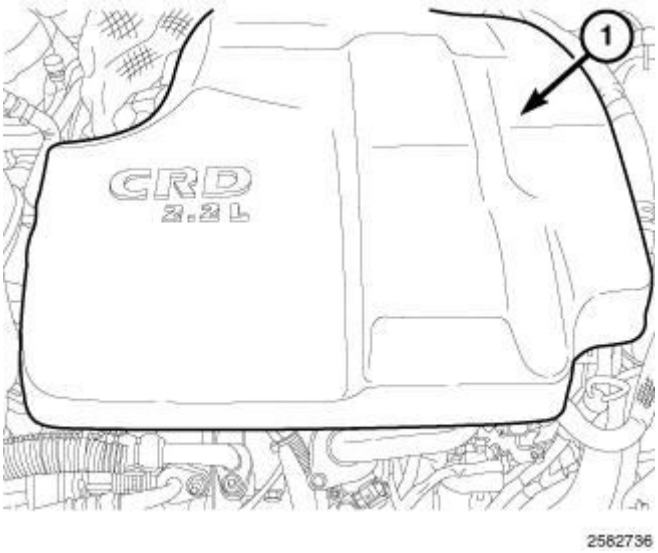

Fig. 328: Engine Cover
Courtesy of CHRYSLER GROUP, LLC

1. Disconnect the negative battery cable.
2. Remove the engine cover (1).

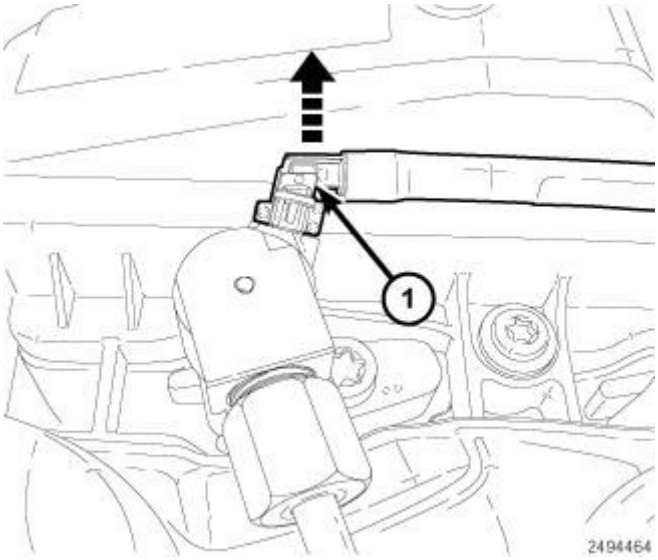

Fig. 329: Releasing Lock Tab
Courtesy of CHRYSLER GROUP, LLC

3. Release the lock tab (1) and disconnect the fuel injector return line from each fuel injector and position aside.

INSTALLATION

INSTALLATION

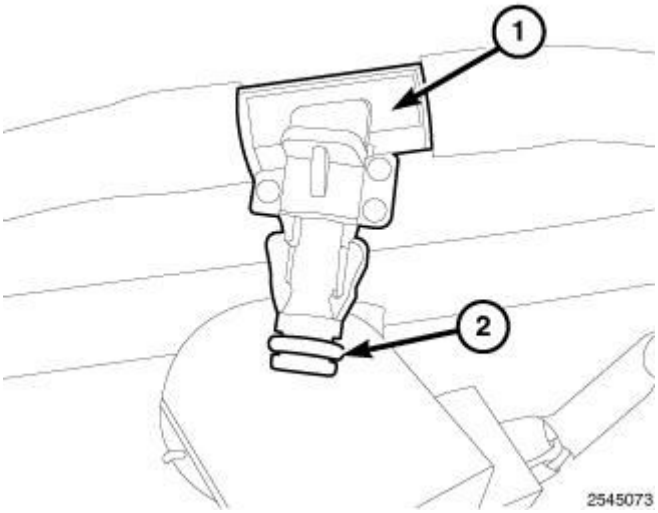

Fig. 330: Fuel Injector Return Lines & O-Ring
Courtesy of CHRYSLER GROUP, LLC

1. Replace the O-ring (2) on the fuel injector return lines (1).

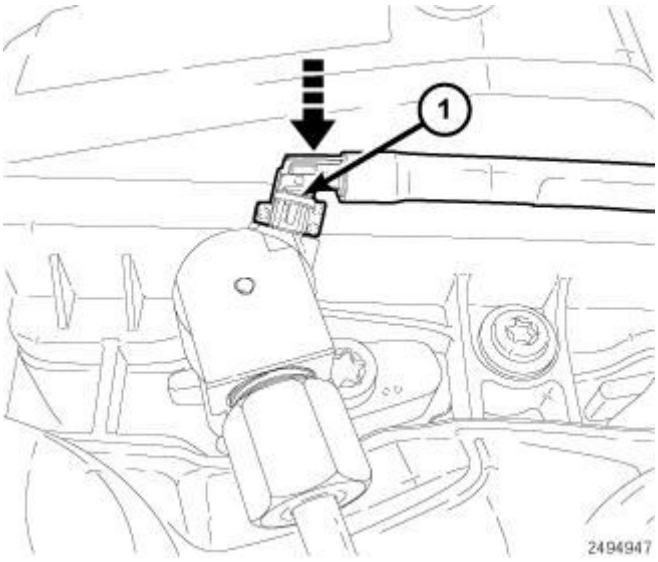

Fig. 331: Installing Lock Tab
Courtesy of CHRYSLER GROUP, LLC

2. Reposition and install the fuel injector return line and set the lock tab (1).
3. Connect the negative battery cable.
4. Start the engine and check for leaks.

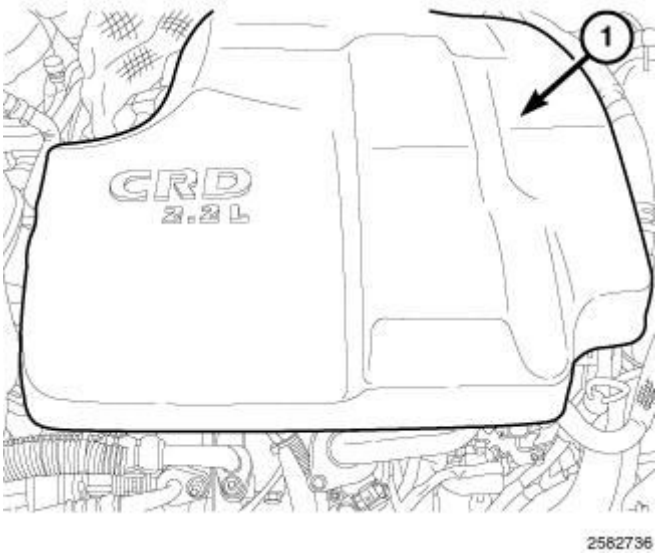

Fig. 332: Engine Cover
Courtesy of CHRYSLER GROUP, LLC

5. Install the engine cover (1).

VALVE, FUEL QUANTITY CONTROL

DESCRIPTION

DESCRIPTION

The fuel quantity control valve mounts to front of the high pressure pump and is controlled by the Powertrain Control Module (PCM). The quantity control valve assists in maintaining proper fuel quantity injected under all operating conditions. Fuel tank heat protection is also provided by the quantity control valve. The valve meters the exact amount of fuel to prevent excess heated fuel from returning to the tank.

OPERATION

OPERATION

The PCM uses the Fuel Quantity Solenoid (FQS) and the fuel pressure regulator to control pressure in the fuel rail through pulse width modulation signal. The FQS is the primary actuated component used to control pressure in the fuel rail. During engine cranking the FQS is in the fully opened (100%) position allowing maximum fuel flow to the high pressure pump to help build fuel rail pressure quickly. During idle, and normal driving conditions the FQS pulse width modulated signal is adjusted to control the volume of fuel entering the high pressure pump to maintain the needed fuel rail pressure. The FQS is a normally closed solenoid. The FQS will default to the full closed position if the solenoid is de-energized.

REMOVAL

REMOVAL

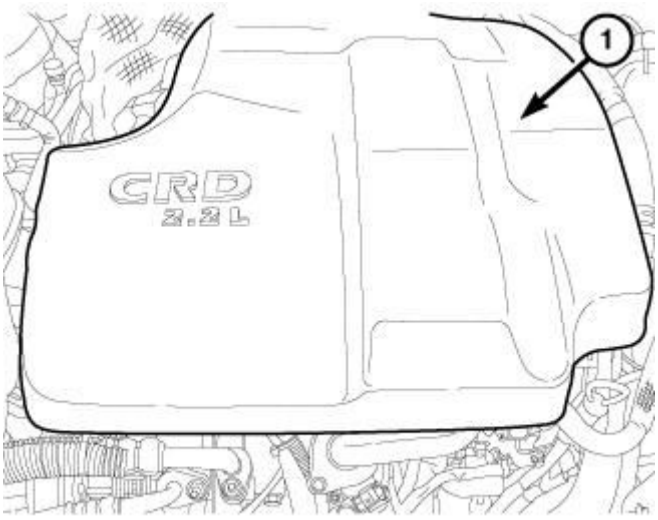

2582736

Fig. 333: Engine Cover
Courtesy of CHRYSLER GROUP, LLC

1. Disconnect the negative battery cable.
2. Remove the engine cover (1).
3. Remove the mixing chamber. Refer to **MANIFOLD, INTAKE, REMOVAL** .
4. Clean surrounding area by the fuel quantity control valve.

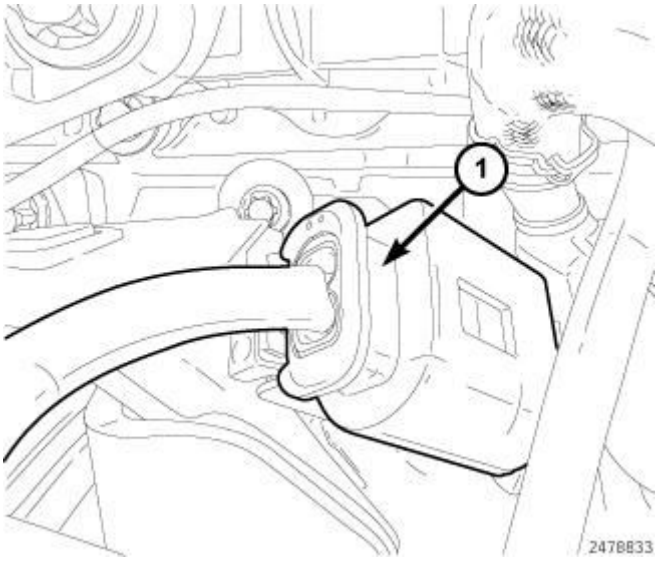

Fig. 334: Fuel Quantity Control Valve Harness Connector
Courtesy of CHRYSLER GROUP, LLC

5. Disconnect the fuel quantity control valve wire harness connector (1).

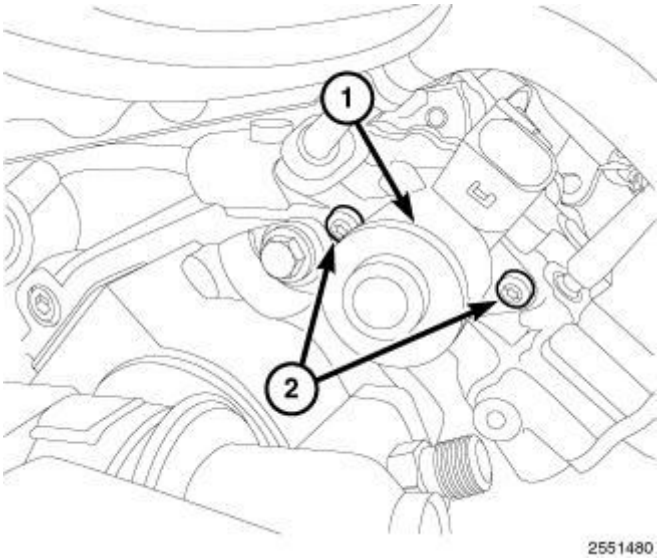

Fig. 335: Fuel Quantity Control Valve & Bolts

Courtesy of CHRYSLER GROUP, LLC

6. Remove bolts (2) and the fuel quantity control valve (1).

INSTALLATION

INSTALLATION

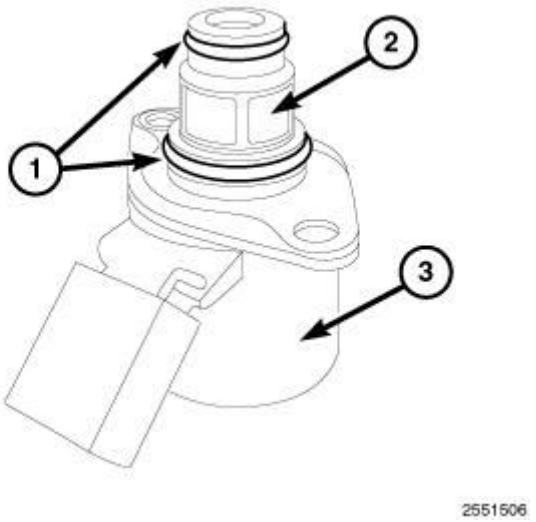

Fig. 336: O-Rings & Fuel Quantity Control Valve
Courtesy of CHRYSLER GROUP, LLC

1. Install new O-rings (1) onto the fuel quantity control valve (3).

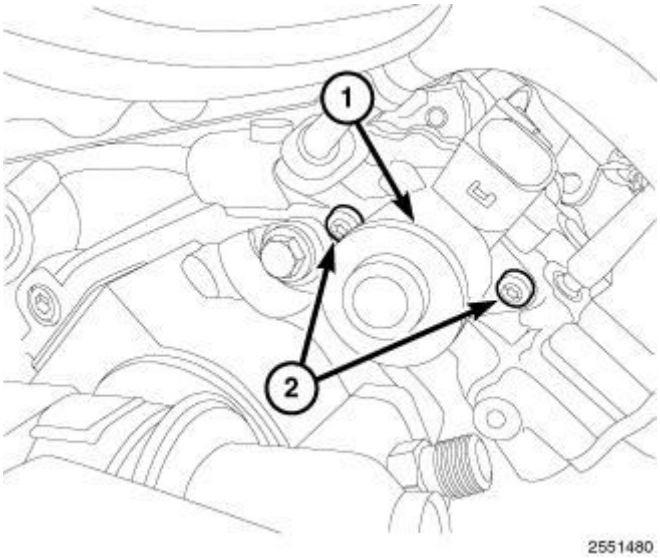

Fig. 337: Fuel Quantity Control Valve & Bolts
Courtesy of CHRYSLER GROUP, LLC

2. Install the fuel quantity control valve (1). Tighten bolts (2) to 7 N.m (62 in.

lbs.).

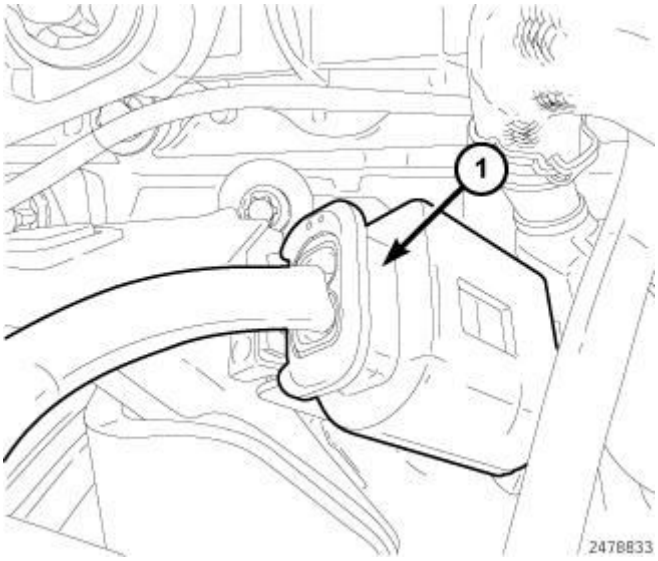

Fig. 338: Fuel Quantity Control Valve Harness Connector
Courtesy of CHRYSLER GROUP, LLC

3. Connect the fuel quantity control valve wire harness connector (1).
4. Install the mixing chamber. Refer to **MANIFOLD, INTAKE, INSTALLATION** .

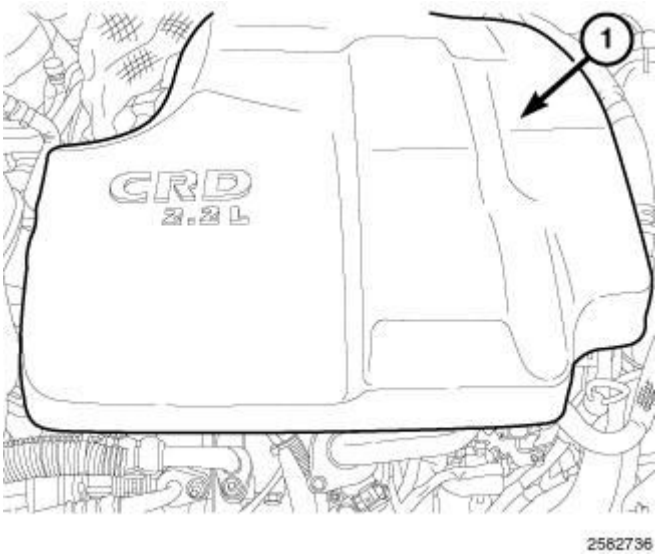

Fig. 339: Engine Cover
Courtesy of CHRYSLER GROUP, LLC

5. Install the engine cover (1).
6. Connect the negative battery cable.

FUEL INJECTION, DIESEL

OPERATION

OPERATION

A vehicle that is not properly tuned and maintained cannot be expected to perform at its maximum efficiency and can have an adverse effect on fuel economy. The following recommendations will ensure that the vehicle is performing at its maximum efficiency:

- **Use the recommended motor oil grade.** Using the manufacturer's recommended grade of Mopar® motor oil can improve fuel mileage by 1-2%. Mopar® motor oil labeled "Energy Conserving" contains friction-reducing additives.
- **Check and replace air filters.** Replacing a clogged air filter with a new Mopar® air filter can improve fuel mileage by as much as 10%.
- **Keep the engine tuned.** Repairing a vehicle that is noticeably out of tune can improve fuel mileage by an average of 4%. Maintaining a vehicle and repairing problems, such as a faulty oxygen sensor, can improve mileage by as much as 40%.
- **Keep tires properly inflated.** Under inflated tires can lower fuel mileage by 0.4% for every 1 psi drop in pressure of all four tires.

SPECIAL TOOLS

SPECIAL TOOLS

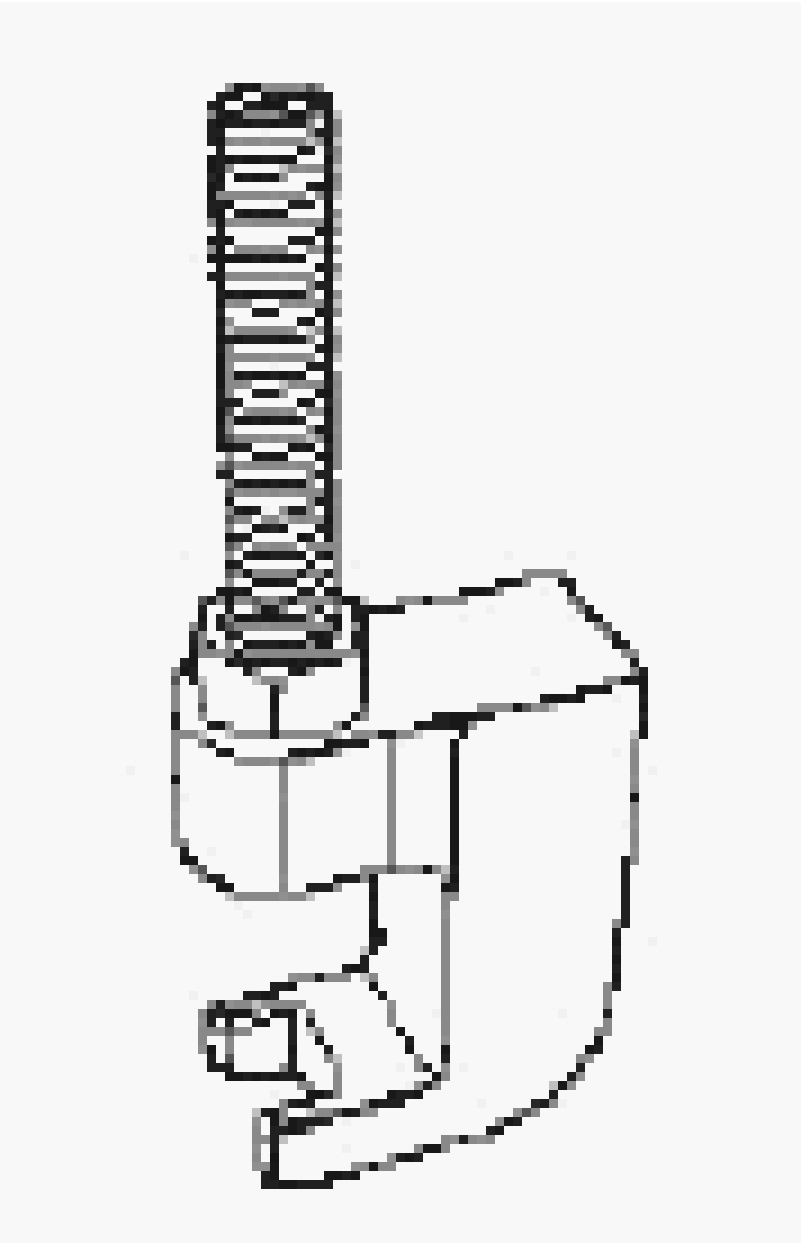

10238 - Claw, Extraction

8941 - Puller
(Originally Shipped In Kit Number(s) 9299, 9299CC, 9300A-CAN, 9550, 9560.)

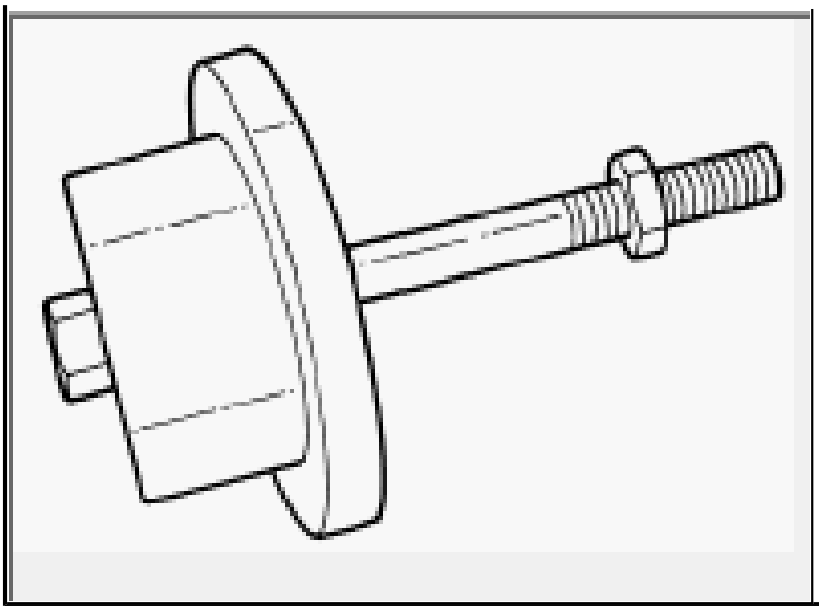

INJECTOR(S), FUEL

DESCRIPTION

DESCRIPTION

Four electronically controlled fuel injectors are located on top of the cylinder head. The injectors generate a fine fuel atomization at injection pressures of up to 1, 800 bar (26, 106 psi). Each injector is held in place by a tensioning claw and retaining bolt. A copper seal ring is located on the injector tip to seal off the injector to the combustion chamber. When servicing the injectors, always replace the copper seal ring and the retaining bolt.

OPERATION

OPERATION

The injector operation can be subdivided into four operating states with the engine running and the high-pressure pump generating pressure:

- Injector closed (with high pressure applied)
- Injector opens (start of injection)
- Injector opened fully
- Injector closes (end of injection)

INJECTOR CLOSED (WITH HIGH PRESSURE APPLIED)

With the injector closed (at-rest state), the solenoid valve is not energized and is

therefore closed. With the bleed orifice closed, the valve spring forces the armature's ball onto the bleed-orifice seat. The rail's high pressure build up in the valve control chamber, and the same pressure is also present in the nozzle's chamber volume. The rail pressure applied at the control plunger's end face, together with the force of the nozzle spring, maintain the nozzle in the closed position against the opening forces applied to its pressure stage.

INJECTOR OPENS (START OF INJECTION)

The solenoid valve is energized with the pickup current which serves to ensure that it open quickly. The force exerted by the triggered solenoid now exceeds that of the valve spring and the armature opens the bleed orifice. Almost immediately, the high-level pick-up current is reduced to the lower holding current required for the electromagnet. This is possible due to the magnetic circuit's air gap now being smaller. When the bleed orifice opens, fuel can flow from the valve control chamber into the cavity situated above it, and from there via the fuel return to the tank. The bleed orifice prevents complete pressure balance, and the pressure in the valve control chamber sinks as a result. This leads to the pressure in the valve-control chamber being lower than that in the nozzle's chamber volume which is still at the same pressure level as the rail. The reduced pressure in the valve-control chamber causes a reduction in the force exerted on the control plunger, the nozzle needle open as a result, and injection starts.

INJECTOR OPENS FULLY

The control plunger reaches its upper stop where it remains supported by a cushion of fuel which is generated by the flow of fuel between the bleed and feed orifices. The injector nozzle has now opened fully, and the fuel is injected into the combustion chamber at a pressure almost equal to that in the fuel rail.

INJECTOR CLOSES (END OF INJECTION)

As soon as the solenoid valve is no longer triggered, the valve spring forces the armature downwards and the ball closes the bleed orifice. The armature is a 2-piece design. Here, although the armature plate is guided by a driver shoulder in its downward movement, it can "overspring" with the return spring so that it exerts no downwards-acting forces on the armature and the ball. The closing of the bleed orifice lead to pressure build up in the control chamber via the input from the feed orifice. This pressure is the same as that in the rail and exerts an increased force on the control plunger through its end face. This force, together

with that of the spring, now exceeds the force exerted by the chamber volume and the nozzle needle closes. Injection ceases as soon as the nozzle needle comes up against its bottom stop again.

STANDARD PROCEDURE

STANDARD PROCEDURE - CLEANING FUEL INJECTORS

NOTE: Before cleaning the injector recesses, seal the injector holes in the injector recesses with the appropriate pin to prevent debris from falling into the recesses and entering the motor.

1. Seal the injector holes inside the cylinder head recesses.
2. Wipe out injector recesses with a non-woven cloth, then clean with a cylinder brush.
3. Clean the bottom of the cylinder recess with a round brush.
4. Blow out the recess and clean again with a non-woven cloth and cover over.
5. Perform these steps for each injector recess.

NOTE: DO NOT clean the tip of the injector with a wire brush. Use a non - woven cloth.

6. Clean injector body with a wire brush.
7. Clean injector tips with a non-woven cloth.

NOTE: Do Not apply antiseize lubricant to the injector body or injector nozzle area.

8. Grease injector body with Lubricate all-purpose white grease.

NOTE: Always replace the seals that seal off the injectors at the cylinder head to the combustion chamber and replace the retaining screws.

REMOVAL

REMOVAL

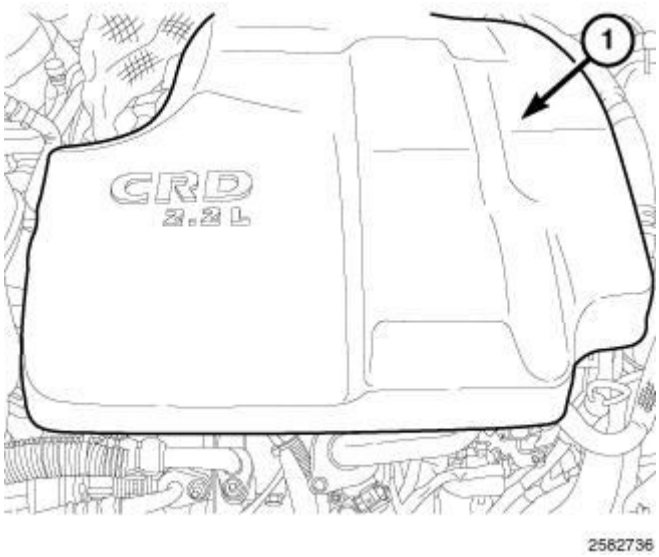

Fig. 340: Engine Cover
Courtesy of CHRYSLER GROUP, LLC

1. Disconnect the negative battery cable.
2. Remove the engine cover (1).

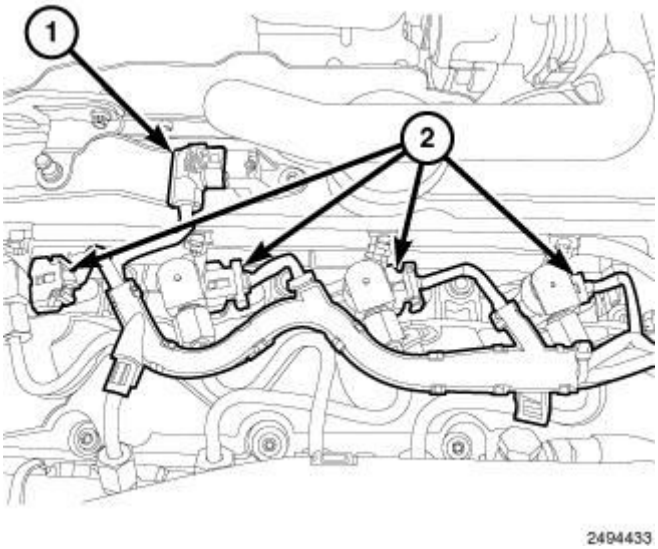

Fig. 341: Camshaft Position Sensor (CMP) Harness Connector & Fuel Injector Harness Connectors
Courtesy of CHRYSLER GROUP, LLC

3. Disconnect the Camshaft Position Sensor (CMP) (1) wire harness connector.
4. Disconnect the fuel injector wire harness connector (2).
5. Lift up on fuel injector wire harness and position aside.

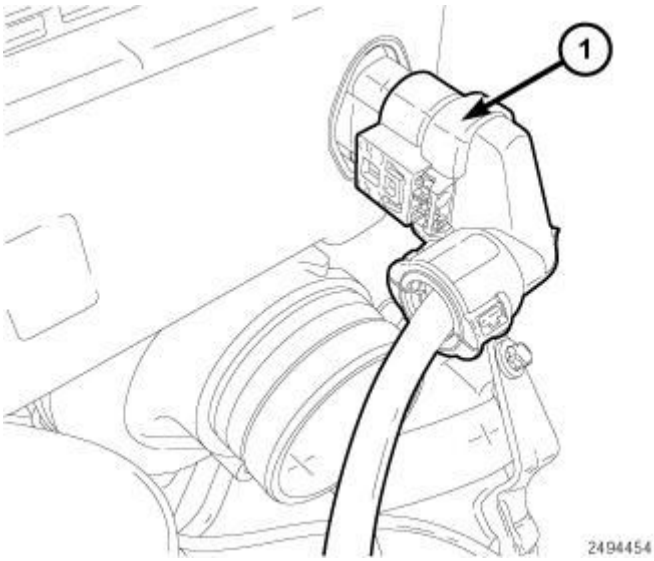

Fig. 342: Turbocharger Actuator Harness Connector
Courtesy of CHRYSLER GROUP, LLC

6. Disconnect the turbocharger actuator (1) wire harness connector.
7. Remove the air cleaner body. Refer to **BODY, AIR CLEANER, REMOVAL** .

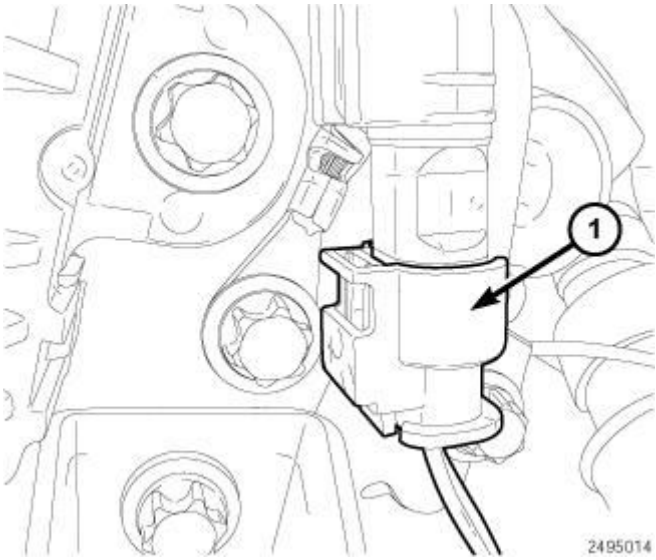

Fig. 343: Turbocharger Exhaust Temperature Sensor Harness Connector
Courtesy of CHRYSLER GROUP, LLC

8. Disconnect the turbocharger exhaust temperature sensor (1) wire harness connector.

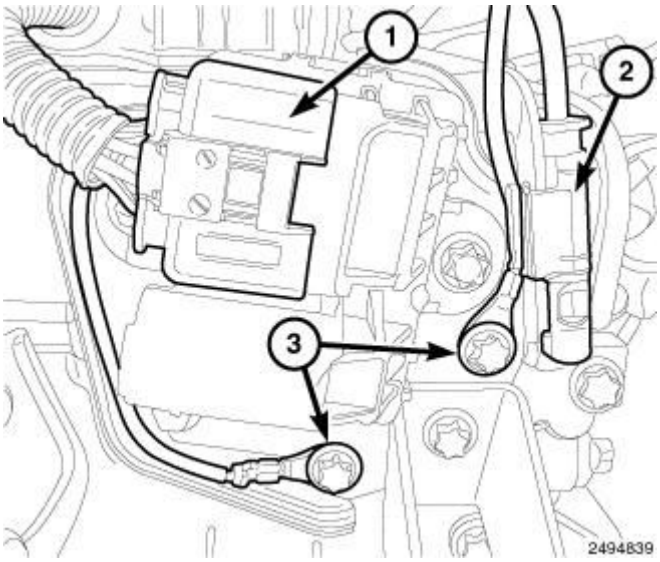

Fig. 344: Glow Plug Module Harness Connector, Bolts & Turbocharger Exhaust Temperature Sensor Harness Connector
Courtesy of CHRYSLER GROUP, LLC

9. Disconnect the turbocharger exhaust temperature sensor wire harness connector (2) from bracket.
10. Remove the two bolts (3) and position aside the ground wires.
11. Disconnect the glow plug module wire harness connector (1).

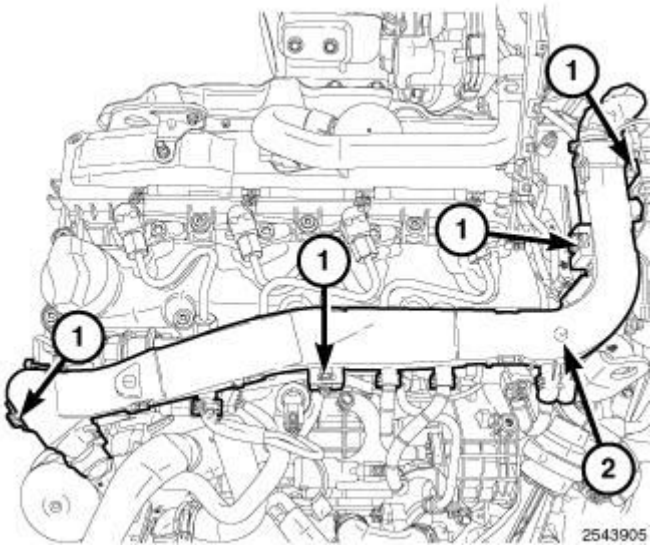

Fig. 345: Lock Tabs & Engine Wire Harness
Courtesy of CHRYSLER GROUP, LLC

12. Disconnect the fuel rail pressure sensor wire harness connector.
13. Release the four lock tabs (1) position aside engine wire harness.

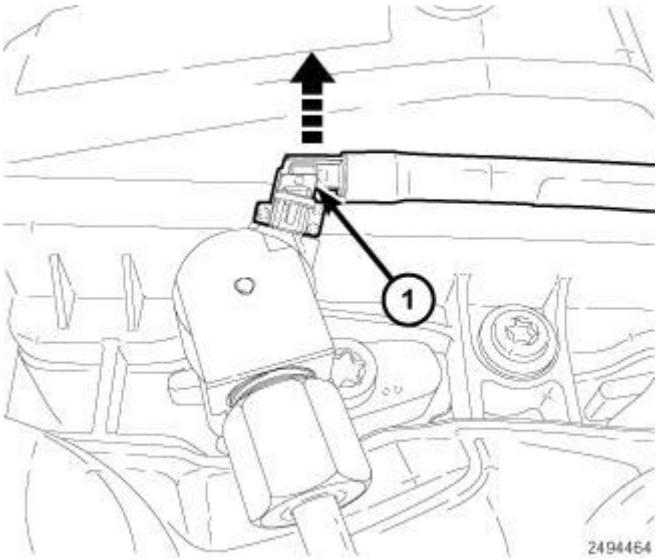

Fig. 346: Releasing Lock Tab
Courtesy of CHRYSLER GROUP, LLC

14. Release the lock tab (1) and disconnect the fuel injector return line from each fuel injector and position aside.

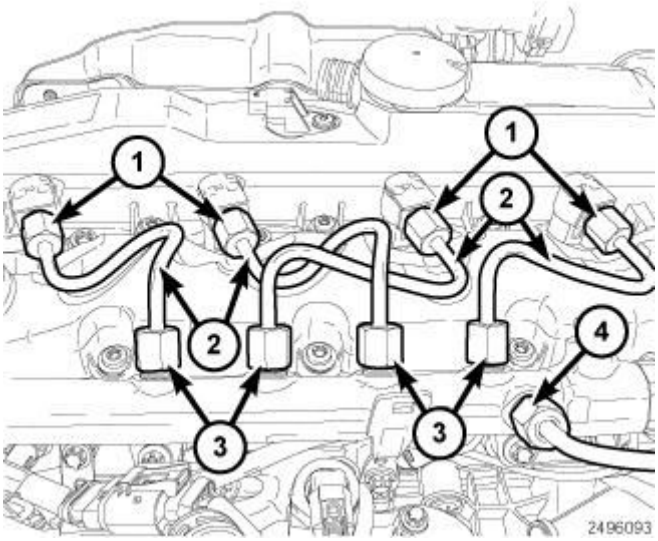

Fig. 347: Fuel Injectors, High Pressure Fuel Tubes, Fuel Rail & High Pressure Feed Line
Courtesy of CHRYSLER GROUP, LLC

15. Remove high pressure fuel tubes (2) at fuel injectors (1) and fuel rail (3) and discard high pressure fuel tubes.
16. Install protective caps onto the fuel injector and fuel rail.

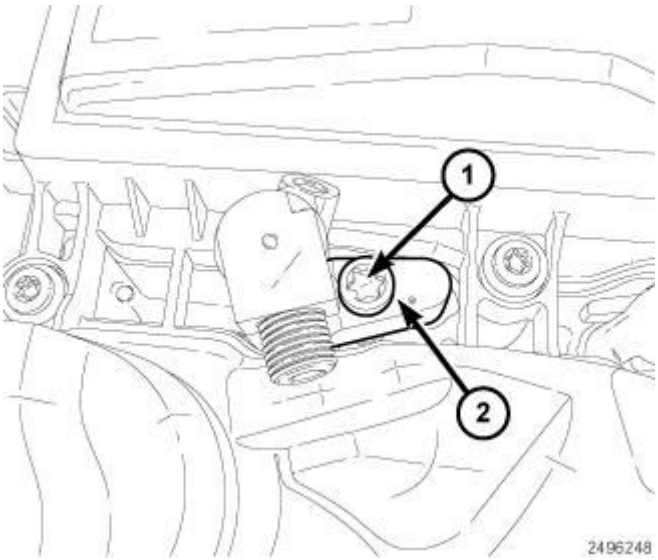

Fig. 348: Bolt & Clamping Claw
Courtesy of CHRYSLER GROUP, LLC

17. Remove bolt (1) and fuel injector clamping claw (2).

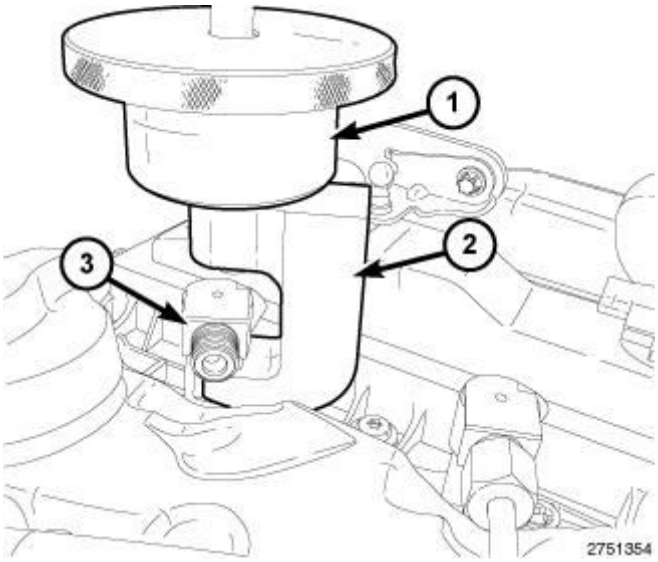

Fig. 349: Removing Fuel Injector
Courtesy of CHRYSLER GROUP, LLC

NOTE: Mark the location of each injector being removed.

18. Using Slide Hammer (special tool #8941, Puller) (1) and Extraction Claw (special tool #10238, Claw, Extraction) (2), remove the fuel injector (3).

INSTALLATION

INSTALLATION

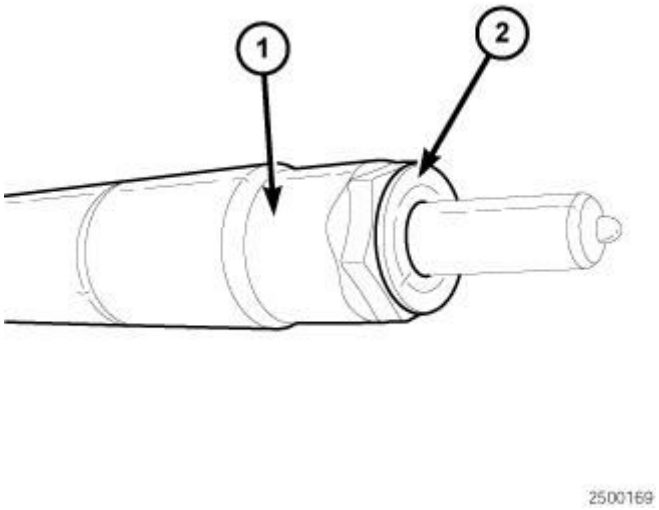

Fig. 350: Injector & Sealing Ring
Courtesy of CHRYSLER GROUP, LLC

1. Clean the fuel injectors and recesses. Refer to **STANDARD PROCEDURE - CLEANING FUEL INJECTORS** .
2. Using Mopar® White Lithium Grease, coat the shaft of the injectors (1).
3. Using new sealing rings (2), install the fuel injectors into exact location of cylinder head.

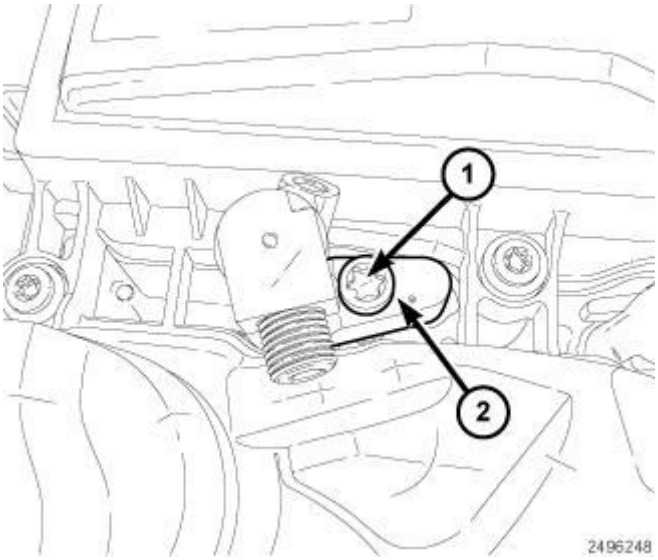

Fig. 351: Bolt & Clamping Claw
Courtesy of CHRYSLER GROUP, LLC

4. Install the fuel clamping claw (2) and a new bolts (1).
   a. Tighten bolts (1) to 15 N.m (133 in. lbs.).
   b. Plus an additional 90 degrees.

c. Plus an additional 90 degrees.

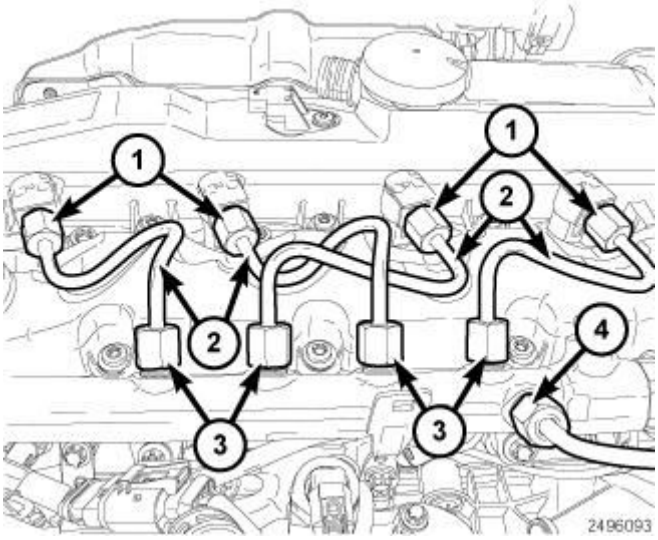

Fig. 352: Fuel Injectors, High Pressure Fuel Tubes, Fuel Rail & High Pressure Feed Line
Courtesy of CHRYSLER GROUP, LLC

NOTE: Any time a high pressure fuel tube has been loosened or disconnected, that high pressure fuel tube must be replaced.

5. Remove the protective caps from the fuel rail and fuel injectors.
6. Install **NEW** high pressure fuel tubes (2) at fuel injectors (1) and fuel rail (3).
7. Tighten the high pressure fuel tubes (2) at fuel injectors (1) to 7 N.m (62 in. lbs.).
8. Tighten the high pressure fuel tubes (2) and fuel rail (3) to 7 N.m (62 in. lbs.).
9. Tighten the high pressure fuel lines (2) at fuel injectors (1) to 33 N.m (24 ft. lbs.).
10. Tighten the high pressure fuel lines (2) and fuel rail (3) to 33 N.m (24 ft. lbs.).

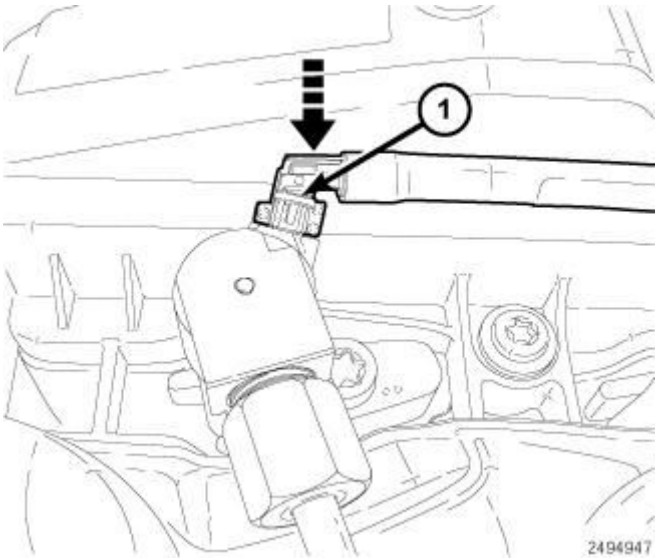

Fig. 353: Installing Lock Tab
Courtesy of CHRYSLER GROUP, LLC

11. Reposition and install the fuel injector return line and set the lock tab (1).

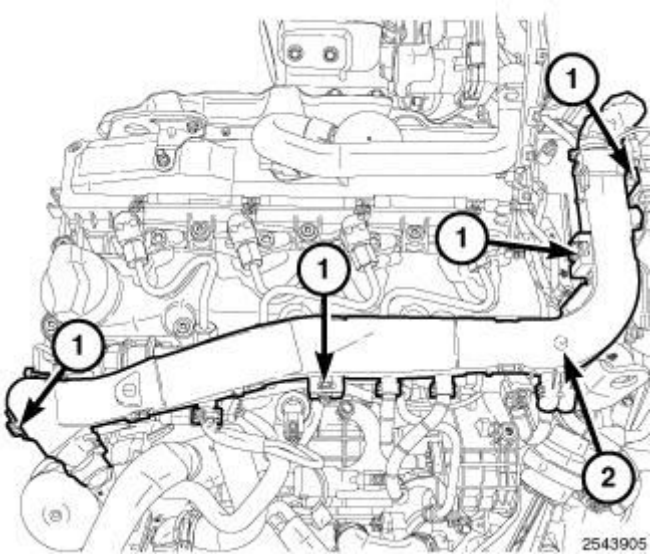

Fig. 354: Lock Tabs & Engine Wire Harness
Courtesy of CHRYSLER GROUP, LLC

12. Reposition the engine wire harness and push down to lock tabs (1).
13. Connect the fuel rail pressure sensor wire harness connector.

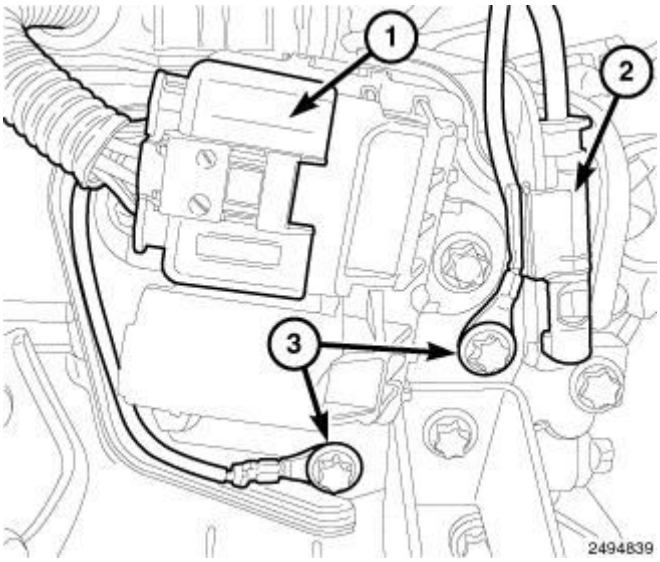

Fig. 355: Glow Plug Module Harness Connector, Bolts & Turbocharger Exhaust Temperature Sensor Harness Connector
Courtesy of CHRYSLER GROUP, LLC

14. Connect the glow plug module connector (1) wire harness connector.
15. Reposition ground wires and tighten bolts (3) to 9 N.m (80 in. lbs.).
16. Connect the turbocharger exhaust temperature sensor wire harness connector (2) to bracket.

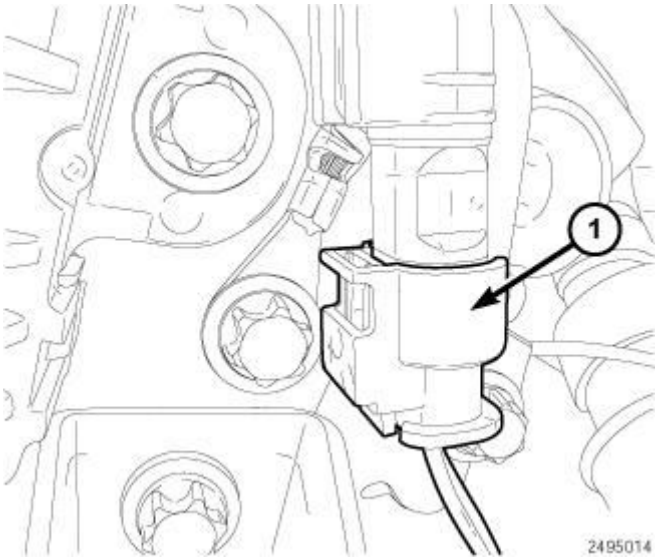

Fig. 356: Turbocharger Exhaust Temperature Sensor Harness Connector
Courtesy of CHRYSLER GROUP, LLC

17. Connect the turbocharger exhaust temperature sensor (1) wire harness connector.

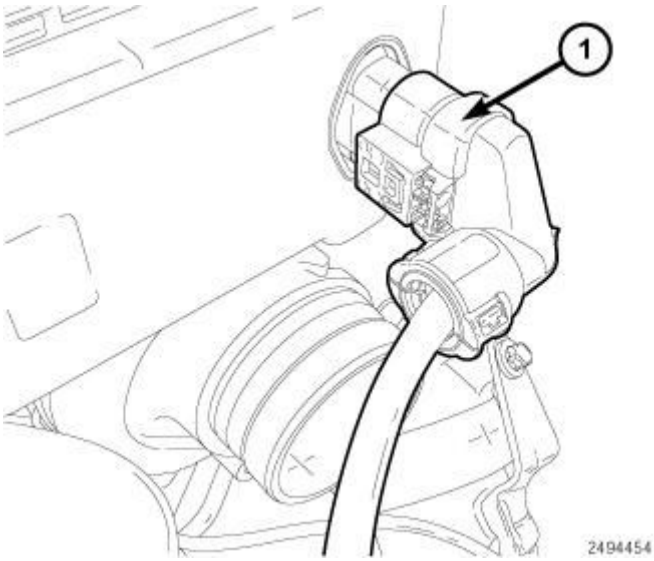

Fig. 357: Turbocharger Actuator Harness Connector
Courtesy of CHRYSLER GROUP, LLC

18. Install the air cleaner body. Refer to **BODY, AIR CLEANER, INSTALLATION** .
19. Connect the turbocharger actuator (1) wire harness connector.

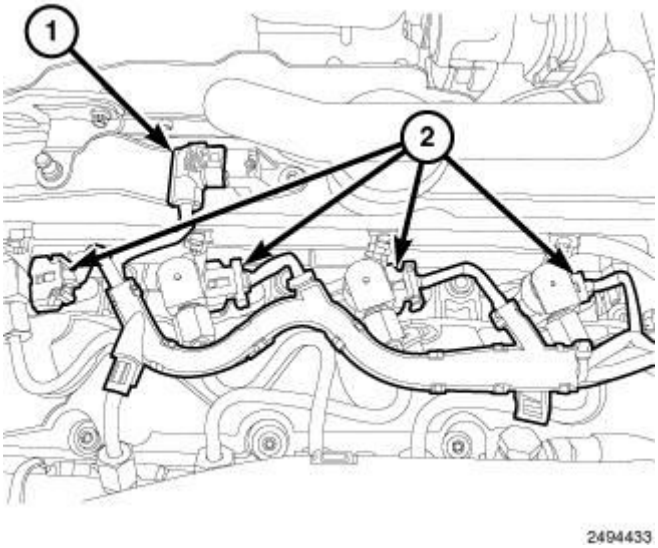

Fig. 358: Camshaft Position Sensor (CMP) Harness Connector & Fuel Injector Harness Connectors
Courtesy of CHRYSLER GROUP, LLC

20. Position the fuel injector wire harness and push down to lock in place.
21. Connect the fuel injector (2) wire harness connector.
22. Connect the Camshaft Position Sensor (CMP) (1) wire harness connector.
23. Connect negative battery cable.

24. Start engine and check for leaks.

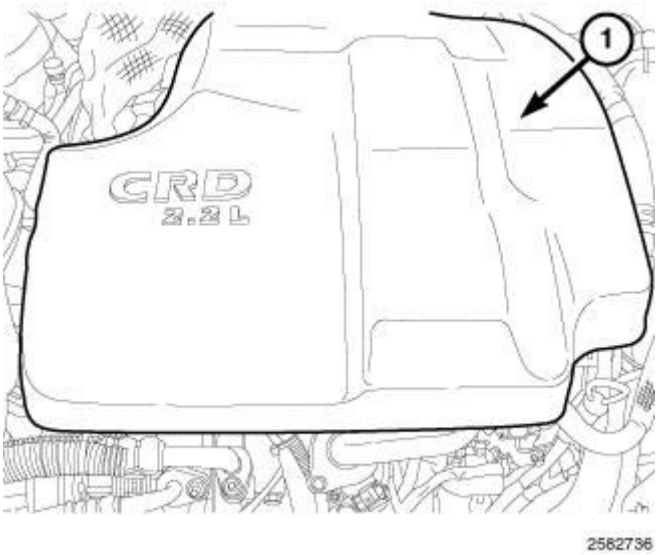

Fig. 359: Engine Cover
Courtesy of CHRYSLER GROUP, LLC

25. Install engine cover.

SENSOR, ACCELERATOR PEDAL POSITION

DESCRIPTION

DESCRIPTION

The Accelerator Pedal Position Sensor (APPS) is a variable resistor that provides the PCM with an input signal (voltage). The signal represents pedal angle position. As the position of the accelerator pedal changes, the resistance of the APPS changes.

REMOVAL

REMOVAL

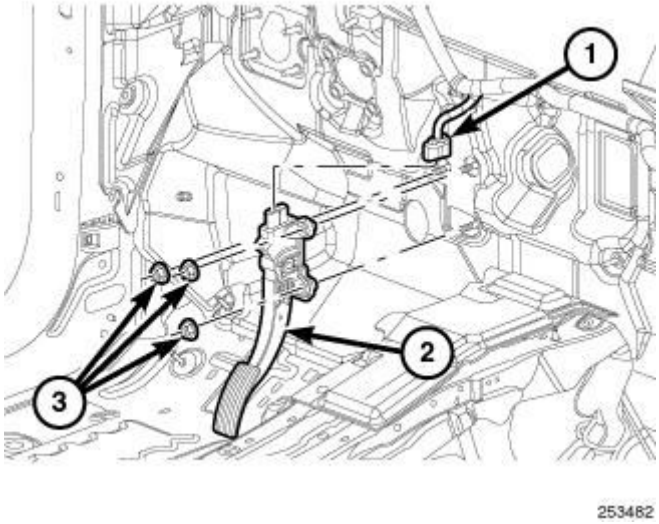

Fig. 360: Pedal And APPS Sensor
Courtesy of CHRYSLER GROUP, LLC

1. Disconnect the negative battery cable.
2. Disconnect the accelerator pedal harness connector (1).
3. Remove mounting nuts (3) band the accelerator pedal (2).

INSTALLATION

INSTALLATION

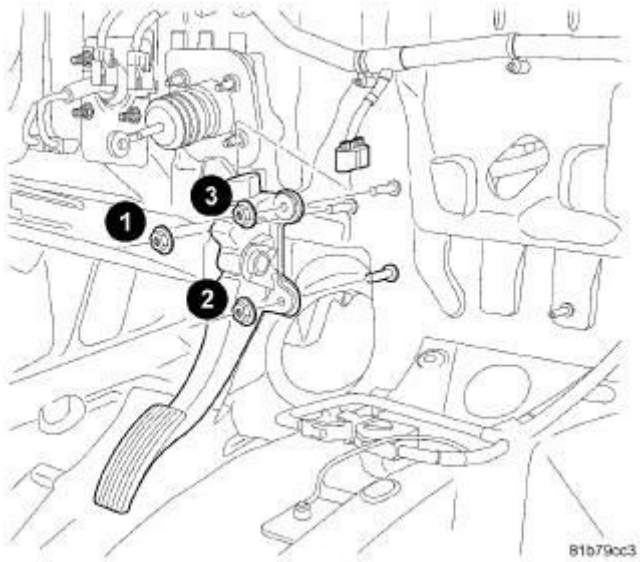

Fig. 361: Accelerator Pedal - LHD
Courtesy of CHRYSLER GROUP, LLC

CAUTION: The accelerator pedal and mounting nuts need to

be torque in a mandatory torque sequence or damage could result to the pedal assembly.

1. Install the accelerator pedal. Using the tightening sequence shown in illustration. Tighten nuts to 16 N.m (142 in. lbs.).

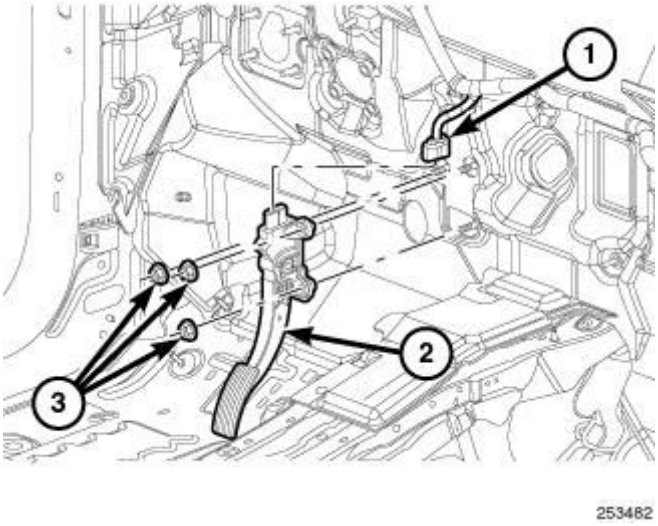

Fig. 362: Pedal And APPS Sensor
Courtesy of CHRYSLER GROUP, LLC

2. Connect the accelerator pedal harness connector (1).
3. Connect negative battery cable.

SENSOR, AIR TEMPERATURE, INTAKE

DESCRIPTION

DESCRIPTION

The Intake Air Temperature (IAT) sensor is integrated with the boost pressure sensor, which is located in the charge air inlet tube. The IAT is used to monitor the intake air temperature.

OPERATION

OPERATION

The intake air temperature sensor is a Negative Temperature Coefficient (NTC) thermistor (resistance varies with temperature). This means at cold air temperature its resistance is high, so the voltage signal will be high. As intake air temperature increases, sensor resistance decreases and the signal voltage will be

low. This allows the sensor to provide an analog voltage signal (0.2-4.8 volts) to the Powertrain Control Module (PCM).

SENSOR, BOOST PRESSURE

DESCRIPTION

DESCRIPTION

The boost pressure sensor is mounted in the mixing chamber. The sensor allows the Powertrain Control Module (PCM) to monitor air pressure go into the intake manifold.

OPERATION

OPERATION

When the intake manifold pressure is low (high vacuum) sensor voltage output is 0.25-1.8 volts at the Powertrain Control Module (PCM). When the intake manifold pressure is high due to turbo boost, sensor voltage output is 2.0-4.7 volts. The sensor receives a 5-volts power supply from the PCM. Sensor ground is also provided by the PCM. The PCM uses boost pressure combined with intake air temperature to determine the volume of air entering the engine.

DIAGNOSIS AND TESTING

DIAGNOSIS AND TESTING - DIAGNOSTIC AND TESTING

If the boost pressure sensor fails, the Powertrain Control Module (PCM) records a Diagnostic Trouble Codes (DTC) into memory and continues to operate the engine in one of the three limp-in modes. When the PCM is operating in this mode, a loss of power will be present, as if the turbocharger was not operating. The best method for diagnosing faults with the boost pressure sensor is with a scan tool. Refer to **2.2L DIESEL - DIAGNOSTIC CODE INDEX** for more information.

Refer to **ON-BOARD DIAGNOSTICS** in Emissions Control System for a list of (DTC's) for certain fuel system components.

REMOVAL

REMOVAL

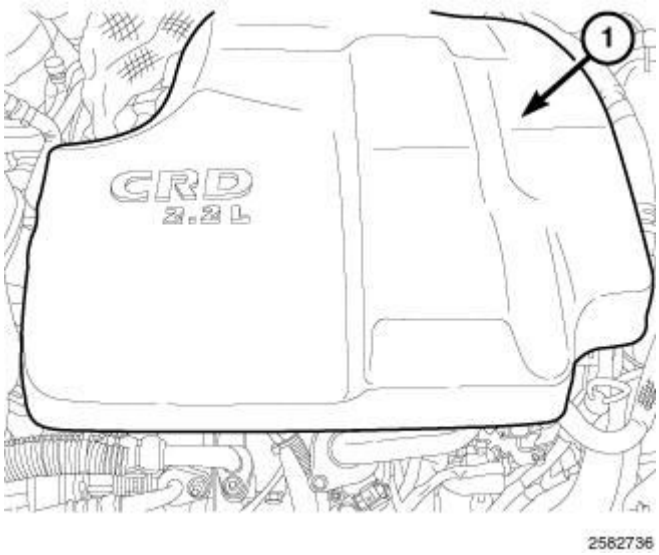

Fig. 363: Engine Cover
Courtesy of CHRYSLER GROUP, LLC

1. Disconnect the negative battery cable.
2. Remove the engine cover (1).

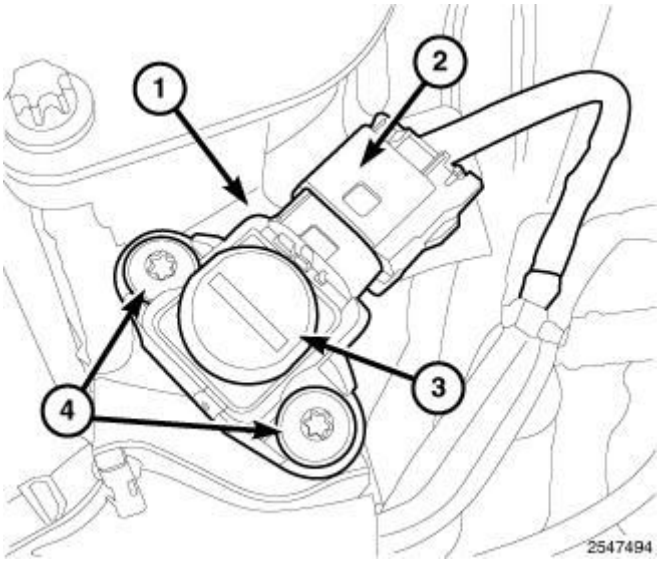

Fig. 364: Mixing Chamber, Harness Connector, Boost Pressure Sensor & Bolts
Courtesy of CHRYSLER GROUP, LLC

3. Disconnect the boost pressure sensor wire harness connector (2).
4. Remove bolts (4) and the boost pressure sensor (3) from the mixing chamber (1).

INSTALLATION

INSTALLATION

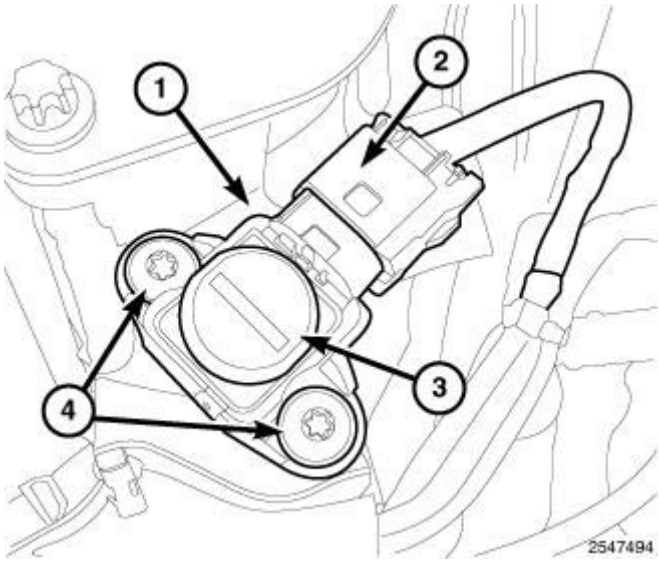

Fig. 365: Mixing Chamber, Harness Connector, Boost Pressure Sensor & Bolts
Courtesy of CHRYSLER GROUP, LLC

1. Install the boost pressure sensor (3) into mixing chamber (1). Tighten bolts (4) to 8 N.m (71 in. lbs.).
2. Connect the boost pressure sensor wire harness connector (2).

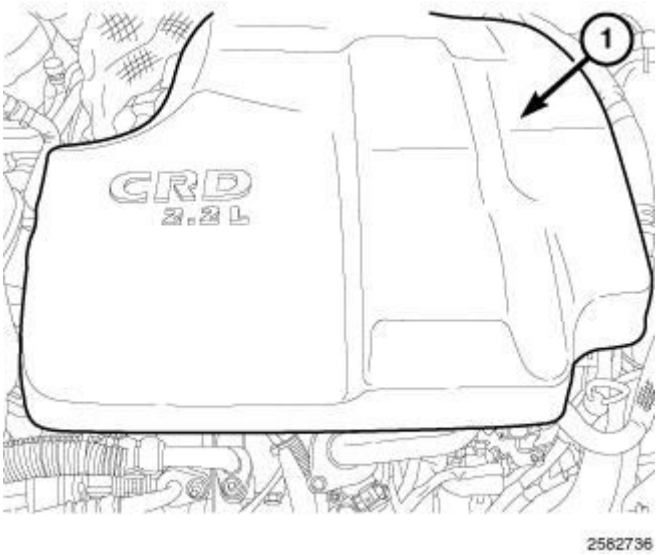

Fig. 366: Engine Cover
Courtesy of CHRYSLER GROUP, LLC

3. Install the engine cover (1).
4. Connect the negative battery cable.

SENSOR, CAMSHAFT POSITION

DESCRIPTION

DESCRIPTION

The camshaft position sensor is mounted on top of the cylinder head cover. The sensor detects the camshaft position by a voltage reference signal. The Powertrain Control Module (PCM) detects Top Dead Center (TDC) position of cylinder 1 by means of the voltage supplied by the camshaft sensor. Injection timing is synchronized by means of the camshaft signal and the crankshaft signal.

OPERATION

OPERATION

The signal circuit of the camshaft sensor has a voltage of approximately 5 volt. If the closed segment of the tone wheel is positioned below the camshaft sensor tip, the camshaft signal is approximately 0 volt. This 0 volt to 5 volt signal is used by the Powertrain Control Module (PCM) for detecting ignition Top Dead Center (TDC) of cylinder 1 as the engine rotates. If no signal is supplied by the camshaft position sensor, the vehicle will take a little longer to start and a DTC will be set by the PCM.

REMOVAL

REMOVAL

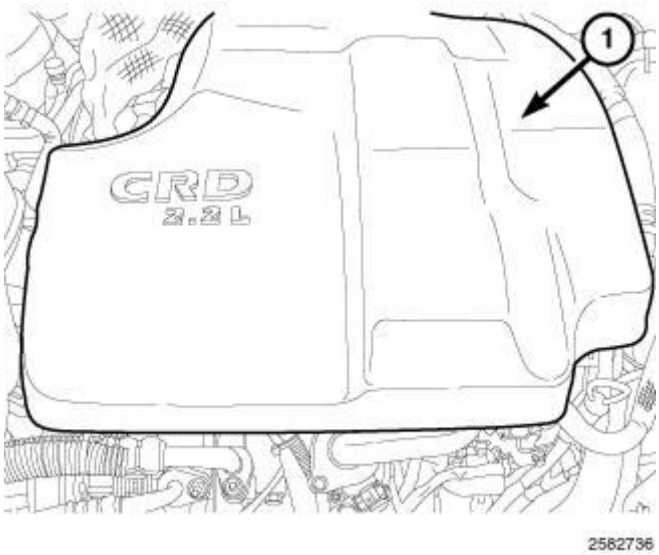

Fig. 367: Engine Cover
Courtesy of CHRYSLER GROUP, LLC

1. Disconnect negative battery cable.
2. Remove engine cover (1).

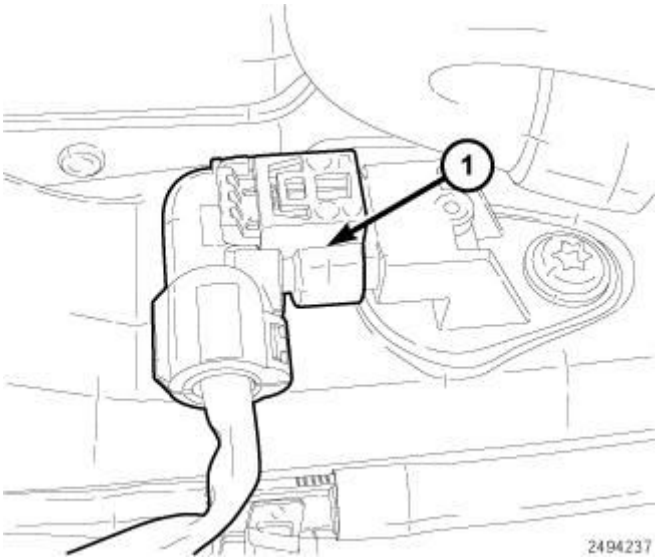

Fig. 368: Camshaft Position Sensor Harness Connector
Courtesy of CHRYSLER GROUP, LLC

3. Disconnect camshaft position sensor wire harness connector (1).

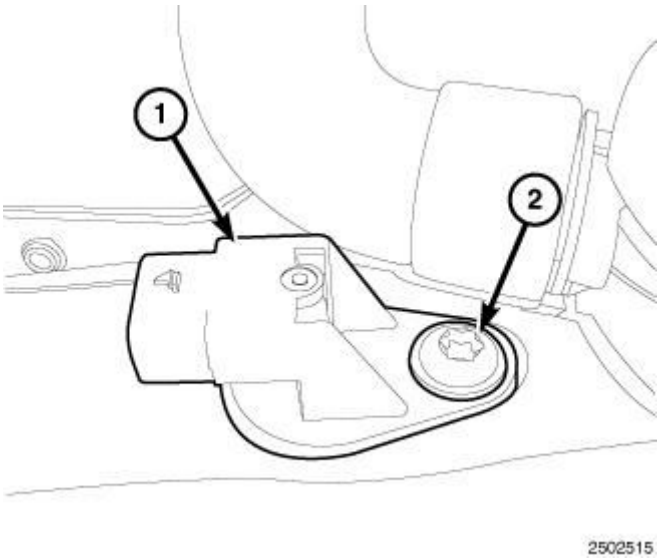

Fig. 369: Cam Position Sensor & Retaining Bolt
Courtesy of CHRYSLER GROUP, LLC

4. Remove retaining bolt and remove the cam position sensor.

INSTALLATION

INSTALLATION

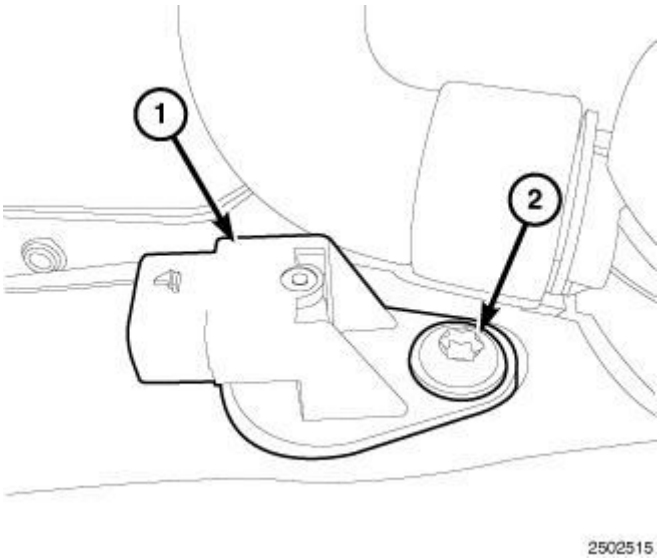

Fig. 370: Cam Position Sensor & Retaining Bolt
Courtesy of CHRYSLER GROUP, LLC

1. Install the camshaft position sensor (1). Tighten bolt (2) to 6 N.m (53 in. lbs.).

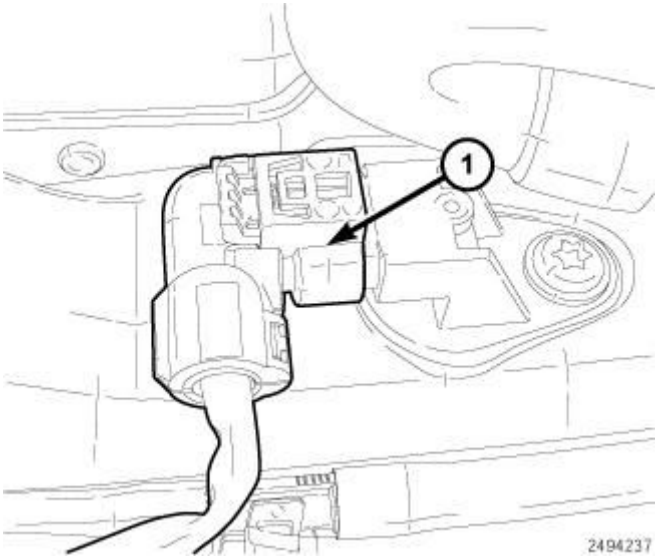

Fig. 371: Camshaft Position Sensor Harness Connector
Courtesy of CHRYSLER GROUP, LLC

2. Connect the cam position sensor wire harness connector (1).

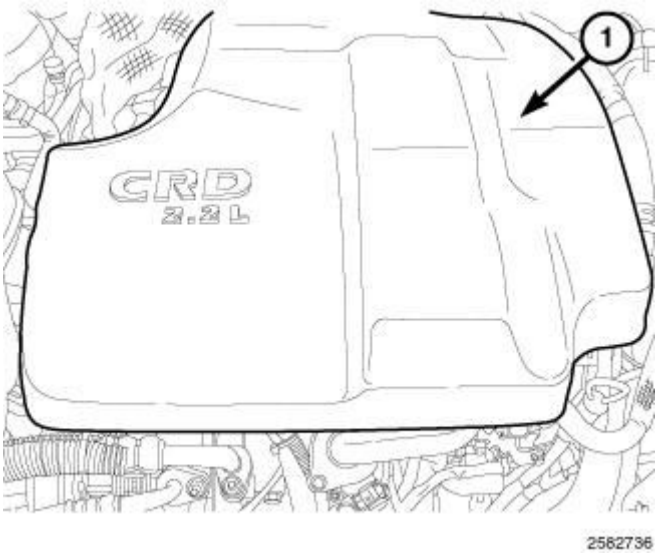

Fig. 372: Engine Cover
Courtesy of CHRYSLER GROUP, LLC

3. Install the engine cover (1).
4. Connect the negative battery cable.

SENSOR, CRANKSHAFT POSITION

DESCRIPTION

DESCRIPTION

The crankshaft position sensor is located on the engine timing cover. This sensor is used to sense engine RPM and when the crankshaft reaches the TDC position during a revolution.

OPERATION

OPERATION

The crankshaft position and engine speed are sensed with a contactless hall effect signal generated by the crankshaft position sensor. The distance between the crankshaft position sensor and the tone wheel on the flywheel assembly is fixed by the installation position.

When the crankshaft rotates, a pulse width modulated (ON/OFF) voltage signal is generated in the crankshaft position sensor by the tone wheel on the flywheel assembly.

REMOVAL

REMOVAL

1. Disconnect the negative battery cable.

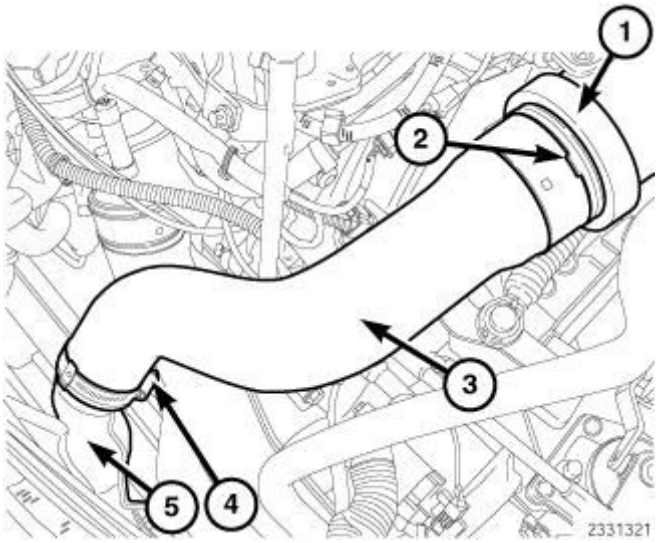

Fig. 373: Upper Charge Air Tube, Lock Ring, Lower Charge Air Tube, Clamp & Charge Air Cooler (CAC) Inlet
Courtesy of CHRYSLER GROUP, LLC

2. Loosen the clamp (4) and disconnect the lower charge air tube (3) from the charge air cooler (CAC) inlet (5).
3. Release the lock ring (2) and remove the lower charge air tube (3) from upper charge air tube (1) to turbocharger.

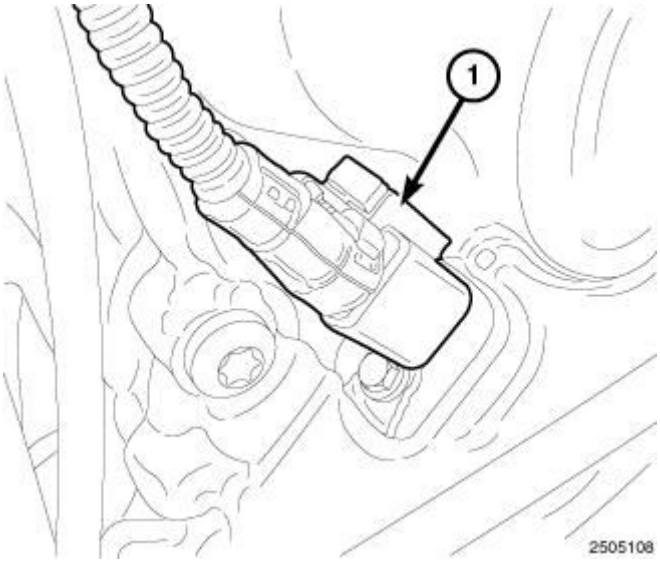

Fig. 374: Crankshaft Position Sensor Harness Connector
Courtesy of CHRYSLER GROUP, LLC

4. Disconnect the crankshaft position sensor wire harness connector (1).

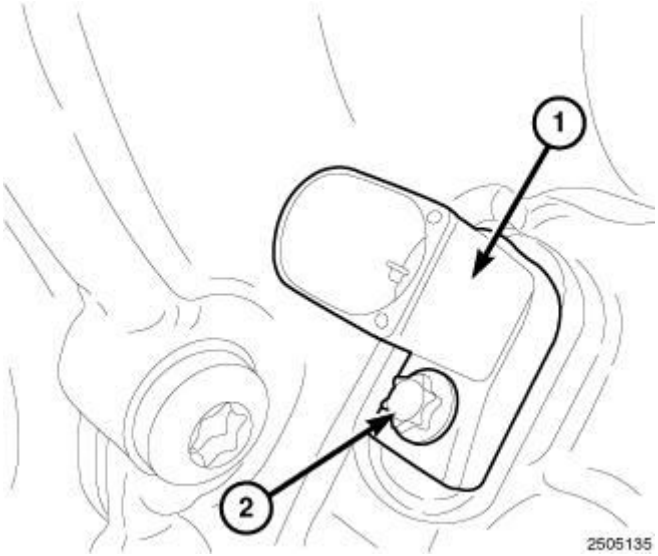

Fig. 375: Crankshaft Position Sensor & Bolt
Courtesy of CHRYSLER GROUP, LLC

5. Remove bolt (2) and the crankshaft position sensor (1).

INSTALLATION

INSTALLATION

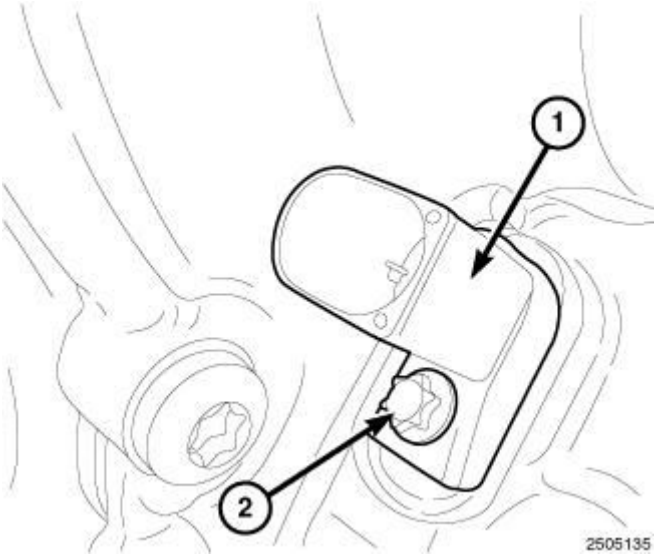

Fig. 376: Crankshaft Position Sensor & Bolt
Courtesy of CHRYSLER GROUP, LLC

1. Install the crankshaft position sensor (1). Tighten bolt (2) to 8 N.m (71 in. lbs).

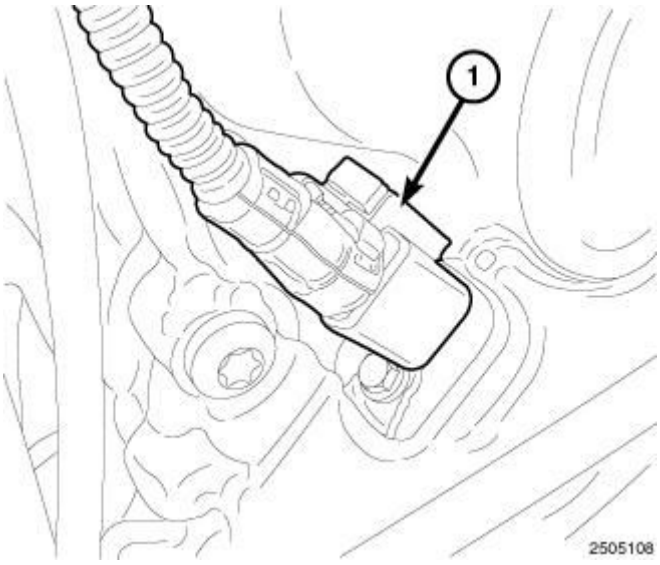

Fig. 377: Crankshaft Position Sensor Harness Connector
Courtesy of CHRYSLER GROUP, LLC

2. Connect the crankshaft position sensor wire harness connector (1).

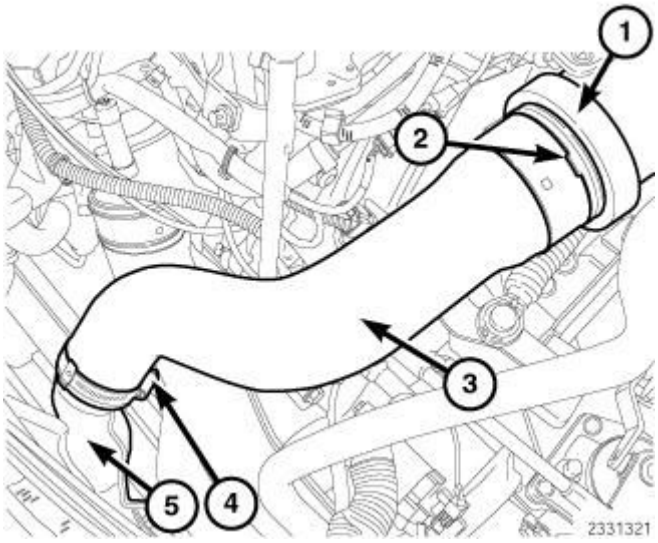

Fig. 378: Upper Charge Air Tube, Lock Ring, Lower Charge Air Tube, Clamp & Charge Air Cooler (CAC) Inlet
Courtesy of CHRYSLER GROUP, LLC

3. Connect the lower charge air tube (3) from the charge air cooler (CAC) inlet (5) and securely tighten clamp (4).
4. Install the lower charge air tube (3) to the upper charge air tube (1) to turbocharger and lock the lock ring in place.
5. Install the negative battery cable.

SENSOR, FUEL TEMPERATURE

REMOVAL

REMOVAL

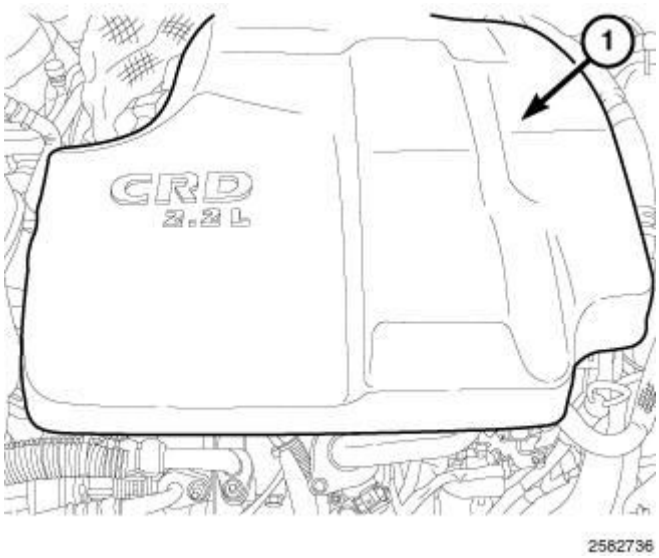

Fig. 379: Engine Cover
Courtesy of CHRYSLER GROUP, LLC

1. Remove the engine cover (1).

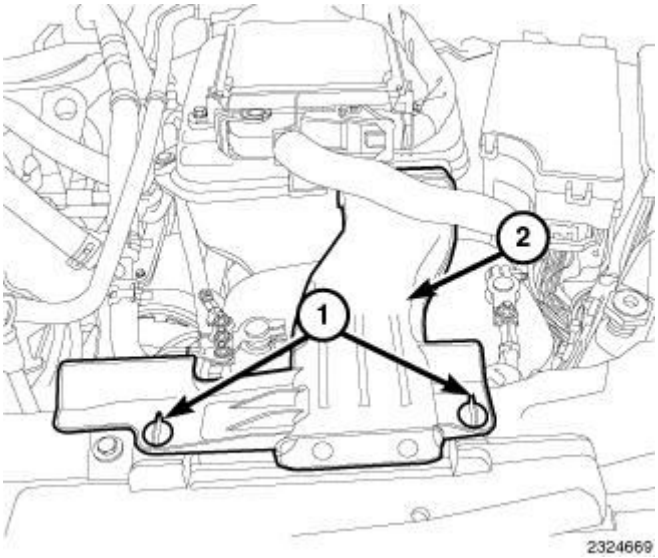

Fig. 380: Quarter Turn Lock Tabs & Air Inlet Duct
Courtesy of CHRYSLER GROUP, LLC

2. Remove air inlet duct (2).
3. Disconnect the negative battery cable.
4. Remove cooling fan assembly. Refer to **FAN, COOLING, REMOVAL** .

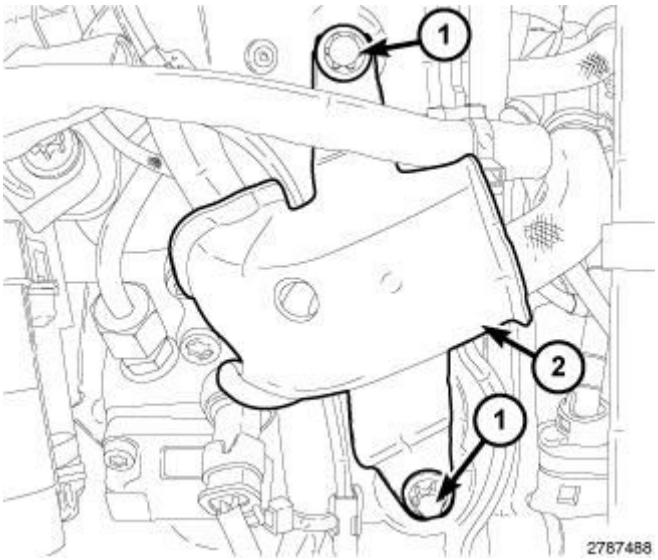

Fig. 381: Identifying Bolts & Heat Shield
Courtesy of CHRYSLER GROUP, LLC

5. Remove bolts (1) and the heat shield (2).

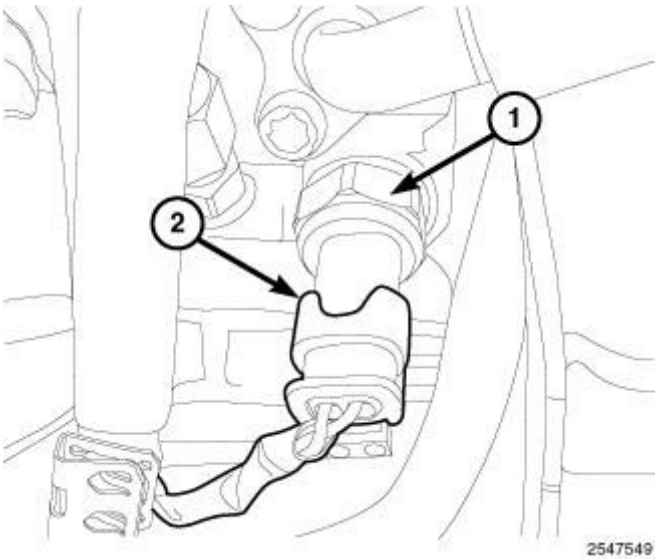

Fig. 382: Fuel Temperature Sensor Harness Connector
Courtesy of CHRYSLER GROUP, LLC

6. Disconnect the fuel temperature sensor wire harness connector (2).
7. Remove the fuel temperature sensor (1).
8. Remove and discard sealing washer and O-ring.

INSTALLATION

INSTALLATION

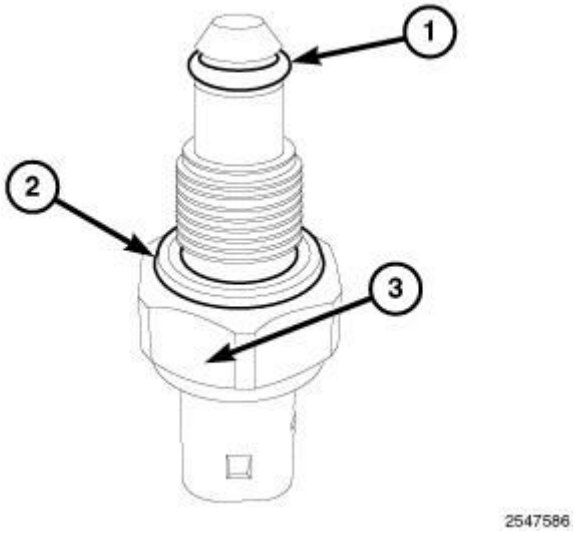

Fig. 383: O-Ring Seal & Sealing Washer
Courtesy of CHRYSLER GROUP, LLC

1. Replace the O-ring seal (1) and sealing washer (2).

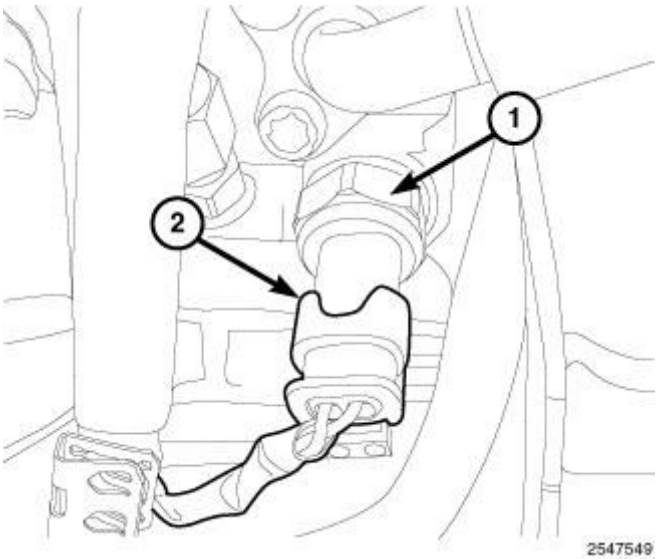

Fig. 384: Fuel Temperature Sensor Harness Connector
Courtesy of CHRYSLER GROUP, LLC

2. Install the fuel temperature sensor (1). Tighten to 15 N.m (133 in. lbs.).
3. Connect the fuel temperature sensor wire harness connector (2).

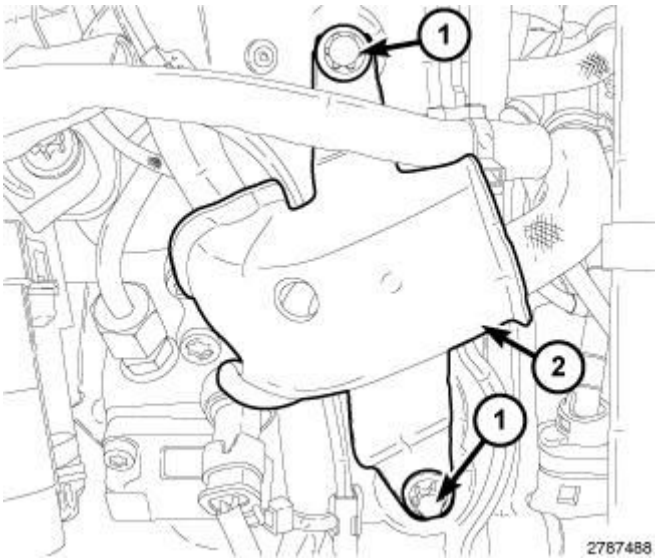

Fig. 385: Identifying Bolts & Heat Shield
Courtesy of CHRYSLER GROUP, LLC

4. Install the heat shield (2). Tighten bolts (1) to 9 N.m (80 in. lbs.).

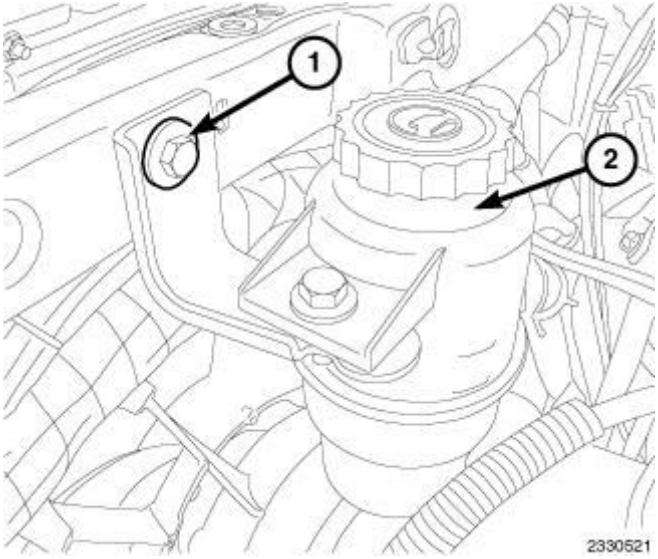

Fig. 386: Power Steering Fluid Reservoir & Mounting Bolt
Courtesy of CHRYSLER GROUP, LLC

5. Install coolant fan assembly. Refer to **FAN, COOLING, INSTALLATION** .
6. Install the power steering reservoir (2). Tighten bolt (1) to 12 N.m (106 in. lbs.).

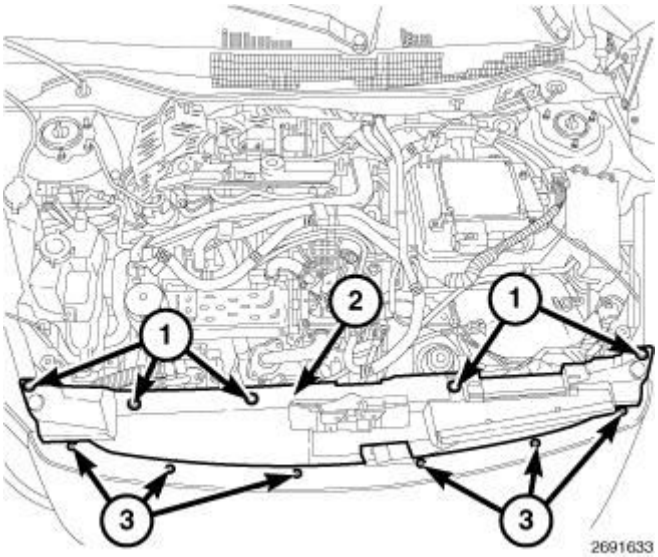

Fig. 387: Upper Radiator Closure Panel
Courtesy of CHRYSLER GROUP, LLC

7. Install the radiator closure panel (2) and securely tighten the bolts (1), screws (3).

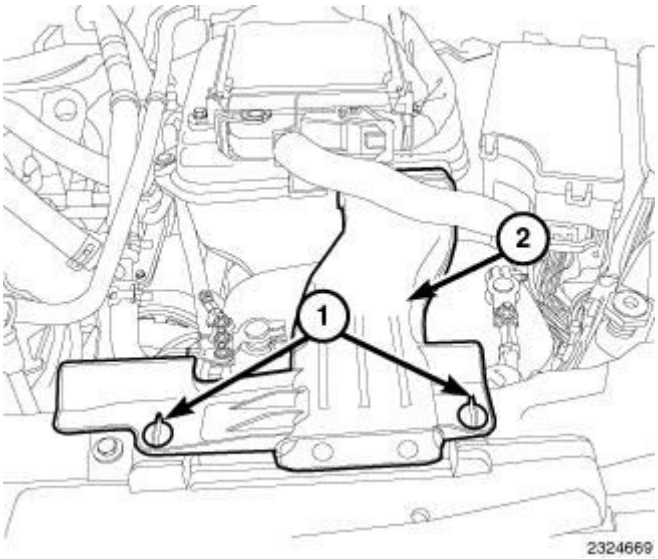

Fig. 388: Quarter Turn Lock Tabs & Air Inlet Duct
Courtesy of CHRYSLER GROUP, LLC

8. Install the air inlet duct (1).
9. Connect the negative battery cable.

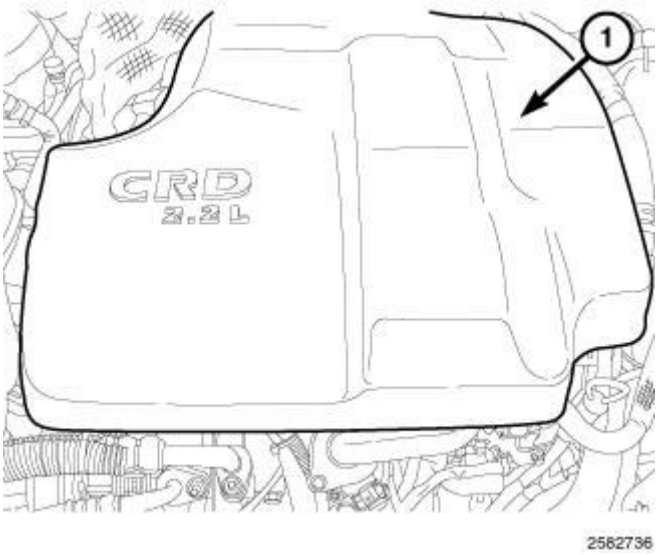

Fig. 389: Engine Cover
Courtesy of CHRYSLER GROUP, LLC

10. Install the engine cover (1).

SENSOR, MASS AIRFLOW (MAF)

DESCRIPTION

DESCRIPTION

The miromechanical Mass Air Flow (MAF) sensor is a hot film thermal flowmeter with an integrated temperature sensor which detects the intake air temperature. The sensor is designed for recording load on combustion engines with diesel fuel injection and has a cylinder size in accordance with the required air flow rate. The MAF Sensor is mounted in-line in the air intake between the air filter and the turbocharger.

OPERATION

OPERATION

The Mass Air Flow (MAF) sensing element consists or two temperature sensors symmetrical to a heating area sitting on a thin membrane. Up and down stream sensors see the same temperature when there is no air flowing through the sensor. With incoming flow, the upstream heating area is cooled down due to heat transfer, while the downstream area retains it's temperature because the air has been heated up after it flows through the heating area. The characteristic of temperature change in relation to airflow at the upstream area is utilized to determine the mass airflow passing through the sensor. This signal voltage

variation is used by the Powertrain Control Module (PCM) along with internal calibrations to coordinate the total mass air flow.

To reduce contamination during sensing, a partial air flow is directed at an angle with respect to the main flow in the measuring channel for the fact that moisture and other particles tend not to react in the same manner that air does after they hit the channel wall. The Diesel Power Relay supplies battery power the to MAF sensor, ground is provided by the PCM.

REMOVAL

REMOVAL

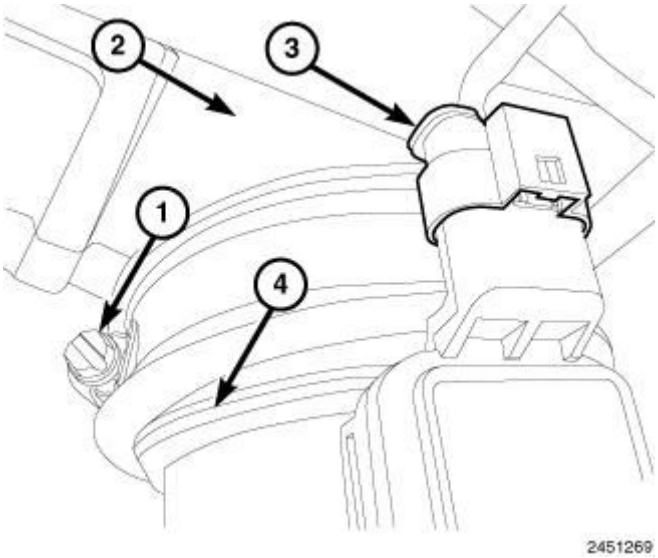

Fig. 390: Mass Air Flow Sensor, Harness Connector, Turbocharger Inlet Tube & Clamp
Courtesy of CHRYSLER GROUP, LLC

1. Disconnect the negative battery cable.
2. Disconnect the Mass Air Flow (MAF) sensor wire harness connector (3).
3. Loosen clamp (1) and disconnect the turbocharger inlet tube (2) from the MAF sensor (4).

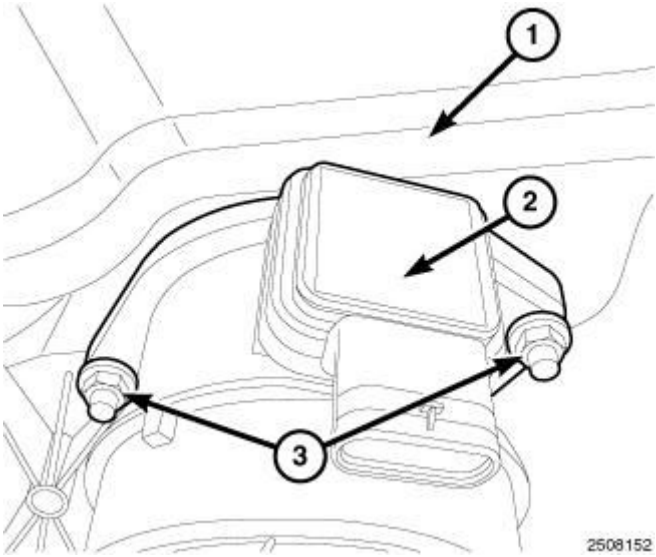

Fig. 391: Air Cleaner Housing, MAF Sensor & Nuts
Courtesy of CHRYSLER GROUP, LLC

4. Remove nuts (3) and the MAF sensor (2) from the air cleaner housing (1).

INSTALLATION

INSTALLATION

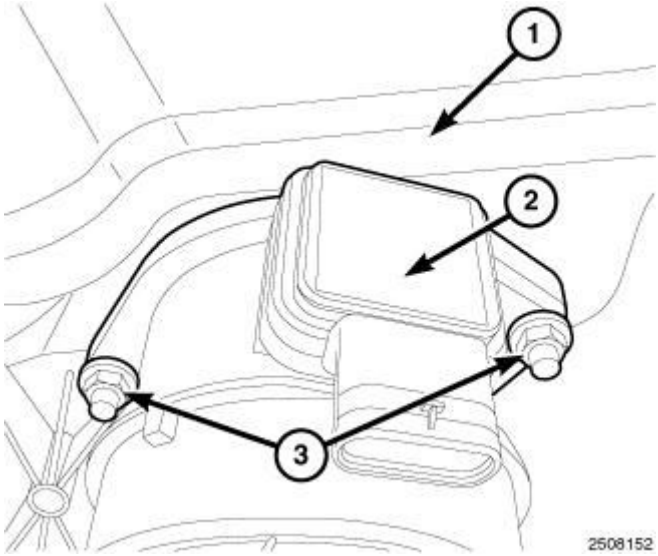

Fig. 392: Air Cleaner Housing, MAF Sensor & Nuts
Courtesy of CHRYSLER GROUP, LLC

1. Install the Mass Air Flow (MAF) sensor (2) to the air cleaner housing (1). Tighten nuts (3) to 6 N.m (53 in. lbs.).

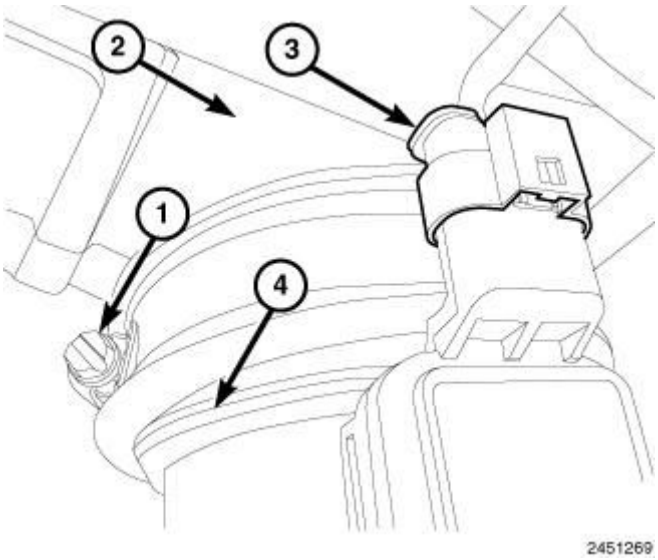

Fig. 393: Mass Air Flow Sensor, Harness Connector, Turbocharger Inlet Tube & Clamp
Courtesy of CHRYSLER GROUP, LLC

2. Connect the turbocharger inlet tube (2) to the MAF sensor (4) and securely tighten clamp (1).
3. Connect the MAF sensor wire harness connector (3).
4. Connect the negative battery cable.
5. With the scan tool, navigate to Miscellaneous Functions and perform the MAF Sensor Replacement Initialization routine.

2014 ENGINE

Ignition System - Service Information - Compass & Patriot

DESCRIPTION

DESCRIPTION

NOTE: All engines use a fixed ignition timing system. Basic ignition timing is not adjustable. All spark advance is determined by the Powertrain Control Module (PCM).

The ignition system used on these engines is referred to as coil on plug. The system's four main components are the coils, crankshaft position sensor, spark plugs, and camshaft position sensors. The coil on plug ignition system utilizes an ignition coil for every cylinder. The ignition coils are mounted directly over the each spark plug.

OPERATION

OPERATION

The crankshaft position sensor and camshaft position sensor are hall effect devices. The camshaft position sensor and crankshaft position sensor generate square wave pulses that are inputs to the PCM. The PCM determines engine position from these sensors. The PCM calculates injector sequence and ignition timing from crankshaft AND camshaft position.

SPECIFICATIONS

FIRING ORDER

2.0, 2.4L

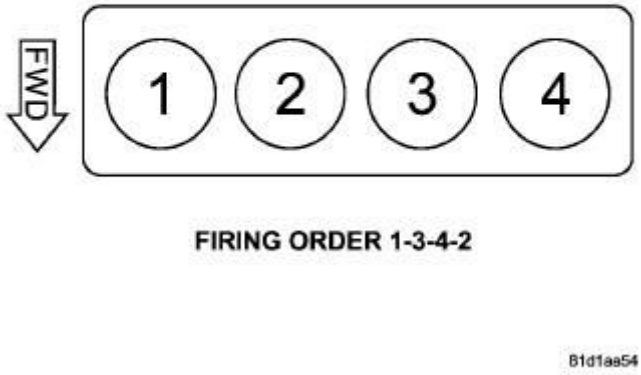

Fig. 1: Transverse 4 Cyl. Firing Order
Courtesy of CHRYSLER GROUP, LLC

The firing order is 1-3-4-2.

IGNITION RESISTANCE

IGNITION COIL RESISTANCE

MANUFACTURER	Engine	Primary Resistance at 21°C-27°C (70° F-80°F)	Secondary Resistance at 21°C-27°C (70° F-80°F)
Diamond Electric Mfg. Corporation	2.0, 2.4L	0.504 to 0.616 ohms	5.22K to 6.38K ohms

SPARK PLUGS

Engine	Spark Plug	Electrode Gap	Thread Size
2.0, 2.4L	ZFR5F-11	1.1 mm (0.043 in.)	M14 X 1.25

TORQUE

DESCRIPTION	N.m	Ft. Lbs.	In. Lbs.
Camshaft Position Sensor Screw	9	-	79.5
Crankshaft Position	9	-	79.5

Sensor Screw			
Coolant Temp. Sensor	17	-	150
Ignition Coil Bolt	9	-	79.5
Ignition Coil Capacitor Bolt	10	-	88.5
Ignition Switch Mounting Screw	2	-	18
Knock Sensor Bolt	20	-	177
Lock Cylinder to Column	12	-	110
Spark Plugs	27	20	-
Variable Valve Timing Solenoid	12	9	-
SKREEM/WCM	2.5	-	22

CAPACITOR, IGNITION

REMOVAL

REMOVAL

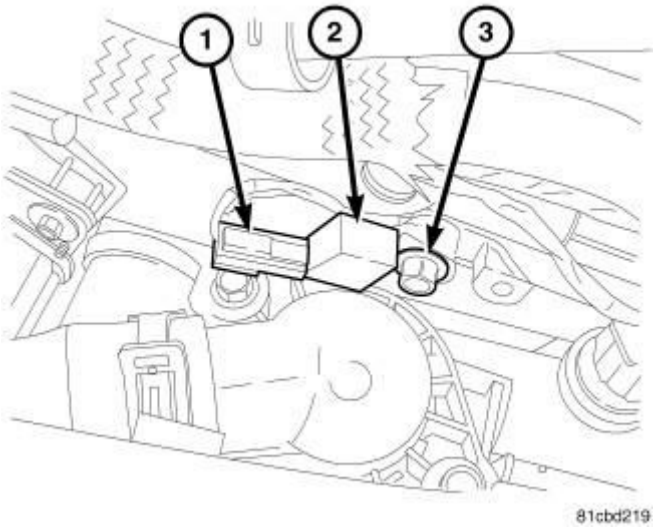

Fig. 2: Ignition Capacitor
Courtesy of CHRYSLER GROUP, LLC

1. Disconnect and isolate negative battery cable at battery.
2. Remove electrical connector (1).
3. Remove mounting bolt (3) and ignition capacitor (2).

INSTALLATION

INSTALLATION

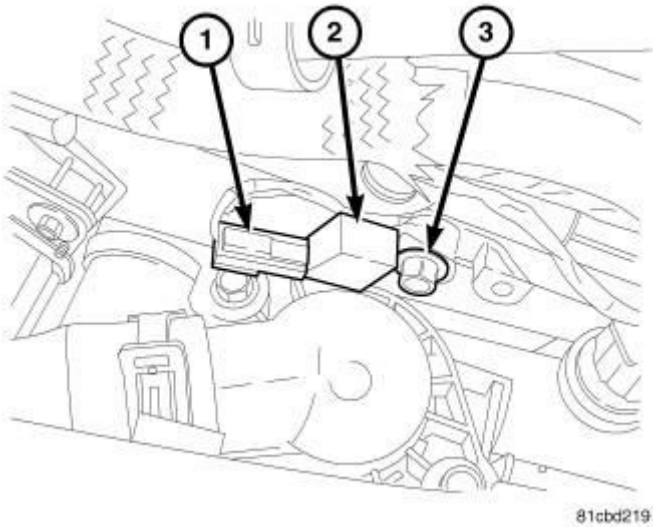

Fig. 3: Ignition Capacitor
Courtesy of CHRYSLER GROUP, LLC

1. Install ignition coil capacitor (2) and bolt (3), tighten bolt to 10 N.m (88.5 ft. lbs.).
2. Connect electrical connector (1).
3. Connect the negative battery cable, tighten the nut to 5 N.m (45 in. lbs.).

COIL, IGNITION

DESCRIPTION

DESCRIPTION

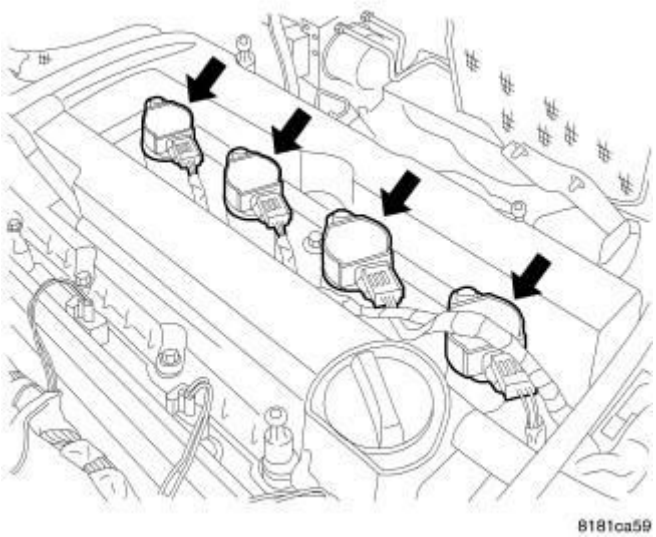

Fig. 4: Ignition Coils
Courtesy of CHRYSLER GROUP, LLC

WARNING: The direct ignition system generates approximately 40, 000 volts. Personal injury could result from contact with this system.

The ignition coil is mounted on the valve cover.

REMOVAL

REMOVAL

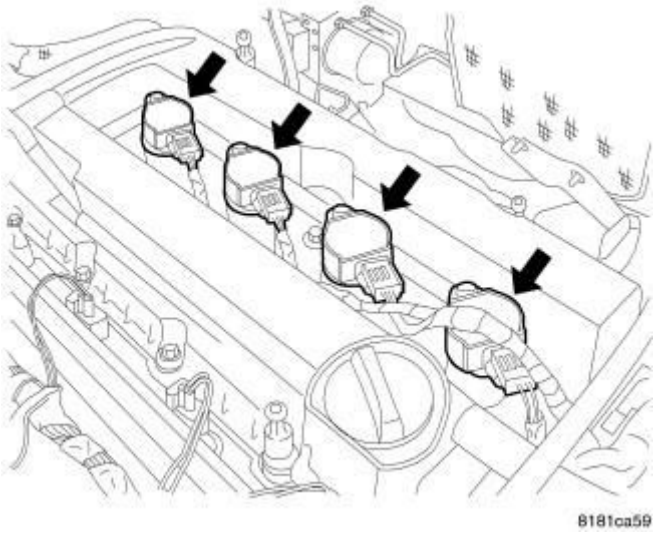

Fig. 5: Ignition Coils
Courtesy of CHRYSLER GROUP, LLC

The electronic ignition coil attaches directly to the valve cover.

1. Remove the negative battery cable.
2. Disconnect electrical connector from ignition coil.

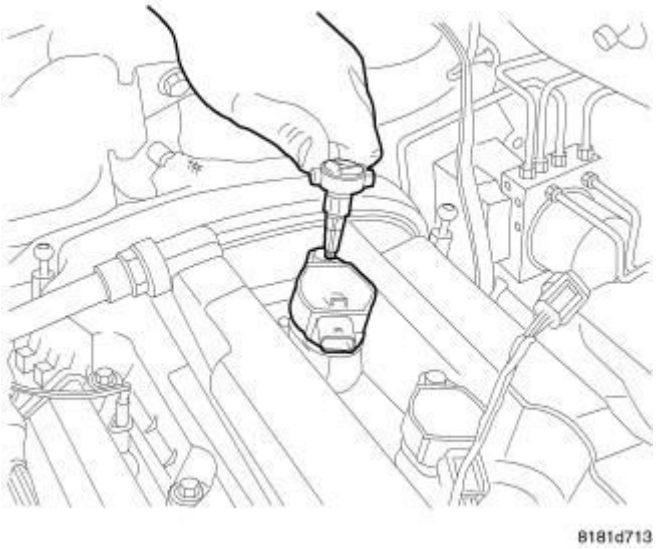

Fig. 6: Ignition Coil Bolt
Courtesy of CHRYSLER GROUP, LLC

3. Remove ignition coil mounting bolts.

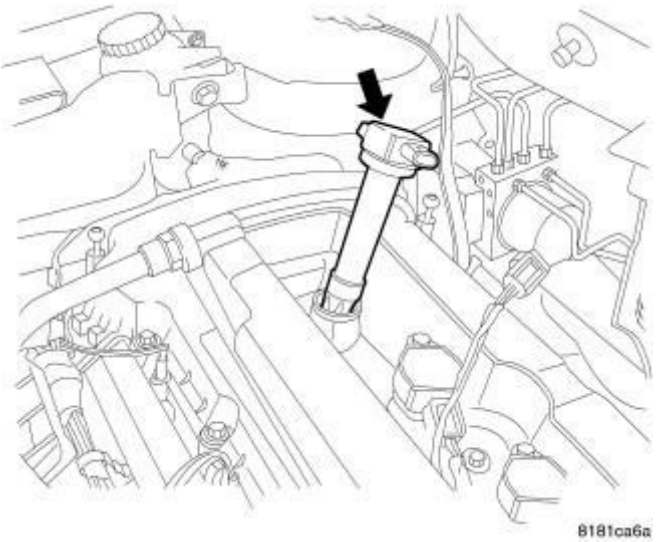

Fig. 7: Removing/Installing Ignition Coil
Courtesy of CHRYSLER GROUP, LLC

4. Remove ignition coil.

INSTALLATION

INSTALLATION

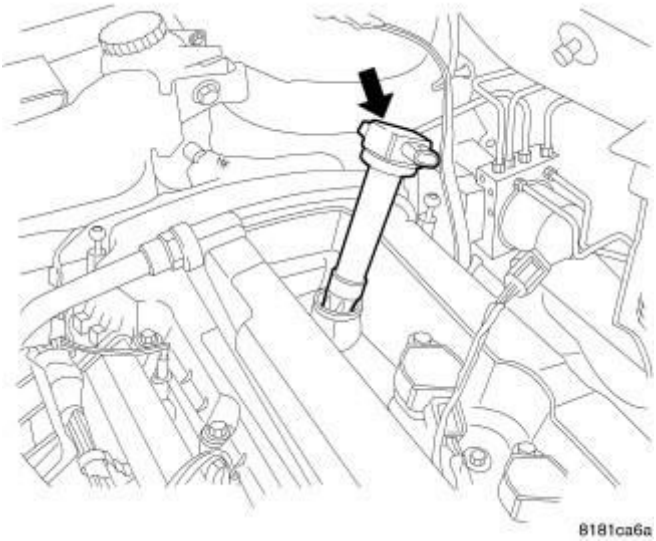

Fig. 8: Removing/Installing Ignition Coil
Courtesy of CHRYSLER GROUP, LLC

1. Install ignition coil.

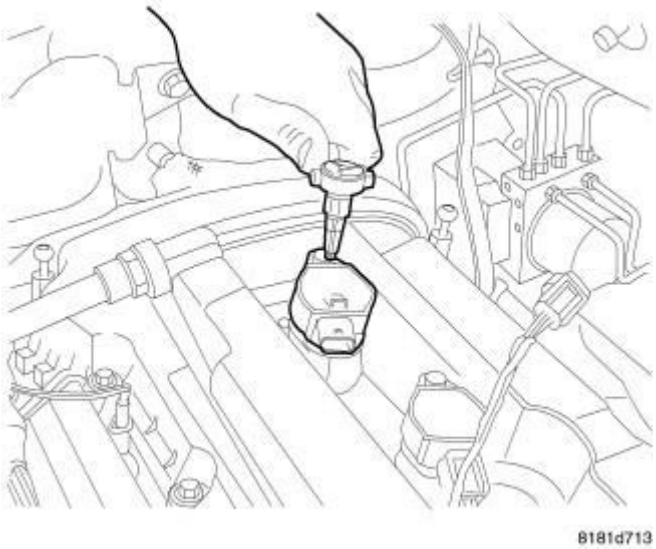

Fig. 9: Ignition Coil Bolt
Courtesy of CHRYSLER GROUP, LLC

2. Tighten bolt to 9 N.m (79.5 in. lbs.).
3. Connect electrical connectors and lock.
4. Install the negative battery cable.

CYLINDER, IGNITION LOCK

REMOVAL

REMOVAL

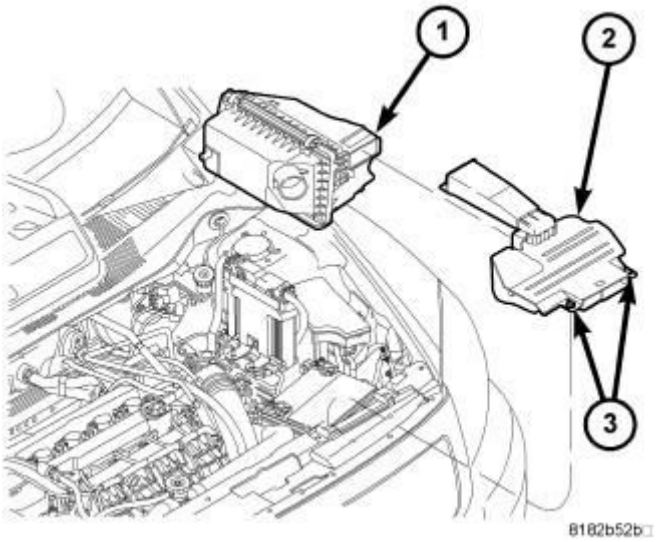

Fig. 10: Air Cleaner Box And Snorkel
Courtesy of CHRYSLER GROUP, LLC

WARNING: Disconnect and isolate the battery negative (ground) cable before beginning steering wheel removal or installation. Allow the front airbag system capacitor to discharge for two minutes before removing the steering wheel or any front airbag system component. This will disable the front airbag system. Failure to disconnect the battery could result in accidental front airbag module deployment and possible personal injury.

Do not place a non-deployed airbag face down on a hard surface as the airbag will propel into the air if accidentally deployed, and could result in serious or fatal injury.

1. Remove air cleaner fresh air duct (2) and disconnect and isolate negative battery cable at battery. Refer to **BATTERY, REMOVAL** .

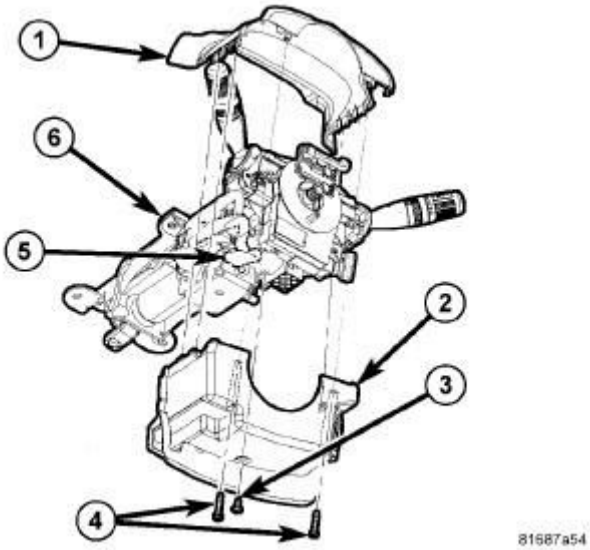

Fig. 11: Steering Column Shrouds
Courtesy of CHRYSLER GROUP, LLC

2. Remove upper (1) and lower (2) steering column shrouds. Refer to **SHROUD, STEERING COLUMN, UPPER, REMOVAL** and **SHROUD, STEERING COLUMN, LOWER, REMOVAL** .

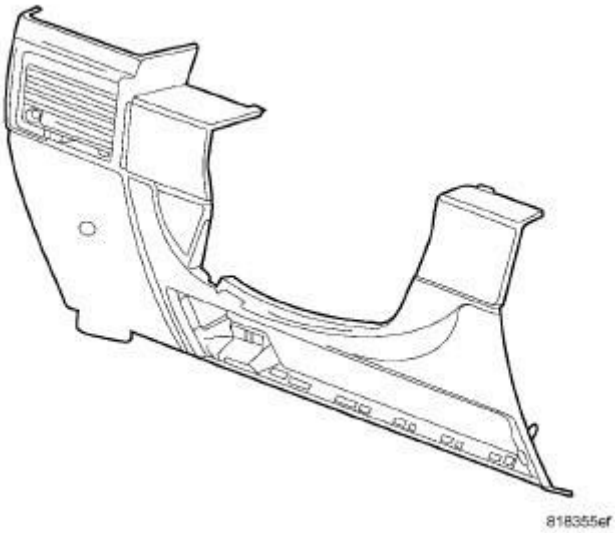

Fig. 12: Steering Column Cover
Courtesy of CHRYSLER GROUP, LLC

3. Remove steering column opening cover. Refer to **COVER, STEERING COLUMN OPENING, REMOVAL** .

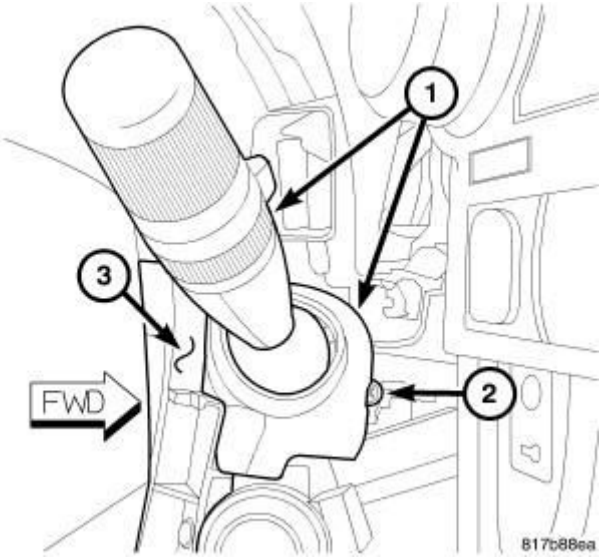

Fig. 13: Removing/Installing Right Multi-Function Switch
Courtesy of CHRYSLER GROUP, LLC

4. Remove the screw (2) that secures the right multi-function switch (1) to the mounting bracket integral to the right side of the clockspring (3) on the steering column.
5. Slide the switch away from the clockspring far enough to disengage the slide tab on the bottom of the switch housing from the channel formation in the mounting bracket. Position the multi-function switch (1) aside.

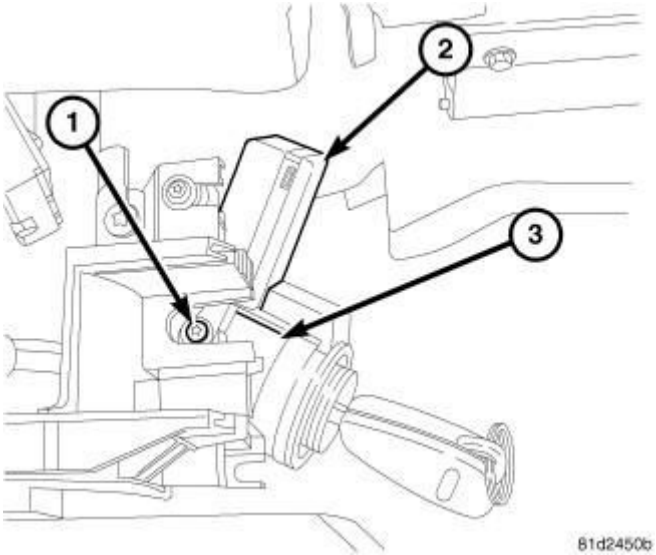

Fig. 14: Identifying Ignition Key/Lock Cylinder
Courtesy of CHRYSLER GROUP, LLC

6. Position steering column to the full down position.
7. Position ignition key to the RUN position.

8. Remove screw (1) fastening the SKREEM/WCM (2) to the lock cylinder housing (3).
9. Unhook the SKREEM/WCM (2) retainer fingers from the lock cylinder housing (3) and position the SKREEM/WCM (2) back on the lock cylinder housing (3).

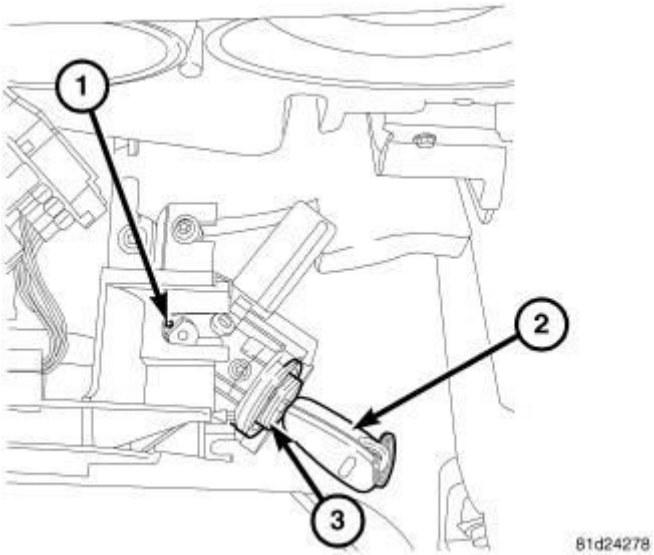

Fig. 15: Identifying Ignition Key/Lock Cylinder
Courtesy of CHRYSLER GROUP, LLC

10. Insert an appropriate tool into the slot (1) formed into the lock cylinder housing. Depress the key cylinder retaining tab.
11. Pull key cylinder (3) and key (2) straight out of the lock cylinder housing as one unit.

INSTALLATION

INSTALLATION

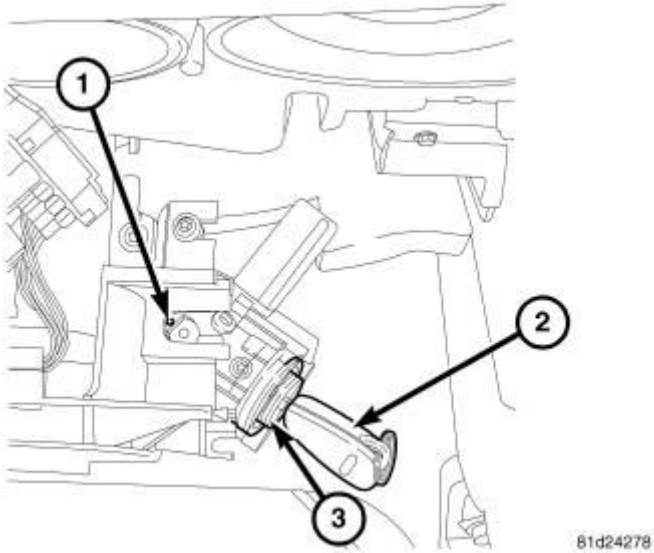

Fig. 16: Identifying Ignition Key/Lock Cylinder
Courtesy of CHRYSLER GROUP, LLC

1. Place actuator in the lock cylinder housing to the RUN position (if not already there).
2. Insert key into key cylinder and turn key cylinder to the RUN position.
3. Align the retaining tab on the key cylinder with the slot in the top of the lock cylinder housing.
4. Slide key cylinder into the lock cylinder housing until key cylinder retaining tab locks the cylinder into place.
5. Rotate key back and forth (OFF to START), then remove and reinstall it, making sure key cylinder and lock cylinder housing operate properly.

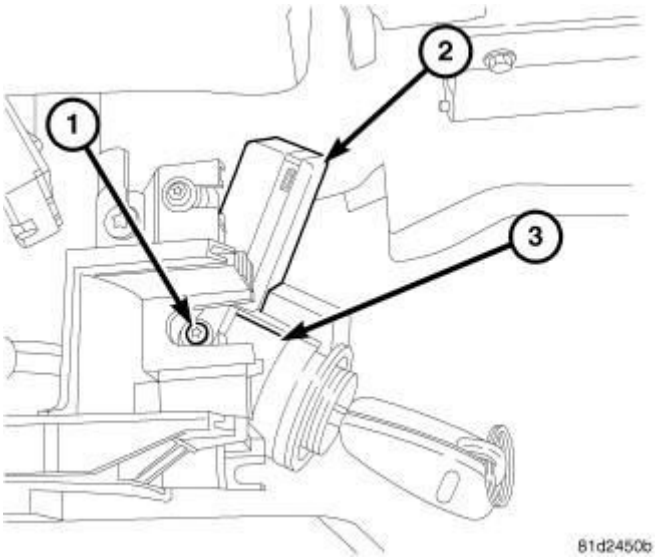

Fig. 17: Identifying Ignition Key/Lock Cylinder

Courtesy of CHRYSLER GROUP, LLC

6. Slide the ring of SKREEM/WCM (2) over lock cylinder housing (3) and engage the retainer fingers in the recesses formed on the lock cylinder housing.
7. Install screw (1) fastening the SKREEM/WCM (2) to lock cylinder housing (3). Tighten screw to 2.5 N.m (22 in. lbs.).

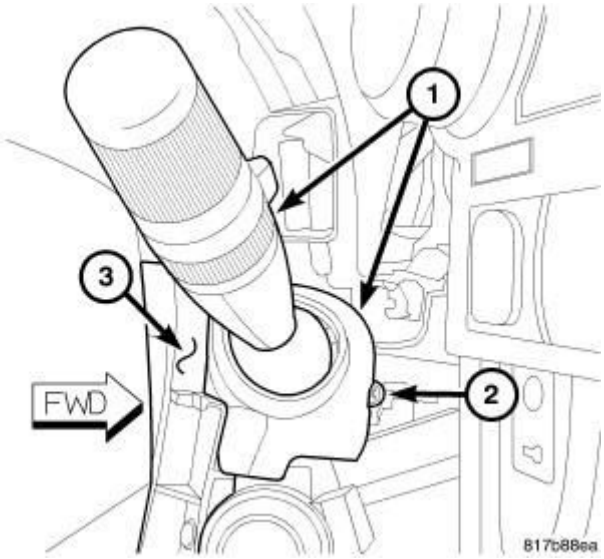

Fig. 18: Removing/Installing Right Multi-Function Switch
Courtesy of CHRYSLER GROUP, LLC

8. Install and tighten the screw (2) that secures the mounting tab on the back of the right multi-function switch (1) to the mounting bracket on the clockspring (3).

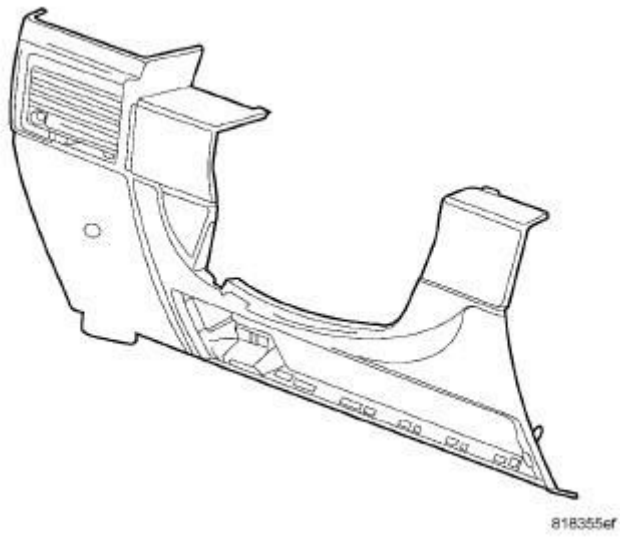

Fig. 19: Steering Column Cover
Courtesy of CHRYSLER GROUP, LLC

9. Install steering column opening cover. Refer to **COVER, STEERING COLUMN OPENING, INSTALLATION** .

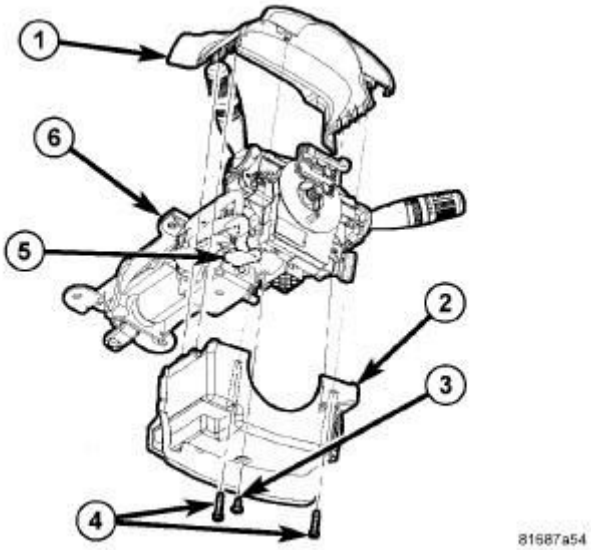

Fig. 20: Steering Column Shrouds
Courtesy of CHRYSLER GROUP, LLC

10. Install upper (1) and lower (2) steering column shrouds. Refer to **SHROUD, STEERING COLUMN, UPPER, INSTALLATION** and **SHROUD, STEERING COLUMN, LOWER, INSTALLATION** .

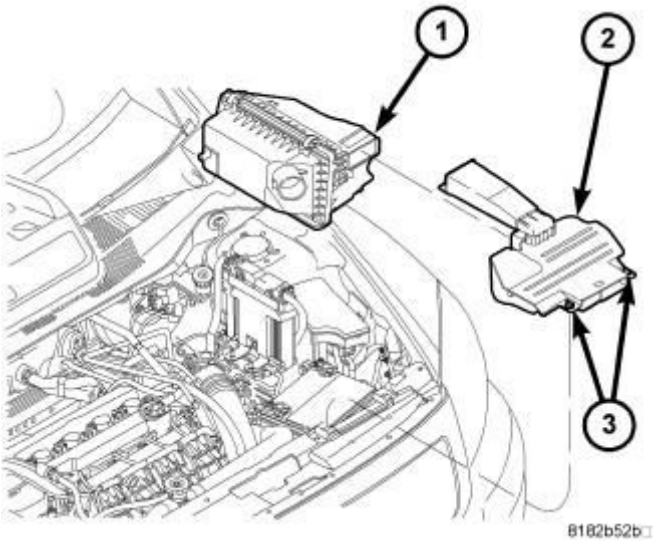

Fig. 21: Air Cleaner Box And Snorkel
Courtesy of CHRYSLER GROUP, LLC

11. Install air cleaner fresh air duct (2) and disconnect and isolate negative battery cable at battery. Refer to **BATTERY, INSTALLATION** .
12. Check operation of all steering column mounted components.

MODULE, GLOW PLUG

DESCRIPTION

DESCRIPTION

There is a glow plug control module and a glow plug relay control that use information received from engine control module.

OPERATION

OPERATION

When the ignition (key) switch is placed in the ON position, a signal is sent to the ECM relating current engine coolant temperature. This signal is sent from the engine coolant temperature sensor.

The glow plug control module receives information about the glow function from the engine control module. The start of glow plug operation, the period of glow plug operation, the actuation frequency and the pulse duty factor are therefore determined by the engine control module.

DIAGNOSIS AND TESTING

DIAGNOSIS AND TESTING - GLOW PLUG RELAYS

Refer to the appropriate Diesel Powertrain Diagnosis information for diagnosing the glow plug module.

REMOVAL

REMOVAL

1. Disconnect the negative battery cable.
2. Remove the air cleaner assembly. Refer to **BODY, AIR CLEANER, REMOVAL** , Diesel .
3. Disconnect the fuel lines.

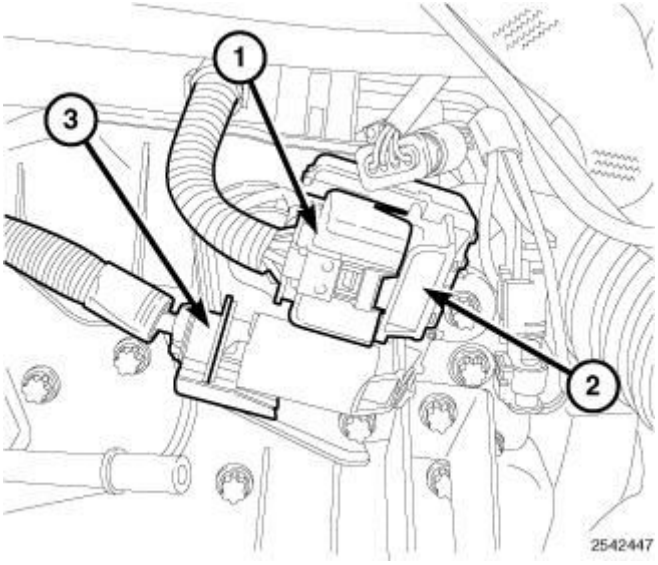

Fig. 22: Identifying Glow Plug Harness Connector, Glow Plug Module & Power Supply Harness Connector
Courtesy of CHRYSLER GROUP, LLC

4. Disconnect the glow plug harness connector (1).
5. Disconnect the power supply harness connector (3) from the glow plug module (2).

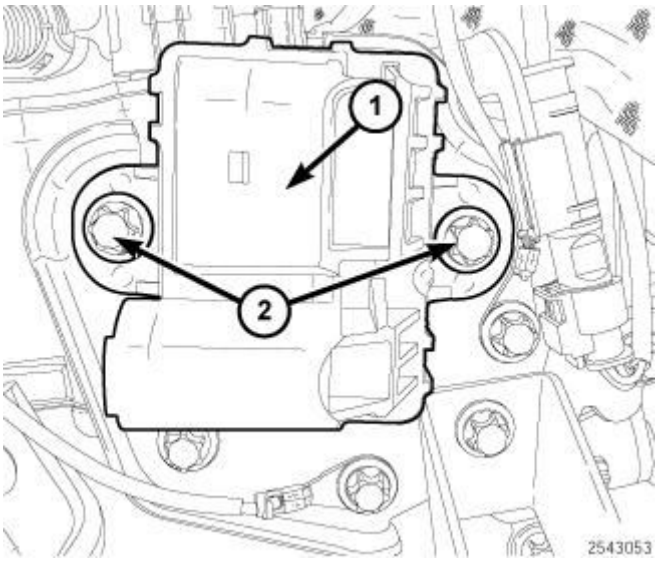

Fig. 23: Identifying Glow Plug Module & Bolts
Courtesy of CHRYSLER GROUP, LLC

6. Remove the bolts (2) and the glow plug module (1).

INSTALLATION

INSTALLATION

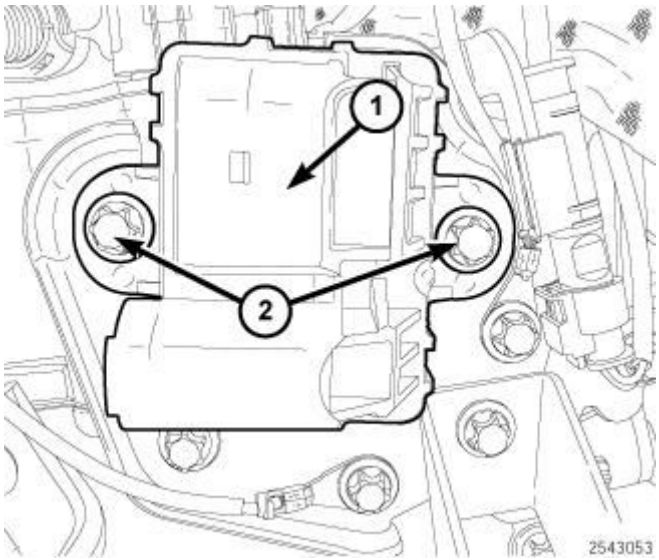

Fig. 24: Identifying Glow Plug Module & Bolts
Courtesy of CHRYSLER GROUP, LLC

1. Install the glow plug module (1). Tighten bolt to 9 N.m (80 in. lbs.).

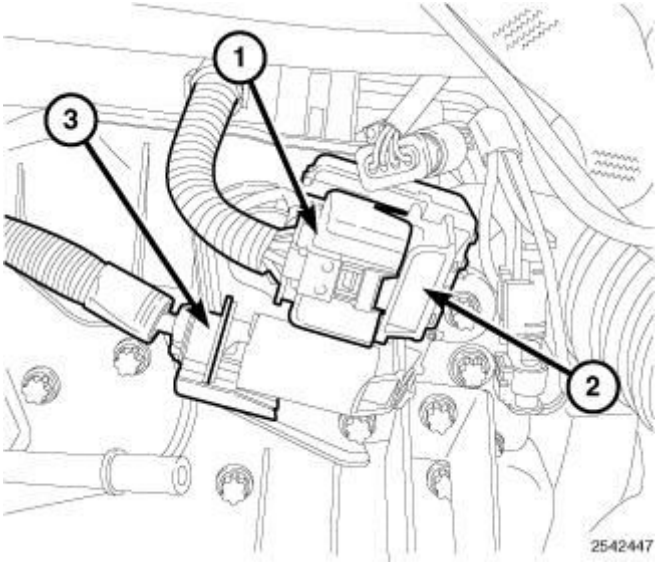

Fig. 25: Identifying Glow Plug Harness Connector, Glow Plug Module & Power Supply Harness Connector
Courtesy of CHRYSLER GROUP, LLC

2. Connect the power supply harness connector (3) to the glow plug module (2).
3. Connect the glow plug harness connector (1).
4. Connect the fuel lines.
5. Install the air cleaner assembly. Refer to **BODY, AIR CLEANER, INSTALLATION** , Diesel .

6. Connect the negative battery cable.

PLUG, GLOW

DESCRIPTION

DESCRIPTION

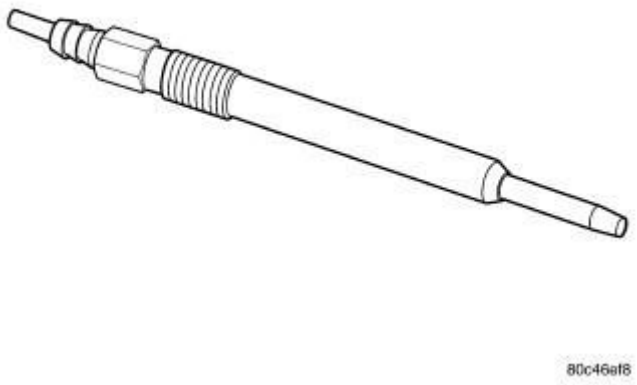

Fig. 26: Glow Plug
Courtesy of CHRYSLER GROUP, LLC

Glow plugs are used to help start a cold or cool engine. The glow plugs will heat up and glow to heat the combustion chamber of each cylinder. An individual glow plug is used for each cylinder. Each glow plug is threaded into the cylinder head below the cylinder head cover.

OPERATION

OPERATION

The glow plugs are used to preheat the combustion chambers in order to achieve the ignition temperature required for the fuel-air mixture.

The heating element is integrated in the glow rod. It consists of a heating winding and a control winding connected in series.

The glow plug system is a quick start type. This allows for immediate start in practically all weather conditions without long periods of preglowing. This works in conjunction with 6-hole injectors, which have a special "ignition" spray pattern. The glow plugs reach 1000° C (1832° F) in 2 seconds.

REMOVAL

REMOVAL

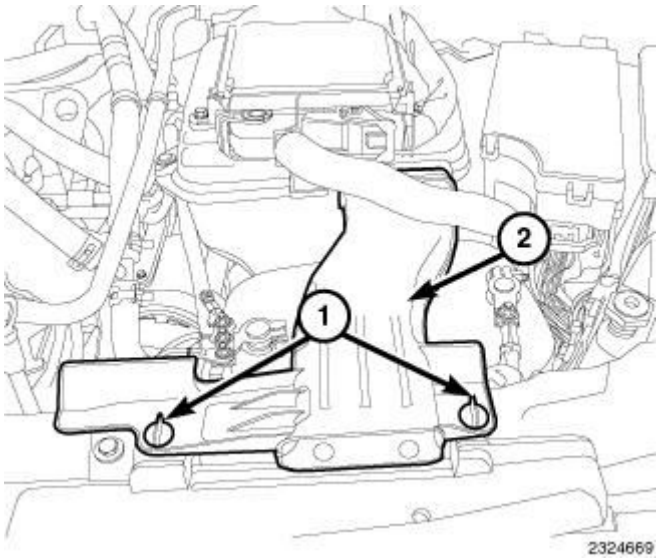

Fig. 27: Quarter Turn Lock Tabs & Air Inlet Duct
Courtesy of CHRYSLER GROUP, LLC

1. Release quarter turn lock tabs (1) and remove air inlet duct (2).
2. Disconnect the negative battery cable.
3. Remove engine cover.

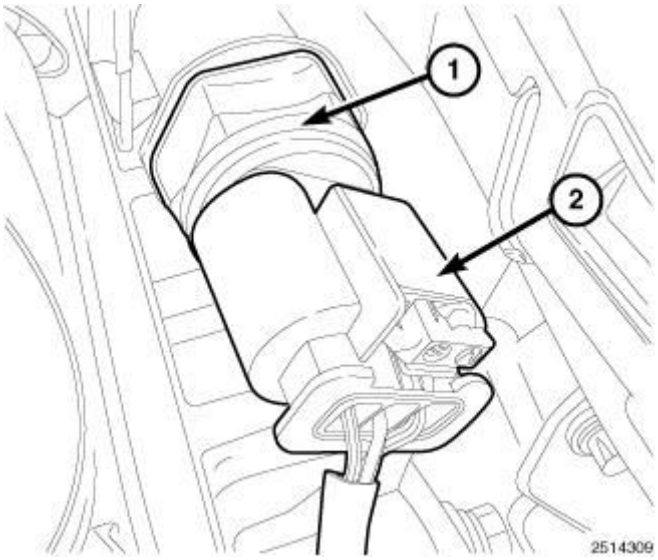

Fig. 28: Identifying Fuel Rail Pressure Regulator Harness Connector
Courtesy of CHRYSLER GROUP, LLC

4. Disconnect the fuel rail pressure sensor harness connector (2).

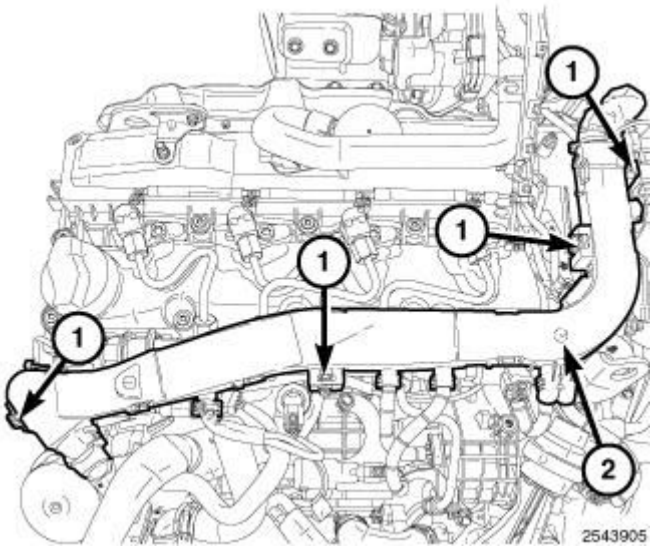

Fig. 29: Lock Tabs & Engine Wire Harness
Courtesy of CHRYSLER GROUP, LLC

5. Release the four lock tabs (1) position aside engine wire harness (2).
6. Disconnect the glow plug four way wire harness connector.

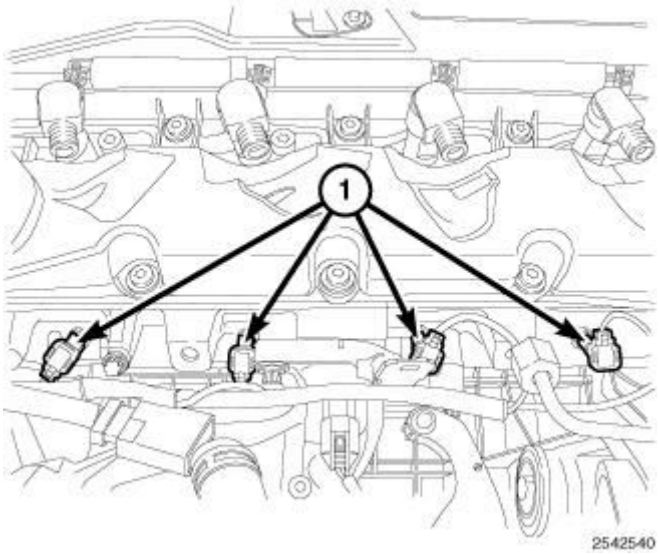

Fig. 30: Identifying Glow Plug Harness Connectors
Courtesy of CHRYSLER GROUP, LLC

7. Disconnect glow plug wire harness connector (1).

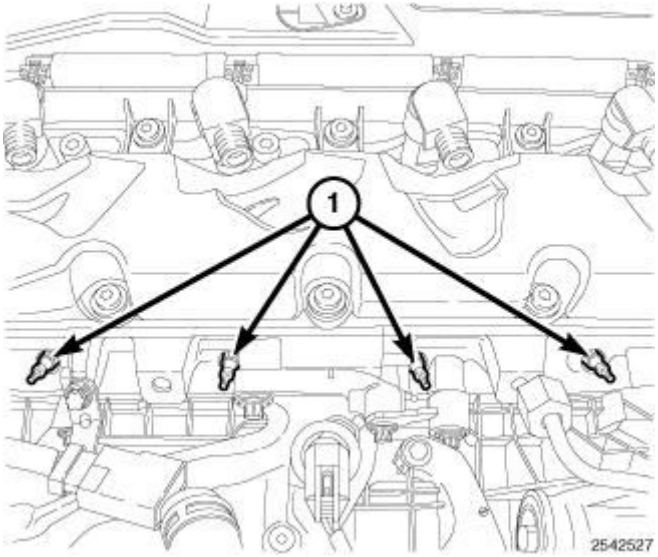

Fig. 31: Identifying Glow Plugs
Courtesy of CHRYSLER GROUP, LLC

NOTE: Clean the area around the glow plug of dirt and debris before removing.

8. Remove glow plugs (1) from cylinder head.

INSTALLATION

INSTALLATION

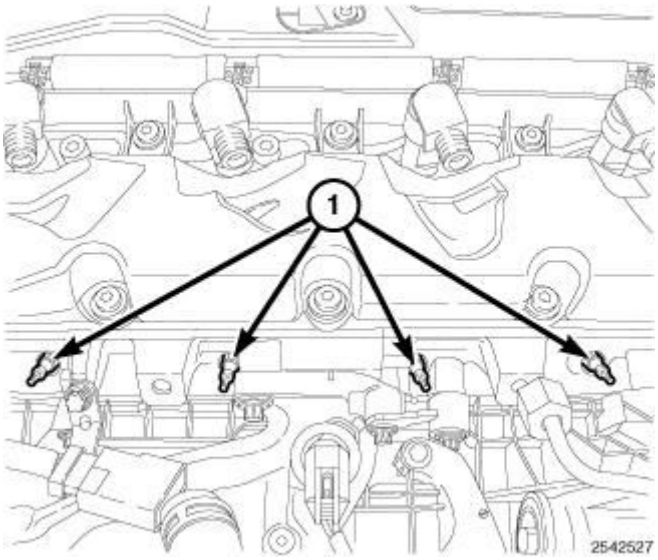

Fig. 32: Identifying Glow Plugs
Courtesy of CHRYSLER GROUP, LLC

1. Clean glow plug bay and install glow plug.

2. Install glow plugs (1). Tighten glow plugs to 11 N.m (97 in. lbs.).

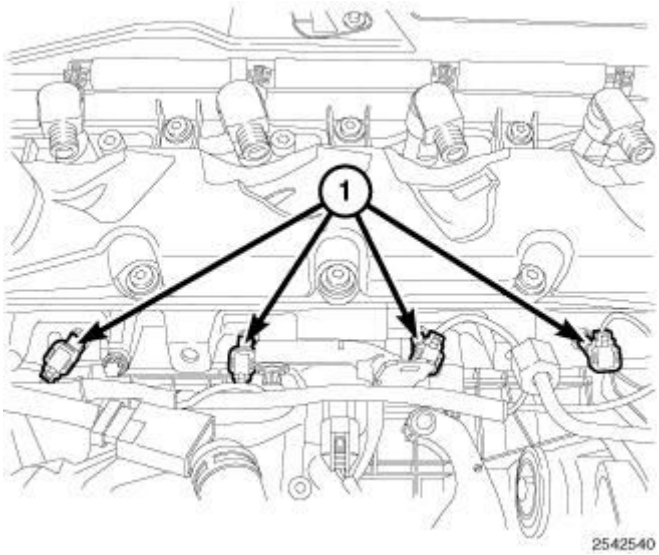

Fig. 33: Identifying Glow Plug Harness Connectors
Courtesy of CHRYSLER GROUP, LLC

3. Connect glow plug wire harness connector (1).

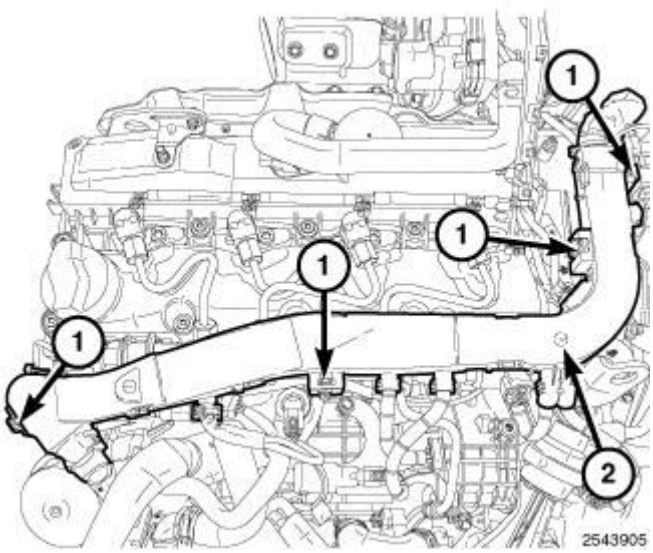

Fig. 34: Lock Tabs & Engine Wire Harness
Courtesy of CHRYSLER GROUP, LLC

4. Connect the glow plug four way harness connector.
5. Position the wire harness (2) and push down to lock tabs (1).

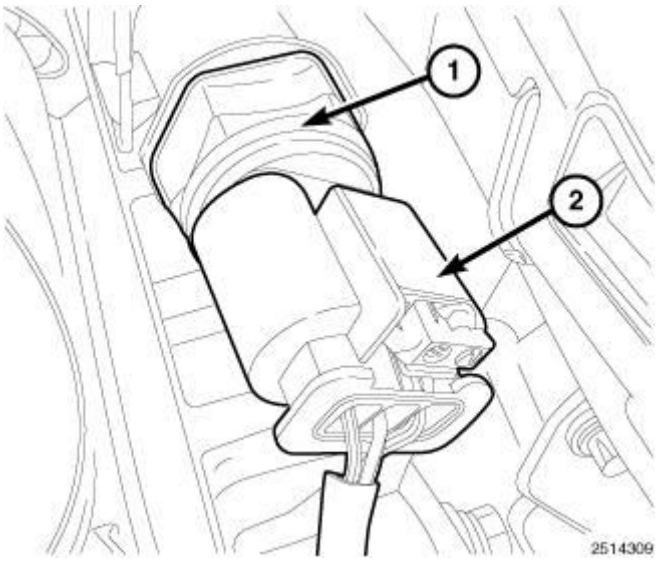

Fig. 35: Identifying Fuel Rail Pressure Regulator Harness Connector
Courtesy of CHRYSLER GROUP, LLC

6. Connect the fuel rail pressure sensor harness connector (2).

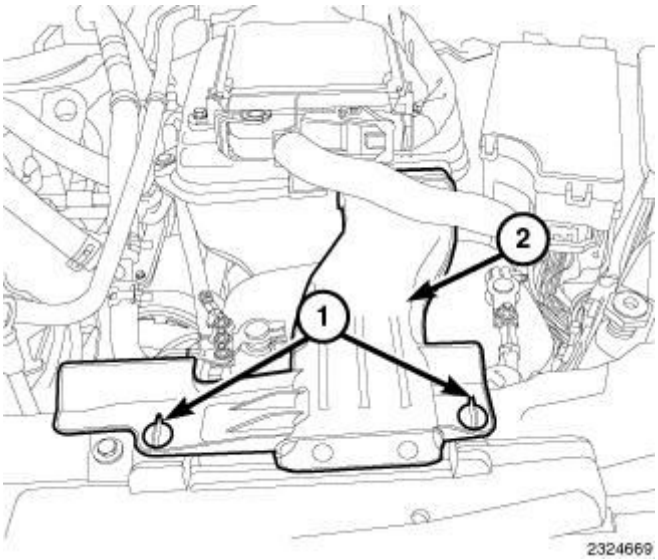

Fig. 36: Quarter Turn Lock Tabs & Air Inlet Duct
Courtesy of CHRYSLER GROUP, LLC

7. Install engine cover.
8. Connect the negative battery cable.
9. Install air inlet duct (2) and lock the quarter turn lock tabs (1).

SENSOR, CAMSHAFT POSITION

DESCRIPTION

DESCRIPTION

The camshaft position sensors are mounted to the front and rear of the cylinder head.

CAMSHAFT POSITION SENSOR-BANK 1 SENSOR 1 is mounted to the forward face of the cylinder head and reads the intake camshaft signals.

CAMSHAFT POSITION SENSOR-BANK 1 SENSOR 2 is mounted to the rear face of the cylinder head and reads the exhaust camshaft signals.

OPERATION

OPERATION

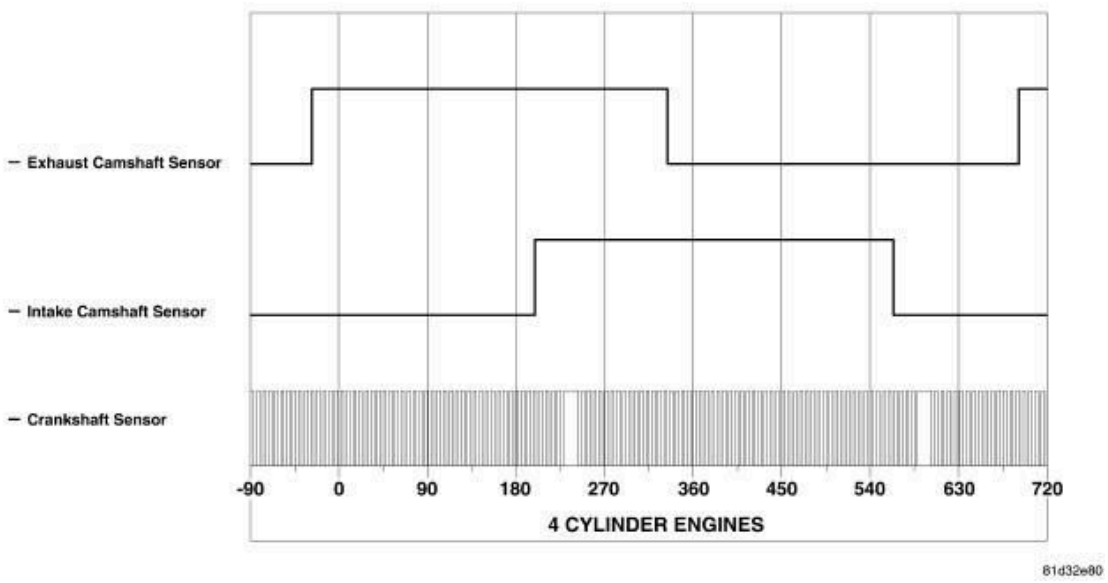

Fig. 37: 4 Cylinder Cam & Crank Signals
Courtesy of CHRYSLER GROUP, LLC

NOTE: The graphic represents the relationship between camshaft and crankshaft sensors edges with camshafts in "lock pin" position (cam shafts are not "phasing"). This is normally seen during idle.

Depiction of good camshaft and crankshaft square wave signals for 4 cylinder engines.

The PCM sends approximately 5 volts to the Hall-effect sensor. This voltage is required to operate the Hall-effect chip and the electronics inside the sensor. The

input to the PCM occurs on a 5 volt output reference circuit. A ground for the sensor is provided through the sensor return circuit. The PCM identifies camshaft position by registering the change from 5 to 0 volts, as signaled from the camshaft position sensor.

The PCM determines fuel injection synchronization and cylinder identification from inputs provided by the camshaft position sensor and crankshaft position sensor. From the two inputs, the PCM determines crankshaft position.

REMOVAL

FRONT

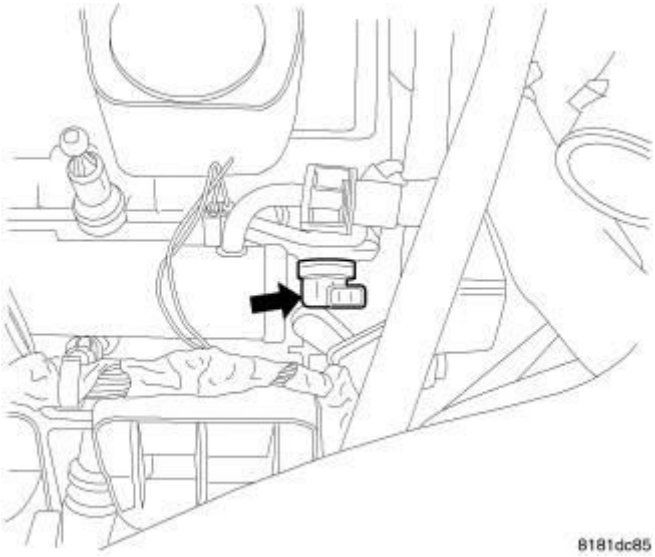

Fig. 38: Front Cam Sensor
Courtesy of CHRYSLER GROUP, LLC

1. Remove the air cleaner hose to throttle body, disconnect the inlet air temperature sensor electrical connector.
2. Disconnect negative battery cable.
3. Disconnect electrical connector from camshaft position sensor.
4. Remove camshaft position sensor mounting screws.

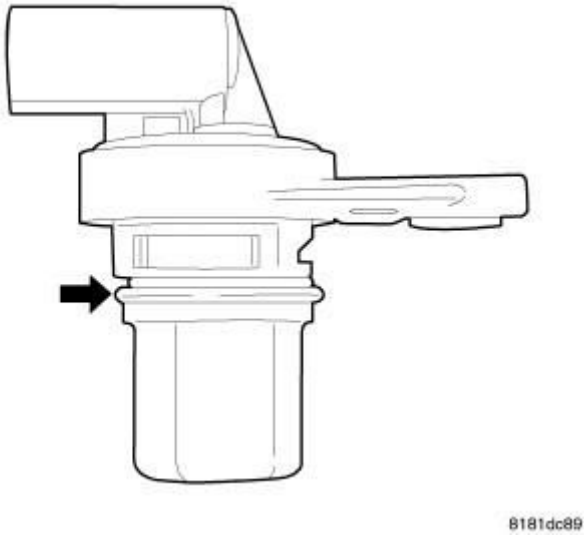

Fig. 39: Cam Sensor
Courtesy of CHRYSLER GROUP, LLC

5. Remove sensor.

REAR

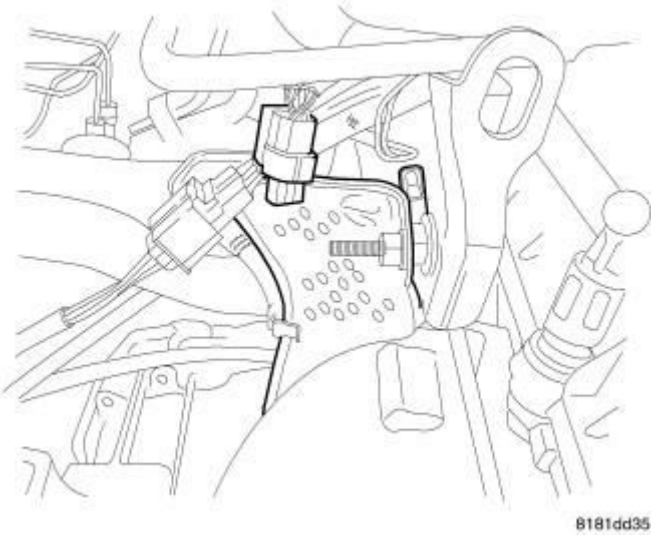

Fig. 40: Rear Cam Sensor Shield Installed
Courtesy of CHRYSLER GROUP, LLC

1. Disconnect negative battery cable.
2. Disconnect electrical connector at sensor.
3. Remove nut retaining heat shield.

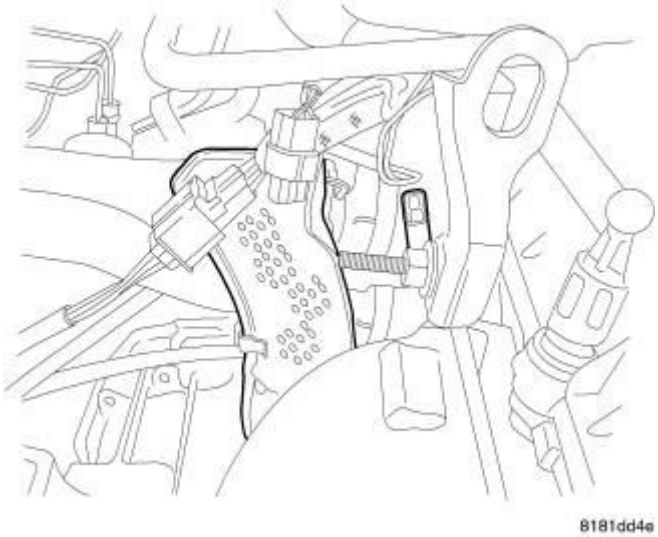

Fig. 41: Rear Cam Sensor Shield Removed
Courtesy of CHRYSLER GROUP, LLC

4. Pull heat shield out to uncover sensor.
5. Remove mounting bolt.

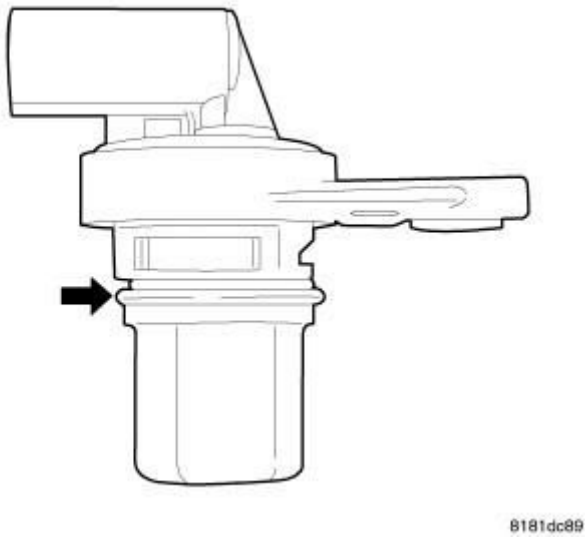

Fig. 42: Cam Sensor
Courtesy of CHRYSLER GROUP, LLC

6. Remove sensor.

INSTALLATION

FRONT

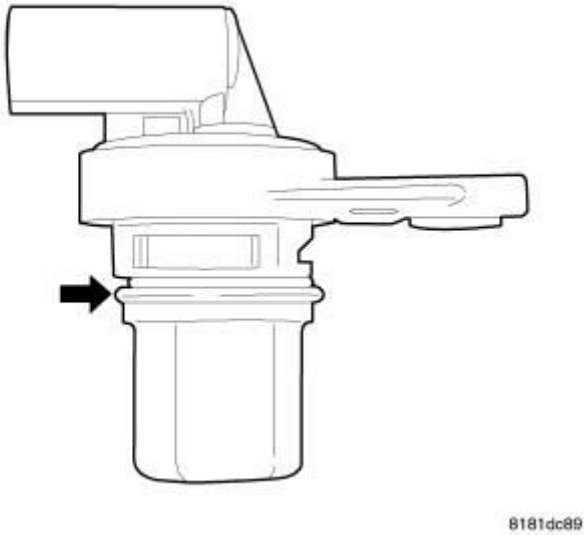

Fig. 43: Cam Sensor
Courtesy of CHRYSLER GROUP, LLC

1. Lubricate sensor o-ring.

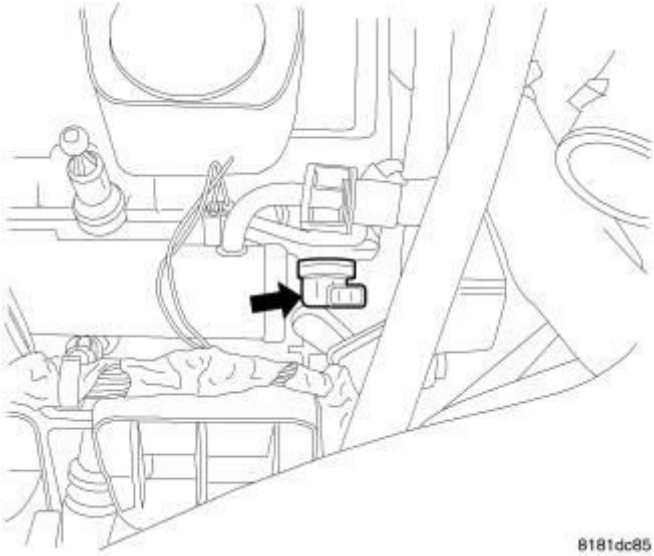

Fig. 44: Front Cam Sensor
Courtesy of CHRYSLER GROUP, LLC

2. Install camshaft position sensor utilizing twisting motion. Make sure sensor is fully seated. Do not drive sensor into the bore with screw. This can cause sensor to be incorrectly seated causing engine to fail. Tighten sensor mounting screws to 9 N.m (79.5 in. lbs.).
3. Carefully attach electrical connector to camshaft position sensor. Installation at an angle may damage the sensor pins.
4. Install the negative battery cable.

5. Install the air cleaner to throttle body hose, connect the inlet air temperature sensor electrical connector.

REAR

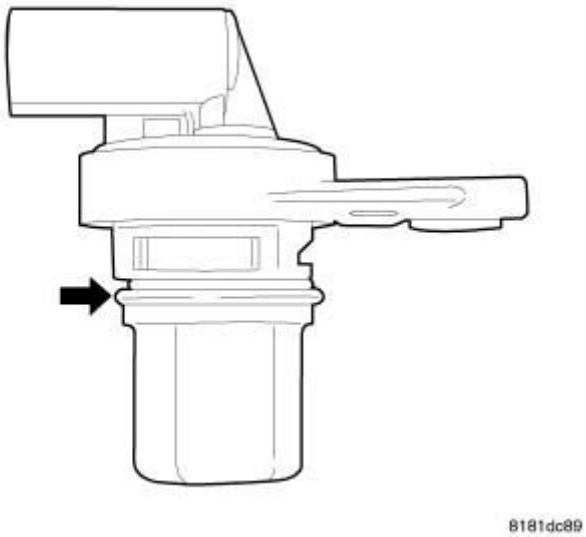

Fig. 45: Cam Sensor
Courtesy of CHRYSLER GROUP, LLC

1. Lubricate sensor o-ring.
2. Install sensor utilizing twisting motion. Make sure sensor is fully seated. Do not drive sensor into the bore with screw. This can cause sensor to be incorrectly seated causing engine to fail.
3. Install mounting bolt and tighten to 9 N.m (79.5 in. lbs.).

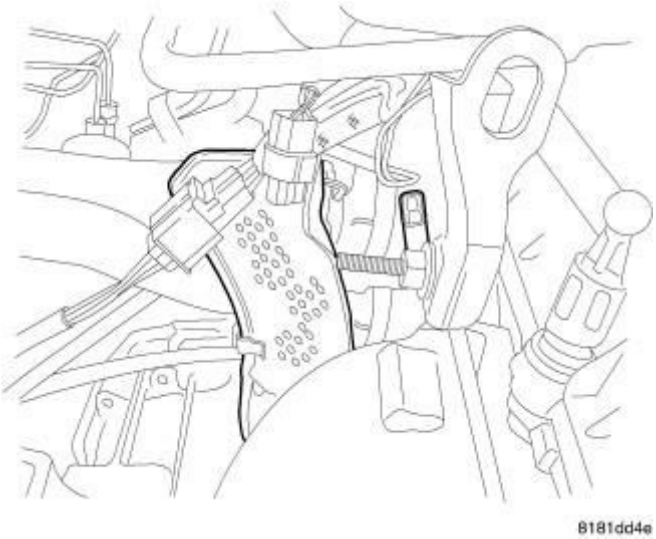

Fig. 46: Rear Cam Sensor Shield Removed

Courtesy of CHRYSLER GROUP, LLC

4. Carefully attach electrical connector to camshaft position sensor. Feel for positive lock (click). Installation at angle may damage the sensor pins.
5. Install heat shield onto mounting stud.
6. Install heat shield retaining nut and tighten.

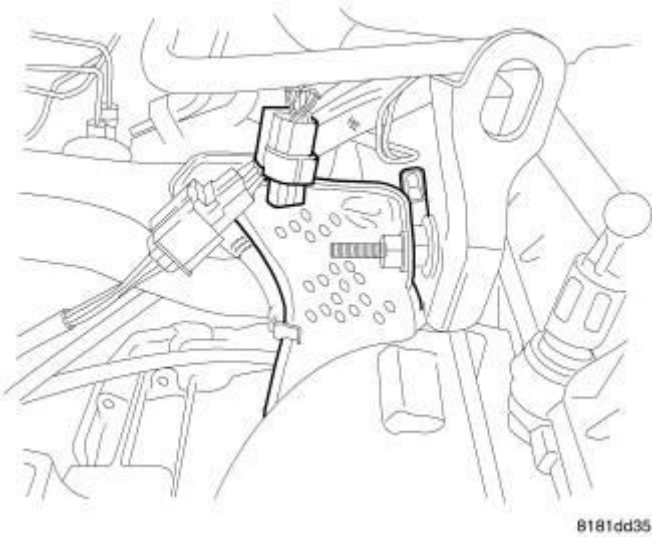

Fig. 47: Rear Cam Sensor Shield Installed
Courtesy of CHRYSLER GROUP, LLC

7. Connect negative battery cable.

SENSOR, KNOCK

DESCRIPTION

DESCRIPTION

The knock sensor is bolted to the cylinder block. The knock sensor is designed to detect engine vibration that is caused by detonation or preignition.

OPERATION

OPERATION

When the knock sensor detects a knock in one of the cylinders, it sends an input signal to the PCM. In response, the PCM retards ignition timing for all cylinders by a scheduled amount.

Knock sensors contain a piezoelectric material which constantly vibrates and

sends an input voltage (signal) to the PCM while the engine operates. As the intensity of the crystal's vibration increases, the knock sensor output voltage also increases.

The voltage signal produced by the knock sensor increases with the amplitude of vibration. The PCM receives as an input the knock sensor voltage signal. If the signal rises above a predetermined level, the PCM will store that value in memory and retard ignition timing to reduce engine knock. If the knock sensor voltage exceeds a preset value, the PCM retards ignition timing for all cylinders. It is not a selective cylinder retard.

The PCM ignores knock sensor input during engine idle conditions. Once the engine speed exceeds a specified value, ignition timing retard is allowed.

Ignition timing is retarded uses its own short term and long term memory program.

Long term memory stores previous detonation information in its battery-backed RAM. The maximum authority that long term memory has over timing retard can be calibrated.

Short term memory is allowed to retard ignition timing up to a preset amount under all operating conditions (as long as RPM is above the minimum RPM) except WOT. The PCM, using short term memory, can respond quickly to retard timing when engine knock is detected. Short term memory is lost any time the ignition key is turned off.

NOTE: Over or under tightening affects knock sensor performance, possibly causing improper spark control.

REMOVAL

REMOVAL

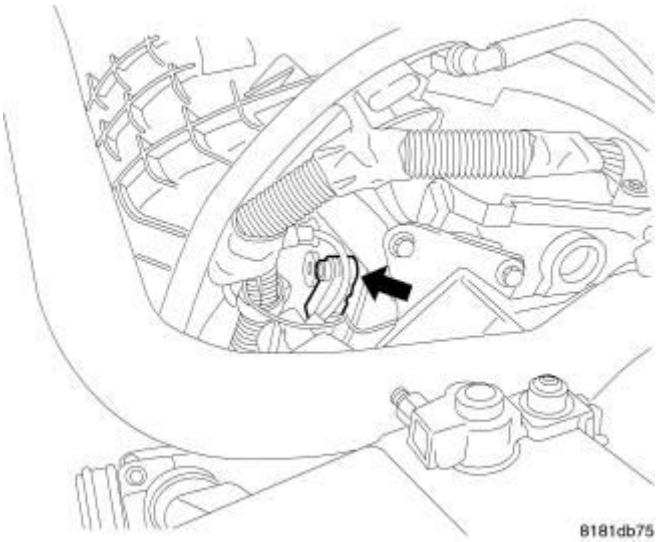

Fig. 48: Knock Sensor Location
Courtesy of CHRYSLER GROUP, LLC

The knock sensor bolts into the side of the cylinder block in front of the starter under the intake manifold.

1. Disconnect the negative battery cable.

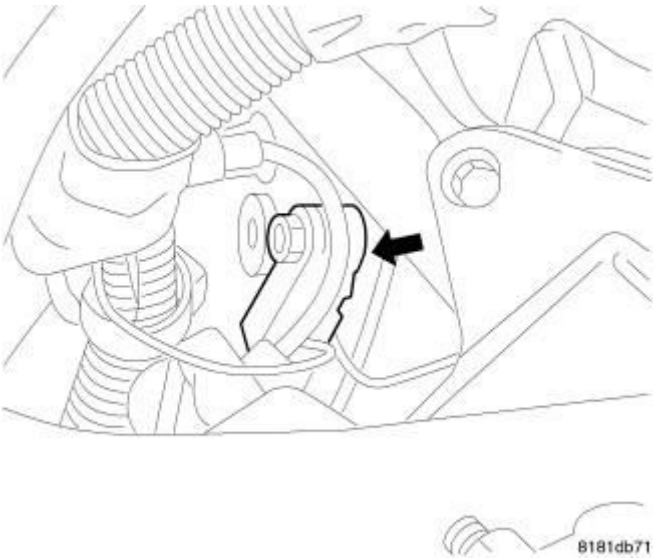

Fig. 49: Knock Sensor
Courtesy of CHRYSLER GROUP, LLC

2. Remove the bolt holding the knock sensor.
3. Remove sensor with electrical connector attached.
4. Disconnect electrical connector from knock sensor.

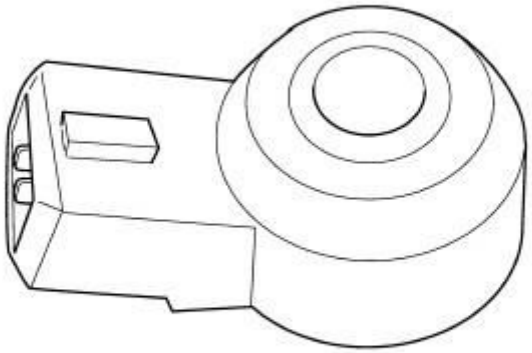

Fig. 50: Knock Sensor
Courtesy of CHRYSLER GROUP, LLC

5. Remove the knock sensor.

INSTALLATION

INSTALLATION

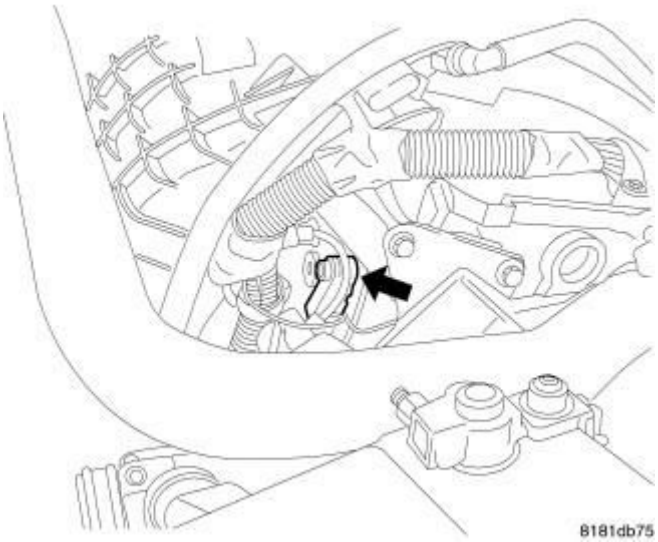

Fig. 51: Knock Sensor Location
Courtesy of CHRYSLER GROUP, LLC

The knock sensor bolts into the side of the cylinder block in front of the starter under the intake manifold.

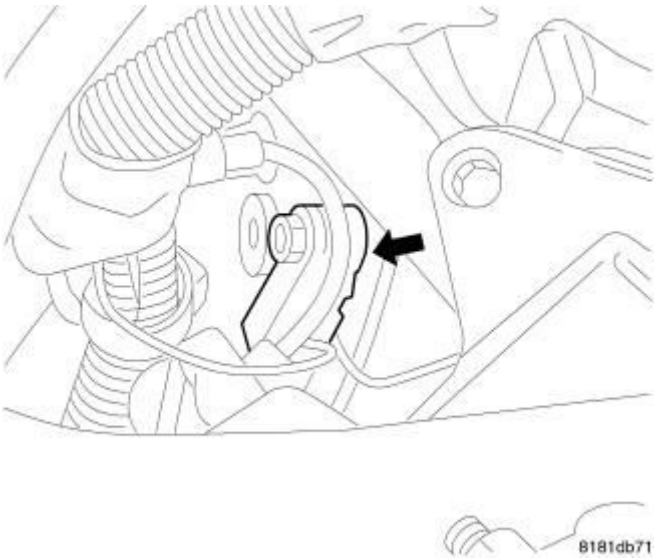

Fig. 52: Knock Sensor
Courtesy of CHRYSLER GROUP, LLC

1. Attach electrical connector to knock sensor.
2. Install knock sensor. Tighten knock sensor bolt to 20 N.m (177 in. lbs.). **Over or under tightening effects knock sensor performance, possibly causing improper spark control.**
3. Connect the negative battery cable.

SOLENOID, VARIABLE VALVE TIMING

DESCRIPTION

DESCRIPTION

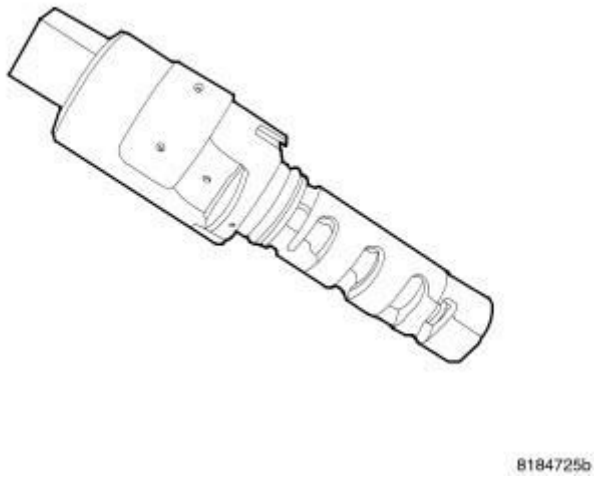

Fig. 53: Solenoid Assembly

Courtesy of CHRYSLER GROUP, LLC

Variable valve timing solenoid assembly. The solenoid receives pulse width modulation signal and the current is controlled within 0 ma to 1000 ma. The spool position is controllable at any position to control supply of oil between the advance and retard ports.

OPERATION

OPERATION

There is both an Intake and an exhaust camshaft sensor on vehicles equipped with a World Engine. The variable valve timing system used on World Engines requires the exact position of both the intake and exhaust camshaft. The GPEC1 uses camshaft sensor data along with crankshaft data to determine the actual position of the camshafts. Intake and exhaust phaser oil control valves are required on World Engine vehicles using variable valve timing. The oil valves direct oil to the Intake and exhaust phasers. Oil pressure in the phasers moves the camshafts to an advanced or retarded position.

To resolve this inherent conflict between optimum high and low speed valve timing, the GPEC1 controlled engine uses a variable valve timing system. The variable valve timing system advances and retards valve timing by rotating the position of both the intake and exhaust camshafts. With this system, the intake valve opening can range from 80 to 120 crankshaft degrees after Top Dead Center. Likewise, the exhaust valve opening can range from 85 to 120 crankshaft degrees before Top Dead Center. This degree of flexibility provides many benefits, including: Improved Engine Performance, Increased Fuel Economy, Improved Idle Stability and Decreased Engine Emissions. In non operating condition, the camshaft stays in lockpin position of cam phases. This is 120 degrees ATDC for intake camshaft and 120 degrees BTDC for exhaust camshaft.

The variable valve timing system is electronically controlled and hydraulically operated. The GPEC1 receives information from many sensors to determine the optimum valve timing. It then pulse-width modulates oil control valves which direct oil to the cam phasers. The cam phasers use oil pressure to rotate the intake and exhaust camshafts. The rotation of the camshafts is referred to as cam phasing. Before the GPEC1 can begin commanding the camshaft phasing, several enabling conditions must be met:

- The engine oil temperature must be at least -6.6°C (20°F)
- The oil control valve coil temperature must be less than 140°C (284°F)
- Engine speed must be at least 600 to 1000 RPM to achieve minimum oil pressure.
- Battery voltage must be at least 10 volts
- And there must be no camshaft or crankshaft sensor faults, engine timing faults, or oil control valve faults

First we will examine variable valve timing enabling conditions, and then we will take a closer look at the inputs and outputs of the system:

- Accelerator pedal position sensor
- Oil temperature sensor
- Map sensor
- Intake cam sensor
- Exhaust cam sensor
- Crankshaft sensor
- GPEC1
- Exhaust phaser oil control valve
- Intake phaser oil control valve
- Inputs
- Engine control module
- Outputs
- Sensed battery voltage

A minimum oil temperature is required to enable variable valve timing operation. Oil temperature and viscosity also have an impact on the operation of variable valve timing after start-up. Oil is used to control the movement of the camshafts. An incorrect oil viscosity could adversely affect the operation of the system or even render the system inoperative. It may even set a fault code.

The accelerator pedal position sensor indicates how far the driver wants to open the throttle plate. The GPEC1 calculates an initial camshaft set point based on whether the accelerator pedal is at part throttle or wide open throttle.

The MAP sensor provides information regarding engine load.

Sensed battery voltage provides information regarding current system voltage. Sensed battery voltage must be at least 10 volts in order for the oil control valves to function properly.

This information allows the GPEC1 to adjust camshaft timing to achieve the best fuel economy, the best engine performance or a combination of both. The hall-effect crankshaft sensor provides RPM information and determines when the number one piston is approaching Top Dead Center. The sensor generates a signal as the tone wheel, attached to the crankshaft, rotates. The tone wheel has 60 teeth minus two. When the gap, created by the missing teeth passes by the sensor, a signal is produced that indicates the number one piston is at Top Dead Center. The GPEC1 uses crankshaft sensor data along with camshaft data to determine the actual position of the camshaft. There are two hall-effect camshaft sensors on engines equipped with variable valve timing. The GPEC1 uses camshaft sensor data along with crankshaft data to determine the actual position of the camshaft.

The GPEC1 individually controls each valve. It sends a pulse width modulated signal to move a spool within the outer casing of the valve. Depending upon spool movement, oil is directed through the passages to advance or retard cam timing. The oil control valve also has a special cleaning strategy at key-on. The cleaning strategy is known as "debris crush mode". At key-on the GPEC1 cycles the oil control valve on and off several (5) times to crush any debris in the oil control valve and prevent the spool valve from sticking. In non operating condition, the camshaft stays in lockpin position of cam phases. This is 120 degrees ATDC for intake camshaft and 120 degrees BTDC for exhaust camshaft.

NOTE: The debris crush mode will only occur with the key on and the engine off (KOEO). If the ignition is cycled to the start position without a momentary pause (immediate crank), the debris crush mode will not occur. In this instance the procedure will be performed at the next key off cycle.

There are two oil control valves. One valve directs oil to the intake cam phaser, the other valve directs oil to the exhaust cam phaser. The valves are designed and function in the same manner. The outer casing of each oil valve has five oil passages. A passage for pressurized supply oil. A passage to the advance chamber of the cam phaser. A passage to the retard chamber of the cam phaser.

A passage for oil return from the advance chamber of the cam phaser. A passage for oil return from the retard chamber of the cam phaser. Oil flows through the passages and applies pressure to the cam phasers to change cam timing.

There are two cam phasers. One phaser controls the position of the intake camshaft. The other phaser controls the position of the exhaust camshaft. The phasers consist of a sprocket, a rotor vane, and a housing or stator. The exhaust cam phaser also consists of a front bushing and spring. We will discuss the purpose and function of the bushing and spring later. The housing is bolted and permanently fixed to the camshaft sprocket, while the rotor vane is bolted and permanently fixed to the camshaft. With this design, any movement of the rotor vane in relation to the housing will also move the camshaft. The phaser and sprocket are serviced as an assembly.

Camshaft and crankshaft sensors provide feedback to the GPEC1 regarding the actual position of the camshafts. The GPEC1 then compares the actual camshaft positioning with desired positioning. If the desired positioning is not achieved within a specified time, during the second key cycle a trouble code is set.

There are six new diagnostic trouble codes available to help you determine if the control circuit from the GPEC1 to the oil control valve is intact and operating properly. The codes identify whether the control circuit is open, shorted to ground, or shorted to power. Three trouble codes are related to intake camshaft positioning, the other three codes are specific to exhaust camshaft positioning.

The oil control valve contains both electrical and mechanical components. It is electrically controlled by the GPEC1. The electrical current that energizes the coil results in mechanical motion of the spool valve. It is possible to verify both the electrical and mechanical operation of the valve. The oil control valve consists of a coil that is energized to move a spool within an outer casing. The condition of the coil can be tested with a Digital Volt Ohmmeter or DVOM. With the DVOM set to measure resistance, check the coil for an open, a short to ground, or excessive resistance. The correct resistance value of the coil is between 6 and 8 ohms. The mechanical operation of the oil control valve can be tested using actuator commands on the scan tool. Remove the oil control valve, then navigate to the actuator menu and select the oil control valve. Use commands to activate the valve and watch as the spool valve moves back and forth inside the casing.

Because the cam phasers are hydraulically operated by engine oil, the condition of the oil is very important. The oil must be of the correct viscosity, not obstructed by debris, to maintain correct pressure. Maintaining the correct oil viscosity is critical to the operation of the variable valve timing system. The wrong oil viscosity may cause the variable valve timing to malfunction and trouble codes to set. The correct oil viscosity for this system is 5W20. Oil must be clean, unobstructed and free to flow through the variable valve timing system. Oil could become obstructed in oil passages located in the cylinder head, cylinder block, or even in the oil screen. In the event oil flow is obstructed, further diagnosis or disassembly may be required to pin point the source of the obstruction. The variable valve timing system relies on oil pressure to advance or retard the position of the camshaft. Insufficient oil pressure will adversely affect the operation of variable valve timing. The minimum oil pressure for this system is 15 psi at normal operating temperature.

Though not directly used to change camshaft positioning, the oil screen is an important component of the variable valve timing system. It helps to remove debris going to the variable valve timing components. The oil screen is located in the cylinder block, immediately below the cylinder head. Oil must pass through the oil screen before entering the oil control valve. The cylinder head must be removed to service the oil screen. The intention is not to service the oil screen during vehicle life.

How the cam phaser works. The cam phaser assembly has eight separate chambers; four advance chambers and four retard chambers. When camshaft advance is requested, oil enters all four advance chambers and exerts force on the rotor vane. Because the rotor vane is bolted to the camshaft, the entire camshaft profile moves along with the rotor vane. At the same time, oil is forced out of the retard chambers. When camshaft retard is requested oil enters the retard chambers to move the camshaft in the opposite direction. There is a lock pin on one side of the rotor vane that fits inside a recessed area in the housing. The lock pin ensures that the default position of the intake cam phaser is 120 crankshaft degrees full retard and the default position of the exhaust cam phaser is 120 crankshaft degrees full advance. When the engine is turned off, rotational force and inertia move the intake camshaft and rotor vane toward the retard position. The exhaust cam phaser includes a spring and bushing to work against the rotational force of the engine, allowing the exhaust cam phaser to lock in the fully advanced position. Under most conditions the cam phasers are returned to lock pin position when the engine is turned off. In the unique condition of an

engine stall, which abruptly shuts off the engine, the cam phasers may not return to the lock pin position. In this case, the phasers will return to the lock pin position at the next start-up. Lock pin position is the most ideal cam timing for idle stability. When engine RPM exceeds approximately 600 to 1000 RPM, oil pressure unlocks the pins and variable valve timing resumes. Once enabling conditions are met, the GPEC1 uses input from sensors to calculate optimum valve timing.

There are four preprogrammed modes from which the GPEC1 bases initial valve timing.

- Starting
- Idle or Part throttle
- Wide open throttle
- Limp-in or Default

From each preprogrammed mode, the GPEC1 adjusts valve timing based on operating conditions.

GPEC1 has calculated optimum intake valve timing of 112 degrees after Top Dead Center and optimum exhaust valve timing of 97 degrees before Top Dead Center. The GPEC1 pulse width modulates the oil control valves to advance or retard the camshaft to their desired location. The spool valve inside the intake oil control valve is energized and moves to allow pressurized oil into the advance chambers of the intake cam phaser. At the same time, the spool valve inside the exhaust oil control valve is energized and moves to allow pressurized oil into the retard chambers of the exhaust cam phaser. Oil enters the advance chambers of the intake phaser and the retard chambers of the exhaust phaser. Oil pressure releases the lock pin from its locked position and pushes against the rotor vane. Both the rotor vanes are moved, advancing the intake camshaft and retarding the exhaust camshaft.

REMOVAL

FRONT SOLENOID 1/1

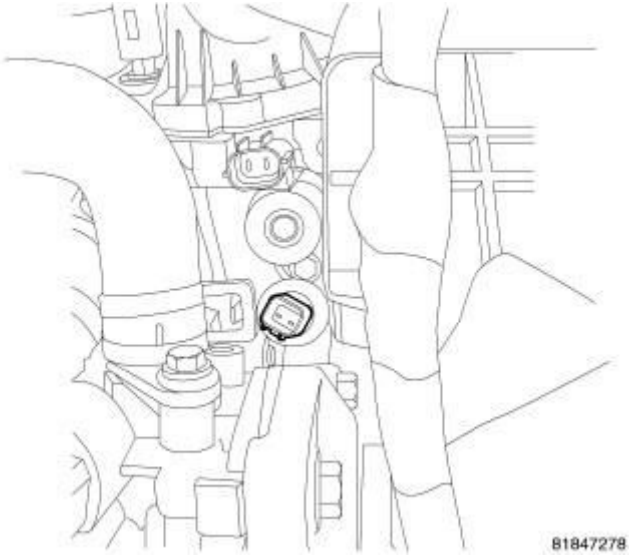

Fig. 54: Oil Pressure Sensor
Courtesy of CHRYSLER GROUP, LLC

1. Disconnect negative battery cable.
2. Remove engine cover.
3. Rotate hose clamp out of way.
4. Disconnect oil pressure sensor electrical connector.
5. Remove oil pressure sensor.
6. Disconnect variable valve timing solenoid electrical connector.

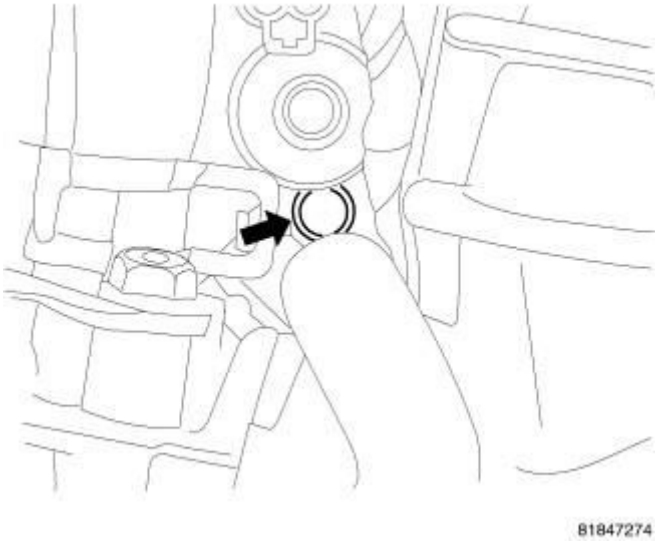

Fig. 55: Solenoid Mounting Bolt
Courtesy of CHRYSLER GROUP, LLC

7. Remove variable valve timing solenoid mounting bolt.

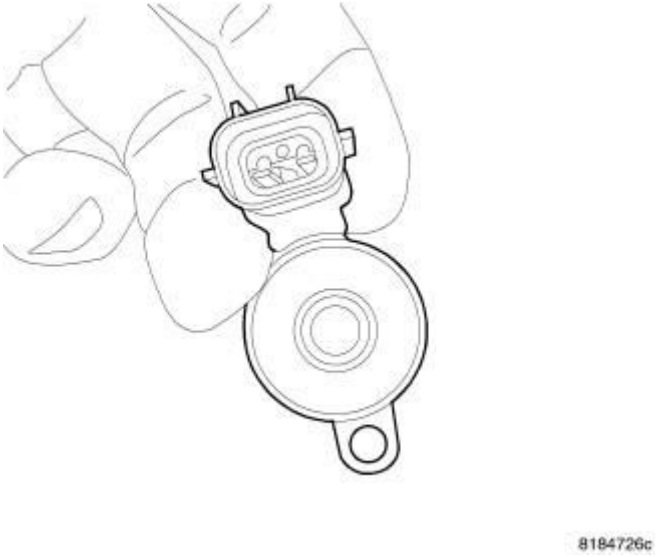

Fig. 56: Solenoid Mounting Tab 1/1
Courtesy of CHRYSLER GROUP, LLC

8. Pull solenoid straight out of cylinder head.

REAR SOLENOID 1/2

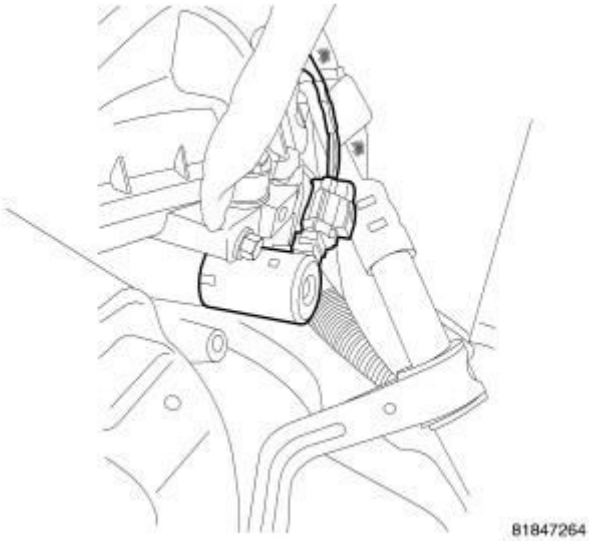

Fig. 57: Solenoid Location 1/2
Courtesy of CHRYSLER GROUP, LLC

1. Disconnect negative battery cable.
2. Remove engine cover.
3. Disconnect variable valve timing solenoid electrical connector.
4. Remove variable valve timing solenoid mounting bolt.

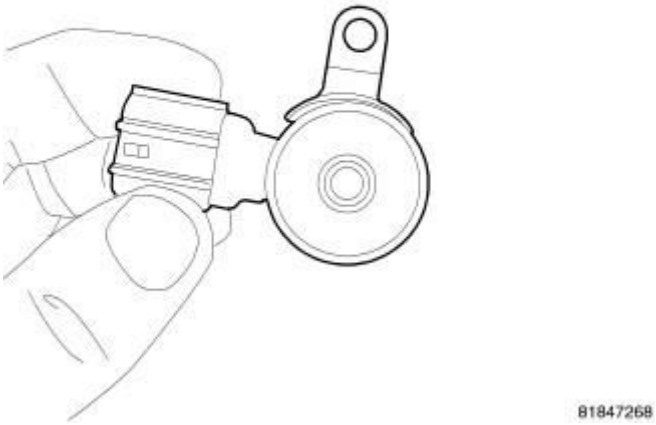

Fig. 58: Solenoid Mounting Tab 1/2
Courtesy of CHRYSLER GROUP, LLC

5. Pull solenoid straight out of cylinder head.

INSTALLATION

FRONT SOLENOID 1/1

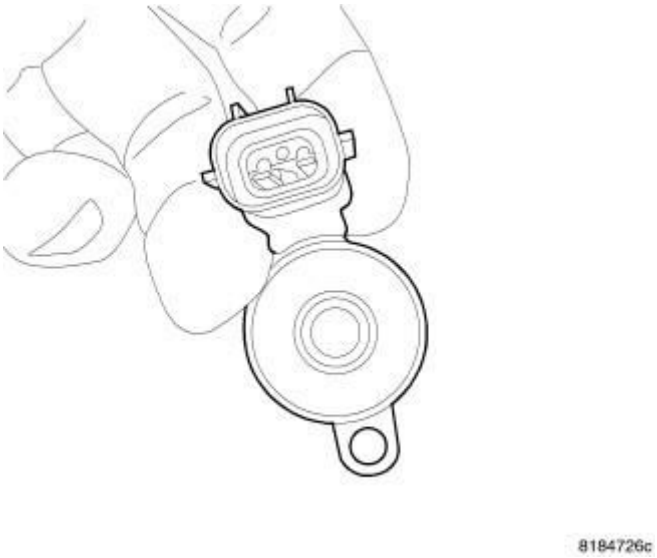

Fig. 59: Solenoid Mounting Tab 1/1
Courtesy of CHRYSLER GROUP, LLC

1. Solenoid for front location 1/1. Note mounting tab location is different between front and rear solenoids.

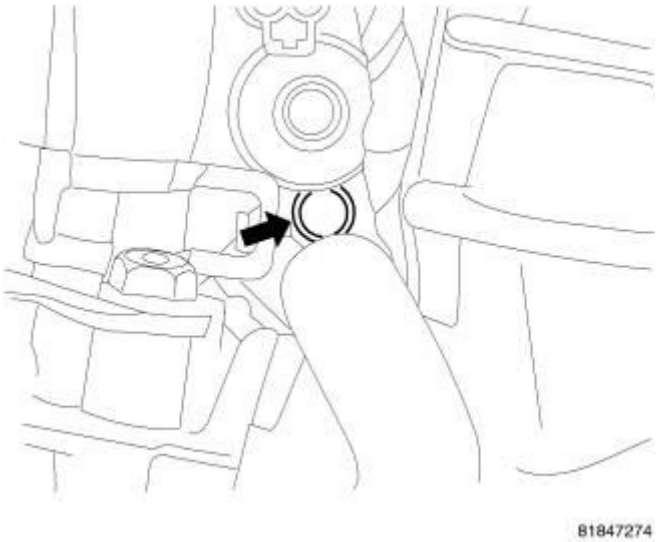

Fig. 60: Solenoid Mounting Bolt
Courtesy of CHRYSLER GROUP, LLC

2. Install solenoid into cylinder head.
3. Install mounting bolt and tighten to 12 N.m (9 ft. lbs.).

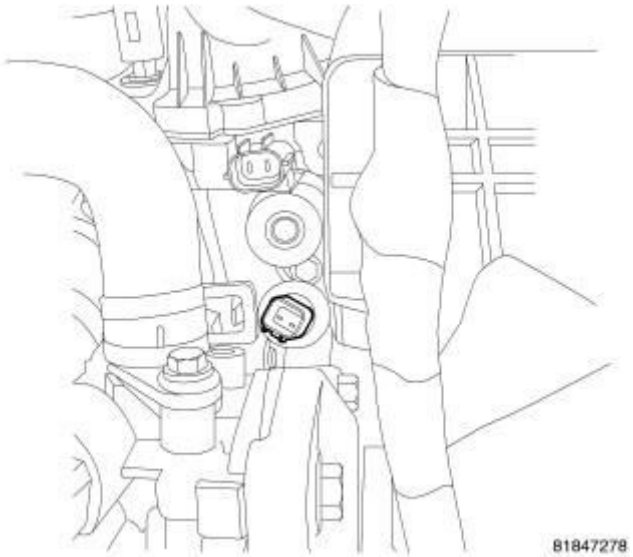

Fig. 61: Oil Pressure Sensor
Courtesy of CHRYSLER GROUP, LLC

4. Install oil pressure sensor.
5. Connect electrical connector to oil pressure sensor.
6. Connect electrical connector to Variable valve timing solenoid.
7. Connect negative battery cable.
8. Install engine cover.

REAR SOLENOID 1/2

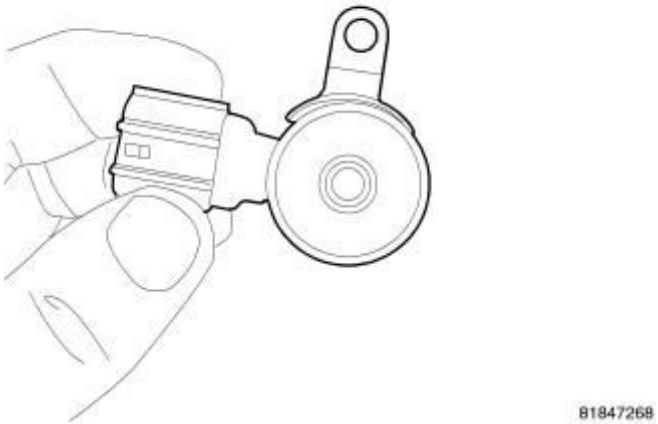

Fig. 62: Solenoid Mounting Tab 1/2
Courtesy of CHRYSLER GROUP, LLC

1. Rear variable valve timing solenoid. Note mounting tab location is different between front and rear solenoids.
2. Install solenoid into cylinder head.
3. Install mounting bolt and tighten to 12 N.m (9 ft. lbs.).
4. Connect electrical connector to Variable valve timing solenoid.

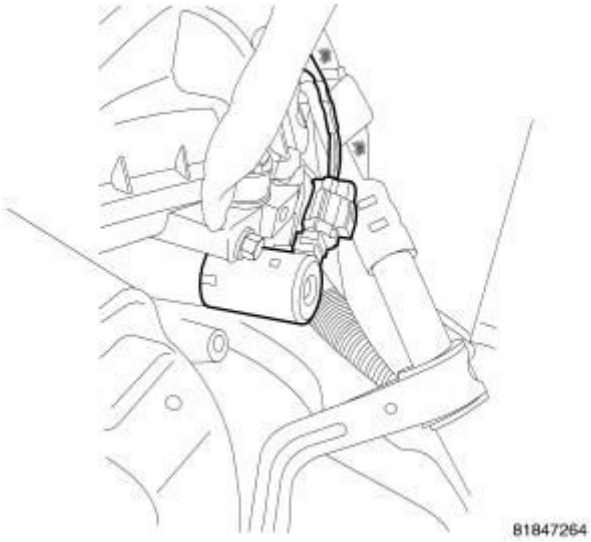

Fig. 63: Solenoid Location 1/2
Courtesy of CHRYSLER GROUP, LLC

5. Connect negative battery cable.

6. Install engine cover.

SPARK PLUG

REMOVAL

REMOVAL

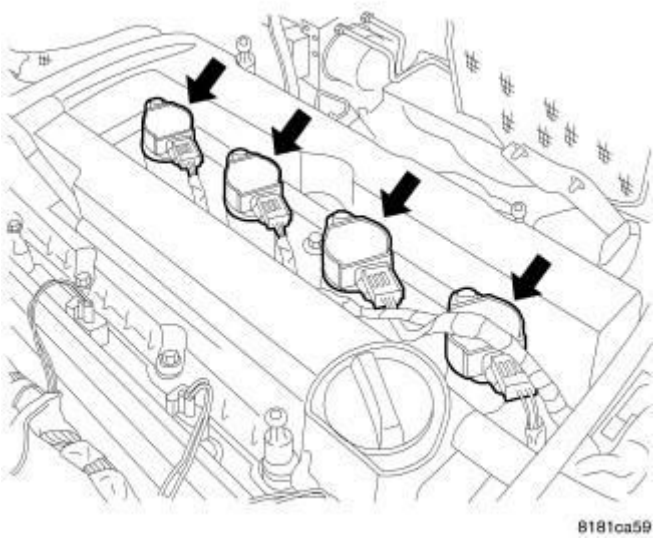

Fig. 64: Ignition Coils
Courtesy of CHRYSLER GROUP, LLC

1. Disconnect the negative battery cable.
2. Disconnect the electrical connectors from ignition coils.

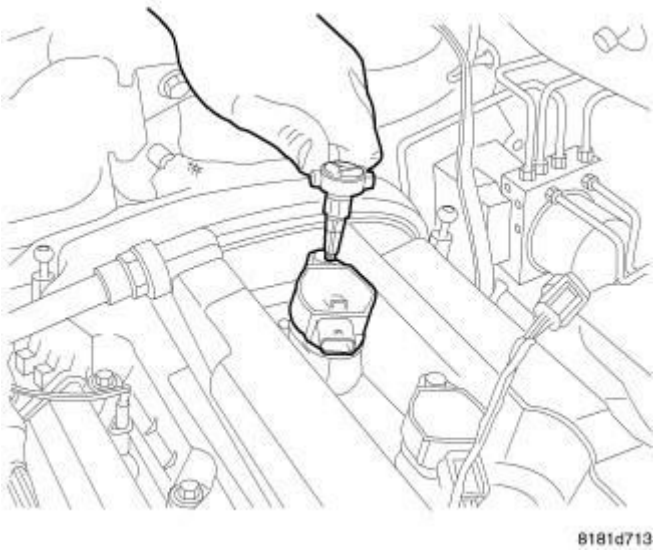

Fig. 65: Ignition Coil Bolt
Courtesy of CHRYSLER GROUP, LLC

3. Remove the ignition coil mounting bolt.

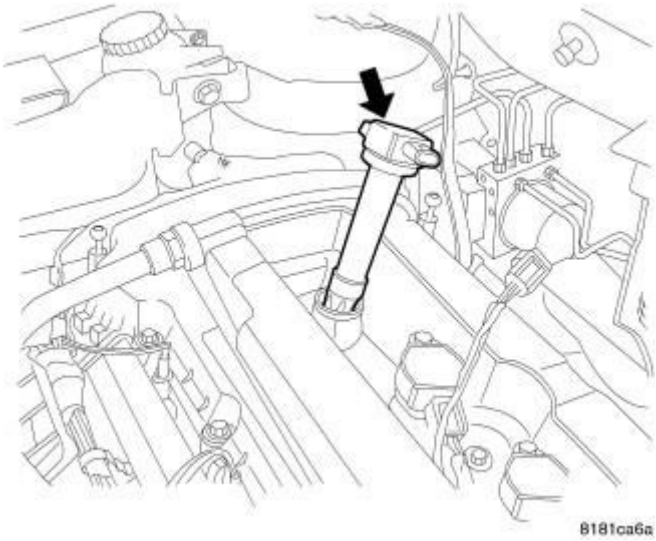

Fig. 66: Removing/Installing Ignition Coil
Courtesy of CHRYSLER GROUP, LLC

4. Twist the ignition coil then pull straight up.

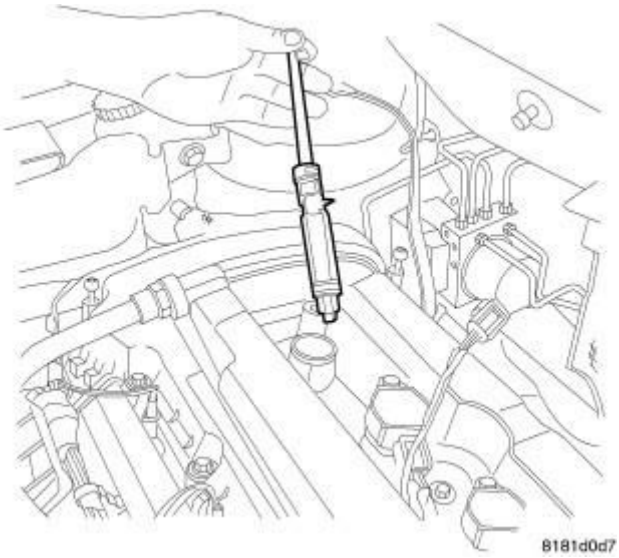

Fig. 67: Removing/Installing Spark Plug
Courtesy of CHRYSLER GROUP, LLC

5. Remove the spark plug using a quality socket with a rubber or foam insert.
6. Inspect the spark plug condition.

INSTALLATION

INSTALLATION

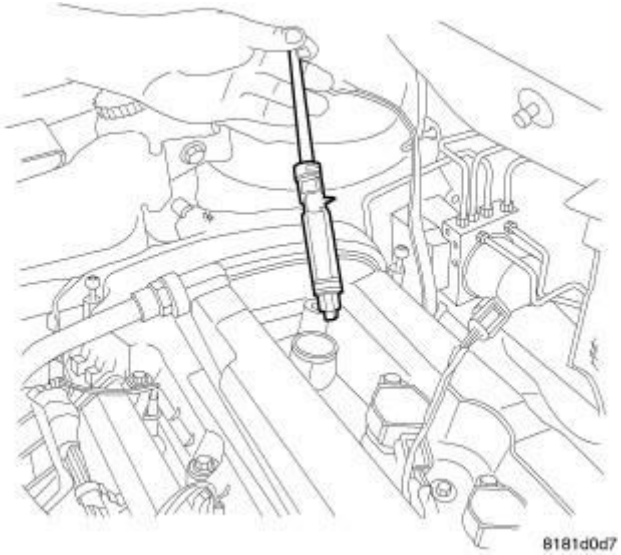

Fig. 68: Removing/Installing Spark Plug
Courtesy of CHRYSLER GROUP, LLC

CAUTION: Handle the spark plugs with care. Do not drop or force the spark plugs into the wells, damage to the electrodes and/or porcelain body may occur. Always start each spark plug by hand in order to avoid cross-threading the spark plug in the cylinder head.

Always tighten spark plugs to the specified torque. Too much or not enough torque will cause damage to the cylinder head and/or spark plug and may lead to poor engine performance.

1. Install each spark plug to the cylinder head. Tighten spark plugs to 27 N.m (20 ft. lbs.).

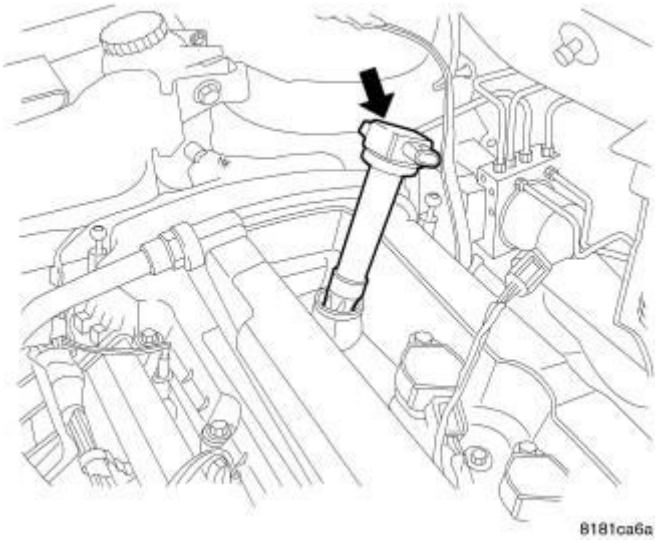

Fig. 69: Removing/Installing Ignition Coil
Courtesy of CHRYSLER GROUP, LLC

2. Install ignition coil onto spark plug.

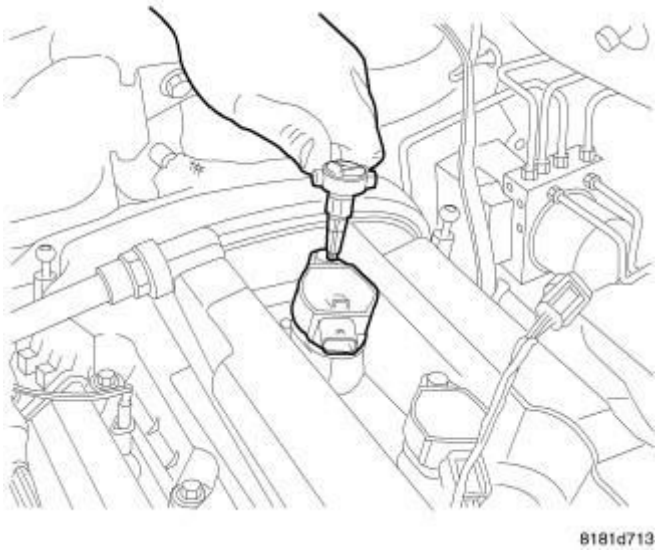

Fig. 70: Ignition Coil Bolt
Courtesy of CHRYSLER GROUP, LLC

3. Install ignition coil mounting bolt. Tighten to 9 N.m (79.5 in. lbs.).
4. Connect ignition coil electrical connectors.
5. Connect the negative battery cable.

SWITCH, IGNITION

REMOVAL

REMOVAL

WARNING: Disconnect and isolate the battery negative (ground) cable before beginning steering wheel removal or installation. Allow the front airbag system capacitor to discharge for two minutes before removing the steering wheel or any front airbag system component. This will disable the front airbag system. Failure to disconnect the battery could result in accidental front airbag module deployment and possible personal injury.

Do not place a non-deployed airbag face down on a hard surface as the airbag will propel into the air if accidentally deployed, and could result in serious or fatal injury.

1. Remove air cleaner fresh air duct (2) and disconnect and isolate negative battery cable at battery. Refer to **BATTERY, REMOVAL** .

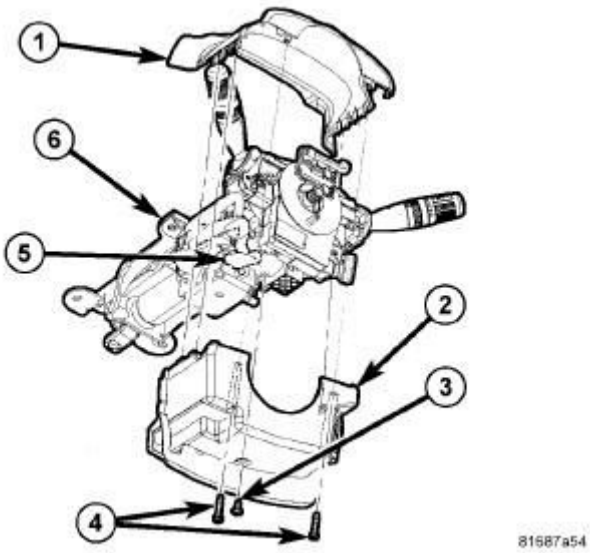

Fig. 71: Steering Column Shrouds
Courtesy of CHRYSLER GROUP, LLC

2. Remove upper (1) and lower (2) steering column shrouds. Refer to **SHROUD, STEERING COLUMN, UPPER, REMOVAL** and **SHROUD, STEERING COLUMN, LOWER, REMOVAL** .

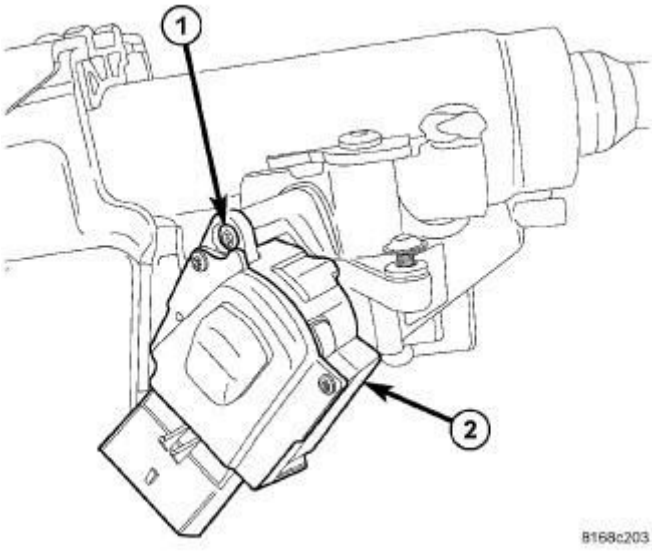

Fig. 72: Ignition Switch Mounting Screw
Courtesy of CHRYSLER GROUP, LLC

3. Position steering column to the full down position.
4. Position ignition key to the RUN position.
5. Disconnect the ignition switch electrical connector.
6. Remove the ignition module mounting screw (1).

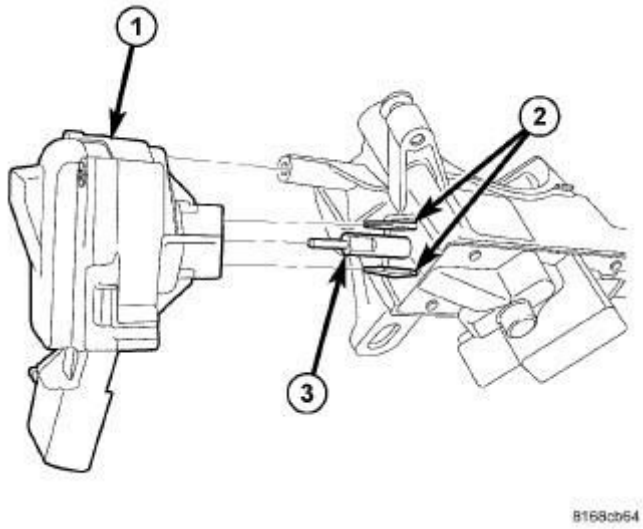

Fig. 73: Ignition Switch Removal/Installation
Courtesy of CHRYSLER GROUP, LLC

CAUTION: Extreme care must be taken when removing the ignition switch. The detent pin (3) located

in the ignition cylinder housing is very delicate. Excessive force used when removing the ignition switch can cause this part to break. The ignition cylinder housing will need to be replace if this occurs.

7. Gently pull ignition module (1) straight out and off the retaining tabs (2) located on the lock cylinder housing.

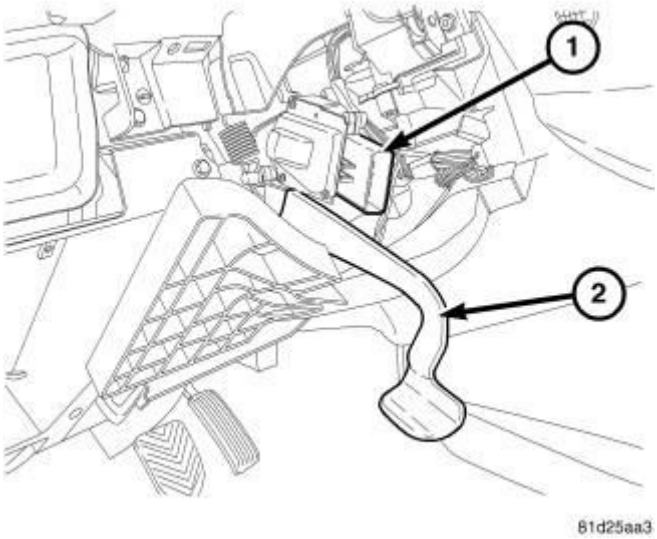

Fig. 74: Ignition Switch Rotated
Courtesy of CHRYSLER GROUP, LLC

8. Pay close attention not to damage the detent pin in the lock cylinder housing when removing the ignition switch. Gently rotate the ignition switch counter - clockwise until the part of the ignition switch where the electrical connector (1) plugs in clears the tilt lever (2) as shown in illustration. Remove the ignition switch from the lock cylinder housing.

INSTALLATION

INSTALLATION

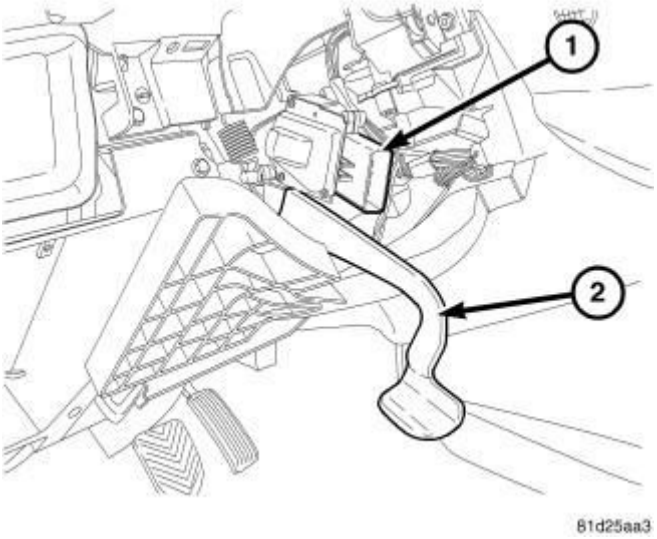

Fig. 75: Ignition Switch Rotated
Courtesy of CHRYSLER GROUP, LLC

CAUTION: Carefully install the ignition switch to the slotted detent pin. If installed forcefully the detent pin will break the ignition cylinder lock housing will have to be replaced.

1. Pay close attention not to damage the detent pin in the lock cylinder housing when installing the ignition switch Position the ignition switch (1) as shown in illustration in order to clear the tilt lever (2).

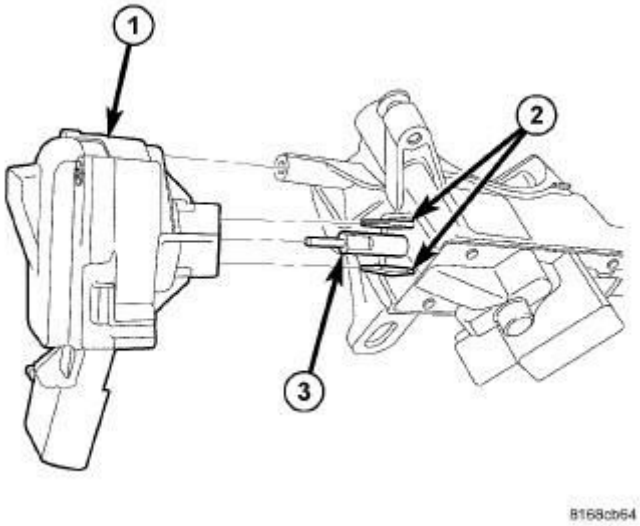

Fig. 76: Ignition Switch Removal/Installation
Courtesy of CHRYSLER GROUP, LLC

2. Ensure the ignition module is in the RUN position and the actuator shaft in the lock housing is in the RUN position.
3. Align the ignition switch (1) with the detent pin (3), and retaining tabs (2) located on the lock cylinder housing. Carefully install the module, snapping it into place over the retaining tabs. Make sure the ignition switch is fully seated.

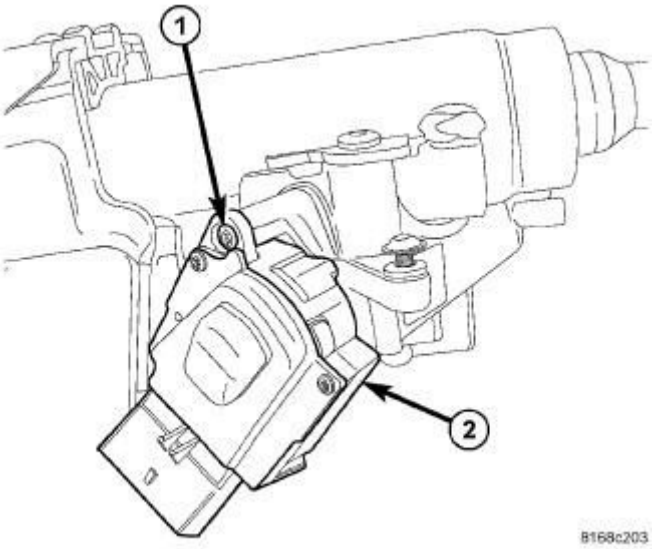

Fig. 77: Ignition Switch Mounting Screw
Courtesy of CHRYSLER GROUP, LLC

4. Install the ignition module (2) mounting screw (1). Tighten the screw to 2 N.m (18 in. lbs.).
5. Connect the ignition switch electrical connector.

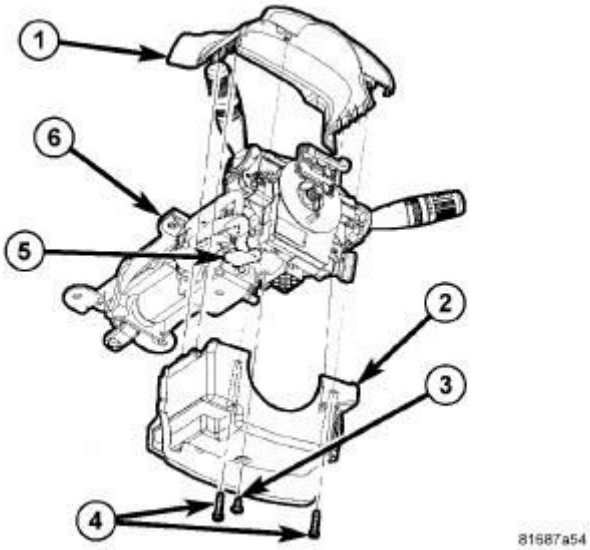

Fig. 78: Steering Column Shrouds
Courtesy of CHRYSLER GROUP, LLC

6. Install upper (1) and lower (2) steering column shrouds. Refer to **SHROUD, STEERING COLUMN, UPPER, INSTALLATION** and **SHROUD, STEERING COLUMN, LOWER, INSTALLATION** .
7. Install air cleaner fresh air duct (2) and disconnect and isolate negative battery cable at battery. Refer to **BATTERY, INSTALLATION** .
8. Check operation of all steering column mounted components.

2014 ENGINE PERFORMANCE

Driveability - Diesel - Non-DTC Based Diagnostics - Compass & Patriot

DIAGNOSIS AND TESTING

ENGINE CRANKS BUT WILL NOT START

For a complete wiring diagram, **refer to appropriate SYSTEM WIRING DIAGRAMS article** .

POSSIBLE CAUSES

Possible Causes
LEAK OR RESTRICTION IN THE INTAKE AIR SYSTEM OR EXHAUST SYSTEM
FUEL SUPPLY CONTAMINATION
FUEL DELIVERY SYSTEM FAILURE
FAULTY GLOW PLUG OPERATION
ENGINE DRIVE CHAIN/BELT
POWERTRAIN CONTROL MODULE (PCM)

DIAGNOSTIC TEST

1. **CHECK ENGINE COMPRESSION WITH THE SCAN TOOL**

NOTE: Perform the diagnostics for any Crank or Cam Sensor DTCs before proceeding with this procedure. Refer to 2.2L DIESEL - DIAGNOSTIC CODE INDEX .

1. With the scan tool, perform the Cylinder Compression Test.

   Does the Cylinder Compression Test indicate low compression in any of the cylinders?

   Yes

   - Using the service information, repair the engine as necessary to regain proper cylinder compression.
   - Perform the POWERTRAIN VERIFICATION TEST - 2.2L DIESEL. Refer to **PCM VERIFICATION TEST - 2.2L**

DIESEL .

No

- Go To 2

2. **CHECK FOR INTAKE AND EXHAUST SYSTEM LEAKS OR RESTRICTIONS**
   1. Inspect the exhaust system for damaged components that could cause an exhaust leak or exhaust flow restrictions.
   2. Inspect all air intake, crankcase vent and Turbocharger related hoses/tubes and connections for damage, air leaks or restrictions.
   3. Inspect the air filter for excessive dirt, soiling or other problems that may cause restricted air flow.

   Were any problems found?

   Yes

   - Repair or replace as necessary.
   - Perform the POWERTRAIN VERIFICATION TEST - 2.2L DIESEL. Refer to **PCM VERIFICATION TEST - 2.2L DIESEL** .

   No

   - Go To 3

3. **CHECK THE FUEL DELIVERY SYSTEM**
   1. Perform the CHECKING THE FUEL DELIVERY SYSTEM diagnostic procedure. Refer to **CHECKING THE FUEL DELIVERY SYSTEM** .

   Is there any evidence of problems?

   Yes

   - Repair as necessary.
   - Perform the POWERTRAIN VERIFICATION TEST - 2.2L DIESEL. Refer to **PCM VERIFICATION TEST - 2.2L DIESEL** .

No

- Go To 4

4. **CHECK THE GLOW PLUG SYSTEM**
   1. Perform the CHECKING THE GLOW PLUG SYSTEM diagnostic procedure. Refer to **CHECKING THE GLOW PLUG SYSTEM** .

      Did the Glow Plug system test good?

      Yes

      - Go To 5

      No

      - Repair as necessary.
      - Perform the POWERTRAIN VERIFICATION TEST - 2.2L DIESEL. Refer to **PCM VERIFICATION TEST - 2.2L DIESEL** .
5. **ENGINE DRIVE CHAINS**
   1. Refer to **2.2L DIESEL - SERVICE INFORMATION** to make sure the Engine Drive Chains are installed correctly and the camshaft and crankshaft gears are timed correctly.

      Were any problems found?

      Yes

      - Repair as necessary.
      - Perform the POWERTRAIN VERIFICATION TEST - 2.2L DIESEL. Refer to **PCM VERIFICATION TEST - 2.2L DIESEL** .

      No

      - Test Complete.

LACK OF ENGINE POWER

For a complete wiring diagram, **refer to appropriate SYSTEM WIRING**

DIAGRAMS article .

POSSIBLE CAUSES

Possible Causes
FUEL INJECTOR QUANTITY ADJUSTMENT
EGR SYSTEM FAILURE
BOOST PRESSURE FAILURE
FUEL DELIVERY SYSTEM FAILURE
LOW ENGINE COMPRESSION
ENGINE DRIVE BELT/CHAIN
TURBOCHARGER

DIAGNOSTIC TEST

1. **CHECK FOR PCM DTCS**
   1. Turn the ignition on.
   2. With the scan tool, read the PCM DTCs.

      Are there any DTCs present?

      Yes

      - Refer to **DTC INDEX** and perform the appropriate diagnostic procedure.
      - Perform the POWERTRAIN VERIFICATION TEST - 2.2L DIESEL. Refer to **PCM VERIFICATION TEST - 2.2L DIESEL** .

      No

      - Go To 2
2. **CHECK THE EGR SYSTEM**
   1. Inspect the EGR System for signs of external soot streaks indicating a leak.
   2. With the scan tool, navigate to Miscellaneous Functions, and perform the EGR/ECU Self Test procedure.

      Were any problems found with the EGR System?

Yes

- Repair as necessary.
- Perform the POWERTRAIN VERIFICATION TEST - 2.2L DIESEL. Refer to **PCM VERIFICATION TEST - 2.2L DIESEL** .

No

- Go To 3

3. **CHECK THE BOOST PRESSURE SYSTEM**
   1. Perform the CHECKING THE BOOST PRESSURE SYSTEM diagnostic procedure. Refer to **CHECKING THE BOOST PRESSURE SYSTEM** .

   Were there any problems found?

   Yes

   - Repair as necessary.
   - Perform the POWERTRAIN VERIFICATION TEST - 2.2L DIESEL. Refer to **PCM VERIFICATION TEST - 2.2L DIESEL** .

   No

   - Go To 4

4. **CHECK THE FUEL DELIVERY SYSTEM**
   1. Perform the CHECKING THE FUEL DELIVERY SYSTEM diagnostic procedure. Refer to **CHECKING THE FUEL DELIVERY SYSTEM** .

   Were there any problems found?

   Yes

   - Repair as necessary.
   - Perform the POWERTRAIN VERIFICATION TEST - 2.2L DIESEL. Refer to **PCM VERIFICATION TEST - 2.2L**

DIESEL .

No

- Go To 5

5. **FUEL INJECTOR**

NOTE: An injector that sticks open can cause this symptom. A sticking injector will cause the engine to misfire and emit excessive black smoke from the exhaust system.

1. Start and idle the engine.
2. With the scan tool, perform the Cylinder Fuel Quantity Correction Test.

NOTE: A problem injector will be indicated by a significant change in correction quantity as compared to the rest of the injectors.

Are any of the injectors displaying a significant amount of injection quantity correction?

Yes

- Using the service information, remove and inspect the Fuel Injectors for signs of damage or debris that may cause the injector to stick. Sticking injectors may cause the combustion chamber to become black and oil soaked. Replace Injector(s) as necessary.
- Perform the POWERTRAIN VERIFICATION TEST - 2.2L DIESEL. Refer to **PCM VERIFICATION TEST - 2.2L DIESEL** .

No

- Go To 6

6. **ENGINE COMPRESSION**

1. With the scan tool, perform the Cylinder Compression Test.

Does the Cylinder Compression Test indicate low compression in any

of the cylinders?

Yes

- Using the service information, repair the engine as necessary to regain proper cylinder compression.
- Perform the POWERTRAIN VERIFICATION TEST - 2.2L DIESEL. Refer to **PCM VERIFICATION TEST - 2.2L DIESEL** .

No

- Go To 7

7. **ENGINE DRIVE BELT/CHAIN**
   1. Refer to **2.2L DIESEL - SERVICE INFORMATION** to make sure the Engine Drive Belt/Chain is installed correctly and the camshaft and crankshaft gears are timed correctly.

      Were any problems found?

      Yes

      - Repair as necessary.
      - Perform the POWERTRAIN VERIFICATION TEST - 2.2L DIESEL. Refer to **PCM VERIFICATION TEST - 2.2L DIESEL** .

      No

      - Test Complete.

CHECKING THE BOOST PRESSURE SENSOR CALIBRATION

For a complete wiring diagram, **refer to appropriate SYSTEM WIRING DIAGRAMS article** .

POSSIBLE CAUSES

Possible Causes
TURBOCHARGER BOOST PRESSURE SENSOR CALIBRATION

DIAGNOSTIC TEST

BOOST PRESSURE SENSOR CALIBRATION

1. Turn the ignition on.
2. With the scan tool, read and compare the Boost Pressure Sensor hpa, Intake Air Pressure Sensor hpa, and Barometric Pressure Sensor hpa.

NOTE: The Boost Pressure Sensor hpa, Intake Air Pressure Sensor hpa, and Barometric Pressure Sensor hpa readings should be close at ignition on. The readings will vary depending on altitude.

Is the Boost Pressure hpa within 2% of the Intake Air Pressure Sensor hpa, and Barometric Pressure Sensor hpa?

Yes

- Test Complete.

No

- Replace the Turbocharger Boost Pressure Sensor in accordance with the service information.
- Perform the POWERTRAIN VERIFICATION TEST - 2.2L DIESEL. Refer to **PCM VERIFICATION TEST - 2.2L DIESEL** .

CHECKING THE BOOST PRESSURE SYSTEM

For a complete wiring diagram, **refer to appropriate SYSTEM WIRING DIAGRAMS article** .

POSSIBLE CAUSES

Possible Causes
TURBOCHARGER ASSEMBLY
BOOST PRESSURE ACTUATOR
LEAK OR RESTRICTION IN THE INTAKE AIR SYSTEM OR EXHAUST SYSTEM

DIAGNOSTIC TEST

1. **CHECK THE BOOST PRESSURE ACTUATOR OPERATION**

   NOTE: If there DTCs present for the Boost Pressure Actuator, perform the diagnostics for that DTC before proceeding with this procedure. Refer to 2.2L DIESEL - DIAGNOSTIC CODE INDEX .

   1. Turn the ignition on.
   2. With the scan tool, actuate the Boost Pressure Actuator to 100%.
   3. While standing at the right front of the vehicle (front of engine side), observe the position of the Boost Pressure Actuator armature.

      Does the Boost Pressure Actuator change from the 10 o'clock to the 9 o'clock position when actuated?

      Yes

      - Go To 3

      No

      - Go To 2

2. **CHECK FOR BOOST PRESSURE ACTUATOR LINKAGE PROBLEM**

   1. Disconnect the linkage from the Boost Pressure Actuator and inspect the linkage for foreign debris, binding or damage that could cause restricted movement.

      Were any problems found?

      Yes

      - Repair or replace as necessary.
      - Perform the POWERTRAIN VERIFICATION TEST - 2.2L DIESEL. Refer to **PCM VERIFICATION TEST - 2.2L DIESEL** .

      No

- Replace the Boost Pressure Actuator or Turbocharger Assembly in accordance with the service information.
- Perform the POWERTRAIN VERIFICATION TEST - 2.2L DIESEL. Refer to **PCM VERIFICATION TEST - 2.2L DIESEL** .

3. **CHECKING BOOST PRESSURE**

NOTE: This test requires two people. One person to test drive the vehicle while a technician observes the scan tool readings.

1. Test drive the vehicle.
2. With the scan tool in Sensors, read and compare the Boost Pressure (PSI) with the Boost Pressure Desired/Setpoint (PSI) while test driving the vehicle under various load conditions such as idle, hard acceleration, and cruise.

NOTE: The Boost Pressure reading should directionally follow (trail) the Boost Pressure Desired/Setpoint reading.

Does the Boost Pressure reading follow the Boost Pressure Desired/Setpoint reading?

Yes

- Test complete.

No

- Go To 4

4. **CHECK FOR INTAKE AND EXHAUST SYSTEM LEAKS OR RESTRICTIONS**
   1. Inspect the air filter for excessive dirt, soiling or other problems that may cause restricted air flow.
   2. Inspect the exhaust system for damaged components that could cause an exhaust leak or exhaust flow restrictions.
   3. Inspect all air intake, crankcase ventilation and Turbocharger related

hoses/tubes and connections for damage, air leaks or restrictions.

View repair?

Yes

- Repair or replace the intake or exhaust system as necessary.
- Perform the POWERTRAIN VERIFICATION TEST - 2.2L DIESEL. Refer to **PCM VERIFICATION TEST - 2.2L DIESEL** .

CHECKING THE GLOW PLUG SYSTEM

For a complete wiring diagram, **refer to appropriate SYSTEM WIRING DIAGRAMS article** .

POSSIBLE CAUSES

Possible Causes
GLOW PLUG WIRING
GLOW PLUGS
GLOW PLUG CONTROL MODULE

DIAGNOSTIC TEST

1. **CHECK FOR VOLTAGE SUPPLY TO THE GLOW PLUGS**
   1. Turn the ignition off.
   2. Disconnect all four of the Glow Plug harness connectors.
   3. Turn the ignition on.
   4. With the scan tool in Actuator Tests, select the Glow Plug Pre-Start mode of actuation.
   5. Using a voltmeter, measure the voltage at the Glow Plug harness connectors.

   Is the voltage reading equal to battery voltage at all four Glow Plug harness connectors?

   Yes

   - Go To 2

No

- Go To 3

2. **CHECK THE RESISTANCE OF THE GLOW PLUGS**
   1. Turn the ignition off.
   2. Using an ohmmeter, measure the resistance between ground and the Glow Plug terminals.

   Is the resistance below 1.0 Ohm at all four Glow Plugs?

   Yes

   - Test complete. Glow Plug system is operating normal.

   No

   - Replace the Glow Plug that measured above 1.0 Ohm in accordance with the service information.
   - Perform the POWERTRAIN VERIFICATION TEST - 2.2L DIESEL. Refer to **PCM VERIFICATION TEST - 2.2L DIESEL** .

3. **CHECK THE RESISTANCE OF THE GLOW PLUG WIRING**

   NOTE: If there is no battery voltage present to all of the Glow Plugs, check the direct battery supply voltage to the Glow Plug Module.

   1. Turn the ignition off.
   2. Disconnect the Glow Plug Module harness connector.
   3. Using an ohmmeter, measure the resistance of the Glow Plug wire that did not have battery voltage present.

   Is the resistance below 5.0 Ohms?

   Yes

   - Replace the Glow Plug Module in accordance with the service information.
   - Perform the POWERTRAIN VERIFICATION TEST - 2.2L

DIESEL. Refer to **PCM VERIFICATION TEST - 2.2L DIESEL** .

No

- Repair the Glow Plug wire that measured above 5.0 Ohms for an open or high resistance.
- Perform the POWERTRAIN VERIFICATION TEST - 2.2L DIESEL. Refer to **PCM VERIFICATION TEST - 2.2L DIESEL** .

CHECKING THE ENGINE MECHANICAL SYSTEMS

For a complete wiring diagram, **refer to appropriate SYSTEM WIRING DIAGRAMS article** .

POSSIBLE CAUSES

Possible Causes
CHECKING ENGINE MECHANICAL SYSTEMS

DIAGNOSTIC TEST

CHECKING ENGINE MECHANICAL

WARNING: Do not attempt to remove or separate high pressure fuel lines. Failure to follow these instructions may result in possible serious or fatal injury.

NOTE: The following items should be checked as a possible cause of a Driveability or No-Start problem:

- Engine Valve Timing - must be within specification.
- Engine Compression - must be within specifications.
- Camshaft Lobes - check for abnormal wear.
- Camshaft Position Sensor - check the camshaft position sensor tooth for debris and deterioration.
- Crankshaft Position Sensor - check the crankshaft tone wheel for debris and deterioration.

- Engine Exhaust System - must be free of any restriction.
- Engine Drive Chains and Sprockets - must be properly positioned.
- Vacuum System - must operate properly and be free of any vacuum leaks.
- Fuel - must have adequate supply and must be free of contamination (ie. debris, water and gasoline).
- Fuel Injectors - must not be plugged or restricted.
- Fuel Lift Pump - must operate properly (where applicable).
- Fuel Injection Pump - must be producing the correct output volume and pressure.
- Inspect the Fuel Lines, Fuel Filter and Fuel Pressure Relief Valve for signs of restriction and leaks.

NOTE: Check for any Technical Service Bulletins that may relate to the problem.

Are there any problems evident?

Yes

- Repair as necessary.
- Perform the POWERTRAIN VERIFICATION TEST - 2.2L DIESEL. Refer to **PCM VERIFICATION TEST - 2.2L DIESEL** .

No

- Test Complete.

CHECKING THE FUEL DELIVERY SYSTEM

For a complete wiring diagram, **refer to appropriate SYSTEM WIRING DIAGRAMS article** .

THEORY OF OPERATION

There are two sides to the 2.2L fuel system. A low pressure and high pressure side. The low pressure side components are the Fuel Lift Pump; the Fuel Filter; Cascade Valve; and the Fuel Quantity Solenoid. The Fuel Lift Pump, mounted inside the tank, delivers the fuel from the tank to the High Pressure Delivery Pump (HPDP). The Fuel Filter, mounted at the bulk head on the drivers side,

removes water and debris from the fuel and helps to prevent damage to the HPDP and Fuel Injectors. The Cascade Valve, located inside the HPDP, regulates the low side pressure at approximately 3.8 bar (55 psi). The Fuel Quantity Solenoid, mounted to the HPDP, controls the quantity of fuel entering the HPDP internal pumping chambers. Excess fuel is returned back to the tank via a return line from the HPDP. The high pressure side components include the High Pressure Delivery Pump; the Fuel Rail; the Fuel Injectors; and the Fuel Pressure Regulator. The HPDP raises the fuel pressure entering the Fuel Rail using two internal pumping chambers. The Fuel Rail holds the high pressure fuel for use by the Fuel Injectors and helps to dampen pressure spikes caused by the HPDP and the opening and closing of the injectors. The solenoid actuated Fuel Injectors deliver high pressure fuel directly into the engine cylinders. During injector operation, a small amount of fuel leaks into the injector return hoses. The injector return hoses connect to the HPDP. A venturi inside the HPDP draws the return flow into the HPDP where it is directed back to the tank via the HPDP return line. The Fuel Pressure Regulator (FPR) works in tandem with the Fuel Quantity Solenoid (FQS) to control the fuel pressure in the fuel rail. During engine cranking, the FQS allows maximum fuel flow and the FPR is closed to allow pressure to build quickly. After the engine starts, the FPR is primarily closed and the high side pressure is regulated using the FQS. The FPR is primarily used to help control spikes in the high pressure side during deceleration or if the FQS is not able to react quickly enough to the demands of the system.

Possible Causes
FUEL SYSTEM LEAK
FUEL CONTAMINATION
FUEL LINE RESTRICTIONS
FUEL FILTER
EXCESSIVE FUEL INJECTOR BACK FLOW LEAKAGE
FUEL LEAKING PASSED FUEL PRESSURE REGULATOR
FUEL LIFT PUMP WIRING
FUEL LIFT PUMP
HIGH PRESSURE DELIVERY PUMP

DIAGNOSTIC TEST

1. **VISUAL INSPECTION**

NOTE: For best results, perform Fuel Delivery System test with vehicle at room temperature. Extreme cold temperatures can cause inaccurate results.

NOTE: Make sure that the vehicle has at least 1/8 of a tank of fuel before proceeding with this test.

1. Perform a visual inspection of the fuel system for any signs of a fuel leak.

   Were any visual signs of a leak detected?

   Yes

   - Repair as necessary
   - Perform the POWERTRAIN VERIFICATION TEST - 2.2L DIESEL. Refer to **PCM VERIFICATION TEST - 2.2L DIESEL** .

   No

   - Go To 2

2. **CHECKING SENSOR VALUES WITH THE SCAN TOOL**

NOTE: If there are any DTCs present for the Fuel Pressure Regulator, Fuel Quantity Solenoid, Fuel Injectors, Crank/Cam Sensors or Fuel Pump Control Circuit or relay, repair those DTCs before continuing with the Fuel Delivery System test.

1. Turn the ignition on, engine not running.
2. With the scan tool, perform the following checks:
   - Check and compare the values of the Ambient Air Temperature Sensor, Coolant Temperature Sensor and Fuel Temperature Sensor with the key on. The values should read approximately the same as each other on a cold engine.
   - Check and compare the values of the Air Inlet Pressure Sensor, Boost Pressure Sensor and Exhaust Differential Pressure Sensor.

The sensors should read approximately the same.

3. If possible, start the engine and check the following:
   - Check the cam/crank synchronization during cranking.
   - Check and compare the MAF Sensor actual reading against the MAF Sensor setpoint.
   - Check the plausibility of the temperature and pressure sensors.

Are the cam and crank synchronized and the sensors reading normal?

Yes

- Go To 3

No

- Repair as necessary.
- Perform the POWERTRAIN VERIFICATION TEST - 2.2L DIESEL. Refer to **PCM VERIFICATION TEST - 2.2L DIESEL** .

3. **SCAN TOOL TEST**
   1. Perform the following tests with the scan tool:
      - Compression Test. The RPM drop in each cylinder should be approximately equal.
      - Injector Kill Test. The RPM drop in each cylinder should be approximately equal.

Do any of the cylinders indicate a problem as compared to the others during the scan tool tests?

Yes

- Evaluate the results of the scan tool tests. If any of the cylinders are found to be performing poorly as compared to the others, check for engine mechanical issues on the suspect cylinder and repair as necessary.
- If no mechanical issues are found with the engine, Go To 4

No

- Go To 5

4. **CHECK THE FUEL INJECTOR SUPPLY**
   1. Turn the ignition off.
   2. Remove and check the High Pressure Supply Line to the Fuel Injector of the cylinder that indicated a problem for a restriction.

      Is the Fuel Injector supply line restricted?

      Yes

      - Clean or replace the Fuel Injector supply line and perform the scan tool test again.

      No

      - Using the wiring diagram as a guide, check the resistance of the Fuel Injector circuits between the injector and the PCM. If the resistance is above 2.0 Ohms, repair the circuit for high resistance and perform the scan tool test again. If the resistance was below 2.0 Ohms for both circuits, replace the Fuel Injector in accordance with the service information.
      - Perform the POWERTRAIN VERIFICATION TEST - 2.2L DIESEL. Refer to **PCM VERIFICATION TEST - 2.2L DIESEL** .

5. **COMPARE THE FUEL PRESSURE ACTUAL READING AGAINST FUEL PRESSURE SET POINT**

   NOTE: This test requires two people. One person to test drive the vehicle while a technician observes the scan tool readings.

   1. With the scan tool, select add the Fuel Pressure Actual to a graph.
   2. With the scan tool, select add the Fuel Pressure Setpoint to a graph.
   3. Select merge graphs.
   4. With the scan tool, compare the Fuel Pressure Actual reading with the Fuel Pressure Setpoint on the graph, while cranking the engine on a no start, or while test driving the vehicle under various load conditions such as idle, hard acceleration, cruise and deceleration.

NOTE: The Fuel Pressure reading should closely follow the Fuel Pressure Setpoint reading.

Select the conclusion that best matches the result of the test:

The Fuel Pressure reading follows closely to the Fuel Pressure Setpoint reading.

- Go To 6

The Fuel Pressure reading is too low.

- If the vehicle is a no start, Go To 10
- If the vehicle starts and runs, Go To 11

The Fuel Pressure reading is too high.

- Go To 7

The Fuel Pressure reading is oscillating excessively above and below the Fuel Pressure Setpoint reading.

- Using a clear tube connected in-line on the low pressure side of the system, check for signs of air bubbles in the fuel supply system. If air bubbles are present, repair the cause of the air bubbles getting into the supply side system. If no air bubbles are present, replace the High Pressure Delivery Pump in accordance with the service information.
- Perform the POWERTRAIN VERIFICATION TEST - 2.2L DIESEL. Refer to **PCM VERIFICATION TEST - 2.2L DIESEL** .

6. **CHECKING FUEL QUALITY/CONTAMINATION**
   1. Collect a fuel sample from the vehicle in a clean see through container.
   2. Collect a fuel sample of fresh clean fuel in a clean, transparent container for reference.
   3. Check the vehicle's fuel sample for the following:
      - Check the color of the fuel. Diesel fuel will generally be a yellow color.

- Allow the fuel to settle and look for cloudiness indicating contamination.
- Check the volatility of the fuel.
- Look for a parting line in the fuel sample indicating another type of liquid mixed with the fuel.
- Look for any signs of debris in the fuel sample.

Were any problems found?

Yes

- Refer to **FUEL DELIVERY, DIESEL** to replace the fuel in the entire fuel system.
- Perform the POWERTRAIN VERIFICATION TEST - 2.2L DIESEL. Refer to **PCM VERIFICATION TEST - 2.2L DIESEL** .

No

- The fuel system is operating normally. Check for any Service Bulletins that may apply.
- Perform the POWERTRAIN VERIFICATION TEST - 2.2L DIESEL. Refer to **PCM VERIFICATION TEST - 2.2L DIESEL** .

7. **CHECKING FOR A RESTRICTION IN THE FUEL RETURN**
   1. Disconnect the fuel return hose that connects to Fuel Injector 4 and leads to the High Pressure Delivery Pump assembly (HPDP).
   2. Connect a rubber hose to the male fitting at Fuel Injector 4 and put the end of the hose into a container to catch the return fuel from the injectors during testing.
   3. Connect a vacuum gauge to the end of the return hose leading back to the HPDP.
   4. While observing the vacuum gauge, start the engine and allow it to come to idle.

NOTE: There should be at least 10" Hg (33.86 kPa) of vacuum if there are no restrictions.

Does the vacuum measure above 10" Hg (33.86 kPa)?

Yes

- Using the wiring diagram as a guide, check the resistance of the Fuel Pressure Regulator circuits. If the resistance is above 2.0 Ohms on any circuit, repair the circuit for high resistance. If the circuits measure below 2.0 Ohms, replace the Fuel Pressure Regulator in accordance with the service information.
- Perform the POWERTRAIN VERIFICATION TEST - 2.2L DIESEL. Refer to **PCM VERIFICATION TEST - 2.2L DIESEL** .

No

- Go To 8

8. **CHECKING FUEL RETURN HOSE FOR A RESTRICTION**
   1. Replace the fuel return hose that connects to Fuel Injector 4 and leads to the High Pressure Delivery Pump assembly (HPDP).
   2. Perform the procedure from Test Step 7 over again.

   Does the vacuum measure above 10" Hg (33.86 kPa)?

   Yes

   - Repair is complete.
   - Perform the POWERTRAIN VERIFICATION TEST - 2.2L DIESEL. Refer to **PCM VERIFICATION TEST - 2.2L DIESEL** .

   No

   - Go To 9

9. **CHECKING FUEL RETURN LINE FOR A RESTRICTION**
   1. Reconnect the fuel return hose that connects to Fuel Injector 4 and leads to the High Pressure Delivery Pump assembly (HPDP).
   2. Disconnect the fuel return line at the quick connect fitting on the left side of the engine.

3. Disconnect the fuel return line at the Fuel Lift Pump.
4. Blow shop air through the return line and check for a restriction.

   Was the return line restricted?

   Yes

   - Repair the restriction in the fuel return line.
   - Perform the POWERTRAIN VERIFICATION TEST - 2.2L DIESEL. Refer to **PCM VERIFICATION TEST - 2.2L DIESEL** .

   No

   - Replace the High Pressure Delivery Pump in accordance with the service information.
   - Perform the POWERTRAIN VERIFICATION TEST - 2.2L DIESEL. Refer to **PCM VERIFICATION TEST - 2.2L DIESEL** .

10. **CHECK THE FUEL RAIL PRESSURE SENSOR**
    1. Disconnect the Fuel Rail Pressure Sensor harness connector.
    2. Attempt to start the engine.

       Does the engine start and run?

       Yes

       - Using the wiring diagram as a guide, check the resistance of the Fuel Rail Pressure Sensor circuits between the Fuel Rail Pressure Sensor and the PCM. If the resistance is above 2.0 Ohms on any circuit, repair the circuit for high resistance. If the circuits measure below 2.0 Ohms, replace the Fuel Rail Pressure Sensor in accordance with the service information.
       - Perform the POWERTRAIN VERIFICATION TEST - 2.2L DIESEL. Refer to **PCM VERIFICATION TEST - 2.2L DIESEL** .

       No

- Go To 11

11. **CHECK THE LOW SIDE FUEL SYSTEM PRESSURE**
    1. Turn the ignition off.
    2. Disconnect the quick connect fitting between the Fuel Filter outlet and the High Pressure Fuel Pump and connect the (special tool #8978A, Decay Tool, Fuel).
    3. Crank the engine or start the engine and observe the reading on the fuel pressure gauge.

    Does the fuel pressure read between 52 psi (3.8 bar) and 58 psi (4.0 bar)?

    Yes, and vehicle starts and runs:

    - Go To 18

    Yes, and vehicle is a no start:

    - Go To 16

    No, pressure reading is below specification:

    - Go To 12

    No, pressure reading is above specification:

    - If the pressure is reading between 58 psi (3.8 bar) and 116 psi (8 bar), check for a restriction in the line between the quick connect fitting and the HPDP. If no restriction is found, replace the High Pressure Delivery Pump and retest the system.
    - If the pressure is reading above 116 psi (8 bar), replace the Fuel Lift Pump and repair the restriction in the line between the quick connect fitting and the HPDP or replace the High Pressure Delivery Pump if no restriction is found and retest the system.
    - Perform the POWERTRAIN VERIFICATION TEST - 2.2L DIESEL. Refer to **PCM VERIFICATION TEST - 2.2L DIESEL** .

12. **CHECK THE FUEL SUPPLY PRESSURE AT FUEL FILTER INLET**

1. Turn the ignition off.
2. Remove the (special tool #8978A, Decay Tool, Fuel) from between the Fuel Filter outlet and the High Pressure Fuel Pump. Reconnect the fuel line.
3. Disconnect the fuel supply line quick connect at the Fuel Filter inlet.
4. Connect the (special tool #8978A, Decay Tool, Fuel) in-line between the fuel supply line and the Fuel Filter inlet fitting.
5. Crank the engine or start the engine and observe the reading on the fuel pressure gauge.

   Does the fuel pressure read above 52 psi (3.8 bar)?

   Yes

   - Replace the Fuel Filter in accordance with the service information.
   - Perform the POWERTRAIN VERIFICATION TEST - 2.2L DIESEL. Refer to **PCM VERIFICATION TEST - 2.2L DIESEL** .

   No

   - Go To 13

13. **CHECK THE FUEL LIFT PUMP MAXIMUM OUTPUT**
    1. While the engine is cranking or running, close the valve after the gauge and observe the pressure gauge reading.

       NOTE: Do not block the line for more than a few seconds or damage to the Fuel Lift Pump can occur. The pressure should spike up and then stabilize at approximately 116 psi (8 bar) in two or three seconds.

       Does the fuel pressure rise to approximately 116 psi (8 bar)?

       Yes

       - Replace the High Pressure Delivery Pump in accordance with the service information.

- Perform the POWERTRAIN VERIFICATION TEST - 2.2L DIESEL. Refer to **PCM VERIFICATION TEST - 2.2L DIESEL** .

No

- Go To 14

14. **CHECK THE VOLTAGE DROP OF THE FUEL PUMP MOTOR CIRCUITS**
    1. Turn the engine off.
    2. Reconnect the fuel lines.

NOTE: The Fuel Lift Pump Module harness connector should remain connected to the pump during this test step in order to accurately measure the voltage drop.

    3. Using a voltmeter, back probe the (N1) Fuel Pump Motor Feed circuit with the positive lead of the meter at the Fuel Lift Pump Module harness connector.
    4. Back probe the (Z201) Fuel Lift Pump Ground circuit with the negative lead of the meter at the Fuel Lift Pump Module harness connector.

CAUTION: Use only approved connector back probe tools when back probing a connector so as not to cause damage to the terminals or insulation of the connector. Damage to the terminals can cause poor terminal contact or retention. Damage to the insulation can introduce corrosion due to water infiltration.

    5. Turn the ignition on.
    6. With a scan tool, actuate the Fuel Lift Pump control to ON (100%).

NOTE: The voltage should read the same as battery voltage if there is no resistance in the circuit.

Is the voltage reading the same as battery voltage +/- 0.2 Volts?

Yes

- Check the supply line between the Fuel Lift Pump and the Fuel Filter for a restriction. If the line is not restricted, replace the Fuel Lift Pump in accordance with the service information.
- Perform the POWERTRAIN VERIFICATION TEST - 2.2L DIESEL. Refer to **PCM VERIFICATION TEST - 2.2L DIESEL** .

No

- Go To 15

15. **CHECK THE VOLTAGE DROP IN THE (N1) FUEL PUMP MOTOR FEED CIRCUIT**
    1. Turn the engine off.
    2. Remove the negative lead of the meter from the Fuel Lift Pump harness connector and connect the lead to a good battery ground.

    NOTE: The Fuel Lift Pump Module harness connector should remain connected.

    3. Turn the ignition on.
    4. With a scan tool, actuate the Fuel Lift Pump control to ON (100%).
    5. Measure the voltage of the (N1) Fuel Pump Motor Feed circuit at the Fuel Lift Pump harness connector.

    Is the voltage reading the same as battery voltage +/- 0.2 Volts?

    Yes

    - Repair the (Z201) Fuel Lift Pump Ground circuit for an open circuit or high resistance.
    - Perform the POWERTRAIN VERIFICATION TEST - 2.2L DIESEL. Refer to **PCM VERIFICATION TEST - 2.2L DIESEL** .

    No

- Repair the (N1) Fuel Pump Motor Feed circuit for an open circuit or high resistance.
- Perform the BODY VERIFICATION TEST. Refer to **STANDARD PROCEDURE** .

16. **STATIC FUEL INJECTOR LEAK BACK CHECK**
    1. Turn the ignition off.
    2. Disconnect the fuel return hoses at the Fuel Injectors.
    3. Install one end of a 4 mm internal diameter clear tube to each Fuel Injector return fitting. Block off the open end of the rubber return hoses to prevent fuel from escaping.

    NOTE: Be sure to isolate each Injector so that the volume from each Injector is being measured individually.

    4. Disconnect the fuel return line at the Fuel Pressure Regulator.
    5. Cap the end of the fuel return line to keep debris from entering the system.
    6. Install an 8 mm clear tube on the end of the Fuel Rail.
    7. Place the end of the 8 mm clear tube into a measurement bottle.
    8. Turn the ignition on.
    9. With the scan tool, navigate to Systems Tests and select the Hydraulic Test Status routine.

    NOTE: This routine will activate the lift pump, disable injections, open the Fuel Quantity Solenoid, and set the Fuel Pressure Regulator to limit rail pressure to approximately 600 bar (8702 psi). The starter will be activated for five seconds. During this cycle, read and record the maximum fuel rail pressure.

    10. Using a metric ruler, measure the quantity of fuel collected in the clear tubes after the five second crank.

    Is the quantity of fuel collected for each Fuel Injector below 10.0 cm?

Yes

- Go To 17

No

- Replace the Fuel Injector or Fuel Injectors that were over specification. Re-run the test to confirm the repair. If after replacing the faulty Fuel Injector(s), the maximum fuel rail pressure is below 500 bar (7252 psi), Go To 17. If the maximum fuel rail pressure is above 500 bar (7252 psi), repair is complete.
- Perform the POWERTRAIN VERIFICATION TEST - 2.2L DIESEL. Refer to **PCM VERIFICATION TEST - 2.2L DIESEL** .

17. **STATIC PRESSURE REGULATOR LEAK BACK/HIGH PRESSURE DELIVERY PUMP CHECK**
    1. Turn the ignition off.
    2. Measure the quantity of fuel that was collected from the Fuel Pressure Regulator during one test cycle.

    Is the quantity of fuel collected from the Fuel Pressure Regulator below 5 ml for one test cycle?

    Yes

    - Replace the High Pressure Delivery Pump in accordance with the service information. Re-run the test to confirm the repair.
    - Perform the POWERTRAIN VERIFICATION TEST - 2.2L DIESEL. Refer to **PCM VERIFICATION TEST - 2.2L DIESEL** .

    No

    - Using the wiring diagram as a guide, check the resistance of the Fuel Pressure Regulator circuits between the Fuel Pressure Regulator and the PCM. If the resistance is above 2.0 Ohms, repair the high resistance in the wiring. If the resistance is below 2.0 Ohms, replace the Fuel Rail Assembly in accordance with the service information. Re-run the test to confirm the repair.

- Perform the POWERTRAIN VERIFICATION TEST - 2.2L DIESEL. Refer to **PCM VERIFICATION TEST - 2.2L DIESEL** .

18. **DYNAMIC FUEL LEAK BACK CHECK**
    1. Turn the ignition off.
    2. Disconnect the fuel return hoses at the Fuel Injectors.
    3. Install a piece of 4 mm clear tubing to each Fuel Injector return fitting. Block off the open end of the rubber return hoses to prevent fuel from escaping and debris from entering the system.
    4. Place the end of the 4 mm clear tube into a measurement bottle.
    5. Disconnect the fuel return line at the Fuel Pressure Regulator.
    6. Cap the end of the fuel return line to keep debris from entering the system.
    7. Install an 8 mm clear tube on the end of the Fuel Rail.
    8. Place the end of the 8 mm clear tube into a measurement bottle.
    9. Turn the ignition on.
    10. With the scan tool, navigate to Systems Tests and select the High Pressure Diagnostic routine. Select "IMV Mode" and start the engine.
    11. The test will start and run automatically, and then stop automatically.
    12. Turn the engine off after the test stops running.
    13. Measure the quantity of fuel collected in each measuring bottle.

    Is the volume of fuel collected for each Fuel Injector below 40 ml and the Fuel Pressure Regulator below 20 ml?

    Yes

    - Go To 19

    No

    - Replace the Fuel Pressure Regulator or the Fuel Injector that was over specification. Re-run the test to confirm the repair.
    - Perform the POWERTRAIN VERIFICATION TEST - 2.2L DIESEL. Refer to **PCM VERIFICATION TEST - 2.2L DIESEL** .

19. **DYNAMIC PRESSURE REGULATOR LEAK BACK/HIGH PRESSURE DELIVERY PUMP CHECK**
    1. Turn the ignition off.
    2. Reconnect the Fuel Injector return hoses.
    3. Empty the bottle connected to the Fuel Pressure Regulator.
    4. Turn the ignition on.
    5. With the scan tool, navigate to Systems Tests and select the High Pressure Diagnostic routine. Select "HPV Mode" and start the engine.
    6. The test will start and run automatically, and then stop automatically.
    7. Measure the quantity of fuel collected in the bottle after the test stops running.

    Is the quantity of fuel collected above 40 ml?

    Yes

    - Using the wiring diagram as a guide, check the resistance of the Fuel Pressure Regulator circuits between the Fuel Pressure Regulator and the PCM. If the resistance is above 2.0 Ohms, repair the high resistance in the wiring. If the resistance is below 2.0 Ohms, replace the Fuel Rail Assembly in accordance with the service information. Re-run the test to confirm the repair.
    - Perform the POWERTRAIN VERIFICATION TEST - 2.2L DIESEL. Refer to **PCM VERIFICATION TEST - 2.2L DIESEL** .

    No

    - Replace the High Pressure Delivery Pump in accordance with the service information. Re-run the test to confirm the repair.
    - Perform the POWERTRAIN VERIFICATION TEST - 2.2L DIESEL. Refer to **PCM VERIFICATION TEST - 2.2L DIESEL** .

ENGINE WILL NOT CRANK

For a complete wiring diagram, **refer to appropriate SYSTEM WIRING DIAGRAMS article** .

POSSIBLE CAUSES

Possible Causes
BATTERY CABLES
LOW BATTERY/POOR BATTERY CONNECTION
CLUTCH INTERLOCK SWITCH INPUT
INCORRECT VIN NOT STORED IN PCM
INCORRECT OR INVALID IGNITION KEY USED
WCM POWERS AND GROUNDS
STARTER MOTOR
MECHANICAL PROBLEM
TOTALLY INTEGRATED POWER MODULE (TIPM)

DIAGNOSTIC TEST

1. **BATTERY CABLES**

NOTE: Make sure there are no Active DTCs in the PCM or TIPM. If the PCM or TIPM have Active DTCs, repair these DTCs before continuing with No Crank diagnosis.

1. Turn the ignition off.

NOTE: The battery must be fully charged before diagnosing a no crank condition.

2. Inspect the battery cables for corrosion, looseness or other problems.

Were there any problems found?

Yes

- Repair as necessary.
- Perform the POWERTRAIN VERIFICATION TEST - 2.2L DIESEL. Refer to **PCM VERIFICATION TEST - 2.2L DIESEL** .

No

- Go To 2

2. **WCM/SKIM CODES PRESENT**
   1. Turn the ignition on.
   2. With the scan tool, read the WCM DTCs.

      Does the scan tool display any WCM DTCs?

      Yes

      - Refer to **DIAGNOSIS AND TESTING** and perform the appropriate diagnostic procedure.
      - Perform the POWERTRAIN VERIFICATION TEST - 2.2L DIESEL. Refer to **PCM VERIFICATION TEST - 2.2L DIESEL** .

      No

      - Go To 3

3. **CHECKING STARTER OPERATION**

   NOTE: The Starter Motor Fuse in the TIPM must not be open for this test to be valid. Check the condition of the Starter Motor Fuse in the TIPM. If the fuse is open, replace and attempt to crank the engine.

   1. Turn the ignition off.
   2. Disconnect the (T750) Starter Control Output circuit at the Starter Motor.
   3. With a 12-Volt test light connected to ground, probe the (T750) Starter Control Output circuit.
   4. Fully depress the clutch pedal.
   5. While observing the test light, turn the ignition switch to the Crank/Start position.

      Is the 12-Volt test light illuminated brightly?

      Yes

- Go To 4

No

- Go To 5

4. **MECHANICAL PROBLEM**
   1. Turn the ignition off.
   2. Attempt to manually rotate the crankshaft 360°.

   Is the crankshaft able to rotate 360°?

   Yes

   - Replace the Starter Motor in accordance with the service information.
   - Perform the POWERTRAIN VERIFICATION TEST - 2.2L DIESEL. Refer to **PCM VERIFICATION TEST - 2.2L DIESEL** .

   No

   - Diagnose and repair the engine mechanical problem.
   - Perform the POWERTRAIN VERIFICATION TEST - 2.2L DIESEL. Refer to **PCM VERIFICATION TEST - 2.2L DIESEL** .
5. **VERIFY CLUTCH SWITCH INPUTS**
   1. Turn the ignition on.
   2. With the scan tool, read the Clutch Upstop Switch and Clutch Interlock Switch inputs while fully depressing and releasing the clutch pedal.

   Does the input for both switched change state while fully depressing and releasing the clutch pedal?

   Yes

   - Go To 6

   No

- Refer to the appropriate service information related to the Clutch Switch. Repair or replace Clutch Switch or Clutch Switch circuitry as necessary to correct Clutch Switch input to the PCM.
- Perform the POWERTRAIN VERIFICATION TEST - 2.2L DIESEL. Refer to **PCM VERIFICATION TEST - 2.2L DIESEL** .

6. **CHECK WIRING, CONNECTORS AND TERMINALS**
   1. Turn the ignition off.
   2. Check the wiring, connectors and terminals associated with the Main Relay and Clutch Switch circuits. Check for poor terminal contact, corrosion, spread terminals, improper connections or other problems that could cause an intermittent condition.

      Were any problems found?

      Yes

      - Repair or replace wiring, connector or terminals as necessary.
      - Perform the POWERTRAIN VERIFICATION TEST - 2.2L DIESEL. Refer to **PCM VERIFICATION TEST - 2.2L DIESEL** .

      No

      - Replace the Totally Integrated Power Module in accordance with the service information.
      - Perform the POWERTRAIN VERIFICATION TEST - 2.2L DIESEL. Refer to **PCM VERIFICATION TEST - 2.2L DIESEL** .

CHECKING THE PCM POWER AND GROUND CIRCUITS

For a complete wiring diagram, **refer to appropriate SYSTEM WIRING DIAGRAMS article** .

POSSIBLE CAUSES

Possible Causes
ASD/MAIN RELAY CONTROL CIRCUIT OPEN

ASD/MAIN RELAY OUTPUT CIRCUIT(S) OPEN
FUSED ASD/MAIN RELAY BATTERY SUPPLY CIRCUIT OPEN
FUSED IGNITION SWITCH (START) OUTPUT CIRCUIT OPEN
FUSED IGNITION SWITCH (START/RUN) OUTPUT CIRCUIT OPEN
PCM GROUND CIRCUIT(S) OPEN
MAIN RELAY

DIAGNOSTIC TEST

NOTE: Before checking the PCM Power and Grounds, check the Totally Integrated Power Module (TIPM) for DTCs. Repair all TIPM ignition switch or power supply related DTCs before continuing with this test.

1. **FUSED ASD MAIN RELAY BATTERY SUPPLY CIRCUIT OPEN**
   1. Turn the ignition off.
   2. Remove the Main Relay.
   3. Turn the ignition on.
   4. Using a 12-Volt test light connected to ground, check both Fused Main Relay Battery Supply circuits in Main Relay connector.

      Is the test light on?

      Yes

      - Go To 2

      No

      - Repair the Fused Main Relay Battery Supply circuit(s) for an open.
      - Perform the POWERTRAIN VERIFICATION TEST - 2.2L DIESEL. Refer to **PCM VERIFICATION TEST - 2.2L DIESEL** .
2. **ASD/MAIN RELAY OUTPUT CIRCUIT OPEN**
   1. Disconnect the PCM C2 harness connector.
   2. Connect a jumper wire between cavity 87 and cavity 30 in the Main Relay connector.

3. Using a 12-Volt test light connected to ground, check the Main Relay Output circuit in PCM C2 harness connector, cavities 1, 3 and 5.

   Did the test light illuminate for each circuit?

   Yes

   - Go To 3

   No

   - Repair the Main Relay Output circuit(s) for an open.
   - Perform the POWERTRAIN VERIFICATION TEST - 2.2L DIESEL. Refer to **PCM VERIFICATION TEST - 2.2L DIESEL** .

3. **PCM GROUND CIRCUIT(S) OPEN**
   1. Turn the ignition off.
   2. Using a 12-Volt test light connected to 12-Volts, check each of the PCM ground circuits in PCM harness C2 connector, cavities 2, 4 and 6.

      Did the test light illuminate for each cavity?

      Yes

      - Go To 4

      No

      - Repair the PCM Ground circuit(s) for an open.
      - Perform the POWERTRAIN VERIFICATION TEST - 2.2L DIESEL. Refer to **PCM VERIFICATION TEST - 2.2L DIESEL** .

4. **FUSED IGNITION SWITCH START OUTPUT CIRCUIT OPEN**
   1. Turn the ignition to the Start position.
   2. Using a 12-Volt test light connected to ground, check the Fused Ignition Switch Start Output circuit in PCM C2 harness connector, cavity 33.

      Did the 12-Volt test light illuminate brightly?

Yes

- Go To 5

No

- Repair the Fused Ignition Switch Start Output circuit for an open or high resistance.
- Perform the POWERTRAIN VERIFICATION TEST - 2.2L DIESEL. Refer to **PCM VERIFICATION TEST - 2.2L DIESEL** .

5. **FUSED IGNITION SWITCH START/RUN OUTPUT CIRCUIT OPEN**
   1. Turn the ignition to the Start position.
   2. Using a 12-Volt test light connected to ground, check the Fused Ignition Switch Start/Run Output circuit in PCM harness connector C2, cavity 15.
   3. Turn the ignition to the Run position.
   4. Using a 12-Volt test light connected to ground, check the Fused Ignition Switch Start/Run Output circuit in PCM harness connector C2, cavity 15.

   Did the 12-Volt test light illuminate brightly for both ignition switch positions?

   Yes

   - Go To 6

   No

   - Repair the Fused Ignition Switch Start/Run Output circuit for an open or high resistance.
   - Perform the POWERTRAIN VERIFICATION TEST - 2.2L DIESEL. Refer to **PCM VERIFICATION TEST - 2.2L DIESEL** .

6. **CHECKING THE MAIN RELAY SYSTEM**
   1. Turn the ignition off.
   2. Connect a jumper wire between ground and the Main Relay Control

circuit in PCM C2 harness connector cavity 44.

3. Turn the ignition on.
4. Using a 12-Volt test light connected to ground, check the Fused Main Relay Output circuits at the PCM C2 harness connector, cavities 1, 3, and 5.

   Does the 12-Volt test light illuminate brightly for each circuit?

   Yes

   - Test Complete. The PCM power and ground circuits tested good.

   No

   - Replace the Main Relay in accordance with the service information.
   - Perform the POWERTRAIN VERIFICATION TEST - 2.2L DIESEL. Refer to **PCM VERIFICATION TEST - 2.2L DIESEL** .

DIAGNOSING AN OIL LIGHT ON

For a complete wiring diagram, **refer to appropriate SYSTEM WIRING DIAGRAMS article** .

POSSIBLE CAUSES

Possible Causes
(K111) OIL LEVEL SWITCH SIGNAL CIRCUIT SHORTED TO GROUND
(K111) OIL LEVEL SWITCH SIGNAL CIRCUIT OPEN/HIGH RESISTANCE
(K900) SENSOR GROUND CIRCUIT OPEN/HIGH RESISTANCE

DIAGNOSTIC TEST

1. **CHECK THE OIL LEVEL**
   1. Turn the ignition off.
   2. Check the engine oil level and verify that it is correct.

Is the oil level within specification?

Yes

- Go To 2

No

- Adjust oil to the proper level and retest.
- Perform the POWERTRAIN VERIFICATION TEST - 2.2L DIESEL. Refer to **PCM VERIFICATION TEST - 2.2L DIESEL** .

2. **CHECK THE (K111) OIL LEVEL SWITCH SIGNAL CIRCUIT FOR A SHORT TO GROUND**
   1. Turn the ignition off.
   2. Disconnect the Oil Level Switch harness connector.
   3. Disconnect the PCM C1 harness connector.
   4. Measure the resistance between ground and the (K111) Oil Level Switch Signal circuit at the Oil Level Switch harness connector.

   Is the resistance above 10k Ohms?

   Yes

   - Go To 3

   No

   - Repair the (K111) Oil Level Switch Signal circuit for a short to ground.
   - Perform the POWERTRAIN VERIFICATION TEST - 2.2L DIESEL. Refer to **PCM VERIFICATION TEST - 2.2L DIESEL** .
3. **CHECK THE (K111) OIL LEVEL SWITCH SIGNAL CIRCUIT FOR AN OPEN/HIGH RESISTANCE**
   1. Measure the resistance of the (K111) Oil Level Switch Signal circuit between the Oil Level Switch harness connector and the PCM C1 harness connector.

Is the resistance below 5.0 Ohms?

Yes

- Go To 4

No

- Repair the (K111) Oil Level Switch Signal circuit for an open or high resistance.
- Perform the POWERTRAIN VERIFICATION TEST - 2.2L DIESEL. Refer to **PCM VERIFICATION TEST - 2.2L DIESEL** .

4. **CHECK THE (K900) SENSOR GROUND CIRCUIT FOR AN OPEN/HIGH RESISTANCE**
   1. Measure the resistance of the (K900) Sensor Ground circuit between the Oil Level Switch harness connector and the PCM C1 harness connector.

      Is the resistance below 5.0 Ohms?

      Yes

      - Go To 5

      No

      - Repair the (K900) Sensor Ground circuit for an open or high resistance.
      - Perform the POWERTRAIN VERIFICATION TEST - 2.2L DIESEL. Refer to **PCM VERIFICATION TEST - 2.2L DIESEL** .
5. **OIL LEVEL SWITCH**
   1. Replace the Oil Level Switch.
   2. Reconnect the PCM C1 harness connector.
   3. Start the engine and allow it to reach operating temperature.
   4. Test drive the vehicle.

      Did the oil light come on at any time?

Yes

- Replace the Powertrain Control Module in accordance with the service information.
- Perform the POWERTRAIN VERIFICATION TEST - 2.2L DIESEL. Refer to **PCM VERIFICATION TEST - 2.2L DIESEL** .

No

- Test complete
- Perform the POWERTRAIN VERIFICATION TEST - 2.2L DIESEL. Refer to **PCM VERIFICATION TEST - 2.2L DIESEL** .

2014 ENGINE PERFORMANCE

Driveability - Gas - Non-DTC Based Diagnostics - Compass & Patriot

DIAGNOSIS AND TESTING

CHECKING THE CHARGING SYSTEM OPERATION

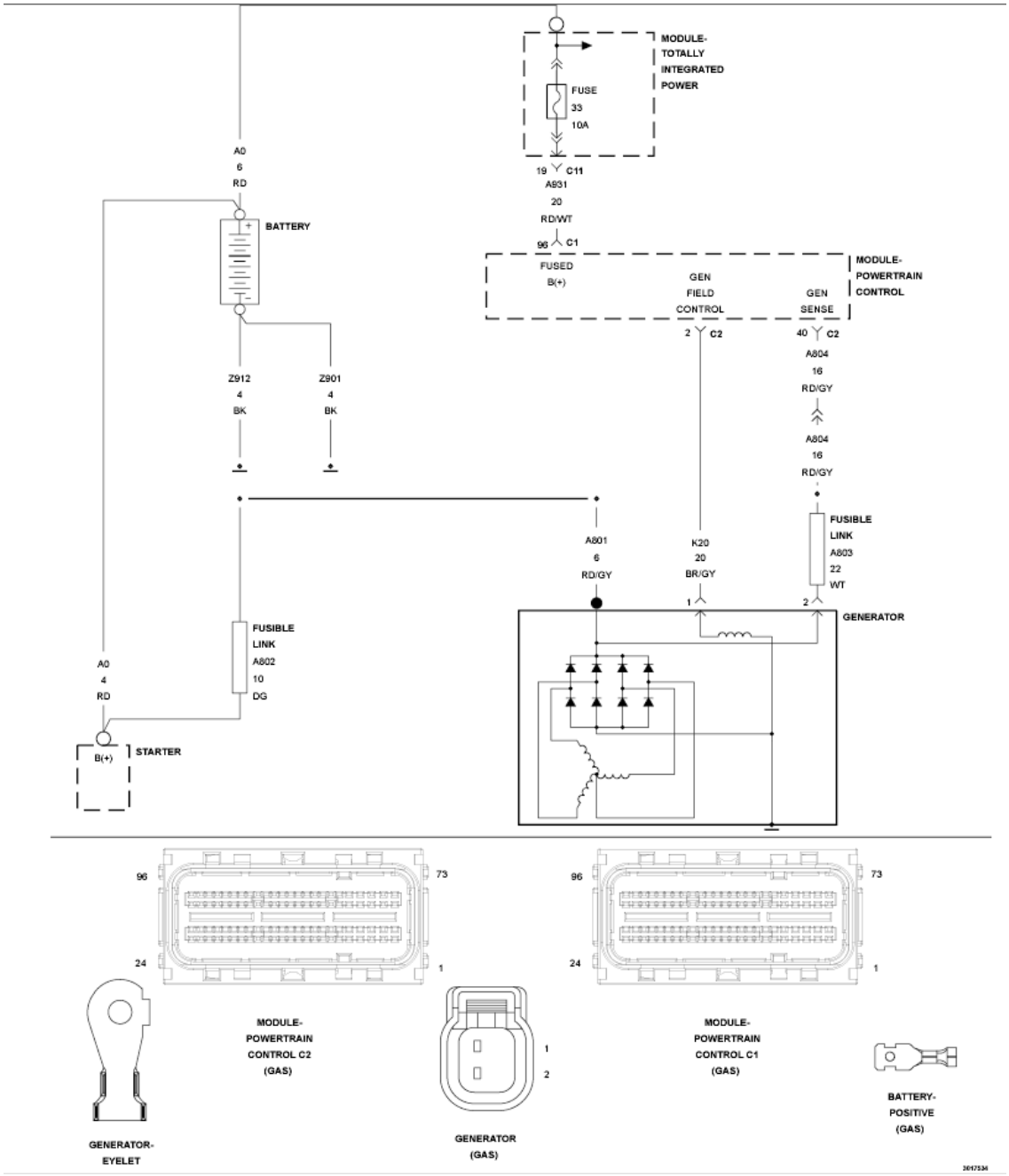

Fig. 1: Charging System Circuit Wiring Diagram
Courtesy of CHRYSLER GROUP, LLC

For a complete wiring diagram, **refer to appropriate SYSTEM WIRING**

DIAGRAMS article .

DIAGNOSTIC TEST

1. GENERATOR FULL FIELD TEST

NOTE: Diagnose and repair any generator sense or field control circuit DTCs before proceeding with this test.

1. Start the engine and allow it to reach operating temperature.

WARNING: When the engine is operating, do not stand in direct line with the fan. Do not put your hands near the pulleys, belts or fan. Do not wear loose clothing. Failure to follow these instructions may result in possible serious or fatal injury.

2. With the scan tool, perform the Generator Full Field test. Follow the instructions displayed on the scan tool.
3. Monitor the system (battery) voltage and the generator sense voltage on the scan tool while performing the test.

NOTE: With the engine running, the difference between the system (battery) voltage and the generator sense voltage should be below 2 volts.

NOTE: With the generator field fully actuated, the system (battery) voltage should be above 14.0 volts.

NOTE: With the generator field actuated off, the system (battery) voltage should be below 13.0 volts, and eventually drop as battery load is increased.

Did the system voltage change as described above during the Generator Full Field test?

Yes

- Test complete.

No

- Go To 2

2. **CHARGING SYSTEM INSPECTION**
   1. Inspect and test the battery in accordance with the Service Information.
   2. Inspect the generator drive belt for proper alignment and adjustment.
   3. Inspect the vehicle for aftermarket accessories that may exceed the generator system output.
   4. Inspect the fuses in the TIPM. If an open fuse is found, use the wire diagram/schematics as a guide and inspect the wiring and connectors for a damaged or shorted circuit.

   Were any problems found?

   Yes

   - Repair as necessary.

   No

   - Go To 3

3. **BATTERY POSITIVE (+) CIRCUIT HIGH RESISTANCE**

   NOTE: Make sure all testing equipment and cables are clear of any engine parts before starting the engine.

   1. Start the engine.

      WARNING: When the engine is operating, do not stand in direct line with the fan. Do not put your hands near the pulleys, belts or fan. Do not wear loose clothing. Failure to follow these instructions may result in possible serious or fatal injury.

   2. Measure the voltage between the B (+) Terminal at the Generator and the Battery Positive (+) Post.

      Is the voltage below 0.4 of a volt?

Yes

- Go To 4

No

- Repair the battery positive (+) circuit between the generator and battery for high resistance.
- Perform the POWERTRAIN VERIFICATION TEST. Refer to **POWERTRAIN VERIFICATION TEST** .

4. **GENERATOR CASE GROUND HIGH RESISTANCE**

NOTE: Make sure all testing equipment and cables are clear of any engine parts before starting the engine.

1. Start the engine.

WARNING: When the engine is operating, do not stand in direct line with the fan. Do not put your hands near the pulleys, belts or fan. Do not wear loose clothing. Failure to follow these instructions may result in possible serious or fatal injury.

2. Measure the voltage between the Generator case and the Battery Negative (-) post.

   Is the voltage below 0.1 of a volt?

   Yes

   - Go To 5

   No

   - Repair the Generator Case ground for high resistance.
   - Perform the POWERTRAIN VERIFICATION TEST. Refer to **POWERTRAIN VERIFICATION TEST** .

5. **(A801) FUSED B(+) CIRCUIT HIGH RESISTANCE**

1. Turn the ignition off.
2. Using a voltmeter, perform a voltage drop test by probing the battery positive (+) terminal and backprobing the PCM C2 (A801) Fused B(+) circuit. Make sure the voltmeter leads are connected so that positive polarity is displayed on the voltmeter.

   WARNING: **When the engine is operating, do not stand in direct line with the fan. Do not put your hands near the pulleys, belts or fan. Do not wear loose clothing. Failure to follow these instructions may result in possible serious or fatal injury.**

3. Start the engine.

   Is the voltage below 0.5 of a volt?

   Yes

   - Go To 6

   No

   - Repair the (A801) Fused B(+) circuit(s) for high resistance.
   - Perform the POWERTRAIN VERIFICATION TEST. Refer to **POWERTRAIN VERIFICATION TEST** .

6. **(A804) GENERATOR SENSE CIRCUIT HIGH RESISTANCE**
   1. Turn the ignition off.
   2. Using a voltmeter, perform a voltage drop test by backprobing the (A804) Generator Sense circuit at the Generator harness connector and backprobing PCM C2 (A804) generator sense circuit. Make sure the voltmeter leads are connected so that positive polarity is displayed on the voltmeter.

      WARNING: **When the engine is operating, do not stand in direct line with the fan. Do not put your hands near the pulleys, belts or fan. Do not wear loose clothing. Failure to**

follow these instructions may result in possible serious or fatal injury.

3. Start the engine.

   Is the voltage below 0.5 of a volt?

   Yes

   - Go To 7

   No

   - Repair the (A804) Generator Sense circuit for high resistance.
   - Perform the POWERTRAIN VERIFICATION TEST. Refer to **POWERTRAIN VERIFICATION TEST** .

7. **(K20) GEN FIELD CONTROL CIRCUIT HIGH RESISTANCE**
   1. Turn the ignition off.
   2. Using a voltmeter, perform a voltage drop test by backprobing the (K20) Gen Field Control circuit at the Generator harness connector and backprobing PCM C2 (K20) generator control circuit. Make sure the voltmeter leads are connected so that positive polarity is displayed on the voltmeter.

      WARNING: **When the engine is operating, do not stand in direct line with the fan. Do not put your hands near the pulleys, belts or fan. Do not wear loose clothing. Failure to follow these instructions may result in possible serious or fatal injury.**

   3. Start the engine.

      Is the voltage below 0.5 of a volt?

      Yes

      - Go To 8

No

- Repair the (K20) Gen Field Control circuit for high resistance.
- Perform the POWERTRAIN VERIFICATION TEST. Refer to **POWERTRAIN VERIFICATION TEST** .

8. **GENERATOR**
   1. Turn the ignition off.
   2. Disconnect the Generator harness connector.
   3. Connect a 12-volt test light connected between ground and the (K20) Gen Field Control circuit in the Generator harness connector.
   4. Turn the ignition on.
   5. With the scan tool, actuate the Alternator Field Control State to toggle.

NOTE: The test light should toggle on and off with the actuation.

NOTE: If a DTC is active, the actuation test may not be allowed by the PCM. If may be necessary to clear DTCs before starting the actuation.

Does the test light illuminate on and off with the actuation?

Yes

- Replace the Generator in accordance with the Service Information.
- Perform the POWERTRAIN VERIFICATION TEST. Refer to **POWERTRAIN VERIFICATION TEST** .

No

- Go To 9

9. **(K20) GEN FIELD CONTROL CIRCUIT SHORTED TO VOLTAGE**

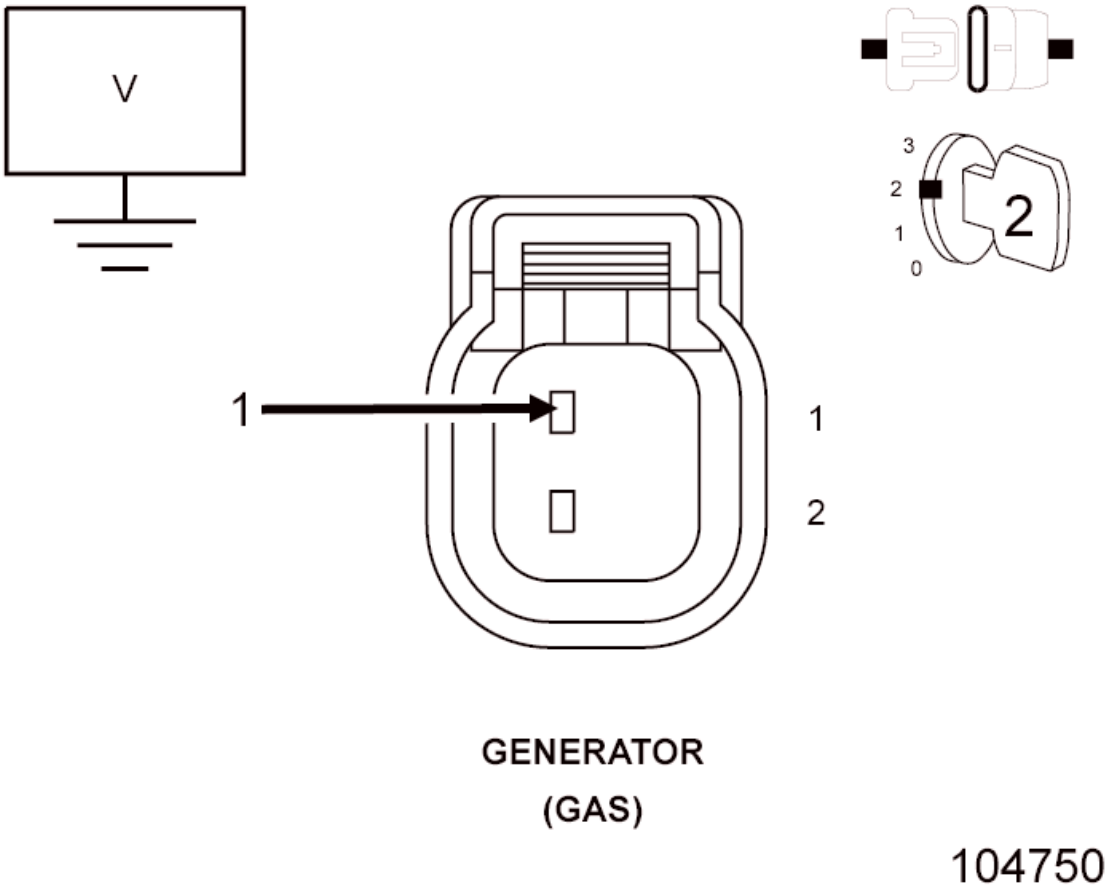

Fig. 2: Checking Generator Field Control Circuit For Short To Voltage
Courtesy of CHRYSLER GROUP, LLC

1. Turn the ignition off.
2. Disconnect the Powertrain Control Module (PCM) C2 harness connector.
3. Turn the ignition on.
4. Measure the voltage of the (K20) Gen Field Control circuit in the Generator harness connector.

   Is there any voltage present?

   Yes

   - Repair the (K20) Gen Field Control circuit for a short to voltage.
   - Perform the POWERTRAIN VERIFICATION TEST. Refer to **POWERTRAIN VERIFICATION TEST** .

   No

- Go To 10

10. **(K20) GEN FIELD CONTROL CIRCUIT SHORTED TO GROUND**

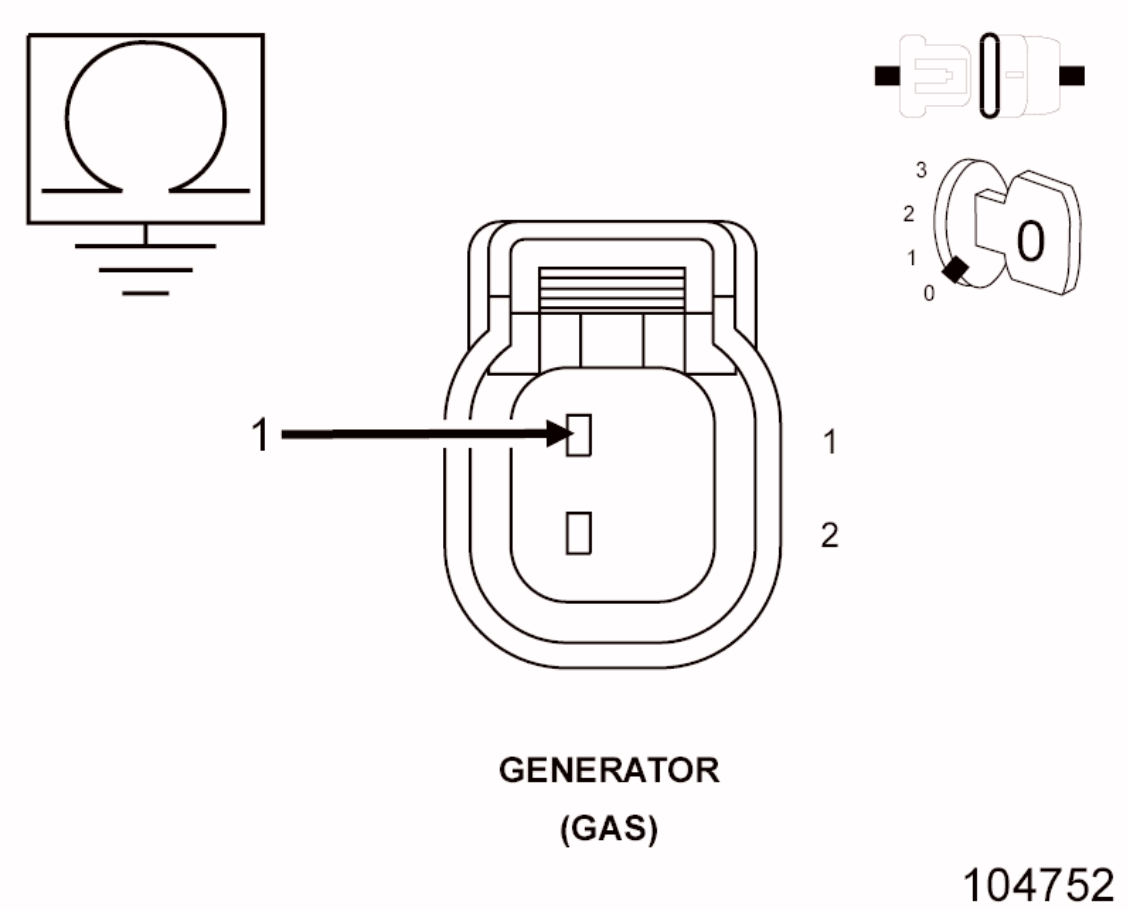

Fig. 3: Checking Generator Field Control Circuit For Short To Ground
Courtesy of CHRYSLER GROUP, LLC

1. Turn the ignition off.
2. Measure the resistance between ground and the (K20) Gen Field Control circuit in the Generator harness connector.

   Is the resistance below 100 Ohms?

   Yes

   - Repair the (K20) Gen Field Control circuit for a short to ground.
   - Perform the POWERTRAIN VERIFICATION TEST. Refer to **POWERTRAIN VERIFICATION TEST** .

   No

- Go To 11

11. **(K20) GEN FIELD CONTROL CIRCUIT OPEN OR HIGH RESISTANCE**

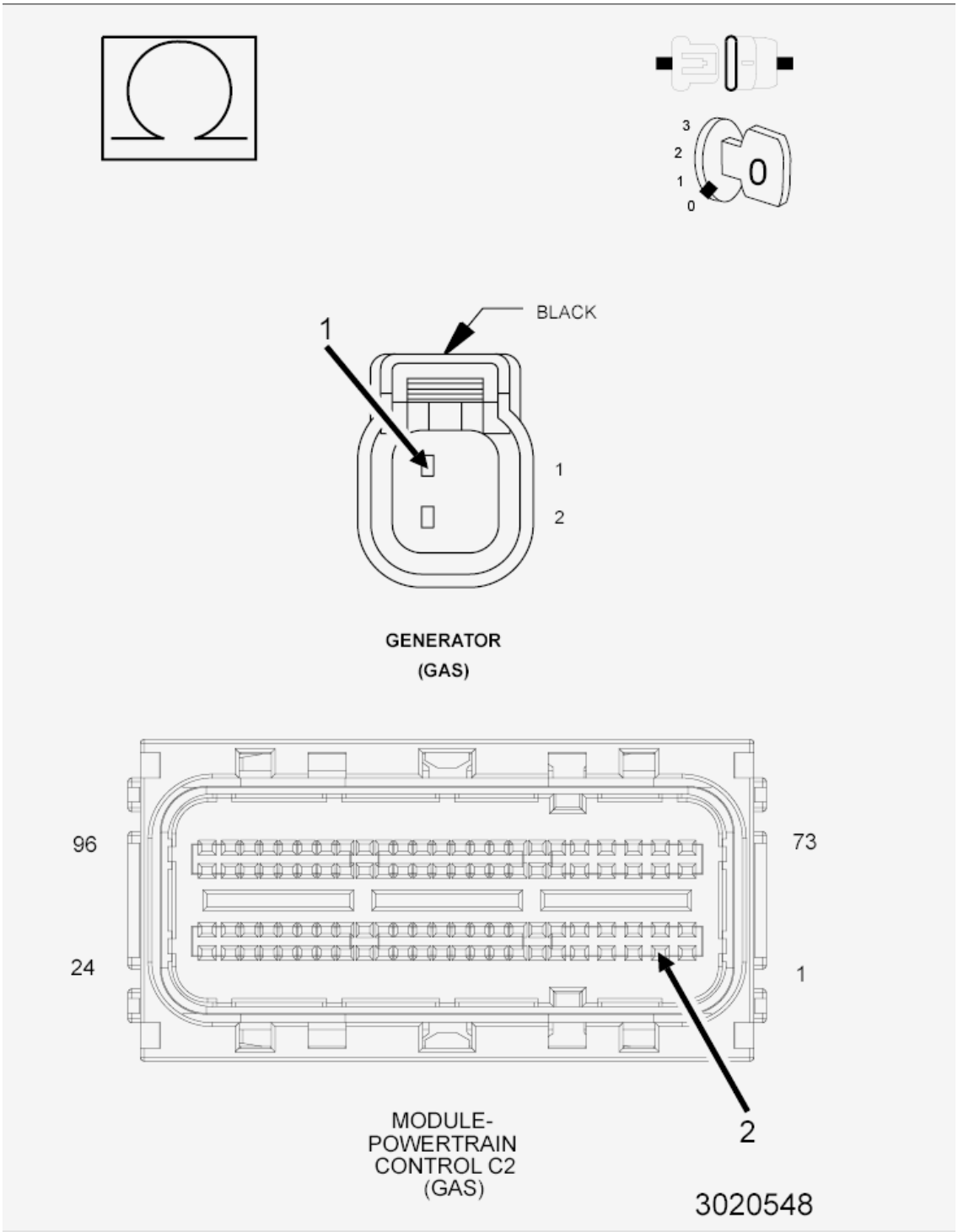

Fig. 4: Checking Generator Field Circuit For An Open Or High Resistance
Courtesy of CHRYSLER GROUP, LLC

CAUTION: Do not probe the PCM harness connectors. Probing the PCM harness connectors will damage the PCM terminals, resulting in poor terminal to pin connection. Install the PCM Pinout Box to perform diagnosis.

1. Measure the resistance of the (K20) Gen Field Control circuit between the Generator harness connector and the appropriate terminal of the PCM Pinout Box (special tool #8815A, Kit, NGC, 38 Position).

   Is the resistance below 5.0 Ohms?

   Yes

   - Go To 12

   No

   - Repair the (K20) Gen Field Control circuit for an open circuit or high resistance.
   - Perform the POWERTRAIN VERIFICATION TEST. Refer to **POWERTRAIN VERIFICATION TEST** .

12. **CHECKING THE PCM POWER AND GROUND CIRCUITS**
    1. Inspect the PCM power and ground circuits.

       Were any problems found?

       Yes

       - Repair the PCM power and ground circuit(s) as necessary.
       - Perform the POWERTRAIN VERIFICATION TEST. Refer to **POWERTRAIN VERIFICATION TEST** .

       No

       - Go To 13

13. **POWERTRAIN CONTROL MODULE (PCM)**
    1. Using the wiring diagram/schematic as a guide, inspect the wiring and connectors between the Generator and the Powertrain Control Module

(PCM).

2. Look for any chafed, pierced, pinched, or partially broken wires.
3. Look for broken, bent, pushed out or corroded terminals.
4. Perform any Technical Service Bulletins that may apply.

Were any problems found?

Yes

- Repair as necessary.
- Perform the POWERTRAIN VERIFICATION TEST. Refer to **POWERTRAIN VERIFICATION TEST** .

No

- Replace and program the Powertrain Control Module (PCM) in accordance with the Service Information. Refer to **MODULE, POWERTRAIN CONTROL, REMOVAL** .
- Perform the POWERTRAIN VERIFICATION TEST. Refer to **POWERTRAIN VERIFICATION TEST** .

CHECKING THE COOLING FAN OPERATION

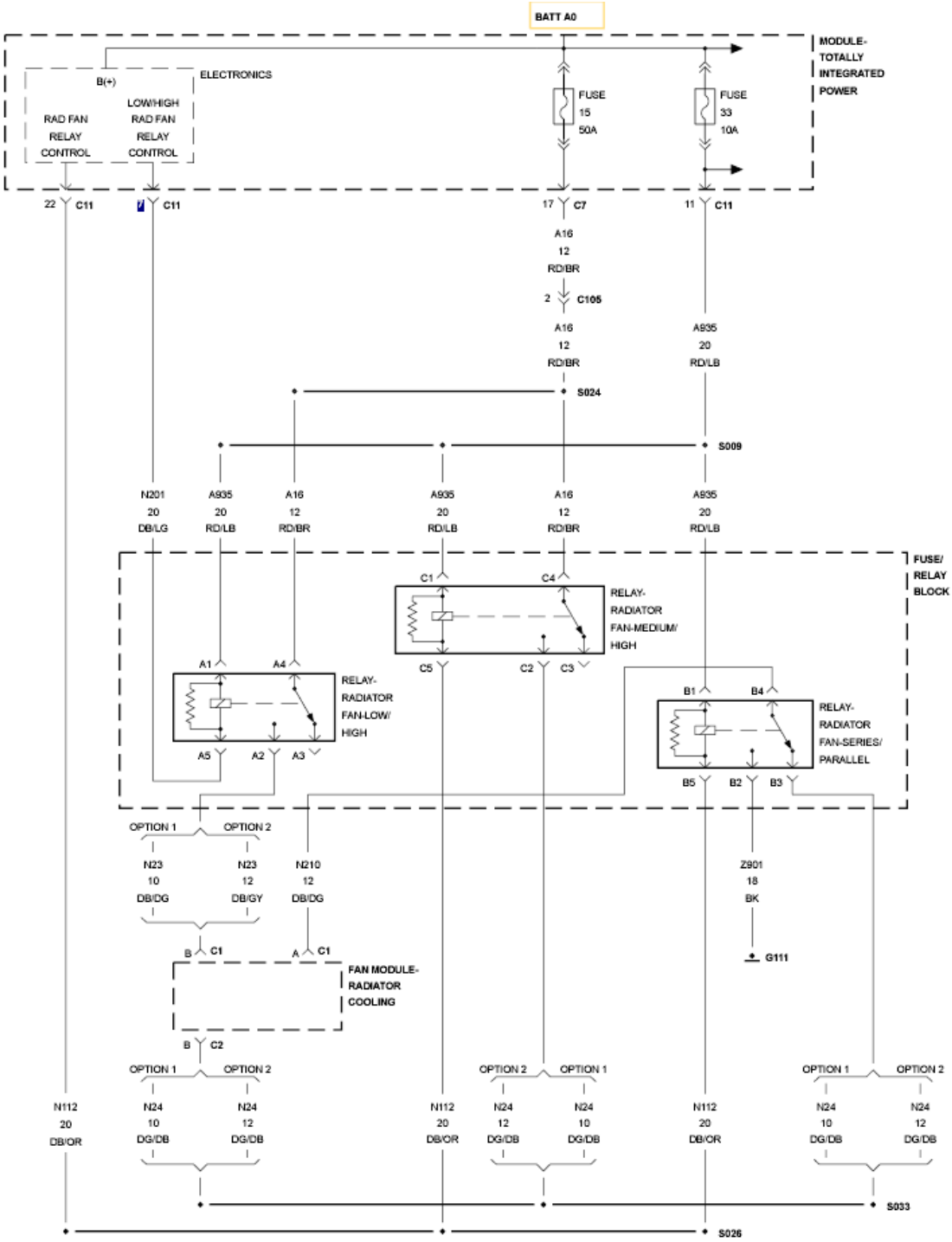

Fig. 5: Radiator Cooling Fan Relays & Radiator Cooling Fan Module Wiring Diagram
Courtesy of CHRYSLER GROUP, LLC

For a complete wiring diagram, **refer to appropriate SYSTEM WIRING DIAGRAMS article** .

DIAGNOSTIC TEST

1. **RADIATOR FAN MEDIUM/HIGH RELAY**

   NOTE: Diagnose and repair any Coolant Fan circuit or Temperature Sensor circuit DTCs before proceeding with this test.

   1. Turn the ignition on.
   2. With the scan tool, actuate the Radiator Fan 2 Control State.

      Does The Cooling Fan Operate?

      Yes

      - Go To 2

      No

      - Go To 11
2. **RADIATOR FAN LOW/HIGH RELAY**
   1. With the scan tool, actuate the Radiator Fan 1 Control State.

      Do both Cooling Fans Operate?

      Yes

      - Test complete.

      No

      - Go To 3
3. **(N23) LOW/HIGH RAD FAN RELAY OUTPUT CIRCUIT**
   1. Turn the ignition off.
   2. Disconnect the C1 Radiator Cooling Fan Module harness connector.
   3. Turn the ignition on.
   4. Using a 12-volt test light connected to ground, check the (N23) Low/High Rad Fan Relay Output circuit in the C1 Radiator Cooling Fan Module harness connector.
   5. With the scan tool, actuate the Radiator Fan 1 Control State.

NOTE: The test light should be illuminated and bright. Compare the brightness to that of a direct connection to the battery.

Is the test light illuminated and bright?

Yes

- Go To 6

No

- Go To 4

4. **RADIATOR FAN LOW/HIGH RELAY**
   1. Turn the ignition off.
   2. Verify the Radiator Fan Low/High Relay is installed properly and the terminals are making a tight fit.
   3. Remove the Radiator Fan Low/High Relay and substitute it with a known good Relay.
   4. Turn the ignition on.
   5. Using a 12-volt test light connected to ground, check the (N23) Low/High Rad Fan Relay Output circuit in the C1 Radiator Cooling Fan Module harness connector.
   6. With the scan tool, actuate the Radiator Fan 1 Control State.

NOTE: The test light should be illuminated and bright. Compare the brightness to that of a direct connection to the battery.

Is the test light illuminated and bright?

Yes

- Replace the Radiator Fan Low/High Relay.
- Perform the PCM VERIFICATION TEST. Refer to **POWERTRAIN VERIFICATION TEST** .

No

- Go To 5

5. **(N23) LOW/HIGH RAD FAN RELAY OUTPUT CIRCUIT OPEN OR HIGH RESISTANCE**
   1. Measure the resistance of the (N23) Low/High Rad Fan Relay Output circuit between the C1 Radiator Cooling Fan Module harness connector and the Radiator Fan Low/High Relay.

      Is the resistance above 5.0 Ohms?

      Yes

      - Repair the (N23) Low/High Rad Fan Relay Output circuit for an open or high resistance.
      - Perform the PCM VERIFICATION TEST. Refer to **POWERTRAIN VERIFICATION TEST** .

      No

      - Go To 17

6. **(N210) RADIATOR FAN SERIES/PARALLEL RELAY**
   1. Turn the ignition off.
   2. Connect the C1 Radiator Cooling Fan Module harness connector.
   3. Remove the Radiator Fan Series/Parallel Relay.
   4. Turn the ignition on.
   5. Using a 12-volt test light connected to ground, check the (N210) Series/Parallel Rad Fan Relay Feed circuit in the Radiator Fan Series/Parallel Relay harness connector.
   6. With the scan tool, actuate the Radiator Fan 1 Control State.

      NOTE: The test light should be illuminated and bright. Compare the brightness to that of a direct connection to the battery.

      Is the test light illuminated and bright?

      Yes

      - Go To 8

No

- Go To 7

7. **COOLING FAN**
   1. Turn the ignition off.
   2. Disconnect the C1 Radiator Cooling Fan Module harness connector.
   3. Connect a jumper wire between the (N23) Low/High Rad Fan Relay Output circuit and the (N210) Series/Parallel Rad Fan Relay Feed of the C1 Radiator Cooling Fan Module harness connector.
   4. Turn the ignition on.
   5. Using a 12-volt test light connected to ground, check the (N210) Series/Parallel Rad Fan Relay Feed circuit in the Radiator Fan Series/Parallel Relay harness connector.
   6. With the scan tool, actuate the Radiator Fan 1 Control State.

NOTE: The test light should be illuminated and bright. Compare the brightness to that of a direct connection to the battery.

Is the test light illuminated and bright?

Yes

- Replace the Cooling Fan.
- Perform the PCM VERIFICATION TEST. Refer to **POWERTRAIN VERIFICATION TEST** .

No

- Go To 9

NOTE: Remove the jumper wire before continuing.

8. **RADIATOR FAN SERIES/PARALLEL RELAY**
   1. Turn the ignition off.
   2. Verify the Radiator Fan Series/Parallel Relay is installed properly and the terminals are making a tight fit.

3. Remove the Radiator Fan Series/Parallel Relay and substitute it with a known good Relay.
4. Turn the ignition on.
5. With the scan tool, actuate the Radiator Fan 1 Control State.

   Do Both Cooling Fans Operate?

   Yes

   - Replace the Radiator Fan Series/Parallel Relay.
   - Perform the PCM VERIFICATION TEST. Refer to **POWERTRAIN VERIFICATION TEST** .

   No

   - Go To 17

9. **(N210) RAD FAN HIGH/LOW CONTROL FEED SHORT TO GROUND**
   1. Turn the ignition off.
   2. Measure the resistance between ground and the (N210) Rad Fan High/Low Relay Feed circuit in the C1 Radiator Cooling Fan Module harness connector.

      Is the resistance below 100 Ohms?

      Yes

      - Repair the (N210) Rad Fan High/Low Control Feed circuit for a short to ground.
      - Perform the PCM VERIFICATION TEST. Refer to **POWERTRAIN VERIFICATION TEST** .

      No

      - Go To 10

10. **(N210) RAD FAN HIGH/LOW CONTROL FEED OPEN OR HIGH RESISTANCE**
    1. Measure the resistance of the (N210) Rad Fan High/Low Control Feed

circuit between the C1 Radiator Cooling Fan Module harness connector and the Radiator Fan Series/Parallel Relay.

Is the resistance above 5.0 Ohms?

Yes

- Repair the (N210) Rad Fan High/Low Control Feed circuit for an open or high resistance.
- Perform the PCM VERIFICATION TEST. Refer to **POWERTRAIN VERIFICATION TEST** .

No

- Go To 17

11. **(Z902) GROUND CIRCUIT OPEN**
    1. Turn the ignition off.
    2. Disconnect the C2 Radiator Cooling Fan Module harness connector.
    3. Using a 12-volt test light connected to voltage, check the (Z902) Ground circuit in the C2 Radiator Cooling Fan Module harness connector.

NOTE: The test light should be illuminated and bright. Compare the brightness to that of a direct connection to the battery.

Is the test light illuminated and bright?

Yes

- Go To 12

No

- Repair the (Z902) Ground circuit for an open or high resistance.
- Perform the PCM VERIFICATION TEST. Refer to **POWERTRAIN VERIFICATION TEST** .

12. **(N24) RAD FAN RELAY OUTPUT CIRCUIT**
    1. Turn the ignition on.

2. Using a 12-volt test light connected to ground, check the (N24) Rad Fan Relay Output circuit in the C2 Radiator Cooling Fan Module harness connector.
3. With the scan tool, actuate the Radiator Fan 2 Control State.

NOTE: The test light should be illuminated and bright. Compare the brightness to that of a direct connection to the battery.

Is the test light illuminated and bright?

Yes

- Replace the Cooling Fan.
- Perform the PCM VERIFICATION TEST. Refer to **POWERTRAIN VERIFICATION TEST** .

No

- Go To 13

13. **RADIATOR FAN MEDIUM/HIGH RELAY**
    1. Turn the ignition off.
    2. Verify the Radiator Fan Medium/High Relay is installed properly and the terminals are making a tight fit.
    3. Remove the Radiator Fan Medium/High Relay and substitute it with a known good Relay.
    4. Turn the ignition on.
    5. Using a 12-volt test light connected to ground, check the (N24) Rad Fan Relay Output circuit in the C2 Radiator Cooling Fan Module harness connector.
    6. With the scan tool, actuate the Radiator Fan 2 Control State.

NOTE: The test light should be illuminated and bright. Compare the brightness to that of a direct connection to the battery.

Is the test light illuminated and bright?

Yes

- Replace the Radiator Fan Medium/High Relay.
- Perform the PCM VERIFICATION TEST. Refer to **POWERTRAIN VERIFICATION TEST** .

No

- Go To 14

14. **(A16) FUSED B+ CIRCUIT**
    1. Turn the ignition off.
    2. Remove the Radiator Fan Medium/High Relay.
    3. Turn the ignition on.
    4. Using a 12-volt test light connected to ground, check the (A16) Fused B+ circuit in the Radiator Fan Medium/High Relay harness connector.

NOTE: The test light should be illuminated and bright. Compare the brightness to that of a direct connection to the battery.

Is the test light illuminated and bright?

Yes

- Go To 16

No

- Go To 15

15. **(A16) FUSED B+ CIRCUIT OPEN OR SHORT TO GROUND**
    1. Turn the ignition off.
    2. Inspect the (A16) Fused B+ fuse.

Is the fuse open?

Yes

- Repair the (A16) B+ circuit, the (N23) Low/High Rad Fan Relay Output circuit or the (N24) Rad Fan Medium/High Relay Output

circuit for a short to ground.
- Replace the (A16) Fused B+ fuse.
- Perform the PCM VERIFICATION TEST. Refer to **POWERTRAIN VERIFICATION TEST** .

No

- Repair the (A16) Fused B+ circuit for an open.
- Perform the PCM VERIFICATION TEST. Refer to **POWERTRAIN VERIFICATION TEST** .

16. **(N24) RAD FAN RELAY OUTPUT CIRCUIT OPEN OR HIGH RESISTANCE**
    1. Measure the resistance of the (N24) Rad Fan Relay Output circuit between the C2 Radiator Cooling Fan Module harness connector and the Radiator Fan Medium/High Relay harness connector.

       Is the resistance above 5.0 Ohms?

       Yes

       - Repair the (N24) Rad Fan Relay Output circuit for an open or high resistance.
       - Perform the PCM VERIFICATION TEST. Refer to **POWERTRAIN VERIFICATION TEST** .

       No

       - Go To 17
17. **RELAY BLOCK**

    NOTE: Before continuing, check the connector terminals for corrosion, damage, or terminal push out. Repair as necessary.

    1. Using the schematics as a guide, inspect the wire harness and connectors. Pay particular attention to all Power and Ground circuits.

       Were there any problems found?

Yes

- Repair as necessary.
- Perform the PCM VERIFICATION TEST. Refer to **POWERTRAIN VERIFICATION TEST** .

No

- Replace the Relay Block in accordance with the Service Information.
- Perform the PCM VERIFICATION TEST. Refer to **POWERTRAIN VERIFICATION TEST** .

CHECKING THE ENGINE COOLANT TEMPERATURE SENSOR OPERATION

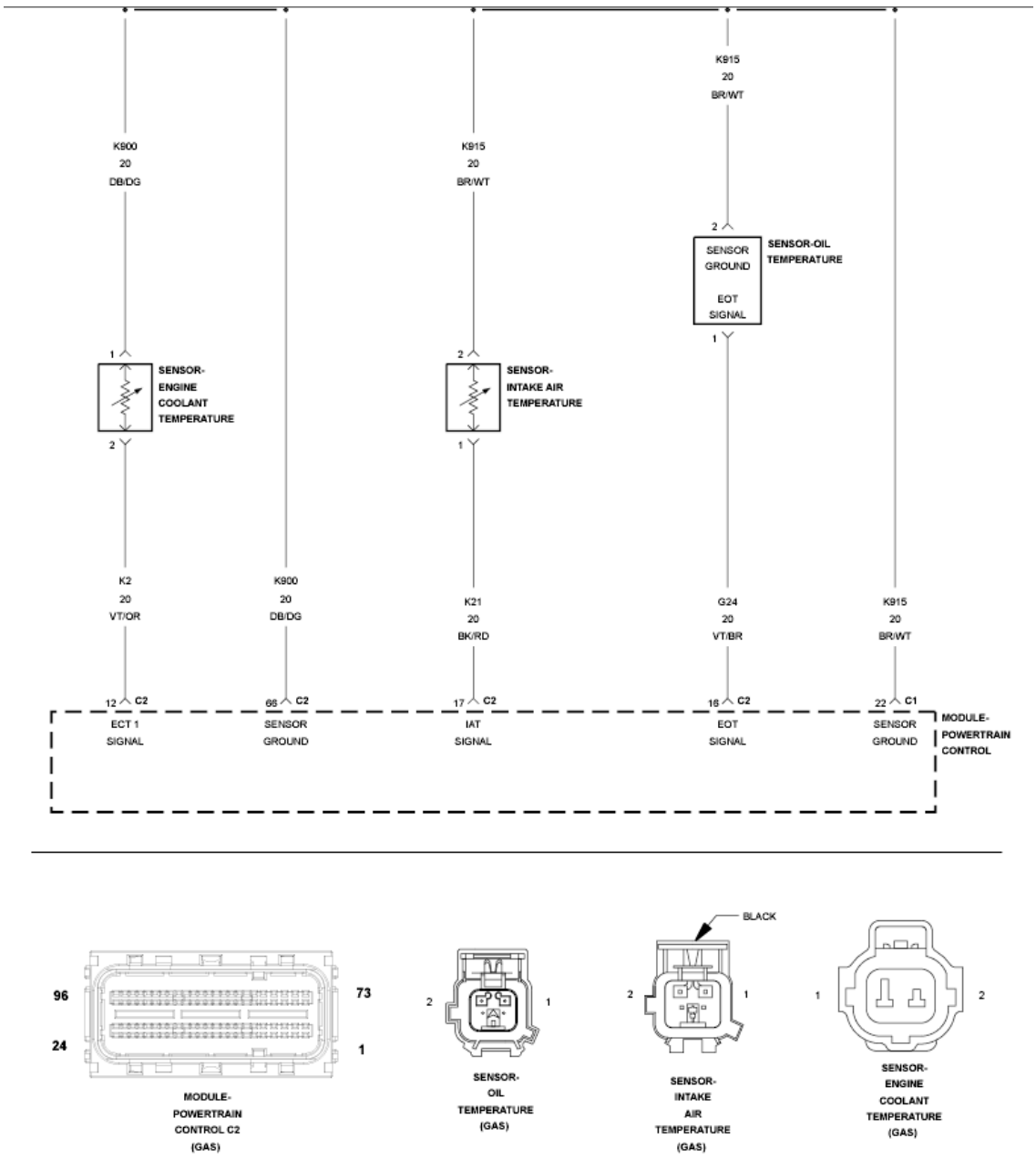

Fig. 6: Temperature Sensor Circuit Diagram
Courtesy of CHRYSLER GROUP, LLC

For a complete wiring diagram, **refer to appropriate SYSTEM WIRING DIAGRAMS article** .

DIAGNOSTIC TEST

1. **ENGINE COOLANT TEMPERATURE SENSOR WIRING OR CONNECTORS**

NOTE: Diagnose and repair any ECT circuit DTCs before proceeding with this test.

NOTE: Allow the engine to cool to ambient temperature before proceeding.

1. Using the wiring diagram/schematic as a guide, inspect the wiring and connectors between the Engine Coolant Temperature sensor(s) and the PCM.
2. Look for any chafed, pierced, pinched, or partially broken wires.
3. Look for broken, bent, pushed out or corroded terminals.
4. Turn the ignition on.
5. Monitor the scan tool data relative to the sensor(s) and wiggle test the wiring and connectors.
6. Look for the data to change or for a DTC to set during the wiggle test.

   Were any problems found?

   Yes

   - Repair as necessary in accordance with the Service Information.
   - Perform the POWERTRAIN VERIFICATION TEST. Refer to **POWERTRAIN VERIFICATION TEST** .

   No

   - Go To 2

2. **ENGINE COOLANT LEVEL AND CONDITION**

   WARNING: **Make sure the engine cooling system is cool before removing the pressure cap or any hose. The cooling system is pressurized when hot. Failure to follow these instructions can result in possible serious or fatal injury.**

   1. Check the engine coolant level and the condition of the engine coolant. Refer to **STANDARD PROCEDURE** .

Were any problems found?

Yes

- Repair as necessary in accordance with the Service Information.
- Perform the POWERTRAIN VERIFICATION TEST. Refer to **POWERTRAIN VERIFICATION TEST** .

No

- Go To 3

3. **THERMOSTAT**

WARNING: **Make sure the engine cooling system is cool before removing the pressure cap or any hose. The cooling system is pressurized when hot. Failure to follow these instructions can result in possible serious or fatal injury.**

1. Using the appropriate service information, determine the proper opening temperature of the thermostat.
2. With the scan tool, read the Engine Coolant Temperature Sensor value for each sensor. If the engine was allowed to cool completely, the value should be approximately equal to the ambient temperature.
3. Monitor the sensor values on the scan tool.
4. Start the engine.

WARNING: **When the engine is operating, do not stand in direct line with the fan. Do not put your hands near the pulleys, belts or fan. Do not wear loose clothing. Failure to follow these instructions may result in possible serious or fatal injury.**

NOTE: **Each thermostat should open at the temperature specified in the Service Information.**

Were any problems found?

Yes

- Repair as necessary in accordance with the Service Information.
- Perform the POWERTRAIN VERIFICATION TEST. Refer to **POWERTRAIN VERIFICATION TEST** .

No

- Go To 4

4. **ENGINE COOLANT TEMPERATURE SENSOR**

NOTE: Allow the engine to cool to ambient temperature before proceeding.

WARNING: Make sure the engine cooling system is cool before removing the pressure cap or any hose. The cooling system is pressurized when hot. Failure to follow these instructions can result in possible serious or fatal injury.

1. With the scan tool, read the Engine Coolant Temperature Sensor value for each sensor. If the engine was allowed to cool completely, the value should be approximately equal to the ambient temperature.
2. Monitor each sensor value on the scan tool and the actual coolant temperature with a thermometer.
3. Start the engine.

WARNING: When the engine is operating, do not stand in direct line with the fan. Do not put your hands near the pulleys, belts or fan. Do not wear loose clothing. Failure to follow these instructions may result in possible serious or fatal injury.

NOTE: The sensor value transition should be smooth as the engine reaches operating temperature. The thermometer reading and the coolant temperature values on the scan tool should remain relatively

close.

Were any problems found?

Yes

- Go To 5

No

- Test complete.

5. **ECT SIGNAL CIRCUIT HIGH RESISTANCE**

NOTE: Perform this procedure for the sensor where erratic sensor values were detected in the previous test step.

1. Turn the ignition off.

CAUTION: Do not probe the PCM harness connectors. Probing the PCM harness connectors will damage the PCM terminals resulting in poor terminal to pin connection. Install the PCM Pinout Box along with the Adapter to perform the diagnosis.

2. Using a voltmeter, perform a voltage drop test by backprobing the ECT Signal circuit at the Engine Coolant Temperature Sensor harness connector and by probing the appropriate terminal of the PCM Pinout Box (special tool #8815A, Kit, NGC, 38 Position). Make sure the voltmeter leads are connected so that positive polarity is displayed on the voltmeter.

WARNING: When the engine is operating, do not stand in direct line with the fan. Do not put your hands near the pulleys, belts or fan. Do not wear loose clothing. Failure to follow these instructions may result in possible serious or fatal injury.

3. Start the engine.

   Is the voltage below 0.5 of a volt?

   Yes

   - Go To 6

   No

   - Repair the ECT Signal circuit for excessive resistance.
   - Perform the POWERTRAIN VERIFICATION TEST. Refer to **POWERTRAIN VERIFICATION TEST** .

6. **SENSOR GROUND CIRCUIT HIGH RESISTANCE**
   1. Turn the ignition off.

      CAUTION: Do not probe the PCM harness connectors. Probing the PCM harness connectors will damage the PCM terminals resulting in poor terminal to pin connection. Install the PCM Pinout Box along with the Adapter to perform the diagnosis.

   2. Using a voltmeter, perform a voltage drop test by backprobing the Sensor Ground circuit at the Engine Coolant Temperature Sensor harness connector and by probing the appropriate terminal of the PCM Pinout Box (special tool #8815A, Kit, NGC, 38 Position). Make sure the voltmeter leads are connected so that positive polarity is displayed on the voltmeter.

      WARNING: When the engine is operating, do not stand in direct line with the fan. Do not put your hands near the pulleys, belts or fan. Do not wear loose clothing. Failure to follow these instructions may result in possible serious or fatal injury.

   3. Start the engine.

Is the voltage below 0.5 volts?

Yes

- Go To 7

No

- Repair the Sensor Ground circuit for excessive resistance.
- Perform the POWERTRAIN VERIFICATION TEST. Refer to **POWERTRAIN VERIFICATION TEST** .

7. **ENGINE COOLANT TEMPERATURE SENSOR**
   1. Using the wiring diagram/schematic as a guide, inspect the wiring and connectors between the Engine Coolant Temperature Sensor and the Powertrain Control Module (PCM).
   2. Look for any chafed, pierced, pinched, or partially broken wires.
   3. Look for broken, bent, pushed out or corroded terminals.
   4. Perform any Technical Service Bulletins that may apply.

   Were any problems found?

   Yes

   - Repair as necessary.
   - Perform the POWERTRAIN VERIFICATION TEST. Refer to **POWERTRAIN VERIFICATION TEST** .

   No

   - Replace the Engine Coolant Temperature Sensor.
   - Perform the POWERTRAIN VERIFICATION TEST. Refer to **POWERTRAIN VERIFICATION TEST** .

CHECKING THE ENGINE MECHANICAL SYSTEM

For a complete wiring diagram, **refer to appropriate SYSTEM WIRING DIAGRAMS article** .

DIAGNOSTIC TEST

CHECKING THE ENGINE MECHANICAL SYSTEM

1. Turn the ignition off.
2. Check for any of the following conditions/mechanical problems:
   - ENGINE VACUUM - must be at least 13 inches in neutral
   - ENGINE VALVE TIMING - must be within specifications
   - ENGINE COMPRESSION - must be within specifications
   - CYLINDER LEAKAGE TEST - must be within specifications
   - ENGINE EXHAUST SYSTEM - must be free of any restrictions or leaks
   - ENGINE PCV SYSTEM - must flow freely
   - TORQUE CONVERTER STALL SPEED - must be within specifications
   - POWER BRAKE BOOSTER - no internal vacuum leaks
   - FUEL - must be free of contamination
   - VALVE SPRINGS - cannot be weak or broken
   - CAM LOBES - must not be worn excessively
   - CAM SHAFTS - must not be worn or have excessive end play

   Are there any engine mechanical problems?

   Yes

   - Repair as necessary in accordance with the Service Information.
   - Perform the POWERTRAIN VERIFICATION TEST. Refer to **POWERTRAIN VERIFICATION TEST** .

   No

   - Test Complete.

CHECKING THE EVAPORATIVE SYSTEM FOR LEAKS

For a complete wiring diagram, **refer to appropriate SYSTEM WIRING DIAGRAMS article** .

DIAGNOSTIC TEST

1. **EVAPORATIVE SYSTEM INSPECTION**
   1. Turn the ignition off.
   2. Raise the vehicle as necessary in accordance with the Service Information.
   3. Visually and physically inspect the entire Evaporative Emission System for any of the following conditions:
      - Holes or cracks
      - Loose seal points
      - Evidence of damaged components
      - Incorrect routing of hoses or tubes
      - Loose or missing fuel filler cap
      - Improper installation of the fuel filler cap
      - Damaged locking tabs on cap and/or fill tube
      - Damaged seal points on cap and/or fill tube
      - Fuel cap gasket seal missing or damaged

   Were any problems found?

   Yes

   - Repair as necessary.
   - Perform the PCM VERIFICATION TEST. Refer to **POWERTRAIN VERIFICATION TEST** .

   No

   - Go To 2
2. **VERIFY EVAPORATIVE EMISSION LEAK**

   WARNING: **Keep lit cigarettes, sparks, flames, and other ignition sources away from the test area to prevent the ignition of explosive gases. Keep the test area well ventilated. Failure to do so may result in possible serious or fatal injury.**

   1. Turn the ignition off.

2. To continue testing, you will need Evaporative Emission Leak Detector (EELD) (special tool #8404C, Kit, EELD And Accessory).

NOTE: The fuel tank should have between 20% and 80% of fuel tank capacity to properly test the Evap system.

3. Connect the red power lead of EELD to the battery positive terminal and the black ground lead to battery negative terminal.
4. Block the vent hose of the Evap Canister.
5. Connect shop air to the EELD.
6. Set the smoke/air control switch to AIR.
7. Insert the tester's AIR supply tip (clear hose) into the 0.040 orifice on the tester's control panel.
8. Press the remote smoke/air start button.
9. Position the red flag on the air flow meter so it is aligned with the indicator ball.
10. When the calibration is complete, release the remote button. The EELD flow meter is now calibrated in liters per minute.
11. Install the service port adapter (special tool #8404-14, Adapter, Evaporative Service Port) on the vehicle's service port (if equipped) or install the (special tool #8404-ADP, Smoke Machine Adapters) into the filter line.
12. Connect the AIR supply hose from the EELD to the service port (if equipped) or to the (special tool #8404-ADP, Smoke Machine Adapters) adapter.
13. Press the remote button to activate AIR flow.

NOTE: Larger volume fuel tanks, lower fuel levels, or vehicles equipped with a Flow Management Valve may indicate high flow and will require four to five minutes to fill.

14. Compare the flow meter indicator ball reading to the red flag.
15. ABOVE the red flag indicates a leak present.
16. BELOW the red flag indicates a sealed system.

Is the indicator ball above the red flag?

Yes

- Go To 3

No

- Refer to the Freeze Frame data, if applicable. If the Freeze Frame data indicates that the vehicle was in motion when the DTC was set, verify that all hoses are connected properly.
- Perform the PCM VERIFICATION TEST. Refer to **POWERTRAIN VERIFICATION TEST** .

3. **EVAPORATIVE EMISSION LEAK DETECTION**

NOTE: A thorough inspection of the Evap system hoses, tubes, and connections may save time in diagnosis. Look for physical damage or signs of wetness at connections. The strong smell of fuel vapors may aid diagnosis also.

1. To continue testing, you will need Evaporative Emissions Leak Detector (EELD) (special tool #8404C, Kit, EELD And Accessory).
2. Remove the AIR supply hose from the service port (if equipped) or from the adapter (special tool #8404-ADP, Smoke Machine Adapters).
3. Connect the SMOKE supply tip (black hose) to the service port (if equipped) or to the adapter (special tool #8404-ADP, Smoke Machine Adapters).
4. Set the smoke/air control switch to SMOKE.

NOTE: The flow meter indicator ball will not move in the smoke mode.

5. Press the remote smoke/air start button.

NOTE: Make sure that smoke has filled the Evap system by continuing to press the remote smoke/air start button, remove the vehicle fuel cap, and wait for

the smoke to exit. Once smoke is detected, reinstall the fuel cap.

NOTE: For the best results, introduce smoke into the system for an additional 60 seconds and continue introducing smoke at 15 second intervals, as necessary.

6. While still holding the remote smoke/air start button, use the white light (special tool #8404-CLL, Light, White) to follow the Evap system path, and look for the source of the leak as indicated by exiting smoke.
7. If a leak is concealed from view (at the top of the fuel tank, for example), release the remote smoke/air start button, and use the ultraviolet (UV) black light (special tool #8404-UVL, Light, UV) and the UV goggles (special tool #8404-20, Goggles, Yellow) to look for residual traces of dye that is left behind by the smoke.
8. The exiting smoke deposits a residual fluid that is either bright green or bright yellow when viewed with a UV light.

Were any problems found?

Yes

- Repair or replace the leaking component as necessary.
- Perform the PCM VERIFICATION TEST. Refer to **POWERTRAIN VERIFICATION TEST** .

No

- Go To 4

4. **CHECKING THE GAS CAP AND FUEL FILLER TUBE**
   1. Thoroughly check the gas cap and filler tube area for leaks.

   Was a leak found at the gas cap or filler tube?

   Yes

   - Go To 5

No

- Go To 6

5. **GAS CAP OR FUEL FILLER TUBE**
   1. Remove the SMOKE supply tip (black hose) from the service port (if equipped) or from the (special tool #8404-ADP, Smoke Machine Adapters) adapter.
   2. Install leak check adapter (special tool #8382, Adapter, Leak Check) (1/4 turn cap) or fuel tank adapter (special tool #6922, Adapter, Fuel Tank) (screw cap) and leak check adapter (special tool #8399, Adapter, Leak Check) (secondary seal depressor) and repeat test 4.

   Was a leak found at the gas cap adapter?

   Yes

   - Replace the fuel filler tube assembly.
   - Perform the PCM VERIFICATION TEST. Refer to **POWERTRAIN VERIFICATION TEST** .

   No

   - Replace the gas cap.
   - Perform the PCM VERIFICATION TEST. Refer to **POWERTRAIN VERIFICATION TEST** .
6. **CHECKING FOR EVAPORATIVE SYSTEM LEAKS IN ZONE 1**

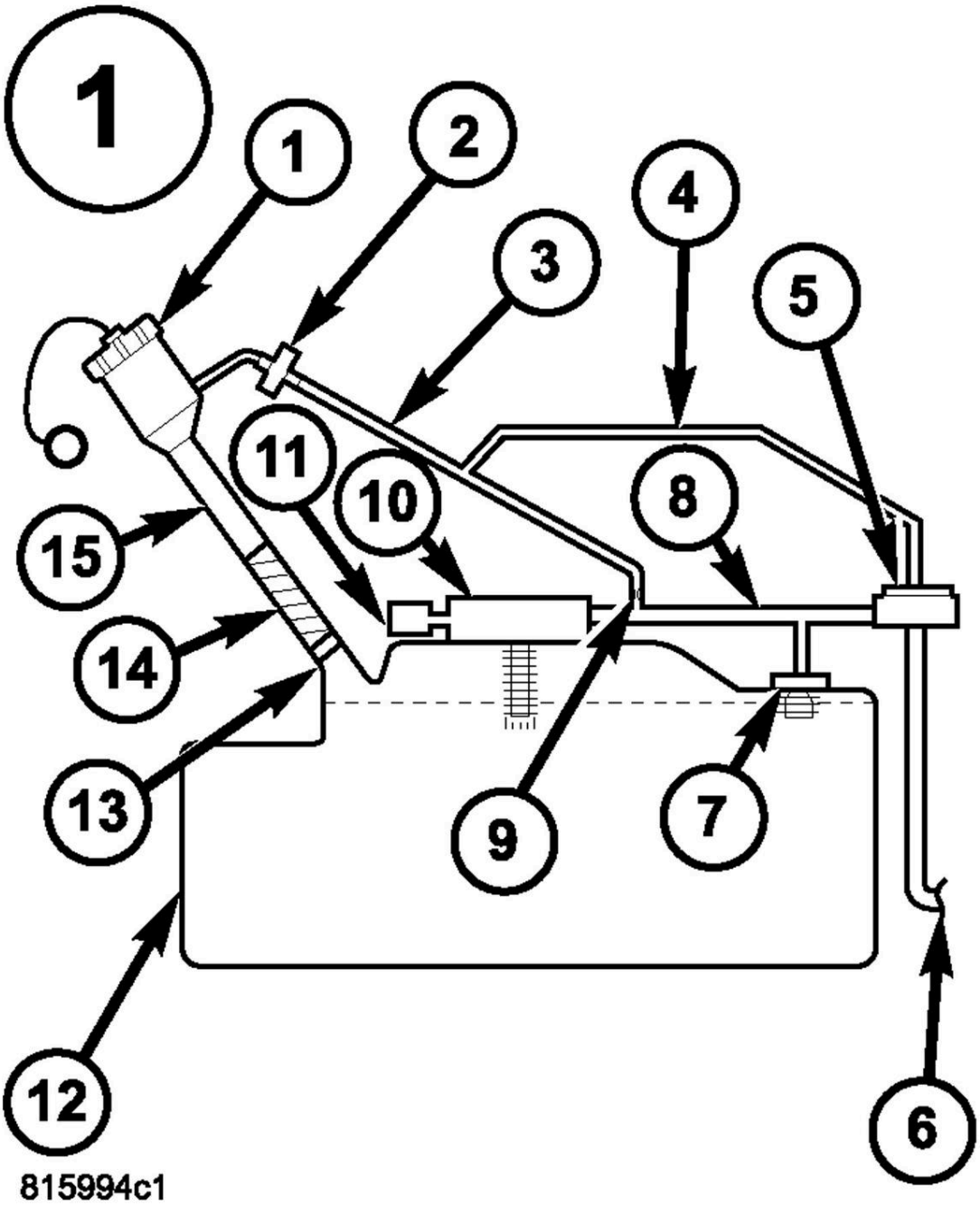

Fig. 7: Identifying EVAP System Zone 1
Courtesy of CHRYSLER GROUP, LLC

NOTE: For testing purposes, the Evap System is divided into three zones. A leak from any of these zones can cause a DTC to set. The lists in the following steps below specify possible leak points in one of the specific zones.

1. Using the list below, check each of the components in Zone 1 of the

evaporative system for leaks:

1. Fuel Cap
2. Recirculation Check Valve
3. Vapor Recirculation Line
4. Signal Vapor Line for FVM
5. Flow Management Valve
6. Fuel Tank to Canister Vapor Line
7. Fuel Tank Vent (Check Valve)
8. Vapor Line to Canister
9. Flow Control Orifice
10. Control Valve
11. Liquid Trap
12. Fuel Tank
13. Check Valve
14. Fuel Fill Tube to Tank connector
15. Fuel Fill Tube
16. Damaged or disconnected components

Were any problems found?

Yes

- Repair or replace the leaking component as necessary.
- Perform the PCM VERIFICATION TEST. Refer to **POWERTRAIN VERIFICATION TEST** .

No

- Go To 7

7. **CHECKING FOR EVAPORATIVE SYSTEM LEAKS IN ZONE 2**

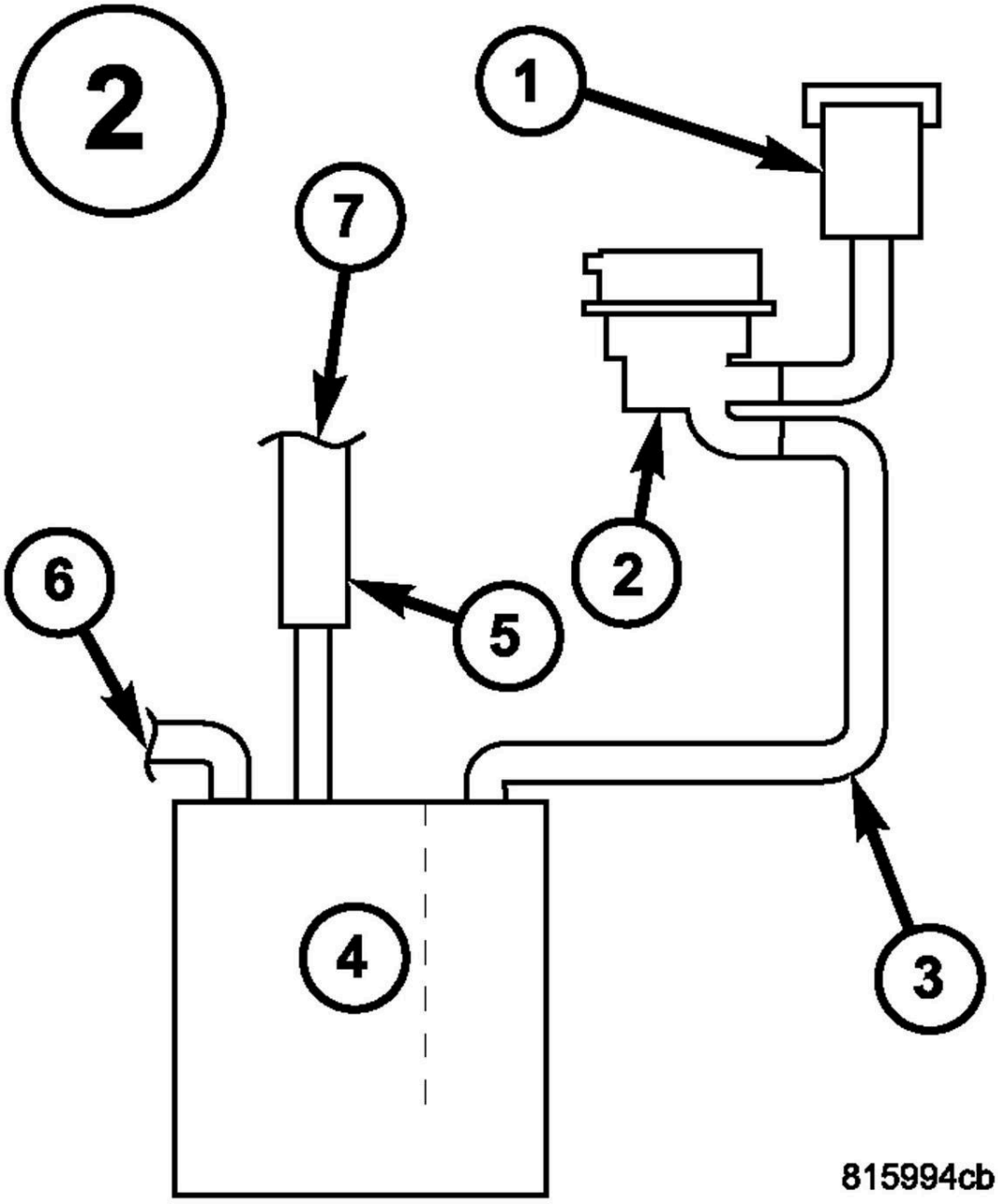

Fig. 8: Identifying EVAP System Zone 2
Courtesy of CHRYSLER GROUP, LLC

NOTE: For testing purposes, the Evap System is divided into three zones. A leak from any of these zones can cause a DTC to set. The lists in the following steps below specify possible leak points in one of the specific zones.

1. Using the list below, check each of the components in Zone 2 of the

evaporative system for leaks:

1. Filter
2. ESIM Switch
3. Canister Vent Line
4. Evap Canister
5. Chassis Purge Valve
6. Fuel Tank to Canister Vapor Line connection
7. Evap Purge connection

Were any problems found?

Yes

- Repair or replace the leaking component as necessary.
- Perform the PCM VERIFICATION TEST. Refer to **POWERTRAIN VERIFICATION TEST** .

No

- Go To 8

8. **CHECKING FOR EVAPORATIVE SYSTEM LEAKS IN ZONE 3**

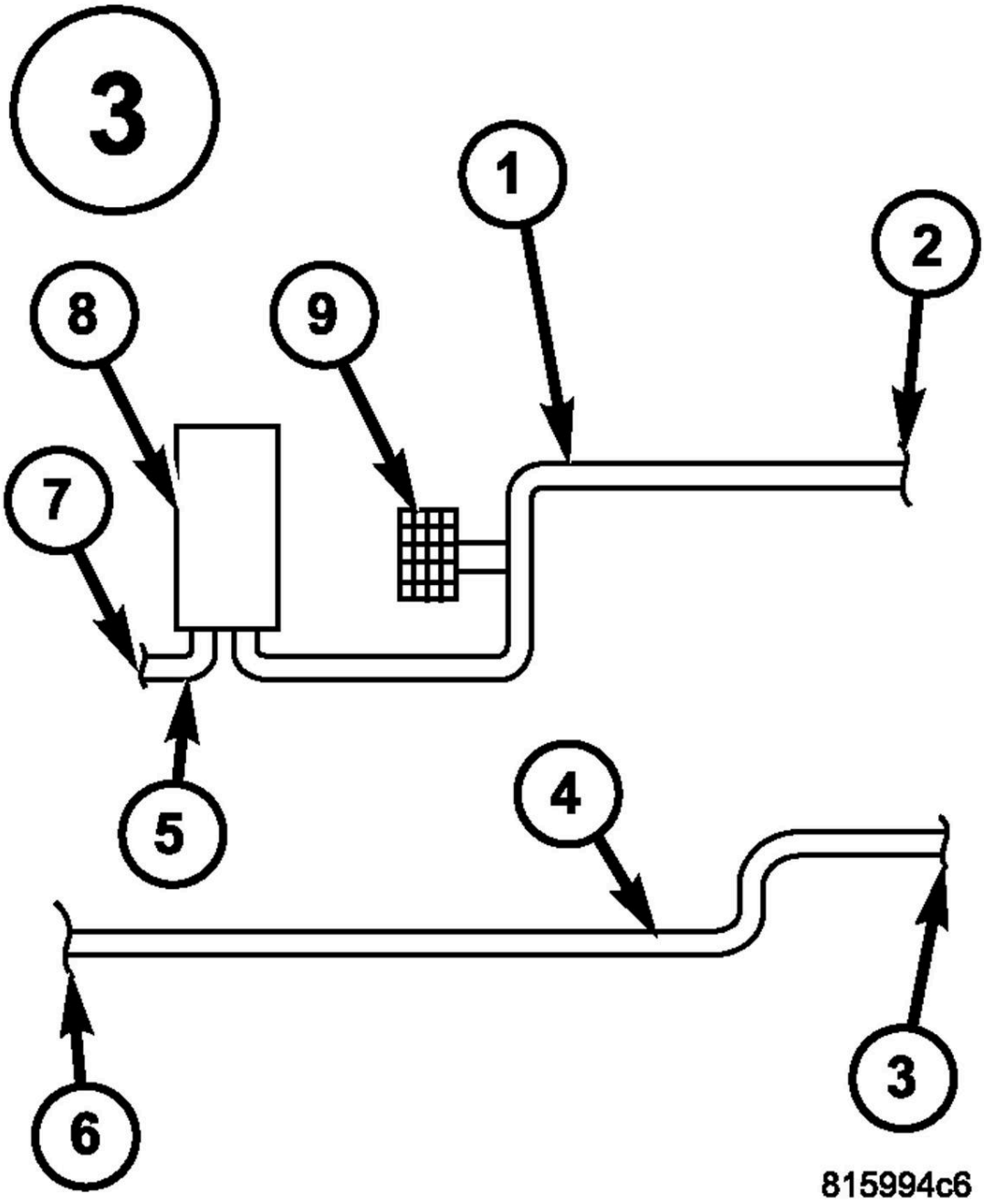

Fig. 9: Identifying EVAP System Zone 3
Courtesy of CHRYSLER GROUP, LLC

NOTE: For testing purposes, the Evap System is divided into three zones. A leak from any of these zones can cause a DTC to set. The lists in the following steps below specify possible leak points in one of the specific zones.

1. Using the list below, check each of the components in Zone 3 of the

evaporative system for leaks:

1. Evap Purge Vacuum Line
2. Connection to Chassis Line
3. Connection to Canister
4. Chassis Purge Line
5. Evap Purge Vacuum Line
6. Connection to Evap Purge Harness
7. Chassis Evap Purge Line connection to Engine Vacuum
8. Evap Purge Valve
9. Service Port

Were any problems found?

Yes

- Repair or replace the leaking component as necessary.
- Perform the PCM VERIFICATION TEST. Refer to **POWERTRAIN VERIFICATION TEST** .

No

- Test complete.

CHECKING THE EXHAUST SYSTEM FOR LEAKS

DIAGNOSTIC TEST

CHECKING THE EXHAUST SYSTEM FOR LEAKS

1. Turn the ignition off.
2. Raise the vehicle in accordance with the Service Information.

WARNING: **The normal operating temperature of the exhaust system is very high. Never work around or attempt to service any part of the exhaust system until it has cooled. Special care should be taken when working near the catalytic converter. The temperature of the**

converter rises to a high level after a short period of engine operating time.

3. Connect Exhaust Cone (special tool #8404-ECT, Exhaust Cone, Truck) to Air Pressure Regulator (with hose) W-18-MIL-1146AS.

CAUTION: The air pressure must not exceed 27.6 kPa (4 psi), otherwise engine damage can occur.

4. Attach shop air to the air pressure regulator.
5. Adjust the Air Pressure Regulator to 27.6 kPa (4 psi).
6. Insert the exhaust cone into the vehicle tail pipe.
7. If the vehicle is equipped with dual exhaust. Use the (special tool #8404-ECT, Exhaust Cone, Truck) with equipped attached plug, plug one side of the dual exhaust pipe. Pressurize the other as described above.
8. Apply Mopar® Air Leak Detector PN 05191804AA (or an equivalent leak finder liquid) to the following areas:
   - All welded joints from the exhaust manifold to 45.72 cm (18 in.) behind the downstream O2 sensor
   - O2 sensor seal points
   - O2 sensor boss welds
   - Flange/joint connection(s)
   - Exhaust manifold to cylinder head connection(s)
   - EGR solenoid gasket base and tube seal points (if equipped)
9. Watch for the Mopar® Air Leak Detector PN 05191804AA (or the equivalent leak finder liquid) to bubble.
10. Use the following definitions to help determine if system or component repair/replacement is necessary:
    - **Type 1 Leak** is defined as a leak where very small foam like bubbles 1 mm (0.04 of an inch) or less appear. Any Type 1 or greater leaks found in welded joints, O2 sensor seal points or O2 sensor boss welds must be repaired or the component must be replaced.
    - **Type 2 Leak** is defined as a leak where larger bubbles pea size, 8 mm (0.3 of an inch) or greater appear. Any Type 2 or greater leaks found in flange or joint connections, exhaust manifold to cylinder head connections, or EGR gasket and tube seal points must be repaired or the

components must be replaced.

Leak Location	Repair required if results at 4 psi reveal bubble size:
Welded joints	Type 1: 1 mm (0.04 in.) or greater
O2 Sensor seal points	Type 1: 1 mm (0.04 in.) or greater
O2 Sensor boss welds	Type 1: 1 mm (0.04 in.) or greater
Flange/joint connections	Type 2: 8 mm (0.31 in.) or greater
Exhaust Manifold to cylinder head connections	Type 2: 8 mm (0.31 in.) or greater
EGR gasket and tube seal points	Type 2: 8 mm (0.31 in.) or greater

11. If a leak is found that matches the above definition, repair or replace the component as necessary.
12. Once the repair is complete, repeat the procedure to verify that all leaks have been repaired.

Were any exhaust leaks found?

Yes

- Repair or replace the leaking exhaust parts as necessary.
- Perform the PCM VERIFICATION TEST. Refer to **POWERTRAIN VERIFICATION TEST** .

No

- Test complete.

CHECKING THE FUEL DELIVERY SYSTEM

For a complete wiring diagram, **refer to appropriate SYSTEM WIRING DIAGRAMS article** .

DIAGNOSTIC TEST

1. **CHECKING THE FUEL PUMP OPERATION**
   1. Turn the ignition on.

NOTE: Diagnose and repair any fuel pump control circuit

or relay DTCs before continuing with this test.

2. With a scan tool, actuate the fuel pump control to ON (100%).

NOTE: It may be necessary to use a mechanics stethoscope in the next step.

3. Listen for fuel pump operation at the fuel tank. The fuel pump should operate smoothly, without excessive noise. If necessary, compare to a known good vehicle of similar year, make, and model.

NOTE: If the pump has excessive noise or grinding, the pump should be replaced.

CAUTION: Stop all actuation tests before continuing.

Is the fuel pump operating when actuated?

Yes

- Go To 2

No

- Go To 7

2. **CHECKING THE FUEL PRESSURE**
   1. Turn the ignition off.

WARNING: The fuel system is under a constant pressure even with the engine off. Before testing or servicing any fuel system hose, fitting or line, the fuel system pressure must be released. Failure to follow these instructions can result in possible serious or fatal injury.

   2. Turn the ignition off.
   3. Install the Fuel Pressure Decay Tester (special tool #8978A, Decay

Tool, Fuel) on the fuel line near the intake manifold

4. Ignition on, engine not running.
5. With a scan tool, actuate the Fuel Pump and observe the fuel pressure gauge.

NOTE: Fuel pressure specification is 407 kPa +/- 34 kPa (59 psi +/- 5 psi).

CAUTION: Stop all actuation tests before continuing.

Select the conclusion that best matches the result of the test:

Fuel pressure is within the stated specification

- Test complete.

Fuel pressure is below the stated specification

- Go To 3

Fuel pressure is above the stated specification

- Replace the fuel filter/pressure regulator.
- Perform the PCM VERIFICATION TEST. Refer to **POWERTRAIN VERIFICATION TEST** .

3. **RESTRICTED FUEL SUPPLY LINE**
   1. Turn the ignition off.

WARNING: The fuel system is under a constant pressure even with the engine off. Before testing or servicing any fuel system hose, fitting or line, the fuel system pressure must be released. Failure to follow these instructions can result in possible serious or fatal injury.

   2. Turn the ignition off.
   3. Remove the Fuel Pressure Decay Tester (special tool #8978A, Decay

Tool, Fuel).

4. Raise the vehicle on a hoist, and disconnect the fuel supply line at the fuel pump module.
5. Install the Fuel Pressure Decay Tester (special tool #8978A, Decay Tool, Fuel) at the fuel pump.
6. Ignition on, engine not running.
7. Read the Fuel Pressure Gauge and record the reading. The fuel pressure specification is 407 kPa +/- 34 kPa (59 psi +/- 5 psi).

Is the fuel pressure within specification?

Yes

- Repair or replace fuel supply line as necessary.
- Perform the PCM VERIFICATION TEST. Refer to **POWERTRAIN VERIFICATION TEST** .

No

- Go To 4

4. **SADDLE FUEL TANK**

Is the vehicle equipped with a saddle type fuel tank?

Yes

- Go To 5

No

- Go To 6

5. **FUEL TANK SIPHON HOSE OR FUEL LINE RESTRICTED OR DAMAGED**
   1. Turn the ignition off.

WARNING: The fuel system is under a constant pressure even with the engine off. Before testing or servicing any fuel system hose, fitting or line, the fuel system pressure

must be released. Failure to follow these instructions can result in possible serious or fatal injury.

2. Gain access to the fuel pump module and the fuel tank module.
3. Inspect the fuel line and siphon hose between the fuel pump module and the fuel tank module. Look for disconnected or damaged lines and hoses.
4. Inspect the fuel pressure regulator for damage or a condition that might cause a fuel flow problem. Make sure that it is seated in the module properly.

   Were any problems found?

   Yes

   - Repair as necessary.
   - Perform the PCM VERIFICATION TEST. Refer to **POWERTRAIN VERIFICATION TEST** .

   No

   - Go To 6

6. **FUEL PUMP INLET STRAINER**
   1. Turn the ignition off.

      WARNING: **The fuel system is under a constant pressure even with the engine off. Before testing or servicing any fuel system hose, fitting or line, the fuel system pressure must be released. Failure to follow these instructions can result in possible serious or fatal injury.**

   2. Remove the fuel pump module and inspect the fuel inlet strainer for damage or a condition that might cause a fuel flow problem.

      Were any problems found?

Yes

- Replace the Fuel Pump Inlet Strainer.
- Perform the PCM VERIFICATION TEST. Refer to **POWERTRAIN VERIFICATION TEST** .

No

- Replace the Fuel Pump Module.
- Perform the PCM VERIFICATION TEST. Refer to **POWERTRAIN VERIFICATION TEST** .

7. **FUEL PUMP GROUND CIRCUIT OPEN OR HIGH RESISTANCE**
   1. Turn the ignition off.
   2. Disconnect the Fuel Pump Module harness connector.
   3. Using a 12-volt test light connected to 12 volts, check the Fuel Pump Motor Ground circuit at the Fuel Pump Module harness connector.

NOTE: The test light should be illuminated and bright. Compare the brightness to that of a direct connection to the battery.

Is the test light illuminated and bright?

Yes

- Replace the Fuel Pump Module in accordance with the Service information.
- Perform the PCM VERIFICATION TEST. Refer to **POWERTRAIN VERIFICATION TEST** .

No

- Repair the Fuel Pump Ground circuit for an open circuit or high resistance.
- Perform the PCM VERIFICATION TEST. Refer to **POWERTRAIN VERIFICATION TEST** .

CHECKING THE IGNITION COIL OPERATION

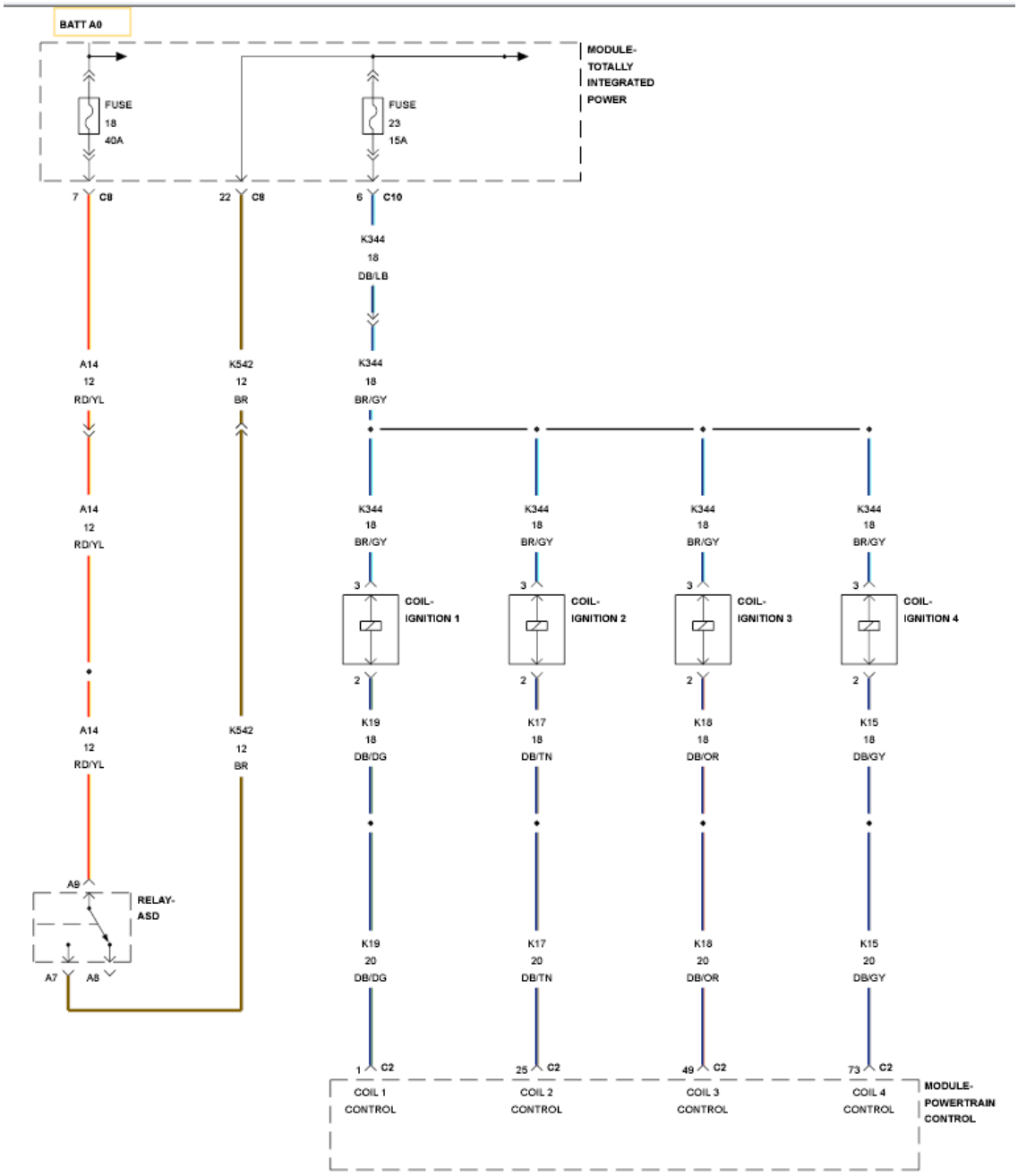

Fig. 10: Ignition Coil Circuit Wiring Diagram
Courtesy of CHRYSLER GROUP, LLC

For a complete wiring diagram, **refer to appropriate SYSTEM WIRING DIAGRAMS article** .

DIAGNOSTIC TEST

1. **IGNITION COIL WIRING OR CONNECTORS**

NOTE: Diagnose and repair any ignition coil, CMP sensor, or

CKP sensor DTCs before proceeding with this test.

1. Turn the ignition off.
2. Using the wiring diagram/schematic as a guide, inspect the wiring and connectors between the Ignition Coil for the cylinder being tested and the PCM.
3. Look for any chafed, pierced, pinched, or partially broken wires.
4. Look for broken, bent, pushed out or corroded terminals.

NOTE: If the vehicle is not equipped with the coil on plug ignition system, check the resistance of the ignition wire(s) before checking the cylinder with a spark tester. The resistance should be below 10k Ohms.

Were any problems found?

Yes

- Repair as necessary in accordance with the Service Information.
- Perform the POWERTRAIN VERIFICATION TEST. Refer to **POWERTRAIN VERIFICATION TEST** .

No

- Go To 2

2. **IGNITION COIL OPERATION**

NOTE: Inspect the ignition coil for damage, carbon tracking on the coil or a damaged spark plug insulator boot. If a problem is found, replace the ignition coil.

1. Turn the ignition off.
2. If the vehicle is equipped with coil on plug ignition system, remove the ignition coil for the cylinder being tested.
3. Disconnect the fuel injector harness connector for the cylinder being tested.
4. For coil on plug ignition systems, install a spark tester(s) on the ignition

coil, otherwise install the spark tester to the ignition wire.

5. While cranking the engine observe the spark coming from the spark tester.

NOTE: A crisp blue spark that jumps the gap of the spark tester should be generated.

Is good spark present?

Yes

- Go To 7

No

- Go To 3

3. **ASD RELAY OUTPUT CIRCUIT OPEN OR HIGH RESISTANCE**
   1. Turn the ignition off.
   2. Disconnect the Ignition Coil harness connector.
   3. Turn the ignition on.
   4. With the scan tool, actuate the ASD Relay to on.
   5. Using a 12-volt test light connected to ground, check the ASD Relay output circuit in the ignition coil harness connector.

NOTE: The test light should be illuminated and bright. Compare the brightness to that of a direct connection to the battery.

Is the test light illuminated and bright during the actuation?

Yes

- Go To 4

No

- Repair the ASD Relay output circuit for an open circuit or high resistance.
- Perform the POWERTRAIN VERIFICATION TEST. Refer to

POWERTRAIN VERIFICATION TEST .

4. **IGNITION COIL**

WARNING: When the engine is operating, do not stand in direct line with the fan. Do not put your hands near the pulleys, belts or fan. Do not wear loose clothing. Failure to follow these instructions may result in possible serious or fatal injury.

1. Using a 12-volt test light connected to 12 volts, check the Ignition Coil control circuit for the cylinder being tested in the Ignition Coil harness connector.
2. Crank the engine for five seconds.

NOTE: The test light should blink each time the circuit is activated by the PCM.

Does the test light blink each time the circuit is activated by the PCM?

Yes

- Replace the Ignition Coil in accordance with the service information.
- Perform the POWERTRAIN VERIFICATION TEST. Refer to **POWERTRAIN VERIFICATION TEST** .

No

- Go To 5

5. **IGNITION COIL CONTROL CIRCUIT OPEN OR HIGH RESISTANCE**
   1. Measure the resistance of the Ignition Coil control circuit for the cylinder being tested between the Ignition Coil harness connector and the PCM C2 harness connector.

      Is the resistance below 5.0 Ohms?

      Yes

- Go To 6

No

- Repair the Ignition Coil control circuit for an open circuit or high resistance.
- Perform the POWERTRAIN VERIFICATION TEST. Refer to **POWERTRAIN VERIFICATION TEST** .

6. **POWERTRAIN CONTROL MODULE (PCM)**
   1. Using the wiring diagram/schematic as a guide, inspect the wiring and connectors between the Ignition Coil for the cylinder being tested and the PCM.
   2. Look for any chafed, pierced, pinched, or partially broken wires.
   3. Look for broken, bent, pushed out or corroded terminals.
   4. Perform any Technical Service Bulletins that may apply.

   Were any problems found?

   Yes

   - Repair as necessary.
   - Perform the POWERTRAIN VERIFICATION TEST. Refer to **POWERTRAIN VERIFICATION TEST** .

   No

   - Replace and program the Powertrain Control Module (PCM) in accordance with the Service Information. Refer to **MODULE, POWERTRAIN CONTROL, REMOVAL** .
   - Perform the POWERTRAIN VERIFICATION TEST. Refer to **POWERTRAIN VERIFICATION TEST** .
7. **SPARK PLUG(S)**
   1. Turn the ignition off.
   2. Remove the spark plug.
   3. Inspect the spark plug for any of the following conditions:
      - Cracks or damage
      - Carbon tracking

- Foreign material
- Gap not within specification
- Loose or broken electrode

NOTE: Lightly tap the bottom of the spark plug on a solid surface. The electrode in the spark plug should not move.

Were any problems found?

Yes

- Replace the spark plug.
- Perform the POWERTRAIN VERIFICATION TEST. Refer to **POWERTRAIN VERIFICATION TEST** .

No

- Test Complete.

CHECKING THE MAP SENSOR OPERATION

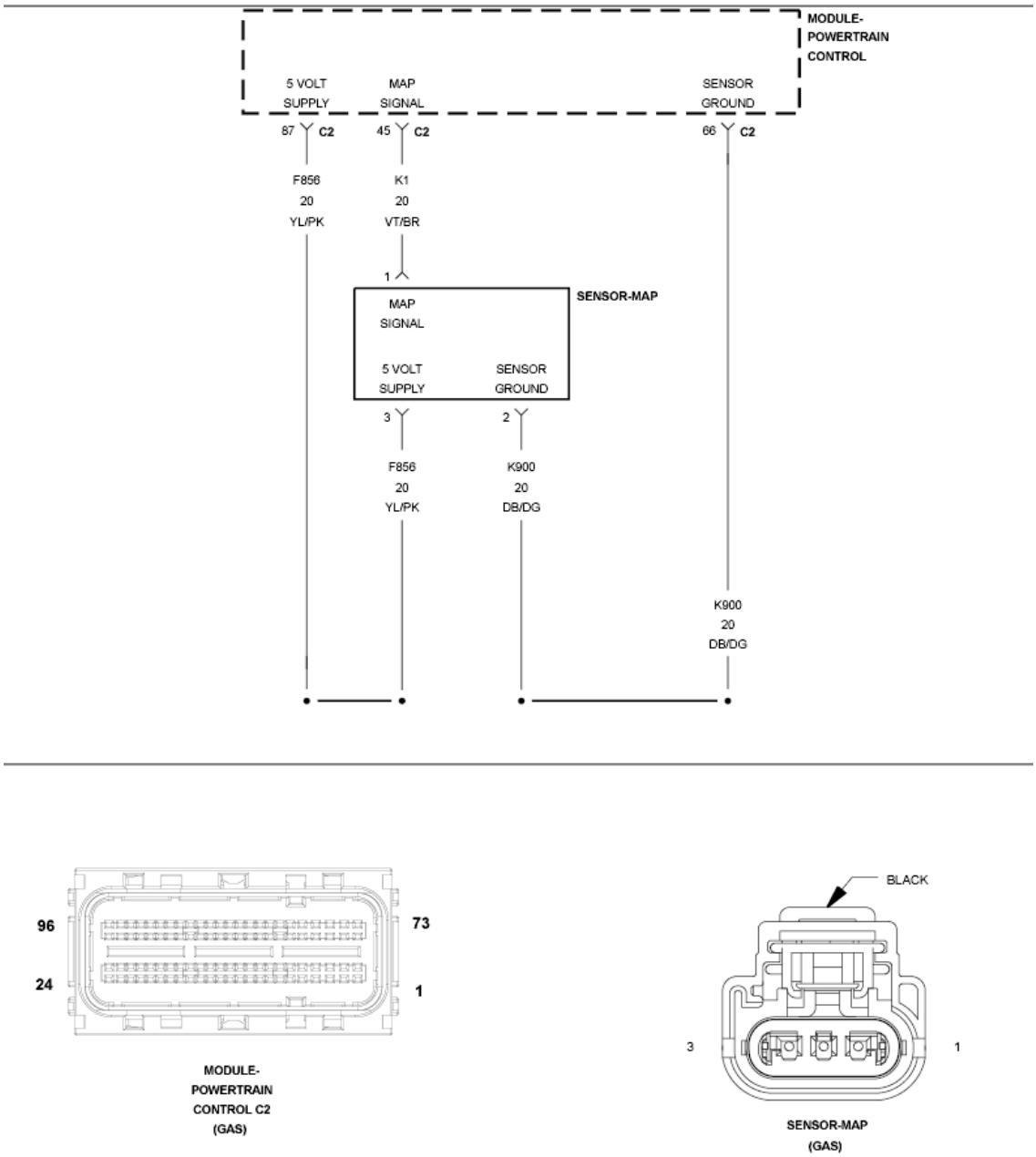

Fig. 11: Manifold Absolute Pressure Sensor Circuit Diagram
Courtesy of CHRYSLER GROUP, LLC

For a complete wiring diagram, **refer to appropriate SYSTEM WIRING DIAGRAMS article** .

DIAGNOSTIC TEST

1. **MAP SENSOR WIRING OR CONNECTORS**

NOTE: Diagnose and repair any MAP Sensor circuit DTCs before proceeding with this test.

NOTE: Diagnose and repair any sensor supply or system voltage DTCs before proceeding with this test.

1. Turn the ignition off.
2. Using the wiring diagram/schematic as a guide, inspect the wiring and connectors between the MAP Sensor and the PCM.
3. Look for any chafed, pierced, pinched, or partially broken wires.
4. Look for broken, bent, pushed out or corroded terminals.
5. Turn the ignition on.
6. Monitor the scan tool data relative to the sensor and wiggle test the wiring and connectors.
7. Look for the data to change or for a DTC to set during the wiggle test. If necessary, check each sensor circuit for high resistance or a shorted condition.

   Were any problems found?

   Yes

   - Repair as necessary in accordance with the Service Information.
   - Perform the POWERTRAIN VERIFICATION TEST. Refer to **POWERTRAIN VERIFICATION TEST** .

   No

   - Go To 2

2. **MAP VACUUM/BAROMETRIC PRESSURE**
   1. With a scan tool, read the Barometric Pressure.

      NOTE: The Barometric Pressure should be approximately equal to the actual barometric pressure. If necessary, compare the Barometric Pressure value of the tested vehicle to the value of a known good vehicle of a similar make and model.

   2. Connect a vacuum gauge to a manifold vacuum source.

3. Start the engine.

NOTE: If engine will not idle, maintain a constant RPM above idle.

WARNING: When the engine is operating, do not stand in direct line with the fan. Do not put your hands near the pulleys, belts or fan. Do not wear loose clothing. Failure to follow these instructions may result in possible serious or fatal injury.

4. With the scan tool, read the MAP Sensor vacuum.

NOTE: The scan tool reading for MAP vacuum should be within 1" of the vacuum gauge reading.

Were any problems found?

Yes

- Go To 4

No

- Go To 3

3. **MAP SENSOR VOLTAGE**
   1. With the scan tool, monitor the MAP Sensor signal voltage.
   2. With the engine idling in neutral or park, snap the throttle.

NOTE: The MAP Sensor signal voltage should change from below 2.0 volts at idle to above 3.5 volts at wide open throttle.

Were any problems found?

Yes

- Go To 4

No

- Test complete.

4. **(F856) 5 VOLT SUPPLY CIRCUIT HIGH RESISTANCE**
   1. Turn the ignition off.

      CAUTION: Do not probe the PCM harness connectors. Probing the PCM harness connectors will damage the PCM terminals resulting in poor terminal to pin connection. Install the PCM Pinout Box along with the Adapter to perform the diagnosis.

   2. Using a voltmeter, perform a voltage drop test by backprobing the (F856) 5 Volt Supply circuit at the MAP Sensor harness connector and by probing the appropriate terminal of the PCM Pinout Box (special tool #8815A, Kit, NGC, 38 Position). Make sure the voltmeter leads are connected so that positive polarity is displayed on the voltmeter.

      WARNING: When the engine is operating, do not stand in direct line with the fan. Do not put your hands near the pulleys, belts or fan. Do not wear loose clothing. Failure to follow these instructions may result in possible serious or fatal injury.

   3. Start the engine.

      Is the voltage below 0.5 of a volt?

      Yes

      - Go To 5

      No

      - Repair the (F856) 5 Volt Supply circuit for excessive resistance.
      - Perform the POWERTRAIN VERIFICATION TEST. Refer to **POWERTRAIN VERIFICATION TEST** .

5. **(K1) MAP SIGNAL CIRCUIT HIGH RESISTANCE**
   1. Turn the ignition off.

      CAUTION: Do not probe the PCM harness connectors. Probing the PCM harness connectors will damage the PCM terminals resulting in poor terminal to pin connection. Install the PCM Pinout Box along with the Adapter to perform the diagnosis.

   2. Using a voltmeter, perform a voltage drop test by backprobing the (K1) MAP Signal circuit at the MAP Sensor harness connector and by probing the appropriate terminal of the PCM Pinout Box (special tool #8815A, Kit, NGC, 38 Position). Make sure the voltmeter leads are connected so that positive polarity is displayed on the voltmeter.

      WARNING: When the engine is operating, do not stand in direct line with the fan. Do not put your hands near the pulleys, belts or fan. Do not wear loose clothing. Failure to follow these instructions may result in possible serious or fatal injury.

   3. Start the engine.

      Is the voltage below 0.5 of a volt?

      Yes

      - Go To 6

      No

      - Repair the (K1) MAP Signal circuit for excessive resistance.
      - Perform the POWERTRAIN VERIFICATION TEST. Refer to **POWERTRAIN VERIFICATION TEST** .

6. **(K900) SENSOR GROUND CIRCUIT HIGH RESISTANCE**
   1. Turn the ignition off.

CAUTION: Do not probe the PCM harness connectors. Probing the PCM harness connectors will damage the PCM terminals resulting in poor terminal to pin connection. Install the PCM Pinout Box along with the Adapter to perform the diagnosis.

2. Using a voltmeter, perform a voltage drop test by backprobing the (K900) Sensor Ground circuit at the MAP Sensor harness connector and by probing the appropriate terminal of the PCM Pinout Box (special tool #8815A, Kit, NGC, 38 Position). Make sure the voltmeter leads are connected so that positive polarity is displayed on the voltmeter.

WARNING: When the engine is operating, do not stand in direct line with the fan. Do not put your hands near the pulleys, belts or fan. Do not wear loose clothing. Failure to follow these instructions may result in possible serious or fatal injury.

3. Start the engine.

   Is the voltage below 0.5 of a volt?

   Yes

   - Go To 7

   No

   - Repair the (K900) Sensor Ground circuit for excessive resistance.
   - Perform the POWERTRAIN VERIFICATION TEST. Refer to **POWERTRAIN VERIFICATION TEST** .

7. **MAP SENSOR**
   1. Using the wiring diagram/schematic as a guide, inspect the wiring and connectors between the MAP Sensor and the Powertrain Control Module (PCM).
   2. Look for any chafed, pierced, pinched, or partially broken wires.

3. Look for broken, bent, pushed out or corroded terminals.
4. Perform any Technical Service Bulletins that may apply.

Were any problems found?

Yes

- Repair as necessary.
- Perform the POWERTRAIN VERIFICATION TEST. Refer to **POWERTRAIN VERIFICATION TEST** .

No

- Replace the MAP Sensor.
- Perform the POWERTRAIN VERIFICATION TEST. Refer to **POWERTRAIN VERIFICATION TEST** .

CHECKING THE OXYGEN SENSOR OPERATION

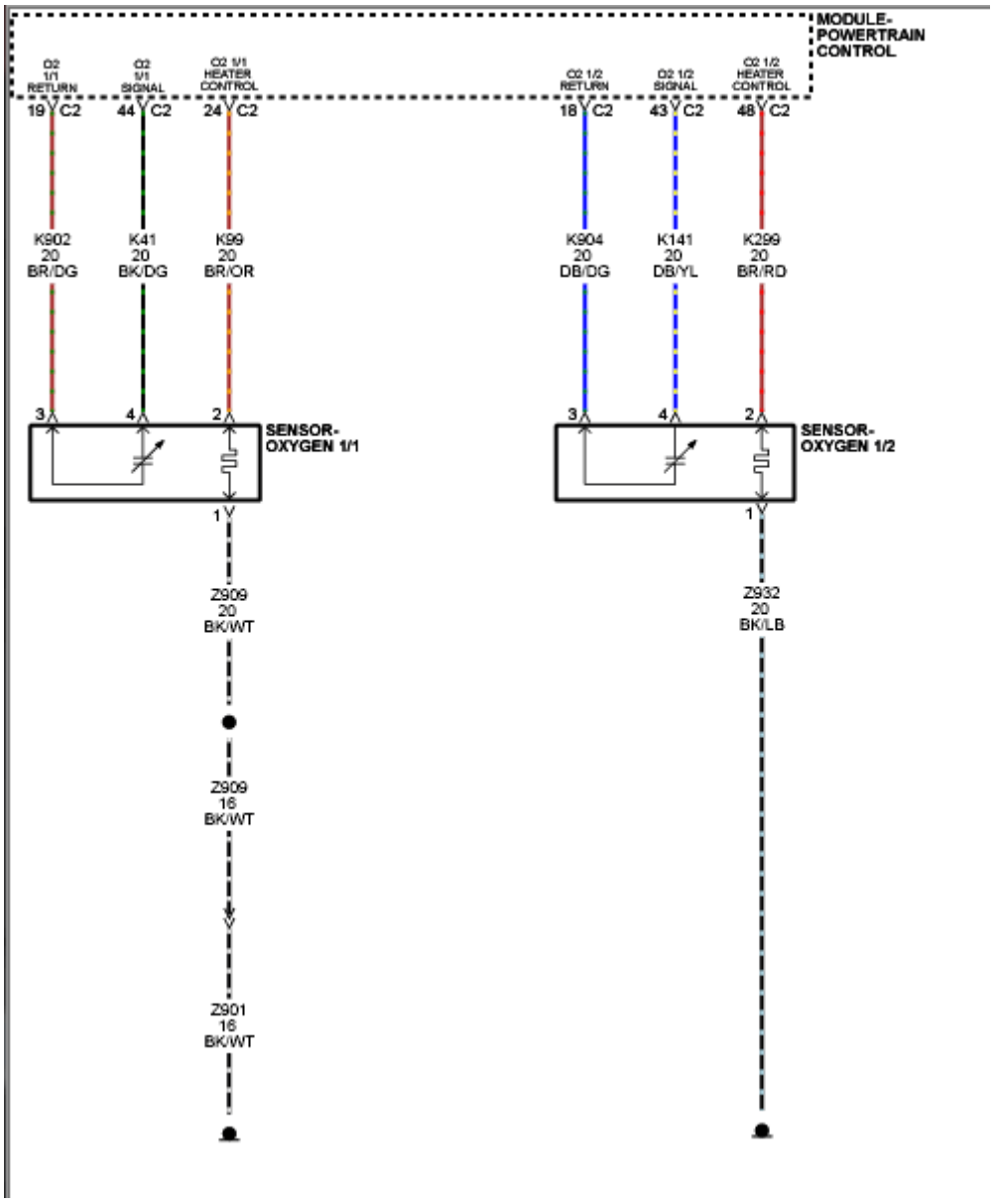

Fig. 12: Oxygen Sensor Circuit Diagram
Courtesy of CHRYSLER GROUP, LLC

For a complete wiring diagram, **refer to appropriate SYSTEM WIRING DIAGRAMS article** .

DIAGNOSTIC TEST

1. **OXYGEN SENSOR, WIRING OR CONNECTORS**

NOTE: Diagnose and repair any O2 sensor or rationality DTCs before proceeding with this test.

NOTE: When performing this procedure as part of another

diagnostic process, it may be necessary to repeat this test for all of the oxygen sensors on the vehicle.

1. Turn the ignition off.
2. Using the wiring diagram/schematic as a guide, inspect the wiring and connectors between the Oxygen sensor and the Powertrain Control Module (PCM).
3. Look for any chafed, pierced, pinched or partially broken wires.
4. Look for broken, bent, pushed out or corroded terminals.
5. Turn the ignition on.
6. Monitor the scan tool data relative to the sensor and wiggle test the wiring and connectors.
7. Look for the data to change or for a DTC to set during the wiggle test. If necessary, check each sensor circuit for high resistance or a shorted condition.

   Were any problems found?

   Yes

   - Repair as necessary.
   - Perform the POWERTRAIN VERIFICATION TEST. Refer to **POWERTRAIN VERIFICATION TEST** .

   No

   - Go To 2

2. **OXYGEN SENSOR VOLTAGE**
   1. Start the engine and allow it to reach normal operating temperature.

      WARNING: **When the engine is operating, do not stand in direct line with the fan. Do not put your hands near the pulleys, belts or fan. Do not wear loose clothing. Failure to follow these instructions may result in possible serious or fatal injury.**

   2. With a scan tool, monitor all O2 Sensor voltage readings.

Is the voltage switching between 2.5 and 3.4 volts for all O2 sensors?

Yes

- Go To 3

No

- Go To 4

3. **O2 SENSOR HEATER OPERATION**
   1. Turn the ignition off.

      NOTE: Wait a minimum of 10 minutes to allow the O2 Sensor to cool down before continuing the test. Allow the O2 Sensor voltage to stabilize at 5.0 volts.

   2. Turn the ignition on.
   3. With a scan tool, actuate the O2 Sensor heater.
   4. With the scan tool, monitor O2 Sensor voltage for at least two minutes.

      Does the voltage stay above 4.5 volts?

      Yes

      - Go To 4

      No

      - Test complete.

4. **O2 SENSOR**
   1. Turn the ignition off.

      NOTE: Check for contaminants that may cause improper O2 Sensor operation, such as contaminated fuel, unapproved silicone, or evidence of oil or coolant.

   2. Disconnect the O2 Sensor harness connector.

3. Turn the ignition on.
4. With a scan tool, monitor the O2 Sensor voltage.

NOTE: The voltage should be approximately 5.0 volts with the connector disconnected.

5. Connect a jumper wire between the signal circuit and the return circuit in the O2 Sensor harness connector.

NOTE: The voltage should drop from 5.0 volts to 2.5 volts with the jumper wire in place.

Is the O2 Sensor voltage displayed on the scan tool as described?

Yes

- Replace the O2 Sensor.
- Perform the POWERTRAIN VERIFICATION TEST. Refer to **POWERTRAIN VERIFICATION TEST** .

No

- Go To 5

5. **O2 SENSOR SIGNAL CIRCUIT**
   1. Using the wiring diagram/schematic as a guide, inspect the O2 Sensor Signal circuit and connectors between the O2 sensor and the PCM.
   2. Check the O2 Sensor signal circuit for a short to ground, open circuit, short to voltage or high resistance.

   Were any problems found?

   Yes

   - Repair as necessary.
   - Perform the POWERTRAIN VERIFICATION TEST. Refer to **POWERTRAIN VERIFICATION TEST** .

   No

- Go To 6

6. **O2 SENSOR RETURN CIRCUIT**
   1. Using the wiring diagram/schematic as a guide, inspect the O2 Sensor Return circuit and connectors between the O2 sensor and the PCM.
   2. Check the O2 Sensor return circuit for a short to ground, open circuit, short to voltage or high resistance.

   Were any problems found?

   Yes

   - Repair as necessary.
   - Perform the POWERTRAIN VERIFICATION TEST. Refer to **POWERTRAIN VERIFICATION TEST** .

   No

   - Go To 7

7. **POWERTRAIN CONTROL MODULE (PCM)**
   1. Using the wiring diagram/schematic as a guide, inspect the wiring and connectors between the O2 sensor and the PCM.
   2. Look for any chafed, pierced, pinched or partially broken wires.
   3. Look for broken, bent, pushed out or corroded terminals.
   4. Monitor the scan tool data relative to the components tested in this procedure and wiggle test the wiring and connectors.
   5. Look for the data to change or for a DTC to set during the wiggle test.
   6. Perform any Technical Service Bulletins (TSBs) that may apply.

   Were any problems found?

   Yes

   - Repair as necessary.
   - Perform the POWERTRAIN VERIFICATION TEST. Refer to **POWERTRAIN VERIFICATION TEST** .

   No

- Replace and program the Powertrain Control Module (PCM) in accordance with the Service Information.
- Perform the POWERTRAIN VERIFICATION TEST. Refer to **POWERTRAIN VERIFICATION TEST** .

CHECKING THE TEMPERATURE SENSORS

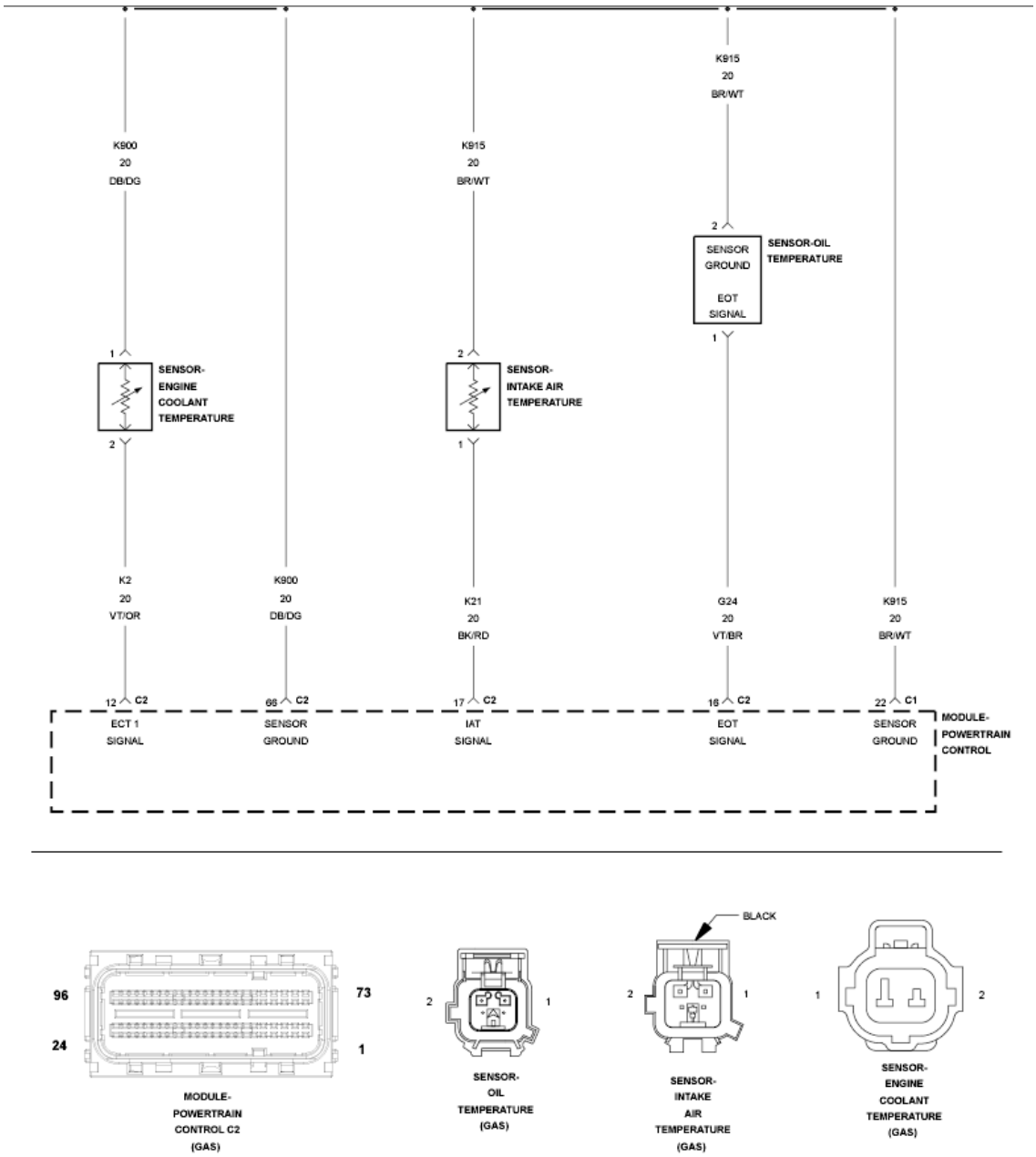

Fig. 13: Temperature Sensor Circuit Diagram
Courtesy of CHRYSLER GROUP, LLC

For a complete wiring diagram, **refer to appropriate SYSTEM WIRING**

DIAGRAMS article .

DIAGNOSTIC TEST

1. **COMPARE TEMPERATURE SENSOR VALUES**
   1. Turn the ignition off.
   2. Allow the vehicle to sit with the ignition off in an environment where the temperature is consistent and above - 7° C (19.4° F) until the engine coolant temperature is equal to ambient temperature.
   3. Turn the ignition on.
   4. Using a thermometer, measure and record the underhood and ambient temperatures.
   5. With a scan tool, read the ambient air temperature (AAT), engine coolant temperature (ECT), engine oil temperature (EOT) and intake air temperature (IAT) sensor values, as applicable.

      Are all temperature sensor values within 10° C (18° F) of the thermometer and the other sensor values?

      Yes

      - Test complete.

      No

      - Go To 2
2. **TEMPERATURE SENSOR WIRING OR CONNECTORS**

   NOTE: Perform the following procedures for each sensor that was not within the specified range as described in the previous step.

   1. Using the wiring diagram/schematic as a guide, inspect the wiring and connectors between the temperature sensor(s) and the applicable control module.
   2. Look for any chafed, pierced, pinched, or partially broken wires.
   3. Look for broken, bent, pushed out or corroded terminals.
   4. Turn the ignition on.

5. Monitor the scan tool data relative to the sensor(s) and wiggle Test. the wiring and connectors.
6. Look for the data to change or for a DTC to set during the wiggle Test.

Were any problems found?

Yes

- Repair as necessary in accordance with the Service Information.
- Perform the PCM VERIFICATION TEST. Refer to **POWERTRAIN VERIFICATION TEST** .

No

- Go To 3

3. **SENSOR VOLTAGE**
   1. Turn the ignition off.
   2. Disconnect the temperature sensor harness connector.
   3. Connect a jumper wire between the signal circuit and the sensor ground circuit in the sensor harness connector.
   4. Turn the ignition on.
   5. With a scan tool, read the sensor voltage.

NOTE: The sensor voltage should be approximately 0.0 volts (plus or minus 0.1 of a volt) with the jumper wire in place.

Does the scan tool display the voltage as described above?

Yes

- Go To 4

No

- Go To 5

4. **TEMPERATURE SENSOR**
   1. Turn the ignition off.

2. Remove the jumper wire from between the signal circuit and the sensor ground circuit in the sensor harness connector.
3. Turn the ignition on.
4. With a scan tool, read the sensor voltage.

NOTE: The sensor voltage should be approximately 5.0 volts (plus or minus 0.1 of a volt) with the connector disconnected.

Does the scan tool display the voltage as described above?

Yes

- Replace the sensor.
- Perform the POWERTRAIN VERIFICATION TEST. Refer to **POWERTRAIN VERIFICATION TEST** .

No

- Go To 5

5. **SIGNAL CIRCUIT SHORTED TO GROUND**
   1. Turn the ignition off.
   2. Measure the resistance between ground and the signal circuit in the sensor harness connector.

   Is the resistance above 100 Ohms?

   Yes

   - Go To 6

   No

   - Repair the signal circuit for a short to ground.
   - Perform the POWERTRAIN VERIFICATION TEST. Refer to **POWERTRAIN VERIFICATION TEST** .

6. **SIGNAL CIRCUIT SHORTED TO SENSOR GROUND CIRCUIT**
   1. Measure the resistance between the signal circuit and the sensor ground

circuit in the sensor harness connector.

Is the resistance above 100 Ohms?

Yes

- Go To 7

No

- Repair the signal circuit for a short to the sensor ground circuit.
- Perform the POWERTRAIN VERIFICATION TEST. Refer to **POWERTRAIN VERIFICATION TEST** .

7. **SIGNAL CIRCUIT HIGH RESISTANCE**
   1. Turn the ignition off.
   2. Connect the temperature sensor harness connector.

      CAUTION: Do not probe the PCM harness connectors. Probing the PCM harness connectors will damage the PCM terminals resulting in poor terminal to pin connection. Install the PCM Pinout Box along with the Adapter to perform the diagnosis.

   3. Using a voltmeter, perform a voltage drop Test. by backprobing the signal circuit at the sensor harness connector and at the applicable module connector (or by probing the appropriate terminal of the PCM Pinout Box (special tool #8815A, Kit, NGC, 38 Position). Make sure the voltmeter leads are connected so that positive polarity is displayed on the voltmeter.

      WARNING: When the engine is operating, do not stand in direct line with the fan. Do not put your hands near the pulleys, belts or fan. Do not wear loose clothing. Failure to follow these instructions may result in possible serious or fatal injury.

   4. Start the engine.

Is the voltage below 0.5 of a volt?

Yes

- Go To 8

No

- Repair the signal circuit for high resistance.
- Perform the POWERTRAIN VERIFICATION TEST. Refer to **POWERTRAIN VERIFICATION TEST** .

8. **SENSOR GROUND CIRCUIT HIGH RESISTANCE**
   1. Turn the ignition off.

      CAUTION: Do not probe the PCM harness connectors. Probing the PCM harness connectors will damage the PCM terminals resulting in poor terminal to pin connection. Install the PCM Pinout Box along with the Adapter to perform the diagnosis.

   2. Using a voltmeter, perform a voltage drop Test. by backprobing the sensor ground circuit at the sensor harness connector and at the applicable module connector (or by probing the appropriate terminal of the PCM Pinout Box (special tool #8815A, Kit, NGC, 38 Position). Make sure the voltmeter leads are connected so that positive polarity is displayed on the voltmeter.

      WARNING: When the engine is operating, do not stand in direct line with the fan. Do not put your hands near the pulleys, belts or fan. Do not wear loose clothing. Failure to follow these instructions may result in possible serious or fatal injury.

   3. Start the engine.

      Is the voltage below 0.5 of a volt?

Yes

- Go To 9

No

- Repair the sensor ground circuit for high resistance.
- Perform the POWERTRAIN VERIFICATION TEST. Refer to **POWERTRAIN VERIFICATION TEST** .

9. **MODULE**
   1. Using the wiring diagram/schematic as a guide, inspect the wiring and connectors between the sensor and the applicable control module. Refer to the appropriate wiring information.
   2. Look for any chafed, pierced, pinched, or partially broken wires.
   3. Look for broken, bent, pushed out or corroded terminals.
   4. Monitor the scan tool data relative to this circuit and wiggle Test the wiring and connectors.
   5. Look for the data to change or for the DTC to reset during the wiggle Test.
   6. Perform any Technical Service Bulletins that may apply.

   Were any problems found?

   Yes

   - Repair as necessary.
   - Perform the POWERTRAIN VERIFICATION TEST. Refer to **POWERTRAIN VERIFICATION TEST** .

   No

   - Replace the applicable control module in accordance with the Service Information.
   - Perform the POWERTRAIN VERIFICATION TEST. Refer to **POWERTRAIN VERIFICATION TEST** .

FUEL DELIVERY SYSTEM OUTPUT - FLOW TEST

For a complete wiring diagram, **refer to appropriate SYSTEM WIRING**

DIAGRAMS article .

WARNING: Follow these safety precautions to reduce the risk of fire and possible serious or fatal injury when performing this test procedure.

- **Fuel or fuel vapors are highly flammable. A fire could occur if an ignition source is present. Do not expose the fuel or the test equipment used in this procedure to open flames or sparks.**
- **Inhalation of fuel vapors could lead to disorientation and personal injury. Keep the service area well ventilated, or perform this test procedure in an area where there is a building exhaust removal system.**
- **Relieve fuel system pressure before servicing fuel system components.**
- **Use extreme caution when connecting and disconnecting fuel lines.**
- **Considerable fuel leakage may occur when servicing the fuel system. Wear protective eyewear and clothing to protect from fuel splash, and take suitable fuel containment measures.**
- **Wrap a shop towel around the fuel pressure gauge connection to absorb fuel leakage that occurs when connecting the test equipment. Place the towel in an approved container when complete.**
- **Never store fuel in an open container due to the possibility of fire or explosion. Have a dry chemical (Class B) fire extinguisher nearby.**

DIAGNOSTIC TEST

1. **CHECK FUEL DELIVERY SYSTEM FOR LEAKS AND DAMAGE**

WARNING: The fuel system is under a constant pressure (even with the engine off). Before testing or servicing any fuel system hose, fitting, or line, the fuel system pressure must be released. Failure to follow these instructions can result in possible serious or fatal injury.

1. Visually and physically inspect the fuel delivery system for external leaks and damage.

   Is the system leaking or damaged?

   Yes

   - Repair or replace as necessary.
   - Perform the PCM VERIFICATION TEST. Refer to **POWERTRAIN VERIFICATION TEST** .

   No

   - Go To 2

2. **INSTALL APPROPRIATE FUEL LINE ADAPTERS / FITTING FROM THE GAS AND DIESEL FUEL PRESSURE/DECAY TESTER 8978A**

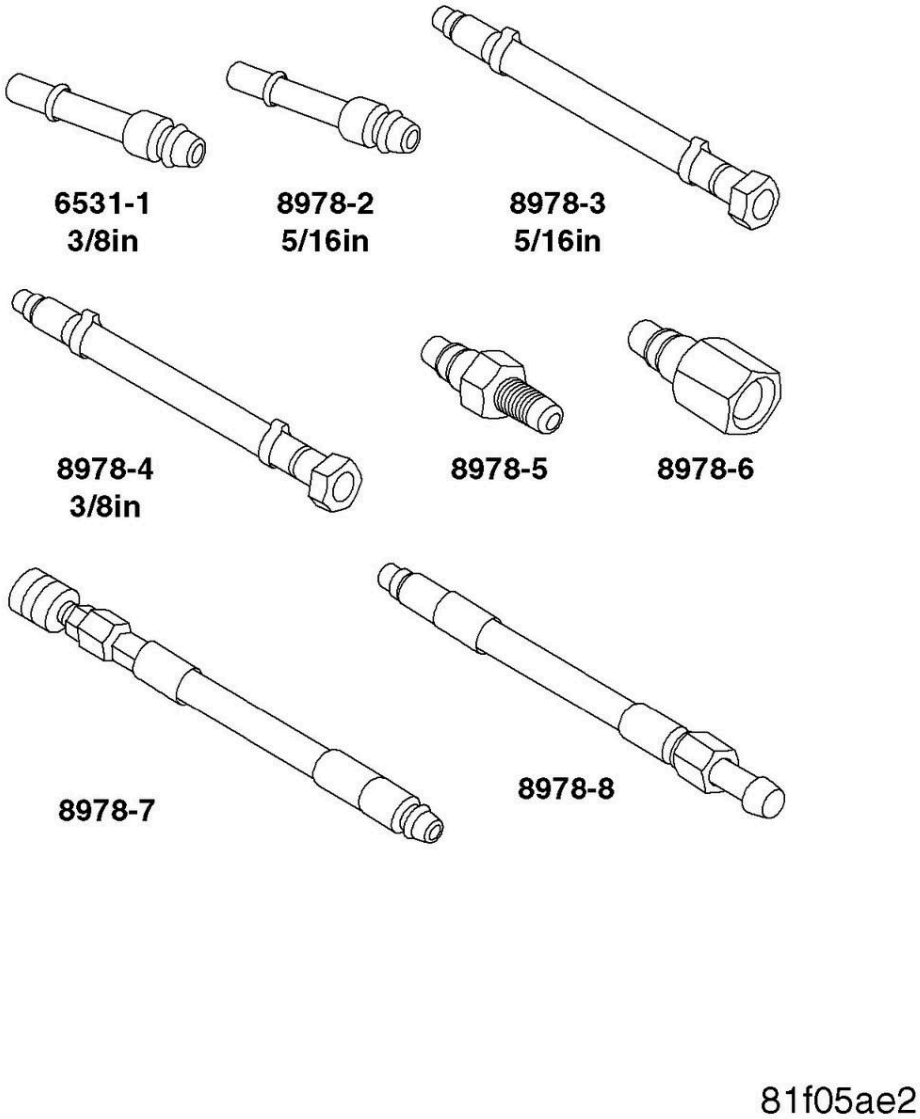

Fig. 14: Fuel Line Adapters/Fitting
Courtesy of CHRYSLER GROUP, LLC

1. Turn the ignition off.

WARNING: The fuel system is under a constant pressure (even with the engine off). Before testing or servicing any fuel system hose, fitting, or line, the fuel system pressure must be released. Failure to follow these instructions can result in possible serious or fatal injury.

2. Disconnect the frame rail fuel supply line connector between the fuel supply line and the fuel rail.
3. Install the appropriate Fuel Line Adapters / Fitting from the Gas and Diesel Fuel Pressure/Decay Tester (special tool #8978A, Decay Tool, Fuel).

Proceed

- Go To 3

3. **INSTALL FUEL PRESSURE GAUGE ASSEMBLY**

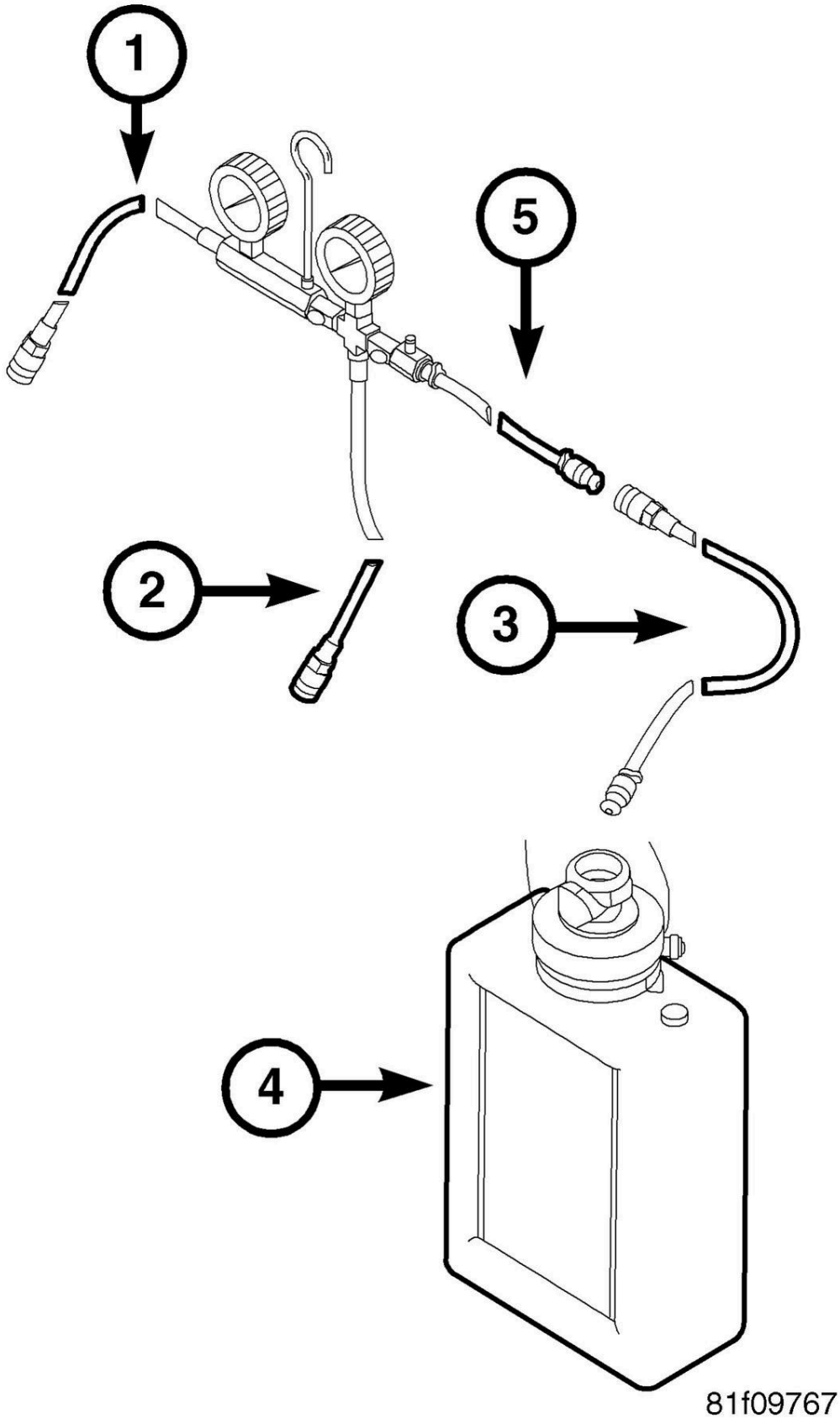

Fig. 15: Identifying Fuel Pressure Gauge Assembly Components
Courtesy of CHRYSLER GROUP, LLC

WARNING: The fuel system is under a constant pressure (even with the engine off). Before testing or servicing any fuel system hose, fitting, or line, the fuel system pressure must be released. Failure to follow these instructions can result in possible serious or fatal injury.

1. Connect Fuel Pressure Gauge Assembly (special tool #8978A, Decay Tool, Fuel), Fuel Inlet Hose (1) and Fuel Outlet Hose (2) to the Fuel Line Adapters / Fitting.
2. Connect special tool Drain Extension Hose 535680 (3) to the Fuel Pressure Gauge Assembly Drain Hose (5).
3. Connect Reservoir Assembly 534960 (4) to Drain Extension Hose 535680 (3).

WARNING: To reduce the risk of fire and possible serious or fatal injury, place Reservoir Assembly 534960 (4) on the floor and out of the way so that it is not a trip hazard.

Proceed

- Go To 4

4. **CHECK FUEL PRESSURE**

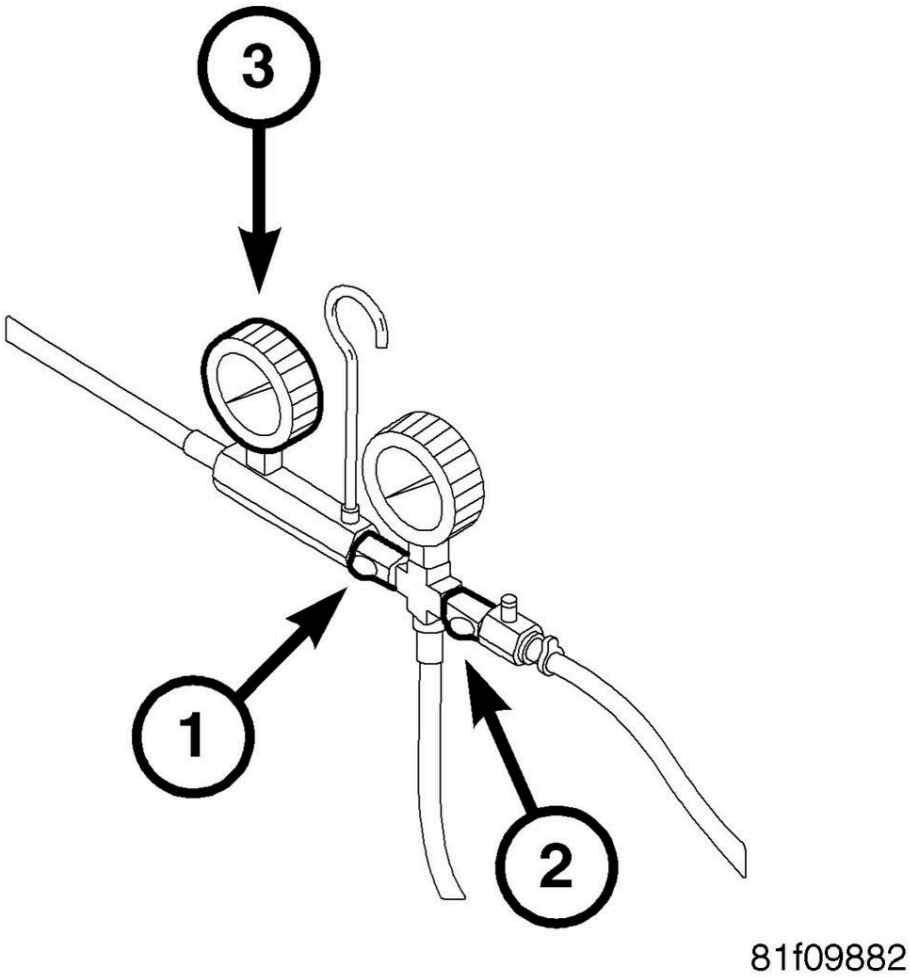

Fig. 16: Identifying Fuel System Isolation Valve & Flow Test Valves
Courtesy of CHRYSLER GROUP, LLC

WARNING: **The fuel system is under a constant pressure (even with the engine off). Before testing or servicing any fuel system hose, fitting, or line, the fuel system pressure must be released. Failure to follow these instructions can result in possible serious or fatal injury.**

1. Perform the following procedure to purge air from the system:
   - Open the Fuel System Isolation Valve (1).
   - Close the Flow Test Valve (2).
   - Ignition on, engine not running.
   - With the scan tool, actuate the fuel pump.
   - Open the Flow Test Valve (1) for 10 seconds, then close the Valve.

- **CAUTION: Stop All Actuations.**
- Turn the ignition off.
- Disconnect, empty and then reconnect the Reservoir Assembly.

2. Turn the ignition on, wait five seconds, turn the ignition off and then wait one minute before proceeding.
3. Read the Fuel Pressure Gauge (3) and record the reading. The fuel pressure specification is 407 kPa +/- 34 kPa (59 psi +/- 5 psi).

   Is the fuel pressure within specifications?

   Yes

   - Go To 5

   No

   - Refer to **CHECKING THE FUEL DELIVERY SYSTEM** and perform the CHECKING THE FUEL DELIVERY SYSTEM diagnostic procedure.

5. **CHECK FUEL DELIVERY SYSTEM OUTPUT**

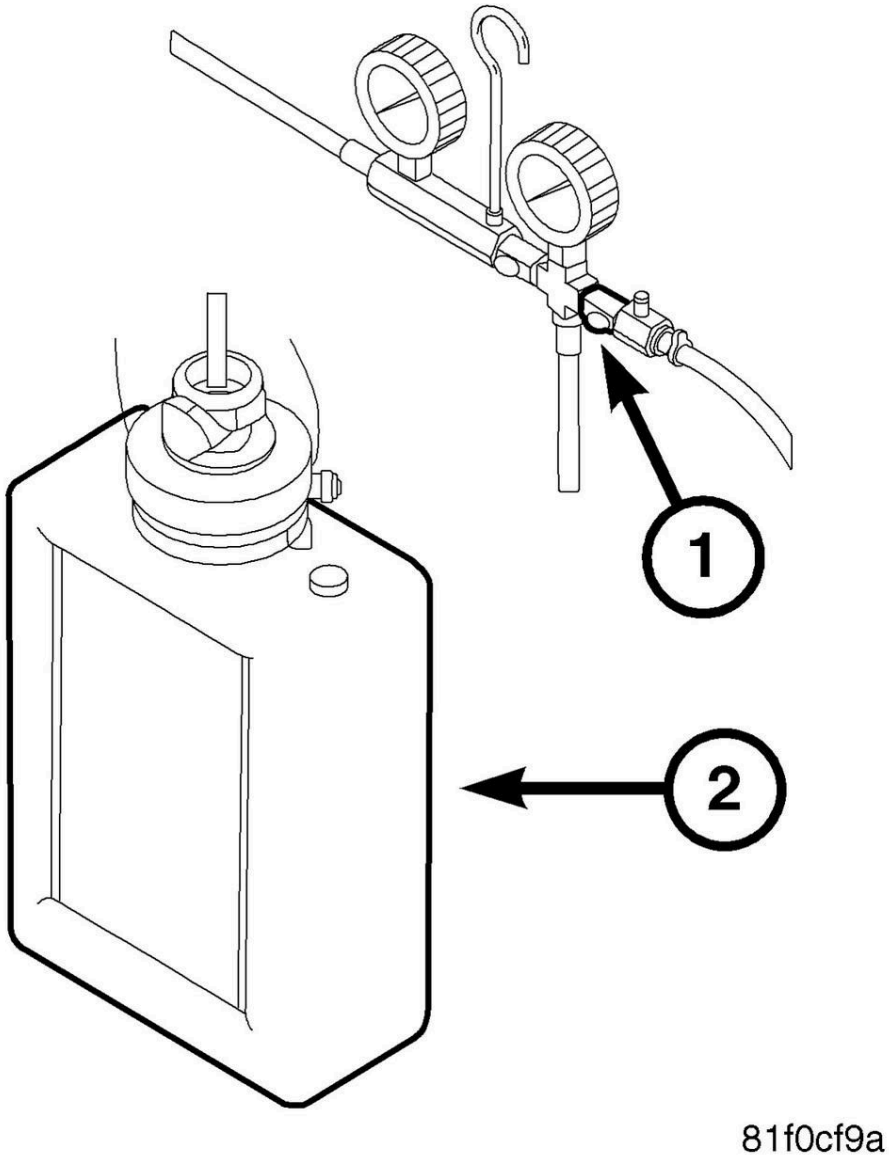

Fig. 17: Checking Fuel Delivery System Output
Courtesy of CHRYSLER GROUP, LLC

WARNING: The fuel system is under a constant pressure (even with the engine off). Before testing or servicing any fuel system hose, fitting, or line, the fuel system pressure must be released. Failure to follow these instructions can result in possible serious or fatal injury.

1. Ignition on, engine not running.
2. With the scan tool, actuate the fuel pump.

3. Open the Flow Test Valve (1) for 20 seconds, then close the Valve.

CAUTION: Stop all actuations.

4. Turn the ignition off.
5. Measure the amount of fuel in the Reservoir Assembly (2). The fuel output specification is ml/s X 20 seconds = fuel flow in ml.

FUEL FLOW		
ENGINE	**ml/s**	**ml per 20 Seconds**
4 Cylinder and 6 Cylinder	20.8333A	417
8 Cylinder	38.88889	778

Does the amount of fuel in the reservoir meet or exceed the specification?

Yes

- Test complete.

No

- Refer to **CHECKING THE FUEL DELIVERY SYSTEM** and perform the CHECKING THE FUEL DELIVERY SYSTEM diagnostic procedure.

FUEL PRESSURE LEAK DOWN

For a complete wiring diagram, **refer to appropriate SYSTEM WIRING DIAGRAMS article** .

POSSIBLE CAUSES

POSSIBLE CAUSES
FUEL DELIVERY SYSTEM LEAKING OR DAMAGED
FUEL PUMP MODULE
FUEL INJECTOR(S)

WARNING: Follow these safety precautions to reduce the risk of fire and possible serious or fatal injury when performing this test procedure.

- **Fuel or fuel vapors are highly flammable. A fire could occur if an ignition source is present. Do not expose the fuel or the test equipment used in this procedure to open flames or sparks.**
- **Inhalation of fuel vapors could lead to disorientation and personal injury. Keep the service area well ventilated, or perform this test procedure in an area where there is a building exhaust removal system.**
- **Relieve fuel system pressure before servicing fuel system components.**
- **Use extreme caution when connecting and disconnecting fuel lines.**
- **Considerable fuel leakage may occur when servicing the fuel system. Wear protective eye wear and clothing to protect from fuel splash, and take suitable fuel containment measures.**
- **Wrap a shop towel around the fuel pressure gauge connection to absorb fuel leakage that occurs when connecting the test equipment. Place the towel in an approved container when complete.**
- **Never store fuel in an open container due to the possibility of fire or explosion. Have a dry chemical (Class B) fire extinguisher nearby.**

DIAGNOSTIC TEST

1. CHECK FUEL DELIVERY SYSTEM FOR LEAKS AND DAMAGE

WARNING: The fuel system is under a constant pressure (even with the engine off). Before testing or servicing any fuel system hose, fitting, or line,

the fuel system pressure must be released. Failure to follow these instructions can result in possible serious or fatal injury.

1. Visually and physically inspect the fuel delivery system for external leaks and damage.

   Is the system leaking or damaged?

   Yes

   - Repair / replace as necessary.
   - Perform the POWERTRAIN VERIFICATION TEST. Refer to **POWERTRAIN VERIFICATION TEST** .

   No

   - Go To 2

2. **INSTALL APPROPRIATE FUEL LINE ADAPTERS / FITTING FROM GAS AND DIESEL FUEL PRESSURE/DECAY TESTER 8978A**

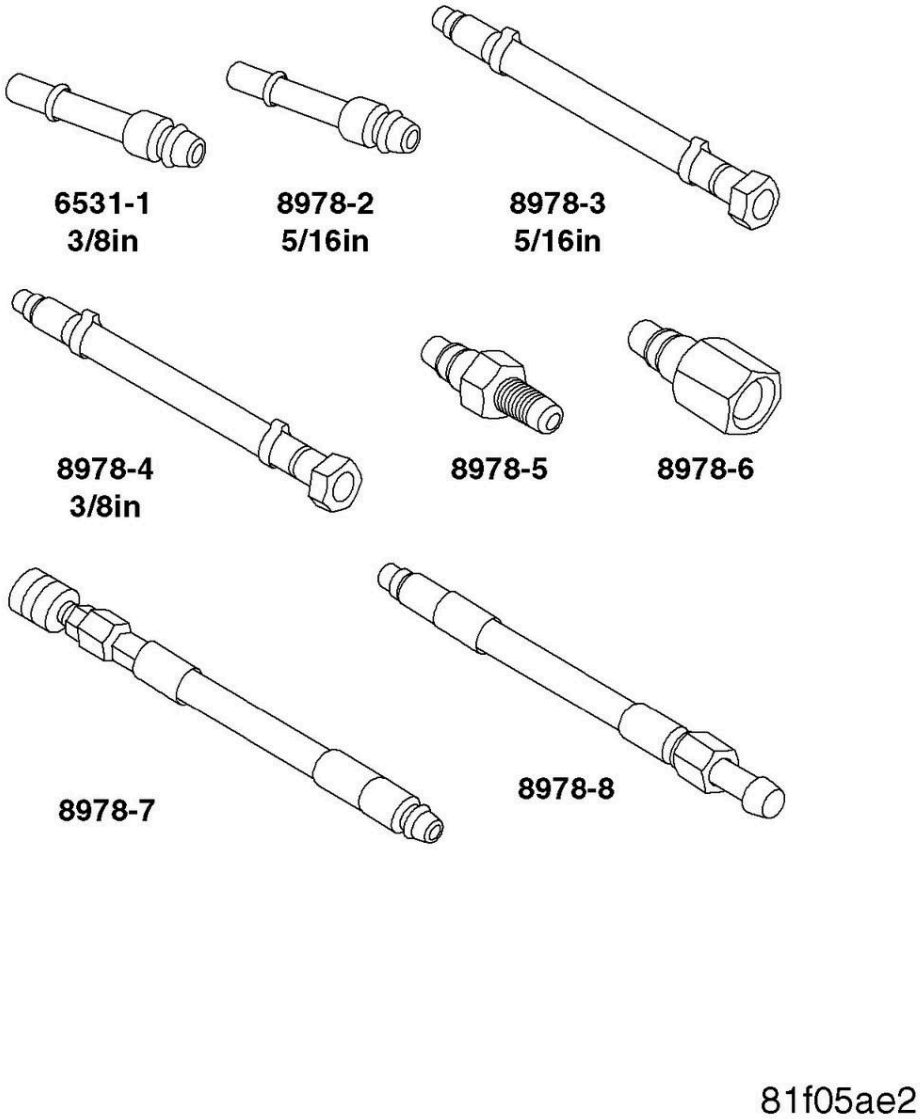

Fig. 18: Fuel Line Adapters/Fitting
Courtesy of CHRYSLER GROUP, LLC

1. Turn the ignition off.

WARNING: The fuel system is under a constant pressure (even with the engine off). Before testing or servicing any fuel system hose, fitting, or line, the fuel system pressure must be released. Failure to follow these instructions can result in possible serious or fatal injury.

2. Disconnect the frame rail fuel supply line connector between the fuel supply line and the fuel rail.
3. Install the appropriate Fuel Line Adapters / Fitting from Gas and Diesel Fuel Pressure/Decay Tester (special tool #8978A, Decay Tool, Fuel).

Proceed

- Go To 3

3. **INSTALL FUEL PRESSURE GAUGE ASSEMBLY**

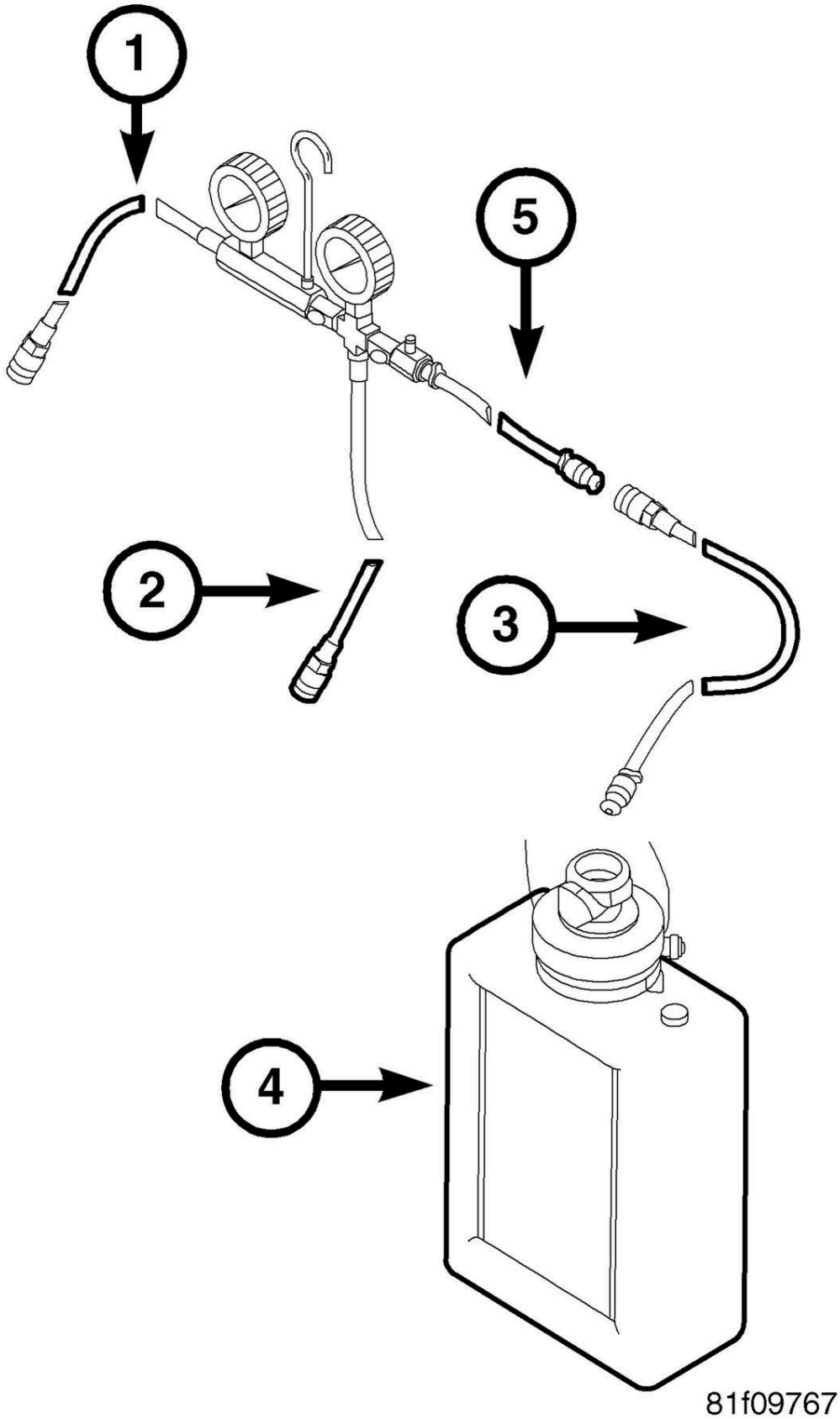

Fig. 19: Identifying Fuel Pressure Gauge Assembly Components
Courtesy of CHRYSLER GROUP, LLC

WARNING: The fuel system is under a constant pressure (even with the engine off). Before testing or servicing any fuel system hose, fitting, or line, the fuel system pressure must be released. Failure to follow these instructions can result in possible serious or fatal injury.

1. Connect Gas and Diesel Fuel Pressure/Decay Tester (special tool #8978A, Decay Tool, Fuel), Fuel Inlet Hose (1) and Fuel Outlet Hose (2) to the Fuel Line Adapters / Fitting.
2. Connect Drain Extension Hose 535680 (3) to the Fuel Pressure Gauge Assembly Drain Hose (5).
3. Connect the Reservoir Assembly 534960 (4) to the Drain Extension Hose 535680 (3).

WARNING: To reduce the risk of fire and serious possible serious or fatal injury, place Reservoir Assembly 534960 (4) on the floor and out of the way so that it is not a trip hazard.

Proceed

- Go To 4

4. **CHECK FUEL PRESSURE**

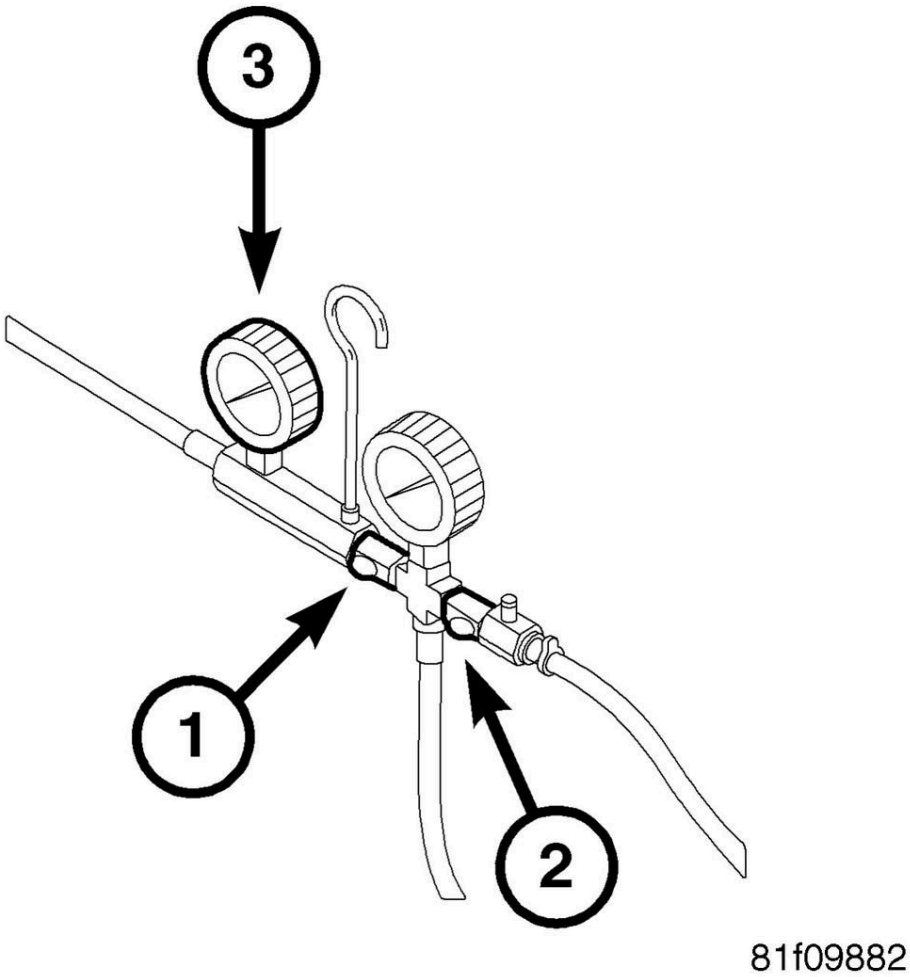

Fig. 20: Identifying Fuel System Isolation Valve & Flow Test Valves
Courtesy of CHRYSLER GROUP, LLC

WARNING: **The fuel system is under a constant pressure (even with the engine off). Before testing or servicing any fuel system hose, fitting, or line, the fuel system pressure must be released. Failure to follow these instructions can result in possible serious or fatal injury.**

1. Perform the following procedure to purge air from the system:
   - Open the Fuel System Isolation Valve (1).
   - Close the Flow Test Valve (2).
   - Ignition on, engine not running.
   - With the scan tool, actuate the fuel pump.
   - Open the Flow Test Valve (1) for 10 seconds, then close the Valve.

- **CAUTION: Stop All Actuations.**
- Turn the ignition off.
- Disconnect, empty and then reconnect the Reservoir Assembly.

2. Turn the ignition on, wait five seconds, turn the ignition off and then wait 1 minute before proceeding.
3. Read the Fuel Pressure Gauge (3) and record the reading.
4. The fuel pressure specification is 407 kPa +/- 34 kPa (59 psi +/- 5 psi).

   Is the fuel pressure within specifications?

   Yes

   - Go To 5

   No

   - Perform the CHECKING THE FUEL DELIVERY SYSTEM diagnostic procedure as directed. Refer to **CHECKING THE FUEL DELIVERY SYSTEM**.

5. **CHECK FUEL DELIVERY SYSTEM FOR LEAK DOWN**

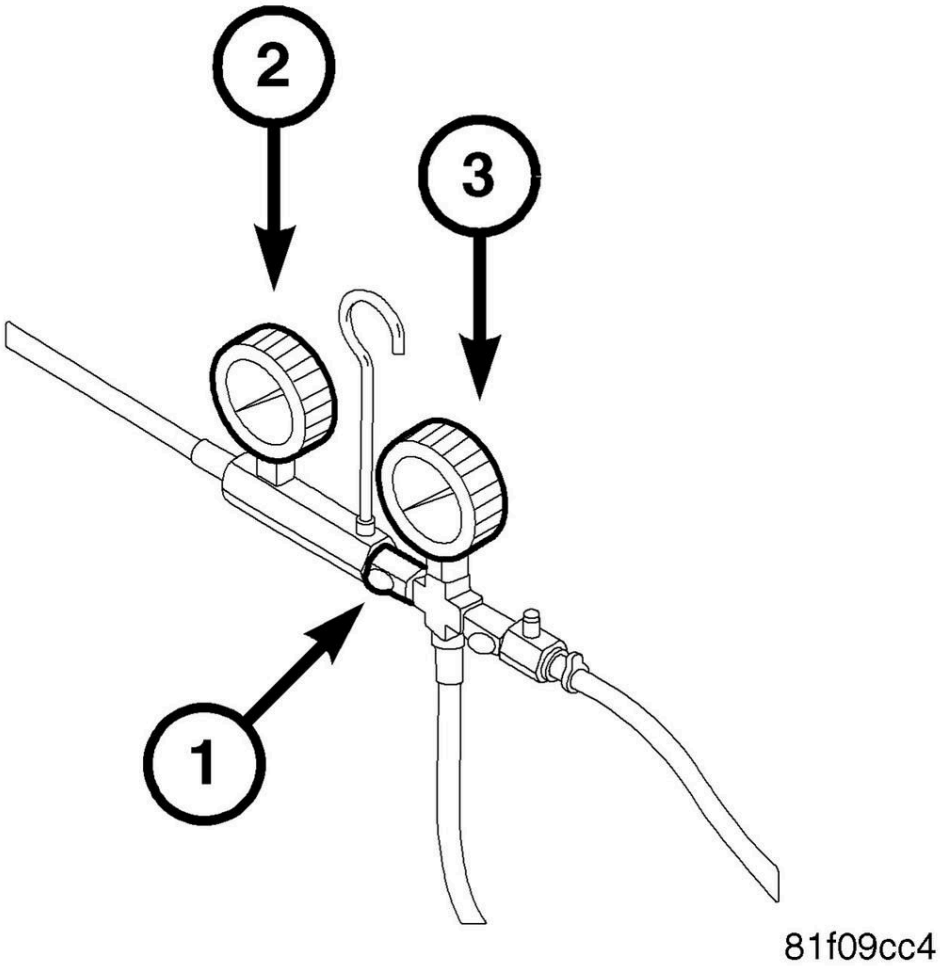

Fig. 21: Checking Fuel Delivery System For Leak Down
Courtesy of CHRYSLER GROUP, LLC

WARNING: **The fuel system is under a constant pressure (even with the engine off). Before testing or servicing any fuel system hose, fitting, or line, the fuel system pressure must be released. Failure to follow these instructions can result in possible serious or fatal injury.**

1. Close the Fuel System Isolation Valve (1) and then wait five minutes before proceeding.
2. Read the Fuel Inlet (2) and Fuel Outlet (3) Pressure Gauges. The pressure should not drop more than 10 psi on either gauge.

   Does the fuel pressure drop more than 10 psi?

Yes - On Fuel Inlet Gauge (1)

- Replace the appropriate fuel pump module as indicated in the table below.

Vehicle	Check Valve Location
LC	Auxiliary fuel pump module (right-side of fuel tank)
LX	Auxiliary fuel pump module (right-side of fuel tank)
JC	Primary fuel pump module (left-side of fuel tank)
JS	Primary fuel pump module (left-side of fuel tank)
MK	Primary fuel pump module (left-side of fuel tank)
PM	Primary fuel pump module (left-side of fuel tank)

NOTE: The check valve allows residual fuel pressure to remain in the line and not de-pressurize into the tank when the fuel pump is off.

- Perform the POWERTRAIN VERIFICATION TEST. Refer to **POWERTRAIN VERIFICATION TEST** .

Yes - On Fuel Outlet Gauge (2)

- Replace the leaking fuel injector(s).
- Perform the POWERTRAIN VERIFICATION TEST. Refer to **POWERTRAIN VERIFICATION TEST** .

No

- If directed here by another test, return to that test. Otherwise, test complete.

HARD START FUEL SYSTEM

For a complete wiring diagram, **refer to appropriate SYSTEM WIRING DIAGRAMS article** .

POSSIBLE CAUSES

Possible Causes
FUEL CONTAMINATION
RESTRICTED FUEL SUPPLY LINE
FUEL PUMP INLET STRAINER PLUGGED
FUEL PUMP MODULE
FUEL INJECTOR(S)

DIAGNOSTIC TEST

1. **CHECKING FUEL PRESSURE**
   1. Turn the ignition off.

      WARNING: **The fuel system is under a constant pressure even with the engine off. Before testing or servicing any fuel system hose, fitting or line, the fuel system pressure must be released. Failure to follow these instructions can result in possible serious or fatal injury.**

   2. Turn the ignition off.
   3. Install the Fuel Pressure Decay Tester (special tool #8978A, Decay Tool, Fuel) on the fuel line near the intake manifold
   4. Ignition on, engine not running.
   5. With a scan tool, actuate the Fuel Pump and observe the fuel pressure gauge.

      NOTE: **All gas engines except SRT-4 fuel pressure specification is 407 kPa +/- 34 kPa (59 psi +/- 5 psi). SRT-4 only fuel pressure specification is 552 kPa +/- 34 kPa (80 psi +/- 5 psi).**

      Choose a conclusion that best matches your fuel pressure reading.

Below Specification

- Go To 2

Within Specification

- Go To 4

2. **RESTRICTED FUEL SUPPLY LINE**

WARNING: The fuel system is under a constant pressure even with the engine off. Before testing or servicing any fuel system hose, fitting or line, the fuel system pressure must be released. Failure to follow these instructions can result in possible serious or fatal injury.

1. Turn the ignition off.
2. Remove the Fuel Pressure Decay Tester (special tool #8978A, Decay Tool, Fuel).
3. Raise the vehicle on a hoist, and disconnect the fuel supply line at the fuel pump module.
4. Install the Fuel Pressure Decay Tester (special tool #8978A, Decay Tool, Fuel) at the fuel pump.
5. Ignition on, engine not running.
6. Read the Fuel Pressure Gauge and record the reading. **Non SRT-4** fuel pressure specification is 407 kPa +/- 34 kPa (59 psi +/- 5 psi). **SRT-4** fuel pressure specification is 552 kPa +/- 34 kPa (80 psi +/- 5 psi).

Is the fuel pressure within specification?

Yes

- Visually and physically inspect the fuel supply lines between the fuel tank and the fuel rail. Repair/replace as necessary.
- Perform the PCM VERIFICATION TEST. Refer to **POWERTRAIN VERIFICATION TEST** .

No

- Go To 3

3. **CHECKING THE FUEL PUMP INLET**

WARNING: The fuel system is under a constant pressure even with the engine off. Before testing or servicing any fuel system hose, fitting or line, the fuel system pressure must be released. Failure to follow these instructions can result in possible serious or fatal injury.

1. Turn the ignition off.
2. Remove the Fuel Pump Module and Fuel Tank Module (if equipped), inspect the Fuel Pump Inlet and the bottom of the fuel tank for debris that could cause the fuel pump inlet to be plugged.

   Is the Fuel Inlet Strainer plugged?

   Yes

   - Repair/Replace as necessary.
   - Perform the PCM VERIFICATION TEST. Refer to **POWERTRAIN VERIFICATION TEST** .

   No

   - Replace the Fuel Pump Module.
   - Perform the PCM VERIFICATION TEST. Refer to **POWERTRAIN VERIFICATION TEST** .

4. **FUEL PUMP MODULE**

NOTE: Before continuing visually and physically inspect the fuel delivery system for external leaks or damage. Repair / replace as necessary.

WARNING: The fuel system is under a constant pressure even with the engine off. Before testing or servicing any fuel system hose, fitting or line, the fuel system pressure must be released.

Failure to follow these instructions can result in possible serious or fatal injury.

1. Turn the ignition off.
2. Install the Fuel Pressure Decay Tester (special tool #8978A, Decay Tool, Fuel) at the intake manifold.
3. Start the engine and allow the fuel system to reach maximum pressure.
4. Turn the ignition off.
5. Close the Fuel System Isolation Valve and then wait five minutes before proceeding.

NOTE: All gas engines except SRT-4 fuel pressure specification is 407 kPa +/- 34 kPa (59 psi +/- 5 psi). SRT-4 only fuel pressure specification is 552 kPa +/- 34 kPa (80 psi +/- 5 psi).

6. Read the Fuel Inlet and Fuel Outlet Pressure Gauges. The pressure should not drop more than 10 psi on either gauge.
7. Monitor the fuel pressure gauge for a minimum of five minutes.

Does the fuel pressure drop more than 10 psi?

Yes - On Fuel Inlet Gauge

- Replace Fuel Pump Module.
- Perform the PCM VERIFICATION TEST. Refer to **POWERTRAIN VERIFICATION TEST** .

Yes - On Fuel Outlet Gauge

- Replace the leaking fuel injector(s).
- Perform the PCM VERIFICATION TEST. Refer to **POWERTRAIN VERIFICATION TEST** .

No

- If directed here by another test, return to that test. Otherwise, test complete.

2014 ENGINE PERFORMANCE

Emissions Control - Compass & Patriot

DESCRIPTION

MONITORED COMPONENT

COMPREHENSIVE-COMPONENTS

There are several components that will affect vehicle emissions if they malfunction. If one of these components malfunctions the Malfunction Indicator Lamp (Check Engine) will illuminate.

Some of the component monitors are checking for proper operation of the part. Electrically operated components now have input (rationality) and output (functionality) checks as well as continuity tests (opens/shorts). Previously, a component like the Throttle Position sensor (TPS) was checked by the PCM for an open or shorted circuit. If one of these conditions occurred, a DTC was set. Now there is a check to ensure that the component is working. This is done by watching for a TPS indication of a greater or lesser throttle opening than MAP and engine RPM indicate. In the case of the TPS, if engine vacuum is high and engine RPM is 1600 or greater and the TPS indicates a large throttle opening, a DTC will be set. The same applies to low vacuum and 1600 RPM.

Any component that has an associated 'limp in' will set a fault after 1 trip with the malfunction present.

Refer to the **DTC INDEX** and the appropriate Powertrain Diagnostic Information for diagnostic procedures.

The following is a list of the monitored components:

- Catalyst Monitor
- Comprehensive Components
- EGR (if equipped)
- Fuel Control (rich/lean)
- Oxygen Sensor Monitor
- Oxygen Sensor Heater Monitor
- Purge

- Misfire
- Evaporative System Integrity Monitor (ESIM)

COMPREHENSIVE COMPONENTS

Along with the major monitors, OBD II requires that the diagnostic system monitor any component that could affect emissions levels. In many cases, these components were being tested under OBD I. The OBD I requirements focused mainly on testing emissions-related components for electrical opens and shorts.

However, OBD II also requires that inputs from powertrain components to the PCM be tested for **rationality** , and that outputs to powertrain components from the PCM be tested for **functionality** . Methods for monitoring the various Comprehensive Component monitoring include:

1. Circuit Continuity
    - Open
    - Shorted high
    - Shorted to ground
2. Rationality or Proper Functioning

- Inputs tested for rationality
- Outputs tested for functionality

NOTE: Comprehensive component monitors are continuous. Therefore, enabling conditions do not apply. All will set a DTC and illuminate the MIL in 1- trip.

Input Rationality - While input signals to the PCM are constantly being monitored for electrical opens and shorts, they are also tested for rationality. This means that the input signal is compared against other inputs and information to see if it makes sense under the current conditions.

PCM sensor inputs that are checked for rationality include:

- Manifold Absolute Pressure (MAP) Sensor
- Oxygen Sensor (O2S) (slow response)
- Engine Coolant Temperature (ECT) Sensor

- Camshaft Position (CMP) Sensor
- Vehicle Speed Sensor
- Crankshaft Position (CKP) Sensor
- Inlet Air Temperature Sensor
- Throttle Position (TPS) Sensor
- Power Steering Switch
- Oxygen Sensor Heater
- Engine Controller
- Brake Switch
- Evaporative System Integrity Monitor (ESIM)
- P/N Switch
- Trans Controls

Output Functionality - PCM outputs are tested for functionality in addition to testing for opens and shorts. When the PCM provides a voltage to an output component, it can verify that the command was carried out by monitoring specific input signals for expected changes. For example, when the PCM commands the Idle Air Control (IAC) Motor to a specific position under certain operating conditions, it expects to see a specific (target) idle speed (RPM). If it does not, it stores a DTC.

PCM outputs monitored for functionality include:

- Fuel Injectors
- Ignition Coils
- Torque Converter Clutch Solenoid
- Purge Solenoid
- EGR Solenoid (if equipped)
- Radiator Fan Control
- Trans Controls

OXYGEN SENSOR (O2S) MONITOR

DESCRIPTION - Effective control of exhaust emissions is achieved by an oxygen feedback system. The most important element of the feedback system is the O2S. The O2S is located in the exhaust path. Once it reaches operating

temperature 300° to 350°C (572° to 662°F), the sensor generates a voltage that is inversely proportional to the amount of oxygen in the exhaust. When there is a large amount of oxygen in the exhaust caused by a lean condition, misfire or exhaust leak, the sensor produces a low voltage, below 450 mV. When the oxygen content is lower, caused by a rich condition, the sensor produces a higher voltage, above 450mV.

The information obtained by the sensor is used to calculate the fuel injector pulse width. The PCM is programmed to maintain the optimum air/fuel ratio. At this mixture ratio, the catalyst works best to remove hydrocarbons (HC), carbon monoxide (CO) and nitrous oxide (NOx) from the exhaust.

The O2S is also the main sensing element for the EGR, Catalyst and Fuel Monitors, and purge.

The O2S may fail in any or all of the following manners:

- Slow response rate (Big Slope)
- Reduced output voltage (Half Cycle)
- Heater Performance

Slow Response Rate (Big Slope) - Response rate is the time required for the sensor to switch from lean to rich signal output once it is exposed to a richer than optimum A/F mixture or vice versa. As the PCM adjusts the air/fuel ratio, the sensor must be able to rapidly detect the change. As the sensor ages, it could take longer to detect the changes in the oxygen content of the exhaust gas. The rate of change that an oxygen sensor experiences is called 'Big Slope'. The PCM checks the oxygen sensor voltage in increments of a few milliseconds.

Reduced Output Voltage (Half Cycle) - The output voltage of the O2S ranges from 2.5 to 5 volt. A good sensor can easily generate any output voltage in this range as it is exposed to different concentrations of oxygen. To detect a shift in the A/F mixture (lean or rich), the output voltage has to change beyond a threshold value. A malfunctioning sensor could have difficulty changing beyond the threshold value. Many times the condition is only temporary and the sensor will recover. Under normal conditions the voltage signal surpasses the threshold, and a counter is incremented by one. This is called the Half Cycle Counter.

Heater Performance - The heater is tested by a separate monitor. Refer to

OXYGEN-SENSOR-O2S-MONITOR.

OPERATION - As the Oxygen Sensor signal switches, the PCM monitors the half cycle and big slope signals from the oxygen sensor. If during the test neither counter reaches a predetermined value, a malfunction is entered and a Freeze Frame is stored. Only one counter reaching its predetermined value is needed for the monitor to pass.

The Oxygen Sensor Signal Monitor is a two trip monitor that is tested only once per trip. When the Oxygen Sensor fails the test in two consecutive trips, the MIL is illuminated and a DTC is set. The MIL is extinguished when the Oxygen Sensor monitor passes in three consecutive trips. The DTC is erased from memory after 40 consecutive warm-up cycles without test failure.

Enabling Conditions - The following conditions must typically be met for the PCM to run the oxygen sensor monitor:

- Battery voltage
- Engine temperature
- Engine run time
- Engine run time at a predetermined speed
- Engine run time at a predetermined speed and throttle opening
- Transmission in gear (automatic only)
- Fuel system in Closed Loop
- Long Term Adaptive (within parameters)
- Power Steering Switch in low PSI (no load)
- Engine at idle
- Fuel level above 15%
- Barometric pressure
- Engine RPM within acceptable range of desired idle
- Closed throttle speed

Pending Conditions - The Task Manager typically does not run the Oxygen Sensor Signal Monitor if overlapping monitors are running or the MIL is illuminated for any of the following:

- Misfire Monitor

- Front Oxygen Sensor and Heater Monitor
- MAP Sensor
- Vehicle Speed Sensor
- Engine Coolant Temperature Sensor
- Throttle Position
- Engine Controller Self Test Faults
- Cam or Crank Sensor
- Injector and Coil
- EVAP Electrical
- EGR Solenoid Electrical (if equipped)
- Intake Air Temperature
- 5 Volt Feed

Conflict - The Task Manager does not run the Oxygen Sensor Monitor if any of the following conditions are present:

- A/C ON (A/C clutch cycling temporarily suspends monitor)
- Purge flow in progress

Suspend - The Task Manager suspends maturing a fault for the Oxygen Sensor Monitor if any of the following are present:

- Oxygen Sensor Heater Monitor, Priority 1
- Misfire Monitor, Priority 2

CATALYST MONITOR

To comply with clean air regulations, vehicles are equipped with catalytic converters. These converters reduce the emission of hydrocarbons, oxides of nitrogen and carbon monoxide.

Normal vehicle miles or engine misfire can cause a catalyst to decay. A meltdown of the ceramic core can cause a reduction of the exhaust passage. This can increase vehicle emissions and deteriorate engine performance, driveability and fuel economy.

The catalyst monitor uses dual oxygen sensors (O2S's) to monitor the efficiency

of the converter. The dual O2S strategy is based on the fact that as a catalyst deteriorates, its oxygen storage capacity and its efficiency are both reduced. By monitoring the oxygen storage capacity of a catalyst, its efficiency can be indirectly calculated. The upstream O2S is used to detect the amount of oxygen in the exhaust gas before the gas enters the catalytic converter. The PCM calculates the A/F mixture from the output of the O2S. A low voltage indicates high oxygen content (lean mixture). A high voltage indicates a low content of oxygen (rich mixture).

When the upstream O2S detects a high oxygen condition, there is an abundance of oxygen in the exhaust gas. A functioning converter would store this oxygen so it can use it for the oxidation of HC and CO. As the converter absorbs the oxygen, there will be a lack of oxygen downstream of the converter. The output of the downstream O2S will indicate limited activity in this condition.

As the converter loses the ability to store oxygen, the condition can be detected from the behavior of the downstream O2S. When the efficiency drops, no chemical reaction takes place. This means the concentration of oxygen will be the same downstream as upstream. The output voltage of the downstream O2S copies the voltage of the upstream sensor. The only difference is a time lag (seen by the PCM) between the switching of the O2S's.

To monitor the system, the number of lean-to-rich switches of upstream and downstream O2S's is counted. The ratio of downstream switches to upstream switches is used to determine whether the catalyst is operating properly. An effective catalyst will have fewer downstream switches than it has upstream switches i.e., a ratio closer to zero. For a totally ineffective catalyst, this ratio will be one-to-one, indicating that no oxidation occurs in the device.

The system must be monitored so that when catalyst efficiency deteriorates and exhaust emissions increase to over the legal limit, the MIL (check engine lamp) will be illuminated.

Monitor Operation - To monitor catalyst efficiency, the PCM expands the rich and lean switch points of the heated oxygen sensor. With extended switch points, the air/fuel mixture runs richer and leaner to overburden the catalytic converter. Once the test is started, the air/fuel mixture runs rich and lean and the O2 switches are counted. A switch is counted when an oxygen sensor signal goes from below the lean threshold to above the rich threshold. The number of Rear

O2 sensor switches is divided by the number of Front O2 sensor switches to determine the switching ratio.

The test runs for 20 seconds. As catalyst efficiency deteriorates over the life of the vehicle, the switch rate at the downstream sensor approaches that of the upstream sensor. If at any point during the test period the switch ratio reaches a predetermined value, a counter is incremented by one. The monitor is enabled to run another test during that trip. When the test fails three times, the counter increments to three, a malfunction is entered, and a Freeze Frame is stored. When the counter increments to three during the next trip, the code is matured and the MIL is illuminated. If the test passes the first, no further testing is conducted during that trip.

The MIL is extinguished after three consecutive good trips. The good trip criteria for the catalyst monitor is more stringent than the failure criteria. In order to pass the test and increment one good trip, the downstream sensor switch rate must be less than 80% of the upstream rate (60% for manual transmissions). The failure percentages are 90% and 70% respectively.

Enabling Conditions - The following conditions must typically be met before the PCM runs the catalyst monitor. Specific times for each parameter may be different from engine to engine.

- Accumulated drive time
- Enable time
- Ambient air temperature
- Barometric pressure
- Catalyst warm-up counter
- Engine coolant temperature
- Accumulated throttle position sensor
- Vehicle speed
- MAP
- RPM
- Engine in closed loop
- Fuel level

Pending Conditions -

- Misfire DTC
- Front Oxygen Sensor Response
- Front Oxygen Sensor Heater Monitor
- Front Oxygen Sensor Electrical
- Rear Oxygen Sensor Rationality (middle check)
- Rear Oxygen Sensor Heater Monitor
- Rear Oxygen Sensor Electrical
- Fuel System Monitor
- All MAP faults
- All ECT sensor faults
- Purge flow solenoid functionality
- Purge flow solenoid electrical
- All PCM self test faults
- All CMP and CKP sensor faults
- All injector and ignition electrical faults
- Vehicle Speed Sensor
- Brake switch
- Inlet air temperature

Conflict - The catalyst monitor does not run if any of the following are conditions are present:

- EGR Monitor in progress
- Fuel system rich intrusive test in progress
- EVAP Monitor in progress
- Time since start is less than 60 seconds
- Low fuel level
- Low ambient air temperature

Suspend - The Task Manager does not mature a catalyst fault if any of the following are present:

- Oxygen Sensor Monitor, Priority 1
- Upstream Oxygen Sensor Heater, Priority 1

- EGR Monitor, Priority 1
- EVAP Monitor, Priority 1
- Fuel System Monitor, Priority 2
- Misfire Monitor, Priority 2

VEHICLE EMISSION CONTROL INFORMATION LABEL

All models have a Vehicle Emission Control Information (VECI) Label. Chrysler permanently attaches the label in the engine compartment. It cannot be removed without defacing information and destroying the label.

The label contains the vehicle's model year and what regulations the vehicle conforms to also if the vehicle is OBD II compliant.

TRIP DEFINITION

A "Trip" means vehicle operation (following an engine-off period) of duration and driving mode such that all components and systems are monitored at least once by the diagnostic system. The monitors must successfully pass before the PCM can verify that a previously malfunctioning component is meeting the normal operating conditions of that component. For misfire or fuel system malfunction, the MIL may be extinguished if the fault does not recur when monitored during three subsequent sequential driving cycles in which conditions are similar to those under which the malfunction was first determined.

Anytime the MIL is illuminated, a DTC is stored. The DTC can self erase only after the MIL has been extinguished. Once the MIL is extinguished, the PCM must pass the diagnostic test for the most recent DTC for 40 warm-up cycles (80 warm-up cycles for the Fuel System Monitor and the Misfire Monitor). A warm-up cycle can best be described by the following:

- The engine must be running
- A rise of 4.4° C (40°F) in engine temperature must occur from the time when the engine was started
- Engine coolant temperature must crossover 71° C (160°F)
- A "driving cycle" that consists of engine start up and engine shut off.

Once the above conditions occur, the PCM is considered to have passed a warm-up cycle. Due to the conditions required to extinguish the MIL and erase the

DTC, it is most important that after a repair has been made, all DTC's be erased and the repair verified by running 1-good trip.

NON-MONITORED CIRCUITS

FUEL-PRESSURE

The PCM does not monitor all circuits, systems and conditions that could have malfunctions causing driveability problems. However, problems with these systems may cause the PCM to store diagnostic trouble codes for other systems or components. For example, a fuel pressure problem will not register a fault directly, but could cause a rich/lean condition or misfire. This could cause the PCM to store an oxygen sensor or misfire diagnostic trouble code.

The major non-monitored circuits are listed below along with examples of failures modes that do not directly cause the PCM to set a DTC, but for a system that is monitored.

FUEL PRESSURE

The fuel pressure regulator controls fuel system pressure. The PCM cannot detect a clogged fuel pump inlet filter or a pinched fuel supply. However, these could result in a rich or lean condition causing the PCM to store an oxygen sensor, fuel system, or misfire diagnostic trouble code.

SECONDARY IGNITION CIRCUIT

The PCM cannot detect an inoperative ignition coil, fouled or worn spark plugs, ignition cross firing, or open spark plug cables. The misfire will however, increase the oxygen content in the exhaust, deceiving the PCM in to thinking the fuel system is too lean. Also see misfire detection. There are DTC's that can detect misfire and Ionization shorts in the secondary ignition circuit. For more information, refer to the appropriate Powertrain Diagnostic Information.

CYLINDER COMPRESSION

The PCM cannot detect uneven, low, or high engine cylinder compression. Low compression lowers O2 content in the exhaust. Leading to fuel system, oxygen sensor, or misfire detection fault.

EXHAUST SYSTEM

The PCM cannot detect a plugged, restricted or leaking exhaust system. It may

set a EGR (if equipped) or Fuel system or O2S fault.

FUEL INJECTOR MECHANICAL MALFUNCTIONS

The PCM cannot determine if a fuel injector is clogged, the needle is sticking or if the wrong injector is installed. However, these could result in a rich or lean condition causing the PCM to store a diagnostic trouble code for either misfire, an oxygen sensor, or the fuel system.

EXCESSIVE OIL CONSUMPTION

Although the PCM monitors engine exhaust oxygen content when the system is in closed loop, it cannot determine excessive oil consumption.

THROTTLE BODY AIR FLOW

The PCM cannot detect a clogged or restricted air cleaner inlet or filter element.

VACUUM ASSIST

The PCM cannot detect leaks or restrictions in the vacuum circuits of vacuum assisted engine control system devices. However, these could cause the PCM to store a MAP sensor diagnostic trouble code and cause a high idle condition.

PCM SYSTEM GROUND

The PCM cannot determine a poor system ground. However, one or more diagnostic trouble codes may be generated as a result of this condition. The module should be mounted to the body at all times, including when diagnostics are performed.

PCM CONNECTOR ENGAGEMENT

The PCM may not be able to determine spread or damaged connector pins. However, it might store diagnostic trouble codes as a result of spread connector pins.

MONITORED SYSTEMS

OXYGEN-SENSOR-O2S-MONITOR

There are new electronic circuit monitors that check fuel, emission, engine and ignition performance. These monitors use information from various sensor circuits to indicate the overall operation of the fuel, engine, ignition and emission

systems and thus the emissions performance of the vehicle.

The fuel, engine, ignition and emission systems monitors do not indicate a specific component problem. They do indicate that there is an implied problem within one of the systems and that a specific problem must be diagnosed.

If any of these monitors detect a problem affecting vehicle emissions, the Malfunction Indicator (Check Engine) Lamp will be illuminated. These monitors generate Diagnostic Trouble Codes that can be displayed with the a scan tool.

The following is a list of the system monitors:

- EGR Monitor (if equipped)
- Misfire Monitor
- Fuel System Monitor
- Oxygen Sensor Monitor
- Oxygen Sensor Heater Monitor
- Catalyst Monitor
- Evaporative System Leak Detection Monitor (if equipped)

Following is a description of each system monitor, and its DTC.

Refer to the appropriate Powertrain Diagnostics Information for diagnostic procedures.

OXYGEN SENSOR (O2S) MONITOR

Effective control of exhaust emissions is achieved by an oxygen feedback system. The most important element of the feedback system is the O2S. The O2S is located in the exhaust path. Once it reaches operating temperatures of 300° to 350°C (572° to 662°F), the sensor generates a voltage that is inversely proportional to the amount of oxygen in the exhaust. The information obtained by the sensor is used to calculate the fuel injector pulse width. The PCM is programmed to maintain the optimum air/fuel ratio. At this mixture ratio, the catalyst works best to remove hydrocarbons (HC), carbon monoxide (CO) and nitrous oxide (NOx) from the exhaust.

The O2S is also the main sensing element for the EGR (if equipped), Catalyst and Fuel Monitors.

The O2S may fail in any or all of the following manners:

- Slow response rate
- Reduced output voltage
- Dynamic shift
- Shorted or open circuits

Response rate is the time required for the sensor to switch from lean to rich once it is exposed to a richer than optimum A/F mixture or vice versa. As the sensor starts malfunctioning, it could take longer to detect the changes in the oxygen content of the exhaust gas.

The output voltage of the O2S ranges from 0 to 1 volt (voltages are offset by 2.5 volts on NGC vehicles). A good sensor can easily generate any output voltage in this range as it is exposed to different concentrations of oxygen. To detect a shift in the A/F mixture (lean or rich), the output voltage has to change beyond a threshold value. A malfunctioning sensor could have difficulty changing beyond the threshold value.

OXYGEN SENSOR HEATER MONITOR

If there is an oxygen sensor (O2S) DTC as well as a O2S heater DTC, the O2S heater fault MUST be repaired first. After the O2S fault is repaired, verify that the heater circuit is operating correctly.

Effective control of exhaust emissions is achieved by an oxygen feedback system. The most important element of the feedback system is the O2S. The O2S is located in the exhaust path. Once it reaches operating temperatures of 300° to 350°C (572° to 662°F), the sensor generates a voltage that is inversely proportional to the amount of oxygen in the exhaust. The information obtained by the sensor is used to calculate the fuel injector pulse width. This maintains a 14.7 to 1 Air Fuel (A/F) ratio. At this mixture ratio, the catalyst works best to remove hydrocarbons (HC), carbon monoxide (CO) and nitrogen oxide (NOx) from the exhaust.

The voltage readings taken from the O2S are very temperature sensitive. The readings are not accurate below 300°C (572 °F). Heating of the O2S is done to allow the engine controller to shift to closed loop control as soon as possible. The heating element used to heat the O2S must be tested to ensure that it is heating the sensor properly.

The O2S circuit is monitored for a drop in voltage. The sensor output is used to test the heater by isolating the effect of the heater element on the O2S output voltage from the other effects.

EGR MONITOR (IF EQUIPPED)

The Powertrain Control Module (PCM) performs an on-board diagnostic check of the EGR system.

The EGR monitor is used to test whether the EGR system is operating within specifications. The diagnostic check activates only during selected engine/driving conditions. When the conditions are met, the EGR is turned off (solenoid energized) and the O2S compensation control is monitored. Turning off the EGR shifts the air fuel (A/F) ratio in the lean direction. The O2S data should indicate an increase in the O2 concentration in the combustion chamber when the exhaust gases are no longer recirculated. While this test does not directly measure the operation of the EGR system, it can be inferred from the shift in the O2S data whether the EGR system is operating correctly. Because the O2S is being used, the O2S test must pass its test before the EGR test. Also looks at EGR linear potentiometer for feedback.

MISFIRE MONITOR

Excessive engine misfire results in increased catalyst temperature and causes an increase in HC emissions. Severe misfires could cause catalyst damage. To prevent catalytic convertor damage, the PCM monitors engine misfire.

The Powertrain Control Module (PCM) monitors for misfire during most engine operating conditions (positive torque) by looking at changes in the crankshaft speed. If a misfire occurs the speed of the crankshaft will vary more than normal.

FUEL SYSTEM MONITOR

To comply with clean air regulations, vehicles are equipped with catalytic converters. These converters reduce the emission of hydrocarbons, oxides of nitrogen and carbon monoxide. The catalyst works best when the air fuel (A/F) ratio is at or near the optimum of 14.7 to 1.

The PCM is programmed to maintain the optimum air/fuel ratio. This is done by making short term corrections in the fuel injector pulse width based on the O2S output. The programmed memory acts as a self calibration tool that the engine

controller uses to compensate for variations in engine specifications, sensor tolerances and engine fatigue over the life span of the engine. By monitoring the actual air-fuel ratio with the O2S (short term) and multiplying that with the program long-term (adaptive) memory and comparing that to the limit, it can be determined whether it will pass an emissions test. If a malfunction occurs such that the PCM cannot maintain the optimum A/F ratio, then the MIL will be illuminated.

CATALYST MONITOR

To comply with clean air regulations, vehicles are equipped with catalytic converters. These converters reduce the emission of hydrocarbons, oxides of nitrogen and carbon monoxide.

Normal vehicle miles or engine misfire can cause a catalyst to decay. A meltdown of the ceramic core can cause a reduction of the exhaust passage. This can increase vehicle emissions and deteriorate engine performance, driveability and fuel economy.

The catalyst monitor uses dual oxygen sensors (O2S's) to monitor the efficiency of the converter. The dual O2S's strategy is based on the fact that as a catalyst deteriorates, its oxygen storage capacity and its efficiency are both reduced. By monitoring the oxygen storage capacity of a catalyst, its efficiency can be indirectly calculated. The upstream O2S is used to detect the amount of oxygen in the exhaust gas before the gas enters the catalytic converter. The PCM calculates the A/F mixture from the output of the O2S. A low voltage indicates high oxygen content (lean mixture). A high voltage indicates a low content of oxygen (rich mixture).

When the upstream O2S detects a lean condition, there is an abundance of oxygen in the exhaust gas. A functioning converter would store this oxygen so it can use it for the oxidation of HC and CO. As the converter absorbs the oxygen, there will be a lack of oxygen downstream of the converter. The output of the downstream O2S will indicate limited activity in this condition.

As the converter loses the ability to store oxygen, the condition can be detected from the behavior of the downstream O2S. When the efficiency drops, no chemical reaction takes place. This means the concentration of oxygen will be the same downstream as upstream. The output voltage of the downstream O2S copies the voltage of the upstream sensor. The only difference is a time lag (seen

by the PCM) between the switching of the O2S's.

To monitor the system, the number of lean-to-rich switches of upstream and downstream O2S's is counted. The ratio of downstream switches to upstream switches is used to determine whether the catalyst is operating properly. An effective catalyst will have fewer downstream switches than it has upstream switches i.e., a ratio closer to zero. For a totally ineffective catalyst, this ratio will be one-to-one, indicating that no oxidation occurs in the device.

The system must be monitored so that when catalyst efficiency deteriorates and exhaust emissions increase to over the legal limit, the MIL (Check Engine lamp) will be illuminated.

EVAPORATIVE SYSTEM INTEGRITY MONITOR (ESIM)

The ESIM (Evaporative System Integrity Monitor), while physically different than the NVLD system, performs the same basic function as the NVLD does - controlling evaporative emissions. The ESIM has been simplified because the solenoid used on the NVLD is not used on the ESIM. In most cases the ESIM mounts directly to the vapor canister. In the event that the ESIM can not be mounted directly to the canister, an adaptor is used. It is important to ensure the ESIM is mounted vertical due to the operation of the ESIM design. (Note: The electrical connector on the ESIM will be at the 3 o'clock position if mounted correctly.)

The ESIM consists of housing, two check valves (sometimes referred to as weights), a diaphragm, a switch and a cover. The larger check valve seals for pressure and the smaller one seals for vacuum.

During refueling, pressure is built up in the evaporative system. When pressure reaches approximately 0.5 inches of water, the large check valve unseats and pressure vents to the fresh air filter.

Conversely, when the system cools and the resulting vacuum lifts the small check valve from its seat and allows fresh air to enter the system and relieve the vacuum condition. When a calibrated amount of vacuum is achieved in the evaporative system, the diaphragm is pulled inward, pushing on the spring and closing the contacts.

The ESIM conducts test on the evaporative system as follows: An engine off,

non-intrusive test for small leaks and an engine running, intrusive test for medium/large leaks.

The ESIM weights seal the EVAP. system during engine off conditions. If the EVAP. system is sealed, it will be pulled into a vacuum, either due to the cool down from operating temperature or diurnal ambient temperature cycling. When the vacuum in the system exceeds about 1" H20, the vacuum switch closes. The switch closure sends a signal to the GPEC1. In order to pass the non-intrusive small leak test, the ESIM switch must close within a calculated amount of time and within a specified amount of key-off events.

If the ESIM switch does not close as specified, the test is considered inconclusive and the intrusive engine running test will be run during the next key-on cycle. This intrusive test will run on the next cold engine running condition.

Conditions for running the intrusive test are:

- After the vehicle is started, the engine coolant temperature must be within 10° C (50° F) of ambient to indicate a cold start.
- The fuel level must be between 12% and 88%.
- The engine must be in closed loop.
- Manifold vacuum must be greater than a minimum specified value.
- Ambient temperature must be between 4° C and 37° C (39° F and 98° F) or and the elevation level must be below 8500 feet.

The test is accomplished by the GPEC1 activating the purge solenoid to create a vacuum in the evaporative system. The GPEC1 then measures the amount of time it takes for the vacuum to dissipate. This is known as the vacuum decay method. If the switch opens quickly a large leak is recorded. If the switch opens after a predetermined amount of time, then the small leak matures. If the switch does not close, then a general evaporative failure is recorded. The purge monitor tests the integrity of the hose attached between the purge valve and throttle body/intake. The purge monitor is a two stage test and it runs only after the evaporative system passes the small leak test.

Even when all of the thresholds are met, a small leak won't be recorded until after the medium/large leak monitor has been run. This is accomplished by the GPEC1 activating the purge solenoid to create a vacuum in the evaporative system. The GPEC1 then measures the amount of time it takes for the vacuum to dissipate.

This is known as the vacuum decay method. If the switch opens quickly a large leak is recorded. If the switch opens after a predetermined amount of time, then the small leak matures. If the medium/large leak test runs and the ESIM switch doesn't close, a general evaporative test is run. The purge solenoid is activated for approximately 10 seconds, increasing the amount of vacuum in the system. If the ESIM switch closes after the extended purge activation, a large leak fault is generated. If the switch doesn't close, a general evaporative system fault is generated.

The purge monitor tests the integrity of the hose attached between the purge valve and throttle body/intake. The purge monitor is a two stage test and it runs only after the evaporative system passes the small leak test.

Stage one of the purge monitor is non-intrusive. GPEC1 monitors the purge vapor ratio. If the ratio is above a calibrated specification, the monitor passes. Stage two is an intrusive test and it runs only if stage one fails. During the stage two test, the GPEC commands the purge solenoid to flow at a specified rate to force the purge vapor ratio to update. The vapor ratio is compared to a calibrated specification and if it is less than specified, a one-trip failure is recorded.

The ESIM switch stuck closed monitor checks to see if the switch is stuck closed. This is a power down test that runs at key-off; when the GPEC1 sees 0 rpm's, the purge solenoid is energized for a maximum of 30 seconds, venting any vacuum trapped in the evaporative system. If the switch opens or was open before the test began, the monitor passes. If the switch doesn't open, the monitor fails. This is a two-trip MIL. The star scan tool can be used to force the ESIM switch stick closed monitor to run.

The GPEC1 also uses the ESIM to detect a loose or missing gas cap. The GPEC1 controller looks for a change in the fuel level (25% minimum) and then gas cap is loose or missing. If a medium/large leak is detected, a loose gas cap light illuminates and a pending one-trip fault code is set. On the GPEC1, this is a three-trip fault before the code matures

HIGH AND LOW LIMITS

The PCM compares input signal voltages from each input device with established high and low limits for the device. If the input voltage is not within limits and other criteria are met, the PCM stores a diagnostic trouble code in memory. Other diagnostic trouble code criteria might include engine RPM limits

or input voltages from other sensors or switches that must be present before verifying a diagnostic trouble code condition.

OPERATION

OPERATION

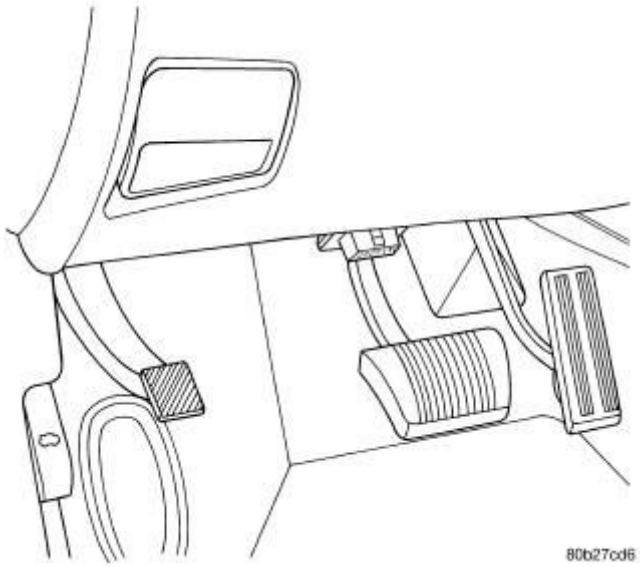

Fig. 1: Identifying Data Link Connector
Courtesy of CHRYSLER GROUP, LLC

The Powertrain Control Module (PCM) monitors many different circuits in the fuel injection, ignition, emission and engine systems. If the PCM senses a problem with a monitored circuit often enough to indicate an actual problem, it stores a Diagnostic Trouble Code (DTC) in the PCM's memory. If the code applies to a non-emissions related component or system, and the problem is repaired or ceases to exist, the PCM cancels the code after 40 warmup cycles. Diagnostic trouble codes that affect vehicle emissions illuminate the Malfunction Indicator Lamp (MIL). Refer to **MIL ILLUMINATION**.

Certain criteria must be met before the PCM stores a DTC in memory. The criteria may be a specific range of engine RPM, engine temperature, and/or input voltage to the PCM.

The PCM might not store a DTC for a monitored circuit even though a malfunction has occurred. This may happen because one of the DTC criteria for the circuit has not been met. **For example** , assume the diagnostic trouble code criteria requires the PCM to monitor the circuit only when the engine operates

between 750 and 2000 RPM. Suppose the sensor's output circuit shorts to ground when engine operates above 2400 RPM (resulting in 0 volt input to the PCM). Because the condition happens at an engine speed above the maximum threshold (2000 RPM), the PCM will not store a DTC.

There are several operating conditions for which the PCM monitors and sets DTC's. Refer to **MONITORED SYSTEMS**, **MONITORED COMPONENT**, and **NON-MONITORED CIRCUITS**.

NOTE: Various diagnostic procedures may actually cause a diagnostic monitor to set a DTC. For instance, pulling a spark plug wire to perform a spark test may set the misfire code. When a repair is completed and verified, use the scan tool to erase all DTC's and extinguish the MIL.

Technicians can display stored DTC's. For obtaining the DTC information, use the Data Link Connector with the scan tool .

EVAPORATIVE EMISSIONS

CANISTER, VAPOR

DESCRIPTION

DESCRIPTION

The canister mounts to a left rear rail in the rear of the vehicle. The vacuum and vapor tube connect to the top of the canister.

OPERATION

OPERATION

All vehicles use a maintenance free, evaporative (EVAP) canister. Fuel tank vapors vent into the canister. The canister temporarily holds the fuel vapors until intake manifold vacuum draws them into the combustion chamber. The Powertrain Control Module (PCM) purges the canister through the proportional purge solenoid. The PCM purges the canister at predetermined intervals and engine conditions.

PURGE FREE CELLS

Purge-free memory cells are used to identify the fuel vapor content of the evaporative canister. Since the evaporative canister is not purged 100% of the time, the PCM stores information about the evaporative canister's vapor content in a memory cell.

The purge-free cells are constructed similar to certain purge-normal cells. The purge-free cells can be monitored by the scan tool. The only difference between the purge-free cells and normal adaptive cells is that in purge-free, the purge is completely turned off. This gives the PCM the ability to compare purge and purge-free operation.

REMOVAL

REMOVAL

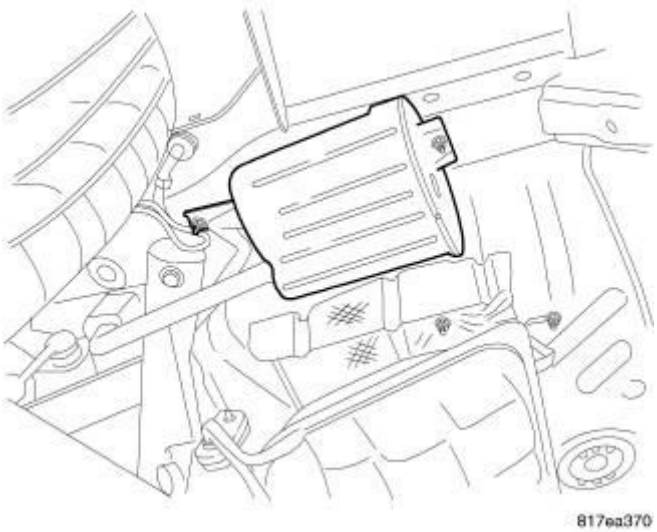

Fig. 2: Canister Mounting
Courtesy of CHRYSLER GROUP, LLC

1. Disconnect negative battery cable.
2. Raise and support vehicle.

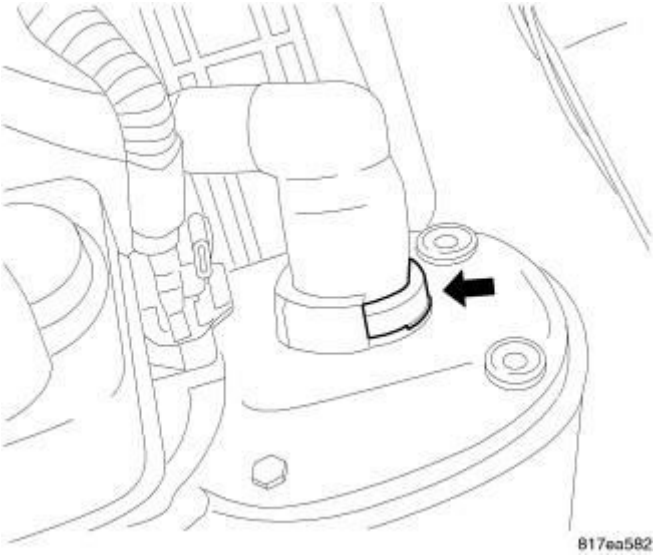

Fig. 3: Fresh Air Hose Connection
Courtesy of CHRYSLER GROUP, LLC

3. Depress locking tab on vapor hose connector and pull off of canister.

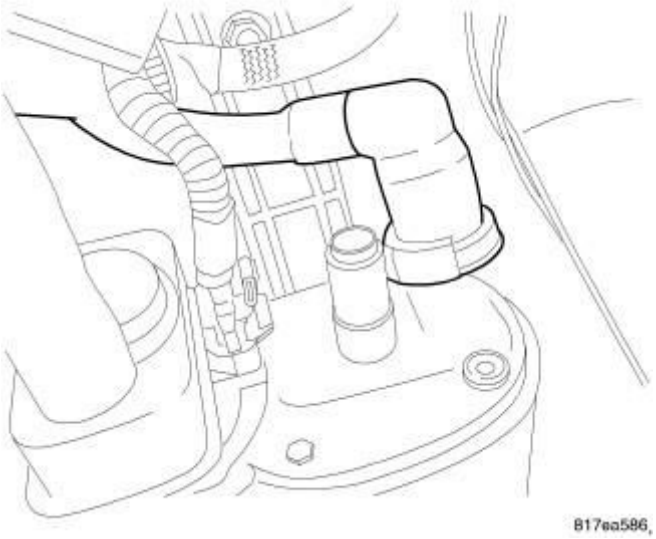

Fig. 4: Fresh Air Hose Connection Removed
Courtesy of CHRYSLER GROUP, LLC

4. Remove hose from ESIM module.
5. Vapor hose removed.

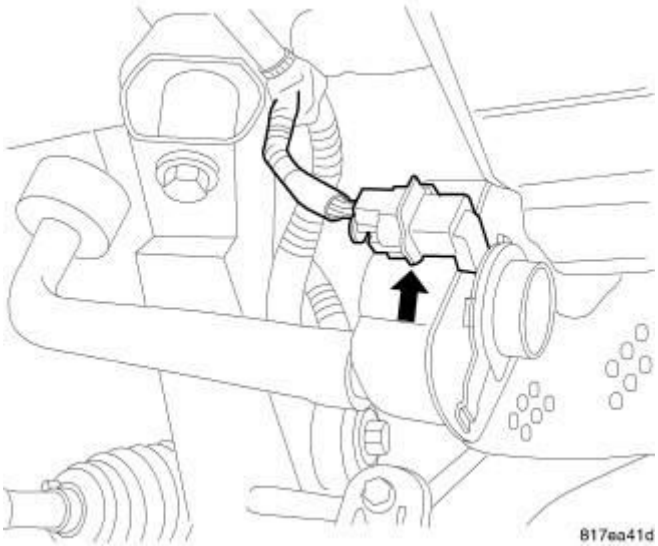

Fig. 5: ESIM Module Electrical Connector
Courtesy of CHRYSLER GROUP, LLC

6. Disconnect the electrical connector from ESIM module.

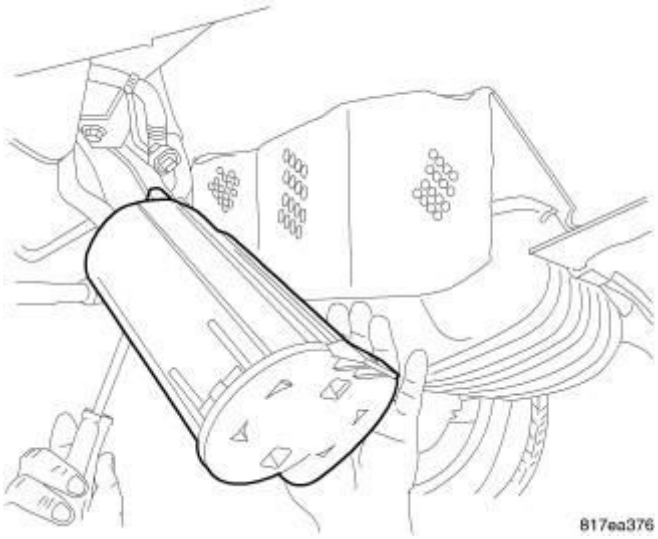

Fig. 6: Canister Removed
Courtesy of CHRYSLER GROUP, LLC

7. Remove two vapor canister mounting bolts.
8. Remove assembly.

INSTALLATION

INSTALLATION

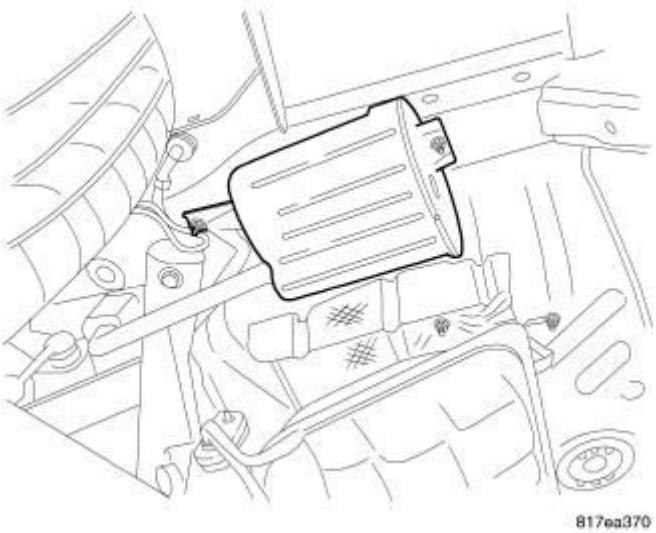

Fig. 7: Canister Mounting
Courtesy of CHRYSLER GROUP, LLC

1. Install canister and bracket.

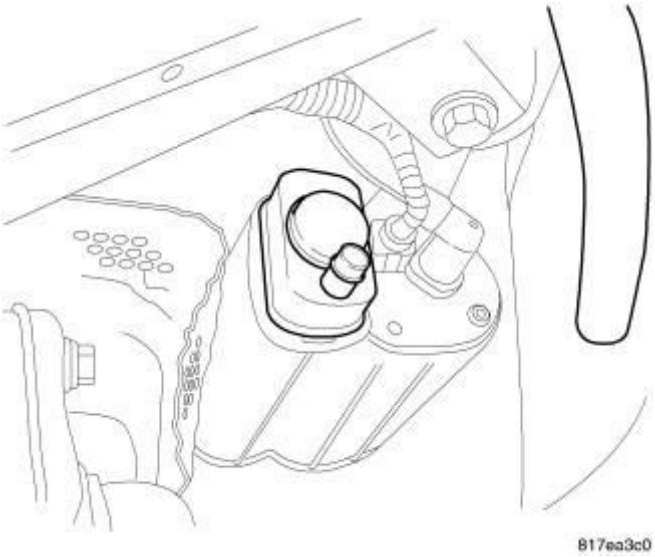

Fig. 8: ESIM
Courtesy of CHRYSLER GROUP, LLC

2. Connect filter hose to ESIM.

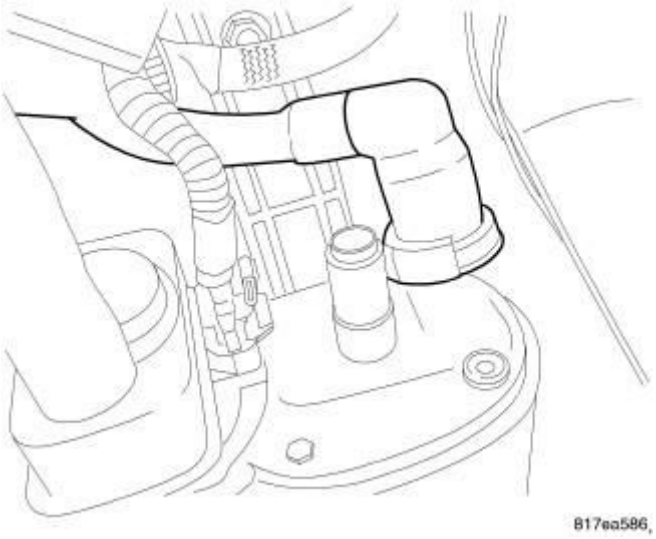

Fig. 9: Fresh Air Hose Connection Removed
Courtesy of CHRYSLER GROUP, LLC

3. Connect vapor hose.

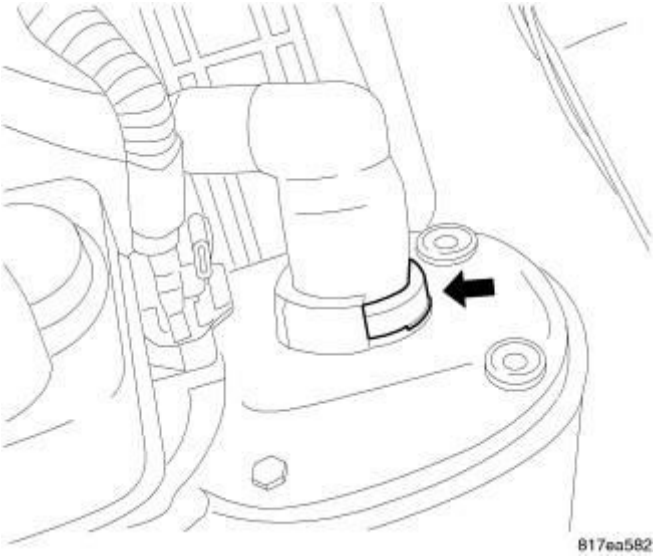

Fig. 10: Fresh Air Hose Connection
Courtesy of CHRYSLER GROUP, LLC

4. Make sure locking tab on hose connector locks in place.

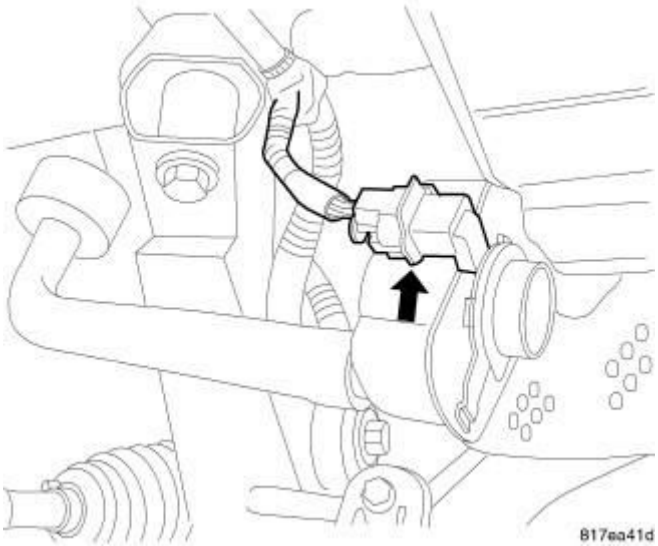

Fig. 11: ESIM Module Electrical Connector
Courtesy of CHRYSLER GROUP, LLC

5. Connect electrical connector to ESIM module.
6. Lower vehicle.
7. Connect negative battery cable.

CAP, FUEL FILLER

DESCRIPTION

DESCRIPTION

The plastic fuel fill cap is threaded/quarter turn onto the end of the fuel filler tube. It's purpose is to retain vapors and fuel in the fuel tank.

OPERATION

OPERATION

The loss of any fuel vapor out of fuel filler tube is prevented by the use of pressure-vacuum fuel fill cap. Relief valves inside the cap will release fuel tank pressure at predetermined pressures. Fuel tank vacuum will also be released at predetermined values. This cap must be replaced by a similar unit if replacement is necessary. This is in order for the system to remain effective.

CAUTION: Remove the fill cap before servicing any fuel system component to relieve fuel tank pressure. If the cap is left off or loose, a Diagnostic Trouble

Code (DTC) may be set.

SENSOR, FUEL TANK PRESSURE

DESCRIPTION

DESCRIPTION

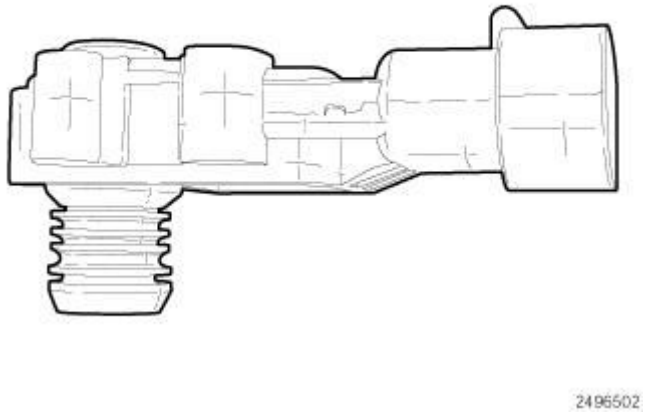

Fig. 12: Fuel Tank Pressure Sensor
Courtesy of CHRYSLER GROUP, LLC

The fuel tank pressure sensor provides the PCM with information on vapor pressure inside the fuel tank. The sensor is a diaphragm-type pressure sensor and varies its voltage output depending on fuel tank pressure. When the fuel tank isolation valve is activated (closed), preventing fuel vapors from leaving the tank, the PCM will monitor the fuel tank pressure sensor to prevent pressure from increasing or decreasing to an unsafe level.

Excessive fuel tank pressure could cause fuel vapors to vent out the fuel filler cap or damage system components while insufficient fuel tank pressure (vacuum) caused by lack of air entering the tank to take the place of consumed fuel could lead to collapsed tank, lines or loss of fuel pressure.

REMOVAL

REMOVAL

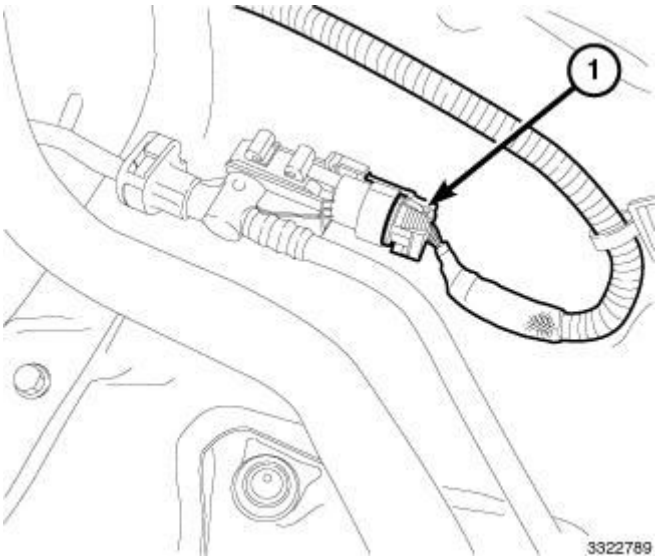

Fig. 13: Fuel Tank Pressure Sensor Electrical Connector
Courtesy of CHRYSLER GROUP, LLC

NOTE: The Fuel Tank Pressure sensor is located under the rear of the vehicle, and is integrated in the vent tube coming from the fuel pump module.

1. Disconnect and isolate the negative battery cable.
2. Remove the fuel filler cap to relieve tank pressure.
3. Raise and support the vehicle. Refer to **HOISTING, STANDARD PROCEDURE** .
4. Disconnect the fuel tank pressure sensor electrical connector (1).

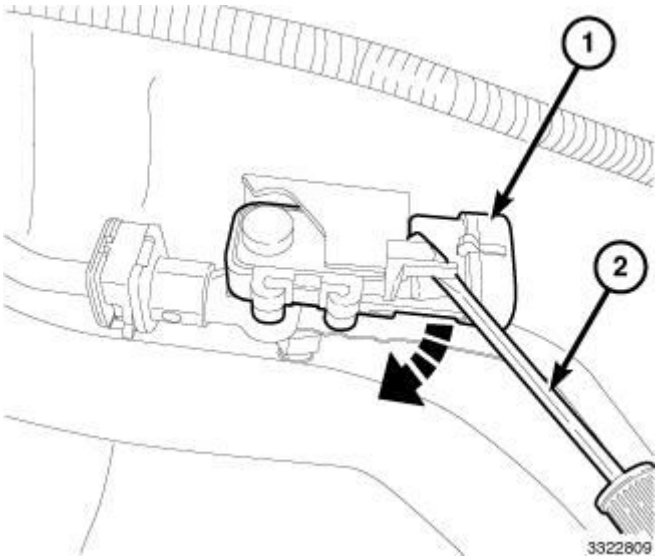

Fig. 14: Removing Fuel Tank Pressure Sensor
Courtesy of CHRYSLER GROUP, LLC

5. Carefully raise the retaining tab (2), rotate and remove the fuel tank pressure sensor (1) from the fuel tank vent tube.

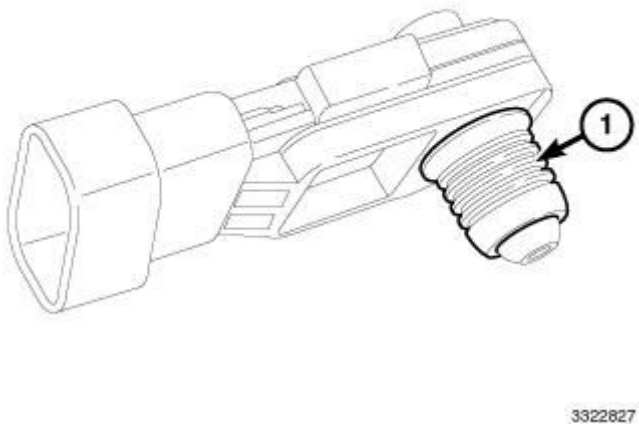

Fig. 15: Fuel Tank Pressure Sensor Seal
Courtesy of CHRYSLER GROUP, LLC

6. The fuel tank pressure sensor seal (1) can be reused if not damaged.

INSTALLATION

INSTALLATION

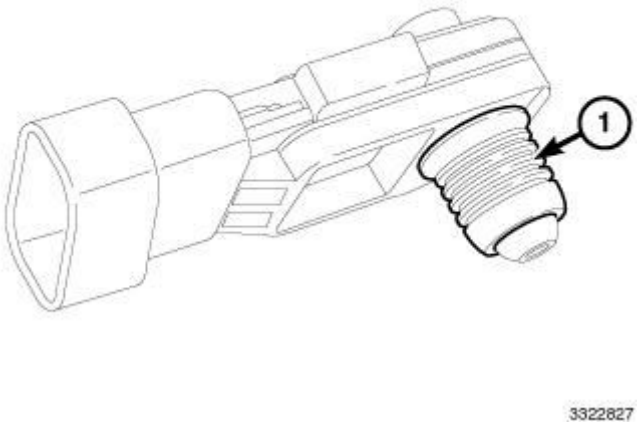

Fig. 16: Fuel Tank Pressure Sensor Seal
Courtesy of CHRYSLER GROUP, LLC

1. The fuel tank pressure sensor seal (1) can be reused if not damaged.

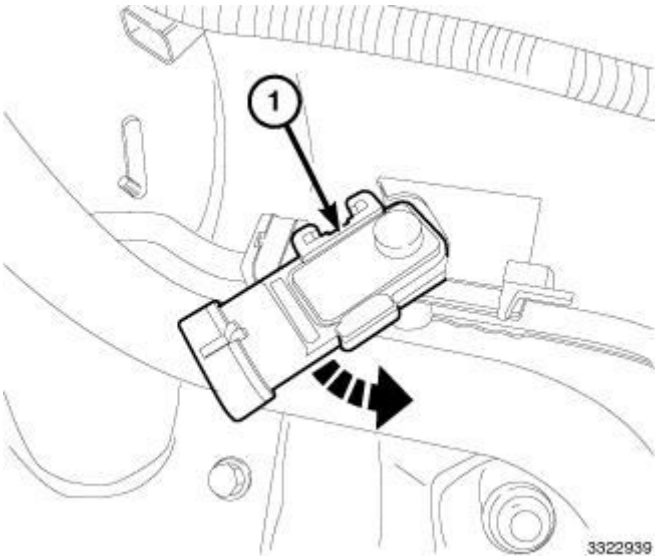

Fig. 17: Installing Fuel Tank Pressure Sensor
Courtesy of CHRYSLER GROUP, LLC

2. Install the fuel tank pressure sensor (1) into the fuel tank vent tube and rotate into position.

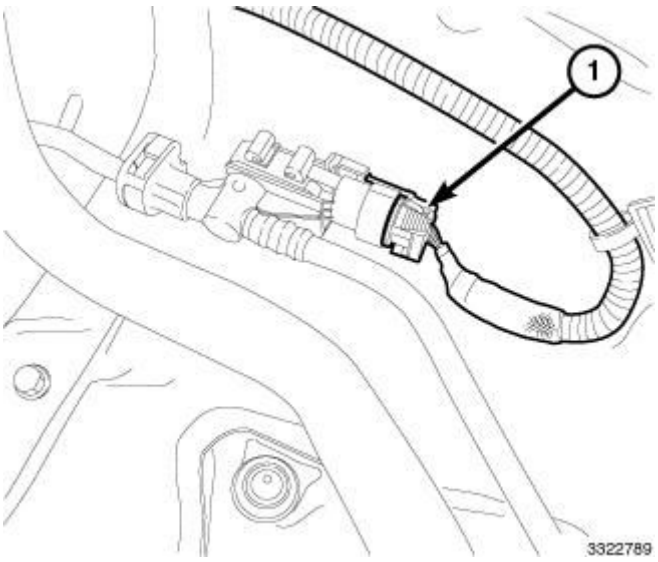

Fig. 18: Fuel Tank Pressure Sensor Electrical Connector
Courtesy of CHRYSLER GROUP, LLC

3. Connect the fuel tank pressure sensor electrical connector (1).
4. Lower the vehicle.
5. Install the fuel filler cap.
6. Connect the negative battery cable and tighten nut to 5 N.m (45 in. lbs.).

SOLENOID, EVAPORATIVE EMISSIONS PURGE

DESCRIPTION

DESCRIPTION

The vehicle uses a Linear Purge Valve. The linear purge valve is a solenoid that regulates the rate of vapor flow from the EVAP canister to the intake manifold. The PCM operates the linear purge valve.

OPERATION

OPERATION

All vehicles use a linear purge valve. The linear purge valve is a solenoid that regulates the rate of vapor flow from the evaporative emission (EVAP) canister to the intake manifold. The powertrain control module (PCM) operates the linear purge valve.

During the cold start warm-up period and the hot start time delay, the PCM does not energize the solenoid. When de-energized, no vapors are purged.

The linear purge valve operates at a frequency of 200 Hz and is controlled by an engine controller circuit that senses the current being applied to the linear purge valve and then adjusts that current to achieve the desired purge flow. The linear purge valve controls the purge rate of fuel vapors from the vapor canister and fuel tank to the engine intake manifold.

REMOVAL

REMOVAL

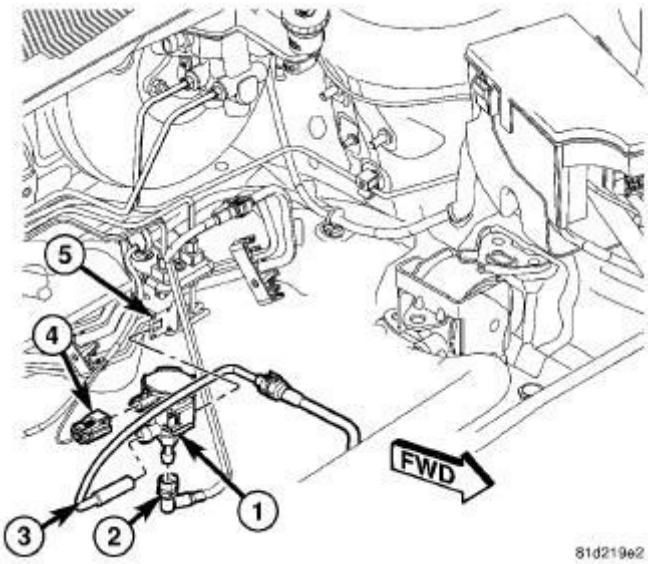

Fig. 19: EVAP Purge Solenoid, Hoses & Connector
Courtesy of CHRYSLER GROUP, LLC

1. Disconnect and isolate negative battery cable at battery.
2. Disconnect electrical connector (4) from evaporator purge solenoid (1).
3. Remove purge hose (3) from evaporator purge solenoid (1).
4. Remove quick connect fuel tank hose (2) from evaporator purge solenoid (1).
5. Release tab to remove evaporator purge solenoid (1) from body bracket (5).

INSTALLATION

INSTALLATION

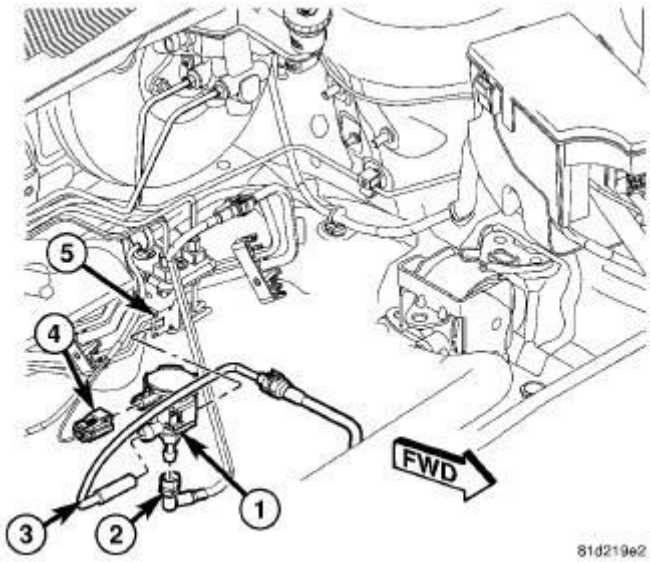

Fig. 20: EVAP Purge Solenoid, Hoses & Connector
Courtesy of CHRYSLER GROUP, LLC

1. Install evaporator purge solenoid (1) to body bracket (5). Make sure the tab secures the solenoid to the bracket.
2. Install quick connect fuel tank hose (2) to evaporator purge solenoid (1).
3. Install purge hose (3) to evaporator purge solenoid (1).
4. Connect electrical connector (4) to evaporator purge solenoid (1).
5. Connect negative battery cable, tighten nut to 5 N.m (45 in. lbs.).

VALVE, POSITIVE CRANKCASE VENTILATION (PCV)

DESCRIPTION

DESCRIPTION

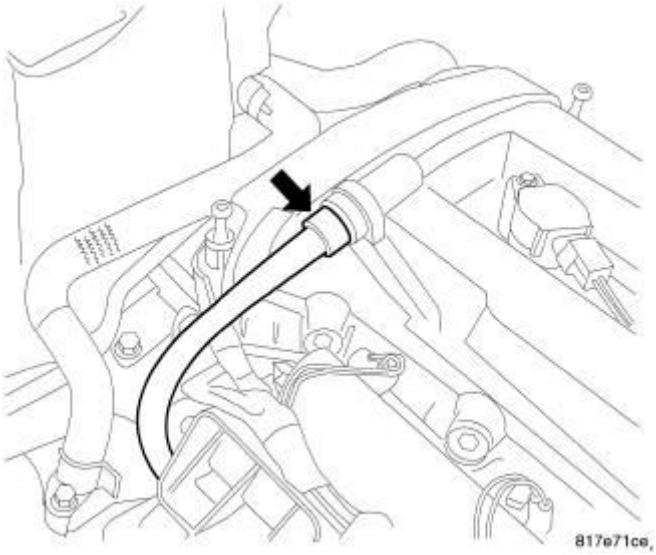

Fig. 21: PCV Installed
Courtesy of CHRYSLER GROUP, LLC

It threads into the valve cover.

OPERATION

OPERATION

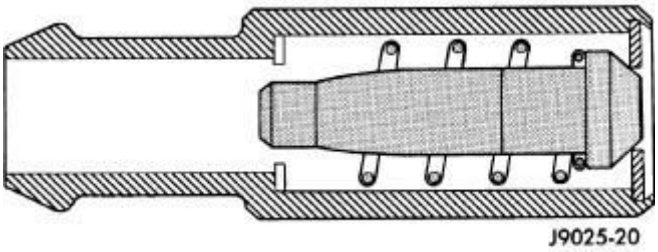

Fig. 22: Engine Off Or Engine Backfire No Vapor Flow
Courtesy of CHRYSLER GROUP, LLC

When the engine is not operating or during an engine backfire, the spring forces the plunger back against the seat. This prevents vapors from flowing through the valve.

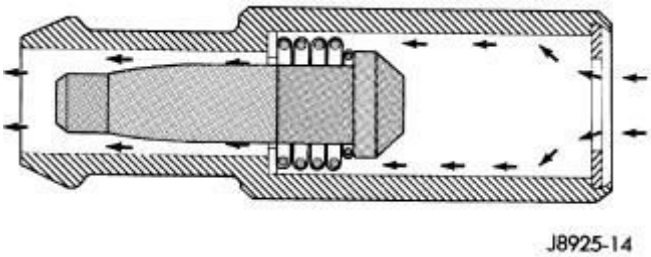

Fig. 23: High Intake Manifold Vacuum Minimal Vapor Flow
Courtesy of CHRYSLER GROUP, LLC

When the engine is at idle or cruising, high manifold vacuum is present. At these times manifold vacuum is able to completely compress the spring and pull the plunger to the top of the valve. In this position there is minimal vapor flow through the valve.

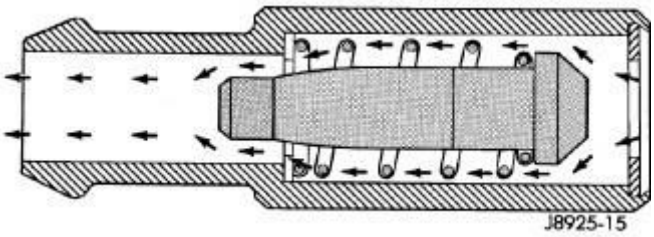

Fig. 24: Moderate Intake Manifold Vacuum Maximum Vapor Flow
Courtesy of CHRYSLER GROUP, LLC

During periods of moderate intake manifold vacuum the plunger is only pulled part way back from the inlet. This results in maximum vapor flow through the valve.

DIAGNOSIS AND TESTING

DIAGNOSIS AND TESTING - PCV SYSTEM

WARNING: Apply parking brake and/or block wheels before performing any test or adjustment with the engine operating.

1. With engine idling, remove the hose from the PCV valve. If the valve is not plugged, a hissing noise will be heard as air passes through the valve. A strong vacuum should also be felt when a finger is placed over the valve inlet.
2. Install hose on PCV valve. Remove the make-up air hose from the air plenum at the rear of the engine. Hold a piece of stiff paper (parts tag) loosely over the end of the make-up air hose.
3. After allowing approximately one minute for crankcase pressure to reduce, the paper should draw up against the hose with noticeable force. If the engine does not draw the paper against the grommet after installing a new valve, replace the PCV valve hose.

4. Turn the engine off. Remove the PCV valve from intake manifold. The valve should rattle when shaken.
5. Replace the PCV valve and retest the system if it does not operate as described in the preceding tests. **Do not attempt to clean the old PCV valve.**

REMOVAL

REMOVAL

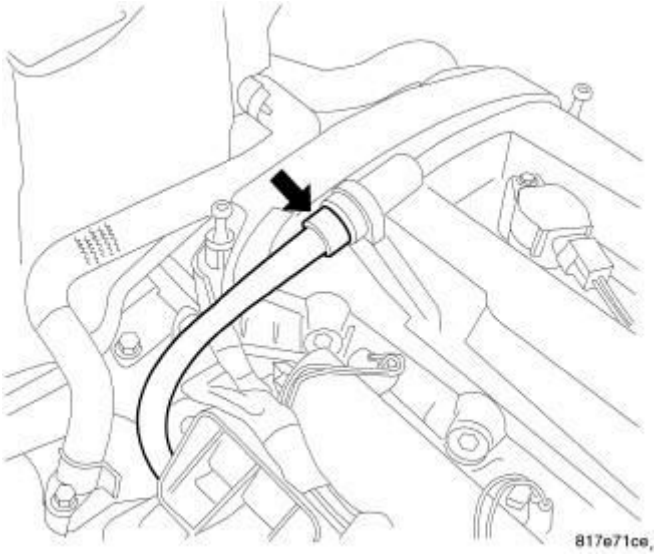

Fig. 25: PCV Installed
Courtesy of CHRYSLER GROUP, LLC

1. Remove the engine cover.

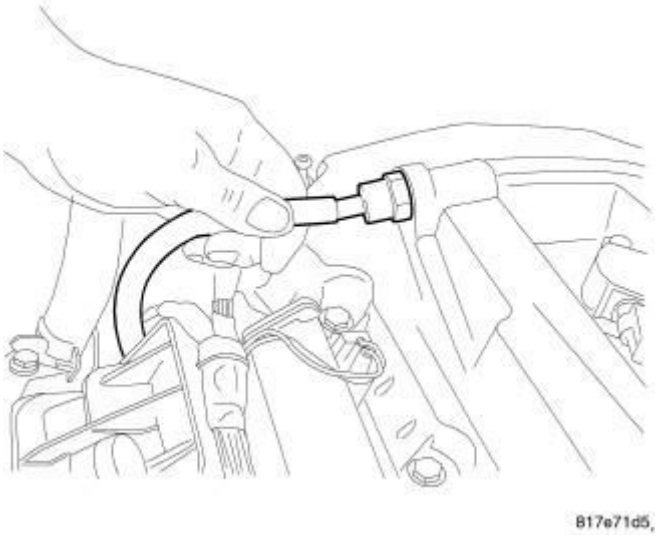

Fig. 26: Removing/Installing Hose

Courtesy of CHRYSLER GROUP, LLC

2. Remove the hose from the PCV valve.

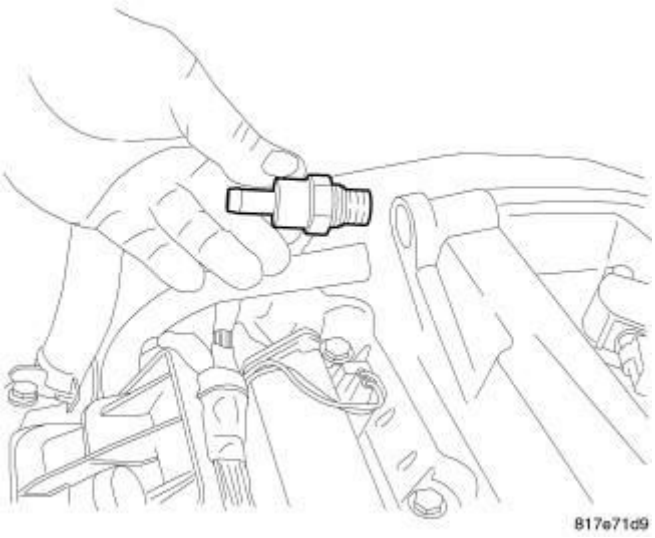

Fig. 27: PCV Removed
Courtesy of CHRYSLER GROUP, LLC

3. Unscrew the PCV valve.

INSTALLATION

INSTALLATION

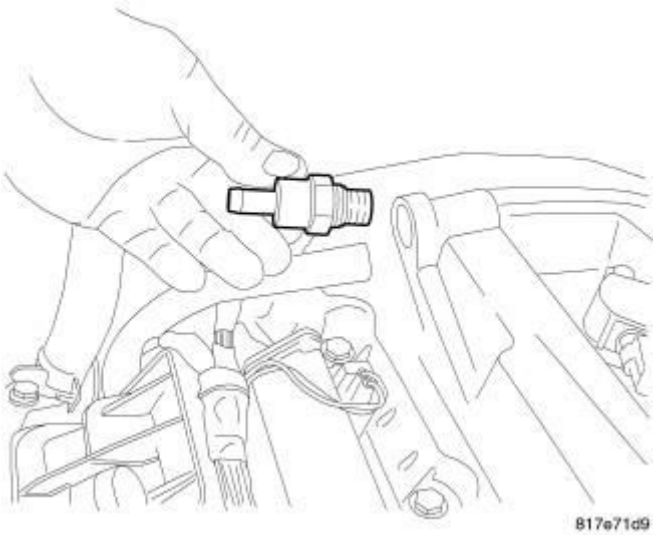

Fig. 28: PCV Removed
Courtesy of CHRYSLER GROUP, LLC

1. Lubricate the O-ring on the valve.

2. Install the PCV valve and tighten the valve to 8.1 N.m (72 in. lbs.).

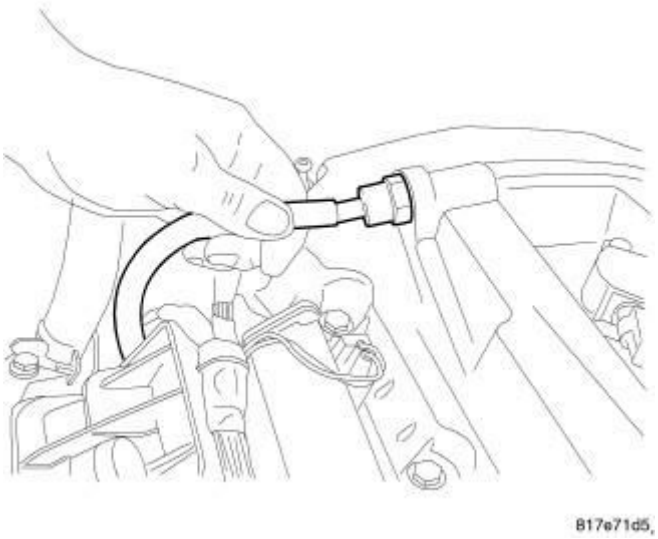

Fig. 29: Removing/Installing Hose
Courtesy of CHRYSLER GROUP, LLC

3. Install the hose.

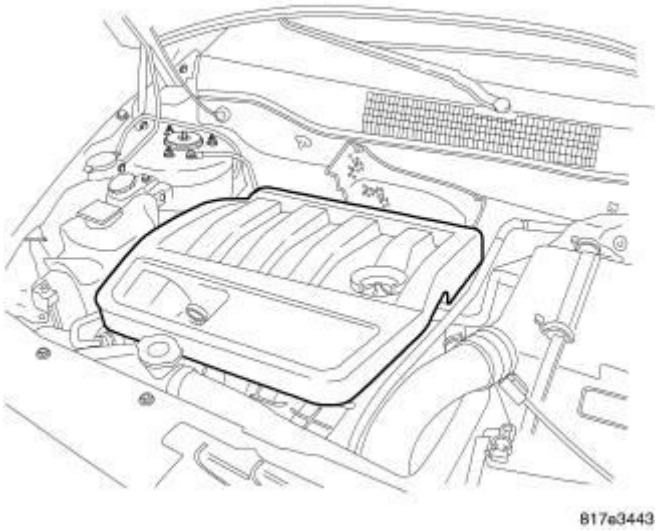

Fig. 30: Engine Cover
Courtesy of CHRYSLER GROUP, LLC

4. Install engine cover.

EXHAUST GAS RECIRCULATION [ENE]

DESCRIPTION

DESCRIPTION

The EGR system reduces oxides of nitrogen (NOx) in the engine exhaust. This is accomplished by allowing a predetermined amount of hot exhaust gas to recirculate and dilute the incoming fuel/air mixture.

A malfunctioning EGR system can cause engine stumble, sags, or hesitation, rough idle, engine stalling and poor driveability.

OPERATION

OPERATION

An EGR valve assembly is located toward the front of the engine. An EGR solenoid, located on top of the intake manifold near EGR valve. The EGR solenoid controls the "on time" of the EGR valve. The Powertrain Control Module (PCM) operates the EGR solenoid. The vacuum pump supplies vacuum for the EGR solenoid and the EGR valve. This pump also supplies vacuum for operation of the power brake booster and the heating and air conditioning system. The pump is located in the rear of the cylinder head and is driven by the exhaust camshaft. When the PCM supplies a variable ground signal to the EGR solenoid, EGR system operation begins. The PCM will monitor and determine when to supply and remove this variable ground signal. This will depend on inputs from the engine coolant temperature, throttle position and engine speed sensors. When the variable ground signal is supplied to the EGR solenoid, vacuum will be allowed to pass through the EGR solenoid and on to the EGR valve through a connecting hose.

Exhaust gas recirculation will begin in this order when:

- The PCM determines that EGR system operation is necessary.
- The engine is running to operate the vacuum pump.
- A variable ground signal is supplied to the EGR solenoid.
- Variable vacuum passes through the EGR solenoid to the EGR valve.
- The inlet seat (poppet valve) at the bottom of the EGR valve opens to dilute and recirculate exhaust gas back into the mixing chamber.

The EGR system will be shut down by the PCM after 60 seconds of continuous engine idling to improve idle quality.

SPECIFICATIONS

TORQUE SPECIFICATIONS

TORQUE SPECIFICATIONS TABLE

Description	N.m	Ft. Lbs	In. Lbs
EGR Air Flow Control Valve Bolt	9	-	80
EGR Back Pressure Transducer	25	18	-
EGR Bypass Valve	9	-	80
EGR Bypass Vacuum Diaphragm Bolt	12	-	106
EGR Cooler Support Bolt	9	-	80
EGR Manifold Bolts	9	-	80
EGR Support Bracket Bolts	9	-	80
EGR Tube Bolt	9	-	80
EGR Vacuum Solenoid Bolts	9	-	80
EGR Valve Bolts	9	-	80
Vacuum Tube Bolt	9	-	80

SOLENOID, EXHAUST GAS RECIRCULATION (EGR)

DESCRIPTION

DESCRIPTION

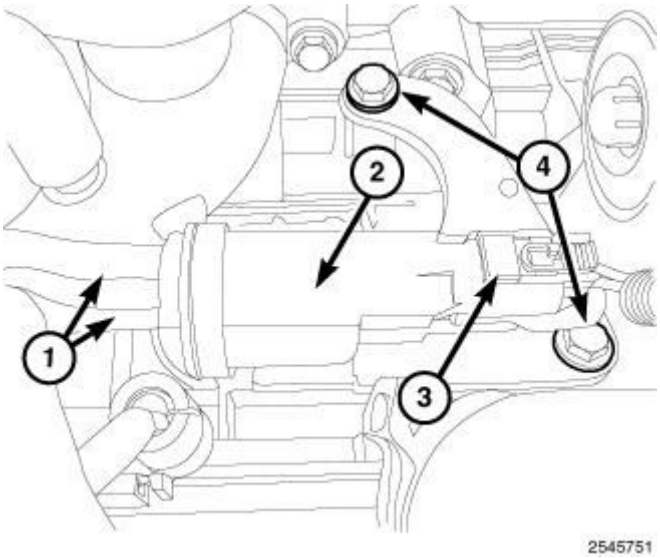

Fig. 31: Identifying Vacuum Harness, EGR Solenoid, EGR Solenoid

Harness Connector & Bolts
Courtesy of CHRYSLER GROUP, LLC

The EGR solenoid (2) is attached to a bracket that is mounted to the top of intake manifold. The EGR solenoid serves two different functions. One is to control vacuum bleed-off of the EGR valve. The other is to control the "on time" of the EGR valve.

REMOVAL

REMOVAL

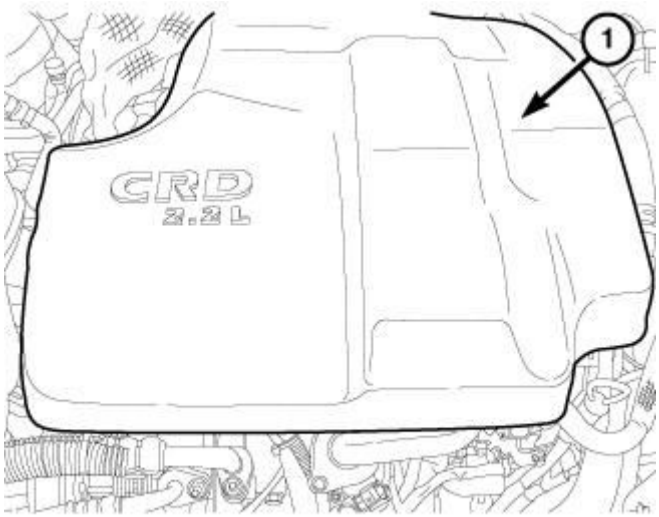

2582736

Fig. 32: Engine Cover
Courtesy of CHRYSLER GROUP, LLC

1. Disconnect the negative battery cable.
2. Remove the engine cover (1).

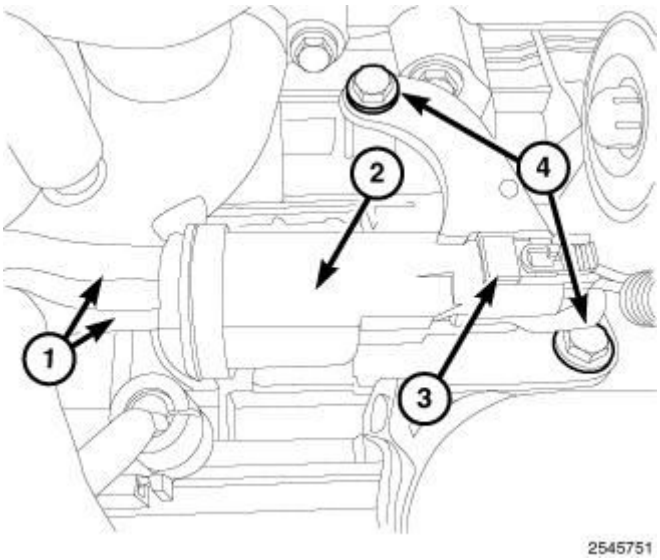

Fig. 33: Identifying Vacuum Harness, EGR Solenoid, EGR Solenoid Harness Connector & Bolts
Courtesy of CHRYSLER GROUP, LLC

3. Disconnect the EGR solenoid wire harness connector (3).
4. Disconnect the EGR vacuum harness (1) from the EGR solenoid (2).
5. Remove bolts (4) and the EGR vacuum solenoid (2) from the intake manifold.

INSTALLATION

INSTALLATION

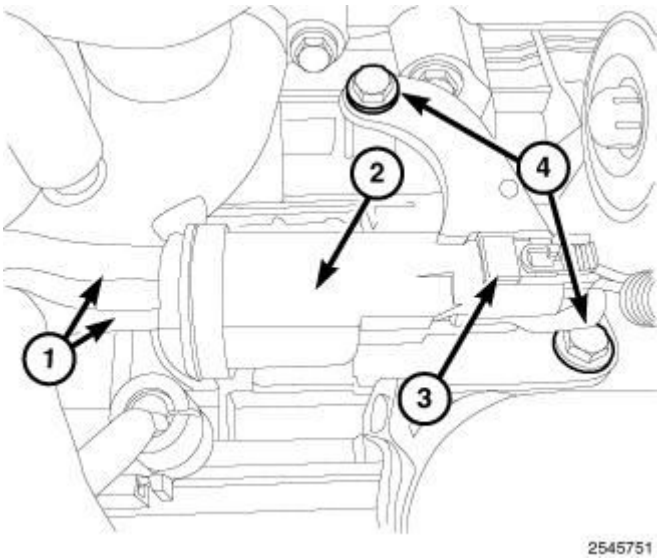

Fig. 34: Identifying Vacuum Harness, EGR Solenoid, EGR Solenoid Harness Connector & Bolts
Courtesy of CHRYSLER GROUP, LLC

1. Install EGR vacuum solenoid (2) onto the intake manifold. Tighten bolts (4) to 9 N.m (80 in. lbs.).
2. Connect EGR vacuum harness (1) to the EGR solenoid (2).
3. Connect EGR solenoid wire harness connector (3).

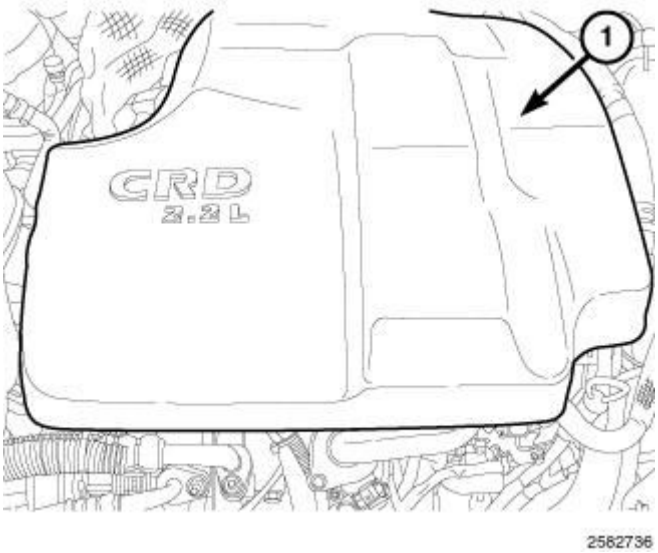

Fig. 35: Engine Cover
Courtesy of CHRYSLER GROUP, LLC

4. Install the engine cover (1).
5. Connect the negative battery cable.

TRANSDUCER, EGR BACK PRESSURE

REMOVAL

REMOVAL

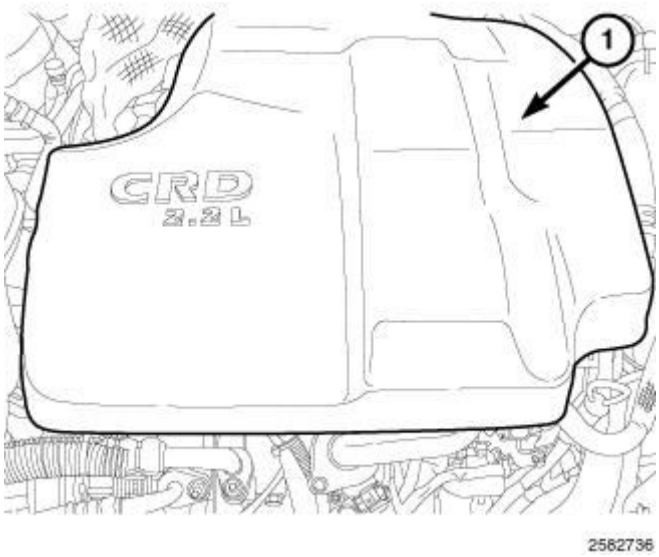

Fig. 36: Engine Cover
Courtesy of CHRYSLER GROUP, LLC

1. Disconnect the negative battery cable.
2. Remove the engine cover (1).

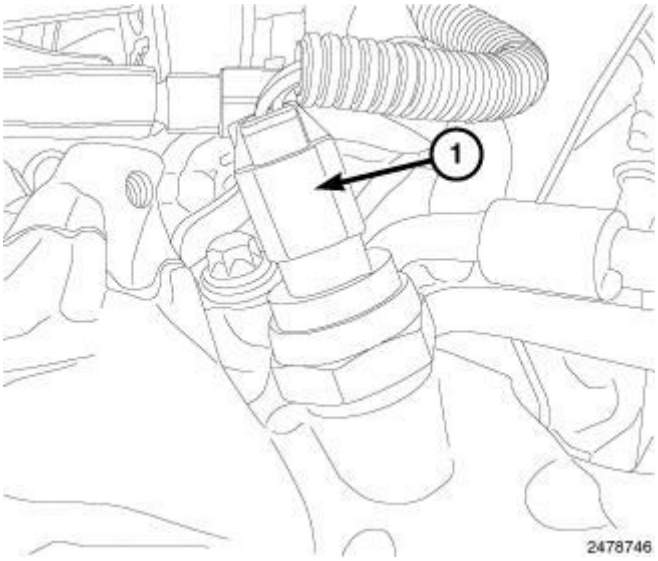

Fig. 37: Identifying EGR Back Pressure Transducer Harness Connector
Courtesy of CHRYSLER GROUP, LLC

3. Disconnect the EGR back pressure transducer wire harness connector (1).

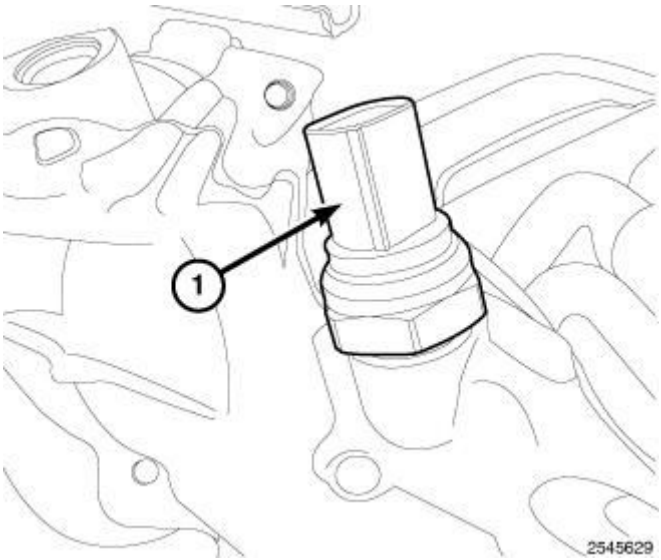

Fig. 38: Identifying EGR Back Pressure Transducer
Courtesy of CHRYSLER GROUP, LLC

4. Remove the EGR back pressure transducer (1).

INSTALLATION

INSTALLATION

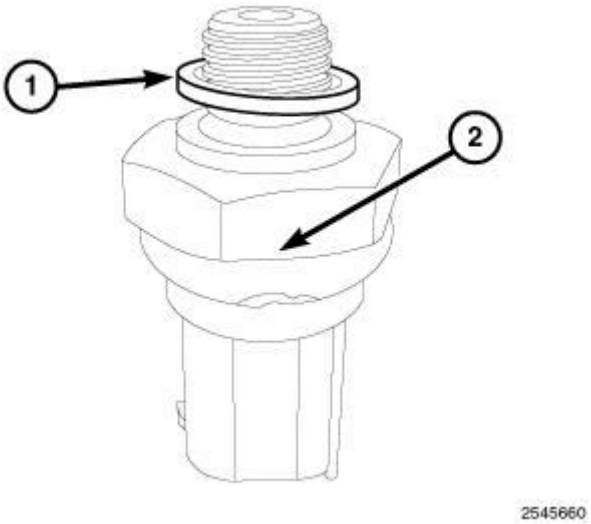

Fig. 39: Identifying Sealing Washer & EGR Back Pressure Transducer
Courtesy of CHRYSLER GROUP, LLC

1. Using a new sealing washer (1), install the EGR back pressure transducer (2). Tighten transducer (2) to 25 N.m (18 ft. lbs.).

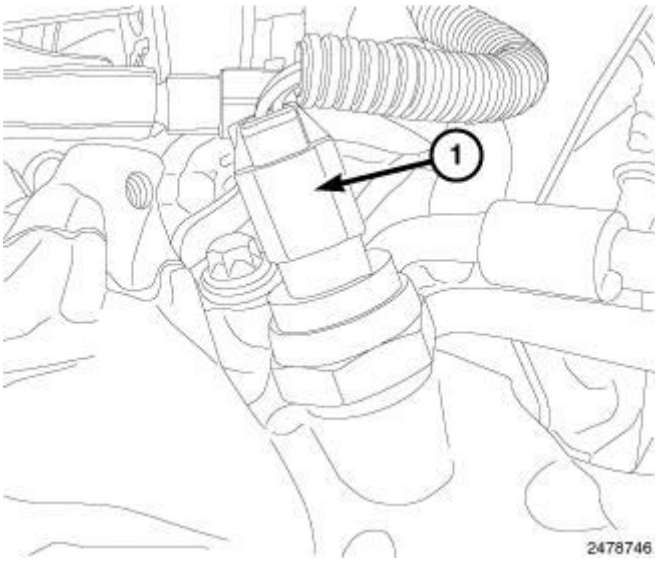

Fig. 40: Identifying EGR Back Pressure Transducer Harness Connector
Courtesy of CHRYSLER GROUP, LLC

2. Connect the EGR back pressure transducer wire harness connector (1).

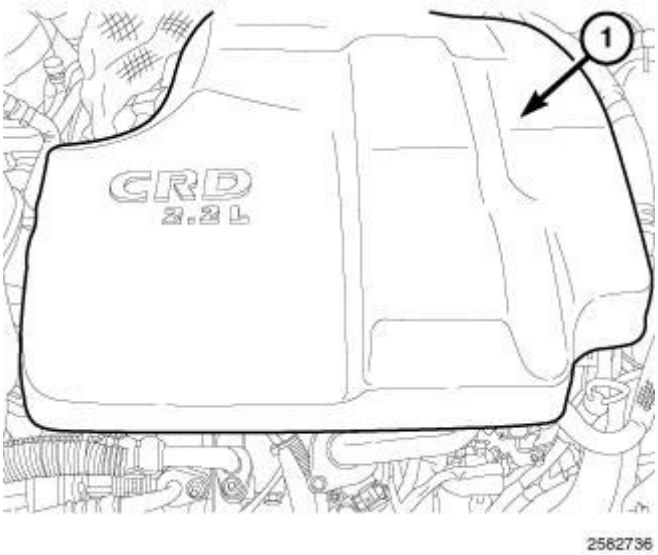

Fig. 41: Engine Cover
Courtesy of CHRYSLER GROUP, LLC

3. Install the engine cover (1).
4. Connect the negative battery cable.

TUBE, EXHAUST GAS RECIRCULATION (EGR)

REMOVAL

REMOVAL

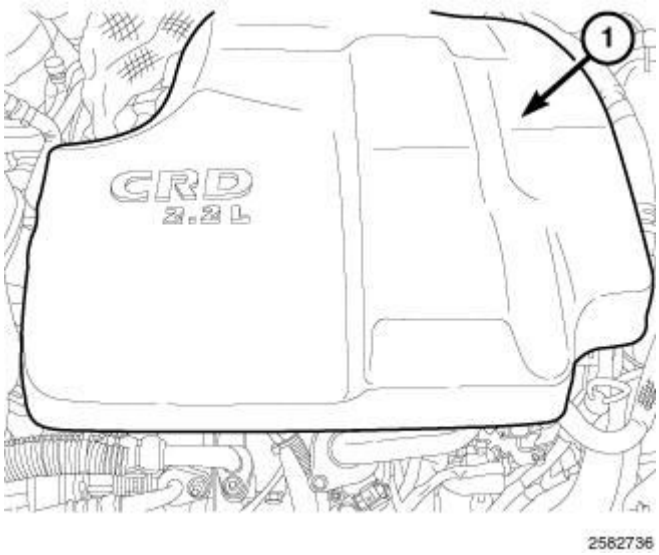

Fig. 42: Engine Cover
Courtesy of CHRYSLER GROUP, LLC

1. Disconnect the negative battery cable.
2. Remove the engine cover (1).

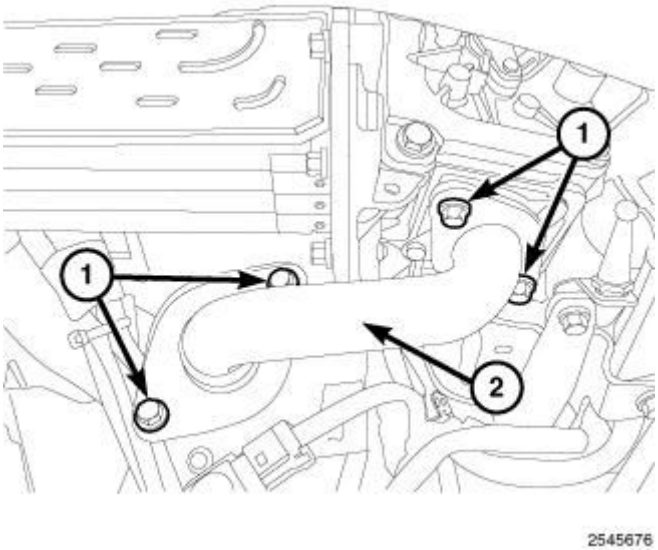

Fig. 43: Identifying Bolts & ERG Tube
Courtesy of CHRYSLER GROUP, LLC

3. Remove the four bolts (1) and the EGR tube (2).

INSTALLATION

INSTALLATION

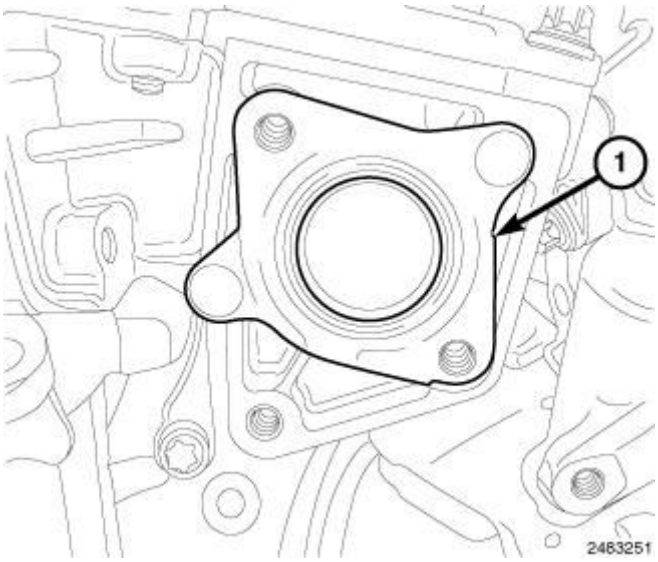

Fig. 44: Installing EGR Tube Gasket Onto EGR Actuator
Courtesy of CHRYSLER GROUP, LLC

1. Clean all gasket mating surfaces.
2. Install a new EGR tube gasket (1) onto the EGR actuator.

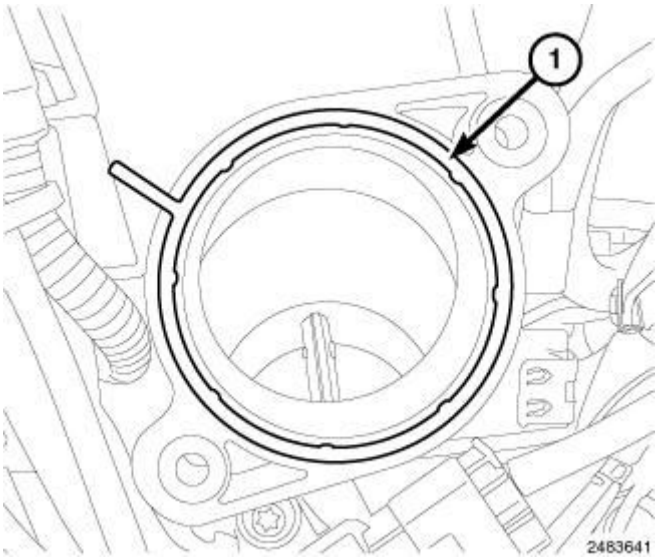

Fig. 45: Installing/Removing EGR Tube Gasket Onto Mixing Chamber
Courtesy of CHRYSLER GROUP, LLC

3. Install a new EGR tube gasket (1) onto the mixing chamber.

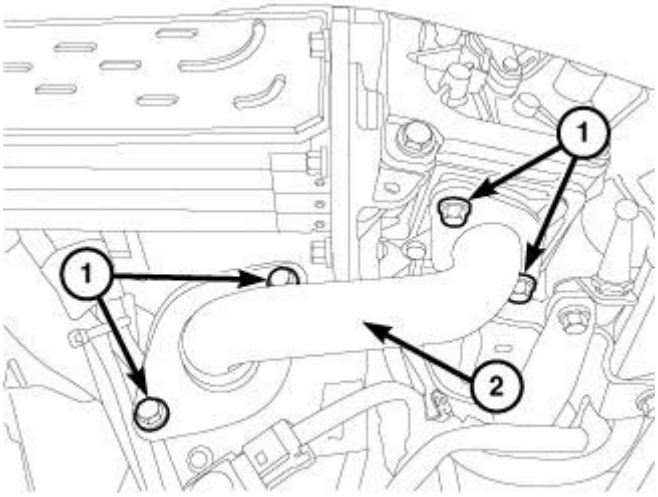

2545676

Fig. 46: Identifying Bolts & ERG Tube
Courtesy of CHRYSLER GROUP, LLC

4. Install the EGR tube (2). Tighten bolts (1) to 9 N.m (80 in. lbs.).

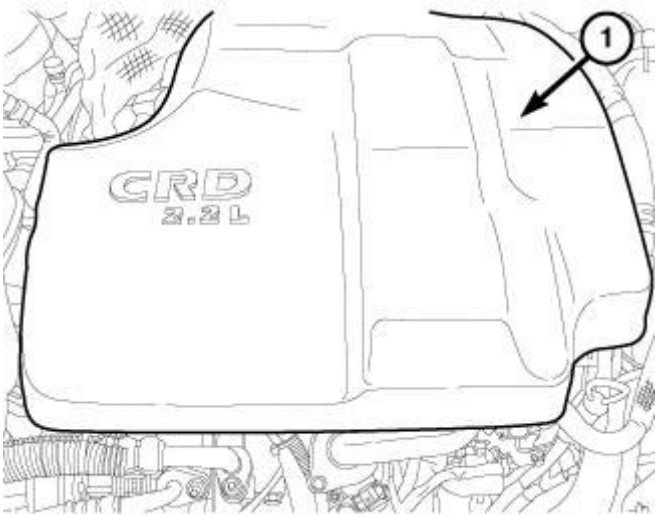

2562736

Fig. 47: Engine Cover
Courtesy of CHRYSLER GROUP, LLC

5. Install the engine cover (1).
6. Connect the negative battery cable.

VALVE, EXHAUST GAS RECIRCULATION (EGR)

DESCRIPTION

DESCRIPTION

The EGR valve is mounted inline to the EGR cooler.

OPERATION

OPERATION

The engines use Exhaust Gas Recirculation (EGR) systems. The EGR system reduces oxides of nitrogen (NOx) in engine exhaust and helps prevent detonation (engine knock). Under normal operating conditions, engine cylinder temperature can reach more than 1649°C (3000°F). Formation of NOx increases proportionally with combustion temperature. To reduce the emission of these oxides, the cylinder temperature must be lowered. The system allows a predetermined amount of hot exhaust gas to recirculate and dilute the incoming air/fuel mixture. The diluted air/fuel mixture reduces peak flame temperature during combustion.

REMOVAL

REMOVAL

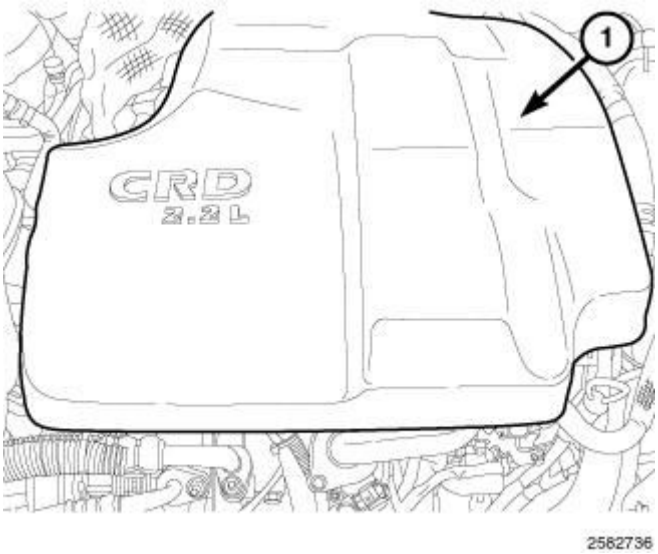

Fig. 48: Engine Cover
Courtesy of CHRYSLER GROUP, LLC

1. Disconnect the negative battery cable.
2. Remove the engine cover (1).
3. Drain the cooling system. Refer to **STANDARD PROCEDURE** .

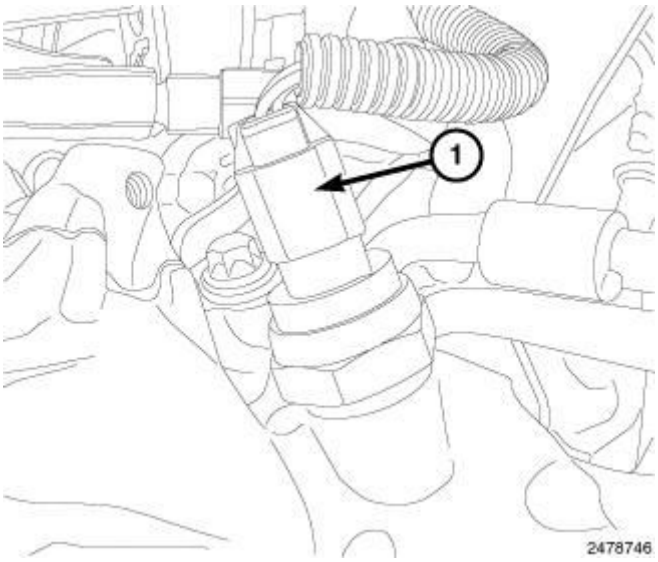

Fig. 49: Identifying EGR Back Pressure Transducer Harness Connector
Courtesy of CHRYSLER GROUP, LLC

4. Disconnect the EGR back pressure transducer wire harness connector (1).

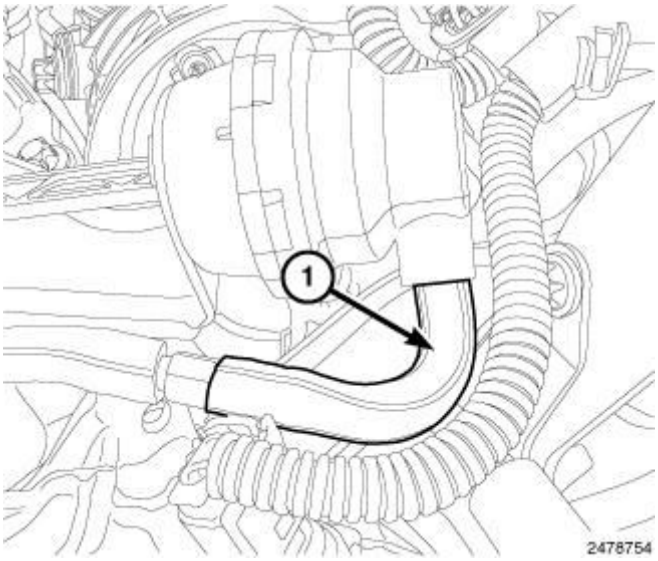

Fig. 50: Identifying Vacuum Line
Courtesy of CHRYSLER GROUP, LLC

5. Disconnect the vacuum line (1) from the EGR control valve actuator.

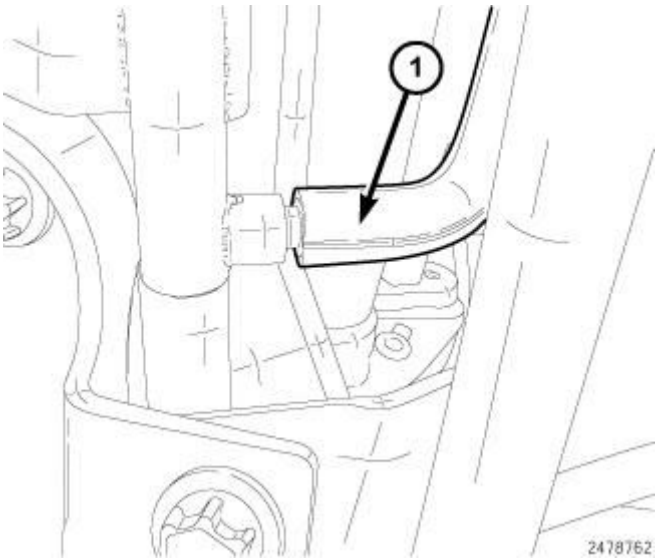

Fig. 51: Vacuum Supply Line At EGR Solenoid
Courtesy of CHRYSLER GROUP, LLC

6. Disconnect the vacuum supply line (1) to the EGR solenoid.

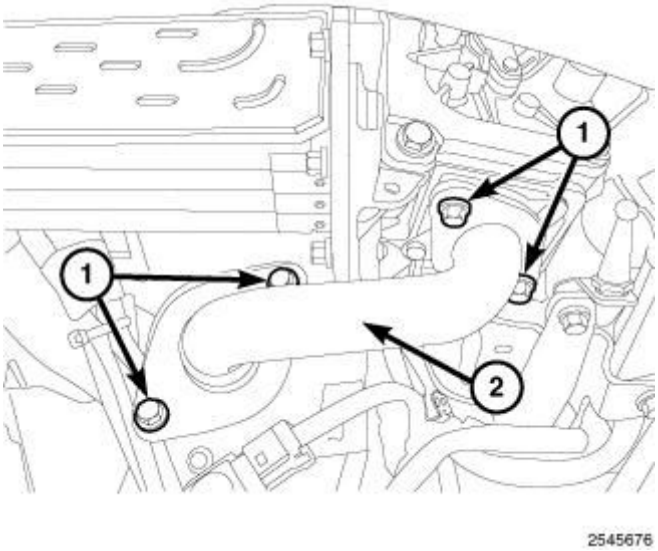

Fig. 52: Identifying Bolts & ERG Tube
Courtesy of CHRYSLER GROUP, LLC

7. Remove EGR tube bolts (1) and the EGR tube (2).

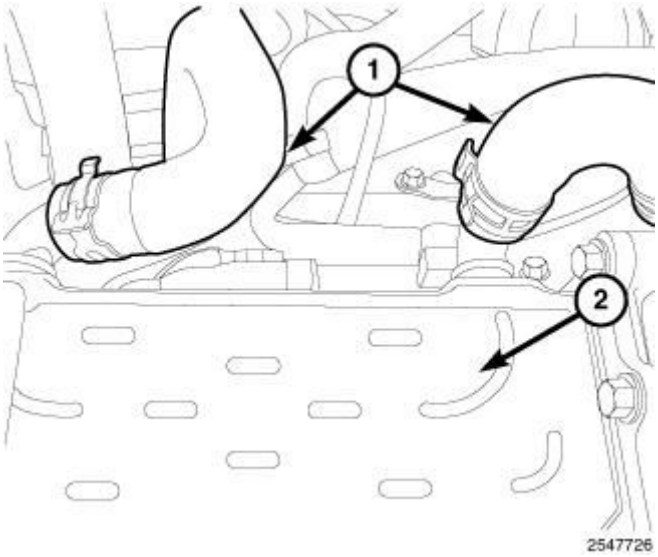

Fig. 53: Identifying Coolant Hoses & EGR Cooler
Courtesy of CHRYSLER GROUP, LLC

8. Disconnect coolant hoses (1) from the EGR cooler (2).

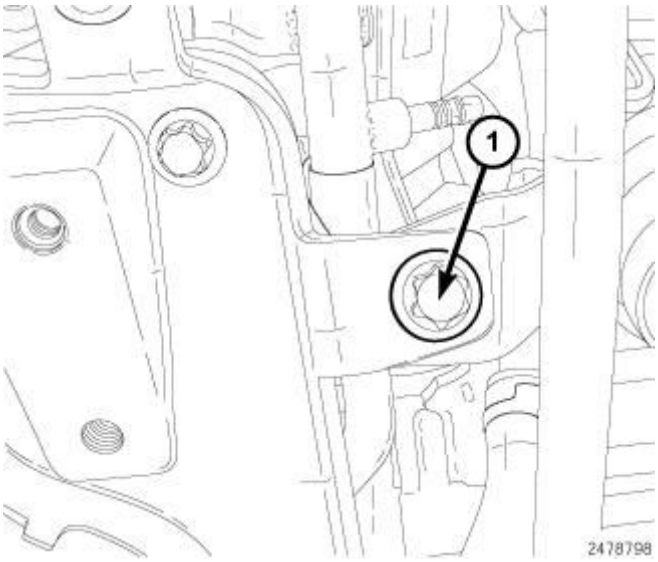

Fig. 54: Oil Dip Stick Bolt
Courtesy of CHRYSLER GROUP, LLC

9. Remove the bolt (1) securing the oil dip stick tube.

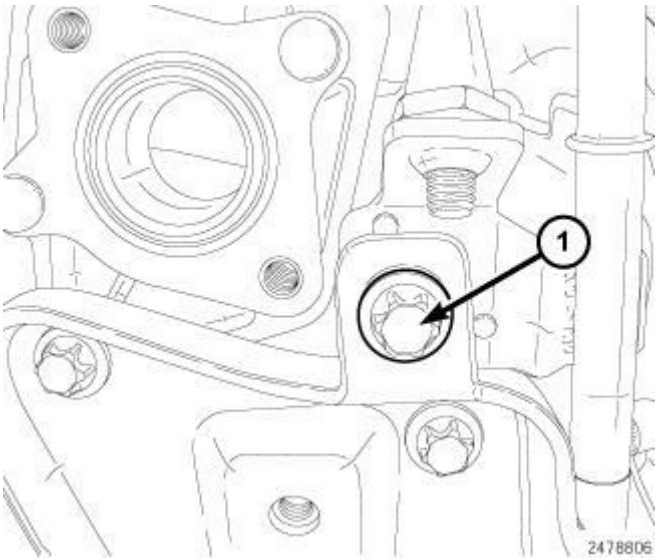

Fig. 55: Vacuum Tube Bolt
Courtesy of CHRYSLER GROUP, LLC

10. Remove the bolt (1) securing the vacuum tube.

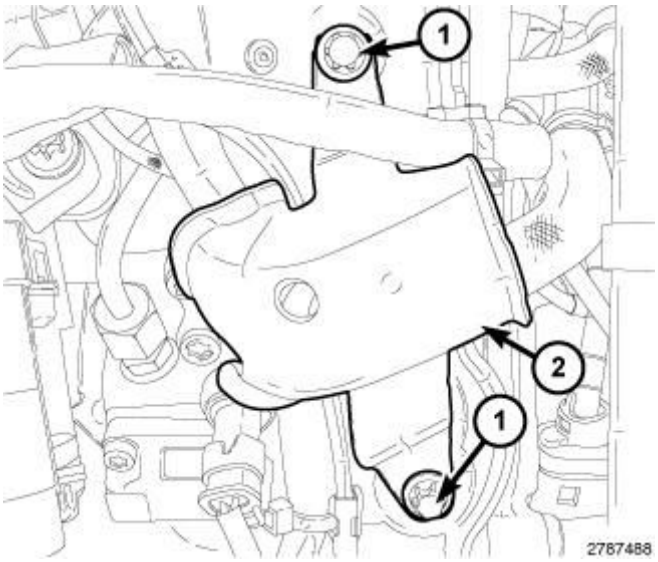

Fig. 56: Identifying Bolts & Heat Shield
Courtesy of CHRYSLER GROUP, LLC

11. Remove bolts (1) and the heat shield (2).

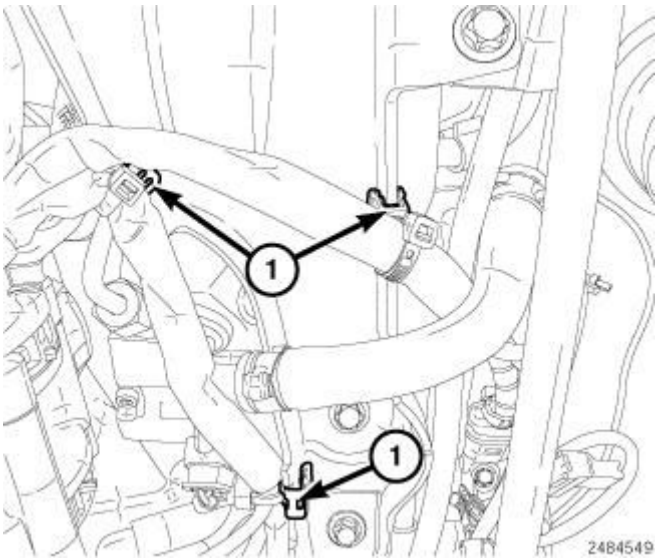

Fig. 57: Wire Harness Retainers
Courtesy of CHRYSLER GROUP, LLC

12. Disconnect the wire harness retainers (1).

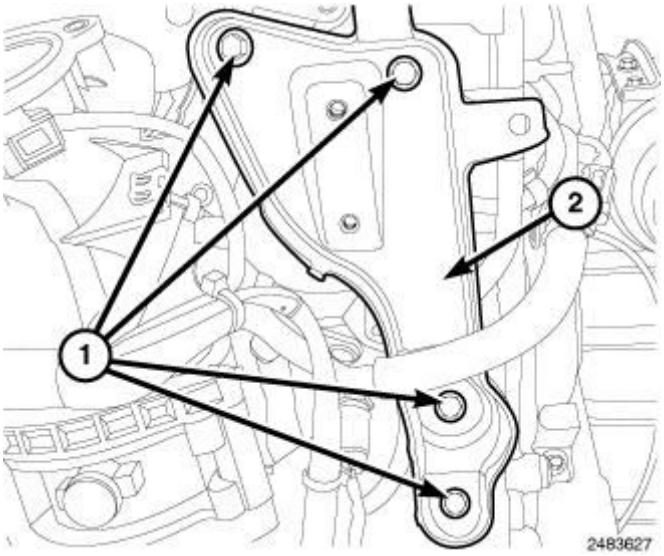

Fig. 58: Identifying Bolts & EGR Support Bracket
Courtesy of CHRYSLER GROUP, LLC

13. Remove bolts (1) and the EGR support bracket (2).

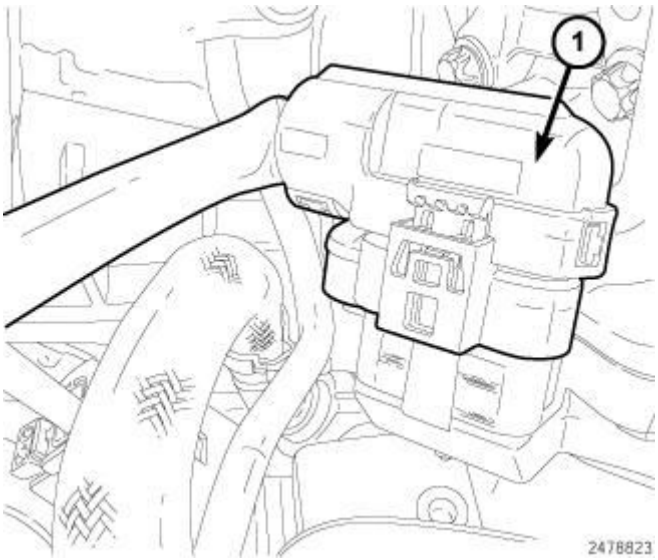

Fig. 59: Identifying EGR Valve Harness Connector
Courtesy of CHRYSLER GROUP, LLC

14. Disconnect the EGR valve wire harness connector (1).

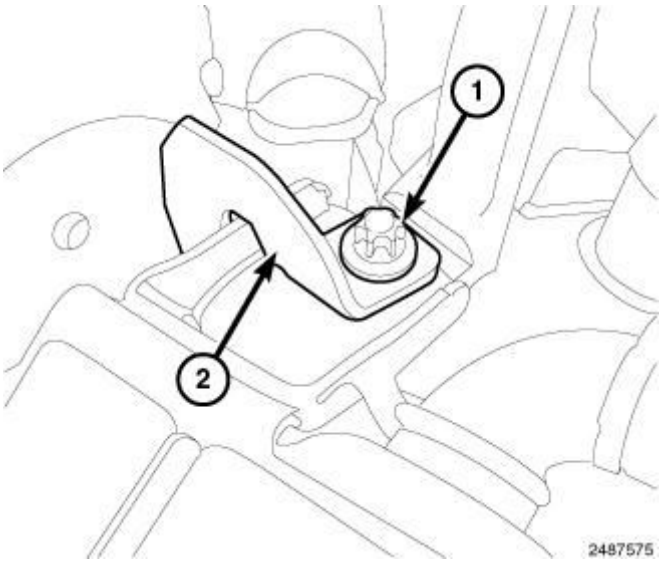

Fig. 60: Upper EGR Cooler Bolt & Bracket
Courtesy of CHRYSLER GROUP, LLC

15. Remove the upper EGR cooler bolt (1) and bracket (2).

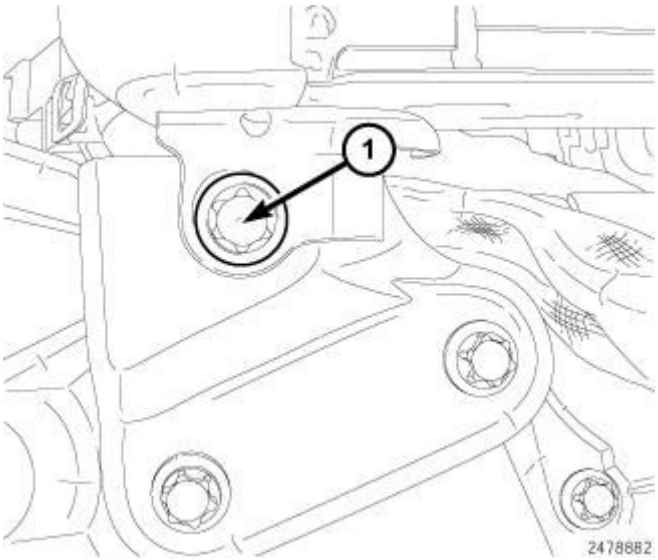

Fig. 61: Lower EGR Cooler Bolt
Courtesy of CHRYSLER GROUP, LLC

16. Remove the lower EGR cooler bolt (1).

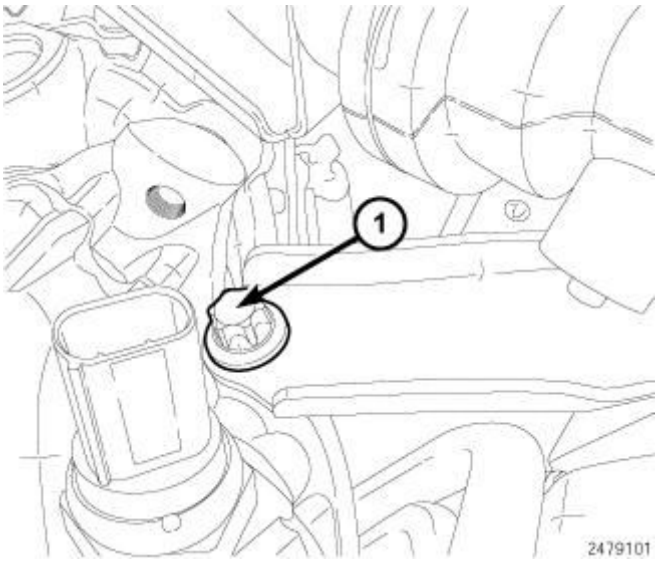

Fig. 62: Support Bracket Bolt
Courtesy of CHRYSLER GROUP, LLC

17. Remove the support bracket bolt (1).

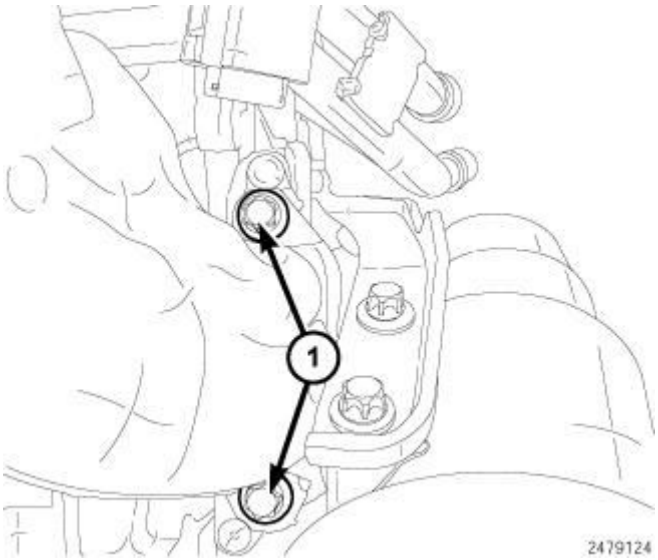

Fig. 63: Identifying EGR Cooler Manifold Bolts
Courtesy of CHRYSLER GROUP, LLC

18. Remove two bolts (1) and the EGR cooler manifold.

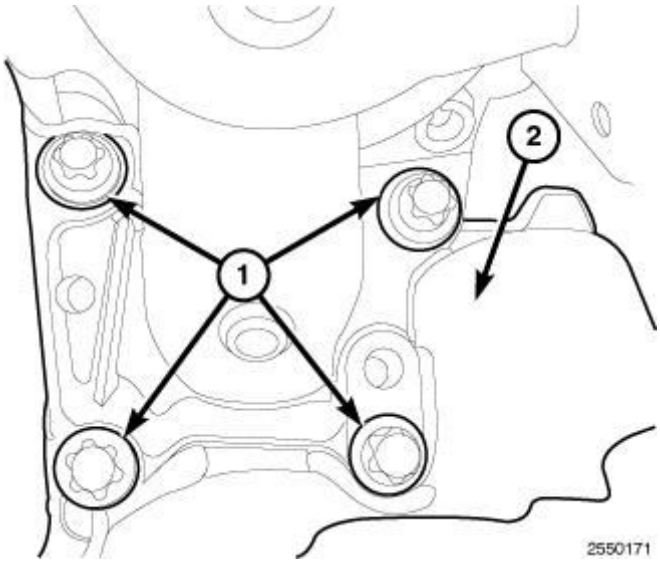

Fig. 64: Identifying Bolts & EGR Valve
Courtesy of CHRYSLER GROUP, LLC

19. Remove bolts (1) and the EGR valve (2).

INSTALLATION

INSTALLATION

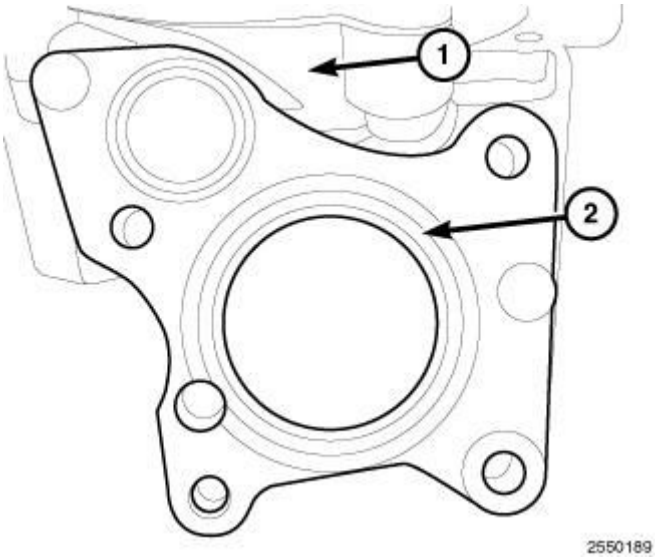

Fig. 65: Identifying EGR Cooler & Gasket
Courtesy of CHRYSLER GROUP, LLC

1. Clean all the gasket surface areas.
2. Install a new gasket (2) onto the EGR cooler (1).

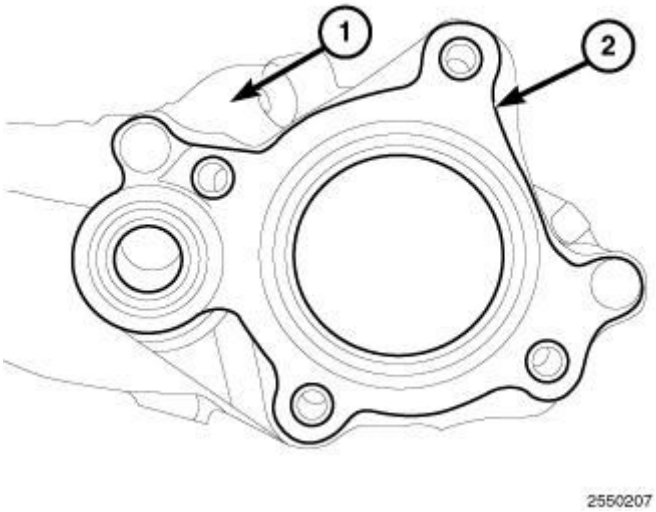

Fig. 66: Identifying EGR Inlet Pipe & Gasket
Courtesy of CHRYSLER GROUP, LLC

3. Install a new gasket (2) onto the EGR inlet pipe (1).

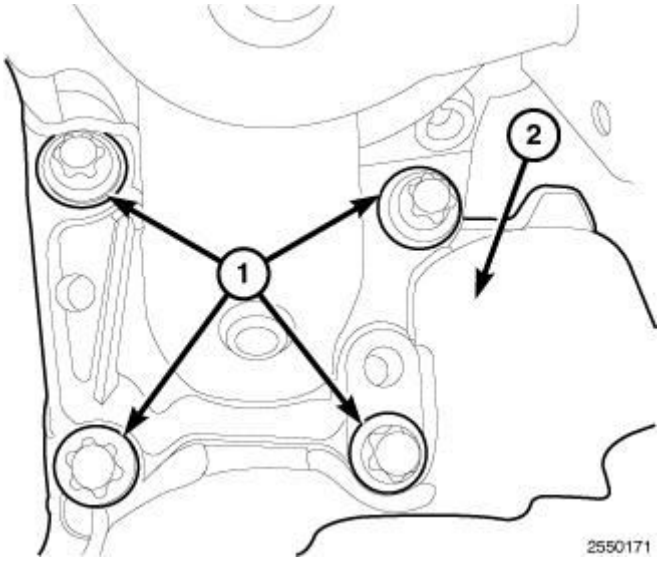

Fig. 67: Identifying Bolts & EGR Valve
Courtesy of CHRYSLER GROUP, LLC

4. Install EGR valve (2). Tighten bolts (1) to 9 N.m (80 in. lbs.).

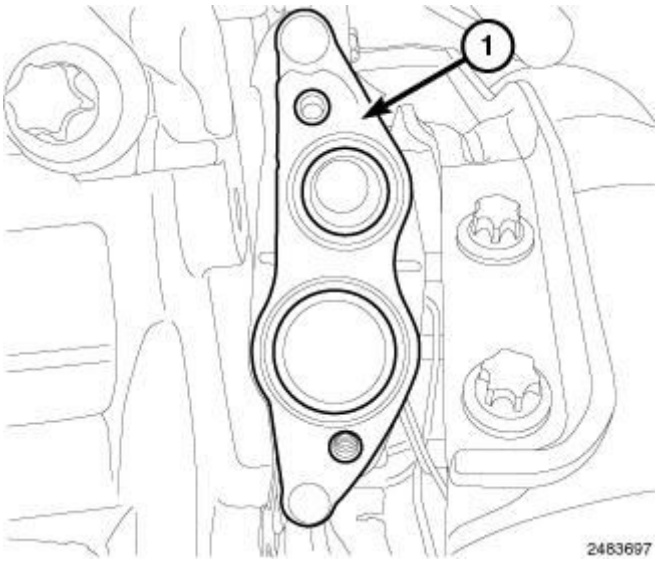

Fig. 68: Identifying EGR Manifold Gasket
Courtesy of CHRYSLER GROUP, LLC

5. Clean the gasket surfaces and install a new EGR manifold gasket (1).

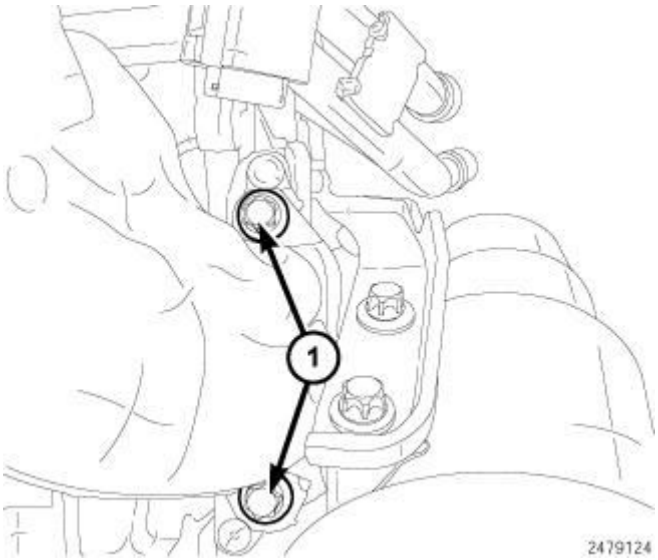

Fig. 69: Identifying EGR Cooler Manifold Bolts
Courtesy of CHRYSLER GROUP, LLC

6. Install the EGR manifold. Tighten bolts (1) to 9 N.m (80 in. lbs.).

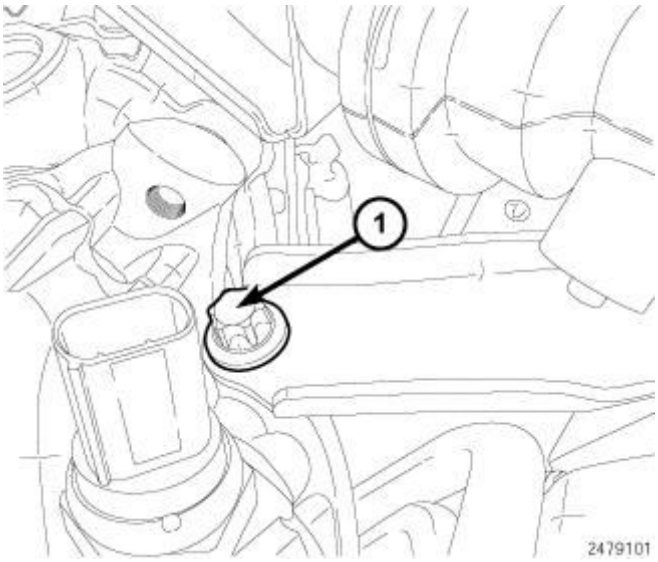

Fig. 70: Support Bracket Bolt
Courtesy of CHRYSLER GROUP, LLC

7. Install the support bracket bolt (1). Tighten bolt (1) to 9 N.m (80 in. lbs.).

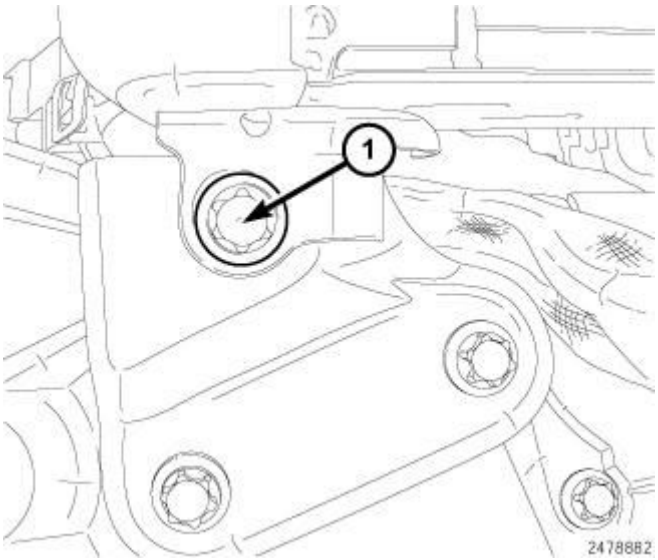

Fig. 71: Lower EGR Cooler Bolt
Courtesy of CHRYSLER GROUP, LLC

8. Install the lower EGR cooler support bolt (1). Tighten bolt (1) to 9 N.m (80 in. lbs.).

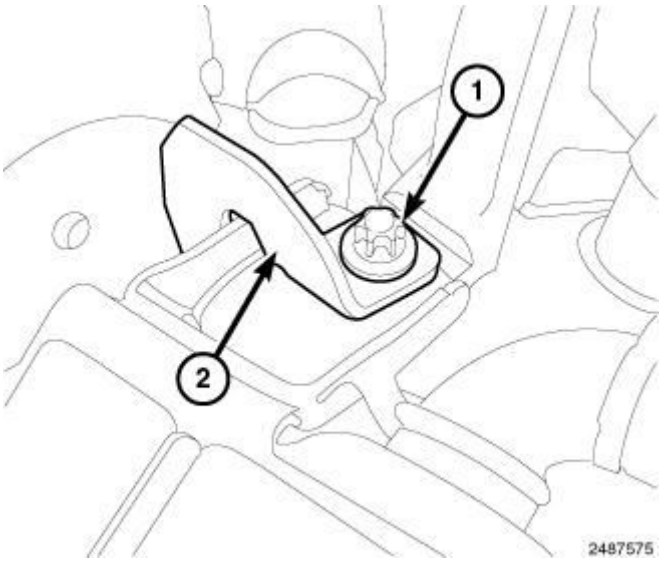

Fig. 72: Upper EGR Cooler Bolt & Bracket
Courtesy of CHRYSLER GROUP, LLC

9. Install the upper EGR cooler support bolt (1). Tighten bolt (1) to 9 N.m (80 in. lbs.).

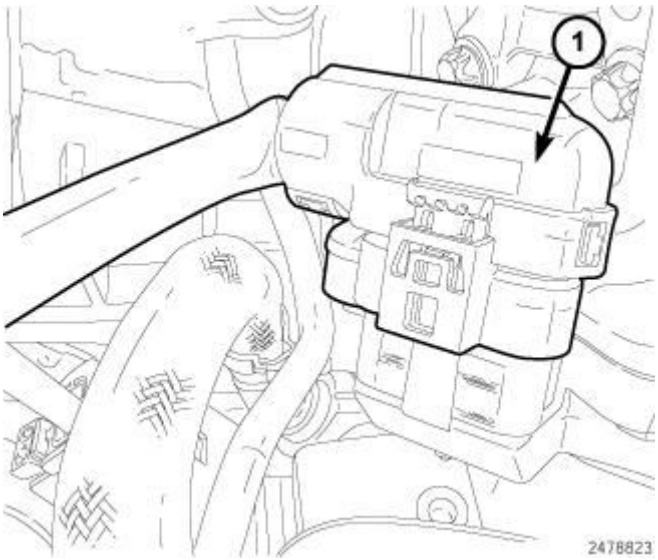

Fig. 73: Identifying EGR Valve Harness Connector
Courtesy of CHRYSLER GROUP, LLC

10. Disconnect the EGR valve wire harness connector (1).

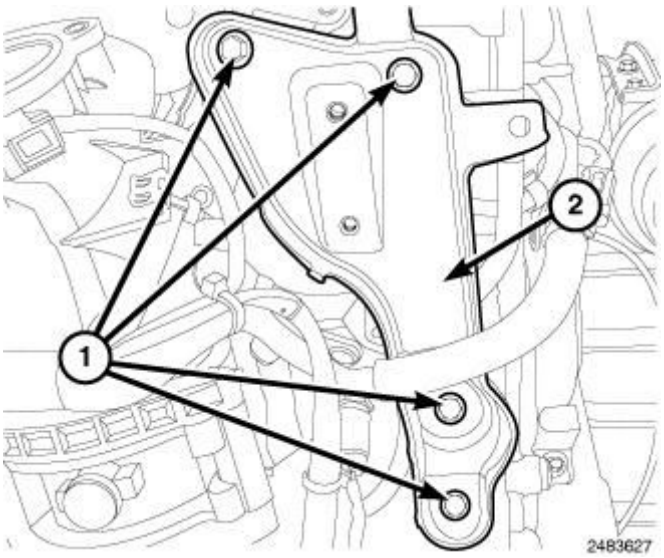

Fig. 74: Identifying Bolts & EGR Support Bracket
Courtesy of CHRYSLER GROUP, LLC

11. Install the EGR support bracket (2). Tighten bolts (1) to 9 N.m (80 in. lbs.).

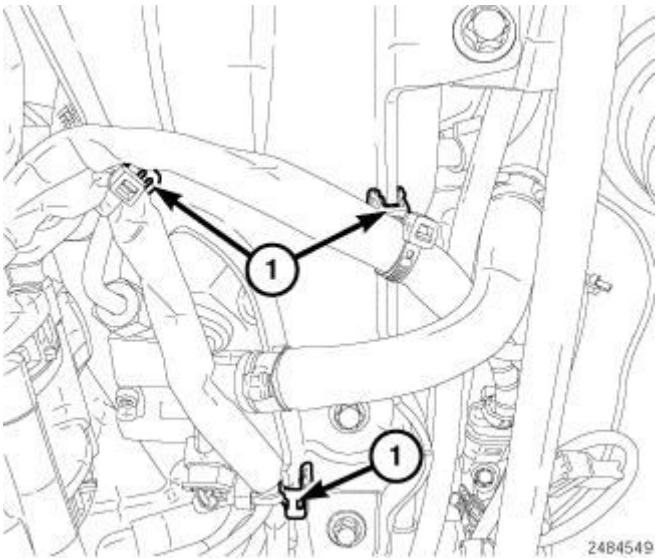

Fig. 75: Wire Harness Retainers
Courtesy of CHRYSLER GROUP, LLC

12. Connect the wire harness retainers (1).

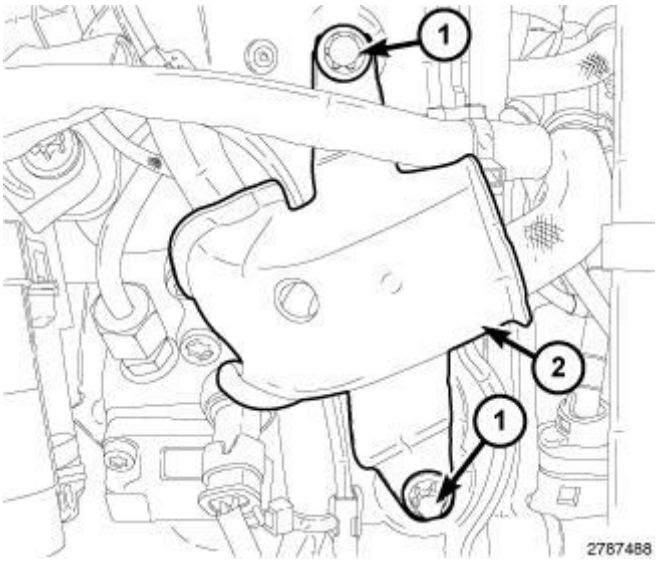

Fig. 76: Identifying Bolts & Heat Shield
Courtesy of CHRYSLER GROUP, LLC

13. Install the heat shield (2). Tighten bolts (1) to 9 N.m (80 in. lbs.).

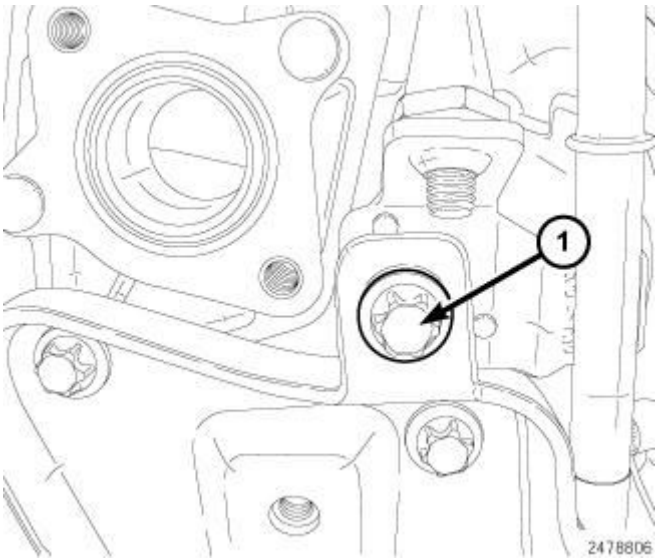

Fig. 77: Vacuum Tube Bolt
Courtesy of CHRYSLER GROUP, LLC

14. Install the bolt (1) securing the vacuum tube and tighten to 9 N.m (80 in. lbs.).

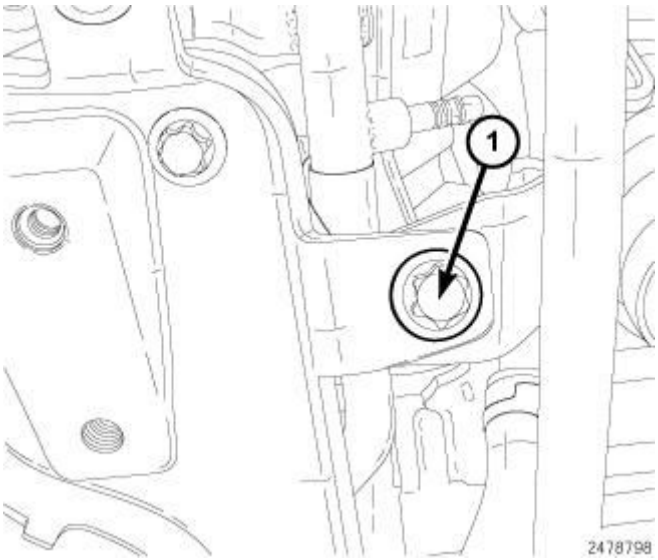

Fig. 78: Oil Dip Stick Bolt
Courtesy of CHRYSLER GROUP, LLC

15. Install the bolt (1) securing the oil dip stick tube and tighten bolt (1) to 9 N.m (80 in. lbs.).

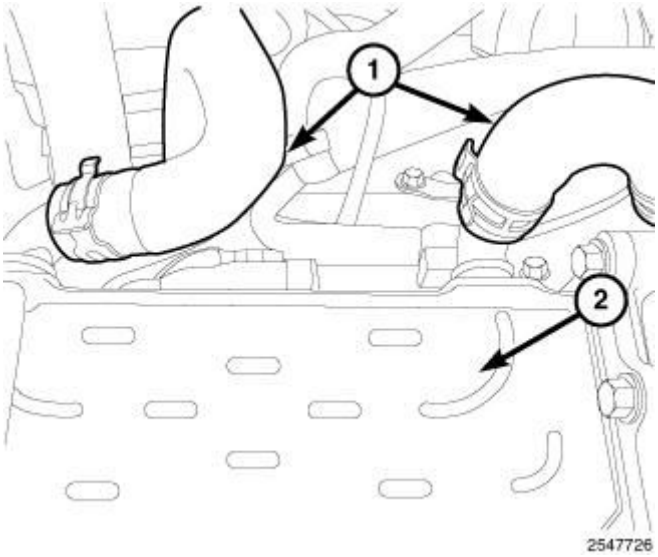

Fig. 79: Identifying Coolant Hoses & EGR Cooler
Courtesy of CHRYSLER GROUP, LLC

16. Connect coolant hoses (1) from the EGR cooler (2).

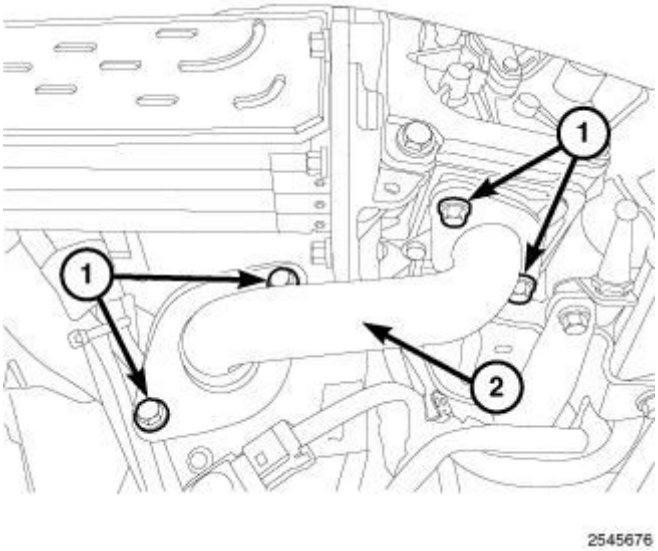

Fig. 80: Identifying Bolts & ERG Tube
Courtesy of CHRYSLER GROUP, LLC

17. Install the EGR tube (2). Tighten bolts (1) to 9 N.m (80 in. lbs.).

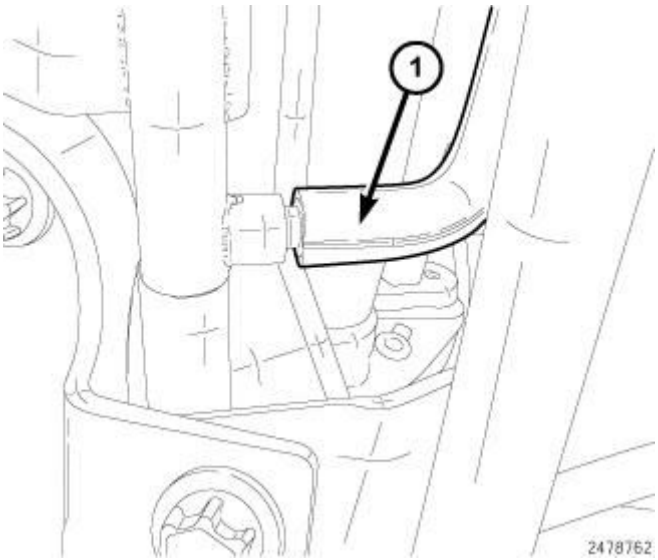

Fig. 81: Vacuum Supply Line At EGR Solenoid
Courtesy of CHRYSLER GROUP, LLC

18. Connect the vacuum supply line (1) to the EGR solenoid.

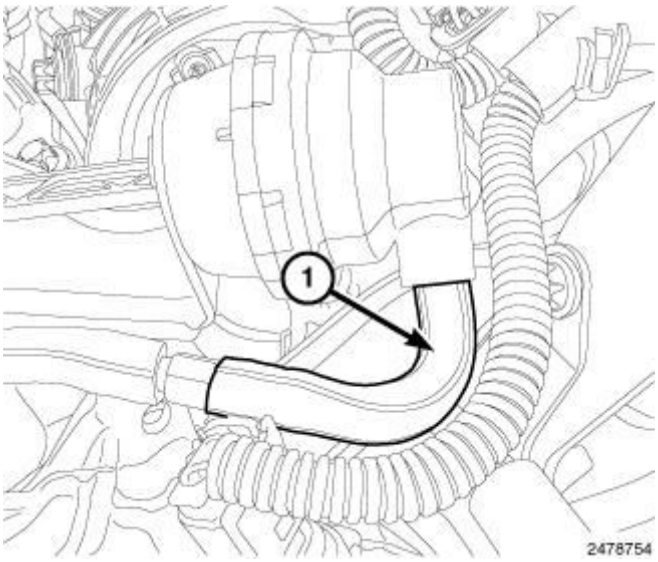

Fig. 82: Identifying Vacuum Line
Courtesy of CHRYSLER GROUP, LLC

19. Connect EGR valve vacuum line (1).

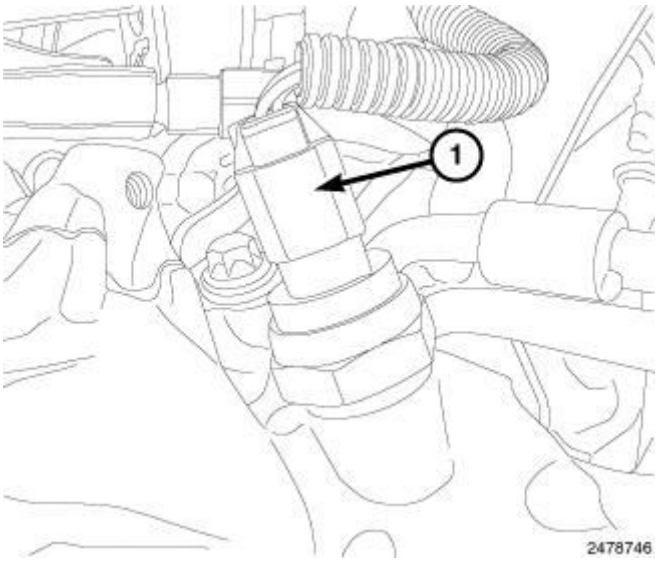

Fig. 83: Identifying EGR Back Pressure Transducer Harness Connector
Courtesy of CHRYSLER GROUP, LLC

20. Connect the EGR back pressure transducer harness connector (1).
21. Fill the cooling system. Refer to **STANDARD PROCEDURE** .
22. Install the engine cover (1).
23. Connect the negative battery cable.

VALVE, EXHAUST GAS RECIRCULATION (EGR) AIRFLOW CONTROL

REMOVAL

REMOVAL

1. Disconnect negative battery cable.
2. Remove the mixing chamber. Refer to **MANIFOLD, INTAKE, REMOVAL** .

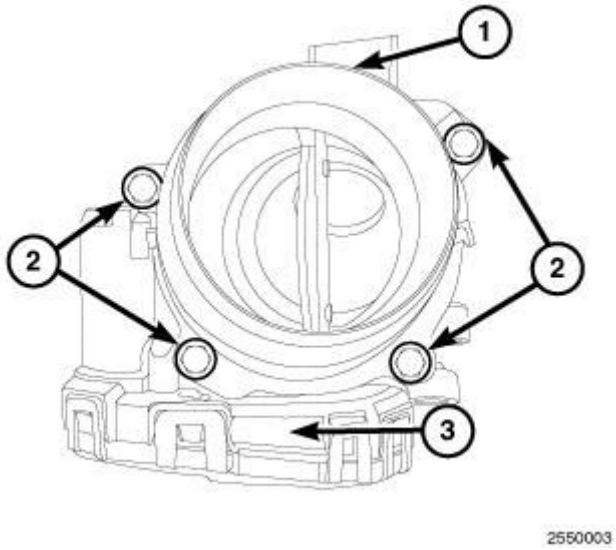

Fig. 84: EGR Air Flow Control Valve & Bolts
Courtesy of CHRYSLER GROUP, LLC

3. Remove bolts (2) and the EGR air flow control valve (3).

INSTALLATION

INSTALLATION

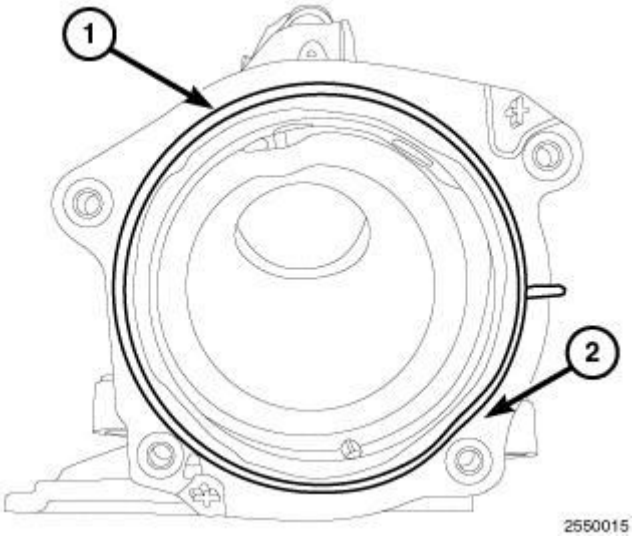

Fig. 85: Gasket & Mixing Chamber
Courtesy of CHRYSLER GROUP, LLC

1. Clean all gasket matting surfaces.
2. Install new gasket (1) on the lower mixing chamber (2).

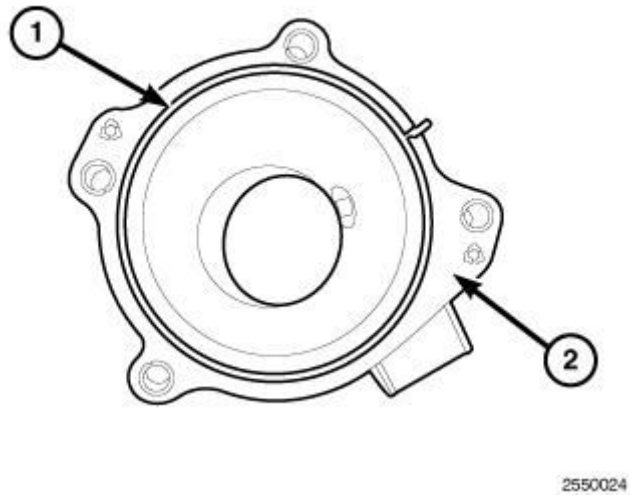

Fig. 86: Gasket & Inlet Housing
Courtesy of CHRYSLER GROUP, LLC

3. Install new gasket (1) onto inlet housing (2).

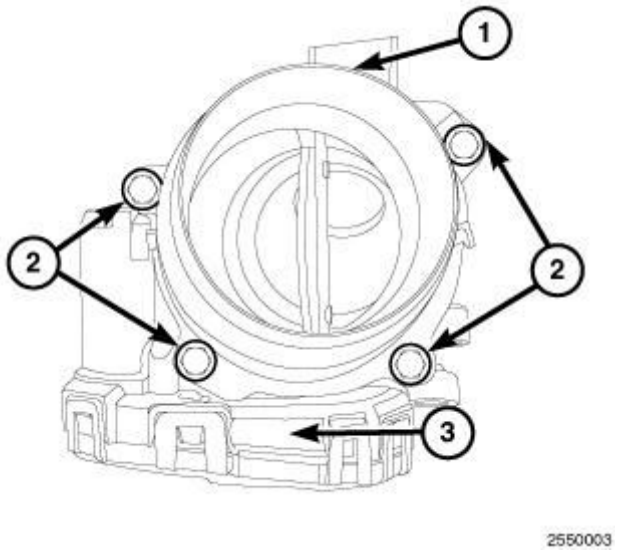

Fig. 87: EGR Air Flow Control Valve & Bolts
Courtesy of CHRYSLER GROUP, LLC

4. Install the EGR air flow control valve (3) to mixing chamber. Tighten bolts (2) to 9 N.m (80 in. lbs.).
5. Install the mixing chamber. Refer to **MANIFOLD, INTAKE, INSTALLATION** .
6. Connect the negative battery cable.

VALVE, EXHAUST GAS RECIRCULATION (EGR) COOLER BYPASS

REMOVAL

REMOVAL

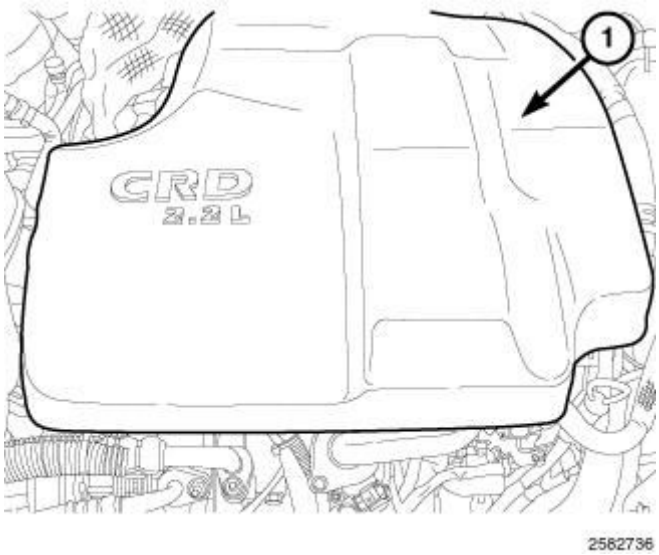

Fig. 88: Engine Cover
Courtesy of CHRYSLER GROUP, LLC

1. Disconnect the negative battery cable.
2. Remove the engine cover (1).
3. Partially drain the cooling system. Refer to **STANDARD PROCEDURE** .

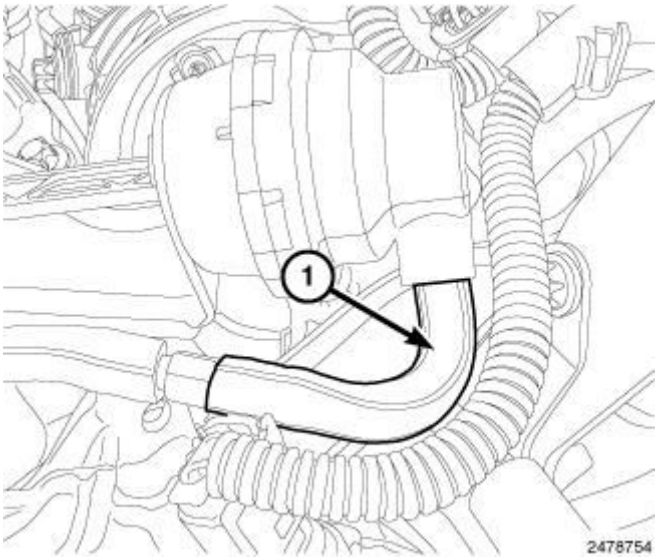

Fig. 89: Identifying Vacuum Line
Courtesy of CHRYSLER GROUP, LLC

4. Disconnect the vacuum line (1) from the EGR control valve actuator.

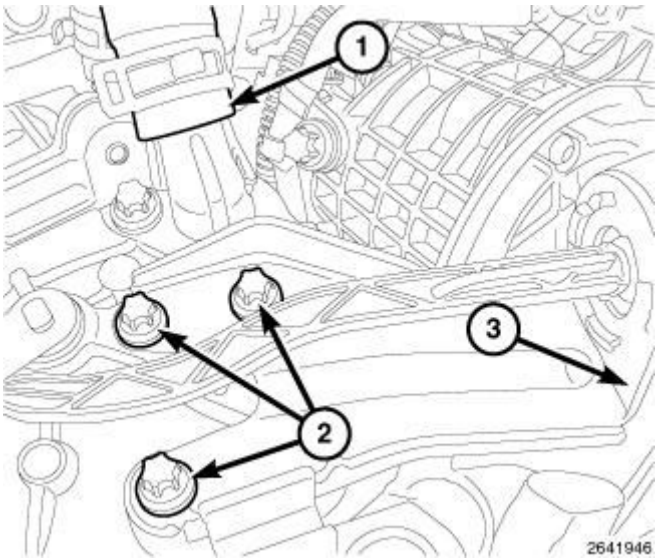

Fig. 90: Identifying EGR Cooler Bypass Coolant Hose, Bolts & EGR Cooler Bypass Vacuum Diaphragm
Courtesy of CHRYSLER GROUP, LLC

5. Disconnect the EGR cooler bypass coolant hose (1).
6. Remove bolts (2) and position aside EGR cooler bypass vacuum diaphragm (3).

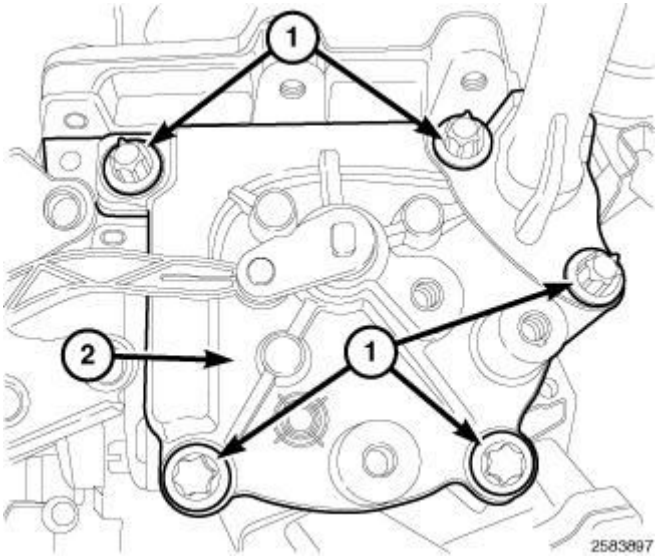

Fig. 91: Identifying Bolts & EGR Cooler Bypass Valve
Courtesy of CHRYSLER GROUP, LLC

7. Remove bolts (1) and the EGR cooler bypass valve (2).

INSTALLATION

INSTALLATION

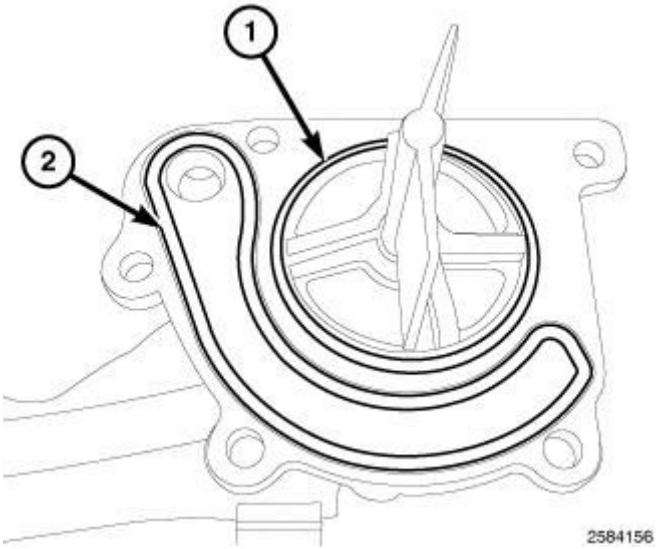

Fig. 92: Identifying O-Ring Gaskets
Courtesy of CHRYSLER GROUP, LLC

1. Clean the gasket mating surfaces.
2. Install new O-ring gaskets (1 and 2).

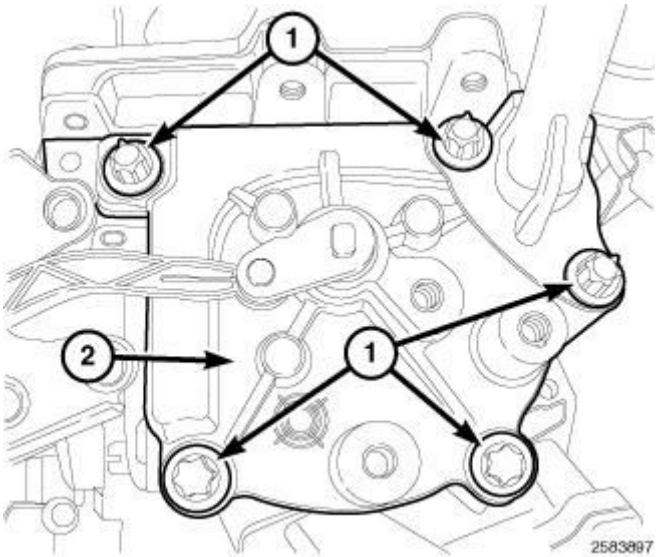

Fig. 93: Identifying Bolts & EGR Cooler Bypass Valve
Courtesy of CHRYSLER GROUP, LLC

3. Install the EGR bypass valve (2). Tighten bolts (1) to 9 N.m (80 in. lbs.).

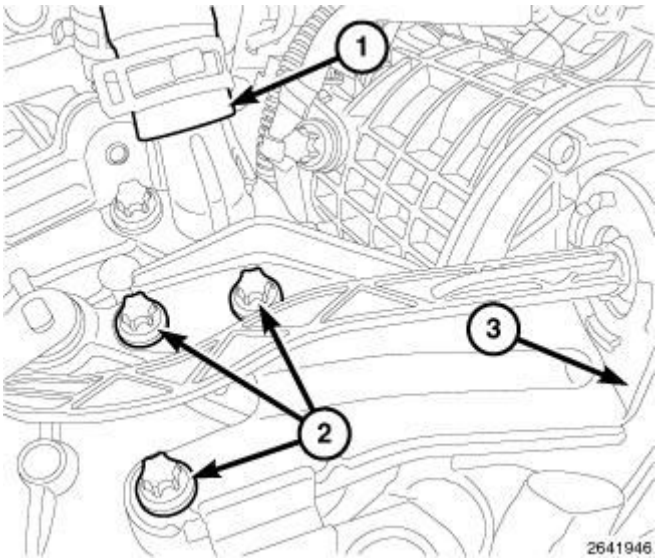

Fig. 94: Identifying EGR Cooler Bypass Coolant Hose, Bolts & EGR Cooler Bypass Vacuum Diaphragm
Courtesy of CHRYSLER GROUP, LLC

4. Position the EGR cooler bypass vacuum diaphragm (3). Tighten bolts (2) to 12 N.m (106 in. lbs.).
5. Connect the EGR cooler bypass coolant hose (1).

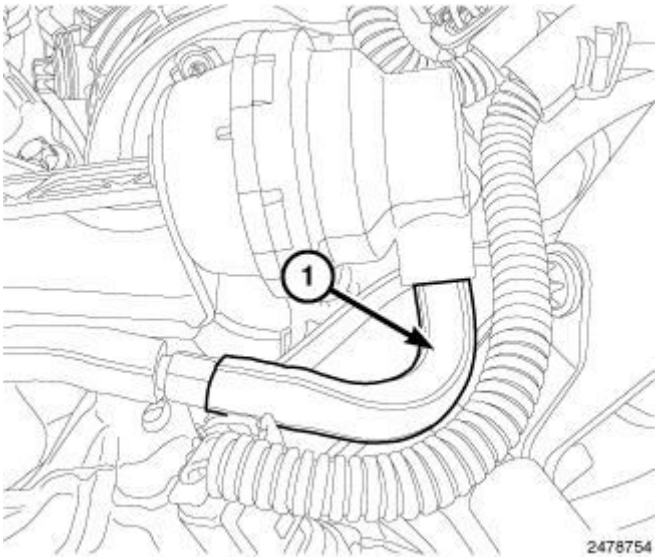

Fig. 95: Identifying Vacuum Line
Courtesy of CHRYSLER GROUP, LLC

6. Connect the vacuum line (1) to the EGR control valve actuator.
7. Fill the cooling system. Refer to **STANDARD PROCEDURE** .

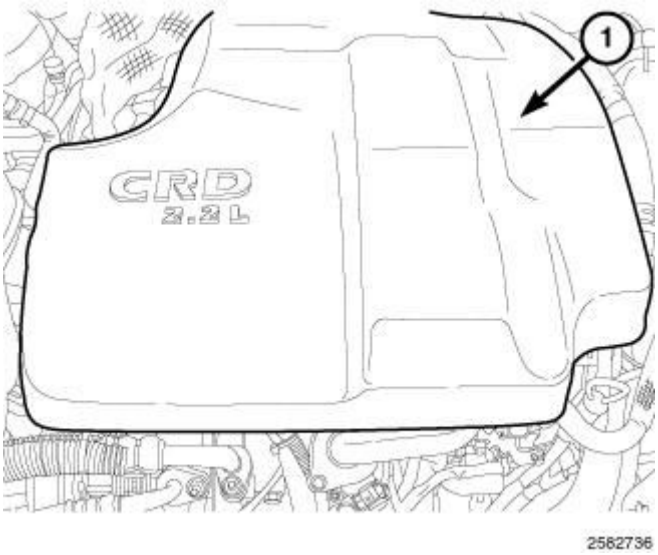

Fig. 96: Engine Cover
Courtesy of CHRYSLER GROUP, LLC

8. Install the engine cover (1).
9. Connect the negative battery cable.
10. Start the engine and check for leaks.

ON-BOARD DIAGNOSTICS

TASK MANAGER

DESCRIPTION

DESCRIPTION

The PCM is responsible for efficiently coordinating the operation of all the emissions-related components. The PCM is also responsible for determining if the diagnostic systems are operating properly. The software designed to carry out these responsibilities is call the "Task Manager".

GLOSSARY OF TERMS

APPS	Accelerator Pedal Position Sensor
AAT	Ambient Air Temperature
ABS	Anti-Lock Brake System
ASD	Auto Shut Down
BARO	Barometric
CGW	Central Gateway

CKP	Crankshaft Position Sensor
CMP	Camshaft Position Sensor
CMTC	Compass/Mini-Trip Computer
DCHA	Diesel Cabin Heater Assist
DLC	Data Link Connector
DTC	Diagnostic Trouble Code
EATX	Electronic Automatic Transaxle
ECT	Engine Coolant Temperature
ECM	Engine Control Module
EGR	Exhaust Gas Recirculation
ETC	Electronic Throttle Control
GEN	Generator
GPEC	Global Powertrain Engine Controller
FCM	Front Control Module
FDCM	Final Drive Control Module
IAT	Intake/Inlet Air Temperature
IAC	Idle Air Control
IOD	Ignition Off-Draw
IPM	Integrated Power Module
JTEC	Jeep Truck Engine Controller
KS	Knock Sensor
LDP	Leak Detection Pump
MAP	Manifold Air Pressure
MDS	Multi Displacement System
MIC	Mechanical Instrument Cluster
MIL	Malfunction Indicator Lamp
MTV	Manifold Tuning Valve
NGC	Next Generation Controller
NVLD	Natural Vacuum Leak Detection
O2S	Oxygen Sensor
OBD	On Board Diagnostic
PDC	Power Distribution Center
PCI	Programmable Communication Interface

PCM	Powertrain Control Module
PCV	Positive Crankcase Ventilation
PEP	Peripheral Expansion Port
SBEC	Single Board Engine Controller
SCM	Steering Control Module
S/C	Speed Control
SKIM	Sentry Key Immobilizer Module
SKIS	Sentry Key Immobilizer System
SKREEM	Sentry Key Remote Entry Module
SKREES	Sentry Key Remote Entry System
SOL	Solenoid
SRV	Short Runner Valve
TCM	Transmission Control Module
TCC	Torque Converter Clutch
TIP	Throttle Inlet Pressure
TIPM	Totally Integrated Power Module
TP	Throttle Position
TPMS	Tire Pressure Monitor System
TRS	Transmission Range Sensor
VSS	Vehicle Speed Sensor/Signal
WCM	Wireless Control Module

OPERATION

OPERATION

The Task Manager determines when tests happen and when functions occur. Many of the diagnostic steps required by OBD II must be performed under specific operating conditions. The Task Manager software organizes and prioritizes the diagnostic procedures. The job of the Task Manager is to determine if conditions are appropriate for tests to be run, monitor the parameters for a trip for each test, and record the results of the test. Following are the responsibilities of the Task Manager software:

- Test Sequence
- MIL Illumination
- Diagnostic Trouble Codes (DTCs)

- Trip Indicator
- Freeze Frame Data Storage
- Similar Conditions Window

TEST SEQUENCE

In many instances, emissions systems must fail diagnostic tests more than once before the PCM illuminates the MIL. These tests are known as 'two trip monitors.' Other tests that turn the MIL lamp on after a single failure are known as 'one trip monitors.' A trip is defined as 'start the vehicle and operate it to meet the criteria necessary to run the given monitor.'

Many of the diagnostic tests must be performed under certain operating conditions. However, there are times when tests cannot be run because another test is in progress (conflict), another test has failed (pending) or the Task Manager has set a fault that may cause a failure of the test (suspend).

- **Pending**

  Under some situations the Task Manager will not run a monitor if the MIL is illuminated and a fault is stored from another monitor. In these situations, the Task Manager postpones monitors **pending** resolution of the original fault. The Task Manager does not run the test until the problem is remedied.

  For example, when the MIL is illuminated for an Oxygen Sensor fault, the Task Manager does not run the Catalyst Monitor until the Oxygen Sensor fault is remedied. Since the Catalyst Monitor is based on signals from the Oxygen Sensor, running the test would produce inaccurate results.

- **Conflict**

  There are situations when the Task Manager does not run a test if another monitor is in progress. In these situations, the effects of another monitor running could result in an erroneous failure. If this **conflict** is present, the monitor is not run until the conflicting condition passes. Most likely the monitor will run later after the conflicting monitor has passed.

  For example, if the Fuel System Monitor is in progress, the Task Manager does not run the catalyst Monitor. Since both tests monitor changes in air/fuel ratio and adaptive fuel compensation, the monitors will conflict with

each other.

- **Suspend**

  Occasionally the Task Manager may not allow a two trip fault to mature. The Task Manager will **suspend** the maturing of a fault if a condition exists that may induce an erroneous failure. This prevents illuminating the MIL for the wrong fault and allows more precise diagnosis.

  For example, if the PCM is storing a one trip fault for the Oxygen Sensor and the catalyst monitor, the Task Manager may still run the catalyst Monitor but will suspend the results until the Oxygen Sensor Monitor either passes or fails. At that point the Task Manager can determine if the catalyst system is actually failing or if an Oxygen Sensor is failing.

MIL ILLUMINATION

The PCM Task Manager carries out the illumination of the MIL. The Task Manager triggers MIL illumination upon test failure, depending on monitor failure criteria.

The Task Manager Screen shows both a Requested MIL state and an Actual MIL state. When the MIL is illuminated upon completion of a test for a good trip, the Requested MIL state changes to OFF. However, the MIL remains illuminated until the next key cycle. (On some vehicles, the MIL will actually turn OFF during the third good trip) During the key cycle for the third good trip, the Requested MIL state is OFF, while the Actual MIL state is ON. After the next key cycle, the MIL is not illuminated and both MIL states read OFF.

DIAGNOSTIC TROUBLE CODES (DTCS)

With OBD II, different DTC faults have different priorities according to regulations. As a result, the priorities determine MIL illumination and DTC erasure. DTCs are entered according to individual priority. DTCs with a higher priority overwrite lower priority DTCs.

Priorities

- Priority 0 -Non-emissions related trouble codes.
- Priority 1 - One trip failure of a two trip fault for non-fuel system and non-misfire. (MIL Off)

- Priority 2 - One trip failure of a two trip fault for fuel system (rich/lean) or misfire. (MIL Off)
- Priority 3 - Two trip failure for a non-fuel system and non-misfire or matured one trip comprehensive component fault. (MIL On)
- Priority 4 - Two trip failure or matured fault for fuel system (rich/lean) and misfire or one trip catalyst damaging misfire. Catalyst damage misfire is a 2 trip MIL. The MIL flashes on the first trip when catalyst damage misfire levels are present. (MIL On)

Non-emissions related failures have no priority. One trip failures of two trip faults have low priority. Two trip failures or matured faults have higher priority. One and two trip failures of fuel system and misfire monitor take precedence over non-fuel system and non-misfire failures.

DTC SELF ERASURE

With one trip components or systems, the MIL is illuminated upon test failure and DTCs are stored.

Two trip monitors are components requiring failure in two consecutive trips for MIL illumination. Upon failure of the first test, the Task Manager enters a maturing code. If the component fails the test for a second time the code matures and a DTC is set.

After three good trips the MIL is extinguished and the Task Manager automatically switches the trip counter to a warm-up cycle counter. DTCs are automatically erased following 40 warm-up cycles if the component does not fail again.

For misfire and fuel system monitors, the component must pass the test under a Similar Conditions Window in order to record a good trip. A Similar Conditions Window is when engine RPM is within ±375 RPM and load is within ±20% of when the fault occurred.

NOTE: It is important to understand that a component does not have to fail under a similar window of operation to mature. It must pass the test under a Similar Conditions Window when it failed to record a Good Trip for DTC erasure for misfire and fuel system monitors.

DTCs can be erased anytime with a scan tool. Erasing the DTC with the scan tool erases all OBD II information. The scan tool automatically displays a warning that erasing the DTC will also erase all OBD II monitor data. This includes all counter information for warm-up cycles, trips and Freeze Frame.

TRIP INDICATOR

The **Trip** is essential for running monitors and extinguishing the MIL. In OBD II terms, a trip is a set of vehicle operating conditions that must be met for a specific monitor to run. All trips begin with a key cycle.

Good Trip

The Good Trip counters are as follows:

- Global Good Trip
- Fuel System Good Trip
- Misfire Good Trip
- Alternate Good Trip (appears as a Global Good Trip on scan tool)
-
    - Comprehensive Components
    - Major Monitor
- Warm-Up Cycles

Global Good Trip

To increment a Global Good Trip, the Oxygen sensor and Catalyst efficiency monitors must have run and passed, and 2 minutes of engine run time.

Fuel System Good Trip

To count a good trip (three required) and turn off the MIL, the following conditions must occur:

- Engine in closed loop
- Operating in Similar Conditions Window
- Short Term multiplied by Long Term less than threshold
- Less than threshold for a predetermined time

If all of the previous criteria are met, the PCM will count a good trip (three required) and turn off the MIL.

Misfire Good Trip

If the following conditions are met the PCM will count one good trip (three required) in order to turn off the MIL:

- Operating in Similar Condition Window
- 1000 engine revolutions with no misfire

Alternate Good Trip

Alternate Good Trips are used in place of Global Good Trips for Comprehensive Components and Major Monitors. If the Task Manager cannot run a Global Good Trip because a component fault is stopping the monitor from running, it will attempt to count an Alternate Good Trip.

The Task Manager counts an Alternate Good Trip for Comprehensive components when the following conditions are met:

- Two minutes of engine run time, idle or driving
- No other faults occur

The Task Manager counts an Alternate Good Trip for a Major Monitor when the monitor runs and passes. Only the Major Monitor that failed needs to pass to count an Alternate Good Trip.

Warm-Up Cycles

Once the MIL has been extinguished by the Good Trip Counter, the PCM automatically switches to a Warm-Up Cycle Counter that can be viewed on the scan tool. Warm-Up Cycles are used to erase DTCs and Freeze Frames. Forty Warm-Up cycles must occur in order for the PCM to self-erase a DTC and Freeze Frame. A Warm-Up Cycle is defined as follows:

- Engine coolant temperature must start below and rise above 71° C (160° F)
- Engine coolant temperature must rise by 4.5° C (40° F)
- No further faults occur

FREEZE FRAME DATA STORAGE

Once a failure occurs, the Task Manager records several engine operating conditions and stores it in a Freeze Frame. The Freeze Frame is considered one frame of information taken by an on-board data recorder. When a fault occurs, the PCM stores the input data from various sensors so that technicians can determine under what vehicle operating conditions the failure occurred.

The data stored in Freeze Frame is usually recorded when a system fails the first time for two trip faults. Freeze Frame data will only be overwritten by a different fault with a higher priority.

CAUTION: Erasing DTCs, either with the scan tool; or by disconnecting the battery, also clears all Freeze Frame data.

SIMILAR CONDITIONS WINDOW

The Similar Conditions Window displays information about engine operation during a monitor. Absolute MAP (engine load) and Engine RPM are stored in this window when a failure occurs. There are two different Similar conditions Windows: Fuel System and Misfire.

FUEL SYSTEM

- **Fuel System Similar Conditions Window** - An indicator that 'Absolute MAP When Fuel Sys Fail' and 'RPM When Fuel Sys Failed' are all in the same range when the failure occurred. Indicated by switching from 'NO' to 'YES'.
- **Absolute MAP When Fuel Sys Fail** - The stored MAP reading at the time of failure. Informs the user at what engine load the failure occurred.
- **Absolute MAP** - A live reading of engine load to aid the user in accessing the Similar Conditions Window.
- **RPM When Fuel Sys Fail** - The stored RPM reading at the time of failure. Informs the user at what engine RPM the failure occurred.
- **Engine RPM** - A live reading of engine RPM to aid the user in accessing the Similar Conditions Window.
- **Adaptive Memory Factor** - The PCM utilizes both Short Term Compensation and Long Term Adaptive to calculate the Adaptive Memory

Factor for total fuel correction.

- **Upstream O2S Volts** - A live reading of the Oxygen Sensor to indicate its performance. For example, stuck lean, stuck rich, etc.
- **SCW Time in Window (Similar Conditions Window Time in Window)** - A timer used by the PCM that indicates that, after all Similar Conditions have been met, if there has been enough good engine running time in the SCW without failure detected. This timer is used to increment a Good Trip.
- **Fuel System Good Trip Counter** - A Trip Counter used to turn OFF the MIL for Fuel System DTCs. To increment a Fuel System Good Trip, the engine must be in the Similar Conditions Window, Adaptive Memory Factor must be less than calibrated threshold and the Adaptive Memory Factor must stay below that threshold for a calibrated amount of time.
- **Test Done This Trip** - Indicates that the monitor has already been run and completed during the current trip.

MISFIRE

- **Same Misfire Warm-Up State** - Indicates if the misfire occurred when the engine was warmed up (above 71° C (160° F)).
- **In Similar Misfire Window** - An indicator that 'Absolute MAP When Misfire Occurred' and 'RPM When Misfire Occurred' are all in the same range when the failure occurred. Indicated by switching from 'NO' to 'YES'.
- **Absolute MAP When Misfire Occurred** - The stored MAP reading at the time of failure. Informs the user at what engine load the failure occurred.
- **Absolute MAP** - A live reading of engine load to aid the user in accessing the Similar Conditions Window.
- **RPM When Misfire Occurred** - The stored RPM reading at the time of failure. Informs the user at what engine RPM the failure occurred.
- **Engine RPM** - A live reading of engine RPM to aid the user in accessing the Similar Conditions Window.
- **Adaptive Memory Factor** - The PCM utilizes both Short Term Compensation and Long Term Adaptive to calculate the Adaptive Memory Factor for total fuel correction.
- **200 Rev Counter** - Counts 0-100 720 degree cycles.
- **SCW Cat 200 Rev Counter** - Counts when in similar conditions.
- **SCW FTP 1000 Rev Counter** - Counts 0-4 when in similar conditions.

- **Misfire Good Trip Counter** - Counts up to three to turn OFF the MIL.

OBD II MONITOR RUN PROCESS

The following procedure has been established to assist technicians in the field with enabling and running OBD II Monitors. The order listed in the following procedure is intended to allow the technician to effectively complete each monitor and to set the CARB Readiness Status in the least time possible.

NOTE: Once the monitor run process has begun, do not turn off the ignition. By turning the ignition key off, monitor enabling conditions will be lost. EVAP Monitor runs after key off. By performing a Battery Disconnect, or Selecting Erase DTCs, the CARB Readiness and all additional OBD II information will be cleared.

MONITOR PRELIMINARY CHECKS:

1. Plug a scan tool into the vehicle's Data Link Connector (DLC).
2. Turn the ignition, KEY ON - ENGINE OFF. Watch for MIL lamp illumination during the bulb check. MIL lamp must have illuminated, if not, repair MIL lamp.
3. Using a scan tool check for Powertrain related DTCs.

- Verify that No Emissions Related DTCs are Present. If an Emissions DTC is Present, the OBD II Monitors may not run and the CARB Readiness will not update.
- The Emissions related DTC, will need to be repaired, then cleared. By clearing DTCs, the OBD Monitors will need to be run and completed to set the CARB Readiness Status.

Using the scan tool check the CARB Readiness Status.

Do all the CARB Readiness Status Locations read YES?

- YES - all monitors have been completed and this vehicle is ready to be I/M or Emission Tested.
- NO - then the following procedure needs to be followed to run/complete all available monitors.

NOTE: Only the monitors, which are not YES in the CARB Readiness Status, need to be completed. Specific criteria need to be met for each monitor. The most efficient order to run the monitors has been outlined below, including suggestions to aid the process.

EVAPORATIVE EMISSION SYSTEM LEAK DETECTION WITH PURGE MONITOR

This monitor requires a cool down cycle, usually an overnight soak for at least 8 hours without the engine running. The ambient temperature must decrease overnight - parking the vehicle outside is advised. To run this test the fuel level must be between 15-85% full. Criteria for EVAP monitor:

- Engine off time greater than one hour.
- Fuel Level between 15% and 85%.
- Start Up ECT and IAT within 10°C (18°F).
- Vehicle started and run until Purge Monitor reports a result.

NOTE: If the vehicle does not report a result and the conditions where correct. It may take up to two weeks to fail the small leak monitor. DO NOT use this test to attempt to determine a fault. Use the appropriate service information procedure for finding a small leak. If there are no faults and the conditions are correct this test will run and report a pass. Note the Small leak test can find leaks less than 10 thousands of an inch. If a small leak is present it takes approximately one week of normal driving to report a failure.

CATALYST / O2 MONITOR

The Catalyst and O2 Monitor information are acquired and processed at the same time. Most vehicles will need to be driven at highway speed (less than 50 mph) (73km/h) for a few minutes. Some vehicles run the monitor at idle in drive. If the vehicle is equipped with a manual transmission, using 4th gear may assist in meeting the monitor running criteria.

- Engine RPM between 1200 to 3000.
- Engine temperature greater than 70°C (158°F)

- Engine run time greater than 92 seconds
- MAP between 10 - 20 kPa (7.5 - 15 Hg)
- Vehicle speed between 20 - 70 mph (29-103 km/h)

EGR MONITOR

After the vehicle has reached the below conditions and during a throttle decel the EGR monitor will run.

- Engine RPM between 1375 - 2500
- Engine temperature greater than 70°C (158°F)
- Engine run time greater than 125 seconds
- Vehicle speed between 25 - 70 mph (37-103 km/h)

O2 SENSOR HEATER MONITOR

This monitor is now continuously running once the heaters are energized. Pass information will be processed at power down.

MIS-FIRE MONITOR

The Misfire Monitor is a continuous two-trip monitor. The monitor uses two different tests/counters:

NOTE: The Adaptive Numerator must be learned before the PCM will run the Mis-Fire Monitor. The PCM updates the Adaptive Numerator at every key-ON, and is relearned after battery disconnect. The Misfire Monitor will not run until the Adaptive Numerator has updated since the last battery disconnect. If the Adaptive Numerator is equal to the default value then the PCM knows that the Adaptive Numerator has not been learned and does not permit the Misfire Monitor to run. If the Adaptive Numerator exceeds a calibrated percentage, the PCM sets a DTC for CKP NOT LEARNED and illuminates the MIL.

- 200 Revolution Counter - Looks for misfire that can cause immediate catalyst damage.
- 1000 Revolution Counter - Looks for misfire that can cause emissions to increase 1.5 times the Federal Test Procedure (FTP) standards. This test

must also identify misfire percentages that might cause a "durability demonstration vehicle" to fail an Inspection and Maintenance Program tailpipe emissions test.

2014 ENGINE PERFORMANCE

Powertrain Control Module (PCM) - Electrical Diagnostics, 2.0L & 2.4L - Compass & Patriot

STANDARD PROCEDURE

INTERMITTENT CONDITION

For a complete wiring diagram, **refer to appropriate SYSTEM WIRING DIAGRAMS article** .

DIAGNOSTIC TEST

INTERMITTENT DTC

WARNING: When the engine is operating, do not stand in direct line with the fan. Do not put your hands near the pulleys, belts or fan. Do not wear loose clothing. Failure to follow these instructions may result in possible serious or fatal injury.

1. The conditions necessary to set this DTC are not present at this time.
2. Review the scan tool environmental data. If possible, try to duplicate the conditions under which the DTC set.
3. If applicable, actuate the component with the scan tool.
4. Monitor the scan tool data relative to this circuit and wiggle test the wiring and connectors.
5. Look for the data to change, the actuation to be interrupted, or for the DTC to reset during the wiggle test.
6. Perform any Technical Service Bulletins (TSBs) that may apply.
7. Turn the ignition off.
8. Visually inspect the related wire harness. Disconnect all the related harness connectors. Look for any chafed, pierced, pinched, partially broken wires and broken, bent, pushed out, or corroded terminals.
9. Perform a voltage drop test on the related circuits between the suspected component and the PCM.
10. Inspect and clean all PCM, engine, and chassis grounds that are related to the most current DTC.
11. If numerous trouble codes were set, use a schematic and inspect any

common ground or supply circuits.

12. For intermittent Misfire DTCs check for restrictions in the Intake and Exhaust system, proper installation of Sensors, vacuum leaks, and binding components that are run by the accessory drive belt.
13. Use the scan tool to perform a System Test if one applies to the component.
14. A co-pilot, data recorder, and/or lab scope should be used to help diagnose intermittent conditions.

Were any problems found during the above inspections?

Yes

- Perform the necessary repairs.
- Perform the Powertrain Verification Test.

No

- Test Complete.

PRE-DIAGNOSTIC TROUBLESHOOTING PROCEDURE

DIAGNOSTIC TEST

1. **NO RESPONSE**
   1. Make sure the scan tool will communicate with the appropriate modules.

      Are you currently experiencing a NO RESPONSE condition?

      Yes

      - The NO RESPONSE condition must be properly diagnosed before continuing. Refer to **DIAGNOSIS AND TESTING** .

      No

      - Go To 2
2. **NO START**

Is the customer complaint a NO START condition?

Yes

- Check the vehicle for any NO START related PCM DTCs or Vehicle Theft Security related DTCs. Refer to the **DTC INDEX** .
- If no Theft related DTCs are present, refer to the Non DTC Diagnostic Procedures that relate to Fuel and Starting. Refer to **DIAGNOSIS AND TESTING** .

No

- Go To 3

3. **VEHICLE HISTORY AND TSB(s)**
   1. Continue by reading PCM DTCs and record the related Freeze Frame data if any DTCs are present.
   2. Whether or not any DTCs are present you will want to check the following items which may assist in repairing the customers complaint successfully.
   3. Check the vehicle's repair history.
   4. If the vehicle has a repair history that pertains to the customer's current complaint, review the repair.
   5. Inspect the vehicle for any aftermarket accessories that may have been installed incorrectly.
   6. Check for any TSBs related to the customer's complaint or DTCs.
   7. If a TSB applies, follow the instructions per the TSB.

   Choose the following scenario that best applies.

   The TSB repaired the customer's complaint.

   - Testing complete.

   A DTC is present, no TSB applies, or the TSB didn't repair the customer's complaint.

   - Go To 4

   No DTCs are present.

   - Perform the INTERMITTENT CONDITION diagnostic procedure.

Refer to **INTERMITTENT CONDITION** .

4. **WIRE HARNESS INSPECTION**
   1. Clear the DTCs.
   2. Attempt to duplicate the customer complaint.
   3. Whether the customer complaint can be duplicated or not, make a quick wire harness inspection related to the DTCs that were previously cleared.
   4. Check the Powertrain Control Module connectors, the suspected component connection, in-line connectors, wire harness splices, PCM power and ground circuits, and any related fuses.
   5. If the DTCs are fuel or air related, check the fuel level and quality.

   Were any repairs made that fixed the customer's complaint?

   Yes

   - Testing complete.

   No

   - Perform the diagnostic test procedure related to the DTC. Refer to the **DTC INDEX** .

POWERTRAIN VERIFICATION TEST

For a complete wiring diagram **refer to appropriate SYSTEM WIRING DIAGRAMS article** .

DIAGNOSTIC TEST

1. **SELECTING THE PROPER VERIFICATION TEST**

   The following verification test are for different repairs. Select the appropriate Verification test for the repair that has been completed.

   Speed Control repair

   - Go To 2

   Charging System repair

- Go To 3

Evap System repair

- Go To 4

All other repairs

- Go To 5

2. **POWERTRAIN VERIFICATION TEST 1**

NOTE: If this vehicle is equipped with an Electronic Throttle Control system, and the APP Sensors, PCM, or Throttle Body Assembly have been replaced, use the scan tool to perform the ETC RELEARN function.

NOTE: After completing the Powertrain Verification Test the Transmission Verification Test must be performed.

NOTE: If the PCM has been replaced and the correct VIN and mileage have not been programmed, a DTC will set in the ABS Module, Airbag Module and the SKIM/SKREEM.

NOTE: If the vehicle is equipped with a Sentry Key Remote Entry, Secret Key data must be updated. Refer to the Service Information for the PCM, SKIM/SKREEM and the Transponder (ignition key) for programming information. Using the scan tool, program the Secret Key information into the PCM using the PCM replaced function under the WCM menu.

1. Inspect the vehicle to make sure that all engine components are properly installed and connected.
2. Connect the scan tool to the data link connector and erase all codes.
3. Turn the speed control ON (if equipped, cruise light will be on).
4. Depress and release the SET Switch when the vehicle speed is greater than 56 km/h (35 mph). The speed control should engage and hold the

selected speed.

5. Press and hold the RESUME/ACCEL Switch. The vehicle speed should increase by at least 3 km/h (2 mph).
6. Press and hold the COAST switch. The vehicle speed should decrease.
7. Using caution, press and release the brake pedal. The speed control should disengage.
8. Bring the vehicle speed back up to 56 km/h (35 mph).
9. Press the RESUME/ACCEL switch. The speed control should resume the previously set speed.
10. Hold down the SET switch. The vehicle should decelerate.
11. Make sure vehicle speed is greater than 56 km/h (35 mph) and release the SET Switch. The vehicle should adjust and set a new vehicle speed.
12. Press and release the CANCEL switch. The speed control should disengage.
13. Bring the vehicle speed back up above 56 km/h (35 mph) and engage speed control.
14. Turn the Speed Control Off. (Cruise light will be off). The speed control should disengage.

NOTE: OVERSHOOT/UNDERSHOOT FOLLOWING SPEED CONTROL SET.

15. If the vehicle operator repeatedly presses and releases the SET button with their foot off of the accelerator (referred to as "lift foot set"), the vehicle may accelerate and exceed the desired set speed by up to 8 km/h (5 mph).
16. It may also decelerate to less than the desired set speed, before finally achieving the desired set speed.
17. The Speed Control System has an adaptive strategy that compensates for vehicle-to-vehicle variations in speed control cable lengths.
18. When the speed control is set with the vehicles operators foot off of the accelerator pedal, the speed control thinks there is excessive speed control cable slack and adapts accordingly.
19. If the "lift foot sets" are continually used, a speed control overshoot/undershoot condition will develop.

20. To "unlearn" the overshoot/undershoot condition, the vehicle operator has to press and release the set button while maintaining the desired set speed using the accelerator pedal (not decelerating or accelerating).
21. Then turn the cruise control switch to the OFF position (or press the CANCEL button if equipped) after waiting 10 seconds.
22. This procedure must be performed approximately 10-15 times to completely unlearn the overshoot/undershoot condition.

Did the Speed Control pass the above test?

Yes

- Repair is complete.

No

- Check for any related Technical Service Bulletins and/or refer to the appropriate Diagnostic Procedure.

3. **POWERTRAIN VERIFICATION TEST 2**
   1. 1. If this vehicle is equipped with an Electronic Throttle Control system, and the APP Sensors, PCM, or Throttle Body Assembly has been replaced use a scan tool to perform the ETC RELEARN function.

NOTE: After completing the Powertrain Verification Test the Transmission Verification Test must be performed.

NOTE: If the PCM has been replaced and the correct VIN and mileage have not been programmed, a DTC will set in the ABS Module, Airbag Module and the SKIM/SKREEM.

NOTE: If the vehicle is equipped with a Sentry Key Remote Entry, Secret Key data must be updated. Refer to the Service Information for the PCM, SKIM/SKREEM and the Transponder (ignition key) for programming information. Using the scan tool, program the Secret Key information

into the PCM using the PCM replaced function under the WCM menu.

2. Inspect the vehicle to make sure that all components related to the repair are properly installed and connected.
3. With the scan tool, clear DTCs.
4. Perform generator output test. Refer to the appropriate service information as necessary.
5. Start the engine and set engine speed to 2000 RPM for at least thirty seconds.
6. Cycle the ignition key off and on.
7. With the scan tool, read the DTCs.

   Are any DTCs or symptoms remaining?

   Yes

   - Check for any Technical Service Bulletins and/or refer to the appropriate Diagnostic Procedure.

   No

   - Repair is complete.

4. **POWERTRAIN VERIFICATION TEST 3**
   1. Install the Miller Tool # (special tool #8404C, Kit, EELD And Accessory) Evaporative Emission Leak Detector (EELD) according to the instructions in the previous DTC table.
   2. Set the smoke/air control switch to AIR.
   3. Insert the tester's AIR supply tip (clear hose) into the appropriate calibration orifice on the tester's control panel (based on DTC leak size).
   4. Press the remote smoke/air start button.
   5. Position the red flag on the air flow meter so it is aligned with the indicator ball.
   6. When the calibration is complete, release the remote button. The EELD flow meter is now calibrated in liters per minute to the size of leak indicated by the DTC set in the PCM.

7. Install the service port adapter # (special tool #8404-14, Adapter, Evaporative Service Port) on the vehicle's service port.
8. Connect the Air supply hose from the EELD to the vehicle.
9. Press the remote button to activate AIR flow.

NOTE: Larger volume fuel tanks, lower fuel levels or if the vehicle is equipped with a Flow Management Valve may indicate high flow and will require 4 to 5 minutes to fill.

10. Compare the flow meter indicator ball reading to the red flag.
11. ABOVE the red flag indicates a leak present.
12. BELOW the red flag indicates a sealed system.

NOTE: If this vehicle is equipped with an Electronic Throttle Control system, and the APP Sensors, PCM, or Throttle Body Assembly have been replaced, use the scan tool to perform the ETC RELEARN function.

13. If the indicator ball shows a leak present, perform the smoke test indicated in the previous test and identify the leak and repair. Perform this verification test when the repair is complete.

    Did the indicator ball indicate the a leak is present?

    Yes

    - Repeat the DTC test to identify the leak and repair.

    No

    - Repair is complete.

5. **POWERTRAIN VERIFICATION TEST 4**

NOTE: After completing the Powertrain Verification Test the Transmission Verification Test must be performed.

NOTE: If the PCM has been replaced and the correct VIN and mileage have not been programmed, a DTC will set in the ABS Module, Airbag Module and the SKIM/SKREEM.

NOTE: If the vehicle is equipped with a Sentry Key Remote Entry, Secret Key data must be updated. Refer to the Service Information for the PCM, SKIM/SKREEM and the Transponder (ignition key) for programming information. Using the scan tool, program the Secret Key information into the PCM using the PCM replaced function under the WCM menu.

NOTE: If this vehicle is equipped with an Electronic Throttle Control system, and the APP Sensors, PCM, or Throttle Body Assembly have been replaced, use the scan tool to perform the ETC RELEARN function.

NOTE: When replacing an O2 Sensor, the PCM RAM memory must be cleared, either by disconnecting the PCM C1 connector or momentarily disconnecting the Battery negative terminal.

1. The NGC learns the characteristics of each O2 heater element and these old values should be cleared when installing a new O2 sensor. The customer may experience driveability issues if this is not performed.
2. Inspect the vehicle to make sure that all engine components are properly installed and connected. Reassemble and reconnect components as necessary.
3. Connect the scan tool to the data link connector.
4. Make sure the fuel tank has at least a quarter tank of fuel. Turn off all accessories.
5. If the Catalyst was replaced, with the scan tool go to the Miscellaneous Menu Option "Catalyst Replaced" and press enter.
6. If a Comprehensive Component DTC was repaired, perform steps 12 - 14. If a Major OBDII Monitor DTC was repaired skip those steps and continue verification.

7. After the ignition has been off for at least 10 seconds, restart the vehicle and run 2 minutes.
8. With the scan tool, monitor the appropriate pre-test enabling conditions until all conditions have been met. Once the conditions have been met, switch screen to the appropriate OBDII monitor, (Audible beeps when the monitor is running).
9. If the repaired OBDII trouble code has reset or was seen in the monitor while on the road test, the repair is not complete. Check for any related technical service bulletins or flash updates and return to Engine Electrical Diagnostic List.
10. If the conditions cannot be duplicated, erase all DTCs with the Scan tool.
11. If another DTC has set, return to the Engine Electrical Diagnostic List and follow the path specified for that DTC.

    Did the OBDII Monitor run successfully and has the Good Trip Counter changed to one or more?

    Yes

    - Repair is complete.

    No

    - Check for any related Technical Service Bulletins and/or refer to the appropriate Diagnostic Procedure.

2014 ENGINE PERFORMANCE

Powertrain Control Module (PCM) - Electrical Diagnostics, 2.0L & 2.4L - Compass & Patriot

DIAGNOSIS AND TESTING

P000A-BANK 1 CAMSHAFT 1 POSITION SLOW RESPONSE

For a complete wiring diagram, **refer to appropriate SYSTEM WIRING DIAGRAMS article** .

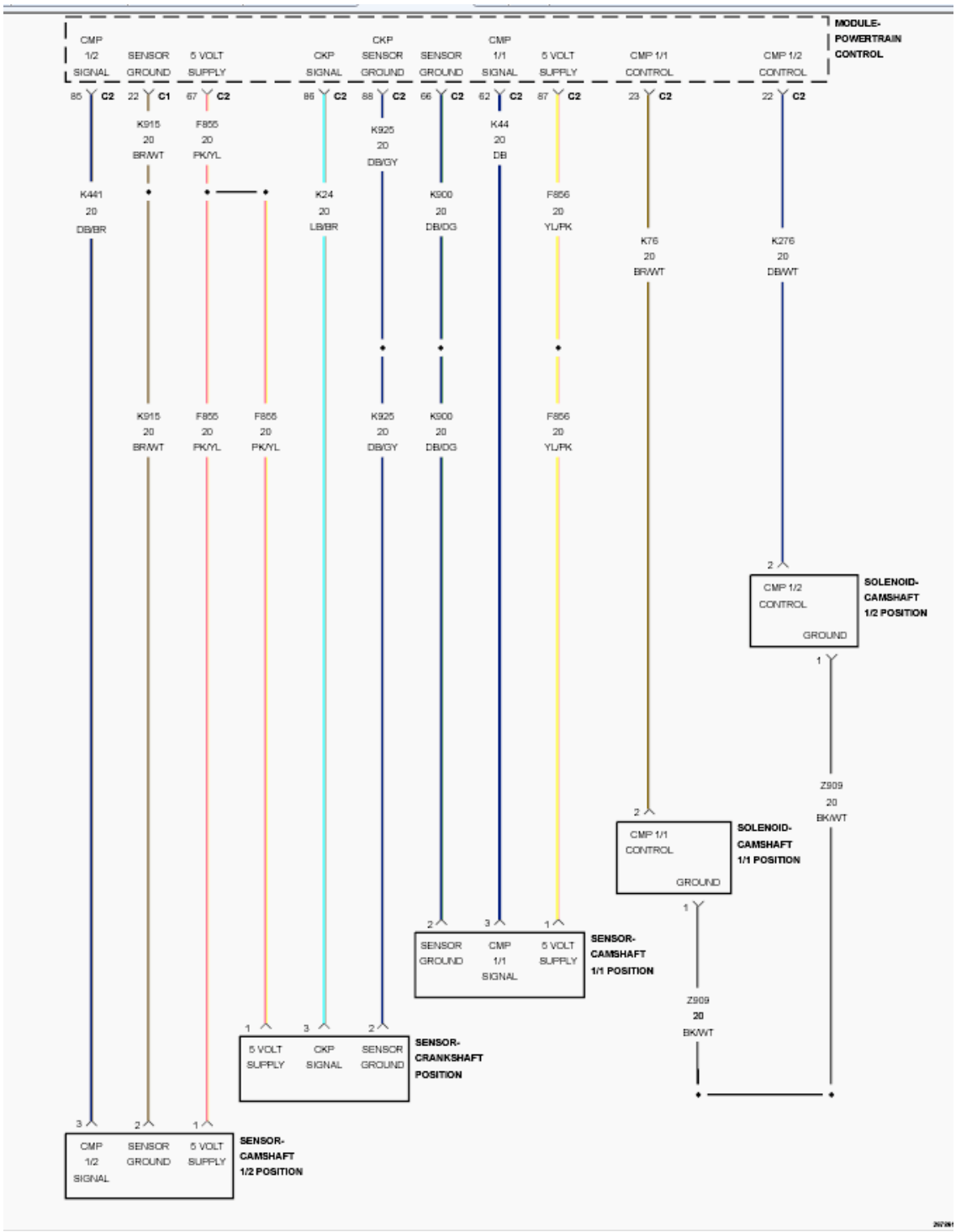

Fig. 1: Variable Valve Timing Circuit Diagram
Courtesy of CHRYSLER GROUP, LLC

THEORY OF OPERATION

Dual Variable Valve Timing (VVT) allows the Powertrain Control Module (PCM) to monitor and adjust the position of each camshaft, based on desired torque levels and engine operating conditions. The PCM controls two solenoid

operated control valves, one for each camshaft, that are used to direct oil pressure to hydraulic actuators mounted between each camshaft and its driving sprocket. The oil pressure alters the angular position or phasing of each camshaft relative to crankshaft rotation. A sensor is used to monitor the position of each camshaft.

WHEN MONITORED

Variable Valve Timing (VVT) rationality is monitored under the following conditions: (1) Cam phasing is commanded; (2) Oil temperature is between -12° C to 139°C (10°F to 282°F); (3) Battery voltage is greater than 10.0 volts; (3) Engine speed is at least 650 to 1400 RPM, depending on oil temperature; (4) No CMP Sensor, CKP Sensor, or OBDI plausibility errors. Before VVT can be enabled, reference adaptation must be completed.

SET CONDITION

The actual camshaft phasing position does not match the desired camshaft phasing position during camshaft phasing position changes.

POSSIBLE CAUSES

Possible Causes
ENGINE OIL DIRTY OR CONTAMINATED
INCORRECT ENGINE OIL VISCOSITY
LOW ENGINE OIL PRESSURE
GROUND CIRCUIT HIGH RESISTANCE
(K76) CMP 1/1 CONTROL CIRCUIT OPEN OR HIGH RESISTANCE
CAMSHAFT 1/1 POSITION SOLENOID/OIL CONTROL VALVE
CAMSHAFT 1/1 PHASER
POWERTRAIN CONTROL MODULE (PCM)

Always perform the Pre-Diagnostic Troubleshooting procedure before proceeding. Refer to PRE-DIAGNOSTIC TROUBLESHOOTING PROCEDURE .

DIAGNOSTIC TEST

1. **ACTIVE DTC**

NOTE: Diagnose and repair any system voltage DTCs before

continuing with this test.

NOTE: Diagnose and repair any CMP sensor or CKP sensor DTCs before continuing with this test.

NOTE: Diagnose and repair any oil pressure or oil pressure sensor DTCs before continuing with this test.

1. Start the engine and allow it to reach normal operating temperature.

   WARNING: When the engine is operating, do not stand in direct line with the fan. Do not put your hands near the pulleys, belts or fan. Do not wear loose clothing. Failure to follow these instructions may result in possible serious or fatal injury.

2. With the scan tool, clear DTCs in the Powertrain Control Module (PCM).
3. Test drive the vehicle under the conditions in which the DTC is monitored, as outlined above.
4. With the scan tool, select View DTCs.

   Is the status Active for this DTC?

   Yes

   - Go To 2

   No

   - Perform the INTERMITTENT CONDITION diagnostic procedure. Refer to **INTERMITTENT CONDITION** .

2. **CAMSHAFT 1/1 POSITION SOLENOID/OIL CONTROL VALVE INSPECTION**
   1. Turn the ignition off.
   2. Remove the Camshaft 1/1 Position Solenoid/Oil Control Valve in accordance with the Service Information. Do not disconnect the harness

connector. Refer to **2.0L CONTROL VALVE, OIL INTAKE, REMOVAL** or **2.4L CONTROL VALVE, OIL INTAKE, REMOVAL** .

3. Perform a visual inspection of the open part of the solenoid (spool valve) for the presence of any debris (metallic or non-metallic).

NOTE: **If contamination is observed, the Camshaft 1/1 Position Solenoid/Oil Control Valve must be replaced. After replacing the valve, verify that the engine oil has been replaced with the appropriate oil in accordance with the Service Information.**

Were any problems found?

Yes

- Replace the Camshaft 1/1 Position Solenoid/Oil Control Valve in accordance with the service information. Refer to **2.0L CONTROL VALVE, OIL INTAKE, REMOVAL** or **2.4L CONTROL VALVE, OIL INTAKE, REMOVAL** .
- Perform the POWERTRAIN VERIFICATION TEST. Refer to **POWERTRAIN VERIFICATION TEST** .

No

- Go To 3

3. **CHECK THE CAMSHAFT 1/1 POSITION SOLENOID/OIL CONTROL VALVE ACTUATION**
   1. Turn the ignition on.
   2. With the scan tool, actuate the Camshaft 1/1 Position Solenoid/Oil Control Valve.
   3. Perform a visual inspection of the spool valve for erratic movement or sticking during the forward and reverse stroke.

NOTE: **If sticking or erratic movement is observed, the Camshaft 1/1 Position Solenoid/Oil Control Valve must be replaced. After replacing the valve, verify that the engine oil has been replaced with the**

appropriate oil in accordance with the Service Information.

Select the appropriate response from the choices below:

Normal operation. No sticking or erratic movement is observed

- Go To 4

No movement is observed

- Go To 7

Sticking or erratic movement is observed

- Replace the Camshaft 1/1 Position Solenoid/Oil Control Valve in accordance with the service information. Refer to **2.0L CONTROL VALVE, OIL INTAKE, REMOVAL** or **2.4L CONTROL VALVE, OIL INTAKE, REMOVAL** .
- Perform the POWERTRAIN VERIFICATION TEST. Refer to **POWERTRAIN VERIFICATION TEST** .

4. **INCORRECT ENGINE OIL VISCOSITY**
   1. Review the vehicle service history to determine if the correct viscosity engine oil was used.

      Were any problems found?

      Yes

      - Change the engine oil in accordance with the service information and retest.
      - Perform the POWERTRAIN VERIFICATION TEST. Refer to **POWERTRAIN VERIFICATION TEST** .

      No

      - Go To 5
5. **ENGINE OIL DIRTY OR CONTAMINATED**
   1. Turn the ignition off.

2. Inspect engine oil for signs of contamination, sludge, or foreign material.

   Were any problems found?

   Yes

   - Clean the engine oil system, including oil passages, in accordance with the service information and retest.
   - Perform the POWERTRAIN VERIFICATION TEST. Refer to **POWERTRAIN VERIFICATION TEST** .

   No

   - Go To 6

6. **LOW ENGINE OIL PRESSURE**
   1. Perform the CHECKING ENGINE OIL PRESSURE diagnostic procedure. Refer to **2.0L CHECKING ENGINE OIL PRESSURE** or **2.4L CHECKING ENGINE OIL PRESSURE** .
   2. Compare the oil pressure readings to the service information specifications.

      Is the engine oil pressure below specifications?

      Yes

      - Repair the cause of the low engine oil pressure in accordance with the service information and retest.
      - Perform the POWERTRAIN VERIFICATION TEST. Refer to **POWERTRAIN VERIFICATION TEST** .

      No

      - Go To 12

7. **CAMSHAFT 1/1 POSITION SOLENOID/OIL CONTROL VALVE WIRING AND CONNECTORS**
   1. Turn the ignition off.
   2. Inspect the wiring and connectors between the Camshaft 1/1 Position Solenoid/Oil Control Valve and the Powertrain Control Module (PCM).

3. Look for any chafed, pierced, pinched, or partially broken wires.
4. Look for broken, bent, pushed out or corroded terminals.

Were any problems found?

Yes

- Repair as necessary.
- Perform the POWERTRAIN VERIFICATION TEST. Refer to **POWERTRAIN VERIFICATION TEST** .

No

- Go To 8

8. **CHECK THE GROUND CIRCUIT FOR HIGH RESISTANCE**

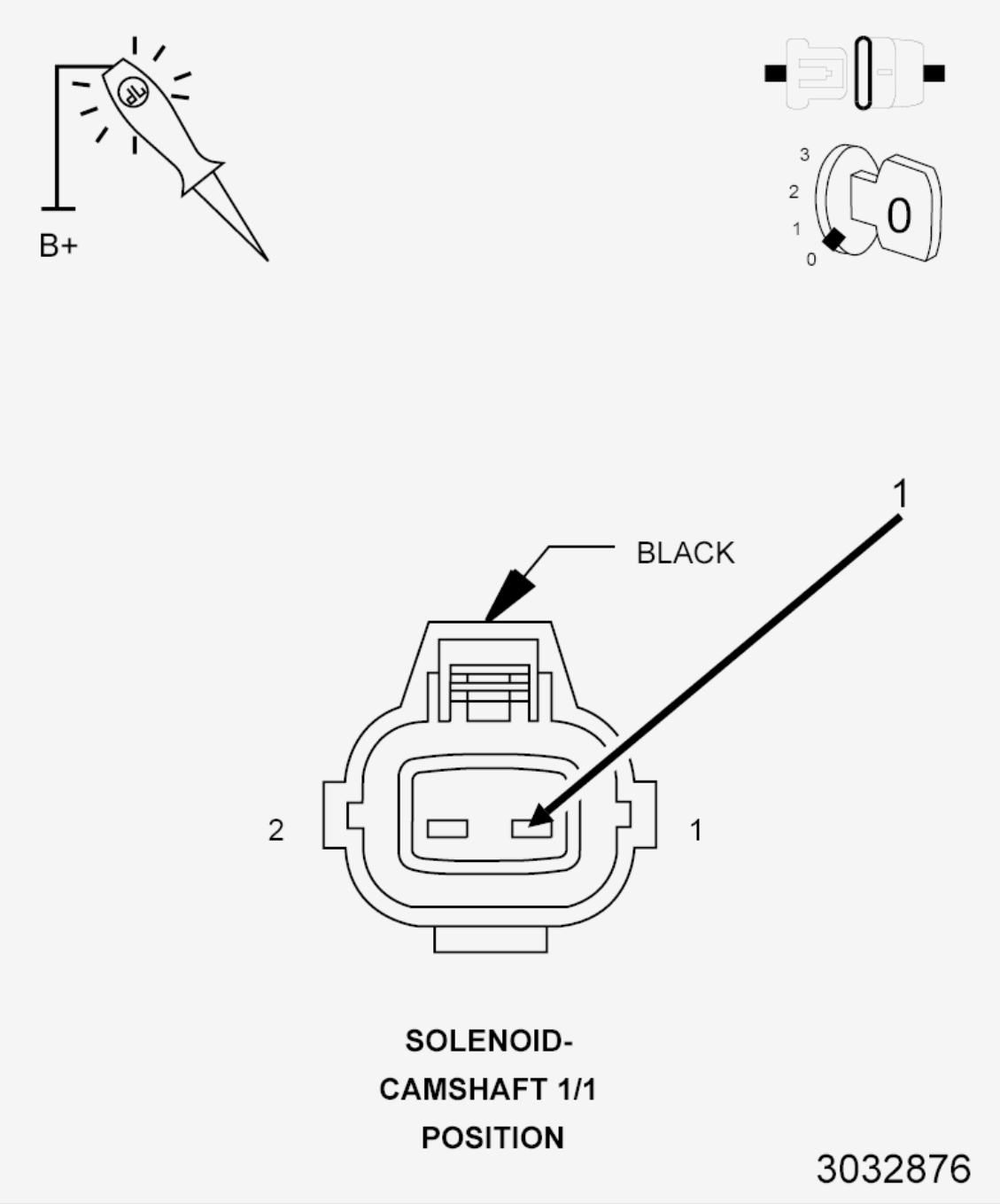

Fig. 2: Checking Ground Circuit For Open Or High Resistance
Courtesy of CHRYSLER GROUP, LLC

1. Turn the ignition off.
2. Disconnect the Camshaft 1/1 Position Solenoid/Oil Control Valve harness connector.
3. Turn the ignition on.
4. Using a 12-volt test light connected to B (+), check the Ground circuit in the Camshaft 1/1 Position Solenoid/Oil Control Valve harness

connector.

NOTE: The test light should be illuminated and bright. Compare the brightness to that of a direct connection to the battery.

Is the test light illuminated and bright?

Yes

- Go To 9

No

- Repair the excessive resistance in the Ground circuit.
- Perform the POWERTRAIN VERIFICATION TEST. Refer to **POWERTRAIN VERIFICATION TEST** .

9. **CHECK THE (K76) CMP 1/1 CONTROL CIRCUIT**

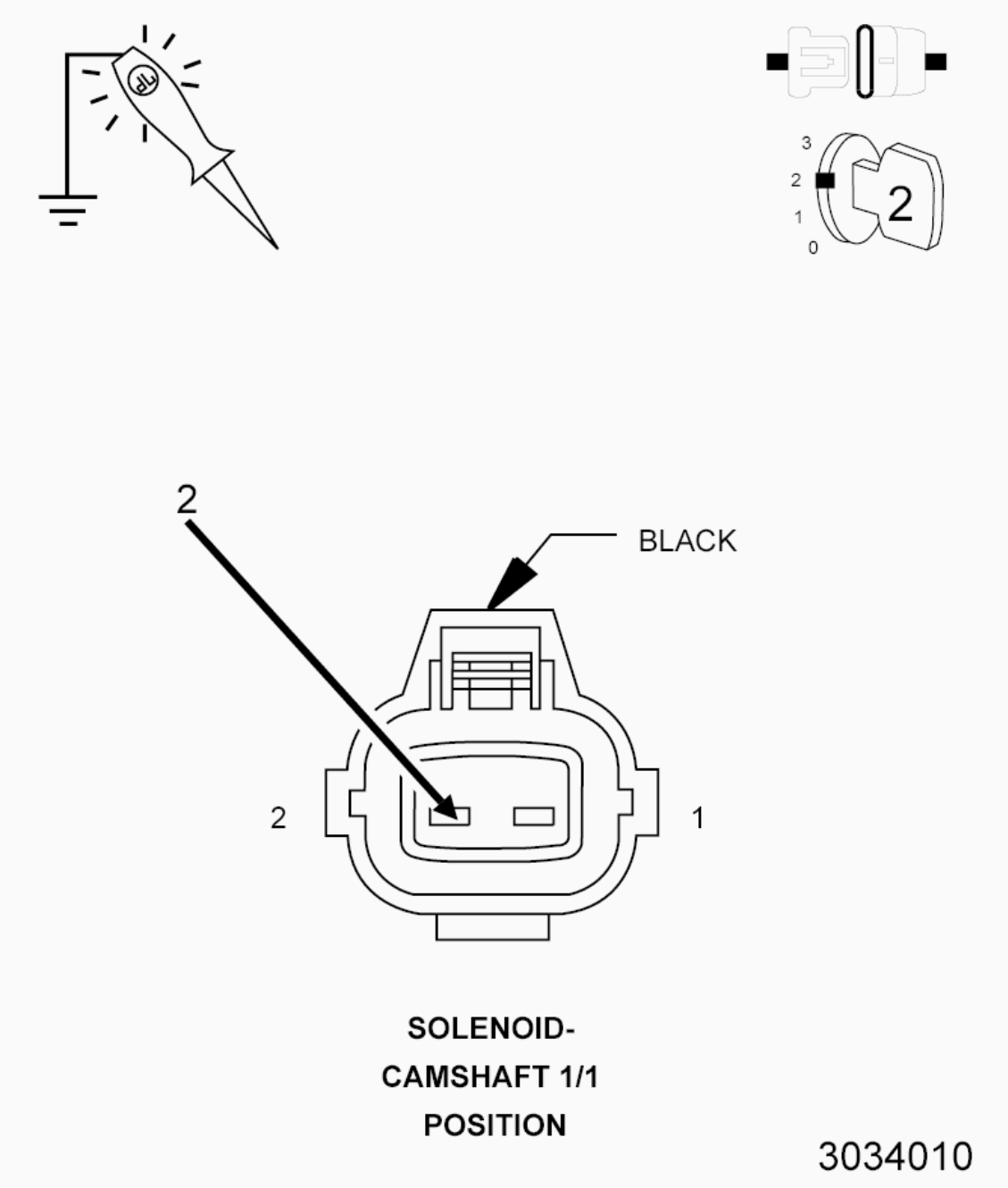

Fig. 3: Checking CMP 1/1 Solenoid Actuation
Courtesy of CHRYSLER GROUP, LLC

1. With the scan tool, actuate the Camshaft 1/1 Position Solenoid/Oil Control Valve to the ON (maximum percentage) position.
2. Using a 12-volt test light connected to ground, check the (K76) CMP 1/1 Control circuit in the Camshaft 1/1 Position Solenoid harness connector.

NOTE: The test light should be illuminated and bright.

Compare the brightness to that of a direct connection to the battery.

Is the test light illuminated and bright?

Yes

- Go To 11

No

- Go To 10

10. **CHECK THE (K76) CMP 1/1 CONTROL CIRCUIT FOR AN OPEN/HIGH RESISTANCE**
    1. Turn the ignition off.
    2. Disconnect the PCM C2 harness connector.

    CAUTION: Do not probe the PCM harness connectors. Probing the PCM harness connectors will damage the PCM terminals resulting in poor terminal to pin connection. Install the GPEC Diagnostic Adaptor to perform the diagnosis.

    3. Connect the (special tool #10436, Adapter, GPEC Diagnostic).
    4. Measure the resistance of the (K76) CMP 1/1 Control circuit between the Camshaft 1/1 Position Solenoid harness connector and the GPEC Adaptor.

    Is the resistance below 5.0 Ohms?

    Yes

    - Go To 13

    No

    - Repair the (K76) CMP 1/1 Control circuit for an open or high resistance.

- Perform the POWERTRAIN VERIFICATION TEST. Refer to **POWERTRAIN VERIFICATION TEST** .

11. **CAMSHAFT 1/1 POSITION SOLENOID/OIL CONTROL VALVE**
    1. Turn the ignition off.
    2. Inspect the wiring and connectors between the Camshaft 1/1 Position Solenoid/Oil Control Valve and the Powertrain Control Module (PCM).
    3. Look for any chafed, pierced, pinched, or partially broken wires.
    4. Look for broken, bent, pushed out or corroded terminals.

    Were any problems found?

    Yes

    - Repair as necessary.
    - Perform the POWERTRAIN VERIFICATION TEST. Refer to **POWERTRAIN VERIFICATION TEST** .

    No

    - Replace the Camshaft 1/1 Position Solenoid/Oil Control Valve in accordance with the service information. Refer to **2.0 L CONTROL VALVE, OIL INTAKE, REMOVAL** or **2.4L CONTROL VALVE, OIL INTAKE, REMOVAL** .
    - Perform the POWERTRAIN VERIFICATION TEST. Refer to **POWERTRAIN VERIFICATION TEST** .

12. **CAMSHAFT PHASER**
    1. Turn the ignition off.
    2. Remove the appropriate Camshaft Phaser in accordance with the service information.
    3. Inspect the Phaser for contamination, foreign material, or any condition that would restrict operation of the Phaser.
    4. Inspect the Phaser oil passages for signs of sludge or foreign material.

    NOTE: The Phaser should not be disassembled. If the Phaser is damaged, it must be replaced.

    Were any problems found?

Yes

- Repair as necessary.
- Perform the POWERTRAIN VERIFICATION TEST. Refer to **POWERTRAIN VERIFICATION TEST** .

No

- Perform the INTERMITTENT CONDITION diagnostic procedure. Refer to **INTERMITTENT CONDITION** .

13. **POWERTRAIN CONTROL MODULE (PCM)**
    1. Turn the ignition off.
    2. Inspect the wiring and connectors between the Camshaft 1/1 Position Solenoid/Oil Control Valve and the Powertrain Control Module (PCM).
    3. Look for any chafed, pierced, pinched, or partially broken wires.
    4. Look for broken, bent, pushed out or corroded terminals.
    5. Perform any Technical Service Bulletins (TSBs) that apply.

    Were any problems found?

    Yes

    - Repair as necessary.
    - Perform the POWERTRAIN VERIFICATION TEST. Refer to **POWERTRAIN VERIFICATION TEST** .

    No

    - Replace and program the Powertrain Control Module (PCM) in accordance with the service information. Refer to **MODULE, POWERTRAIN CONTROL, REMOVAL** .
    - Perform the POWERTRAIN VERIFICATION TEST. Refer to **POWERTRAIN VERIFICATION TEST** .

P000B-BANK 1 CAMSHAFT 2 POSITION SLOW RESPONSE

For a complete wiring diagram, **refer to appropriate SYSTEM WIRING DIAGRAMS article** .

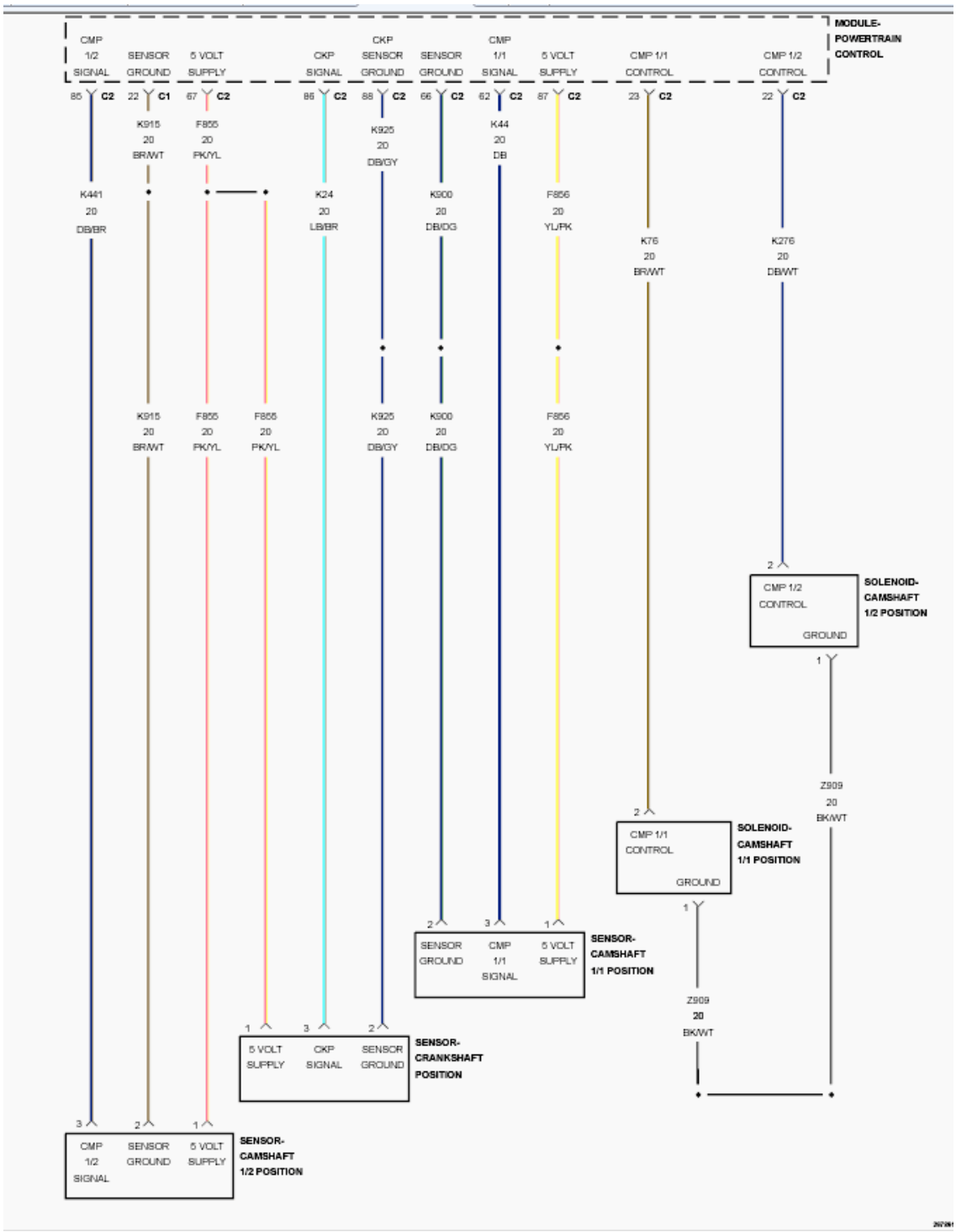

Fig. 4: Variable Valve Timing Circuit Diagram
Courtesy of CHRYSLER GROUP, LLC

THEORY OF OPERATION

Dual Variable Valve Timing (VVT) allows the Powertrain Control Module (PCM) to monitor and adjust the position of each camshaft, based on desired torque levels and engine operating conditions. The PCM controls two solenoid

operated control valves, one for each camshaft, that are used to direct oil pressure to hydraulic actuators mounted between each camshaft and its driving sprocket. The oil pressure alters the angular position or phasing of each camshaft relative to crankshaft rotation. A sensor is used to monitor the position of each camshaft.

WHEN MONITORED

Variable Valve Timing (VVT) rationality is monitored under the following conditions: (1) Cam phasing is commanded; (2) Oil temperature is between -12° C to 139°C (10°F to 282°F); (3) Battery voltage is greater than 10.0 volts; (3) Engine speed is at least 650 to 1400 RPM, depending on oil temperature; (4) No CMP sensor, CKP sensor, or OBDI plausibility errors. Before VVT can be enabled, reference adaptation must be completed.

SET CONDITION

The actual camshaft phasing position does not match the desired camshaft phasing position during camshaft phasing position changes.

POSSIBLE CAUSES

Possible Causes
ENGINE OIL DIRTY OR CONTAMINATED
INCORRECT ENGINE OIL VISCOSITY
LOW ENGINE OIL PRESSURE
GROUND CIRCUIT HIGH RESISTANCE
(K276) CMP 1/2 CONTROL CIRCUIT OPEN OR HIGH RESISTANCE
CAMSHAFT 1/2 POSITION SOLENOID/OIL CONTROL VALVE
CAMSHAFT 1/2 PHASER
POWERTRAIN CONTROL MODULE (PCM)

Always perform the Pre-Diagnostic Troubleshooting procedure before proceeding. Refer to PRE-DIAGNOSTIC TROUBLESHOOTING PROCEDURE .

DIAGNOSTIC TEST

1. **ACTIVE DTC**

NOTE: Diagnose and repair any system voltage DTCs before

continuing with this test.

NOTE: Diagnose and repair any CMP sensor or CKP sensor DTCs before continuing with this test.

NOTE: Diagnose and repair any oil pressure or oil pressure sensor DTCs before continuing with this test.

1. Start the engine and allow it to reach normal operating temperature.

   WARNING: When the engine is operating, do not stand in direct line with the fan. Do not put your hands near the pulleys, belts or fan. Do not wear loose clothing. Failure to follow these instructions may result in possible serious or fatal injury.

2. With the scan tool, Clear DTCs in the Powertrain Control Module (PCM).
3. Test drive the vehicle under the conditions in which the DTC is monitored, as outlined above.
4. With the scan tool, select View DTCs.

   Is the status Active for this DTC?

   Yes

   - Go To 2

   No

   - Perform the INTERMITTENT CONDITION diagnostic procedure. Refer to **INTERMITTENT CONDITION** .

2. **CAMSHAFT 1/2 POSITION SOLENOID/OIL CONTROL VALVE INSPECTION**
   1. Turn the ignition off.
   2. Remove the Camshaft 1/2 Position Solenoid/Oil Control Valve in accordance with the Service Information. Do not disconnect the harness

connector. Refer to **2.0L CONTROL VALVE, OIL INTAKE, REMOVAL** or **2.4L CONTROL VALVE, OIL INTAKE, REMOVAL** .

3. Perform a visual inspection of the open part of the solenoid (spool valve) for the presence of any debris (metallic or non-metallic).

NOTE: **If contamination is observed, the Camshaft 1/2 Position Solenoid/Oil Control Valve must be replaced. After replacing the valve, verify that the engine oil has been replaced with the appropriate oil in accordance with the Service Information.**

Were any problems found?

Yes

- Replace the Camshaft 1/2 Position Solenoid/Oil Control Valve in accordance with the Service Information. Refer to **2.0L CONTROL VALVE, OIL INTAKE, REMOVAL** or **2.4L CONTROL VALVE, OIL INTAKE, REMOVAL** .
- Perform the POWERTRAIN VERIFICATION TEST. Refer to **POWERTRAIN VERIFICATION TEST** .

No

- Go To 3

3. **CHECK THE CAMSHAFT 1/2 POSITION SOLENOID/OIL CONTROL VALVE ACTUATION**
   1. Turn the ignition on.
   2. With the scan tool, actuate the Camshaft 1/2 Position Solenoid/Oil Control Valve.
   3. Perform a visual inspection of the spool valve for erratic movement or sticking during the forward and reverse stroke.

NOTE: **If sticking or erratic movement is observed, the Camshaft 1/2 Position Solenoid/Oil Control Valve must be replaced. After replacing the valve, verify that the engine oil has been replaced with the**

appropriate oil in accordance with the Service Information.

Select the appropriate response from the choices below:

Normal operation. No sticking or erratic movement is observed

- Go To 4

No movement is observed

- Go To 7

Sticking or erratic movement is observed

- Replace the Camshaft 1/2 Position Solenoid/Oil Control Valve in accordance with the Service Information.
- Perform the POWERTRAIN VERIFICATION TEST. Refer to **POWERTRAIN VERIFICATION TEST** .

4. **INCORRECT ENGINE OIL VISCOSITY**
   1. Review the vehicle service history to determine if the correct viscosity engine oil was used.

      Were any problems found?

      Yes

      - Change the engine oil in accordance with the service information and retest.
      - Perform the POWERTRAIN VERIFICATION TEST. Refer to **POWERTRAIN VERIFICATION TEST** .

      No

      - Go To 5
5. **ENGINE OIL DIRTY OR CONTAMINATED**
   1. Turn the ignition off.
   2. Inspect engine oil for signs of contamination, sludge, or foreign material.

Were any problems found?

Yes

- Clean the engine oil system, including oil passages, in accordance with the service information and retest.
- Perform the POWERTRAIN VERIFICATION TEST. Refer to **POWERTRAIN VERIFICATION TEST** .

No

- Go To 6

6. **LOW ENGINE OIL PRESSURE**
   1. Perform the CHECKING ENGINE OIL PRESSURE diagnostic procedure. Refer to **2.0L CHECKING ENGINE OIL PRESSURE** or **2.4L CHECKING ENGINE OIL PRESSURE** .
   2. Compare the oil pressure readings to the service information specifications. Refer to Specifications in the appropriate Engine Service Information .

   Is the engine oil pressure below specifications?

   Yes

   - Repair the cause of the low engine oil pressure in accordance with the service information and retest.
   - Perform the POWERTRAIN VERIFICATION TEST. Refer to **POWERTRAIN VERIFICATION TEST** .

   No

   - Go To 12

7. **CAMSHAFT 1/2 POSITION SOLENOID/OIL CONTROL VALVE WIRING AND CONNECTORS**
   1. Turn the ignition off.
   2. Inspect the wiring and connectors between the Camshaft 1/2 Position Solenoid/Oil Control Valve and the Powertrain Control Module (PCM).
   3. Look for any chafed, pierced, pinched, or partially broken wires.

4. Look for broken, bent, pushed out or corroded terminals.

   Were any problems found?

   Yes

   - Repair as necessary.
   - Perform the POWERTRAIN VERIFICATION TEST. Refer to **POWERTRAIN VERIFICATION TEST** .

   No

   - Go To 8

8. **CHECK THE GROUND CIRCUIT FOR HIGH RESISTANCE**

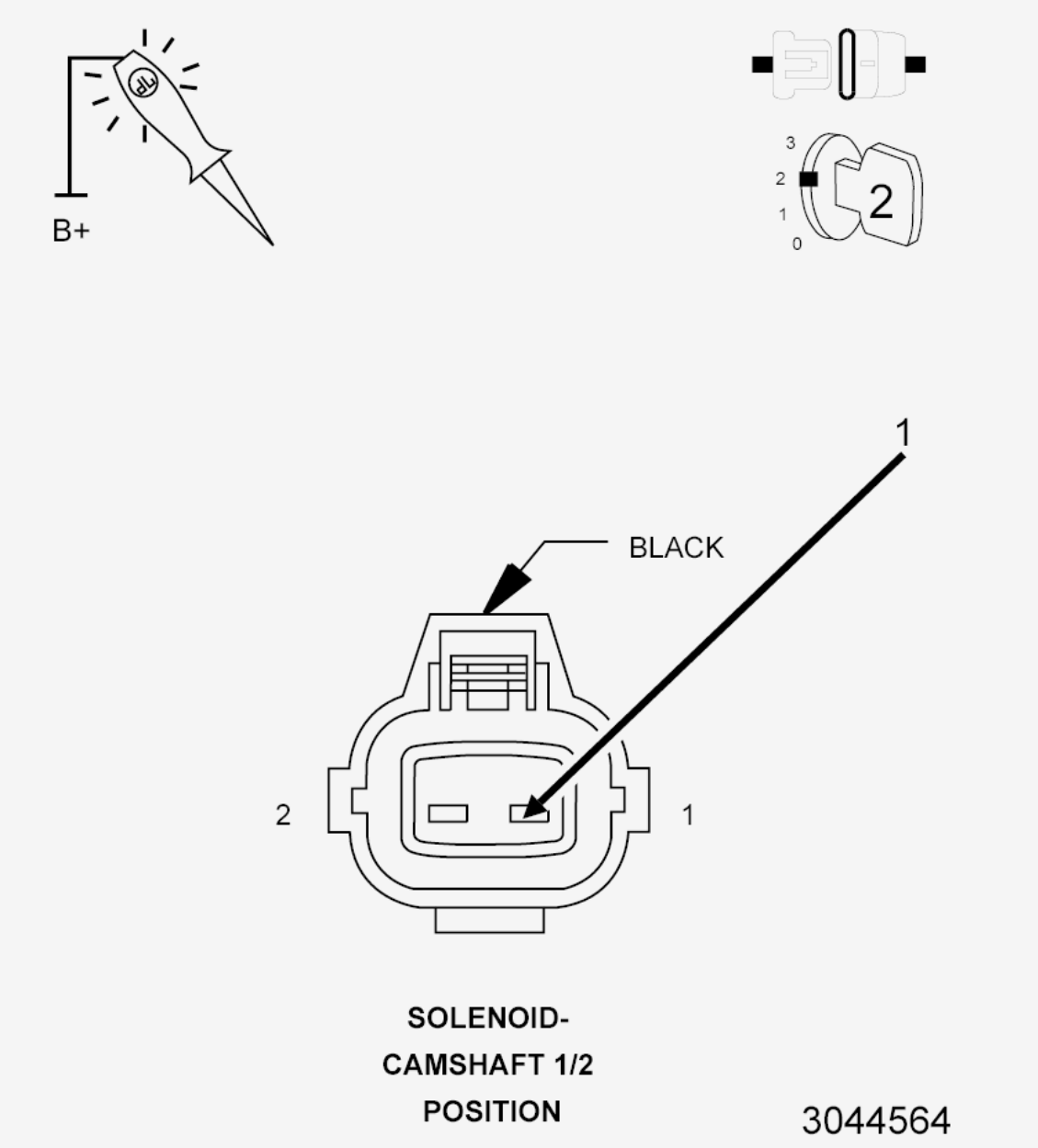

Fig. 5: Checking Ground Circuit For High Resistance
Courtesy of CHRYSLER GROUP, LLC

1. Turn the ignition off.
2. Disconnect the Camshaft 1/2 Position Solenoid/Oil Control Valve harness connector.
3. Turn the ignition on.
4. Using a 12-volt test light connected to B (+), check the Ground circuit in the Camshaft 1/2 Position Solenoid/Oil Control Valve harness connector.

NOTE: The test light should be illuminated and bright. Compare the brightness to that of a direct connection to the battery.

Is the test light illuminated and bright?

Yes

- Go To 9

No

- Repair the Ground circuit for an open or high resistance.
- Perform the POWERTRAIN VERIFICATION TEST. Refer to **POWERTRAIN VERIFICATION TEST** .

9. **CHECK THE (K276) CMP 1/2 CONTROL CIRCUIT**

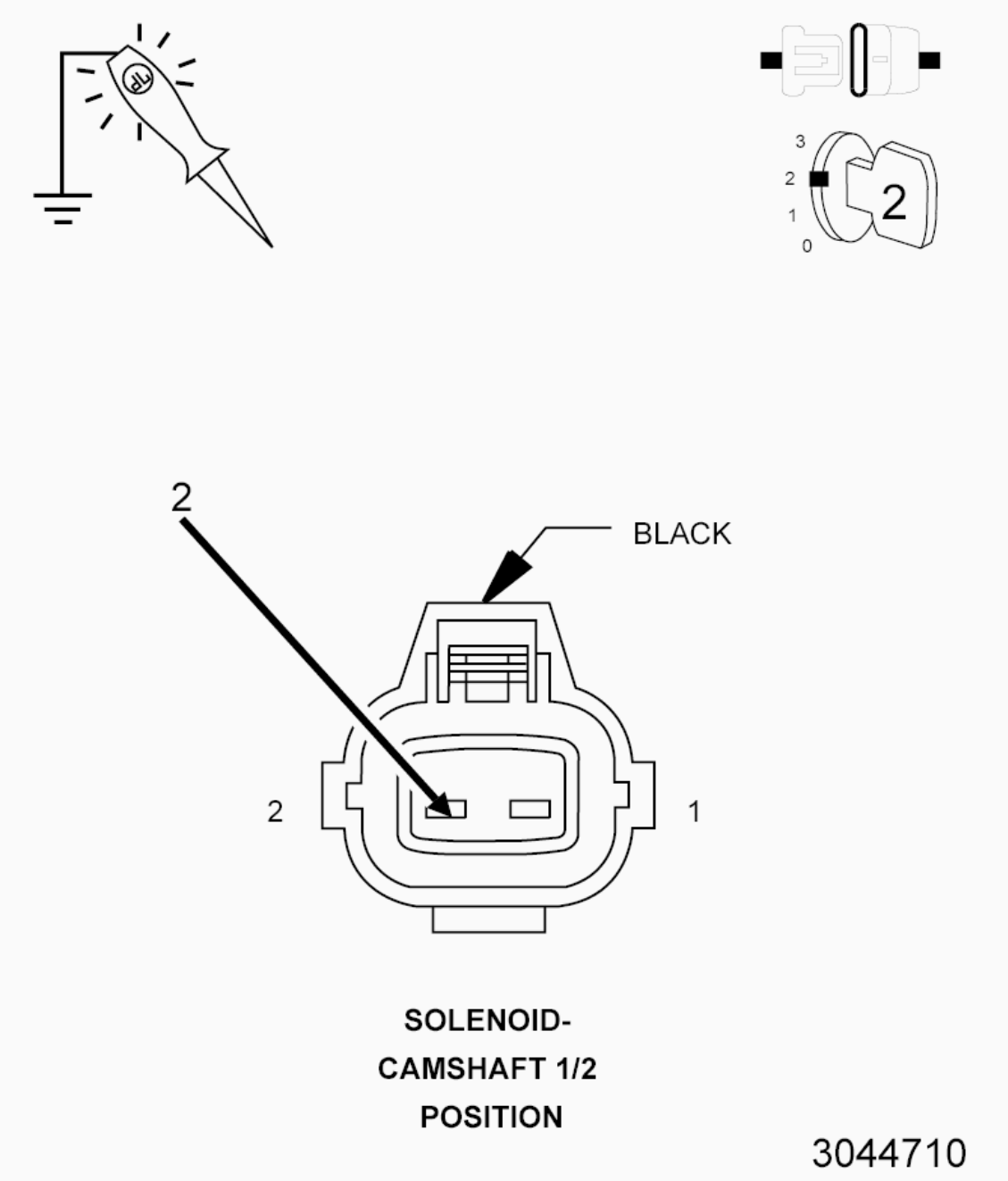

Fig. 6: Checking CMP 1/2 Control Circuit
Courtesy of CHRYSLER GROUP, LLC

1. With the scan tool, actuate the Camshaft 1/2 Position Solenoid/Oil Control Valve to the ON (maximum percentage) position.
2. Using a 12-volt test light connected to ground, check the (K276) CMP 1/2 Control circuit in the Camshaft 1/2 Position Solenoid harness connector.

NOTE: The test light should be illuminated and bright.

Compare the brightness to that of a direct connection to the battery.

Is the test light illuminated and bright?

Yes

- Go To 11

No

- Go To 10

10. **CHECK THE (K276) CMP 1/2 CONTROL CIRCUIT FOR AN OPEN/HIGH RESISTANCE**
    1. Turn the ignition off.
    2. Disconnect the PCM C2 harness connector.

    CAUTION: Do not probe the PCM harness connectors. Probing the PCM harness connectors will damage the PCM terminals resulting in poor terminal to pin connection. Install the GPEC Diagnostic Adaptor to perform the diagnosis.

    3. Connect the (special tool #10436, Adapter, GPEC Diagnostic).
    4. Measure the resistance of the (K276) CMP 1/2 Control circuit between the Camshaft 1/2 Position Solenoid harness connector and the GPEC Adaptor.

    Is the resistance below 5.0 Ohms?

    Yes

    - Go To 13

    No

    - Repair the (K276) CMP 1/2 Control circuit for an open or high resistance.

- Perform the POWERTRAIN VERIFICATION TEST. Refer to **POWERTRAIN VERIFICATION TEST** .

11. **CAMSHAFT 1/2 POSITION SOLENOID/OIL CONTROL VALVE**
    1. Turn the ignition off.
    2. Inspect the wiring and connectors between the Camshaft 1/2 Position Solenoid/Oil Control Valve and the Powertrain Control Module (PCM).
    3. Look for any chafed, pierced, pinched, or partially broken wires.
    4. Look for broken, bent, pushed out or corroded terminals.

    Were any problems found?

    Yes

    - Repair as necessary.
    - Perform the POWERTRAIN VERIFICATION TEST. Refer to **POWERTRAIN VERIFICATION TEST** .

    No

    - Replace the Camshaft 1/2 Position Solenoid/Oil Control Valve in accordance with the service information. Refer to **2.0L CONTROL VALVE, OIL INTAKE, REMOVAL** or **2.4L CONTROL VALVE, OIL INTAKE, REMOVAL** .
    - Perform the POWERTRAIN VERIFICATION TEST. Refer to **POWERTRAIN VERIFICATION TEST** .

12. **CAMSHAFT PHASER**
    1. Turn the ignition off.
    2. Remove the appropriate Camshaft Phaser in accordance with the Service information.
    3. Inspect the Phaser for contamination, foreign material, or any condition that would restrict operation of the Phaser.
    4. Inspect the Phaser oil passages for signs of sludge or foreign material.

    NOTE: The Phaser should not be disassembled. If the Phaser is damaged, it must be replaced.

    Were any problems found?

Yes

- Repair as necessary.
- Perform the POWERTRAIN VERIFICATION TEST. Refer to **POWERTRAIN VERIFICATION TEST** .

No

- Perform the INTERMITTENT CONDITION diagnostic procedure. Refer to **INTERMITTENT CONDITION** .

13. **POWERTRAIN CONTROL MODULE (PCM)**
    1. Turn the ignition off.
    2. Inspect the wiring and connectors between the Camshaft 1/2 Position Solenoid/Oil Control Valve and the Powertrain Control Module (PCM).
    3. Look for any chafed, pierced, pinched, or partially broken wires.
    4. Look for broken, bent, pushed out or corroded terminals.
    5. Perform any Technical Service Bulletins (TSBs) that apply.

    Were any problems found?

    Yes

    - Repair as necessary.
    - Perform the POWERTRAIN VERIFICATION TEST. Refer to **POWERTRAIN VERIFICATION TEST** .

    No

    - Replace and program the Powertrain Control Module (PCM) in accordance with the Service Information. Refer to **MODULE, POWERTRAIN CONTROL, REMOVAL** .
    - Perform the POWERTRAIN VERIFICATION TEST. Refer to **POWERTRAIN VERIFICATION TEST** .

P0010-BANK 1 CAMSHAFT 1 POSITION ACTUATOR CIRCUIT OPEN

For a complete wiring diagram, **refer to appropriate SYSTEM WIRING DIAGRAMS article** .

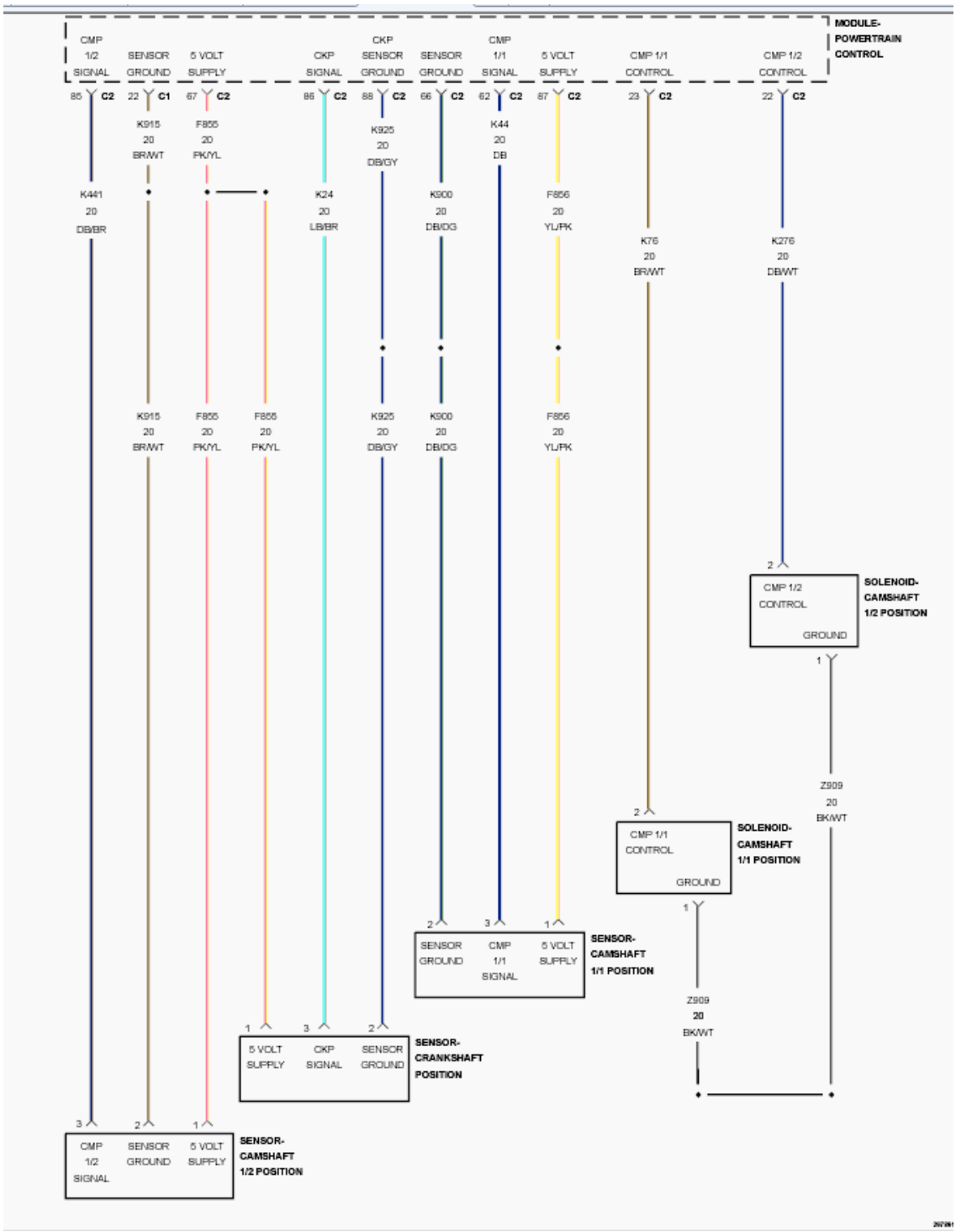

Fig. 7: Variable Valve Timing Circuit Diagram
Courtesy of CHRYSLER GROUP, LLC

THEORY OF OPERATION

Dual Variable Valve Timing (VVT) allows the Powertrain Control Module (PCM) to monitor and adjust the position of each camshaft, based on desired torque levels and engine operating conditions. The PCM controls two solenoid

operated control valves, one for each camshaft, that are used to direct oil pressure to hydraulic actuators mounted between each camshaft and its driving sprocket. The oil pressure alters the angular position or phasing of each camshaft relative to crankshaft rotation. A sensor is used to monitor the position of each camshaft.

WHEN MONITORED

With the engine running and battery voltage greater than 10.4 volts.

SET CONDITION

The Powertrain Control Module (PCM) detects that the actual state of the Camshaft 1/1 Position Solenoid does not match the intended state.

POSSIBLE CAUSES

Possible Causes
GROUND CIRCUIT OPEN OR HIGH RESISTANCE
(K76) CMP 1/1 CONTROL CIRCUIT OPEN OR HIGH RESISTANCE
CAMSHAFT 1/1 POSITION SOLENOID
POWERTRAIN CONTROL MODULE (PCM)

Always perform the Pre-Diagnostic Troubleshooting procedure before proceeding. Refer to PRE-DIAGNOSTIC TROUBLESHOOTING PROCEDURE .

DIAGNOSTIC TEST

1. **ACTIVE DTC**
    1. Ignition on, engine not running.
    2. With the scan tool, clear DTCs in the Powertrain Control Module (PCM).
    3. Start the engine and allow it to reach normal operating temperature.

WARNING: **When the engine is operating, do not stand in direct line with the fan. Do not put your hands near the pulleys, belts or fan. Do not wear loose clothing. Failure to follow these instructions may result in possible serious or fatal injury.**

4. With the scan tool, select View DTCs.

   Is the status Active for this DTC?

   Yes

   - Go To 2

   No

   - Perform the INTERMITTENT CONDITION diagnostic procedure. Refer to **INTERMITTENT CONDITION** .

2. **CHECK THE GROUND CIRCUIT FOR AN OPEN/HIGH RESISTANCE**

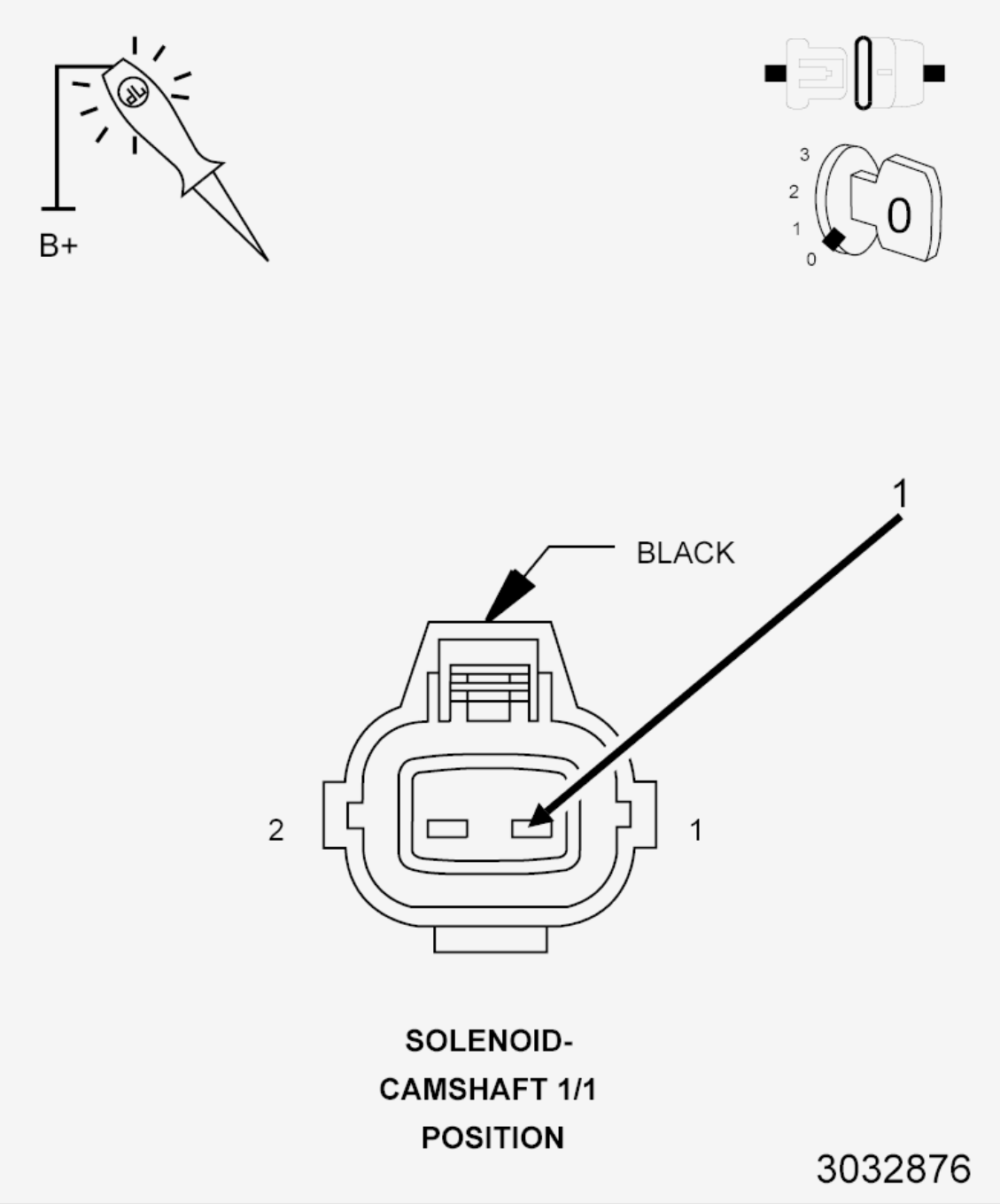

Fig. 8: Checking Ground Circuit For Open Or High Resistance
Courtesy of CHRYSLER GROUP, LLC

1. Turn the ignition off.
2. Disconnect the Camshaft 1/1 Position Solenoid/Oil Control Valve harness connector.
3. Turn the ignition on.
4. Using a 12-volt test light connected to B+, check the Ground circuit in the Camshaft 1/1 Position Solenoid/Oil Control Valve harness

connector.

NOTE: The test light should be illuminated and bright. Compare the brightness to that of a direct connection to the battery.

Is the test light illuminated and bright?

Yes

- Go To 3

No

- Repair the Ground circuit for an open or high resistance.
- Perform the POWERTRAIN VERIFICATION TEST. Refer to **POWERTRAIN VERIFICATION TEST** .

3. **CHECK THE (K76) CMP 1/1 CONTROL CIRCUIT FOR AN OPEN/HIGH RESISTANCE**
   1. Turn the ignition off.
   2. Disconnect the PCM C2 harness connector.

      CAUTION: Do not probe the PCM harness connectors. Probing the PCM harness connectors will damage the PCM terminals resulting in poor terminal to pin connection. Install the GPEC Diagnostic Adaptor to perform the diagnosis.

   3. Connect the (special tool #10436, Adapter, GPEC Diagnostic).
   4. Measure the resistance of the (K76) CMP 1/1 Control circuit between the Camshaft 1/1 Position Solenoid harness connector and the GPEC Adaptor.

      Is the resistance below 5.0 Ohms?

      Yes

      - Go To 4

No

- Repair the (K76) CMP 1/1 Control circuit for an open or high resistance.
- Perform the POWERTRAIN VERIFICATION TEST. Refer to **POWERTRAIN VERIFICATION TEST** .

4. **CHECK THE CAMSHAFT 1/1 POSITION SOLENOID ACTUATION**

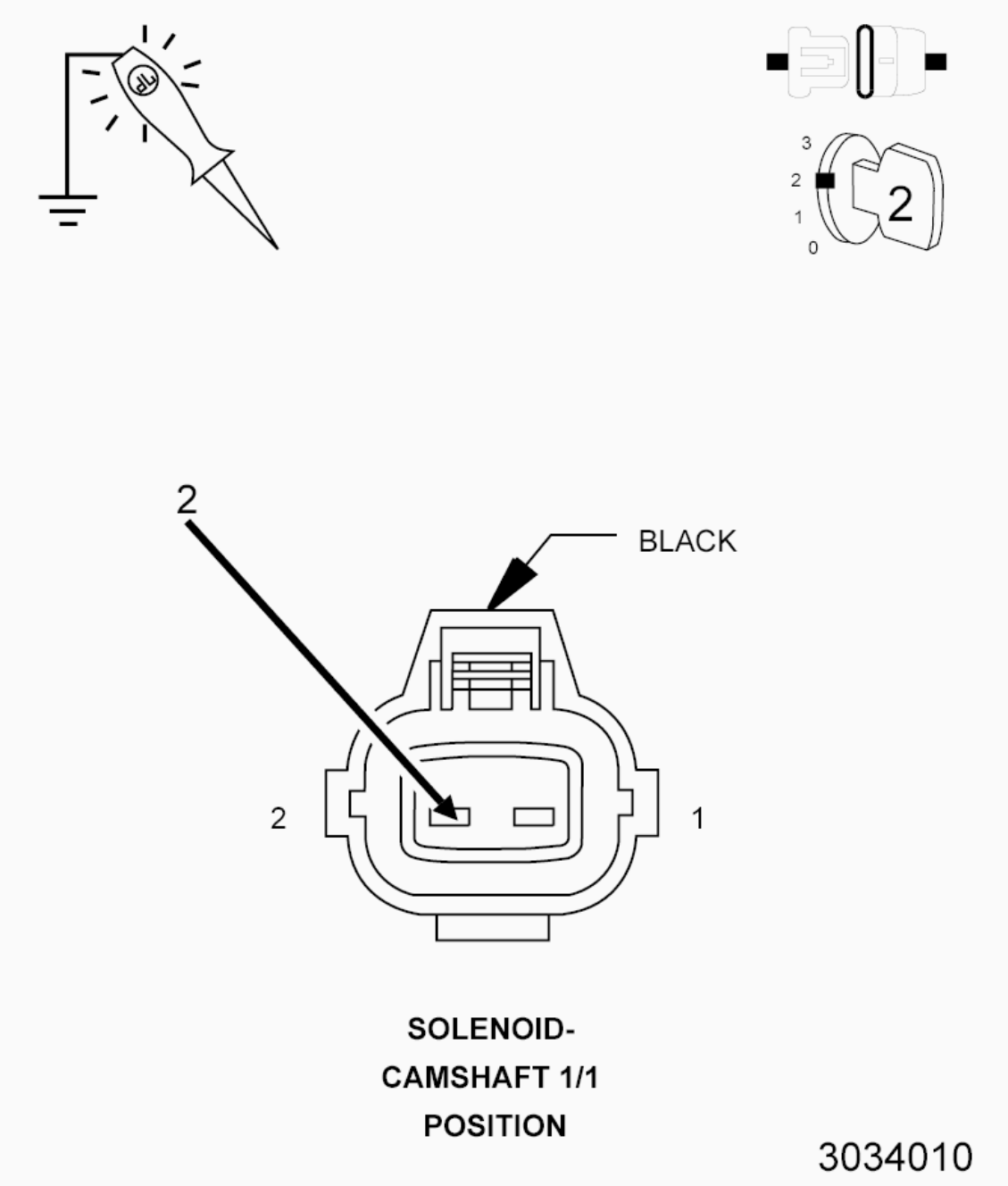

Fig. 9: Checking CMP 1/1 Solenoid Actuation
Courtesy of CHRYSLER GROUP, LLC

1. With the scan tool, actuate the Camshaft 1/1 Position Solenoid/Oil Control Valve to the ON (maximum percentage) position.
2. Using a 12-volt test light connected to ground, check the (K76) CMP 1/1 Control circuit in the Camshaft 1/1 Position Solenoid harness connector.

NOTE: The test light should be illuminated and bright. Compare the brightness to that of a direct connection to the battery.

Is the test light illuminated and bright?

Yes

- Go To 5

No

- Go To 6

5. **CAMSHAFT 1/1 POSITION SOLENOID**
   1. Turn the ignition off.
   2. Inspect the wiring and connectors between the Camshaft 1/1 Position Solenoid and the Powertrain Control Module (PCM).
   3. Look for any chafed, pierced, pinched, or partially broken wires.
   4. Look for broken, bent, pushed out or corroded terminals. Verify that there is good pin to terminal contact in the related connectors.

   Were any problems found?

   Yes

   - Repair as necessary.
   - Perform the POWERTRAIN VERIFICATION TEST. Refer to **POWERTRAIN VERIFICATION TEST** .

   No

   - Replace the Camshaft 1/1 Position Solenoid in accordance with the service information. Refer to **2.0L CONTROL VALVE, OIL**

INTAKE, REMOVAL or **2.4L CONTROL VALVE, OIL INTAKE, REMOVAL** .

- Perform the POWERTRAIN VERIFICATION TEST. Refer to **POWERTRAIN VERIFICATION TEST** .

6. **POWERTRAIN CONTROL MODULE (PCM)**
   1. Using the wiring diagram/schematic as a guide, inspect the wiring and connectors between the Camshaft 1/1 Position Solenoid and the Powertrain Control Module (PCM).
   2. Look for any chafed, pierced, pinched, or partially broken wires.
   3. Look for broken, bent, pushed out or corroded terminals.
   4. Perform any Technical Service Bulletins that may apply.

   Were any problems found?

   Yes

   - Repair as necessary.
   - Perform the POWERTRAIN VERIFICATION TEST. Refer to **POWERTRAIN VERIFICATION TEST** .

   No

   - Replace and program the Powertrain Control Module (PCM) in accordance with the service information. Refer to **MODULE, POWERTRAIN CONTROL, REMOVAL** .
   - Perform the POWERTRAIN VERIFICATION TEST. Refer to **POWERTRAIN VERIFICATION TEST** .

P0013-BANK 1 CAMSHAFT 2 POSITION ACTUATOR CIRCUIT OPEN

For a complete wiring diagram, **refer to appropriate SYSTEM WIRING DIAGRAMS article** .

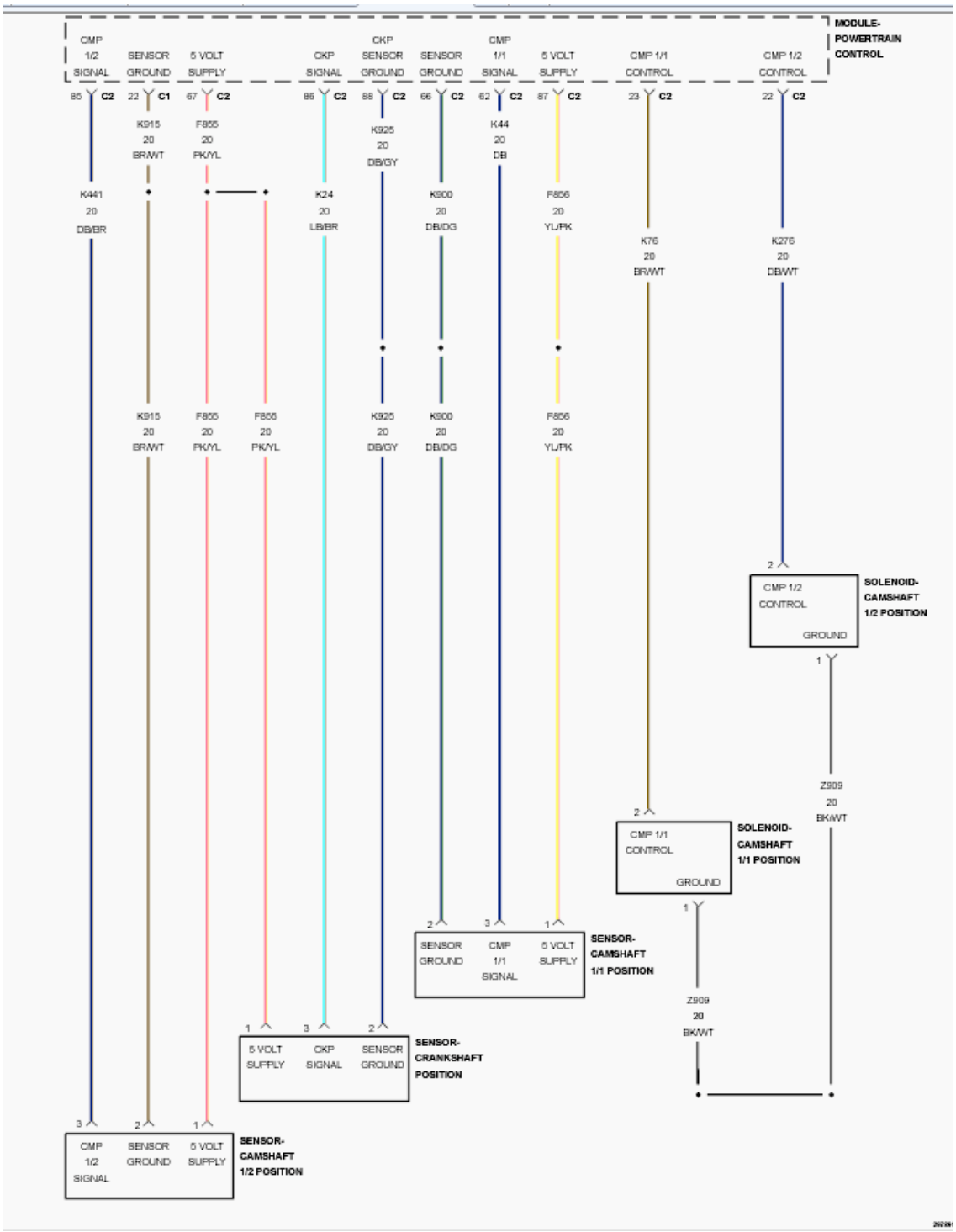

Fig. 10: Variable Valve Timing Circuit Diagram
Courtesy of CHRYSLER GROUP, LLC

THEORY OF OPERATION

Dual Variable Valve Timing (VVT) allows the Powertrain Control Module (PCM) to monitor and adjust the position of each camshaft, based on desired torque levels and engine operating conditions. The PCM controls two solenoid

operated control valves, one for each camshaft, that are used to direct oil pressure to hydraulic actuators mounted between each camshaft and its driving sprocket. The oil pressure alters the angular position or phasing of each camshaft relative to crankshaft rotation. A sensor is used to monitor the position of each camshaft.

WHEN MONITORED

With the engine running and battery voltage greater than 10.4 volts.

SET CONDITION

The Powertrain Control Module (PCM) detects that the actual state of the Camshaft 1/2 Position Solenoid does not match the intended state.

POSSIBLE CAUSES

Possible Causes
GROUND CIRCUIT OPEN OR HIGH RESISTANCE
(K276) CMP 1/2 CONTROL CIRCUIT OPEN OR HIGH RESISTANCE
CAMSHAFT 1/2 POSITION SOLENOID
POWERTRAIN CONTROL MODULE (PCM)

Always perform the Pre-Diagnostic Troubleshooting procedure before proceeding. Refer to PRE-DIAGNOSTIC TROUBLESHOOTING PROCEDURE .

DIAGNOSTIC TEST

1. **ACTIVE DTC**
    1. Ignition on, engine not running.
    2. With the scan tool, clear DTCs in the Powertrain Control Module (PCM).
    3. Start the engine and allow it to reach normal operating temperature.

WARNING: **When the engine is operating, do not stand in direct line with the fan. Do not put your hands near the pulleys, belts or fan. Do not wear loose clothing. Failure to follow these instructions may result in possible serious or fatal injury.**

4. With the scan tool, select View DTCs.

   Is the status Active for this DTC?

   Yes

   - Go To 2

   No

   - Perform the INTERMITTENT CONDITION diagnostic procedure. Refer to **INTERMITTENT CONDITION** .

2. **CHECK THE GROUND CIRCUIT FOR AN OPEN/HIGH RESISTANCE**

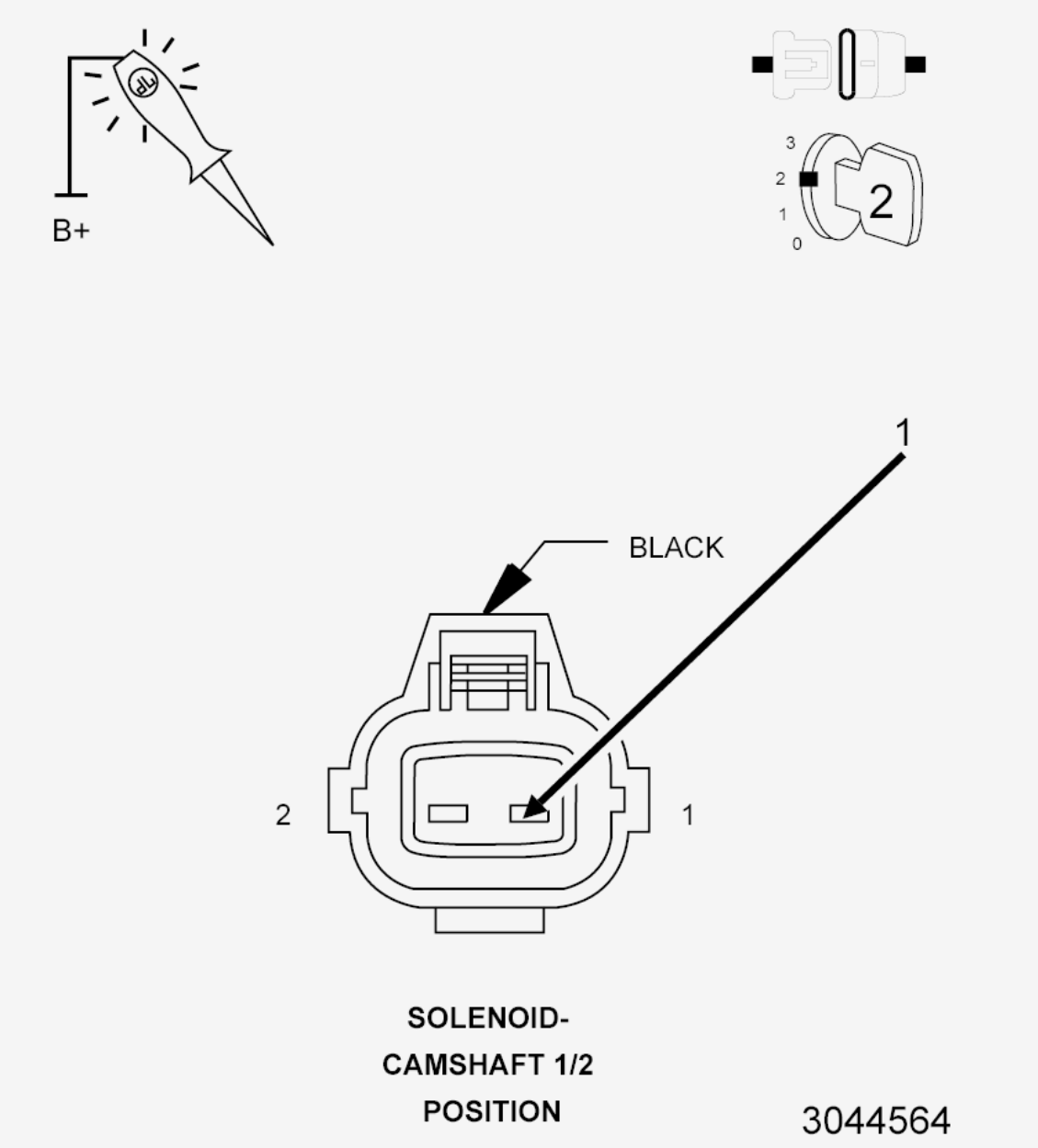

Fig. 11: Checking Ground Circuit For High Resistance
Courtesy of CHRYSLER GROUP, LLC

1. Turn the ignition off.
2. Disconnect the Camshaft 1/2 Position Solenoid harness connector.
3. Turn the ignition on.
4. Using a 12-volt test light connected to Fused B+, check the Ground circuit in the Camshaft 1/2 Position Solenoid harness connector.

NOTE: The test light should be illuminated and bright. Compare the brightness to that of a direct

connection to the battery.

Is the test light illuminated and bright?

Yes

- Go To 3

No

- Repair the Ground circuit for an open or high resistance.
- Perform the POWERTRAIN VERIFICATION TEST. Refer to **POWERTRAIN VERIFICATION TEST** .

3. **CHECK THE (K276) CMP 1/2 CONTROL CIRCUIT FOR AN OPEN/HIGH RESISTANCE**
   1. Turn the ignition off.
   2. Disconnect the PCM C2 harness connector.

      CAUTION: Do not probe the PCM harness connectors. Probing the PCM harness connectors will damage the PCM terminals resulting in poor terminal to pin connection. Install the GPEC Diagnostic Adaptor to perform the diagnosis.

   3. Connect the (special tool #10436, Adapter, GPEC Diagnostic).
   4. Measure the resistance of the (K276) CMP 1/2 Control circuit between the Camshaft 1/2 Position Solenoid harness connector and the GPEC Adaptor.

      Is the resistance below 5.0 Ohms?

      Yes

      - Go To 4

      No

      - Repair the (K276) CMP 1/2 Control circuit for an open or high

resistance.

- Perform the POWERTRAIN VERIFICATION TEST. Refer to **POWERTRAIN VERIFICATION TEST** .

4. **CHECK THE CAMSHAFT 1/2 POSITION SOLENOID ACTUATION**

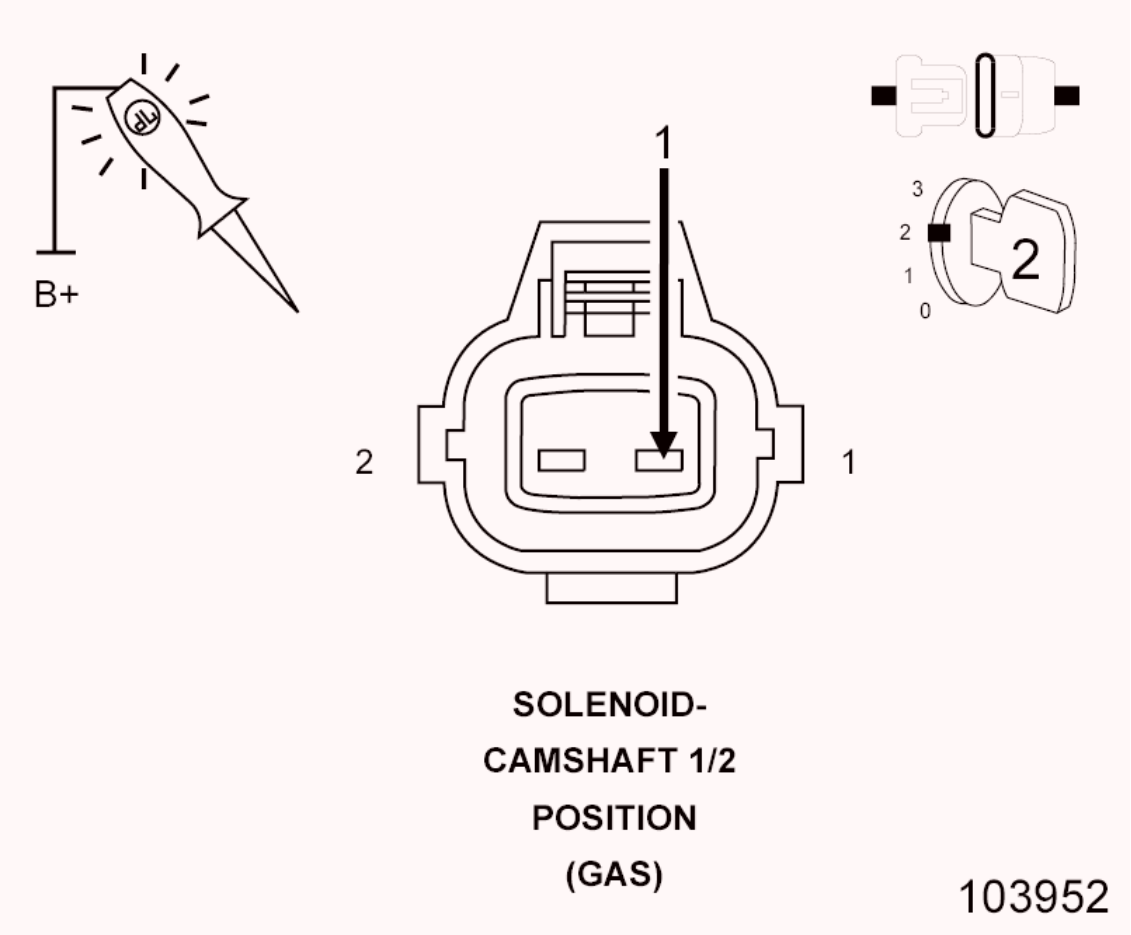

Fig. 12: Checking CMP 1/2 Solenoid Actuation
Courtesy of CHRYSLER GROUP, LLC

1. Connect the PCM C2 harness connector.
2. Turn the ignition on.
3. With the scan tool, actuate the Camshaft 1/2 Position Solenoid/Oil Control Valve to the ON (maximum percentage) position.
4. Using a 12-volt test light connected to ground, probe the (K276) CMP 1/2 Control circuit in the Camshaft 1/2 Position Solenoid harness connector.

NOTE: The test light should be illuminated and bright. Compare the brightness to that of a direct

connection to the battery.

Is the test light illuminated and bright?

Yes

- Go To 5

No

- Go To 6

5. **CAMSHAFT 1/2 POSITION SOLENOID**
   1. Turn the ignition off.
   2. Inspect the wiring and connectors between the Camshaft 1/2 Position Solenoid and the Powertrain Control Module (PCM).
   3. Look for any chafed, pierced, pinched, or partially broken wires.
   4. Look for broken, bent, pushed out or corroded terminals. Verify that there is good pin to terminal contact in the related connectors.

   Were any problems found?

   Yes

   - Repair as necessary.
   - Perform the POWERTRAIN VERIFICATION TEST. Refer to **POWERTRAIN VERIFICATION TEST** .

   No

   - Replace the Camshaft 1/2 Position Solenoid in accordance with the service information. Refer to **2.0L CONTROL VALVE, OIL INTAKE, REMOVAL** or **2.4L CONTROL VALVE, OIL INTAKE, REMOVAL** .
   - Perform the POWERTRAIN VERIFICATION TEST. Refer to **POWERTRAIN VERIFICATION TEST** .
6. **POWERTRAIN CONTROL MODULE (PCM)**
   1. Using the wiring diagram/schematic as a guide, inspect the wiring and connectors between the Camshaft 1/2 Position Solenoid and the

Powertrain Control Module (PCM).

2. Look for any chafed, pierced, pinched, or partially broken wires.
3. Look for broken, bent, pushed out or corroded terminals.
4. Perform any Technical Service Bulletins that may apply.

Were any problems found?

Yes

- Repair as necessary.
- Perform the POWERTRAIN VERIFICATION TEST. Refer to **POWERTRAIN VERIFICATION TEST** .

No

- Replace and program the Powertrain Control Module (PCM) in accordance with the service information. Refer to **MODULE, POWERTRAIN CONTROL, REMOVAL** .
- Perform the POWERTRAIN VERIFICATION TEST. Refer to **POWERTRAIN VERIFICATION TEST** .

P0016-CRANKSHAFT/CAMSHAFT TIMING MISALIGNMENT - BANK 1 SENSOR 1

For a complete wiring diagram, **refer to appropriate SYSTEM WIRING DIAGRAMS article** .

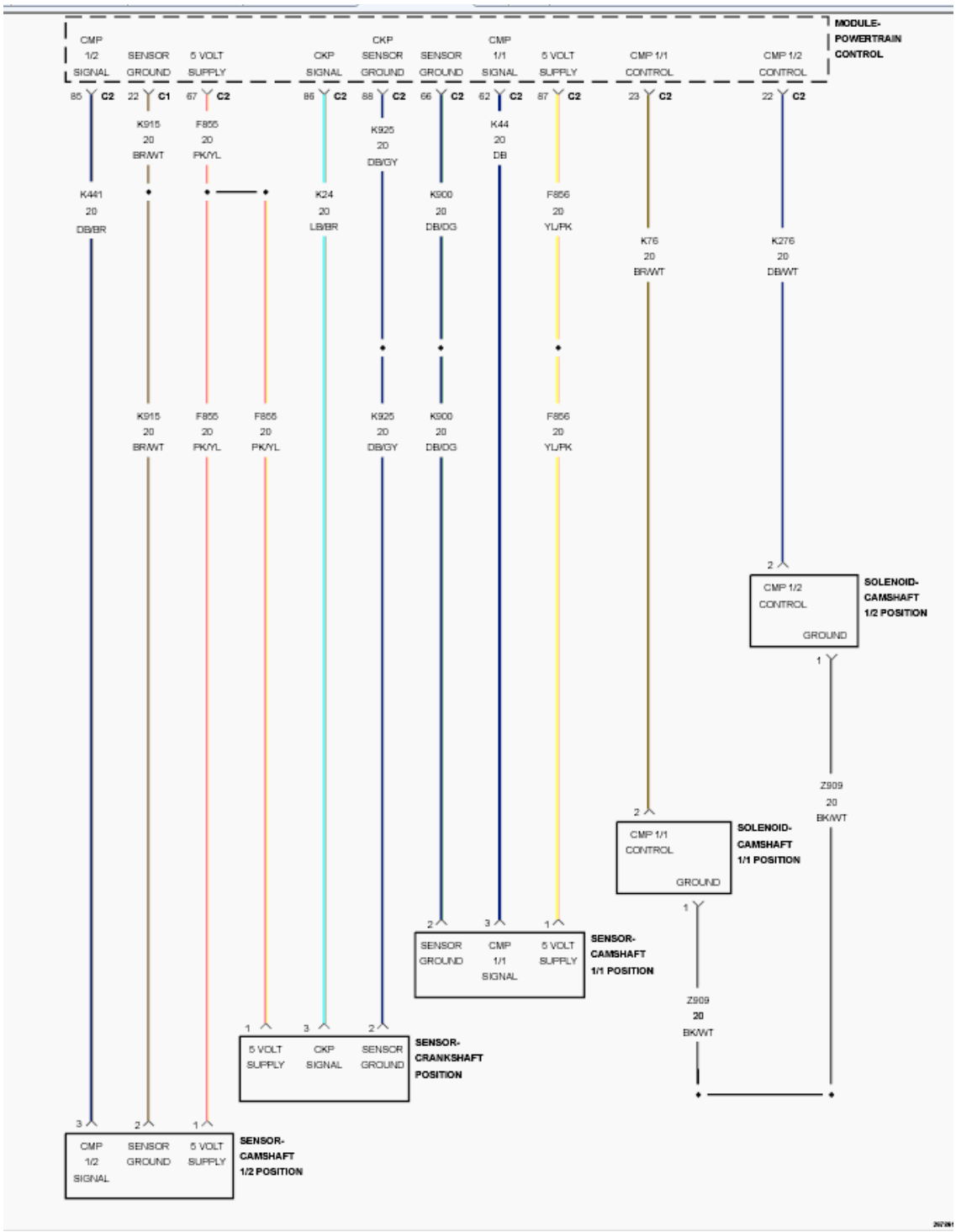

Fig. 13: Variable Valve Timing Circuit Diagram
Courtesy of CHRYSLER GROUP, LLC

WHEN MONITORED

With the engine speed present and within a calibrated amount.

SET CONDITION

The Powertrain Control Module (PCM) detects that the camshaft position is out of phase with the crankshaft position. One Trip Fault. Three good trips to turn off the MIL.

POSSIBLE CAUSES

Possible Causes
ENGINE OIL DIRTY OR CONTAMINATED
INCORRECT ENGINE OIL VISCOSITY
CRANKSHAFT POSITION SENSOR CIRCUIT WIRING OR CONNECTORS
CAMSHAFT 1/1 POSITION SENSOR CIRCUIT WIRING OR CONNECTORS
GROUND CIRCUIT HIGH RESISTANCE
(K76) CMP 1/1 CONTROL CIRCUIT OPEN OR HIGH RESISTANCE
CAMSHAFT 1/1 POSITION SOLENOID
CAMSHAFT PHASER
CAMSHAFT 1/1 POSITION SENSOR
CRANKSHAFT POSITION SENSOR
CRANKSHAFT, TONE WHEEL OR FLEX PLATE
CAMSHAFT, TONE WHEEL OR PULSE RING
POWERTRAIN CONTROL MODULE (PCM)

Always perform the Pre-Diagnostic Troubleshooting procedure before proceeding. Refer to PRE-DIAGNOSTIC TROUBLESHOOTING PROCEDURE .

DIAGNOSTIC TEST

1. **ACTIVE DTC**
    1. Turn the ignition on.
    2. With the scan tool select View DTCs.
    3. Record the related Freeze Frame data.
    4. Start the engine and allow it to reach operating temperature.

WARNING: When the engine is operating, do not stand in direct line with the fan. Do not put

your hands near the pulleys, belts or fan. Do not wear loose clothing. Failure to follow these instructions may result in possible serious or fatal injury.

NOTE: If the DTC does not reset it may be necessary to test drive the vehicle.

Is the status Active for this DTC?

Yes

- Go To 2

No

- Perform the INTERMITTENT CONDITION diagnostic procedure. Refer to **INTERMITTENT CONDITION** .

2. **CRANKSHAFT POSITION SENSOR CIRCUIT WIRING OR CONNECTORS**
   1. Turn the ignition off.
   2. Using the wiring diagram/schematic as a guide, inspect the wiring and connectors between the Crankshaft Position Sensor and the Powertrain Control Module (PCM).
   3. Look for any chafed, pierced, pinched or partially broken wires.
   4. Look for broken, bent, pushed out or corroded terminals.
   5. Inspect the Crankshaft Position Sensor for conditions such as loose mounting screws, damage, or cracks.

   Were any problems found?

   Yes

   - Repair as necessary.
   - Perform the POWERTRAIN VERIFICATION TEST. Refer to **POWERTRAIN VERIFICATION TEST** .

   No

- Go To 3

3. **CAMSHAFT 1/1 POSITION SENSOR CIRCUIT WIRING OR CONNECTORS**
   1. Using the wiring diagram/schematic as a guide, inspect the wiring and connectors between the Camshaft 1/1 Position Sensor and the Powertrain Control Module (PCM).
   2. Look for any chafed, pierced, pinched or partially broken wires.
   3. Look for broken, bent, pushed out or corroded terminals.
   4. Inspect the Camshaft 1/1 Position Sensor for conditions such as loose mounting screws, damage, or cracks.

   Were any problems found?

   Yes

   - Repair as necessary.
   - Perform the POWERTRAIN VERIFICATION TEST. Refer to **POWERTRAIN VERIFICATION TEST** .

   No

   - Go To 4

4. **CRANKSHAFT POSITION SENSOR IRREGULAR SIGNAL**

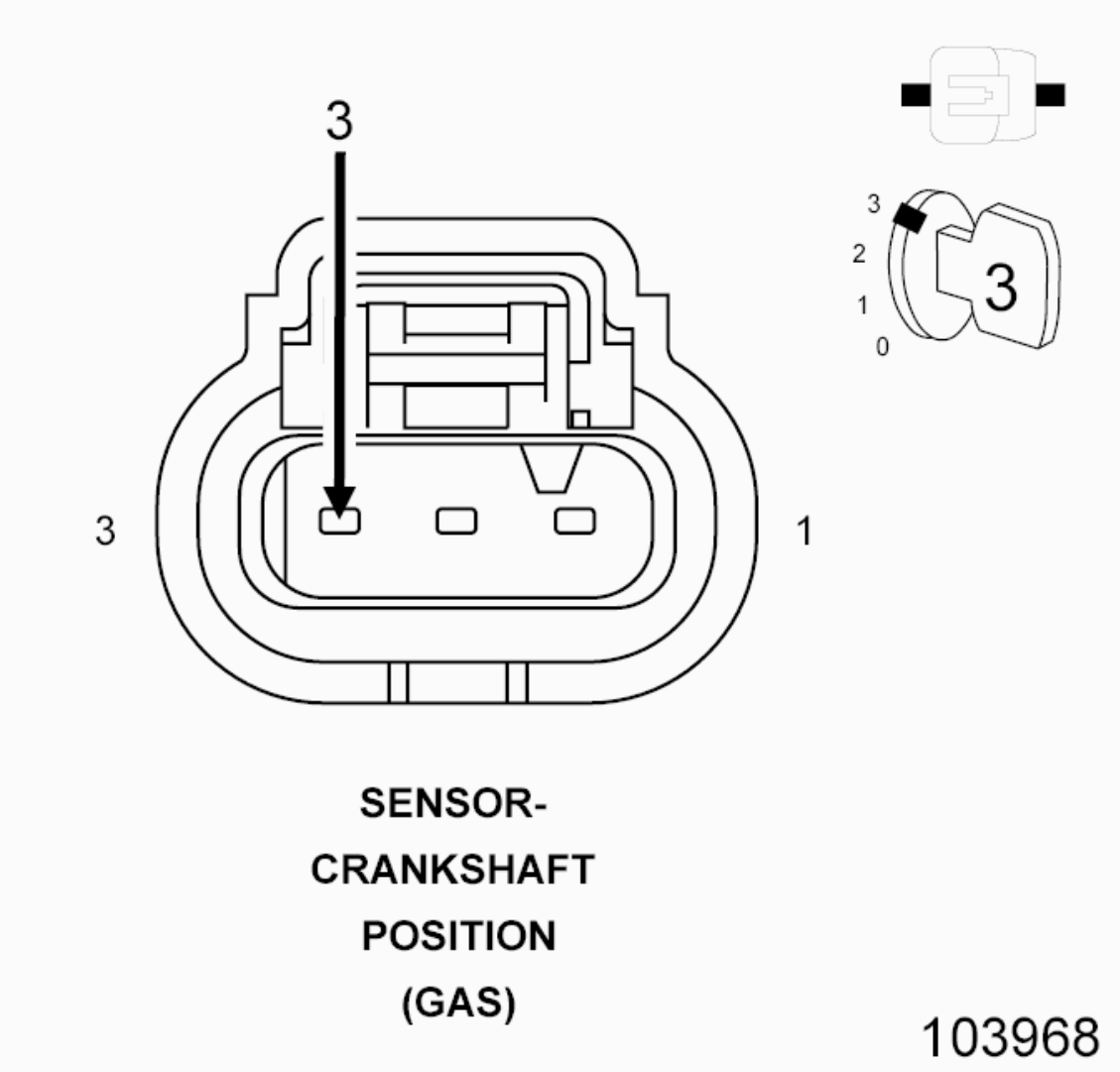

Fig. 14: Crankshaft Position Sensor Harness Connector End View
Courtesy of CHRYSLER GROUP, LLC

1. Using a lab scope and the (special tool #6801, Terminal Probe), back probe the (K24) CKP Signal circuit in the Crankshaft Position Sensor harness connector.
2. Turn the ignition on.
3. Wiggle the related wire harness and lightly tap on the Crankshaft Position Sensor while monitoring the lab scope screen.
4. Start the engine.
5. Monitor the Crankshaft Position Sensor signal on the lab scope screen.

   Were any Crankshaft Position Sensor signals irregular or missing?

   Yes

- Go To 6

No

- Go To 5

5. **CAMSHAFT 1/1 POSITION SENSOR IRREGULAR SIGNAL**

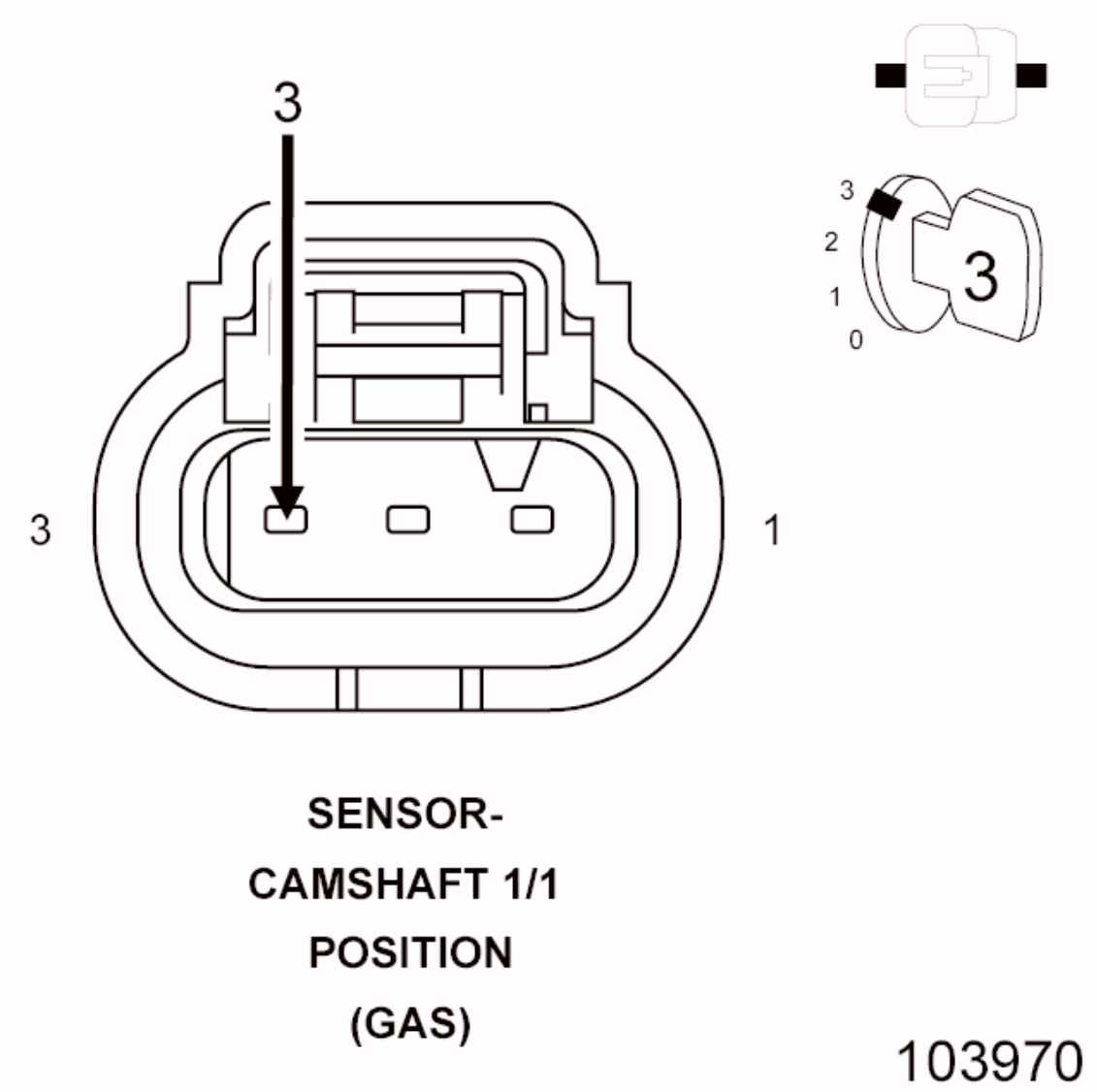

Fig. 15: Camshaft 1/1 Position Sensor Connector End View
Courtesy of CHRYSLER GROUP, LLC

1. Turn the ignition off.
2. Using a lab scope and the (special tool #6801, Terminal Probe), back probe the (K44) CMP 1/1 Signal circuit in the Camshaft 1/1 Position Sensor harness connector.

3. Turn the ignition on.
4. Wiggle the related wire harness and lightly tap on the Camshaft 1/1 Position Sensor while monitoring the lab scope screen.
5. Start the engine.
6. Monitor the Camshaft 1/1 Position Sensor signal on the lab scope screen.

   Were any Camshaft 1/1 Position Sensor signals irregular or missing?

   Yes

   - Go To 7

   No

   - Go To 10

6. **CRANKSHAFT, TONE WHEEL OR FLEX PLATE**
   1. Turn the ignition off.
   2. Remove the Crankshaft Position Sensor.
   3. Inspect the Crankshaft Position Sensor and mounting area for any condition that would result in an incorrect signal, such as damage, foreign material or excessive movement.

      Were any problems found?

      Yes

      - Repair as necessary.
      - Perform the POWERTRAIN VERIFICATION TEST. Refer to **POWERTRAIN VERIFICATION TEST** .

      No

      - Go To 8

7. **CAMSHAFT, TONE WHEEL OR PULSE RING**
   1. Turn the ignition off.
   2. Remove the Camshaft 1/1 Position Sensor.
   3. Inspect the Camshaft 1/1 Position Sensor and mounting area for any

condition that would result in an incorrect signal, such as damage, foreign material or excessive movement.

Were any problems found?

Yes

- Repair as necessary.
- Perform the POWERTRAIN VERIFICATION TEST. Refer to **POWERTRAIN VERIFICATION TEST** .

No

- Go To 9

8. **CRANKSHAFT POSITION SENSOR**
   1. Using the wiring diagram/schematic as a guide, inspect the wiring and connectors between the Crankshaft Position Sensor and the Powertrain Control Module (PCM).
   2. Look for any chafed, pierced, pinched or partially broken wires.
   3. Look for broken, bent, pushed out or corroded terminals.

   Were any problems found?

   Yes

   - Repair as necessary.
   - Perform the POWERTRAIN VERIFICATION TEST. Refer to **POWERTRAIN VERIFICATION TEST** .

   No

   - Replace the Crankshaft Position Sensor. Refer to **SENSOR, CRANKSHAFT POSITION, REMOVAL** .
   - Perform the POWERTRAIN VERIFICATION TEST. Refer to **POWERTRAIN VERIFICATION TEST** .

9. **CAMSHAFT 1/1 POSITION SENSOR**
   1. Using the wiring diagram/schematic as a guide, inspect the wiring and connectors between the Camshaft 1/1 Position Sensor and the Powertrain Control Module (PCM).

2. Look for any chafed, pierced, pinched or partially broken wires.
3. Look for broken, bent, pushed out or corroded terminals.

Were any problems found?

Yes

- Repair as necessary.
- Perform the POWERTRAIN VERIFICATION TEST. Refer to **POWERTRAIN VERIFICATION TEST** .

No

- Replace the Camshaft 1/1 Position Sensor. Refer to **SENSOR, CAMSHAFT POSITION, REMOVAL** .
- Perform the POWERTRAIN VERIFICATION TEST. Refer to **POWERTRAIN VERIFICATION TEST** .

10. **CAMSHAFT 1/1 POSITION SOLENOID/OIL CONTROL VALVE INSPECTION**
    1. Turn the ignition off.
    2. Remove the Camshaft 1/1 Position Solenoid/Oil Control Valve in accordance with the service information. Do not disconnect the harness connector.
    3. Perform a visual inspection of the open part of the solenoid (spool valve) for the presence of any debris (metallic or non-metallic).

NOTE: If contamination is observed, the Camshaft 1/1 Position Solenoid/Oil Control Valve must be replaced. After replacing the valve, verify that the engine oil has been replaced with the appropriate oil in accordance with the Service Information.

Were any problems found?

Yes

- Replace the Camshaft 1/1 Position Solenoid/Oil Control Valve in accordance with the service information. Refer to **2.0L**

CONTROL VALVE, OIL INTAKE, REMOVAL or **2.4L CONTROL VALVE, OIL INTAKE, REMOVAL** .

- Perform the POWERTRAIN VERIFICATION TEST. Refer to **POWERTRAIN VERIFICATION TEST** .

No

- Go To 11

11. **CAMSHAFT 1/1 POSITION SOLENOID/OIL CONTROL VALVE ACTUATION**
    1. Turn the ignition on.
    2. With the scan tool, actuate the Camshaft 1/1 Position Solenoid/Oil Control Valve.
    3. Perform a visual inspection of the spool valve for erratic movement or sticking during the forward and reverse stroke.

NOTE: If sticking or erratic movement is observed, the Camshaft 1/1 Position Solenoid/Oil Control Valve must be replaced. After replacing the valve, verify that the engine oil has been replaced with the appropriate oil in accordance with the Service Information.

Select the appropriate response from the choices below:

Normal operation. No sticking or erratic movement is observed

- Go To 12

No movement is observed

- Go To 14

Sticking or erratic movement is observed

- Replace the Camshaft 1/1 Position Solenoid/Oil Control Valve in accordance with the service information. Refer to **2.0L CONTROL VALVE, OIL INTAKE, REMOVAL** or **2.4L CONTROL VALVE, OIL INTAKE, REMOVAL** .

- Perform the POWERTRAIN VERIFICATION TEST. Refer to **POWERTRAIN VERIFICATION TEST** .

12. **INCORRECT ENGINE OIL VISCOSITY**
    1. Review the vehicle service history to determine if the correct viscosity engine oil was used.

       Were any problems found?

       Yes

       - Change the engine oil and retest.
       - Perform the POWERTRAIN VERIFICATION TEST. Refer to **POWERTRAIN VERIFICATION TEST** .

       No

       - Go To 13

13. **ENGINE OIL DIRTY OR CONTAMINATED**
    1. Turn the ignition off.
    2. Inspect engine oil for signs of contamination, sludge or foreign material.

       Were any problems found?

       Yes

       - Clean the engine oil system, including oil passages, in accordance with the service information and retest.
       - Perform the POWERTRAIN VERIFICATION TEST. Refer to **POWERTRAIN VERIFICATION TEST** .

       No

       - Go To 19

14. **CAMSHAFT 1/1 POSITION SOLENOID/OIL CONTROL VALVE WIRING AND CONNECTORS**
    1. Turn the ignition off.
    2. Inspect the wiring and connectors between the Camshaft 1/1 Position

Solenoid/Oil Control Valve and the Powertrain Control Module (PCM).

3. Look for any chafed, pierced, pinched or partially broken wires.
4. Look for broken, bent, pushed out or corroded terminals.

Were any problems found?

Yes

- Repair as necessary.
- Perform the POWERTRAIN VERIFICATION TEST. Refer to **POWERTRAIN VERIFICATION TEST** .

No

- Go To 15

15. **CHECK THE GROUND CIRCUIT FOR HIGH RESISTANCE**

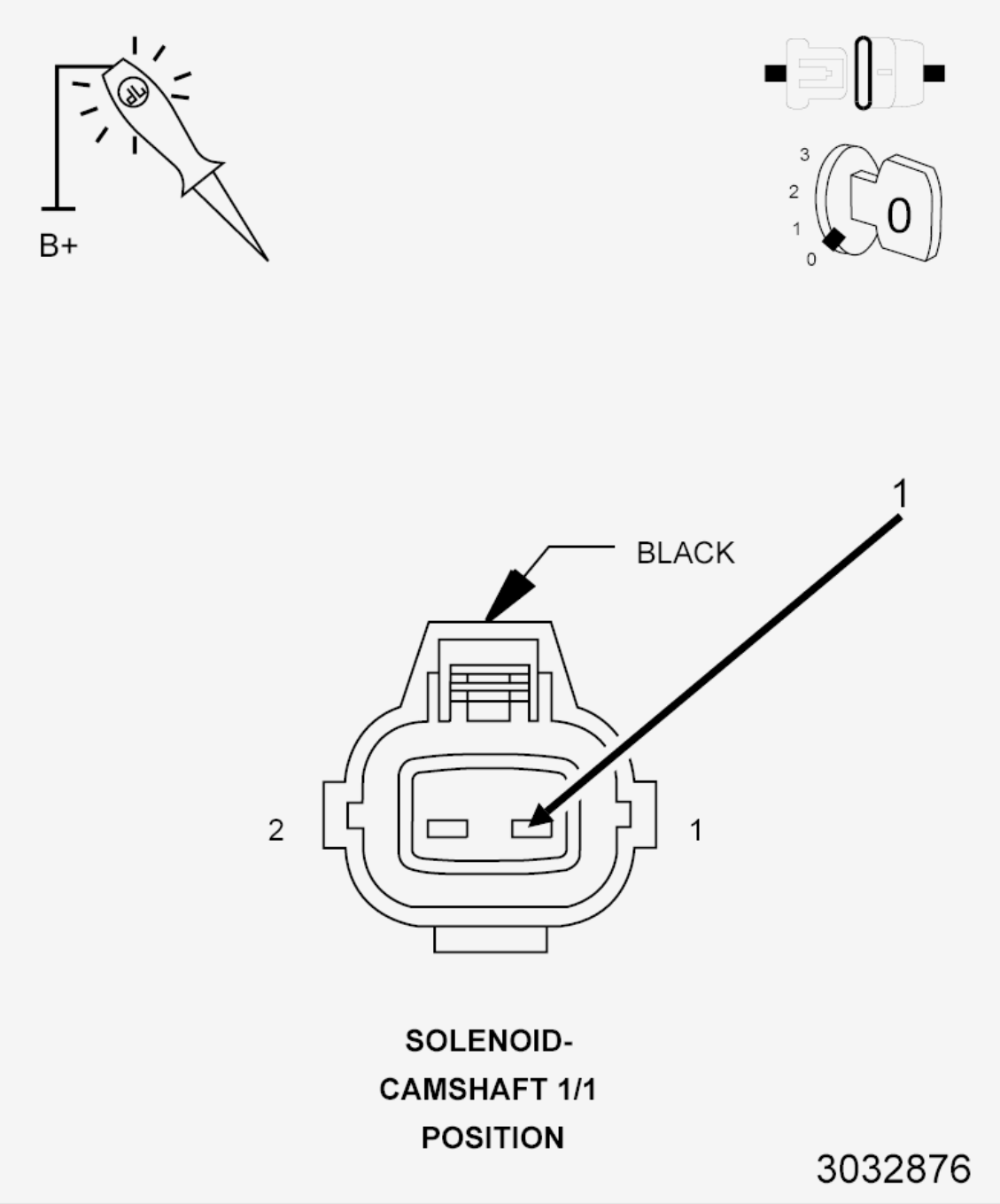

Fig. 16: Checking Ground Circuit For Open Or High Resistance
Courtesy of CHRYSLER GROUP, LLC

1. Turn the ignition off.
2. Disconnect the Camshaft 1/1 Position Solenoid/Oil Control Valve harness connector.
3. Turn the ignition on.
4. Using a 12-volt test light connected to B+, check the Ground circuit in the Camshaft 1/1 Position Solenoid/Oil Control Valve harness

connector.

NOTE: The test light should be illuminated and bright. Compare the brightness to that of a direct connection to the battery.

Is the test light illuminated and bright?

Yes

- Go To 16

No

- Repair the excessive resistance in the Ground circuit.
- Perform the POWERTRAIN VERIFICATION TEST. Refer to **POWERTRAIN VERIFICATION TEST** .

16. **CHECK THE (K76) CMP 1/1 CONTROL CIRCUIT ACTUATION**

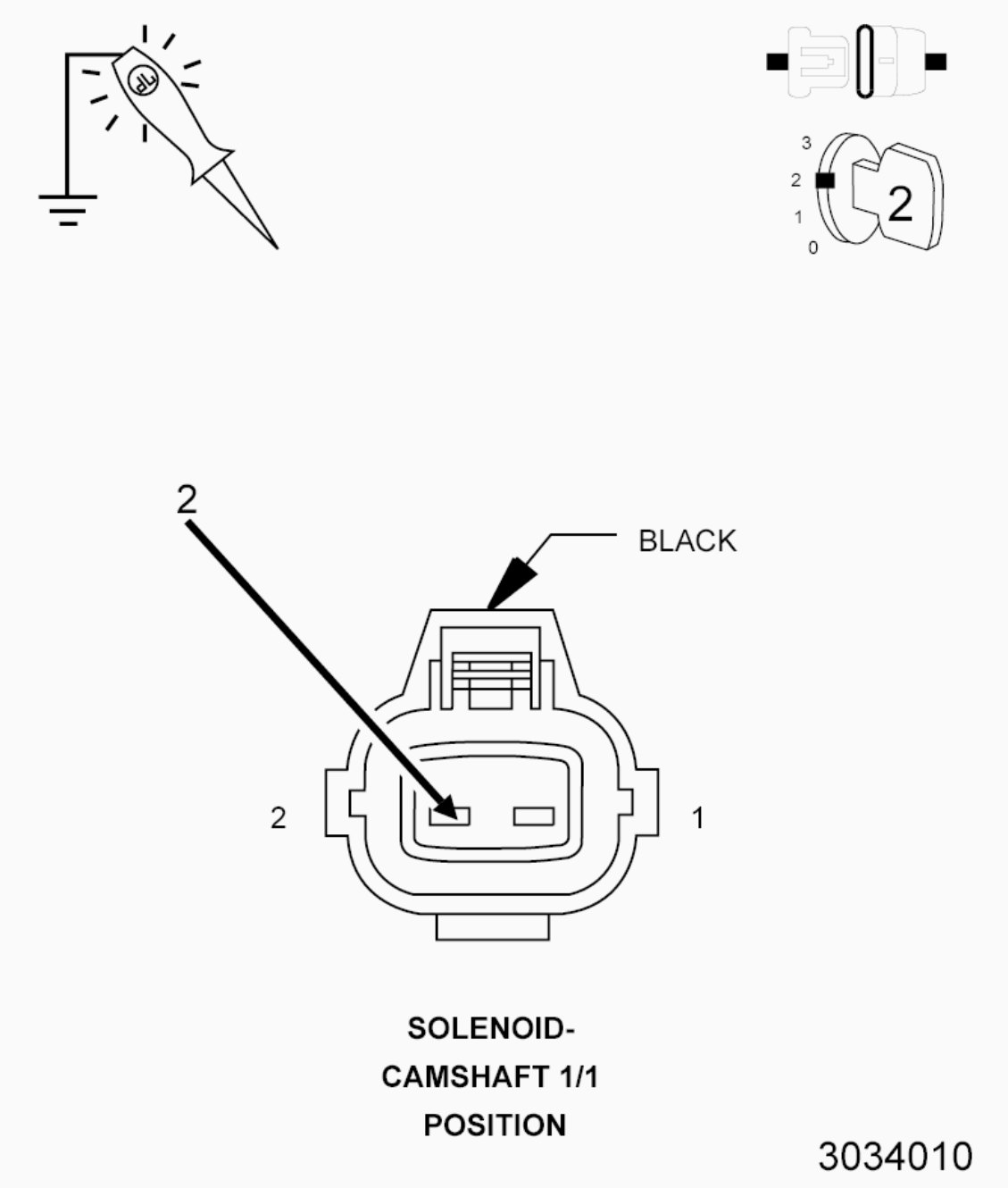

Fig. 17: Checking CMP 1/1 Solenoid Actuation
Courtesy of CHRYSLER GROUP, LLC

1. With the scan tool, actuate the Camshaft 1/1 Position Solenoid/Oil Control Valve to the ON (maximum percentage) position.
2. Using a 12-volt test light connected to ground, check the (K76) CMP 1/1 Control circuit in the Camshaft 1/1 Position Solenoid harness connector.

NOTE: The test light should be illuminated and bright.

Compare the brightness to that of a direct connection to the battery.

Is the test light illuminated and bright?

Yes

- Go To 18

No

- Go To 17

17. **CHECK THE (K76) CMP 1/1 CONTROL CIRCUIT FOR AN OPEN/HIGH RESISTANCE**
    1. Turn the ignition off.
    2. Disconnect the PCM C2 harness connector.

    CAUTION: Do not probe the PCM harness connectors. Probing the PCM harness connectors will damage the PCM terminals resulting in poor terminal to pin connection. Install the GPEC Diagnostic Adaptor to perform the diagnosis.

    3. Connect the (special tool #10436, Adapter, GPEC Diagnostic).
    4. Measure the resistance of the (K76) CMP 1/1 Control circuit between the Camshaft 1/1 Position Solenoid harness connector and the GPEC Adaptor.

    Is the resistance below 5.0 Ohms?

    Yes

    - Go To 20

    No

    - Repair the (K76) CMP 1/1 Control circuit for an open or high resistance.

- Perform the POWERTRAIN VERIFICATION TEST. Refer to **POWERTRAIN VERIFICATION TEST** .

18. **CAMSHAFT 1/1 POSITION SOLENOID/OIL CONTROL VALVE**
    1. Turn the ignition off.
    2. Inspect the wiring and connectors between the Camshaft 1/1 Position Solenoid/Oil Control Valve and the Powertrain Control Module (PCM).
    3. Look for any chafed, pierced, pinched or partially broken wires.
    4. Look for broken, bent, pushed out or corroded terminals.

    Were any problems found?

    Yes

    - Repair as necessary.
    - Perform the POWERTRAIN VERIFICATION TEST. Refer to **POWERTRAIN VERIFICATION TEST** .

    No

    - Replace the Camshaft 1/1 Position Solenoid in accordance with the service information. Refer to **2.0L CONTROL VALVE, OIL INTAKE, REMOVAL** or **2.4L CONTROL VALVE, OIL INTAKE, REMOVAL** .
    - Perform the POWERTRAIN VERIFICATION TEST. Refer to **POWERTRAIN VERIFICATION TEST** .

19. **CAMSHAFT PHASER**
    1. Turn the ignition off.
    2. Remove the appropriate Camshaft Phaser in accordance with the service information.
    3. Inspect the Phaser for contamination, foreign material or any condition that would restrict operation of the Phaser.
    4. Inspect the Phaser oil passages for signs of sludge or foreign material.

    NOTE: The Phaser should not be disassembled. If the Phaser is damaged, it must be replaced.

    Were any problems found?

Yes

- Repair as necessary.
- Perform the POWERTRAIN VERIFICATION TEST. Refer to **POWERTRAIN VERIFICATION TEST** .

No

- Perform the INTERMITTENT CONDITION diagnostic procedure. Refer to **INTERMITTENT CONDITION** .

20. **POWERTRAIN CONTROL MODULE (PCM)**
    1. Turn the ignition off.
    2. Inspect the wiring and connectors between the Camshaft 1/1 Position Solenoid/Oil Control Valve and the Powertrain Control Module (PCM).
    3. Look for any chafed, pierced, pinched or partially broken wires.
    4. Look for broken, bent, pushed out or corroded terminals.
    5. Perform any Technical Service Bulletins (TSBs) that apply.

    Were any problems found?

    Yes

    - Repair as necessary.
    - Perform the POWERTRAIN VERIFICATION TEST. Refer to **POWERTRAIN VERIFICATION TEST** .

    No

    - Replace and program the Powertrain Control Module (PCM) in accordance with the service information. Refer to **MODULE, POWERTRAIN CONTROL, REMOVAL** .
    - Perform the POWERTRAIN VERIFICATION TEST. Refer to **POWERTRAIN VERIFICATION TEST** .

P0017-CRANKSHAFT/CAMSHAFT TIMING MISALIGNMENT - BANK 1 SENSOR 2

For a complete wiring diagram, **refer to appropriate SYSTEM WIRING DIAGRAMS article** .

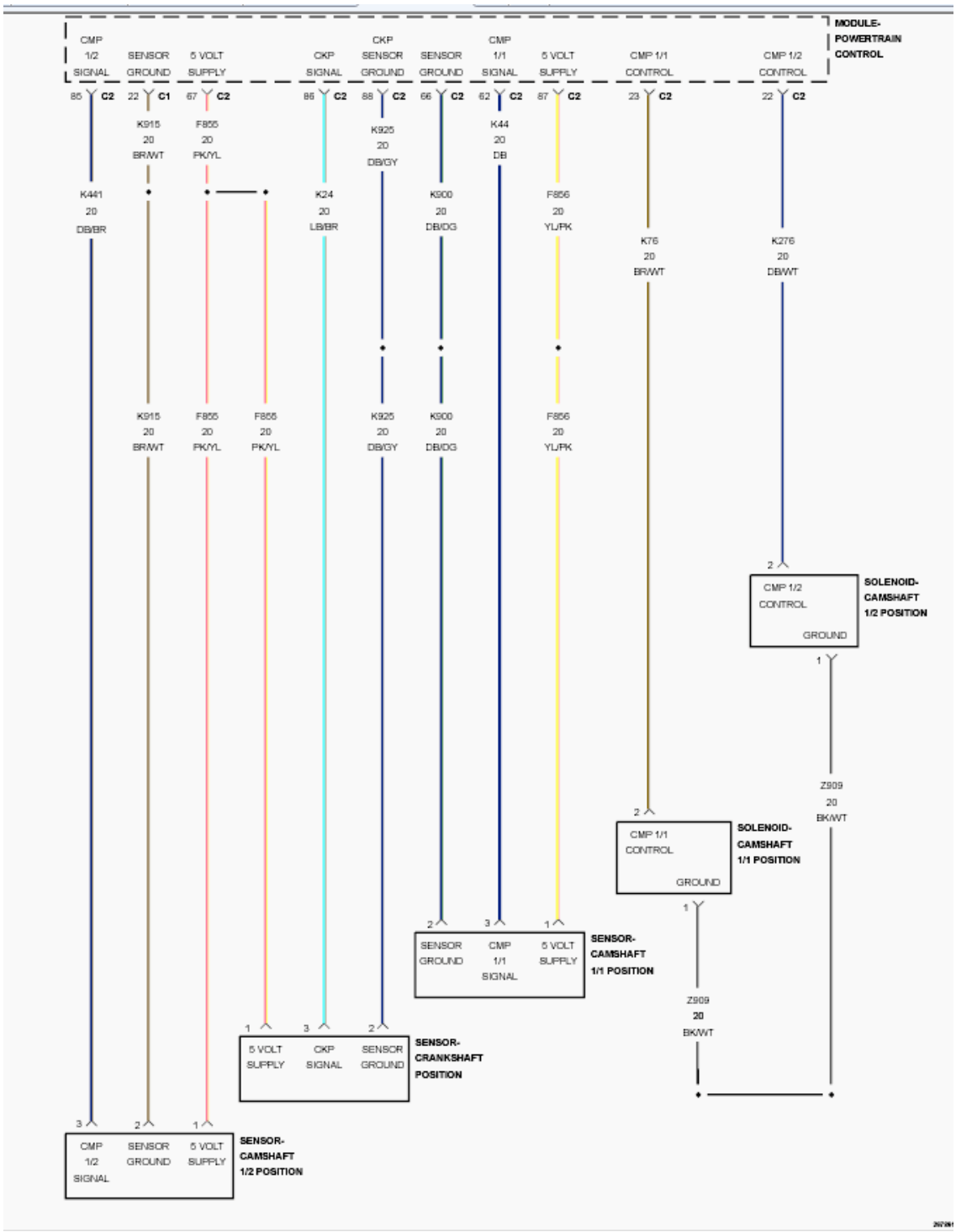

Fig. 18: Variable Valve Timing Circuit Diagram
Courtesy of CHRYSLER GROUP, LLC

WHEN MONITORED

With the engine speed present and within a calibrated amount.

SET CONDITION

The Powertrain Control Module (PCM) detects that the camshaft position is out of phase with the crankshaft position. One Trip Fault. Three good trips to turn off the MIL.

POSSIBLE CAUSES

POSSIBLE CAUSES
ENGINE OIL DIRTY OR CONTAMINATED
INCORRECT ENGINE OIL VISCOSITY
CRANKSHAFT POSITION SENSOR CIRCUIT WIRING OR CONNECTORS
CAMSHAFT 1/2 POSITION SENSOR CIRCUIT WIRING OR CONNECTORS
GROUND CIRCUIT HIGH RESISTANCE
(K276) CMP 1/2 CONTROL CIRCUIT OPEN OR HIGH RESISTANCE
CAMSHAFT 1/2 POSITION SOLENOID
CAMSHAFT PHASER
CAMSHAFT 1/2 POSITION SENSOR
CRANKSHAFT POSITION SENSOR
CRANKSHAFT, TONE WHEEL OR FLEX PLATE
CAMSHAFT, TONE WHEEL OR PULSE RING
POWERTRAIN CONTROL MODULE (PCM)

Always perform the Pre-Diagnostic Troubleshooting procedure before proceeding. Refer to PRE-DIAGNOSTIC TROUBLESHOOTING PROCEDURE .

DIAGNOSTIC TEST

1. **ACTIVE DTC**
    1. Turn the ignition on.
    2. With the scan tool select View DTCs.
    3. Record the related Freeze Frame data.
    4. Start the engine and allow it to reach operating temperature.

WARNING: When the engine is operating, do not stand in direct line with the fan. Do not put

your hands near the pulleys, belts or fan. Do not wear loose clothing. Failure to follow these instructions may result in possible serious or fatal injury.

NOTE: If the DTC does not reset it may be necessary to test drive the vehicle.

Is the status Active for this DTC?

Yes

- Go To 2

No

- Perform the INTERMITTENT CONDITION diagnostic procedure. Refer to **INTERMITTENT CONDITION** .

2. **CRANKSHAFT POSITION SENSOR CIRCUIT WIRING OR CONNECTORS**
   1. Turn the ignition off.
   2. Using the wiring diagram/schematic as a guide, inspect the wiring and connectors between the Crankshaft Position Sensor and the Powertrain Control Module (PCM).
   3. Look for any chafed, pierced, pinched or partially broken wires.
   4. Look for broken, bent, pushed out or corroded terminals.
   5. Inspect the Crankshaft Position Sensor for conditions such as loose mounting screws, damage, or cracks.

   Were any problems found?

   Yes

   - Repair as necessary.
   - Perform the POWERTRAIN VERIFICATION TEST. Refer to **POWERTRAIN VERIFICATION TEST** .

   No

- Go To 3

3. **CAMSHAFT 1/2 POSITION SENSOR CIRCUIT WIRING OR CONNECTORS**
   1. Using the wiring diagram/schematic as a guide, inspect the wiring and connectors between the Camshaft 1/2 Position Sensor and the Powertrain Control Module (PCM).
   2. Look for any chafed, pierced, pinched or partially broken wires.
   3. Look for broken, bent, pushed out or corroded terminals.
   4. Inspect the Camshaft 1/2 Position Sensor for conditions such as loose mounting screws, damage, or cracks.

   Were any problems found?

   Yes

   - Repair as necessary.
   - Perform the POWERTRAIN VERIFICATION TEST. Refer to **POWERTRAIN VERIFICATION TEST** .

   No

   - Go To 4

4. **CRANKSHAFT POSITION SENSOR IRREGULAR SIGNAL**

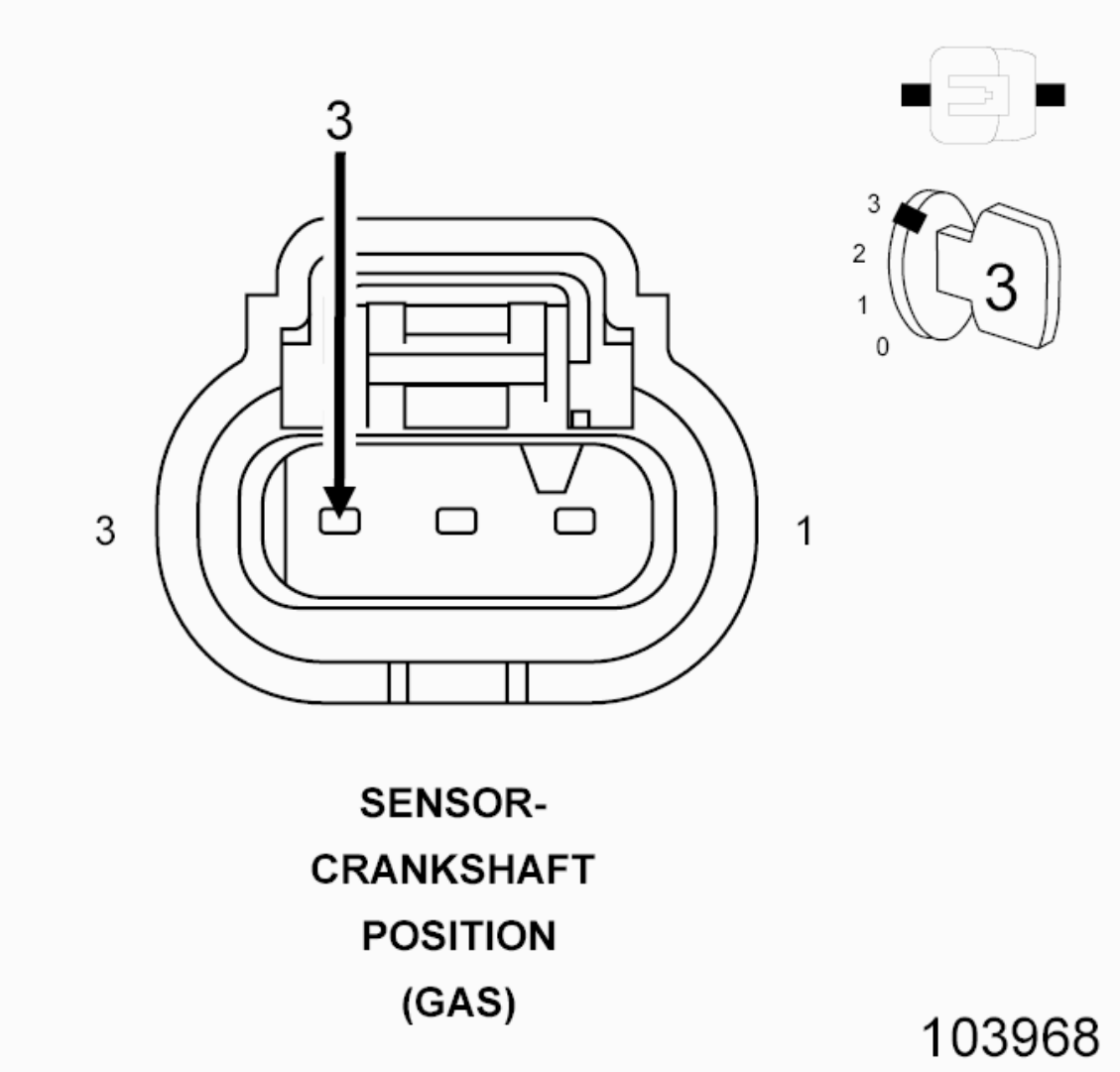

Fig. 19: Crankshaft Position Sensor Harness Connector End View
Courtesy of CHRYSLER GROUP, LLC

1. Using a lab scope and the (special tool #6801, Terminal Probe), back probe the (K24) CKP Signal circuit in the Crankshaft Position Sensor harness connector.
2. Turn the ignition on.
3. Wiggle the related wire harness and lightly tap on the Crankshaft Position Sensor while monitoring the lab scope screen.
4. Start the engine.
5. Monitor the Crankshaft Position Sensor signal on the lab scope screen.

   Were any Crankshaft Position Sensor signals irregular or missing?

   Yes

- Go To 6

No

- Go To 5

5. **CAMSHAFT 1/2 POSITION SENSOR IRREGULAR SIGNAL**

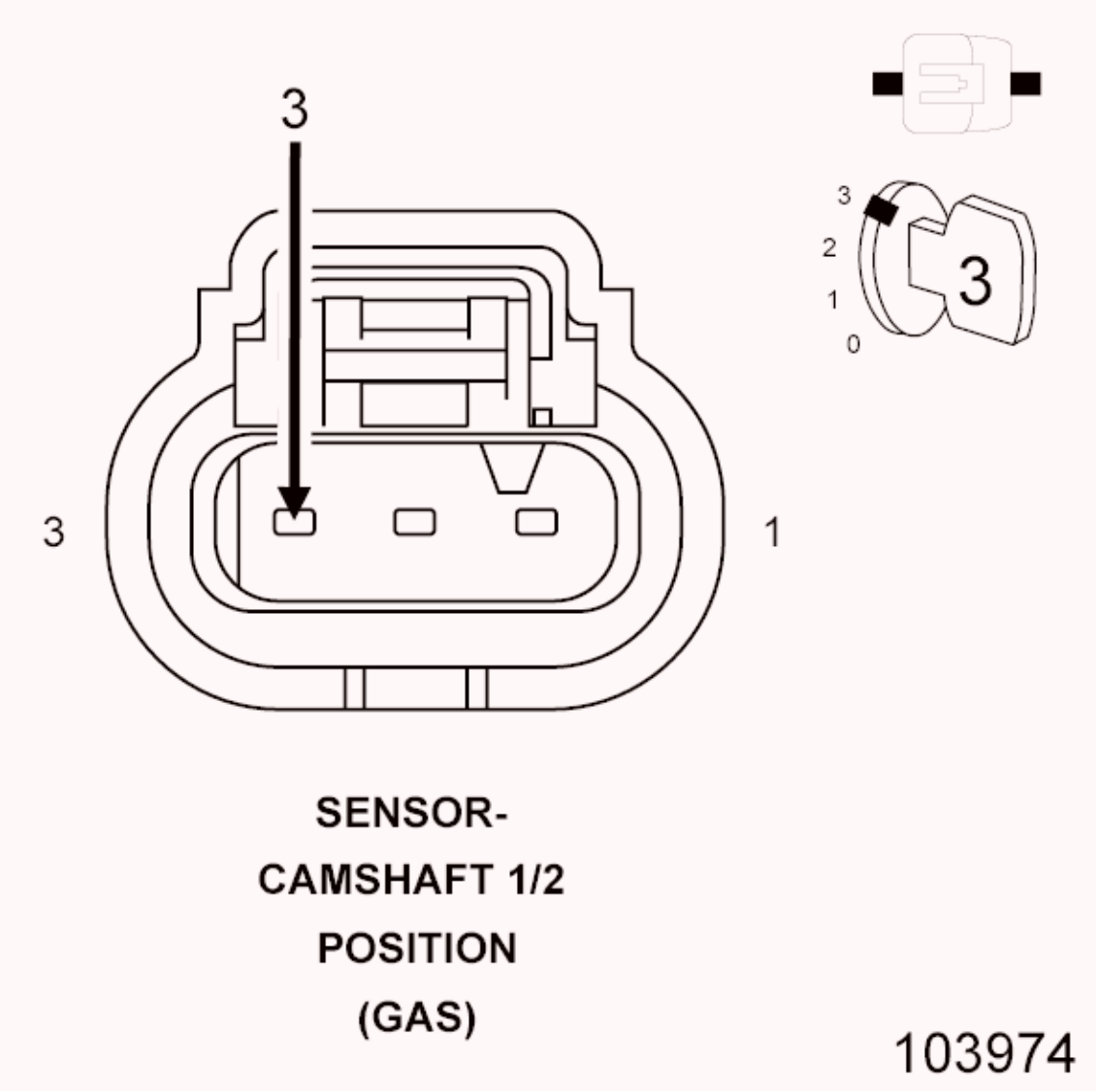

Fig. 20: Camshaft 1/2 Position Sensor Connector End View
Courtesy of CHRYSLER GROUP, LLC

1. Turn the ignition off.
2. Using a lab scope and the (special tool #6801, Terminal Probe), back probe the (K441) CMP 1/2 Signal circuit in the Camshaft 1/2 Position Sensor harness connector.

3. Turn the ignition on.
4. Wiggle the related wire harness and lightly tap on the Camshaft 1/2 Position Sensor while monitoring the lab scope screen.
5. Start the engine.
6. Monitor the Camshaft 1/2 Position Sensor signal on the lab scope screen.

   Were any Camshaft 1/2 Position Sensor signals irregular or missing?

   Yes

   - Go To 7

   No

   - Go To 10

6. **CRANKSHAFT, TONE WHEEL OR FLEX PLATE**
   1. Turn the ignition off.
   2. Remove the Crankshaft Position Sensor.
   3. Inspect the Crankshaft Position Sensor and mounting area for any condition that would result in an incorrect signal, such as damage, foreign material or excessive movement.

      Were any problems found?

      Yes

      - Repair as necessary.
      - Perform the POWERTRAIN VERIFICATION TEST. Refer to **POWERTRAIN VERIFICATION TEST** .

      No

      - Go To 8

7. **CAMSHAFT, TONE WHEEL OR PULSE RING**
   1. Turn the ignition off.
   2. Remove the Camshaft 1/2 Position Sensor.
   3. Inspect the Camshaft 1/2 Position Sensor and mounting area for any

condition that would result in an incorrect signal, such as damage, foreign material or excessive movement.

Were any problems found?

Yes

- Repair as necessary.
- Perform the POWERTRAIN VERIFICATION TEST. Refer to **POWERTRAIN VERIFICATION TEST** .

No

- Go To 9

8. **CRANKSHAFT POSITION SENSOR**
   1. Using the wiring diagram/schematic as a guide, inspect the wiring and connectors between the Crankshaft Position Sensor and the Powertrain Control Module (PCM).
   2. Look for any chafed, pierced, pinched or partially broken wires.
   3. Look for broken, bent, pushed out or corroded terminals.

   Were any problems found?

   Yes

   - Repair as necessary.
   - Perform the POWERTRAIN VERIFICATION TEST. Refer to **POWERTRAIN VERIFICATION TEST** .

   No

   - Replace the Crankshaft Position Sensor in accordance with the service information. Refer to **SENSOR, CRANKSHAFT POSITION, REMOVAL** .
   - Perform the POWERTRAIN VERIFICATION TEST. Refer to **POWERTRAIN VERIFICATION TEST** .
9. **CAMSHAFT 1/2 POSITION SENSOR**
   1. Using the wiring diagram/schematic as a guide, inspect the wiring and connectors between the Camshaft 1/2 Position Sensor and the

Powertrain Control Module (PCM).

2. Look for any chafed, pierced, pinched or partially broken wires.
3. Look for broken, bent, pushed out or corroded terminals.

Were any problems found?

Yes

- Repair as necessary.
- Perform the POWERTRAIN VERIFICATION TEST. Refer to **POWERTRAIN VERIFICATION TEST** .

No

- Replace the Camshaft 1/2 Position Sensor in accordance with the service information. Refer to **SENSOR, CAMSHAFT POSITION, REMOVAL** .
- Perform the POWERTRAIN VERIFICATION TEST. Refer to **POWERTRAIN VERIFICATION TEST** .

10. **CAMSHAFT 1/2 POSITION SOLENOID/OIL CONTROL VALVE INSPECTION**
    1. Turn the ignition off.
    2. Remove the Camshaft 1/2 Position Solenoid/Oil Control Valve in accordance with the Service Information. Do not disconnect the harness connector.
    3. Perform a visual inspection of the open part of the solenoid (spool valve) for the presence of any debris (metallic or non-metallic).

NOTE: If contamination is observed, the Camshaft 1/2 Position Solenoid/Oil Control Valve must be replaced. After replacing the valve, verify that the engine oil has been replaced with the appropriate oil in accordance with the Service Information.

Were any problems found?

Yes

- Replace the Camshaft 1/2 Position Solenoid/Oil Control Valve in accordance with the Service Information. Refer to **2.0L CONTROL VALVE, OIL INTAKE, REMOVAL** or **2.4L CONTROL VALVE, OIL INTAKE, REMOVAL** .
- Perform the POWERTRAIN VERIFICATION TEST. Refer to **POWERTRAIN VERIFICATION TEST** .

No

- Go To 11

11. **CAMSHAFT 1/2 POSITION SOLENOID/OIL CONTROL VALVE ACTUATION**
    1. Turn the ignition on.
    2. With the scan tool, actuate the Camshaft 1/2 Position Solenoid/Oil Control Valve.
    3. Perform a visual inspection of the spool valve for erratic movement or sticking during the forward and reverse stroke.

NOTE: If sticking or erratic movement is observed, the Camshaft 1/2 Position Solenoid/Oil Control Valve must be replaced. After replacing the valve, verify that the engine oil has been replaced with the appropriate oil in accordance with the Service Information.

Select the appropriate response from the choices below:

Normal operation. No sticking or erratic movement is observed

- Go To 12

No movement is observed

- Go To 14

Sticking or erratic movement is observed

- Replace the Camshaft 1/2 Position Solenoid/Oil Control Valve in accordance with the service information. Refer to **2.0L**

CONTROL VALVE, OIL INTAKE, REMOVAL or **2.4L CONTROL VALVE, OIL INTAKE, REMOVAL** .

- Perform the POWERTRAIN VERIFICATION TEST. Refer to **POWERTRAIN VERIFICATION TEST** .

12. **INCORRECT ENGINE OIL VISCOSITY**
    1. Review the vehicle service history to determine if the correct viscosity engine oil was used.

       Were any problems found?

       Yes

       - Change the engine oil and retest.
       - Perform the POWERTRAIN VERIFICATION TEST. Refer to **POWERTRAIN VERIFICATION TEST** .

       No

       - Go To 13

13. **ENGINE OIL DIRTY OR CONTAMINATED**
    1. Turn the ignition off.
    2. Inspect engine oil for signs of contamination, sludge or foreign material.

       Were any problems found?

       Yes

       - Clean the engine oil system, including oil passages, in accordance with the service information and retest.
       - Perform the POWERTRAIN VERIFICATION TEST. Refer to **POWERTRAIN VERIFICATION TEST** .

       No

       - Go To 19

14. **CAMSHAFT 1/2 POSITION SOLENOID/OIL CONTROL VALVE WIRING AND CONNECTORS**

1. Turn the ignition off.
2. Inspect the wiring and connectors between the Camshaft 1/2 Position Solenoid/Oil Control Valve and the Powertrain Control Module (PCM).
3. Look for any chafed, pierced, pinched or partially broken wires.
4. Look for broken, bent, pushed out or corroded terminals.

Were any problems found?

Yes

- Repair as necessary.
- Perform the POWERTRAIN VERIFICATION TEST. Refer to **POWERTRAIN VERIFICATION TEST** .

No

- Go To 15

15. **CHECK THE GROUND CIRCUIT FOR HIGH RESISTANCE**

NOTE: The test light should be illuminated and bright. Compare the brightness to that of a direct connection to the battery.

1. Turn the ignition off.
2. Disconnect the Camshaft 1/2 Position Solenoid/Oil Control Valve harness connector.
3. Turn the ignition on.
4. Using a 12-volt test light connected to B+, check the Ground circuit in the Camshaft 1/2 Position Solenoid/Oil Control Valve harness connector.

NOTE: The test light should be illuminated and bright. Compare the brightness to that of a direct connection to the battery.

Is the test light illuminated and bright?

Yes

- Go To 16

No

- Repair the Ground circuit for high resistance.
- Perform the POWERTRAIN VERIFICATION TEST. Refer to **POWERTRAIN VERIFICATION TEST** .

16. **CHECK THE (K276) CMP 1/2 CONTROL CIRCUIT ACTUATION**

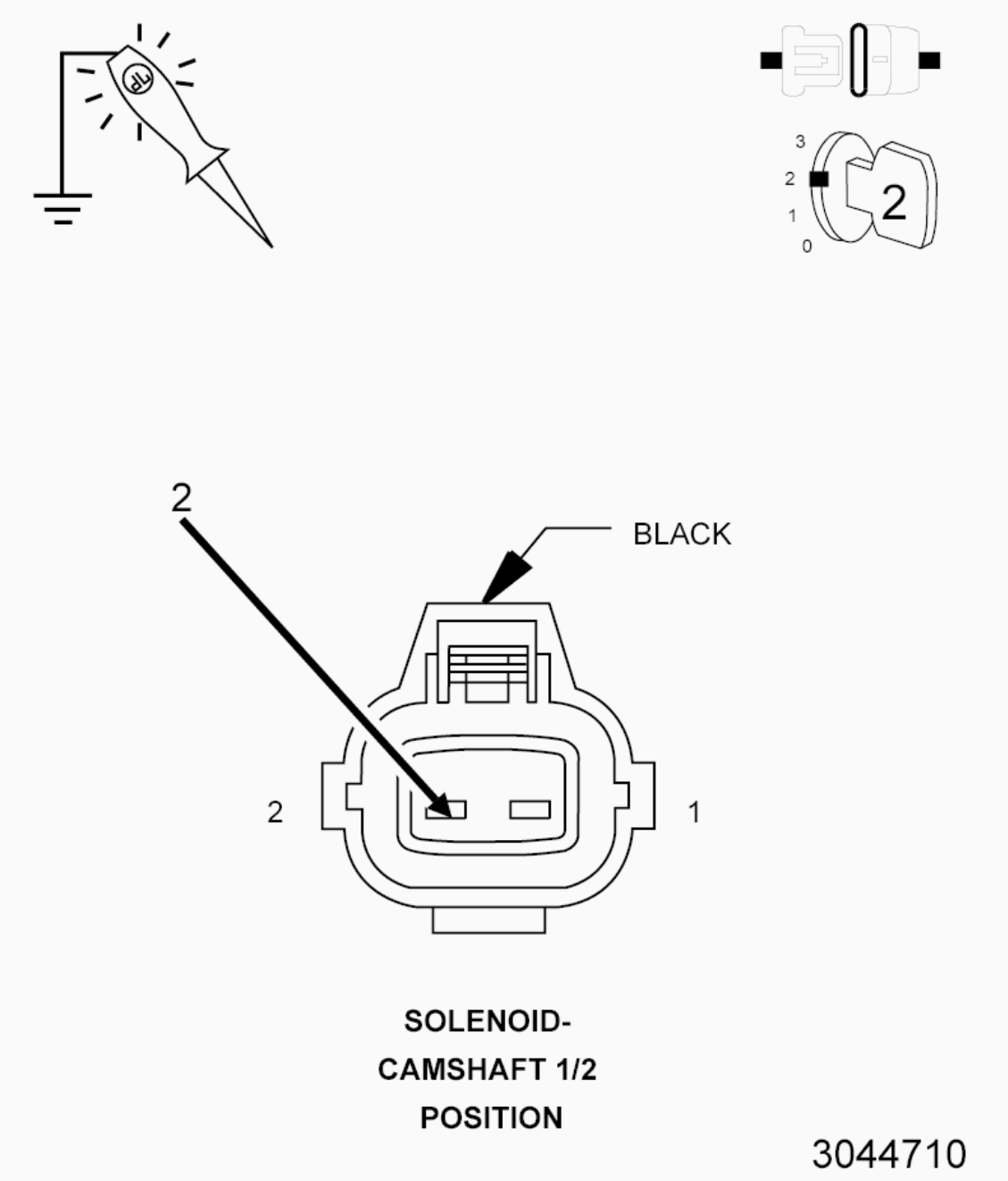

Fig. 21: Checking CMP 1/2 Control Circuit Actuation

Courtesy of CHRYSLER GROUP, LLC

1. With the scan tool, actuate the Camshaft 1/2 Position Solenoid/Oil Control Valve to the ON (maximum percentage) position.
2. Using a 12-volt test light connected to ground, check the (K276) CMP 1/2 Control circuit in the Camshaft 1/2 Position Solenoid harness connector.

NOTE: The test light should be illuminated and bright. Compare the brightness to that of a direct connection to the battery.

Is the test light illuminated and bright?

Yes

- Go To 18

No

- Go To 17

17. **CHECK THE (K276) CMP 1/2 CONTROL CIRCUIT FOR AN OPEN/HIGH RESISTANCE**
    1. Turn the ignition off.
    2. Disconnect the PCM C2 harness connector.

CAUTION: Do not probe the PCM harness connectors. Probing the PCM harness connectors will damage the PCM terminals resulting in poor terminal to pin connection. Install the GPEC Diagnostic Adaptor to perform the diagnosis.

    3. Connect the (special tool #10436, Adapter, GPEC Diagnostic).
    4. Measure the resistance of the (K276) CMP 1/2 Control circuit between the Camshaft 1/2 Position Solenoid harness connector and the GPEC Adaptor.

    Is the resistance below 5.0 Ohms?

Yes

- Go To 20

No

- Repair the (K276) CMP 1/2 Control circuit for an open or high resistance.
- Perform the POWERTRAIN VERIFICATION TEST. Refer to **POWERTRAIN VERIFICATION TEST** .

18. **CAMSHAFT 1/2 POSITION SOLENOID/OIL CONTROL VALVE**
    1. Turn the ignition off.
    2. Inspect the wiring and connectors between the Camshaft 1/2 Position Solenoid/Oil Control Valve and the Powertrain Control Module (PCM).
    3. Look for any chafed, pierced, pinched or partially broken wires.
    4. Look for broken, bent, pushed out or corroded terminals.

    Were any problems found?

    Yes

    - Repair as necessary.
    - Perform the POWERTRAIN VERIFICATION TEST. Refer to **POWERTRAIN VERIFICATION TEST** .

    No

    - Replace the Camshaft 1/2 Position Solenoid/Oil Control Valve in accordance with the service information. Refer to **2.0L CONTROL VALVE, OIL INTAKE, REMOVAL** or **2.4L CONTROL VALVE, OIL INTAKE, REMOVAL** .
    - Perform the POWERTRAIN VERIFICATION TEST. Refer to **POWERTRAIN VERIFICATION TEST** .
19. **CAMSHAFT PHASER**
    1. Turn the ignition off.
    2. Remove the appropriate Camshaft Phaser in accordance with the Service information.
    3. Inspect the Phaser for contamination, foreign material or any condition

that would restrict operation of the Phaser.

4. Inspect the Phaser oil passages for signs of sludge or foreign material.

NOTE: The Phaser should not be disassembled. If the Phaser is damaged, it must be replaced.

Were any problems found?

Yes

- Repair as necessary.
- Perform the POWERTRAIN VERIFICATION TEST. Refer to **POWERTRAIN VERIFICATION TEST** .

No

- Perform the INTERMITTENT CONDITION diagnostic procedure. Refer to **INTERMITTENT CONDITION** .

20. **POWERTRAIN CONTROL MODULE (PCM)**
    1. Turn the ignition off.
    2. Inspect the wiring and connectors between the Camshaft 1/2 Position Solenoid/Oil Control Valve and the Powertrain Control Module (PCM).
    3. Look for any chafed, pierced, pinched or partially broken wires.
    4. Look for broken, bent, pushed out or corroded terminals.
    5. Perform any Technical Service Bulletins (TSBs) that apply.

    Were any problems found?

    Yes

    - Repair as necessary.
    - Perform the POWERTRAIN VERIFICATION TEST. Refer to **POWERTRAIN VERIFICATION TEST** .

    No

    - Replace and program the Powertrain Control Module (PCM) in accordance with the service information. Refer to **MODULE,**

POWERTRAIN CONTROL, REMOVAL .

- Perform the POWERTRAIN VERIFICATION TEST. Refer to **POWERTRAIN VERIFICATION TEST** .

P0031-O2 SENSOR 1/1 HEATER CIRCUIT LOW

For a complete wiring diagram, **refer to appropriate SYSTEM WIRING DIAGRAMS article** .

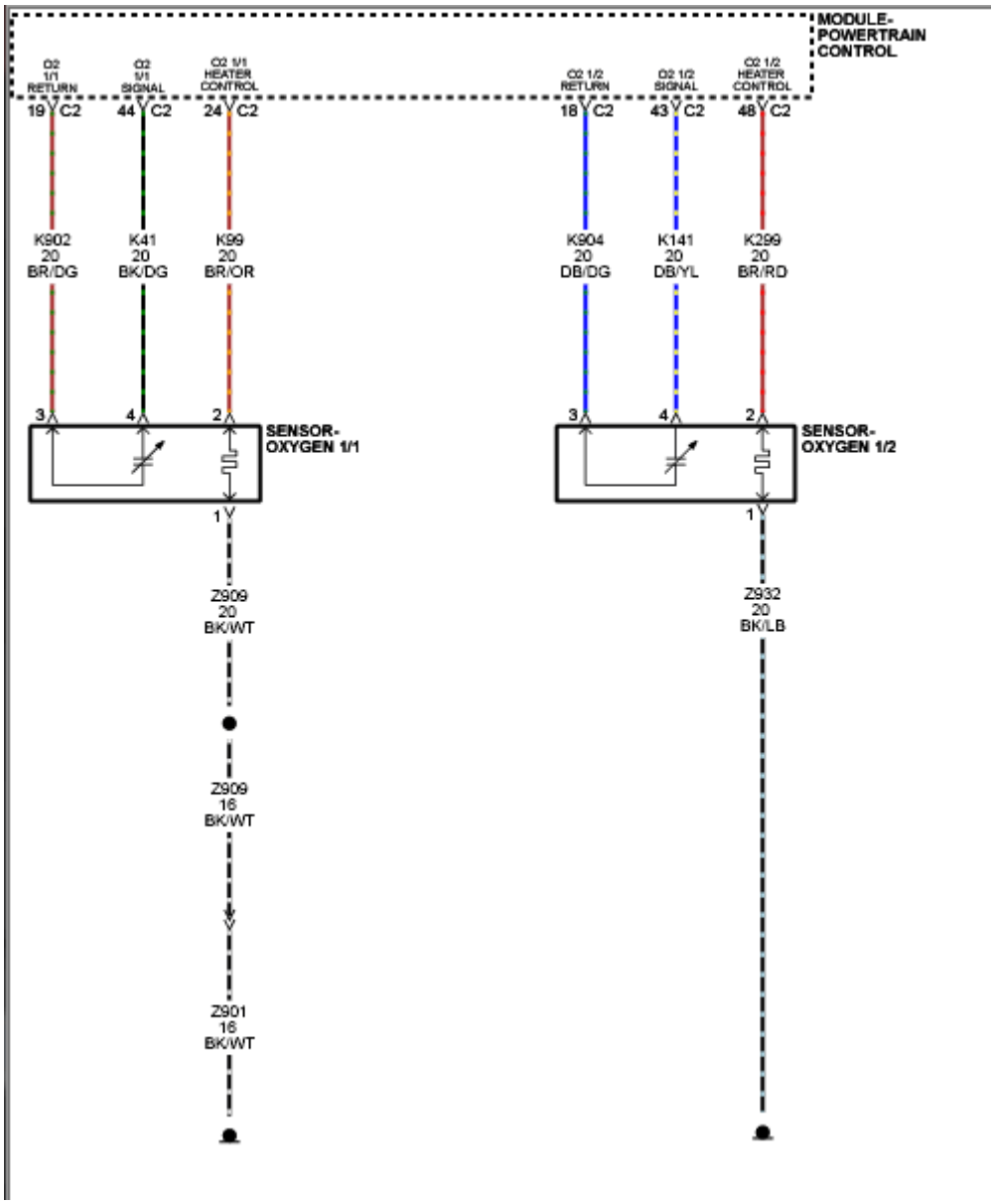

Fig. 22: Oxygen Sensor Circuit Diagram
Courtesy of CHRYSLER GROUP, LLC

THEORY OF OPERATION

For the 02 Sensor to deliver accurate readings the sensing element must be heated. A Positive Temperature Coefficient (PTC) element inside the O2 Sensor heats up as current passes through it. This allows the system to enter Closed Loop quickly. The Powertrain Control Module (PCM) turns on this circuit based on Engine Coolant Temperature (ECT) and engine loads. During operation the heater circuit is momentarily disabled to allow a resistance measurement to be taken to infer heater temperature. The current delivery to the heater is duty cycled to maintain a specific target temperature. The error from the target temperature is continuously monitored to assess heater performance. If a malfunction occurs the circuit is turned off and a DTC will set.

WHEN MONITORED

With the engine running and battery voltage greater than 10.4 Volts.

SET CONDITION

The Powertrain Control Module (PCM) detects that the Oxygen Sensor 1/1 Heater Control circuit is shorted low.

POSSIBLE CAUSES

Possible Causes
(K99) O2 1/1 HEATER CONTROL CIRCUIT SHORTED TO GROUND
(K99) O2 1/1 HEATER CONTROL CIRCUIT OPEN OR HIGH RESISTANCE
(Z909) GROUND CIRCUIT OPEN OR HIGH RESISTANCE
OXYGEN SENSOR 1/1
POWERTRAIN CONTROL MODULE (PCM)

Always perform the Pre-Diagnostic Troubleshooting procedure before proceeding. Refer to PRE-DIAGNOSTIC TROUBLESHOOTING PROCEDURE .

DIAGNOSTIC TEST

1. **ACTIVE DTC**
    1. Start the engine and allow it to reach normal operating temperature.

WARNING: When the engine is operating, do not

stand in direct line with the fan. Do not put your hands near the pulleys, belts or fan. Do not wear loose clothing. Failure to follow these instructions may result in possible serious or fatal injury.

2. With the scan tool, select View DTCs.

   Is the status Active for this DTC?

   Yes

   - Go To 2

   No

   - Perform the INTERMITTENT CONDITION diagnostic procedure. Refer to **INTERMITTENT CONDITION** .

2. **CHECK THE GROUND CIRCUIT FOR AN OPEN/HIGH RESISTANCE**

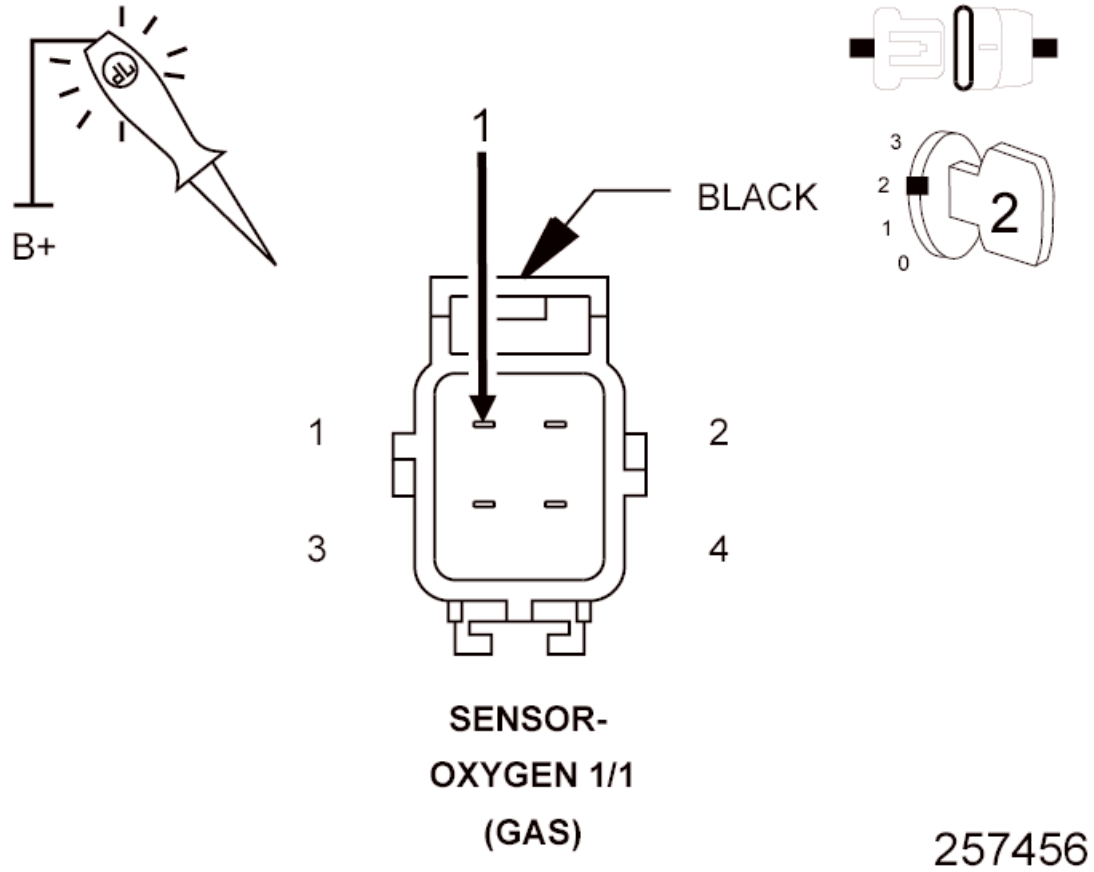

Fig. 23: Checking Ground Circuit For Open Or High Resistance
Courtesy of CHRYSLER GROUP, LLC

1. Turn the ignition off.
2. Disconnect the Oxygen Sensor 1/1 harness connector.
3. Turn the ignition on.
4. Using a 12-volt test light connected to 12 volts, check the Ground circuit in the Oxygen Sensor 1/1 harness connector.

NOTE: The test light should be illuminated and bright. Compare the brightness to that of a direct connection to the battery.

Is the test light illuminated and bright?

Yes

- Go To 3

No

- Repair the Ground circuit for an open or high resistance.
- Perform the POWERTRAIN VERIFICATION TEST. Refer to **POWERTRAIN VERIFICATION TEST** .

3. **CHECK THE (K99) O2 1/1 HEATER CONTROL CIRCUIT FOR A SHORT TO GROUND**

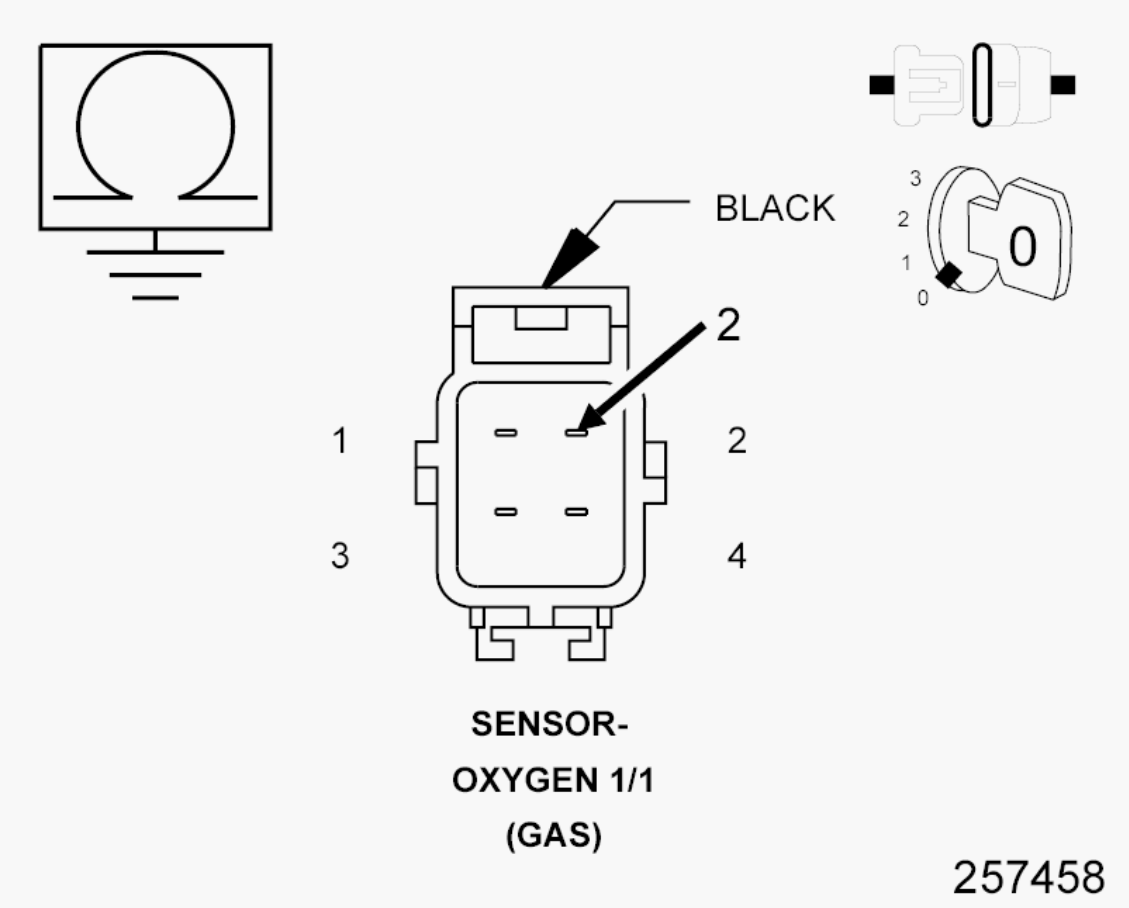

Fig. 24: Checking O2 Sensor 1/1 Heater Control Circuit For Short To Ground
Courtesy of CHRYSLER GROUP, LLC

1. Turn the ignition off.
2. Disconnect the Powertrain Control Module (PCM) c2 harness connector.
3. Measure the resistance between ground and the (K99) O2 1/1 Heater Control circuit in the Oxygen Sensor 1/1 harness connector.

   Is the resistance above 10k Ohms?

Yes

- Go To 4

No

- Repair the (K99) O2 1/1 Heater Control circuit for a short to ground.
- Perform the POWERTRAIN VERIFICATION TEST. Refer to **POWERTRAIN VERIFICATION TEST** .

4. **CHECK THE (K99) O2 1/1 HEATER CONTROL CIRCUIT FOR AN OPEN/HIGH RESISTANCE**

CAUTION: Do not probe the PCM harness connectors. Probing the PCM harness connectors will damage the PCM terminals resulting in poor terminal to pin connection. Install the GPEC Diagnostic Adaptor to perform the diagnosis.

1. Connect the (special tool #10436, Adapter, GPEC Diagnostic).
2. Measure the resistance of the (K99) O2 1/1 Heater Control circuit between the Oxygen Sensor 1/1 harness connector and the GPEC Adaptor.

   Is the resistance below 5.0 Ohms?

   Yes

   - Go To 5

   No

   - Repair the (K99) O2 1/1 Heater Control circuit for an open or high resistance.
   - Perform the POWERTRAIN VERIFICATION TEST. Refer to **POWERTRAIN VERIFICATION TEST** .

5. **OXYGEN SENSOR 1/1**

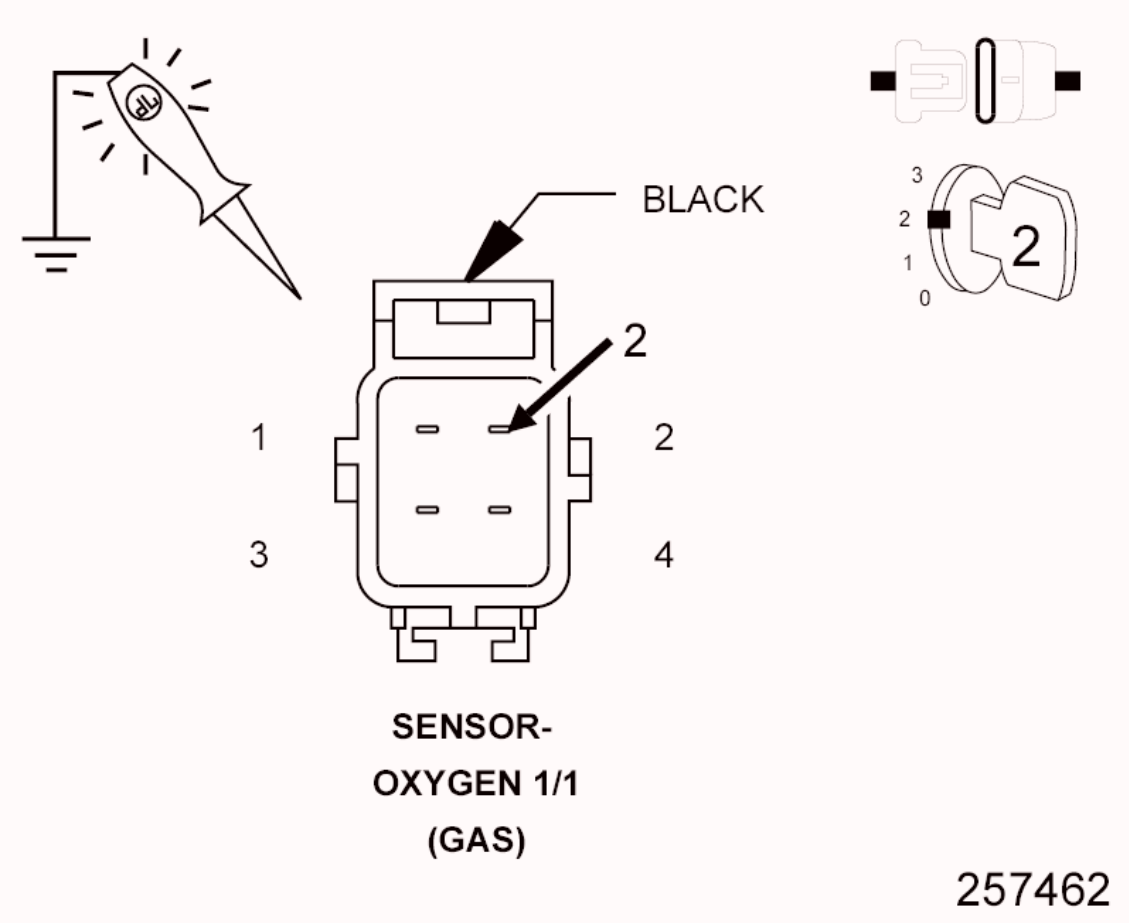

Fig. 25: Checking O2 Heater Control Circuit
Courtesy of CHRYSLER GROUP, LLC

1. Reconnect the PCM C2 harness connector.
2. Turn the ignition on.
3. With the scan tool, actuate the Oxygen Sensor 1/1 control to the maximum allowable percentage.
4. Using a 12-volt test light connected to ground, check the (K99) O2 1/1 Heater Control circuit in the Oxygen Sensor 1/1 harness connector.

NOTE: The test light should flash dimly.

5. With the scan tool, actuate the Oxygen Sensor 1/1 control to OFF (0%).
6. Using a 12-volt test light connected to ground, check the (K99) O2 1/1 Heater Control circuit in the Oxygen Sensor 1/1 harness connector.

NOTE: The test light should not be illuminated with the control actuated OFF (0%).

Does the test light flash dimly with the actuator ON (25%) and not illuminated with the actuator OFF (0%)?

Yes

- Replace the Oxygen Sensor 1/1 in accordance with the service information. Refer to **SENSOR, OXYGEN, REMOVAL** .
- Perform the POWERTRAIN VERIFICATION TEST. Refer to **POWERTRAIN VERIFICATION TEST** .

No

- Go To 6

6. **POWERTRAIN CONTROL MODULE (PCM)**
   1. Using the wiring diagram/schematic as a guide, inspect the wiring and connectors between the Oxygen Sensor 1/1 and the Powertrain Control Module (PCM).
   2. Look for any chafed, pierced, pinched or partially broken wires.
   3. Look for broken, bent, pushed out or corroded terminals.
   4. Perform any Technical Service Bulletins (TSBs) that may apply.

   Were any problems found?

   Yes

   - Repair as necessary.
   - Perform the POWERTRAIN VERIFICATION TEST. Refer to **POWERTRAIN VERIFICATION TEST** .

   No

   - Replace and program the Powertrain Control Module (PCM) in accordance with the service information. Refer to **MODULE, POWERTRAIN CONTROL, REMOVAL** .
   - Perform the POWERTRAIN VERIFICATION TEST. Refer to **POWERTRAIN VERIFICATION TEST** .

P0032-O2-SENSOR 1/1 HEATER CIRCUIT HIGH

For a complete wiring diagram, **refer to appropriate SYSTEM WIRING DIAGRAMS article** .

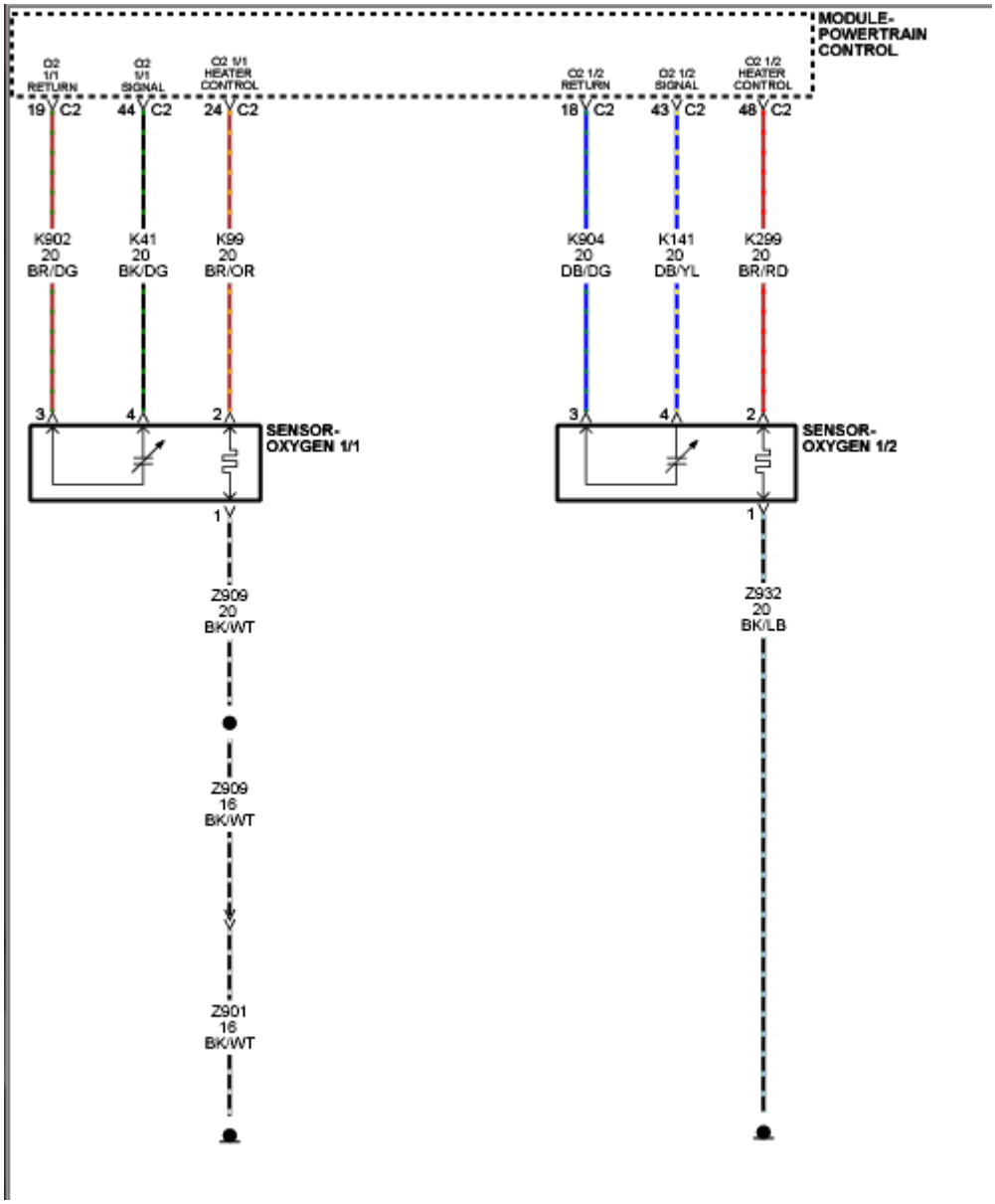

Fig. 26: Oxygen Sensor Circuit Diagram
Courtesy of CHRYSLER GROUP, LLC

THEORY OF OPERATION

For the 02 Sensor to deliver accurate readings the sensing element must be heated. A Positive Temperature Coefficient (PTC) element inside the O2 Sensor heats up as current passes through it. This allows the system to enter Closed Loop quickly. The Powertrain Control Module (PCM) turns on this circuit based on Engine Coolant Temperature (ECT) and engine loads. During operation the heater circuit is momentarily disabled to allow a resistance measurement to be

taken to infer heater temperature. The current delivery to the heater is duty cycled to maintain a specific target temperature. The error from the target temperature is continuously monitored to assess heater performance. If a malfunction occurs the circuit is turned off and a DTC will set.

WHEN MONITORED

With the engine running and battery voltage greater than 10.4 volts.

SET CONDITION

The Powertrain Control Module (PCM) detects that the Oxygen Sensor 1/1 heater control circuit is shorted high.

POSSIBLE CAUSES

Possible Causes
(K99) O2 1/1 HEATER CONTROL CIRCUIT SHORTED TO VOLTAGE
(K99) O2 1/1 HEATER CONTROL CIRCUIT OPEN OR HIGH RESISTANCE
O2 SENSOR GROUND CIRCUIT OPEN
OXYGEN SENSOR 1/1
POWERTRAIN CONTROL MODULE (PCM)

Always perform the Pre-Diagnostic Troubleshooting procedure before proceeding. Refer to PRE-DIAGNOSTIC TROUBLESHOOTING PROCEDURE .

DIAGNOSTIC TEST

1. **ACTIVE DTC**
    1. Start the engine and allow it to reach normal operating temperature.

        WARNING: **When the engine is operating, do not stand in direct line with the fan. Do not put your hands near the pulleys, belts or fan. Do not wear loose clothing. Failure to follow these instructions may result in possible serious or fatal injury.**

    2. With the scan tool, select View DTCs.

Is the status Active for this DTC?

Yes

- Go To 2

No

- Perform the INTERMITTENT CONDITION diagnostic procedure. Refer to **INTERMITTENT CONDITION** .

2. **CHECK THE (K99) O2 1/1 HEATER CONTROL CIRCUIT FOR A SHORT TO VOLTAGE**

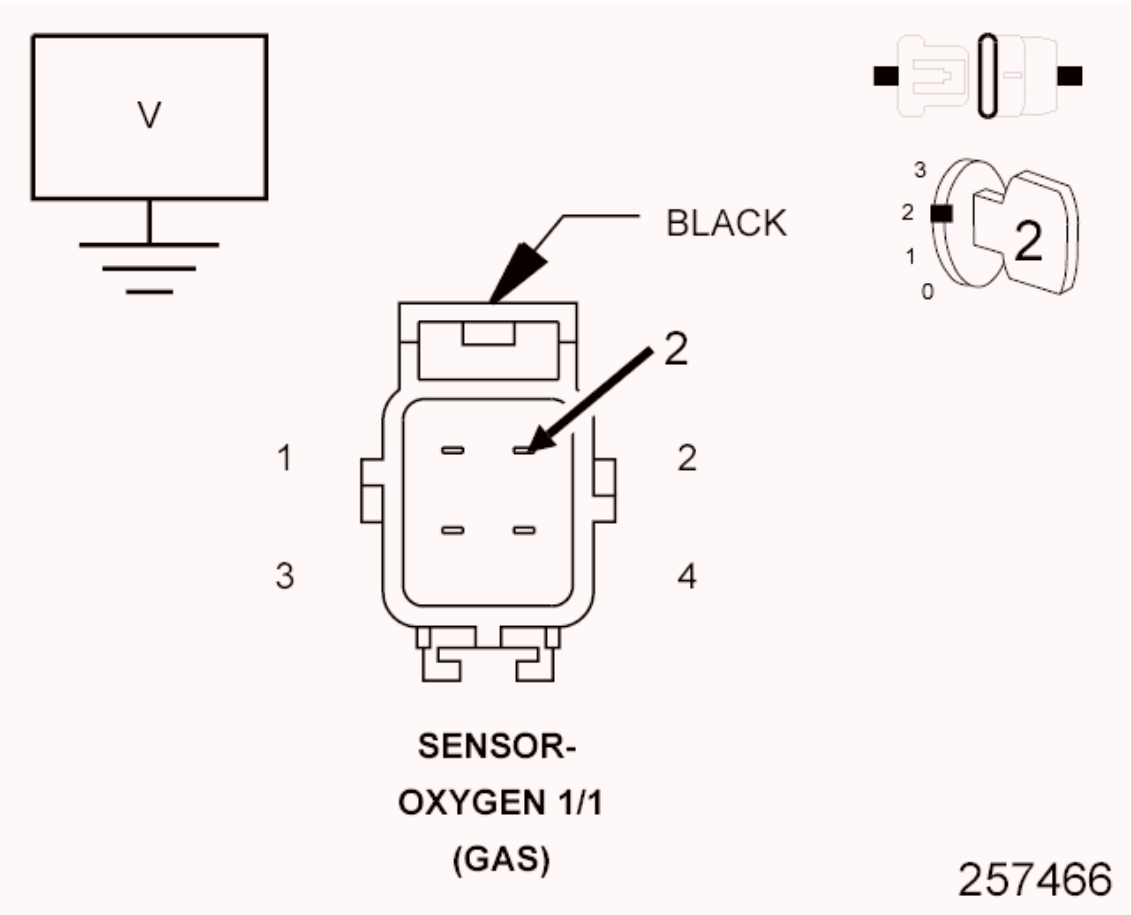

Fig. 27: Checking O2 Sensor 1/1 Heater Control Circuit For Short To Voltage
Courtesy of CHRYSLER GROUP, LLC

1. Turn the ignition off.
2. Disconnect the Oxygen Sensor 1/1 harness connector.
3. Disconnect the PCM C2 harness connector.

4. Turn the ignition on.
5. Measure the voltage of the (K99) O2 1/1 Heater Control circuit in the Oxygen Sensor 1/1 harness connector.

   Is there any voltage present?

   Yes

   - Repair the (K99) O2 1/1 Heater Control circuit for a short to voltage.
   - Perform the POWERTRAIN VERIFICATION TEST. Refer to **POWERTRAIN VERIFICATION TEST** .

   No

   - Go To 3

3. **CHECK THE (K99) O2 1/1 HEATER CONTROL CIRCUIT FOR AN OPEN/HIGH RESISTANCE**

   CAUTION: Do not probe the PCM harness connectors. Probing the PCM harness connectors will damage the PCM terminals resulting in poor terminal to pin connection. Install the GPEC Diagnostic Adaptor to perform the diagnosis.

   1. Connect the (special tool #10436, Adapter, GPEC Diagnostic).
   2. Measure the resistance of the (K99) O2 1/1 Heater Control circuit between the Oxygen Sensor 1/1 harness connector and the GPEC Adaptor.

      Is the resistance below 5.0 Ohms?

      Yes

      - Go To 4

      No

      - Repair the (K99) O2 1/1 Heater Control circuit for an open or high

resistance.

- Perform the POWERTRAIN VERIFICATION TEST. Refer to **POWERTRAIN VERIFICATION TEST** .

4. **CHECK THE O2 SENSOR GROUND CIRCUIT FOR AN OPEN**

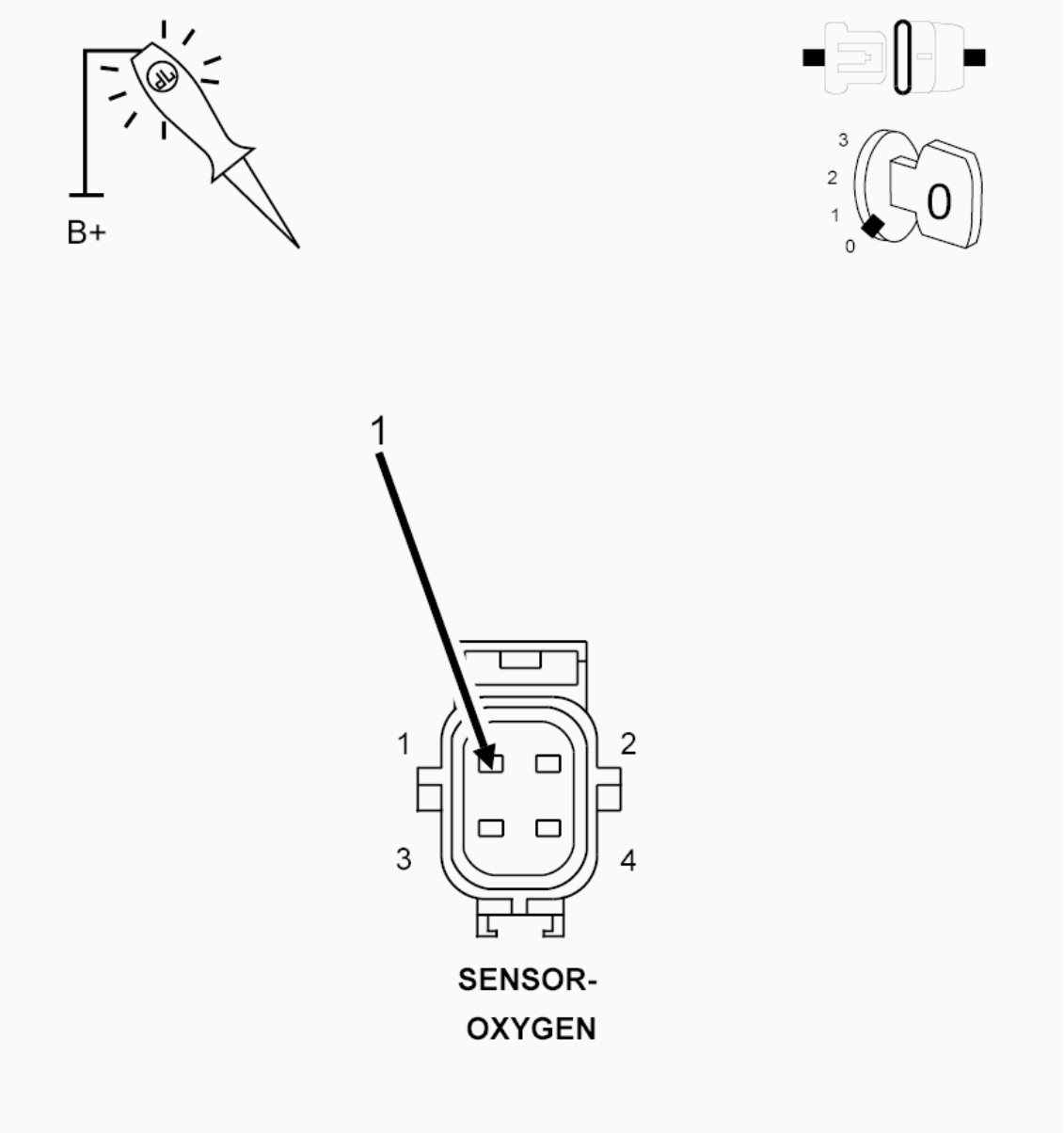

Fig. 28: Checking O2 Sensor Ground Circuit For Open
Courtesy of CHRYSLER GROUP, LLC

1. Using a 12-volt test light connected to Fused B+, probe the O2 Sensor Ground circuit in the O2 Sensor harness connector.

   Does the test light illuminate brightly?

Yes

- Go To 5

No

- Repair the excessive resistance in the O2 Sensor Ground circuit.
- Perform the POWERTRAIN VERIFICATION TEST. Refer to **POWERTRAIN VERIFICATION TEST** .

5. **OXYGEN SENSOR 1/1**

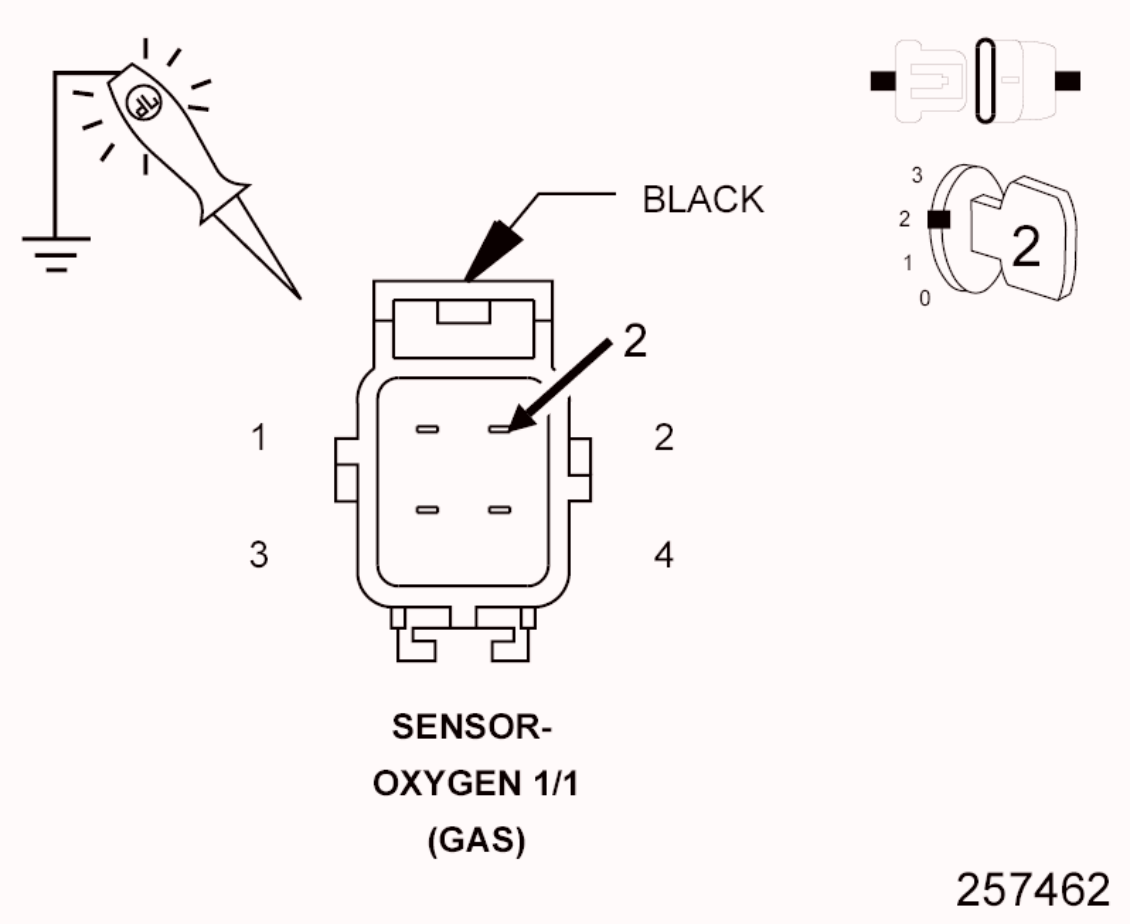

Fig. 29: Checking O2 Heater Control Circuit
Courtesy of CHRYSLER GROUP, LLC

1. Reconnect the PCM C2 harness connector.
2. Turn the ignition on.
3. With the scan tool, actuate the Oxygen Sensor 1/1 control to the maximum allowable percentage.
4. Using a 12-volt test light connected to ground, check the (K99) O2 1/1

Heater Control circuit in the Oxygen Sensor 1/1 harness connector.

NOTE: The test light should flash dimly.

5. With the scan tool, actuate the Oxygen Sensor 1/1 control to the OFF (0%) position.
6. Using a 12-volt test light connected to ground, check the (K99) O2 1/1 Heater Control circuit in the Oxygen Sensor 1/1 harness connector.

NOTE: The test light should not be illuminated.

Does the test light flash dimly with the actuator ON (25%) and not illuminated with the actuator OFF (0%)?

Yes

- Replace the Oxygen Sensor 1/1 in accordance with the service information. Refer to **SENSOR, OXYGEN, REMOVAL** .
- Perform the POWERTRAIN VERIFICATION TEST. Refer to **POWERTRAIN VERIFICATION TEST** .

No

- Go To 6

6. **POWERTRAIN CONTROL MODULE (PCM)**
   1. Using the wiring diagram/schematic as a guide, inspect the wiring and connectors between the Oxygen Sensor 1/1 and the Powertrain Control Module (PCM).
   2. Look for any chafed, pierced, pinched or partially broken wires.
   3. Look for broken, bent, pushed out or corroded terminals.
   4. Perform any Technical Service Bulletins (TSBs) that may apply.

   Were any problems found?

   Yes

   - Repair as necessary.
   - Perform the POWERTRAIN VERIFICATION TEST. Refer to

POWERTRAIN VERIFICATION TEST .

No

- Replace and program the Powertrain Control Module (PCM) in accordance with the service information. Refer to **MODULE, POWERTRAIN CONTROL, REMOVAL** .
- Perform the POWERTRAIN VERIFICATION TEST. Refer to **POWERTRAIN VERIFICATION TEST** .

P0037-O2-SENSOR 1/2 HEATER CIRCUIT LOW

For a complete wiring diagram, **refer to appropriate SYSTEM WIRING DIAGRAMS article** .

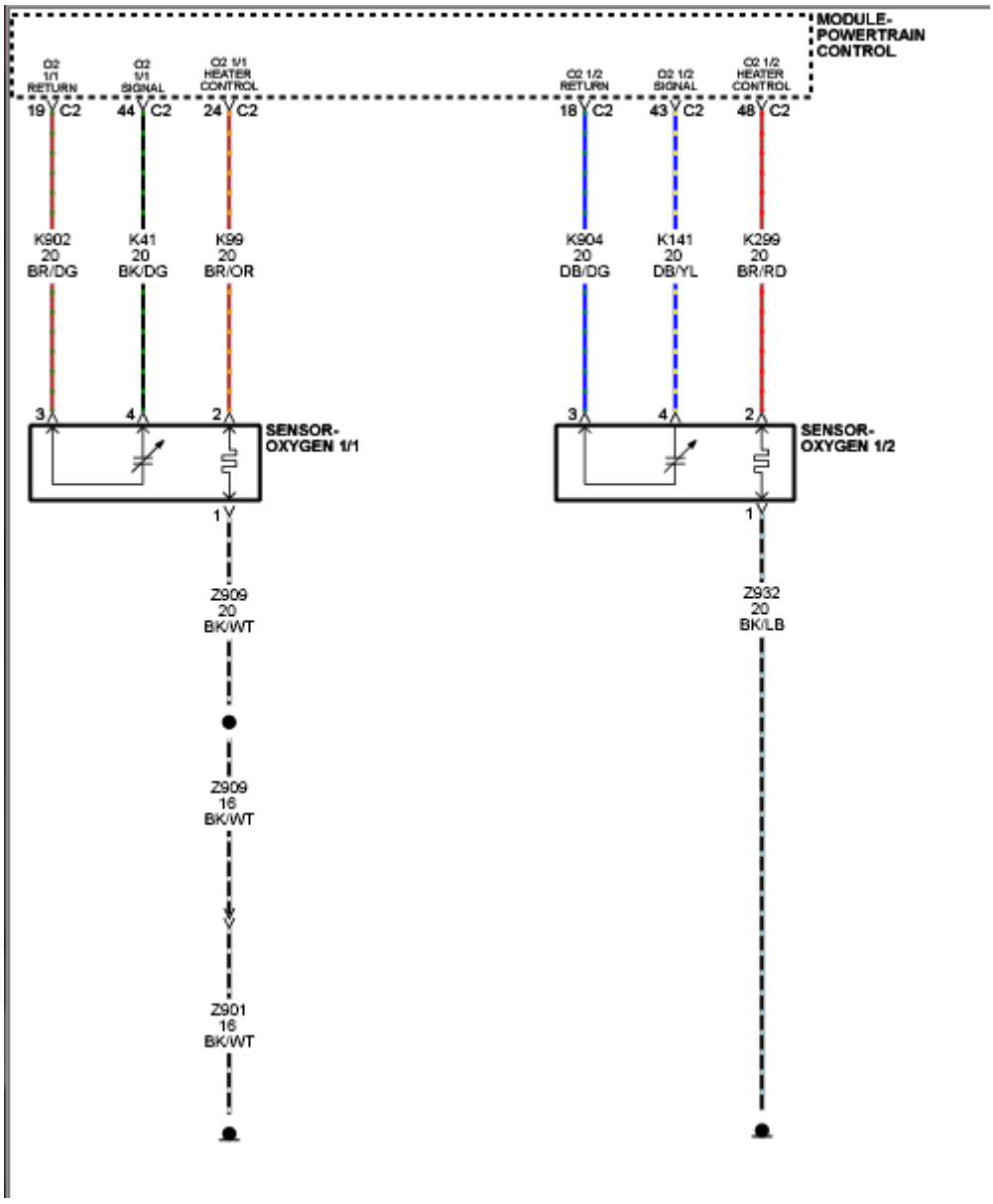

Fig. 30: Oxygen Sensor Circuit Diagram
Courtesy of CHRYSLER GROUP, LLC

THEORY OF OPERATION

For the 02 Sensor to deliver accurate readings the sensing element must be heated. A Positive Temperature Coefficient (PTC) element inside the O2 Sensor heats up as current passes through it. This allows the system to enter Closed Loop quickly. The Powertrain Control Module (PCM) turns on this circuit based on Engine Coolant Temperature (ECT) and engine loads. During operation the heater circuit is momentarily disabled to allow a resistance measurement to be taken to infer heater temperature. The current delivery to the heater is duty cycled to maintain a specific target temperature. The error from the target temperature is continuously monitored to assess heater performance. If a

malfunction occurs the circuit is turned off and a DTC will set.

WHEN MONITORED

With the engine running and battery voltage greater than 10.4 volts.

SET CONDITION

The Powertrain Control Module (PCM) detects that the Oxygen Sensor 1/2 Heater Control circuit is shorted low.

POSSIBLE CAUSES

Possible Causes
(K299) O2 1/2 HEATER CONTROL CIRCUIT SHORTED TO GROUND
(K299) O2 1/2 HEATER CONTROL CIRCUIT OPEN OR HIGH RESISTANCE
(Z932) GROUND CIRCUIT OPEN OR HIGH RESISTANCE
OXYGEN SENSOR 1/2
POWERTRAIN CONTROL MODULE (PCM)

Always perform the Pre-Diagnostic Troubleshooting procedure before proceeding. Refer to PRE-DIAGNOSTIC TROUBLESHOOTING PROCEDURE .

DIAGNOSTIC TEST

1. **ACTIVE DTC**
    1. Start the engine and allow it to reach normal operating temperature.

        WARNING: **When the engine is operating, do not stand in direct line with the fan. Do not put your hands near the pulleys, belts or fan. Do not wear loose clothing. Failure to follow these instructions may result in possible serious or fatal injury.**

    2. With the scan tool, select View DTCs.

        Is the status Active for this DTC?

Yes

- Go To 2

No

- Perform the INTERMITTENT CONDITION diagnostic procedure. Refer to **INTERMITTENT CONDITION** .

2. **CHECK THE GROUND CIRCUIT FOR AN OPEN/HIGH RESISTANCE**

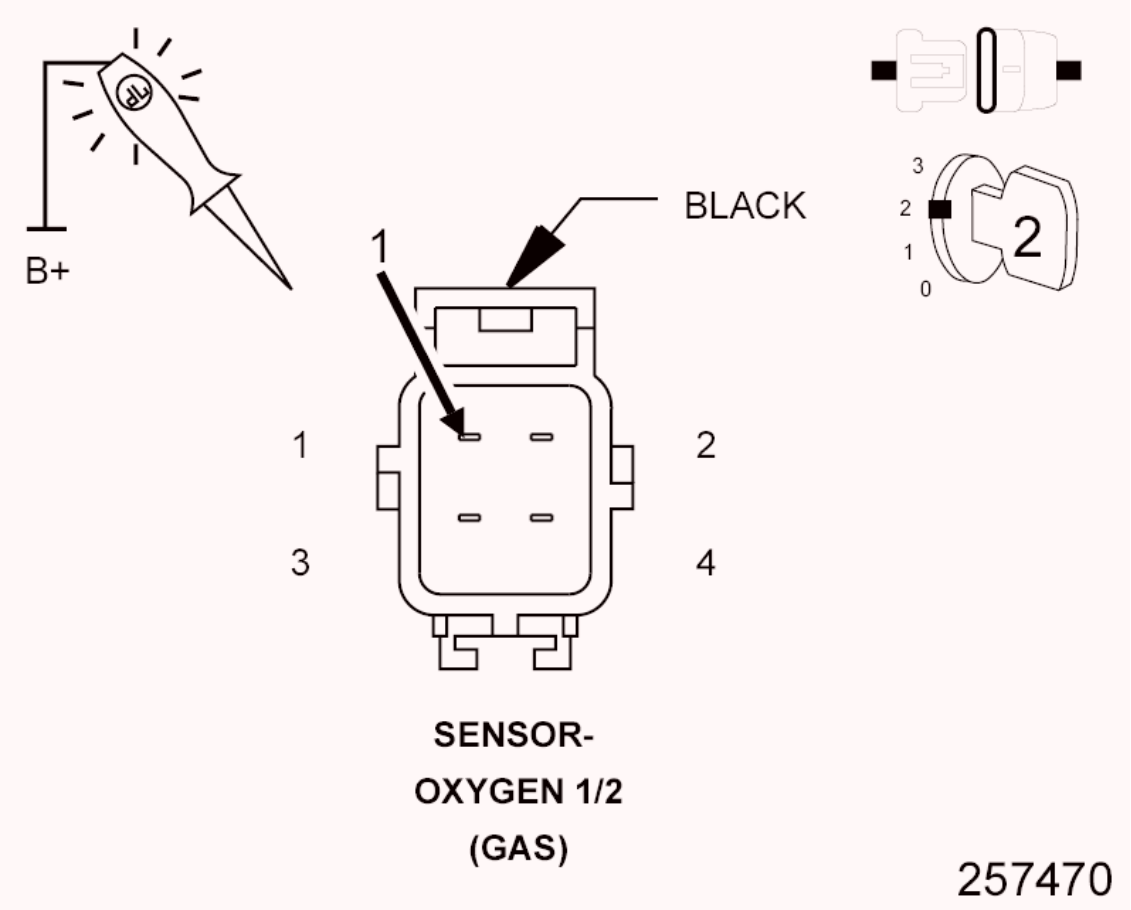

Fig. 31: Checking Ground Circuit For Open Or High Resistance
Courtesy of CHRYSLER GROUP, LLC

1. Turn the ignition off.
2. Disconnect the Oxygen Sensor 1/2 harness connector.
3. Turn the ignition on.
4. Using a 12-volt test light connected to 12 volts, check the Ground circuit in the Oxygen Sensor 1/2 harness connector.

NOTE: The test light should be illuminated and bright. Compare the brightness to that of a direct connection to the battery.

Is the test light illuminated and bright?

Yes

- Go To 3

No

- Repair the Ground circuit for an open or high resistance.
- Perform the POWERTRAIN VERIFICATION TEST. Refer to **POWERTRAIN VERIFICATION TEST** .

3. **CHECK THE (K299) O2 1/2 HEATER CONTROL CIRCUIT FOR A SHORT TO GROUND**

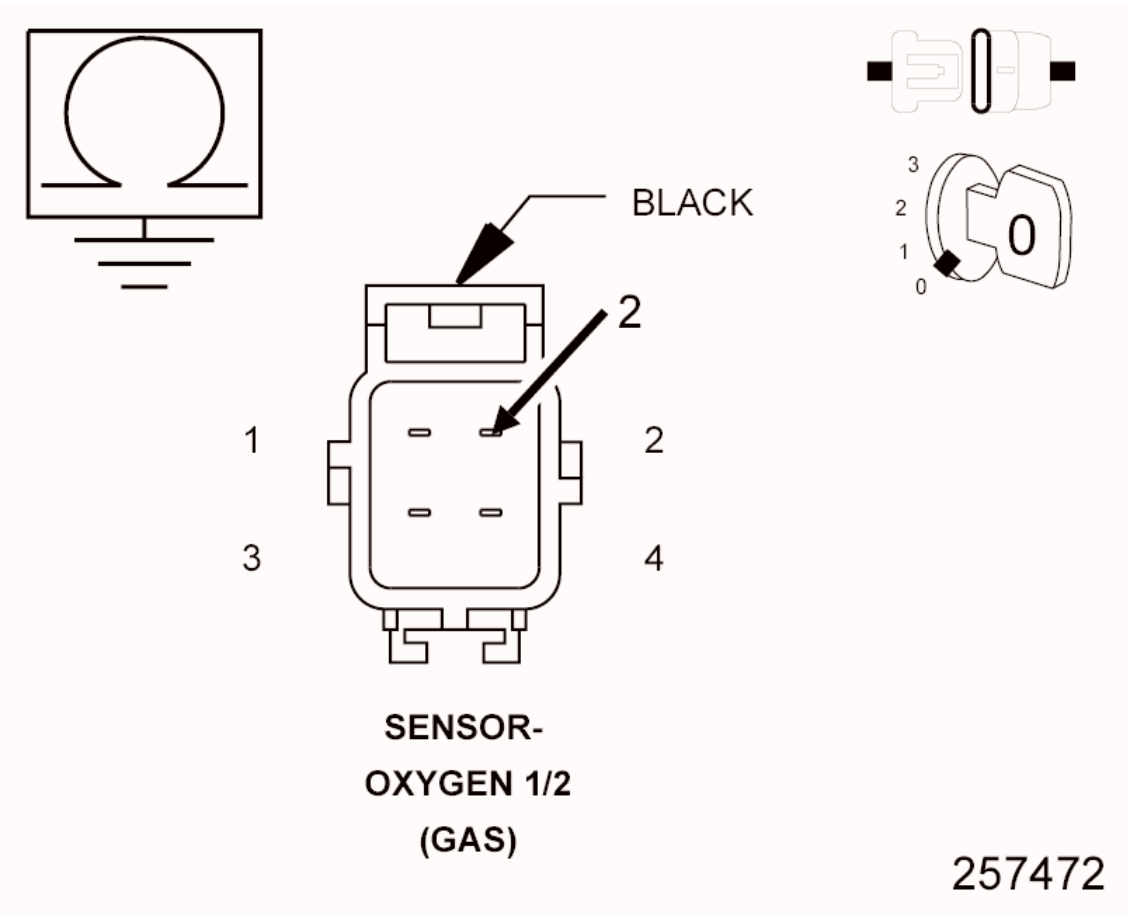

Fig. 32: Checking O2 Sensor 1/2 Heater Control Circuit For Short To

Ground
Courtesy of CHRYSLER GROUP, LLC

1. Turn the ignition off.
2. Disconnect the PCM C2 harness connector.
3. Measure the resistance between ground and the (K299) O2 1/2 Heater Control circuit in the Oxygen Sensor 1/2 harness connector.

   Is the resistance above 10k Ohms?

   Yes

   - Go To 4

   No

   - Repair the (K299) O2 1/2 Heater Control circuit for a short to ground.
   - Perform the POWERTRAIN VERIFICATION TEST. Refer to **POWERTRAIN VERIFICATION TEST** .

4. **CHECK THE (K299) O2 1/2 HEATER CONTROL CIRCUIT FOR AN OPEN/HIGH RESISTANCE**

   CAUTION: Do not probe the PCM harness connectors. Probing the PCM harness connectors will damage the PCM terminals resulting in poor terminal to pin connection. Install the GPEC Diagnostic Adaptor to perform the diagnosis.

   1. Connect the (special tool #10436, Adapter, GPEC Diagnostic).
   2. Measure the resistance of the (K299) O2 1/2 Heater Control circuit between the Oxygen Sensor 1/2 harness connector and the GPEC Adaptor.

      Is the resistance below 5.0 Ohms?

      Yes

      - Go To 5

No

- Repair the (K299) O2 1/2 Heater Control circuit for an open circuit or high resistance.
- Perform the POWERTRAIN VERIFICATION TEST. Refer to **POWERTRAIN VERIFICATION TEST** .

5. **OXYGEN SENSOR 1/2**

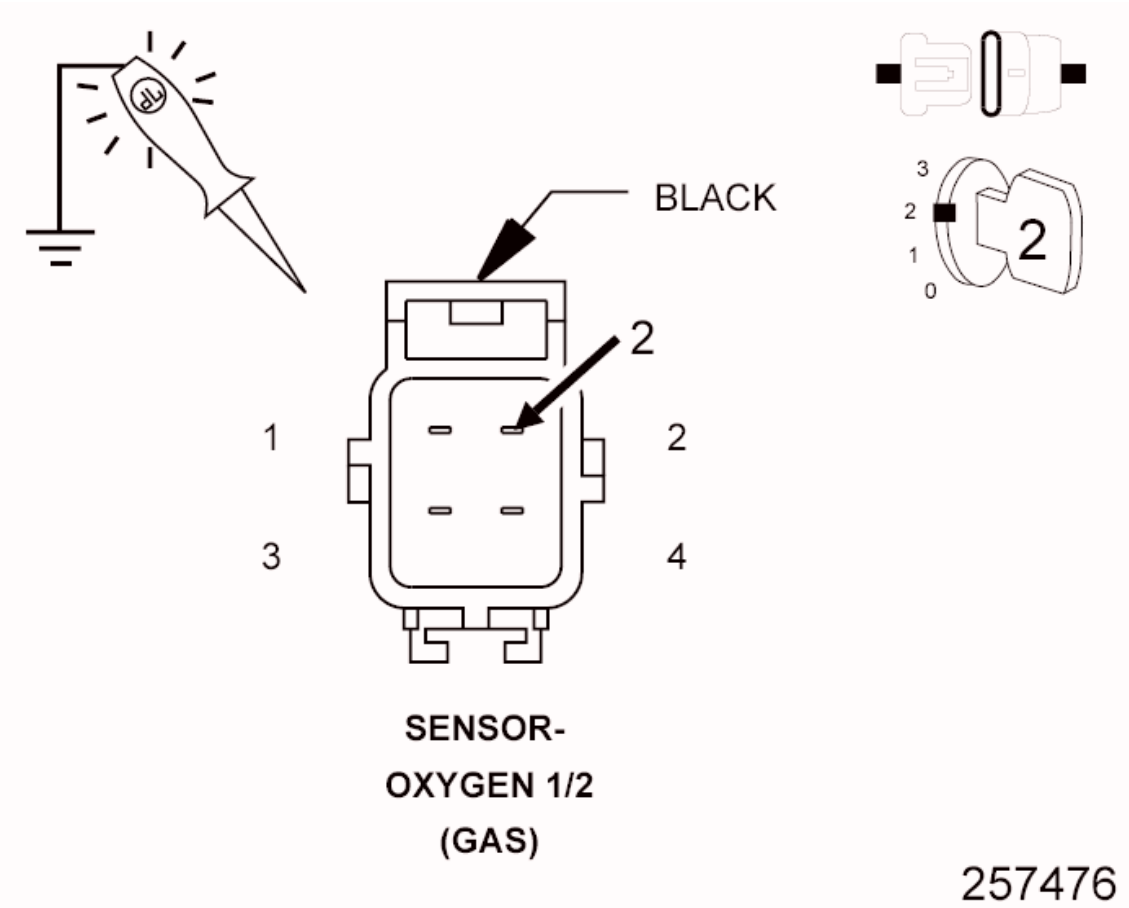

Fig. 33: Checking O2 Heater Control Circuit
Courtesy of CHRYSLER GROUP, LLC

1. Reconnect the PCM C2 harness connector.
2. Turn the ignition on.
3. With the scan tool, actuate the Oxygen Sensor 1/2 control to the maximum allowable %.
4. Using a 12-volt test light connected to ground, check the (K299) O2 1/2 Heater Control circuit in the Oxygen Sensor 1/2 harness connector.

NOTE: The test light should flash dimly.

5. With the scan tool, actuate the Oxygen Sensor 1/2 control to the OFF (0%) position.
6. Using a 12-volt test light connected to ground, check the (K299) O2 1/2 Heater Control circuit in the Oxygen Sensor 1/2 harness connector.

NOTE: The test light should not be illuminated.

Does the test light flash dimly with the actuator ON (25%) and not illuminated with the actuator OFF (0%)?

Yes

- Replace the Oxygen Sensor 1/2 in accordance with the service information. Refer to **SENSOR, OXYGEN, REMOVAL** .
- Perform the POWERTRAIN VERIFICATION TEST. Refer to **POWERTRAIN VERIFICATION TEST** .

No

- Go To 6

6. **POWERTRAIN CONTROL MODULE (PCM)**
   1. Using the wiring diagram/schematic as a guide, inspect the wiring and connectors between the Oxygen Sensor 1/2 and the Powertrain Control Module (PCM).
   2. Look for any chafed, pierced, pinched or partially broken wires.
   3. Look for broken, bent, pushed out or corroded terminals.
   4. Perform any Technical Service Bulletins (TSBs) that may apply.

   Were any problems found?

   Yes

   - Repair as necessary.
   - Perform the POWERTRAIN VERIFICATION TEST. Refer to **POWERTRAIN VERIFICATION TEST** .

   No

- Replace and program the Powertrain Control Module (PCM) in accordance with the service information. Refer to **MODULE, POWERTRAIN CONTROL, REMOVAL** .
- Perform the POWERTRAIN VERIFICATION TEST. Refer to **POWERTRAIN VERIFICATION TEST** .

P0038-O2-SENSOR 1/2 HEATER CIRCUIT HIGH

For a complete wiring diagram, **refer to appropriate SYSTEM WIRING DIAGRAMS article** .

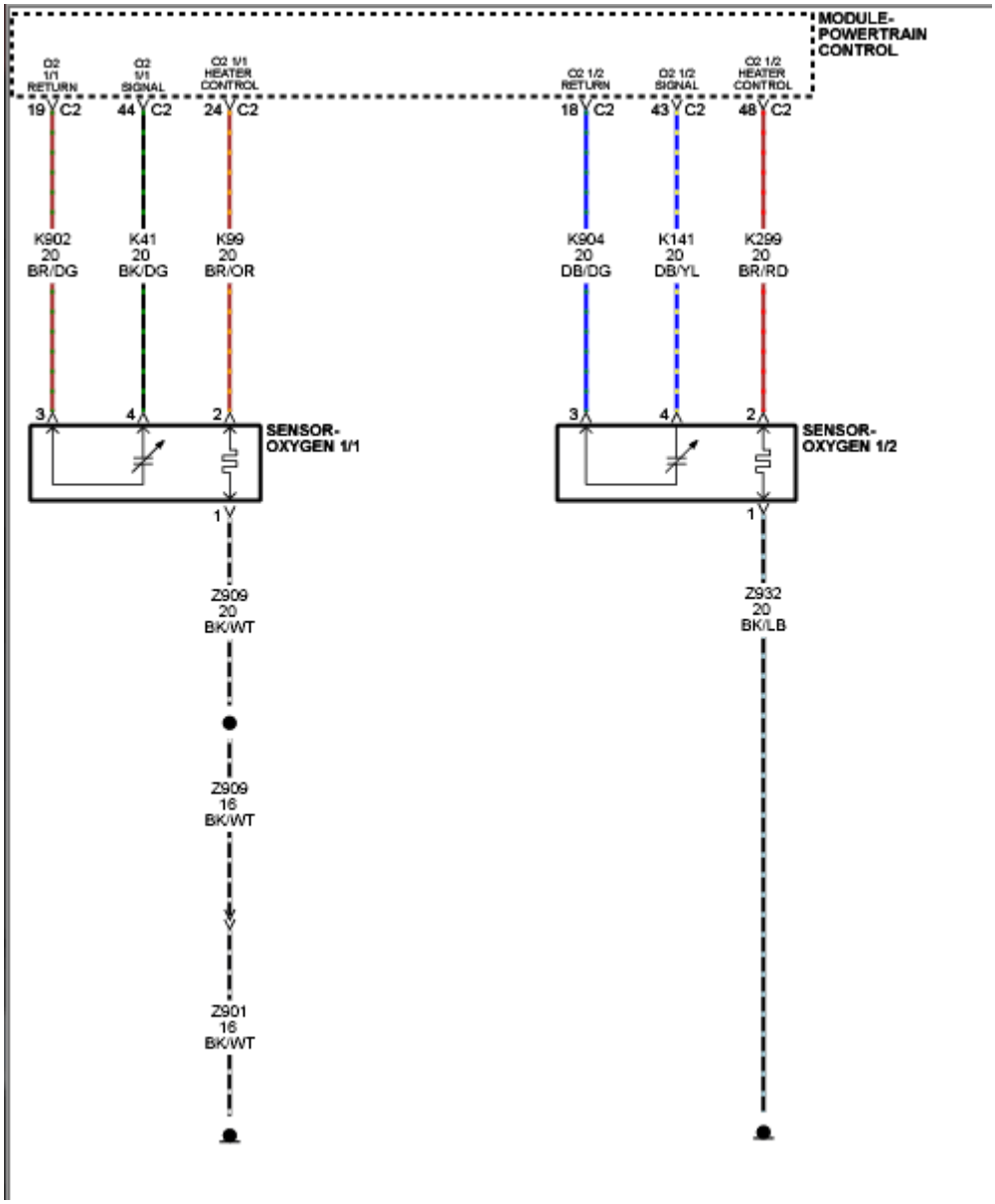

Fig. 34: Oxygen Sensor Circuit Diagram
Courtesy of CHRYSLER GROUP, LLC

THEORY OF OPERATION

For the 02 Sensor to deliver accurate readings the sensing element must be heated. A Positive Temperature Coefficient (PTC) element inside the O2 Sensor heats up as current passes through it. This allows the system to enter Closed Loop quickly. The Powertrain Control Module (PCM) turns on this circuit based on Engine Coolant Temperature (ECT) and engine loads. During operation the heater circuit is momentarily disabled to allow a resistance measurement to be taken to infer heater temperature. The current delivery to the heater is duty cycled to maintain a specific target temperature. The error from the target temperature is continuously monitored to assess heater performance. If a malfunction occurs the circuit is turned off and a DTC will set.

WHEN MONITORED

With the engine running and battery voltage greater than 10.4 volts.

SET CONDITION

The Powertrain Control Module (PCM) detects that the Oxygen Sensor 1/2 Heater Control circuit is shorted high.

POSSIBLE CAUSES

Possible Causes
(K299) O2 1/2 HEATER CONTROL CIRCUIT SHORTED TO VOLTAGE
(K299) O2 1/2 HEATER CONTROL CIRCUIT OPEN OR HIGH RESISTANCE
O2 SENSOR GROUND CIRCUIT OPEN
OXYGEN SENSOR 1/2
POWERTRAIN CONTROL MODULE (PCM)

Always perform the Pre-Diagnostic Troubleshooting procedure before proceeding. Refer to PRE-DIAGNOSTIC TROUBLESHOOTING PROCEDURE .

DIAGNOSTIC TEST

1. **ACTIVE DTC**
    1. Start the engine and allow it to reach normal operating temperature.

WARNING: When the engine is operating, do not stand in direct line with the fan. Do not put your hands near the pulleys, belts or fan. Do not wear loose clothing. Failure to follow these instructions may result in possible serious or fatal injury.

2. With the scan tool, select View DTCs.

   Is the status Active for this DTC?

   Yes

   - Go To 2

   No

   - Perform the INTERMITTENT CONDITION diagnostic procedure. Refer to **INTERMITTENT CONDITION** .

2. **CHECK THE (K299) O2 1/2 HEATER CONTROL CIRCUIT FOR A SHORT TO VOLTAGE**

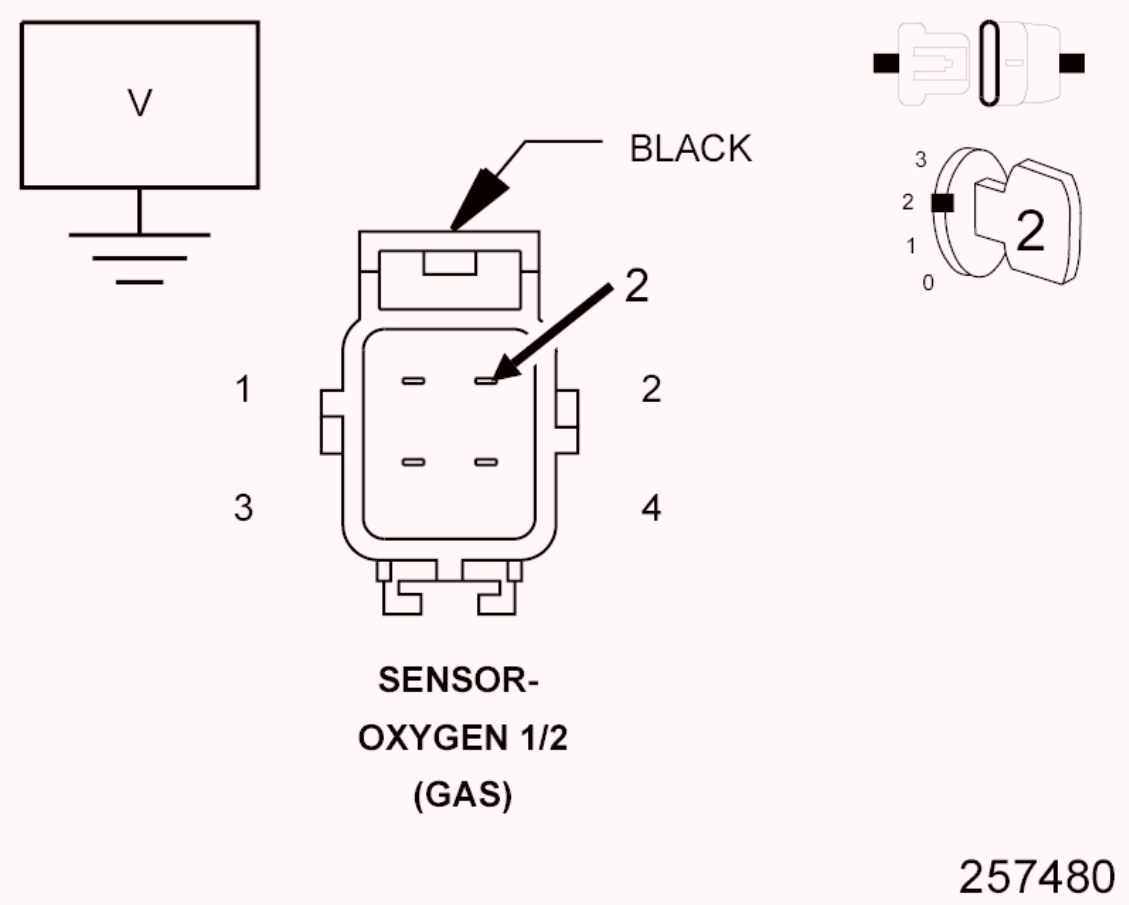

Fig. 35: Checking O2 1/2 Heater Control Circuit For Short To Voltage
Courtesy of CHRYSLER GROUP, LLC

1. Turn the ignition off.
2. Disconnect the Oxygen Sensor 1/2 harness connector.
3. Disconnect the PCM C2 harness connector.
4. Turn the ignition on.
5. Measure the voltage of the (K299) O2 1/2 Heater Control circuit in the Oxygen Sensor 1/2 harness connector.

   Is there any voltage present?

   Yes

   - Repair the (K299) O2 1/2 Heater Control circuit for a short to voltage.
   - Perform the POWERTRAIN VERIFICATION TEST. Refer to **POWERTRAIN VERIFICATION TEST** .

No

- Go To 3

3. **CHECK THE (K299) O2 1/2 HEATER CONTROL CIRCUIT FOR AN OPEN/HIGH RESISTANCE**

CAUTION: Do not probe the PCM harness connectors. Probing the PCM harness connectors will damage the PCM terminals resulting in poor terminal to pin connection. Install the GPEC Diagnostic Adaptor to perform the diagnosis.

1. Connect the (special tool #10436, Adapter, GPEC Diagnostic).
2. Measure the resistance of the (K299) O2 1/2 Heater Control circuit between the Oxygen Sensor 1/2 harness connector and the GPEC Adaptor.

   Is the resistance below 5.0 Ohms?

   Yes

   - Go To 4

   No

   - Repair the (K299) O2 1/2 Heater Control circuit for an open or high resistance.
   - Perform the POWERTRAIN VERIFICATION TEST. Refer to **POWERTRAIN VERIFICATION TEST** .

4. **CHECK THE O2 SENSOR GROUND CIRCUIT FOR AN OPEN**

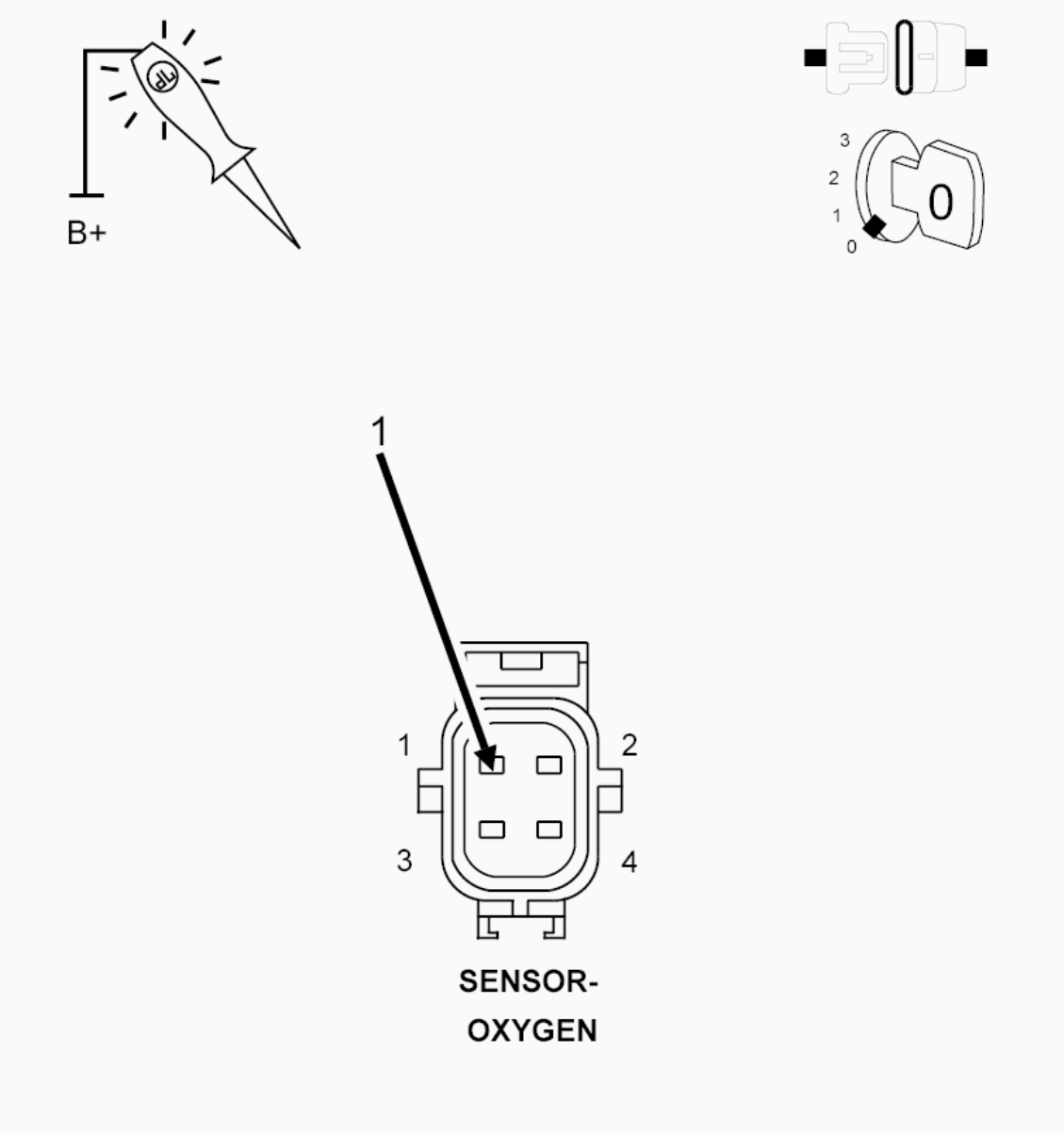

Fig. 36: Checking O2 Sensor Ground Circuit For Open
Courtesy of CHRYSLER GROUP, LLC

1. Using a 12-volt test light connected to Fused B+, probe the O2 Sensor Ground circuit in the O2 Sensor harness connector.

   Does the test light illuminate brightly?

   Yes

   - Go To 5

   No

- Repair the excessive resistance in the O2 Sensor Ground circuit.
- Perform the POWERTRAIN VERIFICATION TEST. Refer to **POWERTRAIN VERIFICATION TEST** .

5. **OXYGEN SENSOR 1/2**

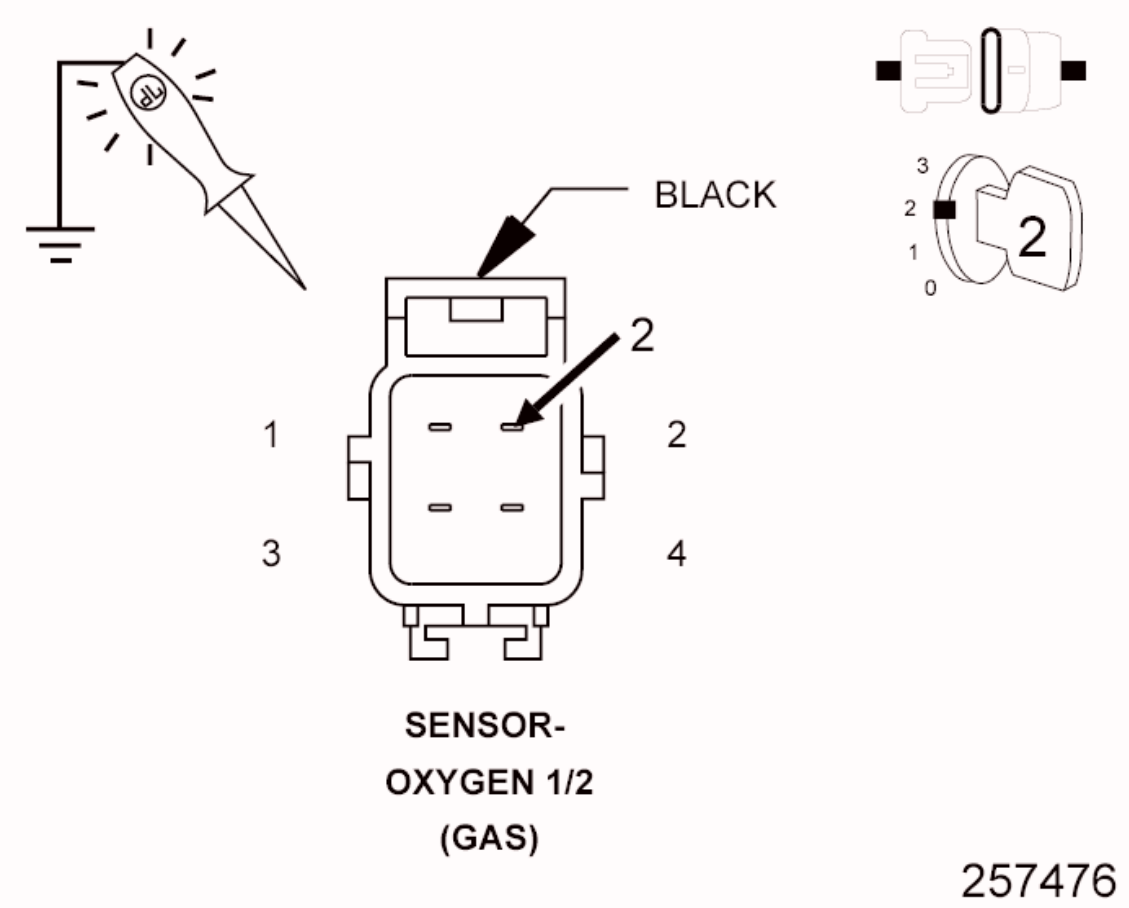

Fig. 37: Checking O2 Heater Control Circuit
Courtesy of CHRYSLER GROUP, LLC

1. Reconnect the PCM C2 harness connector.
2. Turn the ignition on.
3. With the scan tool, actuate the Oxygen Sensor 1/2 control to the maximum allowable percentage.
4. Using a 12-volt test light connected to ground, check the (K299) O2 1/2 Heater Control circuit in the Oxygen Sensor 1/2 harness connector.

NOTE: The test light should flash dimly.

5. With the scan tool, actuate the Oxygen Sensor 1/2 control to the OFF

(0%) position.

6. Using a 12-volt test light connected to ground, check the (K299) O2 1/2 Heater Control circuit in the Oxygen Sensor 1/2 harness connector.

NOTE: The test light should not be illuminated.

Does the test light flash dimly with the actuator ON (25%) and not illuminated with the actuator OFF (0%)?

Yes

- Replace the Oxygen Sensor 1/2 in accordance with the service information. Refer to **SENSOR, OXYGEN, REMOVAL** .
- Perform the POWERTRAIN VERIFICATION TEST. Refer to **POWERTRAIN VERIFICATION TEST** .

No

- Go To 6

6. **POWERTRAIN CONTROL MODULE (PCM)**
   1. Using the wiring diagram/schematic as a guide, inspect the wiring and connectors between the Oxygen Sensor 1/2 and the Powertrain Control Module (PCM).
   2. Look for any chafed, pierced, pinched or partially broken wires.
   3. Look for broken, bent, pushed out or corroded terminals.
   4. Perform any Technical Service Bulletins (TSBs) that may apply.

   Were any problems found?

   Yes

   - Repair as necessary.
   - Perform the POWERTRAIN VERIFICATION TEST. Refer to **POWERTRAIN VERIFICATION TEST** .

   No

   - Replace and program the Powertrain Control Module (PCM) in accordance with the service information. Refer to **MODULE,**

POWERTRAIN CONTROL, REMOVAL .

- Perform the POWERTRAIN VERIFICATION TEST. Refer to **POWERTRAIN VERIFICATION TEST** .

P0071-AMBIENT AIR TEMPERATURE SENSOR PERFORMANCE

For a complete wiring diagram, **refer to appropriate SYSTEM WIRING DIAGRAMS article** .

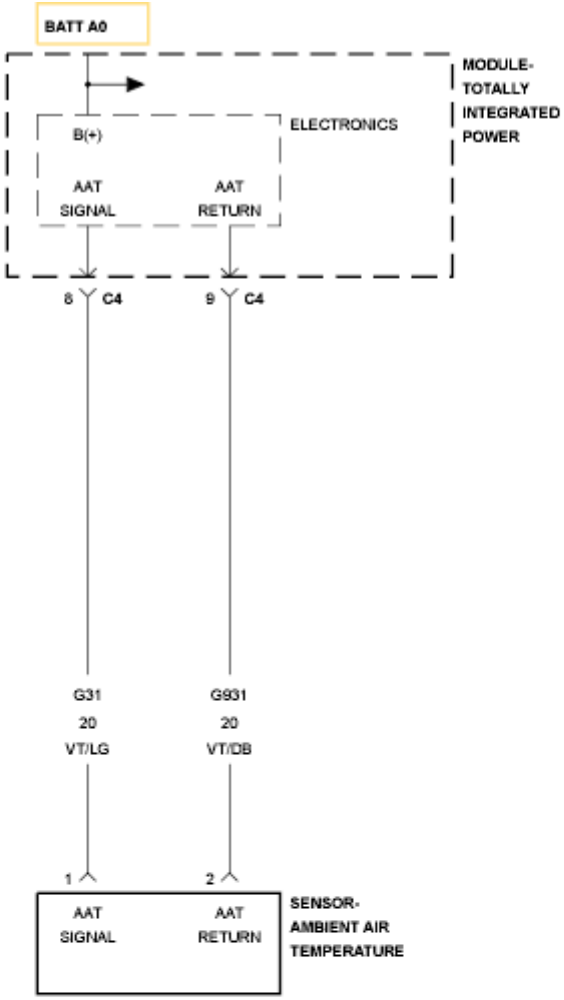

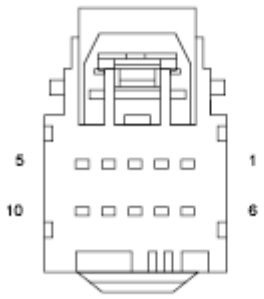

MODULE-
TOTALLY
INTEGRATED
POWER C4

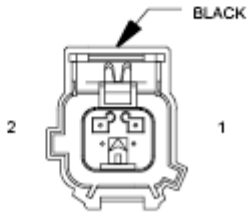

SENSOR-
AMBIENT
AIR
TEMPERATURE

Fig. 38: Ambient Air Temperature Sensor Circuit Diagram
Courtesy of CHRYSLER GROUP, LLC

THEORY OF OPERATION

Temperature sensor performance looks at the outputs of three temperature sensors and compares them under cold start conditions. Following a start to run delay time, the outputs of the Ambient Air, Engine Coolant and Intake Air Temperature sensors will be compared. If the engine coolant and ambient air temperature sensors agree and the intake air temperature does not agree, the intake air temperature sensor is declared as irrational. If declared irrational a second comparison will be done after a short drive cycle.

WHEN MONITORED

With engine off time greater than 480 minutes and ambient temperature greater than -7° C (19.4° F).

SET CONDITION

After a calibrated amount of cool down time, the PCM compares the AAT, ECT, and IAT Sensor values. If one sensor value is not within 10° C (18° F) of the other temperature sensors for two consecutive trips, a DTC will set. Three good trips to turn off the MIL.

POSSIBLE CAUSES

Possible Causes
(G31) AAT SIGNAL CIRCUIT SHORTED TO VOLTAGE
(G31) AAT SIGNAL CIRCUIT SHORTED TO GROUND
(G31) AAT SIGNAL CIRCUIT SHORTED TO (G931) AAT SENSOR GROUND CIRCUIT
(G31) AAT SIGNAL CIRCUIT OPEN OR HIGH RESISTANCE
(G931) AAT SENSOR GROUND CIRCUIT OPEN OR HIGH RESISTANCE
AMBIENT AIR TEMPERATURE SENSOR
TOTALLY INTEGRATED POWER MODULE (TIPM)

Always perform the Pre-Diagnostic Troubleshooting procedure before proceeding. Refer to PRE-DIAGNOSTIC TROUBLESHOOTING

PROCEDURE .

DIAGNOSTIC TEST

1. **ACTIVE DTC**

   NOTE: Diagnose any CAN - C Communication DTCs before continuing.

   1. Turn the ignition off.
   2. If possible, allow the vehicle to sit with the ignition off for more than 480 minutes in an environment where the temperature is consistent and above -7°C (19.4°F).
   3. Test drive the vehicle. The vehicle must exceed 48 km/h (30 mph) during the test drive. Do not cycle the ignition off when the test drive is completed.
   4. With a scan tool, select View DTCs.

      Is the status Active or Pending for this DTC?

      Yes

      - Go To 3

      No

      - Go To 2

2. **AMBIENT AIR TEMPERATURE**
   1. Turn the ignition off.
   2. Allow the vehicle to sit with the ignition off in an environment where the temperature is consistent and above -7°C (19.4°F) until the engine coolant temperature is equal to ambient temperature.
   3. Turn the ignition on.
   4. With a scan tool, compare the AAT, ECT, and IAT sensor values.

      Is the Ambient Air Temperature Sensor value within 10°C (18°F) of the other two sensor values?

      Yes

- Perform the INTERMITTENT CONDITION diagnostic procedure. Refer to **INTERMITTENT CONDITION** .

No

- Go To 3

3. **CHECK THE (G31) AAT SIGNAL CIRCUIT FOR A SHORT TO VOLTAGE**

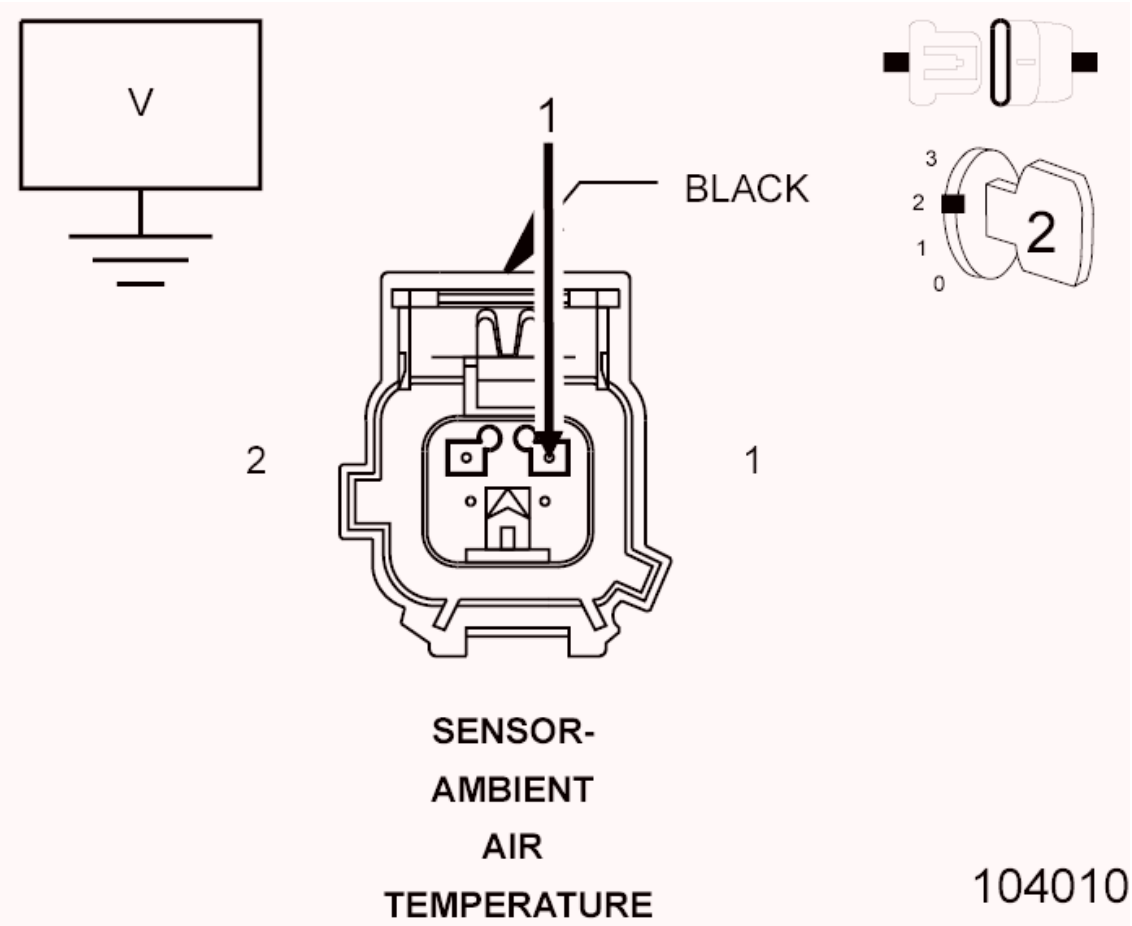

Fig. 39: Checking AAT Signal Circuit For Short To Voltage
Courtesy of CHRYSLER GROUP, LLC

1. Turn the ignition off.
2. Disconnect the Ambient Air Temperature Sensor harness connector.
3. Disconnect the Totally Integrated Power Module (TIPM) C4 harness connector.
4. Turn the ignition on.
5. Measure the voltage of the (G31) AAT Signal circuit in the Ambient

Air Temperature Sensor harness connector.

Is there any voltage present?

Yes

- Repair the (G31) AAT Signal circuit for a short to voltage.
- Perform the POWERTRAIN VERIFICATION TEST. Refer to **POWERTRAIN VERIFICATION TEST** .

No

- Go To 4

4. **CHECK THE (G31) AAT SIGNAL CIRCUIT FOR A SHORT TO GROUND**

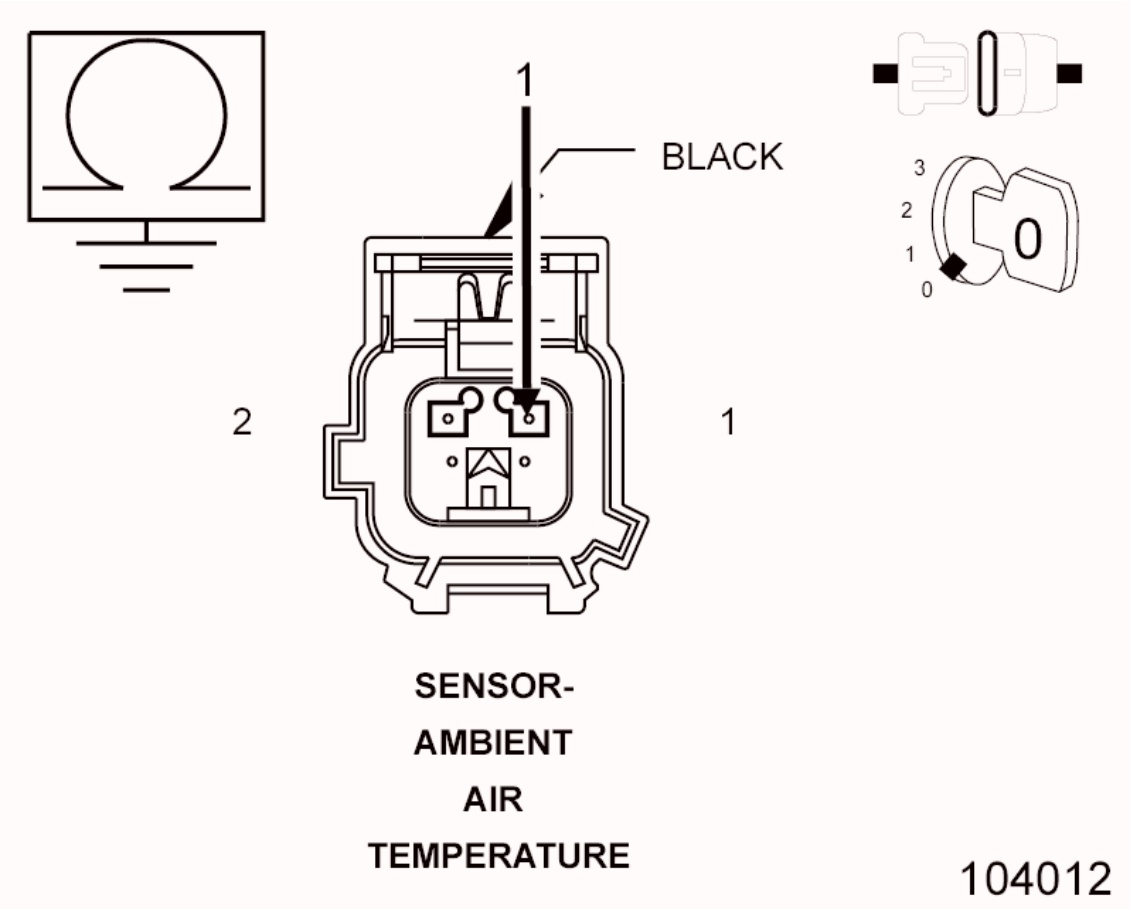

Fig. 40: Checking AAT Signal Circuit For Short To Ground
Courtesy of CHRYSLER GROUP, LLC

1. Turn the ignition off.

2. Measure the resistance between ground and the (G31) AAT Signal circuit in the Ambient Air Temperature Sensor harness connector.

   Is the resistance above 10k Ohms?

   Yes

   - Go To 5

   No

   - Repair the (G31) AAT Signal circuit for a short to ground.
   - Perform the POWERTRAIN VERIFICATION TEST. Refer to **POWERTRAIN VERIFICATION TEST** .

5. **CHECK FOR THE (G31) AAT SIGNAL CIRCUIT SHORTED TO THE (G931) AAT SENSOR GROUND CIRCUIT**

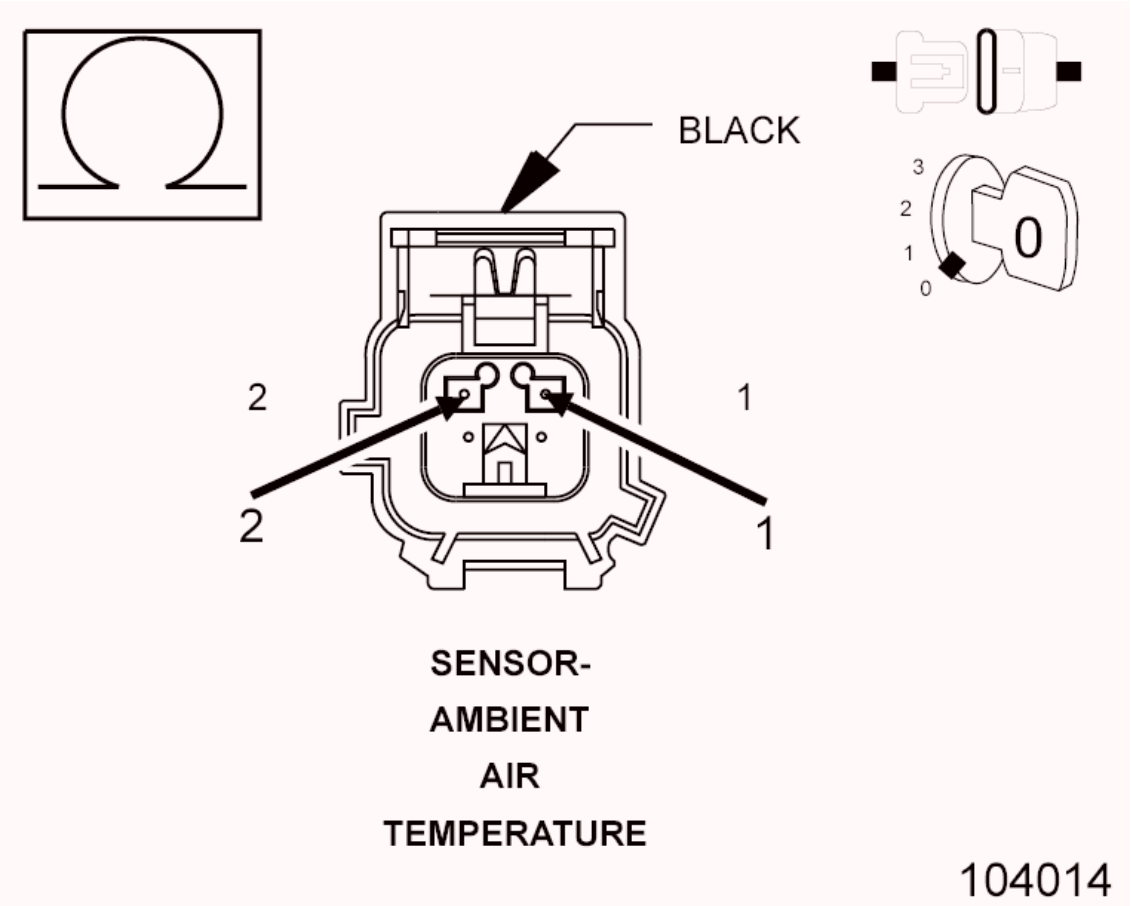

Fig. 41: Checking AAT Signal Circuit For Short To Sensor Ground Circuit
Courtesy of CHRYSLER GROUP, LLC

1. Measure the resistance between the (G31) AAT Signal circuit and the (G931) AAT Sensor Ground circuit in the Ambient Air Temperature Sensor harness connector.

   Is the resistance above 10k Ohms?

   Yes

   - Go To 6

   No

   - Repair the (G31) AAT Signal circuit for a short to the (G931) AAT Sensor Ground circuit.
   - Perform the POWERTRAIN VERIFICATION TEST. Refer to **POWERTRAIN VERIFICATION TEST** .

6. **CHECK THE (G31) AAT SIGNAL CIRCUIT FOR AN OPEN/HIGH RESISTANCE**

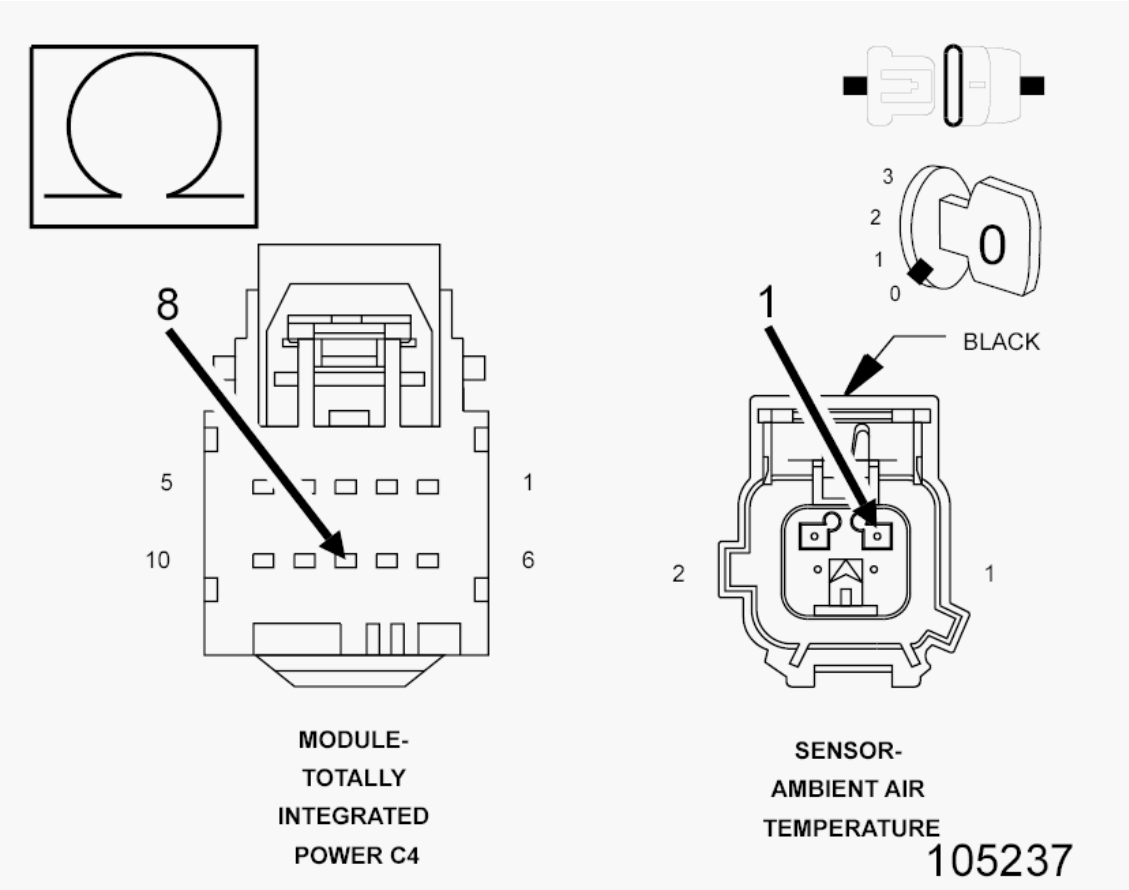

Fig. 42: Checking AAT Signal Circuit For Open Or High Resistance

Courtesy of CHRYSLER GROUP, LLC

1. Measure the resistance of the (G31) AAT Signal circuit between the Ambient Air Temperature Sensor harness connector and the Totally Integrated Power Module (TIPM) harness connector.

   Is the resistance below 5.0 Ohms?

   Yes

   - Go To 7

   No

   - Repair the (G31) AAT Signal circuit for an open or high resistance.
   - Perform the POWERTRAIN VERIFICATION TEST. Refer to **POWERTRAIN VERIFICATION TEST** .

7. **CHECK THE (G931) AAT SENSOR GROUND CIRCUIT FOR AN OPEN/HIGH RESISTANCE**

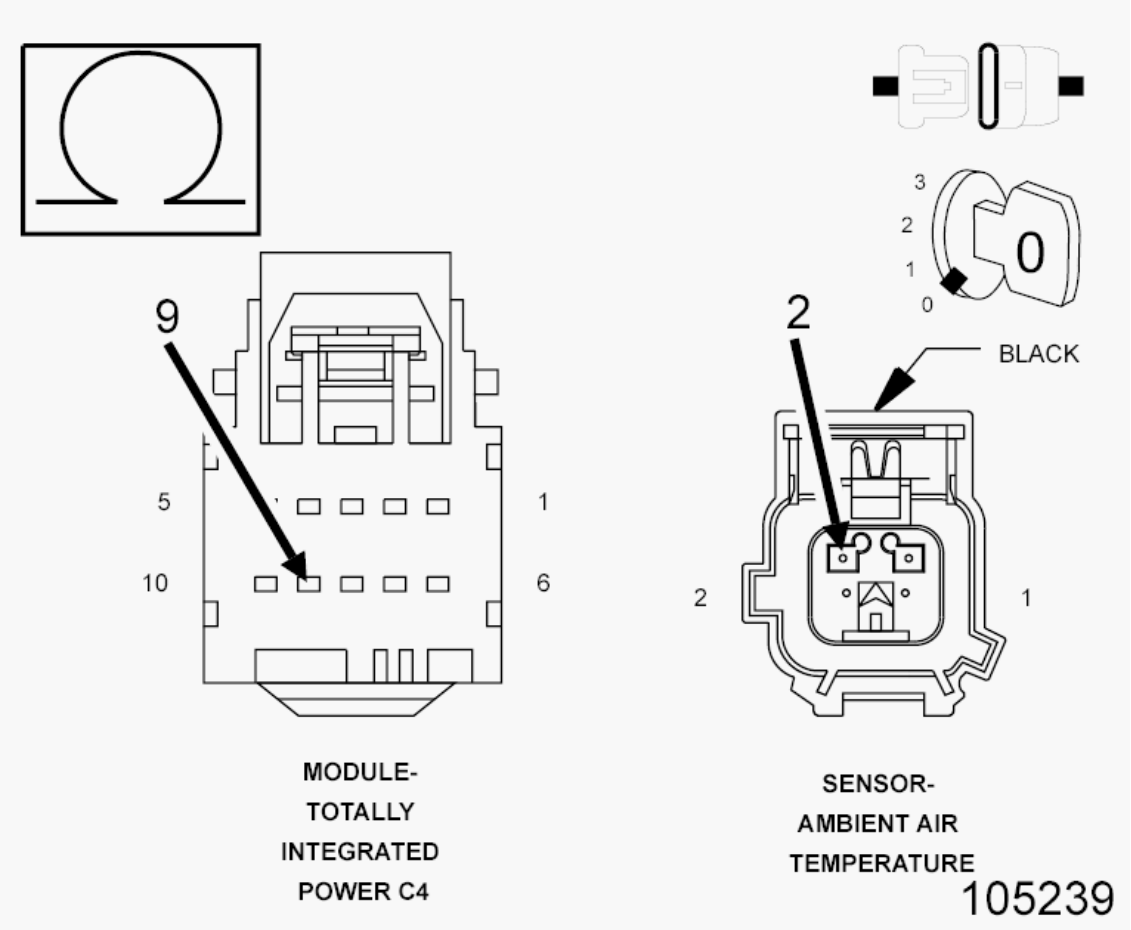

Fig. 43: Checking AAT Ground Circuit For Open Or High Resistance
Courtesy of CHRYSLER GROUP, LLC

1. Measure the resistance of the (G931) AAT Sensor Ground circuit between the Ambient Air Temperature Sensor harness connector and the Totally Integrated Power Module (TIPM) C4 harness connector.

   Is the resistance below 5.0 Ohms?

   Yes

   - Go To 8

   No

   - Repair the (G931) AAT Sensor Ground for an open or high resistance.
   - Perform the POWERTRAIN VERIFICATION TEST. Refer to **POWERTRAIN VERIFICATION TEST** .

8. **AMBIENT AIR TEMPERATURE SENSOR**

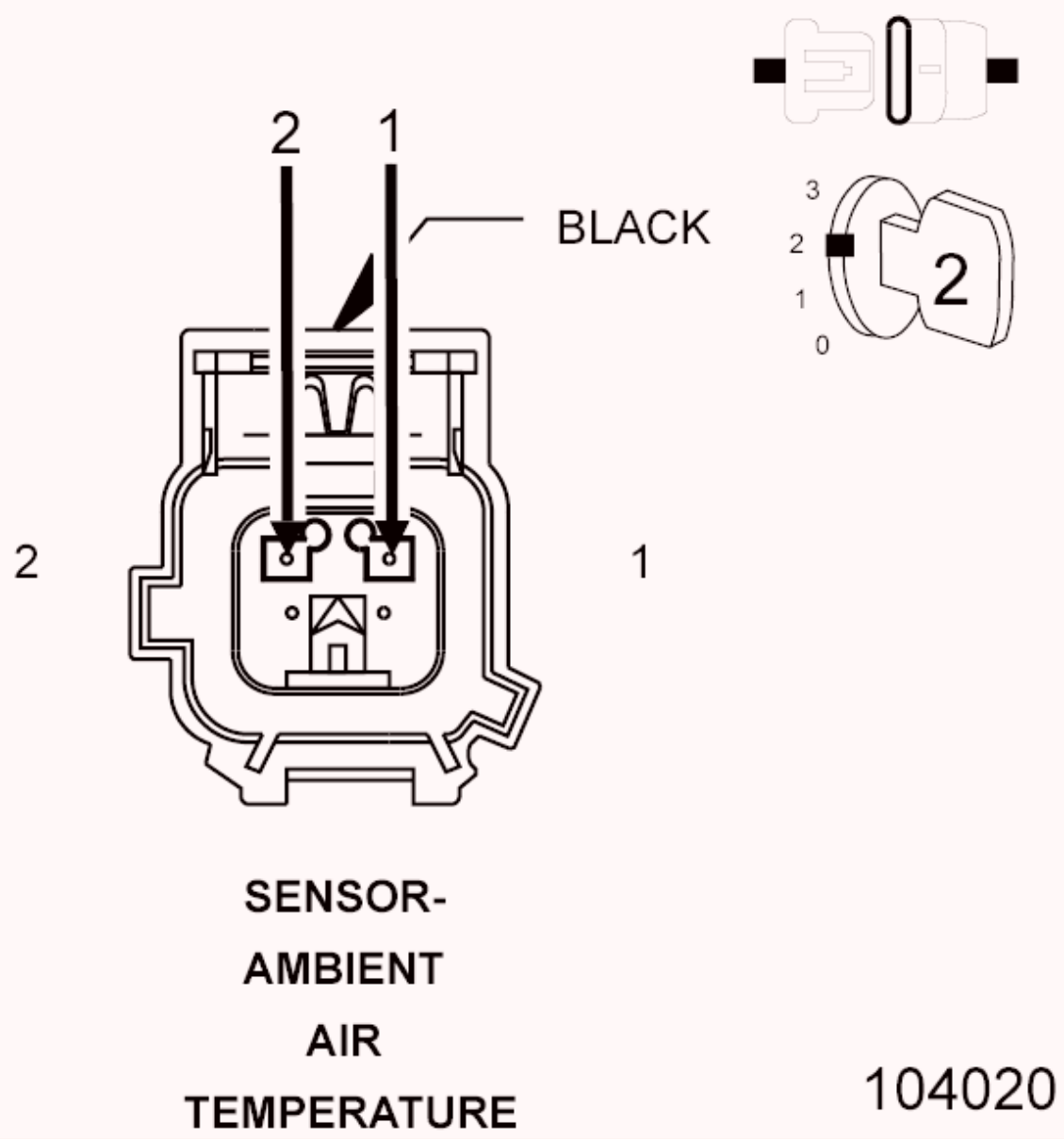

Fig. 44: Ambient Air Temperature Sensor Harness Connector End View
Courtesy of CHRYSLER GROUP, LLC

1. Turn the ignition off.
2. Connect the Totally Integrated Power Module (TIPM) C4 harness connector.
3. Connect a jumper wire between the (G931) AAT Sensor Ground circuit and the (G31) AAT Signal circuit in the Ambient Air Temperature Sensor harness connector.
4. Turn the ignition on.
5. With the scan tool, read the Ambient Air Temperature Sensor signal

voltage.

Is the voltage below 1.0 volt with the jumper wire in place?

Yes

- Replace the Ambient Air Temperature Sensor in accordance with the Service Information.
- Perform the POWERTRAIN VERIFICATION TEST. Refer to **POWERTRAIN VERIFICATION TEST** .

No

- Go To 9

9. **TOTALLY INTEGRATED POWER MODULE (TIPM)**
    1. Using the wiring diagram/schematic as a guide, inspect the wiring and connectors between the Ambient Air Temperature Sensor and the Totally Integrated Power Module (TIPM).
    2. Look for any chafed, pierced, pinched, or partially broken wires.
    3. Look for broken, bent, pushed out or corroded terminals.
    4. Monitor the scan tool data relative to this circuit and wiggle test the wiring and connectors.
    5. Look for the data to change or for the DTC to reset during the wiggle test.
    6. Perform any Technical Service Bulletins that may apply.

    Were any problems found?

    Yes

    - Repair as necessary.
    - Perform the POWERTRAIN VERIFICATION TEST. Refer to **POWERTRAIN VERIFICATION TEST** .

    No

    - Replace the Totally Integrated Power Module (TIPM) in accordance with the service information.

- Perform the BODY VERIFICATION TEST. Refer to **STANDARD PROCEDURE** .

P0072-AMBIENT AIR TEMPERATURE SENSOR CIRCUIT LOW

For a complete wiring diagram, **refer to appropriate SYSTEM WIRING DIAGRAMS article** .

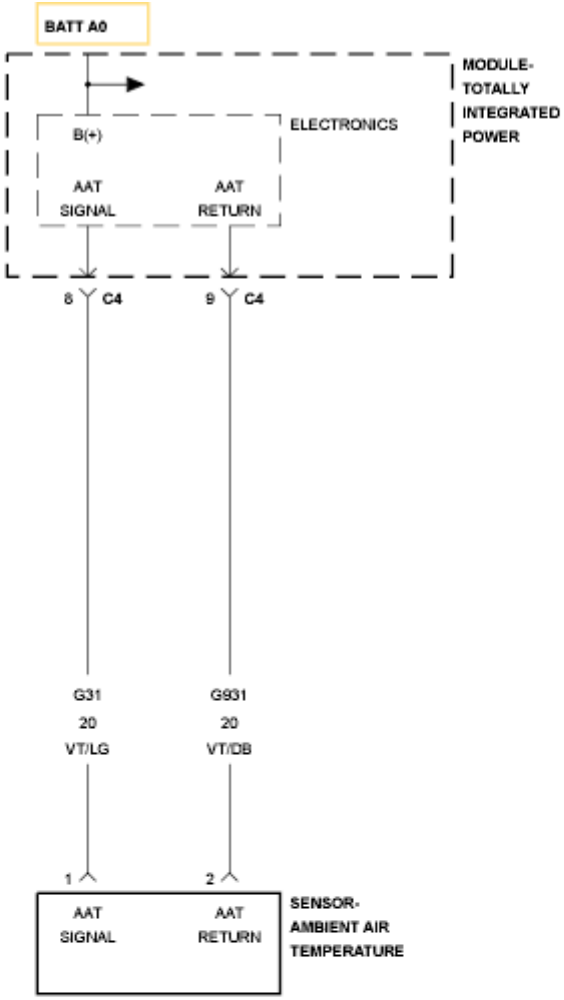

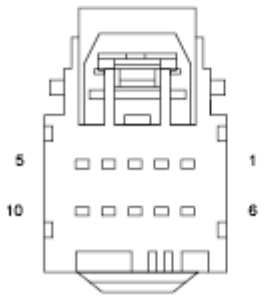

MODULE-
TOTALLY
INTEGRATED
POWER C4

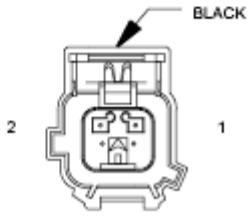

SENSOR-
AMBIENT
AIR
TEMPERATURE

Fig. 45: Ambient Air Temperature Sensor Circuit Diagram
Courtesy of CHRYSLER GROUP, LLC

THEORY OF OPERATION

Temperature sensor performance looks at the outputs of three temperature sensors and compares them under cold start conditions. Following a start to run delay time, the outputs of the Ambient Air, Engine Coolant and Intake Air Temperature sensors will be compared. If the engine coolant and ambient air temperature sensors agree and the intake air temperature does not agree, the intake air temperature sensor is declared as irrational. If declared irrational a second comparison will be done after a short drive cycle.

WHEN MONITORED

With the ignition on and battery voltage greater than 10.4 volts.

SET CONDITION

The PCM detects that the Ambient Air Temperature Sensor input voltage is below the minimum acceptable value.

POSSIBLE CAUSES

Possible Causes
(G31) AAT SIGNAL CIRCUIT SHORTED TO GROUND
(G31) AAT SIGNAL CIRCUIT SHORTED TO (G931) AAT SENSOR GROUND
AMBIENT AIR TEMPERATURE SENSOR
TOTALLY INTEGRATED POWER MODULE (TIPM)

Always perform the Pre-Diagnostic Troubleshooting procedure before proceeding. Refer to PRE-DIAGNOSTIC TROUBLESHOOTING PROCEDURE .

DIAGNOSTIC TEST

1. **ACTIVE DTC**

NOTE: Diagnose any CAN - C Communication DTCs before continuing.

NOTE: Diagnose and repair any system voltage DTCs before continuing with this test.

1. Start the engine and allow it to reach normal operating temperature.

   WARNING: When the engine is operating, do not stand in direct line with the fan. Do not put your hands near the pulleys, belts or fan. Do not wear loose clothing. Failure to follow these instructions may result in possible serious or fatal injury.

2. With the scan tool, select View DTCs.

   Is the status Active for this DTC?

   Yes

   - Go To 2

   No

   - Perform the INTERMITTENT CONDITION diagnostic procedure. Refer to **INTERMITTENT CONDITION** .

2. **CHECK THE (G31) AAT SIGNAL CIRCUIT FOR A SHORT TO GROUND**

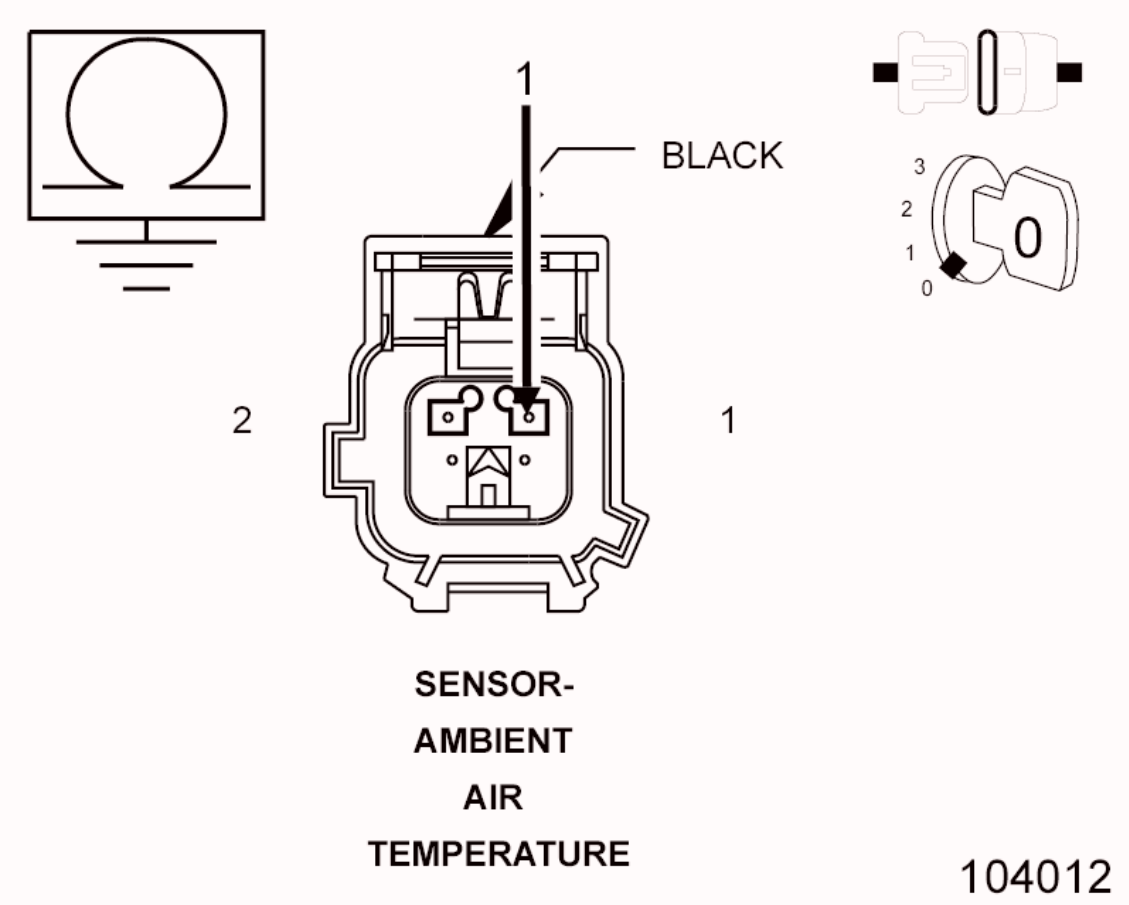

Fig. 46: Checking AAT Signal Circuit For Short To Ground
Courtesy of CHRYSLER GROUP, LLC

1. Turn the ignition off.
2. Disconnect the Ambient Air Temperature Sensor harness connector.
3. Disconnect the TIPM C4 harness connector.
4. Measure the resistance between ground and the (G31) AAT Signal circuit in the Ambient Air Temperature Sensor harness connector.

   Is the resistance above 10k Ohms?

   Yes

   - Go To 3

   No

   - Repair the (G31) AAT Signal circuit for a short to ground.
   - Perform the POWERTRAIN VERIFICATION TEST. Refer to

POWERTRAIN VERIFICATION TEST .

3. **CHECK FOR THE (G31) AAT SIGNAL CIRCUIT SHORTED TO THE (G931) AAT SENSOR GROUND CIRCUIT**

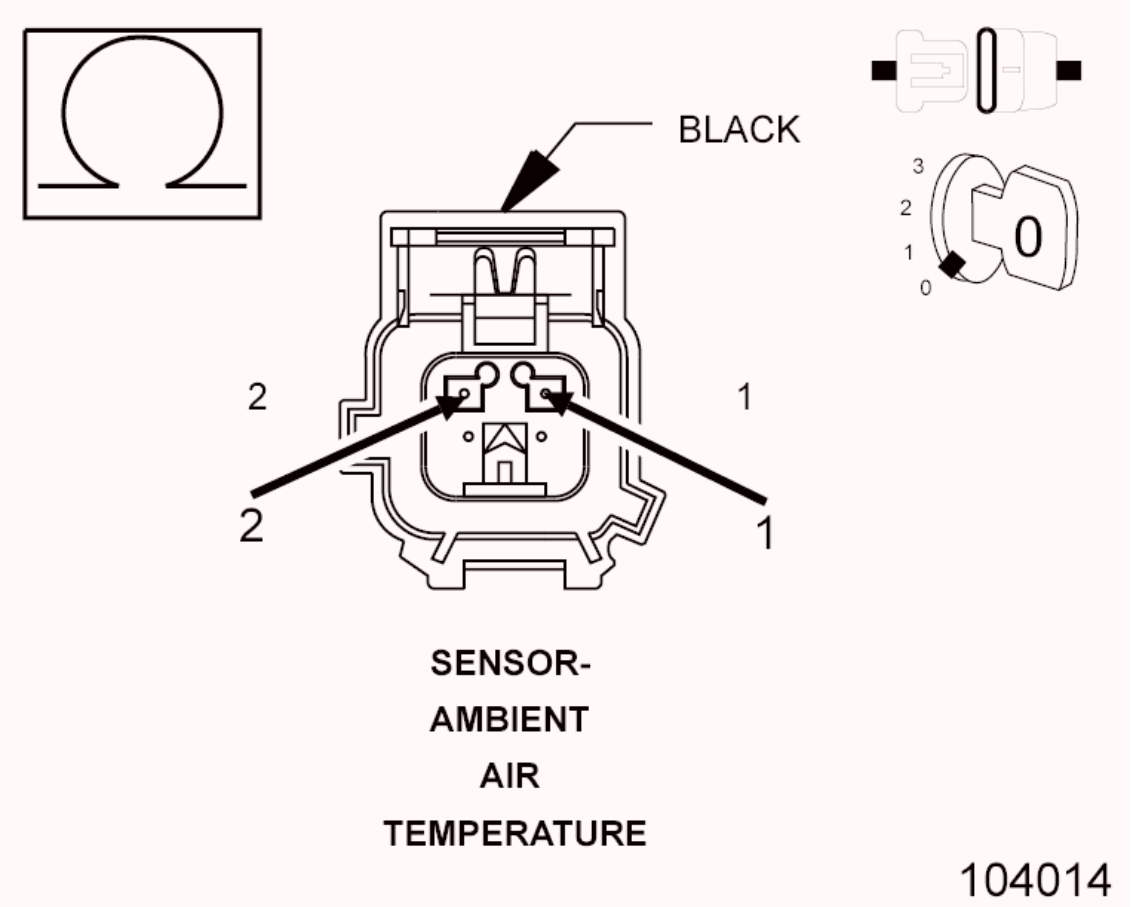

Fig. 47: Checking AAT Signal Circuit For Short To Sensor Ground Circuit
Courtesy of CHRYSLER GROUP, LLC

1. Measure the resistance between the (G31) AAT Signal circuit and the (G931) AAT Sensor Ground circuit in the Ambient Air Temperature Sensor harness connector.

   Is the resistance above 10k Ohms?

   Yes

   - Go To 4

   No

- Repair the (G31) AAT Signal circuit for a short to the (G931) AAT Sensor Ground circuit.
- Perform the POWERTRAIN VERIFICATION TEST. Refer to **POWERTRAIN VERIFICATION TEST** .

4. **AMBIENT AIR TEMPERATURE SENSOR**
   1. Turn the ignition off.
   2. Reconnect the TIPM C4 harness connector.
   3. Turn the ignition on.
   4. With the scan tool, read the Ambient Air Temperature Sensor signal voltage.

      Is the voltage above 4.9 volts with the Ambient Air Temperature Sensor harness disconnected?

      Yes

      - Replace the ambient air temperature sensor in accordance with the service information.
      - Perform the POWERTRAIN VERIFICATION TEST. Refer to **POWERTRAIN VERIFICATION TEST** .

      No

      - Go To 5

5. **TOTALLY INTEGRATED POWER MODULE (TIPM)**
   1. Using the wiring diagram/schematic as a guide, inspect the wiring and connectors between the Ambient Air Temperature Sensor and the Totally Integrated Power Module (TIPM).
   2. Look for any chafed, pierced, pinched, or partially broken wires.
   3. Look for broken, bent, pushed out or corroded terminals.
   4. Monitor the scan tool data relative to this circuit and wiggle test the wiring and connectors.
   5. Look for the data to change or for the DTC to reset during the wiggle test.
   6. Perform any Technical Service Bulletins that may apply.

Were any problems found?

Yes

- Repair as necessary.
- Perform the BODY VERIFICATION TEST. Refer to **STANDARD PROCEDURE** .

No

- Replace and program the Totally Integrated Power Module (TIPM) in accordance with the service information.
- Perform the BODY VERIFICATION TEST. Refer to **STANDARD PROCEDURE** .

P0073-AMBIENT AIR TEMPERATURE SENSOR CIRCUIT HIGH

For a complete wiring diagram, **refer to appropriate SYSTEM WIRING DIAGRAMS article** .

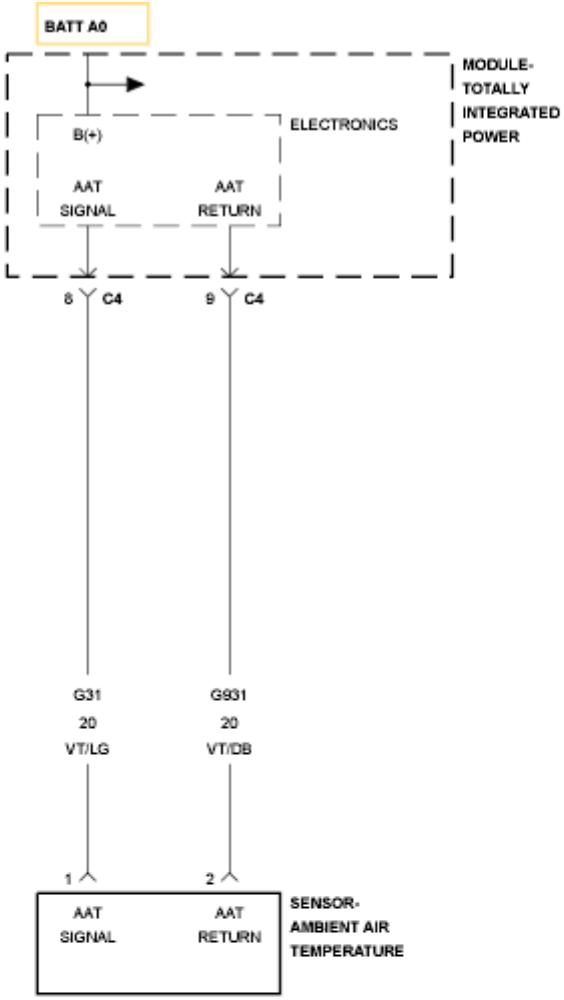
BATT A0
MODULE-
TOTALLY
INTEGRATED
POWER
ELECTRONICS
B(+)
AAT
SIGNAL
AAT
RETURN
8
C4
9
C4
G31
20
VT/LG
G931
20
VT/DB
1
2
AAT
SIGNAL
AAT
RETURN
SENSOR-
AMBIENT AIR
TEMPERATURE

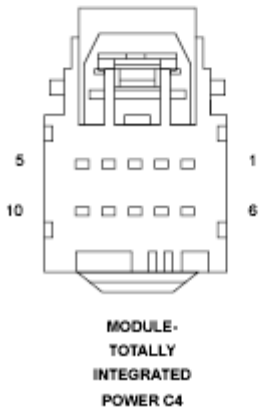
5
1
10
6
MODULE-
TOTALLY
INTEGRATED
POWER C4

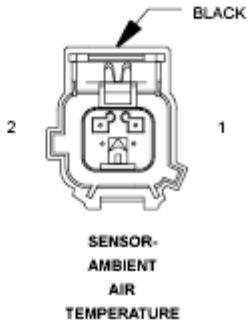
BLACK
2
1
SENSOR-
AMBIENT
AIR
TEMPERATURE

Fig. 48: Ambient Air Temperature Sensor Circuit Diagram
Courtesy of CHRYSLER GROUP, LLC

THEORY OF OPERATION

Temperature sensor performance looks at the outputs of three temperature sensors and compares them under cold start conditions. Following a start to run delay time, the outputs of the Ambient Air, Engine Coolant and Intake Air Temperature sensors will be compared. If the engine coolant and ambient air temperature sensors agree and the intake air temperature does not agree, the intake air temperature sensor is declared as irrational. If declared irrational a second comparison will be done after a short drive cycle.

WHEN MONITORED

With the ignition on and battery voltage greater than 10.4 volts.

SET CONDITION

The Powertrain Control Module (PCM) detects that the Ambient Air Temperature Sensor input voltage is above the maximum acceptable value.

POSSIBLE CAUSES

Possible Causes
(G31) AAT SIGNAL CIRCUIT SHORTED TO VOLTAGE
(G31) AAT SIGNAL CIRCUIT OPEN OR HIGH RESISTANCE
(G931) AAT SENSOR GROUND CIRCUIT OPEN OR HIGH RESISTANCE
AMBIENT AIR TEMPERATURE SENSOR
POWERTRAIN CONTROL MODULE (PCM)

Always perform the Pre-Diagnostic Troubleshooting procedure before proceeding. Refer to PRE-DIAGNOSTIC TROUBLESHOOTING PROCEDURE .

DIAGNOSTIC TEST

1. **ACTIVE DTC**

NOTE: Diagnose any CAN - C Communication DTCs before

continuing.

NOTE: Diagnose and repair any system voltage DTCs before continuing with this test.

1. Start the engine and allow it to reach normal operating temperature.

   WARNING: When the engine is operating, do not stand in direct line with the fan. Do not put your hands near the pulleys, belts or fan. Do not wear loose clothing. Failure to follow these instructions may result in possible serious or fatal injury.

2. With the scan tool, select View DTCs.

   Is the status Active for this DTC?

   Yes

   - Go To 2

   No

   - Perform the INTERMITTENT CONDITION diagnostic procedure. Refer to **INTERMITTENT CONDITION** .

2. **CHECK THE (G31) AAT SIGNAL CIRCUIT FOR A SHORT TO VOLTAGE**

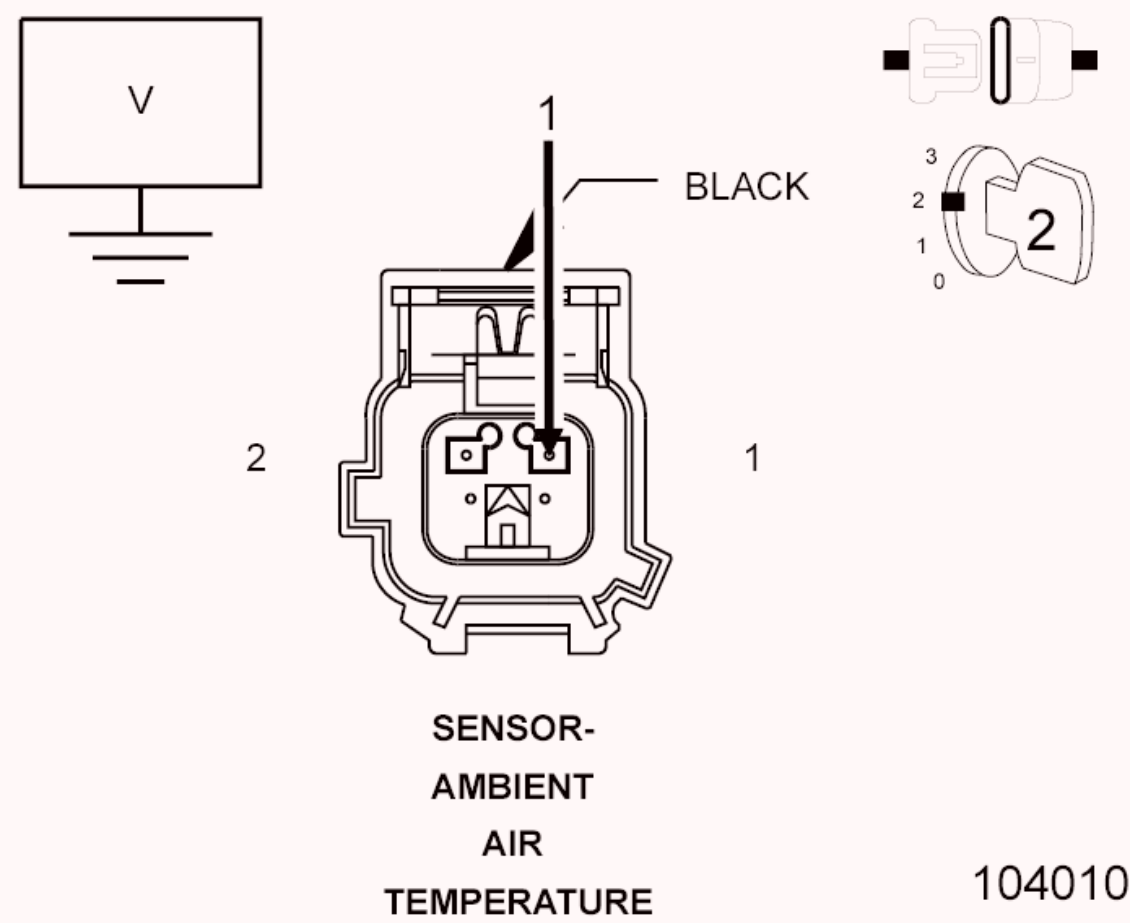

Fig. 49: Checking AAT Signal Circuit For Short To Voltage
Courtesy of CHRYSLER GROUP, LLC

1. Turn the ignition off.
2. Disconnect the Ambient Air Temperature Sensor harness connector.
3. Disconnect the Totally Integrated Power Module (TIPM) C4 harness connector.
4. Turn the ignition on.
5. Measure the voltage of the (G31) AAT Signal circuit in the Ambient Air Temperature Sensor harness connector.

   Is there any voltage present?

   Yes

   - Repair the (G31) AAT Signal circuit for a short to voltage.
   - Perform the POWERTRAIN VERIFICATION TEST. Refer to **POWERTRAIN VERIFICATION TEST** .

No

- Go To 3

3. **CHECK THE (G31) AAT SIGNAL FOR AN OPEN/HIGH RESISTANCE**

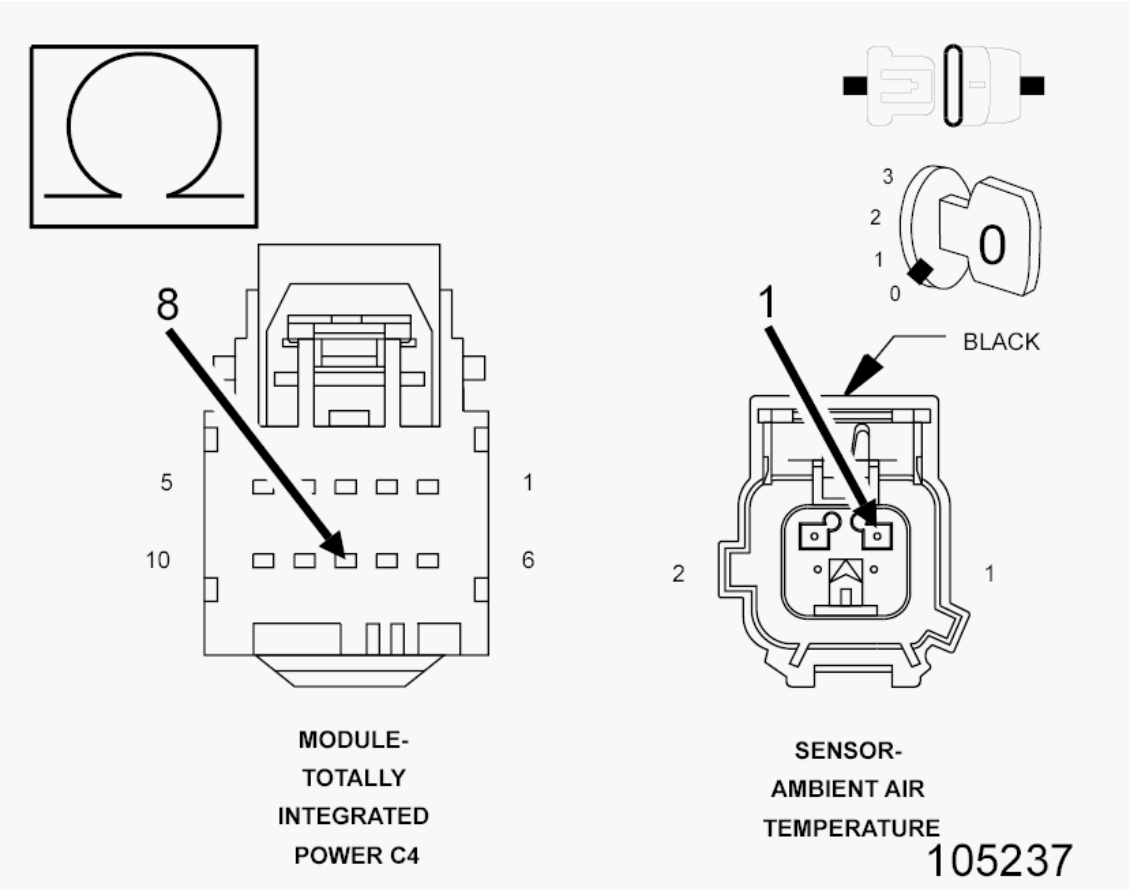

Fig. 50: Checking AAT Signal Circuit For Open Or High Resistance
Courtesy of CHRYSLER GROUP, LLC

1. Turn the ignition off.
2. Measure the resistance of the (G31) AAT Signal circuit between the Ambient Air Temperature Sensor harness connector and the TIPM C4 harness connector.

   Is the resistance below 5.0 Ohms?

   Yes

   - Go To 4

No

- Repair the (G31) AAT Signal circuit for an open or high resistance.
- Perform the POWERTRAIN VERIFICATION TEST. Refer to **POWERTRAIN VERIFICATION TEST** .

4. **CHECK THE (G931) AAT SENSOR GROUND CIRCUIT FOR AN OPEN/HIGH RESISTANCE**

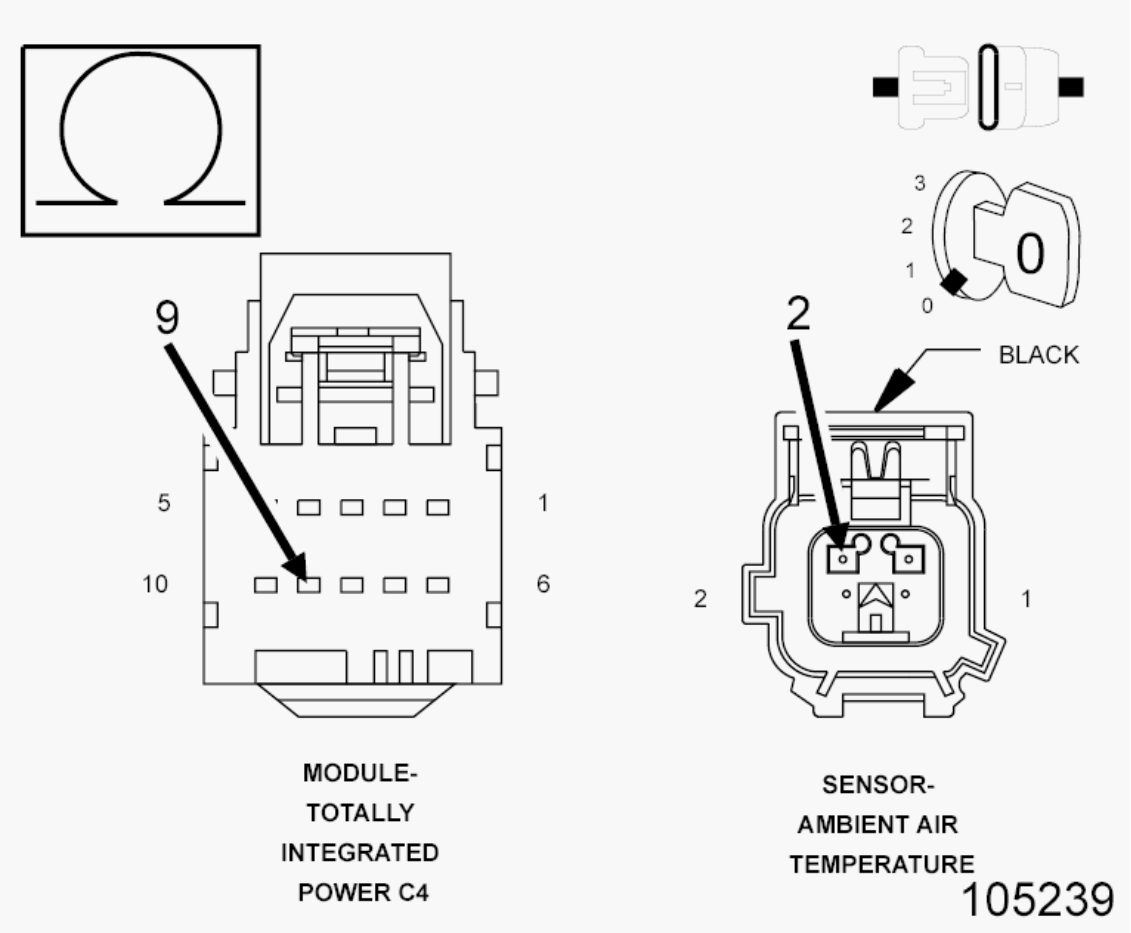

Fig. 51: Checking AAT Ground Circuit For Open Or High Resistance
Courtesy of CHRYSLER GROUP, LLC

1. Measure the resistance of the (G931) AAT Sensor Ground circuit between the Ambient Air Temperature Sensor harness connector and the TIPM C4 harness connector.

   Is the resistance below 5.0 Ohms?

   Yes

- Go To 5

No

- Repair the (G931) AAT Sensor Ground circuit for an open or high resistance.
- Perform the POWERTRAIN VERIFICATION TEST. Refer to **POWERTRAIN VERIFICATION TEST** .

5. **AMBIENT AIR TEMPERATURE SENSOR**

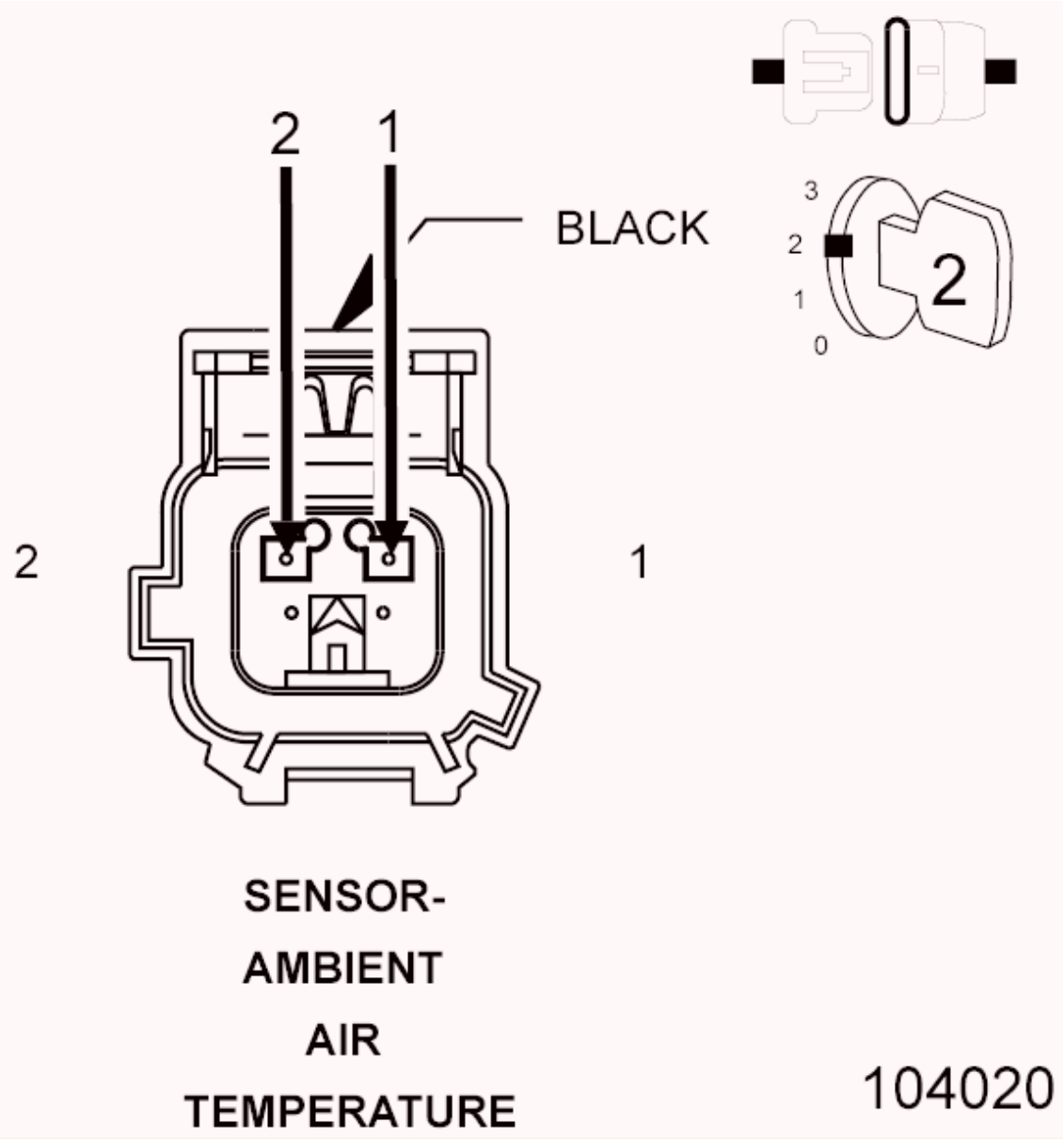

Fig. 52: Ambient Air Temperature Sensor Harness Connector End View
Courtesy of CHRYSLER GROUP, LLC

1. Turn the ignition off.
2. Connect the TIPM C4 harness connector.
3. Connect a jumper between the (G31) AAT Signal circuit and the (G931) AAT Sensor Ground in the Ambient Air Temperature Sensor harness connector.
4. Turn the ignition on.
5. With the scan tool, read the Ambient Air Temperature Sensor signal voltage.

   Is the voltage below 0.1 volt with the jumper in place?

   Yes

   - Replace the Ambient Air Temperature Sensor in accordance with the service information.
   - Perform the POWERTRAIN VERIFICATION TEST. Refer to **POWERTRAIN VERIFICATION TEST** .

   No

   - Go To 6

6. **TOTALLY INTEGRATED POWER MODULE (TIPM)**
   1. Using the wiring diagram/schematic as a guide, inspect the wiring and connectors between the Ambient Air Temperature Sensor and the TIPM.
   2. Look for any chafed, pierced, pinched, or partially broken wires.
   3. Look for broken, bent, pushed out or corroded terminals.
   4. Monitor the scan tool data relative to this circuit and wiggle test the wiring and connectors.
   5. Look for the data to change or for the DTC to reset during the wiggle test.
   6. Perform any Technical Service Bulletins that may apply.

      Were any problems found?

      Yes

- Repair as necessary.
- Perform the POWERTRAIN VERIFICATION TEST. Refer to **POWERTRAIN VERIFICATION TEST** .

No

- Replace and program the Totally Integrated Power Module (TIPM) in accordance with the service information.
- Perform the BODY VERIFICATION TEST. Refer to **STANDARD PROCEDURE** .

P0107-MANIFOLD ABSOLUTE PRESSURE SENSOR CIRCUIT LOW

For a complete wiring diagram, **refer to appropriate SYSTEM WIRING DIAGRAMS article** .

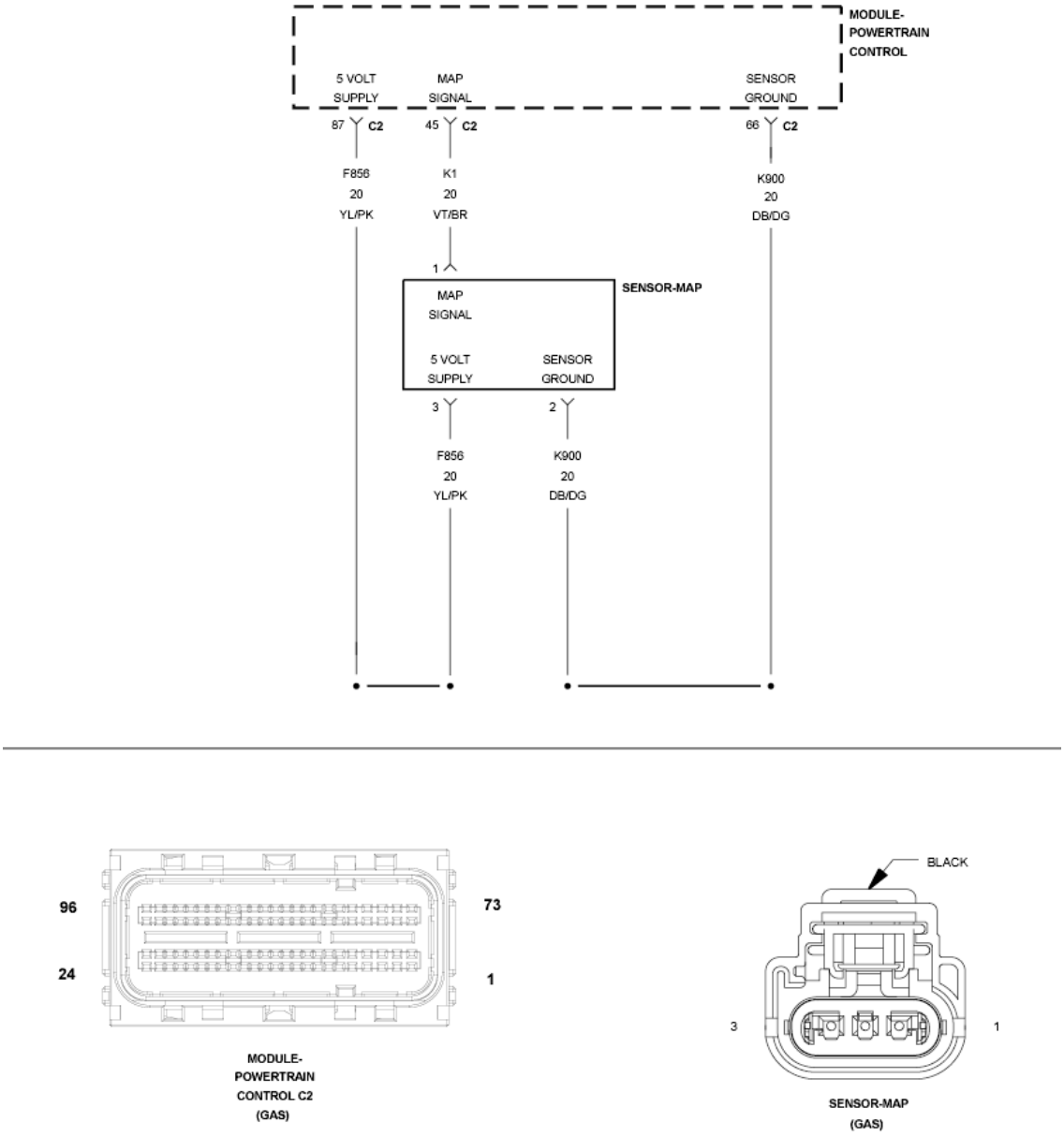

Fig. 53: Manifold Absolute Pressure Sensor Circuit Diagram
Courtesy of CHRYSLER GROUP, LLC

THEORY OF OPERATION

The Manifold Absolute Pressure (MAP) Sensor is a transducer that varies resistance according to changes in altitude and atmospheric conditions. The MAP Sensor reading gives the Powertrain Control Module (PCM) an indication of the current air pressure within the Intake Manifold. The PCM uses this information to help calculate fuel delivery. The MAP Sensor functions as a typical three wire sensor. The PCM supplies 5 volts to the MAP Sensor on a 5 volt reference circuit and provides a ground on a low reference circuit. The MAP Sensor provides a voltage signal to the PCM on a signal circuit relative to the pressure changes.

The PCM receives the Barometric Pressure (BARO) Sensor reading from the MAP Sensor with the ignition on, before the engine is cranking or running.

WHEN MONITORED

With the ignition on and battery voltage greater than 10.4 volts.

SET CONDITION

The Powertrain Control Module (PCM) detects that the MAP Sensor input voltage is below the minimum acceptable threshold. One trip fault. **If the vehicle is equipped with the stop/start feature, the system will be disabled when this DTC is active.**

POSSIBLE CAUSES

Possible Causes
5-VOLT SUPPLY CIRCUIT SHORTED TO GROUND
MAP SIGNAL CIRCUIT SHORTED TO GROUND
5-VOLT SUPPLY CIRCUIT SHORTED TO THE SENSOR GROUND CIRCUIT
MAP SIGNAL CIRCUIT SHORTED TO THE SENSOR GROUND CIRCUIT
5-VOLT SUPPLY CIRCUIT OPEN OR HIGH RESISTANCE
MAP SIGNAL CIRCUIT OPEN OR HIGH RESISTANCE
MAP SENSOR
POWERTRAIN CONTROL MODULE (PCM)

Always perform the Pre-Diagnostic Troubleshooting procedure before proceeding. Refer to PRE-DIAGNOSTIC TROUBLESHOOTING PROCEDURE .

DIAGNOSTIC TEST

1. **ACTIVE DTC**
    1. Start the engine and allow it to idle.

WARNING: **When the engine is operating, do not stand in direct line with the fan. Do not put your hands near the pulleys, belts or fan.**

Do not wear loose clothing. Failure to follow these instructions may result in possible serious or fatal injury.

2. With the scan tool, select View DTCs.

   Is the status Active for this DTC?

   Yes

   - Go To 2

   No

   - Perform the INTERMITTENT DTC diagnostic procedure. Refer to **INTERMITTENT CONDITION** .

2. **CHECK THE (F856) 5-VOLT SUPPLY CIRCUIT VOLTAGE**

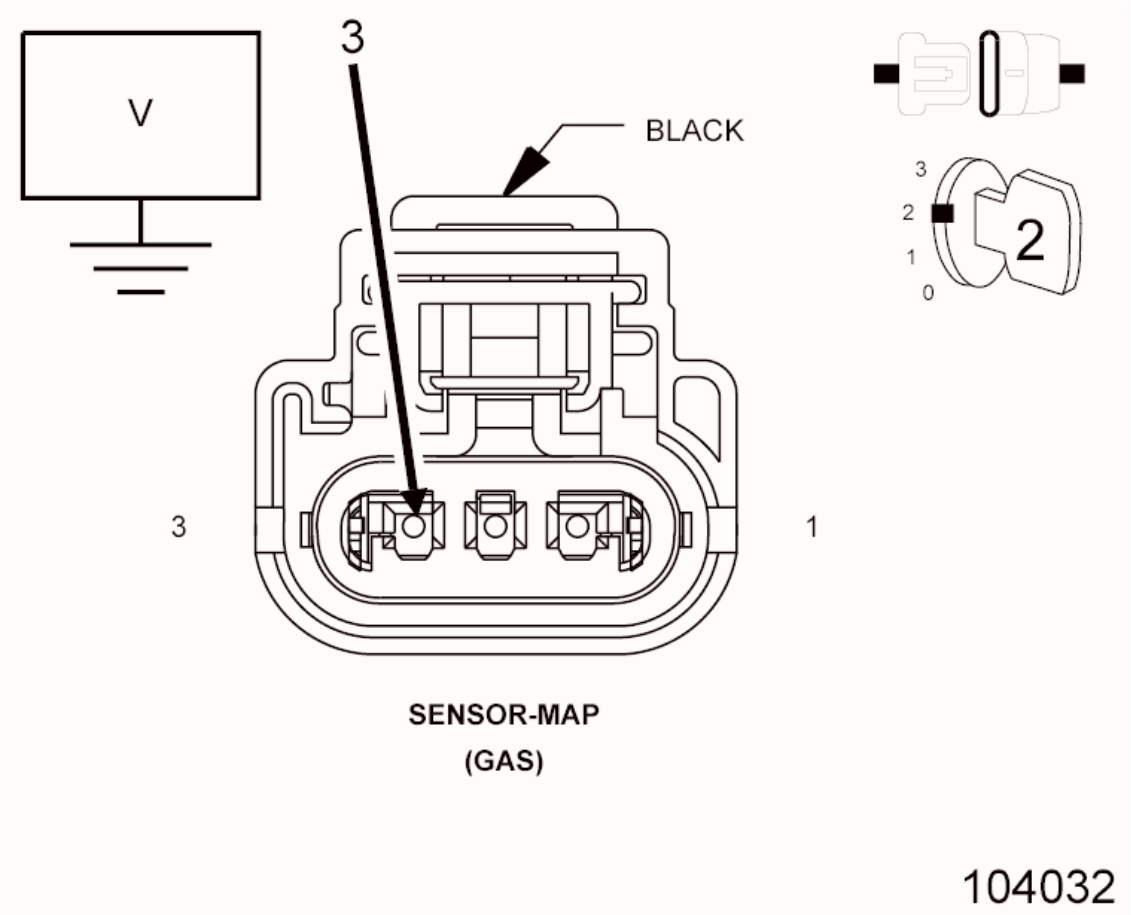

Fig. 54: Checking 5-Volt Supply Circuit Voltage
Courtesy of CHRYSLER GROUP, LLC

1. Turn the ignition off.
2. Disconnect the MAP Sensor harness connector.
3. Turn the ignition on.
4. Measure the voltage of the (F856) 5-Volt Supply circuit in the MAP Sensor harness connector.

   Is the voltage above 4.8 volts?

   Yes

   - Go To 6

   No

   - Go To 3

3. **CHECK THE (F856) 5-VOLT SUPPLY CIRCUIT FOR A SHORT TO GROUND**

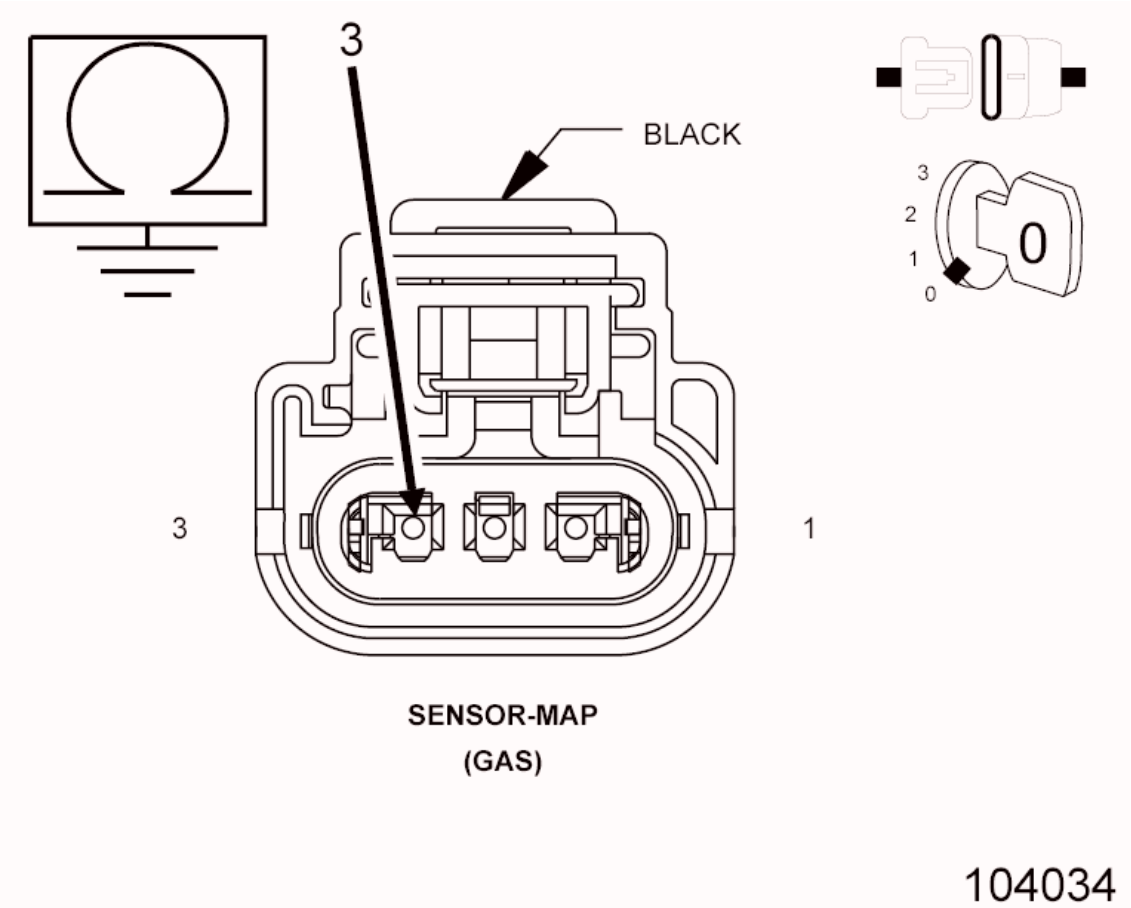

Fig. 55: Checking 5-Volt Supply Circuit For Short To Ground

Courtesy of CHRYSLER GROUP, LLC

1. Turn the ignition off.
2. Disconnect the PCM C2 harness connector.
3. Measure the resistance between ground and the (F856) 5-Volt Supply circuit at the MAP Sensor harness connector.

   Is the resistance above 10k Ohms?

   Yes

   - Go To 4

   No

   - Repair the (F856) 5-Volt Supply circuit for a short to ground.
   - Perform the POWERTRAIN VERIFICATION TEST. Refer to **POWERTRAIN VERIFICATION TEST** .

4. **CHECK FOR THE (F856) 5-VOLT SUPPLY CIRCUIT SHORTED TO THE (K900) SENSOR GROUND CIRCUIT**

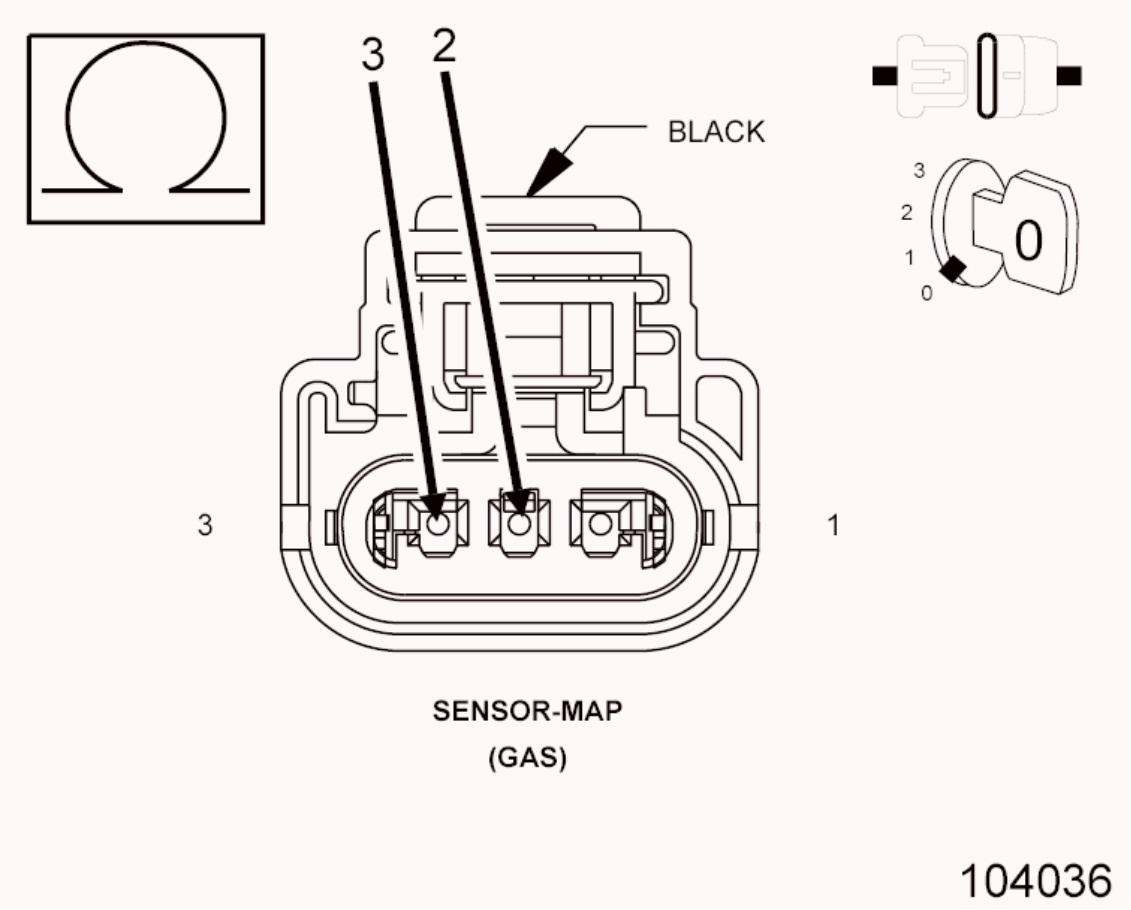

Fig. 56: Checking 5-Volt Supply Circuit For Short To Sensor Ground Circuit
Courtesy of CHRYSLER GROUP, LLC

1. Measure the resistance between the (F856) 5-Volt Supply circuit and the (K900) Sensor Ground circuit at the MAP Sensor harness connector.

   Is the resistance above 10k Ohms?

   Yes

   - Go To 5

   No

   - Repair the (F856) 5-Volt Supply circuit for a short to the (K900) Sensor Ground circuit.
   - Perform the POWERTRAIN VERIFICATION TEST. Refer to **POWERTRAIN VERIFICATION TEST** .

5. **CHECK THE (F856) 5-VOLT SUPPLY CIRCUIT FOR AN OPEN/HIGH RESISTANCE**

CAUTION: Do not probe the PCM harness connectors. Probing the PCM harness connectors will damage the PCM terminals resulting in poor terminal to pin connection. Install the GPEC Diagnostic Adaptor to perform the diagnosis.

1. Connect the (special tool #10436, Adapter, GPEC Diagnostic).
2. Measure the resistance of the (F856) 5-Volt Supply circuit between the MAP Sensor harness connector and the GPEC Adaptor.

Is the resistance below 5.0 Ohms?

Yes

- Go To 10

No

- Repair the (F856) 5-Volt Supply circuit for an open or high resistance.
- Perform the POWERTRAIN VERIFICATION TEST. Refer to **POWERTRAIN VERIFICATION TEST** .

6. **CHECK THE (K1) MAP SIGNAL CIRCUIT FOR A SHORT TO GROUND**

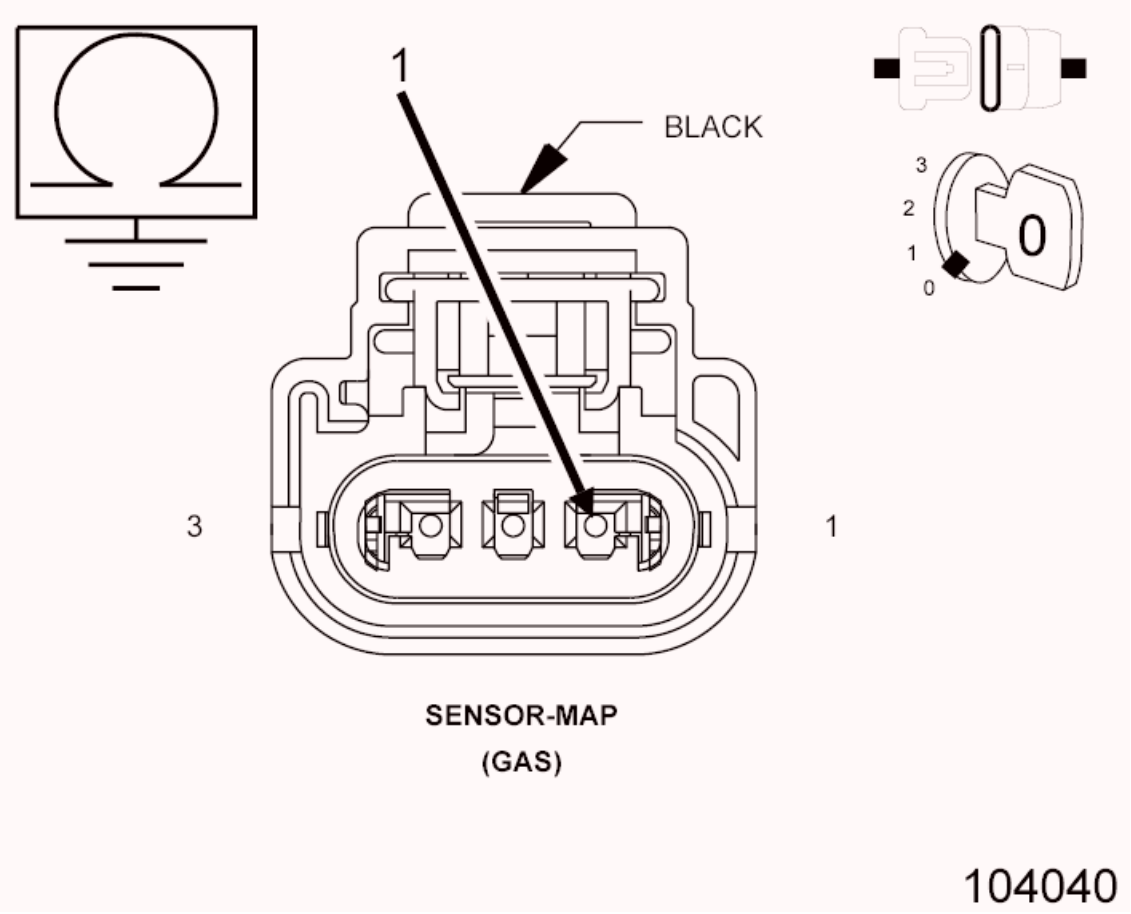

Fig. 57: Checking MAP Signal Circuit For Short To Ground
Courtesy of CHRYSLER GROUP, LLC

1. Turn the ignition off.
2. Disconnect the PCM C2 harness connector.
3. Measure the resistance between ground and the (K1) MAP Signal circuit at the MAP Sensor harness connector.

   Is the resistance above 10k Ohms?

   Yes

   - Go To 7

   No

   - Repair the (K1) MAP Signal circuit for a short to ground.
   - Perform the POWERTRAIN VERIFICATION TEST. Refer to **POWERTRAIN VERIFICATION TEST** .

7. **CHECK FOR THE (K1) MAP SIGNAL CIRCUIT SHORTED TO THE (K900) SENSOR GROUND CIRCUIT**

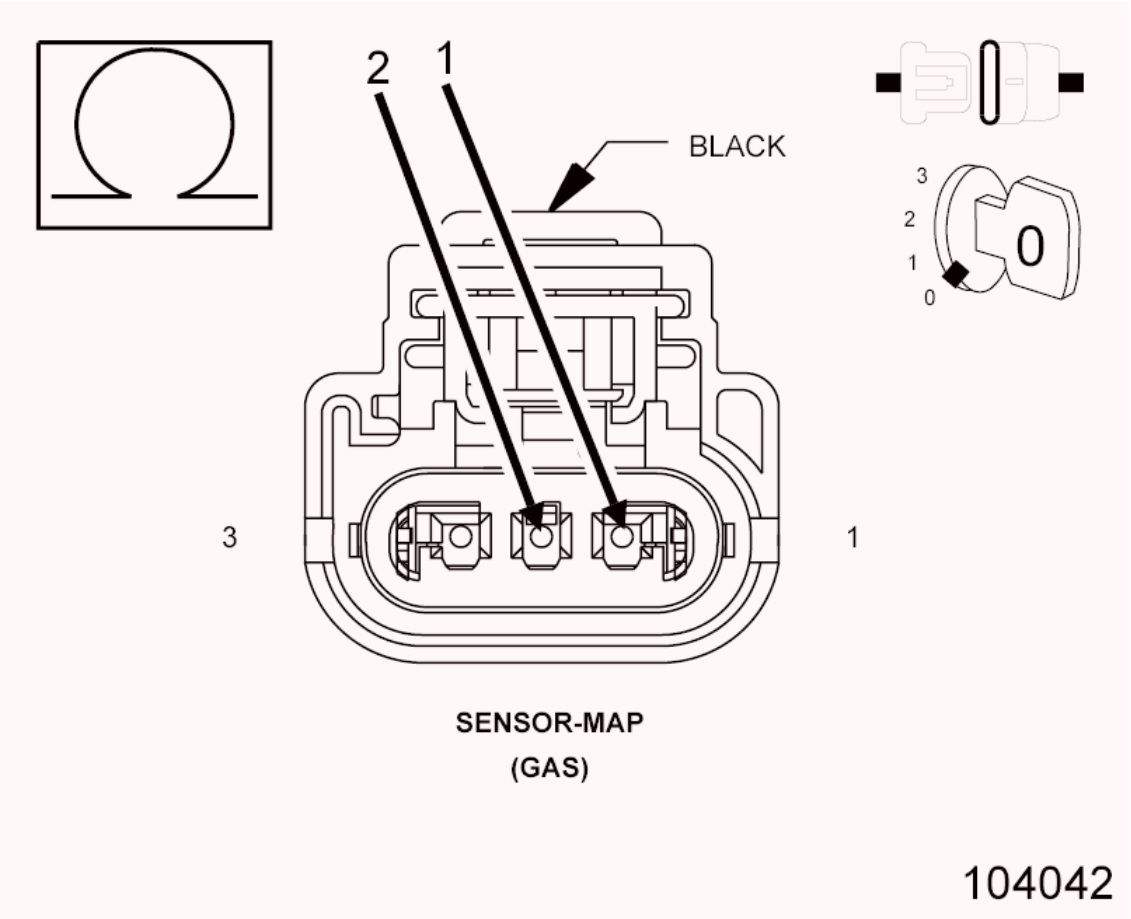

Fig. 58: Checking MAP Signal Circuit For Short To Sensor Ground Circuit
Courtesy of CHRYSLER GROUP, LLC

1. Measure the resistance between the (K1) MAP Signal circuit and the (K900) Sensor Ground circuit at the MAP Sensor harness connector.

   Is the resistance above 10k Ohms?

   Yes

   - Go To 8

   No

   - Repair the (K1) MAP Signal circuit for a short to the (K900) Sensor Ground circuit.

- Perform the POWERTRAIN VERIFICATION TEST. Refer to **POWERTRAIN VERIFICATION TEST** .

8. **CHECK THE (K1) MAP SIGNAL CIRCUIT FOR AN OPEN/HIGH RESISTANCE**

CAUTION: Do not probe the PCM harness connectors. Probing the PCM harness connectors will damage the PCM terminals resulting in poor terminal to pin connection. Install the GPEC Diagnostic Adaptor to perform the diagnosis.

1. Connect the (special tool #10436, Adapter, GPEC Diagnostic).
2. Measure the resistance of the (K1) MAP Signal circuit between the MAP Sensor harness connector and the GPEC Adaptor.

   Is the resistance below 5.0 Ohms?

   Yes

   - Go To 9

   No

   - Repair the (K1) MAP Signal circuit for an open or high resistance.
   - Perform the POWERTRAIN VERIFICATION TEST. Refer to **POWERTRAIN VERIFICATION TEST** .

9. **MAP SENSOR**

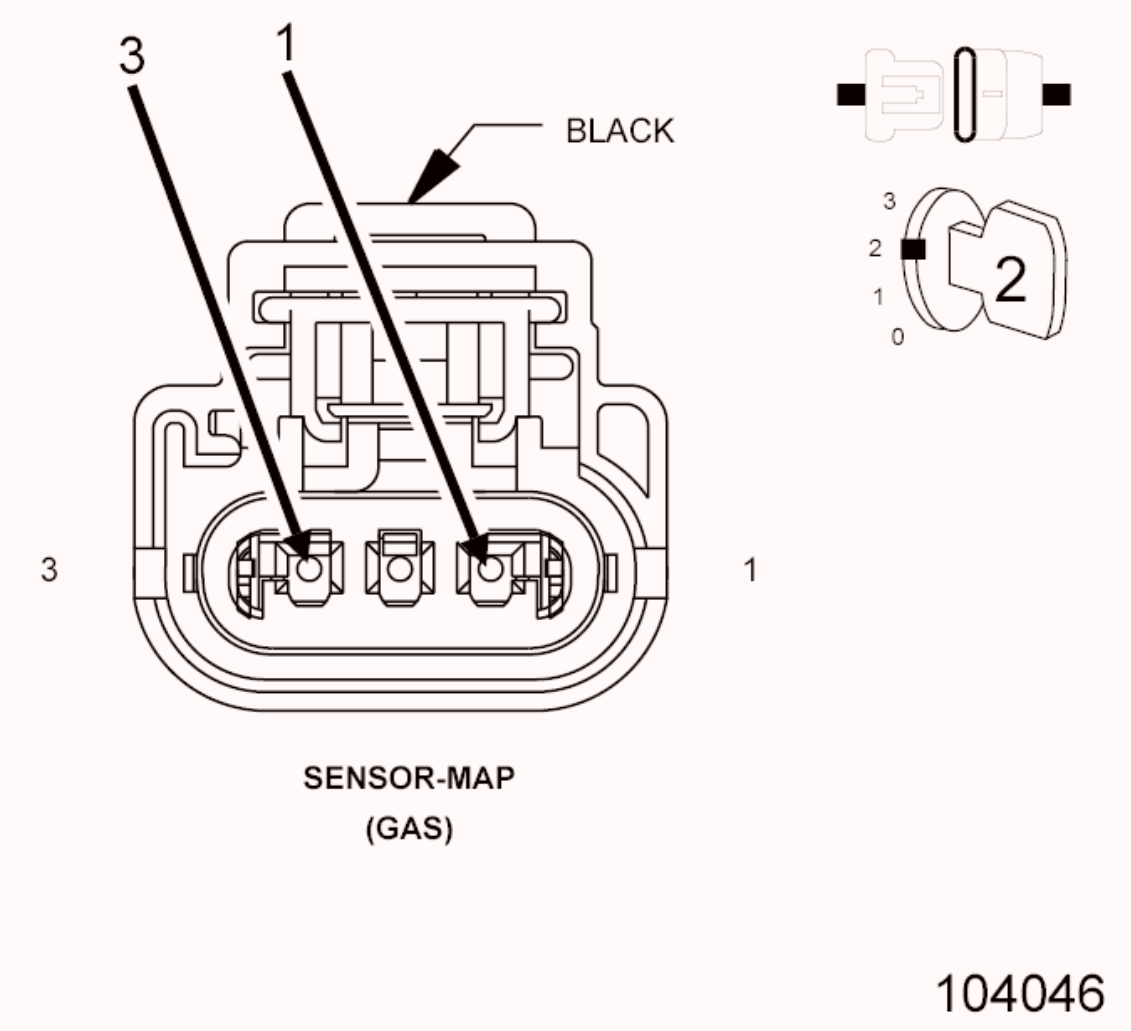

Fig. 59: MAP Sensor Harness Connector End View
Courtesy of CHRYSLER GROUP, LLC

1. Turn the ignition off.
2. Reconnect the PCM C2 harness connector.
3. Connect a jumper between the (F856) 5-Volt Supply circuit and the (K1) MAP Signal circuit at the MAP Sensor harness connector.
4. Turn the ignition on.
5. With the scan tool, read the MAP Sensor signal voltage.

   Is the voltage above 4.8 volts with the jumper in place?

   Yes

   - Replace the MAP Sensor in accordance with the service information. Refer to **SENSOR, MANIFOLD AIR PRESSURE**

(MAP), REMOVAL .

- Perform the POWERTRAIN VERIFICATION TEST. Refer to **POWERTRAIN VERIFICATION TEST** .

No

- Go To 10

10. **POWERTRAIN CONTROL MODULE (PCM)**
    1. Using the wiring diagram/schematic as a guide, inspect the wiring and connectors between the MAP Sensor and the Powertrain Control Module (PCM).
    2. Look for any chafed, pierced, pinched, or partially broken wires.
    3. Look for broken, bent, pushed out or corroded terminals.
    4. Monitor the scan tool data relative to this circuit and wiggle test the wiring and connectors.
    5. Look for the data to change or for the DTC to reset during the wiggle test.
    6. Perform any Technical Service Bulletins that may apply.

    Were any problems found?

    Yes

    - Repair as necessary.
    - Perform the POWERTRAIN VERIFICATION TEST. Refer to **POWERTRAIN VERIFICATION TEST** .

    No

    - Replace and program the Powertrain Control Module (PCM) in accordance with the service information. Refer to **MODULE, POWERTRAIN CONTROL, REMOVAL** .
    - Perform the POWERTRAIN VERIFICATION TEST. Refer to **POWERTRAIN VERIFICATION TEST** .

P0108-MANIFOLD ABSOLUTE PRESSURE SENSOR CIRCUIT HIGH

For a complete wiring diagram, **refer to appropriate SYSTEM WIRING**

DIAGRAMS article .

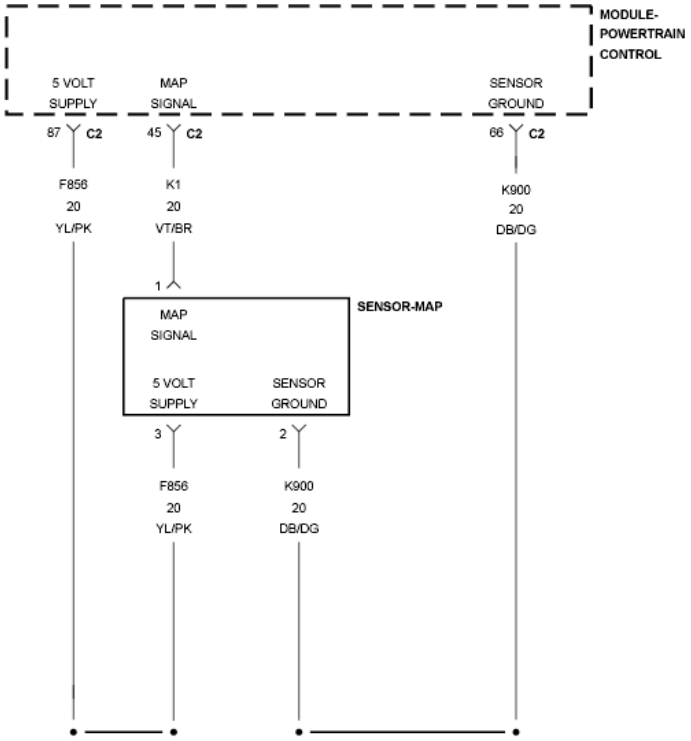

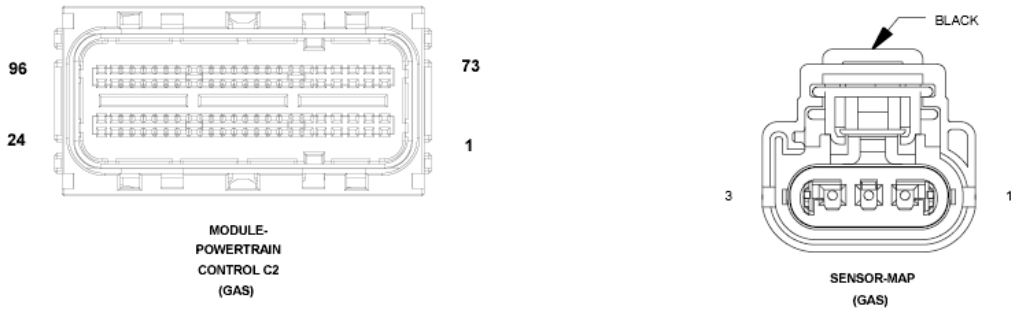

Fig. 60: Manifold Absolute Pressure Sensor Circuit Diagram
Courtesy of CHRYSLER GROUP, LLC

THEORY OF OPERATION

The Manifold Absolute Pressure (MAP) Sensor is a transducer that varies resistance according to changes in altitude and atmospheric conditions. The MAP Sensor reading gives the Powertrain Control Module (PCM) an indication of the current air pressure within the Intake Manifold. The PCM uses this information to help calculate fuel delivery. The MAP Sensor functions as a typical three wire sensor. The PCM supplies 5 volts to the MAP Sensor on a 5 volt reference circuit

and provides a ground on a low reference circuit. The MAP Sensor provides a voltage signal to the PCM on a signal circuit relative to the pressure changes. The PCM receives the Barometric Pressure (BARO) Sensor reading from the MAP Sensor with the ignition on, before the engine is cranking or running.

WHEN MONITORED

With the ignition on and battery voltage greater than 10.4 volts.

SET CONDITION

The Powertrain Control Module (PCM) detects that the Manifold Absolute Pressure (MAP) Sensor input voltage is above the maximum acceptable threshold. One trip fault. **If the vehicle is equipped with the stop/start feature, the system will be disabled when this DTC is active.**

POSSIBLE CAUSES

Possible Causes
5-VOLT SUPPLY CIRCUIT SHORTED TO VOLTAGE
MAP SIGNAL CIRCUIT SHORTED TO VOLTAGE
MAP SIGNAL CIRCUIT SHORTED TO THE 5-VOLT SUPPLY CIRCUIT
MAP SIGNAL CIRCUIT OPEN OR HIGH RESISTANCE
SENSOR GROUND CIRCUIT OPEN OR HIGH RESISTANCE
MAP SENSOR
POWERTRAIN CONTROL MODULE (PCM)

Always perform the Pre-Diagnostic Troubleshooting procedure before proceeding. Refer to PRE-DIAGNOSTIC TROUBLESHOOTING PROCEDURE .

DIAGNOSTIC TEST

1. **ACTIVE DTC**
    1. Start the engine and allow it to idle.

WARNING: When the engine is operating, do not stand in direct line with the fan. Do not put your hands near the pulleys, belts or fan.

Do not wear loose clothing. Failure to follow these instructions may result in possible serious or fatal injury.

2. With the scan tool, select View DTCs.

   Is the status Active for this DTC?

   Yes

   - Go To 2

   No

   - Perform the INTERMITTENT DTC diagnostic procedure. Refer to **INTERMITTENT CONDITION** .

2. **CHECK THE (F856) 5-VOLT SUPPLY CIRCUIT FOR A SHORT TO VOLTAGE**

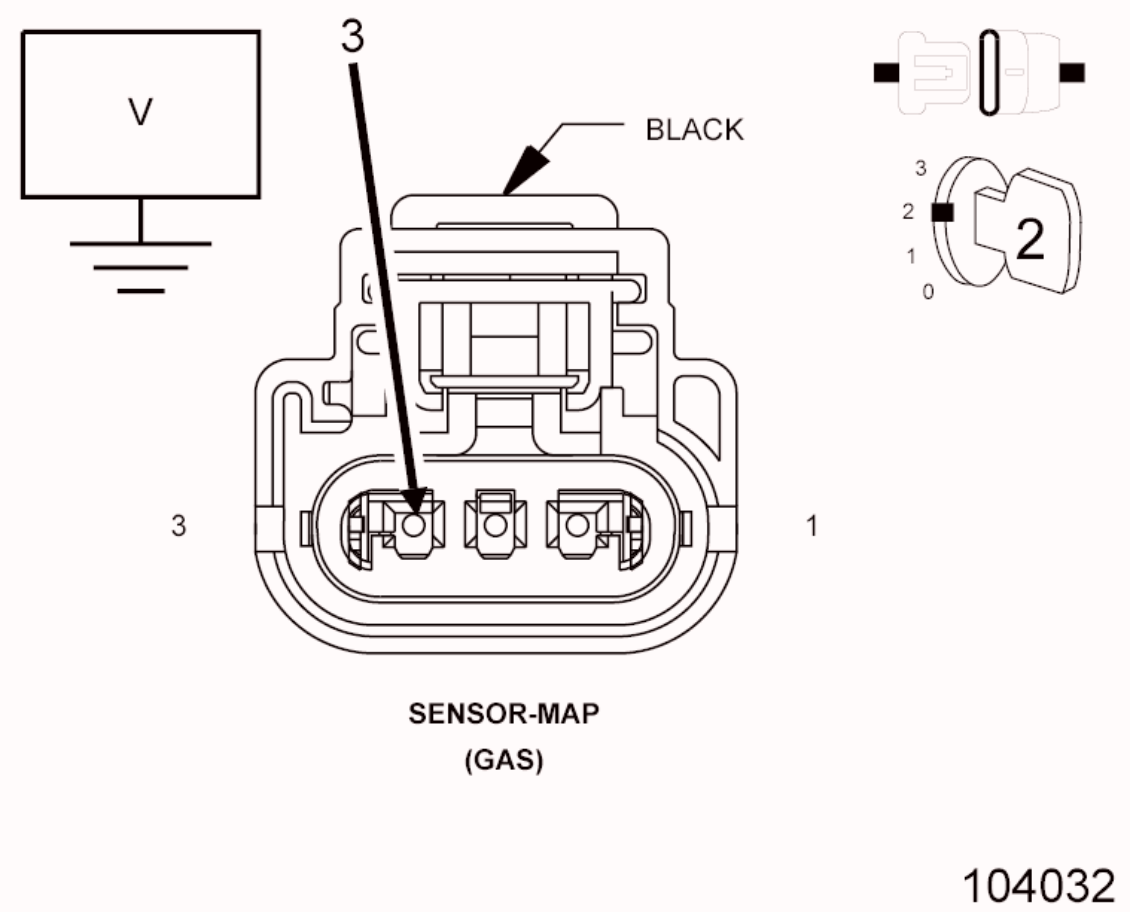

Fig. 61: Checking MAP Sensor 5-Volt Supply Circuit For Short To

Voltage
Courtesy of CHRYSLER GROUP, LLC

1. Turn the ignition off.
2. Disconnect the MAP Sensor harness connector.
3. Turn the ignition on.
4. Measure the voltage of the (F856) 5-Volt Supply circuit at the Manifold Absolute Pressure Sensor harness connector.

   Is the voltage above 5.2 volts?

   Yes

   - Repair the (F856) 5-Volt Supply circuit for a short to voltage.
   - Perform the POWERTRAIN VERIFICATION TEST. Refer to **POWERTRAIN VERIFICATION TEST** .

   No

   - Go To 3

3. **CHECK THE (K1) MAP SIGNAL CIRCUIT FOR A SHORT TO VOLTAGE**

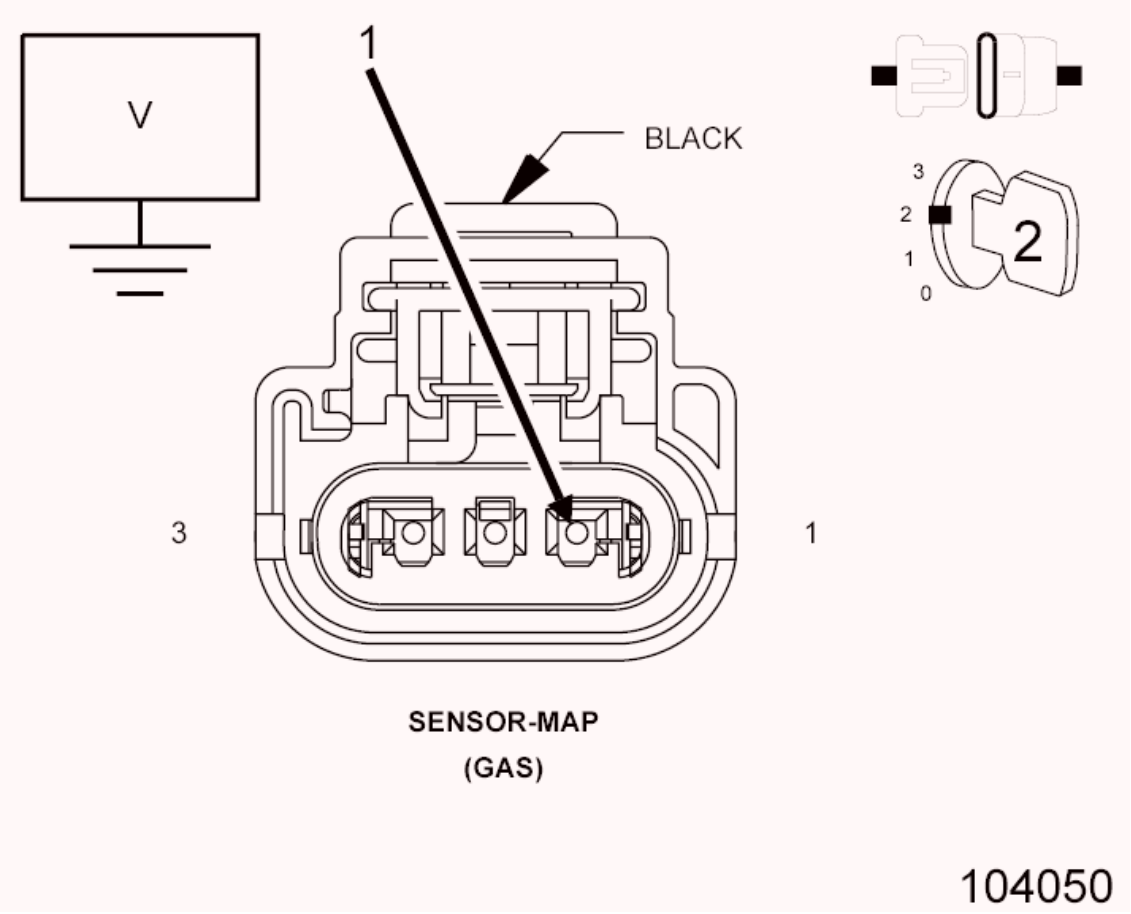

Fig. 62: Checking MAP Signal Circuit For Short To Voltage
Courtesy of CHRYSLER GROUP, LLC

1. Measure the voltage of the (K1) MAP Signal circuit at the MAP Sensor harness connector.

   Is the voltage above 5.2 volts?

   Yes

   - Repair the (K1) MAP Signal circuit for a short to voltage.
   - Perform the POWERTRAIN VERIFICATION TEST. Refer to **POWERTRAIN VERIFICATION TEST** .

   No

   - Go To 4

4. **CHECK FOR THE (K1) MAP SIGNAL CIRCUIT SHORTED TO THE (F856) 5-VOLT SUPPLY CIRCUIT**

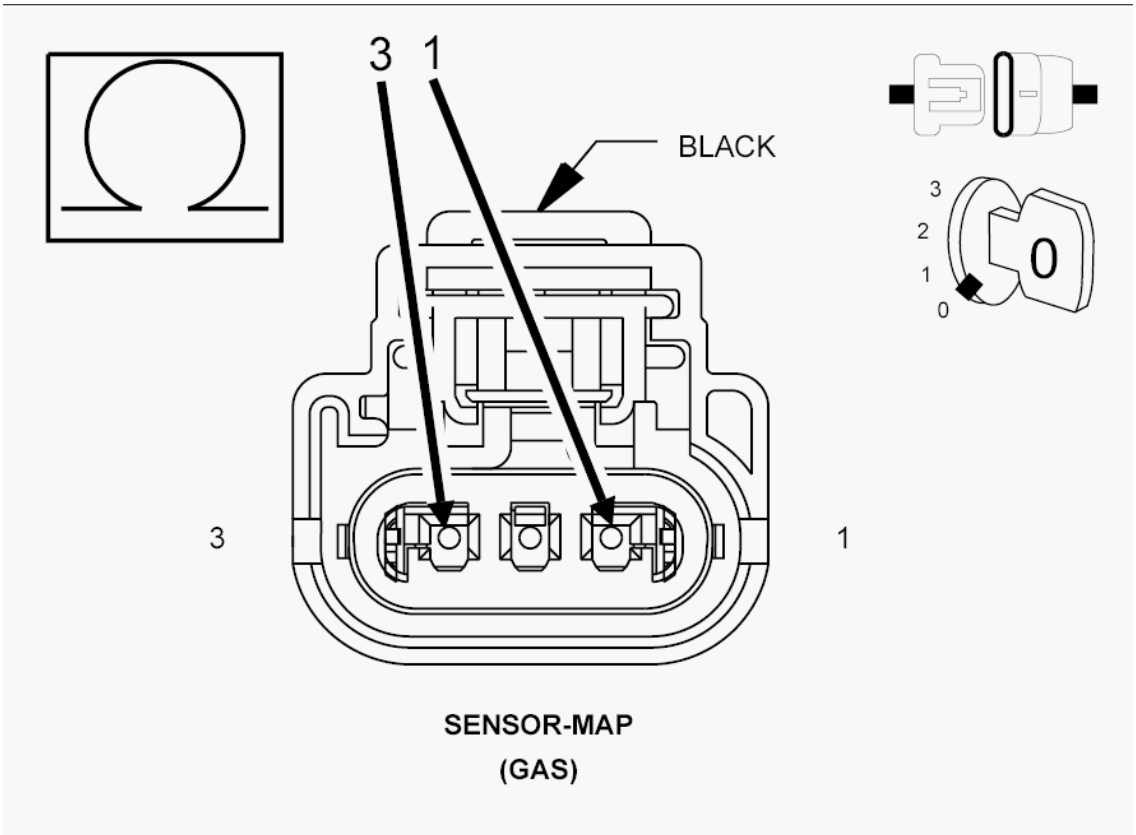

Fig. 63: Checking MAP Signal Circuit For Short To 5-Volt Supply Circuit
Courtesy of CHRYSLER GROUP, LLC

1. Turn the ignition off.
2. Disconnect the PCM C2 harness connector.
3. Measure the resistance between the (K1) MAP Signal circuit and the (F856) 5-Volt Supply at the MAP Sensor harness connector.

   Is the resistance above 10k Ohms?

   Yes

   - Go To 5

   No

   - Repair the (K1) MAP Signal circuit for a short to the (F856) 5-Volt Supply circuit.
   - Perform the POWERTRAIN VERIFICATION TEST. Refer to **POWERTRAIN VERIFICATION TEST** .

5. **CHECK THE (K1) MAP SIGNAL CIRCUIT FOR AN OPEN/HIGH RESISTANCE**

CAUTION: Do not probe the PCM harness connectors. Probing the PCM harness connectors will damage the PCM terminals resulting in poor terminal to pin connection. Install the GPEC Diagnostic Adaptor to perform the diagnosis.

1. Connect the (special tool #10436, Adapter, GPEC Diagnostic).
2. Measure the resistance of the (K1) MAP Signal between the MAP Sensor harness connector and the GPEC Adaptor.

   Is the resistance below 5.0 Ohms?

   Yes

   - Go To 6

   No

   - Repair the (K1) MAP Signal for an open or high resistance.
   - Perform the POWERTRAIN VERIFICATION TEST. Refer to **POWERTRAIN VERIFICATION TEST** .

6. **CHECK THE (K900) SENSOR GROUND CIRCUIT FOR AN OPEN/HIGH RESISTANCE**
   1. Measure the resistance of the (K900) Sensor Ground circuit between the MAP Sensor harness connector and the GPEC Adaptor.

      Is the resistance below 5.0 Ohms?

      Yes

      - Go To 7

      No

      - Repair the (K900) Sensor Ground circuit for an open or high resistance.

- Perform the POWERTRAIN VERIFICATION TEST. Refer to **POWERTRAIN VERIFICATION TEST** .

7. **MAP SENSOR**

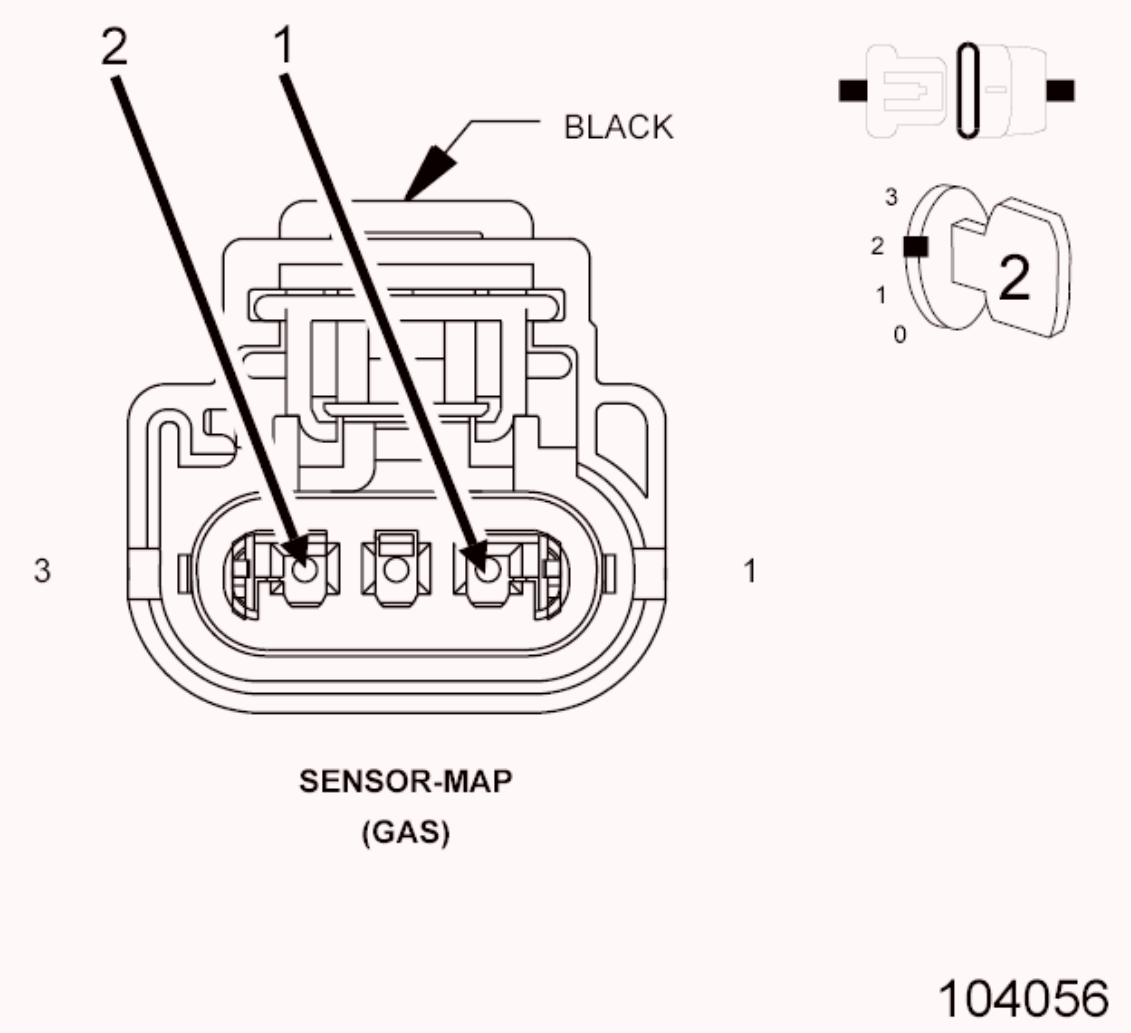

Fig. 64: Manifold Absolute Pressure Sensor Harness Connector End View
Courtesy of CHRYSLER GROUP, LLC

1. Reconnect the PCM C2 harness connector.
2. Connect a jumper between the (K900) Sensor Ground circuit and the (K1) MAP Signal circuit at the MAP Sensor harness connector.
3. Turn the ignition on.
4. With the scan tool, read the MAP Sensor signal voltage.

   Is the voltage below 0.1 volt with the jumper in place?

Yes

- Replace the MAP Sensor in accordance with the service information. Refer to **SENSOR, MANIFOLD AIR PRESSURE (MAP), REMOVAL** .
- Perform the POWERTRAIN VERIFICATION TEST. Refer to **POWERTRAIN VERIFICATION TEST** .

No

- Go To 8

8. **POWERTRAIN CONTROL MODULE (PCM)**
   1. Using the wiring diagram/schematic as a guide, inspect the wiring and connectors between the Manifold Absolute Pressure Sensor and the Powertrain Control Module (PCM).
   2. Look for any chafed, pierced, pinched, or partially broken wires.
   3. Look for broken, bent, pushed out or corroded terminals.
   4. Monitor the scan tool data relative to this circuit and wiggle test the wiring and connectors.
   5. Look for the data to change or for the DTC to reset during the wiggle test.
   6. Perform the Technical Service Bulletins that may apply.

   Were any problems found?

   Yes

   - Repair as necessary.
   - Perform the POWERTRAIN VERIFICATION TEST. Refer to **POWERTRAIN VERIFICATION TEST** .

   No

   - Replace and program the Powertrain Control Module (PCM) in accordance with the service information. Refer to **MODULE, POWERTRAIN CONTROL, REMOVAL** .
   - Perform the POWERTRAIN VERIFICATION TEST. Refer to **POWERTRAIN VERIFICATION TEST** .

P0111-INTAKE AIR TEMPERATURE SENSOR 1 PERFORMANCE

For a complete wiring diagram, **refer to appropriate SYSTEM WIRING DIAGRAMS article** .

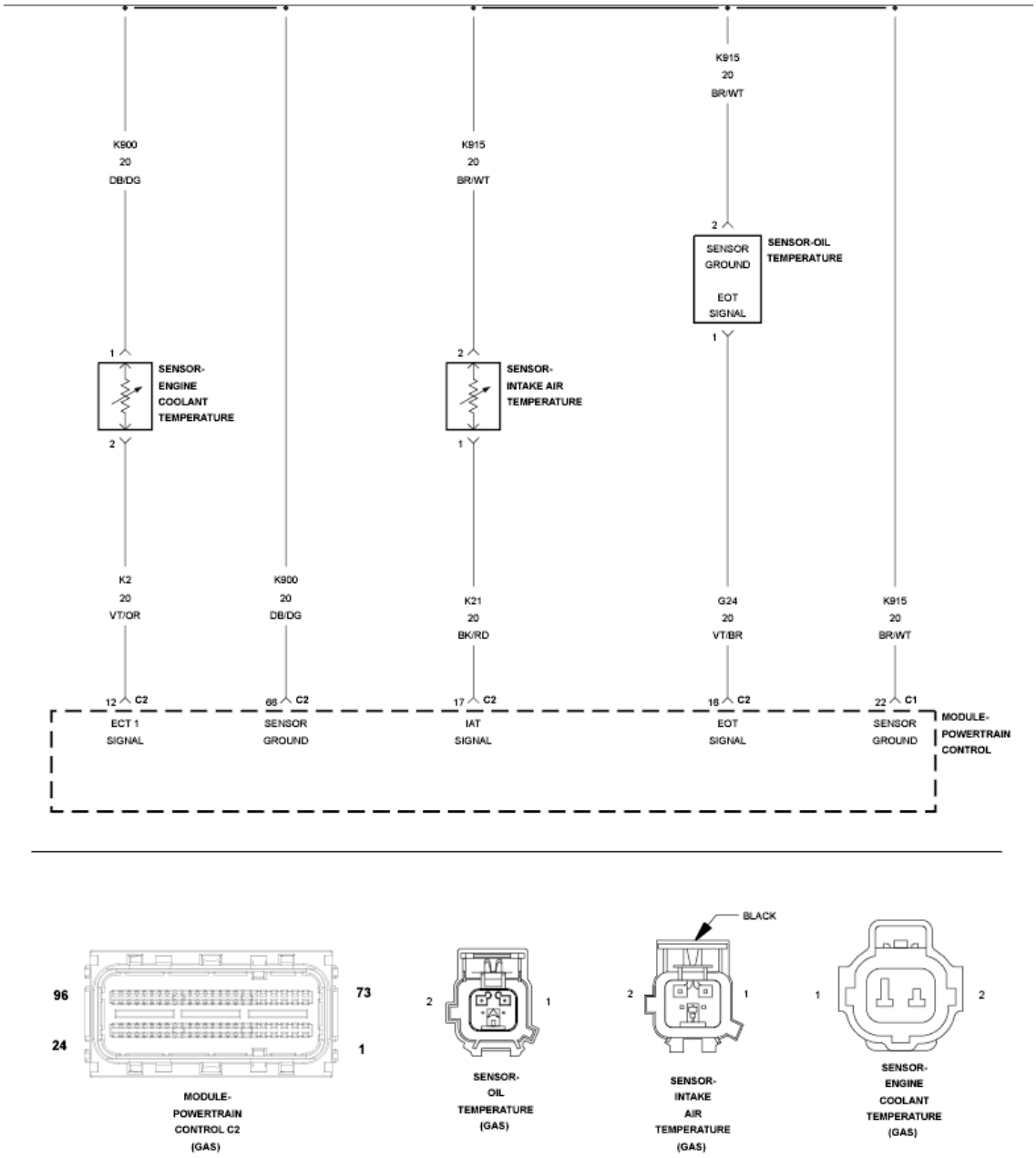

Fig. 65: Temperature Sensors Circuit Diagram
Courtesy of CHRYSLER GROUP, LLC

THEORY OF OPERATION

Temperature sensor performance looks at the outputs of three temperature sensors and compares them under cold start conditions. Following a start to run

delay time, the outputs of the Ambient Air, Engine Coolant and Intake Air Temperature sensors will be compared. If the engine coolant and ambient air temperature sensors agree and the intake air temperature does not agree, the intake air temperature sensor is declared as irrational. If declared irrational a second comparison will be done after a short drive cycle.

WHEN MONITORED

With the engine off time greater than 480 minutes and ambient temperature greater than -7°C (19.4°F).

SET CONDITION

After a calibrated amount of cool down time, the Powertrain Control Module (PCM) compares the Ambient Air Temperature (AAT), Engine Coolant Temperature (ECT), and Intake Air Temperature (IAT) Sensor values. If one sensor value is not within 10°C (18°F) of the other temperature sensors for two consecutive trips, a DTC will set. Three good trips to turn off the MIL.

POSSIBLE CAUSES

Possible Causes
HIGH RESISTANCE IN THE (K21) IAT SIGNAL CIRCUIT
HIGH RESISTANCE IN THE (K915) SENSOR GROUND CIRCUIT
INTAKE AIR TEMPERATURE SENSOR
POWERTRAIN CONTROL MODULE (PCM)

Always perform the Pre-Diagnostic Troubleshooting procedure before proceeding. Refer to PRE-DIAGNOSTIC TROUBLESHOOTING PROCEDURE .

DIAGNOSTIC TEST

1. **INTAKE AIR TEMPERATURE**

NOTE: Diagnose any CAN - C Communication DTCs before continuing.

1. Turn the ignition off.
2. If possible, allow the vehicle to sit with the ignition off for more than 480 minutes in an environment where the temperature is consistent and

above -7°C (19.4°F).

3. Turn the ignition on.
4. With a scan tool, compare the AAT, ECT, and IAT sensor values.

   Is the Intake Air Temperature Sensor value within 10°C (18°F) of the other two sensor values?

   Yes

   - Perform the INTERMITTENT CONDITION diagnostic procedure. Refer to **INTERMITTENT CONDITION** .

   No

   - Go To 2

2. **ACTIVE DTC**
   1. Test drive the vehicle. The vehicle must exceed 48 km/h (30 mph) during the test drive. Do not cycle the ignition off when the test drive is completed.
   2. With a scan tool, select View DTCs.

      Is the status Active or Pending for this DTC?

      Yes

      - Go To 3

      No

      - Perform the INTERMITTENT CONDITION diagnostic procedure. Refer to **INTERMITTENT CONDITION** .

3. **CHECK FOR HIGH RESISTANCE IN THE (K21) IAT SIGNAL CIRCUIT**
   1. Turn the ignition off.
   2. Disconnect the Intake Air Temperature Sensor (IAT) harness connector.
   3. Disconnect the PCM harness connectors.

CAUTION: Do not probe the PCM harness connectors.

Probing the PCM harness connectors will damage the PCM terminals resulting in poor terminal to pin connection. Install the GPEC Diagnostic Adaptor to perform the diagnosis.

4. Connect the (special tool #10436, Adapter, GPEC Diagnostic) to the PCM C2 harness connector.
5. Measure the resistance of the (K21) IAT Signal circuit between the Intake Air Temperature Sensor harness connector and the GPEC Adaptor.

   Is the resistance below 5.0 Ohms?

   Yes

   - Go To 4

   No

   - Repair the (K21) IAT Signal circuit for an open or high resistance.
   - Perform the POWERTRAIN VERIFICATION TEST. Refer to **POWERTRAIN VERIFICATION TEST** .

4. **CHECK FOR HIGH RESISTANCE IN THE (K915) SENSOR GROUND CIRCUIT**

   CAUTION: Do not probe the PCM harness connectors. Probing the PCM harness connectors will damage the PCM terminals resulting in poor terminal to pin connection. Install the GPEC Diagnostic Adaptor to perform the diagnosis.

   1. Connect the (special tool #10436, Adapter, GPEC Diagnostic) to the PCM C1 harness connector.
   2. Measure the resistance of the (K915) Sensor Ground circuit between the Intake Air Temperature Sensor harness connector and the GPEC Adaptor.

      Is the resistance below 5.0 Ohms?

Yes

- Go To 5

No

- Repair the (K915) Sensor Ground for an open or high resistance.
- Perform the POWERTRAIN VERIFICATION TEST. Refer to **POWERTRAIN VERIFICATION TEST** .

5. **INTAKE AIR TEMPERATURE SENSOR**

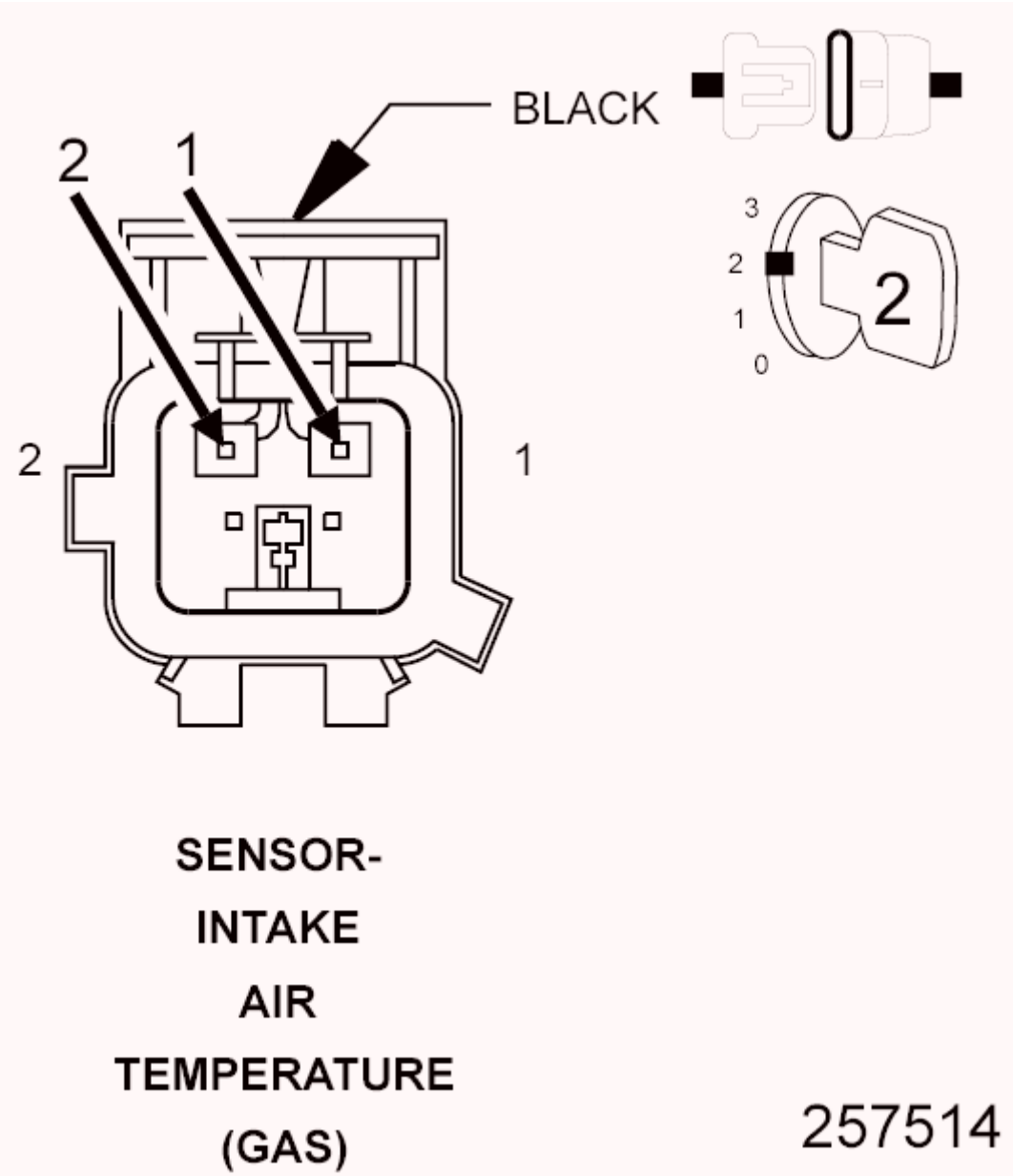

Fig. 66: Intake Air Temperature Sensor Harness Connector End View
Courtesy of CHRYSLER GROUP, LLC

1. Turn the ignition off.
2. Connect the PCM harness connectors.
3. Connect a jumper between the (K915) Sensor Ground circuit and the (K21) IAT Signal circuit in the Intake Air Temperature Sensor harness connector.
4. Turn the ignition on.
5. Using the scan tool, read the Intake Air Temperature Sensor signal voltage.

   Is the voltage below 0.1 volts with the jumper in place?

   Yes

   - Replace the Intake Air Temperature Sensor in accordance with the service information. Refer to **SENSOR, AIR TEMPERATURE, INLET, REMOVAL** .
   - Perform the POWERTRAIN VERIFICATION TEST. Refer to **POWERTRAIN VERIFICATION TEST** .

   No

   - Go To 6

6. **POWERTRAIN CONTROL MODULE (PCM)**
   1. Using the wiring diagram/schematic as a guide, inspect the wiring and connectors between the Intake Air Temperature Sensor and the Powertrain Control Module (PCM).
   2. Look for any chafed, pierced, pinched, or partially broken wires.
   3. Look for broken, bent, pushed out or corroded terminals.
   4. Monitor the scan tool data relative to this circuit and wiggle test the wiring and connectors.
   5. Look for the data to change or for the DTC to reset during the wiggle test.
   6. Perform any Technical Service Bulletins that may apply.

      Were any problems found?

      Yes

- Repair as necessary.
- Perform the POWERTRAIN VERIFICATION TEST. Refer to **POWERTRAIN VERIFICATION TEST** .

No

- Replace and program the Powertrain Control Module (PCM) in accordance with the service information. Refer to **MODULE, POWERTRAIN CONTROL, REMOVAL** .
- Perform the POWERTRAIN VERIFICATION TEST. Refer to **POWERTRAIN VERIFICATION TEST** .

P0112-INTAKE AIR TEMPERATURE SENSOR 1 CIRCUIT LOW

For a complete wiring diagram, **refer to appropriate SYSTEM WIRING DIAGRAMS article** .

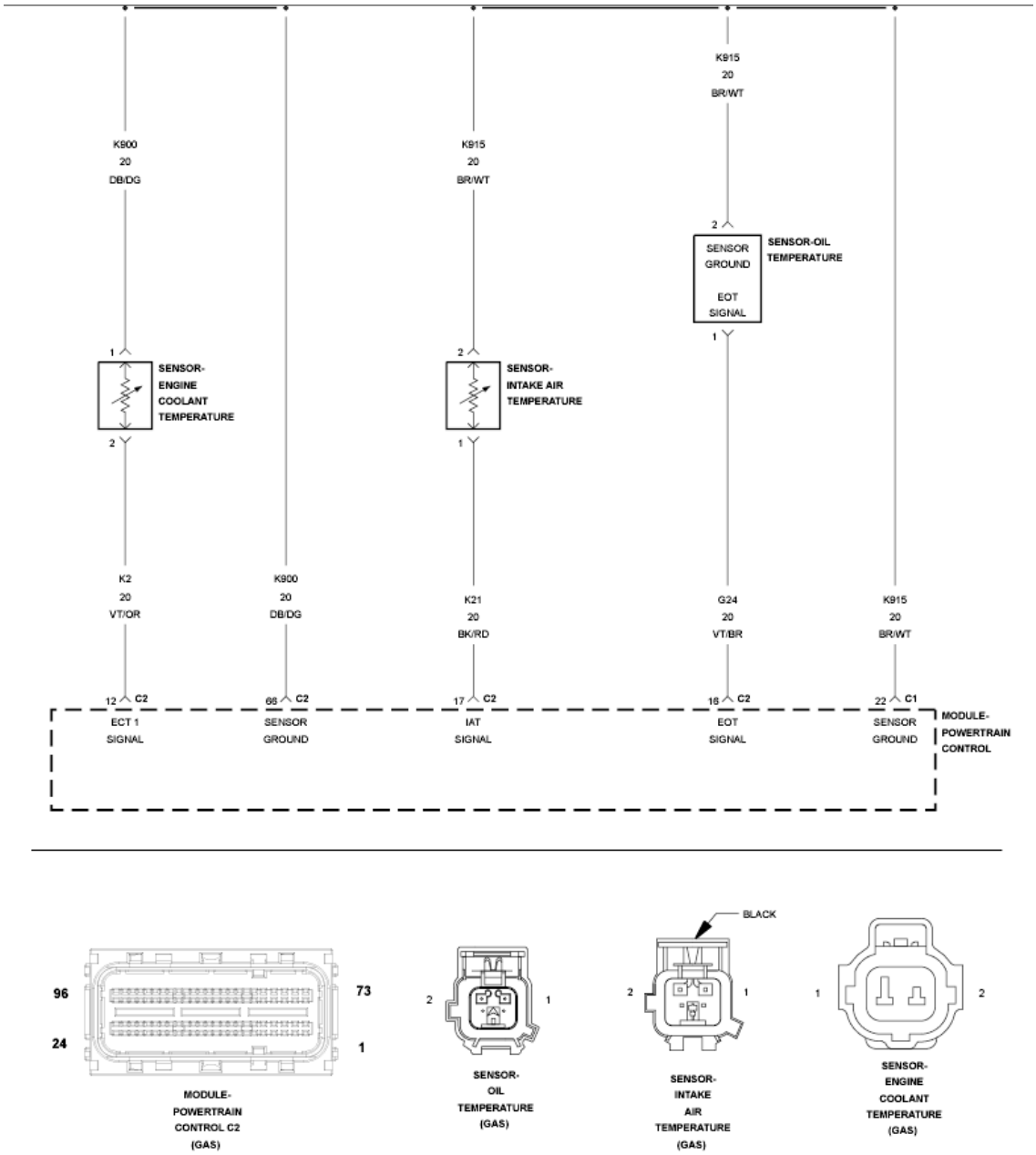

Fig. 67: Temperature Sensors Circuit Diagram
Courtesy of CHRYSLER GROUP, LLC

THEORY OF OPERATION

Temperature sensor performance looks at the outputs of three temperature sensors and compares them under cold start conditions. Following a start to run delay time, the outputs of the Ambient Air, Engine Coolant and Intake Air Temperature sensors will be compared. If the engine coolant and ambient air temperature sensors agree and the intake air temperature does not agree, the intake air temperature sensor is declared as irrational. If declared irrational a

second comparison will be done after a short drive cycle.

WHEN MONITORED

With the ignition on and the battery voltage greater than 10.4 volts.

SET CONDITION

The Powertrain Control Module (PCM) detects that the Intake Air Temperature (IAT) Sensor input voltage is below the minimum acceptable value.

POSSIBLE CAUSES

Possible Causes
(K21) IAT SIGNAL CIRCUIT SHORTED TO GROUND
(K21) IAT SIGNAL CIRCUIT SHORTED TO THE (K915) SENSOR GROUND
INTAKE AIR TEMPERATURE (IAT) SENSOR
POWERTRAIN CONTROL MODULE (PCM)

Always perform the Pre-Diagnostic Troubleshooting procedure before proceeding. Refer to PRE-DIAGNOSTIC TROUBLESHOOTING PROCEDURE .

DIAGNOSTIC TEST

1. **ACTIVE DTC**
   1. Start the engine and allow it to reach normal operating temperature.

      WARNING: **When the engine is operating, do not stand in direct line with the fan. Do not put your hands near the pulleys, belts or fan. Do not wear loose clothing. Failure to follow these instructions may result in possible serious or fatal injury.**

   2. Using the scan tool, select View DTCs.

      Is the status Active for this DTC?

      Yes

- Go To 2

No

- Perform the INTERMITTENT CONDITION diagnostic procedure. Refer to **INTERMITTENT CONDITION** .

2. **CHECK THE (K21) IAT SIGNAL CIRCUIT FOR A SHORT TO GROUND**

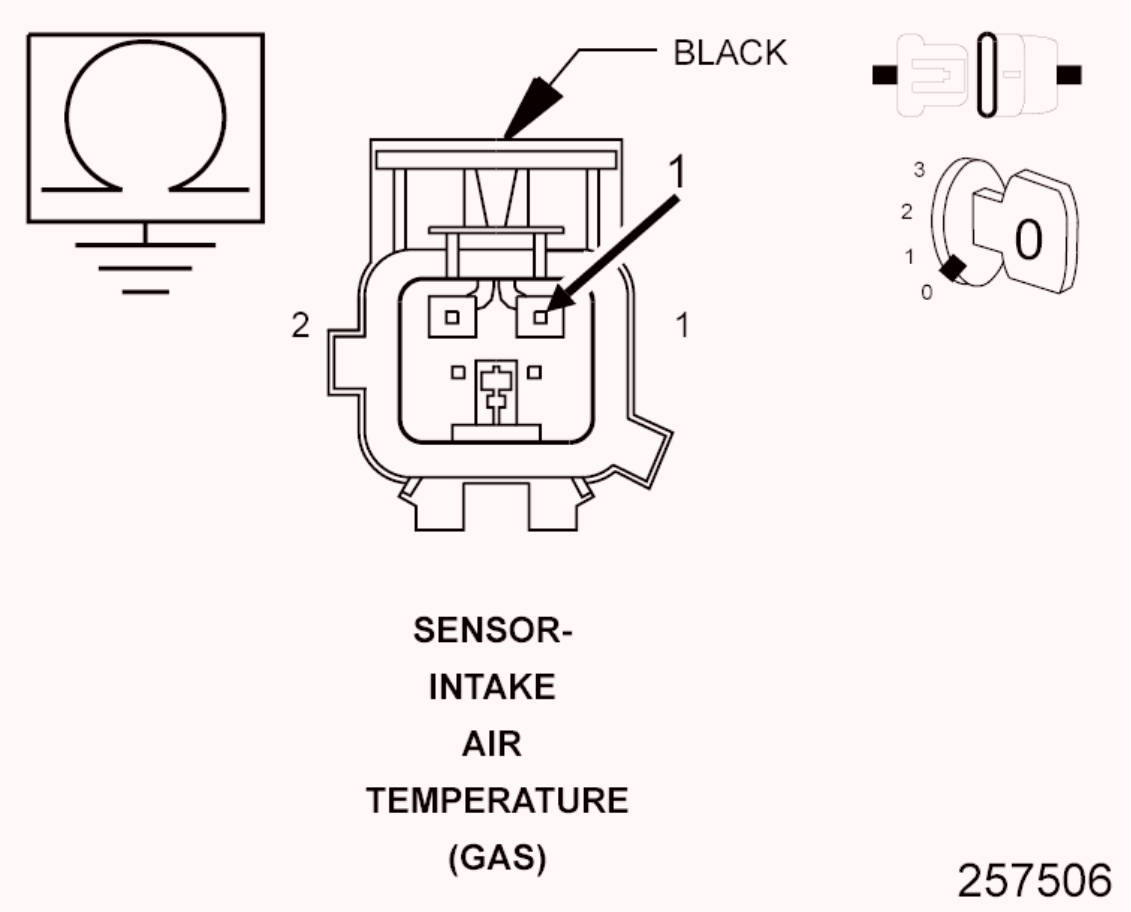

Fig. 68: Checking IAT Signal Circuit For Short To Ground
Courtesy of CHRYSLER GROUP, LLC

1. Turn the ignition off.
2. Disconnect the Intake Air Temperature Sensor harness connector.
3. Disconnect the PCM C1 and C2 harness connectors.
4. Measure the resistance between ground and the (K21) IAT Signal circuit in the Intake Air Temperature Sensor harness connector.

   Is the resistance above 100 Ohms?

Yes

- Go To 3

No

- Repair the (K21) IAT Signal circuit for a short to ground.
- Perform the POWERTRAIN VERIFICATION TEST. Refer to **POWERTRAIN VERIFICATION TEST** .

3. **CHECK FOR THE (K21) IAT SIGNAL CIRCUIT SHORTED TO THE (K915) SENSOR GROUND CIRCUIT**

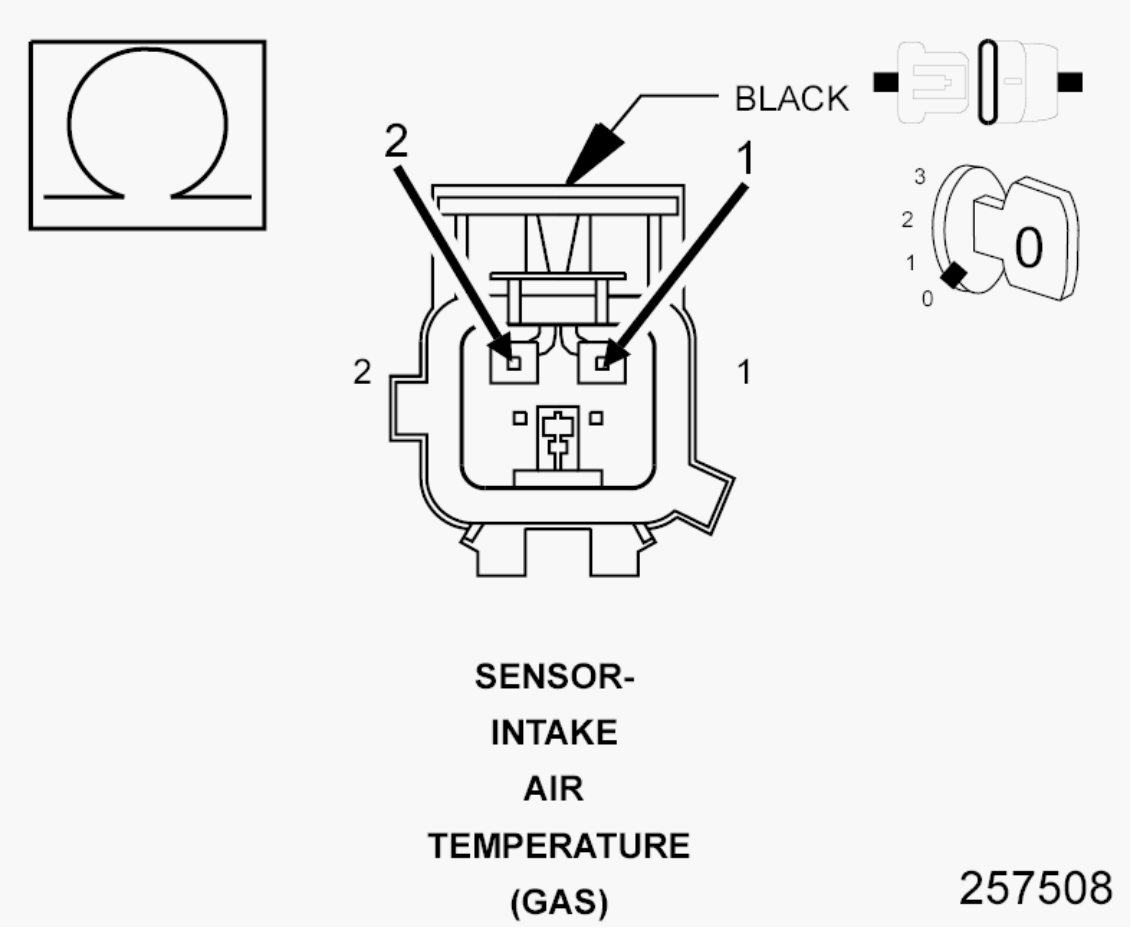

Fig. 69: Checking IAT Signal Circuit For Short To Sensor Ground Circuit
Courtesy of CHRYSLER GROUP, LLC

1. Measure the resistance between the (K21) IAT Signal circuit and the (K915) Sensor Ground circuit in the IAT Sensor harness connector.

Is the resistance above 10k Ohms?

Yes

- Go To 4

No

- Repair the (K21) IAT Signal circuit for a short to the (K915) Sensor Ground circuit.
- Perform the POWERTRAIN VERIFICATION TEST. Refer to **POWERTRAIN VERIFICATION TEST** .

4. **INTAKE AIR TEMPERATURE SENSOR**
   1. Turn the ignition off.
   2. Connect the PCM C1 and C2 harness connectors.
   3. Turn the ignition on.
   4. Using the scan tool, read the IAT Sensor signal voltage.

   Is the voltage above 4.9 volts with the Intake Air Temperature Sensor harness disconnected?

   Yes

   - Replace the Intake Air Temperature Sensor in accordance with the service information. Refer to **SENSOR, AIR TEMPERATURE, INLET, REMOVAL** .
   - Perform the POWERTRAIN VERIFICATION TEST. Refer to **POWERTRAIN VERIFICATION TEST** .

   No

   - Go To 5
5. **POWERTRAIN CONTROL MODULE (PCM)**
   1. Using the wiring diagram/schematic as a guide, inspect the wiring and connectors between the Intake Air Temperature Sensor and the Powertrain Control Module (PCM).
   2. Look for any chafed, pierced, pinched or partially broken wires.
   3. Look for broken, bent, pushed out or corroded terminals.

4. Monitor the scan tool data relative to this circuit and wiggle test the wiring and connectors.
5. Look for the data to change or for the DTC to reset during the wiggle test.
6. Perform any Technical Service Bulletins that may apply.

Were any problems found?

Yes

- Repair as necessary.
- Perform the POWERTRAIN VERIFICATION TEST. Refer to **POWERTRAIN VERIFICATION TEST** .

No

- Replace and program the Powertrain Control Module (PCM) in accordance with the service information. Refer to **MODULE, POWERTRAIN CONTROL, REMOVAL** .
- Perform the POWERTRAIN VERIFICATION TEST. Refer to **POWERTRAIN VERIFICATION TEST** .

P0113-INTAKE AIR TEMPERATURE SENSOR 1 CIRCUIT HIGH

For a complete wiring diagram, **refer to appropriate SYSTEM WIRING DIAGRAMS article** .

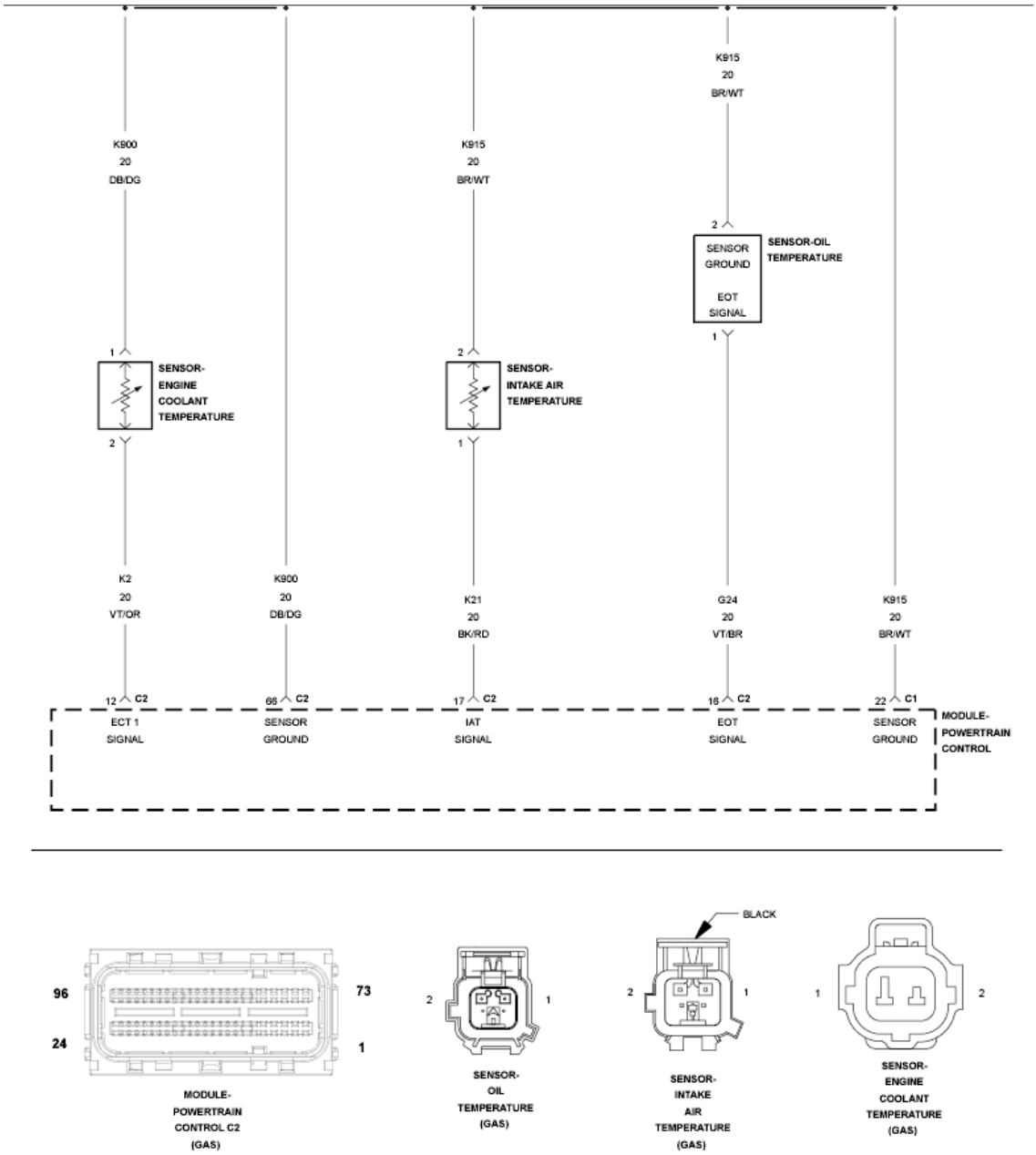

Fig. 70: Temperature Sensors Circuit Diagram
Courtesy of CHRYSLER GROUP, LLC

THEORY OF OPERATION

Temperature sensor performance looks at the outputs of three temperature sensors and compares them under cold start conditions. Following a start to run delay time, the outputs of the Ambient Air, Engine Coolant and Intake Air Temperature sensors will be compared. If the engine coolant and ambient air temperature sensors agree and the intake air temperature does not agree, the intake air temperature sensor is declared as irrational. If declared irrational a

second comparison will be done after a short drive cycle.

WHEN MONITORED

With the ignition on and the battery voltage greater than 10.4 Volts.

SET CONDITION

The Powertrain Control Module (PCM) detects that the Intake Air Temperature (IAT) Sensor input voltage is above the maximum acceptable value.

POSSIBLE CAUSES

POSSIBLE CAUSES
(K21) IAT SIGNAL CIRCUIT SHORTED TO VOLTAGE
(K21) IAT SIGNAL CIRCUIT OPEN OR HIGH RESISTANCE
(K915) SENSOR GROUND CIRCUIT OPEN OR HIGH RESISTANCE
INTAKE AIR TEMPERATURE (IAT) SENSOR
POWERTRAIN CONTROL MODULE (PCM)

Always perform the Pre-Diagnostic Troubleshooting procedure before proceeding. Refer to PRE-DIAGNOSTIC TROUBLESHOOTING PROCEDURE .

DIAGNOSTIC TEST

1. **ACTIVE DTC**
   1. Start the engine and allow it to reach normal operating temperature.

      WARNING: **When the engine is operating, do not stand in direct line with the fan. Do not put your hands near the pulleys, belts or fan. Do not wear loose clothing. Failure to follow these instructions may result in possible serious or fatal injury.**

   2. Using the scan tool, select View DTCs.

      Is the status Active for this DTC?

      Yes

- Go To 2

No

- Perform the INTERMITTENT CONDITION diagnostic procedure. Refer to **INTERMITTENT CONDITION** .

2. **CHECK THE (K21) IAT SIGNAL CIRCUIT FOR A SHORT TO VOLTAGE**

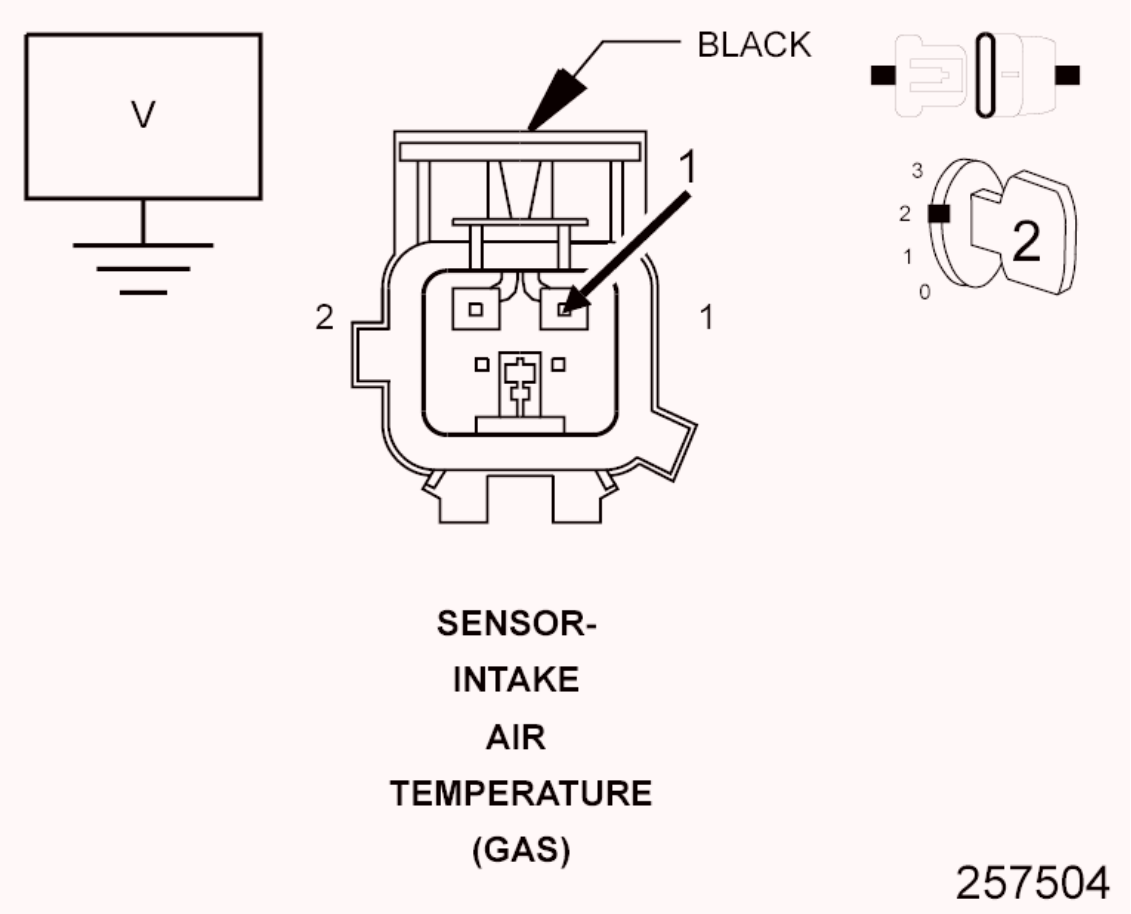

Fig. 71: Checking IAT Signal Circuit For Short To Voltage
Courtesy of CHRYSLER GROUP, LLC

1. Turn the ignition off.
2. Disconnect the Intake Air Temperature (IAT) Sensor harness connector.
3. Turn the ignition on.
4. Measure the voltage of the (K21) IAT Signal circuit in the IAT Sensor harness connector.

   Is the voltage above 5.2 volts?

Yes

- Repair the (K21) IAT Signal circuit for a short to voltage.
- Perform the POWERTRAIN VERIFICATION TEST. Refer to **POWERTRAIN VERIFICATION TEST** .

No

- Go To 3

3. **CHECK THE (K21) IAT SIGNAL CIRCUIT FOR AN OPEN/HIGH RESISTANCE**
   1. Turn the ignition off.
   2. Disconnect the PCM harness connectors.

      CAUTION: Do not probe the PCM harness connectors. Probing the PCM harness connectors will damage the PCM terminals resulting in poor terminal to pin connection. Install the GPEC Diagnostic Adaptor to perform the diagnosis.

   3. Connect the (special tool #10436, Adapter, GPEC Diagnostic) to the PCM C2 harness connector.
   4. Measure the resistance of the (K21) IAT Signal circuit between the IAT Sensor harness connector and the GPEC Adaptor.

      Is the resistance below 5.0 Ohms?

      Yes

      - Go To 4

      No

      - Repair the (K21) IAT Signal circuit for an open or high resistance.
      - Perform the POWERTRAIN VERIFICATION TEST. Refer to **POWERTRAIN VERIFICATION TEST** .

4. **CHECK THE (K915) SENSOR GROUND CIRCUIT FOR AN OPEN/HIGH RESISTANCE**

CAUTION: Do not probe the PCM harness connectors. Probing the PCM harness connectors will damage the PCM terminals resulting in poor terminal to pin connection. Install the GPEC Diagnostic Adaptor to perform the diagnosis.

1. Connect the (special tool #10436, Adapter, GPEC Diagnostic) to the PCM C1 harness connector.
2. Measure the resistance of the (K915) Sensor Ground circuit between the IAT Sensor harness connector and the GPEC Adaptor.

   Is the resistance below 5.0 Ohms?

   Yes

   - Go To 5

   No

   - Repair the (K915) Sensor Ground circuit for an open or high resistance.
   - Perform the POWERTRAIN VERIFICATION TEST. Refer to **POWERTRAIN VERIFICATION TEST** .

5. **INTAKE AIR TEMPERATURE SENSOR**

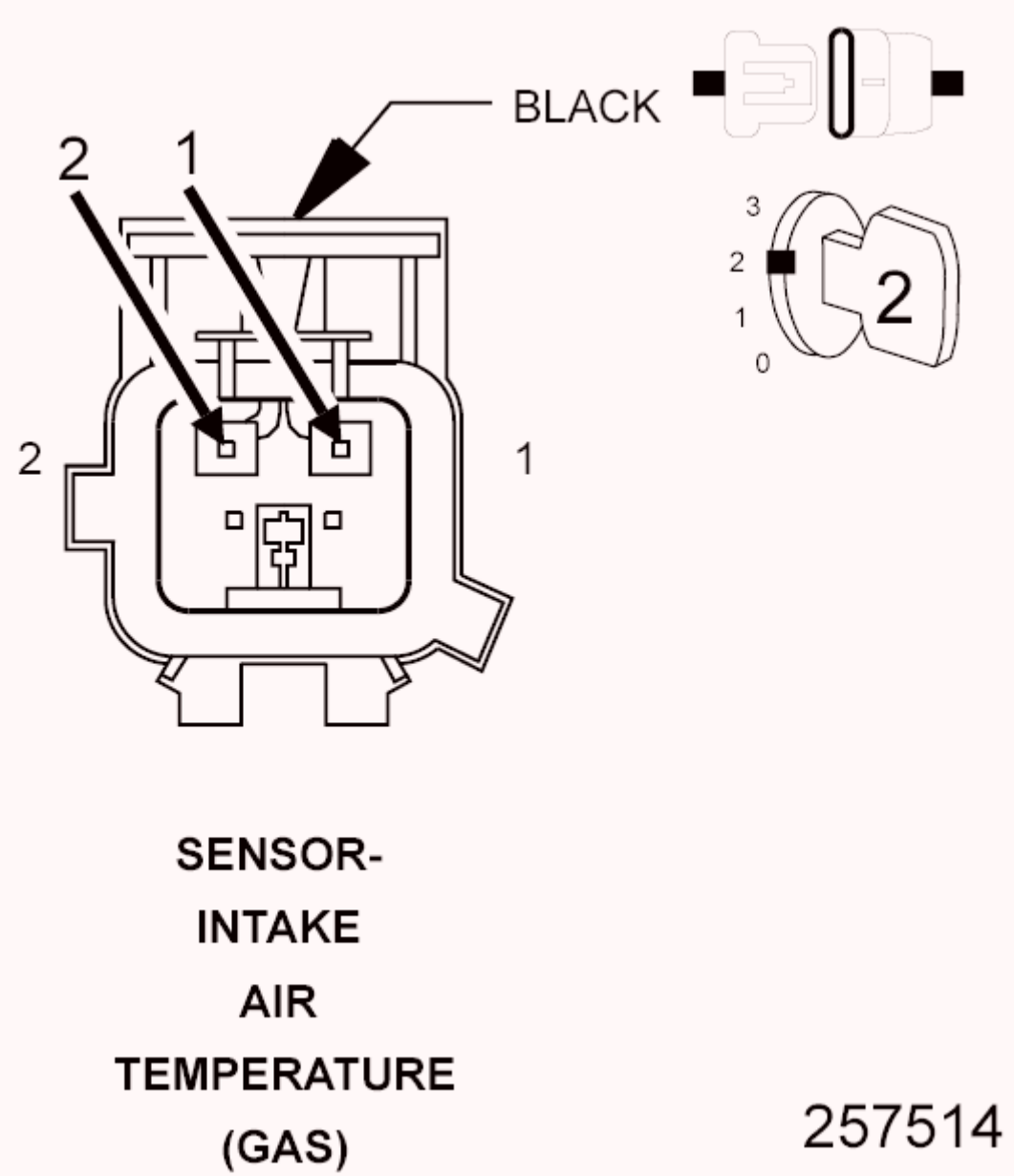

Fig. 72: Intake Air Temperature Sensor Harness Connector End View
Courtesy of CHRYSLER GROUP, LLC

1. Turn the ignition off.
2. Reconnect the PCM harness connectors.
3. Connect a jumper between the (K21) IAT Signal circuit and the (K915) Sensor Ground in the IAT Sensor harness connector.
4. Turn the ignition on.
5. Using the scan tool, read the IAT Sensor signal voltage.

   Is the voltage below 0.1 volts with the jumper in place?

Yes

- Replace the Intake Air Temperature Sensor in accordance with the service information. Refer to **SENSOR, AIR TEMPERATURE, INLET, REMOVAL** .
- Perform the POWERTRAIN VERIFICATION TEST. Refer to **POWERTRAIN VERIFICATION TEST** .

No

- Go To 6

6. **POWERTRAIN CONTROL MODULE (PCM)**
   1. Using the wiring diagram/schematic as a guide, inspect the wiring and connectors between the Intake Air Temperature Sensor and the Powertrain Control Module (PCM).
   2. Look for any chafed, pierced, pinched, or partially broken wires.
   3. Look for broken, bent, pushed out or corroded terminals.
   4. Monitor the scan tool data relative to this circuit and wiggle test the wiring and connectors.
   5. Look for the data to change or for the DTC to reset during the wiggle test.
   6. Perform any Technical Service Bulletins that may apply.

   Were any problems found?

   Yes

   - Repair as necessary.
   - Perform the POWERTRAIN VERIFICATION TEST. Refer to **POWERTRAIN VERIFICATION TEST** .

   No

   - Replace and program the Powertrain Control Module (PCM) in accordance with the service information. Refer to **MODULE, POWERTRAIN CONTROL, REMOVAL** .
   - Perform the POWERTRAIN VERIFICATION TEST. Refer to **POWERTRAIN VERIFICATION TEST** .

P0116-ENGINE COOLANT TEMPERATURE SENSOR PERFORMANCE

For a complete wiring diagram, **refer to appropriate SYSTEM WIRING DIAGRAMS article** .

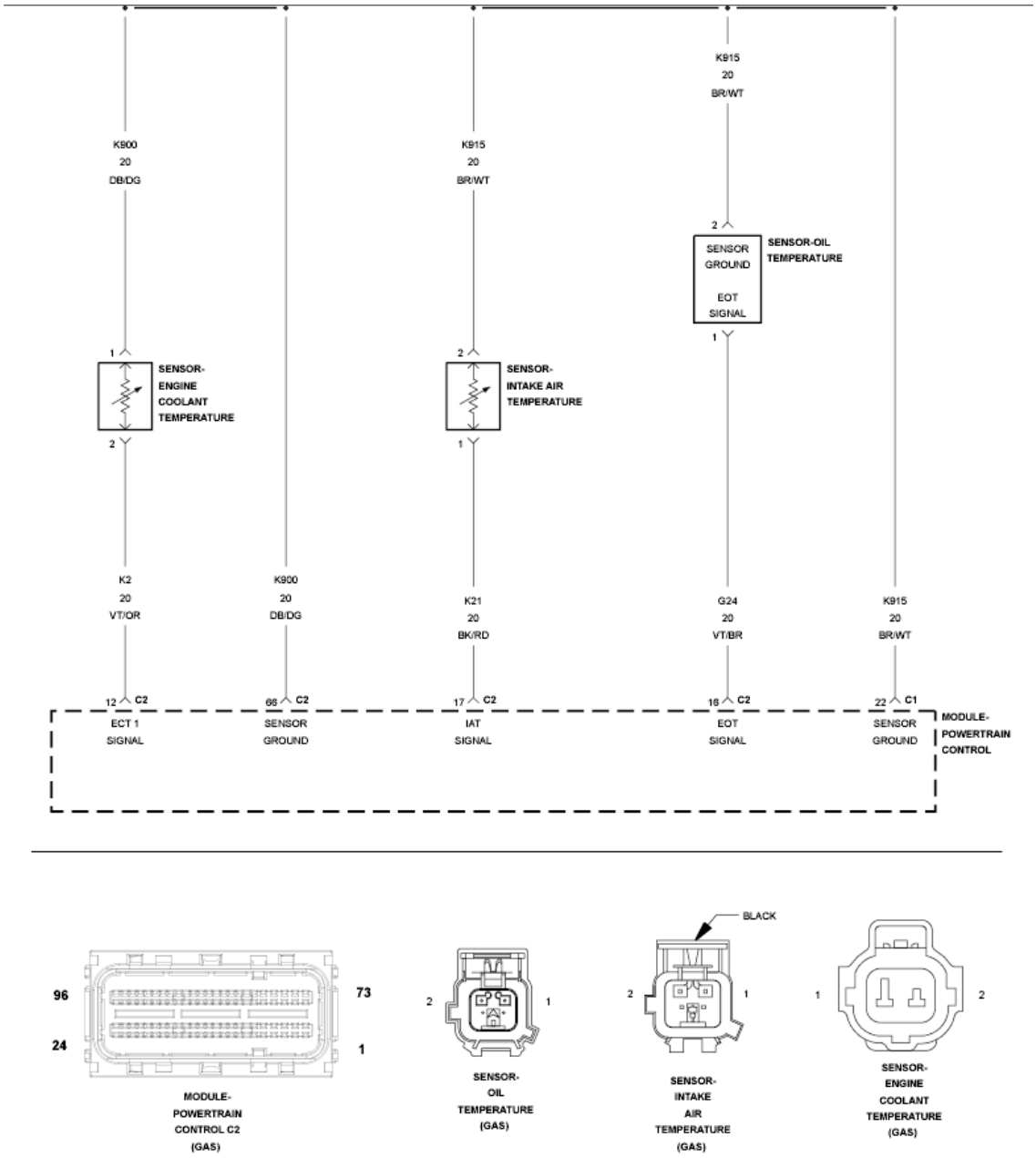

Fig. 73: Temperature Sensors Circuit Diagram
Courtesy of CHRYSLER GROUP, LLC

THEORY OF OPERATION

Temperature sensor performance looks at the outputs of three temperature sensors and compares them under cold start conditions. Following a start to run

delay time, the outputs of the Ambient Air, Engine Coolant and Intake Air Temperature sensors will be compared. If the engine coolant and ambient air temperature sensors agree and the intake air temperature does not agree, the intake air temperature sensor is declared as irrational. If declared irrational a second comparison will be done after a short drive cycle.

WHEN MONITORED

With engine off time greater than 480 minutes and ambient temperature greater than -7 C (19.4°F).

SET CONDITION

After a calibrated amount of cool down time, the Powertrain Control Module (PCM) compares the AAT, ECT, and IAT Sensor values. If one sensor value is not within 10°C (18°F) of the other temperature sensors for two consecutive trips, a DTC will set. Three good trips to turn off the MIL.

POSSIBLE CAUSES

POSSIBLE CAUSES
(K2) ECT SIGNAL CIRCUIT OPEN OR HIGH RESISTANCE
(K900) SENSOR GROUND CIRCUIT OPEN OR HIGH RESISTANCE
ENGINE COOLANT TEMPERATURE (ECT) SENSOR
POWERTRAIN CONTROL MODULE (PCM)

Always perform the Pre-Diagnostic Troubleshooting procedure before proceeding. Refer to PRE-DIAGNOSTIC TROUBLESHOOTING PROCEDURE .

DIAGNOSTIC TEST

1. **ACTIVE DTC**

NOTE: Diagnose any CAN - C Communication DTCs before continuing.

1. Turn the ignition off.
2. If possible, allow the vehicle to sit with the ignition off for more than 480 minutes in an environment where the temperature is consistent and above -7°C (19.4°F).

3. Test drive the vehicle. The vehicle must exceed 48 km/h (30 mph) during the test drive. Do not cycle the ignition off when the test drive is completed.
4. With a scan tool, select View DTCs.

   Is the status Active or Pending for this DTC?

   Yes

   - Go To 2

   No

   - Perform the INTERMITTENT CONDITION diagnostic procedure. Refer to **INTERMITTENT CONDITION** .

2. **ENGINE COOLANT TEMPERATURE**
   1. Turn the ignition off.
   2. Allow the vehicle to sit with the ignition off in an environment where the temperature is consistent and above -7°C (19.4°F) until the engine coolant temperature is equal to ambient temperature.
   3. Turn the ignition on.
   4. With a scan tool, compare the AAT, ECT, and IAT sensor values.

      Is the Engine Coolant Temperature Sensor value within 10°C (18°F) of the other two sensor values?

      Yes

      - Perform the INTERMITTENT CONDITION diagnostic procedure. Refer to **INTERMITTENT CONDITION** .

      No

      - Go To 2

3. **CHECK THE (K2) ECT SIGNAL CIRCUIT FOR AN OPEN/HIGH RESISTANCE**
   1. Turn the ignition off.
   2. Disconnect the Engine Coolant Temperature (ECT) Sensor harness

connector.

3. Disconnect the PCM C2 harness connector.

CAUTION: Do not probe the PCM harness connectors. Probing the PCM harness connectors will damage the PCM terminals resulting in poor terminal to pin connection. Install the GPEC Diagnostic Adaptor to perform the diagnosis.

4. Connect the (special tool #10436, Adapter, GPEC Diagnostic).
5. Measure the resistance of the (K2) ECT Signal circuit between the ECT Sensor harness connector and the GPEC Adaptor.

   Is the resistance below 5.0 Ohms?

   Yes

   - Go To 4

   No

   - Repair the (K2) ECT Signal circuit for an open or high resistance.
   - Perform the POWERTRAIN VERIFICATION TEST. Refer to **POWERTRAIN VERIFICATION TEST** .

4. **CHECK THE (K900) SENSOR GROUND CIRCUIT FOR AN OPEN/HIGH RESISTANCE**
   1. Measure the resistance of the (K900) Sensor Ground circuit between the ECT Sensor harness connector and the GPEC Adaptor.

      Is the resistance below 5.0 Ohms?

      Yes

      - Go To 5

      No

      - Repair the (K900) Sensor Ground for an open or high resistance.

- Perform the POWERTRAIN VERIFICATION TEST. Refer to **POWERTRAIN VERIFICATION TEST** .

5. **ECT SENSOR**

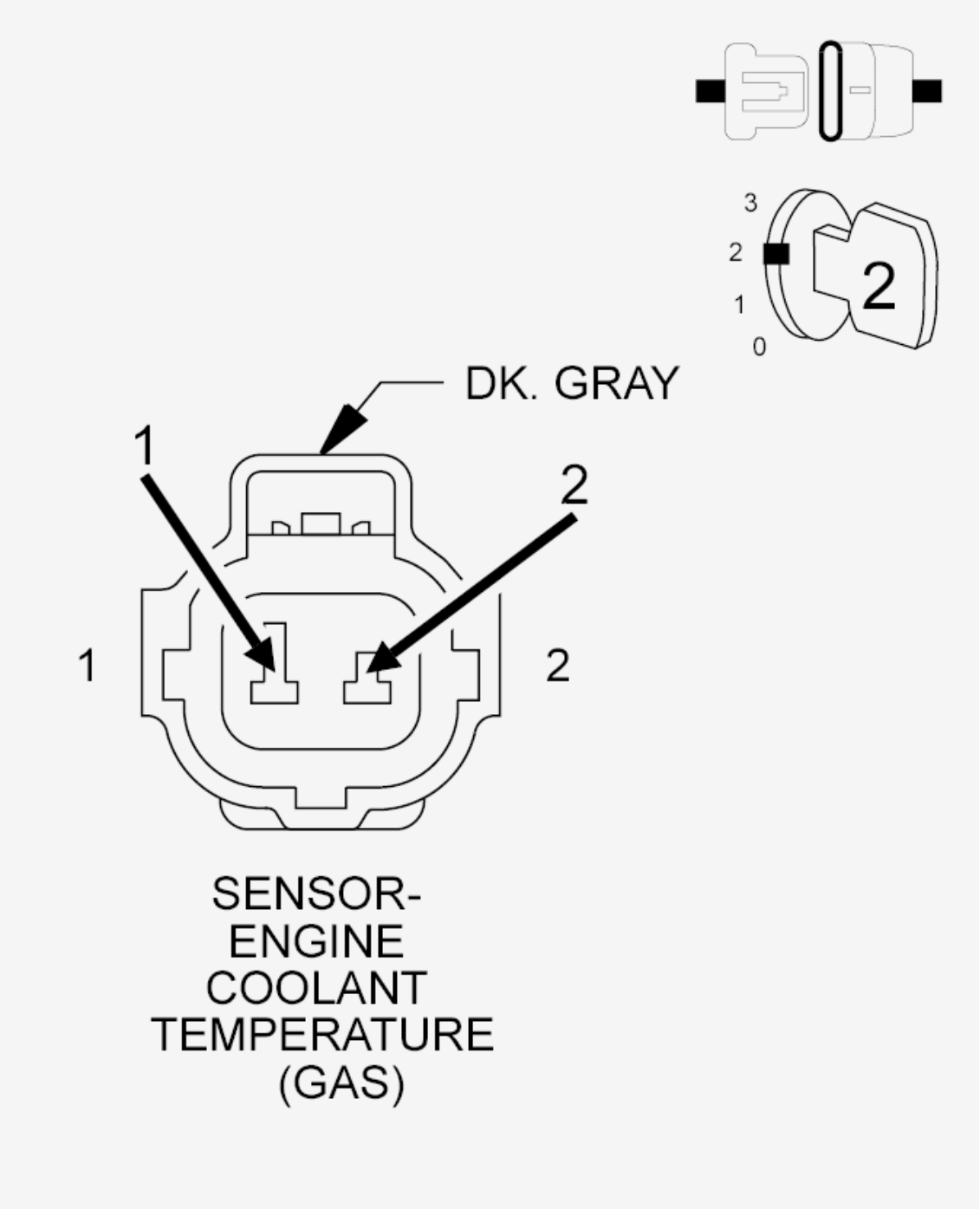

Fig. 74: ECT Sensor Harness Connector End View
Courtesy of CHRYSLER GROUP, LLC

1. Reconnect the PCM C2 harness connector.
2. Connect a jumper between the (K900) Sensor Ground circuit and the

(K2) ECT Signal circuit in the ECT Sensor harness connector.

3. Turn the ignition on.
4. With the scan tool, read the ECT Sensor signal voltage.

   Is the voltage below 0.1 volts with the jumper in place?

   Yes

   - Replace the Engine Coolant Temperature Sensor in accordance with the service information. Refer to **SENSOR, COOLANT TEMPERATURE, REMOVAL** .
   - Perform the POWERTRAIN VERIFICATION TEST. Refer to **POWERTRAIN VERIFICATION TEST** .

   No

   - Go To 6

6. **POWERTRAIN CONTROL MODULE (PCM)**
   1. Using the wiring diagram/schematic as a guide, inspect the wiring and connectors between the Engine Coolant Temperature Sensor and the Powertrain Control Module (PCM).
   2. Look for any chafed, pierced, pinched, or partially broken wires.
   3. Look for broken, bent, pushed out or corroded terminals.
   4. Monitor the scan tool data relative to this circuit and wiggle test the wiring and connectors.
   5. Look for the data to change or for the DTC to reset during the wiggle test.
   6. Perform any Technical Service Bulletins that may apply.

   Were any problems found?

   Yes

   - Repair as necessary.
   - Perform the POWERTRAIN VERIFICATION TEST. Refer to **POWERTRAIN VERIFICATION TEST** .

   No

- Replace and program the Powertrain Control Module (PCM) in accordance with the service information. Refer to **MODULE, POWERTRAIN CONTROL, REMOVAL** .
- Perform the POWERTRAIN VERIFICATION TEST. Refer to **POWERTRAIN VERIFICATION TEST** .

P0117-ENGINE COOLANT TEMPERATURE SENSOR CIRCUIT LOW

For a complete wiring diagram, **refer to appropriate SYSTEM WIRING DIAGRAMS article** .

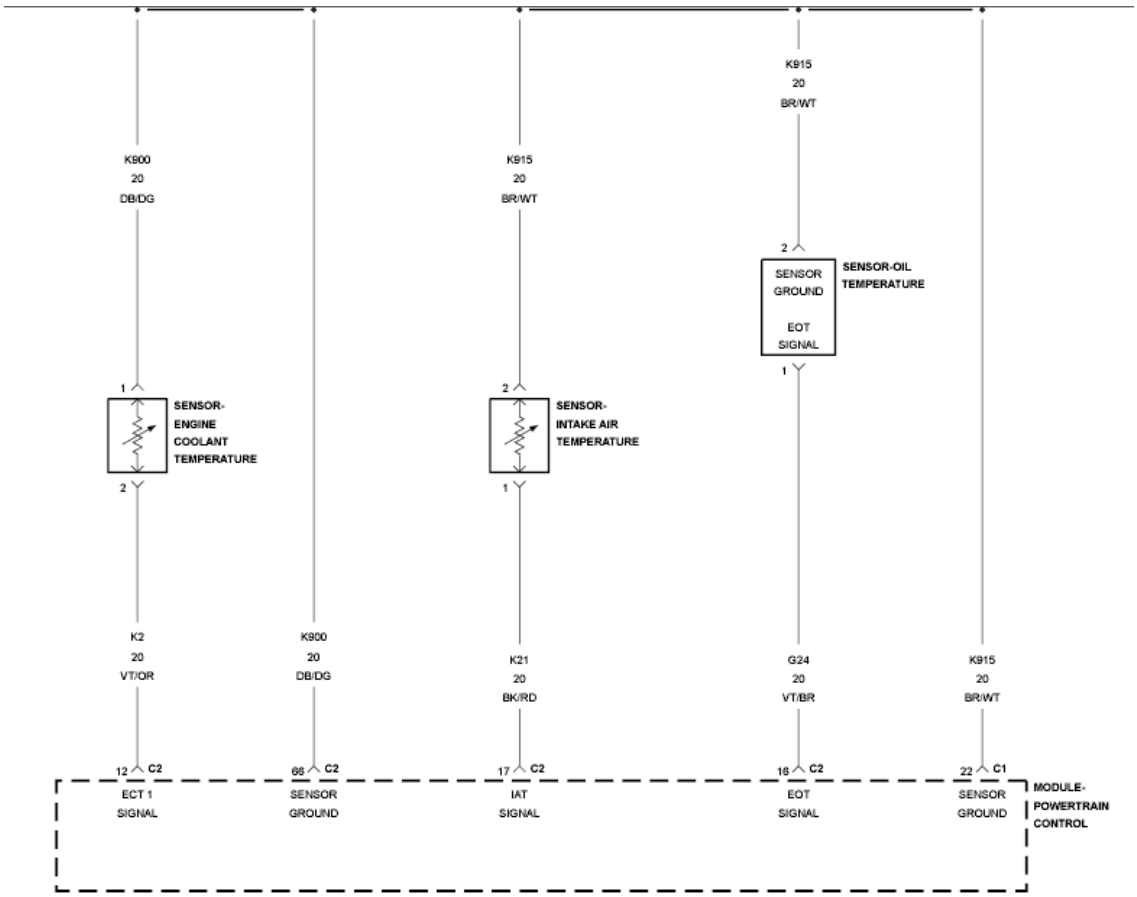

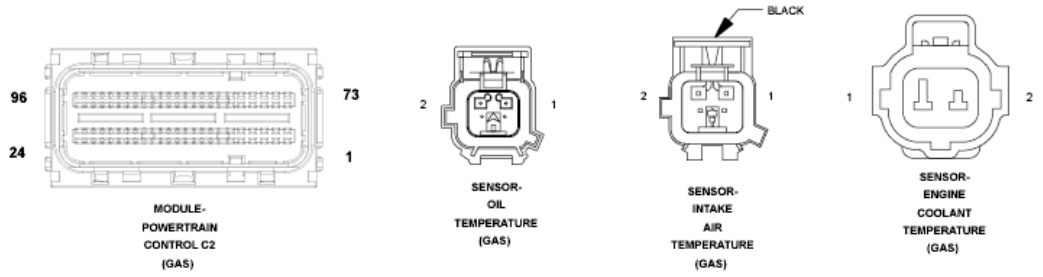

Fig. 75: Temperature Sensors Circuit Diagram
Courtesy of CHRYSLER GROUP, LLC

THEORY OF OPERATION

The Coolant Temperature Sensor is a variable resistor that functions as a normal two wire 5 volt sensor. The PCM supplies a 5 volt reference on the signal circuit, and a ground to the sensors low reference signal circuit.

WHEN MONITORED

With the ignition on and battery voltage greater than 10.4 volts.

SET CONDITION

The Powertrain Control Module (PCM) detects that the Engine Coolant Temperature (ECT) Sensor input voltage is below the minimum acceptable value.

POSSIBLE CAUSES

Possible Causes
(K2) ECT SIGNAL CIRCUIT SHORTED TO GROUND
(K2) ECT SIGNAL CIRCUIT SHORTED TO THE (K900) SENSOR GROUND
ENGINE COOLANT TEMPERATURE (ECT) SENSOR
POWERTRAIN CONTROL MODULE (PCM)

Always perform the Pre-Diagnostic Troubleshooting procedure before proceeding. Refer to PRE-DIAGNOSTIC TROUBLESHOOTING PROCEDURE .

DIAGNOSTIC TEST

1. **ACTIVE DTC**
    1. Start the engine and allow it to reach normal operating temperature.

WARNING: **When the engine is operating, do not stand in direct line with the fan. Do not put your hands near the pulleys, belts or fan. Do not wear loose clothing. Failure to**

follow these instructions may result in possible serious or fatal injury.

2. With the scan tool, select View DTCs.

   Is the status Active for this DTC?

   Yes

   - Go To 2

   No

   - Perform the INTERMITTENT CONDITION diagnostic procedure. Refer to **INTERMITTENT CONDITION** .

2. **CHECK THE (K2) ECT SIGNAL CIRCUIT FOR A SHORT TO GROUND**

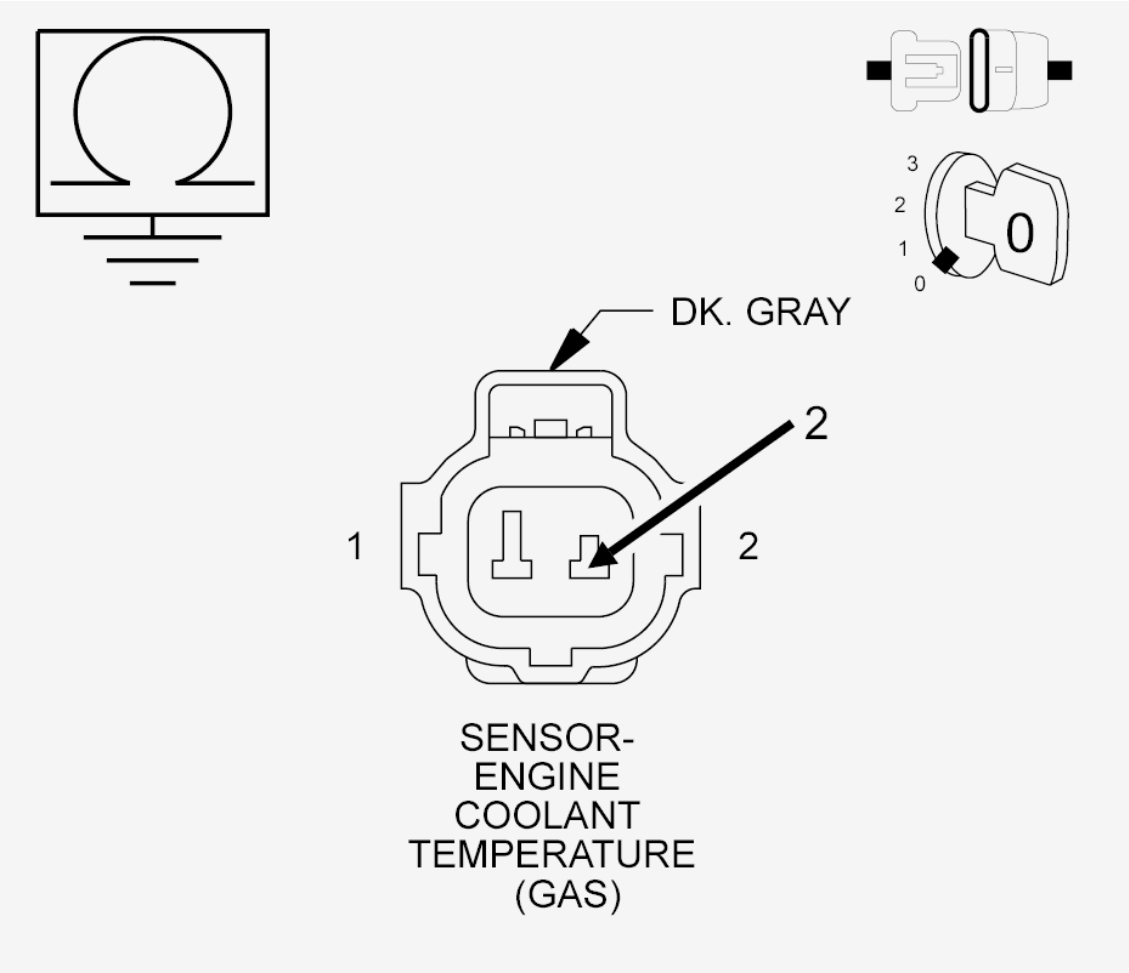

Fig. 76: Checking ECT 1 Signal Circuit For Short To Ground

Courtesy of CHRYSLER GROUP, LLC

1. Turn the ignition off.
2. Disconnect the ECT Sensor harness connector.
3. Disconnect the PCM C2 harness connector.
4. Measure the resistance between ground and the (K2) ECT Signal circuit in the ECT Sensor harness connector.

   Is the resistance above 10k Ohms?

   Yes

   - Go To 3

   No

   - Repair the (K2) ECT Signal circuit for a short to ground.
   - Perform the POWERTRAIN VERIFICATION TEST. Refer to **POWERTRAIN VERIFICATION TEST** .

3. **CHECK FOR THE (K2) ECT SIGNAL CIRCUIT SHORTED TO THE (K900) SENSOR GROUND CIRCUIT**

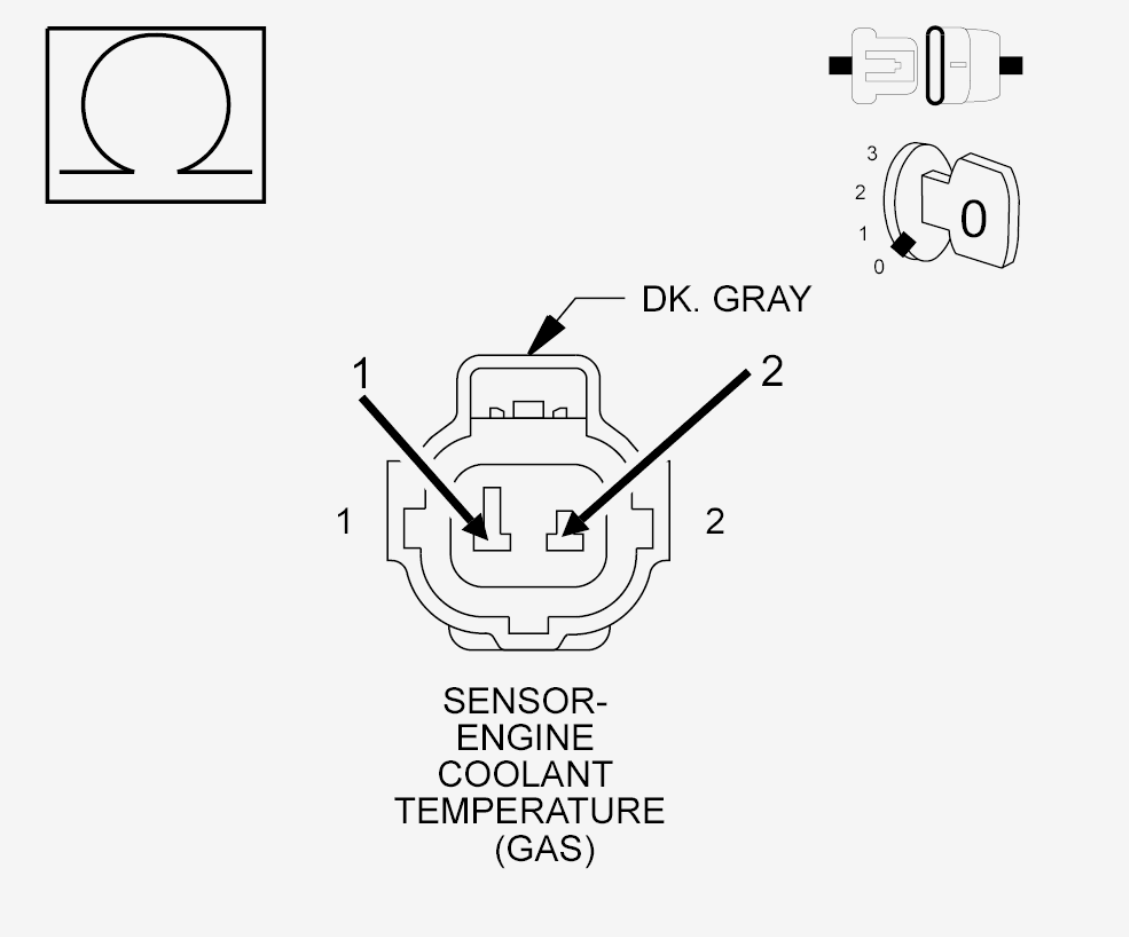

Fig. 77: Checking ECT Signal Circuit For Short To Sensor Ground Circuit
Courtesy of CHRYSLER GROUP, LLC

1. Measure the resistance between the (K2) ECT Signal circuit and the (K900) Sensor Ground circuit in the ECT Sensor 1 harness connector.

   Is the resistance above 10k Ohms?

   Yes

   - Go To 4

   No

   - Repair the (K2) ECT Signal circuit for a short to the (K900) Sensor Ground circuit.
   - Perform the POWERTRAIN VERIFICATION TEST. Refer to **POWERTRAIN VERIFICATION TEST** .

4. **ENGINE COOLANT TEMPERATURE SENSOR 1**
    1. Turn the ignition off.
    2. Reconnect the PCM C2 harness connector.
    3. Turn the ignition on.
    4. With the scan tool, read the ECT Sensor signal voltage.

    Is the voltage above 4.9 volts with the Engine Coolant Temperature Sensor 1 harness disconnected?

    Yes

    - Replace the Engine Coolant Temperature Sensor in accordance with the service information. Refer to **SENSOR, COOLANT TEMPERATURE, REMOVAL** .
    - Perform the POWERTRAIN VERIFICATION TEST. Refer to **POWERTRAIN VERIFICATION TEST** .

    No

    - Go To 5
5. **POWERTRAIN CONTROL MODULE (PCM)**
    1. Using the wiring diagram/schematic as a guide, inspect the wiring and connectors between the Engine Coolant Temperature Sensor 1 and the Powertrain Control Module (PCM).
    2. Look for any chafed, pierced, pinched, or partially broken wires.
    3. Look for broken, bent, pushed out or corroded terminals.
    4. Monitor the scan tool data relative to this circuit and wiggle test the wiring and connectors.
    5. Look for the data to change or for the DTC to reset during the wiggle test.
    6. Perform any Technical Service Bulletins that may apply.

    Were any problems found?

    Yes

    - Repair as necessary.

- Perform the POWERTRAIN VERIFICATION TEST. Refer to **POWERTRAIN VERIFICATION TEST** .

No

- Replace and program the Powertrain Control Module (PCM) in accordance with the service information. Refer to **MODULE, POWERTRAIN CONTROL, REMOVAL** .
- Perform the POWERTRAIN VERIFICATION TEST. Refer to **POWERTRAIN VERIFICATION TEST** .

P0118-ENGINE COOLANT TEMPERATURE SENSOR 1 CIRCUIT HIGH

For a complete wiring diagram, **refer to appropriate SYSTEM WIRING DIAGRAMS article** .

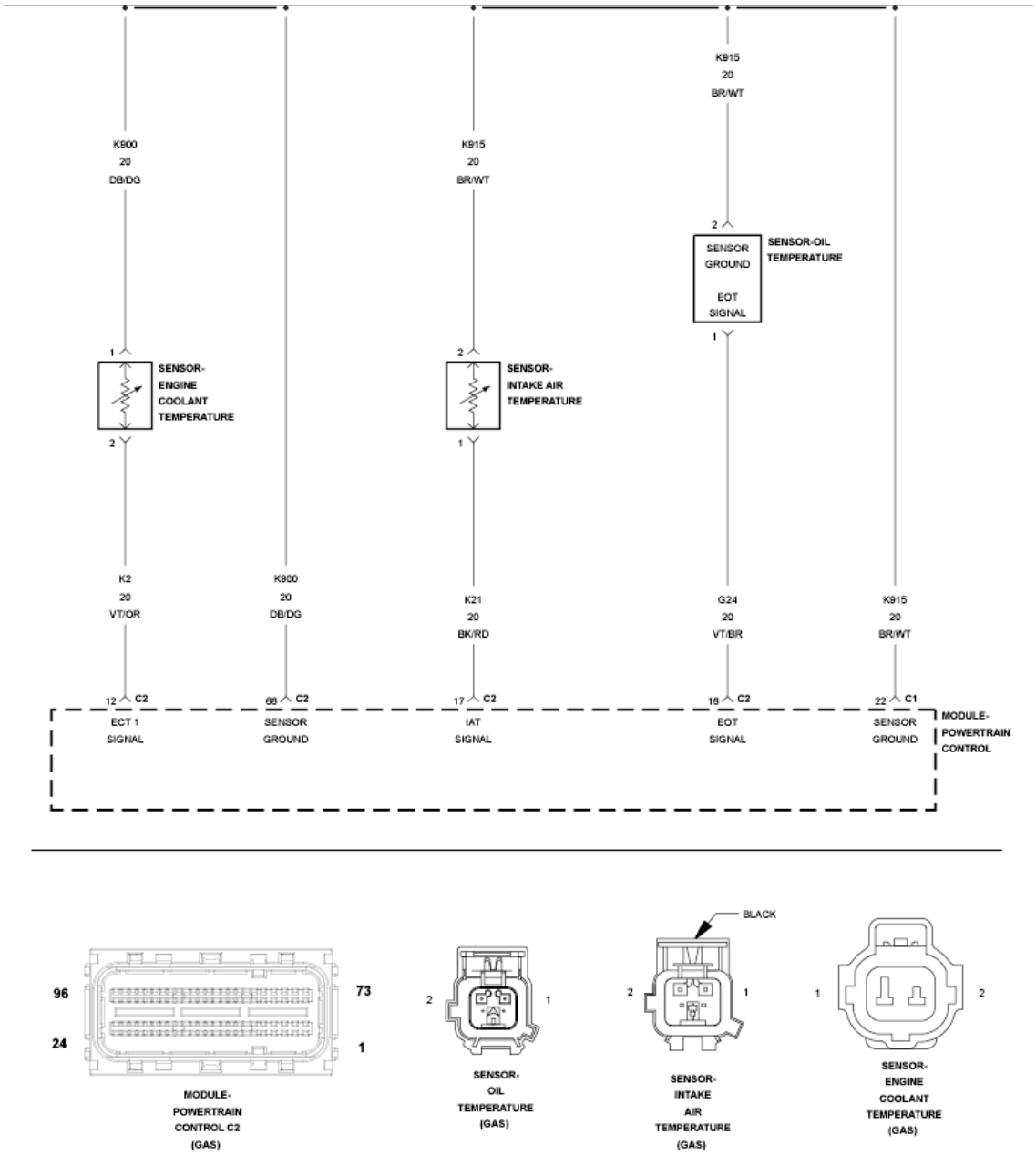

Fig. 78: Temperature Sensors Circuit Diagram
Courtesy of CHRYSLER GROUP, LLC

THEORY OF OPERATION

The Coolant Temperature Sensor is a variable resistor that functions as a normal two wire 5 volt sensor. The PCM supplies a 5 volt reference on the signal circuit, and a ground to the sensors low reference signal circuit.

WHEN MONITORED

With the ignition on and battery voltage greater than 10.4 volts.

SET CONDITION

The Powertrain Control Module (PCM) detects that the Engine Coolant Temperature (ECT) Sensor input voltage is above the maximum acceptable value.

POSSIBLE CAUSES

Possible Causes
(K2) ECT 1 SIGNAL CIRCUIT SHORTED TO VOLTAGE
(K2) ECT 1 SIGNAL CIRCUIT OPEN OR HIGH RESISTANCE
(K900) SENSOR GROUND CIRCUIT OPEN OR HIGH RESISTANCE
ENGINE COOLANT TEMPERATURE (ECT) SENSOR 1
POWERTRAIN CONTROL MODULE (PCM)

Always perform the Pre-Diagnostic Troubleshooting procedure before proceeding. Refer to PRE-DIAGNOSTIC TROUBLESHOOTING PROCEDURE .

DIAGNOSTIC TEST

1. **ACTIVE DTC**
   1. Start the engine and allow it to reach normal operating temperature.

      WARNING: **When the engine is operating, do not stand in direct line with the fan. Do not put your hands near the pulleys, belts or fan. Do not wear loose clothing. Failure to follow these instructions may result in possible serious or fatal injury.**

   2. With the scan tool, select View DTCs.

      Is the status Active for this DTC?

      Yes

      - Go To 2

      No

- Perform the INTERMITTENT CONDITION diagnostic procedure. Refer to **INTERMITTENT CONDITION** .

2. **CHECK THE (K2) ECT SIGNAL CIRCUIT FOR A SHORT TO VOLTAGE**

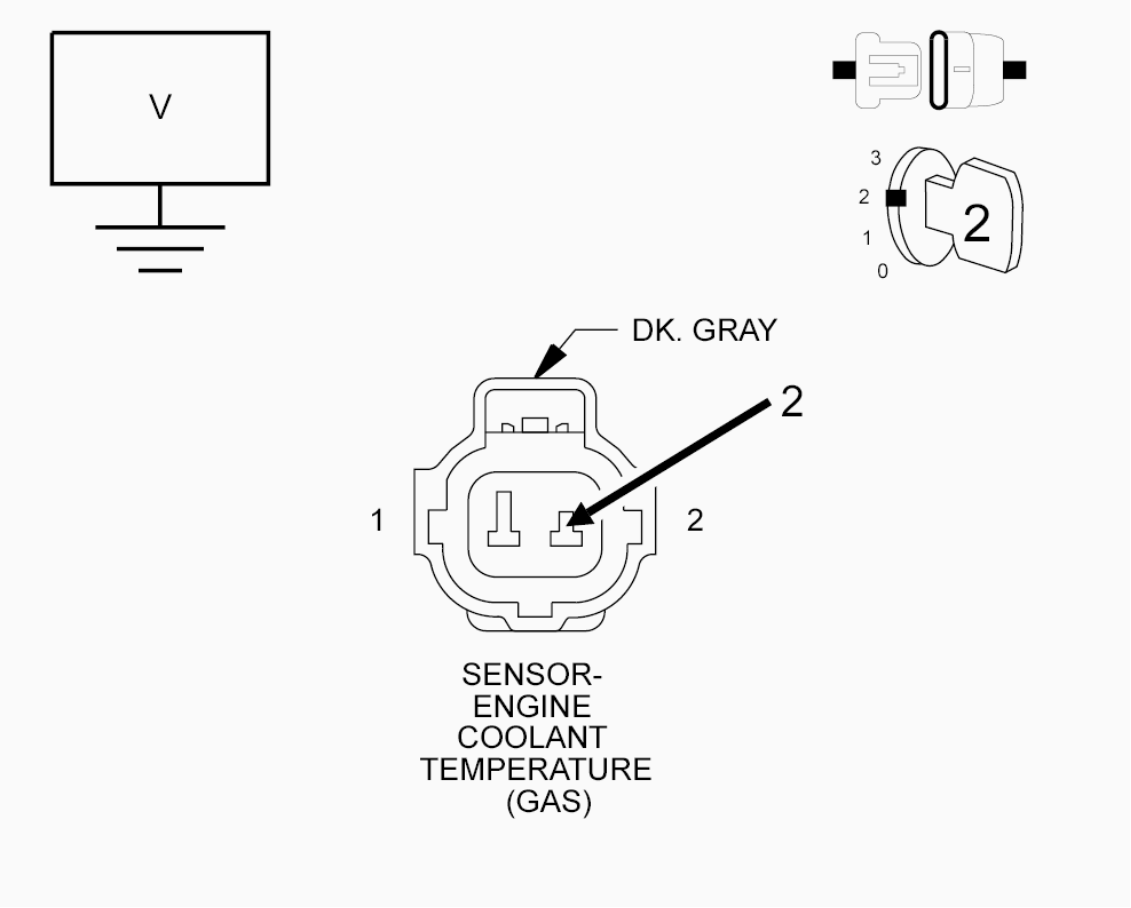

Fig. 79: Checking ECT 1 Circuit For Short To Voltage
Courtesy of CHRYSLER GROUP, LLC

1. Turn the ignition off.
2. Disconnect the Engine Coolant Temperature (ECT) Sensor harness connector.
3. Turn the ignition on.
4. Measure the voltage of the (K2) ECT Signal circuit in the ECT Sensor harness connector.

   Is the voltage above 5.2 volts?

   Yes

- Repair the (K2) ECT Signal circuit for a short to voltage.
- Perform the POWERTRAIN VERIFICATION TEST. Refer to **POWERTRAIN VERIFICATION TEST** .

No

- Go To 3

3. **CHECK THE (K2) ECT SIGNAL FOR AN OPEN/HIGH RESISTANCE**
   1. Turn the ignition off.
   2. Disconnect the PCM C2 harness connector.

      CAUTION: Do not probe the PCM harness connectors. Probing the PCM harness connectors will damage the PCM terminals resulting in poor terminal to pin connection. Install the GPEC Diagnostic Adaptor to perform the diagnosis.

   3. Connect the (special tool #10436, Adapter, GPEC Diagnostic).
   4. Measure the resistance of the (K2) ECT 1 Signal circuit between the ECT Sensor harness connector and the GPEC Adaptor.

      Is the resistance below 5.0 Ohms?

      Yes

      - Go To 4

      No

      - Repair the (K2) ECT Signal circuit for an open or high resistance.
      - Perform the POWERTRAIN VERIFICATION TEST. Refer to **POWERTRAIN VERIFICATION TEST** .

4. **CHECK THE (K900) SENSOR GROUND CIRCUIT FOR AN OPEN/HIGH RESISTANCE**
   1. Measure the resistance of the (K900) Sensor Ground circuit between the ECT Sensor 1 harness connector and the GPEC Adaptor.

Is the resistance below 5.0 Ohms?

Yes

- Go To 5

No

- Repair the (K900) Sensor Ground circuit for an open or high resistance.
- Perform the POWERTRAIN VERIFICATION TEST. Refer to **POWERTRAIN VERIFICATION TEST** .

5. **ENGINE COOLANT TEMPERATURE SENSOR**

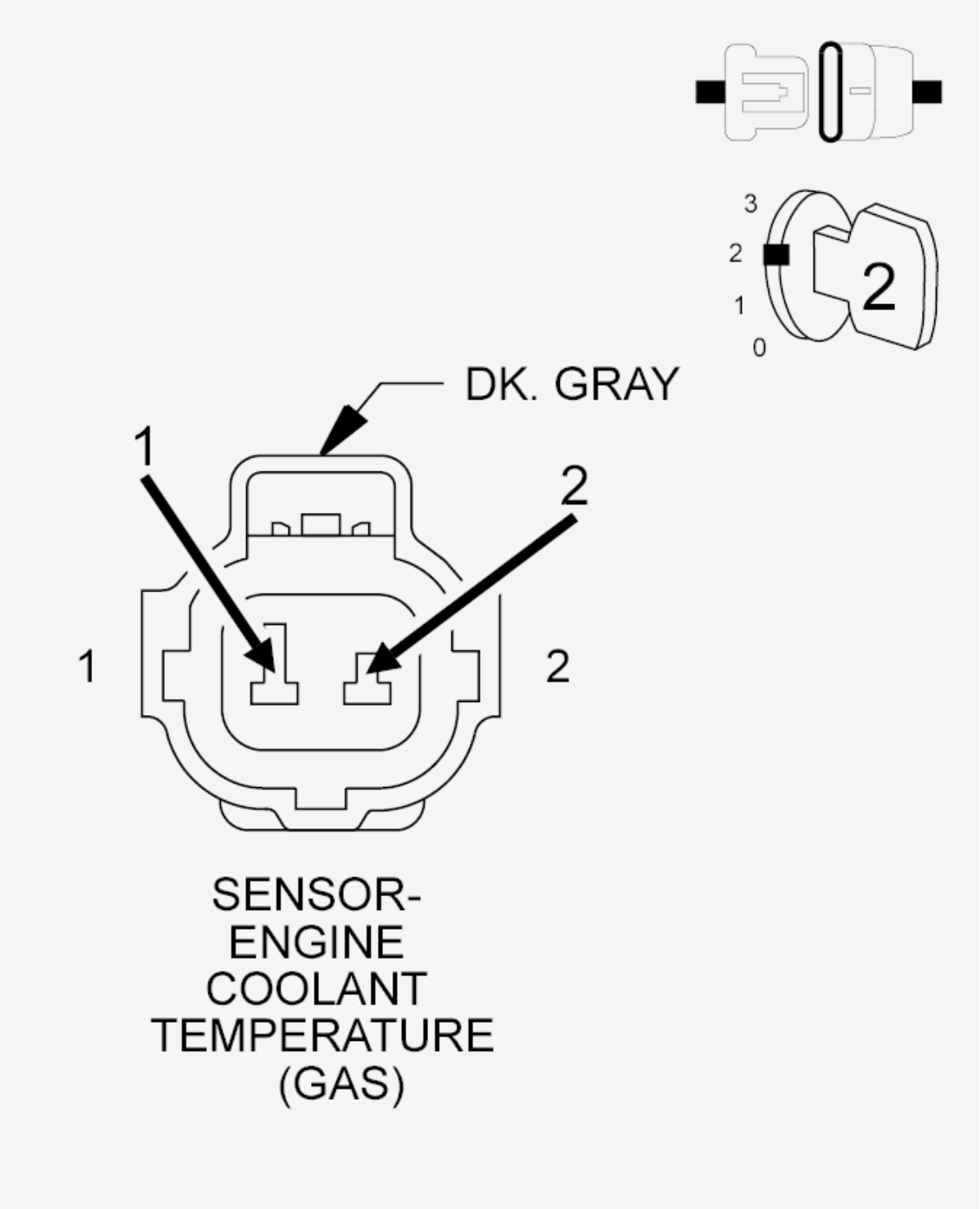

Fig. 80: ECT Sensor Harness Connector End View
Courtesy of CHRYSLER GROUP, LLC

1. Turn the ignition off.
2. Reconnect the PCM C2 harness connector.
3. Connect a jumper between the (K2) ECT Signal circuit and the (K900) Sensor Ground in the Engine Coolant Temperature Sensor harness connector.

4. Turn the ignition on.
5. With the scan tool, read the ECT Sensor signal voltage.

   Is the voltage below 0.1 volts with the jumper in place?

   Yes

   - Replace the Engine Coolant Temperature Sensor in accordance with the service information. Refer to **SENSOR, COOLANT TEMPERATURE, REMOVAL** .
   - Perform the POWERTRAIN VERIFICATION TEST. Refer to **POWERTRAIN VERIFICATION TEST** .

   No

   - Go To 6

6. **POWERTRAIN CONTROL MODULE (PCM)**
   1. Using the wiring diagram/schematic as a guide, inspect the wiring and connectors between the Engine Coolant Temperature Sensor and the Powertrain Control Module (PCM).
   2. Look for any chafed, pierced, pinched, or partially broken wires.
   3. Look for broken, bent, pushed out or corroded terminals.
   4. Monitor the scan tool data relative to this circuit and wiggle test the wiring and connectors.
   5. Look for the data to change or for the DTC to reset during the wiggle test.
   6. Perform any Technical Service Bulletins that may apply.

   Were any problems found?

   Yes

   - Repair as necessary.
   - Perform the POWERTRAIN VERIFICATION TEST. Refer to **POWERTRAIN VERIFICATION TEST** .

   No

- Replace and program the Powertrain Control Module (PCM) in accordance with the service information. Refer to **MODULE, POWERTRAIN CONTROL, REMOVAL** .
- Perform the POWERTRAIN VERIFICATION TEST. Refer to **POWERTRAIN VERIFICATION TEST** .

P0121-THROTTLE POSITION SENSOR 1 PERFORMANCE

For a complete wiring diagram, **refer to appropriate SYSTEM WIRING DIAGRAMS article** .

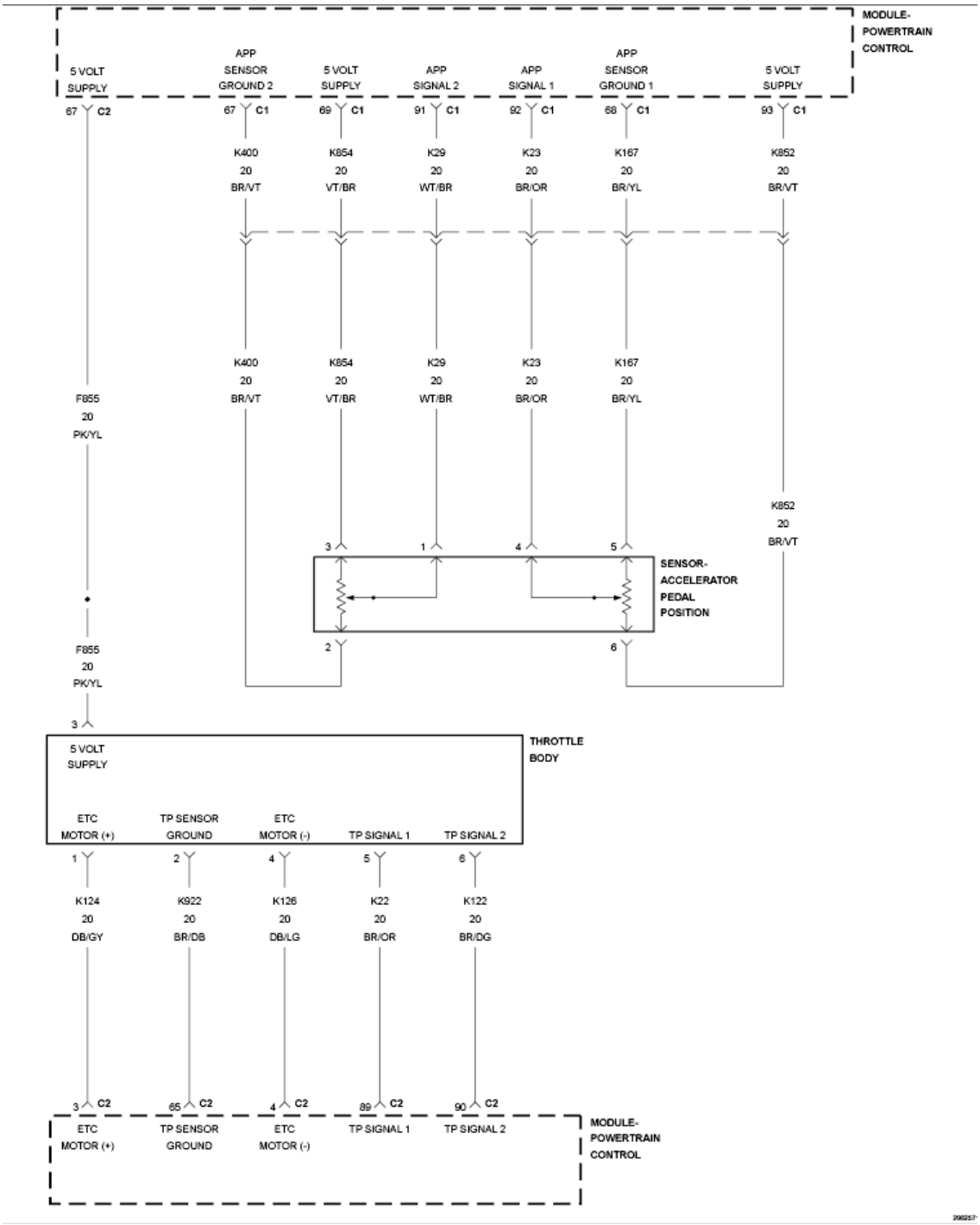

Fig. 81: Throttle Control Circuit Diagram
Courtesy of CHRYSLER GROUP, LLC

WHEN MONITORED

With the ignition on and battery voltage greater than 10.4 volts.

SET CONDITION

The Powertrain Control Module (PCM) detects that the Throttle Position Sensor

1 circuit input voltage is implausible.

POSSIBLE CAUSES

POSSIBLE CAUSES
(F855) 5 VOLT SUPPLY CIRCUIT SHORTED TO VOLTAGE
(K22) TP SIGNAL 1 CIRCUIT SHORTED TO VOLTAGE
(F855) 5 VOLT SUPPLY CIRCUIT SHORTED TO GROUND
(K22) TP SIGNAL 1 CIRCUIT SHORTED TO GROUND
(F855) 5 VOLT SUPPLY CIRCUIT SHORTED TO THE (K22) TP SIGNAL 1 CIRCUIT
(F855) 5 VOLT SUPPLY CIRCUIT SHORTED TO THE (K922) TP SENSOR GROUND CIRCUIT
(K22) TP SIGNAL 1 CIRCUIT SHORTED TO THE (K922) TP SENSOR GROUND CIRCUIT
(F855) 5 VOLT SUPPLY CIRCUIT OPEN OR HIGH RESISTANCE
(K22) TP SIGNAL 1 CIRCUIT OPEN OR HIGH RESISTANCE
(K922) TP SENSOR GROUND CIRCUIT OPEN OR HIGH RESISTANCE
THROTTLE BODY
POWERTRAIN CONTROL MODULE (PCM)

Always perform the Pre-Diagnostic Troubleshooting procedure before proceeding. Refer to PRE-DIAGNOSTIC TROUBLESHOOTING PROCEDURE .

DIAGNOSTIC TEST

1. **ACTIVE DTC**
   1. Start the engine and allow it to idle.

      WARNING: When the engine is operating, do not stand in direct line with the fan. Do not put your hands near the pulleys, belts or fan. Do not wear loose clothing. Failure to follow these instructions may result in possible serious or fatal injury.

   2. With the scan tool, select View DTCs.

Is the status Active for this DTC?

Yes

- Go To 2

No

- Perform the INTERMITTENT CONDITION diagnostic procedure. Refer to **INTERMITTENT CONDITION** .

2. **CHECK THE (F855) 5-VOLT SUPPLY CIRCUIT VOLTAGE**

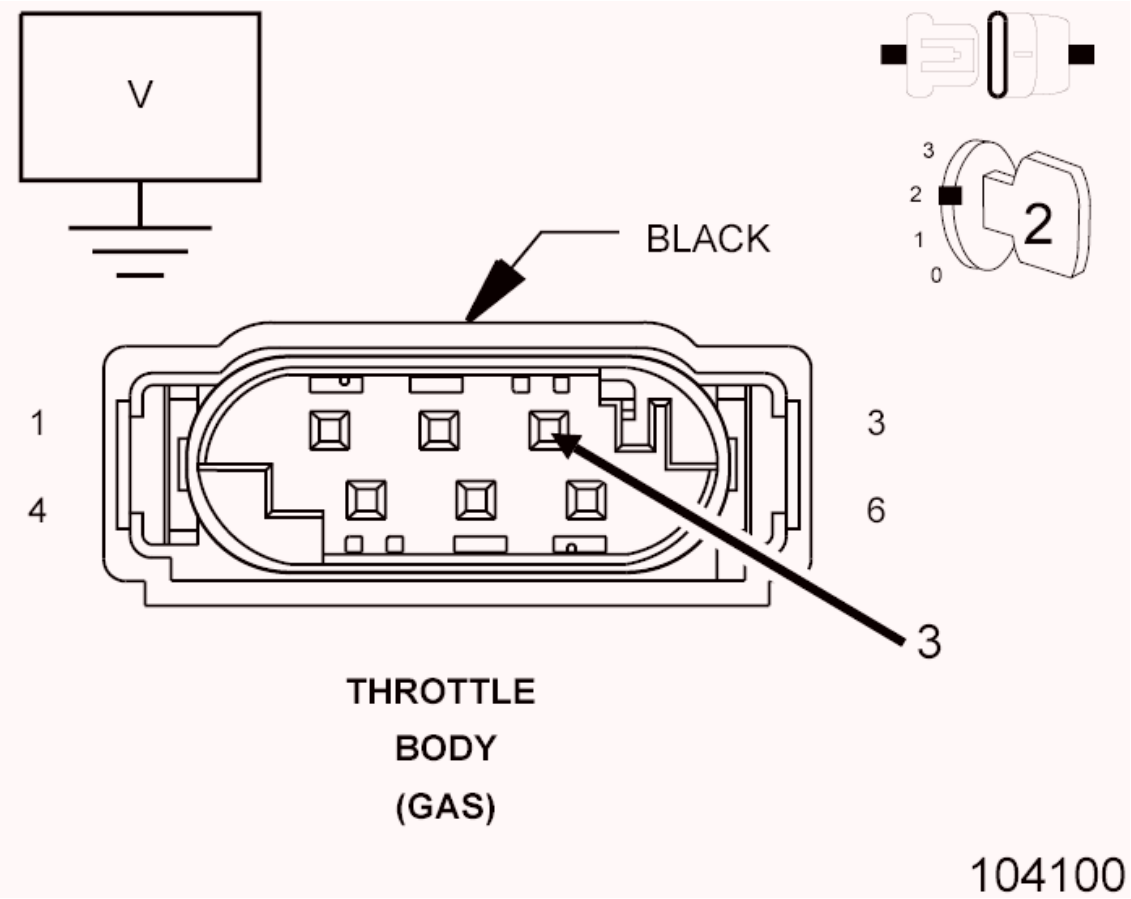

Fig. 82: Checking 5-Volt Supply Circuit
Courtesy of CHRYSLER GROUP, LLC

1. Turn the ignition off.
2. Disconnect the Throttle Body harness connector.
3. Turn the ignition on.
4. Measure the voltage of the (F855) 5-Volt Supply circuit in the Throttle Body harness connector.

Is the voltage between 4.8 and 5.2 volts?

Yes

- Go To 3

No

- Repair the (F855) 5-Volt Supply circuit for an open or short circuit.
- Perform the POWERTRAIN VERIFICATION TEST. Refer to **POWERTRAIN VERIFICATION TEST** .

3. **CHECK THE (K922) TPS SENSOR GROUND CIRCUIT FOR AN OPEN/HIGH RESISTANCE**
   1. Turn the ignition off.
   2. Disconnect the PCM C2 harness connector.

      CAUTION: Do not probe the PCM harness connectors. Probing the PCM harness connectors will damage the PCM terminals resulting in poor terminal to pin connection. Install the GPEC Diagnostic Adaptor to perform the diagnosis.

   3. Connect the (special tool #10436, Adapter, GPEC Diagnostic).
   4. Measure the resistance of the (K922) TPS Sensor Ground circuit between the Throttle Body harness connector and the GPEC Adaptor.

      Is the resistance below 5.0 Ohms?

      Yes

      - Go To 4

      No

      - Repair the (K922) TPS Sensor Ground circuit for an open or high resistance.
      - Perform the POWERTRAIN VERIFICATION TEST. Refer to

POWERTRAIN VERIFICATION TEST .

4. **CHECK THE (K22) TPS SIGNAL 1 CIRCUIT FOR AN OPEN/HIGH RESISTANCE**
   1. Measure the resistance of the (K22) TPS Signal 1 circuit between the Throttle Body harness connector and the GPEC Adaptor.

      Is the resistance below 5.0 Ohms?

      Yes

      - Go To 5.

      No

      - Repair the (K22) TPS Signal 1 circuit for an open or high resistance.
      - Perform the POWERTRAIN VERIFICATION TEST. Refer to **POWERTRAIN VERIFICATION TEST** .
5. **CHECK THE (K122) TPS SIGNAL 2 CIRCUIT FOR AN OPEN/HIGH RESISTANCE**
   1. Measure the resistance of the (K122) TPS Signal 2 circuit between the Throttle Body harness connector and the GPEC Adaptor.

      Is the resistance below 5.0 Ohms?

      Yes

      - Go To 6

      No

      - Repair the (K122) TPS Signal 2 circuit for an open or high resistance.
      - Perform the POWERTRAIN VERIFICATION TEST. Refer to **POWERTRAIN VERIFICATION TEST** .
6. **THROTTLE BODY**
   1. Replace the Throttle Body in accordance with the service information. Refer to **THROTTLE BODY, REMOVAL** .
   2. Turn the ignition on

3. With the scan tool, erase DTCs.
4. Start the engine and allow it to idle.
5. With the scan tool, view DTCs.

   Did the DTC return?

   Yes

   - Go To 7

   No

   - Repair complete.
   - Perform the POWERTRAIN VERIFICATION TEST. Refer to **POWERTRAIN VERIFICATION TEST** .

7. **POWERTRAIN CONTROL MODULE (PCM)**
   1. Using the wiring diagram/schematic as a guide, inspect the wiring and connectors between the Throttle Body and the Powertrain Control Module (PCM).
   2. Look for any chafed, pierced, pinched, or partially broken wires.
   3. Look for broken, bent, pushed out or corroded terminals.
   4. Monitor the scan tool data relative to this circuit and wiggle test the wiring and connectors.
   5. Look for the data to change or for the DTC to reset during the wiggle test.
   6. Perform any Technical Service Bulletins that may apply.

   Were any problems found?

   Yes

   - Repair as necessary.
   - Perform the POWERTRAIN VERIFICATION TEST. Refer to **POWERTRAIN VERIFICATION TEST** .

   No

   - Replace and program the Powertrain Control Module (PCM) in

accordance with the Service Information. Refer to **MODULE, POWERTRAIN CONTROL, REMOVAL** .

- Perform the POWERTRAIN VERIFICATION TEST. Refer to **POWERTRAIN VERIFICATION TEST** .

P0122-THROTTLE POSITION SENSOR 1 CIRCUIT LOW

For a complete wiring diagram, **refer to appropriate SYSTEM WIRING DIAGRAMS article** .

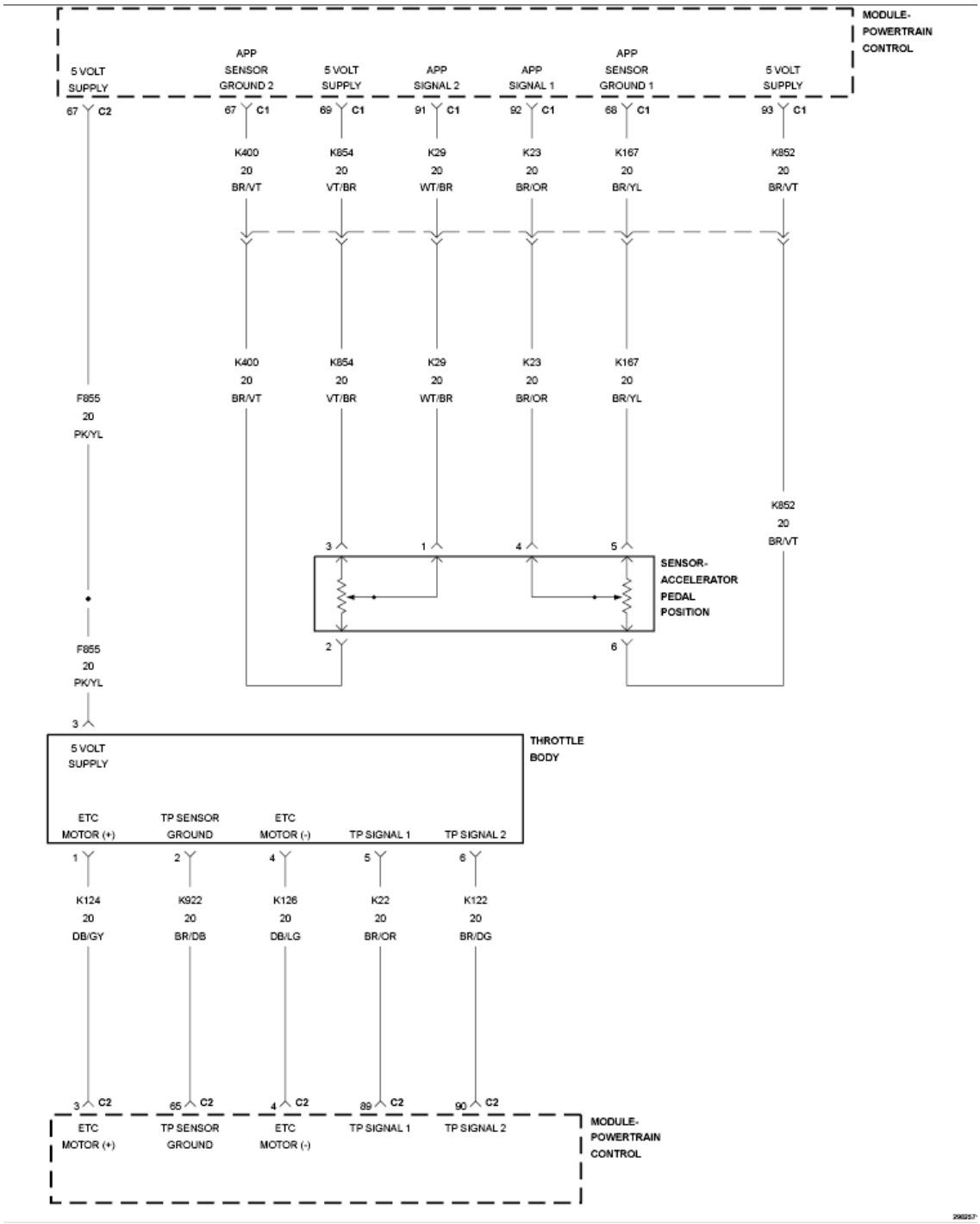

Fig. 83: Throttle Control Circuit Diagram
Courtesy of CHRYSLER GROUP, LLC

WHEN MONITORED

With the ignition on and battery voltage greater than 10.4 volts.

SET CONDITION

The Powertrain Control Module (PCM) detects that the Throttle Position Sensor

1 input voltage is below the minimum acceptable value.

POSSIBLE CAUSES

POSSIBLE CAUSES
(F855) 5 VOLT SUPPLY CIRCUIT SHORTED TO GROUND
(K22) TP SIGNAL 1 CIRCUIT SHORTED TO GROUND
(F855) 5 VOLT SUPPLY CIRCUIT SHORTED TO THE (K922) TP SENSOR GROUND CIRCUIT
(K22) TP SIGNAL 1 CIRCUIT SHORTED TO THE (K922) TP SENSOR GROUND CIRCUIT
(K22) TP SIGNAL 1 CIRCUIT SHORTED TO THE (K124) ETC MOTOR (+) CIRCUIT
(K22) TP SIGNAL 1 CIRCUIT SHORTED TO THE (K126) ETC MOTOR (-) CIRCUIT
(F855) 5 VOLT SUPPLY CIRCUIT OPEN OR HIGH RESISTANCE
(K22) TP SIGNAL 1 CIRCUIT OPEN OR HIGH RESISTANCE
THROTTLE BODY
POWERTRAIN CONTROL MODULE (PCM)

Always perform the Pre-Diagnostic Troubleshooting procedure before proceeding. Refer to PRE-DIAGNOSTIC TROUBLESHOOTING PROCEDURE .

DIAGNOSTIC TEST

1. **ACTIVE DTC**
   1. Start the engine and allow it to idle.

      WARNING: **When the engine is operating, do not stand in direct line with the fan. Do not put your hands near the pulleys, belts or fan. Do not wear loose clothing. Failure to follow these instructions may result in possible serious or fatal injury.**

   2. With the scan tool, select View DTCs.

      Is the status Active for this DTC?

Yes

- Go To 2

No

- Perform the INTERMITTENT CONDITION diagnostic procedure. Refer to **INTERMITTENT CONDITION** .

2. **CHECK THE (F855) 5-VOLT SUPPLY CIRCUIT VOLTAGE**

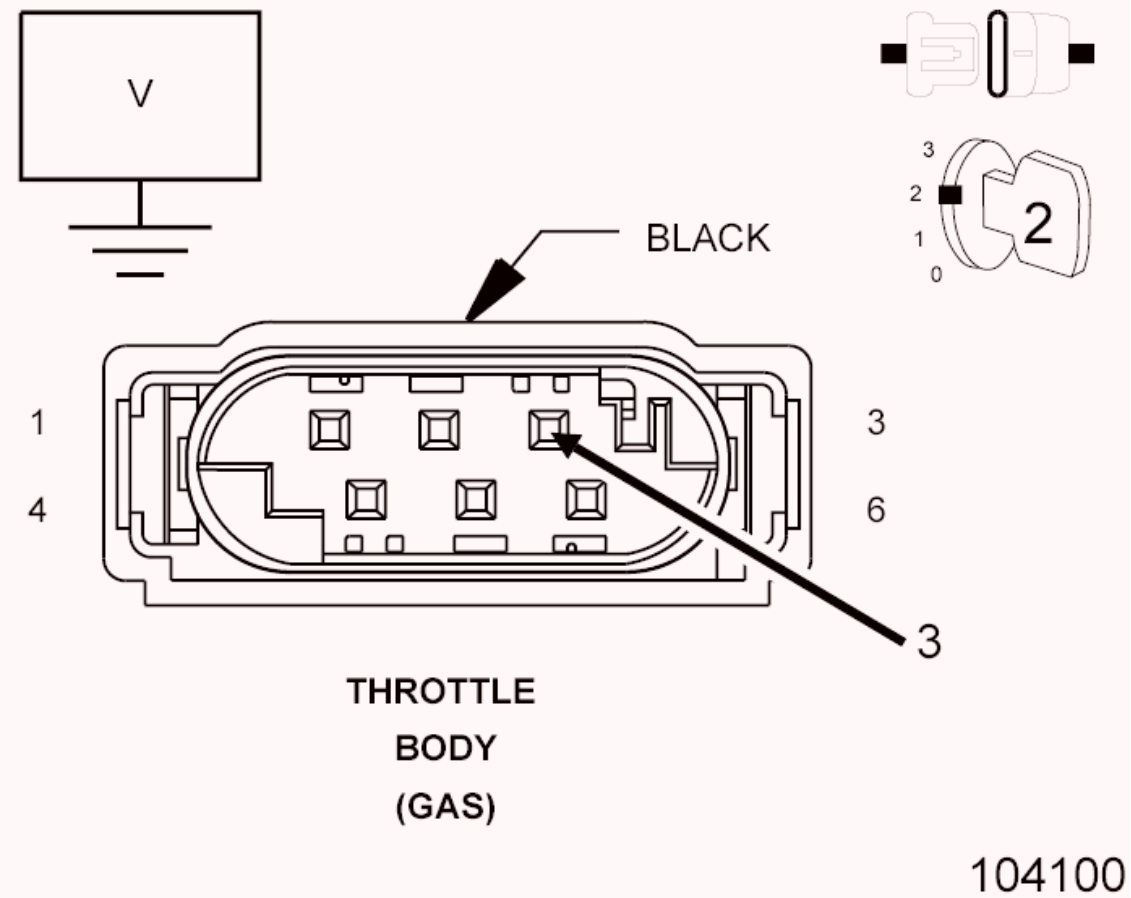

Fig. 84: Checking 5-Volt Supply Circuit
Courtesy of CHRYSLER GROUP, LLC

1. Turn the ignition off.
2. Disconnect the Throttle Body harness connector.
3. Turn the ignition on.
4. Measure the voltage of the (F855) 5-Volt Supply circuit in the Throttle Body harness connector.

   Is the voltage above 4.9 volts?

Yes

- Go To 3

No

- Repair the (F855) 5-Volt Supply circuit for an open or shorted circuit.
- Perform the POWERTRAIN VERIFICATION TEST. Refer to **POWERTRAIN VERIFICATION TEST** .

3. **CHECK THE (K22) TPS SIGNAL 1 CIRCUIT FOR A SHORT TO GROUND**

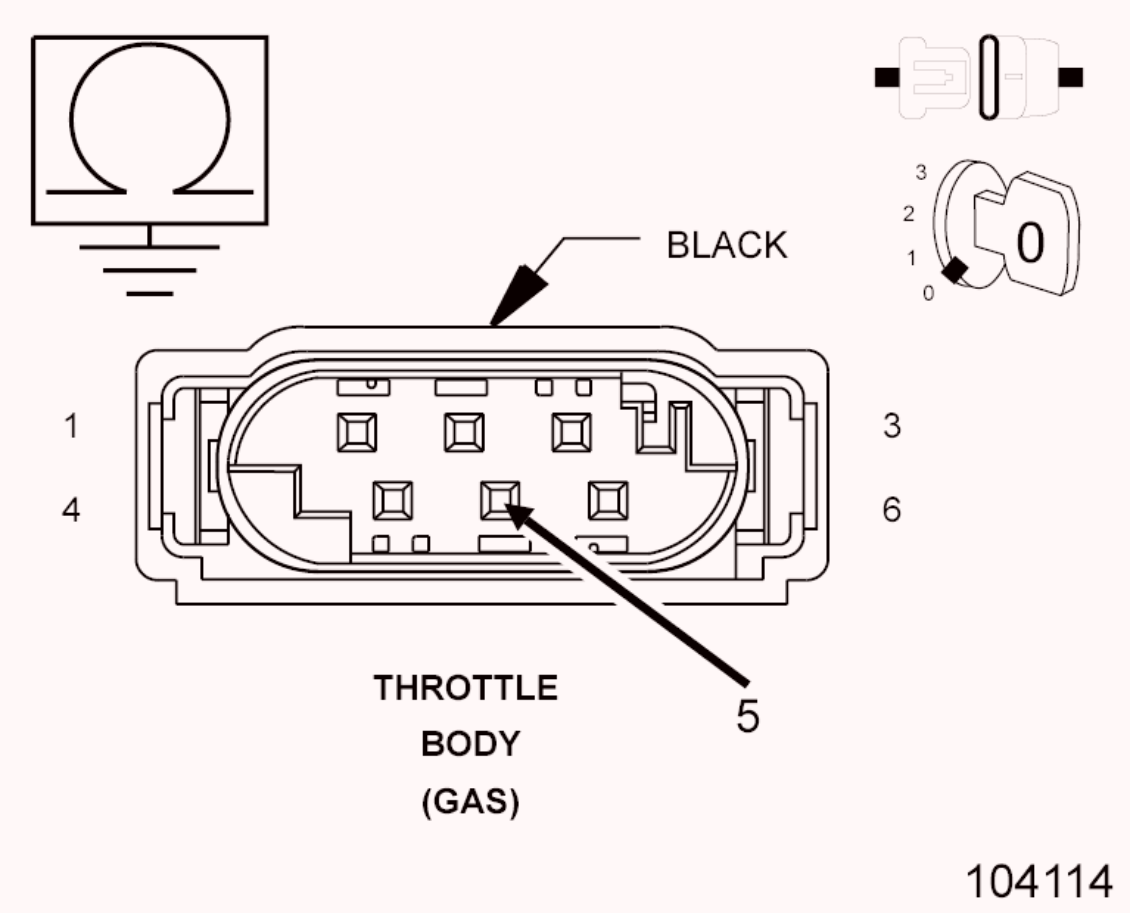

Fig. 85: Checking TP Signal 1 Circuit For Short To Ground
Courtesy of CHRYSLER GROUP, LLC

1. Turn the ignition off.
2. Disconnect the PCM C2 harness connector.
3. Measure the resistance between ground and the (K22) TPS Signal 1

circuit in the Throttle Body harness connector.

Is the resistance above 10k Ohms?

Yes

- Go To 4

No

- Repair the (K22) TPS Signal 1 circuit for a short to ground.
- Perform the POWERTRAIN VERIFICATION TEST. Refer to **POWERTRAIN VERIFICATION TEST** .

4. **CHECK FOR THE (K22) TPS SIGNAL 1 CIRCUIT SHORTED TO THE (K922) TPS SENSOR GROUND CIRCUIT**

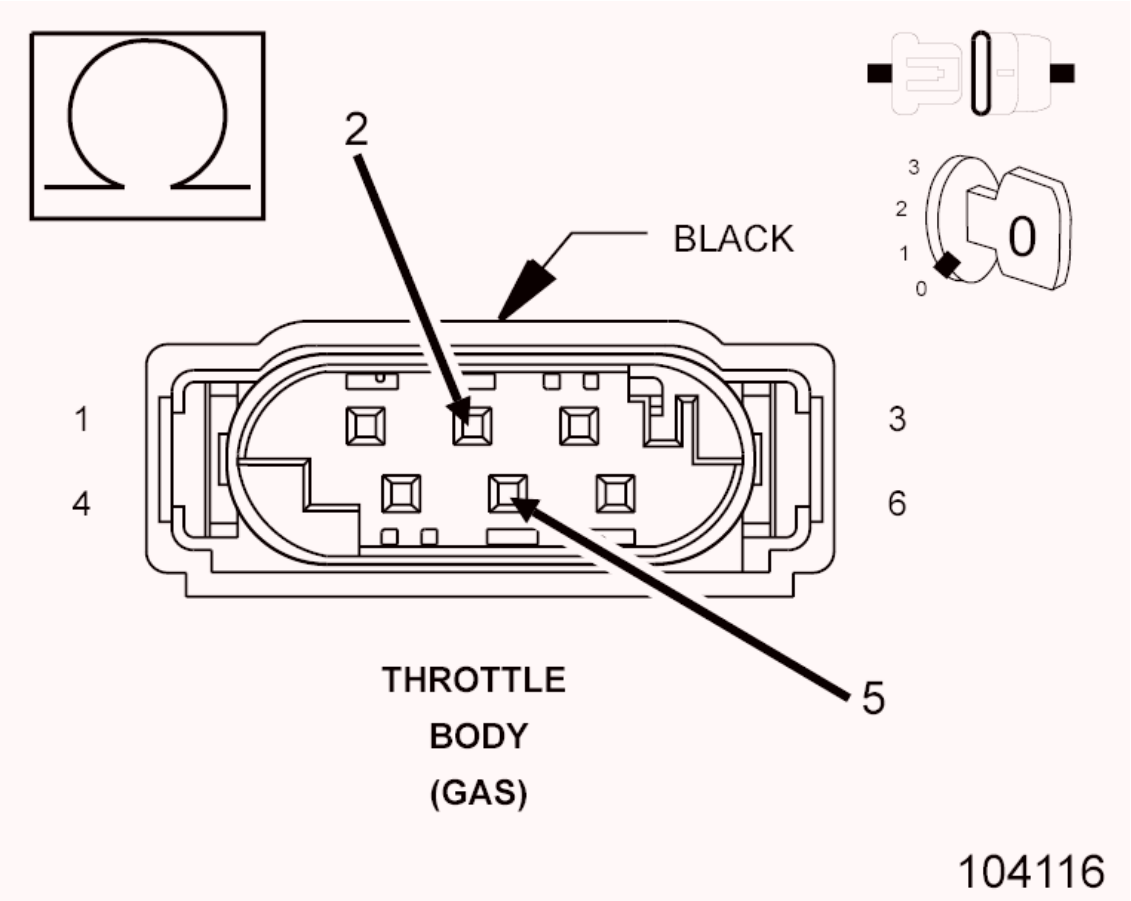

Fig. 86: Checking TP Sensor Signal 1 Circuit For Short To TP Sensor Ground Circuit
Courtesy of CHRYSLER GROUP, LLC

1. Measure the resistance between the (K22) TPS Signal 1 circuit and the (K922) TPS Sensor Ground circuit in the Throttle Body harness connector.

   Is the resistance above 10k Ohms?

   Yes

   - Go To 5

   No

   - Repair the (K22) TPS Signal 1 circuit for a short to the (K922) TPS Sensor Ground circuit.
   - Perform the POWERTRAIN VERIFICATION TEST. Refer to **POWERTRAIN VERIFICATION TEST** .

5. **CHECK FOR THE (K22) TPS SIGNAL 1 CIRCUIT SHORTED TO THE (K124) ETC MOTOR (+) CIRCUIT**

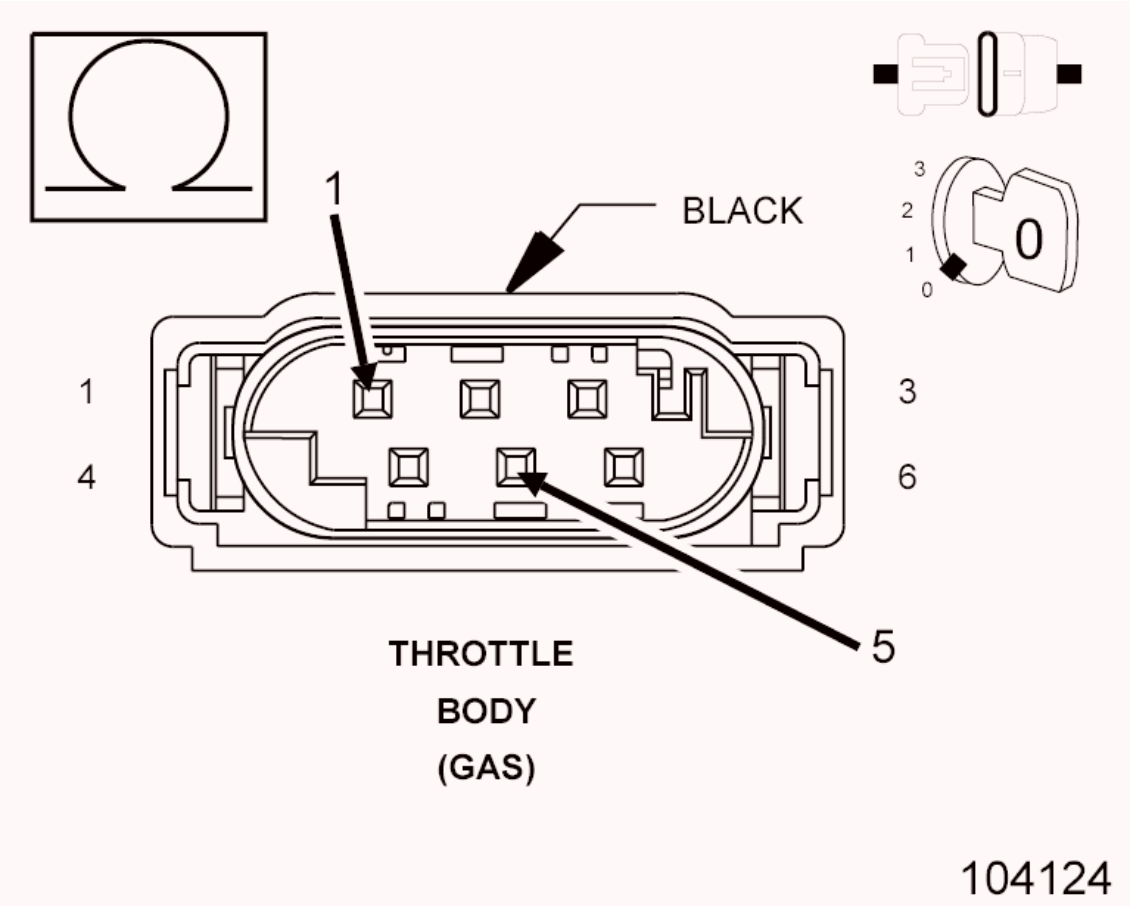

Fig. 87: Checking TP Signal 1 Circuit For Short To ETC Motor (+)

Circuit
Courtesy of CHRYSLER GROUP, LLC

1. Measure the resistance between the (K22) TPS Signal 1 circuit and the (K124) ETC Motor (+) in the Throttle Body harness connector.

   Is the resistance below 10k Ohms?

   Yes

   - Repair the short between the (K124) ETC Motor (+) circuit and the (K22) TP Signal 1 circuit.
   - Perform the POWERTRAIN VERIFICATION TEST. Refer to **POWERTRAIN VERIFICATION TEST** .

   No

   - Go To 6

6. **CHECK FOR THE (K22) TPS SIGNAL 1 CIRCUIT SHORTED TO THE (K126) ETC MOTOR (-) CIRCUIT**

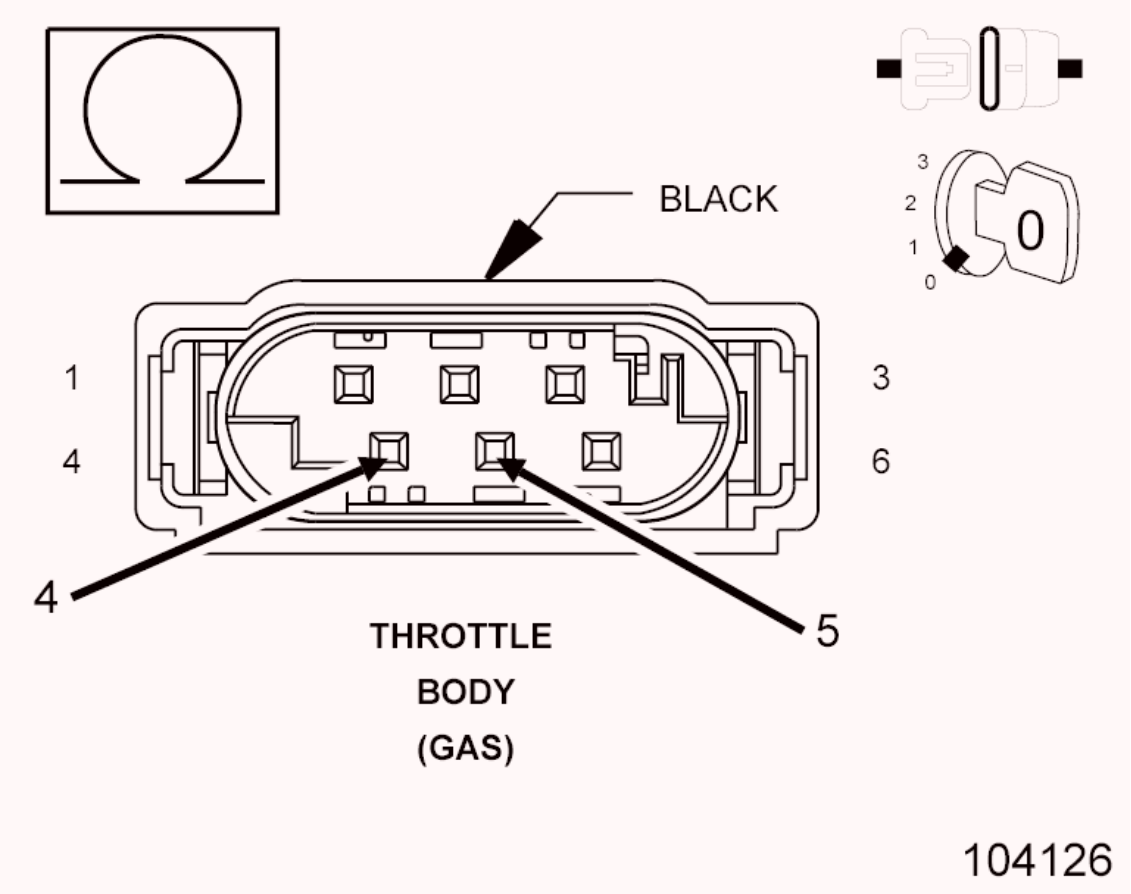

Fig. 88: Checking TP Signal 1 Circuit For Short To ETC Motor (-) Circuit
Courtesy of CHRYSLER GROUP, LLC

1. Measure the resistance between the (K22) TPS Signal 1 circuit and the (K126) ETC Motor (-) in the Throttle Body harness connector.

   Is the resistance below 10k Ohms?

   Yes

   - Repair the short between the (K22) TPS Signal 1 circuit and the (K126) ETC Motor (-) circuit.
   - Perform the POWERTRAIN VERIFICATION TEST. Refer to **POWERTRAIN VERIFICATION TEST** .

   No

   - Go To 7

7. **CHECK THE (K22) TPS SIGNAL 1 CIRCUIT FOR AN OPEN/HIGH**

RESISTANCE

CAUTION: Do not probe the PCM harness connectors. Probing the PCM harness connectors will damage the PCM terminals resulting in poor terminal to pin connection. Install the GPEC Diagnostic Adaptor to perform the diagnosis.

1. Connect the (special tool #10436, Adapter, GPEC Diagnostic).
2. Measure the resistance of the (K22) TPS Signal 1 circuit between the Throttle Body harness connector and the GPEC Adaptor.

   Is the resistance below 5.0 Ohms?

   Yes

   - Go To 8

   No

   - Repair the (K22) TPS Signal 1 circuit for an open or high resistance.
   - Perform the POWERTRAIN VERIFICATION TEST. Refer to **POWERTRAIN VERIFICATION TEST** .

8. **THROTTLE BODY**

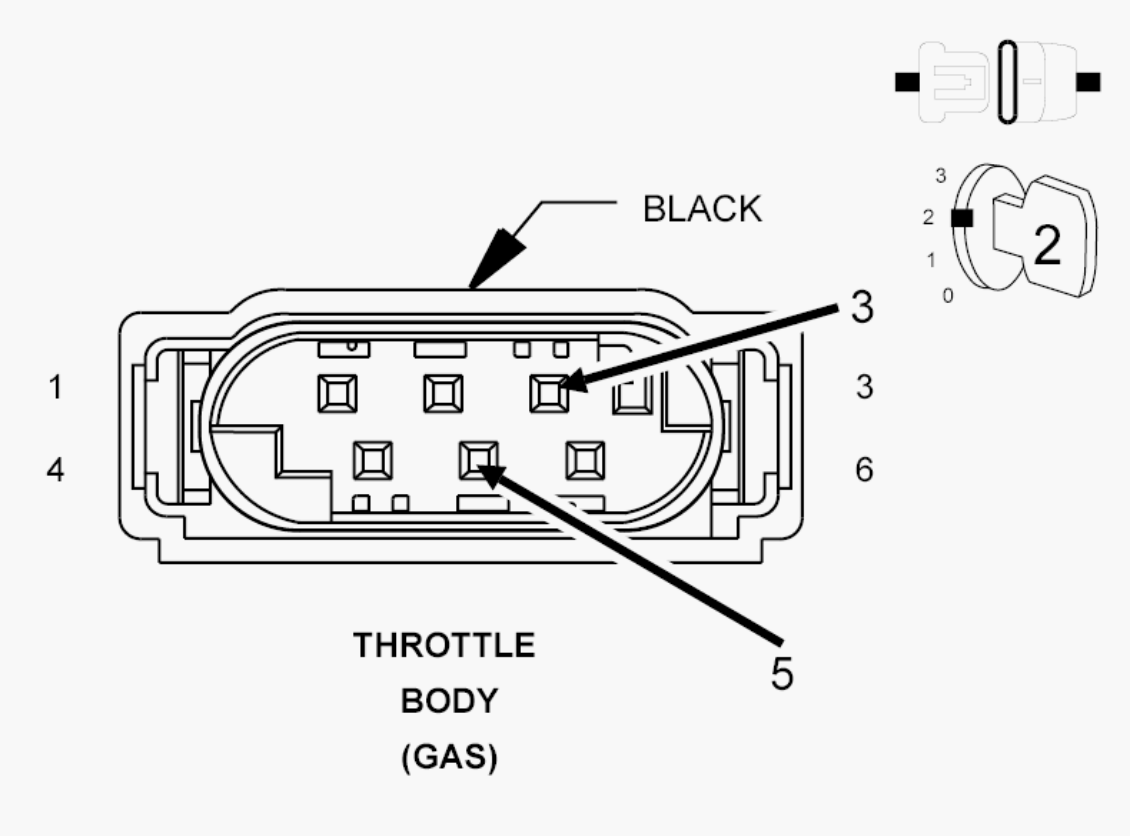

Fig. 89: Throttle Body Harness Connector End View
Courtesy of CHRYSLER GROUP, LLC

1. Turn the ignition off.
2. Reconnect the PCM C2 harness connector.
3. Connect a jumper between the (F855) 5-Volt Supply circuit and the (K22) TPS Signal 1 circuit in the Throttle Body harness connector.
4. Turn the ignition on.
5. With the scan tool, read the TPS Signal 1 circuit voltage.

   Is the voltage above 4.9 volts with the jumper in place?

   Yes

   - Replace the Throttle Body in accordance with the service information. Refer to **THROTTLE BODY, REMOVAL** .
   - Perform the POWERTRAIN VERIFICATION TEST. Refer to **POWERTRAIN VERIFICATION TEST** .

   No

- Go To 9

9. **POWERTRAIN CONTROL MODULE (PCM)**
    1. Using the wiring diagram/schematic as a guide, inspect the wiring and connectors between the Throttle Body and the Powertrain Control Module (PCM).
    2. Look for any chafed, pierced, pinched, or partially broken wires.
    3. Look for broken, bent, pushed out or corroded terminals.
    4. Monitor the scan tool data relative to this circuit and wiggle test the wiring and connectors.
    5. Look for the data to change or for the DTC to reset during the wiggle test.
    6. Perform any Technical Service Bulletins that may apply.

    Were any problems found?

    Yes

    - Repair as necessary.
    - Perform the POWERTRAIN VERIFICATION TEST. Refer to **POWERTRAIN VERIFICATION TEST** .

    No

    - Replace and program the Powertrain Control Module (PCM) in accordance with the service information. Refer to **MODULE, POWERTRAIN CONTROL, REMOVAL** .
    - Perform the POWERTRAIN VERIFICATION TEST. Refer to **POWERTRAIN VERIFICATION TEST** .

P0123-THROTTLE POSITION SENSOR 1 CIRCUIT HIGH

For a complete wiring diagram, **refer to appropriate SYSTEM WIRING DIAGRAMS article** .

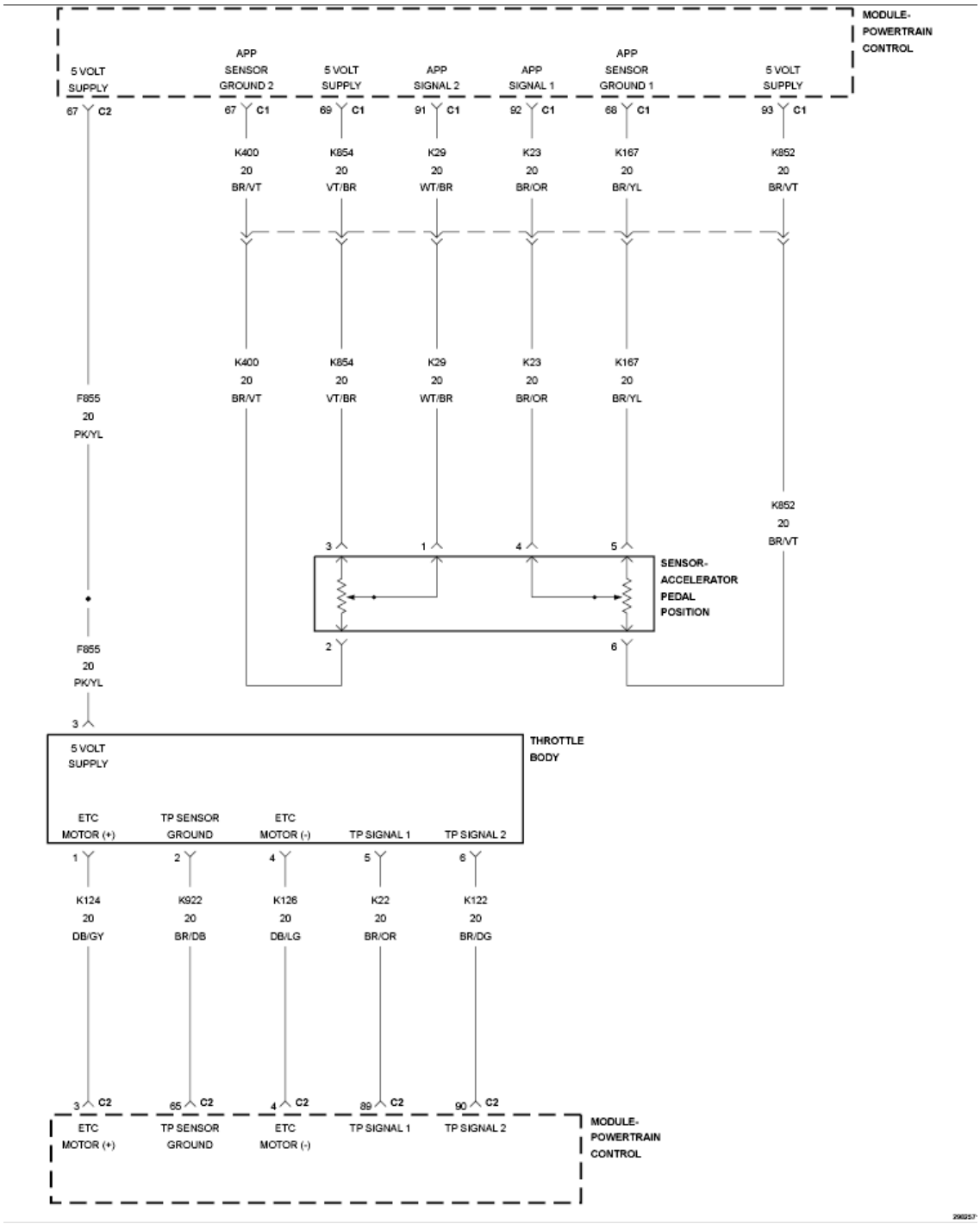

Fig. 90: Throttle Control Circuit Diagram
Courtesy of CHRYSLER GROUP, LLC

WHEN MONITORED

With the ignition on and battery voltage greater than 10.4 volts.

SET CONDITION

The Powertrain Control Module (PCM) detects that the Throttle Position Sensor

1 input voltage is above the maximum acceptable value.

POSSIBLE CAUSES

POSSIBLE CAUSES
(F855) 5 VOLT SUPPLY CIRCUIT SHORTED TO VOLTAGE
(K22) TP SIGNAL 1 CIRCUIT SHORTED TO VOLTAGE
(K22) TP SIGNAL 1 CIRCUIT SHORTED TO THE (F855) 5 VOLT SUPPLY CIRCUIT
(K22) TP SIGNAL 1 CIRCUIT SHORTED TO THE (K124) ETC MOTOR (+) CIRCUIT
(K22) TP SIGNAL 1 CIRCUIT SHORTED TO THE (K126) ETC MOTOR (-) CIRCUIT
(K22) TP SIGNAL 1 CIRCUIT OPEN OR HIGH RESISTANCE
(K922) TP SENSOR GROUND CIRCUIT OPEN OR HIGH RESISTANCE
THROTTLE BODY
POWERTRAIN CONTROL MODULE (PCM)

Always perform the Pre-Diagnostic Troubleshooting procedure before proceeding. Refer to PRE-DIAGNOSTIC TROUBLESHOOTING PROCEDURE .

DIAGNOSTIC TEST

1. **ACTIVE DTC**
   1. Start the engine and allow it to reach normal operating temperature.

      WARNING: **When the engine is operating, do not stand in direct line with the fan. Do not put your hands near the pulleys, belts or fan. Do not wear loose clothing. Failure to follow these instructions may result in possible serious or fatal injury.**

   2. With the scan tool, select View DTCs.

      Is the status Active for this DTC?

      Yes

- Go To 2

No

- Perform the INTERMITTENT CONDITION diagnostic procedure. Refer to **INTERMITTENT CONDITION** .

2. **CHECK THE (F855) 5-VOLT SUPPLY CIRCUIT FOR A SHORT TO VOLTAGE**

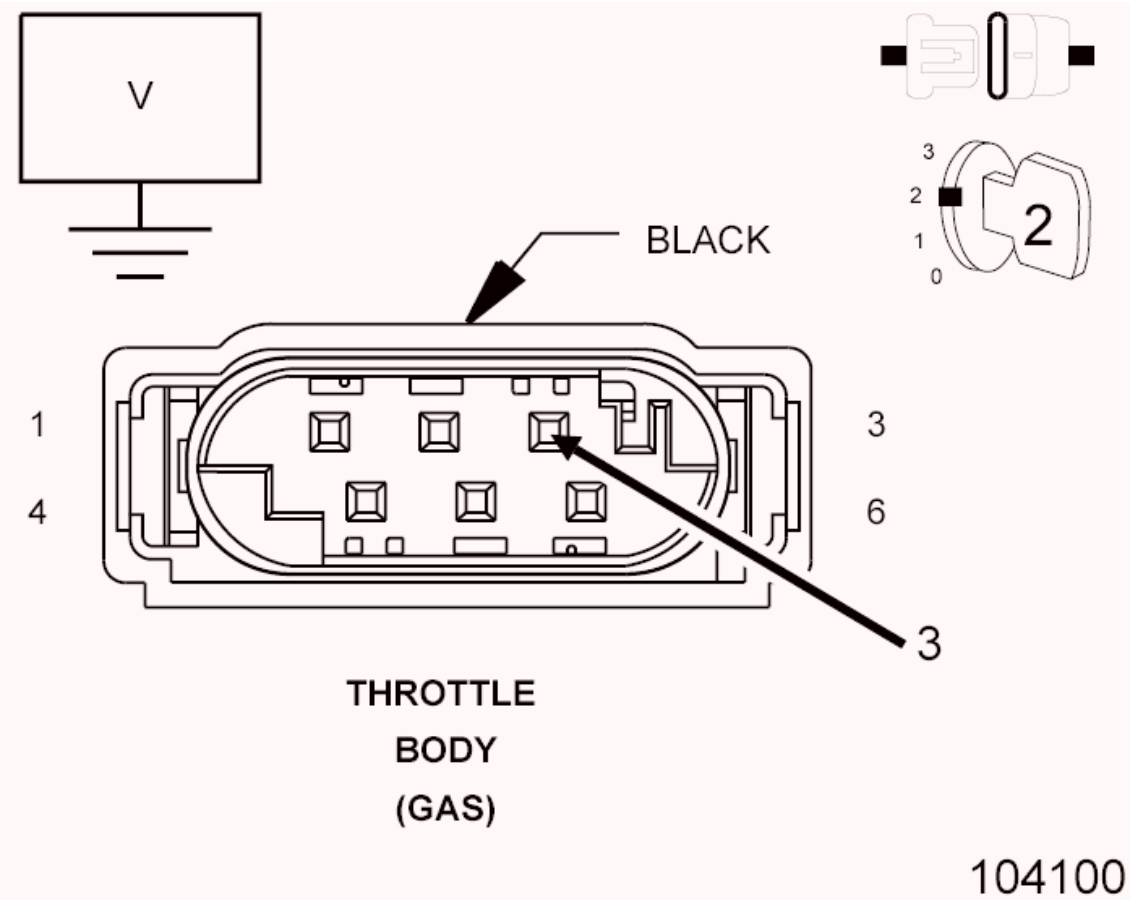

Fig. 91: Checking 5-Volt Supply Circuit For Short To Voltage
Courtesy of CHRYSLER GROUP, LLC

1. Turn the ignition off.
2. Disconnect the Throttle Body harness connector.
3. Turn the ignition on.
4. Measure the voltage of the (F855) 5-Volt Supply circuit in the Throttle Body harness connector.

   Is the voltage above 5.2 volts?

Yes

- Repair the (F855) 5-Volt Supply circuit for a short to voltage.
- Perform the POWERTRAIN VERIFICATION TEST. Refer to **POWERTRAIN VERIFICATION TEST** .

No

- Go To 3

3. **CHECK THE (K22) TPS SIGNAL 1 CIRCUIT FOR A SHORT TO VOLTAGE**

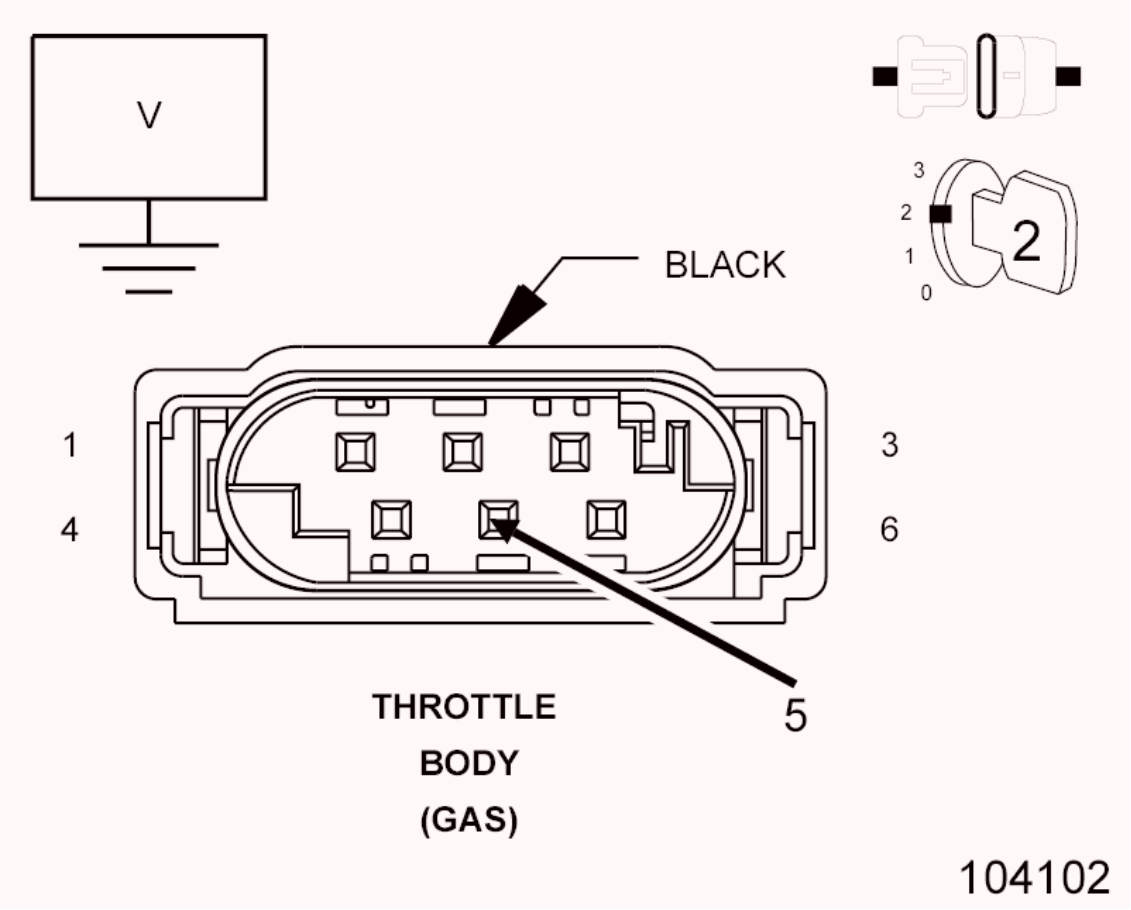

Fig. 92: Checking TP Signal 1 Circuit For Short To Voltage
Courtesy of CHRYSLER GROUP, LLC

1. Measure the voltage of the (K22) TPS Signal 1 circuit in the Throttle Body harness connector.

   Is the voltage above 5.2 volts?

Yes

- Repair the (K22) TPS Signal 1 circuit for a short to voltage.
- Perform the POWERTRAIN VERIFICATION TEST. Refer to **POWERTRAIN VERIFICATION TEST** .

No

- Go To 4

4. **CHECK FOR THE (K22) TPS SIGNAL 1 CIRCUIT SHORTED TO THE (F855) 5-VOLT SUPPLY CIRCUIT**

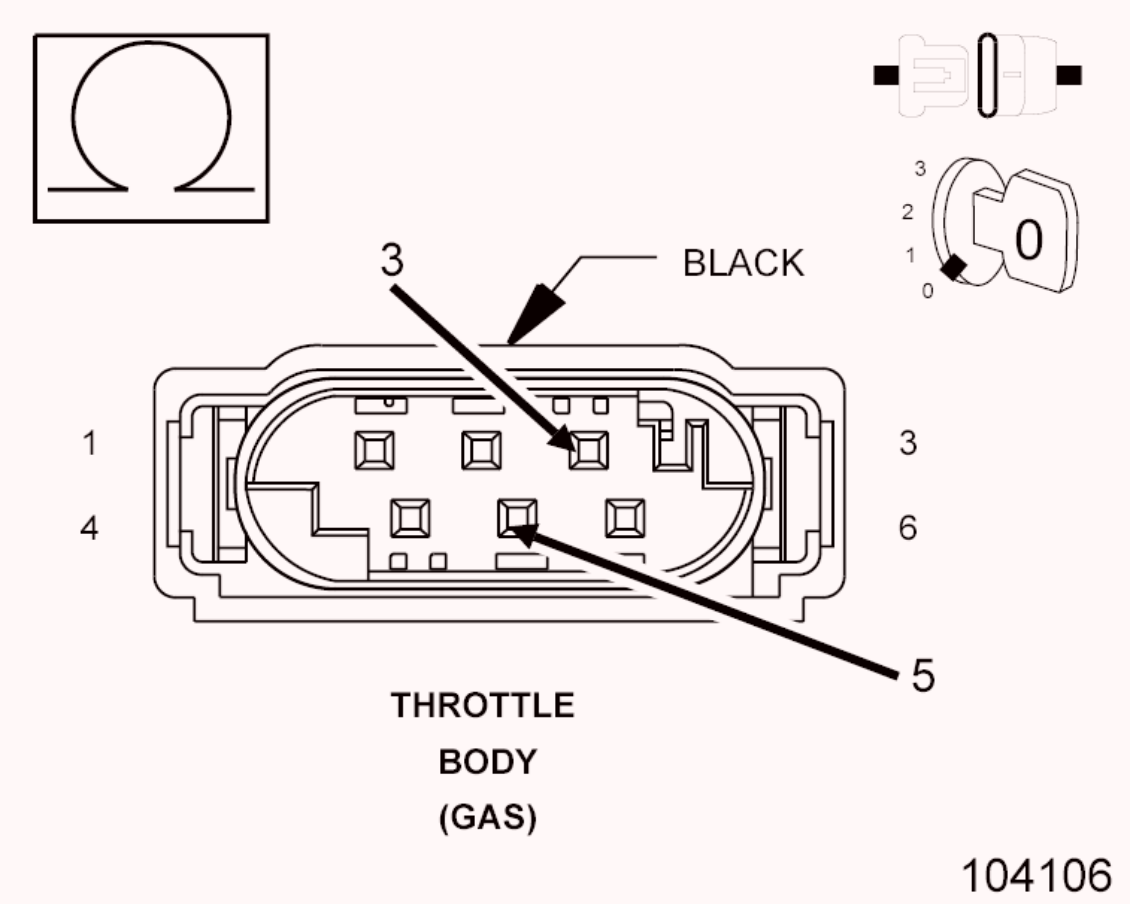

Fig. 93: Checking 5-Volt Supply Circuit For Short To TP Sensor Signal 1 Circuit
Courtesy of CHRYSLER GROUP, LLC

1. Turn the ignition off.
2. Disconnect the PCM C2 harness connector.
3. Measure the resistance between the (K22) TPS Signal 1 circuit and the

(F855) 5-Volt Supply in the Throttle Body harness connector.

Is the resistance above 10k Ohms?

Yes

- Go To 5

No

- Repair the (K22) TPS Signal 1 circuit for a short to the (F855) 5-Volt Supply circuit.
- Perform the POWERTRAIN VERIFICATION TEST. Refer to **POWERTRAIN VERIFICATION TEST** .

5. **CHECK THE (K22) TPS SIGNAL 1 CIRCUIT SHORTED TO THE (K124) ETC MOTOR (+) CIRCUIT**

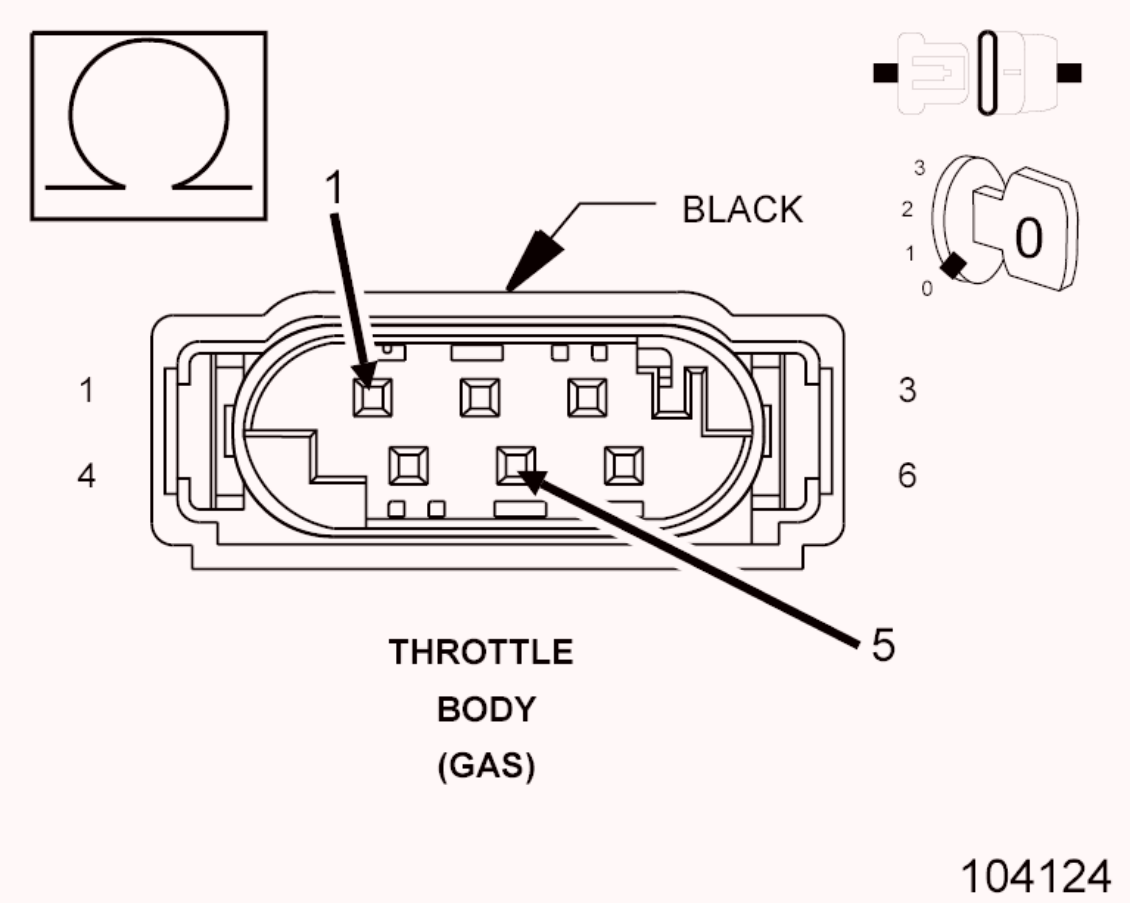

Fig. 94: Checking TP Signal 1 Circuit For Short To ETC Motor (+) Circuit
Courtesy of CHRYSLER GROUP, LLC

1. Measure the resistance between the (K22) TPS Signal 1 circuit and the (K124) ETC Motor (+) in the Throttle Body harness connector.

   Is the resistance above 10k Ohms?

   Yes

   - Go To 6

   No

   - Repair the (K124) ETC Motor (+) circuit for a short to the (F855) 5-Volt Supply circuit.
   - Perform the POWERTRAIN VERIFICATION TEST. Refer to **POWERTRAIN VERIFICATION TEST** .

6. **CHECK THE (K22) TPS SIGNAL 1 CIRCUIT SHORTED TO THE (K126) ETC MOTOR (-) CIRCUIT**

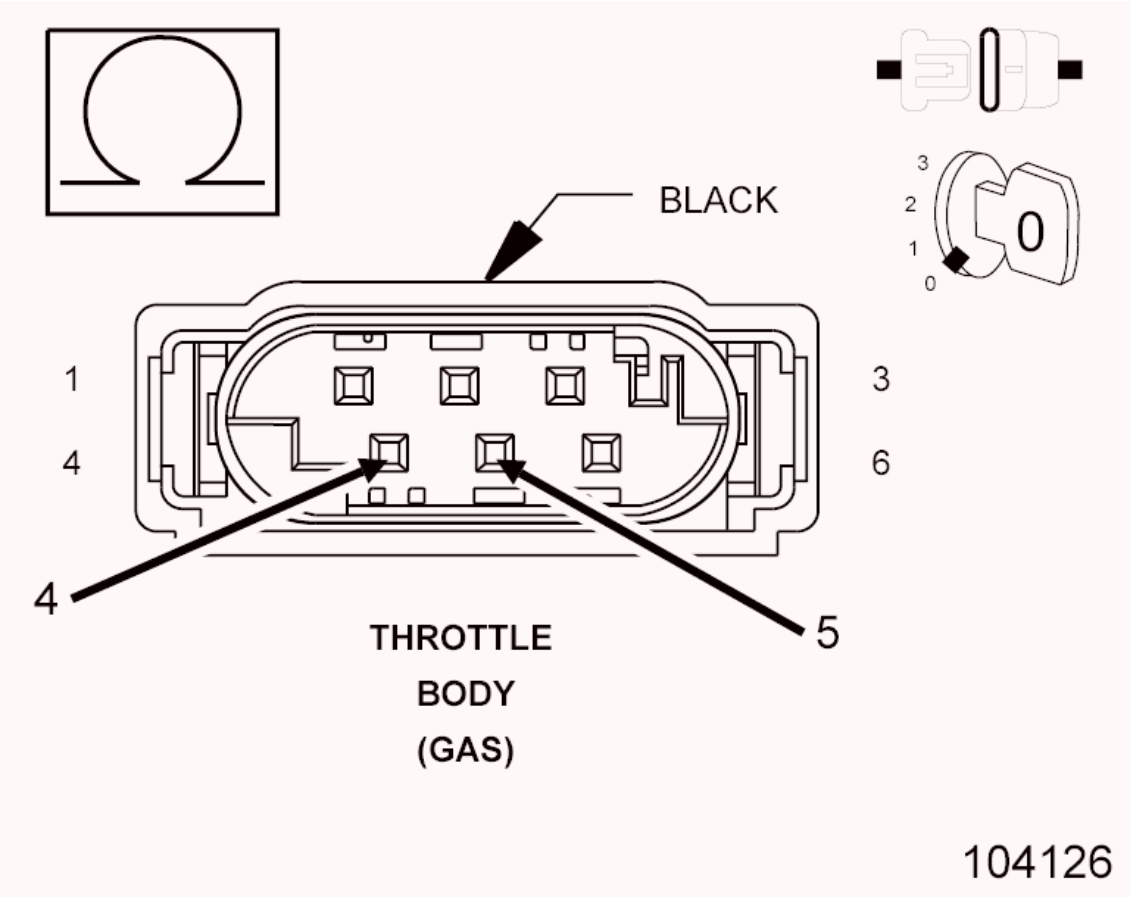

Fig. 95: Checking TP Signal 1 Circuit For Short To ETC Motor (-) Circuit

Courtesy of CHRYSLER GROUP, LLC

1. Measure the resistance between the (K22) TPS Signal 1 circuit and the (K126) ETC Motor (-) in the Throttle Body harness connector.

   Is the resistance above 10k Ohms?

   Yes

   - Go To 7

   No

   - Repair the (K22) TPS Signal 1 circuit for a short to the (K126) ETC Motor (-) circuit.
   - Perform the POWERTRAIN VERIFICATION TEST. Refer to **POWERTRAIN VERIFICATION TEST** .

7. **CHECK THE (K22) TPS SIGNAL 1 CIRCUIT FOR AN OPEN/HIGH RESISTANCE**

   CAUTION: Do not probe the PCM harness connectors. Probing the PCM harness connectors will damage the PCM terminals resulting in poor terminal to pin connection. Install the GPEC Diagnostic Adaptor to perform the diagnosis.

   1. Connect the (special tool #10436, Adapter, GPEC Diagnostic).
   2. Measure the resistance of the (K22) TPS Signal 1 between the Throttle Body harness connector and the GPEC Adaptor.

      Is the resistance below 5.0 Ohms?

      Yes

      - Go To 8

      No

      - Repair the (K22) TPS Signal 1 for an open or high resistance.
      - Perform the POWERTRAIN VERIFICATION TEST. Refer to

POWERTRAIN VERIFICATION TEST .

8. **CHECK THE (K922) TPS SENSOR GROUND CIRCUIT FOR AN OPEN/HIGH RESISTANCE**
   1. Measure the resistance of the (K922) TPS Sensor Ground circuit between the Throttle Body harness connector and the GPEC Adaptor.

      Is the resistance below 5.0 Ohms?

      Yes

      - Go To 9

      No

      - Repair the (K922) TPS Sensor Ground circuit for an open or high resistance.
      - Perform the POWERTRAIN VERIFICATION TEST. Refer to **POWERTRAIN VERIFICATION TEST** .
9. **THROTTLE BODY**

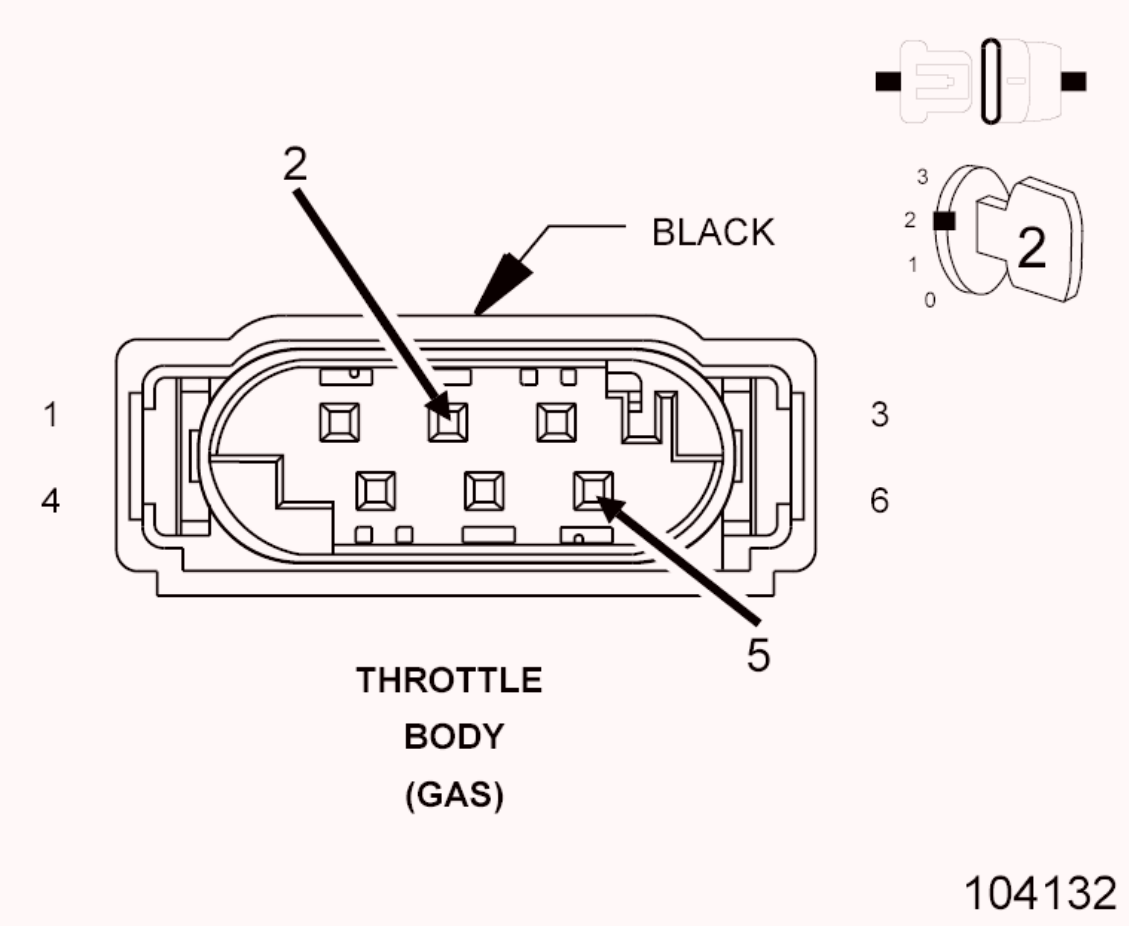

Fig. 96: Throttle Body Harness Connector End View
Courtesy of CHRYSLER GROUP, LLC

1. Turn the ignition off.
2. Reconnect the PCM C2 harness connector.
3. Connect a jumper wire between the (K922) TPS Sensor Ground circuit and the (K22) TPS Signal 1 circuit in the Throttle Body harness connector.
4. Turn the ignition on.
5. With the scan tool, read the TPS Signal 1 circuit voltage.

   Is the voltage below 0.1 volts with the jumper in place?

   Yes

   - Replace the Throttle Body in accordance with the service information. Refer to **THROTTLE BODY, REMOVAL** .
   - Perform the POWERTRAIN VERIFICATION TEST. Refer to

POWERTRAIN VERIFICATION TEST .

No

- Go To 10

10. **POWERTRAIN CONTROL MODULE (PCM)**
    1. Using the wiring diagram/schematic as a guide, inspect the wiring and connectors between the Throttle Body and the Powertrain Control Module (PCM).
    2. Look for any chafed, pierced, pinched, or partially broken wires.
    3. Look for broken, bent, pushed out or corroded terminals.
    4. Monitor the scan tool data relative to this circuit and wiggle test the wiring and connectors.
    5. Look for the data to change or for the DTC to reset during the wiggle test.
    6. Perform any Technical Service Bulletins that may apply.

    Were any problems found?

    Yes

    - Repair as necessary.
    - Perform the POWERTRAIN VERIFICATION TEST. Refer to **POWERTRAIN VERIFICATION TEST** .

    No

    - Replace and program the Powertrain Control Module (PCM) in accordance with the service information. Refer to **MODULE, POWERTRAIN CONTROL, REMOVAL** .
    - Perform the POWERTRAIN VERIFICATION TEST. Refer to **POWERTRAIN VERIFICATION TEST** .

P0125-INSUFFICIENT COOLANT TEMP FOR CLOSE - LOOP FUEL CONTROL

For a complete wiring diagram, **refer to appropriate SYSTEM WIRING DIAGRAMS article** .

WHEN MONITORED

With the ignition on, battery voltage greater than 10.4 volts, and no Engine Coolant Temperature (ECT) sensor circuit DTCs present.

SET CONDITION

The Powertrain Control Module (PCM) detects that the engine coolant temperature is below the calibrated pass value when the engine run time is greater than the calibrated value based on start up coolant temperature. Two trip fault. Three good trips to turn off the MIL.

POSSIBLE CAUSES

POSSIBLE CAUSES
ENGINE COOLANT TEMPERATURE (ECT) SENSOR WIRING OR CONNECTORS
ENGINE COOLANT LEVEL AND CONDITION
THERMOSTAT
ENGINE COOLANT TEMPERATURE (ECT) SENSOR

Always perform the Pre-Diagnostic Troubleshooting procedure before proceeding. Refer to PRE-DIAGNOSTIC TROUBLESHOOTING PROCEDURE .

DIAGNOSTIC TEST

CHECKING THE ENGINE COOLANT TEMPERATURE SENSOR OPERATION.

NOTE: Diagnose and repair any engine coolant temperature sensor circuit DTCs before proceeding with this test.

NOTE: Extremely cold ambient temperatures may cause this DTC to set.

1. Perform the diagnostic procedure for CHECKING THE ENGINE COOLANT TEMPERATURE SENSOR OPERATION. Refer to **DIAGNOSIS AND TESTING** .

   Were any problems found?

   Yes

- Repair as necessary.
- Perform the POWERTRAIN VERIFICATION TEST. Refer to **POWERTRAIN VERIFICATION TEST** .

No

- Perform the INTERMITTENT CONDITION diagnostic procedure. Refer to **INTERMITTENT CONDITION** .

P0128-THERMOSTAT RATIONALITY

For a complete wiring diagram, **refer to appropriate SYSTEM WIRING DIAGRAMS article** .

WHEN MONITORED

With the engine running, start up coolant temperature between -8° C (17.6° F) and 50° C (122° F), the difference between ambient temperature and coolant temperature less than 10° C (50° F) and average vehicle speed greater than 16 kph (10 mph) for more than 18% of vehicle run time.

SET CONDITION

The Powertrain Control Module (PCM) detects that the actual engine coolant temperature does not reach the predicted engine coolant temperature within a specific time. Two trip fault. Three good trips to turn off the MIL.

POSSIBLE CAUSES

POSSIBLE CAUSES
TEMPERATURE SENSOR WIRING OR CONNECTORS
ENGINE COOLANT LEVEL AND CONDITION
THERMOSTAT
TEMPERATURE SENSOR

Always perform the Pre-Diagnostic Troubleshooting procedure before proceeding. Refer to PRE-DIAGNOSTIC TROUBLESHOOTING PROCEDURE .

DIAGNOSTIC TEST

1. **CHECKING THE TEMPERATURE SENSORS.**

NOTE: Diagnose and repair any ambient air temperature (AAT), intake air temperature (IAT), or engine coolant temperature (ECT) sensor circuit or rationality DTCs before continuing with this test.

NOTE: Diagnose and repair any crankshaft (CKP) or camshaft (CMP) sensor circuit or rationality DTCs before continuing with this test.

NOTE: Diagnose and repair any communication DTCs before continuing with this test.

NOTE: Verify that the Pinion Factor has been programmed correctly into the PCM.

1. Perform the diagnostic procedure for CHECKING THE TEMPERATURE SENSORS. Refer to **DIAGNOSIS AND TESTING** .

   Were any problems found?

   Yes

   - Repair as necessary.
   - Perform the POWERTRAIN VERIFICATION TEST. Refer to **POWERTRAIN VERIFICATION TEST** .

   No

   - Go To 2

2. **CHECKING THE ENGINE COOLANT TEMPERATURE SENSOR OPERATION.**
   1. Perform the diagnostic procedure for CHECKING THE ENGINE COOLANT TEMPERATURE SENSOR OPERATION. Refer to **DIAGNOSIS AND TESTING** .

      Were any problems found?

Yes

- Repair as necessary.
- Perform the POWERTRAIN VERIFICATION TEST. Refer to **POWERTRAIN VERIFICATION TEST** .

No

- Perform the INTERMITTENT CONDITION diagnostic procedure. Refer to **INTERMITTENT CONDITION** .

P0129-BAROMETRIC PRESSURE OUT OF RANGE LOW

For a complete wiring diagram, **refer to appropriate SYSTEM WIRING DIAGRAMS article** .

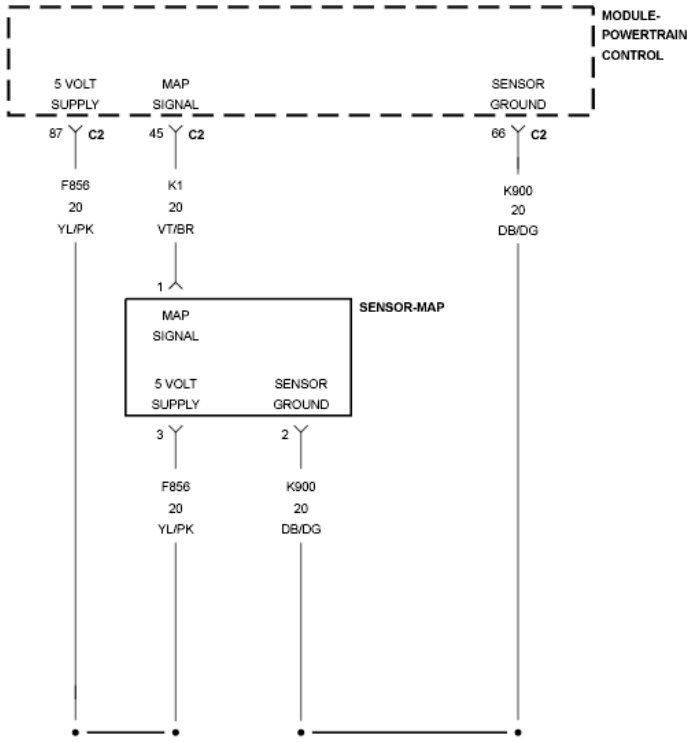

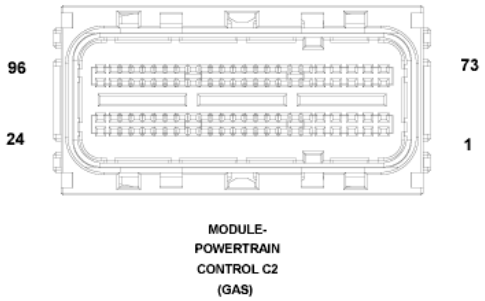

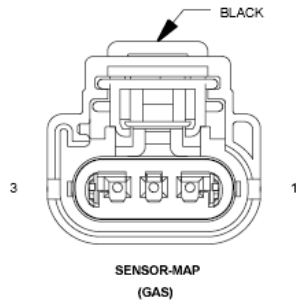

Fig. 97: Manifold Absolute Pressure Sensor Circuit Diagram
Courtesy of CHRYSLER GROUP, LLC

WHEN MONITORED

With engine speed within 64 RPM of target idle, MAP sensor voltage between 0.04 of a volt and 4.96 volts, no vehicle speed, and the throttle closed.

SET CONDITION

Each time the Powertrain Control Module (PCM) detects that the MAP sensor value is greater than a calibrated value for BARO, a counter is incremented. If the counter reaches a calibrated limit, the test fails. One trip fault. Three good

trips to turn off the MIL.

POSSIBLE CAUSES

POSSIBLE CAUSES
MAP SENSOR WIRING OR CONNECTORS
(F856) 5 VOLT SUPPLY CIRCUIT HIGH RESISTANCE
(K1) MAP SIGNAL CIRCUIT HIGH RESISTANCE
(K900) SENSOR GROUND CIRCUIT HIGH RESISTANCE
MAP SENSOR

Always perform the Pre-Diagnostic Troubleshooting procedure before proceeding. Refer to PRE-DIAGNOSTIC TROUBLESHOOTING PROCEDURE .

DIAGNOSTIC TEST

CHECKING THE MAP SENSOR OPERATION

NOTE: Diagnose and repair any MAP sensor circuit DTCs before continuing with this test.

1. Perform the diagnostic procedure for CHECKING THE MAP SENSOR OPERATION. Refer to **DIAGNOSIS AND TESTING** .

   Were any problems found?

   Yes

   - Repair as necessary.
   - Perform the POWERTRAIN VERIFICATION TEST. Refer to **POWERTRAIN VERIFICATION TEST** .

   No

   - Perform the INTERMITTENT CONDITION diagnostic procedure. Refer to **INTERMITTENT CONDITION** .

P0131-O2 SENSOR 1/1 CIRCUIT LOW

For a complete wiring diagram, **refer to appropriate SYSTEM WIRING**

DIAGRAMS article .

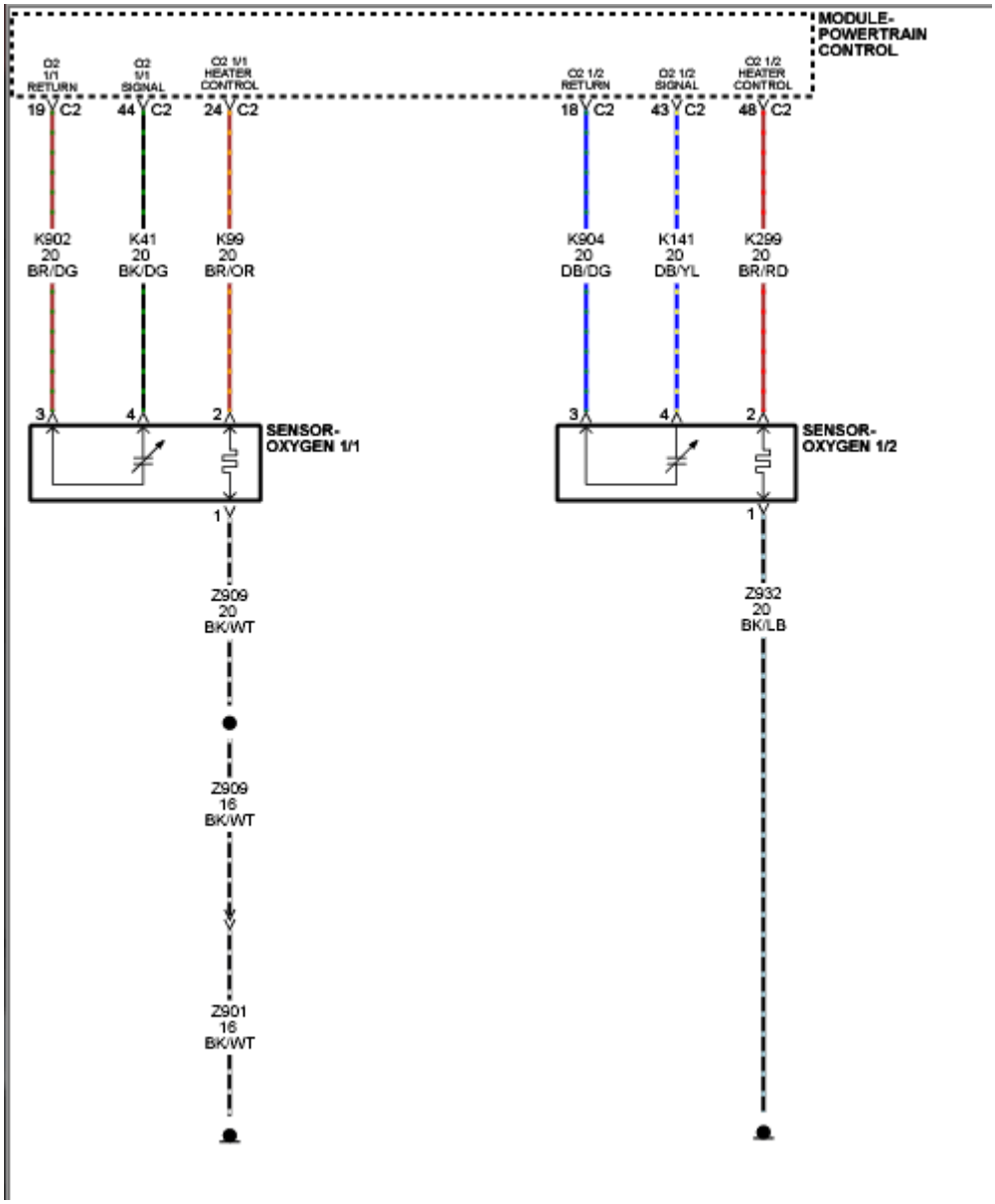

Fig. 98: Oxygen Sensor Circuit Diagram
Courtesy of CHRYSLER GROUP, LLC

THEORY OF OPERATION

The Oxygen Sensors (O2 Sensor) are used for fuel control and catalyst monitoring. Each O2 Sensor measures the oxygen content of the exhaust stream. When the engine is started, the Powertrain Control Module (PCM) operates in an Open Loop mode, ignoring the O2 Sensor signal voltage while calculating the air-to-fuel ratio. The heating elements inside each O2 Sensor heats the sensor to bring it to operating conditions faster. This allows the system to enter Closed Loop earlier and the PCM to calculate the air-to-fuel ratio sooner. While the

engine runs, the O2 Sensor heats up and begins to generate a voltage within a range of 0-1, 275 mV. Once sufficient O2 Sensor voltage fluctuation is observed by the PCM, Closed Loop is entered. The PCM uses the O2 Sensor voltage to determine the air-to-fuel ratio. An O2 Sensor voltage that increases toward 1, 000 mV indicates a rich fuel mixture. An O2 Sensor voltage that decreases toward 0 mV indicates a lean fuel mixture. The Powertrain Control Module (PCM) makes short term and long term fuel corrections to maintain stoichiometric fuel/air ratio for best catalytic converter efficiency. Short term fuel correction is based on upstream O2 Sensor output and is designed for quick engine response. The long term fuel correction compensated for variations in the engine specifications, sensor tolerances and component aging and is designed to correct rich and lean conditions over a longer period of time.

For an aged O2 Sensor, the response rate to the air/fuel change is slower than when it was new. The O2 Sensor tends to move less with the same air/fuel changes in a given time frame. Therefore by observing the activity of voltage readings from the upstream O2 Sensor, the quality of the O2 Sensor can be detected.

WHEN MONITORED

With the engine running for less than 30 seconds, the Oxygen Sensor 1/1 heater temperature less than 251° C (484° F) and the battery voltage greater than 10.4 volts.

SET CONDITION

The Powertrain Control Module (PCM) detects that the Oxygen Sensor 1/1 signal voltage is below 2.5196 volts for 6 seconds after engine startup. One Trip Fault. Three good trips to turn off the MIL.

POSSIBLE CAUSES

POSSIBLE CAUSES
(K41) O2 1/1 SIGNAL CIRCUIT SHORTED TO GROUND
(K902) O2 1/1 RETURN CIRCUIT SHORTED TO GROUND
(K41) O2 1/1 SIGNAL CIRCUIT SHORTED TO THE (K902) O2 1/1 RETURN CIRCUIT
(K41) O2 1/1 SIGNAL CIRCUIT SHORTED TO THE (Z909) GROUND CIRCUIT

OXYGEN SENSOR 1/1
POWERTRAIN CONTROL MODULE (PCM)

Always perform the Pre-Diagnostic Troubleshooting procedure before proceeding. Refer to PRE-DIAGNOSTIC TROUBLESHOOTING PROCEDURE .

DIAGNOSTIC TEST

1. **OXYGEN SENSOR 1/1 VOLTAGE**
   1. Start the engine and allow it to reach normal operating temperature.

      WARNING: When the engine is operating, do not stand in direct line with the fan. Do not put your hands near the pulleys, belts or fan. Do not wear loose clothing. Failure to follow these instructions may result in possible serious or fatal injury.

   2. With a scan tool, monitor the O2 Sensor 1/1 volts.

      Is the voltage less than 2.52 volts?

      Yes

      - Go To 2

      No

      - Perform the INTERMITTENT CONDITION diagnostic procedure. Refer to **INTERMITTENT CONDITION** .
2. **CHECK THE (K41) O2 SENSOR 1/1 SIGNAL CIRCUIT VOLTAGE**
   1. Turn the ignition off.
   2. Disconnect the Oxygen Sensor 1/1 harness connector.
   3. Turn the ignition on.
   4. With a scan tool, monitor the O2 Sensor 1/1 volts.

      Is the voltage above 4.8 volts?

Yes

- Go To 3

No

- Go To 5

3. **OXYGEN SENSOR 1/1**

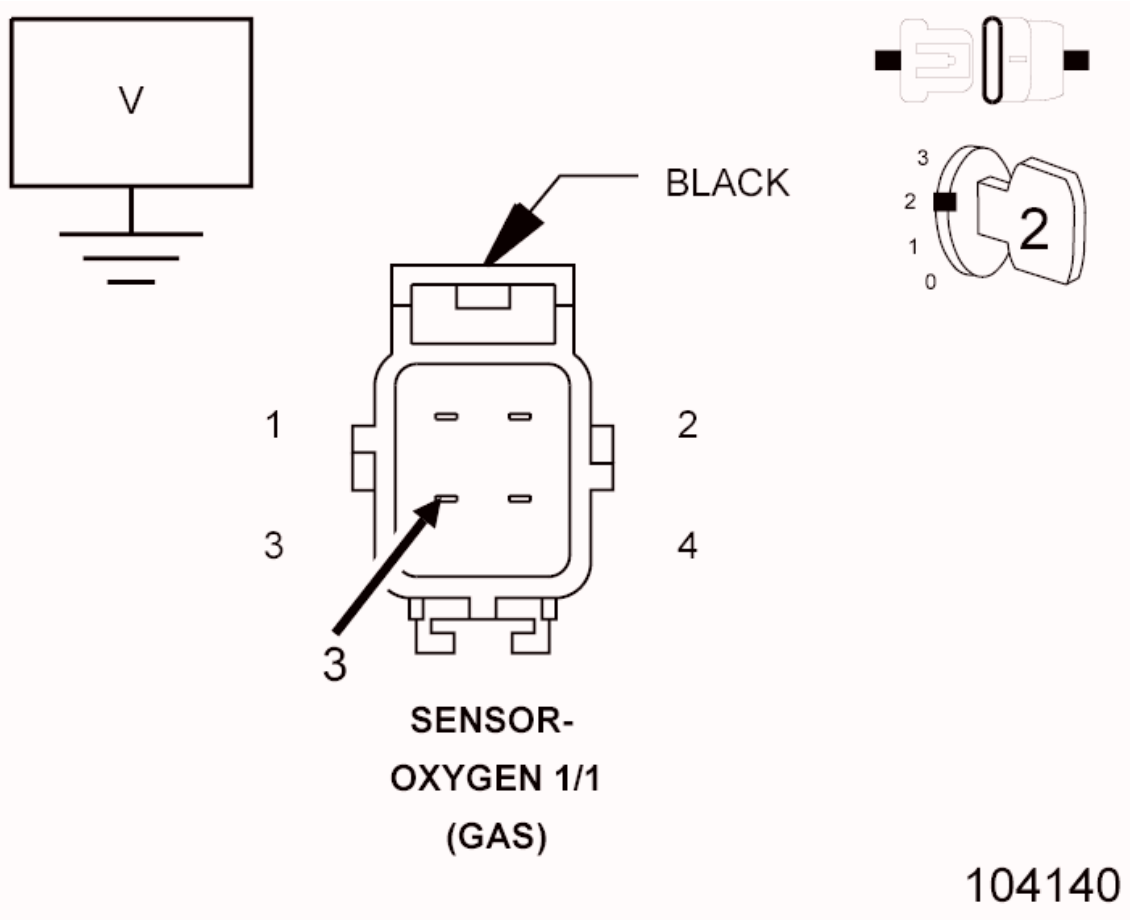

Fig. 99: Checking O2 Sensor Circuit
Courtesy of CHRYSLER GROUP, LLC

1. Measure the voltage on the (K902) O2 Sensor 1/1 Return circuit in the Oxygen Sensor 1/1 harness connector.

   Is the voltage between 2.475 and 2.525 volts?

   Yes

   - Replace the Oxygen Sensor 1/1 in accordance with the service

information. Refer to **SENSOR, OXYGEN, REMOVAL** .

- Perform the POWERTRAIN VERIFICATION TEST. Refer to **POWERTRAIN VERIFICATION TEST** .

No

- Go To 4

4. **CHECK THE (K902) O2 SENSOR 1/1 RETURN CIRCUIT FOR A SHORT TO GROUND**

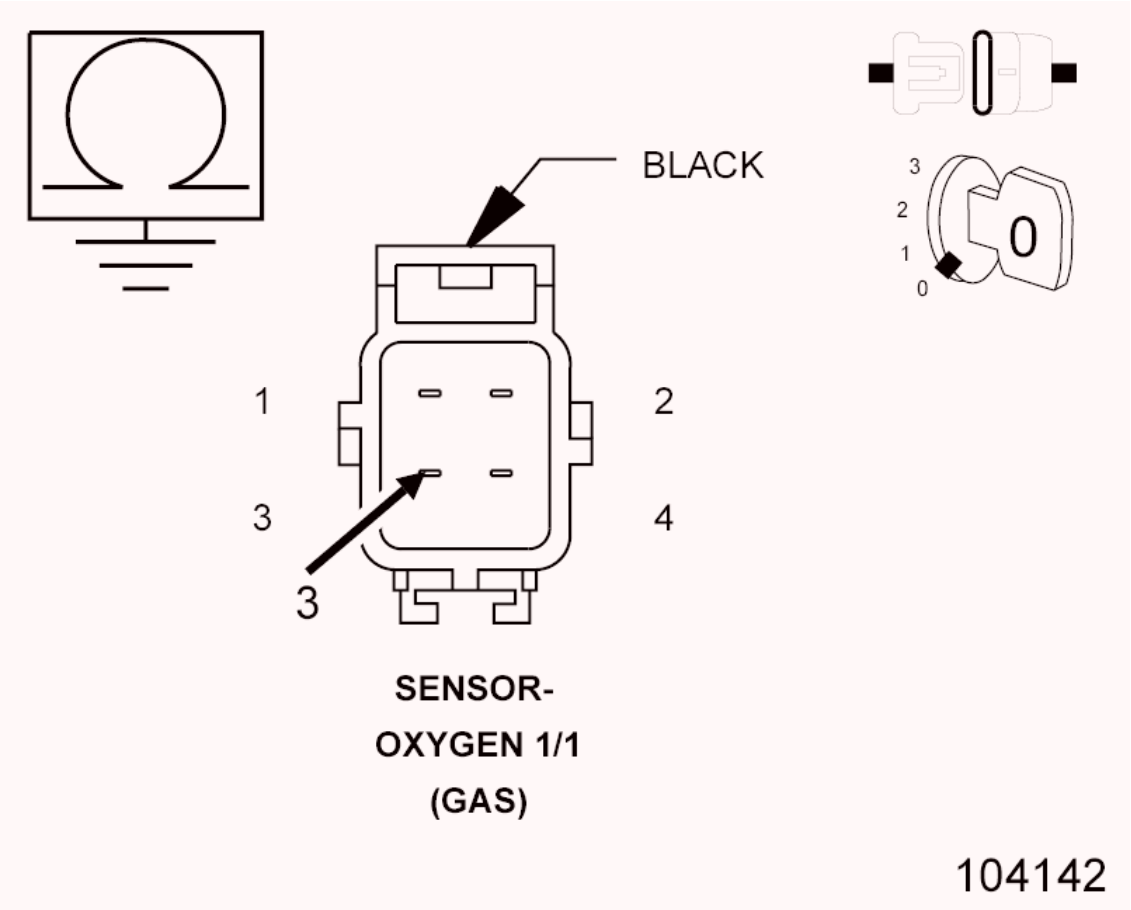

Fig. 100: Checking 1/1 O2 Sensor Return Circuit For Short To Ground
Courtesy of CHRYSLER GROUP, LLC

1. Turn the ignition off.
2. Disconnect the PCM C2 harness connector.
3. Measure the resistance between ground and the (K902) O2 Sensor 1/1 Return circuit in the Oxygen Sensor 1/1 harness connector.

   Is the resistance above 10k Ohms?

Yes

- Go To 8

No

- Repair the (K902) O2 Sensor 1/1 Return circuit for a short to ground.
- Perform the POWERTRAIN VERIFICATION TEST. Refer to **POWERTRAIN VERIFICATION TEST** .

5. **CHECK THE (K41) O2 SENSOR 1/1 SIGNAL CIRCUIT FOR A SHORT TO GROUND**

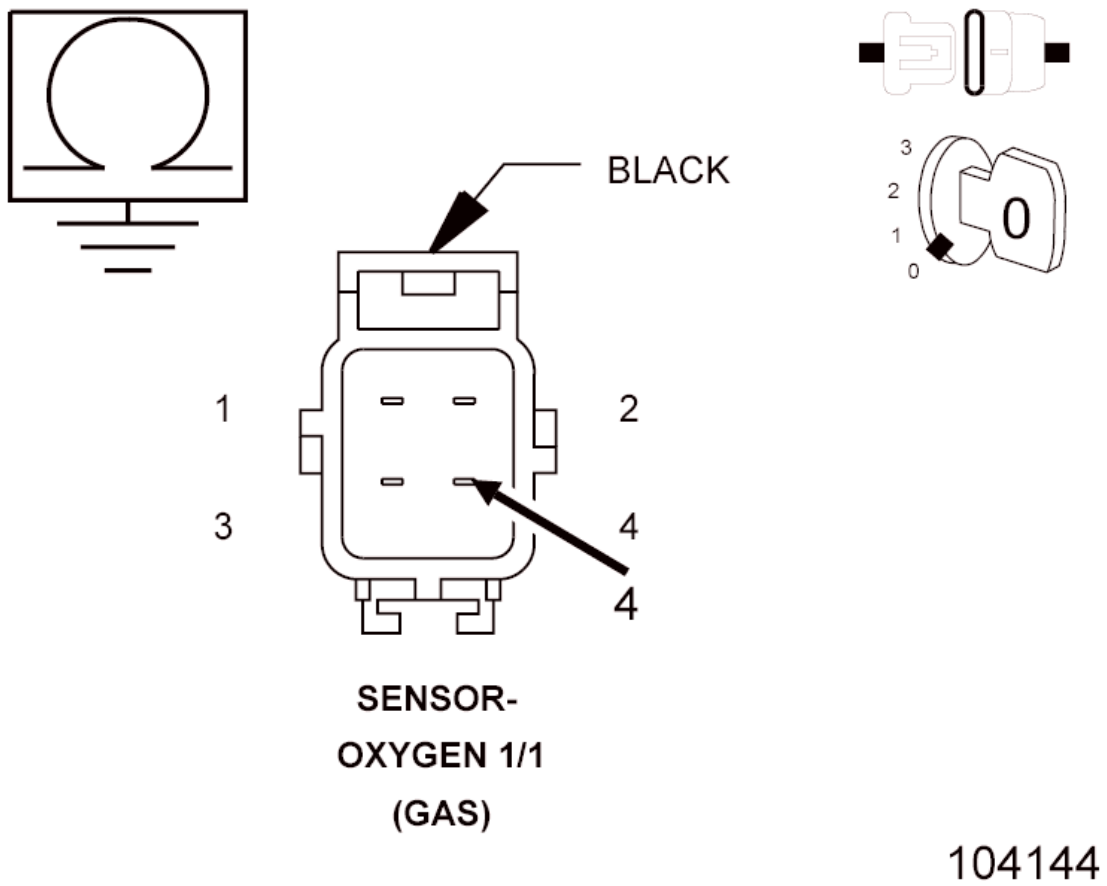

Fig. 101: Checking O2 Sensor 1/1 Signal Circuit For Short To Ground
Courtesy of CHRYSLER GROUP, LLC

1. Measure the resistance between ground and the (K41) O2 Sensor 1/1 Signal circuit in the Oxygen Sensor 1/1 harness connector.

   Is the resistance above 10k Ohms?

Yes

- Go To 6

No

- Repair the (K41) O2 Sensor 1/1 Signal circuit for a short to ground.
- Perform the POWERTRAIN VERIFICATION TEST. Refer to **POWERTRAIN VERIFICATION TEST** .

6. **CHECK FOR THE (K41) O2 1/1 SIGNAL CIRCUIT SHORTED TO THE (K902) O2 1/1 RETURN CIRCUIT**

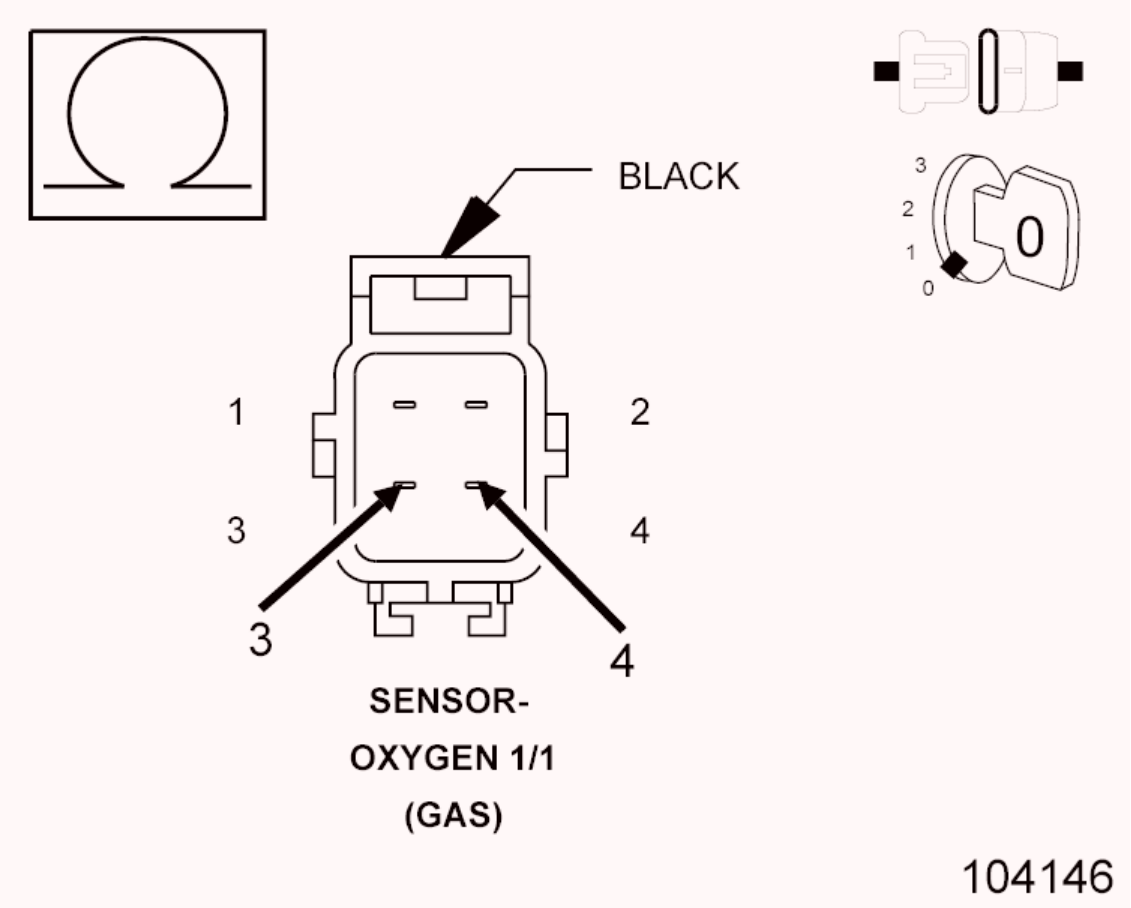

Fig. 102: Checking O2 Sensor 1/1 Signal Circuit For Short To Sensor Return Circuit
Courtesy of CHRYSLER GROUP, LLC

1. Measure the resistance between the (K41) O2 Sensor 1/1 Signal circuit and the (K902) O2 1/1 Return circuit in the Oxygen Sensor 1/1 harness connector.

Is the resistance below 10k Ohms?

Yes

- Go To 7

No

- Repair the short between the (K902) O2 Sensor 1/1 Return circuit and the (K41) O2 1/1 Signal circuit.
- Perform the POWERTRAIN VERIFICATION TEST. Refer to **POWERTRAIN VERIFICATION TEST** .

7. **CHECK FOR THE (K41) O2 SENSOR 1/1 SIGNAL CIRCUIT SHORTED TO THE (Z909) GROUND CIRCUIT**

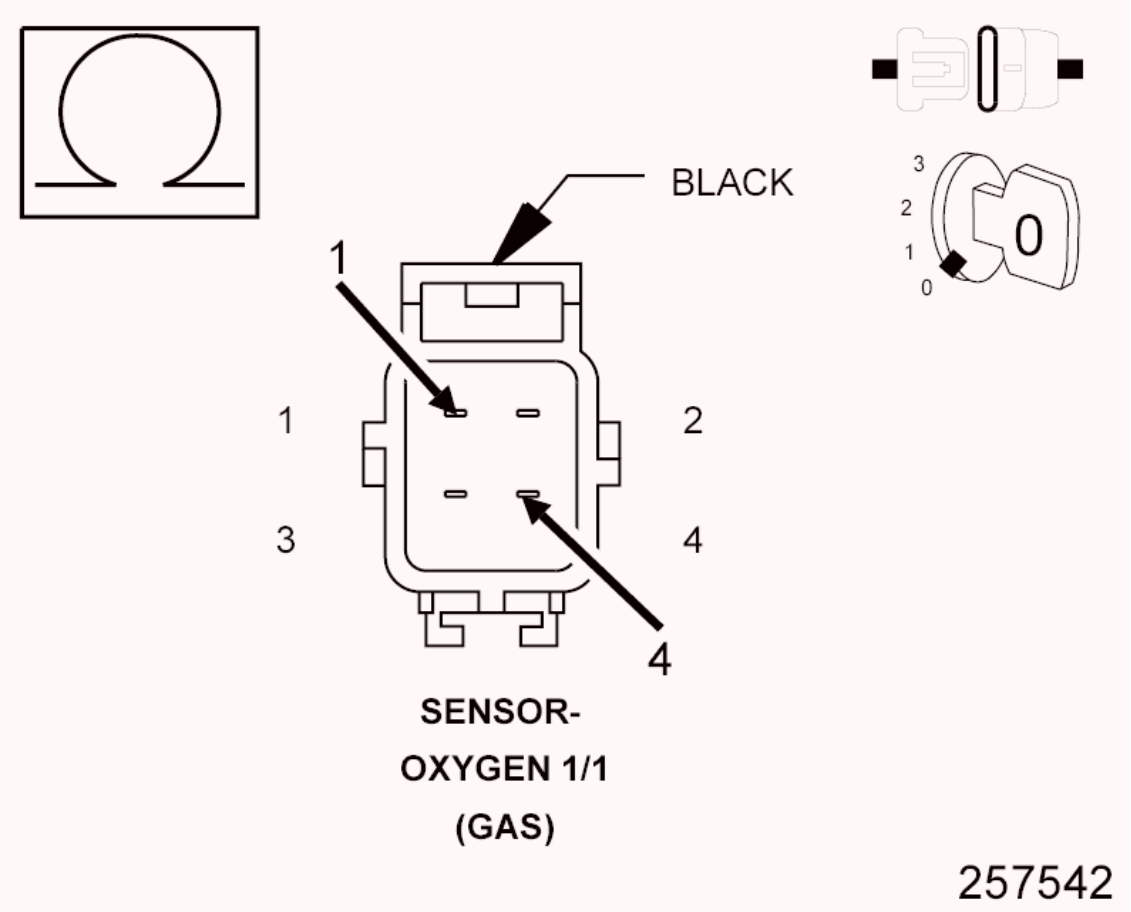

Fig. 103: Checking O2 Sensor 1/1 Signal Circuit For Short To Ground Circuit
Courtesy of CHRYSLER GROUP, LLC

1. Measure the resistance between the (K41) O2 Sensor 1/1 Signal circuit

and the (Z909) Ground circuit in the Oxygen Sensor 1/1 harness connector.

Is the resistance above 10k Ohms?

Yes

- Go To 8

No

- Repair the short between the (Z909) Ground circuit and the (K41) O2 Sensor 1/1 Signal circuit.
- Perform the POWERTRAIN VERIFICATION TEST. Refer to **POWERTRAIN VERIFICATION TEST** .

8. **POWERTRAIN CONTROL MODULE (PCM)**
   1. Using the wiring diagram/schematic as a guide, inspect the wiring and connectors between the Oxygen Sensor 1/1 and the Powertrain Control Module (PCM).
   2. Look for any chafed, pierced, pinched or partially broken wires.
   3. Look for broken, bent, pushed out or corroded terminals.
   4. Perform any Technical Service Bulletins (TSBs) that may apply.

   Were any problems found?

   Yes

   - Repair as necessary.
   - Perform the POWERTRAIN VERIFICATION TEST. Refer to **POWERTRAIN VERIFICATION TEST** .

   No

   - Replace and program the Powertrain Control Module (PCM) in accordance with the service information. Refer to **MODULE, POWERTRAIN CONTROL, REMOVAL** .
   - Perform the POWERTRAIN VERIFICATION TEST. Refer to **POWERTRAIN VERIFICATION TEST** .

P0132-O2 SENSOR 1/1 CIRCUIT HIGH

For a complete wiring diagram, **refer to appropriate SYSTEM WIRING DIAGRAMS article** .

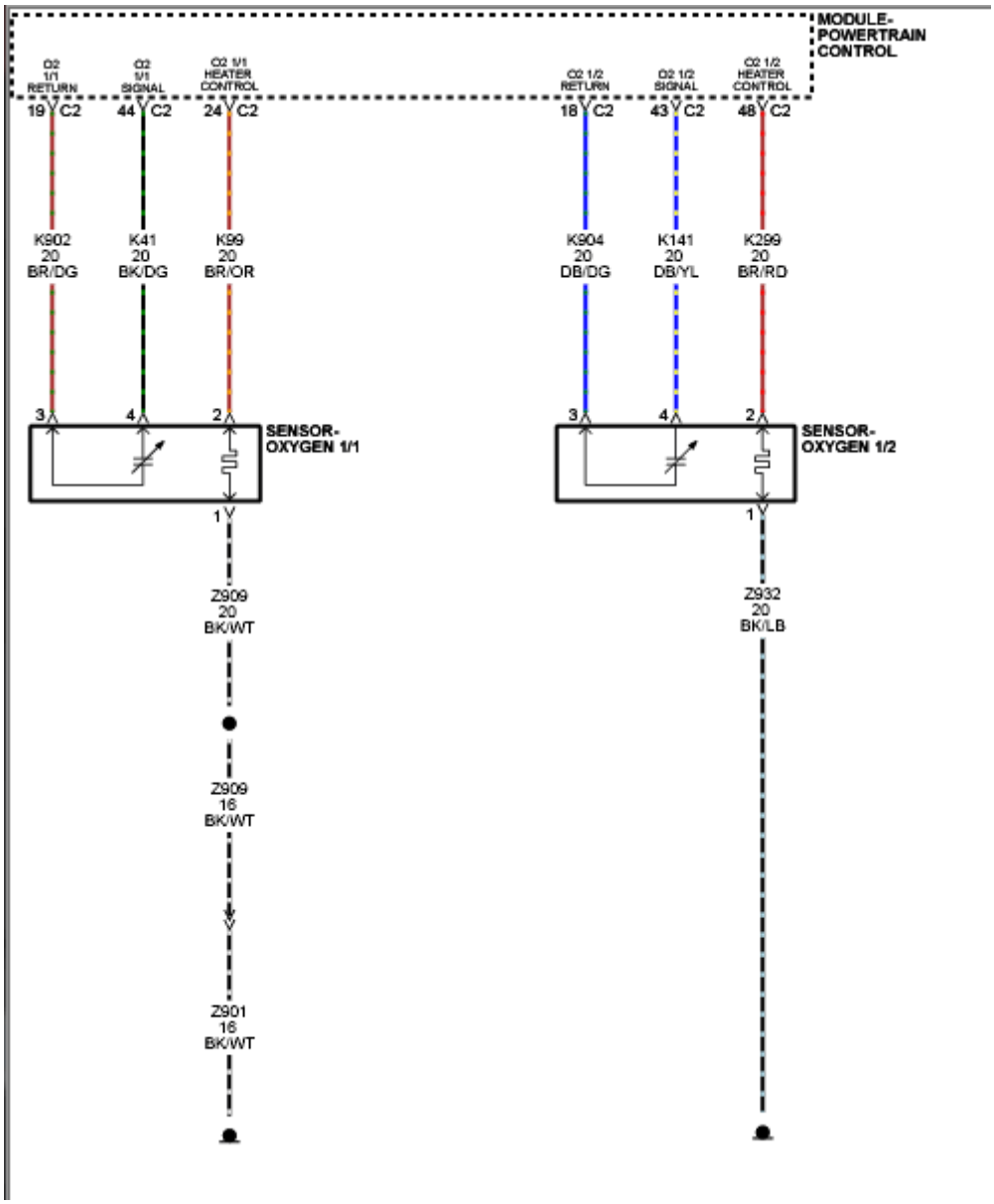

Fig. 104: Oxygen Sensor Circuit Diagram
Courtesy of CHRYSLER GROUP, LLC

THEORY OF OPERATION

The Oxygen Sensors (O2 Sensor) are used for fuel control and catalyst monitoring. Each O2 Sensor measures the oxygen content of the exhaust stream. When the engine is started, the Powertrain Control Module (PCM) operates in an Open Loop mode, ignoring the O2 Sensor signal voltage while calculating the

air-to-fuel ratio. The heating elements inside each O2 Sensor heats the sensor to bring it to operating conditions faster. This allows the system to enter Closed Loop earlier and the PCM to calculate the air-to-fuel ratio sooner. While the engine runs, the O2 Sensor heats up and begins to generate a voltage within a range of 0-1, 275 mV. Once sufficient O2 Sensor voltage fluctuation is observed by the PCM, Closed Loop is entered. The PCM uses the O2 Sensor voltage to determine the air-to-fuel ratio. An O2 Sensor voltage that increases toward 1, 000 mV indicates a rich fuel mixture. An O2 Sensor voltage that decreases toward 0 mV indicates a lean fuel mixture. The Powertrain Control Module (PCM) makes short term and long term fuel corrections to maintain stoichiometric fuel/air ratio for best catalytic converter efficiency. Short term fuel correction is based on upstream O2 Sensor output and is designed for quick engine response. The long term fuel correction compensated for variations in the engine specifications, sensor tolerances and component aging and is designed to correct rich and lean conditions over a longer period of time.

For an aged O2 Sensor, the response rate to the air/fuel change is slower than when it was new. The O2 Sensor tends to move less with the same air/fuel changes in a given time frame. Therefore by observing the activity of voltage readings from the upstream O2 Sensor, the quality of the O2 Sensor can be detected.

WHEN MONITORED

With the Oxygen Sensor 1/1 heater temperature greater than 496° C (925° F) and the battery voltage greater than 10.4 volts.

SET CONDITION

The Powertrain Control Module (PCM) detects that the Oxygen Sensor 1/1 voltage is greater than 3.99 volts for 40 seconds. One Trip Fault. Three good trips to turn off the MIL.

POSSIBLE CAUSES

POSSIBLE CAUSES
(K41) O2 1/1 SIGNAL CIRCUIT SHORTED TO VOLTAGE
(K902) O2 1/1 RETURN CIRCUIT SHORTED TO VOLTAGE
(K41) O2 1/1 SIGNAL CIRCUIT SHORTED TO THE (K99) O2 1/1 HEATER CONTROL CIRCUIT

(K41) O2 1/1 SIGNAL CIRCUIT OPEN OR HIGH RESISTANCE
(K902) O2 1/1 RETURN CIRCUIT OPEN OR HIGH RESISTANCE
OXYGEN SENSOR 1/1
POWERTRAIN CONTROL MODULE (PCM)

Always perform the Pre-Diagnostic Troubleshooting procedure before proceeding. Refer to PRE-DIAGNOSTIC TROUBLESHOOTING PROCEDURE .

DIAGNOSTIC TEST

1. **OXYGEN SENSOR 1/1 VOLTAGE**
   1. Start the engine and allow it to reach operating temperature.

      WARNING: When the engine is operating, do not stand in direct line with the fan. Do not put your hands near the pulleys, belts or fan. Do not wear loose clothing. Failure to follow these instructions may result in possible serious or fatal injury.

   2. With a scan tool, monitor the O2 Sensor 1/1 volts.

      Is the voltage greater than 3.9 volts?

      Yes

      - Go To 2

      No

      - Perform the INTERMITTENT CONDITION diagnostic procedure. Refer to **INTERMITTENT CONDITION** .
2. **CHECK THE (K41) O2 1/1 SENSOR SIGNAL CIRCUIT FOR A SHORT TO VOLTAGE**

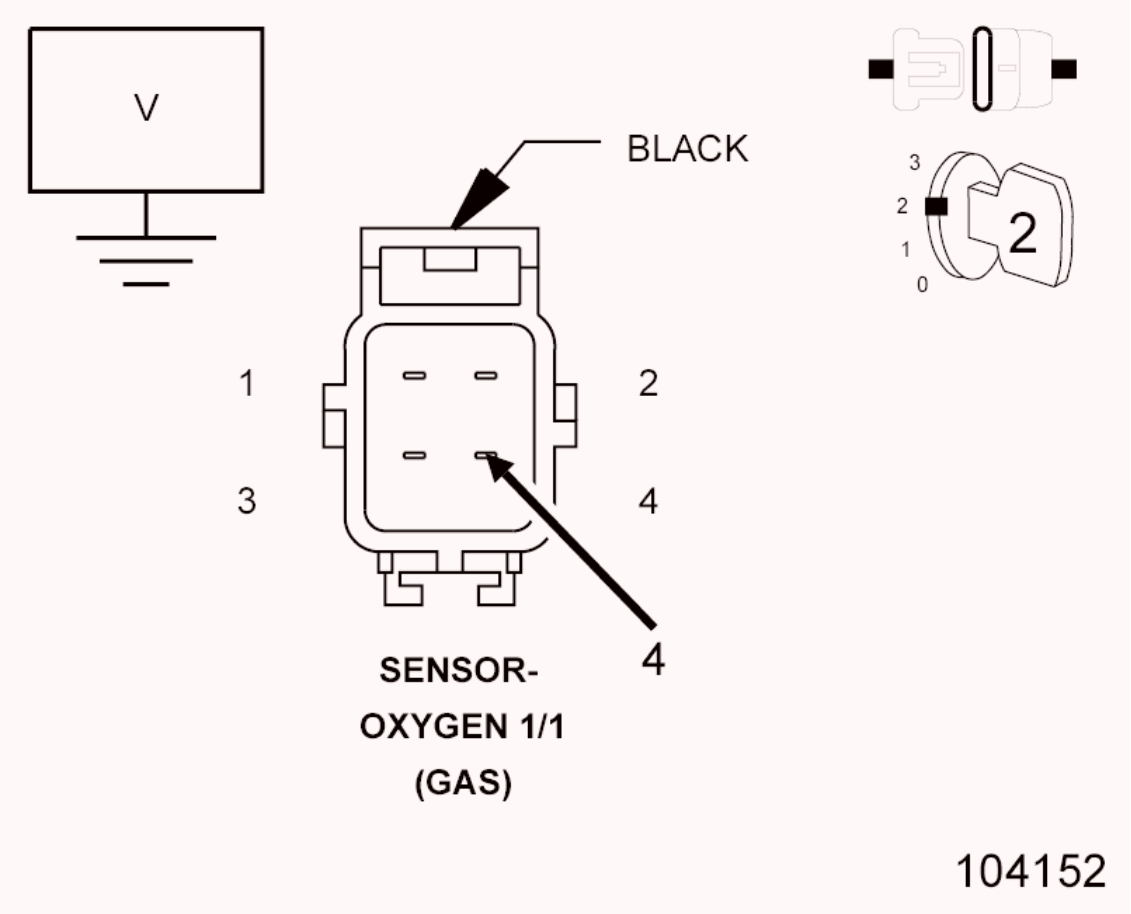

Fig. 105: Checking O2 Sensor 1/1 Signal Circuit For Short To Voltage
Courtesy of CHRYSLER GROUP, LLC

1. Turn the ignition off.
2. Disconnect the Oxygen Sensor 1/1 harness connector.
3. Turn the ignition on.
4. Measure the voltage on the (K41) O2 Sensor 1/1 Signal circuit in the Oxygen Sensor 1/1 harness connector.

NOTE: Measure the voltage in reference to ground, not the (K902) O2 1/1 Return circuit.

Is the voltage above 5.2 volts?

Yes

- Repair the (K41) O2 Sensor 1/1 Signal circuit for a short to voltage.
- Perform the POWERTRAIN VERIFICATION TEST. Refer to

POWERTRAIN VERIFICATION TEST .

No

- Go To 3

3. **CHECK THE (K902) O2 SENSOR 1/1 RETURN CIRCUIT FOR A SHORT TO VOLTAGE**

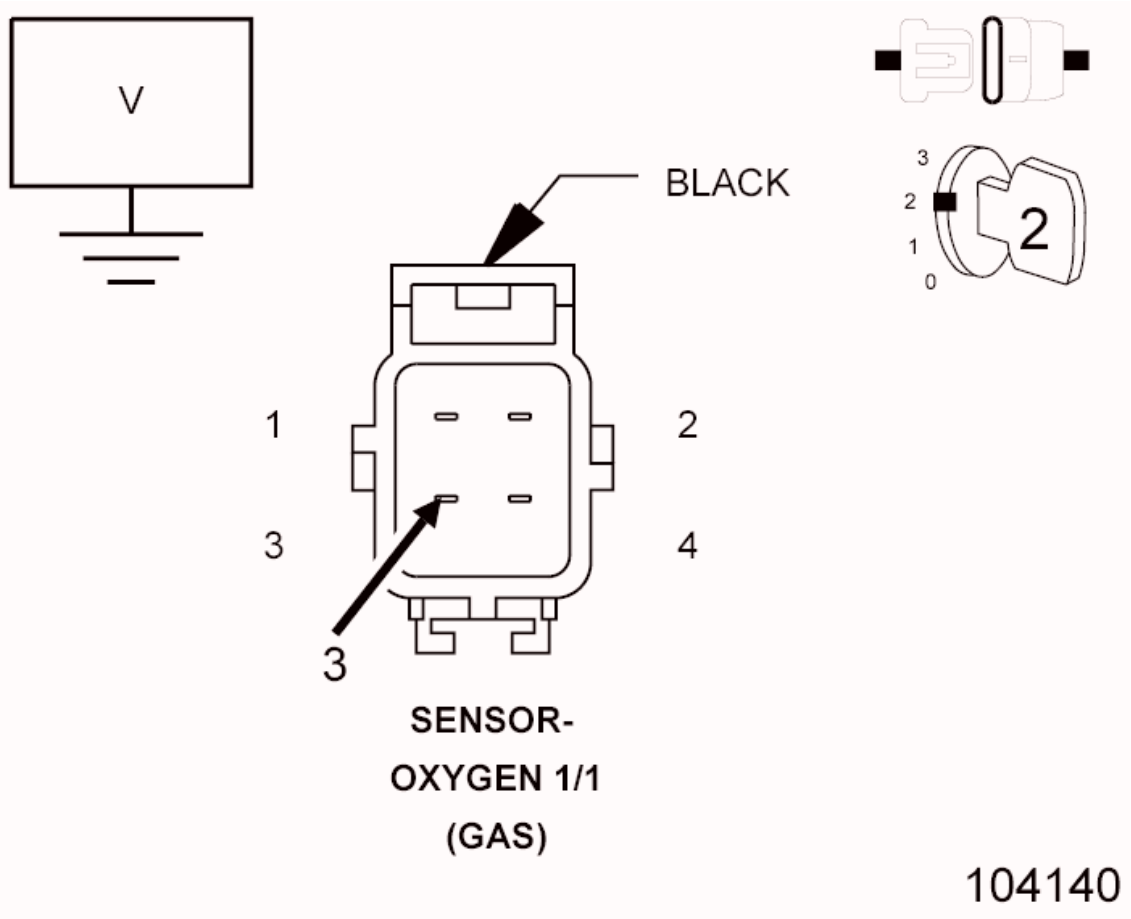

Fig. 106: Checking O2 Sensor 1/1 Return Circuit For Voltage
Courtesy of CHRYSLER GROUP, LLC

1. Turn the ignition off.
2. Disconnect the PCM C2 harness connector.
3. Turn the ignition on.
4. Measure the voltage on the (K902) O2 1/1 Sensor Return circuit in the Oxygen Sensor 1/1 harness connector.

   Is there any voltage present?

Yes

- Repair the (K902) O2 1/1 Sensor Return circuit for a short to voltage.
- Perform the POWERTRAIN VERIFICATION TEST. Refer to **POWERTRAIN VERIFICATION TEST** .

No

- Go To 4

4. **CHECK FOR THE (K41) O2 SENSOR 1/1 SIGNAL CIRCUIT SHORTED TO THE (K99) O2 1/1 HEATER CONTROL CIRCUIT**

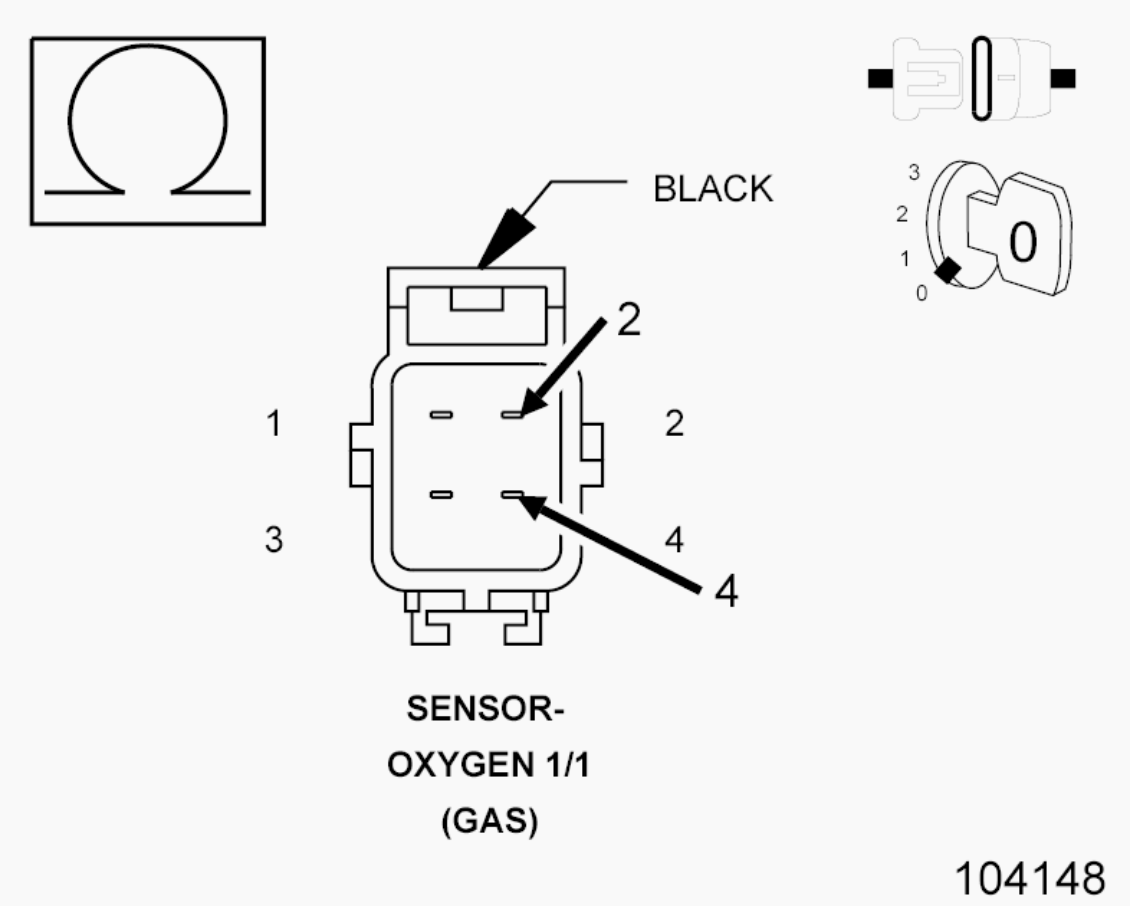

Fig. 107: Checking O2 Sensor 1/1 Signal Circuit For Short To Heater Control Circuit
Courtesy of CHRYSLER GROUP, LLC

1. Turn the ignition off.
2. Measure the resistance between the (K41) O2 Sensor 1/1 Signal circuit and the (K99) O2 1/1 Heater Control circuit the Oxygen Sensor 1/1

harness connector.

Is the resistance above 10k Ohms?

Yes

- Go To 5

No

- Repair the (K41) O2 Sensor 1/1 Signal circuit for a short to the (K99) O2 1/1 Heater Control circuit.
- Perform the POWERTRAIN VERIFICATION TEST. Refer to **POWERTRAIN VERIFICATION TEST** .

5. **OXYGEN SENSOR 1/1**

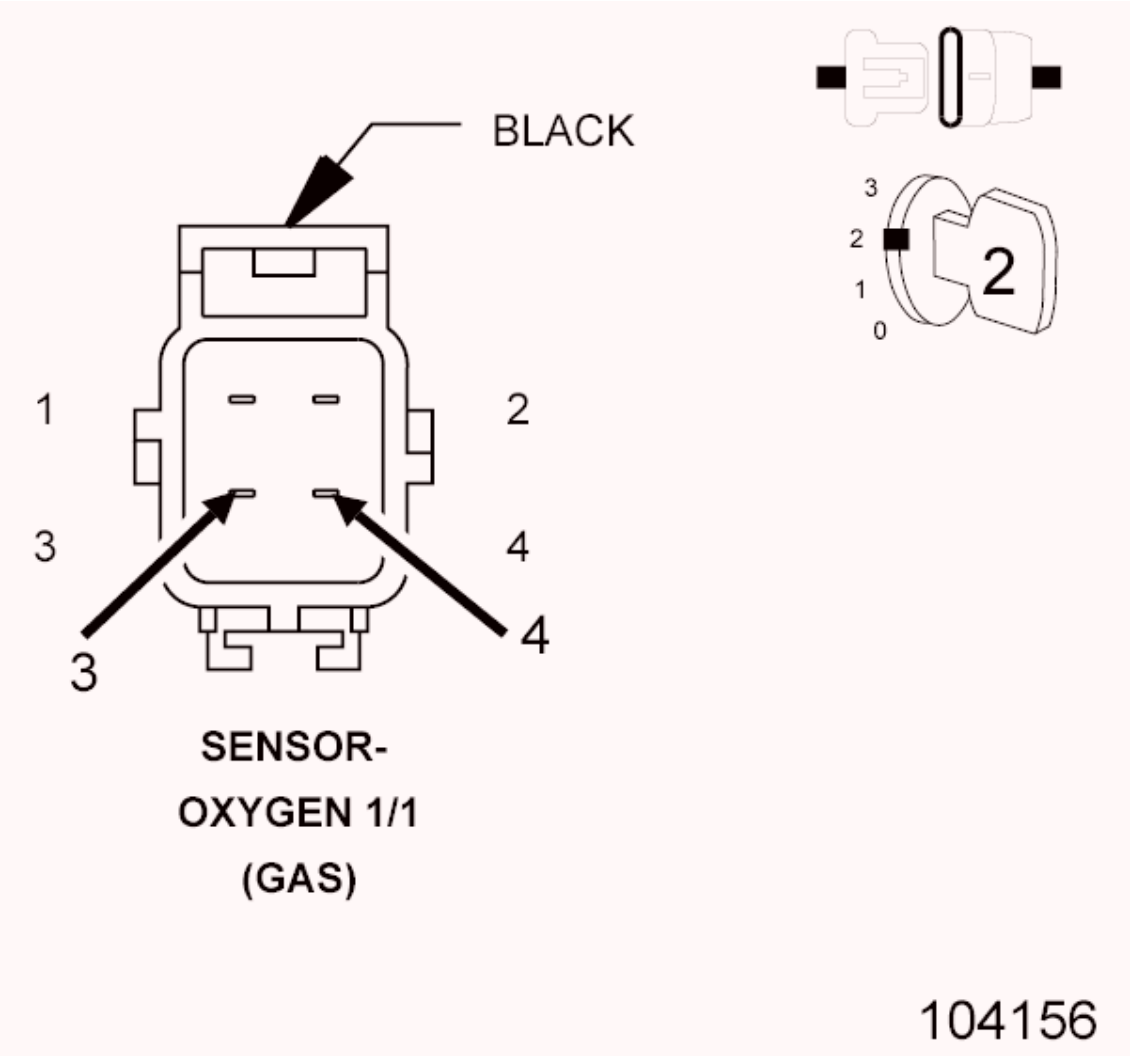

Fig. 108: Oxygen Sensor 1/1 Harness Connector End View

Courtesy of CHRYSLER GROUP, LLC

1. Turn the ignition off.
2. Reconnect the PCM C2 harness connector.
3. Connect a jumper between the (K41) O2 Sensor 1/1 Signal circuit and the (K902) O2 Sensor 1/1 Return circuit in the Oxygen Sensor 1/1 harness connector.
4. Turn the ignition on.
5. With a scan tool, monitor the O2 Sensor 1/1 volts.

   Is the voltage between 2.3 and 2.7 volts with the jumper in place?

   Yes

   - Replace the Oxygen Sensor 1/1 in accordance with the service information. Refer to **SENSOR, OXYGEN, REMOVAL** .
   - Perform the POWERTRAIN VERIFICATION TEST. Refer to **POWERTRAIN VERIFICATION TEST** .

   No

   - Go To 6

6. **CHECK THE (K41) O2 SENSOR 1/1 SIGNAL CIRCUIT FOR AN OPEN/HIGH RESISTANCE**
   1. Turn the ignition off.
   2. Remove the jumper from between the (K41) O2 Sensor 1/1 Signal circuit and the (K902) O2 1/1 Return circuit in the Oxygen Sensor 1/1 harness connector.
   3. Disconnect the PCM C2 harness connector.
   4. Measure the resistance of the (K41) O2 Sensor 1/1 Signal circuit between the Oxygen Sensor 1/1 harness connector to the GPEC Adaptor.

      Is the resistance below 5.0 Ohms?

      Yes

      - Go To 7

No

- Repair the (K41) O2 Sensor 1/1 Signal circuit for an open or high resistance.
- Perform the POWERTRAIN VERIFICATION TEST. Refer to **POWERTRAIN VERIFICATION TEST** .

7. **CHECK THE (K902) O2 1/1 RETURN CIRCUIT FOR AN OPEN/HIGH RESISTANCE**
   1. Measure the resistance of the (K902) O2 1/1 Return circuit between the Oxygen Sensor 1/1 harness connector to the GPEC Adaptor.

      Is the resistance below 5.0 Ohms?

      Yes

      - Go To 8

      No

      - Repair the (K902) O2 1/1 Return circuit for an open or high resistance.
      - Perform the POWERTRAIN VERIFICATION TEST. Refer to **POWERTRAIN VERIFICATION TEST** .
8. **POWERTRAIN CONTROL MODULE (PCM)**
   1. Using the wiring diagram/schematic as a guide, inspect the wiring and connectors between the Oxygen Sensor 1/1 and the Powertrain Control Module (PCM).
   2. Look for any chafed, pierced, pinched or partially broken wires.
   3. Look for broken, bent, pushed out or corroded terminals.
   4. Perform any Technical Service Bulletins (TSBs) that may apply.

      Were any problems found?

      Yes

      - Repair as necessary.
      - Perform the POWERTRAIN VERIFICATION TEST. Refer to **POWERTRAIN VERIFICATION TEST** .

No

- Replace and program the Powertrain Control Module (PCM) in accordance with the service information. Refer to **MODULE, POWERTRAIN CONTROL, REMOVAL** .
- Perform the POWERTRAIN VERIFICATION TEST. Refer to **POWERTRAIN VERIFICATION TEST** .

P0133-O2 SENSOR 1/1 SLOW RESPONSE

For a complete wiring diagram, **refer to appropriate SYSTEM WIRING DIAGRAMS article** .

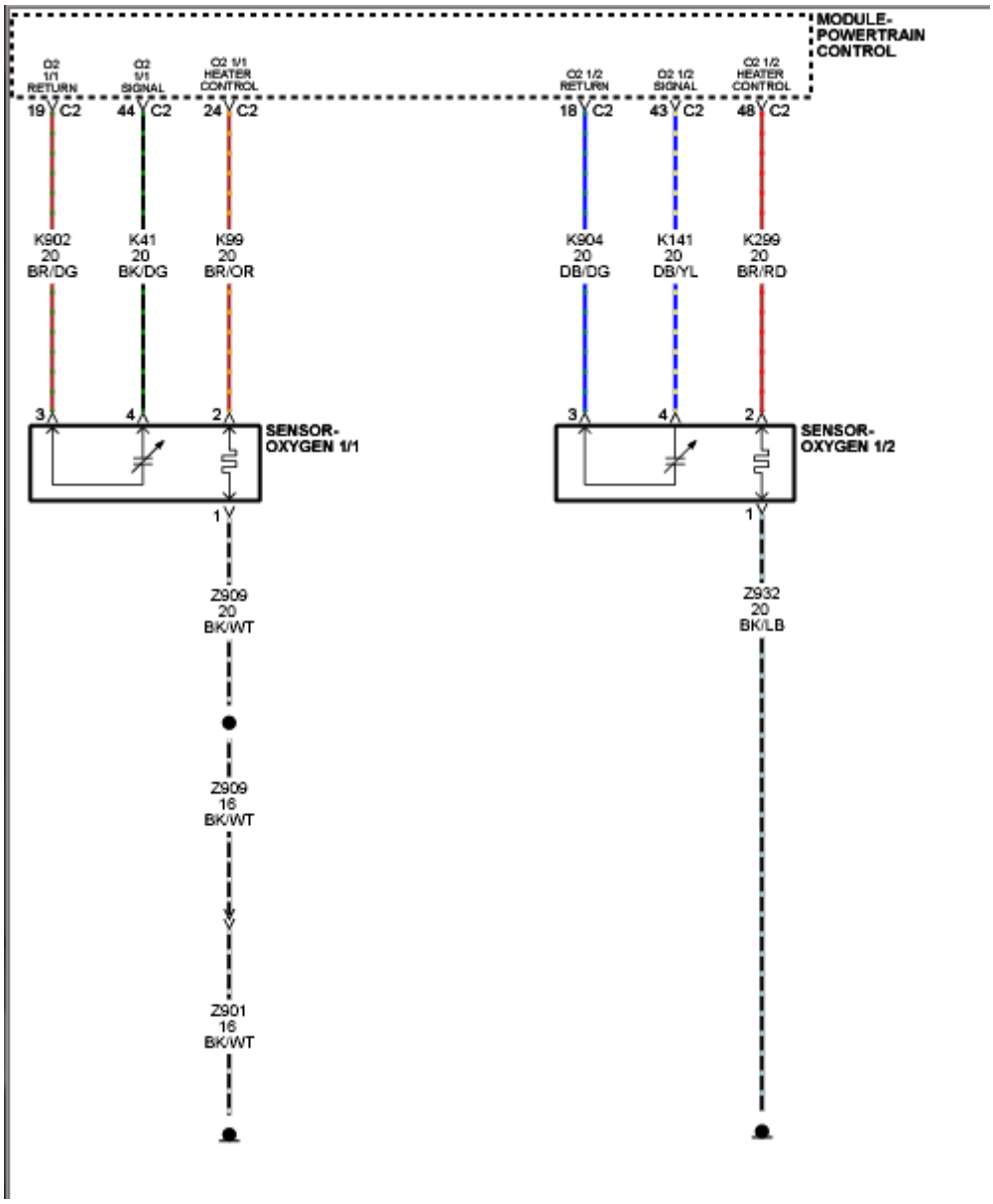

Fig. 109: Oxygen Sensor Circuit Diagram

Courtesy of CHRYSLER GROUP, LLC

THEORY OF OPERATION

The Oxygen Sensors (O2 Sensor) are used for fuel control and catalyst monitoring. Each O2 Sensor measures the oxygen content of the exhaust stream. When the engine is started, the Powertrain Control Module (PCM) operates in an Open Loop mode, ignoring the O2 Sensor signal voltage while calculating the air-to-fuel ratio. The heating elements inside each O2 Sensor heats the sensor to bring it to operating conditions faster. This allows the system to enter Closed Loop earlier and the PCM to calculate the air-to-fuel ratio sooner. While the engine runs, the O2 Sensor heats up and begins to generate a voltage within a range of 0-1, 275 mV. Once sufficient O2 Sensor voltage fluctuation is observed by the PCM, Closed Loop is entered. The PCM uses the O2 Sensor voltage to determine the air-to-fuel ratio. An O2 Sensor voltage that increases toward 1, 000 mV indicates a rich fuel mixture. An O2 Sensor voltage that decreases toward 0 mV indicates a lean fuel mixture. The Powertrain Control Module (PCM) makes short term and long term fuel corrections to maintain stoichiometric fuel/air ratio for best catalytic converter efficiency. Short term fuel correction is based on upstream O2 Sensor output and is designed for quick engine response. The long term fuel correction compensated for variations in the engine specifications, sensor tolerances and component aging and is designed to correct rich and lean conditions over a longer period of time.

For an aged O2 Sensor, the response rate to the air/fuel change is slower than when it was new. The O2 Sensor tends to move less with the same air/fuel changes in a given time frame. Therefore by observing the activity of voltage readings from the upstream O2 Sensor, the quality of the O2 Sensor can be detected.

WHEN MONITORED

With the ECT above 70 C (158 F), engine RPM between 1400 and 2300, the vehicle speed between 64 and 96 kph (40 and 60 mph), and the engine run time greater than 3 minutes.

SET CONDITION

The Powertrain Control Module (PCM) detects that the oxygen sensor signal does not switch adequately during monitoring. Two Trip Fault. Three good trips to turn off the MIL.

POSSIBLE CAUSES

POSSIBLE CAUSES
EXHAUST LEAK
(K41) O2 1/1 SIGNAL CIRCUIT SHORTED TO VOLTAGE
(K902) O2 1/1 RETURN CIRCUIT SHORTED TO VOLTAGE
(K41) O2 1/1 SIGNAL CIRCUIT SHORTED TO GROUND
(K902) O2 1/1 RETURN CIRCUIT SHORTED TO GROUND
(K41) O2 1/1 SIGNAL CIRCUIT OPEN OR HIGH RESISTANCE
(K902) O2 1/1 RETURN CIRCUIT OPEN OR HIGH RESISTANCE
OXYGEN SENSOR 1/1
POWERTRAIN CONTROL MODULE (PCM)

Always perform the Pre-Diagnostic Troubleshooting procedure before proceeding. Refer to PRE-DIAGNOSTIC TROUBLESHOOTING PROCEDURE .

DIAGNOSTIC TEST

1. **EXHAUST LEAK**
   1. Perform the diagnostic procedure for CHECKING THE EXHAUST SYSTEM FOR LEAKS. Refer to **DIAGNOSIS AND TESTING** .

      Were any exhaust leaks found?

      Yes

      - Repair as necessary.
      - Perform the POWERTRAIN VERIFICATION TEST. Refer to **POWERTRAIN VERIFICATION TEST** .

      No

      - Go To 2
2. **ACTIVE DTC**

   NOTE: Check for contaminants that may have damaged the O2 Sensor: contaminated fuel, unapproved silicone, oil and coolant.

NOTE: It may be necessary to test drive the vehicle within the DTC monitoring conditions in order for this DTC to set.

1. Start the engine and allow it to reach operating temperature.

   WARNING: When the engine is operating, do not stand in direct line with the fan. Do not put your hands near the pulleys, belts or fan. Do not wear loose clothing. Failure to follow these instructions may result in possible serious or fatal injury.

2. With a scan tool, select View DTCs.

   Is the status Active for this DTC?

   Yes

   - Go To 3

   No

   - Perform the INTERMITTENT CONDITION diagnostic procedure. Refer to **INTERMITTENT CONDITION** .

3. **CHECK THE (K41) O2 Sensor 1/1 SIGNAL CIRCUIT FOR A SHORT TO VOLTAGE**

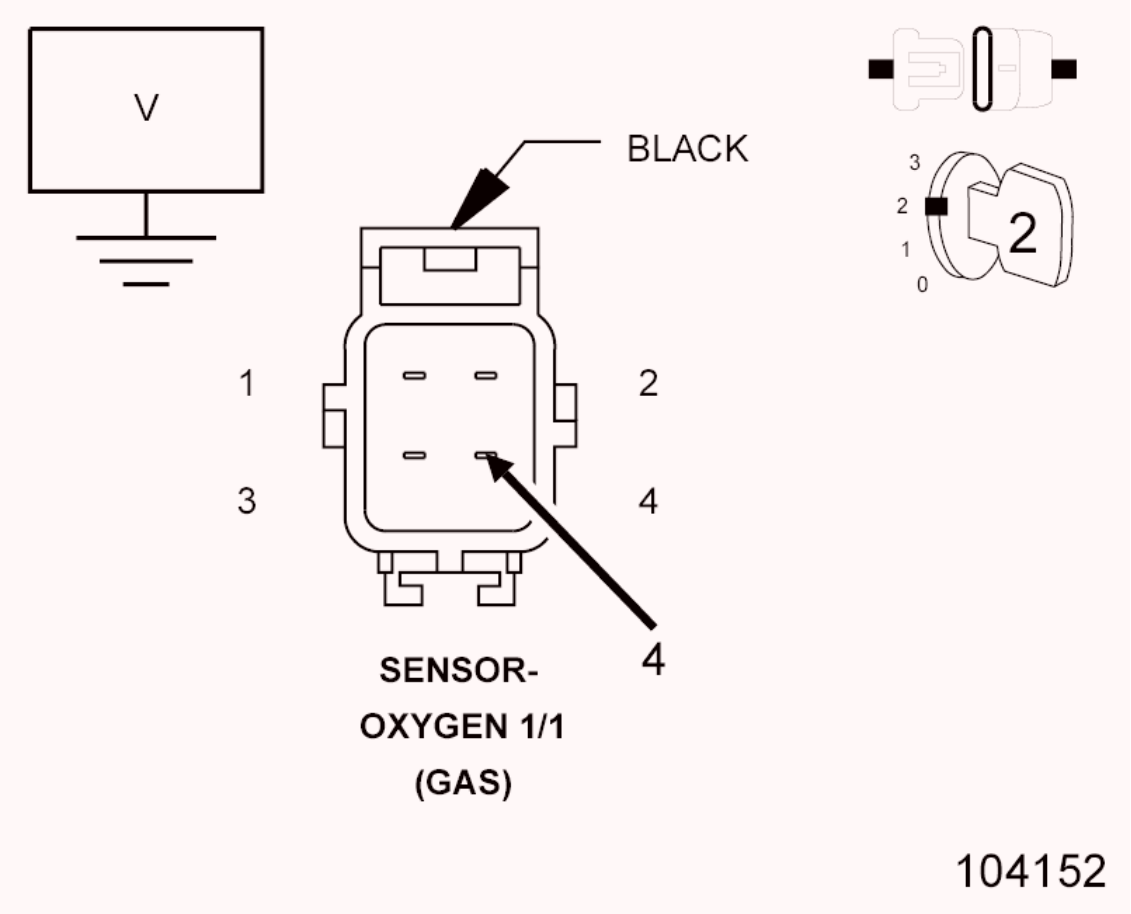

Fig. 110: Checking O2 Sensor 1/1 Signal Circuit For Short To Voltage
Courtesy of CHRYSLER GROUP, LLC

1. Turn the ignition off.
2. Disconnect the Oxygen Sensor 1/1 harness connector.
3. Turn the ignition on.
4. Measure the voltage on the (K41) O2 Sensor 1/1 Signal circuit in the Oxygen Sensor 1/1 harness connector.

NOTE: Measure the voltage in reference to ground, not the (K902) O2 Sensor 1/1 Return circuit.

Is the voltage above 5.2 volts?

Yes

- Repair the (K41) O2 Sensor 1/1 Signal circuit for a short to voltage.
- Perform the POWERTRAIN VERIFICATION TEST. Refer to

POWERTRAIN VERIFICATION TEST .

No

- Go To 4

4. **CHECK THE (K902) O2 SENSOR 1/1 RETURN CIRCUIT FOR A SHORT TO VOLTAGE**

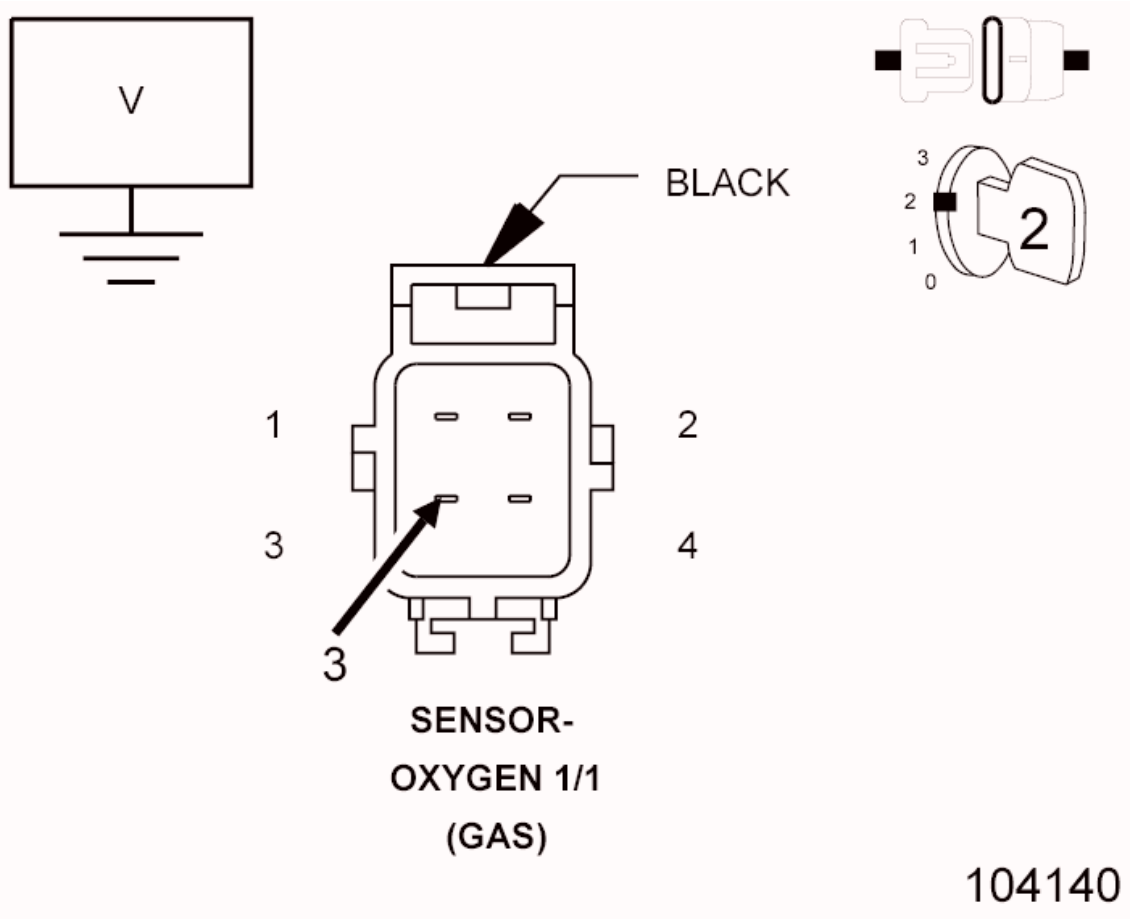

Fig. 111: Checking O2 Sensor 1/1 Return Circuit For Voltage
Courtesy of CHRYSLER GROUP, LLC

1. Turn the ignition off.
2. Disconnect the PCM C2 harness connector.
3. Turn the ignition on.
4. Measure the voltage on the (K902) O2 Sensor 1/1 Return circuit in the Oxygen Sensor 1/1 harness connector.

   Is there any voltage present?

Yes

- Repair the (K902) O2 Sensor 1/1 Return circuit for a short to voltage.
- Perform the POWERTRAIN VERIFICATION TEST. Refer to **POWERTRAIN VERIFICATION TEST** .

No

- Go To 5

5. **CHECK THE (K41) O2 SENSOR 1/1 SIGNAL CIRCUIT FOR A SHORT TO GROUND**

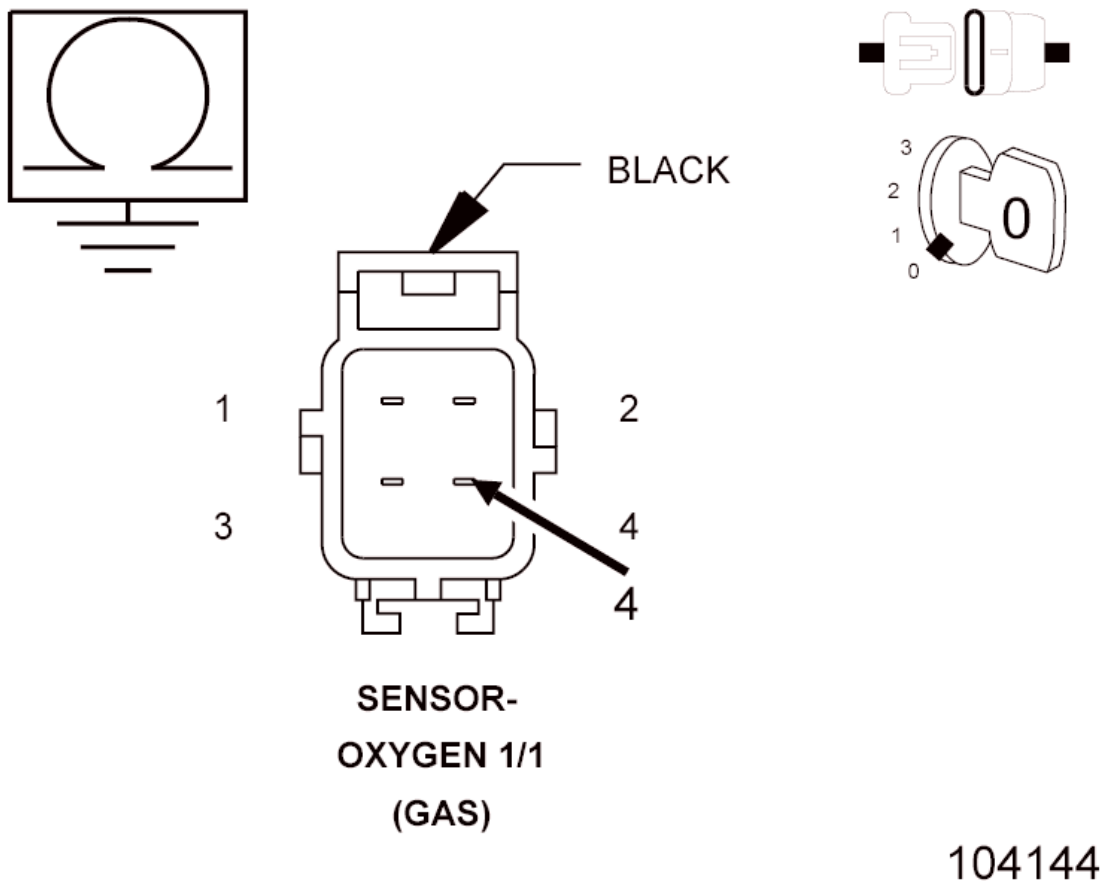

Fig. 112: Checking O2 Sensor 1/1 Signal Circuit For Short To Ground
Courtesy of CHRYSLER GROUP, LLC

1. Turn the ignition off.
2. Measure the resistance between ground and the (K41) O2 Sensor 1/1 Signal circuit in the Oxygen Sensor 1/1 harness connector.

Is the resistance above 10k Ohms?

Yes

- Go To 6

No

- Repair the (K41) O2 Sensor 1/1 Signal circuit for a short to ground.
- Perform the POWERTRAIN VERIFICATION TEST. Refer to **POWERTRAIN VERIFICATION TEST** .

6. **CHECK THE (K902) O2 SENSOR 1/1 RETURN CIRCUIT FOR A SHORT TO GROUND**

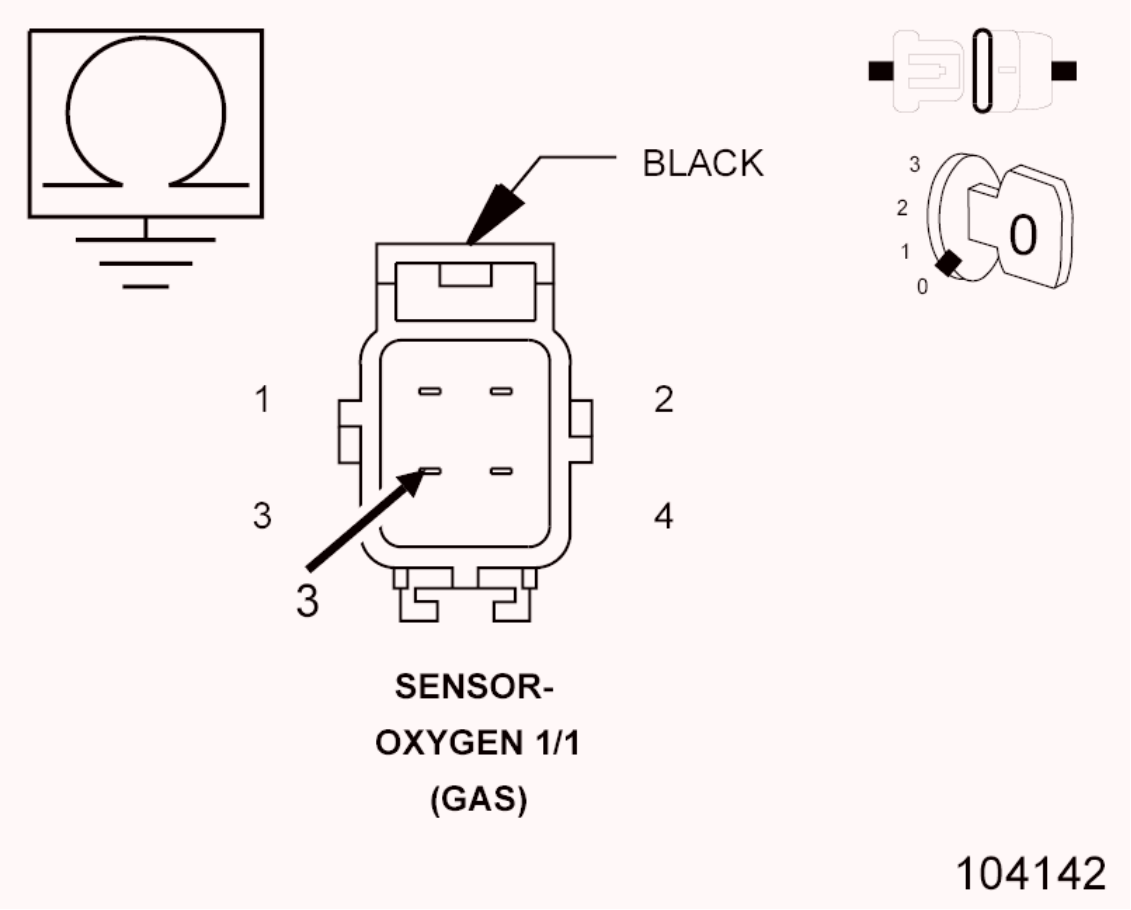

Fig. 113: Checking 1/1 O2 Sensor Return Circuit For Short To Ground
Courtesy of CHRYSLER GROUP, LLC

1. Measure the resistance between ground and the (K902) O2 Sensor 1/1 Return circuit in the Oxygen Sensor 1/1 harness connector.

Is the resistance above 10k Ohms?

Yes

- Go To 7

No

- Repair the (K902) O2 Sensor 1/1 Return circuit for a short to ground.
- Perform the POWERTRAIN VERIFICATION TEST. Refer to **POWERTRAIN VERIFICATION TEST** .

7. **CHECK THE (K41) O2 SENSOR 1/1 SIGNAL CIRCUIT FOR AN OPEN/HIGH RESISTANCE**

CAUTION: Do not probe the PCM harness connectors. Probing the PCM harness connectors will damage the PCM terminals resulting in poor terminal to pin connection. Install the GPEC Diagnostic Adaptor to perform the diagnosis.

1. Connect the (special tool #10436, Adapter, GPEC Diagnostic).
2. Measure the resistance of the (K41) O2 Sensor 1/1 Signal circuit between the Oxygen Sensor 1/1 harness connector to the GPEC Adaptor.

Is the resistance below 5.0 Ohms?

Yes

- Go To 8

No

- Repair the (K41) O2 Sensor 1/1 Signal circuit for an open or high resistance.
- Perform the POWERTRAIN VERIFICATION TEST. Refer to **POWERTRAIN VERIFICATION TEST** .

8. **CHECK THE (K902) O2 SENSOR 1/1 RETURN CIRCUIT FOR AN**

OPEN/HIGH RESISTANCE

1. Measure the resistance of the (K902) O2 Sensor 1/1 Return circuit between the Oxygen Sensor 1/1 harness connector to the GPEC Adaptor.

   Is the resistance below 5.0 Ohms?

   Yes

   - Go To 9

   No

   - Repair the (K902) O2 Sensor 1/1 Return circuit for an open or high resistance.
   - Perform the POWERTRAIN VERIFICATION TEST. Refer to **POWERTRAIN VERIFICATION TEST** .

9. **OXYGEN SENSOR 1/1**

NOTE: Prior to replacing the O2 sensor, verify that the correct part number is being used in order to prevent improper O2 heater control.

1. Using the wiring diagram/schematic as a guide, inspect the wiring and connectors between the Oxygen Sensor 1/1 and the Powertrain Control Module (PCM).
   - Look for any chafed, pierced, pinched or partially broken wires.
   - Look for broken, bent, pushed out or corroded terminals.
   - Perform any Technical Service Bulletins (TSBs) that may apply.

   Were any problems found?

   Yes

   - Repair as necessary.
   - Perform the POWERTRAIN VERIFICATION TEST. Refer to **POWERTRAIN VERIFICATION TEST** .

   No

- Replace the Oxygen Sensor 1/1 in accordance with the service information. Refer to **SENSOR, OXYGEN, REMOVAL** .
- Perform the POWERTRAIN VERIFICATION TEST. Refer to **POWERTRAIN VERIFICATION TEST** .

P0135-O2 SENSOR 1/1 HEATER PERFORMANCE

For a complete wiring diagram, **refer to appropriate SYSTEM WIRING DIAGRAMS article** .

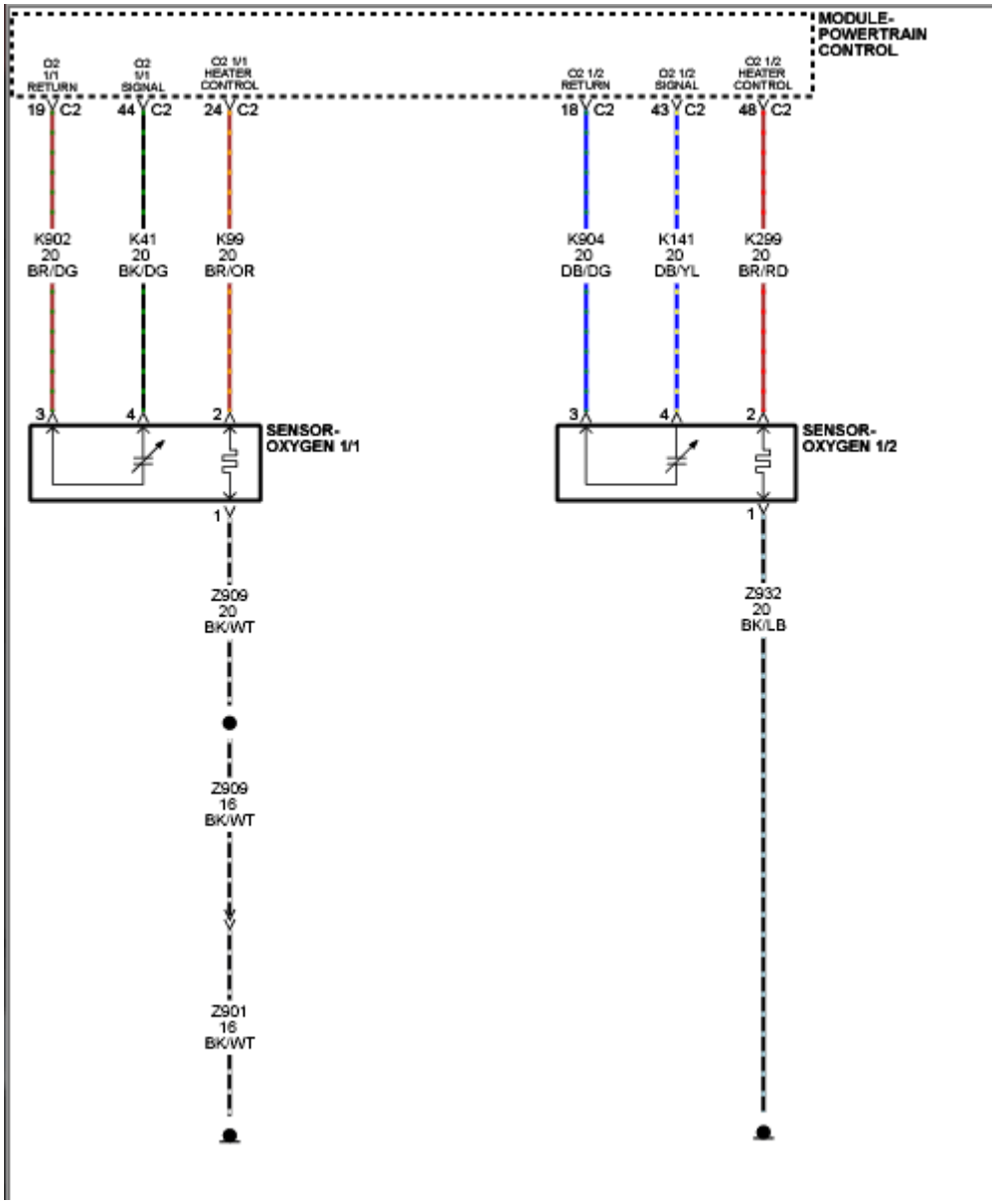

Fig. 114: Oxygen Sensor Circuit Diagram
Courtesy of CHRYSLER GROUP, LLC

THEORY OF OPERATION

For the 02 Sensor to deliver accurate readings the sensing element must be heated. A Positive Temperature Coefficient (PTC) element inside the O2 Sensor heats up as current passes through it. This allows the system to enter Closed Loop quickly. The Powertrain Control Module (PCM) turns on this circuit based on Engine Coolant Temperature (ECT) and engine loads. During operation the heater circuit is momentarily disabled to allow a resistance measurement to be taken to infer heater temperature. The current delivery to the heater is duty cycled to maintain a specific target temperature. The error from the target temperature is continuously monitored to assess heater performance. If a malfunction occurs the circuit is turned off and a DTC will set.

WHEN MONITORED

With the engine running, O2 sensor heater duty cycle greater than 0% and the battery voltage greater than 11.0 volts.

SET CONDITION

The Powertrain Control Module (PCM) detects no O2 sensor output when the heater is powered up. Two trip fault. Three good trips to turn off the MIL.

POSSIBLE CAUSES

POSSIBLE CAUSES
(K99) O2 1/1 HEATER CONTROL CIRCUIT OPEN OR HIGH RESISTANCE
GROUND CIRCUIT OPEN OR HIGH RESISTANCE
OXYGEN SENSOR 1/1
POWERTRAIN CONTROL MODULE (PCM)

Always perform the Pre-Diagnostic Troubleshooting procedure before proceeding. Refer to PRE-DIAGNOSTIC TROUBLESHOOTING PROCEDURE .

DIAGNOSTIC TEST

1. **OXYGEN SENSOR 1/1 HEATER CONTROL OPERATION**
    1. Turn the ignition off.

NOTE: Wait a minimum of eight minutes to allow the sensor to cool down before continuing. The

sensor voltage should stabilize between 2.47 and 2.52 volts.

2. Turn the ignition on.
3. With a scan tool, actuate the Oxygen Sensor 1/1 heater control.
4. With the scan tool, monitor 1/1 O2 Sensor Volts for at least two minutes.

   Does the voltage stay between 2.47 and 2.52 volts?

   Yes

   - Go To 2

   No

   - Perform the INTERMITTENT CONDITION diagnostic procedure. Refer to **INTERMITTENT CONDITION** .

2. **OXYGEN SENSOR 1/1**
   1. Turn the ignition off.

      NOTE: Wait a minimum of 8 minutes to allow the sensor to cool down before continuing.

   2. Disconnect the Oxygen Sensor 1/1 harness connector.
   3. Measure the resistance of the O2 sensor heater element across the Oxygen Sensor 1/1 connector between the heater control terminal and the ground terminal.

      NOTE: The O2 heater element resistance should be measured at 70°F (21.1°C). The resistance value will vary at different temperatures.

      Is the resistance between 2.0 and 30.0 Ohms?

      Yes

      - Go To 3

No

- Replace the Oxygen Sensor 1/1 in accordance with the service information. Refer to **SENSOR, OXYGEN, REMOVAL** .
- Perform the POWERTRAIN VERIFICATION TEST. Refer to **POWERTRAIN VERIFICATION TEST** .

3. **CHECK THE (K99) O2 1/1 HEATER CONTROL CIRCUIT FOR AN OPEN/HIGH RESISTANCE**
   1. Disconnect the PCM C2 harness connector.

      CAUTION: Do not probe the PCM harness connectors. Probing the PCM harness connectors will damage the PCM terminals resulting in poor terminal to pin connection. Install the GPEC Diagnostic Adaptor to perform the diagnosis.

   2. Connect the (special tool #10436, Adapter, GPEC Diagnostic).
   3. Measure the resistance of the (K99) O2 1/1 Heater Control circuit from the Oxygen Sensor 1/1 harness connector to the GPEC Adaptor.

      Is the resistance below 0.5 Ohms?

      Yes

      - Go To 4

      No

      - Repair the (K99) O2 1/1 Heater Control circuit for an open or high resistance.
      - Perform the POWERTRAIN VERIFICATION TEST. Refer to **POWERTRAIN VERIFICATION TEST** .

4. **CHECK THE GROUND CIRCUIT FOR AN OPEN/HIGH RESISTANCE**

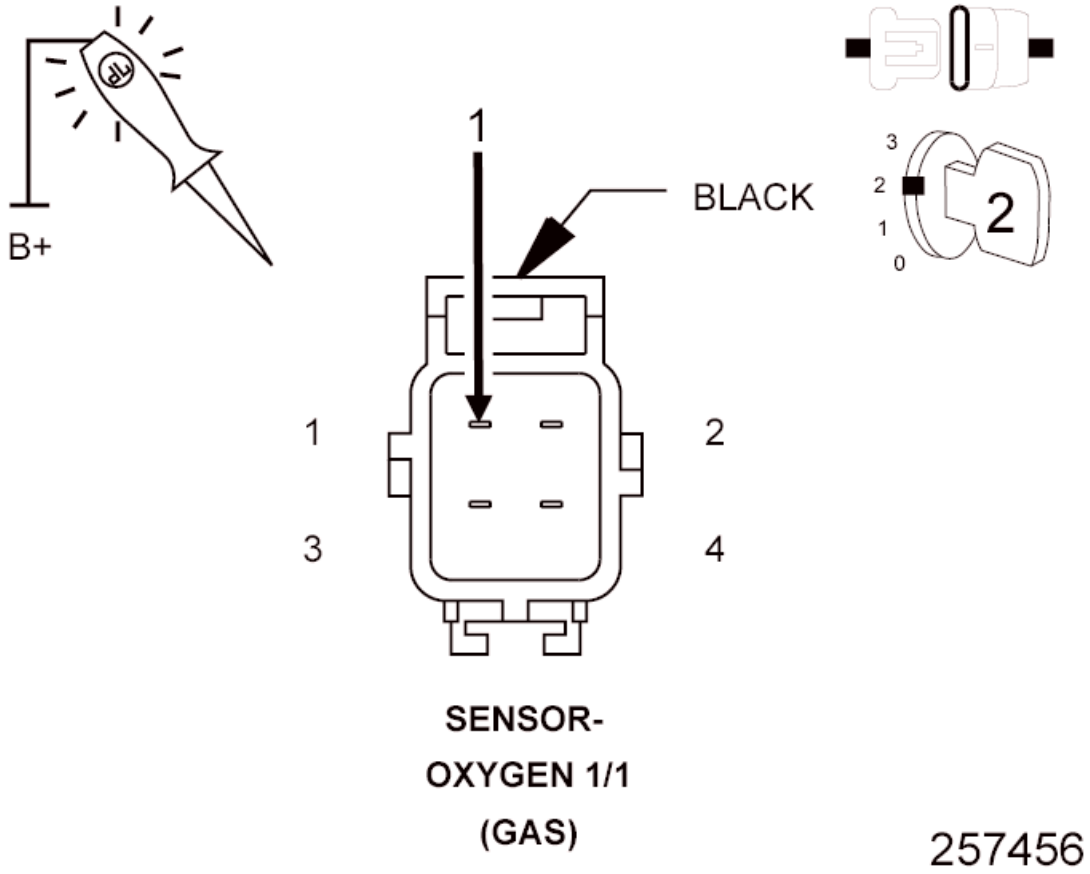

Fig. 115: Checking Ground Circuit For Open Or High Resistance
Courtesy of CHRYSLER GROUP, LLC

1. Using a 12 volt test light connected to 12 volts, check the Ground circuit in the Oxygen Sensor 1/1 harness connector.

   NOTE: The test light should be illuminated and bright. Compare the brightness to that of a direct connection to the battery.

   Is the test light illuminated and bright?

   Yes

   - Go To 5

   No

   - Repair the Ground circuit for an open circuit or high resistance.
   - Perform the POWERTRAIN VERIFICATION TEST. Refer to

POWERTRAIN VERIFICATION TEST .

5. **POWERTRAIN CONTROL MODULE (PCM)**
   1. Using the wiring diagram/schematic as a guide, inspect the wiring and connectors between the Oxygen Sensor 1/1 and the Powertrain Control Module (PCM).
   2. Look for any chafed, pierced, pinched or partially broken wires.
   3. Look for broken, bent, pushed out or corroded terminals.
   4. Perform any Technical Service Bulletins (TSBs) that may apply.

   Were any problems found?

   Yes

   - Repair as necessary.
   - Perform the POWERTRAIN VERIFICATION TEST. Refer to **POWERTRAIN VERIFICATION TEST** .

   No

   - Replace and program the Powertrain Control Module (PCM) in accordance with the service information. Refer to **MODULE, POWERTRAIN CONTROL, REMOVAL** .
   - Perform the POWERTRAIN VERIFICATION TEST. Refer to **POWERTRAIN VERIFICATION TEST** .

P0137-O2 SENSOR 1/2 CIRCUIT LOW

For a complete wiring diagram, **refer to appropriate SYSTEM WIRING DIAGRAMS article** .

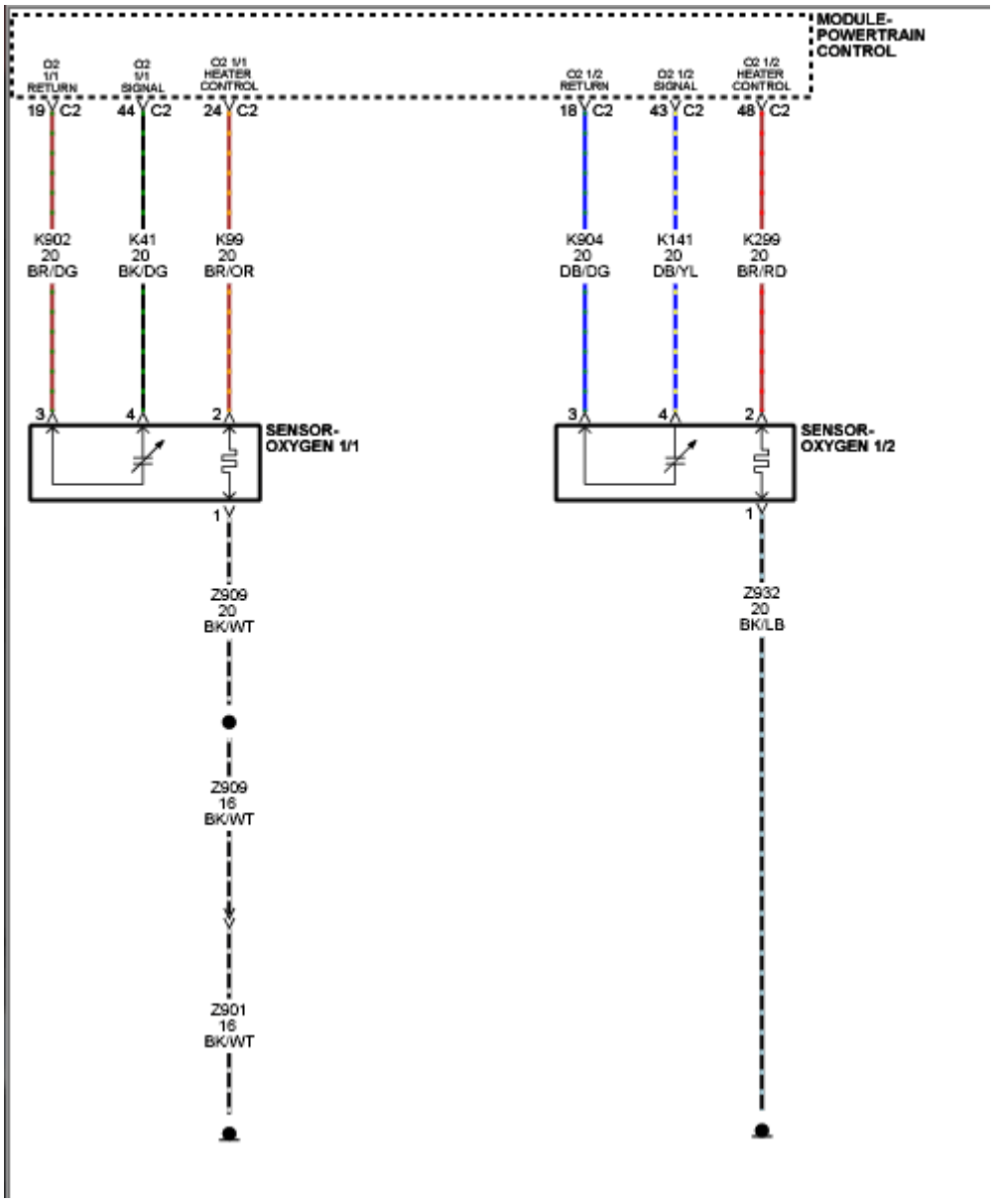

Fig. 116: Oxygen Sensor Circuit Diagram
Courtesy of CHRYSLER GROUP, LLC

THEORY OF OPERATION

The Oxygen Sensors (O2 Sensor) are used for fuel control and catalyst monitoring. Each O2 Sensor measures the oxygen content of the exhaust stream. When the engine is started, the Powertrain Control Module (PCM) operates in an Open Loop mode, ignoring the O2 Sensor signal voltage while calculating the air-to-fuel ratio. The heating elements inside each O2 Sensor heats the sensor to bring it to operating conditions faster. This allows the system to enter Closed Loop earlier and the PCM to calculate the air-to-fuel ratio sooner. While the engine runs, the O2 Sensor heats up and begins to generate a voltage within a range of 0-1, 275 mV. Once sufficient O2 Sensor voltage fluctuation is observed

by the PCM, Closed Loop is entered. The PCM uses the O2 Sensor voltage to determine the air-to-fuel ratio. An O2 Sensor voltage that increases toward 1, 000 mV indicates a rich fuel mixture. An O2 Sensor voltage that decreases toward 0 mV indicates a lean fuel mixture. The Powertrain Control Module (PCM) makes short term and long term fuel corrections to maintain stoichiometric fuel/air ratio for best catalytic converter efficiency. Short term fuel correction is based on upstream O2 Sensor output and is designed for quick engine response. The long term fuel correction compensated for variations in the engine specifications, sensor tolerances and component aging and is designed to correct rich and lean conditions over a longer period of time.

For an aged O2 Sensor, the response rate to the air/fuel change is slower than when it was new. The O2 Sensor tends to move less with the same air/fuel changes in a given time frame. Therefore by observing the activity of voltage readings from the upstream O2 Sensor, the quality of the O2 Sensor can be detected.

WHEN MONITORED

With the engine running for less than 30 seconds, the Oxygen Sensor 1/2 heater temperature less than 251° C (484° F) and the battery voltage greater than 10.4 volts.

SET CONDITION

The Powertrain Control Module (PCM) detects that the Oxygen Sensor 1/2 signal voltage is below 2.5196 volts for six seconds after engine startup. One Trip Fault. Three good trips to turn off the MIL.

POSSIBLE CAUSES

POSSIBLE CAUSES
(K141) O2 1/2 SIGNAL CIRCUIT SHORTED TO GROUND
(K904) O2 1/2 RETURN CIRCUIT SHORTED TO GROUND
(K141) O2 1/2 SIGNAL CIRCUIT SHORTED TO THE (K904) O2 1/2 RETURN CIRCUIT
(K141) O2 1/2 SIGNAL CIRCUIT SHORTED TO THE (K299) O2 1/2 HEATER CONTROL CIRCUIT
OXYGEN SENSOR 1/2
POWERTRAIN CONTROL MODULE (PCM)

Always perform the Pre-Diagnostic Troubleshooting procedure before proceeding. Refer to PRE-DIAGNOSTIC TROUBLESHOOTING PROCEDURE .

DIAGNOSTIC TEST

1. **OXYGEN SENSOR 1/2 VOLTAGE**
   1. Start the engine and allow it to reach normal operating temperature.

      WARNING: When the engine is operating, do not stand in direct line with the fan. Do not put your hands near the pulleys, belts or fan. Do not wear loose clothing. Failure to follow these instructions may result in possible serious or fatal injury.

   2. With a scan tool, monitor the O2 Sensor 1/2 volts.

      Is the voltage less than 2.52 volts?

      Yes

      - Go To 2

      No

      - Perform the INTERMITTENT CONDITION diagnostic procedure. Refer to **INTERMITTENT CONDITION** .
2. **CHECK THE (K141) O2 Sensor 1/2 SIGNAL CIRCUIT VOLTAGE**
   1. Turn the ignition off.
   2. Disconnect the Oxygen Sensor 1/2 harness connector.
   3. Turn the ignition on.
   4. With a scan tool, monitor the O2 Sensor 1/2 volts.

      Is the voltage above 4.8 volts?

      Yes

      - Go To 3

No

- Go To 5

3. **OXYGEN SENSOR 1/2**

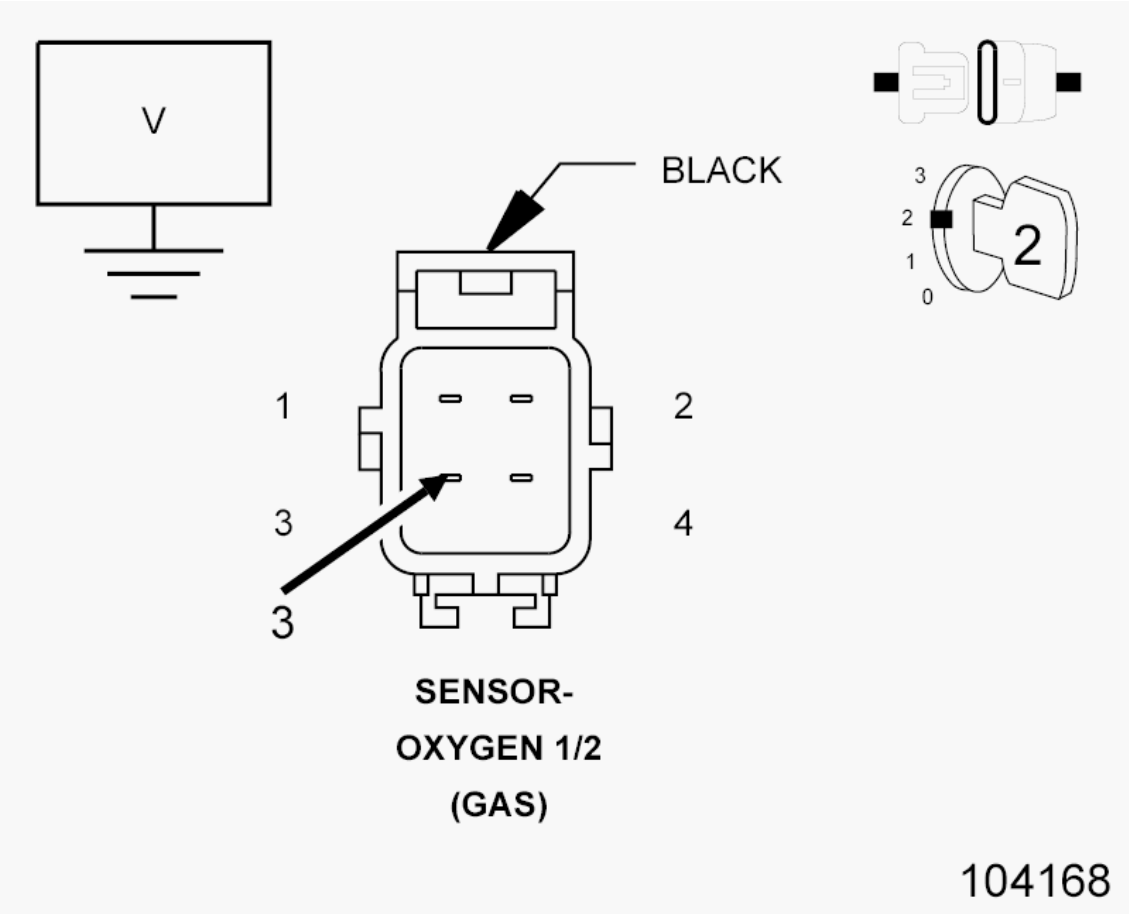

Fig. 117: Checking O2 Sensor Circuit
Courtesy of CHRYSLER GROUP, LLC

1. Measure the voltage on the (K904) O2 Sensor 1/2 Return circuit in the Oxygen Sensor 1/2 harness connector.

   Is the voltage between 2.475 and 2.525 volts?

   Yes

   - Replace the Oxygen Sensor 1/2 in accordance with the service information. Refer to **SENSOR, OXYGEN, REMOVAL** .
   - Perform the POWERTRAIN VERIFICATION TEST. Refer to **POWERTRAIN VERIFICATION TEST** .

No

- Go To 4

4. **CHECK THE (K904) O2 SENSOR 1/2 RETURN CIRCUIT FOR A SHORT TO GROUND**

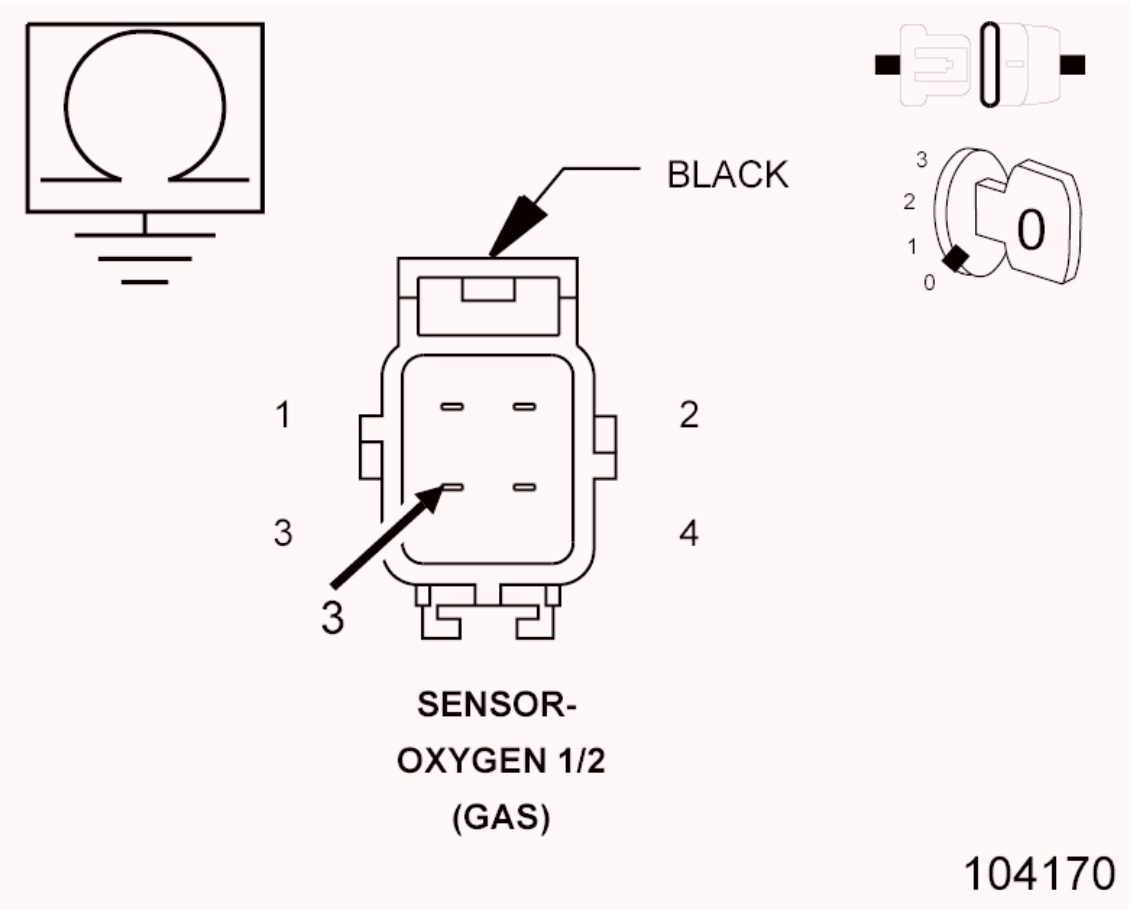

Fig. 118: Checking O2 Sensor 1/2 Return Circuit For Short To Ground
Courtesy of CHRYSLER GROUP, LLC

1. Turn the ignition off.
2. Disconnect the PCM C2 harness connector.
3. Measure the resistance between ground and the (K904) O2 Sensor 1/2 Return circuit in the Oxygen Sensor 1/2 harness connector.

   Is the resistance above 10k Ohms?

   Yes

   - Go To 8

No

- Repair the (K904) O2 Sensor 1/2 Return circuit for a short to ground.
- Perform the POWERTRAIN VERIFICATION TEST. Refer to **POWERTRAIN VERIFICATION TEST** .

5. **CHECK THE (K141) O2 SENSOR 1/2 SIGNAL CIRCUIT FOR A SHORT TO GROUND**

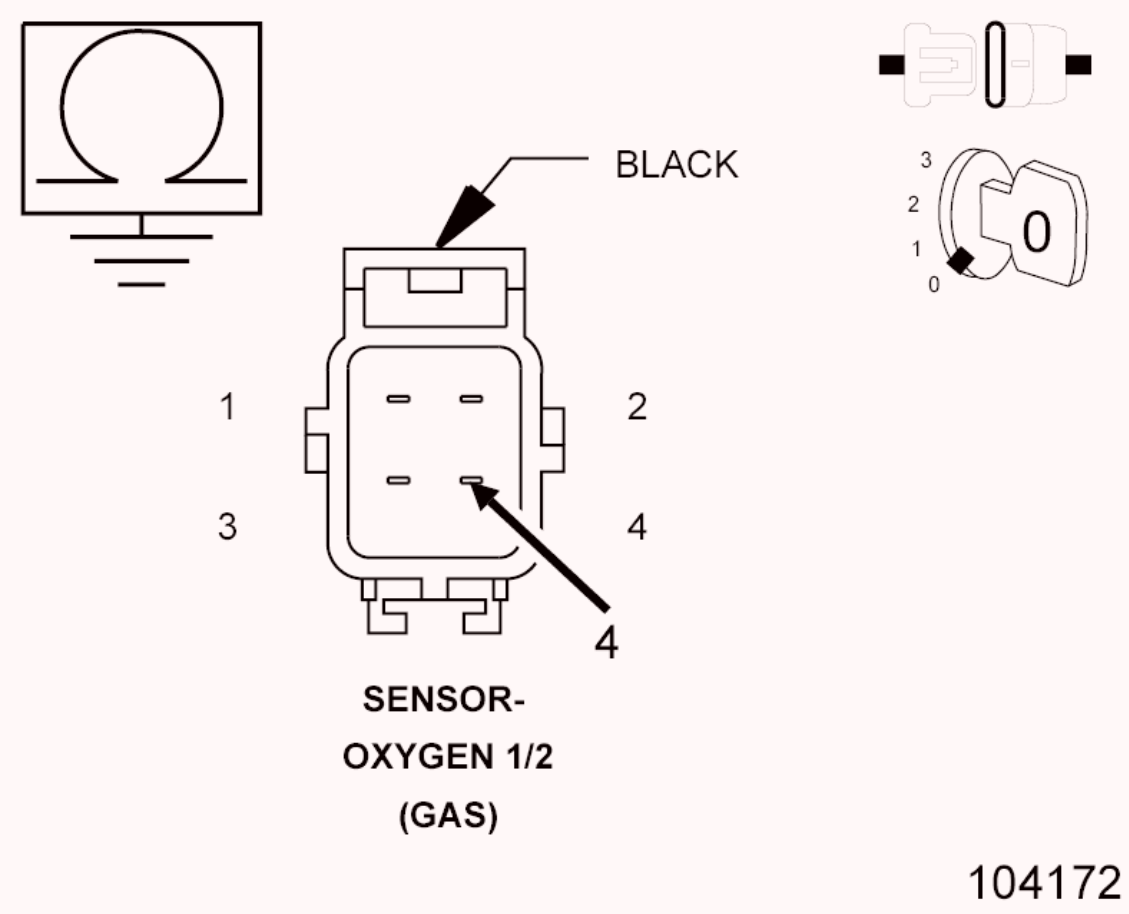

Fig. 119: Checking O2 Sensor 1/2 Circuit For Short To Ground
Courtesy of CHRYSLER GROUP, LLC

1. Measure the resistance between ground and the (K141) O2 Sensor 1/2 Signal circuit in the Oxygen Sensor 1/2 harness connector.

   Is the resistance above 10k Ohms?

   Yes

   - Go To 6

No

- Repair the (K141) O2 Sensor 1/2 Signal circuit for a short to ground.
- Perform the POWERTRAIN VERIFICATION TEST. Refer to **POWERTRAIN VERIFICATION TEST** .

6. **CHECK FOR THE (K141) O2 SENSOR 1/2 SIGNAL CIRCUIT SHORTED TO THE (K904) O2 SENSOR 1/2 RETURN CIRCUIT**

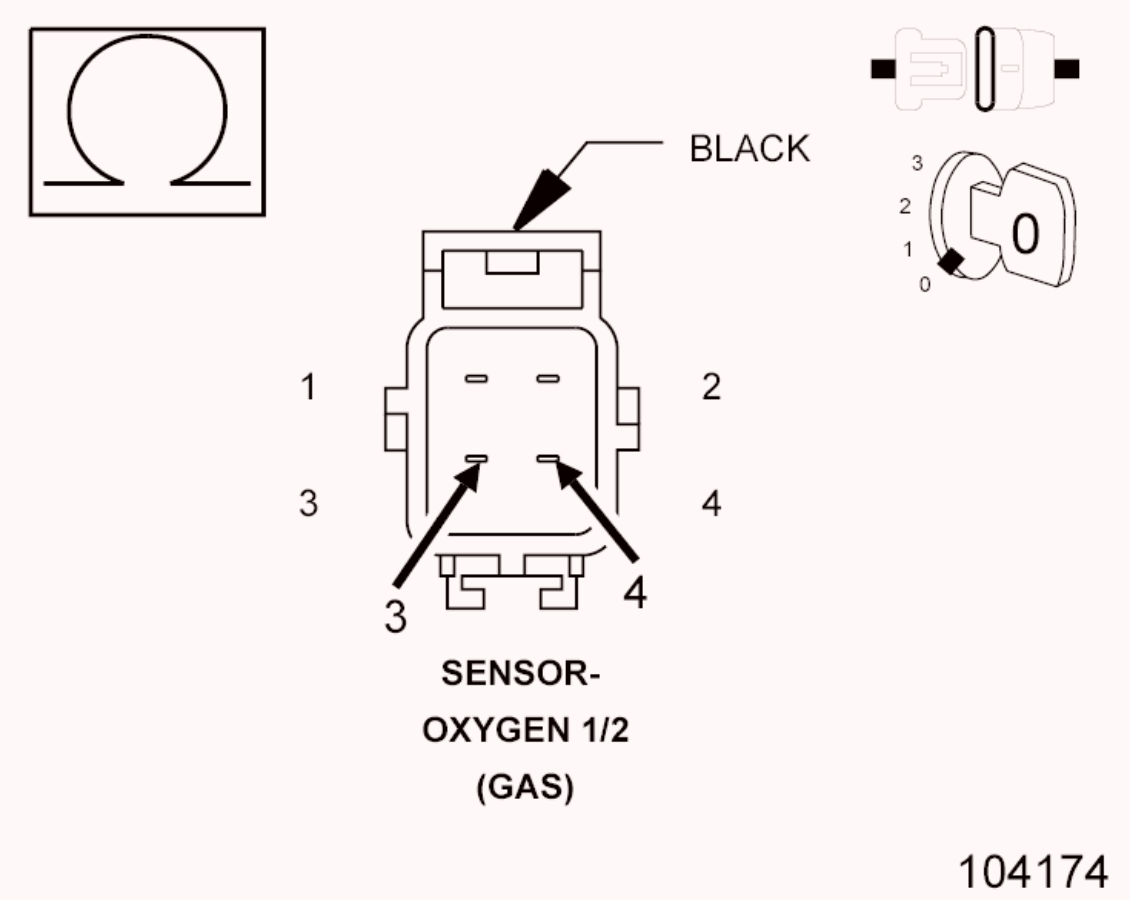

Fig. 120: Checking O2 Sensor 1/2 Signal Circuit For Short To Sensor Return Circuit
Courtesy of CHRYSLER GROUP, LLC

1. Measure the resistance between the (K141) O2 Sensor 1/2 Signal circuit and the (K904) O2 Sensor 1/2 Return circuit in the Oxygen Sensor 1/2 harness connector.

   Is the resistance above 10k Ohms?

   Yes

- Go To 7

No

- Repair the short between the (K904) O2 Sensor 1/2 Return circuit and the (K141) O2 Sensor 1/2 Signal circuit.
- Perform the POWERTRAIN VERIFICATION TEST. Refer to **POWERTRAIN VERIFICATION TEST** .

7. **CHECK FOR THE (K141) O2 SENSOR 1/2 SIGNAL CIRCUIT SHORTED TO THE (K299) O2 SENSOR 1/2 HEATER CONTROL CIRCUIT**

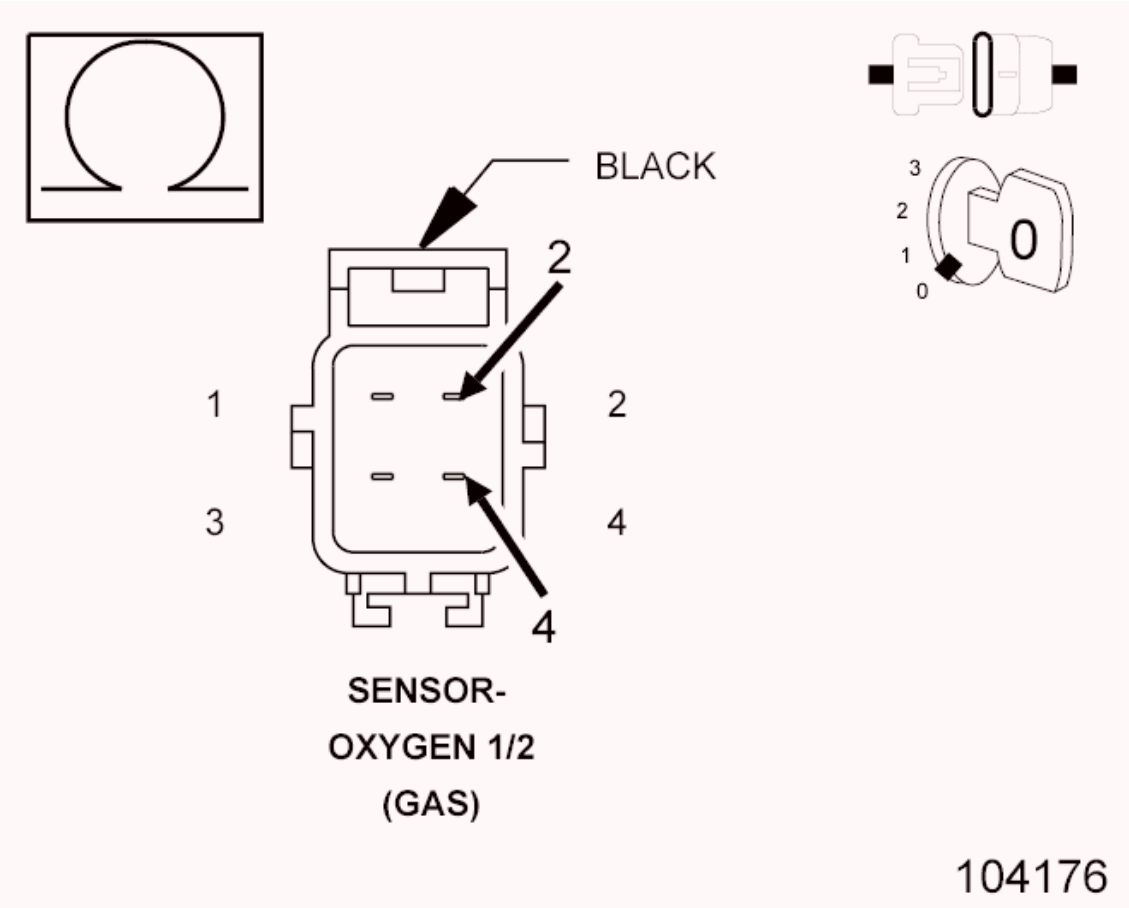

Fig. 121: Checking O2 Sensor 1/2 Signal Circuit For Short To Heater Control Circuit
Courtesy of CHRYSLER GROUP, LLC

1. Measure the resistance between the (K141) O2 Sensor 1/2 Signal circuit and the (K299) O2 Sensor 1/2 Heater Control circuit in the Oxygen Sensor 1/2 harness connector.

Is the resistance above 10k Ohms?

Yes

- Go To 8

No

- Repair the short between the (K299) O2 Sensor 1/2 Heater Control circuit and the (K141) O2 Sensor 1/2 Signal circuit.
- Perform the POWERTRAIN VERIFICATION TEST. Refer to **POWERTRAIN VERIFICATION TEST** .

8. **POWERTRAIN CONTROL MODULE (PCM)**
   1. Using the wiring diagram/schematic as a guide, inspect the wiring and connectors between the Oxygen Sensor 1/2 and the Powertrain Control Module (PCM).
   2. Look for any chafed, pierced, pinched or partially broken wires.
   3. Look for broken, bent, pushed out or corroded terminals.
   4. Perform any Technical Service Bulletins (TSBs) that may apply.

   Were any problems found?

   Yes

   - Repair as necessary.
   - Perform the POWERTRAIN VERIFICATION TEST. Refer to **POWERTRAIN VERIFICATION TEST** .

   No

   - Replace and program the Powertrain Control Module (PCM) in accordance with the service information. Refer to **MODULE, POWERTRAIN CONTROL, REMOVAL** .
   - Perform the POWERTRAIN VERIFICATION TEST. Refer to **POWERTRAIN VERIFICATION TEST** .

P0138-O2 SENSOR 1/2 CIRCUIT HIGH

For a complete wiring diagram, **refer to appropriate SYSTEM WIRING**

DIAGRAMS article .

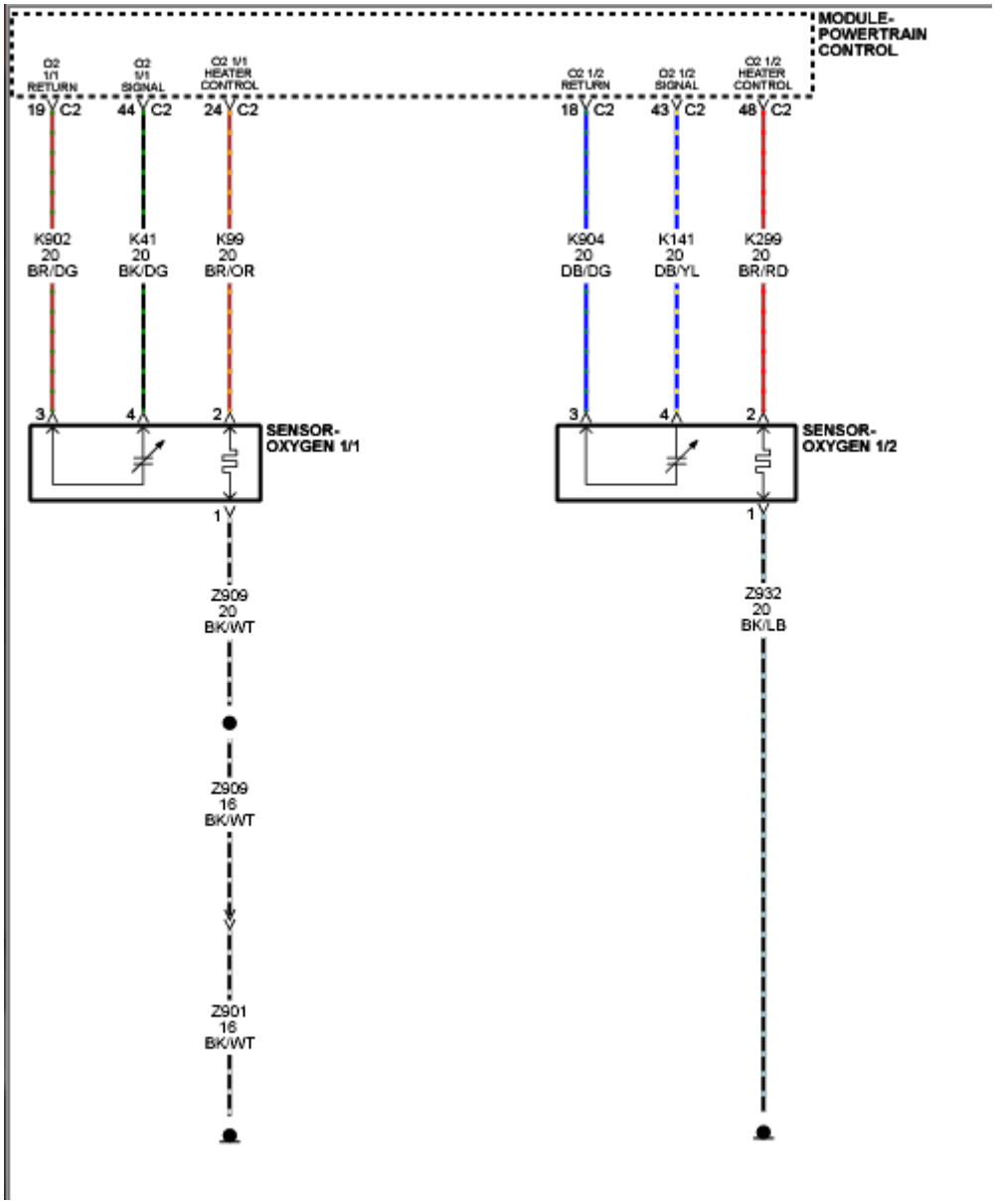

Fig. 122: Oxygen Sensor Circuit Diagram
Courtesy of CHRYSLER GROUP, LLC

THEORY OF OPERATION

The Oxygen Sensors (O2 Sensor) are used for fuel control and catalyst monitoring. Each O2 Sensor measures the oxygen content of the exhaust stream. When the engine is started, the Powertrain Control Module (PCM) operates in an Open Loop mode, ignoring the O2 Sensor signal voltage while calculating the air-to-fuel ratio. The heating elements inside each O2 Sensor heats the sensor to bring it to operating conditions faster. This allows the system to enter Closed Loop earlier and the PCM to calculate the air-to-fuel ratio sooner. While the

engine runs, the O2 Sensor heats up and begins to generate a voltage within a range of 0-1, 275 mV. Once sufficient O2 Sensor voltage fluctuation is observed by the PCM, Closed Loop is entered. The PCM uses the O2 Sensor voltage to determine the air-to-fuel ratio. An O2 Sensor voltage that increases toward 1, 000 mV indicates a rich fuel mixture. An O2 Sensor voltage that decreases toward 0 mV indicates a lean fuel mixture. The Powertrain Control Module (PCM) makes short term and long term fuel corrections to maintain stoichiometric fuel/air ratio for best catalytic converter efficiency. Short term fuel correction is based on upstream O2 Sensor output and is designed for quick engine response. The long term fuel correction compensated for variations in the engine specifications, sensor tolerances and component aging and is designed to correct rich and lean conditions over a longer period of time.

For an aged O2 Sensor, the response rate to the air/fuel change is slower than when it was new. The O2 Sensor tends to move less with the same air/fuel changes in a given time frame. Therefore by observing the activity of voltage readings from the upstream O2 Sensor, the quality of the O2 Sensor can be detected.

WHEN MONITORED

With the Oxygen Sensor 1/2 heater temperature greater than 496° C (925° F) and the battery voltage greater than 10.4 volts.

SET CONDITION

The Powertrain Control Module (PCM) detects that the Oxygen Sensor 1/2 voltage is greater than 3.99 volts for 40 seconds. One Trip Fault. Three good trips to turn off the MIL.

POSSIBLE CAUSES

POSSIBLE CAUSES
(K141) O2 1/2 SIGNAL CIRCUIT SHORTED TO VOLTAGE
(K904) O2 1/2 RETURN CIRCUIT SHORTED TO VOLTAGE
(K141) O2 1/2 SIGNAL CIRCUIT SHORTED TO THE (K299) O2 1/2 HEATER CONTROL CIRCUIT
(K141) O2 1/2 SIGNAL CIRCUIT OPEN OR HIGH RESISTANCE
(K904) O2 1/2 RETURN CIRCUIT OPEN OR HIGH RESISTANCE
OXYGEN SENSOR 1/2

POWERTRAIN CONTROL MODULE (PCM)

Always perform the Pre-Diagnostic Troubleshooting procedure before proceeding. Refer to PRE-DIAGNOSTIC TROUBLESHOOTING PROCEDURE .

DIAGNOSTIC TEST

1. **OXYGEN SENSOR 1/2 VOLTAGE**
   1. Start the engine and allow it to reach operating temperature.

      WARNING: When the engine is operating, do not stand in direct line with the fan. Do not put your hands near the pulleys, belts or fan. Do not wear loose clothing. Failure to follow these instructions may result in possible serious or fatal injury.

   2. With a scan tool, monitor the O2 Sensor 1/2 volts.

      Is the voltage greater than 3.9 volts?

      Yes

      - Go To 2

      No

      - Perform the INTERMITTENT CONDITION diagnostic procedure. Refer to **INTERMITTENT CONDITION** .
2. **CHECK THE (K141) O2 SENSOR 1/2 SIGNAL CIRCUIT FOR A SHORT TO VOLTAGE**

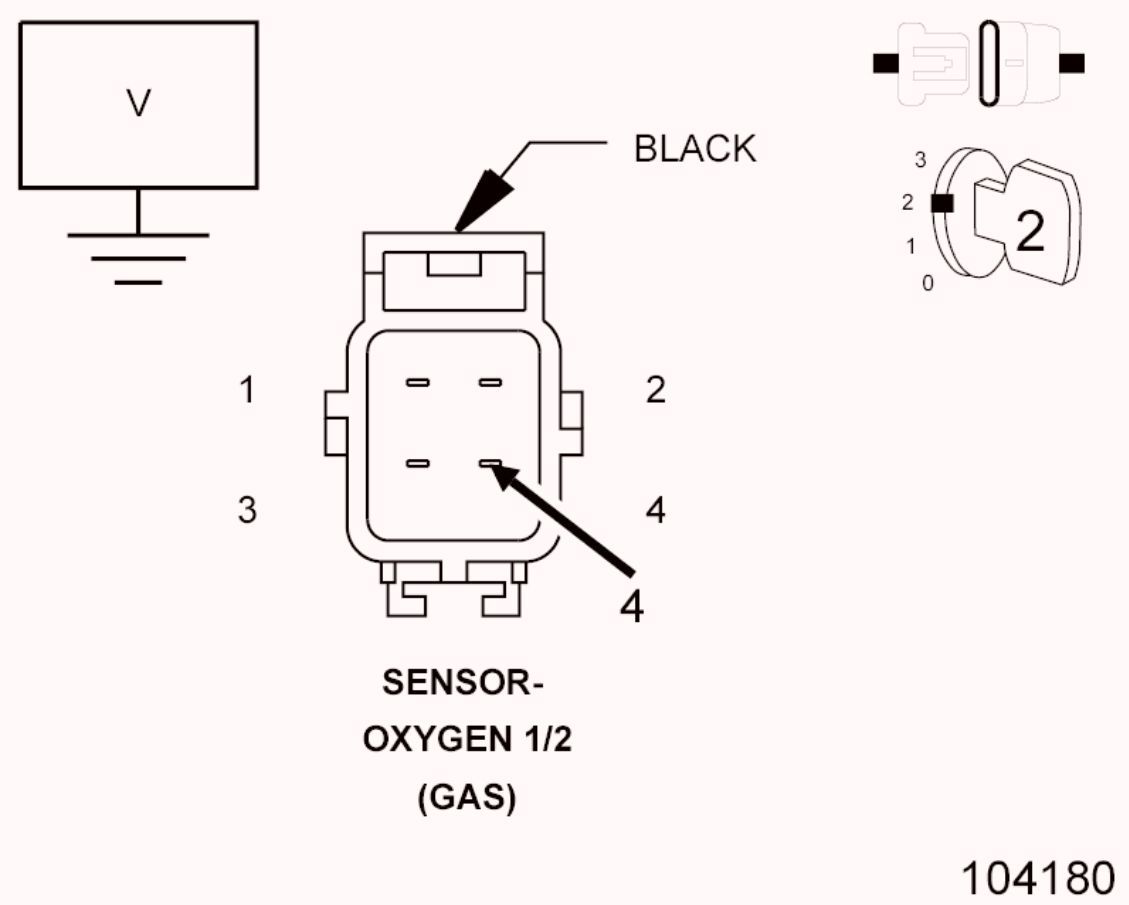

Fig. 123: Checking O2 Sensor Signal Circuit For Short To Voltage
Courtesy of CHRYSLER GROUP, LLC

1. Turn the ignition off.
2. Disconnect the Oxygen Sensor 1/2 harness connector.
3. Turn the ignition on.
4. Measure the voltage on the (K141) O2 Sensor 1/2 Signal circuit in the Oxygen Sensor 1/2 harness connector.

NOTE: Measure the voltage in reference to ground, not the (K904) O2 Sensor 1/2 Return circuit.

Is the voltage above 5.2 volts?

Yes

- Repair the (K141) O2 Sensor 1/2 Signal circuit for a short to voltage.
- Perform the POWERTRAIN VERIFICATION TEST. Refer to

POWERTRAIN VERIFICATION TEST .

No

- Go To 3

3. **CHECK THE (K904) O2 SENSOR 1/2 RETURN CIRCUIT FOR A SHORT TO VOLTAGE**

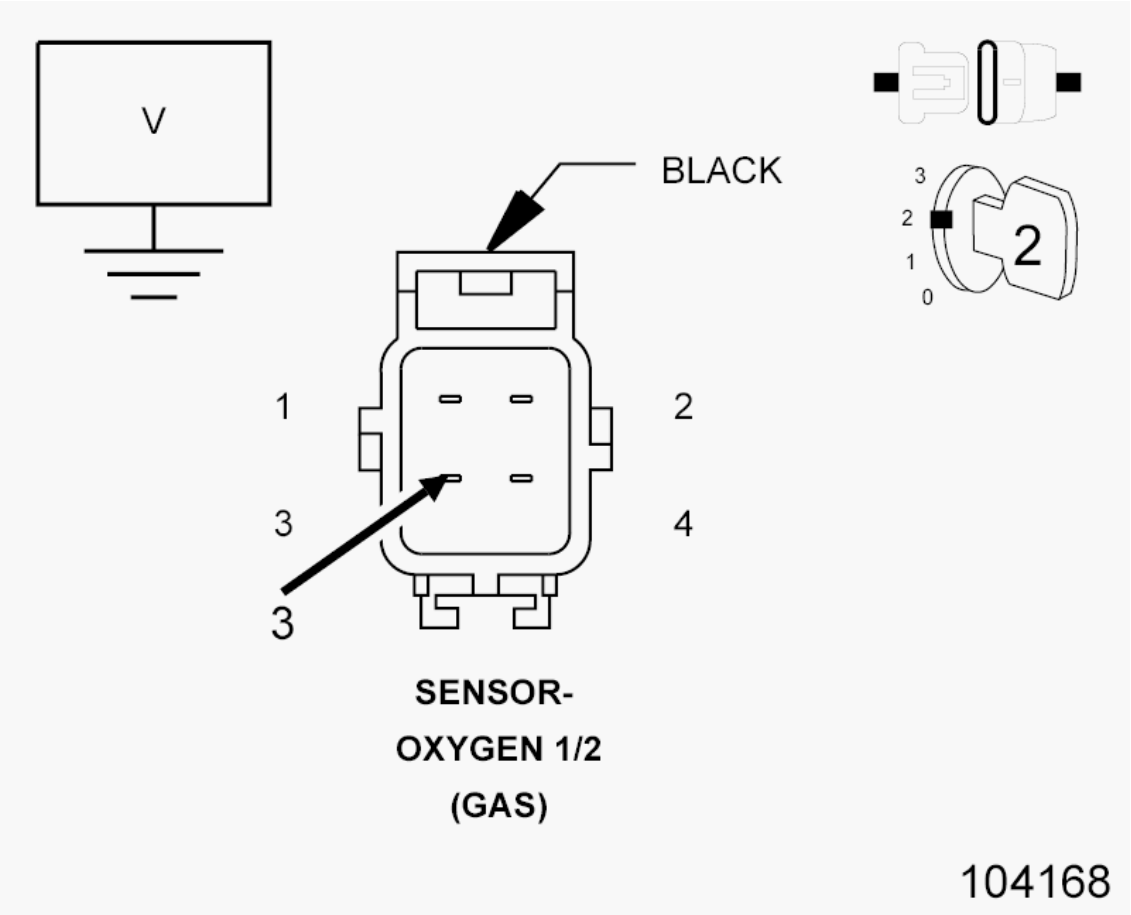

Fig. 124: Checking O2 Sensor Return Circuit For Short To Voltage
Courtesy of CHRYSLER GROUP, LLC

1. Turn the ignition off.
2. Disconnect the PCM C2 harness connector.
3. Turn the ignition on.
4. Measure the voltage on the (K904) O2 Sensor 1/2 Return circuit in the Oxygen Sensor 1/2 harness connector.

   Is there any voltage present?

Yes

- Repair the (K904) O2 Sensor 1/2 Return circuit for a short to voltage.
- Perform the POWERTRAIN VERIFICATION TEST. Refer to **POWERTRAIN VERIFICATION TEST** .

No

- Go To 4

4. **CHECK FOR THE (K141) O2 SENSOR 1/2 SIGNAL CIRCUIT SHORTED TO THE (K299) O2 SENSOR 1/2 HEATER CONTROL CIRCUIT**

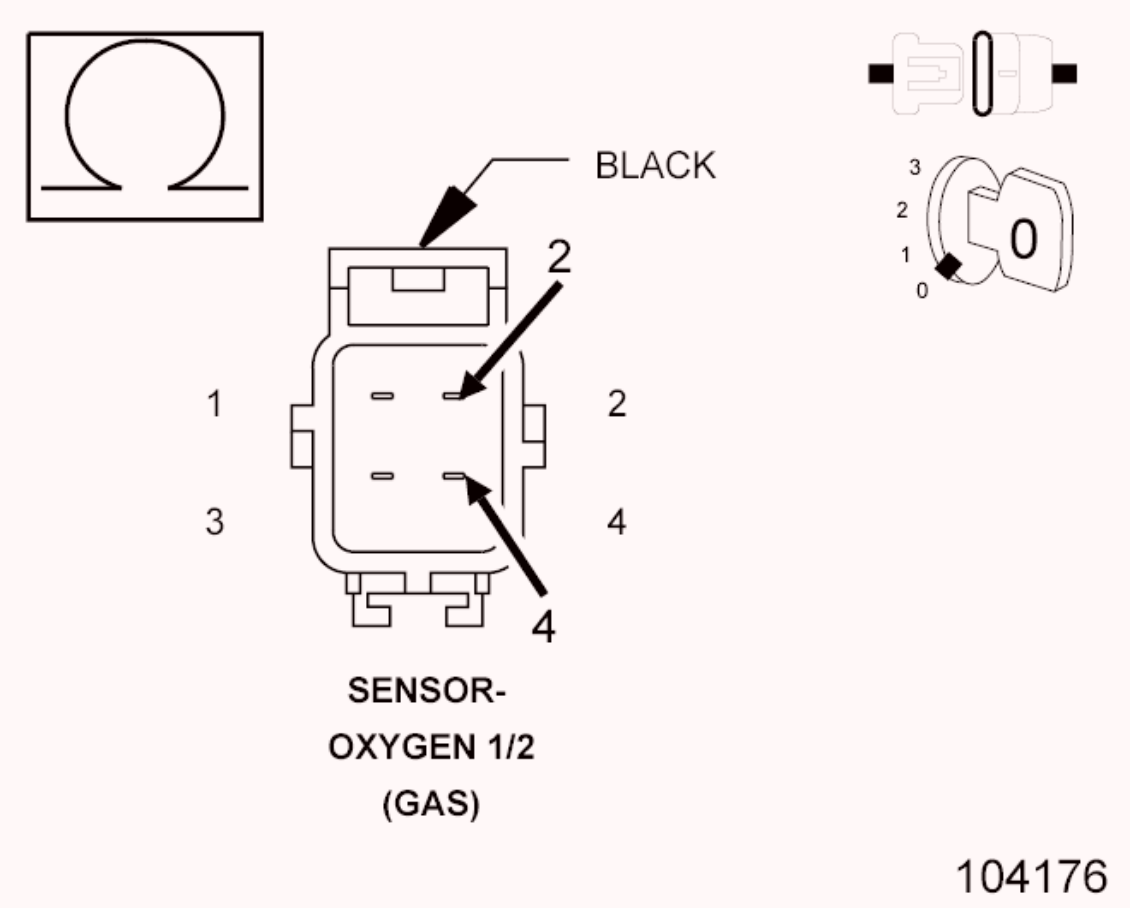

Fig. 125: Checking O2 Sensor 1/2 Signal Circuit For Short To Heater Control Circuit
Courtesy of CHRYSLER GROUP, LLC

1. Turn the ignition off.

2. Measure the resistance between the (K141) O2 Sensor 1/2 Signal circuit and the (K299) O2 Sensor 1/2 Heater Control circuit the Oxygen Sensor 1/2 harness connector.

   Is the resistance above 10k Ohms?

   Yes

   - Go To 5

   No

   - Repair the (K141) O2 Sensor 1/2 Signal circuit for a short to the (K299) O2 Sensor 1/2 Heater Control circuit.
   - Perform the POWERTRAIN VERIFICATION TEST. Refer to **POWERTRAIN VERIFICATION TEST** .

5. **OXYGEN SENSOR 1/2**

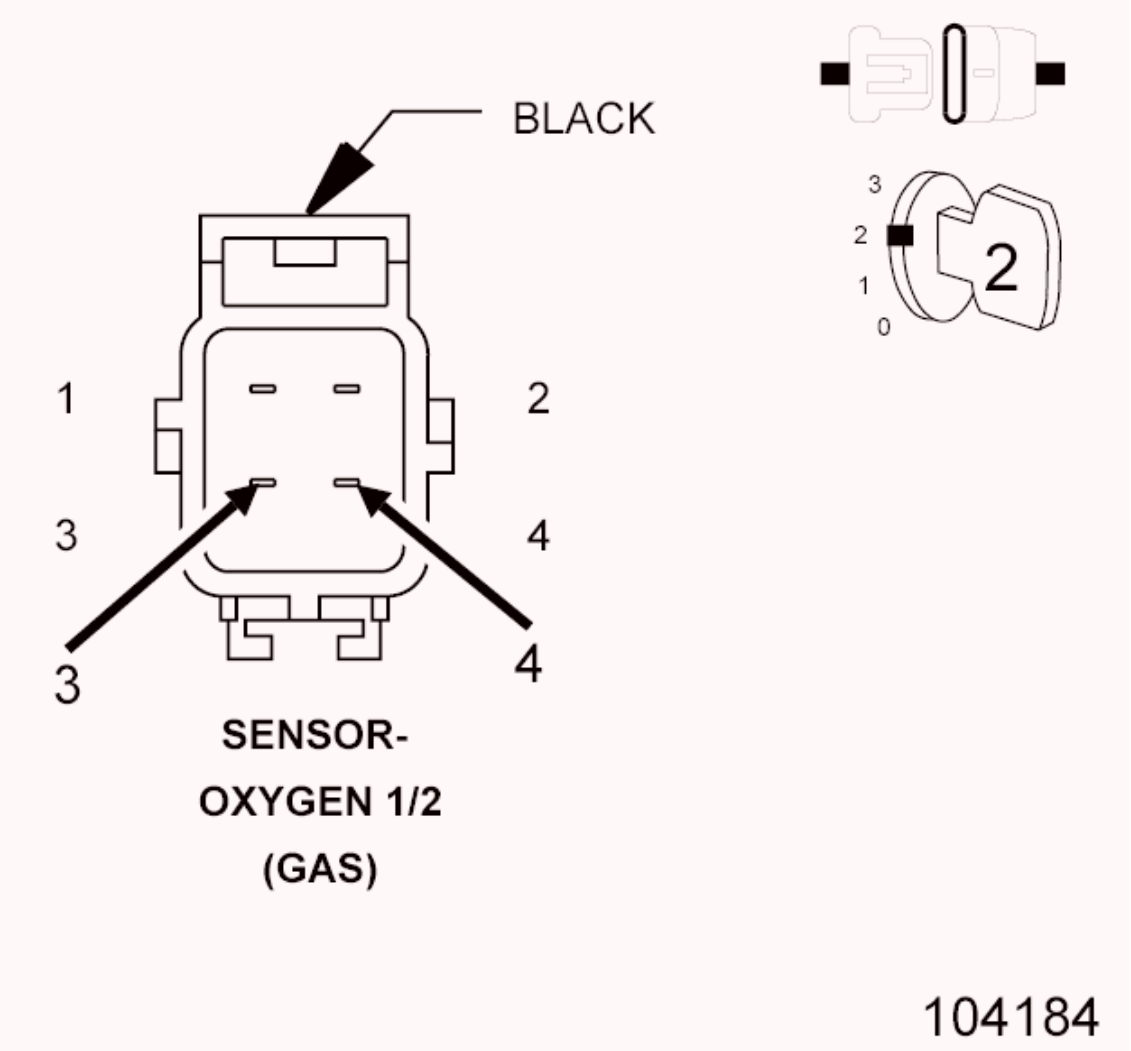

Fig. 126: Oxygen Sensor 1/2 Harness Connector End View
Courtesy of CHRYSLER GROUP, LLC

1. Turn the ignition off.
2. Connect the PCM C2 harness connector.
3. Connect a jumper between the (K141) O2 Sensor 1/2 Signal circuit and the (K904) O2 Sensor 1/2 Return circuit in the Oxygen Sensor 1/2 harness connector.
4. Turn the ignition on.
5. With a scan tool, monitor the O2 Sensor 1/2 volts.

   Is the voltage between 2.3 and 2.7 volts with the jumper in place?

   Yes

   - Replace the Oxygen Sensor 1/2 in accordance with the service

information. Refer to **SENSOR, OXYGEN, REMOVAL** .

- Perform the POWERTRAIN VERIFICATION TEST. Refer to **POWERTRAIN VERIFICATION TEST** .

No

- Go To 6

6. **CHECK THE (K141) O2 SENSOR 1/2 SIGNAL CIRCUIT FOR AN OPEN/HIGH RESISTANCE**
   1. Turn the ignition off.
   2. Remove the jumper from between the (K141) O2 Sensor 1/2 Signal circuit and the (K904) O2 Sensor 1/2 Return circuit in the Oxygen Sensor 1/2 harness connector.
   3. Disconnect the PCM C2 harness connector.

CAUTION: Do not probe the PCM harness connectors. Probing the PCM harness connectors will damage the PCM terminals resulting in poor terminal to pin connection. Install the GPEC Diagnostic Adaptor to perform the diagnosis.

   4. Connect the (special tool #10436, Adapter, GPEC Diagnostic).
   5. Measure the resistance of the (K141) O2 Sensor 1/2 Signal circuit between the Oxygen Sensor 1/2 harness connector to the GPEC Adaptor.

   Is the resistance below 5.0 Ohms?

   Yes

   - Go To 7

   No

   - Repair the (K141) O2 Sensor 1/2 Signal circuit for an open or high resistance.
   - Perform the POWERTRAIN VERIFICATION TEST. Refer to

POWERTRAIN VERIFICATION TEST .

7. **CHECK THE (K904) O2 SENSOR 1/2 RETURN CIRCUIT FOR AN OPEN/HIGH RESISTANCE**
   1. Measure the resistance of the (K904) O2 Sensor 1/2 Return circuit between the Oxygen Sensor 1/2 harness connector to the GPEC Adaptor.

      Is the resistance below 5.0 Ohms?

      Yes

      - Go To 8

      No

      - Repair the (K904) O2 Sensor 1/2 Return circuit for an open or high resistance.
      - Perform the POWERTRAIN VERIFICATION TEST. Refer to **POWERTRAIN VERIFICATION TEST** .
8. **POWERTRAIN CONTROL MODULE (PCM)**
   1. Using the wiring diagram/schematic as a guide, inspect the wiring and connectors between the Oxygen Sensor 1/2 and the Powertrain Control Module (PCM).
   2. Look for any chafed, pierced, pinched or partially broken wires.
   3. Look for broken, bent, pushed out or corroded terminals.
   4. Perform any Technical Service Bulletins (TSBs) that may apply.

      Were any problems found?

      Yes

      - Repair as necessary.
      - Perform the POWERTRAIN VERIFICATION TEST. Refer to **POWERTRAIN VERIFICATION TEST** .

      No

      - Replace and program the Powertrain Control Module (PCM) in accordance with the SERVICE INFORMATION. Refer to

MODULE, POWERTRAIN CONTROL, REMOVAL .

- Perform the POWERTRAIN VERIFICATION TEST. Refer to **POWERTRAIN VERIFICATION TEST** .

P0139-O2 SENSOR 1/2 SLOW RESPONSE

For a complete wiring diagram, **refer to appropriate SYSTEM WIRING DIAGRAMS article** .

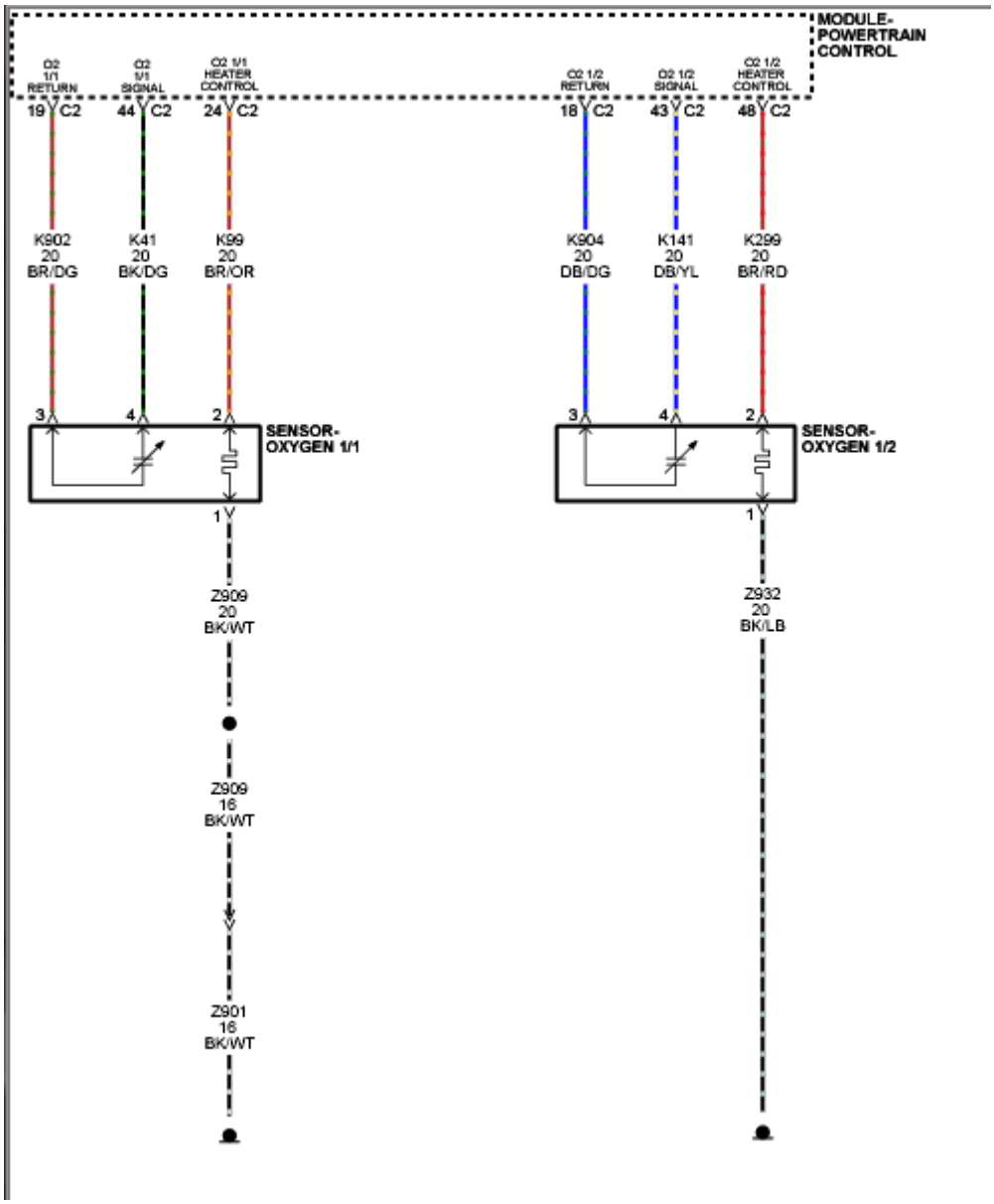

Fig. 127: Oxygen Sensor Circuit Diagram
Courtesy of CHRYSLER GROUP, LLC

THEORY OF OPERATION

The Oxygen Sensors (O2 Sensor) are used for fuel control and catalyst monitoring. Each O2 Sensor measures the oxygen content of the exhaust stream. When the engine is started, the Powertrain Control Module (PCM) operates in an Open Loop mode, ignoring the O2 Sensor signal voltage while calculating the air-to-fuel ratio. The heating elements inside each O2 Sensor heats the sensor to bring it to operating conditions faster. This allows the system to enter Closed Loop earlier and the PCM to calculate the air-to-fuel ratio sooner. While the engine runs, the O2 Sensor heats up and begins to generate a voltage within a range of 0-1, 275 mV. Once sufficient O2 Sensor voltage fluctuation is observed by the PCM, Closed Loop is entered. The PCM uses the O2 Sensor voltage to determine the air-to-fuel ratio. An O2 Sensor voltage that increases toward 1, 000 mV indicates a rich fuel mixture. An O2 Sensor voltage that decreases toward 0 mV indicates a lean fuel mixture. The Powertrain Control Module (PCM) makes short term and long term fuel corrections to maintain stoichiometric fuel/air ratio for best catalytic converter efficiency. Short term fuel correction is based on upstream O2 Sensor output and is designed for quick engine response. The long term fuel correction compensated for variations in the engine specifications, sensor tolerances and component aging and is designed to correct rich and lean conditions over a longer period of time.

For an aged O2 Sensor, the response rate to the air/fuel change is slower than when it was new. The O2 Sensor tends to move less with the same air/fuel changes in a given time frame. Therefore by observing the activity of voltage readings from the upstream O2 Sensor, the quality of the O2 Sensor can be detected.

WHEN MONITORED

With engine run time greater than five minutes, the coolant temperature greater than 75 C (167 F), vehicle speed greater than 64 kph (40 mph) and the vehicle in decel fuel shut-off (coasting with the accelerator pedal fully released).

SET CONDITION

The O2 signal voltage does not switch quickly enough from rich to lean when the fuel is turned off during a coast with the throttle closed. Two Trip Fault. Three good trips to turn off the MIL.

POSSIBLE CAUSES

POSSIBLE CAUSES

EXHAUST LEAK
(K141) O2 1/2 SIGNAL CIRCUIT SHORTED TO VOLTAGE
(K904) O2 1/2 RETURN CIRCUIT SHORTED TO VOLTAGE
(K141) O2 1/2 SIGNAL CIRCUIT SHORTED TO GROUND
(K904) O2 1/2 RETURN CIRCUIT SHORTED TO GROUND
(K141) O2 1/2 SIGNAL CIRCUIT OPEN OR HIGH RESISTANCE
(K904) O2 1/2 RETURN CIRCUIT OPEN OR HIGH RESISTANCE
OXYGEN SENSOR 1/2
POWERTRAIN CONTROL MODULE (PCM)

Always perform the Pre-Diagnostic Troubleshooting procedure before proceeding. Refer to PRE-DIAGNOSTIC TROUBLESHOOTING PROCEDURE .

DIAGNOSTIC TEST

1. **EXHAUST LEAK**

NOTE: A thorough exhaust leak test must be completed before removing an O2 Sensor or any other part from the exhaust system. Do not remove any parts before an exhaust leak check has been completed.

NOTE: An exhaust leak may cause downstream fuel adaptives to cap out, resulting in a false O2 Sensor failure

1. Perform the diagnostic procedure for CHECKING THE EXHAUST SYSTEM FOR LEAKS. Refer to **DIAGNOSIS AND TESTING** .

   Were any problems found?

   Yes

   - Go To 10

   No

   - Go To 2

2. **ACTIVE DTC**

NOTE: Check for contaminants that may have damaged the O2 Sensor: contaminated fuel, unapproved silicone, oil and coolant.

NOTE: It may be necessary to test drive the vehicle within the DTC monitoring conditions in order for this DTC to set.

1. Start the engine and allow it to reach operating temperature.

WARNING: When the engine is operating, do not stand in direct line with the fan. Do not put your hands near the pulleys, belts or fan. Do not wear loose clothing. Failure to follow these instructions may result in possible serious or fatal injury.

2. With a scan tool, select View DTCs.

   Is the status Active for this DTC?

   Yes

   - Go To 3

   No

   - Perform the INTERMITTENT CONDITION diagnostic procedure. Refer to **INTERMITTENT CONDITION** .

3. **CHECK THE (K141) O2 SENSOR 1/2 SIGNAL CIRCUIT FOR A SHORT TO VOLTAGE**

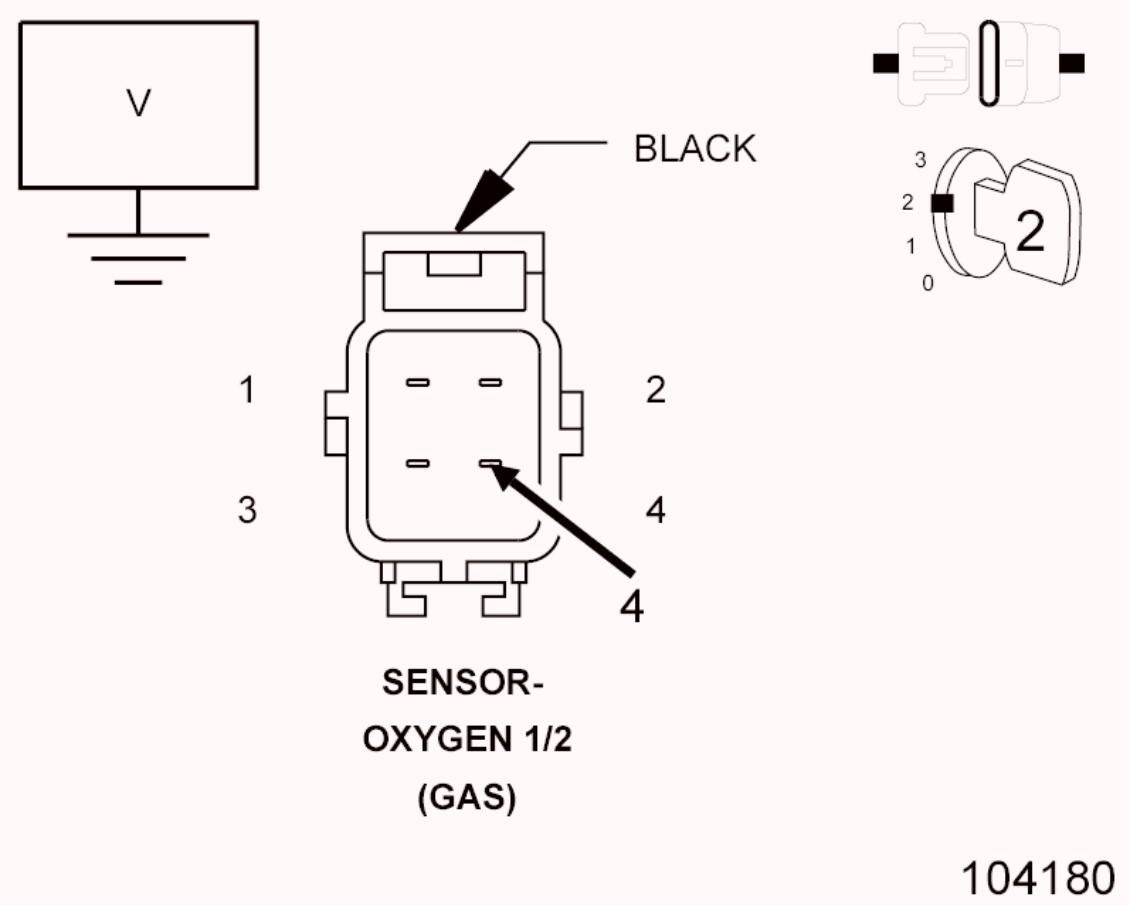

Fig. 128: Checking O2 Sensor Signal Circuit For Short To Voltage
Courtesy of CHRYSLER GROUP, LLC

1. Turn the ignition off.
2. Disconnect the Oxygen Sensor 1/2 harness connector.
3. Turn the ignition on.
4. Measure the voltage on the (K141) O2 Sensor 1/2 Signal circuit in the Oxygen Sensor 1/2 harness connector.

NOTE: Measure the voltage in reference to ground, not the (K904) O2 Sensor 1/2 Return circuit.

Is the voltage above 5.2 volts?

Yes

- Repair the (K141) O2 Sensor 1/2 Signal circuit for a short to voltage.
- Perform the POWERTRAIN VERIFICATION TEST. Refer to

POWERTRAIN VERIFICATION TEST .

No

- Go To 4

4. **CHECK THE (K904) O2 SENSOR 1/2 RETURN CIRCUIT FOR A SHORT TO VOLTAGE**

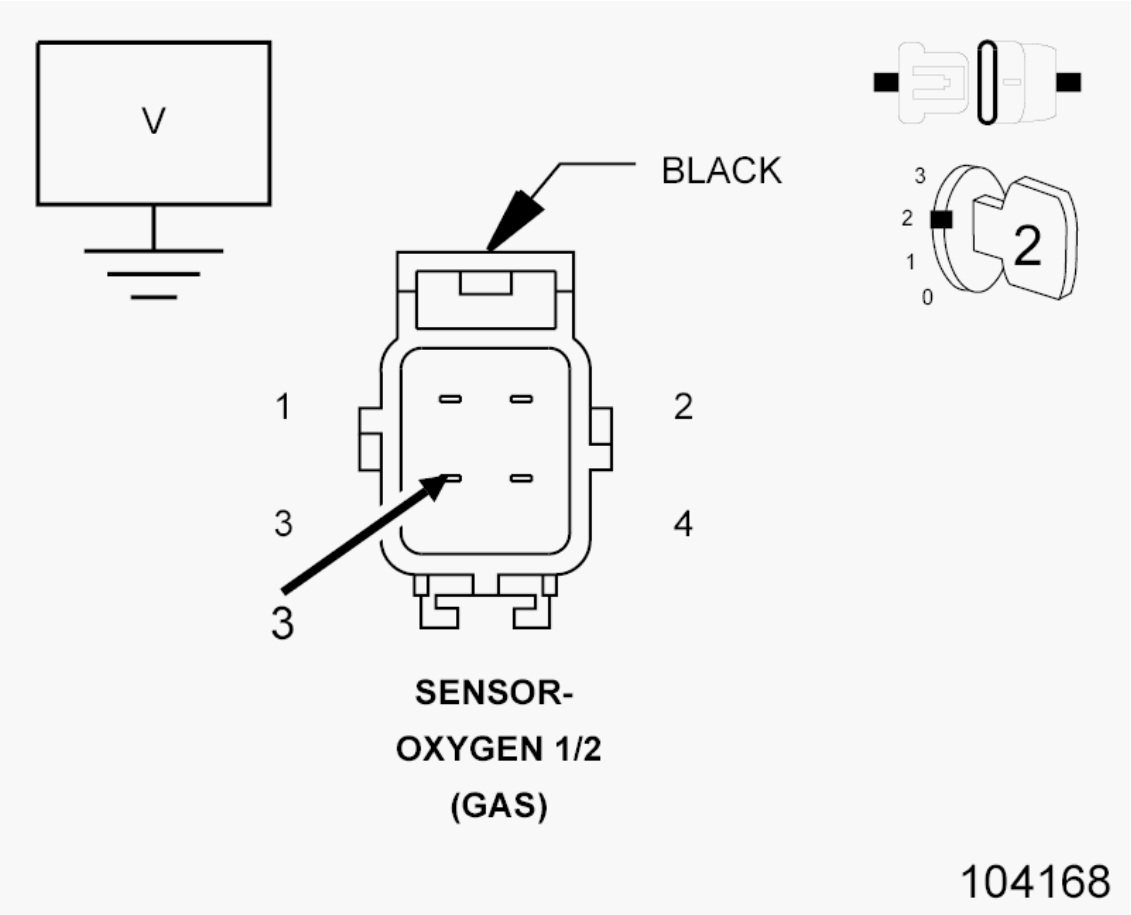

Fig. 129: Checking O2 Sensor Return Circuit For Short To Voltage
Courtesy of CHRYSLER GROUP, LLC

1. Turn the ignition off.
2. Disconnect the PCM C2 harness connector.
3. Turn the ignition on.
4. Measure the voltage on the (K904) O2 Sensor 1/2 Return circuit in the Oxygen Sensor 1/2 harness connector.

   Is there any voltage present?

Yes

- Repair the (K904) O2 Sensor 1/2 Return circuit for a short to voltage.
- Perform the POWERTRAIN VERIFICATION TEST. Refer to **POWERTRAIN VERIFICATION TEST** .

No

- Go To 5

5. **CHECK THE (K141) O2 SENSOR 1/2 SIGNAL CIRCUIT FOR A SHORT TO GROUND**

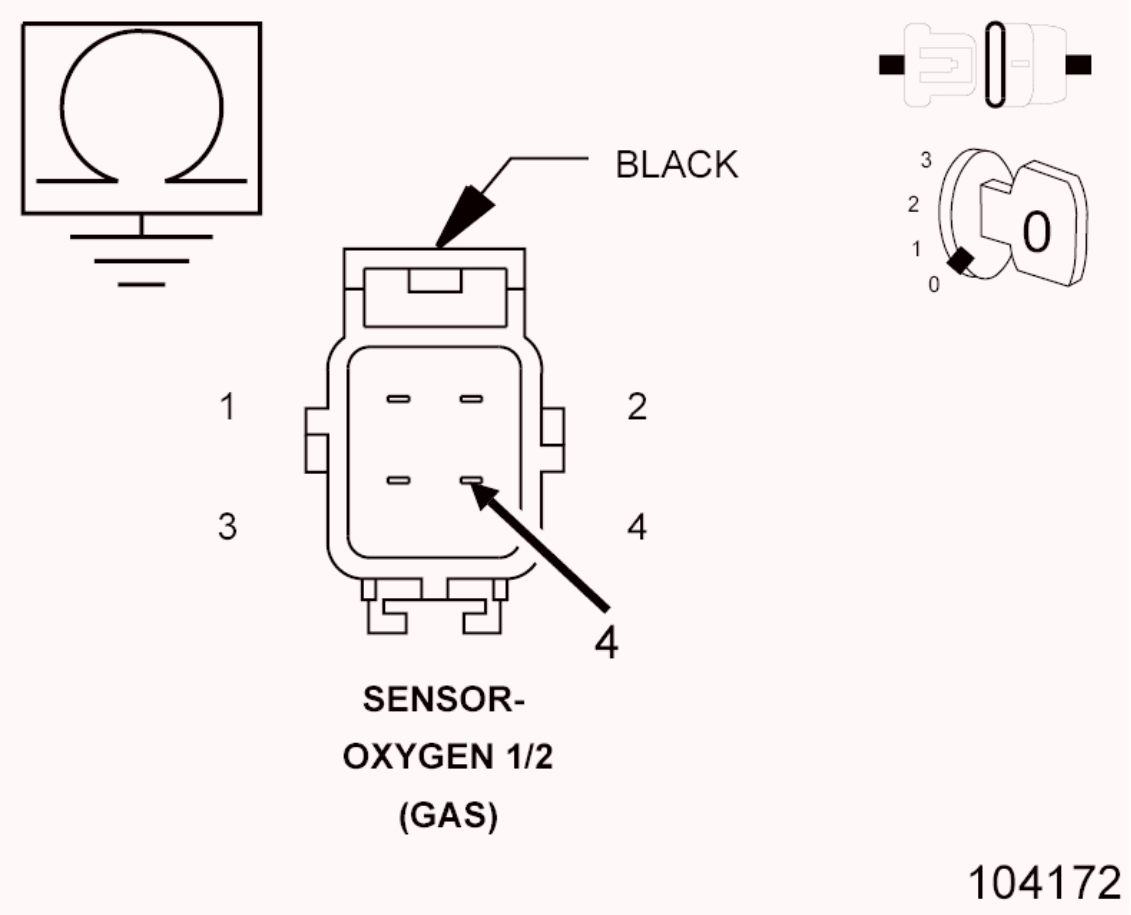

Fig. 130: Checking O2 Sensor Signal Circuit For Short To Ground
Courtesy of CHRYSLER GROUP, LLC

1. Turn the ignition off.
2. Measure the resistance between ground and the (K141) O2 Sensor 1/2 Signal circuit in the Oxygen Sensor 1/2 harness connector.

Is the resistance above 10k Ohms?

Yes

- Go To 6

No

- Repair the (K141) O2 Sensor 1/2 Signal circuit for a short to ground.
- Perform the POWERTRAIN VERIFICATION TEST. Refer to **POWERTRAIN VERIFICATION TEST** .

6. **CHECK THE (K904) O2 SENSOR 1/2 RETURN CIRCUIT FOR A SHORT TO GROUND**

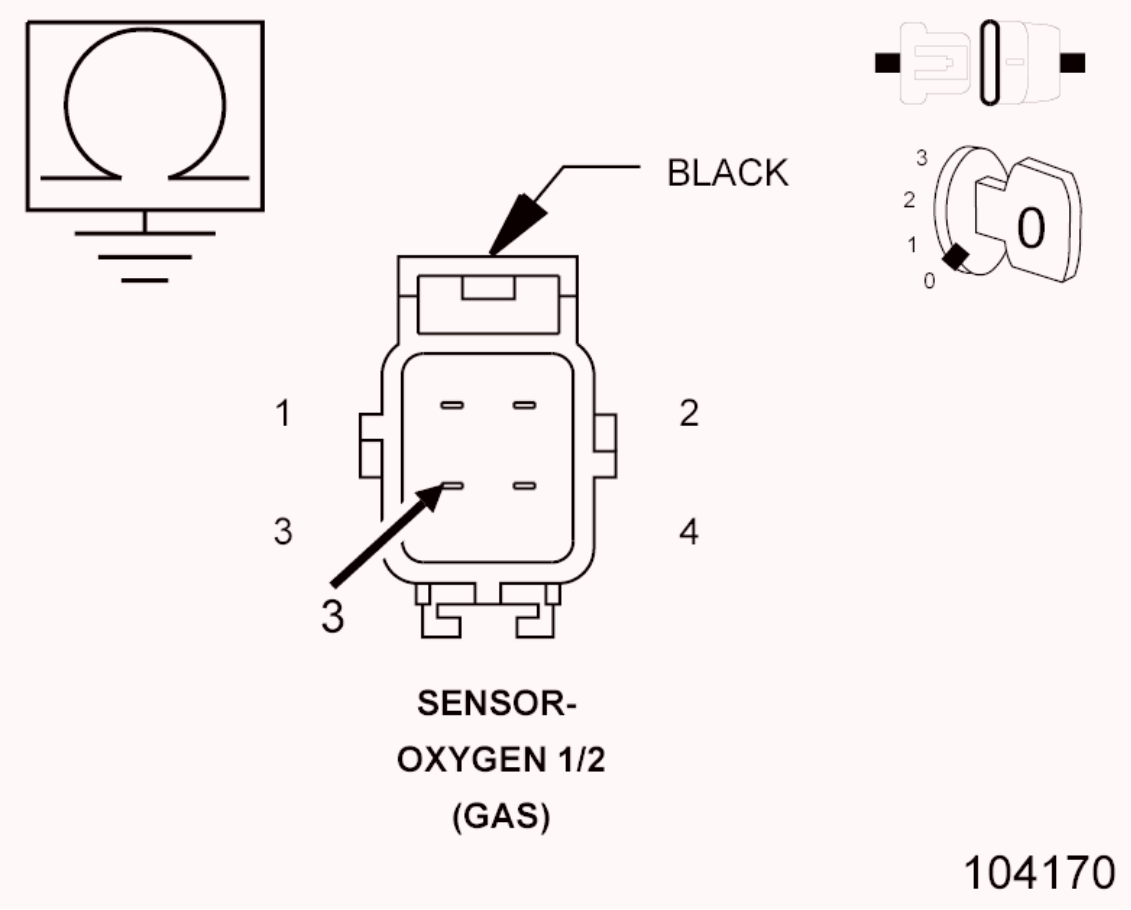

Fig. 131: Checking O2 Sensor 1/2 Return Circuit For Short To Ground
Courtesy of CHRYSLER GROUP, LLC

1. Measure the resistance between ground and the (K904) O2 Sensor 1/2 Return circuit in the Oxygen Sensor 1/2 harness connector.

Is the resistance above 10k Ohms?

Yes

- Go To 7

No

- Repair the (K904) O2 Sensor 1/2 Return circuit for a short to ground.
- Perform the POWERTRAIN VERIFICATION TEST. Refer to **POWERTRAIN VERIFICATION TEST** .

7. **CHECK THE (K141) O2 SENSOR 1/2 SIGNAL CIRCUIT FOR AN OPEN/HIGH RESISTANCE**

CAUTION: Do not probe the PCM harness connectors. Probing the PCM harness connectors will damage the PCM terminals resulting in poor terminal to pin connection. Install the GPEC Diagnostic Adaptor to perform the diagnosis.

1. Connect the (special tool #10436, Adapter, GPEC Diagnostic).
2. Measure the resistance of the (K141) O2 Sensor 1/2 Signal circuit between the Oxygen Sensor 1/2 harness connector to the GPEC Adaptor.

Is the resistance below 5.0 Ohms?

Yes

- Go To 8

No

- Repair the (K141) O2 Sensor 1/2 Signal circuit for an open or high resistance.
- Perform the POWERTRAIN VERIFICATION TEST. Refer to **POWERTRAIN VERIFICATION TEST** .

8. **CHECK THE (K904) O2 SENSOR 1/2 RETURN CIRCUIT FOR AN**

OPEN/HIGH RESISTANCE

1. Measure the resistance of the (K904) O2 Sensor 1/2 Return circuit between the Oxygen Sensor 1/2 harness connector to the GPEC Adaptor.

   Is the resistance below 5.0 Ohms?

   Yes

   - Go To 9

   No

   - Repair the (K904) O2 Sensor 1/2 Return circuit for an open or high resistance.
   - Perform the POWERTRAIN VERIFICATION TEST. Refer to **POWERTRAIN VERIFICATION TEST** .

9. **OXYGEN SENSOR 1/2**

NOTE: Prior to replacing the O2 sensor, verify that the correct part number is being used in order to prevent improper O2 heater control.

1. Using the wiring diagram/schematic as a guide, inspect the wiring and connectors between the Oxygen Sensor 1/2 and the Powertrain Control Module (PCM).
   - Look for any chafed, pierced, pinched or partially broken wires.
   - Look for broken, bent, pushed out or corroded terminals.
   - Perform any Technical Service Bulletins (TSBs) that may apply.

   Were any problems found?

   Yes

   - Repair as necessary.
   - Perform the POWERTRAIN VERIFICATION TEST. Refer to **POWERTRAIN VERIFICATION TEST** .

   No

- Replace the Oxygen Sensor 1/2 in accordance with the SERVICE INFORMATION. Refer to **SENSOR, OXYGEN, REMOVAL** .
- Perform the POWERTRAIN VERIFICATION TEST. Refer to **POWERTRAIN VERIFICATION TEST** .

10. **EXHAUST LEAK**
    1. Repair the exhaust leak(s) as necessary.
    2. Start the engine and allow it to reach operating temperature.
    3. Test drive the vehicle for at least 5 minutes.
    4. During the test drive, accelerate from 64 kph (40 mph) to 80 kph (50 mph), then release the accelerator pedal for at least 3 seconds. Repeat this procedure a minimum of 10 times.
    5. Stop the vehicle and turn the ignition off for 5 seconds.
    6. Test drive the vehicle again for at least 5 minutes.
    7. During the test drive, accelerate from 64 kph (40 mph) to 80 kph (50 mph), then release the accelerator pedal for at least 3 seconds. Repeat this procedure a minimum of 10 times.
    8. Stop the vehicle.
    9. With the scan tool, select View DTCs.

       Does this DTC reset as a pending or stored DTC?

       Yes

       - Retest. Go To 1

       No

       - Test Complete.
       - Perform the PCM VERIFICATION TEST. Refer to **POWERTRAIN VERIFICATION TEST** .

P0140-O2 SENSOR 1/2 SIGNAL INACTIVE

For a complete wiring diagram, **refer to appropriate SYSTEM WIRING DIAGRAMS article** .

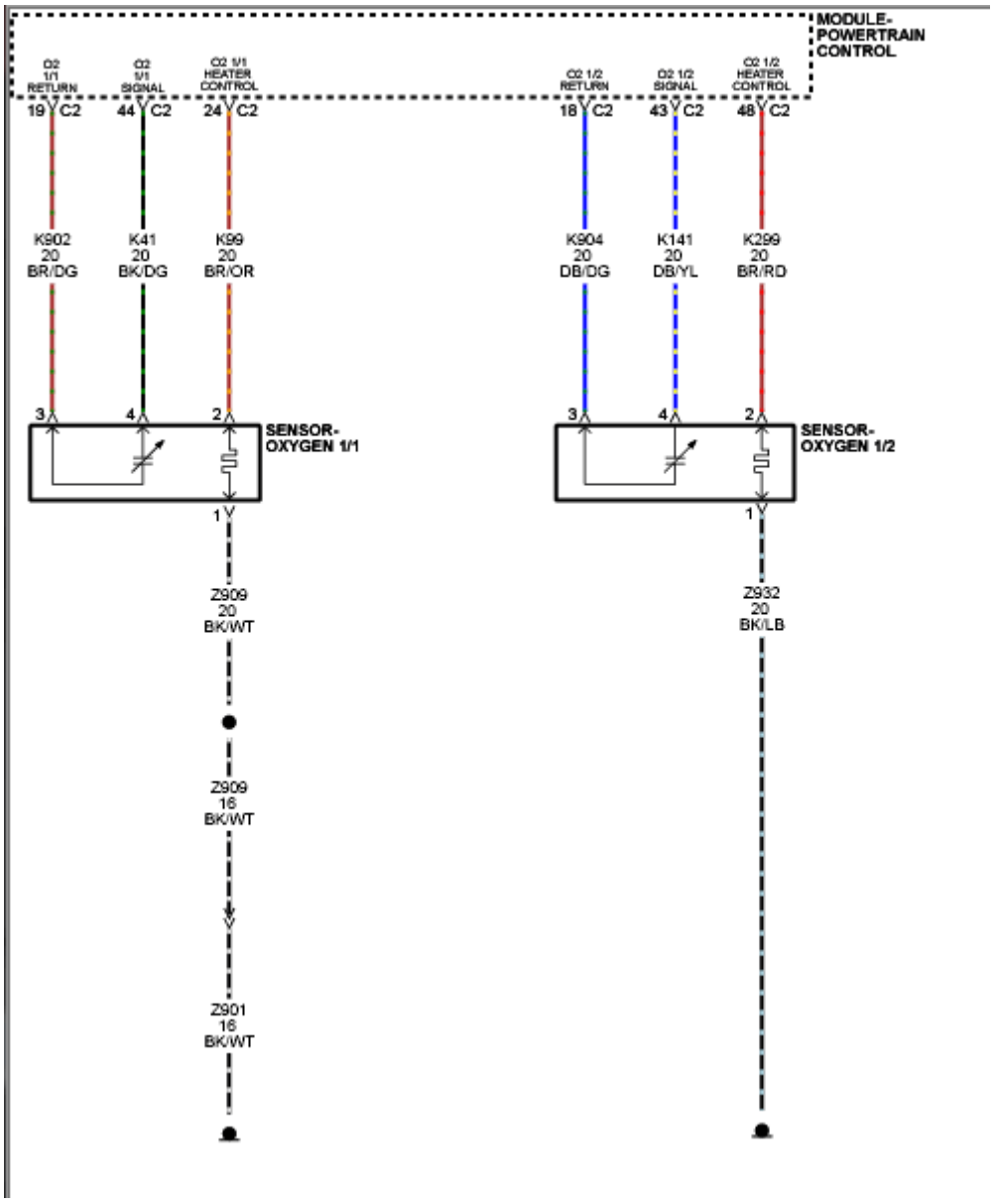

Fig. 132: Oxygen Sensor Circuit Diagram
Courtesy of CHRYSLER GROUP, LLC

THEORY OF OPERATION

The Oxygen Sensors (O2 Sensor) are used for fuel control and catalyst monitoring. Each O2 Sensor measures the oxygen content of the exhaust stream. When the engine is started, the Powertrain Control Module (PCM) operates in an Open Loop mode, ignoring the O2 Sensor signal voltage while calculating the air-to-fuel ratio. The heating elements inside each O2 Sensor heats the sensor to bring it to operating conditions faster. This allows the system to enter Closed Loop earlier and the PCM to calculate the air-to-fuel ratio sooner. While the engine runs, the O2 Sensor heats up and begins to generate a voltage within a range of 0-1, 275 mV. Once sufficient O2 Sensor voltage fluctuation is observed

by the PCM, Closed Loop is entered. The PCM uses the O2 Sensor voltage to determine the air-to-fuel ratio. An O2 Sensor voltage that increases toward 1, 000 mV indicates a rich fuel mixture. An O2 Sensor voltage that decreases toward 0 mV indicates a lean fuel mixture. The Powertrain Control Module (PCM) makes short term and long term fuel corrections to maintain stoichiometric fuel/air ratio for best catalytic converter efficiency. Short term fuel correction is based on upstream O2 Sensor output and is designed for quick engine response. The long term fuel correction compensated for variations in the engine specifications, sensor tolerances and component aging and is designed to correct rich and lean conditions over a longer period of time.

For an aged O2 Sensor, the response rate to the air/fuel change is slower than when it was new. The O2 Sensor tends to move less with the same air/fuel changes in a given time frame. Therefore by observing the activity of voltage readings from the upstream O2 Sensor, the quality of the O2 Sensor can be detected.

WHEN MONITORED

For six minutes after engine start up and the vehicle speed between 20 and 55 MPH.

SET CONDITION

The O2 signal voltage does not switch lean or rich during monitoring for at least 2 to 4 minutes. Two Trip Fault. Three good trips to turn off the MIL.

POSSIBLE CAUSES

POSSIBLE CAUSES
EXHAUST LEAK
(K141) O2 1/2 SIGNAL CIRCUIT SHORTED TO VOLTAGE
(K904) O2 1/2 RETURN CIRCUIT SHORTED TO VOLTAGE
(K141) O2 1/2 SIGNAL CIRCUIT SHORTED TO GROUND
(K904) O2 1/2 RETURN CIRCUIT SHORTED TO GROUND
(K141) O2 1/2 SIGNAL CIRCUIT OPEN OR HIGH RESISTANCE
(K904) O2 1/2 RETURN CIRCUIT OPEN OR HIGH RESISTANCE
OXYGEN SENSOR 1/2
POWERTRAIN CONTROL MODULE (PCM)

Always perform the Pre-Diagnostic Troubleshooting procedure before proceeding. Refer to PRE-DIAGNOSTIC TROUBLESHOOTING PROCEDURE .

DIAGNOSTIC TEST

1. **EXHAUST LEAK**

NOTE: A thorough exhaust leak test must be completed before removing an O2 Sensor or any other part from the exhaust system. Do not remove any parts before an exhaust leak check has been completed.

NOTE: An exhaust leak may cause downstream fuel adaptives to cap out, resulting in a false O2 Sensor failure.

1. Turn the ignition off.
2. Inspect the exhaust system for leaks between the engine and the 1/1 Oxygen Sensor.
3. Perform a leak test with the Evaporative Emissions Leak Detector (EELD) (special tool #8404C, Kit, EELD And Accessory), even if an audible leak is not heard. Pay particular attention to the exhaust manifold to head surface, exhaust pipe to manifold connection, and the O2 Sensor boss for leaks.
4. Connect the SMOKE supply tip (black hose) to the exhaust cone adapter (if equipped) and place it into the tail pipe.
5. Set the smoke/air control switch to SMOKE.
6. Press the remote smoke/air start button.
7. While still holding the remote smoke/air start button, use the white light (special tool #8404-CLL, Light, White) to follow the exhaust system path and look for a leak, indicated by exiting smoke.
8. If a leak is concealed from view, release the remote smoke/air start button and use the ultraviolet (UV) black light (special tool #8404-UVL, Light, UV) and the yellow goggles (special tool #8404-20, Goggles, Yellow) to look for residual traces of dye that is left behind by the smoke.
9. The exiting smoke deposits a residual fluid that is either bright green or

bright yellow in color when viewed with a UV light.

Were any exhaust leaks found?

Yes

- Repair as necessary.
- Perform the POWERTRAIN VERIFICATION TEST. Refer to **POWERTRAIN VERIFICATION TEST** .

No

- Go To 2

2. **ACTIVE DTC**

NOTE: Check for contaminants that may have damaged the O2 Sensor: contaminated fuel, unapproved silicone, oil and coolant.

NOTE: It may be necessary to test drive the vehicle within the DTC monitoring conditions in order for this DTC to set.

1. Start the engine and allow it to reach operating temperature.

WARNING: When the engine is operating, do not stand in direct line with the fan. Do not put your hands near the pulleys, belts or fan. Do not wear loose clothing. Failure to follow these instructions may result in possible serious or fatal injury.

2. With a scan tool, select View DTCs.

Is the status Active for this DTC?

Yes

- Go To 3

No

- Perform the INTERMITTENT CONDITION diagnostic procedure. Refer to **INTERMITTENT CONDITION** .

3. **CHECK THE (K141) O2 SENSOR 1/2 SIGNAL CIRCUIT FOR A SHORT TO VOLTAGE**

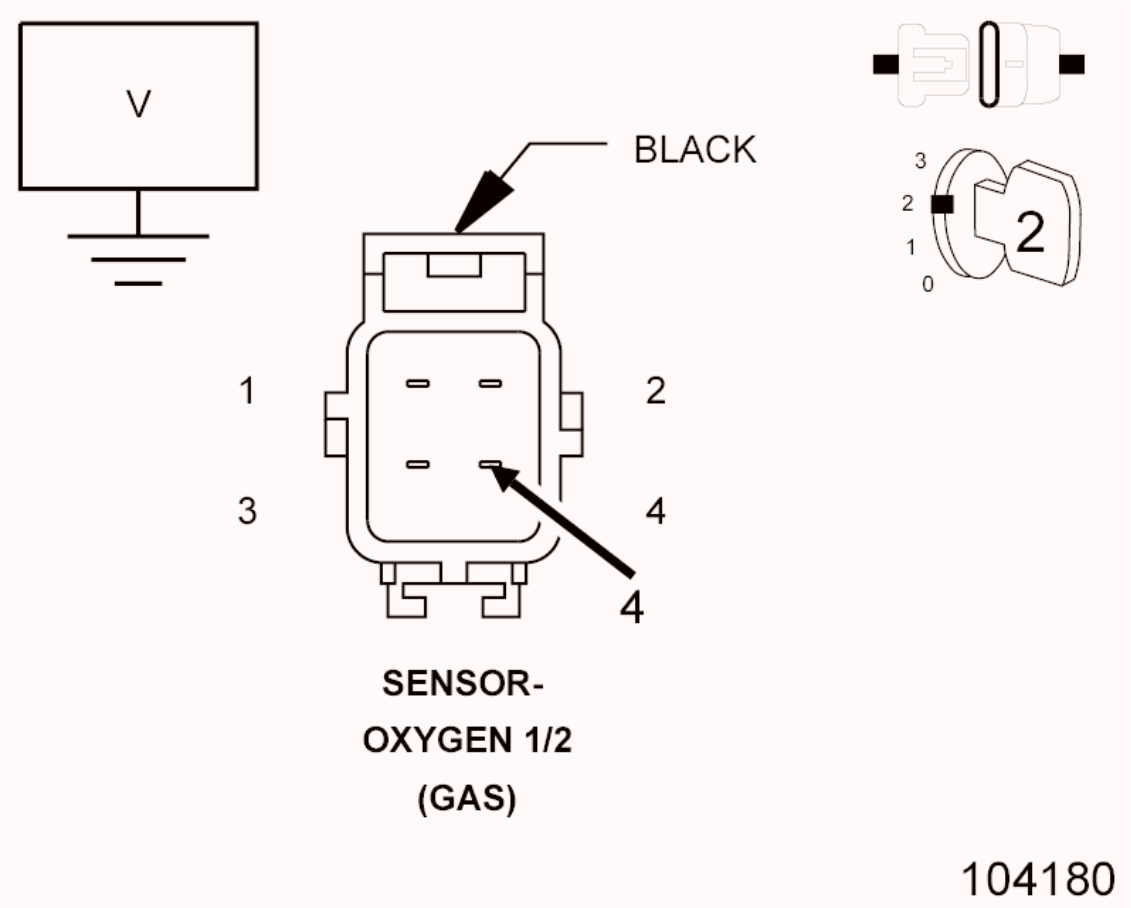

Fig. 133: Checking O2 Sensor Signal Circuit For Short To Voltage
Courtesy of CHRYSLER GROUP, LLC

1. Start the engine and allow it to idle.
2. Disconnect the Oxygen Sensor 1/2 harness connector.
3. Measure the voltage on the (K141) O2 Sensor 1/2 Signal circuit in the Oxygen Sensor 1/2 harness connector.

NOTE: Measure the voltage in reference to ground, not the (K904) O2 Sensor 1/2 Return circuit.

Is the voltage above 5.2 volts?

Yes

- Repair the (K141) O2 Sensor 1/2 Signal circuit for a short to voltage.
- Perform the POWERTRAIN VERIFICATION TEST. Refer to **POWERTRAIN VERIFICATION TEST** .

No

- Go To 4

4. **CHECK THE (K904) O2 SENSOR 1/2 RETURN CIRCUIT FOR A SHORT TO VOLTAGE**

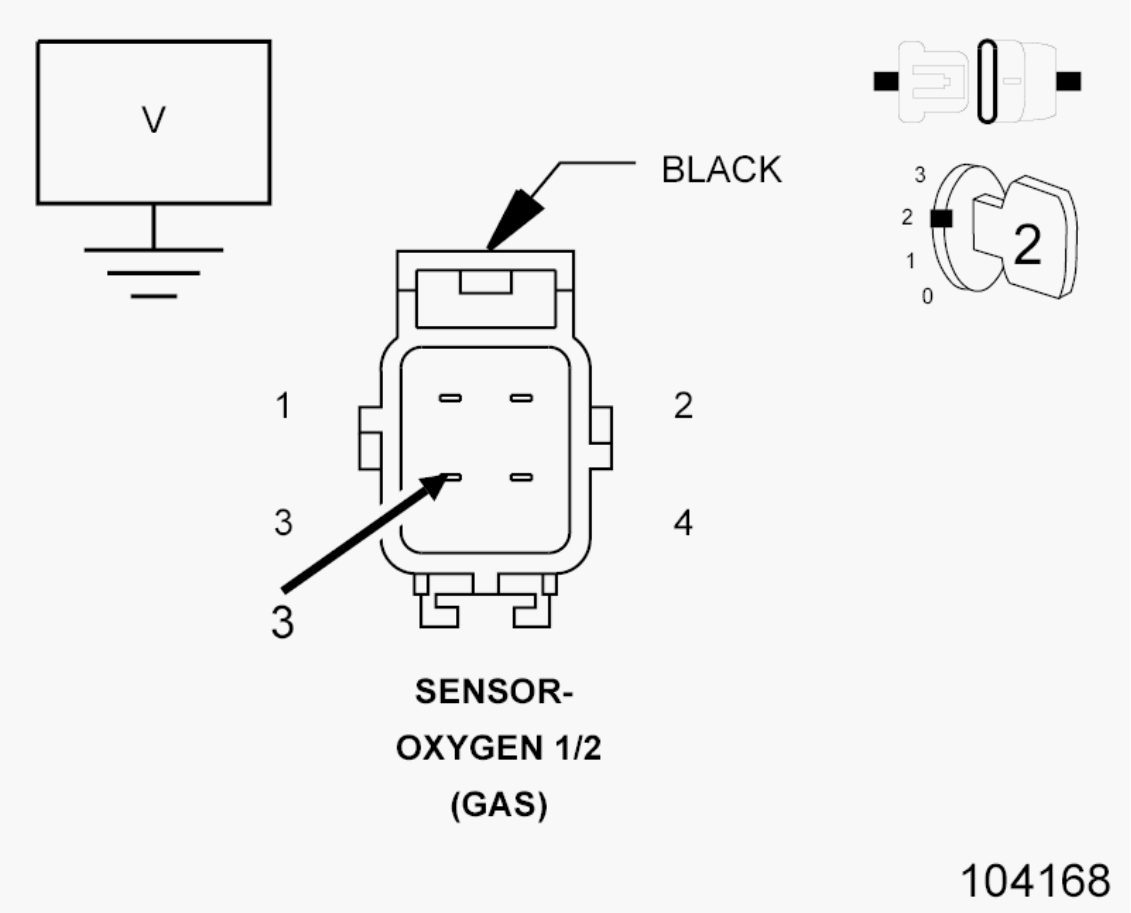

Fig. 134: Checking O2 Sensor Return Circuit For Short To Voltage
Courtesy of CHRYSLER GROUP, LLC

1. Turn the ignition off.
2. Disconnect the PCM C2 harness connector.
3. Turn the ignition on.

4. Measure the voltage on the (K904) O2 Sensor 1/2 Return circuit in the Oxygen Sensor 1/2 harness connector.

   Is there any voltage present?

   Yes

   - Repair the (K904) O2 Sensor 1/2 Return circuit for a short to voltage.
   - Perform the POWERTRAIN VERIFICATION TEST. Refer to **POWERTRAIN VERIFICATION TEST** .

   No

   - Go To 5

5. **CHECK THE (K141) O2 SENSOR 1/2 SIGNAL CIRCUIT SHORTED TO GROUND**

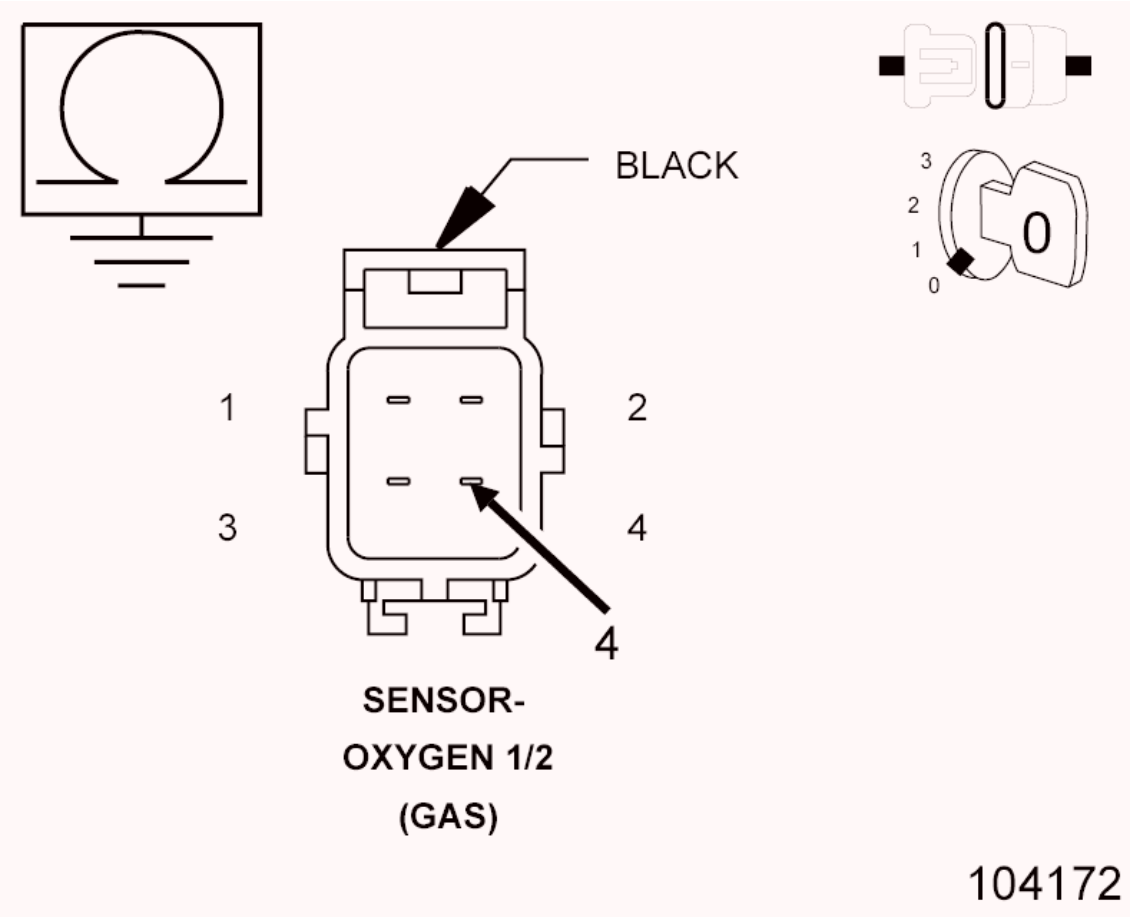

Fig. 135: Checking O2 Sensor Signal Circuit For Short To Ground

Courtesy of CHRYSLER GROUP, LLC

1. Turn the ignition off.
2. Measure the resistance between ground and the (K141) O2 Sensor 1/2 Signal circuit in the Oxygen Sensor 1/2 harness connector.

   Is the resistance above 10k Ohms?

   Yes

   - Go To 6

   No

   - Repair the (K141) O2 Sensor 1/2 Signal circuit for a short to ground.
   - Perform the POWERTRAIN VERIFICATION TEST. Refer to **POWERTRAIN VERIFICATION TEST** .

6. **CHECK THE (K904) O2 SENSOR 1/2 RETURN CIRCUIT FOR A SHORT TO GROUND**

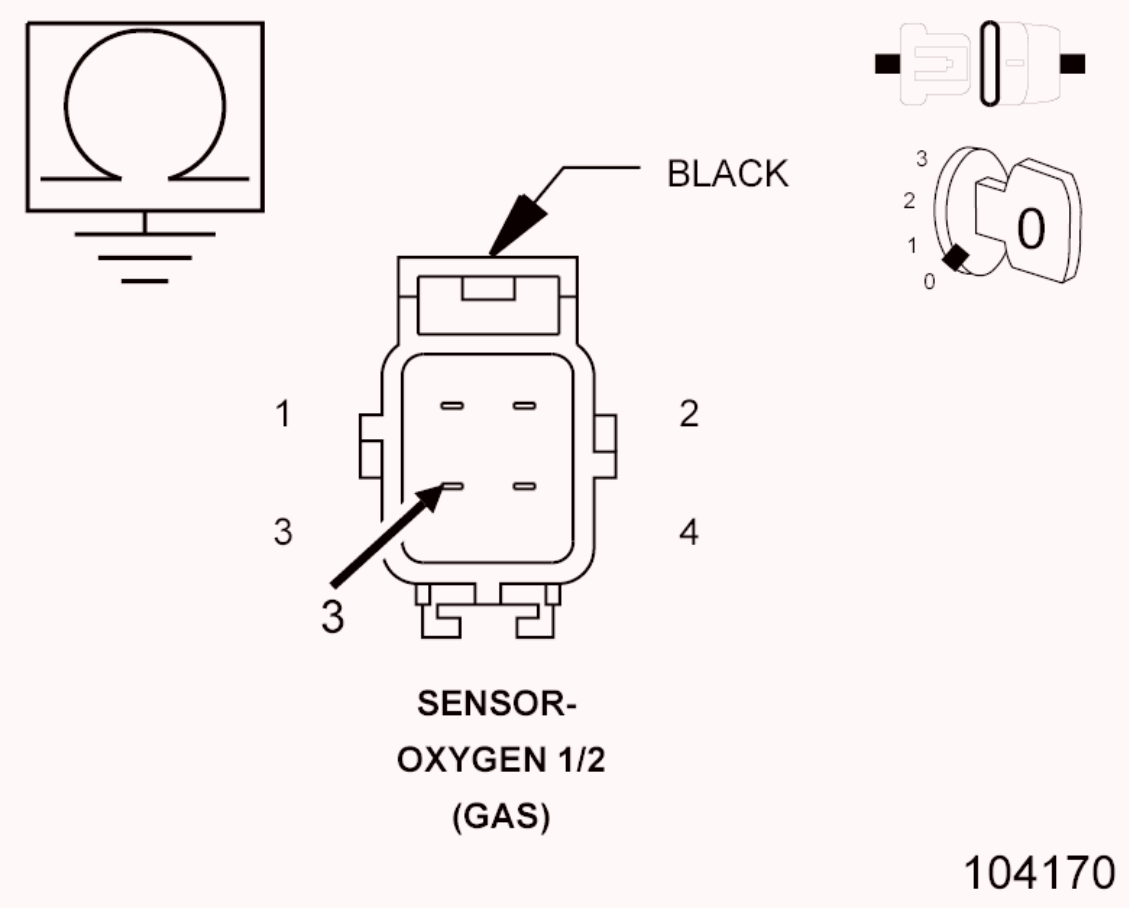

Fig. 136: Checking O2 Sensor 1/2 Return Circuit For Short To Ground
Courtesy of CHRYSLER GROUP, LLC

1. Measure the resistance between ground and the (K904) O2 Sensor 1/2 Return circuit in the Oxygen Sensor 1/2 harness connector.

   Is the resistance above 10k Ohms?

   Yes

   - Go To 7

   No

   - Repair the (K904) O2 Sensor 1/2 Return circuit for a short to ground.
   - Perform the POWERTRAIN VERIFICATION TEST. Refer to **POWERTRAIN VERIFICATION TEST** .

7. **CHECK THE (K141) O2 SENSOR 1/2 SIGNAL CIRCUIT FOR AN OPEN/HIGH RESISTANCE**

CAUTION: Do not probe the PCM harness connectors. Probing the PCM harness connectors will damage the PCM terminals resulting in poor terminal to pin connection. Install the GPEC Diagnostic Adaptor to perform the diagnosis.

1. Connect the (special tool #10436, Adapter, GPEC Diagnostic).
2. Measure the resistance of the (K141) O2 Sensor 1/2 Signal circuit between the Oxygen Sensor 1/2 harness connector to the GPEC Adaptor.

   Is the resistance below 5.0 Ohms?

   Yes

   - Go To 8

   No

   - Repair the (K141) O2 Sensor 1/2 Signal circuit for an open or high resistance.
   - Perform the POWERTRAIN VERIFICATION TEST. Refer to **POWERTRAIN VERIFICATION TEST** .

8. **CHECK THE (K904) O2 SENSOR 1/2 RETURN CIRCUIT FOR AN OPEN/HIGH RESISTANCE**
   1. Measure the resistance of the (K904) O2 Sensor 1/2 Return circuit between the Oxygen Sensor 1/2 harness connector to the GPEC Adaptor.

      Is the resistance below 5.0 Ohms?

      Yes

      - Go To 9

      No

      - Repair the (K904) O2 Sensor 1/2 Return circuit for an open circuit or high resistance.

- Perform the POWERTRAIN VERIFICATION TEST. Refer to **POWERTRAIN VERIFICATION TEST** .

9. **OXYGEN SENSOR 1/2**

NOTE: Prior to replacing the O2 sensor, verify that the correct part number is being used in order to prevent improper O2 heater control.

1. Using the wiring diagram/schematic as a guide, inspect the wiring and connectors between the Oxygen Sensor 1/2 and the Powertrain Control Module (PCM).
2. Look for any chafed, pierced, pinched or partially broken wires.
3. Look for broken, bent, pushed out or corroded terminals.
4. Perform any Technical Service Bulletins (TSBs) that may apply.

Were any problems found?

Yes

- Repair as necessary.
- Perform the POWERTRAIN VERIFICATION TEST. Refer to **POWERTRAIN VERIFICATION TEST** .

No

- Replace the Oxygen Sensor 1/2 in accordance with the service information. Refer to **SENSOR, OXYGEN, REMOVAL** .
- Perform the POWERTRAIN VERIFICATION TEST. Refer to **POWERTRAIN VERIFICATION TEST** .

P0141-O2 SENSOR 1/2 HEATER PERFORMANCE

For a complete wiring diagram, **refer to appropriate SYSTEM WIRING DIAGRAMS article** .

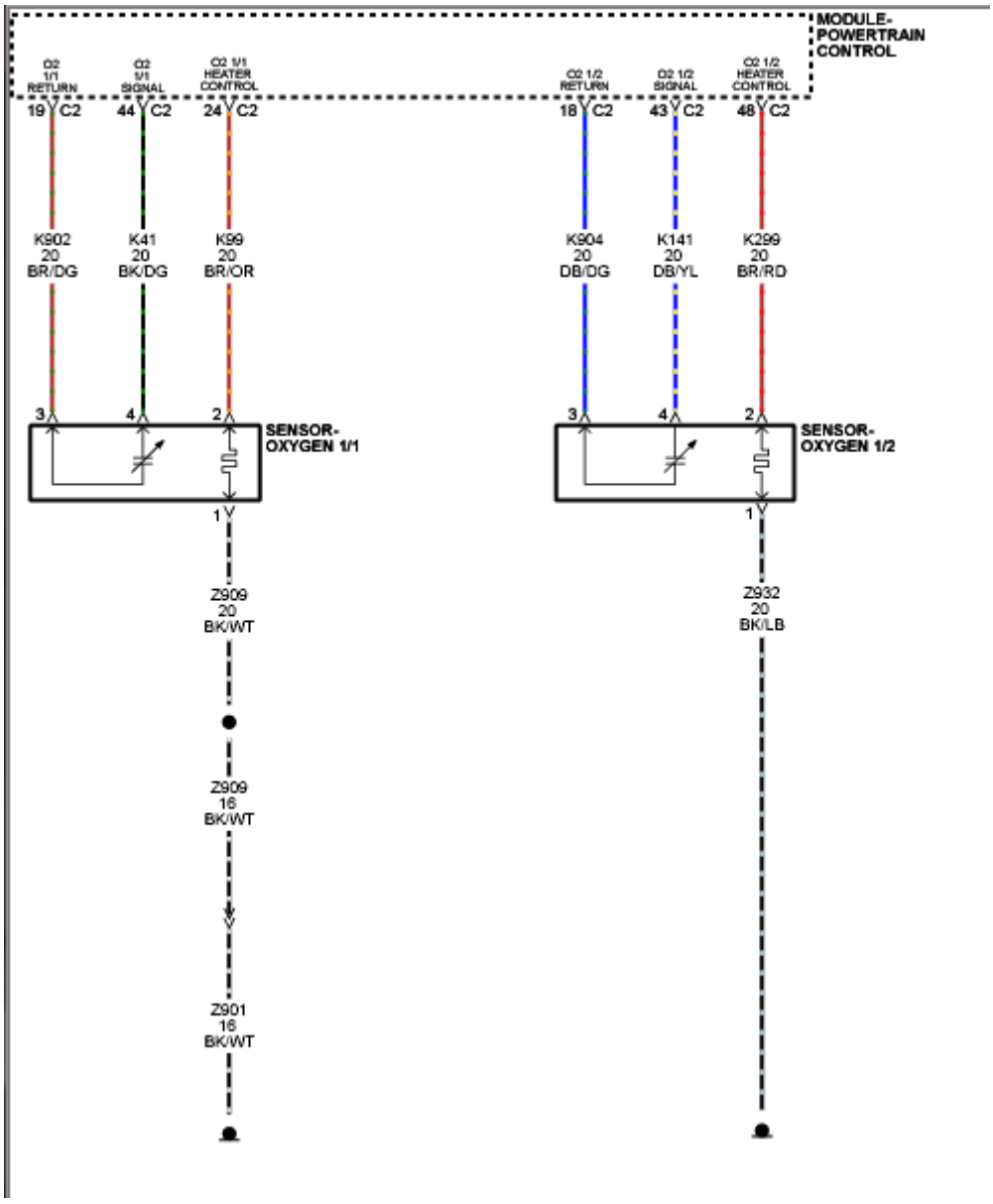

Fig. 137: Oxygen Sensor Circuit Diagram
Courtesy of CHRYSLER GROUP, LLC

THEORY OF OPERATION

For the 02 Sensor to deliver accurate readings the sensing element must be heated. A Positive Temperature Coefficient (PTC) element inside the O2 Sensor heats up as current passes through it. This allows the system to enter Closed Loop quickly. The Powertrain Control Module (PCM) turns on this circuit based on Engine Coolant Temperature (ECT) and engine loads. During operation the heater circuit is momentarily disabled to allow a resistance measurement to be taken to infer heater temperature. The current delivery to the heater is duty cycled to maintain a specific target temperature. The error from the target temperature is continuously monitored to assess heater performance. If a

malfunction occurs the circuit is turned off and a DTC will set.

WHEN MONITORED

With the engine running, O2 sensor heater duty cycle greater than 0% and battery voltage greater than 11.0 volts.

SET CONDITION

The PCM detects no O2 sensor output when the heater is powered up. Two trip fault. Three good trips to turn off the MIL.

POSSIBLE CAUSES

POSSIBLE CAUSES
(K299) O2 1/2 HEATER CONTROL CIRCUIT OPEN OR HIGH RESISTANCE
GROUND CIRCUIT OPEN OR HIGH RESISTANCE
OXYGEN SENSOR 1/2
POWERTRAIN CONTROL MODULE (PCM)

Always perform the Pre-Diagnostic Troubleshooting procedure before proceeding. Refer to PRE-DIAGNOSTIC TROUBLESHOOTING PROCEDURE .

DIAGNOSTIC TEST

1. **OXYGEN SENSOR 1/2 HEATER CONTROL OPERATION**
    1. Turn the ignition off.

    NOTE: Wait A Minimum Of 8 minutes to allow the sensor to cool down before continuing. The sensor voltage should stabilize between 2.47 and 2.52 volts.

    2. Turn the ignition on.
    3. With a scan tool, actuate the Oxygen Sensor 1/1 heater control.
    4. With the scan tool, monitor 1/1 O2 Sensor Volts for at least two minutes.

    Does the voltage stay between 2.47 and 2.52 volts?

Yes

- Go To 2

No

- Perform the INTERMITTENT CONDITION diagnostic procedure. Refer to **INTERMITTENT CONDITION** .

2. **OXYGEN SENSOR 1/2**
   1. Turn the ignition off.

      NOTE: Wait a minimum of eight minutes to allow the sensor to cool down before continuing.

   2. Disconnect the Oxygen Sensor 1/2 harness connector.
   3. Measure the resistance of the O2 sensor heater element across the Oxygen Sensor 1/2 connector between the heater control terminal and the ground terminal.

      NOTE: The O2 heater element resistance should be measured at 21.1°C (70°F). The resistance value will vary at different temperatures.

      Is the resistance between 2.0 and 30.0 Ohms?

      Yes

      - Go To 3

      No

      - Replace the Oxygen Sensor 1/2 in accordance with the service information. Refer to **SENSOR, OXYGEN, REMOVAL** .
      - Perform the POWERTRAIN VERIFICATION TEST. Refer to **POWERTRAIN VERIFICATION TEST** .

3. **CHECK THE (K299) O2 1/2 HEATER CONTROL CIRCUIT FOR AN OPEN/HIGH RESISTANCE**
   1. Disconnect the PCM harness connector.

CAUTION: Do not probe the PCM harness connectors. Probing the PCM harness connectors will damage the PCM terminals resulting in poor terminal to pin connection. Install the GPEC Diagnostic Adaptor to perform the diagnosis.

2. Connect the (special tool #10436, Adapter, GPEC Diagnostic).
3. Measure the resistance of the (K299) O2 1/2 Heater Control circuit from the Oxygen Sensor 1/2 harness connector to the GPEC Adaptor.

   Is the resistance below 0.5 Ohms?

   Yes

   - Go To 4

   No

   - Repair the (K299) O2 1/2 Heater Control circuit for an open or high resistance.
   - Perform the POWERTRAIN VERIFICATION TEST. Refer to **POWERTRAIN VERIFICATION TEST** .

4. **CHECK THE GROUND CIRCUIT FOR AN OPEN/HIGH RESISTANCE**

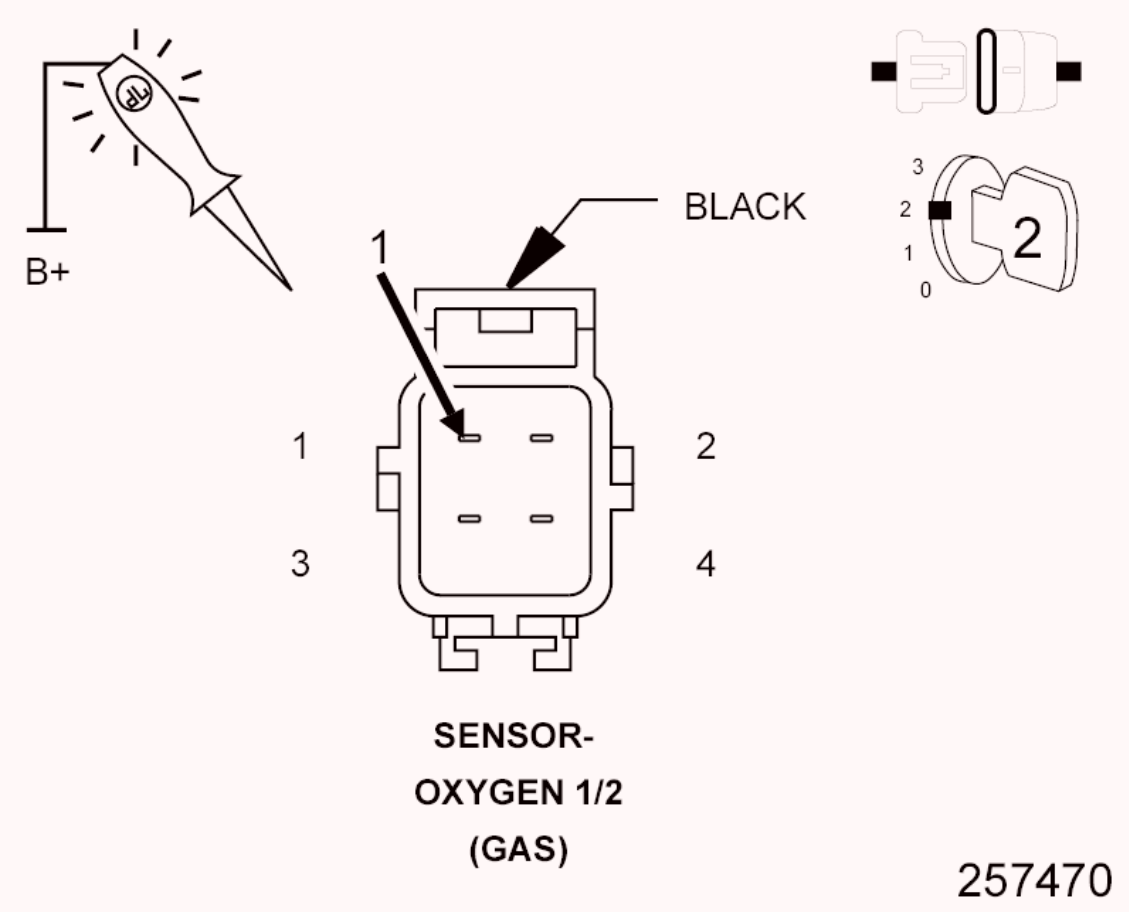

Fig. 138: Checking Ground Circuit For Open Or High Resistance
Courtesy of CHRYSLER GROUP, LLC

1. Using a 12 volt test light connected to 12 volts, check the Ground circuit in the Oxygen Sensor 1/2 harness connector.

   NOTE: The test light should be illuminated and bright. Compare the brightness to that of a direct connection to the battery.

   Is the test light illuminated and bright?

   Yes

   - Go To 5

   No

   - Repair the Ground circuit for an open or high resistance.
   - Perform the POWERTRAIN VERIFICATION TEST. Refer to

POWERTRAIN VERIFICATION TEST .

5. **POWERTRAIN CONTROL MODULE (PCM)**
   1. Using the wiring diagram/schematic as a guide, inspect the wiring and connectors between the Oxygen Sensor 1/2 and the Powertrain Control Module (PCM).
   2. Look for any chafed, pierced, pinched or partially broken wires.
   3. Look for broken, bent, pushed out or corroded terminals.
   4. Perform any Technical Service Bulletins (TSBs) that may apply.

   Were any problems found?

   Yes

   - Repair as necessary.
   - Perform the POWERTRAIN VERIFICATION TEST. Refer to **POWERTRAIN VERIFICATION TEST** .

   No

   - Replace and program the Powertrain Control Module (PCM) in accordance with the service information. Refer to **MODULE, POWERTRAIN CONTROL, REMOVAL** .
   - Perform the POWERTRAIN VERIFICATION TEST. Refer to **POWERTRAIN VERIFICATION TEST** .

P0171-FUEL SYSTEM 1/1 LEAN

For a complete wiring diagram, **refer to appropriate SYSTEM WIRING DIAGRAMS article** .

THEORY OF OPERATION

The fuel feedback system will maintain a stoichiometric fuel/air mixture, 14.7:1, by modifying the injector pulse width according to the oxygen content of the exhaust gas. The Powertrain Control Module (PCM) makes short term and long term fuel corrections to maintain stoichiometric fuel/air ratio for best Catalytic Converter efficiency. Short term fuel correction is based on upstream O2 Sensor output and is designed for quick engine response. The long term fuel correction compensated for variations in the engine specifications, sensor tolerances and

component aging and is designed to correct rich and lean conditions over a longer period of time.

WHEN MONITORED

With the engine running in closed loop, the ambient/battery temperature above -7° C (20° F) and altitude below 8500 ft.

SET CONDITION

The Powertrain Control Module (PCM) monitors the Adaptive Memory factor (a combination of Short Term Adaptive and Long Term Adaptive). If the total fuel addition exceeds a calibrated threshold for an extended period, a fuel system lean fault is stored. If the total fuel subtraction exceeds a calibrated threshold, a fuel system rich fault is stored. Two Trip Fault. Three good trips to turn off the MIL.

POSSIBLE CAUSES

POSSIBLE CAUSES
EXHAUST SYSTEM LEAK
FUEL DELIVERY SYSTEM
ECT SENSOR, WIRING, OR CONNECTORS
MAP SENSOR, WIRING, OR CONNECTORS
O2 SENSOR, WIRING, OR CONNECTORS
ENGINE MECHANICAL SYSTEM
POWERTRAIN CONTROL MODULE (PCM)

Always perform the Pre-Diagnostic Troubleshooting procedure before proceeding. Refer to PRE-DIAGNOSTIC TROUBLESHOOTING PROCEDURE .

DIAGNOSTIC TEST

1. **ACTIVE DTC**
    1. Diagnose and repair any other active component or circuit DTCs before continuing with this procedure.
    2. Turn the ignition on.
    3. With the scan tool, select View DTCs. Copy DTC and Freeze Frame information.
    4. Start the engine and allow it to reach operating temperature.

WARNING: When the engine is operating, do not stand in direct line with the fan. Do not put your hands near the pulleys, belts or fan. Do not wear loose clothing. Failure to follow these instructions may result in possible serious or fatal injury.

NOTE: Attempt to operate the vehicle under conditions similar to which the DTC was set.

NOTE: It may be necessary to test drive the vehicle within the DTC monitoring conditions in order for this DTC to set.

5. With a scan tool, select View DTCs.

   Is the status Active for this DTC?

   Yes

   - Go To 2

   No

   - Perform the INTERMITTENT CONDITION diagnostic procedure. Refer to **INTERMITTENT CONDITION** .

2. **CHECK THE EXHAUST SYSTEM FOR LEAKS**
   1. Perform the diagnostic procedure for CHECKING THE EXHAUST SYSTEM FOR LEAKS. Refer to **DIAGNOSIS AND TESTING** .

      Were any problems found?

      Yes

      - Repair as necessary in accordance with the Service Information.
      - Perform the POWERTRAIN VERIFICATION TEST. Refer to **POWERTRAIN VERIFICATION TEST** .

      No

- Go To 3

3. **CHECK THE FUEL DELIVERY SYSTEM**
   1. Perform the diagnostic procedures for FUEL PRESSURE LEAK DOWN and FUEL DELIVERY SYSTEM OUTPUT - FLOW TEST. Refer to **DIAGNOSIS AND TESTING** .

      Were any problems found?

      Yes

      - Repair as necessary in accordance with the Service Information.
      - Perform the POWERTRAIN VERIFICATION TEST. Refer to **POWERTRAIN VERIFICATION TEST** .

      No

      - Go To 4

4. **CHECK THE ENGINE COOLANT TEMPERATURE SENSOR OPERATION**
   1. Perform the diagnostic procedure for CHECKING THE ENGINE COOLANT TEMPERATURE SENSOR OPERATION. Refer to **DIAGNOSIS AND TESTING** .

      Were any problems found?

      Yes

      - Repair as necessary in accordance with the Service Information.
      - Perform the POWERTRAIN VERIFICATION TEST. Refer to **POWERTRAIN VERIFICATION TEST** .

      No

      - Go To 5

5. **CHECK THE MAP SENSOR OPERATION**
   1. Perform the diagnostic procedure for CHECKING THE MAP SENSOR OPERATION. Refer to **DIAGNOSIS AND TESTING** .

      Were any problems found?

Yes

- Repair as necessary in accordance with the Service Information.
- Perform the POWERTRAIN VERIFICATION TEST. Refer to **POWERTRAIN VERIFICATION TEST** .

No

- Go To 6

6. **CHECK THE OXYGEN SENSOR OPERATION**
   1. Perform the diagnostic procedure for CHECKING THE OXYGEN SENSOR OPERATION. Refer to **DIAGNOSIS AND TESTING** .

   Were any problems found?

   Yes

   - Repair as necessary in accordance with the Service Information.
   - Perform the POWERTRAIN VERIFICATION TEST. Refer to **POWERTRAIN VERIFICATION TEST** .

   No

   - Go To 7

7. **CHECK THE ENGINE MECHANICAL SYSTEM**
   1. Perform the diagnostic procedure for CHECKING THE ENGINE MECHANICAL SYSTEM. Refer to **DIAGNOSIS AND TESTING** .

   Were any problems found?

   Yes

   - Repair as necessary in accordance with the Service Information.
   - Perform the POWERTRAIN VERIFICATION TEST. Refer to **POWERTRAIN VERIFICATION TEST** .

   No

   - Go To 8

8. **POWERTRAIN CONTROL MODULE (PCM)**
   1. Using the wiring diagram/schematic as a guide, inspect the wiring and connectors relative to the components tested in this procedure.
      - Look for any chafed, pierced, pinched or partially broken wires.
      - Look for broken, bent, pushed out or corroded terminals.
      - Monitor the scan tool data relative to the components tested in this procedure and wiggle test the wiring and connectors.
      - Look for the data to change or for a DTC to set during the wiggle test.
      - Perform any Technical Service Bulletins that may apply.

      Were any problems found?

      Yes

      - Repair as necessary.
      - Perform the POWERTRAIN VERIFICATION TEST. Refer to **POWERTRAIN VERIFICATION TEST** .

      No

      - Replace and program the Powertrain Control Module (PCM) in accordance with the Service Information. Refer to **MODULE, POWERTRAIN CONTROL, REMOVAL** .
      - Perform the POWERTRAIN VERIFICATION TEST. Refer to **POWERTRAIN VERIFICATION TEST** .

P0172-FUEL SYSTEM 1/1 RICH

For a complete wiring diagram, **refer to appropriate SYSTEM WIRING DIAGRAMS article** .

THEORY OF OPERATION

The fuel feedback system will maintain a stoichiometric fuel/air mixture, 14.7:1, by modifying the injector pulse width according to the oxygen content of the exhaust gas. The Powertrain Control Module (PCM) makes short term and long term fuel corrections to maintain stoichiometric fuel/air ratio for best Catalytic Converter efficiency. Short term fuel correction is based on upstream O2 Sensor

output and is designed for quick engine response. The long term fuel correction compensated for variations in the engine specifications, sensor tolerances and component aging and is designed to correct rich and lean conditions over a longer period of time.

WHEN MONITORED

With the engine running in closed loop, the ambient/battery temperature above -7°C (20°F) and altitude below 8500 ft.

SET CONDITION

The Powertrain Control Module (PCM) monitors the Adaptive Memory factor (a combination of Short Term Adaptive and Long Term Adaptive). If the total fuel addition exceeds a calibrated threshold for an extended period, a fuel system lean fault is stored. If the total fuel subtraction exceeds a calibrated threshold, a fuel system rich fault is stored. Two Trip Fault. Three good trips to turn off the MIL

POSSIBLE CAUSES

POSSIBLE CAUSES
FUEL DELIVERY SYSTEM
ECT SENSOR, WIRING, OR CONNECTORS
MAP SENSOR, WIRING, OR CONNECTORS
O2 SENSOR, WIRING, OR CONNECTORS
ENGINE MECHANICAL SYSTEM
POWERTRAIN CONTROL MODULE (PCM)

Always perform the Pre-Diagnostic Troubleshooting procedure before proceeding. Refer to PRE-DIAGNOSTIC TROUBLESHOOTING PROCEDURE .

DIAGNOSTIC TEST

1. **ACTIVE DTC**
    1. Diagnose and repair any other active component or circuit DTCs before continuing with this procedure.
    2. Turn the ignition on.
    3. With the scan tool, select View DTCs. Copy DTC and Freeze Frame information.

4. Start the engine and allow it to reach operating temperature.

WARNING: When the engine is operating, do not stand in direct line with the fan. Do not put your hands near the pulleys, belts or fan. Do not wear loose clothing. Failure to follow these instructions may result in possible serious or fatal injury.

NOTE: Attempt to operate the vehicle under conditions similar to which the DTC was set.

NOTE: It may be necessary to test drive the vehicle within the DTC monitoring conditions in order for this DTC to set.

5. With a scan tool, select View DTCs.

   Is the status Active for this DTC?

   Yes

   - Go To 2

   No

   - Perform the INTERMITTENT CONDITION diagnostic procedure. Refer to **INTERMITTENT CONDITION** .

2. **CHECK THE FUEL DELIVERY SYSTEM**
   1. Perform the diagnostic procedures for FUEL PRESSURE LEAK DOWN and FUEL DELIVERY SYSTEM OUTPUT - FLOW TEST. Refer to **DIAGNOSIS AND TESTING** .

      Were any problems found?

      Yes

      - Repair as necessary in accordance with the Service Information.
      - Perform the POWERTRAIN VERIFICATION TEST. Refer to

POWERTRAIN VERIFICATION TEST .

No

- Go To 3

3. **CHECK THE ENGINE COOLANT TEMPERATURE SENSOR OPERATION**
   1. Perform the diagnostic procedure for CHECKING THE ENGINE COOLANT TEMPERATURE SENSOR OPERATION. Refer to **DIAGNOSIS AND TESTING** .

   Were any problems found?

   Yes

   - Repair as necessary in accordance with the Service Information.
   - Perform the POWERTRAIN VERIFICATION TEST. Refer to **POWERTRAIN VERIFICATION TEST** .

   No

   - Go To 4

4. **CHECK THE MAP SENSOR OPERATION**
   1. Perform the diagnostic procedure for CHECKING THE MAP SENSOR OPERATION. Refer to **DIAGNOSIS AND TESTING** .

   Were any problems found?

   Yes

   - Repair as necessary in accordance with the Service Information.
   - Perform the POWERTRAIN VERIFICATION TEST. Refer to **POWERTRAIN VERIFICATION TEST** .

   No

   - Go To 5

5. **CHECK THE OXYGEN SENSOR OPERATION**
   1. Perform the diagnostic procedure for CHECKING THE OXYGEN

SENSOR OPERATION. Refer to **DIAGNOSIS AND TESTING** .

Were any problems found?

Yes

- Repair as necessary in accordance with the Service Information.
- Perform the POWERTRAIN VERIFICATION TEST. Refer to **POWERTRAIN VERIFICATION TEST** .

No

- Go To 6

6. **CHECK THE ENGINE MECHANICAL SYSTEM**
   1. Perform the diagnostic procedure for CHECKING THE ENGINE MECHANICAL SYSTEM. Refer to **DIAGNOSIS AND TESTING** .

   Were any problems found?

   Yes

   - Repair as necessary in accordance with the Service Information.
   - Perform the POWERTRAIN VERIFICATION TEST. Refer to **POWERTRAIN VERIFICATION TEST** .

   No

   - Go To 7

7. **POWERTRAIN CONTROL MODULE (PCM)**
   1. Using the wiring diagram/schematic as a guide, inspect the wiring and connectors relative to the components tested in this procedure.
      - Look for any chafed, pierced, pinched, or partially broken wires.
      - Look for broken, bent, pushed out or corroded terminals.
      - Monitor the scan tool data relative to the components tested in this procedure and wiggle test the wiring and connectors.
      - Look for the data to change or for a DTC to set during the wiggle test.
      - Perform any Technical Service Bulletins that may apply.

Were any problems found?

Yes

- Repair as necessary.
- Perform the POWERTRAIN VERIFICATION TEST. Refer to **POWERTRAIN VERIFICATION TEST** .

No

- Replace and program the Powertrain Control Module (PCM) in accordance with the Service Information. Refer to **MODULE, POWERTRAIN CONTROL, REMOVAL** .
- Perform the POWERTRAIN VERIFICATION TEST. Refer to **POWERTRAIN VERIFICATION TEST** .

P0196-ENGINE OIL TEMPERATURE SENSOR PERFORMANCE

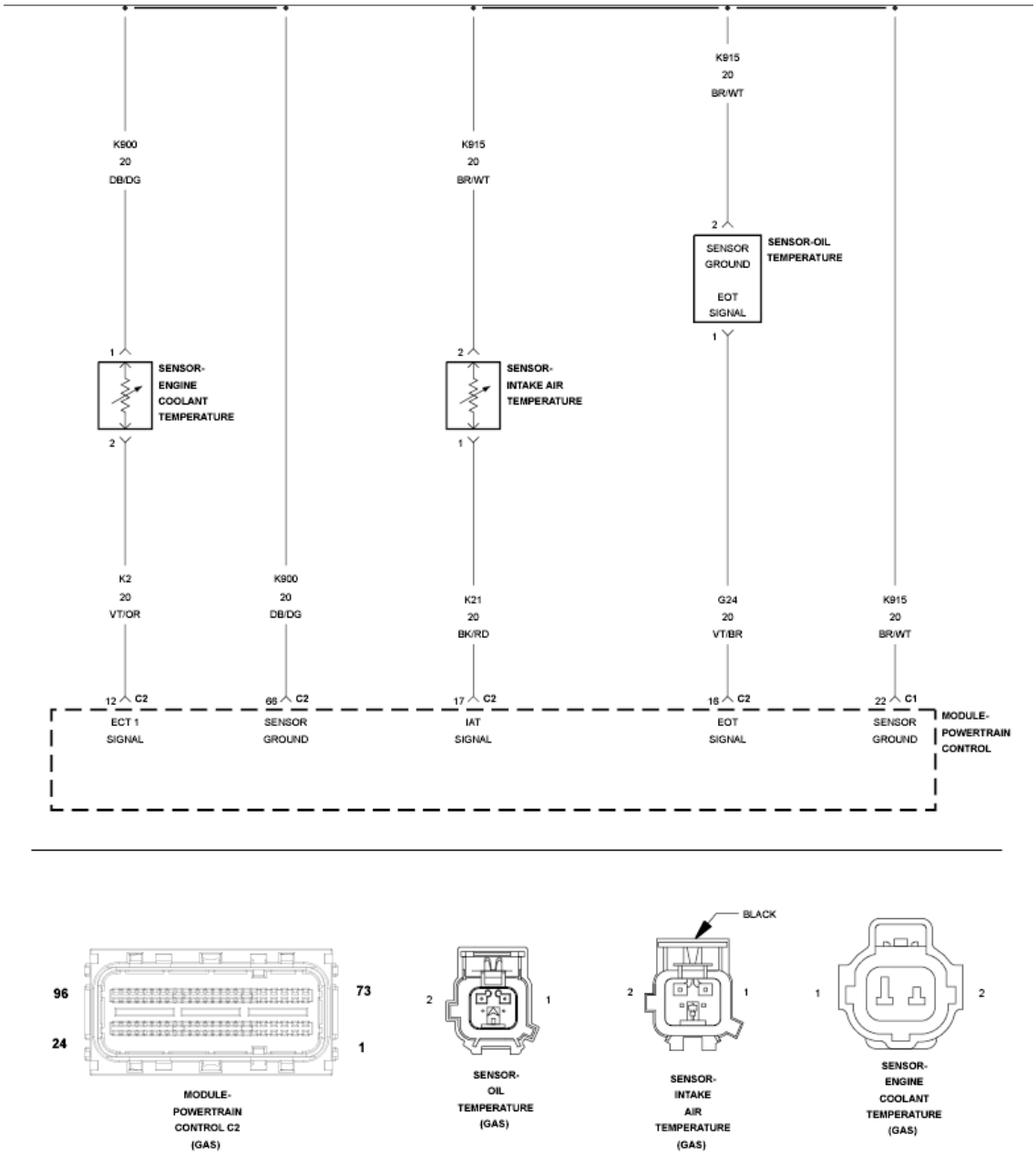

Fig. 139: Temperature Sensors Circuit Diagram
Courtesy of CHRYSLER GROUP, LLC

For a complete wiring diagram, **refer to appropriate SYSTEM WIRING DIAGRAMS article** .

WHEN MONITORED

With engine off time greater than 480 minutes and ambient temperature greater than -7°C (19.4°F).

SET CONDITION

After a calibrated amount of cool down time, the PCM compares the AAT, ECT, and IAT Sensor values. If the general temperature rationality passes, the PCM compares the Oil Temperature Sensor value to a threshold based on the other temp sensor values. If the difference is greater than a calibrated value, the diagnostic fails.

POSSIBLE CAUSES

POSSIBLE CAUSES
(G24) EOT SIGNAL CIRCUIT OPEN OR HIGH RESISTANCE
(K915) SENSOR GROUND CIRCUIT OPEN OR HIGH RESISTANCE
ENGINE OIL TEMPERATURE (EOT) SENSOR
POWERTRAIN CONTROL MODULE (PCM)

Always perform the Pre-Diagnostic Troubleshooting procedure before proceeding. Refer to PRE-DIAGNOSTIC TROUBLESHOOTING PROCEDURE .

DIAGNOSTIC TEST

1. **COMPARE THE TEMPERATURE SENSOR READINGS**

   NOTE: Diagnose any CAN - C Communication DTCs before continuing.

   1. Turn the ignition off.
   2. Allow the vehicle to sit with the ignition off in an environment where the temperature is consistent and above -7°C (19.4°F) until the engine coolant temperature is equal to ambient temperature.
   3. Turn the ignition on.
   4. With a scan tool, compare the Engine Oil Temperature Sensor value to the AAT, ECT, and IAT Sensor values.

      Is the Engine Oil Temperature Sensor value within 10°C (18°F) of the other sensor values?

      Yes

      - Perform the INTERMITTENT CONDITION diagnostic procedure.

Refer to **INTERMITTENT CONDITION** .

No

- Refer to 2.

2. **ACTIVE DTC**

NOTE: If possible, allow the vehicle to sit with the ignition off for more than 480 minutes in an environment where the temperature is consistent and above -7°C (19.4°F).

1. Test drive the vehicle. The vehicle must exceed 48 km/h (30 mph) during the test drive. Do not cycle the ignition off when the test drive is completed.
2. With a scan tool, select View DTCs.

   Is the status Active or Pending for this DTC?

   Yes

   - Go To 3

   No

   - Perform the INTERMITTENT CONDITION diagnostic procedure. Refer to **INTERMITTENT CONDITION** .

3. **CHECK THE (G24) EOT SIGNAL CIRCUIT FOR AN OPEN/HIGH RESISTANCE**
   1. Turn the ignition off.
   2. Disconnect the EOT Sensor harness connector.
   3. Disconnect the PCM C1 and C2 harness connectors.

CAUTION: Do not probe the PCM harness connectors. Probing the PCM harness connectors will damage the PCM terminals resulting in poor terminal to pin connection. Install the GPEC Diagnostic Adaptor to perform the diagnosis.

4. Connect the (special tool #10436, Adapter, GPEC Diagnostic) to the PCM C2 harness connector.
5. Measure the resistance of the (G24) EOT Signal circuit between the Engine Oil Temperature Sensor harness connector and the GPEC Adaptor.

   Is the resistance below 5.0 Ohms?

   Yes

   - Go To 4

   No

   - Repair the (G24) EOT Signal circuit for an open or high resistance.
   - Perform the POWERTRAIN VERIFICATION TEST. Refer to **POWERTRAIN VERIFICATION TEST** .

4. **CHECK THE (K915) SENSOR GROUND CIRCUIT FOR AN OPEN/HIGH RESISTANCE**

   CAUTION: Do not probe the PCM harness connectors. Probing the PCM harness connectors will damage the PCM terminals resulting in poor terminal to pin connection. Install the GPEC Diagnostic Adaptor to perform the diagnosis.

1. Connect the (special tool #10436, Adapter, GPEC Diagnostic) to the PCM C1 harness connector.
2. Measure the resistance of the (K915) Sensor Ground circuit between the EOT Sensor harness connector and the GPEC Adaptor.

   Is the resistance below 5.0 Ohms?

   Yes

   - Go To 5

   No

- Repair the (K915) Sensor Ground for an open or high resistance.
- Perform the POWERTRAIN VERIFICATION TEST. Refer to **POWERTRAIN VERIFICATION TEST** .

5. **ENGINE OIL TEMPERATURE SENSOR**

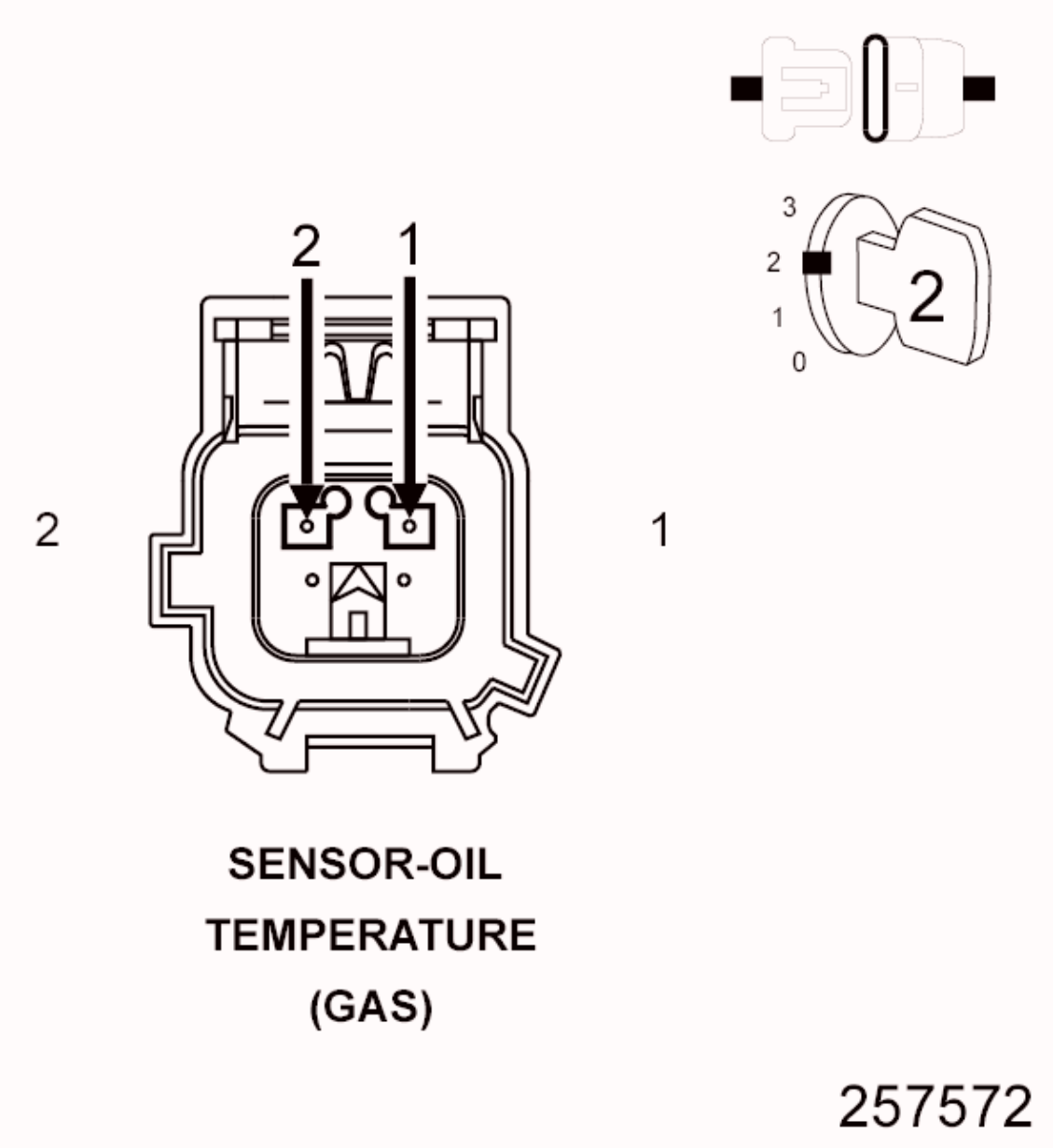

Fig. 140: Engine Oil Temperature Sensor Harness Connector End View
Courtesy of CHRYSLER GROUP, LLC

1. Turn the ignition off.
2. Reconnect the PCM C1 and C2 harness connectors.
3. Connect a jumper between the (K915) Sensor Ground circuit and the (G24) EOT Signal circuit in the Engine Oil Temperature Sensor harness

connector.

4. Turn the ignition on.
5. With the scan tool, read the Engine Oil Temperature Sensor signal voltage.

   Is the voltage below 0.1 volts with the jumper in place?

   Yes

   - Replace the Engine Oil Temperature Sensor in accordance with the service information. Refer to **2.0L SENSOR, OIL TEMPERATURE, REMOVAL** or **2.4L SENSOR, OIL TEMPERATURE, REMOVAL** .
   - Perform the POWERTRAIN VERIFICATION TEST. Refer to **POWERTRAIN VERIFICATION TEST** .

   No

   - Go To 6

6. **POWERTRAIN CONTROL MODULE (PCM)**
   1. Using the wiring diagram/schematic as a guide, inspect the wiring and connectors between the Engine Oil Temperature Sensor and the Powertrain Control Module (PCM).
   2. Look for any chafed, pierced, pinched, or partially broken wires.
   3. Look for broken, bent, pushed out or corroded terminals.
   4. Monitor the scan tool data relative to this circuit and wiggle test the wiring and connectors.
   5. Look for the data to change or for the DTC to reset during the wiggle test.
   6. Perform any Technical Service Bulletins that may apply.

   Were any problems found?

   Yes

   - Repair as necessary.
   - Perform the POWERTRAIN VERIFICATION TEST. Refer to **POWERTRAIN VERIFICATION TEST** .

No

- Replace and program the Powertrain Control Module (PCM) in accordance with the service information. Refer to **MODULE, POWERTRAIN CONTROL, REMOVAL** .
- Perform the POWERTRAIN VERIFICATION TEST. Refer to **POWERTRAIN VERIFICATION TEST** .

P0197-ENGINE OIL TEMPERATURE SENSOR CIRCUIT LOW

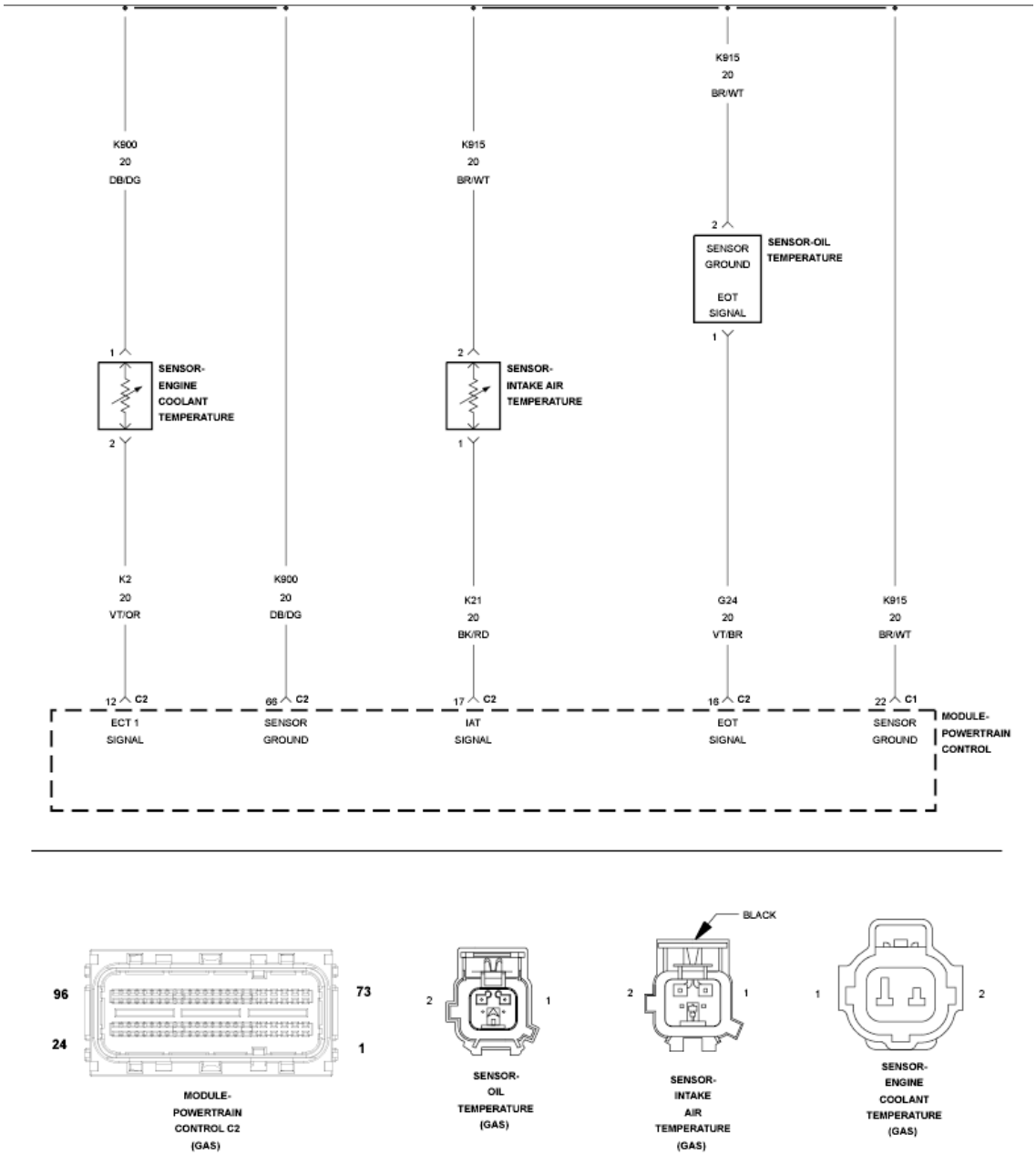

Fig. 141: Temperature Sensors Circuit Diagram

Courtesy of CHRYSLER GROUP, LLC

For a complete wiring diagram, **refer to appropriate SYSTEM WIRING DIAGRAMS article** .

WHEN MONITORED

With the ignition on and battery voltage greater than 10.4 volts.

SET CONDITION

The Powertrain Control Module (PCM) detects that the Engine Oil Temperature (EOT) Sensor input voltage is below the minimum acceptable value.

POSSIBLE CAUSES

POSSIBLE CAUSES
(G24) EOT SIGNAL CIRCUIT SHORTED TO GROUND
(G24) EOT SIGNAL CIRCUIT SHORTED TO THE (K915) SENSOR GROUND CIRCUIT
(G24) EOT SIGNAL CIRCUIT OPEN OR HIGH RESISTANCE
ENGINE OIL TEMPERATURE (EOT) SENSOR
POWERTRAIN CONTROL MODULE (PCM)

Always perform the Pre-Diagnostic Troubleshooting procedure before proceeding. Refer to PRE-DIAGNOSTIC TROUBLESHOOTING PROCEDURE .

DIAGNOSTIC TEST

1. **ACTIVE DTC**
    1. Turn the ignition on.

        WARNING: **When the engine is operating, do not stand in direct line with the fan. Do not put your hands near the pulleys, belts or fan. Do not wear loose clothing. Failure to follow these instructions may result in possible serious or fatal injury.**

    2. With the scan tool, select View DTCs.

Is the status Active for this DTC?

Yes

- Go To 2

No

- Perform the INTERMITTENT CONDITION diagnostic procedure. Refer to **INTERMITTENT CONDITION** .

2. **CHECK THE (G24) EOT SIGNAL CIRCUIT FOR A SHORT TO GROUND**

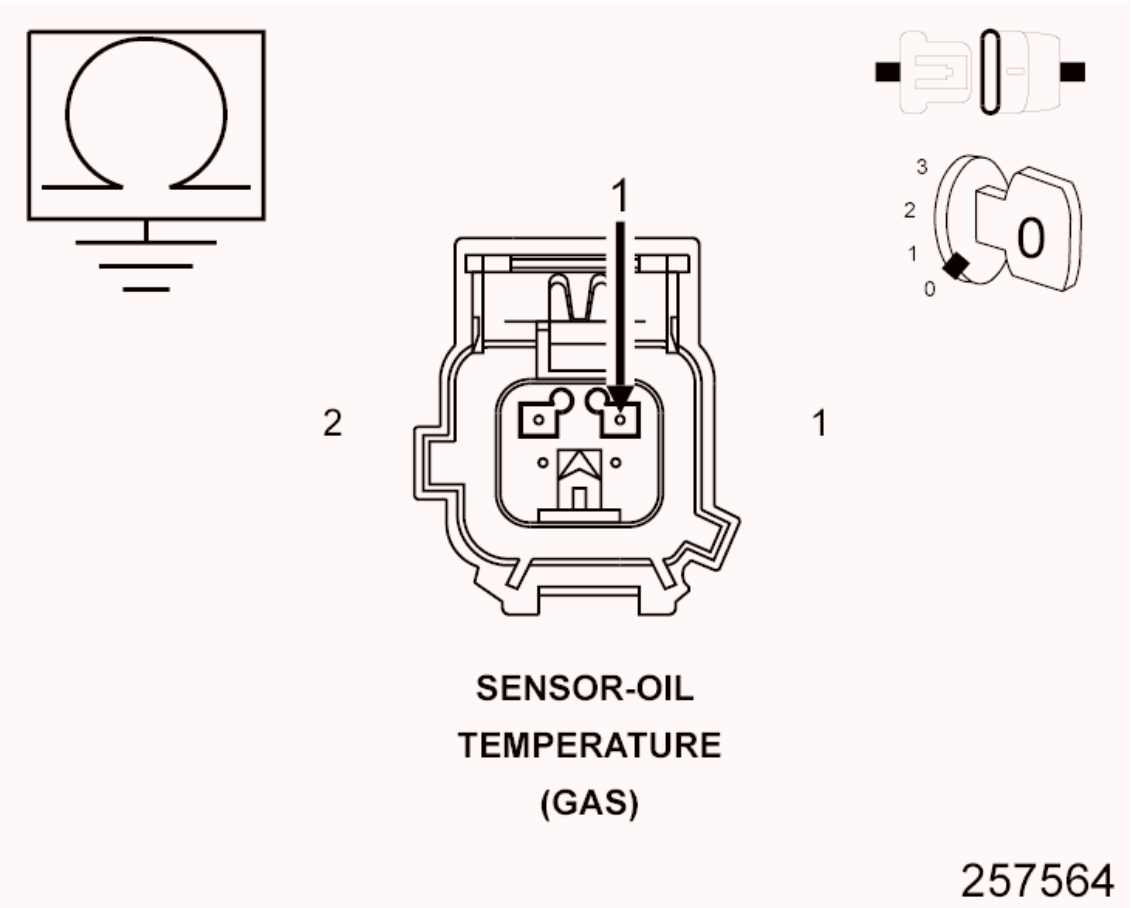

Fig. 142: Checking Engine Oil Temperature Sensor Signal Circuit For Short To Ground
Courtesy of CHRYSLER GROUP, LLC

1. Turn the ignition off.
2. Disconnect the EOT Sensor harness connector.
3. Disconnect the PCM C1 and C2 harness connectors.

4. Measure the resistance between ground and the (G24) EOT Signal circuit in the EOT Sensor harness connector.

   Is the resistance above 10k Ohms?

   Yes

   - Go To 3

   No

   - Repair the (G24) EOT Signal circuit for a short to ground.
   - Perform the POWERTRAIN VERIFICATION TEST. Refer to **POWERTRAIN VERIFICATION TEST** .

3. **CHECK FOR THE (G24) EOT SIGNAL CIRCUIT SHORTED TO THE (K915) SENSOR GROUND CIRCUIT**

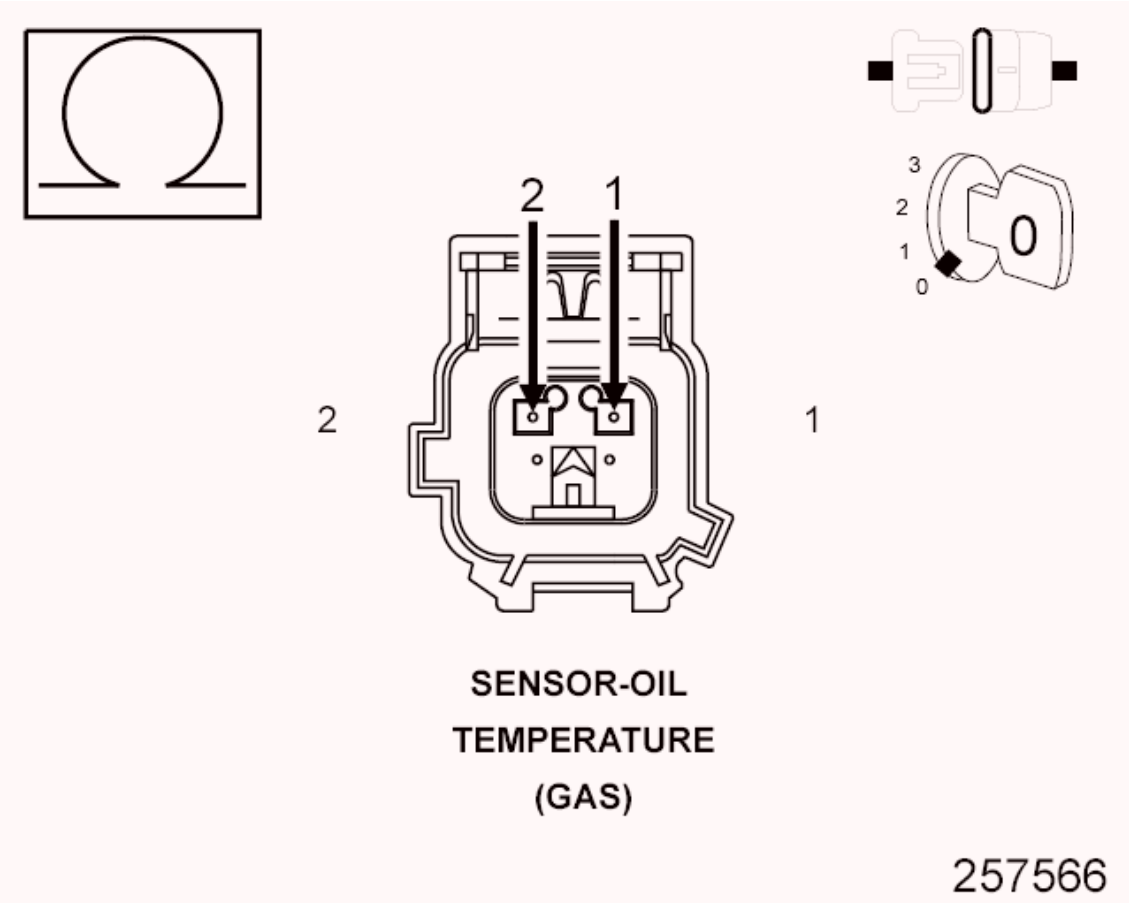

Fig. 143: Checking Engine Oil Temperature Sensor Signal Circuit For Short To Ground Circuit
Courtesy of CHRYSLER GROUP, LLC

1. Measure the resistance between the (G24) EOT Signal circuit and the (K915) Sensor Ground circuit in the EOT Sensor harness connector.

   Is the resistance above 10k Ohms?

   Yes

   - Go To 4

   No

   - Repair the (G24) EOT Signal circuit for a short to the (K915) Sensor Ground circuit.
   - Perform the POWERTRAIN VERIFICATION TEST. Refer to **POWERTRAIN VERIFICATION TEST** .

4. **ENGINE OIL TEMPERATURE SENSOR**
   1. Turn the ignition off.
   2. Reconnect the PCM C1 and C2 harness connectors.
   3. Turn the ignition on.
   4. With the scan tool, read the Engine Oil Temperature Sensor signal voltage.

      Is the voltage above 4.9 volts with the Engine Oil Temperature Sensor harness disconnected?

      Yes

      - Replace the Engine Oil Temperature Sensor in accordance with the service information. Refer to **2.0L SENSOR, OIL TEMPERATURE, REMOVAL** or **2.4L SENSOR, OIL TEMPERATURE, REMOVAL** .
      - Perform the POWERTRAIN VERIFICATION TEST. Refer to **POWERTRAIN VERIFICATION TEST** .

      No

      - Go To 5

5. **POWERTRAIN CONTROL MODULE (PCM)**

1. Using the wiring diagram/schematic as a guide, inspect the wiring and connectors between the Engine Oil Temperature Sensor and the Powertrain Control Module (PCM).
2. Look for any chafed, pierced, pinched, or partially broken wires.
3. Look for broken, bent, pushed out or corroded terminals.
4. Monitor the scan tool data relative to this circuit and wiggle test the wiring and connectors.
5. Look for the data to change or for the DTC to reset during the wiggle test.
6. Perform the Technical Service Bulletins that may apply.

Were any problems found?

Yes

- Repair as necessary.
- Perform the POWERTRAIN VERIFICATION TEST. Refer to **POWERTRAIN VERIFICATION TEST** .

No

- Replace and program the Powertrain Control Module (PCM) in accordance with the Service Information. Refer to **MODULE, POWERTRAIN CONTROL, REMOVAL** .
- Perform the POWERTRAIN VERIFICATION TEST. Refer to **POWERTRAIN VERIFICATION TEST** .

P0198-ENGINE OIL TEMPERATURE SENSOR CIRCUIT HIGH

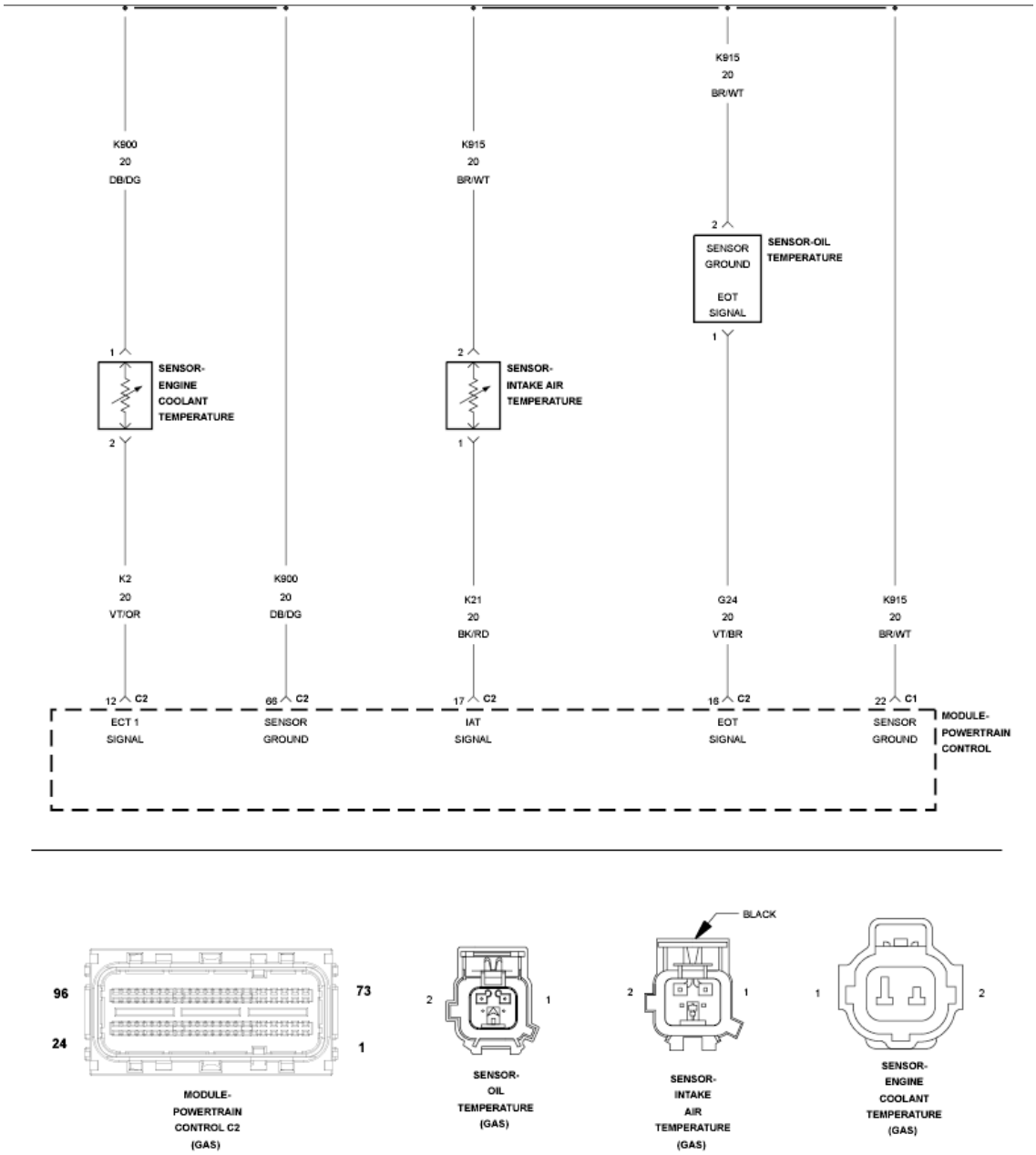

Fig. 144: Temperature Sensors Circuit Diagram
Courtesy of CHRYSLER GROUP, LLC

For a complete wiring diagram, **refer to appropriate SYSTEM WIRING DIAGRAMS article** .

WHEN MONITORED

With the ignition on and battery voltage greater than 10.4 volts.

SET CONDITION

The Powertrain Control Module (PCM) detects that the Engine Oil Temperature (EOT) Sensor input voltage is above the maximum acceptable value.

POSSIBLE CAUSES

POSSIBLE CAUSES
(G24) EOT SIGNAL CIRCUIT SHORTED TO VOLTAGE
(G24) EOT SIGNAL CIRCUIT OPEN OR HIGH RESISTANCE
(K915) SENSOR GROUND CIRCUIT OPEN OR HIGH RESISTANCE
ENGINE OIL TEMPERATURE SENSOR
POWERTRAIN CONTROL MODULE (PCM)

Always perform the Pre-Diagnostic Troubleshooting procedure before proceeding. Refer to PRE-DIAGNOSTIC TROUBLESHOOTING PROCEDURE .

DIAGNOSTIC TEST

1. **ACTIVE DTC**

NOTE: Diagnose and repair any system voltage or sensor reference voltage DTCs before continuing with this test.

1. Turn the ignition on.

WARNING: When the engine is operating, do not stand in direct line with the fan. Do not put your hands near the pulleys, belts or fan. Do not wear loose clothing. Failure to follow these instructions may result in possible serious or fatal injury.

2. With the scan tool, select View DTCs.

   Is the status Active for this DTC?

   Yes

   - Go To 2

No

- Perform the INTERMITTENT CONDITION diagnostic procedure. Refer to **INTERMITTENT CONDITION** .

2. **CHECK THE (G24) EOT SIGNAL CIRCUIT FOR A SHORT TO VOLTAGE**

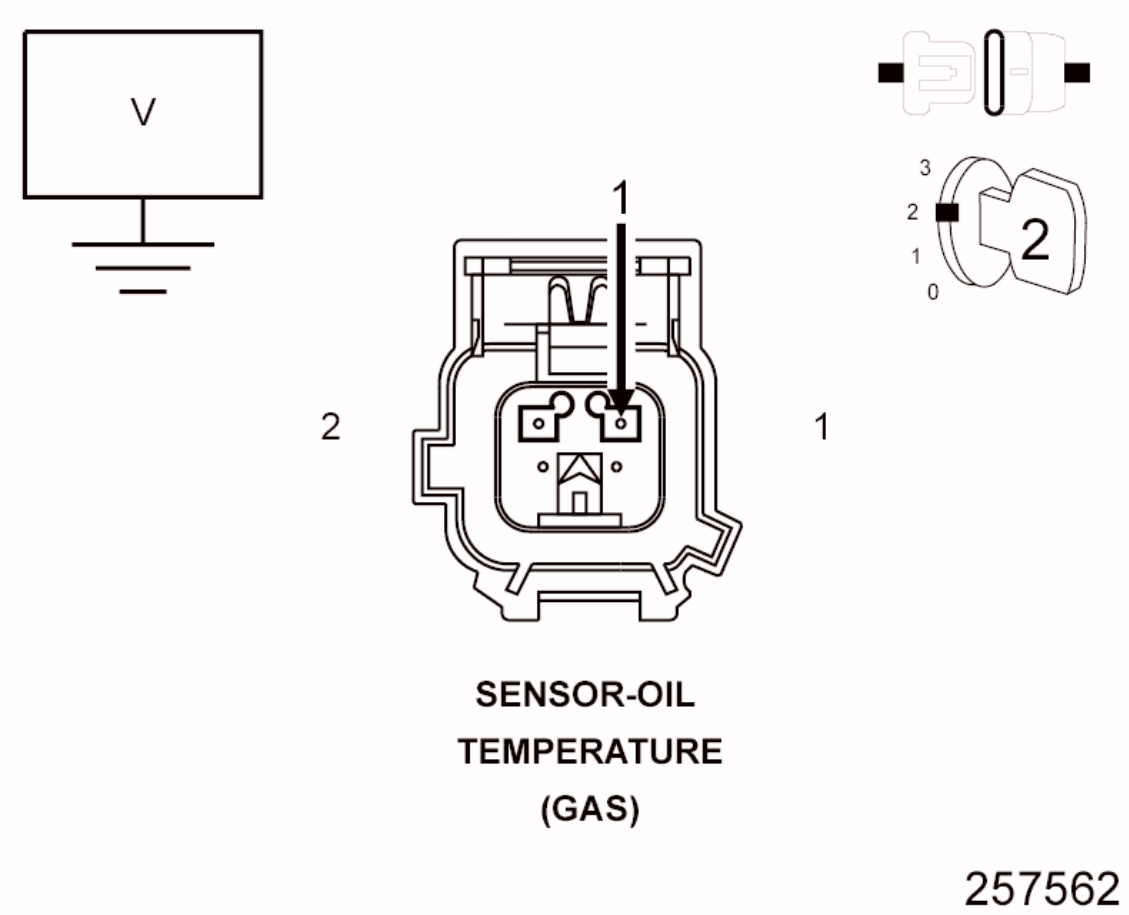

Fig. 145: Checking Engine Oil Temperature Sensor Signal Circuit For Short To Voltage
Courtesy of CHRYSLER GROUP, LLC

1. Turn the ignition off.
2. Disconnect the Engine Oil Temperature Sensor harness connector.
3. Turn the ignition on.
4. Measure the voltage of the (G24) EOT Signal circuit in the Engine Oil Temperature Sensor harness connector.

   Is the voltage above 5.2 volts?

Yes

- Repair the (G24) EOT Signal circuit for a short to voltage.
- Perform the POWERTRAIN VERIFICATION TEST. Refer to **POWERTRAIN VERIFICATION TEST** .

No

- Go To 3

3. **CHECK THE (G24) EOT SIGNAL CIRCUIT FOR AN OPEN/HIGH RESISTANCE**
   1. Turn the ignition off.
   2. Disconnect the PCM C1 and C2 harness connectors.

      CAUTION: Do not probe the PCM harness connectors. Probing the PCM harness connectors will damage the PCM terminals resulting in poor terminal to pin connection. Install the GPEC Diagnostic Adaptor to perform the diagnosis.

   3. Connect the (special tool #10436, Adapter, GPEC Diagnostic) to the PCM C2 harness connector.
   4. Measure the resistance of the (G24) EOT Signal circuit between the EOT Sensor harness connector and the GPEC Adaptor.

      Is the resistance below 5.0 Ohms?

      Yes

      - Go To 4

      No

      - Repair the (G24) EOT Signal circuit for an open or high resistance.
      - Perform the POWERTRAIN VERIFICATION TEST. Refer to **POWERTRAIN VERIFICATION TEST** .

4. **CHECK THE (K915) SENSOR GROUND CIRCUIT FOR AN OPEN/HIGH RESISTANCE**

CAUTION: Do not probe the PCM harness connectors. Probing the PCM harness connectors will damage the PCM terminals resulting in poor terminal to pin connection. Install the GPEC Diagnostic Adaptor to perform the diagnosis.

1. Connect the (special tool #10436, Adapter, GPEC Diagnostic) to the PCM C1 harness connector.
2. Measure the resistance of the (K915) Sensor Ground circuit between the EOT Sensor harness connector and the GPEC Adaptor.

   Is the resistance below 5.0 Ohms?

   Yes

   - Go To 5

   No

   - Repair the (K915) Sensor Ground 3 circuit for an open or high resistance.
   - Perform the POWERTRAIN VERIFICATION TEST. Refer to **POWERTRAIN VERIFICATION TEST** .

5. **ENGINE OIL TEMPERATURE SENSOR**

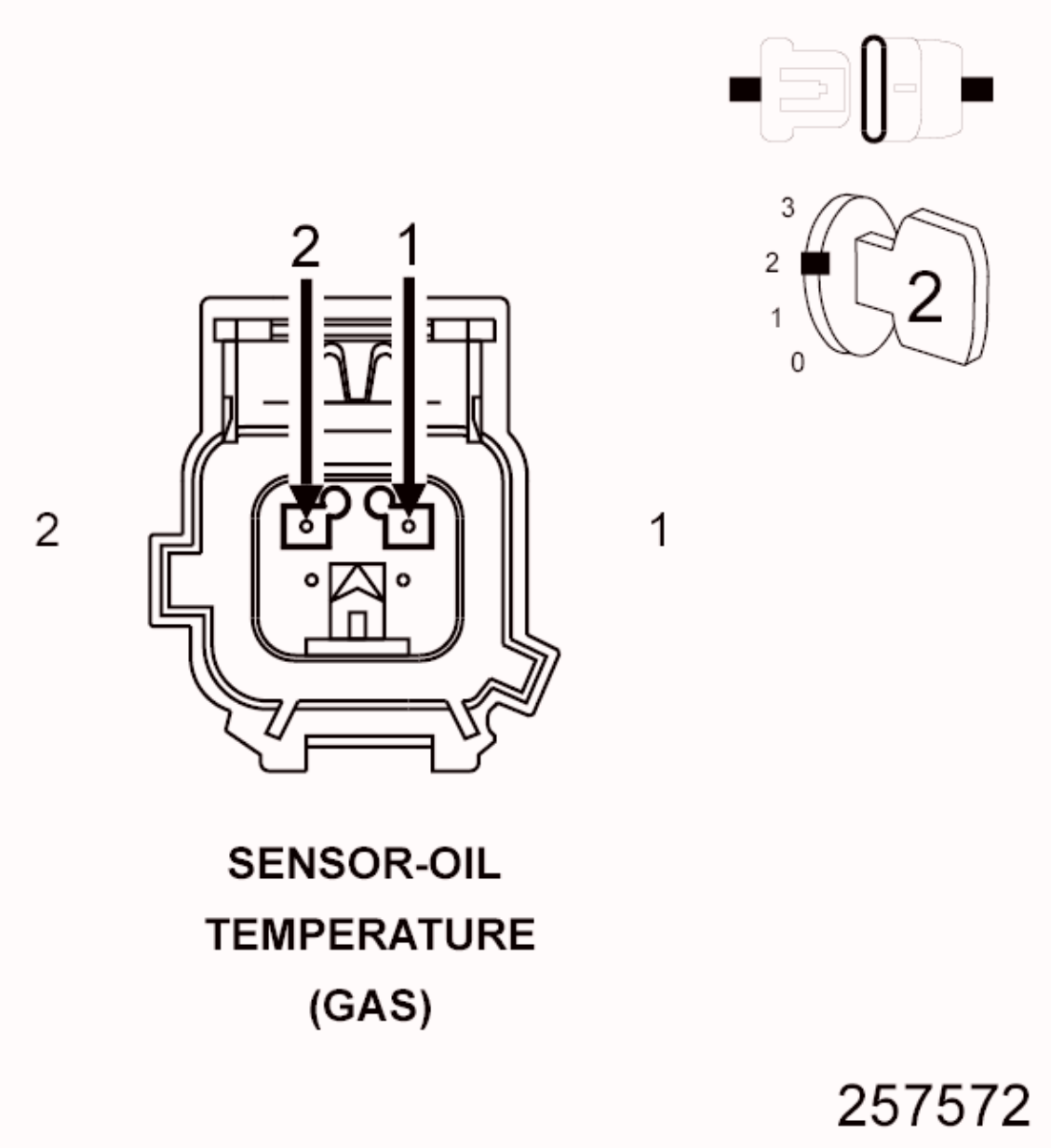

Fig. 146: Engine Oil Temperature Sensor Harness Connector End View
Courtesy of CHRYSLER GROUP, LLC

1. Turn the ignition off.
2. Reconnect the PCM C1 and C2 harness connectors.
3. Connect a jumper between the (G24) EOT Signal circuit and the (K915) Sensor Ground in the EOT Sensor harness connector.
4. Turn the ignition on.
5. With the scan tool, read the Engine Oil Temperature Sensor signal voltage.

   Is the voltage below 0.1 volts with the jumper in place?

Yes

- Replace the Engine Oil Temperature Sensor in accordance with the service information. Refer to **2.0L SENSOR, OIL TEMPERATURE, REMOVAL** or **2.4L SENSOR, OIL TEMPERATURE, REMOVAL** .
- Perform the POWERTRAIN VERIFICATION TEST. Refer to **POWERTRAIN VERIFICATION TEST** .

No

- Go To 6

6. **POWERTRAIN CONTROL MODULE (PCM)**
   1. Using the wiring diagram/schematic as a guide, inspect the wiring and connectors between the Engine Oil Temperature Sensor and the Powertrain Control Module (PCM).
   2. Look for any chafed, pierced, pinched, or partially broken wires.
   3. Look for broken, bent, pushed out or corroded terminals.
   4. Monitor the scan tool data relative to this circuit and wiggle test the wiring and connectors.
   5. Look for the data to change or for the DTC to reset during the wiggle test.
   6. Perform any Technical Service Bulletins that may apply.

   Were any problems found?

   Yes

   - Repair as necessary.
   - Perform the POWERTRAIN VERIFICATION TEST. Refer to **POWERTRAIN VERIFICATION TEST** .

   No

   - Replace and program the Powertrain Control Module (PCM) in accordance with the service information. Refer to **MODULE, POWERTRAIN CONTROL, REMOVAL** .
   - Perform the POWERTRAIN VERIFICATION TEST. Refer to

POWERTRAIN VERIFICATION TEST .

P0201-FUEL INJECTOR 1 CIRCUIT/OPEN

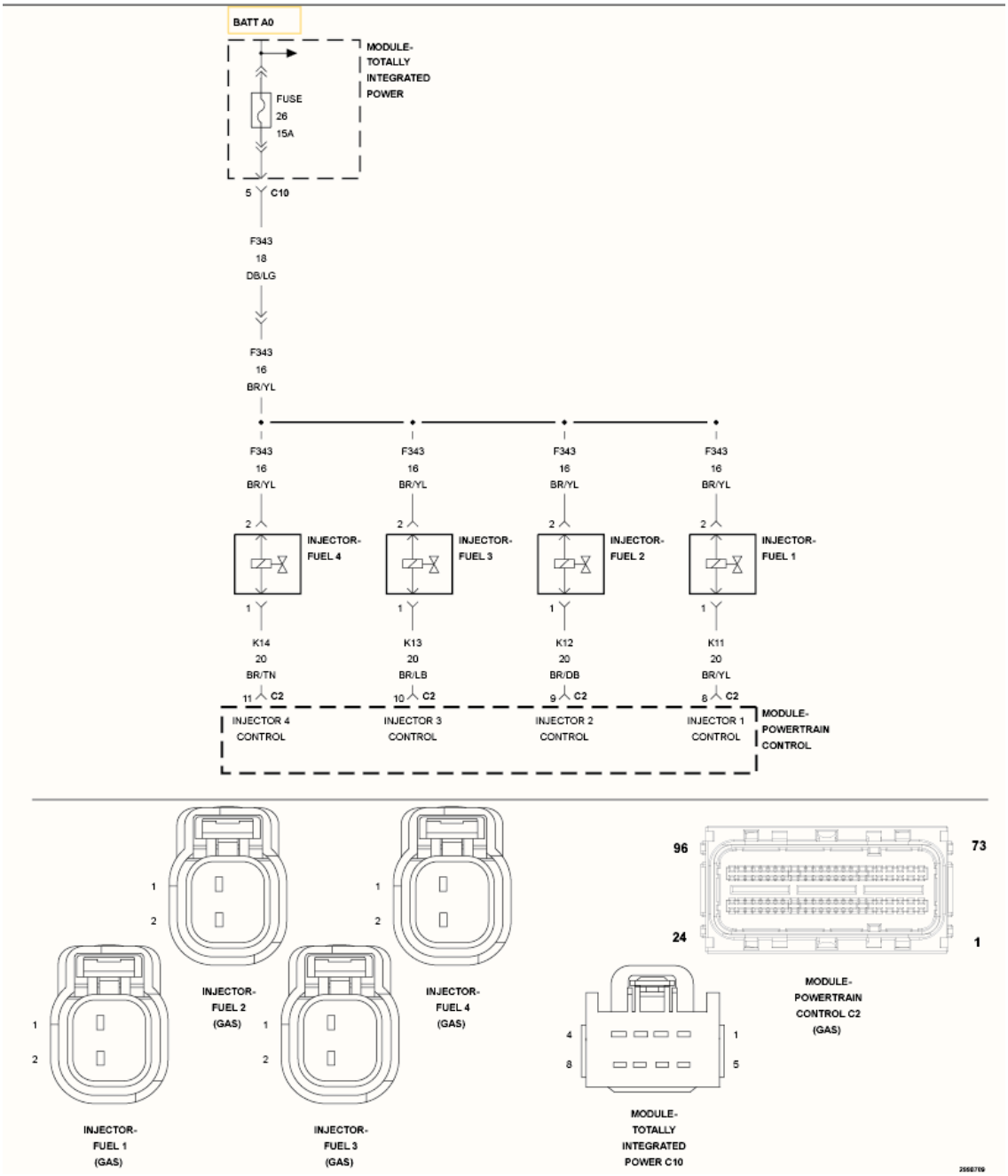

Fig. 147: Fuel Injector Circuit Diagram
Courtesy of CHRYSLER GROUP, LLC

For a complete wiring diagram, **refer to appropriate SYSTEM WIRING DIAGRAMS article** .

WHEN MONITORED

With battery voltage greater than 10.0 volts, ASD relay energized, and engine speed less than 3000 RPM.

SET CONDITION

The Powertrain Control Module (PCM) monitors the continuity of the injector circuits as well as the voltage spike created by the collapse of the magnetic field in the injector coil. Any condition that reduces the maximum current flow or the magnitude of the voltage spike can cause this DTC to set.

POSSIBLE CAUSES

POSSIBLE CAUSES
FUSED ASD RELAY OUTPUT CIRCUIT OPEN OR HIGH RESISTANCE
INJECTOR 1 CONTROL CIRCUIT OPEN OR HIGH RESISTANCE
INJECTOR 1 CONTROL CIRCUIT SHORTED TO GROUND
FUEL INJECTOR 1
POWERTRAIN CONTROL MODULE (PCM)

Always perform the Pre-Diagnostic Troubleshooting procedure before proceeding. Refer to PRE-DIAGNOSTIC TROUBLESHOOTING PROCEDURE .

DIAGNOSTIC TEST

1. **ACTIVE DTC**

NOTE: Diagnose and repair any system voltage or sensor reference voltage DTCs before continuing with this test.

1. Start the engine and allow it to idle.

WARNING: When the engine is operating, do not stand in direct line with the fan. Do not put your hands near the pulleys, belts or fan. Do not wear loose clothing. Failure to follow these instructions may result in possible serious or fatal injury.

2. With the scan tool, select View DTCs.

   Is the status Active for this DTC?

   Yes

   - Go To 2

   No

   - Perform the INTERMITTENT CONDITION diagnostic procedure. Refer to **INTERMITTENT CONDITION** .

2. **CHECK THE (F343) FUSED ASD RELAY OUTPUT CIRCUIT FOR AN OPEN/HIGH RESISTANCE**

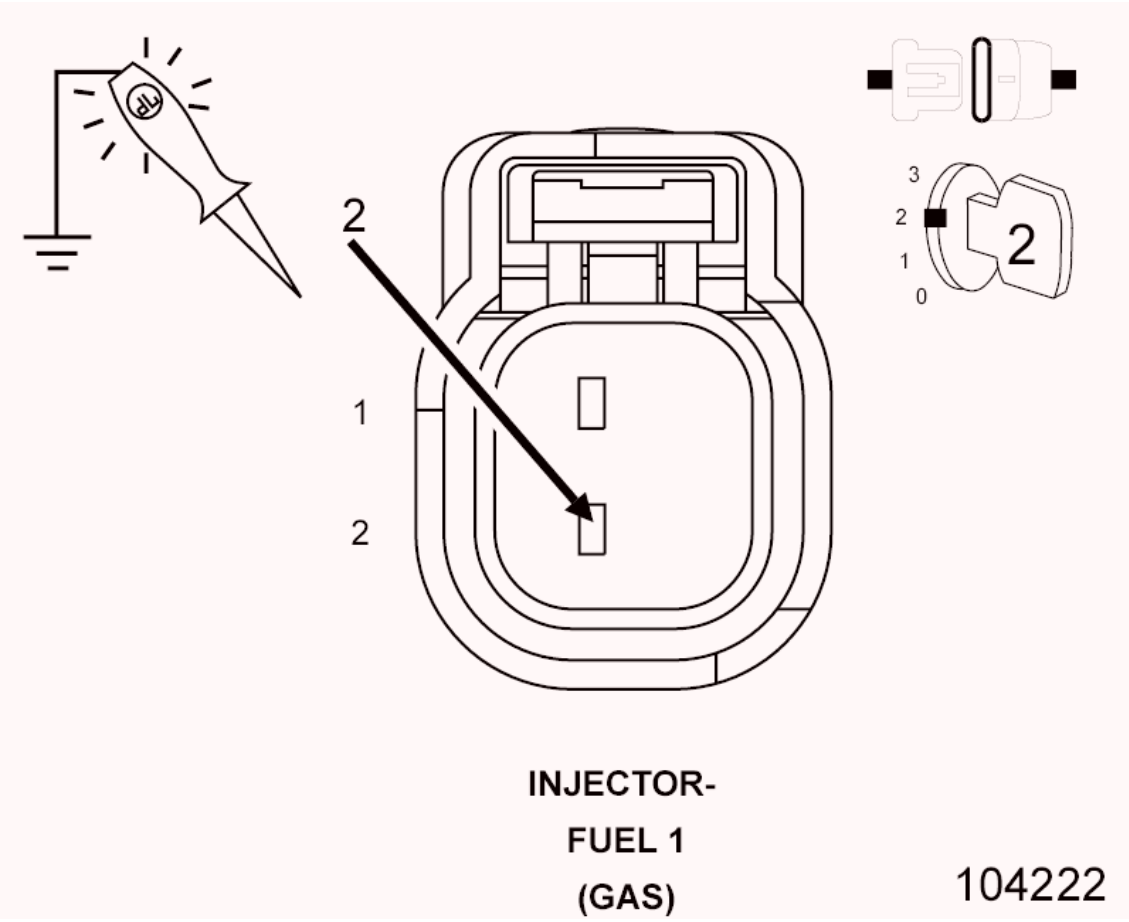

Fig. 148: Checking Fused Main Relay Output Circuit For Open Or High Resistance
Courtesy of CHRYSLER GROUP, LLC

1. Turn the ignition off.

2. Disconnect the Fuel Injector 1 harness connector.
3. Turn the ignition on.
4. Using a 12-volt test light connected to ground, check the (F343) Fused ASD Relay Output circuit in the Fuel Injector 1 harness connector.

NOTE: The test light should be illuminated and bright. Compare the brightness to that of a direct connection to the battery.

Is the test light illuminated and bright?

Yes

- Go To 3

No

- Repair the (F343) Fused ASD Relay Output circuit for an open or high resistance.
- Perform the POWERTRAIN VERIFICATION TEST. Refer to **POWERTRAIN VERIFICATION TEST** .

3. **CHECK THE (K11) INJECTOR 1 CONTROL CIRCUIT FOR AN OPEN/HIGH RESISTANCE**
   1. Turn the ignition off.
   2. Disconnect the PCM C2 harness connector.

CAUTION: Do not probe the PCM harness connectors. Probing the PCM harness connectors will damage the PCM terminals resulting in poor terminal to pin connection. Install the GPEC Diagnostic Adaptor to perform the diagnosis.

   3. Connect the (special tool #10436, Adapter, GPEC Diagnostic).
   4. Measure the resistance of the (K11) Injector 1 Control circuit between the Fuel Injector 1 harness connector and the GPEC Adaptor.

   Is the resistance below 5.0 Ohms?

Yes

- Go To 4

No

- Repair the (K11) Injector 1 Control circuit for an open or high resistance.
- Perform the POWERTRAIN VERIFICATION TEST. Refer to **POWERTRAIN VERIFICATION TEST** .

4. **FUEL INJECTOR 1**
   1. Turn the ignition off.
   2. Measure the resistance between the terminals of Fuel Injector 1.

NOTE: The resistance of the circuit will vary according to the temperature of the injector coil. Use the table below to determine the resistance range of the injector.

Fuel Injector Coil Resistance Based on Engine Temperature	
Temperature	**Resistance**
-20° C (-4° F)	10 Ohms (+/- 0.6 Ohm)
20° C (68° F)	12 Ohms (+/- 0.6 Ohm)
60° C (140° F)	14 Ohms (+/- 0.6 Ohm)
100° C (212° F)	16 Ohms (+/- 0.6 Ohm)

Is the resistance of the injector within the specified range?

Yes

- Go To 5

No

- Replace Fuel Injector 1 in accordance with the service information. Refer to **INJECTOR(S), FUEL, REMOVAL** .
- Perform the POWERTRAIN VERIFICATION TEST. Refer to **POWERTRAIN VERIFICATION TEST** .

5. **CHECK THE (K11) INJECTOR 1 CONTROL CIRCUIT FOR A SHORT TO GROUND**

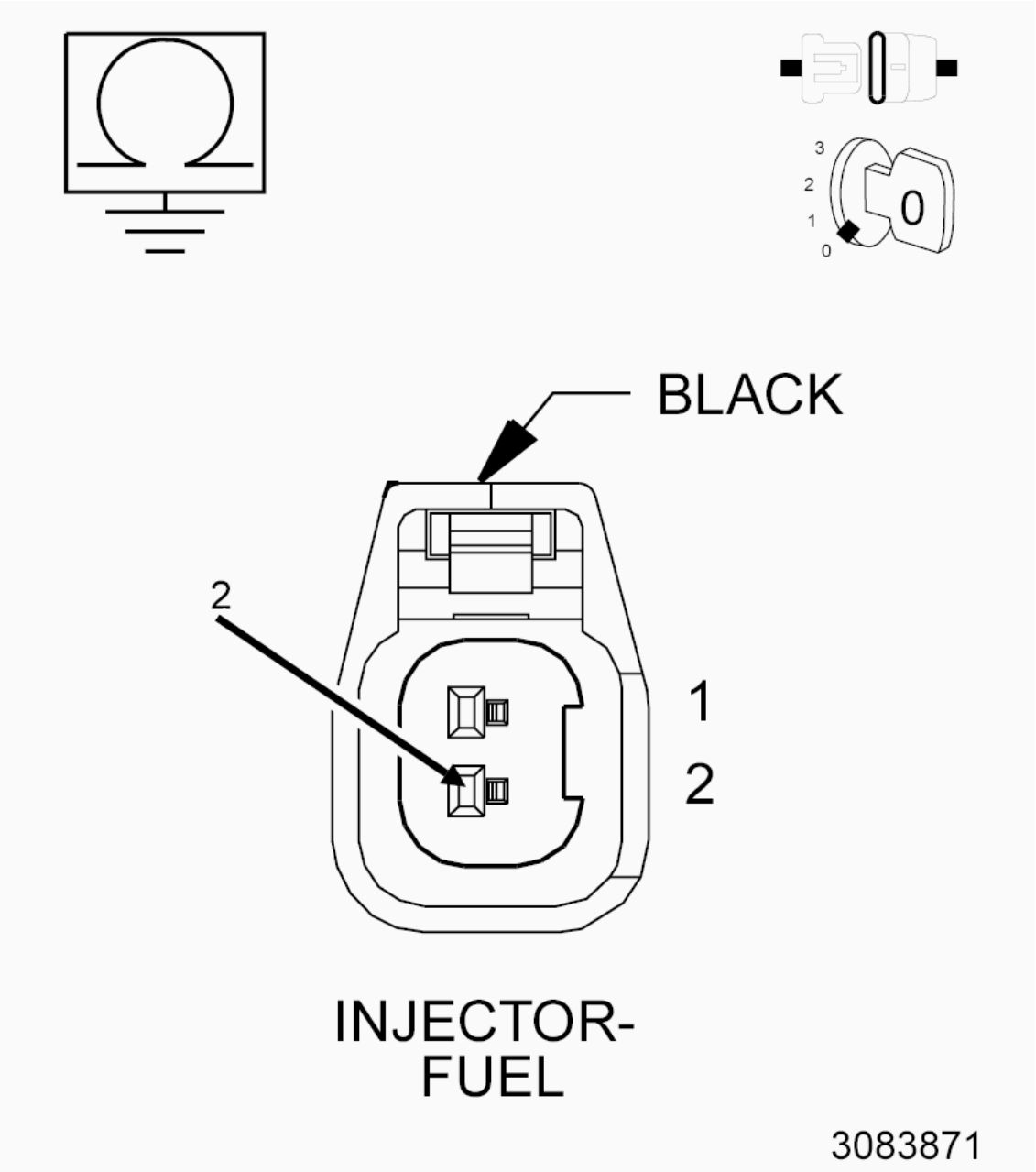

Fig. 149: Checking Injector Control Circuit For Short To Ground
Courtesy of CHRYSLER GROUP, LLC

1. Turn the ignition off.
2. Measure the resistance between ground and the (K11) Injector 1 Control circuit in the Fuel Injector 1 harness connector.

   Is the resistance above 10k Ohms?

Yes

- Go To 6

No

- Repair the (K11) Injector 1 Control circuit for a short to ground.
- Perform the POWERTRAIN VERIFICATION TEST. Refer to **POWERTRAIN VERIFICATION TEST** .

6. **POWERTRAIN CONTROL MODULE (PCM)**
   1. Using the wiring diagram/schematic as a guide, inspect the wiring and connectors between Fuel Injector 1 and the Powertrain Control Module (PCM).
      - Look for any chafed, pierced, pinched, or partially broken wires.
      - Look for broken, bent, pushed out or corroded terminals.
      - Monitor the scan tool data relative to this circuit and wiggle test the wiring and connectors.
      - Look for the data to change or for the DTC to reset during the wiggle test.
      - Perform any Technical Service Bulletins that may apply.

      Were any problems found?

      Yes

      - Repair as necessary.
      - Perform the POWERTRAIN VERIFICATION TEST. Refer to **POWERTRAIN VERIFICATION TEST** .

      No

      - Replace and program the Powertrain Control Module (PCM) in accordance with the service information. Refer to **MODULE, POWERTRAIN CONTROL, REMOVAL** .
      - Perform the POWERTRAIN VERIFICATION TEST. Refer to **POWERTRAIN VERIFICATION TEST** .

P0202-FUEL INJECTOR 2 CIRCUIT/OPEN

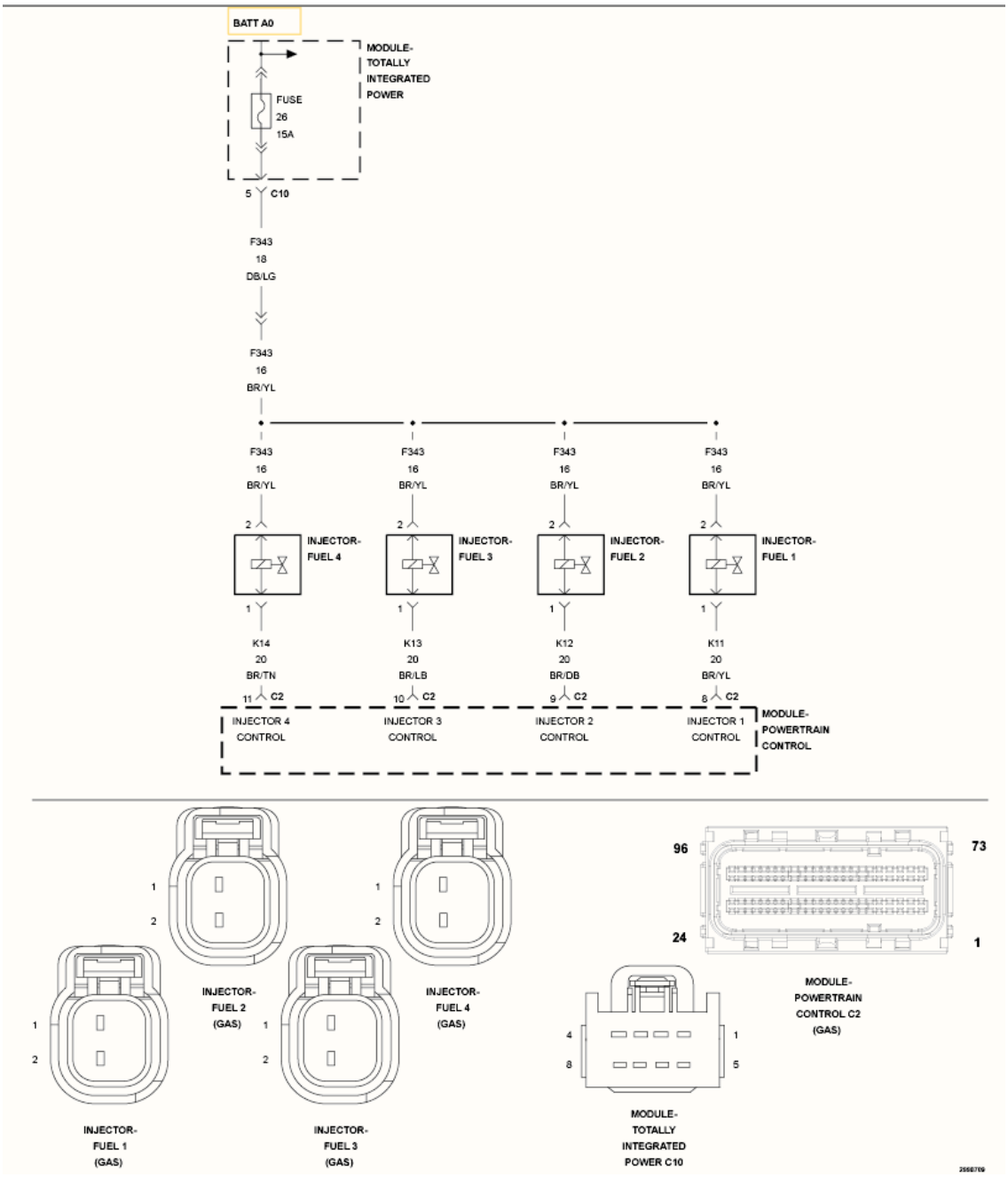

Fig. 150: Fuel Injector Circuit Diagram
Courtesy of CHRYSLER GROUP, LLC

For a complete wiring diagram, **refer to appropriate SYSTEM WIRING DIAGRAMS article** .

WHEN MONITORED

With battery voltage greater than 10 volts, ASD relay energized, and engine speed less than 3000 RPM.

SET CONDITION

The Powertrain Control Module (PCM) monitors the continuity of the injector circuits as well as the voltage spike created by the collapse of the magnetic field in the injector coil. Any condition that reduces the maximum current flow or the magnitude of the voltage spike can cause this DTC to set.

POSSIBLE CAUSES

POSSIBLE CAUSES
FUSED ASD RELAY OUTPUT CIRCUIT OPEN OR HIGH RESISTANCE
INJECTOR 2 CONTROL CIRCUIT OPEN OR HIGH RESISTANCE
INJECTOR 2 CONTROL CIRCUIT SHORTED TO GROUND
FUEL INJECTOR 2
POWERTRAIN CONTROL MODULE (PCM)

Always perform the Pre-Diagnostic Troubleshooting procedure before proceeding. Refer to PRE-DIAGNOSTIC TROUBLESHOOTING PROCEDURE .

DIAGNOSTIC TEST

1. **ACTIVE DTC**

NOTE: Diagnose and repair any system voltage or sensor reference voltage DTCs before continuing with this test.

1. Start the engine and allow it to idle.

WARNING: When the engine is operating, do not stand in direct line with the fan. Do not put your hands near the pulleys, belts or fan. Do not wear loose clothing. Failure to follow these instructions may result in possible serious or fatal injury.

2. With the scan tool, select View DTCs.

   Is the status Active for this DTC?

Yes

- Go To 2

No

- Perform the INTERMITTENT CONDITION diagnostic procedure. Refer to **INTERMITTENT CONDITION** .

2. **CHECK THE (F343) FUSED ASD RELAY OUTPUT CIRCUIT FOR AN OPEN/HIGH RESISTANCE**

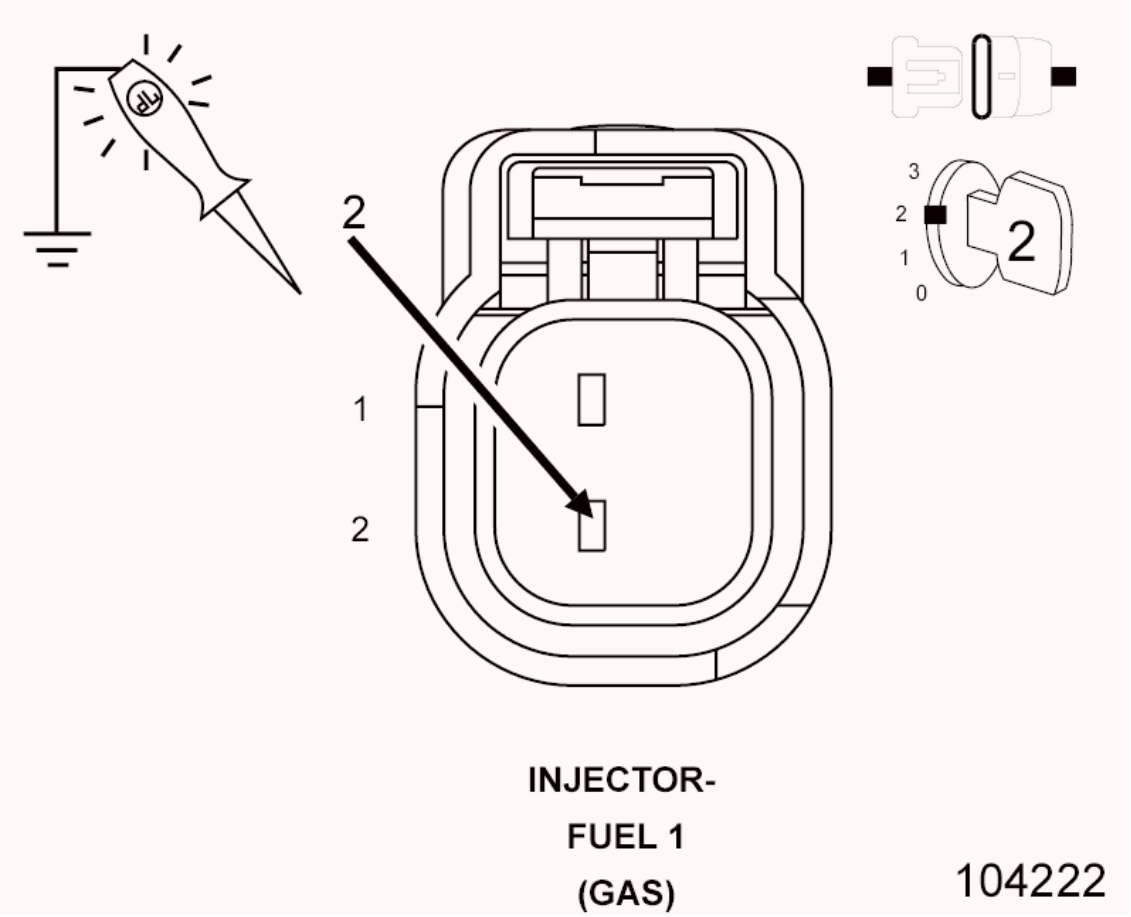

Fig. 151: Checking Fused Main Relay Output Circuit For Open Or High Resistance
Courtesy of CHRYSLER GROUP, LLC

1. Turn the ignition off.
2. Disconnect the Fuel Injector 2 harness connector.
3. Turn the ignition on.
4. Using a 12-volt test light connected to ground, check the (F343) Fused

ASD Relay Output circuit in the Fuel Injector 2 harness connector.

NOTE: The test light should be illuminated and bright. Compare the brightness to that of a direct connection to the battery.

Is the test light illuminated and bright?

Yes

- Go To 3

No

- Repair the (F343) Fused ASD Relay Output circuit for an open or high resistance.
- Perform the POWERTRAIN VERIFICATION TEST. Refer to **POWERTRAIN VERIFICATION TEST** .

3. **CHECK THE (K12) INJECTOR 2 CONTROL CIRCUIT FOR AN OPEN/HIGH RESISTANCE**
   1. Turn the ignition off.
   2. Disconnect the PCM C2 harness connector.

      CAUTION: Do not probe the PCM harness connectors. Probing the PCM harness connectors will damage the PCM terminals resulting in poor terminal to pin connection. Install the GPEC Diagnostic Adaptor to perform the diagnosis.

   3. Connect the (special tool #10436, Adapter, GPEC Diagnostic).
   4. Measure the resistance of the (K12) Injector 2 Control circuit between the Fuel Injector 2 harness connector and the GPEC Adaptor.

      Is the resistance below 5.0 Ohms?

      Yes

      - Go To 4

No

- Repair the (K12) Injector 2 Control circuit for an open or high resistance.
- Perform the POWERTRAIN VERIFICATION TEST. Refer to **POWERTRAIN VERIFICATION TEST** .

4. **FUEL INJECTOR 2**
   1. Turn the ignition off.
   2. Measure the resistance between the terminals of Fuel Injector 2.

NOTE: The resistance of the circuit will vary according to the temperature of the injector coil. Use the table below to determine the resistance range of the injector.

Fuel Injector Coil Resistance Based on Engine Temperature	
Temperature	**Resistance**
-20° C (-4° F)	10 Ohms (+/- 0.6 Ohm)
20° C (68° F)	12 Ohms (+/- 0.6 Ohm)
60° C (140° F)	14 Ohms (+/- 0.6 Ohm)
100° C (212° F)	16 Ohms (+/- 0.6 Ohm)

Is the resistance of the injector within the specified range?

Yes

- Go To 5

No

- Replace Fuel Injector 2 in accordance with the service information. Refer to **INJECTOR(S), FUEL, REMOVAL** .
- Perform the POWERTRAIN VERIFICATION TEST. Refer to **POWERTRAIN VERIFICATION TEST** .

5. **CHECK THE (K12) INJECTOR 2 CONTROL CIRCUIT FOR A SHORT TO GROUND**

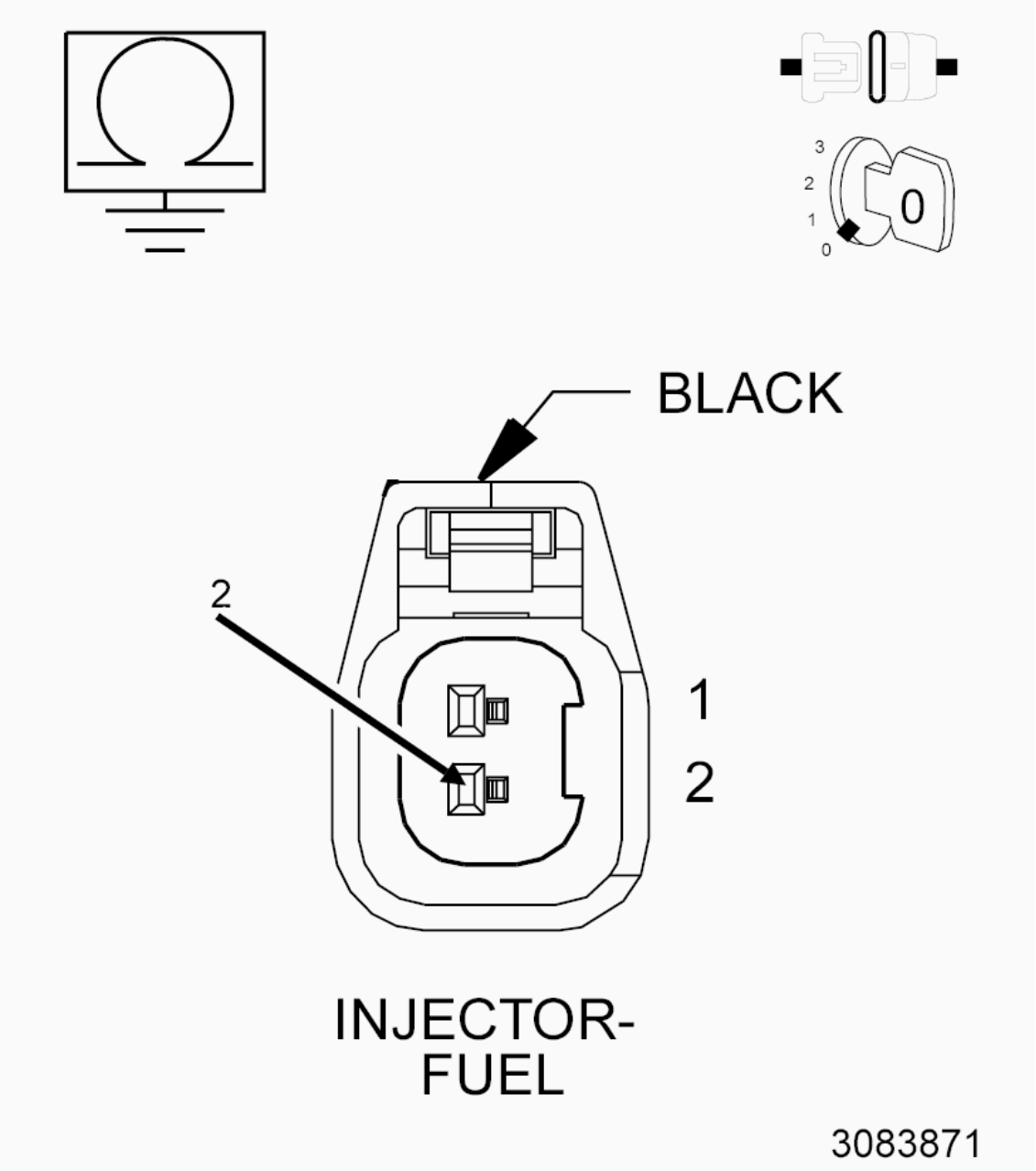

Fig. 152: Checking Injector Control Circuit For Short To Ground
Courtesy of CHRYSLER GROUP, LLC

1. Turn the ignition off.
2. Measure the resistance between ground and the (K12) Injector 2 Control circuit in the Fuel Injector 2 harness connector.

   Is the resistance above 10k Ohms?

   Yes

   - Go To 6

No

- Repair the (K12) Injector 2 Control circuit for a short to ground.
- Perform the POWERTRAIN VERIFICATION TEST. Refer to **POWERTRAIN VERIFICATION TEST** .

6. **POWERTRAIN CONTROL MODULE (PCM)**
   1. Using the wiring diagram/schematic as a guide, inspect the wiring and connectors between Fuel Injector 2 and the Powertrain Control Module (PCM).
      - Look for any chafed, pierced, pinched, or partially broken wires.
      - Look for broken, bent, pushed out or corroded terminals.
      - Monitor the scan tool data relative to this circuit and wiggle test the wiring and connectors.
      - Look for the data to change or for the DTC to reset during the wiggle test.
      - Perform any Technical Service Bulletins that may apply.

      Were any problems found?

      Yes

      - Repair as necessary.
      - Perform the POWERTRAIN VERIFICATION TEST. Refer to **POWERTRAIN VERIFICATION TEST** .

      No

      - Replace and program the Powertrain Control Module (PCM) in accordance with the service information. Refer to **MODULE, POWERTRAIN CONTROL, REMOVAL** .
      - Perform the POWERTRAIN VERIFICATION TEST. Refer to **POWERTRAIN VERIFICATION TEST** .

P0203-FUEL INJECTOR 3 CIRCUIT/OPEN

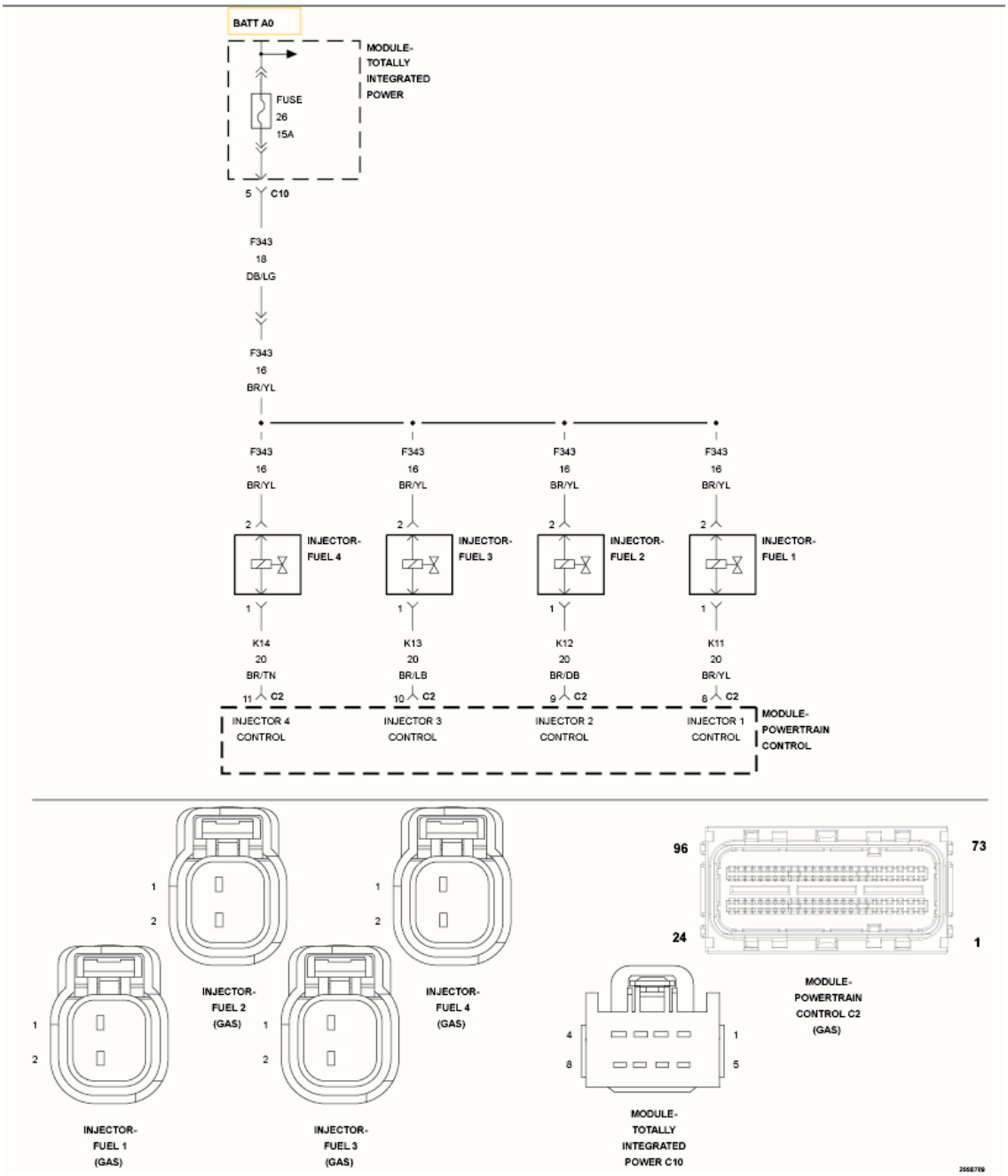

Fig. 153: Fuel Injector Circuit Diagram
Courtesy of CHRYSLER GROUP, LLC

For a complete wiring diagram, **refer to appropriate SYSTEM WIRING DIAGRAMS article** .

WHEN MONITORED

With battery voltage greater than 10.0 volts, ASD relay energized, and engine speed less than 3000 RPM.

SET CONDITION

The Powertrain Control Module (PCM) monitors the continuity of the injector circuits as well as the voltage spike created by the collapse of the magnetic field in the injector coil. Any condition that reduces the maximum current flow or the magnitude of the voltage spike can cause this DTC to set.

POSSIBLE CAUSES

POSSIBLE CAUSES
FUSED ASD RELAY OUTPUT CIRCUIT OPEN OR HIGH RESISTANCE
INJECTOR 3 CONTROL CIRCUIT OPEN OR HIGH RESISTANCE
INJECTOR 3 CONTROL CIRCUIT SHORTED TO GROUND
FUEL INJECTOR 3
POWERTRAIN CONTROL MODULE (PCM)

Always perform the Pre-Diagnostic Troubleshooting procedure before proceeding. Refer to PRE-DIAGNOSTIC TROUBLESHOOTING PROCEDURE .

DIAGNOSTIC TEST

1. **ACTIVE DTC**

NOTE: Diagnose and repair any system voltage or sensor reference voltage DTCs before continuing with this test.

1. Start the engine and allow it to idle.

WARNING: When the engine is operating, do not stand in direct line with the fan. Do not put your hands near the pulleys, belts or fan. Do not wear loose clothing. Failure to follow these instructions may result in possible serious or fatal injury.

2. With the scan tool, select View DTCs.

   Is the status Active for this DTC?

Yes

- Go To 2

No

- Perform the INTERMITTENT CONDITION diagnostic procedure. Refer to **INTERMITTENT CONDITION** .

2. **CHECK THE (F343) FUSED ASD RELAY OUTPUT CIRCUIT FOR AN OPEN/HIGH RESISTANCE**

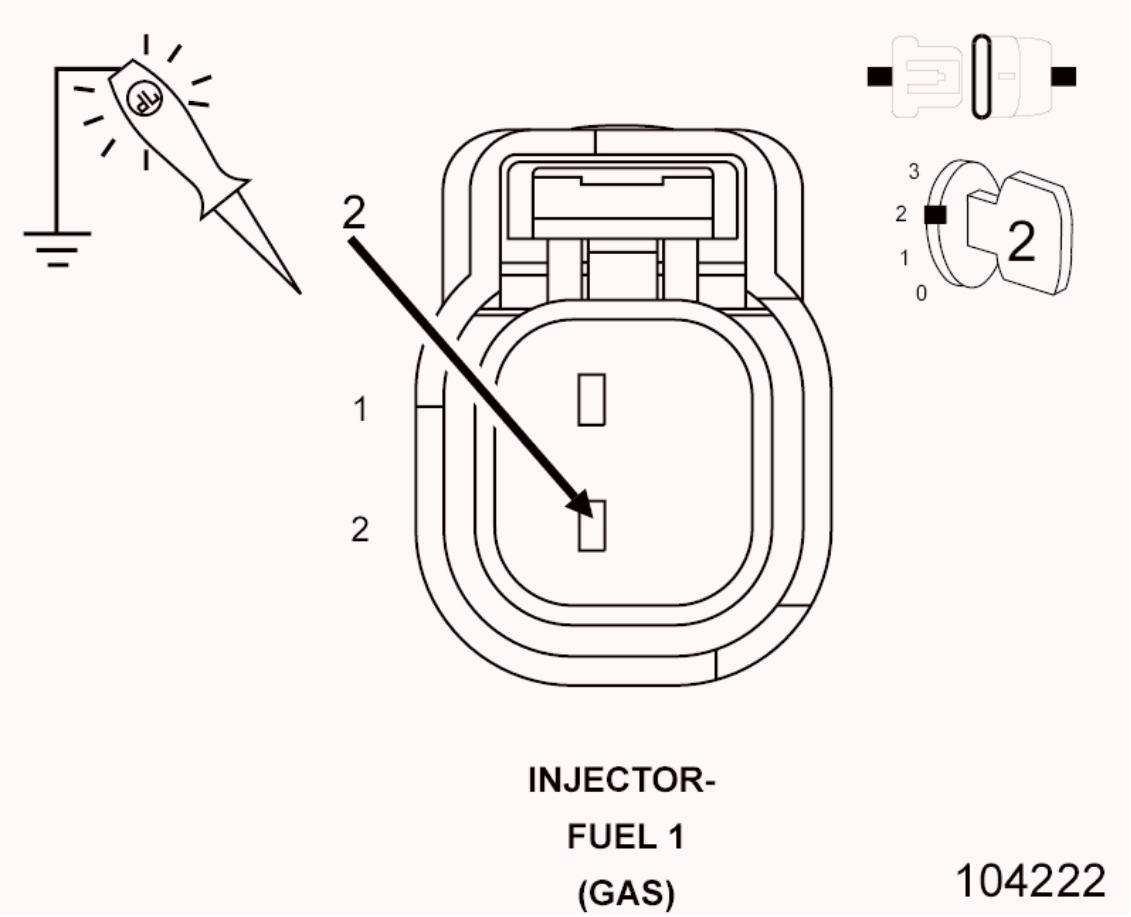

Fig. 154: Checking Fused Main Relay Output Circuit For Open Or High Resistance
Courtesy of CHRYSLER GROUP, LLC

1. Turn the ignition off.
2. Disconnect the Fuel Injector 3 harness connector.
3. Turn the ignition on.
4. Using a 12-volt test light connected to ground, check the (F343) Fused

ASD Relay Output circuit in the Fuel Injector 3 harness connector.

NOTE: The test light should be illuminated and bright. Compare the brightness to that of a direct connection to the battery.

Is the test light illuminated and bright?

Yes

- Go To 3

No

- Repair the (F343) Fused ASD Relay Output circuit for an open or high resistance.
- Perform the POWERTRAIN VERIFICATION TEST. Refer to **POWERTRAIN VERIFICATION TEST** .

3. **CHECK THE (K13) INJECTOR 3 CONTROL CIRCUIT FOR AN OPEN/HIGH RESISTANCE**
   1. Turn the ignition off.
   2. Disconnect the PCM C2 harness connector.

      CAUTION: Do not probe the PCM harness connectors. Probing the PCM harness connectors will damage the PCM terminals resulting in poor terminal to pin connection. Install the GPEC Diagnostic Adaptor to perform the diagnosis.

   3. Connect the (special tool #10436, Adapter, GPEC Diagnostic).
   4. Measure the resistance of the (K13) Injector 3 Control circuit between the Fuel Injector 3 harness connector and the GPEC Adaptor.

      Is the resistance below 5.0 Ohms?

      Yes

      - Go To 4

No

- Repair the (K13) Injector 3 Control circuit for an open or high resistance.
- Perform the POWERTRAIN VERIFICATION TEST. Refer to **POWERTRAIN VERIFICATION TEST** .

4. **FUEL INJECTOR 3**
   1. Turn the ignition off.
   2. Measure the resistance between the terminals of Fuel Injector 3.

NOTE: The resistance of the circuit will vary according to the temperature of the injector coil. Use the table below to determine the resistance range of the injector.

Fuel Injector Coil Resistance Based on Engine Temperature	
Temperature	**Resistance**
-20° C (-4° F)	10 Ohms (+/- 0.6 Ohm)
20° C (68° F)	12 Ohms (+/- 0.6 Ohm)
60° C (140° F)	14 Ohms (+/- 0.6 Ohm)
100° C (212° F)	16 Ohms (+/- 0.6 Ohm)

Is the resistance of the injector within the specified range?

Yes

- Go To 5

No

- Replace Fuel Injector 3 in accordance with the service information. Refer to **INJECTOR(S), FUEL, REMOVAL** .
- Perform the POWERTRAIN VERIFICATION TEST. Refer to **POWERTRAIN VERIFICATION TEST** .

5. **CHECK THE (K13) INJECTOR 3 CONTROL CIRCUIT FOR A SHORT TO GROUND**

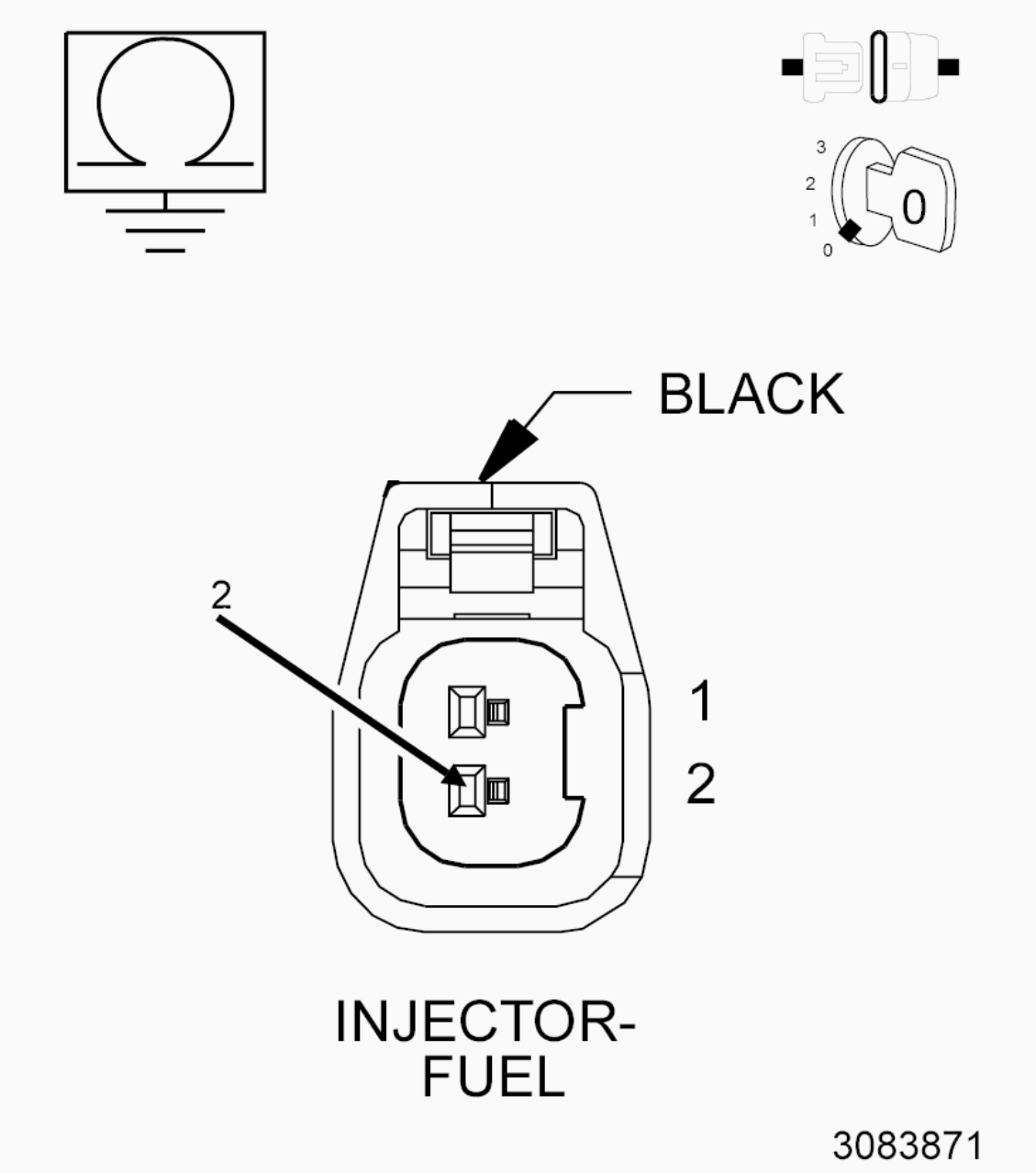

Fig. 155: Checking Injector Control Circuit For Short To Ground
Courtesy of CHRYSLER GROUP, LLC

1. Turn the ignition off.
2. Measure the resistance between ground and the (K13) Injector 3 Control circuit in the Fuel Injector 3 harness connector.

   Is the resistance above 10k Ohms?

   Yes

   - Go To 6

No

- Repair the (K13) Injector 3 Control circuit for a short to ground.
- Perform the POWERTRAIN VERIFICATION TEST. Refer to **POWERTRAIN VERIFICATION TEST** .

6. **POWERTRAIN CONTROL MODULE (PCM)**
   1. Using the wiring diagram/schematic as a guide, inspect the wiring and connectors between Fuel Injector 3 and the Powertrain Control Module (PCM).
      - Look for any chafed, pierced, pinched, or partially broken wires.
      - Look for broken, bent, pushed out or corroded terminals.
      - Monitor the scan tool data relative to this circuit and wiggle test the wiring and connectors.
      - Look for the data to change or for the DTC to reset during the wiggle test.
      - Perform any Technical Service Bulletins that may apply.

      Were any problems found?

      Yes

      - Repair as necessary.
      - Perform the POWERTRAIN VERIFICATION TEST. Refer to **POWERTRAIN VERIFICATION TEST** .

      No

      - Replace and program the Powertrain Control Module (PCM) in accordance with the service information. Refer to **MODULE, POWERTRAIN CONTROL, REMOVAL** .
      - Perform the POWERTRAIN VERIFICATION TEST. Refer to **POWERTRAIN VERIFICATION TEST** .

P0204-FUEL INJECTOR 4 CIRCUIT/OPEN

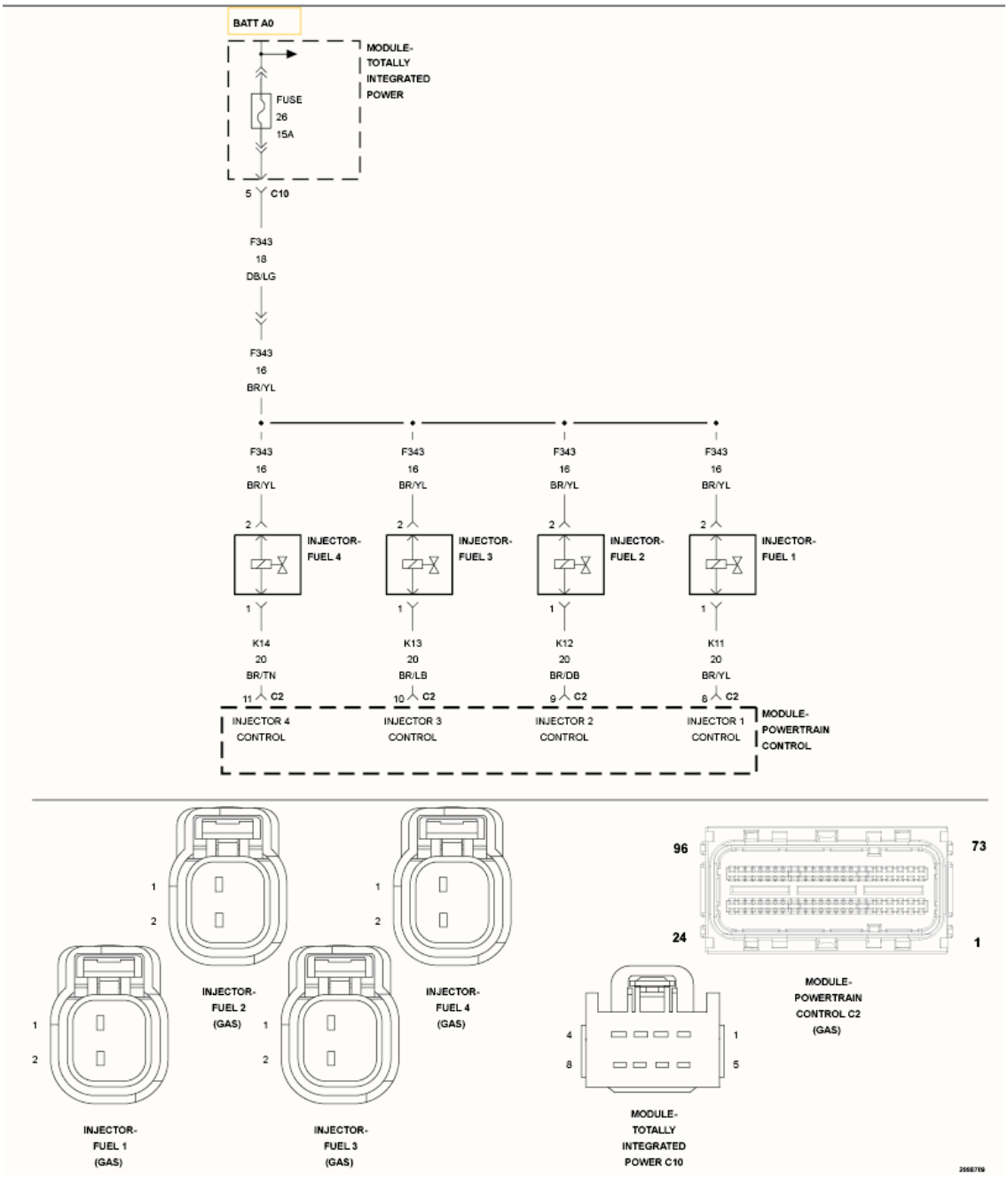

Fig. 156: Fuel Injector Circuit Diagram
Courtesy of CHRYSLER GROUP, LLC

For a complete wiring diagram. **refer to appropriate SYSTEM WIRING DIAGRAMS article** .

WHEN MONITORED

With battery voltage greater than 10.0 volts, ASD Relay energized, and engine speed less than 3000 RPM.

SET CONDITION

The Powertrain Control Module (PCM) monitors the continuity of the injector circuits as well as the voltage spike created by the collapse of the magnetic field in the injector coil. Any condition that reduces the maximum current flow or the magnitude of the voltage spike can cause this DTC to set.

POSSIBLE CAUSES

POSSIBLE CAUSES
FUSED ASD RELAY OUTPUT CIRCUIT OPEN OR HIGH RESISTANCE
INJECTOR 4 CONTROL CIRCUIT OPEN OR HIGH RESISTANCE
INJECTOR 4 CONTROL CIRCUIT SHORTED TO GROUND
FUEL INJECTOR 4
POWERTRAIN CONTROL MODULE (PCM)

Always perform the Pre-Diagnostic Troubleshooting procedure before proceeding. Refer to PRE-DIAGNOSTIC TROUBLESHOOTING PROCEDURE .

DIAGNOSTIC TEST

1. **ACTIVE DTC**

NOTE: Diagnose and repair any system voltage or sensor reference voltage DTCs before continuing with this test.

1. Start the engine and allow it to idle.

WARNING: When the engine is operating, do not stand in direct line with the fan. Do not put your hands near the pulleys, belts or fan. Do not wear loose clothing. Failure to follow these instructions may result in possible serious or fatal injury.

2. With the scan tool, select View DTCs.

   Is the status Active for this DTC?

Yes

- Go To 2

No

- Perform the INTERMITTENT CONDITION diagnostic procedure. Refer to **INTERMITTENT CONDITION** .

2. **CHECK THE (F343) FUSED ASD RELAY OUTPUT CIRCUIT FOR AN OPEN/HIGH RESISTANCE**

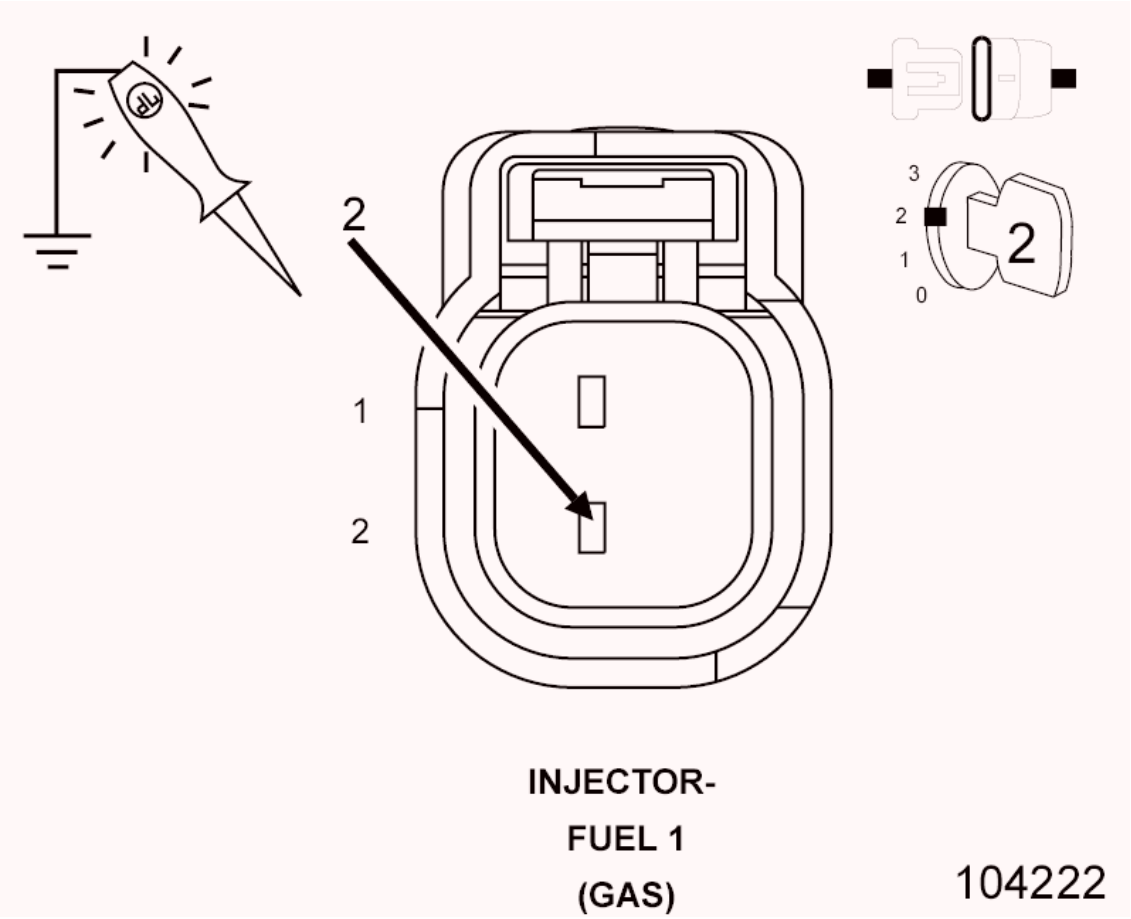

Fig. 157: Checking Fused Main Relay Output Circuit For Open Or High Resistance
Courtesy of CHRYSLER GROUP, LLC

1. Turn the ignition off.
2. Disconnect the Fuel Injector 4 harness connector.
3. Turn the ignition on.
4. Using a 12-volt test light connected to ground, check the (F343) Fused

ASD Relay Output circuit in the Fuel Injector 4 harness connector.

NOTE: The test light should be illuminated and bright. Compare the brightness to that of a direct connection to the battery.

Is the test light illuminated and bright?

Yes

- Go To 3

No

- Repair the (F343) Fused ASD Relay Output circuit for an open or high resistance.
- Perform the POWERTRAIN VERIFICATION TEST. Refer to **POWERTRAIN VERIFICATION TEST** .

3. **CHECK THE (K14) INJECTOR 4 CONTROL CIRCUIT FOR AN OPEN/HIGH RESISTANCE**
   1. Turn the ignition off.
   2. Disconnect the PCM C2 harness connector.

      CAUTION: Do not probe the PCM harness connectors. Probing the PCM harness connectors will damage the PCM terminals resulting in poor terminal to pin connection. Install the GPEC Diagnostic Adaptor to perform the diagnosis.

   3. Connect the (special tool #10436, Adapter, GPEC Diagnostic).
   4. Measure the resistance of the (K14) Injector 4 Control circuit between the Fuel Injector 4 harness connector and the GPEC Adaptor.

      Is the resistance below 5.0 Ohms?

      Yes

      - Go To 4

No

- Repair the (K14) Injector 4 Control circuit for an open or high resistance.
- Perform the POWERTRAIN VERIFICATION TEST. Refer to **POWERTRAIN VERIFICATION TEST** .

4. **FUEL INJECTOR 4**
   1. Turn the ignition off.
   2. Measure the resistance between the terminals of Fuel Injector 4.

NOTE: The resistance of the circuit will vary according to the temperature of the injector coil. Use the table below to determine the resistance range of the injector.

Fuel Injector Coil Resistance Based on Engine Temperature	
Temperature	**Resistance**
-20° C (-4° F)	10 Ohms (+/- 0.6 Ohm)
20° C (68° F)	12 Ohms (+/- 0.6 Ohm)
60° C (140° F)	14 Ohms (+/- 0.6 Ohm)
100° C (212° F)	16 Ohms (+/- 0.6 Ohm)

Is the resistance of the injector within the specified range?

Yes

- Go To 5

No

- Replace Fuel Injector 4 in accordance with the service information. Refer to **INJECTOR(S), FUEL, REMOVAL** .
- Perform the POWERTRAIN VERIFICATION TEST. Refer to **POWERTRAIN VERIFICATION TEST** .

5. **CHECK THE (K14) INJECTOR 4 CONTROL CIRCUIT FOR A SHORT TO GROUND**

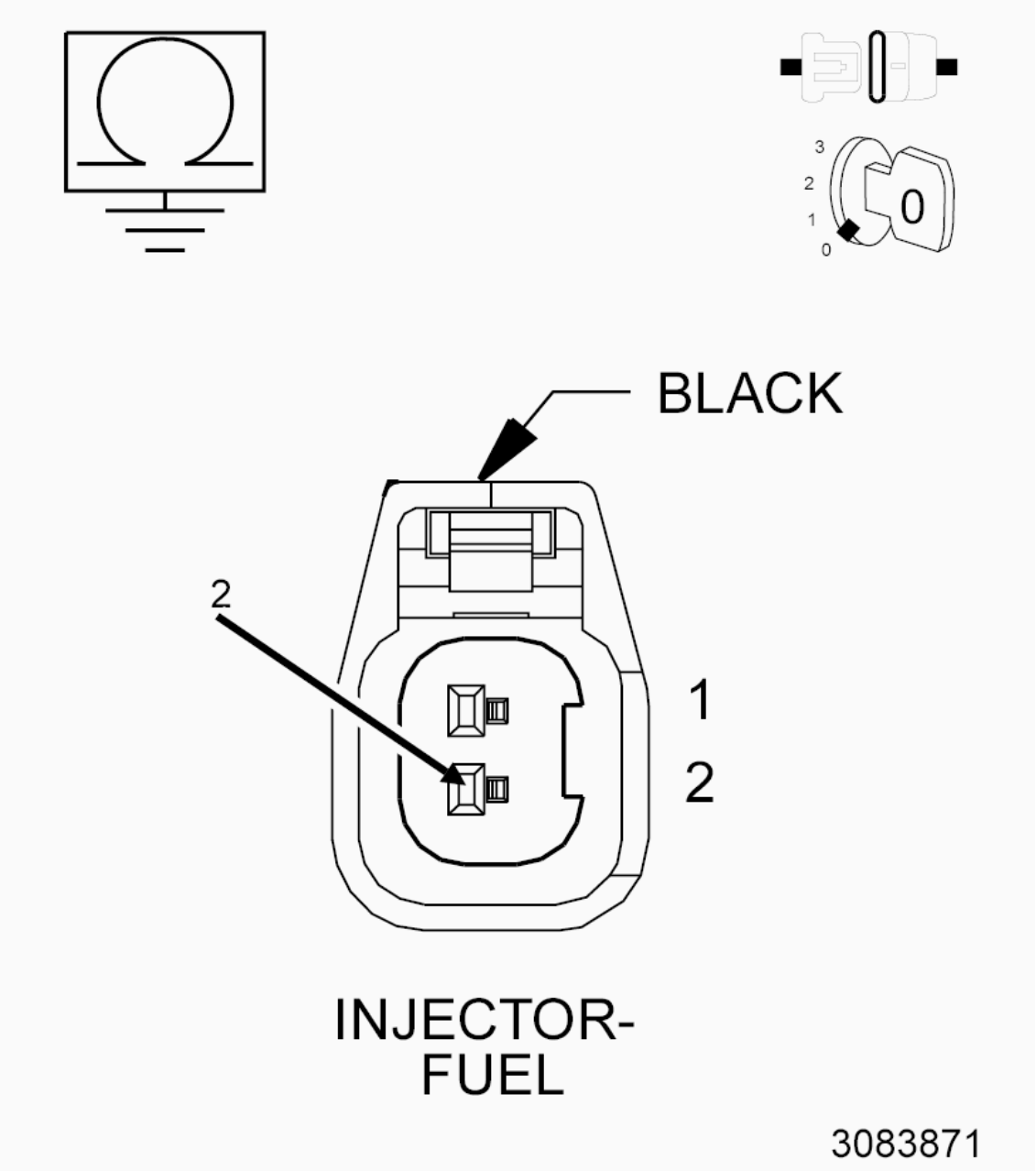

Fig. 158: Checking Injector Control Circuit For Short To Ground
Courtesy of CHRYSLER GROUP, LLC

1. Turn the ignition off.
2. Measure the resistance between ground and the (K14) Injector 4 Control circuit in the Fuel Injector 4 harness connector.

   Is the resistance above 10k Ohms?

   Yes

   - Go To 6

No

- Repair the (K14) Injector 4 Control circuit for a short to ground.
- Perform the POWERTRAIN VERIFICATION TEST. Refer to **POWERTRAIN VERIFICATION TEST** .

6. **POWERTRAIN CONTROL MODULE (PCM)**
   1. Using the wiring diagram/schematic as a guide, inspect the wiring and connectors between Fuel Injector 4 and the Powertrain Control Module (PCM).
      - Look for any chafed, pierced, pinched, or partially broken wires.
      - Look for broken, bent, pushed out or corroded terminals.
      - Monitor the scan tool data relative to this circuit and wiggle test the wiring and connectors.
      - Look for the data to change or for the DTC to reset during the wiggle test.
      - Perform any Technical Service Bulletins that may apply.

      Were any problems found?

      Yes

      - Repair as necessary.
      - Perform the POWERTRAIN VERIFICATION TEST. Refer to **POWERTRAIN VERIFICATION TEST** .

      No

      - Replace and program the Powertrain Control Module (PCM) in accordance with the service information. Refer to **MODULE, POWERTRAIN CONTROL, REMOVAL** .
      - Perform the POWERTRAIN VERIFICATION TEST. Refer to **POWERTRAIN VERIFICATION TEST** .

P0218-HIGH TEMPERATURE OPERATION ACTIVATED

For a complete wiring diagram. **refer to appropriate SYSTEM WIRING DIAGRAMS article** .

THEORY OF OPERATION

This DTC will set to indicate an overheating transmission or engine cooling system. Extended transmission operation above 115° C (240° F) will reduce the durability of the transmission and should be avoided. Correcting the cooling system operation or installing an additional transmission oil cooler will improve transmission durability, especially under extreme conditions such as city/construction stop and go traffic, trailer towing, aggressive driving in low gear, or operation in mountainous areas.

WHEN MONITORED

With the engine running.

SET CONDITION

The transmission overheat shift schedule is activated when the transmission oil temperature reaches 115° C (240° F).

POSSIBLE CAUSES

POSSIBLE CAUSES
DTC ACTIVE IN TRANSMISSION CONTROL MODULE
TRANSMISSION OVERHEATING
ENGINE OVERHEATING
HIGH TEMPERATURE OPERATIONS ACTIVATED

Always perform the Pre-Diagnostic Troubleshooting procedure before proceeding. Refer to PRE-DIAGNOSTIC TROUBLESHOOTING PROCEDURE .

DIAGNOSTIC TEST

1. **DTC ACTIVE IN TRANSMISSION CONTROL MODULE**
    1. This is an informational DTC that indicates that the transmission has been operating in the "Overheat" shift schedule.
    2. With the scan tool, select View DTCs in the Transmission Control Module.

       Are any DTCs set in the Transmission Control Module?

       Yes

- Refer to the Service Information for the related diagnostic or repair procedures.
- Perform the POWERTRAIN VERIFICATION TEST. Refer to **POWERTRAIN VERIFICATION TEST** .

No

- Go To 2

2. **TRANSMISSION OVERHEATING**
   1. With the scan tool, review the Freeze Frame information to help identify the conditions in which the DTC was set.
   2. Attempt to drive the vehicle under the conditions in which the DTC was set.
   3. Transmission overheating may indicate the need for an additional transmission oil cooler.
   4. Check the transmission oil cooler flow in accordance with the Service Information.
   5. Perform any Technical Service Bulletins that may apply.

   Were any problems found?

   Yes

   - Repair as necessary. If the transmission oil cooler is plugged, repair the cause of the plugged oil cooler
   - Perform the POWERTRAIN VERIFICATION TEST. Refer to **POWERTRAIN VERIFICATION TEST** .

   No

   - Go To 3

3. **ENGINE OVERHEATING**
   1. Check the engine cooling system operation in accordance with the Service Information.

   Were any problems found?

   Yes

- Repair as necessary.
- Perform the POWERTRAIN VERIFICATION TEST. Refer to **POWERTRAIN VERIFICATION TEST** .

No

- Perform the INTERMITTENT CONDITION diagnostic procedure. Refer to **INTERMITTENT CONDITION** .

P0221-THROTTLE POSITION SENSOR 2 CIRCUIT PERFORMANCE

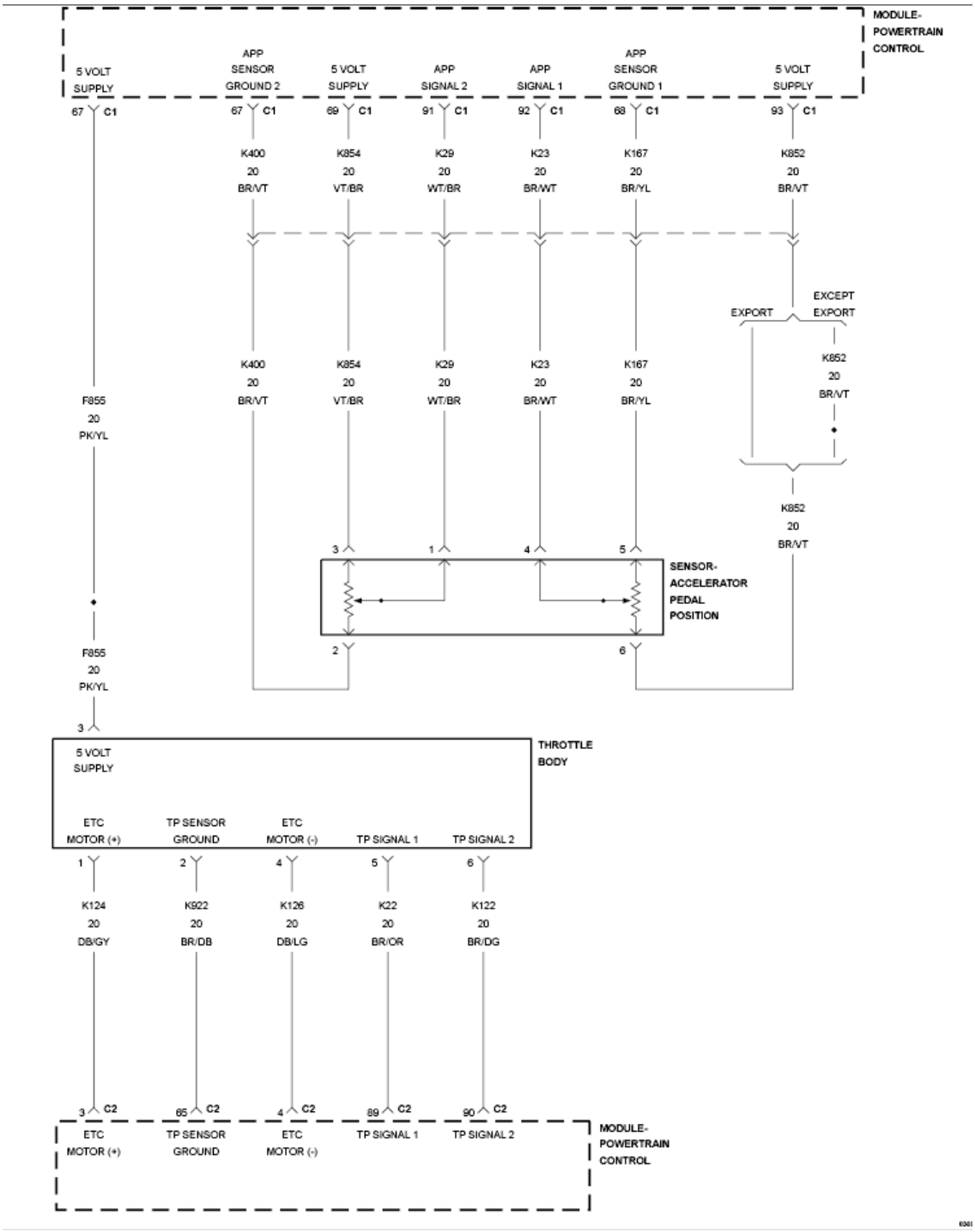

Fig. 159: Throttle Control Circuit Diagram
Courtesy of CHRYSLER GROUP, LLC

For a complete wiring diagram, **refer to appropriate SYSTEM WIRING DIAGRAMS article** .

WHEN MONITORED

With the ignition on and battery voltage greater than 10.4 volts.

SET CONDITION

The Powertrain Control Module (PCM) detects that the Throttle Position Sensor (TPS) 2 circuit input voltage is implausible.

POSSIBLE CAUSES

POSSIBLE CAUSES
(F855) 5 VOLT SUPPLY CIRCUIT OPEN OR HIGH RESISTANCE
(K122) TPS SIGNAL 2 CIRCUIT OPEN OR HIGH RESISTANCE
(K922) TPS GROUND CIRCUIT OPEN OR HIGH RESISTANCE
THROTTLE BODY
POWERTRAIN CONTROL MODULE (PCM)

Always perform the Pre-Diagnostic Troubleshooting procedure before proceeding. Refer to PRE-DIAGNOSTIC TROUBLESHOOTING PROCEDURE .

DIAGNOSTIC TEST

1. **ACTIVE DTC**

NOTE: If there are any 5-Volt Reference DTCs present along with this DTC, diagnose and repair that DTC before continuing with this test procedure.

1. Start the engine and allow it to idle.

WARNING: When the engine is operating, do not stand in direct line with the fan. Do not put your hands near the pulleys, belts or fan. Do not wear loose clothing. Failure to follow these instructions may result in possible serious or fatal injury.

2. With the scan tool, select View DTCs.

   Is the status Active for this DTC?

   Yes

- Go To 2

No

- Perform the INTERMITTENT CONDITION diagnostic procedure. Refer to **INTERMITTENT CONDITION** .

2. **CHECK THE (F855) 5-VOLT SUPPLY CIRCUIT VOLTAGE**

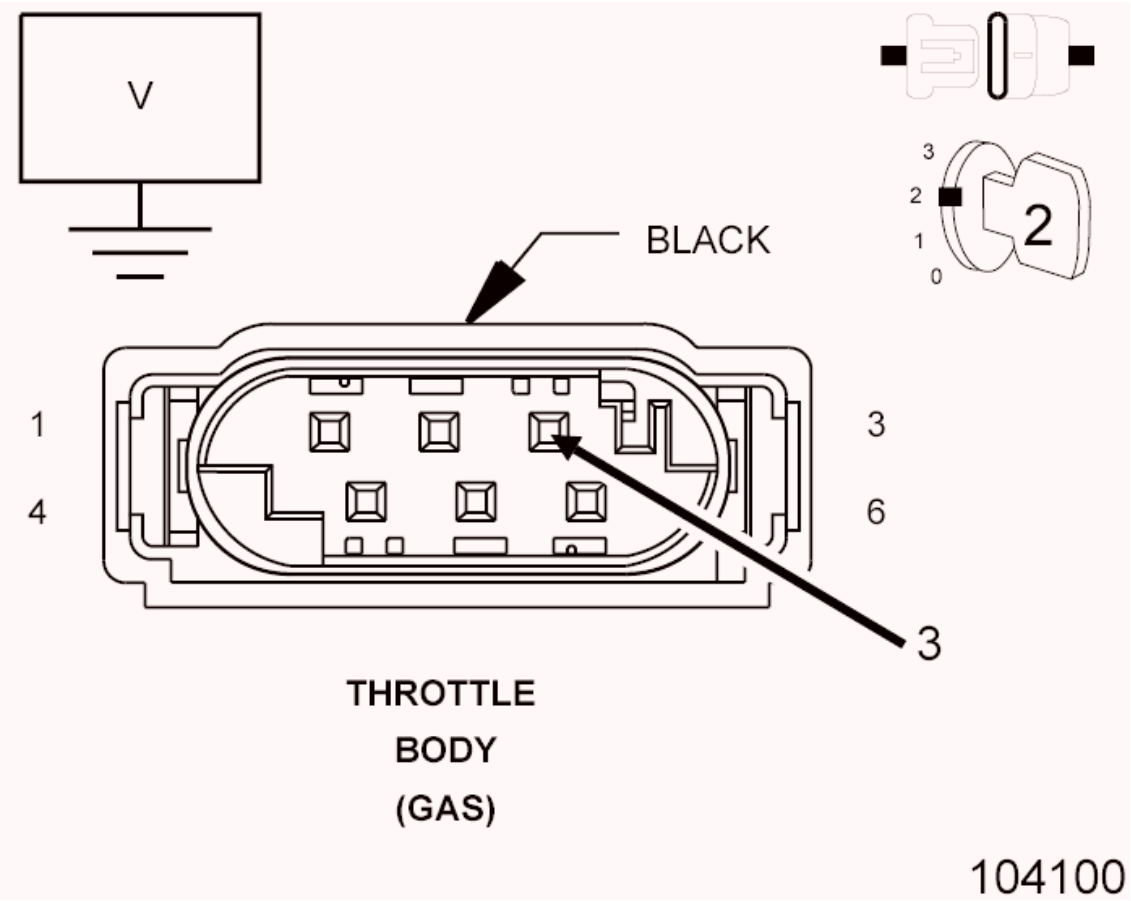

Fig. 160: Checking 5-Volt Supply Circuit
Courtesy of CHRYSLER GROUP, LLC

1. Turn the ignition off.
2. Disconnect the Throttle Body harness connector.
3. Turn the ignition on.
4. Measure the voltage of the (F855) 5-Volt Supply circuit in the Throttle Body harness connector.

   Is the voltage between 4.8 and 5.2 volts?

Yes

- Go To 3

No

- Repair the (F855) 5-Volt Supply circuit for an open or shorted circuit.
- Perform the POWERTRAIN VERIFICATION TEST. Refer to **POWERTRAIN VERIFICATION TEST** .

3. **CHECK THE (K122) TPS SIGNAL 2 CIRCUIT FOR AN OPEN/HIGH RESISTANCE**
   1. Turn the ignition off.
   2. Disconnect the PCM C2 harness connector.

      CAUTION: Do not probe the PCM harness connectors. Probing the PCM harness connectors will damage the PCM terminals resulting in poor terminal to pin connection. Install the GPEC Diagnostic Adaptor to perform the diagnosis.

   3. Connect the (special tool #10436, Adapter, GPEC Diagnostic).
   4. Measure the resistance of the (K122) TPS Signal 2 circuit between the Throttle Body harness connector and the GPEC Adaptor.

      Is the resistance below 5.0 Ohms?

      Yes

      - Go To 4

      No

      - Repair the (K122) TPS Signal 2 circuit for an open or high resistance.
      - Perform the POWERTRAIN VERIFICATION TEST. Refer to **POWERTRAIN VERIFICATION TEST** .

4. **CHECK THE (K922) TPS SENSOR GROUND CIRCUIT FOR AN**

OPEN/HIGH RESISTANCE

1. Measure the resistance of the (K922) TPS Sensor Ground circuit between the Throttle Body harness connector and the GPEC Adaptor.

   Is the resistance below 5.0 Ohms?

   Yes

   - Go To 5

   No

   - Repair the (K922) TPS Sensor Ground circuit for an open or high resistance.
   - Perform the POWERTRAIN VERIFICATION TEST. Refer to **POWERTRAIN VERIFICATION TEST** .

5. **THROTTLE BODY**
   1. Replace the Throttle Body Assembly in accordance with the service information. Refer to **THROTTLE BODY, REMOVAL** .
   2. Turn the ignition on.
   3. With the scan tool, erase DTCs.
   4. Start the engine and allow it to idle.
   5. With the scan tool, view DTCs.

      Did the DTC return?

      Yes

      - Go To 6

      No

      - Repair is complete.
      - Perform the POWERTRAIN VERIFICATION TEST. Refer to **POWERTRAIN VERIFICATION TEST** .

6. **POWERTRAIN CONTROL MODULE (PCM)**
   1. Using the wiring diagram/schematic as a guide, inspect the wiring and connectors between the Throttle Body and the Powertrain Control

Module (PCM).

2. Look for any chafed, pierced, pinched, or partially broken wires.
3. Look for broken, bent, pushed out or corroded terminals.
4. Monitor the scan tool data relative to this circuit and wiggle test the wiring and connectors.
5. Look for the data to change or for the DTC to reset during the wiggle test.
6. Perform any Technical Service Bulletins that may apply.

Were any problems found?

Yes

- Repair as necessary.
- Perform the POWERTRAIN VERIFICATION TEST. Refer to **POWERTRAIN VERIFICATION TEST** .

No

- Replace and program the Powertrain Control Module (PCM) in accordance with the service information. Refer to **MODULE, POWERTRAIN CONTROL, REMOVAL** .
- Perform the POWERTRAIN VERIFICATION TEST. Refer to **POWERTRAIN VERIFICATION TEST** .

P0222-THROTTLE POSITION SENSOR 2 CIRCUIT LOW

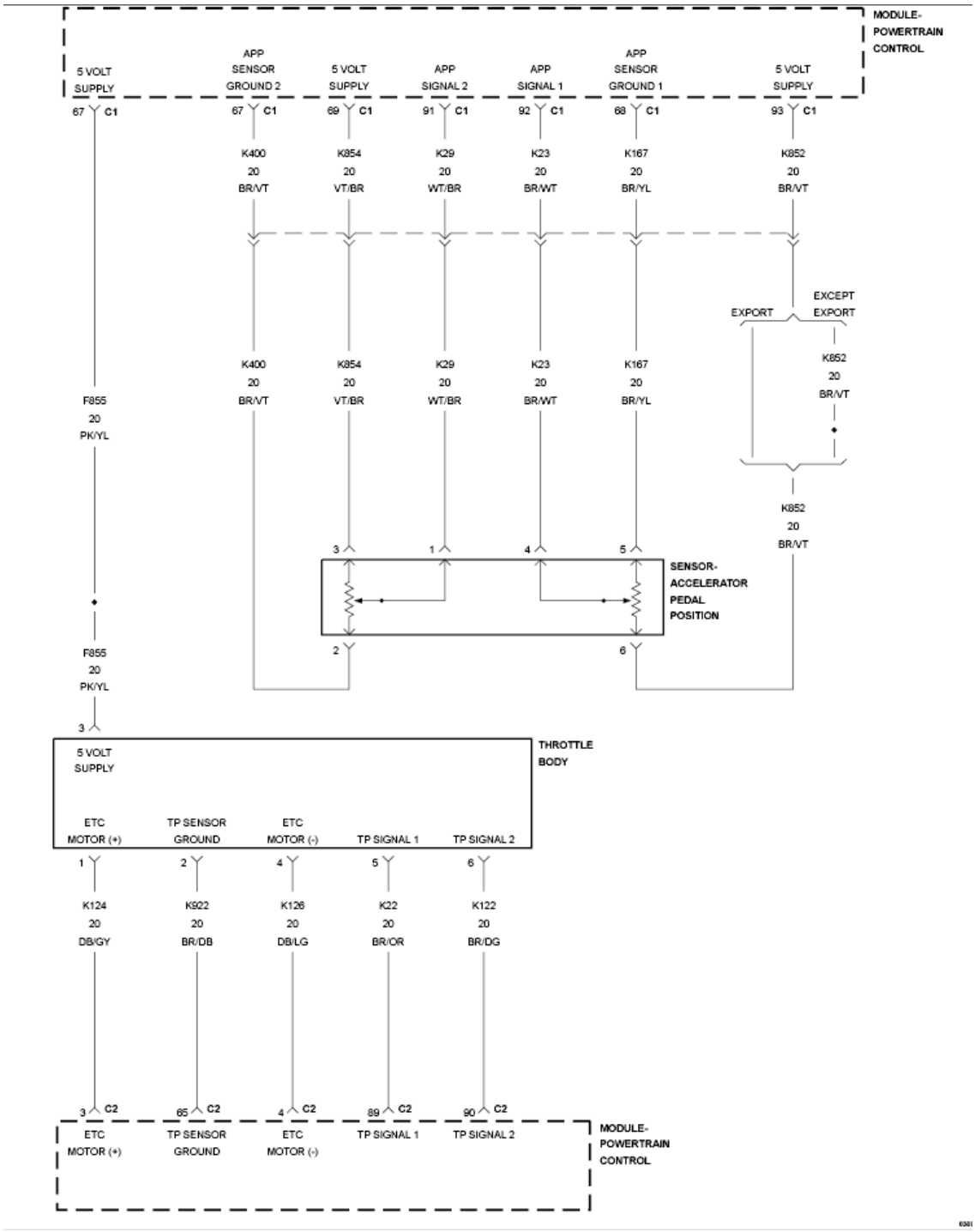

Fig. 161: Throttle Control Circuit Diagram
Courtesy of CHRYSLER GROUP, LLC

For a complete wiring diagram, **refer to appropriate SYSTEM WIRING DIAGRAMS article** .

WHEN MONITORED

With the ignition on and battery voltage greater than 10.4 volts.

SET CONDITION

The Powertrain Control Module (PCM) detects that the Throttle Position Sensor (TPS) 2 input voltage is below the minimum acceptable value.

POSSIBLE CAUSES

POSSIBLE CAUSES
(F855) 5 VOLT SUPPLY CIRCUIT SHORTED TO GROUND
(K122) TP SIGNAL 2 CIRCUIT SHORTED TO GROUND
(F855) 5 VOLT SUPPLY CIRCUIT SHORTED TO THE (K922) TP SENSOR GROUND CIRCUIT
(K122) TP SIGNAL 2 CIRCUIT SHORTED TO THE (K922) TP SENSOR GROUND CIRCUIT
(K122) TP SIGNAL 2 CIRCUIT SHORTED TO THE (K124) ETC MOTOR (+) CIRCUIT
(K122) TP SIGNAL 2 CIRCUIT SHORTED TO THE (K126) ETC MOTOR (-) CIRCUIT
(F855) 5 VOLT SUPPLY CIRCUIT OPEN OR HIGH RESISTANCE
(K122) TP SIGNAL 2 CIRCUIT OPEN OR HIGH RESISTANCE
THROTTLE BODY
POWERTRAIN CONTROL MODULE (PCM)

Always perform the Pre-Diagnostic Troubleshooting procedure before proceeding. Refer to PRE-DIAGNOSTIC TROUBLESHOOTING PROCEDURE .

DIAGNOSTIC TEST.

1. **ACTIVE DTC**

NOTE: Diagnose and repair any system voltage or sensor reference voltage DTCs before continuing with this test.

1. Start the engine and allow it to idle.

WARNING: When the engine is operating, do not stand in direct line with the fan. Do not put

your hands near the pulleys, belts or fan. Do not wear loose clothing. Failure to follow these instructions may result in possible serious or fatal injury.

2. With the scan tool, select View DTCs.

   Is the status Active for this DTC?

   Yes

   - Go To 2

   No

   - Perform the INTERMITTENT CONDITION diagnostic procedure. Refer to **INTERMITTENT CONDITION** .

2. **CHECK THE (F855) 5-VOLT SUPPLY CIRCUIT VOLTAGE**

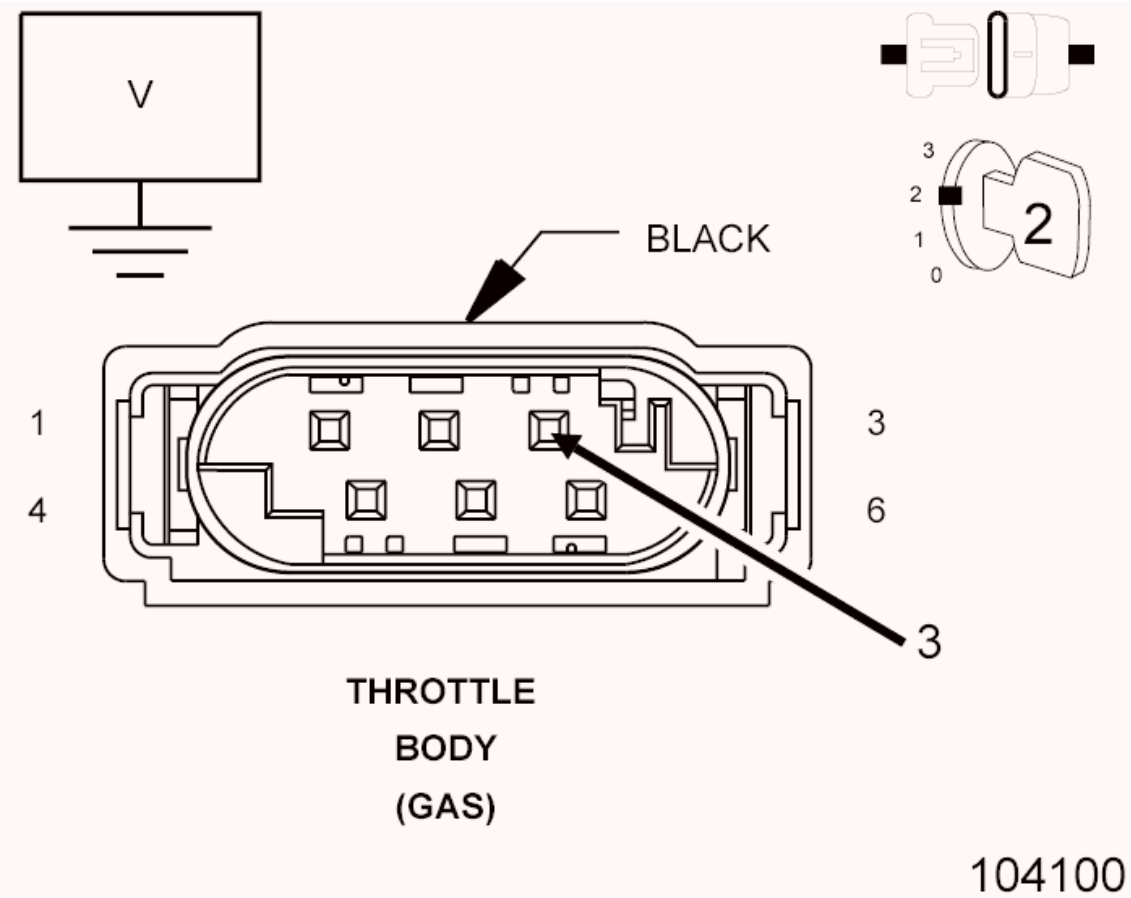

Fig. 162: Checking 5-Volt Supply Circuit

Courtesy of CHRYSLER GROUP, LLC

1. Turn the ignition off.
2. Disconnect the Throttle Body harness connector.
3. Turn the ignition on.
4. Measure the voltage of the (F855) 5-Volt Supply circuit in the Throttle Body harness connector.

   Is the voltage above 4.8 volts?

   Yes

   - Go To 6

   No

   - Go To 3

3. **CHECK THE (F855) 5-VOLT SUPPLY CIRCUIT FOR A SHORT TO GROUND**

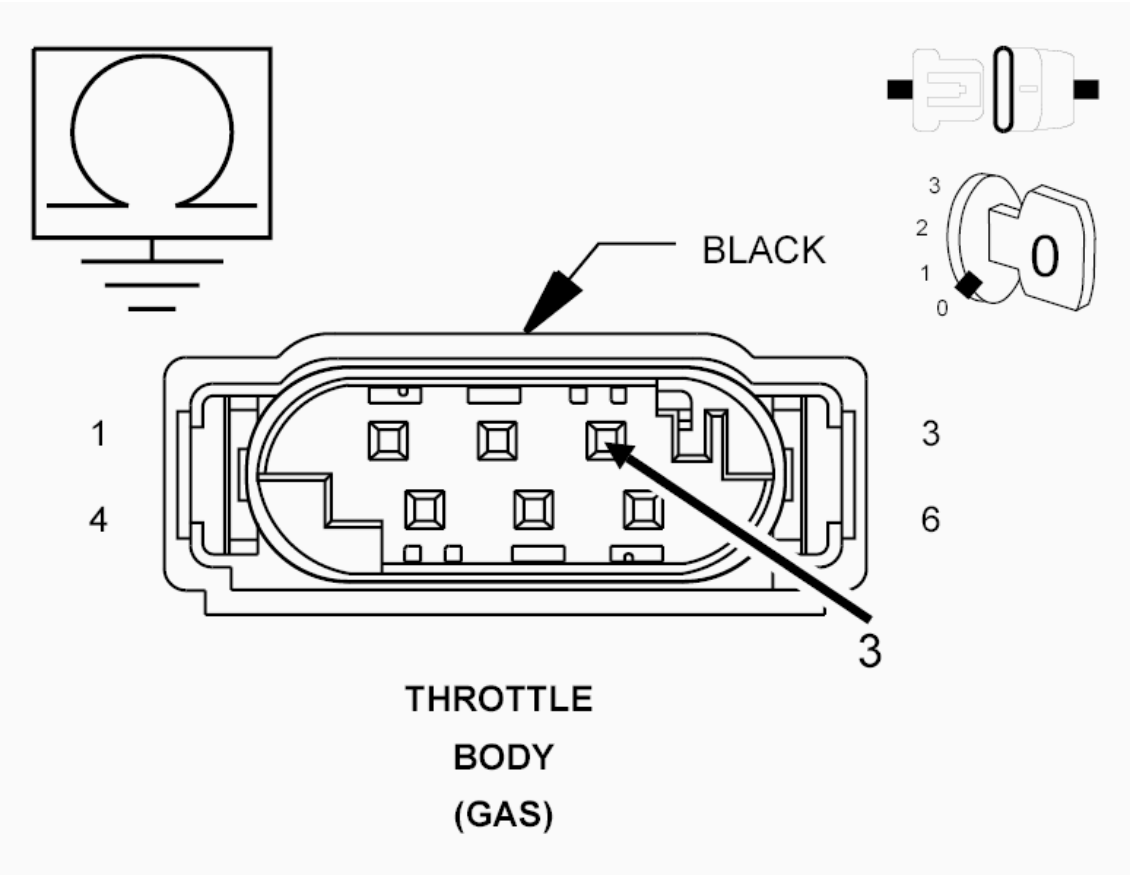

Fig. 163: Checking 5-Volt Supply Circuit For Short To Ground
Courtesy of CHRYSLER GROUP, LLC

1. Turn the ignition on.
2. Disconnect the PCM C2 harness connector.
3. Measure the resistance between ground and the (F855) 5-Volt Supply circuit in the Throttle Body harness connector.

   Is the resistance above 10k Ohms?

   Yes

   - Go To 4

   No

   - Repair the (F855) 5-Volt Supply circuit for a short to ground.
   - Perform the POWERTRAIN VERIFICATION TEST. Refer to **POWERTRAIN VERIFICATION TEST** .

4. **CHECK THE (F855) 5-VOLT SUPPLY CIRCUIT SHORTED TO THE (K922) TPS SENSOR GROUND CIRCUIT**

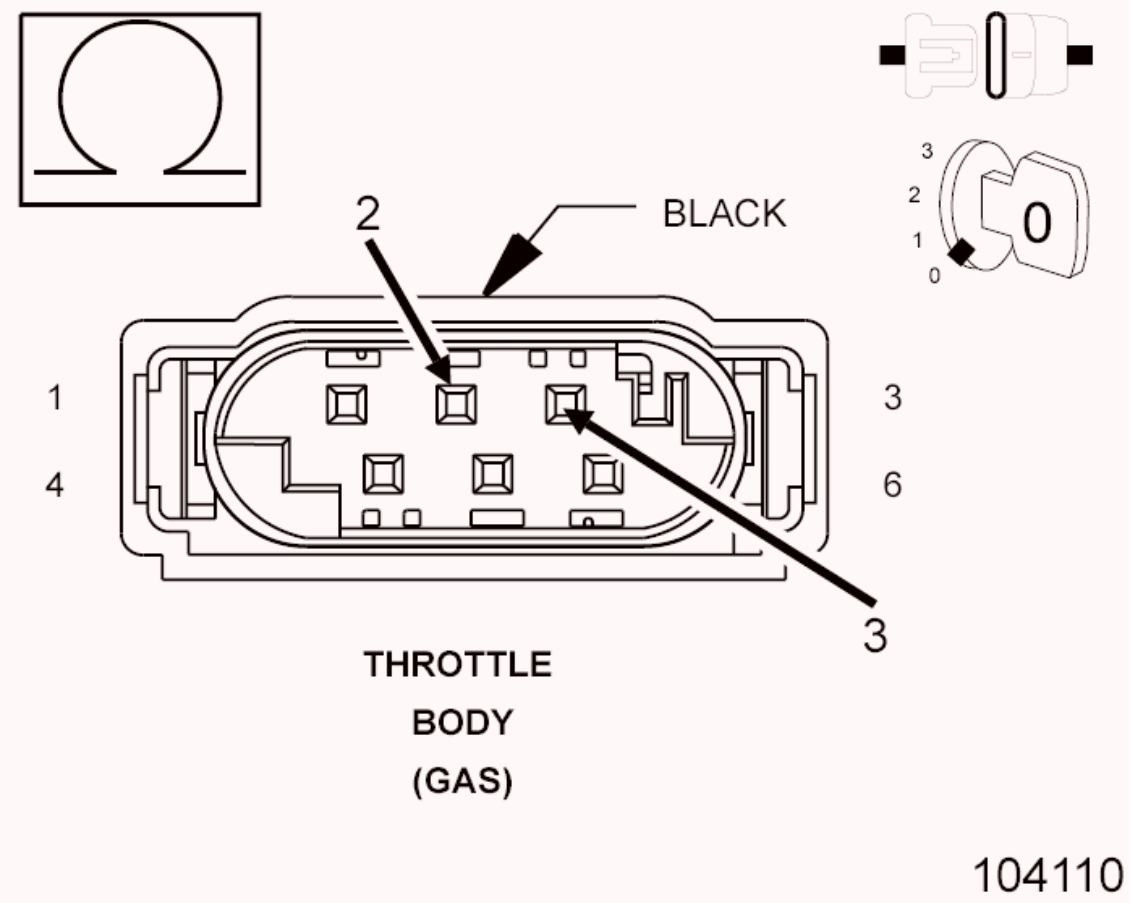

Fig. 164: Checking 5-Volt Supply Circuit For Short To TP Sensor Ground Circuit
Courtesy of CHRYSLER GROUP, LLC

1. Measure the resistance between the (F855) 5 Volt Supply circuit and the (K922) TPS Sensor Ground circuit in the Throttle Body harness connector.

   Is the resistance above 10k Ohms?

   Yes

   - Go To 5

   No

   - Repair the (F855) 5-Volt Supply circuit for a short to the (K922) TPS Sensor Ground circuit.
   - Perform the POWERTRAIN VERIFICATION TEST. Refer to **POWERTRAIN VERIFICATION TEST** .

5. **CHECK THE (F855) 5-VOLT SUPPLY CIRCUIT FOR AN OPEN/HIGH RESISTANCE**

CAUTION: Do not probe the PCM harness connectors. Probing the PCM harness connectors will damage the PCM terminals resulting in poor terminal to pin connection. Install the GPEC Diagnostic Adaptor to perform the diagnosis.

1. Connect the (special tool #10436, Adapter, GPEC Diagnostic).
2. Measure the resistance of the (F855) 5-Volt Supply circuit between the Throttle Body harness connector and the GPEC Adaptor.

Is the resistance below 5.0 Ohms?

Yes

- Go To 12

No

- Repair the (F855) 5-Volt Supply circuit for an open or high resistance.
- Perform the POWERTRAIN VERIFICATION TEST. Refer to **POWERTRAIN VERIFICATION TEST** .

6. **CHECK THE (K122) TPS SIGNAL 2 CIRCUIT FOR A SHORT TO GROUND**

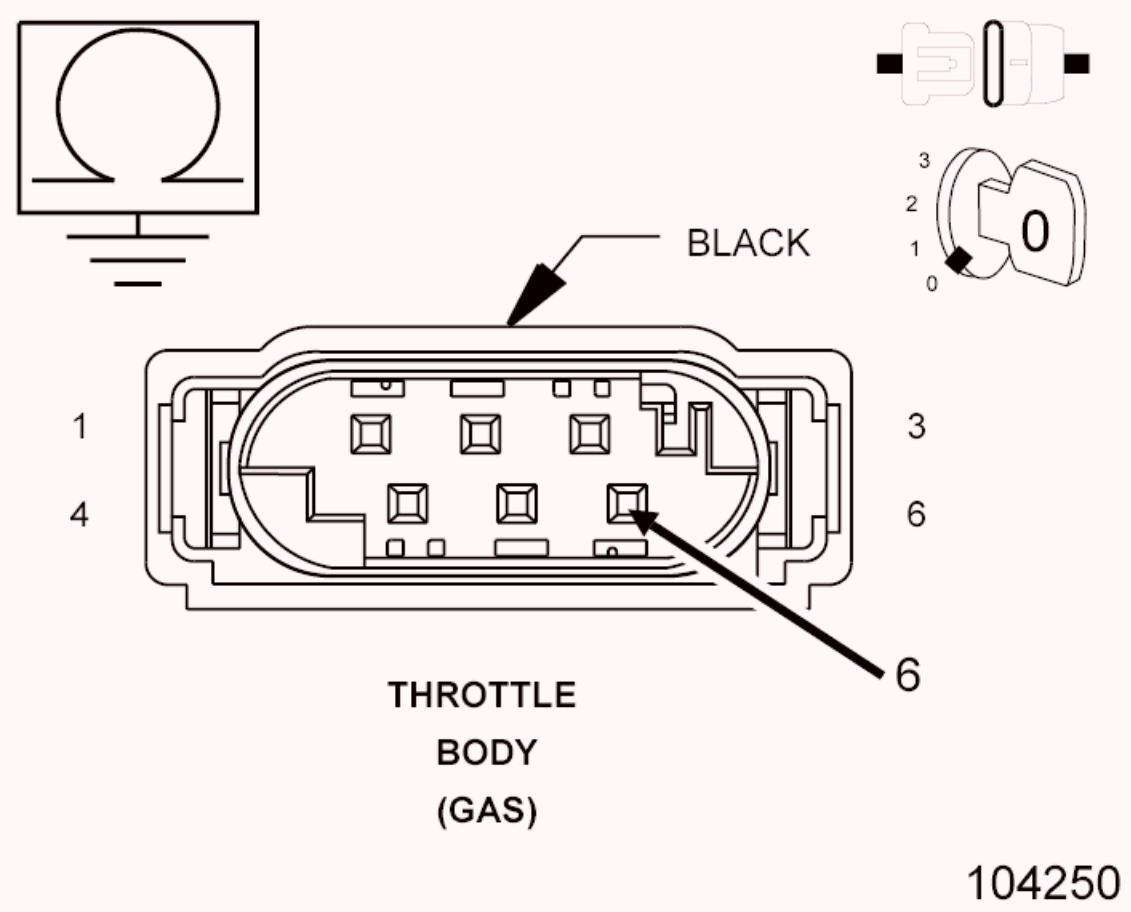

Fig. 165: Checking TP Signal 2 Circuit For Short To Ground
Courtesy of CHRYSLER GROUP, LLC

1. Turn the ignition off.
2. Disconnect the PCM C2 harness connector.
3. Measure the resistance between ground and the (K122) TPS Signal 2 circuit in the Throttle Body harness connector.

   Is the resistance above 10k Ohms?

   Yes

   - Go To 7

   No

   - Repair the (K122) TPS Signal 2 circuit for a short to ground.
   - Perform the POWERTRAIN VERIFICATION TEST. Refer to **POWERTRAIN VERIFICATION TEST** .

7. **CHECK FOR THE (K122) TPS SIGNAL 2 CIRCUIT SHORTED TO THE (K922) TPS SENSOR GROUND CIRCUIT**

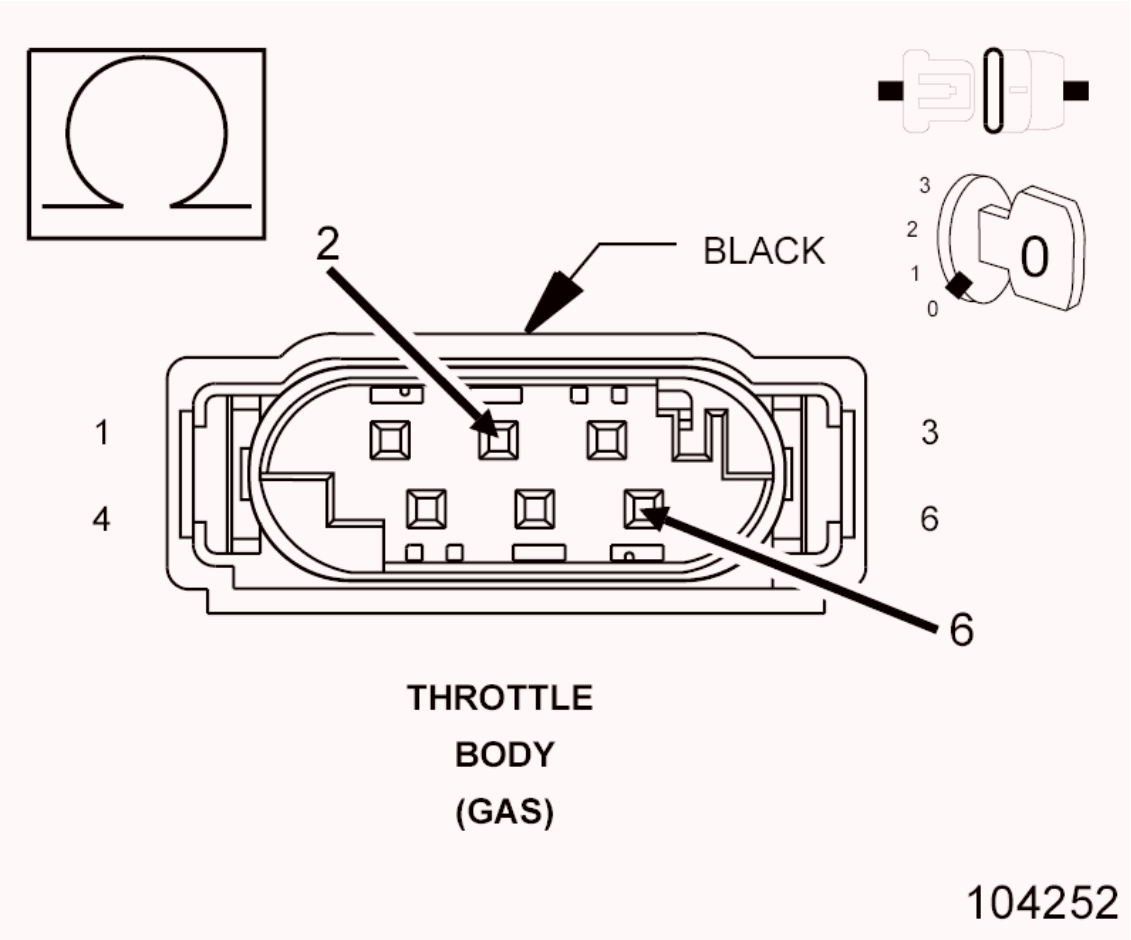

Fig. 166: Checking TP Signal 2 Circuit For Short To Sensor Ground Circuit
Courtesy of CHRYSLER GROUP, LLC

1. Measure the resistance between the (K122) TPS Signal 2 circuit and the (K922) TPS Sensor Ground circuit in the Throttle Body harness connector.

   Is the resistance above 10k Ohms?

   Yes

   - Go To 8

   No

   - Repair the (K122) TPS Signal 2 circuit for a short to the (K922)

TPS Sensor Ground circuit.

- Perform the POWERTRAIN VERIFICATION TEST. Refer to **POWERTRAIN VERIFICATION TEST** .

8. **CHECK FOR THE (K122) TPS SIGNAL 2 CIRCUIT SHORTED TO THE (K124) ETC MOTOR (+) CIRCUIT**

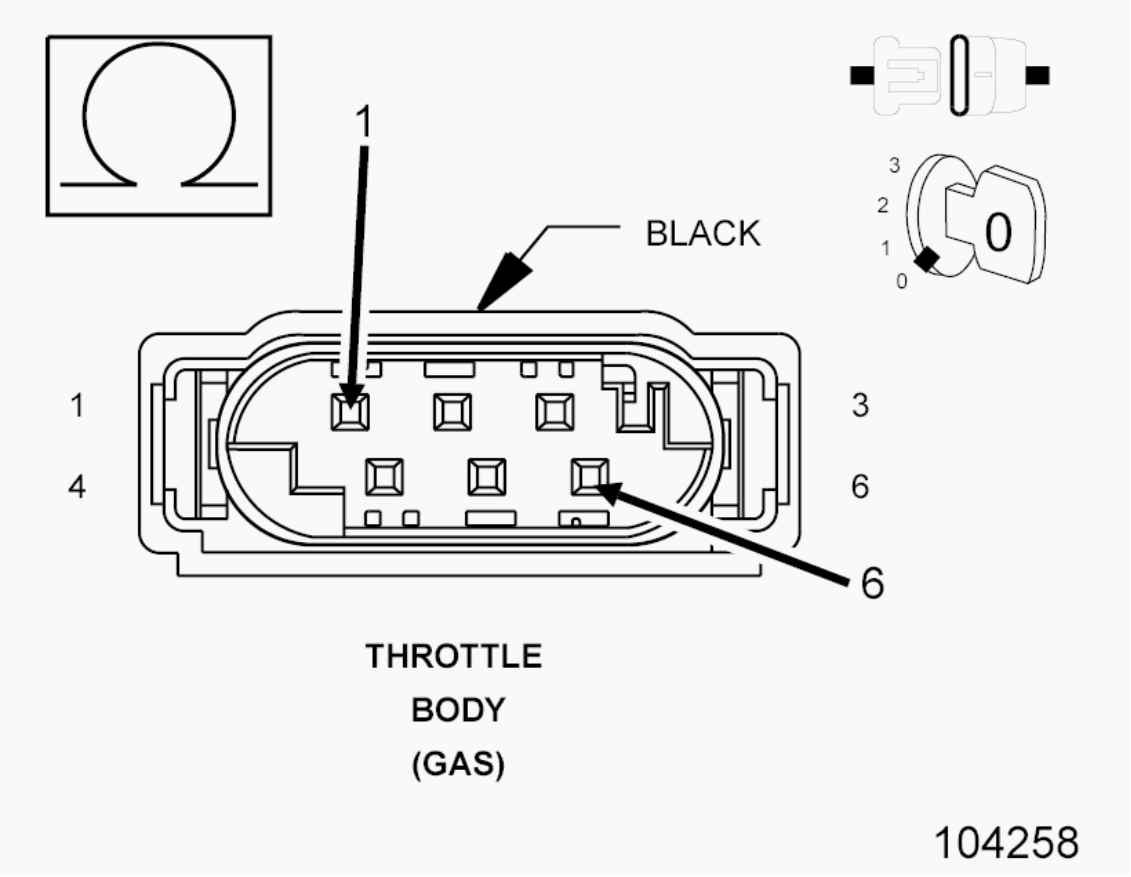

Fig. 167: Checking TP Signal 2 Circuit For Short To ETC Motor (+) Circuit
Courtesy of CHRYSLER GROUP, LLC

1. Measure the resistance between the (K122) TPS Signal 2 circuit and the (K124) ETC Motor (+) in the Throttle Body harness connector.

   Is the resistance above 10k Ohms?

   Yes

   - Go To 9

   No

- Repair the (K122) TPS Signal 2 Circuit for a short to the (K124) ETC Motor (+) circuit.
- Perform the POWERTRAIN VERIFICATION TEST. Refer to **POWERTRAIN VERIFICATION TEST** .

9. **CHECK FOR THE (K122) TPS SIGNAL 2 CIRCUIT SHORTED TO THE (K126) ETC MOTOR (-) CIRCUIT**

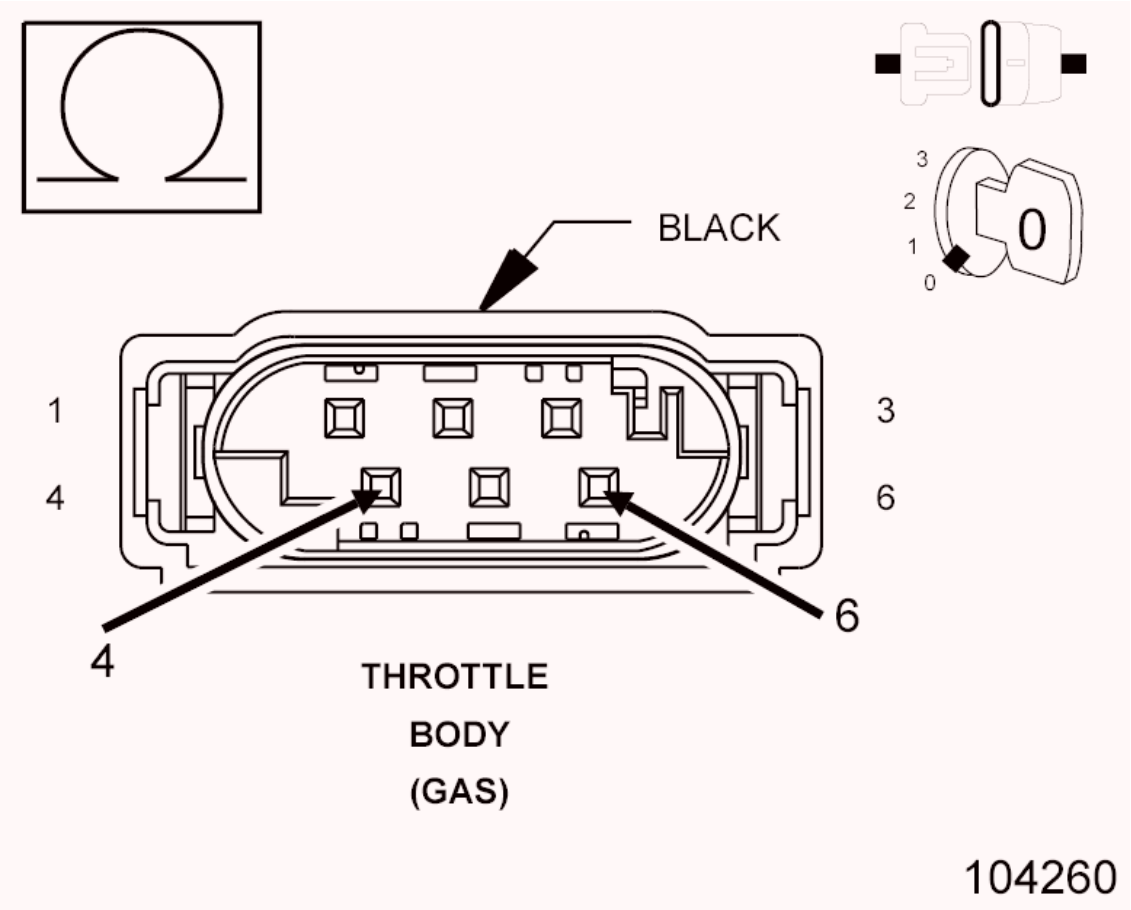

Fig. 168: Checking TP Signal 2 Circuit For Short To ETC Motor (-) Circuit
Courtesy of CHRYSLER GROUP, LLC

1. Measure the resistance between the (K122) TPS Signal 2 circuit and the (K126) ETC Motor (-) in the Throttle Body harness connector.

   Is the resistance above 10k Ohms?

   Yes

   - Go To 10

No

- Repair the (K122) TPS Signal 2 circuit for a short to the (K126) ETC Motor (-) circuit.
- Perform the POWERTRAIN VERIFICATION TEST. Refer to **POWERTRAIN VERIFICATION TEST** .

10. **CHECK THE (K122) TPS SIGNAL 2 CIRCUIT FOR AN OPEN/HIGH RESISTANCE**
    1. Measure the resistance of the (K122) TPS Signal 2 circuit between the Throttle Body harness connector and the PCM C2 harness connector.

    Is the resistance below 5.0 Ohms?

    Yes

    - Go To 11

    No

    - Repair the (K122) TPS Signal 2 circuit for an open or high resistance.
    - Perform the POWERTRAIN VERIFICATION TEST. Refer to **POWERTRAIN VERIFICATION TEST** .

11. **THROTTLE BODY**

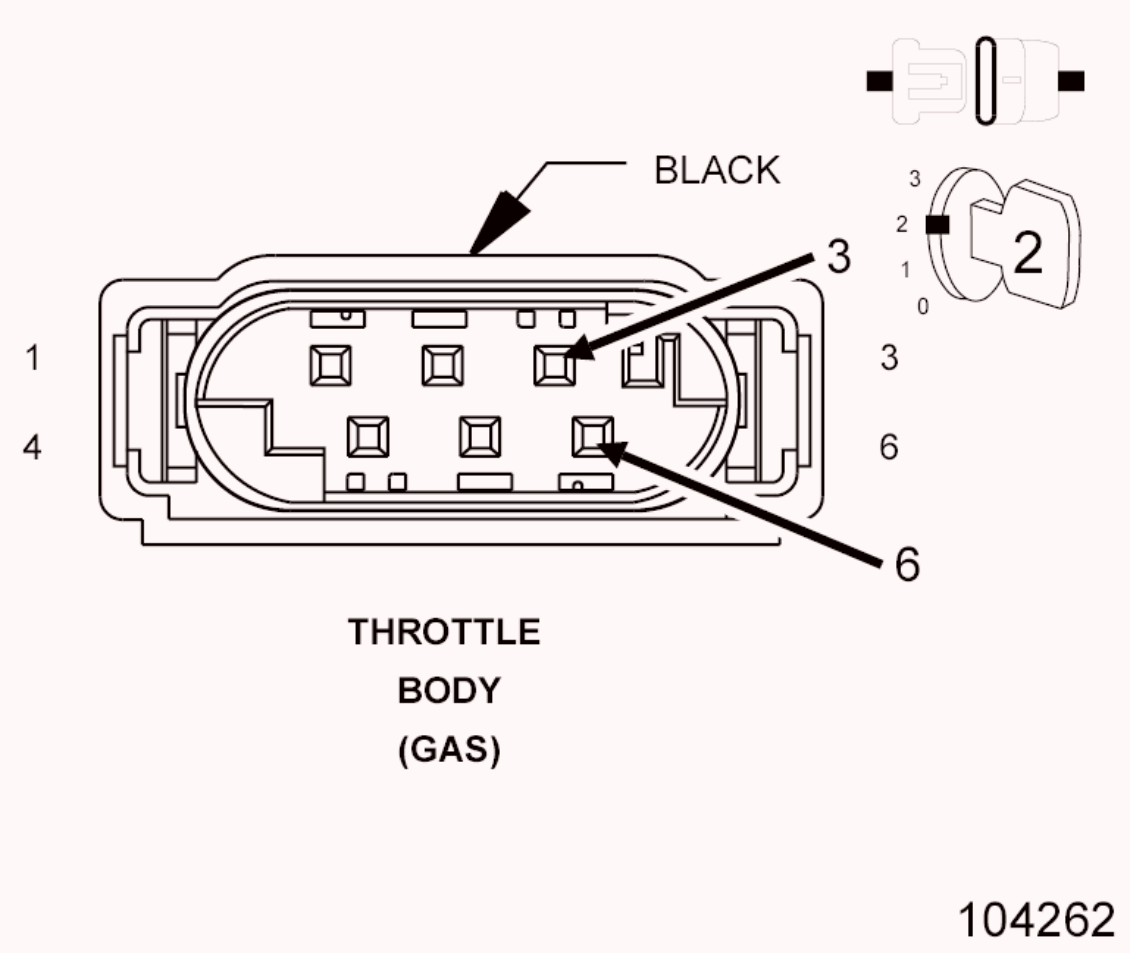

Fig. 169: Throttle Body Harness Connector End View
Courtesy of CHRYSLER GROUP, LLC

1. Turn the ignition off.
2. Reconnect the PCM C2 harness connector.
3. Connect a jumper between the (F855) 5-Volt Supply circuit and the (K122) TPS Signal 2 circuit in the Throttle Body harness connector.
4. Turn the ignition on.
5. With the scan tool, read the TPS Signal 2 circuit voltage.

   Is the voltage above 4.9 volts with the jumper in place?

   Yes

   - Replace the Throttle Body in accordance with the service information. Refer to **THROTTLE BODY, REMOVAL** .
   - Perform the POWERTRAIN VERIFICATION TEST. Refer to **POWERTRAIN VERIFICATION TEST** .

No

- Go To 12

12. **POWERTRAIN CONTROL MODULE (PCM)**
    1. Using the wiring diagram/schematic as a guide, inspect the wiring and connectors between the Throttle Body and the Powertrain Control Module (PCM).
    2. Look for any chafed, pierced, pinched, or partially broken wires.
    3. Look for broken, bent, pushed out or corroded terminals.
    4. Monitor the scan tool data relative to this circuit and wiggle the wiring and connectors.
    5. Look for the data to change or for the DTC to reset during the wiggle Test.
    6. Perform any Technical Service Bulletins that may apply.

    Were any problems found?

    Yes

    - Repair as necessary.
    - Perform the POWERTRAIN VERIFICATION TEST. Refer to **POWERTRAIN VERIFICATION TEST** .

    No

    - Replace and program the Powertrain Control Module (PCM) in accordance with the service information. Refer to **MODULE, POWERTRAIN CONTROL, REMOVAL** .
    - Perform the POWERTRAIN VERIFICATION TEST. Refer to **POWERTRAIN VERIFICATION TEST** .

P0223-THROTTLE POSITION SENSOR 2 CIRCUIT HIGH

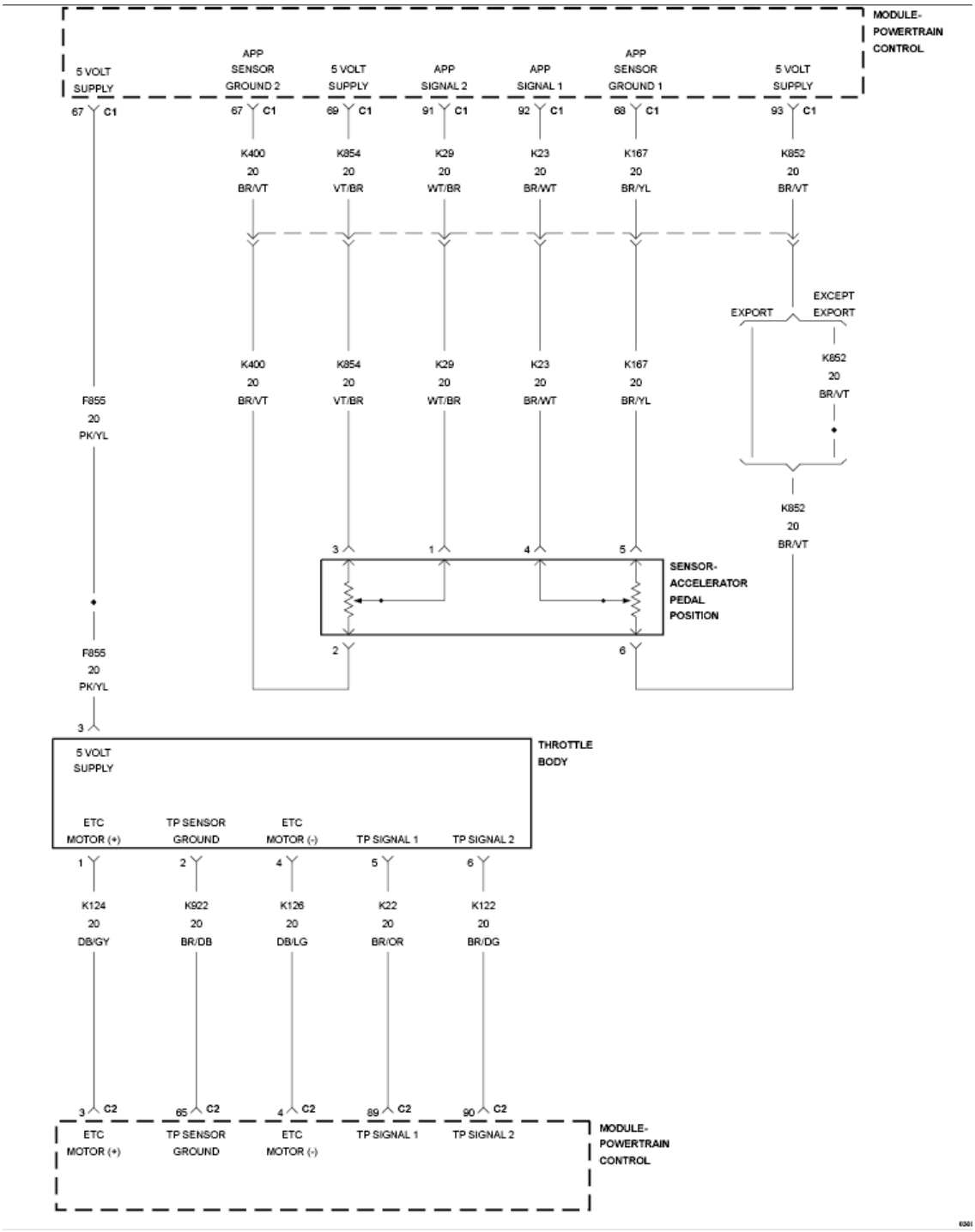

Fig. 170: Throttle Control Circuit Diagram
Courtesy of CHRYSLER GROUP, LLC

For a complete wiring diagram. **refer to appropriate SYSTEM WIRING DIAGRAMS article** .

WHEN MONITORED

With the ignition on and battery voltage greater than 10.4 volts.

SET CONDITION

The Powertrain Control Module (PCM) detects that the Throttle Position Sensor (TPS) 2 input voltage is above the maximum acceptable value.

POSSIBLE CAUSES

POSSIBLE CAUSES
(F855) 5 VOLT SUPPLY CIRCUIT SHORTED TO VOLTAGE
(K122) TP SIGNAL 2 CIRCUIT SHORTED TO VOLTAGE
(K122) TP SIGNAL 2 CIRCUIT SHORTED TO THE (F855) 5 VOLT SUPPLY CIRCUIT
(K122) TP SIGNAL 2 CIRCUIT SHORTED TO THE (K124) ETC MOTOR (+) CIRCUIT
(K122) TP SIGNAL 2 CIRCUIT SHORTED TO THE (K126) ETC MOTOR (-) CIRCUIT
(K122) TP SIGNAL 2 CIRCUIT OPEN OR HIGH RESISTANCE
(K922) TP SENSOR GROUND CIRCUIT OPEN OR HIGH RESISTANCE
THROTTLE BODY
POWERTRAIN CONTROL MODULE (PCM)

Always perform the Pre-Diagnostic Troubleshooting procedure before proceeding. Refer to PRE-DIAGNOSTIC TROUBLESHOOTING PROCEDURE .

DIAGNOSTIC TEST.

1. **ACTIVE DTC**

NOTE: Diagnose and repair any system voltage or sensor reference voltage DTCs before continuing with this test.

1. Start the engine and allow it to reach normal operating temperature.

WARNING: When the engine is operating, do not stand in direct line with the fan. Do not put your hands near the pulleys, belts or fan. Do not wear loose clothing. Failure to

follow these instructions may result in possible serious or fatal injury.

2. With the scan tool, select View DTCs.

   Is the status Active for this DTC?

   Yes

   - Go To 2

   No

   - Perform the INTERMITTENT CONDITION diagnostic procedure. Refer to **INTERMITTENT CONDITION** .

2. **CHECK THE (F855) 5-VOLT SUPPLY CIRCUIT FOR A SHORT TO VOLTAGE**

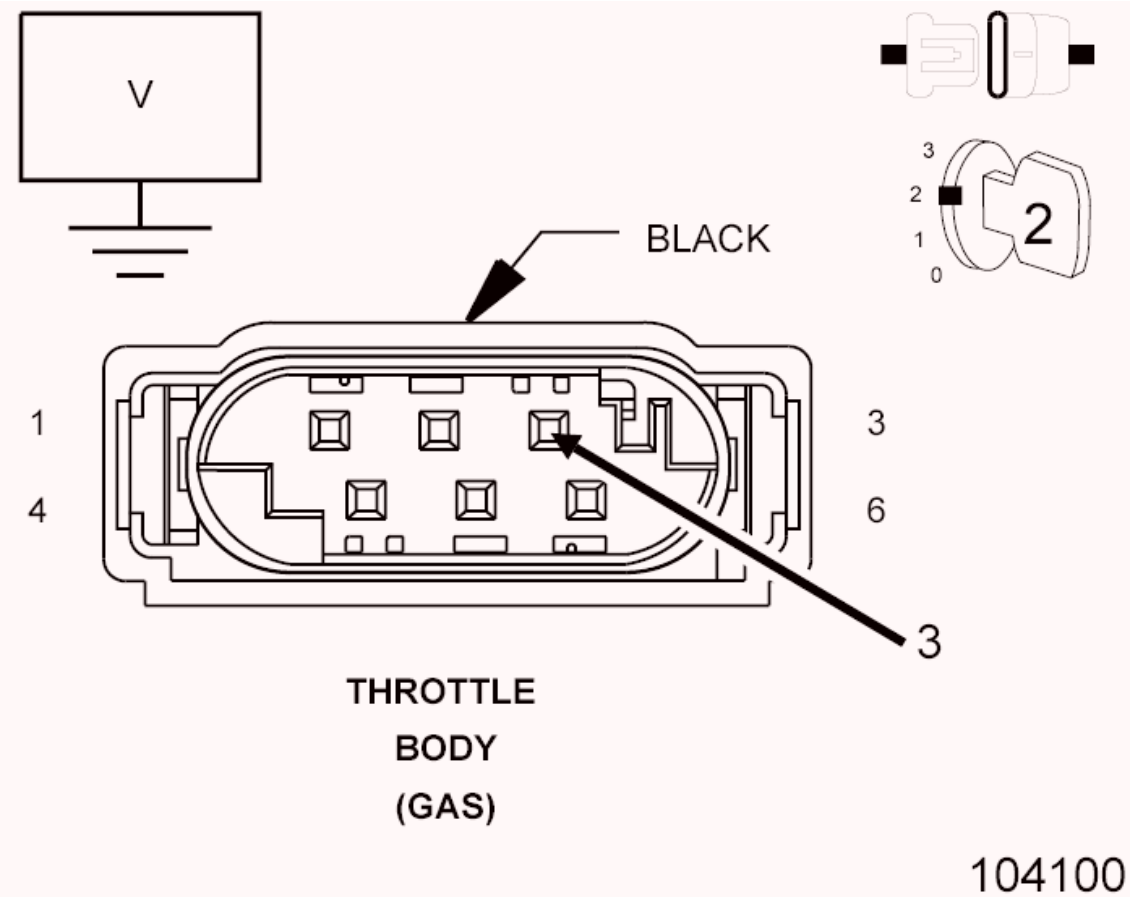

Fig. 171: Checking 5-Volt Supply Circuit For Short To Voltage
Courtesy of CHRYSLER GROUP, LLC

1. Turn the ignition off.
2. Disconnect the Throttle Body harness connector.
3. Turn the ignition on.
4. Measure the voltage of the (F855) 5-Volt Supply circuit in the Throttle Body harness connector.

   Is the voltage above 5.2 volts?

   Yes

   - Repair the (F855) 5-Volt Supply circuit for a short to voltage.
   - Perform the POWERTRAIN VERIFICATION TEST. Refer to **POWERTRAIN VERIFICATION TEST** .

   No

   - Go To 3

3. **CHECK THE (K122) TPS SIGNAL 2 CIRCUIT FOR A SHORT TO VOLTAGE**

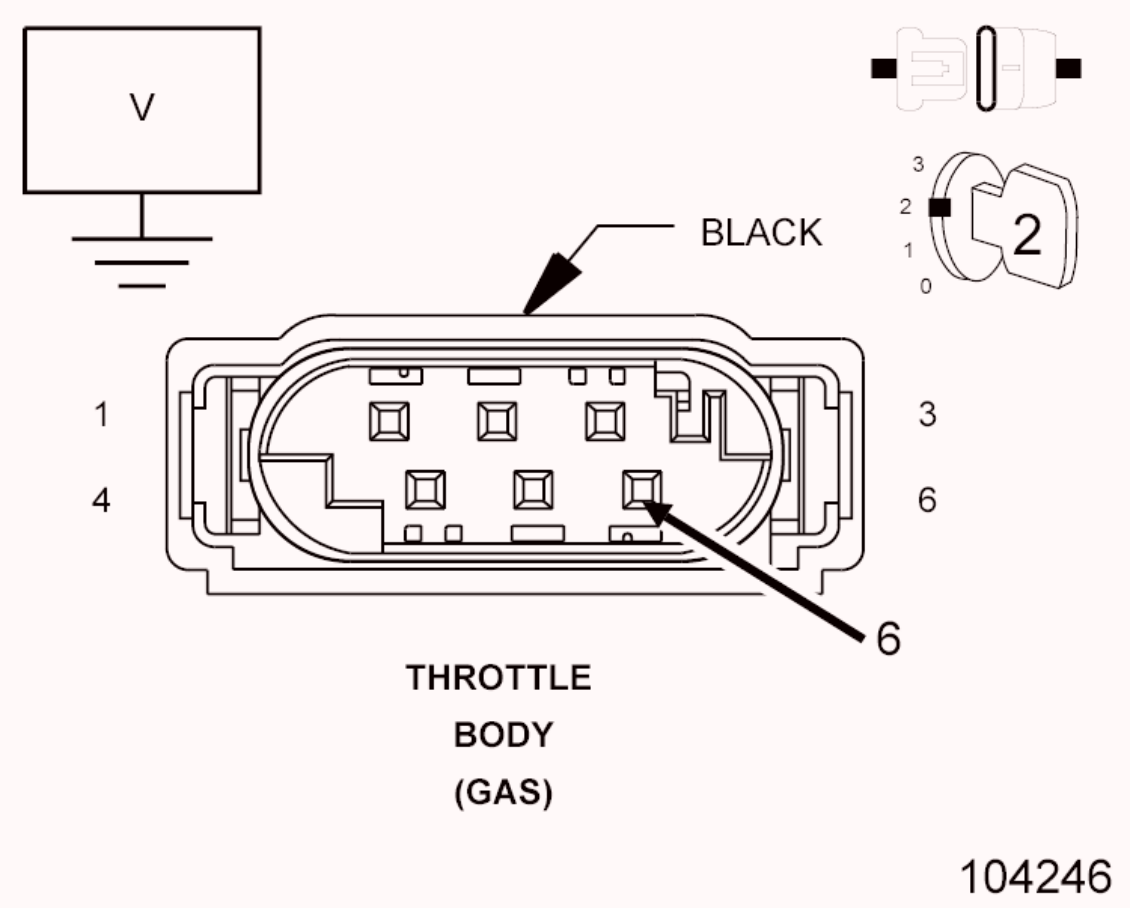

Fig. 172: Checking TP Signal 2 Circuit For Short To Voltage
Courtesy of CHRYSLER GROUP, LLC

1. Measure the voltage of the (K122) TPS Signal 2 circuit in the Throttle Body harness connector.

   Is the voltage above 5.2 volts?

   Yes

   - Repair the (K122) TPS Signal 2 circuit for a short to voltage.
   - Perform the POWERTRAIN VERIFICATION TEST. Refer to **POWERTRAIN VERIFICATION TEST** .

   No

   - Go To 4

4. **CHECK FOR THE (K122) TPS SIGNAL 2 CIRCUIT SHORTED TO THE (F855) 5-VOLT SUPPLY CIRCUIT**

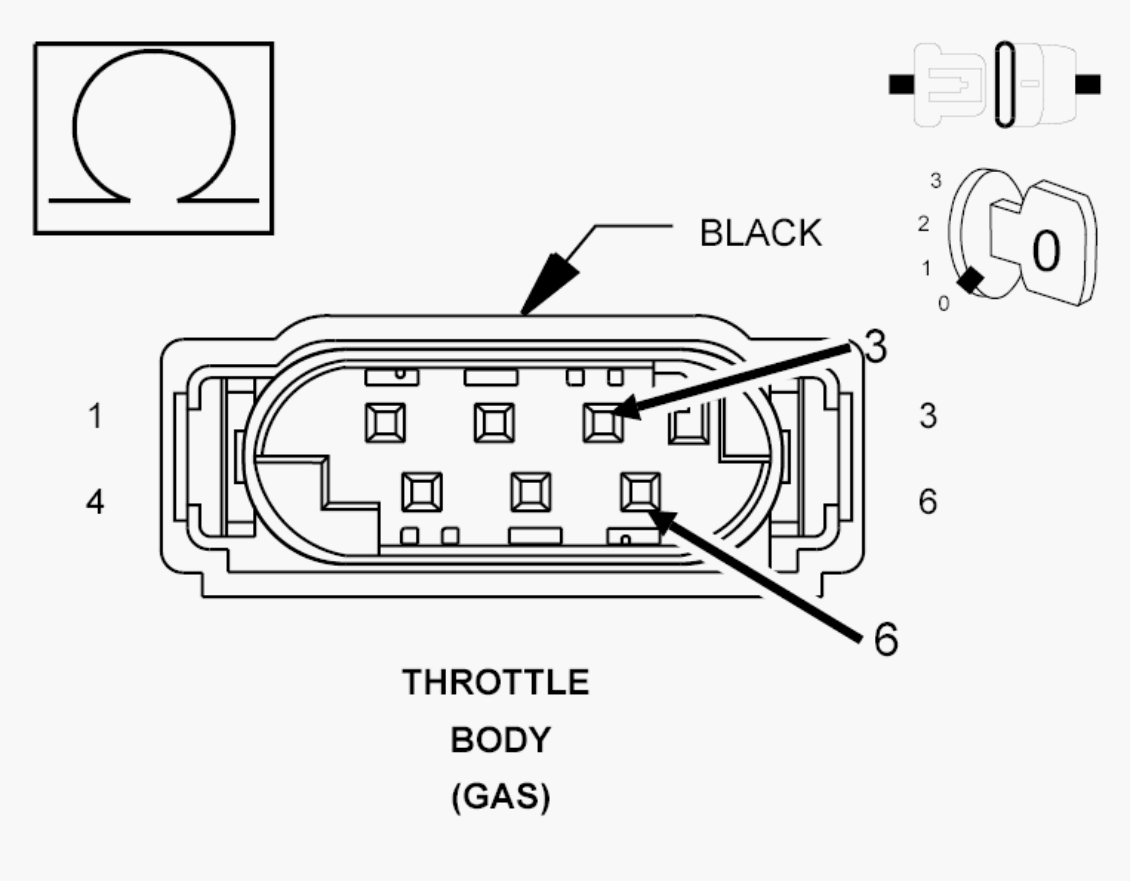

Fig. 173: Checking 5-Volt Supply Circuit For Short To TP Sensor Signal 2 Circuit
Courtesy of CHRYSLER GROUP, LLC

1. Turn the ignition off.
2. Disconnect the PCM C2 harness connector.
3. Measure the resistance between the (K122) TPS Signal 2 circuit and the (F855) 5-Volt Supply in the Throttle Body harness connector.

   Is the resistance above 10k Ohms?

   Yes

   - Go To 5

   No

   - Repair the (K122) TPS Signal 2 circuit for a short to the (F855) 5-Volt Supply circuit.
   - Perform the POWERTRAIN VERIFICATION TEST. Refer to

POWERTRAIN VERIFICATION TEST .

5. **CHECK FOR THE (K122) TPS SIGNAL 2 CIRCUIT SHORTED TO THE (K124) ETC MOTOR (+) CIRCUIT**

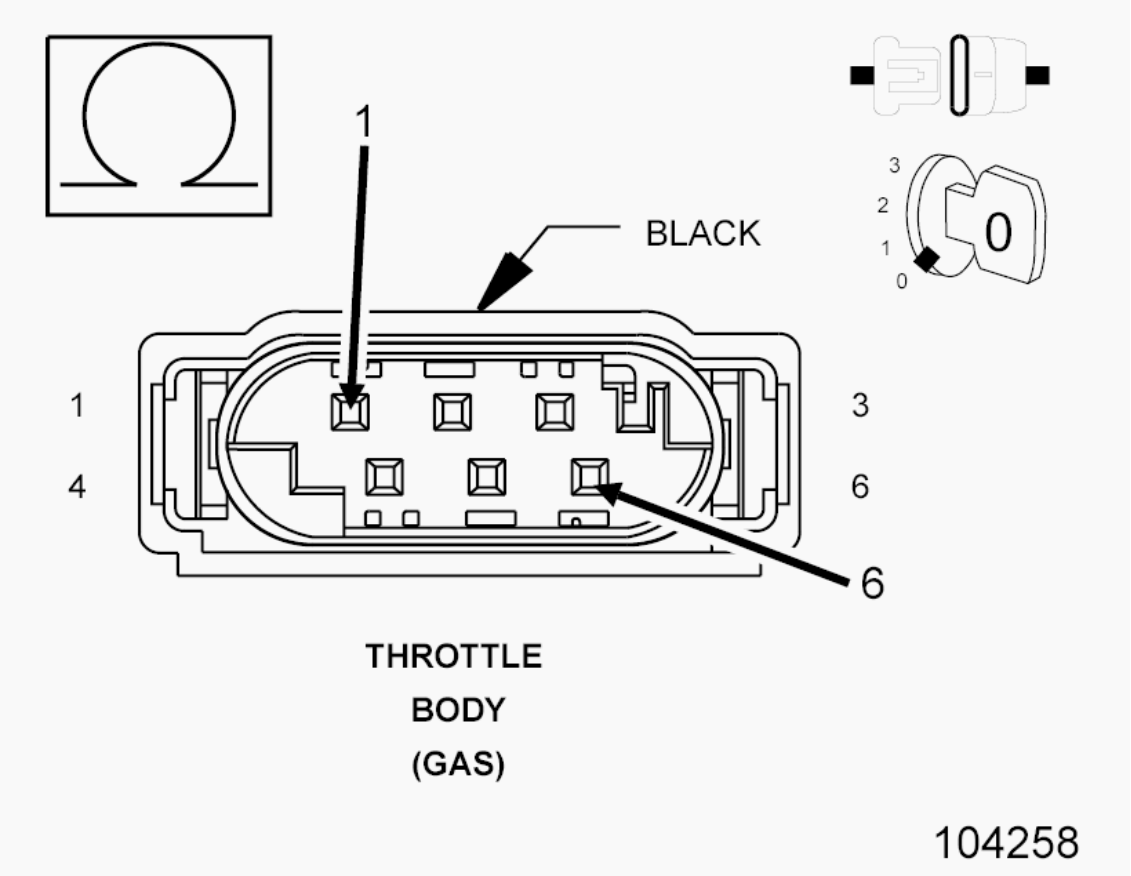

Fig. 174: Checking TP Signal 2 Circuit For Short To ETC Motor (+) Circuit
Courtesy of CHRYSLER GROUP, LLC

1. Measure the resistance between the (K122) TPS Signal 2 circuit and the (K124) ETC Motor (+) in the Throttle Body harness connector.

   Is the resistance above 10k Ohms?

   Yes

   - Go To 6

   No

   - Repair the (K124) ETC Motor (+) circuit for a short to the (K122) TPS Signal circuit.

- Perform the POWERTRAIN VERIFICATION TEST. Refer to **POWERTRAIN VERIFICATION TEST** .

6. **CHECK FOR THE (K122) TPS SIGNAL 2 CIRCUIT SHORTED TO THE (K126) ETC MOTOR (-) CIRCUIT**

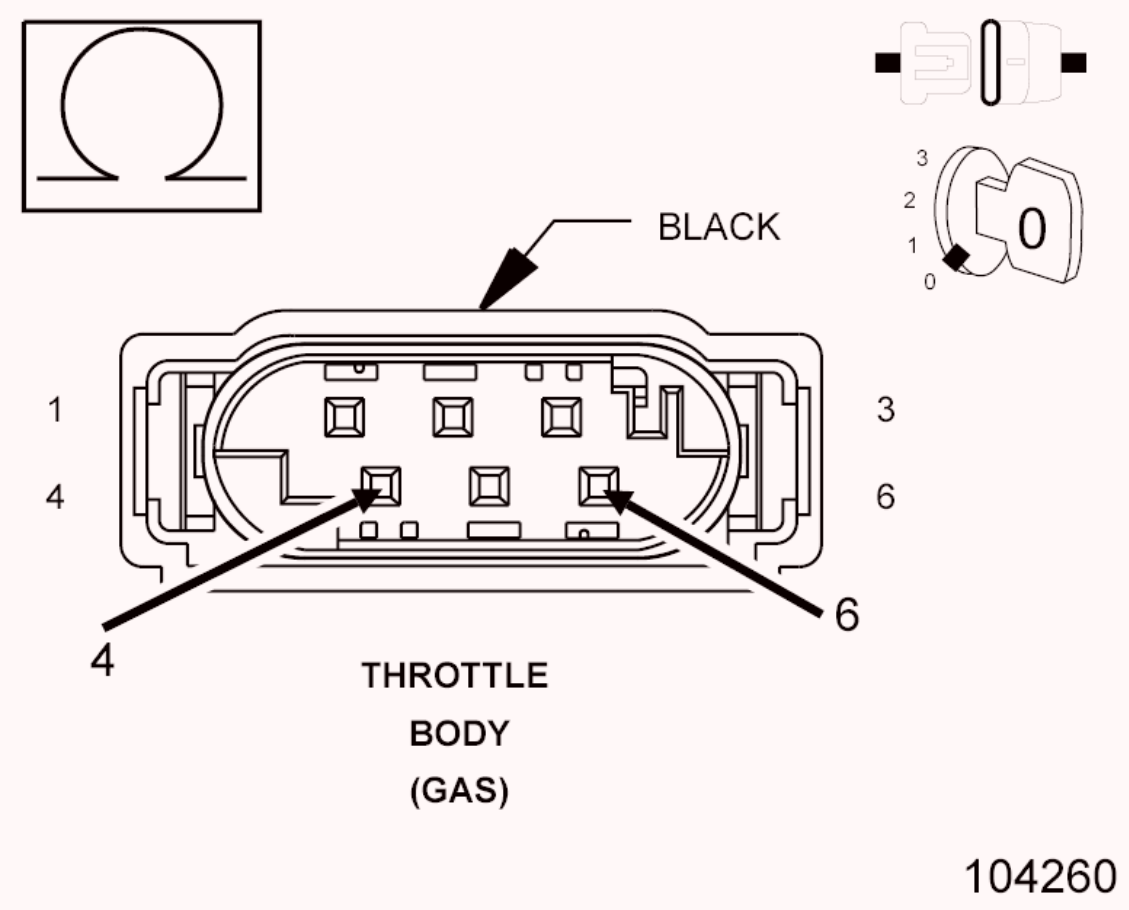

Fig. 175: Checking TP Signal 2 Circuit For Short To ETC Motor (-) Circuit
Courtesy of CHRYSLER GROUP, LLC

1. Measure the resistance between the (K122) TPS Signal 2 circuit and the (K126) ETC Motor (-) in the Throttle Body harness connector.

   Is the resistance above 10k Ohms?

   Yes

   - Go To 7

   No

- Repair the (K122) TPS Signal 2 circuit for a short to the (K126) ETC Motor (-) circuit.
- Perform the POWERTRAIN VERIFICATION TEST. Refer to **POWERTRAIN VERIFICATION TEST** .

7. **CHECK THE (K122) TPS SIGNAL 2 CIRCUIT FOR AN OPEN/HIGH RESISTANCE**
   1. Turn the ignition off.

      CAUTION: Do not probe the PCM harness connectors. Probing the PCM harness connectors will damage the PCM terminals resulting in poor terminal to pin connection. Install the GPEC Diagnostic Adaptor to perform the diagnosis.

   2. Connect the (special tool #10436, Adapter, GPEC Diagnostic).
   3. Measure the resistance of the (K122) TPS Signal 2 between the Throttle Body harness connector and the GPEC Adaptor.

      Is the resistance below 5.0 Ohms?

      Yes

      - Go To 8

      No

      - Repair the (K122) TPS Signal 2 for an open or high resistance.
      - Perform the POWERTRAIN VERIFICATION TEST. Refer to **POWERTRAIN VERIFICATION TEST** .

8. **CHECK THE (K922) TPS SENSOR GROUND CIRCUIT FOR AN OPEN/HIGH RESISTANCE**
   1. Measure the resistance of the (K922) TP Sensor Ground circuit between the Throttle Body harness connector and the GPEC Adaptor.

      Is the resistance below 5.0 Ohms?

      Yes

- Go To 9

No

- Repair the (K922) TP Sensor Ground circuit for an open or high resistance.
- Perform the POWERTRAIN VERIFICATION TEST. Refer to **POWERTRAIN VERIFICATION TEST** .

9. **THROTTLE BODY**

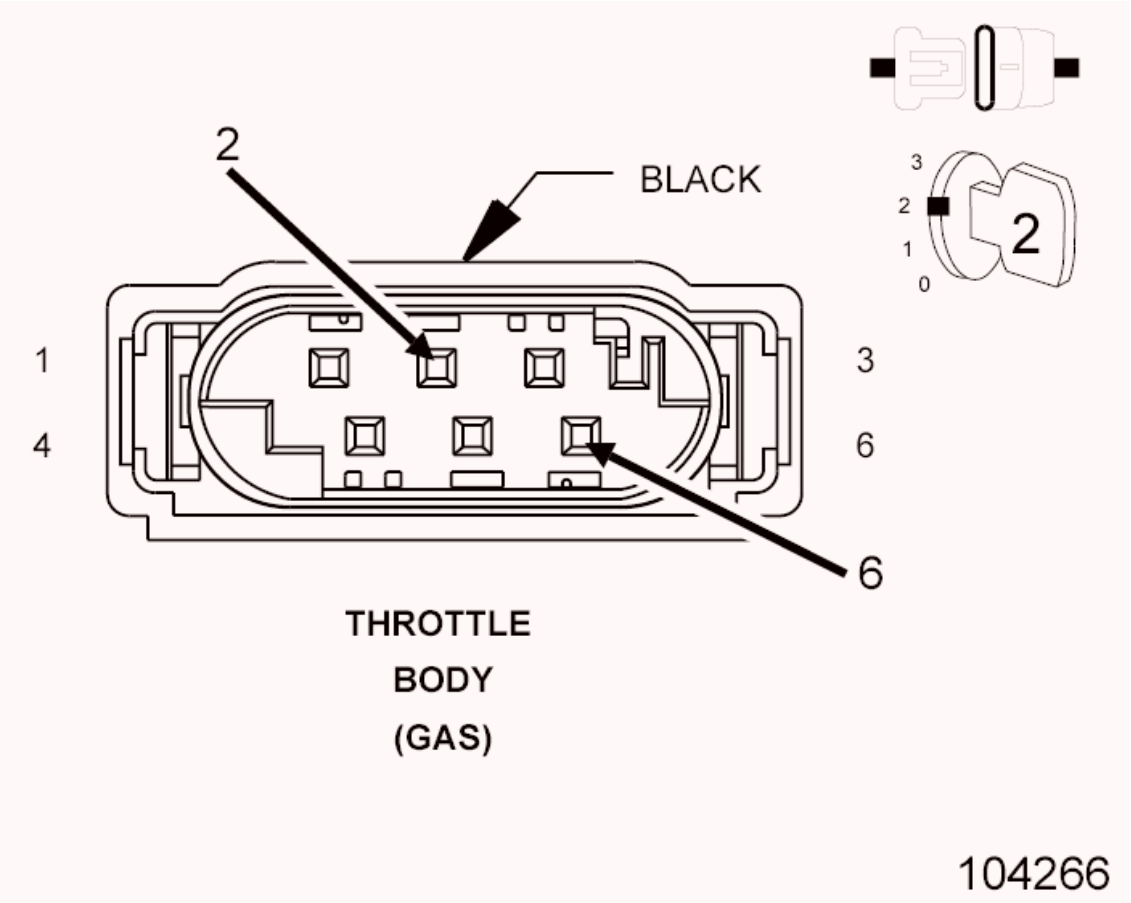

Fig. 176: Throttle Body Harness Connector End View
Courtesy of CHRYSLER GROUP, LLC

1. Turn the ignition off.
2. Connect the PCM C2 harness connector.
3. Connect a jumper between the (K922) TPS Sensor Ground circuit and the (K122) TPS Signal 2 circuit in the Throttle Body harness connector.
4. Turn the ignition on.
5. With the scan tool, read the TPS Signal 2 circuit voltage.

Is the voltage below 0.1 volts with the jumper in place?

Yes

- Replace the Throttle Body in accordance with the service information. Refer to **THROTTLE BODY, REMOVAL** .
- Perform the POWERTRAIN VERIFICATION TEST. Refer to **POWERTRAIN VERIFICATION TEST** .

No

- Go To 10

10. **POWERTRAIN CONTROL MODULE (PCM)**
    1. Using the wiring diagram/schematic as a guide, inspect the wiring and connectors between the Throttle Body and the Powertrain Control Module (PCM).
    2. Look for any chafed, pierced, pinched, or partially broken wires.
    3. Look for broken, bent, pushed out or corroded terminals.
    4. Monitor the scan tool data relative to this circuit and wiggle the wiring and connectors.
    5. Look for the data to change or for the DTC to reset during the wiggle Test.
    6. Perform any Technical Service Bulletins that may apply.

    Were any problems found?

    Yes

    - Repair as necessary.
    - Perform the POWERTRAIN VERIFICATION TEST. Refer to **POWERTRAIN VERIFICATION TEST** .

    No

    - Replace and program the Powertrain Control Module (PCM) in accordance with the service information. Refer to **MODULE, POWERTRAIN CONTROL, REMOVAL** .
    - Perform the POWERTRAIN VERIFICATION TEST. Refer to

POWERTRAIN VERIFICATION TEST .

P0298-ENGINE OIL TEMPERATURE TOO HIGH

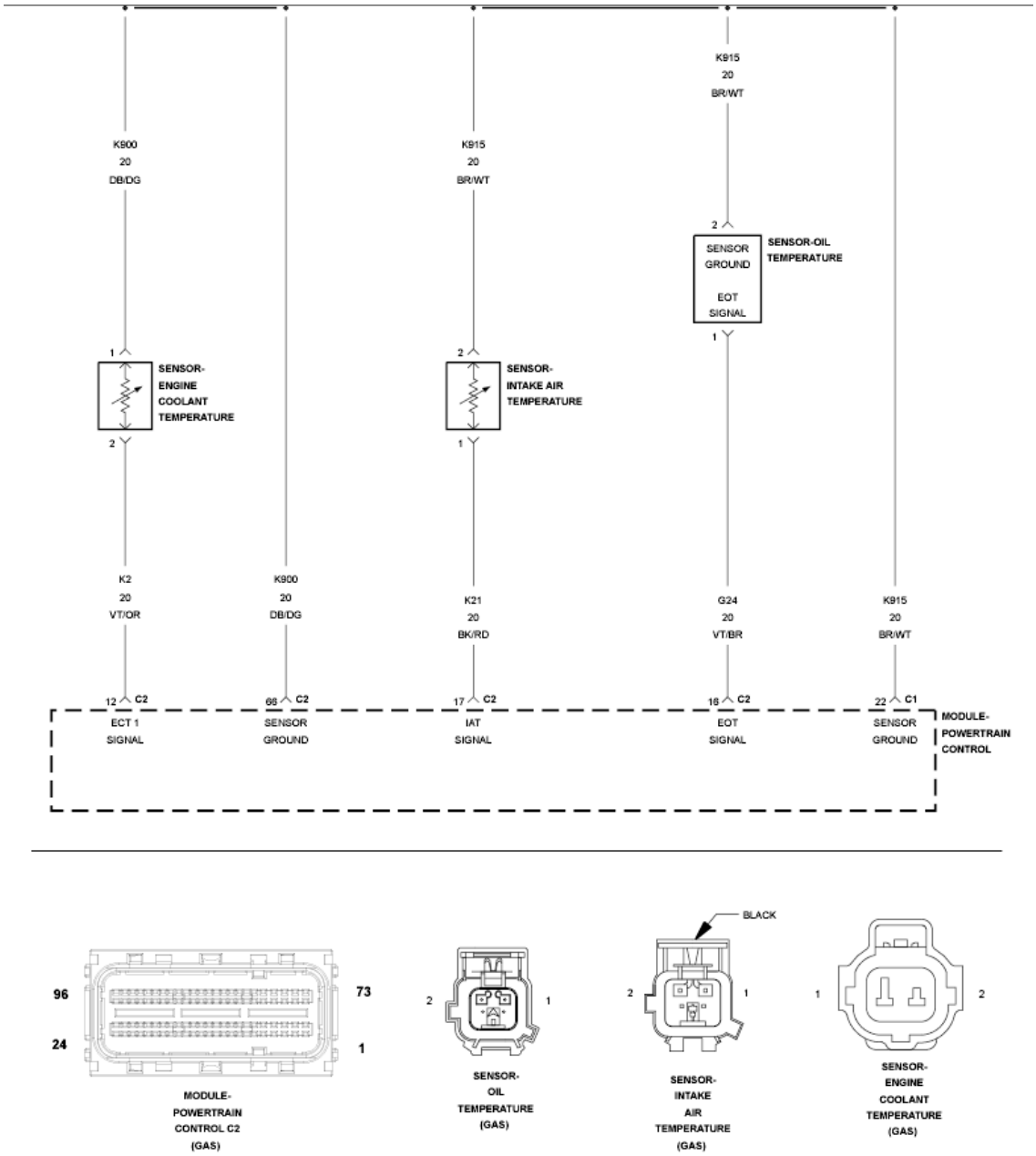

Fig. 177: Temperature Sensors Circuit Diagram
Courtesy of CHRYSLER GROUP, LLC

For a complete wiring diagram, **refer to appropriate SYSTEM WIRING DIAGRAMS article** .

WHEN MONITORED

The engine oil temperature has dropped below a calibrated value. Engine start up.

SET CONDITION

The Engine Oil temperature rises faster than a calibrated modeled temperature. When the actual oil temperature exceeds the calibrated modeled temperature for three minutes the fault is set.

POSSIBLE CAUSES

POSSIBLE CAUSES
(G24) EOT SIGNAL CIRCUIT SHORTED TO VOLTAGE
(G24) EOT SIGNAL CIRCUIT SHORTED TO GROUND
(G24) EOT SIGNAL CIRCUIT SHORTED TO THE (K915) SENSOR GROUND CIRCUIT
(G24) EOT SIGNAL CIRCUIT OPEN OR HIGH RESISTANCE
(K915) SENSOR GROUND CIRCUIT OPEN OR HIGH RESISTANCE
ENGINE OIL TEMPERATURE SENSOR
POWERTRAIN CONTROL MODULE (PCM)

Always perform the Pre-Diagnostic Troubleshooting procedure before proceeding. Refer to PRE-DIAGNOSTIC TROUBLESHOOTING PROCEDURE .

DIAGNOSTIC TEST

1. **ACTIVE DTC**

NOTE: Diagnose any CAN - C Communication DTCs before continuing.

1. Turn the ignition off.
2. If possible, allow the vehicle to sit with the ignition off for more than 60 minutes in an environment where the temperature will allow the oil temperature to cool down.
3. Start the engine and allow it to reach normal operating conditions.
4. With a scan tool, select View DTCs.

Is the status Active or Pending for this DTC?

Yes

- Go To 2

No

- Perform the INTERMITTENT CONDITION diagnostic procedure. Refer to **INTERMITTENT CONDITION** .

2. **ENGINE OIL**
   1. The following conditions must be checked:
      - OEM recommended oil viscosity is being used.
      - Customer is following the oil change schedule.
      - Check the engine oil for contamination. (i.e., fuel and/or engine coolant)
      - Internal engine condition that may effect oil pressure.

   Were any of the above conditions found?

   Yes

   - Repair as necessary.
   - Perform the POWERTRAIN VERIFICATION TEST. Refer to **POWERTRAIN VERIFICATION TEST** .

   No

   - Go To 3

3. **CHECK THE (G24) EOT SIGNAL CIRCUIT FOR A SHORT TO VOLTAGE**

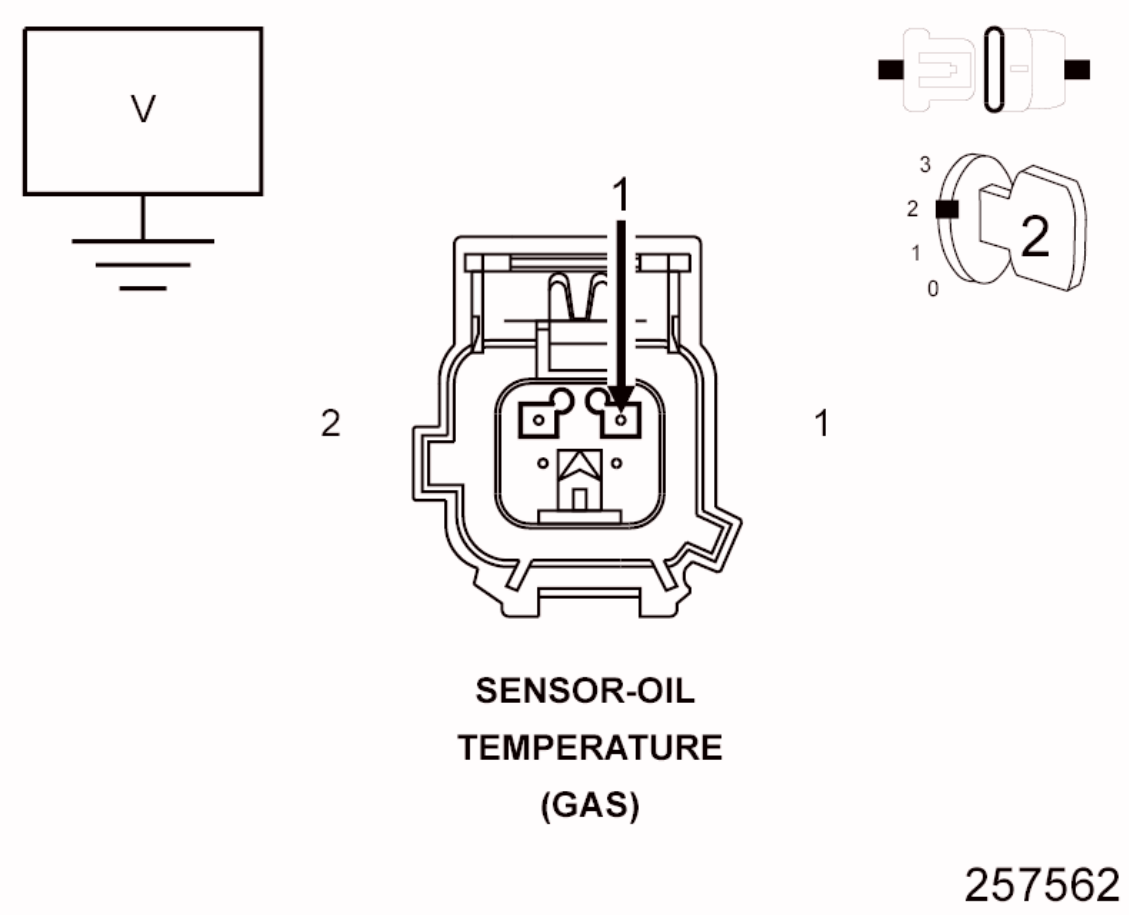

Fig. 178: Checking Engine Oil Temperature Sensor Signal Circuit For Short To Voltage
Courtesy of CHRYSLER GROUP, LLC

1. Turn the ignition off.
2. Disconnect the Engine Oil Temperature Sensor harness connector.
3. Disconnect the PCM harness connectors.
4. Turn the ignition on.
5. Measure the voltage of the (G24) EOT Signal circuit in the Engine Oil Temperature Sensor harness connector.

   Is there any voltage present?

   Yes

   - Repair the (G24) EOT Signal circuit for a short to voltage.
   - Perform the POWERTRAIN VERIFICATION TEST. Refer to **POWERTRAIN VERIFICATION TEST** .

No

- Go To 4

4. **CHECK THE (G24) EOT SIGNAL CIRCUIT FOR A SHORT TO GROUND**

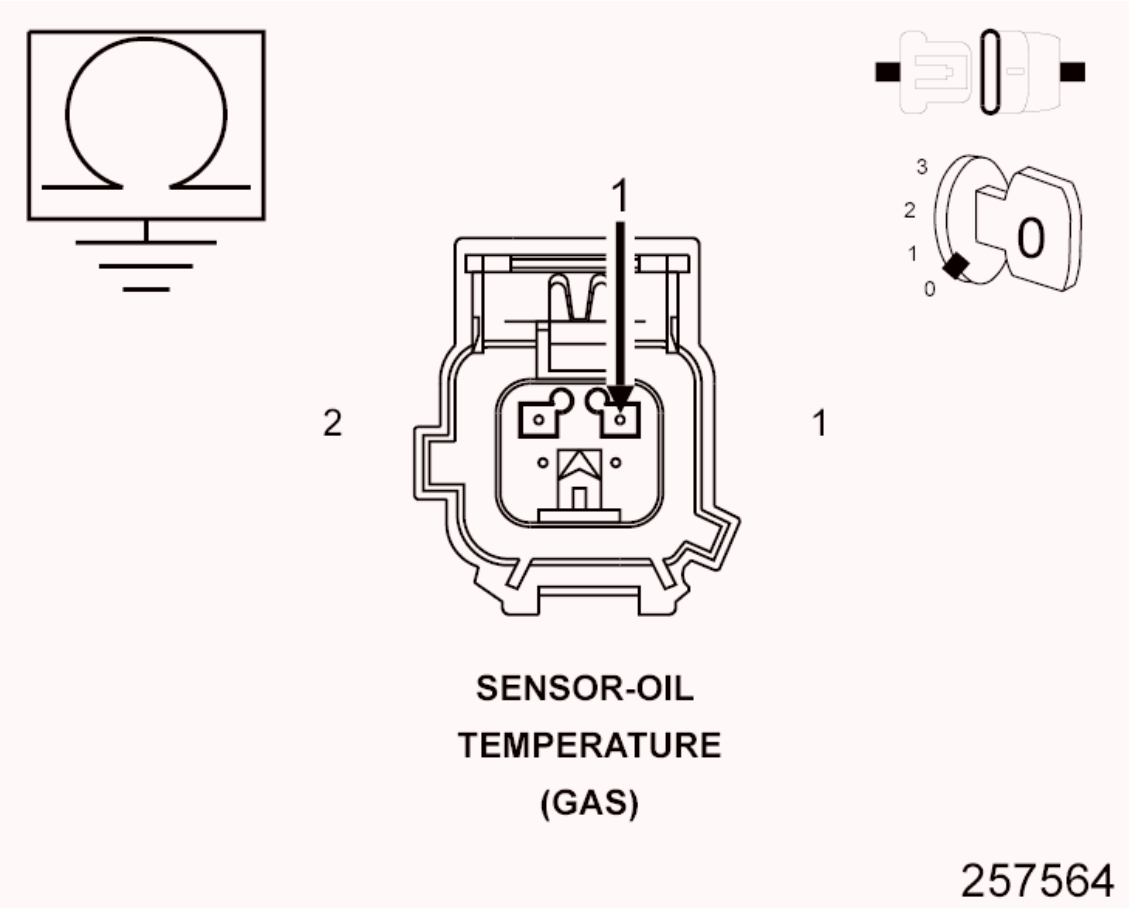

Fig. 179: Checking Engine Oil Temperature Sensor Signal Circuit For Short To Ground
Courtesy of CHRYSLER GROUP, LLC

1. Turn the ignition off.
2. Measure the resistance between ground and the (G24) EOT Signal circuit in the Engine Oil Temperature Sensor harness connector.

   Is the resistance above 10k Ohms?

   Yes

   - Go To 5

No

- Repair the (G24) EOT Signal circuit for a short to ground.
- Perform the POWERTRAIN VERIFICATION TEST. Refer to **POWERTRAIN VERIFICATION TEST** .

5. **CHECK FOR THE (G24) EOT SIGNAL CIRCUIT SHORTED TO THE (K915) SENSOR GROUND CIRCUIT**

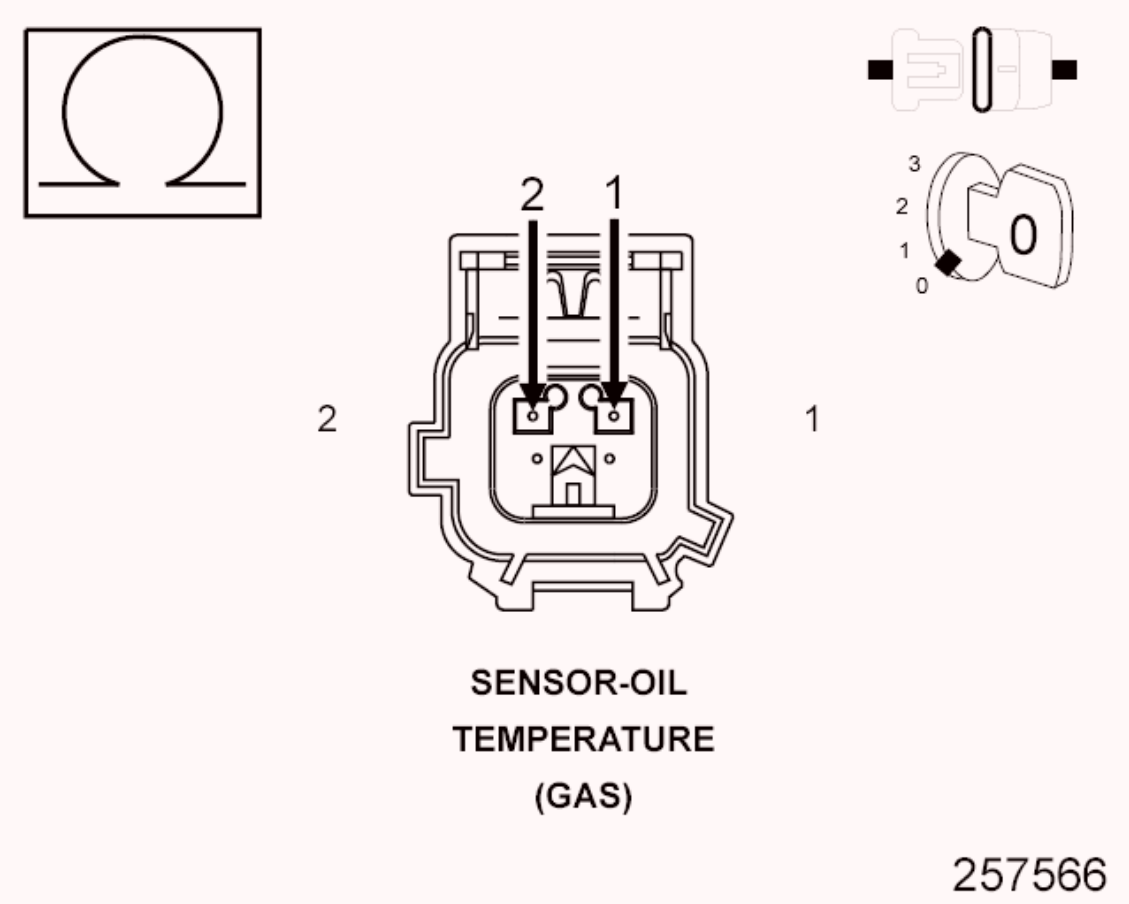

Fig. 180: Checking Engine Oil Temperature Sensor Signal Circuit For Short To Ground Circuit
Courtesy of CHRYSLER GROUP, LLC

1. Measure the resistance between the (G24) EOT Signal circuit and the (K915) Sensor Ground circuit in the Engine Oil Temperature Sensor harness connector.

   Is the resistance above 10k Ohms?

   Yes

- Go To 6

No

- Repair the (G24) EOT Signal circuit for a short to the (K915) Sensor Ground circuit.
- Perform the POWERTRAIN VERIFICATION TEST. Refer to **POWERTRAIN VERIFICATION TEST** .

6. **CHECK THE (G24) EOT SIGNAL CIRCUIT FOR AN OPEN/HIGH RESISTANCE**

CAUTION: Do not probe the PCM harness connectors. Probing the PCM harness connectors will damage the PCM terminals resulting in poor terminal to pin connection. Install the GPEC Diagnostic Adaptor to perform the diagnosis.

1. Connect the (special tool #10436, Adapter, GPEC Diagnostic) to the PCM C2 harness connector.
2. Measure the resistance of the (G24) EOT Signal circuit between the Engine Oil Temperature Sensor harness connector and the GPEC Adaptor.

   Is the resistance below 5.0 Ohms?

   Yes

   - Go To 7

   No

   - Repair the (G24) EOT Signal circuit for an open or high resistance.
   - Perform the POWERTRAIN VERIFICATION TEST. Refer to **POWERTRAIN VERIFICATION TEST** .

7. **CHECK THE (K915) SENSOR GROUND CIRCUIT FOR AN OPEN/HIGH RESISTANCE**

CAUTION: Do not probe the PCM harness connectors. Probing the PCM harness connectors will

damage the PCM terminals resulting in poor terminal to pin connection. Install the GPEC Diagnostic Adaptor to perform the diagnosis.

1. Connect the (special tool #10436, Adapter, GPEC Diagnostic) to the PCM C1 harness connector.
2. Measure the resistance of the (K915) Sensor Ground circuit between the Engine Oil Temperature Sensor harness connector and the GPEC Adaptor.

   Is the resistance below 5.0 Ohms?

   Yes

   - Go To 8

   No

   - Repair the (K915) Sensor Ground for an open or high resistance.
   - Perform the POWERTRAIN VERIFICATION TEST. Refer to **POWERTRAIN VERIFICATION TEST** .

8. **ENGINE OIL TEMPERATURE SENSOR**

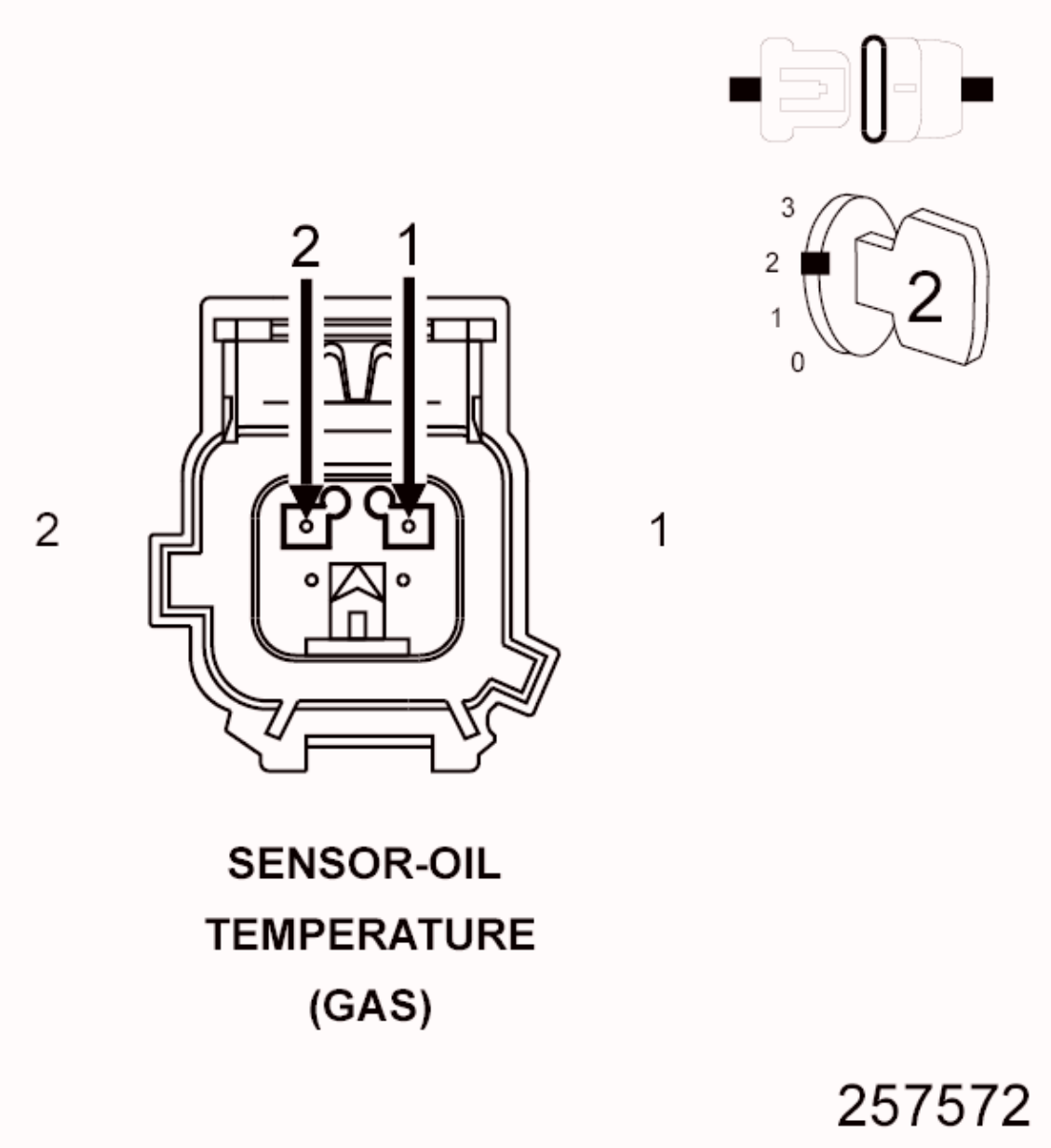

Fig. 181: Engine Oil Temperature Sensor Harness Connector End View
Courtesy of CHRYSLER GROUP, LLC

1. Turn the ignition off.
2. Reconnect the PCM harness connectors.
3. Connect a jumper between the (K915) Sensor Ground circuit and the (G24) EOT Signal circuit in the Engine Oil Temperature Sensor harness connector.
4. Turn the ignition on.
5. With the scan tool, read the Engine Oil Temperature Sensor signal voltage.

Is the voltage below 0.1 volts with the jumper in place?

Yes

- Replace the Engine Oil Temperature Sensor in accordance with the service information. Refer to **2.0L SENSOR, OIL TEMPERATURE, REMOVAL** or **2.4L SENSOR, OIL TEMPERATURE, REMOVAL** .
- Perform the POWERTRAIN VERIFICATION TEST. Refer to **POWERTRAIN VERIFICATION TEST** .

No

- Go To 9

9. **POWERTRAIN CONTROL MODULE (PCM)**
   1. Using the wiring diagram/schematic as a guide, inspect the wiring and connectors between the Engine Oil Temperature Sensor and the Powertrain Control Module (PCM).
      - Look for any chafed, pierced, pinched, or partially broken wires.
      - Look for broken, bent, pushed out or corroded terminals.
      - Monitor the scan tool data relative to this circuit and wiggle the wiring and connectors.
      - Look for the data to change or for the DTC to reset during the wiggle test.
      - Perform any Technical Service Bulletins that may apply.

Were any problems found?

Yes

- Repair as necessary.
- Perform the POWERTRAIN VERIFICATION TEST. Refer to **POWERTRAIN VERIFICATION TEST** .

No

- Replace and program the Powertrain Control Module (PCM) in accordance with the service information. Refer to **MODULE,**

POWERTRAIN CONTROL, REMOVAL .

- Perform the POWERTRAIN VERIFICATION TEST. Refer to **POWERTRAIN VERIFICATION TEST** .

P0300-MULTIPLE CYLINDER MISFIRE

For a complete wiring diagram, **refer to appropriate SYSTEM WIRING DIAGRAMS article** .

WHEN MONITORED

Any time the engine is running and the adaptive numerator has been successfully updated.

SET CONDITION

If the Powertrain Control Module (PCM) detects that the variation in crankshaft speed between each cylinder exceeds a calibrated value, based on engine RPM and load, a fault is set.

POSSIBLE CAUSES

POSSIBLE CAUSES
FUEL DELIVERY SYSTEM
IGNITION COIL, WIRING, OR CONNECTORS
ECT SENSOR, WIRING, OR CONNECTORS
MAP SENSOR, WIRING, OR CONNECTORS
O2 SENSOR, WIRING, OR CONNECTORS
ENGINE MECHANICAL SYSTEM
POWERTRAIN CONTROL MODULE (PCM)

Always perform the Pre-Diagnostic Troubleshooting procedure before proceeding. Refer to PRE-DIAGNOSTIC TROUBLESHOOTING PROCEDURE .

DIAGNOSTIC TEST

1. **DTC IS ACTIVE**
    1. Diagnose and repair any other active component or circuit DTCs before continuing with this procedure.

2. Turn the ignition on.
3. With the scan tool, select View DTCs. Copy DTC and Freeze Frame information.
4. Start the engine and allow it to reach operating temperature.

WARNING: When the engine is operating, do not stand in direct line with the fan. Do not put your hands near the pulleys, belts or fan. Do not wear loose clothing. Failure to follow these instructions may result in possible serious or fatal injury.

NOTE: Attempt to operate the vehicle under conditions similar to which the DTC was set.

NOTE: It may be necessary to test drive the vehicle within the DTC monitoring conditions in order for this DTC to set.

5. With a scan tool, select View DTCs.

   Is the status Active for this DTC?

   Yes

   - Go To 2

   No

   - Perform the INTERMITTENT CONDITION diagnostic procedure. Refer to **INTERMITTENT CONDITION** .

2. **DIAGNOSTIC INSPECTION**

NOTE: Anything that affects the speed of the crankshaft can cause this DTC to set.

NOTE: When a misfire is detected, the PCM will shut down the injector control circuit for the misfiring cylinder.

NOTE: Misfire may occur and may not be caused by component failure. Any of the following conditions can cause a misfire:

1. Inspect the engine for any of the following conditions:
   - Worn serpentine belt
   - Misalignment or binding water pump, P/S pump or A/C compressor pulleys
   - Improper CKP, CMP, MAP, or TP Sensor mounting.
   - Poor connector/terminal to component connection for CKP sensor, CMP sensor, MAP sensor, TP sensor, fuel injector, ignition coil, etc.
   - Corroded PCM power or ground circuits.
   - Vacuum leaks.
   - Restriction in the air induction or exhaust system.
   - Internal engine component malfunction.
   - Moisture on ignition system components
   - Insufficient fuel
   - Low quality fuel
   - Manual transmission bog
   - Towing overload

   Were any problems found?

   Yes

   - Repair as necessary.
   - Perform the POWERTRAIN VERIFICATION TEST. Refer to **POWERTRAIN VERIFICATION TEST** .

   No

   - Go To 3

3. **CHECKING THE FUEL DELIVERY SYSTEM**
   1. Perform the diagnostic procedures for FUEL PRESSURE LEAK DOWN and FUEL DELIVERY SYSTEM OUTPUT - FLOW TEST.

Refer to **DIAGNOSIS AND TESTING** .

Were any problems found?

Yes

- Repair as necessary in accordance with the Service Information.
- Perform the POWERTRAIN VERIFICATION TEST. Refer to **POWERTRAIN VERIFICATION TEST** .

No

- Go To 4

4. **CHECKING THE IGNITION COIL OPERATION**
   1. Perform the diagnostic procedure for CHECKING THE IGNITION COIL OPERATION. Refer to **DIAGNOSIS AND TESTING** .

   Were any problems found?

   Yes

   - Repair as necessary in accordance with the Service Information.
   - Perform the POWERTRAIN VERIFICATION TEST. Refer to **POWERTRAIN VERIFICATION TEST** .

   No

   - Go To 5

5. **CHECKING THE ENGINE COOLANT TEMPERATURE SENSOR OPERATION**
   1. Perform the diagnostic procedure for CHECKING THE ENGINE COOLANT TEMPERATURE SENSOR OPERATION. Refer to **DIAGNOSIS AND TESTING** .

   Were any problems found?

   Yes

   - Repair as necessary in accordance with the Service Information.
   - Perform the POWERTRAIN VERIFICATION TEST. Refer to

POWERTRAIN VERIFICATION TEST .

No

- Go To 6

6. **CHECKING THE MAP SENSOR OPERATION**
   1. Perform the diagnostic procedure for CHECKING THE MAP SENSOR OPERATION. Refer to **DIAGNOSIS AND TESTING** .

   Were any problems found?

   Yes

   - Repair as necessary in accordance with the Service Information.
   - Perform the POWERTRAIN VERIFICATION TEST. Refer to **POWERTRAIN VERIFICATION TEST** .

   No

   - Go To 7

7. **CHECKING THE OXYGEN SENSOR OPERATION**
   1. Perform the diagnostic procedure for CHECKING THE OXYGEN SENSOR OPERATION. Refer to **DIAGNOSIS AND TESTING** .

   Were any problems found?

   Yes

   - Repair as necessary in accordance with the Service Information.
   - Perform the POWERTRAIN VERIFICATION TEST. Refer to **POWERTRAIN VERIFICATION TEST** .

   No

   - Go To 8

8. **CHECKING THE ENGINE MECHANICAL SYSTEM**
   1. Perform the diagnostic procedure for CHECKING THE ENGINE MECHANICAL SYSTEM. Refer to **DIAGNOSIS AND TESTING** .

Were any problems found?

Yes

- Repair as necessary in accordance with the Service Information.
- Perform the POWERTRAIN VERIFICATION TEST. Refer to **POWERTRAIN VERIFICATION TEST** .

No

- Go To 9

9. **POWERTRAIN CONTROL MODULE (PCM)**
   1. Using the wiring diagram/schematic as a guide, inspect the wiring and connectors relative to the components tested in this procedure.
      - Look for any chafed, pierced, pinched, or partially broken wires.
      - Look for broken, bent, pushed out or corroded terminals.
      - Monitor the scan tool data relative to this circuit and wiggle test the wiring and connectors.
      - Look for the data to change or for the DTC to reset during the wiggle test.
      - Perform any technical service bulletins that may apply.

Were any problems found?

Yes

- Repair as necessary.
- Perform the POWERTRAIN VERIFICATION TEST. Refer to **POWERTRAIN VERIFICATION TEST** .

No

- Replace and program the Powertrain Control Module (PCM) in accordance with the Service Information. Refer to **MODULE, POWERTRAIN CONTROL, REMOVAL** .
- Perform the POWERTRAIN VERIFICATION TEST. Refer to **POWERTRAIN VERIFICATION TEST** .

P0301-CYLINDER 1 MISFIRE

For a complete wiring diagram, **refer to appropriate SYSTEM WIRING DIAGRAMS article** .

WHEN MONITORED

Any time the engine is running and the adaptive numerator has been successfully updated.

SET CONDITION

If the Powertrain Control Module (PCM) detects that the variation in crankshaft speed between each cylinder exceeds a calibrated value, based on engine RPM and load, a fault is set.

POSSIBLE CAUSES

POSSIBLE CAUSES
FUEL DELIVERY SYSTEM
IGNITION COIL, WIRING, OR CONNECTORS
ECT SENSOR, WIRING, OR CONNECTORS
MAP SENSOR, WIRING, OR CONNECTORS
O2 SENSOR, WIRING, OR CONNECTORS
ENGINE MECHANICAL SYSTEM
POWERTRAIN CONTROL MODULE (PCM)

Always perform the Pre-Diagnostic Troubleshooting procedure before proceeding. Refer to PRE-DIAGNOSTIC TROUBLESHOOTING PROCEDURE .

DIAGNOSTIC TEST

1. **DTC IS ACTIVE**
    1. Diagnose and repair any other active component or circuit DTCs before continuing with this procedure.
    2. Turn the ignition on.
    3. With the scan tool, select View DTCs. Copy DTC and Freeze Frame information.
    4. Start the engine and allow it to reach operating temperature.

WARNING: When the engine is operating, do not

stand in direct line with the fan. Do not put your hands near the pulleys, belts or fan. Do not wear loose clothing. Failure to follow these instructions may result in possible serious or fatal injury.

NOTE: Attempt to operate the vehicle under conditions similar to which the DTC was set.

NOTE: It may be necessary to test drive the vehicle within the DTC monitoring conditions in order for this DTC to set.

5. With a scan tool, select View DTCs.

   Is the status Active for this DTC?

   Yes

   - Go To 2

   No

   - Perform the INTERMITTENT CONDITION diagnostic procedure. Refer to **INTERMITTENT CONDITION** .

2. **DIAGNOSTIC INSPECTION**

NOTE: Anything that affects the speed of the crankshaft can cause this DTC to set.

NOTE: When a misfire is detected, the PCM will shut down the injector control circuit for the misfiring cylinder.

NOTE: Misfire may occur and may not be caused by component failure. Any of the following conditions can cause a misfire:

- **Worn serpentine belt.**
- **Misalignment or binding water pump, P/S pump**

or A/C compressor pulleys.
- **Improper CKP, CMP, MAP, or TP Sensor mounting.**
- **Poor connector/terminal to component connection for CKP sensor, CMP sensor, MAP sensor, TP sensor, fuel injector, ignition coil, etc.**
- **Corroded PCM power or ground circuits.**
- **Vacuum leaks.**
- **Restriction in the air induction or exhaust system.**
- **Internal engine component malfunction.**
- **Moisture on ignition system components.**
- **Insufficient fuel.**
- **Low quality fuel.**
- **Manual transmission bog.**
- **Towing overload.**

Were any problems found?

Yes

- Repair as necessary.
- Perform the POWERTRAIN VERIFICATION TEST. Refer to **POWERTRAIN VERIFICATION TEST** .

No

- Go To 3

3. **CHECKING THE FUEL DELIVERY SYSTEM**
   1. Perform the diagnostic procedures for FUEL PRESSURE LEAK DOWN and FUEL DELIVERY SYSTEM OUTPUT - FLOW TEST. Refer to **DIAGNOSIS AND TESTING** .

      Were any problems found?

      Yes

- Repair as necessary in accordance with the Service Information.
- Perform the POWERTRAIN VERIFICATION TEST. Refer to **POWERTRAIN VERIFICATION TEST** .

No

- Go To 4

4. **CHECKING THE IGNITION COIL OPERATION**
   1. Perform the diagnostic procedure for CHECKING THE IGNITION COIL OPERATION. Refer to **DIAGNOSIS AND TESTING** .

      Were any problems found?

      Yes

      - Repair as necessary in accordance with the Service Information.
      - Perform the POWERTRAIN VERIFICATION TEST. Refer to **POWERTRAIN VERIFICATION TEST** .

      No

      - Go To 5

5. **CHECKING THE ENGINE COOLANT TEMPERATURE SENSOR OPERATION**
   1. Perform the diagnostic procedure for CHECKING THE ENGINE COOLANT TEMPERATURE SENSOR OPERATION. Refer to **DIAGNOSIS AND TESTING** .

      Were any problems found?

      Yes

      - Repair as necessary in accordance with the Service Information.
      - Perform the POWERTRAIN VERIFICATION TEST. Refer to **POWERTRAIN VERIFICATION TEST** .

      No

      - Go To 6

6. **CHECKING THE MAP SENSOR OPERATION**
   1. Perform the diagnostic procedure for CHECKING THE MAP SENSOR OPERATION. Refer to **DIAGNOSIS AND TESTING** .

      Were any problems found?

      Yes

      - Repair as necessary in accordance with the Service Information.
      - Perform the POWERTRAIN VERIFICATION TEST. Refer to **POWERTRAIN VERIFICATION TEST** .

      No

      - Go To 7
7. **CHECKING THE OXYGEN SENSOR OPERATION**
   1. Perform the diagnostic procedure for CHECKING THE OXYGEN SENSOR OPERATION. Refer to **DIAGNOSIS AND TESTING** .

      Were any problems found?

      Yes

      - Repair as necessary in accordance with the Service Information.
      - Perform the POWERTRAIN VERIFICATION TEST. Refer to **POWERTRAIN VERIFICATION TEST** .

      No

      - Go To 8
8. **CHECKING THE ENGINE MECHANICAL SYSTEM**
   1. Perform the diagnostic procedure for CHECKING THE ENGINE MECHANICAL SYSTEM. Refer to **DIAGNOSIS AND TESTING** .

      Were any problems found?

      Yes

      - Repair as necessary in accordance with the Service Information.

- Perform the POWERTRAIN VERIFICATION TEST. Refer to **POWERTRAIN VERIFICATION TEST** .

No

- Go To 9

9. **POWERTRAIN CONTROL MODULE (PCM)**
   1. Using the wiring diagram/schematic as a guide, inspect the wiring and connectors relative to the components tested in this procedure.
      - Look for any chafed, pierced, pinched, or partially broken wires.
      - Look for broken, bent, pushed out or corroded terminals.
      - Monitor the scan tool data relative to this circuit and wiggle test the wiring and connectors.
      - Look for the data to change or for the DTC to reset during the wiggle test.
      - Perform any technical service bulletins that may apply.

      Were any problems found?

      Yes

      - Repair as necessary in accordance with the Service Information.
      - Perform the POWERTRAIN VERIFICATION TEST. Refer to **POWERTRAIN VERIFICATION TEST** .

      No

      - Replace and program the Powertrain Control Module (PCM) in accordance with the Service Information. Refer to **MODULE, POWERTRAIN CONTROL, REMOVAL** .
      - Perform the POWERTRAIN VERIFICATION TEST. Refer to **POWERTRAIN VERIFICATION TEST** .

P0302-CYLINDER 2 MISFIRE

For a complete wiring diagram, **refer to appropriate SYSTEM WIRING DIAGRAMS article** .

WHEN MONITORED

Any time the engine is running and the adaptive numerator has been successfully updated.

SET CONDITION

If the Powertrain Control Module (PCM) detects that the variation in crankshaft speed between each cylinder exceeds a calibrated value, based on engine RPM and load, a fault is set.

POSSIBLE CAUSES

POSSIBLE CAUSES
FUEL DELIVERY SYSTEM
IGNITION COIL, WIRING, OR CONNECTORS
ECT SENSOR, WIRING, OR CONNECTORS
MAP SENSOR, WIRING, OR CONNECTORS
O2 SENSOR, WIRING, OR CONNECTORS
ENGINE MECHANICAL SYSTEM
POWERTRAIN CONTROL MODULE (PCM)

Always perform the Pre-Diagnostic Troubleshooting procedure before proceeding. Refer to PRE-DIAGNOSTIC TROUBLESHOOTING PROCEDURE .

DIAGNOSTIC TEST

1. **DTC IS ACTIVE**
    1. Diagnose and repair any other active component or circuit DTCs before continuing with this procedure.
    2. Turn the ignition on.
    3. With the scan tool, select View DTCs. Copy DTC and Freeze Frame information.
    4. Start the engine and allow it to reach operating temperature.

WARNING: **When the engine is operating, do not stand in direct line with the fan. Do not put your hands near the pulleys, belts or fan. Do not wear loose clothing. Failure to follow these instructions may result in**

possible serious or fatal injury.

NOTE: Attempt to operate the vehicle under conditions similar to which the DTC was set.

NOTE: It may be necessary to test drive the vehicle within the DTC monitoring conditions in order for this DTC to set.

5. With a scan tool, select View DTCs.

   Is the status Active for this DTC?

   Yes

   - Go To 2

   No

   - Perform the INTERMITTENT CONDITION diagnostic procedure. Refer to **INTERMITTENT CONDITION** .

2. **DIAGNOSTIC INSPECTION**

NOTE: Anything that affects the speed of the crankshaft can cause this DTC to set.

NOTE: When a misfire is detected, the PCM will shut down the injector control circuit for the misfiring cylinder.

NOTE: Misfire may occur and may not be caused by component failure. Any of the following conditions can cause a misfire:

- **Worn serpentine belt**
- **Misalignment or binding water pump, P/S pump or A/C compressor pulleys**
- **Improper CKP, CMP, MAP, or TP Sensor mounting.**

- **Poor connector/terminal to component connection for CKP sensor, CMP sensor, MAP sensor, TP sensor, fuel injector, ignition coil, etc.**
- **Corroded PCM power or ground circuits.**
- **Vacuum leaks.**
- **Restriction in the air induction or exhaust system.**
- **Internal engine component malfunction.**
- **Moisture on ignition system components**
- **Insufficient fuel**
- **Low quality fuel**
- **Manual transmission bog**
- **Towing overload**

Were any problems found?

Yes

- Repair as necessary.
- Perform the POWERTRAIN VERIFICATION TEST. Refer to **POWERTRAIN VERIFICATION TEST** .

No

- Go To 3

3. **CHECKING THE FUEL DELIVERY SYSTEM**
   1. Perform the diagnostic procedures for FUEL PRESSURE LEAK DOWN and FUEL DELIVERY SYSTEM OUTPUT - FLOW TEST. Refer to **DIAGNOSIS AND TESTING** .

      Were any problems found?

      Yes

      - Repair as necessary in accordance with the Service Information.
      - Perform the POWERTRAIN VERIFICATION TEST. Refer to **POWERTRAIN VERIFICATION TEST** .

No

- Go To 4

4. **CHECKING THE IGNITION COIL OPERATION**
   1. Perform the diagnostic procedure for CHECKING THE IGNITION COIL OPERATION. Refer to **DIAGNOSIS AND TESTING** .

      Were any problems found?

      Yes

      - Repair as necessary in accordance with the Service Information.
      - Perform the POWERTRAIN VERIFICATION TEST. Refer to **POWERTRAIN VERIFICATION TEST** .

      No

      - Go To 5

5. **CHECKING THE ENGINE COOLANT TEMPERATURE SENSOR OPERATION**
   1. Perform the diagnostic procedure for CHECKING THE ENGINE COOLANT TEMPERATURE SENSOR OPERATION. Refer to **DIAGNOSIS AND TESTING** .

      Were any problems found?

      Yes

      - Repair as necessary in accordance with the Service Information.
      - Perform the POWERTRAIN VERIFICATION TEST. Refer to **POWERTRAIN VERIFICATION TEST** .

      No

      - Go To 6

6. **CHECKING THE MAP SENSOR OPERATION**
   1. Perform the diagnostic procedure for CHECKING THE MAP SENSOR OPERATION. Refer to **DIAGNOSIS AND TESTING** .

Were any problems found?

Yes

- Repair as necessary in accordance with the Service Information.
- Perform the POWERTRAIN VERIFICATION TEST. Refer to **POWERTRAIN VERIFICATION TEST** .

No

- Go To 7

7. **CHECKING THE OXYGEN SENSOR OPERATION**
   1. Perform the diagnostic procedure for CHECKING THE OXYGEN SENSOR OPERATION. Refer to **DIAGNOSIS AND TESTING** .

   Were any problems found?

   Yes

   - Repair as necessary in accordance with the Service Information.
   - Perform the POWERTRAIN VERIFICATION TEST. Refer to **POWERTRAIN VERIFICATION TEST** .

   No

   - Go To 8

8. **CHECKING THE ENGINE MECHANICAL SYSTEM**
   1. Perform the diagnostic procedure for CHECKING THE ENGINE MECHANICAL SYSTEM. Refer to **DIAGNOSIS AND TESTING** .

   Were any problems found?

   Yes

   - Repair as necessary in accordance with the Service Information.
   - Perform the POWERTRAIN VERIFICATION TEST. Refer to **POWERTRAIN VERIFICATION TEST** .

   No

- Go To 9

9. **POWERTRAIN CONTROL MODULE (PCM)**
   1. Using the wiring diagram/schematic as a guide, inspect the wiring and connectors relative to the components tested in this procedure.
      - Look for any chafed, pierced, pinched, or partially broken wires.
      - Look for broken, bent, pushed out or corroded terminals.
      - Monitor the scan tool data relative to this circuit and wiggle test the wiring and connectors.
      - Look for the data to change or for the DTC to reset during the wiggle test.
      - Perform any technical service bulletins that may apply.

      Were any problems found?

      Yes

      - Repair as necessary.
      - Perform the POWERTRAIN VERIFICATION TEST. Refer to **POWERTRAIN VERIFICATION TEST** .

      No

      - Replace and program the PCM in accordance with the Service Information. Refer to **MODULE, POWERTRAIN CONTROL, REMOVAL** .
      - Perform the POWERTRAIN VERIFICATION TEST. Refer to **POWERTRAIN VERIFICATION TEST** .

P0303-CYLINDER 3 MISFIRE

For a complete wiring diagram, **refer to appropriate SYSTEM WIRING DIAGRAMS article** .

WHEN MONITORED

Any time the engine is running and the adaptive numerator has been successfully updated.

SET CONDITION

If the Powertrain Control Module (PCM) detects that the variation in crankshaft speed between each cylinder exceeds a calibrated value, based on engine RPM and load, a fault is set.

POSSIBLE CAUSES

POSSIBLE CAUSES
FUEL DELIVERY SYSTEM
IGNITION COIL, WIRING, OR CONNECTORS
ECT SENSOR, WIRING, OR CONNECTORS
MAP SENSOR, WIRING, OR CONNECTORS
O2 SENSOR, WIRING, OR CONNECTORS
ENGINE MECHANICAL SYSTEM
POWERTRAIN CONTROL MODULE (PCM)

Always perform the Pre-Diagnostic Troubleshooting procedure before proceeding. Refer to PRE-DIAGNOSTIC TROUBLESHOOTING PROCEDURE .

DIAGNOSTIC TEST

1. **DTC IS ACTIVE**
    1. Diagnose and repair any other active component or circuit DTCs before continuing with this procedure.
    2. Turn the ignition on.
    3. With the scan tool, select View DTCs. Copy DTC and Freeze Frame information.
    4. Start the engine and allow it to reach operating temperature.

WARNING: **When the engine is operating, do not stand in direct line with the fan. Do not put your hands near the pulleys, belts or fan. Do not wear loose clothing. Failure to follow these instructions may result in possible serious or fatal injury.**

NOTE: **Attempt to operate the vehicle under conditions similar to which the DTC was set.**

NOTE: It may be necessary to test drive the vehicle within the DTC monitoring conditions in order for this DTC to set.

5. With a scan tool, select View DTCs.

   Is the status Active for this DTC?

   Yes

   - Go To 2

   No

   - Perform the INTERMITTENT CONDITION diagnostic procedure. Refer to **INTERMITTENT CONDITION** .

2. **DIAGNOSTIC INSPECTION**

NOTE: Anything that affects the speed of the crankshaft can cause this DTC to set.

NOTE: When a misfire is detected, the PCM will shut down the injector control circuit for the misfiring cylinder.

- Worn serpentine belt
- Misalignment or binding water pump, P/S pump or A/C compressor pulleys
- Improper CKP, CMP, MAP, or TP Sensor mounting.
- Poor connector/terminal to component connection for CKP sensor, CMP sensor, MAP sensor, TP sensor, fuel injector, ignition coil, etc.
- Corroded PCM power or ground circuits.
- Vacuum leaks.
- Restriction in the air induction or exhaust system.
- Internal engine component malfunction.

NOTE: Misfire may occur and may not be caused by component failure. Any of the following conditions can cause a misfire:

- Moisture on ignition system components
- Insufficient fuel
- Low quality fuel
- Manual transmission bog
- Towing overload

Were any problems found?

Yes

- Repair as necessary.
- Perform the PCM VERIFICATION TEST. Refer to **POWERTRAIN VERIFICATION TEST** .

No

- Go To 3

3. **CHECKING THE FUEL DELIVERY SYSTEM**
   1. Perform the diagnostic procedures for FUEL PRESSURE LEAK DOWN and FUEL DELIVERY SYSTEM OUTPUT - FLOW TEST. Refer to **DIAGNOSIS AND TESTING** .

      Were any problems found?

      Yes

      - Repair as necessary in accordance with the Service Information.
      - Perform the PCM VERIFICATION TEST. Refer to **POWERTRAIN VERIFICATION TEST** .

      No

      - Go To 4

4. **CHECKING THE IGNITION COIL OPERATION**
   1. Perform the diagnostic procedure for CHECKING THE IGNITION COIL OPERATION. Refer to **DIAGNOSIS AND TESTING** .

      Were any problems found?

Yes

- Repair as necessary in accordance with the Service Information.
- Perform the PCM VERIFICATION TEST. Refer to **POWERTRAIN VERIFICATION TEST** .

No

- Go To 5

5. **CHECKING THE ENGINE COOLANT TEMPERATURE SENSOR OPERATION**
   1. Perform the diagnostic procedure for CHECKING THE ENGINE COOLANT TEMPERATURE SENSOR OPERATION. Refer to **DIAGNOSIS AND TESTING** .

   Were any problems found?

   Yes

   - Repair as necessary in accordance with the Service Information.
   - Perform the PCM VERIFICATION TEST. Refer to **POWERTRAIN VERIFICATION TEST** .

   No

   - Go To 6

6. **CHECKING THE MAP SENSOR OPERATION**
   1. Perform the diagnostic procedure for CHECKING THE MAP SENSOR OPERATION. Refer to **DIAGNOSIS AND TESTING** .

   Were any problems found?

   Yes

   - Repair as necessary in accordance with the Service Information.
   - Perform the PCM VERIFICATION TEST. Refer to **POWERTRAIN VERIFICATION TEST** .

   No

- Go To 7

7. **CHECKING THE OXYGEN SENSOR OPERATION**
   1. Perform the diagnostic procedure for CHECKING THE OXYGEN SENSOR OPERATION. Refer to **DIAGNOSIS AND TESTING** .

      Were any problems found?

      Yes

      - Repair as necessary in accordance with the Service Information.
      - Perform the PCM VERIFICATION TEST. Refer to **POWERTRAIN VERIFICATION TEST** .

      No

      - Go To 8

8. **CHECKING THE ENGINE MECHANICAL SYSTEM**
   1. Perform the diagnostic procedure for CHECKING THE ENGINE MECHANICAL SYSTEM. Refer to **DIAGNOSIS AND TESTING** .

      Were any problems found?

      Yes

      - Repair as necessary in accordance with the Service Information.
      - Perform the PCM VERIFICATION TEST. Refer to **POWERTRAIN VERIFICATION TEST** .

      No

      - Go To 9

9. **POWERTRAIN CONTROL MODULE (PCM)**
   1. Using the wiring diagram/schematic as a guide, inspect the wiring and connectors relative to the components tested in this procedure.
      - Look for any chafed, pierced, pinched, or partially broken wires.
      - Look for broken, bent, pushed out or corroded terminals.
      - Monitor the scan tool data relative to this circuit and wiggle test the wiring and connectors.

- Look for the data to change or for the DTC to reset during the wiggle test.
- Perform any technical service bulletins that may apply.

Were any problems found?

Yes

- Repair as necessary.
- Perform the PCM VERIFICATION TEST. Refer to **POWERTRAIN VERIFICATION TEST** .

No

- Replace and program the Powertrain Control Module (PCM) in accordance with the Service Information. Refer to **MODULE, POWERTRAIN CONTROL, REMOVAL** .
- Perform the PCM VERIFICATION TEST. Refer to **POWERTRAIN VERIFICATION TEST** .

P0304-CYLINDER 4 MISFIRE

For a complete wiring diagram, **refer to appropriate SYSTEM WIRING DIAGRAMS article** .

WHEN MONITORED

Any time the engine is running and the adaptive numerator has been successfully updated.

SET CONDITION

If the Powertrain Control Module (PCM) detects that the variation in crankshaft speed between each cylinder exceeds a calibrated value, based on engine RPM and load, a fault is set.

POSSIBLE CAUSES

POSSIBLE CAUSES
FUEL DELIVERY SYSTEM
IGNITION COIL, WIRING, OR CONNECTORS

ECT SENSOR, WIRING, OR CONNECTORS
MAP SENSOR, WIRING, OR CONNECTORS
O2 SENSOR, WIRING, OR CONNECTORS
ENGINE MECHANICAL SYSTEM
POWERTRAIN CONTROL MODULE (PCM)

Always perform the Pre-Diagnostic Troubleshooting procedure before proceeding. Refer to PRE-DIAGNOSTIC TROUBLESHOOTING PROCEDURE .

DIAGNOSTIC TEST

1. **DTC IS ACTIVE**
   1. Diagnose and repair any other active component or circuit DTCs before continuing with this procedure.
   2. Turn the ignition on.
   3. With the scan tool, select View DTCs. Copy DTC and Freeze Frame information.
   4. Start the engine and allow it to reach operating temperature.

WARNING: When the engine is operating, do not stand in direct line with the fan. Do not put your hands near the pulleys, belts or fan. Do not wear loose clothing. Failure to follow these instructions may result in possible serious or fatal injury.

NOTE: Attempt to operate the vehicle under conditions similar to which the DTC was set.

NOTE: It may be necessary to test drive the vehicle within the DTC monitoring conditions in order for this DTC to set.

   5. With a scan tool, select View DTCs.

      Is the status Active for this DTC?

Yes

- Go To 2

No

- Perform the INTERMITTENT CONDITION diagnostic procedure. Refer to **INTERMITTENT CONDITION** .

2. **DIAGNOSTIC INSPECTION**

NOTE: Anything that affects the speed of the crankshaft can cause this DTC to set.

NOTE: When a misfire is detected, the PCM will shut down the injector control circuit for the misfiring cylinder.

NOTE: Misfire may occur and may not be caused by component failure. Any of the following conditions can cause a misfire:

- **Worn serpentine belt**
- **Misalignment or binding water pump, P/S pump or A/C compressor pulleys**
- **Improper CKP, CMP, MAP, or TP Sensor mounting.**
- **Poor connector/terminal to component connection for CKP sensor, CMP sensor, MAP sensor, TP sensor, fuel injector, ignition coil, etc.**
- **Corroded PCM power or ground circuits.**
- **Vacuum leaks.**
- **Restriction in the air induction or exhaust system.**
- **Internal engine component malfunction.**
- **Moisture on ignition system components**
- **Insufficient fuel**
- **Low quality fuel**

- **Manual transmission bog**
- **Towing overload**

Were any problems found?

Yes

- Repair as necessary.
- Perform the POWERTRAIN VERIFICATION TEST. Refer to **POWERTRAIN VERIFICATION TEST** .

No

- Go To 3

3. **CHECKING THE FUEL DELIVERY SYSTEM**
   1. Perform the diagnostic procedures for FUEL PRESSURE LEAK DOWN and FUEL DELIVERY SYSTEM OUTPUT - FLOW TEST. Refer to **DIAGNOSIS AND TESTING** .

      Were any problems found?

      Yes

      - Repair as necessary in accordance with the Service Information.
      - Perform the POWERTRAIN VERIFICATION TEST. Refer to **POWERTRAIN VERIFICATION TEST** .

      No

      - Go To 4

4. **CHECKING THE IGNITION COIL OPERATION**
   1. Perform the diagnostic procedure for CHECKING THE IGNITION COIL OPERATION. Refer to **DIAGNOSIS AND TESTING** .

      Were any problems found?

      Yes

      - Repair as necessary in accordance with the Service Information.

- Perform the POWERTRAIN VERIFICATION TEST. Refer to **POWERTRAIN VERIFICATION TEST** .

No

- Go To 5

5. **CHECKING THE ENGINE COOLANT TEMPERATURE SENSOR OPERATION**
   1. Perform the diagnostic procedure for CHECKING THE ENGINE COOLANT TEMPERATURE SENSOR OPERATION. Refer to **DIAGNOSIS AND TESTING** .

      Were any problems found?

      Yes

      - Repair as necessary in accordance with the Service Information.
      - Perform the POWERTRAIN VERIFICATION TEST. Refer to **POWERTRAIN VERIFICATION TEST** .

      No

      - Go To 6

6. **CHECKING THE MAP SENSOR OPERATION**
   1. Perform the diagnostic procedure for CHECKING THE MAP SENSOR OPERATION. Refer to **DIAGNOSIS AND TESTING** .

      Were any problems found?

      Yes

      - Repair as necessary in accordance with the Service Information.
      - Perform the POWERTRAIN VERIFICATION TEST. Refer to **POWERTRAIN VERIFICATION TEST** .

      No

      - Go To 7

7. **CHECKING THE OXYGEN SENSOR OPERATION**

1. Perform the diagnostic procedure for CHECKING THE OXYGEN SENSOR OPERATION. Refer to **DIAGNOSIS AND TESTING** .

   Were any problems found?

   Yes

   - Repair as necessary in accordance with the Service Information.
   - Perform the POWERTRAIN VERIFICATION TEST. Refer to **POWERTRAIN VERIFICATION TEST** .

   No

   - Go To 8

8. **CHECKING THE ENGINE MECHANICAL SYSTEM**
   1. Perform the diagnostic procedure for CHECKING THE ENGINE MECHANICAL SYSTEM. Refer to **DIAGNOSIS AND TESTING** .

      Were any problems found?

      Yes

      - Repair as necessary in accordance with the Service Information.
      - Perform the POWERTRAIN VERIFICATION TEST. Refer to **POWERTRAIN VERIFICATION TEST** .

      No

      - Go To 9

9. **POWERTRAIN CONTROL MODULE (PCM)**
   1. Using the wiring diagram/schematic as a guide, inspect the wiring and connectors relative to the components tested in this procedure.
      - Look for any chafed, pierced, pinched, or partially broken wires.
      - Look for broken, bent, pushed out or corroded terminals.
      - Monitor the scan tool data relative to this circuit and wiggle test the wiring and connectors.
      - Look for the data to change or for the DTC to reset during the wiggle test.

- Perform any Technical Service Bulletins that may apply.

Were any problems found?

Yes

- Repair as necessary.
- Perform the POWERTRAIN VERIFICATION TEST. Refer to **POWERTRAIN VERIFICATION TEST** .

No

- Replace and program the Powertrain Control Module (PCM) in accordance with the Service Information. Refer to **MODULE, POWERTRAIN CONTROL, REMOVAL** .
- Perform the POWERTRAIN VERIFICATION TEST. Refer to **POWERTRAIN VERIFICATION TEST** .

2014 ENGINE PERFORMANCE

Powertrain Control Module (PCM) - Electrical Diagnostics, 2.0L & 2.4L - Compass & Patriot

DIAGNOSIS AND TESTING

P0315-NO CRANK SENSOR LEARNED

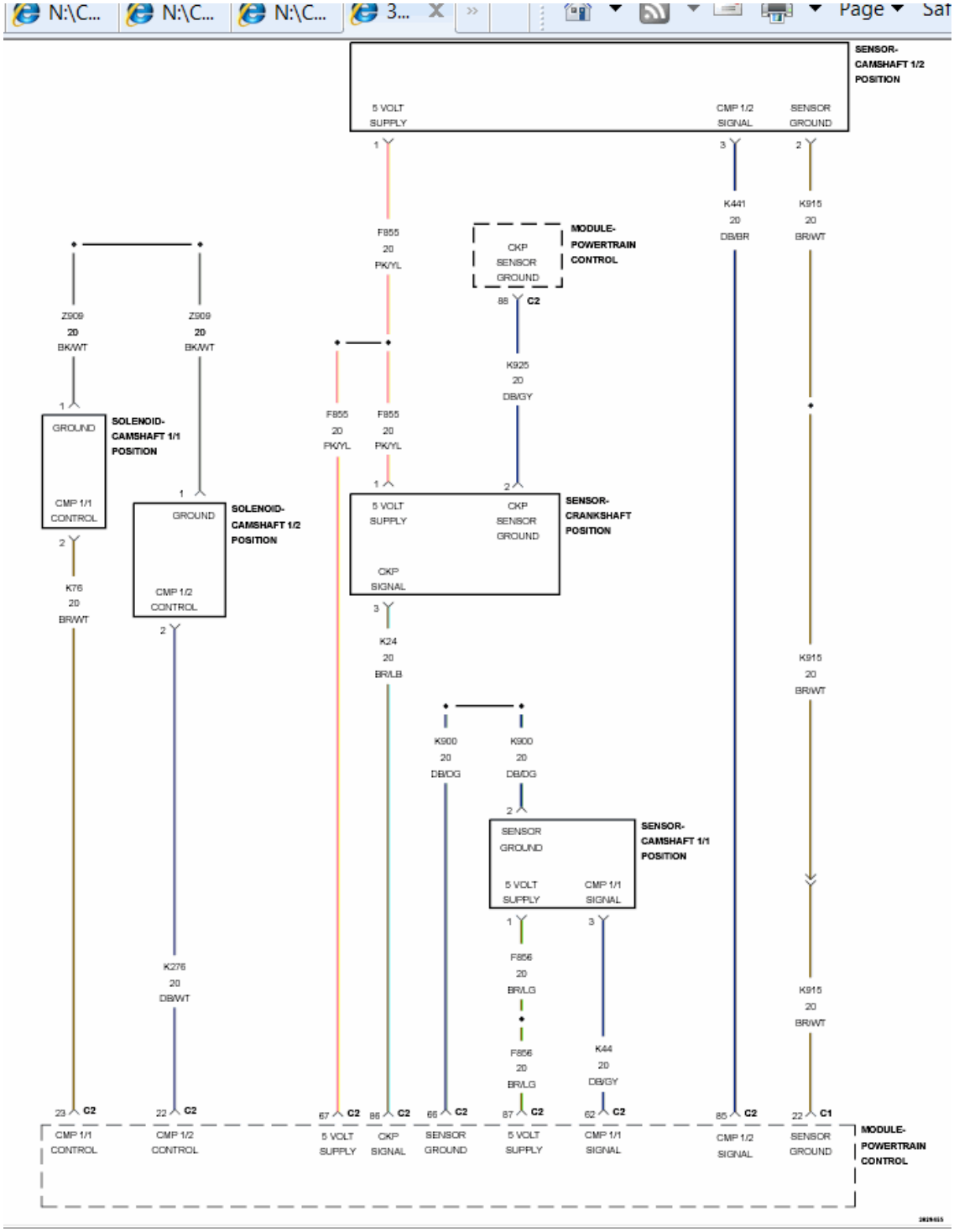

Fig. 1: Camshaft Position Solenoids, Sensors & Crankshaft Position Sensor

Circuit Diagram
Courtesy of CHRYSLER GROUP, LLC

For a complete wiring diagram, **refer to appropriate SYSTEM WIRING DIAGRAMS article** .

WHEN MONITORED

At closed throttle decel, with the A/C off, ECT greater than 75° C (167° F) and engine run time greater than 50 seconds.

SET CONDITION

One of the Crankshaft Position (CKP) Sensor target windows has more than 2.86% variance from the reference. One Trip Fault. Three good trips to turn off the MIL.

POSSIBLE CAUSES

possible causes
CRANKSHAFT POSITION SENSOR CIRCUIT WIRING OR CONNECTORS
CRANKSHAFT POSITION SENSOR
CRANKSHAFT, TONE WHEEL OR FLEX PLATE

Always perform the Pre-Diagnostic Troubleshooting procedure before proceeding. Refer to PRE-DIAGNOSTIC TROUBLESHOOTING PROCEDURE .

DIAGNOSTIC TEST

1. **DTC IS ACTIVE**
    1. Ignition on, engine not running.
    2. With the scan tool select View DTCs.
    3. Record the related Freeze Frame data.
    4. Start the engine and allow it to reach operating temperature.

WARNING: When the engine is operating, do not stand in direct line with the fan. Do not put your hands near the pulleys, belts or fan.

Do not wear loose clothing. Failure to follow these instructions may result in possible serious or fatal injury.

NOTE: If the DTC does not reset it may be necessary to test drive the vehicle.

Is the status Active for this DTC?

Yes

- Go To 2

No

- Perform the INTERMITTENT CONDITION diagnostic procedure. Refer to **INTERMITTENT CONDITION** .

2. **CRANKSHAFT POSITION SENSOR CIRCUIT WIRING OR CONNECTORS**
   1. Using the wiring diagram/schematic as a guide, inspect the wiring and connectors between the Crankshaft Position Sensor and the Powertrain Control Module (PCM).
   2. Look for any chafed, pierced, pinched, or partially broken wires.
   3. Look for broken, bent, pushed out or corroded terminals.
   4. Inspect the Crankshaft Position Sensor for conditions such as loose mounting screws, damage, or cracks.

   Were any problems found?

   Yes

   - Repair as necessary.
   - Perform the POWERTRAIN VERIFICATION TEST. Refer to **POWERTRAIN VERIFICATION TEST** .

   No

   - Go To 3

3. **CRANKSHAFT POSITION SENSOR IRREGULAR SIGNAL**

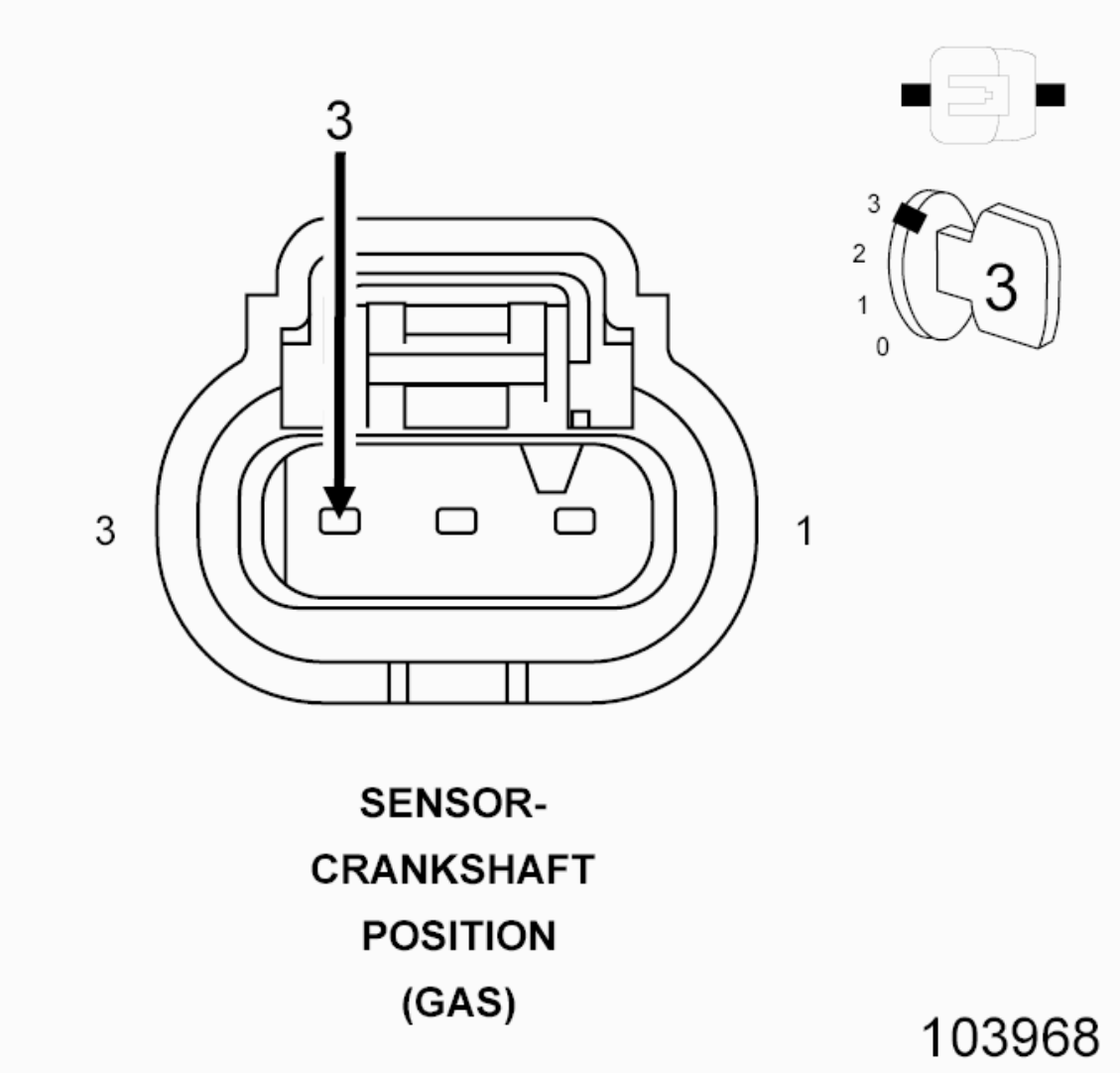

Fig. 2: Crankshaft Position Sensor Harness Connector End View
Courtesy of CHRYSLER GROUP, LLC

1. Turn the ignition off.
2. Using a lab scope and the probing tool (special tool #6801, Terminal Probe), backprobe the (K24) CKP Signal circuit in the Crankshaft Position Sensor harness connector.
3. Ignition on, engine not running.
4. Wiggle the related wire harness and lightly tap on the Crankshaft Position Sensor while monitoring the lab scope screen.
5. Start the engine.
6. Monitor the Crankshaft Position Sensor signal on the lab scope screen.

   Were any Crankshaft Position Sensor signals irregular or missing?

Yes

- Go To 4

No

- Perform the INTERMITTENT CONDITION diagnostic procedure. Refer to **INTERMITTENT CONDITION** .

4. **CRANKSHAFT, TONE WHEEL OR FLEX PLATE**
   1. Turn the ignition off.
   2. Remove the Crankshaft Position Sensor.
   3. Inspect the Crankshaft Position Sensor and mounting area for any condition that would result in an incorrect signal, such as damage, foreign material, or excessive movement.

   Were any problems found?

   Yes

   - Repair as necessary in accordance with the Service Information.
   - Perform the POWERTRAIN VERIFICATION TEST. Refer to **POWERTRAIN VERIFICATION TEST** .

   No

   - Go To 5

5. **CRANKSHAFT POSITION SENSOR**
   1. Using the wiring diagram/schematic as a guide, inspect the wiring and connectors between the Crankshaft Position Sensor and the Powertrain Control Module (PCM).
   2. Look for any chafed, pierced, pinched, or partially broken wires.
   3. Look for broken, bent, pushed out or corroded terminals.

   Were any problems found?

   Yes

   - Repair as necessary.
   - Perform the POWERTRAIN VERIFICATION TEST. Refer to

POWERTRAIN VERIFICATION TEST .

No

- Replace the Crankshaft Position Sensor.
- Perform the POWERTRAIN VERIFICATION TEST. Refer to **POWERTRAIN VERIFICATION TEST** .

P0325-KNOCK SENSOR 1 CIRCUIT

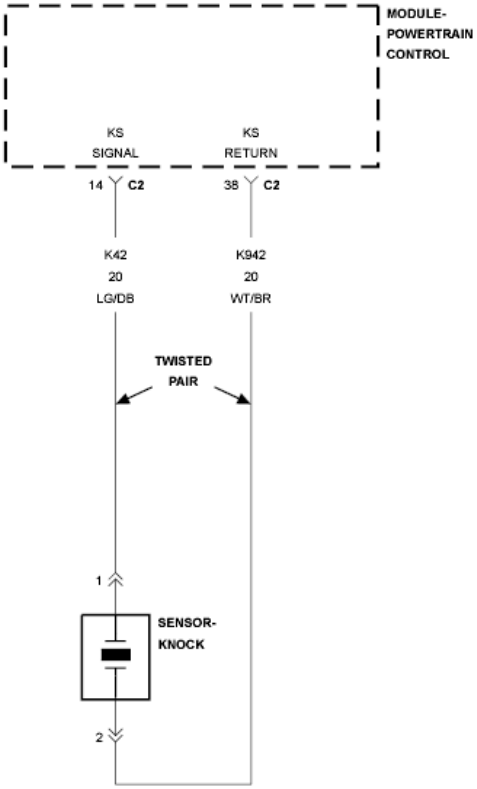

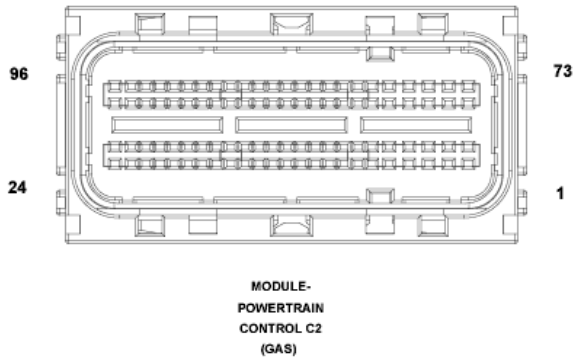

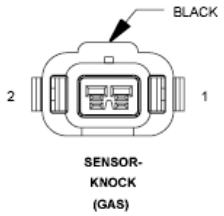

Fig. 3: Knock Sensor Circuit Diagram
Courtesy of CHRYSLER GROUP, LLC

For a complete wiring diagram, **refer to appropriate SYSTEM WIRING DIAGRAMS article** .

WHEN MONITORED

With the engine run time greater than 30 seconds, engine speed greater than 2700 RPM, and engine coolant temperature greater than 0 C (32 F).

SET CONDITION

The Powertrain Control Module (PCM) detects that the Knock Sensor input voltage is:

above 4.0 volts

less than or equal to 1.0 volt with engine RPM at or above 2200

equal to 0.0 volts with engine RPM below 2200

POSSIBLE CAUSES

POSSIBLE CAUSES
(K42) KS SIGNAL CIRCUIT SHORTED TO VOLTAGE
(K42) KS SIGNAL CIRCUIT SHORTED TO GROUND
(K42) KS SIGNAL CIRCUIT SHORTED TO (K942) KS RETURN
(K42) KS SIGNAL CIRCUIT OPEN OR HIGH RESISTANCE
(K942) KS RETURN CIRCUIT OPEN OR HIGH RESISTANCE
KNOCK SENSOR
POWERTRAIN CONTROL MODULE (PCM)

Always perform the Pre-Diagnostic Troubleshooting procedure before proceeding. Refer to PRE-DIAGNOSTIC TROUBLESHOOTING PROCEDURE .

DIAGNOSTIC TEST

1. **ACTIVE DTC**
    1. Start the engine and allow it to reach normal operating temperature.

WARNING: When the engine is operating, do not stand in direct line with the fan. Do not put your hands near the pulleys, belts or fan. Do not wear loose clothing. Failure to follow these instructions may result in possible serious or fatal injury.

NOTE: It may be necessary to test drive the vehicle within the DTC monitoring conditions in order for this DTC to reset.

2. Raise the engine speed to 2700 RPM for a minimum of 30 seconds.
3. With the scan tool, select View DTCs.

Is the status Active for this DTC?

Yes

- Go To 2

No

- Perform the INTERMITTENT CONDITION diagnostic procedure. Refer to **INTERMITTENT CONDITION** .

2. **CHECK THE (K42) KS SIGNAL CIRCUIT FOR A SHORT TO VOLTAGE**

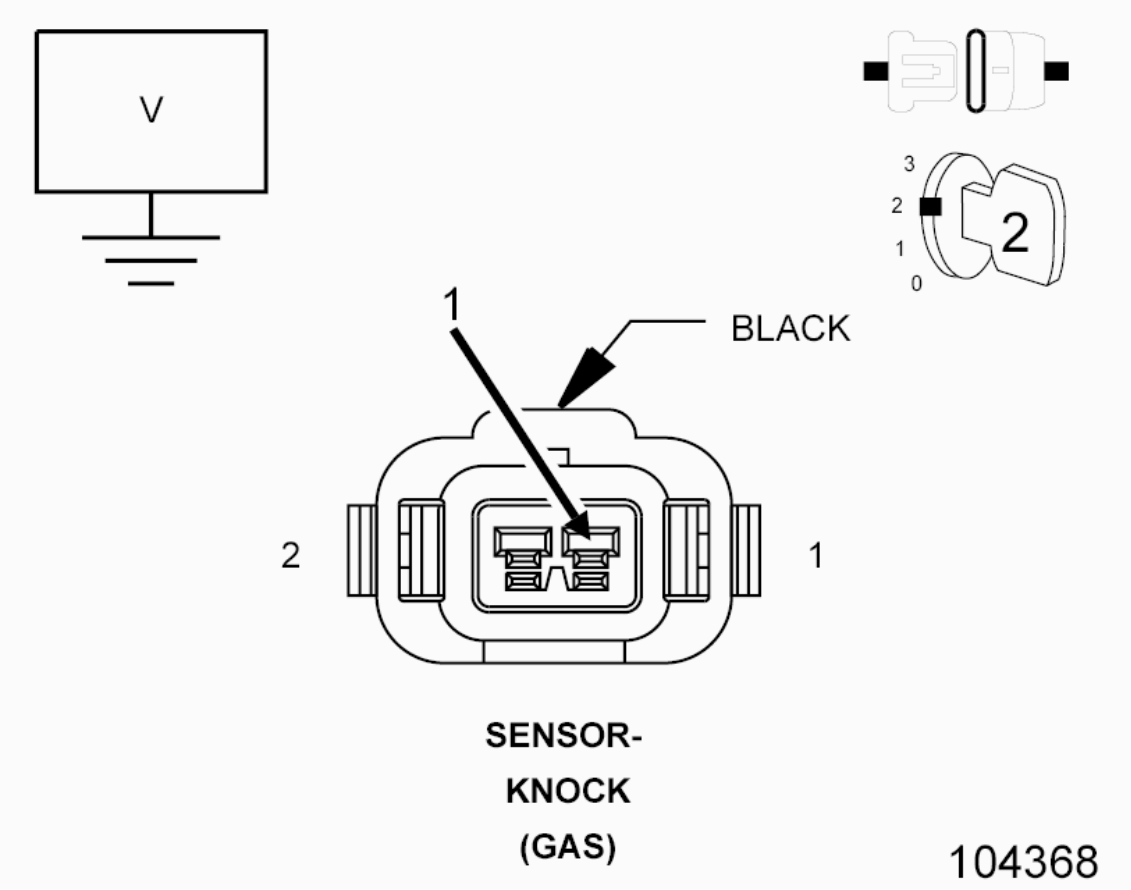

Fig. 4: Checking KS Signal Circuit For Short To Voltage
Courtesy of CHRYSLER GROUP, LLC

1. Turn the ignition off.
2. Disconnect the Knock Sensor harness connector.
3. Turn the ignition on.
4. Measure the voltage of the (K42) KS Signal circuit in the Knock Sensor harness connector.

   Is the voltage above 5.2 volts?

   Yes

   - Repair the (K42) KS Signal circuit for a short to voltage.
   - Perform the POWERTRAIN VERIFICATION TEST. Refer to **POWERTRAIN VERIFICATION TEST** .

   No

   - Go To 3

3. **CHECK THE (K42) KS SIGNAL CIRCUIT FOR A SHORT TO GROUND**

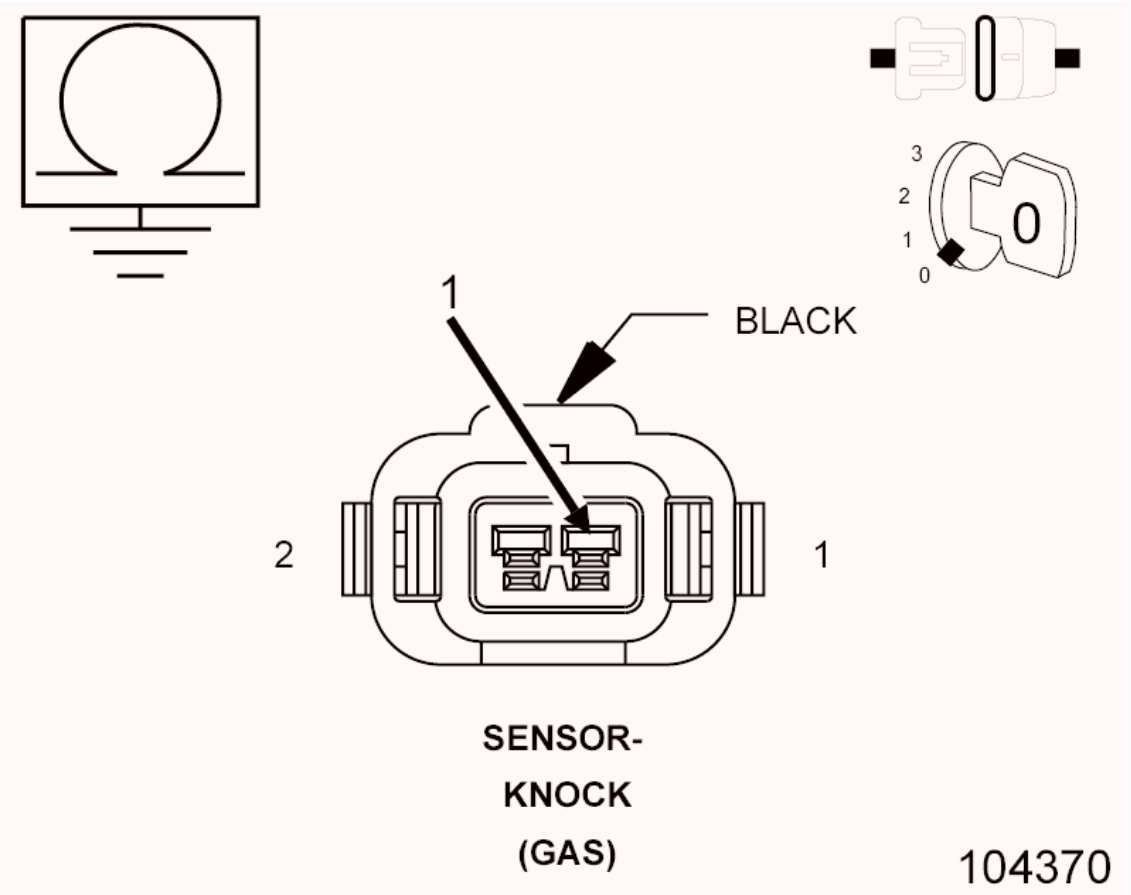

Fig. 5: Checking KS Signal Circuit For Short To Ground
Courtesy of CHRYSLER GROUP, LLC

1. Turn the ignition off.
2. Disconnect the PCM C2 harness connector.
3. Measure the resistance between ground and the (K42) KS Signal circuit in the Knock Sensor harness connector.

   Is the resistance above 10k Ohms?

   Yes

   - Go To 4

   No

   - Repair the (K42) KS Signal circuit for a short to ground.

- Perform the POWERTRAIN VERIFICATION TEST. Refer to **POWERTRAIN VERIFICATION TEST** .

4. **CHECK FOR THE (K42) KS SIGNAL CIRCUIT SHORTED TO THE (K942) KS RETURN CIRCUIT**

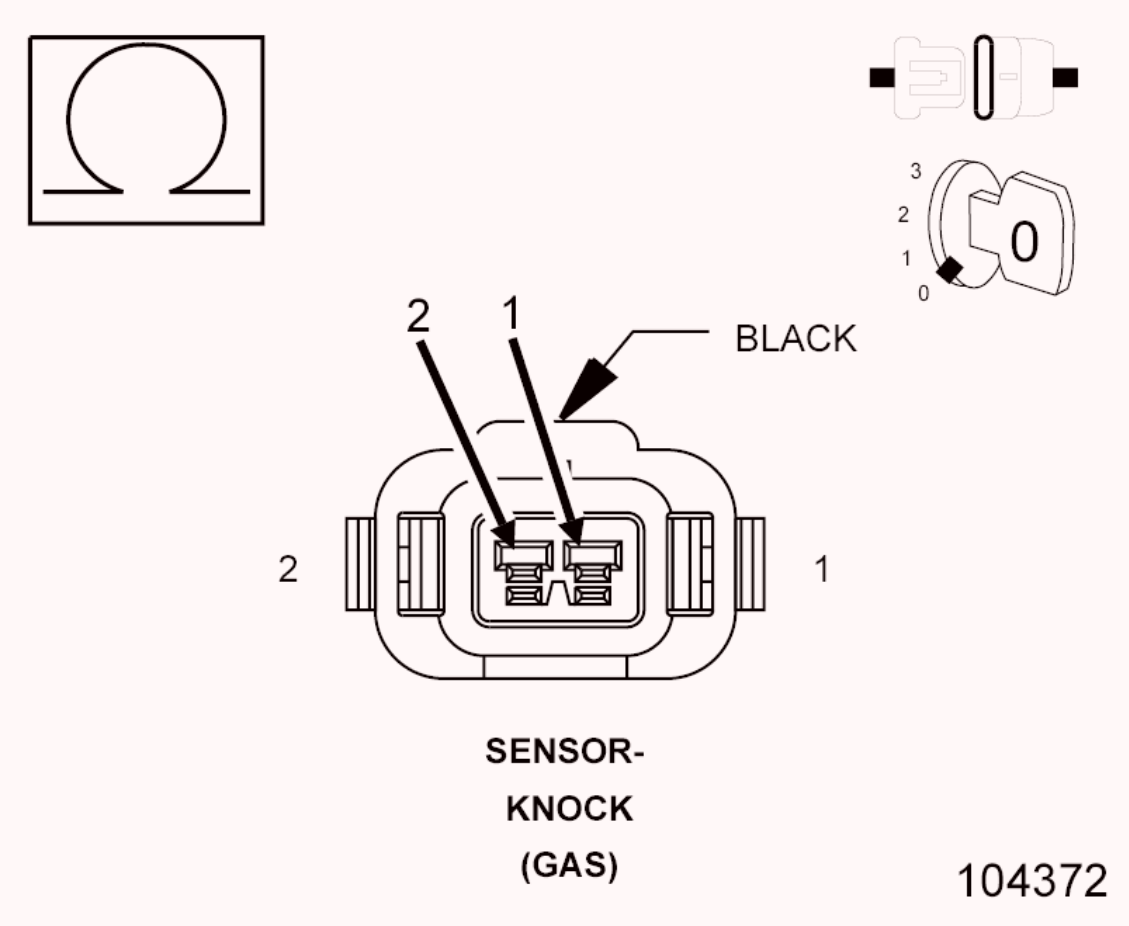

Fig. 6: Checking KS Signal Circuit For Short To KS Return Circuit
Courtesy of CHRYSLER GROUP, LLC

1. Measure the resistance between the (K42) KS Signal circuit and the (K942) KS Return circuit in the Knock Sensor harness connector.

   Is the resistance above 10k Ohms?

   Yes

   - Go To 5

   No

   - Repair the (K42) KS Signal circuit for a short to the (K942) KS

Return circuit.

- Perform the POWERTRAIN VERIFICATION TEST. Refer to **POWERTRAIN VERIFICATION TEST** .

5. **CHECK THE (K42) KS SIGNAL CIRCUIT FOR AN OPEN/HIGH RESISTANCE**

CAUTION: Do not probe the PCM harness connectors. Probing the PCM harness connectors will damage the PCM terminals resulting in poor terminal to pin connection. Install the GPEC Diagnostic Adaptor to perform the diagnosis.

1. Connect the (special tool #10436, Adapter, GPEC Diagnostic).
2. Measure the resistance of the (K42) KS Signal circuit between the Knock Sensor harness connector and the GPEC Adaptor.

Is the resistance below 5.0 Ohms?

Yes

- Go To 6

No

- Repair the (K42) KS Signal circuit for an open or high resistance.
- Perform the POWERTRAIN VERIFICATION TEST. Refer to **POWERTRAIN VERIFICATION TEST** .

6. **CHECK THE (K942) KS RETURN CIRCUIT FOR AN OPEN/HIGH RESISTANCE**

1. Measure the resistance of the (K942) KS Return circuit between the Knock Sensor harness connector and the GPEC Adaptor.

Is the resistance below 5.0 Ohms?

Yes

- Go To 7

No

- Repair the (K942) KS Return for an open or high resistance.
- Perform the POWERTRAIN VERIFICATION TEST. Refer to **POWERTRAIN VERIFICATION TEST** .

7. **KNOCK SENSOR**
   1. Turn the ignition off.
   2. Connect the PCM C2 harness connector.
   3. Replace the Knock Sensor in accordance with the service information.
   4. Start the engine and allow it to reach normal operating temperature.
   5. With the scan tool, select View DTCs.

      Is status Active for this DTC?

      Yes

      - Go To 8

      No

      - Test Complete.
      - Perform the POWERTRAIN VERIFICATION TEST. Refer to **POWERTRAIN VERIFICATION TEST** .

8. **POWERTRAIN CONTROL MODULE (PCM)**
   1. Using the wiring diagram/schematic as a guide, inspect the wiring and connectors between the Knock Sensor and the Powertrain Control Module (PCM).
   2. Look for any chafed, pierced, pinched, or partially broken wires.
   3. Look for broken, bent, pushed out or corroded terminals.
   4. Monitor the scan tool data relative to this circuit and wiggle test the wiring and connectors.
   5. Look for the data to change or for the DTC to reset during the wiggle test.
   6. Perform any Technical Service Bulletins that may apply.

      Were any problems found?

      Yes

- Repair as necessary.
- Perform the POWERTRAIN VERIFICATION TEST. Refer to **POWERTRAIN VERIFICATION TEST** .

No

- Replace and program the Powertrain Control Module (PCM) in accordance with the service information. Refer to **MODULE, POWERTRAIN CONTROL, REMOVAL** .
- Perform the POWERTRAIN VERIFICATION TEST. Refer to **POWERTRAIN VERIFICATION TEST** .

P0335-CRANKSHAFT POSITION SENSOR CIRCUIT

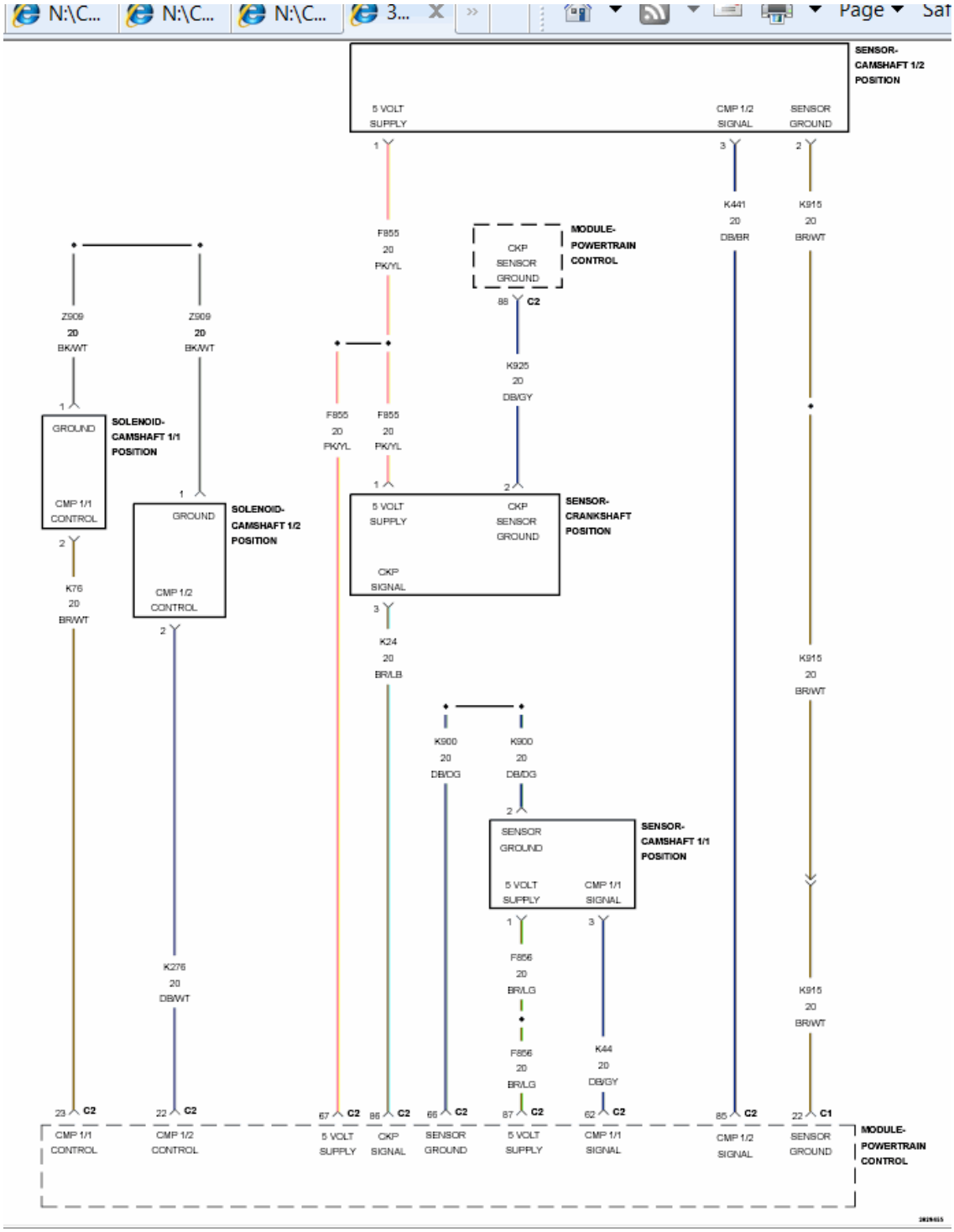

Fig. 7: Camshaft Position Solenoids, Sensors & Crankshaft Position Sensor Circuit Diagram

Courtesy of CHRYSLER GROUP, LLC

For a complete wiring diagram, **refer to appropriate SYSTEM WIRING DIAGRAMS article** .

WHEN MONITORED

With the engine cranking.

SET CONDITION

The Powertrain Control Module (PCM) receives either no signal or an incorrect signal from the Crankshaft Position Sensor.

POSSIBLE CAUSES

Possible Causes
5-VOLT SUPPLY CIRCUIT SHORTED TO VOLTAGE
5-VOLT SUPPLY CIRCUIT SHORTED TO GROUND
5-VOLT SUPPLY CIRCUIT SHORTED TO THE CKP SENSOR GROUND CIRCUIT
5-VOLT SUPPLY CIRCUIT OPEN/HIGH RESISTANCE
CKP SIGNAL CIRCUIT SHORTED TO VOLTAGE
CKP SIGNAL CIRCUIT SHORTED TO GROUND
CKP SIGNAL CIRCUIT SHORTED TO THE CKP SENSOR GROUND CIRCUIT
CKP SIGNAL CIRCUIT OPEN/HIGH RESISTANCE
CKP SENSOR GROUND CIRCUIT OPEN/HIGH RESISTANCE
CRANKSHAFT POSITION SENSOR
POWERTRAIN CONTROL MODULE (PCM)

Always perform the Pre-Diagnostic Troubleshooting procedure before proceeding. Refer to PRE-DIAGNOSTIC TROUBLESHOOTING PROCEDURE .

DIAGNOSTIC TEST

1. **CHECK FOR APPLICABLE TSB**
    1. Check for any applicable TSBs that may apply for this issue.

       Were any TSBs applicable?

       Yes

       - Perform the applicable TSB. Erase the DTC and perform the verification test.

- Perform the POWERTRAIN VERIFICATION TEST. Refer to **POWERTRAIN VERIFICATION TEST** .

No

- Go To 2

2. **ACTIVE DTC**
   1. Turn the ignition on.
   2. Read and copy the DTC's and Freeze Frame Data.
   3. Start the engine, or crank the engine for 10 seconds.

NOTE: If the vehicle starts and runs, wiggle test the wiring and see if problem duplicates or the fault sets.

Is the status Active for this DTC?

Yes

- Go To 5

No

- Go To 3

3. **WIRE HARNESS/CKP SENSOR INSPECTION**
   1. Turn the ignition off.
   2. Disconnect the harness connectors at the PCM and Crank Sensor and inspect for wire chaffing or rub conditions, terminals pushed out on the wiring connector, bent terminals at the PCM and Crank Sensor, water in the connector cavities, presence of corrosion on the terminals of the connectors or components.
   3. Visually inspect the mounting area of Crank Sensor for debris/damage or a loose sensor. Remove the Crank Sensor and inspect the end of the sensor for signs of damage or debris. Rotate the engine and if possible, inspect the target wheel for any signs of damage. Reinstall the Crank Sensor and ensure that the sensor is properly installed and torqued to proper specification.

NOTE: Due to the fact that this DTC is set by an intermittent loss of the signal, the most likely cause is a poor connection at the Crank Sensor or PCM terminals, or a poor signal between the Crank Sensor and target wheel. Because of this, unplugging and reconnecting the harness connectors, or repositioning the Crank Sensor will often repair the condition that set the DTC.

Were any problems found?

Yes

- Perform the appropriate repair.
- Perform the POWERTRAIN VERIFICATION TEST. Refer to **POWERTRAIN VERIFICATION TEST** .

No

- Go To 4

4. **CHECK THE VEHICLE'S REPAIR HISTORY**
   1. Check the history of the vehicle for previous crank sensor related DTCs within the past 90 days.

      Did the repair history show that the vehicle was in dealership for a crank sensor fault within the past 90 days?

      Yes

      - Replace the Crank Sensor in accordance with the service information.
      - Perform the POWERTRAIN VERIFICATION TEST. Refer to **POWERTRAIN VERIFICATION TEST** .

      No

      - Test complete. Reconnect the harness connectors, and erase the DTC. The most likely cause was a poor connection at one of the harness connectors. Verify the DTC does not return.

- Perform the POWERTRAIN VERIFICATION TEST. Refer to **POWERTRAIN VERIFICATION TEST** .

5. **CHECK THE (F855) 5-VOLT SUPPLY CIRCUIT VOLTAGE**

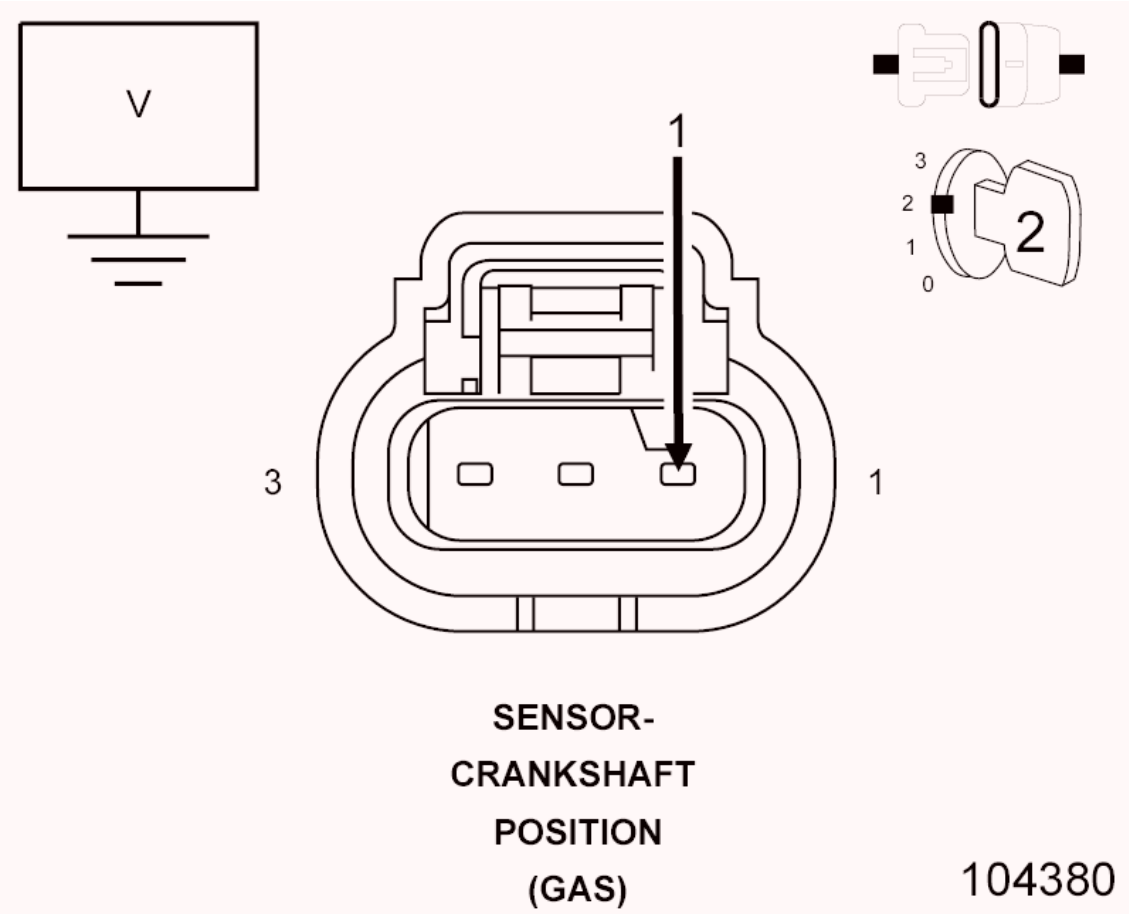

Fig. 8: Checking 5-Volt Supply Circuit
Courtesy of CHRYSLER GROUP, LLC

1. Turn the ignition off.
2. Disconnect the CKP Sensor harness connector.
3. Turn the ignition on.
4. Measure the voltage of the (F855) 5-Volt Supply circuit at the CKP Sensor harness connector.

   Is the voltage between 4.8 and 5.2 volts?

   Yes

   - Go To 6

No, voltage is below 4.8 volts:

- Repair the 5-Volt Supply circuit for an open or short to ground.
- Perform the POWERTRAIN VERIFICATION TEST. Refer to **POWERTRAIN VERIFICATION TEST** .

No, voltage is above 5.2 volts:

- Repair the 5-Volt Supply circuit for a short to voltage.
- Perform the POWERTRAIN VERIFICATION TEST. Refer to **POWERTRAIN VERIFICATION TEST** .

6. **CHECK THE (K24) CKP SIGNAL CIRCUIT VOLTAGE**

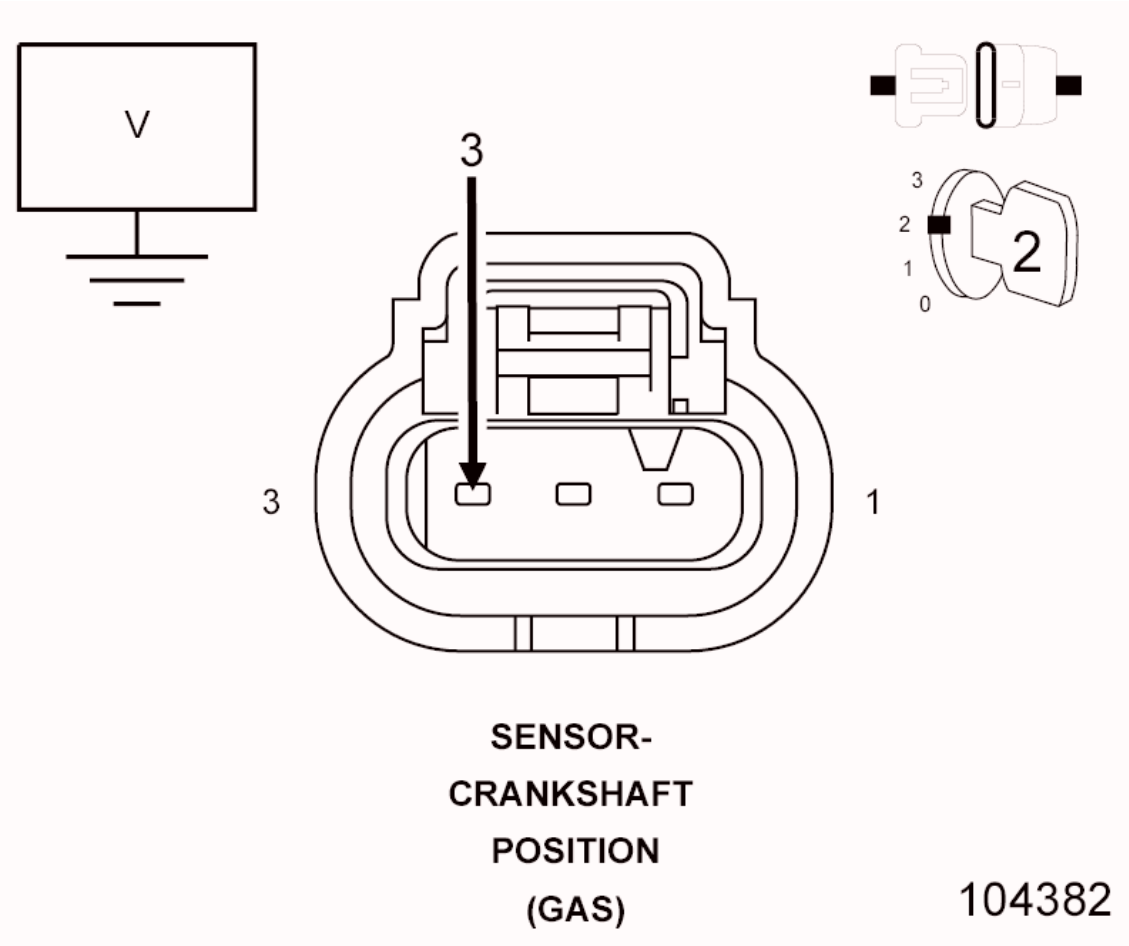

Fig. 9: Checking CKP Signal Circuit Voltage
Courtesy of CHRYSLER GROUP, LLC

1. Measure the voltage of the (K24) CKP Signal circuit at the CKP Sensor harness connector.

Is the voltage between 4.8 and 5.2 volts?

Yes

- Go To 7

No

- Go To 9

No

- Repair the CKP Sensor Signal circuit for a short to voltage.
- Perform the POWERTRAIN VERIFICATION TEST. Refer to **POWERTRAIN VERIFICATION TEST** .

7. **CHECK THE (K925) SENSOR GROUND CIRCUIT FOR AN OPEN/HIGH RESISTANCE**
   1. Turn the ignition off.
   2. Disconnect the PCM C2 harness connector.

      CAUTION: Do not probe the PCM harness connectors. Probing the PCM harness connectors will damage the PCM terminals resulting in poor terminal to pin connection. Install the GPEC Diagnostic Adaptor to perform the diagnosis.

   3. Connect the (special tool #10436, Adapter, GPEC Diagnostic).
   4. Measure the resistance of the (K925) CKP Sensor Ground circuit between the CKP Sensor harness connector and the GPEC Adaptor.

      Is the resistance below 5.0 Ohms?

      Yes

      - Go To 8

      No

      - Repair the (K925) CKP Sensor Ground circuit for an open or high

resistance.

- Perform the POWERTRAIN VERIFICATION TEST. Refer to **POWERTRAIN VERIFICATION TEST** .

8. **TONE WHEEL/PULSE RING INSPECTION**
   1. Turn the ignition off.
   2. Disconnect the battery ground cable.
   3. Remove the CKP Sensor.
   4. Visually inspect the sensor mounting location for damage, foreign material.
   5. Rotate the engine and if possible inspect the target wheel for any signs of damage.

   Were any problems found?

   Yes

   - Repair Issues in mounting location. Repair or replace the Tone Wheel/Pulse Ring as necessary.
   - Perform the POWERTRAIN VERIFICATION TEST. Refer to **POWERTRAIN VERIFICATION TEST** .

   No

   - Replace the Crank Position Sensor in accordance with the service information.
   - Perform the POWERTRAIN VERIFICATION TEST. Refer to **POWERTRAIN VERIFICATION TEST** .

9. **CHECK THE (K24) CKP SIGNAL CIRCUIT FOR A SHORT TO GROUND**

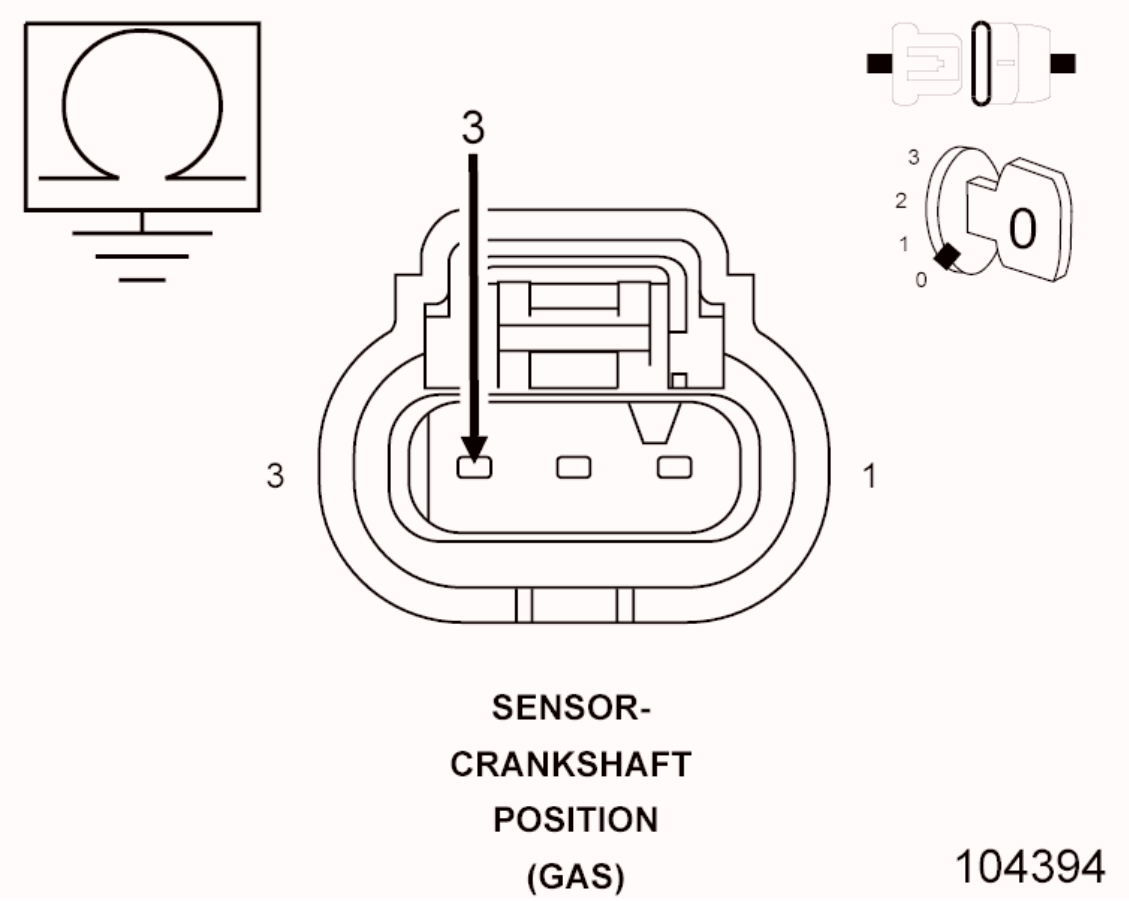

Fig. 10: Checking CKP Signal Circuit For Short To Ground
Courtesy of CHRYSLER GROUP, LLC

1. Turn the ignition off.
2. Disconnect the PCM C2 harness connector.
3. Measure the resistance between ground and the (K24) CKP Signal circuit at the Crankshaft Position Sensor harness connector.

   Is the resistance above 10K Ohms?

   Yes

   - Go To 10

   No

   - Repair the (K24) CKP Signal circuit for a short to ground.
   - Perform the POWERTRAIN VERIFICATION TEST. Refer to **POWERTRAIN VERIFICATION TEST** .

10. **CHECK THE (K24) CKP SIGNAL CIRCUIT FOR AN OPEN/HIGH**

RESISTANCE

1. Measure the resistance of the (K24) CKP Signal circuit between the Crankshaft Position Sensor harness connector and the GPEC Adaptor.

   Is the resistance below 5.0 Ohms?

   Yes

   - Go To 11

   No

   - Repair the (K24) CKP Signal circuit for an open or high resistance.
   - Perform the POWERTRAIN VERIFICATION TEST. Refer to **POWERTRAIN VERIFICATION TEST** .

11. **POWERTRAIN CONTROL MODULE (PCM)**
    1. Using the wiring diagram/schematic as a guide, inspect the wiring and connectors between the Crankshaft Position Sensor and the Powertrain Control Module (PCM).
    2. Look for any chafed, pierced, pinched, or partially broken wires.
    3. Look for broken, bent, pushed out or corroded terminals. Verify that there is good pin to terminal contact in the CKP Sensor and Powertrain Control Module connectors.
    4. Monitor the scan tool data relative to this circuit and wiggle test the wiring and connectors.
    5. Look for the data to change or for the DTC to reset during the wiggle test.

    NOTE: Due to the fact that this DTC is set by an intermittent loss of the signal, the most likely cause is a poor connection at the Crank Sensor or PCM terminals, or a poor signal between the Crank Sensor and target wheel. Because of this, unplugging and reconnecting the harness connectors, or repositioning the Crank Sensor will often repair the condition that set the DTC.

    Were any problems found?

Yes

- Perform the appropriate repair.
- Perform the POWERTRAIN VERIFICATION TEST. Refer to **POWERTRAIN VERIFICATION TEST** .

No

- Replace and program the Powertrain Control Module (PCM) in accordance with the service information. Refer to **MODULE, POWERTRAIN CONTROL, REMOVAL** .
- Perform the POWERTRAIN VERIFICATION TEST. Refer to **POWERTRAIN VERIFICATION TEST** .

P0339-CRANKSHAFT POSITION SENSOR INTERMITTENT

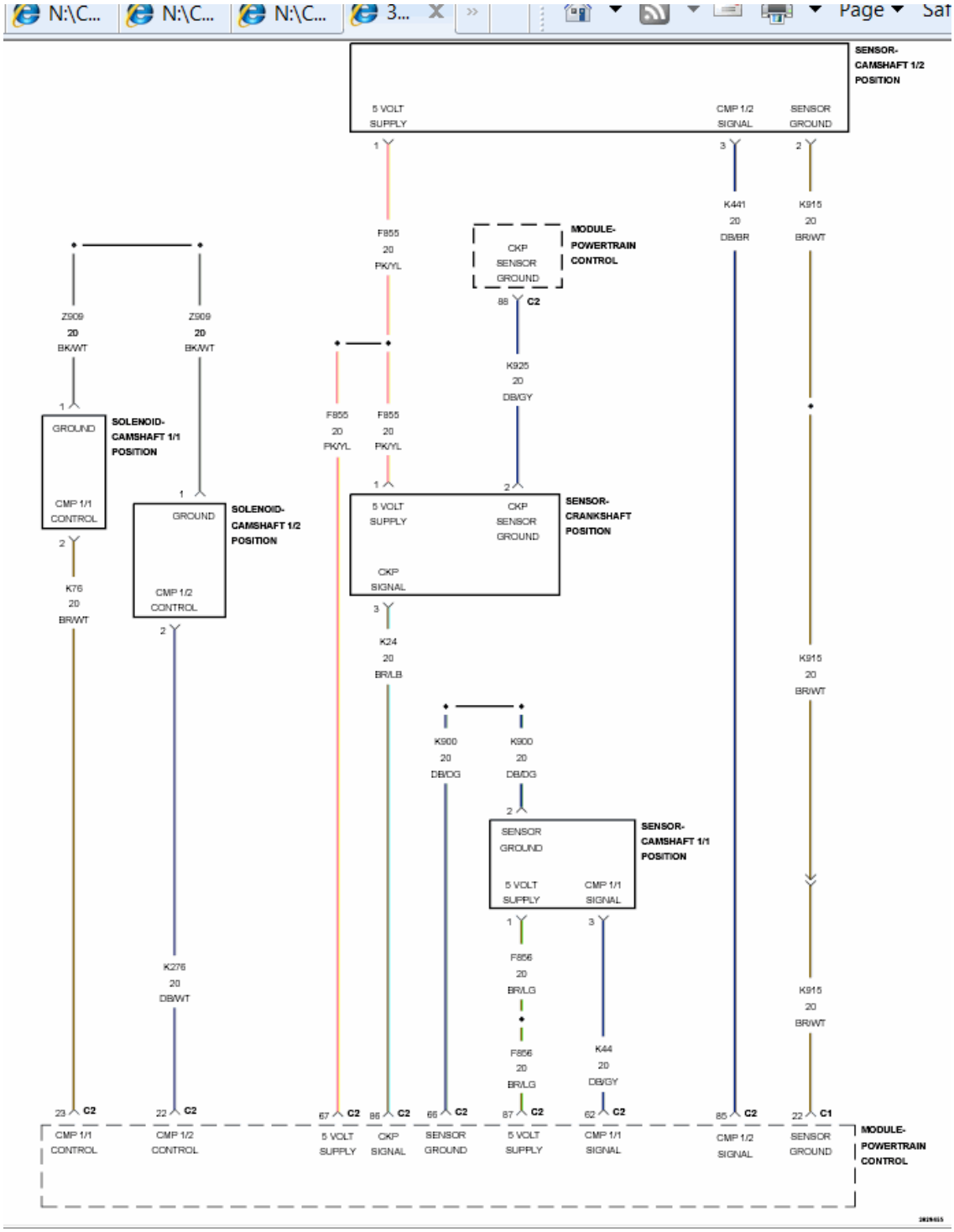

Fig. 11: Camshaft Position Solenoids, Sensors & Crankshaft Position Sensor Circuit Diagram

Courtesy of CHRYSLER GROUP, LLC

For a complete wiring diagram, **refer to appropriate SYSTEM WIRING DIAGRAMS article** .

THEORY OF OPERATION

The Crankshaft Position (CKP) Sensor circuits consist of a Powertrain Control Module (PCM) supplied 5-Volt reference circuit, low reference circuit and an output signal circuit. The CKP Sensor is an internally magnetic biased digital output integrated circuit sensing device. The sensor detects magnetic flux changes between the peaks and valleys of a tone wheel on the crankshaft. Each tooth on the tone wheel is spaced with missing teeth for the reference gap. The CKP Sensor produces an ON/OFF DC voltage of varying frequency, reference output pulses per crankshaft revolution. The frequency of the CKP Sensor output depends on the velocity of the crankshaft. The CKP Sensor sends a digital signal, which represents an image of the crankshaft tone wheel, to the PCM as each tooth on the wheel rotates past the CKP Sensor. The PCM uses each CKP signal pulse to determine crankshaft speed and decodes the crankshaft tone wheel reference gap to identify crankshaft position. This information is then used to sequence the ignition timing and fuel injection events for the engine. The PCM also uses CKP Sensor output information to determine the crankshaft relative position to the camshaft, to detect cylinder misfire and to control the CMP actuator if equipped.

WHEN MONITORED

With the engine cranking or running.

SET CONDITION

The Powertrain Control Module (PCM) detects that CKP Sensor failure counter has reached 20. One Trip Fault. Three good trips to turn off the MIL.

POSSIBLE CAUSES

Possible Causes
5-VOLT SUPPLY CIRCUIT SHORTED TO VOLTAGE
5-VOLT SUPPLY CIRCUIT SHORTED TO GROUND
5-VOLT SUPPLY CIRCUIT SHORTED TO THE CKP SENSOR GROUND CIRCUIT
5-VOLT SUPPLY CIRCUIT OPEN/HIGH RESISTANCE
CKP SIGNAL CIRCUIT SHORTED TO VOLTAGE
CKP SIGNAL CIRCUIT SHORTED TO GROUND
CKP SIGNAL CIRCUIT SHORTED TO THE CKP SENSOR GROUND CIRCUIT

CKP SIGNAL CIRCUIT OPEN/HIGH RESISTANCE
CKP SENSOR GROUND CIRCUIT OPEN/HIGH RESISTANCE
CRANKSHAFT POSITION SENSOR
POWERTRAIN CONTROL MODULE (PCM)

Always perform the Pre-Diagnostic Troubleshooting procedure before proceeding. Refer to PRE-DIAGNOSTIC TROUBLESHOOTING PROCEDURE .

DIAGNOSTIC TEST

1. **CHECK FOR APPLICABLE TSB**
   1. Check for any applicable TSBs that may apply for this issue.

      Were any TSBs applicable?

      Yes

      - Perform the applicable TSB. Erase the DTC and perform the verification test.
      - Perform the POWERTRAIN VERIFICATION TEST. Refer to **POWERTRAIN VERIFICATION TEST** .

      No

      - Go To 2
2. **ACTIVE DTC**
   1. Turn the ignition on.
   2. Read and copy the DTC's and Freeze Frame Data.
   3. Start the engine, or crank the engine for 10 seconds.

      NOTE: If the vehicle starts and runs, wiggle test the wiring and see if problem duplicates or the fault sets.

      Is the status Active for this DTC?

      Yes

- Go To 5

No

- Go To 3

3. **WIRE HARNESS/CKP SENSOR INSPECTION**
   1. Turn the ignition off.
   2. Disconnect the harness connectors at the PCM and Crank Sensor and inspect for wire chaffing or rub conditions, terminals pushed out on the wiring connector, bent terminals at the PCM and Crank Sensor, water in the connector cavities, presence of corrosion on the terminals of the connectors or components.
   3. Visually inspect the mounting area of Crank Sensor for debris/damage or a loose sensor. Remove the Crank Sensor and inspect the end of the sensor for signs of damage or debris. Rotate the engine and if possible, inspect the target wheel for any signs of damage. Reinstall the Crank Sensor and ensure that the sensor is properly installed and torqued to proper specification.

NOTE: Due to the fact that this DTC is set by an intermittent loss of the signal, the most likely cause is a poor connection at the Crank Sensor or PCM terminals, or a poor signal between the Crank Sensor and target wheel. Because of this, unplugging and reconnecting the harness connectors, or repositioning the Crank Sensor will often repair the condition that set the DTC.

Were any problems found?

Yes

- Perform the appropriate repair.
- Perform the POWERTRAIN VERIFICATION TEST. Refer to **POWERTRAIN VERIFICATION TEST** .

No

- Go To 4

4. **CHECK THE VEHICLE'S REPAIR HISTORY**
   1. Check the history of the vehicle for previous crank sensor related DTCs within the past 90 days.

      Did the repair history show that the vehicle was in dealership for a crank sensor fault within the past 90 days?

      Yes

      - Replace the Crank Sensor in accordance with the service information.
      - Perform the POWERTRAIN VERIFICATION TEST. Refer to **POWERTRAIN VERIFICATION TEST** .

      No

      - Test complete. Reconnect the harness connectors, and erase the DTC. The most likely cause was a poor connection at one of the harness connectors. Verify the DTC does not return.
      - Perform the POWERTRAIN VERIFICATION TEST. Refer to **POWERTRAIN VERIFICATION TEST** .
5. **CHECK THE (F855) 5-VOLT SUPPLY CIRCUIT VOLTAGE**
   1.
   2. Turn the ignition off.
   3. Disconnect the CKP Sensor harness connector.
   4. Turn the ignition on.
   5. Measure the voltage of the (F855) 5-Volt Supply circuit at the CKP Sensor harness connector.

      Is the voltage between 4.8 and 5.2 volts?

      Yes

      - Go To 6

      No, voltage is below 4.8 volts:

- Repair the 5-Volt Supply circuit for an open or short to ground.
- Perform the POWERTRAIN VERIFICATION TEST. Refer to **POWERTRAIN VERIFICATION TEST** .

No, voltage is above 5.2 volts:

- Repair the 5-Volt Supply circuit for a short to voltage.
- Perform the POWERTRAIN VERIFICATION TEST. Refer to **POWERTRAIN VERIFICATION TEST** .

6. **CHECK THE (K24) CKP SIGNAL CIRCUIT VOLTAGE**
   1.
   2. Measure the voltage of the (K24) CKP Signal circuit at the CKP Sensor harness connector.

   Is the voltage between 4.8 and 5.2 volts?

   Yes

   - Go To 7

   No

   - Go To 9

   No

   - Repair the CKP Sensor Signal circuit for a short to voltage.
   - Perform the POWERTRAIN VERIFICATION TEST. Refer to **POWERTRAIN VERIFICATION TEST** .

7. **CHECK THE (K925) SENSOR GROUND CIRCUIT FOR AN OPEN/HIGH RESISTANCE**
   1. Turn the ignition off.
   2. Disconnect the PCM C2 harness connector.

CAUTION: Do not probe the PCM harness connectors. Probing the PCM harness connectors will damage the PCM terminals resulting in poor terminal to pin connection. Install the

GPEC Diagnostic Adaptor to perform the diagnosis.

3. Connect the (special tool #10436, Adapter, GPEC Diagnostic).
4. Measure the resistance of the (K925) CKP Sensor Ground circuit between the CKP Sensor harness connector and the GPEC Adaptor.

   Is the resistance below 5.0 Ohms?

   Yes

   - Go To 8

   No

   - Repair the (K925) CKP Sensor Ground circuit for an open or high resistance.
   - Perform the POWERTRAIN VERIFICATION TEST. Refer to **POWERTRAIN VERIFICATION TEST** .

8. **TONE WHEEL/PULSE RING INSPECTION**
   1. Turn the ignition off.
   2. Disconnect the battery ground cable.
   3. Remove the CKP Sensor.
   4. Visually inspect the sensor mounting location for damage, foreign material.
   5. Rotate the engine and if possible inspect the target wheel for any signs of damage.

      Were any problems found?

      Yes

      - Repair Issues in mounting location. Repair or replace the Tone Wheel/Pulse Ring as necessary.
      - Perform the POWERTRAIN VERIFICATION TEST. Refer to **POWERTRAIN VERIFICATION TEST** .

      No

- Replace the Crank Position Sensor in accordance with the service information.
- Perform the POWERTRAIN VERIFICATION TEST. Refer to **POWERTRAIN VERIFICATION TEST** .

9. **CHECK THE (K24) CKP SIGNAL CIRCUIT FOR A SHORT TO GROUND**
   1.
   2. Turn the ignition off.
   3. Disconnect the PCM C2 harness connector.
   4. Measure the resistance between ground and the (K24) CKP Signal circuit at the Crankshaft Position Sensor harness connector.

   Is the resistance above 10K Ohms?

   Yes

   - Go To 10

   No

   - Repair the (K24) CKP Signal circuit for a short to ground.
   - Perform the POWERTRAIN VERIFICATION TEST. Refer to **POWERTRAIN VERIFICATION TEST** .

10. **CHECK THE (K24) CKP SIGNAL CIRCUIT FOR AN OPEN/HIGH RESISTANCE**
    1. Measure the resistance of the (K24) CKP Signal circuit between the Crankshaft Position Sensor harness connector and the GPEC Adaptor.

    Is the resistance below 5.0 Ohms?

    Yes

    - Go To 11

    No

    - Repair the (K24) CKP Signal circuit for an open or high resistance.
    - Perform the POWERTRAIN VERIFICATION TEST. Refer to

POWERTRAIN VERIFICATION TEST .

11. **POWERTRAIN CONTROL MODULE (PCM)**
    1. Using the wiring diagram/schematic as a guide, inspect the wiring and connectors between the Crankshaft Position Sensor and the Powertrain Control Module (PCM).
    2. Look for any chafed, pierced, pinched, or partially broken wires.
    3. Look for broken, bent, pushed out or corroded terminals. Verify that there is good pin to terminal contact in the CKP Sensor and Powertrain Control Module connectors.
    4. Monitor the scan tool data relative to this circuit and wiggle test the wiring and connectors.
    5. Look for the data to change or for the DTC to reset during the wiggle test.

NOTE: Due to the fact that this DTC is set by an intermittent loss of the signal, the most likely cause is a poor connection at the Crank Sensor or PCM terminals, or a poor signal between the Crank Sensor and target wheel. Because of this, unplugging and reconnecting the harness connectors, or repositioning the Crank Sensor will often repair the condition that set the DTC.

Were any problems found?

Yes

- Perform the appropriate repair.
- Perform the POWERTRAIN VERIFICATION TEST. Refer to **POWERTRAIN VERIFICATION TEST** .

No

- Replace and program the Powertrain Control Module (PCM) in accordance with the service information. Refer to **MODULE, POWERTRAIN CONTROL, REMOVAL** .
- Perform the POWERTRAIN VERIFICATION TEST. Refer to **POWERTRAIN VERIFICATION TEST** .

P0340-CAMSHAFT POSITION SENSOR CIRCUIT - BANK 1 SENSOR 1

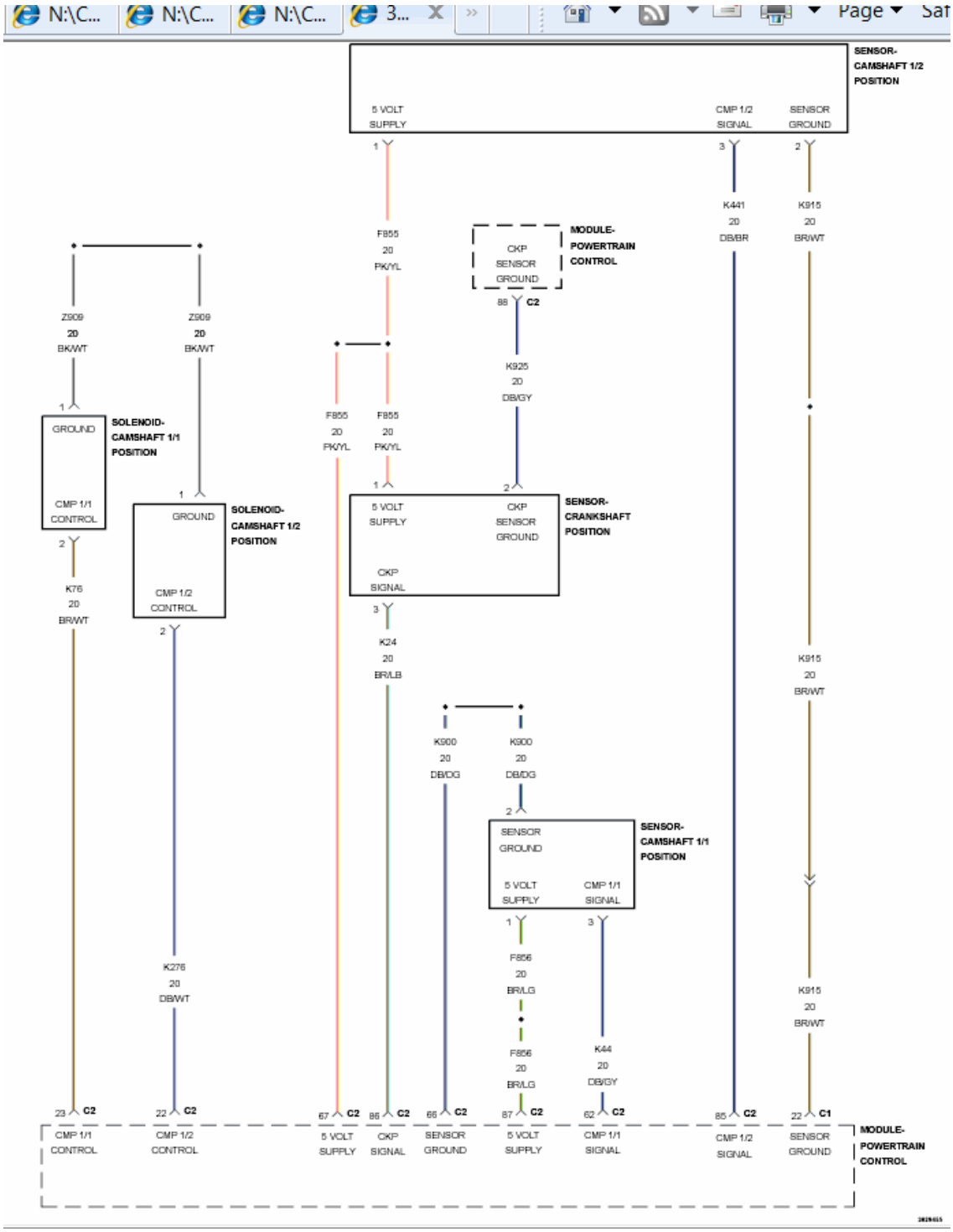

Fig. 12: Camshaft Position Solenoids, Sensors & Crankshaft Position Sensor Circuit Diagram
Courtesy of CHRYSLER GROUP, LLC

For a complete wiring diagram, **refer to appropriate SYSTEM WIRING DIAGRAMS article**

WHEN MONITORED

With the engine cranking or running.

SET CONDITION

The Powertrain Control Module (PCM) receives either no signal or an incorrect signal from the Camshaft 1/1 Position Sensor.

POSSIBLE CAUSES

POSSIBLE CAUSES
(F856) 5-VOLT SUPPLY CIRCUIT SHORTED TO VOLTAGE
(K44) CMP 1/1 SIGNAL CIRCUIT SHORTED TO VOLTAGE
(F856) 5-VOLT SUPPLY CIRCUIT SHORTED TO GROUND
(K44) CMP 1/1 SIGNAL CIRCUIT SHORTED TO GROUND
(F856) 5-VOLT SUPPLY CIRCUIT SHORTED TO THE (K44) CMP 1/1 SIGNAL CIRCUIT
(F856) 5-VOLT SUPPLY CIRCUIT SHORTED TO THE (K900) SENSOR GROUND CIRCUIT
(K44) CMP 1/1 SIGNAL CIRCUIT SHORTED TO THE (K900) SENSOR GROUND CIRCUIT
(F856) 5-VOLT SUPPLY CIRCUIT OPEN OR HIGH RESISTANCE
(K44) CMP 1/1 SIGNAL CIRCUIT OPEN OR HIGH RESISTANCE
(K900) SENSOR GROUND CIRCUIT OPEN OR HIGH RESISTANCE
CAMSHAFT 1/1 POSITION SENSOR (EXHAUST)
POWERTRAIN CONTROL MODULE (PCM)

Always perform the Pre-Diagnostic Troubleshooting procedure before proceeding. Refer to PRE-DIAGNOSTIC TROUBLESHOOTING PROCEDURE .

DIAGNOSTIC TEST

1. **CHECK FOR APPLICABLE TSB**

NOTE: Diagnose and repair any 5-Volt Reference DTCs that are present before continuing with this test procedure.

1. Check for any applicable TSBs that may apply for this issue.

   Were there any applicable TSBs?

   Yes

   - Perform the applicable TSB. Erase the DTC and perform the verification test.
   - Perform the POWERTRAIN VERIFICATION TEST. Refer to **POWERTRAIN VERIFICATION TEST** .

   No

   - Go To 2

2. **ACTIVE DTC**
   1. Turn the ignition on.
   2. Read and copy the DTCs and freeze frame data.
   3. Start the engine or crank the engine for at least ten seconds.
   4. With the scan tool, select View DTCs.

      Is the status Active or pending for this DTC?

      Yes

      - Go To 5

      No

      - Go To 3

3. **WIRE HARNESS/CMP SENSOR INSPECTION**
   1. Turn the ignition off.

      NOTE: The Camshaft 1/1 Position Sensor is located on the Exhaust Camshaft side of the Cylinder Head.

   2. Disconnect the harness connectors at the PCM and Cam Sensor and inspect for wire chaffing or rub conditions, terminals pushed out on the wiring connector, bent terminals at the PCM and Cam Sensor, water in the connector cavities, presence of corrosion on the terminals of the

connectors or components.

3. Visually inspect the mounting area of Cam Sensor for debris/damage, proper machining, or a loose sensor. Remove the Cam Sensor and inspect the end of the sensor for signs of damage or debris (contact marks, etc.). Rotate the engine and if possible, inspect the target wheel for any signs of damage. Reinstall the Cam Sensor and ensure that the sensor is properly installed and torqued to proper specification.

NOTE: Due to the fact that this DTC is set by an intermittent loss of the signal, the most likely cause is a poor connection at the Cam Sensor or PCM terminals, or a poor signal between the Cam Sensor and target wheel. Because of this, unplugging and reconnecting the harness connectors, or repositioning the Cam Sensor will often repair the condition that set the DTC.

Were any problems found?

Yes

- Perform the appropriate repair.
- Perform the POWERTRAIN VERIFICATION TEST. Refer to **POWERTRAIN VERIFICATION TEST** .

No

- Go To 4

4. **CHECK THE VEHICLE'S REPAIR HISTORY**
   1. Check the history of the vehicle for previous Cam Sensor related DTCs within the past 90 days.

      Did the repair history show that the vehicle was in dealership for a Cam Sensor fault within the past 90 days?

      Yes

      - Replace the Exhaust Cam Sensor in accordance with the service information.

- Perform the POWERTRAIN VERIFICATION TEST. Refer to **POWERTRAIN VERIFICATION TEST** .

No

- Test complete. Reconnect the harness connectors and ensure that the Cam Sensor connector is locked properly. Erase the DTC. The most likely cause was a poor connection at one of the harness connectors. Verify the DTC does not return.
- Perform the POWERTRAIN VERIFICATION TEST. Refer to **POWERTRAIN VERIFICATION TEST** .

5. **CHECK THE (F856) 5-VOLT SUPPLY CIRCUIT VOLTAGE**

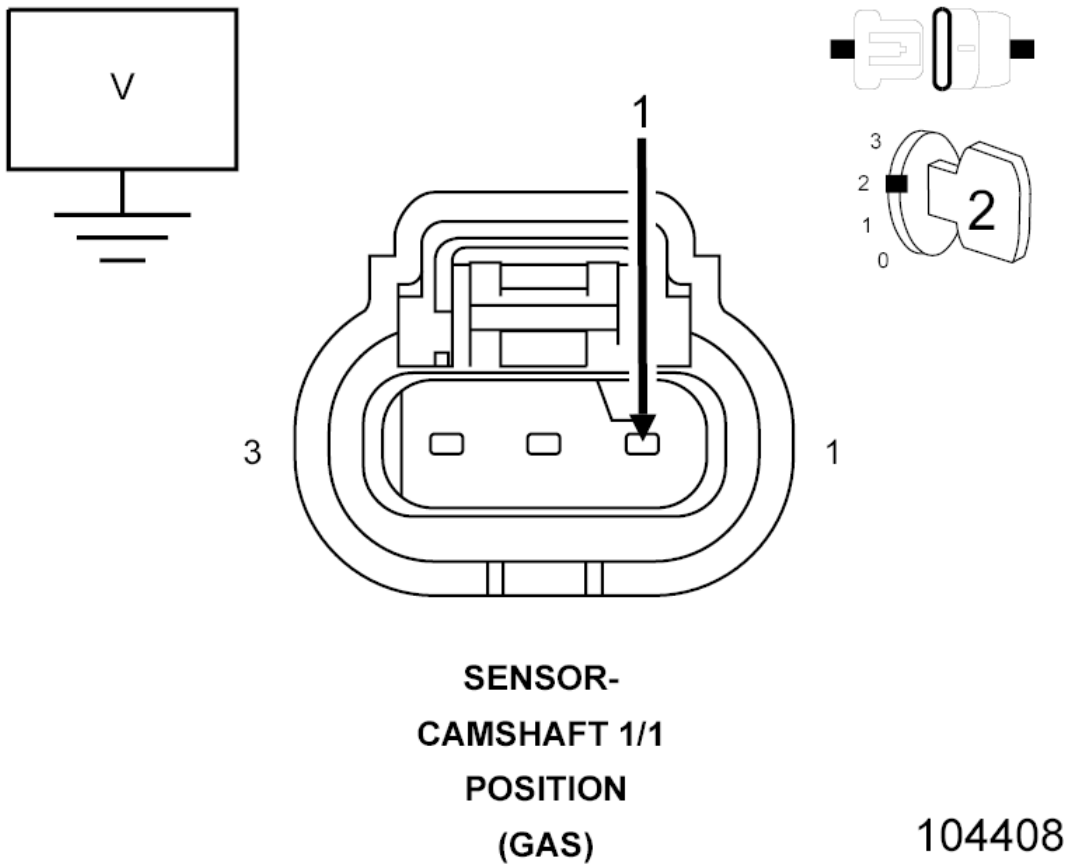

Fig. 13: Checking 5-Volt Supply Circuit
Courtesy of CHRYSLER GROUP, LLC

1. Turn the ignition off.
2. Disconnect the Camshaft 1/1 Position Sensor harness connector.

NOTE: The Camshaft 1/1 Position Sensor is located on the Exhaust Camshaft side of the Cylinder Head.

3. Turn the ignition on.
4. Measure the voltage on the (F856) 5-Volt Supply circuit in the Camshaft 1/1 Position Sensor harness connector.

   Is the voltage between 4.8 and 5.2 volts?

   Yes

   - Go To 6

   No, voltage is below 4.8 volts:

   - Repair the 5-Volt Supply circuit for an open or short to ground.
   - Perform the POWERTRAIN VERIFICATION TEST. Refer to **POWERTRAIN VERIFICATION TEST** .

   No, voltage is above 5.2 volts:

   - Repair the 5-Volt Supply circuit for a short to voltage.
   - Perform the POWERTRAIN VERIFICATION TEST. Refer to **POWERTRAIN VERIFICATION TEST** .

6. **CHECK THE (K44) CMP 1/1 SIGNAL CIRCUIT VOLTAGE**

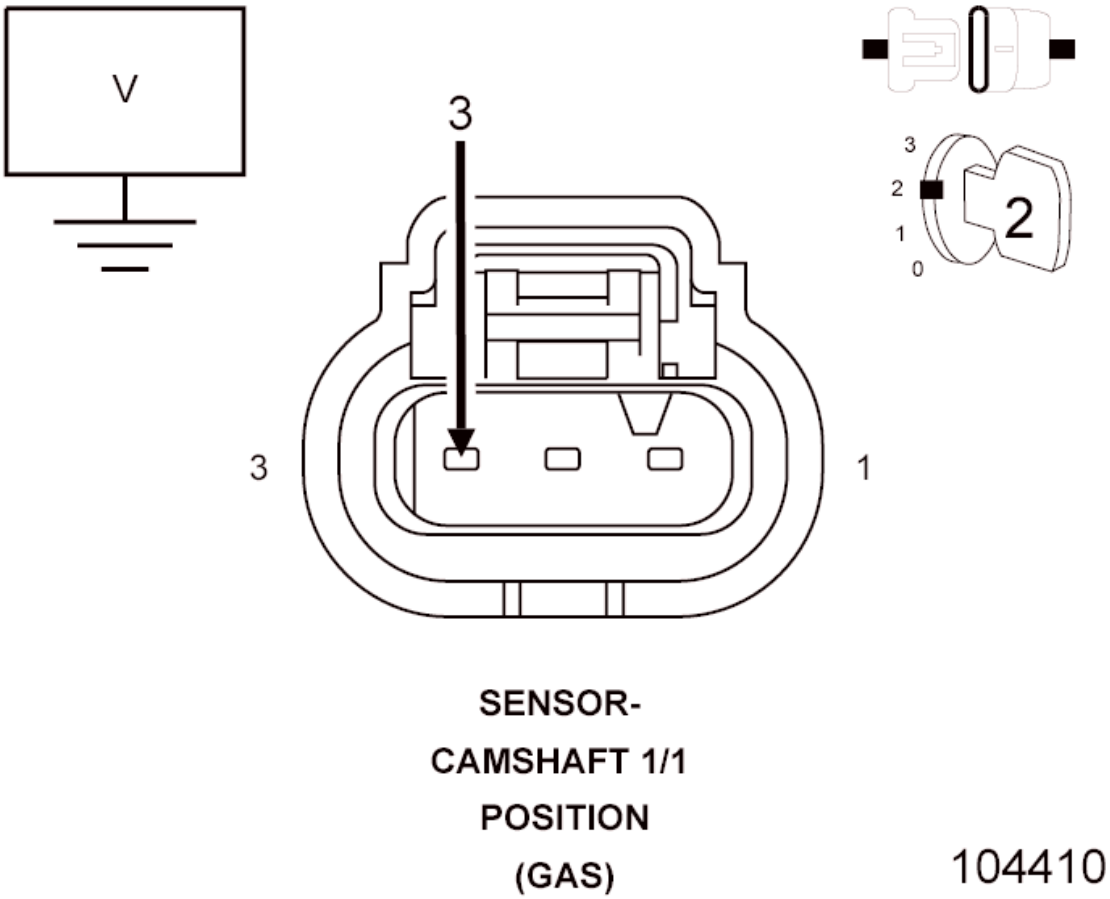

Fig. 14: Checking CMP 1/1 Signal Circuit Voltage
Courtesy of CHRYSLER GROUP, LLC

1. Measure the voltage of the (K44) CMP 1/1 Signal circuit in the Camshaft 1/1 Position Sensor harness connector.

   Is the voltage between 4.8 and 5.2 volts?

   Yes

   - Go To 7

   No, voltage is below 4.8 volts:

   - Go To 11

   No, voltage is above 5.2 volts:

   - Repair the CMP sensor signal circuit for a short to voltage.
   - Perform the POWERTRAIN VERIFICATION TEST. Refer to

POWERTRAIN VERIFICATION TEST .

7. **CHECK THE (K900) SENSOR GROUND CIRCUIT FOR AN OPEN OR HIGH RESISTANCE**
   1. Turn the ignition off.
   2. Disconnect the PCM C2 harness connector.
   3. Measure the resistance of the (K900) Sensor Ground circuit between the Camshaft Position Sensor harness connector and the PCM C2 harness connector.

      Is the resistance below 5.0 Ohms?

      Yes

      - Go To 8

      No

      - Repair the (K900) Sensor Ground circuit for an open circuit or high resistance.
      - Perform the POWERTRAIN VERIFICATION TEST. Refer to **POWERTRAIN VERIFICATION TEST** .
8. **TONE WHEEL/PULSE RING INSPECTION**
   1. Turn the ignition off.
   2. Remove the CMP Sensor.
   3. Visually inspect the sensor mounting location for damage, foreign material.
   4. Manually rotate the engine and if possible inspect the target wheel for any signs of damage.

      Were any problems found?

      Yes

      - Repair Issues in mounting location. Repair or replace the Tone Wheel/Pulse Ring as necessary.
      - Perform the POWERTRAIN VERIFICATION TEST. Refer to **POWERTRAIN VERIFICATION TEST** .

No

- Go To 9

9. **CAMSHAFT POSITION SENSOR**
    1. Using the wiring diagram/schematic as a guide, inspect the wiring and connectors between the Camshaft Position Sensor and the Powertrain Control Module (PCM).
    2. Look for any chafed, pierced, pinched or partially broken wires.
    3. Look for broken, bent, pushed out or corroded terminals.
    4. Replace the Camshaft Position Sensor in accordance with the service information.
    5. Turn the ignition on.
    6. With the scan tool, erase DTCs.
    7. Start the engine or crank the engine for ten seconds.

    Did the DTC return?

    Yes

    - Go To 10

    No

    - Repair complete.
    - Perform the POWERTRAIN VERIFICATION TEST. Refer to **POWERTRAIN VERIFICATION TEST** .

10. **TONE WHEEL/PULSE RING**
    1. Turn the ignition off.
    2. Replace the Target Wheel assembly.
    3. Turn the ignition on.
    4. With the scan tool, erase DTCs.
    5. Start the engine or crank the engine for ten seconds.

    Did the DTC return?

    Yes

- Go To 14

No

- Repair is complete.
- Perform the POWERTRAIN VERIFICATION TEST. Refer to **POWERTRAIN VERIFICATION TEST** .

11. **CHECK THE (K44) CMP 1/1 SIGNAL CIRCUIT FOR A SHORT TO GROUND**

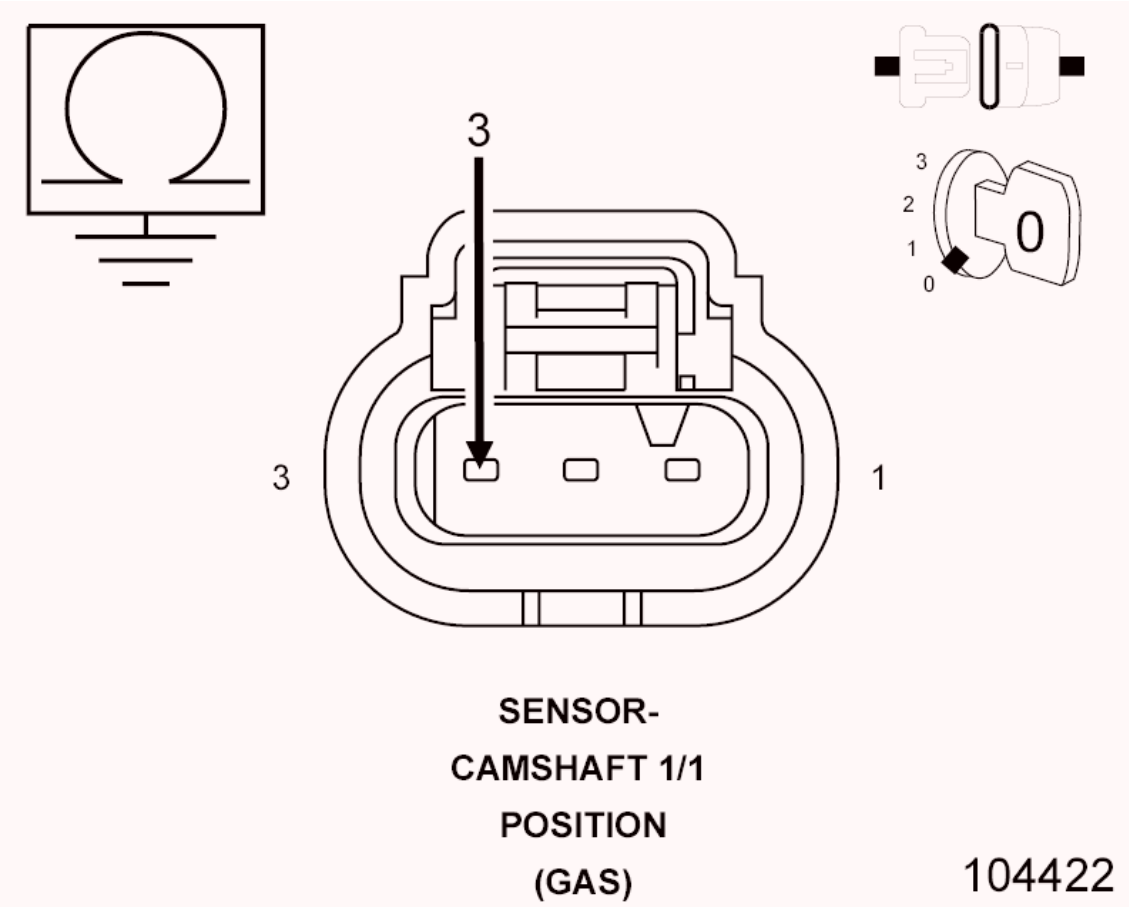

Fig. 15: Checking CMP 1/1 Sensor Signal Circuit For Short To Ground
Courtesy of CHRYSLER GROUP, LLC

1. Turn the ignition off.
2. Disconnect the PCM C2 harness connector.
3. Measure the resistance between ground and the (K44) CMP 1/1 Signal circuit in the Camshaft 1/1 Position Sensor harness connector.

   Is the resistance above 10k Ohms?

Yes

- Go To 12

No

- Repair the (K44) CMP 1/1 Signal circuit for a short to ground.
- Perform the POWERTRAIN VERIFICATION TEST. Refer to **POWERTRAIN VERIFICATION TEST** .

12. **CHECK FOR THE (K44) CMP 1/1 SIGNAL CIRCUIT SHORTED TO THE (K900) SENSOR GROUND CIRCUIT**

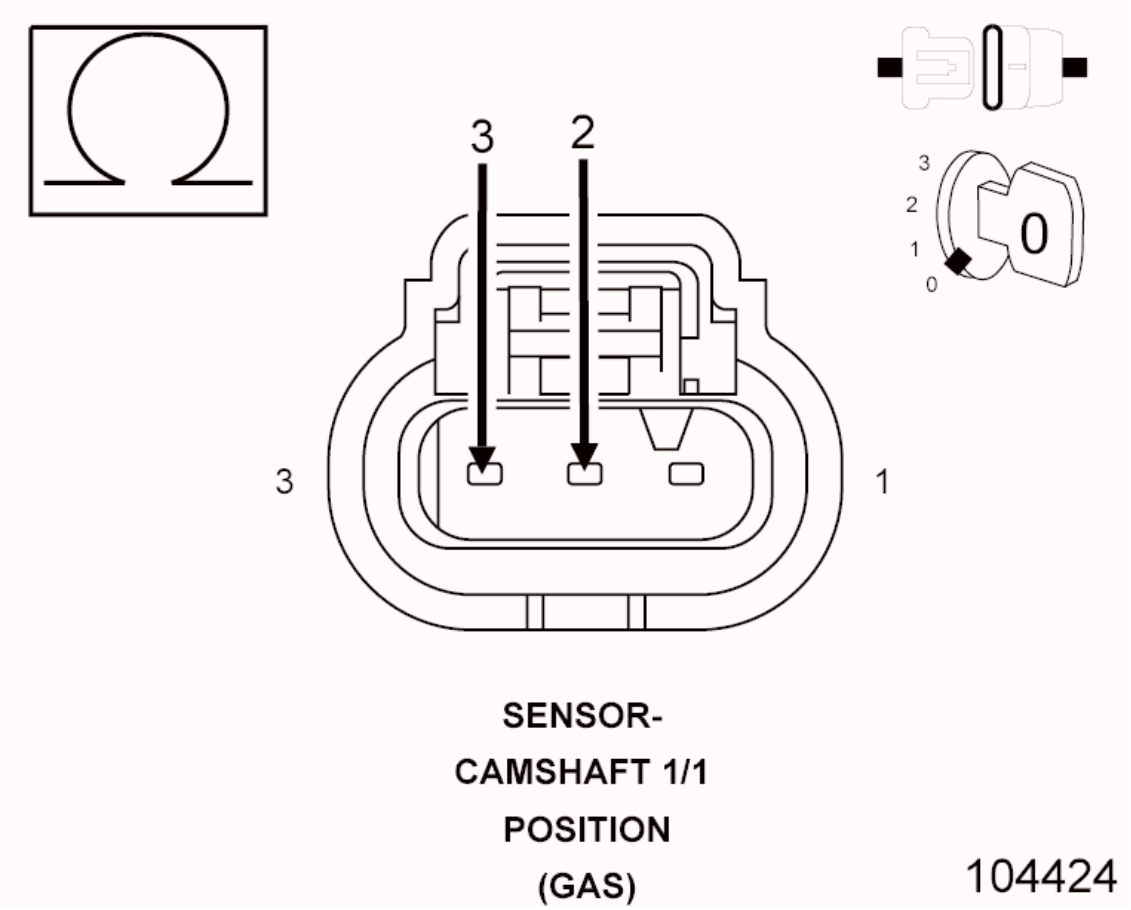

Fig. 16: Checking CMP 1/1 Signal Circuit For Short To Sensor Ground Circuit
Courtesy of CHRYSLER GROUP, LLC

1. Measure the resistance between the (K44) CMP 1/1 Signal circuit and the (K900) Sensor Ground circuit in the Camshaft 1/1 Position Sensor harness connector.

Is the resistance above 10k Ohms?

Yes

- Go To 13

No

- Repair the (K44) CMP 1/1 Signal circuit for a short to the (K900) Sensor Ground circuit.
- Perform the POWERTRAIN VERIFICATION TEST. Refer to **POWERTRAIN VERIFICATION TEST** .

13. **CHECK THE (K44) CMP 1/1 SIGNAL CIRCUIT FOR AN OPEN/HIGH RESISTANCE**

CAUTION: Do not probe the PCM harness connectors. Probing the PCM harness connectors will damage the PCM terminals resulting in poor terminal to pin connection. Install the GPEC Diagnostic Adaptor to perform the diagnosis.

1. Connect the (special tool #10436, Adapter, GPEC Diagnostic).
2. Measure the resistance of the (K44) CMP 1/1 Signal circuit between the Camshaft 1/1 Position Sensor harness connector and the GPEC Adaptor.

Is the resistance below 5.0 Ohms?

Yes

- Go To 14

No

- Repair the (K44) CMP 1/1 Signal circuit for an open circuit or high resistance.
- Perform the POWERTRAIN VERIFICATION TEST. Refer to **POWERTRAIN VERIFICATION TEST** .

14. **POWERTRAIN CONTROL MODULE (PCM)**

1. Using the wiring diagram/schematic as a guide, inspect the wiring and connectors between the Camshaft 1/1 Position Sensor and the Powertrain Control Module (PCM).
2. Look for any chafed, pierced, pinched, or partially broken wires.
3. Look for broken, bent, pushed out or corroded terminals.
4. Monitor the scan tool data relative to this circuit and wiggle test the wiring and connectors.
5. Look for the data to change or for the DTC to reset during the wiggle test.

NOTE: Due to the fact that this DTC may have set from an intermittent loss of the signal, the most likely cause is a poor connection at the Crank Sensor or PCM terminals, or a poor signal between the Crank Sensor and target wheel. Because of this, unplugging and reconnecting the harness connectors, or repositioning the Crank Sensor will often repair the condition that set the DTC.

Were any problems found?

Yes

- Repair as necessary.
- Perform the POWERTRAIN VERIFICATION TEST. Refer to **POWERTRAIN VERIFICATION TEST** .

No

- Replace and program the Powertrain Control Module (PCM) in accordance with the service information. Refer to **MODULE, POWERTRAIN CONTROL, REMOVAL** .
- Perform the POWERTRAIN VERIFICATION TEST. Refer to **POWERTRAIN VERIFICATION TEST** .

P0344-CAMSHAFT POSITION SENSOR INTERMITTENT - BANK 1 SENSOR 1

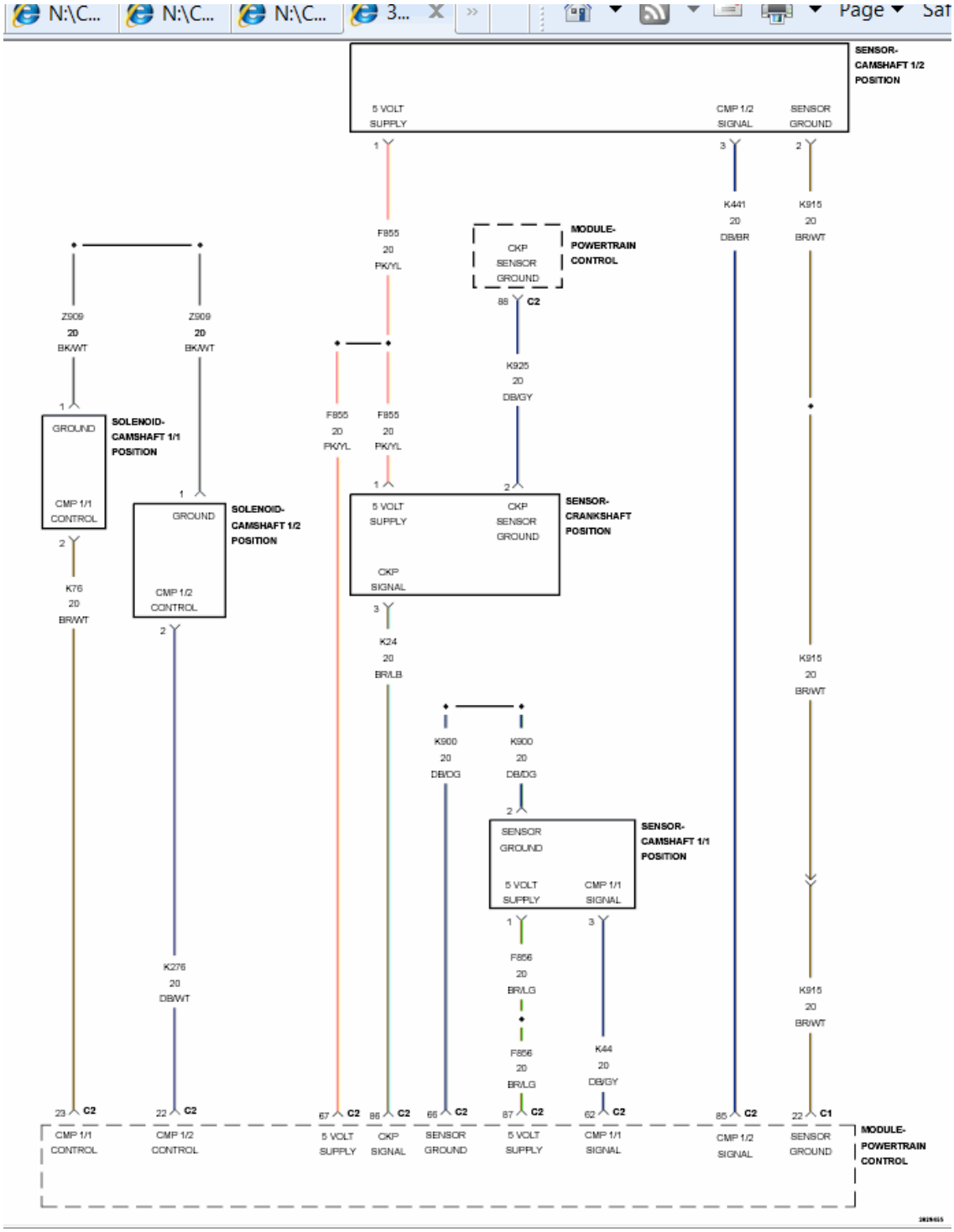

Fig. 17: Camshaft Position Solenoids, Sensors & Crankshaft Position Sensor Circuit Diagram

Courtesy of CHRYSLER GROUP, LLC

For a complete wiring diagram, **refer to appropriate SYSTEM WIRING DIAGRAMS article** .

WHEN MONITORED

With the engine cranking or running.

SET CONDITION

The Powertrain Control Module (PCM) detects an intermittent signal error from the Camshaft 1/1 Position Sensor. One Trip Fault. Three good trips to turn off the MIL.

POSSIBLE CAUSES

POSSIBLE CAUSES
(F856) 5-VOLT SUPPLY CIRCUIT OPEN
(F856) 5-VOLT SUPPLY CIRCUIT SHORTED TO GROUND
(K44) CMP SENSOR SIGNAL 1/1 CIRCUIT SHORTED TO VOLTAGE
(K44) CMP SENSOR SIGNAL 1/1 CIRCUIT OPEN
(K44) CMP SENSOR SIGNAL 1/1 CIRCUIT SHORTED TO GROUND
(K44) CMP SENSOR SIGNAL 1/1 CIRCUIT SHORTED TO THE (F856) 5-VOLT SUPPLY CIRCUIT
TONE WHEEL/PULSE RING
CAMSHAFT POSITION SENSOR 1/1 (EXHAUST)
POWERTRAIN CONTROL MODULE (PCM)

Always perform the Pre-Diagnostic Troubleshooting procedure before proceeding. Refer to PRE-DIAGNOSTIC TROUBLESHOOTING PROCEDURE .

DIAGNOSTIC TEST

1. **CHECK FOR APPLICABLE TSB**

NOTE: Diagnose and repair any 5-Volt Reference DTCs that are present before continuing with this test procedure.

1. Check for any applicable TSBs that may apply for this issue.

   Were there any applicable TSBs?

   Yes

- Perform the applicable TSB. Erase the DTC and perform the verification test.
- Perform the POWERTRAIN VERIFICATION TEST. Refer to **POWERTRAIN VERIFICATION TEST** .

No

- Go To 2

2. **ACTIVE DTC**
   1. Turn the ignition on.
   2. Read and copy the DTCs and freeze frame data.
   3. Start the engine or crank the engine for at least ten seconds.
   4. With the scan tool, select View DTCs.

   Is the status Active or pending for this DTC?

   Yes

   - Go To 5

   No

   - Go To 3

3. **WIRE HARNESS/CMP SENSOR INSPECTION**
   1. Turn the ignition off.

   NOTE: The Camshaft 1/1 Position Sensor is located on the Exhaust Camshaft side of the Cylinder Head.

   2. Disconnect the harness connectors at the PCM and Cam Sensor and inspect for wire chaffing or rub conditions, terminals pushed out on the wiring connector, bent terminals at the PCM and Cam Sensor, water in the connector cavities, presence of corrosion on the terminals of the connectors or components.
   3. Visually inspect the mounting area of Cam Sensor for debris/damage, proper machining, or a loose sensor. Remove the Cam Sensor and inspect the end of the sensor for signs of damage or debris (contact marks, etc.). Rotate the engine and if possible, inspect the target wheel

for any signs of damage. Reinstall the Cam Sensor and ensure that the sensor is properly installed and torqued to proper specification.

NOTE: Due to the fact that this DTC is set by an intermittent loss of the signal, the most likely cause is a poor connection at the Cam Sensor or PCM terminals, or a poor signal between the Cam Sensor and target wheel. Because of this, unplugging and reconnecting the harness connectors, or repositioning the Cam Sensor will often repair the condition that set the DTC.

Were any problems found?

Yes

- Perform the appropriate repair.
- Perform the POWERTRAIN VERIFICATION TEST. Refer to **POWERTRAIN VERIFICATION TEST** .

No

- Go To 4

4. **CHECK THE VEHICLE'S REPAIR HISTORY**
   1. Check the history of the vehicle for previous Cam Sensor related DTCs within the past 90 days.

   Did the repair history show that the vehicle was in dealership for a Cam Sensor fault within the past 90 days?

   Yes

   - Replace the Exhaust Cam Sensor in accordance with the service information.
   - Perform the POWERTRAIN VERIFICATION TEST. Refer to **POWERTRAIN VERIFICATION TEST** .

   No

- Test complete. Reconnect the harness connectors and ensure that the Cam Sensor connector is locked properly. Erase the DTC. The most likely cause was a poor connection at one of the harness connectors. Verify the DTC does not return.
- Perform the POWERTRAIN VERIFICATION TEST. Refer to **POWERTRAIN VERIFICATION TEST** .

5. **CHECK THE (F856) 5-VOLT SUPPLY CIRCUIT VOLTAGE**

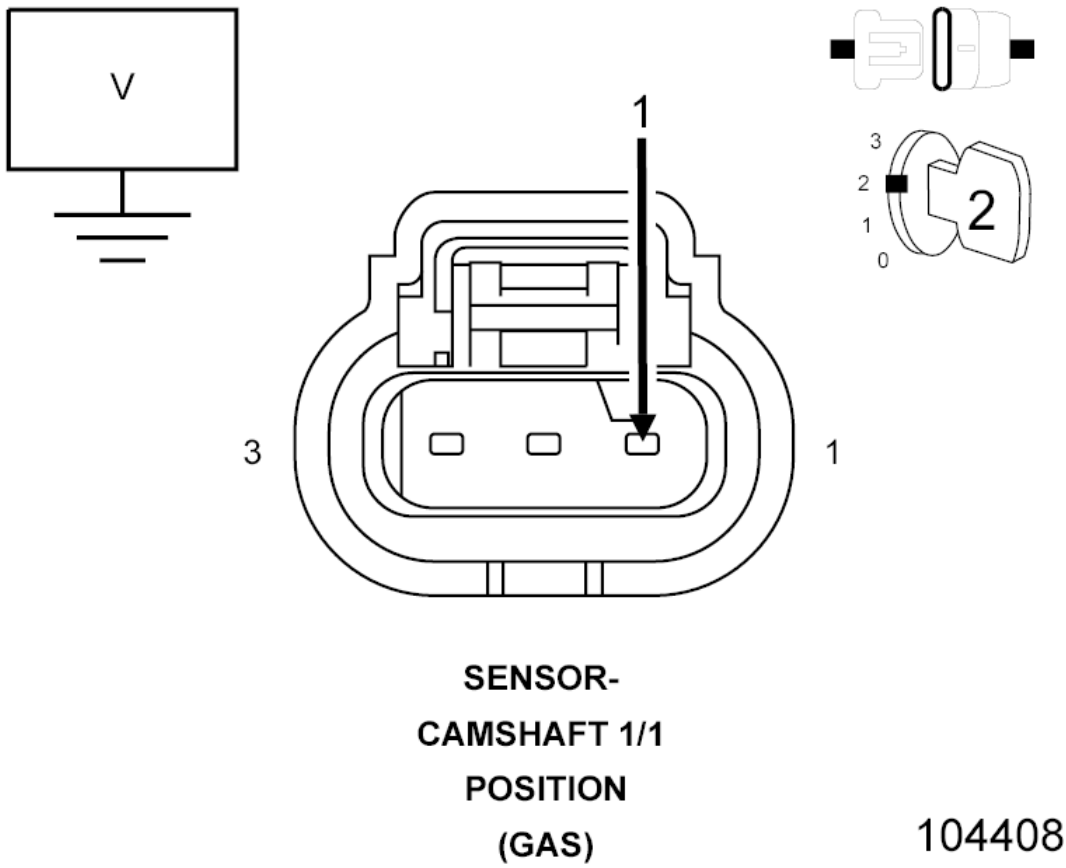

Fig. 18: Checking 5-Volt Supply Circuit
Courtesy of CHRYSLER GROUP, LLC

1. Turn the ignition off.
2. Disconnect the Camshaft 1/1 Position Sensor harness connector.

NOTE: The Camshaft 1/1 Position Sensor is located on the Exhaust Camshaft side of the Cylinder Head.

3. Turn the ignition on.
4. Measure the voltage on the (F856) 5-Volt Supply circuit in the

Camshaft 1/1 Position Sensor harness connector.

Is the voltage between 4.8 and 5.2 volts?

Yes

- Go To 6

No, voltage is below 4.8 volts:

- Repair the 5-Volt Supply circuit for an open or short to ground.
- Perform the POWERTRAIN VERIFICATION TEST. Refer to **POWERTRAIN VERIFICATION TEST** .

No, voltage is above 5.2 volts:

- Repair the 5-Volt Supply circuit for a short to voltage.
- Perform the POWERTRAIN VERIFICATION TEST. Refer to **POWERTRAIN VERIFICATION TEST** .

6. **CHECK THE (K44) CMP 1/1 SIGNAL CIRCUIT VOLTAGE**

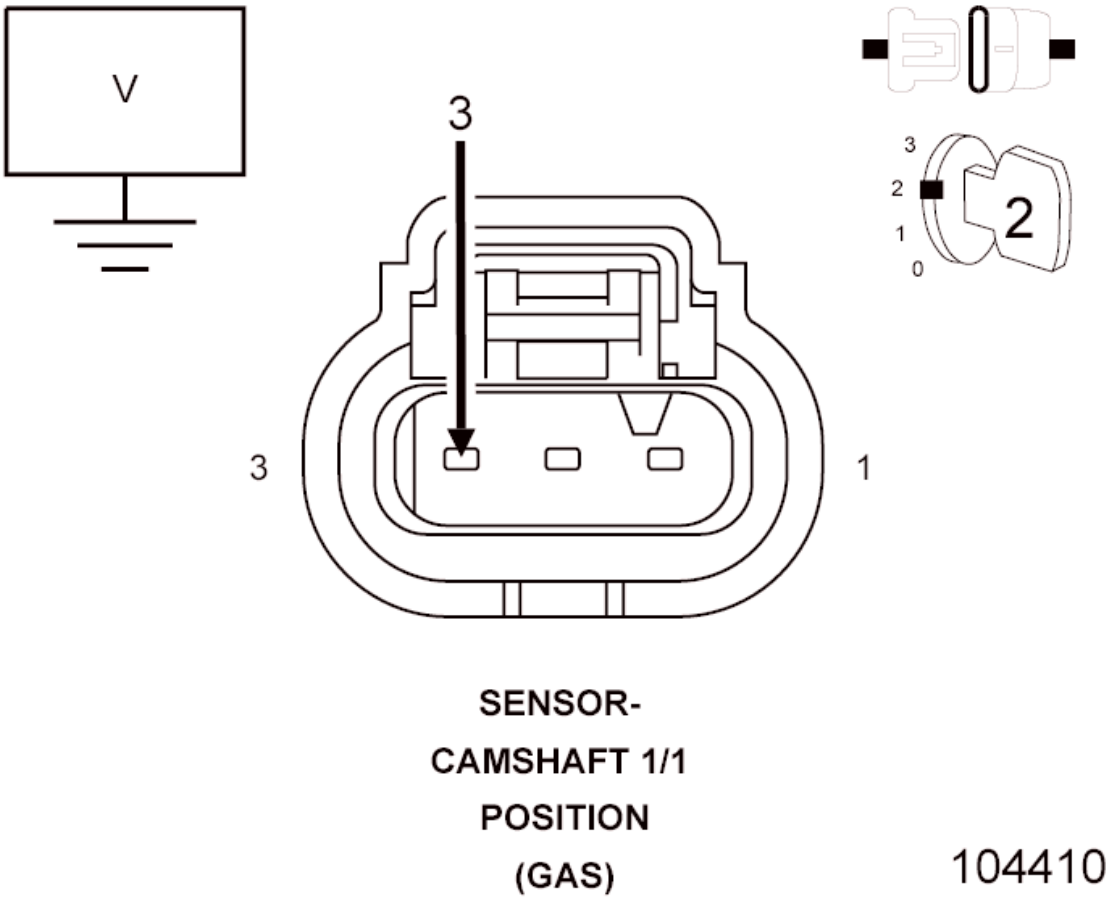

Fig. 19: Checking CMP 1/1 Signal Circuit Voltage
Courtesy of CHRYSLER GROUP, LLC

1. Measure the voltage of the (K44) CMP 1/1 Signal circuit in the Camshaft 1/1 Position Sensor harness connector.

   Is the voltage between 4.8 and 5.2 volts?

   Yes

   - Go To 7

   No, voltage is below 4.8 volts:

   - Go To 11

   No, voltage is above 5.2 volts:

   - Repair the CMP sensor signal circuit for a short to voltage.
   - Perform the POWERTRAIN VERIFICATION TEST. Refer to

POWERTRAIN VERIFICATION TEST .

7. **CHECK THE (K900) SENSOR GROUND CIRCUIT FOR AN OPEN OR HIGH RESISTANCE**

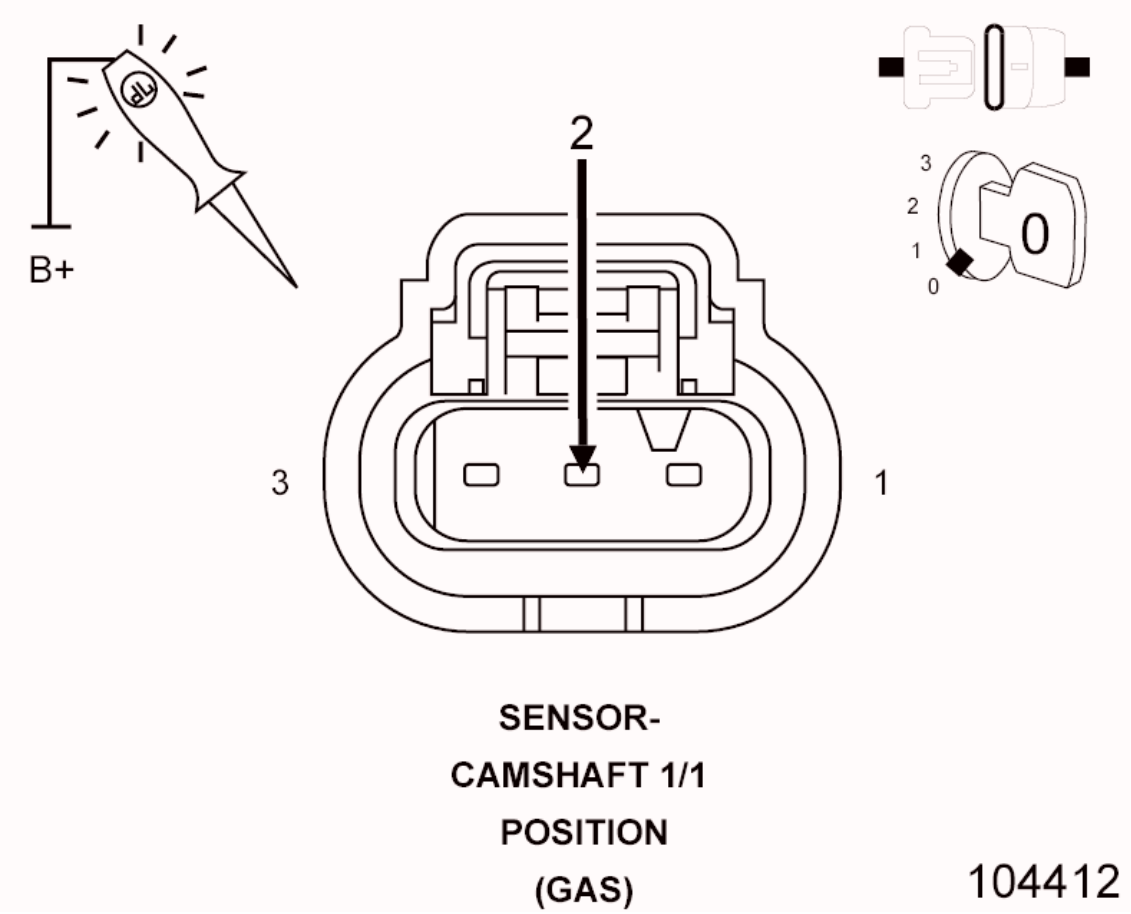

Fig. 20: Checking Sensor Ground Circuit For Open Or High Resistance
Courtesy of CHRYSLER GROUP, LLC

1. Turn the ignition off.
2. Disconnect the PCM C2 harness connector.
3. Measure the resistance of the (K900) Sensor Ground circuit between the Camshaft Position Sensor harness connector and the PCM C2 harness connector.

   Is the resistance below 5.0 Ohms?

   Yes

   - Go To 8

   No

- Repair the (K900) Sensor Ground circuit for an open circuit or high resistance.
- Perform the POWERTRAIN VERIFICATION TEST. Refer to **POWERTRAIN VERIFICATION TEST** .

8. **TONE WHEEL/PULSE RING INSPECTION**
   1. Turn the ignition off.
   2. Remove the CMP Sensor.
   3. Visually inspect the sensor mounting location for damage, foreign material.
   4. Manually rotate the engine and if possible inspect the target wheel for any signs of damage.

   Were any problems found?

   Yes

   - Repair Issues in mounting location. Repair or replace the Tone Wheel/Pulse Ring as necessary.
   - Perform the POWERTRAIN VERIFICATION TEST. Refer to **POWERTRAIN VERIFICATION TEST** .

   No

   - Go To 9

9. **CAMSHAFT POSITION SENSOR**
   1. Using the wiring diagram/schematic as a guide, inspect the wiring and connectors between the Camshaft Position Sensor and the Powertrain Control Module (PCM).
   2. Look for any chafed, pierced, pinched or partially broken wires.
   3. Look for broken, bent, pushed out or corroded terminals.
   4. Replace the Camshaft Position Sensor in accordance with the service information.
   5. Turn the ignition on.
   6. With the scan tool, erase DTCs.
   7. Start the engine or crank the engine for ten seconds.

Did the DTC return?

Yes

- Go To 10

No

- Repair complete.
- Perform the POWERTRAIN VERIFICATION TEST. Refer to **POWERTRAIN VERIFICATION TEST** .

10. **TONE WHEEL/PULSE RING**
    1. Turn the ignition off.
    2. Replace the Target Wheel assembly.
    3. Turn the ignition on.
    4. With the scan tool, erase DTCs.
    5. Start the engine or crank the engine for ten seconds.

    Did the DTC return?

    Yes

    - Go To 14

    No

    - Repair is complete.
    - Perform the POWERTRAIN VERIFICATION TEST. Refer to **POWERTRAIN VERIFICATION TEST** .

11. **CHECK THE (K44) CMP 1/1 SIGNAL CIRCUIT FOR A SHORT TO GROUND**

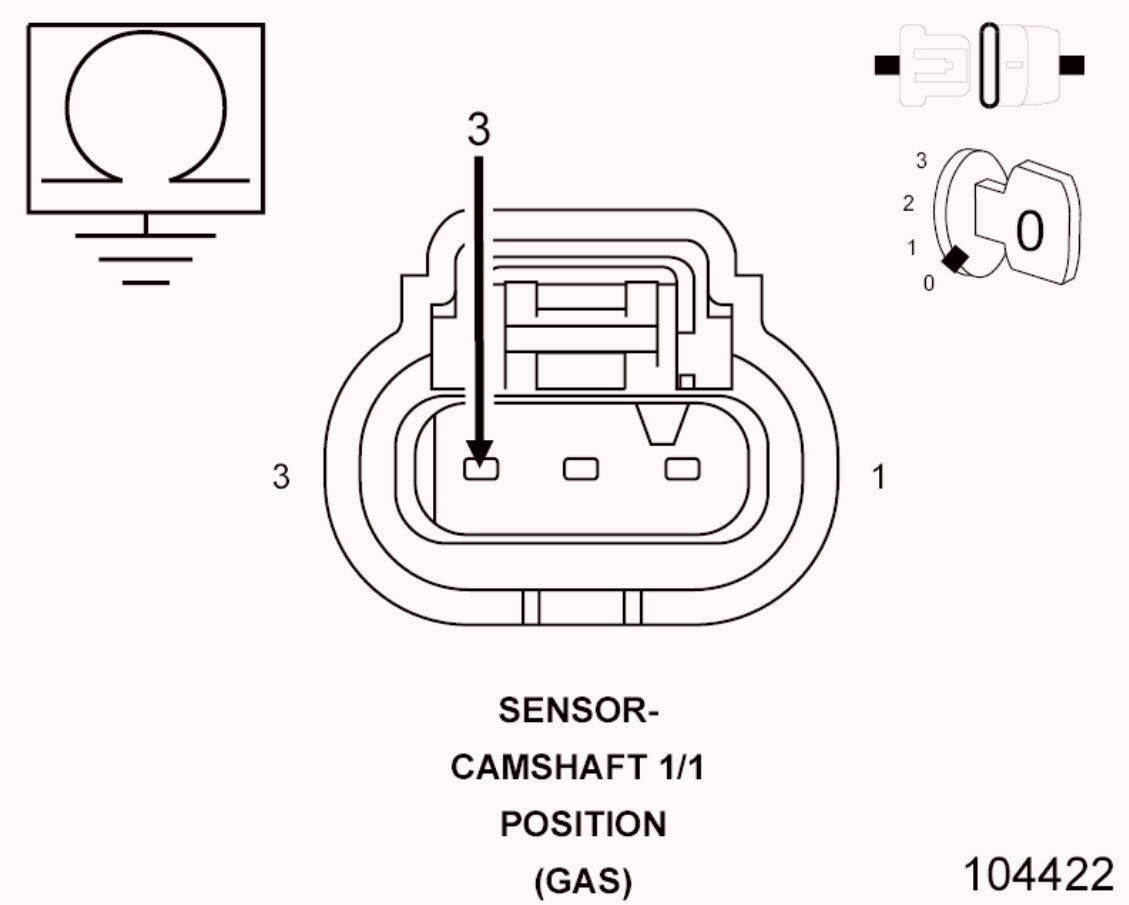

Fig. 21: Checking CMP 1/1 Sensor Signal Circuit For Short To Ground
Courtesy of CHRYSLER GROUP, LLC

1. Turn the ignition off.
2. Disconnect the PCM C2 harness connector.
3. Measure the resistance between ground and the (K44) CMP 1/1 Signal circuit in the Camshaft 1/1 Position Sensor harness connector.

   Is the resistance above 10k Ohms?

   Yes

   - Go To 12

   No

   - Repair the (K44) CMP 1/1 Signal circuit for a short to ground.
   - Perform the POWERTRAIN VERIFICATION TEST. Refer to **POWERTRAIN VERIFICATION TEST** .

12. **CHECK FOR THE (K44) CMP 1/1 SIGNAL CIRCUIT SHORTED TO THE (K900) SENSOR GROUND CIRCUIT**

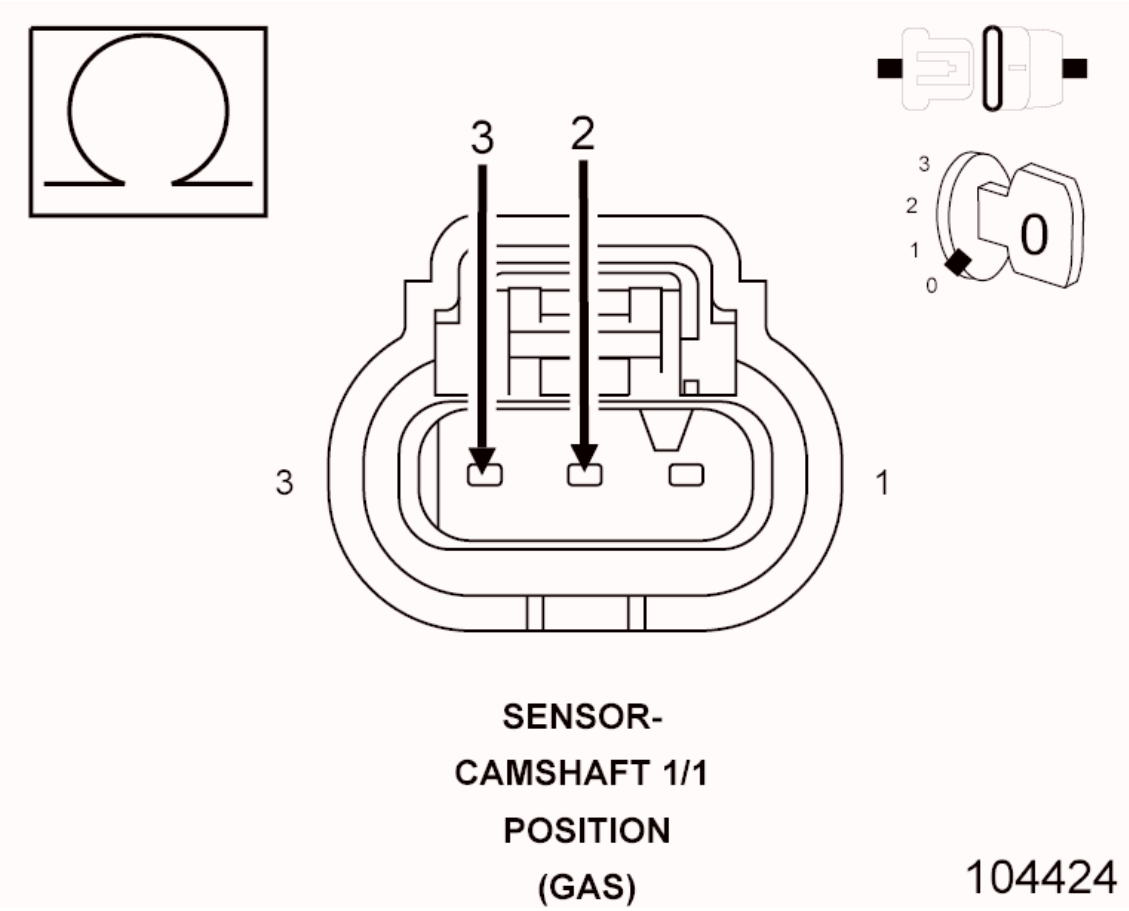

Fig. 22: Checking CMP 1/1 Signal Circuit For Short To Sensor Ground Circuit
Courtesy of CHRYSLER GROUP, LLC

1. Measure the resistance between the (K44) CMP 1/1 Signal circuit and the (K900) Sensor Ground circuit in the Camshaft 1/1 Position Sensor harness connector.

   Is the resistance above 10k Ohms?

   Yes

   - Go To 13

   No

   - Repair the (K44) CMP 1/1 Signal circuit for a short to the (K900)

Sensor Ground circuit.

- Perform the POWERTRAIN VERIFICATION TEST. Refer to **POWERTRAIN VERIFICATION TEST** .

13. **CHECK THE (K44) CMP 1/1 SIGNAL CIRCUIT FOR AN OPEN/HIGH RESISTANCE**

CAUTION: Do not probe the PCM harness connectors. Probing the PCM harness connectors will damage the PCM terminals resulting in poor terminal to pin connection. Install the GPEC Diagnostic Adaptor to perform the diagnosis.

1. Connect the (special tool #10436, Adapter, GPEC Diagnostic).
2. Measure the resistance of the (K44) CMP 1/1 Signal circuit between the Camshaft 1/1 Position Sensor harness connector and the GPEC Adaptor.

   Is the resistance below 5.0 Ohms?

   Yes

   - Go To 14

   No

   - Repair the (K44) CMP 1/1 Signal circuit for an open circuit or high resistance.
   - Perform the POWERTRAIN VERIFICATION TEST. Refer to **POWERTRAIN VERIFICATION TEST** .

14. **POWERTRAIN CONTROL MODULE (PCM)**
    1. Using the wiring diagram/schematic as a guide, inspect the wiring and connectors between the Camshaft 1/1 Position Sensor and the Powertrain Control Module (PCM).
    2. Look for any chafed, pierced, pinched, or partially broken wires.
    3. Look for broken, bent, pushed out or corroded terminals.
    4. Monitor the scan tool data relative to this circuit and wiggle test the wiring and connectors.

5. Look for the data to change or for the DTC to reset during the wiggle test.

NOTE: Due to the fact that this DTC may have set from an intermittent loss of the signal, the most likely cause is a poor connection at the Crank Sensor or PCM terminals, or a poor signal between the Crank Sensor and target wheel. Because of this, unplugging and reconnecting the harness connectors, or repositioning the Crank Sensor will often repair the condition that set the DTC.

Were any problems found?

Yes

- Repair as necessary.
- Perform the POWERTRAIN VERIFICATION TEST. Refer to **POWERTRAIN VERIFICATION TEST** .

No

- Replace and program the Powertrain Control Module (PCM) in accordance with the service information. Refer to **MODULE, POWERTRAIN CONTROL, REMOVAL** .
- Perform the POWERTRAIN VERIFICATION TEST. Refer to **POWERTRAIN VERIFICATION TEST** .

P0365-CAMSHAFT POSITION SENSOR CIRCUIT - BANK 1 SENSOR 2

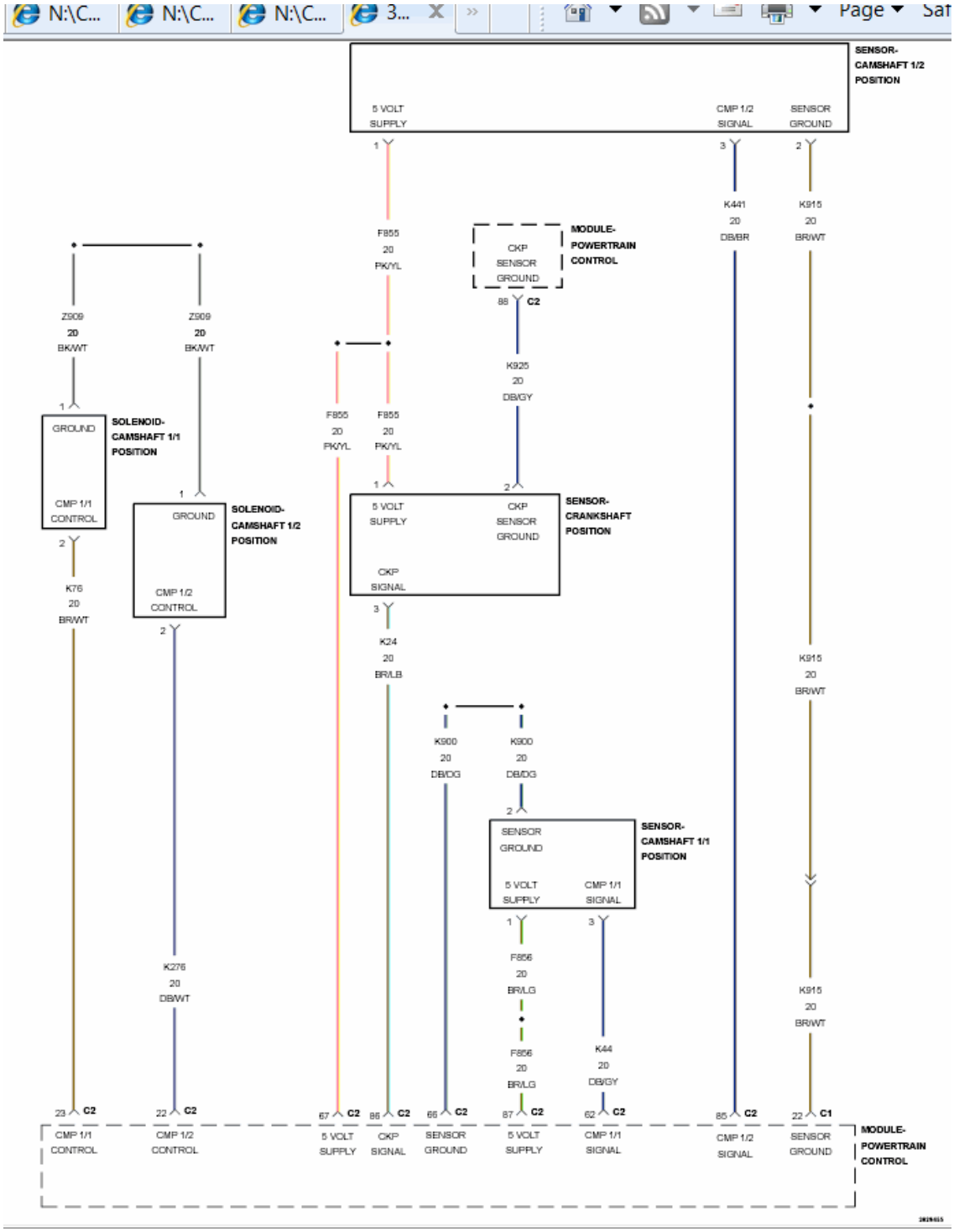

Fig. 23: Camshaft Position Solenoids, Sensors & Crankshaft Position Sensor Circuit Diagram
Courtesy of CHRYSLER GROUP, LLC

For a complete wiring diagram, **refer to appropriate SYSTEM WIRING DIAGRAMS article** .

WHEN MONITORED

With the engine running or cranking.

SET CONDITION

The Powertrain Control Module (PCM) receives either no signal or an incorrect signal from the Camshaft 1/2 Position Sensor.

POSSIBLE CAUSES

POSSIBLE CAUSES
(F855) 5 VOLT SUPPLY CIRCUIT SHORTED TO VOLTAGE
(K441) CMP 1/2 SIGNAL CIRCUIT SHORTED TO VOLTAGE
(F855) 5 VOLT SUPPLY CIRCUIT SHORTED TO GROUND
(K441) CMP 1/2 SIGNAL CIRCUIT SHORTED TO GROUND
(F855) 5 VOLT SUPPLY CIRCUIT SHORTED TO THE (K441) CMP 1/2 SIGNAL CIRCUIT
(F855) 5 VOLT SUPPLY CIRCUIT SHORTED TO THE (K915) SENSOR GROUND CIRCUIT
(K441) CMP 1/2 SIGNAL CIRCUIT SHORTED TO THE (K915) SENSOR GROUND CIRCUIT
(F855) 5 VOLT SUPPLY CIRCUIT OPEN OR HIGH RESISTANCE
(K441) CMP 1/2 SIGNAL CIRCUIT OPEN OR HIGH RESISTANCE
(K915) SENSOR GROUND CIRCUIT OPEN OR HIGH RESISTANCE
CAMSHAFT 1/2 POSITION SENSOR (INTAKE)
POWERTRAIN CONTROL MODULE (PCM)

Always perform the Pre-Diagnostic Troubleshooting procedure before proceeding. Refer to PRE-DIAGNOSTIC TROUBLESHOOTING PROCEDURE .

DIAGNOSTIC TEST

1. **CHECK FOR APPLICABLE TSB**

NOTE: Diagnose and repair any 5-Volt Reference DTCs that are present before continuing with this test procedure.

1. Check for any applicable TSBs that may apply for this issue.

Were there any applicable TSBs?

Yes

- Perform the applicable TSB. Erase the DTC and perform the verification test.
- Perform the POWERTRAIN VERIFICATION TEST. Refer to **POWERTRAIN VERIFICATION TEST** .

No

- Go To 2

2. **ACTIVE DTC**
   1. Turn the ignition on.
   2. Read and copy the DTCs and freeze frame data.
   3. Start the engine or crank the engine for at least ten seconds.
   4. With the scan tool, select View DTCs.

   Is the status Active or pending for this DTC?

   Yes

   - Go To 5

   No

   - Go To 3

3. **WIRE HARNESS/CMP SENSOR INSPECTION**
   1. Turn the ignition off.

      NOTE: The Camshaft 1/2 Position Sensor is located on the Intake Camshaft side of the Cylinder Head.

   2. Disconnect the harness connectors at the PCM and Cam Sensor and inspect for wire chaffing or rub conditions, terminals pushed out on the wiring connector, bent terminals at the PCM and Cam Sensor, water in the connector cavities, presence of corrosion on the terminals of the connectors or components.

3. Visually inspect the mounting area of Cam Sensor for debris/damage, proper machining, or a loose sensor. Remove the Cam Sensor and inspect the end of the sensor for signs of damage or debris (contact marks, etc.). Rotate the engine and if possible, inspect the target wheel for any signs of damage. Reinstall the Cam Sensor and ensure that the sensor is properly installed and torqued to proper specification.

NOTE: Due to the fact that this DTC is set by an intermittent loss of the signal, the most likely cause is a poor connection at the Cam Sensor or PCM terminals, or a poor signal between the Cam Sensor and target wheel. Because of this, unplugging and reconnecting the harness connectors, or repositioning the Cam Sensor will often repair the condition that set the DTC.

Were any problems found?

Yes

- Perform the appropriate repair.
- Perform the POWERTRAIN VERIFICATION TEST. Refer to **POWERTRAIN VERIFICATION TEST** .

No

- Go To 4

4. **CHECK THE VEHICLE'S REPAIR HISTORY**
   1. Check the history of the vehicle for previous Cam Sensor related DTCs within the past 90 days.

      Did the repair history show that the vehicle was in dealership for a Cam Sensor fault within the past 90 days?

      Yes

      - Replace the Exhaust Cam Sensor in accordance with the service information.
      - Perform the POWERTRAIN VERIFICATION TEST. Refer to

POWERTRAIN VERIFICATION TEST .

No

- Test complete. Reconnect the harness connectors and ensure that the Cam Sensor connector is locked properly. Erase the DTC. The most likely cause was a poor connection at one of the harness connectors. Verify the DTC does not return.
- Perform the POWERTRAIN VERIFICATION TEST. Refer to **POWERTRAIN VERIFICATION TEST** .

5. **CHECK THE (F855) 5-VOLT SUPPLY CIRCUIT VOLTAGE**

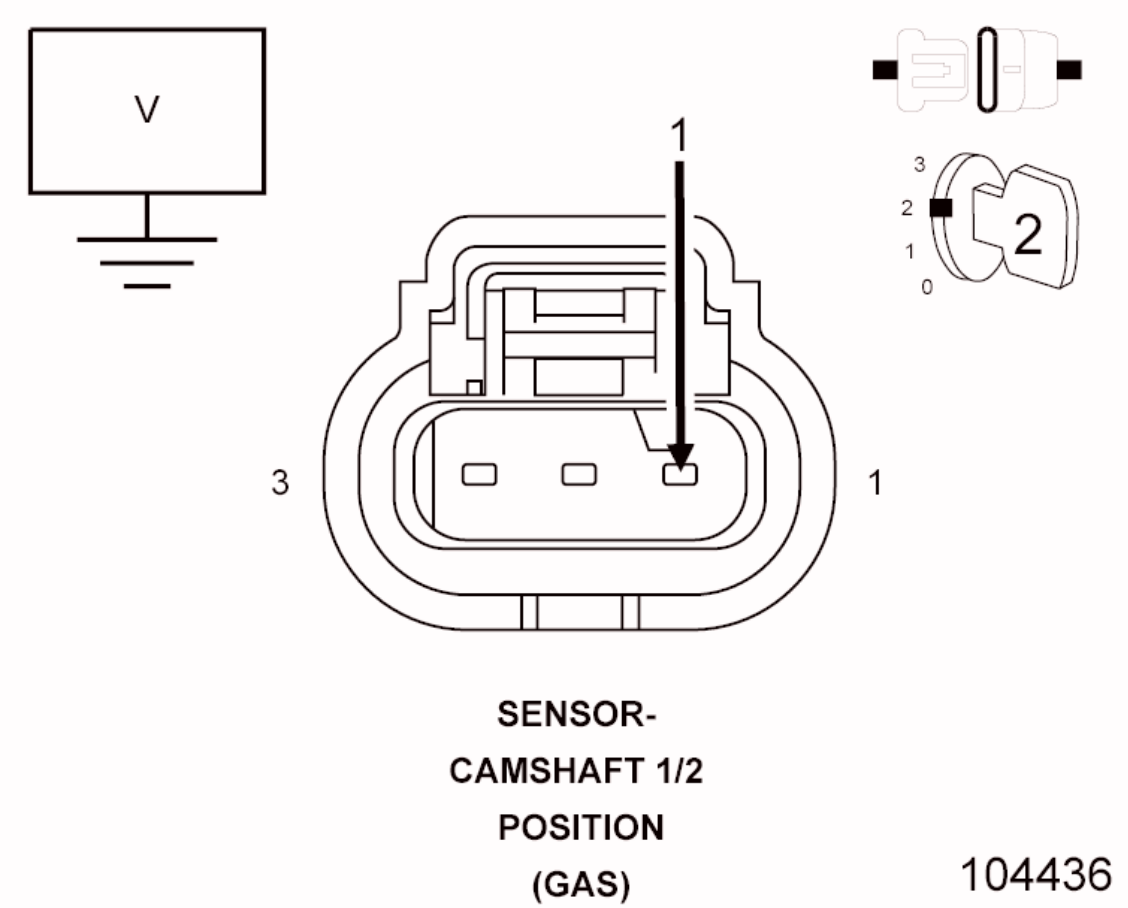

Fig. 24: Checking 5-Volt Supply Circuit
Courtesy of CHRYSLER GROUP, LLC

1. Turn the ignition off.
2. Disconnect the Camshaft 1/2 Position Sensor harness connector.

NOTE: The Camshaft 1/2 Position Sensor is located on

the Intake Camshaft side of the Cylinder Head.

3. Turn the ignition on.
4. Measure the voltage of the (F855) 5-Volt Supply circuit in the Camshaft 1/2 Position Sensor harness connector.

   Is the voltage between 4.8 and 5.2 volts?

   Yes

   - Go To 6

   No, voltage is below 4.8 volts:

   - Repair the (F855) 5-Volt Supply circuit for an open or short to ground.
   - Perform the POWERTRAIN VERIFICATION TEST. Refer to **POWERTRAIN VERIFICATION TEST** .

   No, voltage is above 5.2 volts:

   - Repair the (F855) 5-Volt Supply circuit for a short to voltage.
   - Perform the POWERTRAIN VERIFICATION TEST. Refer to **POWERTRAIN VERIFICATION TEST** .

6. **CHECK THE (K441) CMP 1/2 SIGNAL CIRCUIT VOLTAGE**

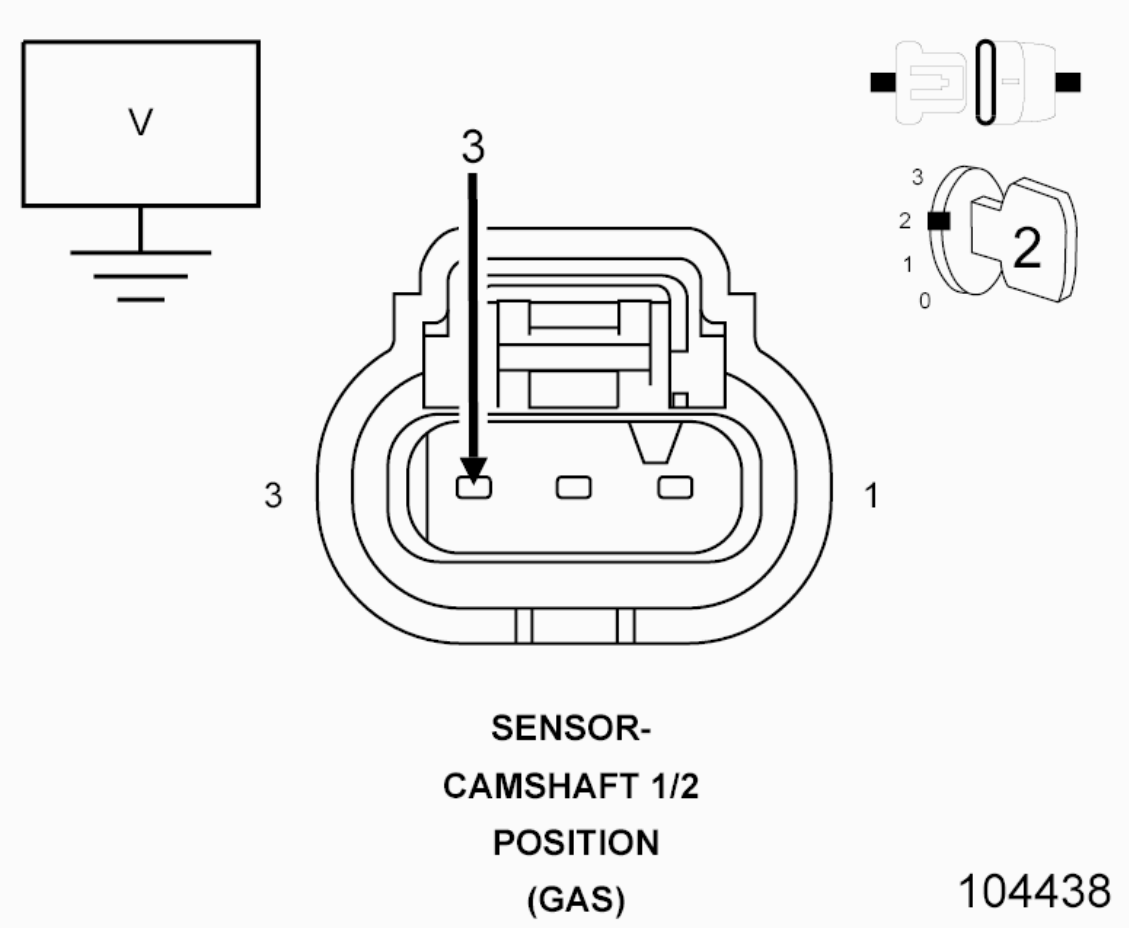

Fig. 25: Checking CMP 1/2 Signal Circuit Voltage
Courtesy of CHRYSLER GROUP, LLC

1. Measure the voltage of the (K441) CMP 1/2 Signal circuit in the Camshaft 1/2 Position Sensor harness connector.

   Is the voltage between 4.8 and 5.2 volts?

   Yes

   - Go To 7

   No, voltage is below 4.8 volts:

   - Go To 11

   No, voltage is above 5.2 volts:

   - Repair the (K441) CMP 1/2 Signal circuit for a short to voltage.
   - Perform the POWERTRAIN VERIFICATION TEST. Refer to

POWERTRAIN VERIFICATION TEST .

7. **CHECK THE (K915) SENSOR GROUND CIRCUIT FOR AN OPEN OR HIGH RESISTANCE**
   1. Turn the ignition off.
   2. Disconnect the PCM C2 harness connector.
   3. Measure the resistance of the (K900) Sensor Ground circuit between the Camshaft Position Sensor harness connector and the PCM C2 harness connector.

      Is the resistance below 5.0 Ohms?

      Yes

      - Go To 8

      No

      - Repair the (K900) Sensor Ground circuit for an open circuit or high resistance.
      - Perform the POWERTRAIN VERIFICATION TEST. Refer to **POWERTRAIN VERIFICATION TEST** .
8. **TONE WHEEL/PULSE RING INSPECTION**
   1. Turn the ignition off.
   2. Remove the CMP Sensor.
   3. Visually inspect the sensor mounting location for damage, foreign material.
   4. Manually rotate the engine and if possible inspect the target wheel for any signs of damage.

      Were any problems found?

      Yes

      - Repair Issues in mounting location. Repair or replace the Tone Wheel/Pulse Ring as necessary.
      - Perform the POWERTRAIN VERIFICATION TEST. Refer to **POWERTRAIN VERIFICATION TEST** .

No

- Go To 9

9. **CAMSHAFT POSITION SENSOR**
    1. Using the wiring diagram/schematic as a guide, inspect the wiring and connectors between the Camshaft Position Sensor and the Powertrain Control Module (PCM).
    2. Look for any chafed, pierced, pinched or partially broken wires.
    3. Look for broken, bent, pushed out or corroded terminals.
    4. Replace the Camshaft Position Sensor in accordance with the service information.
    5. Turn the ignition on.
    6. With the scan tool, erase DTCs.
    7. Start the engine or crank the engine for ten seconds.

    Did the DTC return?

    Yes

    - Go To 10

    No

    - Repair complete.
    - Perform the POWERTRAIN VERIFICATION TEST. Refer to **POWERTRAIN VERIFICATION TEST** .

10. **TONE WHEEL/PULSE RING**
    1. Turn the ignition off.
    2. Replace the Target Wheel assembly.
    3. Turn the ignition on.
    4. With the scan tool, erase DTCs.
    5. Start the engine or crank the engine for ten seconds.

    Did the DTC return?

    Yes

- Go To 14

No

- Repair is complete.
- Perform the POWERTRAIN VERIFICATION TEST. Refer to **POWERTRAIN VERIFICATION TEST** .

11. **CHECK THE (K441) CMP 1/2 SIGNAL CIRCUIT FOR A SHORT TO GROUND**

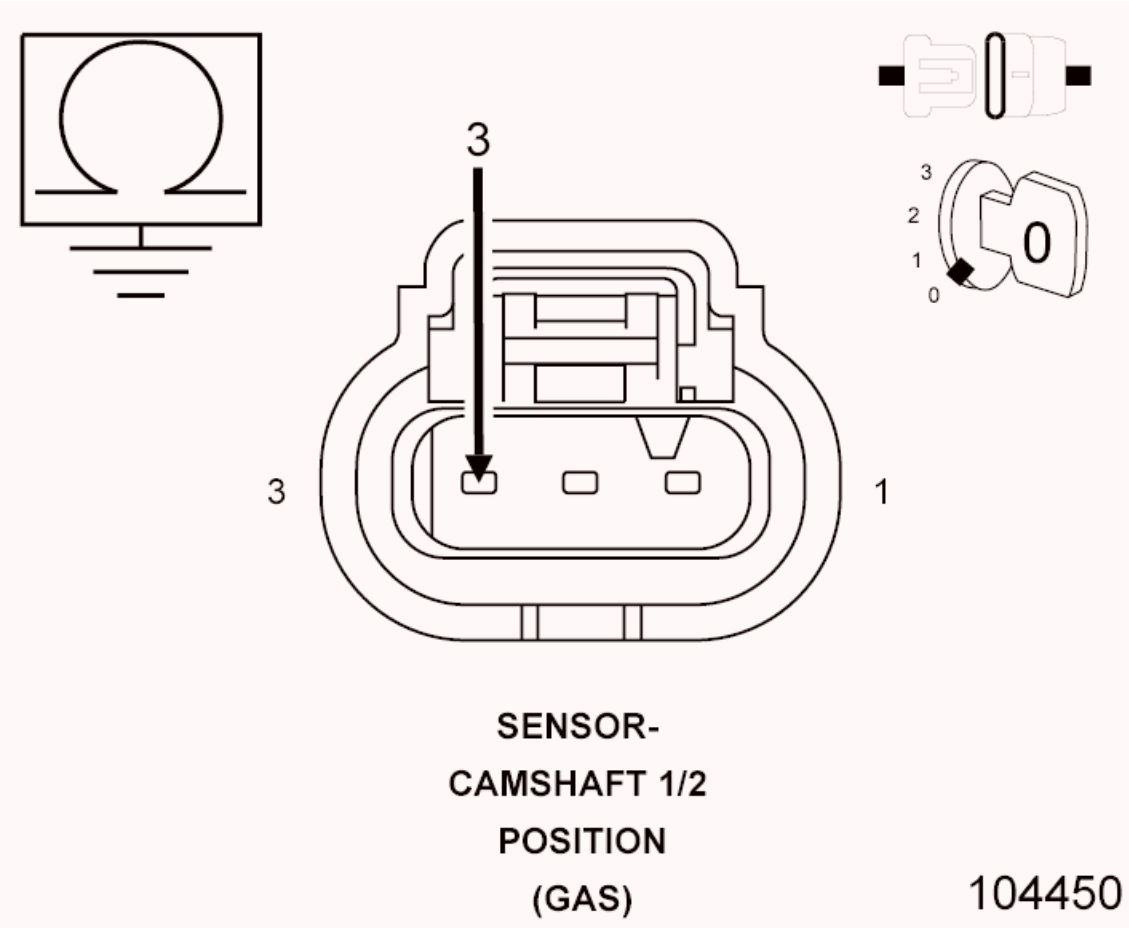

Fig. 26: Checking CMP 1/2 Signal Circuit For Short To Ground
Courtesy of CHRYSLER GROUP, LLC

1. Turn the ignition off.
2. Disconnect the PCM C2 harness connector.
3. Measure the resistance between ground and the (K441) CMP 1/2 Signal circuit in the Camshaft 1/2 Position Sensor harness connector.

   Is the resistance above 10k Ohms?

Yes

- Go To 12

No

- Repair the (K441) CMP 1/2 Signal circuit for a short to ground.
- Perform the POWERTRAIN VERIFICATION TEST. Refer to **POWERTRAIN VERIFICATION TEST** .

12. **CHECK FOR THE (K441) CMP 1/2 SIGNAL CIRCUIT SHORTED TO (K915) SENSOR GROUND CIRCUIT**

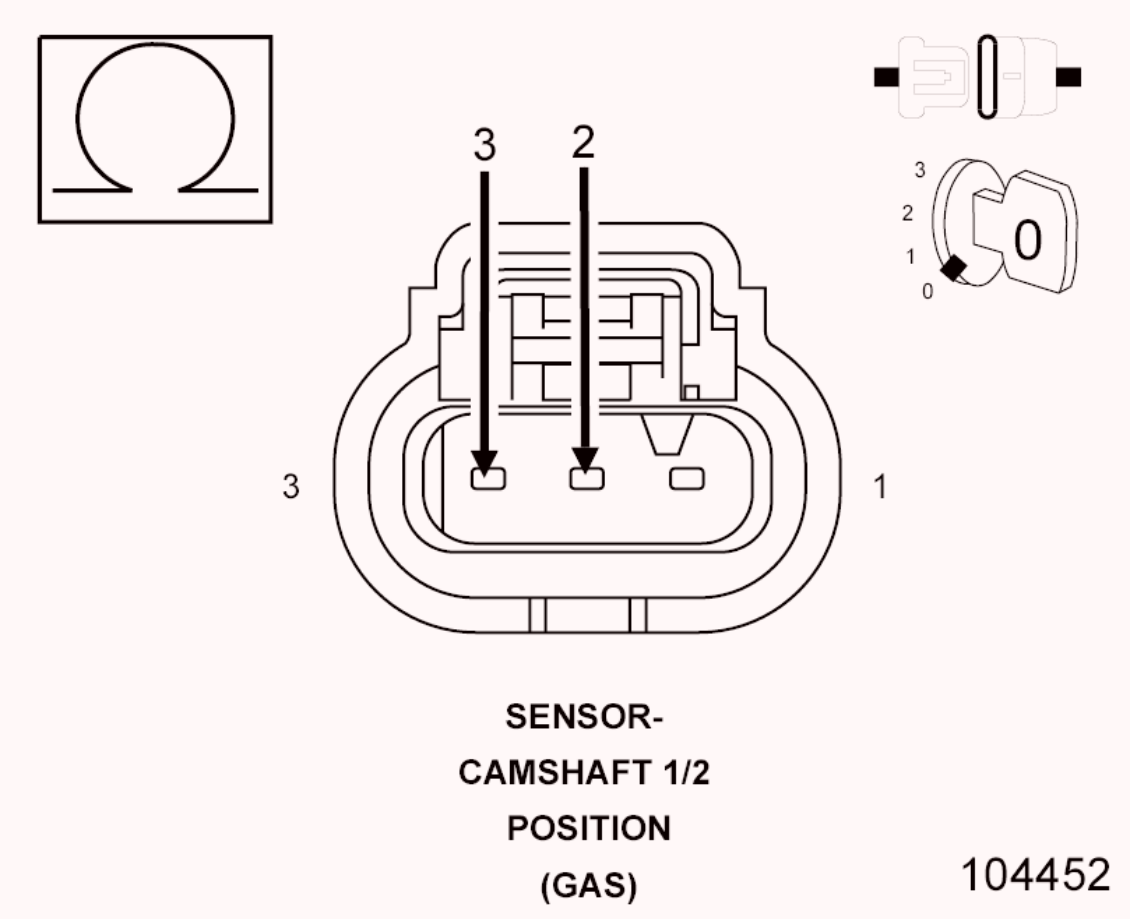

Fig. 27: Checking CMP 1/2 Signal Circuit For Short To Sensor Ground Circuit
Courtesy of CHRYSLER GROUP, LLC

1. Measure the resistance between the (K441) CMP 1/2 Signal circuit and the (K915) Sensor Ground circuit in the Camshaft 1/2 Position Sensor harness connector.

Is the resistance above 10k Ohms?

Yes

- Go To 13

No

- Repair the (K441) CMP 1/2 Signal circuit for a short to the (K915) Sensor Ground circuit.
- Perform the POWERTRAIN VERIFICATION TEST. Refer to **POWERTRAIN VERIFICATION TEST** .

13. **CHECK THE (K441) CMP 1/2 SIGNAL CIRCUIT FOR AN OPEN/HIGH RESISTANCE**

CAUTION: Do not probe the PCM harness connectors. Probing the PCM harness connectors will damage the PCM terminals resulting in poor terminal to pin connection. Install the GPEC Diagnostic Adaptor to perform the diagnosis.

1. Connect the (special tool #10436, Adapter, GPEC Diagnostic).
2. Measure the resistance of the (K441) CMP 1/2 Signal circuit between the Camshaft 1/2 Position Sensor harness connector and the GPEC Adaptor.

Is the resistance below 5.0 Ohms?

Yes

- Go To 14

No

- Repair the (K441) CMP 1/2 Signal circuit for an open or high resistance.
- Perform the POWERTRAIN VERIFICATION TEST. Refer to **POWERTRAIN VERIFICATION TEST** .

14. **POWERTRAIN CONTROL MODULE (PCM)**

1. Using the wiring diagram/schematic as a guide, inspect the wiring and connectors between the Camshaft 1/2 Position Sensor and the Powertrain Control Module (PCM).
2. Look for any chafed, pierced, pinched, or partially broken wires.
3. Look for broken, bent, pushed out or corroded terminals.
4. Perform any Technical Service Bulletins that may apply.

Were any problems found?

Yes

- Repair as necessary.
- Perform the POWERTRAIN VERIFICATION TEST. Refer to **POWERTRAIN VERIFICATION TEST** .

No

- Replace and program the Powertrain Control Module (PCM) in accordance with the service information. Refer to **MODULE, POWERTRAIN CONTROL, REMOVAL** .
- Perform the POWERTRAIN VERIFICATION TEST. Refer to **POWERTRAIN VERIFICATION TEST** .

P0369-CAMSHAFT POSITION SENSOR INTERMITTENT - BANK 1 SENSOR 2

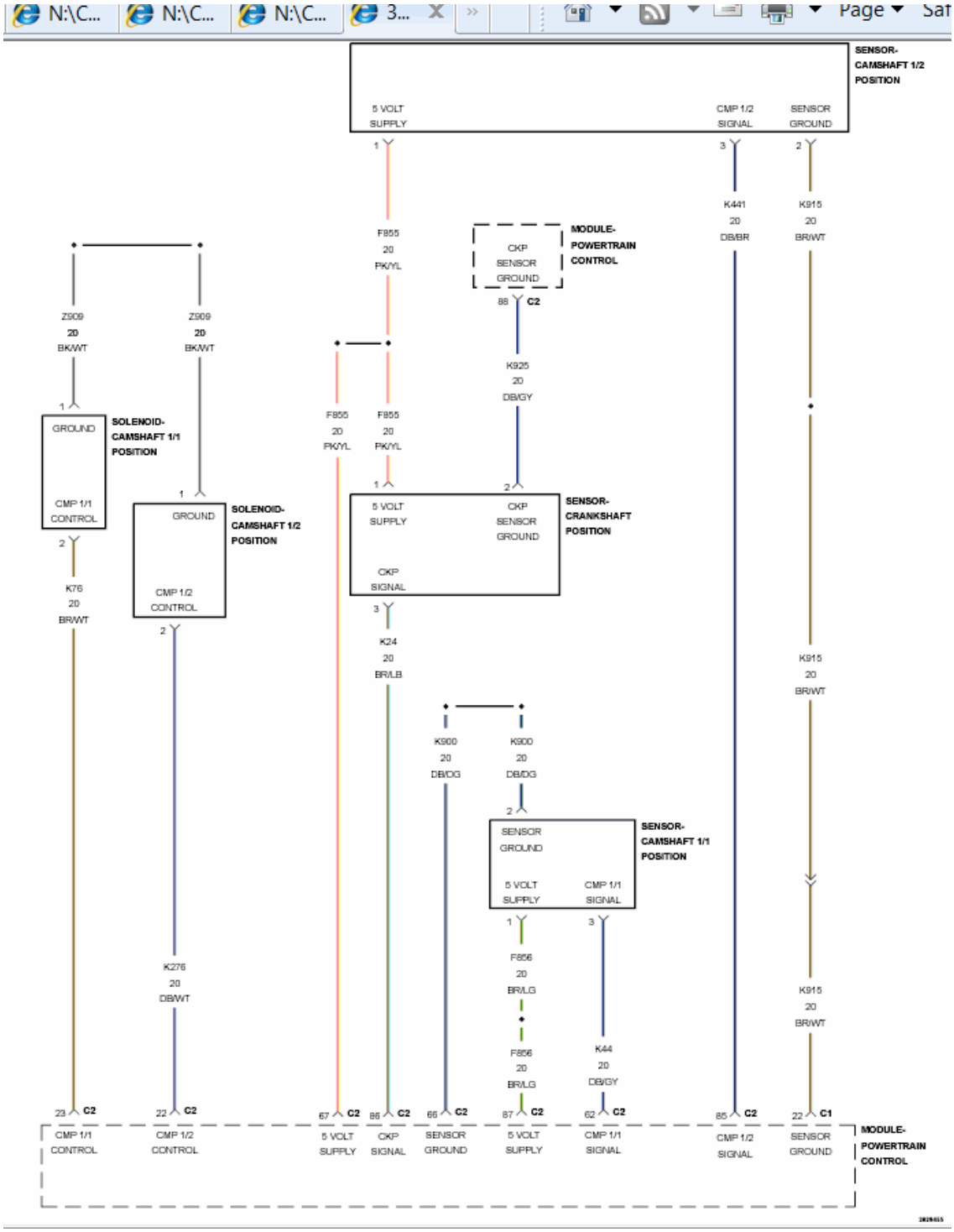

Fig. 28: Camshaft Position Solenoids, Sensors & Crankshaft Position Sensor Circuit Diagram
Courtesy of CHRYSLER GROUP, LLC

For a complete wiring diagram, **refer to appropriate SYSTEM WIRING DIAGRAMS article** .

WHEN MONITORED

With the engine cranking or running.

SET CONDITION

The Powertrain Control Module (PCM) detects an intermittent signal error from the Camshaft 1/2 Position Sensor. One Trip Fault. Three good trips to turn off the MIL.

POSSIBLE CAUSES

POSSIBLE CAUSES
(F855) 5-VOLT SUPPLY CIRCUIT OPEN
(F855) 5-VOLT SUPPLY CIRCUIT SHORTED TO GROUND
(K441) CMP SENSOR SIGNAL 1/2 CIRCUIT SHORTED TO VOLTAGE
(K441) CMP SENSOR SIGNAL 1/2 CIRCUIT OPEN
(K441) CMP SENSOR SIGNAL 1/2 CIRCUIT SHORTED TO GROUND
(K441) CMP SENSOR SIGNAL 1/2 CIRCUIT SHORTED TO THE (F855) 5-VOLT SUPPLY CIRCUIT
TONE WHEEL/PULSE RING
CAMSHAFT POSITION SENSOR 1/1 (INTAKE)
POWERTRAIN CONTROL MODULE (PCM)

Always perform the Pre-Diagnostic Troubleshooting procedure before proceeding. Refer to PRE-DIAGNOSTIC TROUBLESHOOTING PROCEDURE .

DIAGNOSTIC TEST

1. **CHECK FOR APPLICABLE TSB**

NOTE: Diagnose and repair any 5-Volt Reference DTCs that are present before continuing with this test procedure.

1. Check for any applicable TSBs that may apply for this issue.

   Were there any applicable TSBs?

   Yes

- Perform the applicable TSB. Erase the DTC and perform the verification test.
- Perform the POWERTRAIN VERIFICATION TEST. Refer to **POWERTRAIN VERIFICATION TEST** .

No

- Go To 2

2. **ACTIVE DTC**
   1. Turn the ignition on.
   2. Read and copy the DTCs and freeze frame data.
   3. Start the engine or crank the engine for at least ten seconds.
   4. With the scan tool, select View DTCs.

   Is the status Active or pending for this DTC?

   Yes

   - Go To 5

   No

   - Go To 3

3. **WIRE HARNESS/CMP SENSOR INSPECTION**
   1. Turn the ignition off.

   NOTE: The Camshaft 1/2 Position Sensor is located on the Intake Camshaft side of the Cylinder Head.

   2. Disconnect the harness connectors at the PCM and Cam Sensor and inspect for wire chaffing or rub conditions, terminals pushed out on the wiring connector, bent terminals at the PCM and Cam Sensor, water in the connector cavities, presence of corrosion on the terminals of the connectors or components.
   3. Visually inspect the mounting area of Cam Sensor for debris/damage, proper machining, or a loose sensor. Remove the Cam Sensor and inspect the end of the sensor for signs of damage or debris (contact marks, etc.). Rotate the engine and if possible, inspect the target wheel

for any signs of damage. Reinstall the Cam Sensor and ensure that the sensor is properly installed and torqued to proper specification.

NOTE: Due to the fact that this DTC is set by an intermittent loss of the signal, the most likely cause is a poor connection at the Cam Sensor or PCM terminals, or a poor signal between the Cam Sensor and target wheel. Because of this, unplugging and reconnecting the harness connectors, or repositioning the Cam Sensor will often repair the condition that set the DTC.

Were any problems found?

Yes

- Perform the appropriate repair.
- Perform the POWERTRAIN VERIFICATION TEST. Refer to **POWERTRAIN VERIFICATION TEST** .

No

- Go To 4

4. **CHECK THE VEHICLE'S REPAIR HISTORY**
   1. Check the history of the vehicle for previous Cam Sensor related DTCs within the past 90 days.

      Did the repair history show that the vehicle was in dealership for a Cam Sensor fault within the past 90 days?

      Yes

      - Replace the Exhaust Cam Sensor in accordance with the service information.
      - Perform the POWERTRAIN VERIFICATION TEST. Refer to **POWERTRAIN VERIFICATION TEST** .

      No

- Test complete. Reconnect the harness connectors and ensure that the Cam Sensor connector is locked properly. Erase the DTC. The most likely cause was a poor connection at one of the harness connectors. Verify the DTC does not return.
- Perform the POWERTRAIN VERIFICATION TEST. Refer to **POWERTRAIN VERIFICATION TEST** .

5. **CHECK THE (F855) 5-VOLT SUPPLY CIRCUIT VOLTAGE**

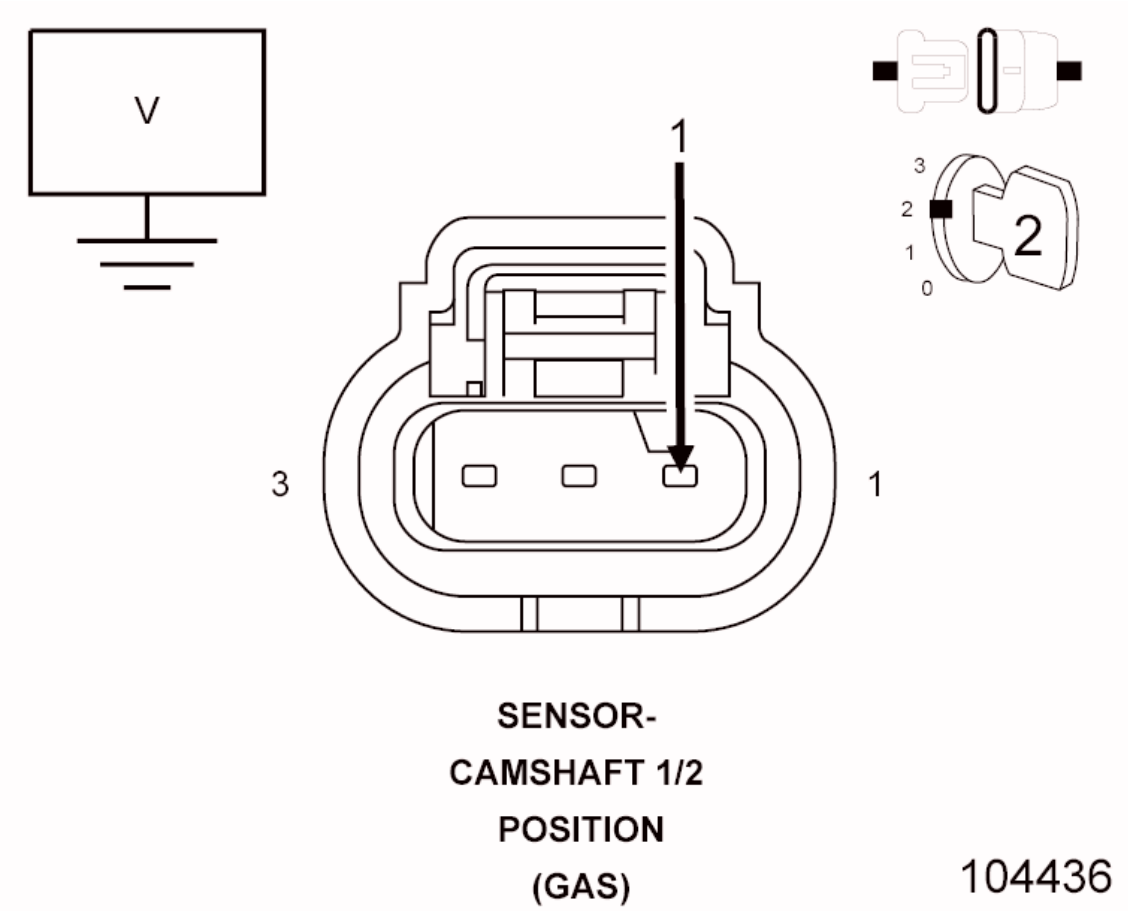

Fig. 29: Checking 5-Volt Supply Circuit
Courtesy of CHRYSLER GROUP, LLC

1. Turn the ignition off.
2. Disconnect the Camshaft 1/2 Position Sensor harness connector.

NOTE: The Camshaft 1/2 Position Sensor is located on the Intake Camshaft side of the Cylinder Head.

3. Turn the ignition on.
4. Measure the voltage of the (F855) 5-Volt Supply circuit in the

Camshaft 1/2 Position Sensor harness connector.

Is the voltage between 4.8 and 5.2 volts?

Yes

- Go To 6

No, voltage is below 4.8 volts:

- Repair the (F855) 5-Volt Supply circuit for an open or short to ground.
- Perform the POWERTRAIN VERIFICATION TEST. Refer to **POWERTRAIN VERIFICATION TEST** .

No, voltage is above 5.2 volts:

- Repair the (F855) 5-Volt Supply circuit for a short to voltage.
- Perform the POWERTRAIN VERIFICATION TEST. Refer to **POWERTRAIN VERIFICATION TEST** .

6. **CHECK THE (K441) CMP 1/2 SIGNAL CIRCUIT VOLTAGE**

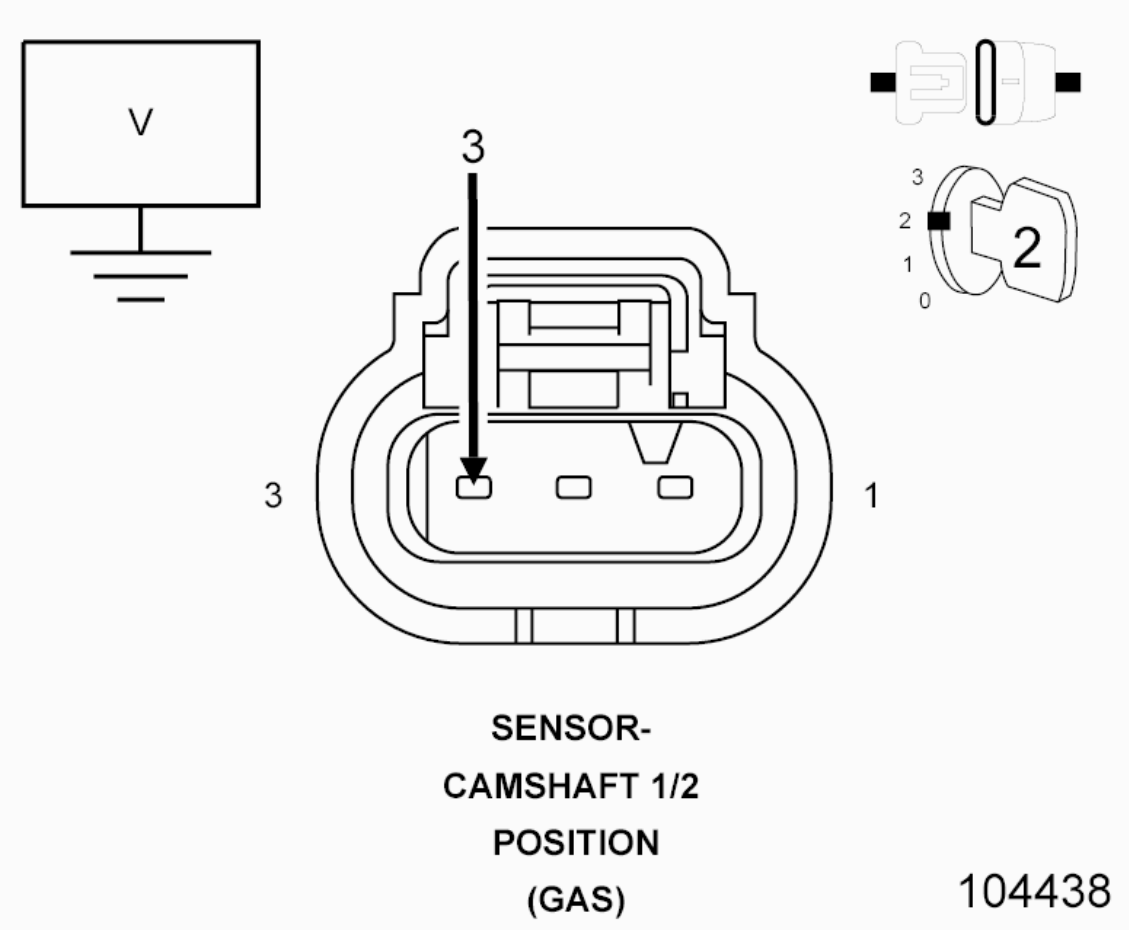

Fig. 30: Checking CMP 1/2 Signal Circuit Voltage
Courtesy of CHRYSLER GROUP, LLC

1. Measure the voltage of the (K441) CMP 1/2 Signal circuit in the Camshaft 1/2 Position Sensor harness connector.

   Is the voltage between 4.8 and 5.2 volts?

   Yes

   - Go To 7

   No, voltage is below 4.8 volts:

   - Go To 11

   No, voltage is above 5.2 volts:

   - Repair the (K441) CMP 1/2 Signal circuit for a short to voltage.
   - Perform the POWERTRAIN VERIFICATION TEST. Refer to

POWERTRAIN VERIFICATION TEST .

7. **CHECK THE (K915) SENSOR GROUND CIRCUIT FOR AN OPEN OR HIGH RESISTANCE**
   1. Turn the ignition off.
   2. Disconnect the PCM C2 harness connector.
   3. Measure the resistance of the (K900) Sensor Ground circuit between the Camshaft Position Sensor harness connector and the PCM C2 harness connector.

      Is the resistance below 5.0 Ohms?

      Yes

      - Go To 8

      No

      - Repair the (K900) Sensor Ground circuit for an open circuit or high resistance.
      - Perform the POWERTRAIN VERIFICATION TEST. Refer to **POWERTRAIN VERIFICATION TEST** .
8. **TONE WHEEL/PULSE RING INSPECTION**
   1. Turn the ignition off.
   2. Remove the CMP Sensor.
   3. Visually inspect the sensor mounting location for damage, foreign material.
   4. Manually rotate the engine and if possible inspect the target wheel for any signs of damage.

      Were any problems found?

      Yes

      - Repair Issues in mounting location. Repair or replace the Tone Wheel/Pulse Ring as necessary.
      - Perform the POWERTRAIN VERIFICATION TEST. Refer to **POWERTRAIN VERIFICATION TEST** .

No

- Go To 9

9. **CAMSHAFT POSITION SENSOR**
    1. Using the wiring diagram/schematic as a guide, inspect the wiring and connectors between the Camshaft Position Sensor and the Powertrain Control Module (PCM).
    2. Look for any chafed, pierced, pinched or partially broken wires.
    3. Look for broken, bent, pushed out or corroded terminals.
    4. Replace the Camshaft Position Sensor in accordance with the service information.
    5. Turn the ignition on.
    6. With the scan tool, erase DTCs.
    7. Start the engine or crank the engine for ten seconds.

    Did the DTC return?

    Yes

    - Go To 10

    No

    - Repair complete.
    - Perform the POWERTRAIN VERIFICATION TEST. Refer to **POWERTRAIN VERIFICATION TEST** .

10. **TONE WHEEL/PULSE RING**
    1. Turn the ignition off.
    2. Replace the Target Wheel assembly.
    3. Turn the ignition on.
    4. With the scan tool, erase DTCs.
    5. Start the engine or crank the engine for ten seconds.

    Did the DTC return?

    Yes

- Go To 14

No

- Repair is complete.
- Perform the POWERTRAIN VERIFICATION TEST. Refer to **POWERTRAIN VERIFICATION TEST** .

11. **CHECK THE (K441) CMP 1/2 SIGNAL CIRCUIT FOR A SHORT TO GROUND**

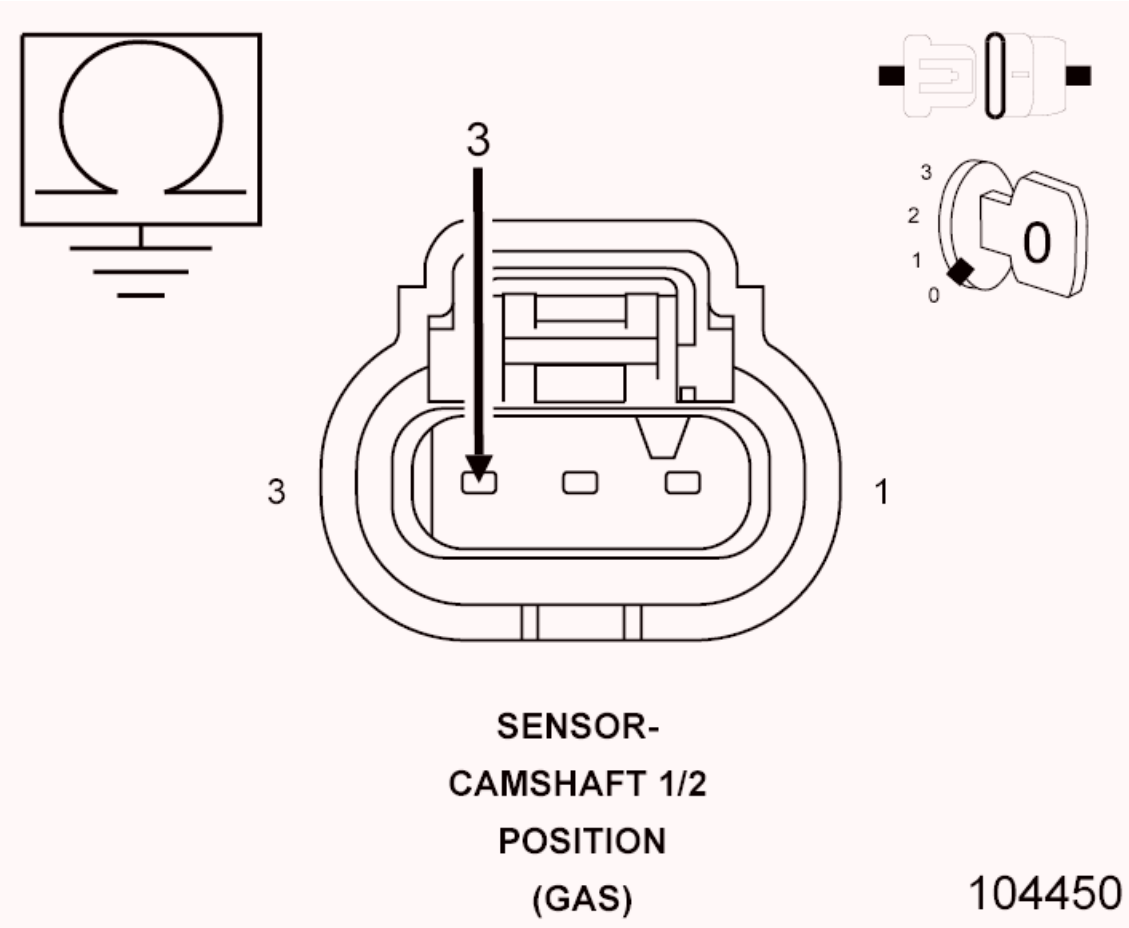

Fig. 31: Checking CMP 1/2 Signal Circuit For Short To Ground
Courtesy of CHRYSLER GROUP, LLC

1. Turn the ignition off.
2. Disconnect the PCM C2 harness connector.
3. Measure the resistance between ground and the (K441) CMP 1/2 Signal circuit in the Camshaft 1/2 Position Sensor harness connector.

   Is the resistance above 10k Ohms?

Yes

- Go To 12

No

- Repair the (K441) CMP 1/2 Signal circuit for a short to ground.
- Perform the POWERTRAIN VERIFICATION TEST. Refer to **POWERTRAIN VERIFICATION TEST** .

12. **CHECK FOR THE (K441) CMP 1/2 SIGNAL CIRCUIT SHORTED TO (K915) SENSOR GROUND CIRCUIT**

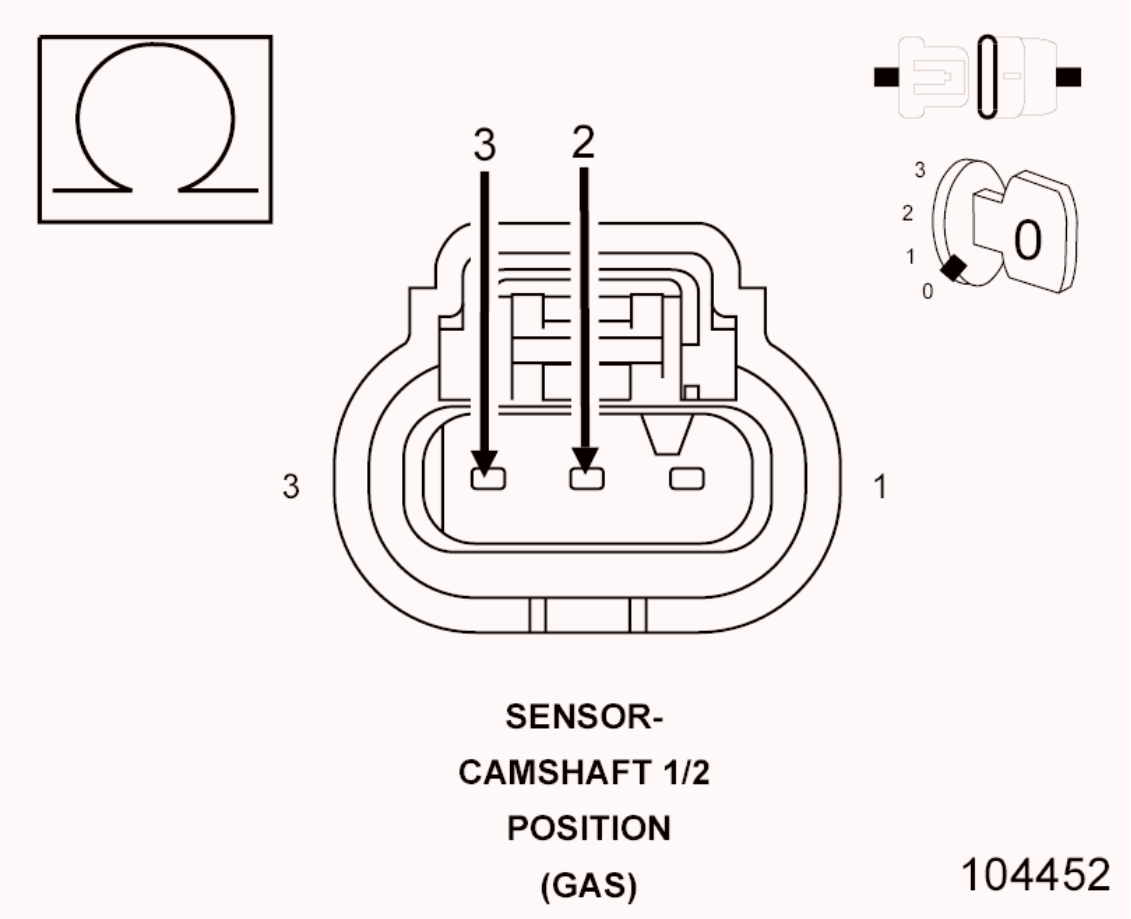

Fig. 32: Checking CMP 1/2 Signal Circuit For Short To Sensor Ground Circuit
Courtesy of CHRYSLER GROUP, LLC

1. Measure the resistance between the (K441) CMP 1/2 Signal circuit and the (K915) Sensor Ground circuit in the Camshaft 1/2 Position Sensor harness connector.

Is the resistance above 10k Ohms?

Yes

- Go To 13

No

- Repair the (K441) CMP 1/2 Signal circuit for a short to the (K915) Sensor Ground circuit.
- Perform the POWERTRAIN VERIFICATION TEST. Refer to **POWERTRAIN VERIFICATION TEST** .

13. **CHECK THE (K441) CMP 1/2 SIGNAL CIRCUIT FOR AN OPEN/HIGH RESISTANCE**

CAUTION: Do not probe the PCM harness connectors. Probing the PCM harness connectors will damage the PCM terminals resulting in poor terminal to pin connection. Install the GPEC Diagnostic Adaptor to perform the diagnosis.

1. Connect the (special tool #10436, Adapter, GPEC Diagnostic).
2. Measure the resistance of the (K441) CMP 1/2 Signal circuit between the Camshaft 1/2 Position Sensor harness connector and the GPEC Adaptor.

Is the resistance below 5.0 Ohms?

Yes

- Go To 14

No

- Repair the (K441) CMP 1/2 Signal circuit for an open or high resistance.
- Perform the POWERTRAIN VERIFICATION TEST. Refer to **POWERTRAIN VERIFICATION TEST** .

14. **POWERTRAIN CONTROL MODULE (PCM)**

1. Using the wiring diagram/schematic as a guide, inspect the wiring and connectors between the Camshaft 1/2 Position Sensor and the Powertrain Control Module (PCM).
2. Look for any chafed, pierced, pinched, or partially broken wires.
3. Look for broken, bent, pushed out or corroded terminals.
4. Perform any Technical Service Bulletins that may apply.

Were any problems found?

Yes

- Repair as necessary.
- Perform the POWERTRAIN VERIFICATION TEST. Refer to **POWERTRAIN VERIFICATION TEST** .

No

- Replace and program the Powertrain Control Module (PCM) in accordance with the service information. Refer to **MODULE, POWERTRAIN CONTROL, REMOVAL** .
- Perform the POWERTRAIN VERIFICATION TEST. Refer to **POWERTRAIN VERIFICATION TEST** .

P0420-CATALYST EFFICIENCY (BANK 1)

For a complete wiring diagram, **refer to appropriate SYSTEM WIRING DIAGRAMS article** .

THEORY OF OPERATION

The State of Change (SOC) catalyst monitor uses the signals from both the upstream and downstream O2 Sensors to detect aging of the catalyst. Based on the fact that when a catalyst ages, it loses some of its Oxygen Storage Capacity (OSC). As a result, part of the untreated exhaust gases can breakthrough the catalyst and causes the downstream O2 Sensor to deviate from its neutral (Stoichiometric) position. By observing the activities in the downstream O2 Sensor signal, located in the exhaust path behind the Catalytic Converter, the degradation level of catalyst can be detected. In general, the higher the downstream O2 Sensor SOC value, the more exhaust gas breakthrough and the lower the Oxygen Storage Capacity of the Catalytic Converter. The Downstream

O2 Sensor response monitor is intended to diagnose a Downstream O2 Sensor that is not moving or stuck in a voltage window and to insure accurate information for catalyst monitor diagnosis.

WHEN MONITORED

With the ECT above 70 C (158 F), engine RPM between 1400 and 2300, vehicle speed between 64 and 96 kph (40 and 60 mph), and engine run time greater than 3 minutes.

SET CONDITION

If the final state of change index is within the calibrated fail threshold. Two trip fault. Three good trips to turn off the MIL.

POSSIBLE CAUSES

POSSIBLE CAUSES
EXHAUST SYSTEM LEAK
ENGINE MECHANICAL CONDITION
AGING OR CONTAMINATED O2 SENSOR
O2 SENSOR WIRING AND CONNECTORS
CATALYTIC CONVERTER

Always perform the Pre-Diagnostic Troubleshooting procedure before proceeding. Refer to PRE-DIAGNOSTIC TROUBLESHOOTING PROCEDURE .

DIAGNOSTIC TEST

1. **ACTIVE DTC**

NOTE: Diagnose and repair any O2 Sensor DTCs before continuing with this test.

NOTE: A new downstream O2 Sensor along with an aging upstream O2 Sensor may cause the DTC to set. Review the vehicle repair history before continuing.

NOTE: It may be necessary to test drive the vehicle within

the DTC monitoring conditions in order for this DTC to set.

NOTE: Attempt to operate the vehicle under conditions similar to which the DTC was set. Refer to Freeze Frame information.

1. Start the engine and allow it to reach operating temperature.

   WARNING: When the engine is operating, do not stand in direct line with the fan. Do not put your hands near the pulleys, belts or fan. Do not wear loose clothing. Failure to follow these instructions may result in possible serious or fatal injury.

2. With a scan tool, select View DTCs.

   Is the status Active for this DTC?

   Yes

   - Go To 2

   No

   - Perform the INTERMITTENT CONDITION diagnostic procedure. Refer to **INTERMITTENT CONDITION** .

2. **CATALYTIC CONVERTER**
   1. Thoroughly inspect the catalytic converter for any of the following conditions:
      - Damage, dents, or holes
      - Severe discoloration caused by overheating
      - Internal damage

      Were any problems found?

      Yes

- Replace the Catalytic Converter. Repair the condition that may have caused the failure.
- Perform the POWERTRAIN VERIFICATION TEST. Refer to **POWERTRAIN VERIFICATION TEST** .

No

- Go To 3

3. **CHECKING THE EXHAUST SYSTEM FOR LEAKS**
   1. Perform the diagnostic procedure for CHECKING THE EXHAUST SYSTEM FOR LEAKS. Refer to **DIAGNOSIS AND TESTING** .

      Were any problems found?

      Yes

      - Repair as necessary.
      - Perform the POWERTRAIN VERIFICATION TEST. Refer to **POWERTRAIN VERIFICATION TEST** .

      No

      - Go To 4

4. **CHECKING THE OXYGEN SENSOR OPERATION**
   1. Perform the diagnostic procedure for CHECKING THE OXYGEN SENSOR OPERATION. Refer to **DIAGNOSIS AND TESTING** .

      Were any problems found?

      Yes

      - Repair as necessary in accordance with the Service Information.
      - Perform the POWERTRAIN VERIFICATION TEST. Refer to **POWERTRAIN VERIFICATION TEST** .

      No

      - Go To 5

5. **ENGINE MECHANICAL CONDITION**

NOTE: Check for signs of contamination that may have damaged the O2 Sensor(s) and Catalytic Converter, such as: contaminated fuel, unapproved silicone, evidence of oil, coolant or anti-seize compound. Repair as necessary.

1. Check the exhaust for excessive smoke caused by an internal engine problem.

   Were any problems found?

   Yes

   - Repair the engine mechanical condition in accordance with the Service Information.
   - Perform the POWERTRAIN VERIFICATION TEST. Refer to **POWERTRAIN VERIFICATION TEST** .

   No

   - Go To 6

6. **UPSTREAM O2 SENSOR**
   1. A new downstream O2 Sensor along with an aging upstream O2 Sensor may cause this DTC to set.
   2. Review the vehicle repair history.

      Has the downstream O2 Sensor been replaced without replacing the upstream O2 Sensor?

      Yes

      - Replace the upstream O2 Sensor as necessary.
      - Perform the POWERTRAIN VERIFICATION TEST. Refer to **POWERTRAIN VERIFICATION TEST** .

      No

      - Go To 7

7. **CATALYTIC CONVERTER**

If there are no possible causes remaining, view repair.

Repair

- Replace the Catalytic Converter.
- Perform the POWERTRAIN VERIFICATION TEST. Refer to **POWERTRAIN VERIFICATION TEST** .

P0440-GENERAL EVAP SYSTEM FAILURE

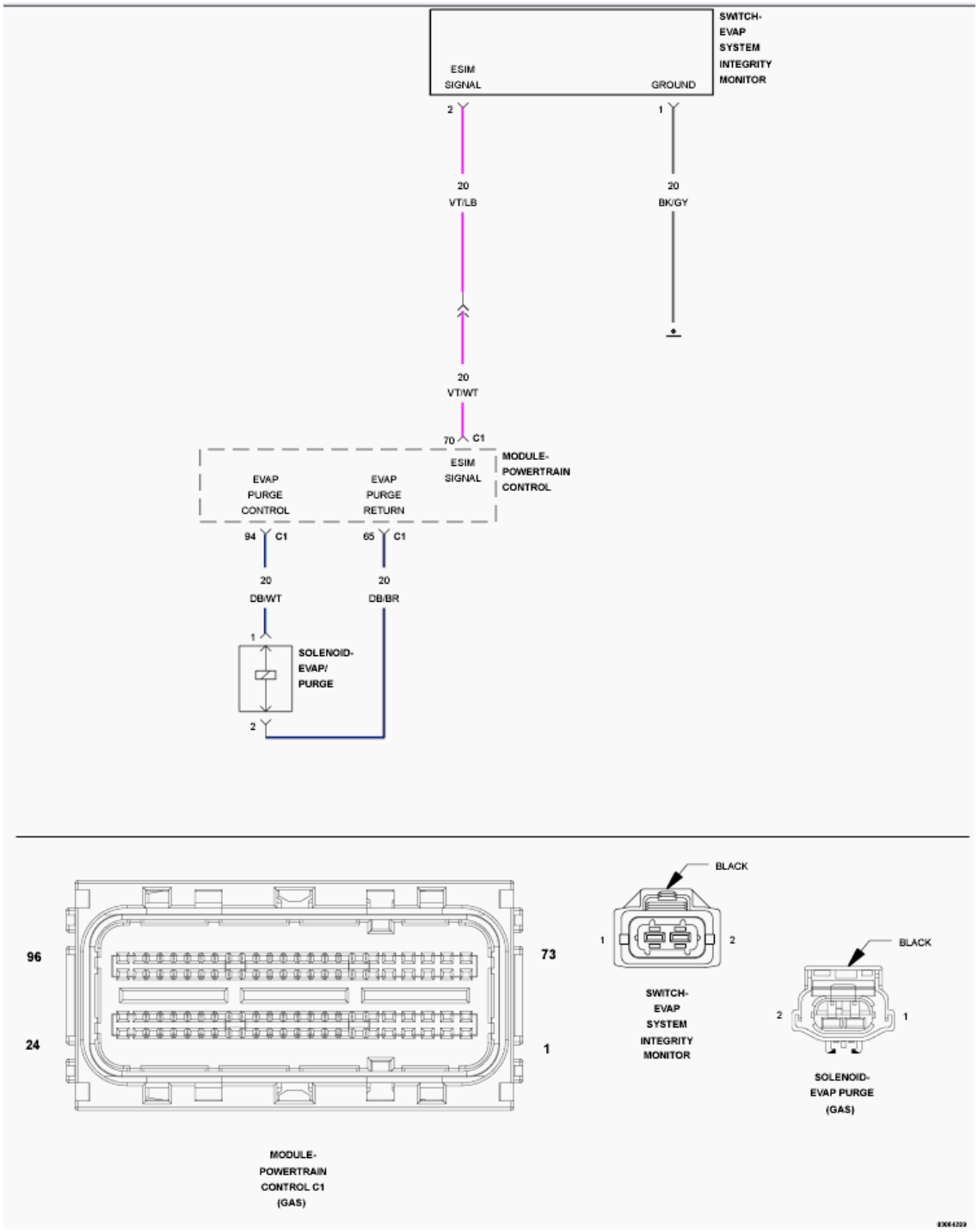

Fig. 33: EVAP Purge Monitor Circuit Diagram
Courtesy of CHRYSLER GROUP, LLC

For a complete wiring diagram, **refer to appropriate SYSTEM WIRING DIAGRAMS article** .

THEORY OF OPERATION

The Evap Purge Monitor tests the integrity of the hoses/tube between the throttle

body/intake and the fuel tank. The monitor is a two stage test and runs only after the Evap system passes the small leak test. Stage one is non-intrusive. The Powertrain Control Module (PCM) monitors the purge vapor ratio and the Evaporative System Integrity Monitor (ESIM) Switch closed ratio. If the purge vapor ratio is above a calculated value, the monitor passes. If the ESIM switch closed ratio is greater than calculated value when purge flow is greater than a minimum value, the monitor passes. Stage two is an intrusive test and runs only if stage one does not pass. The PCM commands the purge solenoid to flow at a specified rate to force the purge vapor ratio to update. The ratio is compared to a calibrated specification. If it is less than specified, a one trip failure is recorded. This test can detect if the purge hose is off, obstructed, or the purge valve is not operational.

WHEN MONITORED

With the engine running after a cold start, difference between ECT and AAT less than 10°C (18°F), fuel level between 12% and 88%, manifold vacuum greater than a minimum value, ambient temperature between 4°C and 37°C (39°F and 89°F), and altitude less than 8500 feet.

SET CONDITION

When the monitor conditions are met, the PCM will ramp in purge flow. If the PCM does not sense an ESIM Switch closure after a calculated amount of purge flow accumulation, an error is detected. Two Trip Fault. Three good trips to turn off the MIL.

POSSIBLE CAUSES

Possible Causes
EVAP PURGE SOLENOID VACUUM SUPPLY
EVAP SYSTEM LEAK
EVAP PURGE HOSE/TUBE OBSTRUCTION
GROUND CIRCUIT OPEN OR HIGH RESISTANCE
(K107) ESIM SIGNAL CIRCUIT OPEN OR HIGH RESISTANCE
EVAP PURGE SOLENOID
EVAPORATIVE SYSTEM INTEGRITY MONITOR (ESIM) SWITCH
POWERTRAIN CONTROL MODULE (PCM)

Always perform the Pre-Diagnostic Troubleshooting procedure before

proceeding. Refer to PRE-DIAGNOSTIC TROUBLESHOOTING PROCEDURE .

DIAGNOSTIC TEST

1. **VEHICLE HISTORY AND SERVICE BULLETIN INVESTIGATION**
   1. Turn the ignition on.
   2. Using the scan tool, read DTCs. Record the related Freeze Frame data if any DTCs are present.
   3. Check the following items which may assist in repairing the customer's complaint successfully:
      - Check the vehicles repair history. If the vehicle has a repair history that pertains to the customer's current complaint, review the repair.
      - Inspect the vehicle for any aftermarket accessories that may have been installed incorrectly.
      - Check for any service bulletin(s) related to the customer's complaint or DTCs. If a service bulletin applies, follow the instructions of the service bulletin.

   Choose the following scenario that best applies:

   The vehicle inspection or service bulletin repaired the customer's complaint.

   - Testing complete.

   A DTC is present, the vehicle inspection revealed no concerns, no service bulletins apply, or the service bulletin did not repair the customer's complaint.

   - Go To 2
2. **ACTIVE DTC**

NOTE: Because a hot vehicle can conceal a potential leak, allow the vehicle to reach ambient temperature before continuing with this procedure.

NOTE: A loose gas cap could caused this DTC to set. Make sure the gas cap is tight and in good condition.

NOTE: If the customer is experiencing an early fuel shut off during the fuel filling process in addition to DTC P0440, P0441, or P0452, check for restrictions in the EVAP Purge tubes/hoses as well as the Fresh Air Filter before continuing.

1. Start the engine.
2. Allow the engine to idle.
3. Using the scan tool, perform the ESIM FORCED MONITOR TEST. Allow the test to complete.
4. Using the scan tool, read DTCs.

   Is the DTC Active or Pending at this time?

   Yes

   - Go To 3

   No

   - Test complete, the condition or conditions that originally set this DTC are not present at this time. Using the wiring diagrams as a guide, check all related splices and connectors for signs of water intrusion, corrosion, pushed out or bent terminals, and correct pin tension.
   - Perform the INTERMITTENT CONDITION diagnostic procedure. Refer to **INTERMITTENT CONDITION** .

3. **EVAP SYSTEM INSPECTION**
   1. Visually and physically Inspect the entire Evaporative Emission System for any of the following conditions:
      - Holes or cracks
      - Loose seal points
      - Damaged or missing components
      - Incorrect routing of hoses and tubes
      - Loose or missing Fuel Filler Cap or seal
      - Damaged locking tabs on the Fuel Filler Cap and/or filler tube
      - Damaged seal points on the Fuel Filler Cap and/or filler tube

Were any problems found?

Yes

- Repair as necessary.
- Perform the POWERTRAIN VERIFICATION TEST. Refer to **POWERTRAIN VERIFICATION TEST** .

No

- Go To 4

4. **EVAP VACUUM SUPPLY HOSE INSPECTION**
   1. Inspect the Evap Purge Solenoid vacuum supply hose for proper routing and installation.
   2. Check for a pinched or plugged hose from the throttle body or intake manifold to the Purge Solenoid.
   3. Make sure the vacuum port at the throttle body or intake manifold is free from any contamination, obstruction, or blockage.

   Were any problems found?

   Yes

   - Repair as necessary.
   - Perform the POWERTRAIN VERIFICATION TEST. Refer to **POWERTRAIN VERIFICATION TEST** .

   No

   - Go To 5

5. **EVAP PURGE SOLENOID**

   WARNING: **Keep lit cigarettes, sparks, flames, and other ignition sources away from the test area to prevent the ignition of explosive gases. Keep the test area well ventilated. Failure to do so may result in possible serious or fatal injury.**

   NOTE: After disconnecting the Evap Purge Solenoid vacuum

connections, inspect the lines and solenoid for signs of contamination.

1. Disconnect the vacuum hoses at the Evap Purge Solenoid.
2. Using a hand vacuum pump, apply 10 in. Hg. to the "CAN" side of the Evap Purge Solenoid.

NOTE: The solenoid should hold vacuum for a minimum of 15 seconds.

3. Turn the ignition on.
4. Using the scan tool, actuate the Evap Purge Solenoid to the ON position.

NOTE: The vacuum should drop when the solenoid is actuated.

Does the solenoid function as described above?

Yes

- Go To 6

No

- Verify that there is good pin to terminal contact in the Solenoid and PCM harness connectors. Replace the Evap Purge Solenoid if no problems were found in the connectors. Refer to **SOLENOID, EVAPORATIVE EMISSIONS PURGE, REMOVAL** .
- Perform the POWERTRAIN VERIFICATION TEST. Refer to **POWERTRAIN VERIFICATION TEST** .

6. **ESIM SWITCH STATE**

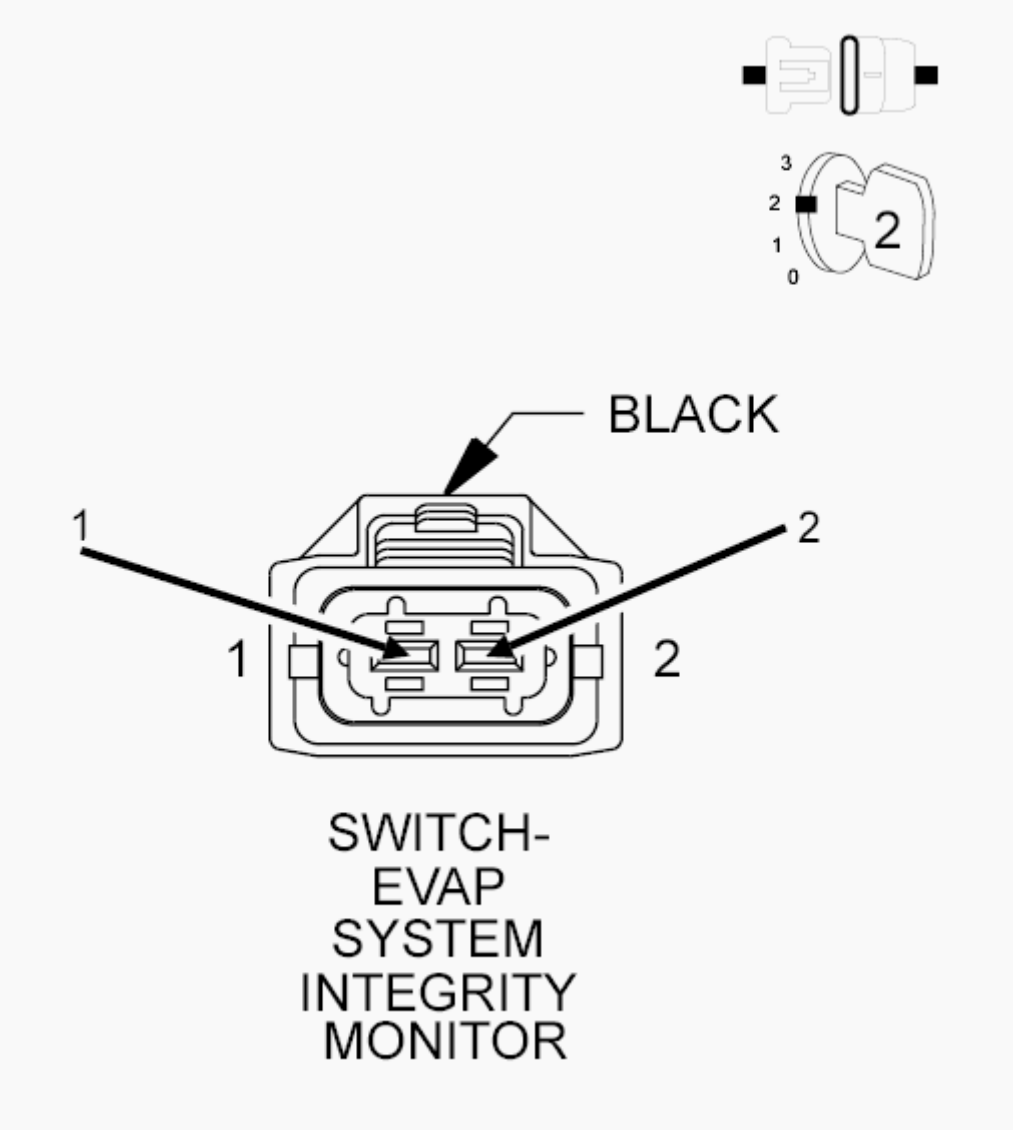

Fig. 34: ESIM Switch Harness Connector End View
Courtesy of CHRYSLER GROUP, LLC

1. Turn the ignition off.
2. Disconnect the ESIM Switch harness connector.
3. Turn the ignition on.
4. Using the scan tool, read the ESIM Switch state.
5. Connect a jumper between the (K107) ESIM Signal circuit and the Ground circuit in the ESIM Switch harness connector.
6. Using the scan tool, read the ESIM Switch state.

   Does the ESIM Switch state change from OPEN to CLOSED when the jumper is installed?

Yes

- Go To 9

No

- Go To 7

7. **CHECK THE (K107) ESIM SIGNAL CIRCUIT FOR AN OPEN/HIGH RESISTANCE**
   1. Turn the ignition off.
   2. Disconnect the PCM C1 harness connector.

      CAUTION: Do not probe the PCM harness connectors. Probing the PCM harness connectors will damage the PCM terminals resulting in poor terminal to pin connection. Install the GPEC Diagnostic Adaptor to perform the diagnosis.

   3. Connect the (special tool #10436, Adapter, GPEC Diagnostic).
   4. Measure the resistance of the (K107) ESIM Signal between the ESIM Switch harness connector and the GPEC Adaptor.

      Is the resistance below 5.0 Ohms?

      Yes

      - Go To 8

      No

      - Repair the (K107) ESIM Signal circuit for an open or high resistance.
      - Perform the POWERTRAIN VERIFICATION TEST. Refer to **POWERTRAIN VERIFICATION TEST** .

8. **CHECK THE GROUND CIRCUIT FOR AN OPEN/HIGH RESISTANCE**

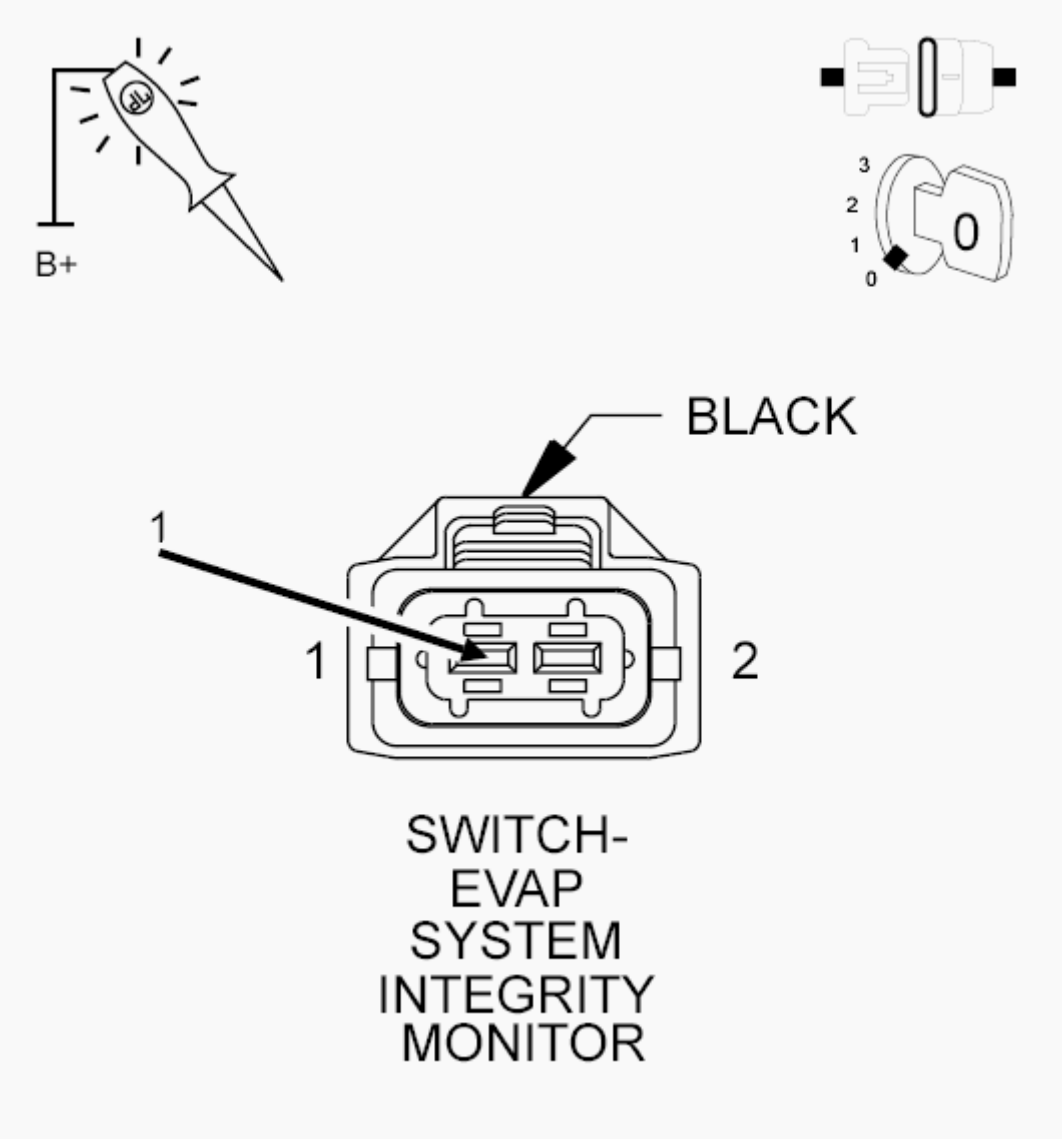

Fig. 35: Checking Ground Circuit For Open Or Excessive Resistance
Courtesy of CHRYSLER GROUP, LLC

1. Using a 12-volt test light connected to 12 volts, check the Ground circuit in the ESIM Switch harness connector.

   NOTE: The test light must illuminate brightly. Compare the brightness to that of a direct connection to the battery.

   Does the test lamp illuminate brightly?

   Yes

   - Go To 14

No

- Repair the Ground circuit for an open or high resistance.
- Perform the POWERTRAIN VERIFICATION TEST. Refer to **POWERTRAIN VERIFICATION TEST** .

9. **VERIFY EVAPORATIVE EMISSION LEAK**

WARNING: Keep lit cigarettes, sparks, flames, and other ignition sources away from the test area to prevent the ignition of explosive gases. Keep the test area well ventilated. Failure to do so may result in possible serious or fatal injury.

1. Turn the ignition off.
2. To continue testing, you will need Evaporative Emission Leak Detector (EELD) (special tool #8404C, Kit, EELD And Accessory).

NOTE: The fuel tank should have between 20% and 80% of fuel tank capacity to properly test the Evap system.

3. Connect the red power lead of EELD to the battery positive terminal and the black ground lead to battery negative terminal.
4. Block the vent hose of the Evap Canister.
5. Connect shop air to the EELD.
6. Set the smoke/air control switch to AIR.
7. Insert the tester's AIR supply tip (clear hose) into the 0.040 orifice on the tester's control panel.
8. Press the remote smoke/air start button.
9. Position the red flag on the air flow meter so it is aligned with the indicator ball.
10. When the calibration is complete, release the remote button. The EELD flow meter is now calibrated in liters per minute.
11. Install the service port adapter (special tool #8404-14, Adapter, Evaporative Service Port) on the vehicle's service port (if equipped) or install the service adapter (special tool #8404-ADP, Smoke Machine Adapters) into the filter line.

12. Connect the AIR supply hose from the EELD to the service port (if equipped) or to the adapter (special tool #8404-ADP, Smoke Machine Adapters).
13. Press the remote button to activate AIR flow.

NOTE: Larger volume fuel tanks, lower fuel levels, or vehicles equipped with a Flow Management Valve may indicate high flow and will require four to five minutes to fill.

14. Compare the flow meter indicator ball reading to the red flag.
15. ABOVE the red flag indicates a leak present.
16. BELOW the red flag indicates a sealed system.

Is the indicator ball above the red flag?

Yes

- Go To 10

No

- Go To 12

10. **EVAPORATIVE EMISSION LEAK DETECTION**

NOTE: A thorough visual inspection of the Evap system hoses, tubes, and connections may save time in your diagnosis. Look for any physical damage or signs of wetness at connections. The strong smell of fuel vapors may aid diagnosis also.

1. Remove the Air supply hose from the service port or the adapter (special tool #8404-ADP, Smoke Machine Adapters).
2. Connect the SMOKE supply tip (black hose) to the service port (if equipped) or to the adapter (special tool #8404-ADP, Smoke Machine Adapters).
3. Set the smoke/air control switch to SMOKE.

NOTE: The flow meter indicator ball will not move at this point.

4. Press the remote smoke/air start button.

NOTE: Make sure that smoke has filled the Evap System by continuing to press the remote smoke/air start button, remove the vehicle fuel cap, and wait for the smoke to exit. Once smoke is indicated reinstall the fuel cap.

NOTE: For optimal performance, introduce smoke into the system for an additional 60 seconds; continue introducing smoke at 15 second intervals, as necessary.

5. While still holding the remote smoke/air start button, use the white light (special tool #8404-CLL, Light, White) to follow the Evap system path, and look for the source of the leak indicated by exiting smoke.
6. If a leak is concealed from view (i.e., top of fuel tank), release the remote smoke/air start button, and use the ultraviolet (UV) black light (special tool #8404-UVL, Light, UV) and the yellow goggles (special tool #8404-20, Goggles, Yellow) to look for residual traces of dye that are left behind by the smoke.
7. The exiting smoke deposits a residual fluid that is either bright green or bright yellow in color when viewed with a UV light.

NOTE: The Evap System is divided into three zones. A leak from any of these zones can cause this DTC to set. The lists below specify the possible leak points in that specific zone. For further assistance see the ZONE IDENTIFICATION CHARTS below.

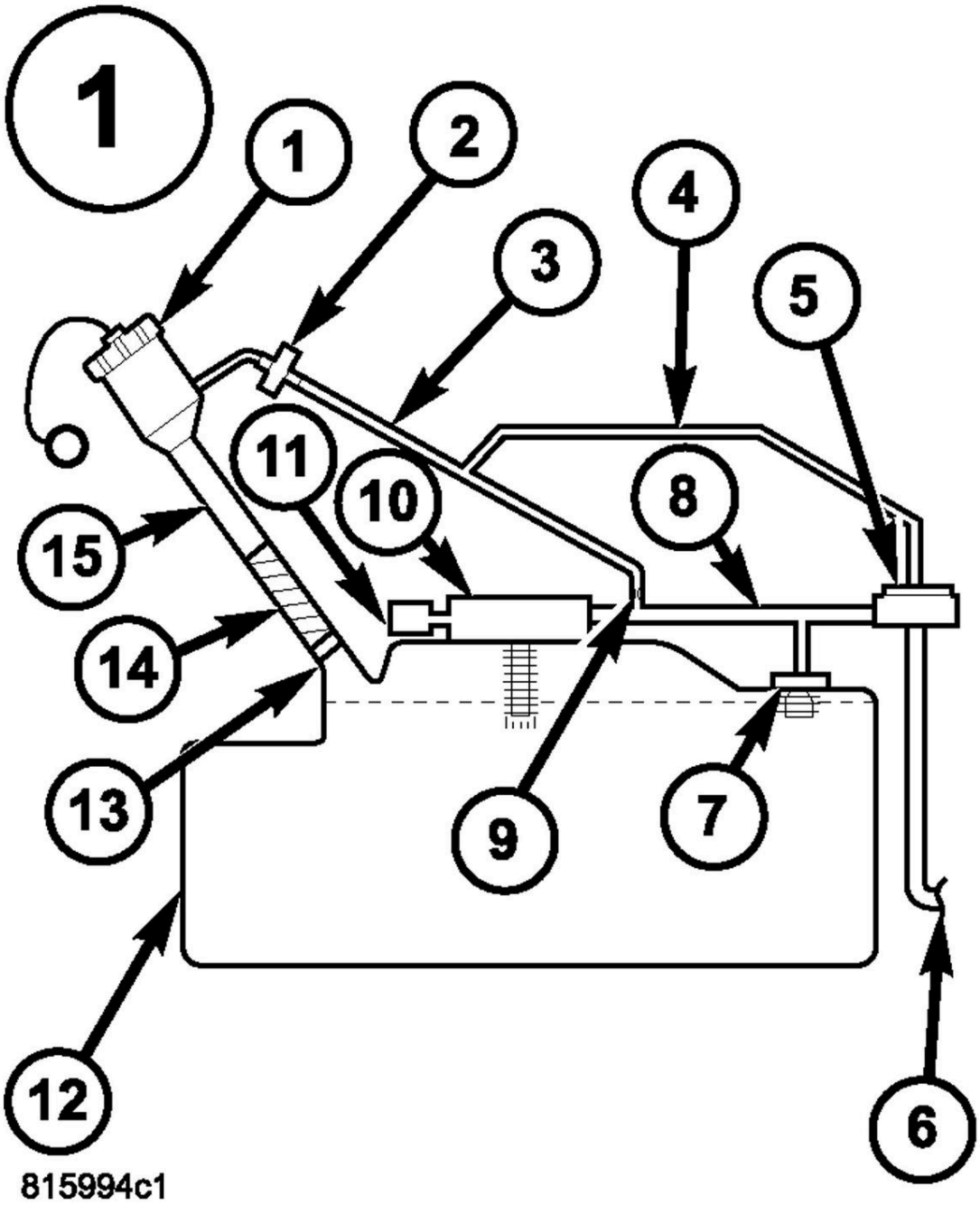

Fig. 36: EVAP System Components Zone 1
Courtesy of CHRYSLER GROUP, LLC

ZONE 1

1. Fuel Cap
2. Recirculation Check Valve
3. Vapor Recirculation Line
4. Signal Vapor Line for FVM

5. Flow Management Valve
6. Fuel Tank to Canister Vapor Line
7. Fuel Tank Vent (Check Valve)
8. Vapor Line to Canister
9. Flow Control Orifice
10. Control Valve
11. Liquid Trap
12. Fuel Tank
13. Check valve
14. Fuel Fill Tube to Tank connector
15. Fuel Fill Tube

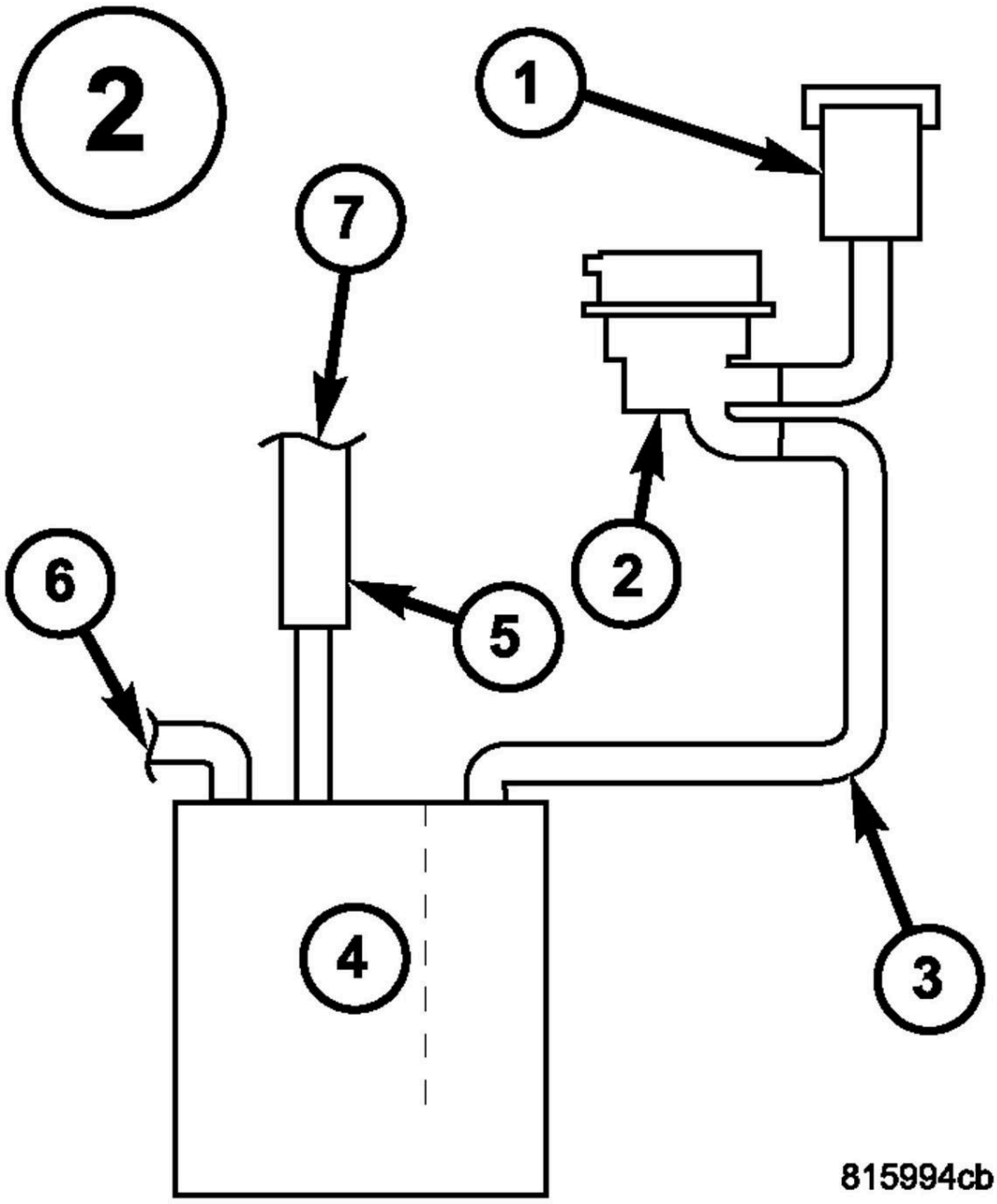

Fig. 37: EVAP System Components Zone 2
Courtesy of CHRYSLER GROUP, LLC

ZONE 2

1. Filter
2. ESIM Switch
3. Canister Vent Line
4. Evap Canister

5. Chassis Purge Valve
6. Fuel Tank to Canister Vapor Line connection
7. Evap Purge connection

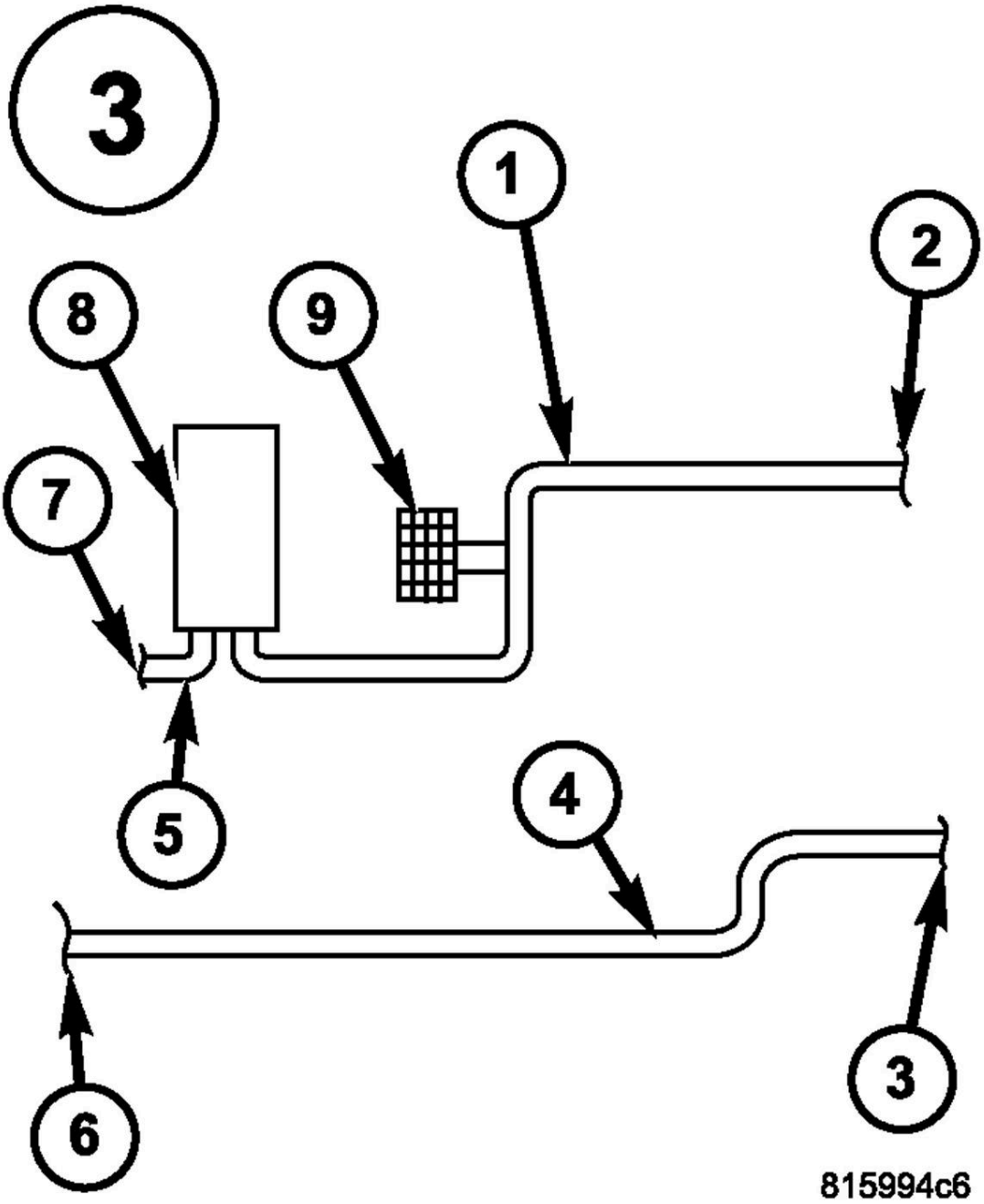

Fig. 38: EVAP System Components Zone 3
Courtesy of CHRYSLER GROUP, LLC

ZONE 3

1. Evap Purge Vacuum Line

2. Connection to Chassis Line
3. Connection to Canister
4. Chassis Purge Line
5. Evap Purge Vacuum Line
6. Connection to Evap Purge Harness
7. Chassis Evap Purge Line connection to Engine Vacuum
8. Evap Purge Valve
9. Service Port

NOTE: Carefully inspect the vent side of the Evap Canister. Due to the filtering system in the canister the smoke or dye may or may not be visible. Introducing smoke into the filtered side of the canister may assist in locating the leak.

Select the appropriate response from the list below:

A leak was found at the gas cap or fuel filler tube

- Go To 11

A leak was found in one or more of the Evap System zones

- If the leak is at a hose connection, remove the hose then reconnect the hose and check for a leak again. All other leaks repair as necessary.
- Perform the POWERTRAIN VERIFICATION TEST. Refer to **POWERTRAIN VERIFICATION TEST** .

No leaks were detected

- Go To 12

11. **LEAK AT FUEL FILLER CAP**
    1. Remove the SMOKE supply tip (black hose) from the service port (if equipped) or to the (special tool #8404-ADP, Smoke Machine Adapters) adapter.
    2. Install Leak Check Adapter (special tool #8382, Adapter, Leak Check)

(1/4 turn cap) or Fuel Tank Adapter (special tool #6922, Adapter, Fuel Tank) (screw on cap) and Leak Check Adapter (special tool #8399, Adapter, Leak Check) (secondary seal depressor) and repeat step 10.

NOTE: The gas cap adapter is being used as a known good cap.

Was a leak found at the gas cap adapter?

Yes

- Replace the Fuel Filler tube assembly.
- Perform the POWERTRAIN VERIFICATION TEST. Refer to **POWERTRAIN VERIFICATION TEST** .

No

- Replace the gas cap.
- Perform the POWERTRAIN VERIFICATION TEST. Refer to **POWERTRAIN VERIFICATION TEST** .

12. **EVAP PURGE HOSE/TUBE AND FRESH AIR FILTER OBSTRUCTION**
    1. Inspect the Evap Purge hose/tube for proper routing and installation between the Evap Purge Solenoid and the Fuel Tank between the Fuel Tank and the Evap Purge Canister
    2. Make sure the hose/tube and fresh air filter are not damaged, kinked, and free from any obstructions.

    Were any problems found?

    Yes

    - Repair or replace as necessary.
    - Perform the POWERTRAIN VERIFICATION TEST. Refer to **POWERTRAIN VERIFICATION TEST** .

    No

    - Go To 13

13. **ESIM SWITCH**
    1. Use the wiring diagram/schematic as a guide, inspect the wiring and connections between the ESIM Switch and the PCM.
    2. Look for any chafed, pierced, pinched, or partially broken wires.
    3. Look for any broken, bent, pushed out, or corroded terminals.
    4. Verify that there is good pin to terminal contact in the ESIM Switch and the Powertrain Control Module harness connectors.
    5. Perform any Technical Service Bulletins that may apply.

    Were any problems found?

    Yes

    - Repair and Replace as necessary.
    - Perform the POWERTRAIN VERIFICATION TEST. Refer to **POWERTRAIN VERIFICATION TEST** .

    No

    - Verify that there is good pin to terminal contact in the ESIM Switch and PCM harness connectors. Replace the ESIM Switch in accordance with the service information if no problems were found in the connectors.
    - Perform the POWERTRAIN VERIFICATION TEST. Refer to **POWERTRAIN VERIFICATION TEST** .
14. **POWERTRAIN CONTROL MODULE (PCM)**
    1. Using the wiring diagram/schematic as a guide, inspect the wiring and connectors between the ESIM Switch and the PCM.
    2. Look for any chafed, pierced, pinched, or partially broken wires.
    3. Look for broken, bent, pushed out or corroded terminals.
    4. Perform any Technical Service Bulletins that may apply.

    Were any problems found?

    Yes

    - Repair as necessary.

- Perform the POWERTRAIN VERIFICATION TEST. Refer to **POWERTRAIN VERIFICATION TEST** .

No

- Replace and program the Powertrain Control Module (PCM) in accordance with the service information. Refer to **MODULE, POWERTRAIN CONTROL, REMOVAL** .
- Perform the POWERTRAIN VERIFICATION TEST. Refer to **POWERTRAIN VERIFICATION TEST** .

P0441-EVAP PURGE SYSTEM PERFORMANCE

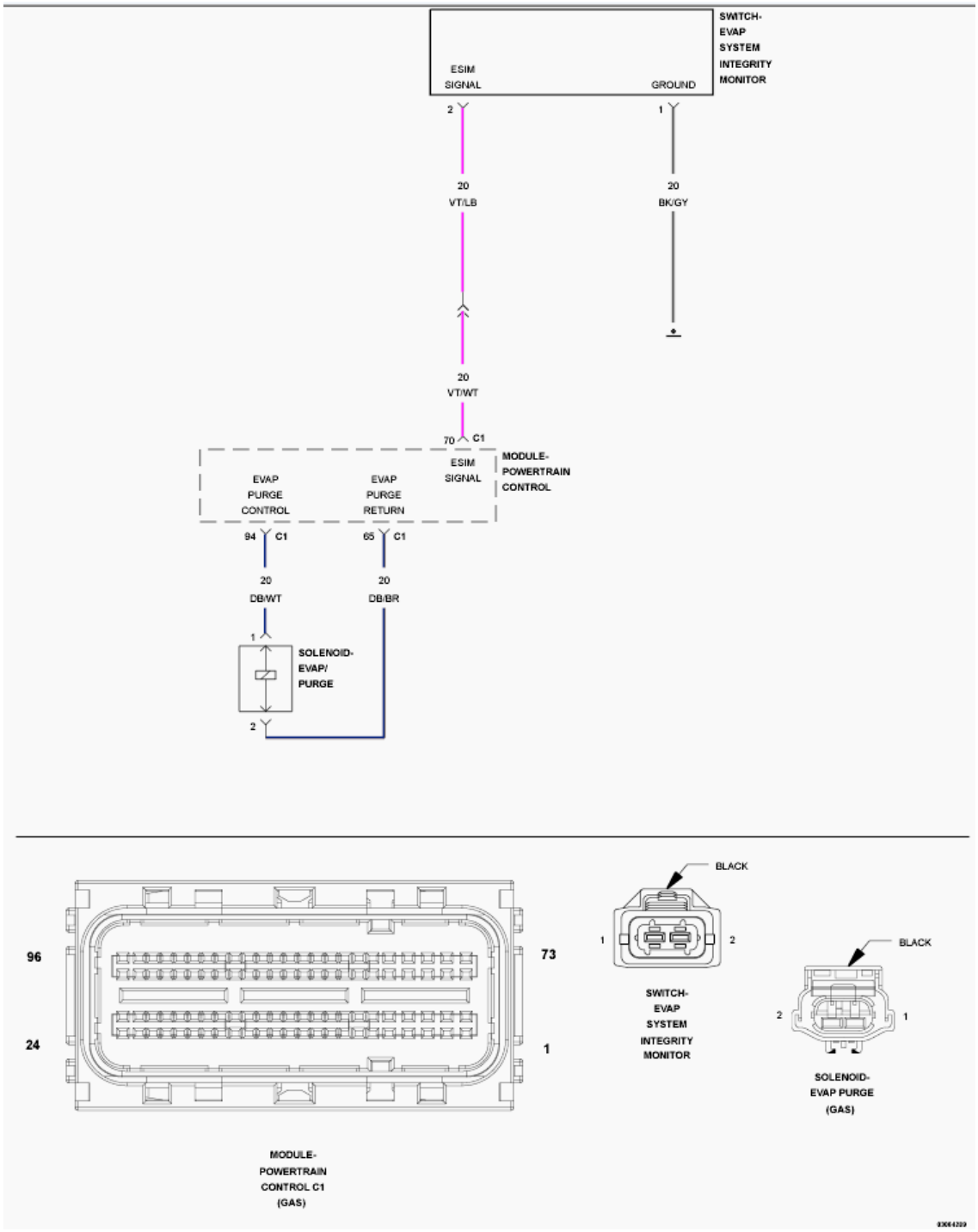

Fig. 39: EVAP Purge Monitor Circuit Diagram
Courtesy of CHRYSLER GROUP, LLC

For a complete wiring diagram, **refer to appropriate SYSTEM WIRING DIAGRAMS article** .

THEORY OF OPERATION

The Evap Purge Monitor tests the integrity of the hoses/tube between the throttle

body/intake and the fuel tank. The monitor is a two stage test and runs only after the Evap system passes the small leak test. Stage one is non-intrusive. The Powertrain Control Module (PCM) monitors the purge vapor ratio and the Evaporative System Integrity Monitor (ESIM) Switch closed ratio. If the purge vapor ratio is above a calculated value, the monitor passes. If the ESIM switch closed ratio is greater than calculated value when purge flow is greater than a minimum value, the monitor passes. Stage two is an intrusive test and runs only if stage one does not pass. The PCM commands the purge solenoid to flow at a specified rate to force the purge vapor ratio to update. The ratio is compared to a calibrated specification. If it is less than specified, a one trip failure is recorded. This test can detect if the purge hose is off, obstructed, or the purge valve is not operational.

WHEN MONITORED

With the engine running, after the Evap System small leak test has passed.

SET CONDITION

If the PCM detects that the purge vapor ratio and the ESIM switch closed ratio are below a calculated value, the PCM commands the purge solenoid to flow at a specified rate to update the purge vapor ratio. If the ratio remains below a specified value, a one trip failure is recorded. Two Trip Fault. Three good trips to turn off the MIL.

POSSIBLE CAUSES

Possible Causes
FUEL TANK PRESSURE (FTP) SENSOR 5-VOLT SUPPLY OPEN CIRCUIT OR EXCESSIVE RESISTANCE
EVAP PURGE SOLENOID VACUUM SUPPLY
EVAP PURGE HOSE/TUBE OBSTRUCTION
FUEL TANK PRESSURE SENSOR
EVAP PURGE SOLENOID
EVAPORATIVE SYSTEM INTEGRITY MONITOR SWITCH (ESIM)
POWERTRAIN CONTROL MODULE (PCM)

Always perform the Pre-Diagnostic Troubleshooting procedure before proceeding. Refer to PRE-DIAGNOSTIC TROUBLESHOOTING PROCEDURE .

DIAGNOSTIC TEST

1. **VEHICLE HISTORY AND SERVICE BULLETIN INVESTIGATION**
   1. Turn the ignition on.
   2. Using the scan tool, read DTCs. Record the related Freeze Frame data if any DTCs are present.
   3. Check the following items which may assist in repairing the customer's complaint successfully:
      - Check the vehicle's repair history. If the vehicle has a repair history that pertains to the customer's current complaint, review the repair.
      - Inspect the vehicle for any aftermarket accessories that may have been installed incorrectly.
      - Check for any service bulletin(s) related to the customer's complaint or DTCs. If a service bulletin applies, follow the instructions of the service bulletin.

   Choose the following scenario that best applies:

   The vehicle inspection or service bulletin repaired the customer's complaint.

   - Testing complete.

   A DTC is present, the vehicle inspection revealed no concerns, no service bulletins apply, or the service bulletin did not repair the customer's complaint.

   - Go To 2
2. **ACTIVE DTC**

   NOTE: Because a hot vehicle can conceal a potential leak, allow the vehicle to reach ambient temperature before continuing with this procedure.

   NOTE: A loose fuel filler cap could caused this DTC to set. Make sure the fuel filler cap is tight and in good condition.

NOTE: If the customer is experiencing an early fuel shut off during the fuel filling process in addition to DTC P0440, P0441, or P0452, check for restrictions in the Evap Purge tubes/hoses as well as the Fresh Air Filter before continuing.

1. Start the engine.
2. Allow the engine to idle.
3. Using the scan tool, perform the ESIM FORCED MONITOR TEST. Allow the test to complete.
4. Using the scan tool, read DTCs.

   Is the DTC Active or Pending at this time?

   Yes

   - Go To 3

   No

   - Test complete, the condition or conditions that originally set this DTC are not present at this time. Using the wiring diagrams as a guide, check all related splices and connectors for signs of water intrusion, corrosion, pushed out or bent terminals, and correct pin tension.
   - Perform the INTERMITTENT CONDITION diagnostic procedure. Refer to **INTERMITTENT CONDITION** .

3. **CHECK THE FUEL TANK PRESSURE (FTP) SENSOR 5-VOLT SUPPLY CIRCUIT FOR AN OPEN/HIGH RESISTANCE**

NOTE: Diagnose and repair any system voltage or sensor supply voltage DTC's before continuing with this test.

Turn the ignition off.

1. Disconnect the FTP Sensor harness connector.
2. Ignition on, engine not running.
3. Measure the voltage on the FTP Sensor 5-Volt Supply circuit at the

FTP Sensor harness connector.

Is the voltage between 4.8 to 5.2 volts?

Yes

- Go To 4

No

- Repair the Fuel Tank Pressure Sensor 5-Volt Supply circuit for an open or high resistance.
- Perform the POWERTRAIN VERIFICATION TEST. Refer to **POWERTRAIN VERIFICATION TEST** .

4. **FUEL TANK PRESSURE (FTP) SENSOR**
   1. Turn the ignition off.
   2. Reconnect the FTP Sensor harness connector.
   3. Remove the fuel filler cap.
   4. Turn the ignition on, engine not running.
   5. With a voltmeter, back probe the FTP Sensor Signal circuit at the FTP Sensor harness connector.

   Is the voltage between 2.3 and 2.7 volts?

   Yes

   - Go To 5

   No

   - Verify that there is good pin to terminal contact in the Fuel Tank Pressure Sensor and Powertrain Control Module connectors. If no problems were found with the connectors, replace the Fuel Tank Pressure Sensor according to the service information.
   - Perform the POWERTRAIN VERIFICATION TEST. Refer to **POWERTRAIN VERIFICATION TEST** .
5. **EVAP SYSTEM INSPECTION**
   1. Visually and physically Inspect the entire Evaporative Emission System

for any of the following conditions:

- Holes or cracks
- Loose seal points
- Damaged or missing components
- Incorrect routing of hoses and tubes
- Loose or missing Fuel Filler Cap or seal
- Damaged locking tabs on the Fuel Filler Cap and/or filler tube
- Damaged seal points on the Fuel Filler Cap and/or filler tube

Were any problems found?

Yes

- Repair as necessary.
- Perform the POWERTRAIN VERIFICATION TEST. Refer to **POWERTRAIN VERIFICATION TEST** .

No

- Go To 6

6. **INSUFFICIENT VACUUM SUPPLY TO THE EVAP PURGE SOLENOID**
   1. Inspect the Evap Purge Solenoid vacuum supply hose for proper routing and installation.
   2. Make sure the vacuum supply hose between the throttle body or intake manifold and the Evap Purge Solenoid is free from any obstructions or blockage.
   3. Make sure the vacuum port at the throttle body or intake manifold is free from any obstructions or blockage.

   Were any problems found?

   Yes

   - Repair as necessary.
   - Perform the POWERTRAIN VERIFICATION TEST. Refer to **POWERTRAIN VERIFICATION TEST** .

No

- Go To 7

7. **EVAP PURGE HOSE/TUBE OBSTRUCTION**
   1. Inspect the Evap Purge hose/tube for proper routing and installation between the Evap Purge Solenoid and the Fuel Tank and between the Fuel Tank and the Evap Purge Canister.
   2. Make sure the hose/tube is not damaged or kinked and is free from any obstructions or blockage.

   Were any problems found?

   Yes

   - Repair or replace as necessary.
   - Perform the POWERTRAIN VERIFICATION TEST. Refer to **POWERTRAIN VERIFICATION TEST** .

   No

   - Go To 8

8. **EVAP PURGE SOLENOID**

   WARNING: **Keep lit cigarettes, sparks, flames, and other ignition sources away from the test area to prevent the ignition of explosive gases. Keep the test area well ventilated. Failure to do so may result in possible serious or fatal injury.**

   NOTE: **After disconnecting the Evap Purge Solenoid vacuum connections, inspect the lines and solenoid for signs of contamination.**

   1. Disconnect the vacuum hoses at the Evap Purge Solenoid.
   2. Using a hand vacuum pump, apply 10 in. Hg. to the "CAN" side of the Evap Purge Solenoid.

   NOTE: **The solenoid should hold vacuum for a minimum**

of 15 seconds.

3. Turn the ignition on.
4. Using the scan tool, actuate the Evap Purge Solenoid to the ON position.

NOTE: The vacuum should drop when the solenoid is actuated.

Does the solenoid function as described above?

Yes

- Go To 9

No

- Verify that there is good pin to terminal contact in the solenoid and PCM harness connectors. Replace the Evap Purge Solenoid if no problems were found in the connectors.
- Perform the POWERTRAIN VERIFICATION TEST. Refer to **POWERTRAIN VERIFICATION TEST** .

9. **POWERTRAIN CONTROL MODULE (PCM)**
   1. Using the wiring diagram/schematic as a guide, inspect the wiring and connectors between the ESIM Switch and the PCM.
   2. Look for any chafed, pierced, pinched, or partially broken wires.
   3. Look for broken, bent, pushed out or corroded terminals.
   4. Perform any Technical Service Bulletins that may apply.

   Were any problems found?

   Yes

   - Repair as necessary.
   - Perform the POWERTRAIN VERIFICATION TEST. Refer to **POWERTRAIN VERIFICATION TEST** .

   No

- Replace and program the Powertrain Control Module (PCM) in accordance with the service information. Refer to **MODULE, POWERTRAIN CONTROL, REMOVAL** .
- Perform the POWERTRAIN VERIFICATION TEST. Refer to **POWERTRAIN VERIFICATION TEST** .

P0443-EVAP PURGE SOLENOID CIRCUIT

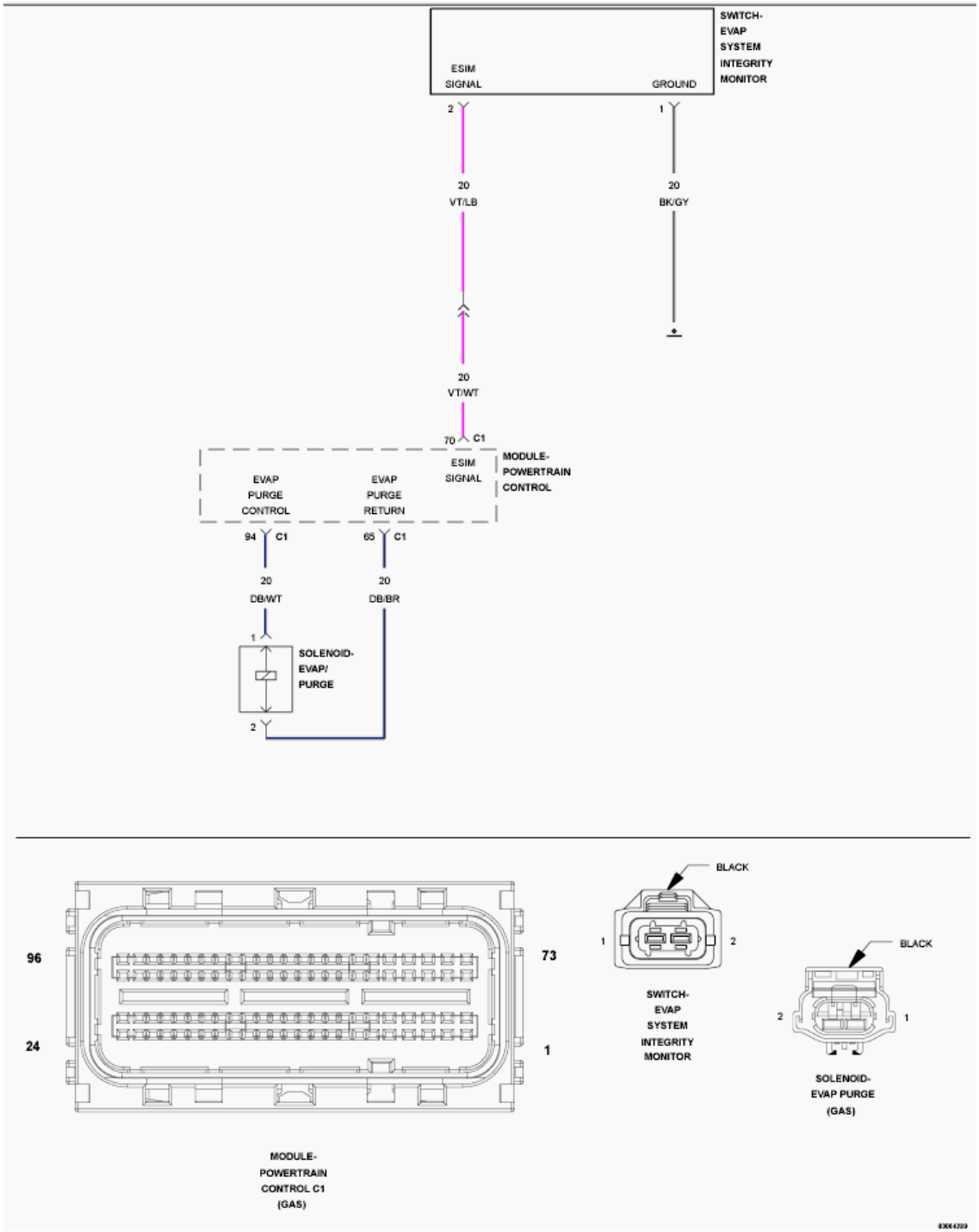

Fig. 40: EVAP Purge Monitor Circuit Diagram
Courtesy of CHRYSLER GROUP, LLC

For a complete wiring diagram, **refer to appropriate SYSTEM WIRING DIAGRAMS article** .

THEORY OF OPERATION

The Evap Purge Monitor tests the integrity of the hoses/tube between the throttle body/intake and the fuel tank. The monitor is a two stage test and runs only after the Evap system passes the small leak test. Stage one is non-intrusive. The Powertrain Control Module (PCM) monitors the purge vapor ratio and the Evaporative System Integrity Monitor (ESIM) Switch closed ratio. If the purge vapor ratio is above a calculated value, the monitor passes. If the ESIM switch closed ratio is greater than calculated value when purge flow is greater than a minimum value, the monitor passes. Stage two is an intrusive test and runs only if stage one does not pass. The PCM commands the purge solenoid to flow at a specified rate to force the purge vapor ratio to update. The ratio is compared to a calibrated specification. If it is less than specified, a one trip failure is recorded. This test can detect if the purge hose is off, obstructed, or the purge valve is not operational.

WHEN MONITORED

With the engine run time above a calibrated value, battery voltage greater than 10.4 Volts, ECT within a specific range, and the Evap Purge Solenoid control active.

SET CONDITION

This PCM compares the circuit feedback to a calibrated closed range when the circuit is de-energized or to a calibrated open range when the circuit is energized. If the value is determined to be out of the calibrated range in either the de-energized or energized state for more than a calibrated amount of time, this DTC will set.

POSSIBLE CAUSES

Possible Causes
EVAP PURGE CONTROL CIRCUIT SHORTED TO VOLTAGE
EVAP PURGE CONTROL CIRCUIT SHORTED TO GROUND

EVAP PURGE CONTROL CIRCUIT OPEN/HIGH RESISTANCE
EVAP PURGE RETURN CIRCUIT OPEN/HIGH RESISTANCE
EVAP PURGE RETURN CIRCUIT SHORTED TO GROUND
EVAP PURGE SOLENOID
POWERTRAIN CONTROL MODULE (PCM)

Always perform the Pre-Diagnostic Troubleshooting procedure before proceeding. Refer to PRE-DIAGNOSTIC TROUBLESHOOTING PROCEDURE .

DIAGNOSTIC TEST

1. **VEHICLE HISTORY AND SERVICE BULLETIN INVESTIGATION**
    1. Turn the ignition on.
    2. Using the scan tool, read DTCs. Record the related Freeze Frame data if any DTCs are present.
    3. Check the following items which may assist in repairing the customer's complaint successfully:
        - Check the vehicle's repair history. If the vehicle has a repair history that pertains to the customer's current complaint, review the repair.
        - Inspect the vehicle for any aftermarket accessories that may have been installed incorrectly.
        - Check for any service bulletin(s) related to the customer's complaint or DTCs. If a service bulletin applies, follow the instructions per the service bulletin.

    Choose the following scenario that best applies:

    The vehicle inspection or service bulletin repaired the customer's complaint.

    - Testing complete.

    A DTC is present, the vehicle inspection revealed no concerns, no service bulletins apply, or the service bulletin did not repair the customer's complaint.

    - Go To 2

2. **ACTIVE DTC**
   1. Turn the ignition on.
   2. Using the scan tool, read the active DTCs.

      Does the scan tool display P0443-EVAP PURGE CONTROL CIRCUIT?

      Yes

      - Go To 3

      No

      - Test complete, the condition or conditions that originally set this DTC are not present at this time. Using the wiring diagrams as a guide, check all related splices and connectors for signs of water intrusion, corrosion, pushed out or bent terminals, and correct pin tension.
      - Perform the INTERMITTENT CONDITION diagnostic procedure. Refer to **INTERMITTENT CONDITION** .
3. **CHECK THE (K52) EVAP PURGE CONTROL CIRCUIT FOR A SHORT TO VOLTAGE**
   1. Turn the ignition off.
   2. Disconnect the Evap Purge Solenoid harness connector.
   3. Disconnect the PCM C1 harness connector.
   4. Measure the resistance between the (K52) Evap Purge Control circuit and all other circuits at the PCM C1 harness connector.

      Is the resistance above 10k Ohms between the (K52) Evap Purge Control circuit and all other circuits?

      Yes

      - Go To 4

      No

      - Repair the short to between the (K52) Evap Purge Control circuit and the circuit that measured below 10k Ohms.

- Perform the POWERTRAIN VERIFICATION TEST. Refer to **POWERTRAIN VERIFICATION TEST** .

4. **CHECK THE (K70) EVAP PURGE RETURN CIRCUIT FOR A SHORT TO GROUND**
   1. Measure the resistance between ground and the (K70) Evap Purge Return circuit at the Evap Purge Solenoid harness connector.

      Is the resistance above 10k Ohms?

      Yes

      - Go To 5

      No

      - Repair the (K70) Evap Purge Return circuit for a short to ground.
      - Perform the POWERTRAIN VERIFICATION TEST. Refer to **POWERTRAIN VERIFICATION TEST** .
5. **CHECK THE (K52) EVAP PURGE CONTROL CIRCUIT FOR A SHORT TO GROUND**

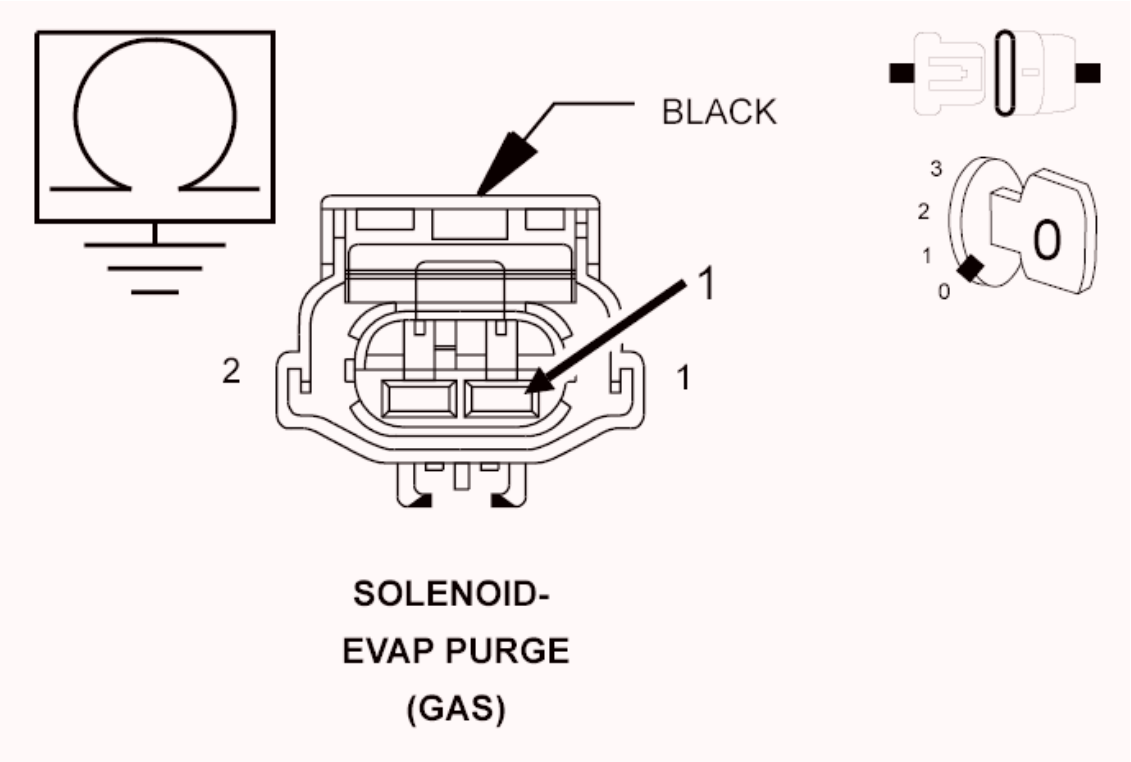

Fig. 41: Checking EVAP Purge Control Circuit For Short To Ground

Courtesy of CHRYSLER GROUP, LLC

1. Measure the resistance between ground and the (K52) Evap Purge Control circuit at the Evap Purge Solenoid harness connector.

   Is the resistance above 10k Ohms?

   Yes

   - Go To 6

   No

   - Repair the (K52) Evap Purge Control circuit for a short to ground.
   - Perform the POWERTRAIN VERIFICATION TEST. Refer to **POWERTRAIN VERIFICATION TEST** .

6. **CHECK THE (K52) EVAP PURGE CONTROL CIRCUIT FOR AN OPEN/EXCESSIVE RESISTANCE**

   CAUTION: Do not probe the PCM harness connectors. Probing the PCM harness connectors will damage the PCM terminals resulting in poor terminal to pin connection. Install the GPEC Diagnostic Adaptor to perform the diagnosis.

   1. Connect the (special tool #10436, Adapter, GPEC Diagnostic).
   2. Measure the resistance of the (K52) Evap Purge Control circuit between the Evap Purge Solenoid harness connector and the GPEC Adaptor.

      Is the resistance below 5.0 Ohms?

      Yes

      - Go To 7

      No

      - Repair the (K52) Evap Purge Control circuit for an open or high resistance.
      - Perform the POWERTRAIN VERIFICATION TEST. Refer to

POWERTRAIN VERIFICATION TEST .

7. **CHECK THE (K70) EVAP PURGE RETURN CIRCUIT FOR AN OPEN/EXCESSIVE RESISTANCE**
   1. Measure the resistance of the (K70) Evap Purge Return circuit between the Evap Purge Solenoid harness connector and the GPEC Adaptor.

      Is the resistance below 5.0 Ohms?

      Yes

      - Go To 8

      No

      - Repair the (K70) Evap Purge Return circuit for an open or high resistance.
      - Perform the POWERTRAIN VERIFICATION TEST. Refer to **POWERTRAIN VERIFICATION TEST** .
8. **EVAP PURGE SOLENOID**

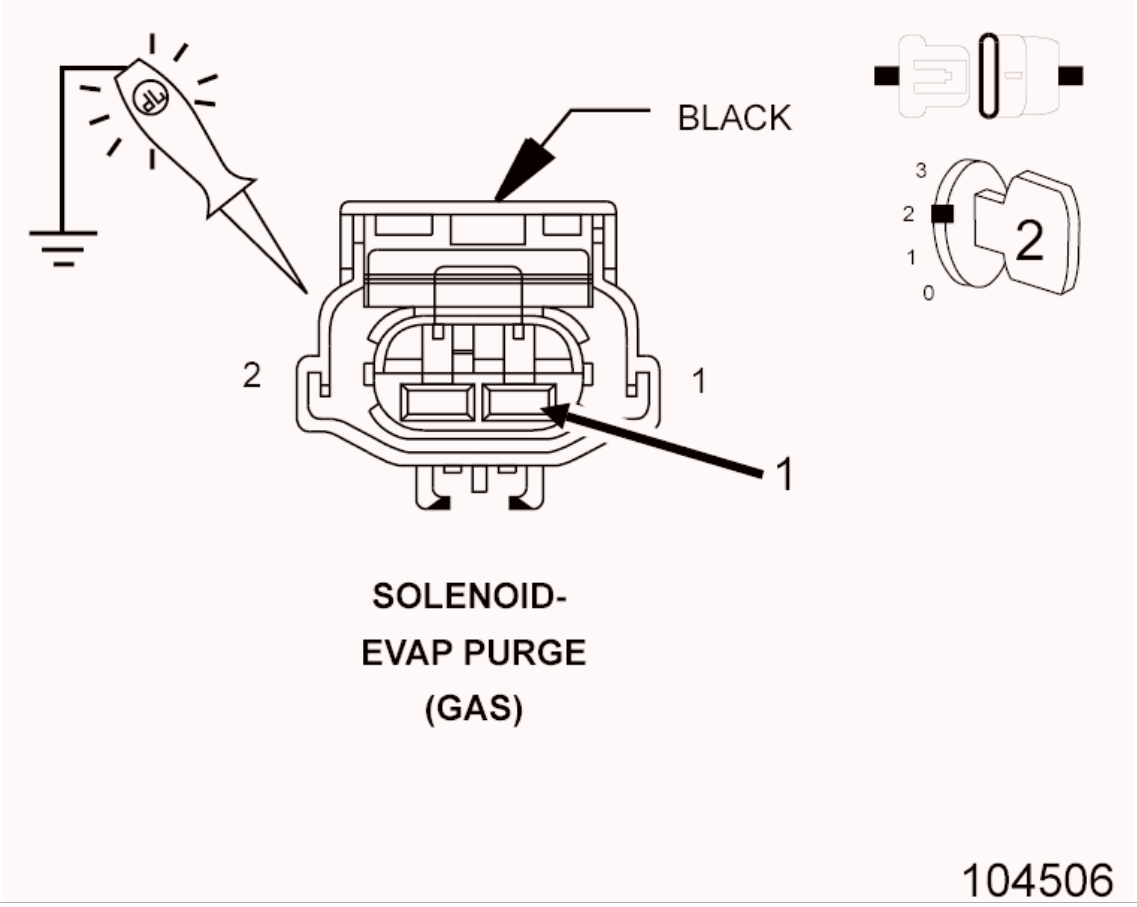

Fig. 42: Checking EVAP Purge Solenoid
Courtesy of CHRYSLER GROUP, LLC

1. Reconnect the PCM C1 harness connector.
2. Turn the ignition on.

NOTE: If the DTC is active, the actuation test may not be allowed by the PCM. If may be necessary to clear the DTCs before starting the actuation.

3. Using the scan tool, actuate the Evaporative Purge Valve Solenoid Duty Cycle.
4. Using a 12-volt test light connected to ground, probe the (K52) Evap Purge Control circuit in the Evap Purge Solenoid harness connector.

NOTE: The voltage supplied to the solenoid circuit during the actuation may be less than battery voltage. The test light should be illuminated, but may not be as bright as a direct connection to the battery.

Is the test light illuminated during the actuation?

Yes

- Replace the Evap Purge Solenoid in accordance with the service information.
- Perform the POWERTRAIN VERIFICATION TEST. Refer to **POWERTRAIN VERIFICATION TEST** .

No

- Go To 9

9. **POWERTRAIN CONTROL MODULE (PCM)**
   1. Using the wiring diagram/schematic as a guide, inspect the wiring and connectors between the Evap Purge Solenoid and the PCM.
   2. Look for any chafed, pierced, pinched, or partially broken wires.
   3. Look for broken, bent, pushed out or corroded terminals.

4. Perform any Technical Service Bulletins that may apply.

   Were any problems found?

   Yes

   - Repair as necessary.
   - Perform the POWERTRAIN VERIFICATION TEST. Refer to **POWERTRAIN VERIFICATION TEST** .

   No

   - Replace and program the Powertrain Control Module (PCM) in accordance with the service information. Refer to **MODULE, POWERTRAIN CONTROL, REMOVAL** .
   - Perform the POWERTRAIN VERIFICATION TEST. Refer to **POWERTRAIN VERIFICATION TEST** .

P0452-EVAP PRESSURE SWITCH STUCK CLOSED

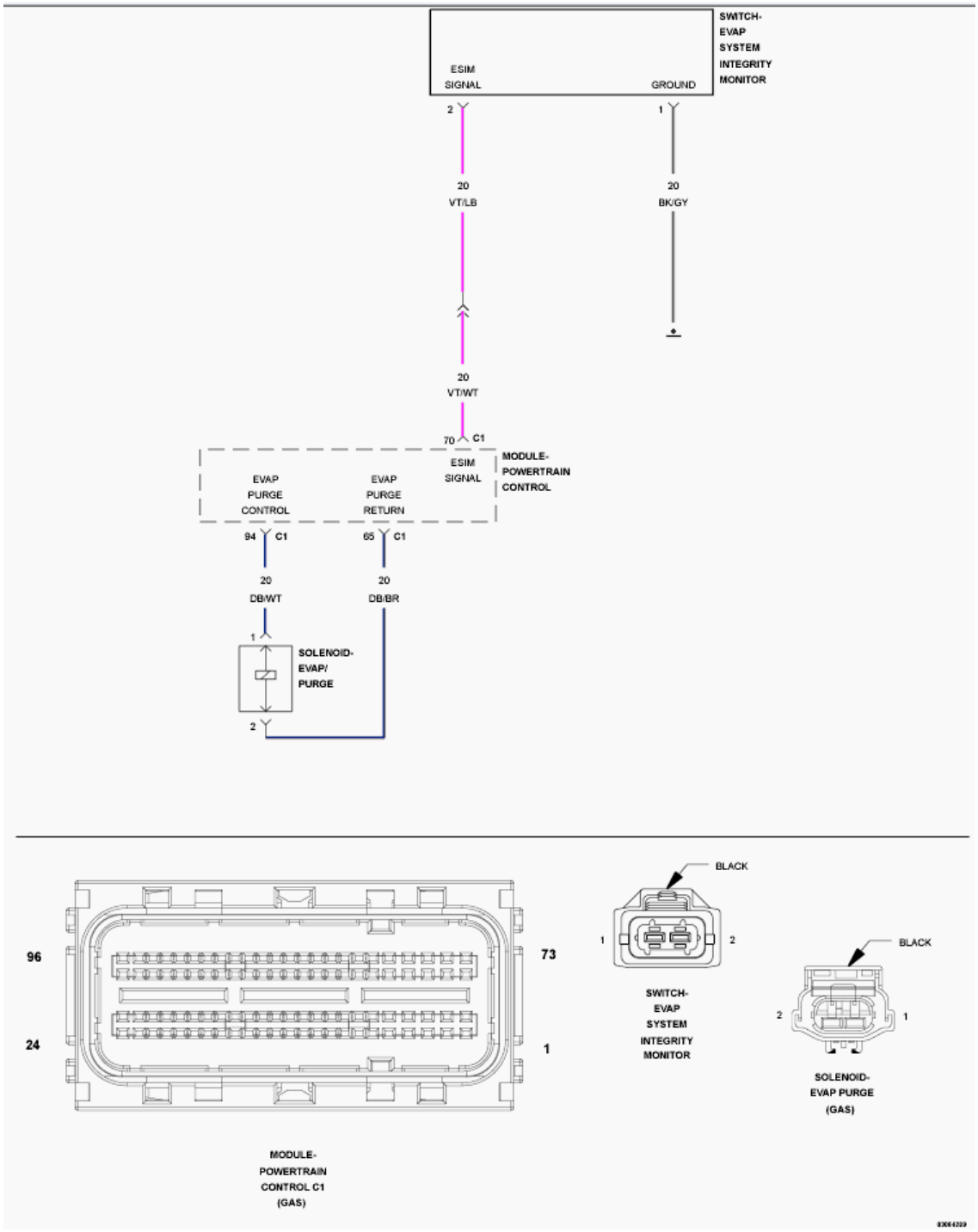

Fig. 43: EVAP Purge Monitor Circuit Diagram
Courtesy of CHRYSLER GROUP, LLC

For a complete wiring diagram, **refer to appropriate SYSTEM WIRING DIAGRAMS article** .

THEORY OF OPERATION

The Evap Purge Monitor tests the integrity of the hoses/tube between the throttle

body/intake and the fuel tank. The monitor is a two stage test and runs only after the Evap system passes the small leak test. Stage one is non-intrusive. The Powertrain Control Module (PCM) monitors the purge vapor ratio and the Evaporative System Integrity Monitor (ESIM) Switch closed ratio. If the purge vapor ratio is above a calculated value, the monitor passes. If the ESIM switch closed ratio is greater than calculated value when purge flow is greater than a minimum value, the monitor passes. Stage two is an intrusive test and runs only if stage one does not pass. The PCM commands the purge solenoid to flow at a specified rate to force the purge vapor ratio to update. The ratio is compared to a calibrated specification. If it is less than specified, a one trip failure is recorded. This test can detect if the purge hose is off, obstructed, or the purge valve is not operational.

WHEN MONITORED

Immediately after key off.

SET CONDITION

At key off, the PCM energizes the Purge Solenoid for a calibrated amount of time (30 seconds maximum) and stores the state of the ESIM switch. The state is evaluated again at the next key on. If the PCM does not detect that the ESIM switch is open, an error is detected. Two Trip Fault. Three good trips to turn off the MIL.

POSSIBLE CAUSES

Possible Causes
EVAP PURGE HOSE/TUBE OBSTRUCTION
(K107) ESIM SIGNAL CIRCUIT SHORTED TO GROUND
(K52) EVAP PURGE CONTROL CIRCUIT SHORTED TO GROUND
EVAPORATIVE SYSTEM INTEGRITY MONITOR (ESIM) SWITCH
EVAP PURGE SOLENOID
POWERTRAIN CONTROL MODULE (PCM)

Always perform the Pre-Diagnostic Troubleshooting procedure before proceeding. Refer to PRE-DIAGNOSTIC TROUBLESHOOTING PROCEDURE .

DIAGNOSTIC TEST

1. **VEHICLE HISTORY AND SERVICE BULLETIN INVESTIGATION**
    1. Turn the ignition on.
    2. Using the scan tool, read DTCs. Record the related Freeze Frame data if any DTCs are present.
    3. Check the following items which may assist in repairing the customer's complaint successfully:
        - Check the vehicle's repair history. If the vehicle has a repair history that pertains to the customer's current complaint, review the repair.
        - Inspect the vehicle for any aftermarket accessories that may have been installed incorrectly.
        - Check for any service bulletin(s) related to the customer's complaint or DTCs. If a service bulletin applies, follow the instructions of the service bulletin.

    Choose the following scenario that best applies:

    The vehicle inspection or service bulletin repaired the customer's complaint.

    - Testing complete.

    A DTC is present, the vehicle inspection revealed no concerns, no service bulletins apply, or the service bulletin did not repair the customer's complaint.

    - Go To 2
2. **ACTIVE DTC**

NOTE: Because a hot vehicle can conceal a potential leak, allow the vehicle to reach ambient temperature before continuing with this procedure.

NOTE: A loose gas cap could caused this DTC to set. Make sure the gas cap is tight and in good condition.

NOTE: If the customer is experiencing an early fuel shut off during the fuel filling process in addition to DTC P0440, P0441, or P0452, check for restrictions in the

EVAP Purge tubes/hoses as well as the Fresh Air Filter before continuing.

1. Start the engine.
2. Allow the engine to idle.
3. Using the scan tool, perform the ESIM FORCED MONITOR TEST. Allow the test to complete.
4. Using the scan tool, read DTCs.

   Is the DTC Active or Pending at this time?

   Yes

   - Go To 3

   No

   - Test complete, the condition or conditions that originally set this DTC are not present at this time. Using the wiring diagrams as a guide, check all related splices and connectors for signs of water intrusion, corrosion, pushed out or bent terminals, and correct pin tension.
   - Perform the INTERMITTENT CONDITION diagnostic procedure. Refer to **INTERMITTENT CONDITION** .

3. **ESIM SWITCH STATE**
   1. With a scan tool, read the ESIM Switch state.
   2. Disconnect the purge hose at the EVAP canister.

      Does the ESIM Switch state change from 'Closed' to 'Open' when the purge hose was disconnected?

      Yes

      - Go To 4

      No

      - Go To 7

4. **EVAP PURGE HOSE/TUBE OBSTRUCTION**

1. Inspect the Evap Purge hose/tube between the Evap Purge Solenoid and the Fuel Tank and between the Fuel Tank and the Evap Purge Canister for proper routing and installation.
2. Make sure the hoses and tubes are not damaged, kinked, or blocked.

   Were any problems found?

   Yes

   - Repair or replace as necessary.
   - Perform the POWERTRAIN VERIFICATION TEST. Refer to **POWERTRAIN VERIFICATION TEST** .

   No

   - Go To 5

5. **CHECK THE (K52) EVAP PURGE CONTROL CIRCUIT FOR A SHORT TO GROUND**

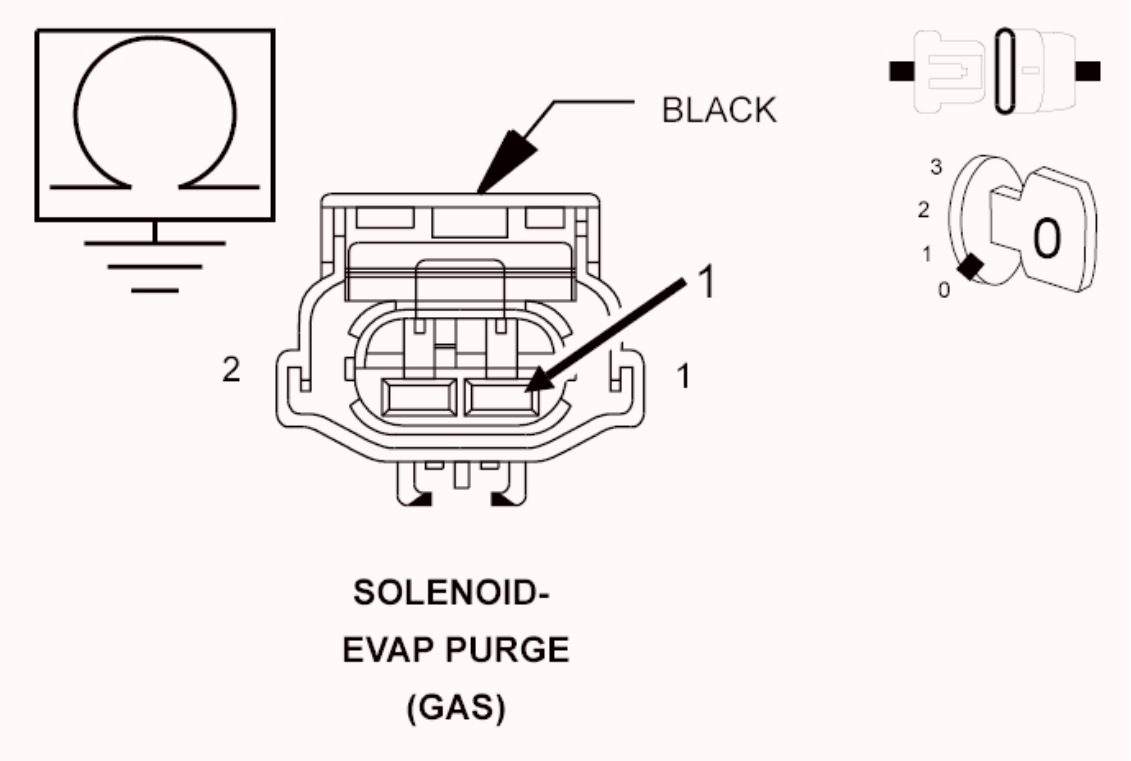

Fig. 44: Checking EVAP Purge Control Circuit For Short To Ground
Courtesy of CHRYSLER GROUP, LLC

1. Turn the ignition off.

2. Disconnect the PCM C1 harness connector.
3. Measure the resistance between ground and the (K52) Evap Purge Control circuit in the Evap Purge Solenoid harness connector.

   Is the resistance above 10k Ohms?

   Yes

   - Go To 6

   No

   - Repair the (K52) Evap Purge Control circuit for a short to ground.
   - Perform the POWERTRAIN VERIFICATION TEST. Refer to **POWERTRAIN VERIFICATION TEST** .

6. **EVAP PURGE SOLENOID**
   1. Using the wiring diagram/schematic as a guide, inspect the wiring and connectors between the Evap Purge Solenoid and the PCM.
   2. Look for any chafed, pierced, pinched, or partially broken wires.
   3. Look for broken, bent, pushed out or corroded terminals.
   4. Perform any Technical Service Bulletins that may apply.

   Were any problems found?

   Yes

   - Repair as necessary.
   - Perform the POWERTRAIN VERIFICATION TEST. Refer to **POWERTRAIN VERIFICATION TEST** .

   No

   - Replace the Evap Purge Solenoid in accordance with the service information. Refer to **SOLENOID, EVAPORATIVE EMISSIONS PURGE, REMOVAL** .
   - Perform the POWERTRAIN VERIFICATION TEST. Refer to **POWERTRAIN VERIFICATION TEST** .

7. **ESIM SWITCH**

1. With a scan tool, read the ESIM Switch state.
2. Disconnect the ESIM Switch harness connector.

   Does the ESIM Switch state change from CLOSED to OPEN when the switch is disconnected?

   Yes

   - Replace the ESIM Switch in accordance with the service information.
   - Perform the POWERTRAIN VERIFICATION TEST. Refer to **POWERTRAIN VERIFICATION TEST** .

   No

   - Go To 8

8. **CHECK THE (K107) ESIM SIGNAL CIRCUIT FOR A SHORT TO GROUND**

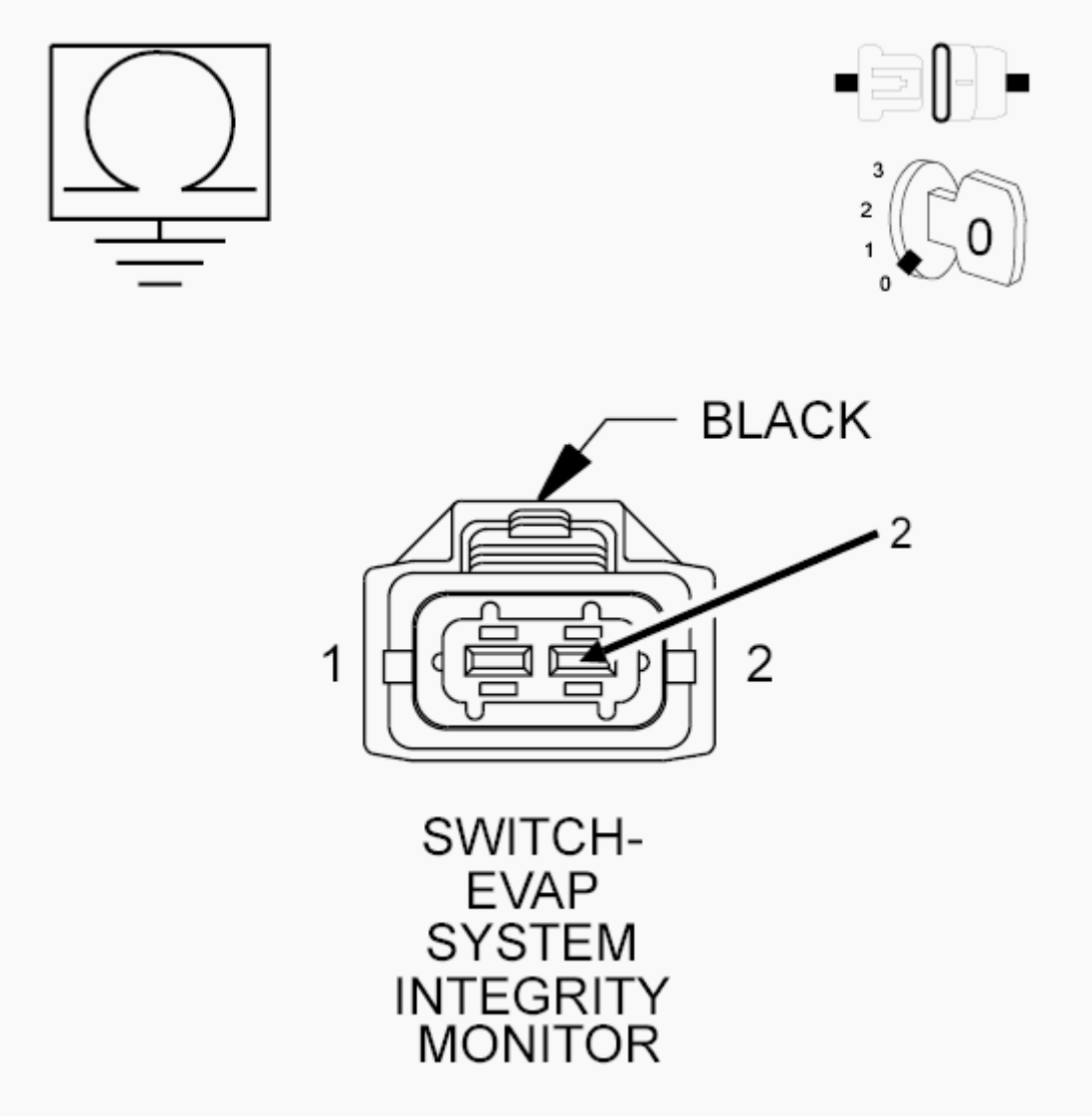

Fig. 45: Checking ESIM Signal Circuit For Short To Ground
Courtesy of CHRYSLER GROUP, LLC

1. Turn the ignition off.
2. Disconnect the PCM C1 harness connector.
3. Measure the resistance between ground and the (K107) ESIM Signal circuit in the ESIM Switch harness connector.

   Is the resistance above 10k Ohms?

   Yes

   - Go To 9

   No

- Repair the (K107) ESIM Signal circuit for a short to ground.
- Perform the POWERTRAIN VERIFICATION TEST. Refer to **POWERTRAIN VERIFICATION TEST** .

9. **POWERTRAIN CONTROL MODULE (PCM)**
   1. Using the wiring diagram/schematic as a guide, inspect the wiring and connectors between the Evap Purge Solenoid and the Powertrain Control Module (PCM) and between the ESIM Switch and the PCM.
   2. Look for any chafed, pierced, pinched, or partially broken wires.
   3. Look for broken, bent, pushed out or corroded terminals.
   4. Perform any Technical Service Bulletins that may apply.

   Were any problems found?

   Yes

   - Repair as necessary.
   - Perform the POWERTRAIN VERIFICATION TEST. Refer to **POWERTRAIN VERIFICATION TEST** .

   No

   - Replace and program the Powertrain Control Module (PCM) in accordance with the service information. Refer to **MODULE, POWERTRAIN CONTROL, REMOVAL** .
   - Perform the POWERTRAIN VERIFICATION TEST. Refer to **POWERTRAIN VERIFICATION TEST** .

P0455-EVAP SYSTEM LARGE LEAK

For a complete wiring diagram, **refer to appropriate SYSTEM WIRING DIAGRAMS article** .

THEORY OF OPERATION

The Evap Purge Monitor tests the integrity of the hoses/tube between the throttle body/intake and the fuel tank. The monitor is a two stage test and runs only after the Evap system passes the small leak test. Stage one is non-intrusive. The Powertrain Control Module (PCM) monitors the purge vapor ratio and the Evaporative System Integrity Monitor (ESIM) Switch closed ratio. If the purge

vapor ratio is above a calculated value, the monitor passes. If the ESIM switch closed ratio is greater than calculated value when purge flow is greater than a minimum value, the monitor passes. Stage two is an intrusive test and runs only if stage one does not pass. The PCM commands the purge solenoid to flow at a specified rate to force the purge vapor ratio to update. The ratio is compared to a calibrated specification. If it is less than specified, a one trip failure is recorded. This test can detect if the purge hose is off, obstructed, or the purge valve is not operational.

WHEN MONITORED

With the engine running, during a cold start test with the fuel level above 12%, ambient temperature between 4°C and 32°C (39°F and 89°F) and the fuel system in closed loop. The test runs when the small leak test is maturing.

SET CONDITION

The PCM activates the Evap Purge Solenoid to pull the Evap system into a vacuum to close the ESIM Switch. Once the ESIM Switch is closed, the PCM turns the Evap Purge solenoid off to seal the Evap system. If the ESIM Switch reopens before the calibrated amount of time, a large leak error is detected. Two Trip Fault. Three good trips to turn off the MIL.

POSSIBLE CAUSES

Possible Causes
EVAP PURGE SOLENOID VACUUM SUPPLY
EVAP PURGE HOSE/TUBE OBSTRUCTION
EVAP SYSTEM LEAK
EVAPORATIVE SYSTEM INTEGRITY MONITOR (ESIM) SWITCH

Always perform the Pre-Diagnostic Troubleshooting procedure before proceeding. Refer to PRE-DIAGNOSTIC TROUBLESHOOTING PROCEDURE .

DIAGNOSTIC TEST

1. **VEHICLE HISTORY AND SERVICE BULLETIN INVESTIGATION**
    1. Turn the ignition on.
    2. Using the scan tool, read DTCs. Record the related Freeze Frame data if

any DTCs are present.

3. Check the following items which may assist in repairing the customer's complaint successfully:
   - Check the vehicle's repair history. If the vehicle has a repair history that pertains to the customer's current complaint, review the repair.
   - Inspect the vehicle for any aftermarket accessories that may have been installed incorrectly.
   - Check for any service bulletin(s) related to the customer's complaint or DTCs. If a service bulletin applies, follow the instructions of the service bulletin.

   Choose the following scenario that best applies:

   The vehicle inspection or service bulletin repaired the customer's complaint.

   - Testing complete.

   A DTC is present, the vehicle inspection revealed no concerns, no service bulletins apply, or the service bulletin did not repair the customer's complaint.

   - Go To 2

2. **ACTIVE DTC**

   NOTE: Because a hot vehicle can conceal a potential leak, allow the vehicle to reach ambient temperature before continuing with this procedure.

   1. Start the engine.
   2. Allow the engine to idle.
   3. Using the scan tool, perform the ESIM FORCED MONITOR TEST. Allow the test to complete.
   4. Using the scan tool, read DTCs.

   Is the DTC Active or Pending at this time?

   Yes

- Go To 3

No

- Test complete, the condition or conditions that originally set this DTC are not present at this time. Using the wiring diagrams as a guide, check all related splices and connectors for signs of water intrusion, corrosion, pushed out or bent terminals, and correct pin tension.
- Perform the INTERMITTENT CONDITION diagnostic procedure. Refer to **INTERMITTENT CONDITION** .

3. **EVAP SYSTEM INSPECTION**
   1. Visually and physically Inspect the entire Evaporative Emission System for any of the following conditions:
      - Holes or cracks
      - Damaged or missing components
      - Incorrect routing of hoses and tubes
      - Loose or missing Fuel Filler Cap (if applicable) or flap
      - Damaged locking tabs on the Fuel Filler Cap (if applicable) and/or filler tube flap
      - Damaged seal points on the Fuel Filler Cap (if applicable) and/or filler tube flap

      Were any problems found?

      Yes

      - Repair as necessary.
      - Perform the POWERTRAIN VERIFICATION TEST. Refer to **POWERTRAIN VERIFICATION TEST** .

      No

      - Go To 4
4. **VERIFY EVAPORATIVE EMISSION LEAK**

   WARNING: Keep lit cigarettes, sparks, flames, and other

ignition sources away from the test area to prevent the ignition of explosive gases. Keep the test area well ventilated. Failure to do so may result in possible serious or fatal injury.

1. To continue testing you will need the (special tool #8404C, Kit, EELD And Accessory).

NOTE: The fuel tank should have between 20% and 80% of fuel tank capacity to properly test the Evap system.

2. Connect the red power lead of the EELD to the battery positive terminal and the black ground lead to battery negative terminal.
3. Connect shop air to the EELD.
4. Set the smoke/air control switch to AIR.
5. Insert the tester's AIR supply tip (clear hose) into the appropriate calibration orifice on the tester's control panel (based on DTC leak size).
6. Press the remote smoke/air start button.
7. Position the red flag on the air flow meter so it is aligned with the indicator ball.
8. When the calibration is complete, release the remote button. The EELD flow meter is now calibrated in liters per minute to the size leak indicated by the DTC set in the PCM.
9. Remove the Vent Filter and install the service adapter (special tool #8404-ADP, Smoke Machine Adapters) into the vent line.
10. Connect the AIR supply hose from the EELD to the adapter.
11. Press the remote button to activate AIR flow.

NOTE: Larger volume fuel tanks, lower fuel levels, or vehicles equipped with a Flow Management Valve may indicate high flow and will require four to five minutes to fill.

12. Compare the flow meter indicator ball reading to the red flag.

13. ABOVE the red flag indicates a leak present.
14. BELOW the red flag indicates a sealed system.

Is the indicator ball above the red flag?

Yes

- Go To 5

No

- Review the Freeze Frame data recorded in step 1. If the data indicates that the vehicle was in motion when the DTC was set, verify that all hoses are properly connected.
- Perform the POWERTRAIN VERIFICATION TEST. Refer to **POWERTRAIN VERIFICATION TEST** .

5. **EVAPORATIVE EMISSION LEAK DETECTION**

NOTE: A thorough visual inspection of the Evap system hoses, tubes, and connections may save time in your diagnosis. Look for any physical damage or signs of wetness at connections. The strong smell of fuel vapors may aid diagnosis also.

1. Remove the Air supply hose from the adapter.
2. Connect the SMOKE supply tip (black hose) to the adapter.
3. Set the smoke/air control switch to SMOKE.

NOTE: The flow meter indicator ball will not move in the smoke mode.

4. Press the remote smoke/air start button.

NOTE: Make sure that smoke has filled the Evap System by continuing to press the remote smoke/air start button, remove the vehicle fuel cap (if applicable) or open the flap (capless), and wait for the smoke to exit. Once smoke is indicated reinstall the fuel

cap or close the flap.

NOTE: For optimal performance, introduce smoke into the system for an additional 60 seconds; continue introducing smoke at 15 second intervals, as necessary.

5. While still holding the remote smoke/air start button, use the white light (special tool #8404-CLL, Light, White) to follow the Evap system path, and look for the source of the leak indicated by exiting smoke.
6. If a leak is concealed from view (i.e., top of fuel tank), release the remote smoke/air start button, and use the ultraviolet (UV) black light (special tool #8404-UVL, Light, UV) and the yellow goggles (special tool #8404-20, Goggles, Yellow) to look for residual traces of dye that is left behind by the smoke.
7. The exiting smoke deposits a residual fluid that is either bright green or bright yellow in color when viewed with a UV light.

NOTE: The Evap System is divided into three zones. A leak from any of these zones can cause this DTC to set. The lists below specify the possible leak points in that specific zone. For further assistance see the ZONE IDENTIFICATION CHARTS below.

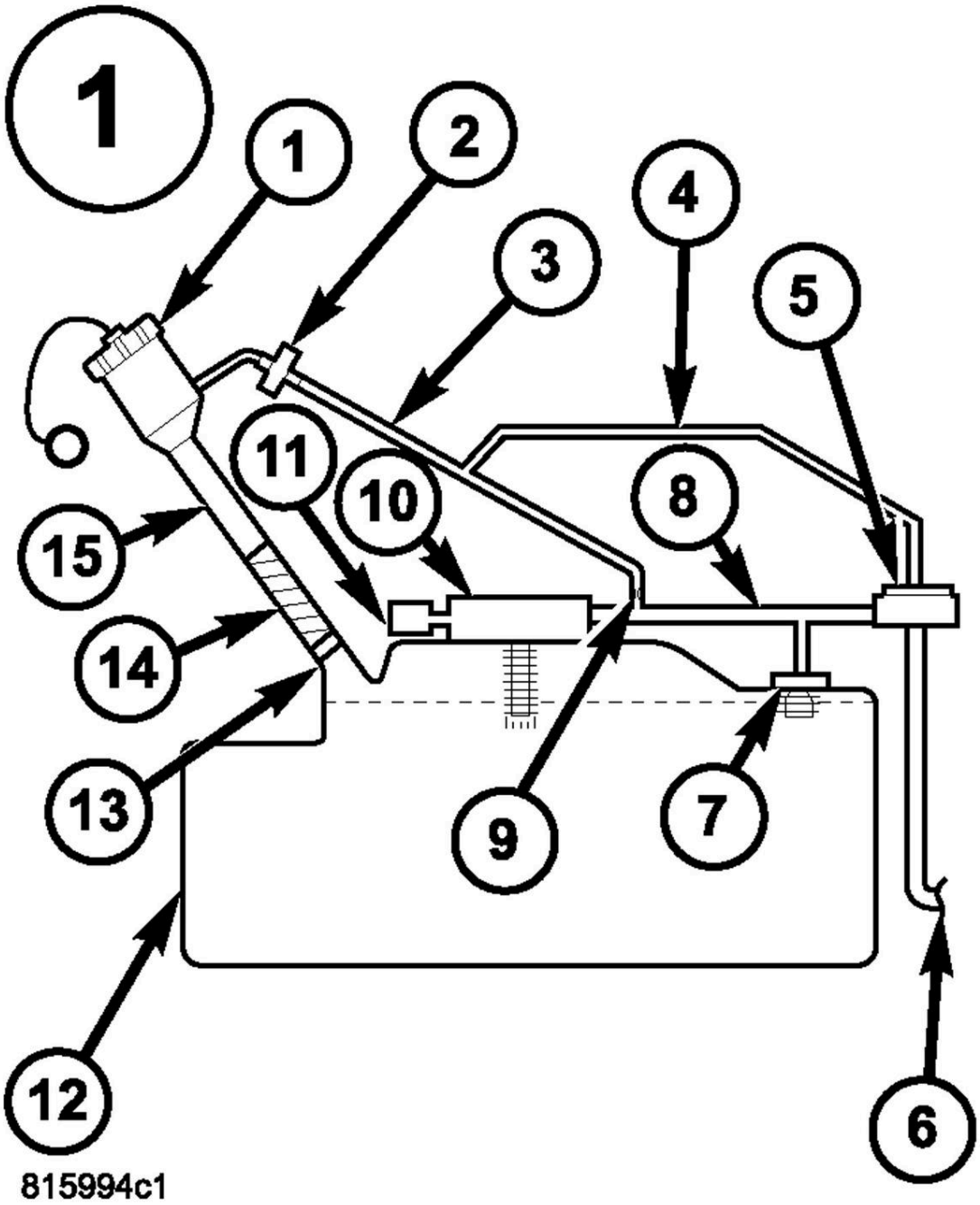

Fig. 46: EVAP System Components Zone 1
Courtesy of CHRYSLER GROUP, LLC

ZONE 1 EVAP SYSTEM COMPONENTS	
CALLOUT	DESCRIPTION
1	Fuel Cap (if applicable)
2	Recirculation Check Valve
3	Vapor Recirculation Line
4	Signal Vapor Line for FVM

5	Flow Management Valve
6	Fuel Tank to Canister Vapor Line
7	Fuel Tank Vent (Check Valve)
8	Vapor Line to Canister
9	Flow Control Orifice
10	Control Valve
11	Liquid Trap
12	Fuel Tank
13	Check valve
14	Fuel Fill Tube to Tank connector
15	Fuel Fill Tube (System may be equipped with either a Fuel Cap or the Capless Fuel Filler system, depending on the vehicles application)

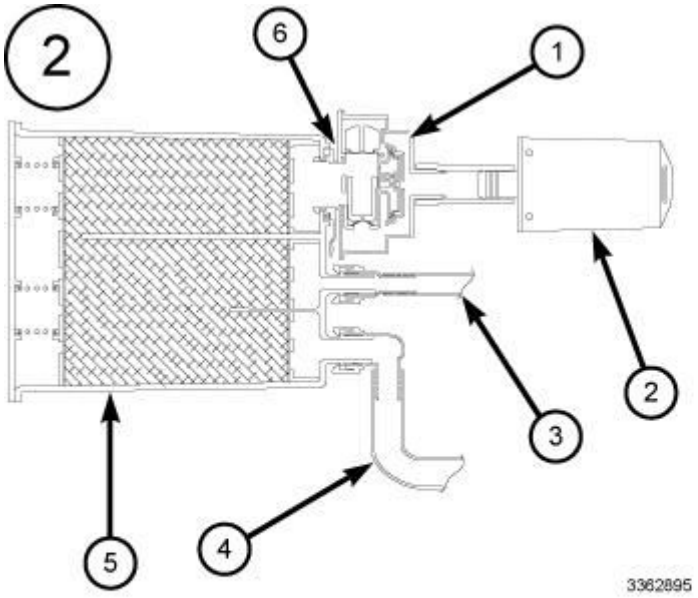

Fig. 47: Evaporative System Components Zone 2
Courtesy of CHRYSLER GROUP, LLC

ZONE 2 EVAP SYSTEM COMPONENTS	
CALLOUT	DESCRIPTION

1	ESIM switch
2	Filter
3	Evaporative Purge connection
4	Fuel Tank to Canister Vapor Line
5	Evaporative Canister
6	ESIM Switch O-Ring Seal

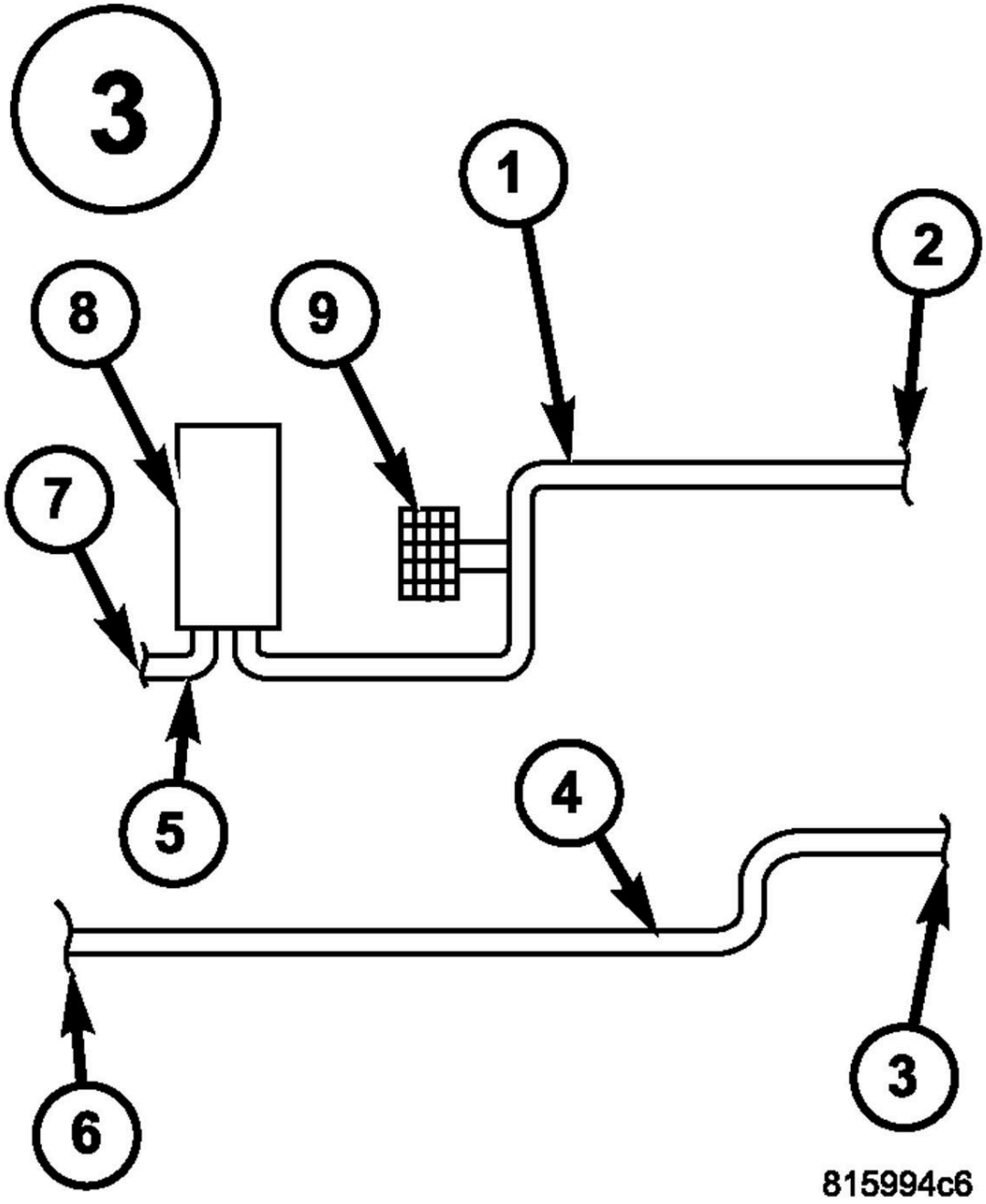

Fig. 48: EVAP System Components Zone 3
Courtesy of CHRYSLER GROUP, LLC

ZONE 3 EVAP SYSTEM COMPONENTS	
CALLOUT	DESCRIPTION
1	Evap Purge Vacuum Line
2	Connection to Chassis Line
3	Connection to Canister
4	Chassis Purge Line
5	Evap Purge Vacuum Line
6	Connection to Evap Purge Harness
7	Chassis Evap Purge Line connection to Engine Vacuum
8	Evap Purge Valve
9	Service Port (if equipped)

NOTE: Carefully inspect the vent side of the Evap Canister. Due to the filtering system in the canister the smoke may not be as thick. Introducing smoke into the filtered side of the canister may assist in locating the leak.

Select the appropriate response from the list below:

A leak was found at the Fuel Cap (if applicable) or Fuel Filler Tube Assembly

- Perform the appropriate repair by replacing the Fuel Filler Tube Assembly and/or the Fuel Cap (if applicable).
- Perform the POWERTRAIN VERIFICATION TEST. Refer to **POWERTRAIN VERIFICATION TEST** .

A leak was found in one or more of the Evap System zones

- If the leak is at a hose connection, remove the hose then reconnect the hose and check for a leak again. All other leaks repair as necessary.
- Perform the POWERTRAIN VERIFICATION TEST. Refer to **POWERTRAIN VERIFICATION TEST** .

No leaks were detected

- Go To 6

6. **EVAP PURGE SOLENOID**

NOTE: After disconnecting the Evap Purge Solenoid vacuum connections, inspect the lines and solenoid for signs of contamination.

1. Disconnect the vacuum hoses at the Evap Purge Solenoid.
2. Using a hand vacuum pump, apply 10 in. Hg. to the "CAN" side of the Evap Purge Solenoid purge solenoid.

NOTE: The solenoid should hold vacuum for a minimum of 15 seconds.

3. Turn the ignition on.
4. Using the scan tool, actuate the Evap Purge Solenoid to the ON position.

NOTE: The vacuum should drop when the solenoid is actuated.

Does the solenoid function as described above?

Yes

- Go To 7

No

- Verify that there is good pin to terminal contact in the Solenoid and PCM harness connectors. Replace the Evap Purge Solenoid in accordance with the service information if no problems were found in the connectors. Refer to **SOLENOID, EVAPORATIVE EMISSIONS PURGE, REMOVAL** .
- Perform the POWERTRAIN VERIFICATION TEST. Refer to **POWERTRAIN VERIFICATION TEST** .

7. **ESIM SWITCH**
   1. Using the wiring diagram/schematic as a guide, inspect the wiring and

connectors between the ESIM Switch and the PCM.

2. Look for any chafed, pierced, pinched, or partially broken wires.
3. Look for broken, bent, pushed out or corroded terminals.
4. Perform any Technical Service Bulletins that may apply.

Were any problems found?

Yes

- Repair as necessary.
- Perform the POWERTRAIN VERIFICATION TEST. Refer to **POWERTRAIN VERIFICATION TEST** .

No

- Verify that there is good pin to terminal contact in the ESIM Switch and PCM harness connectors. Replace the ESIM Switch in accordance with the service information if no problems were found in the connectors.
- Perform the POWERTRAIN VERIFICATION TEST. Refer to **POWERTRAIN VERIFICATION TEST** .

P0456-EVAP SYSTEM SMALL LEAK

For a complete wiring diagram, **refer to appropriate SYSTEM WIRING DIAGRAMS article** .

THEORY OF OPERATION

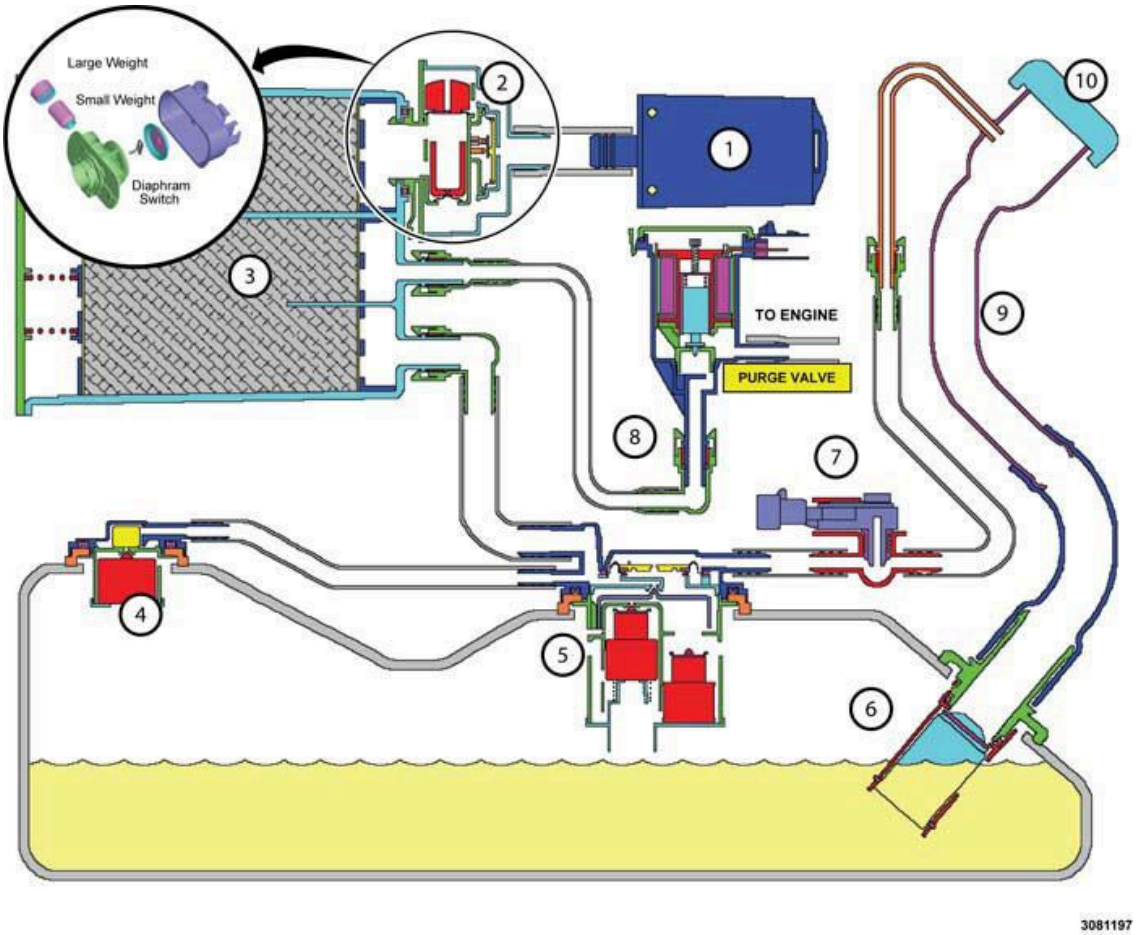

Fig. 49: EVAP System Components
Courtesy of CHRYSLER GROUP, LLC

EVAP SYSTEM COMPONENTS	
CALLOUT	**DESCRIPTION**
1	Filter
2	ESIM Switch
3	Evaporative Canister
4	Fuel Tank Vent (Check Valve)
5	Control Valve
6	Inlet Check Valve
7	Fuel Tank Pressure Sensor
8	To Purge System
9	Fuel Fill Tube

This diagnostic tests the evaporative emission (EVAP) system for a small leak when the ignition is turned OFF and the correct conditions are met. Heat is transferred from operating the vehicle and ambient conditions into a vehicle fuel

tank during normal operation. When the ignition is turned OFF and the EVAP system is sealed, a change in the fuel tank vapor temperature occurs, which results in corresponding pressure changes in the fuel tank vapor space. This change is monitored by the Powertrain Control Module (PCM) using the fuel tank pressure sensor input. The PCM then makes a judgment on the integrity of the system. With a 0.51 mm (0.02 in) leak in the system, the amount of pressure change observed is significantly less than that of a sealed system.

WHEN MONITORED

With the ignition off, fuel level less than 88%, ambient temperature between 4°C and 43°C (39°F and 109°F).

SET CONDITION

As temperatures change, a vacuum is created in the fuel tank and Evap system. With the Evap system sealed, the Powertrain Control Module (PCM) monitors the ESIM switch. If the ESIM switch does not close within a calibrated time, an error is detected by the PCM. One Trip Fault. Three good trips to turn off the MIL.

POSSIBLE CAUSES

Possible Causes
EVAP PURGE SOLENOID VACUUM SUPPLY
EVAP PURGE HOSE/TUBE OBSTRUCTION
EVAP SYSTEM LEAK

Always perform the Pre-Diagnostic Troubleshooting procedure before proceeding. Refer to PRE-DIAGNOSTIC TROUBLESHOOTING PROCEDURE .

DIAGNOSTIC TEST

1. **VEHICLE HISTORY AND SERVICE BULLETIN INVESTIGATION**
    1. Turn the ignition on.
    2. Using the scan tool, read DTCs. Record the related Freeze Frame data if any DTCs are present.
    3. Check the following items which may assist in repairing the customer's complaint successfully:

- Check the vehicle's repair history. If the vehicle has a repair history that pertains to the customer's current complaint, review the repair.
- Inspect the vehicle for any aftermarket accessories that may have been installed incorrectly.
- Check for any service bulletin(s) related to the customer's complaint or DTCs. If a service bulletin applies, follow the instructions of the service bulletin.

Choose the following scenario that best applies:

The vehicle inspection or service bulletin repaired the customer's complaint.

- Testing complete.

A DTC is present, the vehicle inspection revealed no concerns, no service bulletins apply, or the service bulletin did not repair the customer's complaint.

- Go To 2

2. **ACTIVE DTC**

NOTE: Because a hot vehicle can conceal a potential leak, allow the vehicle to reach ambient temperature before continuing with this procedure.

NOTE: A loose gas cap could have caused this DTC to set. Make sure the gas cap is tight and in good condition.

1. Start the engine.
2. Allow the engine to reach normal operating temperature.
3. With a scan tool, read DTCs.

Is the DTC Active or Pending at this time?

Yes

- Go To 3

No

- Test complete, the condition or conditions that originally set this DTC are not present at this time. Using the wiring diagrams as a guide, check all related splices and connectors for signs of water intrusion, corrosion, pushed out or bent terminals, and correct pin tension.
- Perform the INTERMITTENT CONDITION diagnostic procedure. Refer to **INTERMITTENT CONDITION** .

3. **EVAP SYSTEM INSPECTION**
   1. Visually and physically Inspect the entire Evaporative Emission System for any of the following conditions:
      - Holes or cracks
      - Loose seal points
      - Damaged or missing components
      - Incorrect routing of hoses and tubes
      - Loose or missing Fuel Filler Cap or seal
      - Damaged locking tabs on the Fuel Filler Cap and/or filler tube
      - Damaged seal points on the Fuel Filler Cap and/or filler tube

      Were any problems found?

      Yes

      - Repair as necessary.
      - Perform the POWERTRAIN VERIFICATION TEST. Refer to **POWERTRAIN VERIFICATION TEST** .

      No

      - Go To 4
4. **VERIFY EVAPORATIVE EMISSION LEAK**

   WARNING: **Keep lit cigarettes, sparks, flames, and other ignition sources away from the test area to prevent the ignition of explosive gases. Keep the test area well ventilated. Failure to do so**

may result in possible serious or fatal injury.

1. To continue testing, you will need Evaporative Emission Leak Detector (EELD) 8404C.

NOTE: The fuel tank should have between 20% and 80% of fuel tank capacity to properly test the Evap system.

2. Connect the red power lead of EELD to the battery positive terminal and the black ground lead to battery negative terminal.
3. Block the vent hose of the Evap Canister.
4. Connect shop air to the EELD.
5. Set the smoke/air control switch to AIR.
6. Insert the tester's AIR supply tip (clear hose) into the 0.040 orifice on the tester's control panel.
7. Press the remote smoke/air start button.
8. Position the red flag on the air flow meter so it is aligned with the indicator ball.
9. When the calibration is complete, release the remote button. The EELD flow meter is now calibrated in liters per minute.
10. Install the service port adapter (special tool #8404-14, Adapter, Evaporative Service Port) on the vehicle's service port (if equipped) or install the service adapter (special tool #8404-ADP, Smoke Machine Adapters) into the filter line.
11. Connect the AIR supply hose from the EELD to the service port (if equipped) or to the adapter (special tool #8404-ADP, Smoke Machine Adapters).
12. Press the remote button to activate AIR flow.

NOTE: Larger volume fuel tanks, lower fuel levels, or vehicles equipped with a Flow Management Valve may indicate high flow and will require four to five minutes to fill.

13. Compare the flow meter indicator ball reading to the red flag.

14. ABOVE the red flag indicates a leak present.
15. BELOW the red flag indicates a sealed system.

Is the indicator ball above the red flag?

Yes

- Go To 5

No

- Review the Freeze Frame data recorded in step 1. If the data indicates that the vehicle was in motion when the DTC was set, verify that all hoses are properly connected.
- Perform the POWERTRAIN VERIFICATION TEST. Refer to **POWERTRAIN VERIFICATION TEST** .

5. **EVAPORATIVE EMISSION LEAK DETECTION**

NOTE: A thorough visual inspection of the Evap system hoses, tubes, and connections may save time in your diagnosis. Look for any physical damage or signs of wetness at connections. The strong smell of fuel vapors may aid diagnosis also.

1. To continue testing, you will need Evaporative Emissions Leak Detector (EELD) (special tool #8404C, Kit, EELD And Accessory).
2. Remove the Air supply hose from the service port (if equipped) or from the adapter (special tool #8404-ADP, Smoke Machine Adapters).
3. Connect the SMOKE supply tip (black hose) to the service port (if equipped) or to the adapter (special tool #8404-ADP, Smoke Machine Adapters).
4. Set the smoke/air control switch to SMOKE.

NOTE: The flow meter indicator ball will not move in the smoke mode.

5. Press the remote smoke/air start button.

NOTE: Make sure that smoke has filled the Evap system by continuing to press the remote smoke/air start button, remove the vehicle fuel cap, and wait for the smoke to exit. Once smoke is indicated reinstall the fuel cap.

NOTE: For optimal performance, introduce smoke into the system for an additional 60 seconds; continue introducing smoke at 15 second intervals, as necessary.

6. While still holding the remote smoke/air start button, use the white light (special tool #8404-CLL, Light, White) to follow the Evap system path, and look for the source of the leak indicated by exiting smoke.
7. If a leak is concealed from view (i.e., top of fuel tank), release the remote smoke/air start button, and use the ultraviolet (UV) black light (special tool #8404-UVL, Light, UV) and the yellow goggles (special tool #8404-20, Goggles, Yellow) to look for residual traces of dye that is left behind by the smoke.
8. The exiting smoke deposits a residual fluid that is either bright green or bright yellow in color when viewed with a UV light.

NOTE: The Evap System is divided into three zones. A leak from any of these zones can cause this DTC to set. The lists below specify the possible leak points in that specific zone. For further assistance see the ZONE IDENTIFICATION CHARTS below.

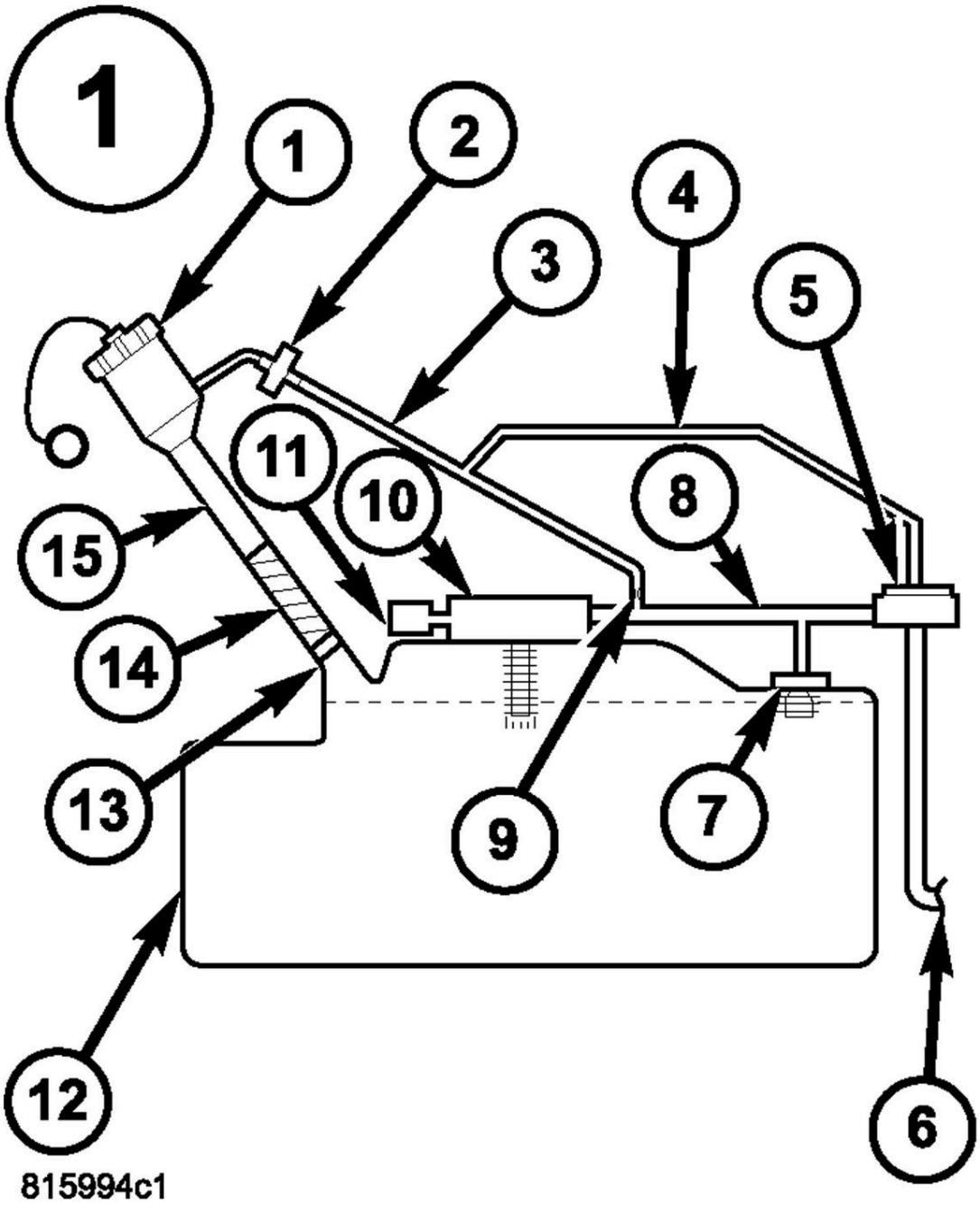

Fig. 50: EVAP System Components Zone 1
Courtesy of CHRYSLER GROUP, LLC

ZONE 1 EVAP SYSTEM COMPONENTS	
CALLOUT	DESCRIPTION
1	Fuel Cap
2	Recirculation Check Valve
3	Vapor Recirculation Line
4	Signal Vapor Line for FVM

5	Flow Management Valve
6	Fuel Tank to Canister Vapor Line
7	Fuel Tank Vent (Check Valve)
8	Vapor Line to Canister
9	Flow Control Orifice
10	Control Valve
11	Liquid Trap
12	Fuel Tank
13	Check valve
14	Fuel Fill Tube to Tank connector
15	Fuel Fill Tube

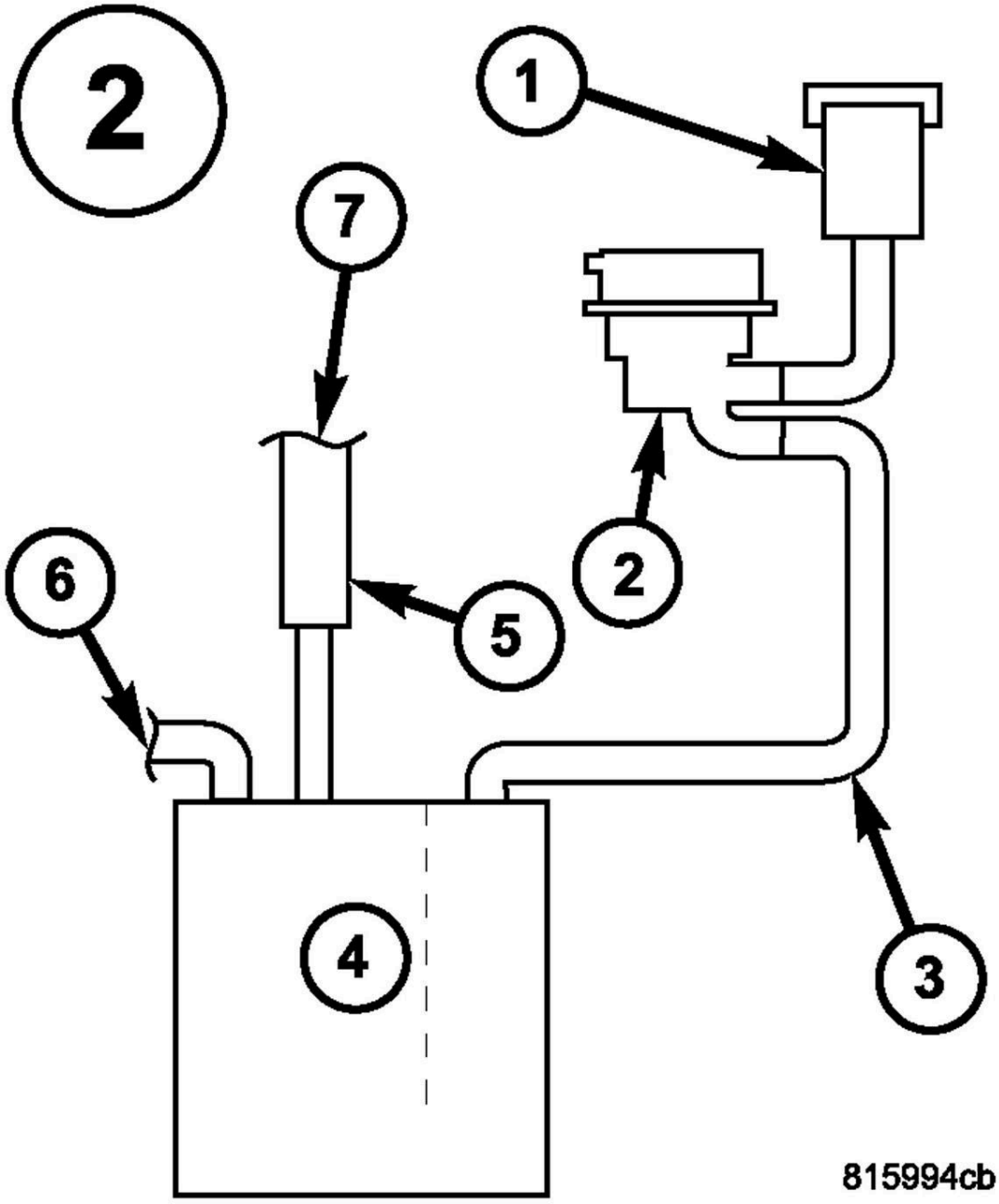

Fig. 51: EVAP System Components Zone 2
Courtesy of CHRYSLER GROUP, LLC

ZONE 2 EVAP SYSTEM COMPONENTS	
CALLOUT	DESCRIPTION
1	Filter
2	ESIM Switch
3	Canister Vent Line
4	Evap Canister

5	Chassis Purge Valve
6	Fuel Tank to Canister Vapor Line connection
7	Evap Purge connection

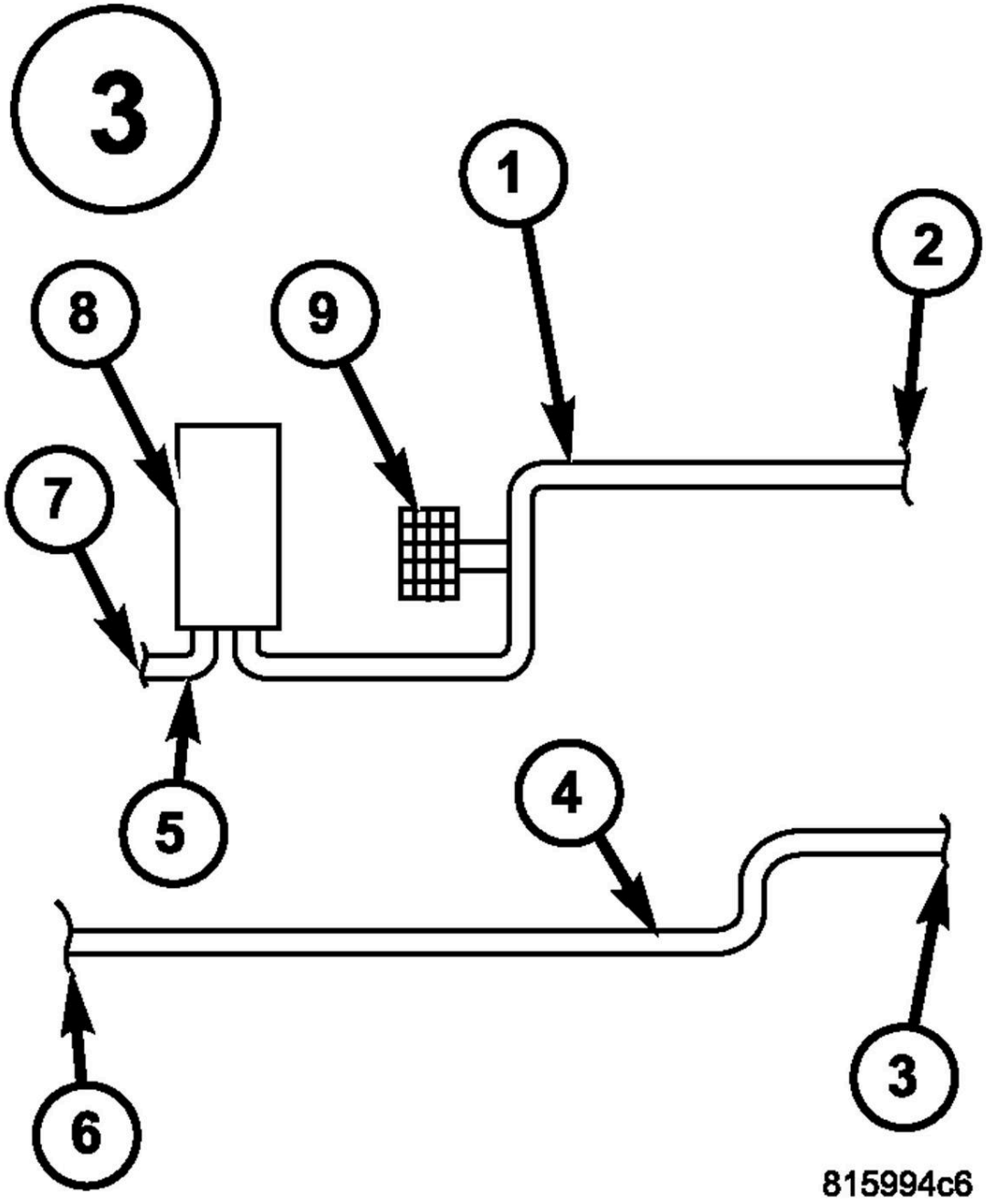

Fig. 52: EVAP System Components Zone 3
Courtesy of CHRYSLER GROUP, LLC

ZONE 3 EVAP SYSTEM COMPONENTS	

CALLOUT	DESCRIPTION
1	Evap Purge Vacuum Line
2	Connection to Chassis Line
3	Connection to Canister
4	Chassis Purge Line
5	Evap Purge Vacuum Line
6	Connection to Evap Purge Harness
7	Chassis Evap Purge Line connection to Engine Vacuum
8	Evap Purge Valve
9	Service Port

NOTE: Carefully inspect the vent side of the Evap Canister. Due to the filtering system in the canister the smoke may not be as thick. Introducing smoke into the filtered side of the canister may assist in locating the leak.

Select the appropriate response from the list below:

A leak was found at the gas cap or fuel filler tube

- Go To 6

A leak was found in one or more of the Evap System zones

- If the leak is at a hose connection, remove the hose then reconnect the hose and check for a leak again. All other leaks repair as necessary.
- Perform the POWERTRAIN VERIFICATION TEST. Refer to **POWERTRAIN VERIFICATION TEST** .

No leaks were detected

- Go To 7

6. **LEAK AT GAS CAP**
   1. Remove the SMOKE supply tip (black hose) from the service port (if equipped) or to the adapter (special tool #8404-ADP, Smoke Machine

Adapters).

2. Install Leak Check Adapter (special tool #8382, Adapter, Leak Check) (1/4 turn cap) or Fuel Tank Adapter (special tool #6922, Adapter, Fuel Tank) (screw on cap) and Leak Check Adapter (special tool #8399, Adapter, Leak Check) (secondary seal depressor) and repeat step 5.

NOTE: The gas cap adapter is being used as a known good cap.

Was a leak found at the gas cap adapter?

Yes

- Replace the Fuel Filler tube assembly.
- Perform the POWERTRAIN VERIFICATION TEST. Refer to **POWERTRAIN VERIFICATION TEST** .

No

- Replace the gas cap.
- Perform the POWERTRAIN VERIFICATION TEST. Refer to **POWERTRAIN VERIFICATION TEST** .

7. **EVAP PURGE SOLENOID**

NOTE: After disconnecting the Evap Purge Solenoid vacuum connections, inspect the lines and solenoid for signs of contamination.

1. Disconnect the vacuum hoses at the Evap Purge Solenoid.
2. Using a hand vacuum pump, apply 10 in. Hg. to the "CAN" side of the Evap Purge Solenoid.

NOTE: The solenoid should hold vacuum for a minimum of 15 seconds.

3. Turn the ignition on.
4. Using the scan tool, actuate the Evap Purge Solenoid to the ON position.

NOTE: The vacuum should drop when the solenoid is actuated.

Does the solenoid function as described above?

Yes

- Go To 8

No

- Verify that there is good pin to terminal contact in the Solenoid and PCM harness connectors. Replace the Evap Purge Solenoid in accordance with the service information if no problems were found in the connectors. Refer to **SOLENOID, EVAPORATIVE EMISSIONS PURGE, REMOVAL** .
- Perform the POWERTRAIN VERIFICATION TEST. Refer to **POWERTRAIN VERIFICATION TEST** .

8. **ESIM SWITCH**
   1. Using the wiring diagram/schematic as a guide, inspect the wiring and connectors between the ESIM Switch and the PCM.
   2. Look for any chafed, pierced, pinched, or partially broken wires.
   3. Look for broken, bent, pushed out or corroded terminals.
   4. Perform any Technical Service Bulletins that may apply.

   Were any problems found?

   Yes

   - Repair as necessary.
   - Perform the POWERTRAIN VERIFICATION TEST. Refer to **POWERTRAIN VERIFICATION TEST** .

   No

   - Verify that there is good pin to terminal contact in the ESIM Switch and PCM harness connectors. Replace the ESIM Switch in accordance with the service information if no problems were found in the connectors.

- Perform the POWERTRAIN VERIFICATION TEST. Refer to **POWERTRAIN VERIFICATION TEST** .

P0457-EVAP SYSTEM - LOOSE FUEL CAP

For a complete wiring diagram, **refer to appropriate SYSTEM WIRING DIAGRAMS article** .

THEORY OF OPERATION

Fuel level is recorded when the ignition key is turned off and is compared to the fuel level when the ignition key is turned back on. The Powertrain Control Module (PCM) recognizes a 25% increase in fuel level and will fail the Large leak test because the Fuel Filler Cap is faulty or not installed properly, or the Capless Fuel Filler Assembly flap did not seal properly after fueling. A LOOSE GAS CAP message will be displayed on the cluster to inform the customer.

WHEN MONITORED

After the ignition is switched on, the Powertrain Control Module (PCM) detects a 25% increase in fuel level from the previous ignition off state.

SET CONDITION

The Powertrain Control Module (PCM) initiated an intrusive test after a 25% fuel level increase and the switch either opened before the maximum calibrated time, which is determined to be a large leak or the switch did not close at all, which is determined to be a general evaporative system failure. One good trip turns off the MIL.

POSSIBLE CAUSES

POSSIBLE CAUSES
LOOSE OR MISSING FUEL FILLER CAP

Always perform the Pre-Diagnostic Troubleshooting procedure before proceeding. Refer to PRE-DIAGNOSTIC TROUBLESHOOTING PROCEDURE .

DIAGNOSTIC TEST

1. **FUEL FILLER CAP/CAPLESS FUEL FILLER VISUAL**

INSPECTION

1. Remove the Fuel Filler Cap (if applicable) and visually inspect for the following:
   - Loose or missing Fuel Filler Cap or seal
   - Damaged locking tabs on the Fuel Filler Cap and/or filler tube
   - Damaged seal points on the Fuel Filler Cap and/or filler tube
2. If the vehicle is equipped with the Capless Fuel Filler Assembly, visually inspect the flap and seal for proper sealing.

   Were any problems found?

   Yes

   - Repair as necessary.
   - Perform the PCM VERIFICATION TEST. Refer to **POWERTRAIN VERIFICATION TEST** .

   No

   - Go To 2

2. **FUEL FILLER CAP**
   1. Reinstall the Fuel Filler Cap if equipped.
   2. Start the engine.
   3. Allow the engine to idle.
   4. Using the scan tool, perform the ESIM FORCED MONITOR TEST. Allow the test to complete.

      Did the test pass the ESIM FORCED MONITOR TEST leak test?

      Yes

      - Test complete, the condition or conditions that originally set this DTC are not present at this time.
      - Perform the PCM VERIFICATION TEST. Refer to **POWERTRAIN VERIFICATION TEST** .

      No

- Replace the Fuel Filler Cap or Capless Fuel Filler Assembly in accordance with the service information.
- Perform the CHECKING FOR AN INTERMITTENT DTC diagnostic procedure. Refer to **INTERMITTENT CONDITION** .

P0461-FUEL LEVEL SENSOR 1 PERFORMANCE

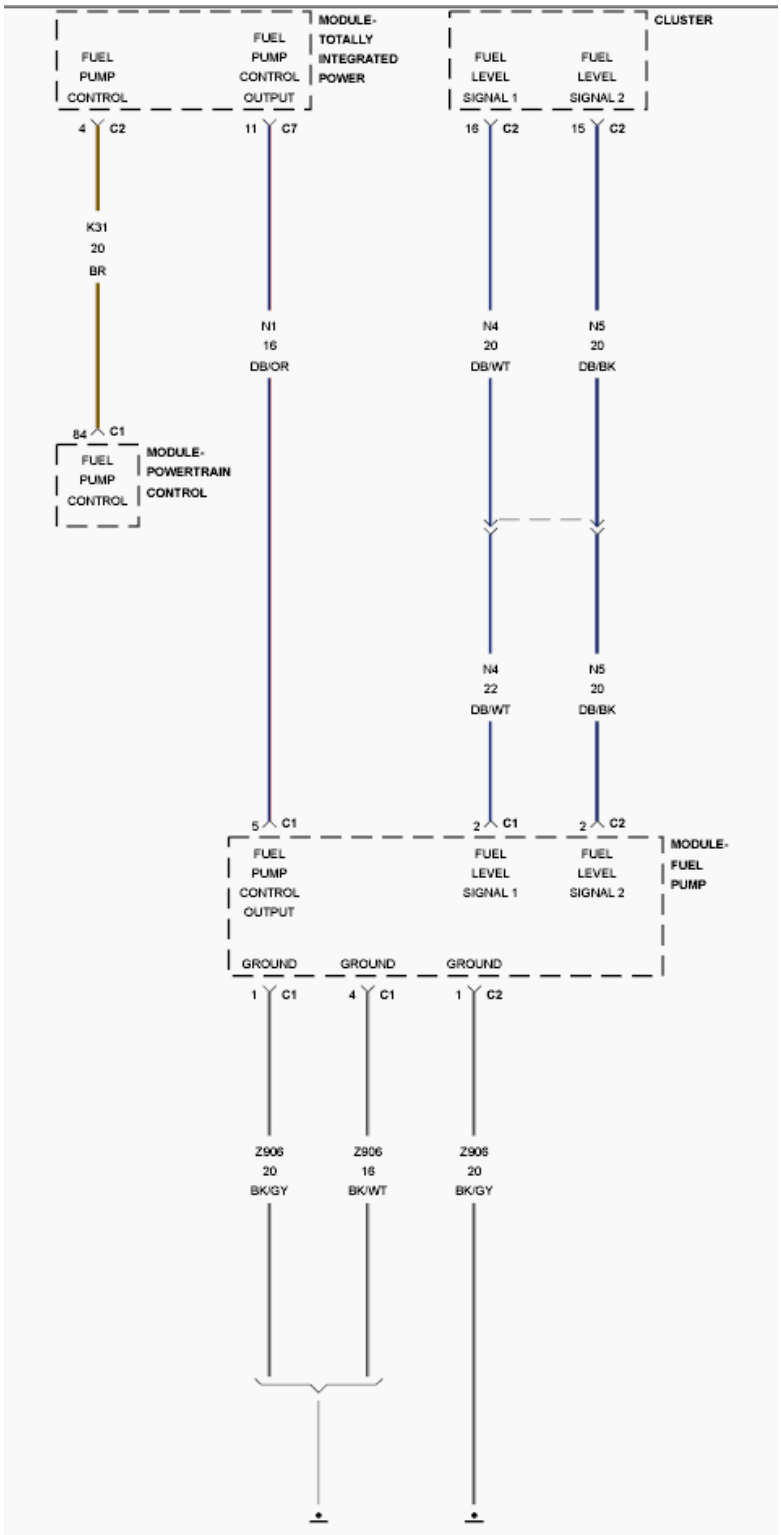

Fig. 53: Fuel Pump Circuit Diagram
Courtesy of CHRYSLER GROUP, LLC

For a complete wiring diagram, **refer to appropriate SYSTEM WIRING DIAGRAMS article** .

WHEN MONITORED

With engine run time greater than 128 seconds.

SET CONDITION

The Powertrain Control Module (PCM) detects no change in the Fuel Level Sensor 1 circuit voltage over time during monitoring.

POSSIBLE CAUSES

Possible Causes
FUEL PUMP MODULE WIRING OR CONNECTORS
INTERIOR OR EXTERIOR FUEL TANK DAMAGE
(N4) FUEL LEVEL SIGNAL 1 CIRCUIT SHORTED TO VOLTAGE
(N4) FUEL LEVEL SIGNAL 1 CIRCUIT SHORTED TO GROUND
(N4) FUEL LEVEL SIGNAL 1 CIRCUIT OPEN OR HIGH RESISTANCE
(Z906) GROUND CIRCUIT OPEN OR HIGH RESISTANCE
FUEL LEVEL SENSOR 1
INSTRUMENT CLUSTER (CCN)

Always perform the Pre-Diagnostic Troubleshooting procedure before proceeding. Refer to PRE-DIAGNOSTIC TROUBLESHOOTING PROCEDURE .

DIAGNOSTIC TEST

1. **DIAGNOSTIC TROUBLE CODE (DTC) IS ACTIVE**
    1. Turn the ignition on.
    2. Using the scan tool, read DTCs and review the DTC environmental information.

       Is the good trip counter greater than 0?

       Yes

       - Test complete, the condition or conditions that originally set this DTC are not present at this time. Using the wiring diagrams as a guide, check all related splices and connectors for signs of water intrusion, corrosion, pushed out or bent terminals, and correct pin tension.
       - Perform the INTERMITTENT CONDITION diagnostic procedure.

Refer to **INTERMITTENT CONDITION** .

No

- Go To 2

2. **EXTERIOR FUEL TANK DAMAGE**
   1. Inspect the exterior of the fuel tank for any damage that may restrict the movement of the fuel level sensor floats.

      Were any problems found?

      Yes

      - Replace the fuel tank as necessary.
      - Perform the BODY VERIFICATION TEST. Refer to **STANDARD PROCEDURE** .

      No

      - Go To 3

3. **FUEL PUMP MODULE WIRING AND CONNECTORS**
   1. Using the wiring diagram/schematic as a guide, inspect the wiring and connectors between the Fuel Pump Module harness connector and the Instrument Cluster (CCN).
   2. Look for any chafed, pierced, pinched or partially broken wires.
   3. Look for broken, bent, pushed out or corroded terminals.
   4. Perform any Technical Service Bulletins that may apply.

      Were any problems found?

      Yes

      - Repair as necessary.
      - Perform the BODY VERIFICATION TEST. Refer to **STANDARD PROCEDURE** .

      No

      - Go To 4

4. **(N4) FUEL LEVEL SIGNAL 1 CIRCUIT VOLTAGE**

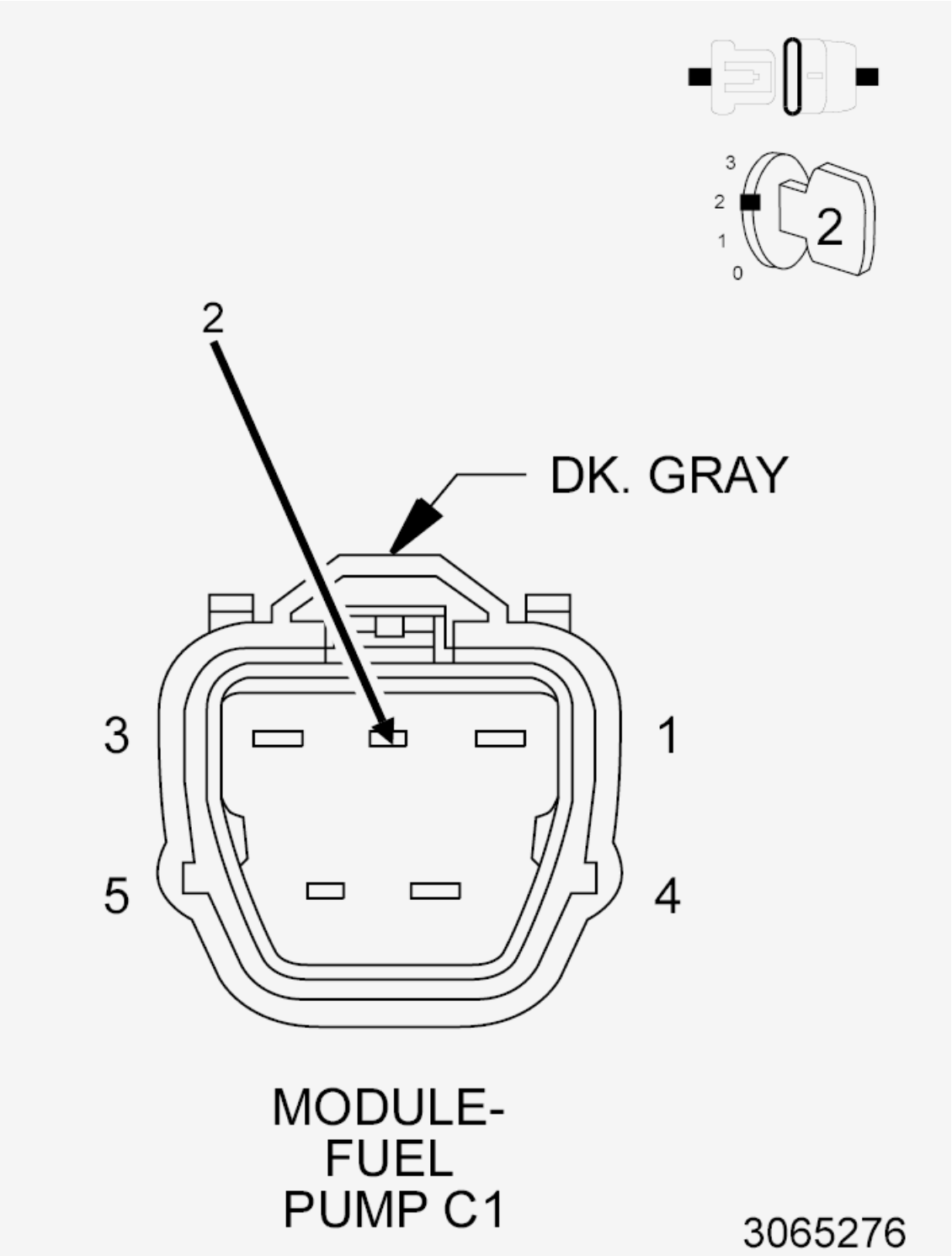

Fig. 54: Fuel Pump Module Harness Connector End View
Courtesy of CHRYSLER GROUP, LLC

1. Turn the ignition off.
2. Disconnect the Fuel Pump Module harness connector.

3. Turn the ignition on.
4. Using the scan tool, read the Fuel Level Sensor 1 circuit voltage.

NOTE: The sensor voltage should be approximately 5.0 Volts (plus or minus 0.1 Volt) with the connector disconnected.

5. Turn the ignition off.
6. Connect a jumper wire between the (N4) Fuel Level Signal 1 circuit and ground in the Fuel Pump Module harness connector.
7. Turn the ignition on.
8. Using the scan tool, read the Fuel Level Sensor 1 circuit voltage.

NOTE: The sensor voltage should be approximately 0.0 Volts (plus or minus 0.1 Volt) with the jumper wire in place.

Does the scan tool display the voltage as described above?

Yes

- Go To 5

No

- Go To 8

5. **(Z906) GROUND CIRCUIT OPEN OR HIGH RESISTANCE**

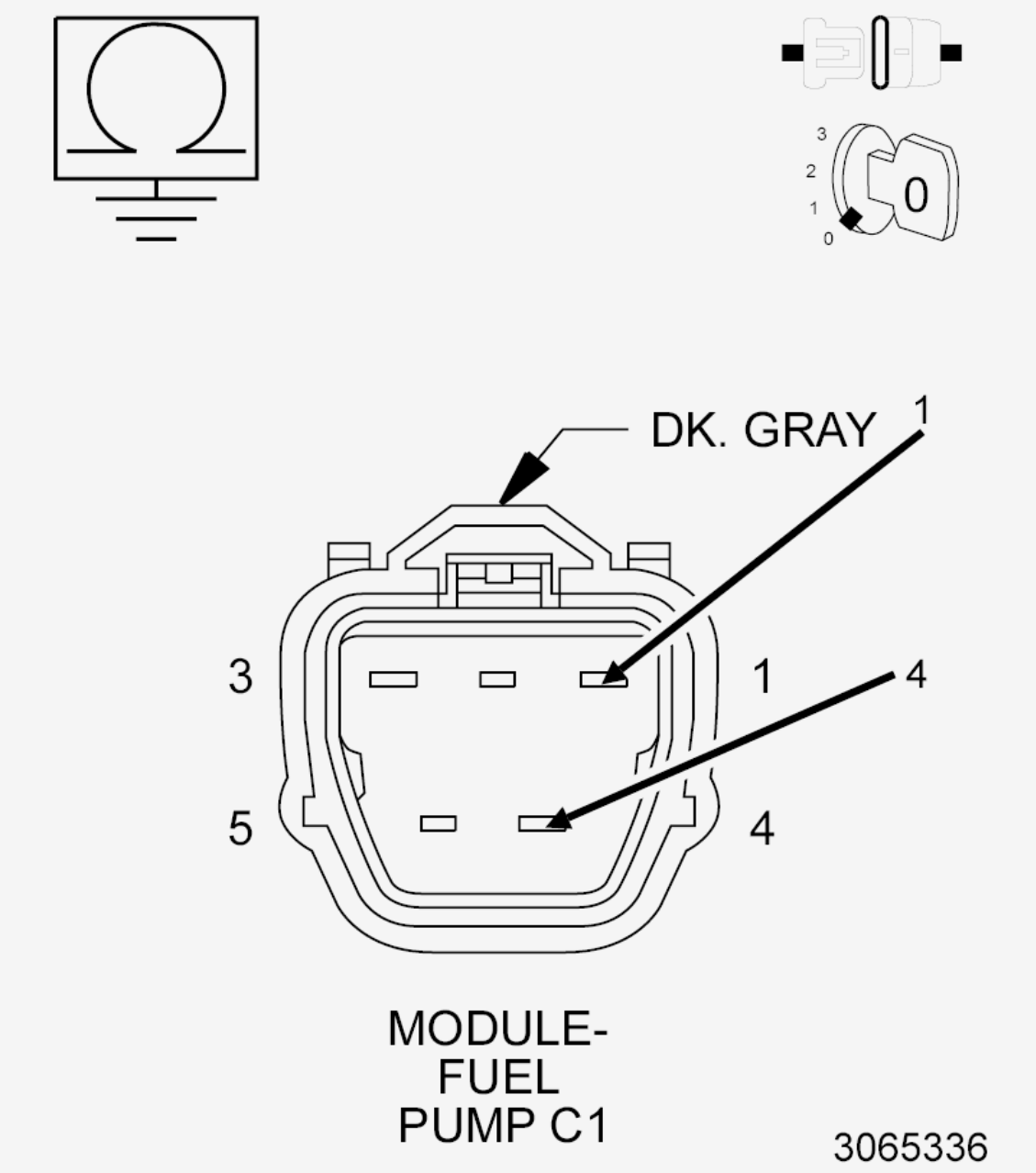

Fig. 55: Checking Ground Circuit For Open Or High Resistance
Courtesy of CHRYSLER GROUP, LLC

1. Turn the ignition off.
2. Measure the resistance between ground and the (Z906) Ground circuit in the Fuel Pump Module harness connector.

   Is the resistance below 5.0 Ohms?

   Yes

   - Go To 6

No

- Repair the open or high resistance in the (Z906) Ground.
- Perform the BODY VERIFICATION TEST. Refer to **STANDARD PROCEDURE** .

6. **FUEL TANK WIRING HARNESS INSPECTION**

WARNING: The fuel system is under a constant pressure (even with the engine off). Before testing or servicing any fuel system hose, fitting or line, the fuel system pressure must be released. Failure to follow these instructions can result in possible serious or fatal injury.

1. Remove the fuel tank in accordance with the Service Information.
2. Inspect the wiring and connectors between the Fuel Pump Module harness connector and the Fuel Level Sensor.
3. Look for any chafed, pierced, pinched or partially broken wires.
4. Look for broken, bent, pushed out or corroded terminals.

Were any problems found?

Yes

- Repair as necessary.
- Perform the BODY VERIFICATION TEST. Refer to **STANDARD PROCEDURE** .

No

- Go To 7

7. **FUEL LEVEL SENSOR 1 INSPECTION**

1. Remove the Fuel Level Sensor 1 sensor.
2. Inspect the Fuel Level Sensor 1 and the inside of the fuel tank for any condition that would restrict the movement of the fuel level sensor float.

Were any problems found?

Yes

- Repair or replace the fuel tank components as necessary.
- Perform the BODY VERIFICATION TEST. Refer to **STANDARD PROCEDURE** .

No

- Replace the Fuel Level Sensor 1.
- Perform the BODY VERIFICATION TEST. Refer to **STANDARD PROCEDURE** .

8. **(N4) FUEL LEVEL SIGNAL 1 CIRCUIT SHORTED TO VOLTAGE**

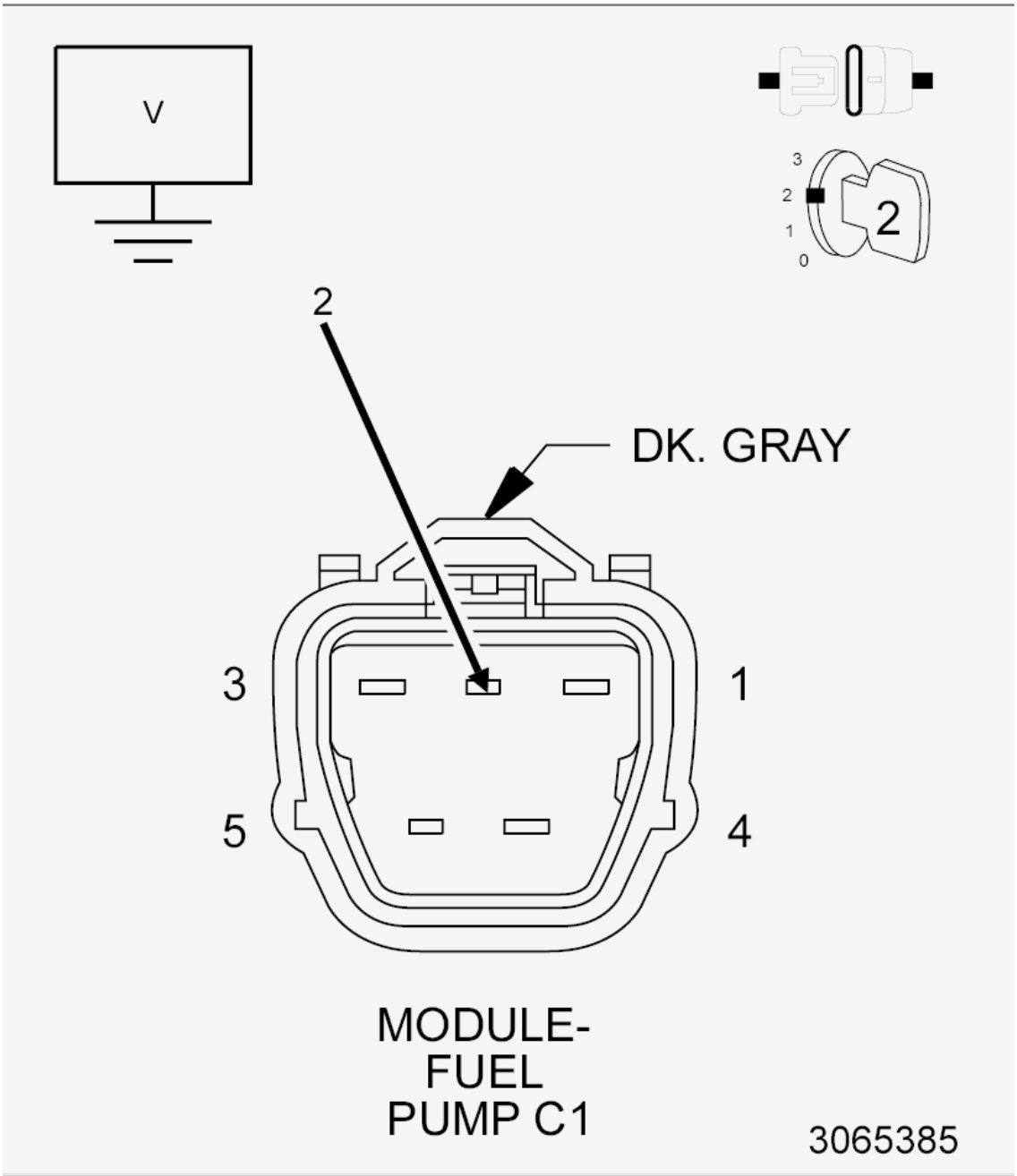

Fig. 56: Checking Fuel Level Signal 1 Circuit For Short To Voltage
Courtesy of CHRYSLER GROUP, LLC

1. Turn the ignition off.
2. Disconnect the Instrument Cluster (CCN) C2 harness connector.
3. Turn the ignition on.
4. Measure the voltage of the (N4) Fuel Level Signal 1 circuit in the Fuel Level Sensor 1 harness connector.

   Is there any voltage present?

Yes

- Repair the short to voltage in the (N4) Fuel Level Signal 1 circuit.
- Perform the BODY VERIFICATION TEST. Refer to **STANDARD PROCEDURE** .

No

- Go To 9

9. **(N4) FUEL LEVEL SIGNAL 1 CIRCUIT SHORTED TO GROUND**

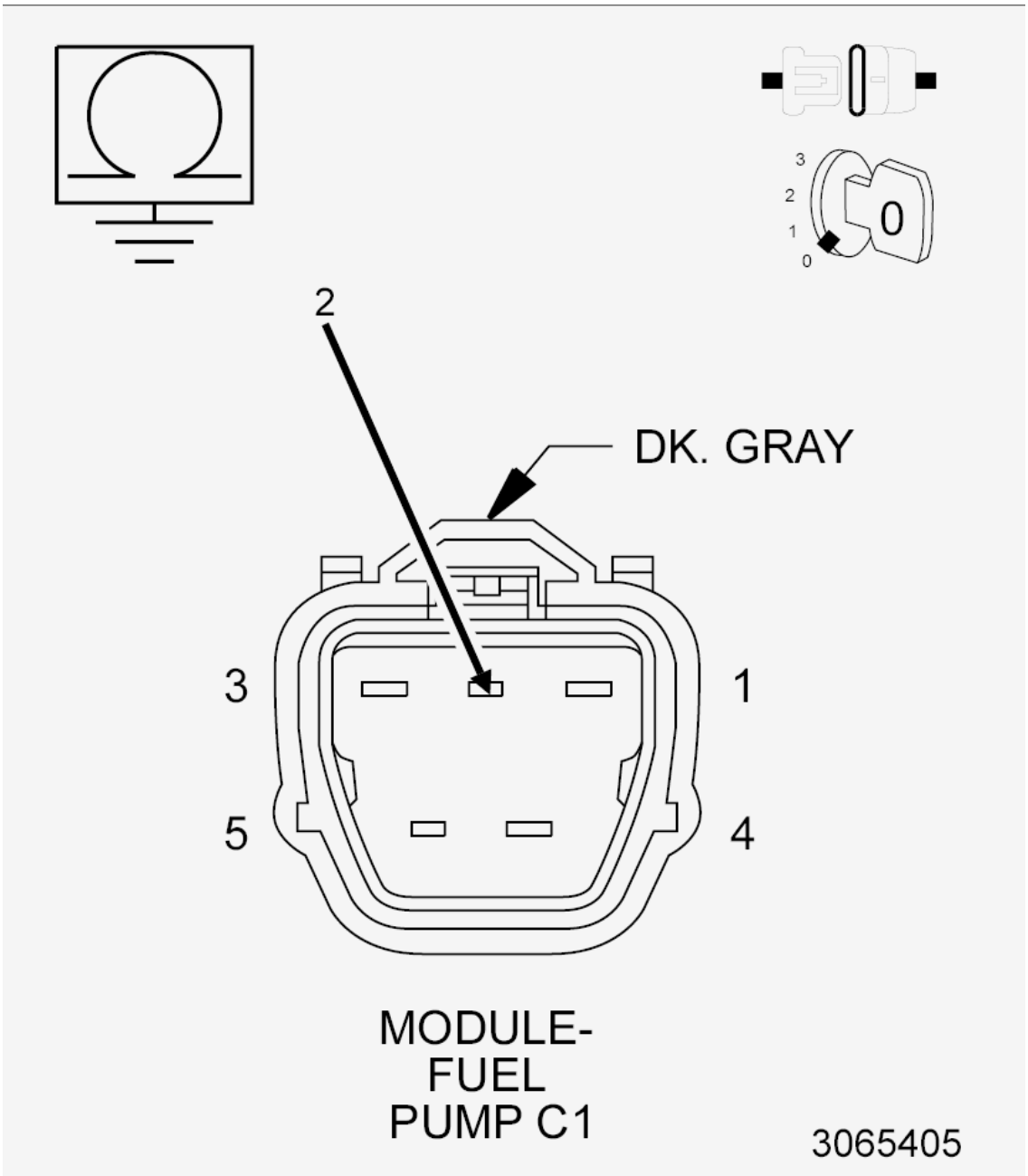

Fig. 57: Checking Fuel Level Signal 1 Circuit For Short To Ground
Courtesy of CHRYSLER GROUP, LLC

1. Turn the ignition off.
2. Measure the resistance between ground and the (N4) Fuel Level Signal 1 circuit in the Fuel Level Sensor 1 harness connector.

   Is the resistance above 100 Ohms?

   Yes

   - Go To 10

   No

   - Repair the short to ground in the (N4) Fuel Level Signal 1 circuit.
   - Perform the BODY VERIFICATION TEST. Refer to **STANDARD PROCEDURE** .

10. **(N4) FUEL LEVEL SIGNAL 1 CIRCUIT OPEN OR HIGH RESISTANCE**

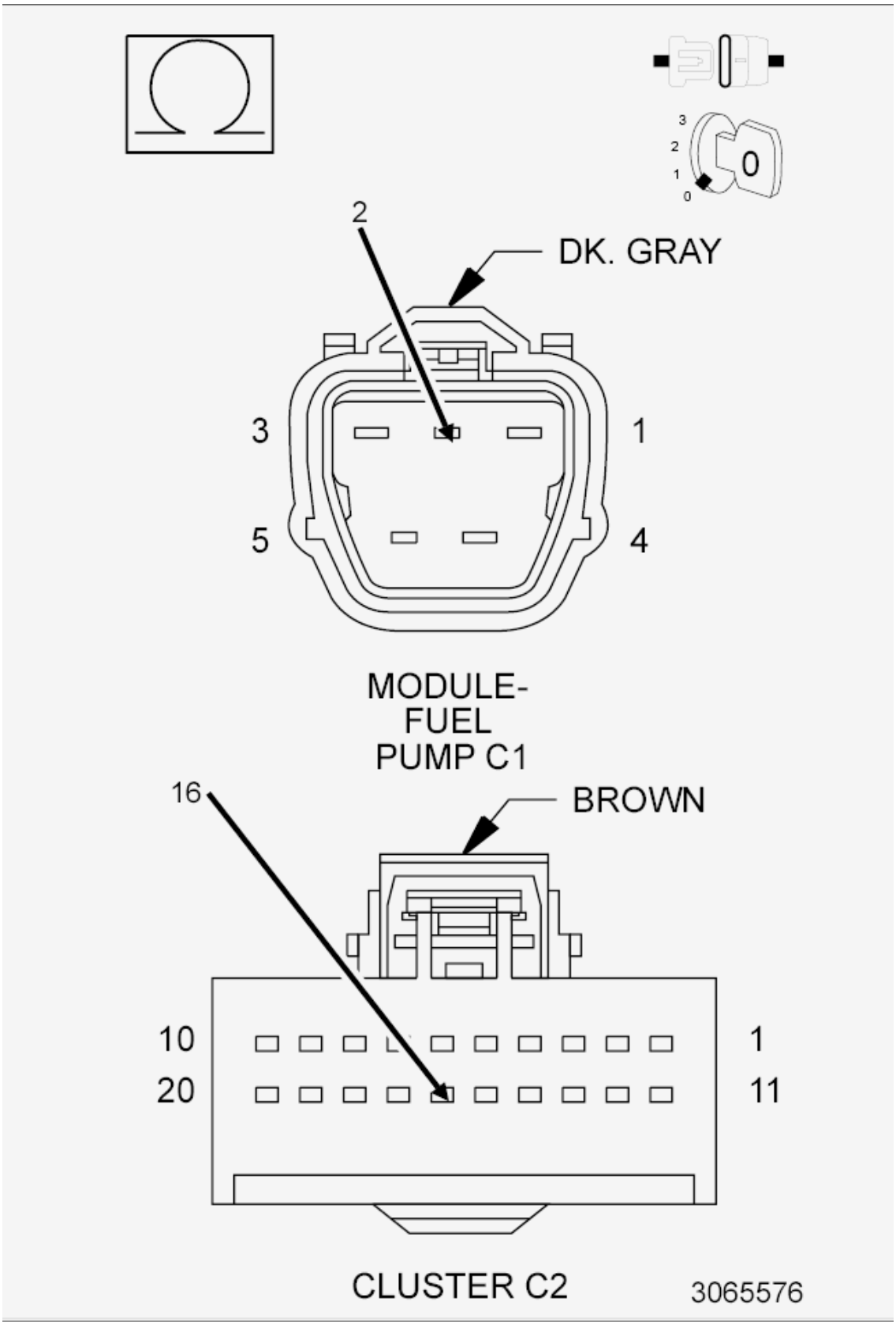

Fig. 58: Checking Fuel Level Signal 1 Circuit For Open Or High Resistance
Courtesy of CHRYSLER GROUP, LLC

1. Measure the resistance of the (N4) Fuel Level Signal 1 circuit between the Fuel Pump Module harness connector and the Instrument Cluster (CCN) C2 harness connector.

   Is the resistance below 5.0 Ohms?

   Yes

   - Go To 11

   No

   - Repair the open or high resistance in the (N4) Fuel Level Signal 1 circuit.
   - Perform the BODY VERIFICATION TEST. Refer to **STANDARD PROCEDURE** .

11. **INSTRUMENT CLUSTER (CCN)**
    1. Using the wiring diagram/schematic as a guide, inspect the wiring and connectors between the Fuel Pump Module and the Instrument Cluster (CCN).
    2. Look for any chafed, pierced, pinched or partially broken wires.
    3. Look for broken, bent, pushed out or corroded terminals.
    4. Perform any Technical Service Bulletins that may apply.

    Were any problems found?

    Yes

    - Repair as necessary.
    - Perform the BODY VERIFICATION TEST. Refer to **STANDARD PROCEDURE** .

    No

    - Replace the Instrument Cluster (CCN) in accordance with the Service Information.
    - Perform the BODY VERIFICATION TEST. Refer to **STANDARD PROCEDURE** .

P0462-FUEL LEVEL SENSOR 1 LOW CIRCUIT

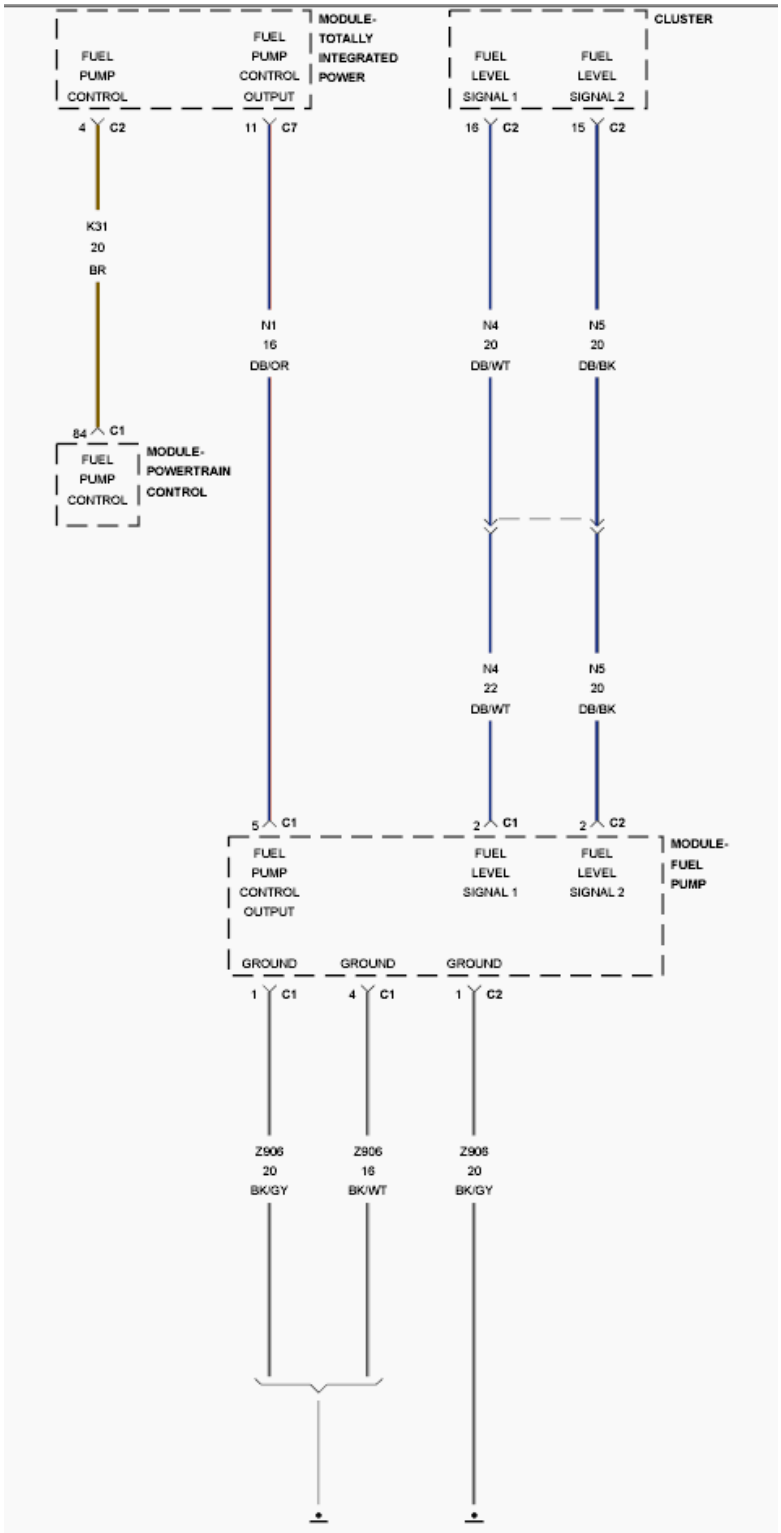

Fig. 59: Fuel Pump Circuit Diagram
Courtesy of CHRYSLER GROUP, LLC

For a complete wiring diagram, **refer to appropriate SYSTEM WIRING DIAGRAMS article** .

WHEN MONITORED

With the ignition on and battery voltage greater than 10.4 Volts.

SET CONDITION

The Powertrain Control Module (PCM) detects that the Fuel Level Sensor input voltage is below the minimum acceptable value.

POSSIBLE CAUSES

Possible Causes
(N4) FUEL LEVEL SIGNAL 1 CIRCUIT SHORTED TO GROUND
(N4) FUEL LEVEL SIGNAL 1 CIRCUIT OPEN OR HIGH RESISTANCE
FUEL LEVEL SENSOR
INSTRUMENT CLUSTER (CCN)

Always perform the Pre-Diagnostic Troubleshooting procedure before proceeding. Refer to PRE-DIAGNOSTIC TROUBLESHOOTING PROCEDURE .

DIAGNOSTIC TEST

1. **DIAGNOSTIC TROUBLE CODE (DTC) IS ACTIVE**
   1. Start the engine and allow it to reach normal operating temperature.

      WARNING: **When the engine is operating, do not stand in direct line with the fan. Do not put your hands near the pulleys, belts or fan. Do not wear loose clothing. Failure to follow these instructions may result in possible serious or fatal injury.**

   2. Using the scan tool, read the active DTCs.

      Does the scan tool display P0462-FUEL LEVEL SENSOR 1 LOW CIRCUIT?

      Yes

      - Go To 2

No

- Test complete, the condition or conditions that originally set this DTC are not present at this time. Using the wiring diagrams as a guide, check all related splices and connectors for signs of water intrusion, corrosion, pushed out or bent terminals, and correct pin tension.
- Perform the INTERMITTENT CONDITION diagnostic procedure. Refer to **INTERMITTENT CONDITION** .

2. **(N4) FUEL LEVEL SIGNAL 1 CIRCUIT SHORTED TO GROUND**

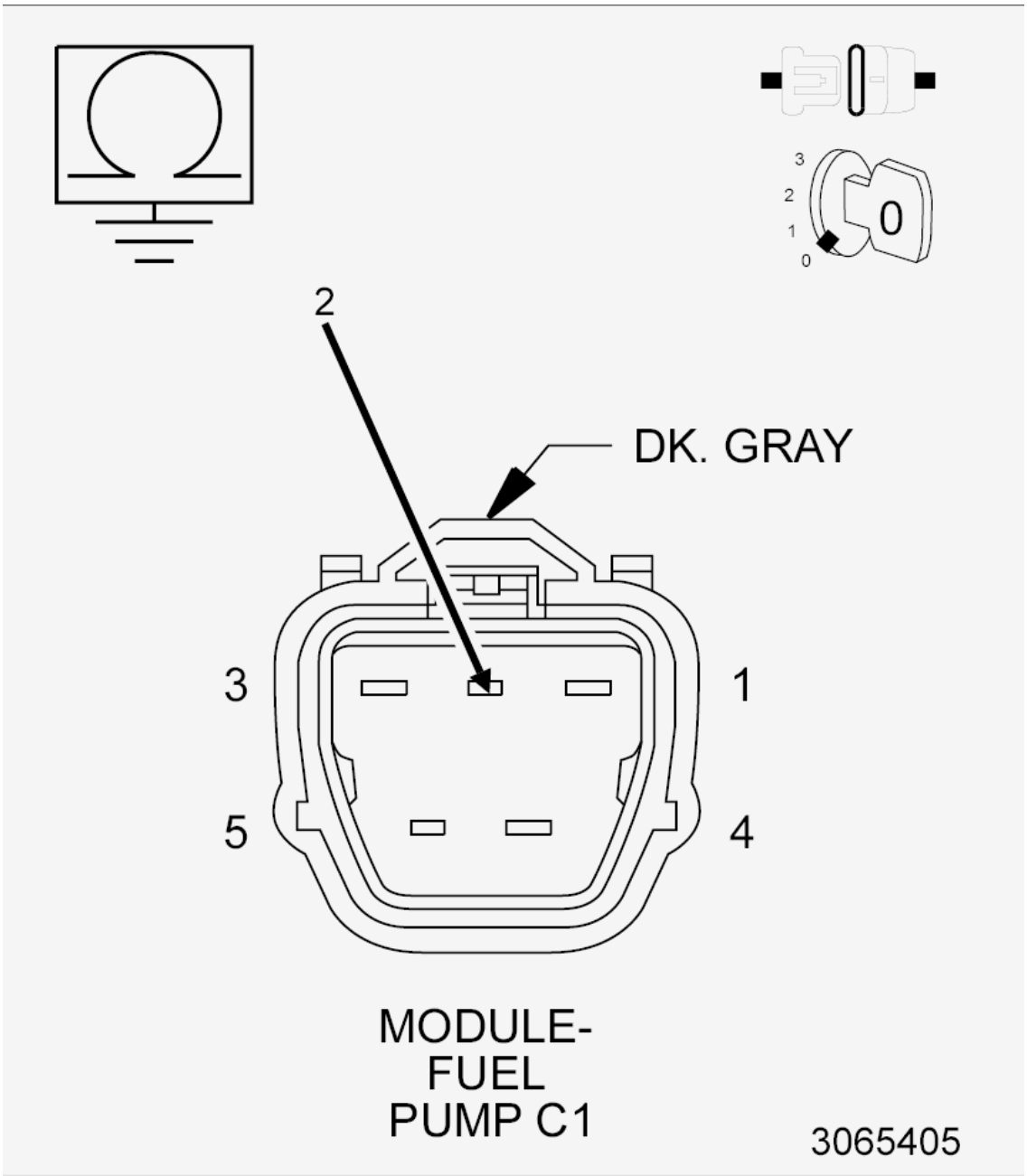

Fig. 60: Checking Fuel Level Signal 1 Circuit For Short To Ground
Courtesy of CHRYSLER GROUP, LLC

1. Turn the ignition off.
2. Disconnect the Fuel Pump Module harness connector.
3. Disconnect the Instrument Cluster (CCN) C2 harness connector.
4. Measure the resistance between ground and the (N4) Fuel Level Signal 1 circuit in the Fuel Level Sensor harness connector.

   Is the resistance above 100 Ohms?

   Yes

   - Go To 3

   No

   - Repair the short to ground in the (N4) Fuel Level Signal 1 circuit.
   - Perform the BODY VERIFICATION TEST. Refer to **STANDARD PROCEDURE** .

3. **(N4) FUEL LEVEL SIGNAL 1 CIRCUIT OPEN CIRCUIT OR HIGH RESISTANCE**

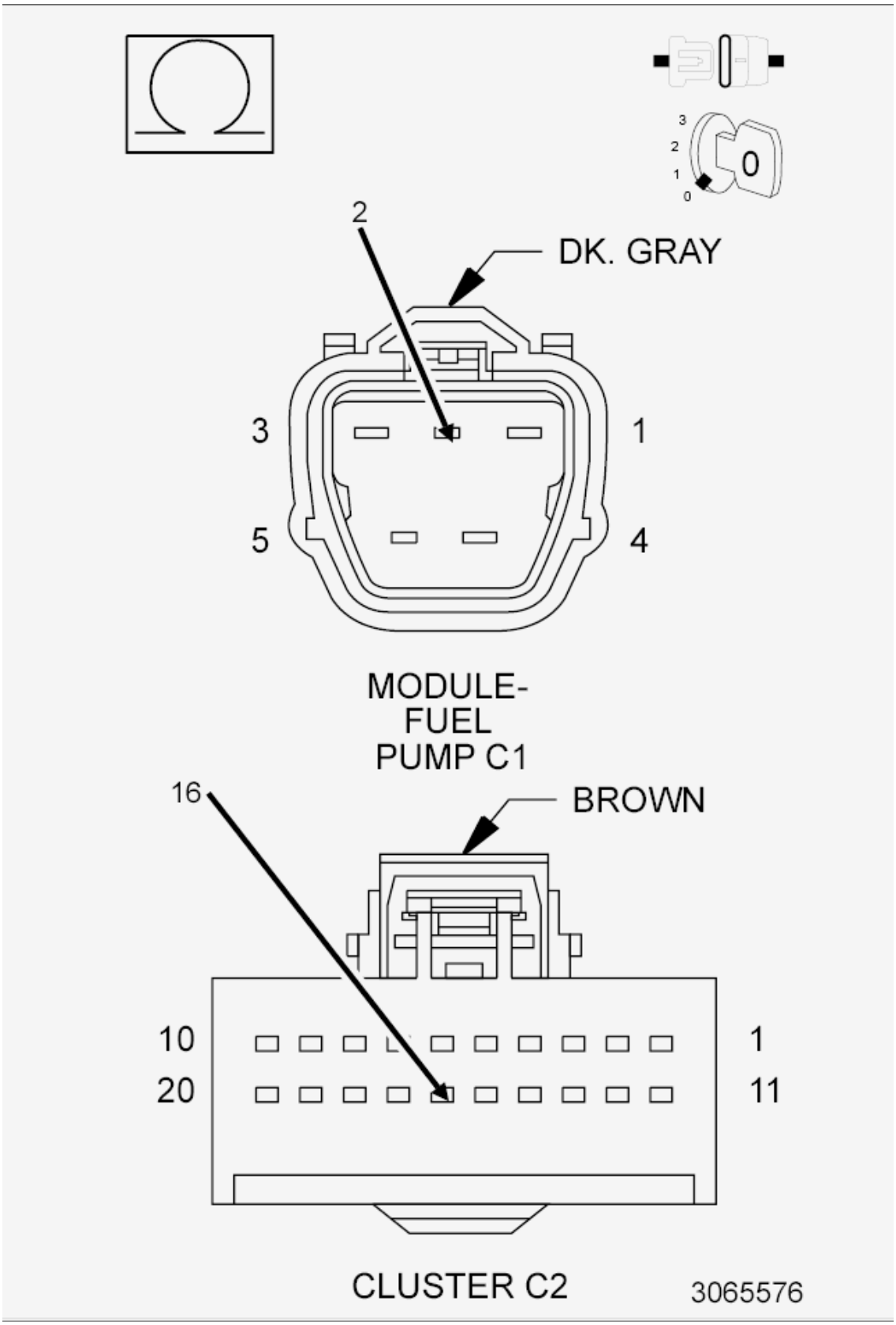

Fig. 61: Checking Fuel Level Signal 1 Circuit For Open Or High Resistance
Courtesy of CHRYSLER GROUP, LLC

1. Measure the resistance of the (N4) Fuel Level Signal 1 circuit between the Fuel Pump Module harness connector and the Instrument Cluster (CCN) C2 harness connector.

   Is the resistance below 5.0 Ohms?

   Yes

   - Go To 4

   No

   - Repair the open circuit or high resistance in the (N4) Fuel Level Signal 1 circuit.
   - Perform the BODY VERIFICATION TEST. Refer to **STANDARD PROCEDURE** .

4. **FUEL LEVEL SENSOR**
   1. Turn the ignition off.
   2. Connect the Instrument Cluster (CCN) C2 harness connector.
   3. Turn the ignition on.
   4. Using the scan tool, read the Fuel Level Sensor 1 signal voltage.

      Is the voltage above 4.5 Volts with the Fuel Level Sensor harness disconnected?

      Yes

      - Replace the Fuel Level Sensor in accordance with the service information. Refer to **SENDING UNIT AND SENSOR, FUEL LEVEL, REMOVAL** .
      - Perform the BODY VERIFICATION TEST. Refer to **STANDARD PROCEDURE** .

      No

      - Go To 5

5. **INSTRUMENT CLUSTER (CCN)**
   1. Using the wiring diagram/schematic as a guide, inspect the wiring and

connectors between the Fuel Level Sensor and the Instrument Cluster (CCN).

2. Look for any chafed, pierced, pinched or partially broken wires.
3. Look for broken, bent, pushed out or corroded terminals.
4. Perform any Technical Service Bulletins that may apply.

Were any problems found?

Yes

- Repair as necessary.
- Perform the BODY VERIFICATION TEST. Refer to **STANDARD PROCEDURE** .

No

- Replace and program the Instrument Cluster (CCN) in accordance with the Service Information. Refer to **REMOVAL** .
- Perform the BODY VERIFICATION TEST. Refer to **STANDARD PROCEDURE** .

P0463-FUEL LEVEL SENSOR 1 HIGH CIRCUIT

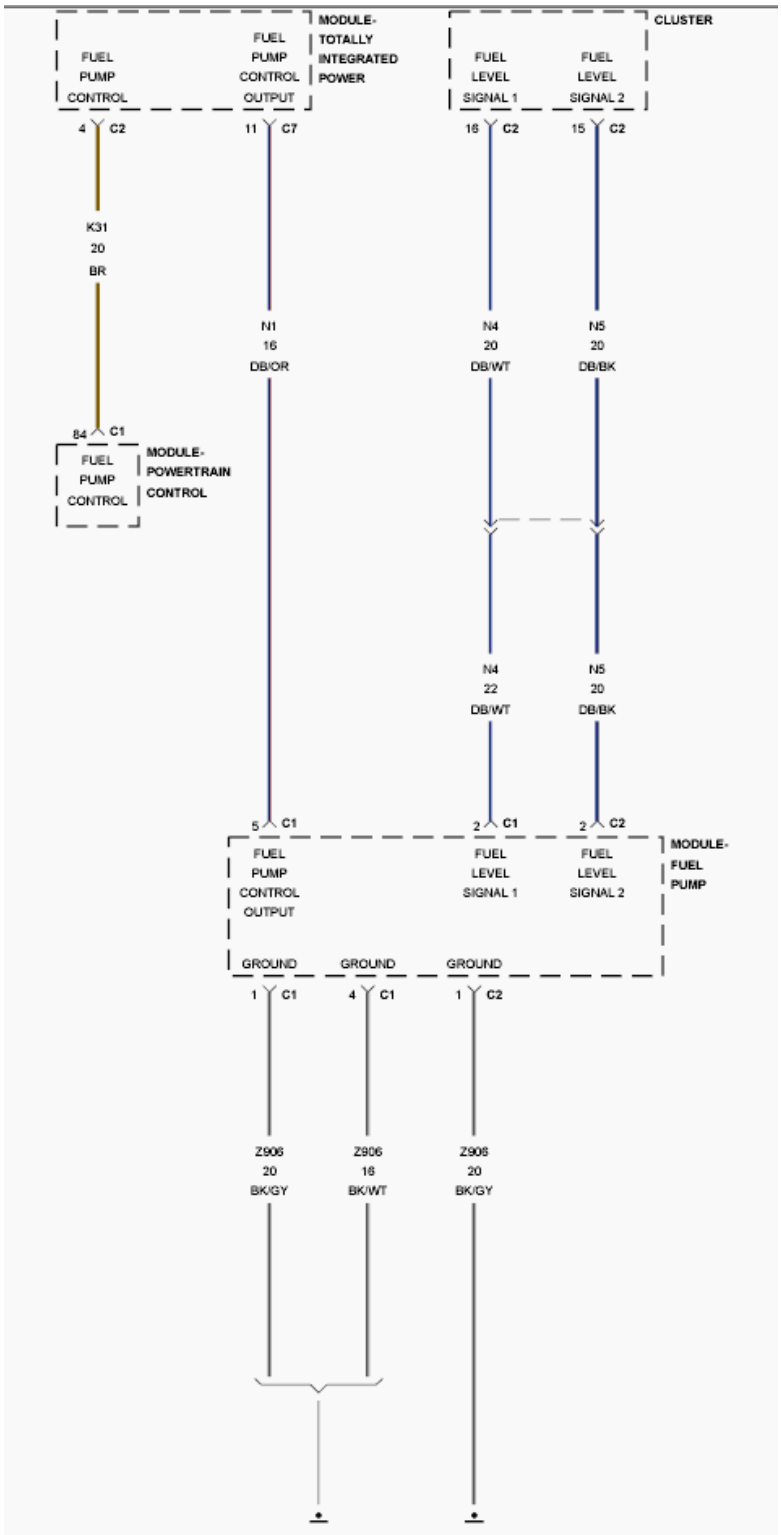

Fig. 62: Fuel Pump Circuit Diagram
Courtesy of CHRYSLER GROUP, LLC

For a complete wiring diagram, **refer to appropriate SYSTEM WIRING DIAGRAMS article** .

WHEN MONITORED

With the ignition on and the battery voltage greater than 10.4 Volts.

SET CONDITION

The Powertrain Control Module (PCM) detects that the Fuel Level Sensor input voltage is above the maximum acceptable value.

POSSIBLE CAUSES

Possible Causes
(N4) FUEL LEVEL SIGNAL 1 CIRCUIT SHORTED TO VOLTAGE
(N4) FUEL LEVEL SIGNAL 1 CIRCUIT OPEN OR HIGH RESISTANCE
(Z906) GROUND CIRCUIT OPEN OR HIGH RESISTANCE
FUEL LEVEL SENSOR
INSTRUMENT CLUSTER (CCN)

Always perform the Pre-Diagnostic Troubleshooting procedure before proceeding. Refer to PRE-DIAGNOSTIC TROUBLESHOOTING PROCEDURE .

DIAGNOSTIC TEST

1. **DIAGNOSTIC TROUBLE CODE (DTC) IS ACTIVE**
   1. Start the engine and allow it to reach normal operating temperature.

      WARNING: **When the engine is operating, do not stand in direct line with the fan. Do not put your hands near the pulleys, belts or fan. Do not wear loose clothing. Failure to follow these instructions may result in possible serious or fatal injury.**

   2. Using the scan tool, read the active DTCs.

      Does the scan tool display P0463-FUEL LEVEL SENSOR 1 HIGH CIRCUIT?

      Yes

      - Go To 2

No

- Test complete, the condition or conditions that originally set this DTC are not present at this time. Using the wiring diagrams as a guide, check all related splices and connectors for signs of water intrusion, corrosion, pushed out or bent terminals, and correct pin tension.
- Perform the INTERMITTENT CONDITION diagnostic procedure. Refer to **INTERMITTENT CONDITION** .

2. **(N4) FUEL LEVEL SIGNAL 1 CIRCUIT SHORTED TO VOLTAGE**

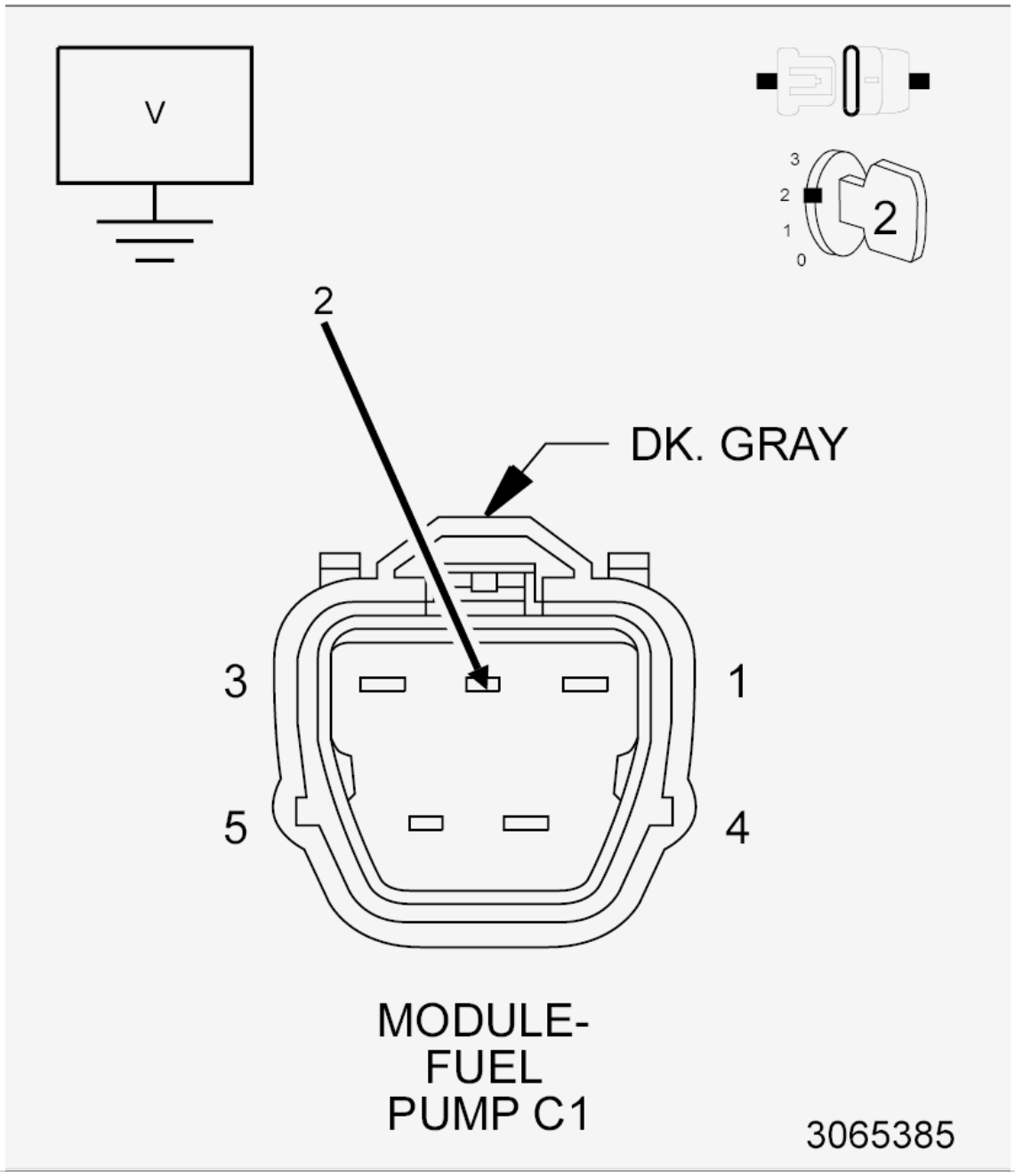

Fig. 63: Checking Fuel Level Signal 1 Circuit For Short To Voltage
Courtesy of CHRYSLER GROUP, LLC

1. Turn the ignition off.
2. Disconnect the Fuel Pump Module harness connector.
3. Disconnect the Instrument Cluster (CCN) C2 harness connector.
4. Turn the ignition on.
5. Measure the voltage of the (N4) Fuel Level Signal 1 circuit in the Fuel Level Sensor harness connector.

   Is there any voltage present?

   Yes

   - Repair the short to voltage in the (N4) Fuel Level Signal 1 circuit.
   - Perform the BODY VERIFICATION TEST. Refer to **STANDARD PROCEDURE** .

   No

   - Go To 3

3. **(N4) FUEL LEVEL SIGNAL 1 OPEN OR HIGH RESISTANCE**

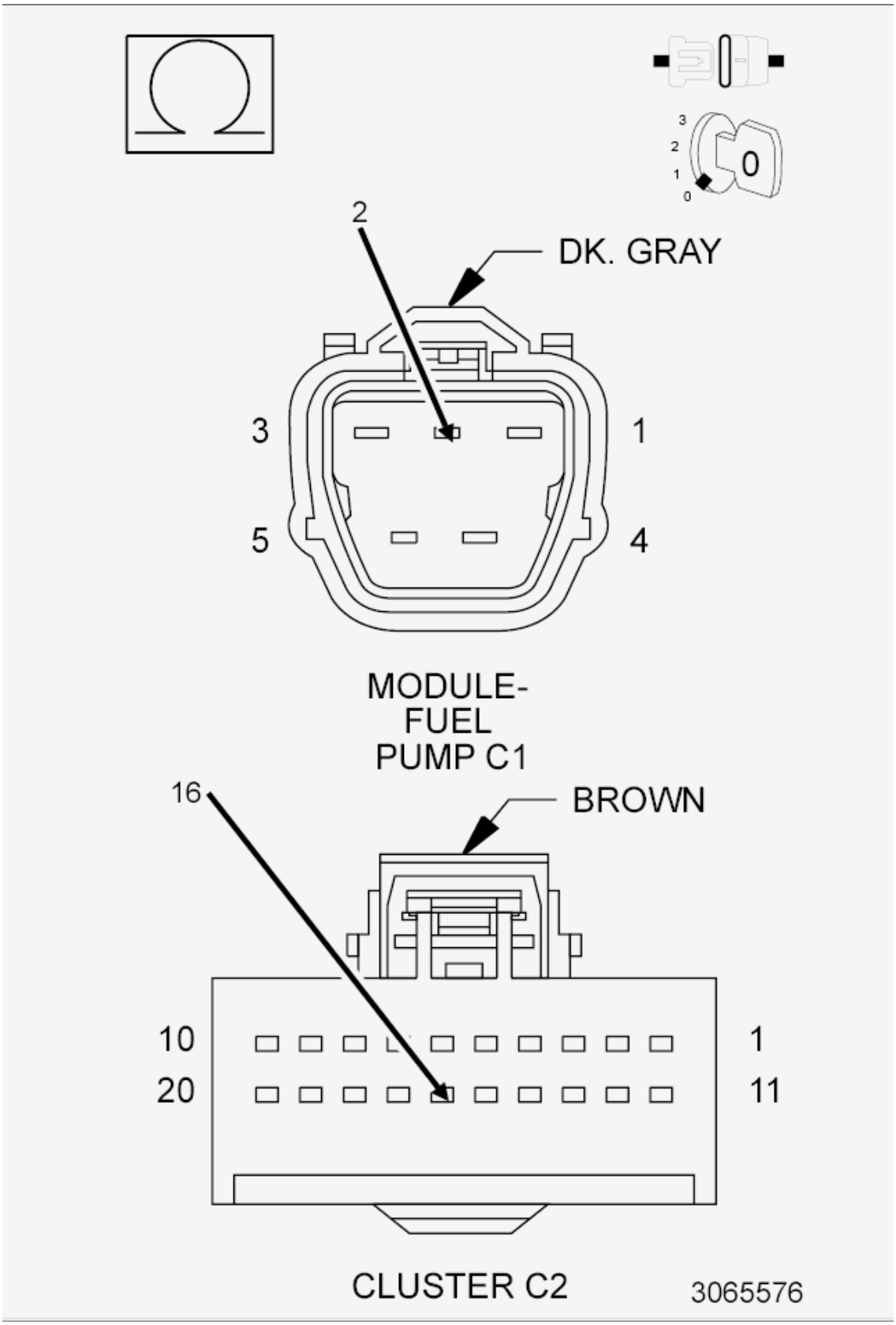

Fig. 64: Checking Fuel Level Signal 1 Circuit For Open Or High Resistance
Courtesy of CHRYSLER GROUP, LLC

1. Turn the ignition off.
2. Measure the resistance of the (N4) Fuel Level Signal 1 circuit between the Fuel Level Sensor harness connector and the Instrument Cluster (CCN) harness connector.

   Is the resistance below 5.0 Ohms?

   Yes

   - Go To 4

   No

   - Repair the open circuit or high resistance in the (N4) Fuel Level Signal 1 circuit.
   - Perform the BODY VERIFICATION TEST. Refer to **STANDARD PROCEDURE** .

4. **(Z906) GROUND CIRCUIT OPEN OR HIGH RESISTANCE**

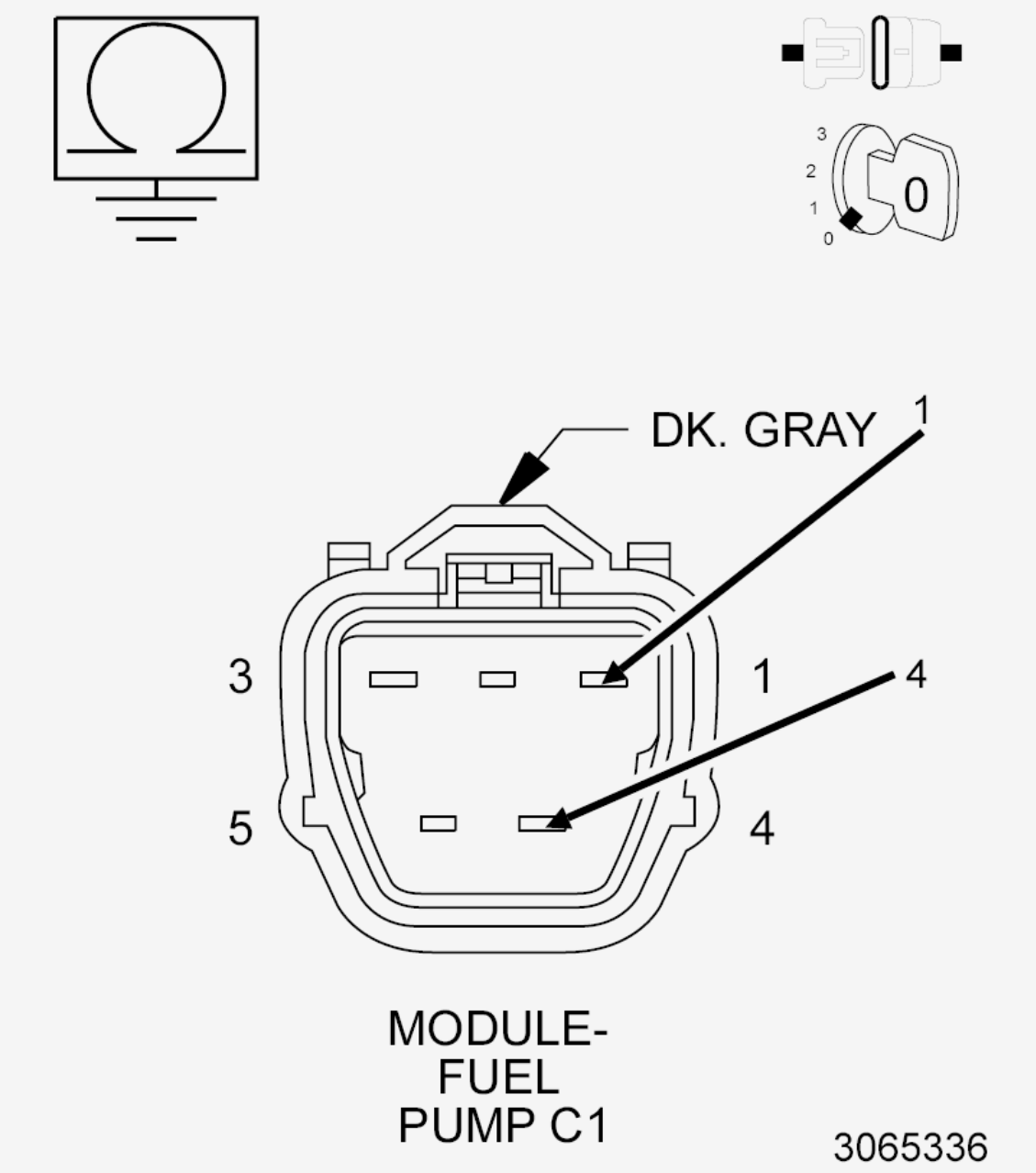

Fig. 65: Checking Ground Circuit For Open Or High Resistance
Courtesy of CHRYSLER GROUP, LLC

1. Measure the resistance between ground and the (Z906) Ground circuit in the Fuel Level Sensor harness connector.

   Is the resistance below 5.0 Ohms?

   Yes

   - Go To 5

No

- Repair the open or high resistance in the (Z906) Ground circuit.
- Perform the BODY VERIFICATION TEST. Refer to **STANDARD PROCEDURE** .

5. **FUEL LEVEL SENSOR**

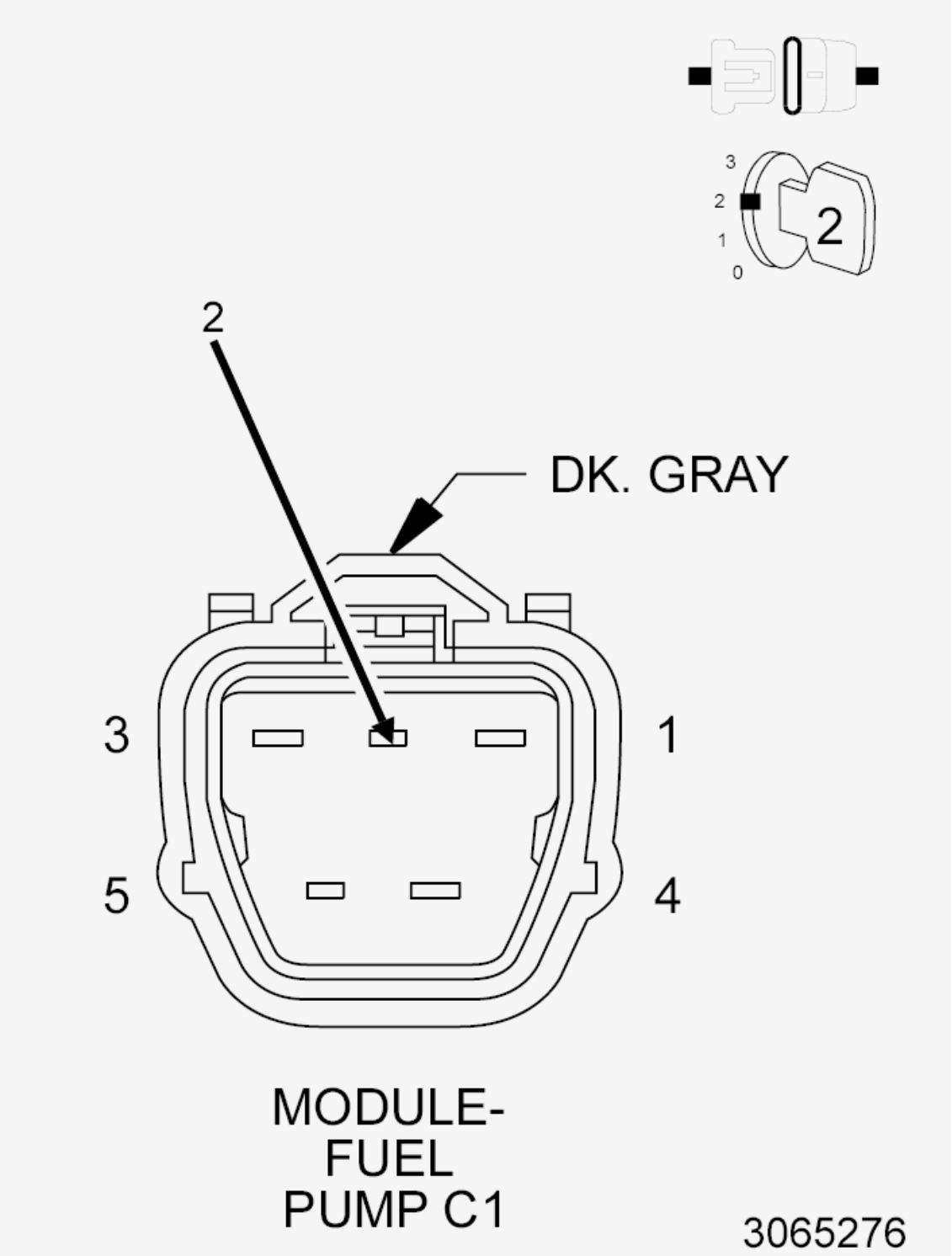

Fig. 66: Fuel Pump Module Harness Connector End View
Courtesy of CHRYSLER GROUP, LLC

1. Turn the ignition off.
2. Connect the Instrument Cluster (CCN) C2 harness connector.
3. Connect a jumper wire between ground and the (N4) Fuel Level Signal 1 circuit in the Fuel Level Sensor harness connector.
4. Turn the ignition on.
5. Using the scan tool, read the Fuel Level Sensor 1 signal voltage.

   Is the voltage below 1.0 Volt with the jumper wire in place?

   Yes

   - Replace the Fuel Level Sensor in accordance with the Service Information. Refer to **SENDING UNIT AND SENSOR, FUEL LEVEL, REMOVAL** .
   - Perform the BODY VERIFICATION TEST. Refer to **STANDARD PROCEDURE** .

   No

   - Go To 6

6. **INSTRUMENT CLUSTER (CCN)**
   1. Using the wiring diagram/schematic as a guide, inspect the wiring and connectors between the Fuel Level Sensor and the Instrument Cluster (CCN).
   2. Look for any chafed, pierced, pinched, or partially broken wires.
   3. Look for broken, bent, pushed out or corroded terminals.
   4. Perform any Technical Service Bulletins that may apply.

   Were any problems found?

   Yes

   - Repair as necessary.
   - Perform the BODY VERIFICATION TEST. Refer to **STANDARD PROCEDURE** .

No

- Replace and program the Instrument Cluster (CCN) in accordance with the Service Information. Refer to **REMOVAL** .
- Perform the BODY VERIFICATION TEST. Refer to **STANDARD PROCEDURE** .

P0480-COOLING FAN 1 CONTROL CIRCUIT

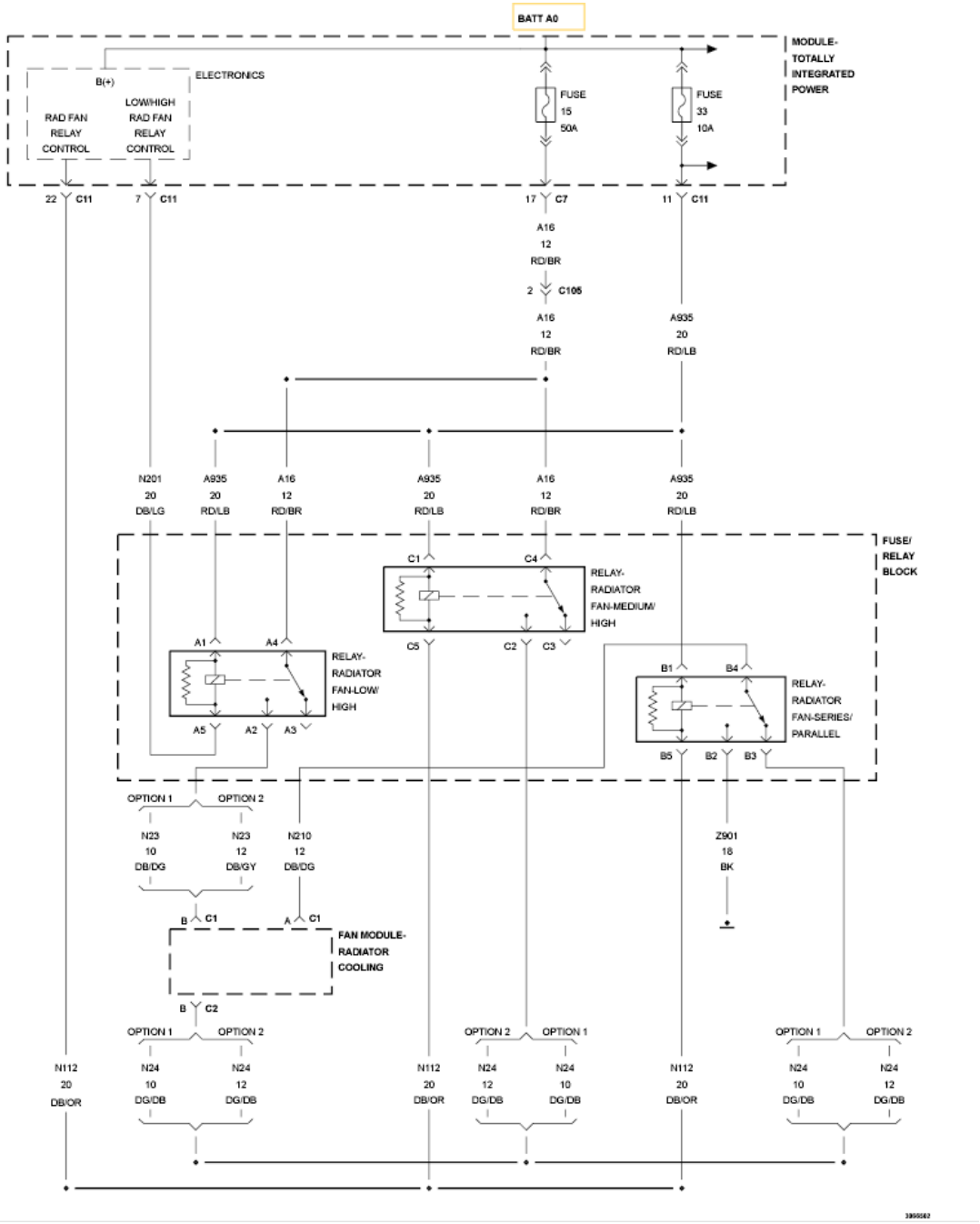

Fig. 67: Cooling Fan Circuit Diagram
Courtesy of CHRYSLER GROUP, LLC

For a complete wiring diagram, **refer to appropriate SYSTEM WIRING DIAGRAMS article** .

WHEN MONITORED

With the ignition on. Battery voltage greater than 10 volts.

SET CONDITION

An open or shorted circuit is detected in the Low/High Rad Fan Control circuit. One Trip Fault. Three good trips to turn off the MIL.

POSSIBLE CAUSES

POSSIBLE CAUSES
(A16) FUSED (B+) CIRCUITS
(N201) LOW/HIGH/HIGH RAD FAN CONTROL CIRCUIT SHORTED TO BATTERY VOLTAGE
(N201) LOW/HIGH RAD FAN CONTROL CIRCUIT OPEN
(N201) LOW/HIGH RAD FAN CONTROL CIRCUIT SHORTED TO GROUND
LOW/HIGH RAD FAN RELAY
TOTALLY INTEGRATED POWER MODULE (TIPM)

Always perform the Pre-Diagnostic Troubleshooting procedure before proceeding. Refer to PRE-DIAGNOSTIC TROUBLESHOOTING PROCEDURE .

DIAGNOSTIC TEST

1. **RADIATOR COOLING FAN MODULE OPERATION**
    1. Ignition on, engine not running.
    2. With a scan tool, select Radiator Cooling Fan Relay #1 Control State to actuate the Cooling Fan (Low/High).

       Is the one Cooling Fan operating?

       Yes

       - Perform the INTERMITTENT CONDITION diagnostic procedure. Refer to **INTERMITTENT CONDITION** .

No

- Go To 2

2. **(A16) FUSED B+ CIRCUIT**

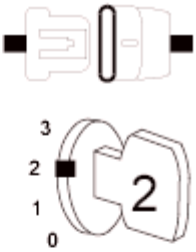

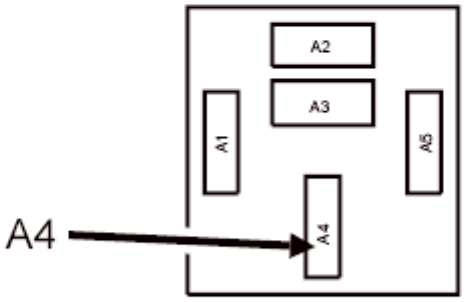

RELAY-
RADIATOR
FAN-LOW/
HIGH
(IN F/RB)

257704

Fig. 68: Checking Fused B+ Circuit
Courtesy of CHRYSLER GROUP, LLC

1. Ignition on.
2. Disconnect the Low/High Rad Relay harness connector.
3. Using a 12-volt test light connected to ground, probe the (A16) Fused B+ circuit in the Low/High Rad Relay harness connector.

Does the test light illuminate brightly?

Yes

- Go To 3

No

- Repair the (A16) Fused B+ circuit. Inspect the related fuse and repair as necessary.
- Perform the BODY VERIFICATION TEST. Refer to **STANDARD PROCEDURE** .

3. **(N201) LOW/HIGH RAD FAN CONTROL CIRCUIT**

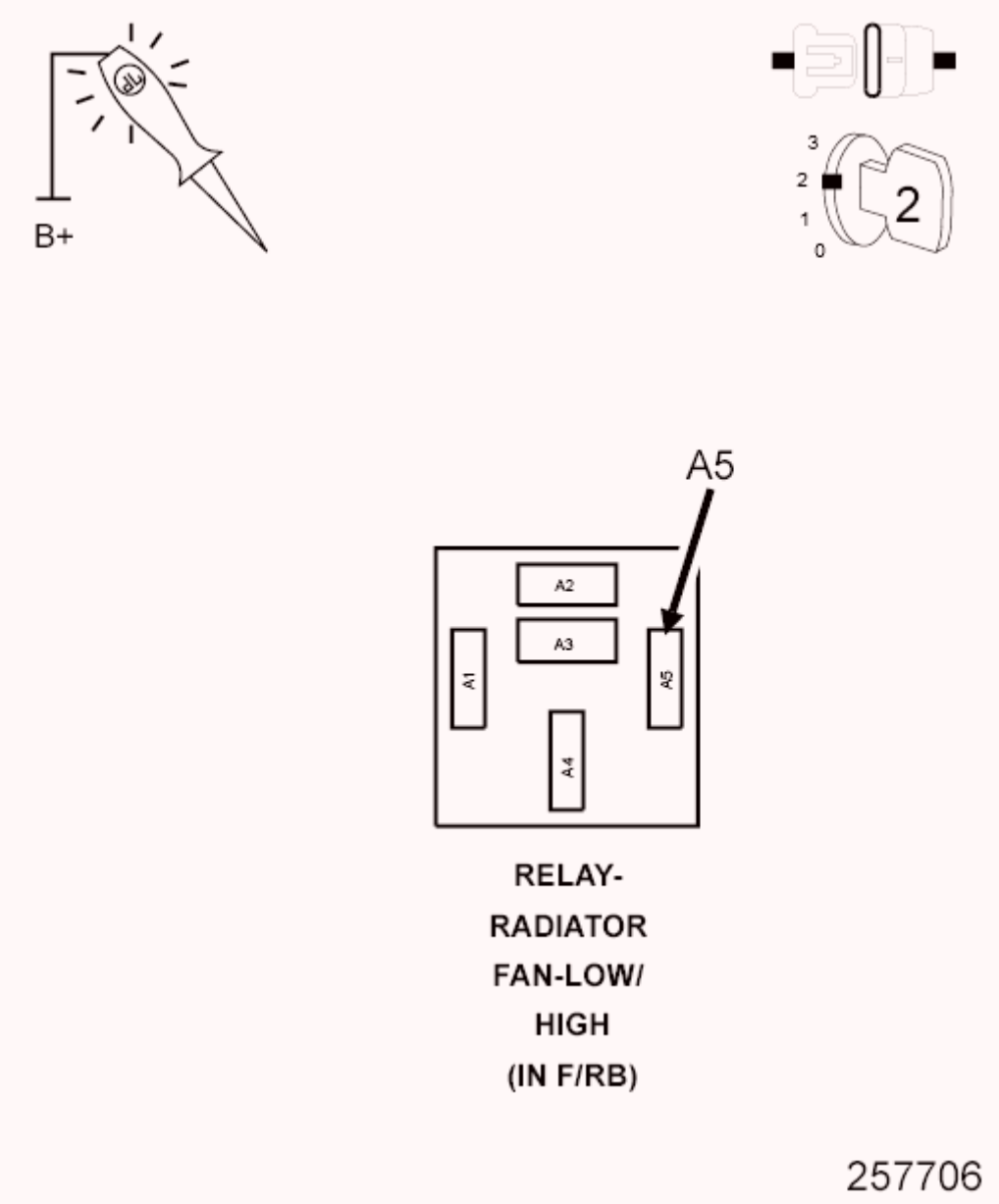

Fig. 69: Checking Low/High Rad Fan Control Circuit
Courtesy of CHRYSLER GROUP, LLC

1. Turn the ignition on, engine not running.
2. With a scan tool, select Radiator Cooling Fan Relay 1 Control State, Toggle, to actuate the Cooling Fan (Low/High).
3. Using a 12-volt test light connected to battery voltage, probe the (N201) Low/High Rad Fan Control circuit in the Low/High Rad Relay harness connector.

   Does the test light illuminate brightly and flash on and off?

   Yes

- Replace the Low/High Rad Fan Relay.
- Perform the BODY VERIFICATION TEST. Refer to **STANDARD PROCEDURE** .

No

- Go To 4

4. **(N201) LOW/HIGH RAD FAN CONTROL CIRCUIT SHORTED TO BATTERY VOLTAGE**

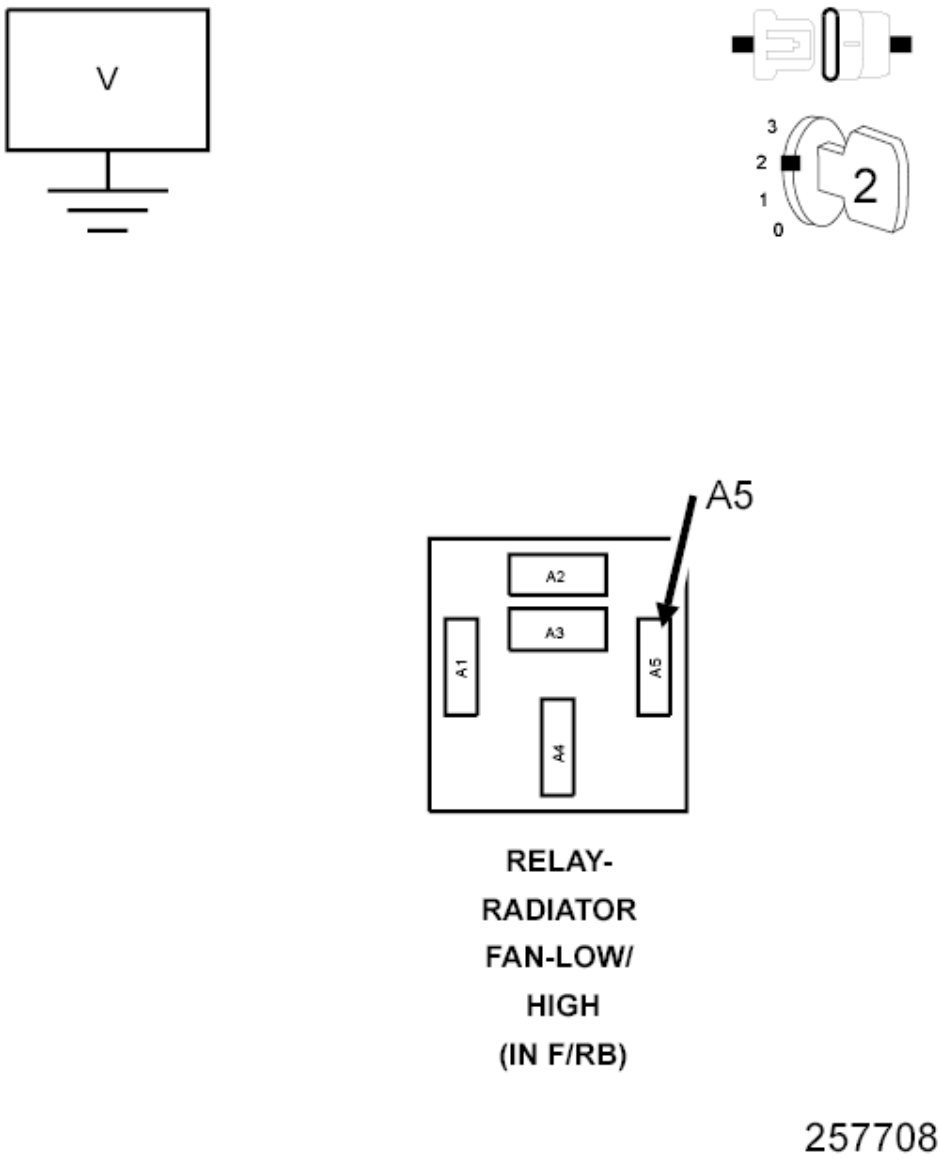

Fig. 70: Checking Low/High Rad Fan Control Circuit For Short To Battery
Courtesy of CHRYSLER GROUP, LLC

1. Disconnect the TIPM C11 harness connector.
2. Using a voltmeter, measure the voltage of the (N201) Low/High Rad Fan Control circuit in the Low/High Rad Relay harness connector.

   Is there voltage present?

   Yes

   - Repair the short to voltage in the (N201) Low/High Rad Fan Control circuit
   - Perform the BODY VERIFICATION TEST. Refer to **STANDARD PROCEDURE** .

   No

   - Go To 5

5. **(N201) LOW/HIGH RAD FAN CONTROL CIRCUIT OPEN**

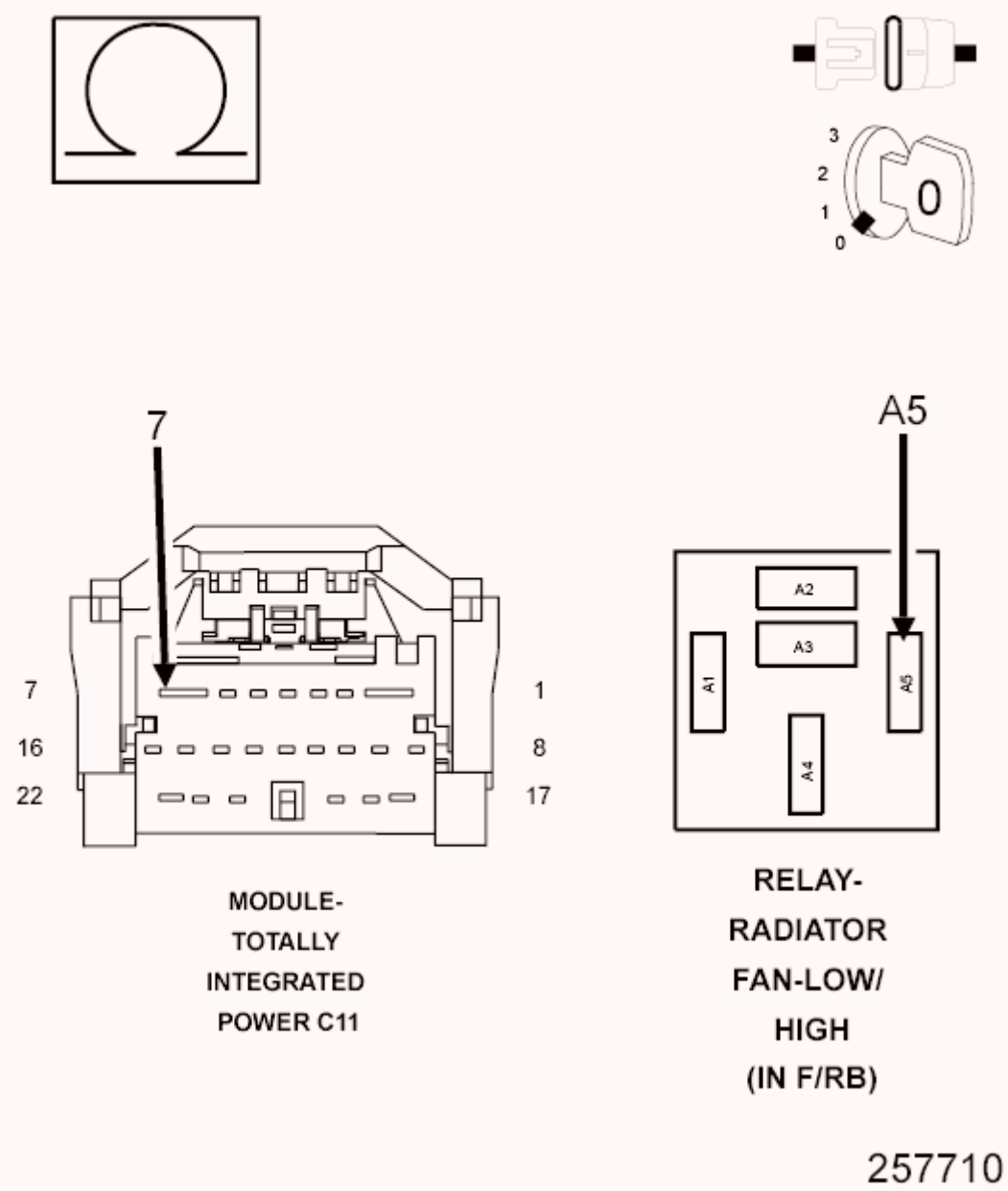

Fig. 71: Checking Low/High Rad Fan Control Circuit For Open
Courtesy of CHRYSLER GROUP, LLC

1. Measure the resistance of the (N201) Low/High Rad Fan Control circuit from the Low/High Rad Relay harness connector to the TIPM C11 harness connector.

   Is the resistance below 5.0 Ohms?

   Yes

   - Go To 6

No

- Repair the open in the (N201) Low/High Rad Fan Control circuit.
- Perform the BODY VERIFICATION TEST. Refer to **STANDARD PROCEDURE** .

6. **(N201) LOW/HIGH RAD FAN CONTROL CIRCUIT SHORTED TO GROUND**

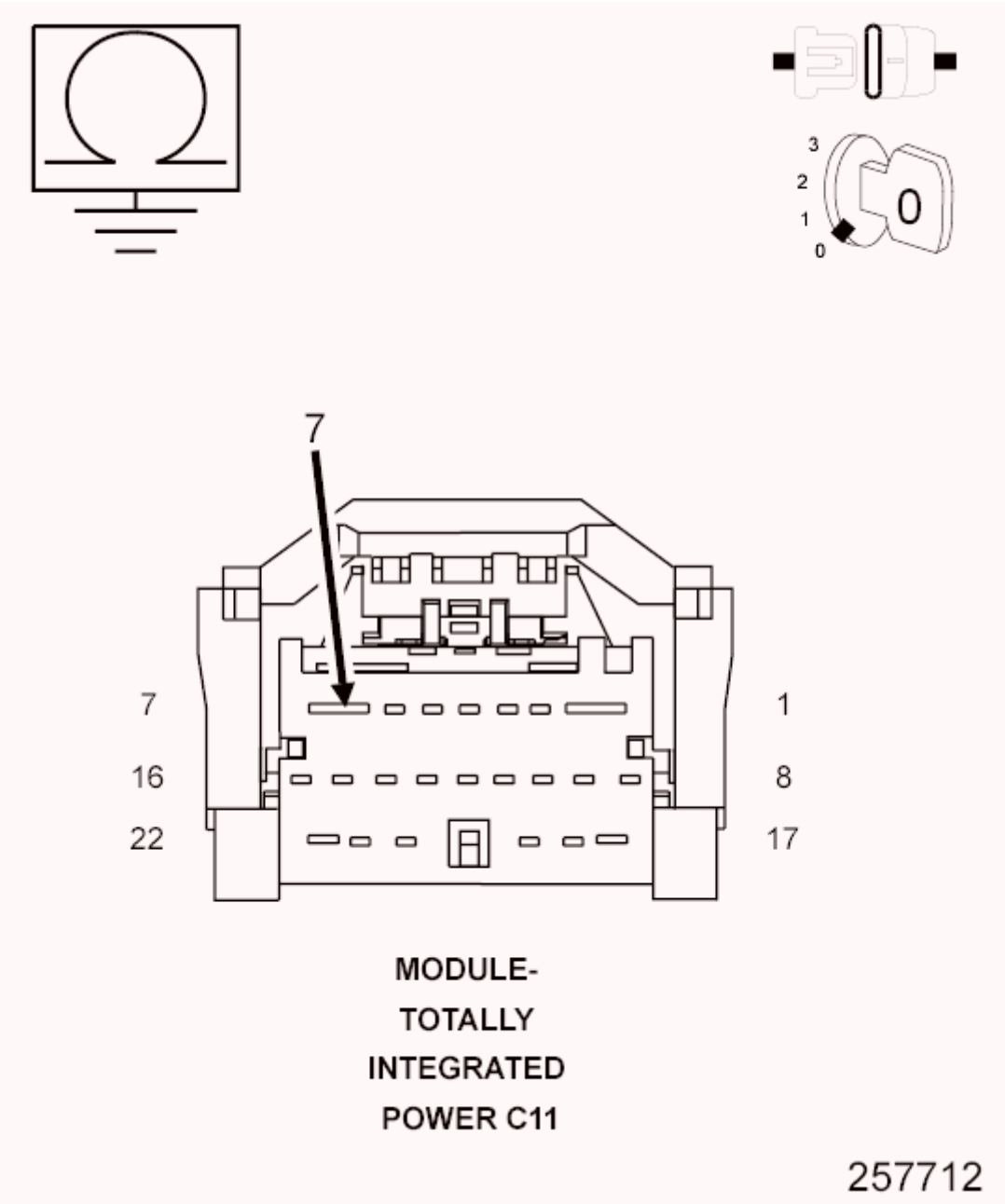

Fig. 72: Checking Low/High Rad Fan Relay Control Circuit For Short To Ground
Courtesy of CHRYSLER GROUP, LLC

1. Measure the resistance between ground and the (N201) Low/High Rad Fan Control circuit in the TIPM C11 harness connector.

   Is the resistance below 100 Ohms?

   Yes

   - Repair the short to ground in the (N201) Low/High Rad Fan Control circuit.
   - Perform the BODY VERIFICATION TEST. Refer to **STANDARD PROCEDURE** .

   No

   - Replace the Totally Integrated Power Module in accordance with the Service Information.
   - Perform the BODY VERIFICATION TEST. Refer to **STANDARD PROCEDURE** .

P0481-COOLING FAN 2 CONTROL CIRCUIT

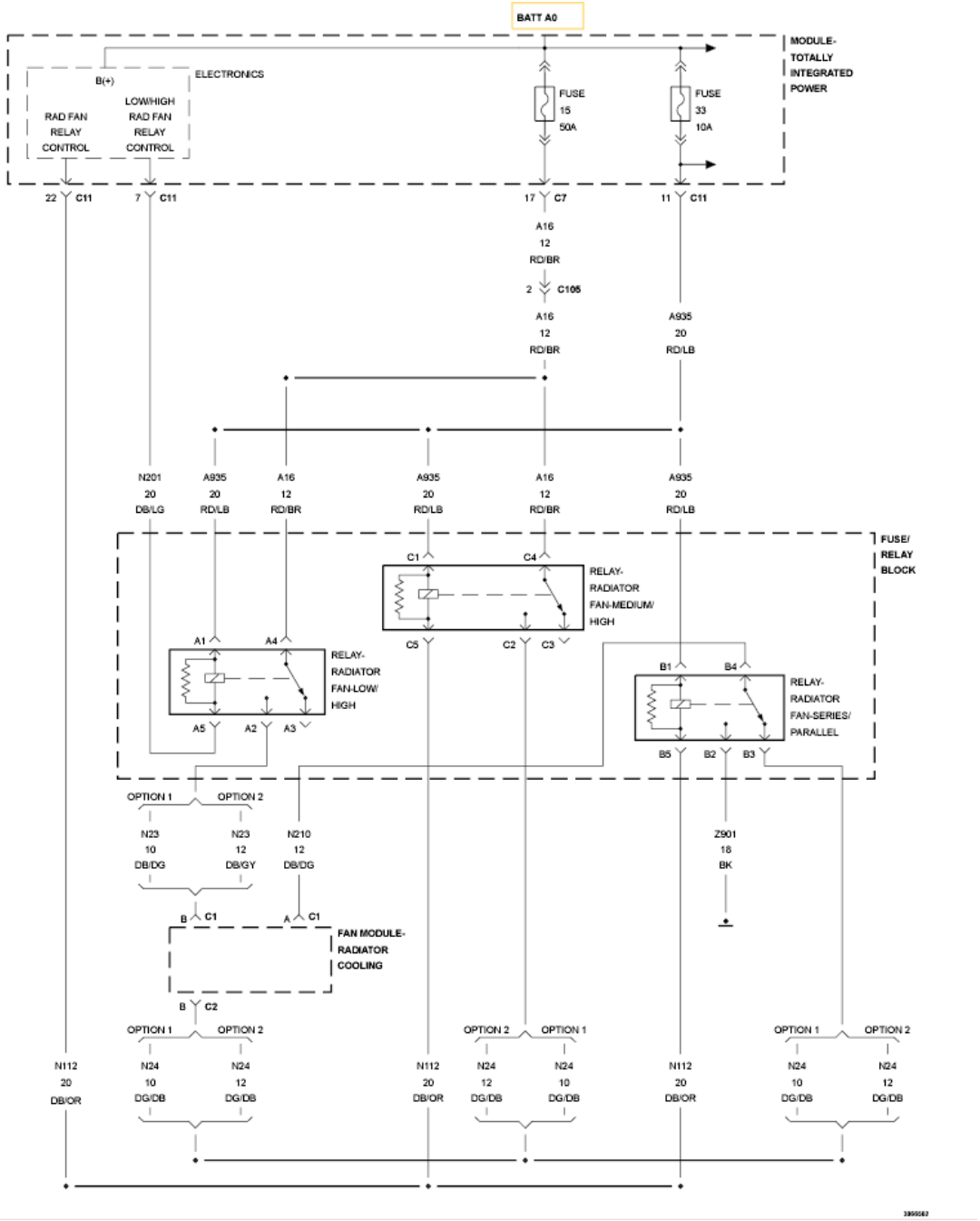

Fig. 73: Cooling Fan Circuit Diagram
Courtesy of CHRYSLER GROUP, LLC

For a complete wiring diagram, **refer to appropriate SYSTEM WIRING DIAGRAMS article** .

WHEN MONITORED

With the ignition on. Battery voltage greater than 10 volts.

SET CONDITION

An open or shorted circuit is detected in the High Speed Rad Fan Control circuit. One Trip Fault. Three good trips to turn off the MIL.

POSSIBLE CAUSES

POSSIBLE CAUSES
(A16) FUSED (B+) CIRCUITS
(N112) RAD FAN RELAY CONTROL CIRCUIT SHORTED TO BATTERY VOLTAGE
(N112) RAD FAN RELAY CONTROL CIRCUIT OPEN
(N112) RAD FAN RELAY CONTROL CIRCUIT SHORTED TO GROUND
MED/HIGH RAD FAN RELAY
SERIES/PARALLEL RAD FAN RELAY
TOTALLY INTEGRATED POWER MODULE (TIPM)

Always perform the Pre-Diagnostic Troubleshooting procedure before proceeding. Refer to PRE-DIAGNOSTIC TROUBLESHOOTING PROCEDURE .

DIAGNOSTIC TEST

1. **RADIATOR COOLING FAN MODULE OPERATION**
    1. Ignition on, engine not running.
    2. With a scan tool, actuate both the Radiator Cooling Fan Relays #1 and #2.

    Are both cooling fan operating at medium speed?

    Yes

    - Perform the INTERMITTENT CONDITION diagnostic procedure. Refer to **INTERMITTENT CONDITION** .

    No

    - Go To 2
2. **(A16) FUSED B+ CIRCUIT**

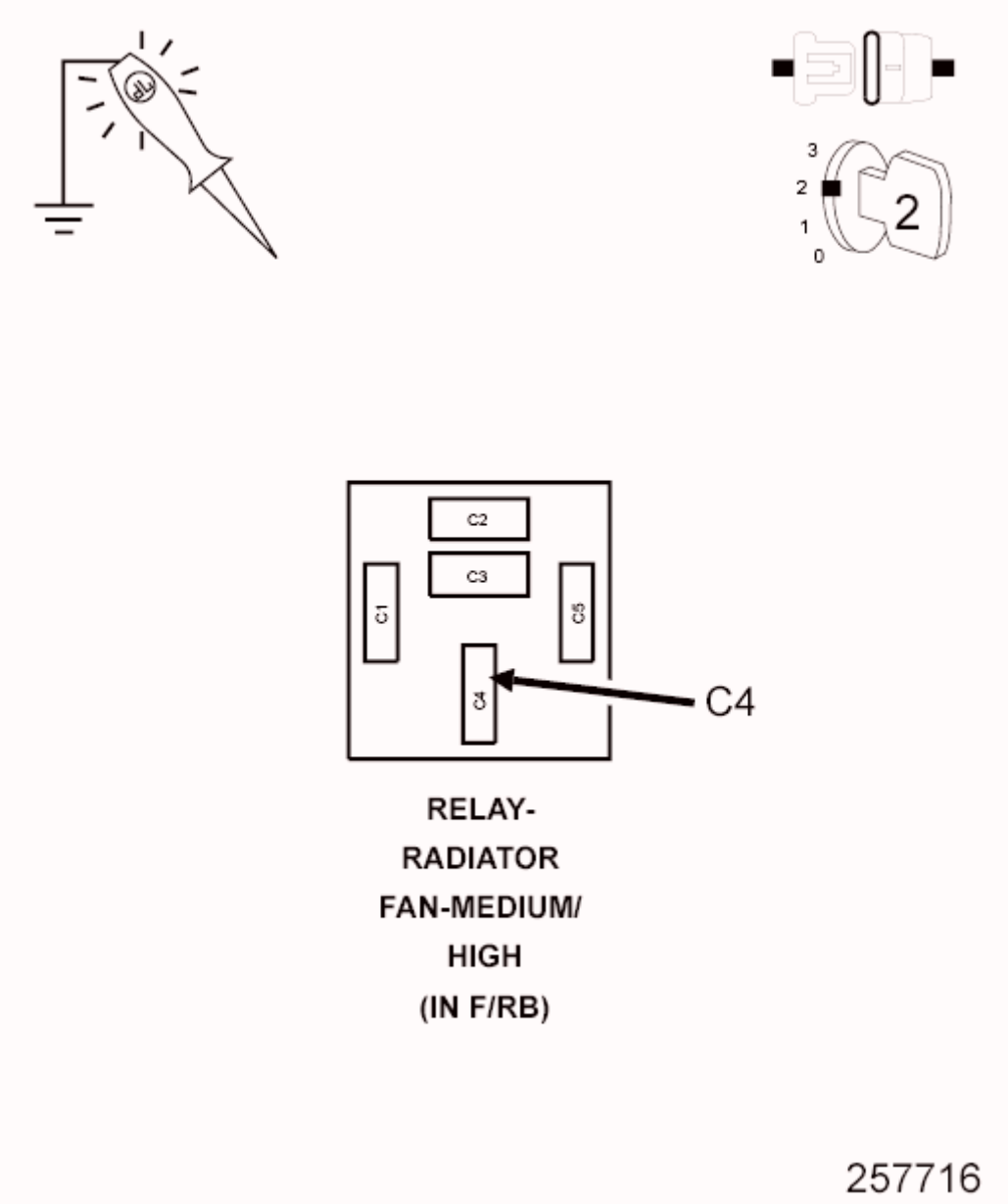

Fig. 74: Checking Fused B+ Circuit
Courtesy of CHRYSLER GROUP, LLC

1. Ignition on.
2. Disconnect the Med/High Rad Fan Relay from the Fuse/Relay Block.
3. Disconnect the Series/Parallel Rad Fan Relay from the Fuse/Relay Block.
4. Using a 12-volt test light connected to ground, probe the (A16) Fused B+ circuit at both the Med/High Rad Fan Relay and the Series/Parallel Rad Fan Relay connectors.

   Does the test light illuminate brightly at each terminal?

Yes

- Go To 3

No

- Repair the (A16) Fused B+ circuit. Inspect the related fuse and repair as necessary.
- Perform the BODY VERIFICATION TEST. Refer to **STANDARD PROCEDURE** .

3. **MED/HIGH RAD FAN RELAY**

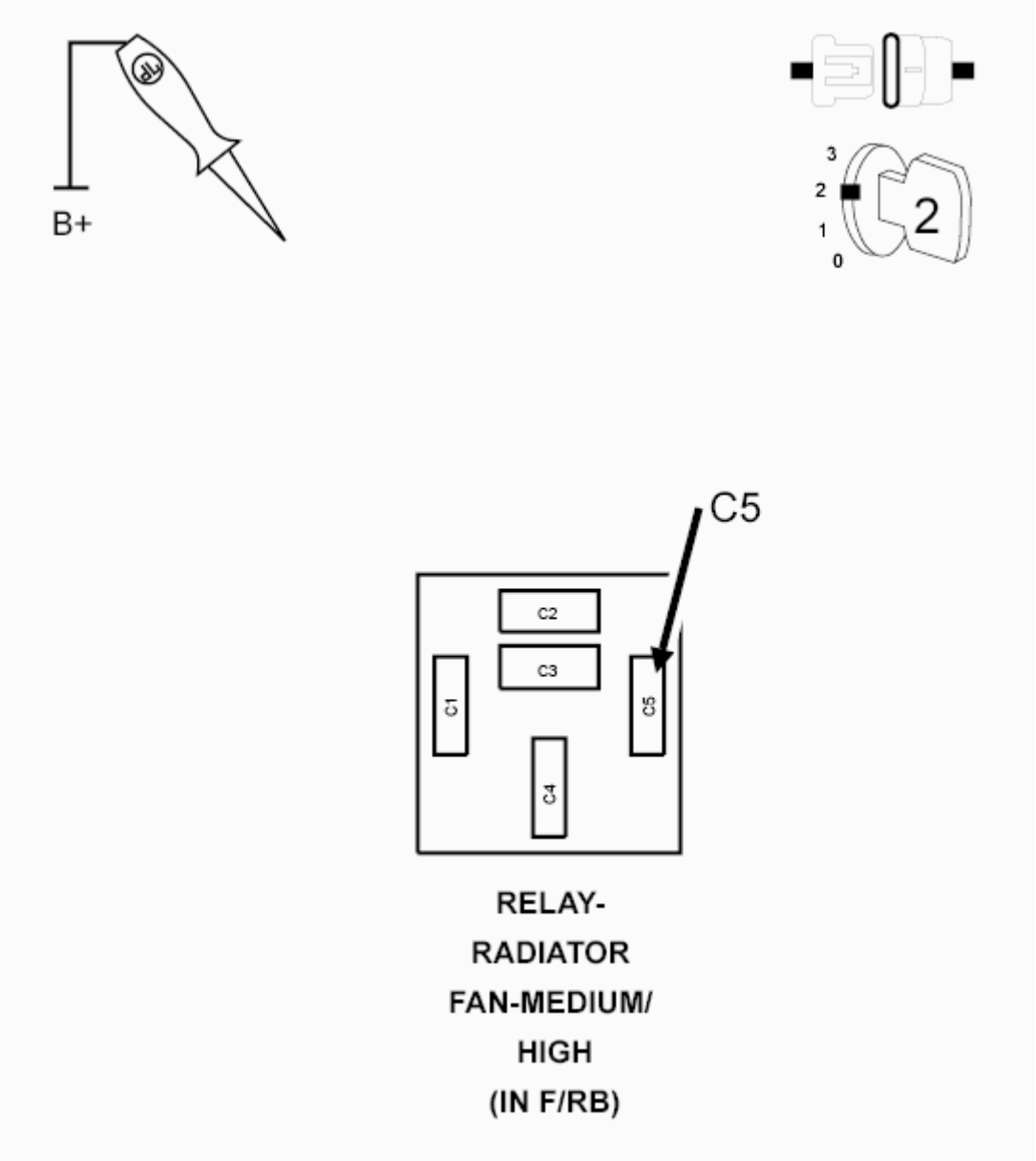

Fig. 75: Checking Med/High Rad Fan Control Circuit

Courtesy of CHRYSLER GROUP, LLC

1. Install the Series/Parallel Rad Fan Relay.
2. Turn the ignition on, engine not running.
3. With a scan tool, select Radiator Cooling Fan Relay 2 Control State, Toggle, to actuate the Cooling Fan (Med/High Rad Fan Relay).
4. Using a 12-volt test light connected to battery voltage, probe the (N112) Rad Fan Relay Control circuit at the Med/High Rad Fan Relay.

   Does the test light illuminate brightly and flash on and off?

   Yes

   - Replace the Med/High Rad Fan Relay.
   - Perform the BODY VERIFICATION TEST. Refer to **STANDARD PROCEDURE** .

   No

   - Go To 4

4. **SERIES/PARALLEL RAD FAN RELAY)**

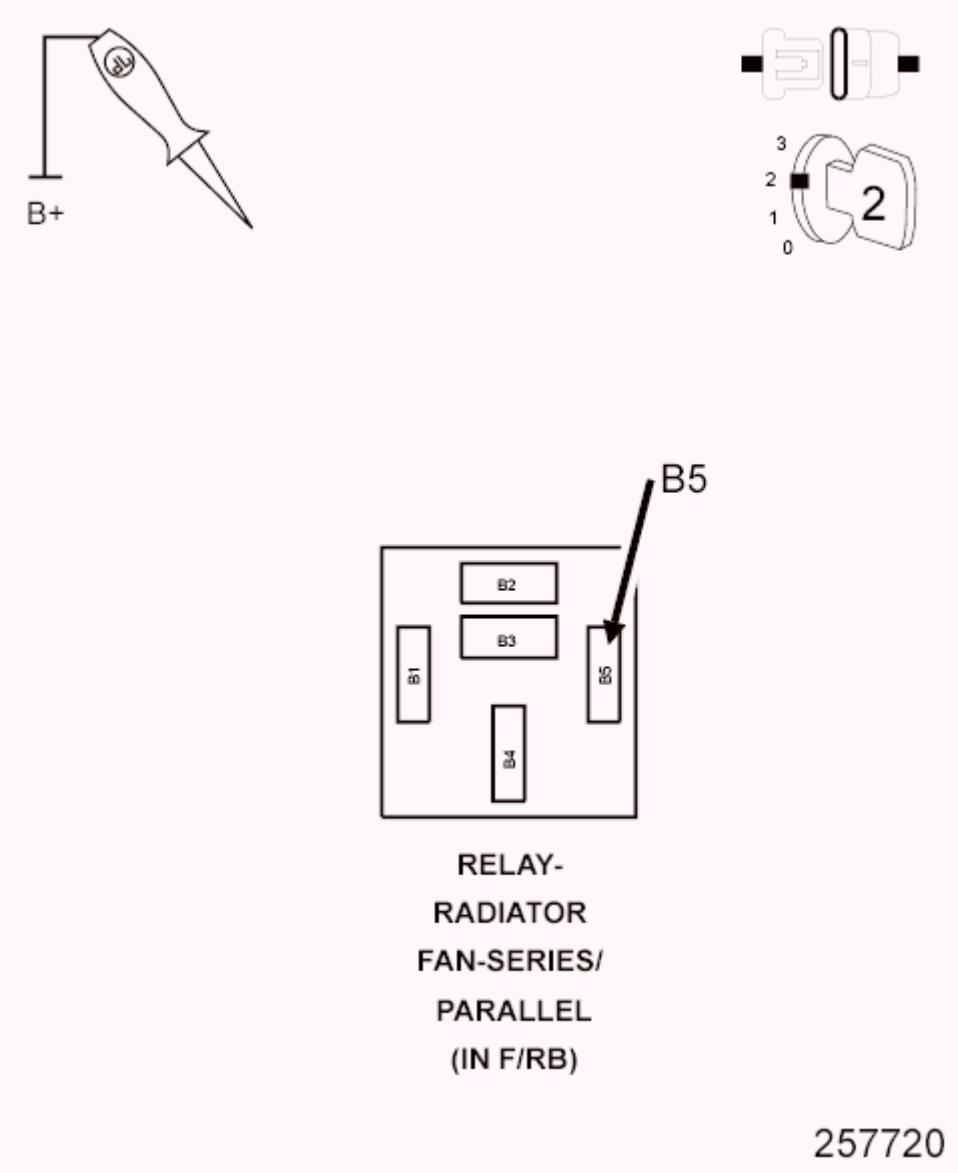

Fig. 76: Checking Series/Parallel Rad Fan Relay
Courtesy of CHRYSLER GROUP, LLC

1. Remove the Series/Parallel Rad Fan Relay.
2. Install the Med/High Rad Fan Relay.
3. Turn the ignition on, engine not running.
4. With a scan tool, select Radiator Cooling Fan Relay 2 Control State, Toggle, to actuate the Cooling Fan (Series/Parallel Rad Fan Relay).
5. Using a 12-volt test light connected to battery voltage, probe the (N112) Rad Fan Relay Control circuit at the Series/Parallel Rad Fan Relay.

   Does the test light illuminate brightly and flash on and off?

Yes

- Replace the Series/Parallel Rad Fan Relay.
- Perform the BODY VERIFICATION TEST. Refer to **STANDARD PROCEDURE** .

No

- Go To 5

5. **(N112) RAD FAN RELAY CONTROL CIRCUIT SHORTED TO BATTERY VOLTAGE**

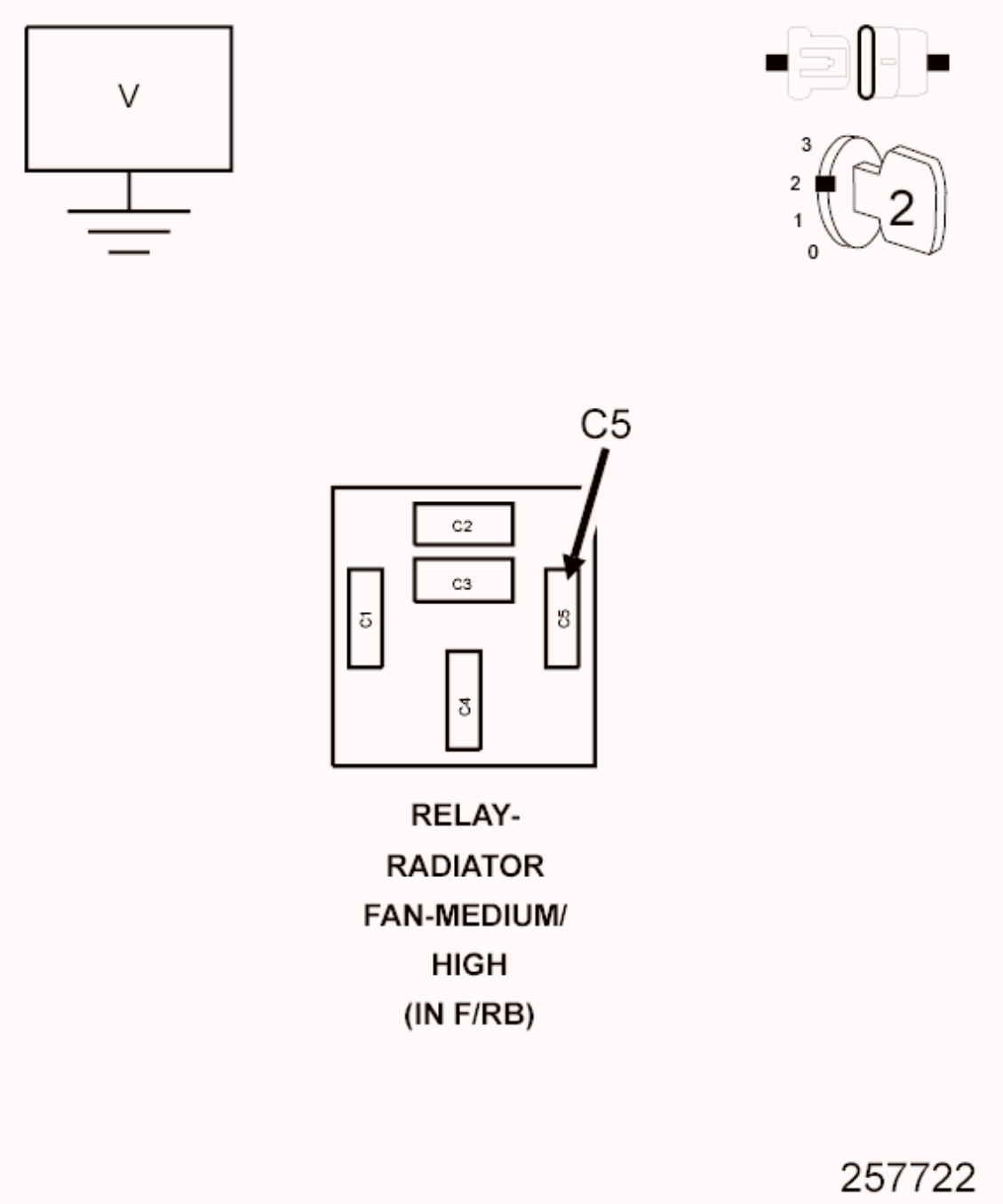

Fig. 77: Checking Radiator Fan Relay Control Circuit For Short To Battery
Courtesy of CHRYSLER GROUP, LLC

1. Disconnect the TIPM C11 harness connector.
2. Using a voltmeter, measure the voltage of the (N112) Rad Fan Relay Control circuit in the Med/High Rad Fan Relay harness connector.

   Is there voltage present?

Yes

- Repair the short to voltage in the (N112) Rad Fan Relay Control circuit.
- Perform the BODY VERIFICATION TEST. Refer to **STANDARD PROCEDURE** .

No

- Go To 6

6. **(N112) RAD FAN RELAY CONTROL CIRCUIT OPEN**

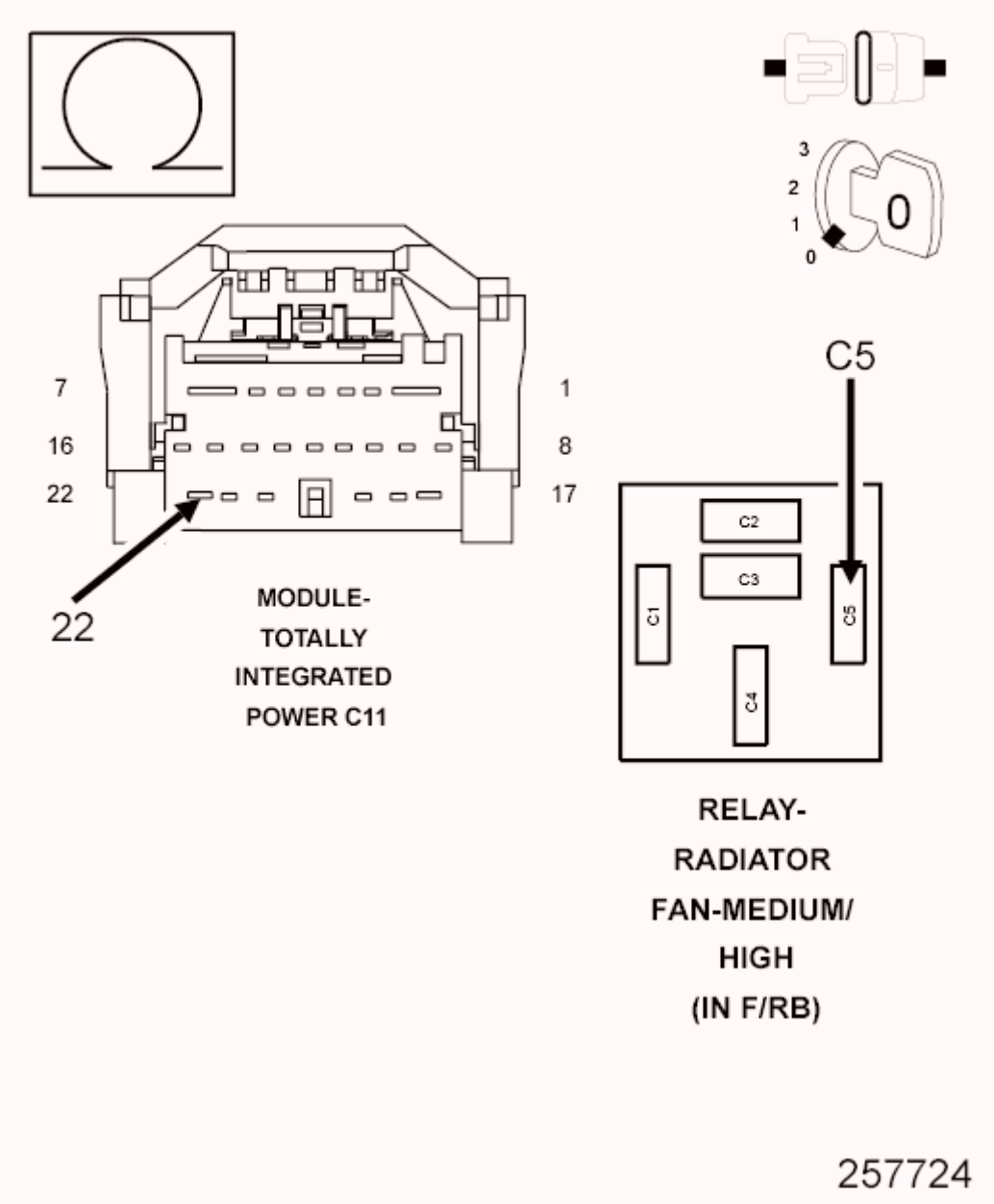

Fig. 78: Checking Rad Fan Relay Control Circuit For An Open
Courtesy of CHRYSLER GROUP, LLC

1. Measure the resistance of the (N112) Rad Fan Relay Control circuit from the Med/High Rad Fan Relay harness connector to the TIPM C11 harness connector.

   Is the resistance below 5.0 Ohms?

   Yes

   - Go To 7

   No

   - Repair the open in the (N112) Rad Fan Relay Control circuit.
   - Perform the BODY VERIFICATION TEST. Refer to **STANDARD PROCEDURE** .

7. **(N112) RAD FAN RELAY CONTROL CIRCUIT SHORTED TO GROUND**

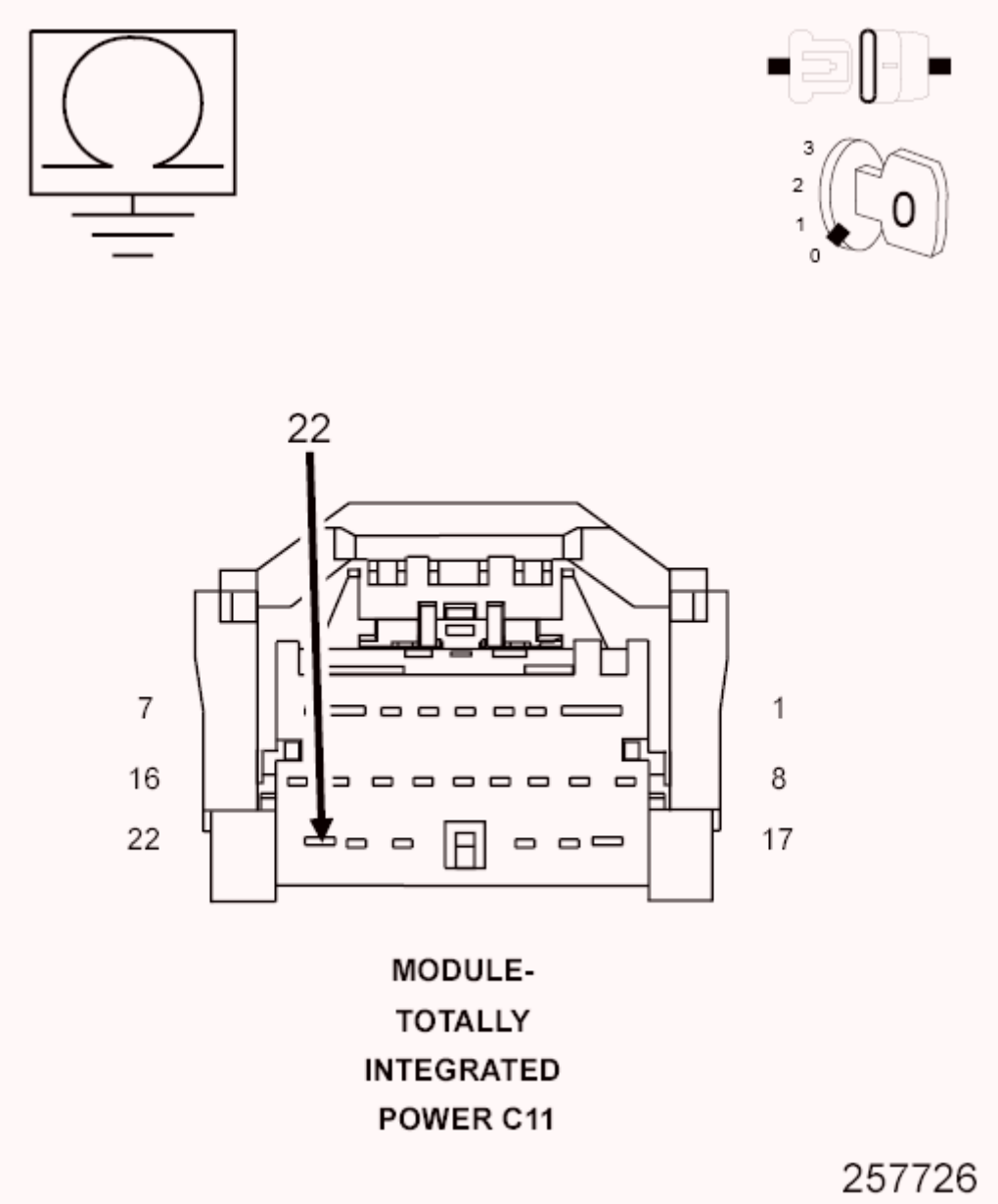

Fig. 79: Checking Rad Fan Relay Control Circuit For Short To Ground
Courtesy of CHRYSLER GROUP, LLC

1. Measure the resistance between ground and the (N112) Rad Fan Relay Control circuit in the TIPM C11 harness connector.

   Is the resistance below 100 Ohms?

   Yes

   - Repair the short to ground in the (N112) Rad Fan Relay Control circuit.
   - Perform the BODY VERIFICATION TEST. Refer to

STANDARD PROCEDURE .

No

- Replace the Totally Integrated Power Module in accordance with the Service Information.
- Perform the BODY VERIFICATION TEST. Refer to **STANDARD PROCEDURE** .

P0501-VEHICLE SPEED SENSOR 1 PERFORMANCE

For a complete wiring diagram, **refer to appropriate SYSTEM WIRING DIAGRAMS article** .

THEORY OF OPERATION

The vehicle speed sensor rationality is a continuous test that monitors the vehicle speed sensor for lack of activity. The rationality will not run if a limp-in exists for MAP, Throttle Position, and Engine Coolant Temperature. If vehicle speed sensor is below a minimum threshold for a period of time after the vehicle is operated at a sufficient load, a failure will be indicated.

WHEN MONITORED

With the engine running, transmission not in park or neutral, brakes not applied, and engine RPM greater than 1500.

SET CONDITION

This code will set if no vehicle speed signal is received from the ABS Module for more than 11 seconds for two consecutive trips. Two Trip Fault. Three good trips to turn off the MIL.

POSSIBLE CAUSES

POSSIBLE CAUSES
ACTIVE BUS OR COMMUNICATION DTCS
TIRE CIRCUMFERENCE
POWERTRAIN CONTROL MODULE (PCM)

Always perform the Pre-Diagnostic Troubleshooting procedure before proceeding. Refer to PRE-DIAGNOSTIC TROUBLESHOOTING

PROCEDURE .

DIAGNOSTIC TEST

1. **ACTIVE DTC**
   1. Ignition on, engine not running.

      NOTE: Check for any Bus Communication DTCs. If no Bus or Communication DTCs are set, check for active DTCs in the Anti-Lock Brake Module. Any bus, communication, or VSS DTCs in the Anti-Lock Brake Module must be properly diagnosed before continuing.

   2. With a scan tool, select View DTCs.

      Is the status Active for this DTC?

      Yes

      - Go To 2

      No

      - Perform the INTERMITTENT CONDITION diagnostic procedure. Refer to **INTERMITTENT CONDITION** .

2. **VISUAL INSPECTION**

   NOTE: This code can set due to tire circumference differences and from the front or rear wheels being on a slippery surface while the opposite tires are not.

   1. This code may also set on a hard acceleration on loose gravel or during other off road driving conditions.
   2. Check tire pressure of all the tires.
   3. Check tire wear on all the tires.
   4. Ask the customer what the road and driving conditions were like when the fault set.

      Were any problems found?

Yes

- Repair as necessary. If the code set during a front OR rear wheel spin condition, no repair is necessary.
- Perform the POWERTRAIN VERIFICATION TEST. Refer to **POWERTRAIN VERIFICATION TEST** .

No

- Go To 3

3. **POWERTRAIN CONTROL MODULE (PCM)**
   1. Using the wiring diagram/schematic as a guide, inspect the wiring and connectors related to this circuit.
   2. Look for any chafed, pierced, pinched, or partially broken wires.
   3. Look for broken, bent, pushed out or corroded terminals.
   4. Perform any Technical Service Bulletins that may apply.

   Were any problems found?

   Yes

   - Repair as necessary.
   - Perform the POWERTRAIN VERIFICATION TEST. Refer to **POWERTRAIN VERIFICATION TEST** .

   No

   - Replace and program the Powertrain Control Module (PCM) in accordance with the Service Information. Refer to **MODULE, POWERTRAIN CONTROL, REMOVAL** .
   - Perform the POWERTRAIN VERIFICATION TEST. Refer to **POWERTRAIN VERIFICATION TEST** .

P0501-VEHICLE SPEED SENSOR 1 PERFORMANCE (MTX NON-ABS)

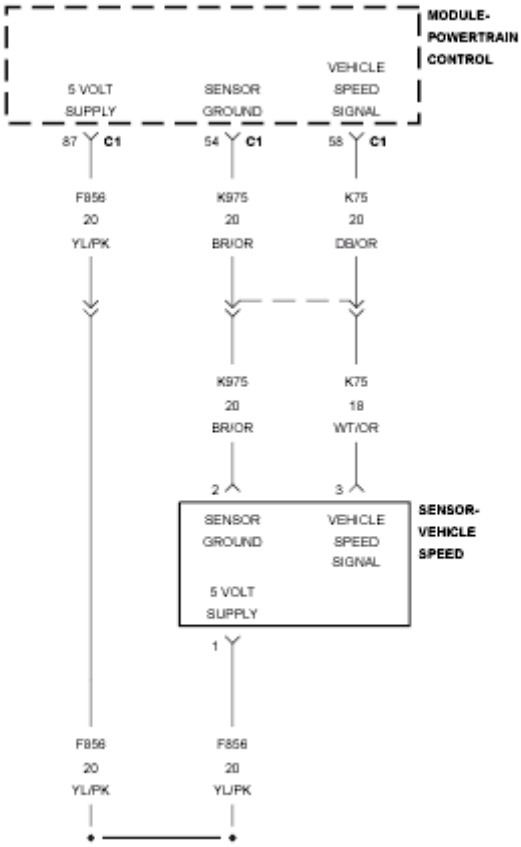

Fig. 80: Vehicle Speed Sensor Circuit Diagram
Courtesy of CHRYSLER GROUP, LLC

For a complete wiring diagram, **refer to appropriate SYSTEM WIRING DIAGRAMS article** .

WHEN MONITORED

With the ignition on and battery voltage greater than 10.4 volts.

SET CONDITION

The Powertrain Control Module (PCM) detects an implausible voltage on the Vehicle Speed Sensor circuit.

POSSIBLE CAUSES

POSSIBLE CAUSES
(F856) 5 VOLT SUPPLY CIRCUIT SHORTED TO VOLTAGE
(K75) VEHICLE SPEED SIGNAL CIRCUIT SHORTED TO VOLTAGE
(F856) 5 VOLT SUPPLY CIRCUIT SHORTED TO GROUND

(K75) VEHICLE SPEED SIGNAL CIRCUIT SHORTED TO GROUND
(F856) 5 VOLT SUPPLY CIRCUIT SHORTED TO THE (K75) VEHICLE SPEED SIGNAL CIRCUIT
(F856) 5 VOLT SUPPLY CIRCUIT SHORTED TO THE (K975) SENSOR GROUND CIRCUIT
(K75) VEHICLE SPEED SIGNAL CIRCUIT SHORTED TO THE (K975) SENSOR GROUND CIRCUIT
(F856) 5 VOLT SUPPLY CIRCUIT OPEN OR HIGH RESISTANCE
(K75) VEHICLE SPEED SIGNAL CIRCUIT OPEN OR HIGH RESISTANCE
(K975) SENSOR GROUND CIRCUIT OPEN OR HIGH RESISTANCE
VEHICLE SPEED SENSOR
POWERTRAIN CONTROL MODULE (PCM)

Always perform the Pre-Diagnostic Troubleshooting procedure before proceeding. Refer to PRE-DIAGNOSTIC TROUBLESHOOTING PROCEDURE .

DIAGNOSTIC TEST

1. **DTC IS ACTIVE**
   1. Start the engine.
   2. Allow the engine to reach normal operating temperature.

      NOTE: Diagnose and repair any system voltage or sensor reference voltage DTCs before continuing with this test.

      NOTE: It may be necessary to test drive the vehicle within the DTC monitoring conditions in order for this DTC to set.

   3. With the scan tool, select View DTCs.

      Is the status Active for this DTC?

      Yes

- Go To 2

No

- Perform the INTERMITTENT CONDITION diagnostic procedure. Refer to **INTERMITTENT CONDITION** .

2. **(F856) 5 VOLT SUPPLY CIRCUIT VOLTAGE**

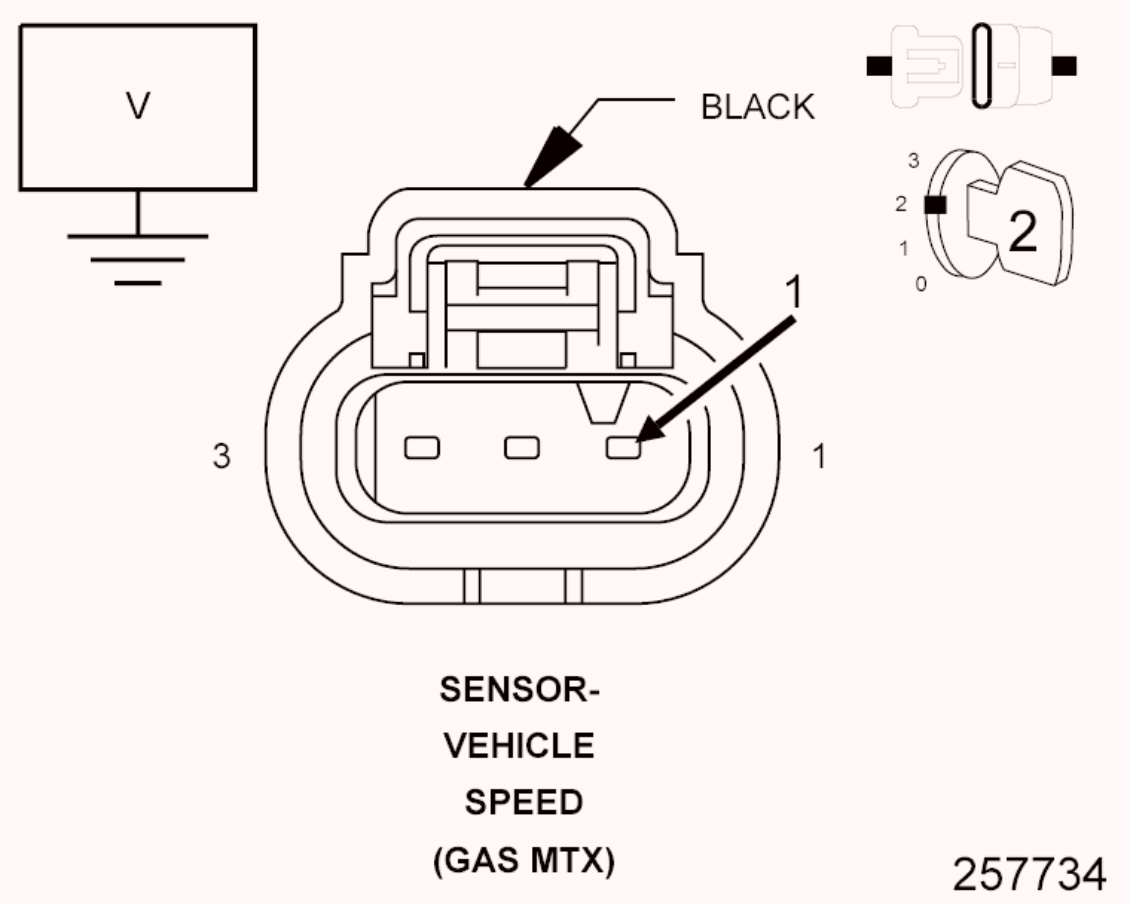

Fig. 81: Checking 5-Volt Supply Circuit
Courtesy of CHRYSLER GROUP, LLC

1. Turn the ignition off.
2. Disconnect the Vehicle Speed Sensor harness connector.
3. Turn the ignition on.
4. Measure the voltage of the (F856) 5 Volt Supply circuit in the Vehicle Speed Sensor harness connector.

   Is the voltage between 4.5 and 5.5 volts?

Yes

- Go To 3

No

- Go To 7

3. **(K75) VEHICLE SPEED SIGNAL CIRCUIT VOLTAGE**

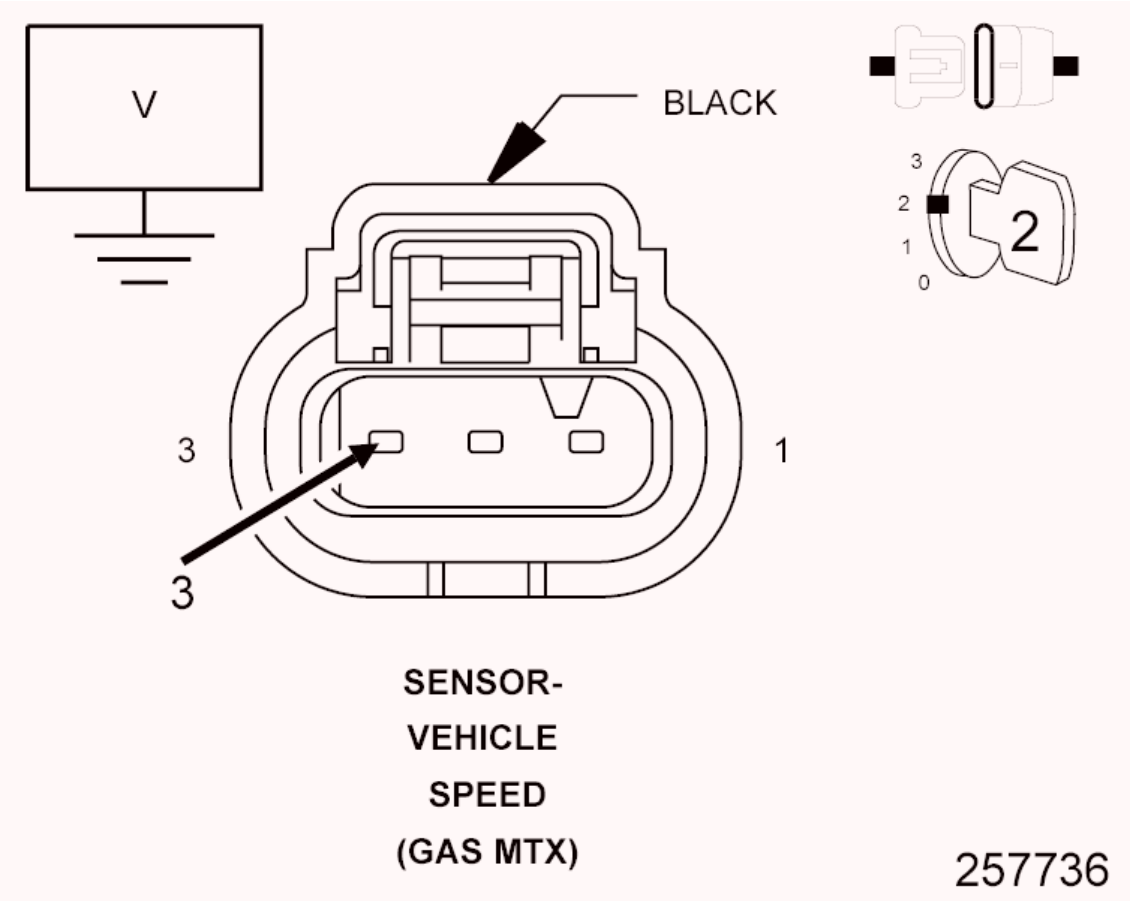

Fig. 82: Checking Vehicle Speed Signal Circuit
Courtesy of CHRYSLER GROUP, LLC

1. Measure the voltage of the (K75) Vehicle Speed Signal circuit in the Vehicle Speed Sensor harness connector.

   Is the voltage between 4.5 and 5.5 volts?

   Yes

   - Go To 4

No

- Go To 11

4. **(K975) SENSOR GROUND CIRCUIT TEST**
   1. Turn the ignition off.
   2. Using a 12-volt test light connected to 12 volts, check the (K975) Sensor Ground circuit in the Vehicle Speed Sensor harness connector.

NOTE: The test light should be illuminated and bright. Compare the brightness to that of a direct connection to the battery.

Is the test light illuminated and bright?

Yes

- Go To 5

No

- Go To 15

5. **(F856) 5 VOLT SUPPLY CIRCUIT SHORTED TO THE (K75) VEHICLE SPEED SIGNAL CIRCUIT**

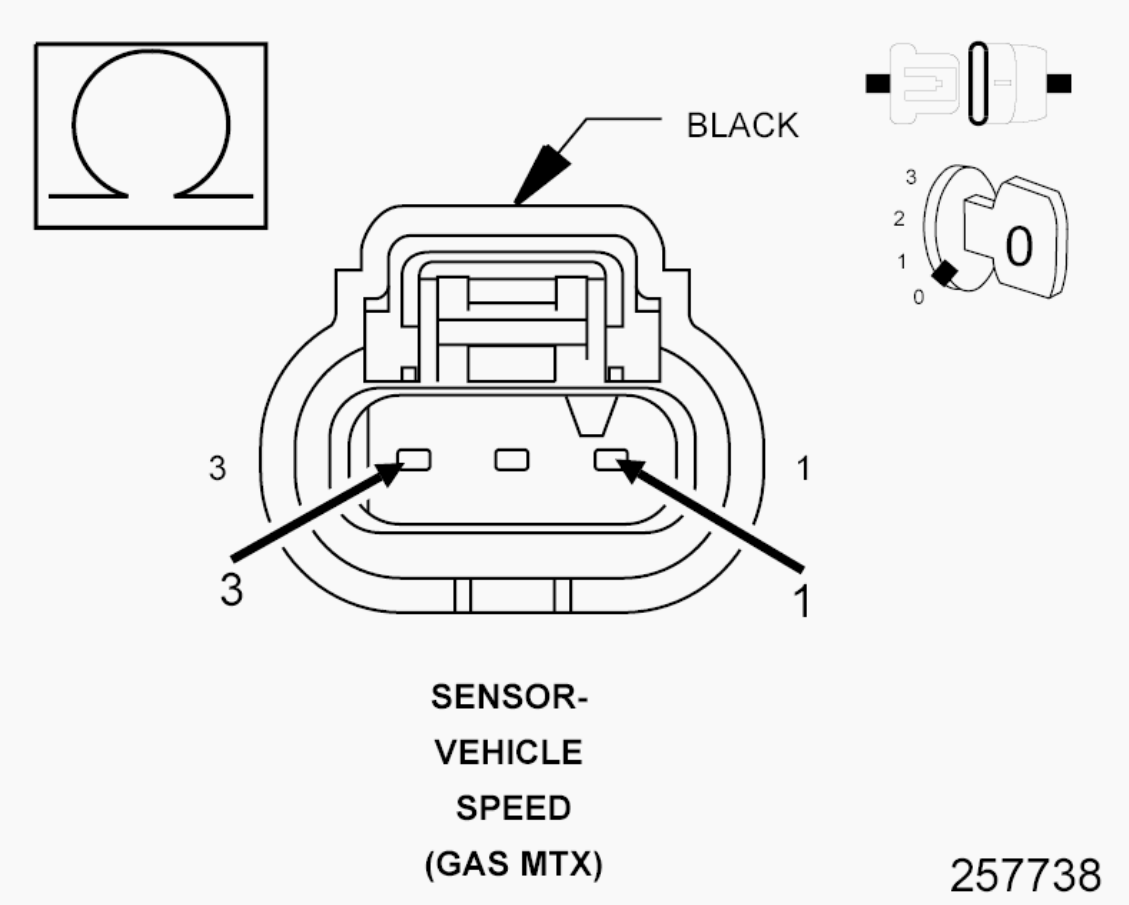

Fig. 83: Checking 5 Volt Supply Circuit For Short To Vehicle Speed Signal Circuit
Courtesy of CHRYSLER GROUP, LLC

1. Turn the ignition off.
2. Disconnect the Powertrain Control Module (PCM) C1 harness connector.
3. Measure the resistance between the (F856) 5 Volt Supply circuit and the (K75) Vehicle Speed Signal circuit in the Vehicle Speed Sensor harness connector.

   Is the resistance above 100 Ohms?

   Yes

   - Go To 6

   No

   - Repair the (F856) 5 Volt Supply circuit for a short to the (K75)

Vehicle Speed Signal circuit.

- Perform the POWERTRAIN VERIFICATION TEST. Refer to **POWERTRAIN VERIFICATION TEST** .

6. **VEHICLE SPEED SENSOR**
   1. Using the wiring diagram/schematic as a guide, inspect the wiring and connectors between the Vehicle Speed Sensor and the Powertrain Control Module (PCM).
   2. Look for any chafed, pierced, pinched, or partially broken wires.
   3. Look for broken, bent, pushed out or corroded terminals.
   4. Inspect the Vehicle Speed Sensor for any condition that would result in an incorrect signal, such as damage, corrosion, or contamination.

   Were any problems found?

   Yes

   - Repair as necessary.
   - Perform the POWERTRAIN VERIFICATION TEST. Refer to **POWERTRAIN VERIFICATION TEST** .

   No

   - Replace the Vehicle Speed Sensor.
   - Perform the POWERTRAIN VERIFICATION TEST. Refer to **POWERTRAIN VERIFICATION TEST** .

7. **(F856) 5 VOLT SUPPLY CIRCUIT SHORTED TO VOLTAGE**

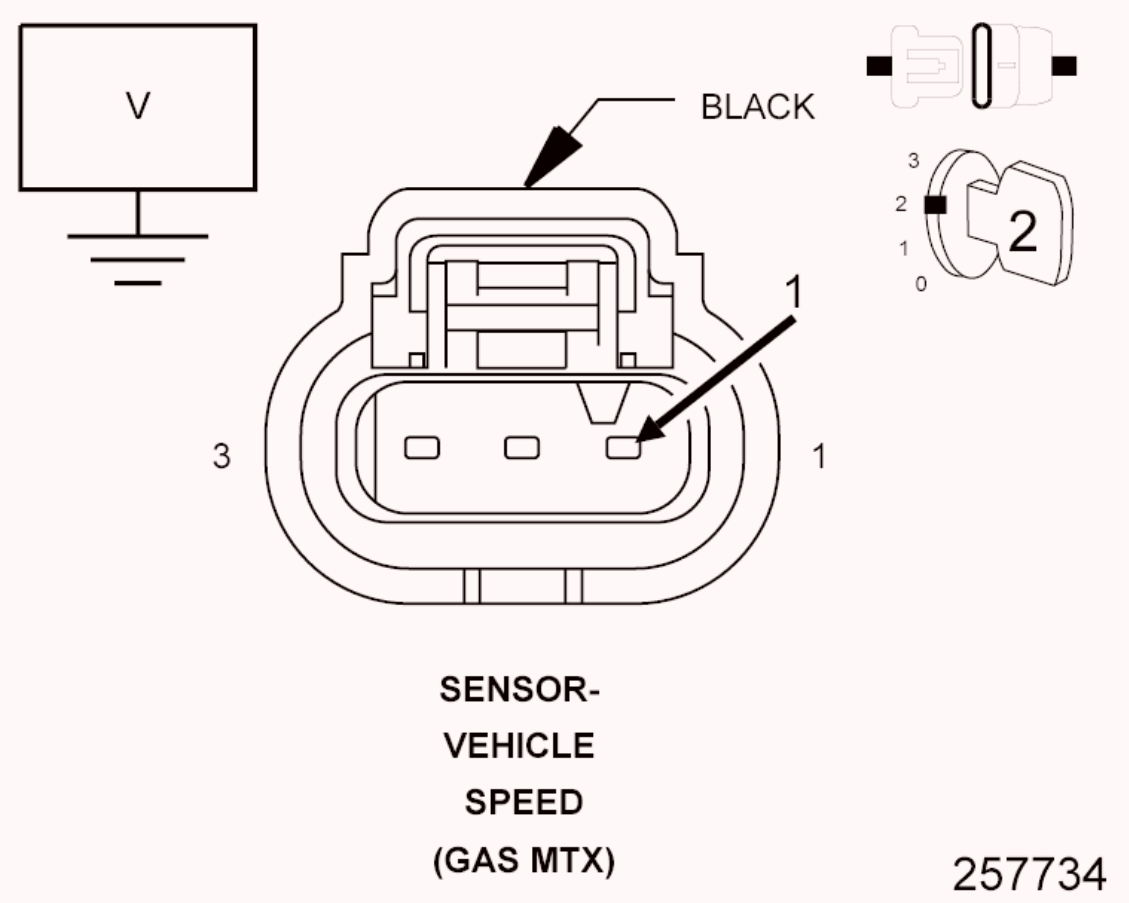

Fig. 84: Checking 5-Volt Supply Circuit
Courtesy of CHRYSLER GROUP, LLC

1. Turn the ignition off.
2. Disconnect the Powertrain Control Module (PCM) C2 harness connector.
3. Turn the ignition on.
4. Measure the voltage of the (F856) 5 Volt Supply circuit in the Vehicle Speed Sensor harness connector.

   Is there any voltage present?

   Yes

   - Repair the (F856) 5 Volt Supply circuit for a short to voltage.
   - Perform the POWERTRAIN VERIFICATION TEST. Refer to **POWERTRAIN VERIFICATION TEST** .

   No

- Go To 8

8. **(F856) 5 VOLT SUPPLY CIRCUIT SHORTED TO GROUND**

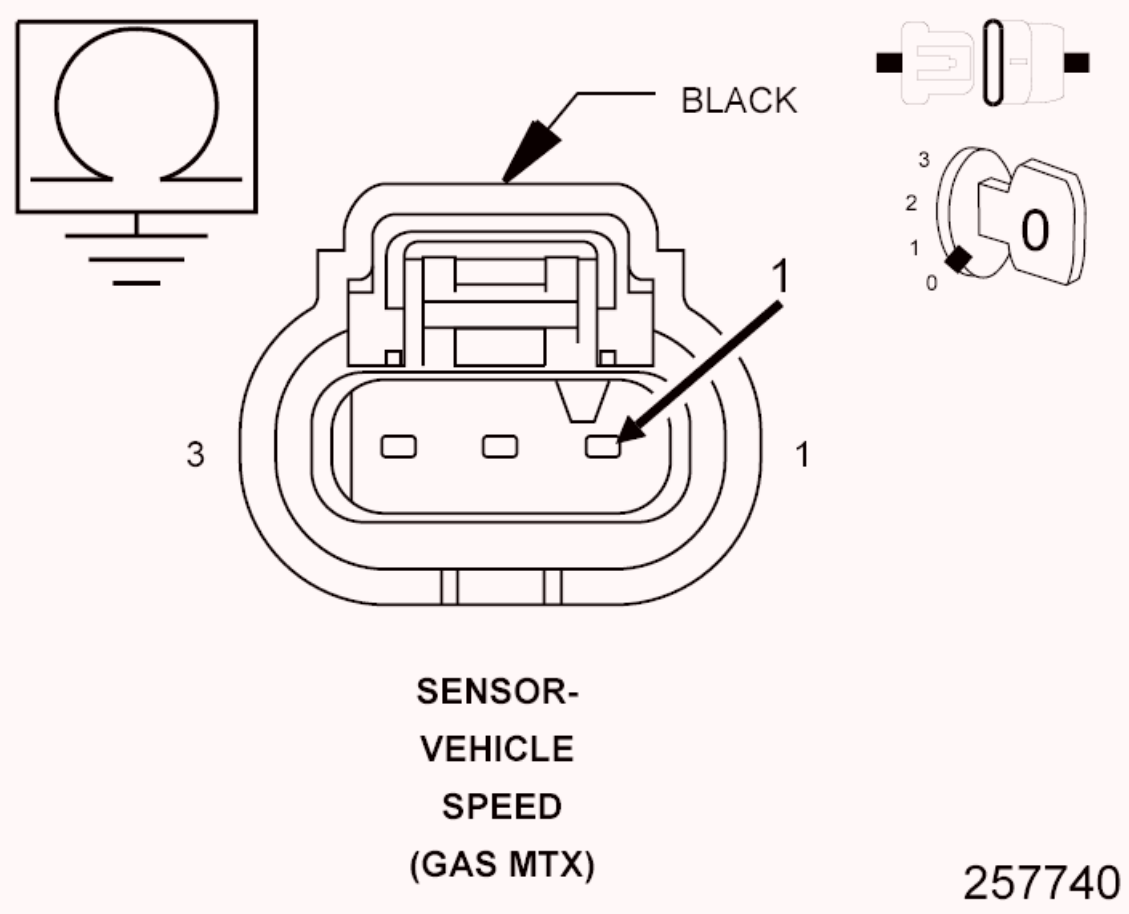

Fig. 85: Checking VSS 5-Volt Supply Circuit For Short To Ground
Courtesy of CHRYSLER GROUP, LLC

1. Turn the ignition off.
2. Measure the resistance between ground and the (F856) 5 Volt Supply circuit in the Vehicle Speed Sensor harness connector.

   Is the resistance above 100 Ohms?

   Yes

   - Go To 9

   No

   - Repair the (F856) 5 Volt Supply circuit for a short to ground.

- Perform the POWERTRAIN VERIFICATION TEST. Refer to **POWERTRAIN VERIFICATION TEST** .

9. **(F856) 5 VOLT SUPPLY CIRCUIT SHORTED TO THE (K975) SENSOR GROUND CIRCUIT**

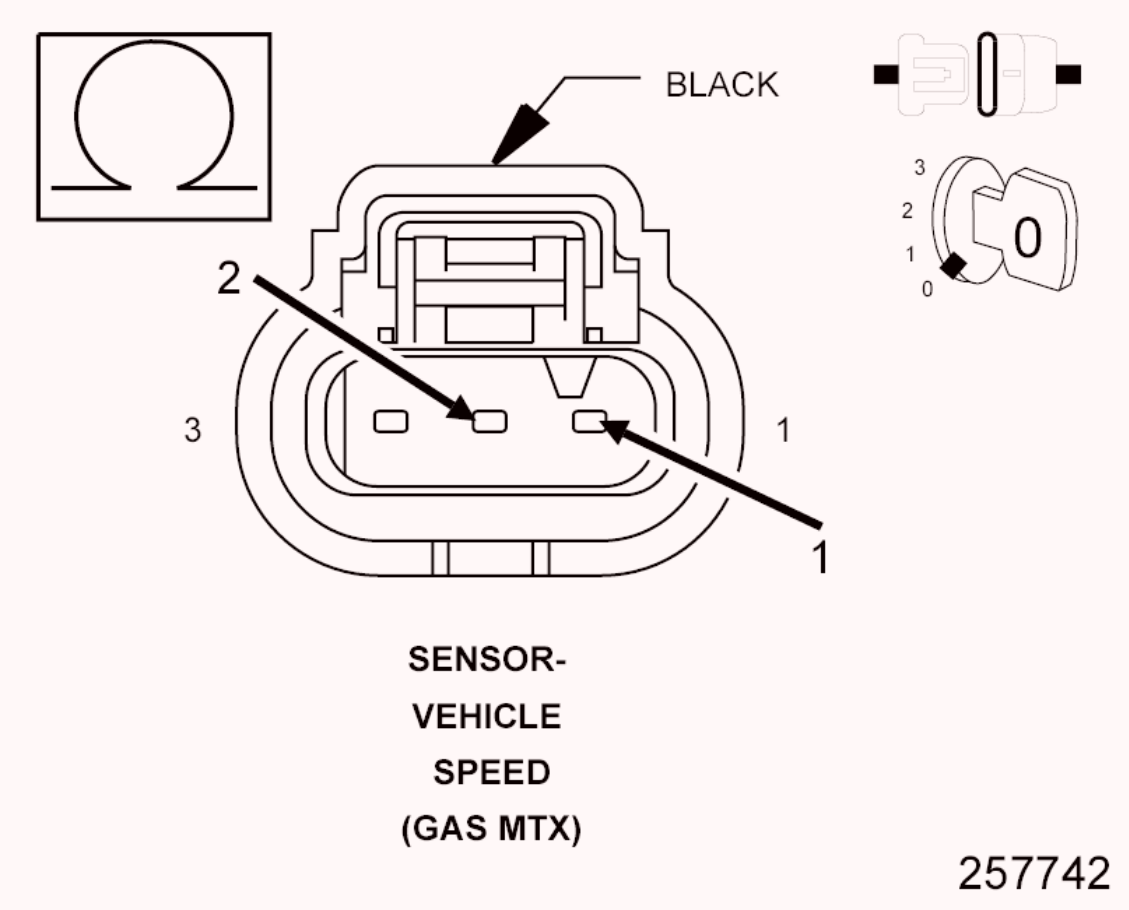

Fig. 86: Checking VSS 5-Volt Supply Circuit For Short To Sensor Ground Circuit
Courtesy of CHRYSLER GROUP, LLC

1. Measure the resistance between the (F856) 5 Volt Supply circuit and the (K975) Sensor Ground circuit in the Vehicle Speed Sensor harness connector.

   Is the resistance above 100 Ohms?

   Yes

   - Go To 10

   No

- Repair the (F856) 5 Volt Supply circuit for a short to the (K975) Sensor Ground circuit.
- Perform the POWERTRAIN VERIFICATION TEST. Refer to **POWERTRAIN VERIFICATION TEST** .

10. **(F856) 5 VOLT SUPPLY CIRCUIT OPEN OR HIGH RESISTANCE**

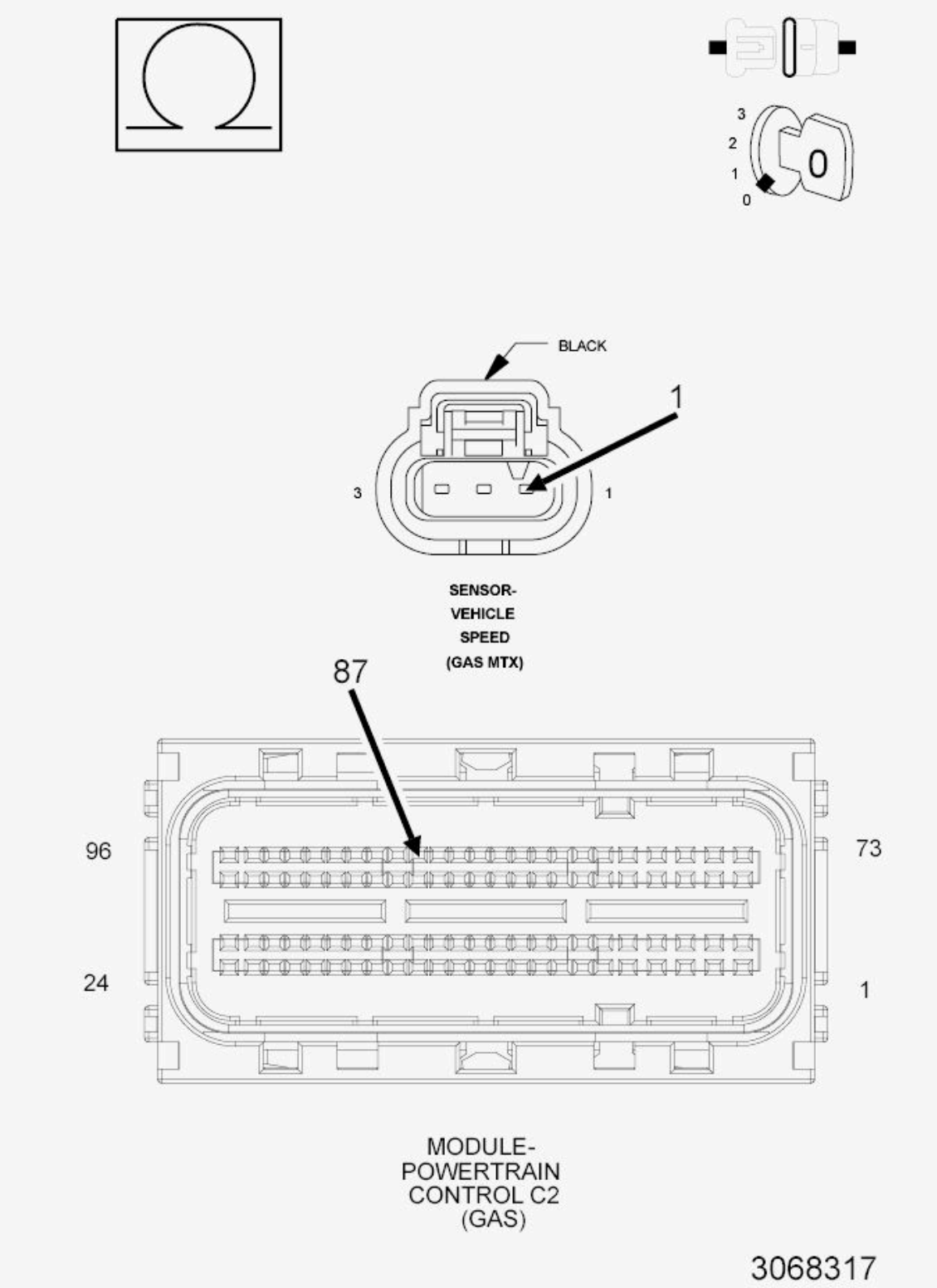

Fig. 87: Checking 5 Volt Supply Circuit For Open Or High Resistance
Courtesy of CHRYSLER GROUP, LLC

1. Measure the resistance of the (F856) 5 Volt Supply circuit between the Vehicle Speed Sensor harness connector and the Powertrain Control Module (PCM) harness connector.

Is the resistance below 5.0 Ohms?

Yes

- Go To 16

No

- Repair the (F856) 5 Volt Supply circuit for an open circuit or high resistance.
- Perform the POWERTRAIN VERIFICATION TEST. Refer to **POWERTRAIN VERIFICATION TEST** .

11. **(K75) VEHICLE SPEED SIGNAL CIRCUIT SHORTED TO VOLTAGE**

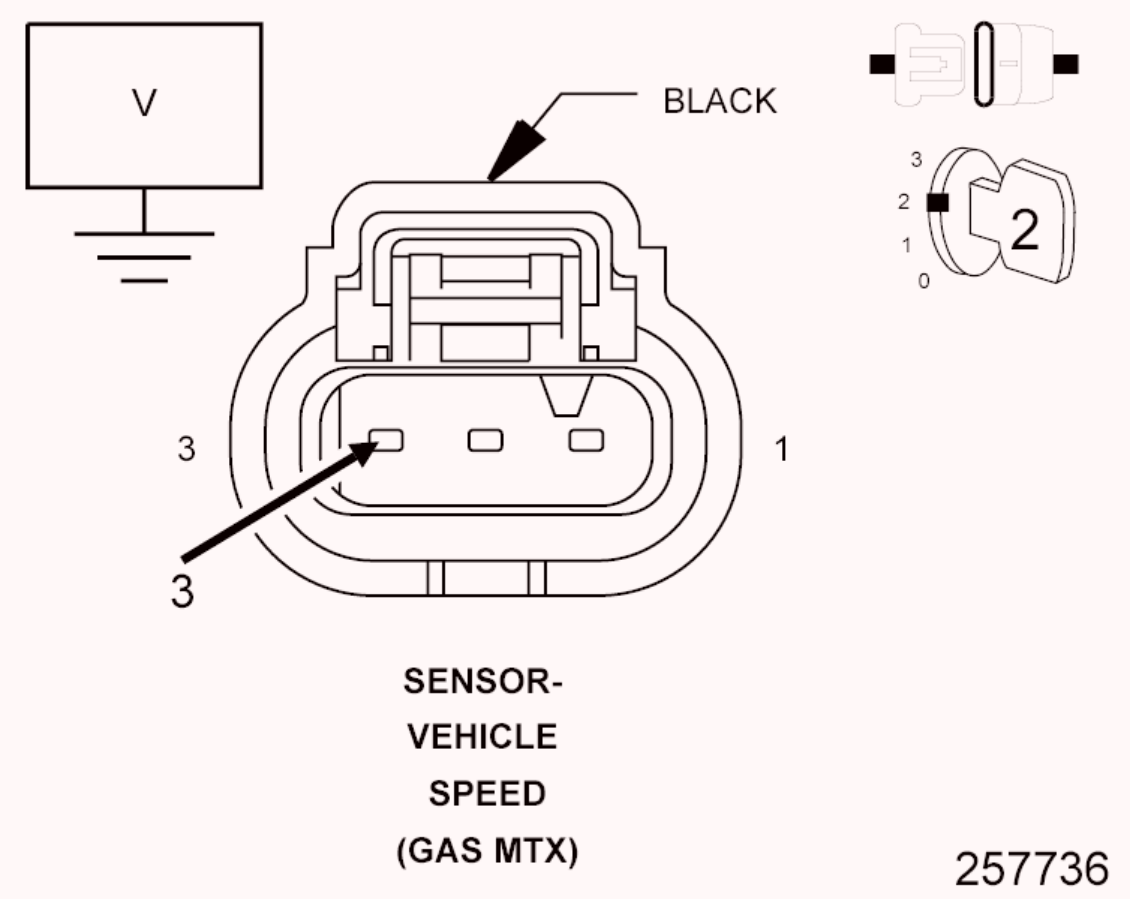

Fig. 88: Checking Vehicle Speed Signal Circuit For Short To Voltage
Courtesy of CHRYSLER GROUP, LLC

1. Turn the ignition off.
2. Disconnect the PCM C1 harness connector.

3. Turn the ignition on.
4. Measure the voltage of the (K75) Vehicle Speed Signal circuit in the Vehicle Speed Sensor harness connector.

   Is there any voltage present?

   Yes

   - Repair the (K75) Vehicle Speed Signal circuit for a short to voltage.
   - Perform the POWERTRAIN VERIFICATION TEST. Refer to **POWERTRAIN VERIFICATION TEST** .

   No

   - Go To 12

12. **(K75) VEHICLE SPEED SIGNAL CIRCUIT SHORTED TO GROUND**

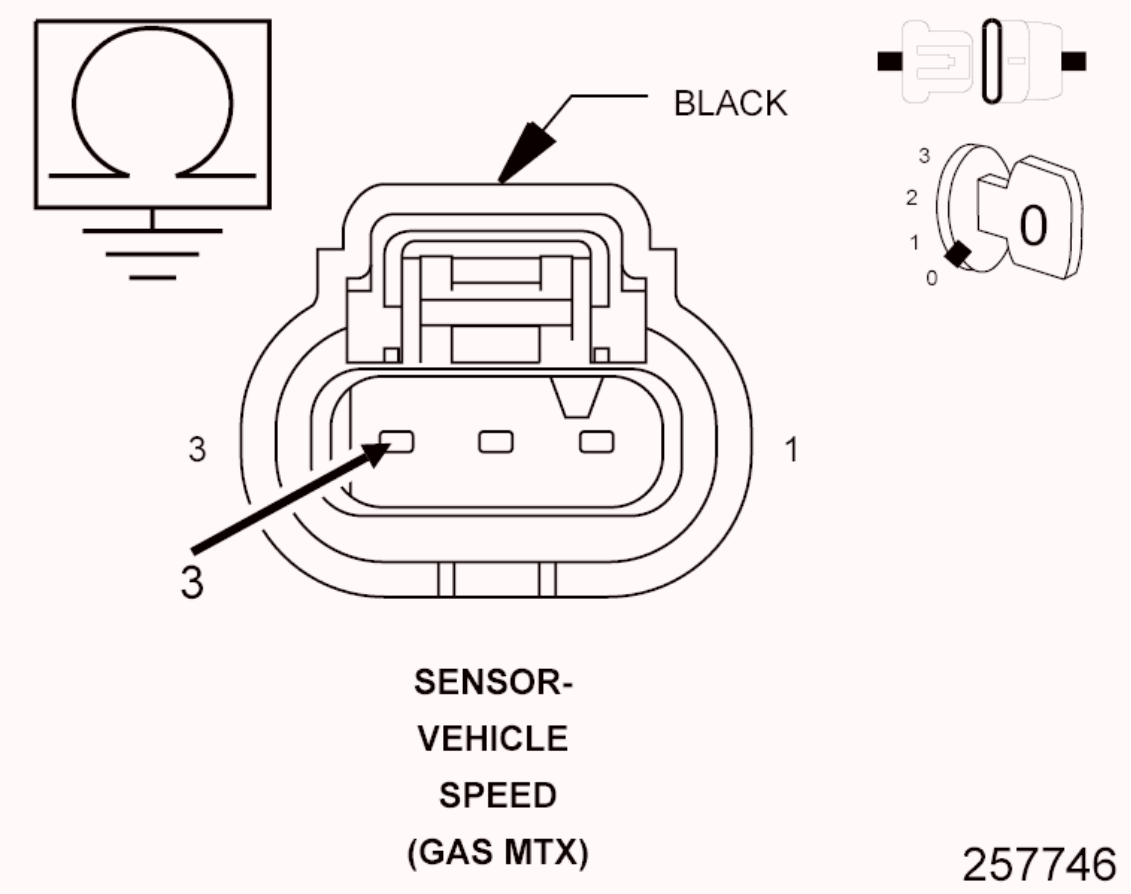

Fig. 89: Checking VSS Signal Circuit For Short To Ground

Courtesy of CHRYSLER GROUP, LLC

1. Turn the ignition off.
2. Measure the resistance between ground and the (K75) Vehicle Speed Signal circuit in the Vehicle Speed Sensor harness connector.

   Is the resistance above 100 Ohms?

   Yes

   - Go To 13

   No

   - Repair the (K75) Vehicle Speed Signal circuit for a short to ground.
   - Perform the POWERTRAIN VERIFICATION TEST. Refer to **POWERTRAIN VERIFICATION TEST** .

13. **(K75) VEHICLE SPEED SIGNAL CIRCUIT SHORTED TO THE (K975) SENSOR GROUND CIRCUIT**

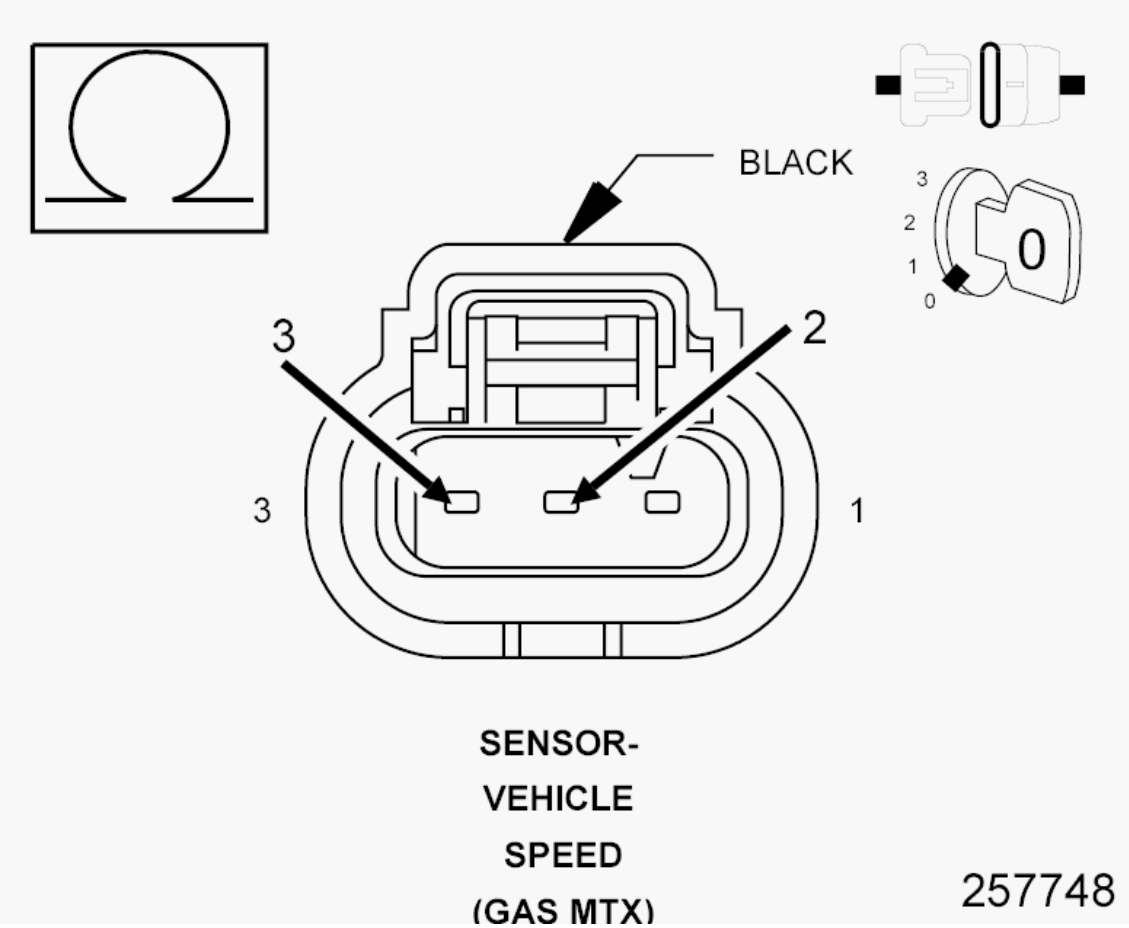

Fig. 90: Checking VSS Circuit For Short To Sensor Ground Circuit
Courtesy of CHRYSLER GROUP, LLC

1. Measure the resistance between the (K75) Vehicle Speed Signal circuit and the (K975) Sensor Ground circuit in the Vehicle Speed Sensor harness connector.

   Is the resistance above 100 Ohms?

   Yes

   - Go To 14

   No

   - Repair the (K75) Vehicle Speed Signal circuit for a short to the (K975) Sensor Ground circuit.
   - Perform the POWERTRAIN VERIFICATION TEST. Refer to **POWERTRAIN VERIFICATION TEST** .

14. **(K75) VEHICLE SPEED SIGNAL CIRCUIT OPEN OR HIGH**

RESISTANCE

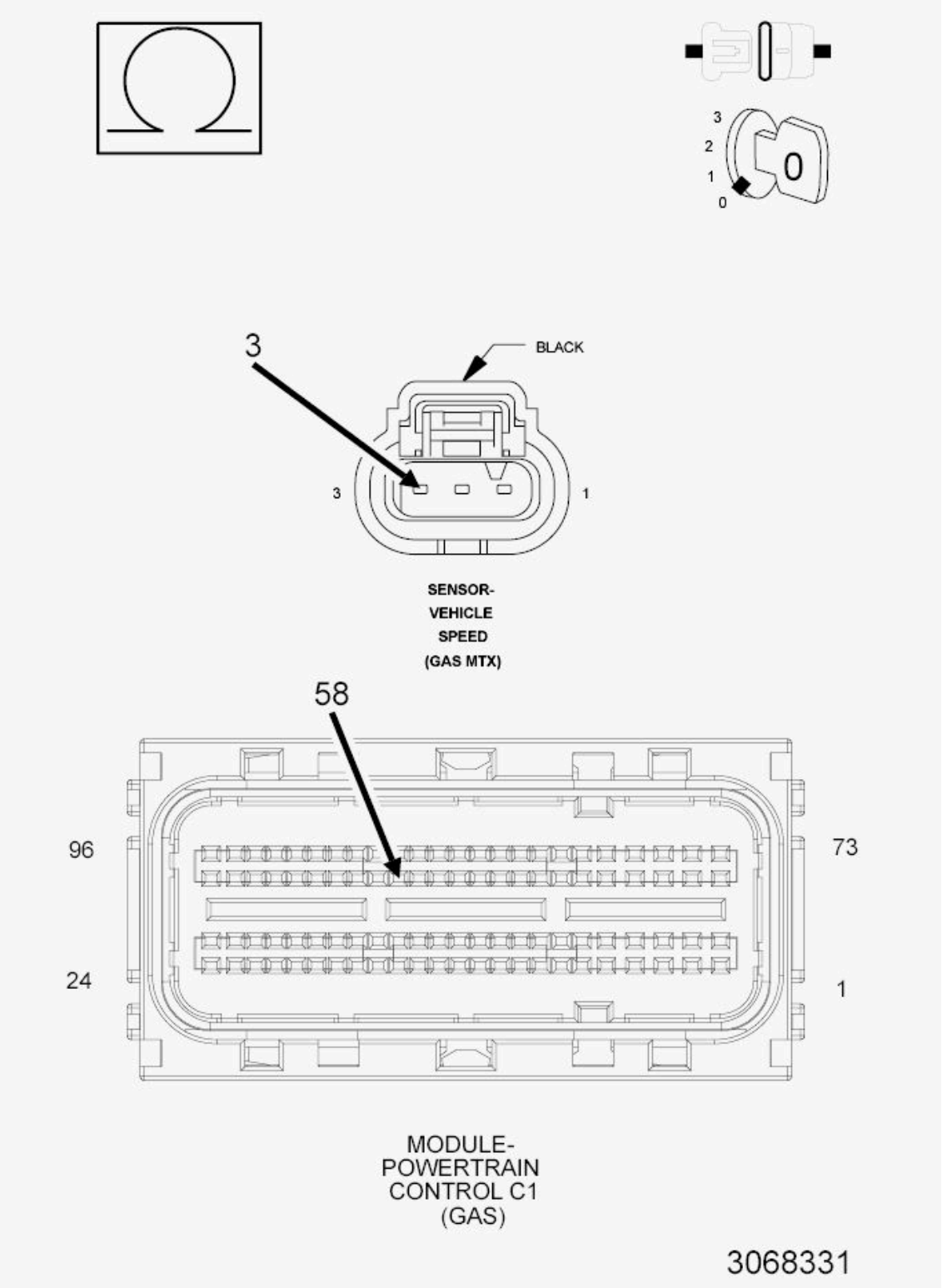

Fig. 91: Checking Vehicle Speed Signal Circuit For Open Or High Resistance
Courtesy of CHRYSLER GROUP, LLC

1. Measure the resistance of the (K75) Vehicle Speed Signal circuit between the Vehicle Speed Sensor harness connector and the PCM C1 harness connector.

   Is the resistance below 5.0 Ohms?

   Yes

   - Go To 16

   No

   - Repair the (K75) Vehicle Speed Signal circuit for an open circuit or high resistance.
   - Perform the POWERTRAIN VERIFICATION TEST. Refer to **POWERTRAIN VERIFICATION TEST** .

15. **(K975) SENSOR GROUND CIRCUIT OPEN OR HIGH RESISTANCE**

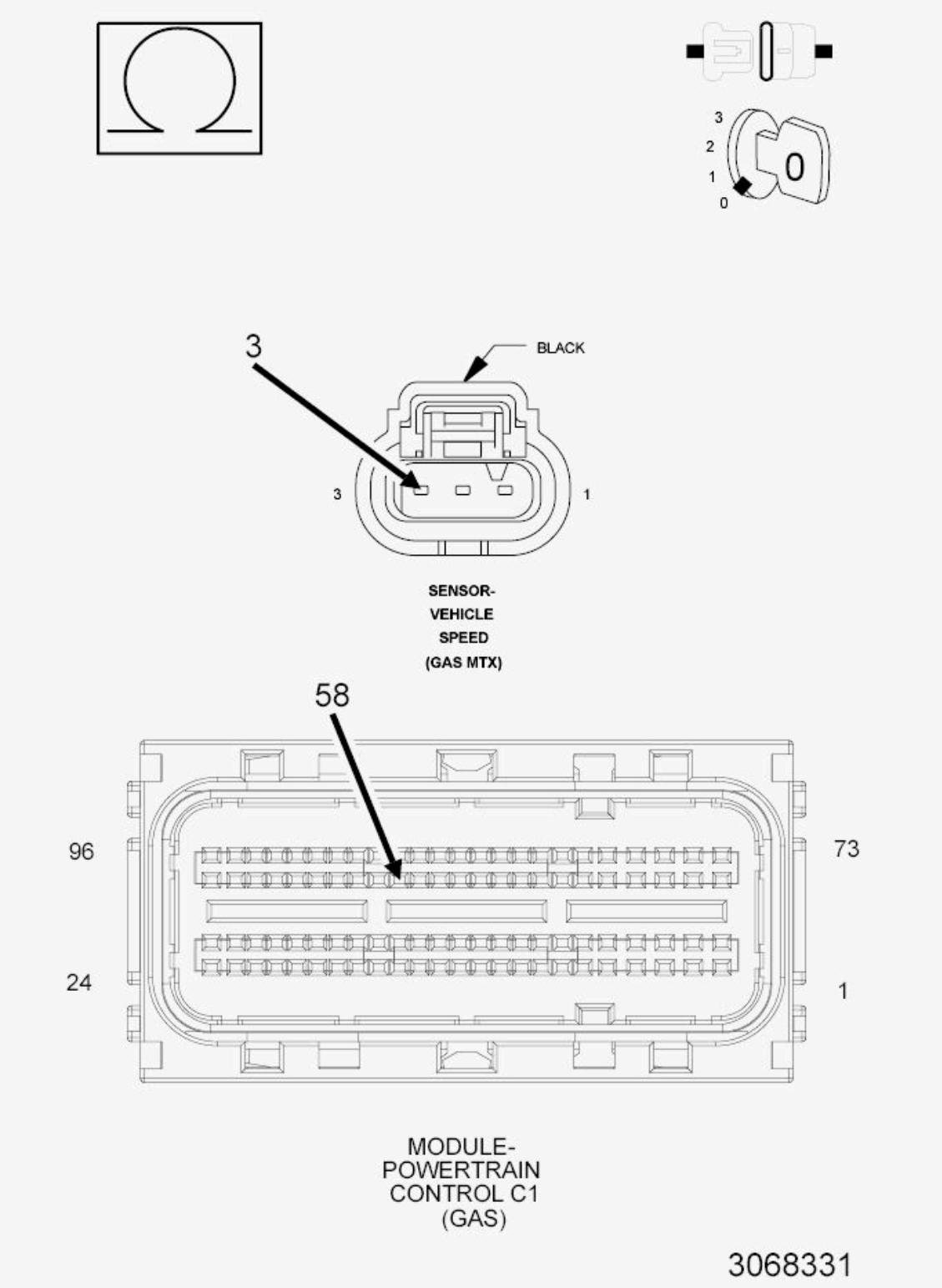

Fig. 92: Checking Vehicle Speed Sensor Ground Circuit For Open Or High Resistance
Courtesy of CHRYSLER GROUP, LLC

1. Turn the ignition off.
2. Disconnect the PCM C1 harness connector.

3. Measure the resistance of the (K975) Sensor Ground circuit between the Vehicle Speed Sensor harness connector and the PCM C1 harness connector.

   Is the resistance below 5.0 Ohms?

   Yes

   - Go To 16

   No

   - Repair the circuit for an open circuit or high resistance.
   - Perform the POWERTRAIN VERIFICATION TEST. Refer to **POWERTRAIN VERIFICATION TEST** .

16. **POWERTRAIN CONTROL MODULE (PCM)**
    1. Using the wiring diagram/schematic as a guide, inspect the wiring and connectors between the Vehicle Speed Sensor and the Powertrain Control Module (PCM).
    2. Look for any chafed, pierced, pinched, or partially broken wires.
    3. Look for broken, bent, pushed out or corroded terminals.
    4. Monitor the scan tool data relative to this circuit and wiggle test the wiring and connectors.
    5. Look for the data to change or for the DTC to reset during the wiggle test.
    6. Perform any Technical Service Bulletins that may apply.

    Were any problems found?

    Yes

    - Repair as necessary.
    - Perform the POWERTRAIN VERIFICATION TEST. Refer to **POWERTRAIN VERIFICATION TEST** .

    No

    - Replace and program the Powertrain Control Module (PCM) in

accordance with the Service Information. Refer to **MODULE, POWERTRAIN CONTROL, REMOVAL** .

- Perform the POWERTRAIN VERIFICATION TEST. Refer to **POWERTRAIN VERIFICATION TEST** .

P0503-VEHICLE SPEED SENSOR 1 ERRATIC (EXC MTX NON-ABS)

For a complete wiring diagram, **refer to appropriate SYSTEM WIRING DIAGRAMS article** .

THEORY OF OPERATION

The vehicle speed sensor rationality is a continuous test that monitors the vehicle speed sensor for lack of activity. The rationality will not run if a limp-in exists for MAP, Throttle Position, and Engine Coolant Temperature. If vehicle speed sensor is below a minimum threshold for a period of time after the vehicle is operated at a sufficient load, a failure will be indicated.

WHEN MONITORED

With the engine running, transmission not in park or neutral, brakes not applied, and engine RPM greater than 1500.

SET CONDITION

This code will set if no vehicle speed signal is received from the ABS Module for more than 11 seconds for 2 consecutive trips. Two Trip Fault. Three good trips to turn off the MIL.

POSSIBLE CAUSES

POSSIBLE CAUSES
ACTIVE BUS OR COMMUNICATION DTCS
TIRE CIRCUMFERENCE
POWERTRAIN CONTROL MODULE (PCM)

Always perform the Pre-Diagnostic Troubleshooting procedure before proceeding. Refer to PRE-DIAGNOSTIC TROUBLESHOOTING PROCEDURE .

DIAGNOSTIC TEST.

1. **ACTIVE DTC**
   1. Ignition on, engine not running.

      NOTE: Check for any Bus Communication DTCs. If no Bus or Communication DTCs are set, check for active DTCs in the Anti-Lock Brake Module. Any bus, communication, or VSS DTCs in the Anti-Lock Brake Module must be properly diagnosed before continuing.

   2. With a scan tool, select View DTCs.

      Is the status Active for this DTC?

      Yes

      - Go To 2

      No

      - Perform the CHECKING FOR AN INTERMITTENT DTC Diagnostic Procedure. Refer to **INTERMITTENT CONDITION** .
2. **VISUAL INSPECTION**

   NOTE: This code can set due to tire circumference differences and from the front or rear wheels being on a slippery surface while the opposite tires are not.

   1. This code may also set on a hard acceleration on loose gravel or during other off road driving conditions.
   2. Check tire pressure of all the tires.
   3. Check tire wear on all the tires.
   4. Ask the customer what the road and driving conditions were like when the fault set.

      Were any problems found?

      Yes

- Repair as necessary. If the code set during a front OR rear wheel spin condition, no repair is necessary.
- Perform the PCM VERIFICATION TEST. Refer to **POWERTRAIN VERIFICATION TEST** .

No

- Go To 3

3. **POWERTRAIN CONTROL MODULE (PCM)**
   1. Using the wiring diagram/schematic as a guide, inspect the wiring and connectors related to this circuit.
   2. Look for any chafed, pierced, pinched, or partially broken wires.
   3. Look for broken, bent, pushed out or corroded terminals.
   4. Refer to any Technical Service Bulletins that may apply.

   Were any problems found?

   Yes

   - Repair as necessary.
   - Perform the PCM VERIFICATION TEST. Refer to **POWERTRAIN VERIFICATION TEST** .

   No

   - Replace and program the Powertrain Control Module (PCM) in accordance with the Service Information. Refer to **MODULE, POWERTRAIN CONTROL, REMOVAL** .
   - Perform the PCM VERIFICATION TEST. Refer to **POWERTRAIN VERIFICATION TEST** .

P0503-VEHICLE SPEED SENSOR 1 ERRATIC (MTX NON-ABS)

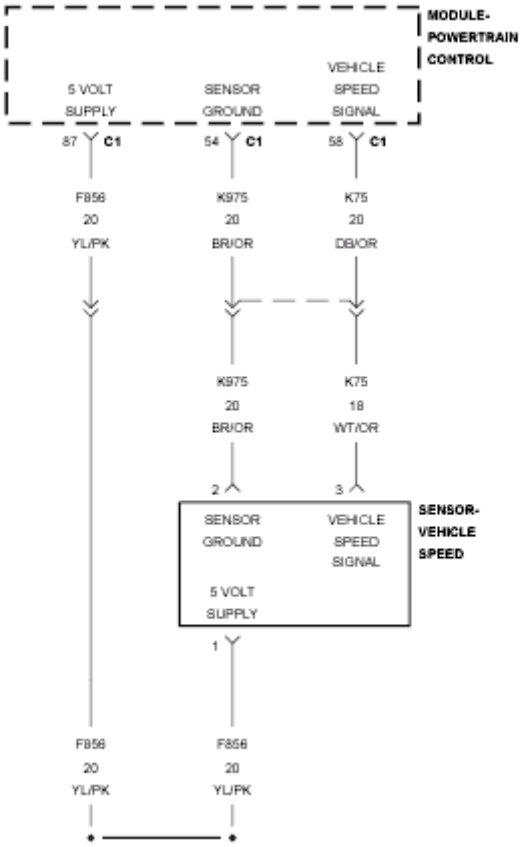

Fig. 93: Vehicle Speed Sensor Circuit Diagram
Courtesy of CHRYSLER GROUP, LLC

For a complete wiring diagram, **refer to appropriate SYSTEM WIRING DIAGRAMS article** .

WHEN MONITORED

With the ignition on and battery voltage greater than 10.4 volts.

SET CONDITION

The Powertrain Control Module (PCM) detects an implausible voltage on the Vehicle Speed Sensor circuit.

POSSIBLE CAUSES

POSSIBLE CAUSES
(F856) 5 VOLT SUPPLY CIRCUIT SHORTED TO VOLTAGE
(K75) VEHICLE SPEED SIGNAL CIRCUIT SHORTED TO VOLTAGE
(F856) 5 VOLT SUPPLY CIRCUIT SHORTED TO GROUND

(K75) VEHICLE SPEED SIGNAL CIRCUIT SHORTED TO GROUND
(F856) 5 VOLT SUPPLY CIRCUIT SHORTED TO THE (K75) VEHICLE SPEED SIGNAL CIRCUIT
(F856) 5 VOLT SUPPLY CIRCUIT SHORTED TO THE (K914) SENSOR GROUND CIRCUIT
(K75) VEHICLE SPEED SIGNAL CIRCUIT SHORTED TO THE (K914) SENSOR GROUND CIRCUIT
(F856) 5 VOLT SUPPLY CIRCUIT OPEN OR HIGH RESISTANCE
(K75) VEHICLE SPEED SIGNAL CIRCUIT OPEN OR HIGH RESISTANCE
(K914) SENSOR GROUND CIRCUIT OPEN OR HIGH RESISTANCE
VEHICLE SPEED SENSOR
POWERTRAIN CONTROL MODULE (PCM)

Always perform the Pre-Diagnostic Troubleshooting procedure before proceeding. Refer to PRE-DIAGNOSTIC TROUBLESHOOTING PROCEDURE .

DIAGNOSTIC TEST

1. **DTC IS ACTIVE**
   1. Start the engine.
   2. Allow the engine to reach normal operating temperature.

      NOTE: Diagnose and repair any system voltage or sensor reference voltage DTCs before continuing with this test.

      NOTE: It may be necessary to test drive the vehicle within the DTC monitoring conditions in order for this DTC to set.

   3. With the scan tool, select View DTCs.

      Is the status Active for this DTC?

      Yes

- Go To 2

No

- Perform the INTERMITTENT CONDITION diagnostic procedure. Refer to **INTERMITTENT CONDITION** .

2. **(F856) 5 VOLT SUPPLY CIRCUIT VOLTAGE**

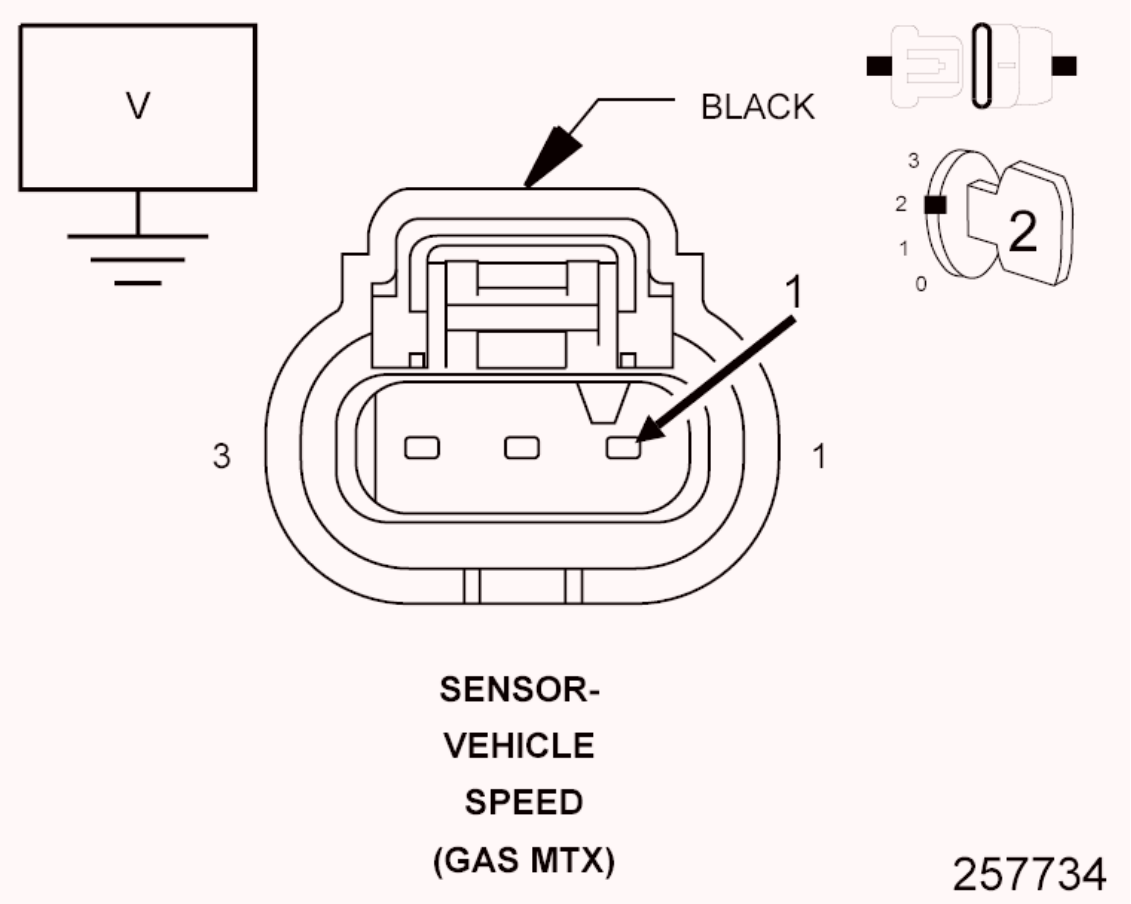

Fig. 94: Checking 5-Volt Supply Circuit
Courtesy of CHRYSLER GROUP, LLC

1. Turn the ignition off.
2. Disconnect the Vehicle Speed Sensor harness connector.
3. Turn the ignition on.
4. Measure the voltage of the (F856) 5 Volt Supply circuit in the Vehicle Speed Sensor harness connector.

   Is the voltage between 4.5 and 5.5 volts?

Yes

- Go To 3

No

- Go To 7

3. **(K75) VEHICLE SPEED SIGNAL CIRCUIT VOLTAGE**

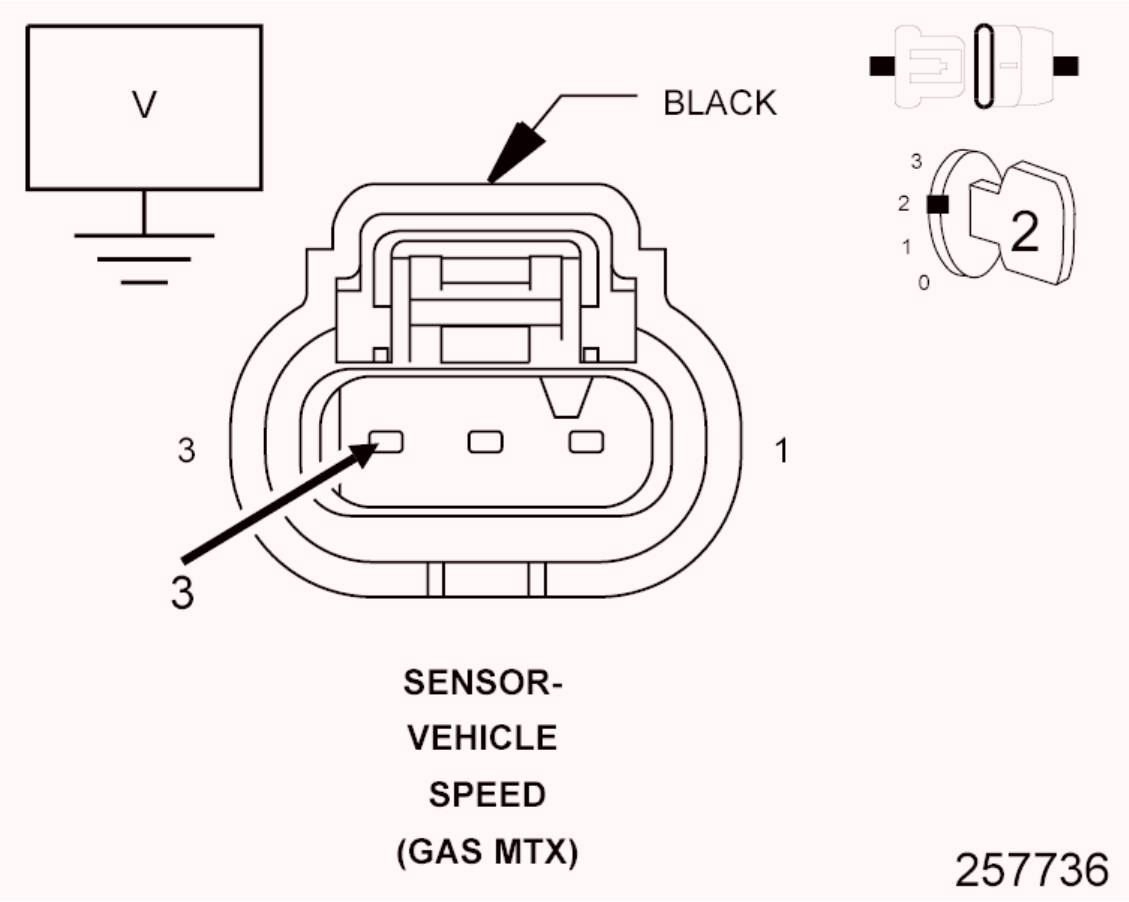

Fig. 95: Checking Vehicle Speed Signal Circuit
Courtesy of CHRYSLER GROUP, LLC

1. Measure the voltage of the (K75) Vehicle Speed Signal circuit in the Vehicle Speed Sensor harness connector.

   Is the voltage between 4.5 and 5.5 volts?

   Yes

   - Go To 4

No

- Go To 11

4. **(K914) SENSOR GROUND CIRCUIT TEST**
   1. Turn the ignition off.
   2. Using a 12-volt test light connected to 12 volts, check the (K914) Sensor Ground in the Vehicle Speed Sensor harness connector.

NOTE: The test light should be illuminated and bright. Compare the brightness to that of a direct connection to the battery.

Is the test light illuminated and bright?

Yes

- Go To 5

No

- Go To 15

5. **(F856) 5 VOLT SUPPLY CIRCUIT SHORTED TO THE (K75) VEHICLE SPEED SIGNAL CIRCUIT**

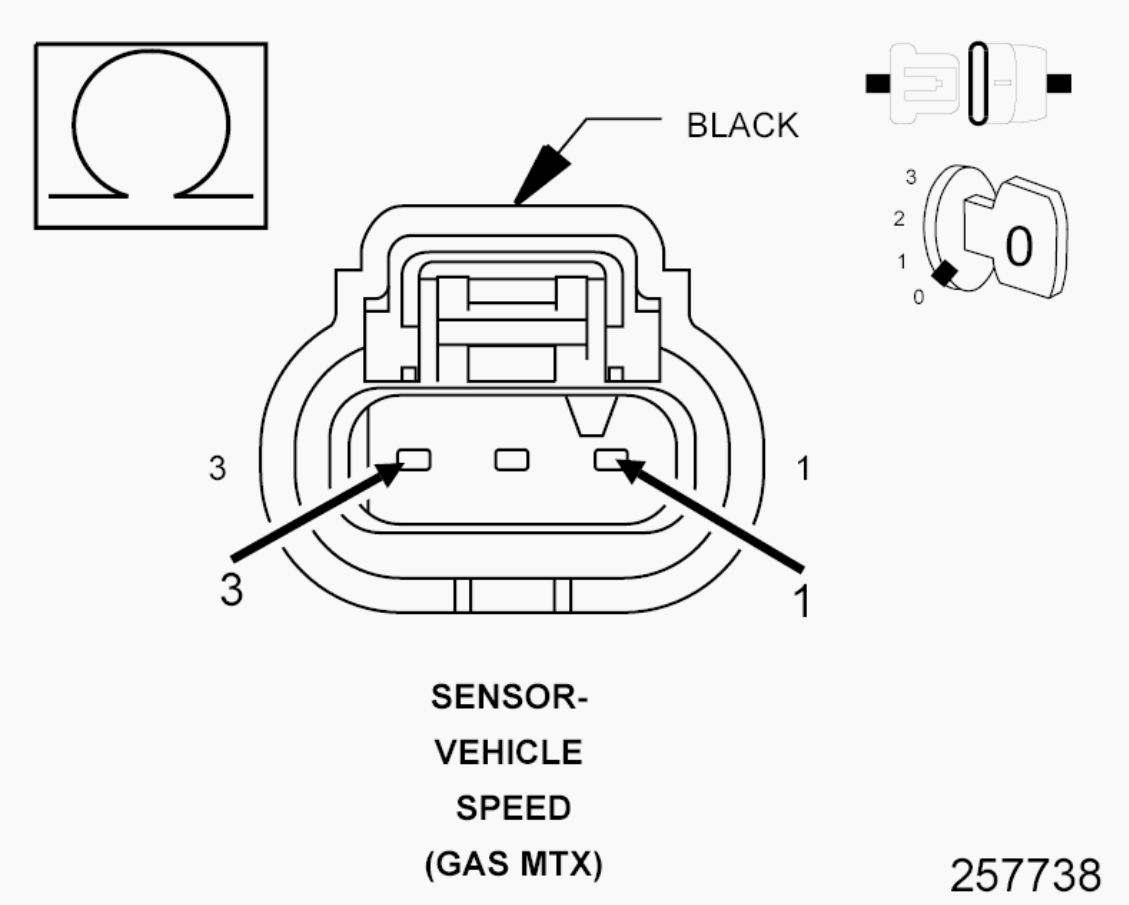

Fig. 96: Checking 5 Volt Supply Circuit For Short To Vehicle Speed Signal Circuit
Courtesy of CHRYSLER GROUP, LLC

1. Turn the ignition off.
2. Disconnect the Powertrain Control Module (PCM) C1 and C2 harness connectors.
3. Measure the resistance between the (F856) 5 Volt Supply circuit and the (K75) Vehicle Speed Signal circuit in the Vehicle Speed Sensor harness connector.

   Is the resistance above 100 Ohms?

   Yes

   - Go To 6

   No

   - Repair the (F856) 5 Volt Supply circuit for a short to the (K75)

Vehicle Speed Signal circuit.

- Perform the POWERTRAIN VERIFICATION TEST. Refer to **POWERTRAIN VERIFICATION TEST** .

6. **VEHICLE SPEED SENSOR**
   1. Using the wiring diagram/schematic as a guide, inspect the wiring and connectors between the Vehicle Speed Sensor and the Powertrain Control Module (PCM).
   2. Look for any chafed, pierced, pinched, or partially broken wires.
   3. Look for broken, bent, pushed out or corroded terminals.
   4. Inspect the Vehicle Speed Sensor for any condition that would result in an incorrect signal, such as damage, corrosion, or contamination.

   Were any problems found?

   Yes

   - Repair as necessary.
   - Perform the POWERTRAIN VERIFICATION TEST. Refer to **POWERTRAIN VERIFICATION TEST** .

   No

   - Replace the Vehicle Speed Sensor in accordance with the service information.
   - Perform the POWERTRAIN VERIFICATION TEST. Refer to **POWERTRAIN VERIFICATION TEST** .

7. **(F856) 5 VOLT SUPPLY CIRCUIT SHORTED TO VOLTAGE**

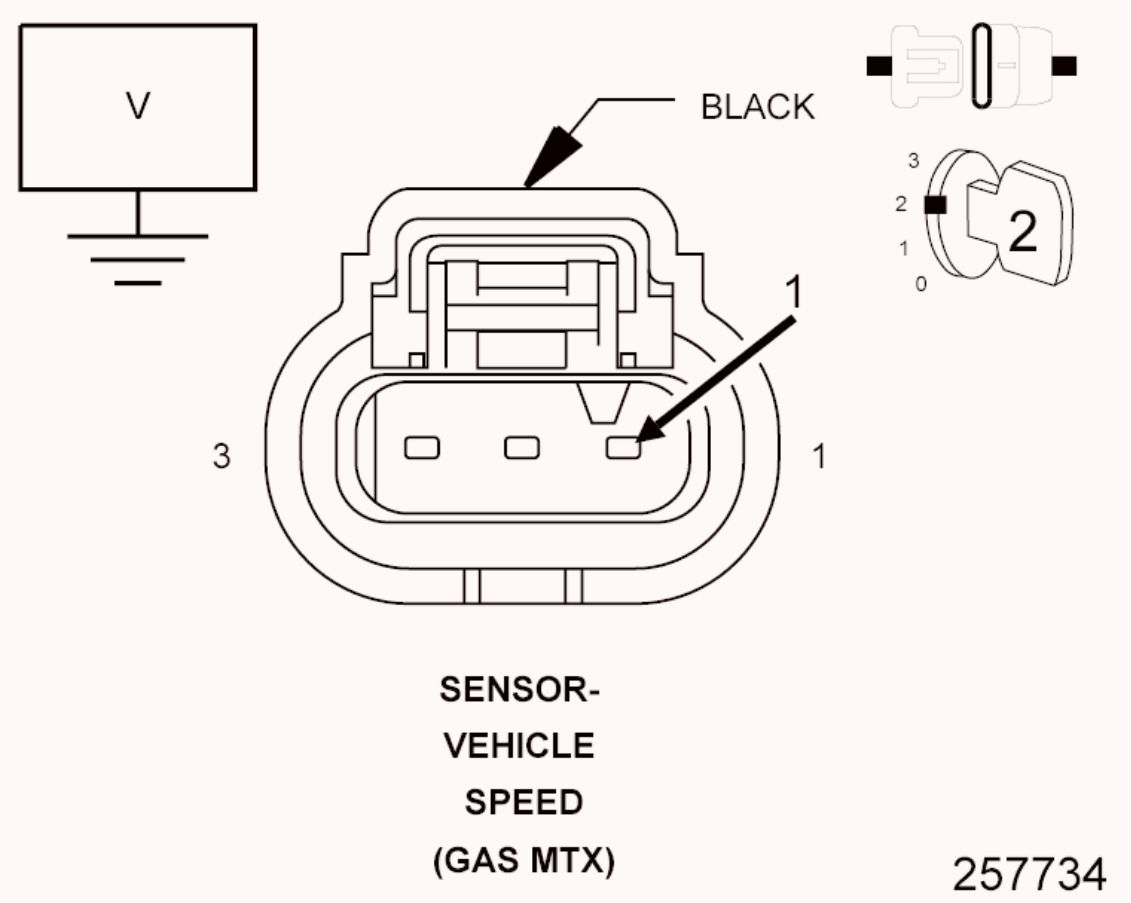

Fig. 97: Checking 5 Volt Supply Circuit For Short To Voltage
Courtesy of CHRYSLER GROUP, LLC

1. Turn the ignition off.
2. Disconnect the Powertrain Control Module (PCM) C2 harness connector.
3. Turn the ignition on.
4. Measure the voltage of the (F856) 5 Volt Supply circuit in the Vehicle Speed Sensor harness connector.

   Is there any voltage present?

   Yes

   - Repair the (F856) 5 Volt Supply circuit for a short to voltage.
   - Perform the POWERTRAIN VERIFICATION TEST. Refer to **POWERTRAIN VERIFICATION TEST** .

   No

- Go To 8

8. **(F856) 5 VOLT SUPPLY CIRCUIT SHORTED TO GROUND**

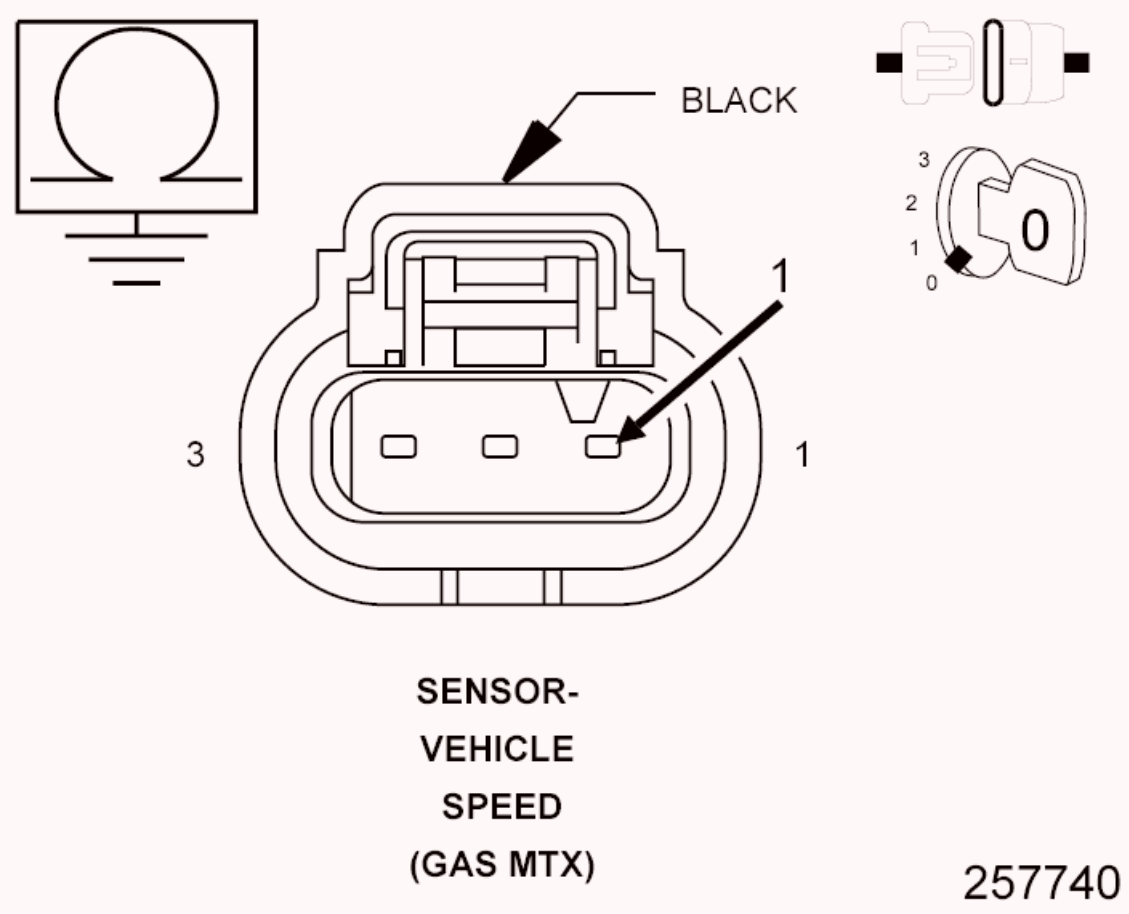

Fig. 98: Checking VSS 5-Volt Supply Circuit For Short To Ground
Courtesy of CHRYSLER GROUP, LLC

1. Turn the ignition off.
2. Measure the resistance between ground and the (F856) 5 Volt Supply circuit in the Vehicle Speed Sensor harness connector.

   Is the resistance above 100 Ohms?

   Yes

   - Go To 9

   No

   - Repair the (F856) 5 Volt Supply circuit for a short to ground.

- Perform the POWERTRAIN VERIFICATION TEST. Refer to **POWERTRAIN VERIFICATION TEST** .

9. **(F856) 5 VOLT SUPPLY CIRCUIT SHORTED TO THE (K914) SENSOR GROUND CIRCUIT**

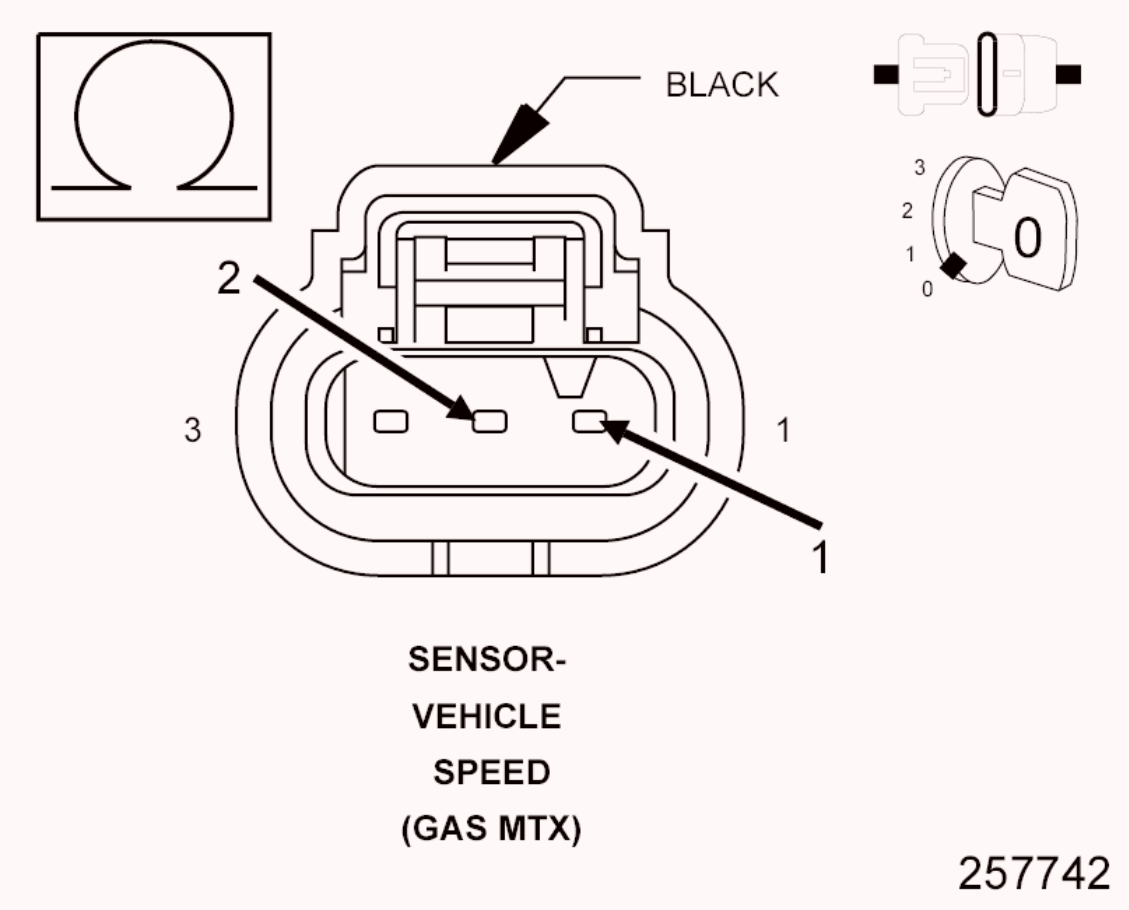

Fig. 99: Checking VSS 5-Volt Supply Circuit For Short To Sensor Ground Circuit
Courtesy of CHRYSLER GROUP, LLC

1. Measure the resistance between the (F856) 5 Volt Supply circuit and the (K914) Sensor Ground circuit in the Vehicle Speed Sensor harness connector.

   Is the resistance above 100 Ohms?

   Yes

   - Go To 10

   No

- Repair the (F856) 5 Volt Supply circuit for a short to the (K914) Sensor Ground circuit.
- Perform the POWERTRAIN VERIFICATION TEST. Refer to **POWERTRAIN VERIFICATION TEST** .

10. **(F856) 5 VOLT SUPPLY CIRCUIT OPEN OR HIGH RESISTANCE**

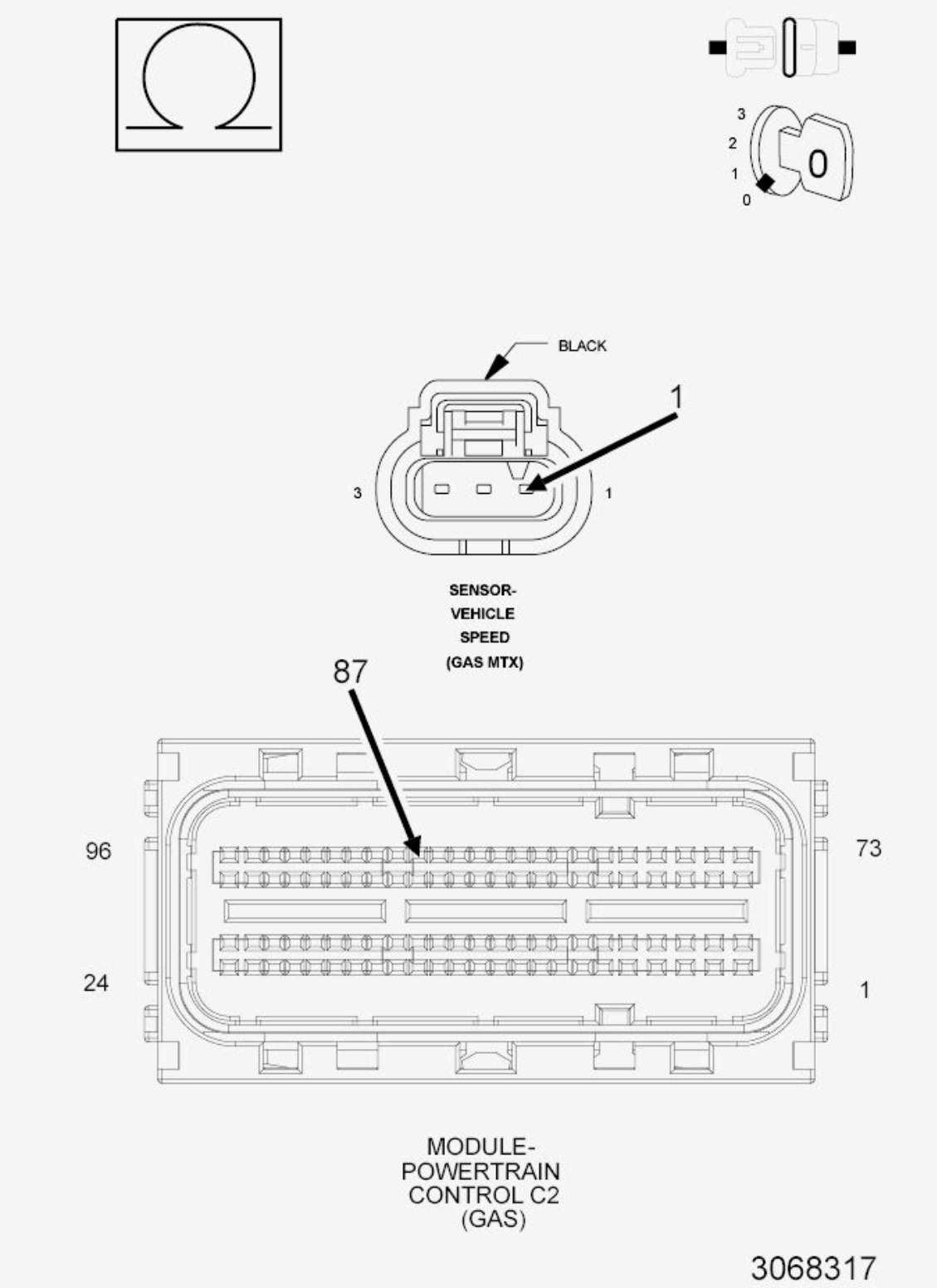

Fig. 100: Checking 5 Volt Supply Circuit For Open Or High Resistance
Courtesy of CHRYSLER GROUP, LLC

1. Measure the resistance of the (F856) 5 Volt Supply circuit between the Vehicle Speed Sensor harness connector and the PCM C2 harness connector.

Is the resistance below 5.0 Ohms?

Yes

- Go To 16

No

- Repair the (F856) 5 Volt Supply circuit for an open circuit or high resistance.
- Perform the POWERTRAIN VERIFICATION TEST. Refer to **POWERTRAIN VERIFICATION TEST** .

11. **(K75) VEHICLE SPEED SIGNAL CIRCUIT SHORTED TO VOLTAGE**

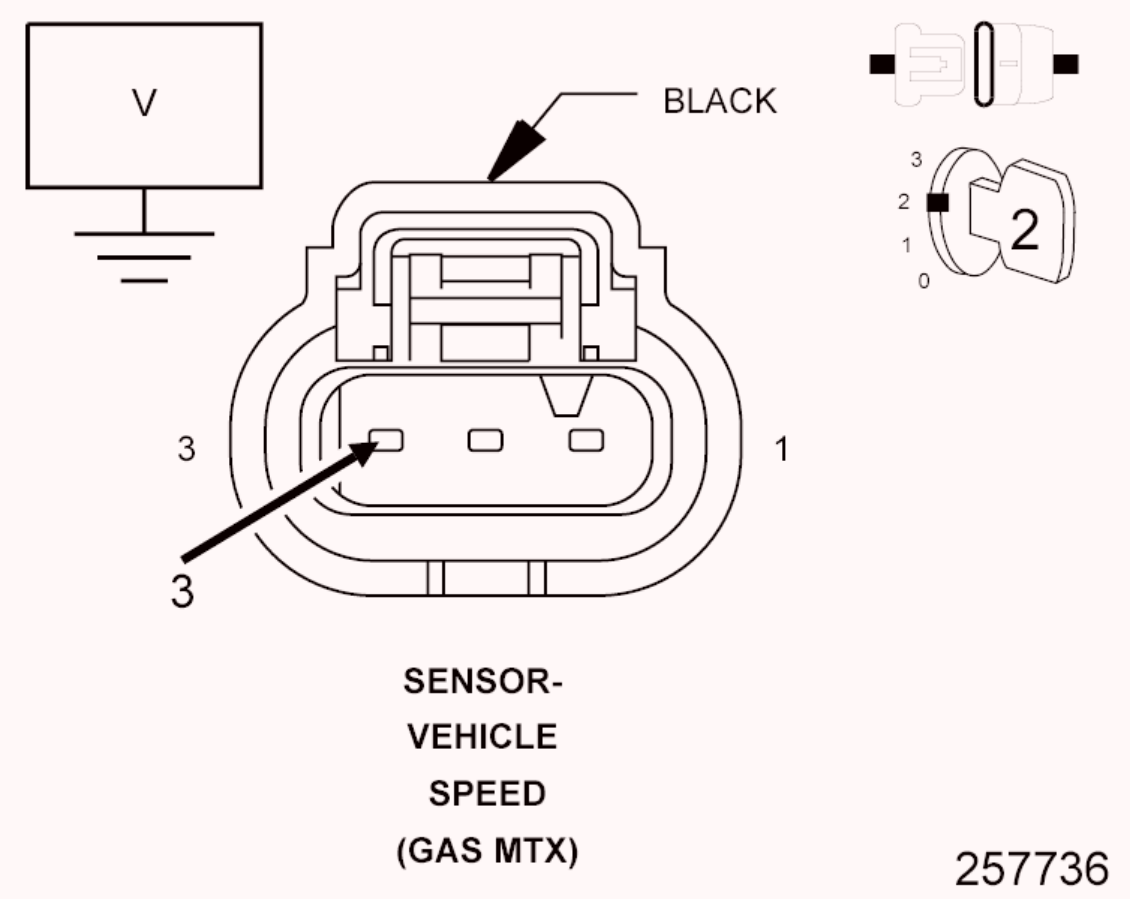

Fig. 101: Checking Vehicle Speed Signal Circuit For Short To Voltage
Courtesy of CHRYSLER GROUP, LLC

1. Turn the ignition off.
2. Disconnect the PCM C1 harness connector.

3. Turn the ignition on.
4. Measure the voltage of the (K75) Vehicle Speed Signal circuit in the Vehicle Speed Sensor harness connector.

   Is there any voltage present?

   Yes

   - Repair the (K75) Vehicle Speed Signal circuit for a short to voltage.
   - Perform the POWERTRAIN VERIFICATION TEST. Refer to **POWERTRAIN VERIFICATION TEST** .

   No

   - Go To 12

12. **(K75) VEHICLE SPEED SIGNAL CIRCUIT SHORTED TO GROUND**

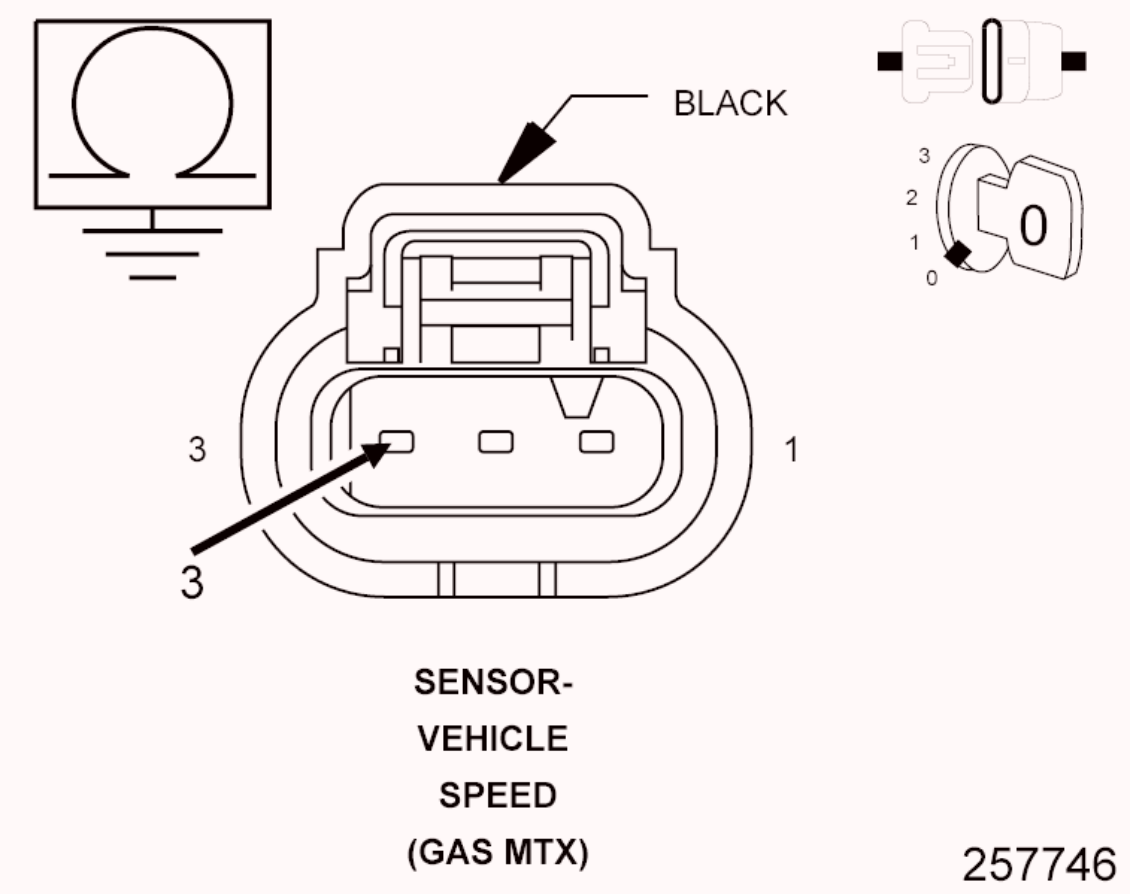

Fig. 102: Checking VSS Signal Circuit For Short To Ground

Courtesy of CHRYSLER GROUP, LLC

1. Turn the ignition off.
2. Measure the resistance between ground and the (K75) Vehicle Speed Signal circuit in the Vehicle Speed Sensor harness connector.

   Is the resistance above 100 Ohms?

   Yes

   - Go To 13

   No

   - Repair the (K75) Vehicle Speed Signal circuit for a short to ground.
   - Perform the POWERTRAIN VERIFICATION TEST. Refer to **POWERTRAIN VERIFICATION TEST** .

13. **(K75) VEHICLE SPEED SIGNAL CIRCUIT SHORTED TO THE (K914) SENSOR GROUND CIRCUIT**

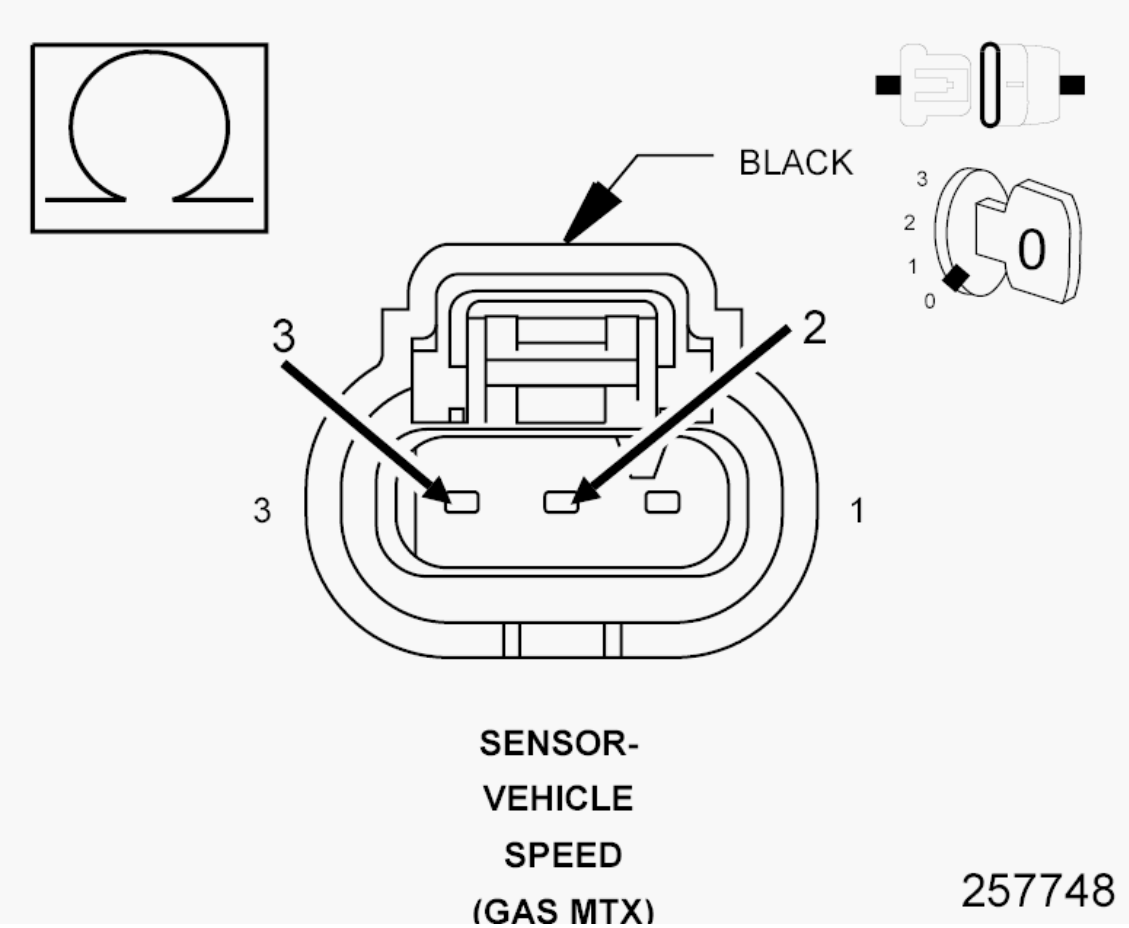

Fig. 103: Checking VSS Circuit For Short To Sensor Ground Circuit
Courtesy of CHRYSLER GROUP, LLC

1. Measure the resistance between the (K75) Vehicle Speed Signal circuit and the (K914) Sensor Ground circuit in the Vehicle Speed Sensor harness connector.

   Is the resistance above 100 Ohms?

   Yes

   - Go To 14

   No

   - Repair the (K75) Vehicle Speed Signal circuit for a short to the (K914) Sensor Ground circuit.
   - Perform the POWERTRAIN VERIFICATION TEST. Refer to **POWERTRAIN VERIFICATION TEST** .

14. **(K75) VEHICLE SPEED SIGNAL CIRCUIT OPEN OR HIGH**

RESISTANCE

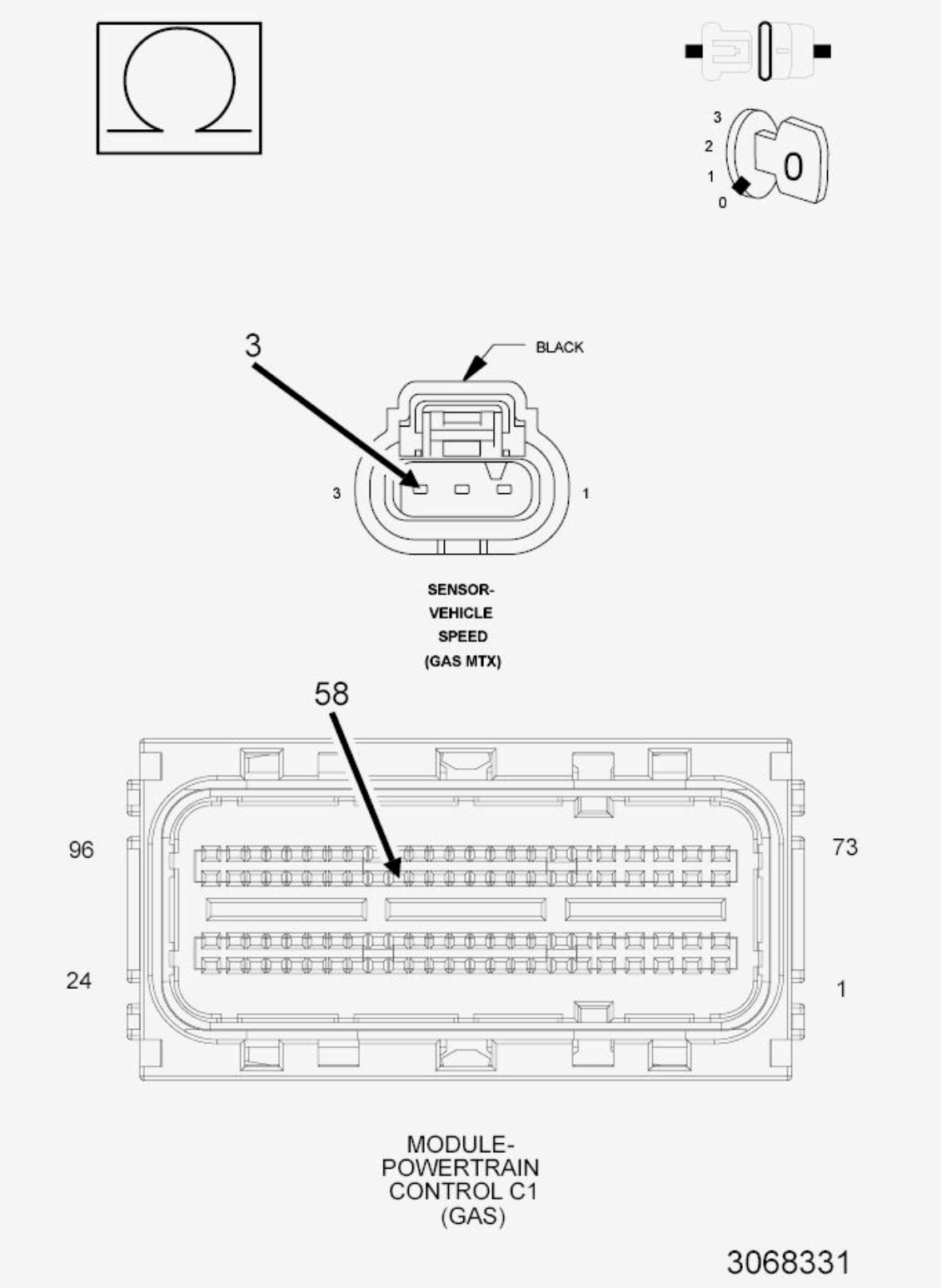

Fig. 104: Checking Vehicle Speed Signal Circuit For Open Or High Resistance
Courtesy of CHRYSLER GROUP, LLC

1. Measure the resistance of the (K75) Vehicle Speed Signal circuit between the Vehicle Speed Sensor harness connector and the PCM C1 harness connector.

   Is the resistance below 5.0 Ohms?

   Yes

   - Go To 16

   No

   - Repair the (K75) Vehicle Speed Signal circuit for an open circuit or high resistance.
   - Perform the POWERTRAIN VERIFICATION TEST. Refer to **POWERTRAIN VERIFICATION TEST** .

15. **(K975) SENSOR GROUND CIRCUIT OPEN OR HIGH RESISTANCE**

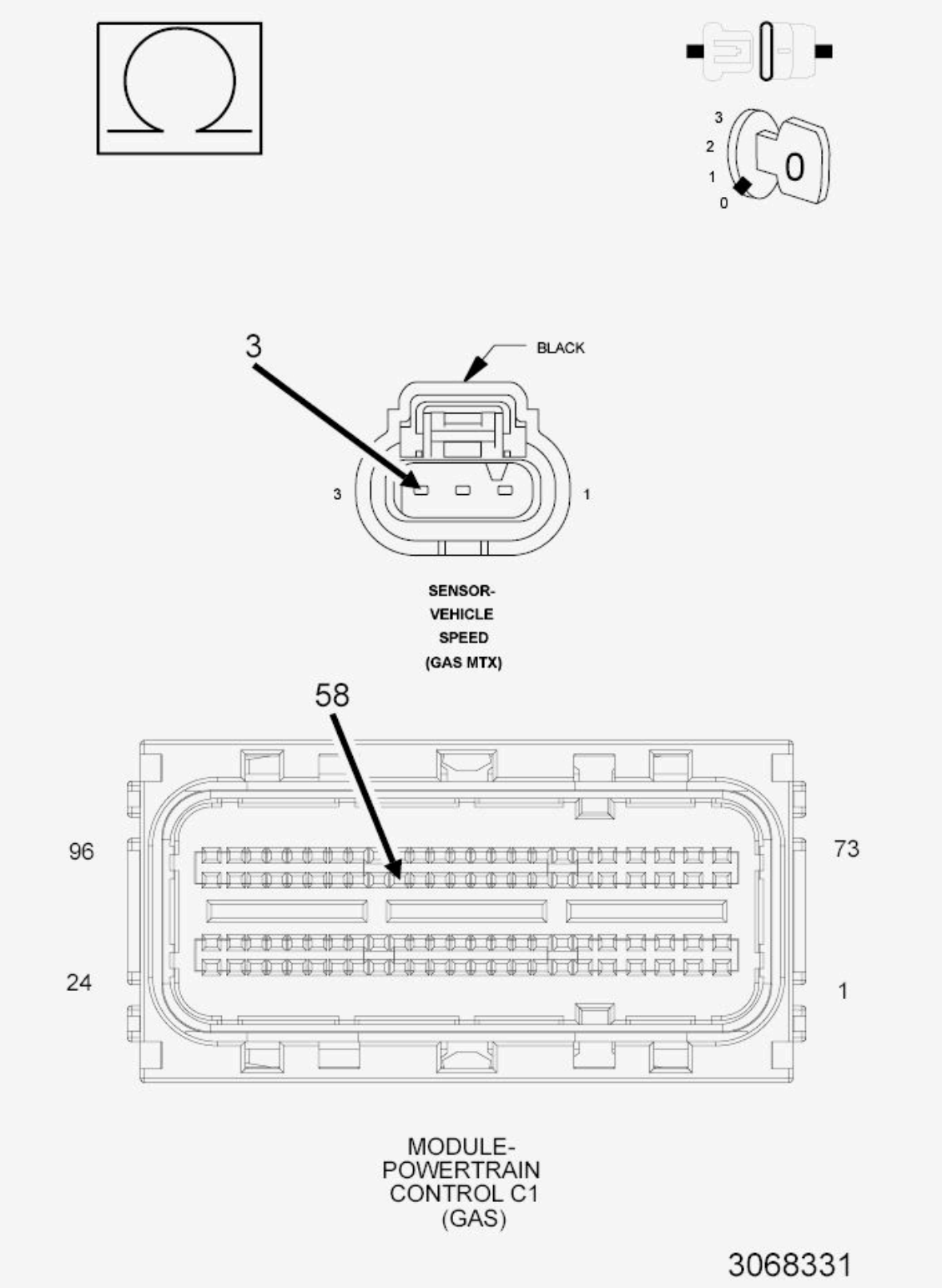

Fig. 105: Checking Vehicle Speed Signal Circuit For Open Or High Resistance
Courtesy of CHRYSLER GROUP, LLC

1. Turn the ignition off.
2. Disconnect the PCM C1 harness connector.

3. Measure the resistance of the (K975) Sensor Ground circuit between the Vehicle Speed Sensor harness connector and the PCM C1 harness connector.

   Is the resistance below 5.0 Ohms?

   Yes

   - Go To 16

   No

   - Repair the circuit for an open circuit or high resistance.
   - Perform the POWERTRAIN VERIFICATION TEST. Refer to **POWERTRAIN VERIFICATION TEST** .

16. **POWERTRAIN CONTROL MODULE (PCM)**
    1. Using the wiring diagram/schematic as a guide, inspect the wiring and connectors between the Vehicle Speed Sensor and the Powertrain Control Module (PCM).
    2. Look for any chafed, pierced, pinched, or partially broken wires.
    3. Look for broken, bent, pushed out or corroded terminals.
    4. Monitor the scan tool data relative to this circuit and wiggle test the wiring and connectors.
    5. Look for the data to change or for the DTC to reset during the wiggle test.
    6. Perform any Technical Service Bulletins that may apply.

    Were any problems found?

    Yes

    - Repair as necessary.
    - Perform the POWERTRAIN VERIFICATION TEST. Refer to **POWERTRAIN VERIFICATION TEST** .

    No

    - Replace and program the Powertrain Control Module (PCM) in

accordance with the Service Information. Refer to **MODULE, POWERTRAIN CONTROL, REMOVAL** .

- Perform the POWERTRAIN VERIFICATION TEST. Refer to **POWERTRAIN VERIFICATION TEST** .

P0506-IDLE SPEED PERFORMANCE LOWER THAN EXPECTED

For a complete wiring diagram, **refer to appropriate SYSTEM WIRING DIAGRAMS article** .

THEORY OF OPERATION

The objective of the Idle "Speed Rationality" is to monitor the ability to achieve and maintain a steady idle condition. The Engine Speed Error is calculated by comparing the difference between the Idle Set Speed from the Engine Speed and filtering the result. If engine speed does not come within a calibrated threshold of target idle speed, a timer is started. If the timer reaches its maximum threshold without the idle set speed returning inside of its calibrated threshold, a soft failure is generated.

WHEN MONITORED

With the engine running at idle, MAF < 250 mg/tdc, air temp > -17.8°C (0°F) and < -7°C (19.4°F) enable after coolant temp > 70°C (158°F) or air temp > -7° C (19.4°F), coolant temp > -7°C (19.4°F) < 130°C (266°F), canister purge <100% duty cycle, and no VSS, MAF/MAP, ECT, TPS, ETC, CKP Sensor, Fuel Injector, Fuel System or ABS DTCs.

SET CONDITION

Engine speed is 100 RPM or more below idle speed for 30.0 seconds. Two Trip Fault. Three good trips to turn off the MIL.

POSSIBLE CAUSES

POSSIBLE CAUSES
AIR INDUCTION SYSTEM RESTRICTIONS
PCV SYSTEM RESTRICTIONS
THROTTLE BODY
POWERTRAIN CONTROL MODULE (PCM)

Always perform the Pre-Diagnostic Troubleshooting procedure before proceeding. Refer to PRE-DIAGNOSTIC TROUBLESHOOTING PROCEDURE .

DIAGNOSTIC TEST

1. **ACTIVE DTC**

   NOTE: If any other IAC Motor or Throttle Body DTCs are present, they must be diagnosed and repaired before continuing this test.

   1. Start the engine and allow it to reach operating temperature.

      WARNING: When the engine is operating, do not stand in direct line with the fan. Do not put your hands near the pulleys, belts or fan. Do not wear loose clothing. Failure to follow these instructions may result in possible serious or fatal injury.

   2. With a scan tool, select View DTCs.

      Is the status Active for this DTC?

      Yes

      - Go To 2

      No

      - Perform the INTERMITTENT CONDITION diagnostic procedure. Refer to **INTERMITTENT CONDITION** .

2. **AIR INDUCTION SYSTEM**

   1. Inspect the air induction system for the following problems:
      - Restrictions - dirty air cleaner, foreign material trapped in the air intake tube, etc.

      Were any problems found?

Yes

- Repair as necessary.
- Perform the POWERTRAIN VERIFICATION TEST. Refer to **POWERTRAIN VERIFICATION TEST** .

No

- Go To 3

3. **PCV SYSTEM**
   1. Inspect the PCV system for the following problems:
      - Restrictions - sticking valve, collapsed hoses or tubes, obstructed passages or ports, etc.

   Were any problems found?

   Yes

   - Repair as necessary.
   - Perform the POWERTRAIN VERIFICATION TEST. Refer to **POWERTRAIN VERIFICATION TEST** .

   No

   - Go To 4

4. **THROTTLE BODY OPERATION**

   WARNING: **When the engine is operating, do not stand in direct line with the fan. Do not put your hands near the pulleys, belts or fan. Do not wear loose clothing. Failure to follow these instructions may result in possible serious or fatal injury.**

   1. Inspect the throttle body for carbon build up or other restrictions.
   2. Using a straight edge, verify that the throttle plate is not bent. If the throttle plate is bent, the throttle body must be replaced.
   3. Start the engine.

4. While the vehicle is running, lightly tap on ETC Motor with your hand, and listen for the idle to raise.

   Were any problems found or did the idle fluctuate while tapping on the ETC Motor?

   Yes

   - Repair as necessary.
   - Perform the POWERTRAIN VERIFICATION TEST. Refer to **POWERTRAIN VERIFICATION TEST** .

   No

   - Go To 5

5. **POWERTRAIN CONTROL MODULE (PCM)**
   1. Using the wiring diagram/schematic as a guide, inspect the wiring and connectors between the throttle body and the Powertrain Control Module (PCM).
   2. Look for any chafed, pierced, pinched, or partially broken wires.
   3. Look for broken, bent, pushed out or corroded terminals.
   4. Perform any Technical Service Bulletins that may apply.

   Were any problems found?

   Yes

   - Repair as necessary.
   - Perform the POWERTRAIN VERIFICATION TEST. Refer to **POWERTRAIN VERIFICATION TEST** .

   No

   - Replace and program the Powertrain Control Module (PCM) in accordance with the Service Information. Refer to **MODULE, POWERTRAIN CONTROL, REMOVAL** .
   - Perform the POWERTRAIN VERIFICATION TEST. Refer to **POWERTRAIN VERIFICATION TEST** .

P0507-IDLE SPEED PERFORMANCE HIGHER THAN EXPECTED

For a complete wiring diagram, **refer to appropriate SYSTEM WIRING DIAGRAMS article** .

THEORY OF OPERATION

The objective of the Idle "Speed Rationality" is to monitor the ability to achieve and maintain a steady idle condition. The Engine Speed Error is calculated by comparing the difference between the Idle Set Speed from the Engine Speed and filtering the result. If engine speed does not come within a calibrated threshold of target idle speed, a timer is started. If the timer reaches its maximum threshold without the idle set speed returning inside of its calibrated threshold, a soft failure is generated.

THEORY OF OPERATION

The objective of the Idle "Speed Rationality" is to monitor the ability to achieve and maintain a steady idle condition. The Engine Speed Error is calculated by comparing the difference between the Idle Set Speed from the Engine Speed and filtering the result. If engine speed does not come within a calibrated threshold of target idle speed, a timer is started. If the timer reaches its maximum threshold without the idle set speed returning inside of its calibrated threshold, a soft failure is generated.

WHEN MONITORED

With the engine running at idle, MAF < 250 mg/tdc, air temp > -17.8°C (0°F) and < -7°C (19.4°F) enable after coolant temp > 70°C (158°F) or air temp > -7° C (19.4°F), coolant temp > -7°C (19.4°F) < 130°C (266°F), canister purge <100% duty cycle, and no VSS, MAF/MAP, ECT, TPS, ETC, CKP Sensor, Fuel Injector, Fuel System or ABS DTCs.

SET CONDITION

Engine speed is 200 RPM or more above idle speed for 30.0 seconds. Two Trip Fault. Three good trips to turn off the MIL.

POSSIBLE CAUSES

Possible Causes
PCV SYSTEM LEAKS

INTERNAL OR EXTERNAL ENGINE VACUUM LEAKS
LOSS OF COMMUNICATION WITH ABS MODULE
THROTTLE BODY
POWERTRAIN CONTROL MODULE (PCM)

Always perform the Pre-Diagnostic Troubleshooting procedure before proceeding. Refer to PRE-DIAGNOSTIC TROUBLESHOOTING PROCEDURE .

DIAGNOSTIC TEST

1. **ACTIVE DTC**

NOTE: If any other Throttle Body DTCs are present, they must be diagnosed and repaired before continuing this test.

NOTE: If there is a loss of communication with the ABS Module or implausible data from the ABS Module DTC present, diagnose and repair those faults before proceeding. A Loss of communication w/ABS will default vehicle speed to zero while driving and false fail the idle speed rationality diagnostics, setting this code.

NOTE: It may be necessary to drive the vehicle to meet the conditions to set this DTC, try to repeat the conditions in which the fault originally set by reviewing the Freeze Frame data.

1. Start the engine.
2. Allow the engine to reach normal operating temperature, road test the vehicle.
3. With a scan tool, select View DTCs.

   Is the DTC Active or Pending at this time?

   Yes

- Go To 2

No

- Perform the INTERMITTENT CONDITION diagnostic procedure. Refer to **INTERMITTENT CONDITION** .

2. **PCV SYSTEM**
   1. Inspect the PCV system for the following problems:
   2. Leaks - cracked or damaged hoses or tubes, poor hose or tube connections, PCV valve stuck open, etc.

   Were any problems found?

   Yes

   - Repair as necessary.
   - Perform the POWERTRAIN VERIFICATION TEST. Refer to **POWERTRAIN VERIFICATION TEST** .

   No

   - Go To 3

3. **VACUUM LEAKS**

   WARNING: When the engine is operating, do not stand in direct line with the fan. Do not put your hands near the pulleys, belts, or fan. Do not wear loose clothing. Failure to follow these instructions can result in possible serious or fatal injury.

   1. Start the engine.
   2. Inspect the engine for internal leaks.
   3. Inspect any external components that can create a vacuum leak. Inspect the following items, but not limited too:
      - Vacuum supply lines
      - Brake Booster
      - Purge Solenoid

- Engine seals

Were any vacuum leaks found?

Yes

- Repair the vacuum leak as necessary.
- Perform the POWERTRAIN VERIFICATION TEST. Refer to **POWERTRAIN VERIFICATION TEST** .

No

- Go To 4

4. **THROTTLE BODY OPERATION**
   1. Inspect the throttle body for carbon build up, other restrictions, and a bent throttle plate using a straight edge.
   2. If the throttle plate does not close entirely it may be bent and needs to be replaced.

      WARNING: **When the engine is operating, do not stand in direct line with the fan. Do not put your hands near the pulleys, belts, or fan. Do not wear loose clothing. Failure to follow these instructions can result in possible serious or fatal injury.**

   3. While the vehicle is running, perform a wire and connector wiggle test on the ETC Motor wiring and connections, and listen for idle to raise.

      Were any problems found or did the idle fluctuate while performing a wire and connector wiggle test?

      Yes

      - Verify that there is good pin to terminal contact at the Throttle Body and the Powertrain Control Module connectors. Replace the Throttle Body Assembly if no problems were found in the connectors. Disconnect the Battery when replacing the Throttle Body Assembly. After installation is complete, use a scan tool and

select the Throttle Body Self Learn.

- Perform the POWERTRAIN VERIFICATION TEST. Refer to **POWERTRAIN VERIFICATION TEST** .

No

- Go To 5

5. **POWERTRAIN CONTROL MODULE (PCM)**

NOTE: Before replacing PCM, verify that there are no vacuum leaks. The most common cause for this DTC is an internal or external vacuum leak.

1. Using the wiring diagram/schematic as a guide, inspect the wiring and connectors between the Throttle Body and the Powertrain Control Module (PCM).
2. Look for any chafed, pierced, pinched, or partially broken wires.
3. Look for broken, bent, pushed out or corroded terminals. Verify that there is good pin to terminal contact in the Throttle Body and Powertrain Control Module harness connectors.
4. Perform any Technical Service Bulletins that may apply.

Were there any problems found?

Yes

- Repair as necessary.
- Perform the POWERTRAIN VERIFICATION TEST. Refer to **POWERTRAIN VERIFICATION TEST** .

No

- Replace and program the Powertrain Control Module in accordance with the service information. Refer to **MODULE, POWERTRAIN CONTROL, REMOVAL** .
- Perform the POWERTRAIN VERIFICATION TEST. Refer to **POWERTRAIN VERIFICATION TEST** .

P050B-COLD START IGNITION TIMING PERFORMANCE

For a complete wiring diagram, **refer to appropriate SYSTEM WIRING DIAGRAMS article** .

THEORY OF OPERATION

Spark adjustment during a cold start is intended to provide quick response to idle speed variations. The spark adjust diagnostics monitors spark advance on a cold start over a period of time, then compares the average spark advance to a threshold.

WHEN MONITORED

During a cold start condition, with the difference between the AAT and ECT at startup below 10°C, and the engine running at idle.

SET CONDITION

The Powertrain Control Module (PCM) detects that engine speed is 50 RPM or more (depending on vehicle specifications) below target idle speed for more than three seconds, and the average spark advance is above the failure threshold for more than the specified limit. Two trip fault. Three good trips to turn off the MIL.

POSSIBLE CAUSES

Possible Causes
RESTRICTED INTAKE AIR SYSTEM
LOW BATTERY VOLTAGE
FUEL CONTAMINATION
EXCESSIVE RESISTANCE IN THE (K124) ETC MOTOR (+)
EXCESSIVE RESISTANCE IN THE (K126) ETC MOTOR (-)
THROTTLE BODY
POWERTRAIN CONTROL MODULE (PCM)

Always perform the Pre-Diagnostic Troubleshooting procedure before proceeding. Refer to PRE-DIAGNOSTIC TROUBLESHOOTING PROCEDURE .

DIAGNOSTIC TEST

1. **ACTIVE DTC**

NOTE: Low battery voltage can cause excessive current draw in very hot and very cold ambient temperatures. Look closely at the temperatures at which this DTC set and make sure the battery can pass a load test before continuing.

NOTE: Diagnose and repair any other DTCs set in the PCM before proceeding with this test.

1. Turn the ignition on.
2. With the scan tool, select View DTCs and review the DTC environmental information.

   Is the DTC Active at this time?

   Yes

   - Go To 2

   No

   - The DTC is not active at this time. Perform the INTERMITTENT CONDITION diagnostic procedure. Refer to **INTERMITTENT CONDITION** .

2. **THROTTLE PLATE INSPECTION**
   1. Turn the ignition off.
   2. Remove the air cleaner assembly.
   3. Check for any signs of a foreign material (ice, dirt, or excessive carbon build up) on the throttle plate or in the bore causing the throttle plate to stick.

      Were any problems found?

      Yes

      - Remove the debris if possible or replace the Throttle Body. Disconnect the battery when replacing the Throttle Body. After installation is complete, use a scan tool and perform the ETC RELEARN function.

- Perform the POWERTRAIN VERIFICATION TEST. Refer to **POWERTRAIN VERIFICATION TEST** .

No

- Go To 3

3. **DIRTY AIR FILTER**
   1. Remove and inspect the air filter.

      Were any problems found?

      Yes

      - Replace the air filter.
      - Perform the POWERTRAIN VERIFICATION TEST. Refer to **POWERTRAIN VERIFICATION TEST** .

      No

      - Go To 4

4. **CONTAMINATED FUEL**
   1. Inspect the fuel for contamination. (dirt, water, or other foreign material)

      Were any problems found?

      Yes

      - Drain the fuel from the fuel tank into an approved gas holding tank and add clean fuel. Refer to **STANDARD PROCEDURE** .

      No

      - Go To 5

5. **CHECK FOR EXCESSIVE RESISTANCE IN THE (K124) ETC MOTOR (+) CIRCUIT**
   1. Turn the ignition off.
   2. Disconnect the PCM C2 harness connector.

CAUTION: Do not probe the PCM harness connectors. Probing the PCM harness connectors will damage the PCM terminals resulting in poor terminal to pin connection. Install the GPEC Diagnostic Adaptor to perform the diagnosis.

3. Connect the (special tool #10436, Adapter, GPEC Diagnostic) in line with the PCM C2 harness connector.
4. Using a voltmeter, perform a voltage drop test by back probing the (K124) ETC Motor (+) circuit at the Throttle Body harness connector and by probing the GPEC Adaptor. Make sure the voltmeter leads are connected so that positive polarity is displayed on the voltmeter.

WARNING: When the engine is operating, do not stand in direct line with the fan. Do not put your hands near the pulleys, belts or fan. Do not wear loose clothing. Failure to follow these instructions may result in possible serious or fatal injury.

5. Start the engine.

   Is the voltage below 0.2 volts?

   Yes

   - Go To 6

   No

   - Repair the (K124) ETC Motor (+) for excessive resistance.
   - Perform the POWERTRAIN VERIFICATION TEST. Refer to **POWERTRAIN VERIFICATION TEST** .

6. **CHECK FOR EXCESSIVE RESISTANCE IN THE (K126) ETC MOTOR (-) CIRCUIT**
   1. Turn the ignition off.
   2. Using a voltmeter, perform a voltage drop test by back probing the

(K126) ETC Motor (-) circuit at the Throttle Body harness connector and by probing the GPEC Adaptor. Make sure the voltmeter leads are connected so that positive polarity is displayed on the voltmeter.

WARNING: When the engine is operating, do not stand in direct line with the fan. Do not put your hands near the pulleys, belts or fan. Do not wear loose clothing. Failure to follow these instructions may result in possible serious or fatal injury.

3. Start the engine.

   Is the voltage below 0.2 volts?

   Yes

   - Go To 7

   No

   - Repair the (K126) ETC Motor (-) for excessive resistance.
   - Perform the POWERTRAIN VERIFICATION TEST. Refer to **POWERTRAIN VERIFICATION TEST** .

7. **THROTTLE BODY**
   1. Turn the ignition off.
   2. Measure the resistance of the ETC Motor by probing the appropriate terminals of the PCM C2 harness connector for the (K124) ETC Motor (+) circuit and the (K126) ETC Motor (-) circuit.

      Is the resistance between 2.5 and 25 Ohms at closed throttle?

      Yes

      - Go To 8

      No

      - Replace the Throttle Body. Disconnect the battery when replacing the Throttle Body. After installation is complete, use a scan tool

and perform the ETC RELEARN function.

- Perform the POWERTRAIN VERIFICATION TEST. Refer to **POWERTRAIN VERIFICATION TEST** .

8. **POWERTRAIN CONTROL MODULE (PCM)**
   1. Using the wiring diagram/schematic as a guide, inspect the wiring and connectors between the Throttle Body and the Powertrain Control Module (PCM).
   2. Look for any chafed, pierced, pinched, or partially broken wires.
   3. Look for broken, bent, pushed out or corroded terminals.
   4. Perform any Technical Service Bulletins that may apply.

   Were any problems found?

   Yes

   - Repair as necessary.
   - Perform the POWERTRAIN VERIFICATION TEST. Refer to **POWERTRAIN VERIFICATION TEST** .

   No

   - Replace and program the Powertrain Control Module (PCM) in accordance with the service information. Refer to **MODULE, POWERTRAIN CONTROL, REMOVAL** .
   - Perform the POWERTRAIN VERIFICATION TEST. Refer to **POWERTRAIN VERIFICATION TEST** .

P0513-INVALID SKIM KEY

For a complete wiring diagram, **refer to appropriate SYSTEM WIRING DIAGRAMS article** .

WHEN MONITORED

Ignition on.

SET CONDITION

The Powertrain Control Module (PCM) detects an invalid ignition key. One Trip Fault.

POSSIBLE CAUSES

POSSIBLE CAUSES
INCORRECT VIN PROGRAMMED IN THE PCM
NO COMMUNICATION WITH SKREEM/WCM
NO VIN PROGRAMMED IN THE PCM
IGNITION KEY
POWERTRAIN CONTROL MODULE (PCM)

Always perform the Pre-Diagnostic Troubleshooting procedure before proceeding. Refer to PRE-DIAGNOSTIC TROUBLESHOOTING PROCEDURE .

DIAGNOSTIC TEST

1. **ACTIVE DTC**

NOTE: An external Radio-Frequency Identification (RFID) key (and/or pass/radio key), such as one used to gain access to a 24 hour gym, can cause this DTC to set and create a no start condition. Inspect the customer's key chain for any type of RFID key. If one is not found, question the customer to see if a spare key chain has this RFID key on it or if it was removed from the original key chain before the vehicle was released for service. If a RFID key is present, remove the ignition key from the vehicle and remove the RFID key from the key chain. For GPEC equipped vehicles, disconnect the battery and wait a minimum of 5 minutes, reconnect and attempt to start the vehicle. For NGC equipped vehicles, turn the ignition on a minimum for one hour, and then attempt to start the vehicle. If the vehicle does not start, continue with the diagnostic test.

1. Ignition on, engine not running.
2. With a scan tool, select View DTCs.

Is the status Active for this DTC?

Yes

- Go To 2

No

- Go To 6

2. **NO COMMUNICATION WITH SKREEM/WCM**

NOTE: For vehicle communication problems, use the scan tool to refer to the Network Review Screen. The screen depicts a high level view of the vehicle network. Fault and problem areas appear in red. Selecting any of the network components allows access to the source of the problem.

1. With the scan tool, attempt to communicate with the WCM.

   Can the scan tool communicate with the WCM?

   Yes

   - Go To 3

   No

   - Refer to **DIAGNOSIS AND TESTING** and perform the No Response from WCM diagnostic procedure.

3. **SKREEM/WCM TROUBLE CODES SET**

1. With the scan tool, check for WCM DTCs.

   Are any DTCs present in the WCM?

   Yes

   - Refer to **DIAGNOSIS AND TESTING** and perform the appropriate diagnostic procedure.

   No

- Go To 4

4. **VIN PROGRAMMED INTO PCM**
   1. With the scan tool, display the VIN that is programmed in the PCM.

      Has a VIN been programmed into the PCM?

      Yes

      - Go To 5

      No

      - Program the correct VIN into the PCM and retest.
      - Perform the WCM VERIFICATION TEST. Refer to **STANDARD PROCEDURE** .

5. **POWERTRAIN CONTROL MODULE (PCM)**
   1. Turn the ignition off.
   2. Replace and program the SKREEM/WCM in accordance with the Service Information.
   3. Ignition on, engine not running.
   4. With the scan tool, erase all WCM and PCM DTCs.
   5. Attempt to start the engine.
   6. With a scan tool, select View DTCs.

      Is the status Active for this DTC?

      Yes

      NOTE: Before continuing, check the PCM harness connector terminals for corrosion, damage, or terminal push out. Repair as necessary.

      - Replace and program the Powertrain Control Module in accordance with the Service Information. Refer to **MODULE, POWERTRAIN CONTROL, REMOVAL** .
      - Perform the POWERTRAIN VERIFICATION TEST. Refer to **POWERTRAIN VERIFICATION TEST** .

No

- Test Complete.

6. **IGNITION KEY**

NOTE: This DTC could have been set if the WCM harness connector was disconnected, or if the WCM was replaced recently.

NOTE: All of the ignition keys for this vehicle must be tested to verify proper operation.

NOTE: If this DTC cannot be reset, it could have been an actual theft attempt.

1. Ignition on, engine not running.
2. Verify that the correct VIN is programmed into the PCM and WCM.
3. Turn the ignition off.
4. Using each vehicle key, turn the ignition on and start the engine.
5. With a scan tool, View DTCs for each key.

Is the status Active for this DTC?

Yes

- Replace the ignition key.
- Perform the WCM VERIFICATION TEST. Refer to **STANDARD PROCEDURE** .

No

- Test Complete.

P0522-ENGINE OIL PRESSURE SWITCH CIRCUIT LOW

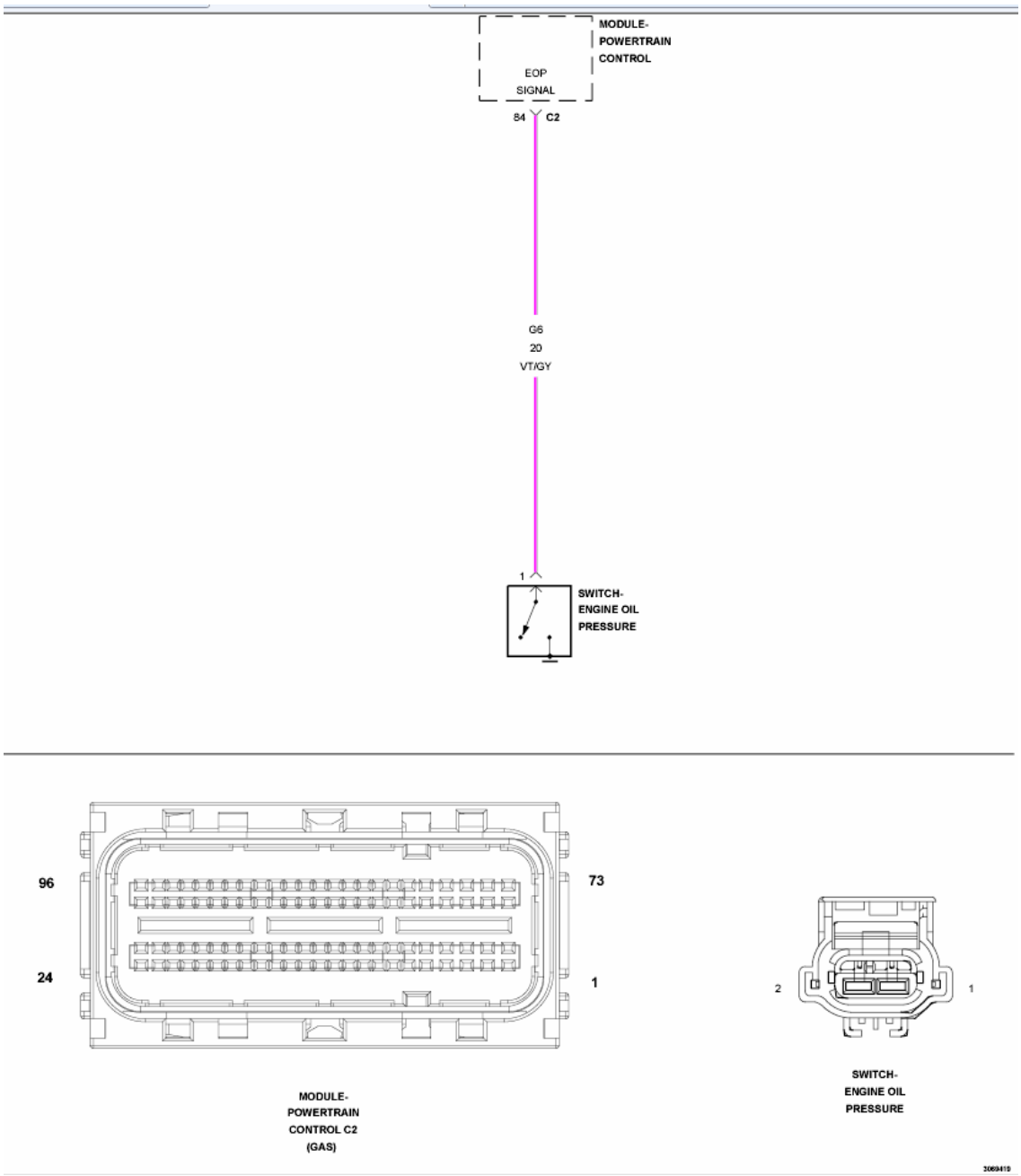

Fig. 106: Engine Oil Pressure Sensor Circuit Diagram
Courtesy of CHRYSLER GROUP, LLC

For a complete wiring diagram, **refer to appropriate SYSTEM WIRING DIAGRAMS article** .

WHEN MONITORED

With the ignition on and battery voltage greater than 10.4 Volts.

SET CONDITION

The Powertrain Control Module (PCM) detects that the Oil Pressure Sensor input voltage is below the minimum acceptable value.

POSSIBLE CAUSES

Possible Causes
(G6) EOP SIGNAL CIRCUIT SHORTED TO GROUND
ENGINE OIL PRESSURE SWITCH
POWERTRAIN CONTROL MODULE (PCM)

Always perform the Pre-Diagnostic Troubleshooting procedure before proceeding. Refer to PRE-DIAGNOSTIC TROUBLESHOOTING PROCEDURE .

DIAGNOSTIC TEST

1. **DTC IS ACTIVE**
   1. Start the engine and allow it to reach normal operating temperature.

      WARNING: **When the engine is operating, do not stand in direct line with the fan. Do not put your hands near the pulleys, belts or fan. Do not wear loose clothing. Failure to follow these instructions may result in possible serious or fatal injury.**

   2. With the scan tool, select View DTCs.

      Is the status Active for this DTC?

      Yes

      - Go To 2

      No

      - Perform the INTERMITTENT CONDITION diagnostic procedure. Refer to **INTERMITTENT CONDITION** .
2. **(G6) EOP SIGNAL CIRCUIT SHORTED TO GROUND**

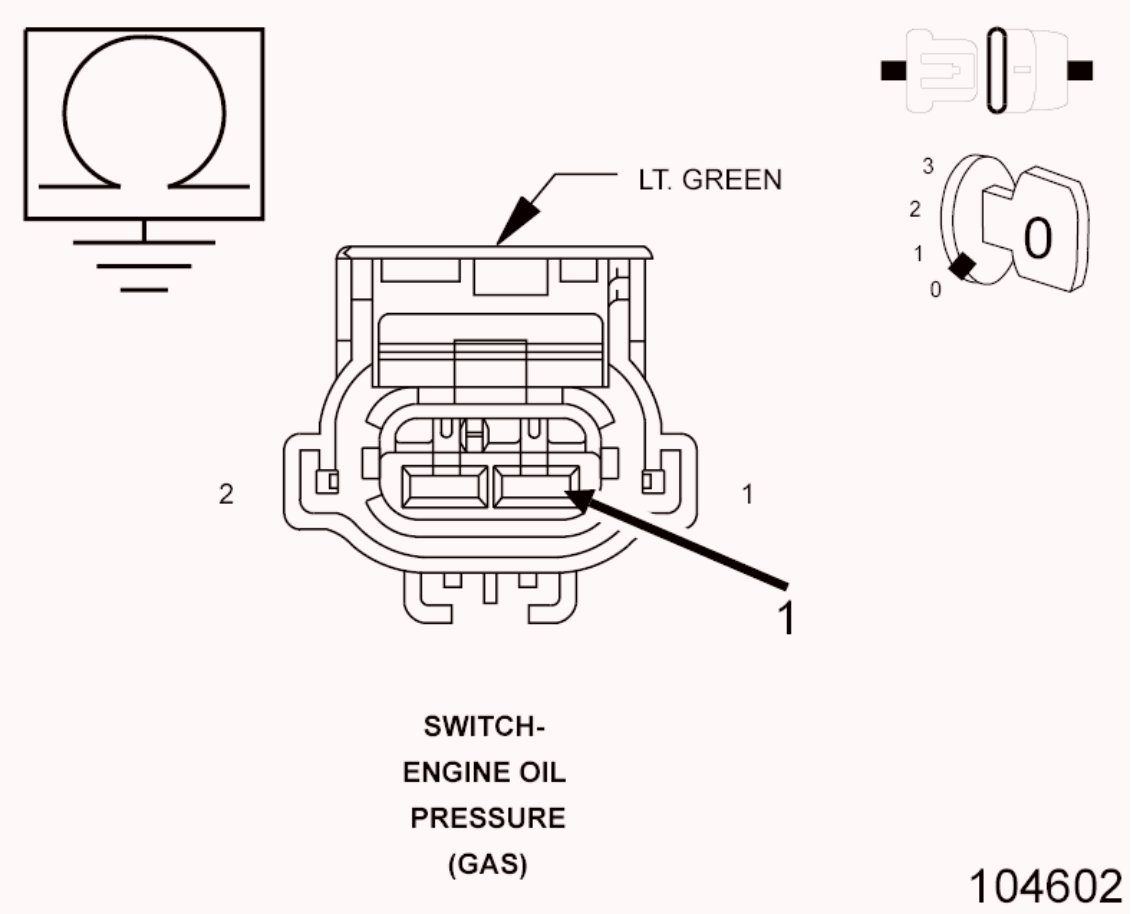

Fig. 107: Checking EOP Signal Circuit For Short To Ground
Courtesy of CHRYSLER GROUP, LLC

1. Turn the ignition off.
2. Disconnect the Engine Oil Pressure Switch harness connector.
3. Disconnect the Powertrain Control Module C2 harness connector.
4. Measure the resistance between ground and the (G6) EOP Signal circuit in the Engine Oil Pressure Switch harness connector.

   Is the resistance above 100 Ohms?

   Yes

   - Go To 3

   No

   - Repair the (G6) EOP Signal circuit for a short to ground.
   - Perform the POWERTRAIN VERIFICATION TEST. Refer to

POWERTRAIN VERIFICATION TEST .

3. **ENGINE OIL PRESSURE SWITCH**
   1. Turn the ignition off.
   2. Connect the PCM C2 harness connector.
   3. Turn the ignition on.
   4. With the scan tool, select View DTCs.

   NOTE: The PCM should display an Engine Oil Pressure Sensor Circuit High DTC with the switch disconnected.

   Is the status Active for an Engine Oil Pressure Sensor Circuit High DTC with the switch disconnected?

   Yes

   - Replace the Engine Oil Pressure Switch in accordance with the Service Information.
   - Perform the POWERTRAIN VERIFICATION TEST. Refer to **POWERTRAIN VERIFICATION TEST** .

   No

   - Go To 4
4. **POWERTRAIN CONTROL MODULE (PCM)**
   1. Using the wiring diagram/schematic as a guide, inspect the wiring and connectors between the Engine Oil Pressure Switch and the Powertrain Control Module (PCM).
   2. Look for any chafed, pierced, pinched, or partially broken wires.
   3. Look for broken, bent, pushed out or corroded terminals.
   4. Perform any Technical Service Bulletins that may apply.

   Were any problems found?

   Yes

   - Repair as necessary.

- Perform the POWERTRAIN VERIFICATION TEST. Refer to **POWERTRAIN VERIFICATION TEST** .

No

- Replace and program the Powertrain Control Module (PCM) in accordance with the Service Information. Refer to **MODULE, POWERTRAIN CONTROL, REMOVAL** .
- Perform the POWERTRAIN VERIFICATION TEST. Refer to **POWERTRAIN VERIFICATION TEST** .

P0523-ENGINE OIL PRESSURE SWITCH CIRCUIT HIGH

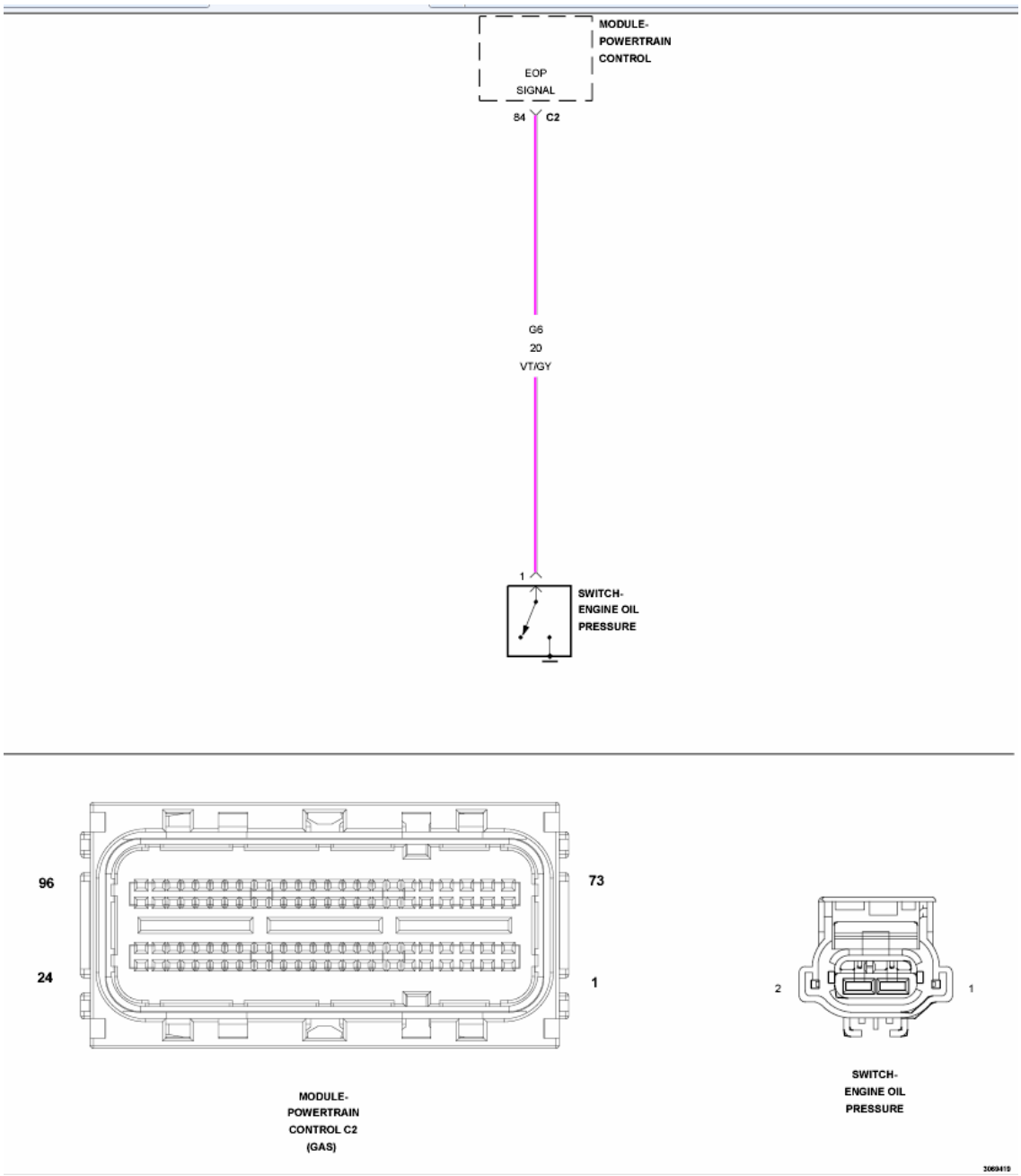

Fig. 108: Engine Oil Pressure Sensor Circuit Diagram
Courtesy of CHRYSLER GROUP, LLC

For a complete wiring diagram, **refer to appropriate SYSTEM WIRING DIAGRAMS article** .

WHEN MONITORED

With the ignition on and battery voltage greater than 10.4 Volts.

SET CONDITION

The Powertrain Control Module (PCM) detects that the Oil Pressure Sensor input voltage is above the maximum acceptable value.

POSSIBLE CAUSES

Possible Causes
(G6) EOP SIGNAL CIRCUIT SHORTED TO VOLTAGE
(G6) EOP SIGNAL CIRCUIT OPEN OR HIGH RESISTANCE
ENGINE OIL PRESSURE SWITCH
POWERTRAIN CONTROL MODULE (PCM)

Always perform the Pre-Diagnostic Troubleshooting procedure before proceeding. Refer to PRE-DIAGNOSTIC TROUBLESHOOTING PROCEDURE .

DIAGNOSTIC TEST

1. **ACTIVE DT**

   NOTE: A low engine oil pressure condition may cause this DTC to set. Verify correct engine oil pressure in accordance with the Service Information before proceeding with the diagnostic procedure.

   1. Start the engine and allow it to reach normal operating temperature.

      WARNING: When the engine is operating, do not stand in direct line with the fan. Do not put your hands near the pulleys, belts or fan. Do not wear loose clothing. Failure to follow these instructions may result in possible serious or fatal injury.

   2. Using the scan tool, select View DTCs.

      Is the status Active for this DTC?

      Yes

      - Go To 2

No

- Perform the INTERMITTENT CONDITION diagnostic procedure. Refer to **INTERMITTENT CONDITION** .

2. **CHECK THE (G6) EOP SIGNAL CIRCUIT FOR A SHORT TO VOLTAGE**

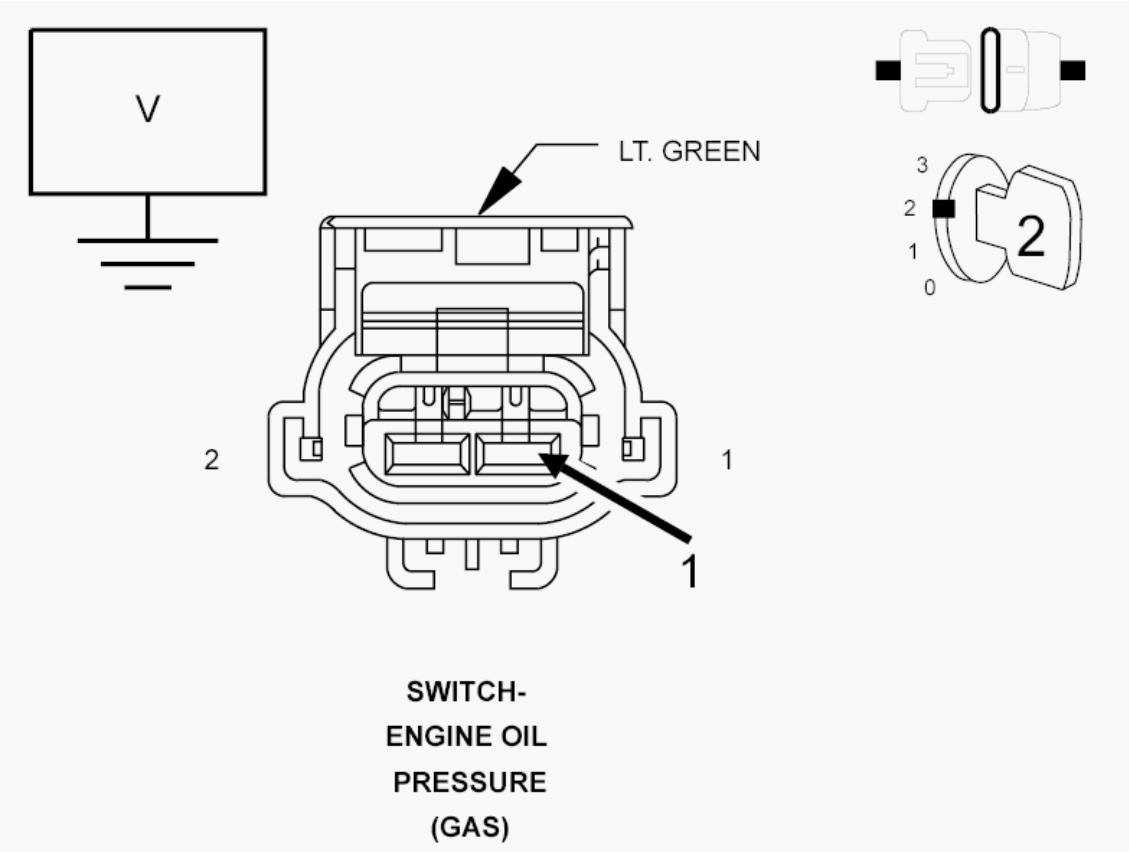

Fig. 109: Checking EOP Signal Circuit For Short To Voltage
Courtesy of CHRYSLER GROUP, LLC

1. Turn the ignition off.
2. Disconnect the Engine Oil Pressure Switch harness connector.
3. Disconnect the PCM C2 harness connector.
4. Turn the ignition on.
5. Measure the voltage of the (G6) EOP Signal circuit in the Engine Oil Pressure Switch harness connector.

   Is there any voltage present?

   Yes

- Repair the (G6) EOP Signal circuit for a short to voltage.
- Perform the POWERTRAIN VERIFICATION TEST. Refer to **POWERTRAIN VERIFICATION TEST** .

No

- Go To 3

3. **CHECK THE (G6) EOP SIGNAL CIRCUIT FOR AN OPEN/HIGH RESISTANCE**
   1. Turn the ignition off.

      CAUTION: Do not probe the PCM harness connectors. Probing the PCM harness connectors will damage the PCM terminals resulting in poor terminal to pin connection. Install the GPEC Diagnostic Adaptor to perform the diagnosis.

   2. Connect the (special tool #10436, Adapter, GPEC Diagnostic).
   3. Measure the resistance of the (G6) EOP Signal circuit between the Engine Oil Pressure Switch harness connector and the GPEC Adaptor.

      Is the resistance below 5.0 Ohms?

      Yes

      - Go To 4

      No

      - Repair the (G6) EOP Signal circuit for an open or high resistance.
      - Perform the POWERTRAIN VERIFICATION TEST. Refer to **POWERTRAIN VERIFICATION TEST** .

4. **ENGINE OIL PRESSURE SWITCH**

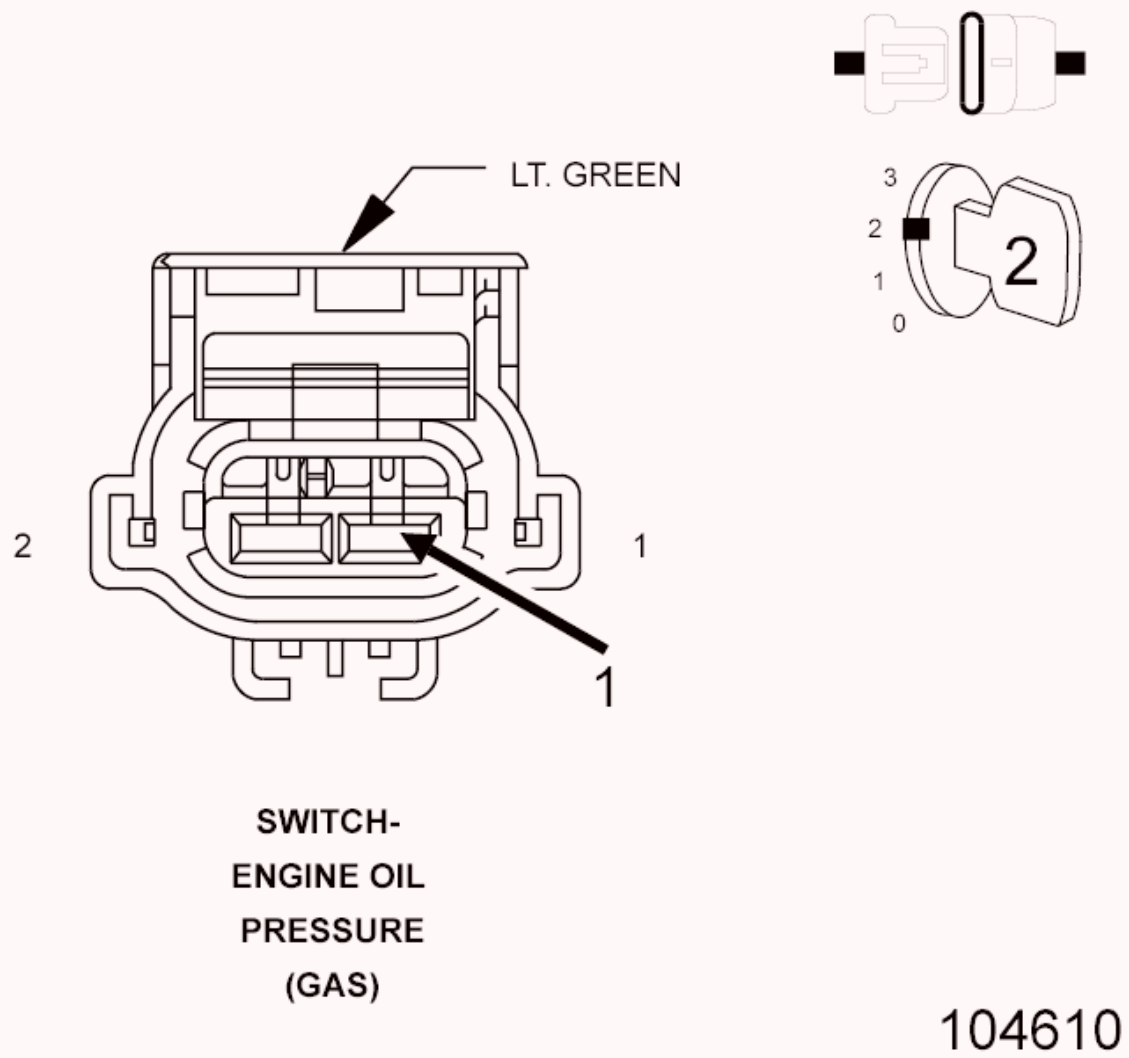

Fig. 110: Engine Oil Pressure Switch Harness Connector End View
Courtesy of CHRYSLER GROUP, LLC

1. Turn the ignition off.
2. Reconnect the PCM C2 harness connector.
3. Connect a jumper between ground and the (G6) EOP Signal circuit at the Engine Oil Pressure Switch harness connector.
4. Turn the ignition on.

NOTE: The PCM should display an Engine Oil Pressure Sensor Circuit Low DTC with the jumper in place.

Is the status Active for an Engine Oil Pressure Sensor Circuit High DTC with the jumper in place?

Yes

- Replace the Engine Oil Pressure Switch in accordance with the service information.
- Perform the POWERTRAIN VERIFICATION TEST. Refer to **POWERTRAIN VERIFICATION TEST** .

No

- Go To 5

5. **POWERTRAIN CONTROL MODULE (PCM)**
   1. Using the wiring diagram/schematic as a guide, inspect the wiring and connectors between the Engine Oil Pressure Switch and the Powertrain Control Module (PCM).
   2. Look for any chafed, pierced, pinched, or partially broken wires.
   3. Look for broken, bent, pushed out or corroded terminals.
   4. Perform any Technical Service Bulletins that may apply.

   Were any problems found?

   Yes

   - Repair as necessary.
   - Perform the POWERTRAIN VERIFICATION TEST. Refer to **POWERTRAIN VERIFICATION TEST** .

   No

   - Replace and program the Powertrain Control Module (PCM) in accordance with the service information. Refer to **MODULE, POWERTRAIN CONTROL, REMOVAL** .
   - Perform the POWERTRAIN VERIFICATION TEST. Refer to **POWERTRAIN VERIFICATION TEST** .

P0532-A/C PRESSURE SENSOR CIRCUIT LOW

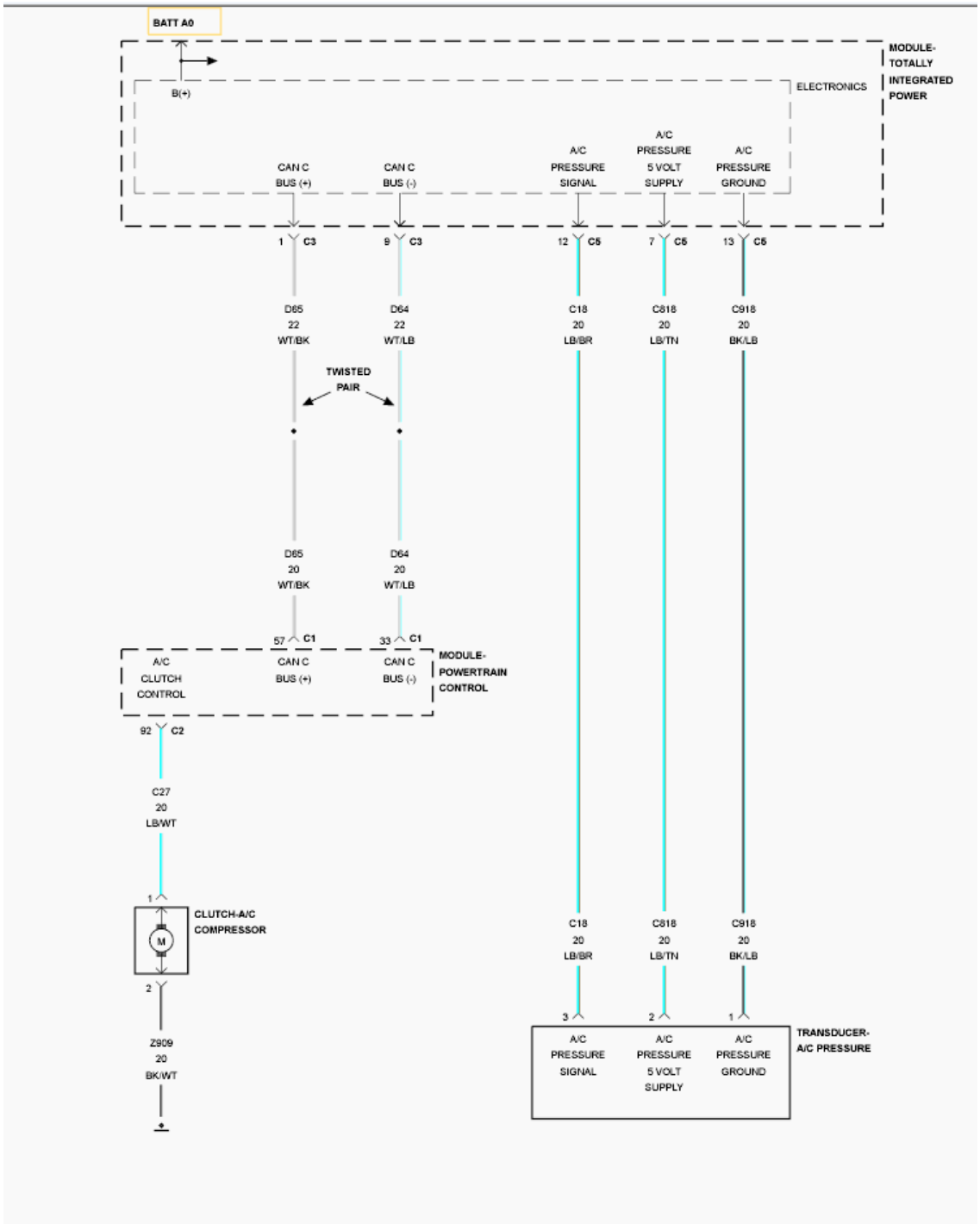

Fig. 111: A/C Pressure Transducer Circuit Diagram
Courtesy of CHRYSLER GROUP, LLC

For a complete wiring diagram, **refer to appropriate SYSTEM WIRING DIAGRAMS article** .

THEORY OF OPERATION

The A/C pressure transducer monitors the pressures in the high side of the A/C

refrigerant system through its connection to a fitting on the A/C discharge line and its internal resistance changes in response to the pressures it monitors. The Totally Integrated Power Module (TIPM) provides a five Volt reference signal and a sensor ground to the A/C pressure transducer, then monitors the output voltage of the transducer on a sensor return circuit to determine refrigerant pressure the TIPM busses the reads to PCM. The PCM is programmed to respond to this and other sensor inputs by controlling the operation of the A/C clutch and the radiator cooling fan to help optimize A/C system performance and to protect the A/C system components from damage. The PCM will request disengagement of the A/C clutch when high side pressure rises above 3219 kPa (476 psi) and re-engage the clutch when high side pressure drops below 2937 kPa (426 psi). The PCM will also disengage the A/C clutch if the high side pressure drops below 110 kPa (16 psi) and will re-engage the clutch when the high side pressure rises above 220 kPa (32 psi). When the refrigerant pressure rises above 1655 kPa (240 psi), the PCM will actuate the cooling fan.

WHEN MONITORED

With the ignition on and battery voltage greater than 10.4 volts.

SET CONDITION

The Powertrain Control Module (PCM) detects that the A/C Pressure Sensor input voltage is below the minimum acceptable value.

POSSIBLE CAUSES

Possible Causes
(C818) A/C PRESSURE SENSOR SUPPLY CIRCUIT SHORTED TO GROUND
(C18) A/C PRESSURE SENSOR SIGNAL CIRCUIT SHORTED TO GROUND
(C818) A/C PRESSURE SENSOR SUPPLY CIRCUIT SHORTED TO THE (C918) A/C PRESSURE SENSOR GROUND CIRCUIT
(C18) A/C PRESSURE SENSOR SIGNAL CIRCUIT SHORTED TO THE (C918) A/C PRESSURE SENSOR GROUND CIRCUIT
(C818) A/C PRESSURE SENSOR SUPPLY CIRCUIT OPEN OR HIGH RESISTANCE
(C18) A/C PRESSURE SENSOR SIGNAL CIRCUIT OPEN OR HIGH RESISTANCE

A/C PRESSURE TRANSDUCER
TOTALLY INTEGRATED POWER MODULE (TIPM)

Always perform the Pre-Diagnostic Troubleshooting procedure before proceeding. Refer to PRE-DIAGNOSTIC TROUBLESHOOTING PROCEDURE .

DIAGNOSTIC TEST

1. **DTC IS ACTIVE**

   NOTE: Diagnose and repair any system voltage or sensor reference voltage DTCs before continuing with this test.

   1. Start the engine and allow it to reach normal operating temperature.

      WARNING: When the engine is operating, do not stand in direct line with the fan. Do not put your hands near the pulleys, belts or fan. Do not wear loose clothing. Failure to follow these instructions may result in possible serious or fatal injury.

   2. With the scan tool, select View DTCs.

      Is the status Active for this DTC?

      Yes

      - Go To 2

      No

      - Perform the INTERMITTENT CONDITION diagnostic procedure. Refer to **INTERMITTENT CONDITION** .

2. **(C818) A/C PRESSURE SENSOR SUPPLY CIRCUIT VOLTAGE**

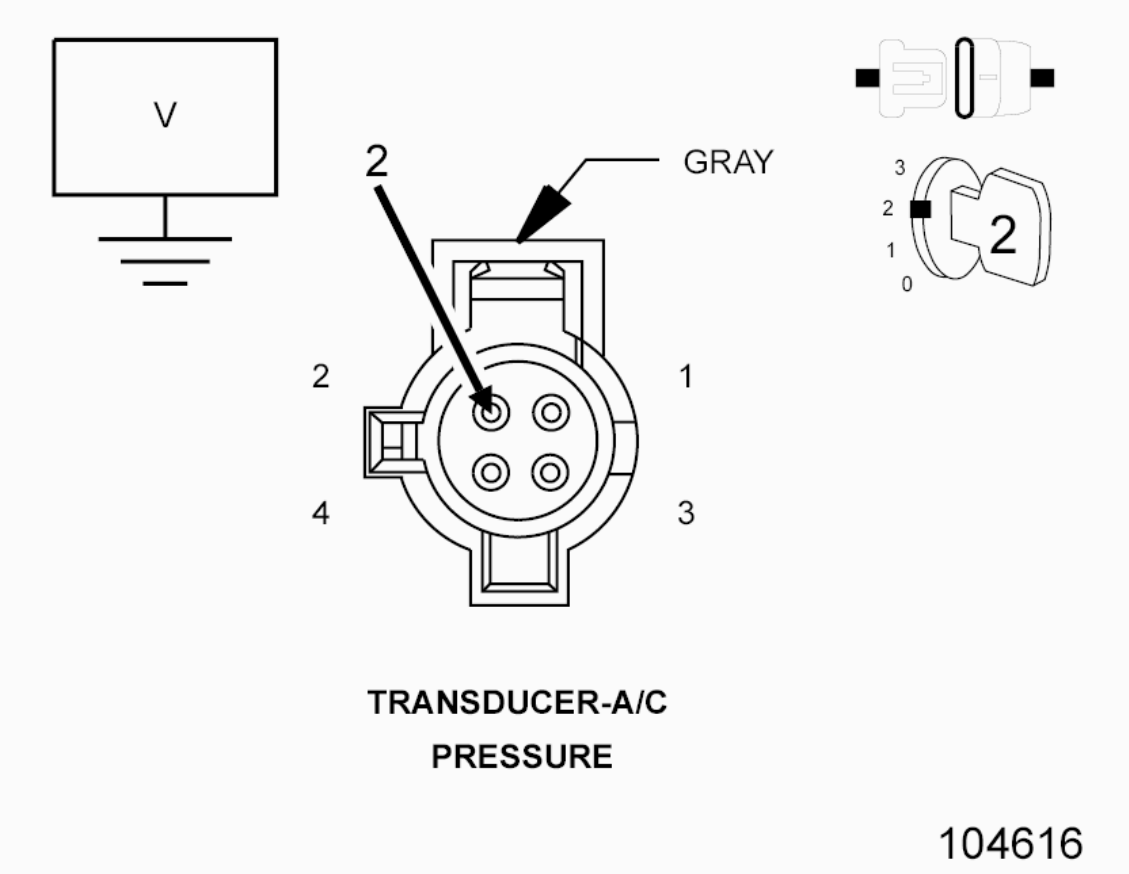

Fig. 112: Checking A/C Pressure Sensor Supply Circuit Voltage
Courtesy of CHRYSLER GROUP, LLC

1. Turn the ignition off.
2. Disconnect the A/C Pressure Transducer harness connector.
3. Turn the ignition on.
4. Measure the voltage of the (C818) A/C Pressure Sensor Supply circuit in the A/C Pressure Transducer harness connector.

   Is the voltage above 4.5 volts?

   Yes

   - Go To 6

   No

   - Go To 3

3. **(C818) A/C PRESSURE SENSOR SUPPLY CIRCUIT SHORTED TO GROUND**

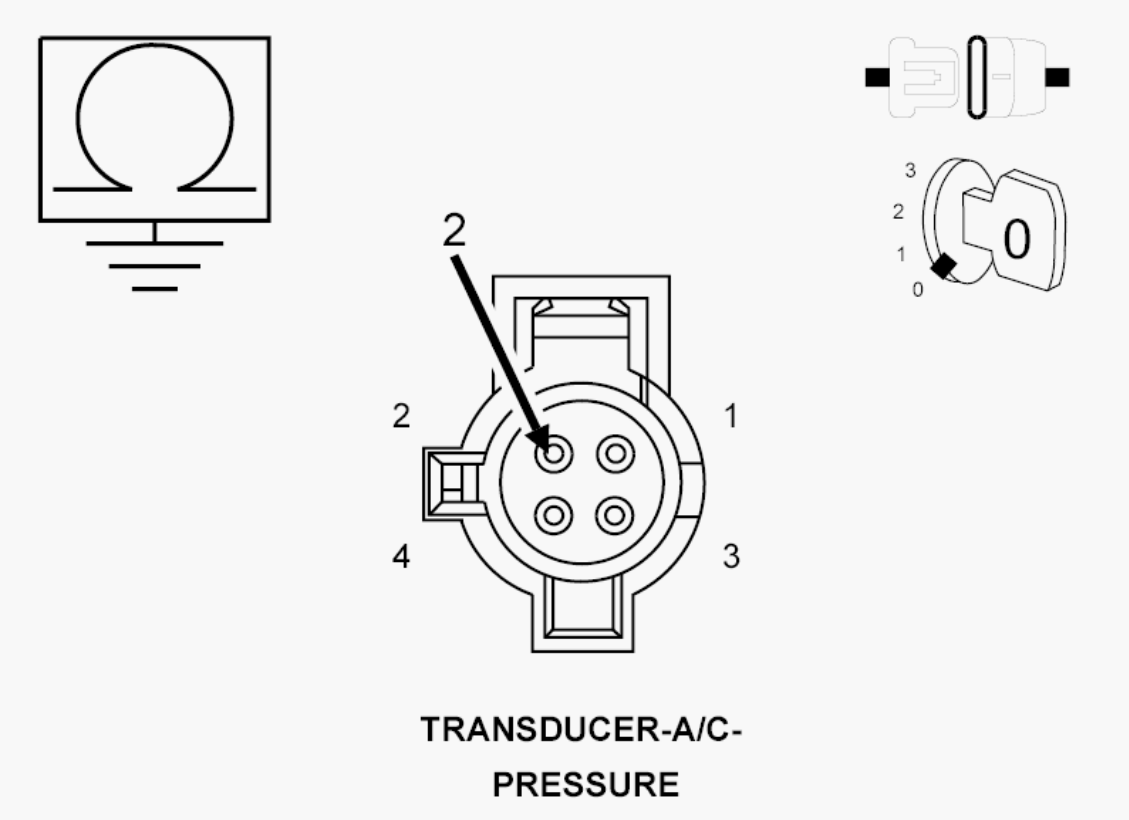

Fig. 113: Checking A/C Pressure Sensor Supply Circuit For Short To Ground
Courtesy of CHRYSLER GROUP, LLC

1. Turn the ignition on.
2. Disconnect the Totally Integrated Power Module (TIPM) C5 harness connector.
3. Measure the resistance between ground and the (C818) A/C Pressure Sensor Supply circuit in the A/C Pressure Transducer harness connector.

   Is the resistance above 1000 Ohms?

   Yes

   - Go To 4

   No

   - Repair the (C818) A/C Pressure Sensor Supply circuit for a short to ground.

- Perform the POWERTRAIN VERIFICATION TEST. Refer to **POWERTRAIN VERIFICATION TEST** .

4. **(C818) A/C PRESSURE SENSOR SUPPLY CIRCUIT SHORTED TO THE (C918) A/C PRESSURE SENSOR GROUND CIRCUIT**

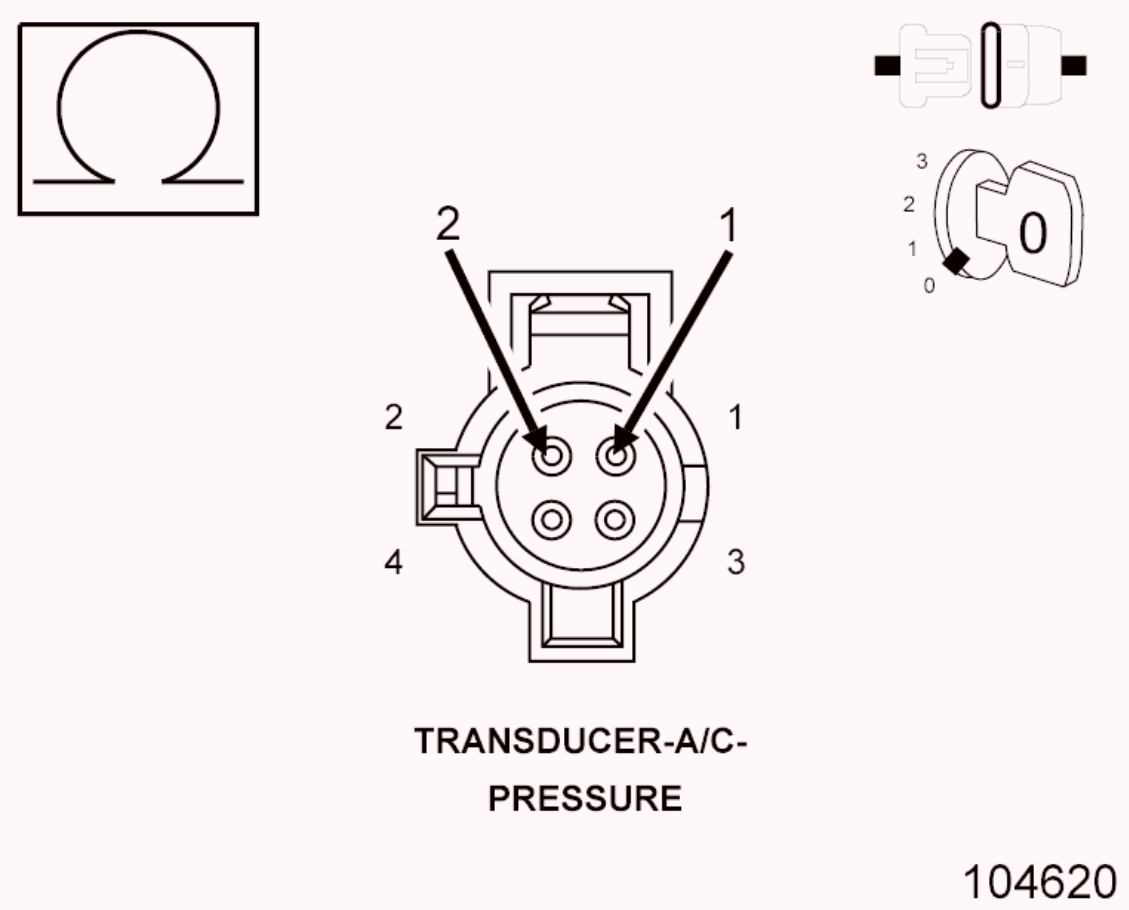

Fig. 114: Checking A/C Pressure Sensor Supply Circuit For Short To A/C Pressure Sensor Ground Circuit
Courtesy of CHRYSLER GROUP, LLC

1. Measure the resistance between the (C818) A/C Pressure Sensor Supply circuit and the (C918) A/C Pressure Sensor Ground circuit in the A/C Pressure Transducer harness connector.

   Is the resistance above 100 Ohms?

   Yes

   - Go To 5

   No

- Repair the (C818) A/C Pressure Sensor Supply circuit for a short to the (C918) A/C Pressure Sensor Ground circuit.
- Perform the POWERTRAIN VERIFICATION TEST. Refer to **POWERTRAIN VERIFICATION TEST** .

5. **(C818) A/C PRESSURE SENSOR SUPPLY CIRCUIT OPEN OR HIGH RESISTANCE**

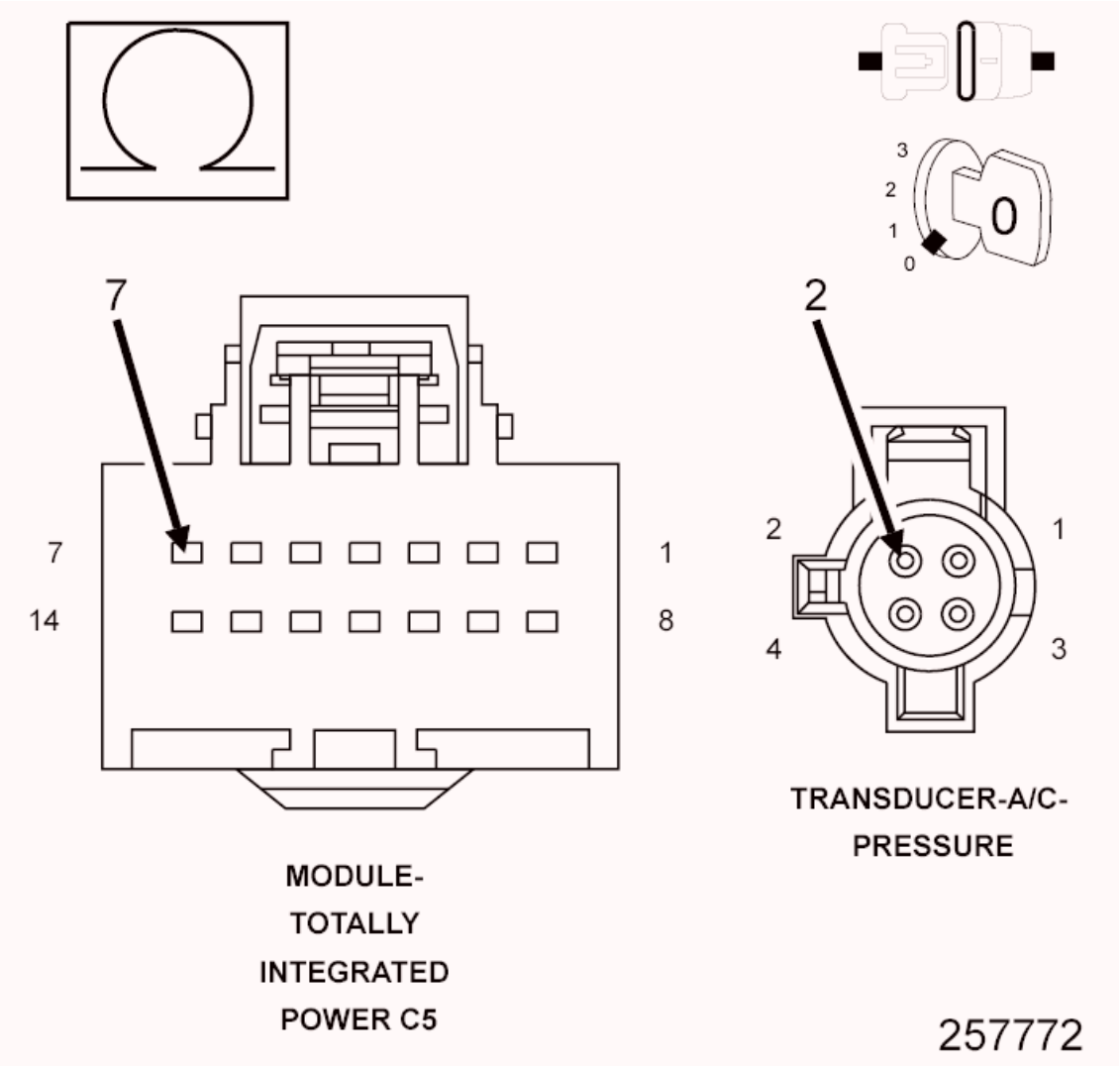

Fig. 115: Checking A/C Pressure Sensor Supply Circuit For Open Or High Resistance
Courtesy of CHRYSLER GROUP, LLC

1. Measure the resistance of the (C818) A/C Pressure Sensor Supply circuit between the A/C Pressure Transducer harness connector and the Totally Integrated Power Module (TIPM) C5 harness connector.

   Is the resistance below 5.0 Ohms?

Yes

- Go To 10

No

- Repair the (C818) A/C Pressure Sensor Supply circuit for an open circuit or high resistance.
- Perform the POWERTRAIN VERIFICATION TEST. Refer to **POWERTRAIN VERIFICATION TEST** .

6. **(C18) A/C PRESSURE SENSOR SIGNAL CIRCUIT SHORTED TO GROUND**

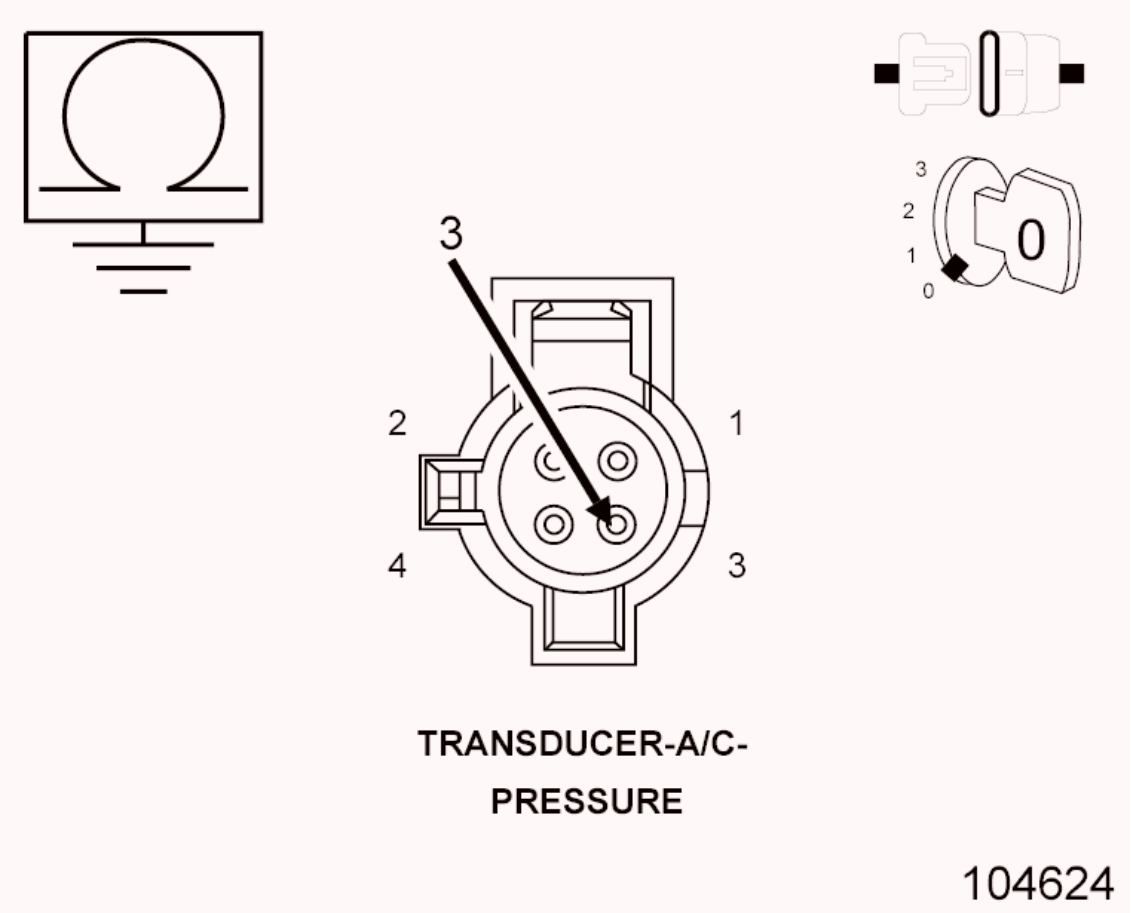

Fig. 116: Checking A/C Pressure Sensor Signal Circuit For Short To Ground
Courtesy of CHRYSLER GROUP, LLC

1. Turn the ignition off.
2. Disconnect the Totally Integrated Power Module (TIPM) C5 harness

connector.

3. Measure the resistance between ground and the (C18) A/C Pressure Sensor Signal circuit in the A/C Pressure Transducer harness connector.

   Is the resistance above 100 Ohms?

   Yes

   - Go To 7

   No

   - Repair the (C18) A/C Pressure Sensor Signal circuit for a short to ground.
   - Perform the POWERTRAIN VERIFICATION TEST. Refer to **POWERTRAIN VERIFICATION TEST** .

7. **(C18) A/C PRESSURE SENSOR SIGNAL CIRCUIT SHORTED TO THE (C918) A/C PRESSURE SENSOR GROUND CIRCUIT**

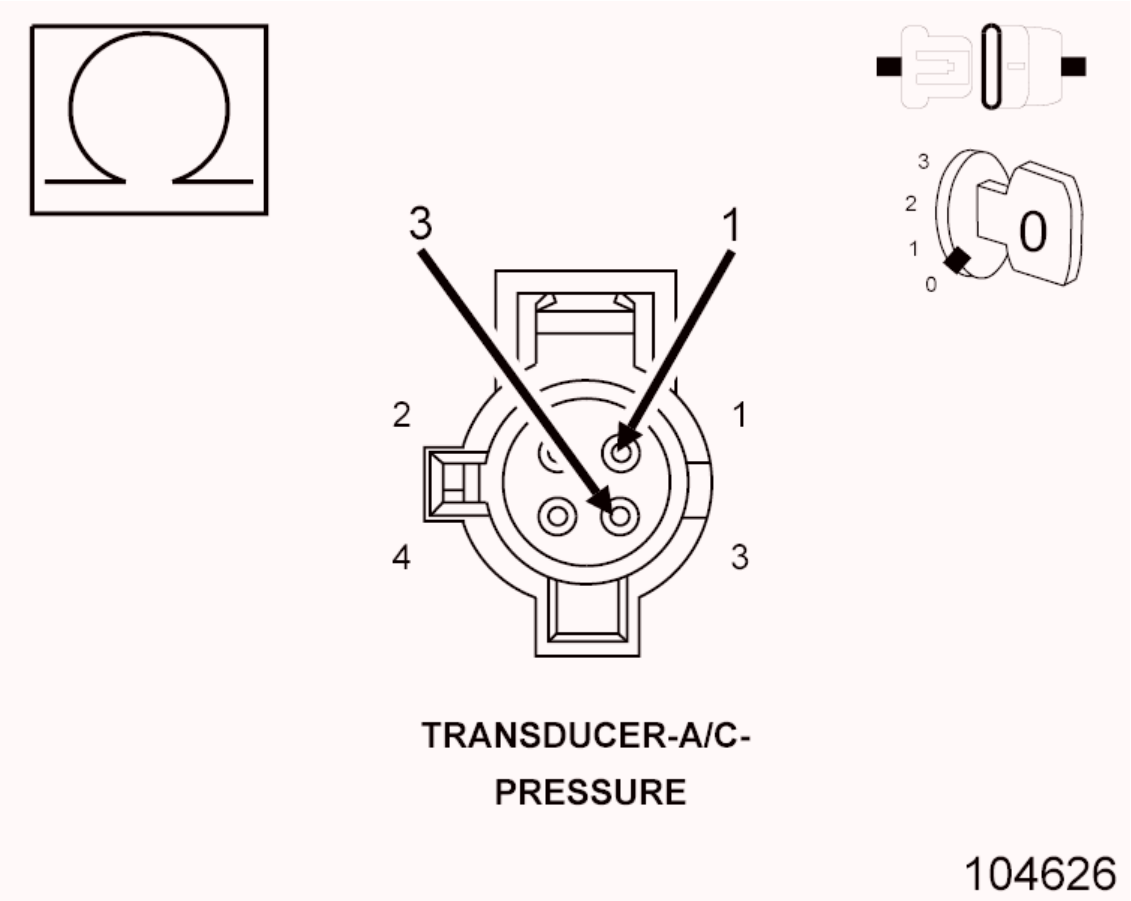

Fig. 117: Checking A/C Pressure Sensor Signal Circuit For Short To

A/C Pressure Sensor Ground Circuit
Courtesy of CHRYSLER GROUP, LLC

1. Measure the resistance between the (C18) A/C Pressure Sensor Signal circuit and the (C918) A/C Pressure Sensor Ground circuit in the A/C Pressure Transducer harness connector.

   Is the resistance above 100 Ohms?

   Yes

   - Go To 8

   No

   - Repair the (C18) A/C Pressure Sensor Signal circuit for a short to the (C918) A/C Pressure Sensor Ground circuit.
   - Perform the POWERTRAIN VERIFICATION TEST. Refer to **POWERTRAIN VERIFICATION TEST** .

8. **(C18) A/C PRESSURE SENSOR SIGNAL CIRCUIT OPEN OR HIGH RESISTANCE**

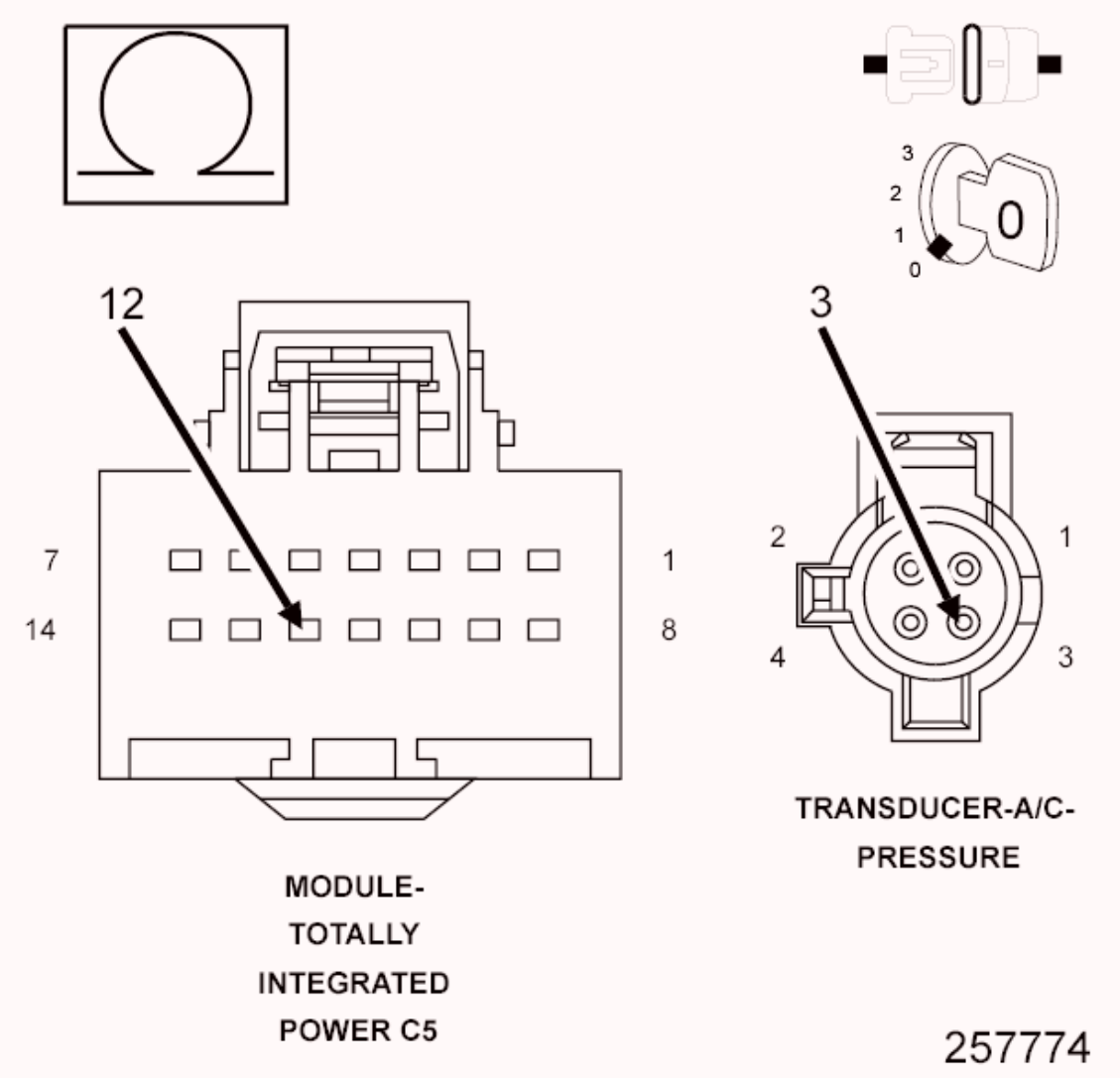

Fig. 118: Checking A/C Pressure Sensor Signal Circuit For Open Or High Resistance
Courtesy of CHRYSLER GROUP, LLC

1. Measure the resistance of the (C18) A/C Pressure Sensor Signal circuit between the A/C Pressure Transducer harness connector and the TIPM C5 harness connector.

   Is the resistance below 5.0 Ohms?

   Yes

   - Go To 9

   No

- Repair the (C18) A/C Pressure Sensor Signal circuit for an open circuit or high resistance.
- Perform the POWERTRAIN VERIFICATION TEST. Refer to **POWERTRAIN VERIFICATION TEST** .

9. **AC PRESSURE TRANSDUCER**

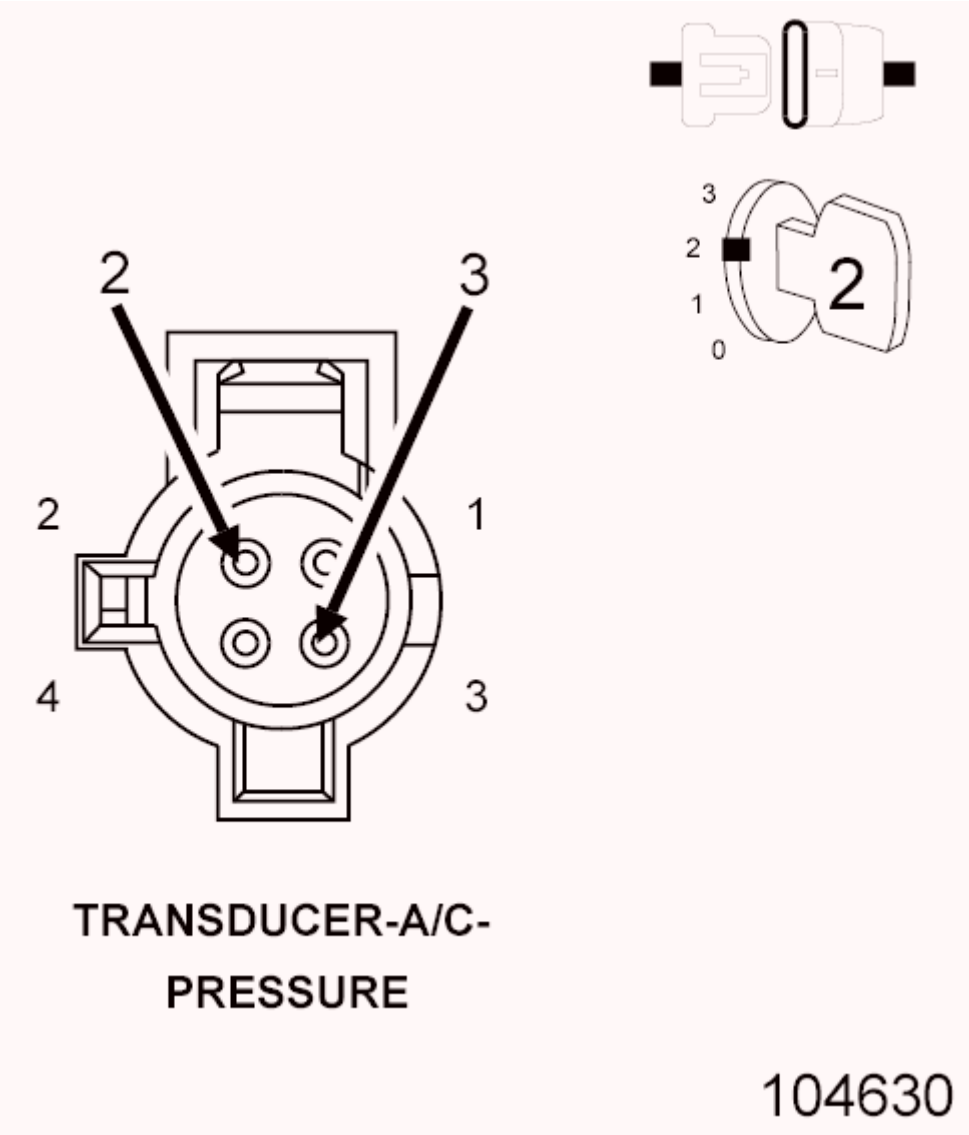

Fig. 119: A/C Pressure Transducer Harness Connector End View
Courtesy of CHRYSLER GROUP, LLC

1. Turn the ignition off.
2. Connect the TIPM C5 harness connector.
3. Connect a jumper wire between the (C818) A/C Pressure Sensor Supply circuit and the (C18) A/C Pressure Sensor Signal circuit in the A/C Pressure Transducer harness connector.

4. Turn the ignition on.
5. With the scan tool, read the AC Pressure Transducer signal voltage.

   Is the voltage above 4.5 volts with the jumper wire in place?

   Yes

   - Replace the A/C Pressure Transducer in accordance with the Service Information. Refer to **TRANSDUCER, A/C PRESSURE, REMOVAL** .
   - Perform the POWERTRAIN VERIFICATION TEST. Refer to **POWERTRAIN VERIFICATION TEST** .

   No

   - Go To 10

10. **TOTALLY INTEGRATED POWER MODULE (TIPM)**
    1. Using the wiring diagram/schematic as a guide, inspect the wiring and connectors between the A/C Pressure Transducer and the Totally Integrated Power Module (TIPM).
    2. Look for any chafed, pierced, pinched, or partially broken wires.
    3. Look for broken, bent, pushed out or corroded terminals.
    4. Perform any Technical Service Bulletins that may apply.

       Were any problems found?

       Yes

       - Repair as necessary.
       - Perform the BODY VERIFICATION TEST. Refer to **STANDARD PROCEDURE** .

       No

       - Replace and program the Totally Integrated Power Module (TIPM) in accordance with the Service Information.
       - Perform the BODY VERIFICATION TEST. Refer to **STANDARD PROCEDURE** .

P0533-A/C PRESSURE SENSOR CIRCUIT HIGH

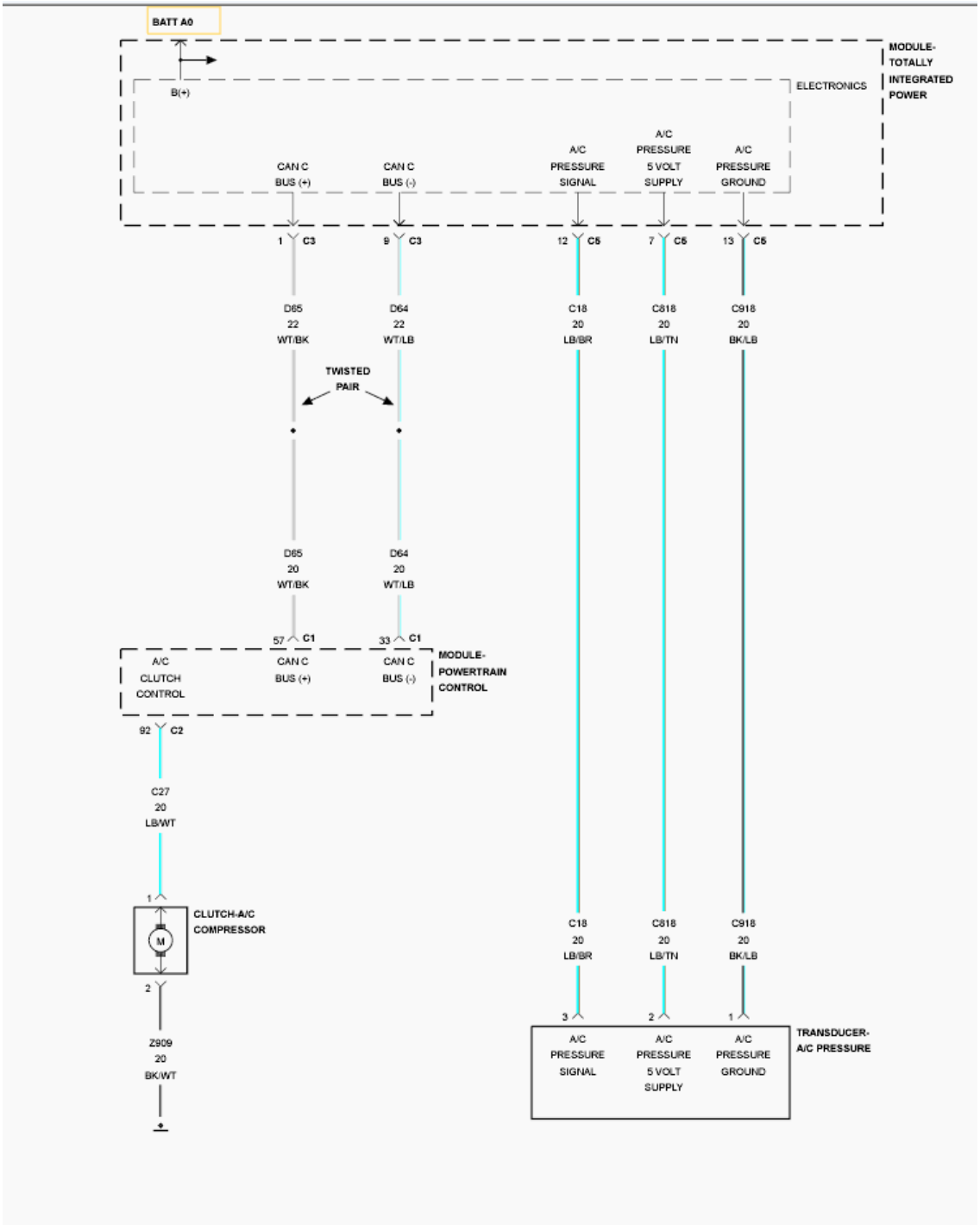

Fig. 120: A/C Pressure Transducer Circuit Diagram
Courtesy of CHRYSLER GROUP, LLC

For a complete wiring diagram, **refer to appropriate SYSTEM WIRING DIAGRAMS article**

THEORY OF OPERATION

The A/C pressure transducer monitors the pressures in the high side of the A/C refrigerant system through its connection to a fitting on the A/C discharge line and its internal resistance changes in response to the pressures it monitors. The Totally Integrated Power Module (TIPM) provides a five Volt reference signal and a sensor ground to the A/C pressure transducer, then monitors the output voltage of the transducer on a sensor return circuit to determine refrigerant pressure the TIPM busses the reads to PCM. The PCM is programmed to respond to this and other sensor inputs by controlling the operation of the A/C clutch and the radiator cooling fan to help optimize A/C system performance and to protect the A/C system components from damage. The PCM will request disengagement of the A/C clutch when high side pressure rises above 3219 kPa (476 psi) and re-engage the clutch when high side pressure drops below 2937 kPa (426 psi). The PCM will also disengage the A/C clutch if the high side pressure drops below 110 kPa (16 psi) and will re-engage the clutch when the high side pressure rises above 220 kPa (32 psi). When the refrigerant pressure rises above 1655 kPa (240 psi), the PCM will actuate the cooling fan.

WHEN MONITORED

With the ignition on and battery voltage greater than 10.4 volts.

SET CONDITION

The Powertrain Control Module (PCM) detects that the A/C Pressure Sensor input voltage is above the maximum acceptable value.

POSSIBLE CAUSES

Possible Causes
(C818) A/C PRESSURE SENSOR SUPPLY CIRCUIT SHORTED TO VOLTAGE
(C18) A/C PRESSURE SENSOR SIGNAL CIRCUIT SHORTED TO VOLTAGE
(C18) A/C PRESSURE SENSOR SIGNAL CIRCUIT SHORTED TO THE (C818) A/C PRESSURE SENSOR SUPPLY CIRCUIT
(C18) A/C PRESSURE SENSOR SIGNAL CIRCUIT OPEN OR HIGH RESISTANCE
(C918) A/C PRESSURE SENSOR GROUND CIRCUIT OPEN OR HIGH RESISTANCE
A/C PRESSURE TRANSDUCER

TOTALLY INTEGRATED POWER MODULE (TIPM)

Always perform the Pre-Diagnostic Troubleshooting procedure before proceeding. Refer to PRE-DIAGNOSTIC TROUBLESHOOTING PROCEDURE .

DIAGNOSTIC TEST

1. **DTC IS ACTIVE**

   NOTE: Diagnose and repair any CAN C Bus, system voltage, or sensor reference voltage DTCs before continuing with this test.

   1. Start the engine and allow it to reach normal operating temperature.

      WARNING: When the engine is operating, do not stand in direct line with the fan. Do not put your hands near the pulleys, belts or fan. Do not wear loose clothing. Failure to follow these instructions may result in possible serious or fatal injury.

   2. With the scan tool, select View DTCs.

      Is the status Active for this DTC?

      Yes

      - Go To 2

      No

      - Perform the INTERMITTENT CONDITION diagnostic procedure. Refer to **INTERMITTENT CONDITION** .

2. **(C818) A/C PRESSURE SENSOR SUPPLY CIRCUIT SHORTED TO VOLTAGE**

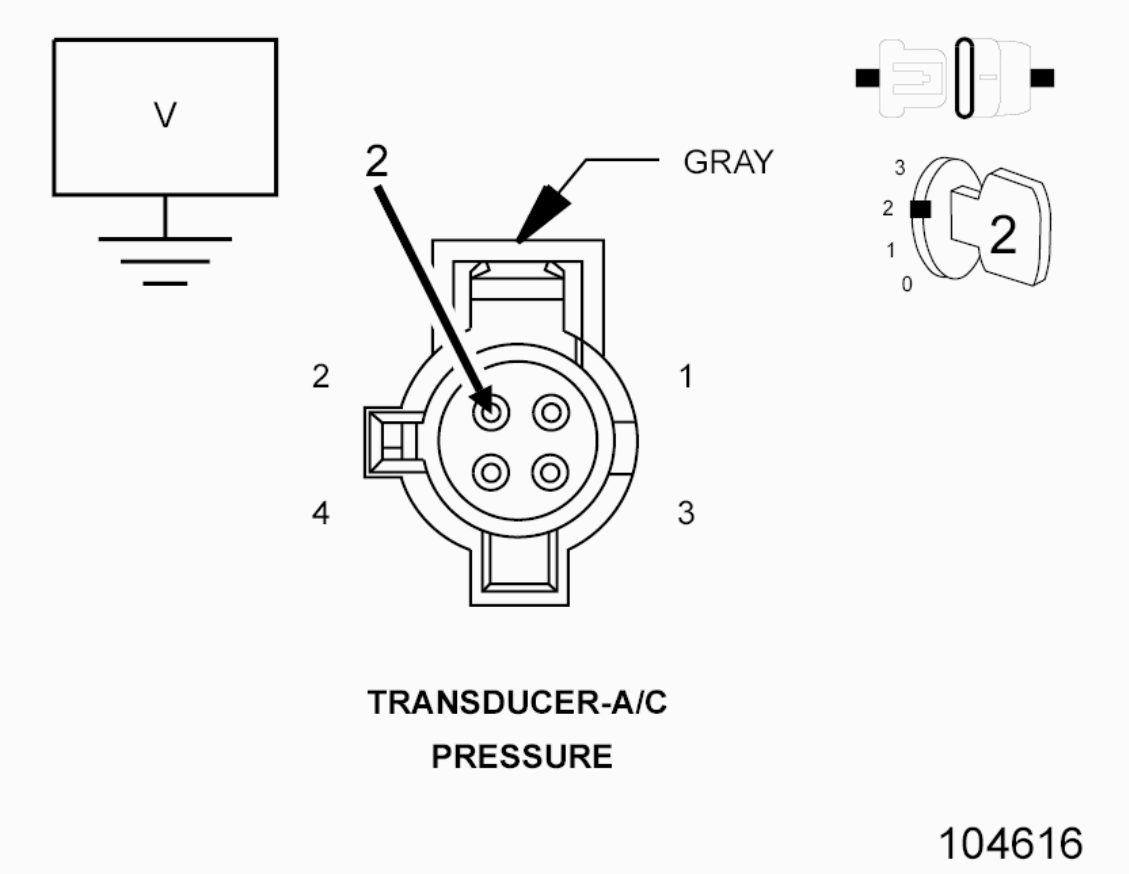

Fig. 121: Checking A/C Pressure Sensor Supply Circuit For Short To Voltage
Courtesy of CHRYSLER GROUP, LLC

1. Turn the ignition off.
2. Disconnect the A/C Pressure Transducer connector.
3. Disconnect the Totally Integrated Power Module (TIPM) C5 harness connector.
4. Turn the ignition on.
5. Measure the voltage of the (C818) A/C Pressure Sensor Supply circuit in the A/C Pressure Transducer harness connector.

   Is there any voltage present?

   Yes

   - Repair the (C818) A/C Pressure Sensor Supply circuit for a short to voltage.
   - Perform the POWERTRAIN VERIFICATION TEST. Refer to **POWERTRAIN VERIFICATION TEST** .

No

- Go To 3

3. **(C18) A/C PRESSURE SENSOR SIGNAL CIRCUIT SHORTED TO VOLTAGE**

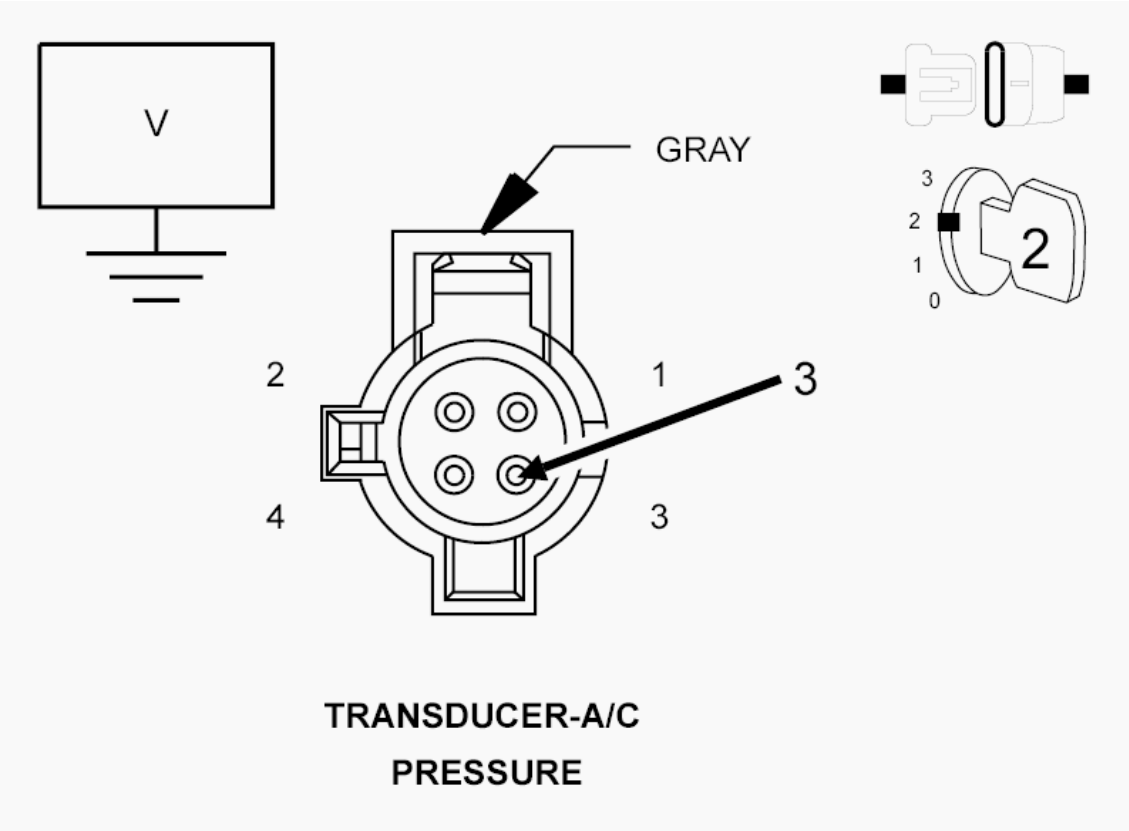

Fig. 122: Checking A/C Pressure Sensor Signal Circuit For Short To Voltage
Courtesy of CHRYSLER GROUP, LLC

1. Measure the voltage of the (C18) A/C Pressure Sensor Signal circuit in the A/C Pressure Transducer harness connector.

   Is there any voltage present?

   Yes

   - Repair the (C18) A/C Pressure Sensor Signal circuit for a short to voltage.
   - Perform the POWERTRAIN VERIFICATION TEST. Refer to **POWERTRAIN VERIFICATION TEST** .

No

- Go To 4

4. **(C18) A/C PRESSURE SENSOR SIGNAL CIRCUIT SHORTED TO THE (C818) A/C PRESSURE SENSOR SUPPLY CIRCUIT**

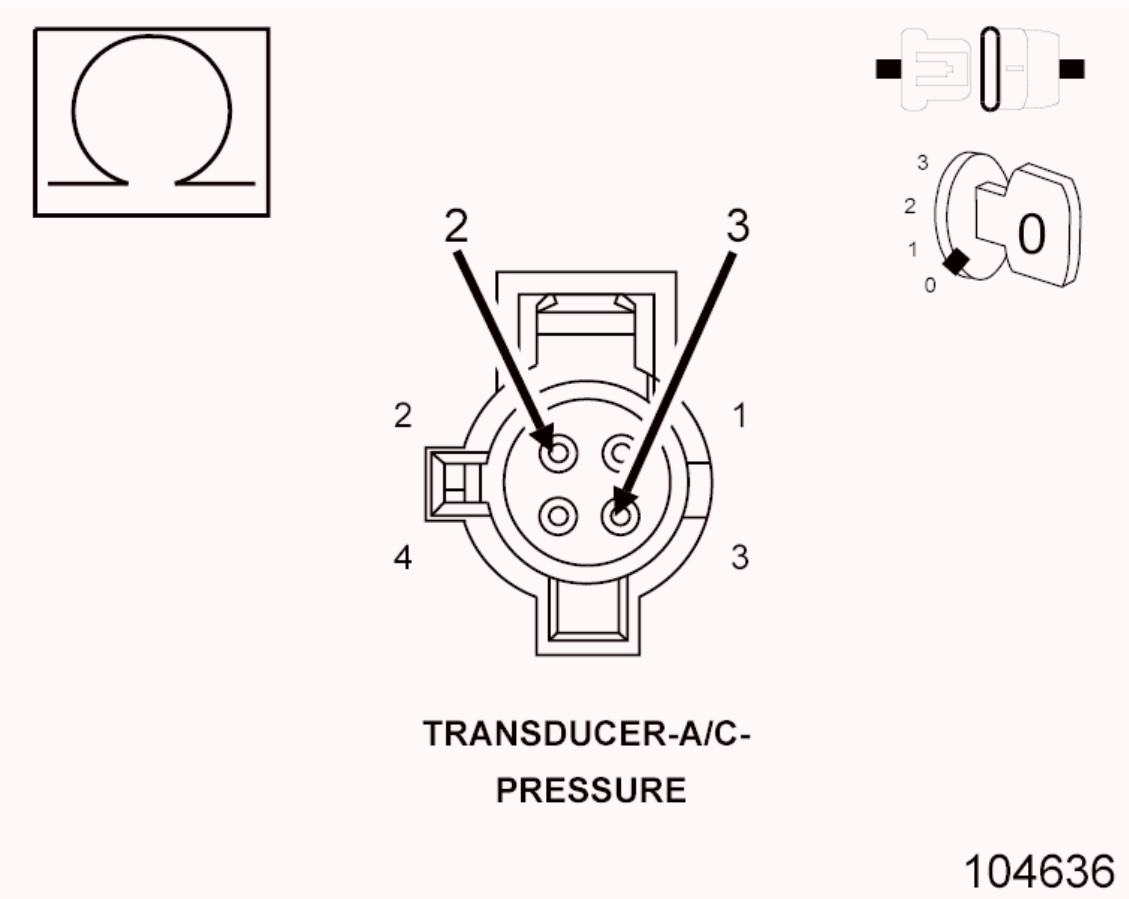

Fig. 123: Checking A/C Pressure Sensor Signal Circuit For Short To A/C Pressure Sensor Supply Circuit
Courtesy of CHRYSLER GROUP, LLC

1. Measure the resistance between the (C18) A/C Pressure Sensor Signal circuit and the (C818) A/C Pressure Sensor Supply circuit in the A/C Pressure Transducer harness connector.

   Is the resistance below 100 Ohms?

   Yes

   - Repair the (C18) A/C Pressure Sensor Signal circuit for a short to the (C818) A/C Pressure Sensor Supply circuit.

- Perform the POWERTRAIN VERIFICATION TEST. Refer to **POWERTRAIN VERIFICATION TEST** .

No

- Go To 5

5. **(C18) A/C PRESSURE SENSOR SIGNAL CIRCUIT OPEN OR HIGH RESISTANCE**

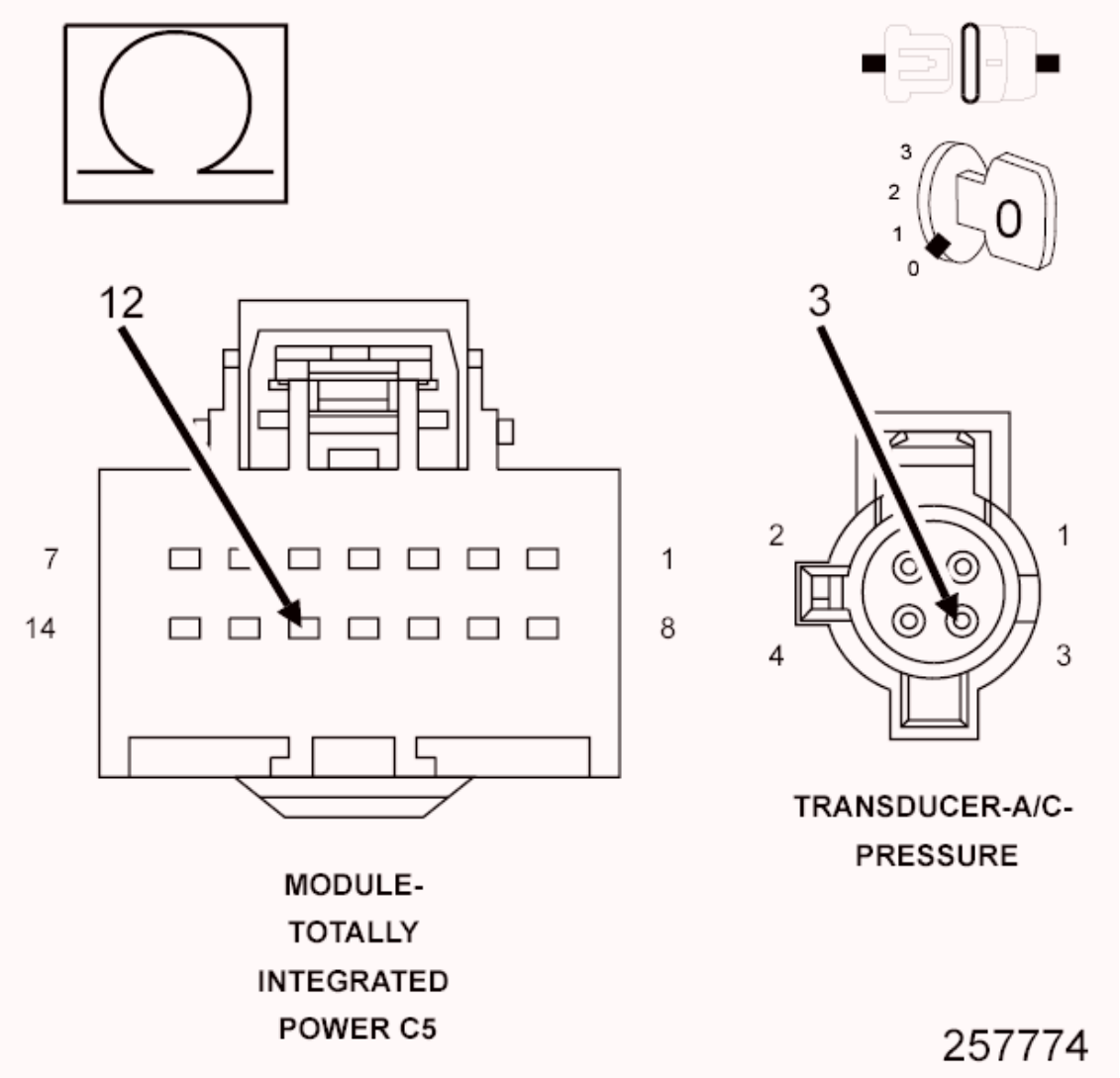

Fig. 124: Checking A/C Pressure Sensor Signal Circuit For Open Or High Resistance
Courtesy of CHRYSLER GROUP, LLC

1. Turn the ignition off.
2. Measure the resistance of the (C18) A/C Pressure Sensor Signal circuit

between the A/C Pressure Transducer harness connector and the Totally Integrated Power Module (TIPM) harness connector.

Is the resistance below 5.0 Ohms?

Yes

- Go To 6

No

- Repair the (C18) A/C Pressure Sensor Signal circuit for an open circuit or high resistance.
- Perform the POWERTRAIN VERIFICATION TEST. Refer to **POWERTRAIN VERIFICATION TEST** .

6. **(C918) A/C PRESSURE SENSOR GROUND CIRCUIT OPEN OR HIGH RESISTANCE**

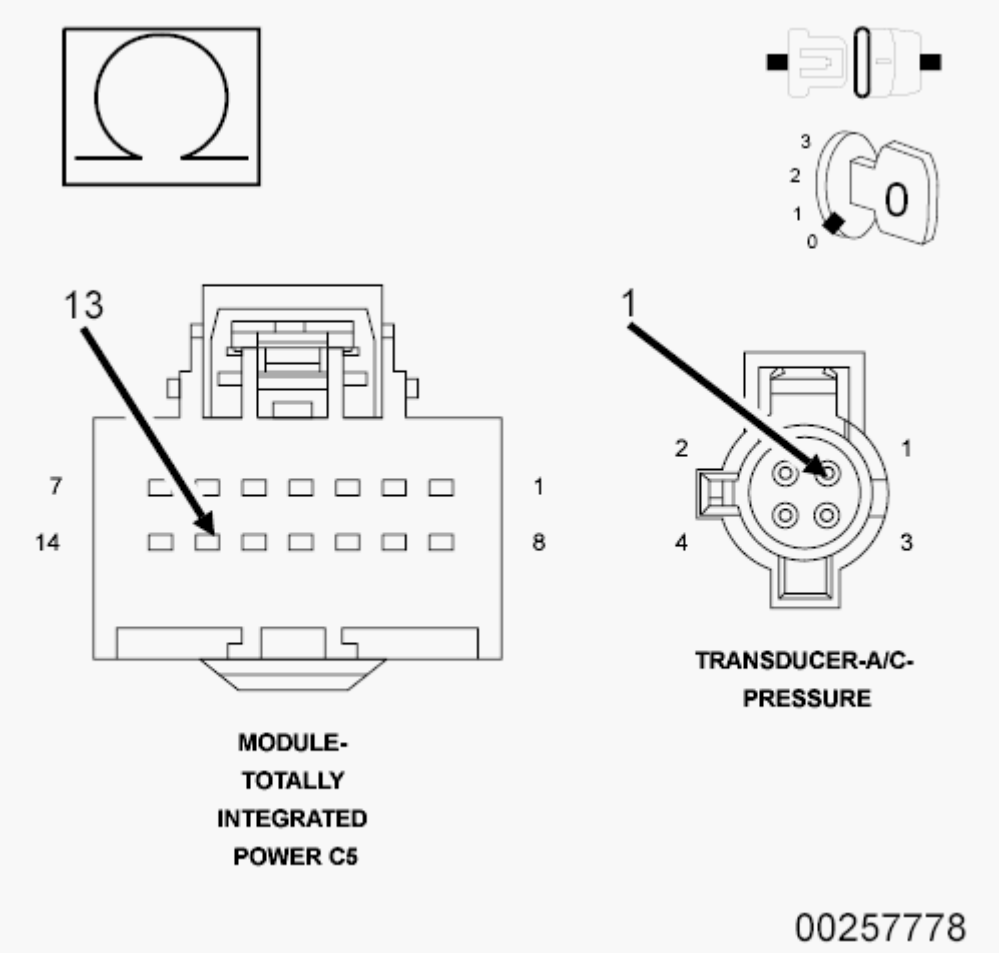

Fig. 125: Checking A/C Pressure Sensor Ground Circuit For Open Or

High Resistance
Courtesy of CHRYSLER GROUP, LLC

1. Measure the resistance of the (C918) A/C Pressure Sensor Ground circuit between the A/C Pressure Transducer harness connector and the TIPM C5 harness connector.

   Is the resistance below 5.0 Ohms?

   Yes

   - Go To 7

   No

   - Repair the (C918) A/C Pressure Sensor Ground circuit for an open circuit or high resistance.
   - Perform the POWERTRAIN VERIFICATION TEST. Refer to **POWERTRAIN VERIFICATION TEST** .

7. **A/C PRESSURE TRANSDUCER**

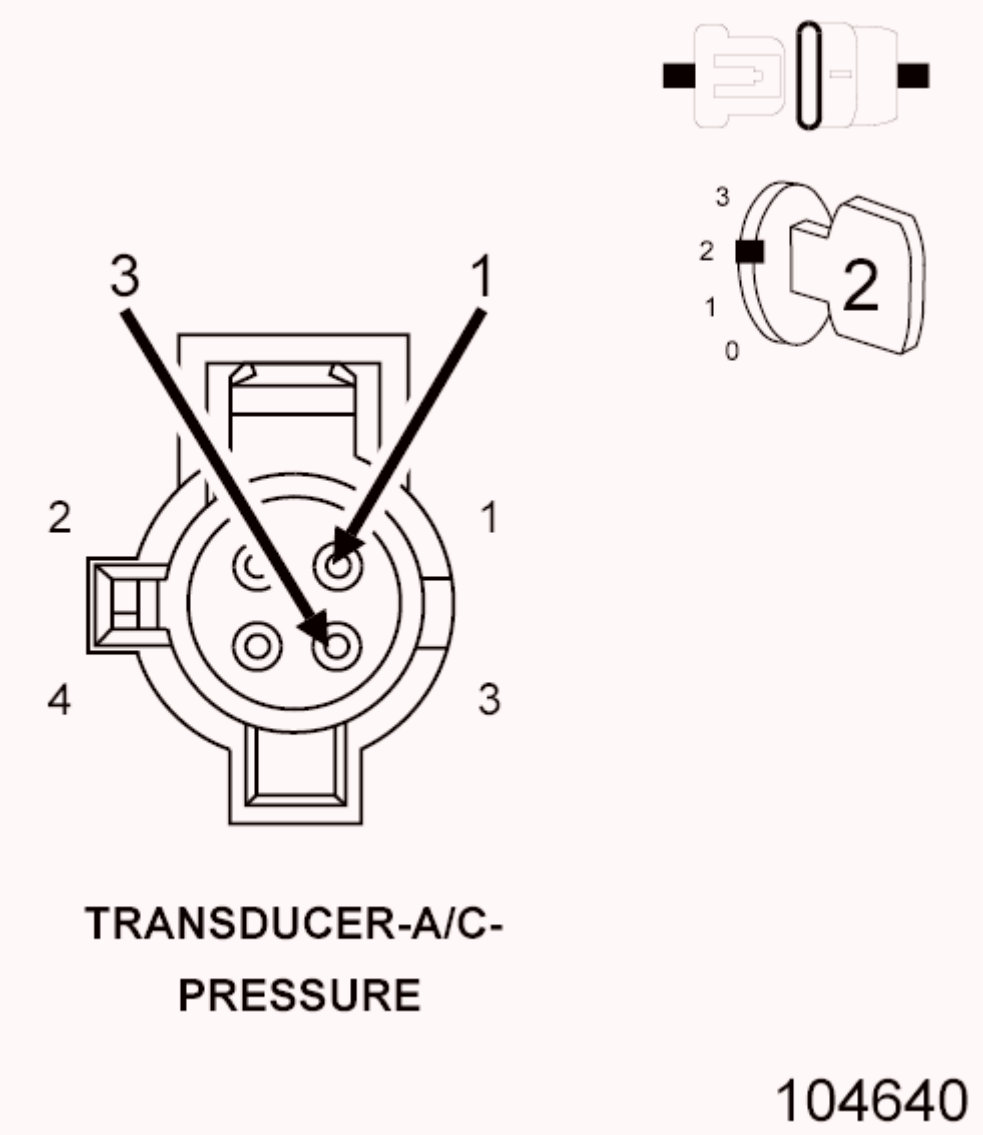

Fig. 126: A/C Pressure Transducer Harness Connector End View
Courtesy of CHRYSLER GROUP, LLC

1. Turn the ignition off.
2. Connect the TIPM C5 harness connector.
3. Connect a jumper wire between the (C918) A/C Pressure Sensor Ground circuit and the (C18) A/C Pressure Sensor Signal circuit in the A/C Pressure Transducer harness connector.
4. Turn the ignition on.
5. With the scan tool, read the A/C Pressure Transducer signal voltage.

   Is the voltage below 1.0 volt with the jumper wire in place?

   Yes

- Replace the A/C Pressure Transducer in accordance with the Service Information.
- Perform the POWERTRAIN VERIFICATION TEST. Refer to **POWERTRAIN VERIFICATION TEST** .

No

- Go To 8

8. **TOTALLY INTEGRATED POWER MODULE (TIPM)**
   1. Using the wiring diagram/schematic as a guide, inspect the wiring and connectors between the A/C Pressure Transducer and the Totally Integrated Power Module (TIPM).
   2. Look for any chafed, pierced, pinched, or partially broken wires.
   3. Look for broken, bent, pushed out or corroded terminals.
   4. Perform any Technical Service Bulletins that may apply.

   Were any problems found?

   Yes

   - Repair as necessary.
   - Perform the BODY VERIFICATION TEST. Refer to **STANDARD PROCEDURE** .

   No

   - Replace and program the Totally Integrated Power Module (TIPM) in accordance with the Service Information.
   - Perform the BODY VERIFICATION TEST. Refer to **STANDARD PROCEDURE** .

P0562-BATTERY/SYSTEM VOLTAGE LOW

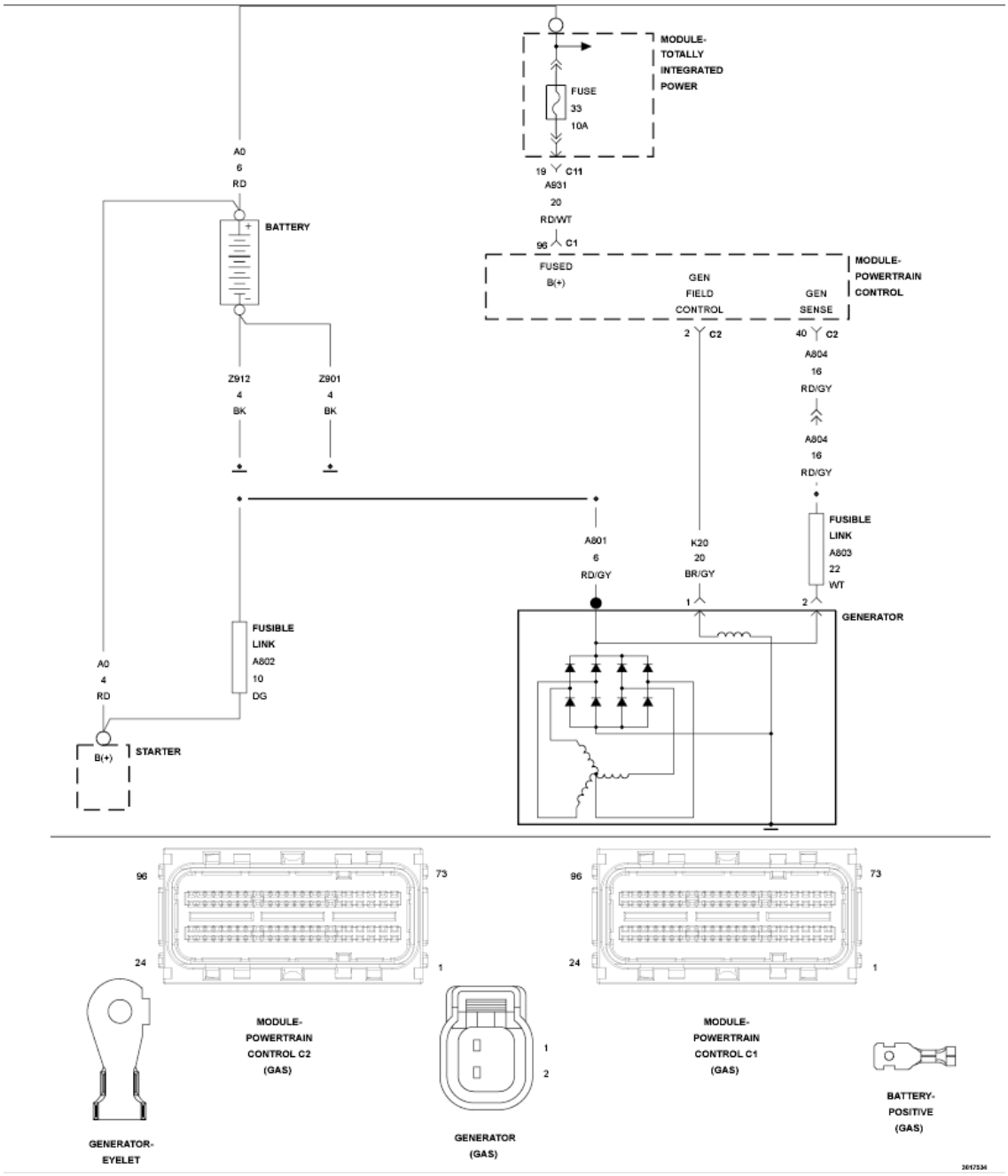

Fig. 127: Charging System Circuit Diagram
Courtesy of CHRYSLER GROUP, LLC

For a complete wiring diagram, **refer to appropriate SYSTEM WIRING DIAGRAMS article** .

WHEN MONITORED

With engine running for more than 30 seconds.

SET CONDITION

Battery voltage at the Powertrain Control Module (PCM) is less than 11.7 volts for a set period of time. One Trip Fault.

POSSIBLE CAUSES

POSSIBLE CAUSES
BATTERY POSITIVE CIRCUIT HIGH RESISTANCE
GENERATOR CASE GROUND HIGH RESISTANCE
(A931) FUSED B+ CIRCUIT HIGH RESISTANCE
(Z925) GROUND CIRCUIT(S) HIGH RESISTANCE
POWERTRAIN CONTROL MODULE (PCM)

Always perform the Pre-Diagnostic Troubleshooting procedure before proceeding. Refer to PRE-DIAGNOSTIC TROUBLESHOOTING PROCEDURE .

DIAGNOSTIC TEST

1. **ACTIVE DTC**

NOTE: Diagnose and repair any charging system DTCs before proceeding with this test.

NOTE: Inspect and test the battery in accordance with the Service Information before continuing with this test.

NOTE: Inspect the generator drive belt before continuing with this test.

NOTE: Inspect the vehicle for aftermarket accessories that may exceed the Generator System output.

NOTE: Inspect the fuses in the IPM. If an open fuse is found, use the wire diagram/schematic as a guide and inspect the wiring and connectors for damage.

1. Start the engine and allow it to reach operating temperature.
2. With the scan tool, select View DTCs.

Is the status Active for this DTC?

Yes

- Go To 2

No

- Perform the INTERMITTENT CONDITION diagnostic procedure. Refer to **INTERMITTENT CONDITION** .

2. **CHECK THE BATTERY POSITIVE (+) CIRCUIT FOR HIGH RESISTANCE**

WARNING: When the engine is operating, do not stand in direct line with the fan. Do not put your hands near the pulleys, belts or fan. Do not wear loose clothing. Failure to follow these instructions may result in possible serious or fatal injury.

NOTE: Make sure all testing equipment and cables are clear of any engine parts before starting the engine.

1. Start the engine.
2. Measure the voltage between the B (+) Terminal at the Generator and the Battery Positive (+) Post.

Is the voltage above 0.1 volts?

Yes

- Repair the Battery Positive (+) circuit for high resistance.
- Perform the POWERTRAIN VERIFICATION TEST. Refer to **POWERTRAIN VERIFICATION TEST** .

No

- Go To 3

3. **CHECK THE GENERATOR CASE GROUND FOR HIGH**

RESISTANCE

NOTE: Make sure all testing equipment and cables are clear of any engine parts before starting the engine.

1. Start the engine and allow it to reach operating temperature.
2. Measure the voltage between the Generator case and the Battery Negative (-) post.

   Is the voltage above 0.1 volts?

   Yes

   - Repair the Generator Case ground for high resistance.
   - Perform the POWERTRAIN VERIFICATION TEST. Refer to **POWERTRAIN VERIFICATION TEST** .

   No

   - Go To4

4. **CHECK THE (A931) FUSED B+ CIRCUIT FOR HIGH RESISTANCE**
   1. Turn the ignition off.
   2. Disconnect the PCM C1 harness connector.
   3. Turn the ignition on.
   4. Using a 12-volt test light connected to ground, check the (A931) Fused B+ circuit in the PCM C1 harness connector.

      NOTE: The test light should be illuminated and bright. Compare the brightness to that of a direct connection to the battery.

      Is the test light illuminated and bright?

      Yes

      - Go To 5

      No

- Repair the (A931) Fused B+ circuit for high resistance.
- Perform the POWERTRAIN VERIFICATION TEST. Refer to **POWERTRAIN VERIFICATION TEST** .

5. **CHECK THE (Z925) GROUND CIRCUIT(S) FOR HIGH RESISTANCE**
   1. Turn the ignition off.
   2. Using a 12-volt test light connected to 12 volts, check the (Z925) Ground circuits in the PCM C1 harness connector.

      NOTE: The test light should be illuminated and bright. Compare the brightness to that of a direct connection to the battery.

      Is the test light illuminated and bright?

      Yes

      - Go To 6

      No

      - Repair the (Z925) Ground circuit(s) for high resistance.
      - Perform the POWERTRAIN VERIFICATION TEST. Refer to **POWERTRAIN VERIFICATION TEST** .

6. **POWERTRAIN CONTROL MODULE (PCM)**
   1. Using the wiring diagram/schematic as a guide, inspect the wiring and connectors between the Generator and the Powertrain Control Module (PCM).
   2. Look for any chafed, pierced, pinched, or partially broken wires.
   3. Look for broken, bent, pushed out or corroded terminals.
   4. Perform any Technical Service Bulletins that may apply.

      Were any problems found?

      Yes

      - Repair as necessary.

- Perform the POWERTRAIN VERIFICATION TEST. Refer to **POWERTRAIN VERIFICATION TEST** .

No

- Replace and program the Powertrain Control Module (PCM) in accordance with the service information. Refer to **MODULE, POWERTRAIN CONTROL, REMOVAL** .
- Perform the POWERTRAIN VERIFICATION TEST. Refer to **POWERTRAIN VERIFICATION TEST** .

P0563-BATTERY/SYSTEM VOLTAGE HIGH

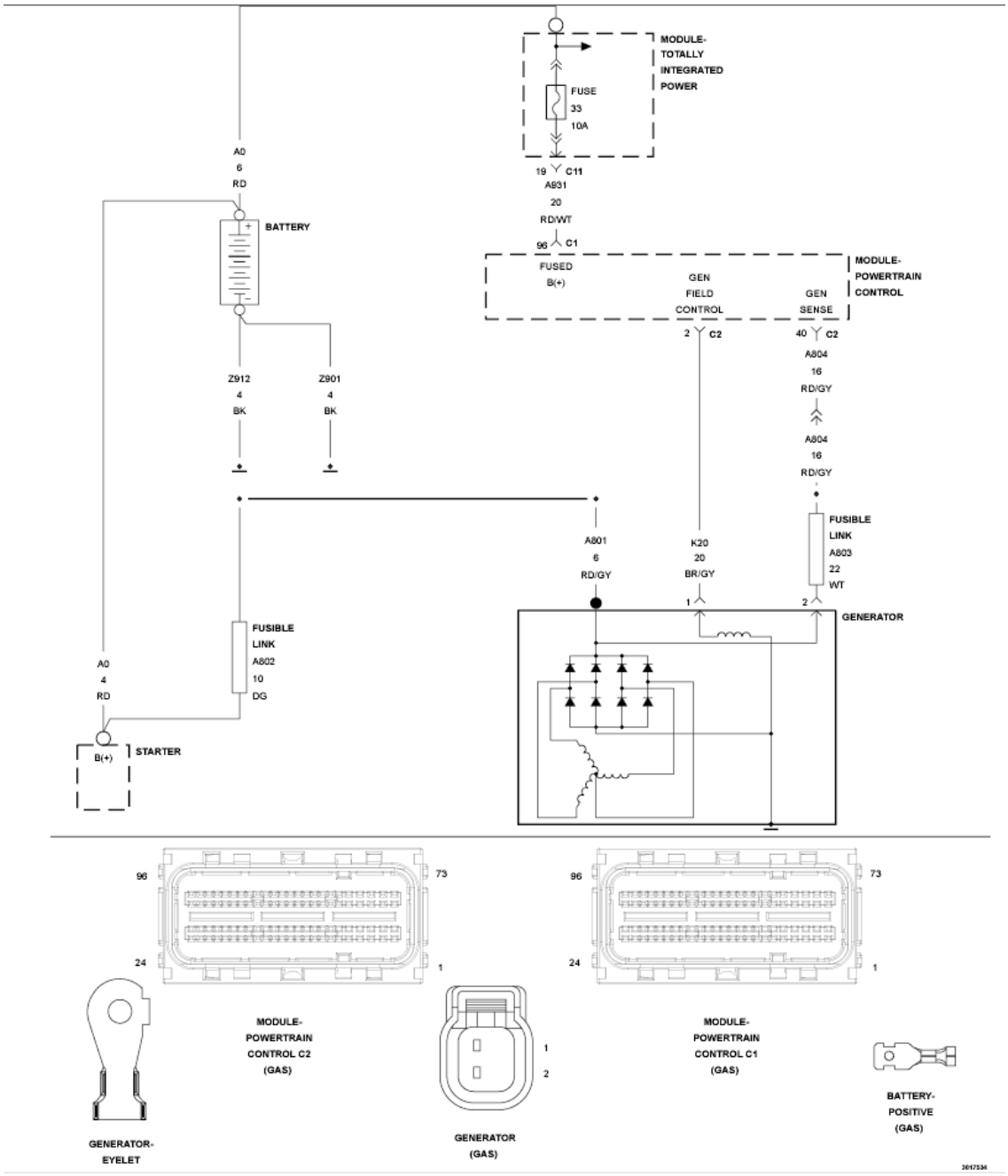

Fig. 128: Charging System Circuit Diagram
Courtesy of CHRYSLER GROUP, LLC

For a complete wiring diagram, **refer to appropriate SYSTEM WIRING DIAGRAMS article** .

WHEN MONITORED

With the engine running for more than 30 seconds.

SET CONDITION

Battery voltage is 1 volt greater than desired voltage for more than five seconds. One Trip Fault.

POSSIBLE CAUSES

POSSIBLE CAUSES
(A804) GEN SENSE CIRCUIT OPEN OR HIGH RESISTANCE
(K20) GEN FIELD CONTROL CIRCUIT SHORTED TO VOLTAGE
GENERATOR
POWERTRAIN CONTROL MODULE (PCM)

Always perform the Pre-Diagnostic Troubleshooting procedure before proceeding. Refer to PRE-DIAGNOSTIC TROUBLESHOOTING PROCEDURE .

DIAGNOSTIC TEST

1. **ACTIVE DTC**

NOTE: Diagnose and repair any charging system or generator DTCs before continuing with this test.

NOTE: Inspect and test the battery in accordance with the Service Information before continuing with this test.

NOTE: Inspect the generator drive belt before continuing with this test.

NOTE: Inspect the vehicle for aftermarket accessories that may exceed the Generator System output.

NOTE: Inspect the fuses in the TIPM. If an open fuse is found, use the wire diagram/schematic as a guide and inspect the wiring and connectors for damage.

1. Start the engine and allow it to reach operating temperature.
2. With the scan tool, select View DTCs.

Is the status Active for this DTC?

Yes

- Go To 2

No

- Perform the INTERMITTENT CONDITION diagnostic procedure. Refer to **INTERMITTENT CONDITION** .

2. **CHECK THE (A804) GENERATOR SENSE CIRCUIT FOR AN OPEN/HIGH RESISTANCE**
   1. Turn the ignition on.
   2. Using a 12-volt test light connected to ground, check the (A804) Generator Sense circuit in the Generator harness connector.

NOTE: The test light should be illuminated and bright. Compare the brightness to that of a direct connection to the battery.

Is the test light illuminated and bright?

Yes

- Go To 3

No

- Repair the (A804) Generator Sense circuit for an open or high resistance.
- Perform the POWERTRAIN VERIFICATION TEST. Refer to **POWERTRAIN VERIFICATION TEST** .

3. **CHECK THE (K20) GENERATOR FIELD CONTROL CIRCUIT FOR A SHORT TO VOLTAGE**
   1. Turn the ignition off.
   2. Disconnect the PCM C2 harness connector.
   3. Turn the ignition on.
   4. Measure the voltage on the (K20) Generator Field Control circuit in the Generator harness connector.

Is there any voltage present?

Yes

- Repair the (K20) Generator Field Control circuit for a short to voltage.
- Perform the POWERTRAIN VERIFICATION TEST. Refer to **POWERTRAIN VERIFICATION TEST** .

No

- Go To 4

4. **POWERTRAIN CONTROL MODULE (PCM)**
   1. Using the wiring diagram/schematic as a guide, inspect the wiring and connectors between the Generator and the Powertrain Control Module (PCM).
   2. Look for any chafed, pierced, pinched, or partially broken wires.
   3. Look for broken, bent, pushed out or corroded terminals.
   4. Perform any Technical Service Bulletins that may apply.

   Were any problems found?

   Yes

   - Repair as necessary.
   - Perform the POWERTRAIN VERIFICATION TEST. Refer to **POWERTRAIN VERIFICATION TEST** .

   No

   - Replace and program the Powertrain Control Module (PCM) in accordance with the service information. Refer to **MODULE, POWERTRAIN CONTROL, REMOVAL** .
   - Perform the POWERTRAIN VERIFICATION TEST. Refer to **POWERTRAIN VERIFICATION TEST** .

P0571-BRAKE SWITCH 1 PERFORMANCE

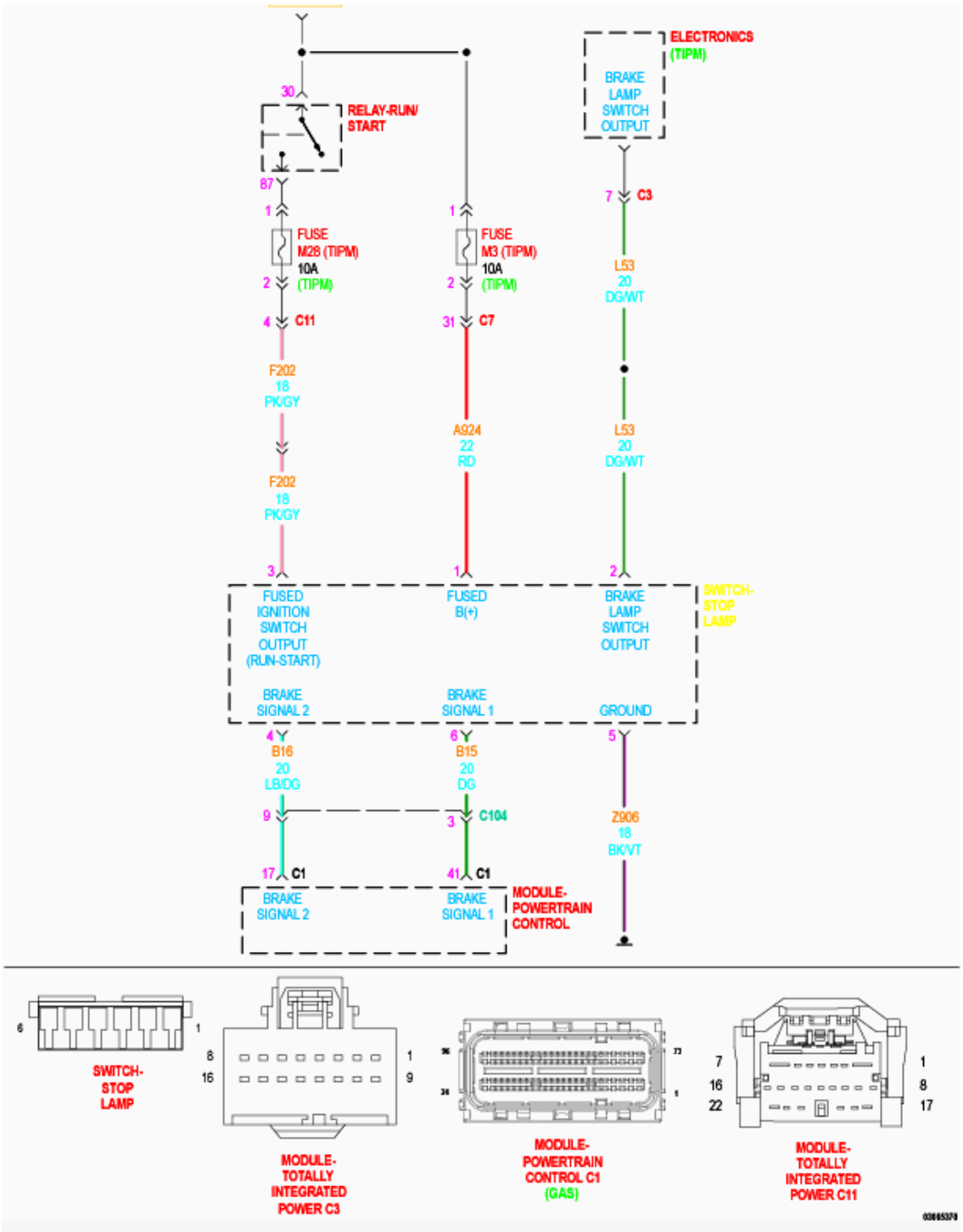

Fig. 129: Brake Switch Circuit Diagram
Courtesy of CHRYSLER GROUP, LLC

For a complete wiring diagram, **refer to appropriate SYSTEM WIRING DIAGRAMS article** .

WHEN MONITORED

With the ignition on and battery voltage greater than 10.4 Volts.

SET CONDITION

The Powertrain Control Module (PCM) detects that the states of Brake Signal 1 and Brake Signal 2 do not match for more than 50 ms.

POSSIBLE CAUSES

Possible Causes
(B15) BRAKE SIGNAL 1 CIRCUIT SHORTED TO GROUND
(B16) BRAKE SIGNAL 2 CIRCUIT SHORTED TO VOLTAGE
(F202) FUSED IGNITION SWITCH OUTPUT (RUN-START) CIRCUIT OPEN OR HIGH RESISTANCE
(Z906) GROUND CIRCUIT OPEN OR HIGH RESISTANCE
(B15) BRAKE SIGNAL 1 CIRCUIT OPEN OR HIGH RESISTANCE
(B16) BRAKE SIGNAL 2 CIRCUIT OPEN OR HIGH RESISTANCE
STOP LAMP SWITCH
POWERTRAIN CONTROL MODULE (PCM)

Always perform the Pre-Diagnostic Troubleshooting procedure before proceeding. Refer to PRE-DIAGNOSTIC TROUBLESHOOTING PROCEDURE .

DIAGNOSTIC TEST

1. **ACTIVE DTC**
    1. Turn the ignition on.
    2. With the scan tool, monitor the states of Brake Signal 1 and Brake Signal 2 while pressing and releasing the brake pedal several times.

       Do the states change from Pressed when the pedal is pressed to Not Pressed when the pedal is released?

       Yes

       - Perform the INTERMITTENT CONDITION diagnostic procedure. Refer to **INTERMITTENT CONDITION** .

       No

       - Go To 2

2. **CHECK THE (B15) BRAKE SIGNAL 1 CIRCUIT**
   1. Turn the ignition off.
   2. Disconnect the PCM C1 harness connector.

      CAUTION: Do not probe the PCM harness connectors. Probing the PCM harness connectors will damage the PCM terminals resulting in poor terminal to pin connection. Install the GPEC Diagnostic Adaptor to perform the diagnosis.

   3. Connect the (special tool #10436, Adapter, GPEC Diagnostic).
   4. Using a 12-volt test light connected to 12 Volts, check the (B15) Brake Signal 1 circuit in the GPEC Adaptor while pressing and releasing the brake pedal several times.

      Does the test light change from illuminated when the pedal is pressed to not illuminated when the pedal is released?

      Yes

      - Go To 3

      No

      - Go To 4
3. **CHECK THE (B16) BRAKE SIGNAL 2 CIRCUIT**
   1. Turn the ignition on.
   2. Using a 12-volt test light connected to ground, check the (B16) Brake Signal 2 circuit in the GPEC Adaptor while pressing and releasing the brake pedal several times.

      Does the test light change from illuminated when the pedal is pressed to not illuminated when the pedal is released?

      Yes

      - Go To 11

No

- Go To 7

4. **CHECK THE (Z906) GROUND CIRCUIT FOR AN OPEN/HIGH RESISTANCE**

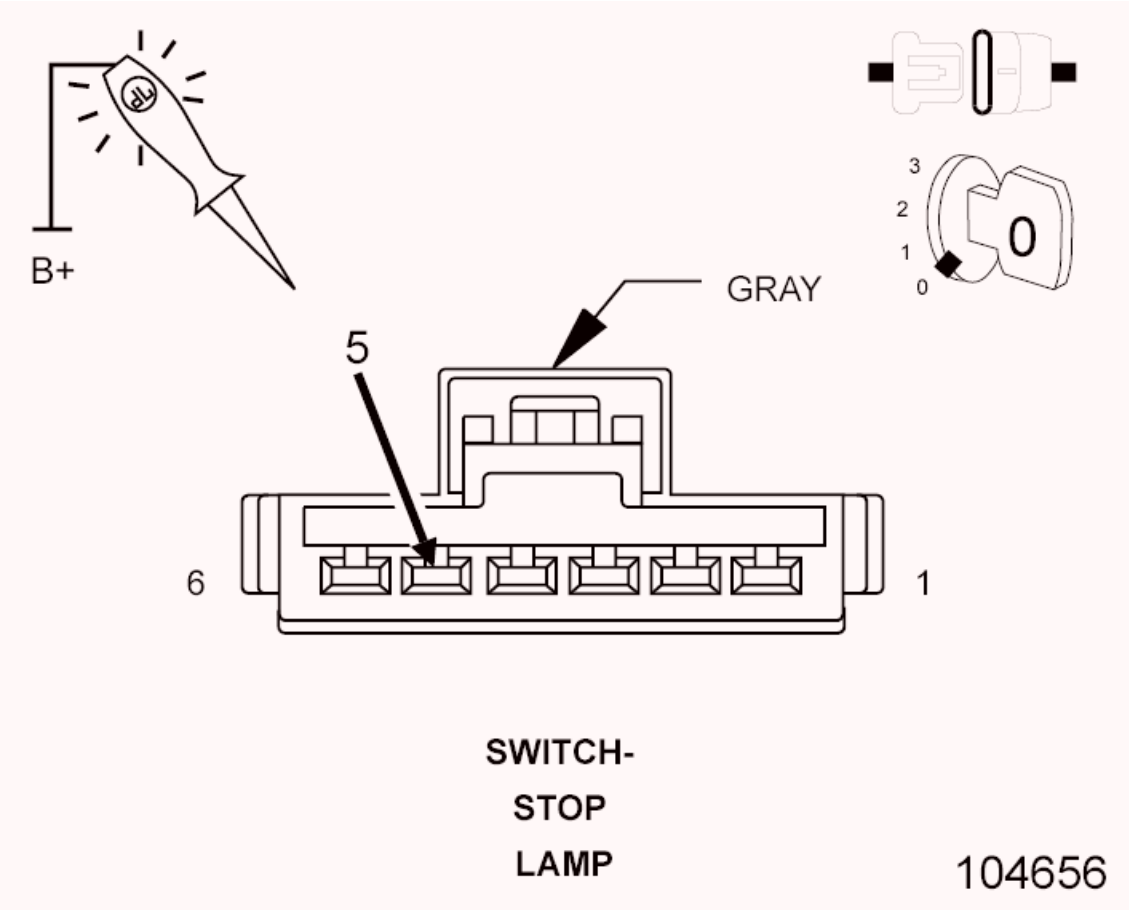

Fig. 130: Checking Stop Lamp Ground Circuit For Open Or High Resistance
Courtesy of CHRYSLER GROUP, LLC

1. Turn the ignition off.
2. Disconnect the Stop Lamp Switch harness connector.
3. Using a 12-volt test light connected to 12 volts, check the (Z906) Ground circuit in the Stop Lamp Switch harness connector.

NOTE: The test light should be illuminated and bright. Compare the brightness to that of a direct connection to the battery.

Is the test light illuminated and bright?

Yes

- Go To 5

No

- Repair the (Z906) Ground circuit for an open or high resistance.
- Perform the POWERTRAIN VERIFICATION TEST. Refer to **POWERTRAIN VERIFICATION TEST** .

5. **CHECK THE (B15) BRAKE SIGNAL 1 CIRCUIT FOR A SHORT TO GROUND**

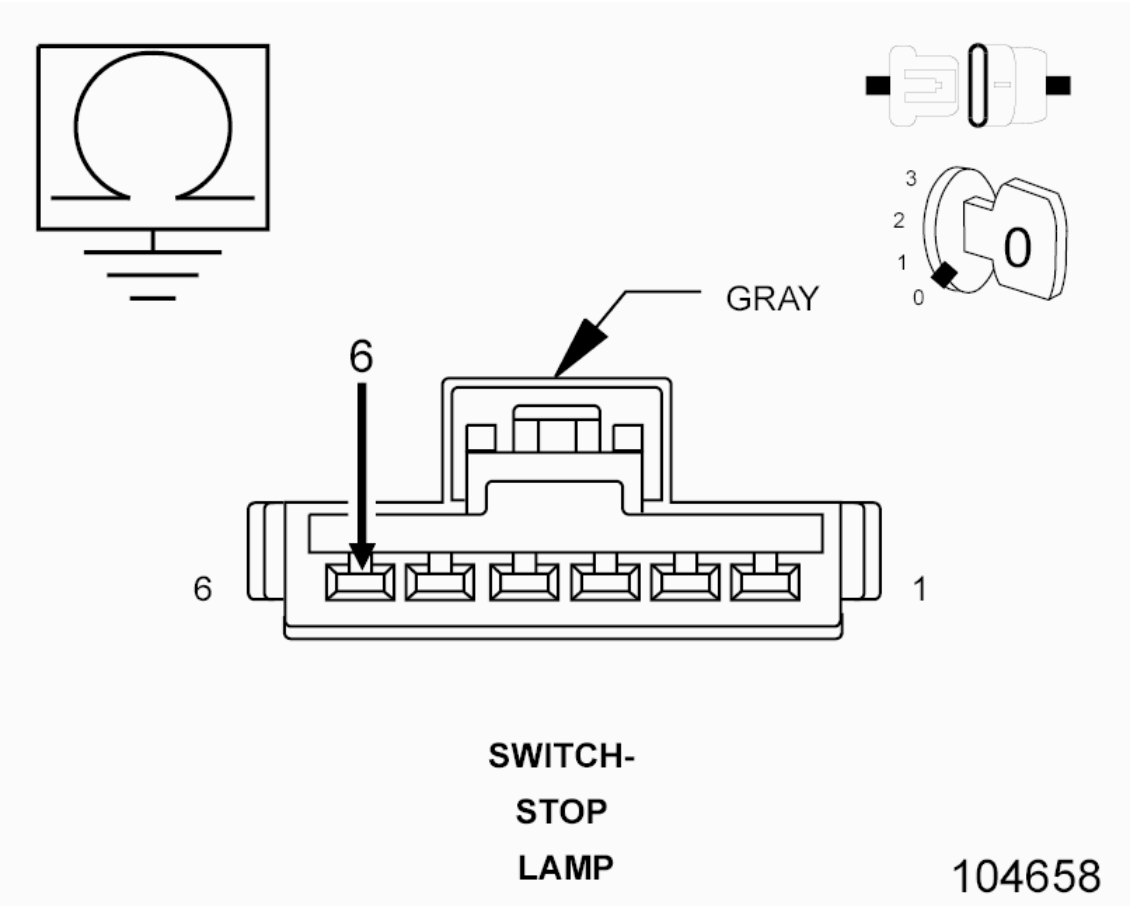

Fig. 131: Checking Brake Signal 1 Circuit For Short To Ground
Courtesy of CHRYSLER GROUP, LLC

1. Measure the resistance between ground and the (B15) Brake Signal 1 circuit in the Stop Lamp Switch harness connector.

Is the resistance above 10k Ohms?

Yes

- Go To 6

No

- Repair the (B15) Brake Signal 1 circuit for a short to ground.
- Perform the POWERTRAIN VERIFICATION TEST. Refer to **POWERTRAIN VERIFICATION TEST** .

6. **CHECK THE (B15) BRAKE SIGNAL 1 CIRCUIT OPEN OR HIGH RESISTANCE**
   1. Measure the resistance of the (B15) Brake Signal 1 circuit between the Stop Lamp Switch harness connector and the GPEC Adaptor.

   Is the resistance below 5.0 Ohms?

   Yes

   - Go To 10

   No

   - Repair the (B15) Brake Signal 1 circuit for an open or high resistance.
   - Perform the POWERTRAIN VERIFICATION TEST. Refer to **POWERTRAIN VERIFICATION TEST** .

7. **CHECK THE (F202) FUSED IGNITION SWITCH OUTPUT (RUN-START) CIRCUIT FOR AN OPEN/HIGH RESISTANCE**

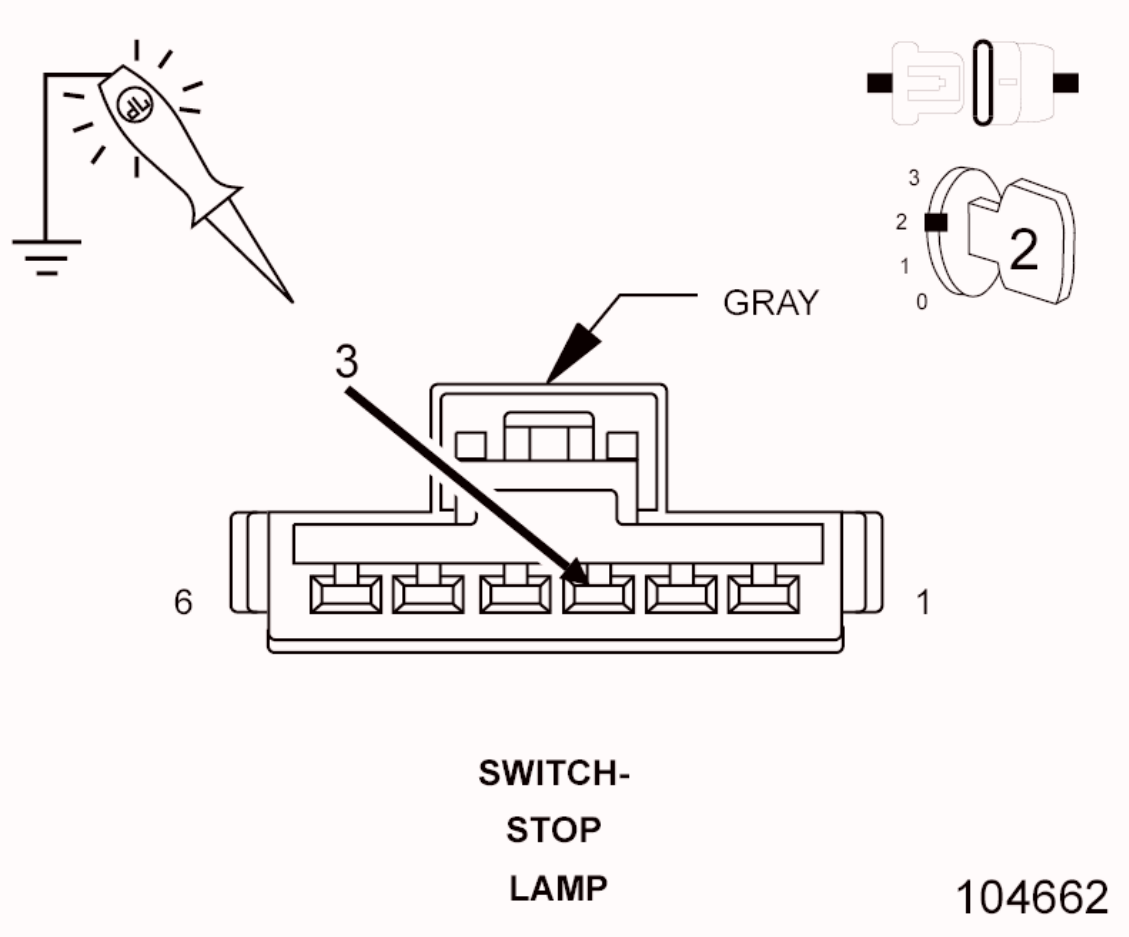

Fig. 132: Checking Fused Ignition Switch Output (Run-Start) Circuit For Open Or High Resistance
Courtesy of CHRYSLER GROUP, LLC

1. Turn the ignition off.
2. Disconnect the Stop Lamp Switch harness connector.
3. Turn the ignition on.
4. Using a 12-volt test light connected to ground, check the (F202) Fused Ignition Switch Output (Run-Start) circuit in the Stop Lamp Switch harness connector.

NOTE: The test light should be illuminated and bright. Compare the brightness to that of a direct connection to the battery.

Is the test light illuminated and bright?

Yes

- Go To 8

No

- Repair the (F202) Fused Ignition Switch Output (Run-Start) circuit for an open or high resistance. Inspect the related fuse. If the fuse is open, check the circuit for a short to ground.
- Perform the POWERTRAIN VERIFICATION TEST. Refer to **POWERTRAIN VERIFICATION TEST** .

8. **CHECK THE (B16) BRAKE SIGNAL 2 CIRCUIT FOR A SHORT TO VOLTAGE**

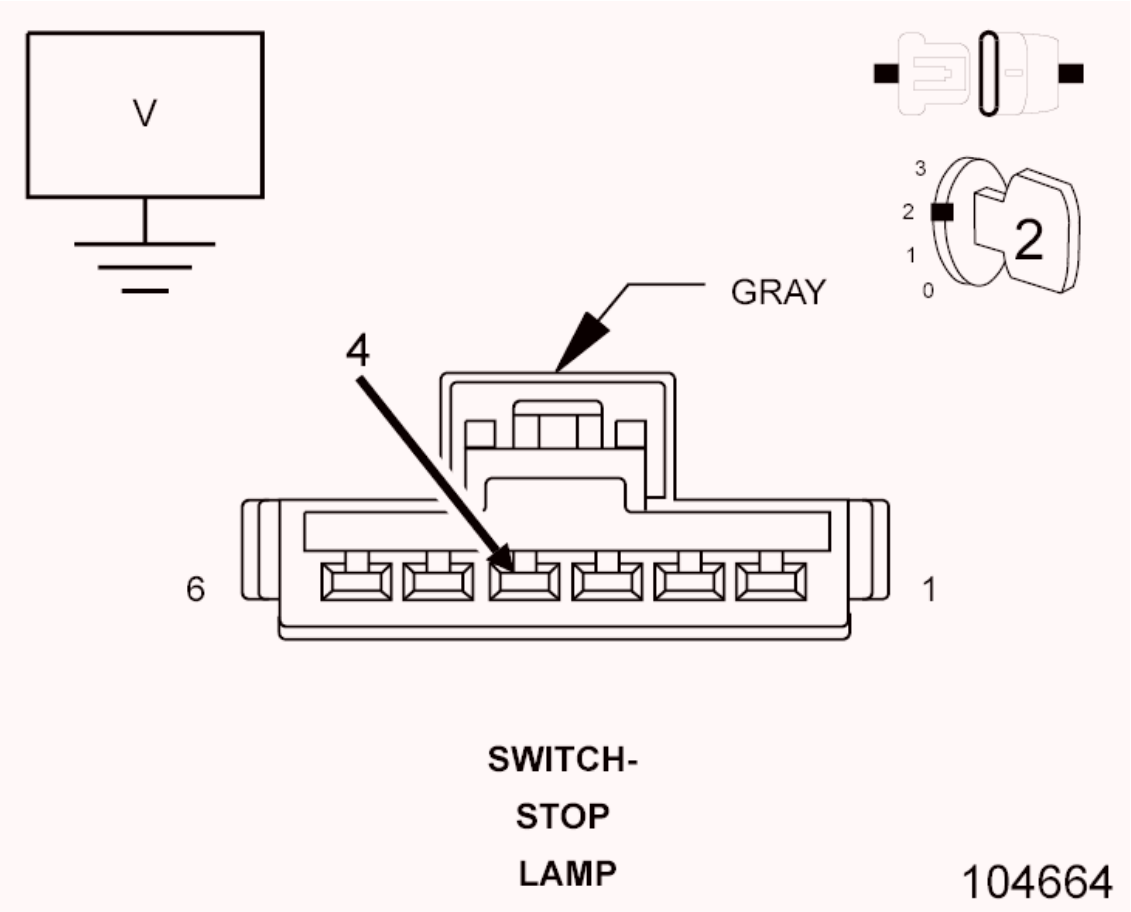

Fig. 133: Checking Brake Signal 2 Circuit For Short To Voltage
Courtesy of CHRYSLER GROUP, LLC

1. Measure the voltage of the (B16) Brake Signal 2 circuit in the Stop Lamp Switch harness connector.

   Is there any voltage present?

Yes

- Repair the (B16) Brake Signal 2 circuit for a short to voltage.
- Perform the POWERTRAIN VERIFICATION TEST. Refer to **POWERTRAIN VERIFICATION TEST** .

No

- Go To 9

9. **CHECK THE (B16) BRAKE SIGNAL 2 CIRCUIT FOR AN OPEN/HIGH RESISTANCE**
   1. Measure the resistance of the (B16) Brake Signal 2 circuit between the Stop Lamp Switch harness connector and the GPEC Adaptor.

      Is the resistance below 5.0 Ohms?

      Yes

      - Go To 10

      No

      - Repair the (B16) Brake Signal 2 circuit for an open or high resistance.
      - Perform the POWERTRAIN VERIFICATION TEST. Refer to **POWERTRAIN VERIFICATION TEST** .

10. **STOP LAMP SWITCH**
    1. Using the wiring diagram/schematic as a guide, inspect the wiring and connectors between the Stop Lamp Switch and the Powertrain Control Module (PCM).
    2. Look for any chafed, pierced, pinched or partially broken wires.
    3. Look for broken, bent, pushed out or corroded terminals.
    4. Monitor the scan tool data relative to this circuit and wiggle test the wiring and connectors.
    5. Look for the data to change or for the DTC to reset during the wiggle test.
    6. Perform any Technical Service Bulletins that may apply.

Were any problems found?

Yes

- Repair as necessary.
- Perform the POWERTRAIN VERIFICATION TEST. Refer to **POWERTRAIN VERIFICATION TEST** .

No

- Replace the Stop Lamp Switch in accordance with the service information.
- Perform the POWERTRAIN VERIFICATION TEST. Refer to **POWERTRAIN VERIFICATION TEST** .

11. **POWERTRAIN CONTROL MODULE (PCM)**
    1. Using the wiring diagram/schematic as a guide, inspect the wiring and connectors between the Stop Lamp Switch and the Powertrain Control Module (PCM).
    2. Look for any chafed, pierced, pinched or partially broken wires.
    3. Look for broken, bent, pushed out or corroded terminals.
    4. Perform any Technical Service Bulletins that may apply.

    Were any problems found?

    Yes

    - Repair as necessary.
    - Perform the POWERTRAIN VERIFICATION TEST. Refer to **POWERTRAIN VERIFICATION TEST** .

    No

    - Replace and program the Powertrain Control Module (PCM) in accordance with the service information. Refer to **MODULE, POWERTRAIN CONTROL, REMOVAL** .
    - Perform the POWERTRAIN VERIFICATION TEST. Refer to **POWERTRAIN VERIFICATION TEST** .

P0572-BRAKE SWITCH 1 STUCK ON

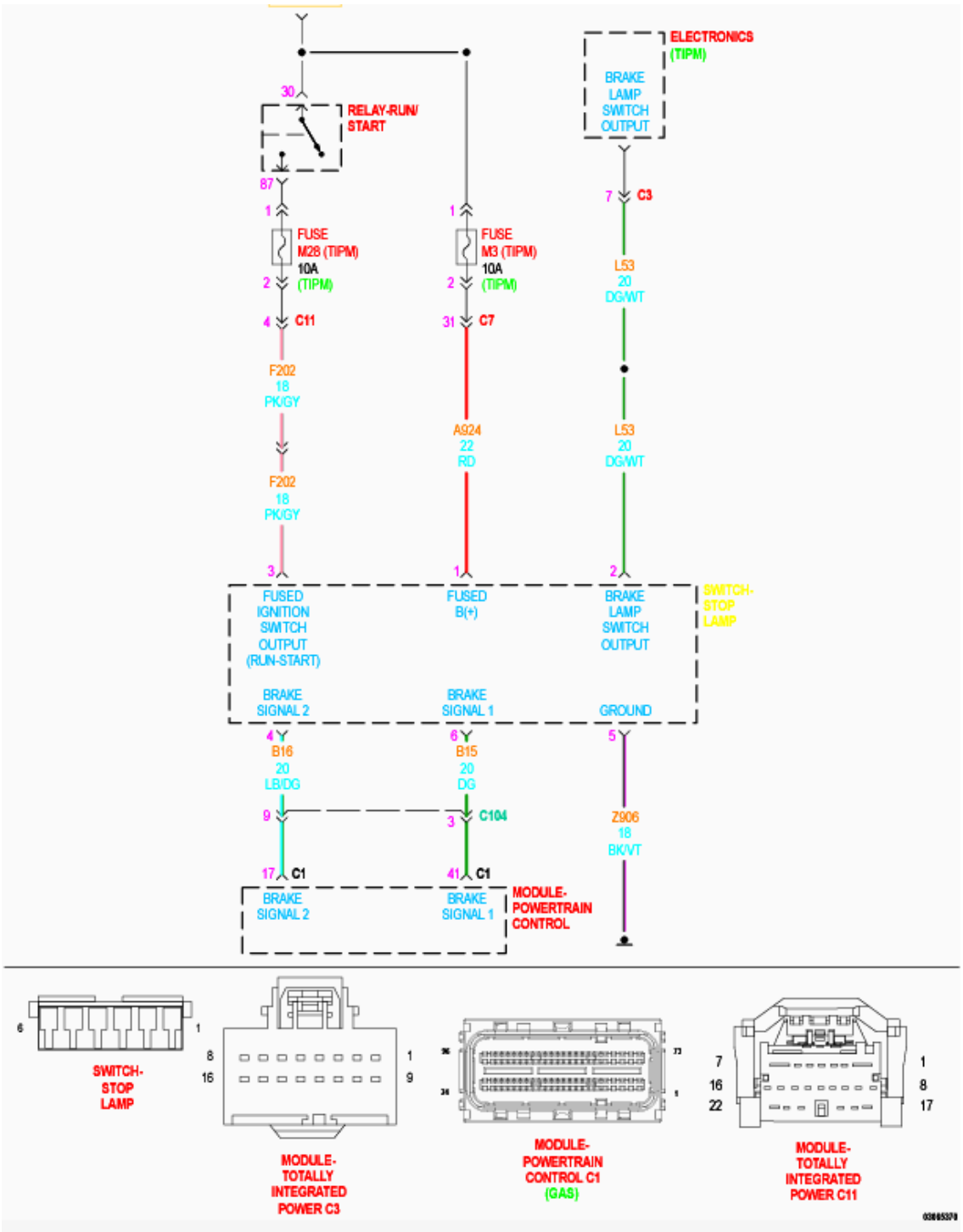

Fig. 134: Brake Switch Circuit Diagram
Courtesy of CHRYSLER GROUP, LLC

For a complete wiring diagram, **refer to appropriate SYSTEM WIRING DIAGRAMS article** .

WHEN MONITORED

With the ignition on, battery voltage greater than 10.4 Volts and ambient

temperature above -23 C.

SET CONDITION

The Powertrain Control Module (PCM) detects that the state of Brake Signal 1 does not change as expected.

POSSIBLE CAUSES

Possible Causes
(B15) BRAKE SIGNAL 1 CIRCUIT SHORTED TO GROUND
(B16) BRAKE SIGNAL 2 CIRCUIT SHORTED TO VOLTAGE
(F202) FUSED IGNITION SWITCH OUTPUT (RUN-START) CIRCUIT OPEN OR HIGH RESISTANCE
(Z906) GROUND CIRCUIT OPEN OR HIGH RESISTANCE
(B15) BRAKE SIGNAL 1 CIRCUIT OPEN OR HIGH RESISTANCE
(B16) BRAKE SIGNAL 2 CIRCUIT OPEN OR HIGH RESISTANCE
STOP LAMP SWITCH
POWERTRAIN CONTROL MODULE (PCM)

Always perform the Pre-Diagnostic Troubleshooting procedure before proceeding. Refer to PRE-DIAGNOSTIC TROUBLESHOOTING PROCEDURE .

DIAGNOSTIC TEST

1. **ACTIVE DTC**
    1. Turn the ignition on.
    2. With the scan tool, monitor the states of Brake Signal 1 and Brake Signal 2 while pressing and releasing the brake pedal several times.

       Do the states change from Pressed when the pedal is pressed to Not Pressed when the pedal is released?

       Yes

       - Perform the INTERMITTENT CONDITION diagnostic procedure. Refer to **INTERMITTENT CONDITION** .

       No

- Go To 2

2. **CHECK THE (B15) BRAKE SIGNAL 1 CIRCUIT**
   1. Turn the ignition off.
   2. Disconnect the PCM C1 harness connector.

      CAUTION: Do not probe the PCM harness connectors. Probing the PCM harness connectors will damage the PCM terminals resulting in poor terminal to pin connection. Install the GPEC Diagnostic Adaptor to perform the diagnosis.

   3. Connect the (special tool #10436, Adapter, GPEC Diagnostic).
   4. Using a 12-volt test light connected to 12 Volts, check the (B15) Brake Signal 1 circuit in the GPEC Adaptor while pressing and releasing the brake pedal several times.

      Does the test light change from illuminated when the pedal is pressed to not illuminated when the pedal is released?

      Yes

      - Go To 3

      No

      - Go To 4

3. **CHECK THE (B16) BRAKE SIGNAL 2 CIRCUIT**
   1. Turn the ignition on.
   2. Using a 12-volt test light connected to ground, check the (B16) Brake Signal 2 circuit in the GPEC Adaptor while pressing and releasing the brake pedal several times.

      Does the test light change from illuminated when the pedal is pressed to not illuminated when the pedal is released?

      Yes

- Go To 11

No

- Go To 7

4. **CHECK THE (Z906) GROUND CIRCUIT FOR AN OPEN/HIGH RESISTANCE**

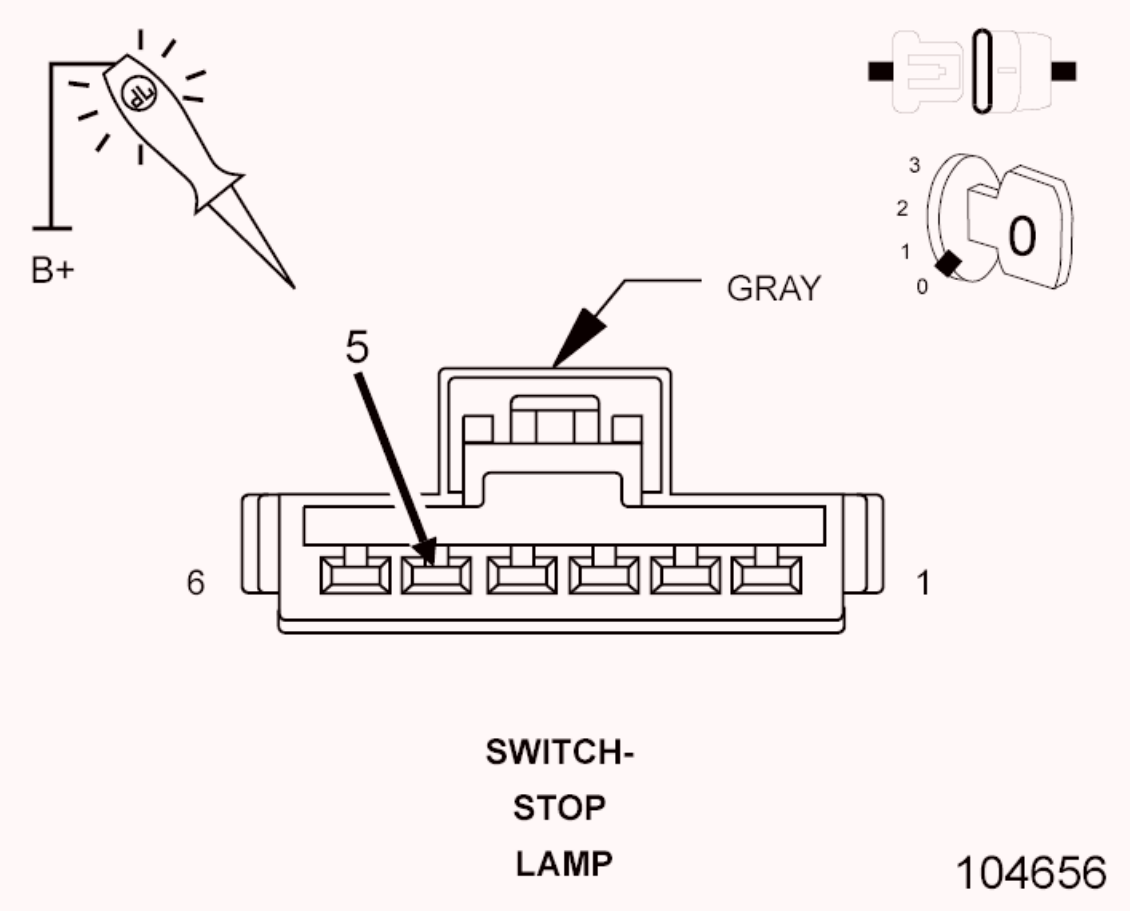

Fig. 135: Checking Stop Lamp Ground Circuit For Open Or High Resistance
Courtesy of CHRYSLER GROUP, LLC

1. Turn the ignition off.
2. Disconnect the Stop Lamp Switch harness connector.
3. Using a 12-volt test light connected to 12 volts, check the (Z906) Ground circuit in the Stop Lamp Switch harness connector.

NOTE: The test light should be illuminated and bright. Compare the brightness to that of a direct

connection to the battery.

Is the test light illuminated and bright?

Yes

- Go To 5

No

- Repair the (Z906) Ground circuit for an open or high resistance.
- Perform the POWERTRAIN VERIFICATION TEST. Refer to **POWERTRAIN VERIFICATION TEST** .

5. **CHECK THE (B15) BRAKE SIGNAL 1 CIRCUIT FOR A SHORT TO GROUND**

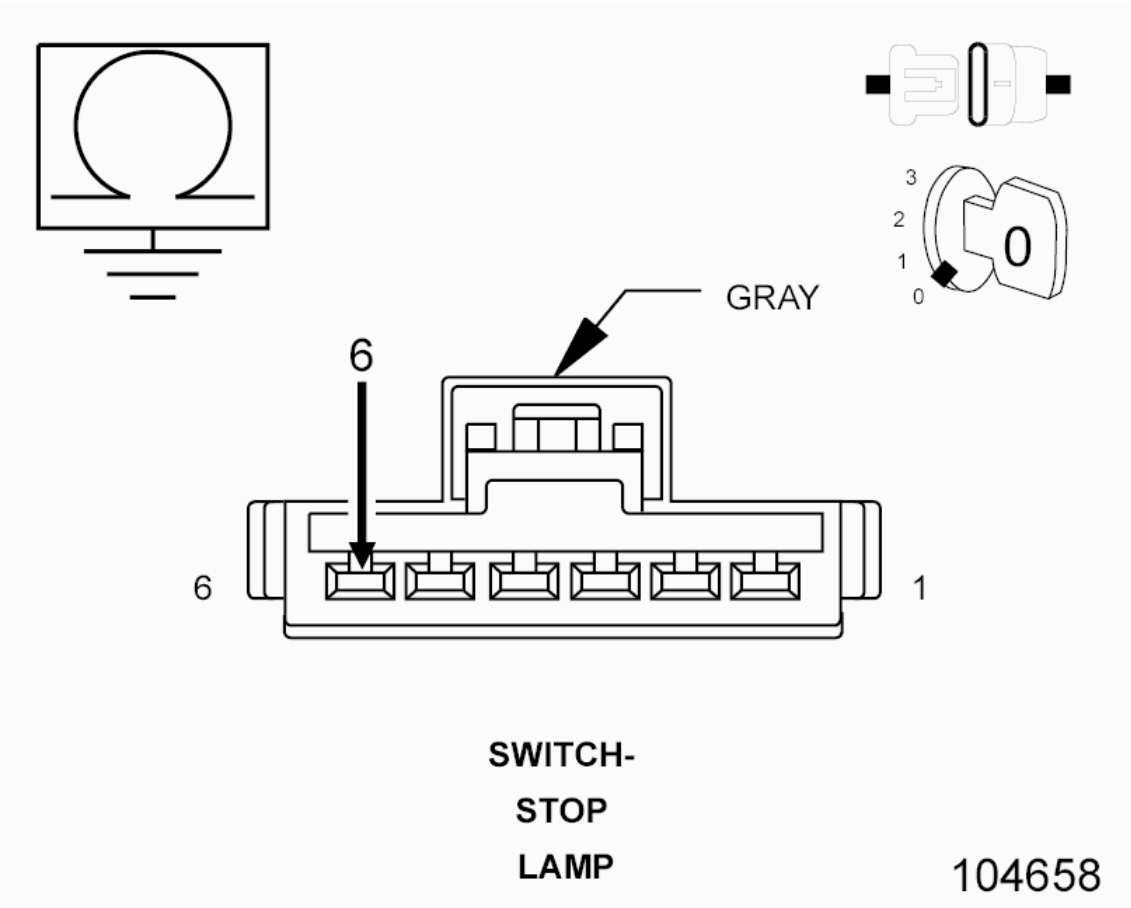

Fig. 136: Checking Brake Signal 1 Circuit For Short To Ground
Courtesy of CHRYSLER GROUP, LLC

1. Measure the resistance between ground and the (B15) Brake Signal 1

circuit in the Stop Lamp Switch harness connector.

Is the resistance above 10k Ohms?

Yes

- Go To 6

No

- Repair the (B15) Brake Signal 1 circuit for a short to ground.
- Perform the POWERTRAIN VERIFICATION TEST. Refer to **POWERTRAIN VERIFICATION TEST** .

6. **CHECK THE (B15) BRAKE SIGNAL 1 CIRCUIT FOR AN OPEN/HIGH RESISTANCE**
   1. Measure the resistance of the (B15) Brake Signal 1 circuit between the Stop Lamp Switch harness connector and the GPEC Adaptor.

   Is the resistance below 5.0 Ohms?

   Yes

   - Go To 10

   No

   - Repair the (B15) Brake Signal 1 circuit for an open or high resistance.
   - Perform the POWERTRAIN VERIFICATION TEST. Refer to **POWERTRAIN VERIFICATION TEST** .

7. **CHECK THE (F202) FUSED IGNITION SWITCH OUTPUT (RUN-START) CIRCUIT FOR AN OPEN/HIGH RESISTANCE**

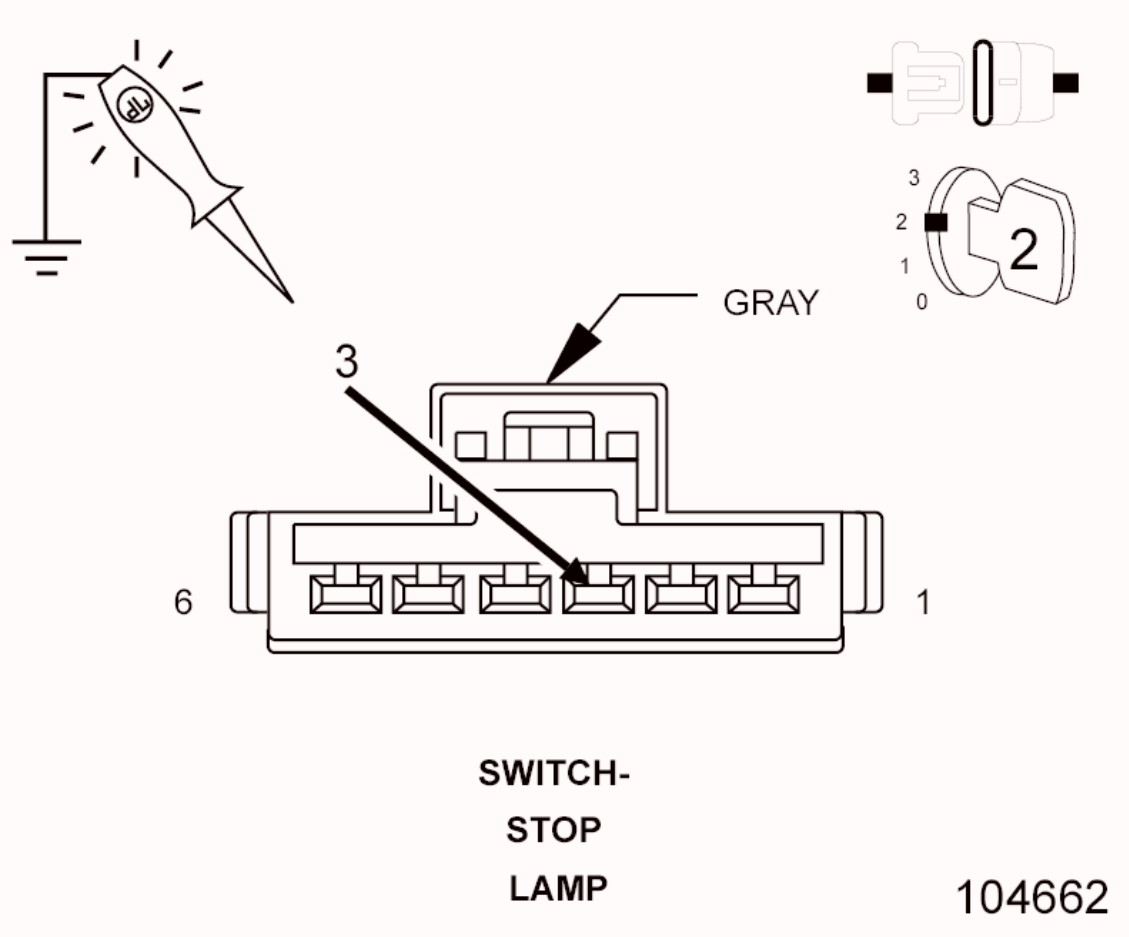

Fig. 137: Checking Fused Ignition Switch Output (Run-Start) Circuit For Open Or High Resistance
Courtesy of CHRYSLER GROUP, LLC

1. Turn the ignition off.
2. Disconnect the Stop Lamp Switch harness connector.
3. Turn the ignition on.
4. Using a 12-volt test light connected to ground, check the (F202) Fused Ignition Switch Output (Run-Start) circuit in the Stop Lamp Switch harness connector.

NOTE: The test light should be illuminated and bright. Compare the brightness to that of a direct connection to the battery.

Is the test light illuminated and bright?

Yes

- Go To 8

No

- Repair the (F202) Fused Ignition Switch Output (Run-Start) circuit for an open or high resistance.
- Perform the POWERTRAIN VERIFICATION TEST. Refer to **POWERTRAIN VERIFICATION TEST** .

8. **CHECK THE (B16) BRAKE SIGNAL 2 CIRCUIT FOR A SHORT TO VOLTAGE**

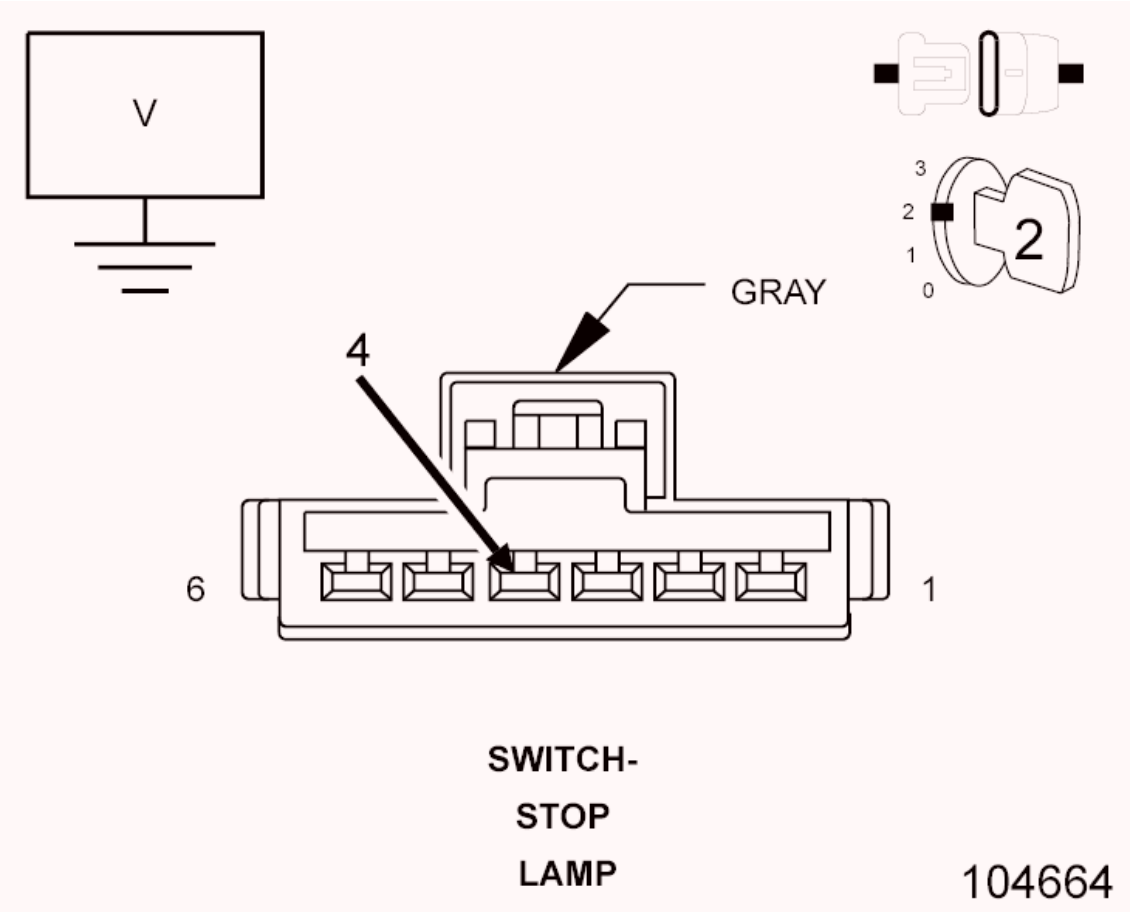

Fig. 138: Checking Brake Signal 2 Circuit For Short To Voltage
Courtesy of CHRYSLER GROUP, LLC

1. Measure the voltage of the (B16) Brake Signal 2 circuit in the Stop Lamp Switch harness connector.

   Is there any voltage present?

   Yes

- Repair the (B16) Brake Signal 2 circuit for a short to voltage.
- Perform the POWERTRAIN VERIFICATION TEST. Refer to **POWERTRAIN VERIFICATION TEST** .

No

- Go To 9

9. **CHECK THE (B16) BRAKE SIGNAL 2 CIRCUIT FOR AN OPEN/HIGH RESISTANCE**

CAUTION: Do not probe the PCM harness connectors. Probing the PCM harness connectors will damage the PCM terminals resulting in poor terminal to pin connection. Install the GPEC Diagnostic Adaptor to perform the diagnosis.

1. Connect the (special tool #10436, Adapter, GPEC Diagnostic).
2. Measure the resistance of the (B16) Brake Signal 2 circuit between the Stop Lamp Switch harness connector and the PCM C1 harness connector.

Is the resistance below 5.0 Ohms?

Yes

- Go To 10

No

- Repair the (B16) Brake Signal 2 circuit for an open or high resistance.
- Perform the POWERTRAIN VERIFICATION TEST. Refer to **POWERTRAIN VERIFICATION TEST** .

10. **STOP LAMP SWITCH**
    1. Using the wiring diagram/schematic as a guide, inspect the wiring and connectors between the Stop Lamp Switch and the Powertrain Control Module (PCM).
    2. Look for any chafed, pierced, pinched or partially broken wires.

3. Look for broken, bent, pushed out or corroded terminals.
4. Monitor the scan tool data relative to this circuit and wiggle test the wiring and connectors.
5. Look for the data to change or for the DTC to reset during the wiggle test.
6. Perform any Technical Service Bulletins that may apply.

Were any problems found?

Yes

- Repair as necessary.
- Perform the POWERTRAIN VERIFICATION TEST. Refer to **POWERTRAIN VERIFICATION TEST** .

No

- Replace the Stop Lamp Switch in accordance with the service information.
- Perform the POWERTRAIN VERIFICATION TEST. Refer to **POWERTRAIN VERIFICATION TEST** .

11. **POWERTRAIN CONTROL MODULE (PCM)**
    1. Using the wiring diagram/schematic as a guide, inspect the wiring and connectors between the Stop Lamp Switch and the Powertrain Control Module (PCM).
    2. Look for any chafed, pierced, pinched or partially broken wires.
    3. Look for broken, bent, pushed out or corroded terminals.
    4. Perform any Technical Service Bulletins that may apply.

    Were any problems found?

    Yes

    - Repair as necessary.
    - Perform the POWERTRAIN VERIFICATION TEST. Refer to **POWERTRAIN VERIFICATION TEST** .

    No

- Replace and program the Powertrain Control Module (PCM) in accordance with the service information. Refer to **MODULE, POWERTRAIN CONTROL, REMOVAL** .
- Perform the powertrain verification test. Refer to **POWERTRAIN VERIFICATION TEST** .

P0573-BRAKE SWITCH 1 STUCK OFF

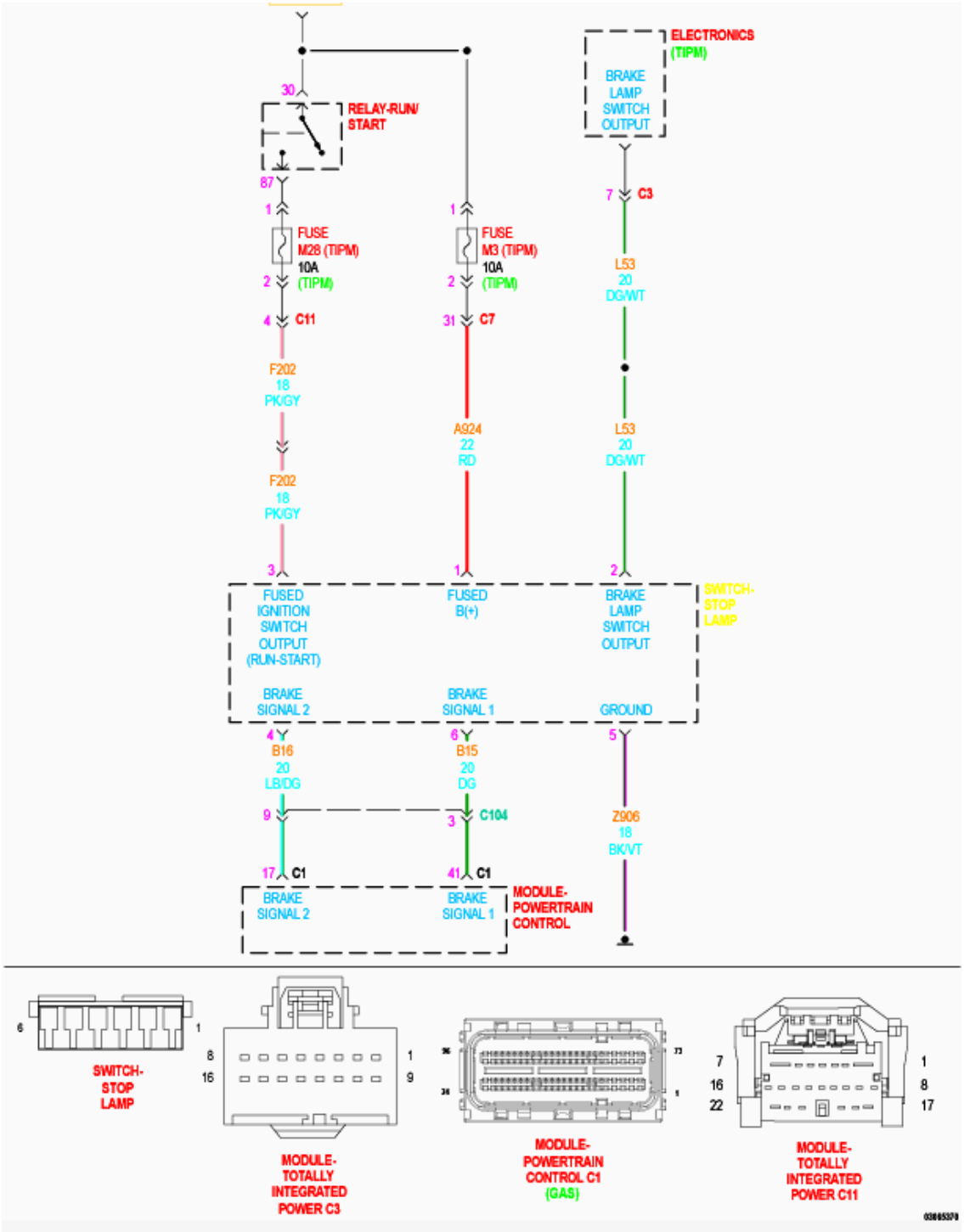

Fig. 139: Brake Switch Circuit Diagram
Courtesy of CHRYSLER GROUP, LLC

For a complete wiring diagram, **refer to appropriate SYSTEM WIRING DIAGRAMS article** .

WHEN MONITORED

With the ignition on, battery voltage greater than 10.4 Volts, ambient temperature above -23 C.

SET CONDITION

The Powertrain Control Module (PCM) detects that the state of Brake Signal 1 does not change as expected.

POSSIBLE CAUSES

Possible Causes
(B15) BRAKE SIGNAL 1 CIRCUIT SHORTED TO GROUND
(B16) BRAKE SIGNAL 2 CIRCUIT SHORTED TO VOLTAGE
(F202) FUSED IGNITION SWITCH OUTPUT (RUN-START) CIRCUIT OPEN OR HIGH RESISTANCE
(Z906) GROUND CIRCUIT OPEN OR HIGH RESISTANCE
(B15) BRAKE SIGNAL 1 CIRCUIT OPEN OR HIGH RESISTANCE
(B16) BRAKE SIGNAL 2 CIRCUIT OPEN OR HIGH RESISTANCE
STOP LAMP SWITCH
POWERTRAIN CONTROL MODULE (PCM)

Always perform the Pre-Diagnostic Troubleshooting procedure before proceeding. Refer to PRE-DIAGNOSTIC TROUBLESHOOTING PROCEDURE .

DIAGNOSTIC TEST

1. **ACTIVE DTC**
    1. Turn the ignition on.
    2. With the scan tool, monitor the states of Brake Signal 1 and Brake Signal 2 while pressing and releasing the brake pedal several times.

Do the Brake Signal states change appropriately as the pedal is pressed and released?

Yes

- Perform the INTERMITTENT CONDITION diagnostic procedure. Refer to **INTERMITTENT CONDITION** .

No

- Go To 2

2. **CHECK THE (B15) BRAKE SIGNAL 1 CIRCUIT**
   1. Turn the ignition off.
   2. Disconnect the PCM C1 harness connector.

      CAUTION: Do not probe the PCM harness connectors. Probing the PCM harness connectors will damage the PCM terminals resulting in poor terminal to pin connection. Install the GPEC Diagnostic Adaptor to perform the diagnosis.

   3. Connect the (special tool #10436, Adapter, GPEC Diagnostic).
   4. Using a 12-volt test light connected to 12 Volts, check the (B15) Brake Signal 1 circuit in the GPEC Adaptor while pressing and releasing the brake pedal several times.

      Does the test light change from illuminated to not illuminated as the brake pedal is pressed and released?

      Yes

      - Go To 3

      No

      - Go To 4

3. **CHECK HE (B16) BRAKE SIGNAL 2 CIRCUIT**
   1. Turn the ignition on.

2. Using a 12-volt test light connected to ground, check the (B16) Brake Signal 2 circuit in the GPEC Adaptor while pressing and releasing the brake pedal several times.

   Does the test light change from illuminated to not illuminated as the brake pedal is pressed and released?

   Yes

   - Go To 11

   No

   - Go To 7

4. **CHECK THE (Z906) GROUND CIRCUIT FOR AN OPEN/HIGH RESISTANCE**

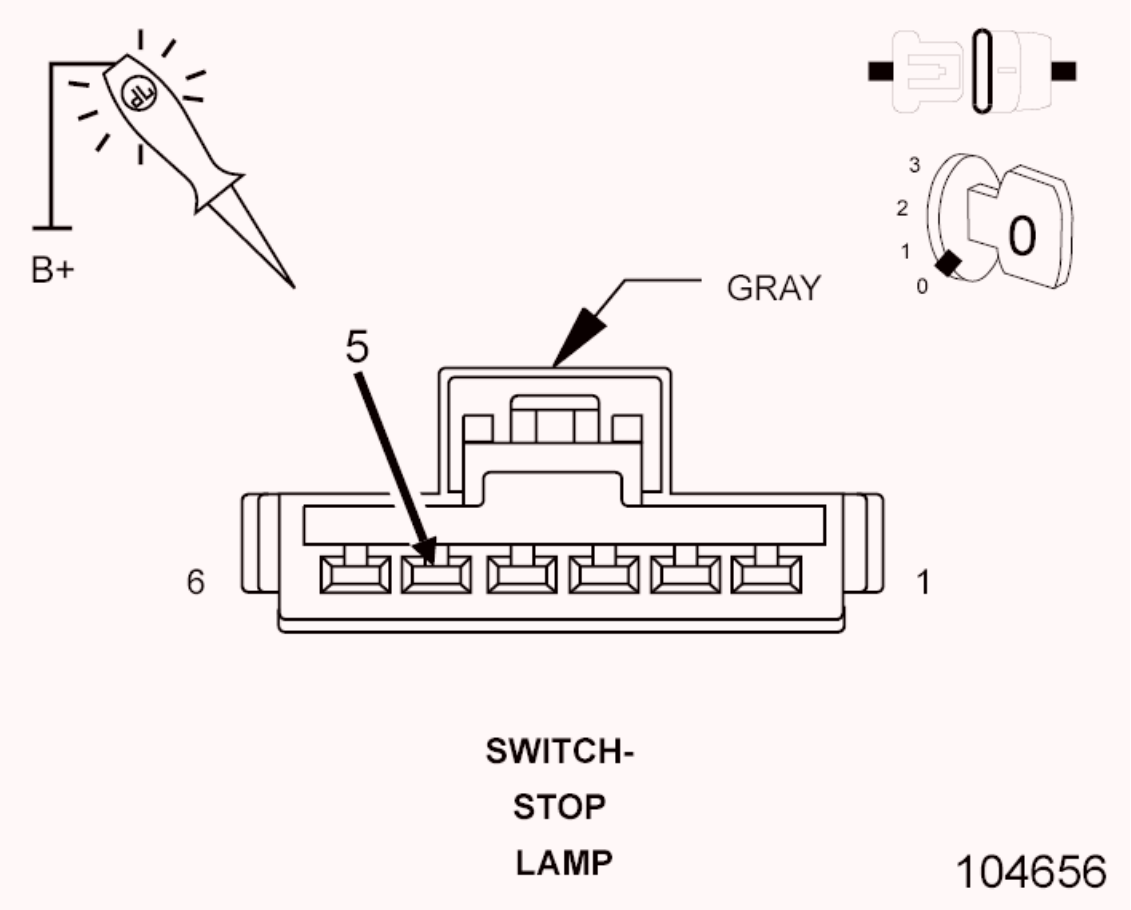

Fig. 140: Checking Stop Lamp Ground Circuit For Open Or High Resistance
Courtesy of CHRYSLER GROUP, LLC

1. Turn the ignition off.
2. Disconnect the Stop Lamp Switch harness connector.
3. Using a 12-volt test light connected to 12 volts, check the (Z906) Ground circuit in the Stop Lamp Switch harness connector.

NOTE: The test light should be illuminated and bright. Compare the brightness to that of a direct connection to the battery.

Is the test light illuminated and bright?

Yes

- Go To 5

No

- Repair the (Z906) Ground circuit for an open or high resistance.
- Perform the POWERTRAIN VERIFICATION TEST. Refer to **POWERTRAIN VERIFICATION TEST** .

5. **CHECK THE (B15) BRAKE SIGNAL 1 CIRCUIT FOR A SHORT TO GROUND**

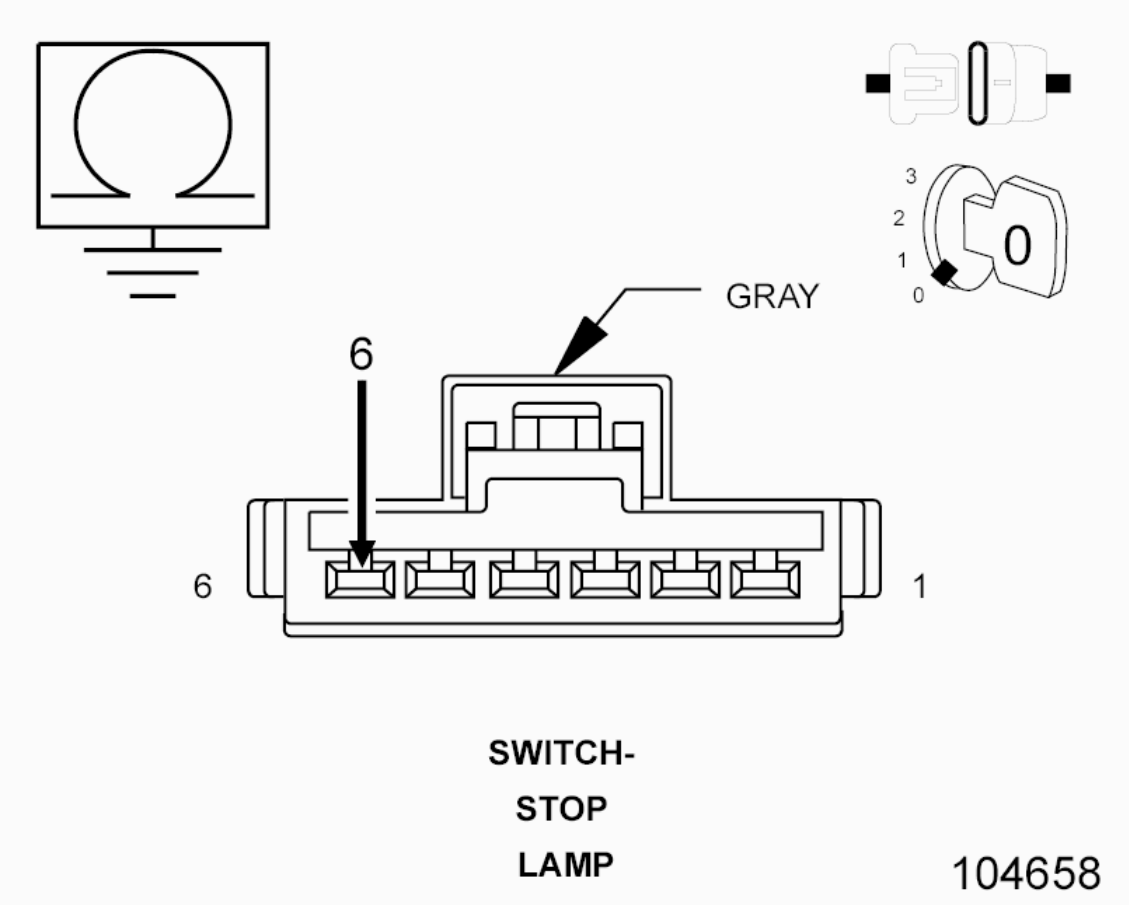

Fig. 141: Checking Brake Signal 1 Circuit For Short To Ground
Courtesy of CHRYSLER GROUP, LLC

1. Measure the resistance between ground and the (B15) Brake Signal 1 circuit in the Stop Lamp Switch harness connector.

   Is the resistance above 10k Ohms?

   Yes

   - Go To 6

   No

   - Repair the (B15) Brake Signal 1 circuit for a short to ground.
   - Perform the POWERTRAIN VERIFICATION TEST. Refer to **POWERTRAIN VERIFICATION TEST** .

6. **CHECK THE (B15) BRAKE SIGNAL 1 CIRCUIT FOR AN OPEN/HIGH RESISTANCE**
   1. Measure the resistance of the (B15) Brake Signal 1 circuit between the

Stop Lamp Switch harness connector and the GPEC Adaptor.

Is the resistance below 5.0 Ohms?

Yes

- Go To 10

No

- Repair the (B15) Brake Signal 1 circuit for an open or high resistance.
- Perform the POWERTRAIN VERIFICATION TEST. Refer to **POWERTRAIN VERIFICATION TEST** .

7. **CHECK THE (F202) FUSED IGNITION SWITCH OUTPUT (RUN-START) CIRCUIT FOR AN OPEN/HIGH RESISTANCE**

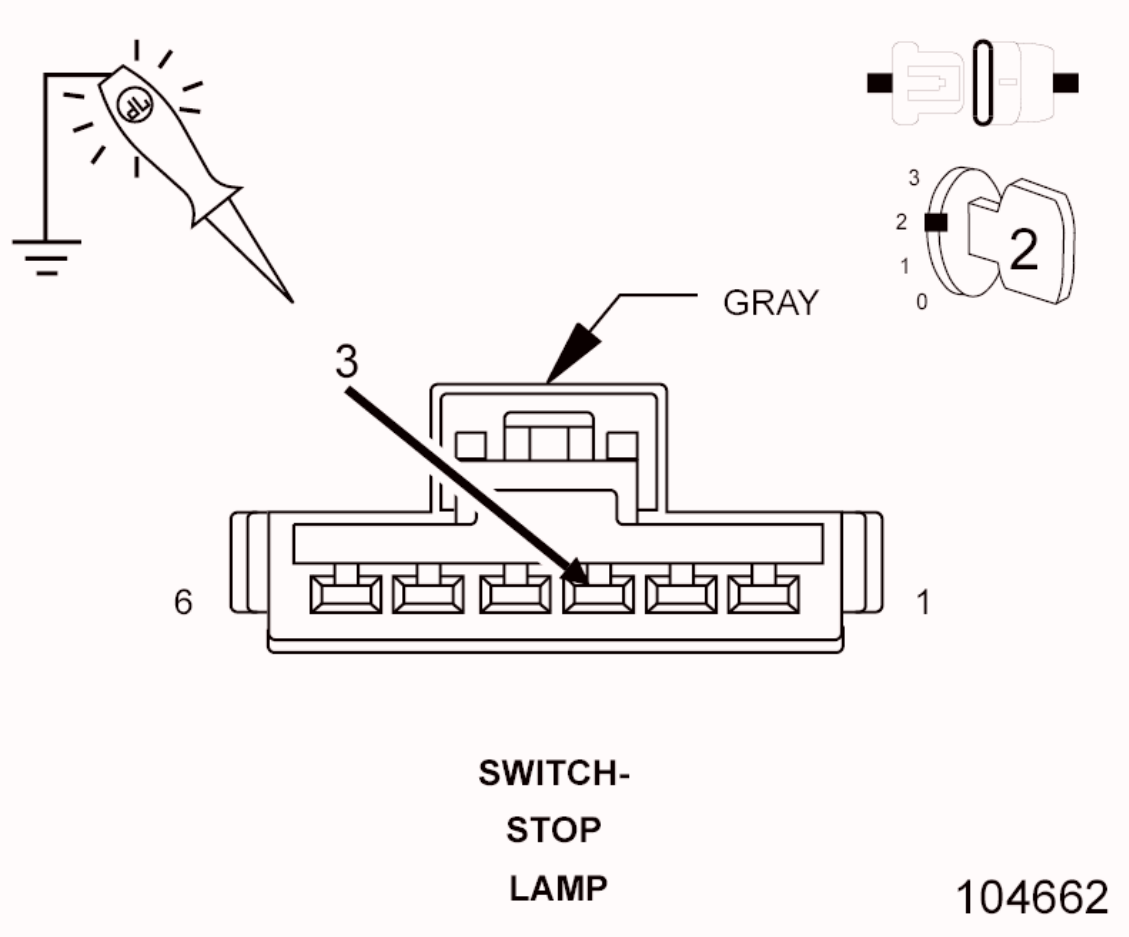

Fig. 142: Checking Fused Ignition Switch Output (Run-Start) Circuit For Open Or High Resistance

Courtesy of CHRYSLER GROUP, LLC

1. Turn the ignition off.
2. Disconnect the Stop Lamp Switch harness connector.
3. Turn the ignition on.
4. Using a 12-volt test light connected to ground, check the (F202) Fused Ignition Switch Output (Run-Start) circuit in the Stop Lamp Switch harness connector.

NOTE: The test light should be illuminated and bright. Compare the brightness to that of a direct connection to the battery.

Is the test light illuminated and bright?

Yes

- Go To 8

No

- Repair the (F202) Fused Ignition Switch Output (Run-Start) circuit for an open or high resistance.
- Perform the POWERTRAIN VERIFICATION TEST. Refer to **POWERTRAIN VERIFICATION TEST** .

8. **CHECK THE (B16) BRAKE SIGNAL 2 CIRCUIT FOR A SHORT TO VOLTAGE**

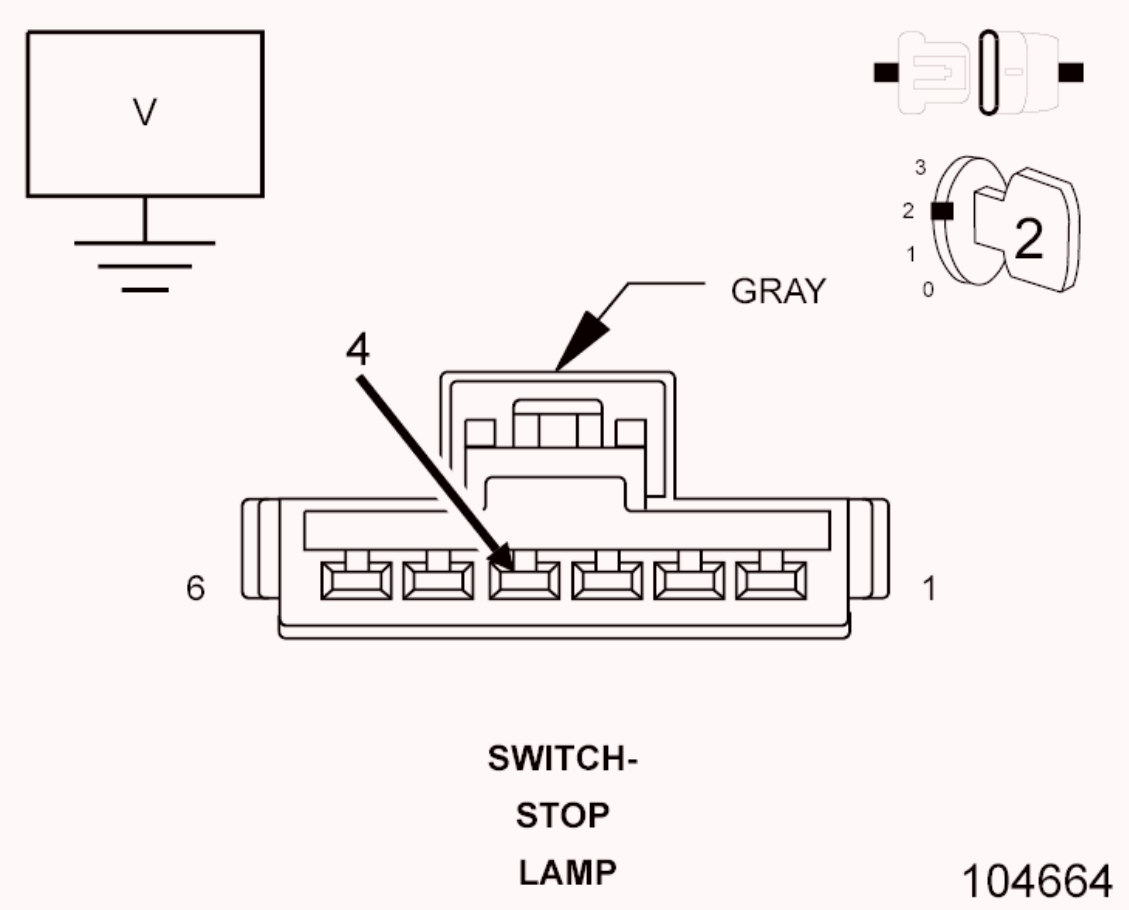

Fig. 143: Checking Brake Signal 2 Circuit For Short To Voltage
Courtesy of CHRYSLER GROUP, LLC

1. Measure the voltage of the (B16) Brake Signal 2 circuit in the Stop Lamp Switch harness connector.

   Is there any voltage present?

   Yes

   - Repair the (B16) Brake Signal 2 circuit for a short to voltage.
   - Perform the POWERTRAIN VERIFICATION TEST. Refer to **POWERTRAIN VERIFICATION TEST** .

   No

   - Go To 9

9. **CHECK THE (B16) BRAKE SIGNAL 2 CIRCUIT FOR AN OPEN/HIGH RESISTANCE**
   1. Measure the resistance of the (B16) Brake Signal 2 circuit between the

Stop Lamp Switch harness connector and the GPEC Adaptor.

Is the resistance below 5.0 Ohms?

Yes

- Go To 10

No

- Repair the (B16) Brake Signal 2 circuit for an open or high resistance.
- Perform the POWERTRAIN VERIFICATION TEST. Refer to **POWERTRAIN VERIFICATION TEST** .

10. **STOP LAMP SWITCH**
    1. Using the wiring diagram/schematic as a guide, inspect the wiring and connectors between the Stop Lamp Switch and the Powertrain Control Module (PCM).
    2. Look for any chafed, pierced, pinched or partially broken wires.
    3. Look for broken, bent, pushed out or corroded terminals.
    4. Monitor the scan tool data relative to this circuit and wiggle test the wiring and connectors.
    5. Look for the data to change or for the DTC to reset during the wiggle test.
    6. Perform any Technical Service Bulletins that may apply.

    Were any problems found?

    Yes

    - Repair as necessary.
    - Perform the POWERTRAIN VERIFICATION TEST. Refer to **POWERTRAIN VERIFICATION TEST** .

    No

    - Replace the Stop Lamp Switch in accordance with the service information.

- Perform the POWERTRAIN VERIFICATION TEST. Refer to **POWERTRAIN VERIFICATION TEST** .

11. **POWERTRAIN CONTROL MODULE (PCM)**
    1. Using the wiring diagram/schematic as a guide, inspect the wiring and connectors between the Stop Lamp Switch and the Powertrain Control Module (PCM).
    2. Look for any chafed, pierced, pinched or partially broken wires.
    3. Look for broken, bent, pushed out or corroded terminals.
    4. Perform any Technical Service Bulletins that may apply.

    Were any problems found?

    Yes

    - Repair as necessary.
    - Perform the POWERTRAIN VERIFICATION TEST. Refer to **POWERTRAIN VERIFICATION TEST** .

    No

    - Replace and program the Powertrain Control Module (PCM) in accordance with the service information. Refer to **MODULE, POWERTRAIN CONTROL, REMOVAL** .
    - Perform the POWERTRAIN VERIFICATION TEST. Refer to **POWERTRAIN VERIFICATION TEST** .

P0579-SPEED CONTROL SWITCH 1 PERFORMANCE

For a complete wiring diagram, **refer to appropriate SYSTEM WIRING DIAGRAMS article** .

WHEN MONITORED

With the ignition switch on and no other S/C Switch DTCs present.

SET CONDITION

The S/C Switch Signal 2 voltage is not within a valid switch signal range.

POSSIBLE CAUSES

Possible Causes
HIGH RESISTANCE IN THE (V72) S/C SIGNAL 2 CIRCUIT
HIGH RESISTANCE IN THE (V937) S/C SWITCH GROUND CIRCUIT
SPEED CONTROL SWITCH
STEERING WHEEL JUMPER HARNESS
CLOCKSPRING
POWERTRAIN CONTROL MODULE (PCM)

DIAGNOSTIC TEST

1. **ACTIVE DTC**
   1. Turn the ignition on.
   2. With the scan tool, select View DTCs. Copy DTC and Freeze Frame information.

      NOTE: This DTC is a two trip fault. If the scan tool indicates a one trip failure, the possible cause may have been the customer pressing switches simultaneously. Test drive the vehicle and activate the Speed Control system. If the DTC matures to an active fault a repair is necessary.

   3. With the scan tool, select View DTCs.

      Is the status Active for this DTC?

      Yes

      - Go To 2

      No

      - Perform the INTERMITTENT CONDITION diagnostic procedure. Refer to **INTERMITTENT CONDITION** .

2. **CHECK FOR HIGH RESISTANCE IN THE SPEED CONTROL SWITCH CIRCUITS**
   1. Turn the ignition off.
   2. Disconnect the Speed Control Switch harness connector.

3. Disconnect the PCM C1 harness connector.

CAUTION: Do not probe the PCM harness connectors. Probing the PCM harness connectors will damage the PCM terminals resulting in poor terminal to pin connection. Install the GPEC Diagnostic Adaptor to perform the diagnosis.

4. Connect the (special tool #10436, Adapter, GPEC Diagnostic).
5. Measure the resistance of the (V72) S/C Signal 2 circuit between the GPEC Adaptor and Speed Control Switch harness connector.
6. Measure the resistance of the (V937) Switch Ground circuit between the GPEC Adaptor and Speed Control Switch harness connector.

   Is the resistance below 5.0 Ohms for both measurements?

   Yes

   - Go To 3

   No

   - Go To 5

3. **SPEED CONTROL SWITCH**
   1. Turn the ignition off.
   2. Disconnect the Speed Control Switch harness connector in accordance with the service information.
   3. Measure the resistance between the (V72) S/C Signal 2 terminal and the (V937) S/C Switch Ground terminal at the Speed Control Switch, not the harness connector.
   4. Monitor the Ohmmeter while pressing each function button on each switch.
   5. The following resistance specs are taken between terminals (V72) S/C Signal 2 terminal and the (V937) Switch Ground terminal of the switch when holding the switch button in the following position:
      - Not pressing any switch - 20.5k Ohms

- On/Off - 0.47k Ohms
- Set/Decel - 4.34k Ohms
- Cancel - 1.24k Ohms
- Resume/Accel - 8.80k Ohms

Does the function on the Speed Control Switch have the correct resistance value +/- 0.2 Ohm?

Yes

- Go To 4

No

- Replace the Speed Control Switch in accordance with the Service information.
- Perform the POWERTRAIN VERIFICATION TEST. Refer to **POWERTRAIN VERIFICATION TEST** .

4. **POWERTRAIN CONTROL MODULE**
   1. Using the wiring diagram/schematic as a guide, inspect the wiring and connectors between the Speed Control Switch and the Powertrain Control Module.
   2. Look for any chafed, pierced, pinched, or partially broken wires.
   3. Look for broken, bent, pushed out or corroded terminals.
   4. Perform any Technical Service Bulletins that may apply.

   Were any problems found?

   Yes

   - Repair as necessary.
   - Perform the POWERTRAIN VERIFICATION TEST. Refer to **POWERTRAIN VERIFICATION TEST** .

   No

   - Replace and program the Powertrain Control Module (PCM) in accordance with the service information. Refer to **MODULE,**

POWERTRAIN CONTROL, REMOVAL .

- Perform the POWERTRAIN VERIFICATION TEST. Refer to **POWERTRAIN VERIFICATION TEST** .

5. **STEERING WHEEL JUMPER HARNESS**
   1. Turn the ignition off.
   2. Disconnect the Clockspring C4 harness connector.
   3. Measure the resistance of the (V72) S/C Signal 2 circuit between the Clockspring C4 harness connector and Speed Control Switch harness connector.
   4. Measure the resistance of the (V937) Switch Ground circuit between the Clockspring C4 harness connector and Speed Control Switch harness connector.

   Is the resistance below 5.0 Ohms for both measurements?

   Yes

   - Go To 6

   No

   - Replace the Steering Wheel Jumper harness in accordance with the service information.
   - Perform the PCM VERIFICATION TEST. Refer to **POWERTRAIN VERIFICATION TEST** .

6. **CLOCKSPRING**
   1. Disconnect the Clockspring C1 harness connector in accordance with the Service Information.
   2. Measure the resistance of the (V72) S/C Signal 2 circuit between the C1 Clockspring connector and the GPEC Adaptor.
   3. Measure the resistance of the (V937) Switch Ground circuit between the C1 Clockspring connector and the GPEC Adaptor.

   Is the resistance below 5.0 Ohms for both measurements?

   Yes

   - Replace the Clockspring in accordance with the service

information.

- Perform the PCM VERIFICATION TEST. Refer to **POWERTRAIN VERIFICATION TEST** .

No

- Repair the circuit that measured above 5.0 Ohms for an open or high resistance.
- Perform the PCM VERIFICATION TEST. Refer to **POWERTRAIN VERIFICATION TEST** .

P0580-SPEED CONTROL SWITCH 1 CIRCUIT LOW

For a complete wiring diagram, **refer to appropriate SYSTEM WIRING DIAGRAMS article** .

WHEN MONITORED

With the ignition on and battery voltage greater than 10.4 Volts.

SET CONDITION

The S/C Signal 1 voltage is below a calibrated threshold for 0.06 second.

POSSIBLE CAUSES

Possible Causes
(V71) S/C SIGNAL 1 CIRCUIT SHORTED TO THE (V937) S/C SWITCH GROUND CIRCUIT
(V71) S/C SIGNAL 1 CIRCUIT SHORTED TO GROUND
CLOCKSPRING
STEERING WHEEL JUMPER HARNESS
SPEED CONTROL SWITCH
POWERTRAIN CONTROL MODULE (PCM)

Always perform the Pre-Diagnostic Troubleshooting procedure before proceeding. Refer to PRE-DIAGNOSTIC TROUBLESHOOTING PROCEDURE .

DIAGNOSTIC TEST

1. **ACTIVE DTC**
   1. Turn the ignition on.
   2. With the scan tool, select View DTCs. Copy DTC and Freeze Frame information.

      NOTE: This DTC is a two trip fault. If the scan tool indicates a one trip failure, the possible cause may have been the customer pressing switches simultaneously. Test drive the vehicle and activate the Speed Control system. If the DTC matures to an active fault a repair is necessary.

   3. With the scan tool, select View DTCs.

      Is the status Active for this DTC?

      Yes

      - Go To 2

      No

      - Perform the INTERMITTENT CONDITION diagnostic procedure. Refer to **INTERMITTENT CONDITION** .

2. **SPEED CONTROL SWITCH**
   1. Turn the ignition off.
   2. Turn the ignition on, engine not running.
   3. Disconnect the Speed Control Switch harness connector.
   4. Measure the voltage of the (V71) S/C Signal 1 circuit at the Speed Control Switch harness connector.

      Does the (V71) S/C Signal 1 circuit voltage read 5.0 Volts with the Speed Control Switch harness connector unplugged?

      Yes

      - Replace the Speed Control Switch in accordance with the service information.

- Perform the POWERTRAIN VERIFICATION TEST. Refer to **POWERTRAIN VERIFICATION TEST** .

No

- Go To 3

3. **STEERING WHEEL JUMPER HARNESS**
   1. Disconnect the Clockspring C4 harness connector.
   2. Measure the voltage of the (V71) S/C Signal 1 circuit at the Clockspring terminal, not the harness connector.

      Does the (V71) S/C Signal 1 circuit voltage read 5.0 Volts with the Clockspring C4 harness connector unplugged?

      Yes

      - Replace the Steering Wheel Jumper harness in accordance with the Service Information.
      - Perform the POWERTRAIN VERIFICATION TEST. Refer to **POWERTRAIN VERIFICATION TEST** .

      No

      - Go To 4

4. **CLOCKSPRING**
   1. Disconnect the Clockspring C1 harness connector in accordance with the Service Information.
   2. Measure the voltage of the (V71) S/C Signal 1 circuit at the Clockspring C1 harness connector.

      Does the (V71) S/C Signal 1 circuit voltage read 5.0 Volts with the Clockspring C1 harness connector unplugged?

      Yes

      - Replace the Clockspring in accordance with the Service Information.
      - Perform the POWERTRAIN VERIFICATION TEST. Refer to **POWERTRAIN VERIFICATION TEST** .

No

- Go To 5

5. **CHECK FOR THE (V71) S/C SIGNAL 1 CIRCUIT SHORTED TO THE (V937) S/C SWITCH GROUND CIRCUIT**
   1. Turn the ignition off.
   2. Measure the resistance between the (V71) S/C Signal 1 circuit and the (V937) S/C Switch Ground circuit at the Clockspring C1 harness connector.

   Is the resistance above 10k Ohms?

   Yes

   - Go To 6

   No

   - Repair the short between the (V71) S/C Signal 1 circuit and the (V937) S/C Switch Ground circuit in the wiring harness.
   - Perform the POWERTRAIN VERIFICATION TEST. Refer to **POWERTRAIN VERIFICATION TEST** .

6. **CHECK THE (V71) S/C SIGNAL 1 CIRCUIT FOR A SHORT TO GROUND**
   1. Measure the resistance between ground and the (V71) S/C Signal 1 circuit at the Clockspring C1 harness connector.

   Is the resistance above 10k Ohms?

   Yes

   - Go To 7

   No

   - Repair the (V71) S/C Signal 1 circuit for a short to ground.
   - Perform the POWERTRAIN VERIFICATION TEST. Refer to **POWERTRAIN VERIFICATION TEST** .

7. **POWERTRAIN CONTROL MODULE**

1. Using the wiring diagram/schematic as a guide, inspect the wiring and connectors between the Speed Control Switch and the Powertrain Control Module.
2. Look for any chafed, pierced, pinched or partially broken wires.
3. Look for broken, bent, pushed out or corroded terminals.
4. Perform any Technical Service Bulletins that may apply.

Were any problems found?

Yes

- Repair as necessary.
- Perform the POWERTRAIN VERIFICATION TEST. Refer to **POWERTRAIN VERIFICATION TEST** .

No

- Replace and program the Powertrain Control Module (PCM) in accordance with the service information. Refer to **MODULE, POWERTRAIN CONTROL, REMOVAL** .
- Perform the POWERTRAIN VERIFICATION TEST. Refer to **POWERTRAIN VERIFICATION TEST** .

P0581-SPEED CONTROL SWITCH 1 CIRCUIT HIGH

For a complete wiring diagram, **refer to appropriate SYSTEM WIRING DIAGRAMS article** .

WHEN MONITORED

With the ignition on.

SET CONDITION

The S/C Signal 1 is above a calibrated threshold for 0.06 second.

POSSIBLE CAUSES

Possible Causes
(V71) S/C SIGNAL 1 CIRCUIT SHORTED TO VOLTAGE
(V71) S/C SIGNAL 1 CIRCUIT OPEN/HIGH RESISTANCE

(V937) S/C SWITCH GROUND CIRCUIT OPEN/HIGH RESISTANCE
CLOCKSPRING
STEERING WHEEL JUMPER HARNESS
SPEED CONTROL SWITCH
POWERTRAIN CONTROL MODULE (PCM)

Always perform the Pre-Diagnostic Troubleshooting procedure before proceeding. Refer to PRE-DIAGNOSTIC TROUBLESHOOTING PROCEDURE .

DIAGNOSTIC TEST

1. **ACTIVE DTC**
   1. Turn the ignition on.
   2. With the scan tool, select View DTCs. Copy DTC and Freeze Frame information.

      NOTE: This DTC is a two trip fault. If the scan tool indicates a one trip failure, the possible cause may have been the customer pressing switches simultaneously. Test drive the vehicle and activate the Speed Control system. If the DTC matures to an active fault a repair is necessary.

   3. With the scan tool, select View DTCs.

      Is the status Active for this DTC?

      Yes

      - Go To 2

      No

      - Perform the INTERMITTENT CONDITION diagnostic procedure. Refer to **INTERMITTENT CONDITION** .
2. **CHECK THE (V71) S/C SIGNAL 1 CIRCUIT FOR A SHORT TO VOLTAGE**
   1. Turn the ignition off.

2. Disconnect the Speed Control Switch harness connector.
3. Turn the ignition on.
4. Measure the voltage of the (V71) S/C Signal 1 circuit in the Speed Control Switch harness connector.

   Is the voltage above 5.2 volts?

   Yes

   - Repair the (V71) S/C Signal 1 circuit for a short to voltage.
   - Perform the POWERTRAIN VERIFICATION TEST. Refer to **POWERTRAIN VERIFICATION TEST** .

   No

   - Go To 3

3. **SPEED CONTROL SWITCH**
   1. Connect a jumper between the (V71) S/C Signal 1 circuit and the (V937) Switch Ground circuit at the Speed Control Switch harness connector.
   2. With the scan tool, select View DTCs.

      Does the P0580-SPEED CONTROL SWITCH 1 CIRCUIT LOW set as active or pending with the jumper in place?

      Yes

      - Replace the Speed Control Switch in accordance with the Service Information.
      - Perform the POWERTRAIN VERIFICATION TEST. Refer to **POWERTRAIN VERIFICATION TEST** .

      No

      - Go To 4

4. **STEERING WHEEL JUMPER HARNESS**
   1. Turn the ignition off.
   2. Disconnect the Clockspring C4 harness connector.

3. Connect a jumper between the (V71) S/C Signal 1 circuit and the (V937) Switch Ground circuit at the Clockspring terminals, not the harness connector.
4. Turn the ignition on.
5. With the scan tool, select View DTCs.

   Does the P0580-SPEED CONTROL SWITCH 1 CIRCUIT LOW set as active or pending with the jumper in place?

   Yes

   - Replace the Steering Wheel Jumper Harness in accordance with the Service Information.
   - Perform the POWERTRAIN VERIFICATION TEST. Refer to **POWERTRAIN VERIFICATION TEST** .

   No

   - Go To 5

5. **CLOCKSPRING**
   1. Turn the ignition off.
   2. Disconnect the Clockspring C1 harness connector.
   3. Connect a jumper between the (V71) S/C Signal 1 circuit and the (V937) Switch Ground circuit at the Clockspring C1 harness connector.
   4. Turn the ignition on.
   5. With the scan tool, select View DTCs.

      Does the P0580-SPEED CONTROL SWITCH 1 CIRCUIT LOW set as active or pending with the jumper in place?

      Yes

      - Replace the Clockspring harness in accordance with the Service Information.
      - Perform the POWERTRAIN VERIFICATION TEST. Refer to **POWERTRAIN VERIFICATION TEST** .

      No

- Go To 6

6. **CHECK THE (V71) S/C SIGNAL 1 CIRCUIT FOR AN OPEN/HIGH RESISTANCE**
   1. Turn the ignition off.
   2. Disconnect the PCM C1 harness connector.

      CAUTION: Do not probe the PCM harness connectors. Probing the PCM harness connectors will damage the PCM terminals resulting in poor terminal to pin connection. Install the GPEC Diagnostic Adaptor to perform the diagnosis.

   3. Connect the (special tool #10436, Adapter, GPEC Diagnostic).
   4. Measure the resistance of the (V71) S/C Signal 1 circuit between the Clockspring C1 harness connector and the GPEC Adaptor.

      Is the resistance below 5.0 Ohms?

      Yes

      - Go To 7

      No

      - Repair the (V71) S/C Signal 1 circuit for an open or high resistance.
      - Perform the POWERTRAIN VERIFICATION TEST. Refer to **POWERTRAIN VERIFICATION TEST** .

7. **CHECK THE (V937) S/C SWITCH GROUND CIRCUIT FOR AN OPEN/HIGH RESISTANCE**
   1. Measure the resistance of the (V937) Switch Ground circuit between the Clockspring C1 harness connector and the GPEC Adaptor.

      Is the resistance below 5.0 Ohms?

      Yes

- Go To 8

No

- Repair the (V937) S/C Switch Ground circuit for an open or high resistance.
- Perform the POWERTRAIN VERIFICATION TEST. Refer to **POWERTRAIN VERIFICATION TEST** .

8. **POWERTRAIN CONTROL MODULE**
   1. Using the wiring diagram/schematic as a guide, inspect the wiring and connectors between the Speed Control Switch and the Powertrain Control Module.
   2. Look for any chafed, pierced, pinched or partially broken wires.
   3. Look for broken, bent, pushed out or corroded terminals.
   4. Perform any Technical Service Bulletins that may apply.

   Were any problems found?

   Yes

   - Repair as necessary.
   - Perform the POWERTRAIN VERIFICATION TEST. Refer to **POWERTRAIN VERIFICATION TEST** .

   No

   - Replace and program the Powertrain Control Module (PCM) in accordance with the service information. Refer to **MODULE, POWERTRAIN CONTROL, REMOVAL** .
   - Perform the POWERTRAIN VERIFICATION TEST. Refer to **POWERTRAIN VERIFICATION TEST** .

P0585-SPEED CONTROL SWITCH 1/2 CORRELATION

For a complete wiring diagram, **refer to appropriate SYSTEM WIRING DIAGRAMS article** .

WHEN MONITORED

With the ignition on and no other S/C Switch DTCs present.

SET CONDITION

The (V71) S/C Signal 1 and (V72) S/C Signal 2 do not indicate the same S/C Switch position.

POSSIBLE CAUSES

Possible Causes
SPEED CONTROL SWITCH

Always perform the Pre-Diagnostic Troubleshooting procedure before proceeding. Refer to PRE-DIAGNOSTIC TROUBLESHOOTING PROCEDURE .

DIAGNOSTIC TEST

SPEED CONTROL SWITCH STATUS

1. Turn the ignition on.
2. With the scan tool, select View DTCs. Copy DTC and Freeze Frame information.
3. Using the scan tool, monitor the Speed Control Switch status.
4. Press each button while noting the Speed Control Switch status for both switches on the scan tool.

   Did the Speed Control Switch 1 status and Speed Control Switch 2 status match when each button is pressed?

   Yes

   - Perform the INTERMITTENT CONDITION diagnostic procedure. Refer to **INTERMITTENT CONDITION** .

   No

   - Replace the Speed Control Switch in accordance with the service information.
   - Perform the POWERTRAIN VERIFICATION TEST. Refer to **POWERTRAIN VERIFICATION TEST** .

P0591-SPEED CONTROL SWITCH 2 PERFORMANCE

For a complete wiring diagram, **refer to appropriate SYSTEM WIRING DIAGRAMS article** .

P0591-SPEED CONTROL SWITCH 2 PERFORMANCE

For a complete wiring diagram, **refer to appropriate SYSTEM WIRING DIAGRAMS article** .

WHEN MONITORED

With the ignition on and battery voltage greater than 10.4 Volts.

SET CONDITION

The Powertrain Control Module (PCM) detects that the Speed Control signal voltage is implausible.

POSSIBLE CAUSES

Possible Causes
(V72) S/C SIGNAL 2 CIRCUIT SHORTED TO VOLTAGE
(V72) S/C SIGNAL 2 CIRCUIT SHORTED TO GROUND
(V72) S/C SIGNAL 2 CIRCUIT SHORTED TO THE (V937) S/C SWITCH GROUND CIRCUIT
(V72) S/C SIGNAL 2 CIRCUIT OPEN OR HIGH RESISTANCE
(V937) S/C SWITCH GROUND CIRCUIT OPEN OR HIGH RESISTANCE
CLOCKSPRING
SPEED CONTROL SWITCH
POWERTRAIN CONTROL MODULE (PCM)

Always perform the Pre-Diagnostic Troubleshooting procedure before proceeding. Refer to PRE-DIAGNOSTIC TROUBLESHOOTING PROCEDURE .

DIAGNOSTIC TEST

1. **ACTIVE DTC**
    1. Ignition on, engine not running.

2. With the scan tool, clear DTCs in the PCM.
3. Start the engine and test drive the vehicle.
4. During the test drive select each of the speed control switch positions.
5. With the scan tool, select View DTCs.

   Is the status Active for this DTC?

   Yes

   - Go To 2

   No

   - Perform the INTERMITTENT CONDITION diagnostic procedure. Refer to **INTERMITTENT CONDITION** .

2. **CHECK FOR HIGH RESISTANCE IN THE SPEED CONTROL SWITCH CIRCUITS**
   1. Turn the ignition off.
   2. Disconnect the Speed Control Switch harness connector.
   3. Disconnect the PCM C1 harness connector.

      CAUTION: Do not probe the PCM harness connectors. Probing the PCM harness connectors will damage the PCM terminals resulting in poor terminal to pin connection. Install the GPEC Diagnostic Adaptor to perform the diagnosis.

   4. Connect the (special tool #10436, Adapter, GPEC Diagnostic).
   5. Measure the resistance of the (V72) S/C Signal 2 circuit between the GPEC Adaptor and Speed Control Switch harness connector.
   6. Measure the resistance of the (V937) Switch Ground circuit between the GPEC Adaptor and Speed Control Switch harness connector.

      Is the resistance below 5.0 Ohms for both measurements?

      Yes

- Go To 3

No

- Go To 5

3. **SPEED CONTROL SWITCH**
   1. Turn the ignition off.
   2. Disconnect the Speed Control Switch harness connector in accordance with the service information.
   3. Measure the resistance between the (V72) S/C Signal 2 terminal and the (V937) S/C Switch Ground terminal at the Speed Control Switch, not the harness connector.
   4. Monitor the Ohmmeter while pressing each function button on each switch.
   5. The following resistance specs are taken between terminals (V72) S/C Signal 2 terminal and the (V937) Switch Ground terminal of the switch when holding the switch button in the following position:
      - Not pressing any switch - 20.5k Ohms
      - On/Off - 0.47k Ohms
      - Set/Decel - 4.34k Ohms
      - Cancel - 1.24k Ohms
      - Resume/Accel - 8.80k Ohms

      Does the function on the Speed Control Switch have the correct resistance value +/- 0.2 Ohm?

      Yes

      - Go To 4

      No

      - Replace the Speed Control Switch in accordance with the service information.
      - Perform the POWERTRAIN VERIFICATION TEST. Refer to **POWERTRAIN VERIFICATION TEST** .
4. **POWERTRAIN CONTROL MODULE**

1. Using the wiring diagram/schematic as a guide, inspect the wiring and connectors between the Speed Control Switch and the Powertrain Control Module.
2. Look for any chafed, pierced, pinched, or partially broken wires.
3. Look for broken, bent, pushed out or corroded terminals.
4. Perform any Technical Service Bulletins that may apply.

   Were any problems found?

   Yes

   - Repair as necessary.
   - Perform the POWERTRAIN VERIFICATION TEST. Refer to **POWERTRAIN VERIFICATION TEST** .

   No

   - Replace and program the Powertrain Control Module (PCM) in accordance with the service information. Refer to **MODULE, POWERTRAIN CONTROL, REMOVAL** .
   - Perform the POWERTRAIN VERIFICATION TEST. Refer to **POWERTRAIN VERIFICATION TEST** .

5. **STEERING WHEEL JUMPER HARNESS**
   1. Turn the ignition off.
   2. Disconnect the Clockspring C4 harness connector.
   3. Measure the resistance of the (V72) S/C Signal 2 circuit between the Clockspring C4 harness connector and Speed Control Switch harness connector.
   4. Measure the resistance of the (V937) Switch Ground circuit between the Clockspring C4 harness connector and Speed Control Switch harness connector.

      Is the resistance below 5.0 Ohms for both measurements?

      Yes

      - Go To 6

No

- Replace the Steering Wheel Jumper harness in accordance with the service information.
- Perform the POWERTRAIN VERIFICATION TEST. Refer to **POWERTRAIN VERIFICATION TEST** .

6. **CLOCKSPRING**
   1. Disconnect the Clockspring C1 harness connector in accordance with the Service Information.
   2. Measure the resistance of the (V72) S/C Signal 2 circuit between the Clockspring C1 harness connector and the GPEC Adaptor.
   3. Measure the resistance of the (V937) Switch Ground circuit between the Clockspring C1 harness connector and the GPEC Adaptor.

   Is the resistance below 5.0 Ohms for both measurements?

   Yes

   - Replace the Clockspring in accordance with the service information.
   - Perform the POWERTRAIN VERIFICATION TEST. Refer to **POWERTRAIN VERIFICATION TEST** .

   No

   - Repair the circuit that measured above 5.0 Ohms for an open or high resistance.
   - Perform the POWERTRAIN VERIFICATION TEST. Refer to **POWERTRAIN VERIFICATION TEST** .

P0592-SPEED CONTROL SWITCH 2 CIRCUIT LOW

For a complete wiring diagram, **refer to appropriate SYSTEM WIRING DIAGRAMS article** .

WHEN MONITORED

With the ignition on.

SET CONDITION

The S/C Signal 2 voltage is below a calibrated threshold for 0.06 second.

POSSIBLE CAUSES

Possible Causes
(V72) S/C SIGNAL 2 CIRCUIT SHORTED TO THE (V937) S/C SWITCH GROUND CIRCUIT
(V72) S/C SIGNAL 2 CIRCUIT SHORTED TO GROUND
CLOCKSPRING
STEERING WHEEL JUMPER HARNESS
SPEED CONTROL SWITCH
POWERTRAIN CONTROL MODULE (PCM)

Always perform the Pre-Diagnostic Troubleshooting procedure before proceeding. Refer to PRE-DIAGNOSTIC TROUBLESHOOTING PROCEDURE .

DIAGNOSTIC TEST

1. **DTC IS ACTIVE**
    1. Turn the ignition on.
    2. With the scan tool, select View DTCs. Copy DTC and Freeze Frame information.

    NOTE: This DTC is a two trip fault. If the scan tool indicates a one trip failure, the possible cause may have been the customer pressing switches simultaneously. Test drive the vehicle and activate the Speed Control system. If the DTC matures to an active fault a repair is necessary.

    3. With the scan tool, select View DTCs.

    Is the status Active for this DTC?

    Yes

    - Go To 2

    No

- Perform the INTERMITTENT CONDITION diagnostic procedure. Refer to **INTERMITTENT CONDITION** .

2. **SPEED CONTROL SWITCH**
   1. Turn the ignition off.
   2. Disconnect the Speed Control Switch harness connector.
   3. Turn the ignition on, engine not running.
   4. Measure the voltage of the (V72) S/C Signal 2 circuit at the Speed Control Switch harness connector.

      Does the (V72) S/C Signal 2 voltage read 5.0 Volts with the Speed Control Switch harness connector unplugged?

      Yes

      - Replace the Speed Control Switch in accordance with the Service Information.
      - Perform the POWERTRAIN VERIFICATION TEST. Refer to **POWERTRAIN VERIFICATION TEST** .

      No

      - Go To 3

3. **STEERING WHEEL JUMPER HARNESS**
   1. Turn the ignition off.
   2. Disconnect the Clockspring C4 harness connector.
   3. Turn the ignition on, engine not running.
   4. Measure the voltage of the (V72) S/C Signal 2 circuit at the Clockspring terminal, not the harness connector.

      Does the (V72) S/C Signal 2 voltage read 5.0 Volts with the Clockspring C4 harness connector unplugged?

      Yes

      - Replace the Steering Wheel Jumper harness in accordance with the Service Information.
      - Perform the POWERTRAIN VERIFICATION TEST. Refer to

POWERTRAIN VERIFICATION TEST .

No

- Go To 4

4. **CLOCKSPRING**
   1. Turn the ignition off.
   2. Disconnect the Clockspring C1 harness connector in accordance with the Service Information.
   3. Turn the ignition on, engine not running.
   4. Measure the voltage of the (V72) S/C Signal 2 circuit at the Clockspring C1 harness connector.

   Does the (V72) S/C Signal 2 voltage read 5.0 Volts with the Clockspring C1 harness connector unplugged?

   Yes

   - Replace the Clockspring in accordance with the Service Information.
   - Perform the POWERTRAIN VERIFICATION TEST. Refer to **POWERTRAIN VERIFICATION TEST** .

   No

   - Go To 5

5. **CHECK FOR THE (V72) S/C SIGNAL 2 CIRCUIT SHORTED TO THE (V937) S/C SWITCH GROUND CIRCUIT**
   1. Turn the ignition off.
   2. Measure the resistance between the (V72) S/C Signal 2 circuit and the (V937) S/C Switch Ground circuit at the Clockspring C1 harness connector.

   Is the resistance above 10k Ohms?

   Yes

   - Go To 6

No

- Repair the short between the (V72) S/C Signal 2 circuit and the (V937) S/C Switch Ground circuit in the wiring harness.
- Perform the POWERTRAIN VERIFICATION TEST. Refer to **POWERTRAIN VERIFICATION TEST** .

6. **CHECK THE (V72) S/C SIGNAL 2 CIRCUIT FOR A SHORT TO GROUND**
   1. Measure the resistance between ground and the (V72) S/C Signal 2 circuit at the Clockspring C1 harness connector.

      Is the resistance above 10k Ohms?

      Yes

      - Go To 7

      No

      - Repair the (V72) S/C Signal 2 circuit for a short to ground.
      - Perform the POWERTRAIN VERIFICATION TEST. Refer to **POWERTRAIN VERIFICATION TEST** .
7. **POWERTRAIN CONTROL MODULE**
   1. Using the wiring diagram/schematic as a guide, inspect the wiring and connectors between the Speed Control Switch and the Powertrain Control Module.
   2. Look for any chafed, pierced, pinched or partially broken wires.
   3. Look for broken, bent, pushed out or corroded terminals.
   4. Perform any Technical Service Bulletins that may apply.

      Were any problems found?

      Yes

      - Repair as necessary.
      - Perform the POWERTRAIN VERIFICATION TEST. Refer to **POWERTRAIN VERIFICATION TEST** .

No

- Replace and program the Powertrain Control Module (PCM) in accordance with the Service Information. Refer to **MODULE, POWERTRAIN CONTROL, REMOVAL** .
- Perform the POWERTRAIN VERIFICATION TEST. Refer to **POWERTRAIN VERIFICATION TEST** .

P0593-SPEED CONTROL SWITCH 2 CIRCUIT HIGH

For a complete wiring diagram, **refer to appropriate SYSTEM WIRING DIAGRAMS article** .

WHEN MONITORED

With the ignition on.

SET CONDITION

The S/C Signal 2 is above a calibrated threshold for 0.06 second.

POSSIBLE CAUSES

Possible Causes
(V72) S/C SIGNAL 2 CIRCUIT SHORTED TO VOLTAGE
(V72) S/C SIGNAL 2 CIRCUIT OPEN/HIGH RESISTANCE
(V937) S/C SWITCH GROUND CIRCUIT OPEN/HIGH RESISTANCE
CLOCKSPRING
STEERING WHEEL JUMPER HARNESS
SPEED CONTROL SWITCH
POWERTRAIN CONTROL MODULE (PCM)

Always perform the Pre-Diagnostic Troubleshooting procedure before proceeding. Refer to PRE-DIAGNOSTIC TROUBLESHOOTING PROCEDURE .

DIAGNOSTIC TEST

1. **ACTIVE DTC**
    1. Turn the ignition on.
    2. With the scan tool, select View DTCs. Copy DTC and Freeze Frame

information.

NOTE: This DTC is a two trip fault. If the scan tool indicates a one trip failure, the possible cause may have been the customer pressing switches simultaneously. Test drive the vehicle and activate the Speed Control system. If the DTC matures to an active fault a repair is necessary.

NOTE: It may be necessary to test drive the vehicle and operate the speed control in order for this DTC to set.

3. With the scan tool, select View DTCs.

   Is the status Active for this DTC?

   Yes

   - Go To 2

   No

   - Perform the INTERMITTENT CONDITION diagnostic procedure. Refer to **INTERMITTENT CONDITION** .

2. **CHECK THE (V72) S/C SIGNAL 2 CIRCUIT FOR A SHORT TO VOLTAGE**
   1. Turn the ignition off.
   2. Disconnect the Speed Control Switch harness connector.
   3. Turn the ignition on.
   4. Measure the voltage of the (V72) S/C Signal 2 circuit in the Speed Control Switch harness connector.

   Is the voltage above 5.2 Volts?

   Yes

   - Repair the (V72) S/C Signal 2 circuit for a short to voltage.
   - Perform the POWERTRAIN VERIFICATION TEST. Refer to

POWERTRAIN VERIFICATION TEST .

No

- Go To 3

3. **SPEED CONTROL SWITCH**
   1. Connect a jumper between the (V72) S/C Signal 2 circuit and the (V937) Switch Ground circuit at the Speed Control Switch harness connector.
   2. With the scan tool, select View DTCs.

   Does the P0592-SPEED CONTROL SWITCH 2 CIRCUIT LOW set as active or pending with the jumper in place?

   Yes

   - Replace the Speed Control Switch in accordance with the service information.
   - Perform the POWERTRAIN VERIFICATION TEST. Refer to **POWERTRAIN VERIFICATION TEST** .

   No

   - Go To 4

4. **STEERING WHEEL JUMPER HARNESS**
   1. Turn the ignition off.
   2. Disconnect the Clockspring C4 harness connector.
   3. Connect a jumper between the (V72) S/C Signal 2 circuit and the (V937) Switch Ground circuit at the Clockspring terminals, not the harness connector.
   4. Turn the ignition on.
   5. With the scan tool, select View DTCs.

   Does the P0592-SPEED CONTROL SWITCH 2 CIRCUIT LOW set as active or pending with the jumper in place?

   Yes

- Replace the Steering Wheel Jumper harness in accordance with the service information.
- Perform the POWERTRAIN VERIFICATION TEST. Refer to **POWERTRAIN VERIFICATION TEST** .

No

- Go To 5

5. **CLOCKSPRING**
   1. Turn the ignition off.
   2. Disconnect the Clockspring C1 harness connector.
   3. Connect a jumper between the (V72) S/C Signal 2 circuit and the (V937) Switch Ground circuit at the Clockspring C1 harness connector.
   4. Turn the ignition on.
   5. With the scan tool, select View DTCs.

   Does the P0592-SPEED CONTROL SWITCH 2 CIRCUIT LOW set as active or pending with the jumper in place?

   Yes

   - Replace the Clockspring in accordance with the service information.
   - Perform the POWERTRAIN VERIFICATION TEST. Refer to **POWERTRAIN VERIFICATION TEST** .

   No

   - Go To 6

6. **CHECK THE (V72) S/C SIGNAL 2 CIRCUIT FOR AN OPEN/HIGH RESISTANCE**
   1. Turn the ignition off.
   2. Disconnect the PCM C1 harness connector.

CAUTION: Do not probe the PCM harness connectors. Probing the PCM harness connectors will damage the PCM terminals resulting in

poor terminal to pin connection. Install the GPEC Diagnostic Adaptor to perform the diagnosis.

3. Connect the (special tool #10436, Adapter, GPEC Diagnostic).
4. Measure the resistance of the (V72) S/C Signal 2 circuit between the Clockspring C1 harness connector and the GPEC Adaptor.

   Is the resistance below 5.0 Ohms?

   Yes

   - Go To 7

   No

   - Repair the (V72) S/C Signal 2 circuit for an open or high resistance.
   - Perform the POWERTRAIN VERIFICATION TEST. Refer to **POWERTRAIN VERIFICATION TEST** .

7. **CHECK THE (V937) S/C SWITCH GROUND CIRCUIT FOR AN OPEN/HIGH RESISTANCE**
   1. Measure the resistance of the (V937) Switch Ground circuit between the Clockspring C1 harness connector and the GPEC Adaptor.

      Is the resistance below 5.0 Ohms?

      Yes

      - Go To 8

      No

      - Repair the (V937) S/C Switch Ground circuit for an open or high resistance.
      - Perform the POWERTRAIN VERIFICATION TEST. Refer to **POWERTRAIN VERIFICATION TEST** .

8. **POWERTRAIN CONTROL MODULE**
   1. Using the wiring diagram/schematic as a guide, inspect the wiring and

connectors between the Speed Control Switch and the Powertrain Control Module.

2. Look for any chafed, pierced, pinched or partially broken wires.
3. Look for broken, bent, pushed out or corroded terminals.
4. Perform any Technical Service Bulletins that may apply.

Were any problems found?

Yes

- Repair as necessary.
- Perform the POWERTRAIN VERIFICATION TEST. Refer to **POWERTRAIN VERIFICATION TEST** .

No

- Replace and program the Powertrain Control Module (PCM) in accordance with the service information. Refer to **MODULE, POWERTRAIN CONTROL, REMOVAL** .
- Perform the POWERTRAIN VERIFICATION TEST. Refer to **POWERTRAIN VERIFICATION TEST** .

P0600-SERIAL COMMUNICATION LINK

For a complete wiring diagram, **refer to appropriate SYSTEM WIRING DIAGRAMS article**

WHEN MONITORED

With the ignition on.

SET CONDITION

The Powertrain Control Module (PCM) detects an internal failure.

POSSIBLE CAUSES

POSSIBLE CAUSES
POWERTRAIN CONTROL MODULE (PCM)

Always perform the Pre-Diagnostic Troubleshooting procedure before

proceeding. Refer to PRE-DIAGNOSTIC TROUBLESHOOTING PROCEDURE .

DIAGNOSTIC TEST.

1. **DTC IS ACTIVE**

NOTE: If any other DTCs are set, they must be diagnosed and repaired before continuing this test.

WARNING: When the engine is operating, do not stand in direct line with the fan. Do not put your hands near the pulleys, belts or fan. Do not wear loose clothing. Failure to follow these instructions may result in possible serious or fatal injury.

1. Ignition on, engine not running.
2. With the scan tool, Clear DTCs in the Powertrain Control Module (PCM).
3. Monitor the scan tool for at least two minutes.
4. Cycle the ignition key off and on several times, leaving the ignition on for at least 10 seconds at a time.
5. Start the engine and allow it to reach operating temperature.
6. With the scan tool, select View DTCs.

Is the status Active for this DTC?

Yes

- Go To 2

No

- Perform the INTERMITTENT CONDITION diagnostic procedure. Refer to **INTERMITTENT CONDITION** .

2. **POWERTRAIN CONTROL MODULE (PCM)**
   1. Using the wiring diagram/schematic as a guide, inspect the Powertrain Control Module (PCM) wiring and connectors.

2. Look for any chafed, pierced, pinched, or partially broken wires.
3. Look for broken, bent, pushed out or corroded terminals.
4. Perform any Technical Service Bulletins that may apply.

Were any problems found?

Yes

- Repair as necessary.
- Perform the POWERTRAIN VERIFICATION TEST. Refer to **POWERTRAIN VERIFICATION TEST** .

No

- Replace and program the Powertrain Control Module (PCM) in accordance with the Service Information. Refer to **MODULE, POWERTRAIN CONTROL, REMOVAL** .
- Perform the POWERTRAIN VERIFICATION TEST. Refer to **POWERTRAIN VERIFICATION TEST** .

P0601-INTERNAL MEMORY CHECKSUM INVALID

For a complete wiring diagram, **refer to appropriate SYSTEM WIRING DIAGRAMS article** .

WHEN MONITORED

With the ignition on.

SET CONDITION

The Powertrain Control Module (PCM) detects an internal failure.

POSSIBLE CAUSES

POSSIBLE CAUSES
POWERTRAIN CONTROL MODULE (PCM)

Always perform the Pre-Diagnostic Troubleshooting procedure before proceeding. Refer to PRE-DIAGNOSTIC TROUBLESHOOTING PROCEDURE .

DIAGNOSTIC TEST

1. **DTC IS ACTIVE**

NOTE: If any other DTCs are set, they must be diagnosed and repaired before continuing this test.

WARNING: When the engine is operating, do not stand in direct line with the fan. Do not put your hands near the pulleys, belts or fan. Do not wear loose clothing. Failure to follow these instructions may result in possible serious or fatal injury.

1. Ignition on, engine not running.
2. With the scan tool, clear DTCs in the Powertrain Control Module (PCM).
3. Monitor the scan tool for at least two minutes.
4. Cycle the ignition key off and on several times, leaving the ignition on for at least 10 seconds at a time.
5. Start the engine and allow it to reach operating temperature.
6. With the scan tool, select View DTCs.

Is the status Active for this DTC?

Yes

- Go to 2

No

- Perform the INTERMITTENT CONDITION diagnostic procedure. Refer to **INTERMITTENT CONDITION** .

2. **POWERTRAIN CONTROL MODULE (PCM)**
   1. Using the wiring diagram/schematic as a guide, inspect the Powertrain Control Module (PCM) wiring and connectors.
   2. Look for any chafed, pierced, pinched, or partially broken wires.
   3. Look for broken, bent, pushed out or corroded terminals.

4. Perform any Technical Service Bulletins that may apply.

   Were any problems found?

   Yes

   - Repair as necessary.
   - Perform the POWERTRAIN VERIFICATION TEST. Refer to **POWERTRAIN VERIFICATION TEST** .

   No

   - Replace and program the Powertrain Control Module (PCM) in accordance with the Service Information. Refer to **MODULE, POWERTRAIN CONTROL, REMOVAL** .
   - Perform the POWERTRAIN VERIFICATION TEST. Refer to **POWERTRAIN VERIFICATION TEST** .

P0606-INTERNAL CONTROL PROCESSOR

For a complete wiring diagram, **refer to appropriate SYSTEM WIRING DIAGRAMS article** .

WHEN MONITORED

With the ignition on.

SET CONDITION

The Powertrain Control Module (PCM) detects an internal failure.

POSSIBLE CAUSES

POSSIBLE CAUSES
POWERTRAIN CONTROL MODULE (PCM)

Always perform the Pre-Diagnostic Troubleshooting procedure before proceeding. Refer to PRE-DIAGNOSTIC TROUBLESHOOTING PROCEDURE .

DIAGNOSTIC TEST

1. **DTC IS ACTIVE**

NOTE: If any other DTCs are set, they must be diagnosed and repaired before continuing this test.

WARNING: When the engine is operating, do not stand in direct line with the fan. Do not put your hands near the pulleys, belts or fan. Do not wear loose clothing. Failure to follow these instructions may result in possible serious or fatal injury.

1. Ignition on, engine not running.
2. With the scan tool, clear DTCs in the Powertrain Control Module (PCM).
3. Monitor the scan tool for at least two minutes.
4. Cycle the ignition key off and on several times, leaving the ignition on for at least 10 seconds at a time.
5. Start the engine and allow it to reach operating temperature.
6. With the scan tool, select View DTCs.

Is the status Active for this DTC?

Yes

- Go to 2.

No

- Perform the INTERMITTENT CONDITION diagnostic procedure. Refer to **INTERMITTENT CONDITION** .

2. **POWERTRAIN CONTROL MODULE (PCM)**
   1. Using the wiring diagram/schematic as a guide, inspect the Powertrain Control Module (PCM) wiring and connectors.
   2. Look for any chafed, pierced, pinched, or partially broken wires.
   3. Look for broken, bent, pushed out or corroded terminals.
   4. Perform any Technical Service Bulletins that may apply.

Were any problems found?

Yes

- Repair as necessary.
- Perform the POWERTRAIN VERIFICATION TEST. Refer to **POWERTRAIN VERIFICATION TEST** .

No

- Replace and program the Powertrain Control Module (PCM) in accordance with the Service Information. Refer to **MODULE, POWERTRAIN CONTROL, REMOVAL** .
- Perform the POWERTRAIN VERIFICATION TEST. Refer to **POWERTRAIN VERIFICATION TEST** .

P060B-ETC A/D GROUND PERFORMANCE

For a complete wiring diagram, **refer to appropriate SYSTEM WIRING DIAGRAMS article** .

WHEN MONITORED

With the ignition on.

SET CONDITION

When the A/D reading does not return to ground within a set period of time during test activation, this DTC will set. Reprogramming the module may not fix this DTC. ETC lamp will flash.

POSSIBLE CAUSES

POSSIBLE CAUSES
POWERTRAIN CONTROL MODULE (PCM)

Always perform the Pre-Diagnostic Troubleshooting procedure before proceeding. Refer to PRE-DIAGNOSTIC TROUBLESHOOTING PROCEDURE .

DIAGNOSTIC TEST

1. **DTC IS ACTIVE**

NOTE: If any other DTCs are set, they must be diagnosed and repaired before continuing this test.

NOTE: An intermittent loss of power to the PCM without performing an ETC Relearn procedure may cause this DTC to set.

WARNING: When the engine is operating, do not stand in direct line with the fan. Do not put your hands near the pulleys, belts or fan. Do not wear loose clothing. Failure to follow these instructions may result in possible serious or fatal injury.

1. Turn the ignition on.
2. With the scan tool, clear DTCs in the Powertrain Control Module (PCM).
3. Verify the Powertrain Control Module (PCM) is at the latest calibration (flash level). If necessary, update the Powertrain Control Module (PCM) in accordance with the Service Information.
4. Start the engine and allow it to reach operating temperature.
5. Increase engine speed by pressing the accelerator pedal. Do not exceed 3500 RPM.
6. With the scan tool, select View DTCs.

Is the status Active for this DTC?

Yes

- Go To 2

No

- Perform the INTERMITTENT CONDITION diagnostic procedure. Refer to **INTERMITTENT CONDITION** .

2. **POWERTRAIN CONTROL MODULE (PCM)**

1. Using the wiring diagram/schematic as a guide, inspect the wiring and connectors between the Throttle Body and the Powertrain Control Module (PCM).
2. Look for any chafed, pierced, pinched, or partially broken wires.
3. Look for broken, bent, pushed out or corroded terminals.
4. Perform any Technical Service Bulletins that may apply.

Were any problems found?

Yes

- Repair as necessary.
- Perform the POWERTRAIN VERIFICATION TEST. Refer to **POWERTRAIN VERIFICATION TEST** .

No

- Replace and program the Powertrain Control Module (PCM) in accordance with the Service Information. Refer to **MODULE, POWERTRAIN CONTROL, REMOVAL** .
- Perform the POWERTRAIN VERIFICATION TEST. Refer to **POWERTRAIN VERIFICATION TEST** .

P060D-ETC LEVEL 2 APP PERFORMANCE

For a complete wiring diagram, **refer to appropriate SYSTEM WIRING DIAGRAMS article** .

WHEN MONITORED

With the ignition on.

SET CONDITION

When secondary software determines that the APPS 1 and APPS 2 signals do not match for a period of time. ETC lamp will flash

POSSIBLE CAUSES

POSSIBLE CAUSES
POWERTRAIN CONTROL MODULE (PCM)

Always perform the Pre-Diagnostic Troubleshooting procedure before proceeding. Refer to PRE-DIAGNOSTIC TROUBLESHOOTING PROCEDURE .

DIAGNOSTIC TEST

1. **DTC IS ACTIVE**

NOTE: If any other DTCs are set, they must be diagnosed and repaired before continuing this test.

NOTE: An intermittent loss of power to the PCM without performing an ETC Relearn procedure may cause this DTC to set.

WARNING: When the engine is operating, do not stand in direct line with the fan. Do not put your hands near the pulleys, belts or fan. Do not wear loose clothing. Failure to follow these instructions may result in possible serious or fatal injury.

1. Turn the ignition on.
2. With the scan tool, clear DTCs in the Powertrain Control Module (PCM).
3. Verify the Powertrain Control Module (PCM) is at the latest calibration (flash level). If necessary, update the Powertrain Control Module (PCM) in accordance with the Service Information.
4. Start the engine and allow it to reach operating temperature.
5. Increase engine speed by pressing the accelerator pedal. Do not exceed 3500 RPM.
6. With the scan tool, select View DTCs.

   Is the status Active for this DTC?

   Yes

   - Go to 2

No

- Perform the INTERMITTENT CONDITION diagnostic procedure. Refer to **INTERMITTENT CONDITION** .

2. **POWERTRAIN CONTROL MODULE (PCM)**
   1. Using the wiring diagram/schematic as a guide, inspect the wiring and connectors between the Throttle Body and the Powertrain Control Module (PCM).
   2. Look for any chafed, pierced, pinched, or partially broken wires.
   3. Look for broken, bent, pushed out or corroded terminals.
   4. Perform any Technical Service Bulletins that may apply.

   Were any problems found?

   Yes

   - Repair as necessary.
   - Perform the POWERTRAIN VERIFICATION TEST. Refer to **POWERTRAIN VERIFICATION TEST** .

   No

   - Replace and program the Powertrain Control Module (PCM) in accordance with the Service Information. Refer to **MODULE, POWERTRAIN CONTROL, REMOVAL** .
   - Perform the POWERTRAIN VERIFICATION TEST. Refer to **POWERTRAIN VERIFICATION TEST** .

P060E-ETC LEVEL 2 TPS PERFORMANCE

For a complete wiring diagram, **refer to appropriate SYSTEM WIRING DIAGRAMS article** .

WHEN MONITORED

With the ignition on.

SET CONDITION

When secondary software determines that the TPS 1 and TPS 2 signals do not

match for a period of time. ETC lamp will flash.

POSSIBLE CAUSES

POSSIBLE CAUSES
POWERTRAIN CONTROL MODULE (PCM)

Always perform the Pre-Diagnostic Troubleshooting procedure before proceeding. Refer to PRE-DIAGNOSTIC TROUBLESHOOTING PROCEDURE .

DIAGNOSTIC TEST

1. **DTC IS ACTIVE**

NOTE: If any other DTCs are set, they must be diagnosed and repaired before continuing this test.

NOTE: An intermittent loss of power to the PCM without performing an ETC Relearn procedure may cause this DTC to set.

WARNING: When the engine is operating, do not stand in direct line with the fan. Do not put your hands near the pulleys, belts or fan. Do not wear loose clothing. Failure to follow these instructions may result in possible serious or fatal injury.

1. Turn the ignition on.
2. With the scan tool, Clear DTCs in the Powertrain Control Module (PCM).
3. Verify the Powertrain Control Module (PCM) is at the latest calibration (flash level). If necessary, update the Powertrain Control Module (PCM) in accordance with the Service Information.
4. Start the engine and allow it to reach operating temperature.
5. Increase engine speed by pressing the accelerator pedal. Do not exceed 3500 RPM.
6. With the scan tool, select View DTCs.

Is the status Active for this DTC?

Yes

- Go To 2

No

- Perform the INTERMITTENT CONDITION diagnostic procedure. Refer to **INTERMITTENT CONDITION** .

2. **POWERTRAIN CONTROL MODULE (PCM)**
   1. Using the wiring diagram/schematic as a guide, inspect the wiring and connectors between the Throttle Body and the Powertrain Control Module (PCM).
   2. Look for any chafed, pierced, pinched, or partially broken wires.
   3. Look for broken, bent, pushed out or corroded terminals.
   4. Perform any Technical Service Bulletins that may apply.

   Were any problems found?

   Yes

   - Repair as necessary.
   - Perform the POWERTRAIN VERIFICATION TEST. Refer to **POWERTRAIN VERIFICATION TEST** .

   No

   - Replace and program the Powertrain Control Module (PCM) in accordance with the Service Information. Refer to **MODULE, POWERTRAIN CONTROL, REMOVAL** .
   - Perform the POWERTRAIN VERIFICATION TEST. Refer to **POWERTRAIN VERIFICATION TEST** .

P060F-ETC LEVEL 2 ECT PERFORMANCE

For a complete wiring diagram, **refer to appropriate SYSTEM WIRING DIAGRAMS article** .

WHEN MONITORED

With the ignition on.

SET CONDITION

When secondary software determines that the Coolant Temperature is implausible for a period of time. ETC lamp will flash.

POSSIBLE CAUSES

POSSIBLE CAUSES
POWERTRAIN CONTROL MODULE (PCM)

Always perform the Pre-Diagnostic Troubleshooting procedure before proceeding. Refer to PRE-DIAGNOSTIC TROUBLESHOOTING PROCEDURE .

DIAGNOSTIC TEST

1. **DTC IS ACTIVE**

NOTE: If any other DTCs are set, they must be diagnosed and repaired before continuing this test.

NOTE: An intermittent loss of power to the PCM without performing an ETC Relearn procedure may cause this DTC to set.

WARNING: When the engine is operating, do not stand in direct line with the fan. Do not put your hands near the pulleys, belts or fan. Do not wear loose clothing. Failure to follow these instructions may result in possible serious or fatal injury.

1. Turn the ignition on.
2. With the scan tool, clear DTCs in the Powertrain Control Module (PCM).
3. Verify the Powertrain Control Module (PCM) is at the latest calibration (flash level). If necessary, update the Powertrain Control Module (PCM) in accordance with the Service Information.

4. Start the engine and allow it to reach operating temperature.
5. Increase engine speed by pressing the accelerator pedal. Do not exceed 3500 RPM.
6. With the scan tool, select View DTCs.

   Is the status Active for this DTC?

   Yes

   - Go To 2

   No

   - Perform the INTERMITTENT CONDITION diagnostic procedure. Refer to **INTERMITTENT CONDITION** .

2. **POWERTRAIN CONTROL MODULE (PCM)**
   1. Using the wiring diagram/schematic as a guide, inspect the wiring and connectors between the Throttle Body and the Powertrain Control Module (PCM).
   2. Look for any chafed, pierced, pinched, or partially broken wires.
   3. Look for broken, bent, pushed out or corroded terminals.
   4. Perfom any Technical Service Bulletins that may apply.

   Were any problems found?

   Yes

   - Repair as necessary.
   - Perform the POWERTRAIN VERIFICATION TEST. Refer to **POWERTRAIN VERIFICATION TEST** .

   No

   - Replace and program the Powertrain Control Module (PCM) in accordance with the Service Information. Refer to **MODULE, POWERTRAIN CONTROL, REMOVAL** .
   - Perform the POWERTRAIN VERIFICATION TEST. Refer to **POWERTRAIN VERIFICATION TEST** .

P0615-STARTER CONTROL CIRCUIT/OPEN

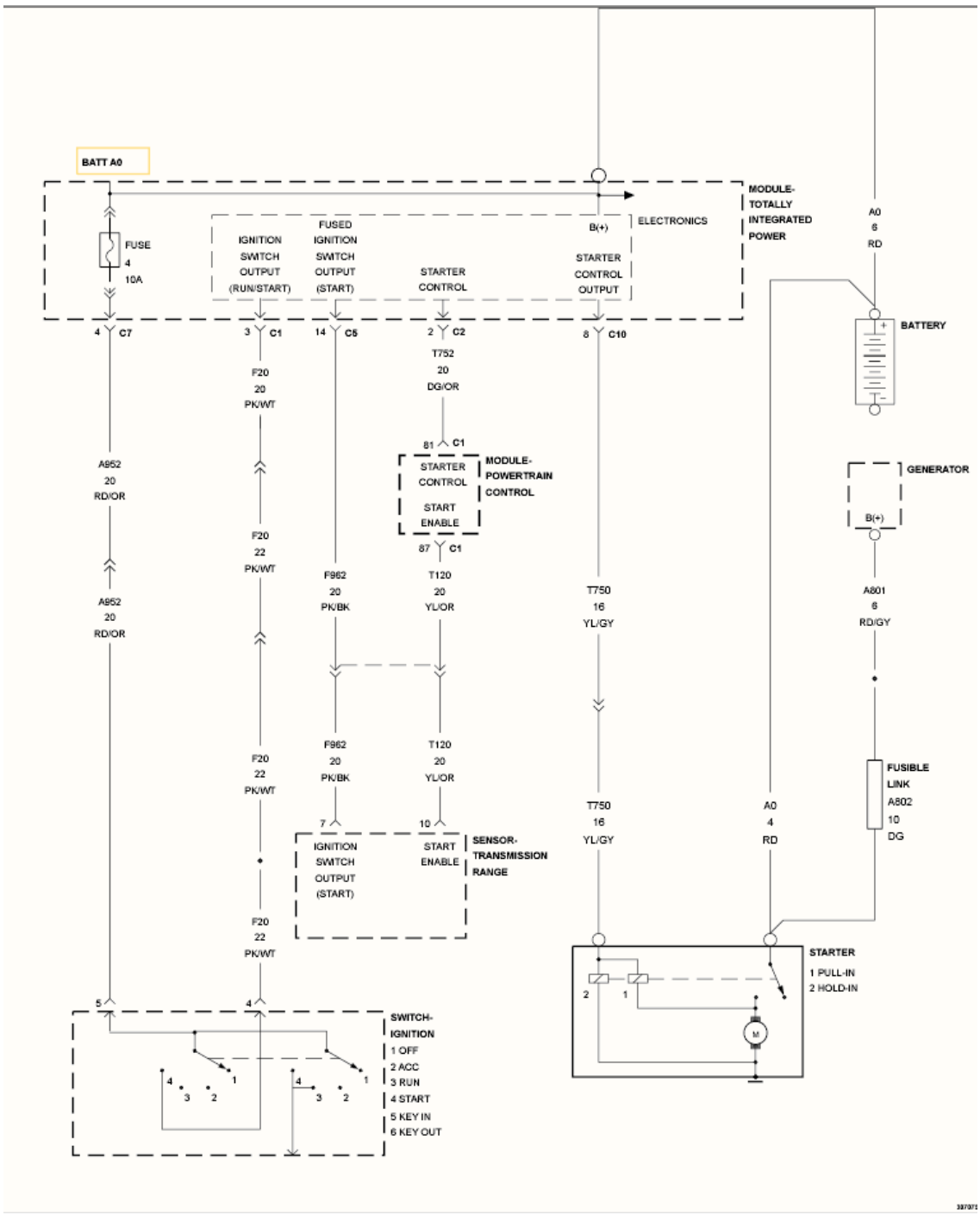

Fig. 144: Starter Circuit Diagram
Courtesy of CHRYSLER GROUP, LLC

For a complete wiring diagram, **refer to appropriate SYSTEM WIRING DIAGRAMS article** .

WHEN MONITORED

With the engine running and battery voltage greater than 10.4 volts.

SET CONDITION

The Powertrain Control Module (PCM) detects that the actual state of the starter control does not match the intended state.

POSSIBLE CAUSES

POSSIBLE CAUSES
(T752) STARTER CONTROL CIRCUIT SHORTED TO VOLTAGE
(T752) STARTER CONTROL CIRCUIT SHORTED TO GROUND
(T752) STARTER CONTROL CIRCUIT OPEN OR HIGH RESISTANCE
TOTALLY INTEGRATED POWER MODULE (TIPM)
POWERTRAIN CONTROL MODULE (PCM)

Always perform the Pre-Diagnostic Troubleshooting procedure before proceeding. Refer to PRE-DIAGNOSTIC TROUBLESHOOTING PROCEDURE .

DIAGNOSTIC TEST

1. **ACTIVE DTC**
   1. Attempt to start the engine. If the engine will not crank, turn the ignition switch to the crank position for 5 seconds.

      WARNING: **When the engine is operating, do not stand in direct line with the fan. Do not put your hands near the pulleys, belts or fan. Do not wear loose clothing. Failure to follow these instructions may result in possible serious or fatal injury.**

   2. With the scan tool, select View DTCs.

      Is the status Active for this DTC?

      Yes

      - Go To 2

No

- Perform the INTERMITTENT CONDITION diagnostic procedure. Refer to **INTERMITTENT CONDITION** .

2. **CHECK THE (T752) STARTER CONTROL CIRCUIT FOR A SHORT TO VOLTAGE**

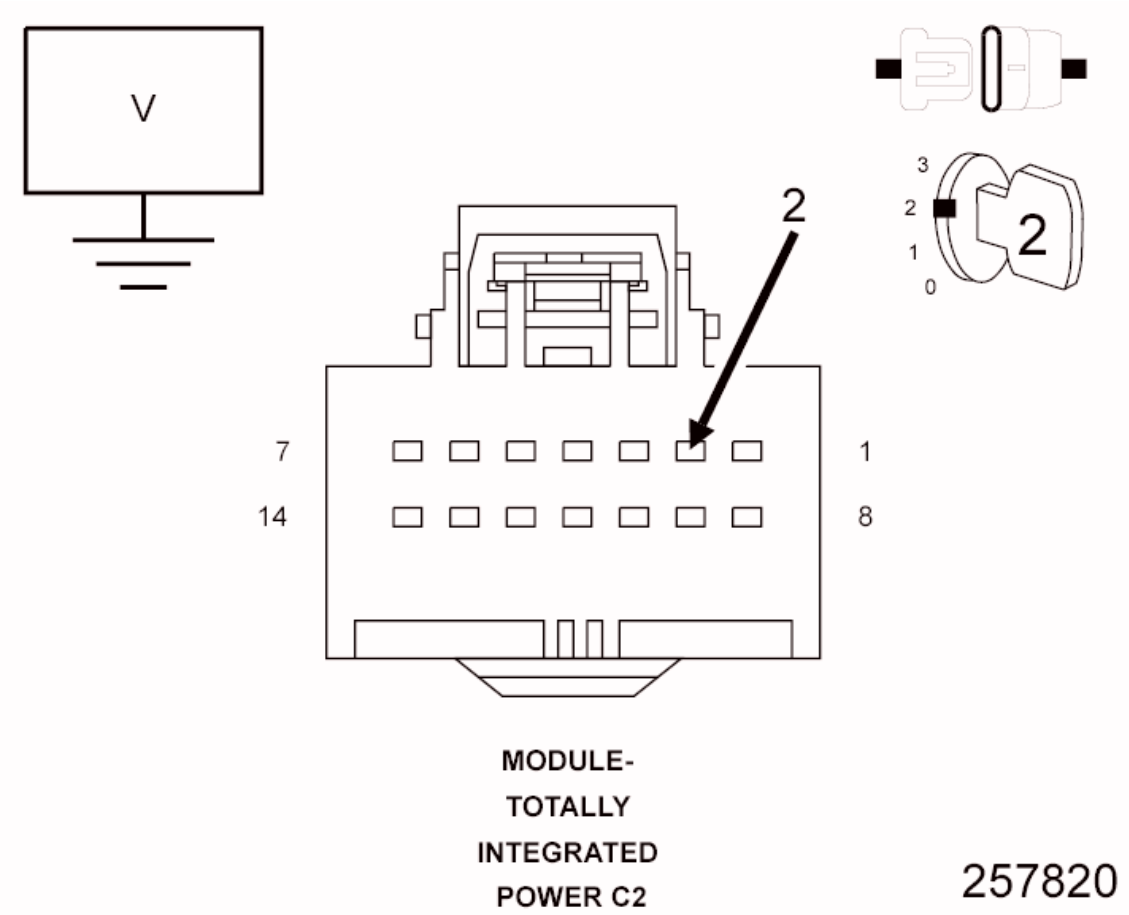

Fig. 145: Checking Starter Control Circuit For Short To Voltage
Courtesy of CHRYSLER GROUP, LLC

1. Turn the ignition off.
2. Disconnect the Totally Integrated Power Module (TIPM) C2 harness connector.
3. Disconnect the PCM C1 harness connector.
4. Turn the ignition on.
5. Measure the voltage of the (T752) Starter Control circuit in the TIPM C2 harness connector.

   Is there any voltage present?

Yes

- Repair the (T752) Starter Control circuit for a short to voltage.
- Perform the POWERTRAIN VERIFICATION TEST. Refer to **POWERTRAIN VERIFICATION TEST** .

No

- Go To 3

3. **CHECK THE (T752) STARTER CONTROL CIRCUIT FOR A SHORT TO GROUND**

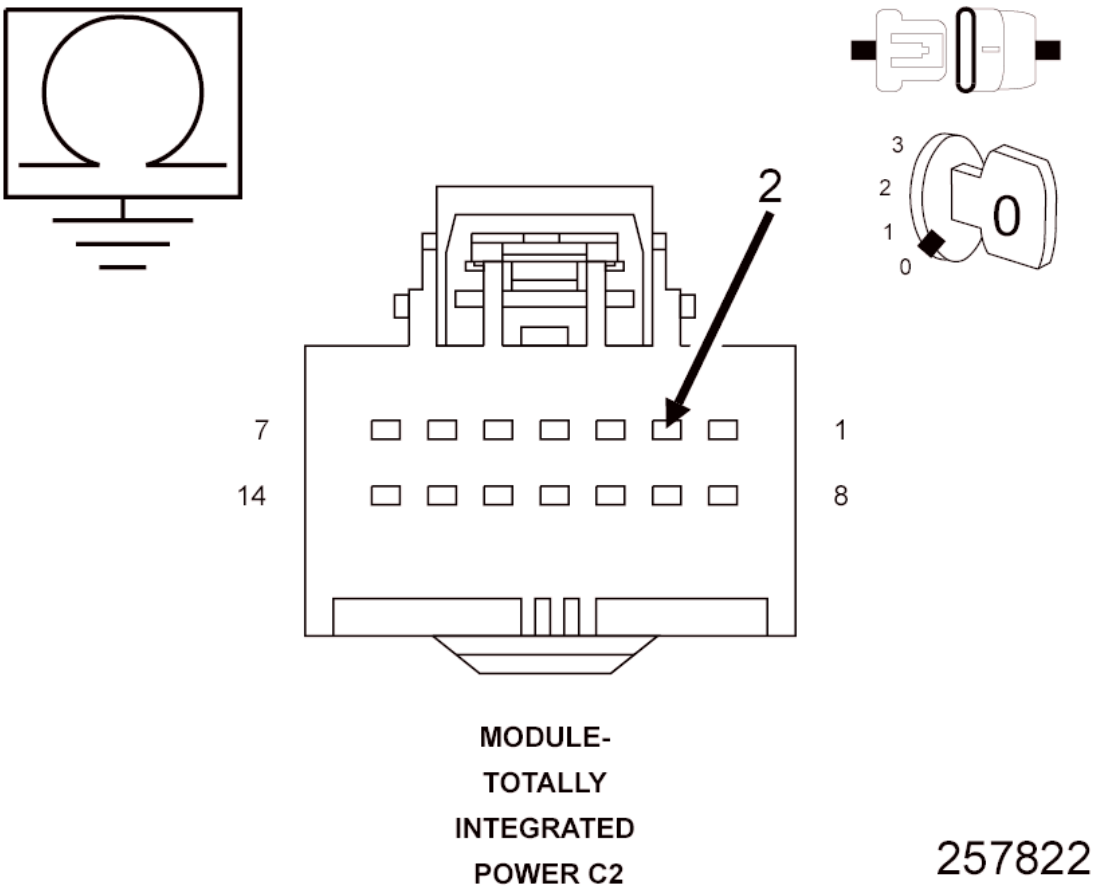

Fig. 146: Checking Starter Control Circuit For Short To Ground
Courtesy of CHRYSLER GROUP, LLC

1. Turn the ignition off.
2. Measure the resistance between ground and the (T752) Starter Control circuit in the TIPM C2 harness connector.

   Is the resistance above 10k Ohms?

Yes

- Go To 4

No

- Repair the (T752) Starter Control circuit for a short to ground.
- Perform the POWERTRAIN VERIFICATION TEST. Refer to **POWERTRAIN VERIFICATION TEST** .

4. **CHECK THE (T752) STARTER CONTROL CIRCUIT FOR AN OPEN/HIGH RESISTANCE**

CAUTION: Do not probe the PCM harness connectors. Probing the PCM harness connectors will damage the PCM terminals resulting in poor terminal to pin connection. Install the GPEC Diagnostic Adaptor to perform the diagnosis.

1. Connect the (special tool #10436, Adapter, GPEC Diagnostic).
2. Measure the resistance of the (T752) Starter Control circuit between the TIPM C2 harness connector and the GPEC Adaptor.

Is the resistance below 5.0 Ohms?

Yes

- Go To 5

No

- Repair the (T752) Starter Control circuit for an open or high resistance.
- Perform the POWERTRAIN VERIFICATION TEST. Refer to **POWERTRAIN VERIFICATION TEST** .

5. **TOTALLY INTEGRATED POWER MODULE (TIPM)**

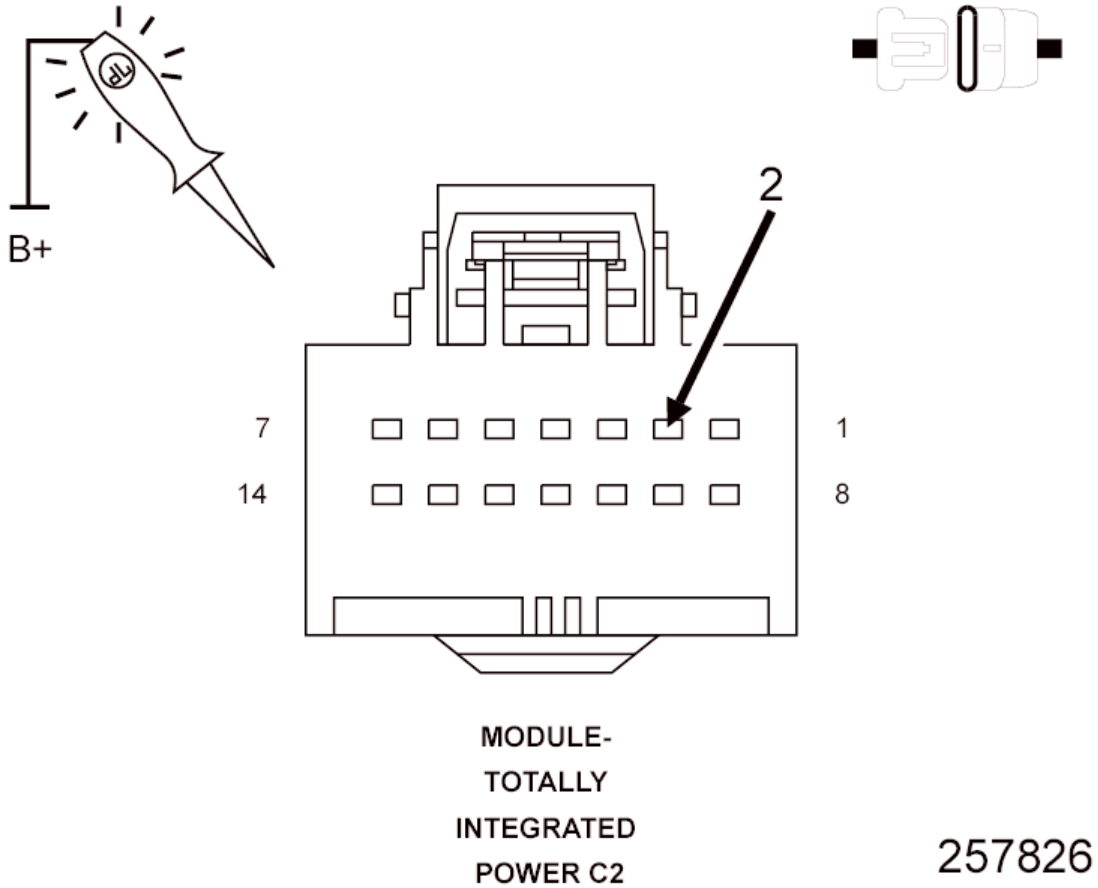

Fig. 147: Checking Starter Control Circuit In TIPM Harness Connector
Courtesy of CHRYSLER GROUP, LLC

1. Connect the PCM C1 harness connector.
2. Turn the ignition on.
3. Using a 12-volt test light connected to 12 volts, check the (T752) Starter Control circuit in the TIPM C2 harness connector.

NOTE: The test light should not be illuminated.

4. While monitoring the test light, move the ignition to the start position.

NOTE: The test light should be illuminated and bright. Compare the brightness to that of a direct connection to the battery.

Is the test light not illuminated with the ignition in the run position and illuminated and bright with the ignition in the start position?

Yes

- Replace the Totally Integrated Power Module (TIPM) in accordance with the service information.
- Perform the BODY VERIFICATION TEST. Refer to **STANDARD PROCEDURE** .

No

- Go To 6

6. **POWERTRAIN CONTROL MODULE (PCM)**
   1. Using the wiring diagram/schematic as a guide, inspect the wiring and connectors between the Totally Integrated Power Module (TIPM) and the Powertrain Control Module (PCM).
   2. Look for any chafed, pierced, pinched, or partially broken wires.
   3. Look for broken, bent, pushed out or corroded terminals.
   4. Perform any Technical Service Bulletins that may apply.

   Were any problems found?

   Yes

   - Repair as necessary.
   - Perform the POWERTRAIN VERIFICATION TEST. Refer to **POWERTRAIN VERIFICATION TEST** .

   No

   - Replace and program the Powertrain Control Module (PCM) in accordance with the service information. Refer to **MODULE, POWERTRAIN CONTROL, REMOVAL** .
   - Perform the POWERTRAIN VERIFICATION TEST. Refer to **POWERTRAIN VERIFICATION TEST** .

P061A-LEVEL 2 TORQUE PERFORMANCE

For a complete wiring diagram, **refer to appropriate SYSTEM WIRING DIAGRAMS article** .

WHEN MONITORED

With the ignition on.

SET CONDITION

When secondary software determines that the requested output is not being achieved by the engine for a period of time. ETC lamp will flash.

POSSIBLE CAUSES

POSSIBLE CAUSES
POWERTRAIN CONTROL MODULE (PCM)

Always perform the Pre-Diagnostic Troubleshooting procedure before proceeding. Refer to PRE-DIAGNOSTIC TROUBLESHOOTING PROCEDURE .

DIAGNOSTIC TEST

1. **DTC IS ACTIVE**

NOTE: If any other DTCs are set, they must be diagnosed and repaired before continuing this test.

NOTE: An intermittent loss of power to the PCM without performing an ETC Relearn procedure may cause this DTC to set.

WARNING: When the engine is operating, do not stand in direct line with the fan. Do not put your hands near the pulleys, belts or fan. Do not wear loose clothing. Failure to follow these instructions may result in possible serious or fatal injury.

1. Turn the ignition on.
2. With the scan tool, clear DTCs in the Powertrain Control Module (PCM).
3. Verify the Powertrain Control Module (PCM) is at the latest calibration (flash level). If necessary, update the Powertrain Control Module (PCM) in accordance with the Service Information.

4. Start the engine and allow it to reach operating temperature.
5. Increase engine speed by pressing the accelerator pedal. Do not exceed 3500 RPM.
6. With the scan tool, select View DTCs.

   Is the status Active for this DTC?

   Yes

   - Go To 2

   No

   - Perform the INTERMITTENT CONDITION diagnostic procedure. Refer to **INTERMITTENT CONDITION** .

2. **POWERTRAIN CONTROL MODULE (PCM)**
   1. Using the wiring diagram/schematic as a guide, inspect the wiring and connectors between the Throttle Body and the Powertrain Control Module (PCM).
   2. Look for any chafed, pierced, pinched, or partially broken wires.
   3. Look for broken, bent, pushed out or corroded terminals.
   4. Perform any Technical Service Bulletins that may apply.

   Were any problems found?

   Yes

   - Repair as necessary.
   - Perform the POWERTRAIN VERIFICATION TEST. Refer to **POWERTRAIN VERIFICATION TEST** .

   No

   - Replace and program the Powertrain Control Module (PCM) in accordance with the Service Information. Refer to **MODULE, POWERTRAIN CONTROL, REMOVAL** .
   - Perform the POWERTRAIN VERIFICATION TEST. Refer to **POWERTRAIN VERIFICATION TEST** .

P061C-ETC LEVEL 2 RPM PERFORMANCE

For a complete wiring diagram, **refer to appropriate SYSTEM WIRING DIAGRAMS article** .

WHEN MONITORED

With the ignition on.

SET CONDITION

When secondary software determines that the engine speed is implausible for a period of time. ETC lamp will flash.

POSSIBLE CAUSES

POSSIBLE CAUSES
POWERTRAIN CONTROL MODULE (PCM)

Always perform the Pre-Diagnostic Troubleshooting procedure before proceeding. Refer to PRE-DIAGNOSTIC TROUBLESHOOTING PROCEDURE .

DIAGNOSTIC TEST

1. **DTC IS ACTIVE**

NOTE: If any other DTCs are set, they must be diagnosed and repaired before continuing this test.

NOTE: An intermittent loss of power to the PCM without performing an ETC Relearn procedure may cause this DTC to set.

WARNING: When the engine is operating, do not stand in direct line with the fan. Do not put your hands near the pulleys, belts or fan. Do not wear loose clothing. Failure to follow these instructions may result in possible serious or fatal injury.

1. Turn the ignition on.

2. With the scan tool, Clear DTCs in the Powertrain Control Module (PCM).
3. Verify the Powertrain Control Module (PCM) is at the latest calibration (flash level). If necessary, update the Powertrain Control Module (PCM) in accordance with the Service Information.
4. Start the engine and allow it to reach operating temperature.
5. Increase engine speed by pressing the accelerator pedal. Do not exceed 3500 RPM.
6. With the scan tool, select View DTCs.

   Is the status Active for this DTC?

   Yes

   - Go To 2

   No

   - Perform the INTERMITTENT CONDITION diagnostic procedure. Refer to **INTERMITTENT CONDITION** .

2. **POWERTRAIN CONTROL MODULE (PCM)**
   1. Using the wiring diagram/schematic as a guide, inspect the wiring and connectors between the Throttle Body and the Powertrain Control Module (PCM).
   2. Look for any chafed, pierced, pinched, or partially broken wires.
   3. Look for broken, bent, pushed out or corroded terminals.
   4. Perform any Technical Service Bulletins that may apply.

   Were any problems found?

   Yes

   - Repair as necessary.
   - Perform the POWERTRAIN VERIFICATION TEST. Refer to **POWERTRAIN VERIFICATION TEST** .

   No

- Replace and program the Powertrain Control Module (PCM) in accordance with the Service Information. Refer to **MODULE, POWERTRAIN CONTROL, REMOVAL** .
- Perform the POWERTRAIN VERIFICATION TEST. Refer to **POWERTRAIN VERIFICATION TEST** .

2014 ENGINE PERFORMANCE

Powertrain Control Module (PCM) - Electrical Diagnostics, 2.0L & 2.4L - Compass & Patriot

DIAGNOSIS AND TESTING

P0622-GENERATOR FIELD CONTROL CIRCUIT

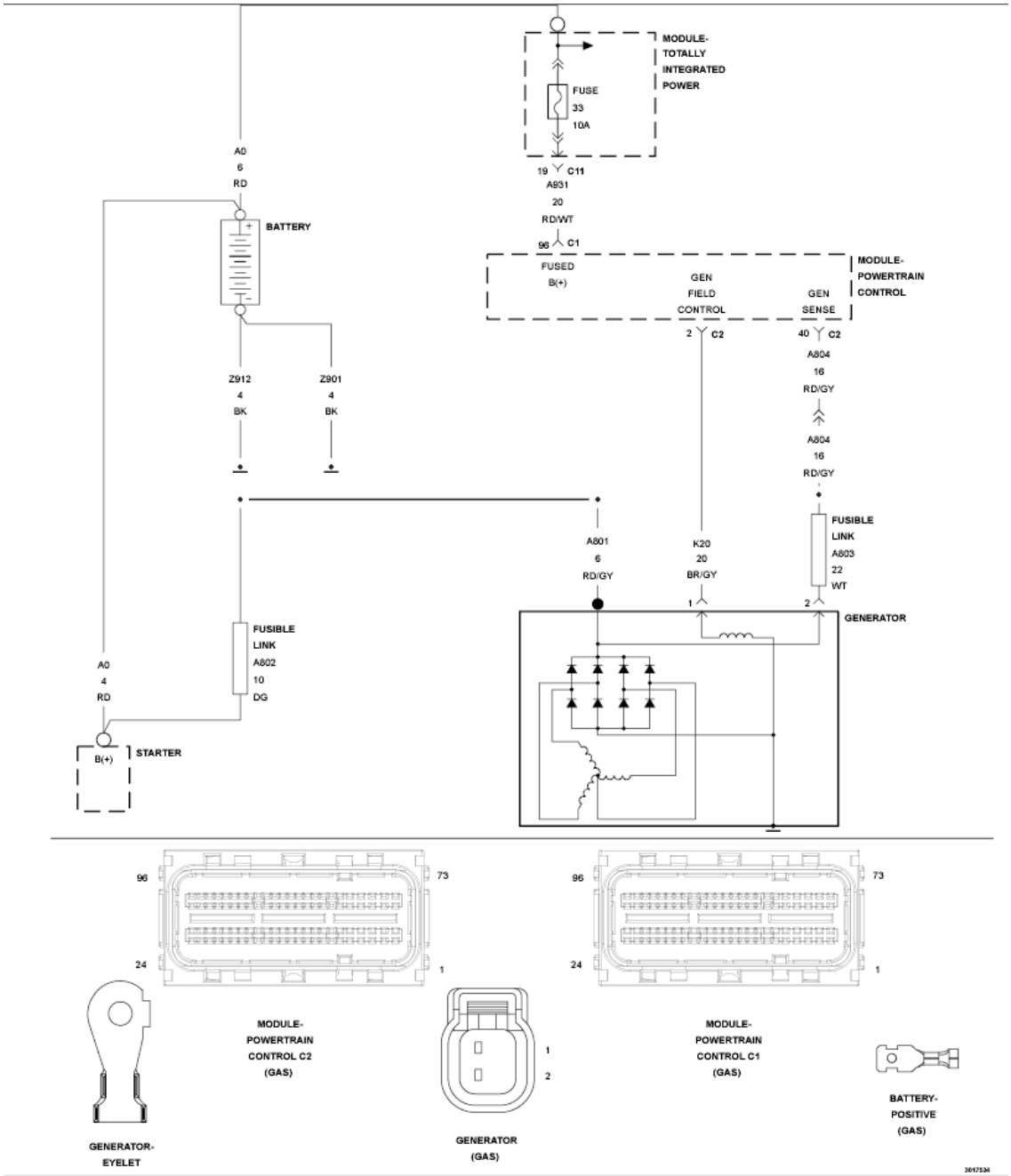

Fig. 1: Charging System Circuit Diagram
Courtesy of CHRYSLER GROUP, LLC

For a complete wiring diagram, **refer to appropriate SYSTEM WIRING**

DIAGRAMS article .

WHEN MONITORED

With the engine running and battery voltage greater than 10.4 volts.

SET CONDITION

The Powertrain Control Module (PCM) detects that the actual state of the generator field control does not match the intended state.

POSSIBLE CAUSES

POSSIBLE CAUSES
(K20) GEN FIELD CONTROL CIRCUIT SHORTED TO VOLTAGE
(K20) GEN FIELD CONTROL CIRCUIT SHORTED TO GROUND
(K20) GEN FIELD CONTROL CIRCUIT OPEN OR HIGH RESISTANCE
GENERATOR
POWERTRAIN CONTROL MODULE (PCM)

Always perform the Pre-Diagnostic Troubleshooting procedure before proceeding. Refer to PRE-DIAGNOSTIC TROUBLESHOOTING PROCEDURE .

DIAGNOSTIC TEST

1. **ACTIVE DTC**
   1. Start the engine and allow it to reach normal operating temperature.

      WARNING: **When the engine is operating, do not stand in direct line with the fan. Do not put your hands near the pulleys, belts or fan. Do not wear loose clothing. Failure to follow these instructions may result in possible serious or fatal injury.**

   2. With the scan tool, select View DTCs.

      Is the status Active for this DTC?

      Yes

- Go To 2

No

- Perform the INTERMITTENT CONDITION diagnostic procedure. Refer to **INTERMITTENT CONDITION** .

2. **CHECK THE (K20) GENERATOR FIELD CONTROL CIRCUIT FOR A SHORT TO VOLTAGE**

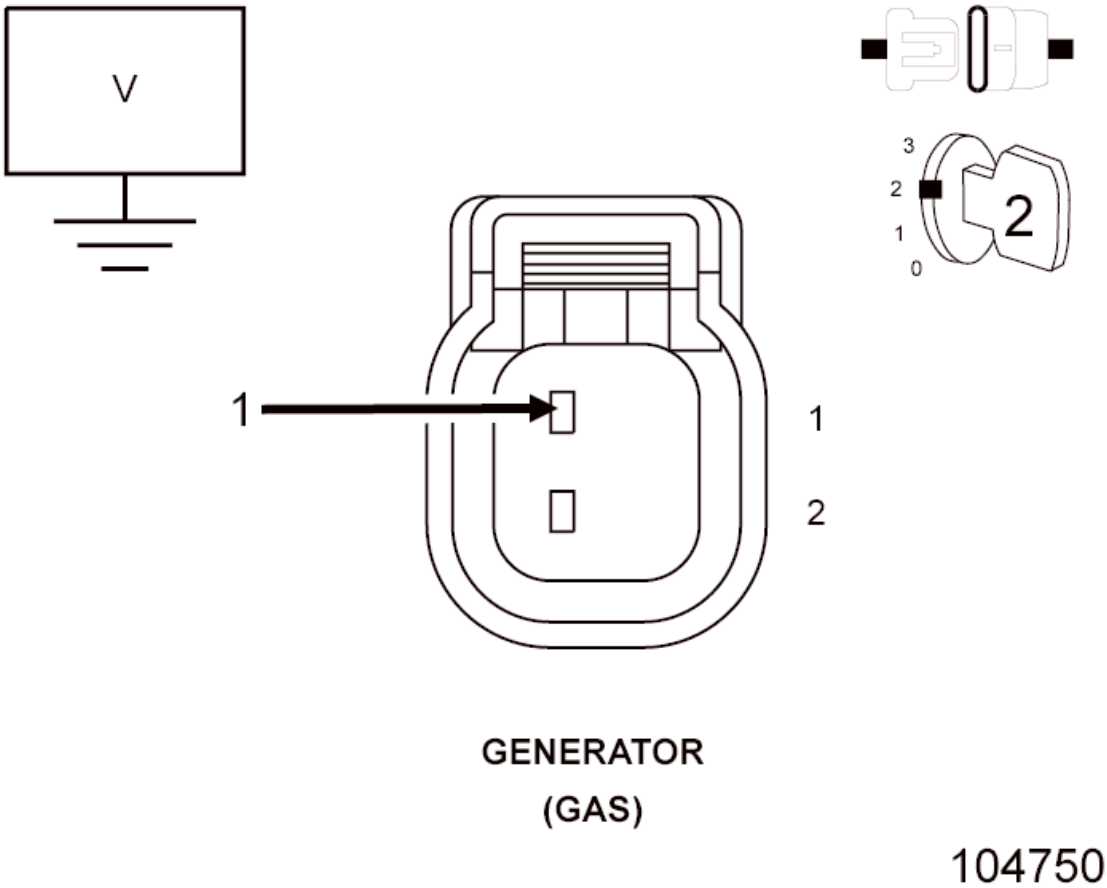

Fig. 2: Checking Generator Field Control Circuit For Short To Voltage
Courtesy of CHRYSLER GROUP, LLC

1. Turn the ignition off.
2. Disconnect the Generator harness connector.
3. Disconnect the PCM C2 harness connector.
4. Turn the ignition on.
5. Measure the voltage of the (K20) Generator Field Control circuit in the Generator harness connector.

Is there any voltage present?

Yes

- Repair the (K20) Generator Field Control circuit for a short to voltage.
- Perform the POWERTRAIN VERIFICATION TEST. Refer to **POWERTRAIN VERIFICATION TEST** .

No

- Go To 3

3. **CHECK THE (K20) GENERATOR FIELD CONTROL CIRCUIT FOR A SHORT TO GROUND**

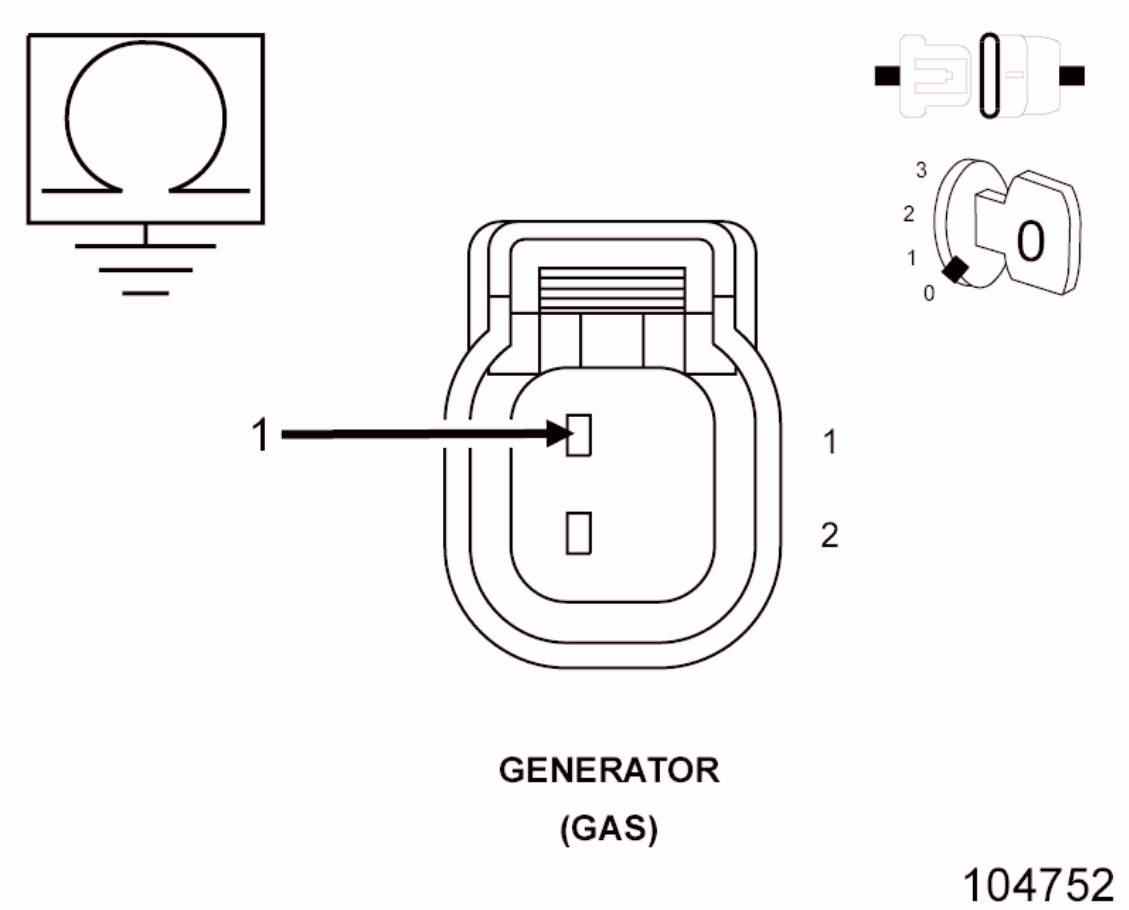

Fig. 3: Checking Generator Field Control Circuit For Short To Ground
Courtesy of CHRYSLER GROUP, LLC

1. Turn the ignition off.
2. Measure the resistance between ground and the (K20) Generator Field

Control circuit in the Generator harness connector.

Is the resistance above 10k Ohms?

Yes

- Repair the (K20) Generator Field Control circuit for a short to ground.
- Perform the POWERTRAIN VERIFICATION TEST. Refer to **POWERTRAIN VERIFICATION TEST** .

No

- Go To 4

4. **CHECK THE (K20) GENERATOR FIELD CONTROL CIRCUIT FOR AN OPEN/HIGH RESISTANCE**
   1. Measure the resistance of the (K20) Generator Field Control circuit between the Generator harness connector and the PCM C2 harness connector.

   Is the resistance below 5.0 Ohms?

   Yes

   - Go To 5

   No

   - Repair the (K20) Generator Field Control circuit for an open or high resistance.
   - Perform the POWERTRAIN VERIFICATION TEST. Refer to **POWERTRAIN VERIFICATION TEST** .
5. **GENERATOR**

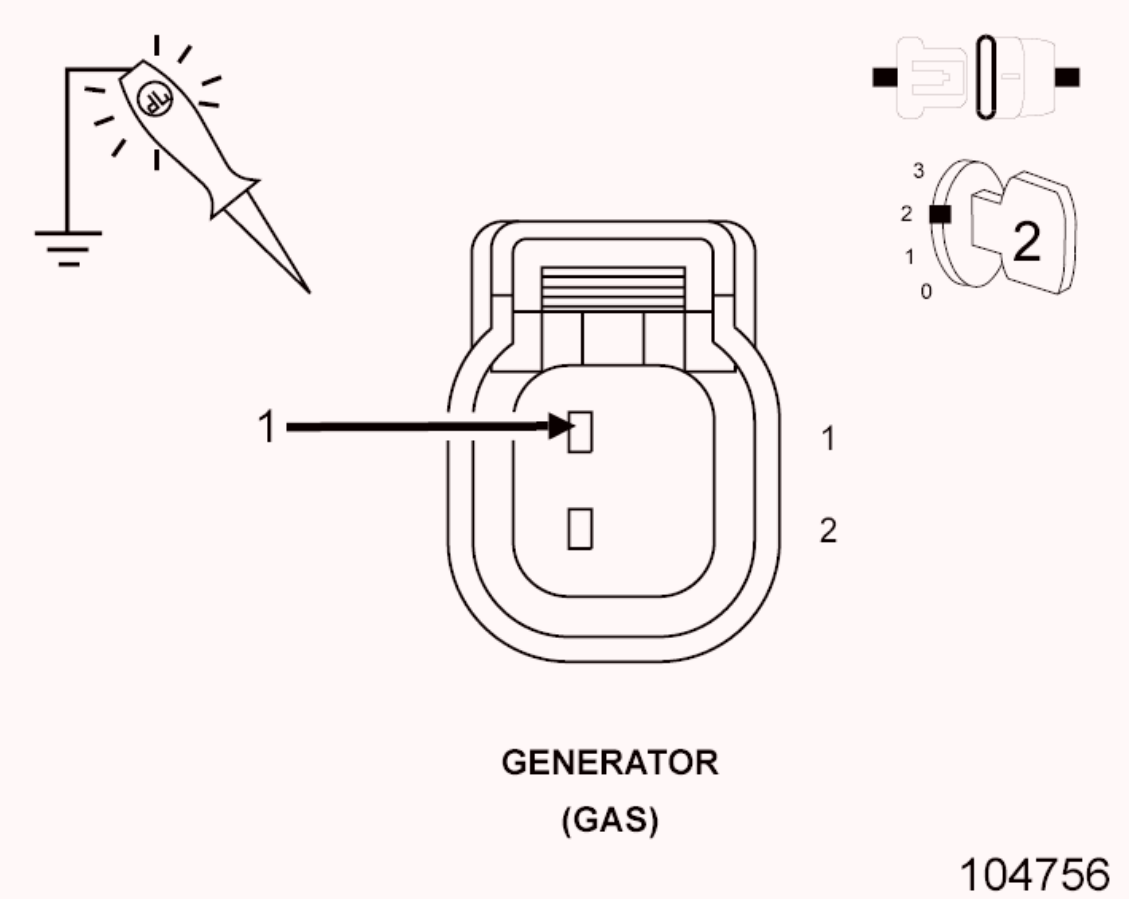

Fig. 4: Checking Generator Field Control Circuit
Courtesy of CHRYSLER GROUP, LLC

1. Connect the PCM C2 harness connector.
2. Turn the ignition on.
3. With the scan tool, actuate the Generator field control to the ON (100%) position.
4. Using a 12-volt test light connected to ground, check the (K20) Generator Field Control circuit in the Generator harness connector.

NOTE: The test light should be illuminated and bright. Compare the brightness to that of a direct connection to the battery.

5. With the scan tool, actuate the Generator field control to the OFF (0%) position.
6. Using a 12-volt test light connected to ground, check the (K20) Generator Field Control circuit in the Generator harness connector.

NOTE: The test light should not be illuminated.

Is the test light illuminated and bright with the actuation ON (100%) and not illuminated with the actuation OFF (0%)?

Yes

- Replace the Generator in accordance with the Service Information. Refer to **GENERATOR, REMOVAL** .
- Perform the POWERTRAIN VERIFICATION TEST. Refer to **POWERTRAIN VERIFICATION TEST** .

No

- Go To 6

6. **POWERTRAIN CONTROL MODULE (PCM)**
   1. Using the wiring diagram/schematic as a guide, inspect the wiring and connectors between the Generator and the Powertrain Control Module (PCM).
   2. Look for any chafed, pierced, pinched, or partially broken wires.
   3. Look for broken, bent, pushed out or corroded terminals.
   4. Perform any Technical Service Bulletins that may apply.

   Were any problems found?

   Yes

   - Repair as necessary.
   - Perform the POWERTRAIN VERIFICATION TEST. Refer to **POWERTRAIN VERIFICATION TEST** .

   No

   - Replace and program the Powertrain Control Module (PCM) in accordance with the service information. Refer to **MODULE, POWERTRAIN CONTROL, REMOVAL** .
   - Perform the POWERTRAIN VERIFICATION TEST. Refer to **POWERTRAIN VERIFICATION TEST** .

P0627-FUEL PUMP CONTROL CIRCUIT OPEN

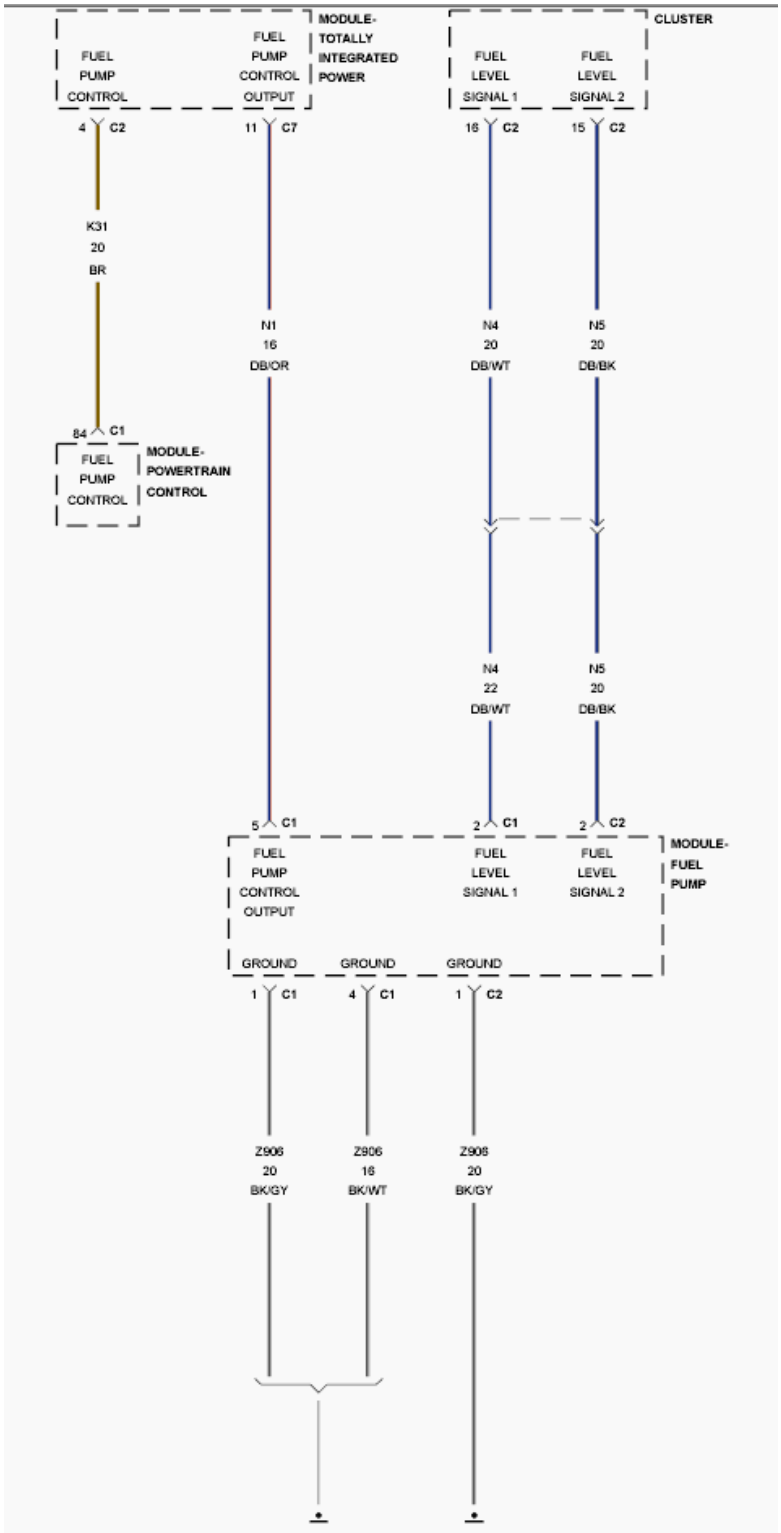

Fig. 5: Fuel Pump Circuit Diagram
Courtesy of CHRYSLER GROUP, LLC

For a complete wiring diagram, **refer to appropriate SYSTEM WIRING DIAGRAMS article** .

WHEN MONITORED

With the engine running and the battery voltage greater than 10.4 Volts.

SET CONDITION

The Powertrain Control Module (PCM) detects that the actual state of the fuel pump control does not match the intended state.

POSSIBLE CAUSES

Possible Causes
(K31) FUEL PUMP CONTROL CIRCUIT SHORTED TO VOLTAGE
(K31) FUEL PUMP CONTROL CIRCUIT SHORTED TO GROUND
(K31) FUEL PUMP CONTROL CIRCUIT OPEN OR HIGH RESISTANCE
TOTALLY INTEGRATED POWER MODULE (TIPM)
POWERTRAIN CONTROL MODULE (PCM)

Always perform the Pre-Diagnostic Troubleshooting procedure before proceeding. Refer to PRE-DIAGNOSTIC TROUBLESHOOTING PROCEDURE .

DIAGNOSTIC TEST

1. **ACTIVE DTC**
   1. Attempt to start the engine. If the engine will not start, crank the engine for five seconds.

      WARNING: **When the engine is operating, do not stand in direct line with the fan. Do not put your hands near the pulleys, belts or fan. Do not wear loose clothing. Failure to follow these instructions may result in possible serious or fatal injury.**

   2. Using the scan tool, read the active DTCs.

      Does the scan tool display P0627-FUEL PUMP CONTROL CIRCUIT/OPEN?

Yes

- Go To 2

No

- Test complete, the condition or conditions that originally set this DTC are not present at this time. Using the wiring diagrams as a guide, check all related splices and connectors for signs of water intrusion, corrosion, pushed out or bent terminals, and correct pin tension.
- Perform the INTERMITTENT CONDITION diagnostic procedure. Refer to **INTERMITTENT CONDITION** .

2. **CHECK THE (K31) FUEL PUMP CONTROL CIRCUIT FOR A SHORT TO VOLTAGE**

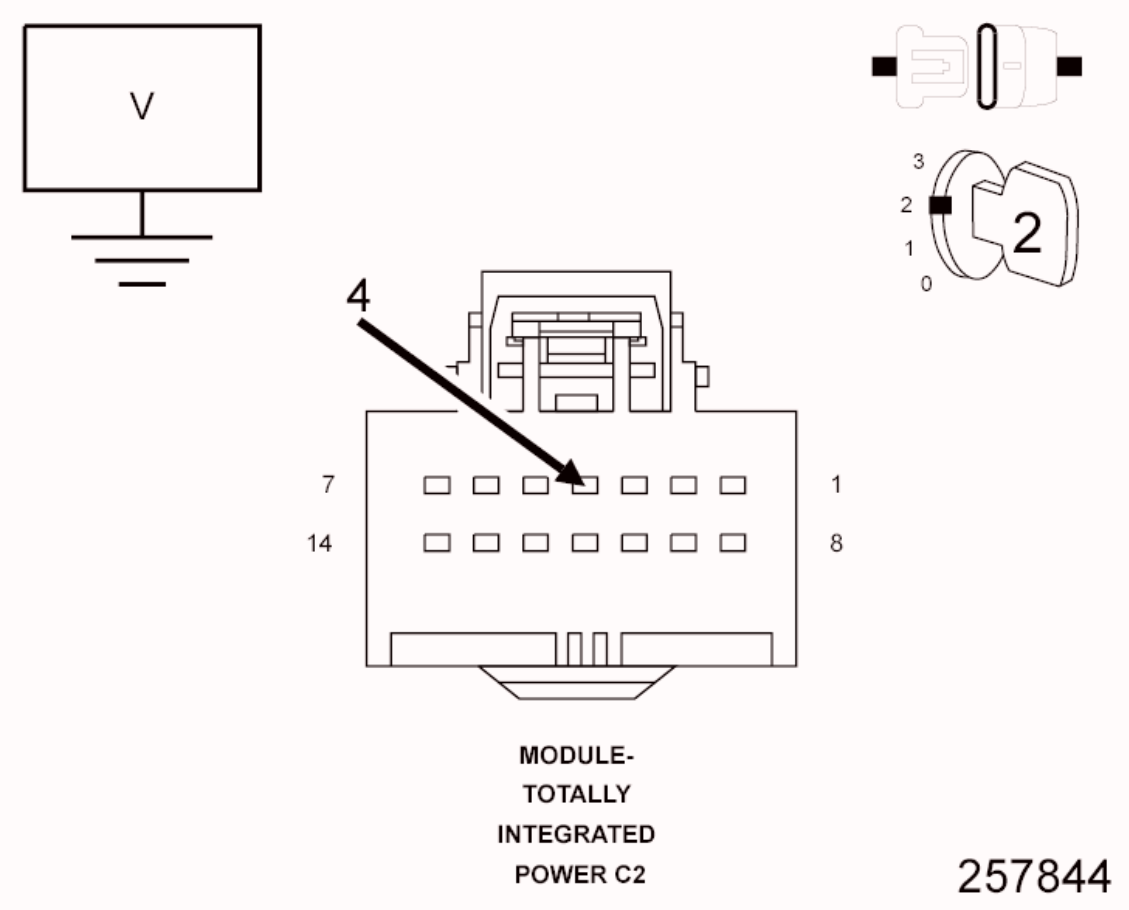

Fig. 6: Checking Fuel Pump Control Circuit For Short To Voltage
Courtesy of CHRYSLER GROUP, LLC

1. Turn the ignition off.

2. Disconnect the TIPM C2 harness connector.
3. Disconnect the PCM C1 harness connector.
4. Turn the ignition on.
5. Measure the voltage of the (K31) Fuel Pump Control circuit in the TIPM C2 harness connector.

   Is there any voltage present?

   Yes

   - Repair the short to voltage in the (K31) Fuel Pump Control circuit.
   - Perform the POWERTRAIN VERIFICATION TEST. Refer to **POWERTRAIN VERIFICATION TEST** .

   No

   - Go To 3

3. **CHECK THE (K31) FUEL PUMP CONTROL CIRCUIT FOR A SHORT TO GROUND**

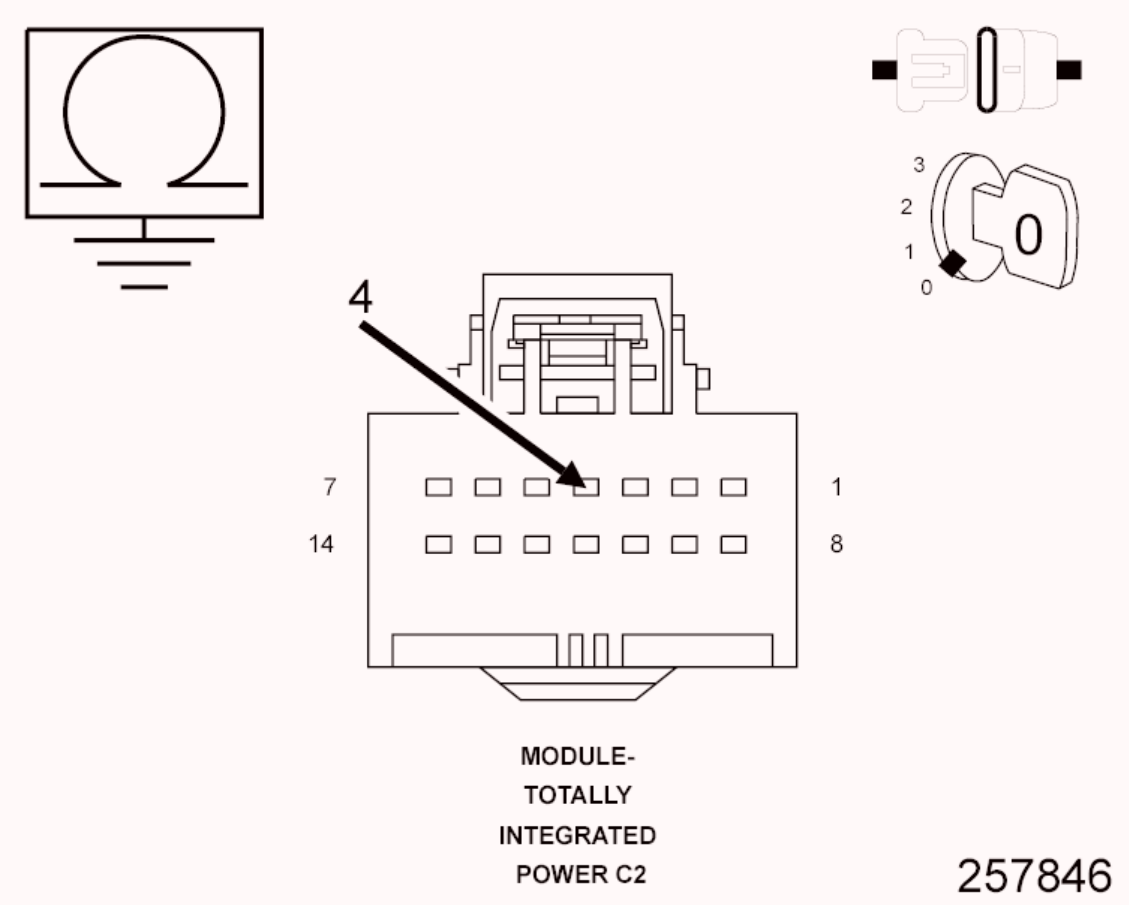

Fig. 7: Checking Fuel Pump Control Circuit For Short To Ground
Courtesy of CHRYSLER GROUP, LLC

1. Turn the ignition off.
2. Measure the resistance between ground and the (K31) Fuel Pump Control circuit in the TIPM C2 harness connector.

   Is the resistance above 10k Ohms?

   Yes

   - Go To 4

   No

   - Repair the (K31) Fuel Pump Control circuit for a short to ground.
   - Perform the POWERTRAIN VERIFICATION TEST. Refer to **POWERTRAIN VERIFICATION TEST** .

4. **CHECK THE (K31) FUEL PUMP CONTROL CIRCUIT FOR AN OPEN/HIGH RESISTANCE**

CAUTION: Do not probe the PCM harness connectors. Probing the PCM harness connectors will damage the PCM terminals resulting in poor terminal to pin connection. Install the GPEC Diagnostic Adaptor to perform the diagnosis.

1. Connect the (special tool #10436, Adapter, GPEC Diagnostic).
2. Measure the resistance of the (K31) Fuel Pump Control circuit between the TIPM C2 harness connector and the GPEC Adaptor.

   Is the resistance below 5.0 Ohms?

   Yes

   - Go To 5

   No

   - Repair the open or high resistance in the (K31) Fuel Pump Control circuit.
   - Perform the POWERTRAIN VERIFICATION TEST. Refer to **POWERTRAIN VERIFICATION TEST** .

5. **TOTALLY INTEGRATED POWER MODULE (TIPM)**
   1. Reconnect the PCM C1 harness connector.
   2. Connect a jumper between ground and the (K31) Fuel Pump Control circuit in the TIPM C2 harness connector.
   3. Turn the ignition on.
   4. Using the scan tool, select View DTCs.

      Is the status Active for the Fuel Pump Control circuit shorted low DTC?

      Yes

      - Replace the Totally Integrated Power Module (TIPM) in accordance with the service information.
      - Perform the BODY VERIFICATION TEST. Refer to **STANDARD PROCEDURE** .

No

- Go To 6

6. **POWERTRAIN CONTROL MODULE (PCM)**
   1. Using the wiring diagram/schematic as a guide, inspect the wiring and connectors between the Totally Integrated Power Module (TIPM) and the Powertrain Control Module (PCM).
   2. Look for any chafed, pierced, pinched or partially broken wires.
   3. Look for broken, bent, pushed out or corroded terminals.
   4. Perform any Technical Service Bulletins that may apply.

   Were any problems found?

   Yes

   - Repair as necessary.
   - Perform the POWERTRAIN VERIFICATION TEST. Refer to **POWERTRAIN VERIFICATION TEST** .

   No

   - Replace and program the Powertrain Control Module (PCM) in accordance with the service information. Refer to **MODULE, POWERTRAIN CONTROL, REMOVAL** .
   - Perform the POWERTRAIN VERIFICATION TEST. Refer to **POWERTRAIN VERIFICATION TEST** .

P062C-ETC LEVEL 2 MPH PERFORMANCE

For a complete wiring diagram, **refer to appropriate SYSTEM WIRING DIAGRAMS article** .

WHEN MONITORED

With the ignition on.

SET CONDITION

When secondary software determines that the vehicle speed is implausible for a period of time. ETC lamp will flash.

POSSIBLE CAUSES

POSSIBLE CAUSES
POWERTRAIN CONTROL MODULE (PCM)

Always perform the Pre-Diagnostic Troubleshooting procedure before proceeding. Refer to PRE-DIAGNOSTIC TROUBLESHOOTING PROCEDURE .

DIAGNOSTIC TEST

1. **DTC IS ACTIVE**

NOTE: If any other DTCs are set, they must be diagnosed and repaired before continuing this test.

NOTE: An intermittent loss of power to the PCM without performing an ETC Relearn procedure may cause this DTC to set.

WARNING: When the engine is operating, do not stand in direct line with the fan. Do not put your hands near the pulleys, belts or fan. Do not wear loose clothing. Failure to follow these instructions may result in possible serious or fatal injury.

1. Turn the ignition on.
2. With the scan tool, clear DTCs in the Powertrain Control Module (PCM).
3. Verify the Powertrain Control Module (PCM) is at the latest calibration (flash level). If necessary, update the Powertrain Control Module (PCM) in accordance with the Service Information.
4. Start the engine and allow it to reach operating temperature.
5. Increase engine speed by pressing the accelerator pedal. Do not exceed 3500 RPM.
6. With the scan tool, select View DTCs.

Is the status Active for this DTC?

Yes

- Go To 2

No

- Perform the INTERMITTENT CONDITION diagnostic procedure. Refer to **INTERMITTENT CONDITION** .

2. **POWERTRAIN CONTROL MODULE (PCM)**
   1. Using the wiring diagram/schematic as a guide, inspect the wiring and connectors between the Throttle Body and the Powertrain Control Module (PCM).
   2. Look for any chafed, pierced, pinched, or partially broken wires.
   3. Look for broken, bent, pushed out or corroded terminals.
   4. Perform any Technical Service Bulletins that may apply.

   Were any problems found?

   Yes

   - Repair as necessary.
   - Perform the POWERTRAIN VERIFICATION TEST. Refer to **POWERTRAIN VERIFICATION TEST** .

   No

   - Replace and program the Powertrain Control Module (PCM) in accordance with the Service Information. Refer to **MODULE, POWERTRAIN CONTROL, REMOVAL** .
   - Perform the POWERTRAIN VERIFICATION TEST. Refer to **POWERTRAIN VERIFICATION TEST** .

P0630-VIN NOT PROGRAMMED IN PCM

For a complete wiring diagram, **refer to appropriate SYSTEM WIRING DIAGRAMS article** .

WHEN MONITORED

At initialization.

SET CONDITION

The VIN has not been programmed into the Powertrain Control Module (PCM). One Trip Fault. Three good trips to turn off the MIL.

POSSIBLE CAUSES

POSSIBLE CAUSES
VIN NOT PROGRAMMED IN THE POWERTRAIN CONTROL MODULE (PCM) POWERTRAIN CONTROL MODULE (PCM)

Always perform the Pre-Diagnostic Troubleshooting procedure before proceeding. Refer to PRE-DIAGNOSTIC TROUBLESHOOTING PROCEDURE .

DIAGNOSTIC TEST

VIN NOT PROGRAMMED IN THE POWERTRAIN CONTROL MODULE (PCM)

1. Ignition on, engine not running.
2. Using the scan tool, program the VIN into the Powertrain Control Module (PCM).
3. Start the engine and allow it to reach normal operating temperature.

   NOTE: If the engine will not start, crank the engine for 15 seconds. Crank at least 2 times with the ignition switch returning to the off position each time.

4. With a scan tool, select View DTCs.

   Is the status Active for this DTC?

   Yes

   - Replace and program the Powertrain Control Module (PCM) in accordance with the Service Information. Refer to **MODULE, POWERTRAIN CONTROL, REMOVAL** .
   - Perform the POWERTRAIN VERIFICATION TEST. Refer to

POWERTRAIN VERIFICATION TEST .

No

- Test complete.
- Perform the POWERTRAIN VERIFICATION TEST. Refer to **POWERTRAIN VERIFICATION TEST** .

P0632-ODOMETER NOT PROGRAMMED IN PCM

For a complete wiring diagram, **refer to appropriate SYSTEM WIRING DIAGRAMS article** .

WHEN MONITORED

Ignition on.

SET CONDITION

The vehicle mileage is not programed into the Powertrain Control Module (PCM). One Trip Fault. Three good trips to turn off the MIL.

POSSIBLE CAUSES

POSSIBLE CAUSES
MILEAGE NOT PROGRAMMED IN THE POWERTRAIN CONTROL MODULE (PCM) POWERTRAIN CONTROL MODULE (PCM)

Always perform the Pre-Diagnostic Troubleshooting procedure before proceeding. Refer to PRE-DIAGNOSTIC TROUBLESHOOTING PROCEDURE .

DIAGNOSTIC TEST

MILEAGE NOT PROGRAMMED IN THE POWERTRAIN CONTROL MODULE (PCM)

1. Ignition on, engine not running.
2. With a scan tool, clear DTCs.
3. Using the scan tool, program the vehicle mileage into the Powertrain Control Module (PCM).

4. Start the engine and allow it to reach normal operating temperature.
5. With a scan tool, select View DTCs.

   Is the status Active for this DTC?

   Yes

   - Replace and program the Powertrain Control Module (PCM) in accordance with the Service Information. Refer to **MODULE, POWERTRAIN CONTROL, REMOVAL** .
   - Perform the PCM VERIFICATION Test. Refer to **POWERTRAIN VERIFICATION TEST** .

   No

   - Test complete.
   - Perform the PCM VERIFICATION Test. Refer to **POWERTRAIN VERIFICATION TEST** .

P0633-SKIM SECRET KEY NOT STORED IN PCM

For a complete wiring diagram, **refer to appropriate SYSTEM WIRING DIAGRAMS article** .

WHEN MONITORED

Ignition on.

SET CONDITION

The Secret Key information has not been programmed into the Powertrain Control Module (PCM). One Trip Fault. Three good trips to turn off the MIL.

POSSIBLE CAUSES

POSSIBLE CAUSES
SECRET KEY INFORMATION NOT PROGRAMMED IN THE POWERTRAIN CONTROL MODULE (PCM)
POWERTRAIN CONTROL MODULE (PCM)

Always perform the Pre-Diagnostic Troubleshooting procedure before

proceeding. Refer to PRE-DIAGNOSTIC TROUBLESHOOTING PROCEDURE .

DIAGNOSTIC TEST

SECRET KEY INFORMATION NOT PROGRAMMED IN THE POWERTRAIN CONTROL MODULE (PCM)

1. Ignition on, engine not running.
2. Using the scan tool, program the Secret Key information into the Powertrain Control Module (PCM) using the PCM Replaced function in the WCM.
3. Start the engine and allow it to reach normal operating temperature.

NOTE: If the engine will not start, crank the engine for 15 seconds. Crank at least two times with the ignition switch returning to the off position each time.

4. With a scan tool, select View DTCs.

   Is the status Active for this DTC?

   Yes

   - Replace and program the Powertrain Control Module (PCM) in accordance with the Service Information. Refer to **MODULE, POWERTRAIN CONTROL, REMOVAL** .
   - Perform the PCM VERIFICATION Test. Refer to **POWERTRAIN VERIFICATION TEST** .

   No

   - Test complete.
   - Perform the PCM VERIFICATION Test. Refer to **POWERTRAIN VERIFICATION TEST** .

P063A-GENERATOR VOLTAGE SENSE CIRCUIT

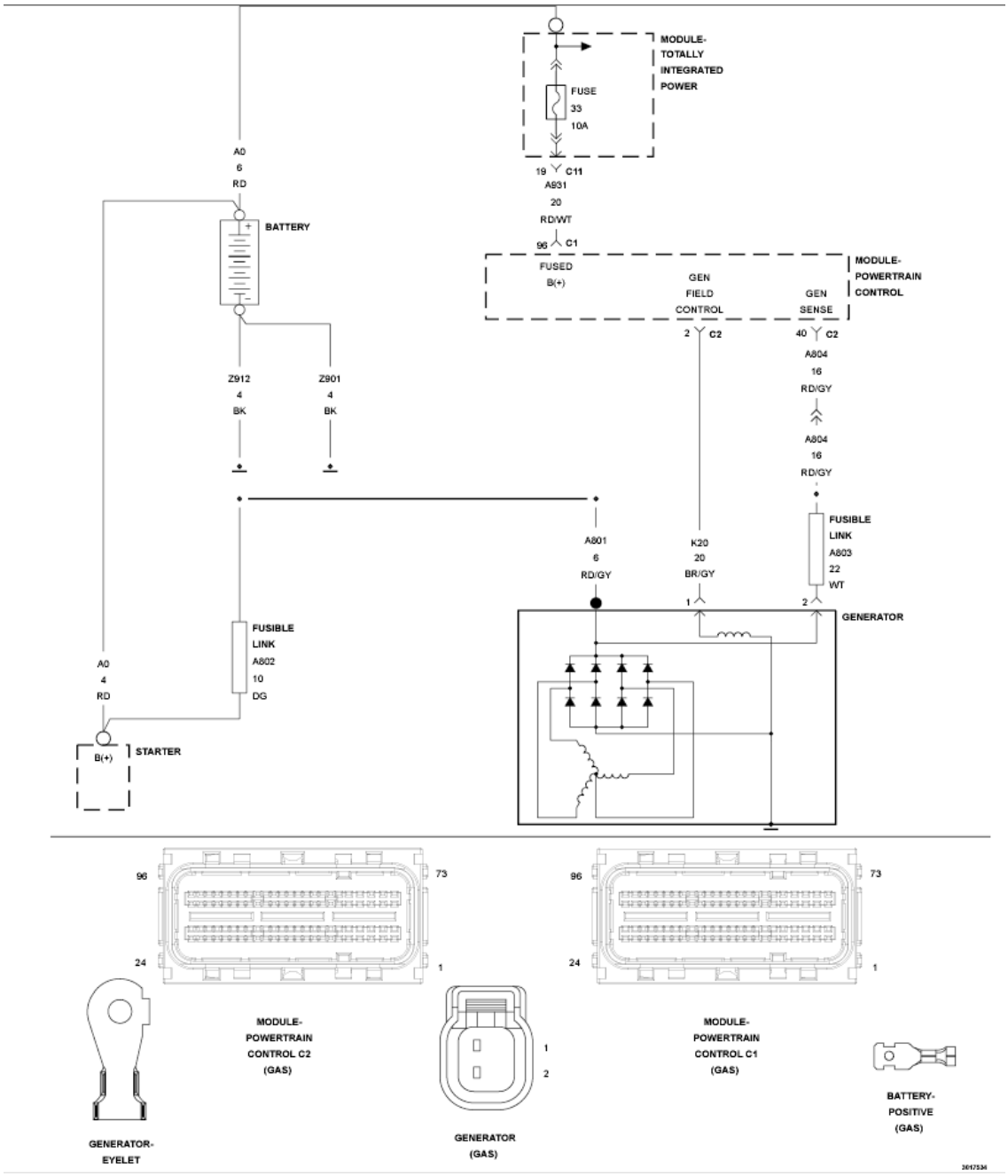

Fig. 8: Charging System Circuit Diagram
Courtesy of CHRYSLER GROUP, LLC

For a complete wiring diagram, **refer to appropriate SYSTEM WIRING DIAGRAMS article** .

WHEN MONITORED

With the engine running and battery voltage greater than 10.4 volts.

SET CONDITION

The Powertrain Control Module (PCM) detects no change when attempting to regulate the generator output.

POSSIBLE CAUSES

POSSIBLE CAUSES
(A804) GEN SENSE CIRCUIT SHORTED TO VOLTAGE
(A804) GEN SENSE CIRCUIT SHORTED TO GROUND
(A804) GEN SENSE CIRCUIT OPEN OR HIGH RESISTANCE
GENERATOR
POWERTRAIN CONTROL MODULE (PCM)

Always perform the Pre-Diagnostic Troubleshooting procedure before proceeding. Refer to PRE-DIAGNOSTIC TROUBLESHOOTING PROCEDURE .

DIAGNOSTIC TEST

1. **ACTIVE DTC**
   1. Start the engine and allow it to reach normal operating temperature.

      WARNING: **When the engine is operating, do not stand in direct line with the fan. Do not put your hands near the pulleys, belts or fan. Do not wear loose clothing. Failure to follow these instructions may result in possible serious or fatal injury.**

   2. With the scan tool, select View DTCs.

      Is the status Active for this DTC?

      Yes

      - Go To 2

      No

      - Perform the INTERMITTENT CONDITION diagnostic procedure. Refer to **INTERMITTENT CONDITION** .

2. CHECK THE (A804) GENERATOR SENSE CIRCUIT FOR A SHORT TO VOLTAGE

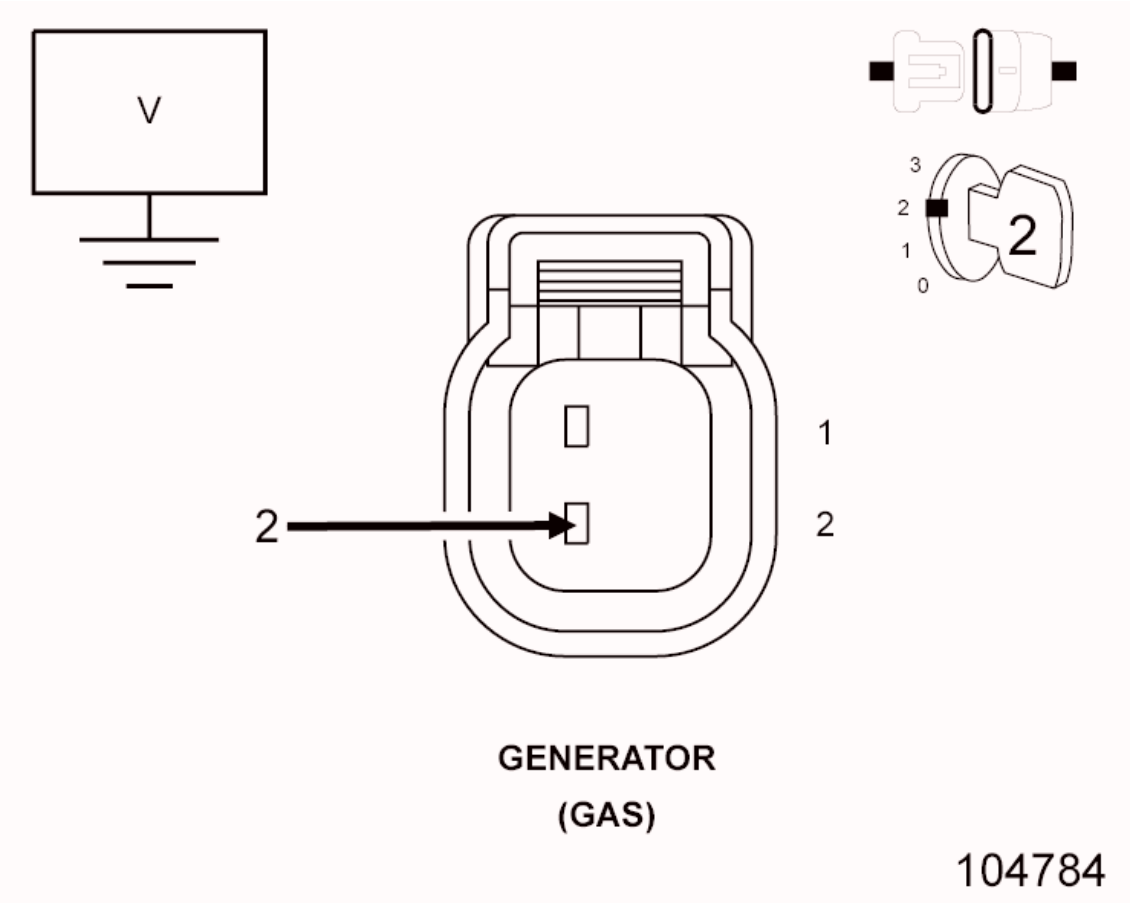

Fig. 9: Checking Generator Sense Circuit For Short To Voltage
Courtesy of CHRYSLER GROUP, LLC

1. Turn the ignition off.
2. Disconnect the Generator harness connector.
3. Disconnect the PCM C2 harness connector.
4. Turn the ignition on.
5. Measure the voltage of the (A804) Generator Sense circuit in the Generator harness connector.

   Is there any voltage present?

   Yes

   - Repair the (A804) Generator Sense circuit for a short to voltage.
   - Perform the PCM VERIFICATION Test. Refer to

POWERTRAIN VERIFICATION TEST .

No

- Go To 3

3. **CHECK THE (A804) GENERATOR SENSE CIRCUIT FOR A SHORT TO GROUND**

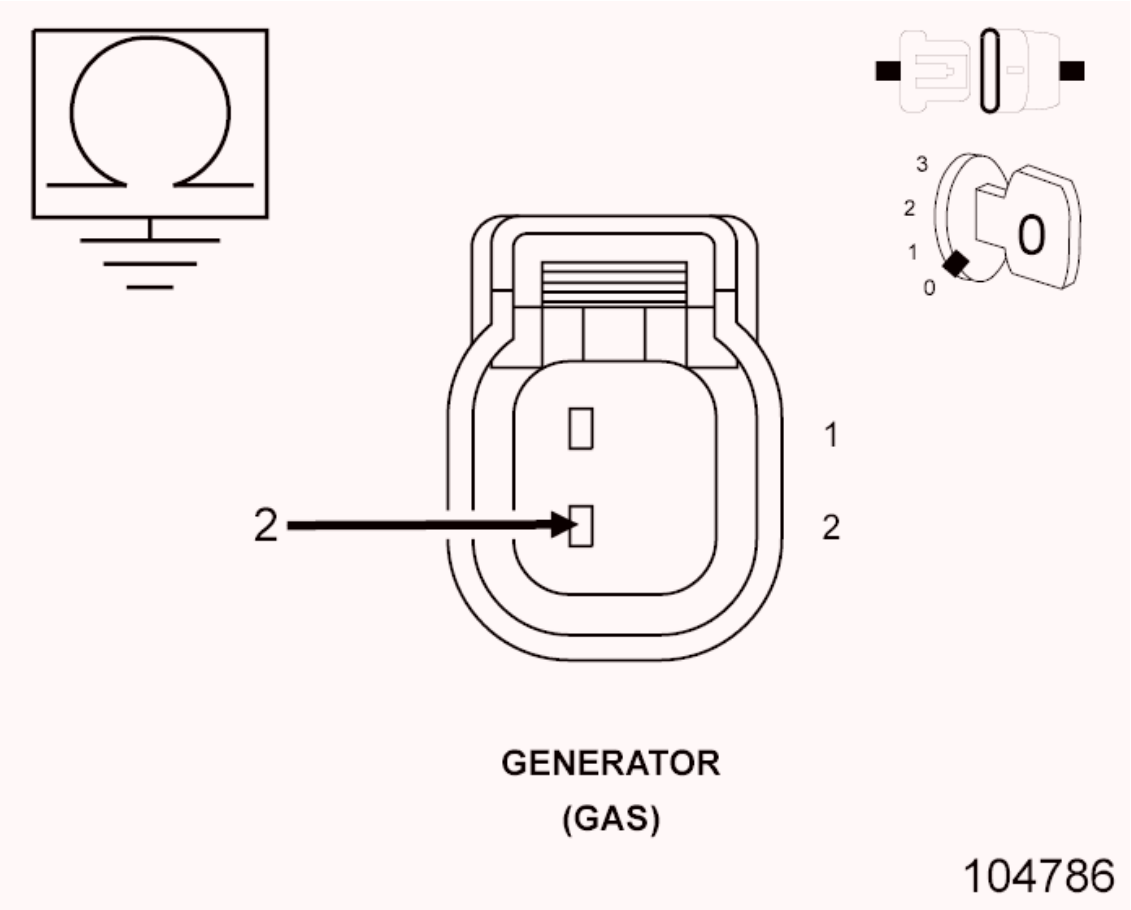

Fig. 10: Checking Generator Sense Circuit For Short To Ground
Courtesy of CHRYSLER GROUP, LLC

1. Turn the ignition off.
2. Measure the resistance between ground and the (A804) Generator Sense circuit in the Generator harness connector.

   Is the resistance above 10k Ohms?

   Yes

   - Go To 4

No

- Repair the (A804) Generator Sense circuit for a short to ground.
- Perform the PCM VERIFICATION Test. Refer to **POWERTRAIN VERIFICATION TEST** .

4. **CHECK THE (A804) GENERATOR SENSE CIRCUIT FOR AN OPEN/HIGH RESISTANCE**

CAUTION: Do not probe the PCM harness connectors. Probing the PCM harness connectors will damage the PCM terminals resulting in poor terminal to pin connection. Install the GPEC Diagnostic Adaptor to perform the diagnosis.

1. Connect the (special tool #10436, Adapter, GPEC Diagnostic).
2. Measure the resistance of the (A804) Generator Sense circuit between the Generator harness connector and the GPEC Adaptor.

Is the resistance below 5.0 Ohms?

Yes

- Go To 5

No

- Repair the (A804) Generator Sense circuit for an open or high resistance.
- Perform the PCM VERIFICATION Test. Refer to **POWERTRAIN VERIFICATION TEST** .

5. **GENERATOR**

WARNING: When the engine is operating, do not stand in direct line with the fan. Do not put your hands near the pulleys, belts or fan. Do not wear loose clothing. Failure to follow these instructions may result in possible serious or fatal injury.

1. Connect the Generator harness connector.

CAUTION: Do not probe the PCM harness connectors. Probing the PCM harness connectors will damage the PCM terminals resulting in poor terminal to pin connection. Install the GPEC Diagnostic Adaptor to perform the diagnosis.

2. Connect the (special tool #10436, Adapter, GPEC Diagnostic) in line with the PCM C2 harness connector.
3. Turn the ignition on.
4. measure the voltage of the (K20) Generator Field Control circuit at the GPEC Adaptor.
5. Start the engine.
6. With the scan tool, perform the Generator Full Field test.
7. Monitor the voltage of the (K20) Generator Field Control circuit with the Generator Full Field test actuated.

NOTE: The voltage should increase more than 1.0 volt.

Does the voltage increase by at least 1.0 volt with the Generator Full Field Test on?

Yes

- Go To 6

No

- Replace the Generator in accordance with the service information.
- Perform the PCM VERIFICATION Test. Refer to **POWERTRAIN VERIFICATION TEST** .

6. **POWERTRAIN CONTROL MODULE (PCM)**
   1. Using the wiring diagram/schematic as a guide, inspect the wiring and connectors between the Generator and the Powertrain Control Module (PCM).

2. Look for any chafed, pierced, pinched, or partially broken wires.
3. Look for broken, bent, pushed out or corroded terminals.
4. Perform any Technical Service Bulletins that may apply.

Were any problems found?

Yes

- Repair as necessary.
- Perform the PCM VERIFICATION Test. Refer to **POWERTRAIN VERIFICATION TEST** .

No

- Replace and program the Powertrain Control Module (PCM) in accordance with the service information. Refer to **MODULE, POWERTRAIN CONTROL, REMOVAL** .
- Perform the PCM VERIFICATION Test. Refer to **POWERTRAIN VERIFICATION TEST** .

P0642-SENSOR REFERENCE VOLTAGE 1 CIRCUIT LOW

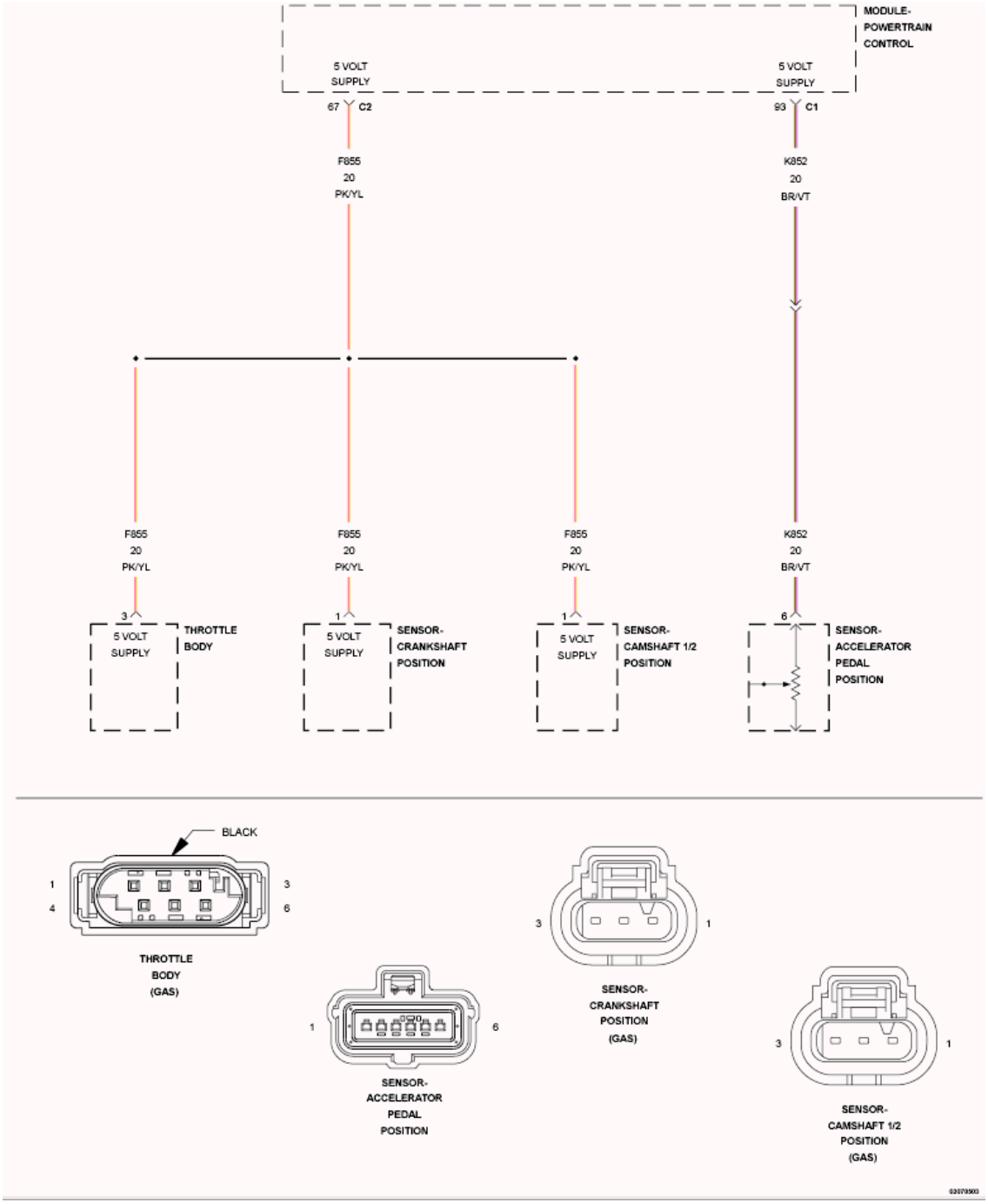

Fig. 11: Sensor Reference Circuit Diagram
Courtesy of CHRYSLER GROUP, LLC

For a complete wiring diagram, **refer to appropriate SYSTEM WIRING DIAGRAMS article** .

WHEN MONITORED

With the ignition on.

SET CONDITION

The Powertrain Control Module (PCM) detects low voltage on the 5-Volt supply circuit.

POSSIBLE CAUSES

Possible Causes
5-VOLT SUPPLY CIRCUIT SHORTED TO GROUND
ACCELERATOR PEDAL POSITION SENSOR
CAMSHAFT 2 POSITION SENSOR
CRANKSHAFT POSITION SENSOR
THROTTLE POSITION SENSOR
POWERTRAIN CONTROL MODULE (PCM)

Always perform the Pre-Diagnostic Troubleshooting procedure before proceeding. Refer to PRE-DIAGNOSTIC TROUBLESHOOTING PROCEDURE .

DIAGNOSTIC TEST

1. **ACTIVE DTC**
   1. Attempt to start the engine. If the engine will not start, crank the engine for five seconds.

      WARNING: **When the engine is operating, do not stand in direct line with the fan. Do not put your hands near the pulleys, belts or fan. Do not wear loose clothing. Failure to follow these instructions may result in possible serious or fatal injury.**

   2. With the scan tool, select View DTCs.

      Is the status Active for this DTC?

      Yes

      - Go To 2

      No

- Perform the INTERMITTENT CONDITION diagnostic procedure. Refer to **INTERMITTENT CONDITION** .

2. **CHECK THE (F855) PRIMARY 5-VOLT SUPPLY VOLTAGE**

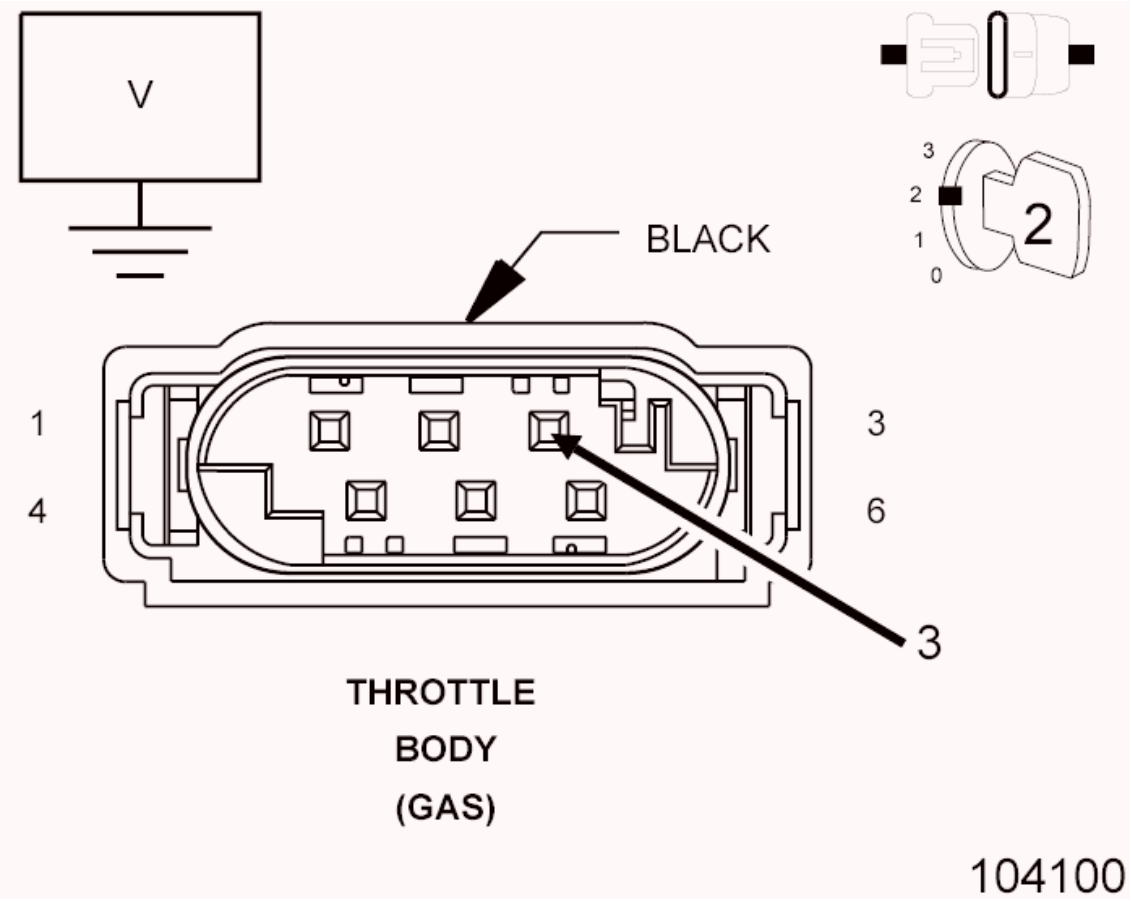

Fig. 12: Checking 5-Volt Supply Circuit
Courtesy of CHRYSLER GROUP, LLC

1. Turn the ignition off.
2. Disconnect the Throttle Body harness connector.
3. Turn the ignition on.
4. Measure the voltage of the (F855) 5-Volt Supply circuit in the Throttle Body harness connector.

   Is the voltage between 4.8 and 5.2 volts?

   Yes

   - Go To 3

No

- Go To 4

3. **THROTTLE BODY**

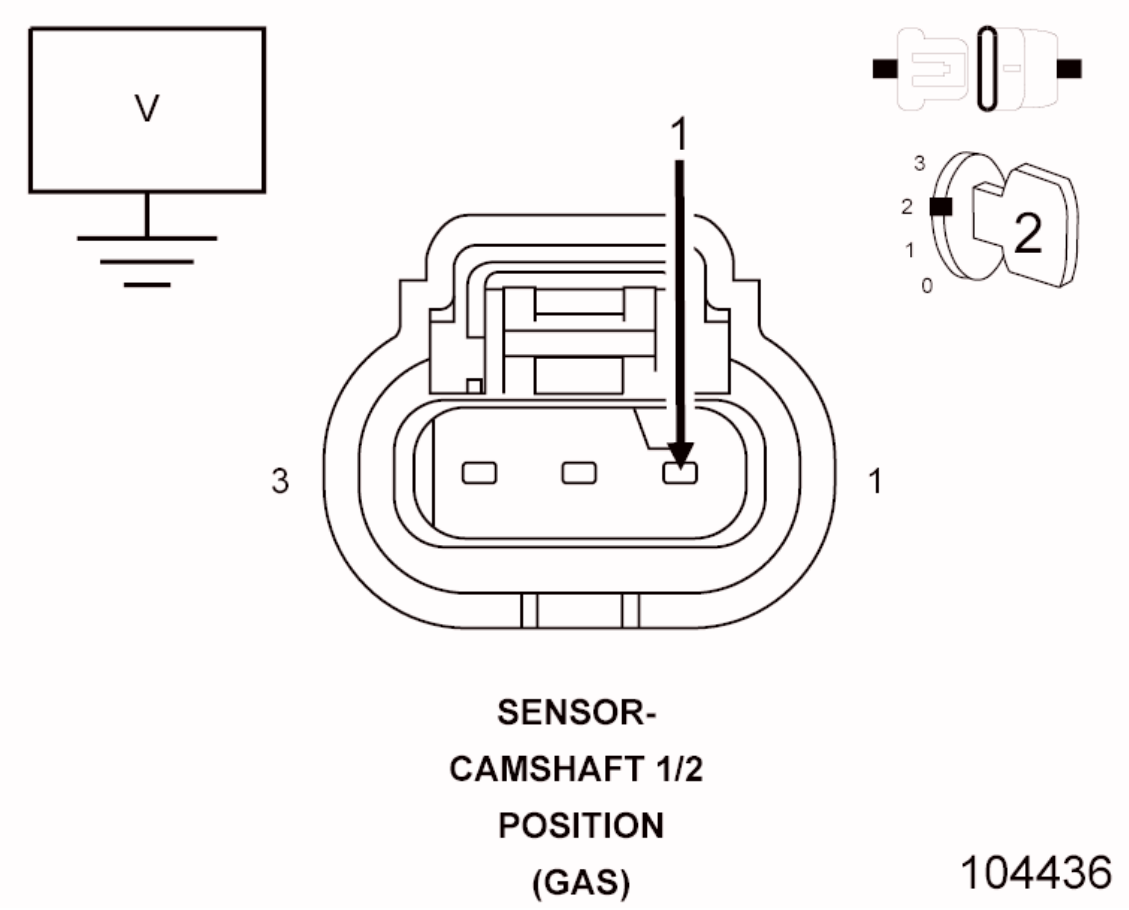

Fig. 13: Checking Camshaft 1/2 Position Sensor 5-Volt Supply Circuit
Courtesy of CHRYSLER GROUP, LLC

1. Turn the ignition off.
2. Connect the Throttle Body harness connector.
3. Disconnect the Camshaft 1/2 Position Sensor harness connector.
4. Turn the ignition on.
5. Measure the voltage of the (F855) 5-Volt Supply circuit at the Camshaft 1/2 Position Sensor harness connector.

   Is the voltage between 4.8 and 5.2 volts?

   Yes

- Replace the Throttle Body in accordance with the service information because the Throttle Body is pulling the 5-Volt supply low.
- Perform the POWERTRAIN VERIFICATION TEST. Refer to **POWERTRAIN VERIFICATION TEST** .

No

- Go To 8

4. **CAMSHAFT 1/2 POSITION SENSOR**

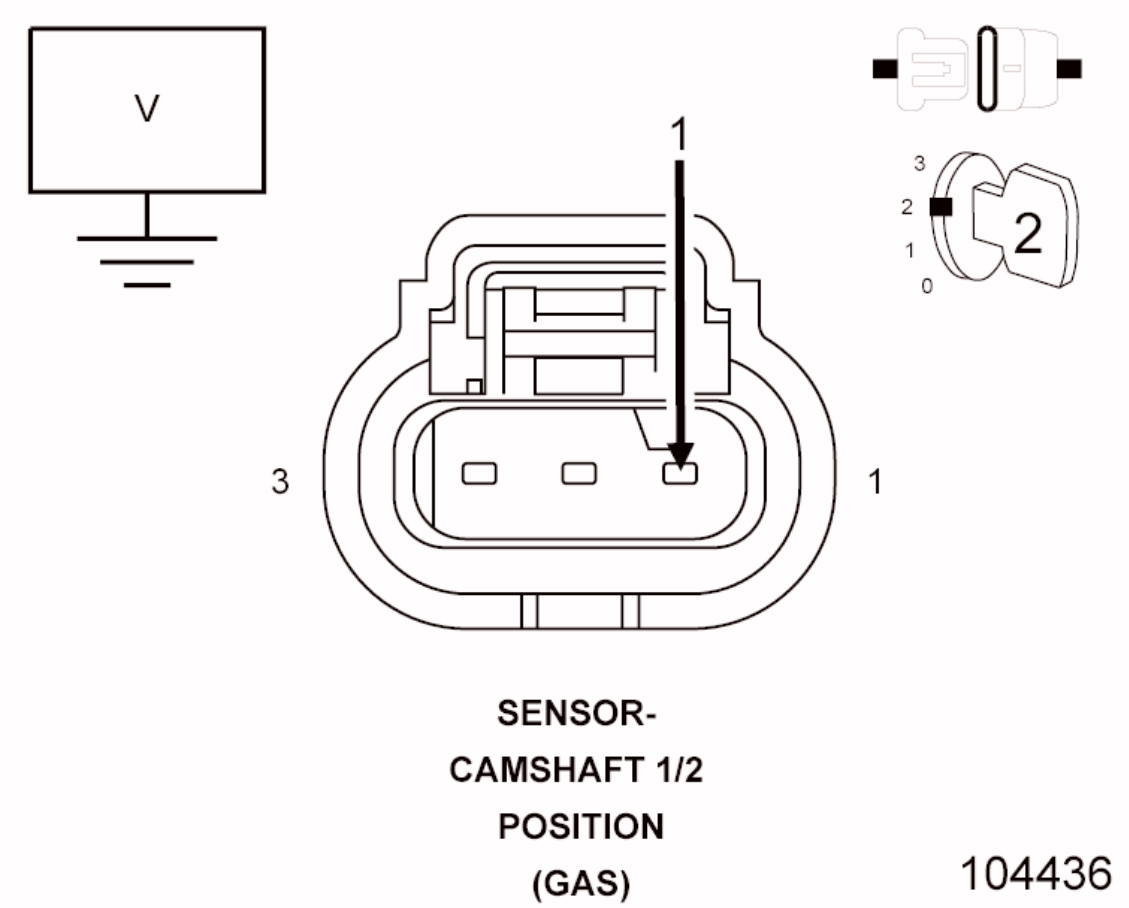

Fig. 14: Checking Camshaft 1/2 Position Sensor 5-Volt Supply Circuit
Courtesy of CHRYSLER GROUP, LLC

1. Turn the ignition off.
2. Disconnect the Camshaft 1/2 Position Sensor harness connector.
3. Turn the ignition on.
4. Continue measuring the voltage of the (F855) 5-Volt Supply circuit at the Throttle Body harness connector.

Is the voltage between 4.8 and 5.2 volts?

Yes

- Replace the Camshaft 1/2 Position Sensor.
- Perform the POWERTRAIN VERIFICATION TEST. Refer to **POWERTRAIN VERIFICATION TEST** .

No

- Go To 5

5. **CRANKSHAFT POSITION SENSOR**

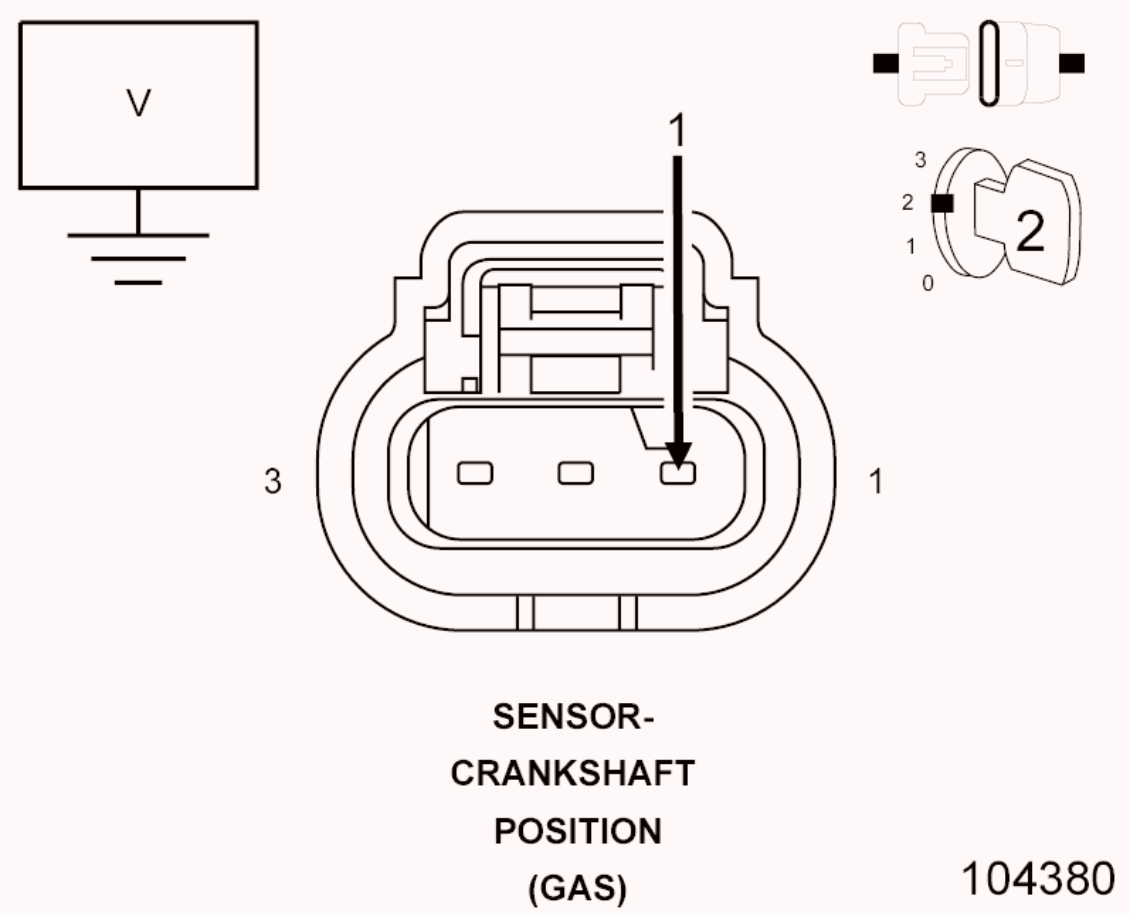

Fig. 15: Checking CKP Sensor 5-Volt Supply Circuit
Courtesy of CHRYSLER GROUP, LLC

1. Turn the ignition off.
2. Disconnect the Crankshaft Position Sensor harness connector.
3. Turn the ignition on.

4. Continue measuring the voltage of the (F855) 5-Volt Supply circuit at the Throttle Body harness connector.

   Is the voltage between 4.8 and 5.2 volts?

   Yes

   - Replace the Crankshaft Position Sensor.
   - Perform the POWERTRAIN VERIFICATION TEST. Refer to **POWERTRAIN VERIFICATION TEST** .

   No

   - Go To 6

6. **ACCELERATOR PEDAL POSITION SENSOR**

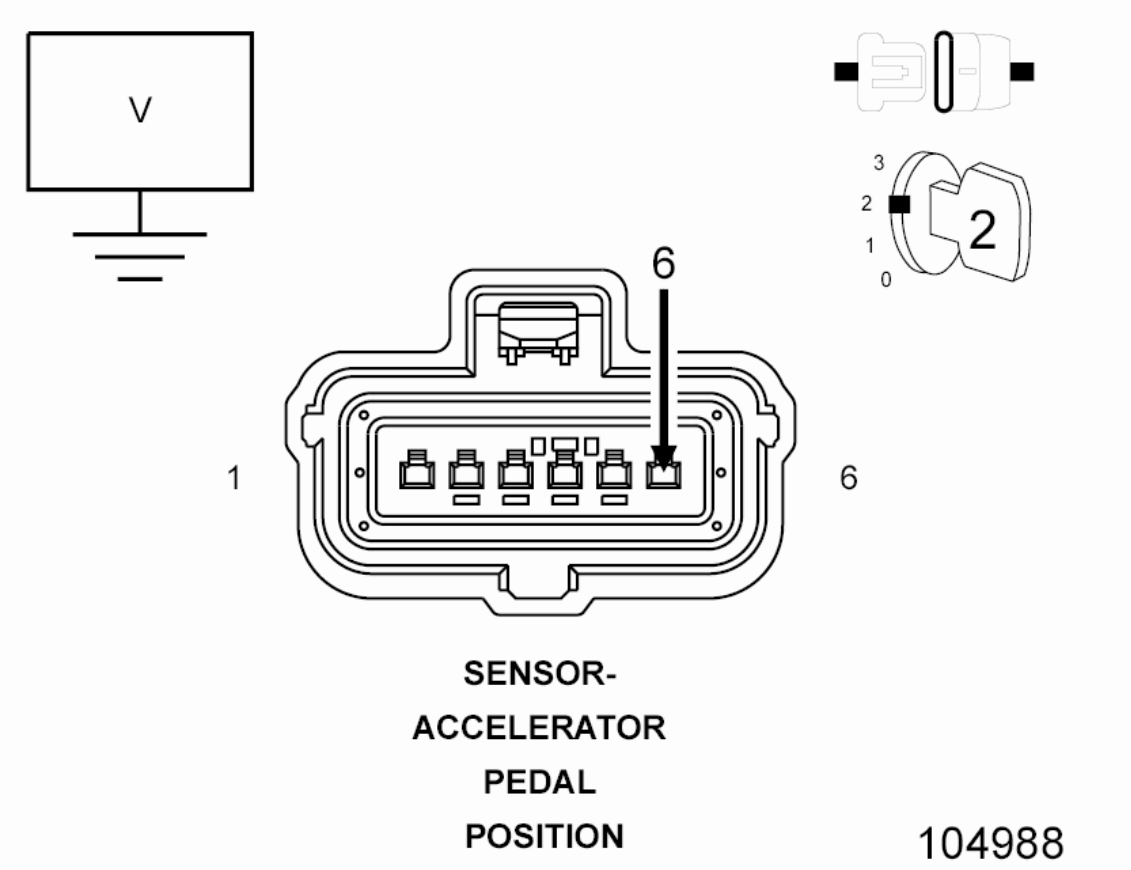

Fig. 16: Checking APP Sensor 5-Volt Supply Circuit
Courtesy of CHRYSLER GROUP, LLC

1. Turn the ignition off.

2. Disconnect the APP Sensor harness connector.
3. Turn the ignition on.
4. Continue measuring the voltage of the (F855) 5-Volt Supply circuit at the Throttle Body harness connector.

   Is the voltage between 4.8 and 5.2 Volts?

   Yes

   - Replace the Throttle Body in accordance with the service information.
   - Perform the POWERTRAIN VERIFICATION TEST. Refer to **POWERTRAIN VERIFICATION TEST** .

   No

   - Go To 7

7. **CHECK THE 5-VOLT SUPPLY CIRCUITS FOR A SHORT TO GROUND**

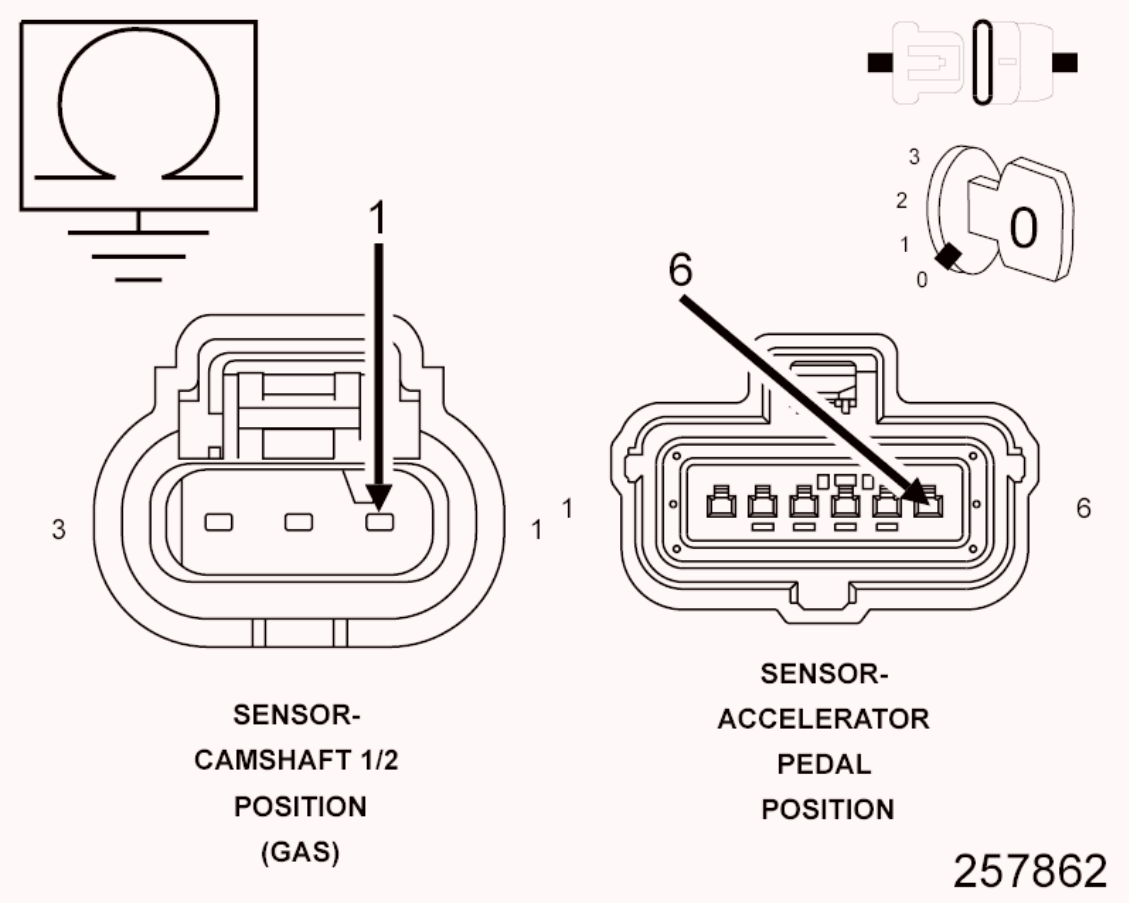

Fig. 17: Checking 5-Volt Supply Circuit For Short To Ground
Courtesy of CHRYSLER GROUP, LLC

1. Turn the ignition off.
2. Disconnect the PCM harness connectors.
3. Measure the resistance between ground and the (F855) 5-Volt Supply circuit.
4. Measure the resistance between ground and the (K852) 5-Volt Supply circuit.

   Is the resistance above 10k Ohms for both circuits?

   Yes

   - Go To 8

   No

   - Repair the 5-Volt Supply circuit for a short to ground.
   - Perform the POWERTRAIN VERIFICATION TEST. Refer to

POWERTRAIN VERIFICATION TEST .

8. **POWERTRAIN CONTROL MODULE (PCM)**
   1. Inspect the (F855) 5-Volt Supply circuit between the Camshaft 1/2 Position Sensor harness connector and the PCM harness connector.
   2. Inspect the (F855) 5-Volt Supply circuit between the Crankshaft Position Sensor harness connector and the PCM harness connector.
   3. Inspect the (F855) 5-Volt Supply circuit between the Throttle Body harness connector and the PCM harness connector.
   4. Inspect the (K852) 5-Volt Supply circuit between the Accelerator Pedal Position Sensor harness connector and the PCM harness connector.
   5. If the vehicle is equipped with a manual transmission, inspect the (F856) 5-Volt Supply circuit between the Vehicle Speed Sensor harness connector and the PCM harness connector.
   6. Look for any chafed, pierced, pinched, or partially broken wires.
   7. Look for broken, bent, pushed out or corroded terminals.
   8. Perform any Technical Service Bulletins that may apply.

   Were any problems found?

   Yes

   - Repair as necessary.
   - Perform the POWERTRAIN VERIFICATION TEST. Refer to **POWERTRAIN VERIFICATION TEST** .

   No

   - Replace and program the Powertrain Control Module (PCM) in accordance with the service information. Refer to **MODULE, POWERTRAIN CONTROL, REMOVAL** .
   - Perform the POWERTRAIN VERIFICATION TEST. Refer to **POWERTRAIN VERIFICATION TEST** .

P0643-SENSOR REFERENCE VOLTAGE 1 CIRCUIT HIGH

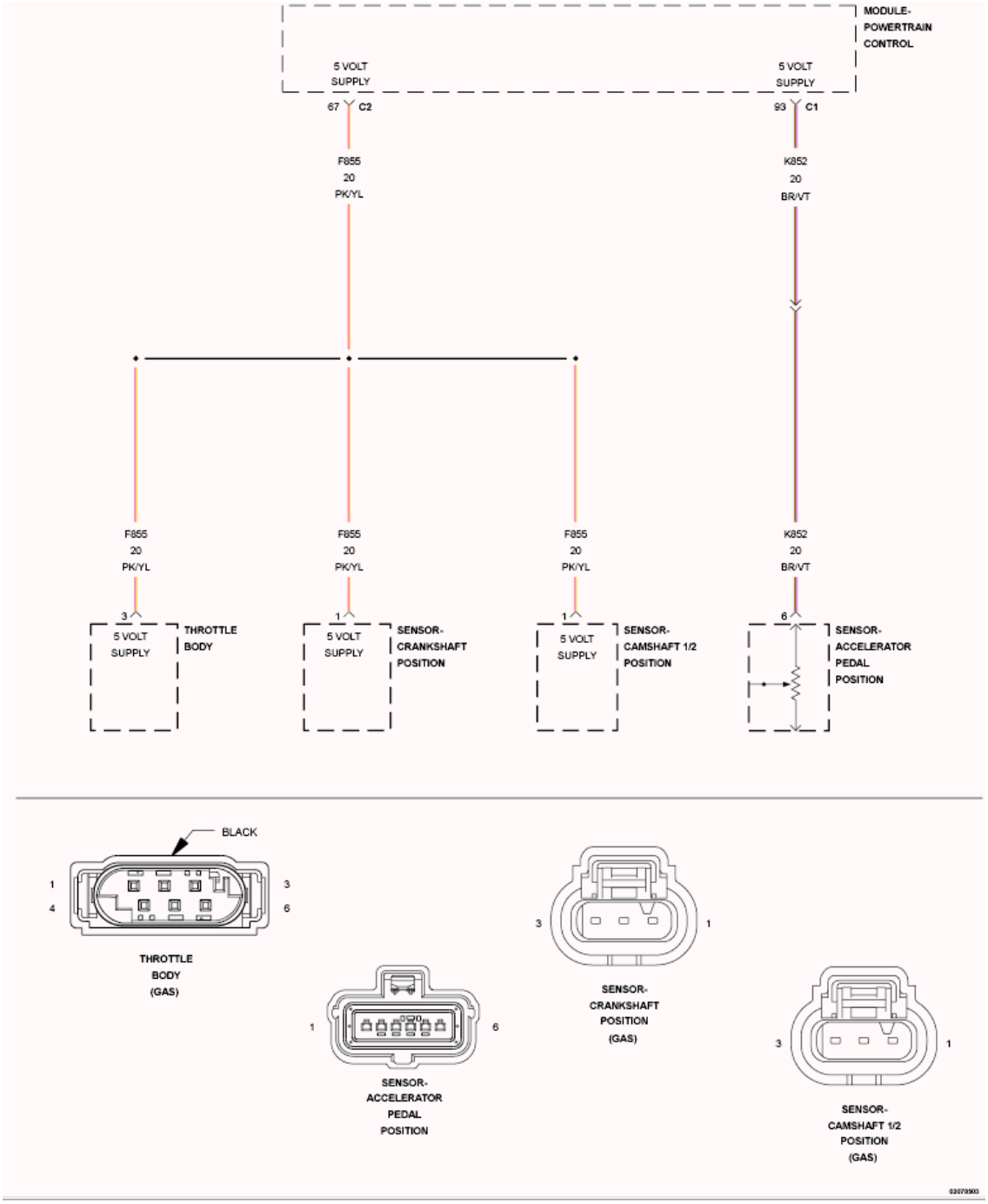

Fig. 18: Sensor Reference Circuit Diagram
Courtesy of CHRYSLER GROUP, LLC

For a complete wiring diagram, **refer to appropriate SYSTEM WIRING DIAGRAMS article** .

WHEN MONITORED

With the ignition on.

SET CONDITION

The Powertrain Control Module (PCM) detects a short to voltage on the 5-Volt supply circuit.

POSSIBLE CAUSES

Possible Causes
(F855) 5-VOLT SUPPLY CIRCUIT SHORTED TO VOLTAGE
(K856) 5-VOLT SUPPLY CIRCUIT SHORTED TO VOLTAGE
POWERTRAIN CONTROL MODULE (PCM)

Always perform the Pre-Diagnostic Troubleshooting procedure before proceeding. Refer to PRE-DIAGNOSTIC TROUBLESHOOTING PROCEDURE .

DIAGNOSTIC TEST

1. **DTC IS ACTIVE**
   1. Attempt to start the engine. If the engine will not start, crank the engine for five seconds.

      WARNING: **When the engine is operating, do not stand in direct line with the fan. Do not put your hands near the pulleys, belts or fan. Do not wear loose clothing. Failure to follow these instructions may result in possible serious or fatal injury.**

   2. With the scan tool, select View DTCs.

      Is the status Active for this DTC?

      Yes

      - Go To 2

      No

      - Perform the INTERMITTENT CONDITION diagnostic procedure. Refer to **INTERMITTENT CONDITION** .
2. **(K852) 5-VOLT SUPPLY CIRCUIT SHORTED TO VOLTAGE**

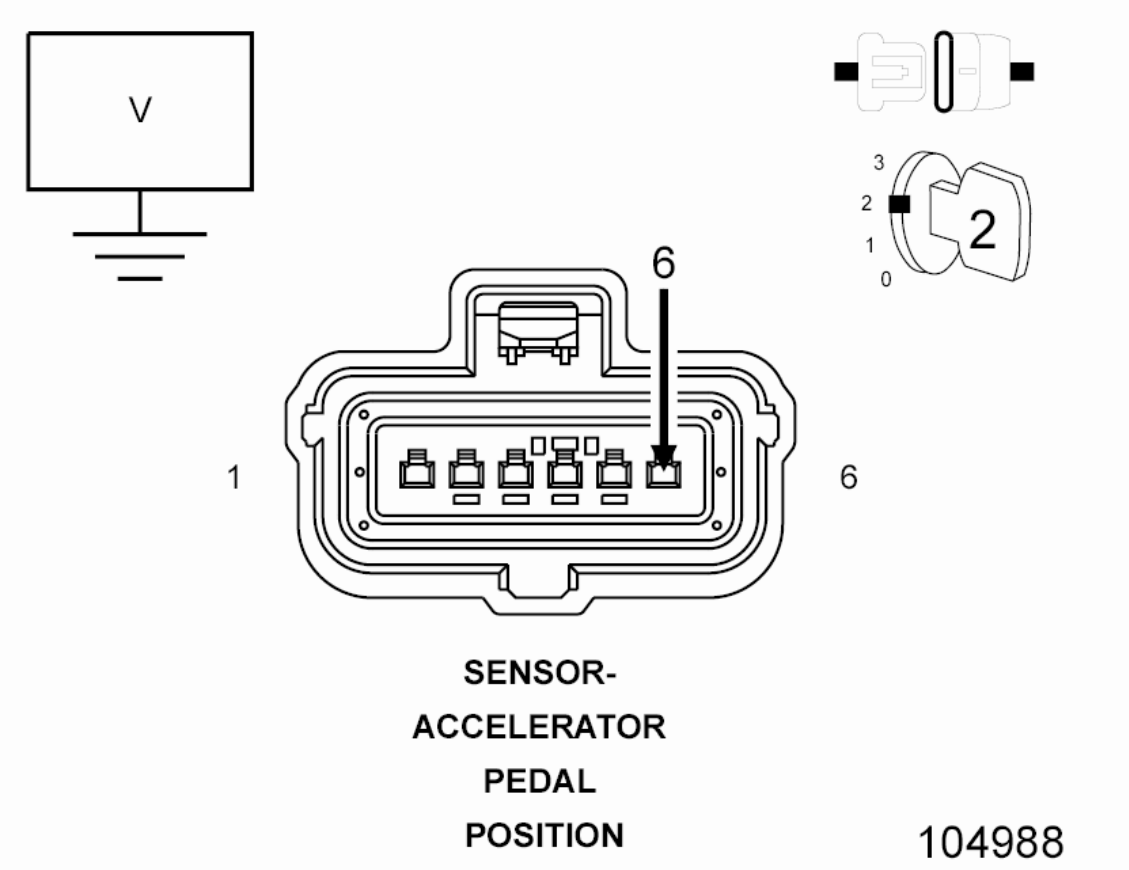

Fig. 19: Checking 5-Volt Supply Circuit For Short To Voltage
Courtesy of CHRYSLER GROUP, LLC

1. Turn the ignition off.
2. Disconnect the Accelerator Pedal Position Sensor harness connector.
3. Disconnect the PCM harness connectors.
4. Measure the voltage on the (K852) 5-Volt Supply circuit.

   Is there any voltage present?

   Yes

   - Repair the (K856) 5-Volt Supply circuit for a short to voltage.
   - Perform the POWERTRAIN VERIFICATION TEST. Refer to **POWERTRAIN VERIFICATION TEST** .

   No

   - Go To 3

3. **(F855) 5-VOLT SUPPLY CIRCUIT SHORTED TO VOLTAGE**

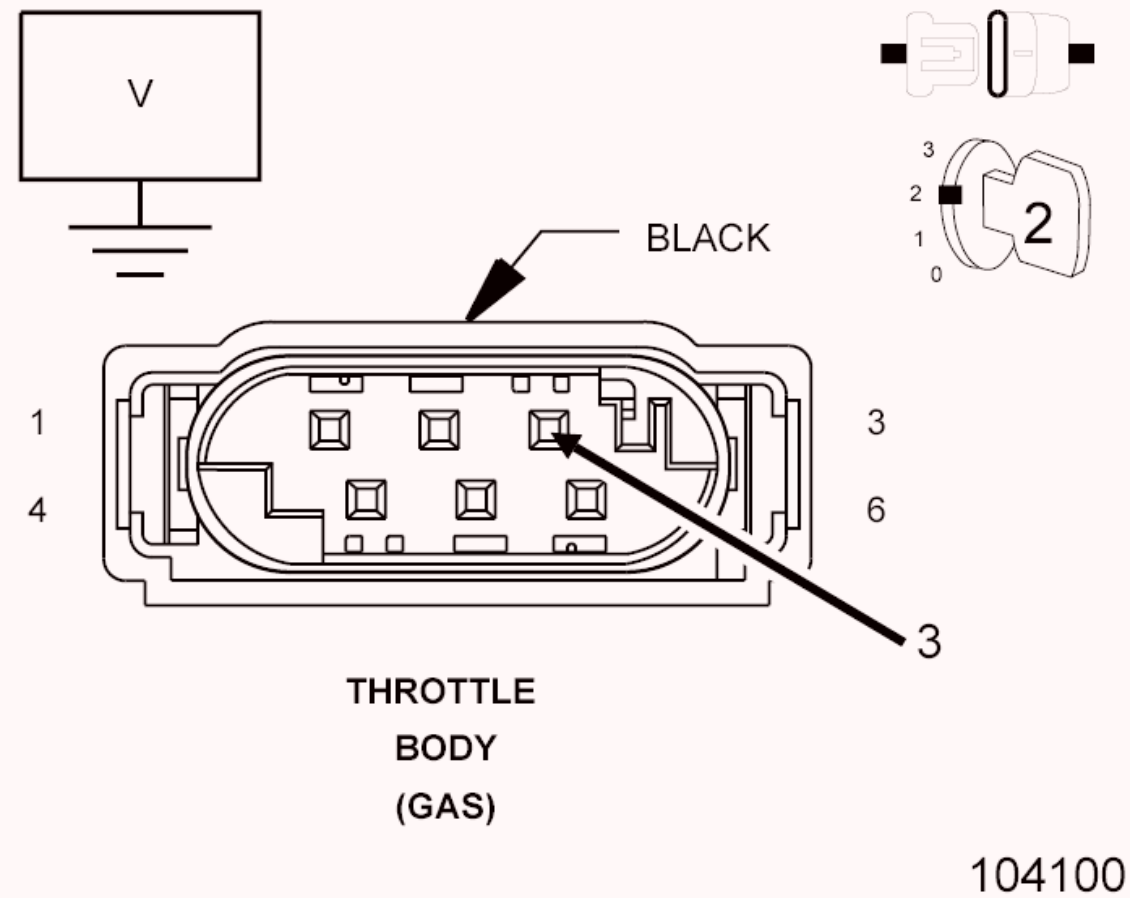

Fig. 20: Checking 5-Volt Supply Circuit For Short To Voltage
Courtesy of CHRYSLER GROUP, LLC

1. Turn the ignition off.
2. Disconnect the Throttle Body harness connector.
3. Turn the ignition on.
4. Measure the voltage on the (F855) 5-Volt Supply circuit.

   Is there any voltage present?

   Yes

   - Repair the (F855) 5-Volt Supply circuit for a short to voltage.
   - Perform the POWERTRAIN VERIFICATION TEST. Refer to **POWERTRAIN VERIFICATION TEST** .

   No

   - Go To 4

4. **POWERTRAIN CONTROL MODULE (PCM)**
    1. Turn the ignition off.
    2. Inspect the (F855) 5-Volt Supply circuit between the Camshaft 1/2 Position Sensor harness connector and the PCM harness connector.
    3. Inspect the (F855) 5-Volt Supply circuit between the Crankshaft Position Sensor harness connector and the PCM harness connector.
    4. Inspect the (F855) 5-Volt Supply circuit between the Throttle Body harness connector and the PCM harness connector.
    5. Inspect the (K852) 5-Volt Supply circuit between the Accelerator Pedal Position Sensor harness connector and the PCM harness connector.
    6. Look for any chafed, pierced, pinched, or partially broken wires.
    7. Look for broken, bent, pushed out or corroded terminals.
    8. Perform any Technical Service Bulletins that may apply.

    Were any problems found?

    Yes

    - Repair as necessary.
    - Perform the POWERTRAIN VERIFICATION TEST. Refer to **POWERTRAIN VERIFICATION TEST** .

    No

    - Replace and program the Powertrain Control Module (PCM) in accordance with the Service Information. Refer to **MODULE, POWERTRAIN CONTROL, REMOVAL** .
    - Perform the POWERTRAIN VERIFICATION TEST. Refer to **POWERTRAIN VERIFICATION TEST** .

P0645-A/C CONTROL CIRCUIT/OPEN

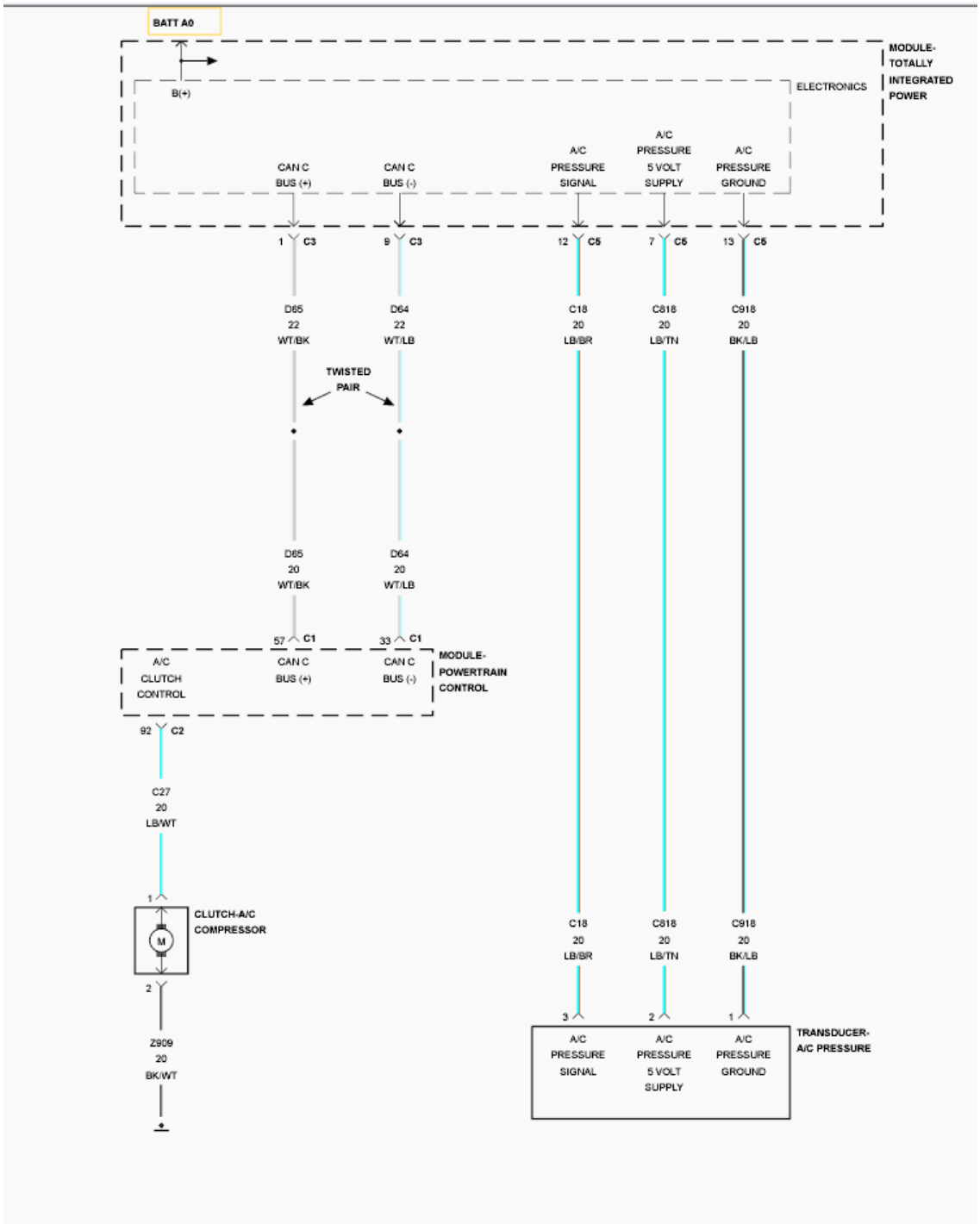

Fig. 21: A/C Pressure Transducer Circuit Diagram
Courtesy of CHRYSLER GROUP, LLC

For a complete wiring diagram, **refer to appropriate SYSTEM WIRING DIAGRAMS article** .

WHEN MONITORED

With the engine running and battery voltage greater than 10.4 volts.

SET CONDITION

The Powertrain Control Module (PCM) detects that the A/C Compressor control circuit voltage is not within an acceptable range.

POSSIBLE CAUSES

Possible Causes
(C27) A/C COMPRESSOR CONTROL CIRCUIT SHORTED TO VOLTAGE
(C27) A/C COMPRESSOR CONTROL CIRCUIT SHORTED TO GROUND
(C27) A/C COMPRESSOR CONTROL CIRCUIT OPEN OR HIGH RESISTANCE
(Z909) GROUND CIRCUIT OPEN OR HIGH RESISTANCE
A/C COMPRESSOR
POWERTRAIN CONTROL MODULE (PCM)

Always perform the Pre-Diagnostic Troubleshooting procedure before proceeding. Refer to PRE-DIAGNOSTIC TROUBLESHOOTING PROCEDURE .

DIAGNOSTIC TEST

1. **ACTIVE DTC**
    1. Start the engine and allow it to reach normal operating temperature.
    2. Turn the Air Conditioning on.

    WARNING: When the engine is operating, do not stand in direct line with the fan. Do not put your hands near the pulleys, belts or fan. Do not wear loose clothing. Failure to follow these instructions may result in possible serious or fatal injury.

    3. With the scan tool, select View DTCs.

    Is the status Active for this DTC?

    Yes

- Go To 2

No

- Perform the INTERMITTENT CONDITION diagnostic procedure. Refer to **INTERMITTENT CONDITION** .

2. **CHECK THE (Z909) GROUND CIRCUIT FOR AN OPEN/HIGH RESISTANCE**

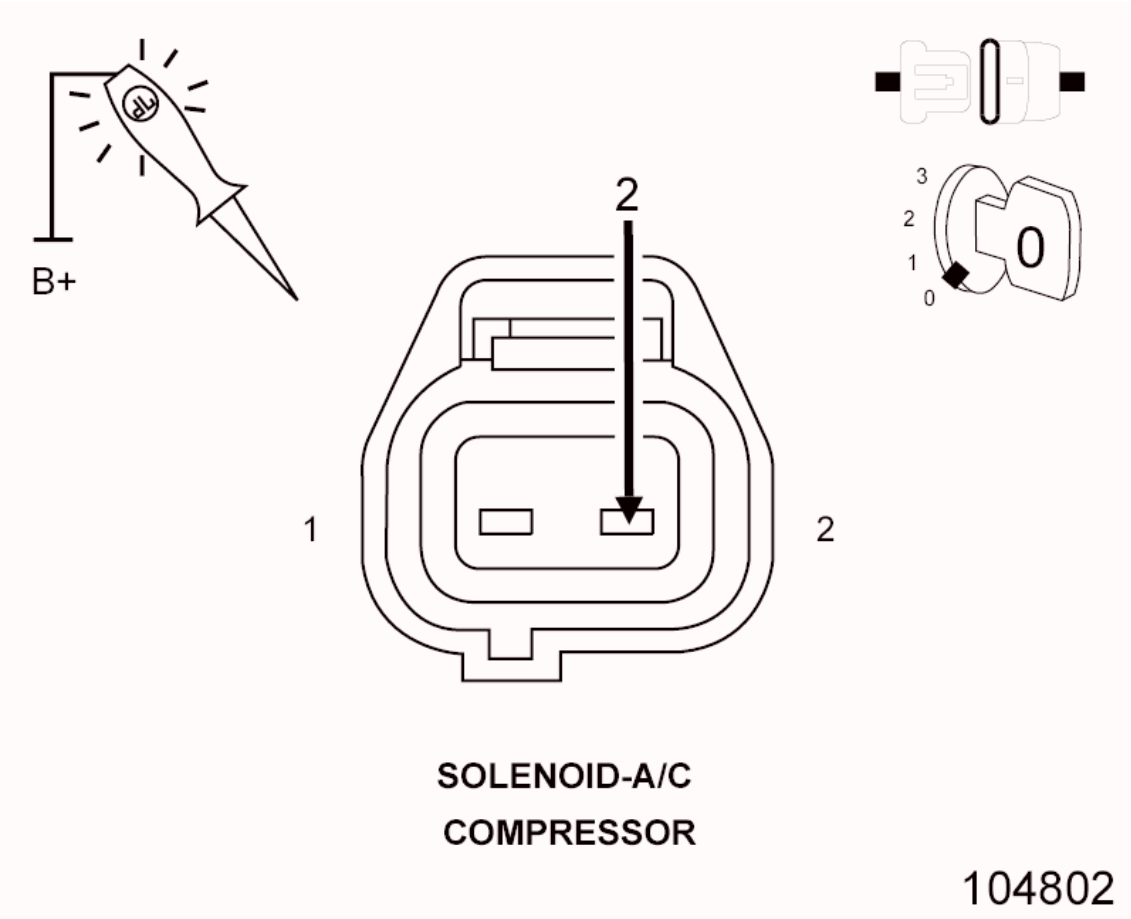

Fig. 22: Checking Ground Circuit For Open Or High Resistance
Courtesy of CHRYSLER GROUP, LLC

1. Turn the ignition off.
2. Disconnect the A/C Compressor harness connector.
3. Turn the ignition on.
4. Using a 12-volt test light connected to 12 volts, check the (Z909) Ground circuit in the A/C Compressor harness connector.

NOTE: The test light should be illuminated and bright.

Compare the brightness to that of a direct connection to the battery.

Is the test light illuminated and bright?

Yes

- Go To 3

No

- Repair the (Z909) Ground circuit for an open or high resistance.
- Perform the POWERTRAIN VERIFICATION TEST. Refer to **POWERTRAIN VERIFICATION TEST** .

3. **CHECK THE (C27) A/C COMPRESSOR CONTROL CIRCUIT FOR A SHORT TO VOLTAGE**

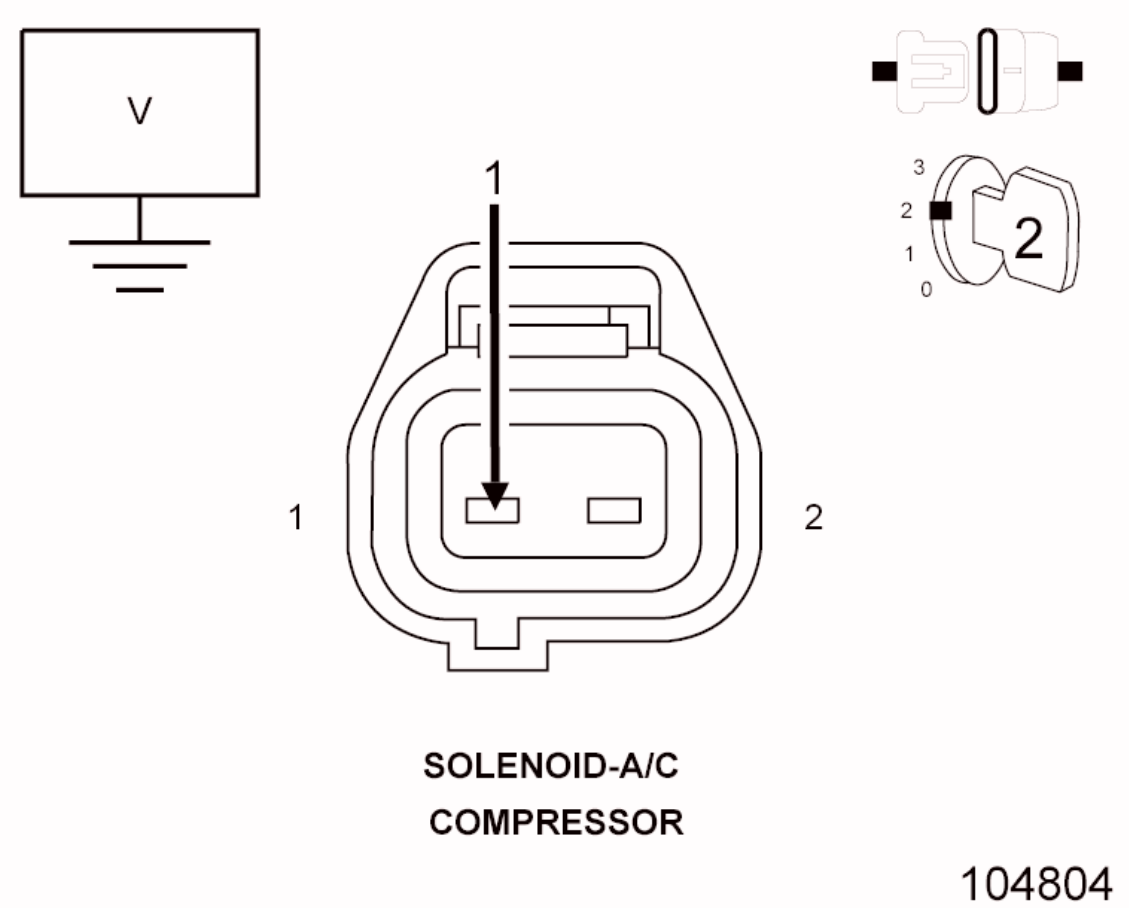

Fig. 23: Checking A/C Compressor Control Circuit For Short To Voltage

Courtesy of CHRYSLER GROUP, LLC

1. Turn the ignition off.
2. Disconnect the PCM C2 harness connector.
3. Turn the ignition on.
4. Measure the voltage of the (C27) A/C Compressor Control circuit in the A/C Compressor harness connector.

   Is there any voltage present?

   Yes

   - Repair the (C27) A/C Compressor Control circuit for a short to voltage.
   - Perform the POWERTRAIN VERIFICATION TEST. Refer to **POWERTRAIN VERIFICATION TEST** .

   No

   - Go To 4

4. **CHECK THE (C27) A/C COMPRESSOR CONTROL CIRCUIT FOR A SHORT TO GROUND**

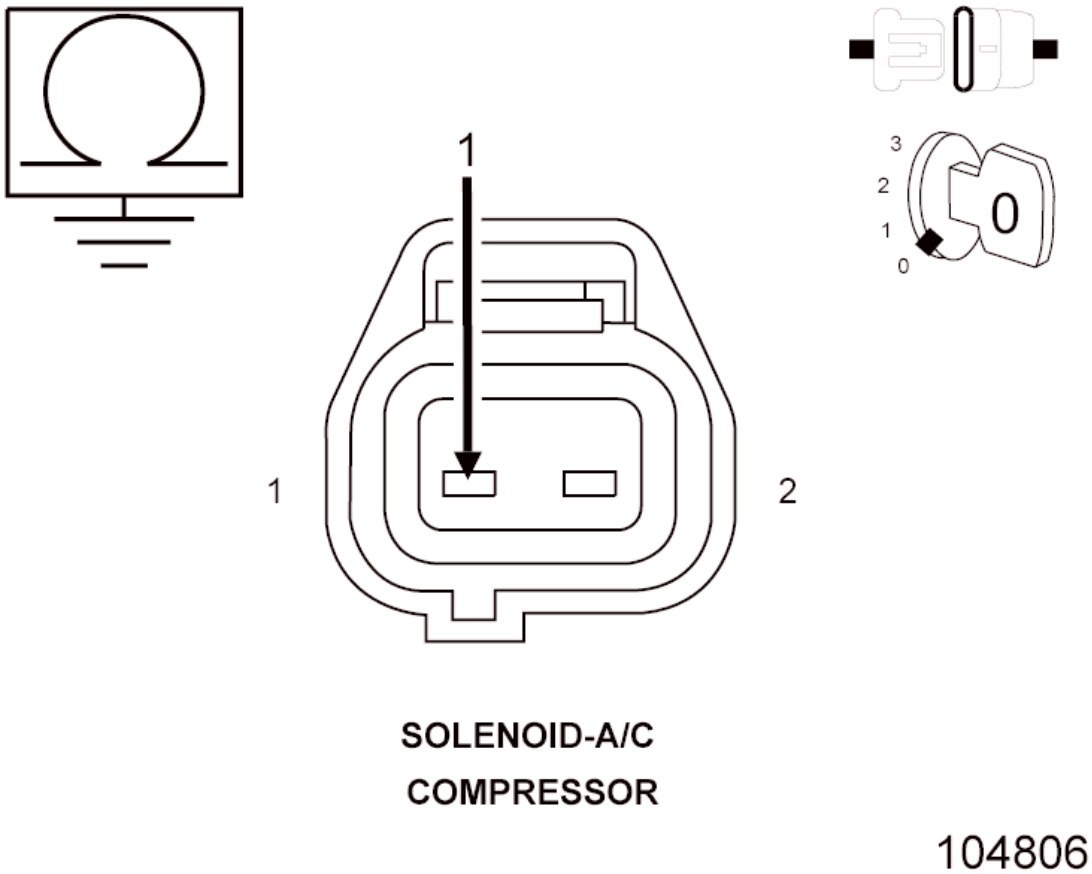

Fig. 24: Checking A/C Compressor Control Circuit For Short To Ground
Courtesy of CHRYSLER GROUP, LLC

1. Turn the ignition off.
2. Measure the resistance between ground and the (C27) A/C Compressor Control circuit in the A/C Compressor harness connector.

   Is the resistance above 10k Ohms?

   Yes

   - Go To 5

   No

   - Repair the (C27) A/C Compressor Control circuit for a short to ground.
   - Perform the POWERTRAIN VERIFICATION TEST. Refer to **POWERTRAIN VERIFICATION TEST** .

5. **CHECK THE (C27) A/C COMPRESSOR CONTROL CIRCUIT FOR AN OPEN/HIGH RESISTANCE**

CAUTION: Do not probe the PCM harness connectors. Probing the PCM harness connectors will damage the PCM terminals resulting in poor terminal to pin connection. Install the GPEC Diagnostic Adaptor to perform the diagnosis.

1. Connect the (special tool #10436, Adapter, GPEC Diagnostic).
2. Measure the resistance of the (C27) A/C Compressor Control circuit between the A/C Compressor harness connector and the GPEC Adaptor.

   Is the resistance below 5.0 Ohms?

   Yes

   - Go To 6

   No

   - Repair the (C27) A/C Compressor Control circuit for an open or high resistance.
   - Perform the POWERTRAIN VERIFICATION TEST. Refer to **POWERTRAIN VERIFICATION TEST** .

6. **A/C COMPRESSOR**

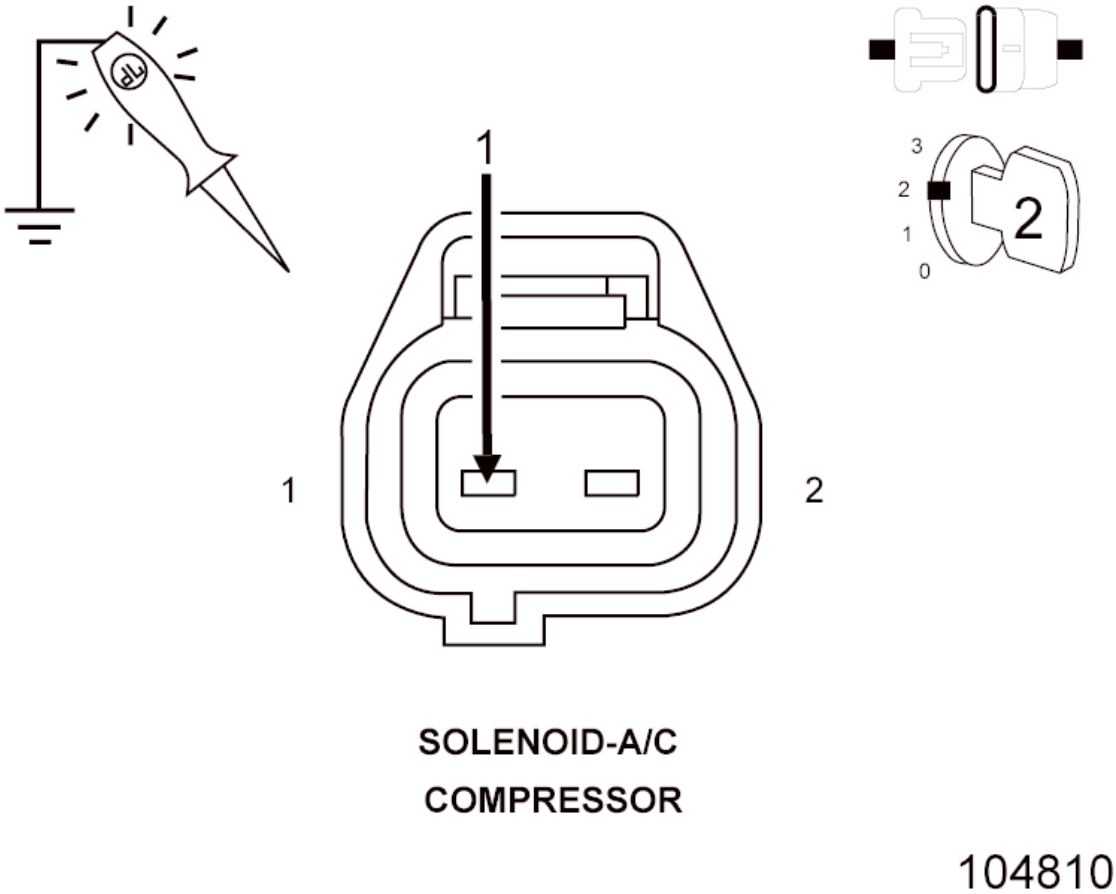

Fig. 25: Checking A/C Compressor Control Circuit
Courtesy of CHRYSLER GROUP, LLC

1. Reconnect the PCM C2 harness connector.
2. Turn the ignition on.
3. With the scan tool, actuate the A/C Compressor control to the ON position.
4. Using a 12-volt test light connected to ground, check the (C27) A/C Compressor Control circuit in the A/C Compressor harness connector.

NOTE: The test light should be illuminated and bright. Compare the brightness to that of a direct connection to the battery.

5. With the scan tool, actuate the A/C Compressor control to the OFF position.
6. Using a 12-volt test light connected to ground, check the (C27) A/C Compressor Control circuit in the A/C Compressor harness connector.

NOTE: The test light should not be illuminated.

Is the test light illuminated and bright with the actuation ON (100%) and not illuminated with the actuation OFF (0%)?

Yes

- Replace the A/C Compressor in accordance with the service information.
- Perform the POWERTRAIN VERIFICATION TEST. Refer to **POWERTRAIN VERIFICATION TEST** .

No

- Go To 7

7. **POWERTRAIN CONTROL MODULE (PCM)**
   1. Using the wiring diagram/schematic as a guide, inspect the wiring and connectors between the A/C Compressor and the Powertrain Control Module (PCM).
   2. Look for any chafed, pierced, pinched, or partially broken wires.
   3. Look for broken, bent, pushed out or corroded terminals.
   4. Perform any Technical Service Bulletins that may apply.

   Were any problems found?

   Yes

   - Repair as necessary.
   - Perform the POWERTRAIN VERIFICATION TEST. Refer to **POWERTRAIN VERIFICATION TEST** .

   No

   - Replace and program the Powertrain Control Module (PCM) in accordance with the service information. Refer to **MODULE, POWERTRAIN CONTROL, REMOVAL** .
   - Perform the POWERTRAIN VERIFICATION TEST. Refer to **POWERTRAIN VERIFICATION TEST** .

P0652-SENSOR REFERENCE VOLTAGE 2 CIRCUIT LOW

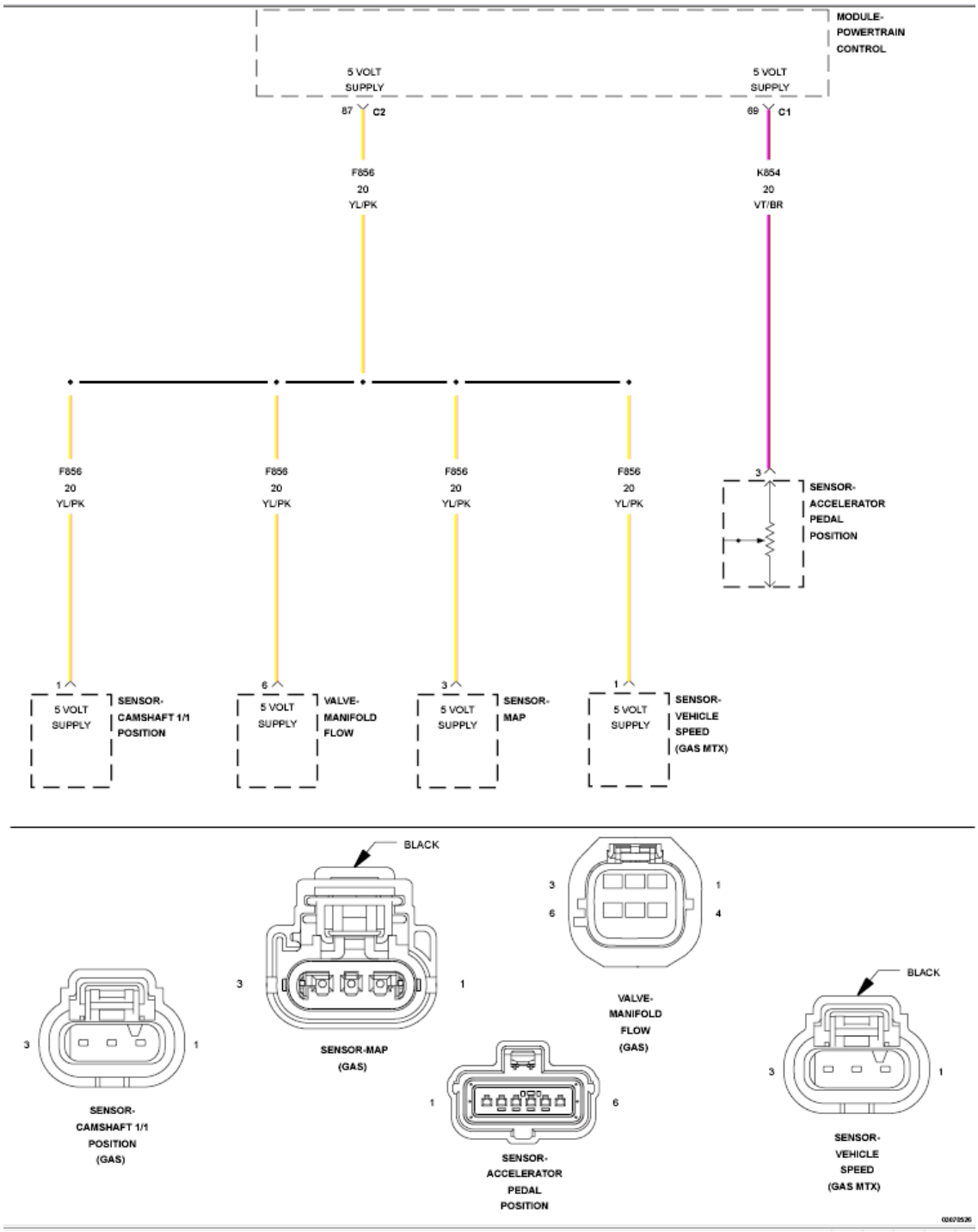

Fig. 26: Sensor Reference Circuit Diagram
Courtesy of CHRYSLER GROUP, LLC

For a complete wiring diagram, **refer to appropriate SYSTEM WIRING DIAGRAMS article** .

WHEN MONITORED

With the ignition on.

SET CONDITION

The Powertrain Control Module (PCM) detects low voltage on the 5-Volt supply circuit.

POSSIBLE CAUSES

Possible Causes
5-VOLT SUPPLY CIRCUIT SHORTED TO GROUND
ACCELERATOR PEDAL POSITION SENSOR
CAMSHAFT 1/1 POSITION SENSOR
MANIFOLD FLOW VALVE
MAP SENSOR
VEHICLE SPEED SENSOR (MTX ONLY)
POWERTRAIN CONTROL MODULE (PCM)

Always perform the Pre-Diagnostic Troubleshooting procedure before proceeding. Refer to PRE-DIAGNOSTIC TROUBLESHOOTING PROCEDURE .

DIAGNOSTIC TEST

1. **DTC IS ACTIVE**
    1. Start the engine and allow it to reach normal operating temperature.

        WARNING: **When the engine is operating, do not stand in direct line with the fan. Do not put your hands near the pulleys, belts or fan. Do not wear loose clothing. Failure to follow these instructions may result in possible serious or fatal injury.**

    2. With the scan tool, select View DTCs.

        Is the status Active for this DTC?

        Yes

- Go To 2

No

- Perform the INTERMITTENT CONDITION diagnostic procedure. Refer to **INTERMITTENT CONDITION** .

2. **(F856) SECONDARY 5 VOLT SUPPLY VOLTAGE CHECK**

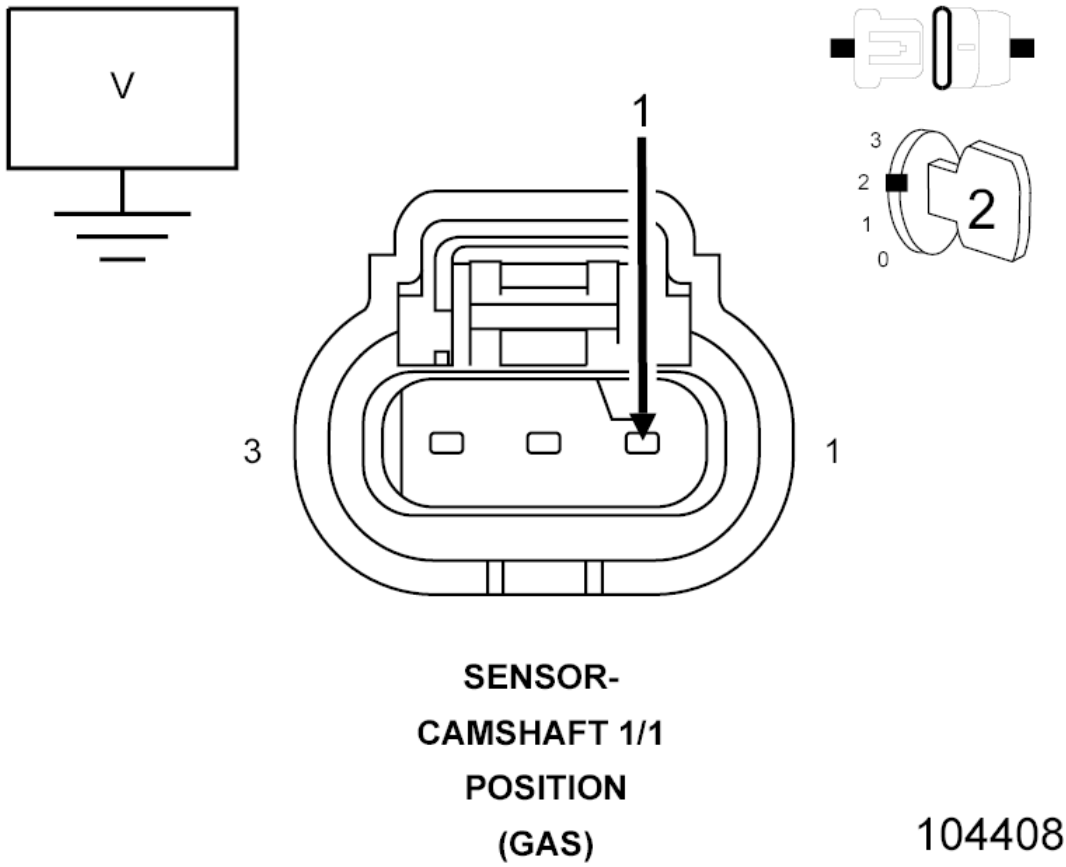

Fig. 27: Checking 5-Volt Supply Circuit
Courtesy of CHRYSLER GROUP, LLC

1. Turn the ignition off.
2. Disconnect the Camshaft 1/1 Position Sensor harness connector.
3. Turn the ignition on.
4. Measure the voltage of the (F856) 5-Volt Supply circuit in the Camshaft 1/1 Position Sensor harness connector.

   Is the voltage between 4.7 and 5.2 volts?

   Yes

- Go To 3

No

- Go To 4

3. **CAMSHAFT 1/1 POSITION SENSOR**

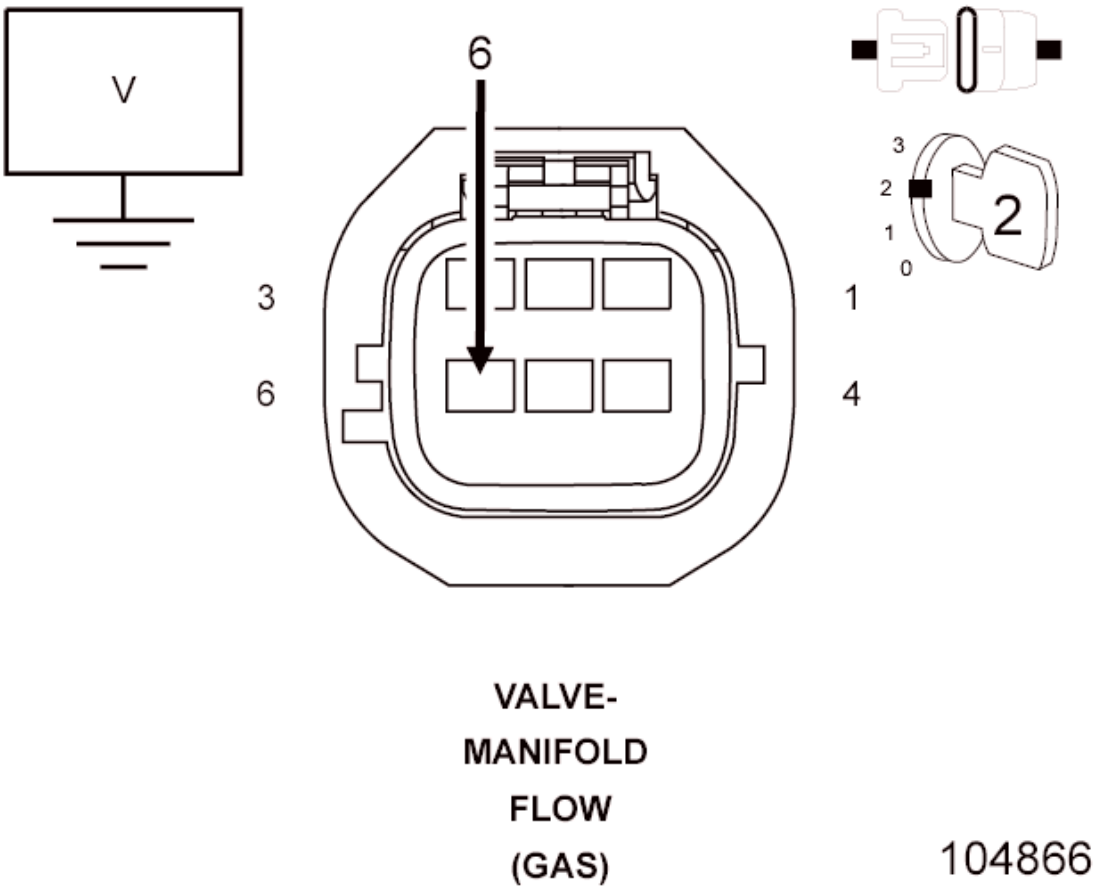

Fig. 28: Checking Manifold Flow Valve 5-Volt Supply Circuit
Courtesy of CHRYSLER GROUP, LLC

1. Turn the ignition off.
2. Connect the Camshaft 1/1 Position Sensor harness connector.
3. Disconnect the Manifold Flow Valve harness connector.
4. Turn the ignition on.
5. Measure the voltage of the (F856) 5-Volt Supply circuit at the Manifold Flow Valve harness connector.

   Is the voltage between 4.7 and 5.2 Volts?

Yes

- Go To 10

No

- Replace the Camshaft 1/1 Position Sensor in accordance with the Service Information because it is the sensor pulling the 5 volt reference low.
- Perform the POWERTRAIN VERIFICATION TEST. Refer to **POWERTRAIN VERIFICATION TEST** .

4. **MANIFOLD FLOW VALVE**

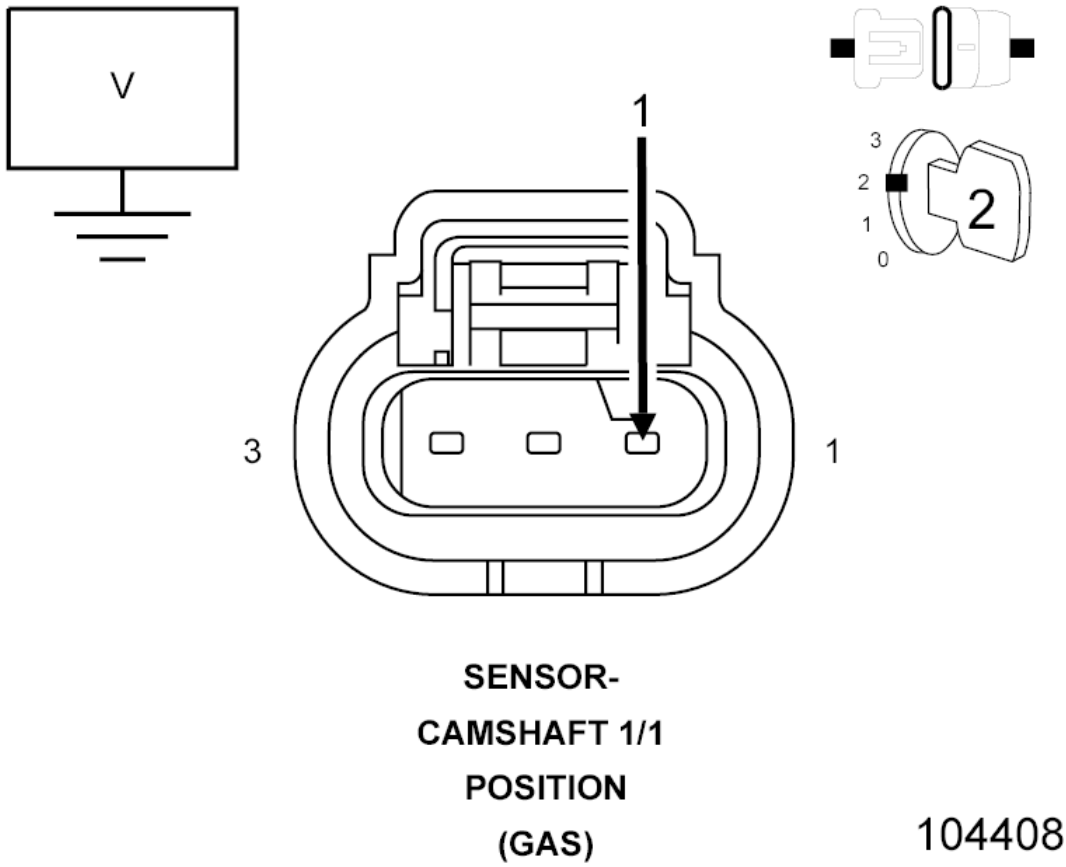

Fig. 29: Checking Camshaft 1/1 Position Sensor 5-Volt Supply Circuit
Courtesy of CHRYSLER GROUP, LLC

1. Turn the ignition off.
2. Disconnect the Manifold Flow Valve harness connector.
3. Turn the ignition on.

4. Continue measuring the voltage of the (F856) 5-Volt Supply circuit at the Camshaft 1/1 Position Sensor harness connector.

   Is the voltage above 4.6 Volts?

   Yes

   - Replace the Manifold Flow Valve in accordance with the Service Information.
   - Perform the POWERTRAIN VERIFICATION TEST. Refer to **POWERTRAIN VERIFICATION TEST** .

   No

   - Go To 5

5. **MAP SENSOR**

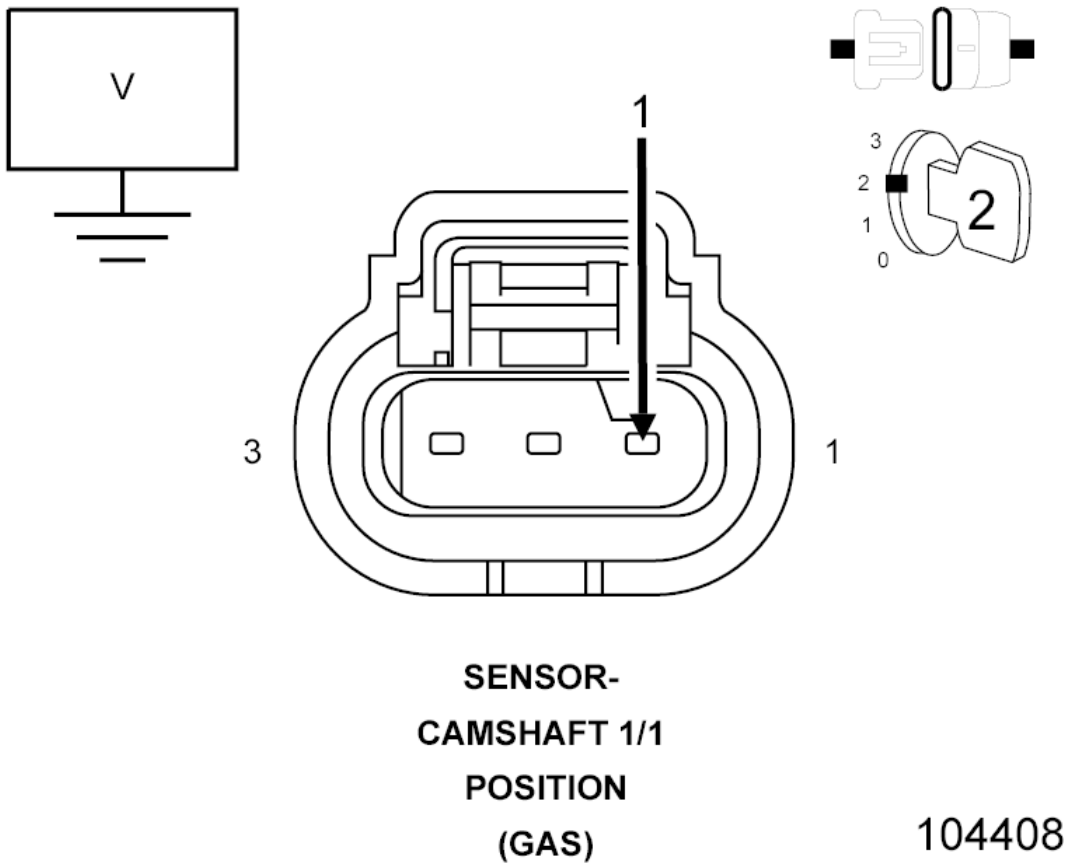

Fig. 30: Checking Camshaft 1/1 Position Sensor 5-Volt Supply Circuit
Courtesy of CHRYSLER GROUP, LLC

1. Turn the ignition off.
2. Disconnect the MAP Sensor harness connector.
3. Turn the ignition on.
4. Continue measuring the voltage of the (F856) 5-Volt Supply circuit at the Camshaft 1/1 Position Sensor harness connector.

   Is the voltage above 4.6 Volts?

   Yes

   - Replace the MAP Sensor in accordance with the Service Information.
   - Perform the POWERTRAIN VERIFICATION TEST. Refer to **POWERTRAIN VERIFICATION TEST** .

   No

   - Go To 7

6. **APP SENSOR**

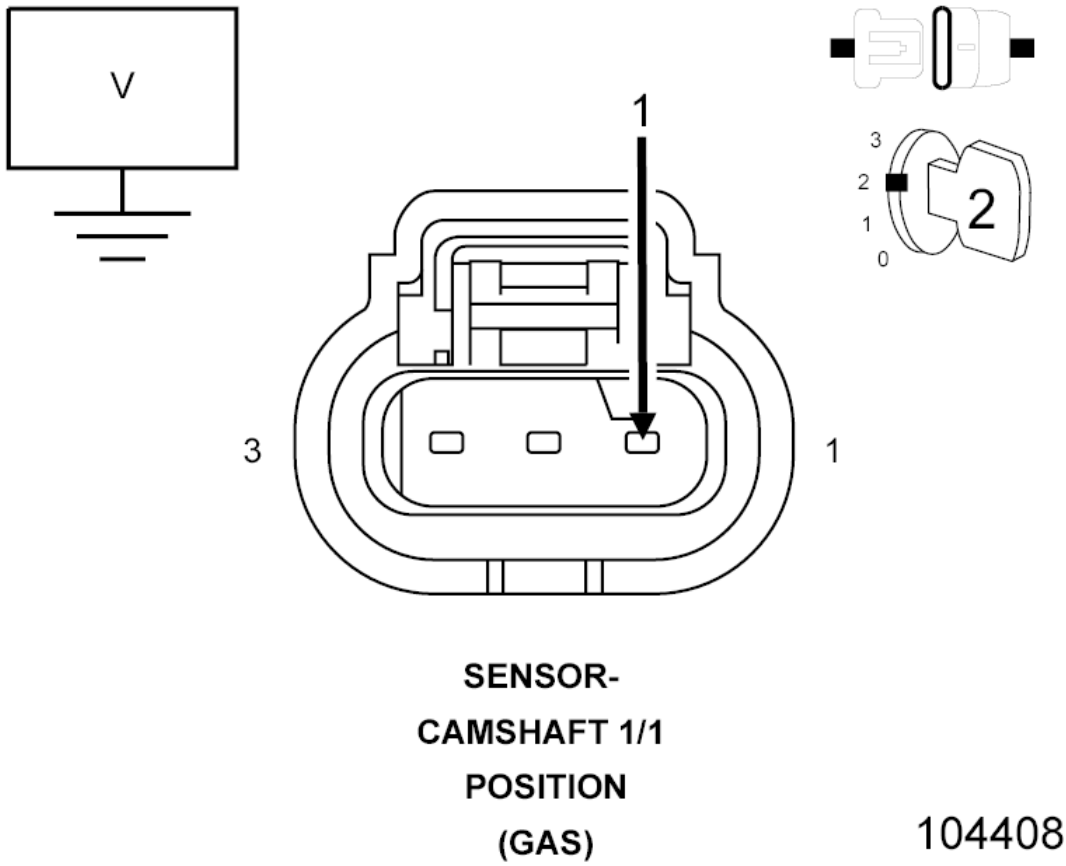

Fig. 31: Checking Camshaft 1/1 Position Sensor 5-Volt Supply Circuit
Courtesy of CHRYSLER GROUP, LLC

1. Turn the ignition off.
2. Disconnect the APP Sensor harness connector.
3. Turn the ignition on.
4. Continue measuring the voltage of the (F856) 5-Volt Supply circuit at the Camshaft 1/1 Position Sensor harness connector.

   Is the voltage above 4.6 Volts?

   Yes

   - Replace the APP Sensor in accordance with the Service Information.
   - Perform the POWERTRAIN VERIFICATION TEST. Refer to **POWERTRAIN VERIFICATION TEST** .

   No

- Go To 7

7. **VEHICLE EQUIPPED WITH MANUAL TRANSMISSION**

Is the vehicle equipped with a manual transmission?

Yes

- Go To 8

No

- Go To 9

8. **VEHICLE SPEED SENSOR**

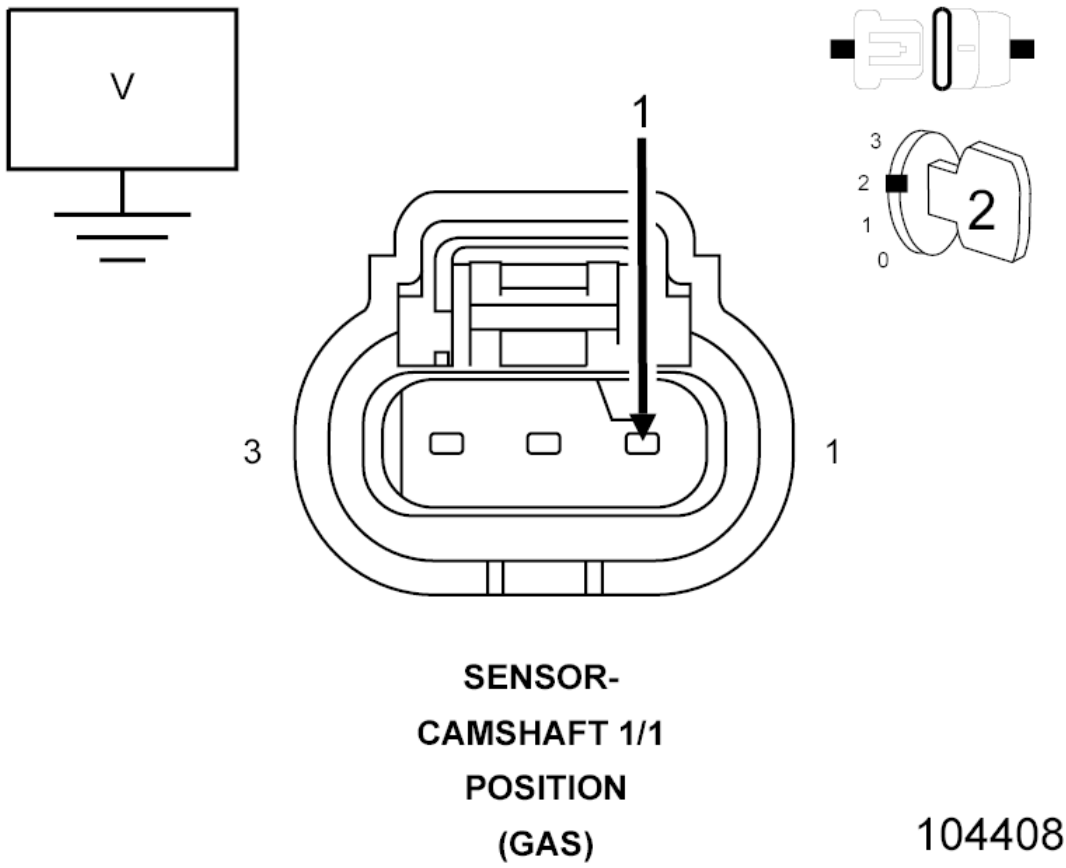

Fig. 32: Checking Camshaft 1/1 Position Sensor 5-Volt Supply Circuit
Courtesy of CHRYSLER GROUP, LLC

NOTE: Only vehicles equipped with a manual transmission will use a Vehicle Speed Sensor.

1. Turn the ignition off.
2. Disconnect the Vehicle Speed Sensor harness connector.
3. Turn the ignition on.
4. Continue measuring the voltage of the (F856) 5 Volt Supply circuit at the Camshaft 1/1 Position Sensor harness connector.

   Is the voltage above 4.6 Volts?

   Yes

   - Replace the Vehicle Speed Sensor.
   - Perform the POWERTRAIN VERIFICATION TEST. Refer to **POWERTRAIN VERIFICATION TEST** .

   No

   - Go To 9

9. **5-VOLT SUPPLY CIRCUIT SHORTED TO GROUND**

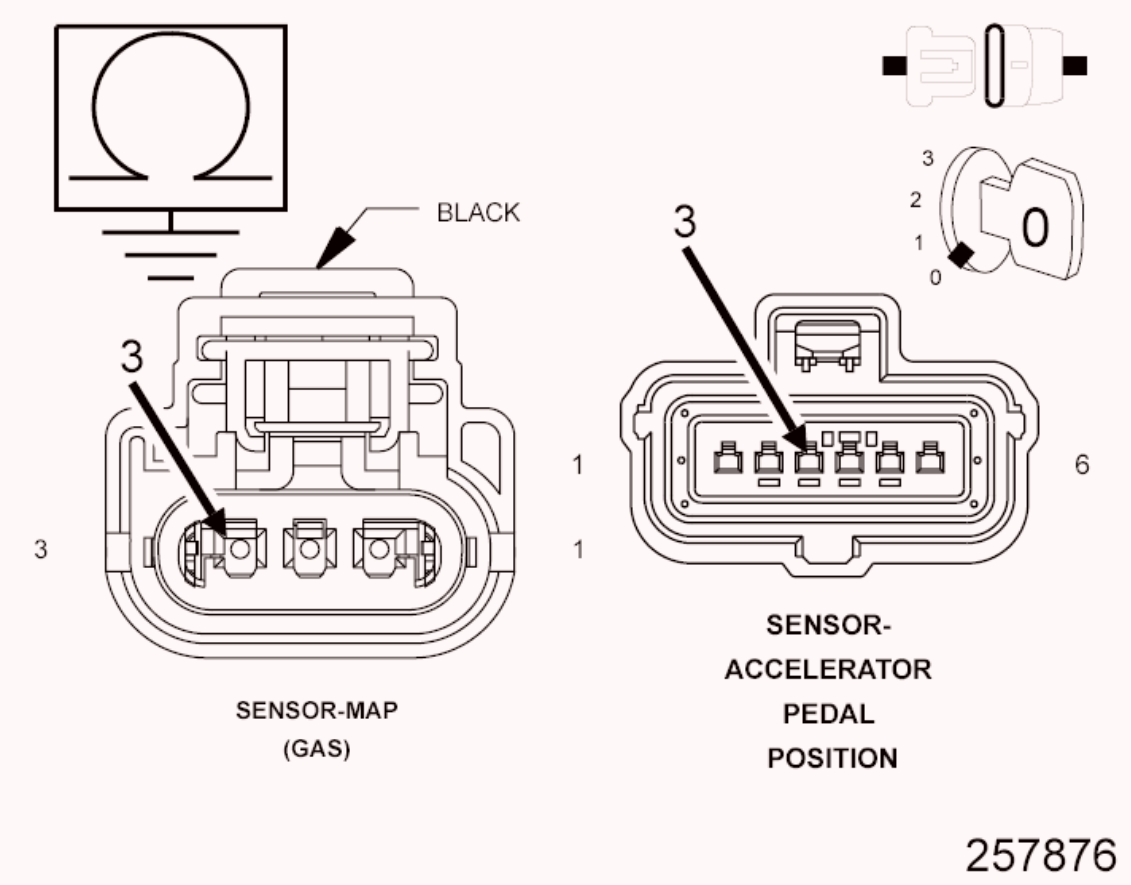

Fig. 33: Checking 5-Volt Supply Circuit For Short To Ground
Courtesy of CHRYSLER GROUP, LLC

1. Turn the ignition off.
2. Disconnect the PCM harness connectors.
3. Measure the resistance between ground and the (F856) 5-Volt Supply circuit.
4. Measure the resistance between ground and the (K854) 5-Volt Supply circuit.

   Is the resistance above 1000 Ohms for both circuits?

   Yes

   - Go To 10

   No

   - Repair the 5 Volt Supply circuit for a short to ground.
   - Perform the POWERTRAIN VERIFICATION TEST. Refer to **POWERTRAIN VERIFICATION TEST** .

10. **POWERTRAIN CONTROL MODULE (PCM)**
    1. Inspect the (K854) 5-Volt Supply circuit between the Accelerator Pedal Position Sensor harness connector and the PCM harness connector.
    2. Inspect the (F856) 5-Volt Supply circuit between the Camshaft 1/1 Position Sensor harness connector and the PCM harness connector.
    3. Inspect the (F856) 5-Volt Supply circuit between the Manifold Flow Valve harness connector and the PCM harness connector.
    4. Inspect the (F856) 5-Volt Supply circuit between the MAP Sensor harness connector and the PCM harness connector.
    5. If the vehicle is equipped with a manual transmission, inspect the (F856) 5-Volt Supply circuit between the Vehicle Speed Sensor harness connector and the PCM harness connector.
    6. Look for any chafed, pierced, pinched, or partially broken wires.
    7. Look for broken, bent, pushed out or corroded terminals.
    8. Perform any Technical Service Bulletins that may apply.

Were any problems found?

Yes

- Repair as necessary.
- Perform the POWERTRAIN VERIFICATION TEST. Refer to **POWERTRAIN VERIFICATION TEST** .

No

- Replace and program the Powertrain Control Module (PCM) in accordance with the Service Information. Refer to **MODULE, POWERTRAIN CONTROL, REMOVAL** .
- Perform the POWERTRAIN VERIFICATION TEST. Refer to **POWERTRAIN VERIFICATION TEST** .

P0653-SENSOR REFERENCE VOLTAGE 2 CIRCUIT HIGH

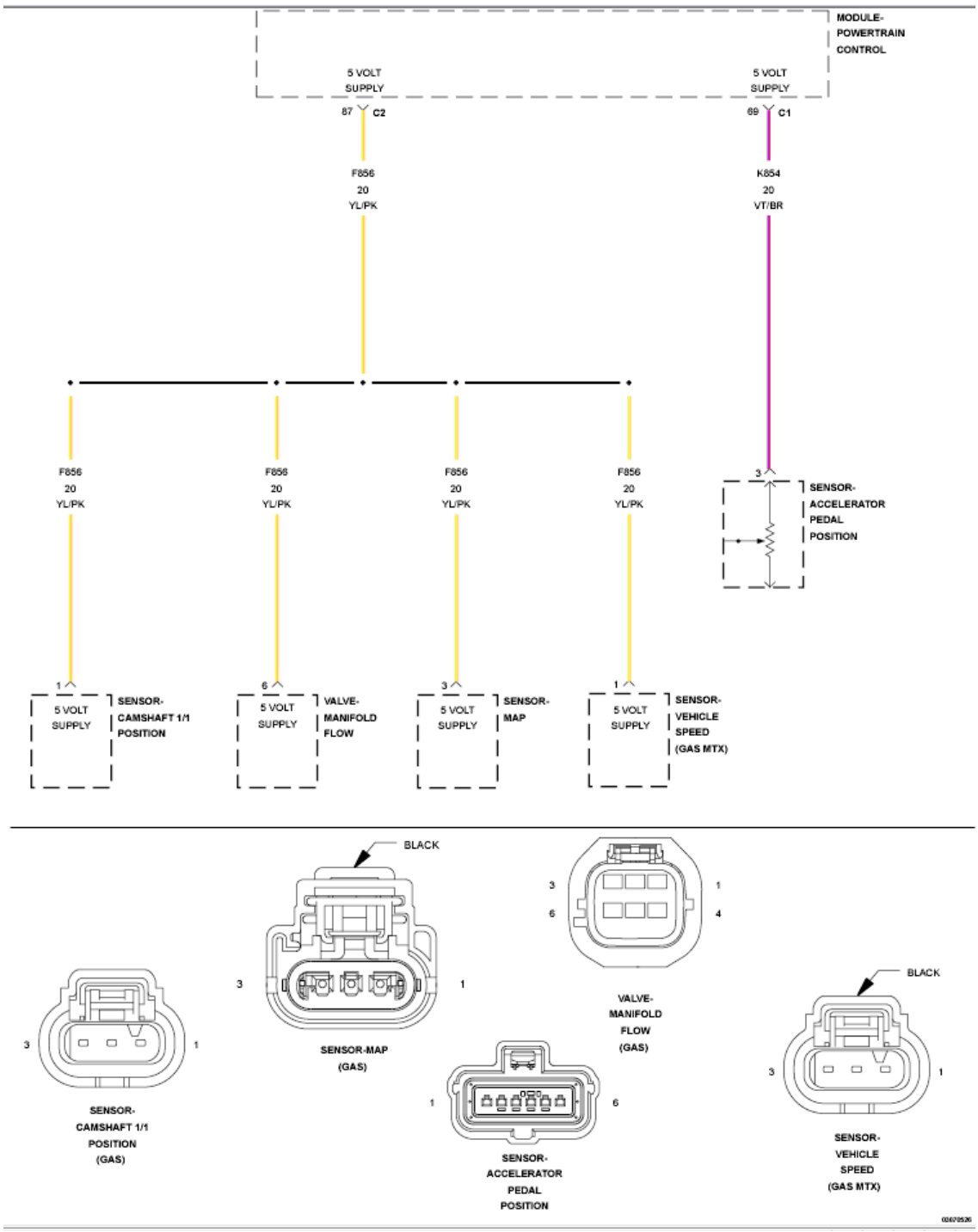

Fig. 34: Sensor Reference Circuit Diagram
Courtesy of CHRYSLER GROUP, LLC

For a complete wiring diagram, **refer to appropriate SYSTEM WIRING DIAGRAMS article** .

WHEN MONITORED

With the ignition on.

SET CONDITION

The Powertrain Control Module (PCM) detects a short to voltage on the 5-Volt supply circuit.

POSSIBLE CAUSES

Possible Causes
(F856) 5-VOLT SUPPLY CIRCUIT SHORTED TO VOLTAGE
(K854) 5-VOLT SUPPLY CIRCUIT SHORTED TO VOLTAGE
POWERTRAIN CONTROL MODULE (PCM)

Always perform the Pre-Diagnostic Troubleshooting procedure before proceeding. Refer to PRE-DIAGNOSTIC TROUBLESHOOTING PROCEDURE .

DIAGNOSTIC TEST

1. **DTC IS ACTIVE**
   1. Start the engine and allow it to reach normal operating temperature.

      WARNING: **When the engine is operating, do not stand in direct line with the fan. Do not put your hands near the pulleys, belts or fan. Do not wear loose clothing. Failure to follow these instructions may result in possible serious or fatal injury.**

   2. With the scan tool, select View DTCs.

      Is the status Active for this DTC?

      Yes

      - Go To 2

      No

      - Perform the INTERMITTENT CONDITION diagnostic procedure. Refer to **INTERMITTENT CONDITION** .
2. **(K854) 5-VOLT SUPPLY CIRCUIT SHORTED TO VOLTAGE**

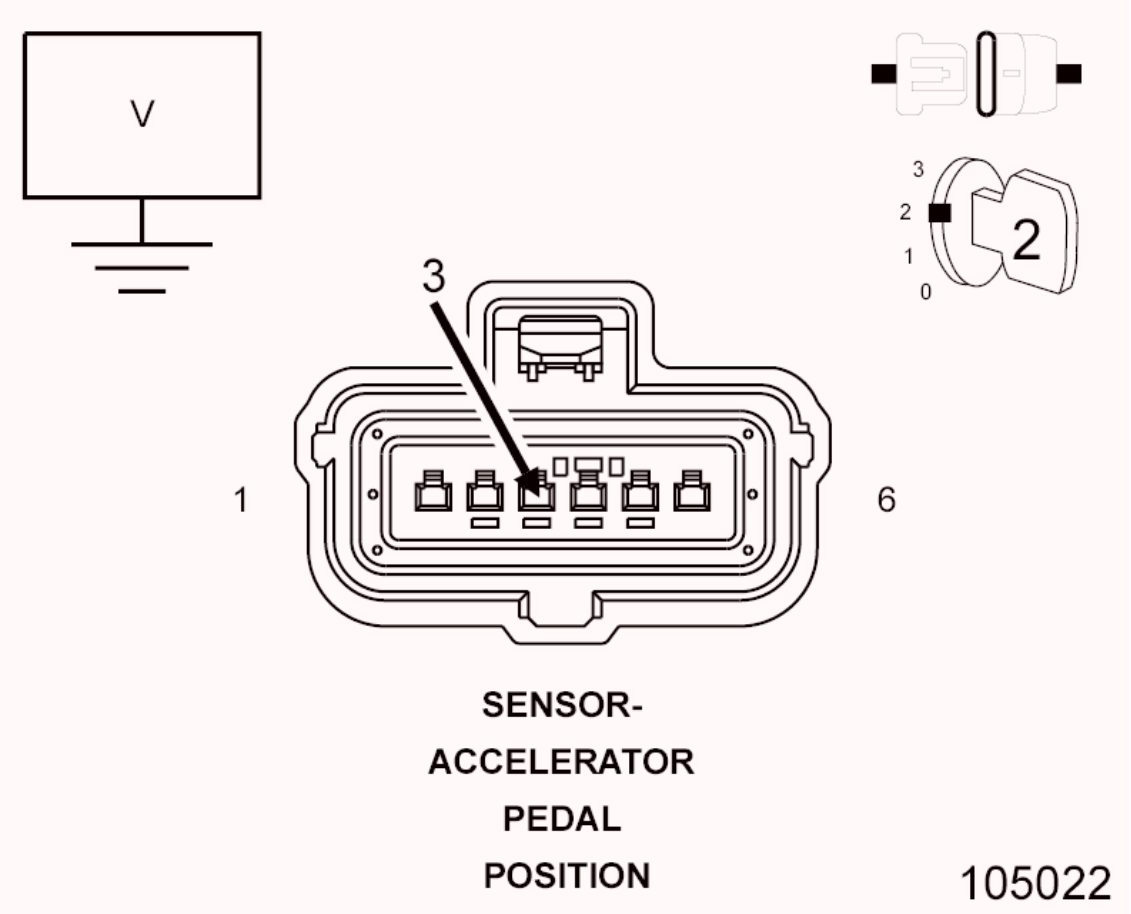

Fig. 35: Checking 5-Volt Supply Circuit For Short To Voltage
Courtesy of CHRYSLER GROUP, LLC

1. Turn the ignition off.
2. Disconnect the Accelerator Pedal Position Sensor harness connector.
3. Disconnect the PCM harness connectors.
4. Measure the voltage on the (K854) 5-Volt Supply circuit.

   Is there any voltage present?

   Yes

   - Repair the (K854) 5-Volt Supply circuit for a short to voltage.
   - Perform the POWERTRAIN VERIFICATION TEST. Refer to **POWERTRAIN VERIFICATION TEST** .

   No

   - Go To 3

3. **(F856) 5-VOLT SUPPLY CIRCUIT SHORTED TO VOLTAGE**

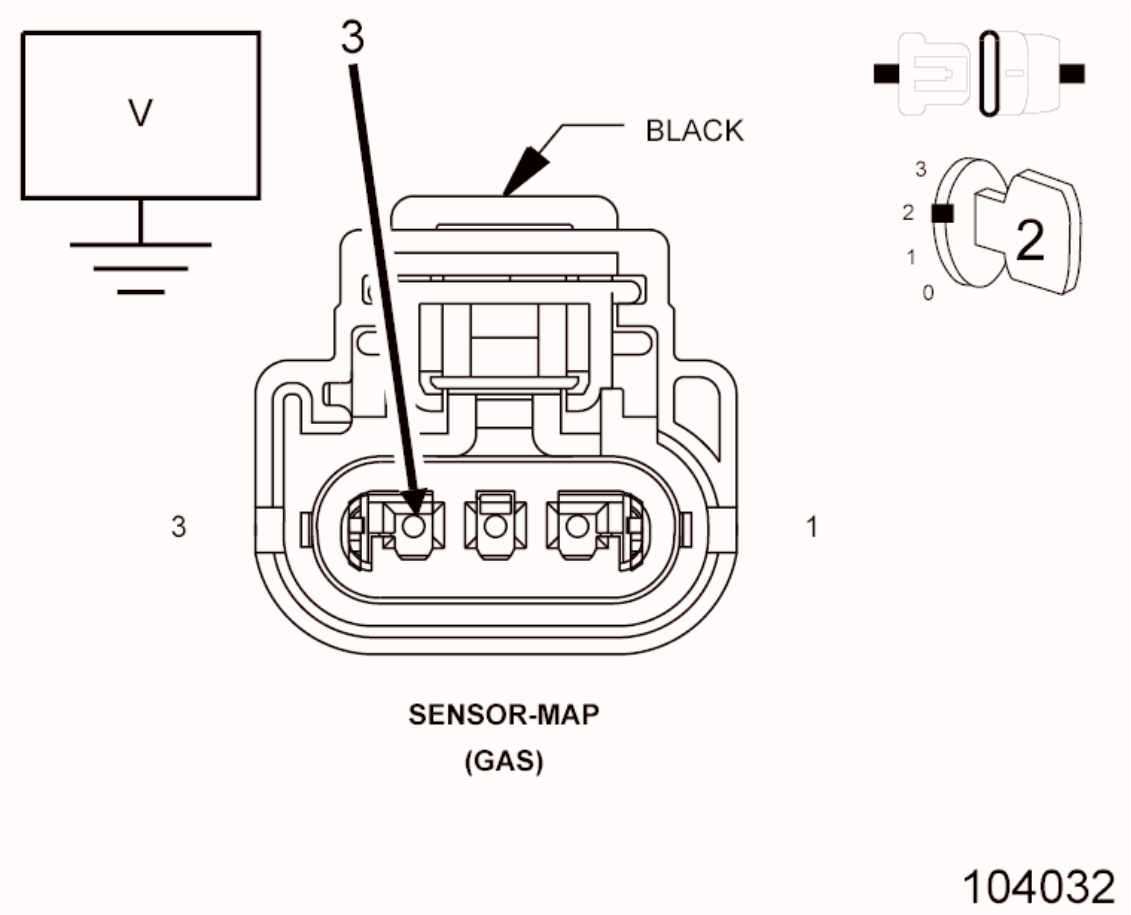

Fig. 36: Checking MAP Sensor 5-Volt Supply Circuit For Short To Voltage
Courtesy of CHRYSLER GROUP, LLC

1. Turn the ignition off.
2. Disconnect the MAP Sensor harness connector.
3. Turn the ignition on.
4. Measure the voltage on the (F856) 5-Volt Supply circuit.

   Is there any voltage present?

   Yes

   - Repair the (F856) 5-Volt Supply circuit for a short to voltage.
   - Perform the POWERTRAIN VERIFICATION TEST. Refer to **POWERTRAIN VERIFICATION TEST** .

No

- Go To 4

4. **POWERTRAIN CONTROL MODULE (PCM)**
   1. Turn the ignition off.
   2. Inspect the (K854) 5-Volt Supply circuit between the Accelerator Pedal Position Sensor harness connector and the PCM harness connector.
   3. Inspect the (F856) 5-Volt Supply circuit between the Camshaft 1/1 Position Sensor harness connector and the PCM harness connector.
   4. Inspect the (F856) 5-Volt Supply circuit between the Manifold Flow Valve harness connector and the PCM harness connector.
   5. Inspect the (F856) 5-Volt Supply circuit between the MAP Sensor harness connector and the PCM harness connector.
   6. If the vehicle is equipped with a manual transmission, inspect the (F856) 5-Volt Supply circuit between the Vehicle Speed Sensor harness connector and the PCM harness connector.
   7. Look for any chafed, pierced, pinched, or partially broken wires.
   8. Look for broken, bent, pushed out or corroded terminals.
   9. Refer to any Technical Service Bulletins that may apply.

   Were any problems found?

   Yes

   - Repair as necessary.
   - Perform the POWERTRAIN VERIFICATION TEST. Refer to **POWERTRAIN VERIFICATION TEST** .

   No

   - Replace and program the Powertrain Control Module (PCM) in accordance with the Service Information. Refer to **MODULE, POWERTRAIN CONTROL, REMOVAL** .
   - Perform the POWERTRAIN VERIFICATION TEST. Refer to **POWERTRAIN VERIFICATION TEST** .

P0685-ASD CONTROL CIRCUIT

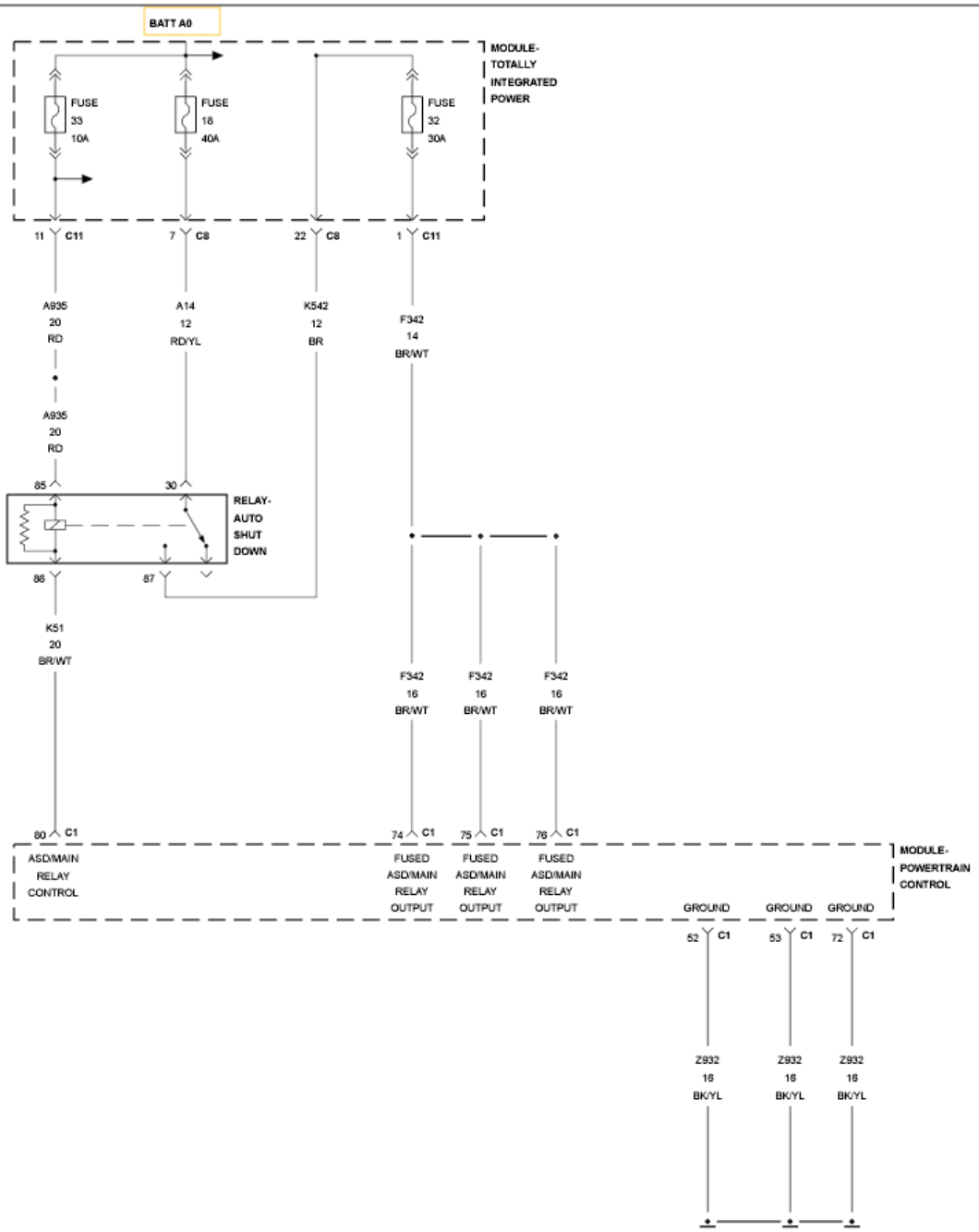

Fig. 37: ASD Control Circuit Diagram
Courtesy of CHRYSLER GROUP, LLC

For a complete wiring diagram, **refer to appropriate SYSTEM WIRING DIAGRAMS article** .

WHEN MONITORED

When the ignition is turned off, during after-run mode of operation.

SET CONDITION

The Powertrain Control Module (PCM) determines that the ASD Relay has shut off before the AFTER-RUN mode of operation has been completed.

POSSIBLE CAUSES

POSSIBLE CAUSES
(K51) ASD RELAY CONTROL CIRCUIT OPEN
(K51) ASD RELAY CONTROL CIRCUIT SHORTED TO VOLTAGE
(K51) ASD RELAY CONTROL CIRCUIT SHORTED TO GROUND
LOSS OF POWERTRAIN CONTROL MODULE POWERS OR GROUNDS
ASD RELAY
POWERTRAIN CONTROL MODULE (PCM)

Always perform the Pre-Diagnostic Troubleshooting procedure before proceeding. Refer to PRE-DIAGNOSTIC TROUBLESHOOTING PROCEDURE .

DIAGNOSTIC TEST

1. **CHECK FOR OTHER DTCS**
   1. Turn the ignition on.
   2. With the scan tool, check for additional DTCs.

      Are other DTCs present?

      Yes

      - Perform the diagnostics for the other DTCs before continuing.
      - Perform the POWERTRAIN VERIFICATION TEST. Refer to **POWERTRAIN VERIFICATION TEST** .

      No

      - Go To 2
2. **CLEAR CODE AND CHECK IF THE DTC RESETS**
   1. With the scan tool, erase PCM DTCs.
   2. Perform several ignition key cycles, pausing for at least 10 seconds between each cycle.

3. Turn the ignition on.
4. With the scan tool, read PCM DTCs.

   Did this DTC Return?

   Yes

   - Go To 3

   No

   - Perform the INTERMITTENT CONDITION diagnostic procedure. Refer to **INTERMITTENT CONDITION** .

3. **SUBSTITUTE THE ASD RELAY**
   1. Turn the ignition off.
   2. Install a known good relay in place of the ASD Relay.
   3. Turn the ignition on.
   4. With the scan tool, erase PCM DTCs.
   5. Perform several ignition key cycles, pausing for at least 10.0 seconds between each cycle.
   6. Turn the ignition on.
   7. With the scan tool, read PCM DTCs.

      Did this DTC return?

      Yes

      - Go To 4

      No

      - Replace the ASD Relay in accordance with the service information.
      - Perform the POWERTRAIN VERIFICATION TEST. Refer to **POWERTRAIN VERIFICATION TEST** .

4. **CHECK PCM POWER AND GROUNDS**
   1. Using the wiring information, check the PCM battery, ignition feed and ground circuits.

Were any problem found with the PCM powers and grounds?

Yes

- Repair as necessary.
- Perform the POWERTRAIN VERIFICATION TEST. Refer to **POWERTRAIN VERIFICATION TEST** .

No

- Go To 5

5. **CHECK THE (K51) ASD RELAY CONTROL CIRCUIT FOR A SHORT TO VOLTAGE**
   1. Reconnect the PCM harness connectors.
   2. Turn the ignition off.
   3. Remove the ASD Relay.
   4. Turn the ignition on.
   5. Measure the voltage an the (K51) ASD Relay Control circuit at terminal 85 of the ASD Relay connector.

   Is there any voltage present?

   Yes

   - Repair the (K51) ASD Relay Control circuit for a short to voltage.
   - Perform the POWERTRAIN VERIFICATION TEST. Refer to **POWERTRAIN VERIFICATION TEST** .

   No

   - Go To 6

6. **CHECK THE (K51) ASD RELAY CONTROL CIRCUIT FOR A SHORT TO GROUND**
   1. Turn the ignition off.
   2. Remove the ASD Relay.
   3. Disconnect the PCM C1 harness connector.
   4. Measure the resistance an the (K51) ASD Relay Control circuit at

terminal 85 of the ASD Relay connector.

Is the resistance above 10k Ohms?

Yes

- Go To 7

No

- Repair the (K51) ASD Relay Control circuit for a short to ground.
- Perform the POWERTRAIN VERIFICATION TEST. Refer to **POWERTRAIN VERIFICATION TEST** .

7. **CHECK THE (K51) ASD RELAY CONTROL CIRCUIT FOR AN OPEN/HIGH RESISTANCE**

CAUTION: Do not probe the PCM harness connectors. Probing the PCM harness connectors will damage the PCM terminals resulting in poor terminal to pin connection. Install the GPEC Diagnostic Adaptor to perform the diagnosis.

1. Connect the (special tool #10436, Adapter, GPEC Diagnostic).
2. Measure the resistance of the (K51) ASD Relay Control circuit between the GPEC Adaptor and the ASD Relay connector.

Is the resistance below 5.0 Ohms?

Yes

- Repair the ASD Relay Control circuit for an open or high resistance.
- Perform the POWERTRAIN VERIFICATION TEST. Refer to **POWERTRAIN VERIFICATION TEST** .

No

- Replace and program the Powertrain Control Module in accordance with the service information. Refer to **MODULE, POWERTRAIN CONTROL, REMOVAL** .

- Perform the POWERTRAIN VERIFICATION TEST. Refer to **POWERTRAIN VERIFICATION TEST** .

P0688-ASD RELAY CONTROL SENSE

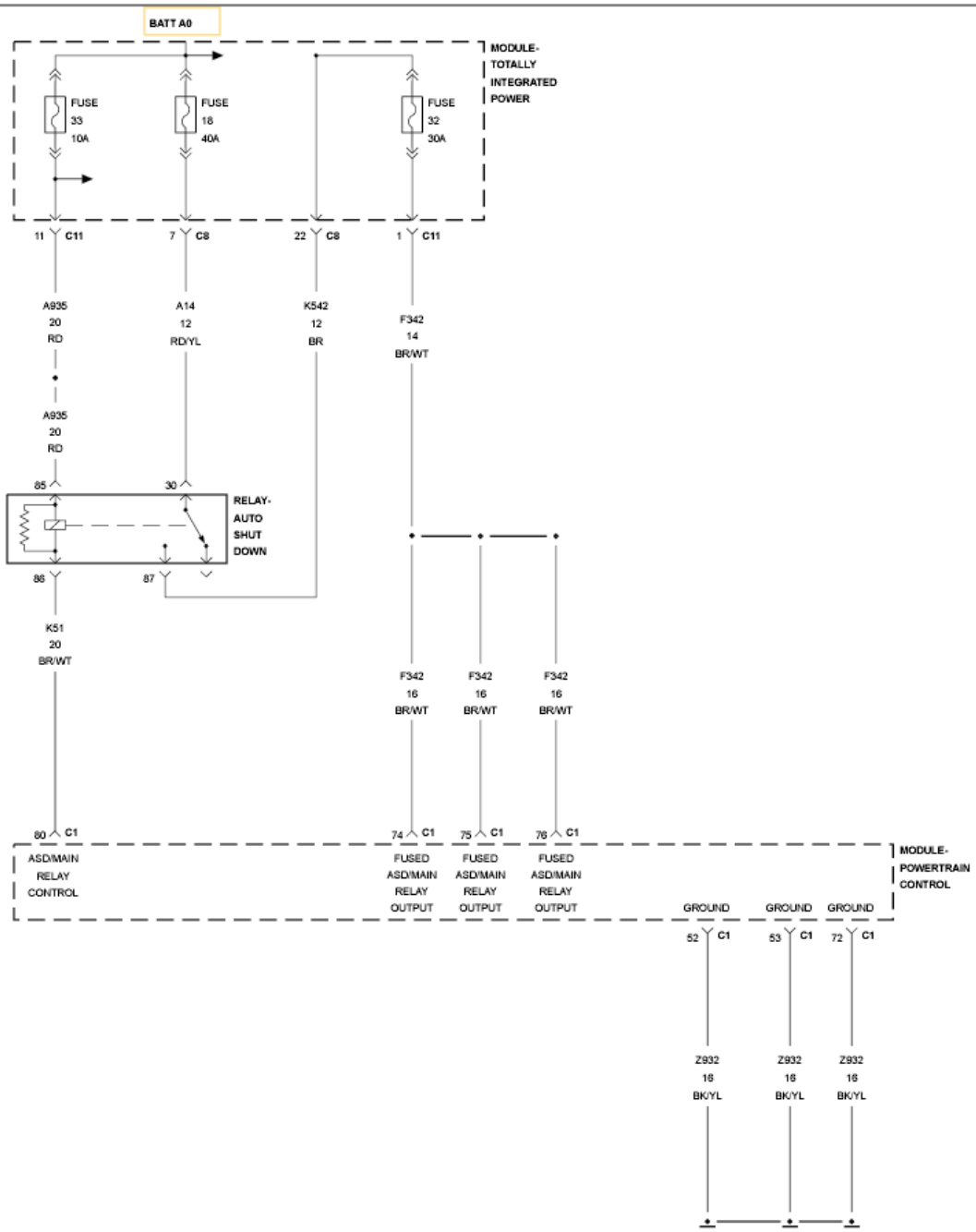

Fig. 38: ASD Control Circuit Diagram
Courtesy of CHRYSLER GROUP, LLC

For a complete wiring diagram, **refer to appropriate SYSTEM WIRING DIAGRAMS article** .

THEORY OF OPERATION

For specific relay location and type. Refer to **FUSE - RELAY LOCATIONS AND TYPES, SPECIFICATIONS** .

WHEN MONITORED

With ignition key on. Battery voltage greater than 10.0 Volts.

SET CONDITION

No voltage sensed at the Powertrain Control Module (PCM) when the ASD relay is energized. One Trip Fault. Three good trips to turn off the MIL.

POSSIBLE CAUSES

Possible Causes
FUSED B+ ASD SUPPLY CIRCUITS/FUSES
ASD RELAY OUTPUT CIRCUIT OPEN/HIGH RESISTANCE
ASD RELAY OUTPUT CIRCUIT SHORTED TO GROUND
TOTALLY INTEGRATED POWER MODULE (TIPM)
POWERTRAIN CONTROL MODULE (PCM)

Always perform the Pre-Diagnostic Troubleshooting procedure before proceeding. Refer to PRE-DIAGNOSTIC TROUBLESHOOTING PROCEDURE .

DIAGNOSTIC TEST

1. **ACTIVE DTC**

NOTE: Verify that there are no concerns with the circuits and fuses that supply power to the ASD relay. If equipped with a removable relay, Look for broken, bent, pushed out or corroded terminals. Verify that the ASD relay is not defective (exchange with known good relay to check operation).

NOTE: If any of the following component DTCs have set along with P0688, diagnose them first before continuing: Ignition Coil(s), Fuel Injector(s), ASD

Control Circuit.

1. Ignition on, engine not running.
2. With the scan tool, select View DTCs.

   Is the DTC Active at this time?

   Yes

   - Go To 2

   No

   - Perform the INTERMITTENT CONDITION diagnostic procedure. Refer to **INTERMITTENT CONDITION** .

2. **POWERTRAIN CONTROL MODULE (PCM)**
   1. Turn the Ignition off.
   2. Connect the appropriate PCM pinout adaptor in line with the PCM connector and harness.
   3. Turn the Ignition on, engine not running.
   4. Using the wiring diagram/schematic as a guide, Measure the voltage at each of the (F342) ASD Control Output circuits at PCM.

      Were there any problems found with the voltage readings?

      Yes

      - Go To 3

      No

      - Look for broken, bent, pushed out or corroded terminals. Verify that there is good pin to terminal contact in the Powertrain Control Module connectors.
      - Check for any Technical Service Bulletins that may apply.
      - If no concerns are found, Replace and program the Powertrain Control Module in accordance with the Service Information. Refer to **MODULE, POWERTRAIN CONTROL, REMOVAL** .

- Perform the POWERTRAIN VERIFICATION TEST. Refer to **POWERTRAIN VERIFICATION TEST** .

3. **(F342) ASD CONTROL OUTPUT CIRCUIT(S) SHORTED TO GROUND**
   1. Turn the ignition off.
   2. Disconnect the PCM C1 harness connector.
   3. Disconnect the appropriate TIPM harness connector.
   4. Measure the resistance between ground and each of the (F342) ASD Control Output circuits in the TIPM harness connector.

   Is the resistance below 100 Ohms?

   Yes

   - Repair the short to ground in the (F342) ASD Control Output circuit(s).
   - Perform the POWERTRAIN VERIFICATION TEST. Refer to **POWERTRAIN VERIFICATION TEST** .

   No

   - Go To 4

4. **(F342) ASD CONTROL OUTPUT CIRCUIT(S) OPEN**
   1. Turn the ignition off.
   2. Measure the resistance of each (F342) ASD Control Output circuits from the TIPM harness connector to the PCM C1 harness connector.

   Is the resistance below 5.0 Ohms?

   Yes

   - Go To 5

   No

   - Repair the open in the (F342) ASD Control Output circuit(s).
   - Perform the POWERTRAIN VERIFICATION TEST. Refer to **POWERTRAIN VERIFICATION TEST** .

5. **TOTALLY INTEGRATED POWER MODULE**
    1. Using the wiring diagram/schematic as a guide, inspect the wiring and connectors between the related TIPM harness connector and the Powertrain Control Module (PCM).
    2. Look for any chafed, pierced, pinched or partially broken wires.
    3. Look for broken, bent, pushed out or corroded terminals. Verify that there is good pin to terminal contact in the TIPM harness connector and Powertrain Control Module connectors.
    4. Perform any Technical Service Bulletins that may apply.

    Were there any problems found?

    Yes

    - Repair as necessary.
    - Perform the BODY VERIFICATION TEST. Refer to **STANDARD PROCEDURE** .

    No

    - Replace and program the Totally Integrated Power Module in accordance with the Service Information.
    - Perform the BODY VERIFICATION TEST. Refer to **STANDARD PROCEDURE** .

P0703-BRAKE SWITCH 2 PERFORMANCE

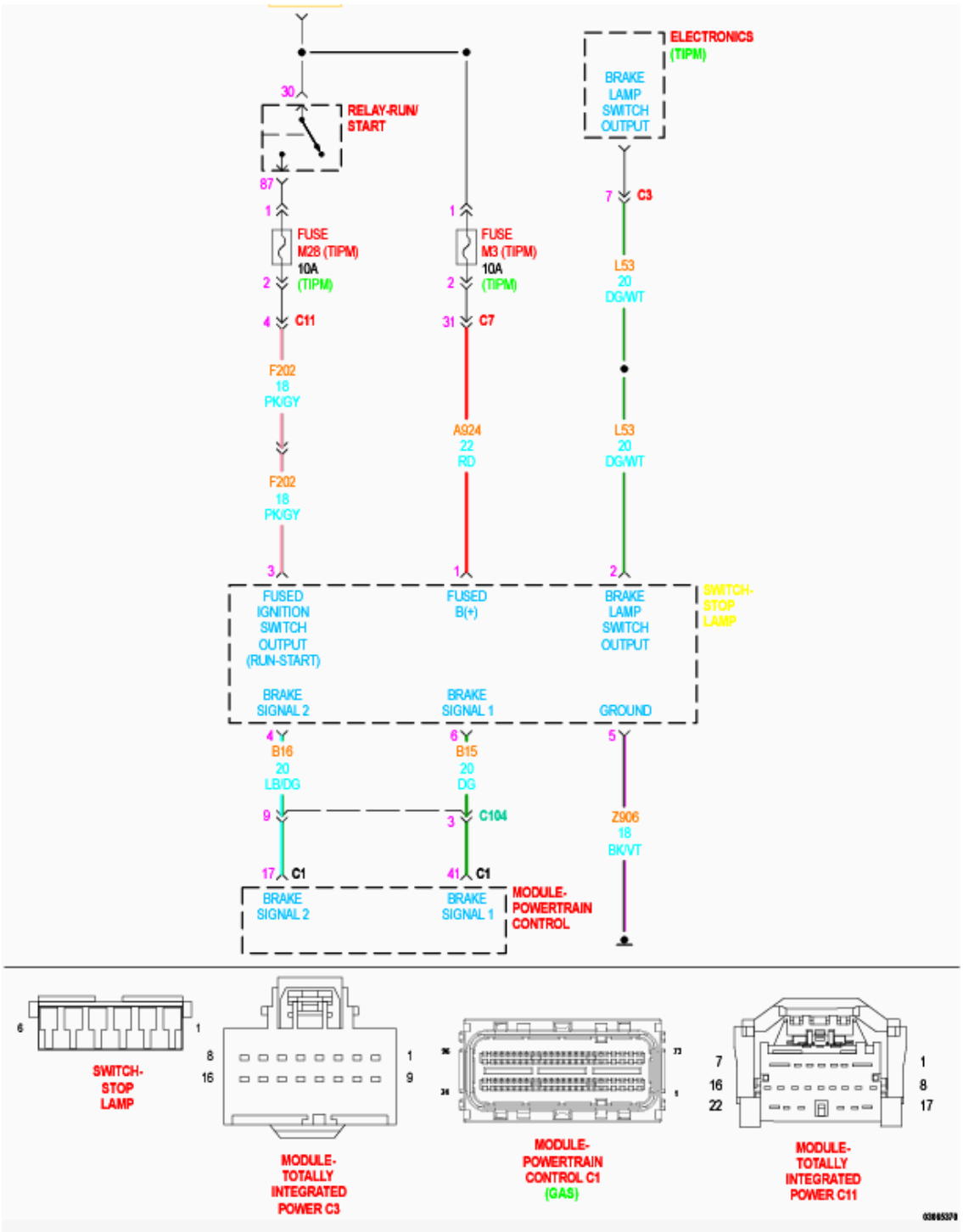

Fig. 39: Brake Switch Circuit Diagram
Courtesy of CHRYSLER GROUP, LLC

For a complete wiring diagram, **refer to appropriate SYSTEM WIRING DIAGRAMS article** .

WHEN MONITORED

With the ignition on and battery voltage greater than 10.4 Volts.

SET CONDITION

The Powertrain Control Module (PCM) detects that the states of Brake Signal 1 and Brake Signal 2 do not match for more than 50 ms.

POSSIBLE CAUSES

Possible Causes
(B15) BRAKE SIGNAL 1 CIRCUIT SHORTED TO GROUND
(B16) BRAKE SIGNAL 2 CIRCUIT SHORTED TO VOLTAGE
(F202) FUSED IGNITION SWITCH OUTPUT (RUN-START) CIRCUIT OPEN OR HIGH RESISTANCE
(Z906) GROUND CIRCUIT OPEN OR HIGH RESISTANCE
(B15) BRAKE SIGNAL 1 CIRCUIT OPEN OR HIGH RESISTANCE
(B16) BRAKE SIGNAL 2 CIRCUIT OPEN OR HIGH RESISTANCE
STOP LAMP SWITCH
POWERTRAIN CONTROL MODULE (PCM)

Always perform the Pre-Diagnostic Troubleshooting procedure before proceeding. Refer to PRE-DIAGNOSTIC TROUBLESHOOTING PROCEDURE .

DIAGNOSTIC TEST

1. **ACTIVE DTC**
    1. Turn the ignition on.
    2. With the scan tool, monitor the states of Brake Signal 1 and Brake Signal 2 while pressing and releasing the brake pedal several times.

       Do the states change from Pressed when the pedal is pressed to Not Pressed when the pedal is released?

       Yes

       - Perform the INTERMITTENT CONDITION diagnostic procedure. Refer to **INTERMITTENT CONDITION** .

       No

       - Go To 2

2. **CHECK THE (B15) BRAKE SIGNAL 1 CIRCUIT**
   1. Turn the ignition off.
   2. Disconnect the PCM C1 harness connector.

      CAUTION: Do not probe the PCM harness connectors. Probing the PCM harness connectors will damage the PCM terminals resulting in poor terminal to pin connection. Install the GPEC Diagnostic Adaptor to perform the diagnosis.

   3. Connect the (special tool #10436, Adapter, GPEC Diagnostic).
   4. Using a 12-volt test light connected to 12 volts, check the (B15) Brake Signal 1 circuit in the GPEC Adaptor while pressing and releasing the brake pedal several times.

      Does the test light change from illuminated when the pedal is pressed to not illuminated when the pedal is released?

      Yes

      - Go To 3

      No

      - Go To 4
3. **CHECK THE (B16) BRAKE SIGNAL 2 CIRCUIT**
   1. Turn the ignition on.
   2. Using a 12-volt test light connected to ground, check the (B16) Brake Signal 2 circuit in the GPEC Adaptor while pressing and releasing the brake pedal several times.

      Does the test light change from illuminated when the pedal is pressed to not illuminated when the pedal is released?

      Yes

      - Go To 11

No

- Go To 7

4. **CHECK THE (Z906) GROUND CIRCUIT FOR AN OPEN/HIGH RESISTANCE**

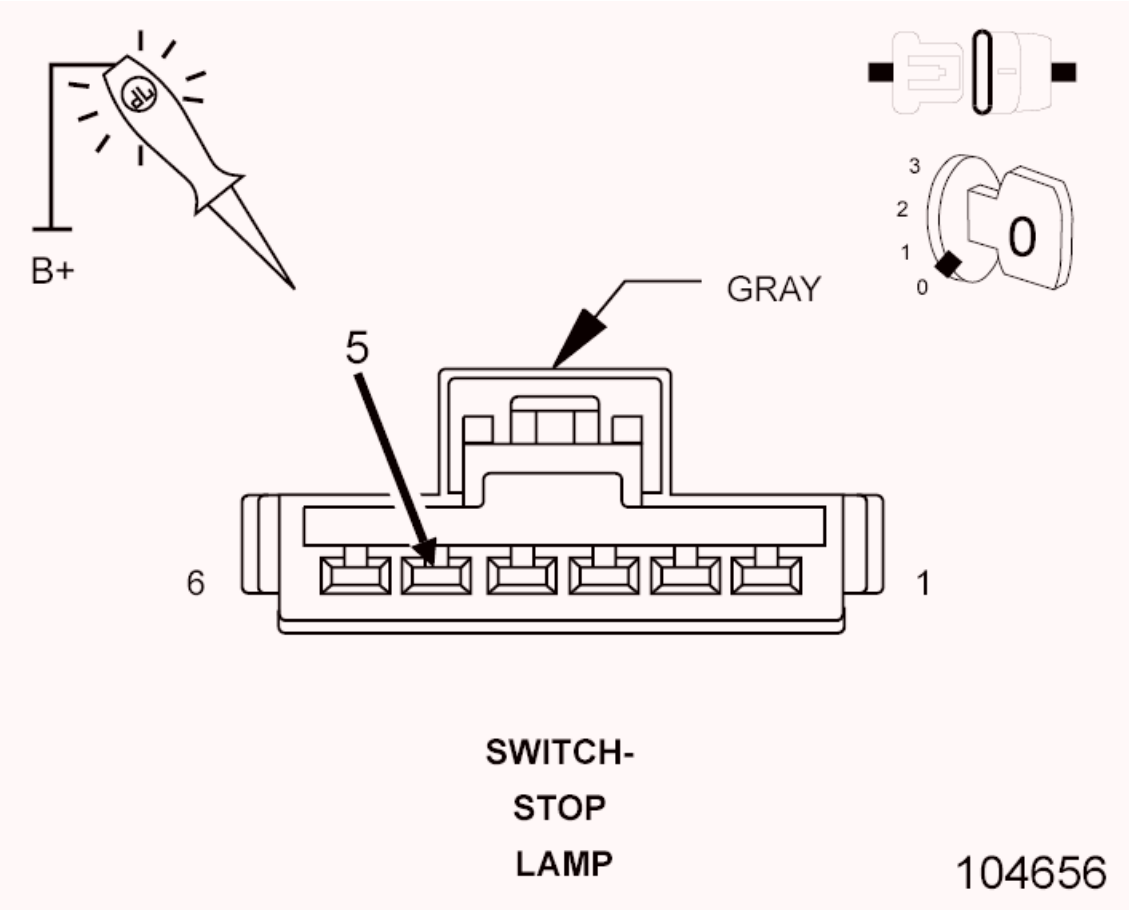

Fig. 40: Checking Stop Lamp Ground Circuit For Open Or High Resistance
Courtesy of CHRYSLER GROUP, LLC

1. Turn the ignition off.
2. Disconnect the Stop Lamp Switch harness connector.
3. Using a 12-volt test light connected to 12 Volts, check the (Z906) Ground circuit in the Stop Lamp Switch harness connector.

NOTE: The test light should be illuminated and bright. Compare the brightness to that of a direct connection to the battery.

Is the test light illuminated and bright?

Yes

- Go To 5

No

- Repair the (Z906) Ground circuit for an open or high resistance.
- Perform the POWERTRAIN VERIFICATION TEST. Refer to **POWERTRAIN VERIFICATION TEST** .

5. **CHECK THE (B15) BRAKE SIGNAL 1 CIRCUIT FOR A SHORT TO GROUND**

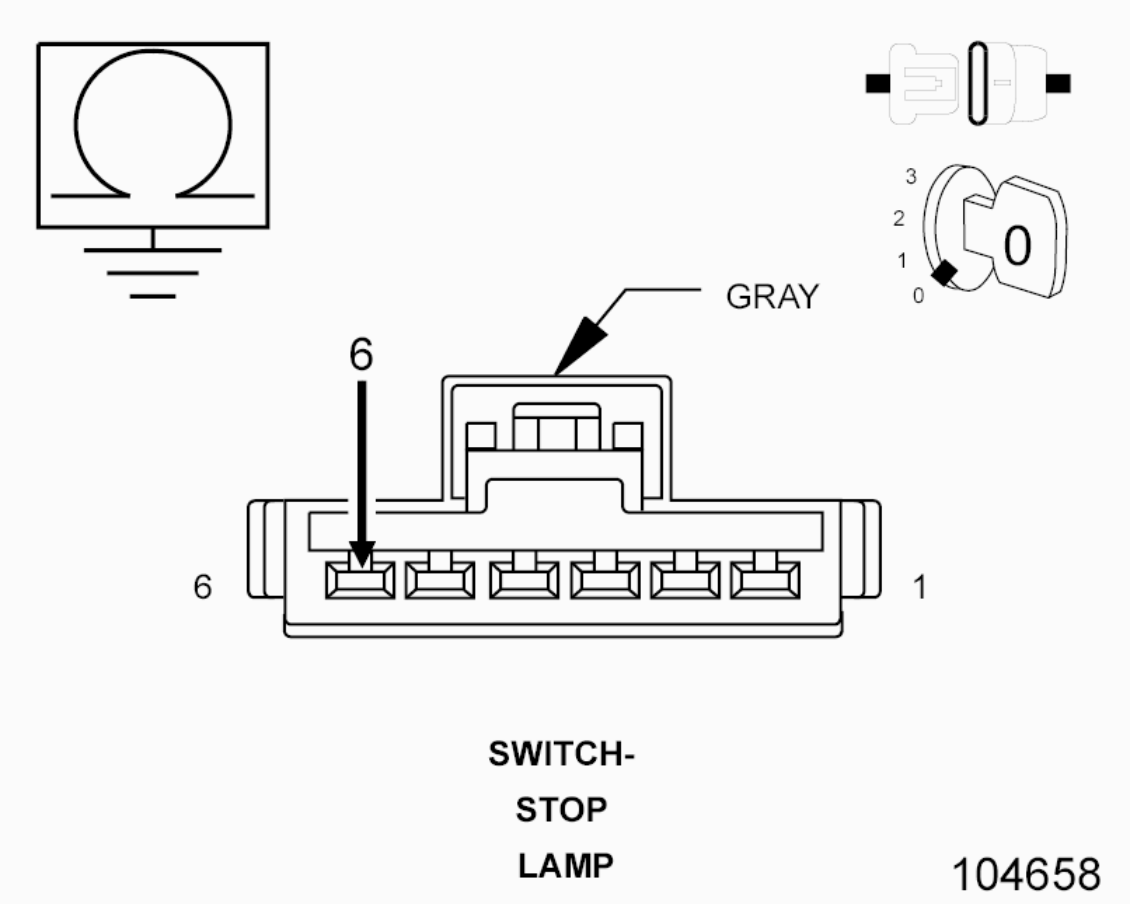

Fig. 41: Checking Brake Signal 1 Circuit For Short To Ground
Courtesy of CHRYSLER GROUP, LLC

1. Measure the resistance between ground and the (B15) Brake Signal 1 circuit in the Stop Lamp Switch harness connector.

Is the resistance above 10k Ohms?

Yes

- Go To 6

No

- Repair the (B15) Brake Signal 1 circuit for a short to ground.
- Perform the POWERTRAIN VERIFICATION TEST. Refer to **POWERTRAIN VERIFICATION TEST** .

6. **CHECK THE (B15) BRAKE SIGNAL 1 CIRCUIT FOR AN OPEN/HIGH RESISTANCE**
   1. Measure the resistance of the (B15) Brake Signal 1 circuit between the Stop Lamp Switch harness connector and the GPEC Adaptor.

   Is the resistance below 5.0 Ohms?

   Yes

   - Go To 10

   No

   - Repair the (B15) Brake Signal 1 circuit for an open or high resistance.
   - Perform the POWERTRAIN VERIFICATION TEST. Refer to **POWERTRAIN VERIFICATION TEST** .

7. **CHECK THE (F202) FUSED IGNITION SWITCH OUTPUT (RUN-START) CIRCUIT FOR AN OPEN/HIGH RESISTANCE**

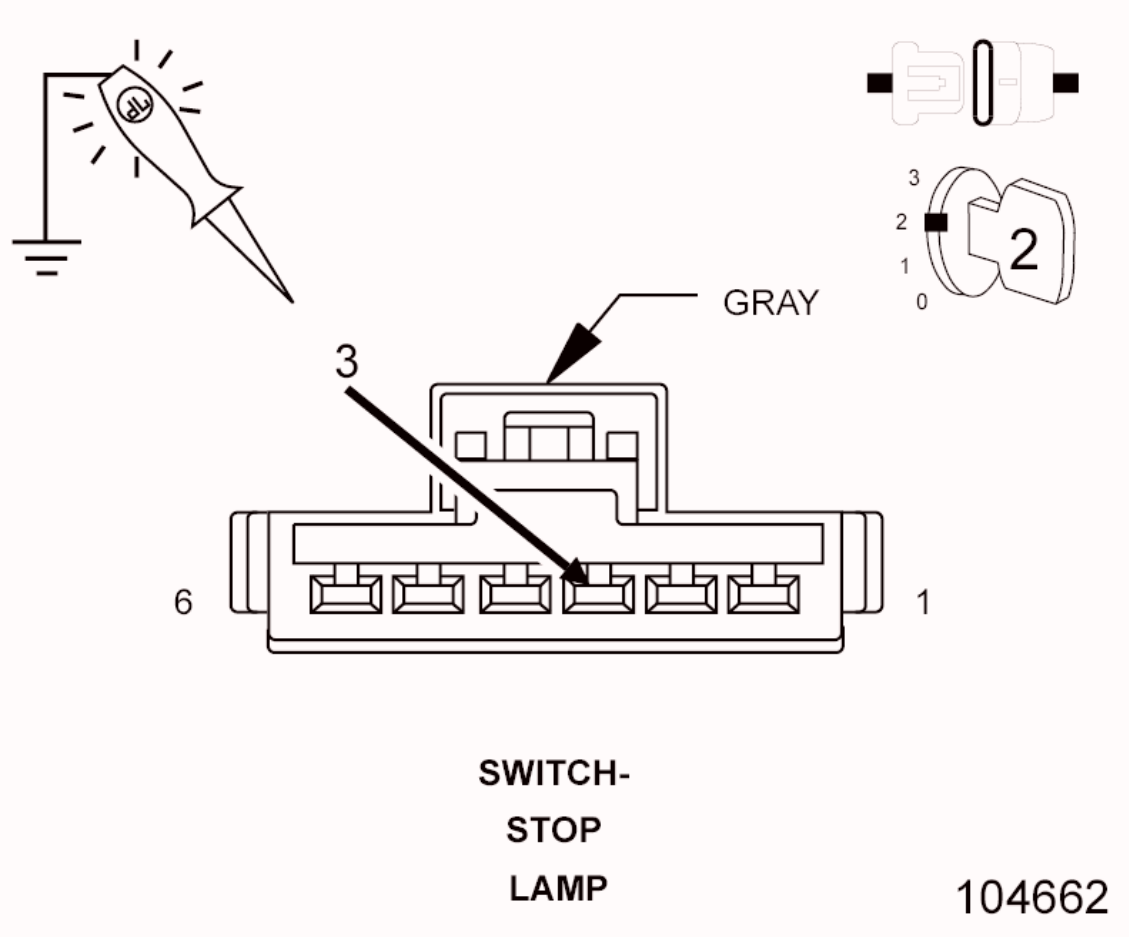

Fig. 42: Checking Fused Ignition Switch Output (Run-Start) Circuit For Open Or High Resistance
Courtesy of CHRYSLER GROUP, LLC

1. Turn the ignition off.
2. Disconnect the Stop Lamp Switch harness connector.
3. Turn the ignition on.
4. Using a 12-volt test light connected to ground, check the (F202) Fused Ignition Switch Output (Run-Start) circuit in the Stop Lamp Switch harness connector.

NOTE: The test light should be illuminated and bright. Compare the brightness to that of a direct connection to the battery.

Is the test light illuminated and bright?

Yes

- Go To 8

No

- Repair the (F202) Fused Ignition Switch Output (Run-Start) circuit for an open or high resistance.
- Perform the POWERTRAIN VERIFICATION TEST. Refer to **POWERTRAIN VERIFICATION TEST** .

8. **CHECK THE (B16) BRAKE SIGNAL 2 CIRCUIT FOR A SHORT TO VOLTAGE**

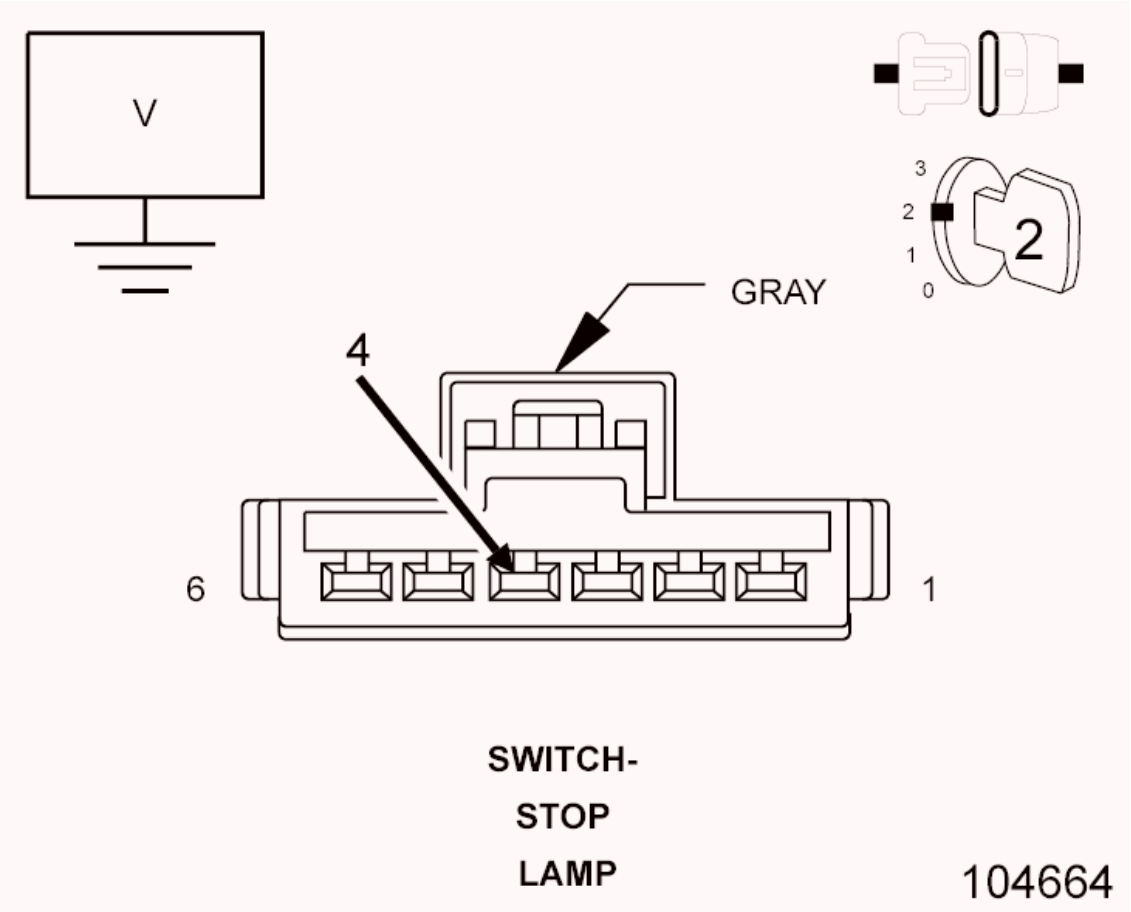

Fig. 43: Checking Brake Signal 2 Circuit For Short To Voltage
Courtesy of CHRYSLER GROUP, LLC

1. Measure the voltage of the (B16) Brake Signal 2 circuit in the Stop Lamp Switch harness connector.

   Is there any voltage present?

   Yes

- Repair the (B16) Brake Signal 2 circuit for a short to voltage.
- Perform the POWERTRAIN VERIFICATION TEST. Refer to **POWERTRAIN VERIFICATION TEST** .

No

- Go To 9

9. **CHECK THE (B16) BRAKE SIGNAL 2 CIRCUIT FOR AN OPEN/HIGH RESISTANCE**
   1. Measure the resistance of the (B16) Brake Signal 2 circuit between the Stop Lamp Switch harness connector and the GPEC Adaptor.

      Is the resistance below 5.0 Ohms?

      Yes

      - Go To 10

      No

      - Repair the (B16) Brake Signal 2 circuit for an open circuit or high resistance.
      - Perform the POWERTRAIN VERIFICATION TEST. Refer to **POWERTRAIN VERIFICATION TEST** .

10. **STOP LAMP SWITCH**
    1. Using the wiring diagram/schematic as a guide, inspect the wiring and connectors between the Stop Lamp Switch and the Powertrain Control Module (PCM).
    2. Look for any chafed, pierced, pinched or partially broken wires.
    3. Look for broken, bent, pushed out or corroded terminals.
    4. Perform any Technical Service Bulletins that may apply.

       Were any problems found?

       Yes

       - Repair as necessary.
       - Perform the POWERTRAIN VERIFICATION TEST. Refer to

POWERTRAIN VERIFICATION TEST .

No

- Replace the Stop Lamp Switch in accordance with the service information.
- Perform the POWERTRAIN VERIFICATION TEST. Refer to **POWERTRAIN VERIFICATION TEST** .

11. **POWERTRAIN CONTROL MODULE (PCM)**
    1. Using the wiring diagram/schematic as a guide, inspect the wiring and connectors between the Stop Lamp Switch and the Powertrain Control Module (PCM).
    2. Look for any chafed, pierced, pinched or partially broken wires.
    3. Look for broken, bent, pushed out or corroded terminals.
    4. Perform any Technical Service Bulletins that may apply.

    Were any problems found?

    Yes

    - Repair as necessary.
    - Perform the POWERTRAIN VERIFICATION TEST. Refer to **POWERTRAIN VERIFICATION TEST** .

    No

    - Replace and program the Powertrain Control Module (PCM) in accordance with the service information. Refer to **MODULE, POWERTRAIN CONTROL, REMOVAL** .
    - Perform the POWERTRAIN VERIFICATION TEST. Refer to **POWERTRAIN VERIFICATION TEST** .

P0850-PARK/NEUTRAL SWITCH PERFORMANCE

For a complete wiring diagram, **refer to appropriate SYSTEM WIRING DIAGRAMS article** .

WHEN MONITORED

Continuously with the transmission in Park, Neutral, or Drive and not in Limp-in

mode.

SET CONDITION

This code will set if the Powertrain Control Module (PCM) detects an irrational Park/Neutral switch state. Two trip fault. Three good trips to turn off the MIL.

POSSIBLE CAUSES

POSSIBLE CAUSES
P/N SIGNAL CIRCUIT SHORTED TO VOLTAGE OR GROUND DTCS PRESENT IN THE TRANSMISSION CONTROL MODULE (TCM) POWERTRAIN CONTROL MODULE (PCM)

Always perform the Pre-Diagnostic Troubleshooting procedure before proceeding. Refer to PRE-DIAGNOSTIC TROUBLESHOOTING PROCEDURE .

DIAGNOSTIC TEST

1. **DTC IS ACTIVE**
    1. Start the engine and allow it to reach normal operating temperature.

        WARNING: **When the engine is operating, do not stand in direct line with the fan. Do not put your hands near the pulleys, belts or fan. Do not wear loose clothing. Failure to follow these instructions may result in possible serious or fatal injury.**

        NOTE: **It may be necessary to test drive the vehicle in order to get this DTC to reset.**

    2. With the scan tool, select View DTCs.

        Is the status Active for this DTC?

        Yes

        - Go To 2

No

- Perform the INTERMITTENT CONDITION diagnostic procedure. Refer to **INTERMITTENT CONDITION** .

2. **DTCS PRESENT IN THE TRANSMISSION CONTROL MODULE (TCM)**

NOTE: If the scan tool is unable to communicate with the TCM, or if there are related communication DTCs present, refer to the Communication Diagnostic Information and perform the appropriate diagnostic procedure.

1. Turn the ignition on.
2. With the scan tool, select View DTCs in the TCM.

Are there any DTCs present in the TCM?

Yes

- Perform the appropriate diagnostic procedure.

No

- Go To 3

3. **POWERTRAIN CONTROL MODULE (PCM)**
   1. Inspect the P/N signal circuit for a short to ground, or a short to voltage with the shifter in Drive or Reverse. Perform the appropriate diagnostic procedures in the Transmission diagnostic information .
   2. Using the wiring diagram/schematic as a guide, inspect the wiring and connectors between the Transmission Range Sensor, the TCM, and the PCM.
   3. Look for any chafed, pierced, pinched, or partially broken wires.
   4. Look for broken, bent, pushed out or corroded terminals.
   5. Perform any Technical Service Bulletins that may apply.

   Were any problems found?

Yes

- Repair as necessary.
- Perform the POWERTRAIN VERIFICATION TEST. Refer to **POWERTRAIN VERIFICATION TEST** .

No

- Replace and program the Powertrain Control Module (PCM) in accordance with the Service Information. Refer to **MODULE, POWERTRAIN CONTROL, REMOVAL** .
- Perform the POWERTRAIN VERIFICATION TEST. Refer to **POWERTRAIN VERIFICATION TEST** .

P1115-GENERAL TEMPERATURE RATIONALITY

For a complete wiring diagram, **refer to appropriate SYSTEM WIRING DIAGRAMS article** .

WHEN MONITORED

With the ignition on and battery voltage greater than 10 volts.

SET CONDITION

AAT, ECT, and IAT sensor inputs are compared during a cold start. After start up, the values are monitored. If one of the readings is not plausible for two consecutive trips, a DTC is stored. Three good trips turns off the MIL.

POSSIBLE CAUSES

POSSIBLE CAUSES
SENSOR SIGNAL CIRCUIT HIGH RESISTANCE
SENSOR GROUND CIRCUIT HIGH RESISTANCE
TEMPERATURE SENSOR
POWERTRAIN CONTROL MODULE (PCM)

Always perform the Pre-Diagnostic Troubleshooting procedure before proceeding. Refer to PRE-DIAGNOSTIC TROUBLESHOOTING PROCEDURE .

DIAGNOSTIC TEST.

1. **ACTIVE DTC**
   1. Turn the ignition on.
   2. With a scan tool, select View DTCs.

NOTE: Diagnose and repair any AAT, ECT, and IAT sensor DTCs before continuing with this test.

NOTE: Diagnose and repair P1607 PCM INTERNAL SHUTDOWN TIMER SLOW RATIONALITY or P2610 PCM INTERNAL SHUTDOWN TIMER FAST RATIONALITY if either code is set before continuing with this test.

NOTE: Using an unapproved block heater in cold temperatures may cause this DTC to set. No repair is required.

Is the status Active for this DTC?

Yes

- Go To 2

No

- Perform the CHECKING FOR AN INTERMITTENT DTC Diagnostic Procedure. Refer to **INTERMITTENT CONDITION** .

2. **TEMPERATURE SENSOR CIRCUIT VALUE IMPLAUSIBLE**

NOTE: Allow the engine sit for 6 - 8 hours before testing.

1. With a scan tool, monitor the AAT, ECT, and IAT sensor values.
2. Start the engine.
3. Allow the engine to reach normal operating temperature.

Does the value for each of the sensors increase smoothly and as

expected?

Yes

- Perform the CHECKING FOR AN INTERMITTENT DTC Diagnostic Procedure. Refer to **INTERMITTENT CONDITION** .

No

- Go To 3

3. **TEMPERATURE SENSOR**

NOTE: If it is necessary to replace the AAT sensor, be sure to drive the vehicle over 30 MPH for at least 5 minutes to update the AAT value.

1. Turn the ignition on.
2. Disconnect the harness connector for the sensor that had a value which did not increase smoothly and as expected.
3. With the scan tool, read the sensor voltage with the connected disconnected.

NOTE: The sensor voltage should be approximately 5.0 volts with the connector disconnected.

4. Connect a jumper wire between the sensor signal circuit and the sensor ground circuit in the harness connector.
5. With the scan tool, read the sensor voltage with the jumper wire in place.

NOTE: The sensor voltage should be approximately 0 volts with the jumper wire in place.

Does the sensor voltage change as described?

Yes

- Replace the sensor.

- Perform the PCM VERIFICATION TEST. Refer to **POWERTRAIN VERIFICATION TEST** .

No

- Go To 4

4. **SENSOR SIGNAL CIRCUIT HIGH RESISTANCE**
   1. Turn the ignition off.
   2. For the AAT sensor, disconnect the TIPM harness connector. Otherwise disconnect the PCM harness connector.
   3. Measure the resistance of the sensor signal circuit from the sensor harness connector to the module harness connector.

   Is the resistance above 5.0 Ohms?

   Yes

   - Repair the sensor signal circuit for high resistance.
   - Perform the PCM VERIFICATION TEST. Refer to **POWERTRAIN VERIFICATION TEST** .

   No

   - Go To 5

5. **SENSOR GROUND CIRCUIT HIGH RESISTANCE**
   1. Measure the resistance of the sensor ground circuit from the sensor harness connector to the module harness connector.

   Is the resistance above 5.0 Ohms?

   Yes

   - Repair the sensor ground circuit for high resistance.
   - Perform the PCM VERIFICATION TEST. Refer to **POWERTRAIN VERIFICATION TEST** .

   No

   - Go To 6

6. **POWERTRAIN CONTROL MODULE (PCM)**
    1. Using the wiring diagram/schematic as a guide, inspect the wiring and connectors between the sensor and the Powertrain Control Module (PCM).
    2. Look for any chafed, pierced, pinched, or partially broken wires.
    3. Look for broken, bent, pushed out or corroded terminals.
    4. Monitor the scan tool data relative to this circuit and wiggle Test. the wiring and connectors.
    5. Look for the data to change or for the DTC to reset during the wiggle Test.
    6. Refer to any Technical Service Bulletins that may apply.

    Were any problems found?

    Yes

    - Repair as necessary.
    - Perform the PCM VERIFICATION TEST. Refer to **POWERTRAIN VERIFICATION TEST** .

    No

    - Replace and program the Powertrain Control Module per Service Information. Refer to **MODULE, POWERTRAIN CONTROL, REMOVAL** .
    - Perform the PCM VERIFICATION TEST. Refer to **POWERTRAIN VERIFICATION TEST** .

P1128-CLOSED LOOP FUELING NOT ACHIEVED - BANK 1 UPSTREAM

For a complete wiring diagram, **refer to appropriate SYSTEM WIRING DIAGRAMS article** .

WHEN MONITORED

With engine run time and coolant temperature above a calibrated value.

SET CONDITION

The Powertrain Control Module (PCM) detects a condition where the vehicle has

remained in open loop fuel control, from a start-up condition, longer than a calibrated amount of time, when conditions would have otherwise expected closed loop operation. Two Trip Fault. Three good trips to turn off the MIL.

POSSIBLE CAUSES

POSSIBLE CAUSES
FUEL DELIVERY SYSTEM
ECT SENSOR, WIRING, OR CONNECTORS
MAP SENSOR, WIRING, OR CONNECTORS
O2 SENSOR, WIRING, OR CONNECTORS
ENGINE MECHANICAL SYSTEM
POWERTRAIN CONTROL MODULE (PCM)

Always perform the Pre-Diagnostic Troubleshooting procedure before proceeding. Refer to PRE-DIAGNOSTIC TROUBLESHOOTING PROCEDURE .

DIAGNOSTIC TEST

1. **DTC IS ACTIVE**
    1. Diagnose and repair any other active component or circuit DTCs before continuing with this procedure.
    2. Turn the ignition on.
    3. With the scan tool, select View DTCs. Copy DTC and Freeze Frame information.
    4. Start the engine and allow it to reach operating temperature.

WARNING: When the engine is operating, do not stand in direct line with the fan. Do not put your hands near the pulleys, belts or fan. Do not wear loose clothing. Failure to follow these instructions may result in possible serious or fatal injury.

NOTE: Attempt to operate the vehicle under conditions similar to which the DTC was set.

NOTE: It may be necessary to test drive the vehicle within the DTC monitoring conditions in order for this DTC to set.

5. With a scan tool, select View DTCs.

   Is the status Active for this DTC?

   Yes

   - Go To 2

   No

   - Perform the INTERMITTENT CONDITION diagnostic procedure. Refer to **INTERMITTENT CONDITION** .

2. **CHECKING THE FUEL DELIVERY SYSTEM**
   1. Perform the diagnostic procedures for FUEL PRESSURE LEAK DOWN and FUEL DELIVERY SYSTEM OUTPUT - FLOW TEST. Refer to **DIAGNOSIS AND TESTING** .

      Were any problems found?

      Yes

      - Repair as necessary in accordance with the Service Information.
      - Perform the POWERTRAIN VERIFICATION TEST. Refer to **POWERTRAIN VERIFICATION TEST** .

      No

      - Go To 3

3. **CHECKING THE ENGINE COOLANT TEMPERATURE SENSOR OPERATION**
   1. Perform the diagnostic procedure for CHECKING THE ENGINE COOLANT TEMPERATURE SENSOR OPERATION. Refer to **DIAGNOSIS AND TESTING** .

      Were any problems found?

Yes

- Repair as necessary in accordance with the Service Information.
- Perform the POWERTRAIN VERIFICATION TEST. Refer to **POWERTRAIN VERIFICATION TEST** .

No

- Go To 4

4. **CHECKING THE MAP SENSOR OPERATION**
   1. Perform the diagnostic procedure for CHECKING THE MAP SENSOR OPERATION. Refer to **DIAGNOSIS AND TESTING** .

   Were any problems found?

   Yes

   - Repair as necessary in accordance with the Service Information.
   - Perform the POWERTRAIN VERIFICATION TEST. Refer to **POWERTRAIN VERIFICATION TEST** .

   No

   - Go To 5

5. **CHECKING THE OXYGEN SENSOR OPERATION**
   1. Perform the diagnostic procedure for CHECKING THE OXYGEN SENSOR OPERATION. Refer to **DIAGNOSIS AND TESTING** .

   Were any problems found?

   Yes

   - Repair as necessary in accordance with the Service Information.
   - Perform the POWERTRAIN VERIFICATION TEST. Refer to **POWERTRAIN VERIFICATION TEST** .

   No

   - Go To 6

6. **CHECKING THE ENGINE MECHANICAL SYSTEM**
   1. Perform the diagnostic procedure for CHECKING THE ENGINE MECHANICAL SYSTEM. Refer to **DIAGNOSIS AND TESTING** .

      Were any problems found?

      Yes

      - Repair as necessary in accordance with the Service Information.
      - Perform the POWERTRAIN VERIFICATION TEST. Refer to **POWERTRAIN VERIFICATION TEST** .

      No

      - Go To 7
7. **POWERTRAIN CONTROL MODULE (PCM)**
   1. Using the wiring diagram/schematic as a guide, inspect the wiring and connectors relative to the components tested in this procedure.
      - Look for any chafed, pierced, pinched, or partially broken wires.
      - Look for broken, bent, pushed out or corroded terminals.
      - Monitor the scan tool data relative to the components tested in this procedure and wiggle test the wiring and connectors.
      - Look for the data to change or for a DTC to set during the wiggle test.
      - Perform any technical service bulletins that may apply.

      Were any problems found?

      Yes

      - Repair as necessary.
      - Perform the POWERTRAIN VERIFICATION TEST. Refer to **POWERTRAIN VERIFICATION TEST** .

      No

      - Replace and program the Powertrain Control Module (PCM) in accordance with the Service Information. Refer to **MODULE,**

POWERTRAIN CONTROL, REMOVAL .

- Perform the POWERTRAIN VERIFICATION TEST. Refer to **POWERTRAIN VERIFICATION TEST** .

P1212-ENGINE OIL TEMPERATURE HIGH - RPM LIMITED

For a complete wiring diagram, **refer to appropriate SYSTEM WIRING DIAGRAMS article** .

WHEN MONITORED

The engine oil temperature has dropped below a calibrated value. Engine start up.

SET CONDITION

The engine oil temperature rises faster than a calibrated modeled temperature. When the actual oil temperature exceeds the calibrated modeled temperature for three minutes the fault is set.

POSSIBLE CAUSES

Possible Causes
(G24) EOT SIGNAL CIRCUIT SHORTED TO VOLTAGE
(G24) EOT SIGNAL CIRCUIT SHORTED TO GROUND
(G24) EOT SIGNAL CIRCUIT SHORTED TO THE (K914) SENSOR GROUND CIRCUIT
(G24) EOT SIGNAL CIRCUIT OPEN OR HIGH RESISTANCE
(K915) SENSOR GROUND CIRCUIT OPEN OR HIGH RESISTANCE
ENGINE OIL TEMPERATURE SENSOR
POWERTRAIN CONTROL MODULE (PCM)

Always perform the Pre-Diagnostic Troubleshooting procedure before proceeding. Refer to PRE-DIAGNOSTIC TROUBLESHOOTING PROCEDURE .

DIAGNOSTIC TEST

1. **ACTIVE DTC**

NOTE: Diagnose any CAN - C Communication DTCs before

continuing.

1. Turn the ignition off.
2. If possible, allow the vehicle to sit with the ignition off for more than 60 minutes in an environment where the ambient temperature will allow the oil temperature to cool.
3. Start the engine and allow it to reach normal operating conditions.
4. With the scan tool, select View DTCs.

   Is the status Active or Pending for this DTC?

   Yes

   - Go To 2

   No

   - Test complete, the condition or conditions that originally set this DTC are not present at this time. Using the wiring diagrams as a guide, check all related splices and connectors for signs of water intrusion, corrosion, pushed out or bent terminals and correct pin tension.
   - Perform the CHECKING FOR AN INTERMITTENT DTC diagnostic procedure. Refer to **INTERMITTENT CONDITION** .

2. **ENGINE OIL**
   1. The following conditions must be checked:
      - OEM recommended oil viscosity is being used.
      - Customer is following the oil change schedule.
      - Check the engine oil for contamination. (i.e., fuel and/or engine coolant).
      - Internal engine condition that may effect oil pressure.

      Were any of the above conditions found?

      Yes

      - Repair as necessary.
      - Perform the POWERTRAIN VERIFICATION TEST. Refer to

POWERTRAIN VERIFICATION TEST .

No

- Go To 3

3. **CHECK THE (G24) EOT SIGNAL CIRCUIT FOR A SHORT TO VOLTAGE**

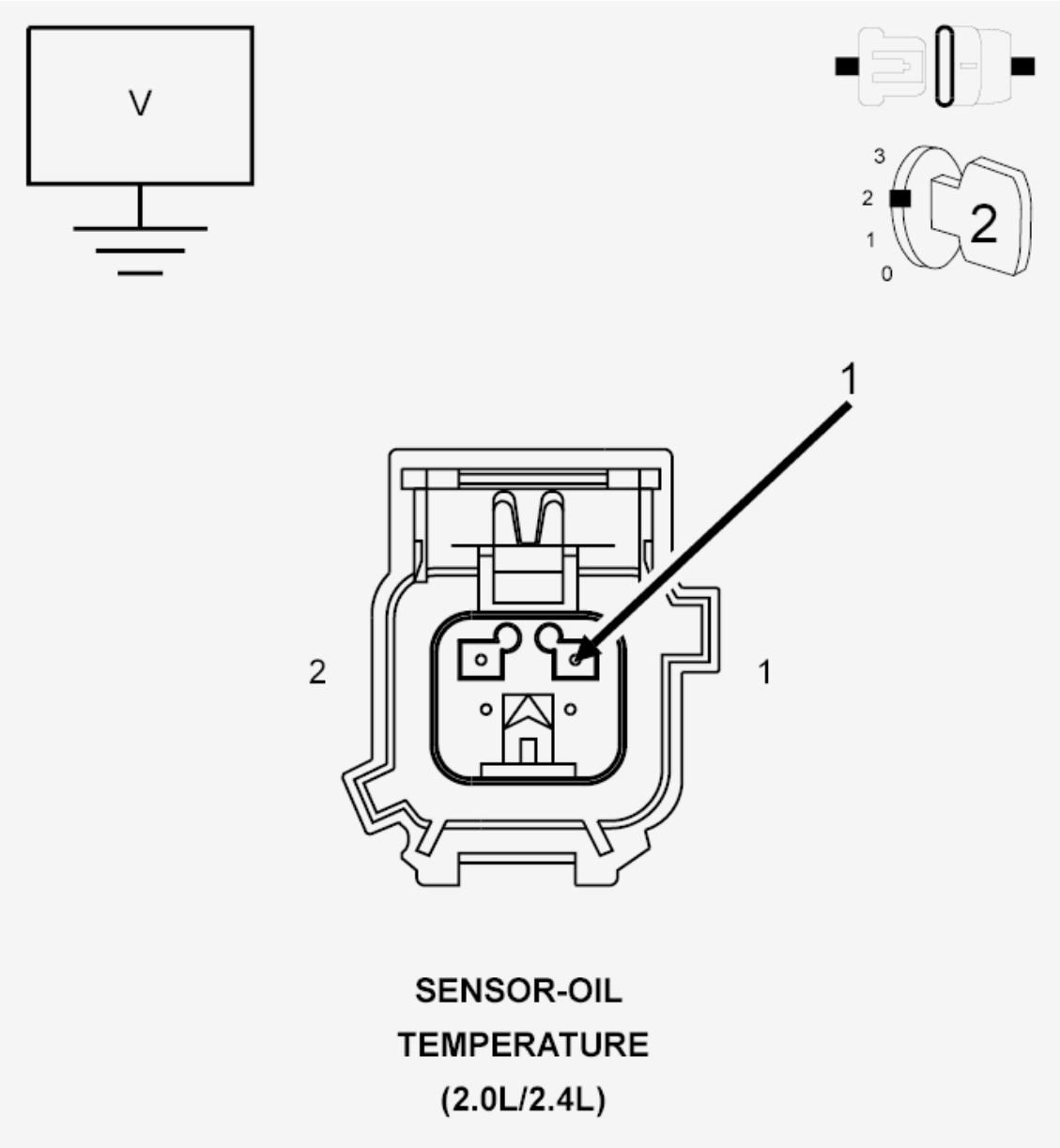

Fig. 44: Checking EOT Signal Circuit For Short To Voltage
Courtesy of CHRYSLER GROUP, LLC

1. Turn the ignition off.
2. Disconnect the Engine Oil Temperature Sensor connector.

3. Disconnect the PCM C2 connector.
4. Turn the ignition on.
5. Measure the voltage of the (G24) EOT Signal circuit in the Engine Oil Temperature Sensor harness connector.

   Is there any voltage present?

   Yes

   - Repair the (G24) EOT Signal circuit for a short to voltage.
   - Perform the POWERTRAIN VERIFICATION TEST. Refer to **POWERTRAIN VERIFICATION TEST** .

   No

   - Go To 4

4. **CHECK THE (G24) EOT SIGNAL CIRCUIT FOR A SHORT TO GROUND**

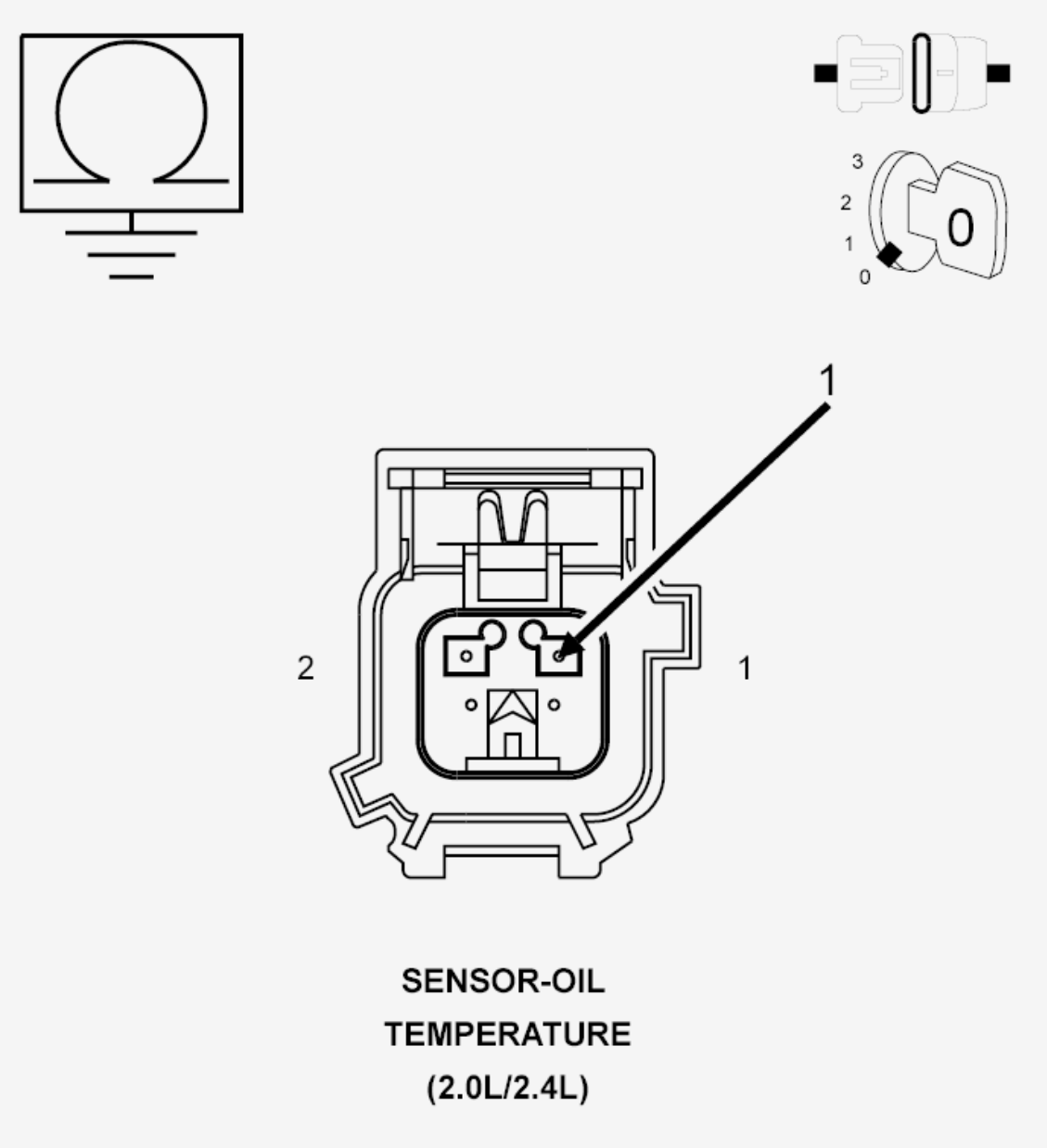

Fig. 45: Checking EOT Signal Circuit For Short To Ground
Courtesy of CHRYSLER GROUP, LLC

1. Turn the ignition off.
2. Measure the resistance between ground and the (G24) EOT Signal circuit in the Engine Oil Temperature Sensor harness connector.

   Is the resistance above 10k Ohms?

   Yes

   - Go To 5

No

- Repair the (G24) EOT Signal circuit for a short to ground.
- Perform the POWERTRAIN VERIFICATION TEST. Refer to **POWERTRAIN VERIFICATION TEST** .

5. **CHECK FOR THE (G24) EOT SIGNAL CIRCUIT SHORTED TO THE (K915) SENSOR GROUND CIRCUIT**

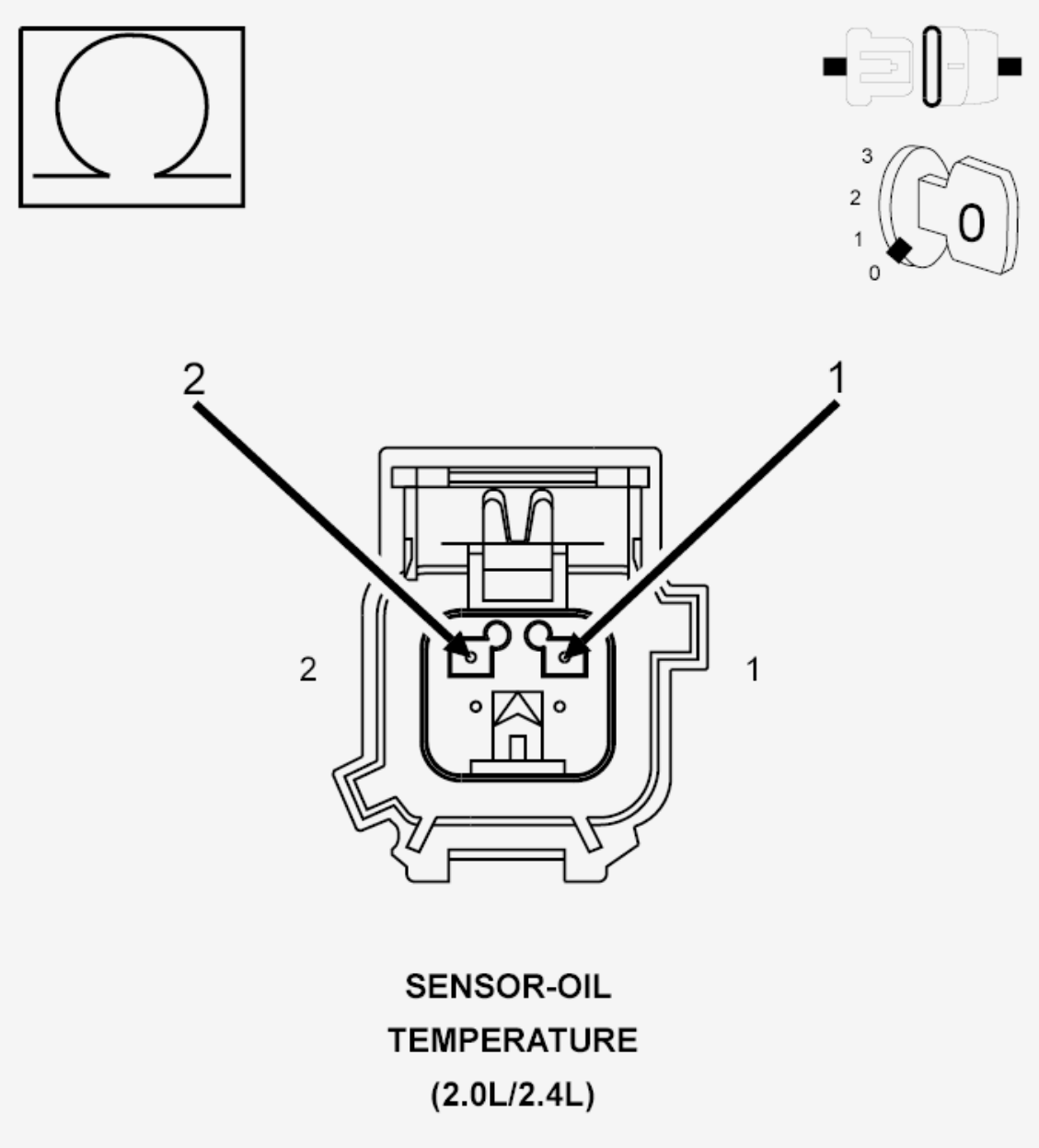

Fig. 46: Checking EOT Signal Circuit For Short To Sensor Ground Circuit
Courtesy of CHRYSLER GROUP, LLC

1. Measure the resistance between the (G24) EOT Signal circuit and the (K915) Sensor Ground circuit in the Engine Oil Temperature Sensor harness connector.

   Is the resistance above 10k Ohms?

   Yes

   - Go To 6

   No

   - Repair the (G24) EOT Signal circuit for a short to the (K915) Sensor Ground circuit.
   - Perform the POWERTRAIN VERIFICATION TEST. Refer to **POWERTRAIN VERIFICATION TEST** .

6. **CHECK THE (G24) EOT SIGNAL CIRCUIT FOR AN OPEN/HIGH RESISTANCE**

   CAUTION: Do not probe the PCM harness connectors. Probing the PCM harness connectors will damage the PCM terminals resulting in poor terminal to pin connection. Install the GPEC Diagnostic Adaptor to perform the diagnosis.

   1. Connect the (special tool #10436, Adapter, GPEC Diagnostic).
   2. Measure the resistance of the (G24) EOT Signal circuit between the Engine Oil Temperature Sensor harness connector and the GPEC Adaptor.

      Is the resistance below 5.0 Ohms?

      Yes

      - Go To 7

      No

      - Repair the (G24) EOT Signal circuit for an open or high resistance.

- Perform the POWERTRAIN VERIFICATION TEST. Refer to **POWERTRAIN VERIFICATION TEST** .

7. **CHECK THE (K915) SENSOR GROUND CIRCUIT FOR AN OPEN/HIGH RESISTANCE**
   1. Disconnect the PCM C1 harness connector.

      CAUTION: Do not probe the PCM harness connectors. Probing the PCM harness connectors will damage the PCM terminals resulting in poor terminal to pin connection. Install the GPEC Diagnostic Adaptor to perform the diagnosis.

   2. Connect the (special tool #10436, Adapter, GPEC Diagnostic).
   3. Measure the resistance of the (K915) Sensor Ground circuit between the Engine Oil Temperature Sensor harness connector and the GPEC Adaptor.

      Is the resistance below 5.0 Ohms?

      Yes

      - Go To 8

      No

      - Repair the (K915) Sensor Ground for an open or high resistance.
      - Perform the POWERTRAIN VERIFICATION TEST. Refer to **POWERTRAIN VERIFICATION TEST** .

8. **ENGINE OIL TEMPERATURE SENSOR**

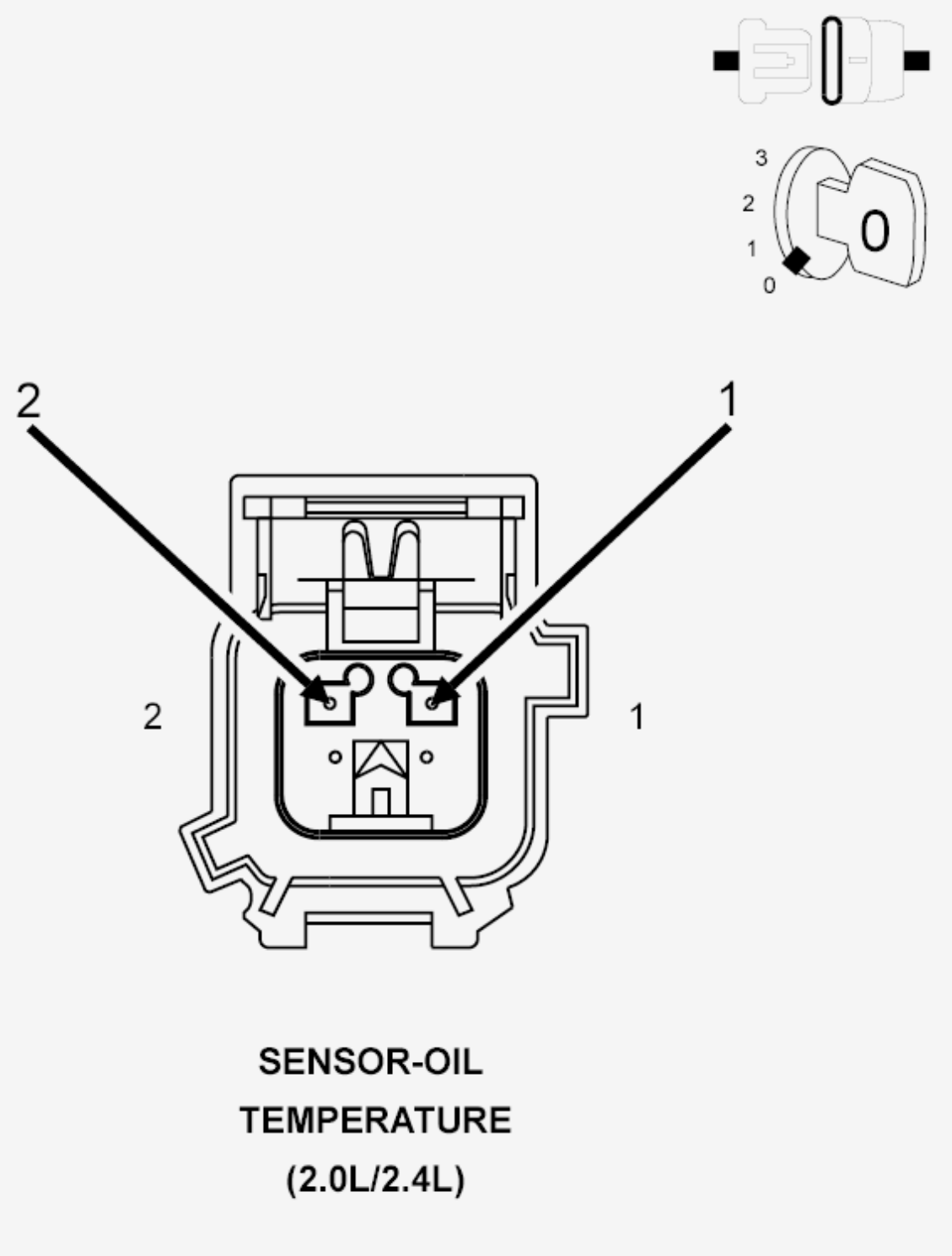

Fig. 47: Engine Oil Temperature Sensor Harness Connector End View
Courtesy of CHRYSLER GROUP, LLC

1. Turn the ignition off.
2. Connect the PCM harness connectors.
3. Connect a jumper between the (K915) Sensor Ground circuit and the (G24) EOT Signal circuit in the Engine Oil Temperature Sensor harness

connector.

4. Turn the ignition on.
5. With the scan tool, read the Engine Oil Temperature Sensor signal voltage.

   Is the voltage below 0.1 volts with the jumper in place?

   Yes

   - Replace the Engine Oil Temperature Sensor in accordance with the service information.
   - Perform the POWERTRAIN VERIFICATION TEST. Refer to **POWERTRAIN VERIFICATION TEST** .

   No

   - Go To 9

9. **POWERTRAIN CONTROL MODULE (PCM)**
   1. Using the wiring diagram/schematic as a guide, inspect the wiring and connectors between the Engine Oil Temperature Sensor and the Powertrain Control Module (PCM).
   2. Look for any chafed, pierced, pinched or partially broken wires.
   3. Look for broken, bent, pushed out or corroded terminals.
   4. Monitor the scan tool data relative to this circuit and wiggle test the wiring and connectors.
   5. Look for the data to change or for the DTC to reset during the wiggle test.
   6. Perform any Technical Service Bulletins that may apply.

   Were any problems found?

   Yes

   - Repair as necessary.
   - Perform the POWERTRAIN VERIFICATION TEST. Refer to **POWERTRAIN VERIFICATION TEST** .

   No

- Replace and program the Powertrain Control Module (PCM) in accordance with the service information. Refer to **MODULE, POWERTRAIN CONTROL, REMOVAL** .
- Perform the POWERTRAIN VERIFICATION TEST. Refer to **POWERTRAIN VERIFICATION TEST** .

P1239-ENGINE OIL TEMPERATURE TOO LOW

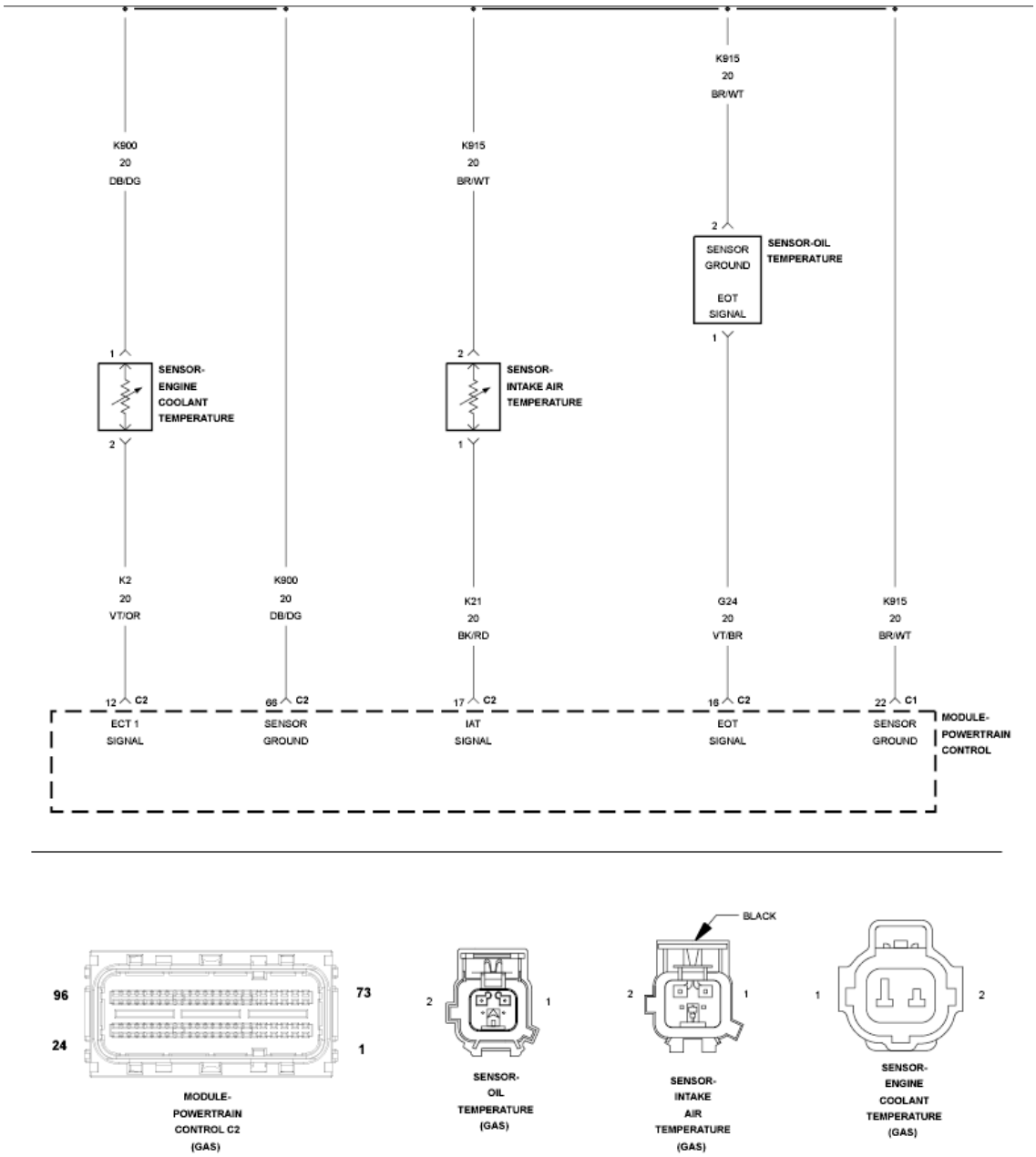

Fig. 48: Temperature Sensors Circuit Diagram
Courtesy of CHRYSLER GROUP, LLC

For a complete wiring diagram, **refer to appropriate SYSTEM WIRING DIAGRAMS article** .

WHEN MONITORED

The engine oil temperature has dropped below a calibrated value. Engine start up.

SET CONDITION

The Powertrain Control Module (PCM) detects that oil temperature is not within the calibrated modeled temperature.

POSSIBLE CAUSES

POSSIBLE CAUSES
(G24) EOT SIGNAL CIRCUIT SHORTED TO VOLTAGE
(G24) EOT SIGNAL CIRCUIT SHORTED TO GROUND
(G24) EOT SIGNAL CIRCUIT SHORTED TO (K915) SENSOR GROUND CIRCUIT
(G24) EOT SIGNAL CIRCUIT OPEN OR HIGH RESISTANCE
(K915) SENSOR GROUND CIRCUIT OPEN OR HIGH RESISTANCE
ENGINE OIL TEMPERATURE SENSOR
POWERTRAIN CONTROL MODULE (PCM)

Always perform the Pre-Diagnostic Troubleshooting procedure before proceeding. Refer to PRE-DIAGNOSTIC TROUBLESHOOTING PROCEDURE .

DIAGNOSTIC TEST

1. **ACTIVE DTC**

   NOTE: Diagnose any CAN - C Communication DTCs before continuing.

   1. Turn the ignition off.
   2. If possible, allow the vehicle to sit with the ignition off for more than 60 minutes in an environment where the temperature will allow the oil temperature to cool down.

3. Start the engine and allow it to reach normal operating conditions.
4. With a scan tool, select View DTCs.

   Is the status Active or Pending for this DTC?

   Yes

   - Go To 2

   No

   - Perform the CHECKING FOR AN INTERMITTENT DTC diagnostic procedure. Refer to **INTERMITTENT CONDITION** .

2. **ENGINE OIL**
   1. The following conditions must be checked:
      - OEM recommended oil viscosity is being used.
      - Customer is following the oil change schedule.
      - Check the engine oil for contamination. (i.e., fuel and/or engine coolant)
      - Internal engine condition that may effect engine temperature.

      Were any of the above conditions found?

      Yes

      - Repair as necessary.
      - Perform the PCM VERIFICATION TEST. Refer to **POWERTRAIN VERIFICATION TEST** .

      No

      - Go To 3

3. **CHECK THE (G24) EOT SIGNAL CIRCUIT FOR A SHORT TO VOLTAGE**

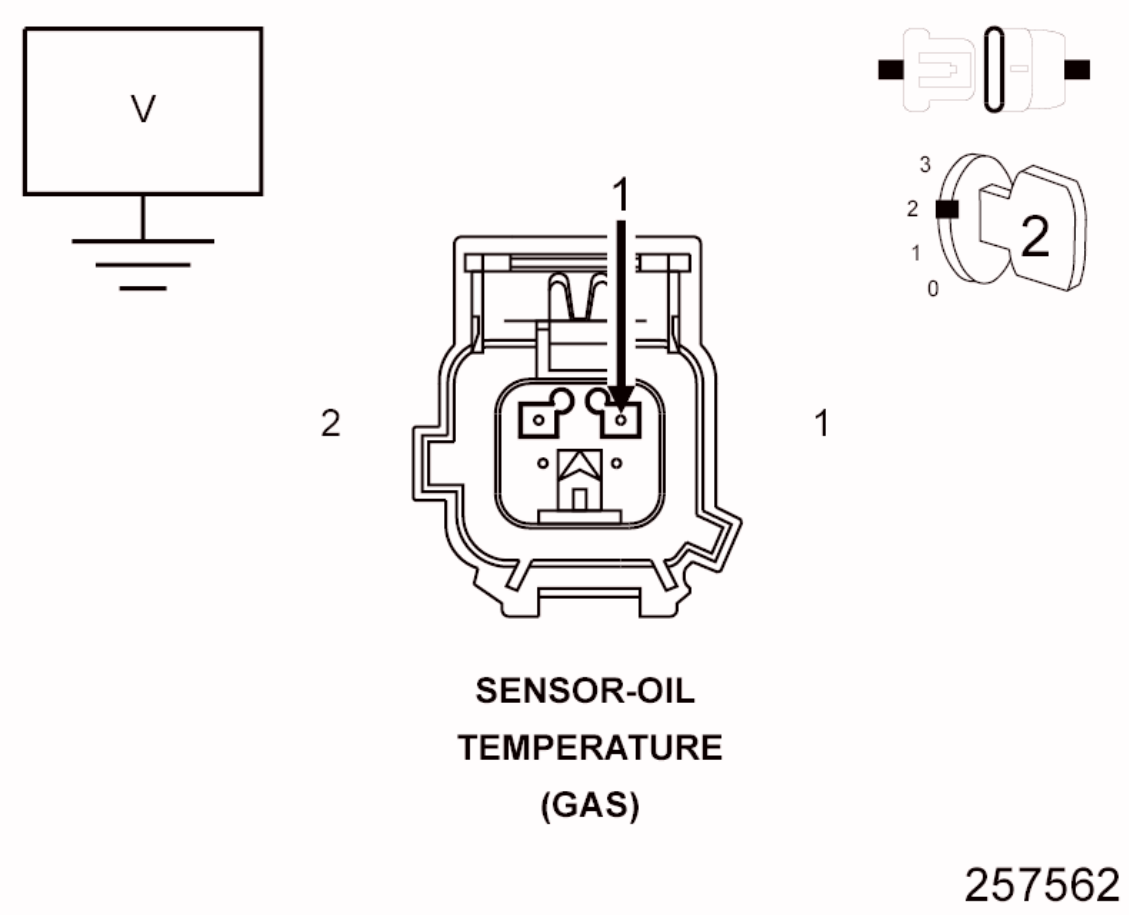

Fig. 49: Checking Engine Oil Temperature Sensor Signal Circuit For Short To Voltage
Courtesy of CHRYSLER GROUP, LLC

1. Turn the ignition off.
2. Disconnect the Engine Oil Temperature Sensor connector.
3. Disconnect the PCM harness connectors.
4. Turn the ignition on.
5. Measure the voltage of the (G24) EOT Signal circuit in the Engine Oil Temperature Sensor harness connector.

   Is there any voltage present?

   Yes

   - Repair the (G24) EOT Signal circuit for a short to voltage.
   - Perform the PCM VERIFICATION TEST. Refer to **POWERTRAIN VERIFICATION TEST** .

No

- Go To 4

4. **CHECK THE (G24) EOT SIGNAL CIRCUIT FOR A SHORT TO GROUND**

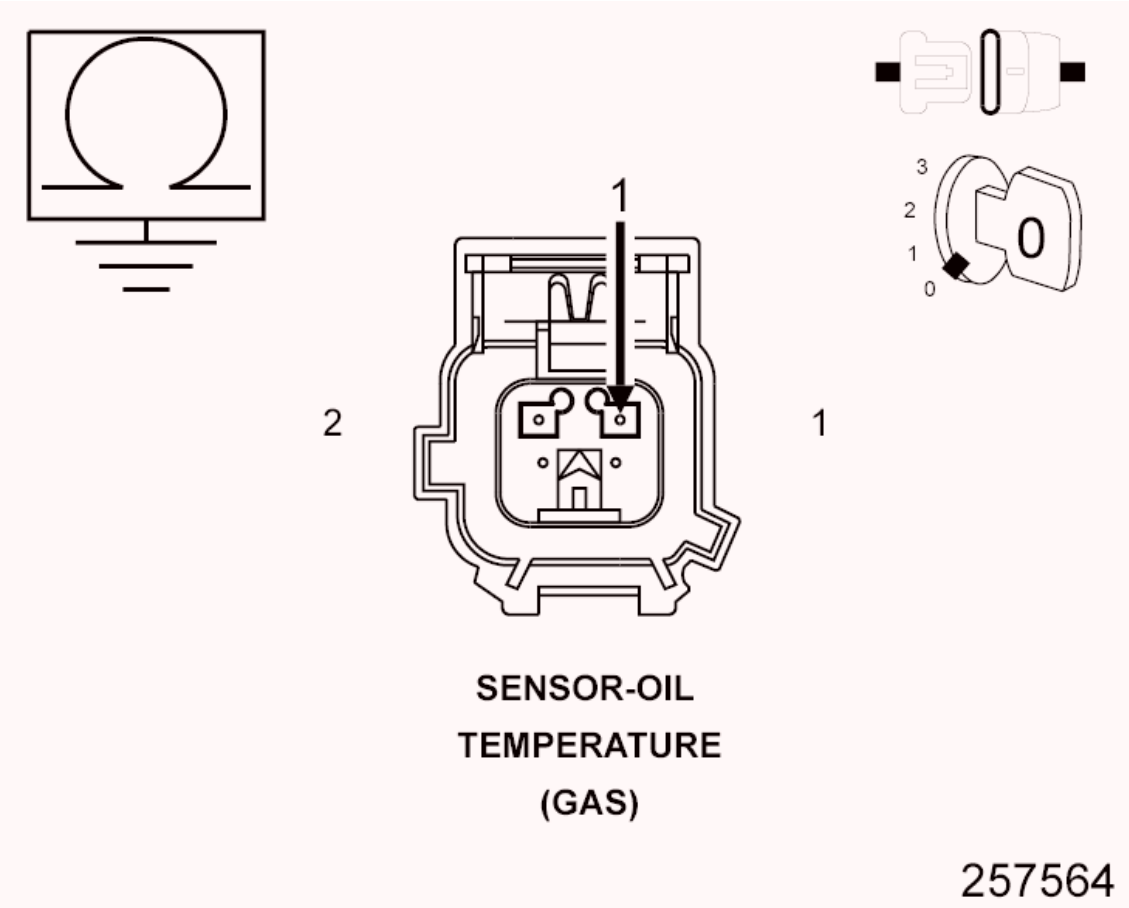

Fig. 50: Checking Engine Oil Temperature Sensor Signal Circuit For Short To Ground
Courtesy of CHRYSLER GROUP, LLC

1. Turn the ignition off.
2. Measure the resistance between ground and the (G24) EOT Signal circuit in the Engine Oil Temperature Sensor harness connector.

   Is the resistance above 10k Ohms?

   Yes

   - Go To 5

No

- Repair the (G24) EOT Signal circuit for a short to ground.
- Perform the PCM VERIFICATION TEST. Refer to **POWERTRAIN VERIFICATION TEST** .

5. **CHECK FOR THE (G24) EOT SIGNAL CIRCUIT SHORTED TO THE (K915) SENSOR GROUND CIRCUIT**

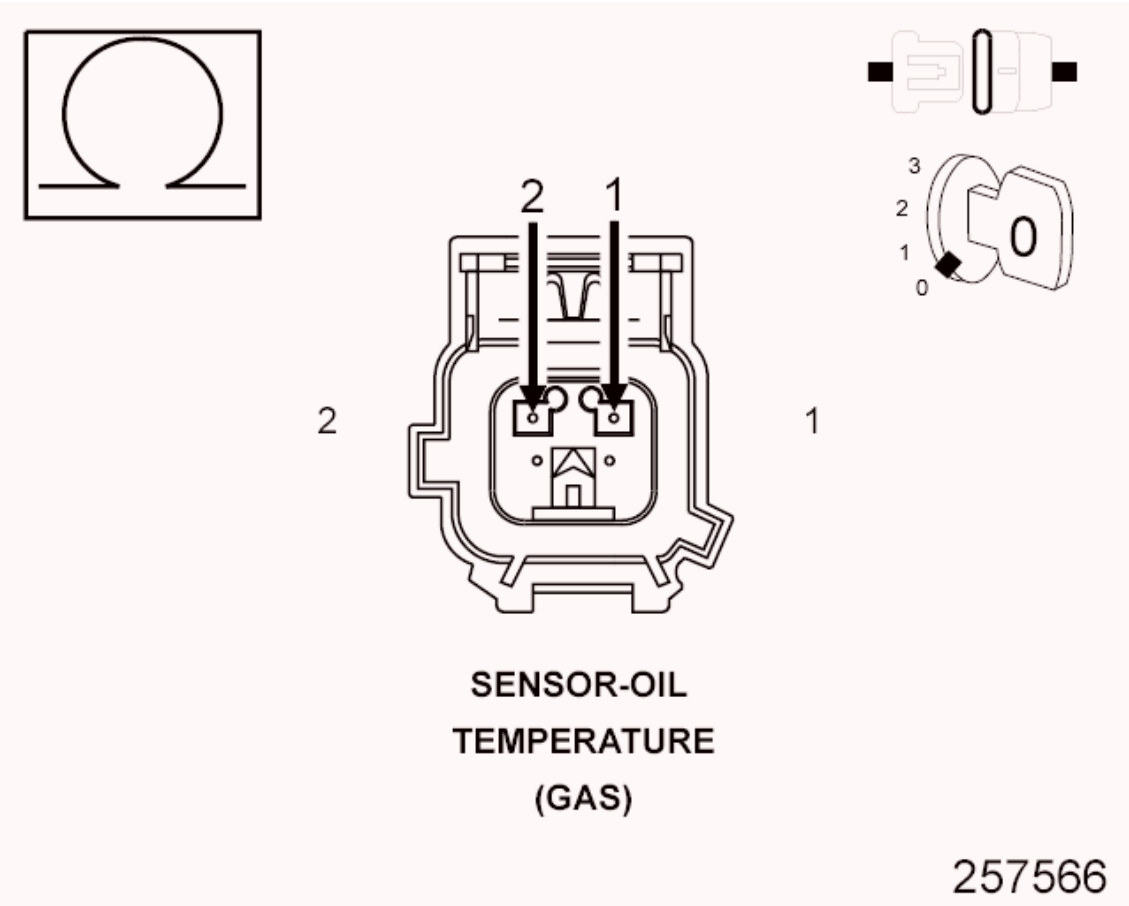

Fig. 51: Checking Engine Oil Temperature Sensor Signal Circuit For Short To Ground Circuit
Courtesy of CHRYSLER GROUP, LLC

1. Measure the resistance between the (G24) EOT Signal circuit and the (K915) Sensor Ground circuit in the Engine Oil Temperature Sensor harness connector.

   Is the resistance above 10k Ohms?

   Yes

- Go To 6

No

- Repair the (G24) EOT Signal circuit for a short to the (K915) Sensor Ground circuit.
- Perform the PCM VERIFICATION TEST. Refer to **POWERTRAIN VERIFICATION TEST** .

6. **CHECK THE (G24) EOT SIGNAL CIRCUIT FOR AN OPEN/HIGH RESISTANCE**

CAUTION: Do not probe the PCM harness connectors. Probing the PCM harness connectors will damage the PCM terminals resulting in poor terminal to pin connection. Install the GPEC Diagnostic Adaptor to perform the diagnosis.

1. Connect the (special tool #10436, Adapter, GPEC Diagnostic) in line with the PCM C2 harness connector.
2. Measure the resistance of the (G24) EOT Signal circuit between the Engine Oil Temperature Sensor harness connector and the GPEC Adaptor.

   Is the resistance below 5.0 Ohms?

   Yes

   - Go To 7

   No

   - Repair the (G24) EOT Signal circuit for an open or high resistance.
   - Perform the PCM VERIFICATION TEST. Refer to **POWERTRAIN VERIFICATION TEST** .

7. **CHECK THE (K915) SENSOR GROUND CIRCUIT FOR AN OPEN/HIGH RESISTANCE**

CAUTION: Do not probe the PCM harness connectors. Probing the PCM harness connectors will

damage the PCM terminals resulting in poor terminal to pin connection. Install the GPEC Diagnostic Adaptor to perform the diagnosis.

1. Connect the (special tool #10436, Adapter, GPEC Diagnostic) in line with the PCM C1 harness connector.
2. Measure the resistance of the (K915) Sensor Ground circuit between the Engine Oil Temperature Sensor harness connector and the GPEC Adaptor.

   Is the resistance below 5.0 Ohms?

   Yes

   - Go To 8

   No

   - Repair the (K915) Sensor Ground for an open or high resistance.
   - Perform the PCM VERIFICATION TEST. Refer to **POWERTRAIN VERIFICATION TEST** .

8. **ENGINE OIL TEMPERATURE SENSOR SIGNAL VOLTAGE**

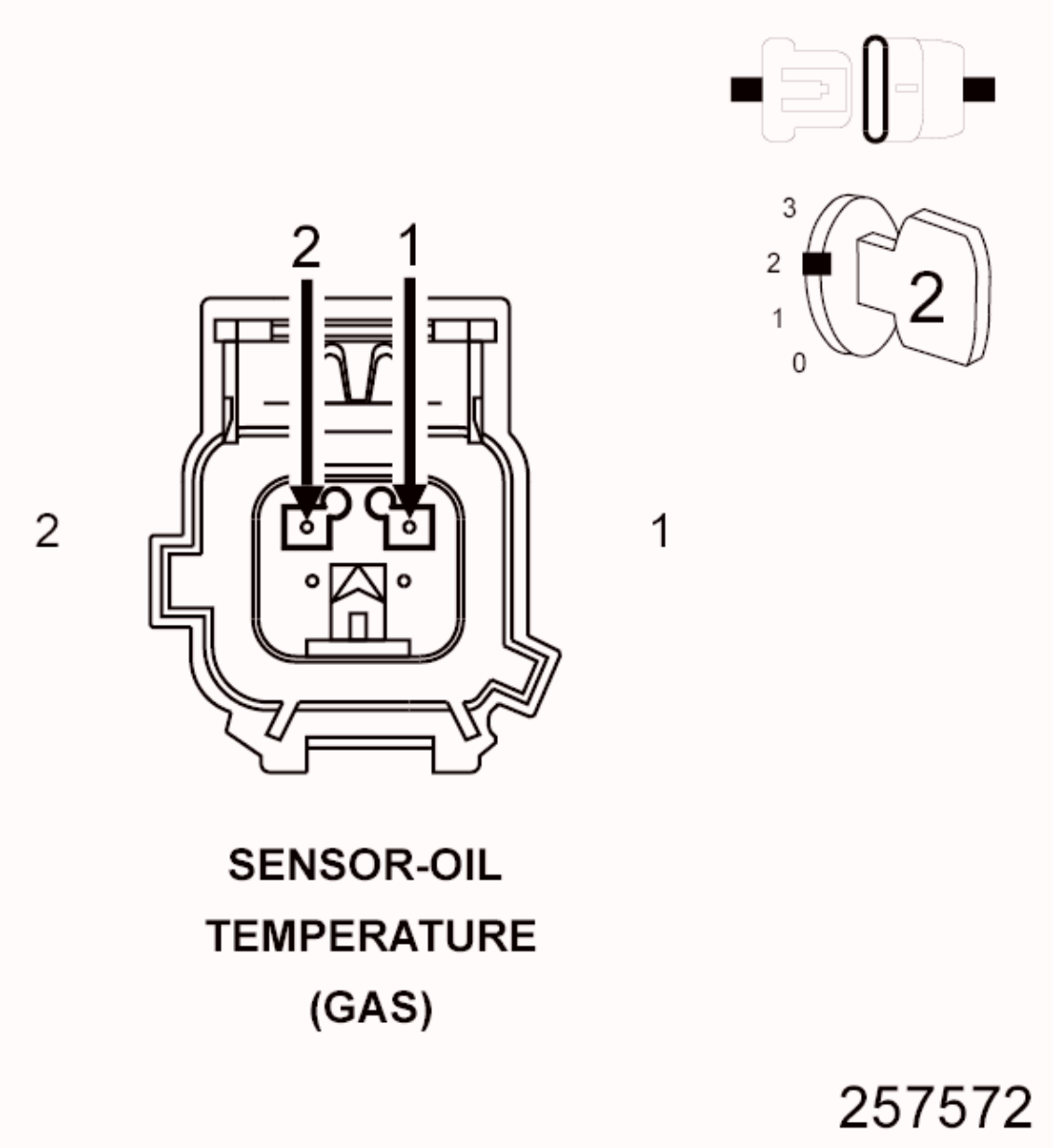

Fig. 52: Engine Oil Temperature Sensor Harness Connector End View
Courtesy of CHRYSLER GROUP, LLC

1. Turn the ignition off.
2. Connect the PCM harness connectors.
3. Connect a jumper between the (K915) Sensor Ground circuit and the (G24) EOT Signal circuit in the Engine Oil Temperature Sensor harness connector.
4. Turn the ignition on.
5. With the scan tool, read the Engine Oil Temperature Sensor signal voltage.

Is the voltage below 0.1 volts with the jumper in place?

Yes

- Go To 9

No

- Go To 10

9. **ENGINE OIL TEMPERATURE SENSOR**
   1. Turn the ignition off.
   2. Inspect the wiring and connectors between the Engine Oil Temperature Sensor and the Powertrain Control Module (PCM).
   3. Look for any chafed, pierced, pinched, or partially broken wires.
   4. Look for broken, bent, pushed out or corroded terminals. Verify that there is good pin to terminal contact in the related connectors.

   Were any problems found?

   Yes

   - Repair as necessary.
   - Perform the PCM VERIFICATION TEST. Refer to **POWERTRAIN VERIFICATION TEST** .

   No

   - Replace the Engine Oil Temperature Sensor in accordance with the service information.
   - Perform the PCM VERIFICATION TEST. Refer to **POWERTRAIN VERIFICATION TEST** .

10. **POWERTRAIN CONTROL MODULE (PCM)**
    1. Using the wiring diagram/schematic as a guide, inspect the wiring and connectors between the Engine Oil Temperature Sensor and the Powertrain Control Module (PCM).
    2. Look for any chafed, pierced, pinched, or partially broken wires.
    3. Look for broken, bent, pushed out or corroded terminals.
    4. Monitor the scan tool data relative to this circuit and wiggle test the

wiring and connectors.

5. Look for the data to change or for the DTC to reset during the wiggle test.
6. Perform any Technical Service Bulletins that may apply.

Were any problems found?

Yes

- Repair as necessary.
- Perform the PCM VERIFICATION TEST. Refer to **POWERTRAIN VERIFICATION TEST** .

No

- Replace and program the Powertrain Control Module (PCM) in accordance with the service information. Refer to **MODULE, POWERTRAIN CONTROL, REMOVAL** .
- Perform the PCM VERIFICATION TEST. Refer to **POWERTRAIN VERIFICATION TEST** .

P1456-FUEL TANK PRESSURE SENSOR CIRCUIT LOW

For a complete wiring diagram, **refer to appropriate SYSTEM WIRING DIAGRAMS article** .

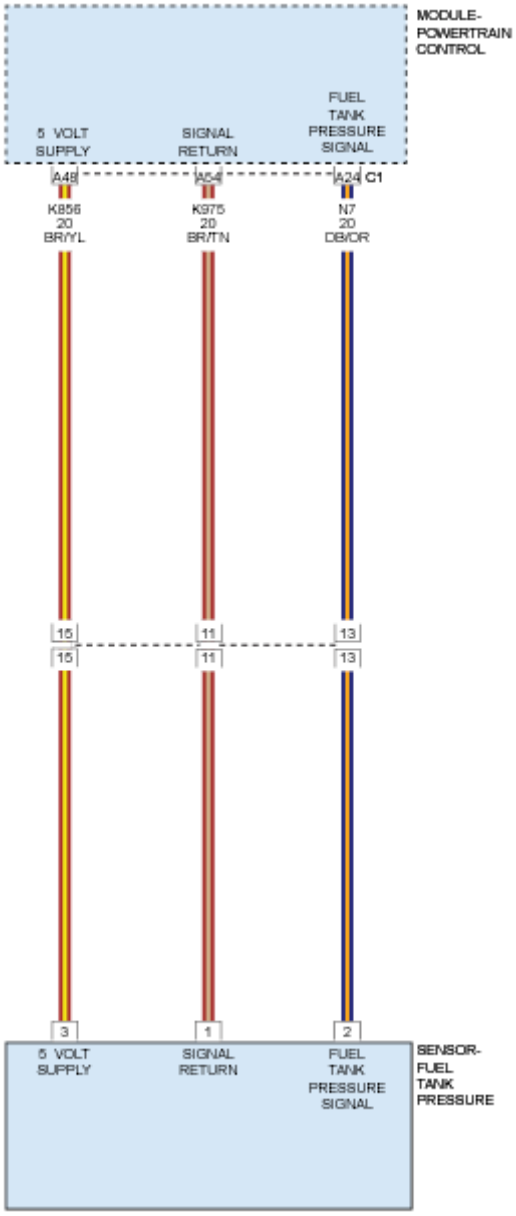

Fig. 53: Fuel Tank Pressure Sensor Circuit Diagram
Courtesy of CHRYSLER GROUP, LLC

WHEN MONITORED

Ignition Key on. Battery voltage greater than 10.38 volts.

SET CONDITION

The Powertrain Control Module (PCM) detects that the Fuel Tank Pressure Sensor (FTP) input voltage is below the minimum acceptable value. One Trip Fault. Three good trips to turn off the MIL.

POSSIBLE CAUSES

POSSIBLE CAUSES
5-VOLT SUPPLY CIRCUIT OPEN/HIGH RESISTANCE
5-VOLT SUPPLY CIRCUIT SHORTED TO GROUND
FTP SENSOR SIGNAL CIRCUIT SHORTED TO GROUND
FTP SENSOR SIGNAL CIRCUIT SHORTED TO THE SENSOR RETURN CIRCUIT
FUEL TANK PRESSURE SENSOR (FTP)
POWERTRAIN CONTROL MODULE (PCM)

Always perform the Pre-Diagnostic Troubleshooting procedure before proceeding. Refer to PRE-DIAGNOSTIC TROUBLESHOOTING PROCEDURE .

DIAGNOSTIC TEST

1. **ACTIVE DTC**
   1. Turn the ignition on.
   2. With the scan tool, read DTCs.

      NOTE: Diagnose and repair any system voltage or 5-Volt Sensor Reference DTCs before continuing with this test.

      Does the scan tool display this DTC as active?

      Yes

      - Go To 2

      No

      - Perform the INTERMITTENT CONDITION diagnostic procedure. Refer to **INTERMITTENT CONDITION** .
2. **CHECK THE (K856) 5-VOLT SUPPLY CIRCUIT VOLTAGE**
   1. Turn the ignition off.
   2. Disconnect the FTP Sensor harness connector.
   3. Turn the ignition on.

4. Measure the voltage on the (K856) 5-Volt Supply circuit at the FTP Sensor harness connector.

   Is the voltage between 4.8 and 5.2 volts?

   Yes

   - Go To 3

   No

   - Repair the (K856) 5-Volt Supply circuit for an open circuit or short to ground.
   - Perform the POWERTRAIN VERIFICATION TEST. Refer to **POWERTRAIN VERIFICATION TEST** .

3. **CHECK THE FTP SENSOR**
   1. With the scan tool, view DTCs.

      NOTE: The P1457-FUEL TANK PRESSURE SENSOR CIRCUIT HIGH should be active or pending with the connector disconnected.

      Does the scan tool display as described above?

      Yes

      - Verify that there is good pin to terminal contact in the FTP Sensor and Powertrain Control Module connectors. Replace the FTP Sensor if no problems were found with the connectors.
      - Perform the POWERTRAIN VERIFICATION TEST. Refer to **POWERTRAIN VERIFICATION TEST** .

      No

      - Go To 4

4. **CHECK THE (N7) FTP SIGNAL CIRCUIT FOR A SHORT TO GROUND**
   1. Turn the ignition off.
   2. Disconnect the PCM C1 harness connector.

3. Measure the resistance between ground and the (N7) FTP Sensor Signal circuit at the FTP Sensor harness connector.

   Is the resistance above 10k Ohms?

   Yes

   - Go To 5

   No

   - Repair the short to ground in the (N7) FTP Sensor Signal circuit.
   - Perform the POWERTRAIN VERIFICATION TEST. Refer to **POWERTRAIN VERIFICATION TEST** .

5. **CHECK FOR THE (N7) FTP SENSOR SIGNAL CIRCUIT SHORTED TO THE (K975) FTP SENSOR RETURN CIRCUIT**
   1. Measure the resistance between the (N7) FTP Sensor Signal circuit and the (K975) FTP Sensor Return circuit at the FTP Sensor harness connector.

      Is the resistance above 10k Ohms?

      Yes

      - Go To 6

      No

      - Repair the short between the (N7) FTP Sensor Signal circuit and the (K975) FTP Sensor Return circuit.
      - Perform the POWERTRAIN VERIFICATION TEST. Refer to **POWERTRAIN VERIFICATION TEST** .

6. **POWERTRAIN CONTROL MODULE (PCM)**
   1. Using the wiring diagram/schematic as a guide, inspect the wiring and connectors for the Powertrain Control Module (PCM).
   2. Look for any chafed, pierced, pinched or partially broken wires.
   3. Look for broken, bent, pushed out or corroded terminals.
   4. Perform any Technical Service Bulletins that may apply.

Were there any problems found?

Yes

- Repair as necessary.
- Perform the POWERTRAIN VERIFICATION TEST. Refer to **POWERTRAIN VERIFICATION TEST** .

No

- Replace and program the Powertrain Control Module in accordance with the service information. Refer to **MODULE, POWERTRAIN CONTROL, REMOVAL** .
- Perform the POWERTRAIN VERIFICATION TEST. Refer to **POWERTRAIN VERIFICATION TEST** .

P1457-FUEL TANK PRESSURE SENSOR CIRCUIT HIGH

For a complete wiring diagram, **refer to appropriate SYSTEM WIRING DIAGRAMS article** .

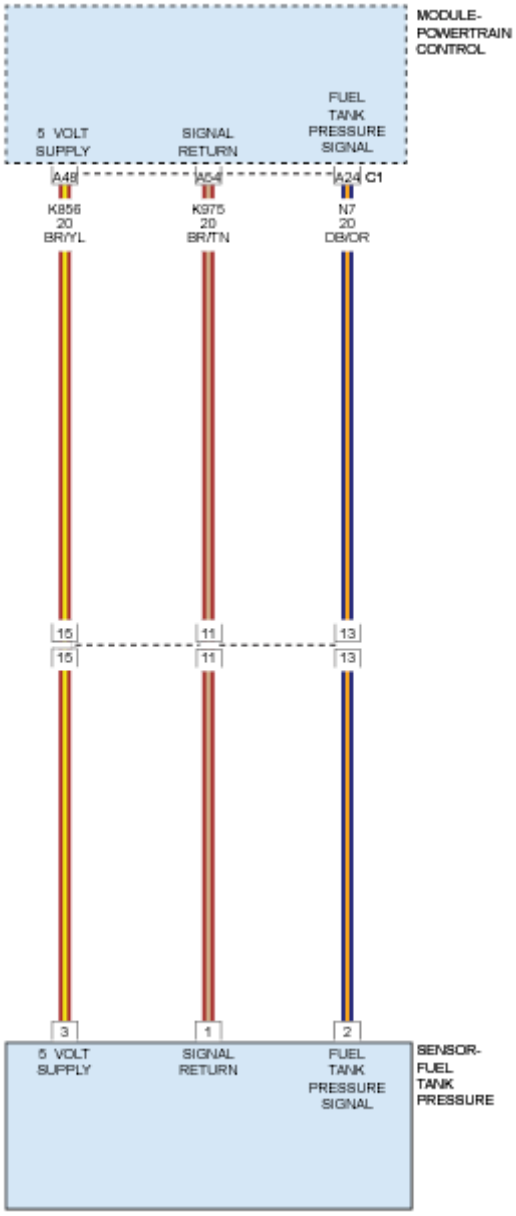

Fig. 54: Fuel Tank Pressure Sensor Circuit Diagram
Courtesy of CHRYSLER GROUP, LLC

WHEN MONITORED

Ignition Key on. Battery voltage greater than 10.38 volts.

SET CONDITION

The Fuel Tank Pressure Sensor (FTP) signal voltage is greater than the maximum allowable voltage. One trip fault. Three good trips to turn off the MIL.

POSSIBLE CAUSES

POSSIBLE CAUSES
FTP SIGNAL CIRCUIT SHORTED TO VOLTAGE
FTP SIGNAL CIRCUIT OPEN/HIGH RESISTANCE
FTP SIGNAL CIRCUIT SHORTED TO THE 5-VOLT SUPPLY CIRCUIT
SENSOR RETURN CIRCUIT OPEN/HIGH RESISTANCE
FUEL TANK PRESSURE (FTP) SENSOR
POWERTRAIN CONTROL MODULE (PCM)

Always perform the Pre-Diagnostic Troubleshooting procedure before proceeding. Refer to PRE-DIAGNOSTIC TROUBLESHOOTING PROCEDURE .

DIAGNOSTIC TEST

1. **ACTIVE DTC**
   1. Start the engine and allow it to reach normal operating temperature.

      WARNING: **When the engine is operating, do not stand in direct line with the fan. Do not put your hands near the pulleys, belts or fan. Do not wear loose clothing. Failure to follow these instructions may result in possible serious or fatal injury.**

      NOTE: **Diagnose and repair any system voltage or sensor supply voltage DTCs before continuing with this test.**

   2. With the scan tool, select View DTCs.

      Is the DTC Active at this time

      Yes

      - Go To 2

      No

      - Perform the INTERMITTENT CONDITION diagnostic procedure.

Refer to **INTERMITTENT CONDITION** .

2. **CHECK THE (N7) FTP SIGNAL CIRCUIT FOR A SHORT TO VOLTAGE**
   1. Turn the ignition off.
   2. Disconnect the FTP Sensor harness connector.
   3. Turn the ignition on.
   4. Measure the voltage on the (N7) FTP Signal circuit at the FTP harness connector.

      Is there any voltage reading above 5.2 volts?

      Yes

      - Repair the (N7) FTP Signal circuit for a short to voltage.
      - Perform the POWERTRAIN VERIFICATION TEST. Refer to **POWERTRAIN VERIFICATION TEST** .

      No

      - Go To 3
3. **CHECK THE (N7) FTP SIGNAL CIRCUIT FOR AN OPEN/HIGH RESISTANCE**
   1. Turn the ignition off.
   2. Disconnect the PCM C1 harness connector.

      CAUTION: Do not probe the PCM harness connectors. Probing the PCM harness connectors will damage the PCM terminals resulting in poor terminal to pin connection. Install the GPEC Diagnostic Adaptor to perform the diagnosis.

   3. Connect the (special tool #10436, Adapter, GPEC Diagnostic).
   4. Measure the resistance of the (N7) FTP Signal circuit between the FTP harness connector and the GPEC Adaptor.

      Is the resistance below 5.0 Ohms?

Yes

- Go To 4

No

- Repair the (N7) FTP Signal circuit for an open or high resistance.
- Perform the POWERTRAIN VERIFICATION TEST. Refer to **POWERTRAIN VERIFICATION TEST** .

4. **CHECK FOR THE (N7) FTP SIGNAL CIRCUIT SHORTED TO THE (K856) 5-VOLT SUPPLY CIRCUIT**
   1. Measure the resistance between the (N7) FTP Signal circuit and the (K856) 5-Volt Supply circuit at the FTP harness connector.

      Is the resistance above 10k Ohms?

      Yes

      - Go To 5

      No

      - Repair the short between the (K856) 5-Volt Supply circuit and the (N7) FTP Signal circuit.
      - Perform the POWERTRAIN VERIFICATION TEST. Refer to **POWERTRAIN VERIFICATION TEST** .
5. **CHECK THE (K975) SENSOR RETURN CIRCUIT FOR AN OPEN/HIGH RESISTANCE**
   1. Measure the resistance of the (K975) Sensor Return circuit from the FTP harness connector to the appropriate terminal the GPEC Adaptor.

      Is the resistance below 5.0 Ohms?

      Yes

      - Go To 6

      No

      - Repair the (K975) Sensor Return circuit for an open or high

resistance.

- Perform the POWERTRAIN VERIFICATION TEST. Refer to **POWERTRAIN VERIFICATION TEST** .

6. **FTP SENSOR**
   1. Turn the ignition off.
   2. Reconnect the PCM C1 harness connector.
   3. Connect a jumper between the (N7) FTP Signal circuit and the (K975) Sensor Return circuit in the Sensor harness connector.
   4. Turn the ignition on.
   5. With the scan tool, view DTCs.

NOTE: The P1456-FUEL TANK PRESSURE SENSOR CIRCUIT LOW should be active or pending with the jumper in place.

Does the scan tool display as described above?

Yes

- Verify that there is good pin to terminal contact in the FTP and Powertrain Control Module connectors. Replace the FTP if no problems were found with the connectors.
- Perform the POWERTRAIN VERIFICATION TEST. Refer to **POWERTRAIN VERIFICATION TEST** .

No

- Go To 7

7. **POWERTRAIN CONTROL MODULE (PCM)**
   1. Using the wiring diagram/schematic as a guide, inspect the wiring and connectors between the FTP and the Powertrain Control Module (PCM).
   2. Look for any chafed, pierced, pinched or partially broken wires.
   3. Look for broken, bent, pushed out or corroded terminals. Verify that there is good pin to terminal contact in the FTP and Powertrain Control Module connectors.
   4. Perform any Technical Service Bulletins that may apply.

Were there any problems found?

Yes

- Repair as necessary.
- Perform the POWERTRAIN VERIFICATION TEST. Refer to **POWERTRAIN VERIFICATION TEST** .

No

- Replace and program the Powertrain Control Module in accordance with the Service Information. Refer to **MODULE, POWERTRAIN CONTROL, REMOVAL** .
- Perform the POWERTRAIN VERIFICATION TEST. Refer to **POWERTRAIN VERIFICATION TEST** .

P1501-VEHICLE SPEED SENSOR 1/2 CORRELATION - DRIVE WHEELS

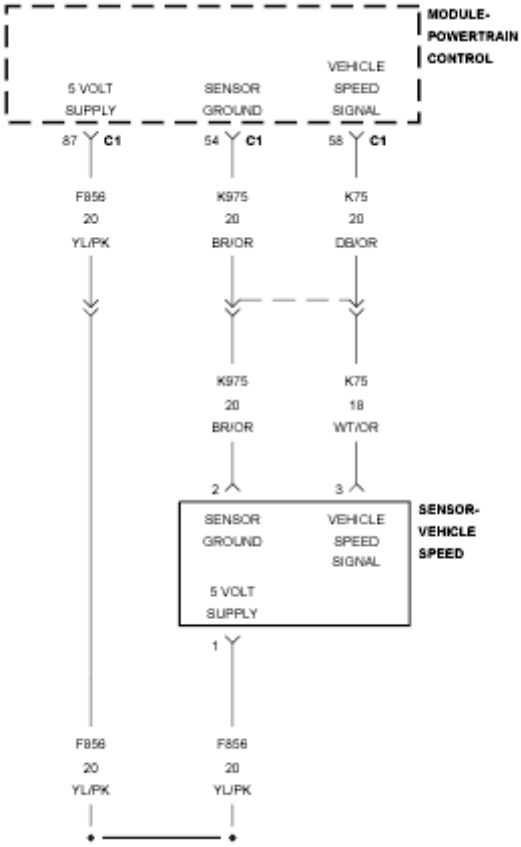

Fig. 55: Vehicle Speed Sensor Circuit Diagram
Courtesy of CHRYSLER GROUP, LLC

For a complete wiring diagram, **refer to appropriate SYSTEM WIRING DIAGRAMS article** .

WHEN MONITORED

With the ignition on and battery voltage greater than 10.4 volts.

SET CONDITION

The Powertrain Control Module (PCM) detects an implausible voltage on the Vehicle Speed Sensor circuit.

POSSIBLE CAUSES

POSSIBLE CAUSES
(F856) 5-VOLT SUPPLY CIRCUIT SHORTED TO VOLTAGE
(K75) VEHICLE SPEED SIGNAL CIRCUIT SHORTED TO VOLTAGE
(F856) 5-VOLT SUPPLY CIRCUIT SHORTED TO GROUND
(K75) VEHICLE SPEED SIGNAL CIRCUIT SHORTED TO GROUND
(F856) 5-VOLT SUPPLY CIRCUIT SHORTED TO THE (K75) VEHICLE SPEED SIGNAL CIRCUIT
(F856) 5-VOLT SUPPLY CIRCUIT SHORTED TO THE (K914) SENSOR GROUND CIRCUIT
(K75) VEHICLE SPEED SIGNAL CIRCUIT SHORTED TO THE (K914) SENSOR GROUND CIRCUIT
(F856) 5-VOLT SUPPLY CIRCUIT OPEN OR HIGH RESISTANCE
(K75) VEHICLE SPEED SIGNAL CIRCUIT OPEN OR HIGH RESISTANCE
(K914) SENSOR GROUND CIRCUIT OPEN OR HIGH RESISTANCE
VEHICLE SPEED SENSOR
POWERTRAIN CONTROL MODULE (PCM)

Always perform the Pre-Diagnostic Troubleshooting procedure before proceeding. Refer to PRE-DIAGNOSTIC TROUBLESHOOTING PROCEDURE .

DIAGNOSTIC TEST

1. **ACTIVE DTC**
    1. Start the engine.

2. Allow the engine to reach normal operating temperature.

NOTE: Diagnose and repair any system voltage or sensor reference voltage DTCs before continuing with this test.

NOTE: Check for any Bus Communication DTCs. If no Bus or Communication DTCs are set, check for active Vehicle Speed Sensor DTCs in the Totally Integrated Power Module. Any bus, communication, or VSS DTCs in the TIPM must be properly diagnosed before continuing.

NOTE: This code may set after a hard acceleration on loose gravel, during other off road driving conditions, or by any condition that causes a wheel speed difference between the front and rear wheels.

NOTE: It may be necessary to test drive the vehicle within the DTC monitoring conditions in order for this DTC to set.

3. With the scan tool, select View DTCs.

Is the status Active for this DTC?

Yes

- Go To 2

No

- Perform the INTERMITTENT CONDITION diagnostic procedure. Refer to **INTERMITTENT CONDITION** .

2. **CHECK THE (F856) 5-VOLT SUPPLY CIRCUIT VOLTAGE**

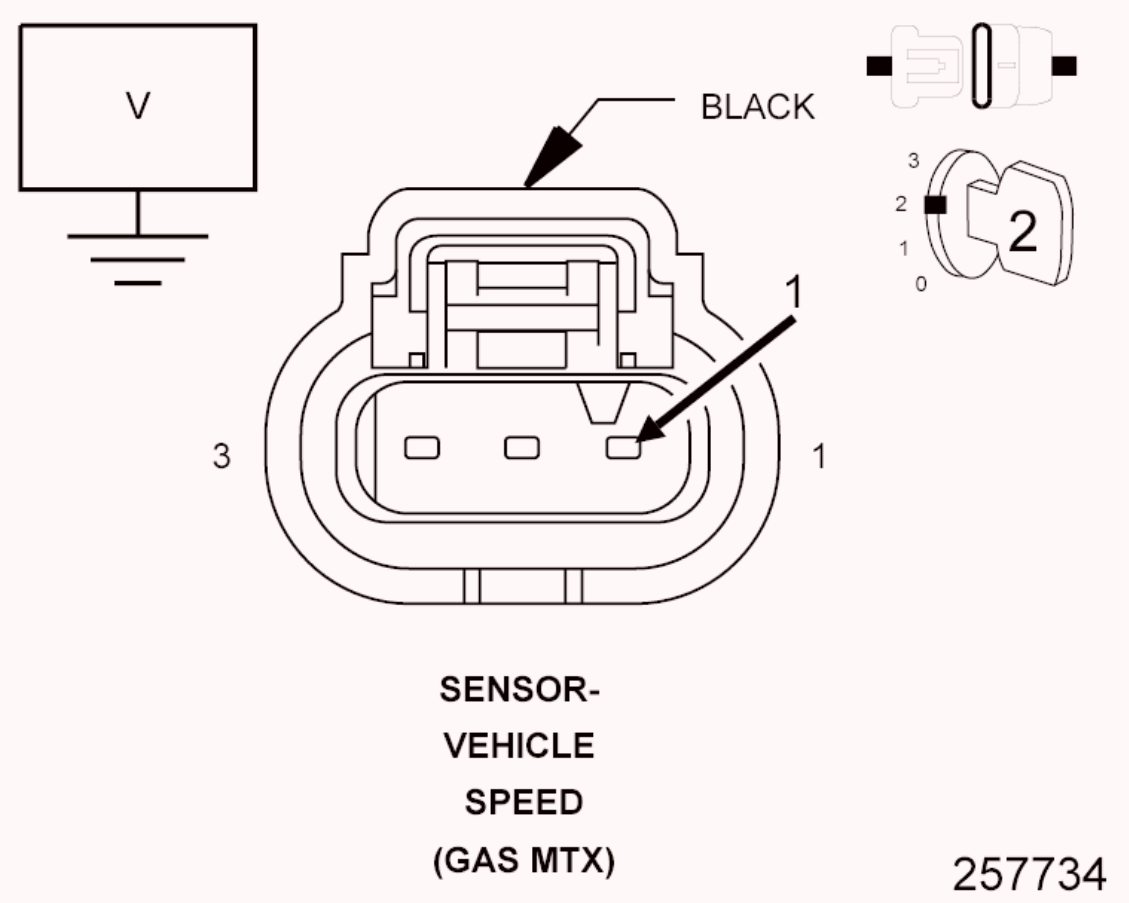

Fig. 56: Checking 5-Volt Supply Circuit
Courtesy of CHRYSLER GROUP, LLC

1. Turn the ignition off.
2. Disconnect the Vehicle Speed Sensor harness connector.
3. Turn the ignition on.
4. Measure the voltage of the (F856) 5-Volt Supply circuit in the Vehicle Speed Sensor harness connector.

   Is the voltage between 4.8 and 5.2 volts?

   Yes

   - Go To 3

   No

   - Go To 7

3. **CHECK THE (K75) VEHICLE SPEED SIGNAL CIRCUIT VOLTAGE**

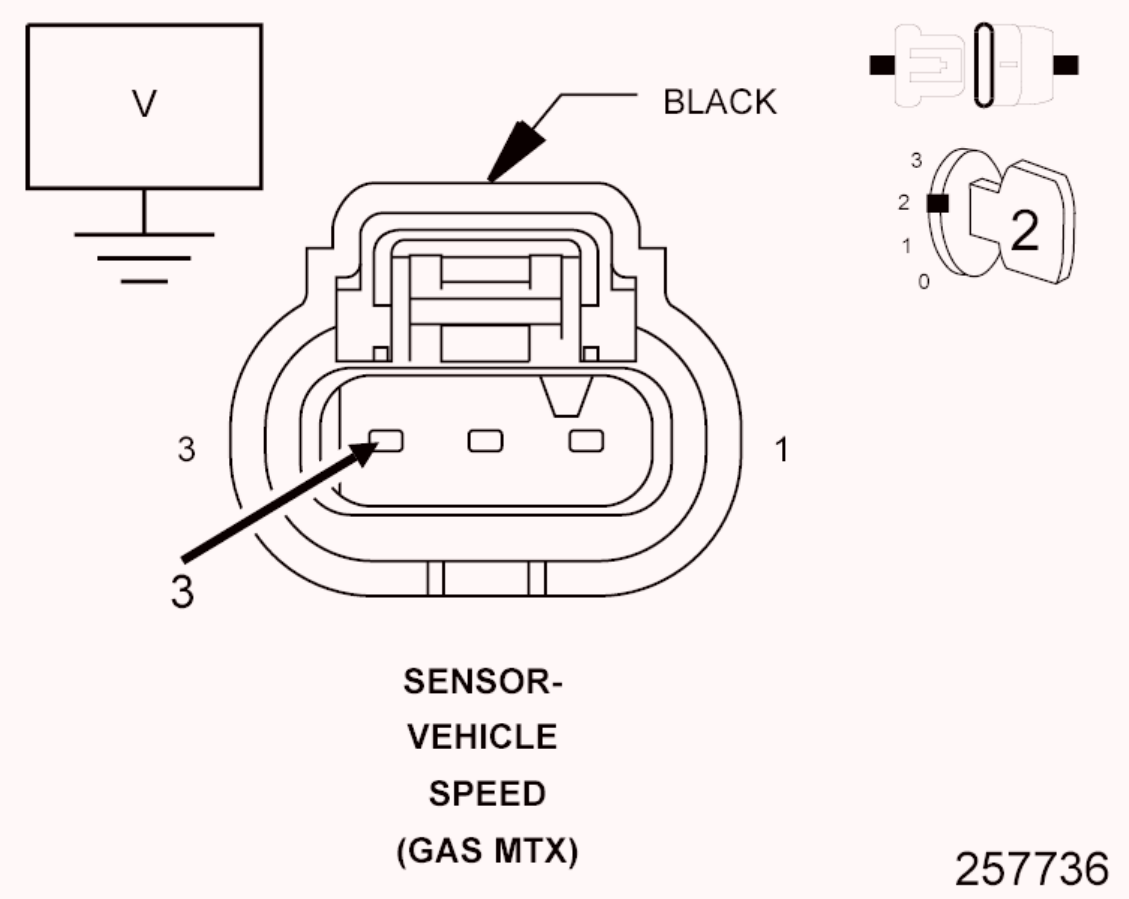

Fig. 57: Checking Vehicle Speed Signal Circuit
Courtesy of CHRYSLER GROUP, LLC

1. Measure the voltage of the (K75) Vehicle Speed Signal circuit in the Vehicle Speed Sensor harness connector.

   Is the voltage between 4.8 and 5.2 volts?

   Yes

   - Go To 4

   No

   - Go To 11

4. **CHECK THE (K914) SENSOR GROUND CIRCUIT**
   1. Turn the ignition off.
   2. Using a 12-volt test light connected to 12 volts, check the (K914) Sensor Ground circuit in the Vehicle Speed Sensor harness connector.

NOTE: The test light should be illuminated and bright. Compare the brightness to that of a direct connection to the battery.

Is the test light illuminated and bright?

Yes

- Go To 5

No

- Go To 15

5. **CHECK FOR THE (F856) 5-VOLT SUPPLY CIRCUIT SHORTED TO THE (K75) VEHICLE SPEED SIGNAL CIRCUIT**

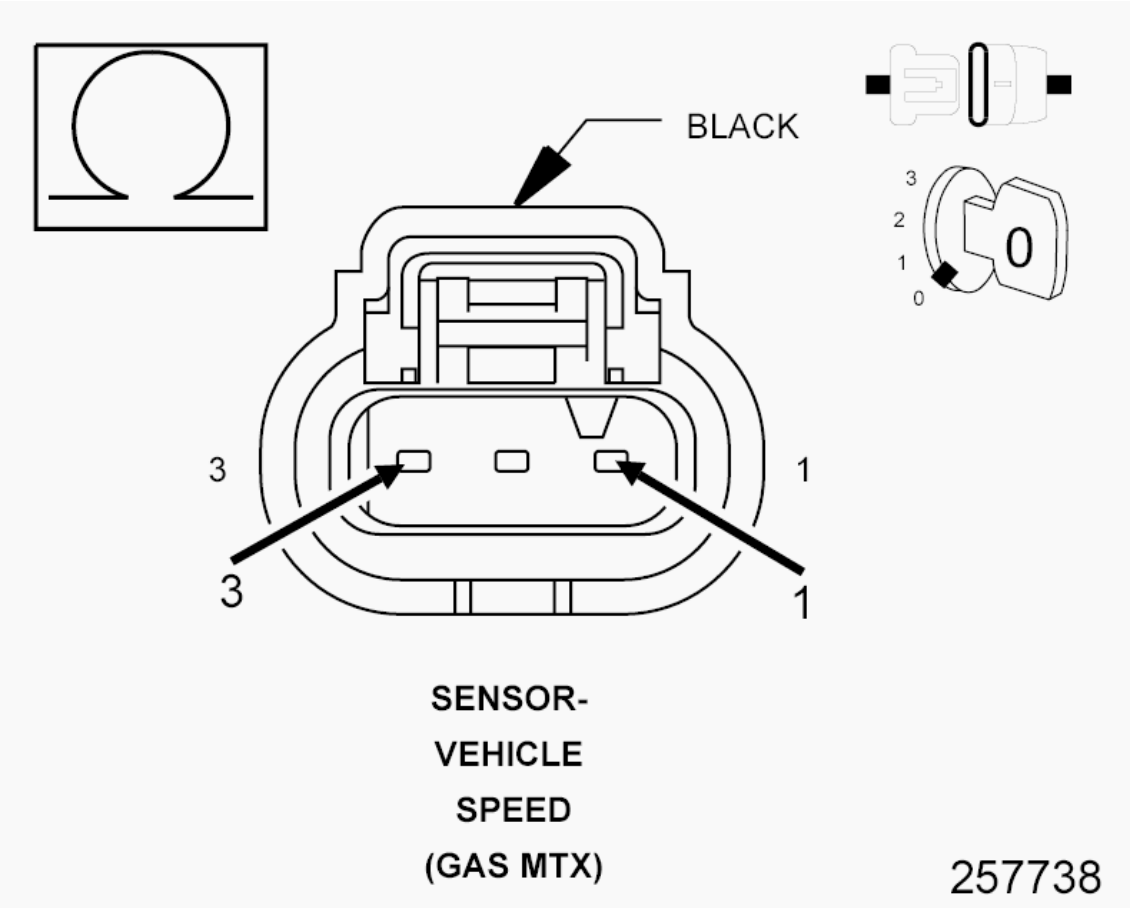

Fig. 58: Checking 5 Volt Supply Circuit For Short To Vehicle Speed Signal Circuit
Courtesy of CHRYSLER GROUP, LLC

1. Turn the ignition off.
2. Disconnect the Powertrain Control Module (PCM) C2 harness connector.
3. Measure the resistance between the (F856) 5-volt Supply circuit and the (K75) Vehicle Speed Signal circuit in the Vehicle Speed Sensor harness connector.

   Is the resistance above 10k Ohms?

   Yes

   - Go To 6

   No

   - Repair the (F856) 5-Volt Supply circuit for a short to the (K75) Vehicle Speed Signal circuit.
   - Perform the POWERTRAIN VERIFICATION TEST. Refer to **POWERTRAIN VERIFICATION TEST** .

6. **VEHICLE SPEED SENSOR**
   1. Using the wiring diagram/schematic as a guide, inspect the wiring and connectors between the Vehicle Speed Sensor and the Powertrain Control Module (PCM).
   2. Look for any chafed, pierced, pinched, or partially broken wires.
   3. Look for broken, bent, pushed out or corroded terminals.
   4. Inspect the Vehicle Speed Sensor for any condition that would result in an incorrect signal, such as damage, corrosion, or contamination.

      Were any problems found?

      Yes

      - Repair as necessary.
      - Perform the POWERTRAIN VERIFICATION TEST. Refer to **POWERTRAIN VERIFICATION TEST** .

      No

- Replace the Vehicle Speed Sensor in accordance with the service information.
- Perform the POWERTRAIN VERIFICATION TEST. Refer to **POWERTRAIN VERIFICATION TEST** .

7. **(F856) 5-VOLT SUPPLY CIRCUIT SHORTED TO VOLTAGE**

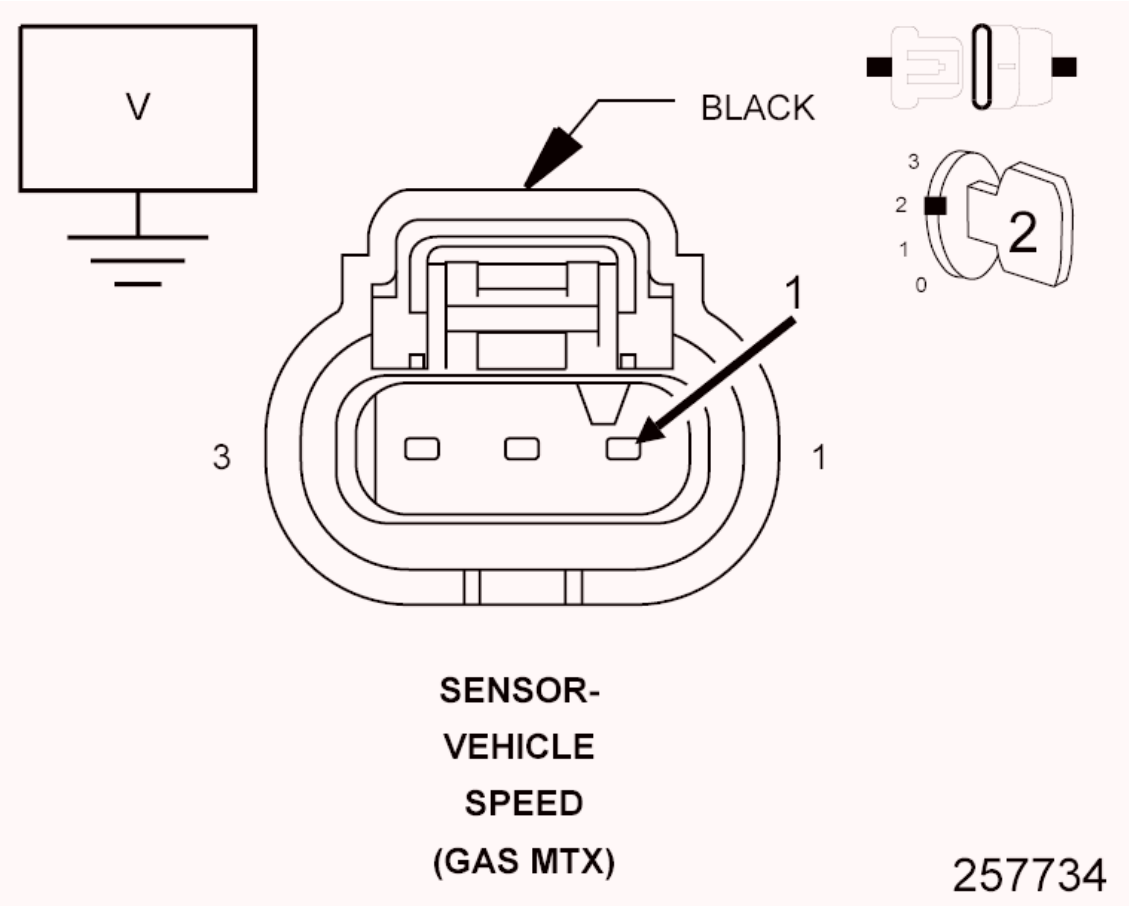

Fig. 59: Checking 5 Volt Supply Circuit For Short To Voltage
Courtesy of CHRYSLER GROUP, LLC

1. Turn the ignition off.
2. Disconnect the Powertrain Control Module (PCM) C2 harness connector.
3. Turn the ignition on.
4. Measure the voltage of the (F856) 5-Volt Supply circuit in the Vehicle Speed Sensor harness connector.

   Is there any voltage present?

   Yes

- Repair the (F856) 5-Volt Supply circuit for a short to voltage.
- Perform the POWERTRAIN VERIFICATION TEST. Refer to **POWERTRAIN VERIFICATION TEST** .

No

- Go To 8

8. **(F856) 5-VOLT SUPPLY CIRCUIT SHORTED TO GROUND**

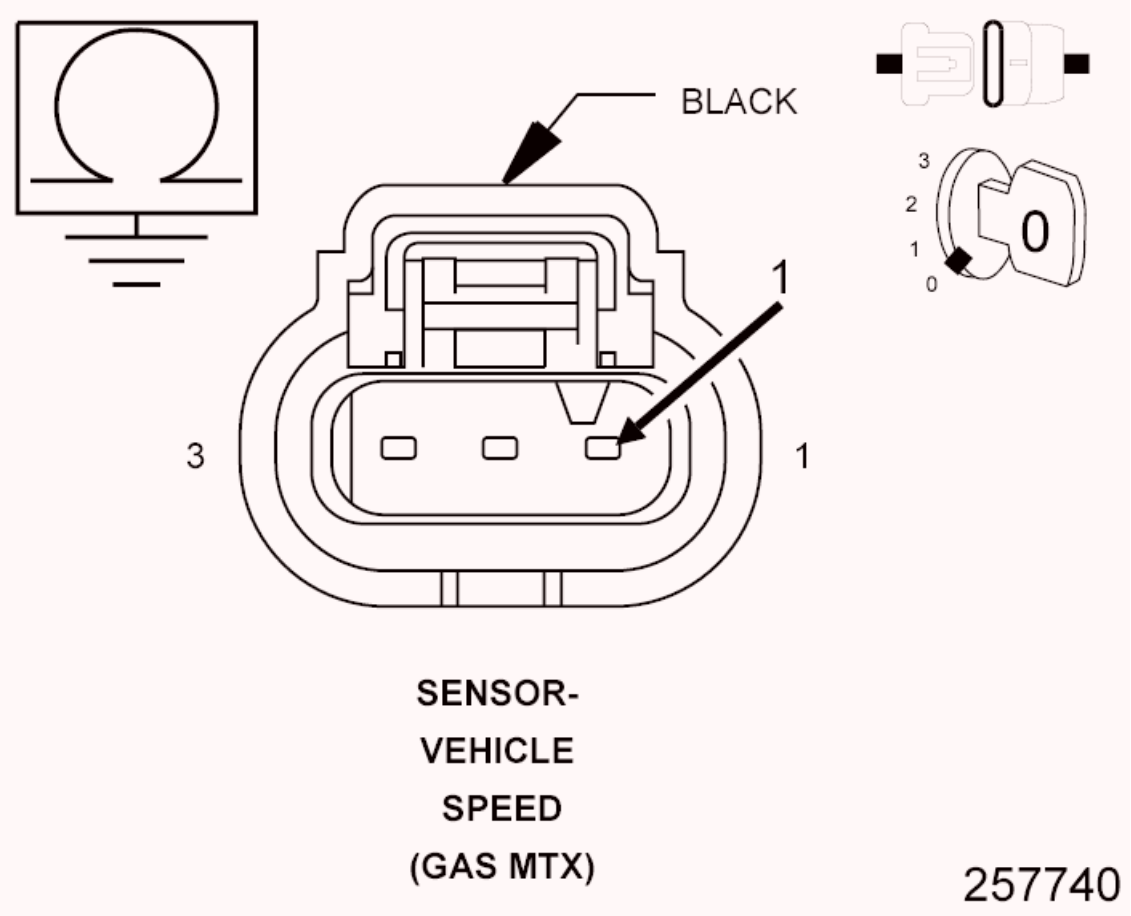

Fig. 60: Checking VSS 5-Volt Supply Circuit For Short To Ground
Courtesy of CHRYSLER GROUP, LLC

1. Turn the ignition off.
2. Measure the resistance between ground and the (F856) 5-Volt Supply circuit in the Vehicle Speed Sensor harness connector.

   Is the resistance above 10k Ohms?

   Yes

- Go To 9

No

- Repair the (F856) 5-Volt Supply circuit for a short to ground.
- Perform the POWERTRAIN VERIFICATION TEST. Refer to **POWERTRAIN VERIFICATION TEST** .

9. **CHECK FOR THE (F856) 5-VOLT SUPPLY CIRCUIT SHORTED TO THE (K914) SENSOR GROUND CIRCUIT**

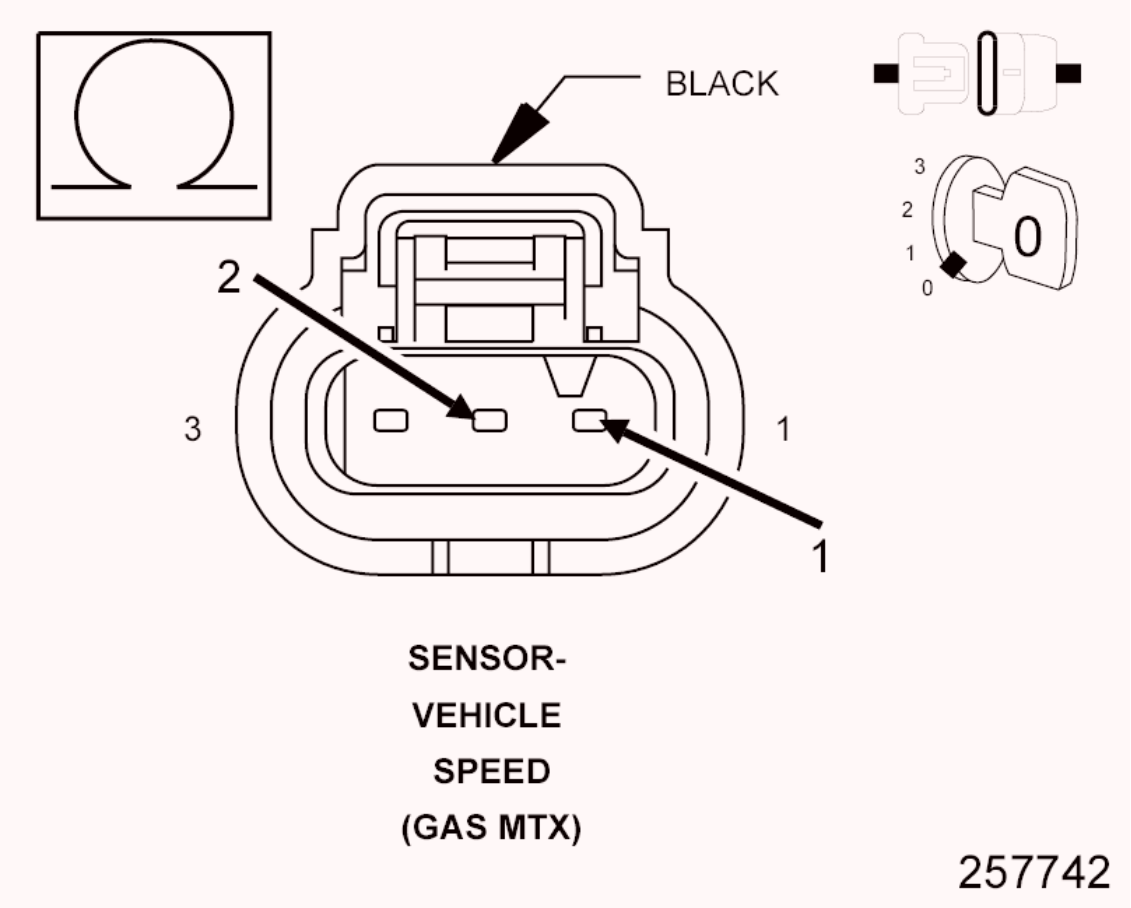

Fig. 61: Checking VSS 5-Volt Supply Circuit For Short To Sensor Ground Circuit
Courtesy of CHRYSLER GROUP, LLC

1. Measure the resistance between the (F856) 5-Volt Supply circuit and the (K914) Sensor Ground circuit in the Vehicle Speed Sensor harness connector.

   Is the resistance above 10k Ohms?

Yes

- Go To 10

No

- Repair the (F856) 5-Volt Supply circuit for a short to the (K914) Sensor Ground circuit.
- Perform the POWERTRAIN VERIFICATION TEST. Refer to **POWERTRAIN VERIFICATION TEST** .

10. **CHECK THE (F856) 5-VOLT SUPPLY CIRCUIT FOR AN OPEN/HIGH RESISTANCE**

CAUTION: Do not probe the PCM harness connectors. Probing the PCM harness connectors will damage the PCM terminals resulting in poor terminal to pin connection. Install the GPEC Diagnostic Adaptor to perform the diagnosis.

1. Connect the (special tool #10436, Adapter, GPEC Diagnostic).
2. Measure the resistance of the (F856) 5-Volt Supply circuit between the Vehicle Speed Sensor harness connector and the GPEC Adaptor.

Is the resistance below 5.0 Ohms?

Yes

- Go To 16

No

- Repair the (F856) 5-Volt Supply circuit for an open or high resistance.
- Perform the POWERTRAIN VERIFICATION TEST. Refer to **POWERTRAIN VERIFICATION TEST** .

11. **CHECK THE (K75) VEHICLE SPEED SIGNAL CIRCUIT FOR A SHORT TO VOLTAGE**

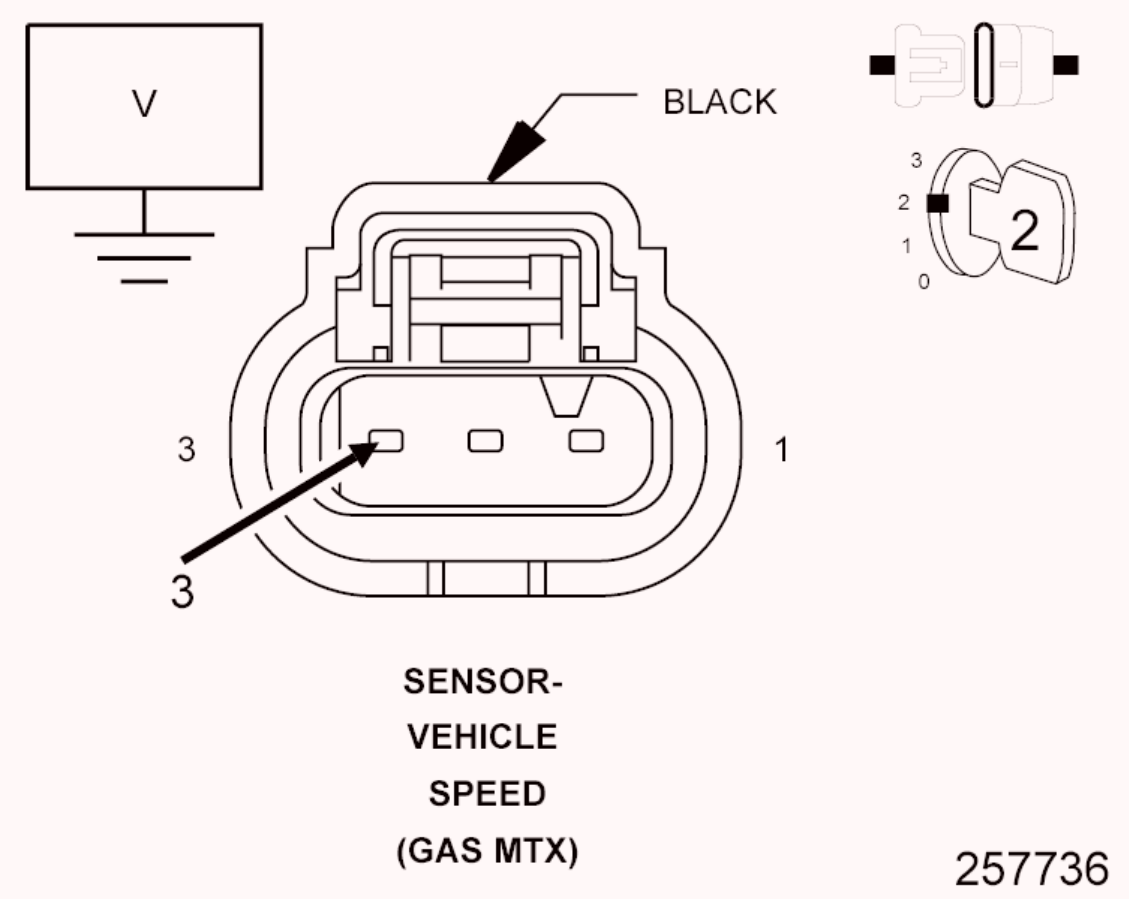

Fig. 62: Checking Vehicle Speed Signal Circuit For Short To Voltage
Courtesy of CHRYSLER GROUP, LLC

1. Turn the ignition off.
2. Disconnect the PCM C1 harness connector.
3. Turn the ignition on.
4. Measure the voltage of the (K75) Vehicle Speed Signal circuit in the Vehicle Speed Sensor harness connector.

   Is there any voltage present?

   Yes

   - Repair the (K75) Vehicle Speed Signal circuit for a short to voltage.
   - Perform the POWERTRAIN VERIFICATION TEST. Refer to **POWERTRAIN VERIFICATION TEST** .

   No

- Go To 12

12. **CHECK THE (K75) VEHICLE SPEED SIGNAL CIRCUIT FOR A SHORT TO GROUND**

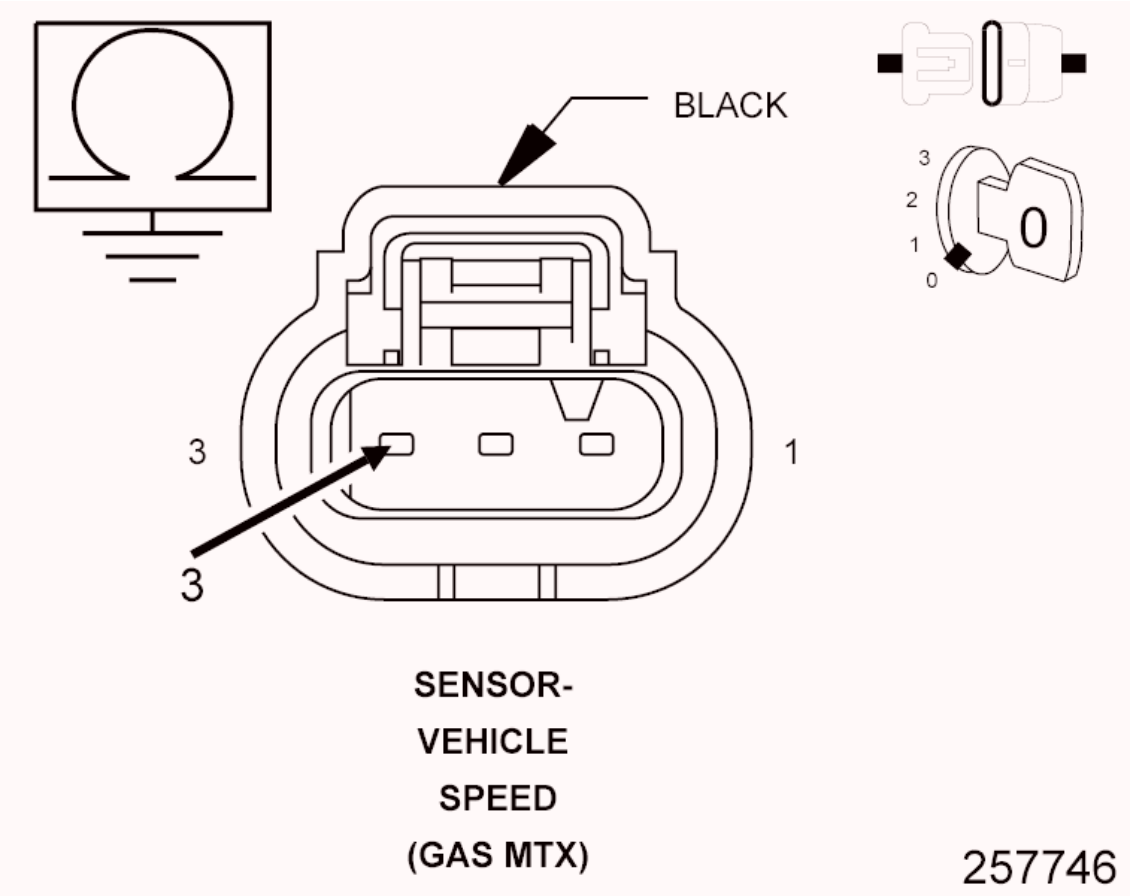

Fig. 63: Checking VSS Signal Circuit For Short To Ground
Courtesy of CHRYSLER GROUP, LLC

1. Turn the ignition off.
2. Measure the resistance between ground and the (K75) Vehicle Speed Signal circuit in the Vehicle Speed Sensor harness connector.

   Is the resistance above 10K Ohms?

   Yes

   - Go To 13

   No

   - Repair the (K75) Vehicle Speed Signal circuit for a short to

ground.

- Perform the POWERTRAIN VERIFICATION TEST. Refer to **POWERTRAIN VERIFICATION TEST** .

13. **CHECK FOR THE (K75) VEHICLE SPEED SIGNAL CIRCUIT SHORTED TO THE (K914) SENSOR GROUND CIRCUIT**

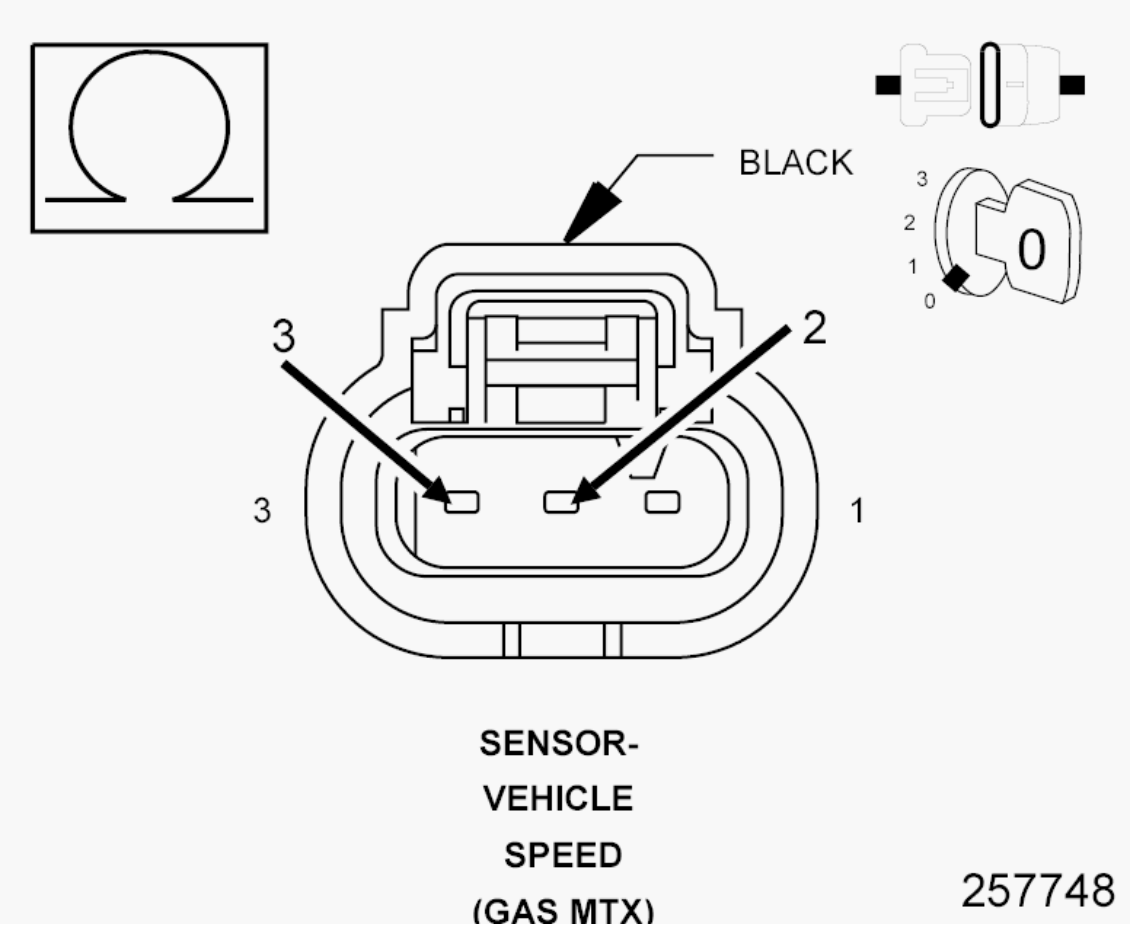

Fig. 64: Checking VSS Circuit For Short To Sensor Ground Circuit
Courtesy of CHRYSLER GROUP, LLC

1. Measure the resistance between the (K75) Vehicle Speed Signal circuit and the (K914) Sensor Ground circuit in the Vehicle Speed Sensor harness connector.

   Is the resistance above 10k Ohms?

   Yes

   - Go To 14

   No

- Repair the (K75) Vehicle Speed Signal circuit for a short to the (K914) Sensor Ground circuit.
- Perform the POWERTRAIN VERIFICATION TEST. Refer to **POWERTRAIN VERIFICATION TEST** .

14. **CHECK THE (K75) VEHICLE SPEED SIGNAL CIRCUIT FOR AN OPEN/HIGH RESISTANCE**
    1. Measure the resistance of the (K75) Vehicle Speed Signal circuit between the Vehicle Speed Sensor harness connector and the GPEC Adaptor.

       Is the resistance below 5.0 Ohms?

       Yes

       - Go To 16

       No

       - Repair the (K75) Vehicle Speed Signal circuit for an open or high resistance.
       - Perform the POWERTRAIN VERIFICATION TEST. Refer to **POWERTRAIN VERIFICATION TEST** .

15. **CHECK THE (K914) SENSOR GROUND CIRCUIT FOR AN OPEN/HIGH RESISTANCE**
    1. Turn the ignition off.
    2. Disconnect the PCM C1 harness connector.
    3. Measure the resistance of the (K914) Sensor Ground circuit between the Vehicle Speed Sensor harness connector and the GPEC Adaptor.

       Is the resistance below 5.0 Ohms?

       Yes

       - Go To 16

       No

       - Repair the (K914) Sensor Ground circuit for an open or high resistance.

- Perform the POWERTRAIN VERIFICATION TEST. Refer to **POWERTRAIN VERIFICATION TEST** .

16. **POWERTRAIN CONTROL MODULE (PCM)**
    1. Using the wiring diagram/schematic as a guide, inspect the wiring and connectors between the Vehicle Speed Sensor and the Powertrain Control Module (PCM).
    2. Look for any chafed, pierced, pinched, or partially broken wires.
    3. Look for broken, bent, pushed out or corroded terminals.
    4. Monitor the scan tool data relative to this circuit and wiggle test the wiring and connectors.
    5. Look for the data to change or for the DTC to reset during the wiggle test.
    6. Perform any Technical Service Bulletins that may apply.

    Were any problems found?

    Yes

    - Repair as necessary.
    - Perform the POWERTRAIN VERIFICATION TEST. Refer to **POWERTRAIN VERIFICATION TEST** .

    No

    - Replace and program the Powertrain Control Module (PCM) in accordance with the service information. Refer to **MODULE, POWERTRAIN CONTROL, REMOVAL** .
    - Perform the POWERTRAIN VERIFICATION TEST. Refer to **POWERTRAIN VERIFICATION TEST** .

P1502-VEHICLE SPEED SENSOR 1/2 CORRELATION - NON-DRIVE WHEELS

For a complete wiring diagram, **refer to appropriate SYSTEM WIRING DIAGRAMS article** .

WHEN MONITORED

With the engine running, transmission not neutral, brakes not applied, and engine RPM greater than 1500.

SET CONDITION

This code will set if the Powertrain Control Module (PCM) receives an implausible vehicle speed signal from the Totally Integrated Power Module (TIPM).

POSSIBLE CAUSES

POSSIBLE CAUSES
ACTIVE BUS OR COMMUNICATION DTCS
DIFFERENCE IN TIRE CIRCUMFERENCE
WHEEL SPEED SENSOR, WIRING, CONNECTORS, OR HARDWARE
POWERTRAIN CONTROL MODULE (PCM)

Always perform the Pre-Diagnostic Troubleshooting procedure before proceeding. Refer to PRE-DIAGNOSTIC TROUBLESHOOTING PROCEDURE .

DIAGNOSTIC TEST

1. **ACTIVE DTC**
   1. Ignition on, engine not running.

      NOTE: Check for any Bus Communication DTCs. If no Bus or Communication DTCs are set, check for active Vehicle Speed Sensor DTCs in the Totally Integrated Power Module. Any bus, communication, or VSS DTCs in the TIPM must be properly diagnosed before continuing.

   2. With a scan tool, select View DTCs.

      Is the status Active for this DTC?

      Yes

      - Go To 2

      No

      - Perform the INTERMITTENT CONDITION diagnostic procedure.

Refer to **INTERMITTENT CONDITION** .

2. **VISUAL INSPECTION**

NOTE: This code may set after a hard acceleration on loose gravel, during other off road driving conditions, or by any condition that causes a wheel speed difference between the front and rear wheels.

1. Perform a thorough inspection of the rear Wheel Speed Sensor, wiring, connector, attaching hardware, and tone wheel.
2. Check tire pressure of all the tires.
3. Check tire wear on all the tires.
4. Ask the customer what the road and driving conditions were like when the fault set.

Were any problems found?

Yes

- Repair as necessary. If the code set during a front OR rear wheel spin condition, no repair may be necessary. Perform a thorough road test to verify proper operation.
- Perform the POWERTRAIN VERIFICATION TEST. Refer to **POWERTRAIN VERIFICATION TEST** .

No

- Go To 3

3. **POWERTRAIN CONTROL MODULE (PCM)**

1. Using the wiring diagram/schematic as a guide, inspect the wiring and connectors related to this circuit.
2. Look for any chafed, pierced, pinched, or partially broken wires.
3. Look for broken, bent, pushed out or corroded terminals.
4. Perform any Technical Service Bulletins that may apply.

Were any problems found?

Yes

- Repair as necessary.
- Perform the POWERTRAIN VERIFICATION TEST. Refer to **POWERTRAIN VERIFICATION TEST** .

No

- Replace and program the Powertrain Control Module (PCM) in accordance with the Service Information. Refer to **MODULE, POWERTRAIN CONTROL, REMOVAL** .
- Perform the POWERTRAIN VERIFICATION TEST. Refer to **POWERTRAIN VERIFICATION TEST** .

P1513-STARTER REQUEST SWITCH STUCK

For a complete wiring diagram, **refer to appropriate SYSTEM WIRING DIAGRAMS article** .

WHEN MONITORED

With the ignition on and battery voltage greater than 10.4 volts.

SET CONDITION

The Powertrain Control Module (PCM) detects voltage on the (F963) Start Enable circuit for a specified time after the engine is running.

POSSIBLE CAUSES

POSSIBLE CAUSES
(F963) START ENABLE CIRCUIT SHORTED TO VOLTAGE
POWERTRAIN CONTROL MODULE (PCM)

Always perform the Pre-Diagnostic Troubleshooting procedure before proceeding. Refer to PRE-DIAGNOSTIC TROUBLESHOOTING PROCEDURE .

DIAGNOSTIC TEST

1. **DTC IS ACTIVE**
    1. Ignition on, engine not running.

NOTE: This DTC can set by holding the ignition switch in the start position after the engine starts.

2. With the scan tool, select View DTCs.

   Is the status Active for this DTC?

   Yes

   - Go To 2

   No

   - Perform the INTERMITTENT CONDITION diagnostic procedure. Refer to **INTERMITTENT CONDITION** .

2. **(F963) START ENABLE CIRCUIT SHORTED TO VOLTAGE**
   1. Turn the ignition off.
   2. Disconnect the Powertrain Control Module (PCM) harness connector.
   3. Turn the ignition on.
   4. Measure the voltage of the (F963) Start Enable circuit in the Powertrain Control Module (PCM) harness connector.

      Is there any voltage present?

      Yes

      - Repair the (F963) Start Enable circuit for a short to voltage.
      - Perform the POWERTRAIN VERIFICATION TEST. Refer to **POWERTRAIN VERIFICATION TEST** .

      No

      - Go To 3

3. **POWERTRAIN CONTROL MODULE (PCM)**
   1. Using the wiring diagram/schematic as a guide, inspect the wiring and connectors between the ignition switch and the Powertrain Control Module (PCM).
   2. Look for any chafed, pierced, pinched, or partially broken wires.

3. Look for broken, bent, pushed out or corroded terminals.
4. Monitor the scan tool data relative to this circuit and wiggle test the wiring and connectors.
5. Look for the data to change or for the DTC to reset during the wiggle test.
6. Perform any Technical Service Bulletins that may apply.

Were any problems found?

Yes

- Repair as necessary.
- Perform the POWERTRAIN VERIFICATION TEST. Refer to **POWERTRAIN VERIFICATION TEST** .

No

- Replace and program the Powertrain Control Module (PCM) in accordance with the Service Information. Refer to **MODULE, POWERTRAIN CONTROL, REMOVAL** .
- Perform the POWERTRAIN VERIFICATION TEST. Refer to **POWERTRAIN VERIFICATION TEST** .

P1572-BRAKE PEDAL STUCK ON

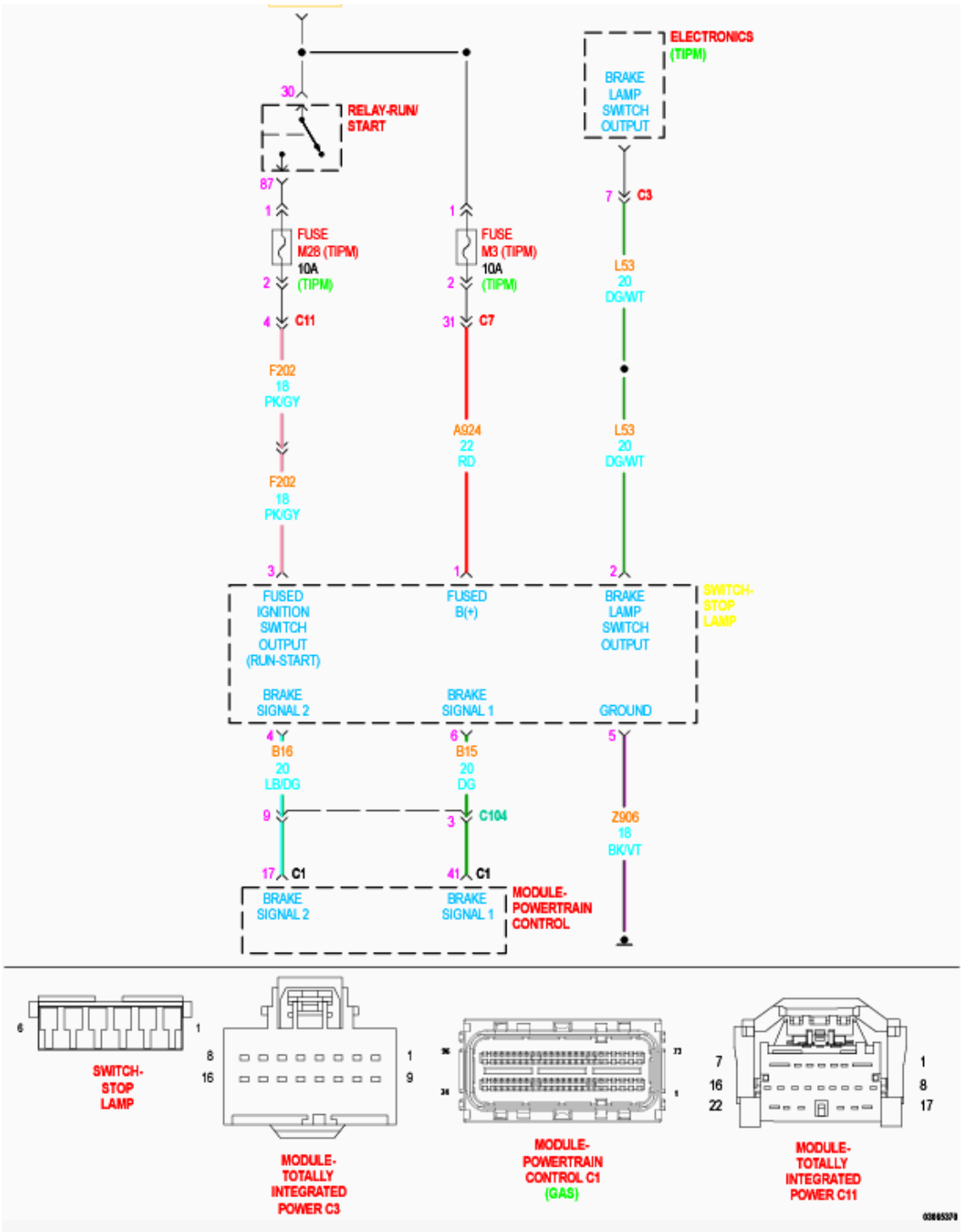

Fig. 65: Brake Switch Circuit Diagram
Courtesy of CHRYSLER GROUP, LLC

For a complete wiring diagram, **refer to appropriate SYSTEM WIRING DIAGRAMS article** .

WHEN MONITORED

With the ignition on and battery voltage greater than 10.4 Volts.

SET CONDITION

The Powertrain Control Module (PCM) detects that the state of brake switch does not change as expected.

POSSIBLE CAUSES

Possible Causes
(B15) BRAKE SIGNAL 1 CIRCUIT SHORTED TO GROUND
(B16) BRAKE SIGNAL 2 CIRCUIT SHORTED TO VOLTAGE
(F202) FUSED IGNITION SWITCH OUTPUT (RUN-START) CIRCUIT OPEN OR HIGH RESISTANCE
(Z967) GROUND CIRCUIT OPEN OR HIGH RESISTANCE
(B15) BRAKE SIGNAL 1 CIRCUIT OPEN OR HIGH RESISTANCE
(B16) BRAKE SIGNAL 2 CIRCUIT OPEN OR HIGH RESISTANCE
STOP LAMP SWITCH
POWERTRAIN CONTROL MODULE (PCM)

Always perform the Pre-Diagnostic Troubleshooting procedure before proceeding. Refer to PRE-DIAGNOSTIC TROUBLESHOOTING PROCEDURE .

DIAGNOSTIC TEST

1. **ACTIVE DTC**
    1. Turn the ignition on.
    2. With the scan tool, monitor the states of Brake Signal 1 and Brake Signal 2 while pressing and releasing the brake pedal several times.

       Do the states change from Pressed when the pedal is pressed to Not Pressed when the pedal is released?

       Yes

       - Perform the INTERMITTENT CONDITION diagnostic procedure. Refer to **INTERMITTENT CONDITION** .

       No

       - Go To 2

2. **CHECK THE (B15) BRAKE SIGNAL 1 CIRCUIT**
   1. Turn the ignition off.
   2. Disconnect the PCM C1 harness connector.
   3. Using a 12-volt test light connected to 12 volts, check the (B15) Brake Signal 1 circuit in the GPEC Adaptor while pressing and releasing the brake pedal several times.

      Does the test light change from illuminated when the pedal is pressed to not illuminated when the pedal is released?

      Yes

      - Go To 3

      No

      - Go To 4
3. **CHECK THE (B16) BRAKE SIGNAL 2 CIRCUIT**
   1. Turn the ignition on.
   2. Using a 12-volt test light connected to ground, check the (B16) Brake Signal 2 circuit in the GPEC Adaptor while pressing and releasing the brake pedal several times.

      Does the test light change from illuminated when the pedal is pressed to not illuminated when the pedal is released?

      Yes

      - Go To 11

      No

      - Go To 7
4. **CHECK THE (Z906) GROUND CIRCUIT FOR AN OPEN/HIGH RESISTANCE**

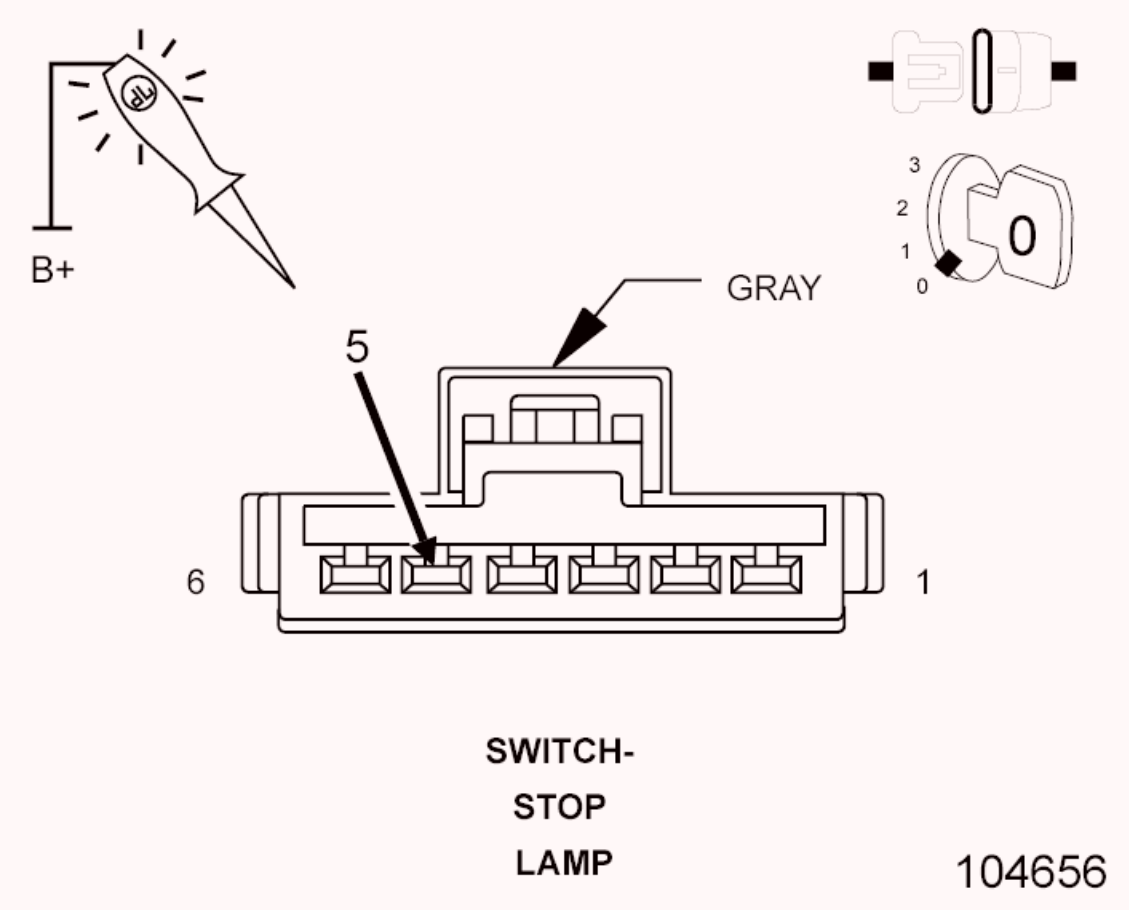

Fig. 66: Checking Stop Lamp Ground Circuit For Open Or High Resistance
Courtesy of CHRYSLER GROUP, LLC

1. Turn the ignition off.
2. Disconnect the Stop Lamp Switch harness connector.
3. Using a 12-volt test light connected to 12 volts, check the (Z906) Ground circuit in the Stop Lamp Switch harness connector.

NOTE: The test light should be illuminated and bright. Compare the brightness to that of a direct connection to the battery.

Is the test light illuminated and bright?

Yes

- Go To 5

No

- Repair the (Z906) Ground circuit for an open or high resistance.
- Perform the POWERTRAIN VERIFICATION TEST. Refer to **POWERTRAIN VERIFICATION TEST** .

5. **CHECK THE (B15) BRAKE SIGNAL 1 CIRCUIT FOR A SHORT TO GROUND**

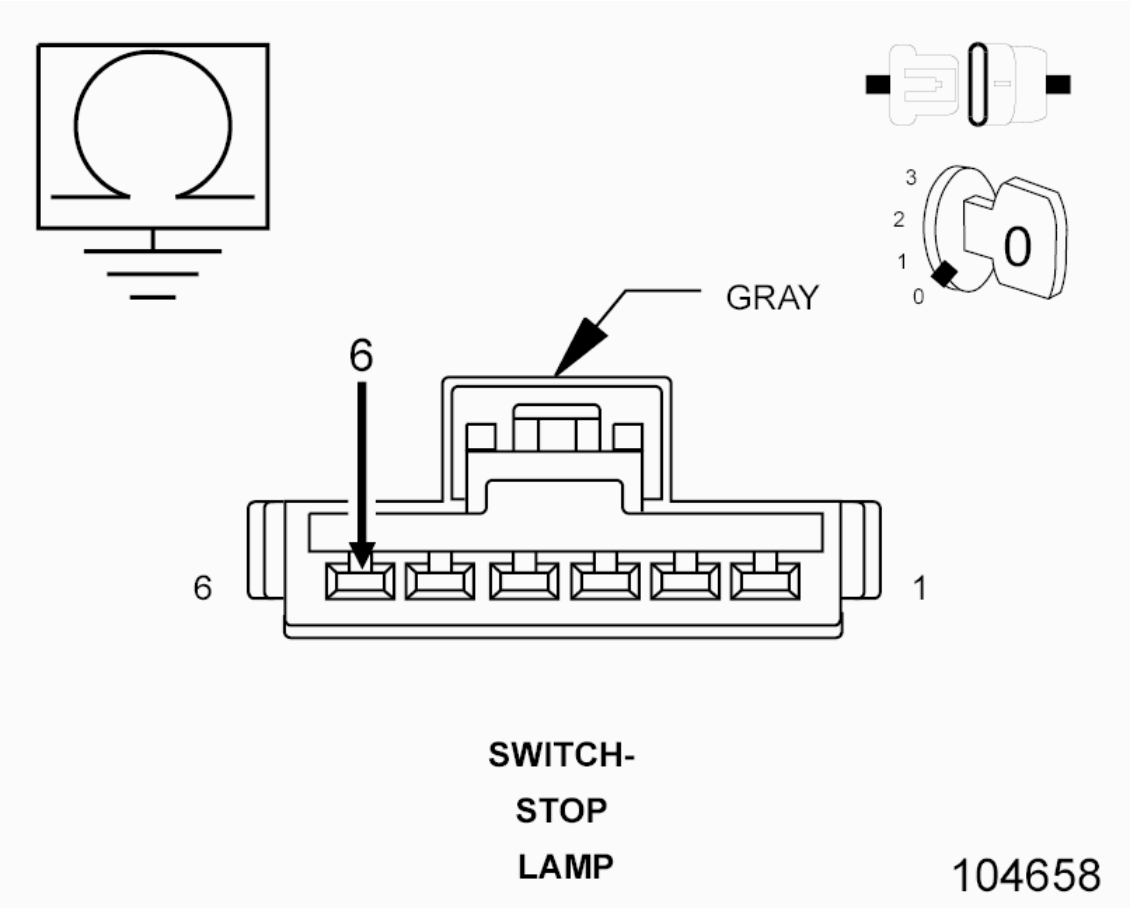

Fig. 67: Checking Brake Signal 1 Circuit For Short To Ground
Courtesy of CHRYSLER GROUP, LLC

1. Measure the resistance between ground and the (B15) Brake Signal 1 circuit in the Stop Lamp Switch harness connector.

   Is the resistance above 10k Ohms?

   Yes

   - Go To 6

   No

- Repair the (B15) Brake Signal 1 circuit for a short to ground.
- Perform the POWERTRAIN VERIFICATION TEST. Refer to **POWERTRAIN VERIFICATION TEST** .

6. **CHECK THE (B15) BRAKE SIGNAL 1 CIRCUIT FOR AN OPEN/HIGH RESISTANCE**

CAUTION: Do not probe the PCM harness connectors. Probing the PCM harness connectors will damage the PCM terminals resulting in poor terminal to pin connection. Install the GPEC Diagnostic Adaptor to perform the diagnosis.

1. Connect the (special tool #10436, Adapter, GPEC Diagnostic).
2. Measure the resistance of the (B15) Brake Signal 1 circuit between the Stop Lamp Switch harness connector and the GPEC Adaptor.

   Is the resistance below 5.0 Ohms?

   Yes

   - Go To 10

   No

   - Repair the (B15) Brake Signal 1 circuit for an open or high resistance.
   - Perform the POWERTRAIN VERIFICATION TEST. Refer to **POWERTRAIN VERIFICATION TEST** .

7. **CHECK THE (F202) FUSED IGNITION SWITCH OUTPUT (RUN-START) CIRCUIT FOR AN OPEN/HIGH RESISTANCE**

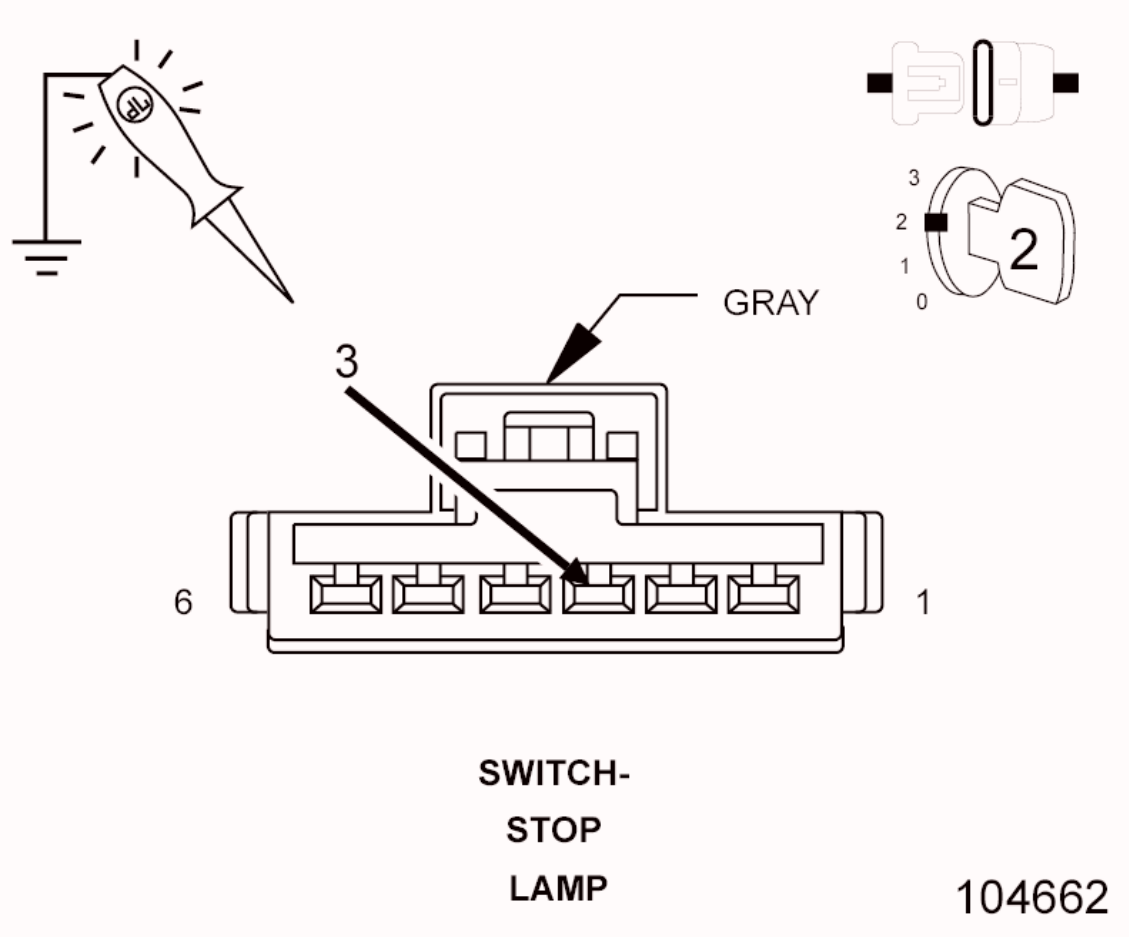

Fig. 68: Checking Fused Ignition Switch Output (Run-Start) Circuit For Open Or High Resistance
Courtesy of CHRYSLER GROUP, LLC

1. Turn the ignition off.
2. Disconnect the Stop Lamp Switch harness connector.
3. Turn the ignition on.
4. Using a 12-volt test light connected to ground, check the (F202) Fused Ignition Switch Output (Run-Start) circuit in the Stop Lamp Switch harness connector.

NOTE: The test light should be illuminated and bright. Compare the brightness to that of a direct connection to the battery.

Is the test light illuminated and bright?

Yes

- Go To 8

No

- Repair the (F202) Fused Ignition Switch Output (Run-Start) circuit for an open or high resistance.
- Perform the POWERTRAIN VERIFICATION TEST. Refer to **POWERTRAIN VERIFICATION TEST** .

8. **CHECK THE (B16) BRAKE SIGNAL 2 CIRCUIT FOR A SHORT TO VOLTAGE**

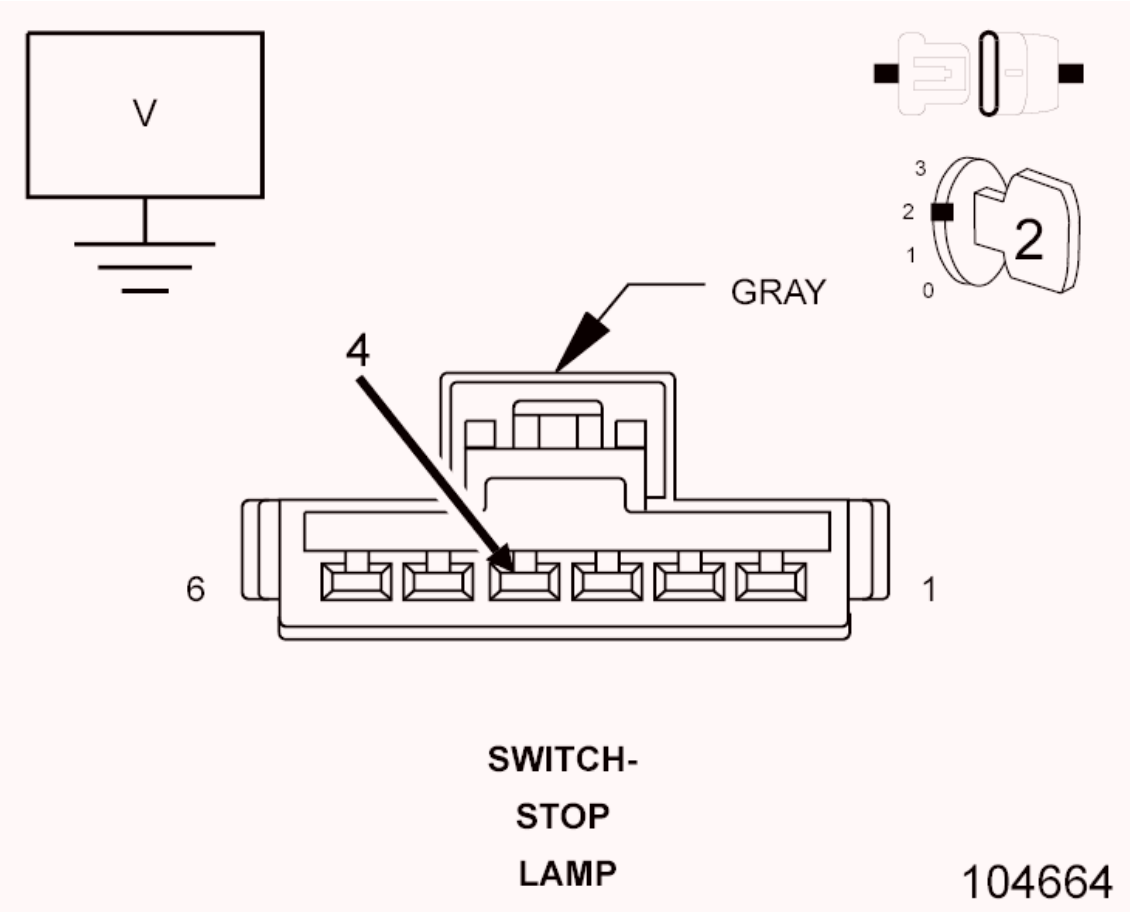

Fig. 69: Checking Brake Signal 2 Circuit For Short To Voltage
Courtesy of CHRYSLER GROUP, LLC

1. Measure the voltage of the (B16) Brake Signal 2 circuit in the Stop Lamp Switch harness connector.

   Is there any voltage present?

   Yes

- Repair the (B16) Brake Signal 2 circuit for a short to voltage.
- Perform the POWERTRAIN VERIFICATION TEST. Refer to **POWERTRAIN VERIFICATION TEST** .

No

- Go To 9

9. **CHECK THE (B16) BRAKE SIGNAL 2 CIRCUIT FOR AN OPEN/HIGH RESISTANCE**
   1. Measure the resistance of the (B16) Brake Signal 2 circuit between the Stop Lamp Switch harness connector and the GPEC Adaptor.

      Is the resistance below 5.0 Ohms?

      Yes

      - Go To 10

      No

      - Repair the (B16) Brake Signal 2 circuit for an open or high resistance.
      - Perform the POWERTRAIN VERIFICATION TEST. Refer to **POWERTRAIN VERIFICATION TEST** .

10. **STOP LAMP SWITCH**
    1. Using the wiring diagram/schematic as a guide, inspect the wiring and connectors between the Stop Lamp Switch and the Powertrain Control Module (PCM).
    2. Look for any chafed, pierced, pinched or partially broken wires.
    3. Look for broken, bent, pushed out or corroded terminals.
    4. Perform any Technical Service Bulletins that may apply.

       Were any problems found?

       Yes

       - Repair as necessary.
       - Perform the POWERTRAIN VERIFICATION TEST. Refer to

POWERTRAIN VERIFICATION TEST .

No

- Replace the Stop Lamp Switch in accordance with the service information.
- Perform the POWERTRAIN VERIFICATION TEST. Refer to **POWERTRAIN VERIFICATION TEST** .

11. **POWERTRAIN CONTROL MODULE (PCM)**
    1. Using the wiring diagram/schematic as a guide, inspect the wiring and connectors between the Stop Lamp Switch and the Powertrain Control Module (PCM).
    2. Look for any chafed, pierced, pinched or partially broken wires.
    3. Look for broken, bent, pushed out or corroded terminals.
    4. Perform any Technical Service Bulletins that may apply.

    Were any problems found?

    Yes

    - Repair as necessary.
    - Perform the POWERTRAIN VERIFICATION TEST. Refer to **POWERTRAIN VERIFICATION TEST** .

    No

    - Replace and program the Powertrain Control Module (PCM) in accordance with the service information. Refer to **MODULE, POWERTRAIN CONTROL, REMOVAL** .
    - Perform the POWERTRAIN VERIFICATION TEST. Refer to **POWERTRAIN VERIFICATION TEST** .

P1573-BRAKE PEDAL STUCK OFF

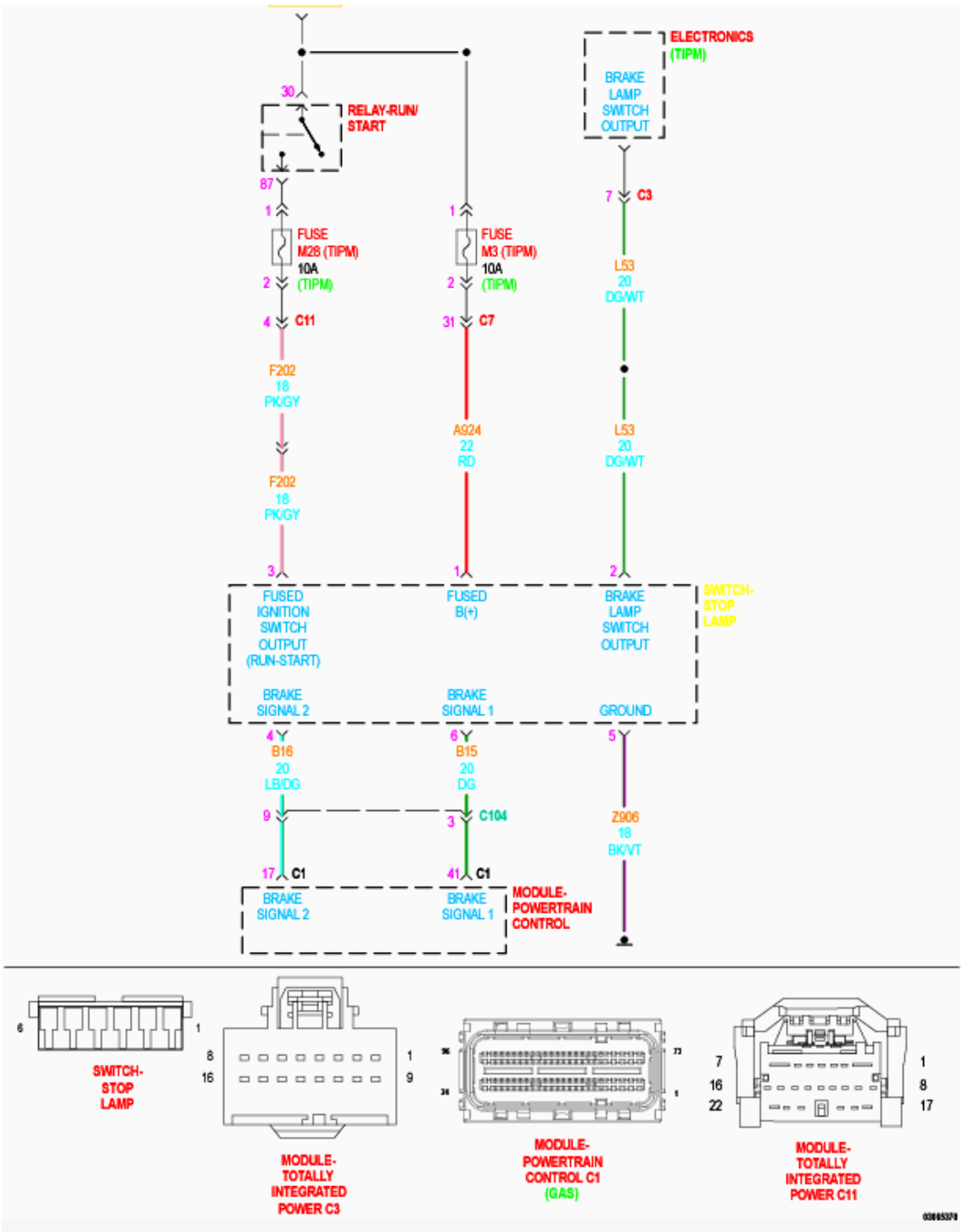

Fig. 70: Brake Switch Circuit Diagram
Courtesy of CHRYSLER GROUP, LLC

For a complete wiring diagram, **refer to appropriate SYSTEM WIRING DIAGRAMS article** .

WHEN MONITORED

With the ignition on and battery voltage greater than 10.4 Volts.

SET CONDITION

The Powertrain Control Module (PCM) detects that the state of Brake Signal 2 does not change as expected.

POSSIBLE CAUSES

Possible Causes
(B15) BRAKE SIGNAL 1 CIRCUIT SHORTED TO GROUND
(B16) BRAKE SIGNAL 2 CIRCUIT SHORTED TO VOLTAGE
(F202) FUSED IGNITION SWITCH OUTPUT (RUN-START) CIRCUIT OPEN OR HIGH RESISTANCE
(Z906) GROUND CIRCUIT OPEN OR HIGH RESISTANCE
(B15) BRAKE SIGNAL 1 CIRCUIT OPEN OR HIGH RESISTANCE
(B16) BRAKE SIGNAL 2 CIRCUIT OPEN OR HIGH RESISTANCE
STOP LAMP SWITCH
POWERTRAIN CONTROL MODULE (PCM)

Always perform the Pre-Diagnostic Troubleshooting procedure before proceeding. Refer to PRE-DIAGNOSTIC TROUBLESHOOTING PROCEDURE .

DIAGNOSTIC TEST

1. **ACTIVE DTC**
    1. Turn the ignition on.
    2. With the scan tool, monitor the states of Brake Signal 1 and Brake Signal 2 while pressing and releasing the brake pedal several times.

       Do the states change from Pressed when the pedal is pressed to Not Pressed when the pedal is released?

       Yes

       - Perform the INTERMITTENT CONDITION diagnostic procedure. Refer to **INTERMITTENT CONDITION** .

       No

       - Go To 2

2. **CHECK THE (B15) BRAKE SIGNAL 1 CIRCUIT**
   1. Turn the ignition off.
   2. Disconnect the PCM C1 harness connector.

      CAUTION: Do not probe the PCM harness connectors. Probing the PCM harness connectors will damage the PCM terminals resulting in poor terminal to pin connection. Install the GPEC Diagnostic Adaptor to perform the diagnosis.

   3. Connect the (special tool #10436, Adapter, GPEC Diagnostic).
   4. Using a 12-volt test light connected to 12 Volts, check the (B15) Brake Signal 1 circuit in the GPEC Adaptor while pressing and releasing the brake pedal several times.

      Does the test light change from illuminated when the pedal is pressed to not illuminated when the pedal is released?

      Yes

      - Go To 3

      No

      - Go To 4
3. **CHECK THE (B16) BRAKE SIGNAL 2 CIRCUIT**
   1. Turn the ignition on.
   2. Using a 12-volt test light connected to ground, check the (B16) Brake Signal 2 circuit in the GPEC Adaptor while pressing and releasing the brake pedal several times.

      Does the test light change from illuminated when the pedal is pressed to not illuminated when the pedal is released?

      Yes

      - Go To 11

No

- Go To 7

4. **CHECK THE (Z906) GROUND CIRCUIT OPEN OR HIGH RESISTANCE**

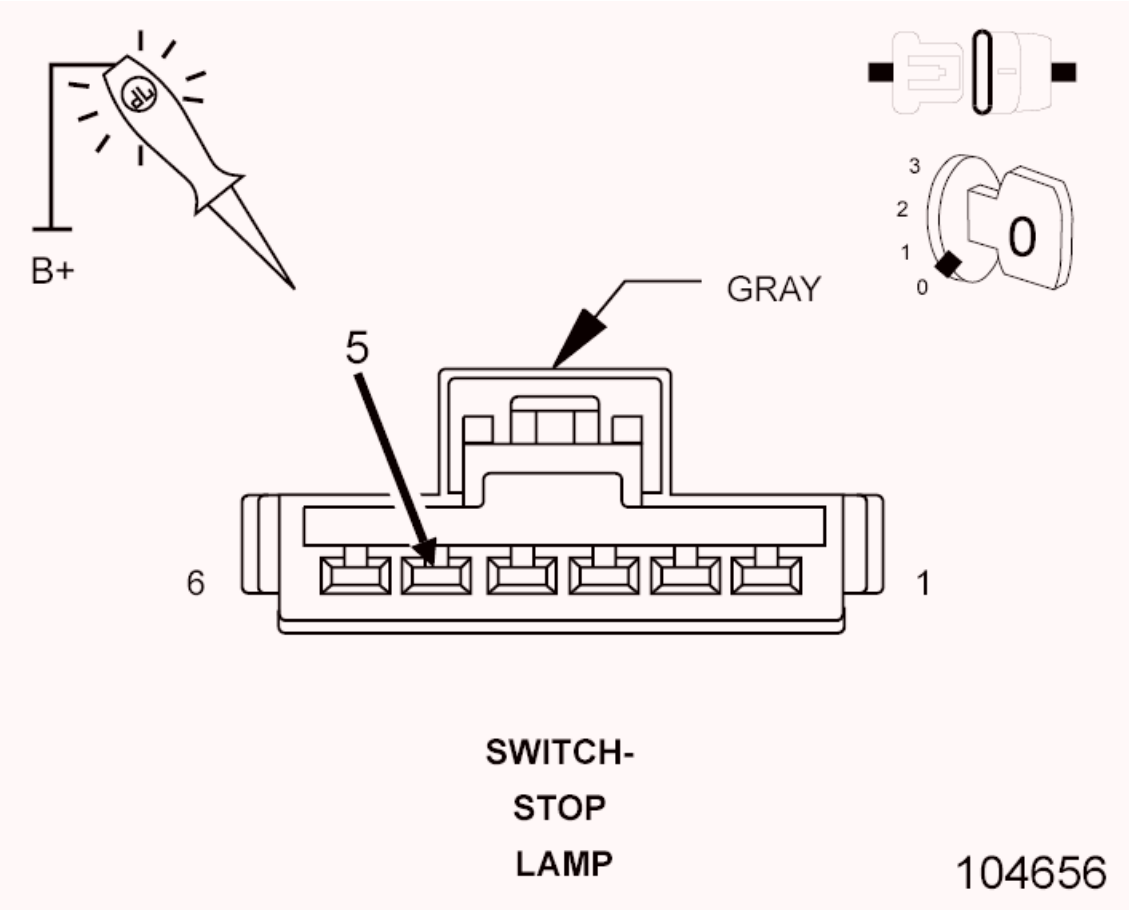

Fig. 71: Checking Stop Lamp Ground Circuit For Open Or High Resistance
Courtesy of CHRYSLER GROUP, LLC

1. Turn the ignition off.
2. Disconnect the Stop Lamp Switch harness connector.
3. Using a 12-volt test light connected to 12 volts, check the (Z906) Ground circuit in the Stop Lamp Switch harness connector.

NOTE: The test light should be illuminated and bright. Compare the brightness to that of a direct connection to the battery.

Is the test light illuminated and bright?

Yes

- Go To 5

No

- Repair the (Z906) Ground circuit for an open or high resistance.
- Perform the POWERTRAIN VERIFICATION TEST. Refer to **POWERTRAIN VERIFICATION TEST** .

5. **CHECK THE (B15) BRAKE SIGNAL 1 CIRCUIT FOR A SHORT TO GROUND**

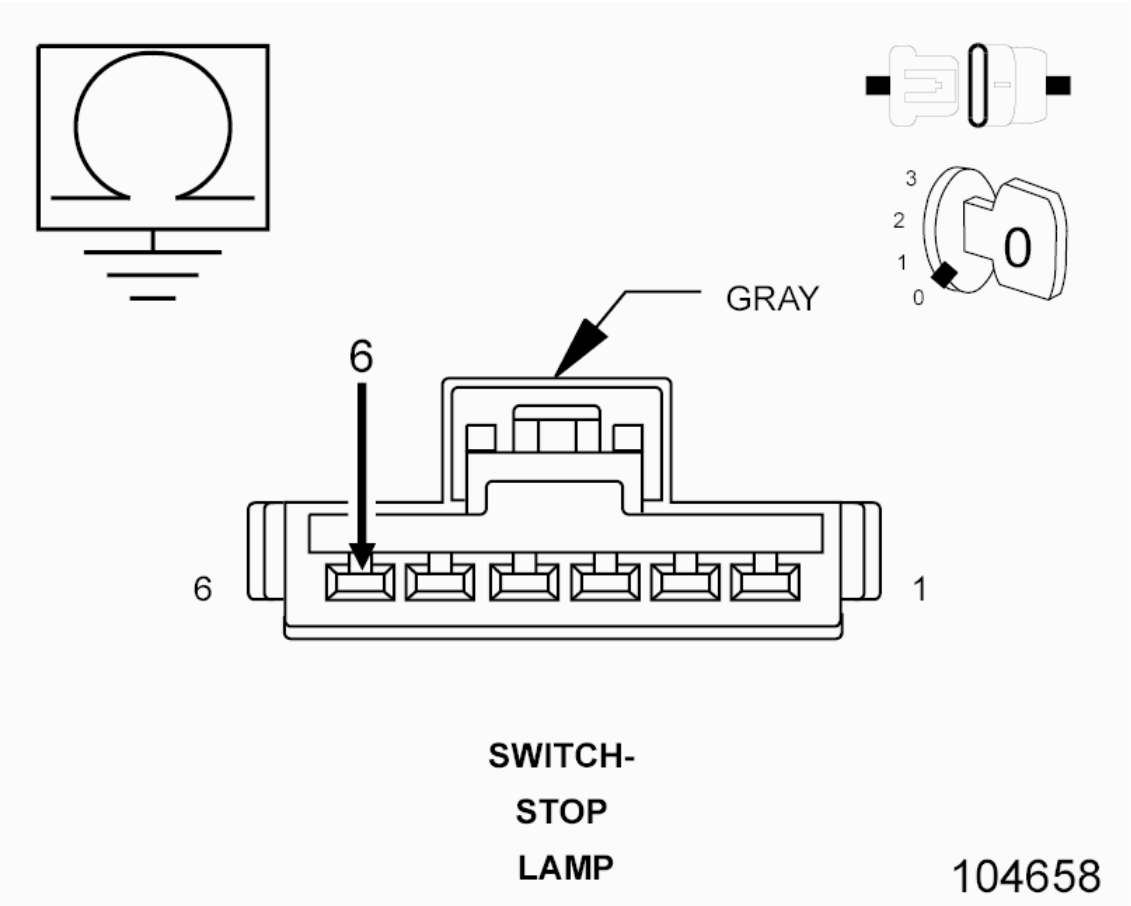

Fig. 72: Checking Brake Signal 1 Circuit For Short To Ground
Courtesy of CHRYSLER GROUP, LLC

1. Measure the resistance between ground and the (B15) Brake Signal 1 circuit in the Stop Lamp Switch harness connector.

Is the resistance above 10k Ohms?

Yes

- Go To 6

No

- Repair the (B15) Brake Signal 1 circuit for a short to ground.
- Perform the POWERTRAIN VERIFICATION TEST. Refer to **POWERTRAIN VERIFICATION TEST** .

6. **CHECK THE (B15) BRAKE SIGNAL 1 CIRCUIT FOR AN OPEN/HIGH RESISTANCE**
   1. Measure the resistance of the (B15) Brake Signal 1 circuit between the Stop Lamp Switch harness connector and the PCM C1 harness connector.

   Is the resistance below 5.0 Ohms?

   Yes

   - Go To 10

   No

   - Repair the (B15) Brake Signal 1 circuit for an open or high resistance.
   - Perform the POWERTRAIN VERIFICATION TEST. Refer to **POWERTRAIN VERIFICATION TEST** .

7. **CHECK THE (F202) FUSED IGNITION SWITCH OUTPUT (RUN-START) CIRCUIT FOR AN OPEN/HIGH RESISTANCE**

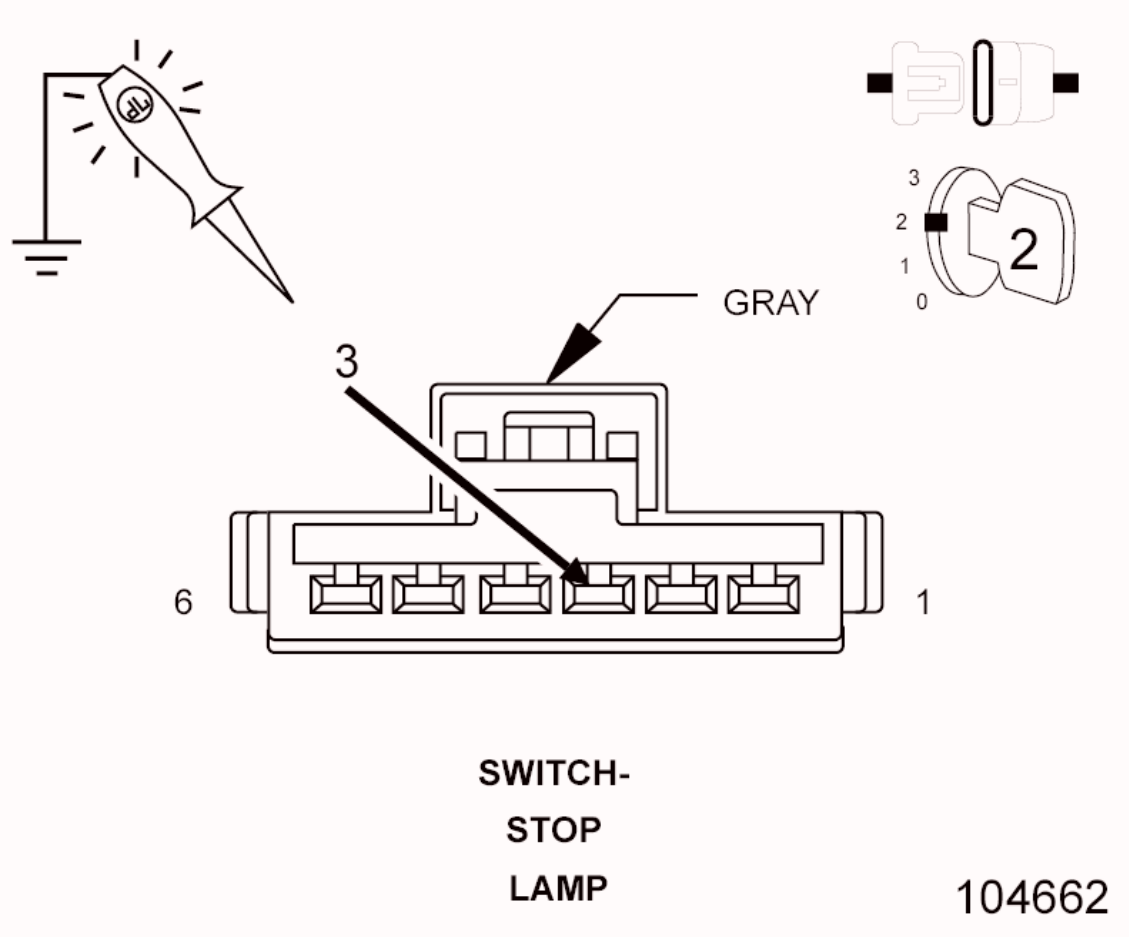

Fig. 73: Checking Fused Ignition Switch Output (Run-Start) Circuit For Open Or High Resistance
Courtesy of CHRYSLER GROUP, LLC

1. Turn the ignition off.
2. Disconnect the Stop Lamp Switch harness connector.
3. Turn the ignition on.
4. Using a 12-volt test light connected to ground, check the (F202) Fused Ignition Switch Output (Run-Start) circuit in the Stop Lamp Switch harness connector.

NOTE: The test light should be illuminated and bright. Compare the brightness to that of a direct connection to the battery.

Is the test light illuminated and bright?

Yes

- Go To 8

No

- Repair the (F202) Fused Ignition Switch Output (Run-Start) circuit for an open or high resistance.
- Perform the POWERTRAIN VERIFICATION TEST. Refer to **POWERTRAIN VERIFICATION TEST** .

8. **CHECK THE (B16) BRAKE SIGNAL 2 CIRCUIT FOR A SHORT TO VOLTAGE**

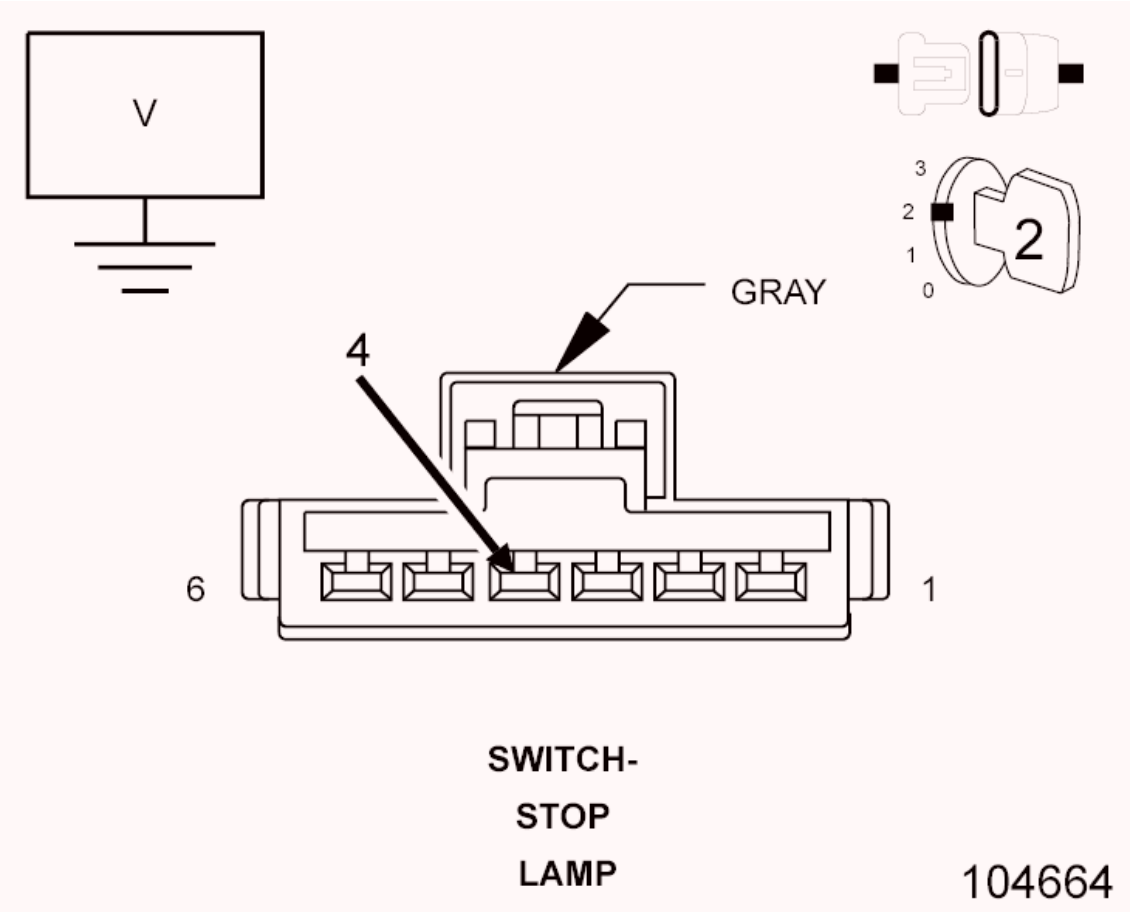

Fig. 74: Checking Brake Signal 2 Circuit For Short To Voltage
Courtesy of CHRYSLER GROUP, LLC

1. Measure the voltage of the (B16) Brake Signal 2 circuit in the Stop Lamp Switch harness connector.

   Is there any voltage present?

   Yes

- Repair the (B16) Brake Signal 2 circuit for a short to voltage.
- Perform the POWERTRAIN VERIFICATION TEST. Refer to **POWERTRAIN VERIFICATION TEST** .

No

- Go To 9

9. **CHECK THE (B16) BRAKE SIGNAL 2 CIRCUIT FOR AN OPEN/HIGH RESISTANCE**
   1. Measure the resistance of the (B16) Brake Signal 2 circuit between the Stop Lamp Switch harness connector and the GPEC Adaptor.

      Is the resistance below 5.0 Ohms?

      Yes

      - Go To 10

      No

      - Repair the (B16) Brake Signal 2 circuit for an open or high resistance.
      - Perform the POWERTRAIN VERIFICATION TEST. Refer to **POWERTRAIN VERIFICATION TEST** .

10. **STOP LAMP SWITCH**
    1. Using the wiring diagram/schematic as a guide, inspect the wiring and connectors between the Stop Lamp Switch and the Powertrain Control Module (PCM).
    2. Look for any chafed, pierced, pinched or partially broken wires.
    3. Look for broken, bent, pushed out or corroded terminals.
    4. Perform any Technical Service Bulletins that may apply.

       Were any problems found?

       Yes

       - Repair as necessary.
       - Perform the POWERTRAIN VERIFICATION TEST. Refer to

POWERTRAIN VERIFICATION TEST .

No

- Replace the Stop Lamp Switch in accordance with the service information.
- Perform the POWERTRAIN VERIFICATION TEST. Refer to **POWERTRAIN VERIFICATION TEST** .

11. **POWERTRAIN CONTROL MODULE (PCM)**
    1. Using the wiring diagram/schematic as a guide, inspect the wiring and connectors between the Stop Lamp Switch and the Powertrain Control Module (PCM).
    2. Look for any chafed, pierced, pinched or partially broken wires.
    3. Look for broken, bent, pushed out or corroded terminals.
    4. Perform any Technical Service Bulletins that may apply.

    Were any problems found?

    Yes

    - Repair as necessary.
    - Perform the POWERTRAIN VERIFICATION TEST. Refer to **POWERTRAIN VERIFICATION TEST** .

    No

    - Replace and program the Powertrain Control Module (PCM) in accordance with the service information. Refer to **MODULE, POWERTRAIN CONTROL, REMOVAL** .
    - Perform the POWERTRAIN VERIFICATION TEST. Refer to **POWERTRAIN VERIFICATION TEST** .

P1593-SPEED CONTROL SWITCH 1/2 STUCK

For a complete wiring diagram, **refer to appropriate SYSTEM WIRING DIAGRAMS article** .

WHEN MONITORED

With the ignition on and battery voltage greater than 10.4 Volts.

SET CONDITION

The Powertrain Control Module (PCM) detects that the (V71) S/C Signal 1 voltage does not match the (V72) S/C Signal 2 voltage.

POSSIBLE CAUSES

Possible Causes
(V71) S/C SIGNAL 1 CIRCUIT SHORTED TO VOLTAGE
(V72) S/C SIGNAL 2 CIRCUIT SHORTED TO VOLTAGE
(V71) S/C SIGNAL 1 CIRCUIT SHORTED TO GROUND
(V72) S/C SIGNAL 2 CIRCUIT SHORTED TO GROUND
(V71) S/C SIGNAL 1 CIRCUIT SHORTED TO THE (V937) S/C SWITCH GROUND CIRCUIT
(V72) S/C SIGNAL 2 CIRCUIT SHORTED TO THE (V937) S/C SWITCH GROUND CIRCUIT
(V71) S/C SIGNAL 1 CIRCUIT OPEN OR HIGH RESISTANCE
(V72) S/C SIGNAL 2 CIRCUIT OPEN OR HIGH RESISTANCE
(V937) S/C SWITCH GROUND CIRCUIT OPEN OR HIGH RESISTANCE
CLOCKSPRING
SPEED CONTROL SWITCH
POWERTRAIN CONTROL MODULE (PCM)

Always perform the Pre-Diagnostic Troubleshooting procedure before proceeding. Refer to PRE-DIAGNOSTIC TROUBLESHOOTING PROCEDURE .

DIAGNOSTIC TEST

1. **ACTIVE DTC**

NOTE: Refer to the following table when diagnosing speed control switch voltage DTCs.

	Switch 1 voltage	Switch 2 voltage
On/Off - Min.	0.5882	3.5294
On/Off - Max.	1.1373	3.9216

Set - Min.	3.1569	1.1765
Set - Max.	3.5686	1.5686
Cancel - Min.	1.5882	2.8431
Cancel - Max.	2.0000	3.2549
Accel - Min.	3.8824	2.0392
Accel - Max.	4.1765	2.4706

1. Start the engine and allow it to idle for at least 60 seconds.

WARNING: When the engine is operating, do not stand in direct line with the fan. Do not put your hands near the pulleys, belts or fan. Do not wear loose clothing. Failure to follow these instructions may result in possible serious or fatal injury.

NOTE: It may be necessary to test drive the vehicle and operate the speed control in order for this DTC to set.

2. With the scan tool, select View DTCs.

   Is the status Active for this DTC?

   Yes

   - Go To 2

   No

   - Perform the INTERMITTENT CONDITION diagnostic procedure. Refer to **INTERMITTENT CONDITION** .

2. **SPEED CONTROL SWITCH**
   1. Turn the ignition off.
   2. Remove the Speed Control Switch in accordance with the Service Information.
   3. Turn the ignition on.
   4. With the scan tool, read the (V71) S/C Signal 1 and (V72) S/C Signal 2

voltages.

NOTE: The voltages should be above 4.8 volts with the Speed Control Switch connector disconnected.

5. Connect a jumper wire between the (V71) S/C Signal 1 circuit and the (V937) S/C Switch Ground circuit in the Speed Control Switch harness connector.
6. With the scan tool, read the (V71) S/C Signal 1 voltage.

NOTE: The (V71) S/C Signal 1 voltage should be below 0.2 volts with the jumper wire in place.

7. Connect a jumper wire between the (V72) S/C Signal 2 circuit and the (V937) S/C Switch Ground circuit in the Speed Control Switch harness connector.
8. With the scan tool, read the (V72) S/C Signal 2 voltage.

NOTE: The (V72) S/C Signal 2 voltage should be below 0.2 volts with the jumper wire in place.

Are the Speed Control voltages displayed as described?

Yes

- Replace the Speed Control Switch in accordance with the service information.
- Perform the POWERTRAIN VERIFICATION TEST. Refer to **POWERTRAIN VERIFICATION TEST** .

No

- Go To 3

3. **CLOCKSPRING**

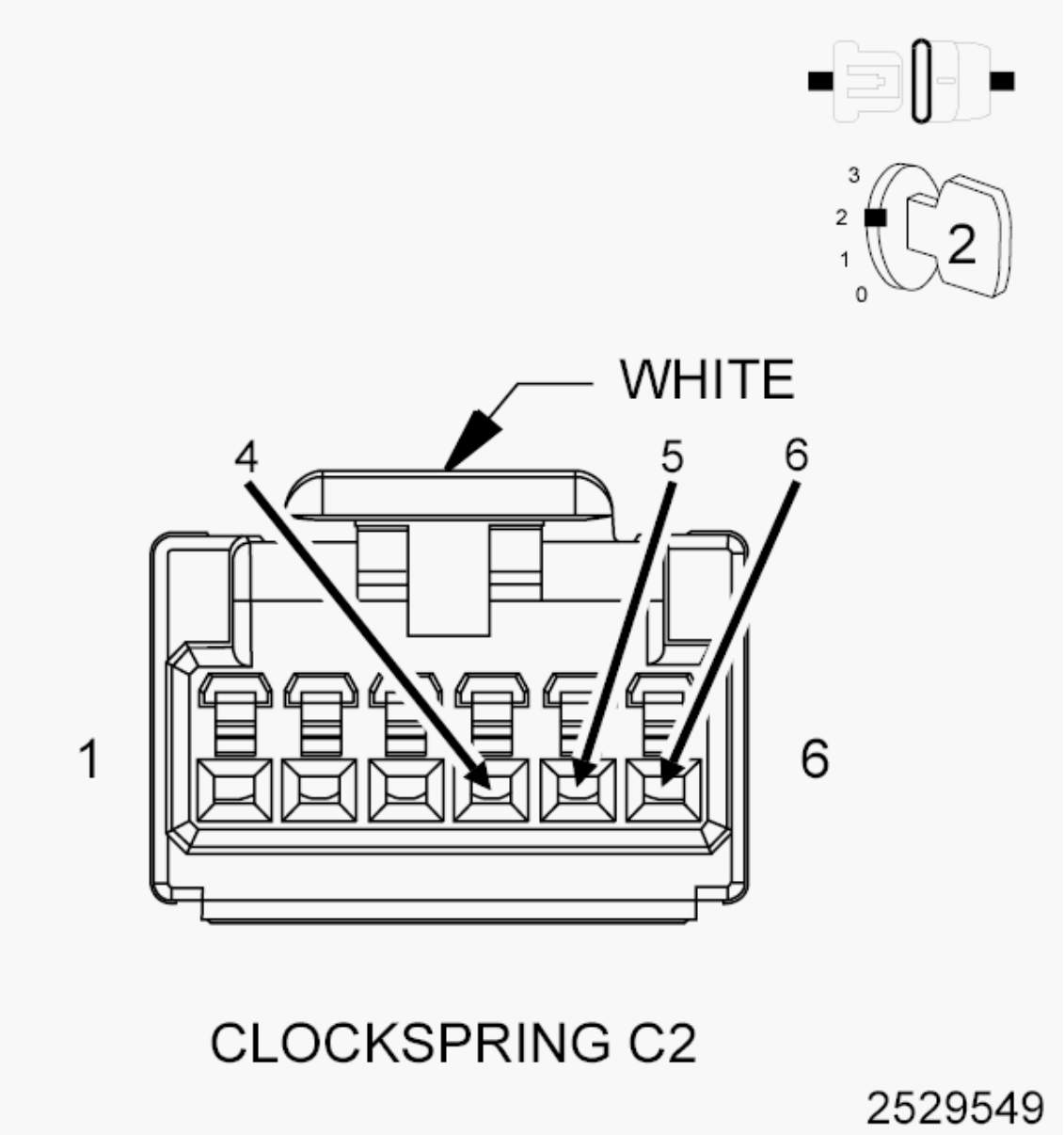

Fig. 75: Clockspring Harness Connector End View
Courtesy of CHRYSLER GROUP, LLC

1. Turn the ignition off.
2. Disconnect the Clockspring C2 harness connector.
3. Turn the ignition on.
4. With the scan tool, read the (V71) S/C Signal 1 and (V72) S/C Signal 2 voltages.

NOTE: The voltages should be above 4.8 volts with the connector disconnected.

5. Connect a jumper wire between the (V71) S/C Signal 1 circuit and the (V937) S/C Switch Ground circuit in the Clockspring C2 harness connector.
6. With the scan tool, read the (V71) S/C Signal 1 voltage.

NOTE: The (V71) S/C Signal 1 voltage should be below 0.2 volts with the jumper wire in place.

7. Connect a jumper wire between the (V72) S/C Signal 2 circuit and the (V937) S/C Switch Ground circuit in the Clockspring C2 harness connector.
8. With the scan tool, read the (V72) S/C Signal 2 voltage.

NOTE: The (V72) S/C Signal 2 voltage should be below 0.2 volts with the jumper wire in place.

Are the Speed Control voltages displayed as described?

Yes

- Replace the Clockspring in accordance with the Service Information.
- Perform the POWERTRAIN VERIFICATION TEST. Refer to **POWERTRAIN VERIFICATION TEST** .

No

- Go To 4

4. **(V71) S/C SIGNAL 1 CIRCUIT SHORTED TO VOLTAGE**

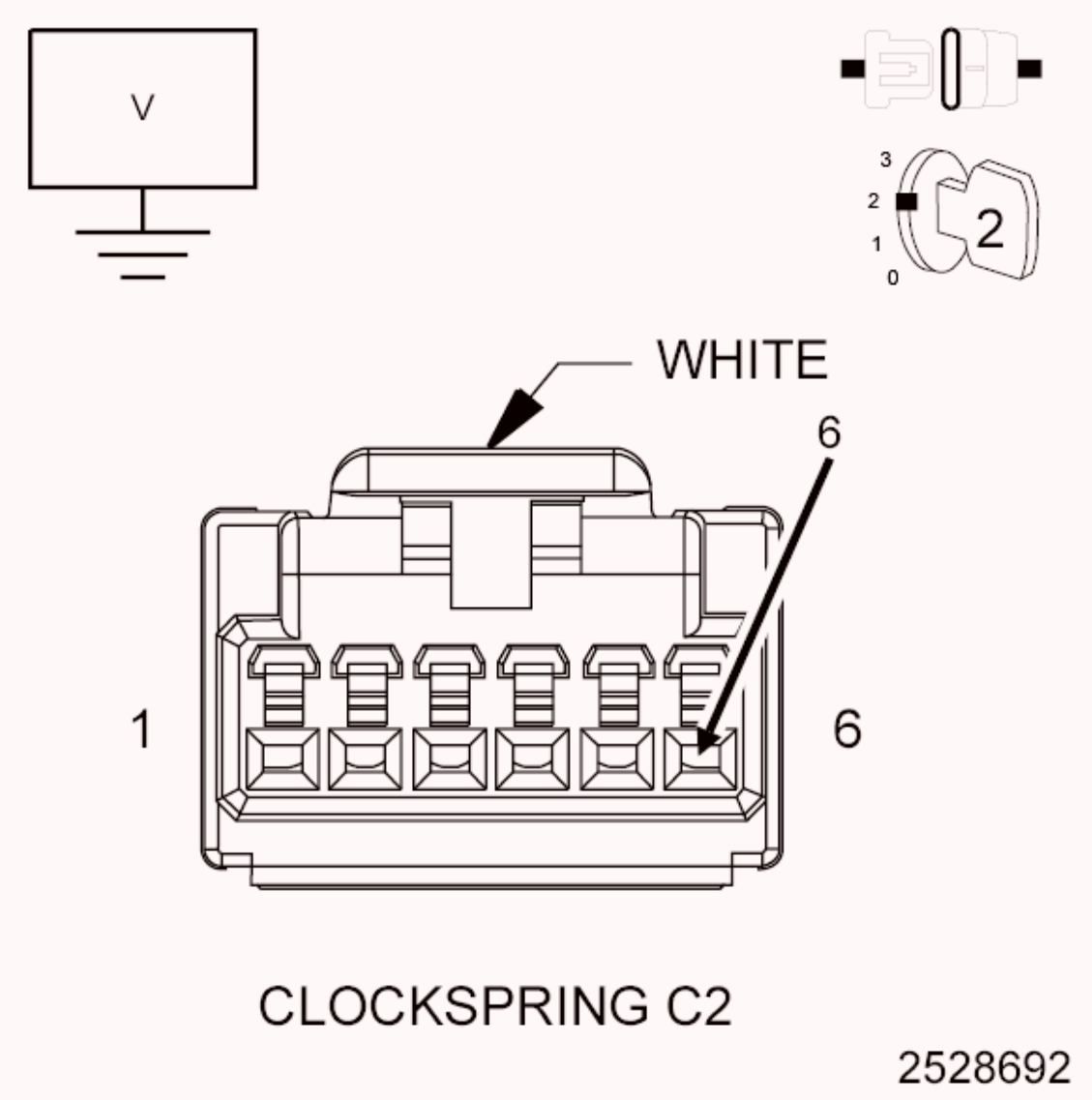

Fig. 76: Checking S/C Signal 1 Circuit For Short To Voltage
Courtesy of CHRYSLER GROUP, LLC

1. Turn the ignition off.
2. Disconnect the PCM harness connector.
3. Turn the ignition on.
4. Measure the voltage of the (V71) S/C Signal 1 circuit in the Clockspring C2 harness connector.

   Is there any voltage present?

   Yes

   - Repair the (V71) S/C Signal 1 circuit for a short to voltage.

- Perform the POWERTRAIN VERIFICATION TEST. Refer to **POWERTRAIN VERIFICATION TEST** .

No

- Go To 5

5. **(V72) S/C SIGNAL 2 CIRCUIT SHORTED TO VOLTAGE**

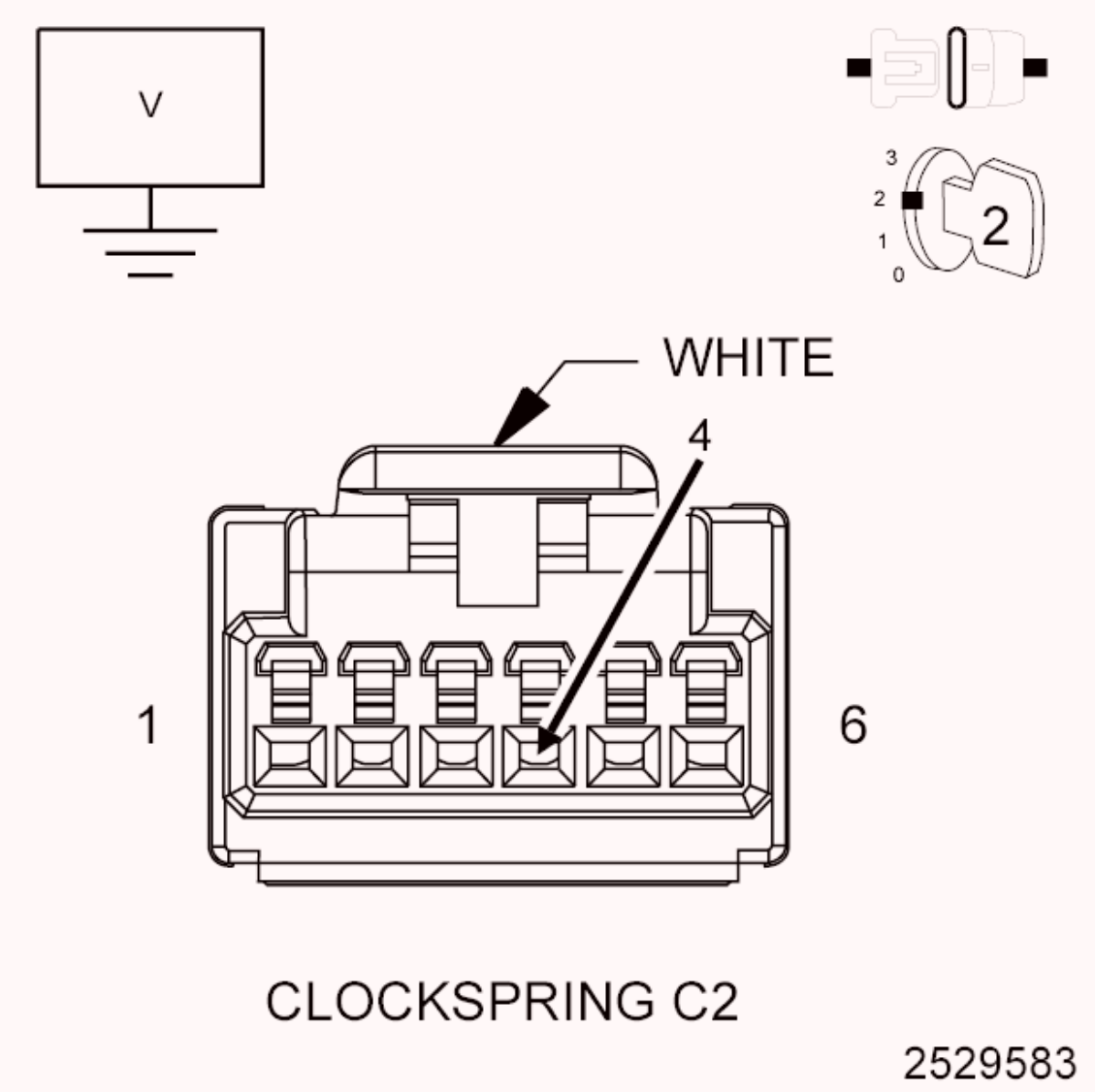

Fig. 77: Checking S/C Signal 2 Circuit For Short To Voltage
Courtesy of CHRYSLER GROUP, LLC

1. Measure the voltage of the (V72) S/C Signal 2 circuit in the Clockspring C2 harness connector.

   Is there any voltage present?

Yes

- Repair the (V72) S/C Signal 2 circuit for a short to voltage.
- Perform the POWERTRAIN VERIFICATION TEST. Refer to **POWERTRAIN VERIFICATION TEST** .

No

- Go To 6

6. **(V71) S/C SIGNAL 1 CIRCUIT SHORTED TO GROUND**

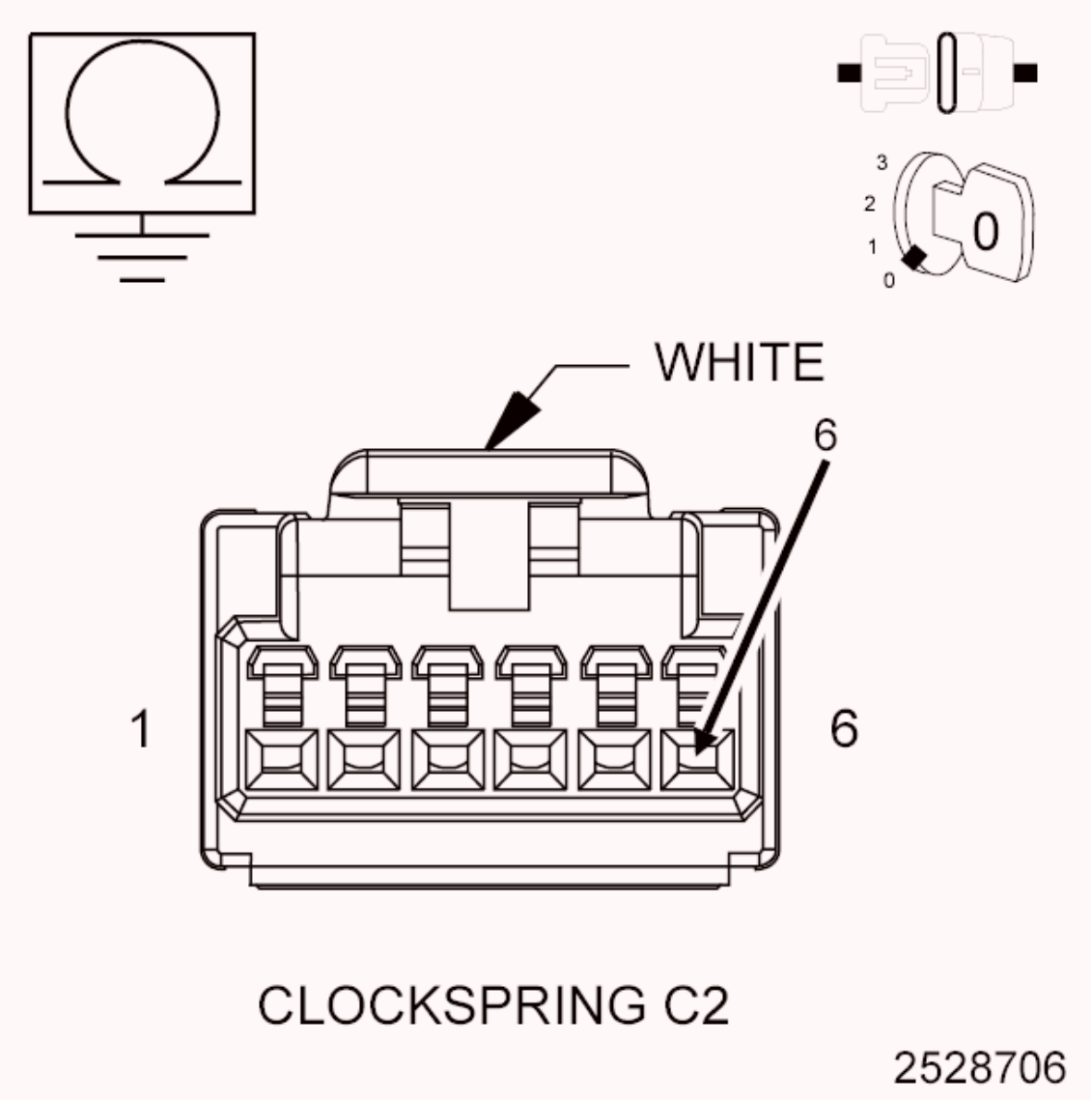

Fig. 78: Checking S/C Signal 1 Circuit For Short To Ground
Courtesy of CHRYSLER GROUP, LLC

1. Turn the ignition off.

2. Measure the resistance between ground and the (V71) S/C Signal 1 circuit in the Clockspring C2 harness connector.

   Is the resistance above 10k Ohms?

   Yes

   - Go To 7

   No

   - Repair the (V71) S/C Signal 1 circuit for a short to ground.
   - Perform the POWERTRAIN VERIFICATION TEST. Refer to **POWERTRAIN VERIFICATION TEST** .

7. **(V72) S/C SIGNAL 2 CIRCUIT SHORTED TO GROUND**

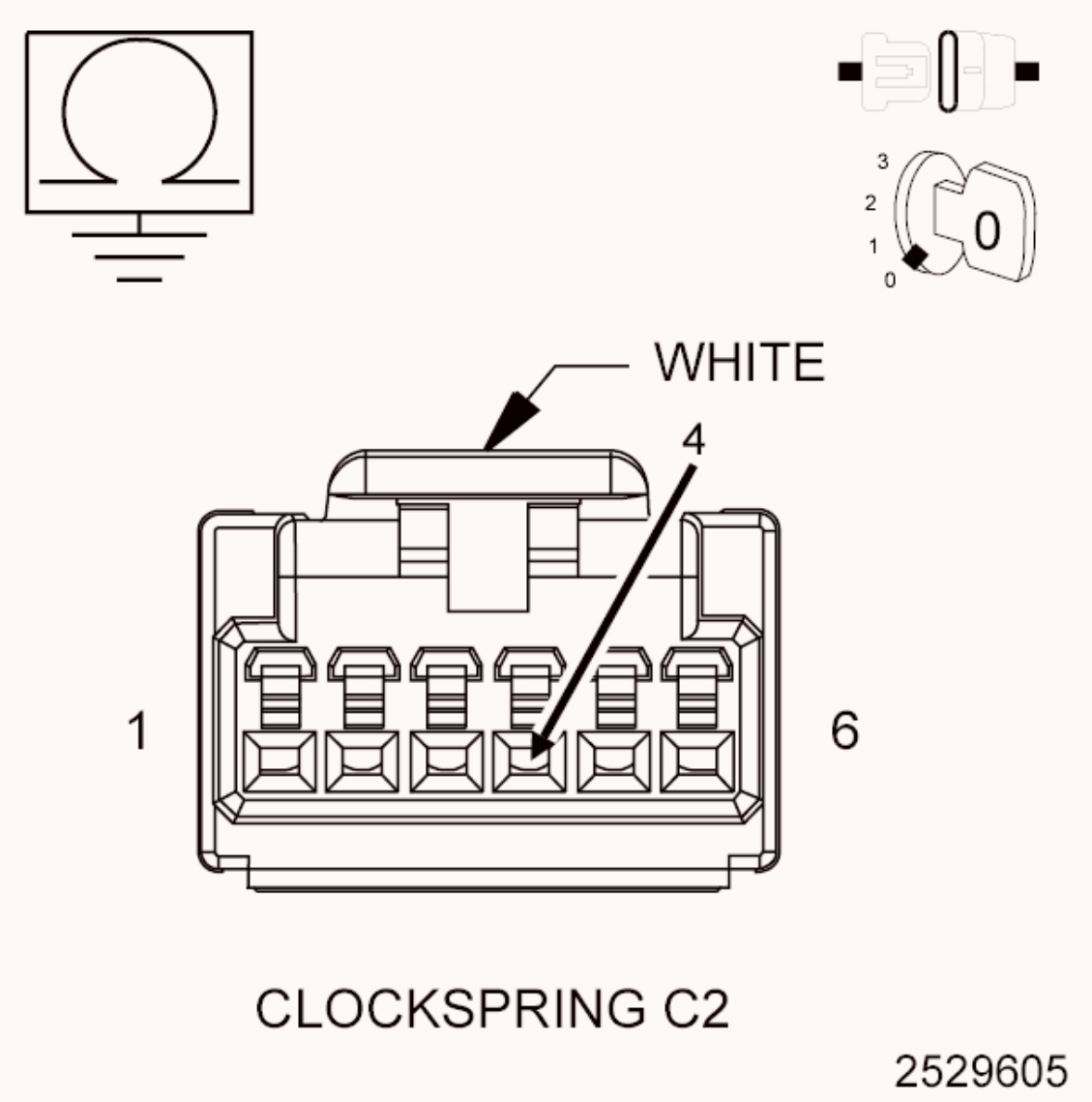

Fig. 79: Checking S/C Signal 2 Circuit For Short To Ground
Courtesy of CHRYSLER GROUP, LLC

1. Turn the ignition off.
2. Measure the resistance between ground and the (V72) S/C Signal 2 circuit in the Clockspring C2 harness connector.

   Is the resistance above 10k Ohms?

   Yes

   - Go To 8

   No

- Repair the (V72) S/C Signal 2 circuit for a short to ground.
- Perform the POWERTRAIN VERIFICATION TEST. Refer to **POWERTRAIN VERIFICATION TEST** .

8. **(V71) S/C SIGNAL 1 CIRCUIT SHORTED TO THE (V937) S/C SWITCH GROUND CIRCUIT**

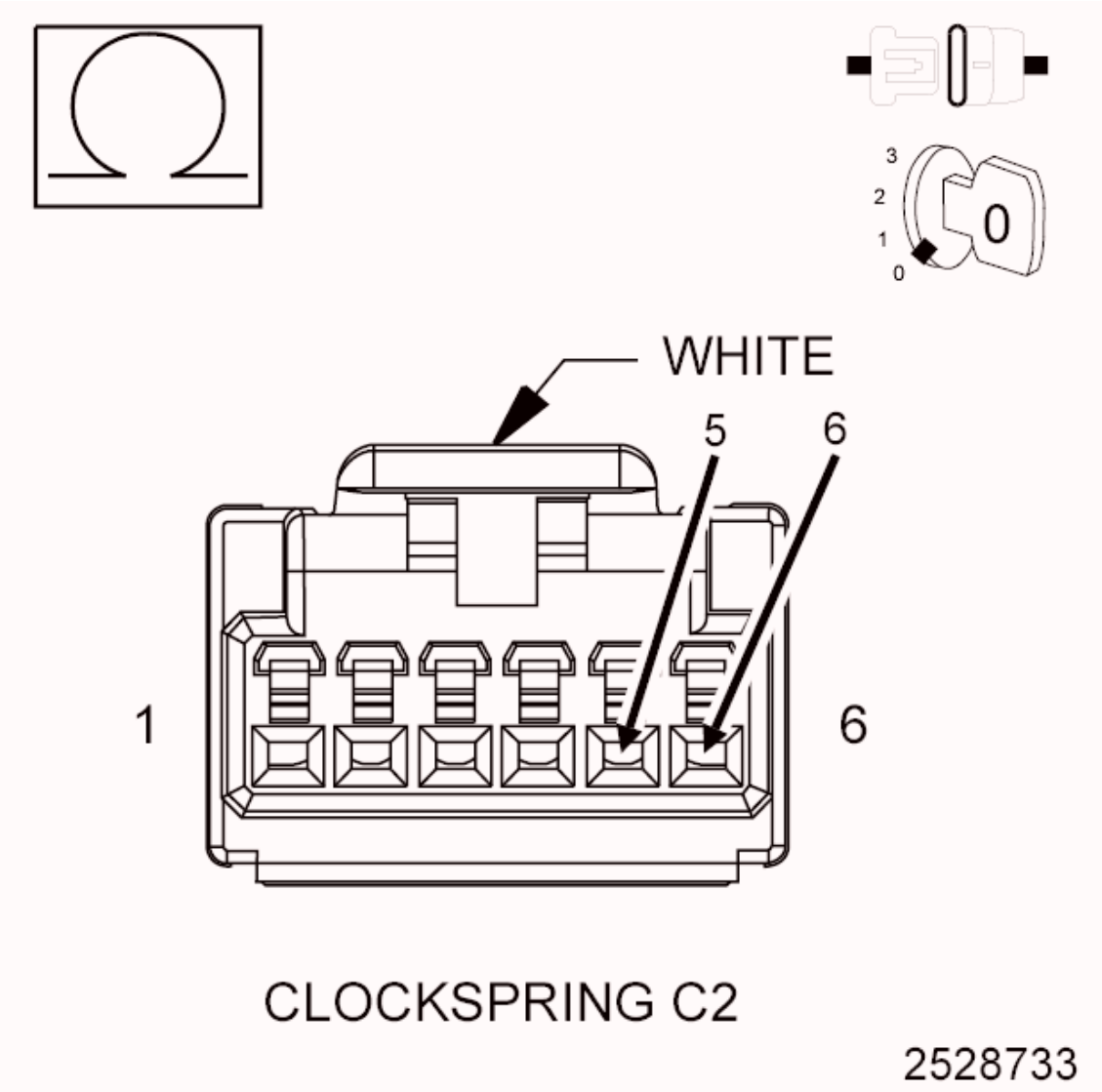

Fig. 80: Checking S/C Signal 1 Circuit For Short To S/C Switch Ground Circuit
Courtesy of CHRYSLER GROUP, LLC

1. Measure the resistance between the (V71) S/C Signal 1 circuit and the (V937) S/C Switch Ground circuit in the C2 Clockspring harness connector.

   Is the resistance above 10k Ohms?

Yes

- Go To 9

No

- Repair the (V71) S/C Signal 1 circuit for a short to the Clockspring circuit.
- Perform the POWERTRAIN VERIFICATION TEST. Refer to **POWERTRAIN VERIFICATION TEST** .

9. **(V72) S/C SIGNAL 2 CIRCUIT SHORTED TO THE (V937) S/C SWITCH GROUND CIRCUIT**

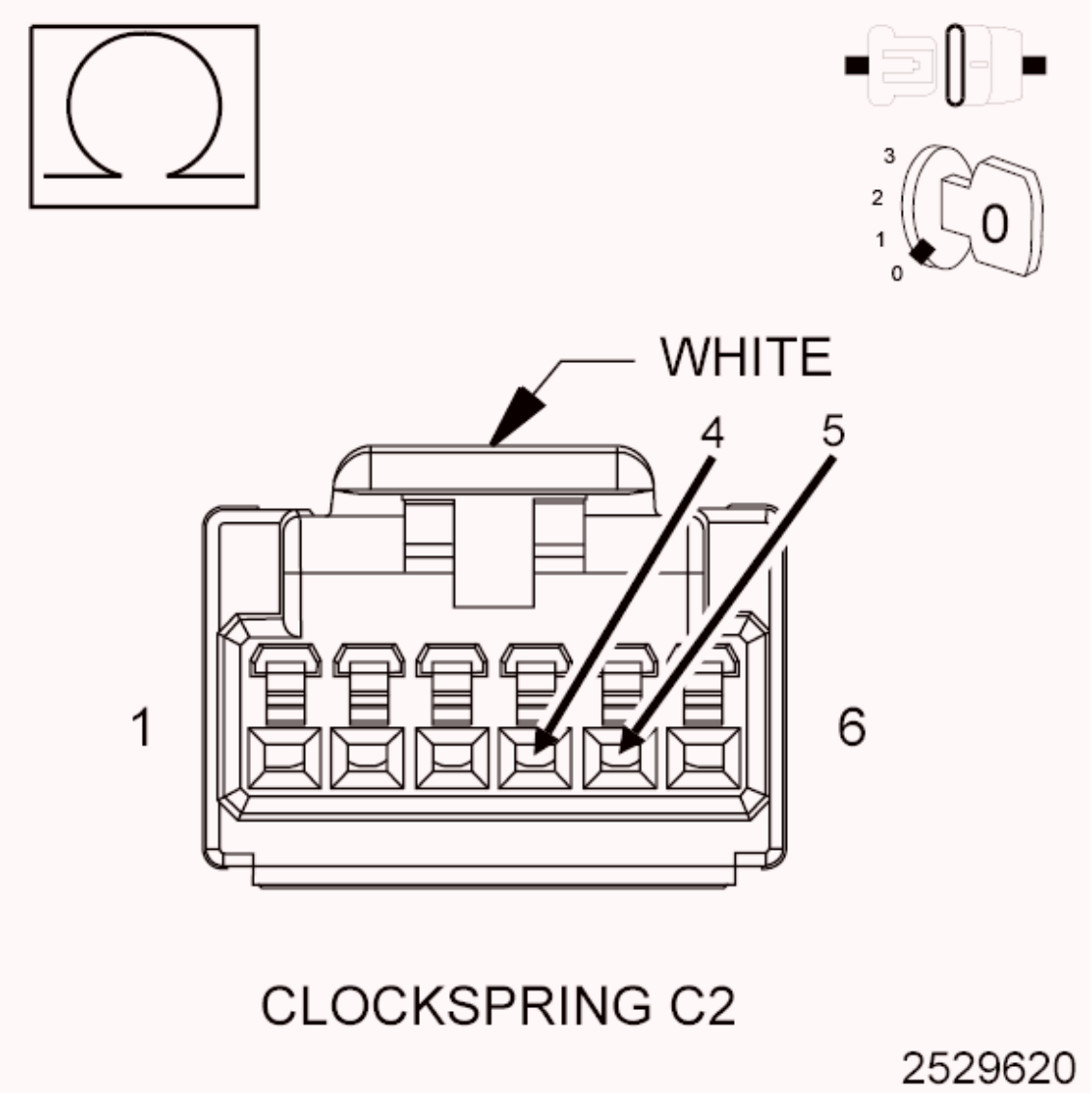

Fig. 81: Checking S/C Signal 2 Circuit For Short To S/C Switch Ground Circuit

Courtesy of CHRYSLER GROUP, LLC

1. Measure the resistance between the (V72) S/C Signal 2 circuit and the (V937) S/C Switch Ground circuit in the Clockspring C2 harness connector.

   Is the resistance above 10k Ohms?

   Yes

   - Go To 10

   No

   - Repair the (V72) S/C Signal 2 circuit for a short to the (V937) S/C Switch Ground circuit.
   - Perform the POWERTRAIN VERIFICATION TEST.

10. **(V71) S/C SIGNAL 1 CIRCUIT OPEN OR HIGH RESISTANCE**

CAUTION: Do not probe the PCM harness connectors. Probing the PCM harness connectors will damage the PCM terminals resulting in poor terminal to pin connection. Install the GPEC Diagnostic Adaptor to perform the diagnosis.

1. Connect the (special tool #10436, Adapter, GPEC Diagnostic).
2. Measure the resistance of the (V71) S/C Signal 1 circuit between the Clockspring C2 harness connector and the GPEC Adaptor.

   Is the resistance below 5.0 Ohms?

   Yes

   - Go To 11

   No

   - Repair the (V71) S/C Signal 1 circuit for an open or high resistance.
   - Perform the POWERTRAIN VERIFICATION TEST. Refer to

POWERTRAIN VERIFICATION TEST .

11. **(V72) S/C SIGNAL 2 CIRCUIT OPEN OR HIGH RESISTANCE**
    1. Measure the resistance of the (V72) S/C Signal 2 circuit between the Clockspring C2 harness connector and the GPEC Adaptor.

       Is the resistance below 5.0 Ohms?

       Yes

       - Go To 12

       No

       - Repair the (V72) S/C Signal 2 circuit for an open or high resistance.
       - Perform the POWERTRAIN VERIFICATION TEST. Refer to **POWERTRAIN VERIFICATION TEST** .
12. **(V937) S/C SWITCH GROUND CIRCUIT OPEN OR HIGH RESISTANCE**
    1. Measure the resistance of the (V937) S/C Switch Ground circuit between the Clockspring C2 harness connector and the GPEC Adaptor.

       Is the resistance below 5.0 Ohms?

       Yes

       - Go To 13

       No

       - Repair the (V937) S/C Switch Ground circuit for an open or high resistance.
       - Perform the POWERTRAIN VERIFICATION TEST. Refer to **POWERTRAIN VERIFICATION TEST** .
13. **POWERTRAIN CONTROL MODULE (PCM)**
    1. Using the wiring diagram/schematic as a guide, inspect the wiring and connectors between the Speed Control Switch and the Powertrain Control Module (PCM).
       - Look for any chafed, pierced, pinched or partially broken wires,

- Look for broken, bent, pushed out or corroded terminals.
- Perform any technical service bulletins that may apply.

Were any problems found?

Yes

- Repair as necessary.
- Perform the POWERTRAIN VERIFICATION TEST. Refer to **POWERTRAIN VERIFICATION TEST** .

No

- Replace and program the Powertrain Control Module (PCM) in accordance with the service information. Refer to **MODULE, POWERTRAIN CONTROL, REMOVAL** .
- Perform the POWERTRAIN VERIFICATION TEST. Refer to **POWERTRAIN VERIFICATION TEST** .

P1607-PCM INTERNAL SHUTDOWN TIMER SLOW RATIONALITY

For a complete wiring diagram, **refer to appropriate SYSTEM WIRING DIAGRAMS article** .

THEORY OF OPERATION

The Powertrain Control Module (PCM) compares actual shutdown time to a calculated shutdown time value. The calculated shut down time value is based on the amount of shutdown time necessary for the ECT to drop a specific amount after a completely warmed up engine is shut down. If the difference between actual shutdown time and the calculated shut down time is greater than a maximum value, a one trip failure will set. The shutdown time is measured again after 1 hour of ignition off time following the next engine warm up cycle. The PCM compares the shutdown time to a calculated value. If the difference is greater than a maximum value, the MIL is illuminated and a DTC will set.

WHEN MONITORED

The Powertrain Control Module (PCM) internal timer is continuously monitored.

SET CONDITION

Upon power up, the Powertrain Control Module (PCM) compares the change in engine coolant temp sensor since last engine shut down and compares it to the amount of time the engine was turned off. If not enough time has occurred to account for the difference in engine coolant temperature then the fault will set. Two Trip Fault. Three good trips to turn off the MIL.

POSSIBLE CAUSES

Possible Causes
PENDING TEMPERATURE SENSOR DTCS
STUCK ENGINE OFF TIMER
LOW OR NO BATTERY VOLTAGE AT PCM DIRECT BATTERY FEED CIRCUIT
FUSED IGNITION SWITCH OUTPUT (RUN-START) CIRCUIT OPEN OR HIGH RESISTANCE
FUSED B+ CIRCUIT OPEN OR HIGH RESISTANCE
POWERTRAIN CONTROL MODULE (PCM)

Always perform the Pre-Diagnostic Troubleshooting procedure before proceeding. Refer to PRE-DIAGNOSTIC TROUBLESHOOTING PROCEDURE .

DIAGNOSTIC TEST

1. **PENDING TEMPERATURE SENSOR DTCS**
    1. Turn the ignition on.
    2. Start the engine and allow it to reach operating temperature.
    3. With the scan tool, select View DTCs.

    Are there any pending Engine Coolant Temperature sensor, Ambient Air Temperature sensor, or general temperature DTCs?

    Yes

    - Diagnose and repair any temperature sensor DTCs and retest.
    - Perform the POWERTRAIN VERIFICATION TEST. Refer to **POWERTRAIN VERIFICATION TEST** .

    No

- Go To 2

2. **ACTIVE DTC**
   1. Turn the ignition on.
   2. With the scan tool, select View DTCs and review the DTC environmental information for this DTC.

      Is the good trip counter greater than 0?

      Yes

      - The DTC is not active at this time. Perform the INTERMITTENT CONDITION diagnostic procedure. Refer to **INTERMITTENT CONDITION** .

      No

      - Go To 3

3. **STUCK ENGINE OFF TIMER**
   1. Using the scan tool under the PCM Data menu, read and record the IGNITION OFF TIME.
   2. Start and allow the engine to idle.
   3. Turn key off and remove from ignition switch for exactly three minutes and 15 seconds.
   4. Turn key on but leave engine off.
   5. Using the scan tool read the IGNITION OFF TIME.

      Does the most recent IGNITION OFF TIME equal three minutes?

      Yes

      - Go To 5

      No

      - Go To 4

4. **IGNITION OFF TIME**
   1. Compare the IGNITION OFF TIME written down with the IGNITION OFF TIME after the 3 minute 15 second shutdown.

Did it change?

Yes

- Go To 5

No

- Go To 7

5. **LOW BATTERY VOLTAGE AT PCM**

NOTE: A loss of battery voltage to the module while the module is powered down is the most likely cause of this DTC.

1. Inspect all PCM power and ground circuits.
2. Inspect and test the battery in accordance with the service information.
3. Inspect the generator drive belt for proper alignment and adjustment.
4. Inspect the vehicle for aftermarket accessories that may exceed the generator system output.
5. Inspect the fuses in the IPM. If an open fuse is found, use the wire diagram/schematics as a guide and inspect the wiring and connectors for a damaged or shorted circuit.

Were any problems found?

Yes

- Repair as necessary.
- Perform the POWERTRAIN VERIFICATION TEST. Refer to **POWERTRAIN VERIFICATION TEST** .

No

- Go To 6

6. **CHECK THE FUSED B+ CIRCUIT FOR AN OPEN/HIGH RESISTANCE**

CAUTION: Do not probe the PCM harness connectors.

Probing the PCM harness connectors will damage the PCM terminals resulting in poor terminal to pin connection. Install the GPEC Diagnostic Adaptor to perform the diagnosis.

1. Connect the (special tool #10436, Adapter, GPEC Diagnostic).
2. With a 12-volt test light connected to ground, check the Fused B+ circuit at the GPEC Adaptor.
3. Check the circuit with the ignition switch in the OFF, ON, and START positions.

   NOTE: The test light should be illuminated and bright regardless of the position of the ignition switch. Compare the brightness to that of a direct connection to the battery.

4. Wiggle test the circuits while checking with the test light to check the circuit for an intermittent problem.

   Is the test light illuminated and bright in each of the ignition switch positions?

   Yes

   - Go To 8

   No

   - Repair the Fused B+ circuit as necessary.
   - Perform the POWERTRAIN VERIFICATION TEST. Refer to **POWERTRAIN VERIFICATION TEST** .

7. **RESET STUCK TIMER**
   1. Turn the ignition off.
   2. Disconnect the PCM harness connectors for five minutes.
   3. Reconnect the PCM harness connectors.
   4. Start and allow the vehicle to Idle for 30 seconds.
   5. Turn key off and remove from ignition switch for exactly two minutes and 15 seconds.

6. Ignition on, engine not running.
7. Using the scan tool go into PCM DATA menu, read the IGNITION OFF TIME.

   Did the timer equal two minutes?

   Yes

   - Test Complete.
   - Perform the POWERTRAIN VERIFICATION TEST. Refer to **POWERTRAIN VERIFICATION TEST** .

   No

   - Go To 8

8. **POWERTRAIN CONTROL MODULE (PCM)**
   1. Using the wiring diagram/schematic as a guide, inspect Powertrain Control Module power and ground circuits.
   2. Look for any chafed, pierced, pinched, or partially broken wires.
   3. Look for broken, bent, pushed out or corroded terminals.
   4. Monitor the scan tool data and wiggle test the wiring and connectors.
   5. Look for the any data to change or for the DTC to reset during the wiggle test.
   6. Perform any Technical Service Bulletins that may apply.

   Were any problems found?

   Yes

   - Repair as necessary.
   - Perform the POWERTRAIN VERIFICATION TEST. Refer to **POWERTRAIN VERIFICATION TEST** .

   No

   - Replace and program the Powertrain Control Module (PCM) in accordance with the service information. Refer to **MODULE, POWERTRAIN CONTROL, REMOVAL** .

- Perform the POWERTRAIN VERIFICATION TEST. Refer to **POWERTRAIN VERIFICATION TEST** .

P1618-SENSOR REFERENCE VOLTAGE 1 CIRCUIT ERRATIC

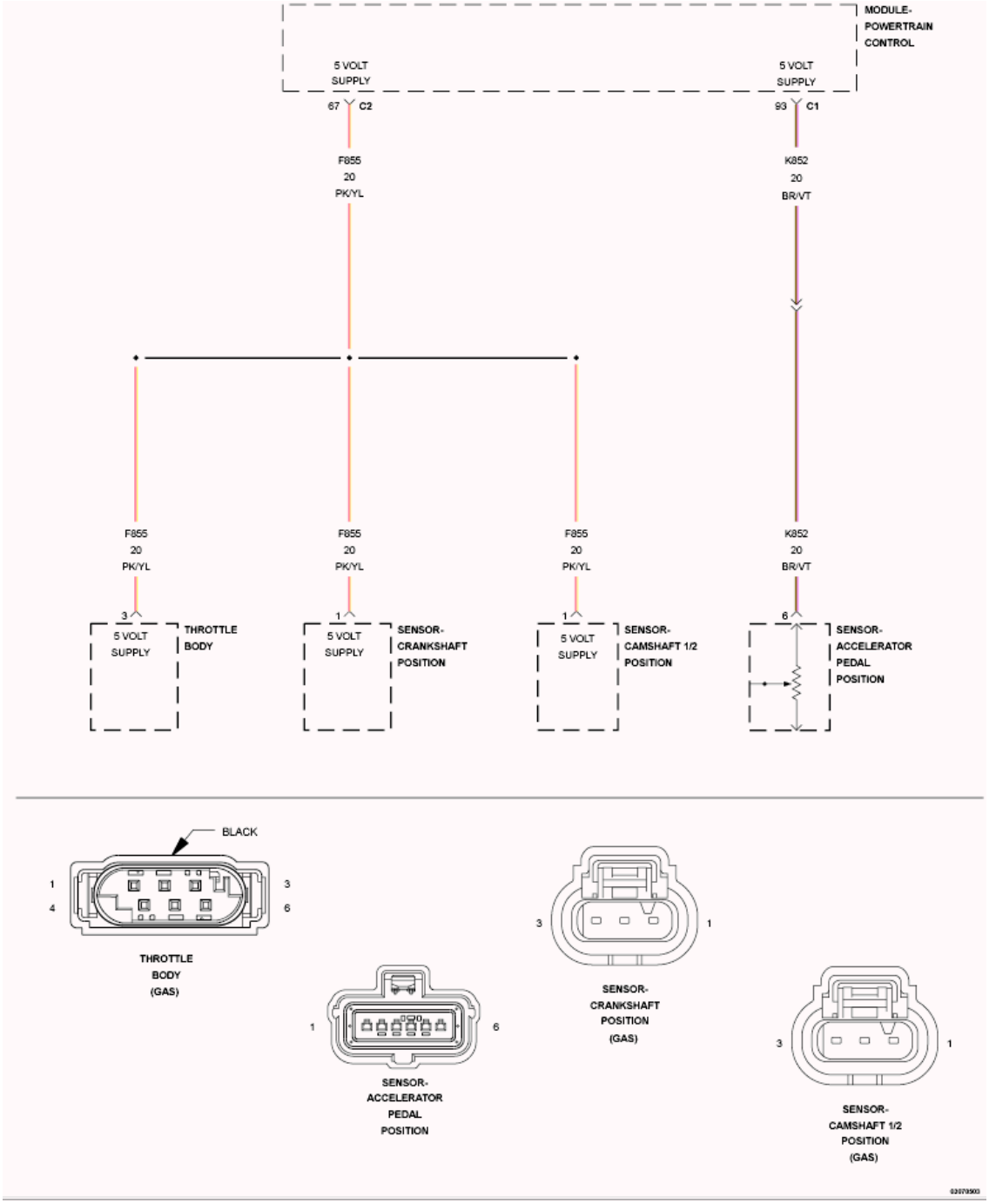

Fig. 82: Sensor Reference Circuit Diagram
Courtesy of CHRYSLER GROUP, LLC

For a complete wiring diagram, **refer to appropriate SYSTEM WIRING DIAGRAMS article** .

WHEN MONITORED

With the ignition on.

SET CONDITION

The Powertrain Control Module (PCM) detects an excessive voltage variation on the 5-Volt supply circuit.

POSSIBLE CAUSES

Possible Causes
5-VOLT SUPPLY CIRCUIT SHORTED TO VOLTAGE
5-VOLT SUPPLY CIRCUIT SHORTED TO GROUND
5-VOLT SUPPLY CIRCUIT OPEN OR HIGH RESISTANCE
ACCELERATOR PEDAL POSITION SENSOR
CAMSHAFT 2 POSITION SENSOR
THROTTLE POSITION SENSOR
CRANKSHAFT POSITION SENSOR
POWERTRAIN CONTROL MODULE (PCM)

Always perform the Pre-Diagnostic Troubleshooting procedure before proceeding. Refer to PRE-DIAGNOSTIC TROUBLESHOOTING PROCEDURE .

DIAGNOSTIC TEST

1. **ACTIVE DTC**
    1. Start the engine and allow it to reach normal operating temperature.

        WARNING: **When the engine is operating, do not stand in direct line with the fan. Do not put your hands near the pulleys, belts or fan. Do not wear loose clothing. Failure to follow these instructions may result in possible serious or fatal injury.**

    2. With the scan tool, select View DTCs.

        Is the status Active for this DTC?

Yes

- Go To 2

No

- Perform the INTERMITTENT CONDITION diagnostic procedure. Refer to **INTERMITTENT CONDITION** .

2. **CHECK THE (F855) 5-VOLT SUPPLY CIRCUIT VOLTAGE**

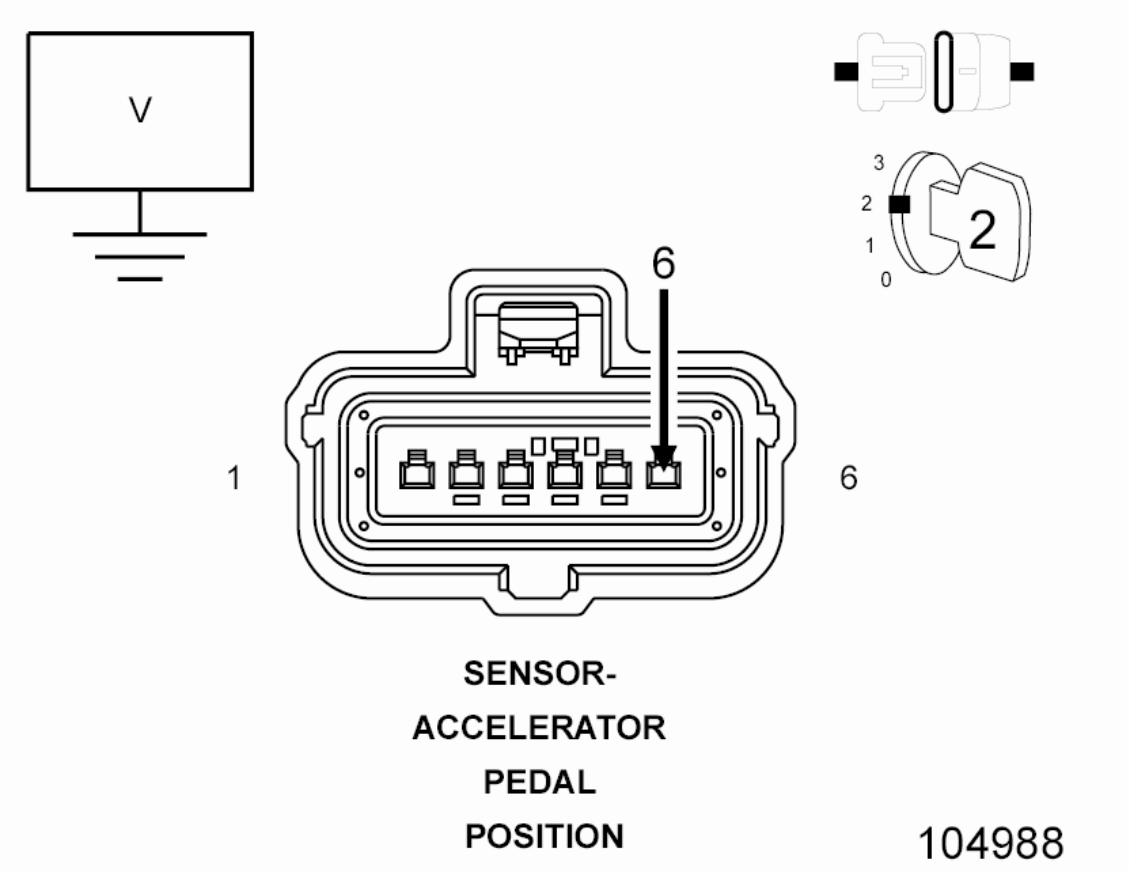

Fig. 83: Checking 5-Volt Supply Circuit Voltage
Courtesy of CHRYSLER GROUP, LLC

1. Turn the ignition off.
2. Disconnect the APP Sensor harness connector.
3. Turn the ignition on.
4. Measure the voltage of the (F855) 5-Volt Supply circuit.

Select the appropriate response from the list below:

Voltage more than 5.2 Volts

- Repair the (F855) 5-Volt Supply circuit for a short to voltage.
- Perform the POWERTRAIN VERIFICATION TEST. Refer to **POWERTRAIN VERIFICATION TEST** .

Voltage between 4.8 and 5.2 volts

- Go To 3

Voltage below 4.8 volts

- Go To 4

3. **ACCELERATOR PEDAL POSITION SENSOR**

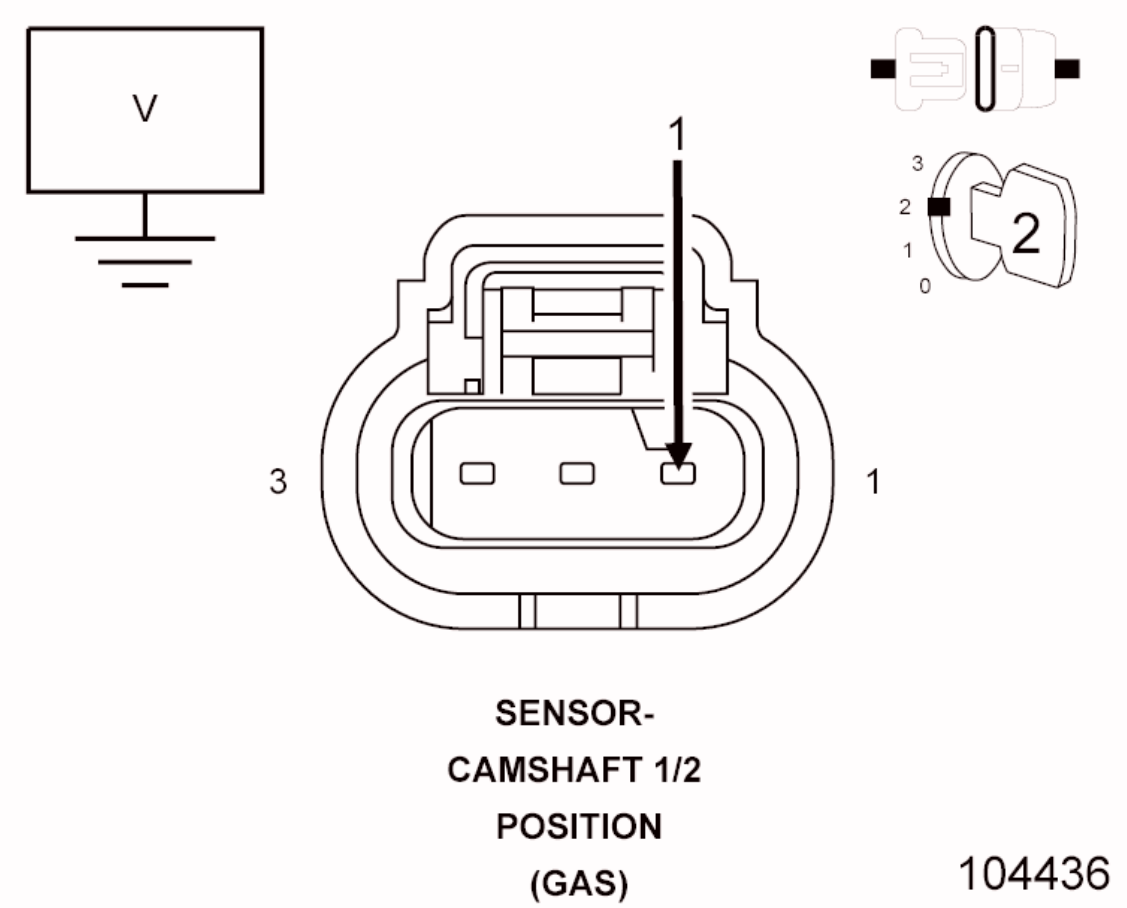

Fig. 84: Checking Camshaft 1/2 Position Sensor 5-Volt Supply Circuit
Courtesy of CHRYSLER GROUP, LLC

1. Turn the ignition off.
2. Reconnect the APP Sensor harness connector.

3. Disconnect the Camshaft 1/2 Position Sensor harness connector.
4. Turn the ignition on.
5. Measure the voltage of the (F855) 5-Volt Supply circuit in the Camshaft 1/2 Position Sensor harness connector.

   Is the voltage below 4.8 Volts?

   Yes

   - Replace the Accelerator Pedal Position Sensor in accordance with the service information.
   - Perform the POWERTRAIN VERIFICATION TEST. Refer to **POWERTRAIN VERIFICATION TEST** .

   No

   - Go To 9

4. **CAMSHAFT 1/2 POSITION SENSOR**

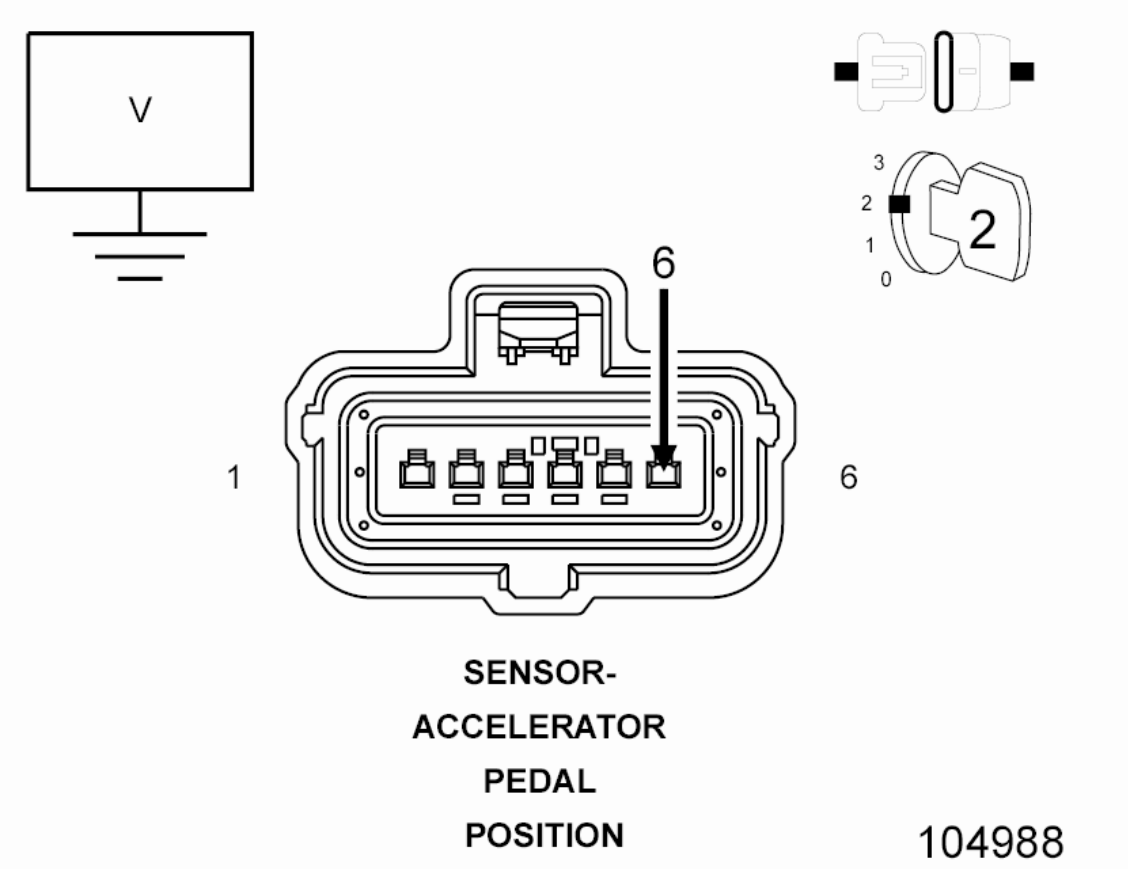

Fig. 85: Checking 5-Volt Supply Circuit Voltage

Courtesy of CHRYSLER GROUP, LLC

1. Turn the ignition off.
2. Disconnect the Camshaft 1/2 Position Sensor harness connector.
3. Turn the ignition on.
4. Measure the voltage of the (F855) 5-Volt Supply circuit in the APP Sensor harness connector.

   Is the voltage above 4.8 volts?

   Yes

   - Replace the Camshaft 1/2 Position Sensor in accordance with the service information.
   - Perform the POWERTRAIN VERIFICATION TEST. Refer to **POWERTRAIN VERIFICATION TEST** .

   No

   - Go To 5

5. **THROTTLE POSITION SENSOR**

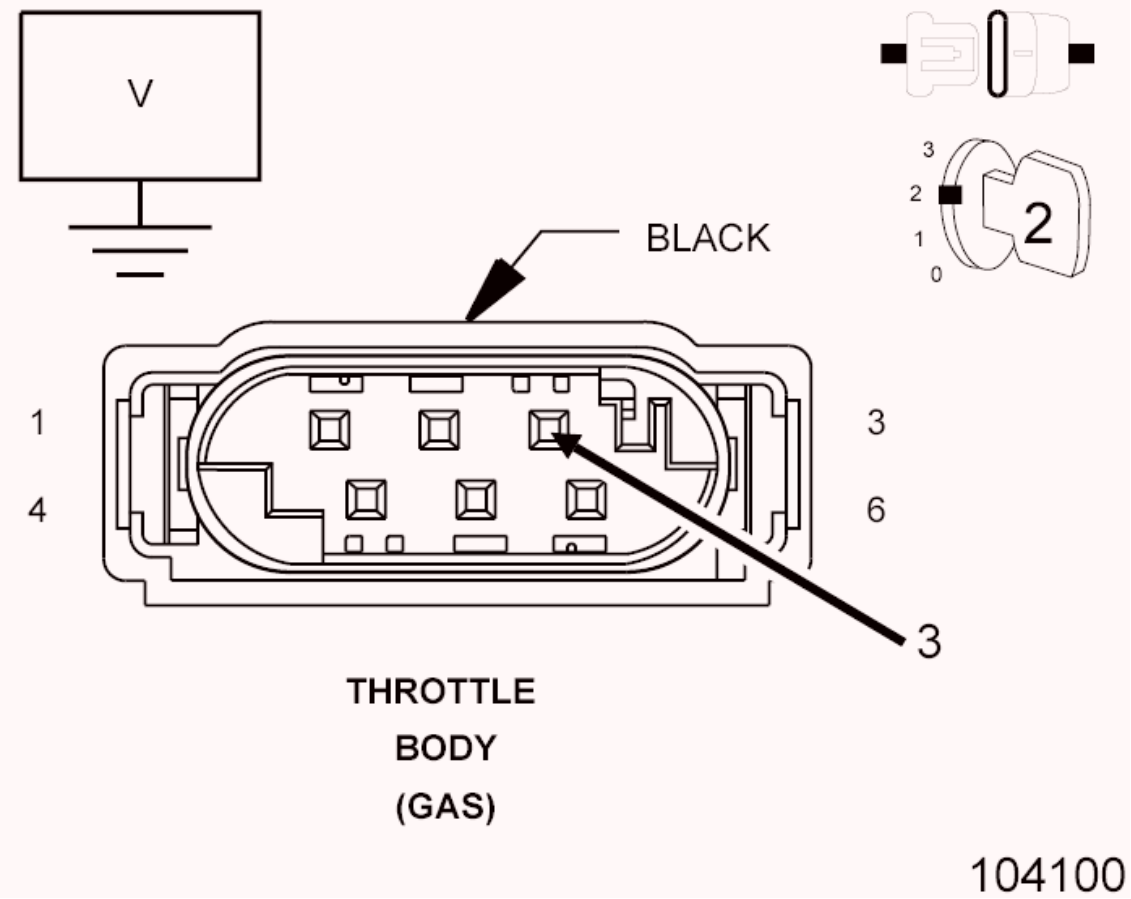

Fig. 86: Checking 5-Volt Supply Circuit
Courtesy of CHRYSLER GROUP, LLC

1. Turn the ignition off.
2. Disconnect the Throttle Body harness connector.
3. Turn the ignition on.
4. Measure the voltage of the (F855) 5 Volt Supply circuit.

   Is the voltage above 4.8 volts?

   Yes

   - Replace the Throttle Body in accordance with the service information.
   - Perform the POWERTRAIN VERIFICATION TEST. Refer to **POWERTRAIN VERIFICATION TEST** .

   No

   - Go To 6

6. CRANKSHAFT POSITION SENSOR

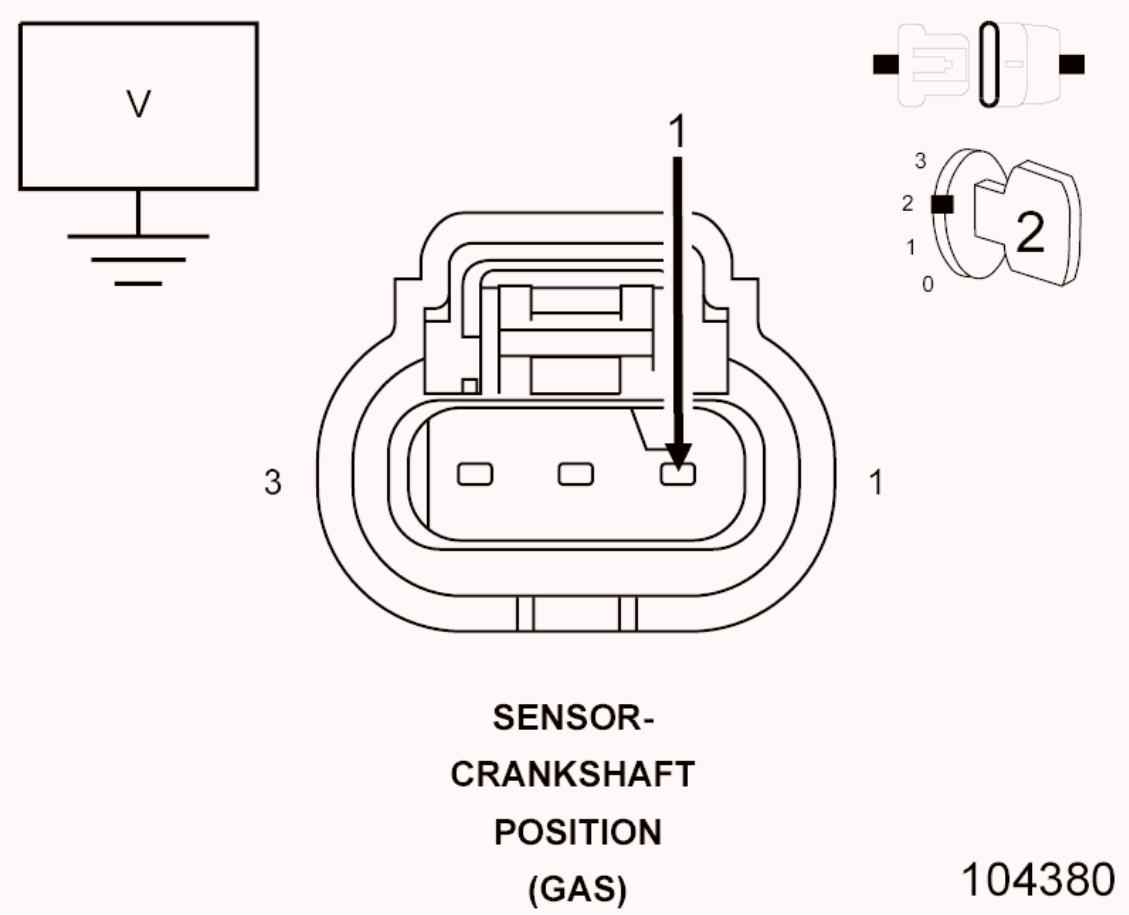

Fig. 87: Checking 5-Volt Supply Circuit
Courtesy of CHRYSLER GROUP, LLC

1. Turn the ignition off.
2. Disconnect the Crankshaft Position Sensor harness connector.
3. Turn the ignition on.
4. Measure the voltage of the (F855) 5-Volt Supply circuit.

   Is the voltage above 4.8 volts?

   Yes

   - Replace the Crankshaft Position Sensor in accordance with the service information.
   - Perform the POWERTRAIN VERIFICATION TEST. Refer to **POWERTRAIN VERIFICATION TEST** .

No

- Go To 7

7. **CHECK THE 5-VOLT SUPPLY CIRCUIT FOR A SHORT TO GROUND**

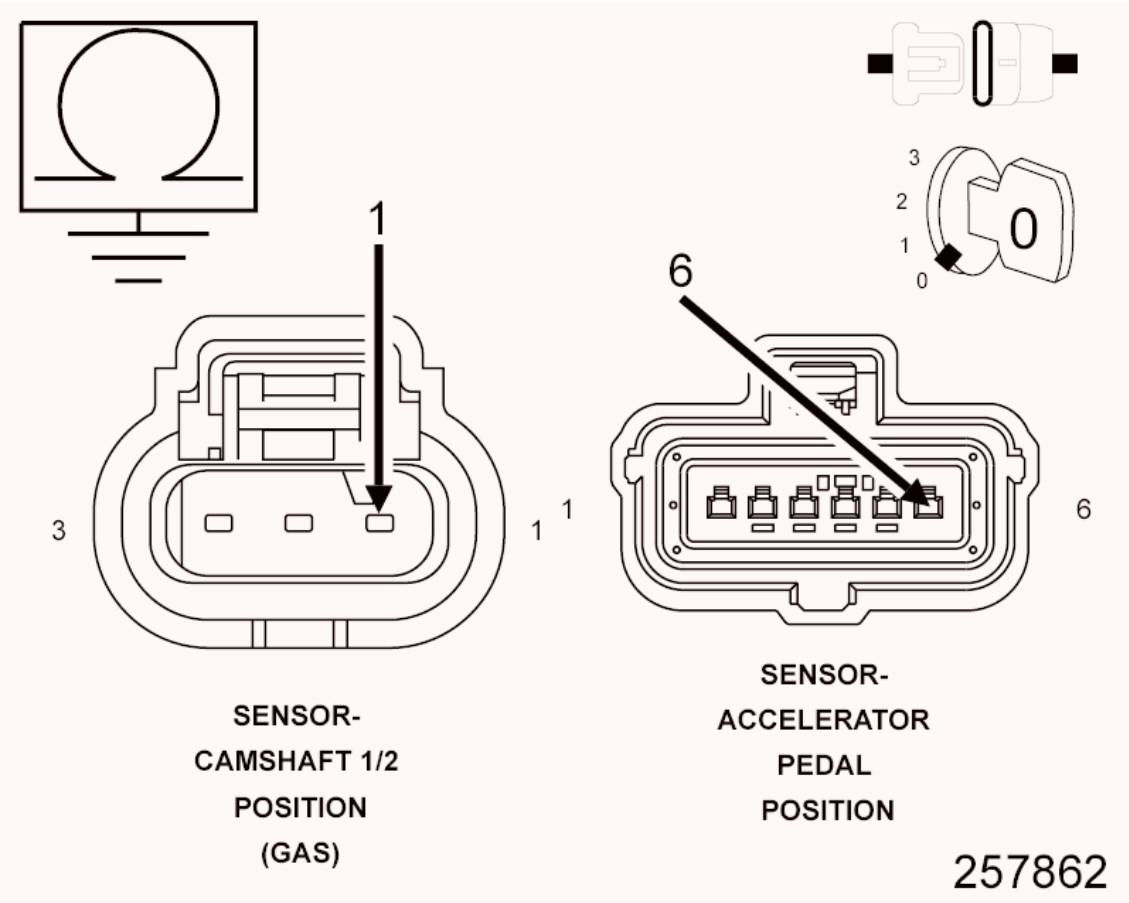

Fig. 88: Checking 5-Volt Supply Circuit For Short To Ground
Courtesy of CHRYSLER GROUP, LLC

NOTE: All sensors connected to the (F855) 5-Volt supply circuit and the (F855) 5-Volt supply circuit must be disconnected.

1. Turn the ignition off.
2. Disconnect the PCM harness connectors.
3. Measure the resistance between ground and the (F855) 5-Volt Supply circuit.
4. Measure the resistance between ground and the (K852) 5-Volt Supply circuit.

Is the resistance above 10k Ohms for both circuits?

Yes

- Go To 8

No

- Repair the 5-Volt Supply circuit for a short to ground.
- Perform the POWERTRAIN VERIFICATION TEST. Refer to **POWERTRAIN VERIFICATION TEST** .

8. **CHECK THE 5-VOLT SUPPLY CIRCUIT FOR AN OPEN/HIGH RESISTANCE**

NOTE: All sensors connected to the (F855) 5-Volt supply circuit and the (K852) 5-Volt supply circuit must be disconnected.

1. Turn the ignition off.

CAUTION: Do not probe the PCM harness connectors. Probing the PCM harness connectors will damage the PCM terminals resulting in poor terminal to pin connection. Install the GPEC Diagnostic Adaptor to perform the diagnosis.

2. Connect the (special tool #10436, Adapter, GPEC Diagnostic).
3. Measure the resistance of the (F855) 5-Volt Supply circuit between the Camshaft 1/2 Position Sensor harness connector and the GPEC Adaptor.
4. Measure the resistance of the (F855) 5-Volt Supply circuit between the Crankshaft Position Sensor harness connector and the GPEC Adaptor.
5. Measure the resistance of the (F855) 5-Volt Supply circuit between the Throttle Body harness connector and the GPEC Adaptor.
6. Measure the resistance of the (K852) 5-Volt Supply circuit between the Accelerator Pedal Position Sensor harness connector and the GPEC Adaptor.

7. If the vehicle is equipped with a manual transmission, measure the resistance of the (K856) 5-Volt Supply circuit between the Vehicle Speed Sensor harness connector and the GPEC Adaptor.

   Is the resistance below 5.0 Ohms for all of the circuits?

   Yes

   - Go To 9

   No

   - Repair the 5-Volt Supply circuit for an open or high resistance.
   - Perform the POWERTRAIN VERIFICATION TEST. Refer to **POWERTRAIN VERIFICATION TEST** .

9. **POWERTRAIN CONTROL MODULE (PCM)**
   1. Inspect the (F855) 5-Volt Supply circuit between the Camshaft 1/2 Position Sensor harness connector and the PCM harness connector.
   2. Inspect the (F855) 5-Volt Supply circuit between the Crankshaft Position Sensor harness connector and the PCM harness connector.
   3. Inspect the (F855) 5-Volt Supply circuit between the Throttle Body harness connector and the PCM harness connector.
   4. Inspect the (K852) 5-Volt Supply circuit between the Accelerator Pedal Position Sensor harness connector and the PCM harness connector.
   5. If the vehicle is equipped with a manual transmission, inspect the (F856) 5-Volt Supply circuit between the Vehicle Speed Sensor harness connector and the PCM harness connector.
   6. Inspect all PCM power and ground circuits.
   7. Look for any chafed, pierced, pinched, or partially broken wires.
   8. Look for broken, bent, pushed out or corroded terminals.
   9. Perform any Technical Service Bulletins that may apply.

   Were any problems found?

   Yes

   - Repair as necessary.

- Perform the POWERTRAIN VERIFICATION TEST. Refer to **POWERTRAIN VERIFICATION TEST** .

No

- Replace and program the Powertrain Control Module (PCM) in accordance with the service information. Refer to **MODULE, POWERTRAIN CONTROL, REMOVAL** .
- Perform the POWERTRAIN VERIFICATION TEST. Refer to **POWERTRAIN VERIFICATION TEST** .

P1621-O2 SENSOR REFERENCE VOLTAGE CIRCUIT LOW

For a complete wiring diagram, **refer to appropriate SYSTEM WIRING DIAGRAMS article** .

WHEN MONITORED

Continuously after 15 seconds of engine runtime, no O2 Sensor Heater DTCs present and battery voltage greater than 10.4 volts.

SET CONDITION

The Oxygen Sensor reference voltage is below 0.9 volts for 60 seconds. The DTC will set as Pending after one trip and Active after two trips. Three good trips to turn off the MIL.

POSSIBLE CAUSES

Possible Causes
O2 SENSOR RETURN CIRCUIT SHORTED TO GROUND
O2 SENSOR
POWERTRAIN CONTROL MODULE (PCM)

Always perform the Pre-Diagnostic Troubleshooting procedure before proceeding. Refer to PRE-DIAGNOSTIC TROUBLESHOOTING PROCEDURE .

DIAGNOSTIC TEST

1. **ACTIVE DTC**

NOTE: The most likely cause of this DTC is a short to ground in one of the O2 Sensor Return circuits.

1. Turn the ignition on, engine not running.
2. With the scan tool select the Data tab and monitor all of the O2 Sensor voltage readings.

   NOTE: Do not use the O2 Volts (0-1) data.

3. Start the engine and allow it to idle long enough for the O2 Sensors to enter closed loop operation (approximately two minutes).

   NOTE: The O2 Sensor voltages should be switching between approximately 2.5 - 3.5 volts with the engine idling. If an O2 Sensor or reference circuit is shorted low, the voltage readings will be less than one volt.

   Are all of the O2 Sensor voltage readings approximately 2.5 - 3.5 volts?

   Yes

   - Perform the INTERMITTENT CONDITION diagnostic procedure. Refer to **INTERMITTENT CONDITION** .

   No

   - Go To 2

2. **CHECK FOR A SHORTED O2 SENSOR**

   WARNING: When the engine is operating, do not stand in direct line with the fan. Do not put your hands near the pulleys, belts or fan. Do not wear loose clothing. Failure to follow these instructions may result in possible serious or fatal injury.

1. Disconnect one of the O2 Sensor harness connectors.
2. With the scan tool, monitor the voltage readings of the O2 Sensors that

are still connected. Reconnect the O2 Sensor connector and repeat this step for each of the O2 Sensors on the vehicle.

NOTE: If the fault is caused by an O2 Sensor that is internally shorted, the other sensors should change from below one volt to switching between 2.5 - 3.5 volts with the faulty sensor disconnected.

Did the voltages change to approximately 2.5 - 3.5 volts for the O2 Sensors STILL CONNECTED when disconnecting any one of the sensors?

Yes

- Verify that there is good pin to terminal contact in the O2 Sensor connector. Replace the faulty O2 Sensor if no problems were found with the connections. Refer to **SENSOR, OXYGEN, REMOVAL** .
- Perform the POWERTRAIN VERIFICATION TEST. Refer to **POWERTRAIN VERIFICATION TEST** .

No

- Go To 3

3. **CHECK THE (K902) O2 SENSOR RETURN CIRCUIT FOR A SHORT TO GROUND**
   1. Turn the ignition off.
   2. Disconnect the PCM C2 harness connector.
   3. Disconnect the O2 Sensor 1/1 harness connector.
   4. Disconnect the O2 Sensor 2/1 harness connector.
   5. Measure the resistance between ground and the (K902) O2 Sensor Return circuit at the O2 Sensor 1/1 or 2/1 harness connector.

   Is the resistance above 10k Ohms?

   Yes

- Go To 4

No

- Repair the (K902) O2 Sensor Return circuit for a short to ground.
- Perform the POWERTRAIN VERIFICATION TEST. Refer to **POWERTRAIN VERIFICATION TEST** .

4. **CHECK THE (K904) O2 SENSOR RETURN CIRCUIT FOR A SHORT TO GROUND**
   1. Disconnect the O2 Sensor 1/2 harness connector.
   2. Disconnect the O2 Sensor 2/2 harness connector.
   3. Measure the resistance between ground and the (K904) O2 Sensor Return circuit at the O2 Sensor 1/2 or 2/2 harness connector.

   Is the resistance above 10k Ohms?

   Yes

   - Go To 5

   No

   - Repair the (K904) O2 Sensor Return circuit for a short to ground.
   - Perform the POWERTRAIN VERIFICATION TEST. Refer to **POWERTRAIN VERIFICATION TEST** .

5. **POWERTRAIN CONTROL MODULE (PCM)**
   1. Using the wiring diagram/schematic as a guide, inspect the wiring and connectors between the Oxygen Sensors and the Powertrain Control Module (PCM).
   2. Look for any chafed, pierced, pinched or partially broken wires.
   3. Look for broken, bent, pushed out or corroded terminals. Verify that there is good pin to terminal contact in the Oxygen Sensors and Control Module connectors.
   4. Perform any Technical Service Bulletins that may apply.

   Were there any problems found?

   Yes

- Repair as necessary.
- Perform the POWERTRAIN VERIFICATION TEST. Refer to **POWERTRAIN VERIFICATION TEST** .

No

- Replace and program the Powertrain Control Module in accordance with the service information. Refer to **MODULE, POWERTRAIN CONTROL, REMOVAL** .
- Perform the POWERTRAIN VERIFICATION TEST. Refer to **POWERTRAIN VERIFICATION TEST** .

P1622-O2 SENSOR REFERENCE VOLTAGE CIRCUIT HIGH

For a complete wiring diagram, **refer to appropriate SYSTEM WIRING DIAGRAMS article** .

WHEN MONITORED

Engine running for 15 seconds, O2 Sensors at operating temperature and battery voltage greater 10.4 volts.

SET CONDITION

The PCM detects that the Reference Signal voltage is greater than 3.7 volts for nine seconds.

POSSIBLE CAUSES

Possible Causes
O2 SENSOR RETURN CIRCUIT SHORTED TO VOLTAGE
O2 SENSOR RETURN CIRCUIT OPEN OR HIGH RESISTANCE
OXYGEN SENSOR
POWERTRAIN CONTROL MODULE (PCM)

Always perform the Pre-Diagnostic Troubleshooting procedure before proceeding. Refer to PRE-DIAGNOSTIC TROUBLESHOOTING PROCEDURE .

DIAGNOSTIC TEST

1. **ACTIVE DTC**
   1. Ignition on, engine not running.
   2. With the scan tool, select View DTCs. Copy DTC and Freeze Frame information.
   3. Start the engine.

      WARNING: **When the engine is operating, do not stand in direct line with the fan. Do not put your hands near the pulleys, belts or fan. Do not wear loose clothing. Failure to follow these instructions may result in possible serious or fatal injury.**

   4. Allow the engine to reach normal operating temperature.
   5. Monitor the scan tool for at least two minutes.
   6. With the scan tool, select View DTCs.

      Is the status Active for this DTC?

      Yes

      - Go To 2

      No

      - Perform the INTERMITTENT CONDITION diagnostic procedure. Refer to **INTERMITTENT CONDITION** .

2. **CHECK THE (K902) O2 SENSOR RETURN CIRCUIT FOR A SHORT TO VOLTAGE**
   1. Turn the ignition off.
   2. Disconnect the PCM C2 harness connector.
   3. Disconnect the O2 Sensor 1/1 harness connector.
   4. Disconnect the O2 Sensor 2/1 harness connector.
   5. Turn the ignition on.
   6. Measure the voltage of the (K902) O2 Sensor Return circuit at the O2 Sensor 1/1 or 2/1 harness connector.

Is there any voltage present?

Yes

- Repair the (K902) O2 Sensor Signal circuit for a short to voltage.
- Perform the POWERTRAIN VERIFICATION TEST. Refer to **POWERTRAIN VERIFICATION TEST** .

No

- Go To 3

3. **CHECK THE (K904) O2 SENSOR RETURN CIRCUIT FOR A SHORT TO VOLTAGE**
   1. Turn the ignition off.
   2. Disconnect the O2 Sensor 1/2 harness connector.
   3. Disconnect the O2 Sensor 2/2 harness connector.
   4. Turn the ignition on.
   5. Measure the voltage of the (K904) O2 Sensor Return circuit at the O2 Sensor 1/2 or 2/2 harness connector.

   Is there any voltage present?

   Yes

   - Repair the (K904) O2 Sensor Signal circuit for a short to voltage.
   - Perform the POWERTRAIN VERIFICATION TEST. Refer to **POWERTRAIN VERIFICATION TEST** .

   No

   - Go To 4

4. **CHECK THE (K902) O2 SENSOR SIGNAL CIRCUIT FOR AN OPEN/HIGH RESISTANCE**
   1. Turn the ignition off.

CAUTION: Do not probe the PCM harness connectors. Probing the PCM harness connectors will damage the PCM terminals resulting in

poor terminal to pin connection. Install the GPEC Diagnostic Adaptor to perform the diagnosis.

2. Connect the (special tool #10436, Adapter, GPEC Diagnostic) to the PCM C2 harness connector.
3. Measure the resistance of the (K902) O2 Sensor Return circuit between the O2 Sensor 1/1 and 2/1 harness connector and the GPEC Adaptor.

   Is the resistance below 5.0 Ohms?

   Yes

   - Go To 5

   No

   - Repair the (K902) 02 Sensor 1/1 or 2/1 Return circuit for an open or high resistance.
   - Perform the POWERTRAIN VERIFICATION TEST. Refer to **POWERTRAIN VERIFICATION TEST** .

5. **CHECK THE (K904) O2 SENSOR SIGNAL CIRCUIT FOR AN OPEN/HIGH RESISTANCE**
   1. Measure the resistance of the (K904) O2 Sensor Return circuit between the O2 Sensor 1/2 and 2/2 harness connector and the GPEC Adaptor.

      Is the resistance below 5.0 Ohms?

      Yes

      - Go To 6

      No

      - Repair the (K904) 02 Sensor 1/2 or 2/2 Signal circuit for an open or high resistance.
      - Perform the POWERTRAIN VERIFICATION TEST. Refer to **POWERTRAIN VERIFICATION TEST** .

6. **O2 SENSOR**

1. Reconnect the PCM C2 harness connector.
2. Ignition on, engine not running.
3. With the scan tool, monitor the O2 Sensor 1/1 voltage.
4. Connect a jumper between the O2 Sensor 1/1 Signal circuit and the O2 Sensor Return circuit at the O2 Sensor 1/1 harness connector.
5. Perform this same procedure for all of the O2 Sensors.

   Is the voltage reading between 2.3 and 2.7 volts on the scan tool with the jumper installed for each O2 Sensor?

   Yes

   - Verify that there is good pin to terminal contact in the O2 Sensors and Powertrain Control Module connectors. Replace the O2 Sensor not indicating the specified voltage if no problems were found with the connections. Refer to **SENSOR, OXYGEN, REMOVAL** .
   - Perform the POWERTRAIN VERIFICATION TEST. Refer to **POWERTRAIN VERIFICATION TEST** .

   No

   - Go To 7

   NOTE: Remove the jumper before continuing.

7. **POWERTRAIN CONTROL MODULE**
   1. Using the wiring diagram/schematic as a guide, inspect the wiring and connectors between the Oxygen Sensors and the PCM.
   2. Look for any chafed, pierced, pinched or partially broken wires.
   3. Look for broken, bent, pushed out or corroded terminals.
   4. Monitor the scan tool data relative to this circuit and wiggle test the wiring and connectors.
   5. Look for the data to change or for the DTC to reset during the wiggle test.
   6. Perform any Technical Service Bulletins that may apply.

   Were any problems found?

Yes

- Repair as necessary.
- Perform the POWERTRAIN VERIFICATION TEST. Refer to **POWERTRAIN VERIFICATION TEST** .

No

- Replace the Powertrain Control Module in accordance with the service information. Refer to **MODULE, POWERTRAIN CONTROL, REMOVAL** .
- Perform the POWERTRAIN VERIFICATION TEST. Refer to **POWERTRAIN VERIFICATION TEST** .

P1628-SENSOR REFERENCE VOLTAGE CIRCUIT ERRATIC

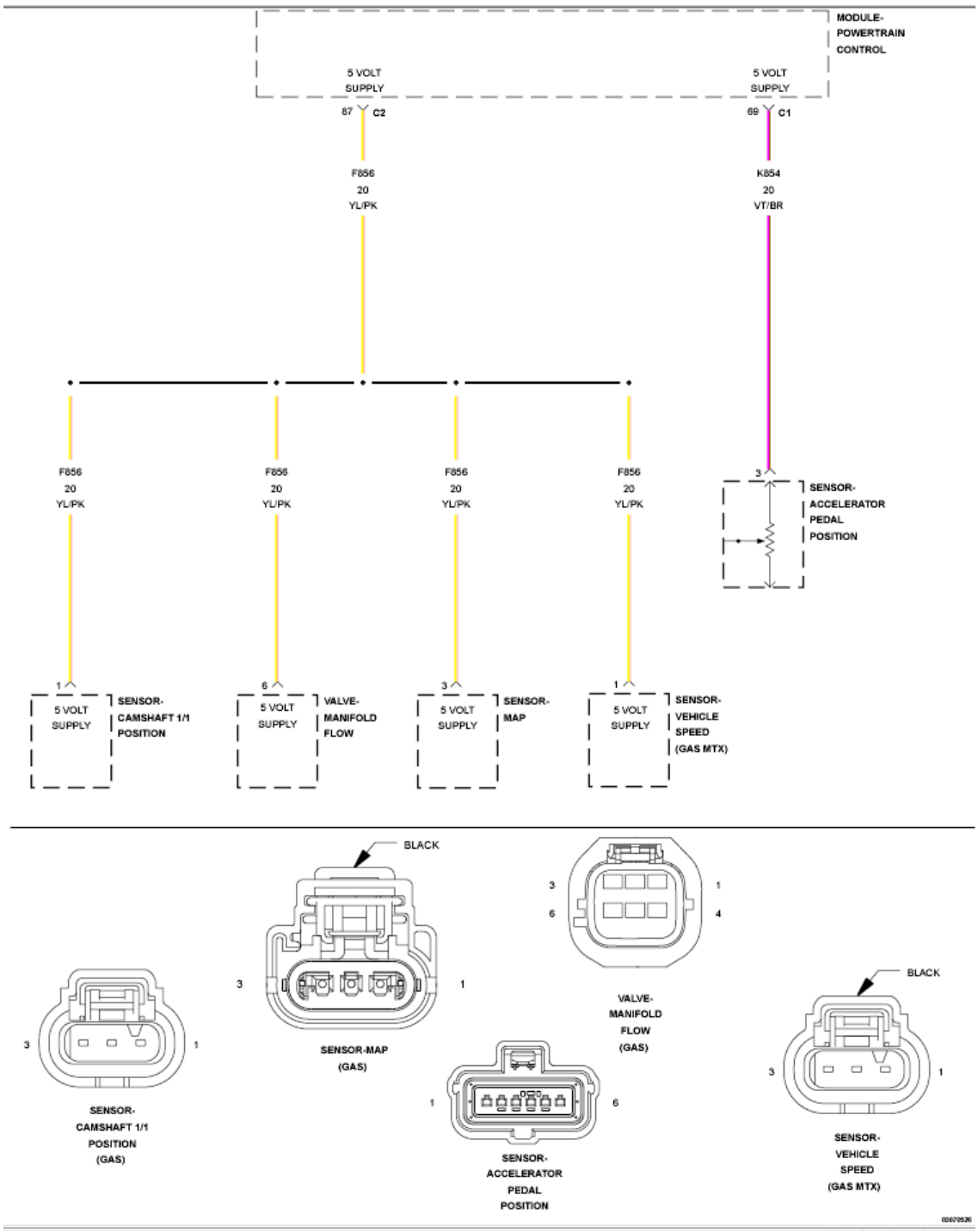

Fig. 89: Sensor Reference Circuit Diagram
Courtesy of CHRYSLER GROUP, LLC

For a complete wiring diagram, **refer to appropriate SYSTEM WIRING DIAGRAMS article** .

WHEN MONITORED

With the ignition on.

SET CONDITION

The Powertrain Control Module (PCM) detects an excessive voltage variation on the 5-Volt supply circuit.

POSSIBLE CAUSES

Possible Causes
5-VOLT SUPPLY CIRCUIT SHORTED TO VOLTAGE
5-VOLT SUPPLY CIRCUIT SHORTED TO GROUND
5-VOLT SUPPLY CIRCUIT OPEN OR HIGH RESISTANCE
ACCELERATOR PEDAL POSITION SENSOR
CAMSHAFT 1/1 POSITION SENSOR
MAP SENSOR
MANIFOLD FLOW VALVE
VEHICLE SPEED SENSOR (MTX ONLY)
POWERTRAIN CONTROL MODULE (PCM)

Always perform the Pre-Diagnostic Troubleshooting procedure before proceeding. Refer to PRE-DIAGNOSTIC TROUBLESHOOTING PROCEDURE .

DIAGNOSTIC TEST

1. **ACTIVE DTC**
   1. Start the engine and allow it to reach normal operating temperature.

      WARNING: **When the engine is operating, do not stand in direct line with the fan. Do not put your hands near the pulleys, belts or fan. Do not wear loose clothing. Failure to follow these instructions may result in possible serious or fatal injury.**

   2. With the scan tool, select View DTCs.

      Is the status Active for this DTC?

      Yes

- Go To 2

No

- Perform the INTERMITTENT CONDITION diagnostic procedure. Refer to **INTERMITTENT CONDITION** .

2. **CHECK THE (F856) 5-VOLT SUPPLY CIRCUIT VOLTAGE**

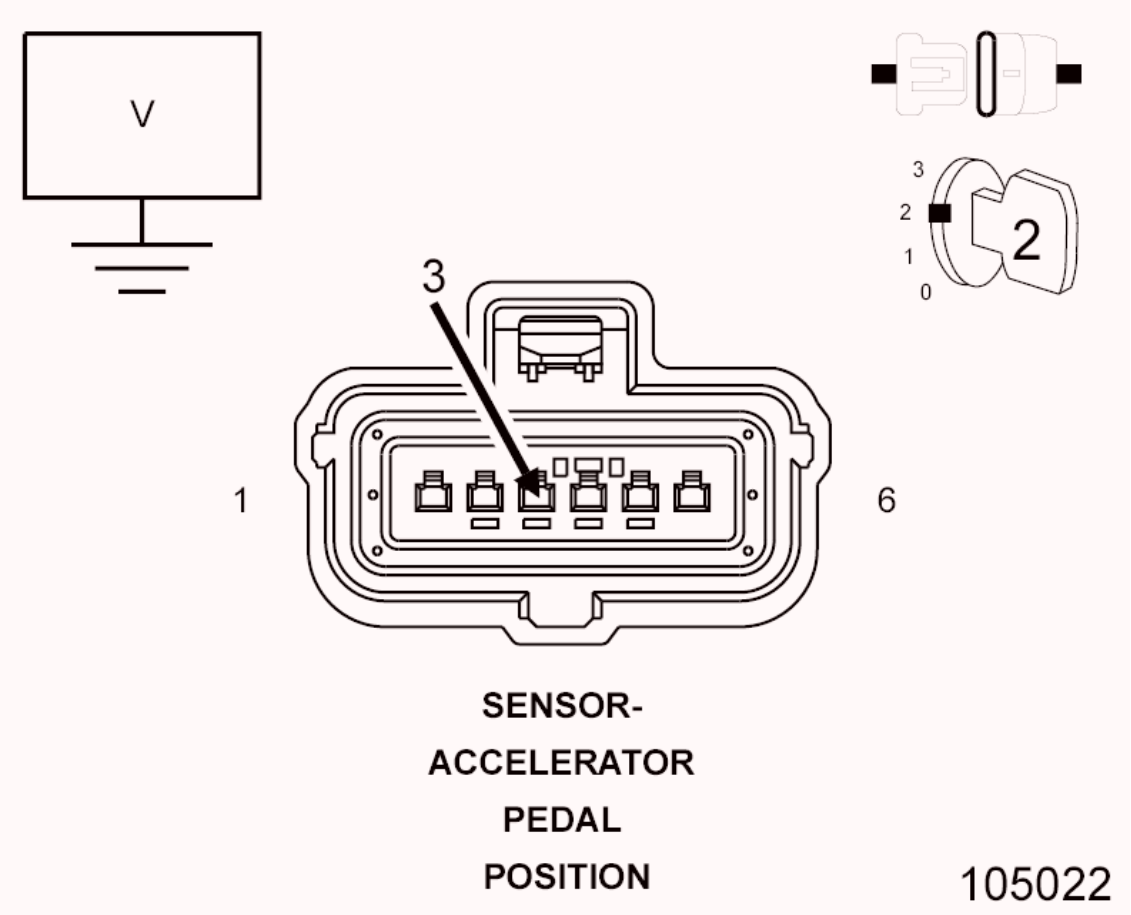

Fig. 90: Checking 5-Volt Supply Circuit
Courtesy of CHRYSLER GROUP, LLC

1. Turn the ignition off.
2. Disconnect the APP Sensor harness connector.
3. Turn the ignition on.
4. Measure the voltage of the (K854) 5-Volt Supply circuit in the APP Sensor harness connector.

   Select the appropriate response from the list below:

Voltage above 5.2 volts

- Repair the 5-Volt Supply circuit for a short to voltage.
- Perform the POWERTRAIN VERIFICATION TEST. Refer to **POWERTRAIN VERIFICATION TEST** .

Voltage between 4.8 and 5.2 volts

- Go To 3

Voltage below 4.8 volts

- Go To 4

3. **ACCELERATOR PEDAL POSITION SENSOR**

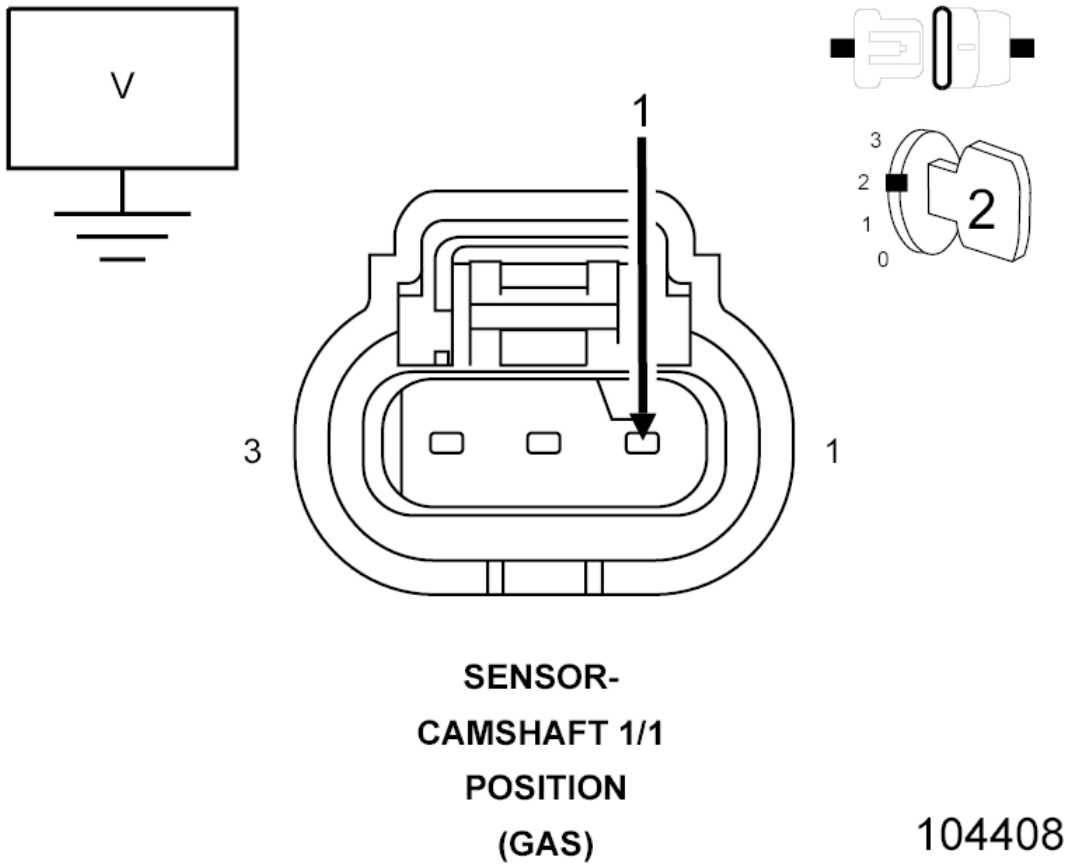

Fig. 91: Checking 5-Volt Supply Circuit
Courtesy of CHRYSLER GROUP, LLC

1. Turn the ignition off.
2. Reconnect the APP Sensor harness connector.

3. Disconnect the Camshaft 1/1 Position Sensor harness connector.
4. Turn the ignition on.
5. Measure the voltage of the (F856) 5-Volt Supply circuit in the Camshaft 1/1 Position Sensor harness connector.

   Is the voltage below 4.8 volts?

   Yes

   - Replace the Accelerator Pedal Position Sensor in accordance with the service information.
   - Perform the POWERTRAIN VERIFICATION TEST. Refer to **POWERTRAIN VERIFICATION TEST** .

   No

   - Go To 11

4. **CAMSHAFT 1/1 POSITION SENSOR**

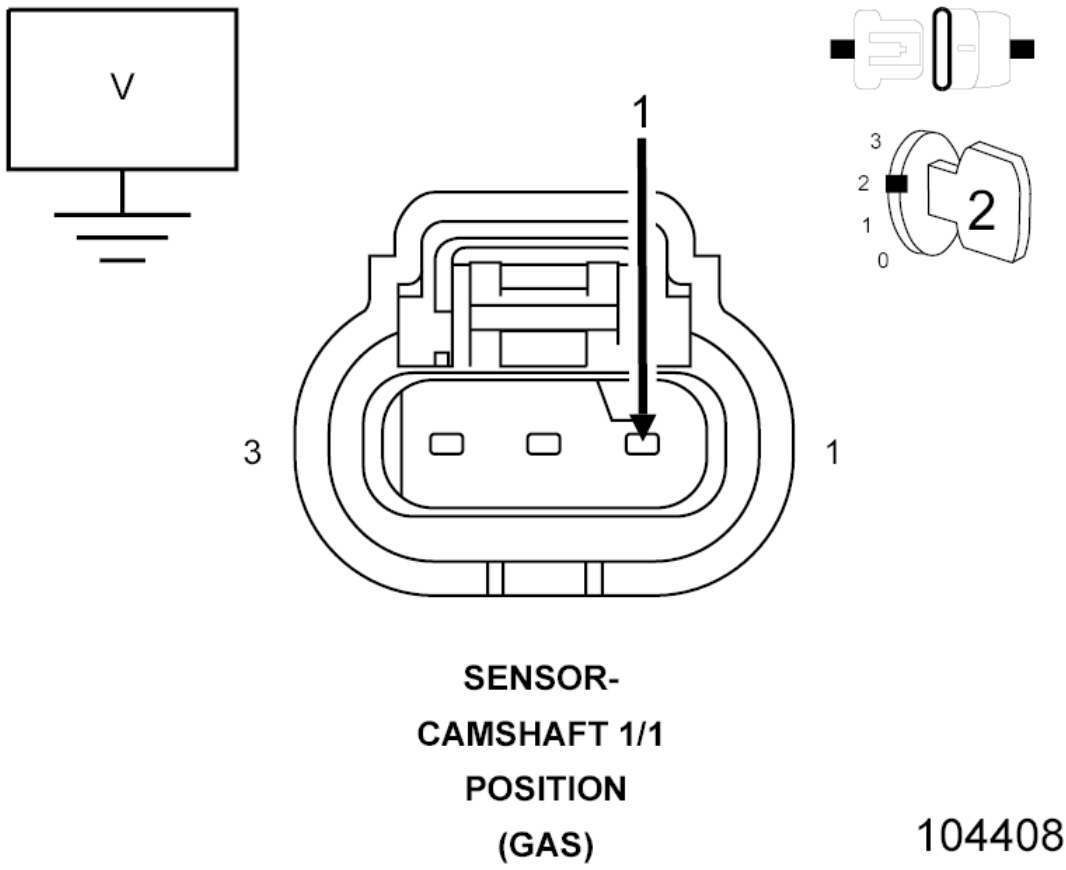

Fig. 92: Checking 5-Volt Supply Circuit

Courtesy of CHRYSLER GROUP, LLC

1. Turn the ignition off.
2. Disconnect the Camshaft 1/1 Position Sensor harness connector.
3. Turn the ignition on.
4. Measure the voltage of the (F856) 5-Volt Supply circuit at the Camshaft 1/1 Position Sensor harness connector.

   Is the voltage above 4.8 volts?

   Yes

   - Replace the Camshaft 1/1 Position Sensor in accordance with the service information.
   - Perform the POWERTRAIN VERIFICATION TEST. Refer to **POWERTRAIN VERIFICATION TEST** .

   No

   - Go To 5

5. **MAP SENSOR**

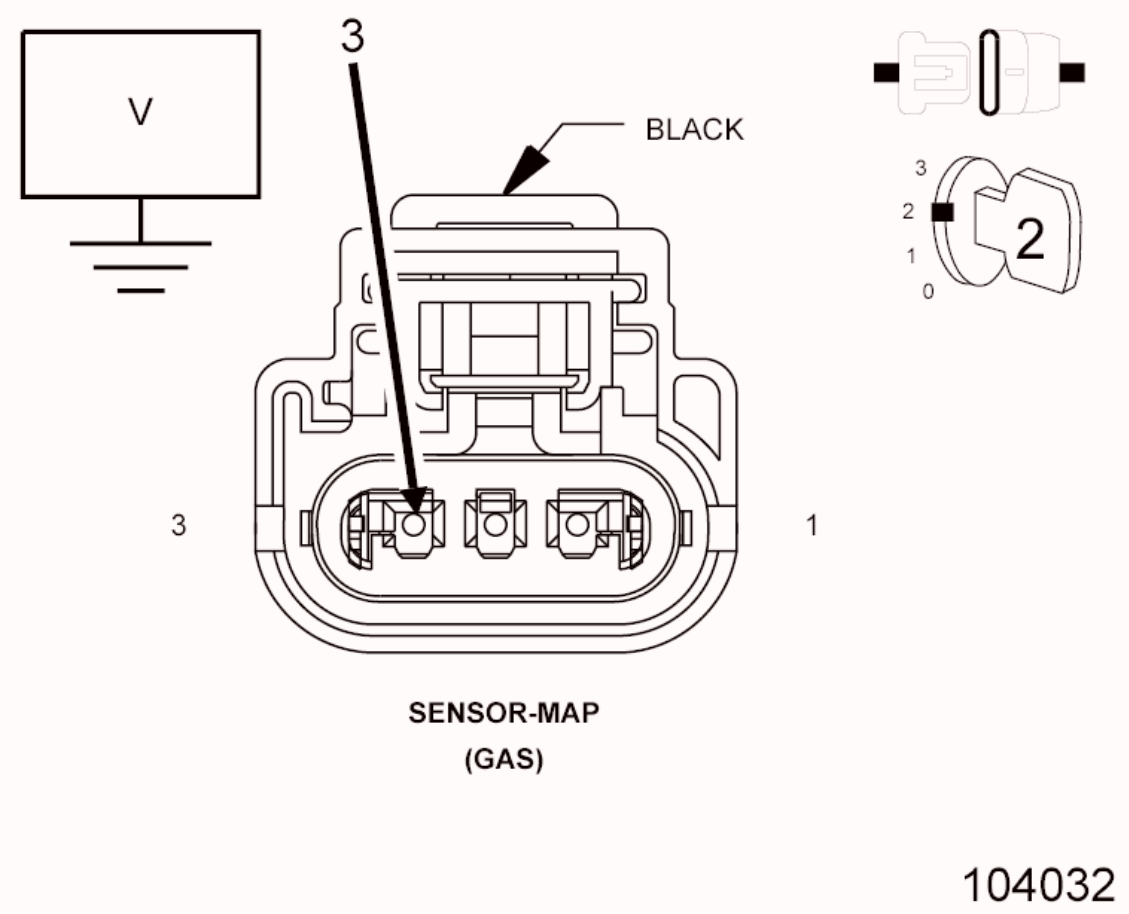

Fig. 93: Checking 5-Volt Supply Circuit
Courtesy of CHRYSLER GROUP, LLC

1. Turn the ignition off.
2. Disconnect the MAP Sensor harness connector.
3. Turn the ignition on.
4. Measure the voltage of the (F856) 5-Volt Supply circuit at the MAP Sensor harness connector.

   Is the voltage above 4.8 volts?

   Yes

   - Replace the MAP Sensor in accordance with the service information.
   - Perform the POWERTRAIN VERIFICATION TEST. Refer to **POWERTRAIN VERIFICATION TEST** .

   No

- Go To 6

6. **MANIFOLD FLOW VALVE**

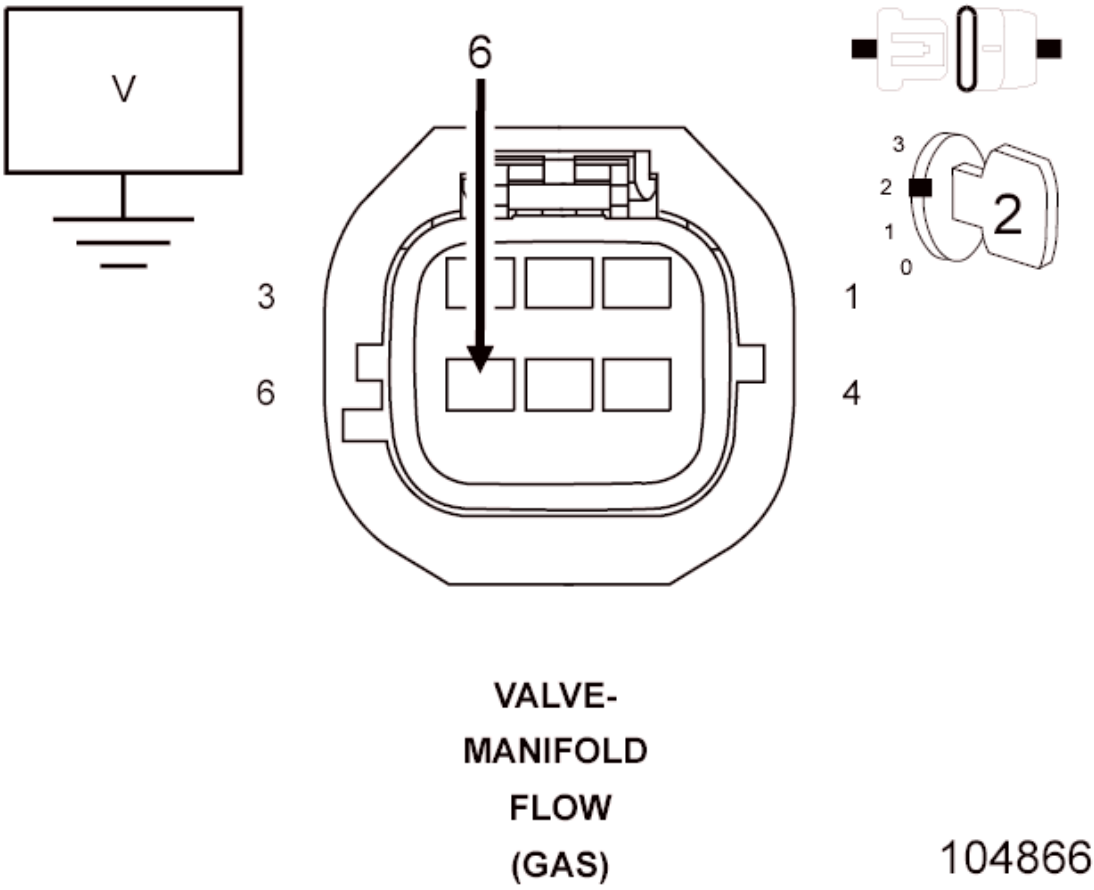

Fig. 94: Checking 5-Volt Supply Circuit
Courtesy of CHRYSLER GROUP, LLC

1. Turn the ignition off.
2. Disconnect the Manifold Flow Valve harness connector.
3. Turn the ignition on.
4. Measure the voltage of the (F856) 5-Volt Supply circuit at the Manifold Flow Valve harness connector.

   Is the voltage above 4.8 volts?

   Yes

   - Replace the Manifold Flow Valve in accordance with the service information.
   - Perform the POWERTRAIN VERIFICATION TEST. Refer to

POWERTRAIN VERIFICATION TEST .

No

- Go To 7

7. **VEHICLE EQUIPPED WITH MANUAL TRANSMISSION**

NOTE: Only vehicles equipped with a manual transmission use a Vehicle Speed Sensor.

Is the vehicle equipped with a manual transmission?

Yes

- Go To 8

No

- Go To 9

8. **VEHICLE SPEED SENSOR**

NOTE: Only vehicles equipped with a manual transmission use a Vehicle Speed Sensor.

1. Turn the ignition off.
2. Disconnect the Vehicle Speed Sensor harness connector.
3. Turn the ignition on.
4. Measure the voltage of the (F856) 5-Volt Supply circuit.

Is the voltage above 4.8 volts?

Yes

- Replace the Vehicle Speed Sensor in accordance with the service information.
- Perform the POWERTRAIN VERIFICATION TEST. Refer to **POWERTRAIN VERIFICATION TEST** .

No

- Go To 9

9. **CHECK THE 5-VOLT SUPPLY CIRCUIT FOR A SHORT TO GROUND**

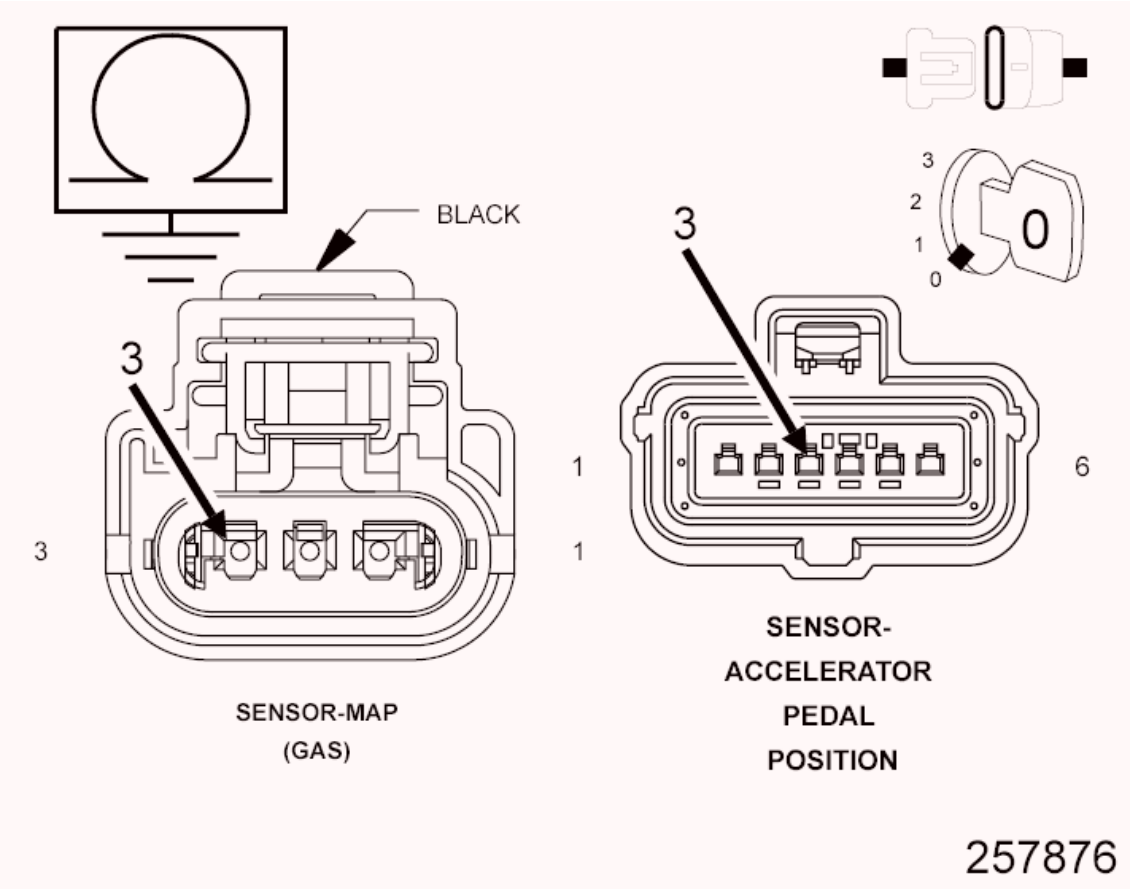

Fig. 95: Checking 5-Volt Supply Circuit For Short To Ground
Courtesy of CHRYSLER GROUP, LLC

NOTE: All sensors connected to the (F856) 5-Volt supply circuit and the (F856) 5-Volt supply circuit must be disconnected.

1. Turn the ignition off.
2. Disconnect the PCM harness connectors.
3. Measure the resistance between ground and the (F856) 5-Volt Supply circuit.
4. Measure the resistance between ground and the (F856) 5-Volt Supply circuit.

   Is the resistance above 10k Ohms for both circuits?

Yes

- Go To 10

No

- Repair the 5-Volt Supply circuit for a short to ground.
- Perform the POWERTRAIN VERIFICATION TEST. Refer to **POWERTRAIN VERIFICATION TEST** .

10. **CHECK THE 5-VOLT SUPPLY CIRCUIT FOR AN OPEN/HIGH RESISTANCE**

NOTE: All sensors connected to the (F856) 5-Volt supply circuit and the (F856) 5-Volt supply circuit must be disconnected.

1. Turn the ignition off.

CAUTION: Do not probe the PCM harness connectors. Probing the PCM harness connectors will damage the PCM terminals resulting in poor terminal to pin connection. Install the GPEC Diagnostic Adaptor to perform the diagnosis.

2. Connect the (special tool #10436, Adapter, GPEC Diagnostic).
3. Measure the resistance of the (F856) 5-Volt Supply circuit between the Camshaft 1/1 Position Sensor harness connector and the GPEC Adaptor.
4. Measure the resistance of the (F856) 5-Volt Supply circuit between the MAP Sensor harness connector and the GPEC Adaptor.
5. Measure the resistance of the (F856) 5-Volt Supply circuit between the Manifold Flow Valve harness connector and the GPEC Adaptor.
6. Measure the resistance of the (F856) 5-Volt Supply circuit between the Accelerator Pedal Position Sensor harness connector and the GPEC Adaptor.
7. If the vehicle is equipped with a manual transmission, inspect the (F856) 5-Volt Supply circuit between the Vehicle Speed Sensor harness

connector and the GPEC Adaptor.

Is the resistance below 5.0 Ohms for all of the circuits?

Yes

- Go To 11

No

- Repair the 5-Volt Supply circuit that measured above 5.0 Ohms for an open or high resistance.
- Perform the POWERTRAIN VERIFICATION TEST. Refer to **POWERTRAIN VERIFICATION TEST** .

11. **POWERTRAIN CONTROL MODULE (PCM)**
    1. Inspect the (F856) 5-Volt Supply circuit between the Camshaft 1/1 Position Sensor harness connector and the PCM harness connector.
    2. Inspect the (F856) 5-Volt Supply circuit between the MAP Sensor harness connector and the PCM harness connector.
    3. Inspect the (F856) 5-Volt Supply circuit between the Manifold Flow Valve harness connector and the PCM harness connector.
    4. Inspect the (F856) 5-Volt Supply circuit between the Accelerator Pedal Position Sensor harness connector and the PCM harness connector.
    5. Inspect all PCM power and ground circuits.
    6. Look for any chafed, pierced, pinched, or partially broken wires.
    7. Look for broken, bent, pushed out or corroded terminals.
    8. Peform any Technical Service Bulletins that may apply.

    Were any problems found?

    Yes

    - Repair as necessary.
    - Perform the POWERTRAIN VERIFICATION TEST. Refer to **POWERTRAIN VERIFICATION TEST** .

    No

- Replace and program the Powertrain Control Module (PCM) in accordance with the service information. Refer to **MODULE, POWERTRAIN CONTROL, REMOVAL** .
- Perform the POWERTRAIN VERIFICATION TEST. Refer to **POWERTRAIN VERIFICATION TEST** .

P1696-EEPROM MEMORY WRITE DENIED/INVALID

For a complete wiring diagram, **refer to appropriate SYSTEM WIRING DIAGRAMS article** .

WHEN MONITORED

Continuously with the ignition on.

SET CONDITION

An attempt to program/write to the internal EEPROM failed. Also checks at power down. One Trip Fault. Three good trips to turn off the MIL.

POSSIBLE CAUSES

POSSIBLE CAUSES
PCM

Always perform the Pre-Diagnostic Troubleshooting procedure before proceeding. Refer to PRE-DIAGNOSTIC TROUBLESHOOTING PROCEDURE .

DIAGNOSTIC TEST

1. **SCAN TOOL DISPLAYS A WRITE FAILURE**
    1. With a scan tool, perform the SRI Memory Test.

       Does scan tool display Write Failure?

       Yes

       - Replace and program the Powertrain Control Module in accordance with the Service Information. Refer to **MODULE, POWERTRAIN CONTROL, REMOVAL** .
       - Perform the POWERTRAIN VERIFICATION TEST. Refer to

POWERTRAIN VERIFICATION TEST .

No

- Go To 2

2. **SCAN TOOL DISPLAYS A WRITE REFUSED**
   1. With the a scan tool, perform the SRI Memory Test.

      Does the scan tool display Write Refused?

      Yes

      - Go To 3

      No

      - Go To 4

3. **PCM REFUSED 2ND TEST**
   1. With a scan tool, perform the SRI Memory Test a third time.

      NOTE: Retest the SRI Memory two more times.

      Does the scan tool display Write Refused again?

      Yes

      - Replace and program the Powertrain Control Module in accordance with the Service Information. Refer to **MODULE, POWERTRAIN CONTROL, REMOVAL** .
      - Perform the POWERTRAIN VERIFICATION TEST. Refer to **POWERTRAIN VERIFICATION TEST** .

      No

      - Test Complete.

4. **SCAN TOOL DISPLAYS SRI MILEAGE INVALID**
   1. With a scan tool, perform the SRI Memory Test.

      Does the scan tool display SRI Mileage Invalid?

Yes

- Update the mileage and retest the SRI Memory.
- Perform the POWERTRAIN VERIFICATION TEST. Refer to **POWERTRAIN VERIFICATION TEST** .

No

- Go To 5

5. **COMPARE SRI MILEAGE WITH ODOMETER**
   1. Compare the SRI Mileage stored with the Instrument Panel Odometer.

      Is the mileage within the specified range displayed on the scan tool?

      Yes

      - Test Complete.

      No

      - Update the mileage and retest the SRI Memory.
      - Perform the POWERTRAIN VERIFICATION TEST. Refer to **POWERTRAIN VERIFICATION TEST** .

P1697-EMR (SRI) MILEAGE NOT STORED

For a complete wiring diagram, **refer to appropriate SYSTEM WIRING DIAGRAMS article** .

WHEN MONITORED

Ignition on and battery voltage greater than 10 volts.

SET CONDITION

The SRI Mileage has not been programmed into the PCM.

POSSIBLE CAUSES

POSSIBLE CAUSES
SRI MILEAGE NOT PROGRAMMED INTO THE PCM POWERTRAIN CONTROL MODULE (PCM)

Always perform the Pre-Diagnostic Troubleshooting procedure before proceeding. Refer to PRE-DIAGNOSTIC TROUBLESHOOTING PROCEDURE .

DIAGNOSTIC TEST

SRI MILEAGE NOT PROGRAMMED INTO THE PCM

1. Ignition on, engine not running.
2. With the scan tool, attempt to program the SRI mileage into the PCM.
3. With the scan tool, clear DTCs in the PCM.
4. Start the engine.
5. Allow the engine to reach normal operating temperature.
6. With a scan tool, select View DTCs.

   Is the status Active for this DTC?

   Yes

   - Replace and program the Powertrain Control Module in accordance with the Service Information. Refer to **MODULE, POWERTRAIN CONTROL, REMOVAL** .
   - Perform the PCM VERIFICATION TEST. Refer to **POWERTRAIN VERIFICATION TEST** .

   No

   - The SRI mileage has been successfully programmed into the PCM. Test is complete.
   - Perform the PCM VERIFICATION TEST. Refer to **POWERTRAIN VERIFICATION TEST** .

P1718-EEPROM INTEGRITY FAILURE

For a complete wiring diagram, **refer to appropriate SYSTEM WIRING DIAGRAMS article** .

WHEN MONITORED

Continuously with the ignition on.

SET CONDITION

An attempt to program/write to the internal EEPROM failed, Also checks at power down. One Trip Fault. Three good trips to turn off the MIL.

POSSIBLE CAUSES

Possible Causes
POWERTRAIN CONTROL MODULE (PCM) SOFTWARE UPDATE EXCESSIVE RESISTANCE IN THE PCM POWER OR GROUND CIRCUITS POWERTRAIN CONTROL MODULE (PCM)

Always perform the Pre-Diagnostic Troubleshooting procedure before proceeding. Refer to PRE-DIAGNOSTIC TROUBLESHOOTING PROCEDURE .

DIAGNOSTIC TEST

1. **ACTIVE DTC**

NOTE: Diagnose and repair any other DTCs set in the PCM before proceeding with this test.

1. Turn the ignition on.
2. With the scan tool, clear DTCs.
3. Start the engine and allow it to reach operating temperature.

WARNING: When the engine is operating, do not stand in direct line with the fan. Do not put your hands near the pulleys, belts or fan. Do not wear loose clothing. Failure to follow these instructions may result in possible serious or fatal injury.

NOTE: It may be necessary to test drive the vehicle in order for this DTC to set.

4. With the scan tool, select View DTCs.

Is the DTC Active at this time?

Yes

- Go To 2

No

- Perform the INTERMITTENT CONDITION diagnostic procedure. Refer to **INTERMITTENT CONDITION** .

2. **PCM ODOMETER MILEAGE NOT PROGRAMMED**
   1. Turn the ignition on.
   2. With the scan tool, attempt to perform the Program PCM Odometer function.
   3. With the scan tool, Clear DTCs.
   4. Start the engine.
   5. Allow the engine to reach normal operating temperature.
   6. With the scan tool, select View DTCs.

   Is the status Active for this DTC?

   Yes

   - Go To 3

   No

   - The SRI mileage has been successfully programmed into the PCM. Test is complete.
   - Perform the POWERTRAIN VERIFICATION TEST. Refer to **POWERTRAIN VERIFICATION TEST** .

3. **CHECKING THE PCM POWER AND GROUND CIRCUITS**
   1. Perform the CHECKING THE PCM POWER AND GROUND CIRCUITS diagnostic procedure. Refer to **DIAGNOSIS AND TESTING** .
   2. Using the wiring diagram/schematic as a guide, inspect the Powertrain Control Module (PCM) wiring and connectors.
   3. Look for any chafed, pierced, pinched or partially broken wires.

4. Look for broken, bent, pushed out or corroded terminals.
5. Perform any Technical Service Bulletins that may apply.

Were any problems found?

Yes

- Repair as necessary.
- Perform the POWERTRAIN VERIFICATION TEST. Refer to **POWERTRAIN VERIFICATION TEST** .

No

- Go To 4

4. **POWERTRAIN CONTROL MODULE (PCM)**
   1. Turn the ignition on.
   2. With the scan tool, attempt to perform the Program PCM Odometer function.
   3. With the scan tool, Clear DTCs.
   4. Start the engine.
   5. Allow the engine to reach normal operating temperature.
   6. With the scan tool, select View DTCs.

   Is the DTC Active at this time?

   Yes

   - Replace and program the Powertrain Control Module (PCM) in accordance with the Service Information. Refer to **MODULE, POWERTRAIN CONTROL, REMOVAL** .
   - Perform the POWERTRAIN VERIFICATION TEST. Refer to **POWERTRAIN VERIFICATION TEST** .

   No

   - The SRI mileage has been successfully programmed into the PCM. Test is complete.
   - Perform the POWERTRAIN VERIFICATION TEST. Refer to

POWERTRAIN VERIFICATION TEST .

P1D83-IMPLAUSIBLE ENGINE OIL TEMPERATURE SIGNAL RECEIVED

For a complete wiring diagram, **refer to appropriate SYSTEM WIRING DIAGRAMS article** .

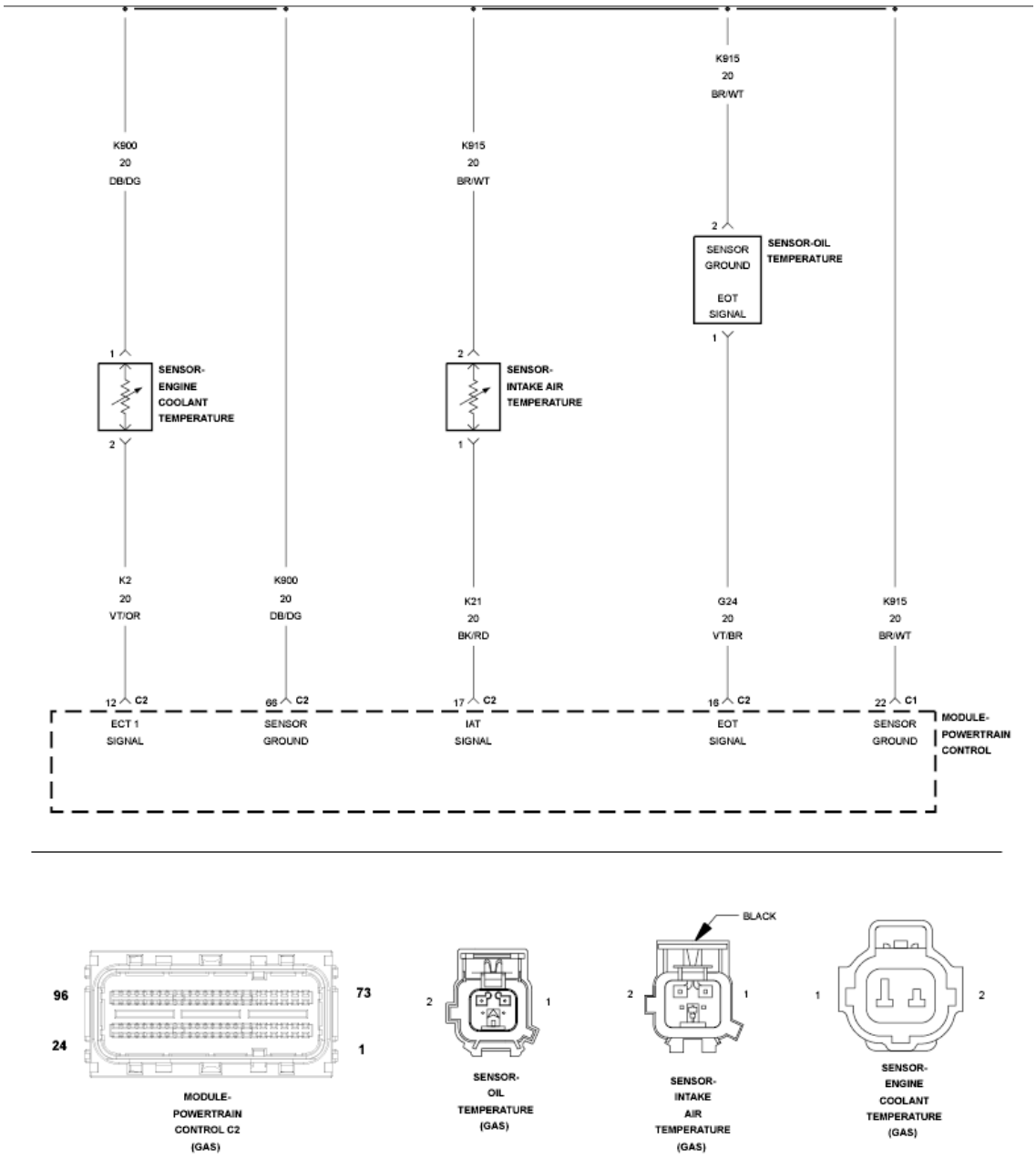

Fig. 96: Temperature Sensors Circuit Diagram
Courtesy of CHRYSLER GROUP, LLC

WHEN MONITORED

With engine off time greater than 480 minutes and ambient temperature greater than -7°C (19.4°F).

SET CONDITION

After a calibrated amount of cool down time, the Powertrain Control Module (PCM) compares the AAT, ECT and IAT Sensor values. If the general temperature rationality passes, the PCM compares the Engine Oil Temperature (EOT) Sensor value to a threshold based on the other temp sensor values. If the difference is greater than a calibrated value, the diagnostic fails.

POSSIBLE CAUSES

Possible Causes
EXCESSIVE RESISTANCE IN THE EOT SENSOR SIGNAL CIRCUIT
EXCESSIVE RESISTANCE IN THE EOT SENSOR GROUND CIRCUIT
ENGINE OIL TEMPERATURE (EOT) SENSOR
POWERTRAIN CONTROL MODULE (PCM)

Always perform the Pre-Diagnostic Troubleshooting procedure before proceeding. Refer to PRE-DIAGNOSTIC TROUBLESHOOTING PROCEDURE .

DIAGNOSTIC TEST

1. **ENGINE OIL TEMPERATURE**
    1. Turn the ignition off.
    2. Allow the vehicle to sit with the ignition off in an environment where the temperature is consistent and above -7°C (19.4°F) and cold soak until the engine coolant temperature is equal to ambient temperature.
    3. Turn the ignition on.
    4. With the scan tool, compare the EOT sensor value to the AAT, ECT and IAT sensor values.

    Is the Engine Oil Temperature Sensor value within 10°C (18°F) of the other sensor values?

    Yes

    - Perform the INTERMITTENT CONDITION diagnostic procedure.

Refer to **INTERMITTENT CONDITION** .

No

- Go To 2

2. **CHECK FOR HIGH RESISTANCE IN THE (G24) ENGINE OIL TEMP SIGNAL CIRCUIT**
   1. Turn the ignition off.
   2. Disconnect the Engine Oil Temperature Sensor harness connector.
   3. Disconnect the PCM C2 harness connector.

      CAUTION: Do not probe the PCM harness connectors. Probing the PCM harness connectors will damage the PCM terminals resulting in poor terminal to pin connection. Install the GPEC Diagnostic Adaptor to perform the diagnosis.

   4. Connect the (special tool #10436, Adapter, GPEC Diagnostic).
   5. Measure the resistance of the (G24) Engine Oil Temperature Signal circuit between the Engine Oil Temp Sensor harness connector and the GPEC Adaptor.

      Is the resistance below 5.0 Ohms?

      Yes

      - Go To 3

      No

      - Repair the (G24) Engine Oil Temp Signal circuit for an open or high resistance.
      - Perform the POWERTRAIN VERIFICATION TEST. Refer to **POWERTRAIN VERIFICATION TEST** .

3. **CHECK FOR HIGH RESISTANCE IN THE (K900) SENSOR GROUND CIRCUIT**
   1. Measure the resistance of the (K900) Sensor ground circuit between the

Engine Oil Temp Sensor harness connector and the GPEC Adaptor.

Is the resistance below 5.0 Ohms?

Yes

- Go To 4

No

- Repair the open or excessive resistance in the (G24) Engine Oil Temp Signal circuit.
- Perform the POWERTRAIN VERIFICATION TEST. Refer to **POWERTRAIN VERIFICATION TEST** .

4. **ENGINE OIL TEMPERATURE SENSOR**
   1. Turn the ignition off.
   2. Reconnect the PCM C2 harness connector.
   3. Turn the ignition on.
   4. With the scan tool, read the Engine Oil Temperature Sensor voltage.

      NOTE: The sensor voltage should be approximately 5.0 volts (plus or minus 0.1 volts) with the connector disconnected.

   5. Connect a jumper between the (G24) EOT Signal circuit and the (K900) Sensor Ground circuit at the Engine Oil Temperature Sensor harness connector.

      NOTE: The sensor voltage should be approximately 0.0 volts (plus or minus 0.1 volt) with the jumper in place.

      Does the scan tool display the voltage as described above?

      Yes

      - Verify that there is good pin to terminal contact in the Engine Oil Temperature Sensor and Powertrain Control Module connectors. Replace the Engine Oil Temperature Sensor if no problems were

found with the connectors. Refer to **2.0L SENSOR, OIL TEMPERATURE, REMOVAL** or **2.4L SENSOR, OIL TEMPERATURE, REMOVAL** .

- Perform the POWERTRAIN VERIFICATION TEST. Refer to **POWERTRAIN VERIFICATION TEST** .

No

- Go To 5

5. **POWERTRAIN CONTROL MODULE (PCM)**
   1. Using the wiring diagram/schematic as a guide, inspect the wiring and connectors between the Engine Oil Temperature Sensor and the Powertrain Control Module (PCM).
   2. Look for any chafed, pierced, pinched or partially broken wires.
   3. Look for broken, bent, pushed out or corroded terminals. Verify that there is good pin to terminal contact in the EOT Sensor and Control Module connectors.
   4. Perform any Technical Service Bulletins (TSBs) that may apply.

   Were there any problems found?

   Yes

   - Repair as necessary.
   - Perform the POWERTRAIN VERIFICATION TEST. Refer to **POWERTRAIN VERIFICATION TEST** .

   No

   - Replace and program the Powertrain Control Module in accordance with the service information. Refer to **MODULE, POWERTRAIN CONTROL, REMOVAL** .
   - Perform the POWERTRAIN VERIFICATION TEST. Refer to **POWERTRAIN VERIFICATION TEST** .

P2004-INTAKE MANIFOLD RUNNER CONTROL STUCK OPEN

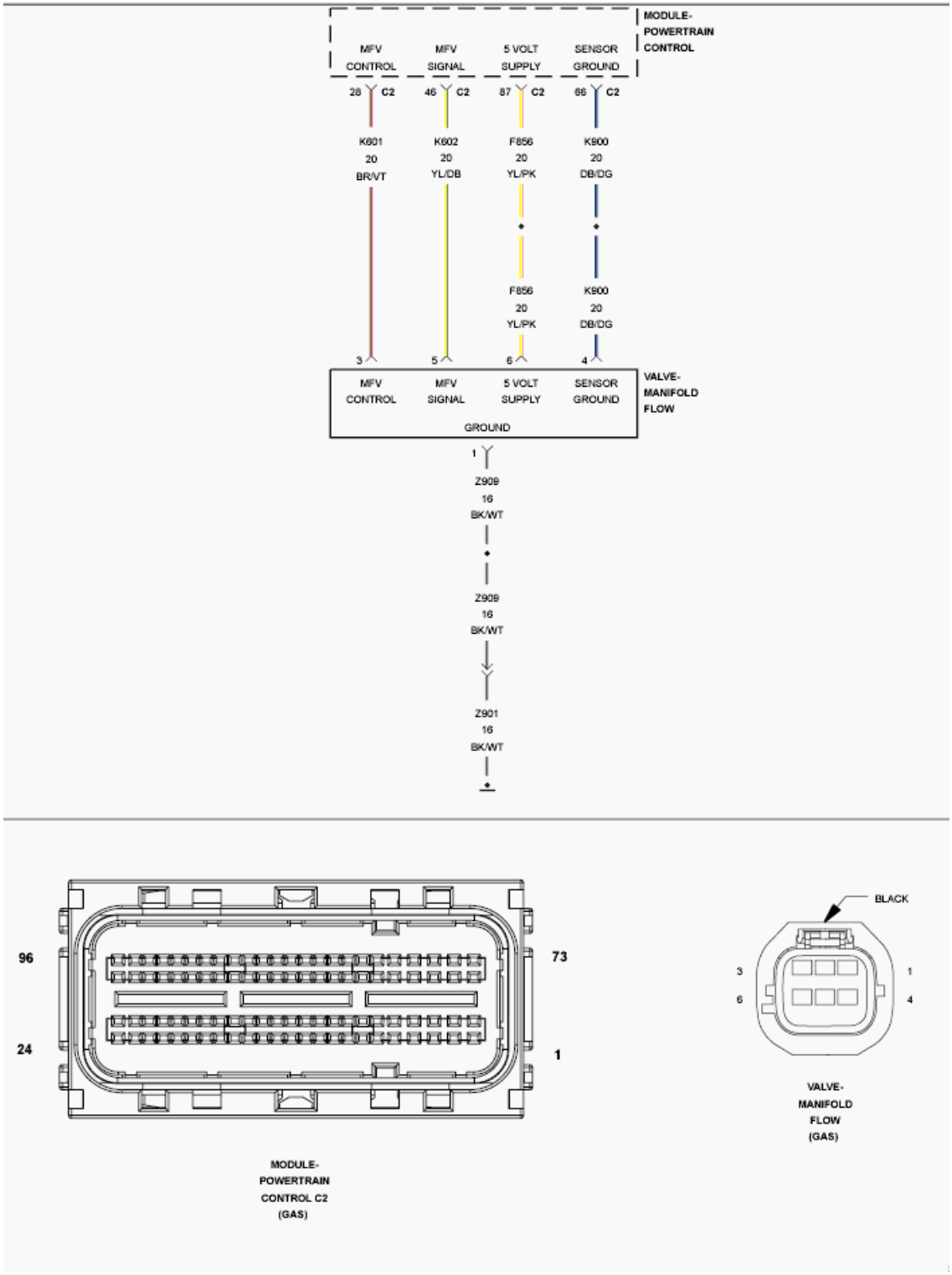

Fig. 97: Manifold Flow Valve Position Sensor Circuit Diagram
Courtesy of CHRYSLER GROUP, LLC

For a complete wiring diagram, **refer to appropriate SYSTEM WIRING DIAGRAMS article** .

WHEN MONITORED

With the engine running, when the valve closes, below a calibrated RPM, depending upon pedal position.

SET CONDITION

The Powertrain Control Module (PCM) detects that the position feedback of the Manifold Flow Valve Position Sensor is not within range of the adapted value learned during in-plant initialization or after a non volatile memory reset (adaptive memory clear).

POSSIBLE CAUSES

Possible Causes
(F856) 5-VOLT SUPPLY CIRCUIT SHORTED TO VOLTAGE
(K602) MFV SIGNAL CIRCUIT SHORTED TO VOLTAGE
(F856) 5-VOLT SUPPLY CIRCUIT SHORTED TO GROUND
(K602) MFV SIGNAL CIRCUIT SHORTED TO GROUND
(F856) 5-VOLT SUPPLY CIRCUIT SHORTED TO (K900) SENSOR GROUND CIRCUIT
(K602) MFV SIGNAL CIRCUIT SHORTED TO (K900) SENSOR GROUND CIRCUIT
(K602) MFV SIGNAL CIRCUIT SHORTED TO THE (F856) 5-VOLT SUPPLY CIRCUIT
(F856) 5-VOLT SUPPLY CIRCUIT OPEN OR HIGH RESISTANCE
(K602) MFV SIGNAL CIRCUIT OPEN OR HIGH RESISTANCE
(K900) SENSOR GROUND CIRCUIT OPEN OR HIGH RESISTANCE
(Z909) GROUND CIRCUIT OPEN OR HIGH RESISTANCE
MANIFOLD FLOW VALVE
INTAKE MANIFOLD
POWERTRAIN CONTROL MODULE (PCM)

Always perform the Pre-Diagnostic Troubleshooting procedure before proceeding. Refer to PRE-DIAGNOSTIC TROUBLESHOOTING PROCEDURE .

DIAGNOSTIC TEST

1. **ACTIVE DTC**
    1. Turn the ignition on.

2. With the scan tool, clear DTCs.
3. Start the engine and allow it to reach operating temperature.

NOTE: It may be necessary to test drive the vehicle to get this DTC to reset.

4. With the scan tool, select View DTCs.

Is the status Active for this DTC?

Yes

- Go To 2

No

- Perform the INTERMITTENT CONDITION diagnostic procedure. Refer to **INTERMITTENT CONDITION** .

2. **CHECK THE (F856) 5-VOLT SUPPLY CIRCUIT VOLTAGE**

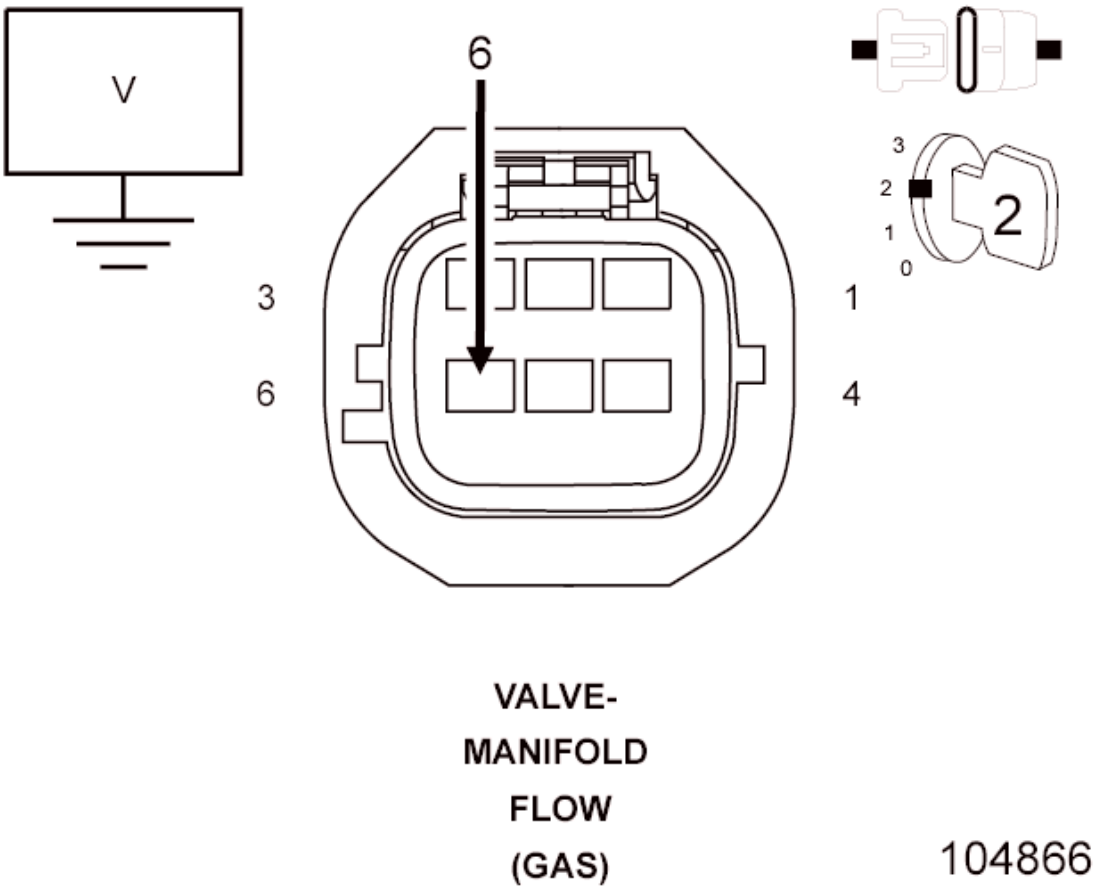

Fig. 98: Checking 5-Volt Supply Circuit
Courtesy of CHRYSLER GROUP, LLC

1. Turn the ignition off.
2. Disconnect the Manifold Flow Valve harness connector.
3. Turn the ignition on.
4. Measure the voltage of the (F856) 5-Volt Supply circuit in the Manifold Flow Valve harness connector.

   Is the voltage between 4.8 and 5.2 volts?

   Yes

   - Go To 7

   No

   - Go To 3

3. **CHECK THE (F856) 5-VOLT SUPPLY CIRCUIT FOR A SHORT TO VOLTAGE**

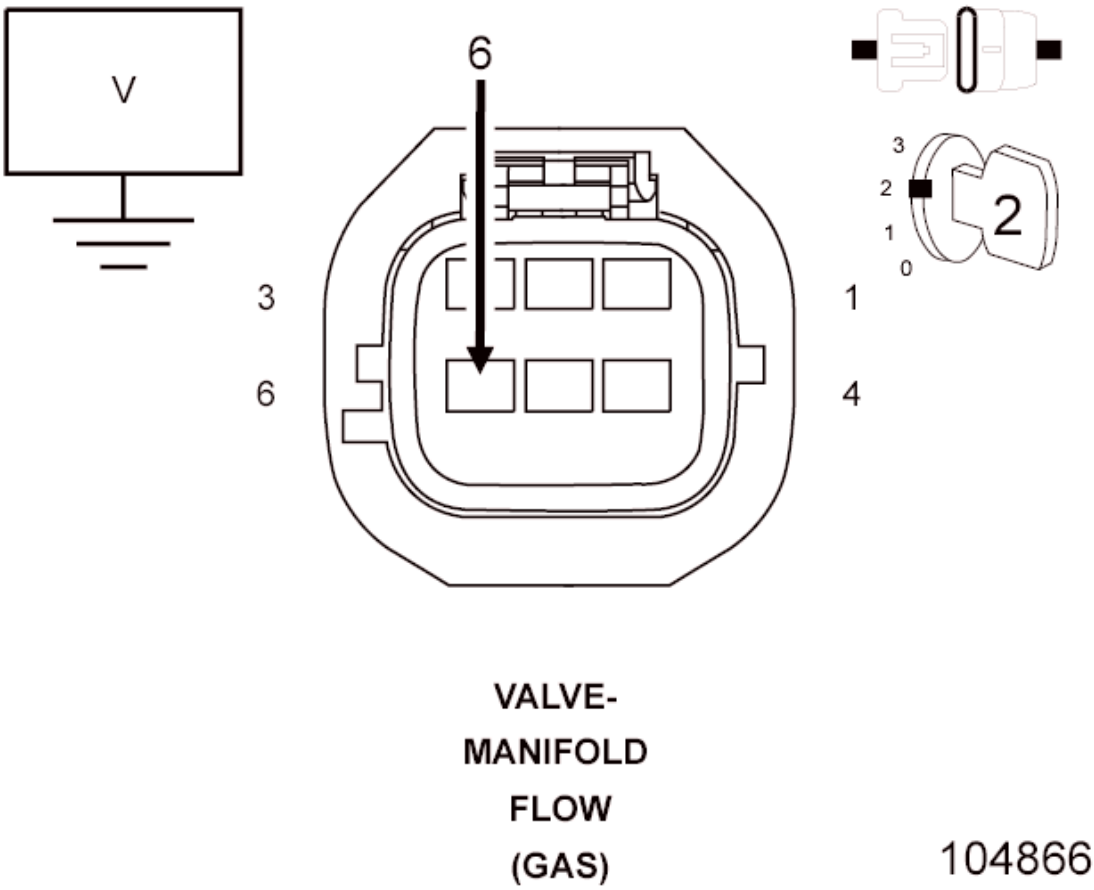

Fig. 99: Checking Manifold Flow Valve 5-Volt Supply Circuit For Short To Voltage
Courtesy of CHRYSLER GROUP, LLC

1. Turn the ignition off.
2. Disconnect the PCM C2 harness connector.
3. Turn the ignition on.
4. Measure the voltage of the (F856) 5-Volt Supply circuit in the Manifold Flow Valve harness connector.

   Is there any voltage present?

   Yes

   - Repair the (F856) 5-Volt Supply circuit for a short to voltage.
   - Perform the POWERTRAIN VERIFICATION TEST. Refer to **POWERTRAIN VERIFICATION TEST** .

   No

- Go To 4

4. **CHECK THE (F856) 5-VOLT SUPPLY CIRCUIT FOR A SHORT TO GROUND**

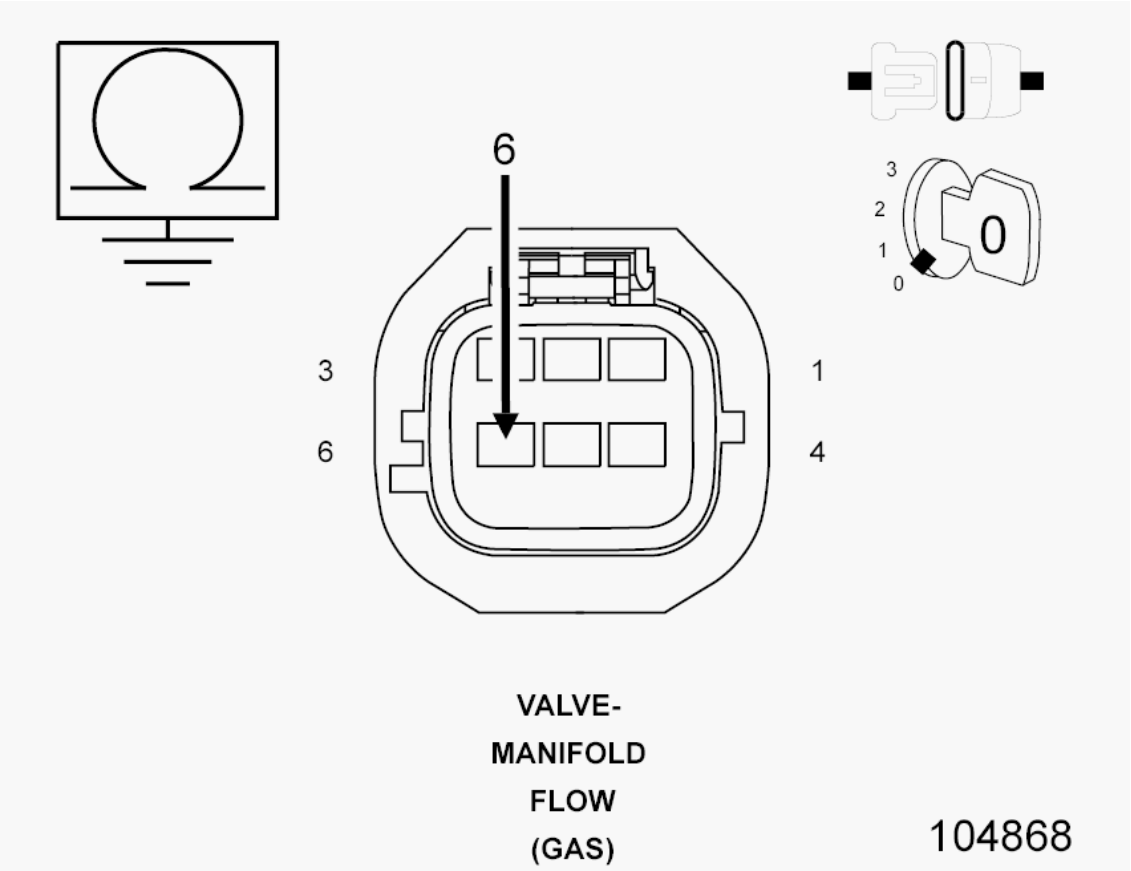

Fig. 100: Checking MFV Supply Circuit For Short To Ground
Courtesy of CHRYSLER GROUP, LLC

1. Measure the resistance between ground and the (F856) 5-Volt Supply circuit in the Manifold Flow Valve harness connector.

   Is the resistance above 10k Ohms?

   Yes

   - Go To 5

   No

   - Repair the (F856) 5-Volt Supply circuit for a short to ground.
   - Perform the POWERTRAIN VERIFICATION TEST. Refer to **POWERTRAIN VERIFICATION TEST** .

5. **CHECK FOR THE (F856) 5-VOLT SUPPLY CIRCUIT SHORTED TO THE (K900) SENSOR GROUND CIRCUIT**

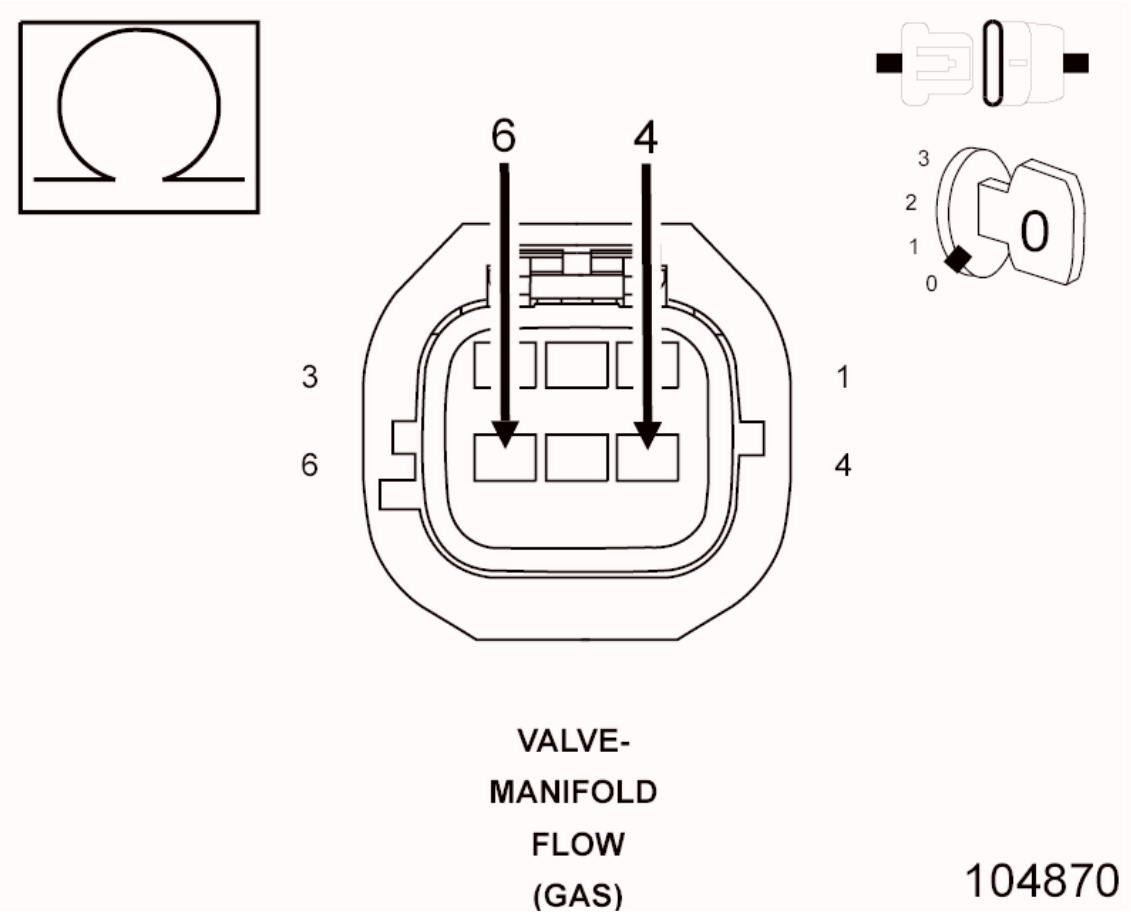

Fig. 101: Checking 5-Volt Supply Circuit For Short To Sensor Ground Circuit
Courtesy of CHRYSLER GROUP, LLC

1. Measure the resistance between the (F856) 5-Volt Supply circuit and the (K900) Sensor Ground circuit in the Manifold Flow Valve harness connector.

   Is the resistance above 10k Ohms?

   Yes

   - Go To 6

   No

   - Repair the (F856) 5-Volt Supply circuit for a short to the (K900)

Sensor Ground circuit.

- Perform the POWERTRAIN VERIFICATION TEST. Refer to **POWERTRAIN VERIFICATION TEST** .

6. **CHECK THE (F856) 5-VOLT SUPPLY CIRCUIT FOR AN OPEN/HIGH RESISTANCE**

CAUTION: Do not probe the PCM harness connectors. Probing the PCM harness connectors will damage the PCM terminals resulting in poor terminal to pin connection. Install the GPEC Diagnostic Adaptor to perform the diagnosis.

1. Connect the (special tool #10436, Adapter, GPEC Diagnostic).
2. Measure the resistance of the (F856) 5-Volt Supply circuit between the Manifold Flow Valve harness connector and the GPEC Adaptor.

Is the resistance below 5.0 Ohms?

Yes

- Go To 16

No

- Repair the (F856) 5-Volt Supply circuit for an open or high resistance.
- Perform the POWERTRAIN VERIFICATION TEST. Refer to **POWERTRAIN VERIFICATION TEST** .

7. **CHECK THE (K602) MFV SIGNAL CIRCUIT VOLTAGE**

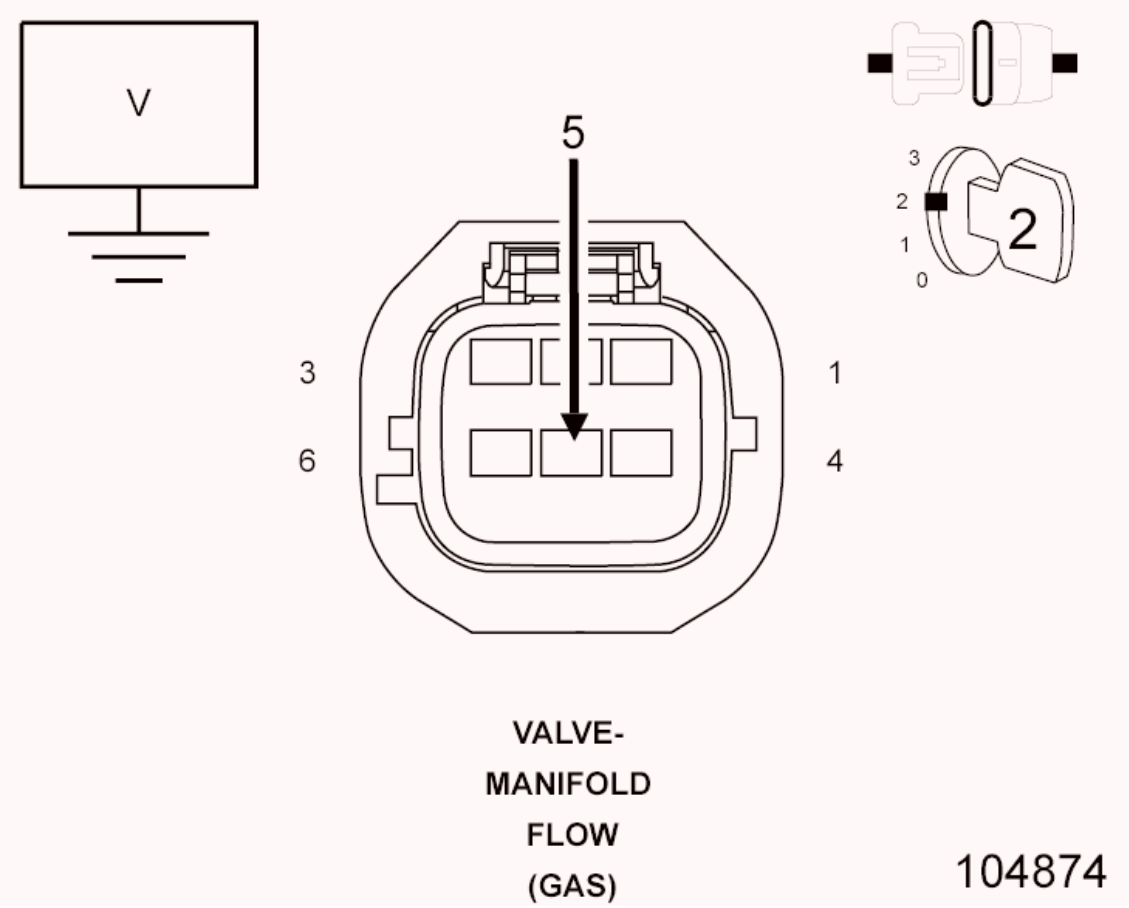

Fig. 102: Checking MFV Signal Circuit
Courtesy of CHRYSLER GROUP, LLC

1. Measure the voltage of the (K602) MFV Signal circuit in the Manifold Flow Valve harness connector.

   Is the voltage between 4.8 and 5.2 volts?

   Yes

   - Go To 12

   No

   - Go To 8

8. **CHECK THE (K602) MFV SIGNAL CIRCUIT FOR A SHORT TO VOLTAGE**

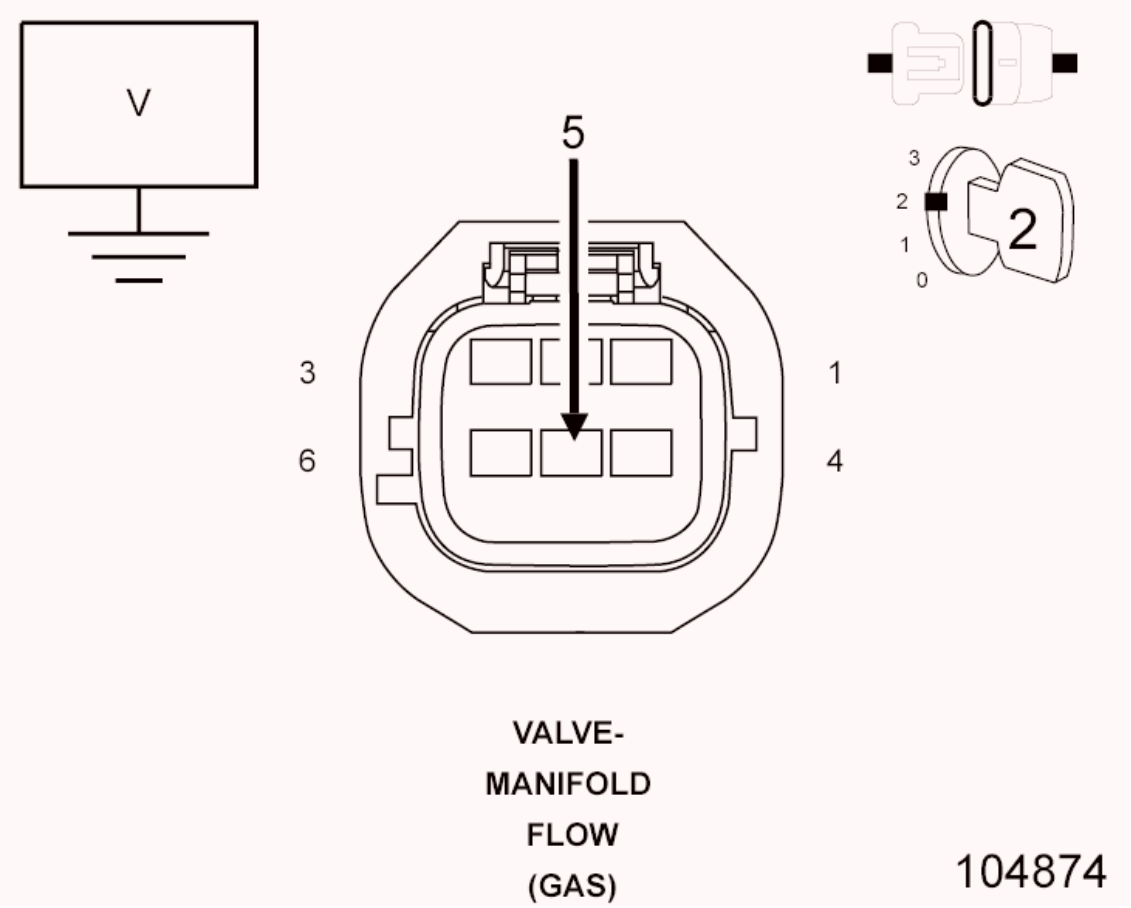

Fig. 103: Checking MFV Signal Circuit For Short To Voltage
Courtesy of CHRYSLER GROUP, LLC

1. Turn the ignition off.
2. Disconnect the PCM C2 harness connector.
3. Turn the ignition on.
4. Measure the voltage of the (K602) MFV Signal circuit in the Manifold Flow Valve harness connector.

   Is there any voltage present?

   Yes

   - Repair the (K602) MFV Signal circuit for a short to voltage.
   - Perform the POWERTRAIN VERIFICATION TEST. Refer to **POWERTRAIN VERIFICATION TEST** .

   No

- Go To 9

9. **CHECK THE (K602) MFV SIGNAL CIRCUIT FOR A SHORT TO GROUND**

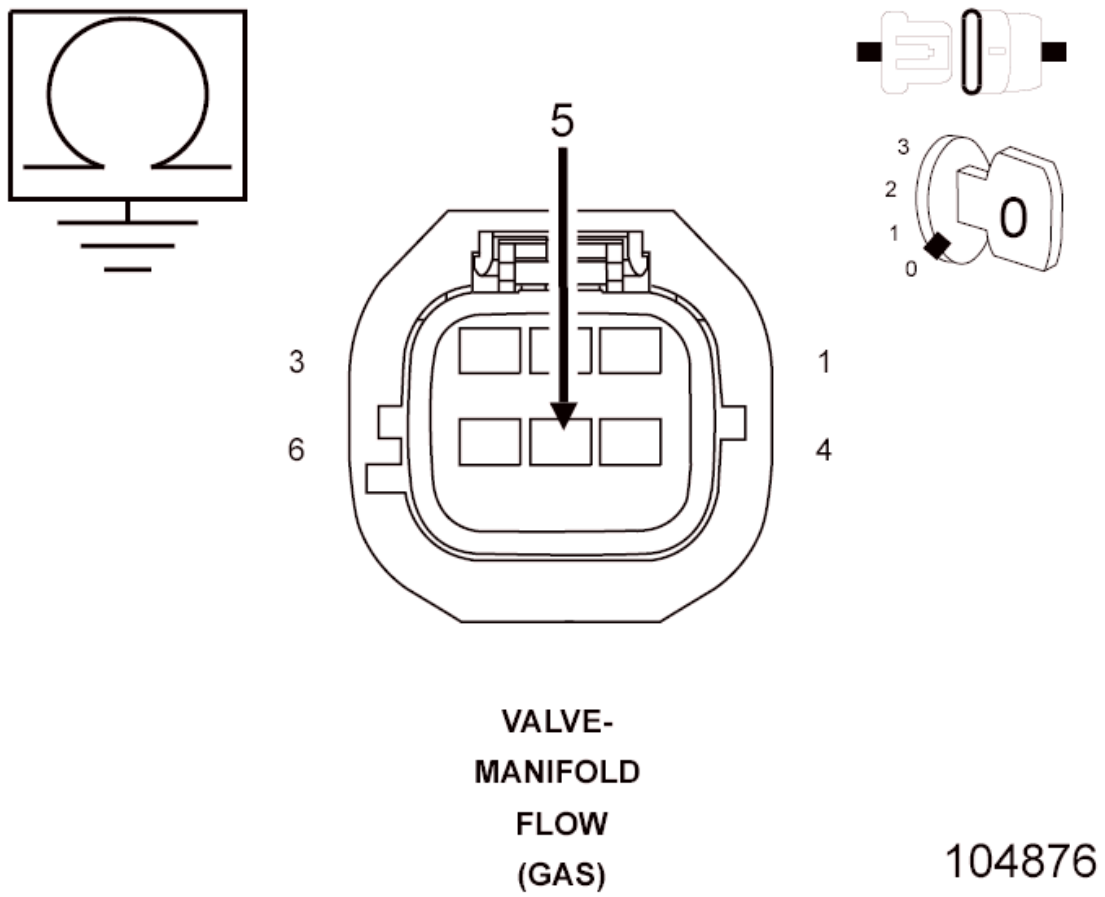

Fig. 104: Checking MFV Signal Circuit For Short To Ground
Courtesy of CHRYSLER GROUP, LLC

1. Turn the ignition off.
2. Measure the resistance between ground and the (K602) MFV Signal circuit in the Manifold Flow Valve harness connector.

   Is the resistance above 10k Ohms?

   Yes

   - Go To 10

   No

   - Repair the (K602) MFV Signal circuit for a short to ground.

- Perform the POWERTRAIN VERIFICATION TEST. Refer to **POWERTRAIN VERIFICATION TEST** .

10. **CHECK FOR THE (K602) MFV SIGNAL CIRCUIT SHORTED TO THE (K900) SENSOR GROUND CIRCUIT**

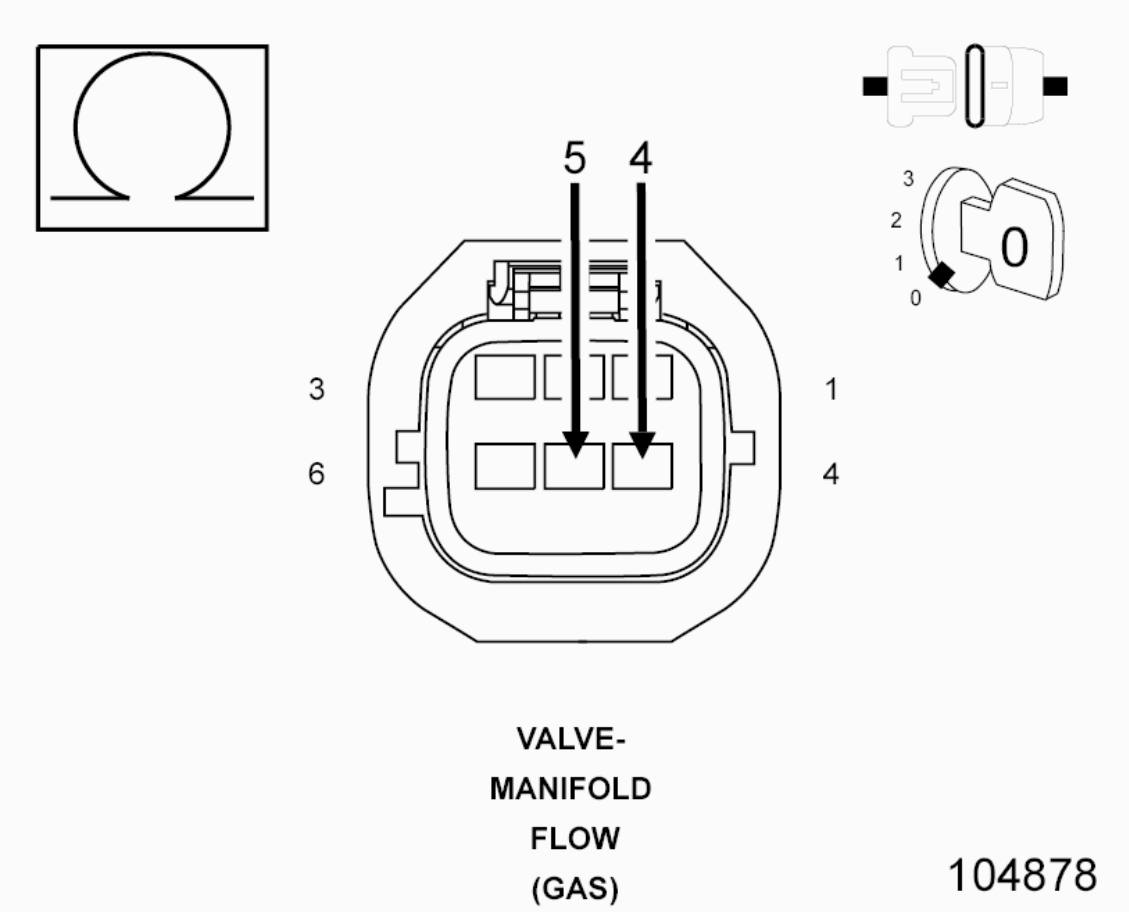

Fig. 105: Checking MFV Signal Circuit For Short To Sensor Ground Circuit
Courtesy of CHRYSLER GROUP, LLC

1. Measure the resistance between the (K602) MFV Signal circuit and the (K900) Sensor Ground circuit in the Manifold Flow Valve harness connector.

   Is the resistance above 10k Ohms?

   Yes

   - Go To 11

   No

- Repair the (K602) MFV Signal circuit for a short to the (K900) Sensor Ground circuit.
- Perform the POWERTRAIN VERIFICATION TEST. Refer to **POWERTRAIN VERIFICATION TEST** .

11. **CHECK THE (K602) MFV SIGNAL CIRCUIT FOR AN OPEN/HIGH RESISTANCE**

CAUTION: Do not probe the PCM harness connectors. Probing the PCM harness connectors will damage the PCM terminals resulting in poor terminal to pin connection. Install the GPEC Diagnostic Adaptor to perform the diagnosis.

1. Connect the (special tool #10436, Adapter, GPEC Diagnostic).
2. Measure the resistance of the (K602) MFV Signal circuit between the Manifold Flow Valve harness connector and the GPEC Adaptor.

Is the resistance below 5.0 Ohms?

Yes

- Go To 16

No

- Repair the (K602) MFV Signal circuit for an open or high resistance.
- Perform the POWERTRAIN VERIFICATION TEST. Refer to **POWERTRAIN VERIFICATION TEST** .

12. **CHECK THE (K900) SENSOR GROUND CIRCUIT FOR AN OPEN/HIGH RESISTANCE**

1. Measure the resistance of the (K900) Sensor Ground circuit between the Manifold Flow Valve harness connector and the GPEC Adaptor.

Is the resistance below 5.0 Ohms?

Yes

- Go To 13

No

- Repair the (K900) Sensor Ground circuit for an open or high resistance.
- Perform the POWERTRAIN VERIFICATION TEST. Refer to **POWERTRAIN VERIFICATION TEST** .

13. **CHECK FOR THE (K602) MFV SIGNAL CIRCUIT SHORTED TO THE (F856) 5-VOLT SUPPLY CIRCUIT**

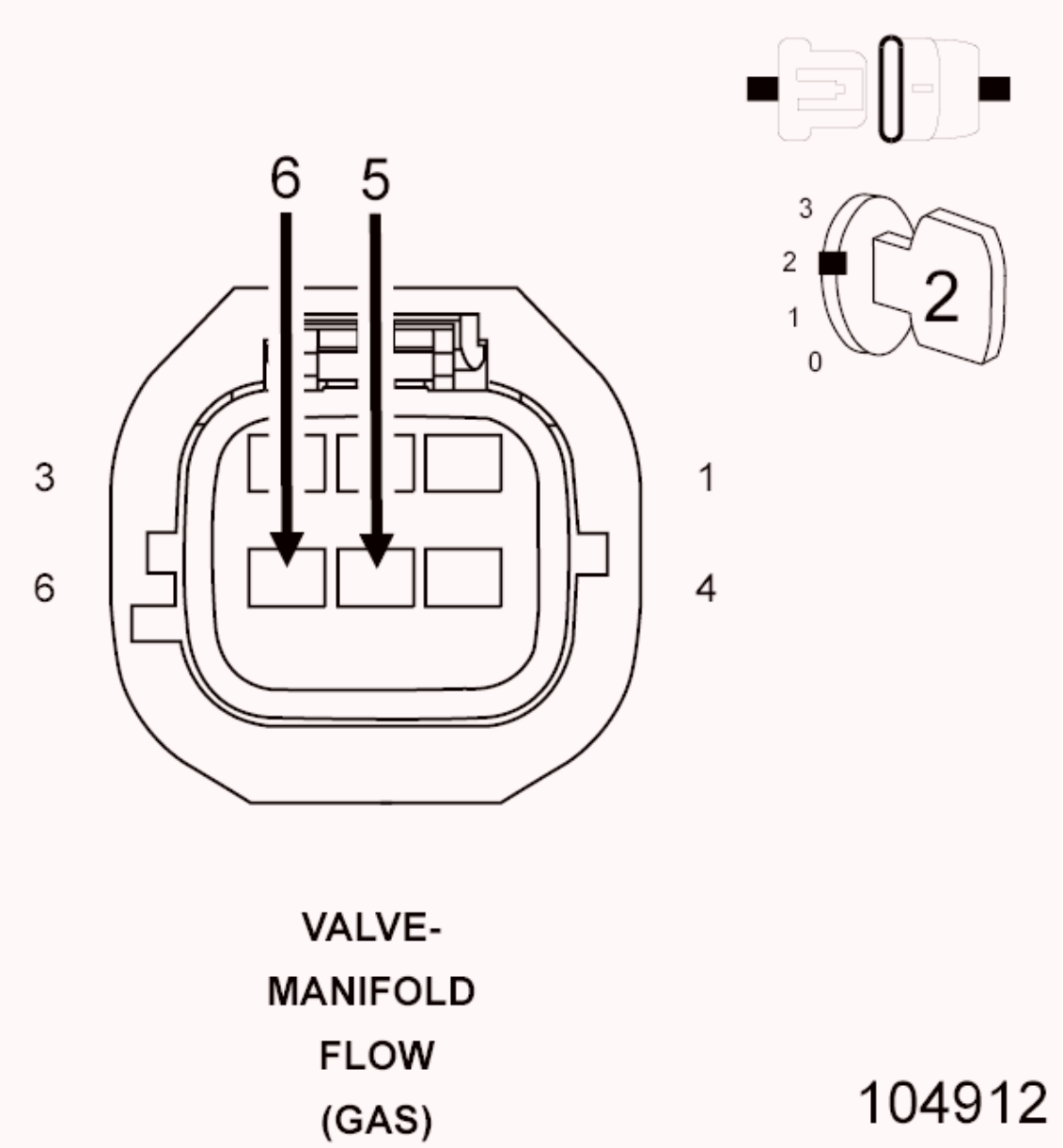

Fig. 106: Manifold Flow Valve Harness Connector End View
Courtesy of CHRYSLER GROUP, LLC

1. Measure the resistance between the (K602) MFV Signal circuit and the

(F856) 5-volt Supply in the Manifold Flow Valve harness connector.

Is the resistance above 10k Ohms?

Yes

- Go To 14

No

- Repair the (K602) MFV Signal circuit for a short to the (F856) 5-Volt Supply circuit.
- Perform the POWERTRAIN VERIFICATION TEST. Refer to **POWERTRAIN VERIFICATION TEST** .

14. **CHECK THE (Z909) GROUND CIRCUIT FOR AN OPEN/HIGH RESISTANCE**

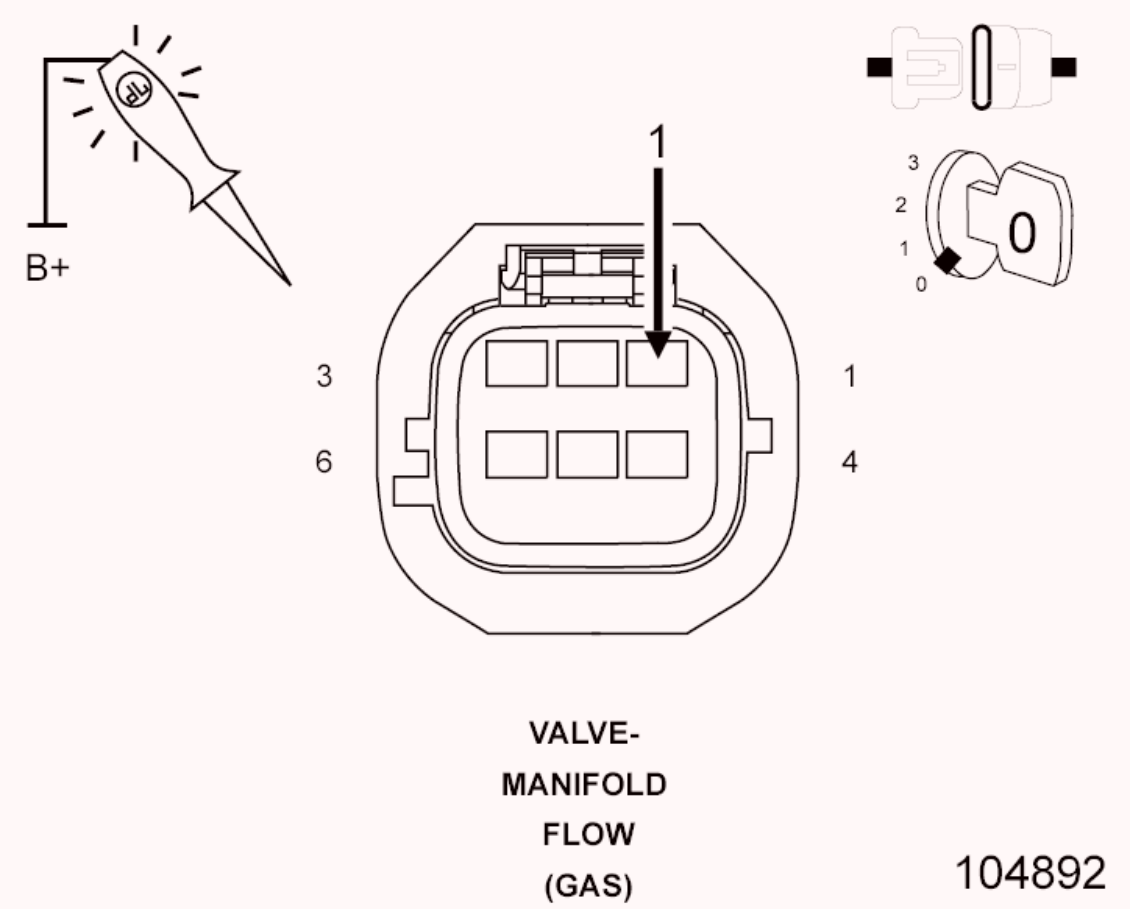

Fig. 107: Checking MFV Ground Circuit For Open Or High Resistance
Courtesy of CHRYSLER GROUP, LLC

1. Using a 12-volt test light connected to 12 volts, check the (Z909) Ground circuit in the Manifold Flow Valve harness connector.

NOTE: The test light should be illuminated and bright. Compare the brightness to that of a direct connection to the battery.

Is the test light illuminated and bright?

Yes

- Go To 15

No

- Repair the (Z909) Ground circuit for an open or high resistance.
- Perform the POWERTRAIN VERIFICATION TEST. Refer to **POWERTRAIN VERIFICATION TEST** .

15. **MANIFOLD FLOW VALVE**
    1. Turn the ignition off.
    2. Using the wiring diagram/schematic as a guide, inspect the wiring and connectors between the Manifold Flow Valve and the Powertrain Control Module (PCM).
    3. Look for any chafed, pierced, pinched, or partially broken wires.
    4. Look for broken, bent, pushed out or corroded terminals.
    5. Perform any Technical Service Bulletins that may apply.
    6. Remove the Manifold Flow Valve.
    7. Inspect the return spring and the valve blade assembly for debris stuck in the path or for frozen/seized blades.

NOTE: Manifold Flow Valve over travel or under travel can cause this DTC to set.

NOTE: If the Manifold Flow Valve blades are seized in the intake manifold, the manifold will have to be replaced.

NOTE: If the Manifold Flow Valve is replaced, a non volatile memory reset must be performed to learn the new port flap adaptive values.

Were any problems found?

Yes

- Repair as necessary.
- Perform the POWERTRAIN VERIFICATION TEST. Refer to **POWERTRAIN VERIFICATION TEST** .

No

- Replace the Manifold Flow Valve in accordance with the service information.
- Perform the POWERTRAIN VERIFICATION TEST. Refer to **POWERTRAIN VERIFICATION TEST** .

16. **POWERTRAIN CONTROL MODULE (PCM)**
    1. Using the wiring diagram/schematic as a guide, inspect the wiring and connectors between the Manifold Flow Valve and the Powertrain Control Module (PCM).
    2. Look for any chafed, pierced, pinched, or partially broken wires.
    3. Look for broken, bent, pushed out or corroded terminals.
    4. Perform any Technical Service Bulletins that may apply.

    Were any problems found?

    Yes

    - Repair as necessary.
    - Perform the POWERTRAIN VERIFICATION TEST. Refer to **POWERTRAIN VERIFICATION TEST** .

    No

    - Replace and program the Powertrain Control Module (PCM) in accordance with the service information. Refer to **MODULE,**

POWERTRAIN CONTROL, REMOVAL .

- Perform the POWERTRAIN VERIFICATION TEST. Refer to **POWERTRAIN VERIFICATION TEST** .

P2006-INTAKE MANIFOLD RUNNER CONTROL STUCK CLOSED

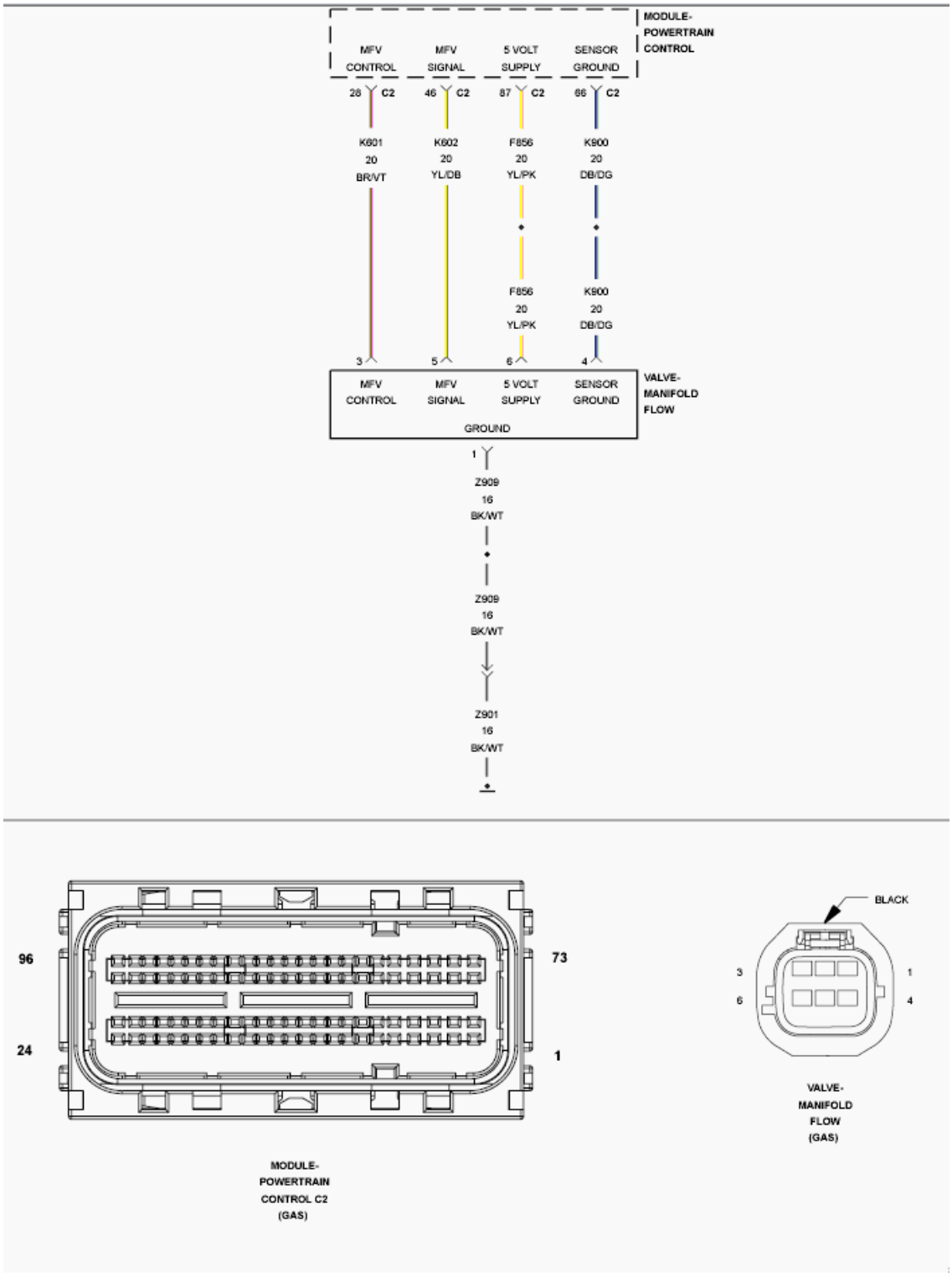

Fig. 108: Manifold Flow Valve Position Sensor Circuit Diagram

Courtesy of CHRYSLER GROUP, LLC

For a complete wiring diagram, **refer to appropriate SYSTEM WIRING DIAGRAMS article** .

WHEN MONITORED

With the engine running, when the valve opens, above a calibrated RPM depending upon pedal position.

SET CONDITION

The Powertrain Control Module (PCM) detects that the position feedback of the Manifold Flow Valve Position Sensor is not within range of the adapted value learned during in-plant initialization or after a non volatile memory reset (adaptive memory clear).

POSSIBLE CAUSES

Possible Causes
(F856) 5-VOLT SUPPLY CIRCUIT SHORTED TO VOLTAGE
(K602) MFV SIGNAL CIRCUIT SHORTED TO VOLTAGE
(F856) 5-VOLT SUPPLY CIRCUIT SHORTED TO GROUND
(K602) MFV SIGNAL CIRCUIT SHORTED TO GROUND
(F856) 5-VOLT SUPPLY CIRCUIT SHORTED TO (K900) SENSOR GROUND CIRCUIT
(K602) MFV SIGNAL CIRCUIT SHORTED TO (K900) SENSOR GROUND CIRCUIT
(K602) MFV SIGNAL CIRCUIT SHORTED TO THE (F856) 5-VOLT SUPPLY CIRCUIT
(F856) 5-VOLT SUPPLY CIRCUIT OPEN OR HIGH RESISTANCE
(K602) MFV SIGNAL CIRCUIT OPEN OR HIGH RESISTANCE
(K900) SENSOR GROUND CIRCUIT OPEN OR HIGH RESISTANCE
(Z909) GROUND CIRCUIT OPEN OR HIGH RESISTANCE
MANIFOLD FLOW VALVE
INTAKE MANIFOLD
POWERTRAIN CONTROL MODULE (PCM)

Always perform the Pre-Diagnostic Troubleshooting procedure before

proceeding. Refer to PRE-DIAGNOSTIC TROUBLESHOOTING PROCEDURE .

DIAGNOSTIC TEST

1. **ACTIVE DTC**
   1. Turn the ignition on.
   2. With the scan tool, clear DTCs.
   3. Start the engine and allow it to reach operating temperature.

      NOTE: It may be necessary to test drive the vehicle to get this DTC to reset.

   4. With the scan tool, select View DTCs.

      Is the status Active for this DTC?

      Yes

      - Go To 2

      No

      - Perform the INTERMITTENT CONDITION diagnostic procedure. Refer to **INTERMITTENT CONDITION** .
2. **CHECK THE (F856) 5-VOLT SUPPLY CIRCUIT VOLTAGE**

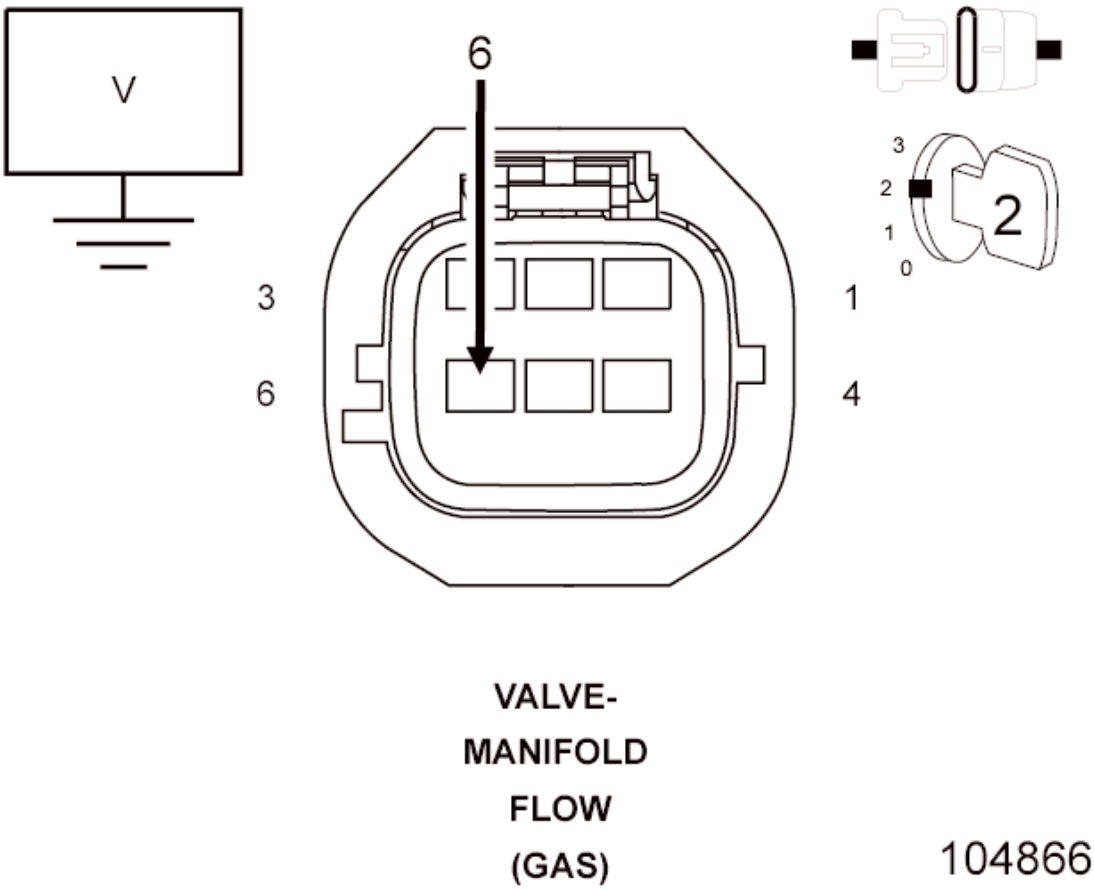

Fig. 109: Checking 5-Volt Supply Circuit
Courtesy of CHRYSLER GROUP, LLC

1. Turn the ignition off.
2. Disconnect the Manifold Flow Valve harness connector.
3. Turn the ignition on.
4. Measure the voltage of the (F856) 5-Volt Supply circuit in the Manifold Flow Valve harness connector.

   Is the voltage between 4.8 and 5.2 volts?

   Yes

   - Go To 7

   No

   - Go To 3

3. **CHECK THE (F856) 5-VOLT SUPPLY CIRCUIT SHORTED TO**

VOLTAGE

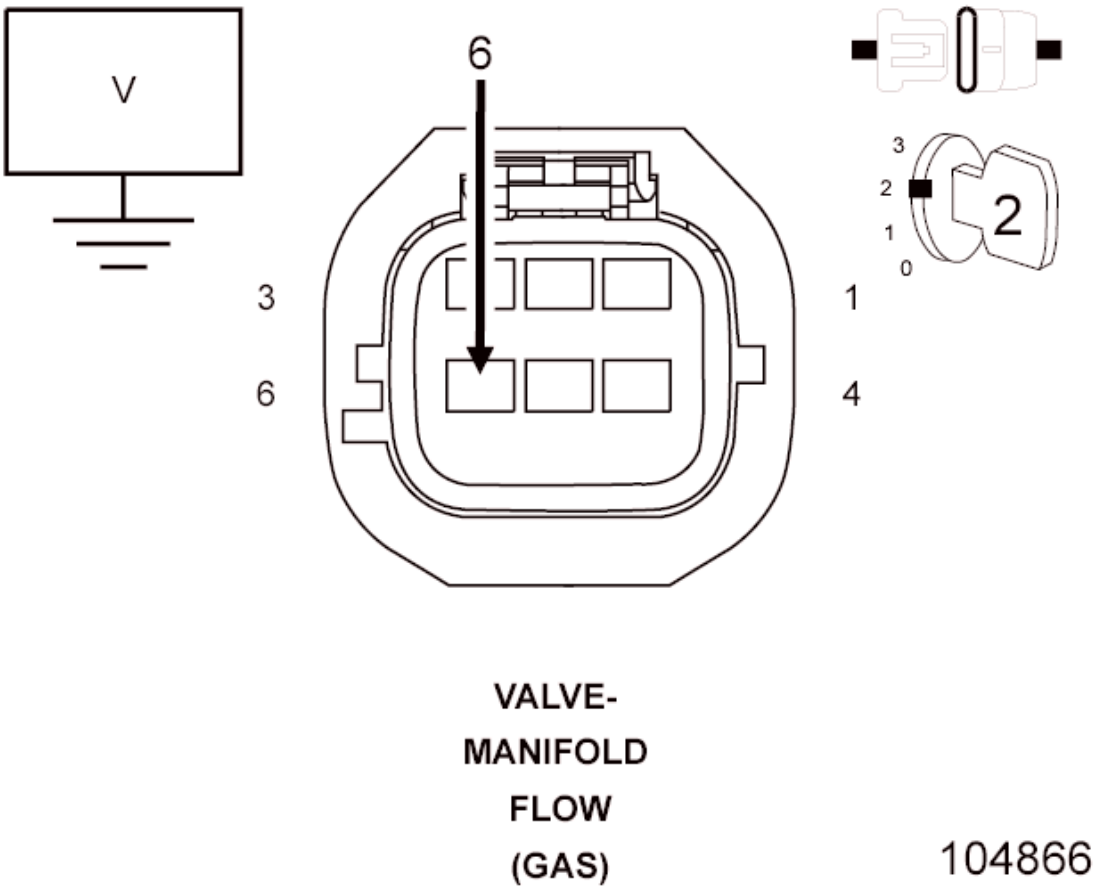

Fig. 110: Checking Manifold Flow Valve 5-Volt Supply Circuit For Short To Voltage
Courtesy of CHRYSLER GROUP, LLC

1. Turn the ignition off.
2. Disconnect the PCM C2 harness connector.
3. Turn the ignition on.
4. Measure the voltage of the (F856) 5-Volt Supply circuit in the Manifold Flow Valve harness connector.

   Is there any voltage present?

   Yes

   - Repair the (F856) 5-Volt Supply circuit for a short to voltage.
   - Perform the POWERTRAIN VERIFICATION TEST. Refer to **POWERTRAIN VERIFICATION TEST** .

No

- Go To 4

4. **CHECK THE (F856) 5-VOLT SUPPLY CIRCUIT FOR A SHORT TO GROUND**

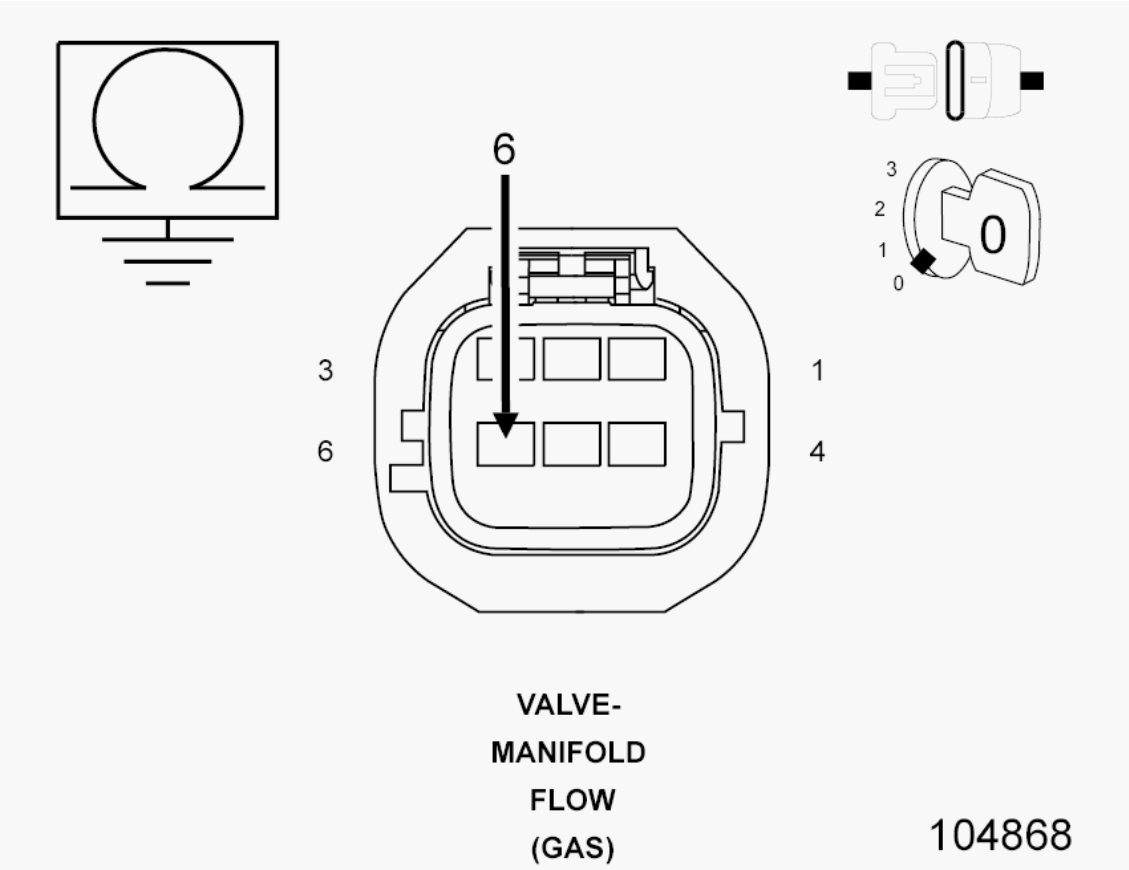

Fig. 111: Checking MFV Supply Circuit For Short To Ground
Courtesy of CHRYSLER GROUP, LLC

1. Measure the resistance between ground and the (F856) 5-Volt Supply circuit in the Manifold Flow Valve harness connector.

   Is the resistance above 10k Ohms?

   Yes

   - Go To 5

   No

   - Repair the (F856) 5-Volt Supply circuit for a short to ground.

- Perform the POWERTRAIN VERIFICATION TEST. Refer to **POWERTRAIN VERIFICATION TEST** .

5. **CHECK FOR THE (F856) 5-VOLT SUPPLY CIRCUIT SHORTED TO THE (K900) SENSOR GROUND CIRCUIT**

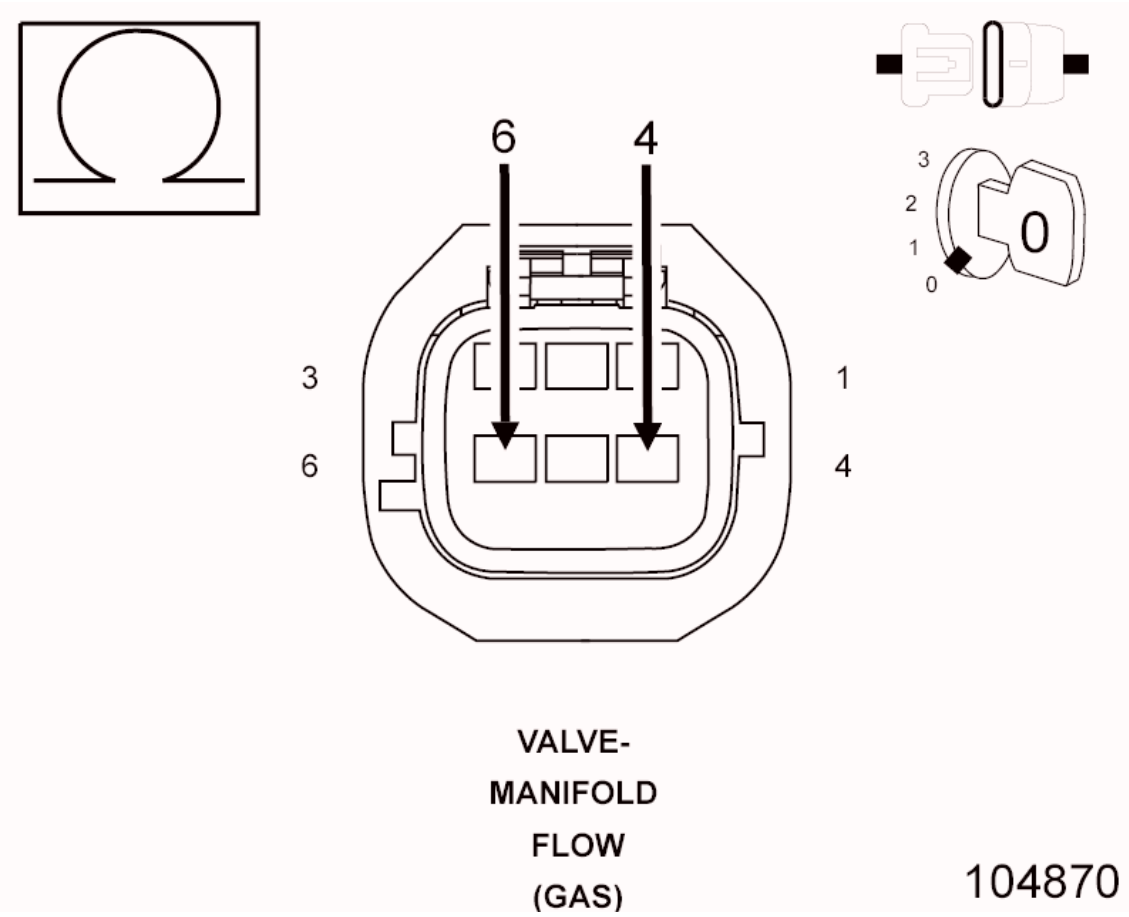

Fig. 112: Checking 5-Volt Supply Circuit For Short To Sensor Ground Circuit
Courtesy of CHRYSLER GROUP, LLC

1. Measure the resistance between the (F856) 5-Volt Supply circuit and the (K900) Sensor Ground circuit in the Manifold Flow Valve harness connector.

   Is the resistance above 10k Ohms?

   Yes

   - Go To 6

   No

- Repair the (F856) 5-Volt Supply circuit for a short to the (K900) Sensor Ground circuit.
- Perform the POWERTRAIN VERIFICATION TEST. Refer to **POWERTRAIN VERIFICATION TEST** .

6. **CHECK THE (F856) 5-VOLT SUPPLY CIRCUIT FOR AN OPEN/HIGH RESISTANCE**

CAUTION: Do not probe the PCM harness connectors. Probing the PCM harness connectors will damage the PCM terminals resulting in poor terminal to pin connection. Install the GPEC Diagnostic Adaptor to perform the diagnosis.

1. Connect the (special tool #10436, Adapter, GPEC Diagnostic).
2. Measure the resistance of the (F856) 5-Volt Supply circuit between the Manifold Flow Valve harness connector and the GPEC Adaptor.

Is the resistance below 5.0 Ohms?

Yes

- Go To 16

No

- Repair the (F856) 5-Volt Supply circuit for an open or high resistance.
- Perform the POWERTRAIN VERIFICATION TEST. Refer to **POWERTRAIN VERIFICATION TEST** .

7. **CHECK THE (K602) MFV SIGNAL CIRCUIT VOLTAGE**

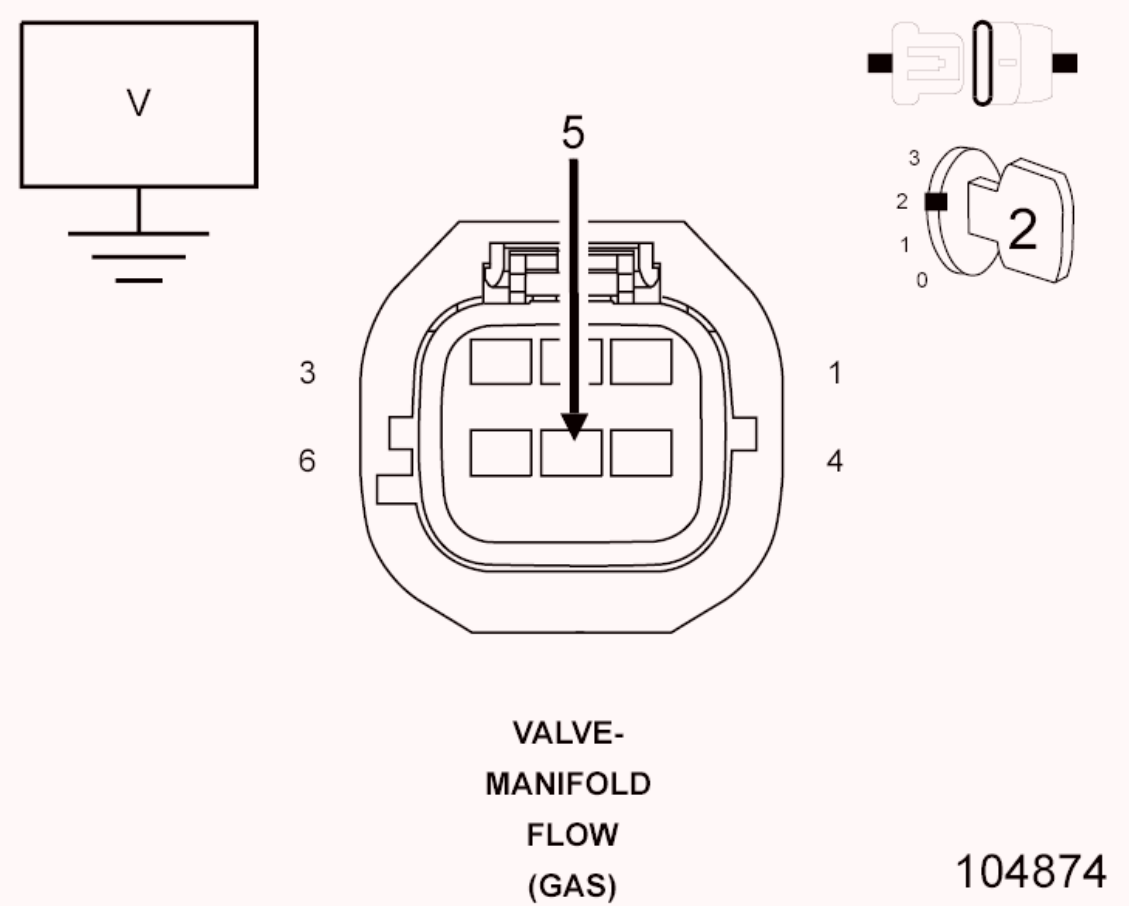

Fig. 113: Checking MFV Signal Circuit
Courtesy of CHRYSLER GROUP, LLC

1. Measure the voltage of the (K602) MFV Signal circuit in the Manifold Flow Valve harness connector.

   Is the voltage between 4.8 and 5.2 volts?

   Yes

   - Go To 12

   No

   - Go To 8

8. **CHECK THE (K602) MFV SIGNAL CIRCUIT FOR A SHORT TO VOLTAGE**

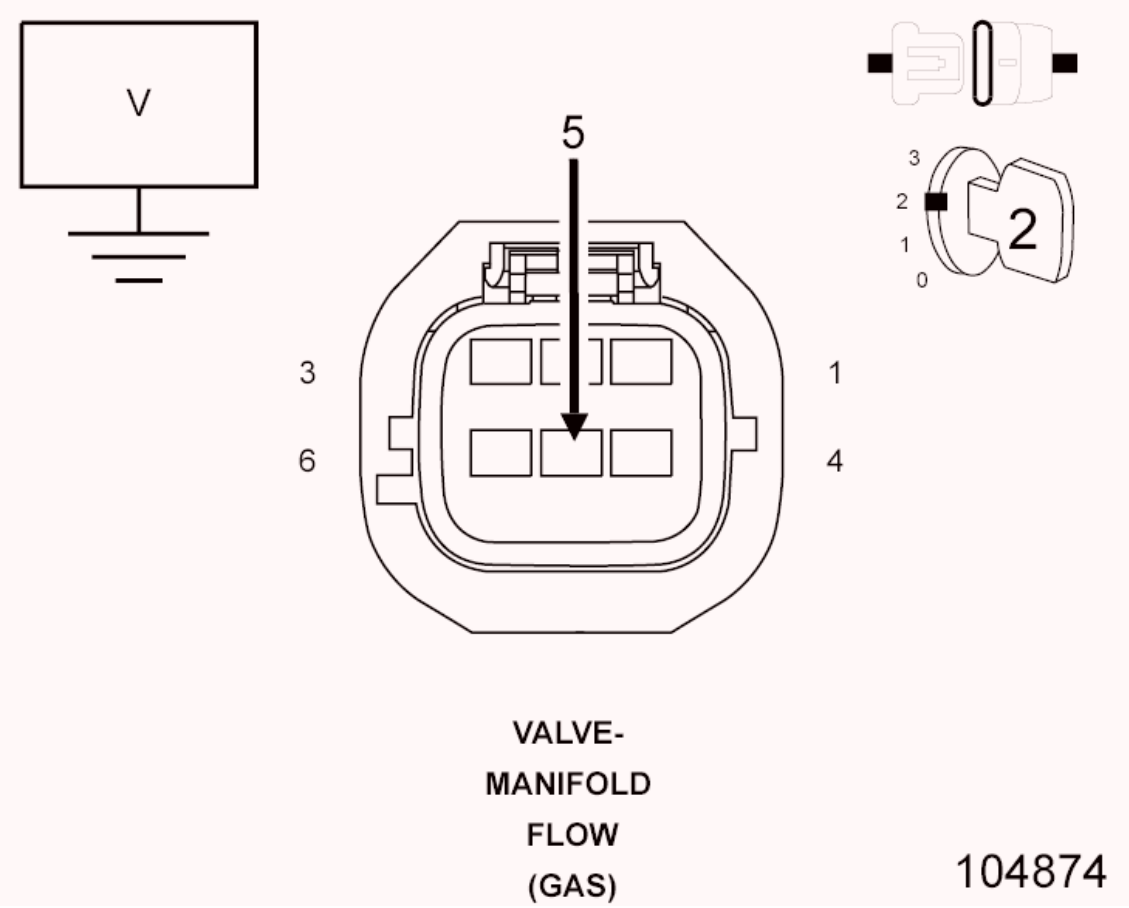

Fig. 114: Checking MFV Signal Circuit For Short To Voltage
Courtesy of CHRYSLER GROUP, LLC

1. Turn the ignition off.
2. Disconnect the PCM C2 harness connector.
3. Turn the ignition on.
4. Measure the voltage of the (K602) MFV Signal circuit in the Manifold Flow Valve harness connector.

   Is there any voltage present?

   Yes

   - Repair the (K602) MFV Signal circuit for a short to voltage.
   - Perform the POWERTRAIN VERIFICATION TEST. Refer to **POWERTRAIN VERIFICATION TEST** .

   No

- Go To 9

9. **CHECK THE (K602) MFV SIGNAL CIRCUIT FOR A SHORT TO GROUND**

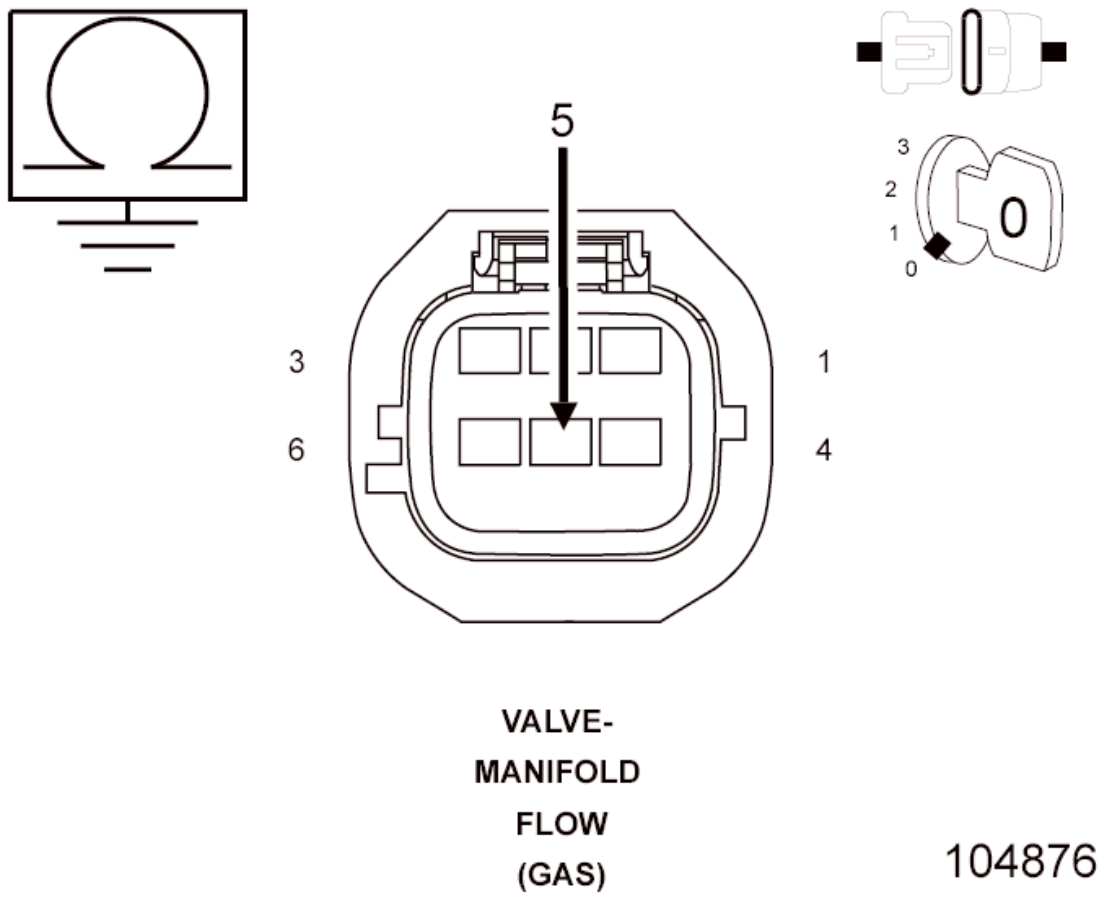

Fig. 115: Checking MFV Signal Circuit For Short To Ground
Courtesy of CHRYSLER GROUP, LLC

1. Turn the ignition off.
2. Measure the resistance between ground and the (K602) MFV Signal circuit in the Manifold Flow Valve harness connector.

   Is the resistance above 10k Ohms?

   Yes

   - Go To 10

   No

   - Repair the (K602) MFV Signal circuit for a short to ground.

- Perform the POWERTRAIN VERIFICATION TEST. Refer to **POWERTRAIN VERIFICATION TEST** .

10. **CHECK FOR THE (K602) MFV SIGNAL CIRCUIT SHORTED TO THE (K900) SENSOR GROUND CIRCUIT**

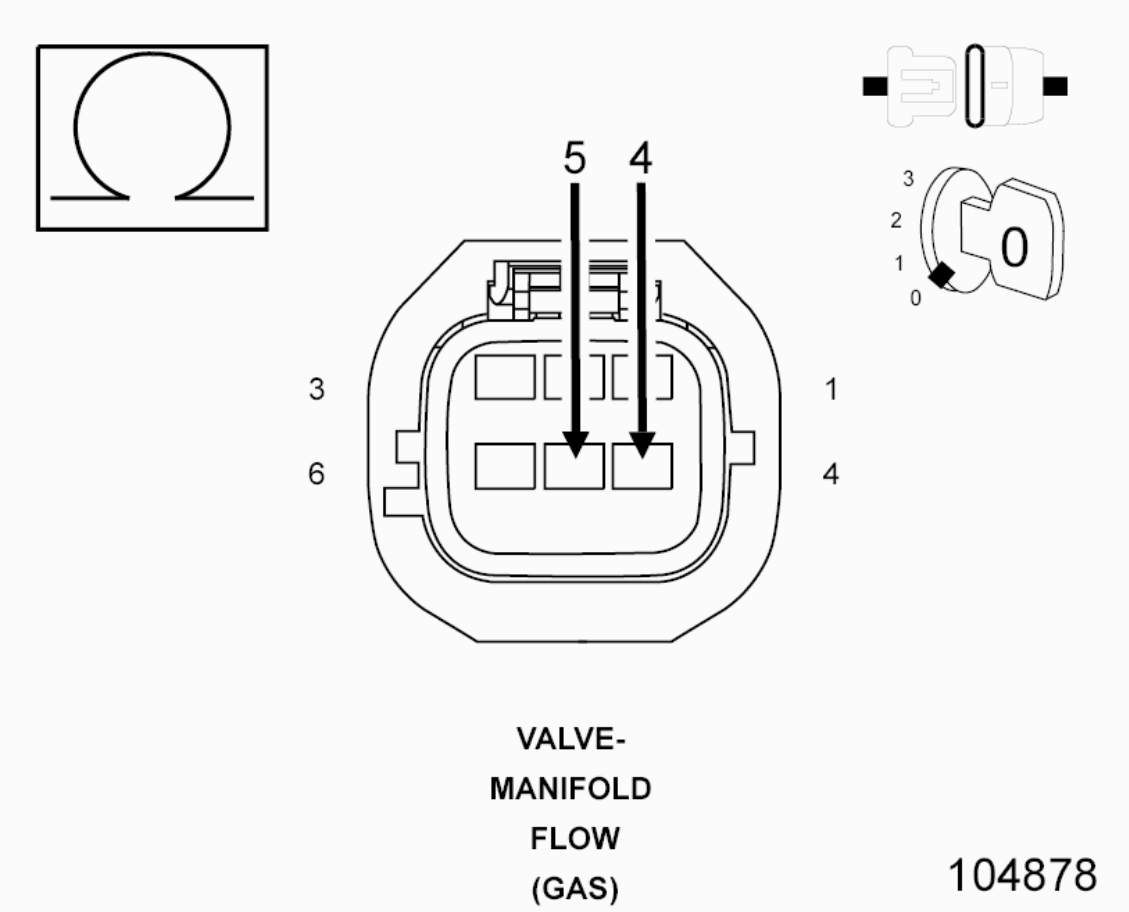

Fig. 116: Checking MFV Signal Circuit For Short To Sensor Ground Circuit
Courtesy of CHRYSLER GROUP, LLC

1. Measure the resistance between the (K602) MFV Signal circuit and the (K900) Sensor Ground circuit in the Manifold Flow Valve harness connector.

   Is the resistance above 10k Ohms?

   Yes

   - Go To 11

   No

- Repair the (K602) MFV Signal circuit for a short to the (K900) Sensor Ground circuit.
- Perform the POWERTRAIN VERIFICATION TEST. Refer to **POWERTRAIN VERIFICATION TEST** .

11. **CHECK THE (K602) MFV SIGNAL CIRCUIT FOR AN OPEN/HIGH RESISTANCE**

CAUTION: Do not probe the PCM harness connectors. Probing the PCM harness connectors will damage the PCM terminals resulting in poor terminal to pin connection. Install the GPEC Diagnostic Adaptor to perform the diagnosis.

1. Connect the (special tool #10436, Adapter, GPEC Diagnostic).
2. Measure the resistance of the (K602) MFV Signal circuit between the Manifold Flow Valve harness connector and the GPEC Adaptor.

Is the resistance below 5.0 Ohms?

Yes

- Go To 16

No

- Repair the (K602) MFV Signal circuit for an open or high resistance.
- Perform the POWERTRAIN VERIFICATION TEST. Refer to **POWERTRAIN VERIFICATION TEST** .

12. **CHECK THE (K900) SENSOR GROUND CIRCUIT FOR AN OPEN/HIGH RESISTANCE**

1. Measure the resistance of the (K900) Sensor Ground circuit between the Manifold Flow Valve harness connector and the PCM C2 harness connector.

Is the resistance below 5.0 Ohms?

Yes

- Go To 13

No

- Repair the (K900) Sensor Ground circuit for an open or high resistance.
- Perform the POWERTRAIN VERIFICATION TEST. Refer to **POWERTRAIN VERIFICATION TEST** .

13. **CHECK FOR THE (K602) MFV SIGNAL CIRCUIT SHORTED TO THE (F856) 5-VOLT SUPPLY CIRCUIT**

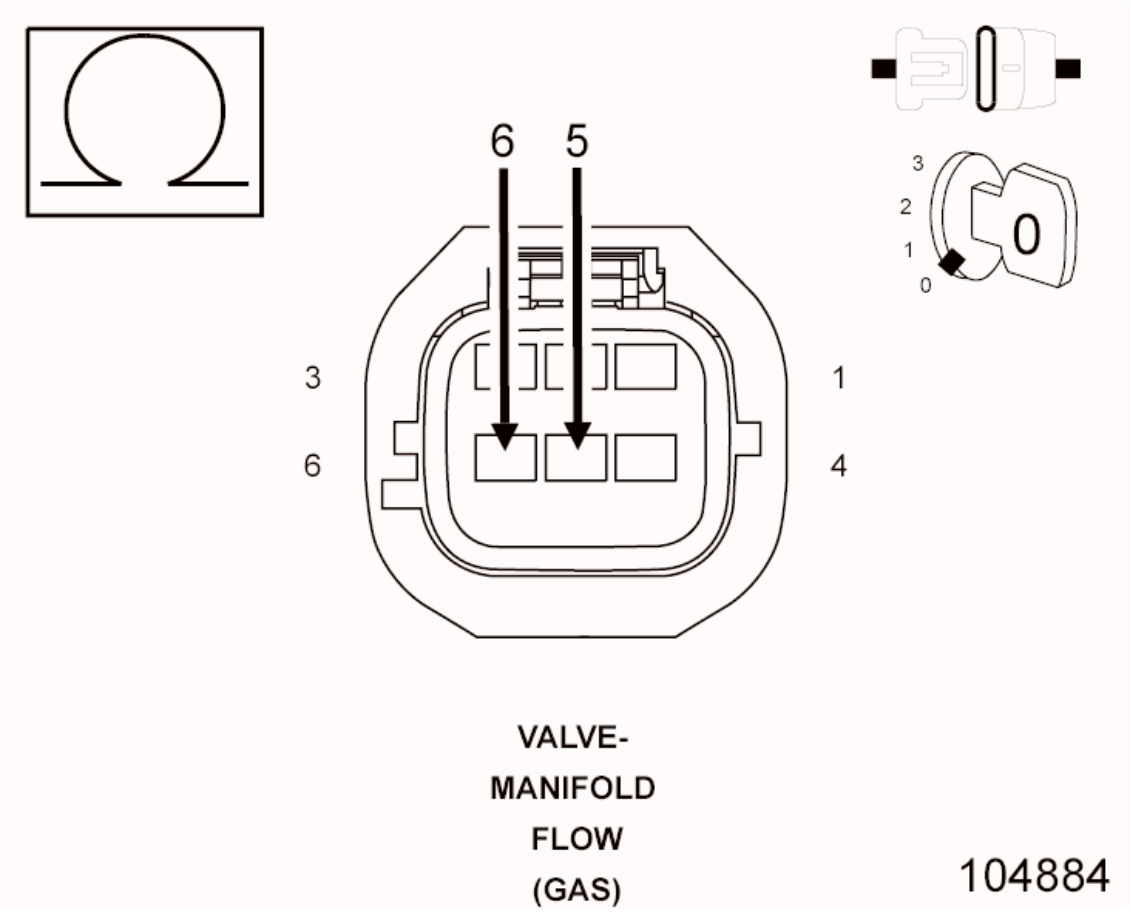

Fig. 117: Checking MFV Signal Circuit For Short To 5-Volt Supply Circuit
Courtesy of CHRYSLER GROUP, LLC

1. Measure the resistance between the (K602) MFV Signal circuit and the (F856) 5-Volt Supply in the Manifold Flow Valve harness connector.

   Is the resistance above 10k Ohms?

Yes

- Go To 14

No

- Repair the (K602) MFV Signal circuit for a short to the (F856) 5-Volt Supply circuit.
- Perform the POWERTRAIN VERIFICATION TEST. Refer to **POWERTRAIN VERIFICATION TEST** .

14. **CHECK THE (Z909) GROUND CIRCUIT FOR AN OPEN/HIGH RESISTANCE**

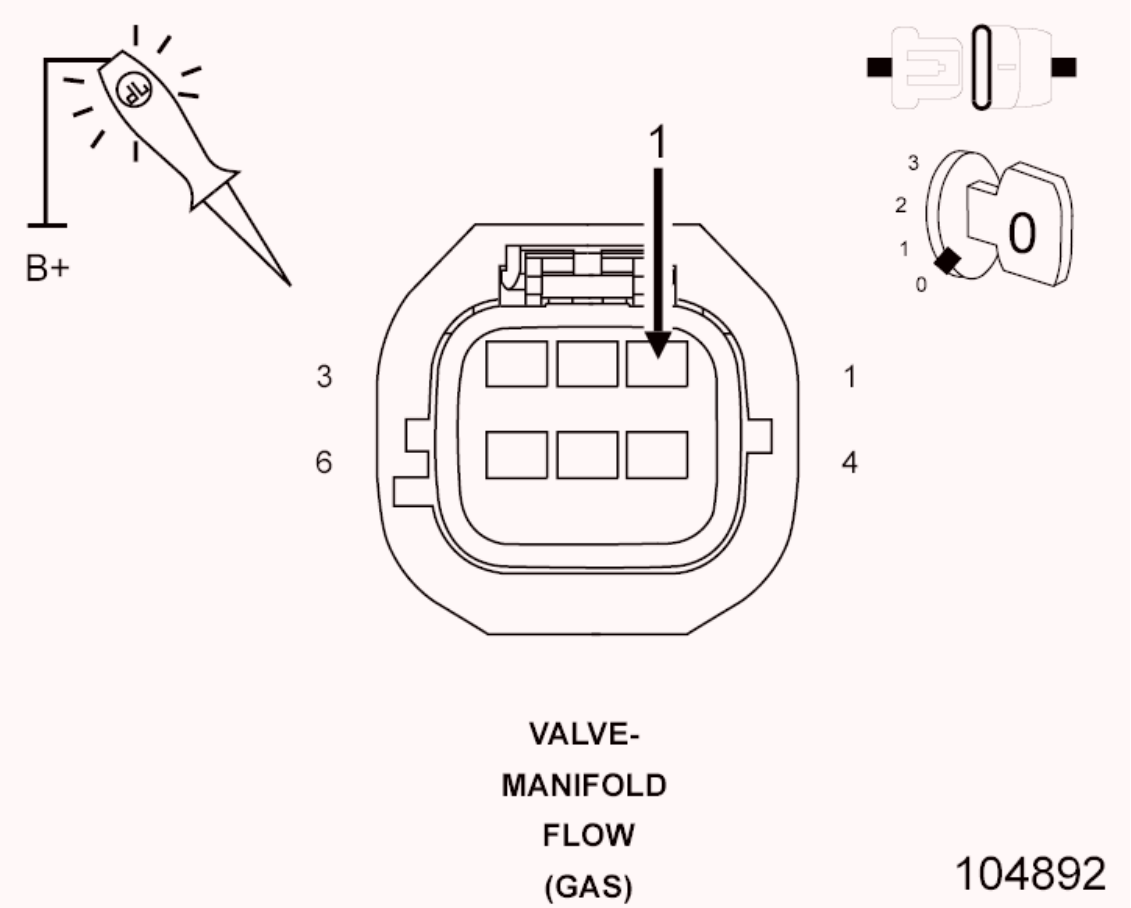

Fig. 118: Checking MFV Ground Circuit For Open Or High Resistance
Courtesy of CHRYSLER GROUP, LLC

1. Using a 12-volt test light connected to 12 volts, check the (Z909) Ground circuit in the Manifold Flow Valve harness connector.

NOTE: The test light should be illuminated and bright.

Compare the brightness to that of a direct connection to the battery.

Is the test light illuminated and bright?

Yes

- Go To 15

No

- Repair the (Z909) Ground circuit for an open or high resistance.
- Perform the POWERTRAIN VERIFICATION TEST. Refer to **POWERTRAIN VERIFICATION TEST** .

15. **MANIFOLD FLOW VALVE**
    1. Turn the ignition off.
    2. Using the wiring diagram/schematic as a guide, inspect the wiring and connectors between the Manifold Flow Valve and the Powertrain Control Module (PCM).
    3. Look for any chafed, pierced, pinched, or partially broken wires.
    4. Look for broken, bent, pushed out or corroded terminals.
    5. Perform any Technical Service Bulletins that may apply.
    6. Remove the Manifold Flow Valve.
    7. Inspect the return spring and the valve blade assembly for debris stuck in the path or for frozen/seized blades.

NOTE: **Manifold Flow Valve over travel or under travel can cause this DTC to set.**

NOTE: **If the Manifold Flow Valve blades are seized in the intake manifold, the manifold will have to be replaced.**

NOTE: **If the Manifold Flow Valve is replaced, a non volatile memory reset must be performed to learn the new port flap adaptive values.**

Were any problems found?

Yes

- Repair as necessary.
- Perform the POWERTRAIN VERIFICATION TEST. Refer to **POWERTRAIN VERIFICATION TEST** .

No

- Replace the Manifold Flow Valve in accordance with the service information.
- Perform the POWERTRAIN VERIFICATION TEST. Refer to **POWERTRAIN VERIFICATION TEST** .

16. **POWERTRAIN CONTROL MODULE (PCM)**
    1. Using the wiring diagram/schematic as a guide, inspect the wiring and connectors between the Manifold Flow Valve and the Powertrain Control Module (PCM).
    2. Look for any chafed, pierced, pinched, or partially broken wires.
    3. Look for broken, bent, pushed out or corroded terminals.
    4. Perform any Technical Service Bulletins that may apply.

    Were any problems found?

    Yes

    - Repair as necessary.
    - Perform the POWERTRAIN VERIFICATION TEST. Refer to **POWERTRAIN VERIFICATION TEST** .

    No

    - Replace and program the Powertrain Control Module (PCM) in accordance with the service information. Refer to **MODULE, POWERTRAIN CONTROL, REMOVAL** .
    - Perform the POWERTRAIN VERIFICATION TEST. Refer to **POWERTRAIN VERIFICATION TEST** .

P2008-INTAKE MANIFOLD RUNNER (SWIRL) CONTROL CIRCUIT/OPEN

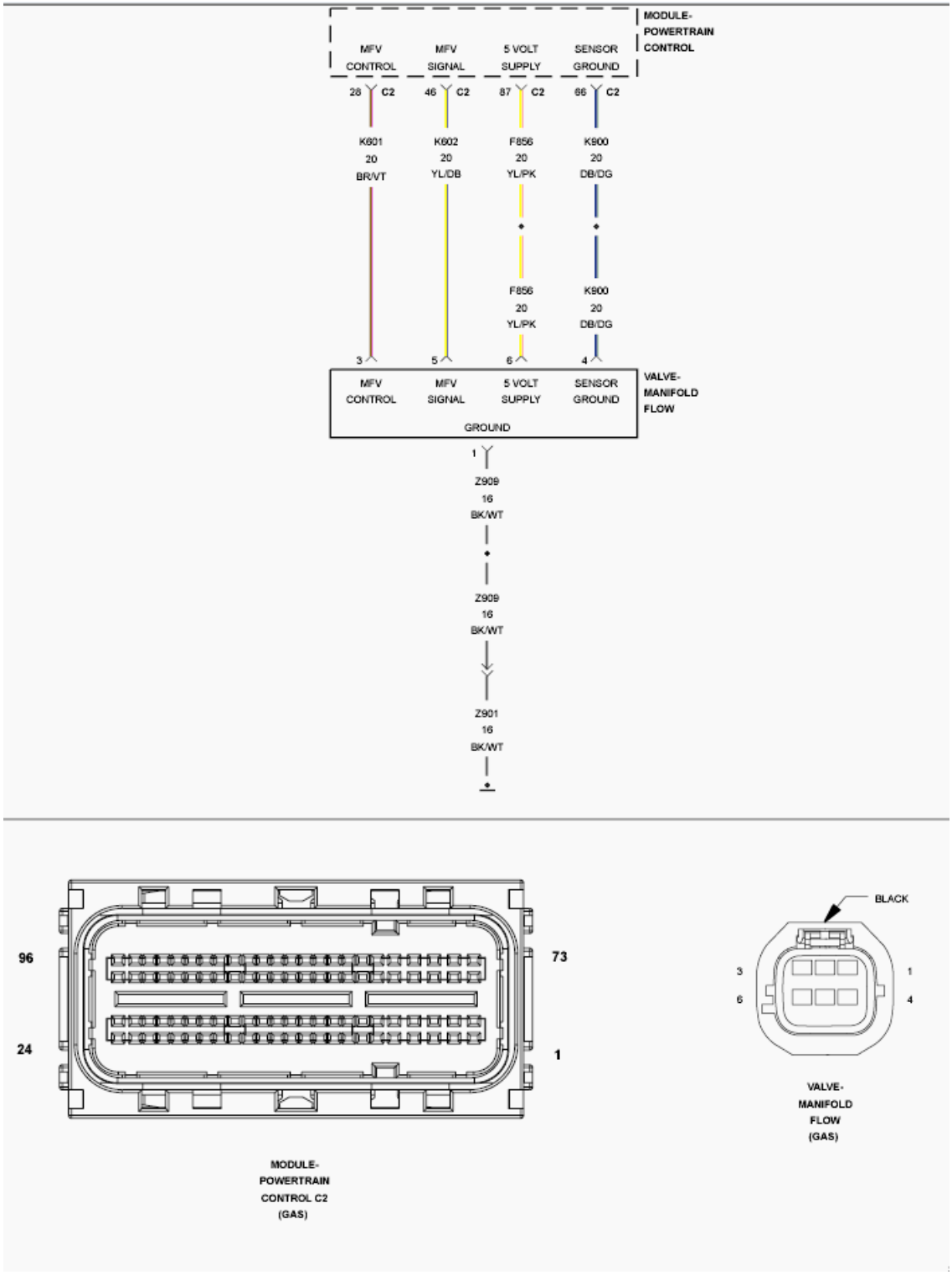

Fig. 119: Manifold Flow Valve Position Sensor Circuit Diagram
Courtesy of CHRYSLER GROUP, LLC

For a complete wiring diagram, **refer to appropriate SYSTEM WIRING DIAGRAMS article** .

WHEN MONITORED

With the engine running and battery voltage greater than 10.4 volts.

SET CONDITION

The Powertrain Control Module (PCM) detects that the Manifold Flow Valve control circuit voltage is not within an acceptable range.

POSSIBLE CAUSES

Possible Causes
(K601) MFV CONTROL CIRCUIT SHORTED TO VOLTAGE
(K601) MFV CONTROL CIRCUIT SHORTED TO GROUND
(K601) MFV CONTROL CIRCUIT OPEN OR HIGH RESISTANCE
(Z909) GROUND CIRCUIT OPEN OR HIGH RESISTANCE
MANIFOLD FLOW VALVE
POWERTRAIN CONTROL MODULE (PCM)

Always perform the Pre-Diagnostic Troubleshooting procedure before proceeding. Refer to PRE-DIAGNOSTIC TROUBLESHOOTING PROCEDURE .

DIAGNOSTIC TEST

1. **ACTIVE DTC**
    1. Turn the ignition on.
    2. With the scan tool, Clear DTCs in the Powertrain Control Module (PCM).
    3. Start the engine and allow it to reach normal operating temperature.

    WARNING: When the engine is operating, do not stand in direct line with the fan. Do not put your hands near the pulleys, belts or fan. Do not wear loose clothing. Failure to follow these instructions may result in possible serious or fatal injury.

    4. With the scan tool, select View DTCs.

    Is the status Active for this DTC?

Yes

- Go To 2

No

- Perform the INTERMITTENT CONDITION diagnostic procedure. Refer to **INTERMITTENT CONDITION** .

2. **CHECK THE (Z909) GROUND CIRCUIT FOR AN OPEN/HIGH RESISTANCE**

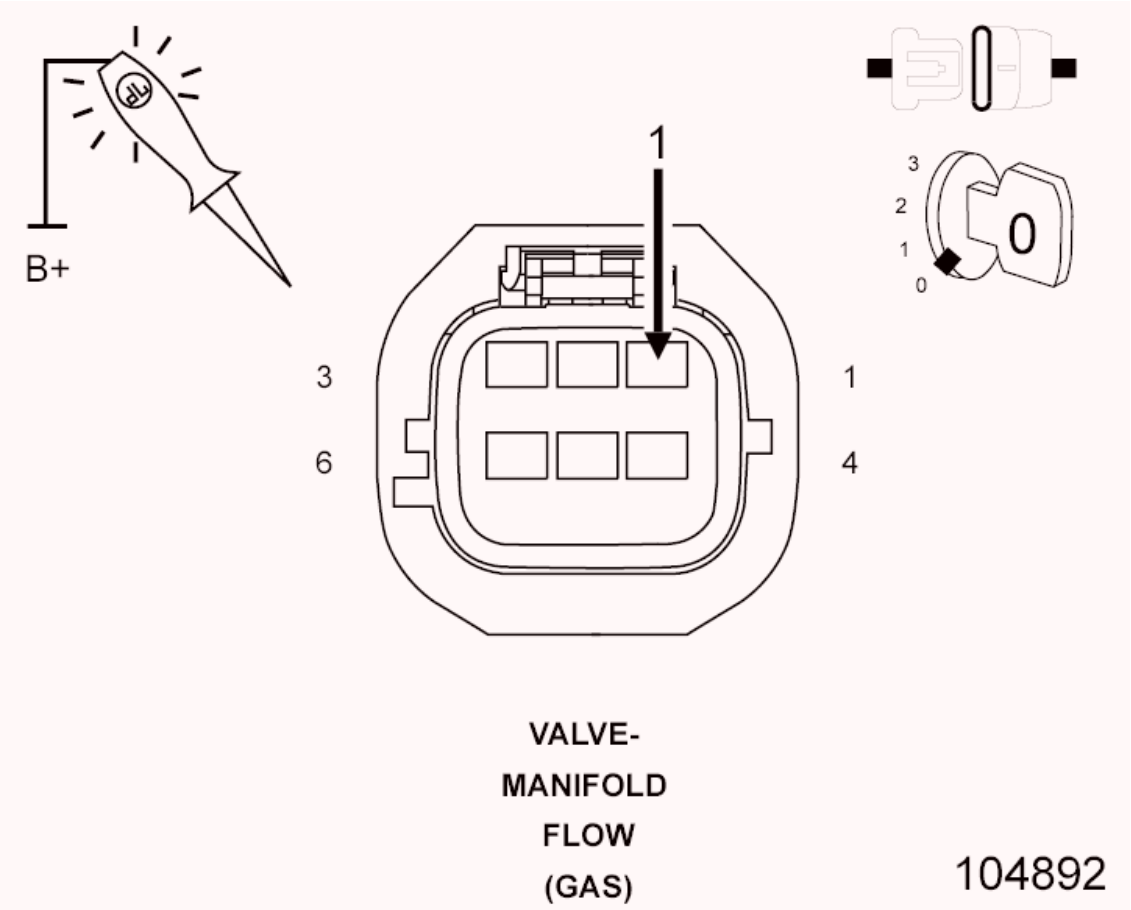

Fig. 120: Checking MFV Ground Circuit For Open Or High Resistance
Courtesy of CHRYSLER GROUP, LLC

1. Turn the ignition off.
2. Disconnect the Manifold Flow Valve harness connector.
3. Using a 12-volt test light connected to 12 volts, check the (Z909) Ground circuit in the Manifold Flow Valve harness connector.

NOTE: The test light should be illuminated and bright. Compare the brightness to that of a direct connection to the battery.

Is the test light illuminated and bright?

Yes

- Go To 3

No

- Repair the (Z909) Ground circuit for an open or high resistance.
- Perform the POWERTRAIN VERIFICATION TEST. Refer to **POWERTRAIN VERIFICATION TEST** .

3. **CHECK THE (K601) MFV CONTROL CIRCUIT FOR A SHORT TO VOLTAGE**

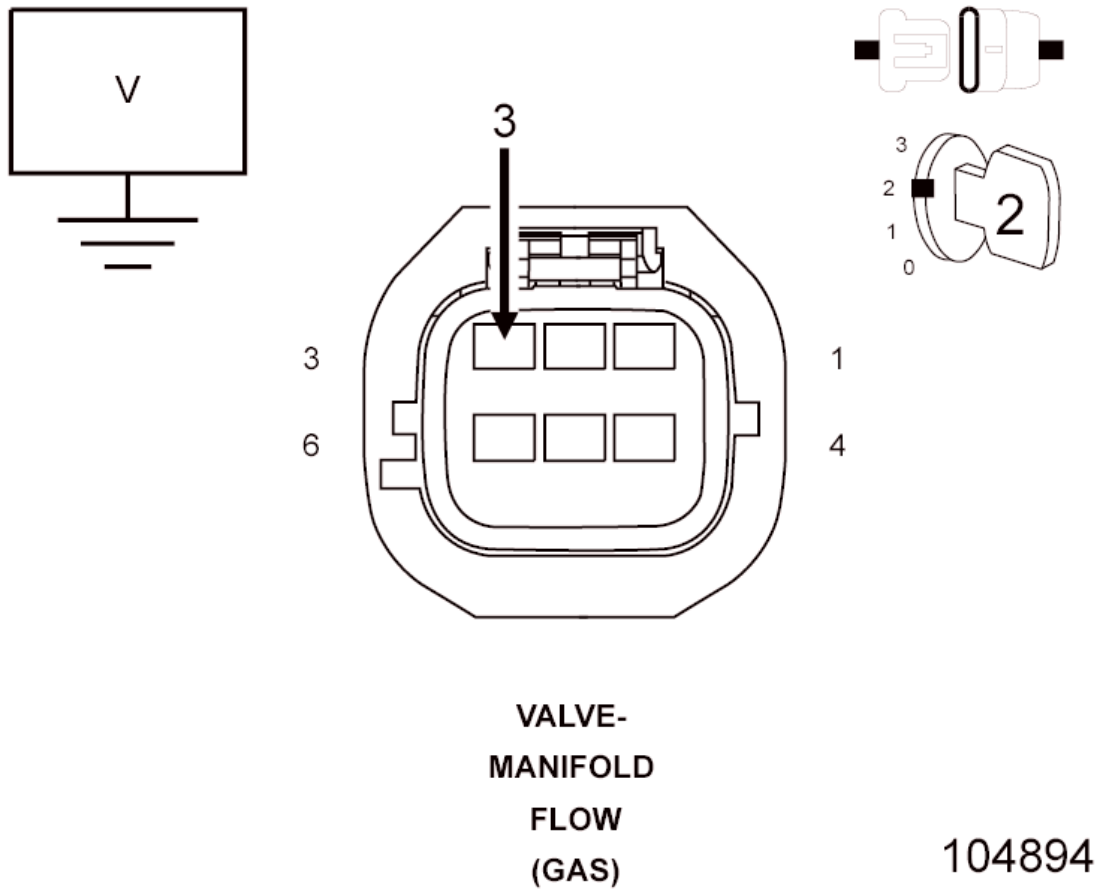

Fig. 121: Checking Control Circuit For Short To Voltage

Courtesy of CHRYSLER GROUP, LLC

1. Turn the ignition off.
2. Disconnect the PCM C2 harness connector.
3. Turn the ignition on.
4. Measure the voltage of the (K601) MFV Control circuit in the Manifold Flow Valve harness connector.

   Is there any voltage present?

   Yes

   - Repair the (K601) MFV Control circuit for a short to voltage.
   - Perform the POWERTRAIN VERIFICATION TEST. Refer to **POWERTRAIN VERIFICATION TEST** .

   No

   - Go To 4

4. **CHECK THE (K601) MFV CONTROL CIRCUIT FOR A SHORT TO GROUND**

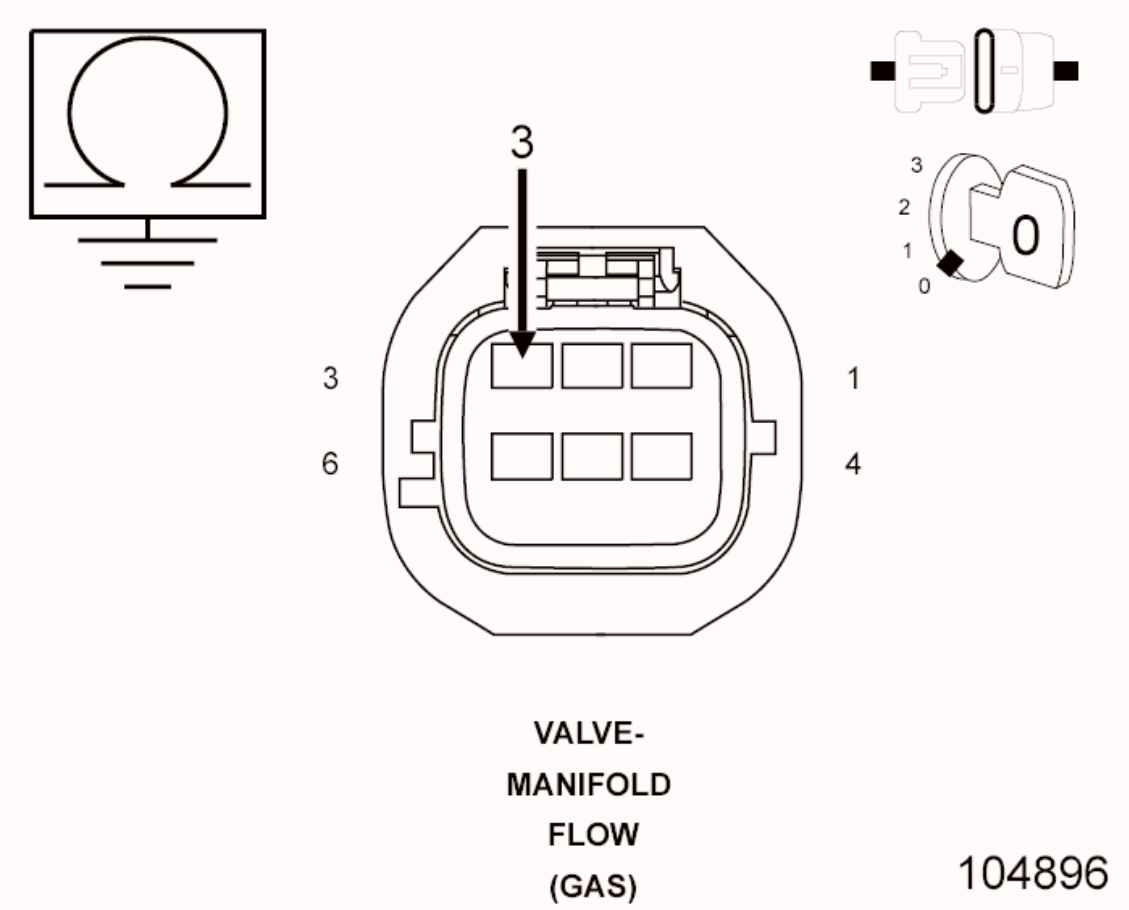

Fig. 122: Checking Control Circuit For Short To Ground
Courtesy of CHRYSLER GROUP, LLC

1. Turn the ignition off.
2. Measure the resistance between ground and the (K601) MFV Control circuit in the Manifold Flow Valve harness connector.

   Is the resistance above 10k Ohms?

   Yes

   - Go To 5

   No

   - Repair the (K601) MFV Control circuit for a short to ground.
   - Perform the POWERTRAIN VERIFICATION TEST. Refer to **POWERTRAIN VERIFICATION TEST** .

5. **CHECK THE (K601) MFV CONTROL CIRCUIT FOR AN OPEN/HIGH RESISTANCE**

CAUTION: Do not probe the PCM harness connectors. Probing the PCM harness connectors will damage the PCM terminals resulting in poor terminal to pin connection. Install the GPEC Diagnostic Adaptor to perform the diagnosis.

1. Connect the (special tool #10436, Adapter, GPEC Diagnostic).
2. Measure the resistance of the (K601) MFV Control circuit between the Manifold Flow Valve harness connector and the GPEC Adaptor.

   Is the resistance below 5.0 Ohms?

   Yes

   - Go To 6

   No

   - Repair the (K601) MFV Control circuit for an open or high resistance.
   - Perform the POWERTRAIN VERIFICATION TEST. Refer to **POWERTRAIN VERIFICATION TEST** .

6. **MANIFOLD FLOW VALVE**

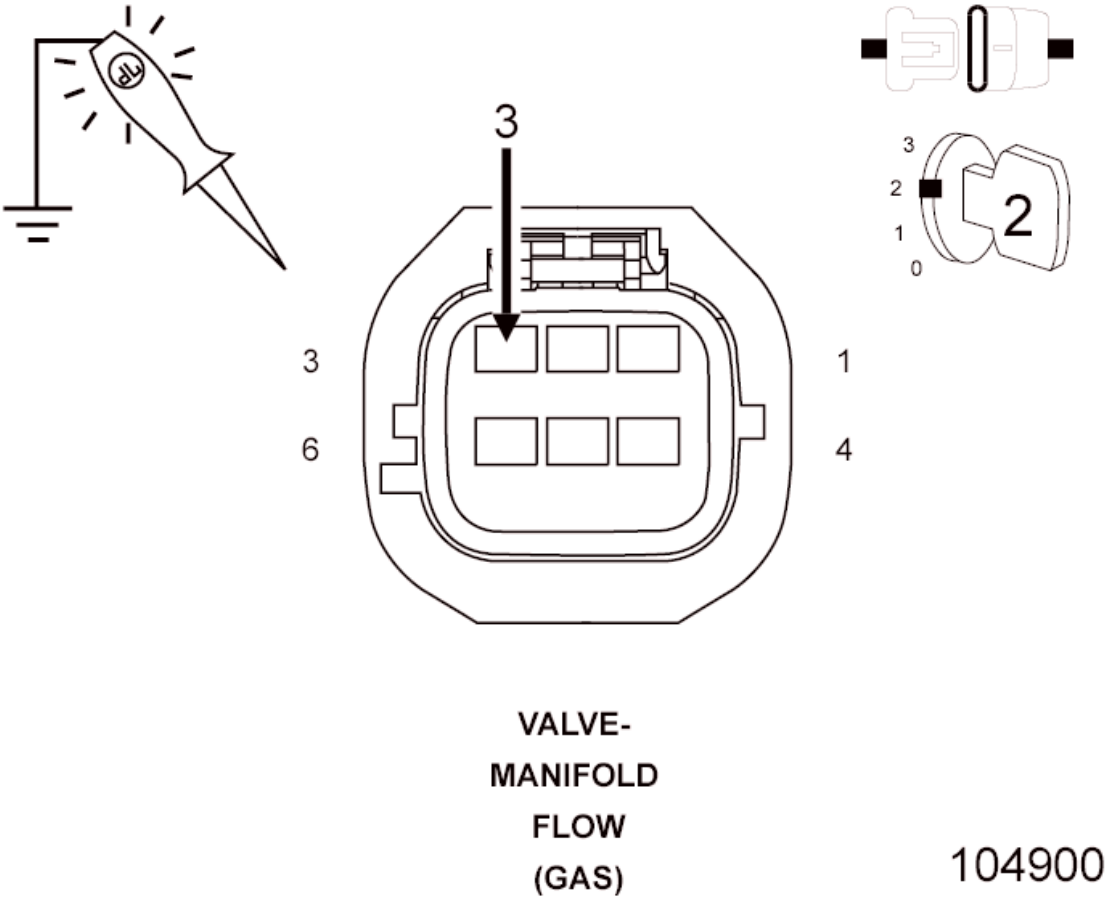

Fig. 123: Checking MFV Circuit
Courtesy of CHRYSLER GROUP, LLC

1. Reconnect the PCM C2 harness connector.
2. Turn the ignition on.
3. With the scan tool, actuate the Manifold Flow Valve control to the ON (100%) position.
4. Using a 12-volt test light connected to ground, check the (K601) MFV Control circuit in the Manifold Flow Valve harness connector.

NOTE: The test light should be illuminated and bright with the control actuated ON (100%). Compare the brightness to that of a direct connection to the battery.

5. With the scan tool, actuate the Manifold Flow Valve control to OFF (0%).
6. Using a 12-volt test light connected to 12 ground, check the (K601)

MFV Control circuit in the Manifold Flow Valve harness connector.

NOTE: The test light should not be illuminated with the control actuated OFF (0%).

Is the test light illuminated and bright with the control actuated ON and not illuminated with the control actuated OFF?

Yes

- Replace the Manifold Flow Valve in accordance with the service information.
- Perform the POWERTRAIN VERIFICATION TEST. Refer to **POWERTRAIN VERIFICATION TEST** .

No

- Go To 7

7. **POWERTRAIN CONTROL MODULE (PCM)**
   1. Using the wiring diagram/schematic as a guide, inspect the wiring and connectors between the Manifold Flow Valve and the Powertrain Control Module (PCM).
   2. Look for any chafed, pierced, pinched, or partially broken wires.
   3. Look for broken, bent, pushed out or corroded terminals.
   4. Perform any Technical Service Bulletins that may apply.

   Were any problems found?

   Yes

   - Repair as necessary.
   - Perform the POWERTRAIN VERIFICATION TEST. Refer to **POWERTRAIN VERIFICATION TEST** .

   No

   - Replace and program the Powertrain Control Module (PCM) in accordance with the service information. Refer to **MODULE, POWERTRAIN CONTROL, REMOVAL** .

- Perform the POWERTRAIN VERIFICATION TEST. Refer to **POWERTRAIN VERIFICATION TEST** .

P2015-INTAKE MANIFOLD RUNNER POSITION SENSOR PERFORMANCE

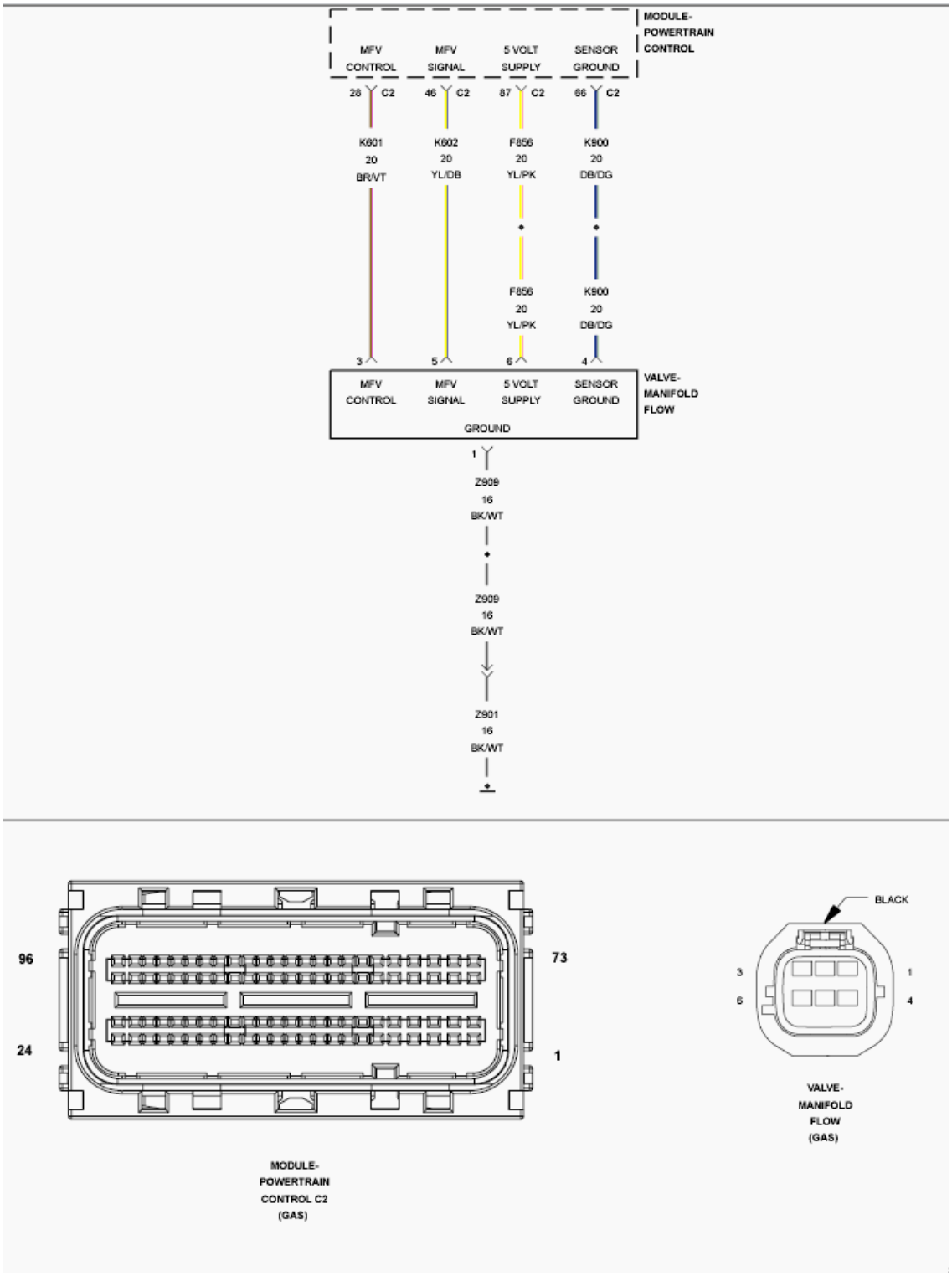

Fig. 124: Manifold Flow Valve Position Sensor Circuit Diagram
Courtesy of CHRYSLER GROUP, LLC

For a complete wiring diagram, **refer to appropriate SYSTEM WIRING DIAGRAMS article** .

WHEN MONITORED

With the ignition on and battery voltage greater than 10.4 volts.

SET CONDITION

The Powertrain Control Module (PCM) detects an implausible voltage on the Manifold Flow Valve circuit.

POSSIBLE CAUSES

Possible Causes
(F856) 5 VOLT SUPPLY CIRCUIT SHORTED TO VOLTAGE
(K602) MFV SIGNAL CIRCUIT SHORTED TO VOLTAGE
(F856) 5 VOLT SUPPLY CIRCUIT SHORTED TO GROUND
(K602) MFV SIGNAL CIRCUIT SHORTED TO GROUND
(F856) 5 VOLT SUPPLY CIRCUIT SHORTED TO THE (K602) MFV SIGNAL CIRCUIT
(F856) 5 VOLT SUPPLY CIRCUIT SHORTED TO THE (K900) SENSOR GROUND CIRCUIT
(K602) MFV SIGNAL CIRCUIT SHORTED TO THE (K900) SENSOR GROUND CIRCUIT
(F856) 5 VOLT SUPPLY CIRCUIT OPEN OR HIGH RESISTANCE
(K602) MFV SIGNAL CIRCUIT OPEN OR HIGH RESISTANCE
(K900) SENSOR GROUND CIRCUIT OPEN OR HIGH RESISTANCE
MANIFOLD FLOW VALVE
POWERTRAIN CONTROL MODULE (PCM)

Always perform the Pre-Diagnostic Troubleshooting procedure before proceeding. Refer to PRE-DIAGNOSTIC TROUBLESHOOTING PROCEDURE .

DIAGNOSTIC TEST

1. **DTC IS ACTIVE**
    1. Start the engine.

2. Allow the engine to reach normal operating temperature.

NOTE: Diagnose and repair any system voltage or sensor reference voltage DTCs before continuing with this test.

3. With the scan tool, select View DTCs.

Is the status Active for this DTC?

Yes

- Go To 2

No

- Perform the INTERMITTENT CONDITION diagnostic procedure. Refer to **INTERMITTENT CONDITION** .

2. **(F856) 5 VOLT SUPPLY CIRCUIT VOLTAGE**

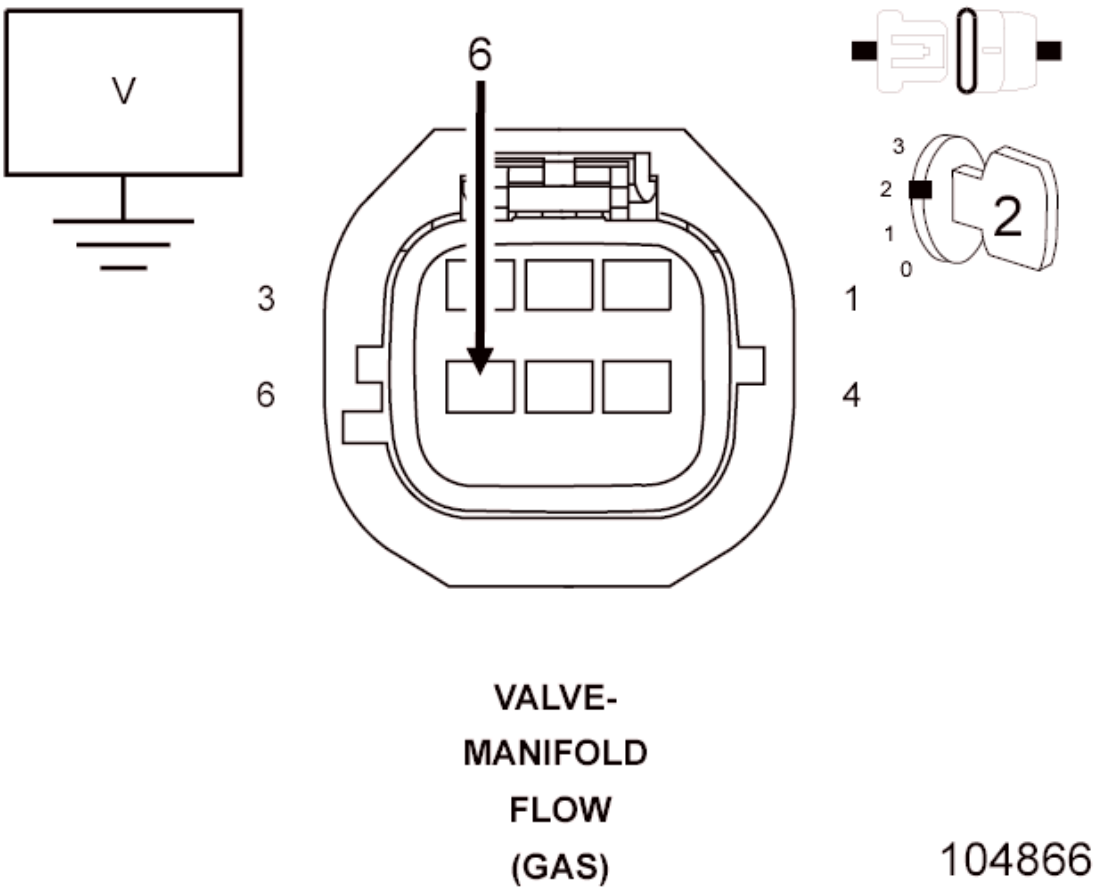

Fig. 125: Checking 5-Volt Supply Circuit
Courtesy of CHRYSLER GROUP, LLC

1. Turn the ignition off.
2. Disconnect the Manifold Flow Valve harness connector.
3. Turn the ignition on.
4. Measure the voltage of the (F856) 5 Volt Supply circuit in the Manifold Flow Valve harness connector.

   Is the voltage between 4.5 and 5.5 volts?

   Yes

   - Go To 3

   No

   - Go To 7

3. **(K602) MFV SIGNAL CIRCUIT VOLTAGE**

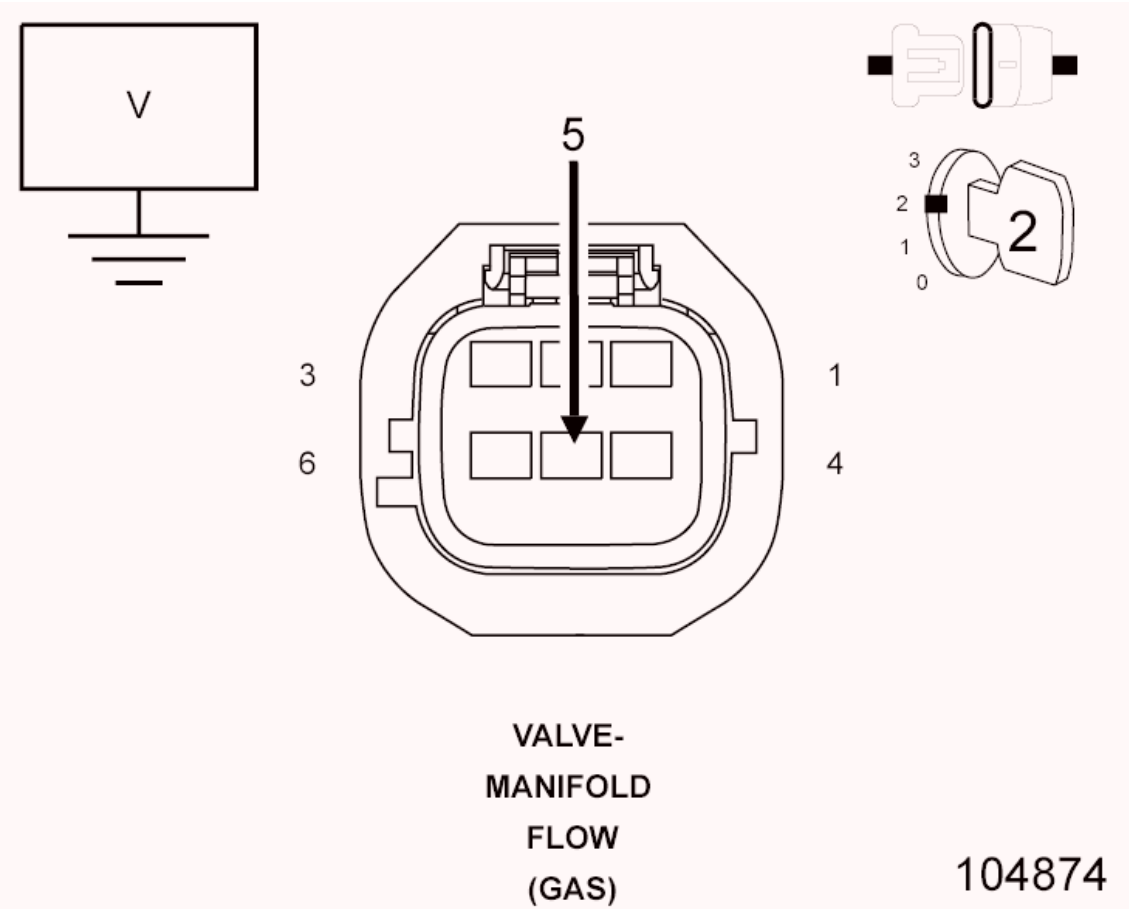

Fig. 126: Checking MFV Signal Circuit
Courtesy of CHRYSLER GROUP, LLC

1. Measure the voltage of the (K602) MFV Signal circuit in the Manifold Flow Valve harness connector.

   Is the voltage between 4.5 and 5.5 volts?

   Yes

   - Go To 4

   No

   - Go To 11

4. **(K900) SENSOR GROUND CIRCUIT TEST**
   1. Turn the ignition off.
   2. Using a 12-volt test light connected to 12 volts, check the (K900) Sensor Ground in the Manifold Flow Valve harness connector.

      NOTE: The test light should be illuminated and bright. Compare the brightness to that of a direct connection to the battery.

      Is the test light illuminated and bright?

      Yes

      - Go To 5

      No

      - Go To 15

5. **(F856) 5 VOLT SUPPLY CIRCUIT SHORTED TO THE (K602) MFV SIGNAL CIRCUIT**

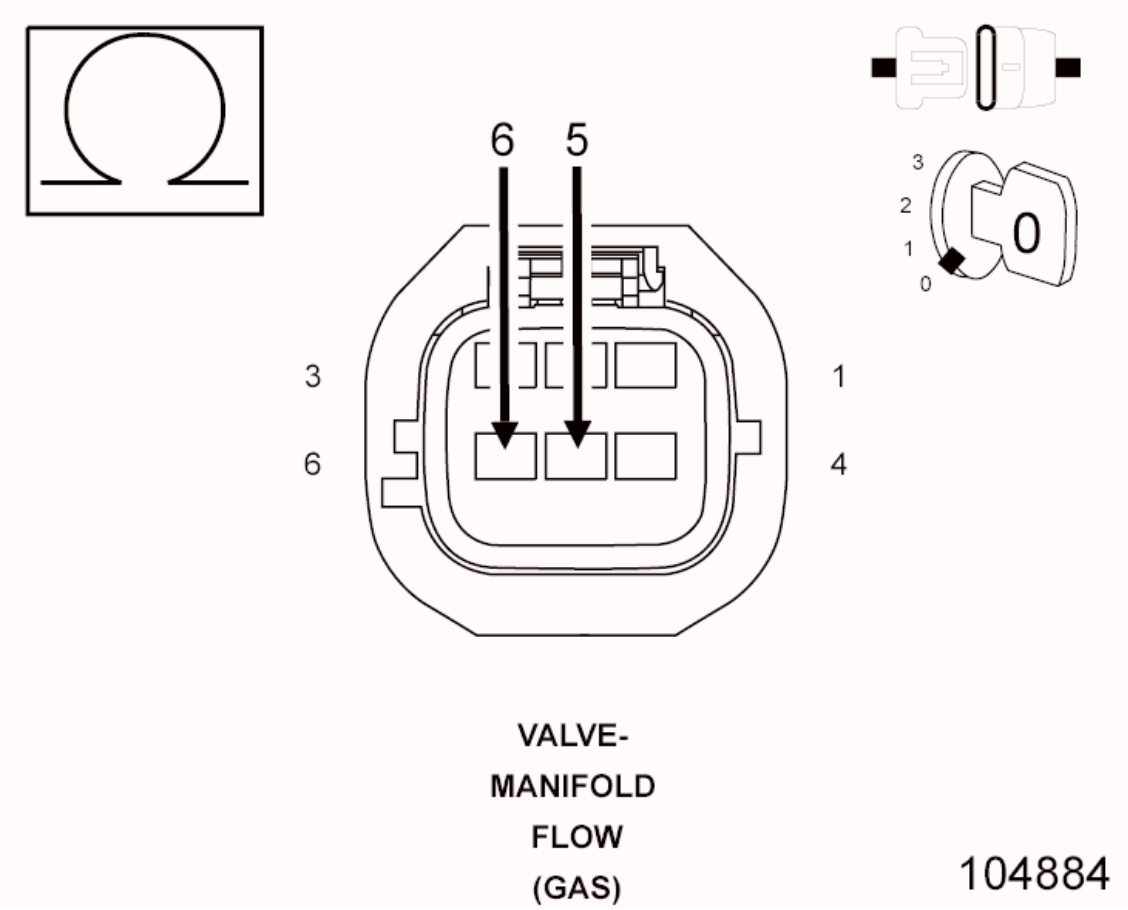

Fig. 127: Checking MFV Signal Circuit For Short To 5-Volt Supply Circuit
Courtesy of CHRYSLER GROUP, LLC

1. Turn the ignition off.
2. Disconnect the PCM C2 harness connector.
3. Measure the resistance between the (F856) 5 Volt Supply circuit and the (K602) MFV Signal circuit in the Manifold Flow Valve harness connector.

   Is the resistance above 100 Ohms?

   Yes

   - Go To 6

   No

   - Repair the (F856) 5 Volt Supply circuit for a short to the (K602) MFV Signal circuit.

- Perform the POWERTRAIN VERIFICATION TEST. Refer to **POWERTRAIN VERIFICATION TEST** .

6. **MANIFOLD FLOW VALVE**
   1. Using the wiring diagram/schematic as a guide, inspect the wiring and connectors between the Manifold Flow Valve and the Powertrain Control Module (PCM).
   2. Look for any chafed, pierced, pinched, or partially broken wires.
   3. Look for broken, bent, pushed out or corroded terminals.
   4. Inspect the Manifold Flow Valve for any condition that would result in an incorrect signal, such as damage or contamination.

   Were any problems found?

   Yes

   - Repair as necessary.
   - Perform the POWERTRAIN VERIFICATION TEST. Refer to **POWERTRAIN VERIFICATION TEST** .

   No

   - Replace the Manifold Flow Valve in accordance with the service information.
   - Perform the POWERTRAIN VERIFICATION TEST. Refer to **POWERTRAIN VERIFICATION TEST** .

7. **(F856) 5 VOLT SUPPLY CIRCUIT SHORTED TO VOLTAGE**

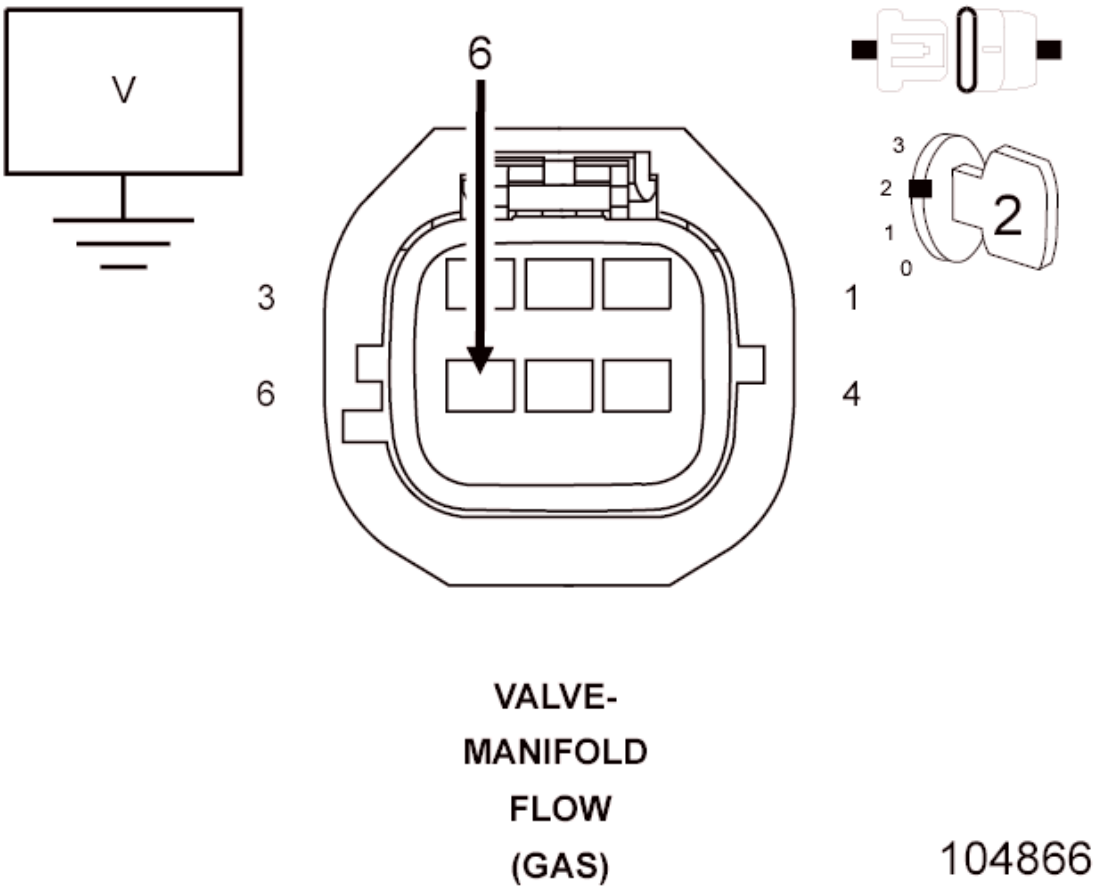

Fig. 128: Checking Manifold Flow Valve 5-Volt Supply Circuit For Short To Voltage
Courtesy of CHRYSLER GROUP, LLC

1. Turn the ignition off.
2. Disconnect the PCM C2 harness connector.
3. Turn the ignition on.
4. Measure the voltage of the (F856) 5 Volt Supply circuit in the Manifold Flow Valve harness connector.

   Is there any voltage present?

   Yes

   - Repair the (F856) 5 Volt Supply circuit for a short to voltage.
   - Perform the POWERTRAIN VERIFICATION TEST. Refer to **POWERTRAIN VERIFICATION TEST** .

   No

- Go To 8

8. **(F856) 5 VOLT SUPPLY CIRCUIT SHORTED TO GROUND**

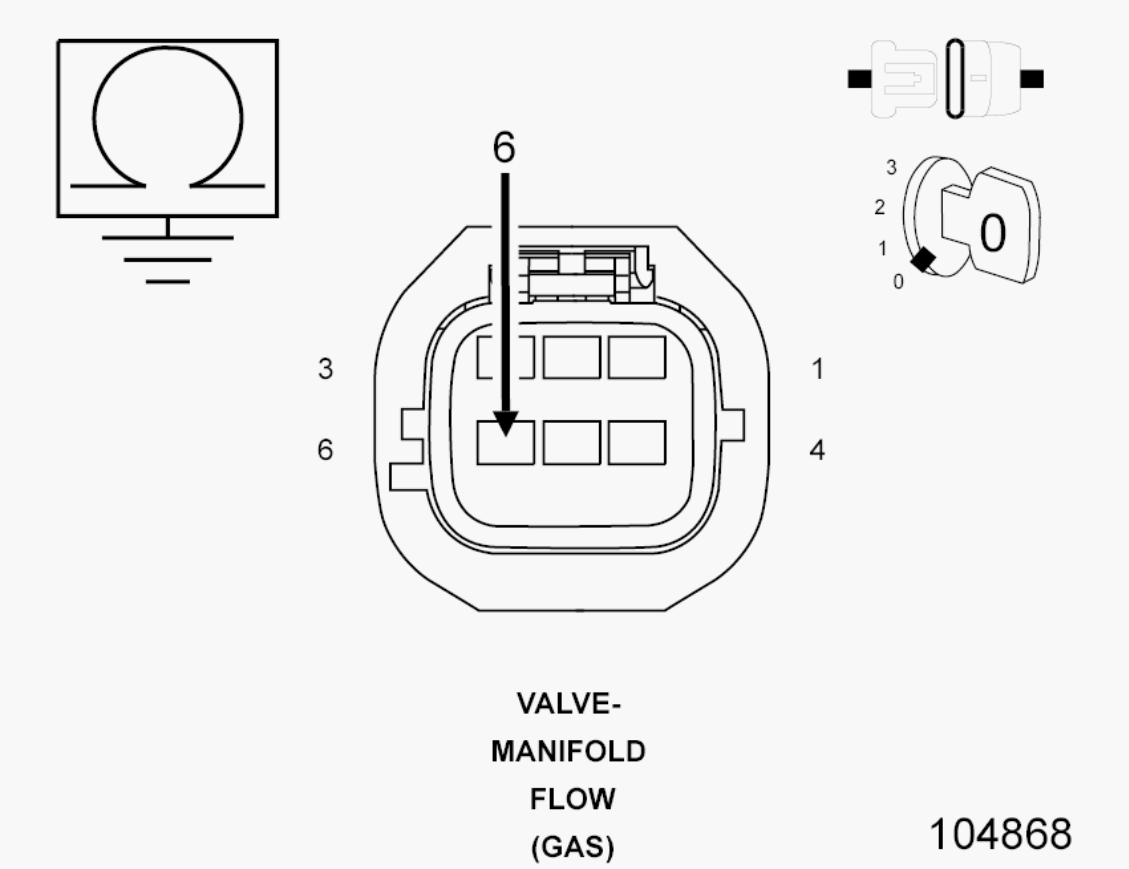

Fig. 129: Checking MFV Supply Circuit For Short To Ground
Courtesy of CHRYSLER GROUP, LLC

1. Turn the ignition off.
2. Measure the resistance between ground and the (F856) 5 Volt Supply circuit in the Manifold Flow Valve harness connector.

   Is the resistance above 100 Ohms?

   Yes

   - Go To 9

   No

   - Repair the (F856) 5 Volt Supply circuit for a short to ground.
   - Perform the POWERTRAIN VERIFICATION TEST. Refer to

POWERTRAIN VERIFICATION TEST .

9. **(F856) 5 VOLT SUPPLY CIRCUIT SHORTED TO THE (K900) SENSOR GROUND CIRCUIT**

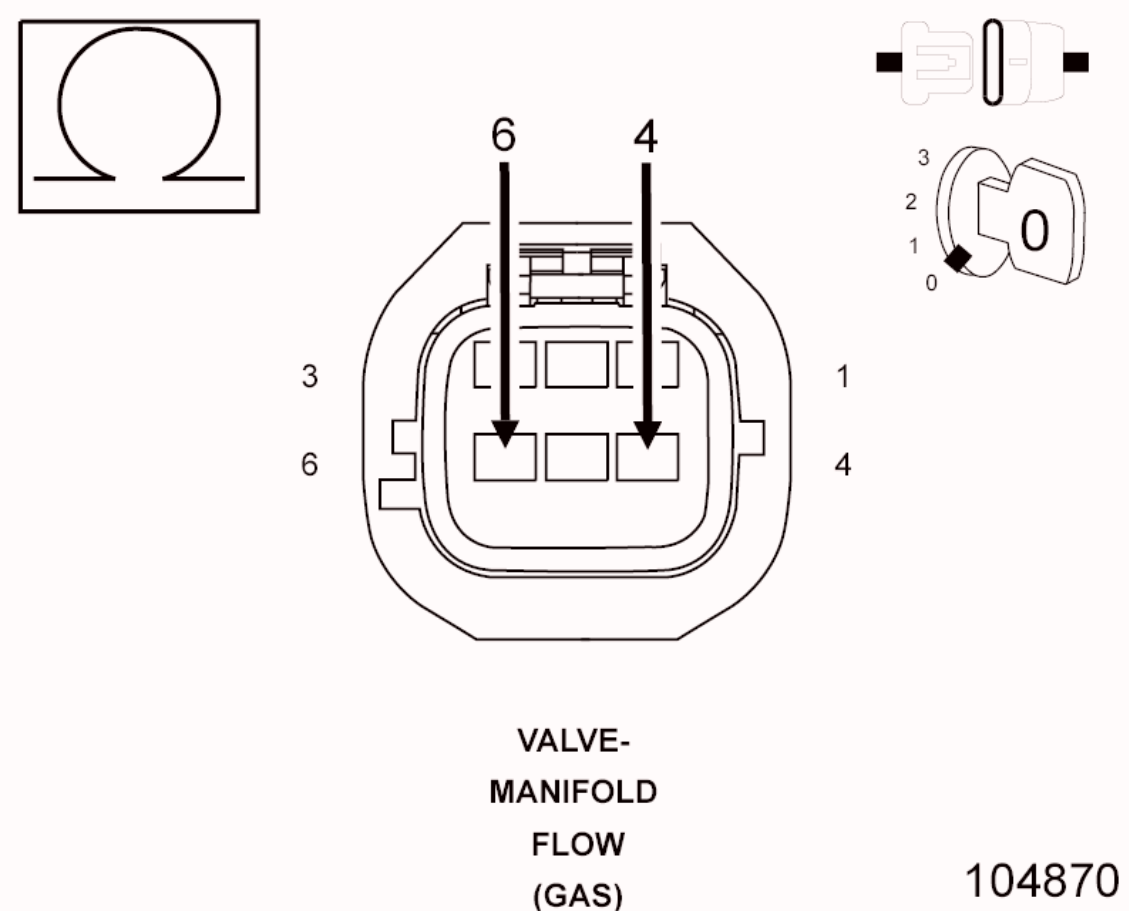

Fig. 130: Checking 5-Volt Supply Circuit For Short To Sensor Ground Circuit
Courtesy of CHRYSLER GROUP, LLC

1. Measure the resistance between the (F856) 5 Volt Supply circuit and the (K900) Sensor Ground circuit in the Manifold Flow Valve harness connector.

   Is the resistance above 100 Ohms?

   Yes

   - Go To 10

   No

- Repair the (F856) 5 Volt Supply circuit for a short to the (K900) Sensor Ground circuit.
- Perform the POWERTRAIN VERIFICATION TEST. Refer to **POWERTRAIN VERIFICATION TEST** .

10. **(F856) 5 VOLT SUPPLY CIRCUIT OPEN OR HIGH RESISTANCE**

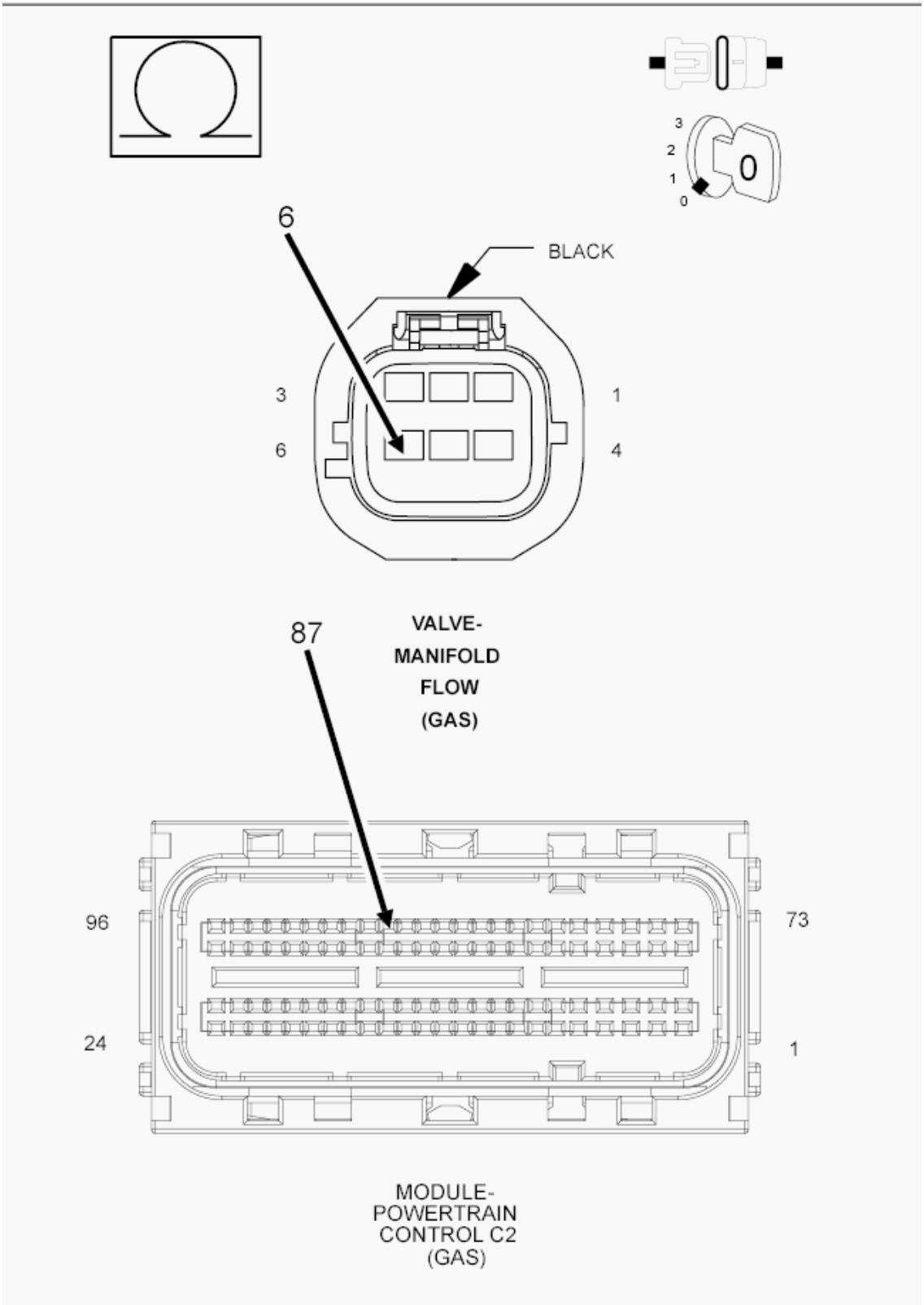

Fig. 131: Checking 5-Volt Supply Circuit For Open Or High Resistance
Courtesy of CHRYSLER GROUP, LLC

1. Measure the resistance of the (F856) 5 Volt Supply circuit between the Manifold Flow Valve harness connector and the PCM C2 harness

connector.

Is the resistance below 5.0 Ohms?

Yes

- Go To 16

No

- Repair the (F856) 5 Volt Supply circuit for an open circuit or high resistance.
- Perform the POWERTRAIN VERIFICATION TEST. Refer to **POWERTRAIN VERIFICATION TEST** .

11. **(K602) MFV SIGNAL CIRCUIT SHORTED TO VOLTAGE**

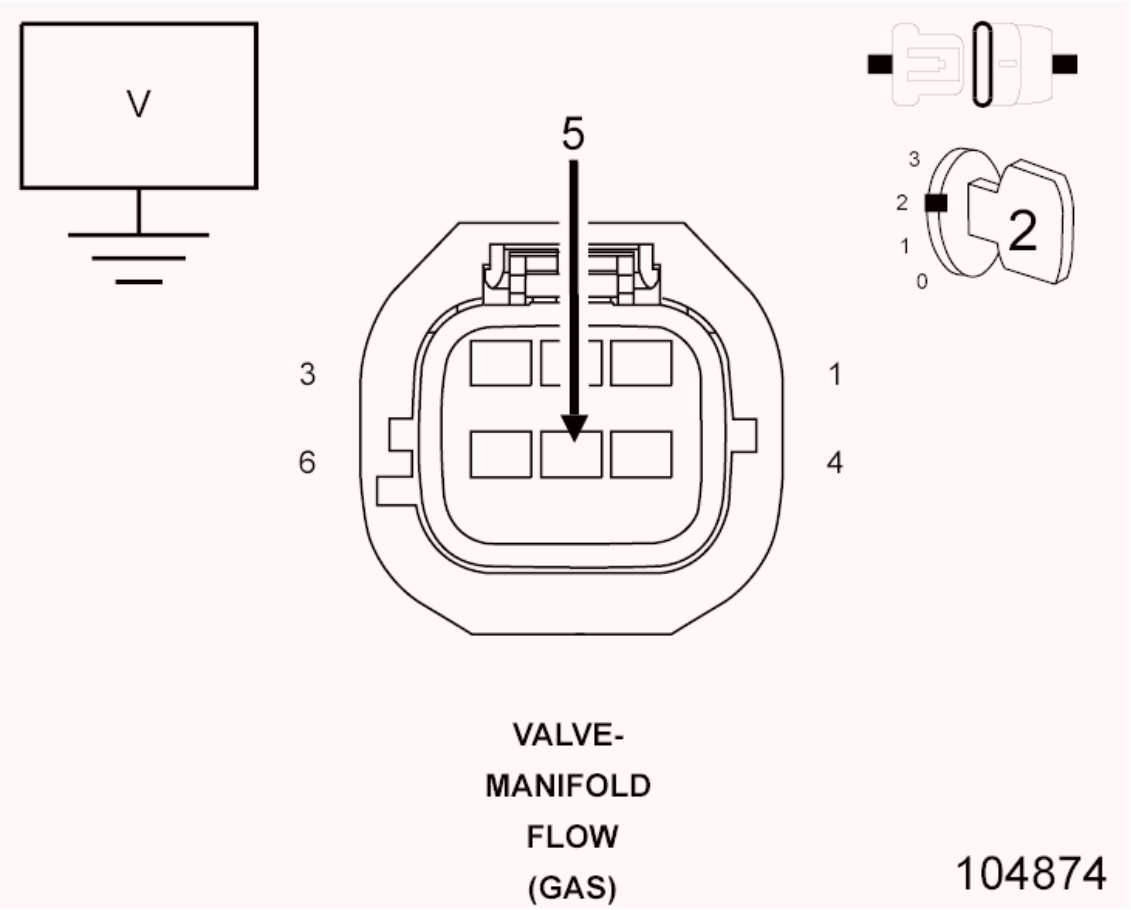

Fig. 132: Checking MFV Signal Circuit For Short To Voltage
Courtesy of CHRYSLER GROUP, LLC

1. Turn the ignition off.

2. Disconnect the PCM C2 harness connector.
3. Turn the ignition on.
4. Measure the voltage of the (K602) MFV Signal circuit in the Manifold Flow Valve harness connector.

   Is there any voltage present?

   Yes

   - Repair the (K602) MFV Signal circuit for a short to voltage.
   - Perform the POWERTRAIN VERIFICATION TEST. Refer to **POWERTRAIN VERIFICATION TEST** .

   No

   - Go To 12

12. **(K602) MFV SIGNAL CIRCUIT SHORTED TO GROUND**

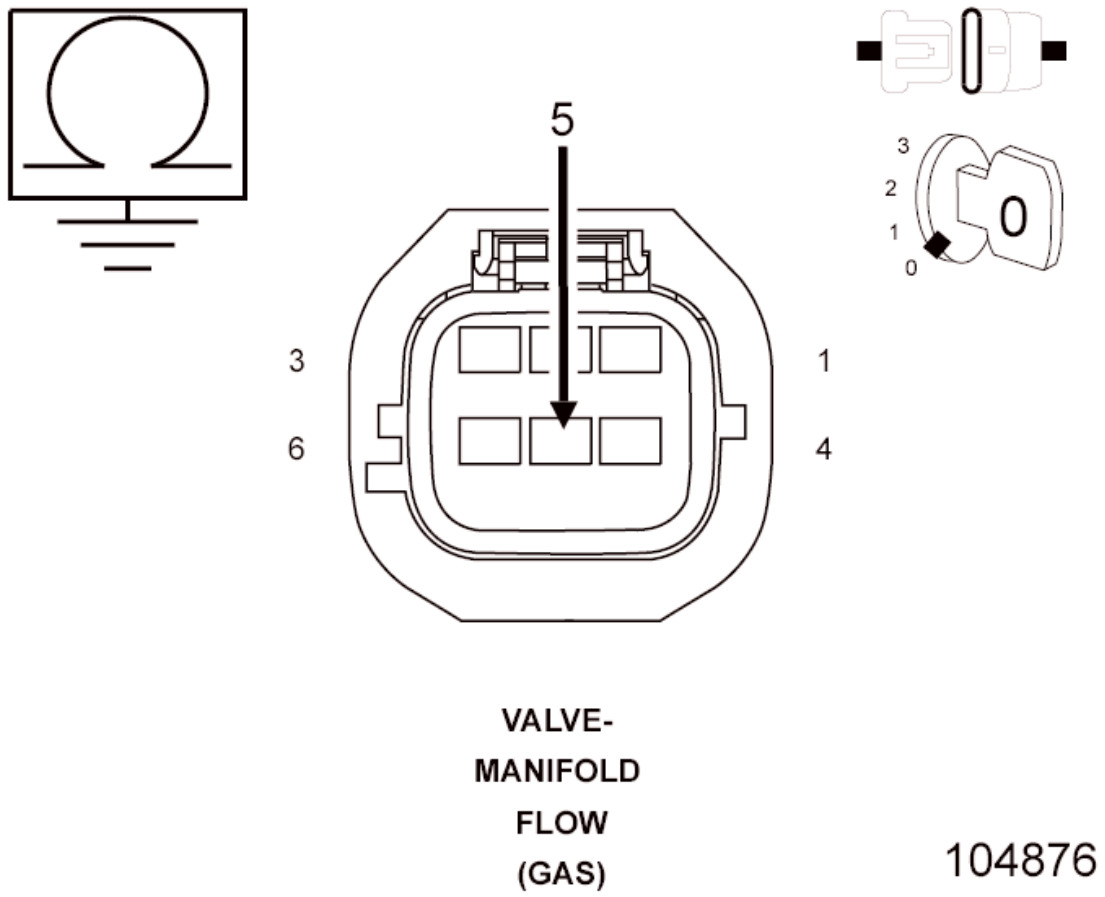

Fig. 133: Checking MFV Signal Circuit For Short To Ground

Courtesy of CHRYSLER GROUP, LLC

1. Turn the ignition off.
2. Measure the resistance between ground and the (K602) MFV Signal circuit in the Manifold Flow Valve harness connector.

   Is the resistance above 10k Ohms?

   Yes

   - Go To 13

   No

   - Repair the (K602) MFV Signal circuit for a short to ground.
   - Perform the POWERTRAIN VERIFICATION TEST. Refer to **POWERTRAIN VERIFICATION TEST** .

13. **(K602) MFV SIGNAL CIRCUIT SHORTED TO THE (K900) SENSOR GROUND CIRCUIT**

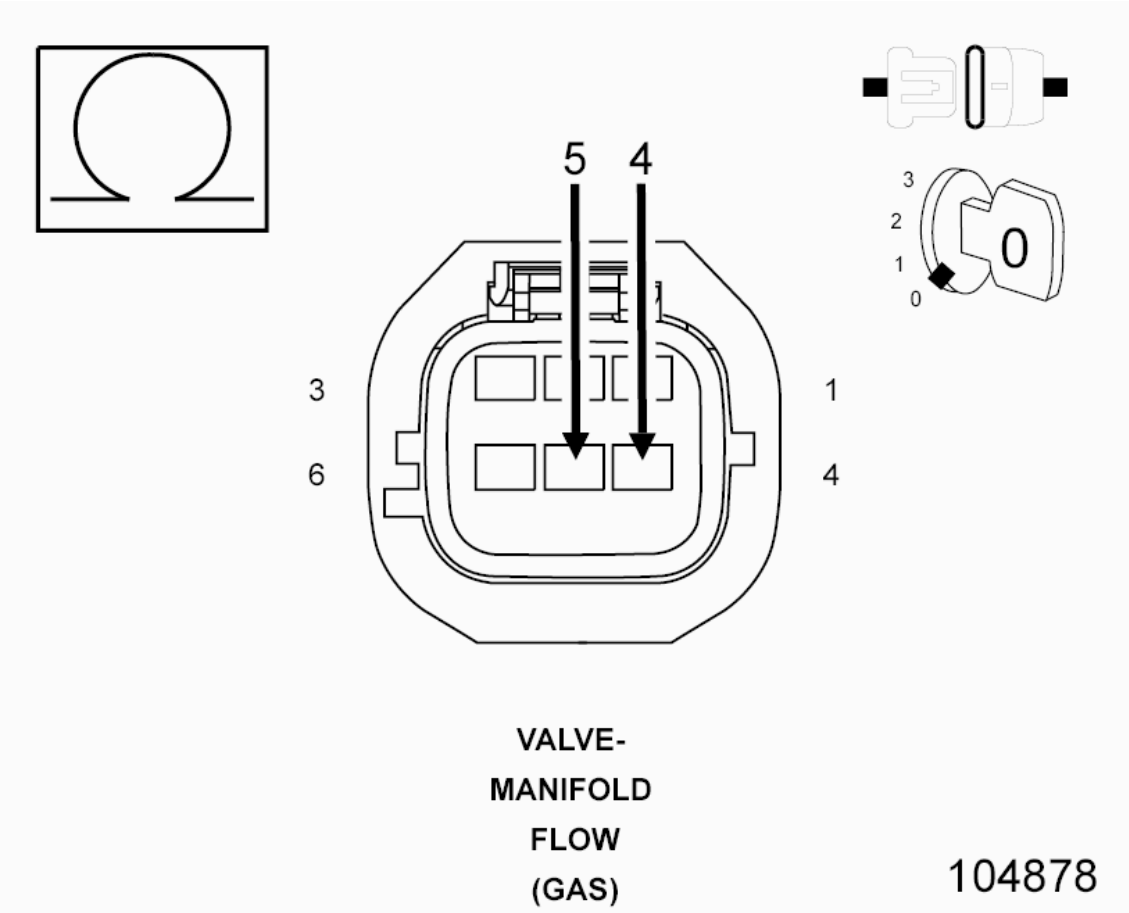

Fig. 134: Checking MFV Signal Circuit For Short To Sensor Ground Circuit
Courtesy of CHRYSLER GROUP, LLC

1. Measure the resistance between the (K602) MFV Signal circuit and the (K900) Sensor Ground circuit in the Manifold Flow Valve harness connector.

   Is the resistance above 10k Ohms?

   Yes

   - Go To 14

   No

   - Repair the (K602) MFV Signal circuit for a short to the (K900) Sensor Ground circuit.
   - Perform the POWERTRAIN VERIFICATION TEST. Refer to **POWERTRAIN VERIFICATION TEST** .

14. **(K602) MFV SIGNAL CIRCUIT OPEN OR HIGH RESISTANCE**

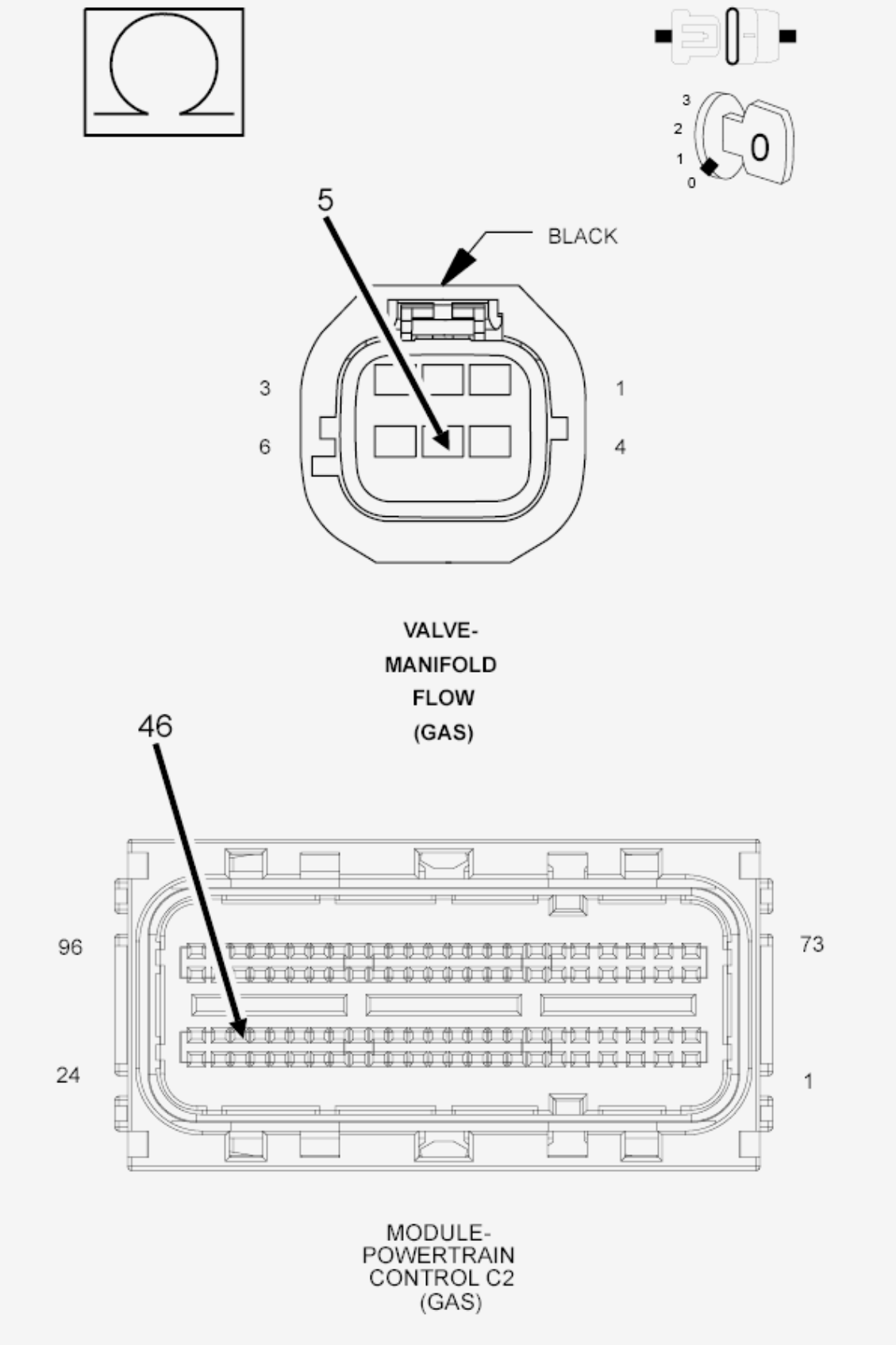

Fig. 135: Checking MFV Signal Circuit For Open Or High Resistance
Courtesy of CHRYSLER GROUP, LLC

1. Measure the resistance of the (K602) MFV Signal circuit between the Manifold Flow Valve harness connector and the PCM C2 harness connector.

   Is the resistance below 5.0 Ohms?

   Yes

   - Go To 16

   No

   - Repair the (K602) MFV Signal circuit for an open circuit or high resistance.
   - Perform the POWERTRAIN VERIFICATION TEST. Refer to **POWERTRAIN VERIFICATION TEST** .

15. **(K900) SENSOR GROUND CIRCUIT OPEN OR HIGH RESISTANCE**

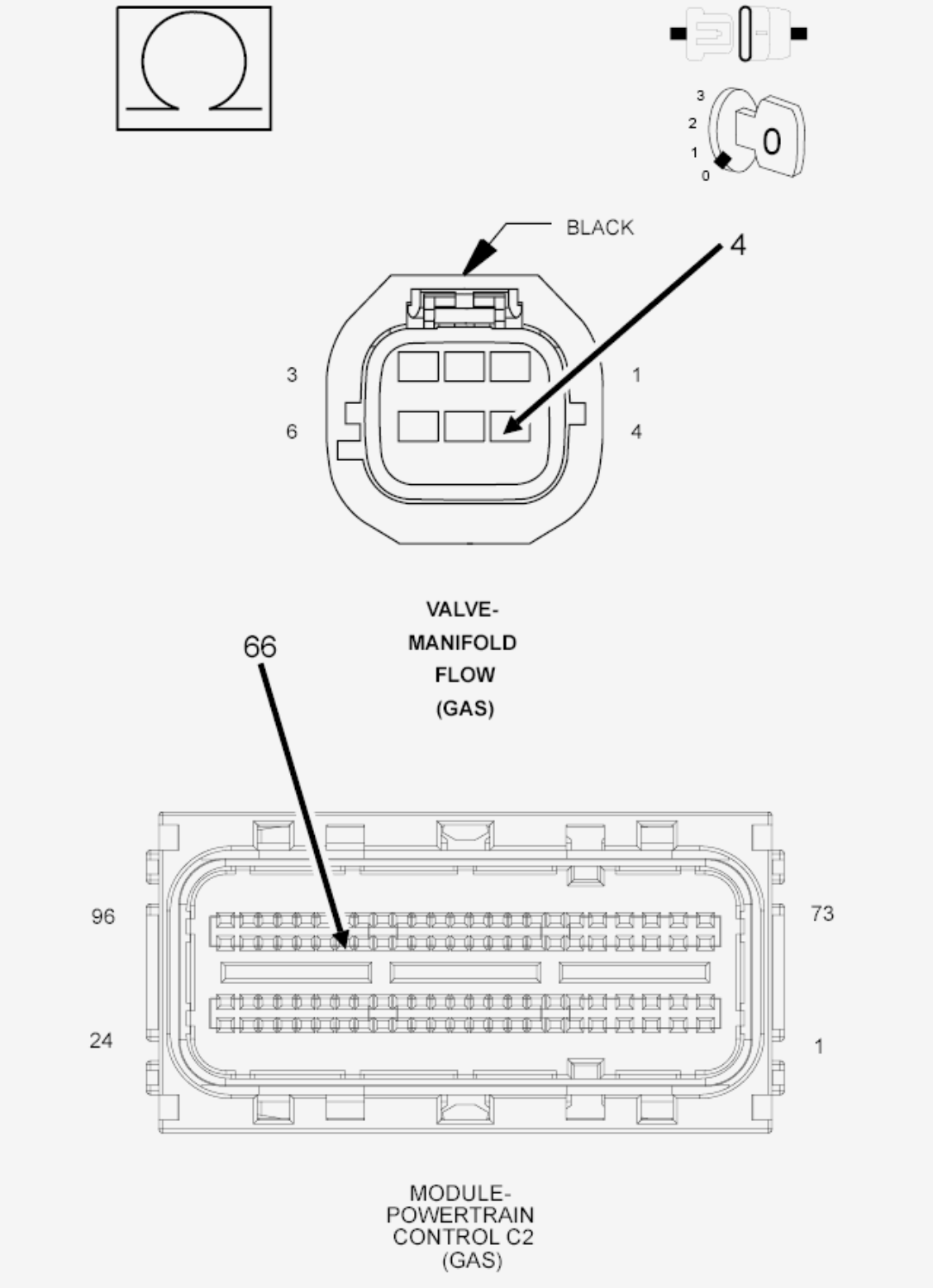

Fig. 136: Checking Sensor Ground Circuit For Open Or High Resistance
Courtesy of CHRYSLER GROUP, LLC

1. Turn the ignition off.

2. Disconnect the PCM C2 harness connector.
3. Measure the resistance of the (K900) Sensor Ground circuit between the Manifold Flow Valve harness connector and the PCM C2 harness connector.

   Is the resistance below 5.0 Ohms?

   Yes

   - Go To 16

   No

   - Repair the circuit for an open circuit or high resistance.
   - Perform the POWERTRAIN VERIFICATION TEST. Refer to **POWERTRAIN VERIFICATION TEST** .

16. **POWERTRAIN CONTROL MODULE (PCM)**
    1. Using the wiring diagram/schematic as a guide, inspect the wiring and connectors between the Manifold Flow Valve and the Powertrain Control Module (PCM).
    2. Look for any chafed, pierced, pinched, or partially broken wires.
    3. Look for broken, bent, pushed out or corroded terminals.
    4. Monitor the scan tool data relative to this circuit and wiggle test the wiring and connectors.
    5. Look for the data to change or for the DTC to reset during the wiggle test.
    6. Perform any Technical Service Bulletins that may apply.

    Were any problems found?

    Yes

    - Repair as necessary.
    - Perform the POWERTRAIN VERIFICATION TEST. Refer to **POWERTRAIN VERIFICATION TEST** .

    No

- Replace and program the Powertrain Control Module (PCM) in accordance with the service information. Refer to **MODULE, POWERTRAIN CONTROL, REMOVAL** .
- Perform the POWERTRAIN VERIFICATION TEST. Refer to **POWERTRAIN VERIFICATION TEST** .

P2016-INTAKE MANIFOLD RUNNER POSITION SENSOR CIRCUIT LOW

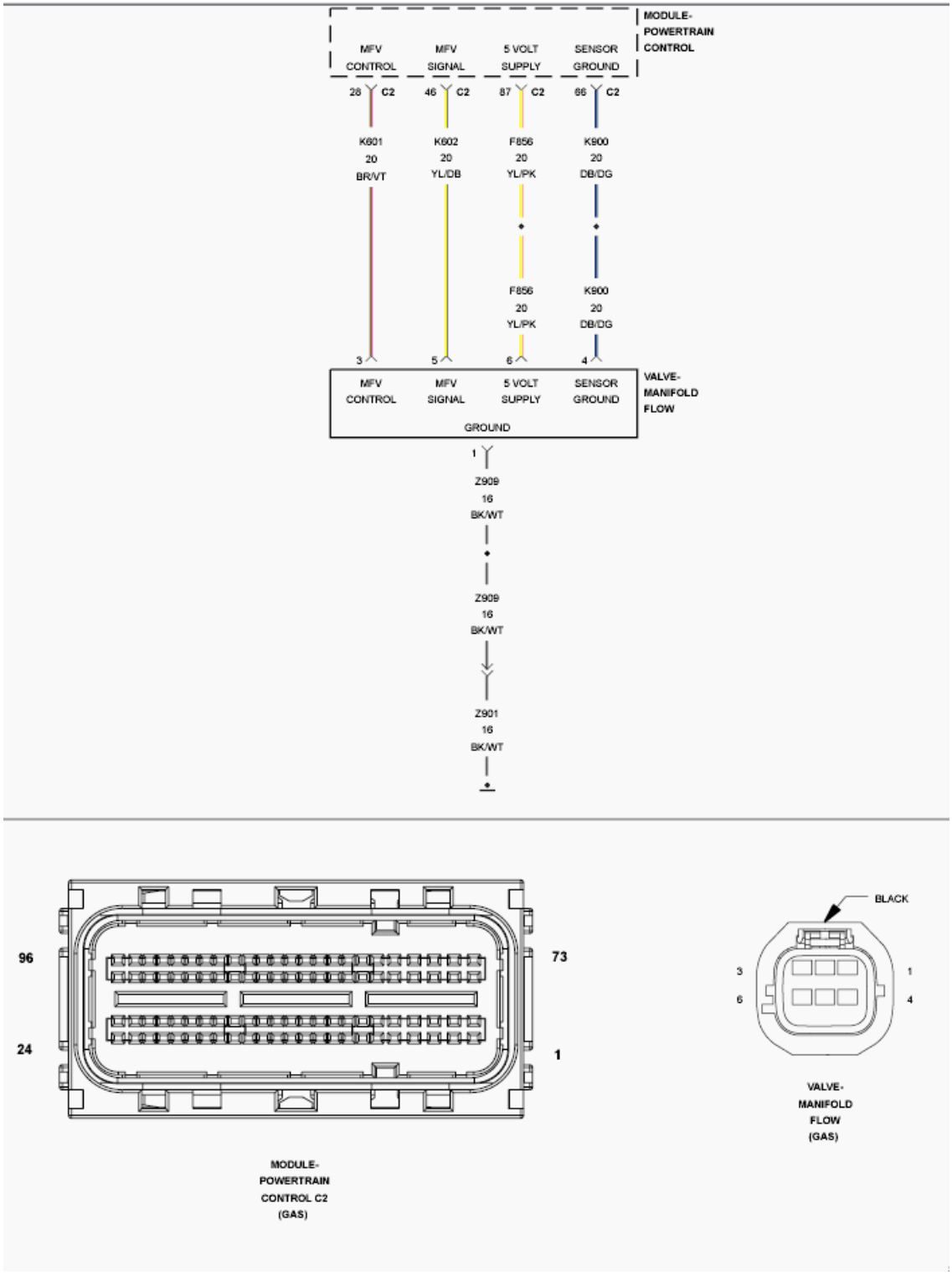

Fig. 137: Manifold Flow Valve Position Sensor Circuit Diagram
Courtesy of CHRYSLER GROUP, LLC

For a complete wiring diagram, **refer to appropriate SYSTEM WIRING DIAGRAMS article** .

WHEN MONITORED

With the ignition on and battery voltage greater than 10.4 volts.

SET CONDITION

The Powertrain Control Module (PCM) detects that the Manifold Flow Valve (MFV) Position Sensor input voltage is below the minimum acceptable value.

POSSIBLE CAUSES

Possible Causes
(F856) 5 VOLT SUPPLY CIRCUIT SHORTED TO GROUND
(K602) MFV SIGNAL CIRCUIT SHORTED TO GROUND
(F856) 5 VOLT SUPPLY CIRCUIT SHORTED TO (K900) SENSOR GROUND CIRCUIT
(K602) MFV SIGNAL CIRCUIT SHORTED TO (K900) SENSOR GROUND CIRCUIT
(F856) 5 VOLT SUPPLY CIRCUIT OPEN OR HIGH RESISTANCE
(K602) MFV SIGNAL CIRCUIT OPEN OR HIGH RESISTANCE
MANIFOLD FLOW VALVE
POWERTRAIN CONTROL MODULE (PCM)

Always perform the Pre-Diagnostic Troubleshooting procedure before proceeding. Refer to PRE-DIAGNOSTIC TROUBLESHOOTING PROCEDURE .

DIAGNOSTIC TEST

1. **DTC IS ACTIVE**

NOTE: Diagnose and repair any system voltage or sensor reference voltage DTCs before continuing with this test.

1. Start the engine and allow it to reach normal operating temperature.

WARNING: When the engine is operating, do not stand in direct line with the fan. Do not put your hands near the pulleys, belts or fan. Do not wear loose clothing. Failure to follow these instructions may result in

possible serious or fatal injury.

2. With the scan tool, select View DTCs.

   Is the status Active for this DTC?

   Yes

   - Go To 2

   No

   - Perform the INTERMITTENT CONDITION diagnostic procedure. Refer to **INTERMITTENT CONDITION** .

2. **(F856) 5 VOLT SUPPLY CIRCUIT VOLTAGE**

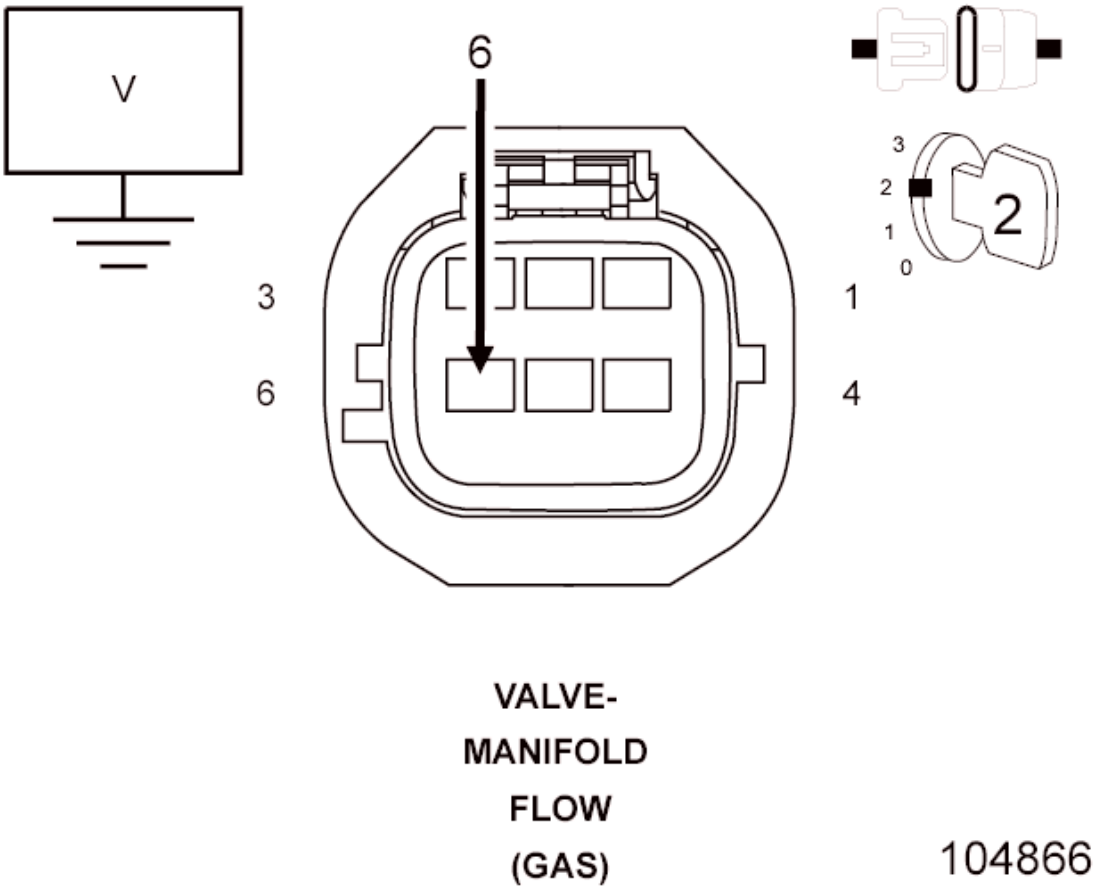

Fig. 138: Checking 5-Volt Supply Circuit
Courtesy of CHRYSLER GROUP, LLC

1. Turn the ignition off.

2. Disconnect the Manifold Flow Valve harness connector.
3. Turn the ignition on.
4. Measure the voltage of the (F856) 5 Volt Supply circuit in the Manifold Flow Valve harness connector.

   Is the voltage above 4.5 volts?

   Yes

   - Go To 6

   No

   - Go To 3

3. **(F856) 5 VOLT SUPPLY CIRCUIT SHORTED TO GROUND**

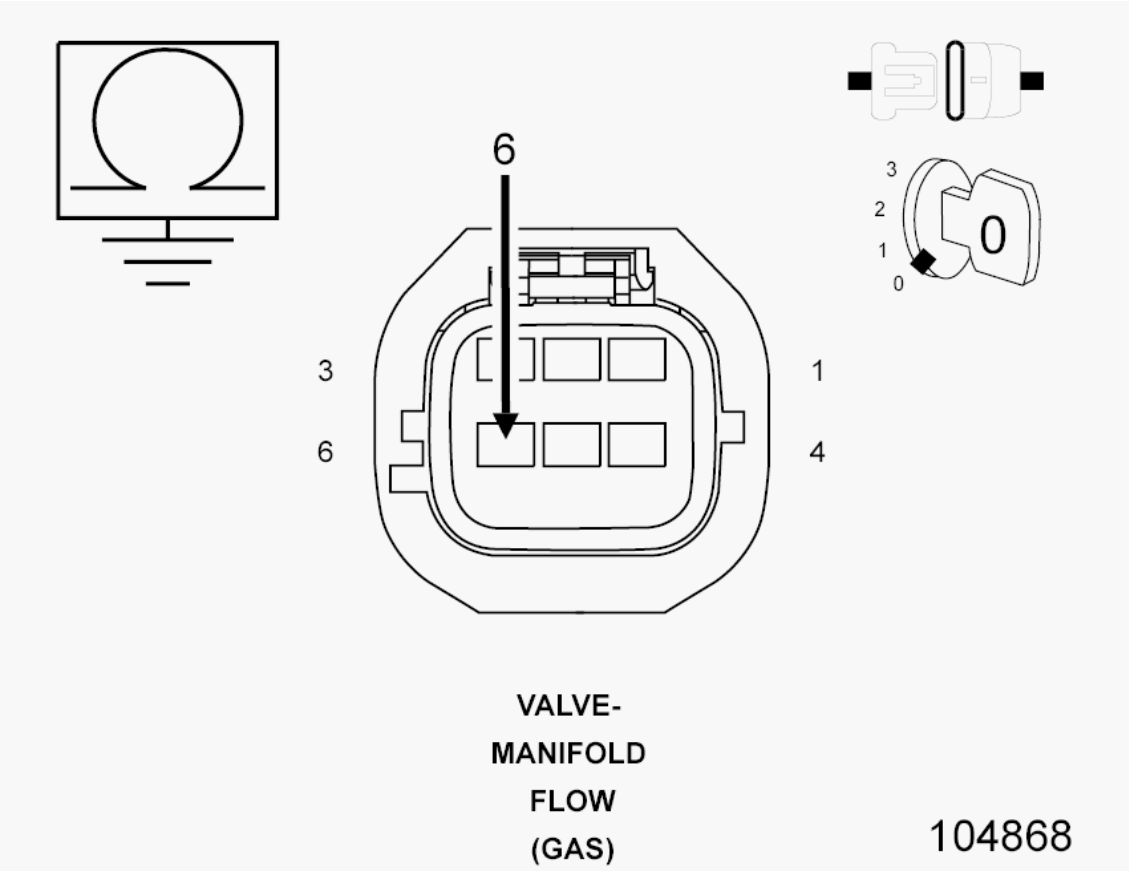

Fig. 139: Checking MFV Supply Circuit For Short To Ground
Courtesy of CHRYSLER GROUP, LLC

1. Turn the ignition on.

2. Disconnect the Powertrain Control Module (PCM) C2 harness connector.
3. Measure the resistance between ground and the (F856) 5 Volt Supply circuit in the Manifold Flow Valve harness connector.

   Is the resistance above 1000 Ohms?

   Yes

   - Go To 4

   No

   - Repair the (F856) 5 Volt Supply circuit for a short to ground.
   - Perform the POWERTRAIN VERIFICATION TEST. Refer to **POWERTRAIN VERIFICATION TEST** .

4. **(F856) 5 VOLT SUPPLY CIRCUIT SHORTED TO THE (K900) SENSOR GROUND CIRCUIT**

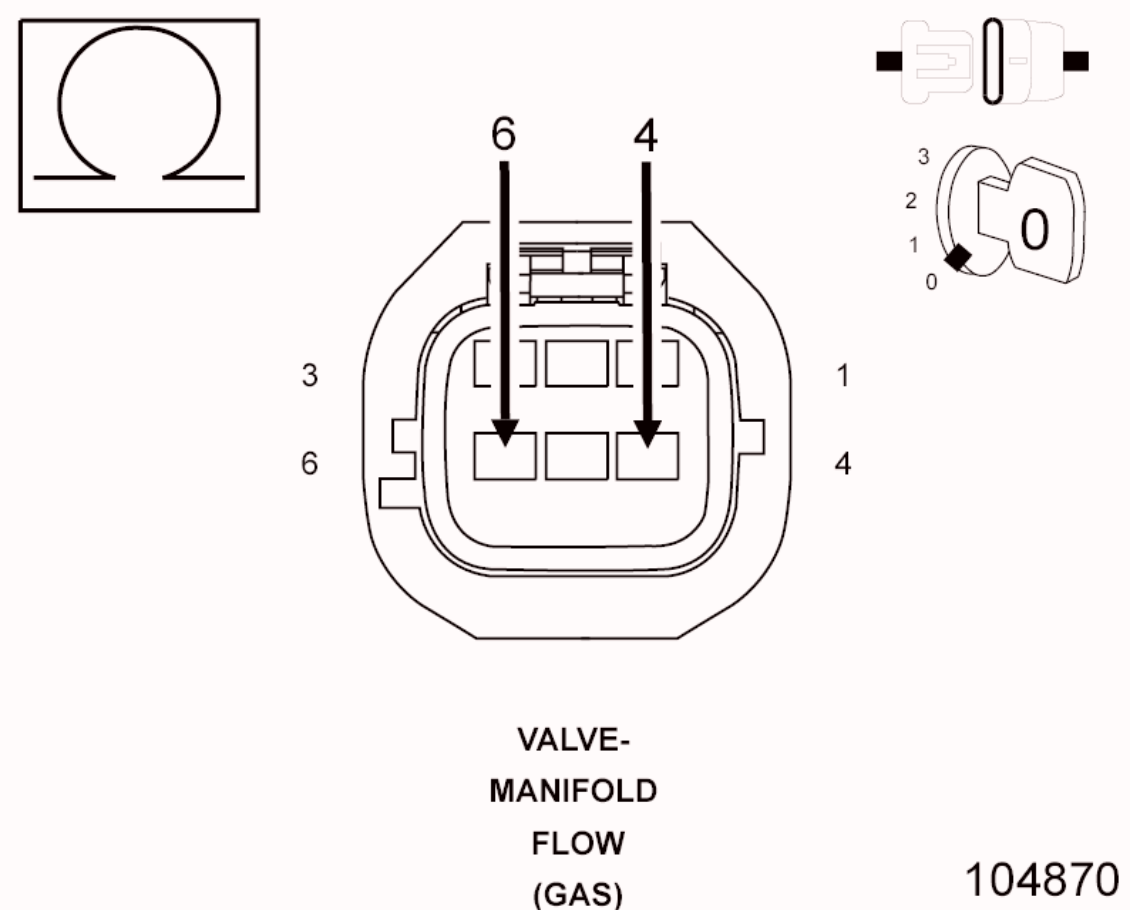

Fig. 140: Checking 5-Volt Supply Circuit For Short To Sensor Ground Circuit
Courtesy of CHRYSLER GROUP, LLC

1. Measure the resistance between the (F856) 5 Volt Supply circuit and the (K900) Sensor Ground circuit in the Manifold Flow Valve harness connector.

   Is the resistance above 10k Ohms?

   Yes

   - Go To 5

   No

   - Repair the (F856) 5 Volt Supply circuit for a short to the (K900) Sensor Ground circuit.
   - Perform the POWERTRAIN VERIFICATION TEST. Refer to **POWERTRAIN VERIFICATION TEST** .

5. **(F856) 5 VOLT SUPPLY CIRCUIT OPEN OR HIGH RESISTANCE**

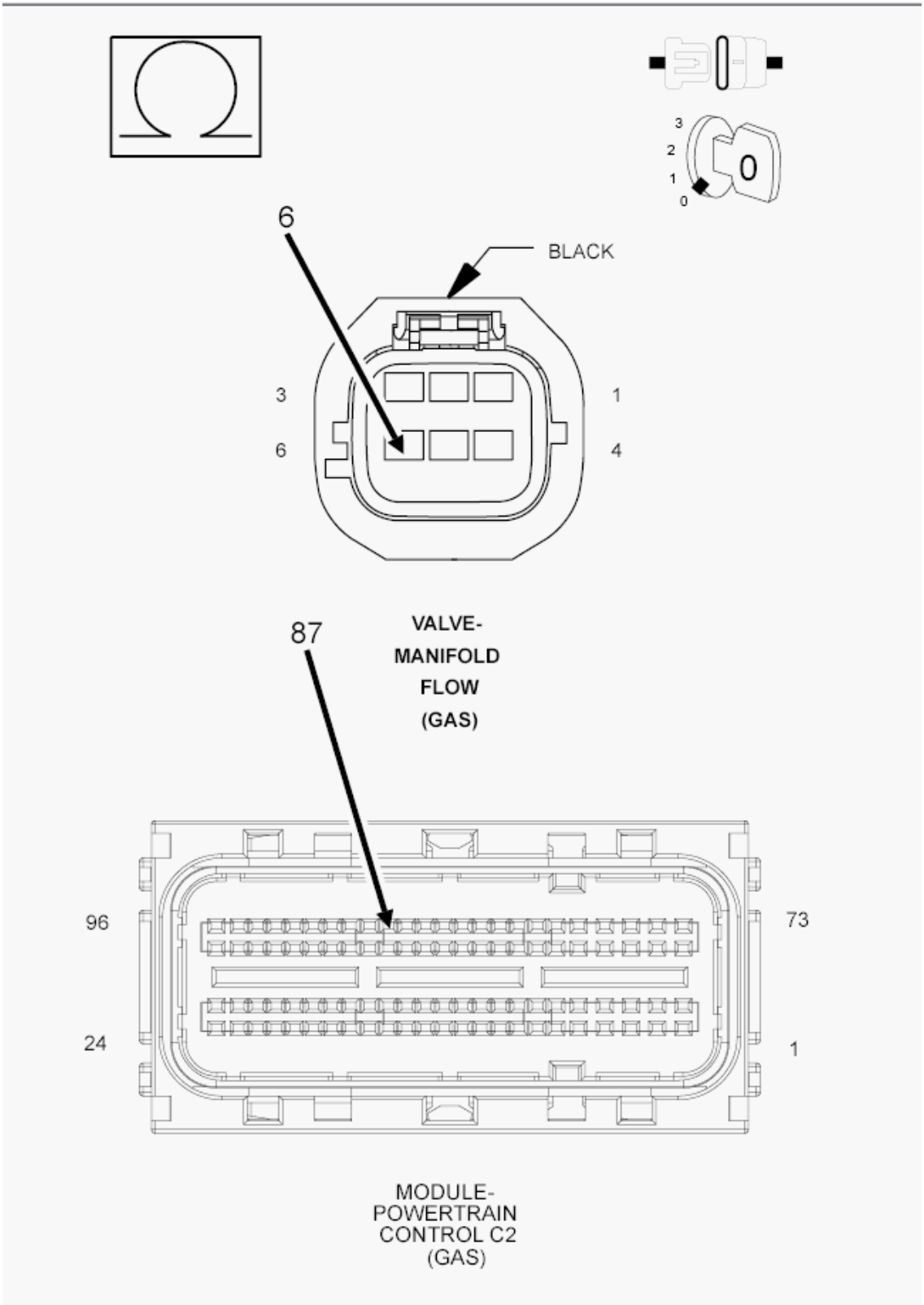

Fig. 141: Checking 5-Volt Supply Circuit For Open Or High Resistance
Courtesy of CHRYSLER GROUP, LLC

1. Measure the resistance of the (F856) 5 Volt Supply circuit between the Manifold Flow Valve harness connector and the PCM C2 harness

connector.

Is the resistance below 5.0 Ohms?

Yes

- Go To 10

No

- Repair the (F856) 5 Volt Supply circuit for an open or high resistance.
- Perform the POWERTRAIN VERIFICATION TEST. Refer to **POWERTRAIN VERIFICATION TEST** .

6. **(K602) MFV SIGNAL CIRCUIT SHORTED TO GROUND**

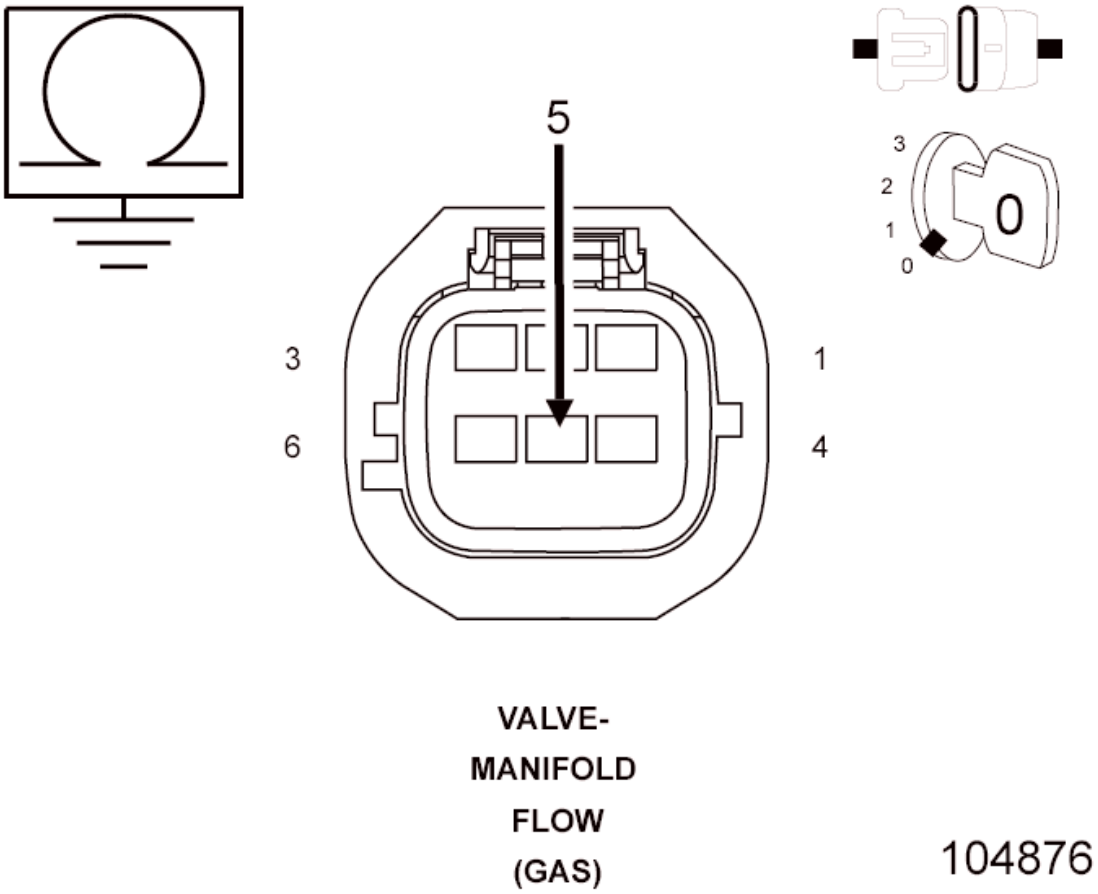

Fig. 142: Checking MFV Signal Circuit For Short To Ground
Courtesy of CHRYSLER GROUP, LLC

1. Turn the ignition off.

2. Disconnect the PCM C2 harness connector.
3. Measure the resistance between ground and the (K602) MFV Signal circuit in the Manifold Flow Valve harness connector.

   Is the resistance above 100 Ohms?

   Yes

   - Go To 7

   No

   - Repair the (K602) MFV Signal circuit for a short to ground.
   - Perform the POWERTRAIN VERIFICATION TEST. Refer to **POWERTRAIN VERIFICATION TEST** .

7. **(K602) MFV SIGNAL CIRCUIT SHORTED TO THE (K900) SENSOR GROUND CIRCUIT**

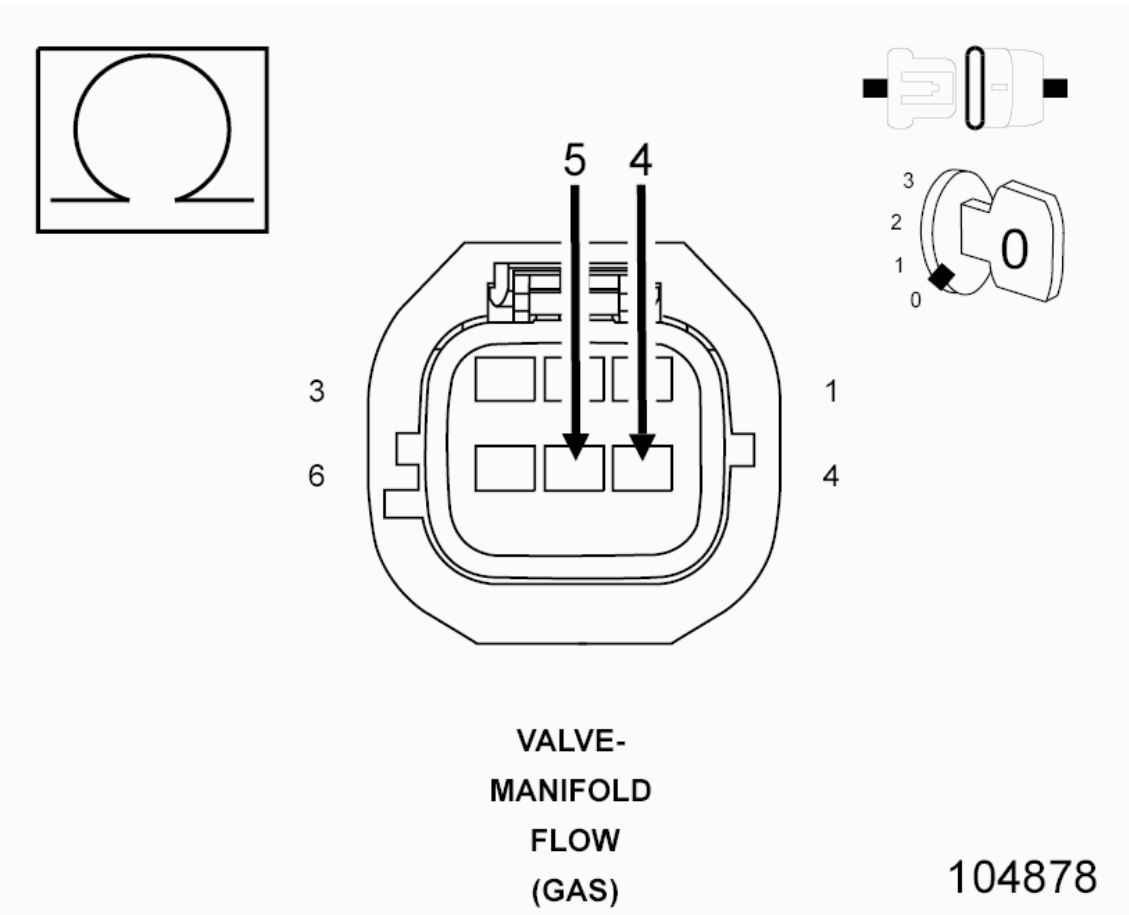

Fig. 143: Checking MFV Signal Circuit For Short To Sensor Ground

Circuit
Courtesy of CHRYSLER GROUP, LLC

1. Measure the resistance between the (K602) MFV Signal circuit and the (K900) Sensor Ground circuit in the Manifold Flow Valve harness connector.

   Is the resistance above 10k Ohms?

   Yes

   - Go To 8

   No

   - Repair the (K602) MFV Signal circuit for a short to the (K900) Sensor Ground circuit.
   - Perform the POWERTRAIN VERIFICATION TEST. Refer to **POWERTRAIN VERIFICATION TEST** .

8. **(K602) MFV SIGNAL CIRCUIT OPEN OR HIGH RESISTANCE**

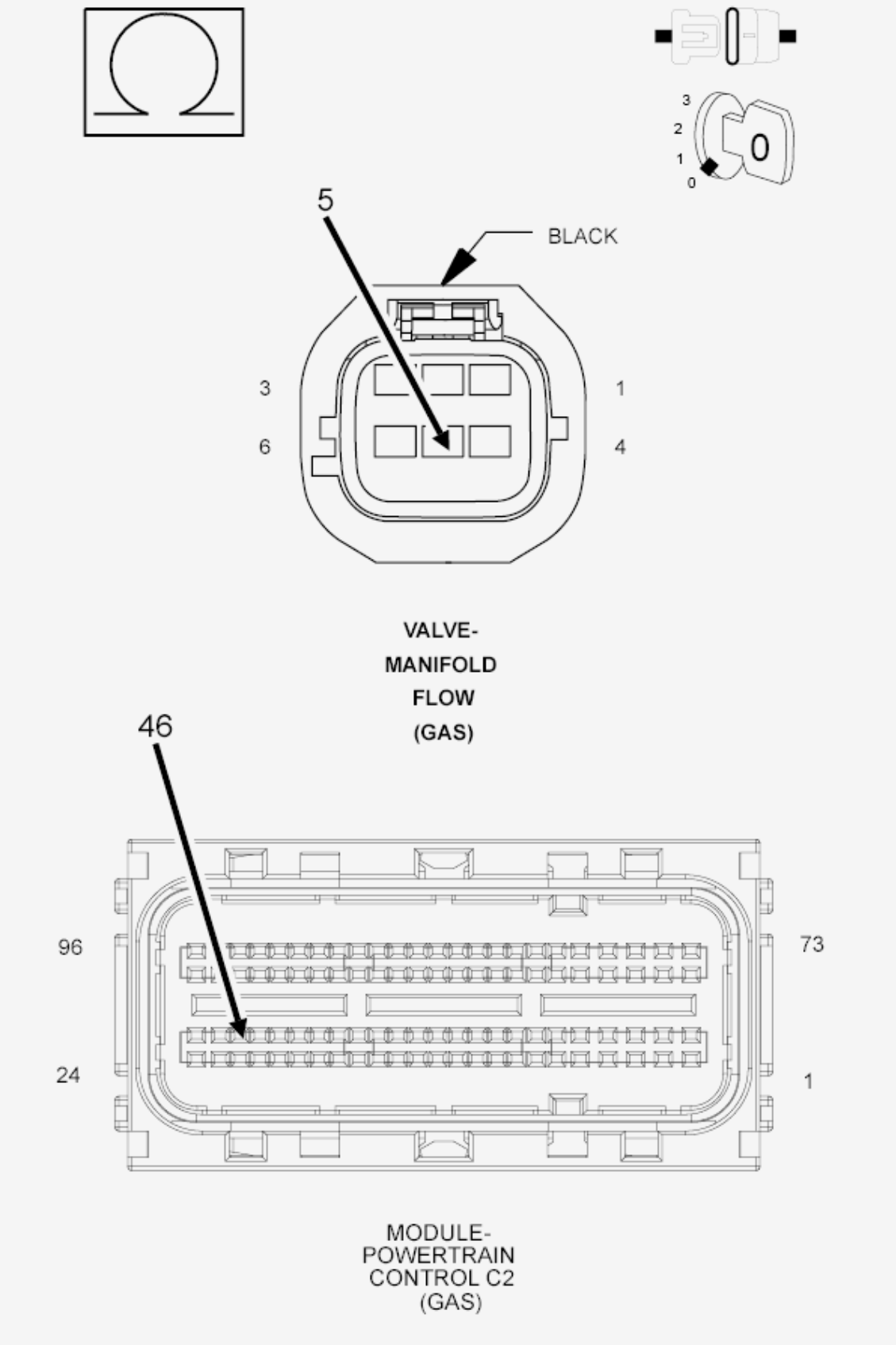

Fig. 144: Checking MFV Signal Circuit For Open Or High Resistance
Courtesy of CHRYSLER GROUP, LLC

1. Measure the resistance of the (K602) MFV Signal circuit between the Manifold Flow Valve harness connector and the PCM C2 harness connector.

   Is the resistance below 5.0 Ohms?

   Yes

   - Go To 9

   No

   - Repair the (K602) MFV Signal circuit for an open circuit or high resistance.
   - Perform the POWERTRAIN VERIFICATION TEST. Refer to **POWERTRAIN VERIFICATION TEST** .

9. **MANIFOLD FLOW VALVE**

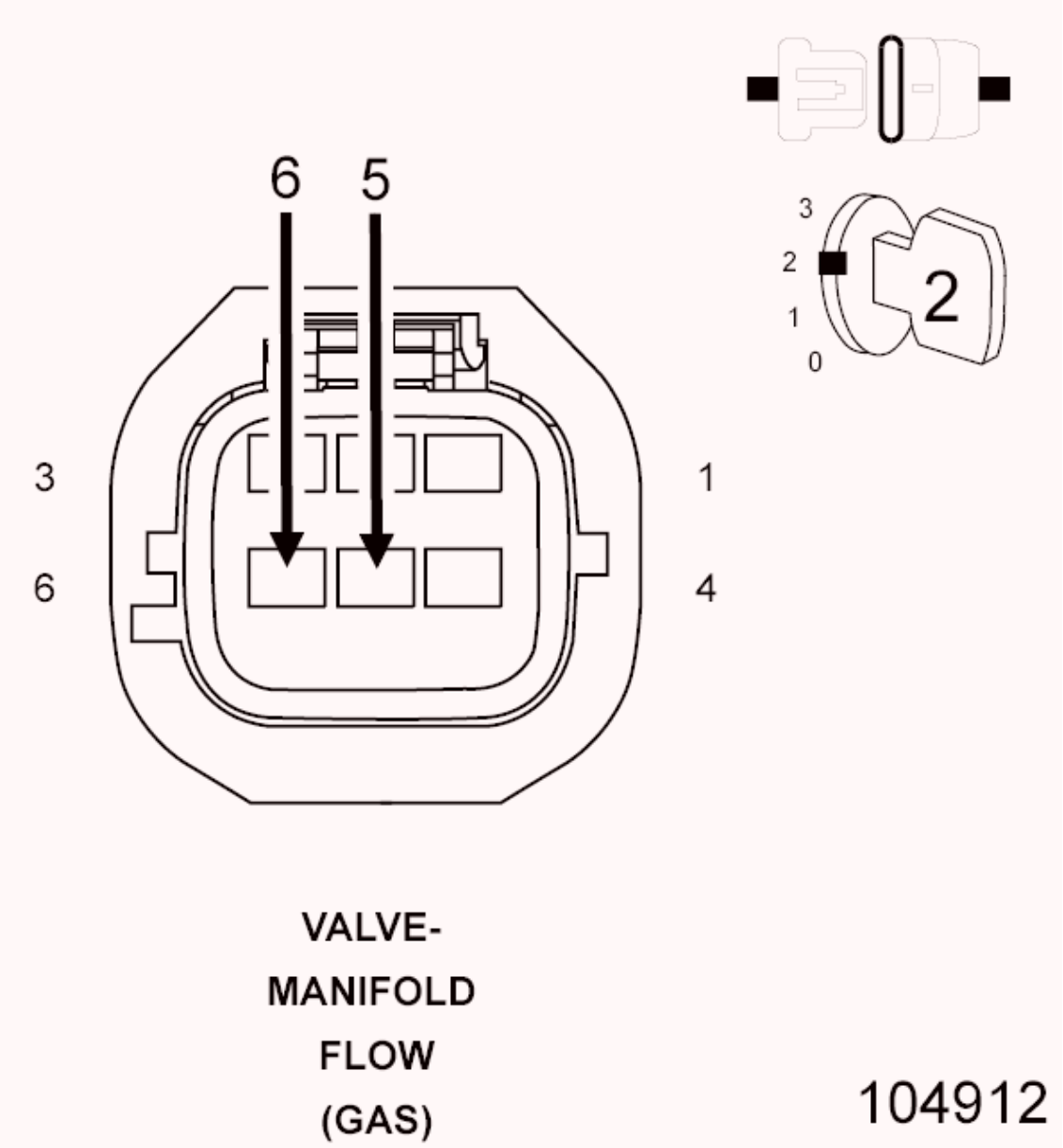

Fig. 145: Manifold Flow Valve Harness Connector End View
Courtesy of CHRYSLER GROUP, LLC

1. Turn the ignition off.
2. Connect the PCM C2 harness connector.
3. Connect a jumper wire between the (F856) 5 Volt Supply circuit and the (K602) MFV Signal circuit in the Manifold Flow Valve harness connector.
4. Turn the ignition on.
5. With the scan tool, read the Manifold Flow Valve signal voltage.

   Is the voltage above 4.5 volts with the jumper wire in place?

Yes

- Replace the Manifold Flow Valve in accordance with the service information.
- Perform the POWERTRAIN VERIFICATION TEST. Refer to **POWERTRAIN VERIFICATION TEST** .

No

- Go To 10

10. **POWERTRAIN CONTROL MODULE (PCM)**
    1. Using the wiring diagram/schematic as a guide, inspect the wiring and connectors between the Manifold Flow Valve and the Powertrain Control Module (PCM).
    2. Look for any chafed, pierced, pinched, or partially broken wires.
    3. Look for broken, bent, pushed out or corroded terminals.
    4. Monitor the scan tool data relative to this circuit and wiggle test the wiring and connectors.
    5. Look for the data to change or for the DTC to reset during the wiggle test.
    6. Perform any Technical Service Bulletins that may apply.

    Were any problems found?

    Yes

    - Repair as necessary.
    - Perform the POWERTRAIN VERIFICATION TEST. Refer to **POWERTRAIN VERIFICATION TEST** .

    No

    - Replace and program the Powertrain Control Module (PCM) in accordance with the Service Information. Refer to **MODULE, POWERTRAIN CONTROL, REMOVAL** .
    - Perform the POWERTRAIN VERIFICATION TEST. Refer to **POWERTRAIN VERIFICATION TEST** .

P2017-INTAKE MANIFOLD RUNNER POSITION SENSOR CIRCUIT HIGH

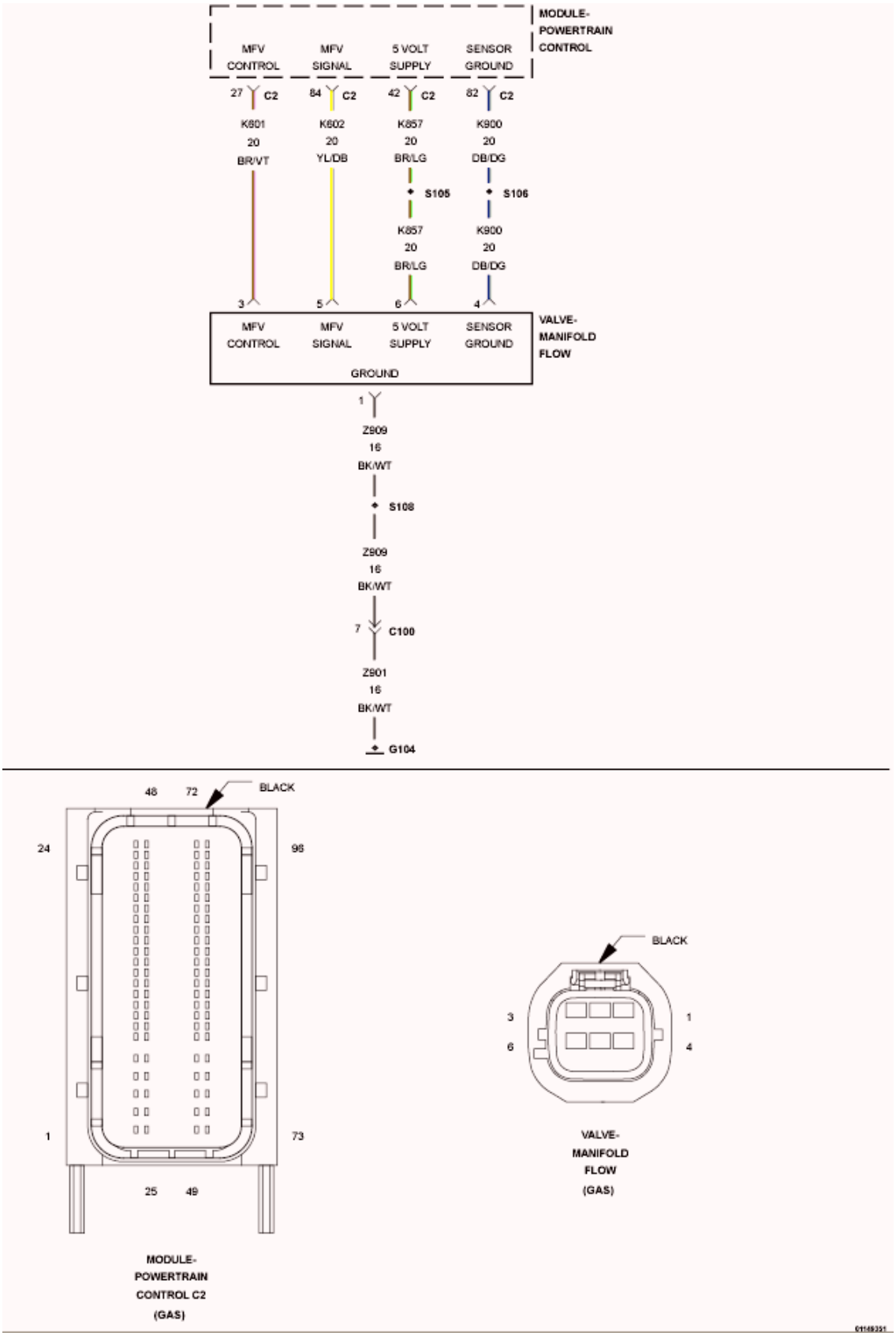

Fig. 146: Manifold Flow Valve Circuit Diagram

Courtesy of CHRYSLER GROUP, LLC

For a complete wiring diagram, **refer to appropriate SYSTEM WIRING DIAGRAMS article** .

WHEN MONITORED

With the ignition on and battery voltage greater than 10.4 volts.

SET CONDITION

The Powertrain Control Module (PCM) detects that the MFV Position Sensor input voltage is above the maximum acceptable value.

POSSIBLE CAUSES

Possible Causes
(F856) 5 VOLT SUPPLY CIRCUIT SHORTED TO VOLTAGE
(K602) MFV SIGNAL CIRCUIT SHORTED TO VOLTAGE
(K602) MFV SIGNAL CIRCUIT SHORTED TO THE (F856) 5 VOLT SUPPLY CIRCUIT
(K602) MFV SIGNAL CIRCUIT OPEN OR HIGH RESISTANCE
(K900) SENSOR GROUND CIRCUIT OPEN OR HIGH RESISTANCE
MANIFOLD FLOW VALVE
POWERTRAIN CONTROL MODULE (PCM)

Always perform the Pre-Diagnostic Troubleshooting procedure before proceeding. Refer to PRE-DIAGNOSTIC TROUBLESHOOTING PROCEDURE .

DIAGNOSTIC TEST

1. **DTC IS ACTIVE**

NOTE: Diagnose and repair any system voltage or sensor reference voltage DTCs before continuing with this test.

1. Start the engine and allow it to reach normal operating temperature.

WARNING: When the engine is operating, do not

stand in direct line with the fan. Do not put your hands near the pulleys, belts or fan. Do not wear loose clothing. Failure to follow these instructions may result in possible serious or fatal injury.

2. With the scan tool, select View DTCs.

   Is the status Active for this DTC?

   Yes

   - Go To 2

   No

   - Perform the INTERMITTENT CONDITION diagnostic procedure. Refer to **INTERMITTENT CONDITION** .

2. **(F856) 5 VOLT SUPPLY CIRCUIT SHORTED TO VOLTAGE**

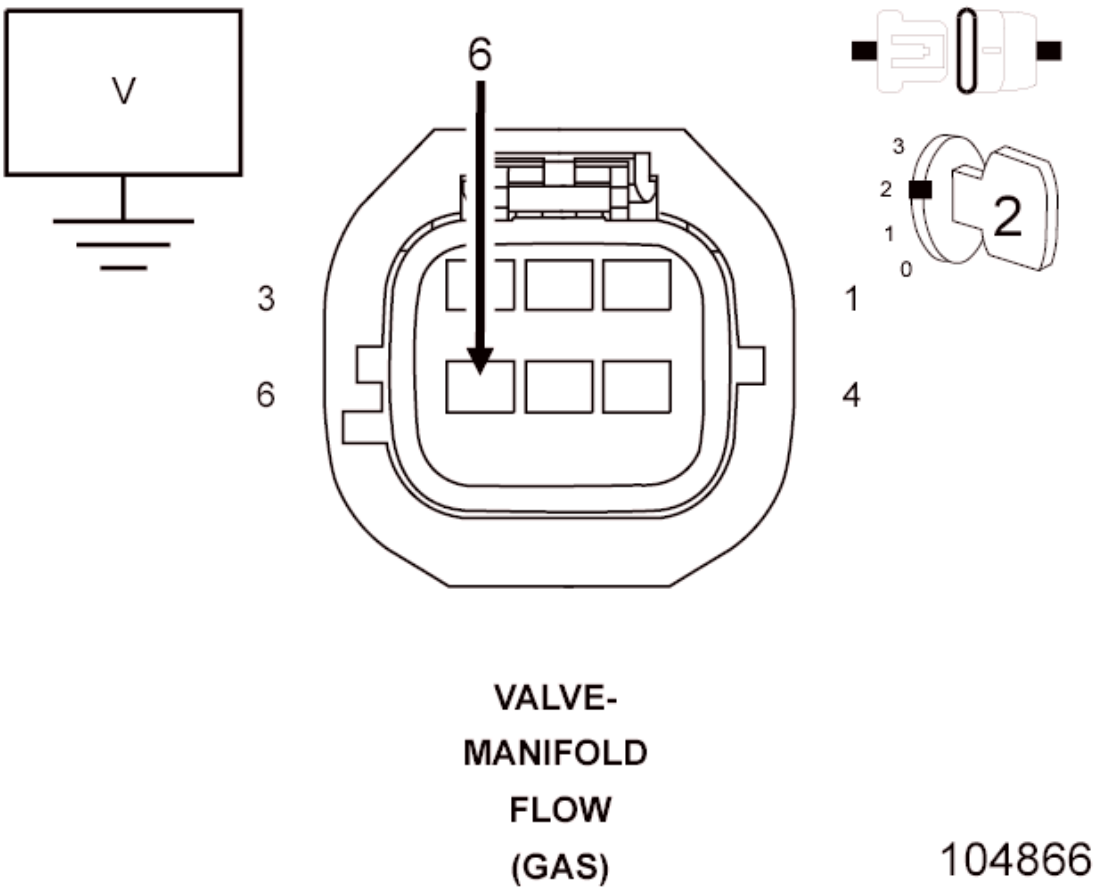

Fig. 147: Checking Manifold Flow Valve 5-Volt Supply Circuit For Short To Voltage
Courtesy of CHRYSLER GROUP, LLC

1. Turn the ignition off.
2. Disconnect the Manifold Flow Valve harness connector.
3. Disconnect the PCM C2 harness connector.
4. Turn the ignition on.
5. Measure the voltage of the (F856) 5 Volt Supply circuit in the Manifold Flow Valve harness connector.

   Is there any voltage present?

   Yes

   - Repair the (F856) 5 Volt Supply circuit for a short to voltage.
   - Perform the POWERTRAIN VERIFICATION TEST. Refer to **POWERTRAIN VERIFICATION TEST** .

   No

   - Go To 3

3. **(K602) MFV SIGNAL CIRCUIT SHORTED TO VOLTAGE**

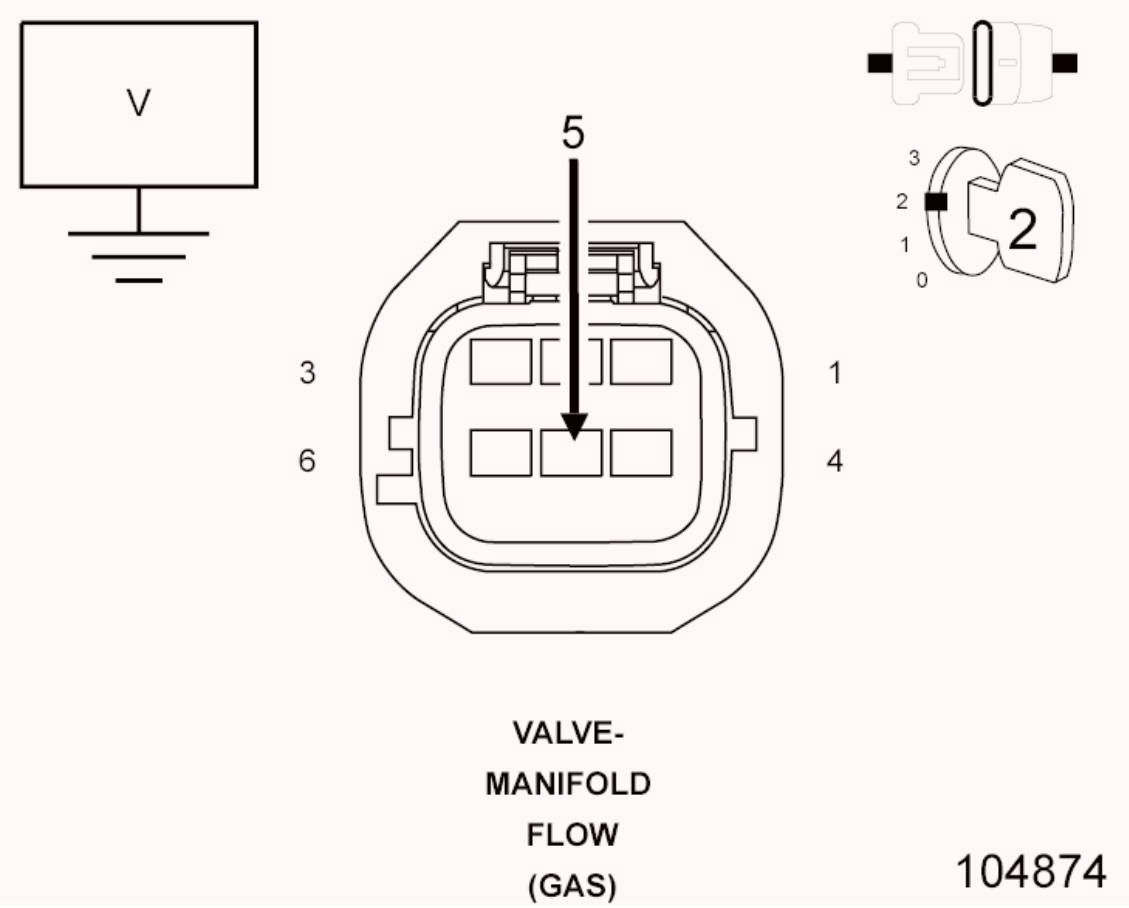

Fig. 148: Checking MFV Signal Circuit For Short To Voltage
Courtesy of CHRYSLER GROUP, LLC

1. Measure the voltage of the (K602) MFV Signal circuit in the Manifold Flow Valve harness connector.

   Is there any voltage present?

   Yes

   - Repair the (K602) MFV Signal circuit for a short to voltage.
   - Perform the POWERTRAIN VERIFICATION TEST. Refer to **POWERTRAIN VERIFICATION TEST** .

   No

   - Go To 4

4. **(K602) MFV SIGNAL CIRCUIT SHORTED TO THE (F856) 5 VOLT SUPPLY CIRCUIT**

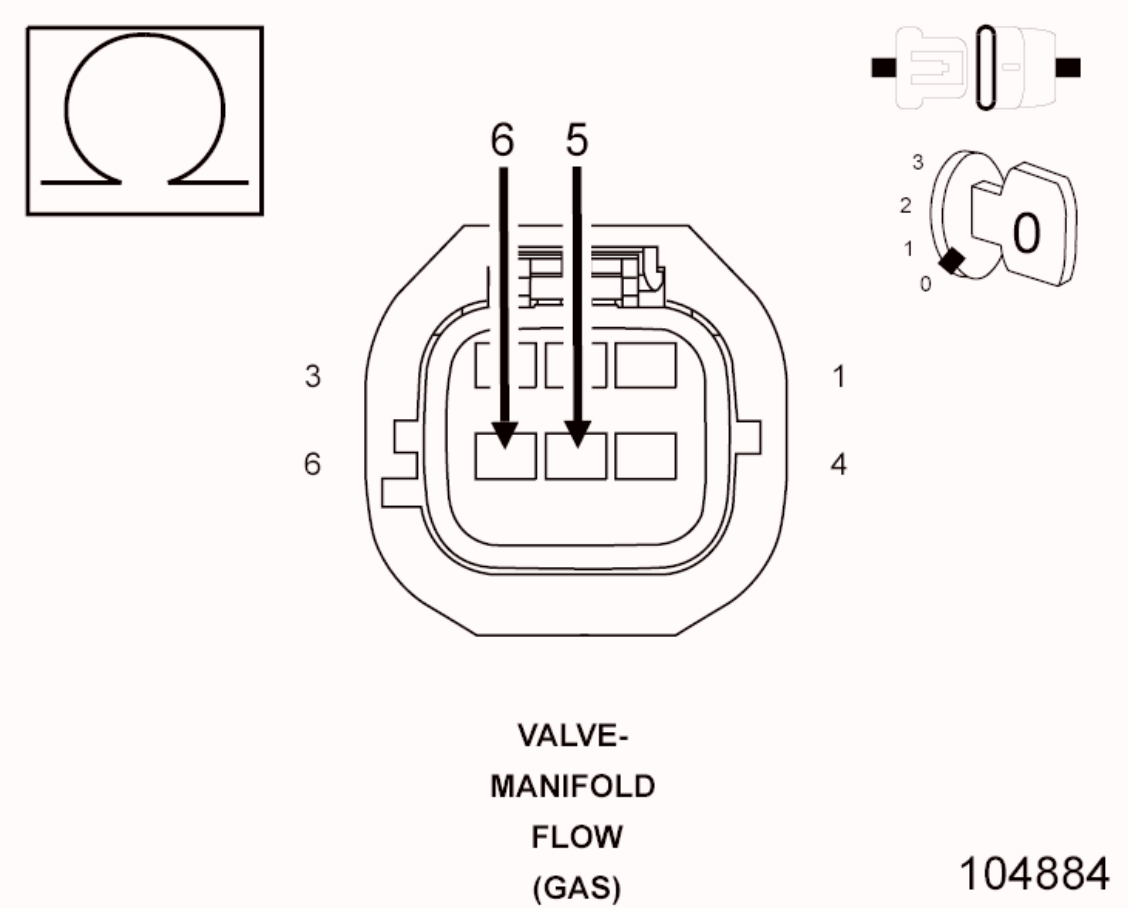

Fig. 149: Checking MFV Signal Circuit For Short To 5-Volt Supply Circuit
Courtesy of CHRYSLER GROUP, LLC

1. Measure the resistance between the (K602) MFV Signal circuit and the (F856) 5 Volt Supply in the Manifold Flow Valve harness connector.

   Is the resistance below 100 Ohms?

   Yes

   - Repair the (K602) MFV Signal circuit for a short to the (F856) 5 Volt Supply circuit.
   - Perform the POWERTRAIN VERIFICATION TEST. Refer to **POWERTRAIN VERIFICATION TEST** .

   No

   - Go To 5

5. **(K602) MFV SIGNAL CIRCUIT OPEN OR HIGH RESISTANCE**

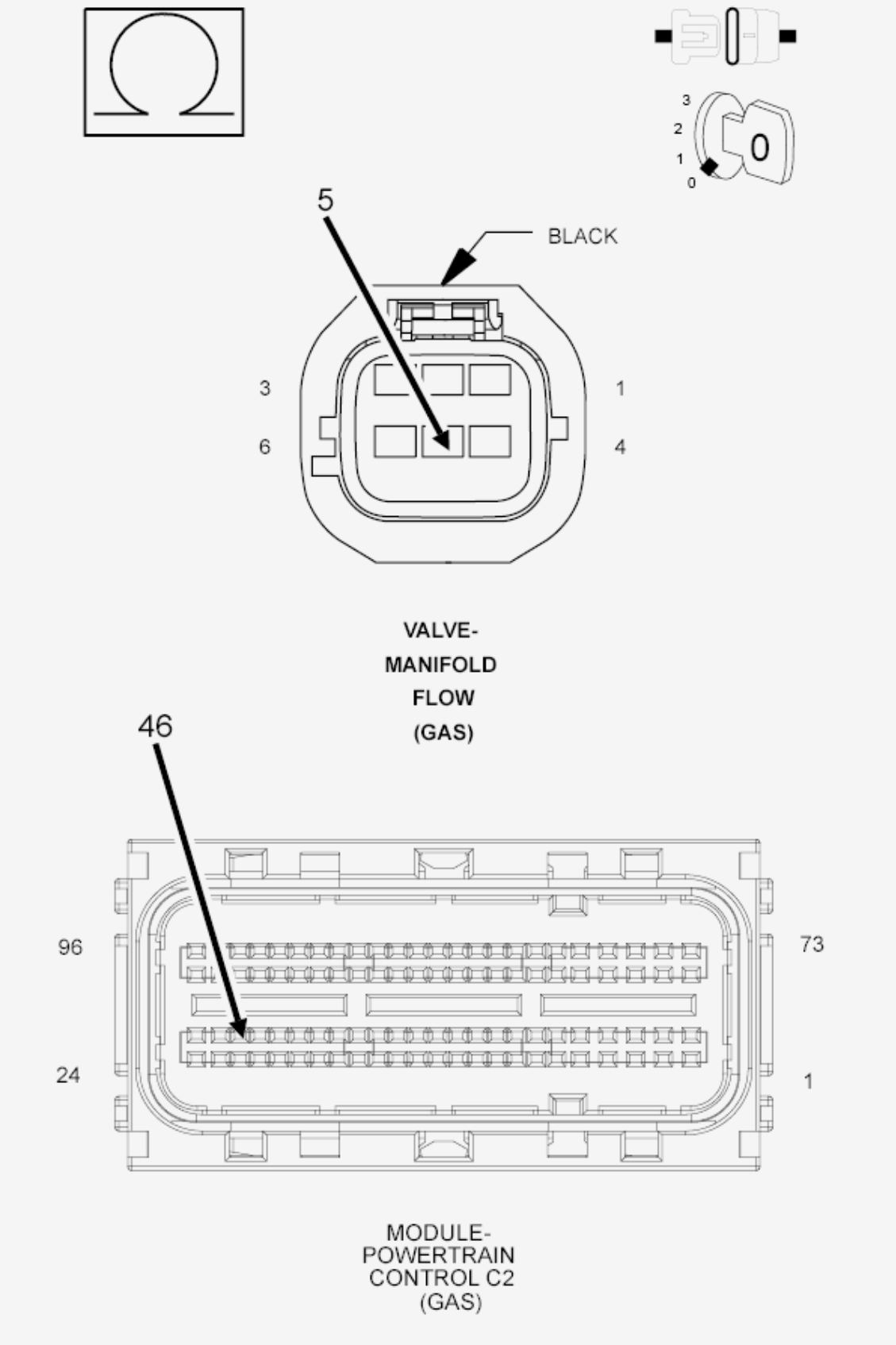

Fig. 150: Checking MFV Signal Circuit For Open Or High Resistance
Courtesy of CHRYSLER GROUP, LLC

1. Turn the ignition off.
2. Measure the resistance of the (K602) MFV Signal circuit between the Manifold Flow Valve harness connector and the PCM C2 harness connector.

   Is the resistance below 5.0 Ohms?

   Yes

   - Go To 6

   No

   - Repair the (K602) MFV Signal circuit for an open circuit or high resistance.
   - Perform the POWERTRAIN VERIFICATION TEST. Refer to **POWERTRAIN VERIFICATION TEST** .

6. **(K900) SENSOR GROUND CIRCUIT OPEN OR HIGH RESISTANCE**

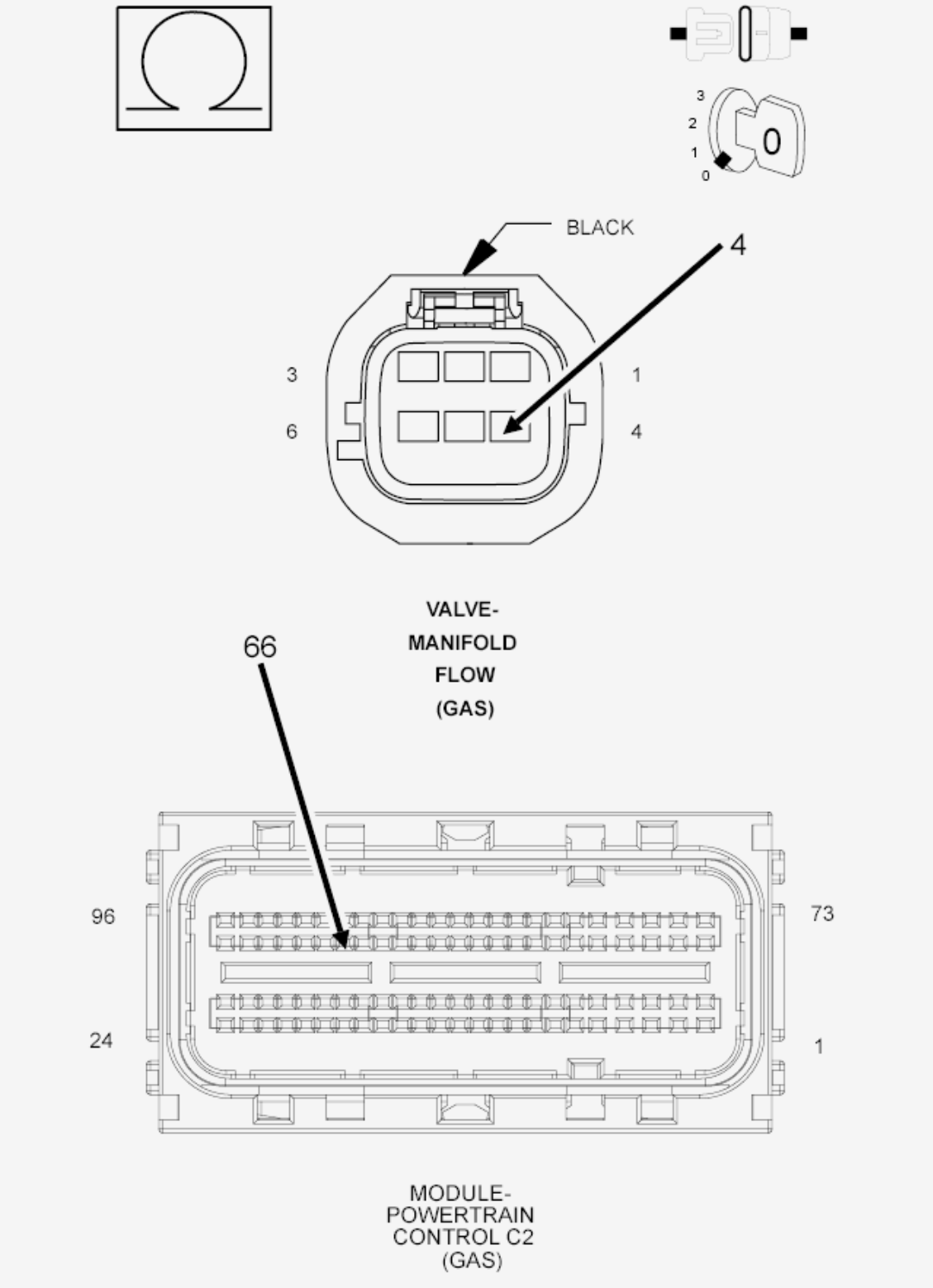

Fig. 151: Checking Sensor Ground Circuit For Open Or High Resistance
Courtesy of CHRYSLER GROUP, LLC

1. Measure the resistance of the (K900) Sensor Ground circuit between

the Manifold Flow Valve harness connector and the PCM C2 harness connector.

Is the resistance below 5.0 Ohms?

Yes

- Go To 7

No

- Repair the (K900) Sensor Ground circuit for an open circuit or high resistance.
- Perform the POWERTRAIN VERIFICATION TEST. Refer to **POWERTRAIN VERIFICATION TEST** .

7. **MANIFOLD FLOW VALVE**

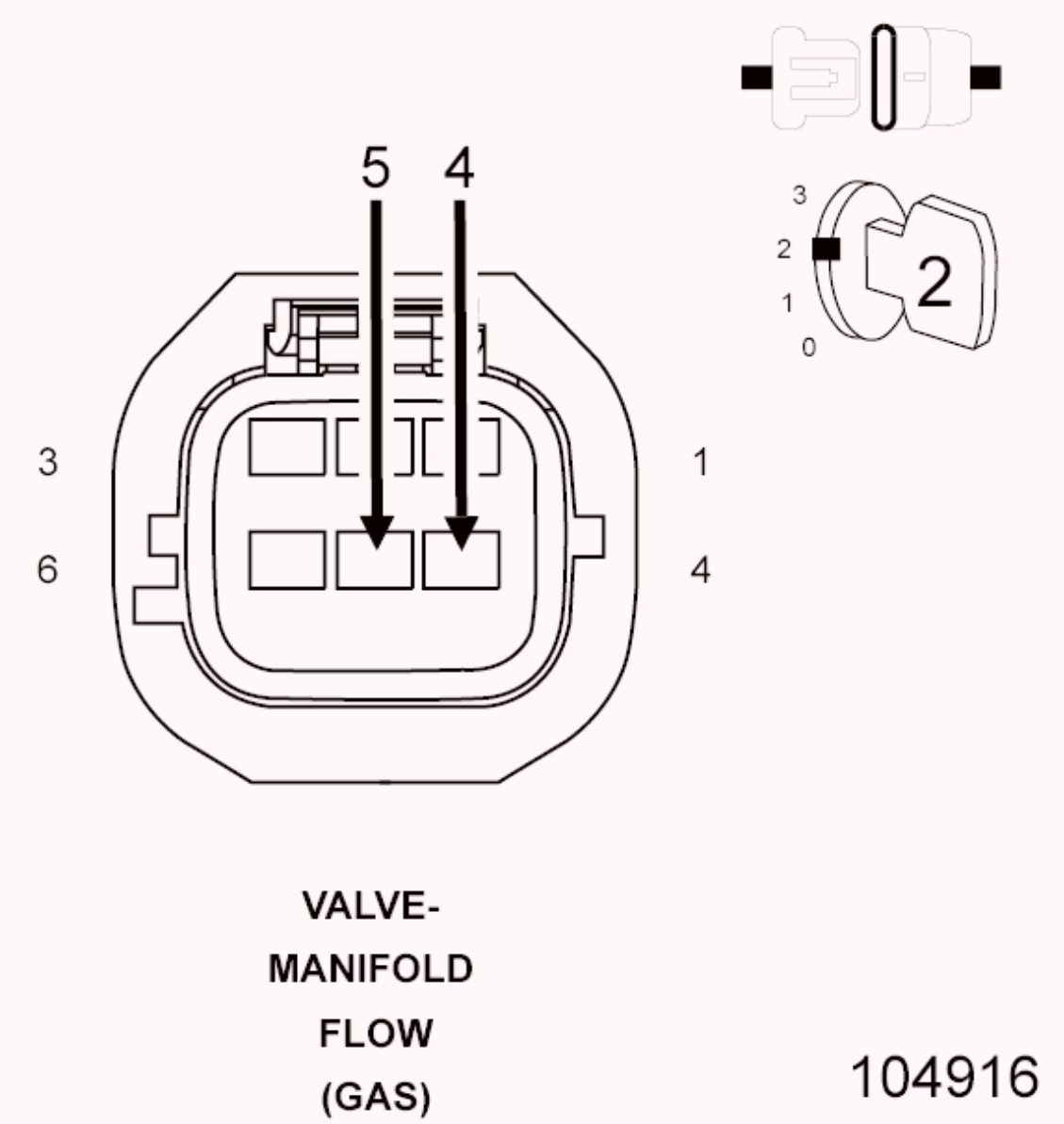

Fig. 152: Manifold Flow Valve Harness Connector End View
Courtesy of CHRYSLER GROUP, LLC

1. Turn the ignition off.
2. Connect the PCM C2 harness connector.
3. Connect a jumper wire between the (K900) Sensor Ground circuit and the (K602) MFV Signal circuit in the Manifold Flow Valve harness connector.
4. Turn the ignition on.
5. With the scan tool, read the Manifold Flow Valve signal voltage.

   Is the voltage below 1.0 volt with the jumper wire in place?

Yes

- Replace the Manifold Flow Valve in accordance with the service information.
- Perform the POWERTRAIN VERIFICATION TEST. Refer to **POWERTRAIN VERIFICATION TEST** .

No

- Go To 8

8. **POWERTRAIN CONTROL MODULE (PCM)**
   1. Using the wiring diagram/schematic as a guide, inspect the wiring and connectors between the Manifold Flow Valve and the Powertrain Control Module (PCM).
   2. Look for any chafed, pierced, pinched, or partially broken wires.
   3. Look for broken, bent, pushed out or corroded terminals.
   4. Monitor the scan tool data relative to this circuit and wiggle test the wiring and connectors.
   5. Look for the data to change or for the DTC to reset during the wiggle test.
   6. Perform any Technical Service Bulletins that may apply.

   Were any problems found?

   Yes

   - Repair as necessary.
   - Perform the POWERTRAIN VERIFICATION TEST. Refer to **POWERTRAIN VERIFICATION TEST** .

   No

   - Replace and program the Powertrain Control Module (PCM) in accordance with the Service Information. Refer to **MODULE, POWERTRAIN CONTROL, REMOVAL** .
   - Perform the POWERTRAIN VERIFICATION TEST. Refer to **POWERTRAIN VERIFICATION TEST** .

P2066-FUEL LEVEL SENSOR 2 PERFORMANCE

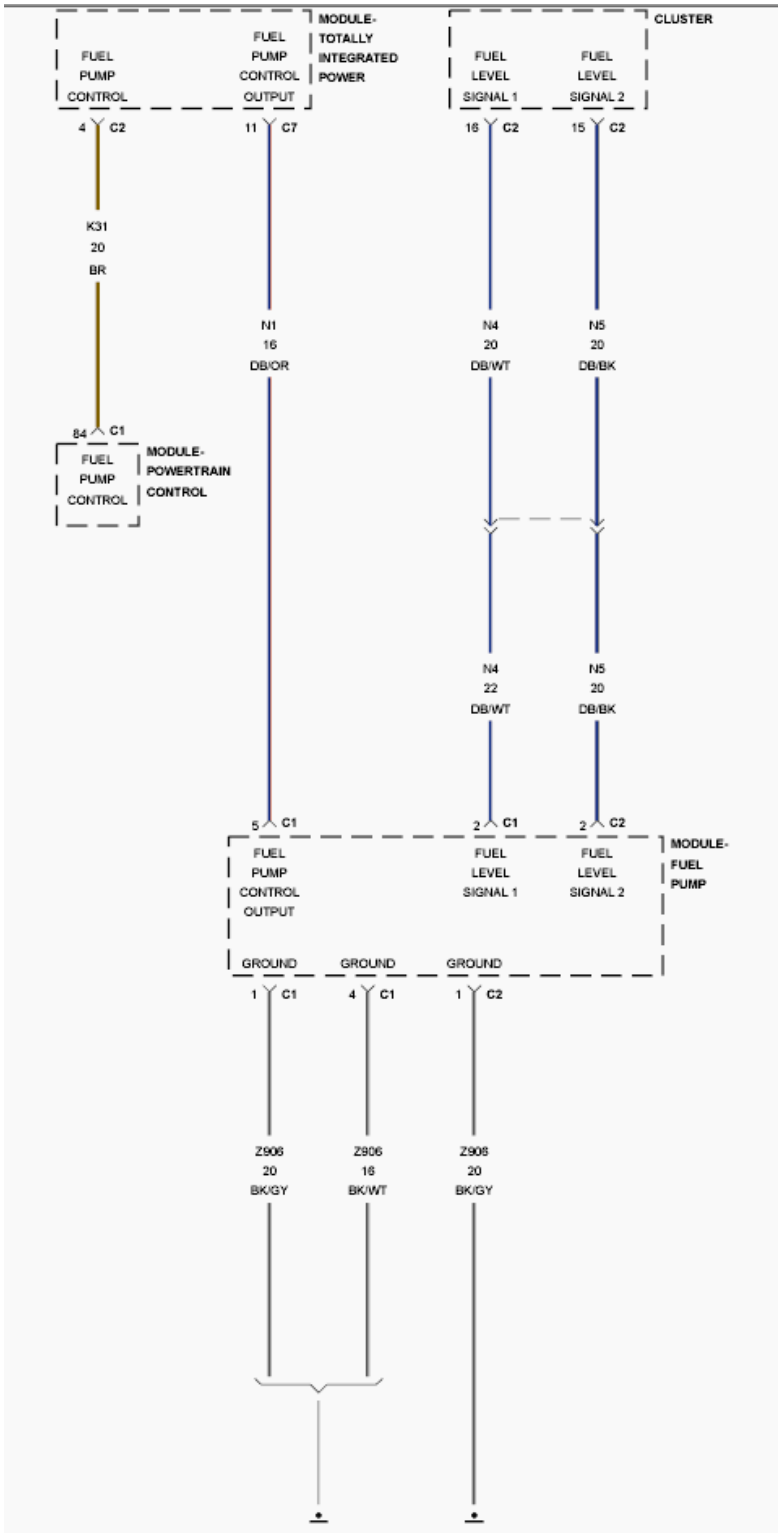

Fig. 153: Fuel Pump Circuit Diagram
Courtesy of CHRYSLER GROUP, LLC

For a complete wiring diagram, **refer to appropriate SYSTEM WIRING DIAGRAMS article** .

THEORY OF OPERATION

The fuel level sensor information is a bussed message to the Powertrain Control Module (PCM) from the Cabin Compartment Node (CCN). The fuel level rationality will set a fault for a fuel level reading that does not change over an accumulated mileage threshold to keep stuck high or stuck low fuel levels from disabling OBD monitors. If the vehicle is fitted with a saddle tank fuel system this feature includes diagnostics for both of the sending units and diagnostics for a siphon tube that has become disconnected or plugged. The power up test looks to see a large enough fuel level voltage change from the last key-off to the following engine run. The engine run test looks to see a fuel level voltage change over an accumulated mileage.

Vehicles fitted with saddle fuel tank configurations have two fuel level sending units. The primary side of the tank has the filler tube inlet near the bottom and contains the fuel pump module. During fuel tank fills, fuel must overflow the primary side to reach the secondary side of the tank. As fuel is consumed, a siphon tube is used to draw fuel from the secondary side to the primary side. Because the siphon tube flow rate exceeds the fuel consumption rate, the secondary side of the tank will be empty before fuel is depleted from the primary side. Fuel level sensor 1 is located on the primary side of the tank. Fuel level sensor 2 is located on the secondary side of the tank.

WHEN MONITORED

With engine run time greater than three minutes and Fuel Level Sensor 1 reading high.

SET CONDITION

The Powertrain Control Module (PCM) detects no change in Fuel Level Sensor 2 circuit voltage after a significant amount of fuel should have been consumed based on a calculated value and the vehicle operating conditions.

POSSIBLE CAUSES

Possible Causes
CAN BUS FAILURE
FUEL LEVEL SENSOR CIRCUIT DTCS SET IN THE CCN
FUEL TANK
OBSTRUCTION TO THE FUEL LEVEL SENSOR

POWERTRAIN CONTROL MODULE (PCM)

Always perform the Pre-Diagnostic Troubleshooting procedure before proceeding. Refer to PRE-DIAGNOSTIC TROUBLESHOOTING PROCEDURE .

DIAGNOSTIC TEST

1. **ACTIVE DTC**

NOTE: Diagnose and repair any CAN bus, communication or implausible signal DTCs before proceeding with this test.

NOTE: Diagnose P2067 or P2068 first, if set along with P2066.

1. Start the engine.
2. Allow the engine to reach normal operating temperature.
3. With the scan tool, select View DTCs.

NOTE: It may be necessary to drive the vehicle to meet the conditions to set this DTC, try to repeat the conditions in which the fault originally set by reviewing the Freeze Frame data.

Is the DTC Active or Pending at this time?

Yes

- Go To 2

No

- Perform the INTERMITTENT CONDITION diagnostic procedure. Refer to **INTERMITTENT CONDITION** .

2. **VISUALLY INSPECT FUEL TANK**
   1. Visually inspect the Fuel Tank for damage that may restrict the Fuel Sending Unit float from moving.

Is the Fuel Tank OK?

Yes

- Go To 3

No

- Replace the Fuel Tank as necessary.
- Perform the POWERTRAIN VERIFICATION TEST. Refer to **POWERTRAIN VERIFICATION TEST** .

3. **FUEL LEVEL SENSOR CIRCUIT DTCS SET IN THE CCN**

Are any Fuel Level Sensor Circuit DTCs set in the CCN?

Yes

- Diagnose the appropriate Fuel Level Sensor Circuit DTC in the CCN. Refer to **DIAGNOSIS AND TESTING** .

No

- Go To 4

4. **INTERNAL INSPECTION OF THE FUEL TANK**

WARNING: The fuel system is under a constant pressure (even with the engine off). Before testing or servicing any fuel system hose, fitting or line, the fuel system pressure must be released. Failure to follow these instructions can result in possible serious or fatal injury.

1. Remove the Fuel Tank in accordance with the Service Information.
2. Remove the Fuel Pump Module.
3. Visually inspect the inside of the Fuel Tank for any obstructions or deformities.
4. Inspect the Fuel Pump Module Float arm for damage.

Were any problems found?

Yes

- Repair or replace as necessary.
- Perform the POWERTRAIN VERIFICATION TEST. Refer to **POWERTRAIN VERIFICATION TEST** .

No

- Go To 5

5. **POWERTRAIN CONTROL MODULE (PCM)**
   1. Using the wiring diagram/schematic as a guide, inspect the wiring and connectors between the Cabin Compartment Node (CCN) and the Powertrain Control Module (PCM).
   2. Look for any chafed, pierced, pinched or partially broken wires.
   3. Look for broken, bent, pushed out or corroded terminals. Verify that there is good pin to terminal contact in the Sensor and Powertrain Control Module connectors.
   4. Perform any Technical Service Bulletins that may apply.

   Were there any problems found?

   Yes

   - Repair as necessary.
   - Perform the POWERTRAIN VERIFICATION TEST. Refer to **POWERTRAIN VERIFICATION TEST** .

   No

   - Replace and program the Powertrain Control Module in accordance with the Service Information. Refer to **MODULE, POWERTRAIN CONTROL, REMOVAL** .
   - Perform the POWERTRAIN VERIFICATION TEST. Refer to **POWERTRAIN VERIFICATION TEST** .

P2067-FUEL LEVEL SENSOR 2 CIRCUIT LOW

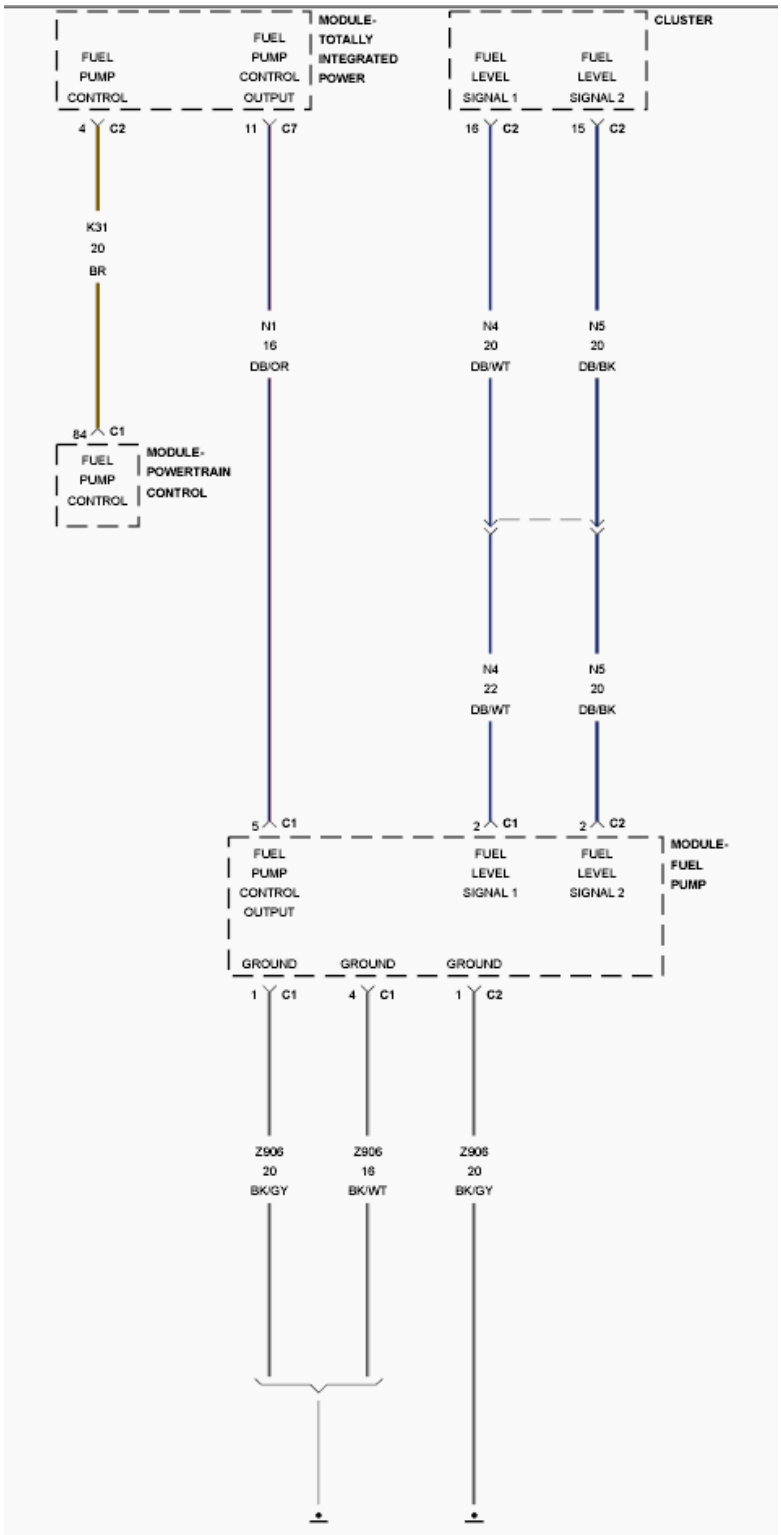

Fig. 154: Fuel Pump Circuit Diagram
Courtesy of CHRYSLER GROUP, LLC

For a complete wiring diagram, **refer to appropriate SYSTEM WIRING DIAGRAMS article** .

THEORY OF OPERATION

The fuel level sensor information is a bussed message to the Powertrain Control Module (PCM) from the Cabin Compartment Node (CCN). The fuel level rationality will set a fault for a fuel level reading that does not change over an accumulated mileage threshold to keep stuck high or stuck low fuel levels from disabling OBD monitors. If the vehicle is fitted with a saddle tank fuel system this feature includes diagnostics for both of the sending units and diagnostics for a siphon tube that has become disconnected or plugged. The power up test looks to see a large enough fuel level voltage change from the last key-off to the following engine run. The engine run test looks to see a fuel level voltage change over an accumulated mileage.

Vehicles fitted with saddle fuel tank configurations have two fuel level sending units. The primary side of the tank has the filler tube inlet near the bottom and contains the fuel pump module. During fuel tank fills, fuel must overflow the primary side to reach the secondary side of the tank. As fuel is consumed, a siphon tube is used to draw fuel from the secondary side to the primary side. Because the siphon tube flow rate exceeds the fuel consumption rate, the secondary side of the tank will be empty before fuel is depleted from the primary side. Fuel level sensor 1 is located on the primary side of the tank. Fuel level sensor 2 is located on the secondary side of the tank.

WHEN MONITORED

With the ignition on and battery voltage greater than 10.4 Volts.

SET CONDITION

The Fuel Level Sensor 2 input voltage is below the minimum acceptable value.

POSSIBLE CAUSES

Possible Causes
CAN BUS FAILURE
FUEL LEVEL SENSOR CIRCUIT DTCS SET IN THE CCN
FUEL TANK
OBSTRUCTION TO THE FUEL LEVEL SENSOR
POWERTRAIN CONTROL MODULE (PCM)

Always perform the Pre-Diagnostic Troubleshooting procedure before proceeding. Refer to PRE-DIAGNOSTIC TROUBLESHOOTING

PROCEDURE .

DIAGNOSTIC TEST

1. **ACTIVE DTC**

   NOTE: Diagnose and repair any CAN bus, communication or implausible signal DTCs before proceeding with this test.

   1. Start the engine.
   2. Allow the engine to reach normal operating temperature.
   3. With the scan tool, select View DTCs.

      NOTE: It may be necessary to drive the vehicle to meet the conditions to set this DTC, try to repeat the conditions in which the fault originally set by reviewing the Freeze Frame data.

   Is the DTC Active or Pending at this time?

   Yes

   - Go To 2

   No

   - Perform the INTERMITTENT CONDITION diagnostic procedure. Refer to **INTERMITTENT CONDITION** .

2. **VISUALLY INSPECT FUEL TANK**
   1. Visually inspect the Fuel Tank for damage that may restrict the Fuel Sending Unit float from moving.

   Is the Fuel Tank OK?

   Yes

   - Go To 3

   No

- Replace the Fuel Tank as necessary.
- Perform the POWERTRAIN VERIFICATION TEST. Refer to **POWERTRAIN VERIFICATION TEST** .

3. **FUEL LEVEL SENSOR CIRCUIT DTCS SET IN THE CCN**

Are any Fuel Level Sensor Circuit DTCs set in the CCN?

Yes

- Diagnose the appropriate Fuel Level Sensor circuit DTC in the CCN. Refer to **DIAGNOSIS AND TESTING** .

No

- Go To 4

4. **INTERNAL INSPECTION OF THE FUEL TANK**

WARNING: **The fuel system is under a constant pressure (even with the engine off). Before testing or servicing any fuel system hose, fitting or line, the fuel system pressure must be released. Failure to follow these instructions can result in possible serious or fatal injury.**

1. Remove the Fuel Tank in accordance with the Service Information.
2. Remove the Fuel Pump Module.
3. Visually inspect the inside of the Fuel Tank for any obstructions or deformities.
4. Inspect the Fuel Pump Module Float arm for damage.

Were any problems found?

Yes

- Repair or replace as necessary.
- Perform the POWERTRAIN VERIFICATION TEST. Refer to **POWERTRAIN VERIFICATION TEST** .

No

- Go To 5

5. **POWERTRAIN CONTROL MODULE (PCM)**
   1. Using the wiring diagram/schematic as a guide, inspect the wiring and connectors between the Cabin Compartment Node (CCN) and the Powertrain Control Module (PCM).
   2. Look for any chafed, pierced, pinched or partially broken wires.
   3. Look for broken, bent, pushed out or corroded terminals. Verify that there is good pin to terminal contact in the Sensor and Powertrain Control Module connectors.
   4. Perform any Technical Service Bulletins that may apply.

   Were there any problems found?

   Yes

   - Repair as necessary.
   - Perform the POWERTRAIN VERIFICATION TEST. Refer to **POWERTRAIN VERIFICATION TEST** .

   No

   - Replace and program the Powertrain Control Module in accordance with the Service Information. Refer to **MODULE, POWERTRAIN CONTROL, REMOVAL** .
   - Perform the POWERTRAIN VERIFICATION TEST. Refer to **POWERTRAIN VERIFICATION TEST** .

P2072-ELECTRONIC THROTTLE CONTROL SYSTEM - ICE BLOCKAGE

For a complete wiring diagram, **refer to appropriate SYSTEM WIRING DIAGRAMS article** .

WHEN MONITORED

With the ignition on and battery voltage greater than 10.4 volts.

SET CONDITION

The Powertrain Control Module (PCM) detects that the throttle plate is stuck during extremely cold ambient temperature operation. The PCM will initiate a

throttle de-icing procedure, and if the throttle blade still doesn't move, this DTC will set. The MIL will not illuminate. The vehicle will be in Limp home condition, limiting RPM and vehicle speed.

POSSIBLE CAUSES

POSSIBLE CAUSES
THROTTLE PLATE OBSTRUCTION

DIAGNOSTIC TEST

THROTTLE BODY INSPECTION

1. Ignition on, engine not running.
2. With a scan tool, select View DTCs. Record the related Freeze Frame data.

   NOTE: Diagnose any other DTCs before continuing.

   NOTE: P2110 will set with P2072. P2118 may also set and the customer will experience a Limp-in condition. If either of these two faults are set, it indicates that the ice blockage software has run and no repair is necessary.

   NOTE: This DTC will set in extreme cold ambient temperatures when the PCM detects that the throttle plate is stuck. By the time the vehicle is serviced, the condition may be corrected.

3. Turn the ignition off.
4. Remove the air cleaner assembly.
5. Check for any signs of a foreign material (ice or dirt) on the throttle plate or in the throttle bore that can cause the throttle plate to stick.

   Were any problems found?

   Yes

   - Repair as necessary. If the throttle blade is frozen, allow the throttle body to thaw naturally in a warm location.

- Perform the POWERTRAIN VERIFICATION TEST. Refer to **POWERTRAIN VERIFICATION TEST** .

No

- Test complete.

P2096-DOWNSTREAM FUEL TRIM SYSTEM 1 LEAN

For a complete wiring diagram, **refer to appropriate SYSTEM WIRING DIAGRAMS article** .

WHEN MONITORED

With the engine running in closed loop, the ambient/battery temperature above -7° C (20° F) and altitude below 8500 ft.

SET CONDITION

The conditions that cause this diagnostic to fail is when the upstream O2 sensor becomes biased from an exhaust leak, O2 sensor contamination, or some other extreme operating condition. The downstream O2 sensor is considered to be protected from extreme environments by the catalyst. The Powertrain Control Module (PCM) monitors the downstream O2 sensor feedback control, called downstream fuel trim, to detect any shift in the upstream O2 sensor target voltage from nominal target voltage. The value of the downstream fuel trim is compared with the lean thresholds. Every time the value exceeds the calibrated threshold, a fail timer is incremented and mass flow through the exhaust is accumulated. If the fail timer and accumulated mass flow exceed the fail thresholds, the test fails and the diagnostic stops running for that trip. If the test fails on consecutive trips, a DTC is set.

POSSIBLE CAUSES

POSSIBLE CAUSES
EXHAUST LEAK
FUEL DELIVERY SYSTEM
O2 SENSOR, WIRING, OR CONNECTORS
ENGINE MECHANICAL SYSTEM
POWERTRAIN CONTROL MODULE (PCM)

Always perform the Pre-Diagnostic Troubleshooting procedure before proceeding. Refer to PRE-DIAGNOSTIC TROUBLESHOOTING PROCEDURE .

DIAGNOSTIC TEST

1. **EXHAUST LEAK**

   NOTE: A thorough exhaust leak test must be completed before removing an O2 Sensor or any other part from the exhaust system. Do not remove any parts before an exhaust leak check has been completed.

   NOTE: An exhaust leak may cause downstream fuel adaptives to rail out, resulting in a false O2 Sensor failure

   1. Perform the diagnostic procedure for CHECKING THE EXHAUST SYSTEM FOR LEAKS. Refer to **DIAGNOSIS AND TESTING** .

      Were any problems found?

      Yes

      - Go To 7

      No

      - Go To 2

2. **DTC IS ACTIVE**
   1. Diagnose and repair any other active component or circuit DTCs before continuing with this procedure.
   2. Turn the ignition on.
   3. With the scan tool, select View DTCs. Copy DTC and Freeze Frame information.
   4. Start the engine and allow it to reach operating temperature.

      WARNING: When the engine is operating, do not stand in direct line with the fan. Do not put

your hands near the pulleys, belts or fan. Do not wear loose clothing. Failure to follow these instructions may result in possible serious or fatal injury.

NOTE: Attempt to operate the vehicle under conditions similar to which the DTC was set.

NOTE: It may be necessary to test drive the vehicle within the DTC monitoring conditions in order for this DTC to set.

5. With a scan tool, select View DTCs.

   Is the status Active for this DTC?

   Yes

   - Go To 3

   No

   - Perform the INTERMITTENT CONDITION diagnostic procedure. Refer to **INTERMITTENT CONDITION** .

3. **CHECKING THE FUEL DELIVERY SYSTEM**
   1. Perform the diagnostic procedures for FUEL PRESSURE LEAK DOWN and FUEL DELIVERY SYSTEM OUTPUT - FLOW TEST. Refer to **DIAGNOSIS AND TESTING** .

      Were any problems found?

      Yes

      - Repair as necessary in accordance with the Service Information.
      - Perform the PCM VERIFICATION TEST. Refer to **POWERTRAIN VERIFICATION TEST** .

      No

      - Go To 4

4. **CHECKING THE OXYGEN SENSOR OPERATION**
   1. Perform the diagnostic procedure for CHECKING THE OXYGEN SENSOR OPERATION. Refer to **DIAGNOSIS AND TESTING** .

      Were any problems found?

      Yes

      - Repair as necessary in accordance with the Service Information.
      - Perform the PCM VERIFICATION TEST. Refer to **POWERTRAIN VERIFICATION TEST** .

      No

      - Go To 5
5. **CHECKING THE ENGINE MECHANICAL SYSTEM**
   1. Perform the diagnostic procedure for CHECKING THE ENGINE MECHANICAL SYSTEM. Refer to **DIAGNOSIS AND TESTING** .

      Were any problems found?

      Yes

      - Repair as necessary in accordance with the Service Information.
      - Perform the PCM VERIFICATION TEST. Refer to **POWERTRAIN VERIFICATION TEST** .

      No

      - Go To 6
6. **POWERTRAIN CONTROL MODULE (PCM)**
   1. Using the wiring diagram/schematic as a guide, inspect the wiring and connectors relative to the components tested in this procedure.
      - Look for any chafed, pierced, pinched, or partially broken wires.
      - Look for broken, bent, pushed out or corroded terminals.
      - Monitor the scan tool data relative to the components tested in this procedure and wiggle test the wiring and connectors.
      - Look for the data to change or for a DTC to set during the wiggle

test.

- Perform any technical service bulletins that may apply.

Were any problems found?

Yes

- Repair as necessary.
- Perform the PCM VERIFICATION TEST. Refer to **POWERTRAIN VERIFICATION TEST** .

No

- Replace and program the PCM in accordance with the Service Information. Refer to **MODULE, POWERTRAIN CONTROL, REMOVAL** .
- Perform the PCM VERIFICATION TEST. Refer to **POWERTRAIN VERIFICATION TEST** .

7. **EXHAUST LEAK**
   1. Repair the exhaust leak(s) as necessary.
   2. Start the engine and allow it to reach operating temperature.
   3. Test drive the vehicle at a steady 80 kph (50 mph) to 97 kph (60 mph) for at least 10 minutes.
   4. Stop the vehicle and turn the ignition off for 5 seconds.
   5. Test drive the vehicle again at a steady 80 kph (50 mph) to 97 kph (60 mph) for at least 10 minutes.
   6. Stop the vehicle.
   7. With the scan tool, select View DTCs.

   Does this DTC reset as a pending or stored DTC?

   Yes

   - Retest. Go To 1

   No

   - Test Complete.

- Perform the PCM VERIFICATION TEST. Refer to **POWERTRAIN VERIFICATION TEST** .

P2097-DOWNSTREAM FUEL TRIM SYSTEM 1 RICH

For a complete wiring diagram, **refer to appropriate SYSTEM WIRING DIAGRAMS article** .

WHEN MONITORED

With the engine running in closed loop, the ambient/battery temperature above -7° C (20° F) and altitude below 8500 ft.

SET CONDITION

The conditions that cause this diagnostic to fail is when the upstream O2 sensor becomes biased from an exhaust leak, O2 sensor contamination, or some other extreme operating condition. The downstream O2 sensor is considered to be protected from extreme environments by the catalyst. The Powertrain Control Module (PCM) monitors the downstream O2 sensor feedback control, called downstream fuel trim, to detect any shift in the upstream O2 sensor target voltage from nominal target voltage. The value of the downstream fuel trim is compared with the rich thresholds. Every time the value exceeds the calibrated threshold, a fail timer is incremented and mass flow through the exhaust is accumulated. If the fail timer and accumulated mass flow exceed the fail thresholds, the test fails and the diagnostic stops running for that trip. If the test fails on consecutive trips, a DTC is set.

POSSIBLE CAUSES

POSSIBLE CAUSES
EXHAUST LEAK
FUEL DELIVERY SYSTEM
O2 SENSOR, WIRING, OR CONNECTORS
ENGINE MECHANICAL SYSTEM
POWERTRAIN CONTROL MODULE (PCM)

Always perform the Pre-Diagnostic Troubleshooting procedure before proceeding. Refer to PRE-DIAGNOSTIC TROUBLESHOOTING PROCEDURE .

DIAGNOSTIC TEST

1. **EXHAUST LEAK**

NOTE: A thorough exhaust leak test must be completed before removing an O2 Sensor or any other part from the exhaust system. Do not remove any parts before an exhaust leak check has been completed.

NOTE: An exhaust leak may cause downstream fuel adaptives to rail out, resulting in a false O2 Sensor failure

1. Perform the diagnostic procedure for CHECKING THE EXHAUST SYSTEM FOR LEAKS. Refer to **DIAGNOSIS AND TESTING** .

   Were any problems found?

   Yes

   - Go To 7

   No

   - Go To 2

2. **DTC IS ACTIVE**
   1. Diagnose and repair any other active component or circuit DTCs before continuing with this procedure.
   2. Turn the ignition on.
   3. With the scan tool, select View DTCs. Copy DTC and Freeze Frame information.
   4. Start the engine and allow it to reach operating temperature.

WARNING: When the engine is operating, do not stand in direct line with the fan. Do not put your hands near the pulleys, belts or fan. Do not wear loose clothing. Failure to follow these instructions may result in possible serious or fatal injury.

NOTE: Attempt to operate the vehicle under conditions similar to which the DTC was set.

NOTE: It may be necessary to test drive the vehicle within the DTC monitoring conditions in order for this DTC to set.

5. With a scan tool, select View DTCs.

   Is the status Active for this DTC?

   Yes

   - Go To 3

   No

   - Perform the INTERMITTENT CONDITION diagnostic procedure. Refer to **INTERMITTENT CONDITION** .

3. **CHECKING THE FUEL DELIVERY SYSTEM**
   1. Perform the diagnostic procedures for FUEL PRESSURE LEAK DOWN and FUEL DELIVERY SYSTEM OUTPUT - FLOW TEST. Refer to **DIAGNOSIS AND TESTING** .

      Were any problems found?

      Yes

      - Repair as necessary in accordance with the Service Information.
      - Perform the PCM VERIFICATION TEST. Refer to **POWERTRAIN VERIFICATION TEST** .

      No

      - Go To 4

4. **CHECKING THE OXYGEN SENSOR OPERATION**
   1. Perform the diagnostic procedure for CHECKING THE OXYGEN SENSOR OPERATION. Refer to **DIAGNOSIS AND TESTING** .

Were any problems found?

Yes

- Repair as necessary in accordance with the Service Information.
- Perform the PCM VERIFICATION TEST. Refer to **POWERTRAIN VERIFICATION TEST** .

No

- Go To 5

5. **CHECKING THE ENGINE MECHANICAL SYSTEM**
   1. Perform the diagnostic procedure for CHECKING THE ENGINE MECHANICAL SYSTEM. Refer to **DIAGNOSIS AND TESTING** .

   Were any problems found?

   Yes

   - Repair as necessary in accordance with the Service Information.
   - Perform the PCM VERIFICATION TEST. Refer to **POWERTRAIN VERIFICATION TEST** .

   No

   - Go To 6

6. **POWERTRAIN CONTROL MODULE (PCM)**
   1. Using the wiring diagram/schematic as a guide, inspect the wiring and connectors relative to the components tested in this procedure.
      - Look for any chafed, pierced, pinched, or partially broken wires.
      - Look for broken, bent, pushed out or corroded terminals.
      - Monitor the scan tool data relative to the components tested in this procedure and wiggle test the wiring and connectors.
      - Look for the data to change or for a DTC to set during the wiggle test.
      - Perform any technical service bulletins that may apply.

   Were any problems found?

Yes

- Repair as necessary.
- Perform the PCM VERIFICATION TEST. Refer to **POWERTRAIN VERIFICATION TEST** .

No

- Replace and program the PCM in accordance with the Service Information. Refer to **MODULE, POWERTRAIN CONTROL, REMOVAL** .
- Perform the PCM VERIFICATION TEST. Refer to **POWERTRAIN VERIFICATION TEST** .

7. **EXHAUST LEAK**
   1. Repair the exhaust leak(s) as necessary.
   2. Start the engine and allow it to reach operating temperature.
   3. Test drive the vehicle at a steady 80 kph (50 mph) to 97 kph (60 mph) for at least 10 minutes.
   4. Stop the vehicle and turn the ignition off for 5 seconds.
   5. Test drive the vehicle again at a steady 80 kph (50 mph) to 97 kph (60 mph) for at least 10 minutes.
   6. Stop the vehicle.
   7. With the scan tool, select View DTCs.

   Does this DTC reset as a pending or stored DTC?

   Yes

   - Retest. Go To 1

   No

   - Test Complete.
   - Perform the PCM VERIFICATION TEST. Refer to **POWERTRAIN VERIFICATION TEST** .

P2100-ELECTRONIC THROTTLE CONTROL MOTOR CIRCUIT

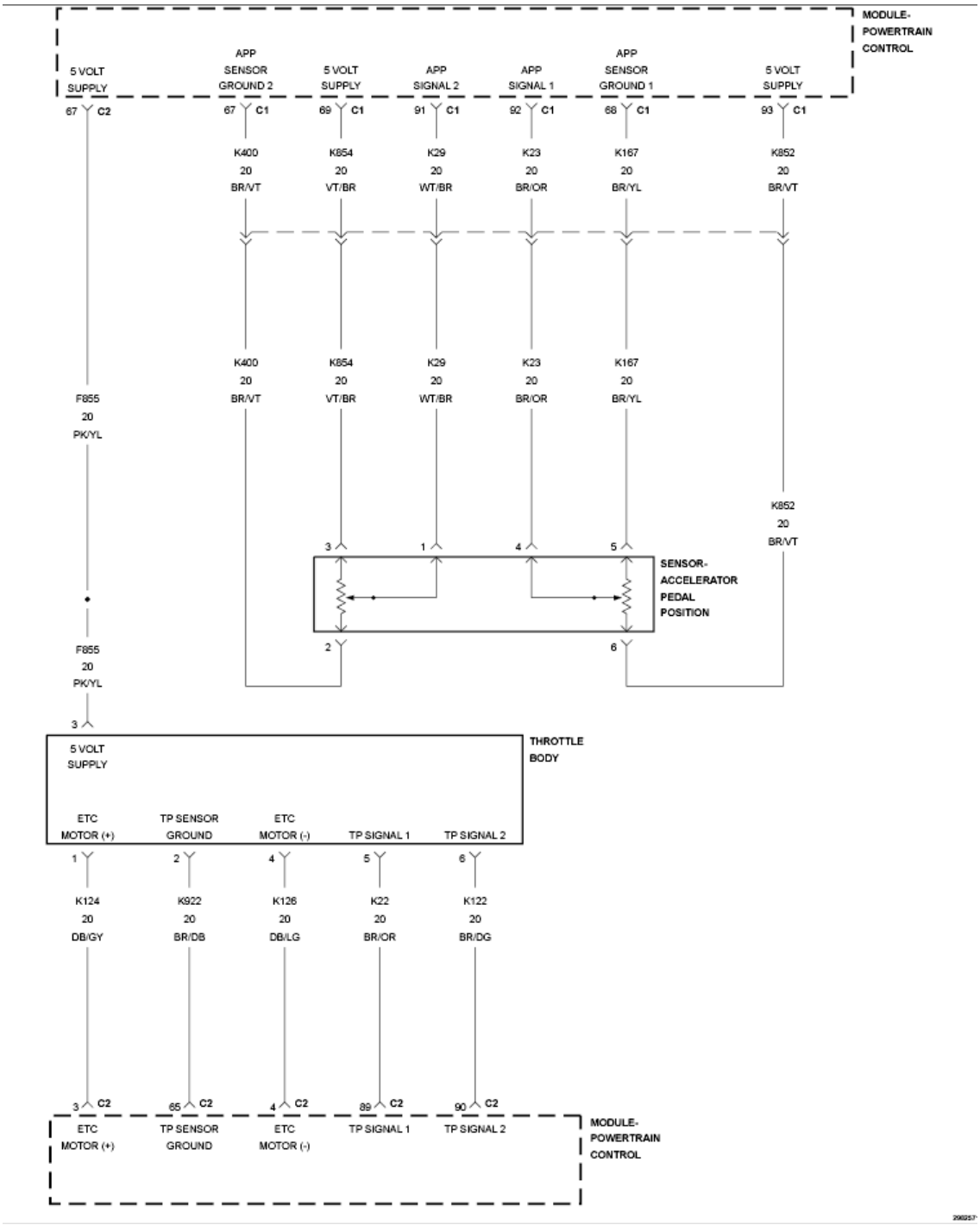

Fig. 155: Throttle Control Circuit Diagram
Courtesy of CHRYSLER GROUP, LLC

For a complete wiring diagram, **refer to appropriate SYSTEM WIRING DIAGRAMS article** .

WHEN MONITORED

With the ignition on and the ETC Motor not in Limp Home mode.

SET CONDITION

When the Powertrain Control Module (PCM) detects an internal error or short between the ETC Motor (-) and ETC Motor (+) circuits in the ETC Motor Driver. One trip fault. ETC light is flashing.

POSSIBLE CAUSES

POSSIBLE CAUSES
LOW BATTERY VOLTAGE
(K124) ETC MOTOR (+) CIRCUIT SHORTED TO VOLTAGE
(K126) ETC MOTOR (-) CIRCUIT SHORTED TO VOLTAGE
(K124) ETC MOTOR (+) CIRCUIT SHORTED TO GROUND
(K126) ETC MOTOR (-) CIRCUIT SHORTED TO GROUND
(K124) ETC MOTOR (+) CIRCUIT SHORTED TO THE (K126) ETC MOTOR (-) CIRCUIT
(K124) ETC MOTOR (+) CIRCUIT OPEN OR HIGH RESISTANCE
(K126) ETC MOTOR (-) CIRCUIT OPEN OR HIGH RESISTANCE
ETC MOTOR/THROTTLE BODY
POWERTRAIN CONTROL MODULE (PCM)

Always perform the Pre-Diagnostic Troubleshooting procedure before proceeding. Refer to PRE-DIAGNOSTIC TROUBLESHOOTING PROCEDURE .

DIAGNOSTIC TEST.

1. **ACTIVE DTC**

NOTE: If this DTC sets intermittently, it is possible that the controller is overheating in extremely hot temperatures. This is considered a normal protection operation. No repair is necessary.

NOTE: Low battery voltage can cause excessive current draw in very hot and cold ambient temperatures. Make sure the battery can pass a load test before continuing. Review Freeze Frame information to determine the ambient temperature when the DTC

set.

1. Start the engine and allow it to reach normal operating temperature.

   WARNING: **When the engine is operating, do not stand in direct line with the fan. Do not put your hands near the pulleys, belts or fan. Do not wear loose clothing. Failure to follow these instructions may result in possible serious or fatal injury.**

2. With the scan tool, select View DTCs.

   Is the status Active for this DTC?

   Yes

   - Go To 2

   No

   - Perform the INTERMITTENT CONDITION diagnostic procedure. Refer to **INTERMITTENT CONDITION** .

2. **THROTTLE PLATE INSPECTION**
   1. Turn the ignition off.
   2. Remove the air cleaner assembly.
   3. Check for any signs of a foreign material (ice or dirt) on the throttle plate or in the throttle bore that can cause the throttle plate to stick.

      Were any problems found?

      Yes

      - Remove the debris if possible or replace the Throttle Body Assembly. Disconnect the Battery when replacing the Throttle Body Assembly. After installation is complete, use a scan tool and select the ETC RELEARN function.
      - Perform the POWERTRAIN VERIFICATION TEST. Refer to **POWERTRAIN VERIFICATION TEST** .

No

- Go To 3

3. **CHECK THE (K124) ETC MOTOR (+) CIRCUIT FOR A SHORT TO VOLTAGE**

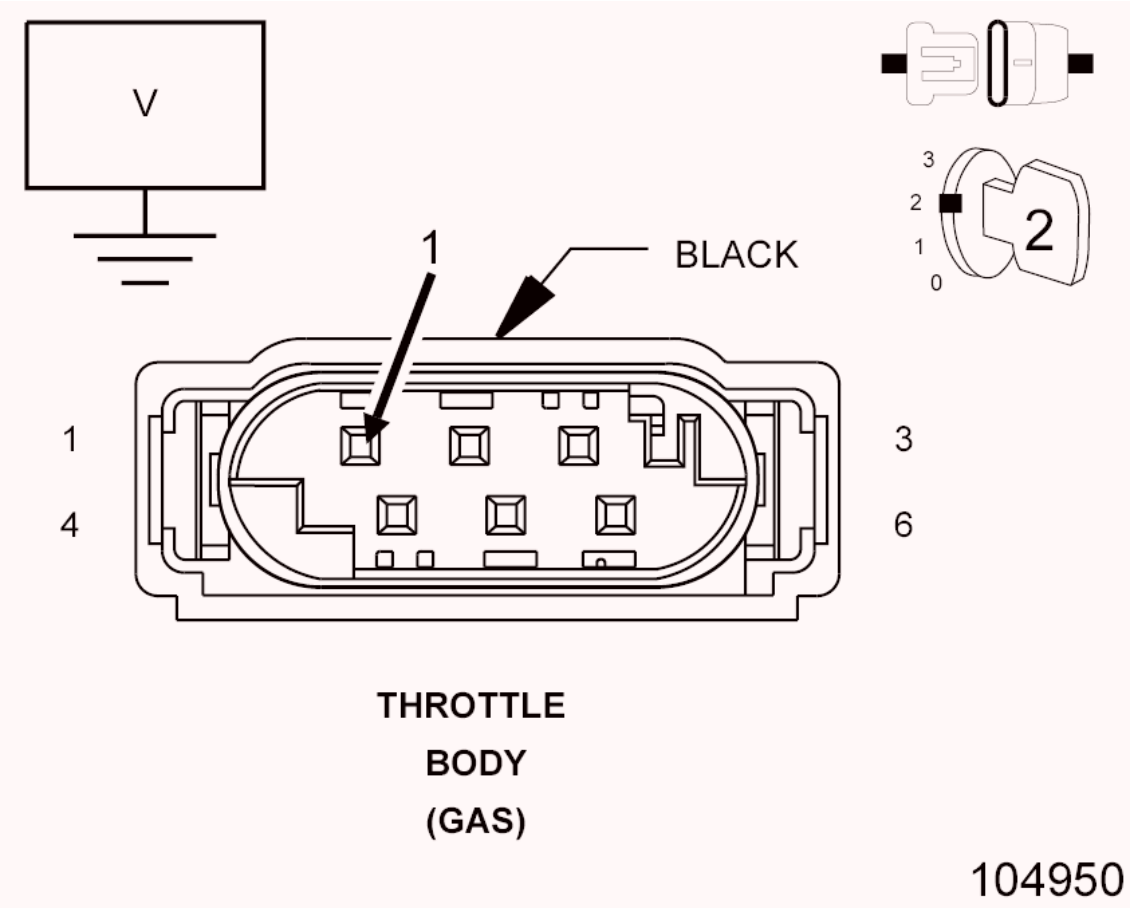

Fig. 156: Checking ETC Motor (+) Circuit For Short To Voltage
Courtesy of CHRYSLER GROUP, LLC

1. Turn the ignition off.
2. Disconnect the Throttle Body harness connector.
3. Disconnect the PCM C2 harness connector.
4. Turn the ignition on.
5. Measure the voltage of the (K124) ETC Motor (+) circuit.

   Is there any voltage present?

   Yes

- Repair the (K124) ETC Motor (+) circuit for a short to voltage.
- Perform the POWERTRAIN VERIFICATION TEST. Refer to **POWERTRAIN VERIFICATION TEST** .

No

- Go To 4

4. **CHECK THE (K126) ETC MOTOR (-) CIRCUIT FOR A SHORT TO VOLTAGE**

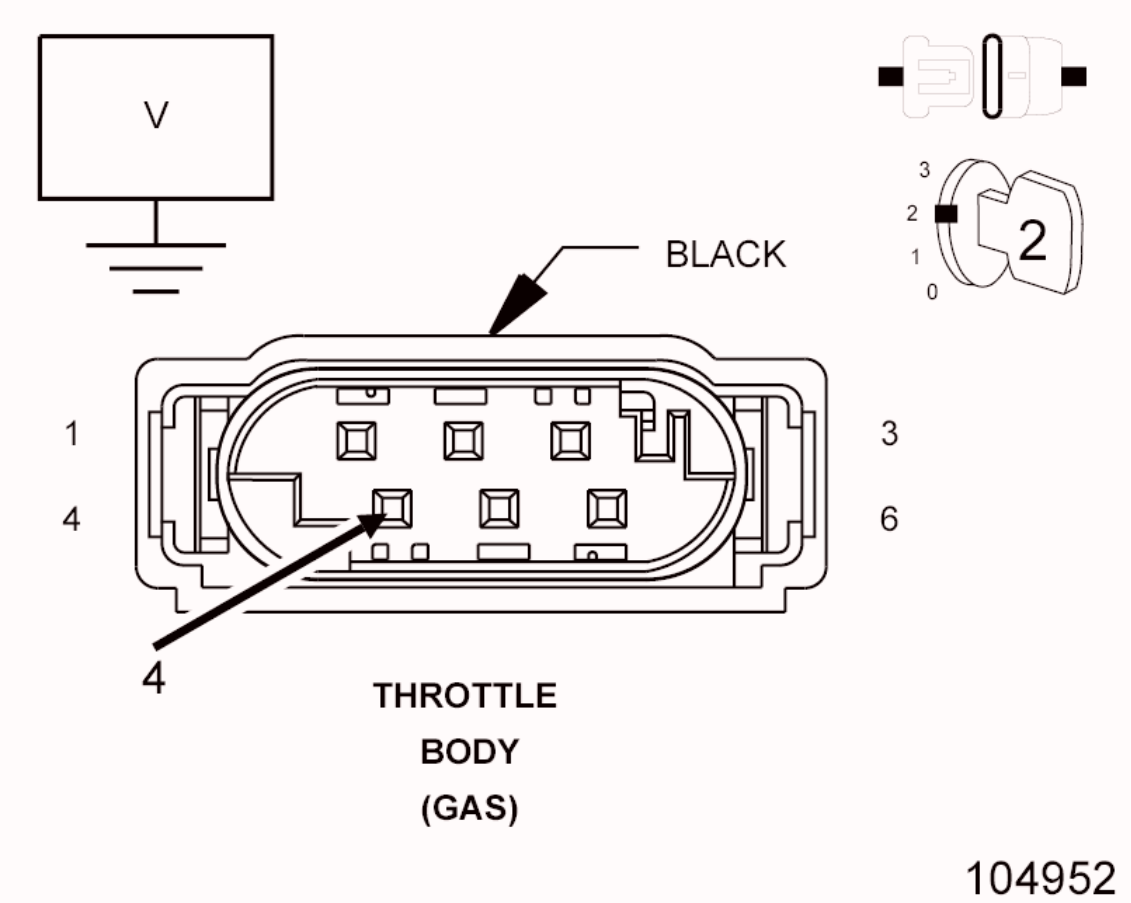

Fig. 157: Checking ETC Motor (-) Circuit For Short To Voltage
Courtesy of CHRYSLER GROUP, LLC

1. Measure the voltage of the (K126) ETC Motor (-) circuit.

   Is there any voltage present?

   Yes

   - Repair the (K126) ETC Motor (-) circuit for a short to voltage.

- Perform the POWERTRAIN VERIFICATION TEST. Refer to **POWERTRAIN VERIFICATION TEST** .

No

- Go To 5

5. **CHECK FOR THE (K124) ETC MOTOR (+) CIRCUIT SHORTED TO THE (K126) ETC MOTOR (-) CIRCUIT**

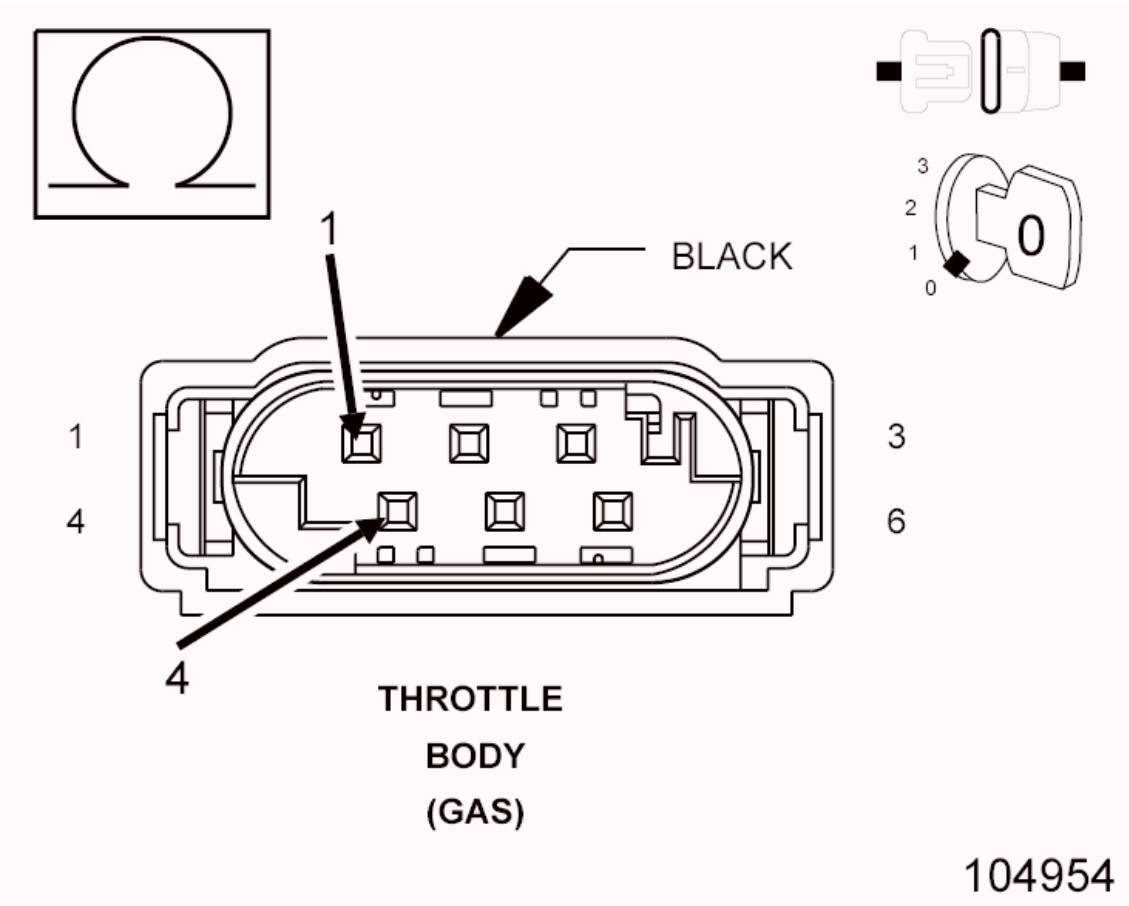

Fig. 158: Checking ETC Motor (+) Circuit For Short To ETC Motor (-) Circuit
Courtesy of CHRYSLER GROUP, LLC

1. Turn the ignition off.
2. Measure the resistance between the (K124) ETC Motor (+) circuit and the (K126) ETC Motor (-) circuit.

   Is the resistance above 10k Ohms?

   Yes

- Go To 6

No

- Repair the short to between the (K124) ETC Motor (+) circuit and the (K126) ETC Motor (-) circuit.
- Perform the POWERTRAIN VERIFICATION TEST. Refer to **POWERTRAIN VERIFICATION TEST** .

6. **CHECK THE (K124) ETC MOTOR (+) CIRCUIT FOR A SHORT TO GROUND**

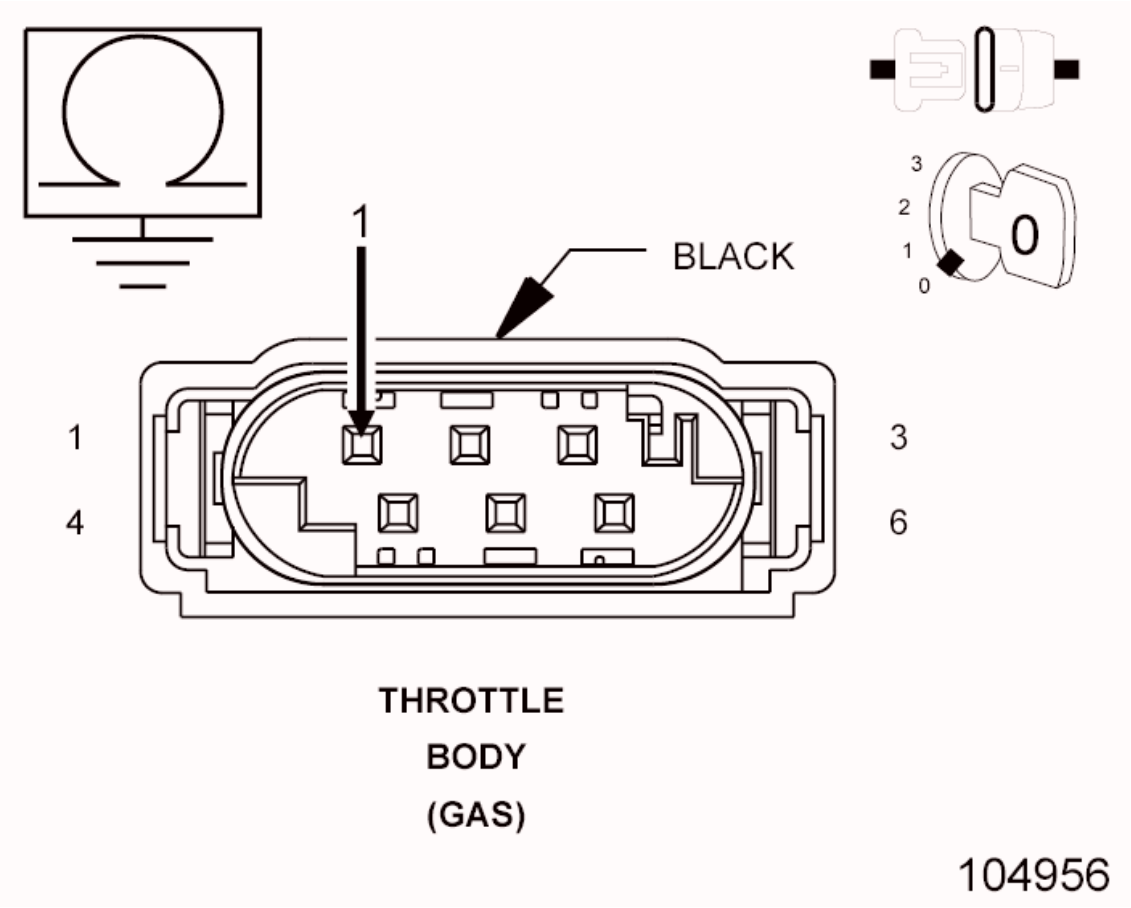

Fig. 159: Checking ETC Motor Circuit (+) For Short To Ground
Courtesy of CHRYSLER GROUP, LLC

1. Measure the resistance between ground and the (K124) ETC Motor (+) circuit.

   Is the resistance above 10k Ohms?

   Yes

- Go To 7

No

- Repair the (K124) ETC Motor (+) circuit for a short to ground.
- Perform the POWERTRAIN VERIFICATION TEST. Refer to **POWERTRAIN VERIFICATION TEST** .

7. **CHECK THE (K126) ETC MOTOR (-) CIRCUIT FOR A SHORT TO GROUND**

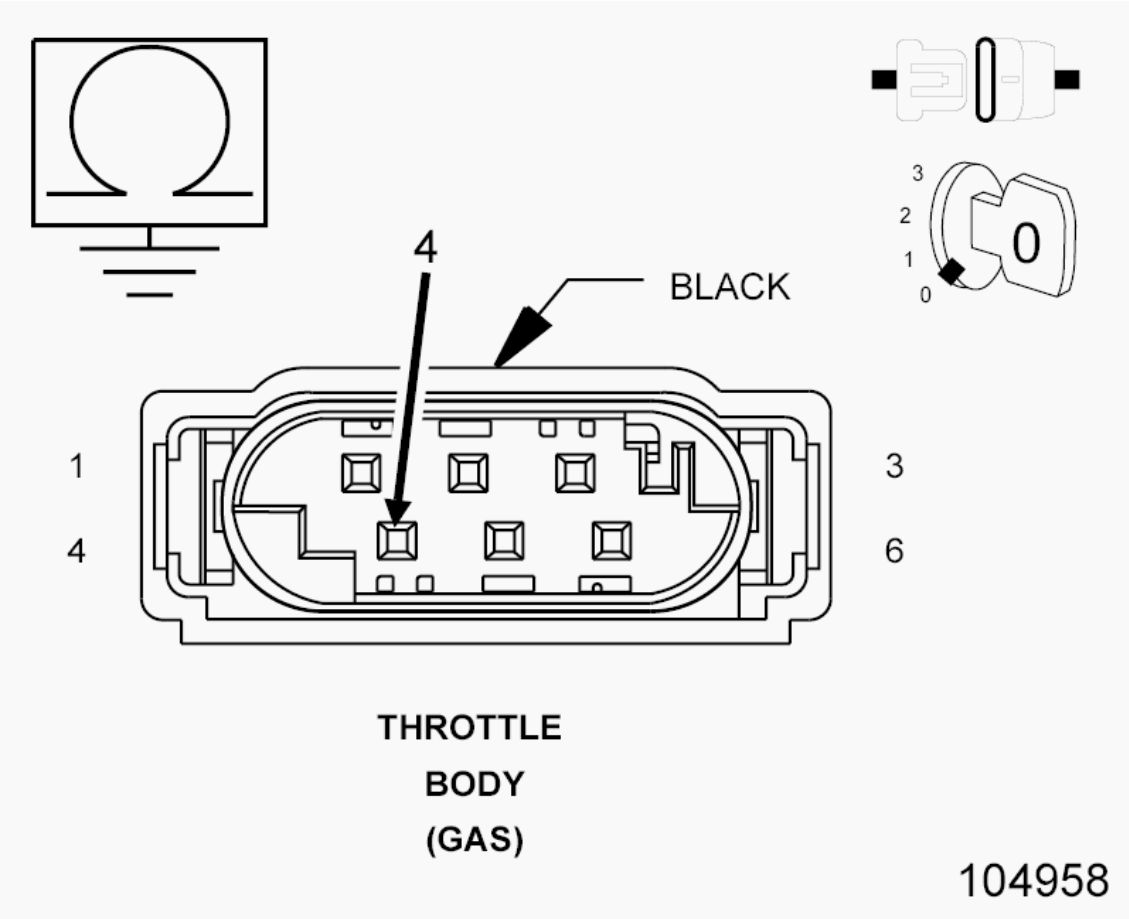

Fig. 160: Checking ETC Motor Circuit (-) For Short To Ground
Courtesy of CHRYSLER GROUP, LLC

1. Measure the resistance between ground and the (K126) ETC Motor (-) circuit.

   Is the resistance above 10k Ohms?

   Yes

- Go To 8

No

- Repair the (K126) ETC Motor (-) circuit for a short to ground.
- Perform the POWERTRAIN VERIFICATION TEST. Refer to **POWERTRAIN VERIFICATION TEST** .

8. **CHECK THE (K126) ETC MOTOR (-) CIRCUIT FOR AN OPEN/HIGH RESISTANCE**

CAUTION: Do not probe the PCM harness connectors. Probing the PCM harness connectors will damage the PCM terminals resulting in poor terminal to pin connection. Install the GPEC Diagnostic Adaptor to perform the diagnosis.

1. Connect the (special tool #10436, Adapter, GPEC Diagnostic).
2. Measure the resistance of the (K126) ETC Motor (-) circuit between the Throttle Body harness connector and the GPEC Adaptor.

Is the resistance below 5.0 Ohms?

Yes

- Go To 9

No

- Repair the (K126) ETC Motor (-) circuit for an open or high resistance.
- Perform the POWERTRAIN VERIFICATION TEST. Refer to **POWERTRAIN VERIFICATION TEST** .

9. **CHECK THE (K124) ETC MOTOR (+) CIRCUIT FOR AN OPEN/HIGH RESISTANCE**

1. Measure the resistance of the (K124) ETC Motor (+) circuit between the Throttle Body harness connector and the GPEC Adaptor.

Is the resistance below 5.0 Ohms?

Yes

- Go To 10

No

- Repair the (K124) ETC Motor (+) circuit for an open or high resistance.
- Perform the POWERTRAIN VERIFICATION TEST. Refer to **POWERTRAIN VERIFICATION TEST** .

10. **ETC MOTOR**
    1. Replace the Throttle Body Assembly in accordance with the service information. After installation is complete, use a scan tool and perform the ETC RELEARN function.
    2. Turn the ignition on.
    3. With the scan tool, erase DTCs.
    4. Cycle the ignition off, and back to the on position.
    5. With the scan tool, view DTCs.

    Did the DTC return?

    Yes

    - Go To 11

    No

    - Repair is complete.
    - Perform the POWERTRAIN VERIFICATION TEST. Refer to **POWERTRAIN VERIFICATION TEST** .

11. **POWERTRAIN CONTROL MODULE (PCM)**
    1. Using the wiring diagram/schematic as a guide, inspect the wiring and connectors between the Throttle Body and the Powertrain Control Module (PCM).
    2. Look for any chafed, pierced, pinched, or partially broken wires.
    3. Look for broken, bent, pushed out or corroded terminals.
    4. Perform any Technical Service Bulletins that may apply.

Were any problems found?

Yes

- Repair as necessary.
- Perform the POWERTRAIN VERIFICATION TEST. Refer to **POWERTRAIN VERIFICATION TEST** .

No

- Replace and program the Powertrain Control Module in accordance with the service information. Refer to **MODULE, POWERTRAIN CONTROL, REMOVAL** .
- Perform the POWERTRAIN VERIFICATION TEST. Refer to **POWERTRAIN VERIFICATION TEST** .

P2101-ELECTRONIC THROTTLE CONTROL MOTOR PERFORMANCE

For a complete wiring diagram, **refer to appropriate SYSTEM WIRING DIAGRAMS article** .

WHEN MONITORED

With the engine running, ETC motor not in limp home mode, and TPS adaptation complete.

SET CONDITION

The Powertrain Control Module (PCM) detects too large of an error between the actual position of the throttle plate and the desired set point. One trip fault. The DTC will set within 5 seconds. Three good trips to turn off the MIL ETC light is flashing.

POSSIBLE CAUSES

POSSIBLE CAUSES
LOW SYSTEM VOLTAGE
THROTTLE BODY ASSEMBLY

Always perform the Pre-Diagnostic Troubleshooting procedure before proceeding. Refer to PRE-DIAGNOSTIC TROUBLESHOOTING

PROCEDURE .

DIAGNOSTIC TEST

1. **DTC IS ACTIVE**

NOTE: If this DTC sets intermittently, it is possible that the controller is overheating in extremely hot temperatures. This is considered a normal protection operation. No repair is necessary.

NOTE: Low system voltage can cause excessive current draw in very hot and cold ambient temperatures. Make sure the battery can pass a load test before continuing. Review Freeze Frame information to determine the ambient temperature when the DTC set.

1. Start the engine and allow it to reach normal operating temperature.

WARNING: **When the engine is operating, do not stand in direct line with the fan. Do not put your hands near the pulleys, belts or fan. Do not wear loose clothing. Failure to follow these instructions may result in possible serious or fatal injury.**

2. With the scan tool, select View DTCs.

   Is the status Active for this DTC?

   Yes

   - Go To 2

   No

   - Perform the INTERMITTENT CONDITION diagnostic procedure. Refer to **INTERMITTENT CONDITION** .

2. **THROTTLE PLATE STICKING OR OBSTRUCTED**

1. Turn the ignition off.
2. Remove the air cleaner assembly.
3. Check for any signs of a foreign material (ice or dirt) on the throttle plate or in the throttle bore that can cause the throttle plate to stick.

   Were any problems found?

   Yes

   - Remove the debris if possible or replace the Throttle Body Assembly. Disconnect the battery when replacing the Throttle Body Assembly. After installation is complete, use a scan tool and perform the ETC Relearn function.
   - Perform the POWERTRAIN VERIFICATION TEST. Refer to **POWERTRAIN VERIFICATION TEST** .

   No

   - Go To 3

3. **THROTTLE PLATE NOT WITHIN DESIRED POSITION**
   1. Start the engine and allow it to reach normal operating temperature.
   2. With a scan tool, monitor the Actual Throttle Position and Desired Throttle Position.

      Is the Actual Throttle Position within 2 degrees of the Desired Throttle Position?

      Yes

      - Go To 4

      No

      - Replace the Throttle Body Assembly. Disconnect the battery when replacing the Throttle Body Assembly. After installation is complete, use a scan tool and perform the ETC Relearn function.
      - Perform the POWERTRAIN VERIFICATION TEST. Refer to **POWERTRAIN VERIFICATION TEST** .

4. **ELECTRONIC THROTTLE CONTROL MOTOR**

1. Turn the ignition on.
2. With a scan tool, actuate the Electronic Throttle Control Motor and observe the movement of the throttle blade.

NOTE: It may be necessary to use a mirror to see the throttle blade.

NOTE: Make sure the motion of the throttle blade is smooth and that it opens and closes.

Did the ETC motor operate properly?

Yes

- Perform the INTERMITTENT CONDITION diagnostic procedure. Refer to **INTERMITTENT CONDITION** .

No

- Replace the Throttle Body Assembly. Disconnect the battery when replacing the Throttle Body Assembly. After installation is complete, use a scan tool and perform the ETC Relearn function.
- Perform the POWERTRAIN VERIFICATION TEST. Refer to **POWERTRAIN VERIFICATION TEST** .

P2107-ELECTRONIC THROTTLE CONTROL MODULE PROCESSOR

For a complete wiring diagram, **refer to appropriate SYSTEM WIRING DIAGRAMS article** .

WHEN MONITORED

With the ignition on.

SET CONDITION

Internal Powertrain Control Module (PCM) failure. Module will attempt to reset, so you will be able to hear the throttle relearning. If the condition is continuous, the vehicle may not be drivable. One trip fault. ETC light is flashing.

POSSIBLE CAUSES

POSSIBLE CAUSES
POWERTRAIN CONTROL MODULE (PCM)

Always perform the Pre-Diagnostic Troubleshooting procedure before proceeding. Refer to PRE-DIAGNOSTIC TROUBLESHOOTING PROCEDURE .

DIAGNOSTIC TEST

1. **DTC IS ACTIVE**

NOTE: If any other DTCs are set, they must be diagnosed and repaired before continuing this test.

NOTE: An intermittent loss of power to the PCM without performing an ETC Relearn procedure may cause this DTC to set.

WARNING: When the engine is operating, do not stand in direct line with the fan. Do not put your hands near the pulleys, belts or fan. Do not wear loose clothing. Failure to follow these instructions may result in possible serious or fatal injury.

1. Turn the ignition on.
2. With the scan tool, clear DTCs in the Powertrain Control Module (PCM).
3. Verify the Powertrain Control Module (PCM) is at the latest calibration (flash level). If necessary, update the Powertrain Control Module (PCM) in accordance with the Service Information.
4. Start the engine and allow it to reach operating temperature.
5. Increase engine speed by pressing the accelerator pedal. Do not exceed 3500 RPM.
6. Test drive the vehicle for 10 miles on a flat road surface.
7. With the scan tool, select View DTCs.

Is the status Active for this DTC?

Yes

- Go to 2

No

- Perform the INTERMITTENT CONDITION diagnostic procedure. Refer to **INTERMITTENT CONDITION** .

2. **POWERTRAIN CONTROL MODULE (PCM)**
   1. Using the wiring diagram/schematic as a guide, inspect the wiring and connectors between the Throttle Body and the Powertrain Control Module (PCM).
   2. Look for any chafed, pierced, pinched, or partially broken wires.
   3. Look for broken, bent, pushed out or corroded terminals.
   4. Perform any Technical Service Bulletins that may apply.

   Were any problems found?

   Yes

   - Repair as necessary.
   - Perform the POWERTRAIN VERIFICATION TEST. Refer to **POWERTRAIN VERIFICATION TEST** .

   No

   - Replace and program the Powertrain Control Module (PCM) in accordance with the Service Information. Refer to **MODULE, POWERTRAIN CONTROL, REMOVAL** .
   - Perform the POWERTRAIN VERIFICATION TEST. Refer to **POWERTRAIN VERIFICATION TEST** .

P2110-ELECTRONIC THROTTLE CONTROL - FORCED LIMITED RPM

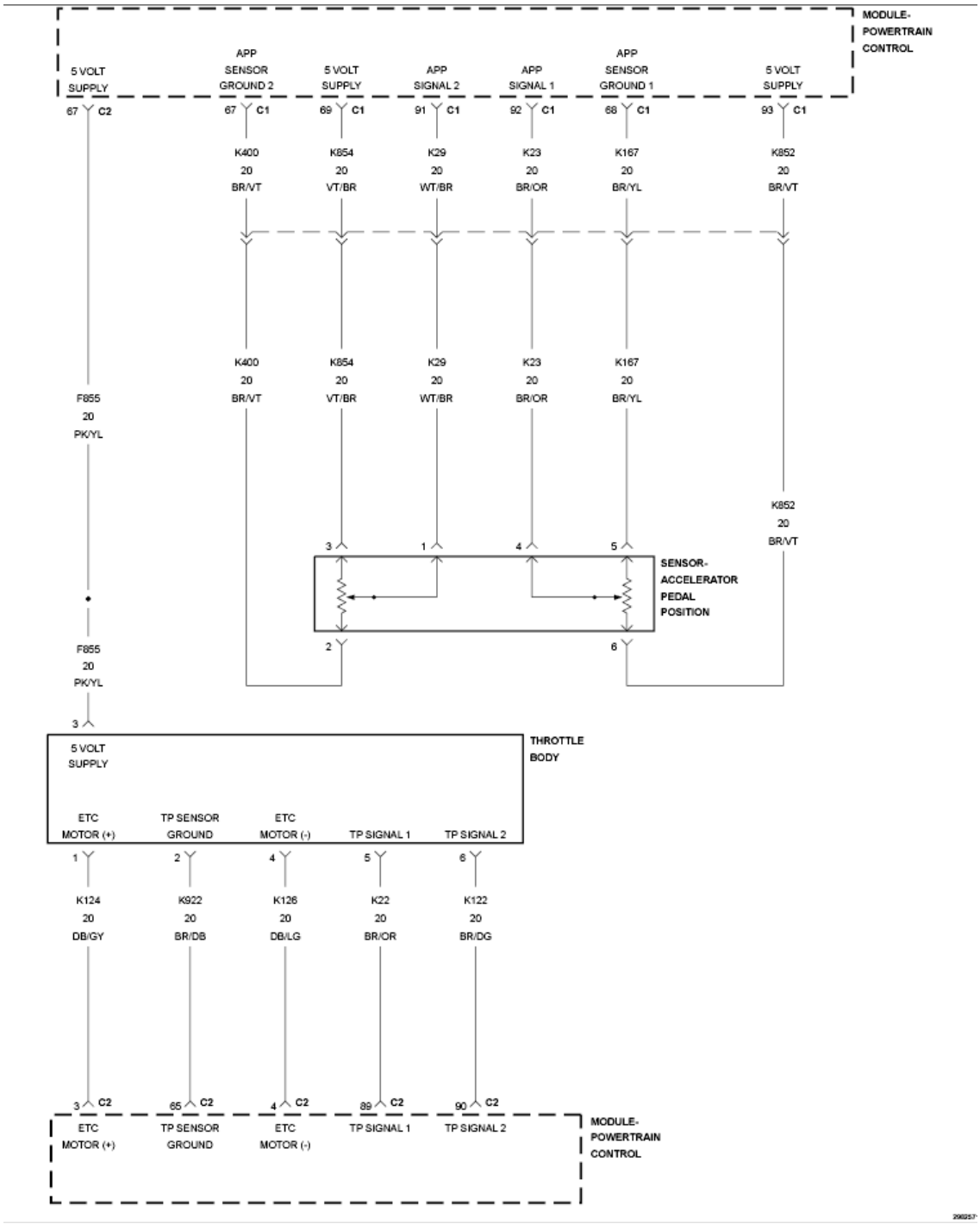

Fig. 161: Throttle Control Circuit Diagram
Courtesy of CHRYSLER GROUP, LLC

For a complete wiring diagram, **refer to appropriate SYSTEM WIRING DIAGRAMS article** .

WHEN MONITORED

Ignition on and ETC motor is working.

SET CONDITION

When the Powertrain Control Module (PCM) requests to limit engine speed if PWM is too high for 20.5 seconds and before P2118 sets. One trip fault and the code will set within 5 seconds. ETC light is illuminated.

POSSIBLE CAUSES

POSSIBLE CAUSES
THROTTLE PLATE STUCK OR OBSTRUCTED
(K124) ETC MOTOR (+) CIRCUIT SHORTED TO VOLTAGE
(K126) ETC MOTOR (-) CIRCUIT SHORTED TO VOLTAGE
(K124) ETC MOTOR (+) CIRCUIT SHORTED TO THE (K126) ETC MOTOR (-) CIRCUIT
(K124) ETC POSITIVE CIRCUIT SHORTED TO GROUND
(K126) ETC NEGATIVE CIRCUIT SHORTED TO GROUND
(K124) ETC MOTOR (+) CIRCUIT OPEN OR HIGH RESISTANCE
(K126) ETC MOTOR (-) CIRCUIT OPEN OR HIGH RESISTANCE
ETC MOTOR
POWERTRAIN CONTROL MODULE (PCM)

Always perform the Pre-Diagnostic Troubleshooting procedure before proceeding. Refer to PRE-DIAGNOSTIC TROUBLESHOOTING PROCEDURE .

DIAGNOSTIC TEST

1. **ACTIVE DTC**
    1. Turn the ignition on.

NOTE: **If this DTC sets intermittently, it is possible that the controller is overheating in extremely hot temperatures. This is considered a normal protection operation. No repair is necessary.**

NOTE: **Low battery voltage can cause excessive current draw in very hot and cold ambient temperatures. Make sure the battery can pass a load test before continuing. Review Freeze Frame information to**

determine the ambient temperature when the DTC set.

NOTE: If P2072 is also set, this indicates that the cold weather ice blockage routine has run. No repair action is required.

NOTE: Diagnose and repair any Throttle Position sensor, system voltage, or 5-Volt Supply DTCs before continuing with this test.

2. Start the engine and allow it to reach normal operating temperature.

   WARNING: When the engine is operating, do not stand in direct line with the fan. Do not put your hands near the pulleys, belts or fan. Do not wear loose clothing. Failure to follow these instructions may result in possible serious or fatal injury.

3. With the scan tool, select View DTCs.

   Is the status Active for this DTC?

   Yes

   - Go To 2

   No

   - Perform the INTERMITTENT CONDITION diagnostic procedure. Refer to **INTERMITTENT CONDITION** .

2. **THROTTLE PLATE INSPECTION**
   1. Turn the ignition off.
   2. Remove the air cleaner assembly.
   3. Check for any signs of a foreign material (ice or dirt) on the throttle plate or in the throttle bore that can cause the throttle plate to stick.
   4. Attempt to manually open the throttle plate. Use an appropriate tool that

will not damage or mar the throttle body.

Were any problems found?

Yes

- Remove the debris if possible or replace the Throttle Body Assembly. Disconnect the battery when replacing the Throttle Body Assembly. After installation is complete, use a scan tool and select the ETC Relearn function.
- Perform the POWERTRAIN VERIFICATION TEST. Refer to **POWERTRAIN VERIFICATION TEST** .

No

- Go To 3

3. **CHECK THE (K124) ETC MOTOR (+) CIRCUIT FOR A SHORT TO VOLTAGE**

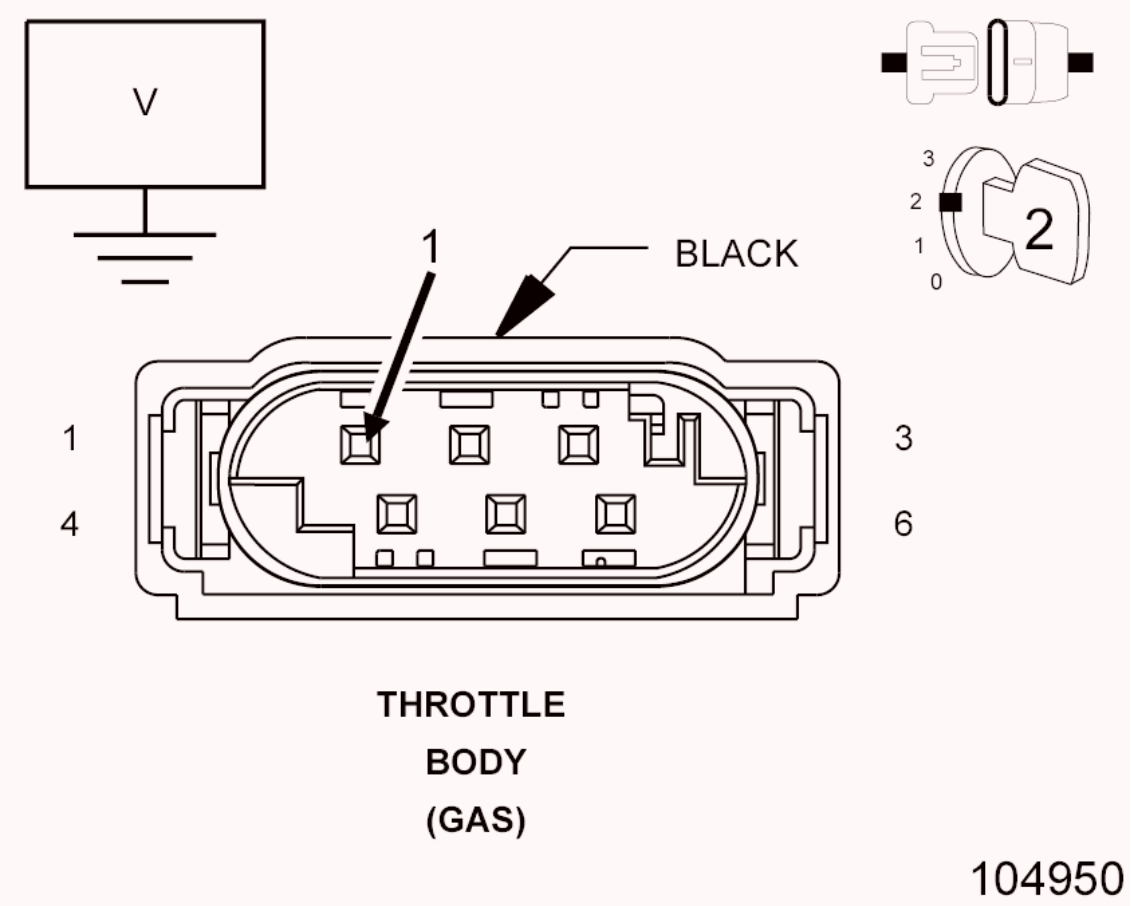

Fig. 162: Checking ETC Motor (+) Circuit For Short To Voltage

Courtesy of CHRYSLER GROUP, LLC

1. Turn the ignition off.
2. Disconnect the Throttle Body harness connector.
3. Disconnect the PCM C2 harness connector.
4. Turn the ignition on.
5. Measure the voltage of the (K124) ETC Motor (+) circuit.

   Is there any voltage present?

   Yes

   - Repair the (K124) ETC Motor (+) circuit for a short to voltage.
   - Perform the POWERTRAIN VERIFICATION TEST. Refer to **POWERTRAIN VERIFICATION TEST** .

   No

   - Go To 4

4. **CHECK THE (K126) ETC MOTOR (-) CIRCUIT FOR A SHORT TO VOLTAGE**

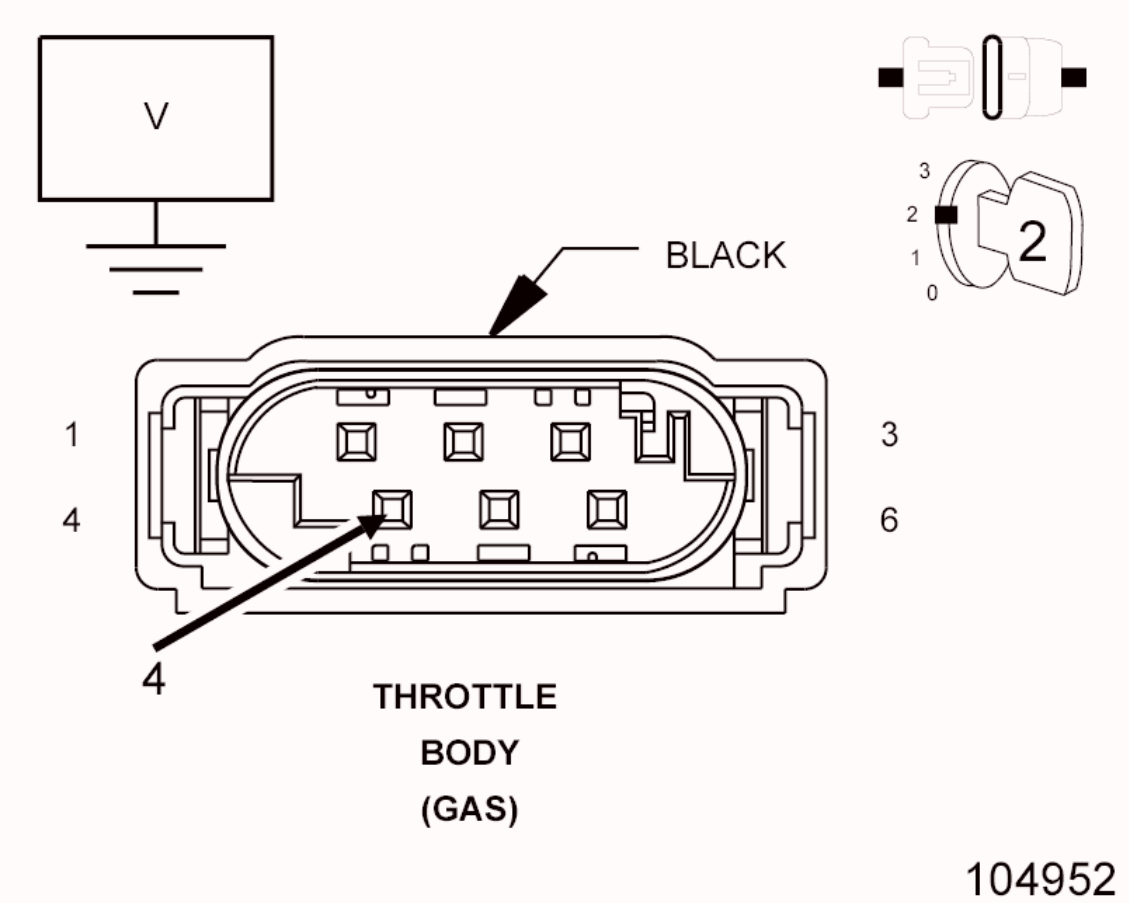

Fig. 163: Checking ETC Motor (-) Circuit For Short To Voltage
Courtesy of CHRYSLER GROUP, LLC

1. Measure the voltage of the (K126) ETC Motor (-) circuit.

   Is there any voltage present?

   Yes

   - Repair the (K126) ETC Motor (-) circuit for a short to voltage.
   - Perform the POWERTRAIN VERIFICATION TEST. Refer to **POWERTRAIN VERIFICATION TEST** .

   No

   - Go To 5

5. **CHECK FOR THE (K124) ETC MOTOR (+) CIRCUIT SHORTED TO THE (K126) ETC MOTOR (-) CIRCUIT**

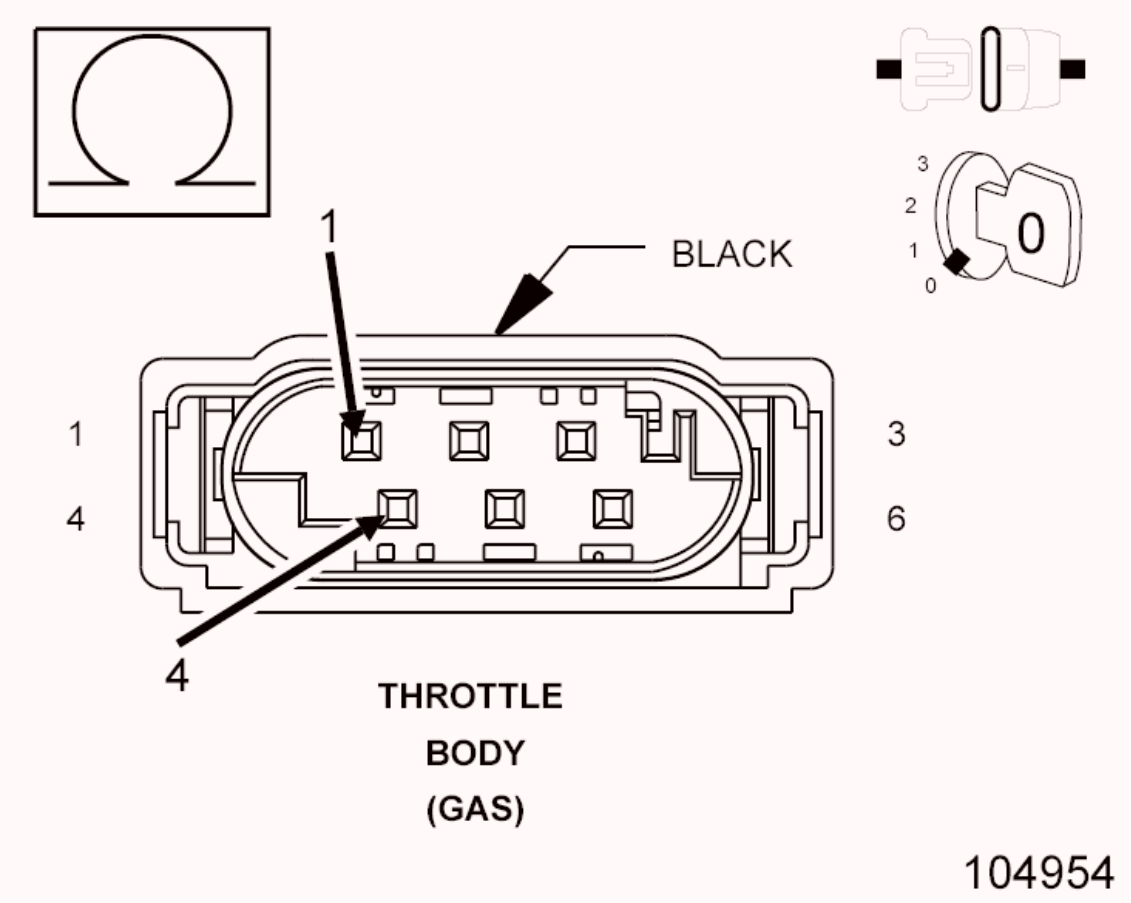

Fig. 164: Checking ETC Motor (+) Circuit For Short To ETC Motor (-) Circuit
Courtesy of CHRYSLER GROUP, LLC

1. Turn the ignition off.
2. Measure the resistance between the (K124) ETC Motor (+) circuit and the (K126) ETC Motor (-) circuit.

   Is the resistance above 10k Ohms?

   Yes

   - Go To 6

   No

   - Repair the short to between the (K124) ETC Motor (+) circuit and the (K126) ETC Motor (-) circuit.
   - Perform the POWERTRAIN VERIFICATION TEST. Refer to **POWERTRAIN VERIFICATION TEST** .

6. **CHECK THE (K124) ETC MOTOR (+) CIRCUIT FOR A SHORT TO GROUND**

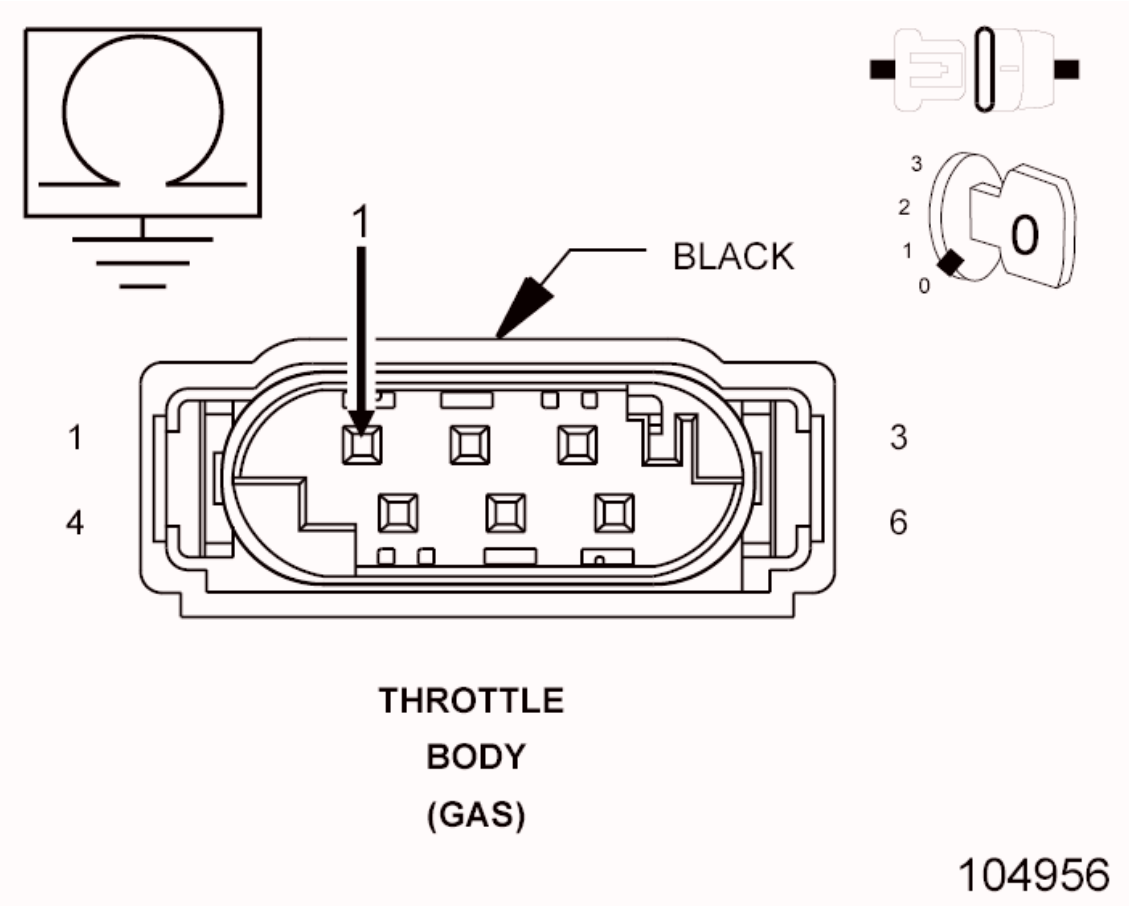

Fig. 165: Checking ETC Motor Circuit (+) For Short To Ground
Courtesy of CHRYSLER GROUP, LLC

1. Measure the resistance between ground and the (K124) ETC Motor (+) circuit.

   Is the resistance above 10k Ohms?

   Yes

   - Go To 7

   No

   - Repair the short to ground in the (K124) ETC Motor (+) circuit.
   - Perform the POWERTRAIN VERIFICATION TEST. Refer to **POWERTRAIN VERIFICATION TEST** .

7. **CHECK THE (K126) ETC MOTOR (-) CIRCUIT FOR A SHORT TO GROUND**

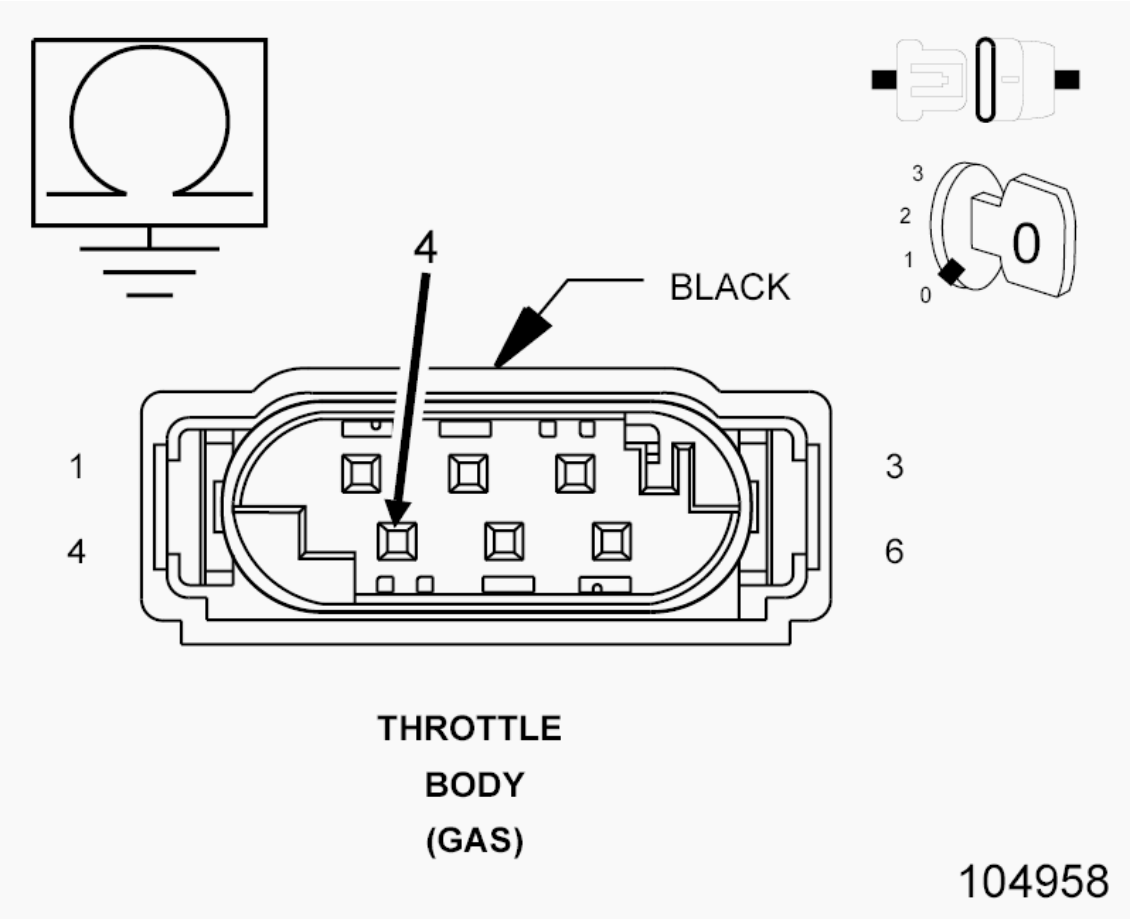

Fig. 166: Checking ETC Motor Circuit (-) For Short To Ground
Courtesy of CHRYSLER GROUP, LLC

1. Measure the resistance between ground and the (K126) ETC Motor (-) circuit.

   Is the resistance above 10k Ohms?

   Yes

   - Repair the short to ground in the (K126) ETC Motor (-) circuit.
   - Perform the POWERTRAIN VERIFICATION TEST. Refer to **POWERTRAIN VERIFICATION TEST** .

   No

   - Go To 8

8. **CHECK THE (K126) ETC MOTOR (-) CIRCUIT FOR AN OPEN/HIGH RESISTANCE**

CAUTION: Do not probe the PCM harness connectors. Probing the PCM harness connectors will damage the PCM terminals resulting in poor terminal to pin connection. Install the GPEC Diagnostic Adaptor to perform the diagnosis.

1. Connect the (special tool #10436, Adapter, GPEC Diagnostic).
2. Measure the resistance of the (K126) ETC Motor (-) circuit between the Throttle Body harness connector and the GPEC Adaptor.

   Is the resistance below 5.0 Ohms?

   Yes

   - Go To 9

   No

   - Repair the (K126) ETC Motor (-) circuit for an open circuit or high resistance.
   - Perform the POWERTRAIN VERIFICATION TEST. Refer to **POWERTRAIN VERIFICATION TEST** .

9. **CHECK THE (K124) ETC MOTOR (+) CIRCUIT FOR AN OPEN /HIGH RESISTANCE**

1. Measure the resistance of the (K124) ETC Motor (+) circuit between the Throttle Body harness connector and the GPEC Adaptor.

   Is the resistance below 5.0 Ohms?

   Yes

   - Go To 10

   No

   - Repair the (K124) ETC Motor (+) circuit for an open circuit or

high resistance.

- Perform the POWERTRAIN VERIFICATION TEST. Refer to **POWERTRAIN VERIFICATION TEST** .

10. **ETC MOTOR**
    1. Replace the Throttle Body Assembly in accordance with the service information. After installation is complete, use a scan tool and perform the ETC RELEARN function.
    2. Turn the ignition on.
    3. With the scan tool, erase DTCs.
    4. Cycle the ignition off, and back to the on position.
    5. With the scan tool, view DTCs.

    Did the DTC return?

    Yes

    - Go To 11

    No

    - Repair is complete.
    - Perform the POWERTRAIN VERIFICATION TEST. Refer to **POWERTRAIN VERIFICATION TEST** .

11. **POWERTRAIN CONTROL MODULE (PCM)**
    1. Using the wiring diagram/schematic as a guide, inspect the wiring and connectors between the Throttle Body and the Powertrain Control Module (PCM).
    2. Look for any chafed, pierced, pinched, or partially broken wires.
    3. Look for broken, bent, pushed out or corroded terminals.
    4. Refer to any Technical Service Bulletins that may apply.

    Were any problems found?

    Yes

    - Repair as necessary.
    - Perform the POWERTRAIN VERIFICATION TEST. Refer to

POWERTRAIN VERIFICATION TEST .

No

- Replace and program the Powertrain Control Module in accordance service information. Refer to **MODULE, POWERTRAIN CONTROL, REMOVAL** .
- Perform the POWERTRAIN VERIFICATION TEST. Refer to **POWERTRAIN VERIFICATION TEST** .

P2111-ELECTRONIC THROTTLE CONTROL - UNABLE TO CLOSE

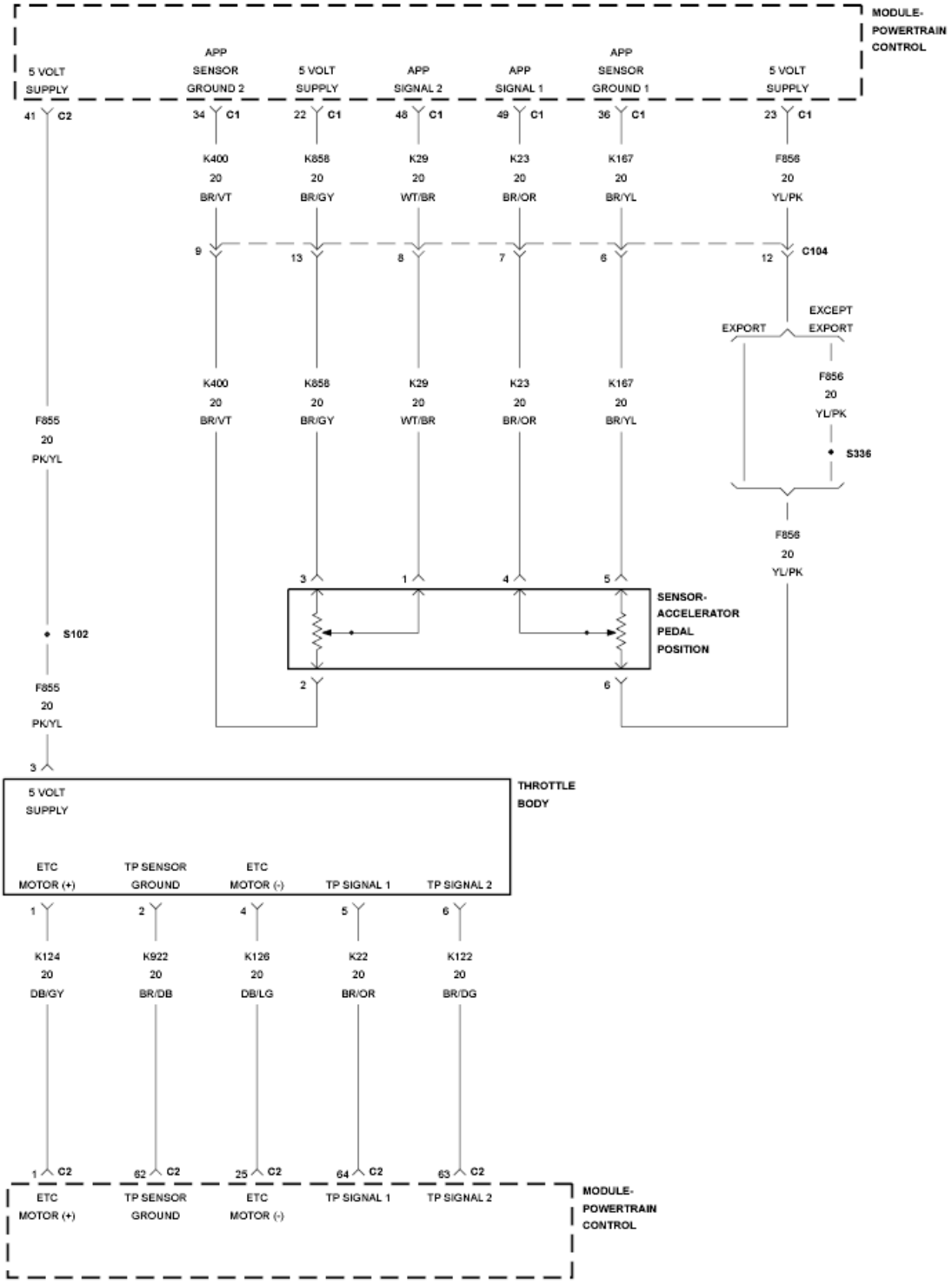

Fig. 167: Throttle Control Circuit Diagram
Courtesy of CHRYSLER GROUP, LLC

For a complete wiring diagram, **refer to appropriate SYSTEM WIRING DIAGRAMS article** .

WHEN MONITORED

Ignition on and battery voltage greater than 10 volts.

SET CONDITION

Just after key on, the throttle is opened and closed to test the system. If the Powertrain Control Module (PCM) detects that the TP Sensor does not return to Limp Home Position, this DTC will set. One trip fault. The DTC will set within five seconds. ETC light is flashing.

POSSIBLE CAUSES

POSSIBLE CAUSES
THROTTLE PLATE STICKING OR OBSTRUCTED
TP SENSOR CIRCUIT(S) HIGH RESISTANCE OR SHORTED
(K124) ETC MOTOR (+) CIRCUIT SHORTED TO VOLTAGE
(K126) ETC MOTOR (-) CIRCUIT SHORTED TO VOLTAGE
(K124) ETC MOTOR (+) CIRCUIT SHORTED TO THE (K126) ETC MOTOR (-) CIRCUIT
(K124) ETC MOTOR (+) CIRCUIT OPEN OR HIGH RESISTANCE
(K126) ETC MOTOR (-) CIRCUIT OPEN OR HIGH RESISTANCE
(K124) ETC MOTOR (+) CIRCUIT SHORTED TO GROUND
(K126) ETC MOTOR (-) CIRCUIT SHORTED TO GROUND
THROTTLE BODY ASSEMBLY
POWERTRAIN CONTROL MODULE (PCM)

Always perform the Pre-Diagnostic Troubleshooting procedure before proceeding. Refer to PRE-DIAGNOSTIC TROUBLESHOOTING PROCEDURE .

DIAGNOSTIC TEST

1. **ACTIVE DTC**

NOTE: Diagnose any TPS or 5-Volt Supply DTCs before continuing.

NOTE: Maximum engine speed could be reduced while this fault is active, based on where the throttle plate is stuck.

NOTE: The PCM tests the ETC Motor by opening and closing the throttle plate before starting the engine. If the throttle plate does not return to the closed position this DTC will set.

1. Start the engine and allow it to reach normal operating temperature.

   WARNING: When the engine is operating, do not stand in direct line with the fan. Do not put your hands near the pulleys, belts or fan. Do not wear loose clothing. Failure to follow these instructions may result in possible serious or fatal injury.

2. With the scan tool, select View DTCs.

   Is the status Active for this DTC?

   Yes

   - Go To 2

   No

   - Perform the INTERMITTENT CONDITION diagnostic procedure. Refer to **INTERMITTENT CONDITION** .

2. **THROTTLE PLATE INSPECTION**
   1. Turn the ignition off.
   2. Remove the air cleaner assembly.
   3. Check for any signs of a foreign material (ice or dirt) on the throttle plate or in the throttle bore that can cause the throttle plate to stick or not fully close.
   4. Attempt to manually open the throttle plate and allow it to close. Use an appropriate tool that will not damage or mar the throttle body.

      Were any problems found?

      Yes

- Repair as necessary or replace the Throttle Body Assembly. Disconnect the battery when replacing the Throttle Body Assembly. After installation is complete, use a scan tool and select the ETC Relearn function.
- Perform the POWERTRAIN VERIFICATION TEST. Refer to **POWERTRAIN VERIFICATION TEST** .

No

- Go To 3

3. **TPS 1 AND TPS 2 BOTH EQUAL 2.5 VOLTS**
   1. With a scan tool, perform the Throttle Follower test and monitor both TPS voltages.

      Are both TPS readings stuck at 2.5 volts?

      Yes

      - Check the TPS Signal circuits for excessive resistance, being shorted together, or shorted to the Sensor Ground circuit.
      - Perform the POWERTRAIN VERIFICATION TEST. Refer to **POWERTRAIN VERIFICATION TEST** .

      No

      - Go To 4

4. **CHECK THE (K124) ETC MOTOR (+) CIRCUIT FOR A SHORT TO VOLTAGE**

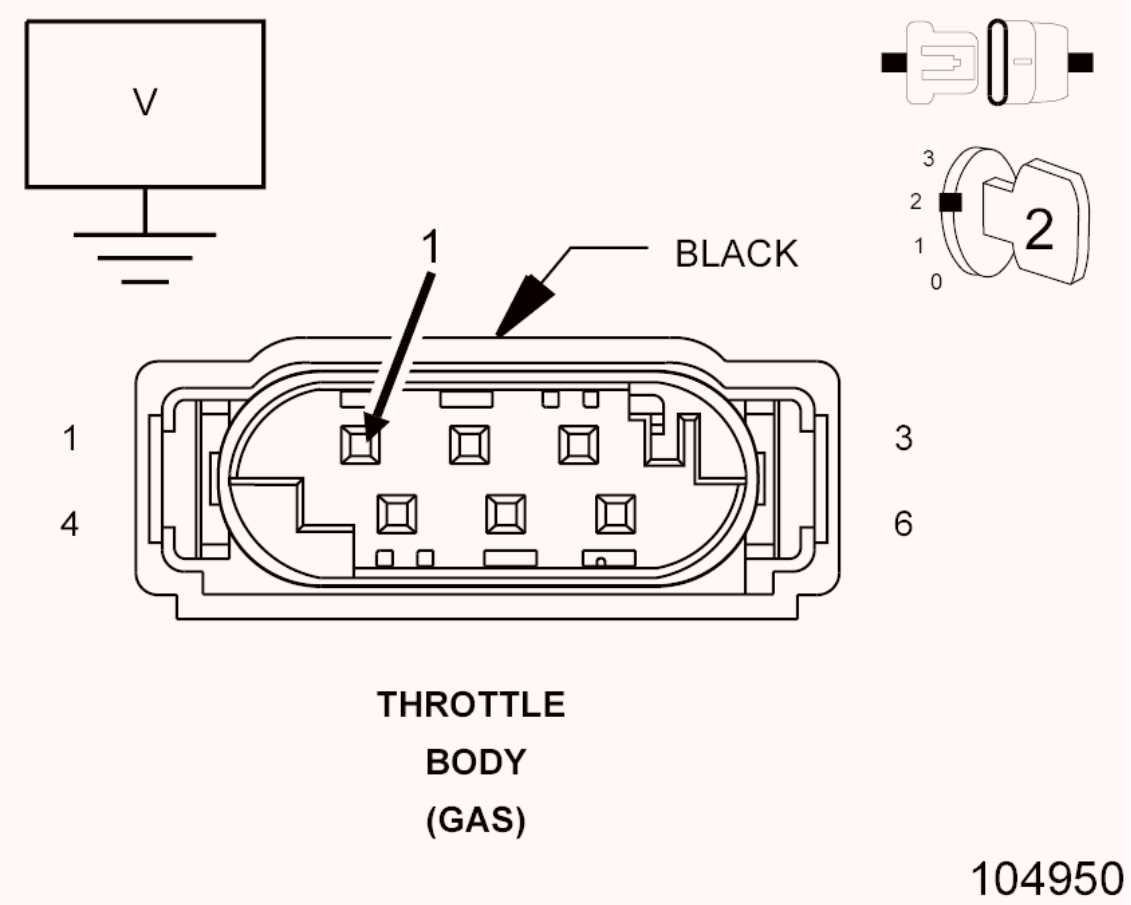

Fig. 168: Checking ETC Motor (+) Circuit For Short To Voltage
Courtesy of CHRYSLER GROUP, LLC

1. Turn the ignition off.
2. Disconnect the Throttle Body harness connector.
3. Disconnect the PCM C2 harness connector.
4. Turn the ignition on.
5. Measure the voltage of the (K124) ETC Motor (+) circuit.

   Is there any voltage present?

   Yes

   - Repair the (K124) ETC Motor (+) circuit for a short to voltage.
   - Perform the POWERTRAIN VERIFICATION TEST. Refer to **POWERTRAIN VERIFICATION TEST** .

   No

- Go To 5

5. **CHECK THE (K126) ETC MOTOR (-) CIRCUIT FOR A SHORT TO VOLTAGE**

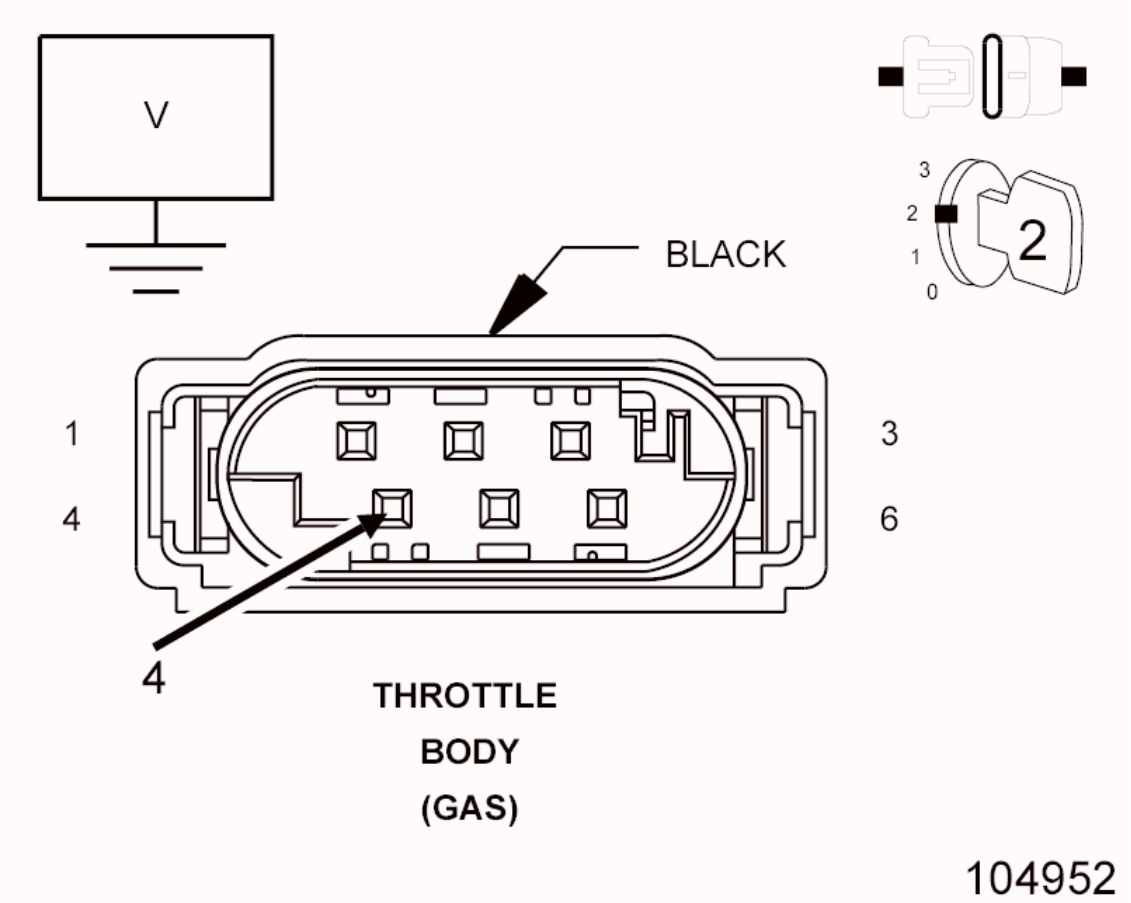

Fig. 169: Checking ETC Motor (-) Circuit For Short To Voltage
Courtesy of CHRYSLER GROUP, LLC

1. Measure the voltage of the (K126) ETC Motor (-) circuit.

   Is there any voltage present?

   Yes

   - Repair the (K126) ETC Motor (-) circuit for a short to voltage.
   - Perform the POWERTRAIN VERIFICATION TEST. Refer to **POWERTRAIN VERIFICATION TEST** .

   No

   - Go To 6

6. **CHECK FOR THE (K124) ETC MOTOR (+) CIRCUIT SHORTED TO THE (K126) ETC MOTOR (-) CIRCUIT**

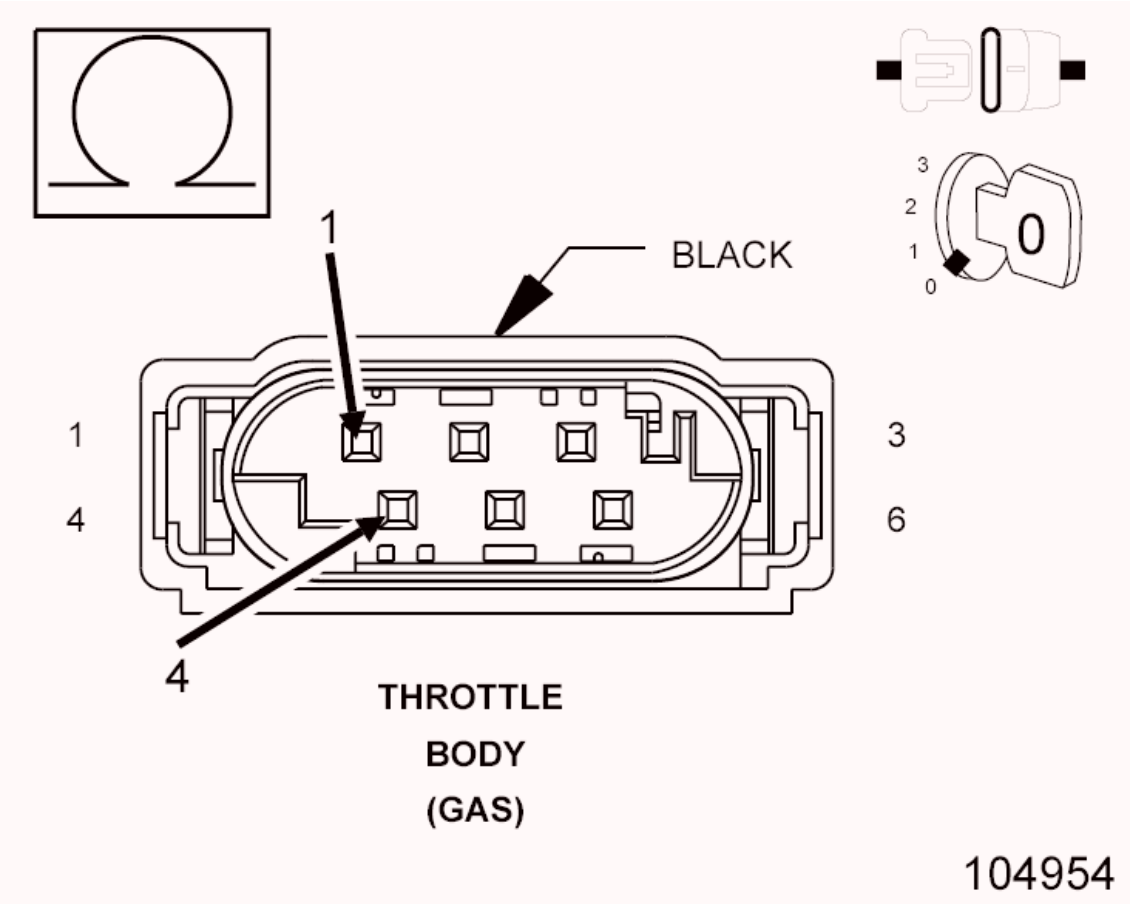

Fig. 170: Checking ETC Motor (+) Circuit For Short To ETC Motor (-) Circuit
Courtesy of CHRYSLER GROUP, LLC

1. Turn the ignition off.
2. Measure the resistance between the (K124) ETC Motor (+) circuit and the (K126) ETC Motor (-) circuit.

   Is the resistance above 10k Ohms?

   Yes

   - Repair the short to between the (K124) ETC Motor (+) circuit and the (K126) ETC Motor (-) circuit.
   - Perform the POWERTRAIN VERIFICATION TEST. Refer to **POWERTRAIN VERIFICATION TEST** .

No

- Go To 7

7. **CHECK THE (K124) ETC MOTOR (+) CIRCUIT FOR A SHORT TO GROUND**

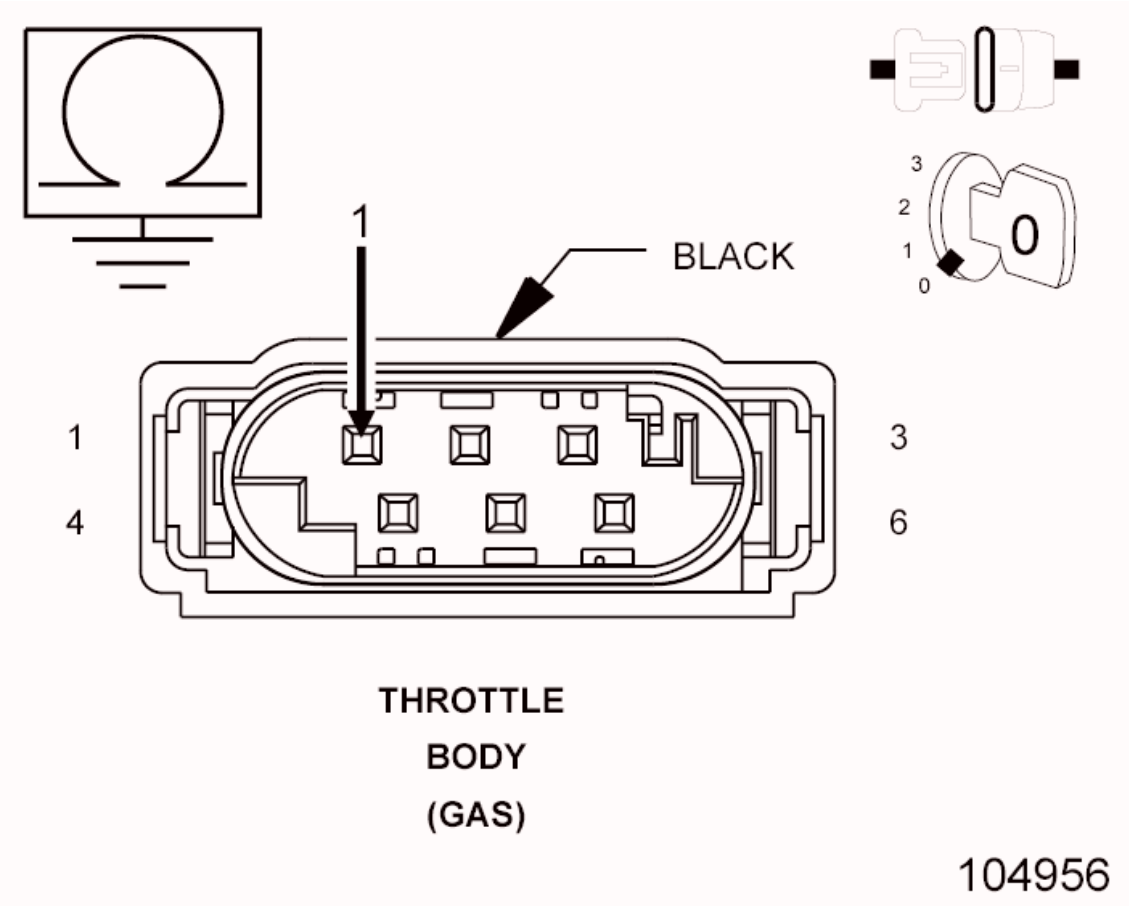

Fig. 171: Checking ETC Motor Circuit (+) For Short To Ground
Courtesy of CHRYSLER GROUP, LLC

1. Measure the resistance between ground and the (K124) ETC Motor (+) circuit.

   Is the resistance above 10k Ohms?

   Yes

   - Go To 8

   No

   - Repair the short to ground in the (K124) ETC Motor (+) circuit.

- Perform the POWERTRAIN VERIFICATION TEST. Refer to **POWERTRAIN VERIFICATION TEST** .

8. **CHECK THE (K126) ETC MOTOR (-) CIRCUIT FOR A SHORT TO GROUND**

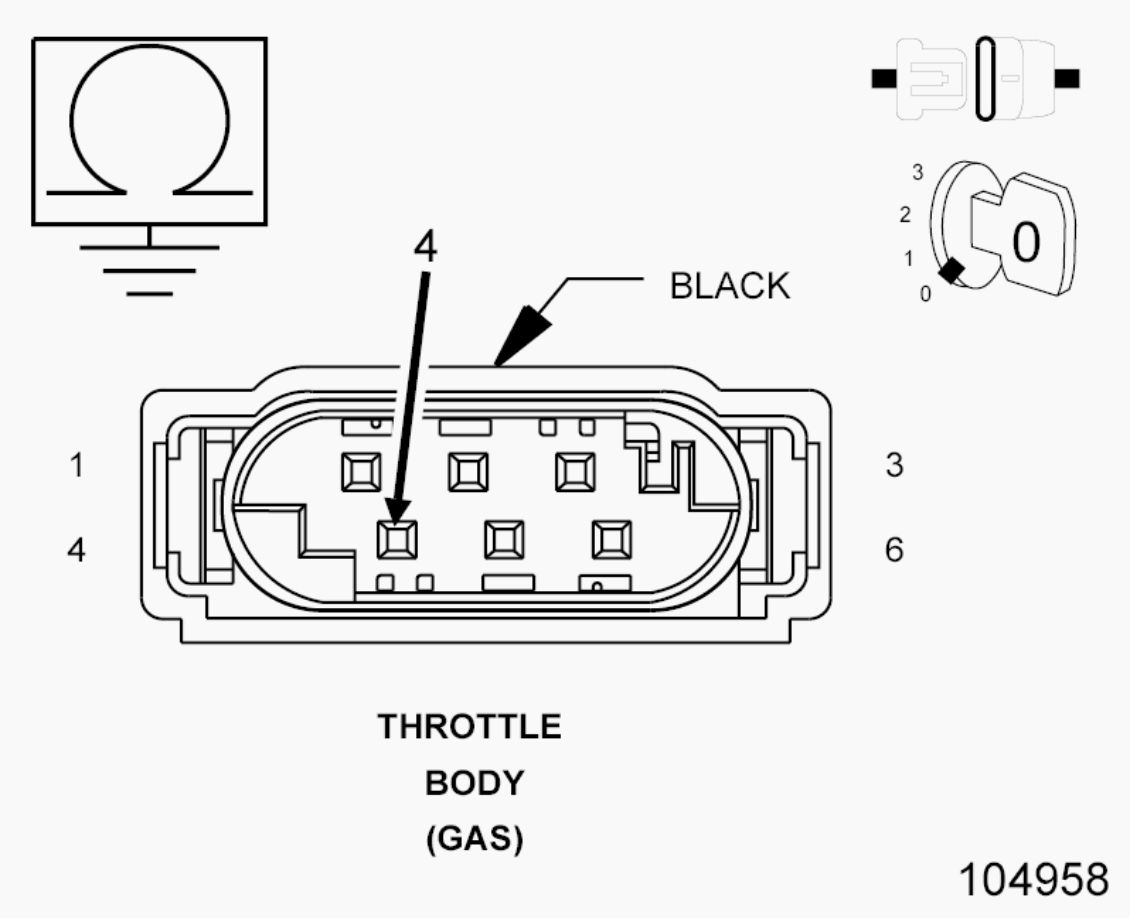

Fig. 172: Checking ETC Motor Circuit (-) For Short To Ground
Courtesy of CHRYSLER GROUP, LLC

1. Measure the resistance between ground and the (K126) ETC Motor (-) circuit.

   Is the resistance above 10k Ohms?

   Yes

   - Go To 9

   No

   - Repair the short to ground in the (K126) ETC Motor (-) circuit.

- Perform the POWERTRAIN VERIFICATION TEST. Refer to **POWERTRAIN VERIFICATION TEST** .

9. **CHECK THE (K126) ETC MOTOR (-) CIRCUIT FOR AN OPEN/HIGH RESISTANCE**

CAUTION: Do not probe the PCM harness connectors. Probing the PCM harness connectors will damage the PCM terminals resulting in poor terminal to pin connection. Install the GPEC Diagnostic Adaptor to perform the diagnosis.

1. Connect the (special tool #10436, Adapter, GPEC Diagnostic).
2. Measure the resistance of the (K126) ETC Motor (-) circuit between the Throttle Body harness connector and the GPEC Adaptor.

Is the resistance below 5.0 Ohms?

Yes

- Go To 10

No

- Repair the (K126) ETC Motor (-) circuit for an open or high resistance.
- Perform the POWERTRAIN VERIFICATION TEST. Refer to **POWERTRAIN VERIFICATION TEST** .

10. **CHECK THE (K124) ETC MOTOR (+) CIRCUIT FOR AN OPEN/HIGH RESISTANCE**

1. Measure the resistance of the (K124) ETC Motor (+) circuit between the Throttle Body harness connector and the GPEC Adaptor.

Is the resistance below 5.0 Ohms?

Yes

- Go To 11

No

- Repair the (K124) ETC Motor (+) circuit for an open or high resistance.
- Perform the POWERTRAIN VERIFICATION TEST. Refer to **POWERTRAIN VERIFICATION TEST** .

11. **POWERTRAIN CONTROL MODULE (PCM)**
    1. Using the wiring diagram/schematic as a guide, inspect the wiring and connectors between the Throttle Body and the Powertrain Control Module (PCM).
    2. Look for any chafed, pierced, pinched, or partially broken wires.
    3. Look for broken, bent, pushed out or corroded terminals.
    4. Perform any Technical Service Bulletins that may apply.

    Were any problems found?

    Yes

    - Repair as necessary.
    - Perform the POWERTRAIN VERIFICATION TEST. Refer to **POWERTRAIN VERIFICATION TEST** .

    No

    - Replace and program the Powertrain Control Module in accordance with the service information. Refer to **MODULE, POWERTRAIN CONTROL, REMOVAL** .
    - Perform the POWERTRAIN VERIFICATION TEST. Refer to **POWERTRAIN VERIFICATION TEST** .

P2112-ELECTRONIC THROTTLE CONTROL - UNABLE TO OPEN

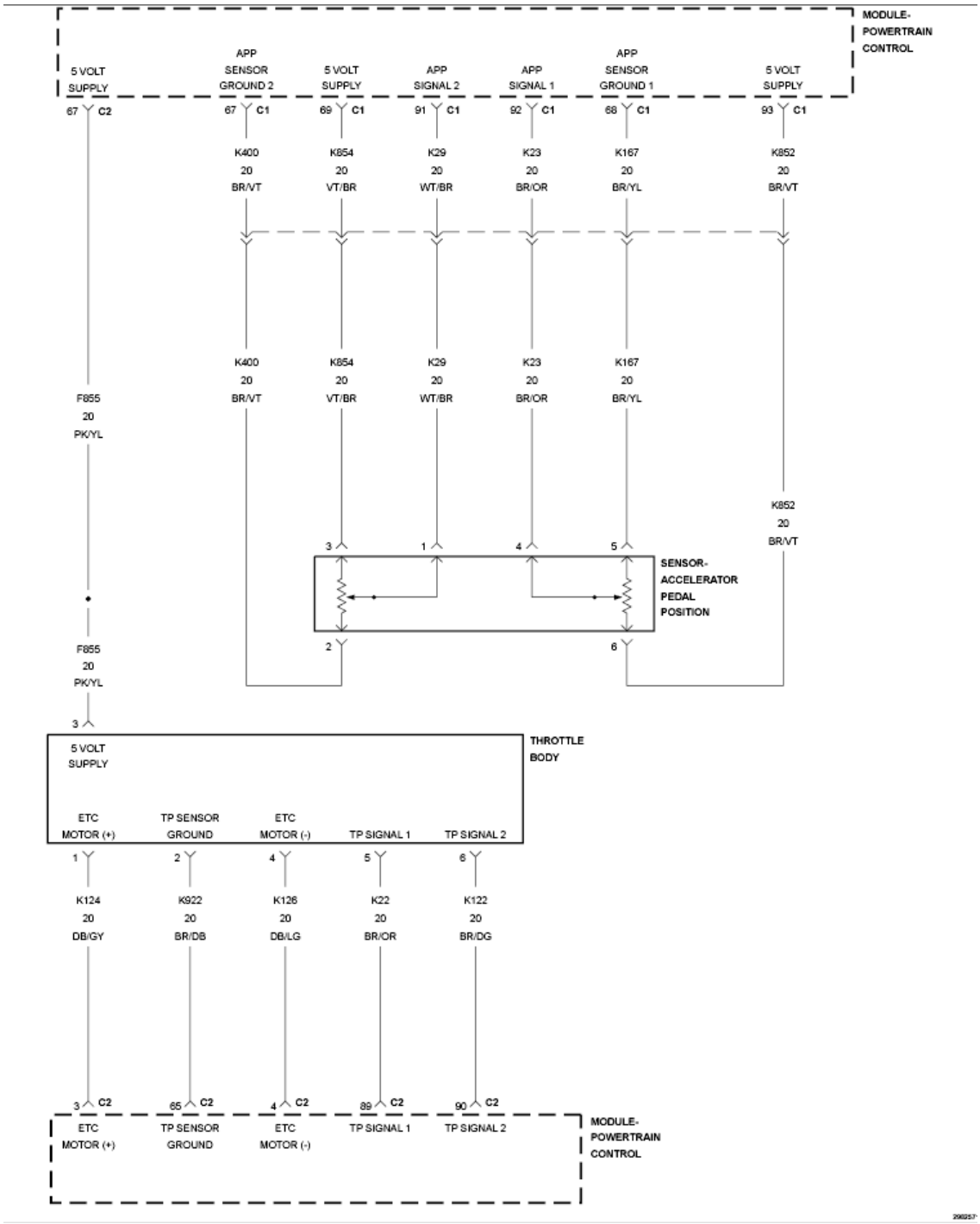

Fig. 173: Throttle Control Circuit Diagram
Courtesy of CHRYSLER GROUP, LLC

For a complete wiring diagram, **refer to appropriate SYSTEM WIRING DIAGRAMS article** .

WHEN MONITORED

Ignition on and battery voltage greater than 10 volts.

SET CONDITION

Just after key on, the throttle is opened and closed to test the system. If the Powertrain Control Module (PCM) detects that the TP Sensor does not move from Limp Home Position, this DTC will set. One trip fault. The DTC will set within five seconds. ETC light is flashing.

POSSIBLE CAUSES

POSSIBLE CAUSES
THROTTLE PLATE STICKING OR OBSTRUCTED
TP SENSOR CIRCUIT(S) HIGH RESISTANCE OR SHORTED
(K124) ETC MOTOR (+) CIRCUIT SHORTED TO VOLTAGE
(K126) ETC MOTOR (-) CIRCUIT SHORTED TO VOLTAGE
(K124) ETC MOTOR (+) CIRCUIT SHORTED TO THE (K126) ETC MOTOR (-) CIRCUIT
(K124) ETC MOTOR (+) CIRCUIT OPEN OR HIGH RESISTANCE
(K126) ETC MOTOR (-) CIRCUIT OPEN OR HIGH RESISTANCE
(K124) ETC MOTOR (+) CIRCUIT SHORTED TO GROUND
(K126) ETC MOTOR (-) CIRCUIT SHORTED TO GROUND
THROTTLE BODY ASSEMBLY
POWERTRAIN CONTROL MODULE (PCM)

Always perform the Pre-Diagnostic Troubleshooting procedure before proceeding. Refer to PRE-DIAGNOSTIC TROUBLESHOOTING PROCEDURE .

DIAGNOSTIC TEST

1. **ACTIVE DTC**

NOTE: Diagnose any TPS or 5-Volt Supply DTCs before continuing.

1. Turn the ignition on.
2. Start the engine and allow it to reach normal operating temperature.

WARNING: When the engine is operating, do not stand in direct line with the fan. Do not put

your hands near the pulleys, belts or fan. Do not wear loose clothing. Failure to follow these instructions may result in possible serious or fatal injury.

3. With the scan tool, select View DTCs.

   Is the status Active for this DTC?

   Yes

   - Go To 2

   No

   - Perform the INTERMITTENT CONDITION diagnostic procedure. Refer to **INTERMITTENT CONDITION** .

2. **THROTTLE PLATE INSPECTION**
   1. Turn the ignition off.
   2. Remove the air cleaner assembly.
   3. Check for any signs of a foreign material (ice or dirt) on the throttle plate or in the throttle bore that can cause the throttle plate to stick or not open.
   4. Attempt to manually open the throttle plate. Use an appropriate tool that will not damage or mar the throttle body.

      Were any problems found?

      Yes

      - Repair as necessary or replace the Throttle Body Assembly. Disconnect the battery when replacing the Throttle Body Assembly. After installation is complete, use a scan tool and select the ETC Relearn function.
      - Perform the POWERTRAIN VERIFICATION TEST. Refer to **POWERTRAIN VERIFICATION TEST** .

      No

- Go To 3

3. **TPS 1 AND TPS 2 BOTH EQUAL 2.5 VOLTS**
   1. With a scan tool, perform the Throttle Follower test and monitor both TPS voltages.

      Are both TPS readings stuck at 2.5 volts?

      Yes

      - Check the TPS Signal circuits for excessive resistance, being shorted together, or being shorted to the Sensor Ground circuit.
      - Perform the POWERTRAIN VERIFICATION TEST. Refer to **POWERTRAIN VERIFICATION TEST** .

      No

      - Go To 4

4. **CHECK THE (K124) ETC MOTOR (+) CIRCUIT FOR A SHORT TO VOLTAGE**

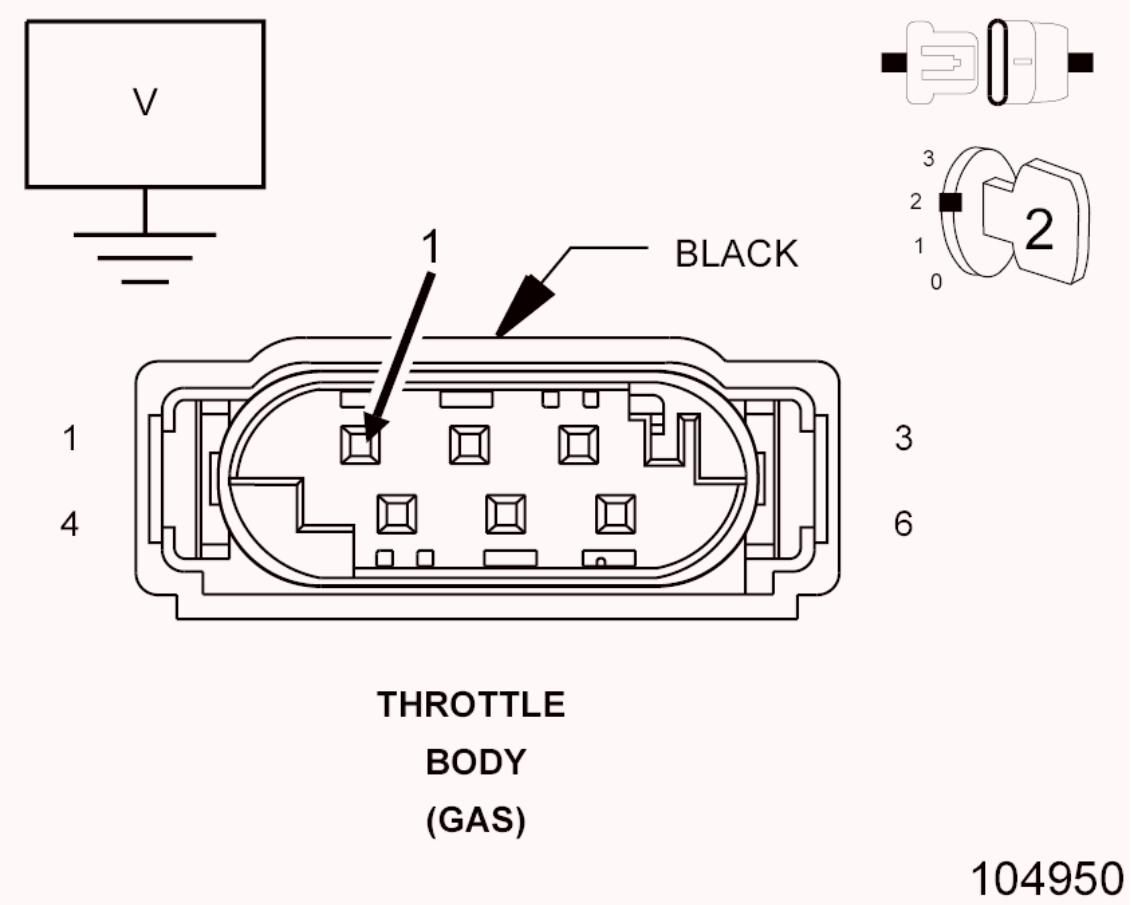

Fig. 174: Checking ETC Motor (+) Circuit For Short To Voltage
Courtesy of CHRYSLER GROUP, LLC

1. Turn the ignition off.
2. Disconnect the Throttle Body harness connector.
3. Disconnect the PCM C2 harness connector.
4. Turn the ignition on.
5. Measure the voltage of the (K124) ETC Motor (+) circuit.

   Is there any voltage present?

   Yes

   - Repair the (K124) ETC Motor (+) circuit for a short to voltage.
   - Perform the POWERTRAIN VERIFICATION TEST. Refer to **POWERTRAIN VERIFICATION TEST** .

   No

- Go To 5

5. **CHECK THE (K126) ETC MOTOR (-) CIRCUIT FOR A SHORT TO VOLTAGE**

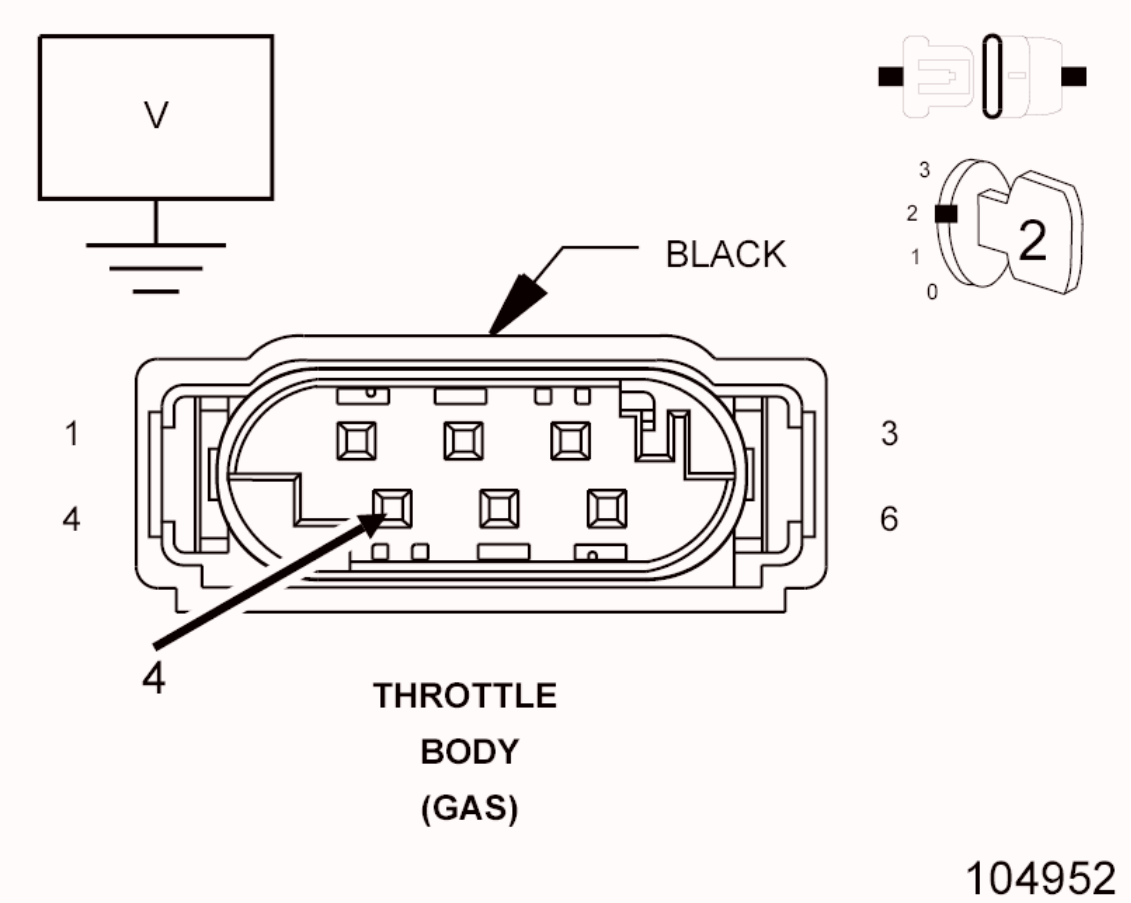

Fig. 175: Checking ETC Motor (-) Circuit For Short To Voltage
Courtesy of CHRYSLER GROUP, LLC

1. Measure the voltage of the (K126) ETC Motor (-) circuit.

   Is there any voltage present?

   Yes

   - Repair the (K126) ETC Motor (-) circuit for a short to voltage.
   - Perform the POWERTRAIN VERIFICATION TEST. Refer to **POWERTRAIN VERIFICATION TEST** .

   No

   - Go To 6

6. **CHECK FOR THE (K124) ETC MOTOR (+) CIRCUIT SHORTED TO THE (K126) ETC MOTOR (-) CIRCUIT**

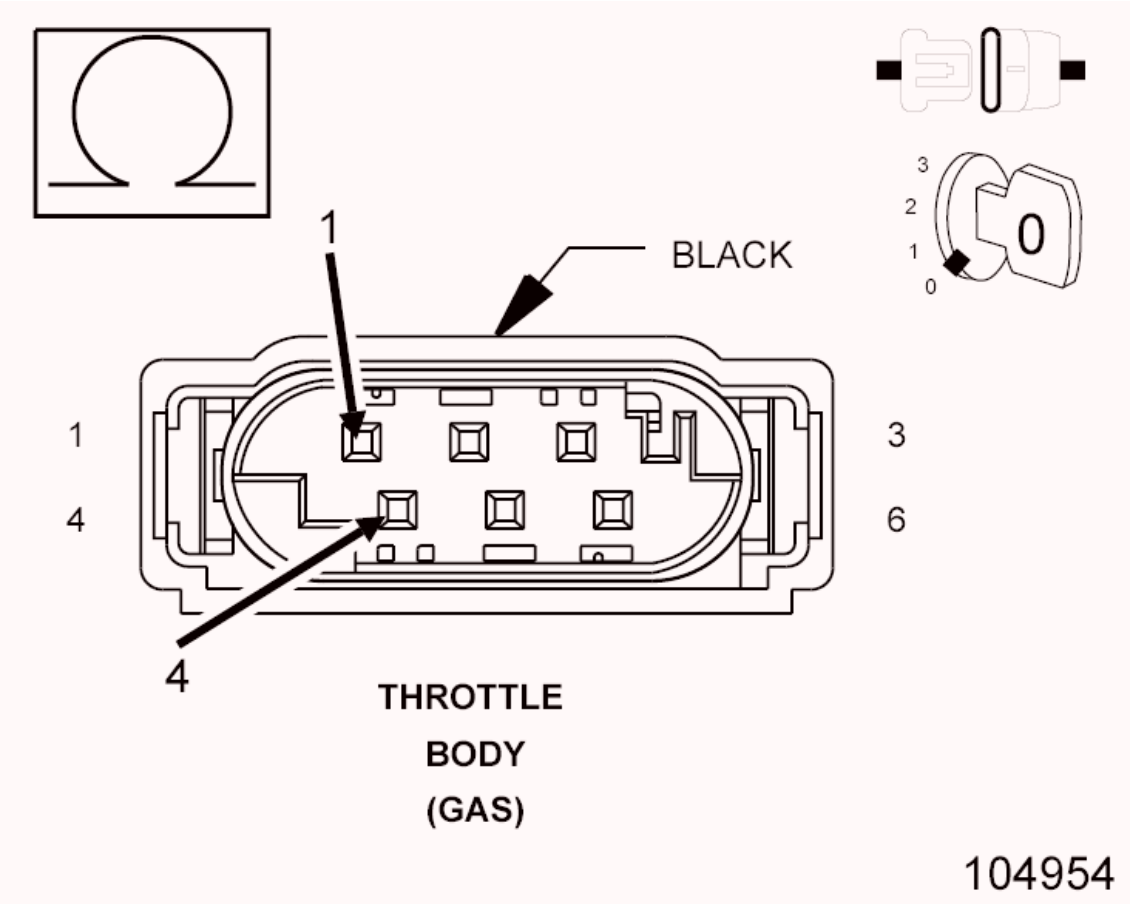

Fig. 176: Checking ETC Motor (+) Circuit For Short To ETC Motor (-) Circuit
Courtesy of CHRYSLER GROUP, LLC

1. Turn the ignition off.
2. Measure the resistance between the (K124) ETC Motor (+) circuit and the (K126) ETC Motor (-) circuit.

   Is the resistance above 10k Ohms?

   Yes

   - Repair the short to between the (K124) ETC Motor (+) circuit and the (K126) ETC Motor (-) circuit.
   - Perform the POWERTRAIN VERIFICATION TEST. Refer to **POWERTRAIN VERIFICATION TEST** .

No

- Go To 7

7. **CHECK THE (K124) ETC MOTOR (+) CIRCUIT FOR A SHORT TO GROUND**

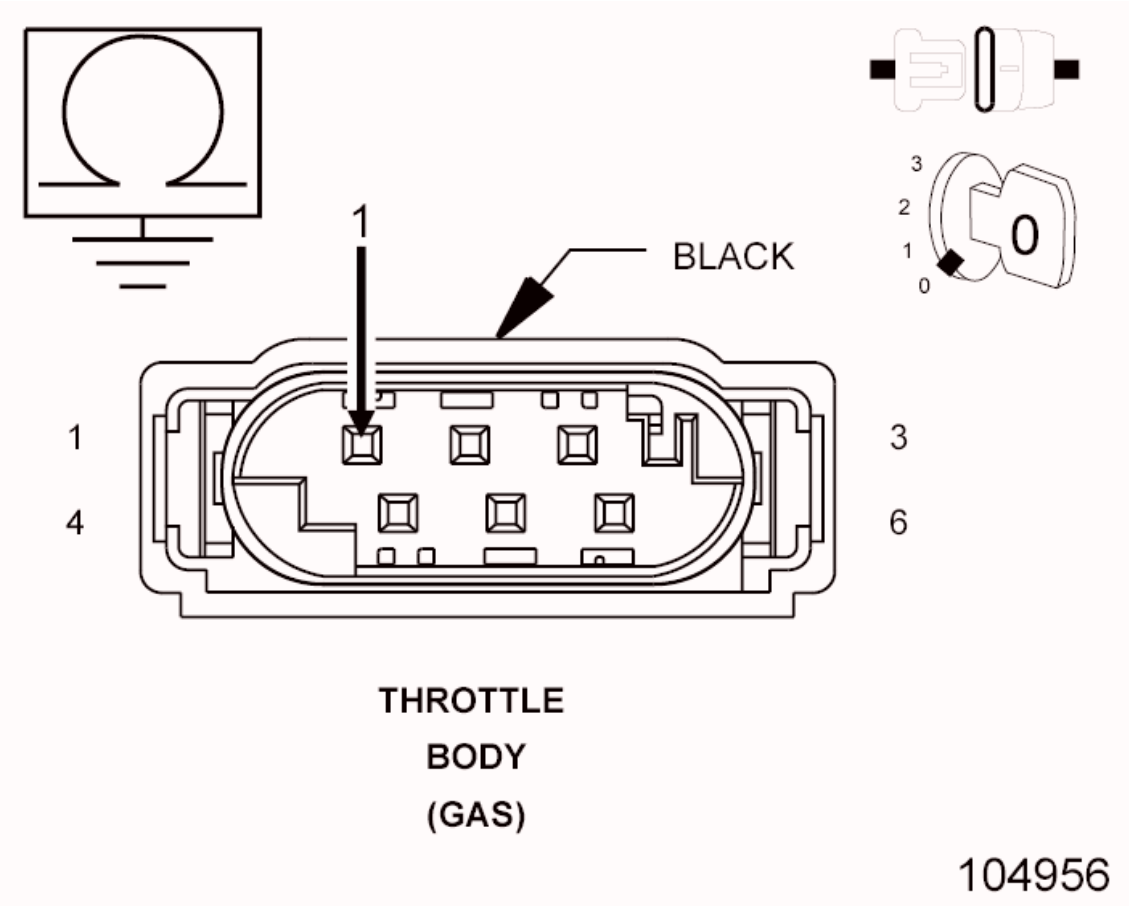

Fig. 177: Checking ETC Motor Circuit (+) For Short To Ground
Courtesy of CHRYSLER GROUP, LLC

1. Measure the resistance between ground and the (K124) ETC Motor (+) circuit.

   Is the resistance above 10k Ohms?

   Yes

   - Go To 8

   No

   - Repair the (K124) ETC Motor (+) circuit for a short to ground.

- Perform the POWERTRAIN VERIFICATION TEST. Refer to **POWERTRAIN VERIFICATION TEST** .

8. **CHECK THE (K126) ETC MOTOR (-) CIRCUIT FOR A SHORT TO GROUND**

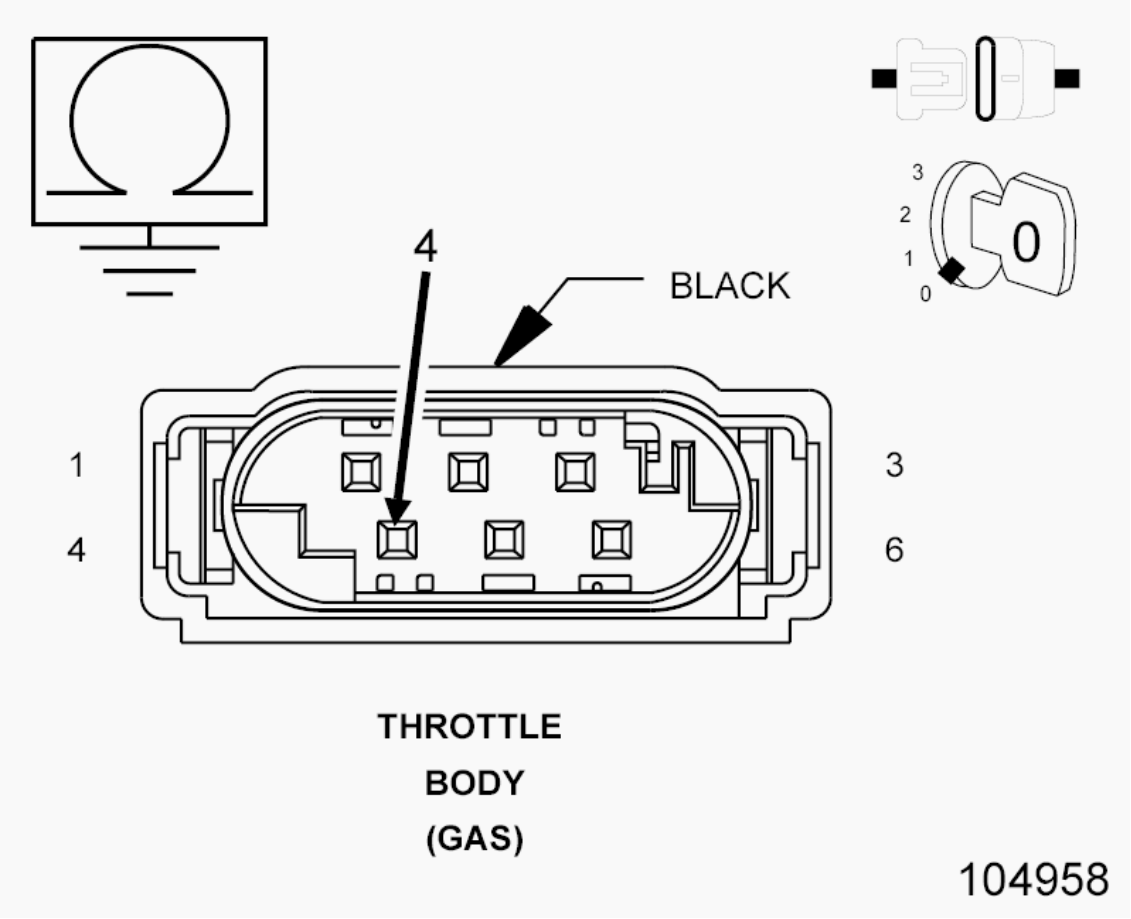

Fig. 178: Checking ETC Motor Circuit (-) For Short To Ground
Courtesy of CHRYSLER GROUP, LLC

1. Measure the resistance between ground and the (K126) ETC Motor (-) circuit.

   Is the resistance above 10k Ohms?

   Yes

   - Go To 9

   No

   - Repair the short to ground in the (K126) ETC Motor (-) circuit.

- Perform the POWERTRAIN VERIFICATION TEST. Refer to **POWERTRAIN VERIFICATION TEST** .

9. **CHECK THE (K126) ETC MOTOR (-) CIRCUIT FOR AN OPEN/HIGH RESISTANCE**

CAUTION: Do not probe the PCM harness connectors. Probing the PCM harness connectors will damage the PCM terminals resulting in poor terminal to pin connection. Install the GPEC Diagnostic Adaptor to perform the diagnosis.

1. Connect the (special tool #10436, Adapter, GPEC Diagnostic).
2. Measure the resistance of the (K126) ETC Motor (-) circuit between the Throttle Body harness connector and the GPEC Adaptor.

Is the resistance below 5.0 Ohms?

Yes

- Go To 10

No

- Repair the (K126) ETC Motor (-) circuit for an open or high resistance.
- Perform the POWERTRAIN VERIFICATION TEST. Refer to **POWERTRAIN VERIFICATION TEST** .

10. **CHECK THE (K124) ETC MOTOR (+) CIRCUIT FOR AN OPEN/HIGH RESISTANCE**

1. Measure the resistance of the (K124) ETC Motor (+) circuit between the Throttle Body harness connector and the GPEC Adaptor.

Is the resistance below 5.0 Ohms?

Yes

- Go To 11

No

- Repair the (K124) ETC Motor (+) circuit for an open or high resistance.
- Perform the POWERTRAIN VERIFICATION TEST. Refer to **POWERTRAIN VERIFICATION TEST** .

11. **POWERTRAIN CONTROL MODULE (PCM)**
    1. Using the wiring diagram/schematic as a guide, inspect the wiring and connectors between the Throttle Body and the Powertrain Control Module (PCM).
    2. Look for any chafed, pierced, pinched, or partially broken wires.
    3. Look for broken, bent, pushed out or corroded terminals.
    4. Perform any Technical Service Bulletins that may apply.

    Were any problems found?

    Yes

    - Repair as necessary.
    - Perform the POWERTRAIN VERIFICATION TEST. Refer to **POWERTRAIN VERIFICATION TEST** .

    No

    - Replace and program the Powertrain Control Module in accordance with the service information. Refer to **MODULE, POWERTRAIN CONTROL, REMOVAL** .
    - Perform the POWERTRAIN VERIFICATION TEST. Refer to **POWERTRAIN VERIFICATION TEST** .

P2115-ACCELERATOR PEDAL POSITION SENSOR 1 MINIMUM STOP PERFORMANCE

For a complete wiring diagram, **refer to appropriate SYSTEM WIRING DIAGRAMS article** .

WHEN MONITORED

With the igniting on. During in-plant testing, the APPS is checked to make sure the minimum and maximum values can be reached. The PCM performs the diagnostic test for this DTC after the diagnostic test for P2166 has passed.

SET CONDITION

APPS 1 has failed to achieve the required minimum value during In-Plant testing. One trip fault and the code will set within 5 seconds. Engine will only idle.

POSSIBLE CAUSES

POSSIBLE CAUSES
ETC RELEARN ACCELERATOR PEDAL POSITION SENSOR

Always perform the Pre-Diagnostic Troubleshooting procedure before proceeding. Refer to PRE-DIAGNOSTIC TROUBLESHOOTING PROCEDURE .

DIAGNOSTIC TEST

1. **ACTIVE DTC**
    1. Turn the ignition on.

        NOTE: This DTC is set when the APPS values are learned in-plant but do not reach the minimum or maximum voltage range.

        NOTE: Diagnose any APP Sensor out of range and 5-Volt Supply DTCs before continuing.

    2. With the scan tool, clear DTCs.
    3. Start the engine.
    4. With the scan tool, select View DTCs.

    Is the status Active for this DTC?

    Yes

    - Go to 2

    No

    - Perform the INTERMITTENT CONDITION diagnostic procedure.

Refer to **INTERMITTENT CONDITION** .

2. **ACCELERATOR PEDAL POSITION SENSOR**
   1. With a scan tool perform the ETC RELEARN function.
   2. With the scan tool, clear DTCs.
   3. Start the engine.
   4. With the scan tool, select View DTCs.

   Is the status Active for this DTC?

   Yes

   - Replace the Accelerator Pedal Position Sensor in accordance with the service information. After installation is complete, perform the ETC RELEARN function.
   - Perform the POWERTRAIN VERIFICATION TEST. Refer to **POWERTRAIN VERIFICATION TEST** .

   No

   - Test Complete.

2014 ENGINE PERFORMANCE

Powertrain Control Module (PCM) - Electrical Diagnostics, 2.0L & 2.4L - Compass & Patriot

DIAGNOSIS AND TESTING

P2116-ACCELERATOR PEDAL POSITION SENSOR 2 MINIMUM STOP PERFORMANCE

For a complete wiring diagram, **refer to appropriate SYSTEM WIRING DIAGRAMS article** .

WHEN MONITORED

With the igniting on. During in-plant testing, the APPS is checked to make sure the minimum and maximum values can be reached. The PCM performs the diagnostic test for this DTC after the diagnostic test for P2167 has passed.

SET CONDITION

APPS 2 has failed to achieve the required minimum value during In-Plant testing. One trip fault and the code will be stored within 5 seconds. Engine will only idle.

POSSIBLE CAUSES

POSSIBLE CAUSES
ETC RELEARN ACCELERATOR PEDAL POSITION SENSOR

Always perform the Pre-Diagnostic Troubleshooting procedure before proceeding. Refer to PRE-DIAGNOSTIC TROUBLESHOOTING PROCEDURE .

DIAGNOSTIC TEST

1. **DTC IS ACTIVE**
    1. Turn the ignition on.

NOTE: This DTC is set when the APPS values are learned in-plant but do not reach the minimum or maximum voltage range.

NOTE: Diagnose any APPS out of range and 5-Volt supply DTCs before continuing.

2. With the scan tool, clear DTCs.
3. Start the engine.
4. With the scan tool, select View DTCs.

Is the status Active for this DTC?

Yes

- Go to 2

No

- Perform the INTERMITTENT CONDITION diagnostic procedure. Refer to **INTERMITTENT CONDITION** .

2. **ACCELERATOR PEDAL POSITION SENSOR**
   1. With a scan tool perform the ETC RELEARN function.
   2. With the scan tool, clear DTCs.
   3. Start the engine.
   4. With the scan tool, select View DTCs.

   Is the status Active for this DTC?

   Yes

   - Replace the Accelerator Pedal Position Sensor in accordance with the Service Information. After installation is complete, perform the ETC RELEARN function.
   - Perform the POWERTRAIN VERIFICATION TEST. Refer to **POWERTRAIN VERIFICATION TEST** .

   No

   - Test Complete.

P2118-ELECTRONIC THROTTLE CONTROL MOTOR CURRENT PERFORMANCE

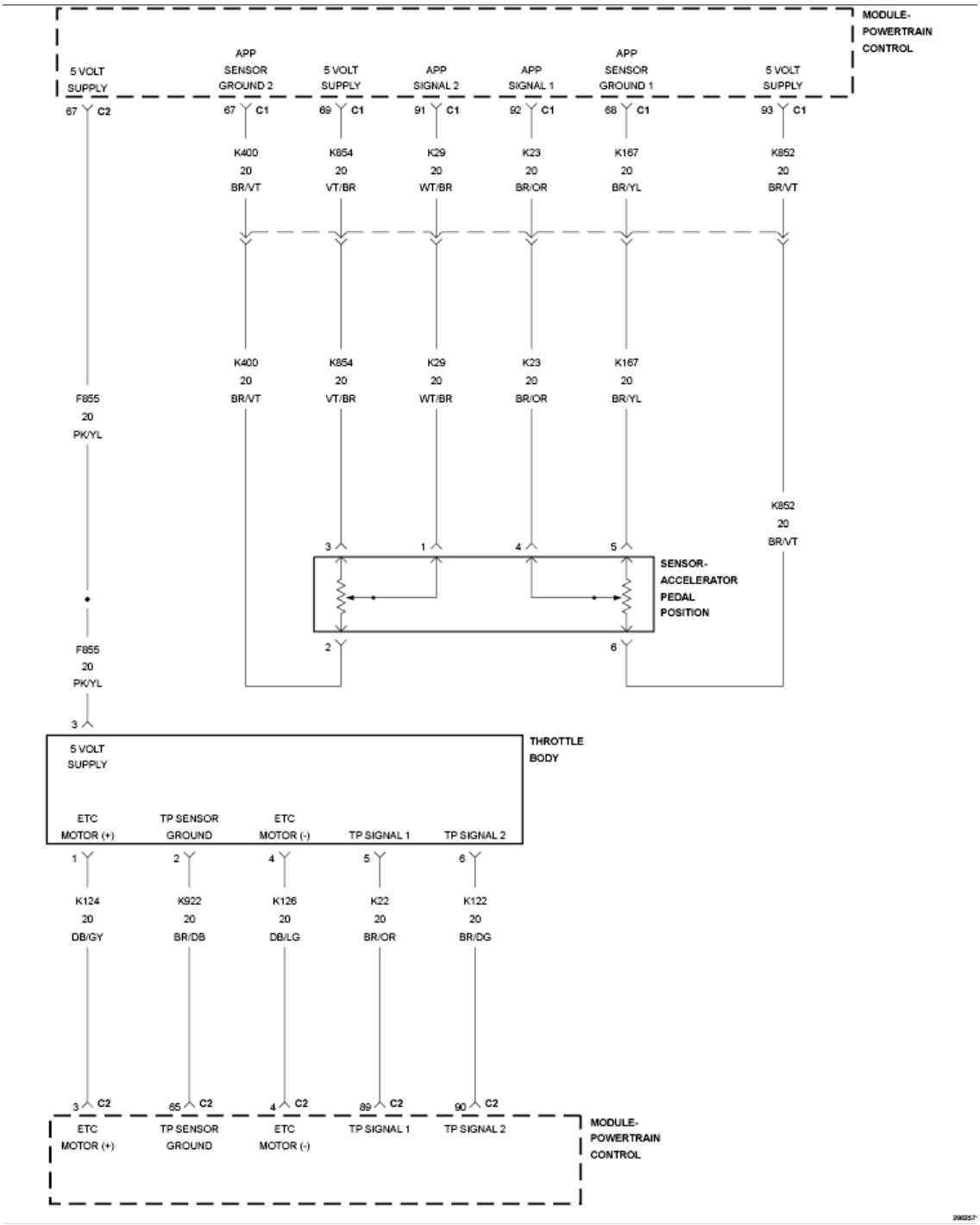

Fig. 1: Throttle Control Circuit Diagram
Courtesy of CHRYSLER GROUP, LLC

For a complete wiring diagram, **refer to appropriate SYSTEM WIRING DIAGRAMS article** .

WHEN MONITORED

Ignition on and ETC motor is not in the Limp Home Position.

SET CONDITION

When the Powertrain Control Module (PCM) detects an internal error or a short between the ETC Motor (-) and ETC Motor (+) circuits in the ETC Motor Driver. One trip fault. ETC light is flashing.

POSSIBLE CAUSES

POSSIBLE CAUSES
THROTTLE PLATE STUCK OR OBSTRUCTED
(K124) ETC MOTOR (+) CIRCUIT SHORTED TO VOLTAGE
(K126) ETC MOTOR (-) CIRCUIT SHORTED TO VOLTAGE
(K124) ETC MOTOR (+) CIRCUIT SHORTED TO THE (K126) ETC MOTOR (-) CIRCUIT
(K124) ETC POSITIVE CIRCUIT SHORTED TO GROUND
(K126) ETC NEGATIVE CIRCUIT SHORTED TO GROUND
(K124) ETC MOTOR (+) CIRCUIT OPEN OR HIGH RESISTANCE
(K126) ETC MOTOR (-) CIRCUIT OPEN OR HIGH RESISTANCE
ETC MOTOR
POWERTRAIN CONTROL MODULE (PCM)

Always perform the Pre-Diagnostic Troubleshooting procedure before proceeding. Refer to PRE-DIAGNOSTIC TROUBLESHOOTING PROCEDURE .

DIAGNOSTIC TEST

1. **ACTIVE DTC**

NOTE: **If this DTC sets intermittently, it is possible that the controller is overheating in extremely hot temperatures. This is considered a normal protection operation. No repair is necessary.**

NOTE: **Low battery voltage can cause excessive current draw in very hot and cold ambient temperatures. Make sure the battery can pass a load test before continuing. Review Freeze Frame information to determine the ambient temperature when the DTC**

set.

NOTE: If P2072 is also set, this indicates that the cold weather ice blockage routine has run. No repair action is necessary.

NOTE: Diagnose and repair any Throttle Position sensor, system voltage, or 5-Volt supply DTCs before continuing with this test.

1. Start the engine and allow it to reach normal operating temperature.

   WARNING: When the engine is operating, do not stand in direct line with the fan. Do not put your hands near the pulleys, belts or fan. Do not wear loose clothing. Failure to follow these instructions may result in possible serious or fatal injury.

2. With the scan tool, select View DTCs.

   Is the status Active for this DTC?

   Yes

   - Go To 2

   No

   - Perform the INTERMITTENT CONDITION diagnostic procedure. Refer to **INTERMITTENT CONDITION** .

2. **THROTTLE PLATE INSPECTION**
   1. Turn the ignition off.
   2. Remove the air cleaner assembly.
   3. Check for any signs of a foreign material (ice or dirt) on the throttle plate or in the throttle bore that can cause the throttle plate to stick.
   4. Attempt to manually open the throttle plate. Use an appropriate tool that will not damage or mar the throttle body.

Were any problems found?

Yes

- Remove the debris if possible or replace the Throttle Body Assembly. Disconnect the battery when replacing the Throttle Body Assembly. After installation is complete, use a scan tool and select the ETC Relearn function.
- Perform the POWERTRAIN VERIFICATION TEST. Refer to **POWERTRAIN VERIFICATION TEST** .

No

- Go To 3

3. **CHECK THE (K124) ETC MOTOR (+) CIRCUIT FOR A SHORT TO VOLTAGE**

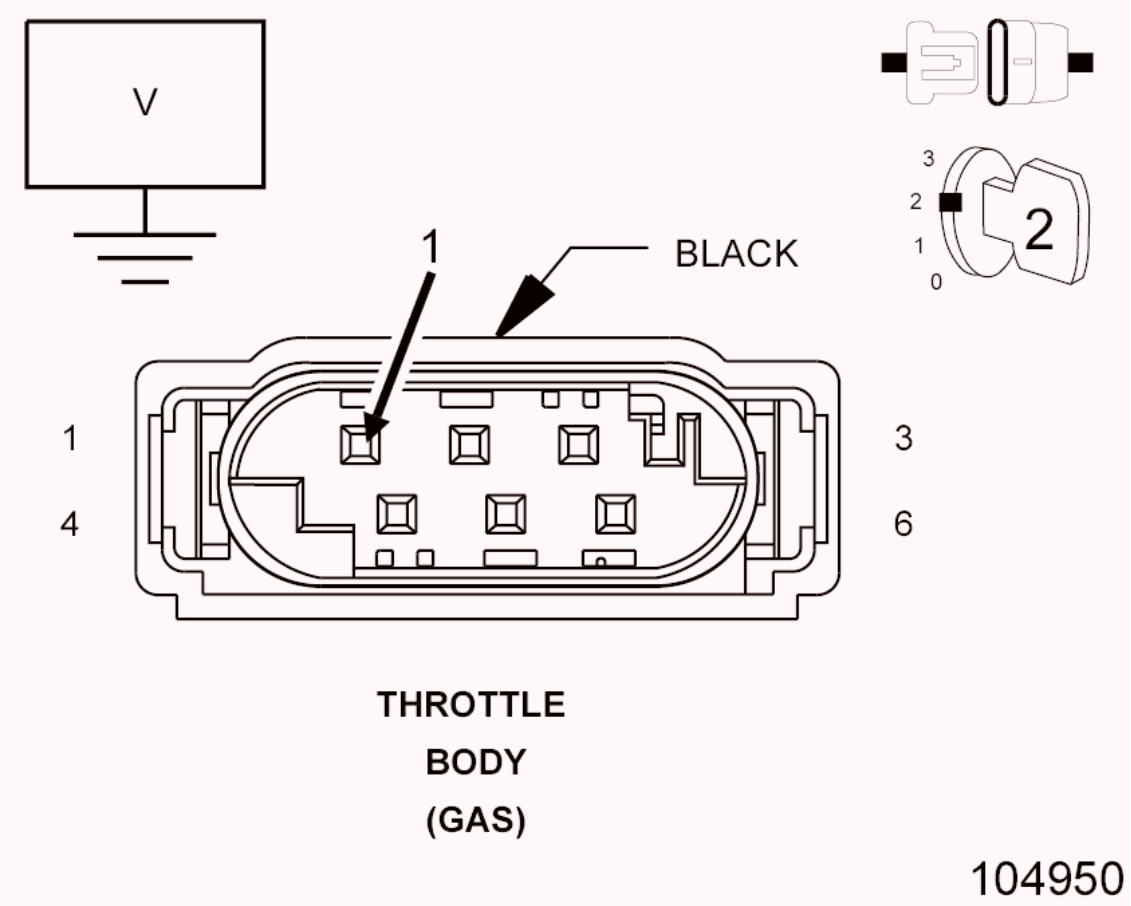

Fig. 2: Checking ETC Motor (+) Circuit For Short To Voltage
Courtesy of CHRYSLER GROUP, LLC

1. Turn the ignition off.
2. Disconnect the Throttle Body harness connector.
3. Disconnect the PCM C2 harness connector.
4. Turn the ignition on.
5. Measure the voltage of the (K124) ETC Motor (+) circuit.

   Is there any voltage present?

   Yes

   - Repair the (K124) ETC Motor (+) circuit for a short to voltage.
   - Perform the POWERTRAIN VERIFICATION TEST. Refer to **POWERTRAIN VERIFICATION TEST** .

   No

   - Go To 4

4. **CHECK THE (K126) ETC MOTOR (-) CIRCUIT FOR A SHORT TO VOLTAGE**

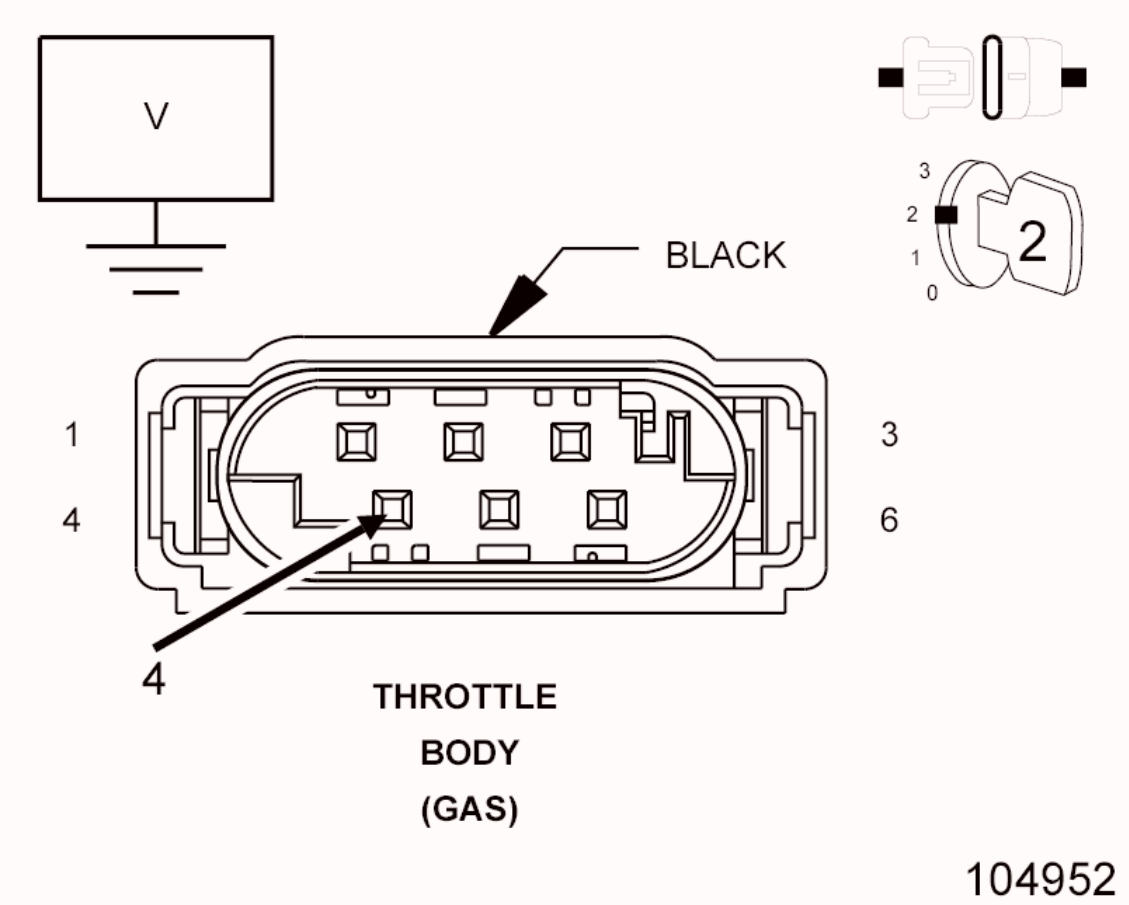

Fig. 3: Checking ETC Motor (-) Circuit For Short To Voltage
Courtesy of CHRYSLER GROUP, LLC

1. Measure the voltage of the (K126) ETC Motor (-) circuit.

   Is there any voltage present?

   Yes

   - Repair the (K126) ETC Motor (-) circuit for a short to voltage.
   - Perform the POWERTRAIN VERIFICATION TEST. Refer to **POWERTRAIN VERIFICATION TEST** .

   No

   - Go To 5

5. **CHECK FOR THE (K124) ETC MOTOR (+) CIRCUIT SHORTED TO THE (K126) ETC MOTOR (-) CIRCUIT**

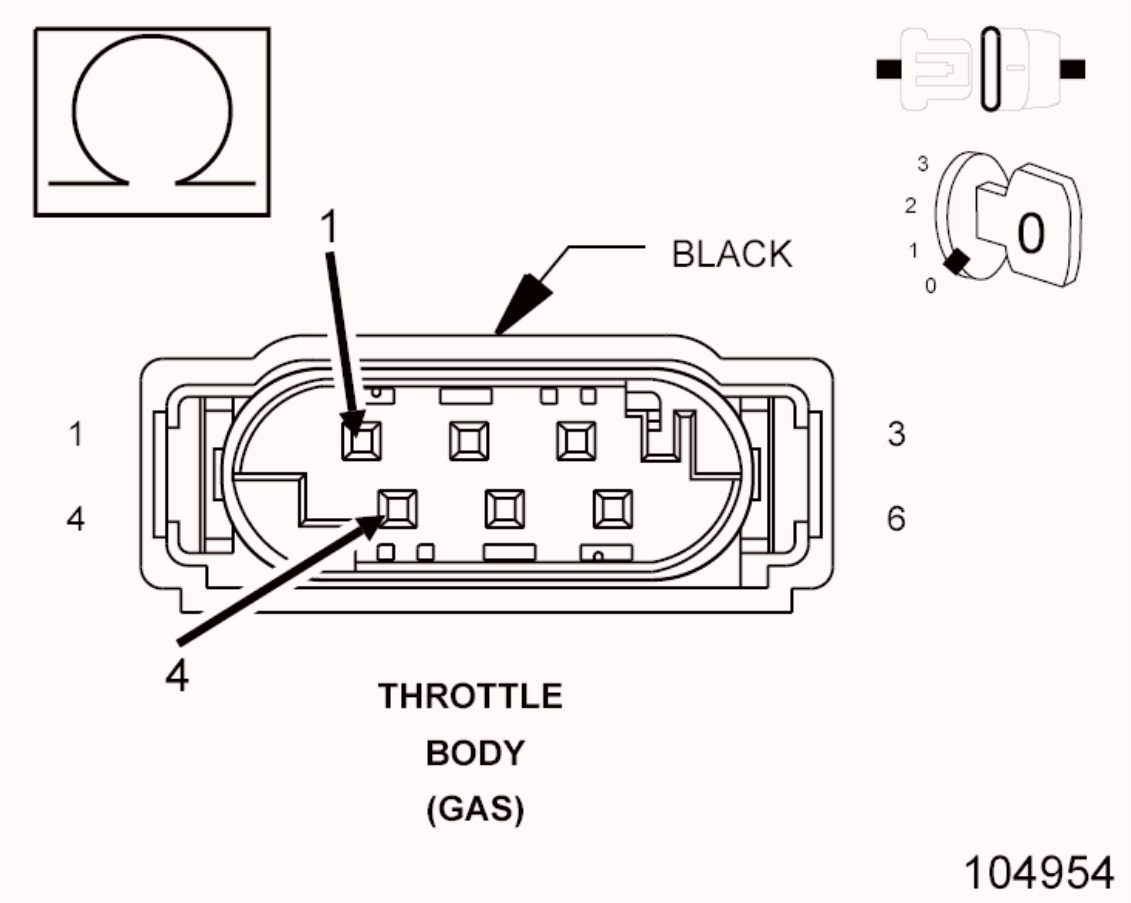

Fig. 4: Checking ETC Motor (+) Circuit For Short To ETC Motor (-) Circuit
Courtesy of CHRYSLER GROUP, LLC

1. Turn the ignition off.
2. Measure the resistance between the (K124) ETC Motor (+) circuit and the (K126) ETC Motor (-) circuit.

   Is the resistance above 10k Ohms?

   Yes

   - Go To 6

   No

   - Repair the short to between the (K124) ETC Motor (+) circuit and the (K126) ETC Motor (-) circuit.
   - Perform the POWERTRAIN VERIFICATION TEST. Refer to **POWERTRAIN VERIFICATION TEST** .

6. **CHECK THE (K124) ETC MOTOR (+) CIRCUIT FOR A SHORT TO GROUND**

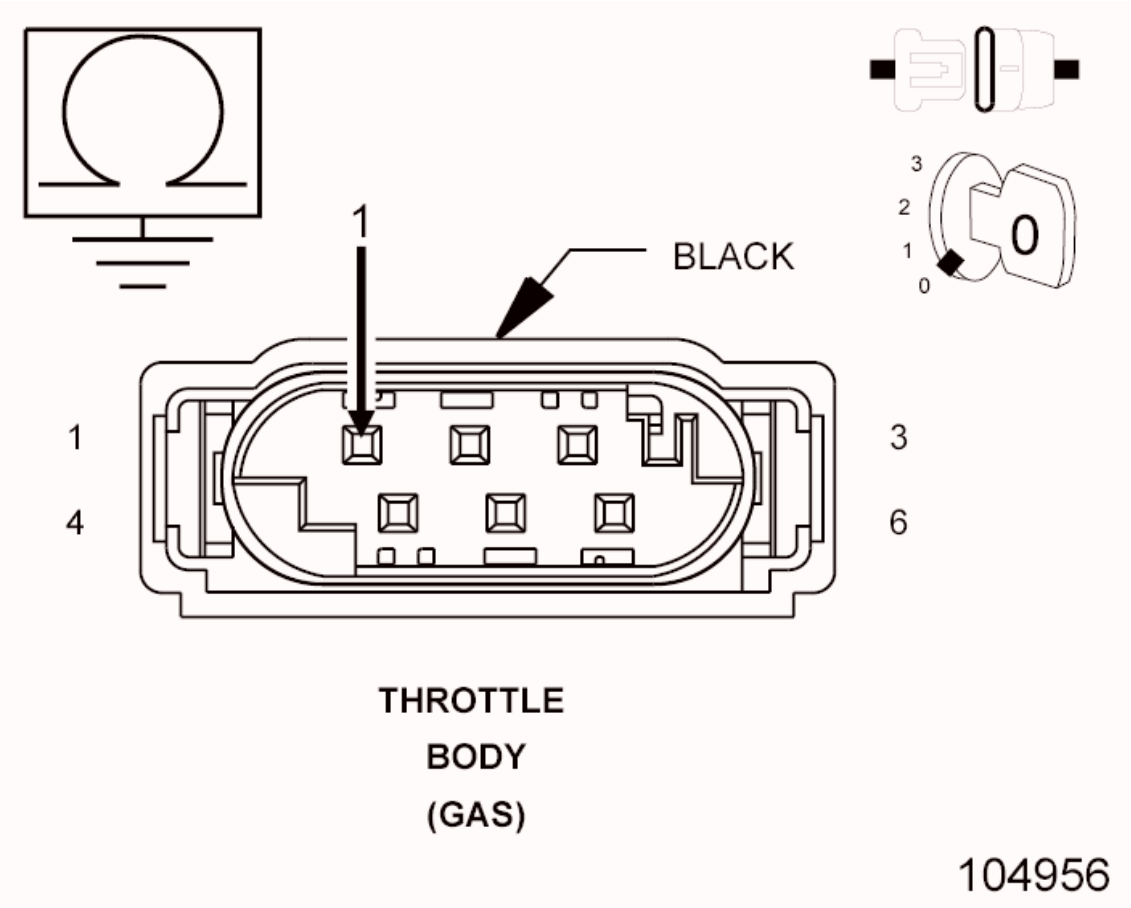

Fig. 5: Checking ETC Motor Circuit (+) For Short To Ground
Courtesy of CHRYSLER GROUP, LLC

1. Measure the resistance between ground and the (K124) ETC Motor (+) circuit.

   Is the resistance above 10k Ohms?

   Yes

   - Go To 7

   No

   - Repair the (K124) ETC Motor (+) circuit for a short to ground.
   - Perform the POWERTRAIN VERIFICATION TEST. Refer to **POWERTRAIN VERIFICATION TEST** .

7. **CHECK THE (K126) ETC MOTOR (-) CIRCUIT FOR A SHORT TO GROUND**

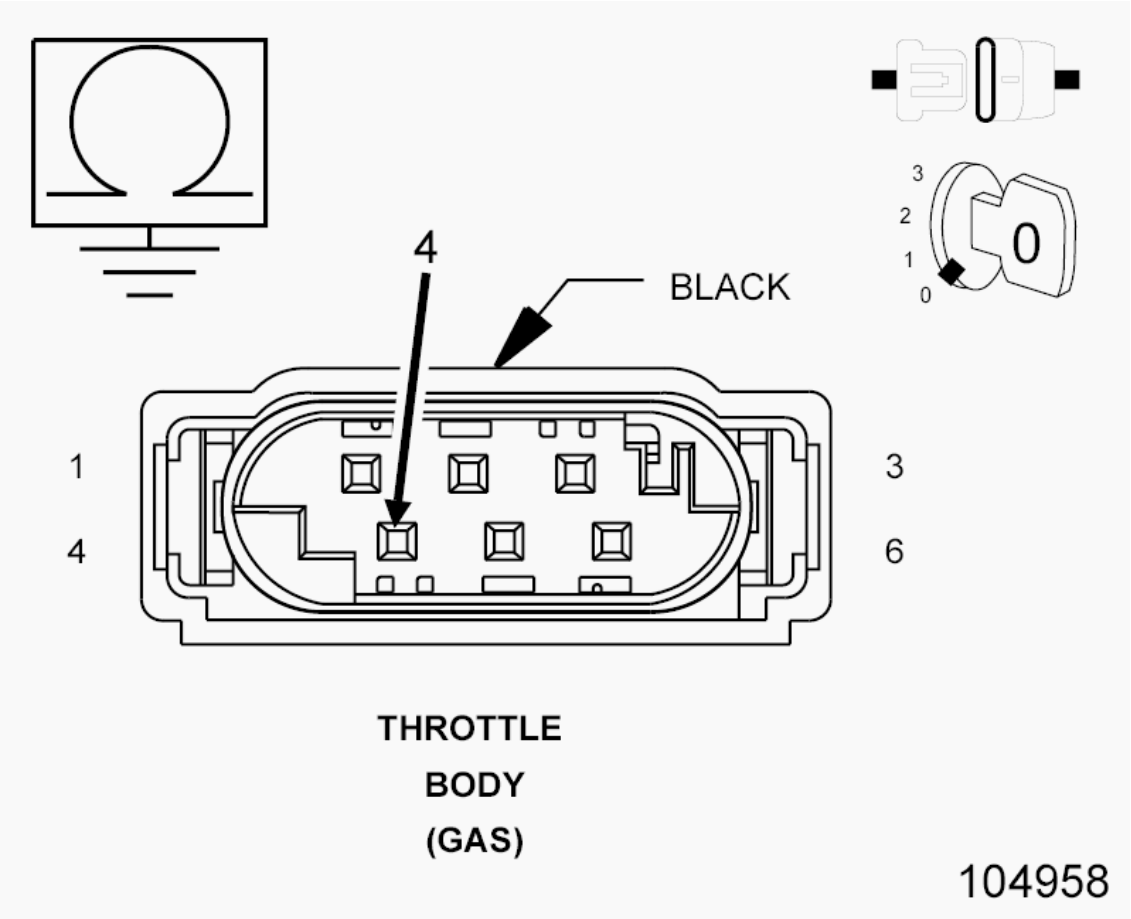

Fig. 6: Checking ETC Motor Circuit (-) For Short To Ground
Courtesy of CHRYSLER GROUP, LLC

1. Measure the resistance between ground and the (K126) ETC Motor (-) circuit.

   Is the resistance above 10k Ohms?

   Yes

   - Go To 8

   No

   - Repair the (K126) ETC Motor (-) circuit for a short to ground.
   - Perform the POWERTRAIN VERIFICATION TEST. Refer to **POWERTRAIN VERIFICATION TEST** .

8. **CHECK THE (K126) ETC MOTOR (-) CIRCUIT FOR AN OPEN/HIGH RESISTANCE**

CAUTION: Do not probe the PCM harness connectors. Probing the PCM harness connectors will damage the PCM terminals resulting in poor terminal to pin connection. Install the GPEC Diagnostic Adaptor to perform the diagnosis.

1. Connect the (special tool #10436, Adapter, GPEC Diagnostic).
2. Measure the resistance of the (K126) ETC Motor (-) circuit between the Throttle Body harness connector and the GPEC Adaptor.

Is the resistance below 5.0 Ohms?

Yes

- Go To 9

No

- Repair the (K126) ETC Motor (-) circuit for an open or high resistance.
- Perform the POWERTRAIN VERIFICATION TEST. Refer to **POWERTRAIN VERIFICATION TEST** .

9. **CHECK THE (K124) ETC MOTOR (+) CIRCUIT FOR AN OPEN/HIGH RESISTANCE**

1. Measure the resistance of the (K124) ETC Motor (+) circuit between the Throttle Body harness connector and the GPEC Adaptor.

Is the resistance below 5.0 Ohms?

Yes

- Go To 10

No

- Repair the (K124) ETC Motor (+) circuit for an open or high

resistance.

- Perform the POWERTRAIN VERIFICATION TEST. Refer to **POWERTRAIN VERIFICATION TEST** .

10. **ETC MOTOR**
    1. Replace the Throttle Body Assembly in accordance with the service information. After installation is complete, use a scan tool and perform the ETC RELEARN function.
    2. Turn the ignition on.
    3. With the scan tool, erase DTCs.
    4. Cycle the ignition off, and back to the on position.
    5. With the scan tool, view DTCs.

    Did the DTC return?

    Yes

    - Go To 11

    No

    - Repair is complete.
    - Perform the POWERTRAIN VERIFICATION TEST. Refer to **POWERTRAIN VERIFICATION TEST** .

11. **POWERTRAIN CONTROL MODULE (PCM)**
    1. Using the wiring diagram/schematic as a guide, inspect the wiring and connectors between the Throttle Body and the Powertrain Control Module (PCM).
    2. Look for any chafed, pierced, pinched, or partially broken wires.
    3. Look for broken, bent, pushed out or corroded terminals.
    4. Perform any Technical Service Bulletins that may apply.

    Were any problems found?

    Yes

    - Repair as necessary.
    - Perform the POWERTRAIN VERIFICATION TEST. Refer to

POWERTRAIN VERIFICATION TEST .

No

- Replace and program the Powertrain Control Module in accordance with the service information. Refer to **MODULE, POWERTRAIN CONTROL, REMOVAL** .
- Perform the POWERTRAIN VERIFICATION TEST. Refer to **POWERTRAIN VERIFICATION TEST** .

P2122-ACCELERATOR PEDAL POSITION SENSOR 1 CIRCUIT LOW

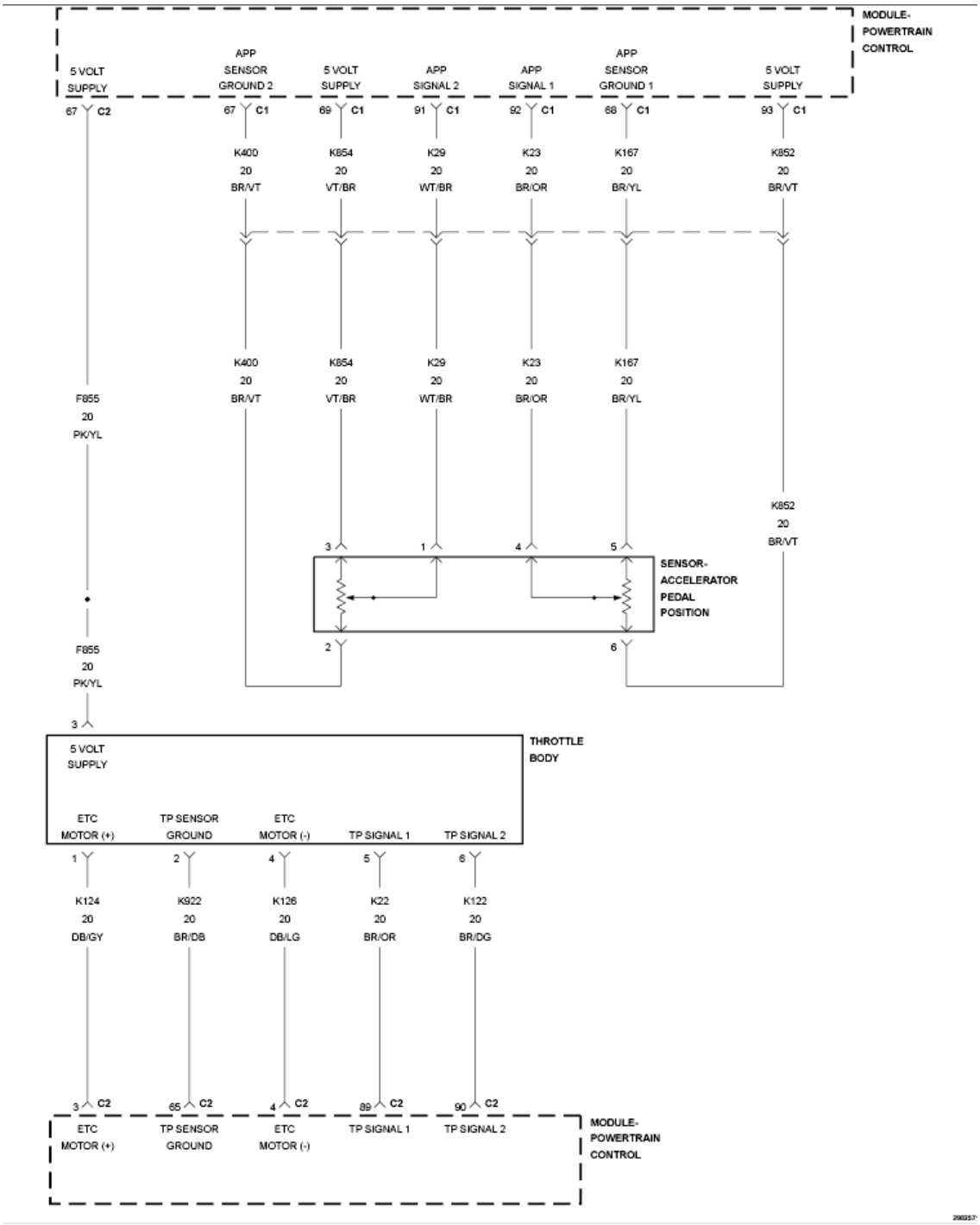

Fig. 7: Throttle Control Circuit Diagram
Courtesy of CHRYSLER GROUP, LLC

For a complete wiring diagram, **refer to appropriate SYSTEM WIRING DIAGRAMS article** .

THEORY OF OPERATION

The Electronic Throttle Control (ETC) system uses two Accelerator Pedal

Position (APP) Sensors to monitor the accelerator pedal position. The APP Sensors 1 and 2 are integrated into one assembly located at the pedal assembly. Each sensor has a 5-volt reference circuit, a low reference circuit, and a signal circuit. The Powertrain Control Module (PCM) reads the two signals individually and then compares the two signals as a redundant check of the throttle position. One of the sensors will fluctuate between 0 volts and 5.0 volts and the other sensor will fluctuate between 0 volts and 2.5 volts. The fluctuation of the two sensors should move proportionately. E.G. When operating properly, the voltage reading of the sensor operating on the 5.0 volt scale will always approximately two time the voltage reading of the sensor on the 2.5 volts scale.

WHEN MONITORED

With the ignition on and battery voltage greater than 10.4 volts.

SET CONDITION

The Powertrain Control Module (PCM) detects that the APP Sensor 1 input voltage is below the minimum acceptable value. Acceleration rate and Engine output are limited. One trip fault and the code will set within 5 seconds. ETC light is flashing

POSSIBLE CAUSES

POSSIBLE CAUSES
5-VOLT SUPPLY APP SENSOR 1 CIRCUIT OPEN OR SHORTED TO GROUND
APP SENSOR 1 SIGNAL CIRCUIT SHORTED TO GROUND
APP SENSOR 1 SIGNAL CIRCUIT SHORTED TO THE APP SENSOR 1 GROUND CIRCUIT
APP SENSOR 1 SIGNAL CIRCUIT SHORTED TO THE APP SENSOR 2 GROUND CIRCUIT
APP SENSOR 1 SIGNAL CIRCUIT OPEN OR HIGH RESISTANCE
APP SENSOR 1 GROUND CIRCUIT OPEN OR HIGH RESISTANCE
ACCELERATOR PEDAL POSITION SENSOR
POWERTRAIN CONTROL MODULE (PCM)

Always perform the Pre-Diagnostic Troubleshooting procedure before proceeding. Refer to PRE-DIAGNOSTIC TROUBLESHOOTING PROCEDURE .

DIAGNOSTIC TEST

1. **ACTIVE DTC**

   NOTE: Diagnose and repair any 5-Volt Sensor supply voltage DTCs before continuing with this test.

   1. Turn the ignition on.
   2. With the scan tool, read DTCs.

   Is the DTC Active or Pending at this time?

   Yes

   - Go To 2

   No

   - Perform the INTERMITTENT CONDITION diagnostic procedure. Refer to **INTERMITTENT CONDITION** .

2. **CHECK THE (K852) 5-VOLT SUPPLY CIRCUIT VOLTAGE**
   1. Turn the ignition off.
   2. Disconnect the Accelerator Pedal Position Sensor harness connector.
   3. Turn the ignition on.
   4. Measure the voltage of the (K852) 5-Volt Supply circuit in the Accelerator Pedal Position Sensor harness connector.

   Is the voltage between 4.9 and 5.2 volts?

   Yes

   - Go To 3

   No

   - Repair the (K852) 5-Volt Supply circuit for an open or short to ground.
   - Perform the POWERTRAIN VERIFICATION TEST. Refer to **POWERTRAIN VERIFICATION TEST** .

3. **CHECK THE (K23) APP SENSOR 1 SIGNAL CIRCUIT FOR A SHORT TO GROUND**
   1. Disconnect the PCM C1 harness connector.
   2. Measure the resistance between ground and the (K23) APP Sensor 1 Signal circuit in the Accelerator Pedal Position Sensor harness connector.

      Is the resistance above 10k Ohms?

      Yes

      - Go To 4

      No

      - Repair the (K23) APP Sensor 1 Signal circuit for a short to ground.
      - Perform the POWERTRAIN VERIFICATION TEST. Refer to **POWERTRAIN VERIFICATION TEST** .
4. **CHECK FOR THE (K23) APP SENSOR 1 SIGNAL CIRCUIT SHORTED TO THE SENSOR GROUND CIRCUITS**
   1. Measure the resistance between the (K23) APP Sensor 1 Signal circuit and the:
      - (K400) Sensor Ground circuit in the Accelerator Pedal Position Sensor harness connector.
      - (K167) Sensor Ground circuit in the Accelerator Pedal Position Sensor harness connector.

      Is the resistance above 10k Ohms?

      Yes

      - Go To 5

      No

      - Repair the (K23) APP Signal 1 circuit for a short to the Sensor Ground circuit that measured below 10k Ohms.
      - Perform the POWERTRAIN VERIFICATION TEST. Refer to **POWERTRAIN VERIFICATION TEST** .

5. **CHECK THE (K23) APP SENSOR 1 SIGNAL CIRCUIT FOR AN OPEN OR HIGH RESISTANCE**

   CAUTION: Do not probe the PCM harness connectors. Probing the PCM harness connectors will damage the PCM terminals resulting in poor terminal to pin connection. Install the GPEC Diagnostic Adaptor to perform the diagnosis.

   1. Connect the (special tool #10436, Adapter, GPEC Diagnostic).
   2. Measure the resistance of the (K23) APP Sensor 1 Signal circuit between the Accelerator Pedal Position Sensor harness connector and the GPEC Adaptor.

      Is the resistance below 5.0 Ohms?

      Yes

      - Go To 6

      No

      - Repair the (K23) APP Sensor 1 Signal circuit for an open circuit or high resistance.
      - Perform the POWERTRAIN VERIFICATION TEST. Refer to **POWERTRAIN VERIFICATION TEST** .

6. **CHECK THE (K167) APP SENSOR GROUND 1 CIRCUIT FOR AN OPEN OR HIGH RESISTANCE**

   1. Measure the resistance of the (K167) APP Sensor Ground 1 circuit between the Accelerator Pedal Position Sensor harness connector and the GPEC Adaptor.

      Is the resistance below 5.0 Ohms?

      Yes

      - Go To 7

      No

- Repair the (K167) APP Sensor Ground 1 circuit for an open circuit or high resistance.
- Perform the POWERTRAIN VERIFICATION TEST. Refer to **POWERTRAIN VERIFICATION TEST** .

7. **CHECK THE ACCELERATOR PEDAL POSITION SENSOR**
   1. Reconnect the PCM C1 harness connector.
   2. Connect a jumper between the (K852) 5-Volt Supply circuit and the (K23) APP Sensor 1 Signal circuit in the Accelerator Pedal Position Sensor harness connector.
   3. Turn the ignition on.
   4. With the scan tool, read the Accelerator Pedal Position Sensor signal voltage.

      Is the voltage above 4.9 volts with the jumper in place?

      Yes

      - Replace the Accelerator Pedal Position Sensor in accordance with the service information.
      - Perform the POWERTRAIN VERIFICATION TEST. Refer to **POWERTRAIN VERIFICATION TEST** .

      No

      - Go To 8

8. **POWERTRAIN CONTROL MODULE (PCM)**
   1. Using the wiring diagram/schematic as a guide, inspect the wiring and connectors between the Accelerator Pedal Position Sensor and the Powertrain Control Module (PCM).
   2. Look for any chafed, pierced, pinched, or partially broken wires.
   3. Look for broken, bent, pushed out or corroded terminals.
   4. Monitor the scan tool data relative to this circuit and wiggle test the wiring and connectors.
   5. Look for the data to change or for the DTC to reset during the wiggle test.
   6. Perform any Technical Service Bulletins that may apply.

Were any problems found?

Yes

- Repair as necessary.
- Perform the POWERTRAIN VERIFICATION TEST. Refer to **POWERTRAIN VERIFICATION TEST** .

No

- Replace and program the Powertrain Control Module (PCM) in accordance with the service information. Refer to **MODULE, POWERTRAIN CONTROL, REMOVAL** .
- Perform the POWERTRAIN VERIFICATION TEST. Refer to **POWERTRAIN VERIFICATION TEST** .

P2123-ACCELERATOR PEDAL POSITION SENSOR 1 CIRCUIT HIGH

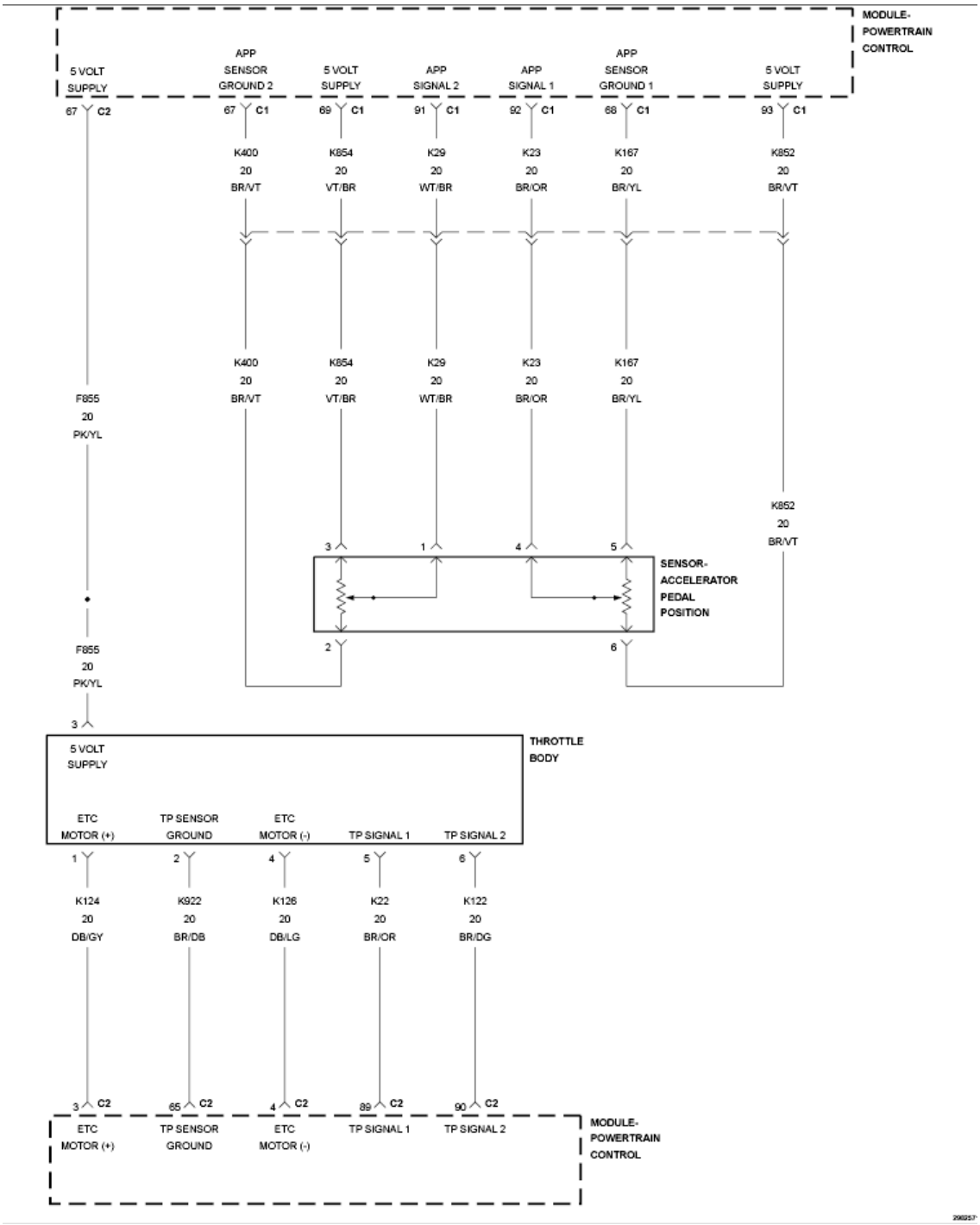

Fig. 8: Throttle Control Circuit Diagram
Courtesy of CHRYSLER GROUP, LLC

For a complete wiring diagram, **refer to appropriate SYSTEM WIRING DIAGRAMS article** .

WHEN MONITORED

With the ignition on and battery voltage greater than 10.4 volts.

SET CONDITION

The Powertrain Control Module (PCM) detects that the APP Sensor 1 input voltage is above the maximum acceptable value.

POSSIBLE CAUSES

POSSIBLE CAUSES
(K852) 5 VOLT SUPPLY CIRCUIT SHORTED TO VOLTAGE
(K23) APP SIGNAL 1 CIRCUIT SHORTED TO VOLTAGE
(K23) APP SIGNAL 1 CIRCUIT SHORTED TO THE (F856) 5 VOLT SUPPLY CIRCUIT
(K23) APP SIGNAL 1 CIRCUIT SHORTED TO THE (K858) 5 VOLT SUPPLY CIRCUIT
(K23) APP SIGNAL 1 CIRCUIT OPEN OR HIGH RESISTANCE
(K167) SENSOR GROUND CIRCUIT OPEN OR HIGH RESISTANCE
ACCELERATOR PEDAL POSITION SENSOR
POWERTRAIN CONTROL MODULE (PCM)

Always perform the Pre-Diagnostic Troubleshooting procedure before proceeding. Refer to PRE-DIAGNOSTIC TROUBLESHOOTING PROCEDURE .

DIAGNOSTIC TEST

1. **ACTIVE**

NOTE: Diagnose and repair any system voltage or sensor supply voltage DTCs before continuing with this test.

1. Start the engine and allow it to reach normal operating temperature.

WARNING: When the engine is operating, do not stand in direct line with the fan. Do not put your hands near the pulleys, belts or fan. Do not wear loose clothing. Failure to follow these instructions may result in possible serious or fatal injury.

2. With the scan tool, select View DTCs.

Is the status Active for this DTC?

Yes

- Go To 2

No

- Perform the INTERMITTENT CONDITION diagnostic procedure. Refer to **INTERMITTENT CONDITION** .

2. **CHECK THE (F856) 5-VOLT SUPPLY CIRCUIT FOR A SHORT TO VOLTAGE**

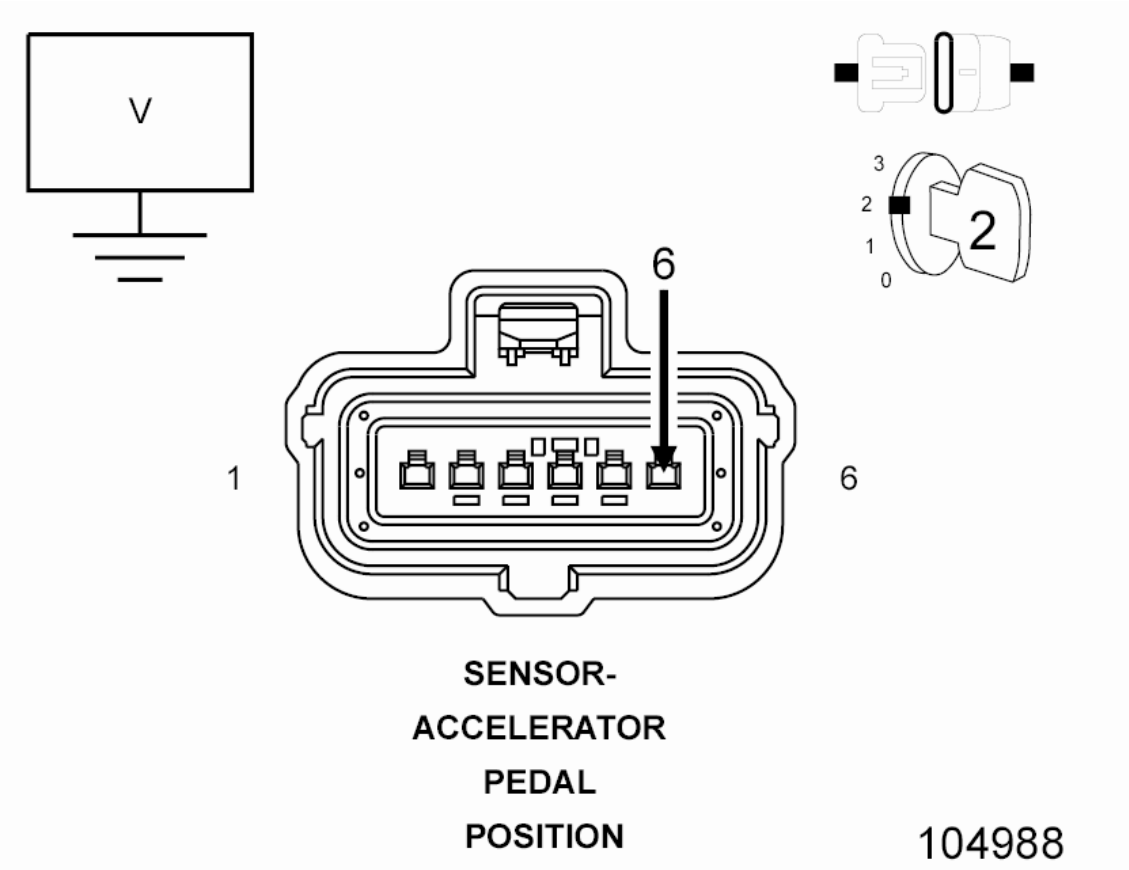

Fig. 9: Checking 5-Volt Supply Circuit For Short To Voltage
Courtesy of CHRYSLER GROUP, LLC

1. Turn the ignition off.
2. Disconnect the Accelerator Pedal Position Sensor harness connector.
3. Disconnect the PCM C1 harness connector.
4. Turn the ignition on.

5. Measure the voltage of the (K852) 5-Volt Supply circuit in the Accelerator Pedal Position Sensor harness connector.

   Is there any voltage present?

   Yes

   - Repair the (K852) 5-Volt Supply circuit for a short to voltage.
   - Perform the POWERTRAIN VERIFICATION TEST. Refer to **POWERTRAIN VERIFICATION TEST** .

   No

   - Go To 3

3. **CHECK THE (K23) APP SIGNAL 1 CIRCUIT FOR A SHORT TO VOLTAGE**

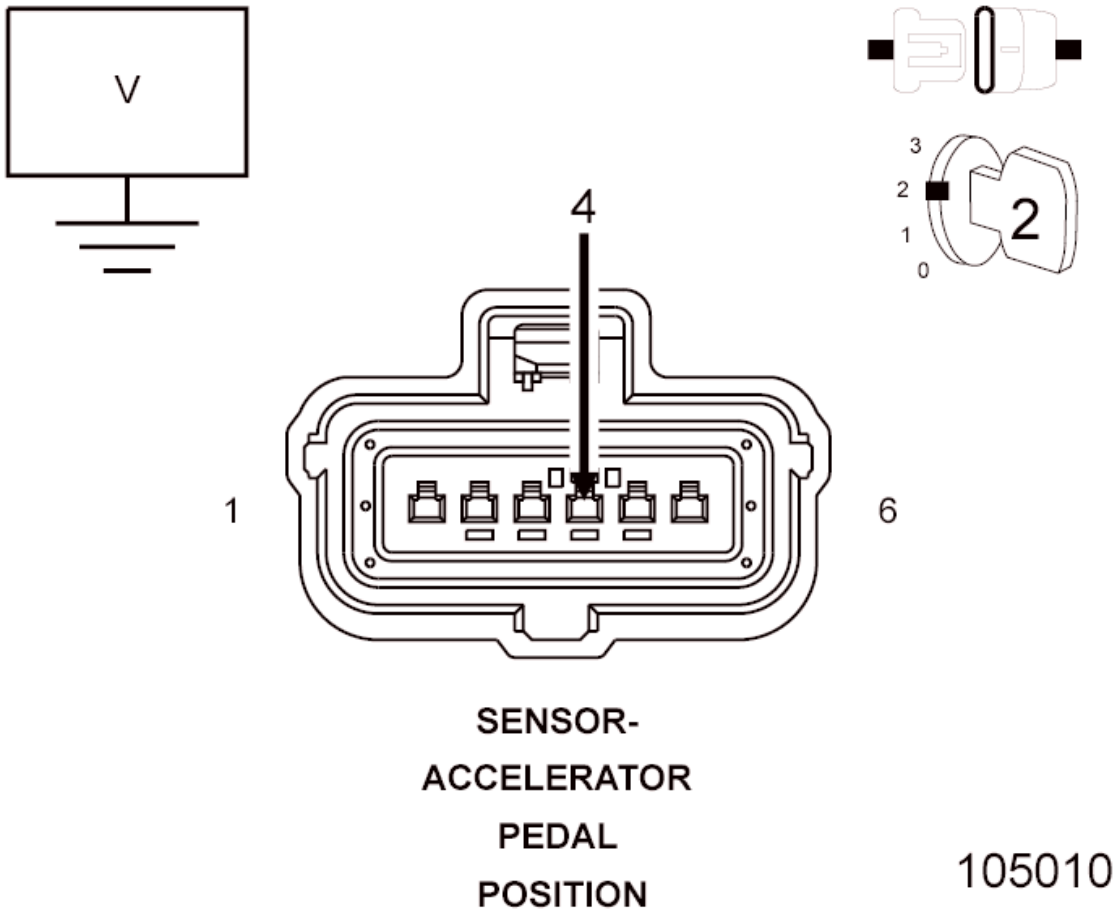

Fig. 10: Checking APP Signal 1 Circuit For Short To Voltage
Courtesy of CHRYSLER GROUP, LLC

1. Measure the voltage of the (K23) APP Signal 1 circuit in the Accelerator Pedal Position Sensor harness connector.

   Is there any voltage present?

   Yes

   - Repair the (K23) APP Signal 1 circuit for a short to voltage.
   - Perform the POWERTRAIN VERIFICATION TEST. Refer to **POWERTRAIN VERIFICATION TEST** .

   No

   - Go To 4

4. **CHECK FOR THE (K23) APP SIGNAL 1 CIRCUIT SHORTED TO THE (K852) 5-VOLT SUPPLY CIRCUIT**

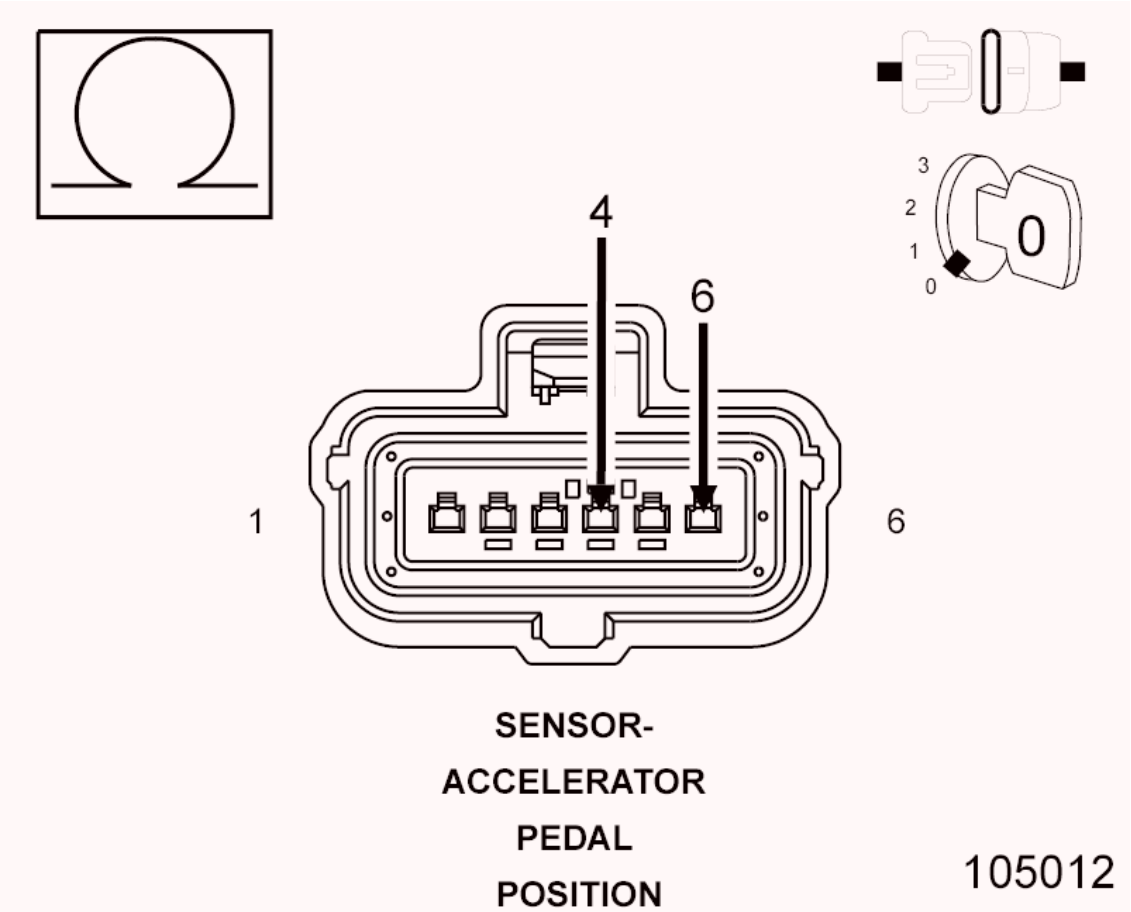

Fig. 11: Checking APP Signal 1 Circuit For Short To 5-Volt Supply Circuit
Courtesy of CHRYSLER GROUP, LLC

1. Measure the resistance between the (K23) APP Signal 1 circuit and the (K852) 5-Volt Supply circuit in the Accelerator Pedal Position Sensor harness connector.

   Is the resistance above 10k Ohms?

   Yes

   - Go To 5

   No

   - Repair the (K23) APP Signal 1 circuit for a short to the (K852) 5-Volt Supply circuit.
   - Perform the POWERTRAIN VERIFICATION TEST. Refer to **POWERTRAIN VERIFICATION TEST** .

5. **CHECK FOR THE (K23) APP SIGNAL 1 CIRCUIT SHORTED TO THE (K854) 5-VOLT SUPPLY CIRCUIT**

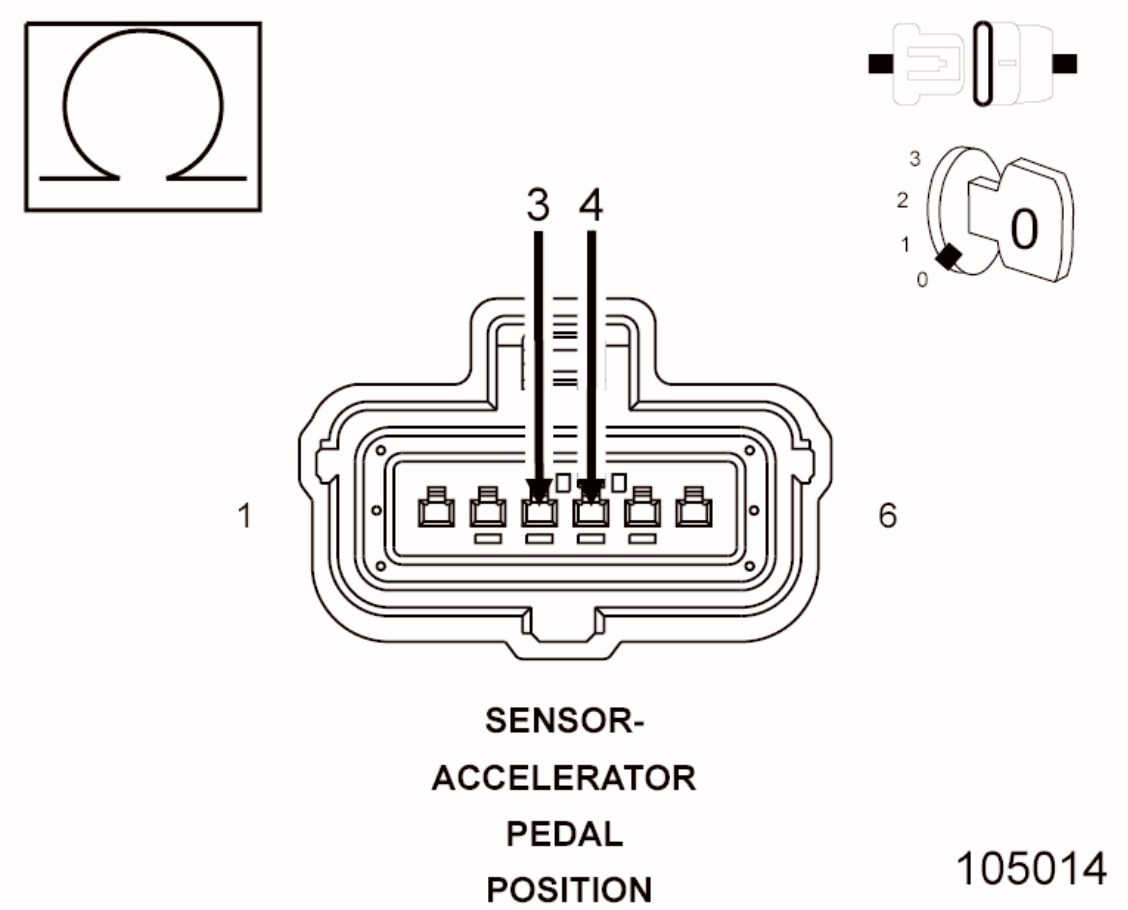

Fig. 12: Checking APP Signal 1 Circuit For Short To 5-Volt Supply

Circuit
Courtesy of CHRYSLER GROUP, LLC

1. Measure the resistance between the (K23) APP Signal 1 circuit and the (K854) 5-Volt Supply circuit in the Accelerator Pedal Position Sensor harness connector.

   Is the resistance above 10k Ohms?

   Yes

   - Go To 6

   No

   - Repair the (K23) APP Signal 1 circuit for a short to the (K854) 5-Volt Supply circuit.
   - Perform the POWERTRAIN VERIFICATION TEST. Refer to **POWERTRAIN VERIFICATION TEST** .

6. **CHECK THE (K23) APP SIGNAL 1 CIRCUIT FOR AN OPEN/HIGH RESISTANCE**

   CAUTION: Do not probe the PCM harness connectors. Probing the PCM harness connectors will damage the PCM terminals resulting in poor terminal to pin connection. Install the GPEC Diagnostic Adaptor to perform the diagnosis.

   1. Connect the (special tool #10436, Adapter, GPEC Diagnostic).
   2. Turn the ignition off.
   3. Measure the resistance of the (K23) APP Signal 1 circuit between the Accelerator Pedal Position Sensor harness connector and the GPEC Adaptor.

      Is the resistance below 5.0 Ohms?

      Yes

      - Go To 7

No

- Repair the (K23) APP Signal 1 circuit for an open or high resistance.
- Perform the POWERTRAIN VERIFICATION TEST. Refer to **POWERTRAIN VERIFICATION TEST** .

7. **CHECK THE (K167) SENSOR GROUND CIRCUIT FOR AN OPEN/HIGH RESISTANCE**
   1. Measure the resistance of the (K167) Sensor Ground circuit between the Accelerator Pedal Position Sensor harness connector and the GPEC Adaptor.

      Is the resistance below 5.0 Ohms?

      Yes

      - Go To 8

      No

      - Repair the (K167) Sensor Ground circuit for an open circuit or high resistance.
      - Perform the POWERTRAIN VERIFICATION TEST. Refer to **POWERTRAIN VERIFICATION TEST** .
8. **ACCELERATOR PEDAL POSITION SENSOR**

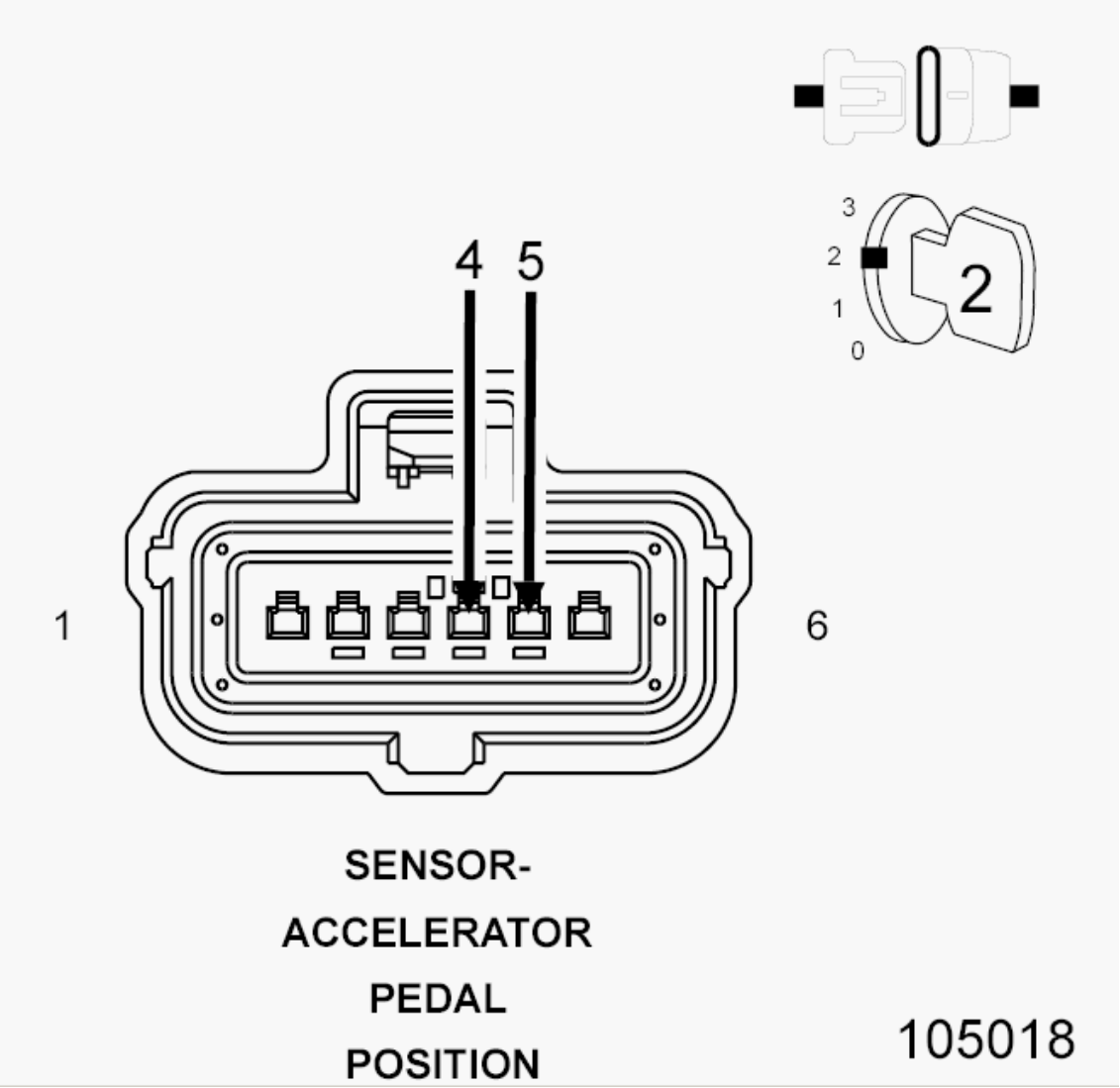

Fig. 13: Accelerator Pedal Position Sensor Harness Connector End View
Courtesy of CHRYSLER GROUP, LLC

1. Turn the ignition off.
2. Connect the PCM C1 harness connector.
3. Connect a jumper between the (K167) Sensor Ground circuit and the (K23) APP Signal 1 circuit in the Accelerator Pedal Position Sensor harness connector.
4. Turn the ignition on.
5. With the scan tool, read the Accelerator Pedal Position Sensor signal voltage.

   Is the voltage below 0.1 volts with the jumper in place?

Yes

- Replace the Accelerator Pedal Position Sensor in accordance with the service information.
- Perform the POWERTRAIN VERIFICATION TEST. Refer to **POWERTRAIN VERIFICATION TEST** .

No

- Go To 9

9. **POWERTRAIN CONTROL MODULE (PCM)**
   1. Using the wiring diagram/schematic as a guide, inspect the wiring and connectors between the Accelerator Pedal Position Sensor and the Powertrain Control Module (PCM).
   2. Look for any chafed, pierced, pinched, or partially broken wires.
   3. Look for broken, bent, pushed out or corroded terminals.
   4. Monitor the scan tool data relative to this circuit and wiggle test the wiring and connectors.
   5. Look for the data to change or for the DTC to reset during the wiggle test.
   6. Perform any Technical Service Bulletins that may apply.

   Were any problems found?

   Yes

   - Repair as necessary.
   - Perform the POWERTRAIN VERIFICATION TEST. Refer to **POWERTRAIN VERIFICATION TEST** .

   No

   - Replace and program the Powertrain Control Module (PCM) in accordance with the service information. Refer to **MODULE, POWERTRAIN CONTROL, REMOVAL** .
   - Perform the POWERTRAIN VERIFICATION TEST. Refer to **POWERTRAIN VERIFICATION TEST** .

P2127-ACCELERATOR PEDAL POSITION SENSOR 2 CIRCUIT LOW

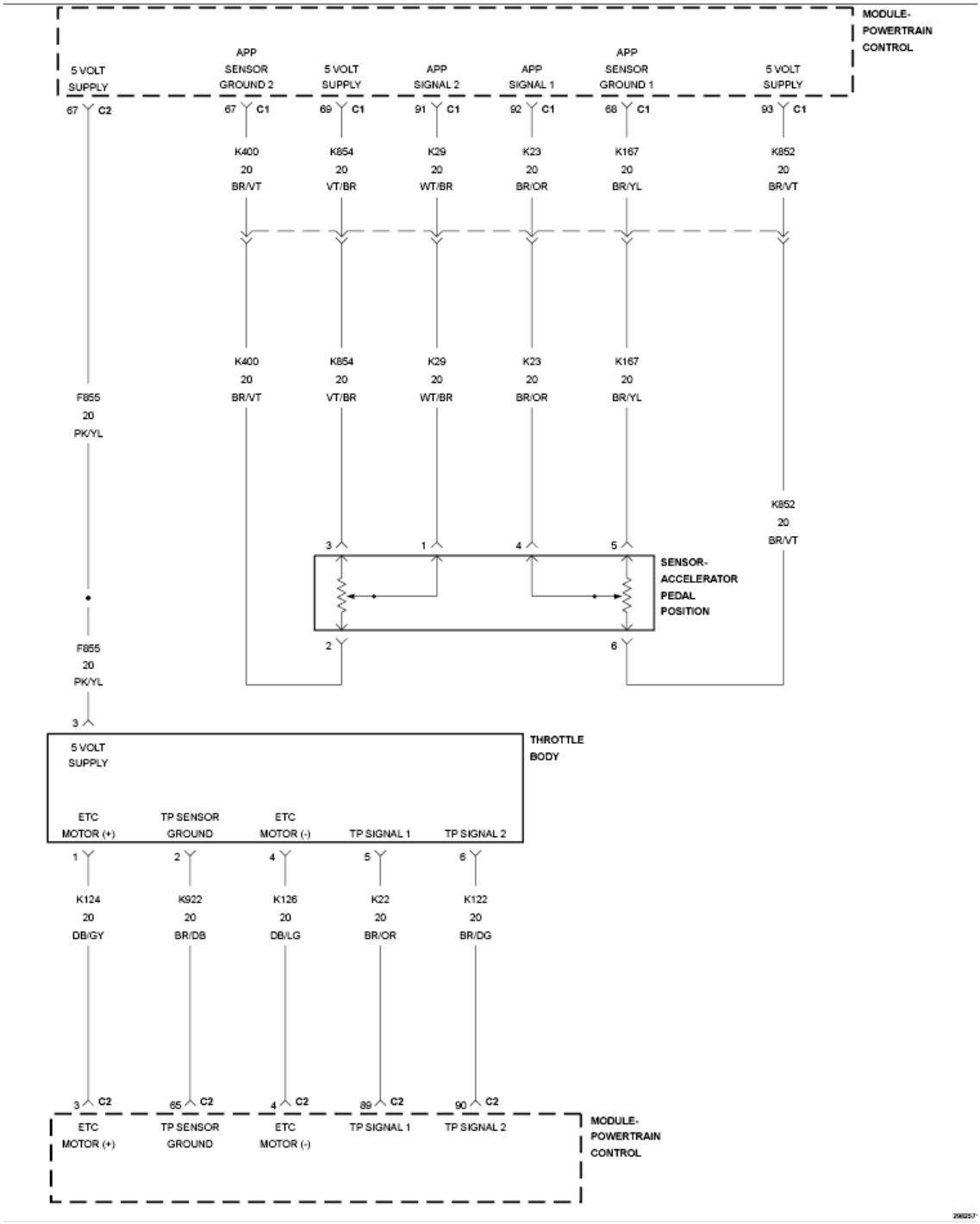

Fig. 14: Throttle Control Circuit Diagram
Courtesy of CHRYSLER GROUP, LLC

For a complete wiring diagram, **refer to appropriate SYSTEM WIRING DIAGRAMS article** .

THEORY OF OPERATION

The Electronic Throttle Control (ETC) system uses two Accelerator Pedal Position (APP) Sensors to monitor the accelerator pedal position. The APP Sensors 1 and 2 are integrated into one assembly located at the pedal assembly. Each sensor has a 5-volt reference circuit, a low reference circuit, and a signal circuit. The Powertrain Control Module (PCM) reads the two signals individually and then compares the two signals as a redundant check of the throttle position. One of the sensors will fluctuate between 0 volts and 5.0 volts and the other sensor will fluctuate between 0 volts and 2.5 volts. The fluctuation of the two sensors should move proportionately. E.G. When operating properly, the voltage reading of the sensor operating on the 5.0 volt scale will always approximately two time the voltage reading of the sensor on the 2.5 volts scale.

WHEN MONITORED

With the ignition on and battery voltage greater than 10.4 volts.

SET CONDITION

The Powertrain Control Module (PCM) detects that the APP Sensor 2 input voltage is below the minimum acceptable value. One trip fault. If the vehicle is equipped with the stop/start feature, the system will be disabled when this DTC is active.

POSSIBLE CAUSES

Possible Causes
5-VOLT SUPPLY CIRCUIT OPEN OR SHORTED TO GROUND
APP SENSOR 2 SIGNAL CIRCUIT OPEN
APP SENSOR 2 SIGNAL CIRCUIT SHORTED TO GROUND
APP SENSOR 2 SIGNAL CIRCUIT SHORTED TO THE APP SENSOR 1 RETURN CIRCUIT
APP SENSOR 2 SIGNAL CIRCUIT SHORTED TO THE APP SENSOR 2 RETURN CIRCUIT
APP SENSOR 2 GROUND CIRCUIT OPEN OR HIGH RESISTANCE
APP SENSOR
POWERTRAIN CONTROL MODULE (PCM)

Always perform the Pre-Diagnostic Troubleshooting procedure before proceeding. Refer to PRE-DIAGNOSTIC TROUBLESHOOTING PROCEDURE .

DIAGNOSTIC TEST

1. **ACTIVE DTC**

   NOTE: Diagnose and repair any 5-Volt Sensor supply voltage DTCs before continuing with this test.

   1. Turn the ignition on.
   2. With the scan tool, read DTCs.

   Is the DTC Active or Pending at this time?

   Yes

   - Go To 2

   No

   - Perform the INTERMITTENT CONDITION diagnostic procedure. Refer to **INTERMITTENT CONDITION** .

2. **CHECK THE (K854) 5-VOLT SUPPLY CIRCUIT VOLTAGE**
   1. Turn the ignition off.
   2. Disconnect the Accelerator Pedal Position Sensor harness connector.
   3. Turn the ignition on.
   4. Measure the voltage of the (K854) 5-Volt Supply circuit in the Accelerator Pedal Position Sensor harness connector.

   Is the voltage between 4.9 and 5.2 volts?

   Yes

   - Go To 3

   No

   - Repair the (K854) 5-Volt Supply circuit for an open or short to ground.
   - Perform the POWERTRAIN VERIFICATION TEST. Refer to **POWERTRAIN VERIFICATION TEST** .

3. **CHECK THE (K29) APP SENSOR 2 SIGNAL CIRCUIT FOR A SHORT TO GROUND**
   1. Disconnect the PCM C1 harness connector.
   2. Measure the resistance between ground and the (K29) APP Sensor 2 Signal circuit in the Accelerator Pedal Position Sensor harness connector.

      Is the resistance above 10k Ohms?

      Yes

      - Go To 4

      No

      - Repair the (K29) APP Sensor 2 Signal circuit for a short to ground.
      - Perform the POWERTRAIN VERIFICATION TEST. Refer to **POWERTRAIN VERIFICATION TEST** .
4. **CHECK FOR THE (K29) APP SENSOR 2 SIGNAL CIRCUIT SHORTED TO THE SENSOR GROUND CIRCUITS**
   1. Measure the resistance between the (K29) APP Sensor 2 Signal circuit and the:
      - (K400) Sensor Ground circuit in the Accelerator Pedal Position Sensor harness connector.
      - (K167) Sensor Ground circuit in the Accelerator Pedal Position Sensor harness connector.

      Is the resistance above 10k Ohms?

      Yes

      - Go To 5

      No

      - Repair the (K29) APP Signal 2 circuit for a short to the Sensor Ground circuit that measured below 10k Ohms.
      - Perform the POWERTRAIN VERIFICATION TEST. Refer to **POWERTRAIN VERIFICATION TEST** .

5. **CHECK THE (K29) APP SENSOR 2 SIGNAL CIRCUIT FOR AN OPEN OR HIGH RESISTANCE**

   CAUTION: Do not probe the PCM harness connectors. Probing the PCM harness connectors will damage the PCM terminals resulting in poor terminal to pin connection. Install the GPEC Diagnostic Adaptor to perform the diagnosis.

   1. Connect the (special tool #10436, Adapter, GPEC Diagnostic).
   2. Measure the resistance of the (K29) APP Sensor 2 Signal circuit between the Accelerator Pedal Position Sensor harness connector and the GPEC Adaptor.

      Is the resistance below 5.0 Ohms?

      Yes

      - Go To 6

      No

      - Repair the (K29) APP Sensor 2 Signal circuit for an open circuit or high resistance.
      - Perform the POWERTRAIN VERIFICATION TEST. Refer to **POWERTRAIN VERIFICATION TEST** .

6. **CHECK THE (K400) APP SENSOR GROUND 2 CIRCUIT FOR AN OPEN OR HIGH RESISTANCE**
   1. Measure the resistance of the (K400) APP Sensor Ground 2 circuit between the Accelerator Pedal Position Sensor harness connector and the GPEC Adaptor.

      Is the resistance below 5.0 Ohms?

      Yes

      - Go To 7

      No

- Repair the (K400) APP Sensor Ground 2 circuit for an open circuit or high resistance.
- Perform the POWERTRAIN VERIFICATION TEST. Refer to **POWERTRAIN VERIFICATION TEST** .

7. **CHECK THE ACCELERATOR PEDAL POSITION SENSOR**
   1. Reconnect the PCM C1 harness connector.
   2. Connect a jumper between the (K854) 5-Volt Supply circuit and the (K29) APP Sensor 2 Signal circuit in the Accelerator Pedal Position Sensor harness connector.
   3. Turn the ignition on.
   4. With the scan tool, read the Accelerator Pedal Position Sensor signal voltage.

      Is the voltage above 4.9 volts with the jumper in place?

      Yes

      - Replace the Accelerator Pedal Position Sensor in accordance with the service information.
      - Perform the POWERTRAIN VERIFICATION TEST. Refer to **POWERTRAIN VERIFICATION TEST** .

      No

      - Go To 8

8. **POWERTRAIN CONTROL MODULE (PCM)**
   1. Using the wiring diagram/schematic as a guide, inspect the wiring and connectors between the Accelerator Pedal Position Sensor and the Powertrain Control Module (PCM).
   2. Look for any chafed, pierced, pinched, or partially broken wires.
   3. Look for broken, bent, pushed out or corroded terminals.
   4. Monitor the scan tool data relative to this circuit and wiggle test the wiring and connectors.
   5. Look for the data to change or for the DTC to reset during the wiggle test.
   6. Perform any Technical Service Bulletins that may apply.

Were any problems found?

Yes

- Repair as necessary.
- Perform the POWERTRAIN VERIFICATION TEST. Refer to **POWERTRAIN VERIFICATION TEST** .

No

- Replace and program the Powertrain Control Module (PCM) in accordance with the service information. Refer to **MODULE, POWERTRAIN CONTROL, REMOVAL** .
- Perform the POWERTRAIN VERIFICATION TEST. Refer to **POWERTRAIN VERIFICATION TEST** .

P2128-ACCELERATOR PEDAL POSITION SENSOR 2 CIRCUIT HIGH

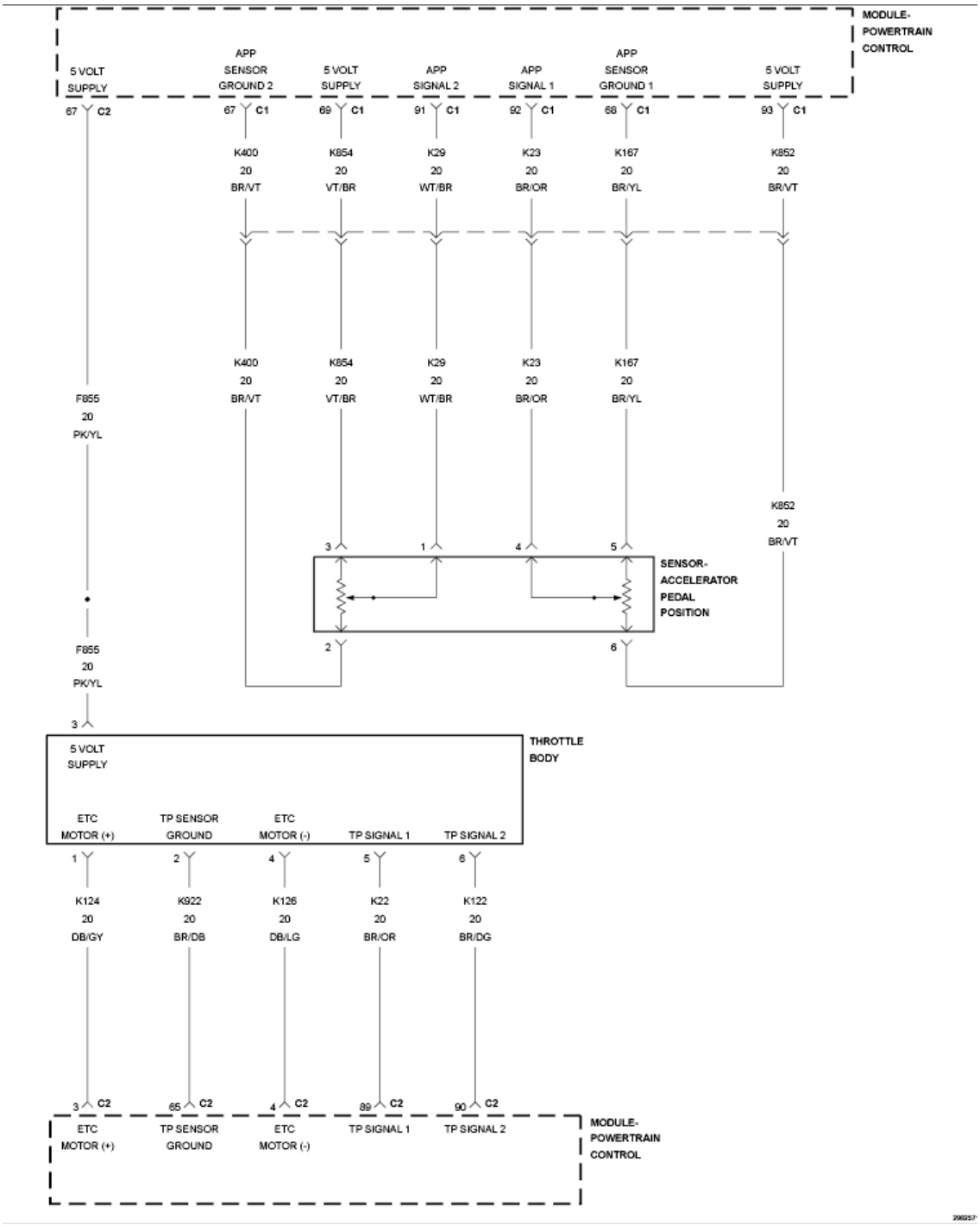

Fig. 15: Throttle Control Circuit Diagram
Courtesy of CHRYSLER GROUP, LLC

For a complete wiring diagram, **refer to appropriate SYSTEM WIRING DIAGRAMS article** .

WHEN MONITORED

With the ignition on and battery voltage greater than 10.4 volts.

SET CONDITION

The Powertrain Control Module (PCM) detects that the APP Sensor 2 input voltage is above the maximum acceptable value.

POSSIBLE CAUSES

POSSIBLE CAUSES
(K854) 5 VOLT SUPPLY CIRCUIT SHORTED TO VOLTAGE
(K29) APP SIGNAL 2 CIRCUIT SHORTED TO VOLTAGE
(K29) APP SIGNAL 2 CIRCUIT SHORTED TO THE (K858) 5 VOLT SUPPLY CIRCUIT
(K29) APP SIGNAL 2 CIRCUIT SHORTED TO THE (K856) 5 VOLT SUPPLY CIRCUIT
(K29) APP SIGNAL 2 CIRCUIT OPEN OR HIGH RESISTANCE
(K400) SENSOR GROUND CIRCUIT OPEN OR HIGH RESISTANCE
ACCELERATOR PEDAL POSITION SENSOR
POWERTRAIN CONTROL MODULE (PCM)

Always perform the Pre-Diagnostic Troubleshooting procedure before proceeding. Refer to PRE-DIAGNOSTIC TROUBLESHOOTING PROCEDURE .

DIAGNOSTIC TEST

1. **ACTIVE DTC**

NOTE: Diagnose and repair any system voltage or sensor supply voltage DTCs before continuing with this test.

1. Start the engine and allow it to reach normal operating temperature.

WARNING: When the engine is operating, do not stand in direct line with the fan. Do not put your hands near the pulleys, belts or fan. Do not wear loose clothing. Failure to follow these instructions may result in possible serious or fatal injury.

2. With the scan tool, select View DTCs.

Is the status Active for this DTC?

Yes

- Go To 2

No

- Perform the INTERMITTENT CONDITION diagnostic procedure. Refer to **INTERMITTENT CONDITION** .

2. **CHECK THE (K854) 5-VOLT SUPPLY CIRCUIT FOR A SHORT TO VOLTAGE**

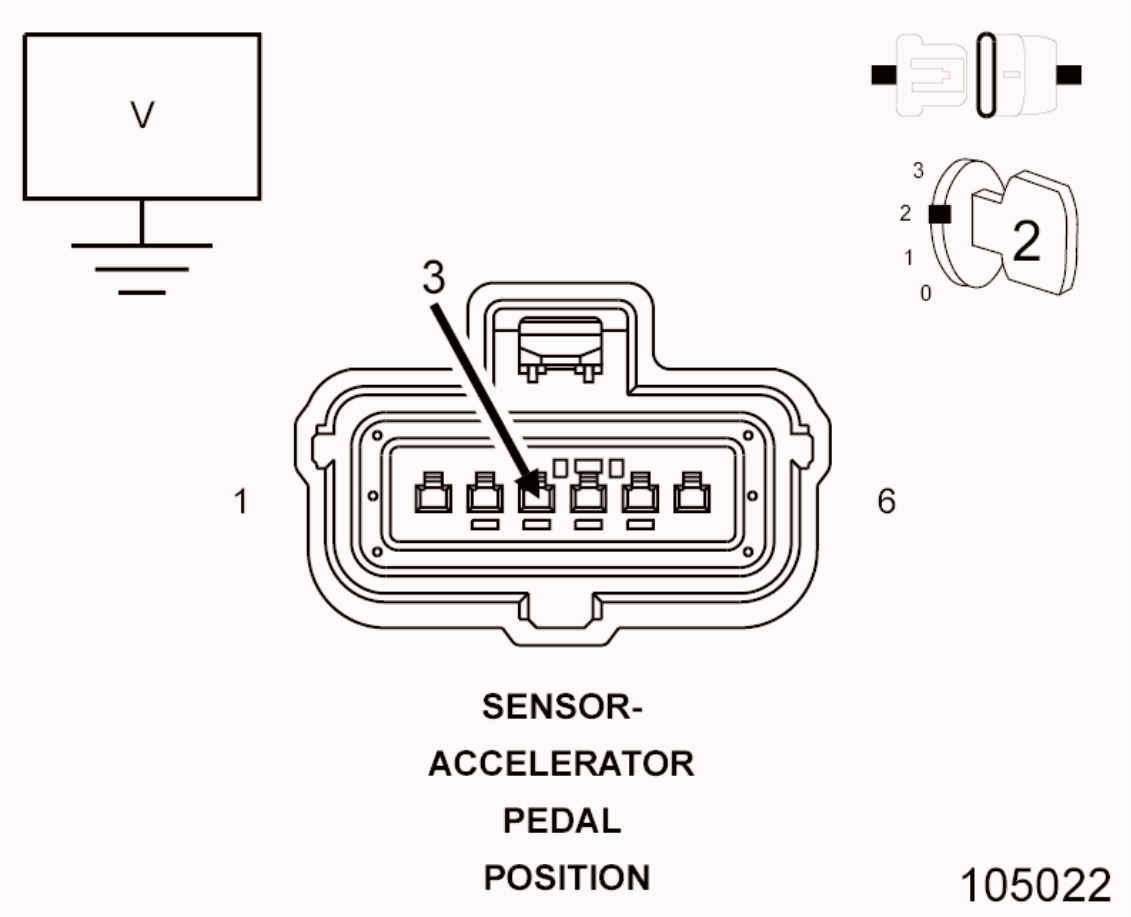

Fig. 16: Checking 5-Volt Supply Circuit For Short To Voltage
Courtesy of CHRYSLER GROUP, LLC

1. Turn the ignition off.
2. Disconnect the Accelerator Pedal Position Sensor harness connector.
3. Disconnect the PCM C1 harness connector.

4. Turn the ignition on.
5. Measure the voltage of the (K854) 5-Volt Supply circuit in the Accelerator Pedal Position Sensor harness connector.

   Is there any voltage present?

   Yes

   - Repair the (K854) 5-Volt Supply circuit for a short to voltage.
   - Perform the POWERTRAIN VERIFICATION TEST. Refer to **POWERTRAIN VERIFICATION TEST** .

   No

   - Go To 3

3. **CHECK THE (K29) APP SIGNAL 2 CIRCUIT FOR A SHORT TO VOLTAGE**

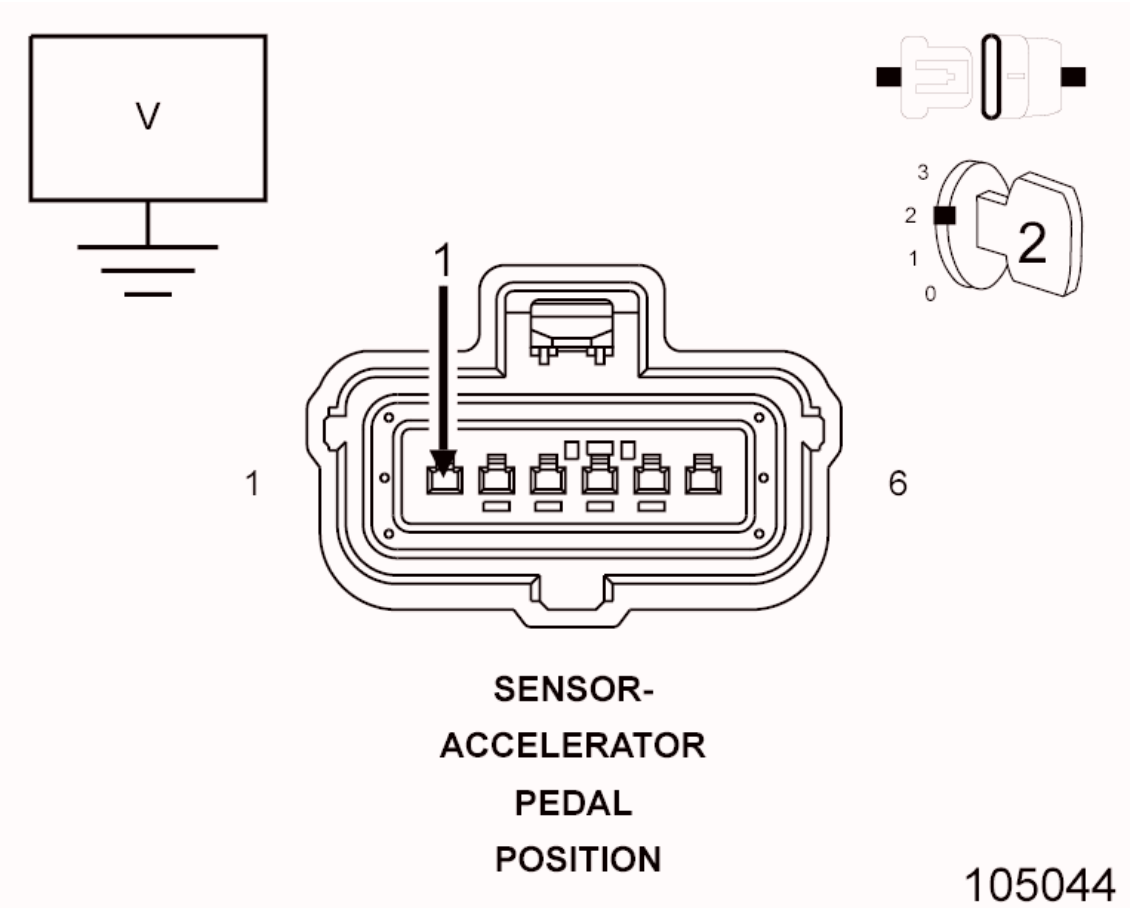

Fig. 17: Checking APP Signal 2 Circuit For Short To Voltage

Courtesy of CHRYSLER GROUP, LLC

1. Measure the voltage of the (K29) APP Signal 2 circuit in the Accelerator Pedal Position Sensor harness connector.

   Is there any voltage present?

   Yes

   - Repair the (K29) APP Signal 2 circuit for a short to voltage.
   - Perform the POWERTRAIN VERIFICATION TEST. Refer to **POWERTRAIN VERIFICATION TEST** .

   No

   - Go To 4

4. **CHECK FOR THE (K29) APP SIGNAL 2 CIRCUIT SHORTED TO THE (K854) 5-VOLT SUPPLY CIRCUIT**

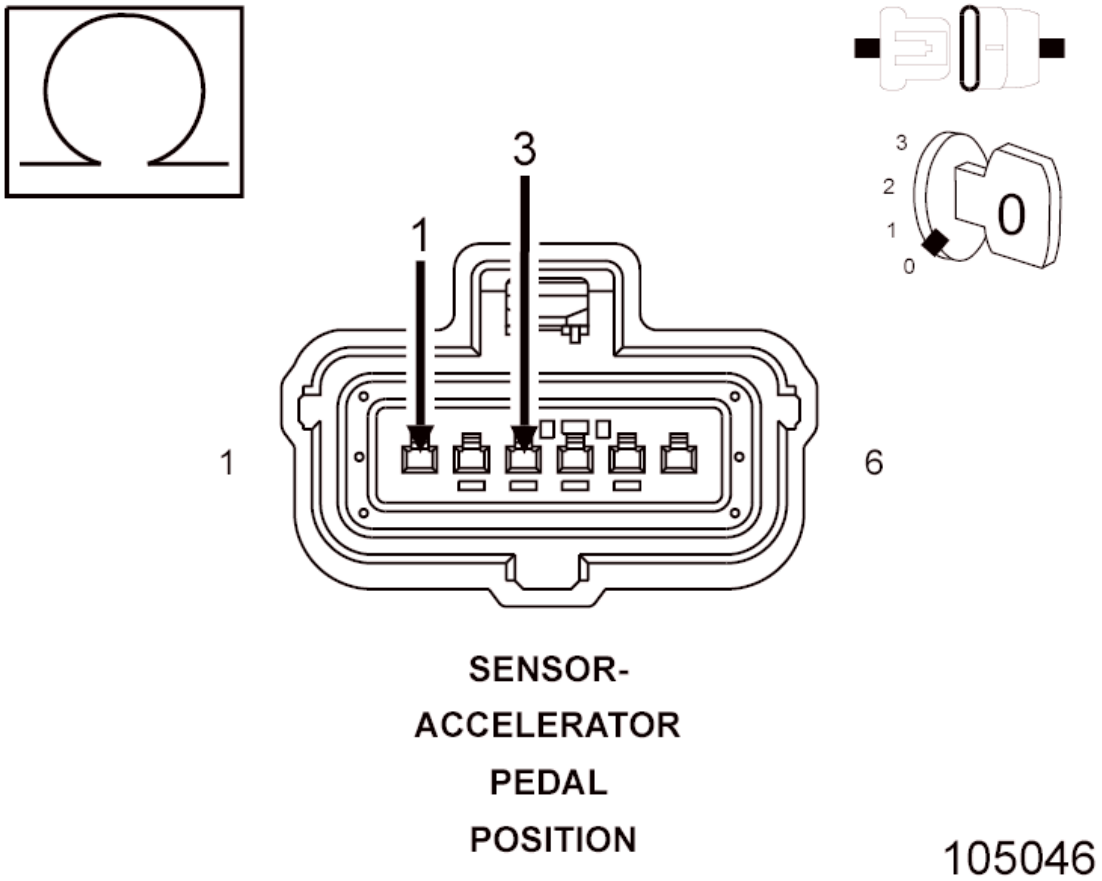

Fig. 18: Checking APP Signal 2 Circuit For Short To 5-Volt Supply

Circuit
Courtesy of CHRYSLER GROUP, LLC

1. Measure the resistance between the (K29) APP Signal 2 circuit and the (K854) 5-Volt Supply circuit in the Accelerator Pedal Position Sensor harness connector.

   Is the resistance above 10k Ohms?

   Yes

   - Go To 5

   No

   - Repair the (K29) APP Signal 2 circuit for a short to the (K854) 5-Volt Supply circuit.
   - Perform the POWERTRAIN VERIFICATION TEST. Refer to **POWERTRAIN VERIFICATION TEST** .

5. **CHECK FOR THE (K29) APP SIGNAL 2 CIRCUIT SHORTED TO THE (K852) 5-VOLT SUPPLY CIRCUIT**

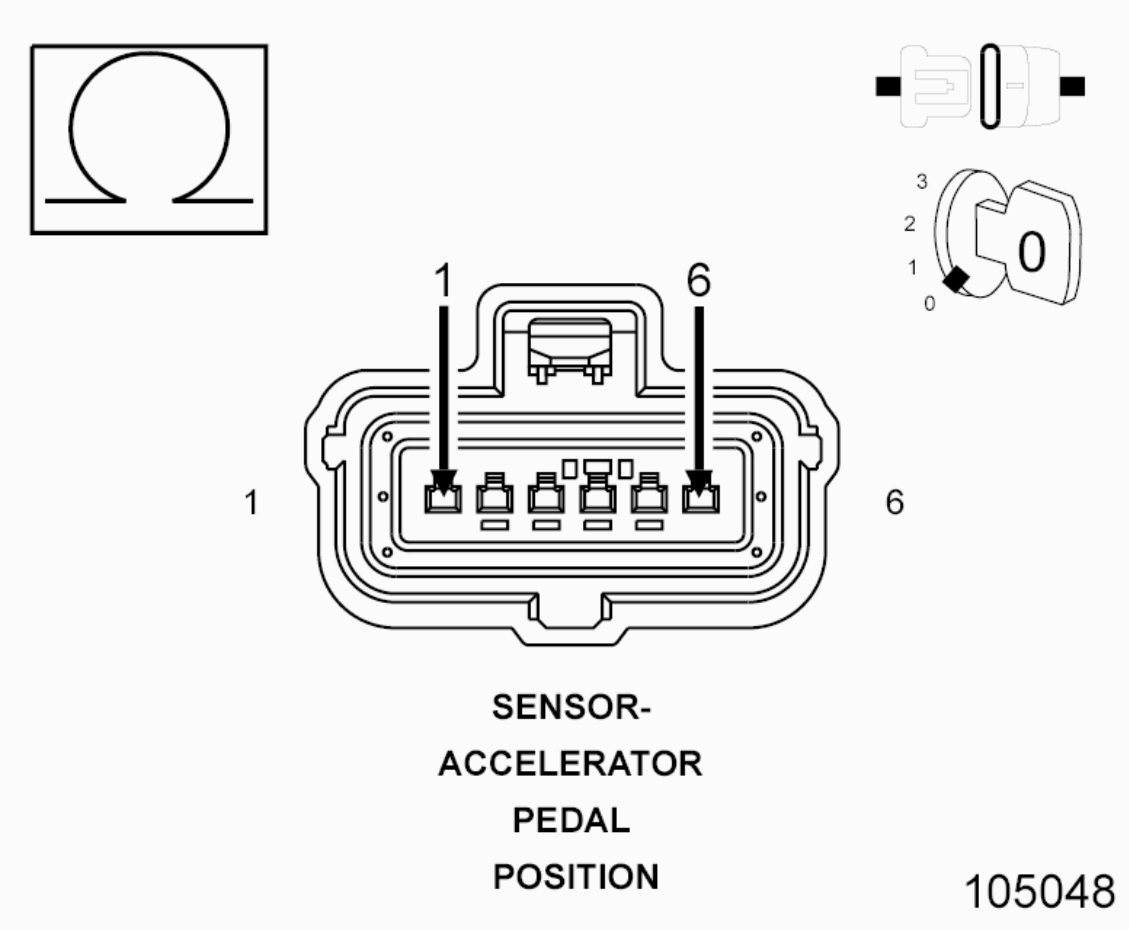

Fig. 19: Checking APP Signal 2 Circuit For Short To 5-Volt Supply Circuit
Courtesy of CHRYSLER GROUP, LLC

1. Measure the resistance between the (K29) APP Signal 2 circuit and the (K852) 5-Volt Supply circuit in the Accelerator Pedal Position Sensor harness connector.

   Is the resistance above 10k Ohms?

   Yes

   - Go To 6

   No

   - Repair the (K29) APP Signal 2 circuit for a short to the (K852) 5-Volt Supply circuit.
   - Perform the POWERTRAIN VERIFICATION TEST. Refer to **POWERTRAIN VERIFICATION TEST** .

6. **CHECK THE (K29) APP SIGNAL 2 CIRCUIT FOR AN OPEN/HIGH RESISTANCE**

CAUTION: Do not probe the PCM harness connectors. Probing the PCM harness connectors will damage the PCM terminals resulting in poor terminal to pin connection. Install the GPEC Diagnostic Adaptor to perform the diagnosis.

1. Connect the (special tool #10436, Adapter, GPEC Diagnostic).
2. Turn the ignition off.
3. Measure the resistance of the (K29) APP Signal 2 circuit between the Accelerator Pedal Position Sensor harness connector and the GPEC Adaptor.

   Is the resistance below 5.0 Ohms?

   Yes

   - Go To 7

   No

   - Repair the (K29) APP Signal 2 circuit for an open or high resistance.
   - Perform the POWERTRAIN VERIFICATION TEST. Refer to **POWERTRAIN VERIFICATION TEST** .

7. **CHECK THE (K400) SENSOR GROUND CIRCUIT FOR AN OPEN/HIGH RESISTANCE**

1. Measure the resistance of the (K400) Sensor Ground circuit between the Accelerator Pedal Position Sensor harness connector and the GPEC Adaptor.

   Is the resistance below 5.0 Ohms?

   Yes

   - Go To 8

No

- Repair the (K400) Sensor Ground circuit for an open or high resistance.
- Perform the POWERTRAIN VERIFICATION TEST. Refer to **POWERTRAIN VERIFICATION TEST** .

8. **ACCELERATOR PEDAL POSITION SENSOR**

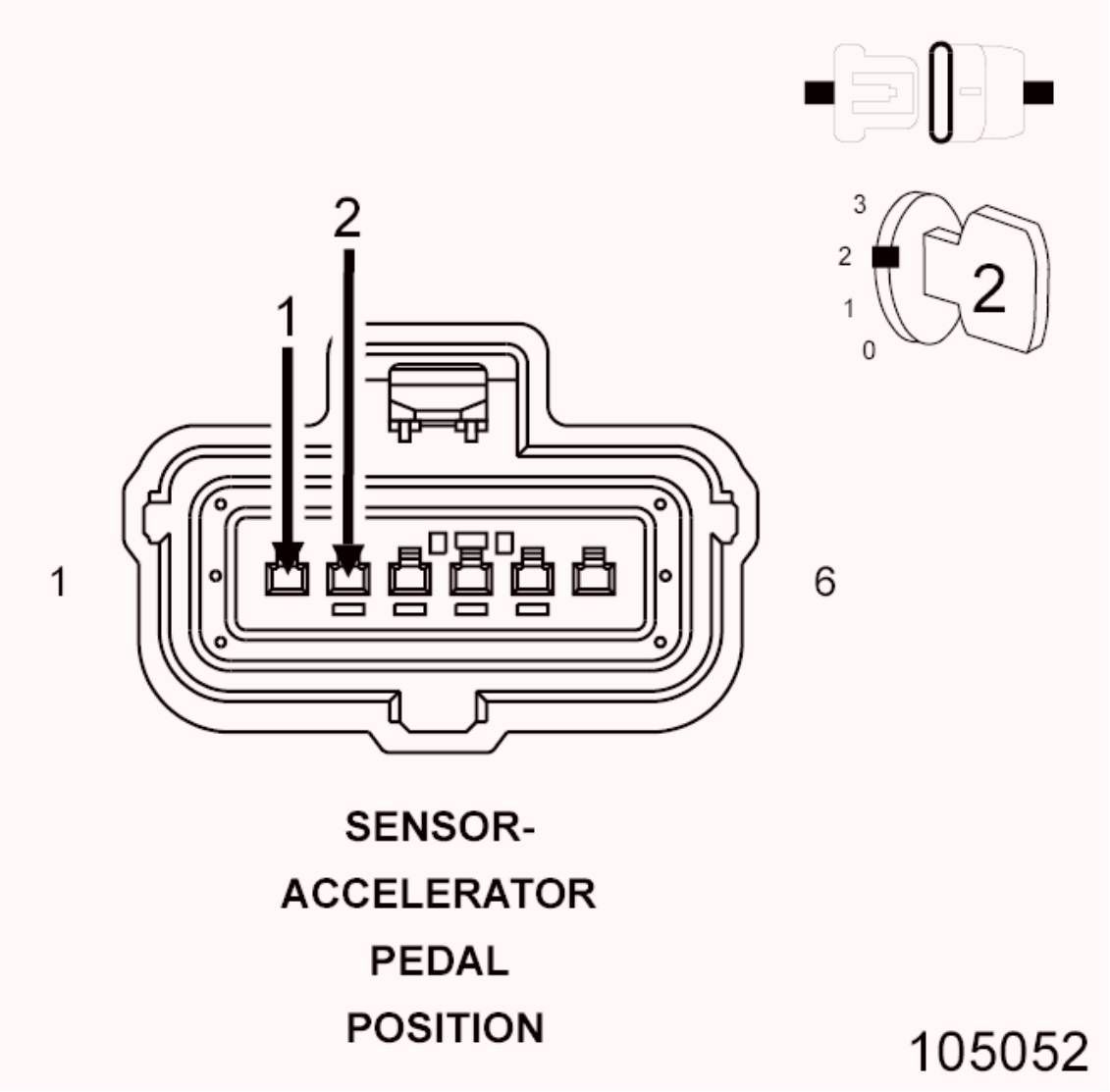

Fig. 20: Accelerator Pedal Position Sensor Harness Connector End View
Courtesy of CHRYSLER GROUP, LLC

1. Turn the ignition off.
2. Reconnect the PCM C1 harness connector.
3. Connect a jumper between the (K400) Sensor Ground circuit and the

(K29) APP Signal 2 circuit in the Accelerator Pedal Position Sensor harness connector.

4. Turn the ignition on.
5. With the scan tool, read the Accelerator Pedal Position Sensor signal voltage.

   Is the voltage below 0.1 volts with the jumper in place?

   Yes

   - Replace the Accelerator Pedal Position Sensor in accordance with the service information.
   - Perform the POWERTRAIN VERIFICATION TEST. Refer to **POWERTRAIN VERIFICATION TEST** .

   No

   - Go To 9

9. **POWERTRAIN CONTROL MODULE (PCM)**
   1. Using the wiring diagram/schematic as a guide, inspect the wiring and connectors between the Accelerator Pedal Position Sensor and the Powertrain Control Module (PCM).
   2. Look for any chafed, pierced, pinched, or partially broken wires.
   3. Look for broken, bent, pushed out or corroded terminals.
   4. Monitor the scan tool data relative to this circuit and wiggle test the wiring and connectors.
   5. Look for the data to change or for the DTC to reset during the wiggle test.
   6. Perform any Technical Service Bulletins that may apply.

   Were any problems found?

   Yes

   - Repair as necessary.
   - Perform the POWERTRAIN VERIFICATION TEST. Refer to **POWERTRAIN VERIFICATION TEST** .

No

- Replace and program the Powertrain Control Module (PCM) in accordance with the service information. Refer to **MODULE, POWERTRAIN CONTROL, REMOVAL** .
- Perform the POWERTRAIN VERIFICATION TEST. Refer to **POWERTRAIN VERIFICATION TEST** .

P2135-THROTTLE POSITION SENSOR 1/2 CORRELATION

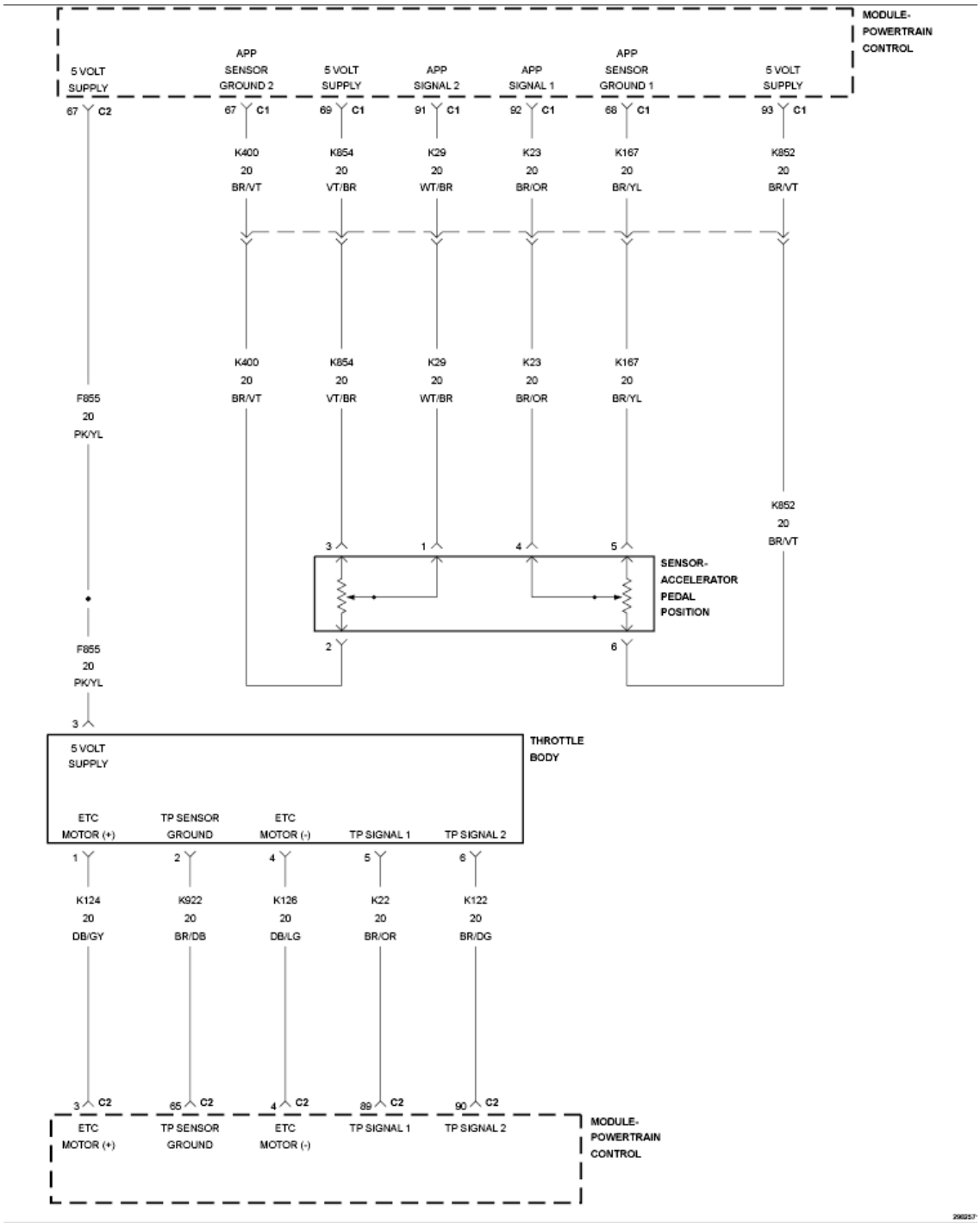

Fig. 21: Throttle Control Circuit Diagram
Courtesy of CHRYSLER GROUP, LLC

For a complete wiring diagram, **refer to appropriate SYSTEM WIRING DIAGRAMS article** .

WHEN MONITORED

With the ignition on, battery voltage greater than 10.4 volts, and no other TP

Sensor DTCs present.

SET CONDITION

The Powertrain Control Module (PCM) detects that the TP Sensor voltages are not plausible. One trip fault and the code will set within five seconds. ETC light is illuminated.

POSSIBLE CAUSES

POSSIBLE CAUSES
(F855) 5 VOLT SUPPLY CIRCUIT SHORTED TO VOLTAGE
(K22) TP SIGNAL 1 CIRCUIT SHORTED TO VOLTAGE
(K122) TP SIGNAL 2 CIRCUIT SHORTED TO VOLTAGE
(F855) 5 VOLT SUPPLY CIRCUIT SHORTED TO GROUND
(K22) TP SIGNAL 1 CIRCUIT SHORTED TO GROUND
(K122) TP SIGNAL 2 CIRCUIT SHORTED TO GROUND
(F855) 5 VOLT SUPPLY CIRCUIT SHORTED TO THE (K22) TP SIGNAL 1 CIRCUIT
(F855) 5 VOLT SUPPLY CIRCUIT SHORTED TO THE (K122) TP SIGNAL 2 CIRCUIT
(F855) 5 VOLT SUPPLY CIRCUIT SHORTED TO THE (K922) TP SENSOR GROUND CIRCUIT
(K22) TP SIGNAL 1 CIRCUIT SHORTED TO THE (K922) TP SENSOR GROUND CIRCUIT
(K122) TP SIGNAL 2 CIRCUIT SHORTED TO THE (K922) TP SENSOR GROUND CIRCUIT
(F855) 5 VOLT SUPPLY CIRCUIT OPEN OR HIGH RESISTANCE
(K22) TP SIGNAL 1 CIRCUIT OPEN OR HIGH RESISTANCE
(K122) TP SIGNAL 2 CIRCUIT OPEN OR HIGH RESISTANCE
(K922) TP SENSOR GROUND CIRCUIT OPEN OR HIGH RESISTANCE
THROTTLE BODY
POWERTRAIN CONTROL MODULE (PCM)

Always perform the Pre-Diagnostic Troubleshooting procedure before proceeding. Refer to PRE-DIAGNOSTIC TROUBLESHOOTING PROCEDURE .

DIAGNOSTIC TEST

1. **ACTIVE DTC**

NOTE: Diagnose and repair any system voltage or sensor reference voltage DTCs before continuing with this test.

NOTE: Diagnose and repair any Throttle Position Sensor Low or High DTCs before continuing.

1. Turn the ignition on.
2. With the scan tool, select View DTCs.

Is the status Active for this DTC?

Yes

- Go To 2

No

- Perform the INTERMITTENT DTC diagnostic procedure. Refer to **INTERMITTENT CONDITION** .

2. **CHECK THE (F855) 5-VOLT SUPPLY CIRCUIT VOLTAGE**

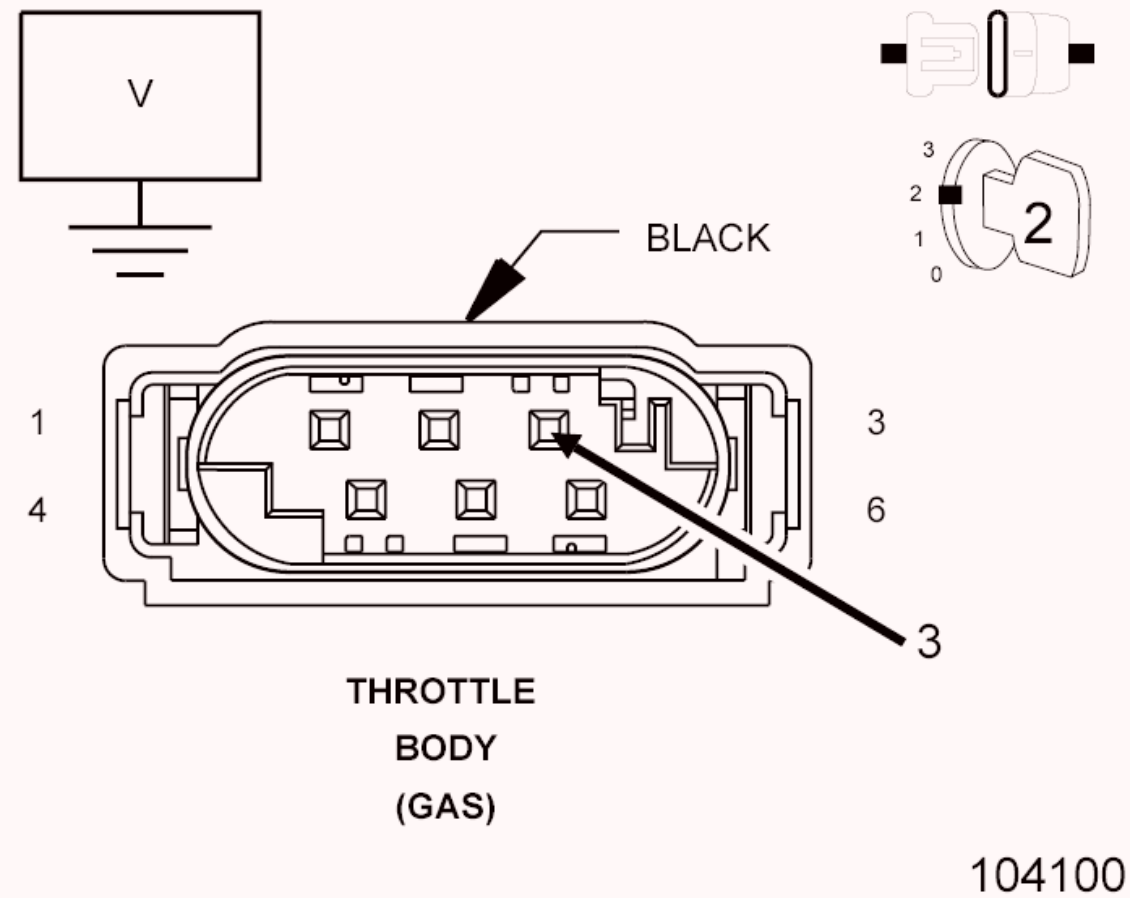

Fig. 22: Checking 5-Volt Supply Circuit
Courtesy of CHRYSLER GROUP, LLC

1. Turn the ignition off.
2. Disconnect the Throttle Body harness connector.
3. Turn the ignition on.
4. Measure the voltage of the (F855) 5-Volt Supply circuit in the Throttle Body harness connector.

   Is the voltage between 4.8 and 5.2 volts?

   Yes

   - Go To 3

   No

   - Repair the (F855) 5-Volt Supply circuit for an open or high resistance.
   - Perform the POWERTRAIN VERIFICATION TEST. Refer to

POWERTRAIN VERIFICATION TEST .

3. **CHECK THE (K22) TPS SIGNAL 1 CIRCUIT FOR A SHORT TO VOLTAGE**

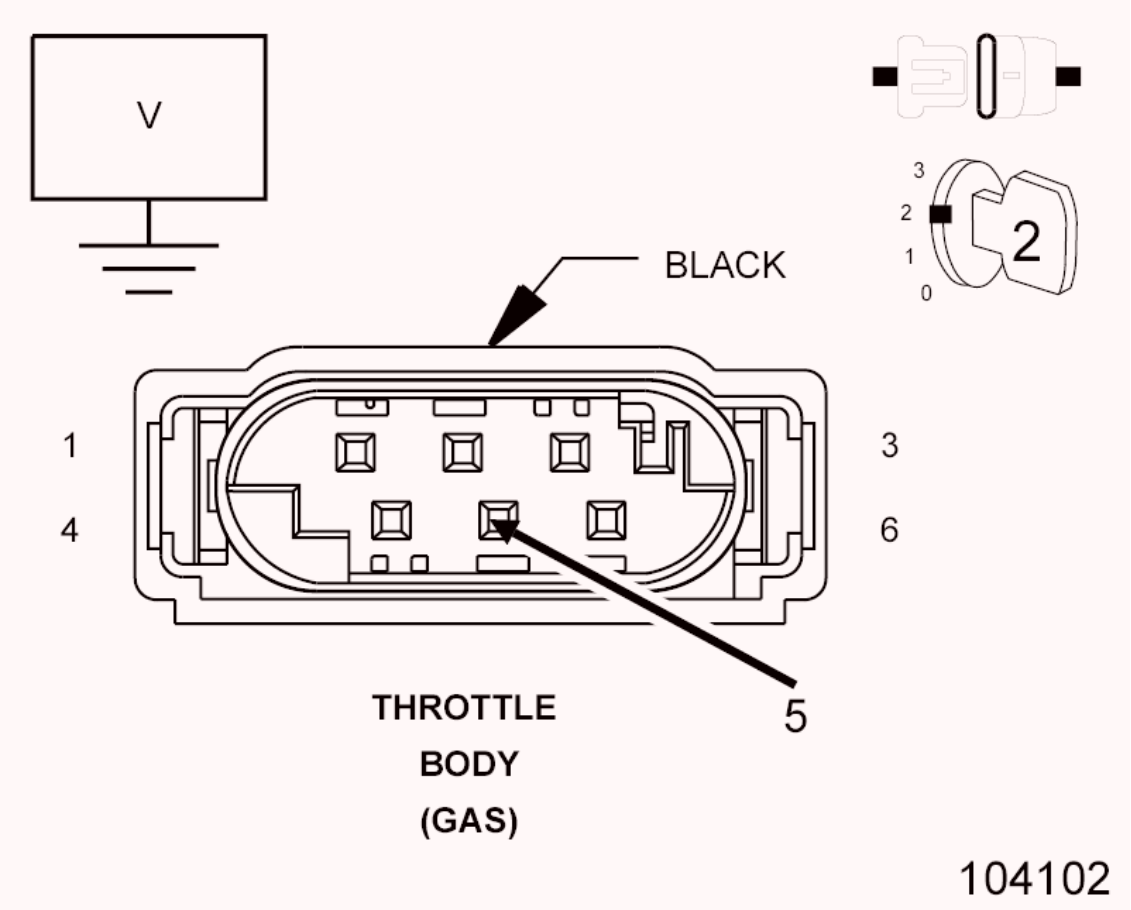

Fig. 23: Checking TP Signal 1 Circuit For Short To Voltage
Courtesy of CHRYSLER GROUP, LLC

1. Measure the voltage of the (K22) TPS Signal 1 circuit in the Throttle Body harness connector.

   Is the voltage above 5.2 volts?

   Yes

   - Go To 10

   No

   - Go To 4

4. **CHECK THE (K122) TPS SIGNAL 2 CIRCUIT FOR A SHORT TO**

VOLTAGE

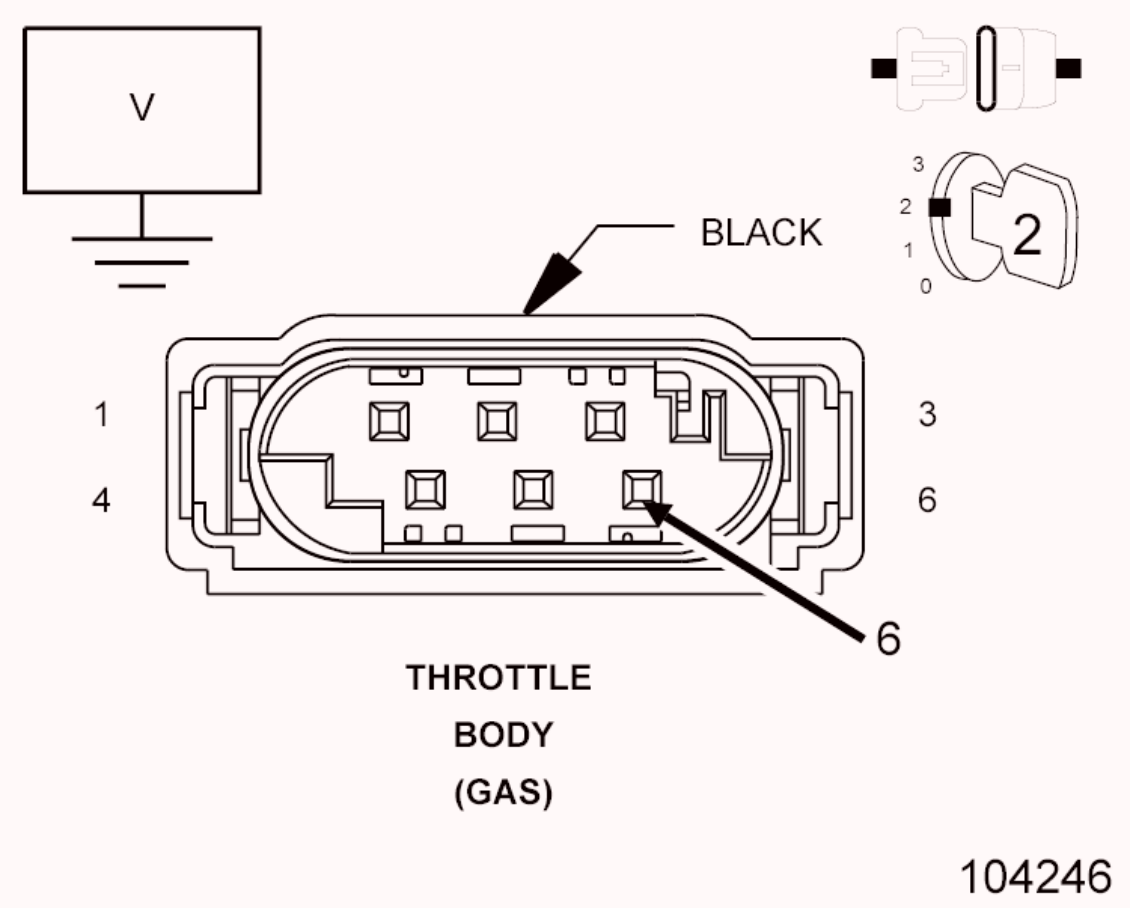

Fig. 24: Checking TP Signal 2 Circuit For Short To Voltage
Courtesy of CHRYSLER GROUP, LLC

1. Measure the voltage of the (K122) TPS Signal 2 circuit in the Throttle Body harness connector.

   Is there any voltage present?

   Yes

   - Go To 11

   No

   - Go To 5

5. **CHECK THE (K922) TPS GROUND CIRCUIT**

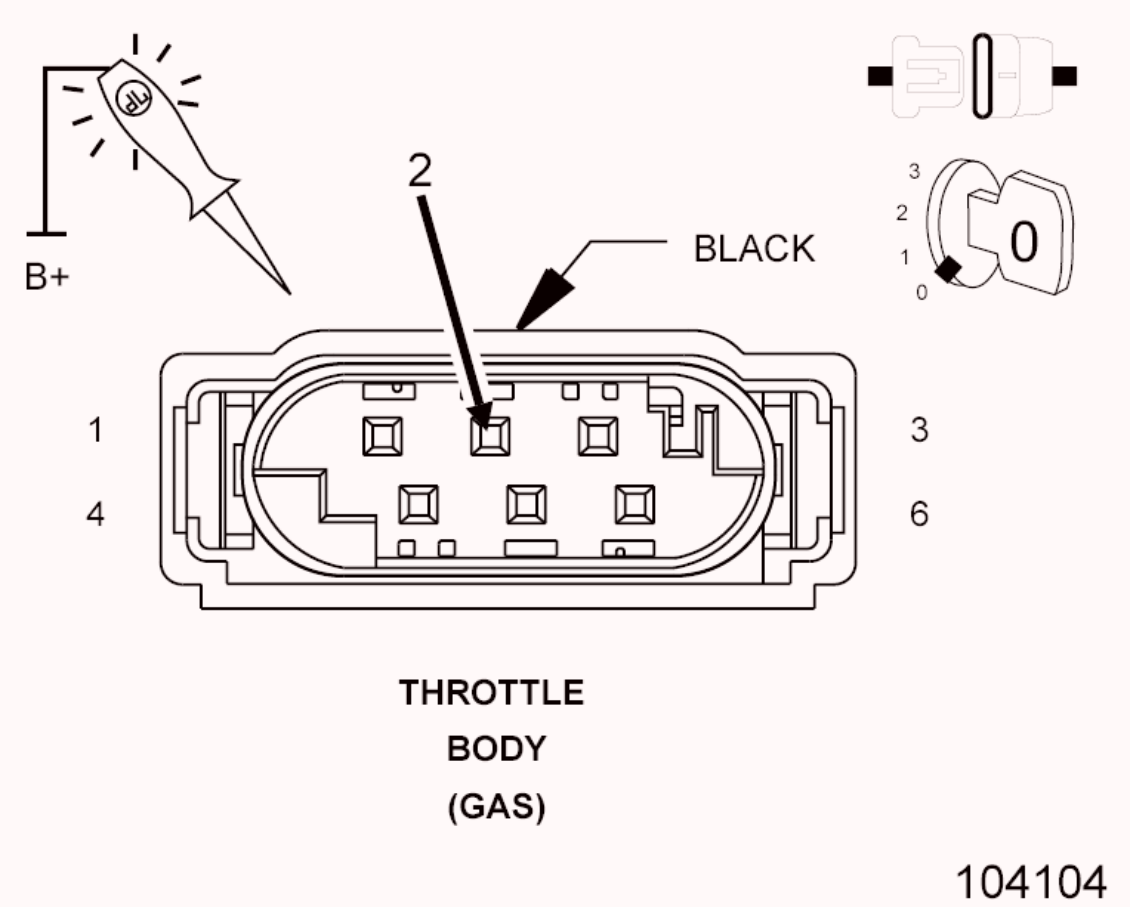

Fig. 25: Checking TP Sensor Ground Circuit
Courtesy of CHRYSLER GROUP, LLC

1. Turn the ignition off.
2. Using a 12-volt test light connected to 12 volts, check the (K922) TPS Ground circuit in the Throttle Body harness connector.

NOTE: The test light should be illuminated and bright. Compare the brightness to that of a direct connection to the battery.

Is the test light illuminated and bright?

Yes

- Go To 6

No

- Repair the (K922) TPS Ground circuit for an open or high

resistance.

- Perform the POWERTRAIN VERIFICATION TEST. Refer to **POWERTRAIN VERIFICATION TEST** .

6. **CHECK FOR THE (K22) TPS SIGNAL 1 CIRCUIT SHORTED TO (K922) TPS GROUND CIRCUIT**

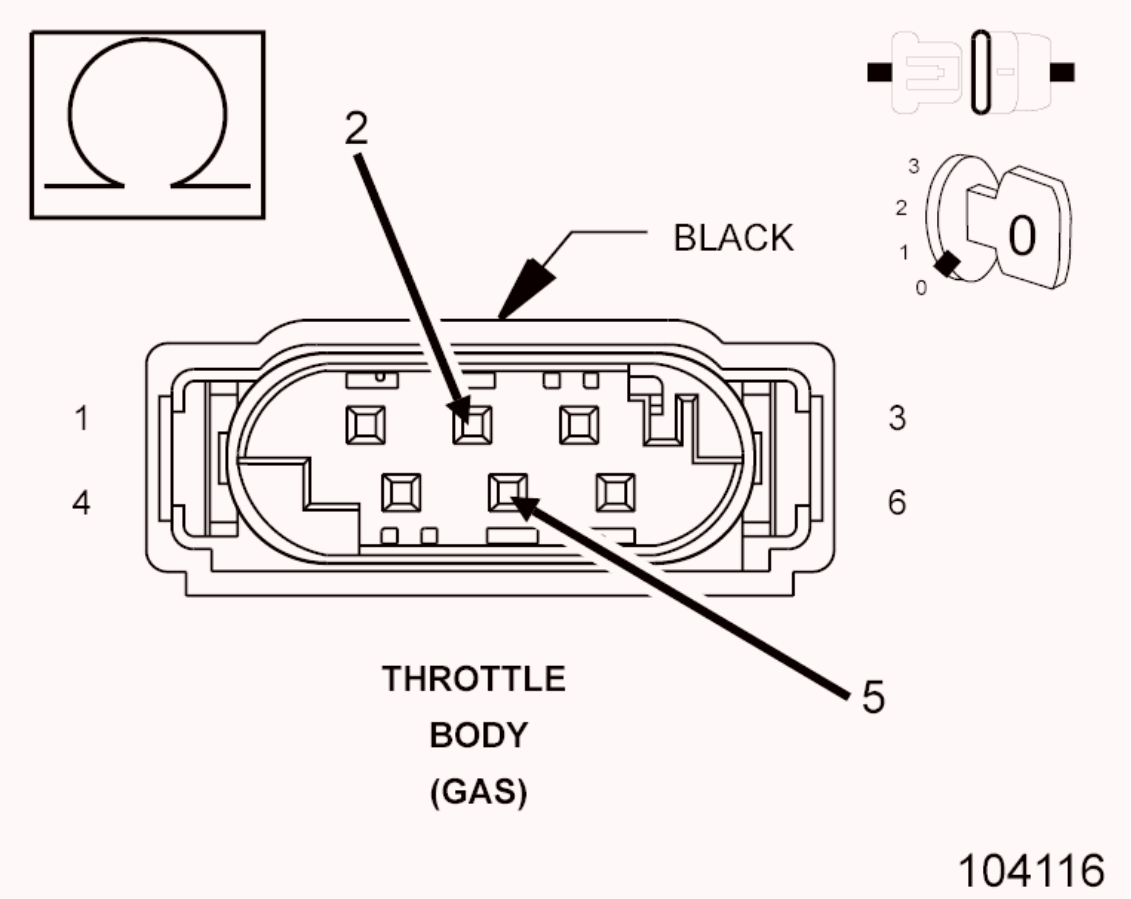

Fig. 26: Checking TP Sensor Signal 1 Circuit For Short To TP Sensor Ground Circuit
Courtesy of CHRYSLER GROUP, LLC

1. Disconnect the PCM C2 harness connector.
2. Measure the resistance between the (K22) TPS Signal 1 circuit and the (K922) TPS Ground circuit in the Throttle Body harness connector.

   Is the resistance above 10k Ohms?

   Yes

   - Go To 7

No

- Repair the (K22) TPS Signal 1 circuit for a short to the (K922) TPS Ground circuit.
- Perform the POWERTRAIN VERIFICATION TEST. Refer to **POWERTRAIN VERIFICATION TEST** .

7. **CHECK THE (K22) TPS SIGNAL 1 CIRCUIT FOR AN OPEN/HIGH RESISTANCE**

CAUTION: Do not probe the PCM harness connectors. Probing the PCM harness connectors will damage the PCM terminals resulting in poor terminal to pin connection. Install the GPEC Diagnostic Adaptor to perform the diagnosis.

1. Connect the (special tool #10436, Adapter, GPEC Diagnostic).
2. Measure the resistance of the (K22) TPS Signal 1 circuit between the Throttle Body harness connector and the GPEC Adaptor.

Is the resistance below 5.0 Ohms?

Yes

- Go To 8

No

- Repair the (K22) TPS Signal 1 circuit for an open or high resistance.
- Perform the POWERTRAIN VERIFICATION TEST. Refer to **POWERTRAIN VERIFICATION TEST** .

8. **CHECK THE (K122) TPS SIGNAL 2 CIRCUIT FOR AN OPEN/HIGH RESISTANCE**

1. Measure the resistance of the (K122) TPS Signal 2 circuit between the Throttle Body harness connector and the GPEC Adaptor.

Is the resistance below 5.0 Ohms?

Yes

- Go To 9

No

- Repair the (K122) TPS Signal 2 circuit for an open or high resistance.
- Perform the POWERTRAIN VERIFICATION TEST. Refer to **POWERTRAIN VERIFICATION TEST** .

9. **THROTTLE BODY**
   1. Using the wiring diagram/schematic as a guide, inspect the wiring and connectors between the Throttle Body and the Powertrain Control Module (PCM).
   2. Look for any chafed, pierced, pinched, or partially broken wires.
   3. Look for broken, bent, pushed out or corroded terminals.
   4. Inspect the Throttle Body for any condition that would result in an incorrect signal, such as damage or contamination.

   Were any problems found?

   Yes

   - Repair as necessary.
   - Perform the POWERTRAIN VERIFICATION TEST. Refer to **POWERTRAIN VERIFICATION TEST** .

   No

   - Replace the Throttle Body in accordance with the service information. Refer to **THROTTLE BODY, REMOVAL** .
   - Perform the POWERTRAIN VERIFICATION TEST. Refer to **POWERTRAIN VERIFICATION TEST** .

10. **CHECK FOR THE (K22) TPS SIGNAL 1 CIRCUIT SHORTED TO ANOTHER VOLTAGE SUPPLY CIRCUIT**
    1. Disconnect the PCM C2 harness connector.

CAUTION: Do not probe the PCM harness connectors. Probing the PCM harness connectors will

damage the PCM terminals resulting in poor terminal to pin connection. Install the GPEC Diagnostic Adaptor to perform the diagnosis.

2. Connect the (special tool #10436, Adapter, GPEC Diagnostic).
3. Measure the resistance between the (K22) TPS Signal 1 circuit and all other voltage supply circuits at the GPEC Adaptor.

   Is the resistance above 10k Ohms between the (K22) TPS Signal 1 circuit and all other voltage supply circuits?

   Yes

   - Go To 12

   No

   - Repair the (K22) TPS Signal 1 circuit for a short to voltage.
   - Perform the POWERTRAIN VERIFICATION TEST. Refer to **POWERTRAIN VERIFICATION TEST** .

11. **CHECK FOR THE (K122) TPS SIGNAL 2 CIRCUIT SHORTED TO ANOTHER VOLTAGE SUPPLY CIRCUIT**
    1. Disconnect the PCM C2 harness connector.

       CAUTION: Do not probe the PCM harness connectors. Probing the PCM harness connectors will damage the PCM terminals resulting in poor terminal to pin connection. Install the GPEC Diagnostic Adaptor to perform the diagnosis.

    2. Connect the (special tool #10436, Adapter, GPEC Diagnostic).
    3. Measure the resistance between the (K122) TPS Signal 2 circuit and all other voltage supply circuits at the GPEC Adaptor.

       Is there any voltage present?

       Yes

- Go To 12

No

- Repair the (K122) TPs Signal 2 circuit for a short to voltage.
- Perform the POWERTRAIN VERIFICATION TEST. Refer to **POWERTRAIN VERIFICATION TEST** .

12. **POWERTRAIN CONTROL MODULE (PCM)**
    1. Using the wiring diagram/schematic as a guide, inspect the wiring and connectors between the Throttle Body and the Powertrain Control Module (PCM).
    2. Look for any chafed, pierced, pinched, or partially broken wires.
    3. Look for broken, bent, pushed out or corroded terminals.
    4. Monitor the scan tool data relative to this circuit and wiggle test the wiring and connectors.
    5. Look for the data to change or for the DTC to reset during the wiggle test.
    6. Perform any Technical Service Bulletins that may apply.

    Were any problems found?

    Yes

    - Repair as necessary.
    - Perform the POWERTRAIN VERIFICATION TEST. Refer to **POWERTRAIN VERIFICATION TEST** .

    No

    - Replace and program the Powertrain Control Module (PCM) in accordance with the service information. Refer to **MODULE, POWERTRAIN CONTROL, REMOVAL** .
    - Perform the POWERTRAIN VERIFICATION TEST. Refer to **POWERTRAIN VERIFICATION TEST** .

P2138-ACCELERATOR PEDAL POSITION SENSOR 1/2 CORRELATION

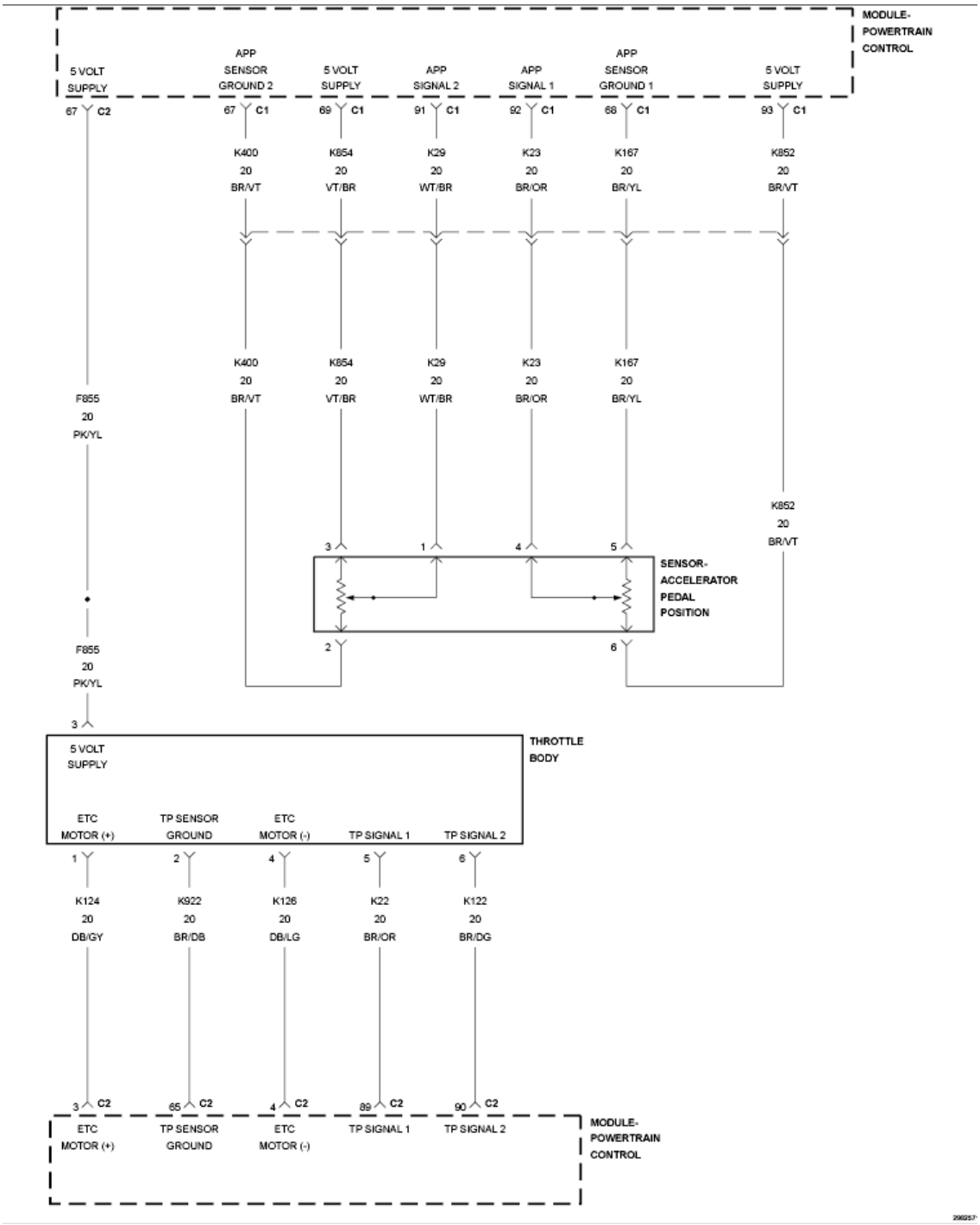

Fig. 27: Throttle Control Circuit Diagram
Courtesy of CHRYSLER GROUP, LLC

For a complete wiring diagram, **refer to appropriate SYSTEM WIRING DIAGRAMS article** .

WHEN MONITORED

With the ignition on, battery voltage greater than 10.4 volts, and no APPS 1 and

APPS 2 DTCs present.

SET CONDITION

The Powertrain Control Module (PCM) detects that the correlation between APPS 1 and APPS 2 is not plausible. Idle may be affected when the brake pedal is pressed or if a brake switch circuit error is present. Acceleration rate and engine output are limited. One trip fault and the code will set within five seconds. ETC light is flashing.

POSSIBLE CAUSES

POSSIBLE CAUSES
(K852) 5 VOLT SUPPLY CIRCUIT OPEN OR HIGH RESISTANCE
(K23) APP SIGNAL 1 CIRCUIT OPEN OR HIGH RESISTANCE
(K167) APP SENSOR GROUND 1 CIRCUIT OPEN OR HIGH RESISTANCE
(K854) 5 VOLT SUPPLY CIRCUIT OPEN OR HIGH RESISTANCE
(K29) APP SIGNAL 2 CIRCUIT OPEN OR HIGH RESISTANCE
(K400) APP SENSOR GROUND 2 CIRCUIT OPEN OR HIGH RESISTANCE
ACCELERATOR PEDAL POSITION SENSOR
POWERTRAIN CONTROL MODULE (PCM)

Always perform the Pre-Diagnostic Troubleshooting procedure before proceeding. Refer to PRE-DIAGNOSTIC TROUBLESHOOTING PROCEDURE .

DIAGNOSTIC TEST

1. **ACTIVE DTC**

NOTE: Diagnose and repair any APP Sensor, system voltage, or sensor supply voltage DTCs before continuing with this test.

1. Start the engine and allow it to reach normal operating temperature.

WARNING: When the engine is operating, do not stand in direct line with the fan. Do not put

your hands near the pulleys, belts or fan. Do not wear loose clothing. Failure to follow these instructions may result in possible serious or fatal injury.

2. With the scan tool, select View DTCs.

   Is the status Active for this DTC?

   Yes

   - Go To 2

   No

   - Perform the INTERMITTENT CONDITION diagnostic procedure. Refer to **INTERMITTENT CONDITION** .

2. **CHECK THE (K852) 5-VOLT SUPPLY CIRCUIT FOR AN OPEN/HIGH RESISTANCE**
   1. Turn the ignition off.
   2. Disconnect the Accelerator Pedal Position Sensor harness connector.
   3. Disconnect the PCM C1 harness connector.

      CAUTION: Do not probe the PCM harness connectors. Probing the PCM harness connectors will damage the PCM terminals resulting in poor terminal to pin connection. Install the GPEC Diagnostic Adaptor to perform the diagnosis.

   4. Connect the (special tool #10436, Adapter, GPEC Diagnostic).
   5. Measure the resistance of the (K852) 5-Volt Supply circuit between the Accelerator Pedal Position Sensor harness connector and the GPEC Adaptor.

      Is the resistance below 5.0 Ohms?

      Yes

- Go To 3

No

- Repair the (K852) 5-Volt Supply circuit for an open or high resistance.
- Perform the POWERTRAIN VERIFICATION TEST. Refer to **POWERTRAIN VERIFICATION TEST** .

3. **CHECK THE (K23) APP SIGNAL 1 CIRCUIT FOR AN OPEN/HIGH RESISTANCE**
   1. Measure the resistance of the (K23) APP Signal 1 circuit between the Accelerator Pedal Position Sensor harness connector and the GPEC Adaptor.

      Is the resistance below 5.0 Ohms?

      Yes

      - Go To 4

      No

      - Repair the (K23) APP Signal 1 circuit for an open or high resistance.
      - Perform the POWERTRAIN VERIFICATION TEST. Refer to **POWERTRAIN VERIFICATION TEST** .
4. **CHECK THE (K167) APP SENSOR GROUND 1 CIRCUIT FOR AN OPEN/HIGH RESISTANCE**
   1. Measure the resistance of the (K167) APP Sensor Ground 1 circuit between the Accelerator Pedal Position Sensor harness connector and the GPEC Adaptor.

      Is the resistance below 5.0 Ohms?

      Yes

      - Go To 5

      No

- Repair the (K167) APP Sensor Ground 1 circuit for an open or high resistance.
- Perform the POWERTRAIN VERIFICATION TEST. Refer to **POWERTRAIN VERIFICATION TEST** .

5. **CHECK THE (K854) 5-VOLT SUPPLY CIRCUIT FOR AN OPEN/HIGH RESISTANCE**
   1. Measure the resistance of the (K854) 5-Volt Supply circuit between the Accelerator Pedal Position Sensor harness connector and the GPEC Adaptor.

      Is the resistance below 5.0 Ohms?

      Yes

      - Go To 6

      No

      - Repair the (K854) 5-Volt Supply circuit for an open or high resistance.
      - Perform the POWERTRAIN VERIFICATION TEST. Refer to **POWERTRAIN VERIFICATION TEST** .
6. **CHECK THE (K29) APP SIGNAL 2 CIRCUIT FOR AN OPEN/HIGH RESISTANCE**
   1. Measure the resistance of the (K29) APP Signal 2 circuit between the Accelerator Pedal Position Sensor harness connector and the GPEC Adaptor.

      Is the resistance below 5.0 Ohms?

      Yes

      - Go To 7

      No

      - Repair the (K29) APP Signal 2 circuit for an open or high resistance.
      - Perform the POWERTRAIN VERIFICATION TEST. Refer to

POWERTRAIN VERIFICATION TEST .

7. **CHECK THE (K400) APP SENSOR GROUND 2 CIRCUIT FOR AN OPEN/HIGH RESISTANCE**
   1. Measure the resistance of the (K400) APP Sensor Ground 2 circuit between the Accelerator Pedal Position Sensor harness connector and the GPEC Adaptor.

      Is the resistance below 5.0 Ohms?

      Yes

      - Go To 8

      No

      - Repair the (K400) APP Sensor Ground 2 circuit for an open or high resistance.
      - Perform the POWERTRAIN VERIFICATION TEST. Refer to **POWERTRAIN VERIFICATION TEST** .
8. **ACCELERATOR PEDAL POSITION SENSOR**
   1. Turn the ignition off.
   2. Connect the Accelerator Pedal Position Sensor harness connector.
   3. Reconnect the PCM C1 harness connector.
   4. Turn the ignition on.
   5. Set up a lab scope to view two graphs simultaneously.
   6. Using one channel on the lab scope, back probe the (K23) APP Signal 1 circuit at the APP Sensor harness connector.
   7. Using the other channel on the lab scope, back probe the (K29) APP Signal 2 circuit at the APP Sensor harness connector.
   8. Slowly press and release the Accelerator Pedal while monitoring the lab scope screen.

      Does the scope pattern show any missing or erratic signals?

      Yes

      - Replace the Accelerator Pedal Position Sensor in accordance with the service information.

- Perform the POWERTRAIN VERIFICATION TEST. Refer to **POWERTRAIN VERIFICATION TEST** .

No

- Go To 9

9. **POWERTRAIN CONTROL MODULE (PCM)**
    1. Using the wiring diagram/schematic as a guide, inspect the wiring and connectors between the Accelerator Pedal Position Sensor and the Powertrain Control Module (PCM).
    2. Look for any chafed, pierced, pinched, or partially broken wires.
    3. Look for broken, bent, pushed out or corroded terminals.
    4. Monitor the scan tool data relative to this circuit and wiggle test the wiring and connectors.
    5. Look for the data to change or for the DTC to reset during the wiggle test.
    6. Perform any Technical Service Bulletins that may apply.

    Were any problems found?

    Yes

    - Repair as necessary.
    - Perform the POWERTRAIN VERIFICATION TEST. Refer to **POWERTRAIN VERIFICATION TEST** .

    No

    - Replace and program the Powertrain Control Module (PCM) in accordance with the service information. Refer to **MODULE, POWERTRAIN CONTROL, REMOVAL** .
    - Perform the POWERTRAIN VERIFICATION TEST. Refer to **POWERTRAIN VERIFICATION TEST** .

P2161-VEHICLE SPEED SENSOR 2 ERRATIC (WITH ABS)

For a complete wiring diagram, **refer to appropriate SYSTEM WIRING DIAGRAMS article** .

WHEN MONITORED

With engine run time greater than 5 seconds, ECT above -8° C (17.6° F), transmission not in park or neutral, brakes not applied, engine RPM greater than 1500, and no ECT, MAP, TPS, ETC, or brake switch stuck DTCs present.

SET CONDITION

The Powertrain Control (PCM) receives an erratic vehicle speed signal. One Trip Fault. Three good trips to turn off the MIL.

POSSIBLE CAUSES

POSSIBLE CAUSES
INTERMITTENT DTC
ACTIVE BUS OR COMMUNICATION DTCS
EXCESSIVE WHEEL SPEED VARIATION
POWERTRAIN CONTROL MODULE (PCM)

Always perform the Pre-Diagnostic Troubleshooting procedure before proceeding. Refer to PRE-DIAGNOSTIC TROUBLESHOOTING PROCEDURE .

DIAGNOSTIC TEST

1. **ACTIVE DTC**

NOTE: Diagnose and repair any communication DTCs before continuing with this test.

NOTE: Diagnose and repair any DTCs set in the ABS Module before continuing with this test.

NOTE: Verify that the correct Pinion Factor and tire size are programmed into the ABS module before continuing. If necessary, update and retest.

1. Start the engine and allow it to reach operating temperature.

WARNING: When the engine is operating, do not stand in direct line with the fan. Do not put

your hands near the pulleys, belts or fan. Do not wear loose clothing. Failure to follow these instructions may result in possible serious or fatal injury.

NOTE: It may be necessary to test drive the vehicle within the DTC monitoring conditions in order for this DTC to set.

2. With a scan tool, select View DTCs.

   Is the status Active for this DTC?

   Yes

   - Go To 2

   No

   - Perform the INTERMITTENT CONDITION diagnostic procedure. Refer to **INTERMITTENT CONDITION** .

2. **TIRE INSPECTION**

NOTE: This DTC can set as a result of excessive wheel speed variation, caused by unequal tire circumference or by front or rear wheels slipping (on loose gravel or ice, due to hard acceleration, etc.)

1. Inspect all tires for proper inflation and excessive wear.
2. Review Freeze Frame information to determine road and driving conditions when the fault set.

   Were any problems found?

   Yes

   - Repair as necessary. If the DTC set during a front or rear wheel spin condition, no repair is necessary.
   - Perform the PCM VERIFICATION Test. Refer to

POWERTRAIN VERIFICATION TEST .

No

- Go To 3

3. **POWERTRAIN CONTROL MODULE (PCM)**
   1. Using the wiring diagram/schematic as a guide, inspect the wiring and connectors between the Anti-lock Brake Module and the Powertrain Control Module (PCM).
   2. Look for any chafed, pierced, pinched, or partially broken wires.
   3. Look for broken, bent, pushed out or corroded terminals.
   4. Perform any Technical Service Bulletins that may apply.

   Were any problems found?

   Yes

   - Repair as necessary.
   - Perform the PCM VERIFICATION Test. Refer to **POWERTRAIN VERIFICATION TEST** .

   No

   - Replace the Powertrain Control Module (PCM) in accordance with the Service Information. Refer to **MODULE, POWERTRAIN CONTROL, REMOVAL** .
   - Perform the PCM VERIFICATION Test. Refer to **POWERTRAIN VERIFICATION TEST** .

P2166-ACCELERATOR PEDAL POSITION SENSOR 1 MAXIMUM STOP PERFORMANCE

For a complete wiring diagram, **refer to appropriate SYSTEM WIRING DIAGRAMS article** .

WHEN MONITORED

With the igniting on. During in-plant testing, the APP Sensor is checked to make sure the minimum and maximum values can be reached.

SET CONDITION

APPS 1 has failed to achieve the required maximum value during In-Plant testing. One trip fault and the code will set within five seconds. Engine will only idle.

POSSIBLE CAUSES

POSSIBLE CAUSES
ETC RELEARN ACCELERATOR PEDAL POSITION SENSOR

Always perform the Pre-Diagnostic Troubleshooting procedure before proceeding. Refer to PRE-DIAGNOSTIC TROUBLESHOOTING PROCEDURE .

DIAGNOSTIC TEST

1. **ACTIVE DTC**

NOTE: This DTC is set when the APPS values are learned in-plant but do not reach the minimum or maximum voltage range.

NOTE: Diagnose any APPS or 5 volt supply DTCs before continuing.

1. Start the engine and allow it to reach normal operating temperature.

WARNING: When the engine is operating, do not stand in direct line with the fan. Do not put your hands near the pulleys, belts or fan. Do not wear loose clothing. Failure to follow these instructions may result in possible serious or fatal injury.

2. With the scan tool, select View DTCs.

   Is the status Active for this DTC?

   Yes

- Go To 2

No

- Perform the INTERMITTENT CONDITION diagnostic procedure. Refer to **INTERMITTENT CONDITION** .

2. **ACCELERATOR PEDAL POSITION SENSOR**
   1. With a scan tool perform the ETC RELEARN function.
   2. With the scan tool, clear DTCs.
   3. Start the engine.
   4. With the scan tool, select View DTCs.

   Is the status Active for this DTC?

   Yes

   - Replace the Accelerator Pedal Position Sensor in accordance with the Service Information. After installation is complete, perform the ETC RELEARN function.
   - Perform the PCM VERIFICATION Test. Refer to **POWERTRAIN VERIFICATION TEST** .

   No

   - Test. Complete.

P2167-ACCELERATOR PEDAL POSITION SENSOR 2 MAXIMUM STOP PERFORMANCE

For a complete wiring diagram, **refer to appropriate SYSTEM WIRING DIAGRAMS article** .

WHEN MONITORED

With the igniting on. During in-plant testing, the APP Sensors need to be checked to make sure the minimum and maximum values can be reached.

SET CONDITION

APPS 2 has failed to achieve the required maximum value during In-Plant testing. One trip fault and the code will be stored within five seconds. Engine

will only idle.

POSSIBLE CAUSES

POSSIBLE CAUSES
ETC RELEARN ACCELERATOR PEDAL POSITION SENSOR

Always perform the Pre-Diagnostic Troubleshooting procedure before proceeding. Refer to PRE-DIAGNOSTIC TROUBLESHOOTING PROCEDURE .

DIAGNOSTIC TEST

1. **DTC ACTIVE**

NOTE: This DTC is set when the APP Sensor values are learned in-plant but do not reach the minimum or maximum voltage range.

NOTE: Diagnose any APPS out of range and 5 volt supply DTCs before continuing.

1. Start the engine and allow it to reach normal operating temperature.

WARNING: When the engine is operating, do not stand in direct line with the fan. Do not put your hands near the pulleys, belts or fan. Do not wear loose clothing. Failure to follow these instructions may result in possible serious or fatal injury.

2. With the scan tool, select View DTCs.

   Is the status Active for this DTC?

   Yes

   - Go To 2

   No

- Perform the INTERMITTENT CONDITION diagnostic procedure. Refer to **INTERMITTENT CONDITION** .

2. **ACCELERATOR PEDAL POSITION SENSOR**
   1. With a scan tool perform the ETC RELEARN function.
   2. With the scan tool, clear DTCs.
   3. Start the engine.
   4. With the scan tool, select View DTCs.

   Is the status Active for this DTC?

   Yes

   - Replace the Accelerator Pedal Position Sensor in accordance with the Service Information. After installation is complete, perform the ETC RELEARN function.
   - Perform the PCM VERIFICATION Test. Refer to **POWERTRAIN VERIFICATION TEST** .

   No

   - Test. complete.

P2172-HIGH AIRFLOW/VACUUM LEAK DETECTED (INSTANTANEOUS ACCUMULATION)

For a complete wiring diagram, **refer to appropriate SYSTEM WIRING DIAGRAMS article** .

WHEN MONITORED

Ignition on and engine running with no MAP Sensor DTCs.

SET CONDITION

A large vacuum leak has been detected or the signal voltage for both TP Sensors is stuck at 2.5 volts and calculated MAP is less than actual MAP minus an offset value. One trip fault and the code will set within five seconds. ETC light will flash.

POSSIBLE CAUSES

POSSIBLE CAUSES

VACUUM LEAK
MAP SENSOR CIRCUIT(S) OPEN, SHORTED, OR HIGH RESISTANCE
THROTTLE POSITION SENSOR CIRCUIT(S) OPEN, SHORTED, OR HIGH RESISTANCE
MAP SENSOR
THROTTLE POSITION SENSOR
POWERTRAIN CONTROL MODULE (PCM)

Always perform the Pre-Diagnostic Troubleshooting procedure before proceeding. Refer to PRE-DIAGNOSTIC TROUBLESHOOTING PROCEDURE .

DIAGNOSTIC TEST

1. **ACTIVE DTC**

NOTE: This fault code could be present if any Cam/Crank DTCs are set (P0335, P0365, P0366). No repair is necessary for P2172.

NOTE: Diagnose and repair any TP Sensor or MAP Sensor DTCs before continuing.

NOTE: Diagnose and repair any VSS or 5-Volt supply circuit DTCs before continuing.

NOTE: The throttle plate and linkage should be free from binding and carbon build up.

NOTE: Make sure the throttle plate is at the idle position.

1. Start the engine and allow it to reach normal operating temperature.

WARNING: **When the engine is operating, do not stand in direct line with the fan. Do not put your hands near the pulleys, belts or fan. Do not wear loose clothing. Failure to follow these instructions may result in**

possible serious or fatal injury.

2. With the scan tool, select View DTCs.

   Is the status Active for this DTC?

   Yes

   - Go To 2

   No

   - Perform the INTERMITTENT CONDITION diagnostic procedure. Refer to **INTERMITTENT CONDITION** .

2. **VACUUM LEAK**

NOTE: This code is enabled on engines equipped with a plastic intake manifold to limit engine operation if a large vacuum leak should occur.

NOTE: A large vacuum leak is the most probable cause of this DTC.

1. Inspect the intake manifold, power brake booster, and PCV system for any vacuum leaks.
2. Inspect the throttle plate. If the throttle blade is bent or will not close, the throttle body may need to be replaced.
3. Inspect the MAP Sensor and Throttle Body for proper installation.
4. Inspect the engine for any mechanical conditions that can cause low engine vacuum.

   Were any problems found?

   Yes

   - Repair as necessary.
   - Perform the PCM VERIFICATION Test. Refer to **POWERTRAIN VERIFICATION TEST** .

No

- Go To 3

3. **MAP SENSOR OPERATION**
   1. Start the engine.
   2. With a scan tool, monitor the MAP Sensor voltage.
   3. Snap the throttle.

   Does the MAP Sensor voltage vary from below 2.0 volts at idle to above 3.5 volts at wide open throttle?

   Yes

   - Go To 5

   No

   - Go To 4

4. **MAP SENSOR**
   1. Turn the ignition off.
   2. Disconnect the MAP Sensor harness connector.
   3. Disconnect the PCM harness connector.
   4. Using the wiring diagram/schematic as a guide, inspect the wiring and connectors between the MAP Sensor and the Powertrain Control Module (PCM).
   5. Look for any chafed, pierced, pinched, or partially broken wires.
   6. Look for broken, bent, pushed out or corroded terminals.
   7. Check each of the MAP Sensor circuits for high resistance or a shorted condition.

   Were any problems found?

   Yes

   - Repair as necessary.
   - Perform the PCM VERIFICATION Test. Refer to **POWERTRAIN VERIFICATION TEST** .

No

- Replace the MAP Sensor.
- Perform the PCM VERIFICATION Test. Refer to **POWERTRAIN VERIFICATION TEST** .

5. **THROTTLE FOLLOWER Test.**
   1. Ignition on, engine not running.
   2. With a scan tool, perform the Throttle Follower Test. and monitor the TP Sensor 1 and TP Sensor 2 voltages.
   3. Slowly press the throttle pedal down.
   4. The voltage for TP Sensor 1 should start at approximately 0.5 volts and increase to approximately 3.3 volts.
   5. The voltage for TP Sensor 2 should start at approximately 4.4 volts and decrease to approximately 1.7 volts.

   Is the voltage within the range specified for each sensor?

   Yes

   - Go To 7

   No

   - Go To 6

6. **THROTTLE BODY**
   1. Turn the ignition off.
   2. Disconnect the Throttle Body harness connector.
   3. Disconnect the PCM harness connector.
   4. Using the wiring diagram/schematic as a guide, inspect the wiring and connectors between the Throttle Body and the Powertrain Control Module (PCM).
   5. Look for any chafed, pierced, pinched, or partially broken wires.
   6. Look for broken, bent, pushed out or corroded terminals.
   7. Check each of the Throttle Body circuits for high resistance or a shorted condition.

   Were any problems found?

Yes

- Repair as necessary.
- Perform the PCM VERIFICATION Test. Refer to **POWERTRAIN VERIFICATION TEST** .

No

- Replace the Throttle Body in accordance with the Service Information.
- Perform the PCM VERIFICATION Test. Refer to **POWERTRAIN VERIFICATION TEST** .

7. **POWERTRAIN CONTROL MODULE (PCM)**
   1. Using the wiring diagram/schematic as a guide, inspect the wiring and connectors between the Throttle Body and the Powertrain Control Module (PCM) and between the MAP Sensor and the Powertrain Control Module (PCM).
   2. Look for any chafed, pierced, pinched, or partially broken wires.
   3. Look for broken, bent, pushed out or corroded terminals.
   4. Perform any Technical Service Bulletins that may apply.

   Were any problems found?

   Yes

   - Repair as necessary.
   - Perform the PCM VERIFICATION Test. Refer to **POWERTRAIN VERIFICATION TEST** .

   No

   - Replace and program the Powertrain Control Module (PCM) in accordance with the Service Information. Refer to **MODULE, POWERTRAIN CONTROL, REMOVAL** .
   - Perform the PCM VERIFICATION Test. Refer to **POWERTRAIN VERIFICATION TEST** .

P2173-HIGH AIRFLOW/VACUUM LEAK DETECTED (SLOW ACCUMULATION)

For a complete wiring diagram, **refer to appropriate SYSTEM WIRING DIAGRAMS article** .

WHEN MONITORED

Ignition on and engine running with no MAP Sensor DTCs.

SET CONDITION

A large vacuum leak has been detected or the signal voltage for both TP Sensors is stuck at 2.5 Volts and calculated MAP is less than the Gas Flow Adaptation value. One trip fault; the DTC will set within five seconds. ETC light will flash.

POSSIBLE CAUSES

POSSIBLE CAUSES
VACUUM LEAK
MAP SENSOR CIRCUIT(S) OPEN, SHORTED, OR HIGH RESISTANCE
MAP SENSOR
POWERTRAIN CONTROL MODULE (PCM)

Always perform the Pre-Diagnostic Troubleshooting procedure before proceeding. Refer to PRE-DIAGNOSTIC TROUBLESHOOTING PROCEDURE .

DIAGNOSTIC TEST

1. **ACTIVE DTC**

NOTE: Diagnose and repair any ETC, MAP Sensor, VSS, or 5-Volt supply circuit DTCs before continuing.

1. Start the engine and allow it to reach normal operating temperature.

WARNING: When the engine is operating, do not stand in direct line with the fan. Do not put your hands near the pulleys, belts or fan. Do not wear loose clothing. Failure to follow these instructions may result in possible serious or fatal injury.

2. Using the scan tool, select View DTCs.

   Is the status Active for this DTC?

   Yes

   - Go To 2

   No

   - Perform the CHECKING FOR AN INTERMITTENT DTC diagnostic procedure. Refer to **INTERMITTENT CONDITION** .

2. **VACUUM LEAK**

NOTE: This DTC is enabled on engines equipped with a plastic intake manifold to limit engine operation if a large vacuum leak should occur.

NOTE: A large vacuum leak is the most probable cause of this DTC.

1. Inspect the intake manifold, power brake booster, and PCV system for any vacuum leaks.
2. Inspect the MAP Sensor and Throttle Body for proper installation.
3. Inspect the engine for any mechanical conditions that can cause low engine vacuum.

   Were any problems found?

   Yes

   - Repair as necessary.
   - Perform the PCM VERIFICATION Test. Refer to **POWERTRAIN VERIFICATION TEST** .

   No

   - Go To 3

3. **MAP SENSOR OPERATION**

1. Start the engine.
2. With a scan tool, monitor the MAP Sensor voltage.
3. Snap the throttle.

   Does the MAP Sensor voltage vary from below 2.0 Volts at idle to above 3.5 Volts at wide open throttle?

   Yes

   - Go To 5

   No

   - Go To 4

4. **MAP SENSOR**
   1. Turn the ignition off.
   2. Disconnect the MAP Sensor harness connector.
   3. Disconnect the PCM harness connector.
   4. Using the wiring diagram/schematic as a guide, inspect the wiring and connectors between the MAP Sensor and the Powertrain Control Module (PCM).
   5. Look for any chafed, pierced, pinched, or partially broken wires.
   6. Look for broken, bent, pushed out or corroded terminals.
   7. Check each of the MAP Sensor circuits for high resistance or a shorted condition.

   Were any problems found?

   Yes

   - Repair as necessary.
   - Perform the PCM VERIFICATION Test. Refer to **POWERTRAIN VERIFICATION TEST** .

   No

   - Replace the MAP Sensor.
   - Perform the PCM VERIFICATION Test. Refer to

POWERTRAIN VERIFICATION TEST .

5. **POWERTRAIN CONTROL MODULE (PCM)**
   1. Using the wiring diagram/schematic as a guide, inspect the wiring and connectors between the MAP Sensor and the Powertrain Control Module (PCM).
   2. Look for any chafed, pierced, pinched, or partially broken wires.
   3. Look for broken, bent, pushed out or corroded terminals.
   4. Perform any Technical Service Bulletins that may apply.

   Were any problems found?

   Yes

   - Repair as necessary.
   - Perform the PCM VERIFICATION Test. Refer to **POWERTRAIN VERIFICATION TEST** .

   No

   - Replace and program the Powertrain Control Module (PCM) in accordance with the Service Information. Refer to **MODULE, POWERTRAIN CONTROL, REMOVAL** .
   - Perform the PCM VERIFICATION Test. Refer to **POWERTRAIN VERIFICATION TEST** .

P2174-LOW AIRFLOW/RESTRICTION DETECTED (INSTANTANEOUS ACCUMULATION)

For a complete wiring diagram, **refer to appropriate SYSTEM WIRING DIAGRAMS article** .

WHEN MONITORED

Ignition on and engine running with no MAP Sensor DTCs.

SET CONDITION

The Powertrain Control Module (PCM) detects that calculated MAP is greater than actual MAP plus an offset value. One trip fault and the code will set within 5 seconds. Three good trips to turn of the MIL. ETC light will flash.

POSSIBLE CAUSES

POSSIBLE CAUSES
AIR INTAKE SYSTEM OBSTRUCTION
VACUUM LEAK
MAP SENSOR CIRCUIT(S) OPEN, SHORTED, OR HIGH RESISTANCE
THROTTLE POSITION SENSOR CIRCUIT(S) OPEN, SHORTED, OR HIGH RESISTANCE
MAP SENSOR
THROTTLE POSITION SENSOR
POWERTRAIN CONTROL MODULE (PCM)

Always perform the Pre-Diagnostic Troubleshooting procedure before proceeding. Refer to PRE-DIAGNOSTIC TROUBLESHOOTING PROCEDURE .

DIAGNOSTIC TEST.

1. **ACTIVE DTC**

NOTE: Diagnose and repair any TP Sensor or MAP Sensor DTCs before continuing.

NOTE: Diagnose and repair any VSS or 5-Volt supply circuit DTCs before continuing.

NOTE: The throttle plate and linkage should be free from binding and carbon build up.

NOTE: Make sure the throttle plate is at the idle position.

1. Start the engine and allow it to reach normal operating temperature.

WARNING: When the engine is operating, do not stand in direct line with the fan. Do not put your hands near the pulleys, belts or fan. Do not wear loose clothing. Failure to follow these instructions may result in possible serious or fatal injury.

2. With the scan tool, select View DTCs.

   Is the status Active for this DTC?

   Yes

   - Go To 2

   No

   - Perform the INTERMITTENT CONDITION diagnostic procedure. Refer to **INTERMITTENT CONDITION** .

2. **VACUUM LEAK**
   1. Inspect the intake manifold, power brake booster, and PCV system for any vacuum leaks.
   2. Inspect the throttle plate. If the throttle blade is bent or will not close, the throttle body may need to be replaced.
   3. Inspect the MAP Sensor and Throttle Body for proper installation.
   4. Inspect the air intake system for any restrictions or obstructions.
   5. Inspect the engine for any mechanical conditions that can cause low engine vacuum.

   Were any problems found?

   Yes

   - Repair as necessary.
   - Perform the PCM VERIFICATION Test. Refer to **POWERTRAIN VERIFICATION TEST** .

   No

   - Go To 3

3. **MAP SENSOR OPERATION**
   1. Start the engine.
   2. With a scan tool, monitor the MAP Sensor voltage.
   3. Snap the throttle.

Does the MAP Sensor voltage vary from below 2.0 volts at idle to above 3.5 volts at wide open throttle?

Yes

- Go To 5

No

- Go To 4

4. **MAP SENSOR**
   1. Turn the ignition off.
   2. Disconnect the MAP Sensor harness connector.
   3. Disconnect the PCM harness connector.
   4. Using the wiring diagram/schematic as a guide, inspect the wiring and connectors between the MAP Sensor and the Powertrain Control Module (PCM).
   5. Look for any chafed, pierced, pinched, or partially broken wires.
   6. Look for broken, bent, pushed out or corroded terminals.
   7. Check each of the MAP Sensor circuits for high resistance or a shorted condition.

   Were any problems found?

   Yes

   - Repair as necessary.
   - Perform the PCM VERIFICATION Test. Refer to **POWERTRAIN VERIFICATION TEST** .

   No

   - Replace the MAP Sensor.
   - Perform the PCM VERIFICATION Test. Refer to **POWERTRAIN VERIFICATION TEST** .

5. **THROTTLE FOLLOWER TEST**
   1. Ignition on, engine not running.

2. With a scan tool, perform the Throttle Follower Test. and monitor the TP Sensor 1 and TP Sensor 2 voltages.
3. Slowly press the throttle pedal down.
4. The voltage for TP Sensor 1 should start at approximately 0.5 volts and increase to approximately 3.3 volts.
5. The voltage for TP Sensor 2 should start at approximately 4.4 volts and decrease to approximately 1.7 volts.

   Is the voltage within the range specified for each sensor?

   Yes

   - Go To 7

   No

   - Go To 6

6. **THROTTLE BODY**
   1. Turn the ignition off.
   2. Disconnect the Throttle Body harness connector.
   3. Disconnect the PCM harness connector.
   4. Using the wiring diagram/schematic as a guide, inspect the wiring and connectors between the Throttle Body and the Powertrain Control Module (PCM).
   5. Look for any chafed, pierced, pinched, or partially broken wires.
   6. Look for broken, bent, pushed out or corroded terminals.
   7. Check each of the Throttle Body circuits for high resistance or a shorted condition.

      Were any problems found?

      Yes

      - Repair as necessary.
      - Perform the PCM VERIFICATION Test. Refer to **POWERTRAIN VERIFICATION TEST** .

No

- Replace the Throttle Body in accordance with the Service Information.
- Perform the PCM VERIFICATION Test. Refer to **POWERTRAIN VERIFICATION TEST** .

7. **POWERTRAIN CONTROL MODULE (PCM)**
   1. Using the wiring diagram/schematic as a guide, inspect the wiring and connectors between the Throttle Body and the Powertrain Control Module (PCM) and between the MAP Sensor and the Powertrain Control Module (PCM).
   2. Look for any chafed, pierced, pinched, or partially broken wires.
   3. Look for broken, bent, pushed out or corroded terminals.
   4. Perform any Technical Service Bulletins that may apply.

   Were any problems found?

   Yes

   - Repair as necessary.
   - Perform the PCM VERIFICATION Test. Refer to **POWERTRAIN VERIFICATION TEST** .

   No

   - Replace and program the Powertrain Control Module (PCM) in accordance with the service information. Refer to **MODULE, POWERTRAIN CONTROL, REMOVAL** .
   - Perform the PCM VERIFICATION Test. Refer to **POWERTRAIN VERIFICATION TEST** .

P2175-LOW AIRFLOW/RESTRICTION DETECTED (SLOW ACCUMULATION)

For a complete wiring diagram, **refer to appropriate SYSTEM WIRING DIAGRAMS article** .

WHEN MONITORED

Ignition on and engine running with no MAP Sensor DTCs.

SET CONDITION

The Powertrain Control Module (PCM) detects that calculated MAP is greater than actual MAP plus an offset value. One trip fault and the code will set within 5 seconds. Three good trips to turn off the MIL. ETC light will flash.

POSSIBLE CAUSES

POSSIBLE CAUSES
AIR INTAKE SYSTEM OBSTRUCTION
VACUUM LEAK
MAP SENSOR CIRCUIT(S) OPEN, SHORTED, OR HIGH RESISTANCE
THROTTLE POSITION SENSOR CIRCUIT(S) OPEN, SHORTED, OR HIGH RESISTANCE
MAP SENSOR
THROTTLE POSITION SENSOR
POWERTRAIN CONTROL MODULE (PCM)

Always perform the Pre-Diagnostic Troubleshooting procedure before proceeding. Refer to PRE-DIAGNOSTIC TROUBLESHOOTING PROCEDURE .

DIAGNOSTIC TEST

1. **ACTIVE DTC**

NOTE: Diagnose and repair any TP Sensor or MAP Sensor DTCs before continuing.

NOTE: Diagnose and repair any VSS or 5-Volt supply circuit DTCs before continuing.

NOTE: The throttle plate and linkage should be free from binding and carbon build up.

NOTE: Make sure the throttle plate is at the idle position.

1. Start the engine and allow it to reach normal operating temperature.

WARNING: When the engine is operating, do not stand in direct line with the fan. Do not put your hands near the pulleys, belts or fan. Do not wear loose clothing. Failure to follow these instructions may result in possible serious or fatal injury.

2. With the scan tool, select View DTCs.

   Is the status Active for this DTC?

   Yes

   - Go To 2

   No

   - Perform the INTERMITTENT CONDITION diagnostic procedure. Refer to **INTERMITTENT CONDITION** .

2. **VACUUM LEAK**
   1. Inspect the intake manifold, power brake booster, and PCV system for any vacuum leaks.
   2. Inspect the throttle plate. If the throttle blade is bent or will not close, the throttle body may need to be replaced.
   3. Inspect the MAP Sensor and Throttle Body for proper installation.
   4. Inspect the air intake system for any restrictions or obstructions.
   5. Inspect the engine for any mechanical conditions that can cause low engine vacuum.

   Were any problems found?

   Yes

   - Repair as necessary.
   - Perform the PCM VERIFICATION Test. Refer to **POWERTRAIN VERIFICATION TEST** .

   No

- Go To 3

3. **MAP SENSOR OPERATION**
   1. Start the engine.
   2. With a scan tool, monitor the MAP Sensor voltage.
   3. Snap the throttle.

   Does the MAP Sensor voltage vary from below 2.0 volts at idle to above 3.5 volts at wide open throttle?

   Yes

   - Go To 5

   No

   - Go To 4

4. **MAP SENSOR**
   1. Turn the ignition off.
   2. Disconnect the MAP Sensor harness connector.
   3. Disconnect the PCM harness connector.
   4. Using the wiring diagram/schematic as a guide, inspect the wiring and connectors between the MAP Sensor and the Powertrain Control Module (PCM).
   5. Look for any chafed, pierced, pinched, or partially broken wires.
   6. Look for broken, bent, pushed out or corroded terminals.
   7. Check each of the MAP Sensor circuits for high resistance or a shorted condition.

   Were any problems found?

   Yes

   - Repair as necessary.
   - Perform the PCM VERIFICATION Test. Refer to **POWERTRAIN VERIFICATION TEST** .

   No

- Replace the MAP Sensor.
- Perform the PCM VERIFICATION Test. Refer to **POWERTRAIN VERIFICATION TEST** .

5. **THROTTLE FOLLOWER TEST**
   1. Ignition on, engine not running.
   2. With a scan tool, perform the Throttle Follower Test. and monitor the TP Sensor 1 and TP Sensor 2 voltages.
   3. Slowly press the throttle pedal down.
   4. The voltage for TP Sensor 1 should start at approximately 0.5 volts and increase to approximately 3.3 volts.
   5. The voltage for TP Sensor 2 should start at approximately 4.4 volts and decrease to approximately 1.7 volts.

   Is the voltage within the range specified for each sensor?

   Yes

   - Go To 7

   No

   - Go To 6

6. **THROTTLE BODY**
   1. Turn the ignition off.
   2. Disconnect the Throttle Body harness connector.
   3. Disconnect the PCM harness connector.
   4. Using the wiring diagram/schematic as a guide, inspect the wiring and connectors between the Throttle Body and the Powertrain Control Module (PCM).
   5. Look for any chafed, pierced, pinched, or partially broken wires.
   6. Look for broken, bent, pushed out or corroded terminals.
   7. Check each of the Throttle Body circuits for high resistance or a shorted condition.

   Were any problems found?

Yes

- Repair as necessary.
- Perform the PCM VERIFICATION Test. Refer to **POWERTRAIN VERIFICATION TEST** .

No

- Replace the Throttle Body in accordance with the Service Information.
- Perform the PCM VERIFICATION Test. Refer to **POWERTRAIN VERIFICATION TEST** .

7. **POWERTRAIN CONTROL MODULE (PCM)**
   1. Using the wiring diagram/schematic as a guide, inspect the wiring and connectors between the Throttle Body and the Powertrain Control Module (PCM) and between the MAP Sensor and the Powertrain Control Module (PCM).
   2. Look for any chafed, pierced, pinched, or partially broken wires.
   3. Look for broken, bent, pushed out or corroded terminals.
   4. Perform any Technical Service Bulletins that may apply.

   Were any problems found?

   Yes

   - Repair as necessary.
   - Perform the PCM VERIFICATION Test. Refer to **POWERTRAIN VERIFICATION TEST** .

   No

   - Replace and program the Powertrain Control Module (PCM) in accordance with the service information. Refer to **MODULE, POWERTRAIN CONTROL, REMOVAL** .
   - Perform the PCM VERIFICATION Test. Refer to **POWERTRAIN VERIFICATION TEST** .

P2181-COOLING SYSTEM PERFORMANCE

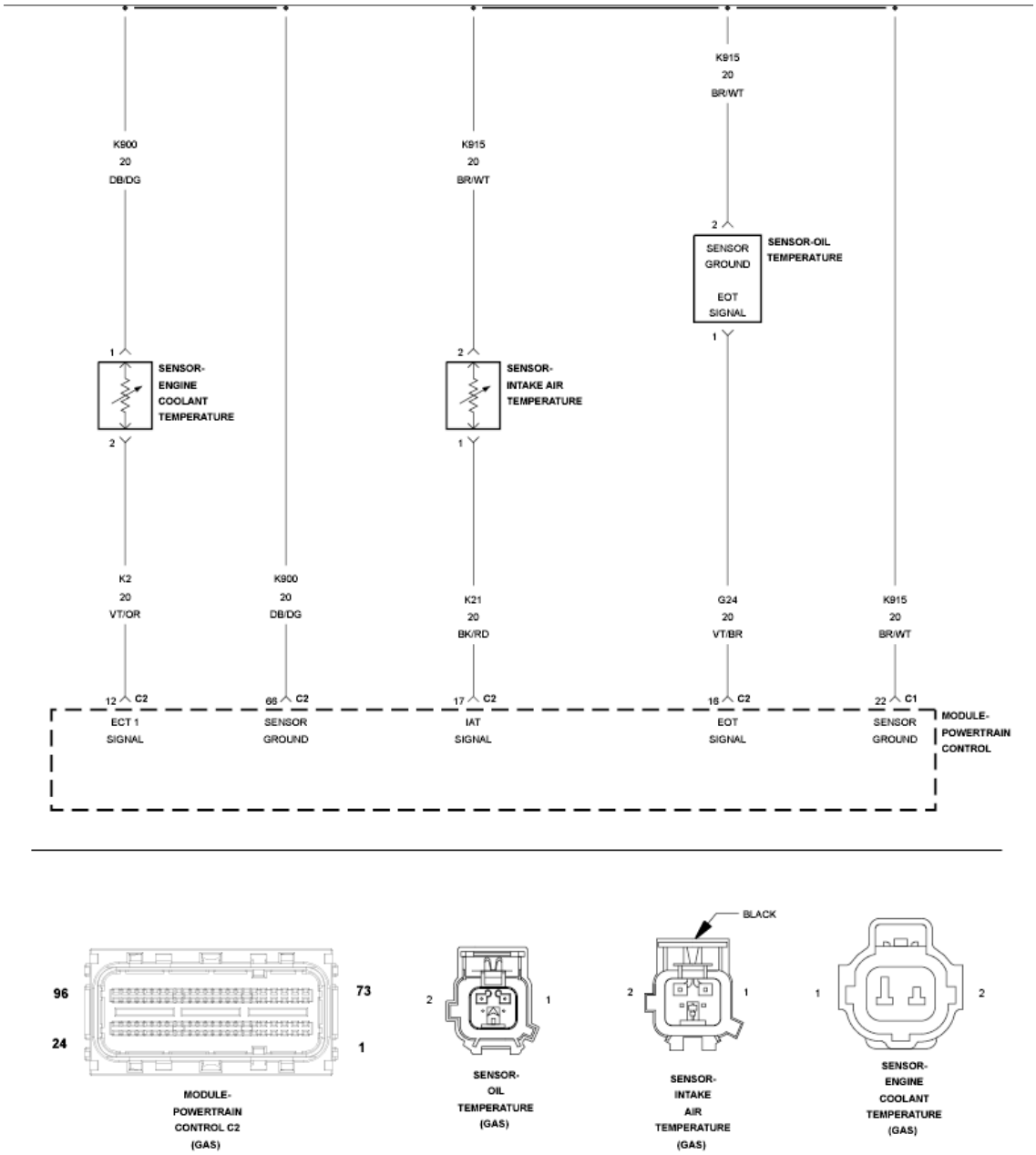

Fig. 28: Temperature Sensors Circuit Diagram
Courtesy of CHRYSLER GROUP, LLC

For a complete wiring diagram, **refer to appropriate SYSTEM WIRING DIAGRAMS article** .

WHEN MONITORED

Ignition on, engine running, and no ECT DTCs present.

SET CONDITION

The coolant temperature should change at a specific rate. If this rate is too slow or too fast this fault will set. Two trip fault. Three good trips to clear MIL. ETC light will illuminate on first trip failure.

POSSIBLE CAUSES

POSSIBLE CAUSES
LOW COOLANT LEVEL
THERMOSTAT
(K2) ECT 1 SIGNAL CIRCUIT SHORTED TO VOLTAGE
(K2) ECT 1 SIGNAL CIRCUIT SHORTED TO GROUND
(K2) ECT 1 SIGNAL CIRCUIT SHORTED TO THE (K900) SENSOR GROUND 1 CIRCUIT
(K2) ECT 1 SIGNAL CIRCUIT OPEN OR HIGH RESISTANCE
(K900) SENSOR GROUND 1 CIRCUIT OPEN OR HIGH RESISTANCE
ENGINE COOLANT TEMPERATURE SENSOR 1
POWERTRAIN CONTROL MODULE (PCM)

Always perform the Pre-Diagnostic Troubleshooting procedure before proceeding. Refer to PRE-DIAGNOSTIC TROUBLESHOOTING PROCEDURE .

DIAGNOSTIC TEST

1. **ACTIVE DTC**

NOTE: Diagnose and repair any Engine Coolant Temperature (ECT) sensor DTCs before proceeding with this test.

NOTE: Inspect the ECT sensor and related PCM connector terminals for corrosion or damage.

NOTE: Extremely cold ambient temperatures may cause this DTC to set.

1. Turn the ignition on.
2. With the scan tool, select View DTCs.
3. Review DTC information.

Is the Good Trip Counter greater than zero?

Yes

- Perform the INTERMITTENT CONDITION diagnostic procedure. Refer to **INTERMITTENT CONDITION** .

No

- Go To 2

2. **LOW ENGINE COOLANT LEVEL**
   1. Ignition on, engine not running.

      WARNING: **Allow the engine to cool before opening the cooling system. The system may be under pressure. Extreme burns or scalding may result. Failure to follow these instructions can result in possible serious or fatal injury.**

   2. Inspect the cooling system for proper coolant level and condition.

      Were any problems found?

      Yes

      - Inspect the vehicle for a coolant leak. Repair as necessary in accordance with the service information.
      - Perform the POWERTRAIN VERIFICATION TEST. Refer to **POWERTRAIN VERIFICATION TEST** .

      No

      - Go To 3

3. **THERMOSTAT**
   1. Ignition on, engine not running.

      NOTE: Allow the engine to cool to ambient temperature before proceeding with this test.

2. Using the appropriate service information, determine the proper opening temperature of the thermostat.
3. With a scan tool, read the ECT sensor value. If the engine was allowed to cool completely, the value should be approximately equal to the ambient temperature.
4. Start the engine and allow it to reach operating temperature while monitoring the ECT sensor value. The sensor value change should be a smooth transition from start up to normal operating temperature. Monitor the actual coolant temperature with a thermometer.

NOTE: As the engine warms up to operating temperature, the actual coolant temperature (thermometer reading) and the coolant temperature value on the scan tool should be relatively close. The thermostat should not open until the engine reaches the temperature specified in the Service Information.

Does the thermostat open at the temperature specified in the Service Information?

Yes

- Go To 4

No

- Replace the thermostat in accordance with the Service Information.
- Perform the POWERTRAIN VERIFICATION TEST. Refer to **POWERTRAIN VERIFICATION TEST** .

4. **CHECK THE (K2) ECT SIGNAL CIRCUIT FOR A SHORT TO VOLTAGE**

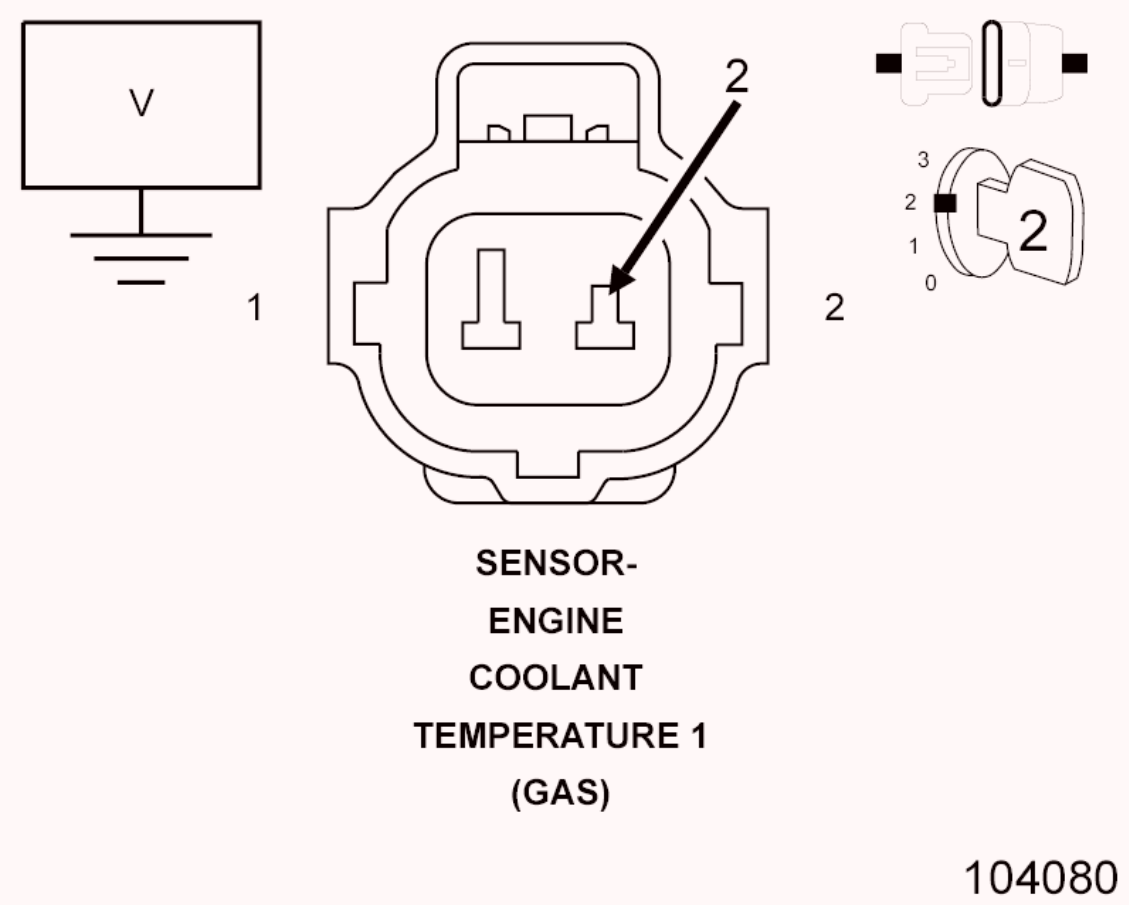

Fig. 29: Checking ECT Signal Circuit For Short To Voltage
Courtesy of CHRYSLER GROUP, LLC

1. Turn the ignition off.
2. Disconnect the Engine Coolant Temperature Sensor harness connector.
3. Turn the ignition on.
4. Measure the voltage of the (K2) ECT Signal circuit in the Engine Coolant Temperature Sensor harness connector.

   Is the voltage above 5.2 volts?

   Yes

   - Repair the (K2) ECT Signal circuit for a short to voltage.
   - Perform the POWERTRAIN VERIFICATION TEST. Refer to **POWERTRAIN VERIFICATION TEST** .

   No

- Go To 5

5. **CHECK THE (K2) ECT SIGNAL CIRCUIT FOR A SHORT TO GROUND**

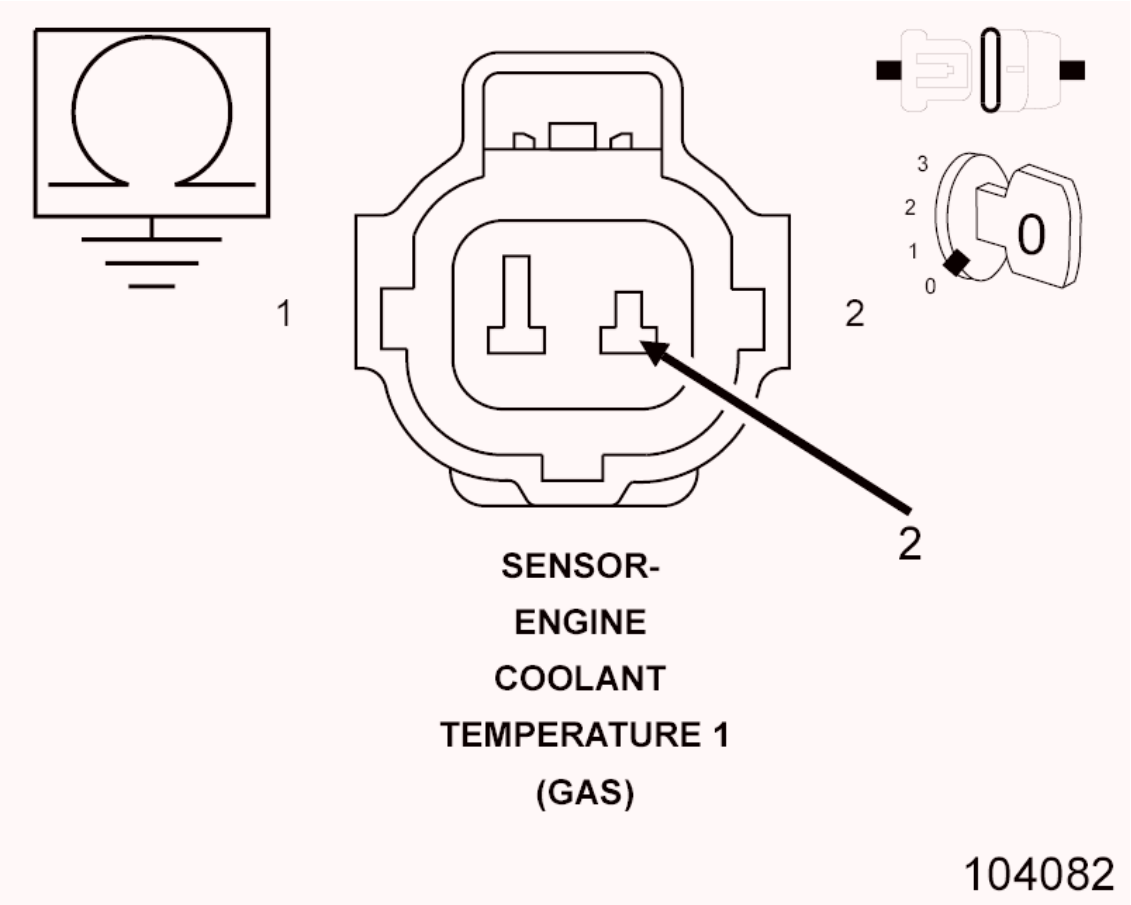

Fig. 30: Checking ECT Signal Circuit For Short To Ground
Courtesy of CHRYSLER GROUP, LLC

1. Turn the ignition off.
2. Disconnect the PCM C2 harness connector.
3. Measure the resistance between ground and the (K2) ECT Signal circuit in the Engine Coolant Temperature Sensor harness connector.

   Is the resistance above 10k Ohms?

   Yes

   - Go To 6

   No

- Repair the (K2) ECT Signal circuit for a short to ground.
- Perform the POWERTRAIN VERIFICATION TEST. Refer to **POWERTRAIN VERIFICATION TEST** .

6. **CHECK FOR THE (K2) ECT SIGNAL CIRCUIT SHORTED TO THE (K900) SENSOR GROUND CIRCUIT**

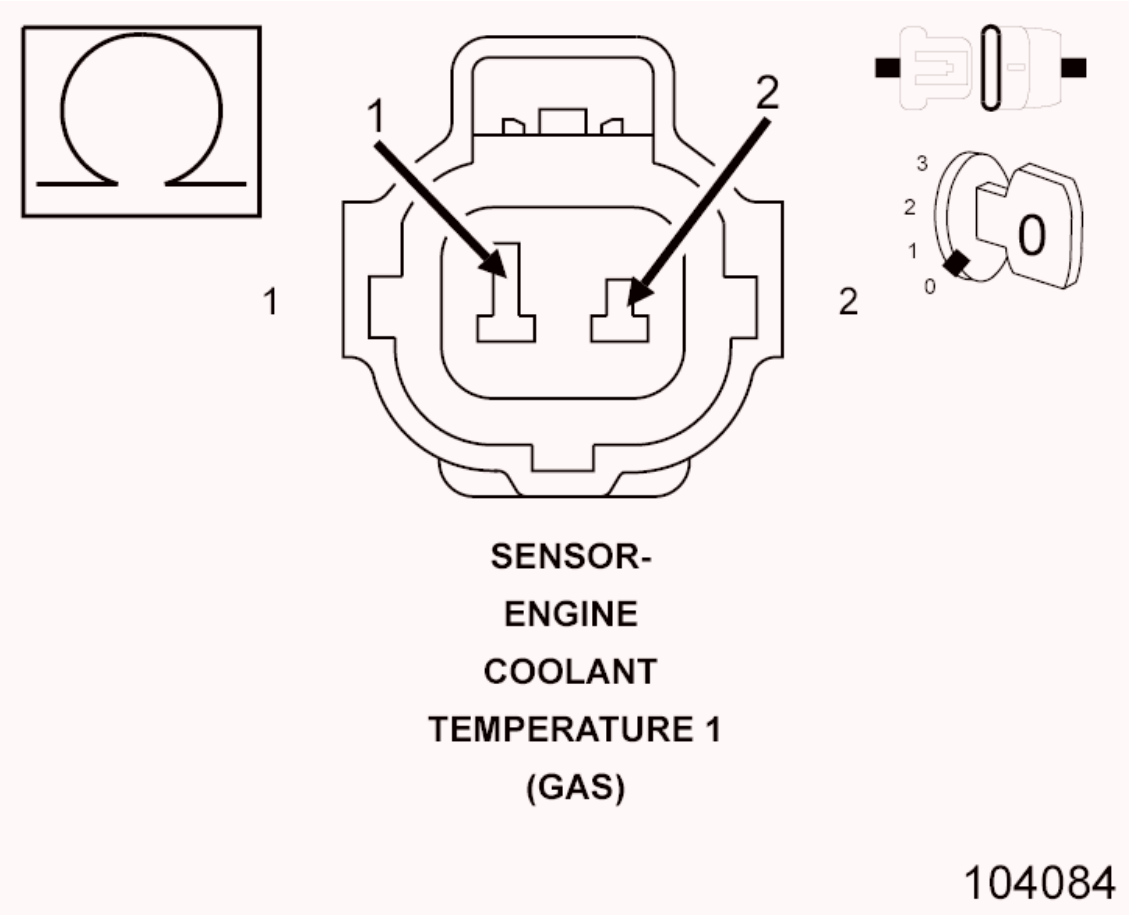

Fig. 31: Checking ECT Sensor Signal Circuit For Short To Sensor Ground Circuit
Courtesy of CHRYSLER GROUP, LLC

1. Measure the resistance between the (K2) ECT Signal circuit and the (K900) Sensor Ground circuit in the Engine Coolant Temperature Sensor harness connector.

   Is the resistance above 10k Ohms?

   Yes

   - Go To 7

No

- Repair the (K2) ECT Signal circuit for a short to the (K900) Sensor Ground circuit.
- Perform the POWERTRAIN VERIFICATION TEST. Refer to **POWERTRAIN VERIFICATION TEST** .

7. **CHECK THE (K2) ECT SIGNAL CIRCUIT FOR AN OPEN/HIGH RESISTANCE**

CAUTION: Do not probe the PCM harness connectors. Probing the PCM harness connectors will damage the PCM terminals resulting in poor terminal to pin connection. Install the GPEC Diagnostic Adaptor to perform the diagnosis.

1. Connect the (special tool #10436, Adapter, GPEC Diagnostic).
2. Measure the resistance of the (K2) ECT Signal circuit between the Engine Coolant Temperature Sensor harness connector and the GPEC Adaptor.

   Is the resistance below 5.0 Ohms?

   Yes

   - Go To 8

   No

   - Repair the (K2) ECT Signal circuit for an open or high resistance.
   - Perform the POWERTRAIN VERIFICATION TEST. Refer to **POWERTRAIN VERIFICATION TEST** .

8. **CHECK THE (K900) SENSOR GROUND CIRCUIT FOR AN OPEN/HIGH RESISTANCE**
   1. Measure the resistance of the (K900) Sensor Ground circuit between the Engine Coolant Temperature Sensor harness connector and the GPEC Adaptor.

      Is the resistance below 5.0 Ohms?

Yes

- Go To 9

No

- Repair the (K900) Sensor Ground for an open or high resistance.
- Perform the POWERTRAIN VERIFICATION TEST. Refer to **POWERTRAIN VERIFICATION TEST** .

9. **ENGINE COOLANT TEMPERATURE SENSOR**

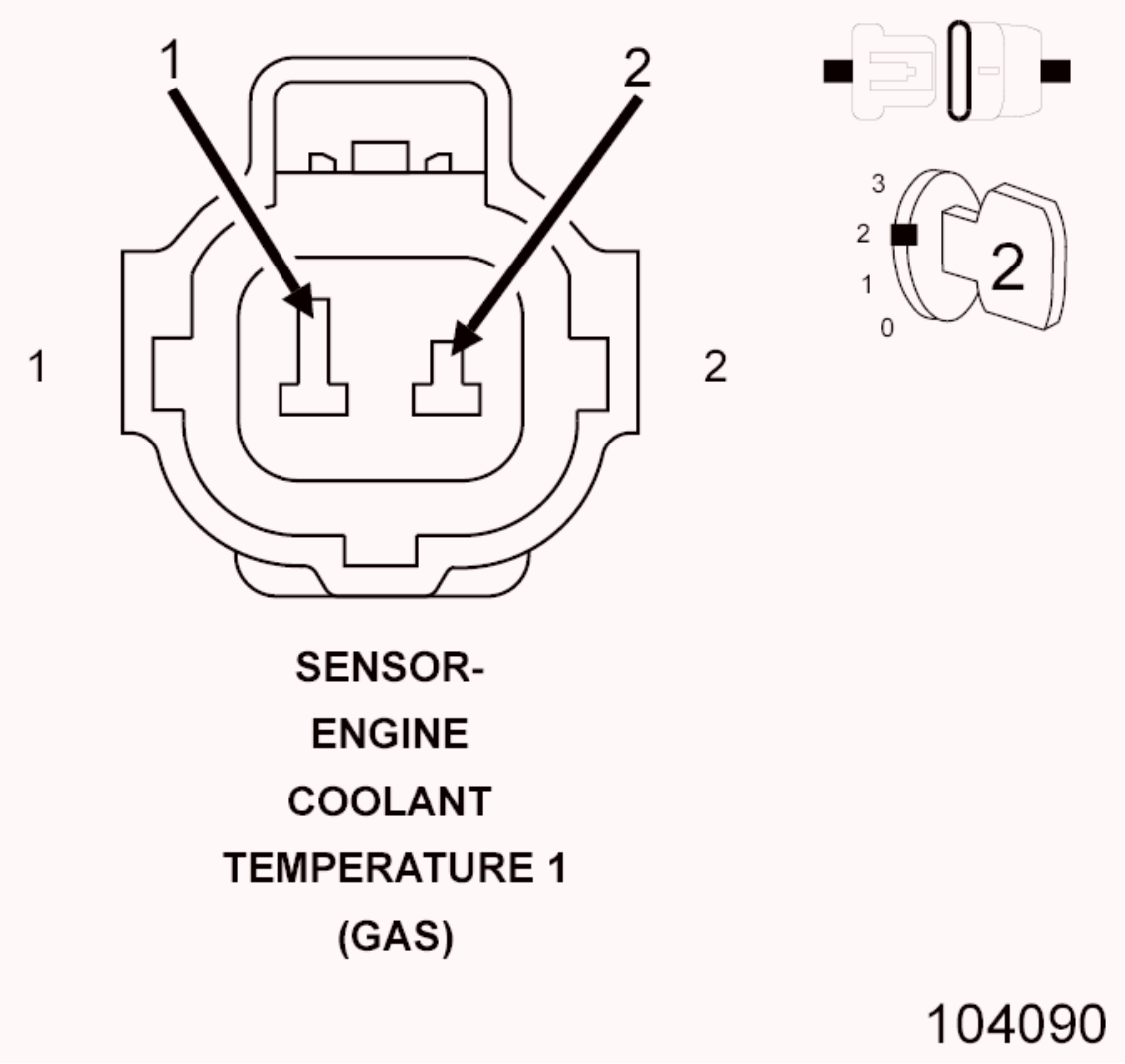

Fig. 32: Engine Coolant Temperature Sensor Harness Connector End View
Courtesy of CHRYSLER GROUP, LLC

1. Turn the ignition off.

2. Reconnect the PCM C2 harness connector.
3. Connect a jumper between the (K900) Sensor Ground circuit and the (K2) ECT Signal circuit in the Engine Coolant Temperature Sensor harness connector.
4. Turn the ignition on.
5. With the scan tool, read the Engine Coolant Temperature Sensor signal voltage.

   Is the voltage below 0.1 volts with the jumper in place?

   Yes

   - Replace the Engine Coolant Temperature Sensor in accordance with the service information.
   - Perform the POWERTRAIN VERIFICATION TEST. Refer to **POWERTRAIN VERIFICATION TEST** .

   No

   - Go To 10

10. **POWERTRAIN CONTROL MODULE (PCM)**
    1. Using the wiring diagram/schematic as a guide, inspect the wiring and connectors between the Engine Coolant Temperature Sensor and the Powertrain Control Module (PCM).
    2. Look for any chafed, pierced, pinched, or partially broken wires.
    3. Look for broken, bent, pushed out or corroded terminals.
    4. Monitor the scan tool data relative to this circuit and wiggle test the wiring and connectors.
    5. Look for the data to change or for the DTC to reset during the wiggle test.
    6. Perform any Technical Service Bulletins that may apply.

       Were any problems found?

       Yes

       - Repair as necessary.

- Perform the POWERTRAIN VERIFICATION TEST. Refer to **POWERTRAIN VERIFICATION TEST** .

No

- Replace and program the Powertrain Control Module (PCM) in accordance with the service information. Refer to **MODULE, POWERTRAIN CONTROL, REMOVAL** .
- Perform the POWERTRAIN VERIFICATION TEST. Refer to **POWERTRAIN VERIFICATION TEST** .

P219A-AIR-FUEL RATIO CYLINDER IMBALANCE BANK 1

For a complete wiring diagram, **refer to appropriate SYSTEM WIRING DIAGRAMS article** .

WHEN MONITORED

Engine Coolant Temperature (ECT) is greater than 70°C (158°F), Engine run time of 90 seconds, engine RPM 1000 - 2700, engine load 30 - 90% and in flex fuel vehicles the Fuel Adaptive Learned must be completed.

SET CONDITION

DTC P113D is not set and the high frequency content of the O2 sensor exceeds a calibrated amount. Two Trip Fault. Three good trips to turn off the MIL.

POSSIBLE CAUSES

Possible Causes
O2 SENSOR HEATER OPERATION
EVAP PURGE SOLENOID OPERATION
O2 SIGNAL CIRCUIT
O2 RETURN CIRCUIT
O2 SENSOR
MAP SENSOR
ECT SENSOR
ENGINE MECHANICAL
FUEL FILTER/PRESSURE REGULATOR
POWERTRAIN CONTROL MODULE (PCM)

Always perform the Pre-Diagnostic Troubleshooting procedure before proceeding. Refer to PRE-DIAGNOSTIC TROUBLESHOOTING PROCEDURE .

DIAGNOSTIC TEST

1. **ACTIVE DTC**

NOTE: Check for contaminates that may have damaged an O2 Sensor: contaminated fuel, unapproved silicone, oil and coolant.

1. Start the engine.
2. Allow the engine to reach normal operating temperature.
3. With the scan tool, read DTCs.

NOTE: It may be necessary to drive the vehicle to meet the conditions to set this DTC, try to repeat the conditions in which the fault originally set by reviewing the Freeze Frame data.

Is the DTC Active or Pending at this time?

Yes

- Go To 2

No

- Perform the INTERMITTENT CONDITION diagnostic procedure. Refer to **INTERMITTENT CONDITION** .

2. **ECT SENSOR OPERATION**

NOTE: For this test to be valid, the thermostat must be operating correctly.

NOTE: For best results, perform this step on a cold engine (cold soak) if possible.

1. Ignition on, engine not running.

2. With the scan tool, read the Engine Coolant Temperature Sensor value. If the engine was allowed to sit overnight (cold soak), the temperature value should be a sensible value that is somewhere close to the ambient temperature.

   NOTE: If engine coolant temperature is above 82°C (180° F), allow the engine to cool until 65°C (150°F) is reached.

3. Start the engine.
4. During engine warm-up, monitor the Engine Coolant Temperature value. The temperature value change should be a smooth transition from start up to normal operating temperature 82°C (180°F). The value should reach at least 82°C (180°F).

   Did the ECT value increase smoothly and reach at least 82°C (180°F)?

   Yes

   - Go To 3

   No

   - Verify that there is good pin to terminal contact in the ECT Sensor and Powertrain Control Module connectors. Replace the Engine Coolant Temperature Sensor if no problems were found with the connectors.
   - Perform the POWERTRAIN VERIFICATION TEST. Refer to **POWERTRAIN VERIFICATION TEST** .

3. **CHECK FUEL PRESSURE**
   1. Perform the CHECKING THE FUEL DELIVERY SYSTEM test procedure. Refer to **DIAGNOSIS AND TESTING** .

      NOTE: Fuel pressure specification is 400 kPa +/- 14 kPa (58 psi +/- 2 psi).

   2. Turn the ignition off.

      Were any fuel system issues found ?

Yes

- Perform the appropriate repairs.
- Perform the POWERTRAIN VERIFICATION TEST. Refer to **POWERTRAIN VERIFICATION TEST** .

No

- Go To 4

4. **O2 SENSOR OPERATION**
   1. Start the engine.
   2. Allow the engine to reach normal operating temperature.

NOTE: **If one of the O2 Sensor Signal or Return circuits is shorted to ground or voltage, all the other O2 Sensor voltage readings will be affected.**

NOTE: **After the repairs have been made, verify proper O2 Sensor operation. If all the O2 Sensor voltage readings have not returned to normal, follow the diagnostic procedure for the remaining O2 Sensors.**

   3. Using the scan tool, monitor the O2 Sensor 1/1 voltage readings.

      Is the voltage switching between 2.5 and 3.4 volts?

Yes

- Go To 5

No

- Go To 9

5. **O2 SENSOR 1/1 HEATER OPERATION**
   1. Turn the ignition off.

NOTE: **Wait a minimum of 10 minutes to allow the O2 Sensor to cool down before continuing the test.**

Allow the O2 Sensor voltage to stabilize at 5.0 volts.

2. Ignition on, engine not running.
3. Using the scan tool, perform the O2 Sensor 1/1 Heater Test.
4. Using the scan tool, monitor the O2 Sensor 1/1 voltage while performing the Heater test for at least two minutes.

   Does the voltage stay above 4.5 volts during the Heater test?

   Yes

   - Verify that there is good pin to terminal contact in the O2 Sensor and Powertrain Control Module connectors. Replace the O2 Sensor if no problems were found with the connectors.
   - Perform the POWERTRAIN VERIFICATION TEST. Refer to **POWERTRAIN VERIFICATION TEST** .

   No

   - Go To 6

6. **MAP SENSOR OPERATION**
   1. Ignition on, engine not running.
   2. With the scan tool, read the Barometric Pressure.

      NOTE: The Barometric Pressure should be approximately equal to the actual barometric pressure. If necessary, compare the barometric pressure value of this vehicle to the value of a known good vehicle of a similar make and model.

   3. Turn the ignition off.
   4. Connect a Vacuum Gauge to a Manifold Vacuum source.
   5. Start the engine.
   6. Allow the engine to idle.

      NOTE: If engine will not idle, maintain a constant RPM

above idle.

7. With the scan tool, read the MAP Sensor vacuum value.

   Is the scan tool reading for MAP Vacuum within 1 inch of the Vacuum Gauge reading and is the Barometric Pressure reading of the vehicle the approximately the same as actual Barometric Pressure?

   Yes

   - Go To 7

   No

   - Verify that there is good pin to terminal contact in the MAP Sensor and Powertrain Control Module connectors. Replace the MAP Sensor if no problems were found with the connectors.
   - Perform the POWERTRAIN VERIFICATION TEST. Refer to **POWERTRAIN VERIFICATION TEST** .

   NOTE: Remove the vacuum gauge before continuing.

7. **EVAP PURGE SOLENOID OPERATION**

NOTE: After disconnecting the Evap Purge Solenoid vacuum connections, inspect the lines and solenoid for signs of contamination.

1. Disconnect the vacuum hoses at the Evap Purge Solenoid.
2. Using a hand vacuum pump, apply 1.0 in. Hg. to the "ENGINE" side of the Evap Purge Solenoid.

   NOTE: The solenoid should hold vacuum for a minimum of 15 seconds.

3. Turn the ignition on.
4. Using the scan tool, actuate the Evap Purge Solenoid to the ON position.

NOTE: The vacuum should drop when the solenoid is actuated.

Does the solenoid function as described above?

Yes

- Go To 8

No

- Verify that there is good pin to terminal contact in the Evap Purge Solenoid and Powertrain Control Module connectors. Replace the Evap Purge Solenoid if no problems were found with the connectors.
- Perform the POWERTRAIN VERIFICATION TEST. Refer to **POWERTRAIN VERIFICATION TEST** .

NOTE: Connect the vacuum hoses before continuing.

8. **ENGINE MECHANICAL**
   1. Check for any of the following conditions/mechanical problems:
      - AIR INDUCTION SYSTEM - must be free from leaks
      - ENGINE VACUUM - must be at least 13 inches in neutral
      - ENGINE VALVE TIMING - must be within specifications
      - ENGINE COMPRESSION - must be within specifications
      - ENGINE EXHAUST SYSTEM - must be free of any restrictions or leaks
      - ENGINE PCV SYSTEM - must flow freely
      - TORQUE CONVERTER STALL SPEED - must be within specifications
      - POWER BRAKE BOOSTER - no internal vacuum leaks
      - FUEL - must be free of contamination
      - FUEL INJECTOR - plugged or restricted injector; control wire not connected to correct injector

Are there any engine mechanical problems?

Yes

- Repair as necessary.
- Perform the POWERTRAIN VERIFICATION TEST. Refer to **POWERTRAIN VERIFICATION TEST** .

No

- Go To 12

9. **O2 SENSOR 1/1**
   1. Ignition on, engine not running.
   2. Disconnect the O2 Sensor 1/1 harness connector.
   3. With the scan tool, monitor the O2 Sensor voltage.
   4. O2 Sensor voltage should read between 4.1 and 5.0 volts on the scan tool with the connector disconnected.
   5. Connect a jumper between the (K99) O2 Sensor 1/1 Signal circuit and the (K902) O2 Sensor 1/1 Return circuit in the O2 Sensor harness connector.

NOTE: The voltage should drop from between 4.1 and 5.0 volts down to 2.5 volts with the jumper connected.

Did the O2 Sensor voltage drop from between 4.1 and 5.0 volts to 2.5 volts when the jumper was installed?

Yes

- Verify that there is good pin to terminal contact in the O2 Sensor and Powertrain Control Module connectors. Replace the O2 Sensor if no problems were found with the connectors.
- Perform the POWERTRAIN VERIFICATION TEST. Refer to **POWERTRAIN VERIFICATION TEST** .

No

- Go To 10

NOTE: Remove the jumper before continuing.

10. **CHECK THE (K99) O2 SENSOR 1/1 SIGNAL CIRCUIT**
    1. Measure the voltage on the (K99) O2 Sensor 1/1 Signal circuit in the O2 Sensor harness connector.

       Is the voltage between 4.1 and 5.0 volts?

       Yes

       - Go To 11

       No

       - Check the (K99) O2 Sensor 1/1 Signal circuit for damage, short to ground, open or short to voltage. Inspect the O2 Sensor connector and the PCM harness connector. If OK, replace and program the Powertrain Control Module in accordance with the Service Information. Refer to **MODULE, POWERTRAIN CONTROL, REMOVAL** .
       - Perform the POWERTRAIN VERIFICATION TEST. Refer to **POWERTRAIN VERIFICATION TEST** .
11. **CHECK THE (K902) O2 SENSOR 1/1 RETURN CIRCUIT**
    1. Measure the voltage on the (K902) O2 Sensor 1/1 Return circuit in the 1/1 O2 Sensor harness connector.

       Is the voltage at 2.5 volts?

       Yes

       - Go To 12

       No

       - Check the (K902) O2 Sensor 1/1 Return circuit for damage, short to ground, open or short to voltage. Inspect the O2 Sensor connector and the PCM harness connector. If OK, replace and program the Powertrain Control Module in accordance with the

Service Information. Refer to **MODULE, POWERTRAIN CONTROL, REMOVAL** .

- Perform the POWERTRAIN VERIFICATION TEST. Refer to **POWERTRAIN VERIFICATION TEST** .

NOTE: Turn the ignition off before continuing.

12. **POWERTRAIN CONTROL MODULE (PCM)**
    1. Using the wiring diagram/schematic as a guide, inspect the wiring and connectors between the Sensors and the Powertrain Control Module (PCM).
       - Look for any chafed, pierced, pinched or partially broken wires.
       - Look for broken, bent, pushed out or corroded terminals.
       - Verify that there is good pin to terminal contact in the O2 Sensor and Powertrain Control Module connectors.
       - Perform any Technical Service Bulletins that may apply.

       Were there any problems found?

       Yes

       - Repair as necessary.
       - Perform the POWERTRAIN VERIFICATION TEST. Refer to **POWERTRAIN VERIFICATION TEST** .

       No

       - Replace and program the Powertrain Control Module in accordance with the service information. Refer to **MODULE, POWERTRAIN CONTROL, REMOVAL** .
       - Perform the POWERTRAIN VERIFICATION TEST. Refer to **POWERTRAIN VERIFICATION TEST** .

P2245-O2 SENSOR 1/1 REFERENCE VOLTAGE CIRCUIT LOW

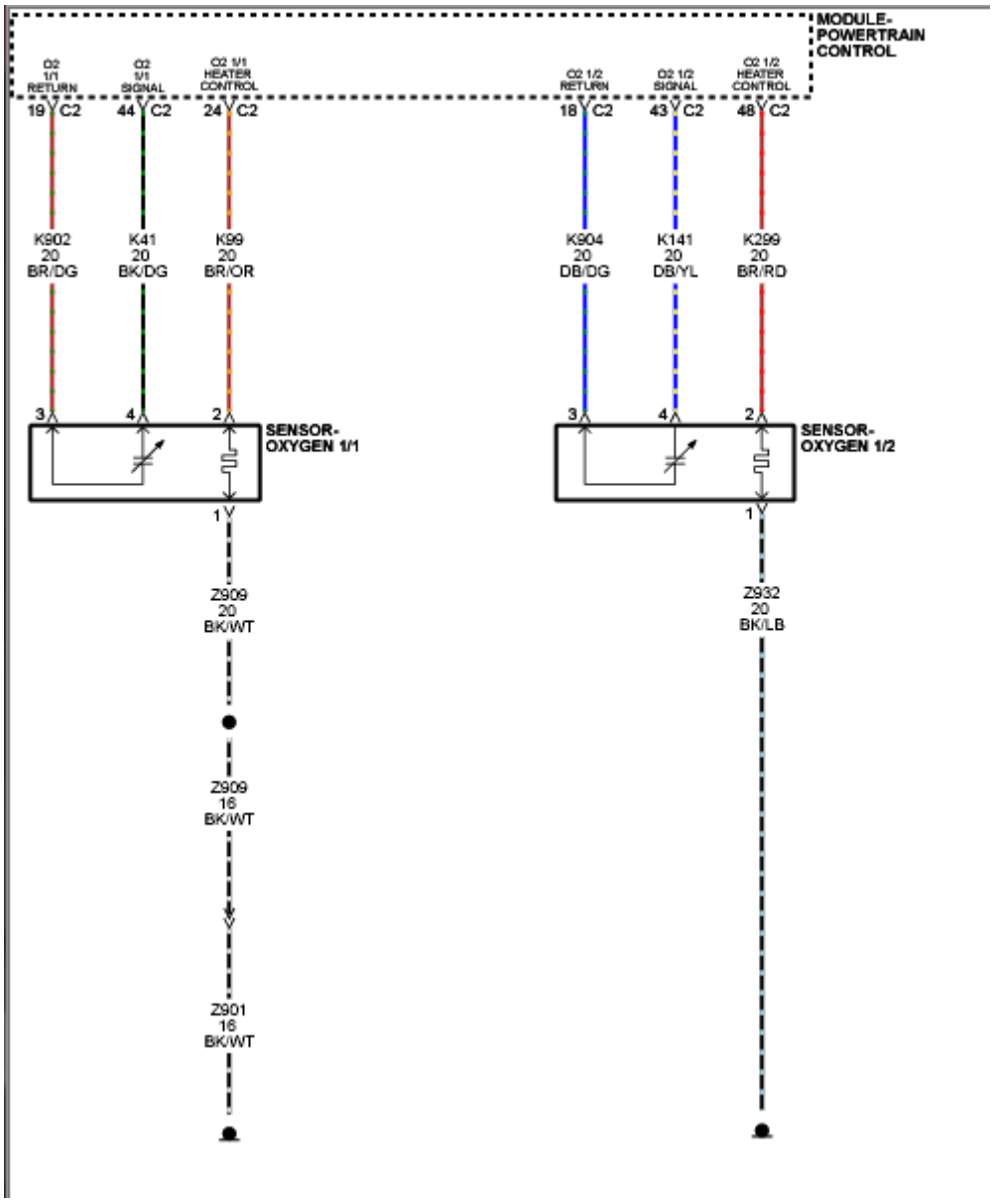

Fig. 33: Oxygen Sensor Circuit Diagram
Courtesy of CHRYSLER GROUP, LLC

For a complete wiring diagram, **refer to appropriate SYSTEM WIRING DIAGRAMS article** .

THEORY OF OPERATION

The Oxygen Sensors (O2 Sensor) are used for fuel control and catalyst monitoring. Each O2 Sensor measures the oxygen content of the exhaust stream. When the engine is started, the Powertrain Control Module (PCM) operates in an Open Loop mode, ignoring the O2 Sensor signal voltage while calculating the air-to-fuel ratio. The heating elements inside each O2 Sensor heats the sensor to bring it to operating conditions faster. This allows the system to enter Closed

Loop earlier and the PCM to calculate the air-to-fuel ratio sooner. While the engine runs, the O2 Sensor heats up and begins to generate a voltage within a range of 0-1, 275 mV. Once sufficient O2 Sensor voltage fluctuation is observed by the PCM, Closed Loop is entered. The PCM uses the O2 Sensor voltage to determine the air-to-fuel ratio. An O2 Sensor voltage that increases toward 1, 000 mV indicates a rich fuel mixture. An O2 Sensor voltage that decreases toward 0 mV indicates a lean fuel mixture. The Powertrain Control Module (PCM) makes short term and long term fuel corrections to maintain stoichiometric fuel/air ratio for best catalytic converter efficiency. Short term fuel correction is based on upstream O2 Sensor output and is designed for quick engine response. The long term fuel correction compensated for variations in the engine specifications, sensor tolerances and component aging and is designed to correct rich and lean conditions over a longer period of time.

For an aged O2 Sensor, the response rate to the air/fuel change is slower than when it was new. The O2 Sensor tends to move less with the same air/fuel changes in a given time frame. Therefore by observing the activity of voltage readings from the upstream O2 Sensor, the quality of the O2 Sensor can be detected.

WHEN MONITORED

With the ignition on and the O2 1/1 Sensor at operating temperature.

SET CONDITION

The Powertrain Control Module (PCM) detects a short to ground on the (K41) O2 Sensor 1/1 Reference Signal circuit for 2.0 seconds.

POSSIBLE CAUSES

Possible Causes
(K41) O2 SENSOR 1/1 REFERENCE SIGNAL CIRCUIT SHORTED TO GROUND
OXYGEN SENSOR
POWERTRAIN CONTROL MODULE (PCM)

Always perform the Pre-Diagnostic Troubleshooting procedure before proceeding. Refer to PRE-DIAGNOSTIC TROUBLESHOOTING PROCEDURE .

DIAGNOSTIC TEST

1. **DTC IS ACTIVE**
   1. Ignition on, engine not running.
   2. With the scan tool, clear DTCs in the Powertrain Control Module (PCM).
   3. Start the engine.
   4. Allow the engine to reach normal operating temperature.
   5. Monitor the scan tool for at least five minutes.
   6. With the scan tool, select View DTCs.

   Is the status Active for this DTC?

   Yes

   - Go To 2

   No

   - Perform the INTERMITTENT CONDITION diagnostic procedure. Refer to **INTERMITTENT CONDITION** .
2. **CHECK THE (K41) O2 SENSOR 1/1 REFERENCE SIGNAL CIRCUIT FOR A SHORT TO GROUND**
   1. Turn the ignition off.
   2. Disconnect the Oxygen Sensor harness connector.
   3. Disconnect the Powertrain Control Module harness connector.
   4. Measure the resistance between ground and the (K41) O2 Sensor 1/1 Reference Signal circuit in the Oxygen Sensor harness connector.

   Is the resistance above 10k Ohms?

   Yes

   - Go To 3

   No

   - Repair the (K41) O2 Sensor 1/1 Reference Signal circuit for a short to ground.

- Perform the POWERTRAIN VERIFICATION TEST. Refer to **POWERTRAIN VERIFICATION TEST** .

3. **OXYGEN SENSOR**
   1. Turn the ignition off.
   2. Reconnect the Powertrain Control Module C2 harness connector.
   3. Replace the Oxygen Sensor in accordance with the service information.
   4. Turn the ignition on.
   5. With the scan tool, navigate to Miscellaneous Functions and perform the O2 Sensor Replaced procedure.
   6. Start the engine.
   7. Allow the engine to reach normal operating temperature.
   8. Monitor the scan tool for at least five minutes.
   9. With the scan tool, select View DTCs.

   Is the status Active for this DTC?

   Yes

   - Go To 4

   No

   - Test Complete.
   - Perform the POWERTRAIN VERIFICATION TEST. Refer to **POWERTRAIN VERIFICATION TEST** .

4. **POWERTRAIN CONTROL MODULE**
   1. Using the wiring diagram/schematic as a guide, inspect the wiring and connectors between the Oxygen Sensor and the Powertrain Control Module.
   2. Look for any chafed, pierced, pinched, or partially broken wires.
   3. Look for broken, bent, pushed out or corroded terminals.
   4. Monitor the scan tool data relative to this circuit and wiggle test the wiring and connectors.
   5. Look for the data to change or for the DTC to reset during the wiggle test.

6. Perform any Technical Service Bulletins that may apply.

   Were any problems found?

   Yes

   - Repair as necessary.
   - Perform the POWERTRAIN VERIFICATION TEST. Refer to **POWERTRAIN VERIFICATION TEST** .

   No

   - Replace the Powertrain Control Module in accordance with the service information. Refer to **MODULE, POWERTRAIN CONTROL, REMOVAL** .
   - Perform the POWERTRAIN VERIFICATION TEST. Refer to **POWERTRAIN VERIFICATION TEST** .

P2246-O2 SENSOR 1/1 REFERENCE VOLTAGE CIRCUIT HIGH

For a complete wiring diagram, **refer to appropriate SYSTEM WIRING DIAGRAMS article** .

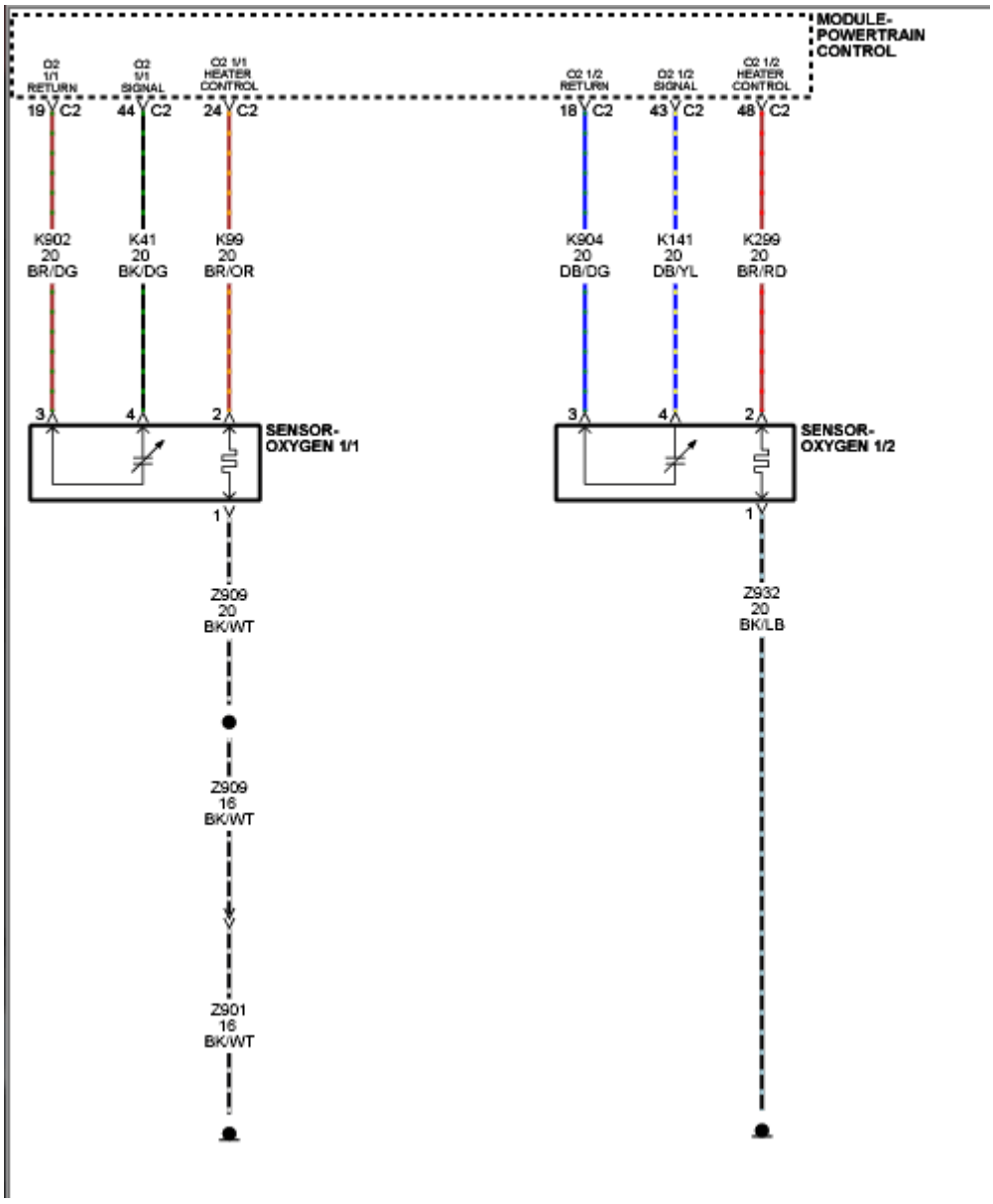

Fig. 34: Oxygen Sensor Circuit Diagram
Courtesy of CHRYSLER GROUP, LLC

THEORY OF OPERATION

The Oxygen Sensors (O2 Sensor) are used for fuel control and catalyst monitoring. Each O2 Sensor measures the oxygen content of the exhaust stream. When the engine is started, the Powertrain Control Module (PCM) operates in an Open Loop mode, ignoring the O2 Sensor signal voltage while calculating the air-to-fuel ratio. The heating elements inside each O2 Sensor heats the sensor to bring it to operating conditions faster. This allows the system to enter Closed Loop earlier and the PCM to calculate the air-to-fuel ratio sooner. While the engine runs, the O2 Sensor heats up and begins to generate a voltage within a range of 0-1, 275 mV. Once sufficient O2 Sensor voltage fluctuation is observed

by the PCM, Closed Loop is entered. The PCM uses the O2 Sensor voltage to determine the air-to-fuel ratio. An O2 Sensor voltage that increases toward 1, 000 mV indicates a rich fuel mixture. An O2 Sensor voltage that decreases toward 0 mV indicates a lean fuel mixture. The Powertrain Control Module (PCM) makes short term and long term fuel corrections to maintain stoichiometric fuel/air ratio for best catalytic converter efficiency. Short term fuel correction is based on upstream O2 Sensor output and is designed for quick engine response. The long term fuel correction compensated for variations in the engine specifications, sensor tolerances and component aging and is designed to correct rich and lean conditions over a longer period of time.

For an aged O2 Sensor, the response rate to the air/fuel change is slower than when it was new. The O2 Sensor tends to move less with the same air/fuel changes in a given time frame. Therefore by observing the activity of voltage readings from the upstream O2 Sensor, the quality of the O2 Sensor can be detected.

WHEN MONITORED

With the ignition on and the O2 Sensor 1/1 at operating temperature.

SET CONDITION

The Powertrain Control Module (PCM) detects a short to voltage on the (K41) O2 Sensor 1/1 Reference Signal circuit for 2.0 seconds.

POSSIBLE CAUSES

Possible Causes
(K41) O2 SENSOR 1/1 REFERENCE SIGNAL CIRCUIT SHORTED TO VOLTAGE
OXYGEN SENSOR
POWERTRAIN CONTROL MODULE (PCM)

Always perform the Pre-Diagnostic Troubleshooting procedure before proceeding. Refer to PRE-DIAGNOSTIC TROUBLESHOOTING PROCEDURE .

DIAGNOSTIC TEST

1. **DTC IS ACTIVE**

1. Ignition on, engine not running.
2. With the scan tool, clear DTCs in the Powertrain Control Module.
3. Start the engine.
4. Allow the engine to reach normal operating temperature.
5. Monitor the scan tool for at least five minutes.
6. With the scan tool, select View DTCs.

   Is the status Active for this DTC?

   Yes

   - Go To 2

   No

   - Perform the INTERMITTENT CONDITION diagnostic procedure. Refer to **INTERMITTENT CONDITION** .

2. **CHECK THE (K41) O2 SENSOR 1/1 REFERENCE SIGNAL CIRCUIT FOR A SHORT TO VOLTAGE**
   1. Turn the ignition off.
   2. Disconnect the Oxygen Sensor connector.
   3. Disconnect the Powertrain Control Module C2 harness connector.
   4. Remove the ASD Relay.
   5. Connect a jumper wire between cavity 87 and cavity 30 of the ASD Relay Connector.
   6. Turn the ignition on.
   7. Measure the voltage of the (K41) O2 Sensor 1/1 Reference Signal circuit at the Oxygen Sensor harness connector.

      Is there any voltage present?

      Yes

      - Repair the (K41) O2 1/1 Reference Signal circuit for a short to voltage.
      - Perform the POWERTRAIN VERIFICATION TEST. Refer to **POWERTRAIN VERIFICATION TEST** .

No

- Go To 3

3. **OXYGEN SENSOR**
   1. Turn the ignition off.
   2. Reconnect the Powertrain Control Module C2 harness connector.
   3. Replace the Oxygen Sensor in accordance with the service information.
   4. Turn the ignition on.
   5. With the scan tool, navigate to Miscellaneous Functions and perform the O2 Sensor Replaced procedure.
   6. Start the engine.
   7. Allow the engine to reach normal operating temperature.
   8. Monitor the scan tool for at least five minutes.
   9. With the scan tool, select View DTCs.

   Is the status Active for this DTC?

   Yes

   - Go To 4

   No

   - Test Complete.
   - Perform the POWERTRAIN VERIFICATION TEST. Refer to **POWERTRAIN VERIFICATION TEST** .

4. **POWERTRAIN CONTROL MODULE**
   1. Using the wiring diagram/schematic as a guide, inspect the wiring and connectors between the Oxygen Sensor and the Powertrain Control Module.
   2. Look for any chafed, pierced, pinched, or partially broken wires.
   3. Look for broken, bent, pushed out or corroded terminals.
   4. Monitor the scan tool data relative to this circuit and wiggle test the wiring and connectors.
   5. Look for the data to change or for the DTC to reset during the wiggle test.

6. Perform any Technical Service Bulletins that may apply.

   Were any problems found?

   Yes

   - Repair as necessary.
   - Perform the POWERTRAIN VERIFICATION TEST. Refer to **POWERTRAIN VERIFICATION TEST** .

   No

   - Replace and program the Powertrain Control Module (PCM) in accordance with the Service Information. Refer to **MODULE, POWERTRAIN CONTROL, REMOVAL** .
   - Perform the POWERTRAIN VERIFICATION TEST. Refer to **POWERTRAIN VERIFICATION TEST** .

P2271-O2 SENSOR 1/2 SIGNAL BIASED RICH

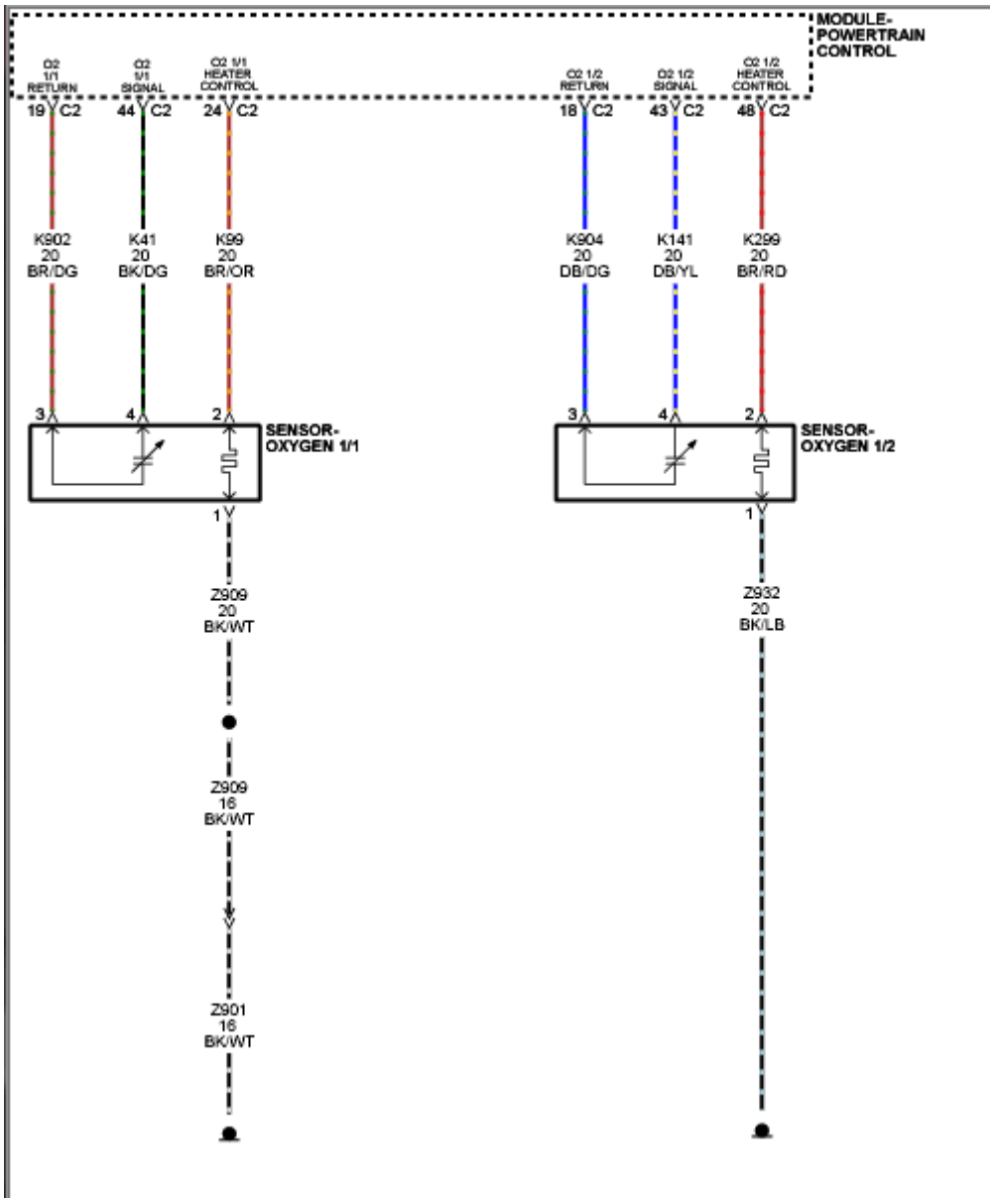

Fig. 35: Oxygen Sensor Circuit Diagram
Courtesy of CHRYSLER GROUP, LLC

For a complete wiring diagram, **refer to appropriate SYSTEM WIRING DIAGRAMS article** .

THEORY OF OPERATION

For an aged Upstream O2 Sensor, the response rate to the air/fuel change is slower than when it was new. The O2 Sensor tends to move less with the same air/fuel changes in a given time frame. Therefore by observing the activity of voltage readings from the Upstream O2 Sensor, the quality of the O2 Sensor can be detected. The Downstream O2 Sensor is located in the exhaust path behind the Catalytic Converter, and is monitored for proper response to assure optimum

Catalytic Converter efficiency. The Downstream O2 Sensor response monitor is intended to diagnose a Downstream O2 Sensor that is not moving or stuck in a voltage window and to insure accurate information for catalyst monitor diagnosis.

WHEN MONITORED

With the engine running, the odometer greater than the minimum mileage allowable for catalyst break-in, and no global or monitor conflicts or disabling conditions present. The test will only run if the monitor has not already run and passed or failed.

SET CONDITION

The Powertrain Control Module (PCM) detects that the sensor does not output a voltage greater than a calibrated high voltage value and less than a calibrated low voltage value within a specific time period. If the voltage pass values are not achieved after the total accumulated test time, a pending fault will be set. An active fault is matured on a second trip failure. Three good trips will turn off the MIL.

POSSIBLE CAUSES

POSSIBLE CAUSES
EXHAUST LEAK
OXYGEN SENSOR WIRING OR CONNECTORS
O2 SENSOR SIGNAL CIRCUIT
O2 SENSOR RETURN CIRCUIT
1/2 OXYGEN SENSOR
POWERTRAIN CONTROL MODULE (PCM)

Always perform the Pre-Diagnostic Troubleshooting procedure before proceeding. Refer to PRE-DIAGNOSTIC TROUBLESHOOTING PROCEDURE .

DIAGNOSTIC TEST

1. **DTC IS ACTIVE**
    1. Start the engine and allow it to reach operating temperature.

WARNING: When the engine is operating, do not stand in direct line with the fan. Do not put your hands near the pulleys, belts or fan. Do not wear loose clothing. Failure to follow these instructions may result in possible serious or fatal injury.

NOTE: It may be necessary to test drive the vehicle within the DTC monitoring conditions in order for this DTC to set.

2. With a scan tool, select View DTCs.

   Is the status Active for this DTC?

   Yes

   - Go To 2

   No

   - Perform the INTERMITTENT CONDITION diagnostic procedure. Refer to **INTERMITTENT CONDITION** .

2. **CHECKING THE EXHAUST SYSTEM FOR LEAKS**
   1. Perform the diagnostic procedure for CHECKING THE EXHAUST SYSTEM FOR LEAKS. Refer to **DIAGNOSIS AND TESTING** .

      Were any problems found?

      Yes

      - Repair as necessary.
      - Perform the POWERTRAIN VERIFICATION TEST. Refer to **POWERTRAIN VERIFICATION TEST** .

      No

      - Go To3

3. **CHECKING THE OXYGEN SENSOR OPERATION**

NOTE: Check for signs of contaminants that may have damaged the O2 Sensor, such as contaminated fuel, unapproved silicone, oil and coolant.

1. Perform the diagnostic procedure for CHECKING THE OXYGEN SENSOR OPERATION. Refer to **DIAGNOSIS AND TESTING** .

   Were any problems found?

   Yes

   - Repair as necessary.
   - Perform the POWERTRAIN VERIFICATION TEST. Refer to **POWERTRAIN VERIFICATION TEST** .

   No

   - Go To 4

4. **POWERTRAIN CONTROL MODULE (PCM)**
   1. Using the wiring diagram/schematic as a guide, inspect the wiring and connectors between the 1/2 Oxygen Sensor and the Powertrain Control Module (PCM).
      - Look for any chafed, pierced, pinched, or partially broken wires.
      - Look for broken, bent, pushed out or corroded terminals.
      - Perform any technical service bulletins that may apply.

      Were any problems found?

      Yes

      - Repair as necessary.
      - Perform the POWERTRAIN VERIFICATION TEST. Refer to **POWERTRAIN VERIFICATION TEST** .

      No

      - Replace and program the Powertrain Control Module (PCM) in accordance with the Service Information. Refer to **MODULE, POWERTRAIN CONTROL, REMOVAL** .

- Perform the POWERTRAIN VERIFICATION TEST. Refer to **POWERTRAIN VERIFICATION TEST** .

P2299-BRAKE PEDAL POSITION/ACCELERATOR PEDAL POSITION INCOMPATIBLE

For a complete wiring diagram, **refer to appropriate SYSTEM WIRING DIAGRAMS article** .

WHEN MONITORED

With the ignition on and no brake or Accelerator Pedal Position (APP) sensor DTCs present.

SET CONDITION

The Powertrain Control Module (PCM) detects that the Brake Switch and the Accelerator Pedal are both pressed for a calculated amount of time. One trip fault and the code will be set within five seconds. ETC light will illuminate, the light will only stay illuminated while DTC is active.

POSSIBLE CAUSES

Possible Causes
CUSTOMER PRESSING ACCELERATOR PEDAL, THEN PRESSING BRAKE PEDAL, AND CONTINUES HOLDING THEM DOWN SIMULTANEOUSLY
STOP LAMP SWITCH
ACCELERATOR PEDAL POSITION SENSOR

Always perform the Pre-Diagnostic Troubleshooting procedure before proceeding. Refer to PRE-DIAGNOSTIC TROUBLESHOOTING PROCEDURE .

DIAGNOSTIC TEST

1. **DTC INFORMATION**

NOTE: If a pedal assembly becomes mechanically stuck the voltage output will stay fixed, if this is also Followed by a long application of the brakes this code will set.

NOTE: When this code sets the pedal position in the PCM software will ramp to idle. If the Pedal voltage changes OR the brake pedal is released, the pedal position in the PCM software will ramp up to the pedal position and the ETC light will go out.

1. With the scan tool, read DTCs and record the related Freeze Frame data.
2. Diagnose all other Stop Lamp Switch and APP sensor codes before continuing.
3. This code can be set by a driver who uses both feet while driving, one for the Accelerator Pedal and the other for the Brake Pedal.

NOTE: The most likely cause of this DTC is caused by the customer Brake Torquing the engine by pressing the Accelerator pedal and the pressing the Brake Pedal.

4. Ask the driver of the vehicle if these conditions apply to their driving habits.

   Are the listed conditions part of the customers driving habits?

   Yes

   - Advise the customer of what caused the DTC. This is normal operation of a ETC equipped vehicle because of safety issues.
   - Perform the POWERTRAIN VERIFICATION TEST. Refer to **POWERTRAIN VERIFICATION TEST** .

   No

   - Go To 2

2. **STOP LAMP SWITCH**
   1. With the scan tool, monitor the status of brake switch 1 and brake switch 2.
   2. Pressed and release the brake pedal.

NOTE: The status for each switch should change from Not Pressed to Pressed when the brake switch is pressed.

Does the status change as described above?

Yes

- Go To 3

No

- Check the Stop Lamp Switch for proper adjustment and installation. Check all related circuits for an open or shorted condition using the appropriate wiring diagram. If no other problems are found, replace the Stop Lamp Switch in accordance with the Service Information.
- Perform the POWERTRAIN VERIFICATION TEST. Refer to **POWERTRAIN VERIFICATION TEST** .

3. **ACCELERATOR PEDAL POSITION SENSOR**
   1. Ignition on, engine not running.
   2. With the scan tool, monitor both APP sensor voltage readings.
   3. Slowly press the accelerator pedal from idle until it reaches the end stop near the floor.
   4. The APP sensor 1 voltage should start at approximately 0.875 Volts and increase to approximately 4.5 Volts with a smooth transition.
   5. The APP sensor 2 voltage should start at approximately 0.45 Volts and increase to approximately 2.3 Volts with a smooth transition.

   Does the sensor voltage change as described above when the accelerator pedal was pressed.

   Yes

   - Perform the INTERMITTENT CONDITION diagnostic procedure. Refer to **INTERMITTENT CONDITION** .

   No

- Check the appropriate APP sensor circuits for an open and shorted condition. If no problems are found, replace the APP sensor Assembly in accordance with the Service Information. After installation, with a scan tool, perform the ETC RELEARN function.
- Perform the POWERTRAIN VERIFICATION TEST. Refer to **POWERTRAIN VERIFICATION TEST** .

P2302-IGNITION COIL 1 SECONDARY CIRCUIT - INSUFFICIENT IONIZATION

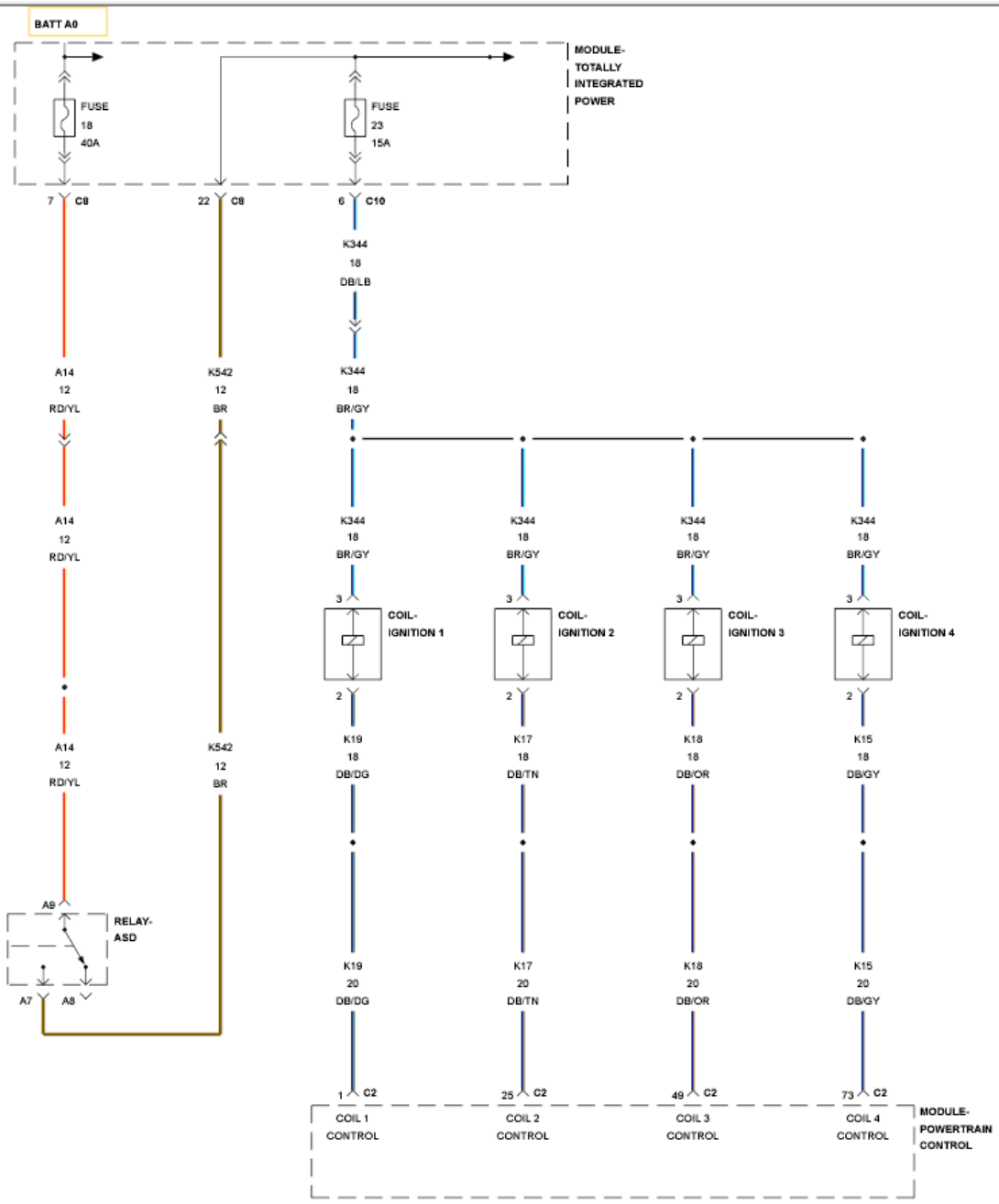

Fig. 36: Ignition Coil Circuit Diagram
Courtesy of CHRYSLER GROUP, LLC

For a complete wiring diagram, **refer to appropriate SYSTEM WIRING DIAGRAMS article** .

THEORY OF OPERATION

The primary winding of each coil-on-plug Ignition Coil is supplied power via the Fused Automatic Shut Down (ASD) Relay Output circuit. The Powertrain Control Module (PCM) completes the circuit to ground internally (low side driver) allowing the energy that is stored in the magnetic field of the primary coil to be transferred to the spark plug via the secondary coil. The PCM determines spark timing by monitoring engine operating parameters via various sensors and then calculating the appropriate moment to initiate the spark event. The PCM manages spark advance depending on engine RPM, manifold absolute pressure, engine coolant and oil temperature.

WHEN MONITORED

With the engine running and battery voltage greater than 10.4 volts.

SET CONDITION

The Powertrain Control Module (PCM) detects that the secondary ignition burn time is incorrect or not present. One Trip Fault.

POSSIBLE CAUSES

Possible Causes
(K344) FUSED ASD RELAY OUTPUT CIRCUIT OPEN OR HIGH RESISTANCE
(K19) COIL 1 CONTROL CIRCUIT SHORTED TO GROUND
(K19) COIL 1 CONTROL CIRCUIT OPEN OR HIGH RESISTANCE
IGNITION COIL 1
POWERTRAIN CONTROL MODULE (PCM)

Always perform the Pre-Diagnostic Troubleshooting procedure before proceeding. Refer to PRE-DIAGNOSTIC TROUBLESHOOTING PROCEDURE .

DIAGNOSTIC TEST

1. **ACTIVE DTC**
   1. Ignition on, engine not running.
   2. With the scan tool, clear DTCs in the Powertrain Control Module (PCM).
   3. Start the engine and allow it to reach normal operating temperature.

      WARNING: **When the engine is operating, do not stand in direct line with the fan. Do not put your hands near the pulleys, belts or fan. Do not wear loose clothing. Failure to follow these instructions may result in possible serious or fatal injury.**

   4. With the scan tool, select View DTCs.

      Is the status Active for this DTC?

      Yes

      - Go To 2

      No

      - Perform the INTERMITTENT CONDITION diagnostic procedure. Refer to **INTERMITTENT CONDITION** .
2. **CHECK THE (F344) FUSED ASD OUTPUT CIRCUIT FOR AN OPEN/HIGH RESISTANCE**

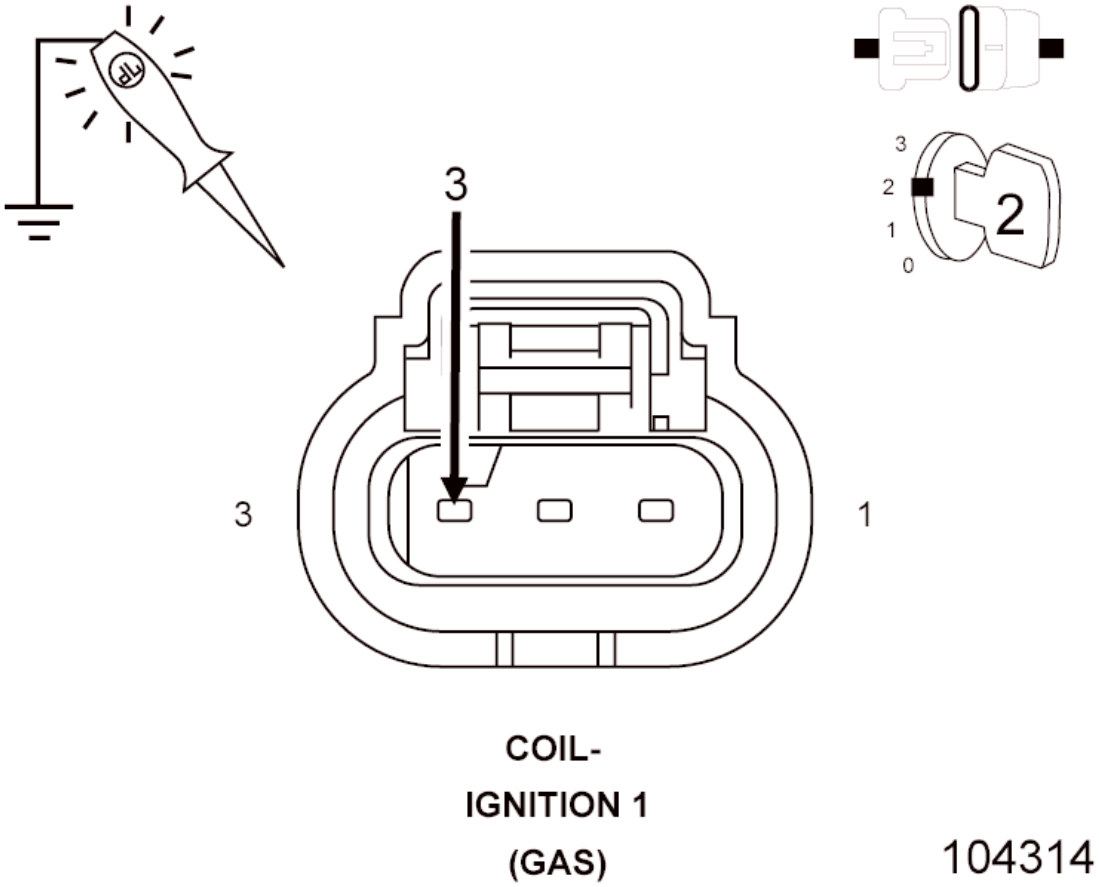

Fig. 37: Checking Fused ASD Output Circuit For Open Or High Resistance
Courtesy of CHRYSLER GROUP, LLC

1. Turn the ignition off.
2. Disconnect the Ignition Coil 1 harness connector.
3. Turn the ignition on.
4. Using a 12-volt test light connected to ground, check the (F344) Fused ASD Relay Output circuit in the Ignition Coil 1 harness connector.

NOTE: The test light should be illuminated and bright. Compare the brightness to that of a direct connection to the battery.

Is the test light illuminated and bright?

Yes

- Go To 3

No

- Repair the (F344) Fused ASD Relay Output circuit for an open circuit or short to ground.
- Perform the POWERTRAIN VERIFICATION TEST. Refer to **POWERTRAIN VERIFICATION TEST** .

3. **CHECK THE (K19) COIL 1 CONTROL CIRCUIT SHORTED TO GROUND**

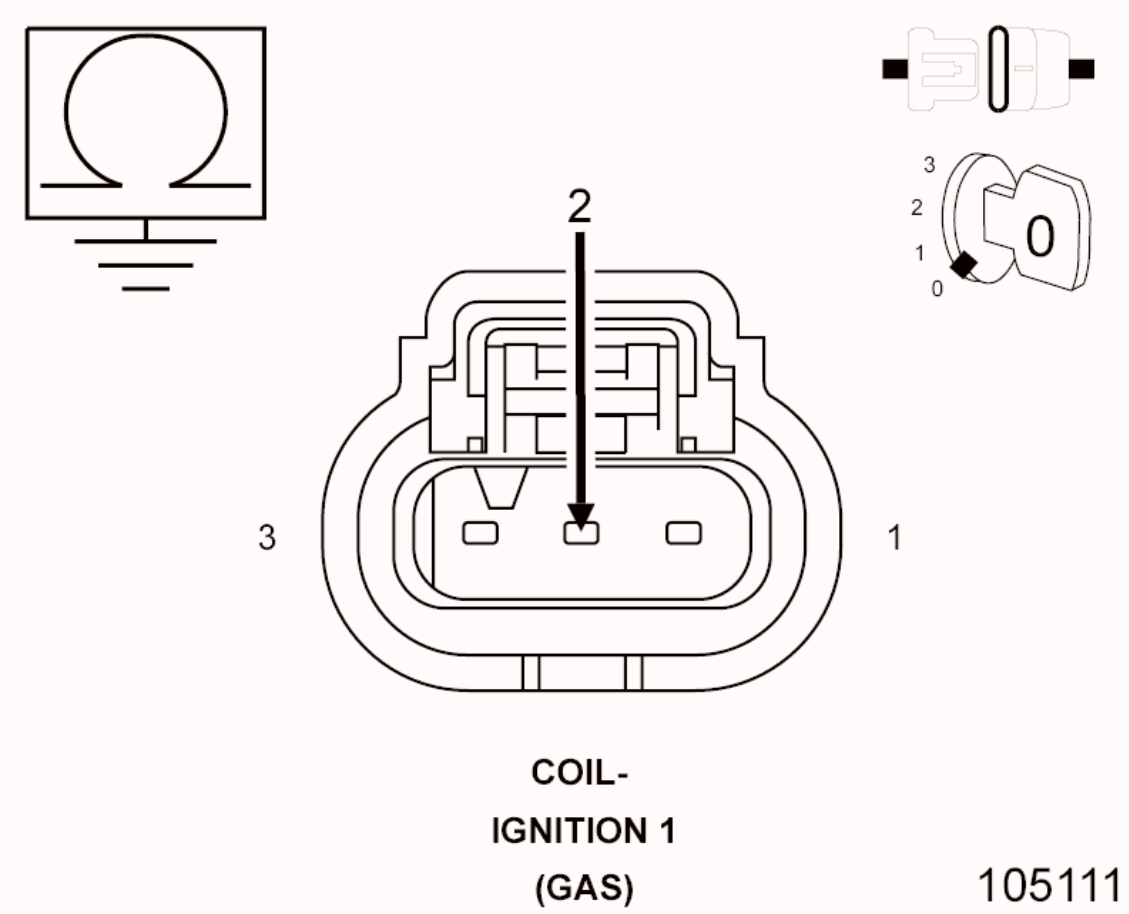

Fig. 38: Checking Coil Control Circuit For Short To Ground
Courtesy of CHRYSLER GROUP, LLC

1. Turn the ignition off.
2. Disconnect the PCM C2 harness connector.
3. Measure the resistance between ground and the (K19) Coil 1 Control circuit in the Ignition Coil 1 harness connector.

   Is the resistance above 10k Ohms?

Yes

- Go To 4

No

- Repair the (K19) Coil 1 Control circuit for a short to ground.
- Perform the POWERTRAIN VERIFICATION TEST. Refer to **POWERTRAIN VERIFICATION TEST** .

4. **CHECK THE (K19) COIL 1 CONTROL CIRCUIT FOR AN OPEN/HIGH RESISTANCE**

CAUTION: Do not probe the PCM harness connectors. Probing the PCM harness connectors will damage the PCM terminals resulting in poor terminal to pin connection. Install the GPEC Diagnostic Adaptor to perform the diagnosis.

1. Connect the (special tool #10436, Adapter, GPEC Diagnostic).
2. Measure the resistance of the (K19) Coil 1 Control circuit between the Ignition Coil 1 harness connector and the GPEC Adaptor.

Is the resistance below 5.0 Ohms?

Yes

- Go To 5

No

- Repair the (K19) Coil 1 Control circuit for an open or high resistance.
- Perform the POWERTRAIN VERIFICATION TEST. Refer to **POWERTRAIN VERIFICATION TEST** .

5. **IGNITION COIL 1**

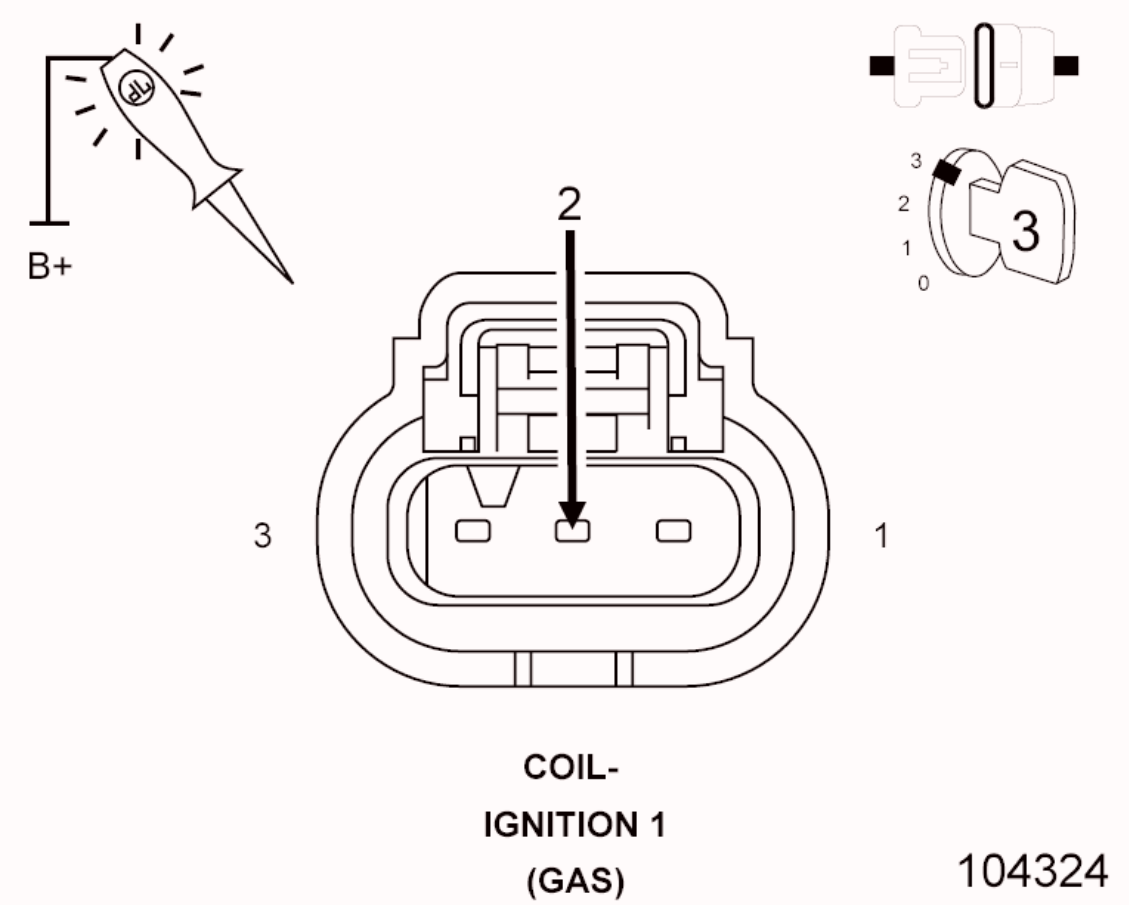

Fig. 39: Checking Ignition Coil Control Circuit
Courtesy of CHRYSLER GROUP, LLC

WARNING: When the engine is operating, do not stand in direct line with the fan. Do not put your hands near the pulleys, belts or fan. Do not wear loose clothing. Failure to follow these instructions may result in possible serious or fatal injury.

1. Reconnect the PCM C2 harness connector.
2. Using a 12-volt test light connected to 12 volts, check the (K19) Coil 1 Control circuit in the Ignition Coil 1 harness connector.
3. Crank the engine for five seconds.

NOTE: The test light should blink each time the circuit is activated by the PCM.

Does the test light blink each time the circuit is activated by the PCM?

Yes

- Replace the Ignition Coil 1 in accordance with the service information. Refer to **COIL, IGNITION, REMOVAL** .
- Perform the POWERTRAIN VERIFICATION TEST. Refer to **POWERTRAIN VERIFICATION TEST** .

No

- Go To 6

6. **POWERTRAIN CONTROL MODULE (PCM)**
   1. Using the wiring diagram/schematic as a guide, inspect the wiring and connectors between the Ignition Coil 1 and the Powertrain Control Module (PCM).
   2. Look for any chafed, pierced, pinched, or partially broken wires.
   3. Look for broken, bent, pushed out or corroded terminals.
   4. Perform any Technical Service Bulletins that may apply.

   Were any problems found?

   Yes

   - Repair as necessary.
   - Perform the POWERTRAIN VERIFICATION TEST. Refer to **POWERTRAIN VERIFICATION TEST** .

   No

   - Replace and program the Powertrain Control Module (PCM) in accordance with the service information. Refer to **MODULE, POWERTRAIN CONTROL, REMOVAL** .
   - Perform the POWERTRAIN VERIFICATION TEST. Refer to **POWERTRAIN VERIFICATION TEST** .

P2305-IGNITION COIL 2 SECONDARY CIRCUIT - INSUFFICIENT IONIZATION

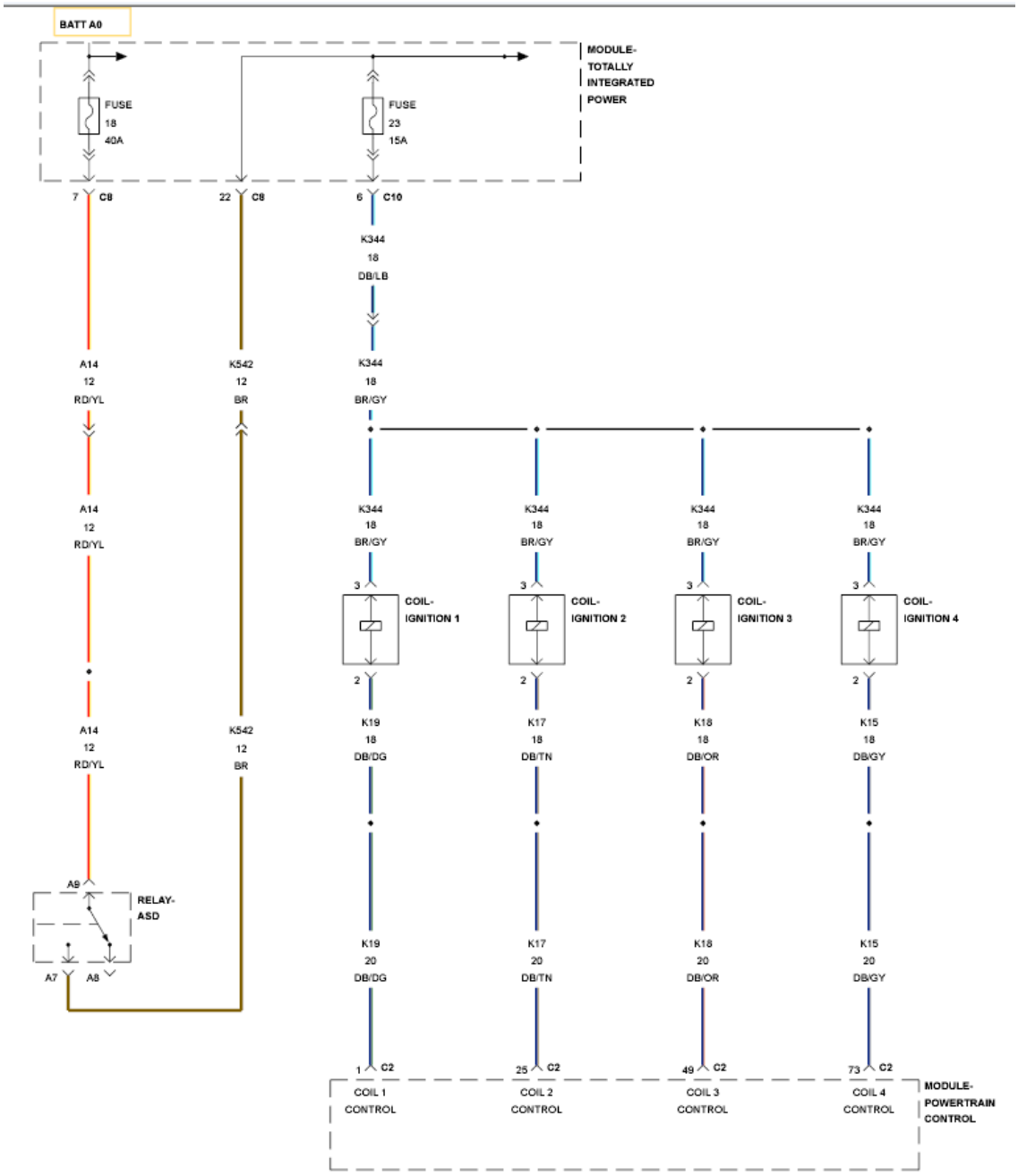

Fig. 40: Ignition Coil Circuit Diagram
Courtesy of CHRYSLER GROUP, LLC

For a complete wiring diagram, **refer to appropriate SYSTEM WIRING DIAGRAMS article** .

THEORY OF OPERATION

The primary winding of each coil-on-plug Ignition Coil is supplied power via the Fused Automatic Shut Down (ASD) Relay Output circuit. The Powertrain Control Module (PCM) completes the circuit to ground internally (low side

driver) allowing the energy that is stored in the magnetic field of the primary coil to be transferred to the spark plug via the secondary coil. The PCM determines spark timing by monitoring engine operating parameters via various sensors and then calculating the appropriate moment to initiate the spark event. The PCM manages spark advance depending on engine RPM, manifold absolute pressure, engine coolant and oil temperature.

WHEN MONITORED

With the engine running and battery voltage greater than 10.4 volts.

SET CONDITION

The Powertrain Control Module (PCM) detects that the secondary ignition burn time is incorrect or not present. One Trip Fault.

POSSIBLE CAUSES

Possible Causes
(K344) FUSED ASD RELAY OUTPUT CIRCUIT OPEN OR HIGH RESISTANCE
(K17) COIL 2 CONTROL CIRCUIT SHORTED TO GROUND
(K17) COIL 2 CONTROL CIRCUIT OPEN OR HIGH RESISTANCE
IGNITION COIL 2
POWERTRAIN CONTROL MODULE (PCM)

Always perform the Pre-Diagnostic Troubleshooting procedure before proceeding. Refer to PRE-DIAGNOSTIC TROUBLESHOOTING PROCEDURE .

DIAGNOSTIC TEST

1. **ACTIVE DTC**
    1. Ignition on, engine not running.
    2. With the scan tool, Clear DTCs in the Powertrain Control Module (PCM).
    3. Start the engine and allow it to reach normal operating temperature.

WARNING: When the engine is operating, do not stand in direct line with the fan. Do not put

your hands near the pulleys, belts or fan. Do not wear loose clothing. Failure to follow these instructions may result in possible serious or fatal injury.

4. With the scan tool, select View DTCs.

   Is the status Active for this DTC?

   Yes

   - Go To 2

   No

   - Perform the INTERMITTENT CONDITION diagnostic procedure. Refer to **INTERMITTENT CONDITION** .

2. **CHECK THE (F344) FUSED ASD RELAY OUTPUT CIRCUIT FOR AN OPEN/HIGH RESISTANCE**

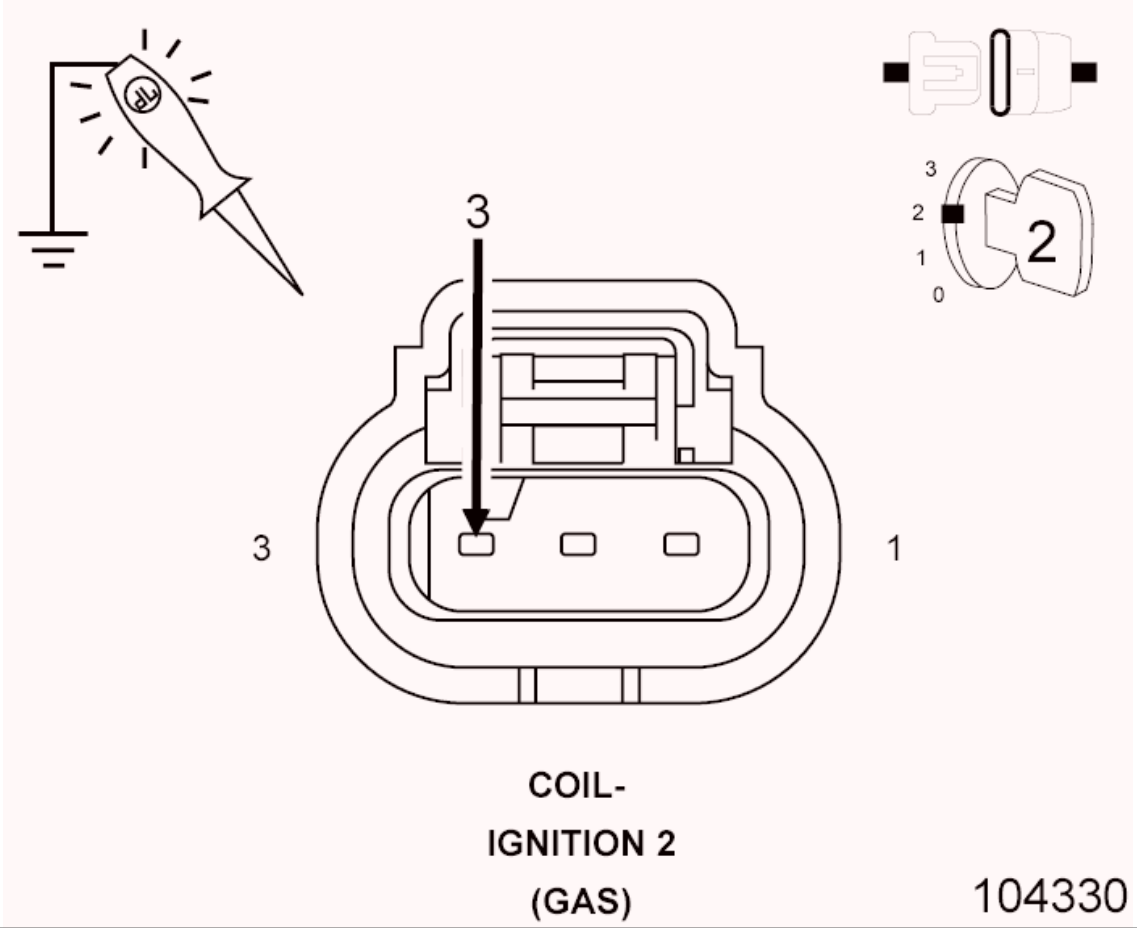

Fig. 41: Checking Fused ASD Relay Output Circuit For Open Or High Resistance
Courtesy of CHRYSLER GROUP, LLC

1. Turn the ignition off.
2. Disconnect the Ignition Coil 2 harness connector.
3. Turn the ignition on.
4. Using a 12-volt test light connected to ground, check the (F344) Fused ASD Relay Output circuit in the Ignition Coil 2 harness connector.

NOTE: The test light should be illuminated and bright. Compare the brightness to that of a direct connection to the battery.

Is the test light illuminated and bright?

Yes

- Go To 3

No

- Repair the (F344) Fused ASD Relay Output circuit for an open circuit or short to ground.
- Perform the POWERTRAIN VERIFICATION TEST. Refer to **POWERTRAIN VERIFICATION TEST** .

3. **CHECK THE (K17) COIL 2 CONTROL CIRCUIT FOR A SHORT TO GROUND**

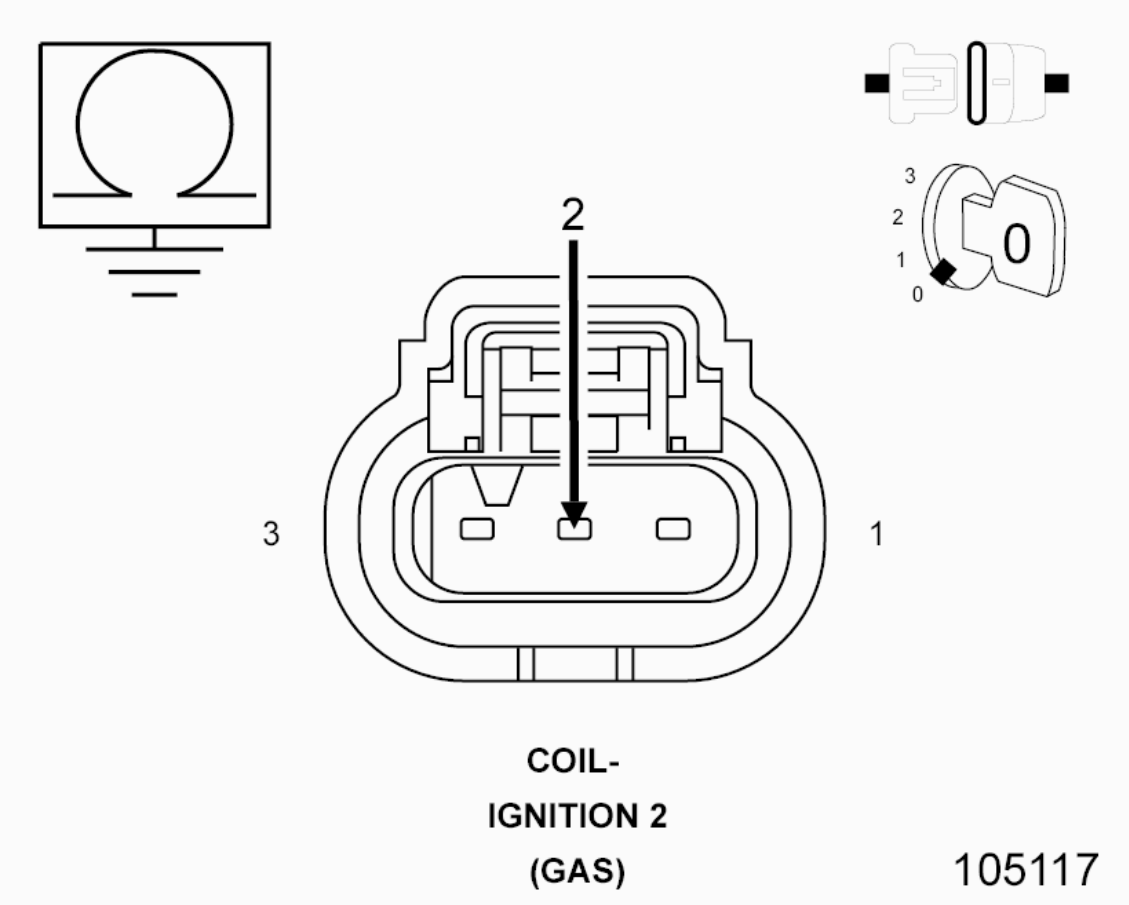

Fig. 42: Checking Coil 2 Control Circuit For Short To Ground
Courtesy of CHRYSLER GROUP, LLC

1. Turn the ignition off.
2. Disconnect the PCM C2 harness connector.
3. Measure the resistance between ground and the (K17) Coil 2 Control circuit in the Ignition Coil 2 harness connector.

   Is the resistance above 10k Ohms?

   Yes

   - Go To 4

   No

   - Repair the (K17) Coil 2 Control circuit for a short to ground.
   - Perform the POWERTRAIN VERIFICATION TEST. Refer to **POWERTRAIN VERIFICATION TEST** .

4. **CHECK THE (K17) COIL 2 CONTROL CIRCUIT FOR AN OPEN/HIGH RESISTANCE**

CAUTION: Do not probe the PCM harness connectors. Probing the PCM harness connectors will damage the PCM terminals resulting in poor terminal to pin connection. Install the GPEC Diagnostic Adaptor to perform the diagnosis.

1. Connect the (special tool #10436, Adapter, GPEC Diagnostic).
2. Measure the resistance of the (K17) Coil 2 Control circuit between the Ignition Coil 2 harness connector and the GPEC Adaptor.

Is the resistance below 5.0 Ohms?

Yes

- Go To 5

No

- Repair the (K17) Coil 2 Control circuit for an open or high resistance.
- Perform the POWERTRAIN VERIFICATION TEST. Refer to **POWERTRAIN VERIFICATION TEST** .

5. **IGNITION COIL 2**

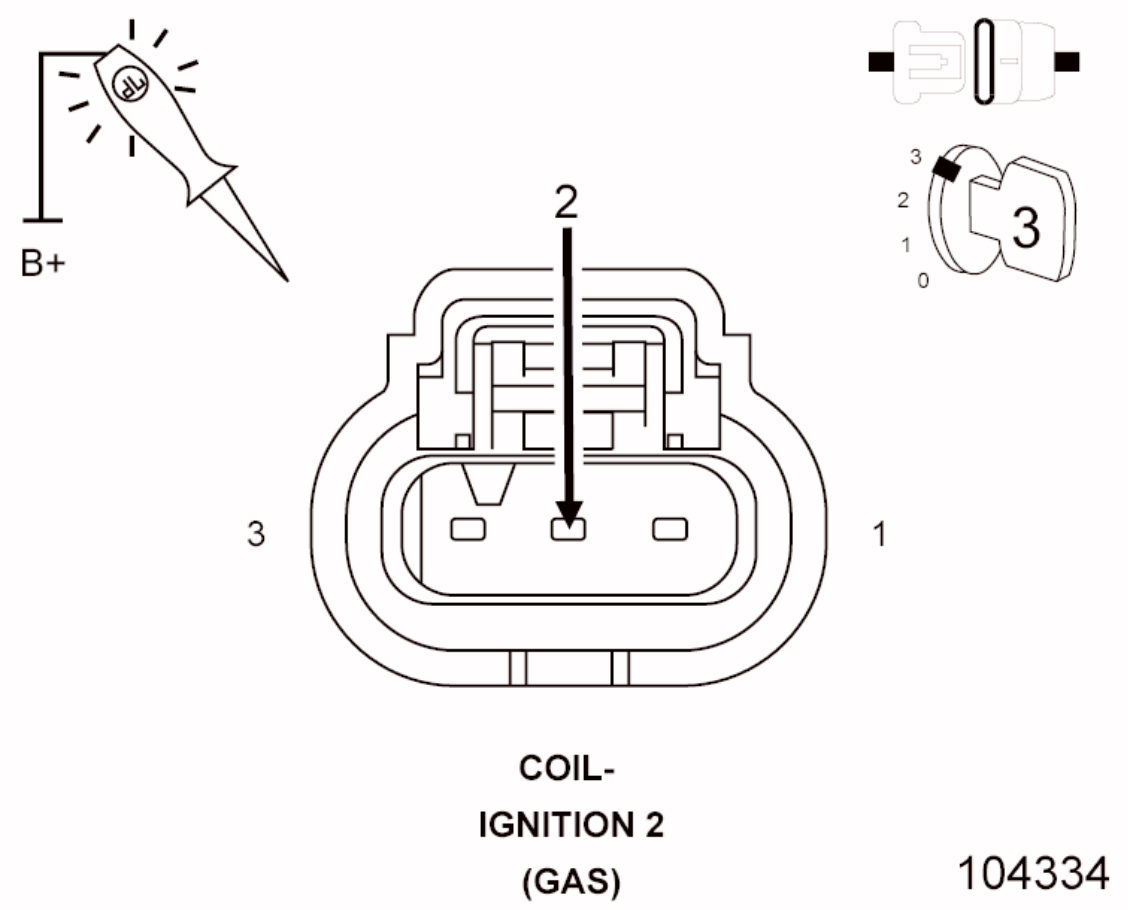

Fig. 43: Checking Ignition Coil 2 Control Circuit
Courtesy of CHRYSLER GROUP, LLC

WARNING: When the engine is operating, do not stand in direct line with the fan. Do not put your hands near the pulleys, belts or fan. Do not wear loose clothing. Failure to follow these instructions may result in possible serious or fatal injury.

1. Connect the PCM C2 harness connector.
2. Using a 12-volt test light connected to 12 volts, check the (K17) Coil 2 Control circuit in the Ignition Coil 2 harness connector.
3. Crank the engine for five seconds.

NOTE: The test light should blink each time the circuit is activated by the PCM.

Does the test light blink each time the circuit is activated by the PCM?

Yes

- Replace the Ignition Coil 2 in accordance with the service information. Refer to **COIL, IGNITION, REMOVAL** .
- Perform the POWERTRAIN VERIFICATION TEST. Refer to **POWERTRAIN VERIFICATION TEST** .

No

- Go To 6

6. **POWERTRAIN CONTROL MODULE (PCM)**
   1. Using the wiring diagram/schematic as a guide, inspect the wiring and connectors between the Ignition Coil 2 and the Powertrain Control Module (PCM).
   2. Look for any chafed, pierced, pinched, or partially broken wires.
   3. Look for broken, bent, pushed out or corroded terminals.
   4. Perform any Technical Service Bulletins that may apply.

   Were any problems found?

   Yes

   - Repair as necessary.
   - Perform the POWERTRAIN VERIFICATION TEST. Refer to **POWERTRAIN VERIFICATION TEST** .

   No

   - Replace and program the Powertrain Control Module (PCM) in accordance with the service information. Refer to **MODULE, POWERTRAIN CONTROL, REMOVAL** .
   - Perform the POWERTRAIN VERIFICATION TEST. Refer to **POWERTRAIN VERIFICATION TEST** .

P2308-IGNITION COIL 3 SECONDARY CIRCUIT - INSUFFICIENT IONIZATION

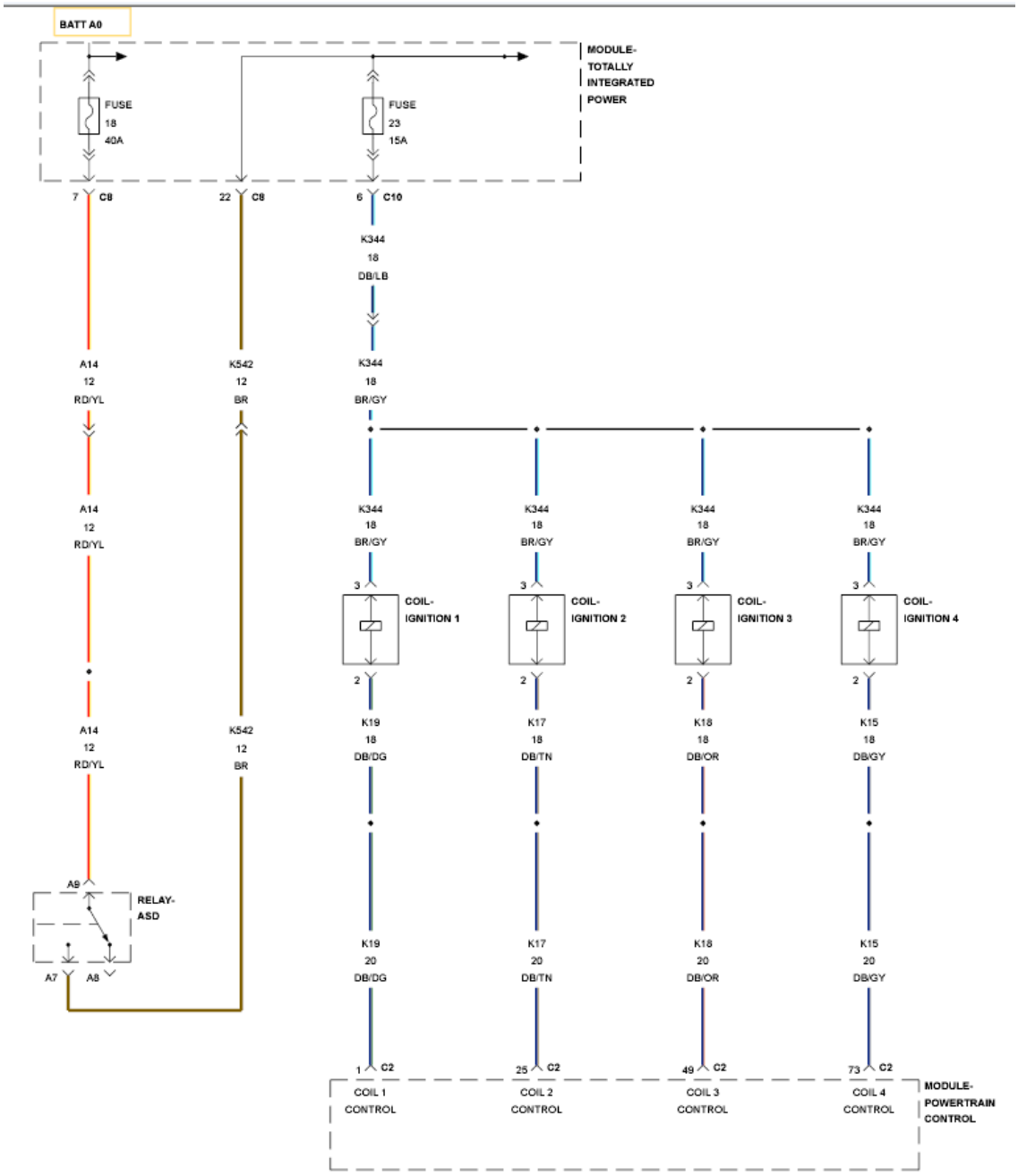

Fig. 44: Ignition Coil Circuit Diagram
Courtesy of CHRYSLER GROUP, LLC

For a complete wiring diagram, **refer to appropriate SYSTEM WIRING DIAGRAMS article** .

THEORY OF OPERATION

The primary winding of each coil-on-plug Ignition Coil is supplied power via the Fused Automatic Shut Down (ASD) Relay Output circuit. The Powertrain Control Module (PCM) completes the circuit to ground internally (low side

driver) allowing the energy that is stored in the magnetic field of the primary coil to be transferred to the spark plug via the secondary coil. The PCM determines spark timing by monitoring engine operating parameters via various sensors and then calculating the appropriate moment to initiate the spark event. The PCM manages spark advance depending on engine RPM, manifold absolute pressure, engine coolant and oil temperature.

WHEN MONITORED

With the engine running and battery voltage greater than 10.4 volts.

SET CONDITION

The Powertrain Control Module (PCM) detects that the secondary ignition burn time is incorrect or not present. One Trip Fault.

POSSIBLE CAUSES

Possible Causes
(K344) FUSED ASD RELAY OUTPUT CIRCUIT OPEN OR HIGH RESISTANCE
(K18) COIL 3 CONTROL CIRCUIT SHORTED TO GROUND
(K18) COIL 3 CONTROL CIRCUIT OPEN OR HIGH RESISTANCE
IGNITION COIL 3
POWERTRAIN CONTROL MODULE (PCM)

Always perform the Pre-Diagnostic Troubleshooting procedure before proceeding. Refer to PRE-DIAGNOSTIC TROUBLESHOOTING PROCEDURE .

DIAGNOSTIC TEST

1. **ACTIVE DTC**
    1. Ignition on, engine not running.
    2. With the scan tool, Clear DTCs in the Powertrain Control Module (PCM).
    3. Start the engine and allow it to reach normal operating temperature.

WARNING: When the engine is operating, do not stand in direct line with the fan. Do not put

your hands near the pulleys, belts or fan. Do not wear loose clothing. Failure to follow these instructions may result in possible serious or fatal injury.

4. With the scan tool, select View DTCs.

   Is the status Active for this DTC?

   Yes

   - Go To 2

   No

   - Perform the INTERMITTENT CONDITION diagnostic procedure. Refer to **INTERMITTENT CONDITION** .

2. **CHECK THE (F344) FUSED ASD RELAY OUTPUT CIRCUIT FOR AN OPEN/HIGH RESISTANCE**

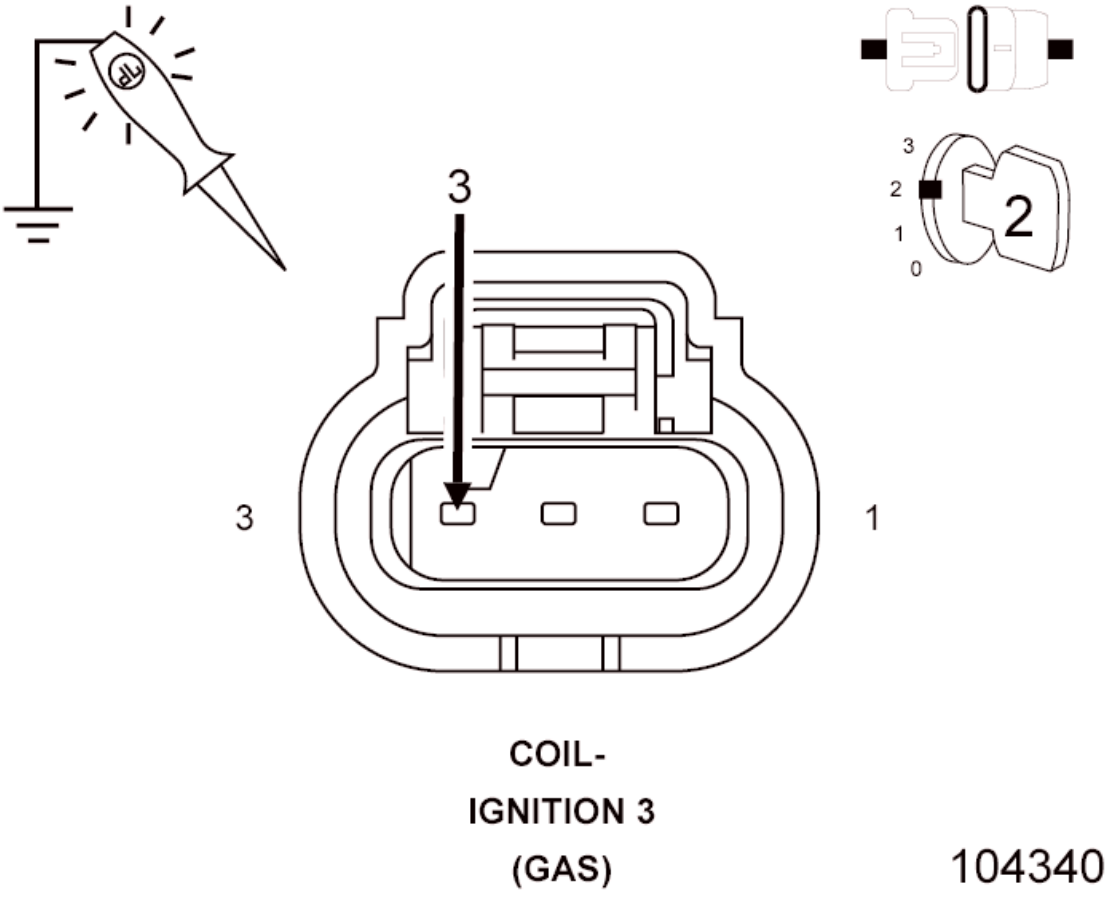

Fig. 45: Checking Fused ASD Relay Output Circuit For Open Or High Resistance
Courtesy of CHRYSLER GROUP, LLC

1. Turn the ignition off.
2. Disconnect the Ignition Coil 3 harness connector.
3. Turn the ignition on.
4. Using a 12-volt test light connected to ground, check the (F344) Fused ASD Relay Output circuit in the Ignition Coil 3 harness connector.

NOTE: The test light should be illuminated and bright. Compare the brightness to that of a direct connection to the battery.

Is the test light illuminated and bright?

Yes

- Go To 3

No

- Repair the (F344) Fused ASD Relay Output circuit for an open circuit or high resistance.
- Perform the POWERTRAIN VERIFICATION TEST. Refer to **POWERTRAIN VERIFICATION TEST** .

3. **CHECK THE (K18) COIL 3 CONTROL CIRCUIT FOR A SHORT TO GROUND**

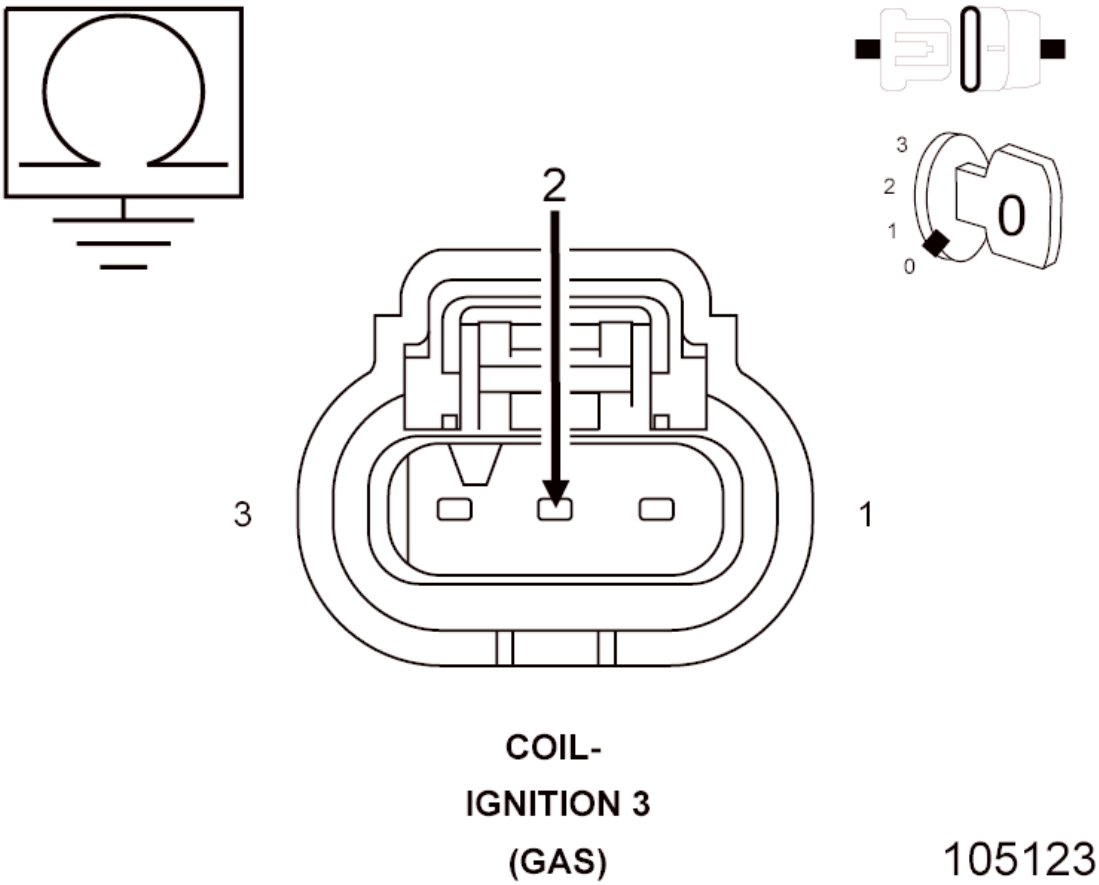

Fig. 46: Checking Coil 3 Control Circuit For Short To Ground
Courtesy of CHRYSLER GROUP, LLC

1. Turn the ignition off.
2. Disconnect the PCM C2 harness connector.
3. Measure the resistance between ground and the (K18) Coil 3 Control circuit in the Ignition Coil 3 harness connector.

   Is the resistance above 10k Ohms?

   Yes

   - Go To 4

   No

   - Repair the (K18) Coil 3 Control circuit for a short to ground.
   - Perform the POWERTRAIN VERIFICATION TEST. Refer to **POWERTRAIN VERIFICATION TEST** .

4. **CHECK THE (K18) COIL 3 CONTROL CIRCUIT FOR AN OPEN/HIGH RESISTANCE**

CAUTION: Do not probe the PCM harness connectors. Probing the PCM harness connectors will damage the PCM terminals resulting in poor terminal to pin connection. Install the GPEC Diagnostic Adaptor to perform the diagnosis.

1. Connect the (special tool #10436, Adapter, GPEC Diagnostic).
2. Measure the resistance of the (K18) Coil 3 Control circuit between the Ignition Coil 3 harness connector and the GPEC Adaptor.

Is the resistance below 5.0 Ohms?

Yes

- Go To 5

No

- Repair the (K18) Coil 3 Control circuit for an open or high resistance.
- Perform the POWERTRAIN VERIFICATION TEST. Refer to **POWERTRAIN VERIFICATION TEST** .

5. **IGNITION COIL 3**

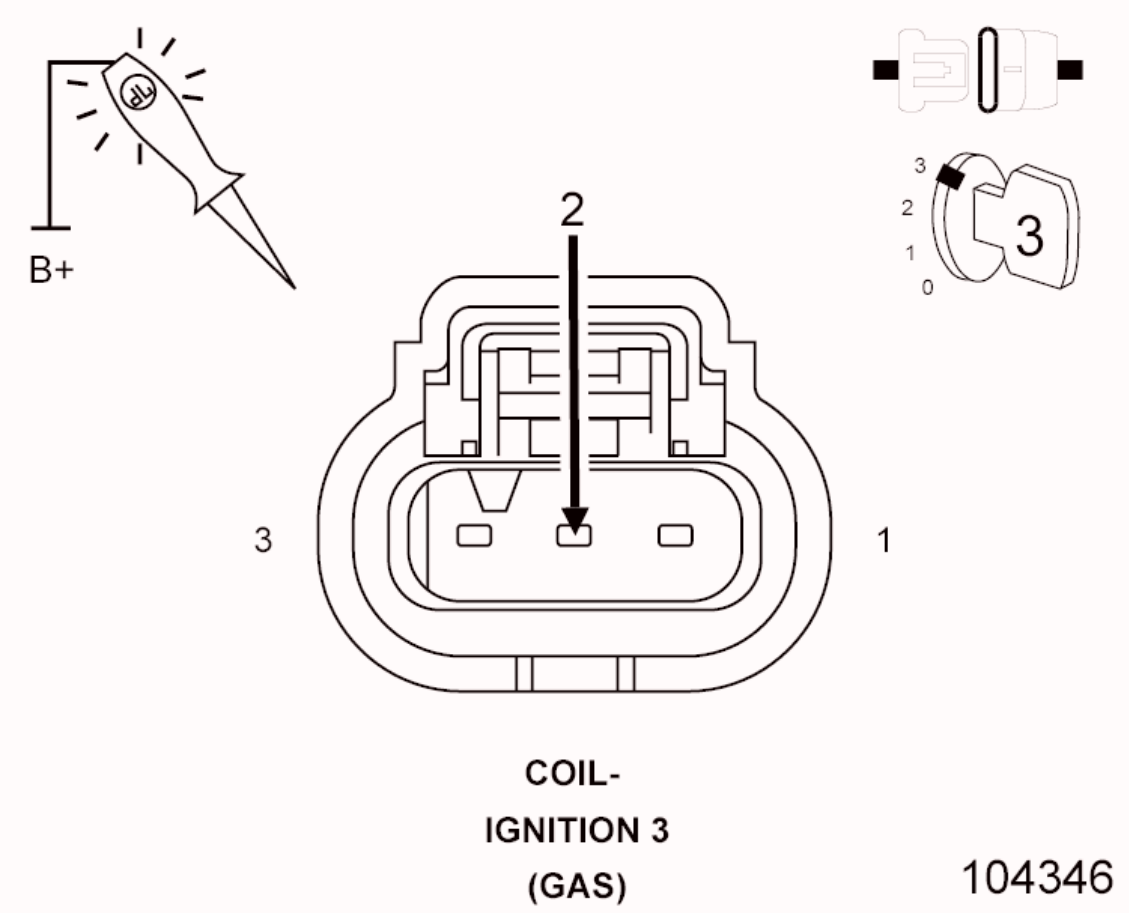

Fig. 47: Check Ignition Coil Control Circuit
Courtesy of CHRYSLER GROUP, LLC

WARNING: When the engine is operating, do not stand in direct line with the fan. Do not put your hands near the pulleys, belts or fan. Do not wear loose clothing. Failure to follow these instructions may result in possible serious or fatal injury.

1. Reconnect the PCM C2 harness connector.
2. Using a 12-volt test light connected to 12 volts, check the (K18) Coil 3 Control circuit in the Ignition Coil 3 harness connector.
3. Crank the engine for five seconds.

NOTE: The test light should blink each time the circuit is activated by the PCM.

Does the test light blink each time the circuit is activated by the PCM?

Yes

- Replace the Ignition Coil 3 in accordance with the service information. Refer to **COIL, IGNITION, REMOVAL** .
- Perform the POWERTRAIN VERIFICATION TEST. Refer to **POWERTRAIN VERIFICATION TEST** .

No

- Go To 6

6. **POWERTRAIN CONTROL MODULE (PCM)**
   1. Using the wiring diagram/schematic as a guide, inspect the wiring and connectors between the Ignition Coil 3 and the Powertrain Control Module (PCM).
   2. Look for any chafed, pierced, pinched, or partially broken wires.
   3. Look for broken, bent, pushed out or corroded terminals.
   4. Perform any Technical Service Bulletins that may apply.

   Were any problems found?

   Yes

   - Repair as necessary.
   - Perform the POWERTRAIN VERIFICATION TEST. Refer to **POWERTRAIN VERIFICATION TEST** .

   No

   - Replace and program the Powertrain Control Module (PCM) in accordance with the service information. Refer to **MODULE, POWERTRAIN CONTROL, REMOVAL** .
   - Perform the POWERTRAIN VERIFICATION TEST. Refer to **POWERTRAIN VERIFICATION TEST** .

P2311-IGNITION COIL 4 SECONDARY CIRCUIT - INSUFFICIENT IONIZATION

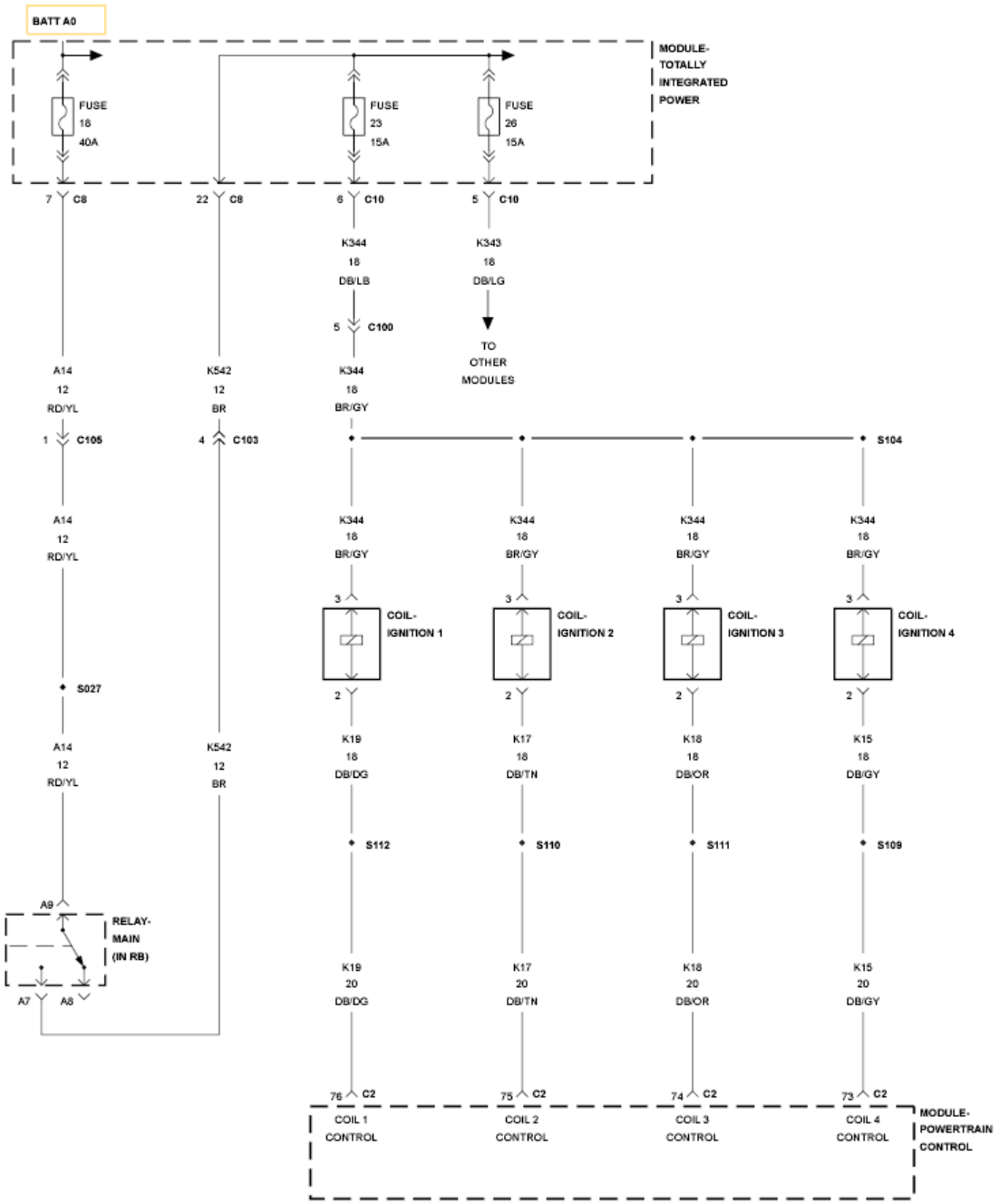

Fig. 48: Ignition Coil Circuit Diagram
Courtesy of CHRYSLER GROUP, LLC

For a complete wiring diagram, **refer to appropriate SYSTEM WIRING DIAGRAMS article** .

THEORY OF OPERATION

The primary winding of each coil-on-plug Ignition Coil is supplied power via the Fused Automatic Shut Down (ASD) Relay Output circuit. The Powertrain

Control Module (PCM) completes the circuit to ground internally (low side driver) allowing the energy that is stored in the magnetic field of the primary coil to be transferred to the spark plug via the secondary coil. The PCM determines spark timing by monitoring engine operating parameters via various sensors and then calculating the appropriate moment to initiate the spark event. The PCM manages spark advance depending on engine RPM, manifold absolute pressure, engine coolant and oil temperature.

WHEN MONITORED

With the engine running and battery voltage greater than 10.4 volts.

SET CONDITION

The Powertrain Control Module (PCM) detects that the secondary ignition burn time is incorrect or not present. One Trip Fault.

POSSIBLE CAUSES

Possible Causes
(K344) FUSED ASD RELAY OUTPUT CIRCUIT OPEN OR HIGH RESISTANCE
(K15) COIL 4 CONTROL CIRCUIT SHORTED TO GROUND
(K15) COIL 4 CONTROL CIRCUIT OPEN OR HIGH RESISTANCE
IGNITION COIL 4
POWERTRAIN CONTROL MODULE (PCM)

Always perform the Pre-Diagnostic Troubleshooting procedure before proceeding. Refer to PRE-DIAGNOSTIC TROUBLESHOOTING PROCEDURE .

DIAGNOSTIC TEST

1. **ACTIVE DTC**
    1. Ignition on, engine not running.
    2. With the scan tool, Clear DTCs in the Powertrain Control Module (PCM).
    3. Start the engine and allow it to reach normal operating temperature.

WARNING: When the engine is operating, do not

stand in direct line with the fan. Do not put your hands near the pulleys, belts or fan. Do not wear loose clothing. Failure to follow these instructions may result in possible serious or fatal injury.

4. With the scan tool, select View DTCs.

   Is the status Active for this DTC?

   Yes

   - Go To 2

   No

   - Perform the INTERMITTENT CONDITION diagnostic procedure. Refer to **INTERMITTENT CONDITION** .

2. **CHECK THE (F344) FUSED ASD RELAY OUTPUT CIRCUIT FOR AN OPEN/HIGH RESISTANCE**

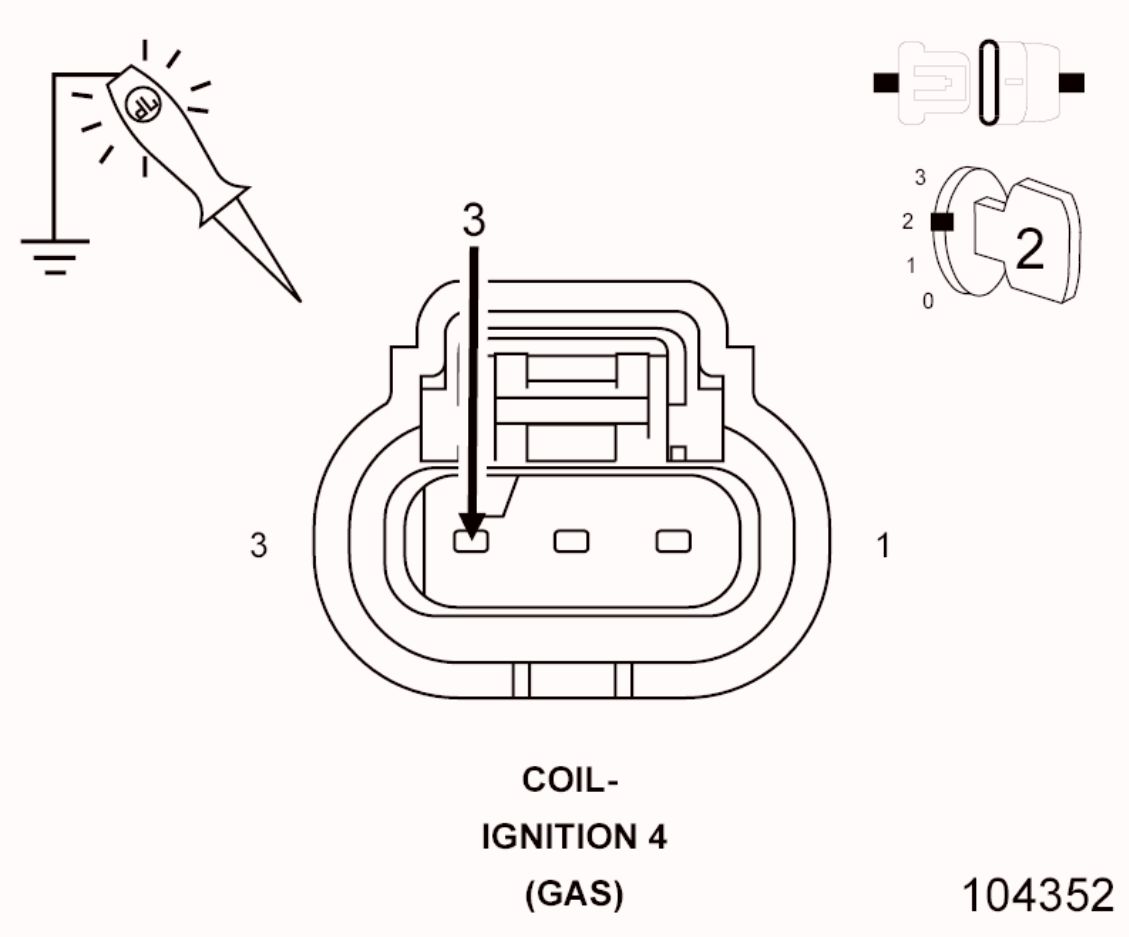

Fig. 49: Checking Fused ASD Relay Output Circuit For Open Or High Resistance
Courtesy of CHRYSLER GROUP, LLC

1. Turn the ignition off.
2. Disconnect the Ignition Coil 4 harness connector.
3. Turn the ignition on.
4. Using a 12-volt test light connected to ground, check the (F344) Fused ASD Relay Output circuit in the Ignition Coil 4 harness connector.

NOTE: The test light should be illuminated and bright. Compare the brightness to that of a direct connection to the battery.

Is the test light illuminated and bright?

Yes

- Go to 3

No

- Repair the (F344) Fused ASD Relay Output circuit for an open circuit or short to ground.
- Perform the POWERTRAIN VERIFICATION TEST. Refer to **POWERTRAIN VERIFICATION TEST** .

3. **CHECK THE (K15) COIL 4 CONTROL CIRCUIT FOR A SHORT TO GROUND**

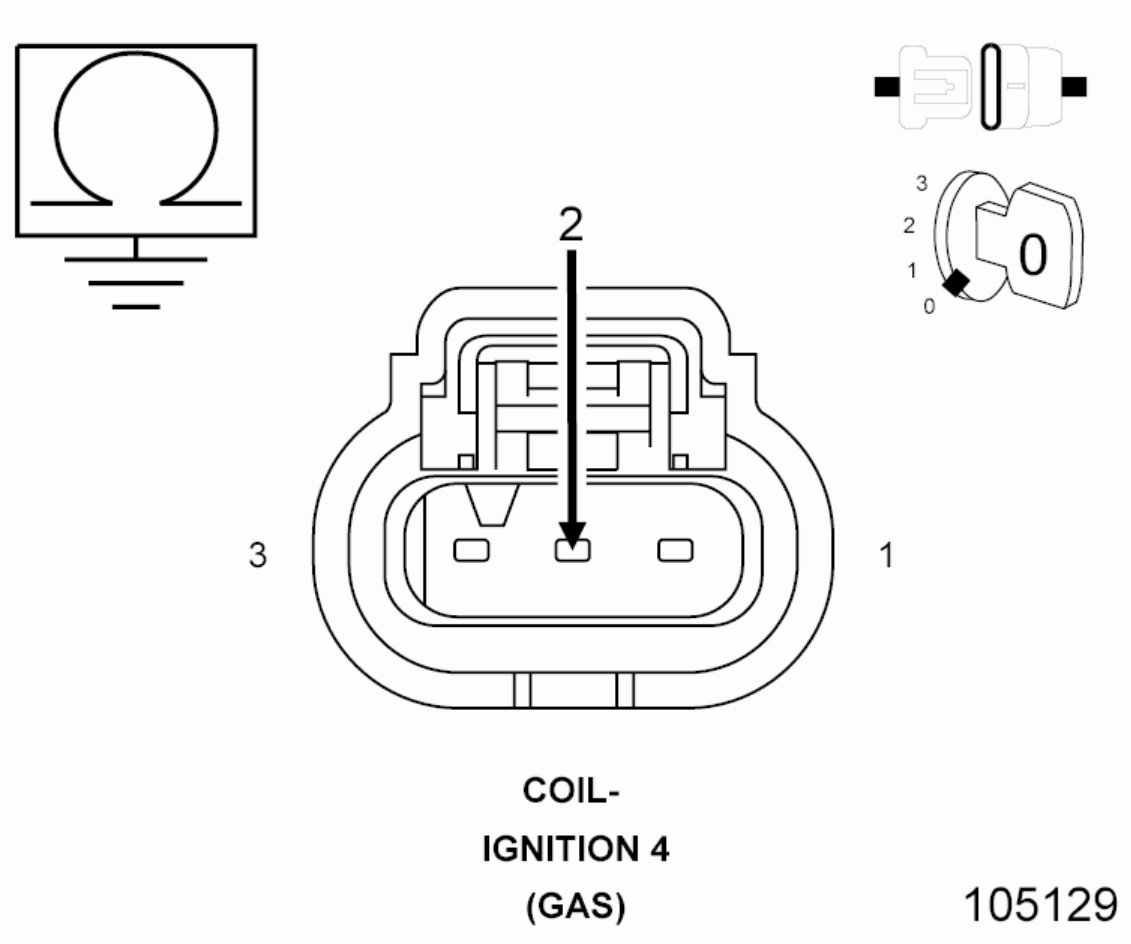

Fig. 50: Checking Coil 4 Control Circuit For Short To Ground
Courtesy of CHRYSLER GROUP, LLC

1. Turn the ignition off.
2. Disconnect the PCM C2 harness connector.
3. Measure the resistance between ground and the (K15) Coil 4 Control circuit in the Ignition Coil 4 harness connector.

Is the resistance above 10k Ohms?

Yes

- Go To 4

No

- Repair the (K15) Coil 4 Control circuit for a short to ground.
- Perform the POWERTRAIN VERIFICATION TEST. Refer to **POWERTRAIN VERIFICATION TEST** .

4. **CHECK THE (K15) COIL 4 CONTROL CIRCUIT FOR AN OPEN/HIGH RESISTANCE**

CAUTION: Do not probe the PCM harness connectors. Probing the PCM harness connectors will damage the PCM terminals resulting in poor terminal to pin connection. Install the GPEC Diagnostic Adaptor to perform the diagnosis.

1. Connect the (special tool #10436, Adapter, GPEC Diagnostic).
2. Measure the resistance of the (K15) Coil 4 Control circuit between the Ignition Coil 4 harness connector and the GPEC Adaptor.

Is the resistance below 5.0 Ohms?

Yes

- Go To 5

No

- Repair the (K15) Coil 4 Control circuit for an open or high resistance.
- Perform the POWERTRAIN VERIFICATION TEST. Refer to **POWERTRAIN VERIFICATION TEST** .

5. **IGNITION COIL 4**

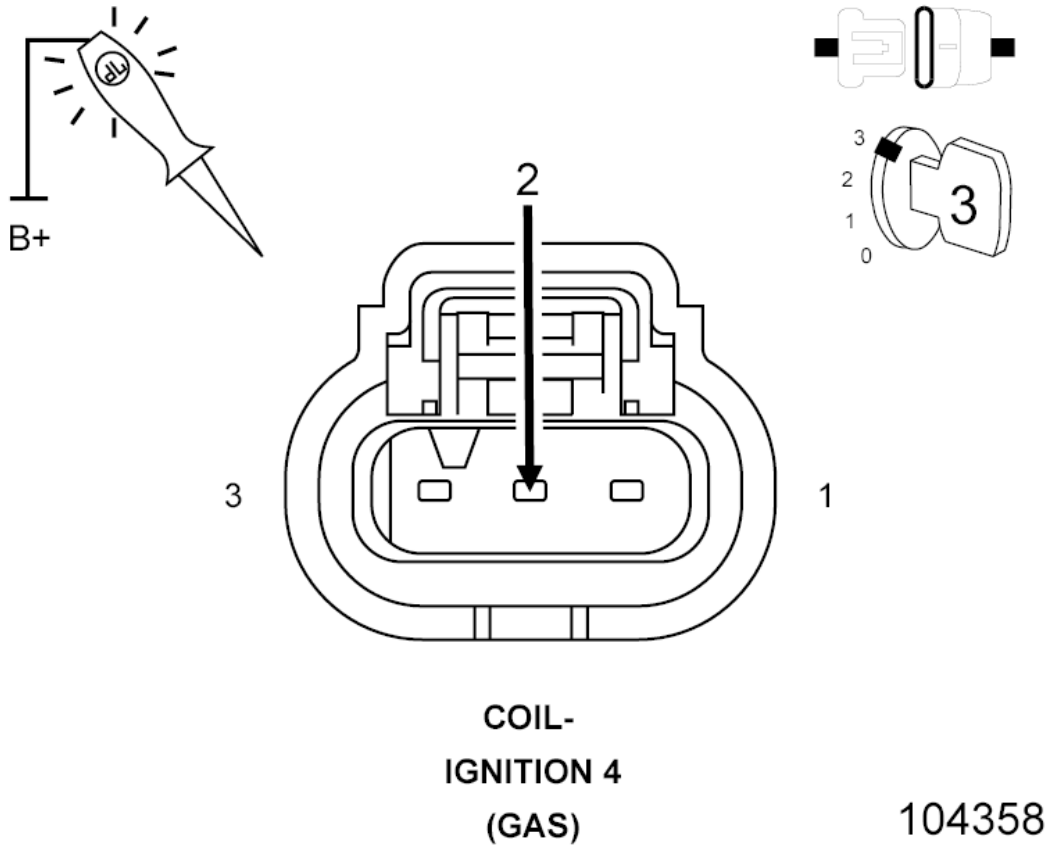

Fig. 51: Check Ignition Coil Control Circuit
Courtesy of CHRYSLER GROUP, LLC

WARNING: When the engine is operating, do not stand in direct line with the fan. Do not put your hands near the pulleys, belts or fan. Do not wear loose clothing. Failure to follow these instructions may result in possible serious or fatal injury.

1. Reconnect the PCM C2 harness connector.
2. Using a 12-volt test light connected to 12 volts, check the (K15) Coil 4 Control circuit in the Ignition Coil 4 harness connector.
3. Crank the engine for five seconds.

NOTE: The test light should blink each time the circuit is activated by the PCM.

Does the test light blink each time the circuit is activated by the PCM?

Yes

- Replace the Ignition Coil 4 in accordance with the service information. Refer to **COIL, IGNITION, REMOVAL** .
- Perform the POWERTRAIN VERIFICATION TEST. Refer to **POWERTRAIN VERIFICATION TEST** .

No

- Go to 6

6. **POWERTRAIN CONTROL MODULE (PCM)**
   1. Using the wiring diagram/schematic as a guide, inspect the wiring and connectors between the Ignition Coil 4 and the Powertrain Control Module (PCM).
   2. Look for any chafed, pierced, pinched, or partially broken wires.
   3. Look for broken, bent, pushed out or corroded terminals.
   4. Perform any Technical Service Bulletins that may apply.

   Were any problems found?

   Yes

   - Repair as necessary.
   - Perform the POWERTRAIN VERIFICATION TEST. Refer to **POWERTRAIN VERIFICATION TEST** .

   No

   - Replace and program the Powertrain Control Module (PCM) in accordance with the service information. Refer to **MODULE, POWERTRAIN CONTROL, REMOVAL** .
   - Perform the POWERTRAIN VERIFICATION TEST. Refer to **POWERTRAIN VERIFICATION TEST** .

P2503-CHARGING SYSTEM OUTPUT LOW

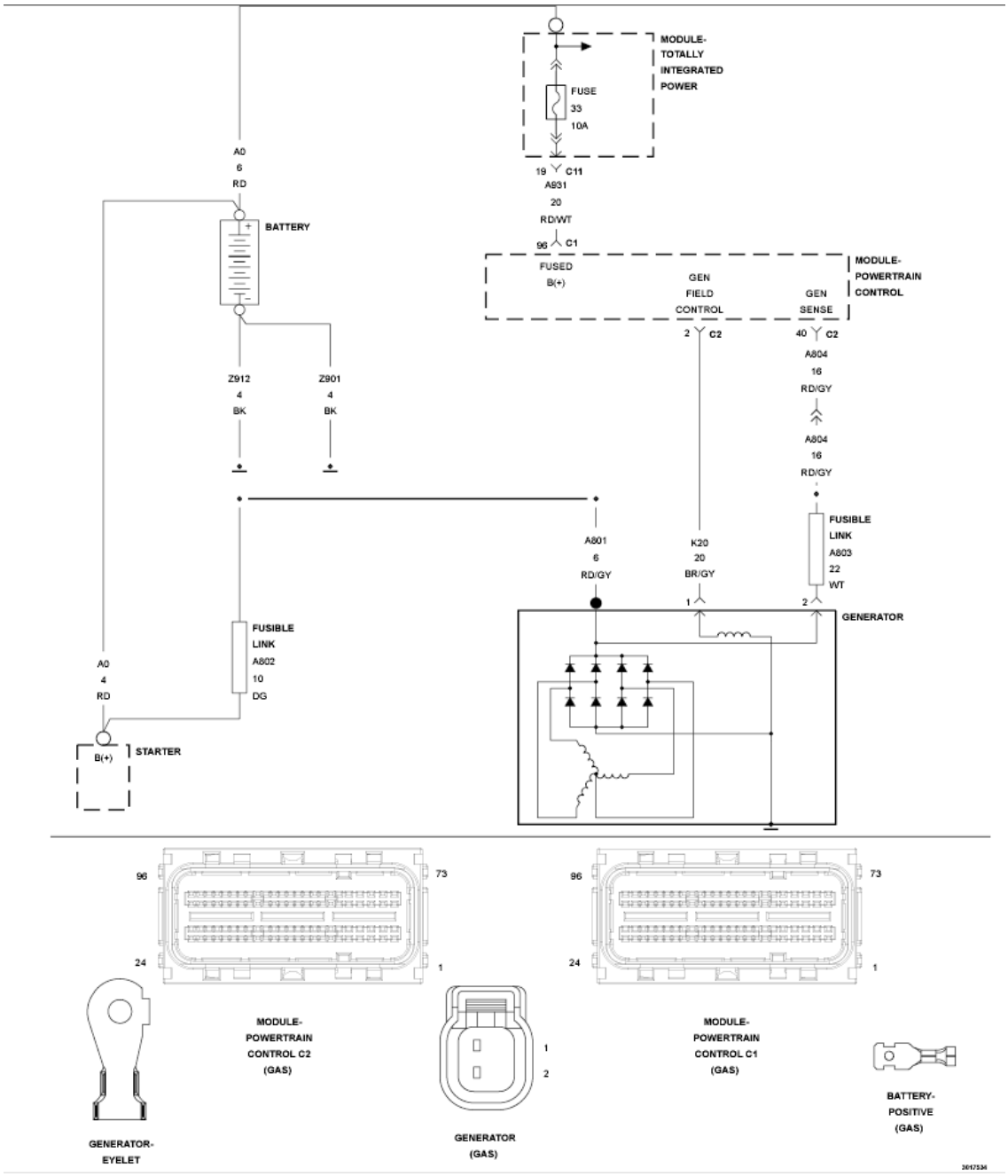

Fig. 52: Charging System Circuit Diagram
Courtesy of CHRYSLER GROUP, LLC

For a complete wiring diagram, **refer to appropriate SYSTEM WIRING DIAGRAMS article** .

WHEN MONITORED

With the engine speed greater than 1157 RPM.

SET CONDITION

The Powertrain Control Module (PCM) detects that battery voltage is 1 volt below charging goal voltage for 13.47 seconds. The PCM compares sensed battery voltage with the field driver on and off. If the voltages are the same, this code will set. One Trip Fault. Three good trips to turn off the MIL.

POSSIBLE CAUSES

POSSIBLE CAUSES
EXCESSIVE RESISTANCE IN THE B(+) CIRCUIT BETWEEN THE GENERATOR AND THE BATTERY
EXCESSIVE RESISTANCE BETWEEN THE GENERATOR CASE AND GROUND
(K20) GEN FIELD CONTROL CIRCUIT SHORTED TO VOLTAGE
(K20) GEN FIELD CONTROL CIRCUIT SHORTED TO GROUND
(K20) GEN FIELD CONTROL CIRCUIT OPEN OR HIGH RESISTANCE
(A804) GEN SENSE CIRCUIT OPEN OR HIGH RESISTANCE
GENERATOR
POWERTRAIN CONTROL MODULE (PCM)

Always perform the Pre-Diagnostic Troubleshooting procedure before proceeding. Refer to PRE-DIAGNOSTIC TROUBLESHOOTING PROCEDURE .

DIAGNOSTIC TEST

1. **ACTIVE DTC**

NOTE: Inspect the vehicle for aftermarket accessories that may exceed the generator system output.

NOTE: Inspect the condition and tension of the generator belt before continuing.

NOTE: Inspect the battery before continuing.

1. Ignition on, engine not running.
2. With a scan tool, select View DTCs. Record DTC and Freeze Frame information

3. With a scan tool, clear DTCs.
4. Start the engine and allow it to reach operating temperature.
5. With the scan tool, select View DTCs.

   Is the status Active for this DTC?

   Yes

   - Go To 2

   No

   - Perform the CHECKING FOR AN INTERMITTENT DTC diagnostic procedure. Refer to **INTERMITTENT CONDITION** .

2. **CHECK FOR EXCESSIVE RESISTANCE IN THE B+ CIRCUIT**

   WARNING: **When the engine is operating, do not stand in direct line with the fan. Do not put your hands near the pulleys, belts or fan. Do not wear loose clothing. Failure to follow these instructions may result in possible serious or fatal injury.**

   NOTE: **Make sure all test equipment and cables are clear of any belts, pulleys, or other moving parts.**

   1. Monitor the voltage between the Generator B+ output terminal and the battery positive (+) post.
   2. Start the engine.

      Is the voltage above 0.1 volts?

      Yes

      - Repair the battery positive (+) circuit between the generator and battery for high resistance.
      - Perform the PCM VERIFICATION TEST. Refer to **POWERTRAIN VERIFICATION TEST** .

No

- Go To 3

3. **CHECK FOR EXCESSIVE RESISTANCE BETWEEN THE GENERATOR CASE AND GROUND**

WARNING: When the engine is operating, do not stand in direct line with the fan. Do not put your hands near the pulleys, belts or fan. Do not wear loose clothing. Failure to follow these instructions may result in possible serious or fatal injury.

NOTE: Make sure all Test. equipment and cables are clear of any belts, pulleys, or other moving parts.

1. Monitor the voltage between the generator case and battery ground (-) post.
2. Start the engine and allow it to reach operating temperature.

Is the voltage above 0.1 volts?

Yes

- Repair the excessive resistance in the Generator Case Ground.
- Perform the PCM VERIFICATION TEST. Refer to **POWERTRAIN VERIFICATION TEST** .

No

- Go To 4

4. **CHECK THE (K20) GENERATOR FIELD CONTROL CIRCUIT FOR A SHORT TO VOLTAGE**

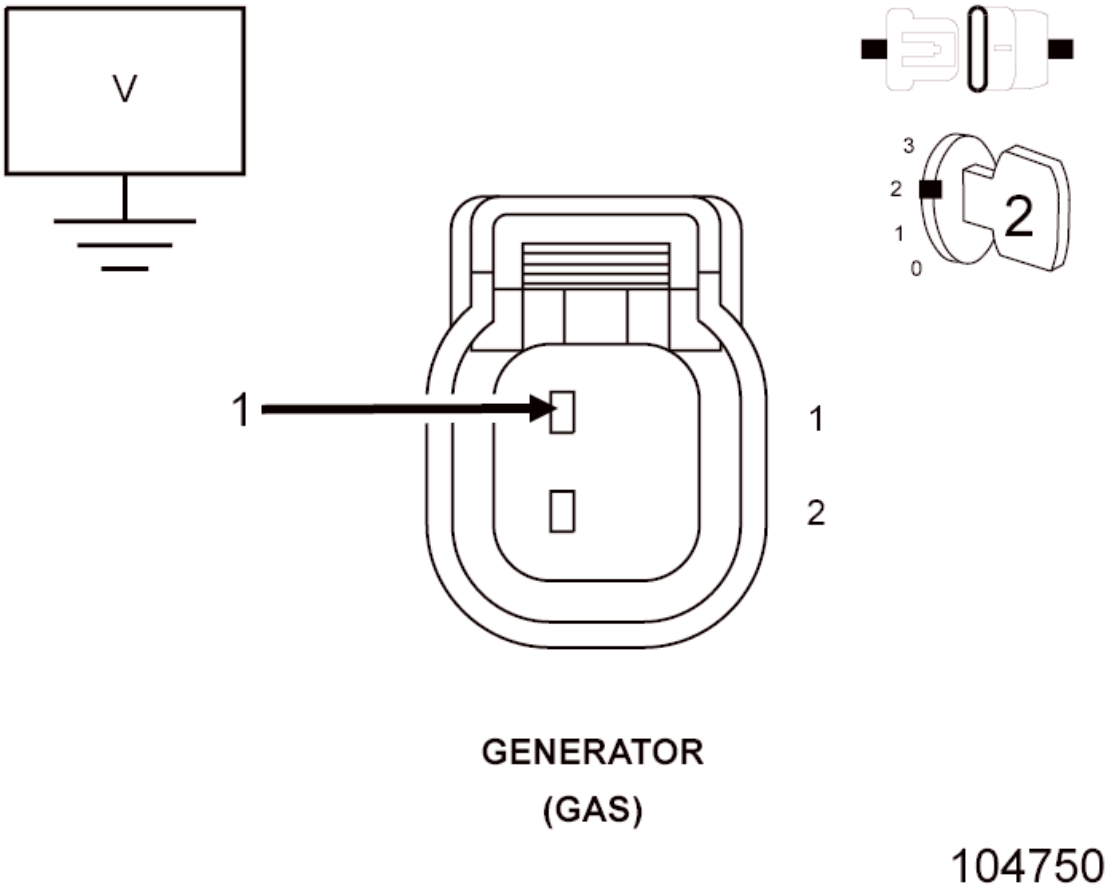

Fig. 53: Checking Generator Field Control Circuit For Short To Voltage
Courtesy of CHRYSLER GROUP, LLC

1. Turn the ignition off.
2. Disconnect the Generator harness connector.
3. Disconnect the PCM C2 harness connector.
4. Turn the ignition on.
5. Measure the voltage of the (K20) Generator Field Control circuit.

   Is there any voltage present?

   Yes

   - Repair the (K20) Generator Field Control circuit for a short to voltage.
   - Perform the PCM VERIFICATION TEST. Refer to **POWERTRAIN VERIFICATION TEST** .

No

- Go To 5

5. **CHECK THE (K20) GENERATOR FIELD CONTROL CIRCUIT FOR A SHORT TO GROUND**

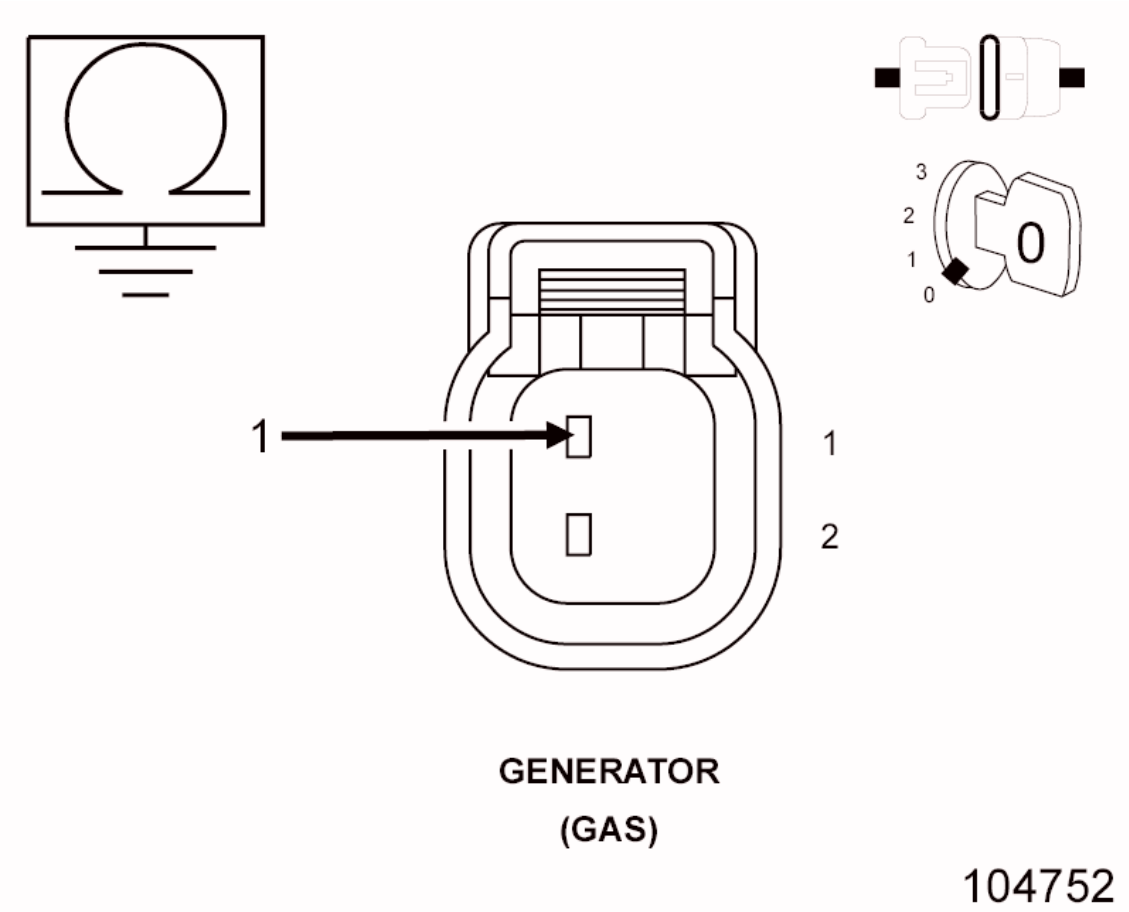

Fig. 54: Checking Generator Field Control Circuit For Short To Ground
Courtesy of CHRYSLER GROUP, LLC

1. Turn the ignition off.
2. Measure the resistance between ground and the (K20) Generator Field Control circuit in the Generator harness connector.

   Is the resistance above 10k Ohms?

   Yes

   - Go To 6

No

- Repair the (K20) Generator Field Control circuit for a short to ground.
- Perform the PCM VERIFICATION TEST. Refer to **POWERTRAIN VERIFICATION TEST** .

6. **CHECK THE (K20) GENERATOR FIELD CONTROL CIRCUIT FOR AN OPEN/HIGH RESISTANCE**

CAUTION: Do not probe the PCM harness connectors. Probing the PCM harness connectors will damage the PCM terminals resulting in poor terminal to pin connection. Install the GPEC Diagnostic Adaptor to perform the diagnosis.

1. Connect the (special tool #10436, Adapter, GPEC Diagnostic).
2. Measure the resistance of the (K20) Generator Field Control circuit between the Generator harness connector and the GPEC Adaptor.

Is the resistance below 5.0 Ohms?

Yes

- Go To 7

No

- Repair the (K20) Generator Field Control circuit for an open or high resistance.
- Perform the PCM VERIFICATION TEST. Refer to **POWERTRAIN VERIFICATION TEST** .

7. **CHECK THE (A804) GENERATOR SENSE CIRCUIT FOR AN OPEN/HIGH RESISTANCE**

1. Measure the resistance of the (A804) Generator Sense between the Generator harness connector and the GPEC Adaptor.

Is the resistance below 5.0 Ohms?

Yes

- Go To 8

No

- Repair the (A804) Generator Sense circuit for an open or high resistance.
- Perform the PCM VERIFICATION TEST. Refer to **POWERTRAIN VERIFICATION TEST** .

8. **GENERATOR**
   1. Turn the ignition off.
   2. Reconnect the PCM C2 harness connector.
   3. Turn the ignition on.
   4. With a scan tool, actuate the Generator Field to toggle on and off.
   5. Using a 12-volt test light connected to ground, check the (K20) Generator Field Control in the Generator harness connector.

NOTE: The test light should be illuminated and bright when toggled on. Compare the brightness to that of a direct connection to the battery.

Does the test light toggle on and off correctly during the actuator test?

Yes

- Replace the Generator in accordance with the service information.
- Perform the PCM VERIFICATION TEST. Refer to **POWERTRAIN VERIFICATION TEST** .

No

- Go To 9

9. **POWERTRAIN CONTROL MODULE (PCM)**
   1. Using the wiring diagram/schematic as a guide, inspect the wiring and connectors between the Generator and the Powertrain Control Module (PCM).
   2. Look for any chafed, pierced, pinched, or partially broken wires.
   3. Look for broken, bent, pushed out or corroded terminals.

4. Monitor the scan tool data relative to this circuit and wiggle test the wiring and connectors.
5. Look for the data to change or for the DTC to reset during the wiggle test.
6. Refer to any Technical Service Bulletins that may apply.

Were any problems found?

Yes

- Repair as necessary.
- Perform the PCM VERIFICATION TEST. Refer to **POWERTRAIN VERIFICATION TEST** .

No

- Replace and program the Powertrain Control Module (PCM) in accordance with the service information. Refer to **MODULE, POWERTRAIN CONTROL, REMOVAL** .
- Perform the PCM VERIFICATION TEST. Refer to **POWERTRAIN VERIFICATION TEST** .

P2504-CHARGING SYSTEM OUTPUT HIGH

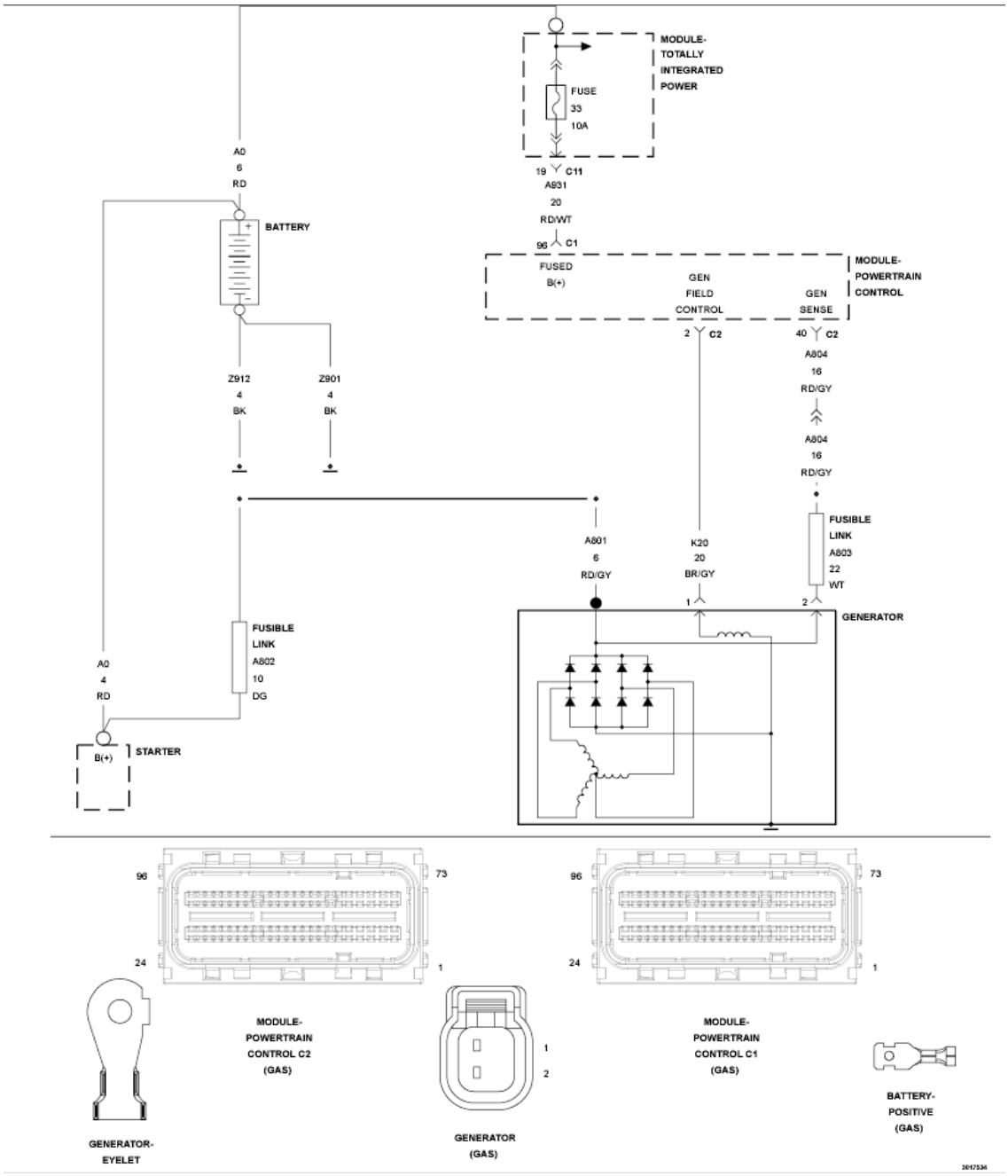

Fig. 55: Charging System Circuit Diagram
Courtesy of CHRYSLER GROUP, LLC

For a complete wiring diagram, **refer to appropriate SYSTEM WIRING DIAGRAMS article** .

WHEN MONITORED

With the engine speed greater than 1157 RPM.

SET CONDITION

The Powertrain Control Module (PCM) compares sensed battery voltage with the Generator Sense circuit voltage. If the Generator Sense circuit voltage if greater than sensed battery voltage, this DTC will set. One Trip Fault. Three good trips to turn off the MIL.

POSSIBLE CAUSES

POSSIBLE CAUSES
EXCESSIVE RESISTANCE IN THE B(+) CIRCUIT BETWEEN THE GENERATOR AND THE BATTERY
EXCESSIVE RESISTANCE BETWEEN THE GENERATOR CASE AND GROUND
(A804) GEN SENSE CIRCUIT SHORTED TO VOLTAGE
(K20) GEN FIELD CONTROL CIRCUIT SHORTED TO VOLTAGE
GENERATOR
POWERTRAIN CONTROL MODULE (PCM)

Always perform the Pre-Diagnostic Troubleshooting procedure before proceeding. Refer to PRE-DIAGNOSTIC TROUBLESHOOTING PROCEDURE .

DIAGNOSTIC TEST

1. **ACTIVE DTC**

NOTE: Inspect the vehicle for aftermarket accessories that may exceed the Generator system output.

NOTE: Inspect the Generator harness connector and the Generator eyelet for corrosion or damage before continuing.

NOTE: Inspect the condition and tension of the Generator belt before continuing.

NOTE: Inspect the battery before continuing.

1. Ignition on, engine not running.
2. With a scan tool, select View DTCs. Record DTC and Freeze Frame

information.

3. With a scan tool, clear DTCs.
4. Start the engine and allow it to reach operating temperature.
5. With the scan tool, select View DTCs.

Is the status Active for this DTC?

Yes

- Go To 2

No

- Perform the INTERMITTENT CONDITION diagnostic procedure. Refer to **INTERMITTENT CONDITION** .

2. **CHECK FOR EXCESSIVE RESISTANCE IN THE B+ CIRCUIT**

WARNING: **When the engine is operating, do not stand in direct line with the fan. Do not put your hands near the pulleys, belts or fan. Do not wear loose clothing. Failure to follow these instructions may result in possible serious or fatal injury.**

NOTE: **Make sure all Test. equipment and cables are clear of any belts, pulleys, or other moving parts.**

1. Monitor the voltage between the generator B+ output terminal and the battery positive (+) post.
2. Start the engine.

Is the voltage above 0.1 volts?

Yes

- Repair the battery positive (+) circuit between the generator and battery for high resistance.
- Perform the PCM VERIFICATION TEST. Refer to **POWERTRAIN VERIFICATION TEST** .

No

- Go To 3

3. **CHECK FOR EXCESSIVE RESISTANCE BETWEEN THE GENERATOR CASE AND GROUND**

WARNING: When the engine is operating, do not stand in direct line with the fan. Do not put your hands near the pulleys, belts or fan. Do not wear loose clothing. Failure to follow these instructions may result in possible serious or fatal injury.

NOTE: Make sure all Test. equipment and cables are clear of any belts, pulleys, or other moving parts.

1. Monitor the voltage between the generator case and battery ground (-) post.
2. Start the engine and allow it to reach operating temperature.

Is the voltage above 0.1 volt?

Yes

- Repair the excessive resistance in the Generator case ground.
- Perform the PCM VERIFICATION TEST. Refer to **POWERTRAIN VERIFICATION TEST** .

No

- Go To 4

4. **CHECK THE (A804) GENERATOR SENSE CIRCUIT FOR A SHORT TO VOLTAGE**

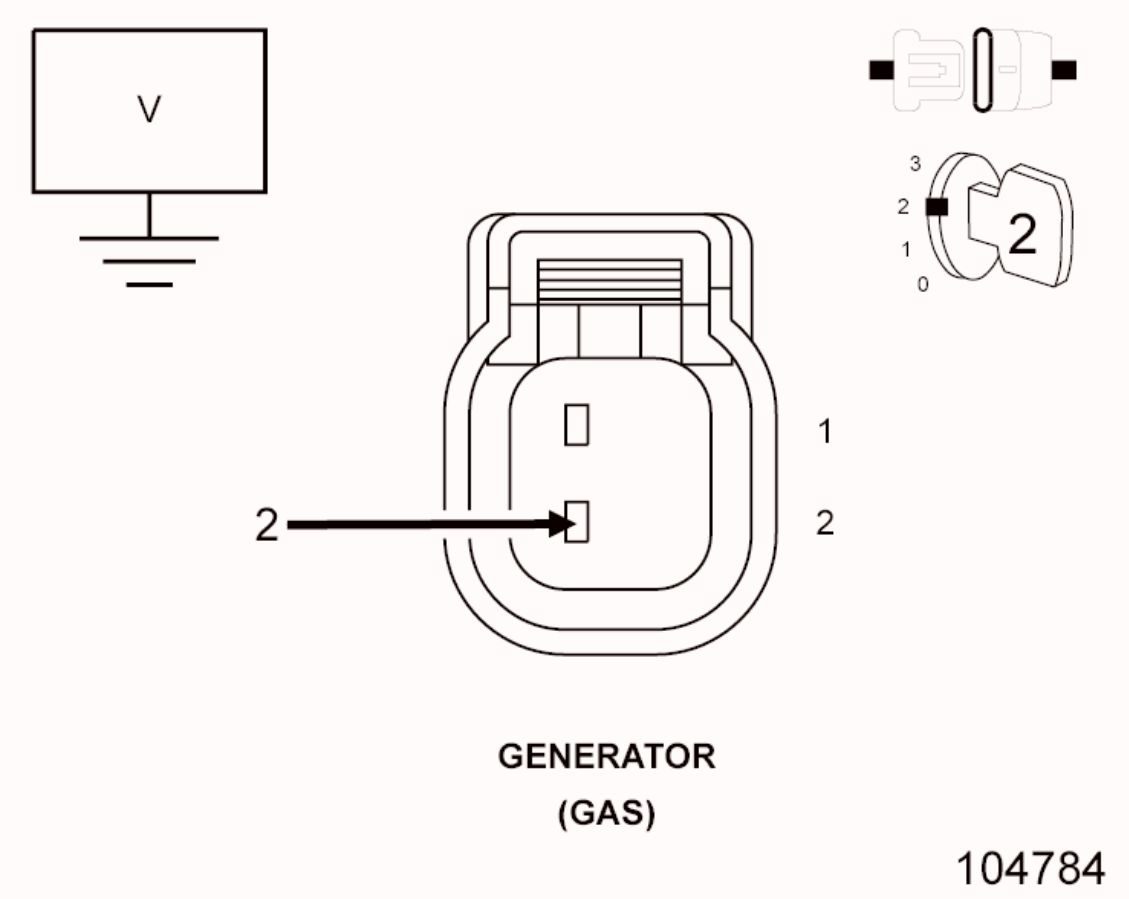

Fig. 56: Checking Generator Sense Circuit For Short To Voltage
Courtesy of CHRYSLER GROUP, LLC

1. Turn the ignition off.
2. Disconnect the Generator harness connector.
3. Disconnect the PCM C2 harness connector.
4. Turn the ignition on.
5. Measure the voltage of the (A804) Generator Sense circuit.

   Is there any voltage present?

   Yes

   - Repair the (A804) Generator Sense circuit for a short to voltage.
   - Perform the PCM VERIFICATION Test. Refer to **POWERTRAIN VERIFICATION TEST** .

   No

- Go To 5

5. **CHECK THE (K20) GENERATOR FIELD CONTROL CIRCUIT FOR A SHORT TO VOLTAGE**

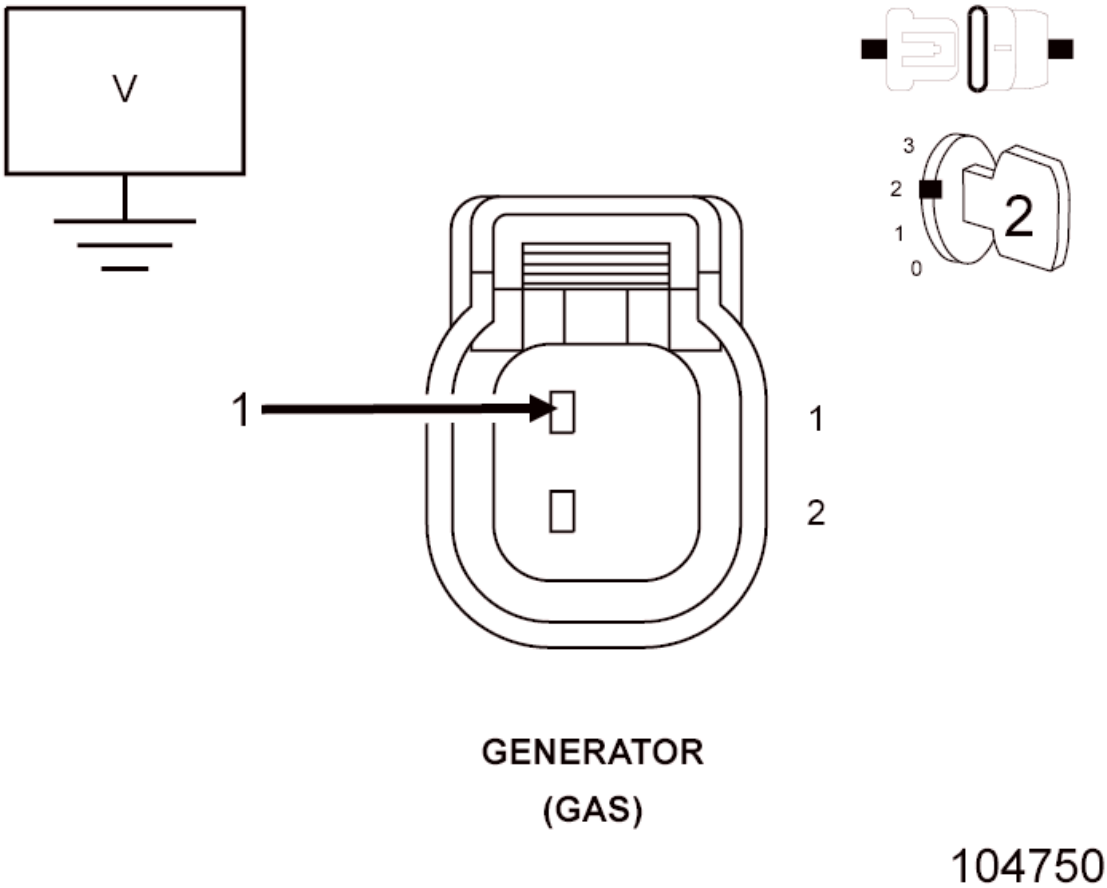

Fig. 57: Checking Generator Field Control Circuit For Short To Voltage
Courtesy of CHRYSLER GROUP, LLC

1. Measure the voltage of the (K20) Generator Field Control circuit.

   Is there any voltage present?

   Yes

   - Repair the (K20) Generator Field Control circuit for a short to voltage.
   - Perform the PCM VERIFICATION Test. Refer to **POWERTRAIN VERIFICATION TEST** .

   No

- Go To 6

6. **GENERATOR**

WARNING: When the engine is operating, do not stand in direct line with the fan. Do not put your hands near the pulleys, belts or fan. Do not wear loose clothing. Failure to follow these instructions may result in possible serious or fatal injury.

1. Turn the ignition off.
2. Connect the Generator harness connector.
3. Reconnect the PCM C2 harness connector.

NOTE: Make sure all Test equipment and cables are clear of any belts, pulleys, or other moving parts.

4. Measure the voltage between the Generator Eyelet terminal and the (A804) Generator Sense circuit in the Generator harness connector.
5. Start the engine and allow it to reach operating temperature.

Is the voltage above 0.1 volts?

Yes

- Replace the Generator in accordance with the service information.
- Perform the PCM VERIFICATION Test. Refer to **POWERTRAIN VERIFICATION TEST** .

No

- Go To 7

7. **POWERTRAIN CONTROL MODULE (PCM)**
   1. Using the wiring diagram/schematic as a guide, inspect the wiring and connectors between the Generator and the Powertrain Control Module (PCM).
   2. Look for any chafed, pierced, pinched, or partially broken wires.
   3. Look for broken, bent, pushed out or corroded terminals.

4. Monitor the scan tool data relative to this circuit and wiggle the wiring and connectors.
5. Look for the data to change or for the DTC to reset during the wiggle test.
6. Perform any Technical Service Bulletins that may apply.

Were any problems found?

Yes

- Repair as necessary.
- Perform the PCM VERIFICATION Test. Refer to **POWERTRAIN VERIFICATION TEST** .

No

- Replace and program the Powertrain Control Module (PCM) in accordance with the service information. Refer to **MODULE, POWERTRAIN CONTROL, REMOVAL** .
- Perform the PCM VERIFICATION Test. Refer to **POWERTRAIN VERIFICATION TEST** .

P2610-PCM INTERNAL ENGINE OFF TIMER PERFORMANCE

For a complete wiring diagram, **refer to appropriate SYSTEM WIRING DIAGRAMS article** .

WHEN MONITORED

Continuously.

SET CONDITION

The Powertrain Control Module (PCM) has detected an interruption in the supplied battery voltage while the module is powered down. Two Trip Fault. Three good trips to turn off the MIL.

POSSIBLE CAUSES

Possible Causes
AMBIENT AIR TEMPERATURE SENSOR

COOLANT TEMPERATURE SENSOR
POWERTRAIN CONTROL MODULE (PCM) SOFTWARE UPDATE
EXCESSIVE RESISTANCE IN THE PCM POWER OR GROUND CIRCUITS
POWERTRAIN CONTROL MODULE (PCM)

Always perform the Pre-Diagnostic Troubleshooting procedure before proceeding. Refer to PRE-DIAGNOSTIC TROUBLESHOOTING PROCEDURE .

DIAGNOSTIC TEST

1. **PENDING TEMPERATURE SENSOR DTCS**

NOTE: An incorrect temperature reading from the Cool Temperature Sensor or Ambient Temperature Sensor could cause this DTC to set. Verify that both temperature sensors are reading correctly before proceeding with this test.

1. Turn the ignition on.

NOTE: If any temperature sensor DTCs are present, allow the vehicle to cool completely before proceeding with this test.

2. Start the engine and allow it to reach operating temperature.
3. With the scan tool, select View DTCs.

Are there any pending Engine Coolant Temperature sensor, Ambient Air Temperature sensor, or general temperature DTCs?

Yes

- Diagnose and repair any temperature sensor DTCs and retest.
- Perform the PCM VERIFICATION Test. Refer to **POWERTRAIN VERIFICATION TEST** .

No

- Go To 2

2. **ACTIVE DTC**
   1. Turn the ignition on.
   2. With the scan tool, select View DTCs and review the DTC environmental information for this DTC.

      Is the good trip counter greater than 0?

      Yes

      - The DTC is not active at this time. Perform the INTERMITTENT CONDITION diagnostic procedure. Refer to **INTERMITTENT CONDITION** .

      No

      - Go To 3

3. **CHECK FOR LOW BATTERY VOLTAGE AT PCM**

   NOTE: A loss of battery voltage to the module while the module is powered down is the most likely cause of this DTC.

   1. Inspect all PCM power and ground circuits.
   2. Inspect and Test. the battery in accordance with the Service Information.
   3. Inspect the generator drive belt for proper alignment and adjustment.
   4. Inspect the vehicle for aftermarket accessories that may exceed the generator system output.
   5. Inspect the fuses in the TIPM. If an open fuse is found, use the wire diagram/schematics as a guide and inspect the wiring and connectors for a damaged or shorted circuit.

      Were any problems found?

      Yes

      - Repair as necessary.

- Perform the PCM VERIFICATION Test. Refer to **POWERTRAIN VERIFICATION TEST** .

No

- Go To 4

4. **CHECK THE (F202) FUSED IGNITION SWITCH OUTPUT (RUN-START) CIRCUIT FOR AN OPEN/HIGH RESISTANCE**
   1. Turn the ignition off.
   2. Disconnect the PCM harness connector.
   3. With a 12-volt test light connected to ground, check the (F202) Fused Ignition Switch Output (Run-Start) circuit.
   4. Check the circuit with the ignition switch in the OFF, ON, and START positions.

      NOTE: The test light should be illuminated and bright with the ignition switch in the ON and START positions. Compare the brightness to that of a direct connection to the battery.

   5. Wiggle the circuit while checking with the test light to check the circuit for an intermittent problem.

      Does the test light illuminate as expected in each of the ignition switch positions?

      Yes

      - Go To 5

      No

      - Repair the circuit as necessary. If an open fuse is found, inspect the circuit for a short to ground.
      - Perform the PCM VERIFICATION Test. Refer to **POWERTRAIN VERIFICATION TEST** .

5. **CHECK THE (A931) FUSED B+ CIRCUIT FOR AN OPEN/HIGH RESISTANCE**

1. With a 12-volt test light connected to ground, check the (A931) Fused B+ circuit.
2. Check the circuit with the ignition switch in the OFF, ON, and START positions.

   NOTE: The test light should be illuminated and bright regardless of the position of the ignition switch. Compare the brightness to that of a direct connection to the battery.

3. Wiggle the circuits while checking with the test light to check the circuit for an intermittent problem.

   Is the test light illuminated and bright in each of the ignition switch positions?

   Yes

   - Go To 6

   No

   - Repair the circuit as necessary.
   - Perform the PCM VERIFICATION Test. Refer to **POWERTRAIN VERIFICATION TEST** .

6. **POWERTRAIN CONTROL MODULE (PCM)**
   1. Using the wiring diagram/schematic as a guide, inspect Powertrain Control Module power and ground circuits.
   2. Look for any chafed, pierced, pinched, or partially broken wires.
   3. Look for broken, bent, pushed out or corroded terminals.
   4. Monitor the scan tool data and wiggle the wiring and connectors.
   5. Look for the any data to change or for the DTC to reset during the wiggle test.
   6. Perform any Technical Service Bulletins that may apply.

   Were any problems found?

   Yes

- Repair as necessary.
- Perform the PCM VERIFICATION Test. Refer to **POWERTRAIN VERIFICATION TEST** .

No

- Replace and program the Powertrain Control Module (PCM) in accordance with the service information. Refer to **MODULE, POWERTRAIN CONTROL, REMOVAL** .
- Perform the PCM VERIFICATION Test. Refer to **POWERTRAIN VERIFICATION TEST** .

U0001-CAN C BUS

For a complete wiring diagram, **refer to appropriate SYSTEM WIRING DIAGRAMS article** .

WHEN MONITORED

Ignition run time is greater than one second. Battery voltage between 9 and 16 volts. Engine run time greater than three seconds.

SET CONDITION

The Powertrain Control Module (PCM) loses communication over the CAN C Bus circuit. The circuit is continuously monitored.

POSSIBLE CAUSES

POSSIBLE CAUSES
CAN C BUS OPEN OR SHORTED CONDITION POWERTRAIN CONTROL MODULE (PCM)

Always perform the Pre-Diagnostic Troubleshooting procedure before proceeding. Refer to PRE-DIAGNOSTIC TROUBLESHOOTING PROCEDURE .

DIAGNOSTIC TEST

ACTIVE DTC

NOTE: For vehicle communication problems, use the scan tool to refer to the Network Review Screen. The screen depicts a high level view of the vehicle network. Fault and problem areas appear in red. Selecting any of the network components allows access to the source of the problem.

1. Ignition on, engine not running.
2. With a scan tool, select View DTCs.

   Is the status Active for this DTC?

   Yes

   - Refer to the **TOTALLY INTEGRATED POWER MODULE (TIPM) - DIAGNOSTIC CODE INDEX** and perform the U0001-Can C Bus diagnostic procedure.

   No

   - Perform the INTERMITTENT CONDITION diagnostic procedure. Refer to **INTERMITTENT CONDITION** .

U0002-CAN C BUS OFF PERFORMANCE

For a complete wiring diagram, **refer to appropriate SYSTEM WIRING DIAGRAMS article** .

WHEN MONITORED

With the ignition on, the battery voltage between 9 and 16 volts and engine run time greater than three seconds.

SET CONDITION

The Powertrain Control Module (PCM) doesn't receive any CAN C bus messages for a specific amount of time.

POSSIBLE CAUSES

Possible Causes
CAN C BUS OPEN OR SHORTED CONDITION POWERTRAIN CONTROL MODULE (PCM)

Always perform the Pre-Diagnostic Troubleshooting procedure before proceeding. Refer to PRE-DIAGNOSTIC TROUBLESHOOTING PROCEDURE .

DIAGNOSTIC TEST

ACTIVE DTC

NOTE: For vehicle communication problems, use the scan tool to refer to the Network Review Screen. The screen depicts a high level view of the vehicle network. Fault and problem areas appear in red. Selecting any of the network components allows access to the source of the problem.

1. Turn the ignition on.
2. With a scan tool, read the active DTCs.

   Does the scan tool display U0002-CAN C BUS OFF PERFORMANCE?

   Yes

   - Refer to the **TOTALLY INTEGRATED POWER MODULE (TIPM) - DIAGNOSTIC CODE INDEX** and perform the U0001-Can C Bus diagnostic procedure.

   No

   - Refer to **DIAGNOSIS AND TESTING** and perform the Stored Lost Communication DTCs diagnostic procedure.

U0101-LOST COMMUNICATION WITH TCM

For a complete wiring diagram, **refer to appropriate SYSTEM WIRING DIAGRAMS article** .

WHEN MONITORED

Ignition run time is greater than one second. Battery voltage between 9 and 16 volts. Engine run time greater than three seconds.

SET CONDITION

The Powertrain Control Module (PCM) doesn't receive a Bus Message from the Transmission Control Module for seven consecutive seconds. The circuit is continuously monitored.

POSSIBLE CAUSES

POSSIBLE CAUSES
CAN C BUS OPEN OR SHORTED CONDITION POWERTRAIN CONTROL MODULE (PCM)

Always perform the Pre-Diagnostic Troubleshooting procedure before proceeding. Refer to PRE-DIAGNOSTIC TROUBLESHOOTING PROCEDURE .

DIAGNOSTIC TEST

ACTIVE DTC

NOTE: For vehicle communication problems, use the scan tool to refer to the Network Review Screen. The screen depicts a high level view of the vehicle network. Fault and problem areas appear in red. Selecting any of the network components allows access to the source of the problem.

1. Ignition on, engine not running.
2. With a scan tool, select View DTCs.

   Is the status Active for this DTC?

   Yes

   - Refer to **TOTALLY INTEGRATED POWER MODULE (TIPM) - DIAGNOSTIC CODE INDEX** and perform the U0101-Lost Communication with TCM diagnostic procedure.

   No

   - Refer to **DIAGNOSIS AND TESTING** and perform the Stored Lost Communication DTCs diagnostic procedure.

U0121-LOST COMMUNICATION WITH ANTI-LOCK BRAKE MODULE

For a complete wiring diagram, **refer to appropriate SYSTEM WIRING DIAGRAMS article** .

WHEN MONITORED

Ignition run time is greater than one second. Battery voltage between 9 and 16 volts. Engine run time greater than three seconds.

SET CONDITION

The Powertrain Control Module (PCM) doesn't receive an ABS message over the CAN C circuit for seven consecutive seconds. The circuit is continuously monitored.

POSSIBLE CAUSES

POSSIBLE CAUSES
CAN C BUS OPEN OR SHORTED CONDITION
ANTI-LOCK BRAKE (ABS) MODULE
TOTALLY INTEGRATED POWER MODULE (TIPM)
POWERTRAIN CONTROL MODULE (PCM)

Always perform the Pre-Diagnostic Troubleshooting procedure before proceeding. Refer to PRE-DIAGNOSTIC TROUBLESHOOTING PROCEDURE .

DIAGNOSTIC TEST

ACTIVE DTC

1. Ignition on, engine not running.
2. With a scan tool, select View DTCs.

   Is the status Active for this DTC?

   Yes

   - Refer to **TOTALLY INTEGRATED POWER MODULE (TIPM) - DIAGNOSTIC CODE INDEX** and perform the U0121-Lost Communication with Anti-Lock Brake Module diagnostic procedure.

   No

- Refer to **DIAGNOSIS AND TESTING** and perform the Stored Lost Communication DTCs diagnostic procedure.

U0140-LOST COMMUNICATION WITH BODY CONTROL MODULE (TIPM)

For a complete wiring diagram, **refer to appropriate SYSTEM WIRING DIAGRAMS article** .

WHEN MONITORED

Ignition run time is greater than one second. Battery voltage between 9 and 16 volts.

SET CONDITION

The Powertrain Control Module (PCM) doesn't receive a Totally Integrated Power Module (TIPM) message over the CAN C bus for seven consecutive seconds. The circuit is continuously monitored.

POSSIBLE CAUSES

POSSIBLE CAUSES
CAN C BUS OPEN OR SHORTED CONDITION
TOTALLY INTEGRATED POWER MODULE (TIPM)
POWERTRAIN CONTROL MODULE (PCM)

Always perform the Pre-Diagnostic Troubleshooting procedure before proceeding. Refer to PRE-DIAGNOSTIC TROUBLESHOOTING PROCEDURE .

DIAGNOSTIC TEST

ACTIVE DTC

NOTE: For vehicle communication problems, use the scan tool to refer to the Network Review Screen. The screen depicts a high level view of the vehicle network. Fault and problem areas appear in red. Selecting any of the network components allows access to the source of the problem.

1. Ignition on, engine not running.

2. With a scan tool, select View DTCs.

   Is the status Active for this DTC?

   Yes

   - Refer to **TOTALLY INTEGRATED POWER MODULE (TIPM) - DIAGNOSTIC CODE INDEX** and perform the U0141-Lost Communication with IPM (FCM/TIPM) diagnostic procedure.

   No

   - Refer to **DIAGNOSIS AND TESTING** and perform the Stored Lost Communication DTCs diagnostic procedure.

U0141-LOST COMMUNICATION WITH IPM (FCM/TIPM)

For a complete wiring diagram, **refer to appropriate SYSTEM WIRING DIAGRAMS article** .

WHEN MONITORED

Ignition run time is greater than one second. Battery voltage between 9 and 16 volts.

SET CONDITION

The Powertrain Control Module (PCM) doesn't receive a message from the Totally Integrated Power Module (TIPM) over the CAN C circuit for seven consecutive seconds. The circuit is continuously monitored.

POSSIBLE CAUSES

POSSIBLE CAUSES
CAN C BUS OPEN OR SHORTED CONDITION
TOTALLY INTEGRATED POWER MODULE (TIPM)
POWERTRAIN CONTROL MODULE (PCM)

Always perform the Pre-Diagnostic Troubleshooting procedure before proceeding. Refer to PRE-DIAGNOSTIC TROUBLESHOOTING PROCEDURE .

DIAGNOSTIC TEST

ACTIVE DTC

NOTE: For vehicle communication problems, use the scan tool to refer to the Network Review Screen. The screen depicts a high level view of the vehicle network. Fault and problem areas appear in red. Selecting any of the network components allows access to the source of the problem.

1. Ignition on, engine not running.
2. With a scan tool, read the active DTCs.

   Does the scan tool display U0141-LOST COMMUNICATION WITH IPM (FCM/TIPM)?

   Yes

   - Refer to **TOTALLY INTEGRATED POWER MODULE (TIPM) - DIAGNOSTIC CODE INDEX** and perform the U0141-Lost Communication with IPM (FCM/TIPM) diagnostic procedure.

   No

   - Refer to **DIAGNOSIS AND TESTING** and perform the Stored Lost Communication DTC diagnostic procedure.

U0151-LOST COMMUNICATION WITH OCCUPANT RESTRAINT CONTROLLER (ORC)

For a complete wiring diagram, **refer to appropriate SYSTEM WIRING DIAGRAMS article** .

WHEN MONITORED

Ignition run time is greater than one second. Battery voltage between 9 and 16 volts. Engine run time greater than three seconds.

SET CONDITION

The Powertrain Control Module (PCM) doesn't receive an Occupant Restraint Controller (ORC) message over the CAN C circuit for seven consecutive seconds. The circuit is continuously monitored.

POSSIBLE CAUSES

POSSIBLE CAUSES
CAN C BUS OPEN OR SHORTED CONDITION
OCCUPANT RESTRAINT CONTROLLER (ORC)
TOTALLY INTEGRATED POWER MODULE (TIPM)
POWERTRAIN CONTROL MODULE (PCM)

Always perform the Pre-Diagnostic Troubleshooting procedure before proceeding. Refer to PRE-DIAGNOSTIC TROUBLESHOOTING PROCEDURE .

DIAGNOSTIC TEST

ACTIVE DTC

1. Turn the ignition on.
2. With a scan tool, read the active DTCs.

   Does the scan tool display U0151-LOST COMMUNICATION WITH OCCUPANT RESTRAINT CONTROLLER (ORC)?

   Yes

   - Refer to **TOTALLY INTEGRATED POWER MODULE (TIPM) - DIAGNOSTIC CODE INDEX** and perform the U0151-Lost Communication with Occupant Restraint Controller (ORC) diagnostic procedure.

   No

   - Refer to **DIAGNOSIS AND TESTING** and perform the Stored Lost Communication DTC diagnostic procedure.

U0168-LOST COMMUNICATION WITH VEHICLE SECURITY MODULE (SKREEM/WCM)

For a complete wiring diagram, **refer to appropriate SYSTEM WIRING DIAGRAMS article** .

WHEN MONITORED

Ignition run time is greater than one second. Battery voltage between 9 and 16

volts. Engine run time greater than three seconds.

SET CONDITION

The Powertrain Control Module (PCM), doesn't receive a SKREEM message over the CAN C circuit for seven consecutive seconds. The circuit is continuously monitored.

POSSIBLE CAUSES

POSSIBLE CAUSES
CAN C BUS OPEN OR SHORTED CONDITION
SKREEM/WCM
TOTALLY INTEGRATED POWER MODULE (TIPM)
POWERTRAIN CONTROL MODULE (PCM)

Always perform the Pre-Diagnostic Troubleshooting procedure before proceeding. Refer to PRE-DIAGNOSTIC TROUBLESHOOTING PROCEDURE .

DIAGNOSTIC TEST

ACTIVE DTC

NOTE: For vehicle communication problems, use the scan tool to refer to the Network Review Screen. The screen depicts a high level view of the vehicle network. Fault and problem areas appear in red. Selecting any of the network components allows access to the source of the problem.

1. Ignition on, engine not running.
2. With a scan tool, select View DTCs.

   Is the status Active for this DTC?

   Yes

   - Refer to **TOTALLY INTEGRATED POWER MODULE (TIPM) - DIAGNOSTIC CODE INDEX** and perform the U0168-Lost Communication with Vehicle Security Module (WCM) diagnostic procedure.

No

- Refer to **DIAGNOSIS AND TESTING** and perform the Stored Lost Communication DTC diagnostic procedure.

U0300-INTERNAL CONTROL MODULE SOFTWARE INCOMPATIBILITY

For a complete wiring diagram, **refer to appropriate SYSTEM WIRING DIAGRAMS article** .

WHEN MONITORED

Ignition on and battery voltage greater than 10 volts.

SET CONDITION

The Powertrain Control Module (PCM) software is incorrect.

POSSIBLE CAUSES

POSSIBLE CAUSES
PCM PROGRAMMED WITH INCORRECT SOFTWARE
POWERTRAIN CONTROL MODULE (PCM)

Always perform the Pre-Diagnostic Troubleshooting procedure before proceeding. Refer to PRE-DIAGNOSTIC TROUBLESHOOTING PROCEDURE .

DIAGNOSTIC TEST

PCM PROGRAMMED WITH INCORRECT SOFTWARE

1. Ignition on, engine not running.
2. Program the PCM in accordance with the Service Information. Refer to **STANDARD PROCEDURE - PCM/ECM REPROGRAMMING - GAS** .
3. Start the engine.
4. Allow the engine to reach normal operating temperature.
5. With a scan tool, select read the active DTCs.

   Does the scan tool display U0300-INTERNAL CONTROL MODULE SOFTWARE INCOMPATIBILITY?

Yes

- Replace and program the Powertrain Control Module (PCM) in accordance with the Service Information. Refer to **MODULE, POWERTRAIN CONTROL, REMOVAL** .
- Perform the POWERTRAIN VERIFICATION TEST. Refer to **POWERTRAIN VERIFICATION TEST** .

No

- The Powertrain Control Module (PCM) has been successfully programmed. Test is complete.
- Perform the POWERTRAIN VERIFICATION TEST. Refer to **POWERTRAIN VERIFICATION TEST** .

U0402-IMPLAUSIBLE DATA RECEIVED FROM TCM

For a complete wiring diagram, **refer to appropriate SYSTEM WIRING DIAGRAMS article** .

WHEN MONITORED

Continuously while the system is active.

SET CONDITION

Implausible data has been received over the bus from the Transmission Control Module (TCM).

POSSIBLE CAUSES

POSSIBLE CAUSES
CAN BUS OPEN OR SHORTED CONDITION
TRANSMISSION CONTROL MODULE (TCM)
POWERTRAIN CONTROL MODULE (PCM)

Always perform the Pre-Diagnostic Troubleshooting procedure before proceeding. Refer to PRE-DIAGNOSTIC TROUBLESHOOTING PROCEDURE .

DIAGNOSTIC TEST

1. **ACTIVE DTC**

NOTE: Diagnose all CAN B and C communication DTCs before continuing.

1. Turn the ignition on.
2. With a scan tool, view DTCs.

Is the status Active for this DTC?

Yes

- Go To 2

No

- Perform the INTERMITTENT CONDITION diagnostic procedure. Refer to **INTERMITTENT CONDITION** .

2. **TCM COMMUNICATION RELATED DTCS IN OTHER MODULES**

1. With a scan tool check for TCM communication related DTCs in other modules on the CAN Bus.

Are there any TCM communication related DTCs in other modules on the CAN Bus at this time?

Yes

- Replace and program the Transmission Control Module (TCM) in accordance with the Service Information.
- Perform the PCM VERIFICATION Test. Refer to **POWERTRAIN VERIFICATION TEST** .

No

- Replace and program the Powertrain Control Module (PCM) in accordance with the Service Information. Refer to **MODULE, POWERTRAIN CONTROL, REMOVAL** .
- Perform the PCM VERIFICATION Test. Refer to **POWERTRAIN VERIFICATION TEST** .

U0415-IMPLAUSIBLE DATA RECEIVED FROM ABS

For a complete wiring diagram, **refer to appropriate SYSTEM WIRING DIAGRAMS article** .

WHEN MONITORED

Continuously while the system is active.

SET CONDITION

Implausible data has been received over the bus from the Anti-lock Brake Module.

POSSIBLE CAUSES

POSSIBLE CAUSES
CAN BUS OPEN OR SHORTED CONDITION
ANTI-LOCK BRAKE MODULE
POWERTRAIN CONTROL MODULE (PCM)

Always perform the Pre-Diagnostic Troubleshooting procedure before proceeding. Refer to PRE-DIAGNOSTIC TROUBLESHOOTING PROCEDURE .

DIAGNOSTIC TEST

1. **ACTIVE DTC**

NOTE: Diagnose all CAN B and C communication DTCs before continuing.

1. Turn the ignition on.
2. With a scan tool, view DTCs.

Is the status Active for this DTC?

Yes

- Go To 2

No

- Performing the INTERMITTENT CONDITION diagnostic procedure. Refer to **INTERMITTENT CONDITION** .

2. **ABS COMMUNICATION RELATED DTCS IN OTHER MODULES**
   1. With a scan tool check for ABS communication related DTCs in other modules on the CAN Bus.

      Are there any ABS communication related DTCs in other modules on the CAN Bus at this time?

      Yes

      - Replace and program the Anti-Lock Brake Module in accordance with the Service Information.
      - Perform the ABS VERIFICATION TEST. Refer to **STANDARD PROCEDURE** .

      No

      - Replace and program the Powertrain Control Module (PCM) in accordance with the Service Information. Refer to **MODULE, POWERTRAIN CONTROL, REMOVAL** .
      - Perform the PCM VERIFICATION TEST. Refer to **POWERTRAIN VERIFICATION TEST** .

U0416-IMPLAUSIBLE DATA RECEIVED FROM ESP

For a complete wiring diagram, **refer to appropriate SYSTEM WIRING DIAGRAMS article** .

WHEN MONITORED

Continuously while the system is active.

SET CONDITION

Implausible data has been received over the bus from the Electronic Stability Program (ESP) in the ABS Module.

POSSIBLE CAUSES

POSSIBLE CAUSES

CAN BUS OPEN OR SHORTED CONDITION
ELECTRONIC STABILITY PROGRAM (ESP)/ANTILOCK BRAKE MODULE (ABS)
POWERTRAIN CONTROL MODULE (PCM)

Always perform the Pre-Diagnostic Troubleshooting procedure before proceeding. Refer to PRE-DIAGNOSTIC TROUBLESHOOTING PROCEDURE .

DIAGNOSTIC TEST

1. **ACTIVE DTC**

   NOTE: Diagnose all CAN B and C communication DTCs before continuing.

   1. Turn the ignition on.
   2. With a scan tool, view DTCs.

      Is the status Active for this DTC?

      Yes

      - Go To 2

      No

      - Refer to **DIAGNOSIS AND TESTING** and perform the Stored Lost Communication DTCs diagnostic procedure.

2. **ABS/ESP COMMUNICATION RELATED DTCS IN OTHER MODULES**
   1. With a scan tool check for ABS/ESP communication related DTCs in other modules on the CAN Bus.

      Are there any ESP communication related DTCs in other modules on the CAN Bus at this time?

      Yes

      - Replace and program the ABS Module in accordance with the

Service Information.

- Perform the ABS VERIFICATION TEST. Refer to **STANDARD PROCEDURE** .

No

- Replace and program the Powertrain Control Module (PCM) in accordance with the Service Information. Refer to **MODULE, POWERTRAIN CONTROL, REMOVAL** .
- Perform the PCM VERIFICATION Test. Refer to **POWERTRAIN VERIFICATION TEST** .

U0431-IMPLAUSIBLE DATA RECEIVED FROM FCM (TIPM)

For a complete wiring diagram, **refer to appropriate SYSTEM WIRING DIAGRAMS article** .

WHEN MONITORED

Continuously while the system is active.

SET CONDITION

Implausible data has been received over the bus from the Totally Integrated Power Module (TIPM).

POSSIBLE CAUSES

POSSIBLE CAUSES
CAN BUS OPEN OR SHORTED CONDITION
TOTALLY INTEGRATED POWER MODULE (TIPM)
POWERTRAIN CONTROL MODULE (PCM)

Always perform the Pre-Diagnostic Troubleshooting procedure before proceeding. Refer to PRE-DIAGNOSTIC TROUBLESHOOTING PROCEDURE .

DIAGNOSTIC TEST

1. **ACTIVE DTC**

NOTE: Diagnose all CAN B and C communication DTCs

before continuing.

1. Turn the ignition on.
2. With a scan tool, view DTCs.

   Is the status Active for this DTC?

   Yes

   - Go To 2

   No

   - Perform the INTERMITTENT CONDITION diagnostic procedure. Refer to **INTERMITTENT CONDITION** .

2. **TIPM COMMUNICATION RELATED DTCS IN OTHER MODULES**
   1. With a scan tool check for TIPM communication related DTCs in other modules on the CAN Bus.

      Are there any TIPM communication related DTCs in other modules on the CAN Bus at this time?

      Yes

      - Replace and program the Totally Integrated Power Module (TIPM) in accordance with the Service Information.
      - Perform the PCM VERIFICATION Test. Refer to **POWERTRAIN VERIFICATION TEST** .

      No

      - Replace and program the Powertrain Control Module (PCM) in accordance with the Service Information. Refer to **MODULE, POWERTRAIN CONTROL, REMOVAL** .
      - Perform the PCM VERIFICATION Test. Refer to **POWERTRAIN VERIFICATION TEST** .

U110A-LOST COMMUNICATION WITH SCM (SAS)

For a complete wiring diagram, **refer to appropriate SYSTEM WIRING**

DIAGRAMS article .

WHEN MONITORED

Ignition run time is greater than one second. Battery voltage between 9 and 16 Volts. Engine run time greater than three seconds.

SET CONDITION

The Powertrain Control Module (PCM) doesn't receive a Steering Angle Sensor (SAS) message over the CAN C circuit for seven consecutive seconds. The circuit is continuously monitored. One Trip fault.

POSSIBLE CAUSES

Possible Causes
CAN C BUS OPEN OR SHORTED CONDITION
STEERING COLUMN CONTROL MODULE
TOTALLY INTEGRATED POWER MODULE (TIPM)
POWERTRAIN CONTROL MODULE (PCM)

Always perform the Pre-Diagnostic Troubleshooting procedure before proceeding. Refer to PRE-DIAGNOSTIC TROUBLESHOOTING PROCEDURE .

DIAGNOSTIC TEST

ACTIVE DTC

1. Ignition on, engine not running.
2. With the scan tool, View PCM DTCs.

   Is the DTC Active at this time?

   Yes

   - Refer to **TOTALLY INTEGRATED POWER MODULE (TIPM) - DIAGNOSTIC CODE INDEX** and perform the U0212-Lost Communication with SCM diagnostic procedure.

   No

- Refer to **DIAGNOSIS AND TESTING** and perform the Stored Lost Communication DTCs diagnostic procedure.

U110C-LOST FUEL LEVEL MESSAGE

For a complete wiring diagram, **refer to appropriate SYSTEM WIRING DIAGRAMS article** .

THEORY OF OPERATION

The fuel level signal is a direct input to the Cluster. The fuel level signal is sent to the Totally Integrated Power Module (TIPM) over the CAN B bus circuit. The Powertrain Control Module (PCM) receives the fuel level signal from the TIPM over the CAN C bus circuit.

WHEN MONITORED

Ignition on.

SET CONDITION

When the Powertrain Control Module (PCM) does not receive a fuel level signal over the CAN C circuit. The circuit is constantly monitored.

POSSIBLE CAUSES

POSSIBLE CAUSES
CAN C BUS CIRCUIT OPEN OR SHORTED
TOTALLY INTEGRATED POWER MODULE (TIPM)
POWERTRAIN CONTROL MODULE (PCM)

Always perform the Pre-Diagnostic Troubleshooting procedure before proceeding. Refer to PRE-DIAGNOSTIC TROUBLESHOOTING PROCEDURE .

DIAGNOSTIC TEST

1. **ACTIVE DTC**

NOTE: For vehicle communication problems, use the scan tool to refer to the Network Review Screen. The screen depicts a high level view of the vehicle

network. Fault and problem areas appear in red. Selecting any of the network components allows access to the source of the problem.

1. Ignition on, engine not running.
2. With a scan tool, select View DTCs.

   Is the status Active for this DTC?

   Yes

   - Go To 2

   No

   - Perform the INTERMITTENT CONDITION diagnostic procedure. Refer to **INTERMITTENT CONDITION** .

2. **U0141-LOST COMMUNICATION WITH IPM (FCM/TIPM) ALSO ACTIVE**
   1. With the scan tool read DTCs.

      Is the DTC U0141-LOST COMMUNICATION WITH IPM (FCM/TIPM) also set?

      Yes

      - Refer to **TOTALLY INTEGRATED POWER MODULE (TIPM) - DIAGNOSTIC CODE INDEX** and perform the U0141-Lost Communication with IPM (FCM/TIPM) diagnostic procedure.

      No

      - Replace and program the Powertrain Control Module (PCM) in accordance with the Service Information. Refer to **MODULE, POWERTRAIN CONTROL, REMOVAL** .
      - Perform the PCM VERIFICATION Test. Refer to **POWERTRAIN VERIFICATION TEST** .

U110E-LOST AMBIENT TEMPERATURE MESSAGE

For a complete wiring diagram, **refer to appropriate SYSTEM WIRING DIAGRAMS article** .

THEORY OF OPERATION

The ambient temperature sensor signal is a direct input to the Totally Integrated Power Module (TIPM). The TIPM sends the Powertrain Control Module (PCM) the ambient temperature signal over the CAN C bus.

WHEN MONITORED

Ignition on.

SET CONDITION

The Powertrain Control Module (PCM) doesn't receive the ambient temperature signal over the CAN C bus from the Totally Integrated Power Module (TIPM). The circuit is continuously monitored.

POSSIBLE CAUSES

POSSIBLE CAUSES
CAN C BUS CIRCUIT OPEN OR SHORTED
TOTALLY INTEGRATED POWER MODULE (TIPM)
POWERTRAIN CONTROL MODULE (PCM)

Always perform the Pre-Diagnostic Troubleshooting procedure before proceeding. Refer to PRE-DIAGNOSTIC TROUBLESHOOTING PROCEDURE .

DIAGNOSTIC TEST

1. **ACTIVE DTC**

NOTE: For vehicle communication problems, use the scan tool to refer to the Network Review Screen. The screen depicts a high level view of the vehicle network. Fault and problem areas appear in red. Selecting any of the network components allows access to the source of the problem.

1. Ignition on, engine not running.

2. With a scan tool, select View DTCs.

   Is the status Active for this DTC?

   Yes

   - Go To 2

   No

   - Perform the INTERMITTENT CONDITION diagnostic procedure. Refer to **INTERMITTENT CONDITION** .

2. **U0141-LOST COMMUNICATION WITH IPM (FCM/TIPM) ALSO ACTIVE**
   1. With the scan tool read DTCs.

      Is the DTC U0141-LOST COMMUNICATION WITH IPM (FCM/TIPM) also set?

      Yes

      - Refer to **TOTALLY INTEGRATED POWER MODULE (TIPM) - DIAGNOSTIC CODE INDEX** and perform the U0141-Lost Communication with IPM (FCM/TIPM) diagnostic procedure.

      No

      - Replace and program the Powertrain Control Module (PCM) in accordance with the Service Information. Refer to **MODULE, POWERTRAIN CONTROL, REMOVAL** .
      - Perform the PCM VERIFICATION Test. Refer to **POWERTRAIN VERIFICATION TEST** .

U1110-LOST VEHICLE SPEED MESSAGE

For a complete wiring diagram, **refer to appropriate SYSTEM WIRING DIAGRAMS article** .

THEORY OF OPERATION

The Powertrain Control Module (PCM) receives the vehicle speed signal over the CAN C bus from the Anti-lock Brake Module.

WHEN MONITORED

Ignition on.

SET CONDITION

The PCM doesn't receive a vehicle speed signal from the Anti-Lock Brake Module over the CAN C bus.

POSSIBLE CAUSES

POSSIBLE CAUSES
CAN C BUS CIRCUIT OPEN OR SHORTED
ANTI-LOCK BRAKE (ABS) MODULE
POWERTRAIN CONTROL MODULE (PCM)

Always perform the Pre-Diagnostic Troubleshooting procedure before proceeding. Refer to PRE-DIAGNOSTIC TROUBLESHOOTING PROCEDURE .

DIAGNOSTIC TEST

1. **ACTIVE DTC**

NOTE: For vehicle communication problems, use the scan tool to refer to the Network Review Screen. The screen depicts a high level view of the vehicle network. Fault and problem areas appear in red. Selecting any of the network components allows access to the source of the problem.

1. Ignition on, engine not running.
2. With a scan tool, select View DTCs.

Is the status Active for this DTC?

Yes

- Go To 2

No

- Perform the INTERMITTENT CONDITION diagnostic procedure. Refer to **INTERMITTENT CONDITION** .

2. **U0121-LOST COMMUNICATION WITH ANTI-LOCK BRAKE MODULE ALSO SET**
   1. With a scan tool, select View DTCs.

      Is the DTC U0121-LOST COMMUNICATION WITH ANTI-LOCK BRAKE MODULE also set?

      Yes

      - Refer to **TOTALLY INTEGRATED POWER MODULE (TIPM) - DIAGNOSTIC CODE INDEX** and perform the U0141-Lost Communication with IPM (FCM/TIPM) diagnostic procedure.

      No

      - Replace and program the Powertrain Control Module (PCM) in accordance with the Service Information. Refer to **MODULE, POWERTRAIN CONTROL, REMOVAL** .
      - Perform the PCM VERIFICATION Test. Refer to **POWERTRAIN VERIFICATION TEST** .

U1113-LOST A/C PRESSURE MESSAGE

For a complete wiring diagram, **refer to appropriate SYSTEM WIRING DIAGRAMS article** .

THEORY OF OPERATION

The A/C Pressure Transducer signal is a direct input to the Totally Integrated Power Module (TIPM). The TIPM sends the Powertrain Control Module (PCM) the A/C pressure signal over the CAN C bus.

WHEN MONITORED

Ignition on.

SET CONDITION

The PCM doesn't receive the A/C Pressure signal over the CAN C bus from the TIPM. The circuit is continuously monitored.

POSSIBLE CAUSES

POSSIBLE CAUSES
CAN C BUS CIRCUIT OPEN OR SHORTED
TOTALLY INTEGRATED POWER MODULE (TIPM)
POWERTRAIN CONTROL MODULE (PCM)

Always perform the Pre-Diagnostic Troubleshooting procedure before proceeding. Refer to PRE-DIAGNOSTIC TROUBLESHOOTING PROCEDURE .

DIAGNOSTIC TEST

1. **ACTIVE DTC**

NOTE: For vehicle communication problems, use the scan tool to refer to the Network Review Screen. The screen depicts a high level view of the vehicle network. Fault and problem areas appear in red. Selecting any of the network components allows access to the source of the problem.

1. Ignition on, engine not running.
2. With a scan tool, select View DTCs.

   Is the status Active for this DTC?

   Yes

   - Go To 2

   No

   - Perform the INTERMITTENT CONDITION diagnostic procedure.

Refer to **INTERMITTENT CONDITION** .

2. **U0141-LOST COMMUNICATION WITH IPM (FCM/TIPM) ALSO ACTIVE**
   1. With the scan tool read DTCs.

      Is the DTC U0141-LOST COMMUNICATION WITH IPM (FCM/TIPM) also set?

      Yes

      - Refer to **TOTALLY INTEGRATED POWER MODULE (TIPM) - DIAGNOSTIC CODE INDEX** and perform the U0141-Lost Communication with IPM (FCM/TIPM) diagnostic procedure.

      No

      - Replace and program the Powertrain Control Module (PCM) in accordance with the Service Information. Refer to **MODULE, POWERTRAIN CONTROL, REMOVAL** .
      - Perform the PCM VERIFICATION Test. Refer to **POWERTRAIN VERIFICATION TEST** .

U1120-LOST WHEEL DISTANCE MESSAGE

For a complete wiring diagram, **refer to appropriate SYSTEM WIRING DIAGRAMS article** .

THEORY OF OPERATION

The Powertrain Control Module (PCM) receives the vehicle speed signal over the CAN C bus from the Anti-lock Brake Module.

WHEN MONITORED

Ignition on.

SET CONDITION

The Powertrain Control module (PCM) doesn't receive a vehicle speed signal from the Anti-Lock Brake Module over the CAN C bus.

POSSIBLE CAUSES

POSSIBLE CAUSES
CAN C BUS CIRCUIT OPEN OR SHORTED
ANTI-LOCK BRAKE (ABS) MODULE
POWERTRAIN CONTROL MODULE (PCM)

Always perform the Pre-Diagnostic Troubleshooting procedure before proceeding. Refer to PRE-DIAGNOSTIC TROUBLESHOOTING PROCEDURE .

DIAGNOSTIC TEST

1. **ACTIVE DTC**

   NOTE: For vehicle communication problems, use the scan tool to refer to the Network Review Screen. The screen depicts a high level view of the vehicle network. Fault and problem areas appear in red. Selecting any of the network components allows access to the source of the problem.

   1. Ignition on, engine not running.
   2. With a scan tool, select View DTCs.

      Is the status Active for this DTC?

      Yes

      - Go To 2

      No

      - Perform the INTERMITTENT CONDITION diagnostic procedure. Refer to **INTERMITTENT CONDITION** .

2. **U0121-LOST COMMUNICATION WITH ANTI-LOCK BRAKE MODULE ALSO SET**
   1. With a scan tool, select View DTCs.

      Is the DTC U0121-LOST COMMUNICATION WITH ANTI-LOCK

BRAKE MODULE also set?

Yes

- Refer to **TOTALLY INTEGRATED POWER MODULE (TIPM) - DIAGNOSTIC CODE INDEX** and perform the U0141-Lost Communication with IPM (FCM/TIPM) diagnostic procedure.

No

- Replace and program the Powertrain Control Module (PCM) in accordance with the Service Information. Refer to **MODULE, POWERTRAIN CONTROL, REMOVAL** .
- Perform the PCM VERIFICATION Test. Refer to **POWERTRAIN VERIFICATION TEST** .

U1403-IMPLAUSIBLE FUEL LEVEL SIGNAL

For a complete wiring diagram, **refer to appropriate SYSTEM WIRING DIAGRAMS article** .

THEORY OF OPERATION

The Totally Integrated Power Module (TIPM) receives a fuel level signal over CAN B from the Cluster. The TIPM transmits the fuel level message to the PCM over the CAN C bus.

WHEN MONITORED

Ignition on.

SET CONDITION

The fuel level message that the Powertrain Control Module (PCM) is receiving is implausible. The circuit is continuously monitored.

POSSIBLE CAUSES

POSSIBLE CAUSES
CAN B OPEN OR SHORTED
INSTRUMENT CLUSTER (CCN)

TOTALLY INTEGRATED POWER MODULE (TIPM)
POWERTRAIN CONTROL MODULE (PCM)

Always perform the Pre-Diagnostic Troubleshooting procedure before proceeding. Refer to PRE-DIAGNOSTIC TROUBLESHOOTING PROCEDURE .

DIAGNOSTIC TEST

1. **ACTIVE DTC**

   NOTE: Diagnose all CAN B and C communication DTCs before continuing.

   NOTE: For vehicle communication problems, use the scan tool to refer to the Network Review Screen. The screen depicts a high level view of the vehicle network. Fault and problem areas appear in red. Selecting any of the network components allows access to the source of the problem.

   1. Ignition on, engine not running.
   2. With a scan tool, select View DTCs.

      Is the status Active for this DTC?

      Yes

      - Go To 2

      No

      - Perform the INTERMITTENT CONDITION diagnostic procedure. Refer to **INTERMITTENT CONDITION** .

2. **CAN B BUS COMMUNICATION DTCS ALSO ACTIVE**
   1. With a scan tool select View DTCs in the TIPM.

      Are any CAN B Bus DTCs active?

      Yes

- Refer to **TOTALLY INTEGRATED POWER MODULE (TIPM) - DIAGNOSTIC CODE INDEX** for diagnostic procedures and for further possible causes.

No

- Replace and program the Powertrain Control Module (PCM) in accordance with the Service Information. Refer to **MODULE, POWERTRAIN CONTROL, REMOVAL** .
- Perform the PCM VERIFICATION Test. Refer to **POWERTRAIN VERIFICATION TEST** .

U1412-IMPLAUSIBLE VEHICLE SPEED SIGNAL RECEIVED

For a complete wiring diagram, **refer to appropriate SYSTEM WIRING DIAGRAMS article** .

THEORY OF OPERATION

The ABS Module sends vehicle speed information over the CAN C Bus circuit to the Powertrain Control Module (PCM).

WHEN MONITORED

Ignition on.

SET CONDITION

The Powertrain Control Module (PCM) gets an implausible signal over the CAN C circuit from the ABS Module. The circuit is continuously monitored.

POSSIBLE CAUSES

POSSIBLE CAUSES
CAN C BUS CIRCUIT SHORTED
CAN C BUS CIRCUIT OPEN
ANTI-LOCK BRAKE (ABS) MODULE
POWERTRAIN CONTROL MODULE (PCM)

Always perform the Pre-Diagnostic Troubleshooting procedure before proceeding. Refer to PRE-DIAGNOSTIC TROUBLESHOOTING

PROCEDURE .

DIAGNOSTIC TEST

1. **ACTIVE DTC**

   NOTE: For vehicle communication problems, use the scan tool to refer to the Network Review Screen. The screen depicts a high level view of the vehicle network. Fault and problem areas appear in red. Selecting any of the network components allows access to the source of the problem.

   1. Ignition on, engine not running.
   2. With a scan tool, select View DTCs.

   Is the status Active for this DTC?

   Yes

   - Go To 2

   No

   - Perform the INTERMITTENT CONDITION diagnostic procedure. Refer to **INTERMITTENT CONDITION** .

2. **DTC U0001-CAN C BUS IS ACTIVE IN THE PCM**
   1. With a scan tool, select View DTCs.

   Is the DTC U0001-CAN C BUS Active in the PCM?

   Yes

   - Refer to **TOTALLY INTEGRATED POWER MODULE (TIPM) - DIAGNOSTIC CODE INDEX** and perform the U0001-Can C Bus diagnostic procedure.

   No

   - Go To 3

3. **ABS MODULE IS ACTIVE ON THE CAN C BUS**
   1. Using the Network Review Screen on the scan tool, verify that the ABS Module is active on the bus.

      Is the ABS Module active on the bus?

      Yes

      - Go To 4

      No

      - Refer to **DIAGNOSIS AND TESTING** and perform the No Response from ABS diagnostic procedure.
4. **DTC U0001-CAN C BUS ACTIVE IN THE TIPM**
   1. With the scan tool, select View DTCs in the TIPM.

      Is the DTC U0001-CAN C BUS Active in the TIPM?

      Yes

      - Replace the ABS Module in accordance with the Service Information.
      - Perform the ABS Verification Test. Refer to **STANDARD PROCEDURE** .

      No

      - Replace and program the Powertrain Control Module (PCM) in accordance with the Service Information. Refer to **MODULE, POWERTRAIN CONTROL, REMOVAL** .
      - Perform the PCM VERIFICATION Test. Refer to **POWERTRAIN VERIFICATION TEST** .

U1417-IMPLAUSIBLE LEFT WHEEL DISTANCE SIGNAL RECEIVED

For a complete wiring diagram, **refer to appropriate SYSTEM WIRING DIAGRAMS article** .

THEORY OF OPERATION

The Anti-Lock Brake (ABS) Module sends an implausible distance signal over the CAN C Bus circuit to the Powertrain Control Module (PCM).

WHEN MONITORED

Ignition on.

SET CONDITION

The Powertrain Control Module (PCM) gets an implausible signal over the CAN C circuit from the ABS Module. The circuit is continuously monitored.

POSSIBLE CAUSES

POSSIBLE CAUSES
VEHICLE SPEED SENSOR DTC ACTIVE IN ANTI-LOCK BRAKE MODULE
CAN C BUS CIRCUIT SHORTED
CAN C BUS CIRCUIT OPEN
ANTI-LOCK BRAKE (ABS) MODULE
POWERTRAIN CONTROL MODULE (PCM)

Always perform the Pre-Diagnostic Troubleshooting procedure before proceeding. Refer to PRE-DIAGNOSTIC TROUBLESHOOTING PROCEDURE .

DIAGNOSTIC TEST

1. **ACTIVE DTC**

NOTE: For vehicle communication problems, use the scan tool to refer to the Network Review Screen. The screen depicts a high level view of the vehicle network. Fault and problem areas appear in red. Selecting any of the network components allows access to the source of the problem.

1. Ignition on, engine not running.
2. With a scan tool, select View DTCs.

   Is the status Active for this DTC?

Yes

- Go To 2

No

- Perform the INTERMITTENT CONDITION diagnostic procedure. Refer to **INTERMITTENT CONDITION** .

2. **ABS MODULE IS ACTIVE ON THE CAN C BUS**
   1. Using the Network Review Screen on the scan tool, verify that the ABS Module is active on the bus.

      Is the ABS Module active on the bus?

      Yes

      - Go To 3

      No

      - Refer to **DIAGNOSIS AND TESTING** and perform the No Response from ABS diagnostic procedure.

3. **DTCS STORED OR ACTIVE IN THE ABS MODULE**
   1. With the scan tool, select View DTCs in the ABS Module.

      Are any DTCs active or stored in the ABS Module?

      Yes

      - Refer to **DIAGNOSIS AND TESTING** and perform the appropriate diagnostic procedure.

      No

      - Go To 4

4. **ACTIVE DTCS IN THE TIPM**
   1. With the scan tool, select ECU View and select the TIPM.
   2. With the scan tool, select View DTCs in the TIPM.

      Are any ABS related DTCs active or stored in the TIPM?

Yes

- Replace the ABS Module in accordance with the Service Information
- Perform the ABS Verification Test. Refer to **STANDARD PROCEDURE** .

No

- Replace and program the Powertrain Control Module in accordance with the Service Information. Refer to **MODULE, POWERTRAIN CONTROL, REMOVAL** .
- Perform the PCM VERIFICATION Test. Refer to **POWERTRAIN VERIFICATION TEST** .

U1418-IMPLAUSIBLE RIGHT WHEEL DISTANCE SIGNAL RECEIVED

For a complete wiring diagram, **refer to appropriate SYSTEM WIRING DIAGRAMS article** .

THEORY OF OPERATION

The ABS Module sends an implausible distance signal over the CAN C Bus circuit to the Powertrain Control Module (PCM).

WHEN MONITORED

Ignition on.

SET CONDITION

The Powertrain Control Module (PCM) gets an implausible signal over the CAN C circuit from the Anti-Lock Brake (ABS) Module. The circuit is continuously monitored.

POSSIBLE CAUSES

POSSIBLE CAUSES
VEHICLE SPEED SENSOR DTC ACTIVE IN ANTI-LOCK BRAKE MODULE
CAN C BUS CIRCUIT SHORTED
CAN C BUS CIRCUIT OPEN

ANTI-LOCK BRAKE (ABS) MODULE
POWERTRAIN CONTROL MODULE (PCM)

Always perform the Pre-Diagnostic Troubleshooting procedure before proceeding. Refer to PRE-DIAGNOSTIC TROUBLESHOOTING PROCEDURE .

DIAGNOSTIC TEST

1. **ACTIVE DTC**

   NOTE: For vehicle communication problems, use the scan tool to refer to the Network Review Screen. The screen depicts a high level view of the vehicle network. Fault and problem areas appear in red. Selecting any of the network components allows access to the source of the problem.

   1. Ignition on, engine not running.
   2. With a scan tool, select View DTCs.

      Is the status Active for this DTC?

      Yes

      - Go To 2

      No

      - Perform the CHECKING FOR AN INTERMITTENT DTC diagnostic procedure. Refer to **INTERMITTENT CONDITION** .

2. **ABS MODULE IS ACTIVE ON THE CAN C BUS**
   1. Using the Network Review Screen on the scan tool, verify that the ABS Module is active on the bus.

      Is the ABS Module active on the bus?

      Yes

      - Go To 3

No

- Refer to **DIAGNOSIS AND TESTING** and perform the No Response from ABS diagnostic procedure.

3. **DTCS STORED OR ACTIVE IN THE ABS MODULE**
   1. With the scan tool, select View DTCs in the ABS Module.

   Are any DTCs active or stored in the ABS Module?

   Yes

   - Refer to **DIAGNOSIS AND TESTING** and perform the appropriate diagnostic procedure.

   No

   - Go To 4

4. **ACTIVE DTCS IN THE TIPM**
   1. With the scan tool, select ECU View and select the TIPM.
   2. With the scan tool, select View DTCs in the TIPM.

   Are any ABS related DTCs active or stored in the TIPM?

   Yes

   - Replace the ABS Module in accordance with the Service Information
   - Perform the ABS Verification Test. Refer to **STANDARD PROCEDURE** .

   No

   - Replace and program the Powertrain Control Module in accordance with the Service Information. Refer to **MODULE, POWERTRAIN CONTROL, REMOVAL** .
   - Perform the PCM VERIFICATION Test. Refer to **POWERTRAIN VERIFICATION TEST** .

2014 ENGINE PERFORMANCE

Powertrain Control Module (PCM) - Electrical Diagnostics, 2.0L & 2.4L - Compass & Patriot

DIAGNOSTIC CODE INDEX

DIAGNOSTIC CODE INDEX

DTC	Description
P000A	BANK 1 CAMSHAFT 1 POSITION SLOW RESPONSE
P000B	BANK 1 CAMSHAFT 2 POSITION SLOW RESPONSE
P0010	BANK 1 CAMSHAFT 1 POSITION ACTUATOR CIRCUIT OPEN
P0013	BANK 1 CAMSHAFT 2 POSITION ACTUATOR CIRCUIT OPEN
P0016	CRANKSHAFT/CAMSHAFT TIMING MISALIGNMENT - BANK 1 SENSOR 1
P0017	CRANKSHAFT/CAMSHAFT TIMING MISALIGNMENT - BANK 1 SENSOR 2
P0031	O2 SENSOR 1/1 HEATER CIRCUIT LOW
P0032	O2-SENSOR 1/1 HEATER CIRCUIT HIGH
P0037	O2-SENSOR 1/2 HEATER CIRCUIT LOW
P0038	O2-SENSOR 1/2 HEATER CIRCUIT HIGH
P0071	AMBIENT AIR TEMPERATURE SENSOR PERFORMANCE
P0072	AMBIENT AIR TEMPERATURE SENSOR CIRCUIT LOW
P0073	AMBIENT AIR TEMPERATURE SENSOR CIRCUIT HIGH
P0107	MANIFOLD ABSOLUTE PRESSURE SENSOR CIRCUIT LOW
P0108	MANIFOLD ABSOLUTE PRESSURE SENSOR CIRCUIT HIGH
P0111	INTAKE AIR TEMPERATURE SENSOR 1 PERFORMANCE
P0112	INTAKE AIR TEMPERATURE SENSOR 1 CIRCUIT LOW
P0113	INTAKE AIR TEMPERATURE SENSOR 1 CIRCUIT

	HIGH
P0116	ENGINE COOLANT TEMPERATURE SENSOR PERFORMANCE
P0117	ENGINE COOLANT TEMPERATURE SENSOR CIRCUIT LOW
P0118	ENGINE COOLANT TEMPERATURE SENSOR 1 CIRCUIT HIGH
P0121	THROTTLE POSITION SENSOR 1 PERFORMANCE
P0122	THROTTLE POSITION SENSOR 1 CIRCUIT LOW
P0123	THROTTLE POSITION SENSOR 1 CIRCUIT HIGH
P0125	INSUFFICIENT COOLANT TEMP FOR CLOSE - LOOP FUEL CONTROL
P0128	THERMOSTAT RATIONALITY
P0129	BAROMETRIC PRESSURE OUT OF RANGE LOW
P0131	O2 SENSOR 1/1 CIRCUIT LOW
P0132	O2 SENSOR 1/1 CIRCUIT HIGH
P0133	O2 SENSOR 1/1 SLOW RESPONSE
P0135	O2 SENSOR 1/1 HEATER PERFORMANCE
P0137	O2 SENSOR 1/2 CIRCUIT LOW
P0138	O2 SENSOR 1/2 CIRCUIT HIGH
P0139	O2 SENSOR 1/2 SLOW RESPONSE
P0140	O2 SENSOR 1/2 SIGNAL INACTIVE
P0141	O2 SENSOR 1/2 HEATER PERFORMANCE
P0171	FUEL SYSTEM 1/1 LEAN
P0172	FUEL SYSTEM 1/1 RICH
P0196	ENGINE OIL TEMPERATURE SENSOR PERFORMANCE
P0197	ENGINE OIL TEMPERATURE SENSOR CIRCUIT LOW
P0198	ENGINE OIL TEMPERATURE SENSOR CIRCUIT HIGH
P0201	FUEL INJECTOR 1 CIRCUIT/OPEN
P0202	FUEL INJECTOR 2 CIRCUIT/OPEN
P0203	FUEL INJECTOR 3 CIRCUIT/OPEN
P0204	FUEL INJECTOR 4 CIRCUIT/OPEN
P0218	HIGH TEMPERATURE OPERATION ACTIVATED
P0221	THROTTLE POSITION SENSOR 2 CIRCUIT

	PERFORMANCE
P0222	THROTTLE POSITION SENSOR 2 CIRCUIT LOW
P0223	THROTTLE POSITION SENSOR 2 CIRCUIT HIGH
P0298	ENGINE OIL TEMPERATURE TOO HIGH
P0300	MULTIPLE CYLINDER MISFIRE
P0301	CYLINDER 1 MISFIRE
P0302	CYLINDER 2 MISFIRE
P0303	CYLINDER 3 MISFIRE
P0304	CYLINDER 4 MISFIRE
P0315	NO CRANK SENSOR LEARNED
P0325	KNOCK SENSOR 1 CIRCUIT
P0335	CRANKSHAFT POSITION SENSOR CIRCUIT
P0339	CRANKSHAFT POSITION SENSOR INTERMITTENT
P0340	CAMSHAFT POSITION SENSOR CIRCUIT - BANK 1 SENSOR 1
P0344	CAMSHAFT POSITION SENSOR INTERMITTENT - BANK 1 SENSOR 1
P0365	CAMSHAFT POSITION SENSOR CIRCUIT - BANK 1 SENSOR 2
P0369	CAMSHAFT POSITION SENSOR INTERMITTENT - BANK 1 SENSOR 2
P0420	CATALYST EFFICIENCY (BANK 1)
P0440	GENERAL EVAP SYSTEM FAILURE
P0441	EVAP PURGE SYSTEM PERFORMANCE
P0443	EVAP PURGE SOLENOID CIRCUIT
P0452	EVAP PRESSURE SWITCH STUCK CLOSED
P0455	EVAP SYSTEM LARGE LEAK
P0456	EVAP SYSTEM SMALL LEAK
P0457	EVAP SYSTEM - LOOSE FUEL CAP
P0461	FUEL LEVEL SENSOR 1 PERFORMANCE
P0462	FUEL LEVEL SENSOR 1 LOW CIRCUIT
P0463	FUEL LEVEL SENSOR 1 HIGH CIRCUIT
P0480	COOLING FAN 1 CONTROL CIRCUIT
P0481	COOLING FAN 2 CONTROL CIRCUIT

P0501	VEHICLE SPEED SENSOR 1 PERFORMANCE
P0501	VEHICLE SPEED SENSOR 1 PERFORMANCE (MTX NON-ABS)
P0503	VEHICLE SPEED SENSOR 1 ERRATIC (EXC MTX NON-ABS)
P0503	VEHICLE SPEED SENSOR 1 ERRATIC (MTX NON-ABS)
P0506	IDLE SPEED PERFORMANCE LOWER THAN EXPECTED
P0507	IDLE SPEED PERFORMANCE HIGHER THAN EXPECTED
P050B	COLD START IGNITION TIMING PERFORMANCE
P0513	INVALID SKIM KEY
P0522	ENGINE OIL PRESSURE SWITCH CIRCUIT LOW
P0523	ENGINE OIL PRESSURE SWITCH CIRCUIT HIGH
P0532	A/C PRESSURE SENSOR CIRCUIT LOW
P0533	A/C PRESSURE SENSOR CIRCUIT HIGH
P0562	BATTERY/SYSTEM VOLTAGE LOW
P0563	BATTERY/SYSTEM VOLTAGE HIGH
P0571	BRAKE SWITCH 1 PERFORMANCE
P0572	BRAKE SWITCH 1 STUCK ON
P0573	BRAKE SWITCH 1 STUCK OFF
P0579	SPEED CONTROL SWITCH 1 PERFORMANCE
P0580	SPEED CONTROL SWITCH 1 CIRCUIT LOW
P0581	SPEED CONTROL SWITCH 1 CIRCUIT HIGH
P0585	SPEED CONTROL SWITCH 1/2 CORRELATION
P0591	SPEED CONTROL SWITCH 2 PERFORMANCE
P0592	SPEED CONTROL SWITCH 2 CIRCUIT LOW
P0593	SPEED CONTROL SWITCH 2 CIRCUIT HIGH
P0600	SERIAL COMMUNICATION LINK
P0601	INTERNAL MEMORY CHECKSUM INVALID
P0606	INTERNAL CONTROL PROCESSOR
P060B	ETC A/D GROUND PERFORMANCE
P060D	ETC LEVEL 2 APP PERFORMANCE
P060E	ETC LEVEL 2 TPS PERFORMANCE

P060F	ETC LEVEL 2 ECT PERFORMANCE
P0615	STARTER CONTROL CIRCUIT/OPEN
P061A	LEVEL 2 TORQUE PERFORMANCE
P061C	ETC LEVEL 2 RPM PERFORMANCE
P0622	GENERATOR FIELD CONTROL CIRCUIT
P0627	FUEL PUMP CONTROL CIRCUIT OPEN
P062C	ETC LEVEL 2 MPH PERFORMANCE
P0630	VIN NOT PROGRAMMED IN PCM
P0632	ODOMETER NOT PROGRAMMED IN PCM
P0633	SKIM SECRET KEY NOT STORED IN PCM
P063A	GENERATOR VOLTAGE SENSE CIRCUIT
P0642	SENSOR REFERENCE VOLTAGE 1 CIRCUIT LOW
P0643	SENSOR REFERENCE VOLTAGE 1 CIRCUIT HIGH
P0645	A/C CONTROL CIRCUIT/OPEN
P0652	SENSOR REFERENCE VOLTAGE 2 CIRCUIT LOW
P0653	SENSOR REFERENCE VOLTAGE 2 CIRCUIT HIGH
P0685	ASD CONTROL CIRCUIT
P0688	ASD RELAY CONTROL SENSE
P0703	BRAKE SWITCH 2 PERFORMANCE
P0850	PARK/NEUTRAL SWITCH PERFORMANCE
P1115	GENERAL TEMPERATURE RATIONALITY
P1128	CLOSED LOOP FUELING NOT ACHIEVED - BANK 1 UPSTREAM
P1212	ENGINE OIL TEMPERATURE HIGH - RPM LIMITED
P1239	ENGINE OIL TEMPERATURE TOO LOW
P1456	FUEL TANK PRESSURE SENSOR CIRCUIT LOW
P1457	FUEL TANK PRESSURE SENSOR CIRCUIT HIGH
P1501	VEHICLE SPEED SENSOR 1/2 CORRELATION - DRIVE WHEELS
P1502	VEHICLE SPEED SENSOR 1/2 CORRELATION - NON-DRIVE WHEELS
P1513	STARTER REQUEST SWITCH STUCK
P1572	BRAKE PEDAL STUCK ON
P1573	BRAKE PEDAL STUCK OFF

P1593	SPEED CONTROL SWITCH 1/2 STUCK
P1607	PCM INTERNAL SHUTDOWN TIMER SLOW RATIONALITY
P1618	SENSOR REFERENCE VOLTAGE 1 CIRCUIT ERRATIC
P1621	O2 SENSOR REFERENCE VOLTAGE CIRCUIT LOW
P1622	O2 SENSOR REFERENCE VOLTAGE CIRCUIT HIGH
P1628	SENSOR REFERENCE VOLTAGE CIRCUIT ERRATIC
P1696	EEPROM MEMORY WRITE DENIED/INVALID
P1697	EMR (SRI) MILEAGE NOT STORED
P1718	EEPROM INTEGRITY FAILURE
P1D83	IMPLAUSIBLE ENGINE OIL TEMPERATURE SIGNAL RECEIVED
P2004	INTAKE MANIFOLD RUNNER CONTROL STUCK OPEN
P2006	INTAKE MANIFOLD RUNNER CONTROL STUCK CLOSED
P2008	INTAKE MANIFOLD RUNNER (SWIRL) CONTROL CIRCUIT/OPEN
P2015	INTAKE MANIFOLD RUNNER POSITION SENSOR PERFORMANCE
P2016	INTAKE MANIFOLD RUNNER POSITION SENSOR CIRCUIT LOW
P2017	INTAKE MANIFOLD RUNNER POSITION SENSOR CIRCUIT HIGH
P2066	FUEL LEVEL SENSOR 2 PERFORMANCE
P2067	FUEL LEVEL SENSOR 2 CIRCUIT LOW
P2072	ELECTRONIC THROTTLE CONTROL SYSTEM - ICE BLOCKAGE
P2096	DOWNSTREAM FUEL TRIM SYSTEM 1 LEAN
P2097	DOWNSTREAM FUEL TRIM SYSTEM 1 RICH
P2100	ELECTRONIC THROTTLE CONTROL MOTOR CIRCUIT
P2101	ELECTRONIC THROTTLE CONTROL MOTOR PERFORMANCE
P2107	ELECTRONIC THROTTLE CONTROL MODULE

	PROCESSOR
P2110	ELECTRONIC THROTTLE CONTROL - FORCED LIMITED RPM
P2111	ELECTRONIC THROTTLE CONTROL - UNABLE TO CLOSE
P2112	ELECTRONIC THROTTLE CONTROL - UNABLE TO OPEN
P2115	ACCELERATOR PEDAL POSITION SENSOR 1 MINIMUM STOP PERFORMANCE
P2116	ACCELERATOR PEDAL POSITION SENSOR 2 MINIMUM STOP PERFORMANCE
P2118	ELECTRONIC THROTTLE CONTROL MOTOR CURRENT PERFORMANCE
P2122	ACCELERATOR PEDAL POSITION SENSOR 1 CIRCUIT LOW
P2123	ACCELERATOR PEDAL POSITION SENSOR 1 CIRCUIT HIGH
P2127	ACCELERATOR PEDAL POSITION SENSOR 2 CIRCUIT LOW
P2128	ACCELERATOR PEDAL POSITION SENSOR 2 CIRCUIT HIGH
P2135	THROTTLE POSITION SENSOR 1/2 CORRELATION
P2138	ACCELERATOR PEDAL POSITION SENSOR 1/2 CORRELATION
P2161	VEHICLE SPEED SENSOR 2 ERRATIC (with ABS)
P2166	ACCELERATOR PEDAL POSITION SENSOR 1 MAXIMUM STOP PERFORMANCE
P2167	ACCELERATOR PEDAL POSITION SENSOR 2 MAXIMUM STOP PERFORMANCE
P2172	HIGH AIRFLOW/VACUUM LEAK DETECTED (INSTANTANEOUS ACCUMULATION)
P2173	HIGH AIRFLOW/VACUUM LEAK DETECTED (SLOW ACCUMULATION)
P2174	LOW AIRFLOW/RESTRICTION DETECTED (INSTANTANEOUS ACCUMULATION)
P2175	LOW AIRFLOW/RESTRICTION DETECTED (SLOW

	ACCUMULATION)
P2181	COOLING SYSTEM PERFORMANCE
P219A	AIR-FUEL RATIO CYLINDER IMBALANCE BANK 1
P2245	O2 SENSOR 1/1 REFERENCE VOLTAGE CIRCUIT LOW
P2246	O2 SENSOR 1/1 REFERENCE VOLTAGE CIRCUIT HIGH
P2271	O2 SENSOR 1/2 SIGNAL BIASED RICH
P2299	BRAKE PEDAL POSITION/ACCELERATOR PEDAL POSITION INCOMPATIBLE
P2302	IGNITION COIL 1 SECONDARY CIRCUIT - INSUFFICIENT IONIZATION
P2305	IGNITION COIL 2 SECONDARY CIRCUIT - INSUFFICIENT IONIZATION
P2308	IGNITION COIL 3 SECONDARY CIRCUIT - INSUFFICIENT IONIZATION
P2311	IGNITION COIL 4 SECONDARY CIRCUIT - INSUFFICIENT IONIZATION
P2503	CHARGING SYSTEM OUTPUT LOW
P2504	CHARGING SYSTEM OUTPUT HIGH
P2610	PCM INTERNAL ENGINE OFF TIMER PERFORMANCE
U0001	CAN C BUS
U0002	CAN C BUS OFF PERFORMANCE
U0101	LOST COMMUNICATION WITH TCM
U0121	LOST COMMUNICATION WITH ANTI-LOCK BRAKE MODULE
U0140	LOST COMMUNICATION WITH BODY CONTROL MODULE (TIPM)
U0141	LOST COMMUNICATION WITH IPM (FCM/TIPM)
U0151	LOST COMMUNICATION WITH OCCUPANT RESTRAINT CONTROLLER (ORC)
U0168	LOST COMMUNICATION WITH VEHICLE SECURITY MODULE (SKREEM/WCM)
U0300	INTERNAL CONTROL MODULE SOFTWARE INCOMPATIBILITY
U0402	IMPLAUSIBLE DATA RECEIVED FROM TCM

U0415	IMPLAUSIBLE DATA RECEIVED FROM ABS
U0416	IMPLAUSIBLE DATA RECEIVED FROM ESP
U0431	IMPLAUSIBLE DATA RECEIVED FROM FCM (TIPM)
U110A	LOST COMMUNICATION WITH SCM (SAS)
U110C	LOST FUEL LEVEL MESSAGE
U110E	LOST AMBIENT TEMPERATURE MESSAGE
U1110	LOST VEHICLE SPEED MESSAGE
U1113	LOST A/C PRESSURE MESSAGE
U1120	LOST WHEEL DISTANCE MESSAGE
U1403	IMPLAUSIBLE FUEL LEVEL SIGNAL
U1412	IMPLAUSIBLE VEHICLE SPEED SIGNAL RECEIVED
U1417	IMPLAUSIBLE LEFT WHEEL DISTANCE SIGNAL RECEIVED
U1418	IMPLAUSIBLE RIGHT WHEEL DISTANCE SIGNAL RECEIVED

2014 ENGINE PERFORMANCE

Powertrain Control Module (PCM) - Electrical Diagnostics, 2.2L Diesel - Compass & Patriot

STANDARD PROCEDURE

INTERMITTENT CONDITION - 2.2L DIESEL

For a complete wiring diagram, **refer to appropriate SYSTEM WIRING DIAGRAMS article** .

DIAGNOSTIC TEST

INTERMITTENT DTC

WARNING: When the engine is operating, do not stand in direct line with the fan. Do not put your hands near the pulleys, belts or fan. Do not wear loose clothing. Failure to follow these instructions may result in possible serious or fatal injury.

1. The conditions necessary to set this DTC are not present at this time.
2. Review the scan tool environmental data. If possible, try to duplicate the conditions under which the DTC set.
3. If applicable, actuate the component with the scan tool.
4. Monitor the scan tool data relative to this circuit and wiggle test the wiring and connectors.
5. Look for the data to change, the actuation to be interrupted, or for the DTC to reset during the wiggle test.
6. Perform any Technical Service Bulletins (TSBs) that may apply.
7. Turn the ignition off.
8. Visually inspect the related wire harness. Disconnect all the related harness connectors. Look for any chafed, pierced, pinched, partially broken wires and broken, bent, pushed out, or corroded terminals.
9. Perform a voltage drop test on the related circuits between the suspected component and the PCM.
10. Inspect and clean all PCM, engine, and chassis grounds that are related to the most current DTC.
11. If numerous trouble codes were set, use a schematic and inspect any

common ground or supply circuits.

12. For intermittent Misfire DTCs check for restrictions in the intake and exhaust system, proper installation of sensors, vacuum leaks, and binding components that are run by the accessory drive belt.
13. Use the scan tool to perform a System Test if one applies to the component.
14. A co-pilot, data recorder, and/or lab scope should be used to help diagnose intermittent conditions.

    Were any problems found during the above inspections?

    Yes

    - Perform the necessary repairs.
    - Perform the PCM VERIFICATION TEST - 2.2L DIESEL. Refer to **PCM VERIFICATION TEST - 2.2L DIESEL** .

    No

    - Test Complete.

PCM REPLACEMENT PROCEDURE

For a complete wiring diagram, **refer to appropriate SYSTEM WIRING DIAGRAMS article** .

DIAGNOSTIC TEST

PCM REPLACEMENT PROCEDURE

1. The PCM has several learned values and information stored in it. If the old PCM is still responsive, this information can be pulled from the PCM and integrated into the New PCM to save time after replacement.

   Is the old PCM still responsive?

   Yes

   - With the scan tool, navigate to Miscellaneous Functions and select the Engine ECU Replacement routine and follow the on screen directions.
   - Perform the PCM VERIFICATION TEST - 2.2L DIESEL. Refer to **PCM VERIFICATION TEST - 2.2L DIESEL** .

No

- Replace the Powertrain Control Module. Go to **SECTION 2 - ADDITIONAL PCM/ECM/TCM REPLACEMENT PROCEDURES** , and perform the necessary routines. .

PCM/ECM/TCM PROGRAMMING

PCM/ECM/TCM FLASH PROGRAMING

This procedure will need to be done when one or more of the following situations are true:

1. A vehicle's Powertrain Control Module/Engine Control Module (PCM/ECM) has been replaced.
2. A diagnostic trouble code (DTC) is set P1602 - PCM/ECM Not Programmed.
3. An updated calibration or software release is available for either the PCM/ECM or TCM ECUs.

This procedure assumes that the wiTECH™ Vehicle Connection Interface (VCI) pod, StarSCAN® and StarMOBILE® devices are configured to your dealership's network with either a wired or wireless connection. The wiTECH™ VCI pod, StarSCAN® and StarMOBILE® must also be running at the latest operating system and software release level. For more help on how to network your StarSCAN® or StarMOBILE® reference the StarSCAN®/StarMOBILE® Quick Start Networking Guide available on 'DealerCONNECT > Service > StarSCAN® and StarMOBILE® Tools > Online Documentation' or at www.dcctools.com, under the Download Center. For the wiTECH™ VCI pod use the "HELP" tab in the wiTECH™ Diagnostic Application.

TABLE OF CONTENTS

1. SECTION 1 - PCM/ECM/TCM FLASH PROCEDURE Refer to **SECTION 1 - PCM/ECM/TCM FLASH PROCEDURE**.
2. REQUIRED TOOLS/EQUIPMENT Refer to **REQUIRED TOOLS/EQUIPMENT:**.
3. TECH TIPS and INFORMATION Refer to **TECH TIPS AND INFORMATION:**.
4. PARTS REQUIRED Refer to **PARTS REQUIRED**.

SECTION 1 - PCM/ECM/TCM FLASH PROCEDURE

If using StarSCAN® or StarMOBILE® Desktop Client. Refer to REPAIR PROCEDURE - Using StarSCAN® or StarMOBILE® Desktop Client.

If using wiTECH™ Diagnostic Application. Refer to REPAIR PROCEDURE - wiTECH™ Diagnostic Application.

REPAIR PROCEDURE - USING STARSCAN® OR STARMOBILE® DESKTOP CLIENT

NOTE: If this flash process is interrupted or aborted, the flash should be restarted.

1. Open the hood of the vehicle and install a battery charger. Verify that the charging rate provides a continuous charge of 13.2 - 13.5 Volts.
2. Connect the StarSCAN® or StarMOBILE® to the vehicle data link connector located under the steering column and turn the ignition key to the "RUN" position.
3. Power on the StarSCAN® or StarMOBILE®. If the StarMOBILE® is being used, launch the StarMOBILE® Desktop Client and connect to the appropriate StarMOBILE® device.
4. Retrieve the old ECU part number. From the tool's Home screen,
   a. Select "ECU View"
   b. Select "PCM/ECM"
   c. Select "More Options"
   d. Select "ECU Flash"
   e. Record the part number at the top of the Flash PCM/ECM screen for later reference.
   f. Program the ECU as follows:
   g. Using the StarSCAN®/StarMOBILE® at the Home screen, select "ECU View"
   h. Select "PCM/ECM"
   i. Select "More Options"
   j. Select "ECU Flash"
   k. Select "Browse for New File" and follow the on screen instructions
   l. Highlight the appropriate calibration based on the part number recorded in Step 4e , or by using Year/Model/Engine and appropriate emissions

selection for the vehicle being worked on

m. Select "Download to Client/Scantool"
n. Once the download is complete, select "Close" and then "Back"
o. Highlight the listed calibration, select "Update Controller" and follow the on screen instructions
p. When the PCM/ECM update is complete, select "OK"
q. Verify that the part number at the top of the Flash PCM/ECM screen has updated to the new part number

NOTE: If this flash process is interrupted or aborted, the flash should be restarted.

5. Continue to complete the process if the ECU has been replaced.
6. Type the necessary information on the "Authorized Modification Label" (p/n 04275086AB) and attach near the VECI label (See for details). Refer to **SECTION 3 - AUTHORIZED MODIFICATION LABEL**.

REPAIR PROCEDURE - WITECH™ DIAGNOSTIC APPLICATION

NOTE: If this flash process is interrupted or aborted, the flash should be restarted.

1. Open the hood of the vehicle and install a battery charger. Verify that the charging rate provides a continuous charge of 13.2 - 13.5 Volts.
2. Connect the wiTECH™ Vehicle Connection Interface (VCI) pod to the vehicle data link connector located under the steering column and turn the ignition key to the "RUN" position.
3. Launch the wiTECH™ Diagnostic Application and connect to the appropriate wiTECH™ device.
4. From the wiTECH™ Diagnostic Application Home screen,
   a. Select "HELP"
   b. Select "HELP CONTENTS"
   c. Follow the "HELP TOPIC" for flashing an ECU.

SECTION 2 - ADDITIONAL PCM/ECM/TCM REPLACEMENT PROCEDURES

NOTE: Find the PCM/ECM/TCM Type for the vehicle, read and

write down the steps, and then go to the step by step instructions for additional information on how to perform these procedures. Refer to STEP-BY-STEP INSTRUCTIONS.

If a 2.0L Controller was replaced, navigate to "Misc. Functions" and perform all applicable routines:

NOTE: The available routines may vary depending on model and year of vehicle.

1. PCM/ECM Replaced - Located within the Security Module
2. ECU Replacement With Value Transfer - if the ECU to be replaced is still responsive

NOTE: If the PCM/ECM data transfer is able to be completed, it may not be necessary to perform routines 7 - 9 .

3. ECU Replacement Without Value Transfer - if the ECU to be replaced is NOT responsive
4. Verify PCM/ECM VIN
5. Injector Quantity Adjustment (For 2012 and older applications only)
6. Program Variant Code
7. Service Diesel Particulate Filter Regeneration
8. Reset Zero Fuel
9. Reset of Lambda Values

If a PT Cruiser, 2.2L Controller was replaced, navigate to "Misc. Functions" and perform all applicable routines:

NOTE: The available routines may vary depending on model and year of vehicle.

1. PCM/ECM Replaced - Located within the Security Module
2. Injector Quantity Adjustment - Only on 06 PT AND up
3. IMA Rapid Calibration Test - Only on 06 PT AND up

If a 3.0L Controller was replaced, navigate to "Misc. Functions" and perform all applicable routines:

NOTE: The available routines may vary depending on model and year of vehicle.

1. PCM/ECM Replaced - Located within the Security Module
2. ECU Replacement With Value Transfer - if the ECU to be replaced is still responsive

NOTE: If the PCM/ECM data transfer is able to be completed, it may not be necessary to perform routines 7 - 12 .

3. ECU Replacement Without Value Transfer - if the ECU to be replaced is NOT responsive
4. Injector Quantity Adjustment
5. Program Variant Code
6. Verify PCM/ECM VIN
7. Diesel Particulate Filter (Used) Learning
8. Reset of Lambda Values
9. Reset Zero Fuel
10. NOx Catalyst (New) Initialization
11. IMA Rapid Calibration Test
12. Fuel Mean Value Adaptation Initialization
13. Exhaust Throttle Plate Adaptive Learn Position

If a 2.8L Controller was replaced, navigate to "Misc. Functions" and perform all applicable routines:

NOTE: The available routines may vary depending on model and year of vehicle.

1. PCM/ECM Replaced - Located within the Security Module
2. ECU Replacement With Value Transfer - if the ECU to be replaced is still responsive

NOTE: If the PCM/ECM data transfer is able to be completed, it may not be necessary to perform routines 6 - 8 .

3. ECU Replacement Without Value Transfer - if the ECU to be replaced is NOT responsive
4. Injector Quantity Adjustment
5. Program Variant Code
6. Fuel Mean Value Adaptation Initialization
7. IMA Rapid Calibration Test
8. Set Oil Dilution Mass Value

If a PM/MK, 2.2L Controller was replaced, navigate to "Misc. Functions" and perform all applicable routines:

NOTE: The available routines may vary depending on model and year of vehicle.

1. PCM/ECM Replaced - Located within the Security Module
2. Engine ECU Replacement

NOTE: If the PCM/ECM data transfer is able to be completed, it may not be necessary to perform routines 5 - 10 .

3. Injector Quantity Adjustment
4. Program Variant Code
5. Swirl Control Learn
6. Throttle Valve Learn
7. VGT Learn
8. MAF Sensor Replace
9. O2 Sensor Replace
10. Used DPF initialize

If a 5.9L Controller was replaced, navigate to "Misc. Functions" and perform all applicable routines:

NOTE: The available routines may vary depending on model and

year of vehicle.

1. PCM/ECM Replaced - Located within the Security Module
2. Check PCM/ECM VIN - if NOT WCM equipped

If a 6.7L Controller was replaced, navigate to "Misc. Functions" and perform all applicable routines:

NOTE: The available routines may vary depending on model and year of vehicle.

1. PCM/ECM Replaced - Located within the Security Module
2. Injector Quantity Adjustment
3. Enable/Disable Vehicle Features - need to enable features
4. Set max vehicle speed
5. Set max cruise speed
6. Idle shutdown timer
7. PTO RPM adjustment
8. Set PTO Max vehicle speed

NOTE: The numbers can be retrieved from the old PCM/ECM using the scan tool if the PCM/ECM is still functional or they may be retrieved from the Fuel Injectors themselves. The numbers are stamped on the intake manifold side of the injectors.

9. Reset Regenerative Filter Timers

If an Aisin TCM was replaced, perform the following additional steps and/or routines:

If an EATX TCM was replaced, perform the following additional steps and/or routines:

If an NGC3 TCM ONLY was replaced, perform the following additional steps and/or routines:

If an NGC4 TCM ONLY was replaced, perform the following additional

steps and/or routines:

1. Quicklearn

If an EGS TCM was replaced, perform the following additional steps and/or routines:

1. Initialize EGS

STEP-BY-STEP INSTRUCTIONS

PCM/ECM Replaced

The vehicle pin (Personal Identification Number) will be required to complete the routine. This information may be obtained in three ways:

1. The original selling invoice
2. DealerCONNECT > Parts > Key Codes
3. Contacting the District Manager.

From the "Home" screen, select "ECU View"

- Select the applicable Security Module
- Select "Misc. Functions"
- Select "PCM/ECM Replaced" and follow the on screen instructions.
- When complete, select "Finish"

Check PCM VIN

From the "Home" screen, select "ECU View"

- Select "PCM/ECM"
- Select "Misc. Functions"
- Select "Check PCM/ECM VIN" and follow the on screen instructions.
- When complete, select "Finish"

Diesel Particulate Filter (Used) Learning

From the "Home" screen, select "ECU View"

- Select "PCM/ECM"
- Select "Misc. Functions"
- Select "Diesel Particulate Filter (Used) Learning" and follow the on screen instructions.
- When complete, select "Finish"

ECU Replacement with Value Transfer

From the "Home" screen, select "ECU View"

- Select "PCM/ECM"
- Select "Misc. Functions"
- Select "ECU Replacement with Value Transfer" and follow the on screen instructions.
- When complete, select "Finish"

ECU Replacement without Value Transfer

From the "Home" screen, select "ECU View"

- Select "PCM/ECM"
- Select "Misc. Functions"
- Select "ECU Replacement without Value Transfer" and follow the on screen instructions.
- When complete, select "Finish"

Enable/Disable Vehicle Features

From the "Home" screen, select "ECU View"

- Select "PCM/ECM"
- Select "Misc. Functions"
- Select "Enable/Disable Vehicle Features" and follow the on screen instructions.
- When complete, select "Finish"

Exhaust Throttle Plate Adaptive Learn Position

From the "Home" screen, select "ECU View"

- Select "PCM/ECM"
- Select "Misc. Functions"
- Select "Exhaust Throttle Plate Adaptive Learn Position" and follow the on screen instructions.
- When complete, select "Finish"

Fuel Mean Value Adaptation Initialization

From the "Home" screen, select "ECU View"

- Select "PCM/ECM"
- Select "Misc. Functions"
- Select "Fuel Mean Value Adaptation Initialization" and follow the on screen instructions.
- When complete, select "Finish"

IMA Rapid Calibration

From the "Home" screen, select "ECU View"

- Select "PCM/ECM"
- Select "Misc. Functions"
- Select "IMA Rapid Calibration Test" and follow the on screen instructions.
- When complete, select "Finish"

Initialize EGS

From the "Home" screen, select "ECU View"

- Select "PCM/ECM"
- Select "Misc. Functions"
- Select "Initialize EGS" and follow the on screen instructions.
- When complete, select "Finish"

Injector Quantity Adjustment

From the "Home" screen, select "ECU View"

- Select "PCM/ECM"
- Select "Misc. Functions"
- Select "Injector Quantity Adjustment" and follow the on screen instructions.
- When complete, select "Finish"

Mobile DeSoot - NO Minimum Required Soot Load

From the "Home" screen, select "ECU View"

- Select "PCM/ECM"
- Select "Misc. Functions"
- Select "Mobile DeSoot - NO Minimum Required Soot Load" and follow the on screen instructions.
- When complete, select "Finish"

NOx Catalyst (New) Initialization

From the "Home" screen, select "ECU View"

- Select "PCM/ECM"
- Select "Misc. Functions"
- Select "NOx Catalyst (New) Initialization" and follow the on screen instructions.
- When complete, select "Finish"

Program Variant Code

From the "Home" screen, select "ECU View"

- Select "PCM/ECM"
- Select "Misc. Functions"
- Select "Program Variant Code" and follow the on screen instructions.
- When complete, select "Finish"

Quicklearn

From the "Home" screen, select "ECU View"

- Select "PCM/ECM"
- Select "Misc. Functions"
- Select "Quicklearn" and follow the on screen instructions.
- When complete, select "Finish"

Reset Regenerative Filter Timers

From the "Home" screen, select "ECU View"

- Select "PCM/ECM"
- Select "Misc. Functions"
- Select "Reset Regenerative Filter Times" and follow the on screen instructions.
- When complete, select "Finish"

Set Oil Dilution Mass Value

From the "Home" screen, select "ECU View"

- Select "PCM/ECM"
- Select "Misc. Functions"
- Select "Set Oil Dilution Mass Value" and follow the on screen instructions.
- When complete, select "Finish"

SECTION 3 - AUTHORIZED MODIFICATION LABEL

NOTE: The following step is required by law when reprogramming a PCM/ECM and/or TCM.

Type the necessary information on the "Authorized Modification Label" and attach near the VECI label.

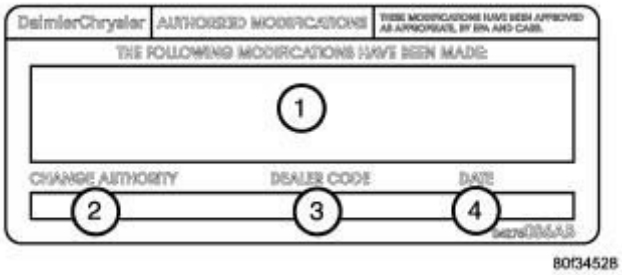

Fig. 1: Authorized Modification Label
Courtesy of CHRYSLER GROUP, LLC

1. Powertrain Control/Transmission Control Module Part Numbers (Insert P/Ns) Used
2. Change Authority: TSB XX--XX
3. Dealer Code: XXXXX
4. Date: XX-XX-XX

REQUIRED TOOLS/EQUIPMENT:

StarSCAN®	StarMOBILE®	wiTECH™
Battery Charger	Battery Charger	Battery Charger
StarSCAN® Tool Kit	StarMOBILE® Tool Kit	wiTECH™ Tool Kit
StarSCAN® Vehicle Cable	StarMOBILE® Vehicle Cable	wiTECH™ Vehicle Cable
	TechCONNECT PC or equivalent	TechCONNECT PC or equivalent
		wiTECH™ Diagnostic Application

TECH TIPS AND INFORMATION:

CAUTION: Extreme care must be taken when programming a calibration into a generic PCM. Do not randomly select a calibration. Once a calibration is selected and programmed, the controller cannot be reprogrammed to a different calibration. The module can only be reprogrammed to a more recent version of that calibration.

1. The wiTECH™ Diagnostic Application is the preferred method for flashing

any Chrysler vehicle ECU. For more information, training tutorials are available under the "HELP" tab in the wiTECH™ Diagnostic Application or at www.dcctools.com, under the 'Training Aids' link.

2. To use the StarMOBILE® in Pass-Through Mode requires that your StarMOBILE® is connected to the dealerships network via a wired or wireless connection. For more information on how to use the StarMOBILE in Pass-Through Mode see the StarMOBILE® training tutorials available on 'DealerCONNECT > Service > StarSCAN® and StarMOBILE® Tools > Training Aids' link or at www.dcctools.com, under the 'Training Aids' link.
3. If the flash process is interrupted or aborted, the flash should be restarted.
4. Due to the PCM/ECM/TCM programming procedure, a DTC may be set in other ECUs within the vehicle. Some DTCs may cause the MIL to illuminate. From the "Home" screen select "System View". Then select "All DTCs". Press "Clear All Stored DTCs" if there are any DTCs shown on the list.
5. Do not allow the battery charger to time out or the charging rate to climb above 13.5 Volts during the flash process.
6. The StarSCAN® and StarMOBILE® diagnostic tools fully support Internet connectivity and must be configured for your dealership's network. For help on setting up your StarSCAN®/StarMOBILE® for the dealership's network, refer to the StarSCAN®/StarMOBILE® Quick Start Networking Guide available on 'DealerCONNECT > Service > StarSCAN® and StarMOBILE® Tools > Online Documentation' or at www.dcctools.com, under the download center.
7. The operating software in the StarSCAN® and StarMOBILE® must be programmed with the latest software release level. The software level is visible in the blue header at the top of the StarSCAN® and StarMOBILE® Desktop Client screens. For instructions on how to update your scan tool, refer to the StarSCAN®/StarMOBILE® Software Update guide available on 'DealerCONNECT > Service > StarSCAN® and StarMOBILE® Tools > Online Documentation' or at www.dcctools.com, under the download center.

PARTS REQUIRED

Qty	Part Number	DESCRIPTION
1	04275086AB	Label, Authorized Modification

PRE-DIAGNOSTIC TROUBLESHOOTING PROCEDURE - 2.2L DIESEL

For a complete wiring diagram, **refer to appropriate SYSTEM WIRING DIAGRAMS article** .

DIAGNOSTIC TEST

1. **NO RESPONSE**

   NOTE: For vehicle communication problems, use the scan tool to refer to the Network Review Screen. The screen depicts a high level view of the vehicle network. Fault and problem areas appear in red.

   Does the scan tool display a Vehicle Network problem or NO RESPONSE condition?

   Yes

   - Perform the appropriate diagnostic procedure. Refer to **DIAGNOSIS AND TESTING** .

   No

   - Go To 2
2. **NO START**

   Does the vehicle have a NO START condition?

   Yes

   - Check the vehicle for any DTCs, including Vehicle Theft Security related DTCs, that may cause a no-start condition.
   - If no DTCs are present that relate to a no-start condition, refer to the Non DTC Diagnostic Procedures that relate to Fuel and Starting. Refer to **DIAGNOSIS AND TESTING** .

   No

   - Go To 3
3. **VEHICLE REPAIR HISTORY AND TSBs**
   1. Check the vehicle repair history for repairs that may relate to the

current condition.

2. Inspect the vehicle for aftermarket accessories that may have been installed incorrectly.
3. Check for any TSBs related to the condition or DTCs.
4. If a TSB applies, follow the procedure outlined in the TSB.

Select the appropriate response for the condition that applies:

Performing a TSB procedure repaired the condition.

- Test Complete.
- Perform the PCM VERIFICATION TEST - 2.2L DIESEL. Refer to **PCM VERIFICATION TEST - 2.2L DIESEL** .

A DTC is present, no TSB applies, or the TSB didn't repair the condition.

- Go To 4

No DTCs or conditions are present.

- Refer to the INTERMITTENT CONDITION Diagnostic Procedure. Refer to **INTERMITTENT CONDITION - 2.2L DIESEL** .

4. **VEHICLE INSPECTION**

WARNING: When the engine is operating, do not stand in a direct line with the fan. Do not put your hands near pulleys, belts or fan. Do not wear loose clothing.

1. Based on the diagnostic condition that applies, review the following list and perform any tests that relate to the condition:
2. If multiple DTCs are set in the ECM, review the wiring schematics for problems in any shared supply or ground circuits. Refer to the diagnostic procedure for **CHECKING THE PCM POWER AND GROUND CIRCUITS** .
3. Inspect the air intake system and turbocharger related tubes for damage,

restriction, or poor connection.

4. Inspect the exhaust system and related tubes for damage, restriction, or poor connection.
5. Remove and inspect the Air Filter for soiling or excessive dirt and debris which may cause an air flow restriction.
6. If the ECM detects and stores a DTC, the ECM also stores the environmental conditions under which the DTC was set.
7. Before erasing stored DTCs, record these conditions. Attempting to duplicate these conditions may assist when checking for an active DTC.
8. With the scan tool, Clear the stored DTC(s).
9. Attempt to duplicate the environmental conditions under which the DTC was set.
10. Review the DTC When Monitored and Set Conditions. If possible, try to duplicate the vehicle conditions under which the DTC conditions will be monitored. Operate the vehicle under those conditions.
11. Using the wiring diagram/schematic as a guide, inspect the wiring and connectors between the component and the module.
12. If the DTC(s) are fuel or air related, check the fuel level and quality.

Were any repairs made that corrected the DTC or condition?

Yes

- Test complete.
- Perform the PCM VERIFICATION TEST - 2.2L DIESEL. Refer to **PCM VERIFICATION TEST - 2.2L DIESEL** .

No

- Refer to the diagnostic test procedure related to the DTC. Refer to the **DTC INDEX** .

PCM VERIFICATION TEST - 2.2L DIESEL

For a complete wiring diagram, **refer to appropriate SYSTEM WIRING DIAGRAMS article** .

DIAGNOSTIC TEST

1. **SELECT THE PROPER VERIFICATION TEST**

   Select the verification test for the repair that has been completed:

   For a Speed Control repair

   - Go To 2

   For a Charging System repair

   - Go To 3

   For a No Start repair

   - Go To 4

   For DTC and all other repairs

   - Go To 5

2. **SPEED CONTROL VERIFICATION TEST**

   NOTE: If the battery was disconnected for any reason, you must perform the Battery Reconnection procedure in the appropriate Service Information.

   1. Inspect the vehicle to make sure that all engine components are properly installed and connected. Reassemble and reconnect components as necessary.
   2. With the scan tool, erase all diagnostic trouble codes (DTCs).
   3. Road test the vehicle at a speed above 60 km/h (35 MPH).
   4. Turn the speed control ON/OFF switch on.
   5. Depress and release the SET switch. If the speed control does not engage, the repair is not complete, continue with step 12.
   6. Quickly depress and release the RESUME/ACCEL switch. If the vehicle speed does not increase by 3 km/h (2 MPH), the repair is not complete, continue with step 12.
   7. Using caution, depress and release the brake pedal. If the speed control does not disengage, the repair is not complete, continue with step 12.

8. With the vehicle speed at least 60 km/h (35 MPH), depress the RESUME/ACCEL switch. If the speed control does not resume at the previously set speed, the repair is not complete, continue with step 12.
9. Hold down the COAST switch. If the vehicle does not decelerate, the repair is not complete, continue with step 12.
10. While still holding down the COAST switch, make sure the vehicle speed is at least 60 km/h (35 MPH) and release the COAST switch. If the vehicle does not adjust and set a new vehicle speed, the repair is not complete, continue with step 12.
11. With the speed control engaged, depress the ON/OFF switch. If the speed control does not disengage, the repair is not complete, continue with step 12.
12. If the vehicle did not successfully perform all of the previous steps, perform any Technical Service Bulletins (TSBs) that pertain to this speed control problem and then, if necessary, return to the DTC List.
13. If the vehicle successfully performed all of the previous steps, the speed control system is now functioning as designed. The repair is now complete.

    Are any DTCs or symptoms remaining?

    Yes

    - Repair is not complete, perform the appropriate diagnostic procedure.

    No

    - Repair is complete.

3. **CHARGING SYSTEM VERIFICATION TEST**

NOTE: If the battery was disconnected for any reason, you must perform the Battery Reconnection procedure in the appropriate Service Information.

1. Inspect the vehicle to make sure that all engine components are properly installed and connected. Reassemble and reconnect components as necessary.

2. With the scan tool, erase all diagnostic trouble codes (DTCs).
3. Start the engine.
4. Raise the engine speed to 2000 RPM for at least 30 seconds.
5. Allow the engine to idle.
6. Turn the ignition off for 20 seconds.
7. Turn the ignition on.
8. With the scan tool, read PCM DTCs.
9. If this DTC has set again, or another DTC has set, look for any Technical Service Bulletins (TSBs) that may relate to this condition. Return to the DTC List if necessary.
10. If the charging system is functioning correctly and there are no DTCs, the repair is now complete.

    Are any DTCs or symptoms remaining?

    Yes

    - Repair is not complete, perform the appropriate diagnostic procedure.

    No

    - Repair is complete.

4. **NO START VERIFICATION TEST**

NOTE: If the battery was disconnected for any reason, you must perform the Battery Reconnection procedure in the appropriate Service Information.

NOTE: If the Wireless Control Module/Wireless Ignition Node has been replaced, make sure the programming procedure for the module has been performed in accordance with the Service Information.

NOTE: If the Powertrain Control Module (PCM) has been replaced, Go to SECTION 2 - ADDITIONAL PCM/ECM/TCM REPLACEMENT PROCEDURES , and

perform the necessary routines. .

1. Inspect the vehicle to make sure that all engine components are properly installed and connected. Reassemble and reconnect components as necessary.
2. Inspect the engine oil for contamination. If it is contaminated, change the oil and filter.
3. With the scan tool, erase all diagnostic trouble codes (DTCs).
4. Turn the ignition off for at least 10 seconds.
5. Attempt to start the engine.
6. If the engine is unable to start, look for any Technical Service Bulletins (TSBs) that may relate to this condition. Return to the DTC List if necessary.
7. If the engine starts and continues to run, the repair is now complete.

   Are any DTCs or symptoms remaining?

   Yes

   - Repair is not complete, perform the appropriate diagnostic procedure.

   No

   - Repair is complete.

5. **ROAD TEST VERIFICATION TEST**

NOTE: If the battery was disconnected for any reason, you must perform the Battery Reconnection procedure in the appropriate Service Information.

1. Inspect the vehicle to make sure that all engine components are properly installed and connected. Reassemble and reconnect components as necessary.
2. If this verification procedure is being performed after a non-DTC test, perform steps 3 and 4. If not, proceed to step 5.
3. Check to see if the initial symptom still exists. If there are no trouble codes and the symptom no longer exists, the repair was successful and

testing is now complete.

4. If the initial or another symptom exists, the repair is not complete. Check all pertinent Technical Service Bulletins (TSBs) and return to the DTC List if necessary.
5. For previously read DTCs that have not been dealt with, return to the DTC List and follow the diagnostic path for that DTC; otherwise, continue to step 6.
6. If the Powertrain Control Module (PCM) has been replaced, Go to **SECTION 2 - ADDITIONAL PCM/ECM/TCM REPLACEMENT PROCEDURES** , and perform the necessary routines. . Then continue to step 7.
7. If equipped with a Transfer Case Position Switch, perform step 8, otherwise, continue with step 9.
8. With the ignition switch on, place the Transfer Case Shift Lever in each gear position, stopping for 15 seconds in each position.
9. With the scan tool, erase all diagnostic trouble codes (DTCs).
10. Road test the vehicle. Drive the vehicle under various driving conditions. Attempt to duplicate the conditions in the Freeze Frame Data under which the DTC was set if possible. If this test is for an A/C Relay Control Circuit, drive the vehicle for at least five minutes with the A/C on.
11. At some point, stop the vehicle and turn the engine off for at least 10 seconds, then restart the engine and continue driving.
12. Upon completion of the road test, check for DTCs with the scan tool.
13. If the repaired DTC has set again, the repair is not complete. Check for any related Technical Service Bulletins (TSBs) and return to the DTC List. If there are no DTCs, the repair was successful and is now complete.

Are any DTCs or symptoms remaining?

Yes

- Repair is not complete, perform the appropriate diagnostic procedure.

No

- Repair is complete.

2014 ENGINE PERFORMANCE

Powertrain Control Module (PCM) - Electrical Diagnostics, 2.2L Diesel - Compass & Patriot

DIAGNOSIS AND TESTING

B10B3-CABIN HEATER 1 CONTROL CIRCUIT

For a complete wiring diagram, **refer to appropriate SYSTEM WIRING DIAGRAMS article** .

WHEN MONITORED

With the ignition on.

SET CONDITION

A Cabin Heater (PTC) 1 error message has been received over the CAN bus from the Totally Integrated Power Module (TIPM).

POSSIBLE CAUSES

Possible Causes
CABIN HEATER RELAY
DTC SET IN TOTALLY INTEGRATED POWER MODULE (TIPM)
POWERTRAIN CONTROL MODULE (PCM)

Always perform the Pre-Diagnostic Troubleshooting procedure before proceeding. Refer to PRE-DIAGNOSTIC TROUBLESHOOTING PROCEDURE - 2.2L DIESEL .

DIAGNOSTIC TEST

1. **DTC IS ACTIVE**

NOTE: This DTC will set if the Powertrain Control Module (PCM) receives a message from the TIPM indicating that a PTC Heater Relay DTC is present.

1. Ignition on, engine not running.
2. With the scan tool, clear DTCs in the Powertrain Control Module.
3. With the scan tool, actuate the PTC Heater Relay 1.

4. With the scan tool, select View DTCs.

   Is the status Active for this DTC?

   Yes

   - Go To 2

   No

   - Perform the INTERMITTENT CONDITION diagnostic procedure. Refer to **INTERMITTENT CONDITION - 2.2L DIESEL** .

2. **POWERTRAIN CONTROL MODULE**
   1. With the scan tool, select View DTCs in the Totally Integrated Power Module.

      Is there a stored or active PTC Heater Control circuit DTC present in the TIPM?

      Yes

      - Refer to the **DTC INDEX** for diagnostic procedures and for further possible causes.

      No

      - Replace and program the Powertrain Control Module in accordance with the service information. Refer to **REMOVAL** .
      - Perform the POWERTRAIN VERIFICATION TEST - 2.2L. Refer to **PCM VERIFICATION TEST - 2.2L DIESEL** .

B10B7-CABIN HEATER 2 CONTROL CIRCUIT

For a complete wiring diagram, **refer to appropriate SYSTEM WIRING DIAGRAMS article** .

WHEN MONITORED

With the ignition on.

SET CONDITION

A Cabin Heater (PTC) 2 error message has been received over the CAN bus from the Totally Integrated Power Module (TIPM).

POSSIBLE CAUSES

Possible Causes
DTC SET IN TOTALLY INTEGRATED POWER MODULE (TIPM)
POWERTRAIN CONTROL MODULE (PCM)

Always perform the Pre-Diagnostic Troubleshooting procedure before proceeding. Refer to PRE-DIAGNOSTIC TROUBLESHOOTING PROCEDURE - 2.2L DIESEL .

DIAGNOSTIC TEST

1. **DTC IS ACTIVE**

   NOTE: This DTC will set if the Powertrain Control Module (PCM) receives a message from the Totally Integrated Power Module indicating that a PTC Heater Relay DTC is present.

   1. Ignition on, engine not running.
   2. With the scan tool, clear DTCs in the Powertrain Control Module.
   3. With the scan tool, actuate the PTC Heater Relay 2.
   4. With the scan tool, select View DTCs.

   Is the status Active for this DTC?

   Yes

   - Go To 2

   No

   - Perform the INTERMITTENT CONDITION diagnostic procedure. Refer to **INTERMITTENT CONDITION - 2.2L DIESEL** .

2. **POWERTRAIN CONTROL MODULE**
   1. With the scan tool, select View DTCs in the Totally Integrated Power Module.

Is there a stored or active PTC Heater Relay DTC present in the Totally Integrated Power Module?

Yes

- Refer to the **DTC INDEX** for diagnostic procedures and for further possible causes.

No

- Replace the Powertrain Control Module in accordance with the Service Information. Refer to **REMOVAL** .
- Perform the POWERTRAIN VERIFICATION TEST - 2.2L. Refer to **PCM VERIFICATION TEST - 2.2L DIESEL** .

P0001-FUEL QUANTITY REGULATOR CONTROL CIRCUIT OPEN

For a complete wiring diagram, **refer to appropriate SYSTEM WIRING DIAGRAMS article** .

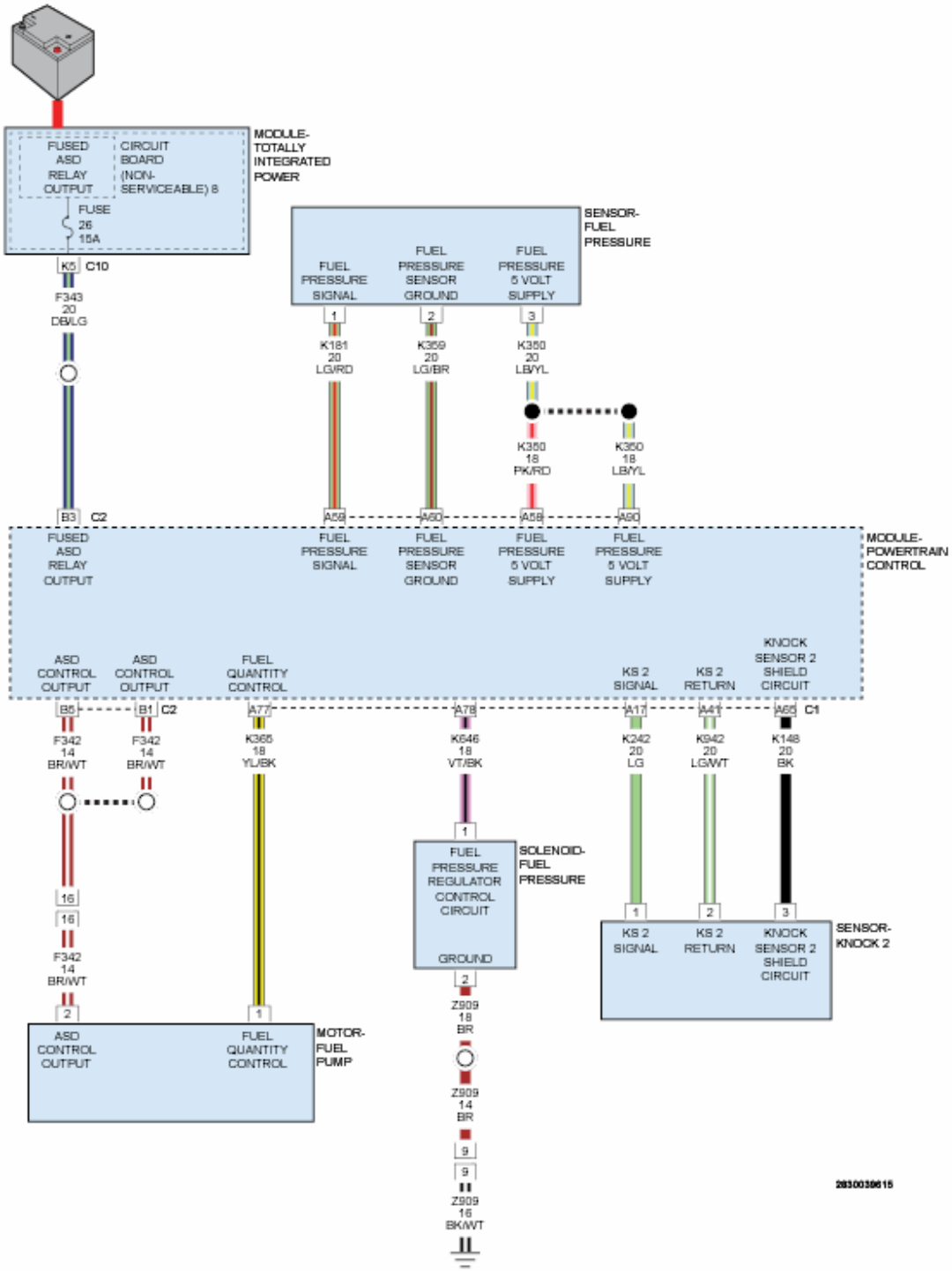

Fig. 1: Fuel System Circuit Diagram
Courtesy of CHRYSLER GROUP, LLC

THEORY OF OPERATION

The Fuel Quantity Solenoid (FQS) is located on the High Pressure Delivery Pump. The Powertrain Control Module (PCM) sends a Pulse Width Modulated (PWM) signal to the FQS to control the amount of fuel that is directed to the

pumping chambers in the High Pressure Delivery Pump. The FQS is normally closed when not being controlled by the PCM. The Fuel Quantity Solenoid works in tandem with the Fuel Pressure Regulator (FPR) to control the fuel pressure in the Fuel Rail. During engine cranking, the FQS is fully opened to allow maximum fuel flow and the FPR is closed to allow pressure to build quickly. After the engine starts, the FPR is primarily closed and the high side pressure is regulated using the FQS. The FPR is primarily used to help control spikes in the high pressure side during deceleration or if the FQS is not able to react quickly enough to the demands of the system.

WHEN MONITORED

Continuously with the ignition on.

SET CONDITION

The Powertrain Control Module (PCM) detects an open circuit on the (K365) Fuel Quantity Solenoid Control circuit for 0.167 of a second.

POSSIBLE CAUSES

Possible Causes
(K365) FUEL QUANTITY SOLENOID CONTROL CIRCUIT OPEN/HIGH RESISTANCE
FUEL QUANTITY SOLENOID
POWERTRAIN CONTROL MODULE (PCM)

Always perform the Pre-Diagnostic Troubleshooting procedure before proceeding. Refer to PRE-DIAGNOSTIC TROUBLESHOOTING PROCEDURE - 2.2L DIESEL .

DIAGNOSTIC TEST

1. **DTC IS ACTIVE**
    1. Ignition on, engine not running.
    2. With the scan tool, clear DTCs in the Powertrain Control Module (PCM).
    3. Start the engine and allow it to idle.
    4. With the scan tool, select View DTCs.
    5. Monitor the scan tool for at least two minutes.

Is the status Active for this DTC?

Yes

- Go To 2

No

- Perform the INTERMITTENT CONDITION - 2.2L Diesel diagnostic procedure. Refer to **INTERMITTENT CONDITION - 2.2L DIESEL** .

2. **CHECK THE (K365) FUEL QUANTITY SOLENOID CONTROL CIRCUIT FOR AN OPEN/HIGH RESISTANCE**
   1. Turn the ignition off.
   2. Disconnect the Fuel Quantity Solenoid harness connector.
   3. Disconnect the PCM C1 harness connector.
   4. Measure the resistance of the (K365) Fuel Quantity Solenoid Control circuit between the Fuel Quantity Solenoid harness connector and the PCM C1 harness connector.

   Is the resistance below 5.0 Ohms?

   Yes

   - Go To 3

   No

   - Repair the (K365) Fuel Quantity Solenoid Control circuit for an open circuit or high resistance.
   - Perform the POWERTRAIN VERIFICATION TEST - 2.2L DIESEL. Refer to **PCM VERIFICATION TEST - 2.2L DIESEL** .

3. **CHECK THE FUEL QUANTITY SOLENOID**
   1. Reconnect the PCM C1 harness connector.
   2. Replace the Fuel Quantity Solenoid in accordance with the service information.
   3. Turn the ignition on.

4. With the scan tool, clear DTCs in the Powertrain Control Module (PCM).
5. Start the engine and allow it to idle.
6. With the scan tool, select View DTCs.
7. Monitor the scan tool for at least two minutes.

   Did the DTC return?

   Yes

   - Go To 4

   No

   - Repair is complete.
   - Perform the POWERTRAIN VERIFICATION TEST - 2.2L DIESEL. Refer to **PCM VERIFICATION TEST - 2.2L DIESEL** .

4. **POWERTRAIN CONTROL MODULE**
   1. Using the wiring diagram/schematic as a guide, inspect the wiring and connectors between the Fuel Quantity Solenoid and the Powertrain Control Module.
   2. Look for any chafed, pierced, pinched, or partially broken wires.
   3. Look for broken, bent, pushed out or corroded terminals.
   4. Perform any Technical Service Bulletins that may apply.

      Were any problems found?

      Yes

      - Repair as necessary.
      - Perform the POWERTRAIN VERIFICATION TEST - 2.2L DIESEL. Refer to **PCM VERIFICATION TEST - 2.2L DIESEL** .

      No

      - Replace the Powertrain Control Module in accordance with the

service information. **Before removing the PCM, perform the "Replace PCM" routine in the Miscellaneous Functions tab of the scan tool.** . Refer to **REMOVAL** .

- Perform the POWERTRAIN VERIFICATION TEST - 2.2L DIESEL. Refer to **PCM VERIFICATION TEST - 2.2L DIESEL** .

P0003-FUEL QUANTITY REGULATOR CONTROL CIRCUIT LOW

For a complete wiring diagram, **refer to appropriate SYSTEM WIRING DIAGRAMS article** .

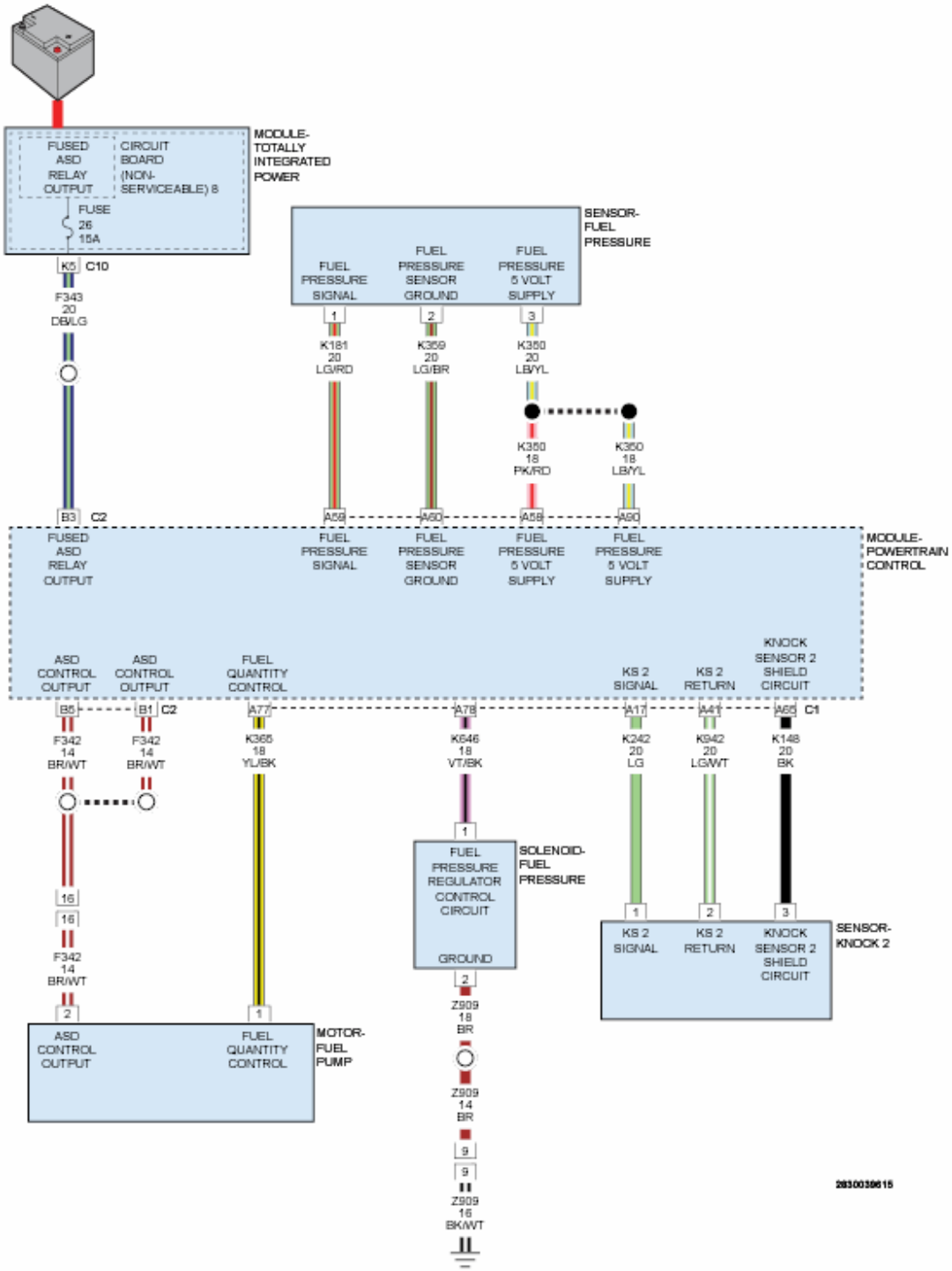

Fig. 2: Fuel System Circuit Diagram
Courtesy of CHRYSLER GROUP, LLC

THEORY OF OPERATION

The Fuel Quantity Solenoid (FQS) is located on the High Pressure Delivery Pump. The Powertrain Control Module (PCM) sends a Pulse Width Modulated (PWM) signal to the FQS to control the amount of fuel that is directed to the

pumping chambers in the High Pressure Delivery Pump. The FQS is normally closed when not being controlled by the PCM. The Fuel Quantity Solenoid works in tandem with the Fuel Pressure Regulator (FPR) to control the fuel pressure in the fuel rail. During engine cranking, the FQS is fully opened to allow maximum fuel flow and the FPR is closed to allow pressure to build quickly. After the engine starts, the FPR is primarily closed and the high side pressure is regulated using the FQS. The FPR is primarily used to help control spikes in the high pressure side during deceleration or if the FQS is not able to react quickly enough to the demands of the system.

WHEN MONITORED

Continuously with the ignition on.

SET CONDITION

The Powertrain Control Module (PCM) detects a short to ground on the (K365) Fuel Quantity Solenoid Control circuit for 0.167 of a second.

POSSIBLE CAUSES

Possible Causes
(K365) FUEL QUANTITY SOLENOID CONTROL CIRCUIT SHORTED TO GROUND
FUEL QUANTITY SOLENOID
POWERTRAIN CONTROL MODULE (PCM)

Always perform the Pre-Diagnostic Troubleshooting procedure before proceeding. Refer to PRE-DIAGNOSTIC TROUBLESHOOTING PROCEDURE - 2.2L DIESEL .

DIAGNOSTIC TEST

1. **DTC IS ACTIVE**
    1. Ignition on, engine not running.
    2. With the scan tool, clear DTCs in the Powertrain Control Module (PCM).
    3. Start the engine and allow it to idle.
    4. With the scan tool, select View DTCs.
    5. Monitor the scan tool for at least two minutes.

Is the status Active for this DTC?

Yes

- Go To 2

No

- Perform the INTERMITTENT CONDITION - 2.2L Diesel diagnostic procedure. Refer to **INTERMITTENT CONDITION - 2.2L DIESEL** .

2. **CHECK THE (K365) FUEL QUANTITY SOLENOID CONTROL CIRCUIT FOR A SHORT TO GROUND**
   1. Turn the ignition off.
   2. Disconnect the Fuel Quantity Solenoid harness connector.
   3. Disconnect the PCM C1 harness connector.
   4. Measure the resistance between ground and the (K365) Fuel Quantity Solenoid Control circuit at the Fuel Quantity Solenoid harness connector.

   Is the resistance above 10k Ohms?

   Yes

   - Go To 3

   No

   - Repair the (K365) Fuel Quantity Solenoid Control circuit for a short to ground.
   - Perform the POWERTRAIN VERIFICATION TEST - 2.2L DIESEL. Refer to **PCM VERIFICATION TEST - 2.2L DIESEL** .

3. **CHECK THE FUEL QUANTITY SOLENOID FOR A SHORT TO GROUND**
   1. Measure the resistance between ground and the (K365) Fuel Quantity Solenoid Control circuit terminal of the Fuel Quantity Solenoid.

   Is the resistance above 10k Ohms?

Yes

- Go To 4

No

- Replace the Fuel Quantity Solenoid in accordance with the service information.
- Perform the POWERTRAIN VERIFICATION TEST - 2.2L DIESEL. Refer to **PCM VERIFICATION TEST - 2.2L DIESEL** .

4. **POWERTRAIN CONTROL MODULE**
   1. Using the wiring diagram/schematic as a guide, inspect the wiring and connectors between the Fuel Quantity Solenoid and the Powertrain Control Module.
   2. Look for any chafed, pierced, pinched, or partially broken wires.
   3. Look for broken, bent, pushed out or corroded terminals.
   4. Perform any Technical Service Bulletins that may apply.

   Were any problems found?

   Yes

   - Repair as necessary.
   - Perform the POWERTRAIN VERIFICATION TEST - 2.2L DIESEL. Refer to **PCM VERIFICATION TEST - 2.2L DIESEL** .

   No

   - Replace the Powertrain Control Module in accordance with the service information. **Before removing the PCM, perform the "Replace PCM" routine in the Miscellaneous Functions tab of the scan tool.** . Refer to **REMOVAL** .
   - Perform the POWERTRAIN VERIFICATION TEST - 2.2L DIESEL. Refer to **PCM VERIFICATION TEST - 2.2L DIESEL** .

P0004-FUEL QUANTITY REGULATOR CONTROL CIRCUIT HIGH

For a complete wiring diagram, **refer to appropriate SYSTEM WIRING DIAGRAMS article** .

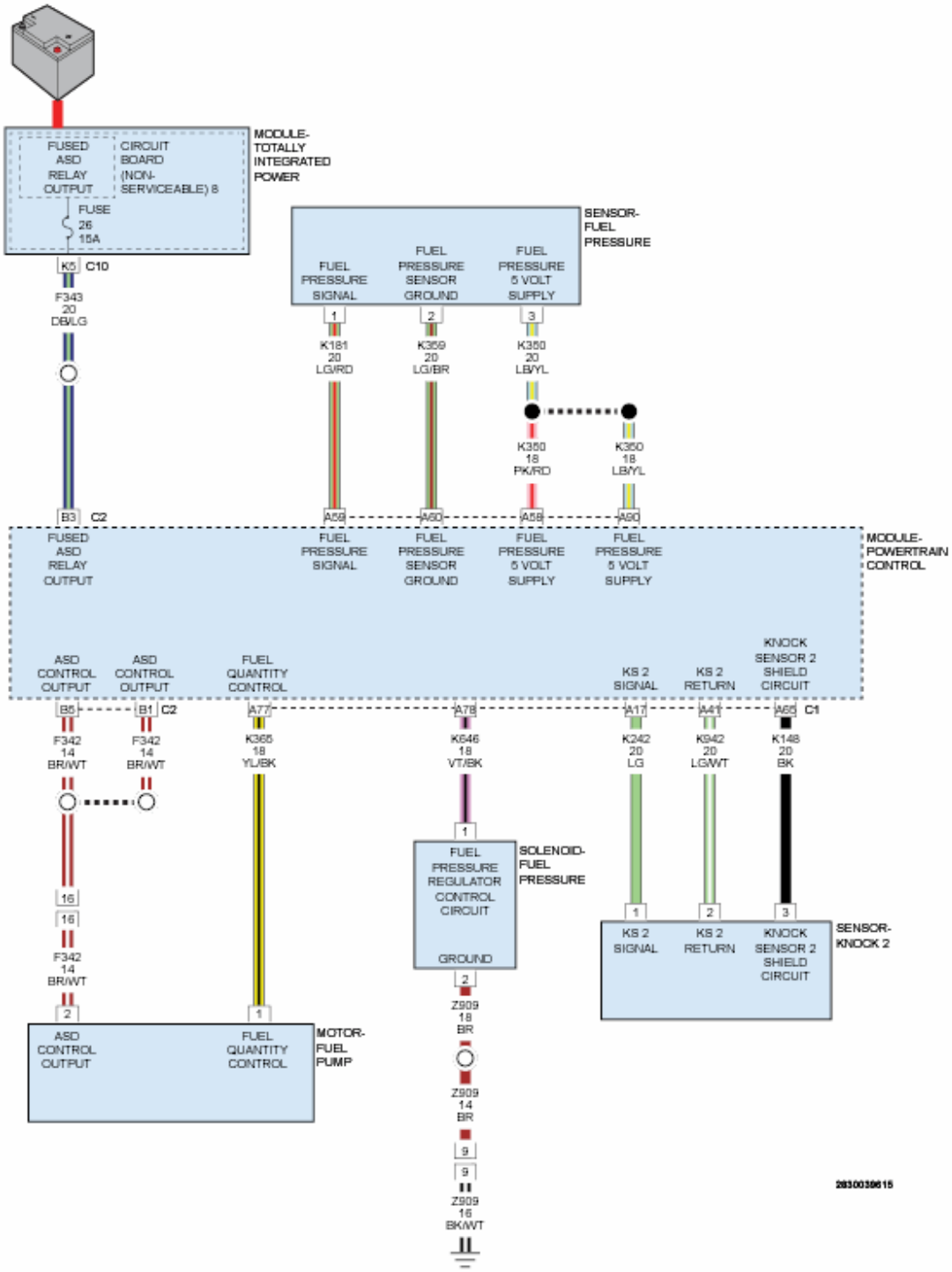

Fig. 3: Fuel System Circuit Diagram
Courtesy of CHRYSLER GROUP, LLC

THEORY OF OPERATION

The Fuel Quantity Solenoid (FQS) is located on the High Pressure Delivery Pump. The Powertrain Control Module (PCM) sends a Pulse Width Modulated (PWM) signal to the FQS to control the amount of fuel that is directed to the pumping chambers in the High Pressure Delivery Pump. The FQS is normally closed when not being controlled by the PCM. The Fuel Quantity Solenoid works in tandem with the Fuel Pressure Regulator (FPR) to control the fuel pressure in the fuel rail. During engine cranking, the FQS is fully opened to allow maximum fuel flow and the FPR is closed to allow pressure to build quickly. After the engine starts, the FPR is primarily closed and the high side pressure is regulated using the FQS. The FPR is primarily used to help control spikes in the high pressure side during deceleration or if the FQS is not able to react quickly enough to the demands of the system.

WHEN MONITORED

Continuously with the ignition on.

SET CONDITION

The Powertrain Control Module (PCM) detects a short to voltage on the (K365) Fuel Quantity Solenoid Control circuit for 0.167 of a second.

POSSIBLE CAUSES

Possible Causes
(K365) FUEL QUANTITY SOLENOID CONTROL CIRCUIT SHORTED TO VOLTAGE
(K365) FUEL QUANTITY SOLENOID CONTROL CIRCUIT SHORTED TO THE (F344) FUSED ASD/MAIN RELAY OUTPUT CIRCUIT
POWERTRAIN CONTROL MODULE (PCM)

Always perform the Pre-Diagnostic Troubleshooting procedure before proceeding. Refer to PRE-DIAGNOSTIC TROUBLESHOOTING PROCEDURE - 2.2L DIESEL .

DIAGNOSTIC TEST

1. **DTC IS ACTIVE**
    1. Ignition on, engine not running.
    2. With the scan tool, clear DTCs in the Powertrain Control Module.

3. Start the engine and allow it to idle.
4. Monitor the scan tool for at least two minutes.
5. With the scan tool, select View DTCs.

   Is the status Active for this DTC?

   Yes

   - Go To 2

   No

   - Perform the INTERMITTENT CONDITION - 2.2L Diesel diagnostic procedure. Refer to **INTERMITTENT CONDITION - 2.2L DIESEL** .

2. **CHECK THE (K365) FUEL QUANTITY SOLENOID CONTROL CIRCUIT FOR A SHORT TO VOLTAGE**
   1. Turn the ignition off.
   2. Disconnect the Fuel Quantity Solenoid harness connector.
   3. Disconnect the PCM C1 harness connector.
   4. Remove the ASD/Main Relay.
   5. Connect a jumper wire between cavity 30 and cavity 87 of the Main Relay Connector.
   6. Turn the ignition on.
   7. Measure the voltage of the (K365) Fuel Quantity Solenoid Control circuit at the Fuel Quantity Solenoid harness connector.

      Is there any voltage present?

      Yes

      - Repair the (K365) Fuel Quantity Solenoid Control circuit for a short to voltage.
      - Perform the POWERTRAIN VERIFICATION TEST - 2.2L DIESEL. Refer to **PCM VERIFICATION TEST - 2.2L DIESEL** .

      No

- Go To 3

3. **CHECK FOR A SHORT BETWEEN THE (K365) FUEL QUANTITY SOLENOIDCONTROL CIRCUIT AND THE (F344) FUSED ASD/MAIN RELAY OUTPUT CIRCUIT**
   1. Turn the ignition off.
   2. Measure the resistance between the (K365) Fuel Quantity Solenoid Control circuit and the (F344) Fused ASD/Main Relay Output circuit at the Fuel Quantity Solenoid harness connector.

      Is the resistance above 10k Ohms?

      Yes

      - Go To 4

      No

      - Repair the short circuit between the (K365) Fuel Quantity Solenoid Control circuit and the (F344) Fused ASD/Main Relay Output circuit.
      - Perform the POWERTRAIN VERIFICATION TEST - 2.2L DIESEL. Refer to **PCM VERIFICATION TEST - 2.2L DIESEL** .
4. **POWERTRAIN CONTROL MODULE**
   1. Using the wiring diagram/schematic as a guide, inspect the wiring and connectors between the Fuel Quantity Solenoid and the Powertrain Control Module.
   2. Look for any chafed, pierced, pinched, or partially broken wires.
   3. Look for broken, bent, pushed out or corroded terminals.
   4. Perform any Technical Service Bulletins that may apply.

      Were any problems found?

      Yes

      - Repair as necessary.
      - Perform the POWERTRAIN VERIFICATION TEST - 2.2L DIESEL. Refer to **PCM VERIFICATION TEST - 2.2L**

DIESEL .

No

- Replace the Powertrain Control Module. **Before removing the PCM, perform the "Replace PCM" routine in the Miscellaneous Functions tab of the scan tool.** . Refer to **REMOVAL** .
- Perform the POWERTRAIN VERIFICATION TEST - 2.2L DIESEL. Refer to **PCM VERIFICATION TEST - 2.2L DIESEL** .

P0045-TURBOCHARGER BOOST CONTROL CIRCUIT/OPEN

For a complete wiring diagram, **refer to appropriate SYSTEM WIRING DIAGRAMS article** .

THEORY OF OPERATION

The Boost Pressure Actuator is part of the Turbocharger assembly. The Boost Pressure Actuator is supplied with a fused ignition power and ground circuit, as well as a Pulse Width Modulated (PWM) signal form the Powertrain Control Module (PCM) to control how much boost pressure is generated. The higher the voltage that is supplied to the actuator, the greater the variable veins of the Turbocharger are opened. The greater the veins are opened, the greater the boost that is generated. The boost pressure is monitored by the Powertrain Control Module (PCM) using the Boost Pressure Sensor, which is located in the Intake Manifold. The Boost Pressure Sensor is supplied 5 Volts and ground by the PCM. The Boost Pressure Sensor sends feedback to the PCM on the sensor signal wire.

WHEN MONITORED

With the ignition on, Boost Pressure Actuator commanded on, and the Starter Relay commanded off.

SET CONDITION

The Powertrain Control Module (PCM) detects that the (K137) Boost Pressure Actuator Control circuit is open for 2.0 seconds.

POSSIBLE CAUSES

Possible Causes
(F342) FUSED MAIN RELAY OUTPUT CIRCUIT OPEN/HIGH RESISTANCE
(F343) FUSED MAIN RELAY OUTPUT CIRCUIT OPEN/HIGH RESISTANCE
(K137) BOOST PRESSURE CONTROL CIRCUIT OPEN/HIGH RESISTANCE
TURBOCHARGER ASSEMBLY
POWERTRAIN CONTROL MODULE (PCM)

Always perform the Pre-Diagnostic Troubleshooting procedure before proceeding. Refer to PRE-DIAGNOSTIC TROUBLESHOOTING PROCEDURE - 2.2L DIESEL .

DIAGNOSTIC TEST

1. **DTC IS ACTIVE**
   1. Ignition on, engine not running.
   2. With the scan tool, clear DTCs in the Powertrain Control Module (PCM).
   3. With the scan tool, actuate the Boost Pressure at 100%.
   4. Monitor the scan tool for at least two minutes.
   5. With the scan tool, select View DTCs.

      Is the status Active for this DTC?

      Yes

      - Go To 2

      No

      - Perform the INTERMITTENT CONDITION - 2.2L Diesel diagnostic procedure. Refer to **INTERMITTENT CONDITION - 2.2L DIESEL** .
2. **CHECK THE (F343) FUSED MAIN RELAY OUTPUT CIRCUIT FOR AN OPEN/HIGH RESISTANCE**
   1. Turn the ignition off.

2. Disconnect the PCM C2 harness connector.
3. Remove the ASD/Main Relay.
4. Connect a jumper wire between cavity 30 and cavity 87 of the Main Relay Connector.
5. Turn the ignition on.
6. Using a 12-Volt test light connected to ground, check the (F343) Fused Main Relay Output circuit at the PCM C2 harness connector.

NOTE: The test light should be illuminated and bright. Compare the brightness to that of a direct connection to the battery.

Is the test light illuminated and bright?

Yes

- Go To 3

No

- Repair the (F343) Fused Main Relay Output circuit for an open circuit or high resistance.
- Perform the POWERTRAIN VERIFICATION TEST - 2.2L DIESEL. Refer to **PCM VERIFICATION TEST - 2.2L DIESEL** .

3. **CHECK THE (F342) FUSED MAIN RELAY OUTPUT CIRCUIT FOR AN OPEN/HIGH RESISTANCE**
   1. Using a 12-Volt test light connected to ground, check the (F342) Fused Main Relay Output circuit in the Boost Pressure Actuator harness connector.

NOTE: The test light should be illuminated and bright. Compare the brightness to that of a direct connection to the battery.

Is the test light illuminated and bright?

Yes

- Go To 4

No

- Repair the (F342) Fused Main Relay Output circuit for an open circuit or high resistance.
- Perform the POWERTRAIN VERIFICATION TEST - 2.2L DIESEL. Refer to **PCM VERIFICATION TEST - 2.2L DIESEL** .

4. **CHECK THE (K137) BOOST PRESSURE ACTUATOR CONTROL CIRCUIT FOR AN OPEN/HIGH RESISTANCE**
   1. Turn the ignition off.
   2. Disconnect the PCM C1 harness connector.
   3. Measure the resistance of the (K137) Boost Pressure Actuator Control circuit between the Boost Pressure Actuator harness connector and the PCM C1 harness connector.

      Is the resistance below 5.0 Ohms?

      Yes

      - Go To 5

      No

      - Repair the (K137) Boost Pressure Actuator Control circuit for an open or high resistance.
      - Perform the POWERTRAIN VERIFICATION TEST - 2.2L DIESEL. Refer to **PCM VERIFICATION TEST - 2.2L DIESEL** .
5. **TURBOCHARGER ASSEMBLY**
   1. Reconnect the PCM harness connectors.
   2. Turn the ignition on.
   3. With the scan tool, actuate the Boost Pressure (Boost Pressure Actuator) to 100%.
   4. Using a 12-Volt test light connected to 12 Volts, check the (K137) Boost Pressure Control circuit in Boost Pressure Actuator harness

connector.

NOTE: The test light should be illuminated and bright. Compare the brightness to that of a direct connection to the battery.

NOTE: The circuit will remain actuated by the controller for 30 seconds. Be certain the actuation is active when checking the circuit.

5. With the scan tool, actuate the Boost Pressure (Boost Pressure Actuator) to 0%.
6. Using a 12-Volt test light connected to 12 Volts, check the (K137) Boost Pressure Control circuit in the Boost Pressure Actuator harness connector.

NOTE: The test light should not be illuminated.

Is the test light illuminated and bright with the actuation at 100% and not illuminated with the actuation at 0%?

Yes

- Replace the Turbocharger assembly in accordance with the service information.
- Perform the POWERTRAIN VERIFICATION TEST - 2.2L DIESEL. Refer to **PCM VERIFICATION TEST - 2.2L DIESEL** .

No

- Go To 6

6. **POWERTRAIN CONTROL MODULE**
   1. Using the wiring diagram/schematic as a guide, inspect the wiring and connectors between the Boost Pressure Actuator and the Powertrain Control Module.
   2. Look for any chafed, pierced, pinched, or partially broken wires.
   3. Look for broken, bent, pushed out or corroded terminals.

4. Perform any Technical Service Bulletins that may apply.

   Were any problems found?

   Yes

   - Repair as necessary.
   - Perform the POWERTRAIN VERIFICATION TEST - 2.2L DIESEL. Refer to **PCM VERIFICATION TEST - 2.2L DIESEL** .

   No

   - Replace the Powertrain Control Module in accordance with the service information. **Before removing the PCM, perform the "Replace PCM" routine in the Miscellaneous Functions tab of the scan tool.** . Refer to **REMOVAL** .
   - Perform the POWERTRAIN VERIFICATION TEST - 2.2L DIESEL. Refer to **PCM VERIFICATION TEST - 2.2L DIESEL** .

P0046-TURBOCHARGER BOOST CONTROL CIRCUIT PERFORMANCE

For a complete wiring diagram, **refer to appropriate SYSTEM WIRING DIAGRAMS article** .

THEORY OF OPERATION

The Boost Pressure Actuator is part of the Turbocharger assembly. The Boost Pressure Actuator is supplied with a fused ignition power and ground circuit, as well as a Pulse Width Modulated (PWM) signal form the Powertrain Control Module (PCM) to control how much boost pressure is generated. The higher the voltage that is supplied to the actuator, the greater the variable veins of the Turbocharger are opened. The greater the veins are opened, the greater the boost that is generated. The boost pressure is monitored by the Powertrain Control Module (PCM) using the Boost Pressure Sensor, which is located in the Intake Manifold. The Boost Pressure Sensor is supplied 5 Volts and ground by the PCM. The Boost Pressure Sensor sends feedback to the PCM on the sensor signal wire.

WHEN MONITORED

With the ignition on, Boost Pressure Actuator commanded on, and the Starter Relay commanded off.

SET CONDITION

The Boost Pressure Actuator reports an internal error to the Powertrain Control Module (PCM).

POSSIBLE CAUSES

Possible Causes
(F342) FUSED MAIN RELAY OUTPUT CIRCUIT OPEN/HIGH RESISTANCE
(F343) FUSED MAIN RELAY OUTPUT CIRCUIT OPEN/HIGH RESISTANCE
(K137) BOOST PRESSURE CONTROL CIRCUIT SHORTED TO GROUND
TURBOCHARGER MECHANICAL PROBLEM
TURBOCHARGER ASSEMBLY

Always perform the Pre-Diagnostic Troubleshooting procedure before proceeding. Refer to PRE-DIAGNOSTIC TROUBLESHOOTING PROCEDURE - 2.2L DIESEL .

DIAGNOSTIC TEST

1. **CHECK THE (F343) FUSED MAIN RELAY OUTPUT CIRCUIT FOR AN OPEN/HIGH RESISTANCE**
   1. Turn the ignition off.
   2. Disconnect the PCM C2 harness connector.
   3. Remove the ASD/Main Relay.
   4. Connect a jumper wire between cavity 30 and cavity 87 of the Main Relay Connector.
   5. Turn the ignition on.
   6. Using a 12-Volt test light connected to ground, check the (F343) Fused Main Relay Output circuit at the PCM C2 harness connector.

NOTE: The test light should be illuminated and bright. Compare the brightness to that of a direct

connection to the battery.

Is the test light illuminated and bright?

Yes

- Go To 2

No

- Repair the (F343) Fused Main Relay Output circuit for an open or high resistance.
- Perform the POWERTRAIN VERIFICATION TEST - 2.2L DIESEL. Refer to **PCM VERIFICATION TEST - 2.2L DIESEL** .

2. **CHECK THE (F342) FUSED MAIN RELAY OUTPUT CIRCUIT FOR AN OPEN/HIGH RESISTANCE**
   1. Using a 12-Volt test light connected to ground, check the (F342) Fused Main Relay Output circuit in the Boost Pressure Actuator harness connector.

      NOTE: The test light should be illuminated and bright. Compare the brightness to that of a direct connection to the battery.

      Is the test light illuminated and bright?

      Yes

      - Go To 3

      No

      - Repair the (F342) Fused Main Relay Output circuit for an open or high resistance.
      - Perform the POWERTRAIN VERIFICATION TEST - 2.2L DIESEL. Refer to **PCM VERIFICATION TEST - 2.2L DIESEL** .

3. **CHECK THE (K137) BOOST PRESSURE ACTUATOR CONTROL**

CIRCUIT FOR A SHORT TO GROUND

1. Turn the ignition off.
2. Disconnect the Boost Pressure Actuator harness connector.
3. Disconnect the PCM C1 harness connector.
4. Measure the resistance between ground and the (K137) Boost Pressure Actuator Control circuit at the Boost Pressure Actuator harness connector.

   Is the resistance above 10k Ohms?

   Yes

   - Go To 4

   No

   - Repair the (K137) Boost Pressure Actuator Control circuit for a short to ground.
   - Perform the POWERTRAIN VERIFICATION TEST - 2.2L DIESEL. Refer to **PCM VERIFICATION TEST - 2.2L DIESEL** .

4. **TURBOCHARGER MECHANICAL PROBLEM**

   1. Inspect the Turbocharger and Boost Pressure Actuator linkage for damage, debris and other problems that could effect Turbocharger vane movement.

      Were any problems found?

      Yes

      - Repair or replace the Turbocharger in accordance with the service information. If the Turbocharger is replaced, navigate to System Test with the scan tool and perform the VGT Learn routine.
      - Perform the POWERTRAIN VERIFICATION TEST - 2.2L DIESEL. Refer to **PCM VERIFICATION TEST - 2.2L DIESEL** .

      No

- Perform the INTERMITTENT CONDITION - 2.2L Diesel diagnostic procedure. Refer to **INTERMITTENT CONDITION - 2.2L DIESEL** .

P0047-TURBOCHARGER BOOST CONTROL CIRCUIT LOW

For a complete wiring diagram, **refer to appropriate SYSTEM WIRING DIAGRAMS article** .

THEORY OF OPERATION

The Boost Pressure Actuator is part of the Turbocharger assembly. The Boost Pressure Actuator is supplied with a fused ignition power and ground circuit, as well as a Pulse Width Modulated (PWM) signal form the Powertrain Control Module (PCM) to control how much boost pressure is generated. The higher the voltage that is supplied to the actuator, the greater the variable veins of the Turbocharger are opened. The greater the veins are opened, the greater the boost that is generated. The boost pressure is monitored by the Powertrain Control Module (PCM) using the Boost Pressure Sensor, which is located in the Intake Manifold. The Boost Pressure Sensor is supplied 5 Volts and ground by the PCM. The Boost Pressure Sensor sends feedback to the PCM on the sensor signal wire.

WHEN MONITORED

With the ignition on, Boost Pressure Actuator commanded on, and the Starter Relay commanded off.

SET CONDITION

The Powertrain Control Module (PCM) detects that the (K137) Boost Pressure Actuator Control circuit is shorted to ground for 5.3 seconds.

POSSIBLE CAUSES

Possible Causes
(F342) FUSED MAIN RELAY OUTPUT CIRCUIT OPEN/HIGH RESISTANCE
(F343) FUSED MAIN RELAY OUTPUT CIRCUIT OPEN/HIGH RESISTANCE
(F344) FUSED MAIN RELAY OUTPUT CIRCUIT OPEN OR HIGH

RESISTANCE
(K137) BOOST PRESSURE CONTROL CIRCUIT SHORTED TO GROUND
TURBOCHARGER ASSEMBLY
POWERTRAIN CONTROL MODULE (PCM)

Always perform the Pre-Diagnostic Troubleshooting procedure before proceeding. Refer to PRE-DIAGNOSTIC TROUBLESHOOTING PROCEDURE - 2.2L DIESEL .

DIAGNOSTIC TEST

1. **DTC IS ACTIVE**
   1. Ignition on, engine not running.
   2. With the scan tool, clear DTCs in the Powertrain Control Module.
   3. With the scan tool, actuate the Boost Pressure at 100%.
   4. Monitor the scan tool for at least two minutes.
   5. With the scan tool, select View DTCs.

   Is the status Active for this DTC?

   Yes

   - Go To 2

   No

   - Perform the INTERMITTENT CONDITION - 2.2L Diesel diagnostic procedure. Refer to **INTERMITTENT CONDITION - 2.2L DIESEL** .
2. **CHECK THE (F344) FUSED MAIN RELAY OUTPUT CIRCUIT FOR AN OPEN/HIGH RESISTANCE**
   1. Turn the ignition off.
   2. Disconnect the Boost Pressure Actuator harness connector.
   3. Turn the ignition on.
   4. Using a 12-Volt test light connected to ground, check the (F344) Fused Main Relay Output circuits in the Boost Pressure Actuator harness connector.

NOTE: The test light should be illuminated and bright. Compare the brightness to that of a direct connection to the battery.

Is the test light illuminated and bright?

Yes

- Go To 3

No

- Repair the (F344) Fused Main Relay Output circuit(s) for an open or high resistance.
- Perform the POWERTRAIN VERIFICATION TEST - 2.2L DIESEL. Refer to **PCM VERIFICATION TEST - 2.2L DIESEL** .

3. **CHECK THE (F343) FUSED MAIN RELAY OUTPUT CIRCUIT FOR AN OPEN/HIGH RESISTANCE**
   1. Turn the ignition off.
   2. Disconnect the PCM C2 harness connector.
   3. Remove the ASD/Main Relay.
   4. Connect a jumper wire between cavity 30 and cavity 87 of the Main Relay Connector.
   5. Turn the ignition on.
   6. Using a 12-Volt test light connected to ground, check the (F343) Fused Main Relay Output circuit at the PCM C2 harness connector.

NOTE: The test light should be illuminated and bright. Compare the brightness to that of a direct connection to the battery.

Is the test light illuminated and bright?

Yes

- Go To 4

No

- Repair the (F343) Fused Main Relay Output circuit for an open or high resistance.
- Perform the POWERTRAIN VERIFICATION TEST - 2.2L DIESEL. Refer to **PCM VERIFICATION TEST - 2.2L DIESEL** .

4. **CHECK THE (F342) FUSED MAIN RELAY OUTPUT CIRCUIT FOR AN OPEN/HIGH RESISTANCE**
   1. Using a 12-Volt test light connected to ground, check the (F342) Fused Main Relay Output circuit in the Boost Pressure Actuator harness connector.

      NOTE: The test light should be illuminated and bright. Compare the brightness to that of a direct connection to the battery.

      Is the test light illuminated and bright?

      Yes

      - Go To 5

      No

      - Repair the (F342) Fused Main Relay Output circuit for an open or high resistance.
      - Perform the POWERTRAIN VERIFICATION TEST - 2.2L DIESEL. Refer to **PCM VERIFICATION TEST - 2.2L DIESEL** .

5. **CHECK THE (K137) BOOST PRESSURE ACTUATOR CONTROL CIRCUIT FOR A SHORT TO GROUND**
   1. Turn the ignition off.
   2. Disconnect the PCM C1 harness connector.
   3. Measure the resistance between ground and the (K137) Boost Pressure Actuator Control circuit in the Boost Pressure Actuator harness connector.

Is the resistance above 10k Ohms?

Yes

- Go To6

No

- Repair the (K137) Boost Pressure Actuator Control circuit for a short to ground.
- Perform the POWERTRAIN VERIFICATION TEST - 2.2L DIESEL. Refer to **PCM VERIFICATION TEST - 2.2L DIESEL** .

6. **TURBOCHARGER ASSEMBLY**
   1. Reconnect the PCM harness connectors.
   2. Turn the ignition on.
   3. With the scan tool, actuate the Boost Pressure (Boost Pressure Actuator) to 100%.
   4. Using a 12-Volt test light connected to 12 Volts, check the (K137) Boost Pressure Control circuit in the Boost Pressure Actuator harness connector.

      NOTE: The test light should be illuminated and bright. Compare the brightness to that of a direct connection to the battery.

      NOTE: The circuit will remain actuated by the controller for 30 seconds. Be certain the actuation is active when checking the circuit.

   5. With the scan tool, actuate the Boost Pressure (Boost Pressure Actuator) to 0%.
   6. Using a 12-Volt test light connected to 12 Volts, check the (K137) Boost Pressure Control circuit in the Boost Pressure Actuator harness connector.

      NOTE: The test light should not be illuminated.

Is the test light illuminated and bright with the actuation at 100% and not illuminated with the actuation at 0%?

Yes

- Replace the Turbocharger assembly in accordance with the service information.
- Perform the POWERTRAIN VERIFICATION TEST - 2.2L DIESEL. Refer to **PCM VERIFICATION TEST - 2.2L DIESEL** .

No

- Go To 7

7. **POWERTRAIN CONTROL MODULE**
   1. Using the wiring diagram/schematic as a guide, inspect the wiring and connectors between the Boost Pressure Actuator and the Powertrain Control Module.
   2. Look for any chafed, pierced, pinched, or partially broken wires.
   3. Look for broken, bent, pushed out or corroded terminals.
   4. Perform any Technical Service Bulletins that may apply.

   Were any problems found?

   Yes

   - Repair as necessary.
   - Perform the POWERTRAIN VERIFICATION TEST - 2.2L DIESEL. Refer to **PCM VERIFICATION TEST - 2.2L DIESEL** .

   No

   - Replace the Powertrain Control Module in accordance with the service information. **Before removing the PCM, perform the "Replace PCM" routine in the Miscellaneous Functions tab of the scan tool.** . Refer to **REMOVAL** .
   - Perform the POWERTRAIN VERIFICATION TEST - 2.2L DIESEL. Refer to **PCM VERIFICATION TEST - 2.2L**

DIESEL .

P0048-TURBOCHARGER BOOST CONTROL CIRCUIT HIGH

For a complete wiring diagram, **refer to appropriate SYSTEM WIRING DIAGRAMS article** .

THEORY OF OPERATION

The Boost Pressure Actuator is part of the Turbocharger assembly. The Boost Pressure Actuator is supplied with a fused ignition power and ground circuit, as well as a Pulse Width Modulated (PWM) signal form the Powertrain Control Module (PCM) to control how much boost pressure is generated. The higher the voltage that is supplied to the actuator, the greater the variable veins of the Turbocharger are opened. The greater the veins are opened, the greater the boost that is generated. The boost pressure is monitored by the Powertrain Control Module (PCM) using the Boost Pressure Sensor, which is located in the Intake Manifold. The Boost Pressure Sensor is supplied 5 Volts and ground by the PCM. The Boost Pressure Sensor sends feedback to the PCM on the sensor signal wire.

WHEN MONITORED

With the ignition on and the Boost Pressure command on.

SET CONDITION

The Powertrain Control Module (PCM) detects that the (K137) Boost Pressure Actuator Control circuit is shorted to voltage for 2.0 seconds.

POSSIBLE CAUSES

Possible Causes
(K137) BOOST PRESSURE CONTROL CIRCUIT SHORTED TO VOLTAGE
(K137) BOOST PRESSURE CONTROL CIRCUIT SHORTED TO THE (F344) FUSED ASD/MAIN RELAY OUTPUT CIRCUIT
TURBOCHARGER ASSEMBLY
POWERTRAIN CONTROL MODULE (PCM)

Always perform the Pre-Diagnostic Troubleshooting procedure before

proceeding. Refer to PRE-DIAGNOSTIC TROUBLESHOOTING PROCEDURE - 2.2L DIESEL .

DIAGNOSTIC TEST

1. **DTC IS ACTIVE**
   1. Ignition on, engine not running.
   2. With the scan tool, clear DTCs in the Powertrain Control Module (PCM).
   3. With the scan tool, actuate the Boost Pressure at 100%.
   4. Monitor the scan tool for at least two minutes.
   5. With the scan tool, select View DTCs.

      Is the status Active for this DTC?

      Yes

      - Go To 2

      No

      - Perform the INTERMITTENT CONDITION - 2.2L Diesel diagnostic procedure. Refer to **INTERMITTENT CONDITION - 2.2L DIESEL** .
2. **CHECK THE (K137) BOOST PRESSURE ACTUATOR CONTROL CIRCUIT FOR A SHORT TO VOLTAGE**
   1. Turn the ignition off.
   2. Disconnect the Boost Pressure Actuator harness connector.
   3. Disconnect the PCM C1 harness connector.
   4. Remove the Main Relay.
   5. Connect a jumper wire between cavity 30 and cavity 87 of the Main Relay Connector.
   6. Turn the ignition on.
   7. Measure the voltage on the (K137) Boost Pressure Actuator Control circuit in the Boost Pressure Actuator harness connector.

      Is there any voltage present?

Yes

- Repair the (K137) Boost Pressure Control circuit for a short to voltage.
- Perform the POWERTRAIN VERIFICATION TEST - 2.2L DIESEL. Refer to **PCM VERIFICATION TEST - 2.2L DIESEL** .

No

- Go To 3

3. **CHECK FOR THE (K137) BOOST PRESSURE ACTUATOR CONTROL CIRCUIT SHORTED TO THE (F344) FUSED ASD/MAIN RELAY OUTPUT CIRCUIT**
   1. Turn the ignition off.
   2. Measure the resistance between the (K137) Boost Pressure Actuator Control circuit and the (F344) Fused ASD/Main Relay Output circuit at the Boost Pressure Actuator harness connector.

      Is the resistance above 10k Ohms?

      Yes

      - Go To 4

      No

      - Repair the short circuit between the (K137) Boost Pressure Actuator Control circuit and the (F344) Fused ASD/Main Relay Output circuit.
      - Perform the POWERTRAIN VERIFICATION TEST - 2.2L DIESEL. Refer to **PCM VERIFICATION TEST - 2.2L DIESEL** .
4. **TURBOCHARGER ASSEMBLY**
   1. Reconnect the PCM C1 harness connector.
   2. Turn the ignition on.
   3. With the scan tool, actuate the Boost Pressure (Boost Pressure Actuator) to 100%.

4. Using a 12-Volt test light connected to 12 Volts, check the (K137) Boost Pressure Actuator Control circuit in the Boost Pressure Actuator harness connector.

   NOTE: The test light should be illuminated and bright. Compare the brightness to that of a direct connection to the battery.

   NOTE: The circuit will remain actuated by the controller for 30 seconds. Be certain the actuation is active when checking the circuit.

   Is the test light illuminated and bright with the actuation at 100%?

   Yes

   - Replace the Turbocharger assembly in accordance with the service information.
   - Perform the POWERTRAIN VERIFICATION TEST - 2.2L DIESEL. Refer to **PCM VERIFICATION TEST - 2.2L DIESEL** .

   No

   - Go To 5

5. **POWERTRAIN CONTROL MODULE**
   1. Using the wiring diagram/schematic as a guide, inspect the wiring and connectors between the Boost Pressure Actuator and the Powertrain Control Module.
   2. Look for any chafed, pierced, pinched, or partially broken wires.
   3. Look for broken, bent, pushed out or corroded terminals.
   4. Perform any Technical Service Bulletins that may apply.

   Were any problems found?

   Yes

   - Repair as necessary.

- Perform the POWERTRAIN VERIFICATION TEST - 2.2L DIESEL. Refer to **PCM VERIFICATION TEST - 2.2L DIESEL** .

No

- Replace the Powertrain Control Module in accordance with the service information. **Before removing the PCM, perform the "Replace PCM" routine in the Miscellaneous Functions tab of the scan tool.** . Refer to **REMOVAL** .
- Perform the POWERTRAIN VERIFICATION TEST - 2.2L DIESEL. Refer to **PCM VERIFICATION TEST - 2.2L DIESEL** .

P0072-AMBIENT AIR TEMPERATURE SENSOR CIRCUIT LOW

For a complete wiring diagram, **refer to appropriate SYSTEM WIRING DIAGRAMS article** .

THEORY OF OPERATION

The Ambient Air Temperature (AAT) Sensor is located in the front of the vehicle near the grill. The AAT Sensor is supplied 5.0 Volts and a ground from the Totally Integrated Power Module (TIPM). The TIPM broadcasts the ambient air temperature over the CAN bus. The Cluster uses this information to display the ambient air temperature. The Powertrain Control Module (PCM) uses this information to determine when to switch on the Crank Case Ventilation Heater and the Cabin Heaters. If the ambient air temperature is below 40°F and heat is selected, the cabin heaters will switch on.

WHEN MONITORED

With the ignition on.

SET CONDITION

The Totally Integrated Power Module (TIPM) detects that the Ambient Air Temperature Sensor signal is below 0.21 Volts for 6.4 seconds.

POSSIBLE CAUSES

Possible Causes

(G31) AMBIENT AIR TEMP SENSOR SIGNAL CIRCUIT SHORTED TO GROUND
(G31) AMBIENT AIR TEMP SENSOR SIGNAL CIRCUIT SHORTED TO THE (G931) SENSOR GROUND
AMBIENT AIR TEMPERATURE SENSOR
TOTALLY INTEGRATED POWER MODULE (TIPM)

Always perform the Pre-Diagnostic Troubleshooting procedure before proceeding. Refer to PRE-DIAGNOSTIC TROUBLESHOOTING PROCEDURE - 2.2L DIESEL .

DIAGNOSTIC TEST

1. **CHECK FOR ACTIVE DTC**
    1. Turn the ignition on.
    2. With the scan tool, erase TIPM DTCs.
    3. Turn the ignition off for 10 seconds.
    4. Turn the ignition on.
    5. Monitor the scan tool for TIPM DTCs.

    Did this DTC return?

    Yes

    - Go To 2

    No

    - Perform the INTERMITTENT CONDITION - 2.2L Diesel diagnostic procedure. Refer to **INTERMITTENT CONDITION - 2.2L DIESEL** .
2. **AMBIENT AIR TEMPERATURE SENSOR**
    1. Turn the ignition off.
    2. Disconnect the Ambient Air Temperature Sensor harness connector.
    3. Turn the ignition on.
    4. Monitor the scan tool for TIPM DTCs for at least two minutes.

    Does the scan tool display P0073 AMBIENT AIR TEMP SENSOR

SIGNAL VOLTAGE TOO HIGH?

Yes

- Replace the Ambient Air Temperature Sensor in accordance with the service information.
- Perform the POWERTRAIN VERIFICATION TEST - 2.2L DIESEL. Refer to **PCM VERIFICATION TEST - 2.2L DIESEL** .

No

- Go To 3

3. **CHECK THE (G31) AMBIENT AIR TEMP SENSOR SIGNAL CIRCUIT FOR A SHORT TO GROUND**
   1. Turn the ignition off.
   2. Disconnect the TIPM C4 harness connector.
   3. Measure the resistance between ground and the (G31) Ambient Air Temperature Sensor Signal circuit.

   Is the resistance above 10k Ohms?

   Yes

   - Go To 4

   No

   - Repair the (G31) Ambient Air Temperature Sensor Signal circuit for a short to ground.
   - Perform the POWERTRAIN VERIFICATION TEST - 2.2L DIESEL. Refer to **PCM VERIFICATION TEST - 2.2L DIESEL** .
4. **CHECK FOR THE (G31) AMBIENT AIR TEMP SENSOR SIGNAL CIRCUIT SHORTED TO THE (G931) SENSOR GROUND**
   1. Measure the resistance between the (G31) Ambient Air Temperature Sensor Signal circuit and the (G931) Sensor Ground circuit.

   Is the resistance above 10k Ohms?

Yes

- Replace and program the Totally Integrated Power Module (TIPM) in accordance with the service information.
- Perform the BODY VERIFICATION TEST. Refer to **STANDARD PROCEDURE** .

No

- Repair the (G31) Ambient Air Temperature Sensor Signal circuit for a short to the (G931) Sensor Ground circuit.
- Perform the POWERTRAIN VERIFICATION TEST - 2.2L DIESEL. Refer to **PCM VERIFICATION TEST - 2.2L DIESEL** .

P0073-AMBIENT AIR TEMPERATURE SENSOR CIRCUIT HIGH

For a complete wiring diagram, **refer to appropriate SYSTEM WIRING DIAGRAMS article** .

THEORY OF OPERATION

The Ambient Air Temperature (AAT) Sensor is located in the front of the vehicle near the grill. The AAT Sensor is supplied 5.0 Volts and a ground from the Totally Integrated Power Module (TIPM). The TIPM broadcasts the ambient air temperature over the CAN bus. The Cluster uses this information to display the ambient air temperature. The Powertrain Control Module (PCM) uses this information to determine when to switch on the Crank Case Ventilation Heater and the Cabin Heaters. If the ambient air temperature is below 40°F and heat is selected, the cabin heaters will switch on.

WHEN MONITORED

With the ignition on.

SET CONDITION

The Totally Integrated Power Module (TIPM) detects that the Ambient Air Temperature Sensor signal is above 4.9 Volts for 6.4 seconds.

POSSIBLE CAUSES

Possible Causes
(D65) CAN BUS + CIRCUIT INTERMITTENT OPEN
(D64) CAN BUS - CIRCUIT INTERMITTENT OPEN
(D64) CAN BUS - CIRCUIT SHORT TO VOLTAGE
(G31) AMBIENT AIR TEMP SENSOR SIGNAL CIRCUIT SHORTED TO VOLTAGE
(G931) AMBIENT AIR TEMP SENSOR GROUND CIRCUIT OPEN
(G31) AMBIENT AIR TEMP SENSOR SIGNAL CIRCUIT OPEN
AMBIENT AIR TEMPERATURE SENSOR
TOTALLY INTEGRATED POWER MODULE (TIPM)

DIAGNOSTIC TEST

1. **CHECK FOR ACTIVE DTC**

   NOTE: If there are any communication DTCs present, repair those DTCs before proceeding with this test procedure.

   1. Turn the ignition on.
   2. With the scan tool, erase TIPM DTCs.
   3. Turn the ignition off for 10.0 seconds.
   4. Turn the ignition on.
   5. Monitor the scan tool for TIPM DTCs.

   Did this DTC return?

   Yes

   - Go To 2

   No

   - Perform the INTERMITTENT CONDITION - 2.2L Diesel diagnostic procedure. Refer to **INTERMITTENT CONDITION - 2.2L DIESEL** .

2. **CHECK THE (G31) AMBIENT AIR TEMP SENSOR SIGNAL CIRCUIT FOR A SHORT TO VOLTAGE**

1. Turn the ignition off.
2. Disconnect the Ambient Air Temperature Sensor harness connector.
3. Disconnect the TIPM C4 harness connector.
4. Remove the Main Relay.
5. Connect a jumper wire between cavity 87 and cavity 30 of the Main Relay connector.
6. Turn the ignition on.
7. Measure the voltage on the (G31) Ambient Air Temperature Sensor Signal circuit.

   Is there any voltage present?

   Yes

   - Repair the (G31) Ambient Air Temperature Sensor Signal circuit for a short to voltage.
   - Perform the POWERTRAIN VERIFICATION TEST - 2.2L DIESEL. Refer to **PCM VERIFICATION TEST - 2.2L DIESEL** .

   No

   - Go To 3

3. **CHECK THE (G31) AMBIENT AIR TEMP SENSOR SIGNAL CIRCUIT FOR AN OPEN/HIGH RESISTANCE**

   NOTE: Remove the jumper wire.

   1. Turn the ignition off.
   2. Measure the resistance of the (G31) Ambient Air Temperature Sensor Signal circuit between TIPM C4 harness connector and the Ambient Air Temperature Sensor harness connector.

      Is the resistance below 5.0 Ohms?

      Yes

      - Go To 4

No

- Repair the (G31) Ambient Air Temperature Sensor Signal circuit for an open or high resistance.
- Perform the POWERTRAIN VERIFICATION TEST - 2.2L DIESEL. Refer to **PCM VERIFICATION TEST - 2.2L DIESEL** .

4. **CHECK THE (G931) AMBIENT AIR TEMP SENSOR GROUND CIRCUIT FOR AN OPEN/HIGH RESISTANCE**
   1. Measure the resistance of the (G931) Ambient Air Temperature Sensor Ground circuit between the TIPM C4 harness connector and the Ambient Air Temperature Sensor harness connector.

      Is the resistance below 5.0 Ohms?

      Yes

      - Go To 5

      No

      - Repair the (G931) Ambient Air Temperature Sensor Ground circuit for an open or high resistance.
      - Perform the POWERTRAIN VERIFICATION TEST - 2.2L DIESEL. Refer to **PCM VERIFICATION TEST - 2.2L DIESEL** .
5. **CHECK THE AMBIENT AIR TEMPERATURE SENSOR**
   1. Reconnect the TIPM C4 harness connector.
   2. Connect a jumper wire between the (G31) Ambient Temperature Sensor Signal and the (G931) Sensor Ground circuit in the Ambient Temperature Sensor harness connector.
   3. Turn the ignition on.
   4. Monitor the scan tool for TIPM DTCs.

      Does the scan tool display P0072 AMBIENT AIR TEMP SENSOR CIRCUIT SIGNAL VOLTAGE TOO LOW?

      Yes

- Replace the Ambient Air Temperature Sensor in accordance with the service information.
- Perform the POWERTRAIN VERIFICATION TEST - 2.2L DIESEL. Refer to **PCM VERIFICATION TEST - 2.2L DIESEL** .

No

- Replace and program the Totally Integrated Power Module (TIPM) in accordance with the service information.
- Perform the BODY VERIFICATION TEST. Refer to **STANDARD PROCEDURE** .

P0087-FUEL RAIL PRESSURE TOO LOW

For a complete wiring diagram, **refer to appropriate SYSTEM WIRING DIAGRAMS article** .

THEORY OF OPERATION

The Fuel Quantity Solenoid (FQS) is located on the High Pressure Delivery Pump. The Powertrain Control Module (PCM) sends a Pulse Width Modulated (PWM) signal to the FQS to control the amount of fuel that is directed to the pumping chambers in the High Pressure Delivery Pump. The FQS is normally closed when not being controlled by the PCM. The Fuel Quantity Solenoid works in tandem with the Fuel Pressure Regulator (FPR) to control the fuel pressure in the fuel rail. During engine cranking, the FQS is fully opened to allow maximum fuel flow and the FPR is closed to allow pressure to build quickly. After the engine starts, the FPR is primarily closed and the high side pressure is regulated using the FQS. The FPR is primarily used to help control spikes in the high pressure side during deceleration or if the FQS is not able to react quickly enough to the demands of the system.

WHEN MONITORED

With the engine running and the fuel level not near empty.

SET CONDITION

The Powertrain Control Module (PCM) detects that the rail pressure feedback is at least 100 BAR (1450 PSI) below the rail pressure demand for six seconds.

POSSIBLE CAUSES

Possible Causes
LOW FUEL
(K31) FUEL LIFT PUMP SIGNAL CIRCUIT OPEN/HIGH RESISTANCE
(K31) FUEL LIFT PUMP SIGNAL CIRCUIT SHORTED TO VOLTAGE
(K350) FUEL RAIL PRESSURE SENSOR 5-VOLT SUPPLY SHORTED TO GROUND
FUEL LINES LEAKING OR RESTRICTED
FUEL FILTER PLUGGED OR RESTRICTED
FUEL CONTROL ACTUATOR STUCK CLOSED
PRESSURE REGULATOR STUCK OPEN
RAIL PRESSURE SENSOR FAILED IN RANGE
FUEL LIFT PUMP
HIGH PRESSURE FUEL PUMP
FUEL INJECTOR LEAKING

Always perform the Pre-Diagnostic Troubleshooting procedure before proceeding. Refer to PRE-DIAGNOSTIC TROUBLESHOOTING PROCEDURE - 2.2L DIESEL .

DIAGNOSTIC TEST

1. **DTC IS ACTIVE**

NOTE: If there are any Fuel Quantity Solenoid, Fuel Pressure Regulator, Fuel Pressure Sensor Fuel Pump Control circuit or 5-Volt Reference DTCs present, diagnose those DTCs before proceeding with this test procedure.

1. Ignition on, engine not running.
2. With the scan tool, check and record Freeze Frame Data.
3. With the scan tool, clear DTCs in the Powertrain Control Module.
4. Start the engine and test drive the vehicle. Attempt to duplicate the conditions recorded in the Freeze Frame Data.
5. With the scan tool, select View DTCs.

Is the status Active for this DTC?

Yes

- Go To 2

No

- Perform the INTERMITTENT CONDITION - 2.2L Diesel diagnostic procedure. Refer to **INTERMITTENT CONDITION - 2.2L DIESEL** .

2. **FUEL DELIVERY SYSTEM TEST**
   1. Perform the CHECKING THE FUEL DELIVERY SYSTEM diagnostic procedure. Refer to **DIAGNOSIS AND TESTING** .

   View repair

   Yes

   - Perform the appropriate repair of the fuel system.
   - Perform the POWERTRAIN VERIFICATION TEST - 2.2L DIESEL. Refer to **PCM VERIFICATION TEST - 2.2L DIESEL** .

P0088-FUEL RAIL PRESSURE TOO HIGH

For a complete wiring diagram, **refer to appropriate SYSTEM WIRING DIAGRAMS article** .

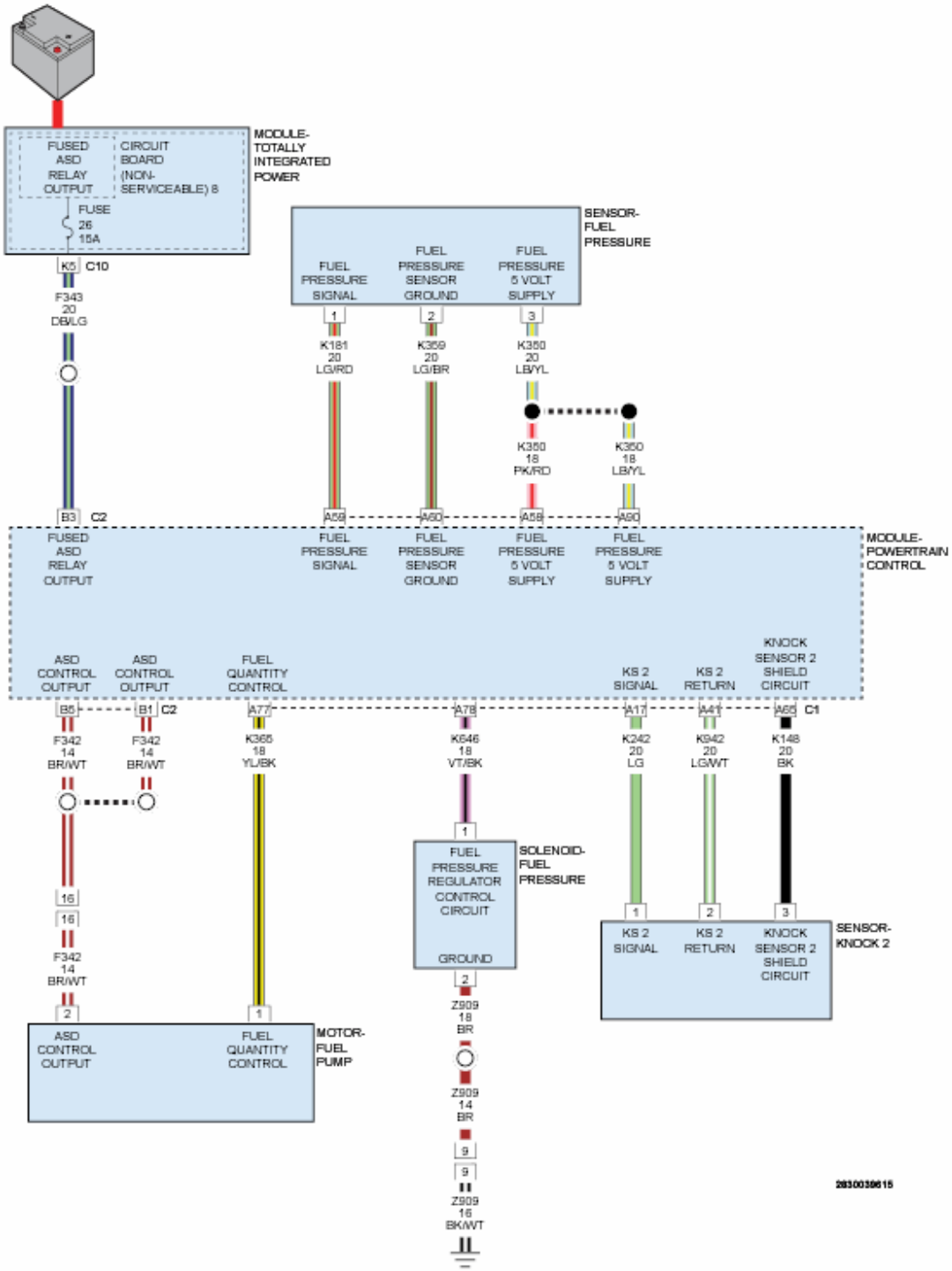

Fig. 4: Fuel System Circuit Diagram
Courtesy of CHRYSLER GROUP, LLC

WHEN MONITORED

With the engine running and the fuel level not near empty.

SET CONDITION

The Powertrain Control Module (PCM) detects that the rail pressure feedback is at least 100 BAR (1450 PSI) above the rail pressure demand for two seconds.

POSSIBLE CAUSES

Possible Causes
(K350) FUEL RAIL PRESSURE SENSOR 5-VOLT SUPPLY SHORTED TO VOLTAGE
(K852) ACCELERATOR PEDAL POSITION SENSOR 1 5-VOLT SUPPLY SHORTED TO VOLTAGE
FUEL RETURN LINE RESTRICTED
FUEL FILTER PLUGGED OR RESTRICTED
FUEL CONTROL ACTUATOR STUCK OPEN
PRESSURE REGULATOR STUCK CLOSED
RAIL PRESSURE SENSOR FAILED IN RANGE
FUEL LIFT PUMP
HIGH PRESSURE FUEL PUMP

Always perform the Pre-Diagnostic Troubleshooting procedure before proceeding. Refer to PRE-DIAGNOSTIC TROUBLESHOOTING PROCEDURE - 2.2L DIESEL .

DIAGNOSTIC TEST

1. **DTC IS ACTIVE**

NOTE: If there are any Fuel Control actuator, Fuel Pressure Regulator, Fuel Pressure Sensor or 5-Volt Reference DTCs present, diagnose those DTCs before proceeding with this test procedure.

1. Ignition on, engine not running.
2. With the scan tool, clear DTCs in the Powertrain Control Module (PCM).
3. With the scan tool, actuate the Fuel Pump.
4. Monitor the scan tool for at least two minutes.
5. With the scan tool, select View DTCs.

Is the status Active for this DTC?

Yes

- Go To 2

No

- Perform the INTERMITTENT CONDITION diagnostic procedure. Refer to **INTERMITTENT CONDITION - 2.2L DIESEL** .

2. **FUEL DELIVERY SYSTEM TEST**
   1. Perform the CHECKING THE FUEL DELIVERY SYSTEM diagnostic procedure. Refer to **DIAGNOSIS AND TESTING** .

   View repair

   Yes

   - Perform the appropriate repair of the fuel system.
   - Perform the POWERTRAIN VERIFICATION TEST - 2.2L DIESEL. Refer to **PCM VERIFICATION TEST - 2.2L DIESEL** .

P0089-00-FUEL PRESSURE 1 CONTROL PERFORMANCE

For a complete wiring diagram, **refer to appropriate SYSTEM WIRING DIAGRAMS article** .

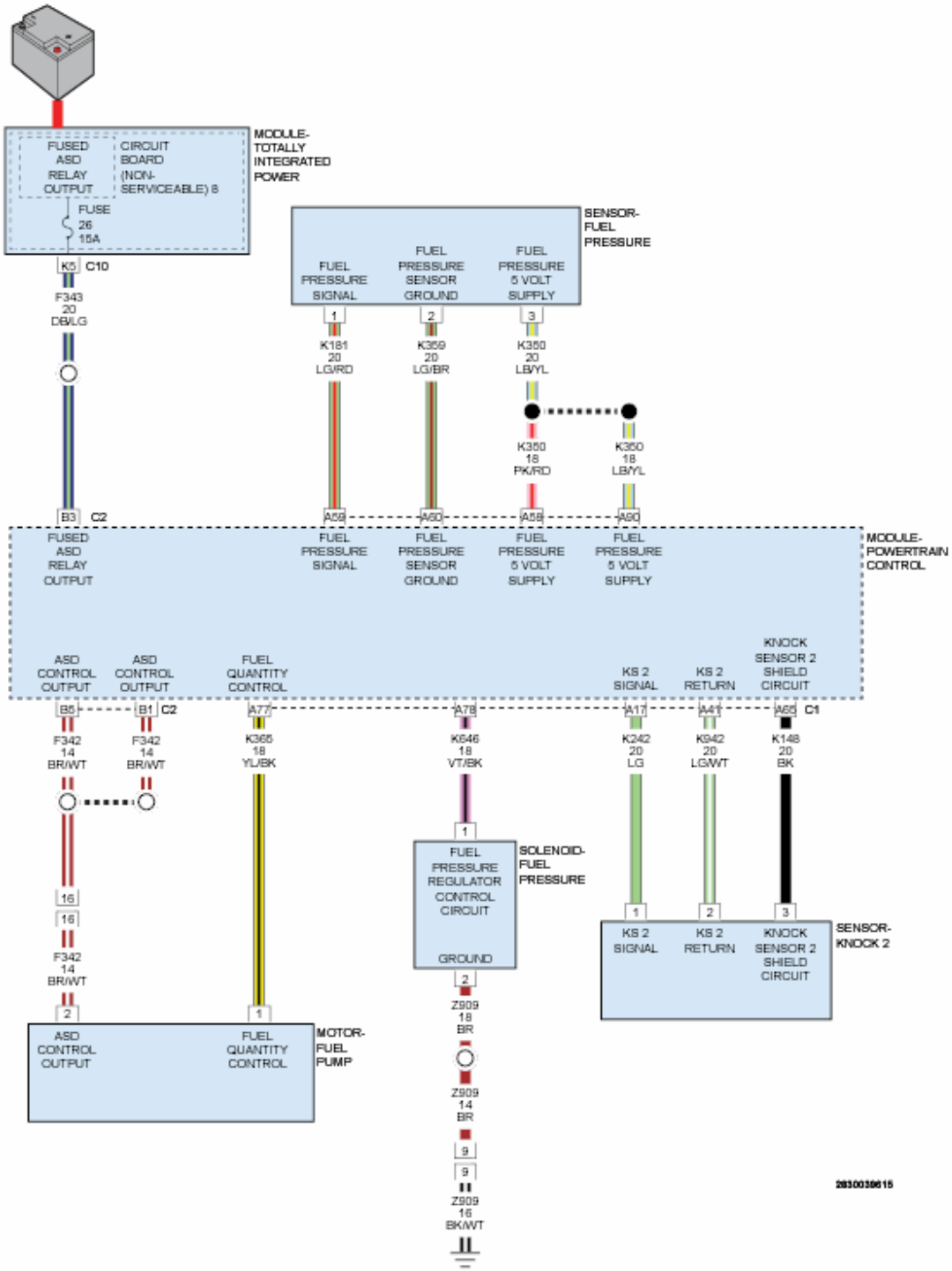

Fig. 5: Fuel System Circuit Diagram
Courtesy of CHRYSLER GROUP, LLC

THEORY OF OPERATION

The Fuel Pressure Regulator (FPR) is located on the end of the Fuel Rail. The Powertrain Control Module (PCM) sends a Pulse Width Modulated (PWM) signal to the FPR to control the pressure in the Fuel Rail. The FPR is normally

open when not being controlled by the PCM. The Fuel Quantity Solenoid (FQS) works in tandem with the Fuel Pressure Regulator to control the fuel pressure in the Fuel Rail. During engine cranking, the FQS is fully opened to allow maximum fuel flow and the FPR is closed to allow pressure to build quickly. After the engine starts, the FPR is primarily closed and the high side pressure is regulated using the FQS. The FPR is primarily used to help control spikes in the high pressure side during deceleration or if the FQS is not able to react quickly enough to the demands of the system.

WHEN MONITORED

Fuel rail pressure is being controlled in closed loop by the Fuel Pressure Regulator.

SET CONDITION

The Powertrain Control Module (PCM) detects that the difference between the actual and estimated current of the Fuel Pressure Regulator is more than 300 mA.

POSSIBLE CAUSES

Possible Causes
(K646) FUEL PRESSURE REGULATOR CONTROL CIRCUIT SHORTED TO GROUND
(K365) FUEL QUANTITY SOLENOID CONTROL CIRCUIT SHORTED TO GROUND
HIGH RESISTANCE IN THE (K646) FUEL PRESSURE REGULATOR CONTROL CIRCUIT
(K31) FUEL LIFT PUMP SIGNAL CIRCUIT OPEN/HIGH RESISTANCE
(K31) FUEL LIFT PUMP SIGNAL CIRCUIT SHORTED TO VOLTAGE
FUEL RETURN LINE RESTRICTED
FUEL FILTER PLUGGED OR RESTRICTED
FUEL QUANTITY SOLENOID STUCK OPEN
PRESSURE REGULATOR STUCK CLOSED
RAIL PRESSURE SENSOR FAILED IN RANGE
FUEL LIFT PUMP
HIGH PRESSURE FUEL PUMP
POWERTRAIN CONTROL MODULE (PCM)

Always perform the Pre-Diagnostic Troubleshooting procedure before proceeding. Refer to PRE-DIAGNOSTIC TROUBLESHOOTING PROCEDURE - 2.2L DIESEL .

DIAGNOSTIC TEST

1. **DTC IS ACTIVE**
   1. Ignition on, engine not running.
   2. With the scan tool, clear DTCs in the PCM.
   3. Start and test drive the vehicle.
   4. Monitor the scan tool for at least two minutes.
   5. With the scan tool, select View DTCs.

      Is the status Active for this DTC?

      Yes

      - Go To 2

      No

      - Perform the INTERMITTENT CONDITION - 2.2L Diesel diagnostic procedure. Refer to **INTERMITTENT CONDITION - 2.2L DIESEL** .
2. **CHECK THE (K31) FUEL PUMP CONTROL CIRCUIT FOR A SHORT TO VOLTAGE**
   1. Turn the ignition off.
   2. Disconnect the TIPM C2 harness connector.
   3. Disconnect the PCM C2 harness connector.
   4. Remove the Main Relay.
   5. Connect a jumper wire between cavity 87 and cavity 30 of the Main Relay Connector.
   6. Turn the ignition on.
   7. Measure the voltage of the (K31) Fuel Pump Control circuit in the TIPM harness connector.

      Is there any voltage present?

Yes

- Repair the (K31) Fuel Pump Control circuit for a short to voltage.
- Perform the POWERTRAIN VERIFICATION TEST - 2.2L DIESEL. Refer to **PCM VERIFICATION TEST - 2.2L DIESEL** .

No

- Go To 3

3. **CHECK THE (K31) FUEL PUMP CONTROL CIRCUIT FOR AN OPEN/HIGH RESISTANCE**
   1. Turn the ignition off.
   2. Measure the resistance of the (K31) Fuel Pump Control circuit between the TIPM harness connector and the PCM harness connector.

      Is the resistance below 5.0 Ohms?

      Yes

      - Go To 4

      No

      - Repair the (K31) Fuel Pump Control circuit for an open or high resistance.
      - Perform the POWERTRAIN VERIFICATION TEST - 2.2L DIESEL. Refer to **PCM VERIFICATION TEST - 2.2L DIESEL** .
4. **CHECK THE (K646) FUEL PRESSURE REGULATOR CONTROL CIRCUIT SHORTED TO GROUND**
   1. Disconnect the PCM C1 harness connector.
   2. Disconnect the Fuel Control Actuator harness connector.
   3. Measure the resistance between ground and the (K646) Fuel Pressure Regulator Control circuit at the Fuel Control Actuator harness connector.

      Is the resistance above 10k Ohms?

Yes

- Go To 5

No

- Repair the (K646) Fuel Pressure Regulator Control circuit for a short to ground.
- Perform the POWERTRAIN VERIFICATION TEST - 2.2L DIESEL. Refer to **PCM VERIFICATION TEST - 2.2L DIESEL** .

5. **CHECK THE (K365) FUEL QUANTITY SOLENOID CONTROL CIRCUIT SHORTED TO GROUND**
   1. Measure the resistance between ground and the (K365) Fuel Quantity Solenoid Control circuit at the Fuel Control Actuator harness connector.

      Is the resistance above 10k Ohms?

      Yes

      - Go To 6

      No

      - Repair the (K365) Fuel Quantity Solenoid Control circuit for a short to ground.
      - Perform the POWERTRAIN VERIFICATION TEST - 2.2L DIESEL. Refer to **PCM VERIFICATION TEST - 2.2L DIESEL** .
6. **CHECK FOR HIGH RESISTANCE IN THE (K646) FUEL PRESSURE REGULATOR CONTROL CIRCUIT**
   1. Measure the resistance of the (K646) Fuel Pressure Regulator Control circuit between the Fuel Control Actuator harness connector and the PCM C1 harness connector.

      Is the resistance below 5.0 Ohms?

      Yes

- Go To 7

No

- Repair the (K646) Fuel Pressure Regulator Control circuit for an open or high resistance.
- Perform the POWERTRAIN VERIFICATION TEST - 2.2L DIESEL. Refer to **PCM VERIFICATION TEST - 2.2L DIESEL** .

7. **CHECK THE FUEL PRESSURE REGULATOR FOR AN OPEN OR HIGH RESISTANCE**
   1. Measure the resistance of the Fuel Pressure Regulator.

      NOTE: The resistance will vary slightly with temperature. The resistance should be approximately 2.2 Ohms at 77°F (25°C).

      Does the resistance reading appear to be correct?

      Yes

      - Go To 8

      No

      - Replace the Fuel Pressure Regulator Control in accordance with the service information.
      - Perform the POWERTRAIN VERIFICATION TEST - 2.2L DIESEL. Refer to **PCM VERIFICATION TEST - 2.2L DIESEL** .

8. **FUEL DELIVERY SYSTEM TEST**
   1. Perform the CHECKING THE FUEL DELIVERY SYSTEM diagnostic procedure. Refer to **DIAGNOSIS AND TESTING** .

      Were any problems found with the Fuel Delivery System?

      Yes

      - Perform the appropriate repair of the fuel system.

- Perform the POWERTRAIN VERIFICATION TEST - 2.2L DIESEL. Refer to **PCM VERIFICATION TEST - 2.2L DIESEL** .

No

- Replace the Powertrain Control Module in accordance with the service information. **Before removing the PCM, perform the "Replace PCM" routine in the Miscellaneous Functions tab of the scan tool.** . Refer to **REMOVAL** .
- Perform the POWERTRAIN VERIFICATION TEST - 2.2L DIESEL. Refer to **PCM VERIFICATION TEST - 2.2L DIESEL** .

P0090-FUEL PRESSURE REGULATOR 1 CONTROL CIRCUIT OPEN

For a complete wiring diagram, **refer to appropriate SYSTEM WIRING DIAGRAMS article** .

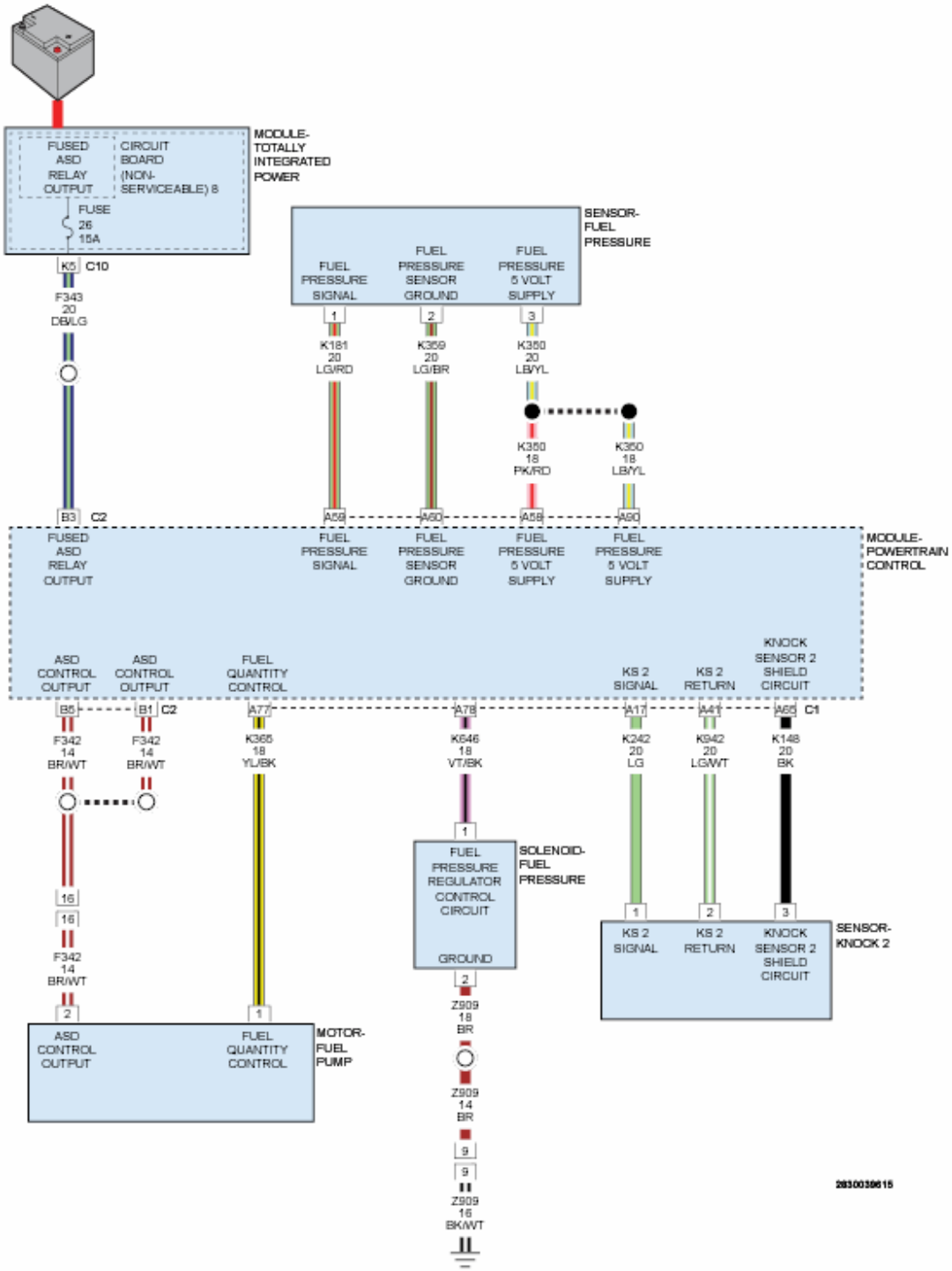

Fig. 6: Fuel System Circuit Diagram
Courtesy of CHRYSLER GROUP, LLC

THEORY OF OPERATION

The Fuel Pressure Regulator (FPR) is located on the end of the Fuel Rail. The Powertrain Control Module (PCM) sends a Pulse Width Modulated (PWM) signal to the FPR to control the pressure in the Fuel Rail. The FPR is normally

open when not being controlled by the PCM. The Fuel Quantity Solenoid (FQS) works in tandem with the Fuel Pressure Regulator to control the fuel pressure in the Fuel Rail. During engine cranking, the FQS is fully opened to allow maximum fuel flow and the FPR is closed to allow pressure to build quickly. After the engine starts, the FPR is primarily closed and the high side pressure is regulated using the FQS. The FPR is primarily used to help control spikes in the high pressure side during deceleration or if the FQS is not able to react quickly enough to the demands of the system.

WHEN MONITORED

With the ignition on.

SET CONDITION

The Powertrain Control Module (PCM) detects an open circuit on the (K646) Fuel Pressure Regulator Control circuit for 0.167 of a second.

POSSIBLE CAUSES

Possible Causes
(K646) FUEL PRESSURE REGULATOR CONTROL CIRCUIT OPEN OR HIGH RESISTANCE
FUEL PRESSURE REGULATOR
POWERTRAIN CONTROL MODULE (PCM)

Always perform the Pre-Diagnostic Troubleshooting procedure before proceeding. Refer to PRE-DIAGNOSTIC TROUBLESHOOTING PROCEDURE - 2.2L DIESEL .

DIAGNOSTIC TEST

1. **DTC IS ACTIVE**
    1. Ignition on, engine not running.
    2. With the scan tool, clear DTCs in the Powertrain Control Module (PCM).
    3. Monitor the scan tool for at least two minutes.
    4. With the scan tool, select View DTCs.

    Is the status Active for this DTC?

Yes

- Go To 2

No

- Perform the INTERMITTENT CONDITION - 2.2L Diesel diagnostic procedure. Refer to **INTERMITTENT CONDITION - 2.2L DIESEL** .

2. **CHECK THE (K646) FUEL PRESSURE REGULATOR CONTROL CIRCUIT FOR AN OPEN OR HIGH RESISTANCE**
   1. Turn the ignition off.
   2. Disconnect the Fuel Pressure Regulator harness connector.
   3. Disconnect the Powertrain Control Module C1 harness connector.
   4. Measure the resistance of the (K646) Fuel Pressure Regulator Control circuit between the Fuel Pressure Regulator harness connector and the Powertrain Control Module C1 harness connector.

   Is the resistance below 5.0 Ohms?

   Yes

   - Go To 3

   No

   - Repair the (K646) Fuel Pressure Regulator Control circuit for an open or high resistance.
   - Perform the POWERTRAIN VERIFICATION TEST - 2.2L. Refer to **PCM VERIFICATION TEST - 2.2L DIESEL** .
3. **CHECK THE FUEL PRESSURE REGULATOR**
   1. Reconnect the Powertrain Control Module C1 harness connector.
   2. Connect a jumper between ground and the (K646) Fuel Pressure Regulator Control circuit at the Fuel Pressure Regulator harness connector.
   3. Turn the ignition on.
   4. Monitor the scan tool for at least two minutes.
   5. With the scan tool, select View DTCs.

Did DTC P0091-FUEL PRESSURE REGULATOR 1 CONTROL CIRCUIT LOW become active?

Yes

- Replace the Fuel Pressure Regulator in accordance with the service information.
- Perform the POWERTRAIN VERIFICATION TEST - 2.2L. Refer to **PCM VERIFICATION TEST - 2.2L DIESEL** .

No

- Replace the Powertrain Control Module in accordance with the service information. **Before removing the PCM, perform the "Replace PCM" routine in the Miscellaneous Functions tab of the scan tool.** . Refer to **REMOVAL** .
- Perform the POWERTRAIN VERIFICATION TEST - 2.2L. Refer to **PCM VERIFICATION TEST - 2.2L DIESEL** .

P0091-FUEL PRESSURE REGULATOR 1 CONTROL CIRCUIT LOW

For a complete wiring diagram, **refer to appropriate SYSTEM WIRING DIAGRAMS article** .

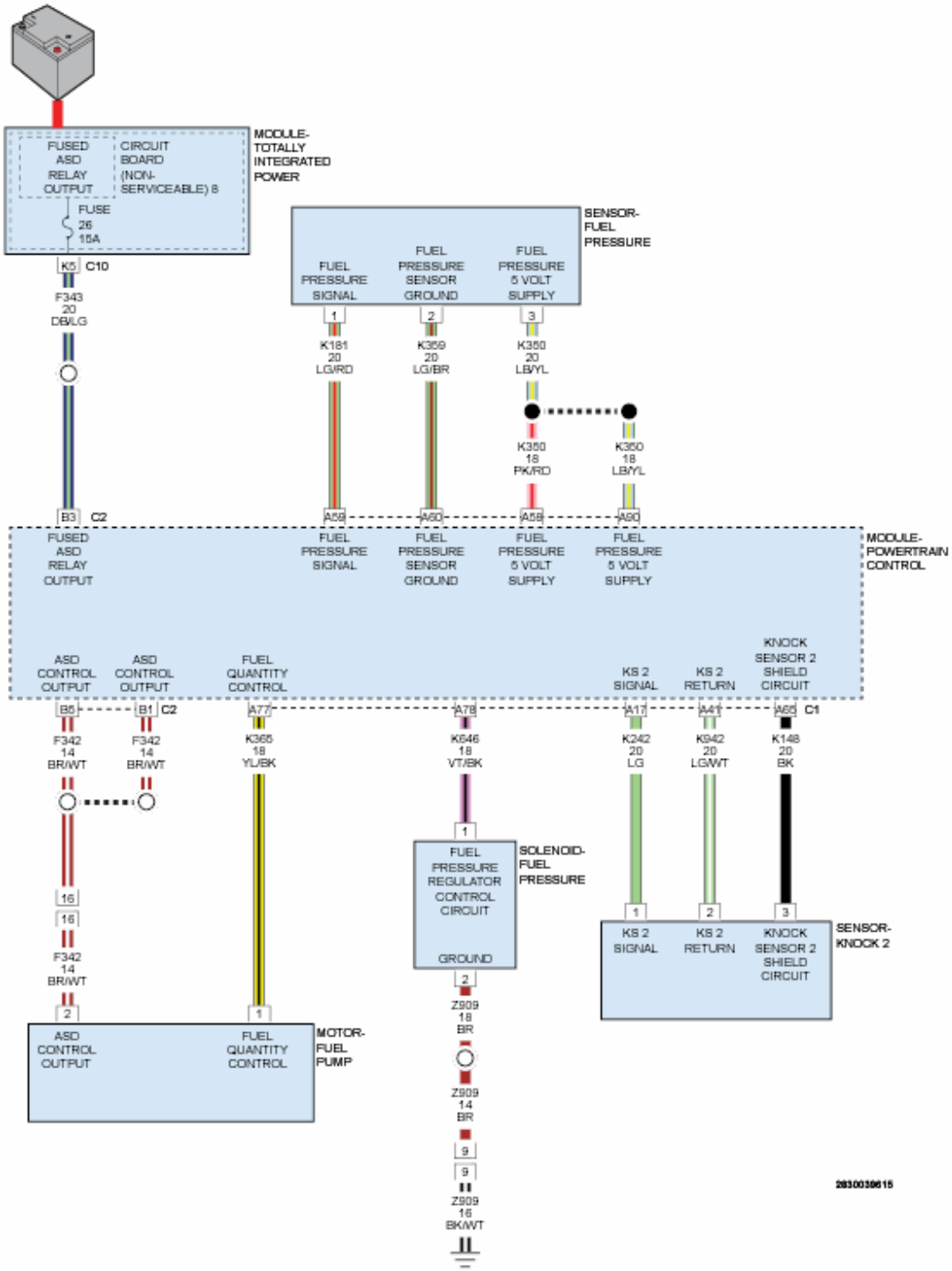

Fig. 7: Fuel System Circuit Diagram
Courtesy of CHRYSLER GROUP, LLC

THEORY OF OPERATION

The Fuel Pressure Regulator (FPR) is located on the end of the Fuel Rail. The Powertrain Control Module (PCM) sends a Pulse Width Modulated (PWM) signal to the FPR to control the pressure in the Fuel Rail. The FPR is normally

open when not being controlled by the PCM. The Fuel Quantity Solenoid (FQS) works in tandem with the Fuel Pressure Regulator to control the fuel pressure in the Fuel Rail. During engine cranking, the FQS is fully opened to allow maximum fuel flow and the FPR is closed to allow pressure to build quickly. After the engine starts, the FPR is primarily closed and the high side pressure is regulated using the FQS. The FPR is primarily used to help control spikes in the high pressure side during deceleration or if the FQS is not able to react quickly enough to the demands of the system.

WHEN MONITORED

With the ignition on and the Fuel Pump command off.

SET CONDITION

The Powertrain Control Module (PCM) detects a short to ground on the (K646) Fuel Pressure Regulator Control circuit for 0.167 seconds.

POSSIBLE CAUSES

Possible Causes
(K646) FUEL PRESSURE REGULATOR CONTROL CIRCUIT SHORTED TO GROUND
FUEL PRESSURE REGULATOR
POWERTRAIN CONTROL MODULE (PCM)

Always perform the Pre-Diagnostic Troubleshooting procedure before proceeding. Refer to PRE-DIAGNOSTIC TROUBLESHOOTING PROCEDURE - 2.2L DIESEL .

DIAGNOSTIC TEST

1. **DTC IS ACTIVE**
    1. Ignition on, engine not running.
    2. With the scan tool, clear DTCs in the Powertrain Control Module (PCM).
    3. Monitor the scan tool for at least two minutes.
    4. With the scan tool, select View DTCs.

    Is the status Active for this DTC?

Yes

- Go To 2

No

- Perform the INTERMITTENT CONDITION - 2.2L Diesel diagnostic procedure. Refer to **INTERMITTENT CONDITION - 2.2L DIESEL** .

2. **CHECK THE (K646) FUEL PRESSURE REGULATOR CONTROL CIRCUIT FOR A SHORTED TO GROUND**
   1. Turn the ignition off.
   2. Disconnect the Fuel Pressure Regulator harness connector.
   3. Disconnect the Powertrain Control Module C1 harness connector.
   4. Measure the resistance between ground and the (K646) Fuel Pressure Regulator Control circuit at the Fuel Pressure Regulator harness connector.

   Is the resistance above 10k Ohms?

   Yes

   - Go To 3

   No

   - Repair the (K646) Fuel Pressure Regulator Control circuit for a short to ground.
   - Perform the POWERTRAIN VERIFICATION TEST - 2.2L. Refer to **PCM VERIFICATION TEST - 2.2L DIESEL** .

3. **CHECK THE FUEL PRESSURE REGULATOR**
   1. Turn the ignition off.
   2. Reconnect the Powertrain Control Module C1 harness connector.
   3. Turn the ignition on.
   4. Monitor the scan tool for at least two minutes.
   5. With the scan tool, select View DTCs.

   Did DTC P0090-FUEL PRESSURE REGULATOR 1 CONTROL

CIRCUIT OPEN become active?

Yes

- Replace the Fuel Pressure Regulator in accordance with the service information.
- Perform the POWERTRAIN VERIFICATION TEST - 2.2L. Refer to **PCM VERIFICATION TEST - 2.2L DIESEL** .

No

- Replace the Powertrain Control Module in accordance with the service information. **Before removing the PCM, perform the "Replace PCM" routine in the Miscellaneous Functions tab of the scan tool.** . Refer to **REMOVAL** .
- Perform the POWERTRAIN VERIFICATION TEST - 2.2L. Refer to **PCM VERIFICATION TEST - 2.2L DIESEL** .

P0092-FUEL PRESSURE REGULATOR 1 CONTROL CIRCUIT HIGH

For a complete wiring diagram, **refer to appropriate SYSTEM WIRING DIAGRAMS article** .

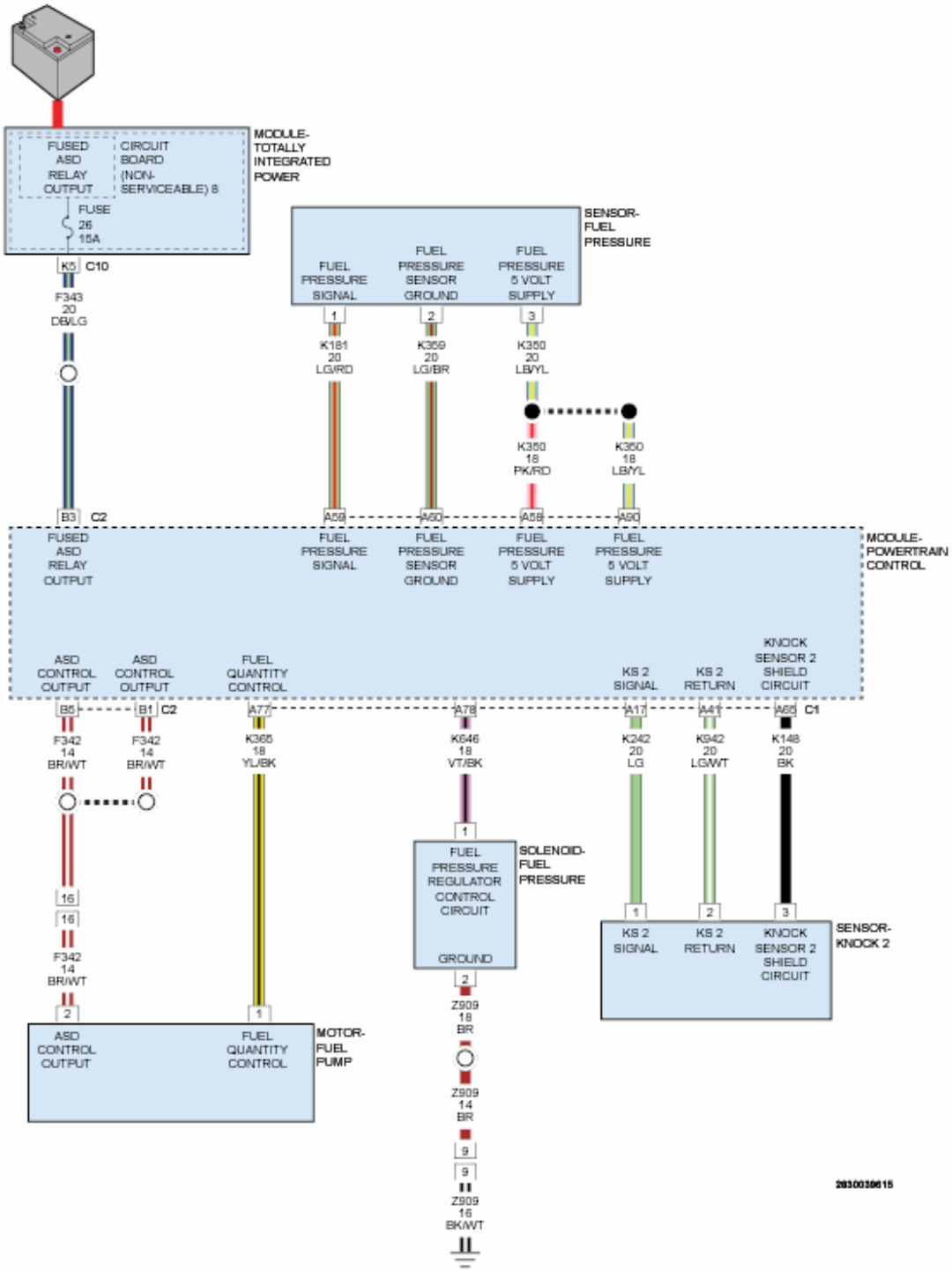

Fig. 8: Fuel System Circuit Diagram
Courtesy of CHRYSLER GROUP, LLC

THEORY OF OPERATION

The Fuel Pressure Regulator (FPR) is located on the end of the Fuel Rail. The Powertrain Control Module (PCM) sends a Pulse Width Modulated (PWM) signal to the FPR to control the pressure in the Fuel Rail. The FPR is normally

open when not being controlled by the PCM. The Fuel Quantity Solenoid (FQS) works in tandem with the Fuel Pressure Regulator to control the fuel pressure in the Fuel Rail. During engine cranking, the FQS is fully opened to allow maximum fuel flow and the FPR is closed to allow pressure to build quickly. After the engine starts, the FPR is primarily closed and the high side pressure is regulated using the FQS. The FPR is primarily used to help control spikes in the high pressure side during deceleration or if the FQS is not able to react quickly enough to the demands of the system.

WHEN MONITORED

With the ignition on.

SET CONDITION

The Powertrain Control Module (PCM) detects a short to voltage on the (K646) Fuel Pressure Regulator Control circuit for 0.167 seconds.

POSSIBLE CAUSES

Possible Causes
(K646) FUEL PRESSURE REGULATOR CONTROL CIRCUIT SHORTED TO VOLTAGE
FUEL PRESSURE REGULATOR
POWERTRAIN CONTROL MODULE (PCM)

Always perform the Pre-Diagnostic Troubleshooting procedure before proceeding. Refer to PRE-DIAGNOSTIC TROUBLESHOOTING PROCEDURE - 2.2L DIESEL .

DIAGNOSTIC TEST

1. **DTC IS ACTIVE**
    1. Ignition on, engine not running.
    2. With the scan tool, clear DTCs in the Powertrain Control Module (PCM).
    3. Monitor the scan tool for at least two minutes.
    4. With the scan tool, select View DTCs.

    Is the status Active for this DTC?

Yes

- Go To 2

No

- Perform the INTERMITTENT CONDITION - 2.2L Diesel diagnostic procedure. Refer to **INTERMITTENT CONDITION - 2.2L DIESEL** .

2. **CHECK THE (K646) FUEL PRESSURE REGULATOR CONTROL CIRCUIT FOR A SHORTED TO VOLTAGE**
   1. Turn the ignition off.
   2. Disconnect the Fuel Pressure Regulator harness connector.
   3. Disconnect the Powertrain Control Module C1 harness connector.
   4. Remove the Main Relay.
   5. Connect a jumper wire between cavity 87 and cavity 30 of the Main Relay Connector.
   6. Turn the ignition on.
   7. Measure the voltage of the (K646) Fuel Pressure Regulator Control circuit in the Fuel Pressure Regulator harness connector.

   Is there any voltage present?

   Yes

   - Repair the (K646) Fuel Pressure Regulator Control circuit for a short to voltage.
   - Perform the POWERTRAIN VERIFICATION TEST - 2.2L. Refer to **PCM VERIFICATION TEST - 2.2L DIESEL** .

   No

   - Go To 3

3. **CHECK THE FUEL PRESSURE REGULATOR**
   1. Turn the ignition off.
   2. Reconnect the Powertrain Control Module C1 harness connector.
   3. Turn the ignition on.

4. Monitor the scan tool for at least two minutes.
5. With the scan tool, select View DTCs.

   Did DTC P0090-FUEL PRESSURE REGULATOR 1 CONTROL CIRCUIT OPEN become active?

   Yes

   - Replace the Fuel Pressure Regulator in accordance with the service information.
   - Perform the POWERTRAIN VERIFICATION TEST - 2.2L. Refer to **PCM VERIFICATION TEST - 2.2L DIESEL** .

   No

   - Replace the Powertrain Control Module in accordance with the service information. **Before removing the PCM, perform the "Replace PCM" routine in the Miscellaneous Functions tab of the scan tool.** . Refer to **REMOVAL** .
   - Perform the POWERTRAIN VERIFICATION TEST - 2.2L. Refer to **PCM VERIFICATION TEST - 2.2L DIESEL** .

P0096-INTAKE AIR TEMPERATURE SENSOR 2 CIRCUIT PERFORMANCE

For a complete wiring diagram, **refer to appropriate SYSTEM WIRING DIAGRAMS article** .

THEORY OF OPERATION

The Intake Air Temperature (IAT) Sensor is located on the Intake Manifold. The IAT Sensor is supplied a 5-Volt signal and a sensor ground from the Powertrain Control Module (PCM). The PCM uses the feedback information to determine the temperature of the charge air entering the Intake Manifold, which is used to help in determining how much fuel should be injected.

WHEN MONITORED

With the ignition on.

SET CONDITION

The Powertrain Control Module (PCM) detects that the (K48) Intake Air Temperature Sensor 2 signal is implausible.

POSSIBLE CAUSES

Possible Causes
HIGH RESISTANCE IN THE (K48) INTAKE AIR TEMPERATURE SENSOR 2 SIGNAL CIRCUIT
HIGH RESISTANCE IN THE (K916) SENSOR GROUND CIRCUIT
INTAKE AIR TEMPERATURE SENSOR
POWERTRAIN CONTROL MODULE (PCM)

Always perform the Pre-Diagnostic Troubleshooting procedure before proceeding. Refer to PRE-DIAGNOSTIC TROUBLESHOOTING PROCEDURE - 2.2L DIESEL .

DIAGNOSTIC TEST

1. **CHECK FOR ACTIVE DTC**
    1. Turn the ignition on.
    2. With the scan tool, erase PCM DTCs.
    3. Turn the ignition off for 10.0 seconds.
    4. Turn the ignition on.
    5. With the scan tool, view PCM DTCs.

    Did this DTC set again?

    Yes

    - Go To 2

    No

    - Perform the INTERMITTENT CONDITION - 2.2L Diesel diagnostic procedure. Refer to **INTERMITTENT CONDITION - 2.2L DIESEL** .
2. **CHECK FOR HIGH RESISTANCE IN THE (K48) INTAKE AIR TEMPERATURE SENSOR 2 SIGNAL CIRCUIT**
    1. Turn the ignition off.

2. Disconnect the Intake Air Temperature Sensor 2 harness connector.
3. Disconnect the PCM C1 harness connector.
4. Measure the resistance of the (K48) Intake Air Temperature Sensor 2 Signal circuit between PCM C1 harness connector and the Intake Air Temperature Sensor 2 harness connector.

   Is the resistance below 5.0 Ohms?

   Yes

   - Go To 3

   No

   - Repair the (K48) Intake Air Temperature Sensor 2 Signal circuit for an open or high resistance.
   - Perform the POWERTRAIN VERIFICATION TEST - 2.2L DIESEL. Refer to **PCM VERIFICATION TEST - 2.2L DIESEL** .

3. **CHECK FOR HIGH RESISTANCE IN THE (K916) SENSOR GROUND CIRCUIT**
   1. Measure the resistance of the (K916) Sensor Ground circuit between the PCM C1 harness connector and the Intake Air Temperature Sensor 2 harness connector.

      Is the resistance below 5.0 Ohms?

      Yes

      - Go To 4

      No

      - Repair the (K916) Sensor Ground circuit for an open or high resistance.
      - Perform the POWERTRAIN VERIFICATION TEST - 2.2L DIESEL. Refer to **PCM VERIFICATION TEST - 2.2L DIESEL** .
4. **CHECK THE INTAKE AIR TEMPERATURE SENSOR 2**

1. Turn the ignition off.
2. Reconnect the Intake Air Temperature Sensor 2 harness connector.
3. Reconnect the PCM C1 harness connector.
4. Turn the ignition on.
5. With the scan tool, erase PCM DTCs.
6. Turn the ignition off.
7. Disconnect the Intake Air Temperature Sensor 2 harness connector.
8. Turn the ignition on.
9. With the scan tool, view PCM DTCs.

NOTE: The scan tool should display the P0098-INTAKE AIR TEMPERATURE SENSOR 2 HIGH DTC as active with the harness connector disconnected.

10. With the ignition on, connect a jumper wire between the (K48) Intake Air Temperature Sensor 2 Signal circuit and the (K916) Sensor Ground circuit in the Intake Air Temperature Sensor 2 harness connector.

NOTE: Be careful not to spread the terminals in the connector.

11. With the scan tool, view PCM DTCs.

NOTE: The scan tool should display the P0097-INTAKE AIR TEMPERATURE SENSOR 2 LOW DTC as active with the circuits shorted together.

Does the scan tool display P0098 with connector disconnected and P0097 with the circuits shorted together?

Yes

- Replace the Intake Air Temperature Sensor in accordance with the service information.
- Perform the POWERTRAIN VERIFICATION TEST - 2.2L DIESEL. Refer to **PCM VERIFICATION TEST - 2.2L DIESEL** .

No

- Replace the Powertrain Control Module in accordance with the service information. **Before removing the PCM, perform the "Replace PCM" routine in the Miscellaneous Functions tab of the scan tool.** . Refer to **REMOVAL** .
- Perform the POWERTRAIN VERIFICATION TEST - 2.2L DIESEL. Refer to **PCM VERIFICATION TEST - 2.2L DIESEL** .

P0097-INTAKE AIR TEMPERATURE SENSOR 2 CIRCUIT LOW

For a complete wiring diagram, **refer to appropriate SYSTEM WIRING DIAGRAMS article** .

THEORY OF OPERATION

The Intake Air Temperature (IAT) Sensor is located on the Intake Manifold. The IAT Sensor is supplied 5-Volt signal and a sensor ground from the Powertrain Control Module (PCM). The PCM uses the feedback information to determine the temperature of the charge air entering the Intake Manifold, which is used to help in determining how much fuel should be injected.

WHEN MONITORED

With the ignition on.

SET CONDITION

The Intake Air Temperature Sensor 2 signal is below 0.17 Volts for two seconds.

POSSIBLE CAUSES

Possible Causes
(K48) INTAKE AIR TEMPERATURE SENSOR 2 SIGNAL CIRCUIT SHORTED TO GROUND
(K48) INTAKE AIR TEMPERATURE SENSOR 2 SIGNAL CIRCUIT SHORTED TO THE (K916) SENSOR GROUND
INTAKE AIR TEMPERATURE
POWERTRAIN CONTROL MODULE (PCM)

Always perform the Pre-Diagnostic Troubleshooting procedure before proceeding. Refer to PRE-DIAGNOSTIC TROUBLESHOOTING PROCEDURE - 2.2L DIESEL .

DIAGNOSTIC TEST

1. **CHECK FOR ACTIVE DTC**
   1. Turn the ignition on.
   2. With the scan tool, erase PCM DTCs.
   3. Turn the ignition off for 10.0 seconds.
   4. Turn the ignition on.
   5. With the scan tool, view PCM DTCs.

   Did this DTC return?

   Yes

   - Go To 2

   No

   - Perform the INTERMITTENT CONDITION - 2.2L Diesel diagnostic procedure. Refer to **INTERMITTENT CONDITION - 2.2L DIESEL** .
2. **CHECK THE INTAKE AIR TEMPERATURE SENSOR**
   1. Turn the ignition off.
   2. Disconnect the Intake Air Temperature Sensor 2 harness connector.
   3. Turn the ignition on.
   4. With the scan tool, view PCM DTCs.

   Does the scan tool display P0098-Intake Air Temperature Sensor 2 HIGH DTC as active?

   Yes

   - Replace the Intake Air Temperature Sensor 2 in accordance with the service information.
   - Perform the POWERTRAIN VERIFICATION TEST - 2.2L

DIESEL. Refer to **PCM VERIFICATION TEST - 2.2L DIESEL** .

No

- Go To 3

3. **CHECK THE (K48) INTAKE AIR TEMPERATURE SENSOR 2 SIGNAL CIRCUIT FOR A SHORT TO GROUND**
   1. Turn the ignition off.
   2. Disconnect the PCM C1 harness connector.
   3. Measure the resistance between ground and the (K48) Intake Air Temperature Sensor 2 Signal circuit.

   Is the resistance above 10K Ohms?

   Yes

   - Go To 4

   No

   - Repair the (K48) Intake Air Temperature Sensor 2 Signal circuit for a short to ground.
   - Perform the POWERTRAIN VERIFICATION TEST - 2.2L DIESEL. Refer to **PCM VERIFICATION TEST - 2.2L DIESEL** .
4. **CHECK FOR THE (K48) INTAKE AIR TEMPERATURE SENSOR 2 SIGNAL CIRCUIT SHORTED TO (K916) SENSOR GROUND**
   1. Measure the resistance between the (K48) Intake Air Temperature Sensor 2 Signal circuit and the (K931) Sensor Ground circuit at the Intake Air Temperature Sensor 2 harness connector.

   Is the resistance below 10k Ohms?

   Yes

   - Repair the (K48) Intake Air Temperature Sensor 2 Signal circuit for a short to the (K916) Sensor Ground circuit.
   - Perform the POWERTRAIN VERIFICATION TEST - 2.2L

DIESEL. Refer to **PCM VERIFICATION TEST - 2.2L DIESEL** .

No

- Replace the Powertrain Control Module in accordance with the service information. **Before removing the PCM, perform the "Replace PCM" routine in the Miscellaneous Functions tab of the scan tool.** . Refer to **REMOVAL** .
- Perform the POWERTRAIN VERIFICATION TEST - 2.2L DIESEL. Refer to **PCM VERIFICATION TEST - 2.2L DIESEL** .

P0098-INTAKE AIR TEMPERATURE SENSOR 2 CIRCUIT HIGH

For a complete wiring diagram, **refer to appropriate SYSTEM WIRING DIAGRAMS article** .

THEORY OF OPERATION

The Intake Air Temperature (IAT) Sensor is located on the Intake Manifold. The IAT Sensor is supplied 5-Volt signal and a sensor ground from the Powertrain Control Module (PCM). The PCM uses the feedback information to determine the temperature of the charge air entering the Intake Manifold, which is used to help in determining how much fuel should be injected.

WHEN MONITORED

With the ignition on.

SET CONDITION

The (K48) Intake Air Temperature Sensor 2 signal is above 4.97 Volts.

POSSIBLE CAUSES

Possible Causes
(K48) INTAKE AIR TEMPERATURE SENSOR 2 SIGNAL CIRCUIT SHORTED TO VOLTAGE
(K48) INTAKE AIR TEMPERATURE SENSOR 2 SIGNAL CIRCUIT OPEN
(K916) SENSOR GROUND CIRCUIT OPEN

INTAKE AIR TEMPERATURE SENSOR
POWERTRAIN CONTROL MODULE (PCM)

DIAGNOSTIC TEST

1. **CHECK FOR ACTIVE DTC**
    1. Turn the ignition on.
    2. With the scan tool, erase PCM DTCs.
    3. Turn the ignition off for 10.0 seconds.
    4. Turn the ignition on.
    5. With the scan tool, View PCM DTCs.

    Did this DTC return?

    Yes

    - Go To 2

    No

    - Perform the INTERMITTENT CONDITION - 2.2L Diesel diagnostic procedure. Refer to **INTERMITTENT CONDITION - 2.2L DIESEL** .
2. **CHECK THE (K48) INTAKE AIR TEMPERATURE SENSOR 2 SIGNAL CIRCUIT FOR A SHORT TO VOLTAGE**
    1. Turn the ignition off.
    2. Disconnect the Intake Air Temperature Sensor 2 harness connector.
    3. Disconnect the PCM C1 harness connector.
    4. Remove the Main Relay.
    5. Connect a jumper wire between cavity B7 and cavity B9 of the Main Relay connector.
    6. Turn the ignition on.
    7. Measure the voltage on the (K48) Intake Air Temperature Sensor 2 Signal circuit at the Intake Air Temperature Sensor 2 harness connector.

    Is there any voltage present?

Yes

- Repair the (K48) Intake Air Temperature Sensor 2 Signal circuit for a short to voltage.
- Perform the POWERTRAIN VERIFICATION TEST - 2.2L DIESEL. Refer to **PCM VERIFICATION TEST - 2.2L DIESEL** .

No

- Go To 3

3. **CHECK THE (K48) INTAKE AIR TEMPERATURE SENSOR 2 SIGNAL CIRCUIT FOR AN OPEN**
   1. Turn the ignition off.
   2. Remove the jumper.
   3. Reinstall the Main Relay.
   4. Measure the resistance of the (K48) Intake Air Temperature Sensor 2 Signal circuit between PCM C1 harness connector and the Intake Air Temperature Sensor 2 harness connector.

   Is the resistance below 5.0 Ohms?

   Yes

   - Go To 4

   No

   - Repair the (K48) Intake Air Temperature Sensor 2 Signal circuit for an open or high resistance.
   - Perform the POWERTRAIN VERIFICATION TEST - 2.2L DIESEL. Refer to **PCM VERIFICATION TEST - 2.2L DIESEL** .
4. **CHECK THE (K916) SENSOR GROUND CIRCUIT FOR AN OPEN**
   1. Measure the resistance of the (K916) Sensor Ground circuit between the PCM C1 harness connector and the Intake Air Temperature Sensor 2 harness connector.

Is the resistance below 5.0 Ohms?

Yes

- Go To 5

No

- Repair the (K916) Sensor Ground circuit for an open or high resistance.
- Perform the POWERTRAIN VERIFICATION TEST - 2.2L DIESEL. Refer to **PCM VERIFICATION TEST - 2.2L DIESEL** .

5. **CHECK THE INTAKE AIR TEMPERATURE SENSOR**
   1. Connect a jumper wire between the (K48) Intake Air Temperature Sensor 2 Signal circuit and the (K916) Sensor Ground circuit in the Intake Air Temperature Sensor 2 harness connector.

      NOTE: Be careful not to spread the terminals in the connector.

   2. Turn the ignition on.
   3. Monitor the scan tool for PCM DTCs.

      Does the scan tool display the P0097-INTAKE AIR TEMPERATURE SENSOR 2 LOW DTC as active?

      Yes

      - Replace the Intake Air Temperature Sensor in accordance with the service information.
      - Perform the POWERTRAIN VERIFICATION TEST - 2.2L DIESEL. Refer to **PCM VERIFICATION TEST - 2.2L DIESEL** .

      No

      - Replace the Powertrain Control Module in accordance with the service information. **Before removing the PCM, perform the**

"Replace PCM" routine in the Miscellaneous Functions tab of the scan tool. . Refer to **REMOVAL** .

- Perform the POWERTRAIN VERIFICATION TEST - 2.2L DIESEL. Refer to **PCM VERIFICATION TEST - 2.2L DIESEL** .

P0100-MASS AIR FLOW SENSOR "A"

For a complete wiring diagram, **refer to appropriate SYSTEM WIRING DIAGRAMS article** .

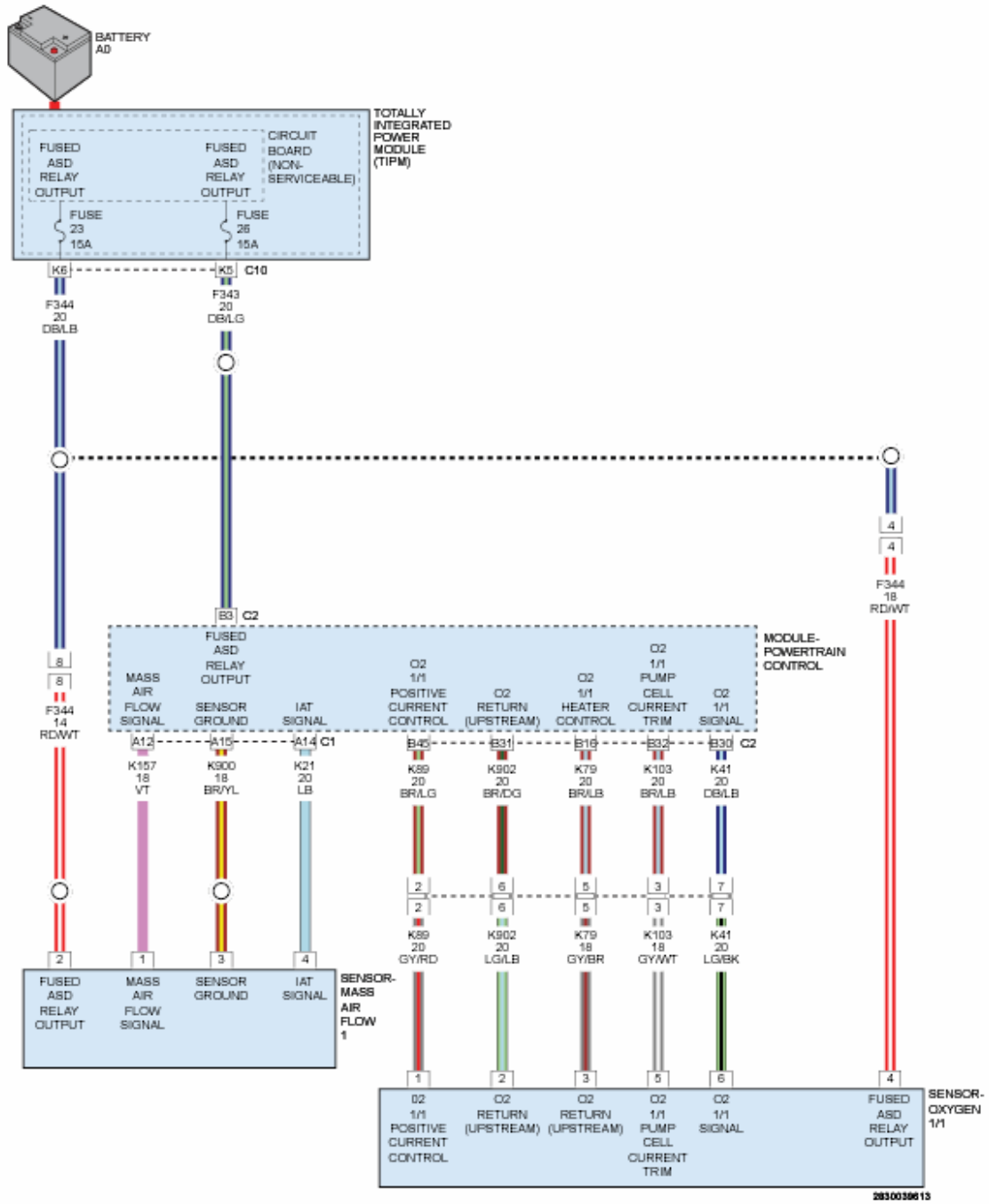

Fig. 9: O2 & MAF Sensors Circuit Diagram
Courtesy of CHRYSLER GROUP, LLC

THEORY OF OPERATION

The Mass Air Flow (MAF) Sensor is located near the air filter box. The MAF Sensor is used to measure the volume of air flowing into the Intake Manifold. It does this by heating an element in the path of the air flow. The heated element is cooled more rapidly as more air flows past. The current required to maintain the temperature of the sensor element is used as an indicator of the air mass flowing

past the element. Integrated electronics evaluate this measurement, making it possible to precisely determine the air volume flow rate.

WHEN MONITORED

Ignition on and engine running.

SET CONDITION

The Powertrain Control Module (PCM) detects a Mass Air Flow electrical fault or if the signal is implausible.

POSSIBLE CAUSES

Possible Causes
MASS AIR FLOW SENSOR HIGH OR LOW DTC PRESENT
INTAKE AIR SYSTEM LEAK OR RESTRICTION
MASS AIR FLOW SENSOR
POWERTRAIN CONTROL MODULE (PCM)

Always perform the Pre-Diagnostic Troubleshooting procedure before proceeding. Refer to PRE-DIAGNOSTIC TROUBLESHOOTING PROCEDURE - 2.2L DIESEL .

DIAGNOSTIC TEST

1. **DTC IS ACTIVE**
    1. Ignition on, engine not running.
    2. With the scan tool, clear DTCs in the Powertrain Control Module.
    3. Start the engine and allow it to reach normal operating temperature.
    4. With the scan tool, select View DTCs.

    Is the status Active for this DTC?

    Yes

    - Go To 2

    No

    - Perform the INTERMITTENT CONDITION - 2.2L Diesel

diagnostic procedure. Refer to **INTERMITTENT CONDITION - 2.2L DIESEL** .

2. **CHECK FOR A MASS AIR FLOW SENSOR HIGH OR LOW DTC PRESENT**
   1. With the scan tool, select View DTCs.

      Are there any Mass Air Flow Sensor circuit DTCs that are active ?

      Yes

      - Repair the Mass Air Flow Sensor circuit DTCs before continuing with this test procedure.
      - Perform the POWERTRAIN VERIFICATION TEST - 2.2L DIESEL. Refer to **PCM VERIFICATION TEST - 2.2L DIESEL** .

      No

      - Go To 3
3. **CHECK THE INTAKE SYSTEM**
   1. Turn the ignition off.
   2. Inspect the air filter for excessive dirt, soiling or other problems that may cause restricted air flow.
   3. Inspect all air intake and Turbocharger related hoses/tubes and connections.

      Were any leaks or restrictions found in the intake or Turbocharger systems?

      Yes

      - Repair the Intake or Turbocharger system as necessary.
      - Perform the POWERTRAIN VERIFICATION TEST - 2.2L DIESEL. Refer to **PCM VERIFICATION TEST - 2.2L DIESEL** .

      No

      - Go To 4

4. **MASS AIR FLOW SENSOR**
    1. Turn the ignition off.
    2. Connect the Powertrain Control Module connector.
    3. Replace the Mass Air Flow Sensor in accordance with the service information.
    4. Turn the ignition on.
    5. With the scan tool, clear DTCs.
    6. With the scan tool, navigate to Miscellaneous Functions and perform the MAF Sensor Replacement Initialization routine.
    7. Start the engine and allow it to reach normal operating temperature.
    8. With the scan tool, select View DTCs.

    Is the status Active for this DTC?

    Yes

    - Go To 5

    No

    - Test Complete.
    - Perform the POWERTRAIN VERIFICATION TEST - 2.2L DIESEL. Refer to **PCM VERIFICATION TEST - 2.2L DIESEL** .
5. **POWERTRAIN CONTROL MODULE**
    1. Using the wiring diagram/schematic as a guide, inspect the wiring and connectors between the Mass Air Flow Sensor and the Powertrain Control Module.
    2. Look for any chafed, pierced, pinched, or partially broken wires.
    3. Look for broken, bent, pushed out or corroded terminals.
    4. Monitor the scan tool data relative to this circuit and wiggle test the wiring and connectors.
    5. Look for the data to change or for the DTC to reset during the wiggle test.
    6. Perform any Technical Service Bulletins that may apply.

Were any problems found?

Yes

- Repair as necessary.
- Perform the POWERTRAIN VERIFICATION TEST - 2.2L DIESEL. Refer to **PCM VERIFICATION TEST - 2.2L DIESEL** .

No

- Replace the Powertrain Control Module in accordance with the service information. **Before removing the PCM, perform the "Replace PCM" routine in the Miscellaneous Functions tab of the scan tool.** . Refer to **REMOVAL** .
- Perform the POWERTRAIN VERIFICATION TEST - 2.2L DIESEL. Refer to **PCM VERIFICATION TEST - 2.2L DIESEL** .

P0102-MASS AIR FLOW SENSOR CIRCUIT LOW

For a complete wiring diagram, **refer to appropriate SYSTEM WIRING DIAGRAMS article** .

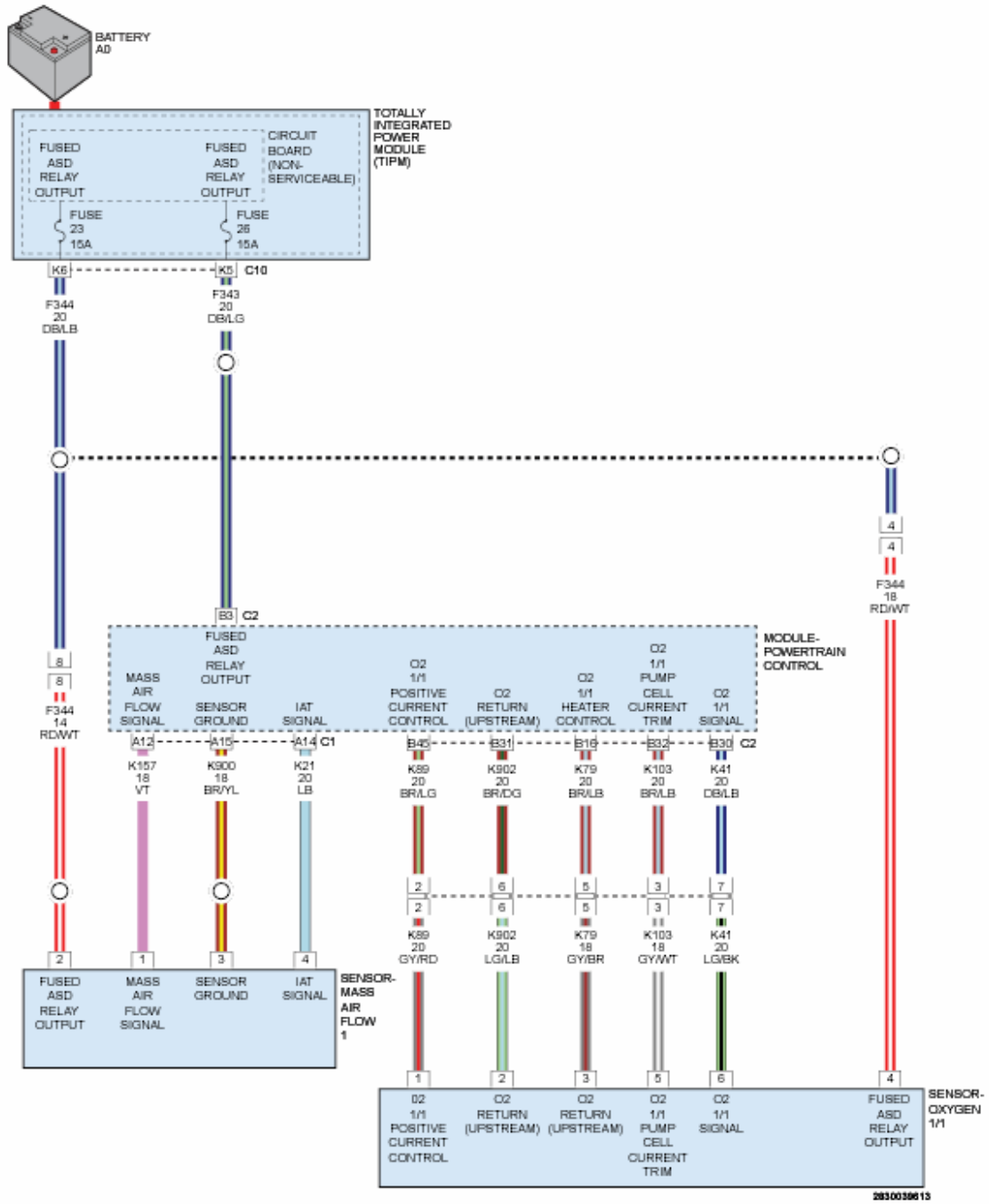

Fig. 10: O2 & MAF Sensors Circuit Diagram
Courtesy of CHRYSLER GROUP, LLC

THEORY OF OPERATION

The Mass Air Flow (MAF) Sensor is located near the air filter box. The MAF Sensor is used to measure the volume of air flowing into the Intake Manifold. It does this by heating an element in the path of the air flow. The heated element is cooled more rapidly as more air flows past. The current required to maintain the temperature of the sensor element is used as an indicator of the air mass flowing

past the element. Integrated electronics evaluate this measurement, making it possible to precisely determine the air volume flow rate.

WHEN MONITORED

No reference Voltage DTCs present. With the engine running and engine speed below 5100 RPM.

SET CONDITION

The Mass Air Flow Sensor digital signal period is below the valid operating range for 0.5 seconds.

POSSIBLE CAUSES

Possible Causes
(K157) MAF SENSOR SIGNAL CIRCUIT SHORTED TO GROUND
(K157) MAF SENSOR SIGNAL CIRCUIT SHORTED TO THE (K900) MAF SENSOR GROUND CIRCUIT
MASS AIR FLOW (MAF) SENSOR
POWERTRAIN CONTROL MODULE (PCM)

Always perform the Pre-Diagnostic Troubleshooting procedure before proceeding. Refer to PRE-DIAGNOSTIC TROUBLESHOOTING PROCEDURE - 2.2L DIESEL .

DIAGNOSTIC TEST

1. **DTC IS ACTIVE**
    1. Ignition on, engine not running.
    2. With the scan tool, clear DTCs in the Powertrain Control Module.
    3. Start the engine and allow it to reach normal operating temperature.
    4. With the scan tool, select View DTCs.

    Is the status Active for this DTC?

    Yes

    - Go To 2

    No

- Perform the INTERMITTENT CONDITION - 2.2L Diesel diagnostic procedure. Refer to **INTERMITTENT CONDITION - 2.2L DIESEL** .

2. **CHECK THE (K157) MASS AIR FLOW SENSOR SIGNAL CIRCUIT FOR A SHORT TO GROUND**
   1. Turn the ignition off.
   2. Disconnect the Mass Air Flow Sensor harness connector.
   3. Disconnect the Powertrain Control Module harness connector.
   4. Measure the resistance between ground and the (K157) Mass Air Flow Sensor Signal circuit at the Mass Air Flow Sensor harness connector.

   Is the resistance below 10k Ohms?

   Yes

   - Repair the (K157) Mass Air Flow Sensor Signal circuit for a short to ground.
   - Perform the POWERTRAIN VERIFICATION TEST - 2.2L DIESEL. Refer to **PCM VERIFICATION TEST - 2.2L DIESEL** .

   No

   - Go To 3

3. **CHECK FOR THE (K157) MAF SENSOR SIGNAL CIRCUIT SHORTED TO THE (K900) MAF SENSOR GROUND CIRCUIT**
   1. Measure the resistance between the (K157) MAF Sensor Signal circuit and the (K900) MAF Sensor Ground circuit at the MAF Sensor harness connector.

   Is the resistance above 10k Ohms?

   Yes

   - Go To 4

   No

   - Repair the (K157) MAF Sensor Signal circuit for a short to the

(K957) MAF Sensor Ground circuit.

- Perform the POWERTRAIN VERIFICATION TEST - 2.2L DIESEL. Refer to **PCM VERIFICATION TEST - 2.2L DIESEL** .

4. **MASS AIR FLOW SENSOR**
   1. Turn the ignition off.
   2. Connect the Powertrain Control Module connector.
   3. Replace the Mass Air Flow Sensor in accordance with the service information.
   4. Turn the ignition on.
   5. With the scan tool, Clear DTCs.
   6. With the scan tool, navigate to Miscellaneous Functions and perform the MAF Sensor Replacement Initialization routine.
   7. Start the engine and allow it to reach normal operating temperature.
   8. With the scan tool, select View DTCs.

   Is the status Active for this DTC?

   Yes

   - Go To 5

   No

   - Test Complete.
   - Perform the POWERTRAIN VERIFICATION TEST - 2.2L DIESEL. Refer to **PCM VERIFICATION TEST - 2.2L DIESEL** .

5. **POWERTRAIN CONTROL MODULE**
   1. Using the wiring diagram/schematic as a guide, inspect the wiring and connectors between the Mass Air Flow Sensor and the Powertrain Control Module.
   2. Look for any chafed, pierced, pinched, or partially broken wires.
   3. Look for broken, bent, pushed out or corroded terminals.
   4. Monitor the scan tool data relative to this circuit and wiggle test the wiring and connectors.

5. Look for the data to change or for the DTC to reset during the wiggle test.
6. Perform any Technical Service Bulletins that may apply.

Were any problems found?

Yes

- Repair as necessary.
- Perform the POWERTRAIN VERIFICATION TEST - 2.2L DIESEL. Refer to **PCM VERIFICATION TEST - 2.2L DIESEL** .

No

- Replace the Powertrain Control Module in accordance with the service information. **Before removing the PCM, perform the "Replace PCM" routine in the Miscellaneous Functions tab of the scan tool.** . Refer to **REMOVAL** .
- Perform the POWERTRAIN VERIFICATION TEST - 2.2L DIESEL. Refer to **PCM VERIFICATION TEST - 2.2L DIESEL** .

P0103-MASS AIR FLOW SENSOR CIRCUIT HIGH

For a complete wiring diagram, **refer to appropriate SYSTEM WIRING DIAGRAMS article** .

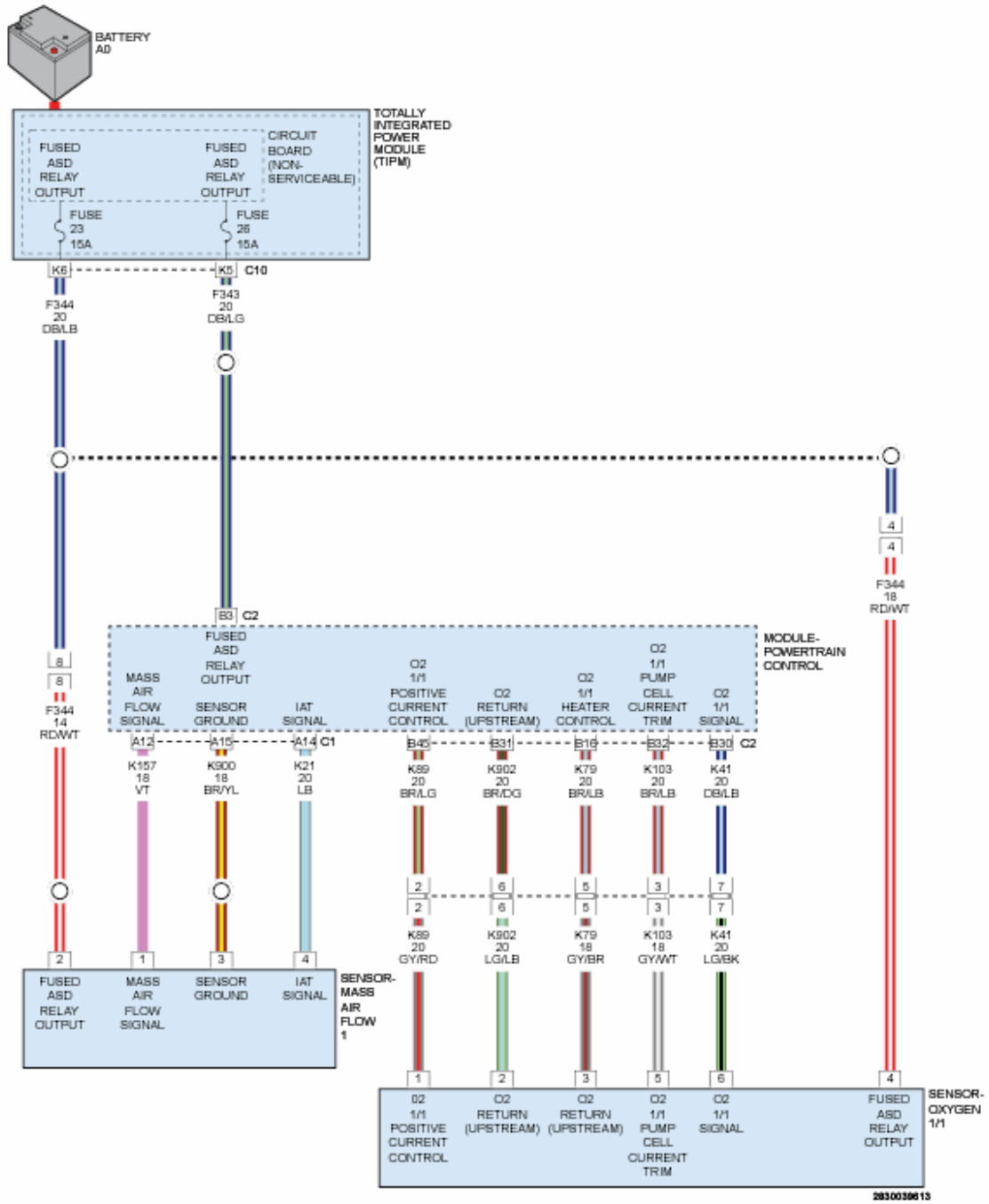

Fig. 11: O2 & MAF Sensors Circuit Diagram
Courtesy of CHRYSLER GROUP, LLC

THEORY OF OPERATION

The Mass Air Flow (MAF) Sensor is located near the air filter box. The MAF Sensor is used to measure the volume of air flowing into the Intake Manifold. It does this by heating an element in the path of the air flow. The heated element is cooled more rapidly as more air flows past. The current required to maintain the temperature of the sensor element is used as an indicator of the air mass flowing

past the element. Integrated electronics evaluate this measurement, making it possible to precisely determine the air volume flow rate.

WHEN MONITORED

Ignition on.

SET CONDITION

The Mass Air Flow Sensor digital signal period is above the valid operating range for 0.5 seconds.

POSSIBLE CAUSES

Possible Causes
(F344) FUSED MAIN RELAY OUTPUT CIRCUIT OPEN/HIGH RESISTANCE
(K157) MASS AIR FLOW SENSOR SIGNAL CIRCUIT OPEN/HIGH RESISTANCE
(K157) MASS AIR FLOW SENSOR SIGNAL CIRCUIT SHORTED TO VOLTAGE
(K900) MASS AIR FLOW SENSOR GROUND CIRCUIT OPEN/HIGH RESISTANCE
MASS AIR FLOW SENSOR
POWERTRAIN CONTROL MODULE (PCM)

Always perform the Pre-Diagnostic Troubleshooting procedure before proceeding. Refer to PRE-DIAGNOSTIC TROUBLESHOOTING PROCEDURE - 2.2L DIESEL .

DIAGNOSTIC TEST

1. **DTC IS ACTIVE**

NOTE: If DTC P0652 or P0653 is present with this DTC, diagnose DTCs P0652 or P0653 before diagnosing this DTC.

1. Ignition on, engine not running.
2. With the scan tool, Clear DTCs in the Powertrain Control Module.

3. Start the engine and allow it to reach normal operating temperature.
4. With the scan tool, select View DTCs.

   Is the status Active for this DTC?

   Yes

   - Go To 2

   No

   - Perform the INTERMITTENT CONDITION - 2.2L Diesel diagnostic procedure. Refer to **INTERMITTENT CONDITION - 2.2L DIESEL** .

2. **CHECK THE (F344) FUSED MAIN RELAY OUTPUT CIRCUIT FOR AN OPEN/HIGH RESISTANCE**
   1. Turn the ignition off.
   2. Disconnect the Mass Air Flow Sensor harness connector.
   3. Turn the ignition on.
   4. Using a 12-volt test light connected to ground, check the (F344) Fused Main Relay Output circuit at the Mass Air Flow Sensor harness connector.

      NOTE: The test light should be illuminated and bright. Compare the brightness to that of a direct connection to the battery.

      Is the test light illuminated and bright?

      Yes

      - Go To 3

      No

      - Repair the (F344) Fused Main Relay Output circuit for an open circuit or short to ground.
      - Perform the POWERTRAIN VERIFICATION TEST - 2.2L DIESEL. Refer to **PCM VERIFICATION TEST - 2.2L**

DIESEL .

3. **CHECK THE (K157) MASS AIR FLOW SENSOR SIGNAL CIRCUIT FOR A SHORT TO VOLTAGE**
   1. Measure the voltage on the (K157) MAF Sensor Signal circuit at the MAF Sensor harness connector.

      Is there any voltage present?

      Yes

      - Repair the (K157) MAF Sensor Signal circuit for a short to voltage.
      - Perform the POWERTRAIN VERIFICATION TEST - 2.2L DIESEL. Refer to **PCM VERIFICATION TEST - 2.2L DIESEL** .

      No

      - Go To 4
4. **CHECK THE (K157) MASS AIR FLOW SENSOR SIGNAL CIRCUIT FOR AN OPEN/HIGH RESISTANCE**
   1. Turn the ignition off.
   2. Disconnect the Powertrain Control Module C1 harness connector.
   3. Measure the resistance of the (K157) Mass Air Flow Sensor Signal circuit between the Mass Air Flow Sensor connector and the Powertrain Control Module C1 harness connector.

      Is the resistance below 5.0 Ohms?

      Yes

      - Go To 5

      No

      - Repair the (K157) Mass Air Flow Sensor Signal circuit for an open or high resistance.
      - Perform the POWERTRAIN VERIFICATION TEST - 2.2L DIESEL. Refer to **PCM VERIFICATION TEST - 2.2L**

DIESEL .

5. **MASS AIR FLOW SENSOR**
   1. Replace the Mass Air Flow Sensor in accordance with the service information.
   2. Reconnect the Mass Air Flow Sensor harness connector.
   3. Reconnect the Powertrain Control Module C1 harness connector.
   4. Turn the ignition on.
   5. With the scan tool, Clear DTCs.
   6. With the scan tool, navigate to Miscellaneous Functions and perform the MAF Sensor Replacement Initialization routine.
   7. Start the engine and allow it to reach normal operating temperature.
   8. With the scan tool, select View DTCs.

      Is the status Active for this DTC?

      Yes

      - Go To 6

      No

      - Test Complete.
      - Perform the POWERTRAIN VERIFICATION TEST - 2.2L DIESEL. Refer to **PCM VERIFICATION TEST - 2.2L DIESEL** .
6. **POWERTRAIN CONTROL MODULE**
   1. Using the wiring diagram/schematic as a guide, inspect the wiring and connectors between the Mass Air Flow Sensor and the Powertrain Control Module.
   2. Look for any chafed, pierced, pinched, or partially broken wires.
   3. Look for broken, bent, pushed out or corroded terminals.
   4. Monitor the scan tool data relative to this circuit and wiggle test the wiring and connectors.
   5. Look for the data to change or for the DTC to reset during the wiggle test.
   6. Perform any Technical Service Bulletins that may apply.

Were any problems found?

Yes

- Repair as necessary.
- Perform the POWERTRAIN VERIFICATION TEST - 2.2L DIESEL. Refer to **PCM VERIFICATION TEST - 2.2L DIESEL** .

No

- Replace the Powertrain Control Module in accordance with the service information. **Before removing the PCM, perform the "Replace PCM" routine in the Miscellaneous Functions tab of the scan tool.** . Refer to **REMOVAL** .
- Perform the POWERTRAIN VERIFICATION TEST - 2.2L DIESEL. Refer to **PCM VERIFICATION TEST - 2.2L DIESEL** .

P0105-ATMOSPHERIC PRESSURE/BAROMETRIC PRESSURE SENSOR CIRCUIT

For a complete wiring diagram, **refer to appropriate SYSTEM WIRING DIAGRAMS article** .

WHEN MONITORED

At ignition on, engine not running.

SET CONDITION

The Intake Air Pressure Sensor Signal is above 4.8 Volts or below 0.19 of a Volt for 0.3 of a second.

POSSIBLE CAUSES

Possible Causes
INTAKE AIR PRESSURE SENSOR HIGH OR LOW DTC PRESENT
INTAKE AIR PRESSURE SENSOR
POWERTRAIN CONTROL MODULE (PCM)

Always perform the Pre-Diagnostic Troubleshooting procedure before

proceeding. Refer to PRE-DIAGNOSTIC TROUBLESHOOTING PROCEDURE - 2.2L DIESEL .

DIAGNOSTIC TEST

1. **CHECK FOR AN INTAKE AIR PRESSURE SENSOR HIGH OR LOW DTC PRESENT**
   1. Ignition on, engine not running.
   2. With the scan tool, select View DTCs.

   Are there any Intake Air Pressure Sensor circuit DTCs that are active ?

   Yes

   - Repair the Intake Air Pressure Sensor circuit DTCs before continuing with this test procedure.
   - Perform the POWERTRAIN VERIFICATION TEST - 2.2L DIESEL. Refer to **PCM VERIFICATION TEST - 2.2L DIESEL** .

   No

   - Go To 2
2. **CHECK THE INTAKE AIR PRESSURE SENSOR**
   1. Ignition on, engine not running.
   2. With the scan tool, select Data Display and compare the readings of the Intake Air Pressure Sensor to the BARO Sensor.

   NOTE: With the engine not running the Intake Air Pressure Sensor should read approximately the same as the BARO Sensor.

   Do the values of the Intake Air Pressure Sensor and BARO Sensor read approximately the same?

   Yes

   - Perform the INTERMITTENT CONDITION diagnostic procedure. Refer to **INTERMITTENT CONDITION - 2.2L DIESEL** .

No

- Go To 3

3. **POWERTRAIN CONTROL MODULE**
   1. Turn the ignition off.
   2. Replace the Intake Air Pressure Sensor in accordance with the service information.
   3. Turn the ignition on, engine not running.
   4. With the scan tool, erase DTCs.
   5. Leave the ignition on for up to five minutes.

   Did the DTC return?

   Yes

   - Replace the Powertrain Control Module. **Before removing the PCM, perform the "Replace PCM" routine in the Miscellaneous Functions tab of the scan tool.** . Refer to **REMOVAL** .
   - Perform the POWERTRAIN VERIFICATION TEST - 2.2L DIESEL. Refer to **PCM VERIFICATION TEST - 2.2L DIESEL** .

   No

   - Test complete.
   - Perform the POWERTRAIN VERIFICATION TEST - 2.2L DIESEL. Refer to **PCM VERIFICATION TEST - 2.2L DIESEL** .

P0106-MANIFOLD ABSOLUTE PRESSURE SENSOR PERFORMANCE

For a complete wiring diagram, **refer to appropriate SYSTEM WIRING DIAGRAMS article** .

THEORY OF OPERATION

The Intake Air Pressure Sensor is located between the air filter box and the Intake Manifold. The Intake Air Pressure Sensor is used to measure the pressure

of the air entering into the Intake Manifold. It uses this measurement, along with other sensor inputs, to determine how much fuel should be injected as well as to help in determining a restricted air filter.

WHEN MONITORED

With the ignition on.

SET CONDITION

The Powertrain Control Module (PCM) detects that the Intake Air Pressure Sensor signal is implausible.

POSSIBLE CAUSES

Possible Causes
HIGH RESISTANCE IN THE (K68) INTAKE AIR PRESSURE SENSOR CIRCUIT
HIGH RESISTANCE IN THE (K915) SENSOR GROUND CIRCUIT
INTAKE AIR PRESSURE SENSOR
POWERTRAIN CONTROL MODULE (PCM)

Always perform the Pre-Diagnostic Troubleshooting procedure before proceeding. Refer to PRE-DIAGNOSTIC TROUBLESHOOTING PROCEDURE - 2.2L DIESEL .

DIAGNOSTIC TEST

1. **DTC IS ACTIVE**

   NOTE: If there are any sensor reference voltage DTCs present, repair those before proceeding with this test.

   1. Ignition on, engine not running.
   2. With the scan tool, clear DTCs in the Powertrain Control Module.
   3. Start the engine.
   4. With the scan tool, select View DTCs.

   Did this DTC return?

   Yes

- Go To 2

No

- Perform the INTERMITTENT CONDITION - 2.2L Diesel diagnostic procedure. Refer to **INTERMITTENT CONDITION - 2.2L DIESEL** .

2. **CHECK FOR HIGH RESISTANCE IN THE (K68) INTAKE AIR PRESSURE SENSOR CIRCUIT**
   1. Turn the ignition off.
   2. Disconnect the Intake Air Pressure Sensor harness connector.
   3. Disconnect the PCM C1 harness connector.
   4. Turn the ignition on.
   5. Measure the resistance of the (K68) Intake Air Pressure Sensor Signal circuit between the Intake Air Pressure Sensor harness connector and the PCM C1 harness connector.

   Is the resistance below 5.0 Ohms?

   Yes

   - Go To 3

   No

   - Repair the (K68) Intake Air Pressure Sensor Signal circuit for an open or high resistance.
   - Perform the POWERTRAIN VERIFICATION TEST - 2.2L DIESEL. Refer to **PCM VERIFICATION TEST - 2.2L DIESEL** .

3. **CHECK FOR HIGH RESISTANCE IN THE (K915) SENSOR GROUND CIRCUIT**
   1. Measure the resistance of the (K915) Sensor Ground circuit between the Intake Air Pressure Sensor harness connector and the PCM C1 harness connector.

   Is the resistance below 5.0 Ohms?

Yes

- Go To 4

No

- Repair the (K915) Sensor Ground circuit for an open or high resistance.
- Perform the POWERTRAIN VERIFICATION TEST - 2.2L DIESEL. Refer to **PCM VERIFICATION TEST - 2.2L DIESEL** .

4. **CHECK THE INTAKE AIR PRESSURE SENSOR**
   1. Reconnect the PCM C1 harness connector.
   2. Reconnect the Intake Air Pressure Sensor harness connector.
   3. Turn the ignition on.
   4. With the scan tool, clear DTCs.
   5. Turn the ignition off.
   6. Disconnect the Intake Air Pressure Sensor harness connector.
   7. Connect a jumper between the (K68) Intake Air Pressure Sensor Signal circuit and the (F856) Intake Air Pressure Sensor 5-Volt Supply circuit at the Intake Air Pressure Sensor harness connector.

      NOTE: Be careful not to spread the terminals in the connector.

   8. Turn the ignition on.
   9. With the scan tool, select View DTCs.

      Does the DTC P0108-MANIFOLD ABSOLUTE PRESSURE SENSOR CIRCUIT HIGH display as active?

      Yes

      - Replace the Intake Air Pressure Sensor in accordance with the service information.
      - Perform the POWERTRAIN VERIFICATION TEST - 2.2L DIESEL. Refer to **PCM VERIFICATION TEST - 2.2L**

DIESEL .

No

- Go To 5

5. **POWERTRAIN CONTROL MODULE**
   1. Using the wiring diagram/schematic as a guide, inspect the wiring and connectors between the Intake Air Pressure Sensor and the Powertrain Control Module.
   2. Look for any chafed, pierced, pinched, or partially broken wires.
   3. Look for broken, bent, pushed out or corroded terminals.
   4. Monitor the scan tool data relative to this circuit and wiggle test the wiring and connectors.
   5. Look for the data to change or for the DTC to reset during the wiggle test.
   6. Perform any Technical Service Bulletins that may apply.

   Were any problems found?

   Yes

   - Repair as necessary.
   - Perform the POWERTRAIN VERIFICATION TEST - 2.2L DIESEL. Refer to **PCM VERIFICATION TEST - 2.2L DIESEL** .

   No

   - Replace the Powertrain Control Module in accordance with the service information. **Before removing the PCM, perform the "Replace PCM" routine in the Miscellaneous Functions tab of the scan tool.** . Refer to **REMOVAL** .
   - Perform the POWERTRAIN VERIFICATION TEST - 2.2L DIESEL. Refer to **PCM VERIFICATION TEST - 2.2L DIESEL** .

P0107-MANIFOLD ABSOLUTE PRESSURE SENSOR CIRCUIT LOW

For a complete wiring diagram, **refer to appropriate SYSTEM WIRING**

DIAGRAMS article .

THEORY OF OPERATION

The Intake Air Pressure Sensor is located between the air filter box and the Intake Manifold. The Intake Air Pressure Sensor is used to measure the pressure of the air entering into the Intake Manifold. It uses this measurement, along with other sensor inputs, to determine how much fuel should be injected as well as to help in determining a restricted air filter.

WHEN MONITORED

With the ignition on.

SET CONDITION

The (K68) Intake Air Pressure Sensor Signal circuit is below the valid operating range for 0.2 seconds.

POSSIBLE CAUSES

Possible Causes
(K354) DIFFERENTIAL PRESSURE SENSOR 5-VOLT SUPPLY CIRCUIT SHORTED TO GROUND
(F856) 5-VOLT SUPPLY CIRCUIT SHORTED TO GROUND
(F856) 5-VOLT SUPPLY CIRCUIT OPEN/HIGH RESISTANCE
(K68) INTAKE AIR PRESSURE SENSOR SIGNAL CIRCUIT OPEN/HIGH RESISTANCE
(K68) INTAKE AIR PRESSURE SENSOR SIGNAL CIRCUIT SHORTED TO GROUND
INTAKE AIR PRESSURE SENSOR
POWERTRAIN CONTROL MODULE (PCM)

Always perform the Pre-Diagnostic Troubleshooting procedure before proceeding. Refer to PRE-DIAGNOSTIC TROUBLESHOOTING PROCEDURE - 2.2L DIESEL .

DIAGNOSTIC TEST

1. **DTC IS ACTIVE**

NOTE: If there are any 5-Volt reference DTCs present, repair those DTCs before proceeding with this test.

1. Ignition on, engine not running.
2. With the scan tool, clear DTCs in the Powertrain Control Module.
3. Start the engine.
4. With the scan tool, select View DTCs.

   Did this DTC reset?

   Yes

   - Go To 2

   No

   - Perform the INTERMITTENT CONDITION - 2.2L Diesel diagnostic procedure. Refer to **INTERMITTENT CONDITION - 2.2L DIESEL** .

2. **CHECK THE (F586) 5-VOLT SUPPLY CIRCUIT FOR AN OPEN/HIGH RESISTANCE**
   1. Turn the ignition off.
   2. Disconnect the Intake Air Pressure Sensor harness connector.
   3. Disconnect the Powertrain Control Module C1 harness connector.
   4. Measure the resistance of the (F586) 5-Volt Supply circuit between the Intake Air Pressure Sensor harness connector and the Powertrain Control Module C1 harness connector.

      Is the resistance below 5.0 Ohms?

      Yes

      - Go To 3

      No

      - Repair the (F586) 5-Volt Supply circuit for an circuit or high resistance.

- Perform the POWERTRAIN VERIFICATION TEST - 2.2L DIESEL. Refer to **PCM VERIFICATION TEST - 2.2L DIESEL** .

3. **CHECK THE (K68) INTAKE AIR PRESSURE SENSOR SIGNAL CIRCUIT FOR AN OPEN/HIGH RESISTANCE**
   1. Measure the resistance of the (K68) Intake Air Pressure Sensor Signal circuit between the Intake Air Pressure Sensor harness connector and the Powertrain Control Module C1 harness connector.

      Is the resistance below 5.0 Ohms?

      Yes

      - Go To 4

      No

      - Repair the (K68) Intake Air Pressure Sensor Signal circuit for an circuit or high resistance.
      - Perform the POWERTRAIN VERIFICATION TEST - 2.2L DIESEL. Refer to **PCM VERIFICATION TEST - 2.2L DIESEL** .
4. **CHECK THE (K68) INTAKE AIR PRESSURE SENSOR SIGNAL CIRCUIT FOR A SHORT TO GROUND**
   1. Measure the resistance between ground and the (K68) Intake Air Pressure Sensor Signal circuit at the Intake (K68) Intake Air Pressure Sensor harness connector.

      Is the resistance below 10k Ohms?

      Yes

      - Repair the (K68) Intake Air Pressure Sensor Signal circuit for a short to ground.
      - Perform the POWERTRAIN VERIFICATION TEST - 2.2L DIESEL. Refer to **PCM VERIFICATION TEST - 2.2L DIESEL** .

      No

- Go To 5

5. **CHECK THE INTAKE AIR PRESSURE SENSOR**
   1. Reconnect the Powertrain Control Module C1 harness connector.
   2. Reconnect the Intake Air Pressure Sensor harness connector.
   3. Turn the ignition on.
   4. With the scan tool, Clear DTCs.
   5. Turn the ignition off.
   6. Disconnect the Intake Air Pressure Sensor harness connector.
   7. Connect a jumper between the (K68) Intake Air Pressure Sensor Signal circuit and the (F856) Intake Air Pressure Sensor 5-Volt Supply circuit at the Intake Air Pressure Sensor harness connector.

      NOTE: Be careful not to spread the terminals in the connector.

   8. Turn the ignition on.
   9. With the scan tool, select View DTCs.

      Does the DTC P0108-MANIFOLD ABSOLUTE PRESSURE SENSOR HIGH display as active?

      Yes

      - Replace the Intake Air Pressure Sensor in accordance with the service information.
      - Perform the POWERTRAIN VERIFICATION TEST - 2.2L DIESEL. Refer to **PCM VERIFICATION TEST - 2.2L DIESEL** .

      No

      - Go To 6

6. **POWERTRAIN CONTROL MODULE**
   1. Using the wiring diagram/schematic as a guide, inspect the wiring and connectors between the Intake Air Pressure Sensor and the Powertrain Control Module.
   2. Look for any chafed, pierced, pinched, or partially broken wires.

3. Look for broken, bent, pushed out or corroded terminals.
4. Monitor the scan tool data relative to this circuit and wiggle test the wiring and connectors.
5. Look for the data to change or for the DTC to reset during the wiggle test.
6. Perform any Technical Service Bulletins that may apply.

Were any problems found?

Yes

- Repair as necessary.
- Perform the POWERTRAIN VERIFICATION TEST - 2.2L DIESEL. Refer to **PCM VERIFICATION TEST - 2.2L DIESEL** .

No

- Replace the Powertrain Control Module in accordance with the service information. **Before removing the PCM, perform the "Replace PCM" routine in the Miscellaneous Functions tab of the scan tool.** . Refer to **REMOVAL** .
- Perform the POWERTRAIN VERIFICATION TEST - 2.2L DIESEL. Refer to **PCM VERIFICATION TEST - 2.2L DIESEL** .

P0108-MANIFOLD ABSOLUTE PRESSURE SENSOR CIRCUIT HIGH

For a complete wiring diagram, **refer to appropriate SYSTEM WIRING DIAGRAMS article** .

THEORY OF OPERATION

The Intake Air Pressure Sensor is located between the air filter box and the Intake Manifold. The Intake Air Pressure Sensor is used to measure the pressure of the air entering into the Intake Manifold. It uses this measurement, along with other sensor inputs, to determine how much fuel should be injected as well as to help in determining a restricted air filter.

WHEN MONITORED

With the ignition on.

SET CONDITION

The (K68) Intake Air Pressure Sensor Signal circuit is above the valid operating range for 0.2 seconds.

POSSIBLE CAUSES

Possible Causes
(K354) DIFFERENTIAL PRESSURE SENSOR 5-VOLT SUPPLY CIRCUIT SHORTED TO VOLTAGE
(F856) 5-VOLT SUPPLY CIRCUIT SHORTED TO VOLTAGE
(K68) INTAKE AIR PRESSURE SENSOR SIGNAL CIRCUIT SHORTED TO VOLTAGE
(K68) INTAKE AIR PRESSURE SENSOR SIGNAL CIRCUIT SHORTED TO THE (F856) INTAKE AIR PRESSURE SENSOR 5-VOLT SUPPLY CIRCUIT
(K915) SENSOR GROUND CIRCUIT OPEN/HIGH RESISTANCE
INTAKE AIR PRESSURE SENSOR
POWERTRAIN CONTROL MODULE (PCM)

Always perform the Pre-Diagnostic Troubleshooting procedure before proceeding. Refer to PRE-DIAGNOSTIC TROUBLESHOOTING PROCEDURE - 2.2L DIESEL .

DIAGNOSTIC TEST

1. **DTC IS ACTIVE**

   NOTE: If there are 5-Volt reference DTCs present, repair those DTCs before proceeding with this test.

   1. Ignition on, engine not running.
   2. With the scan tool, clear DTCs in the Powertrain Control Module.
   3. Start the engine.
   4. With the scan tool, select View DTCs.

   Did this DTC reset?

Yes

- Go To 2

No

- Perform the INTERMITTENT CONDITION - 2.2L Diesel diagnostic procedure. Refer to **INTERMITTENT CONDITION - 2.2L DIESEL** .

2. **CHECK THE (K68) INTAKE AIR PRESSURE SENSOR SIGNAL CIRCUIT FOR A SHORT TO VOLTAGE**
   1. Turn the ignition off.
   2. Disconnect the Intake Air Pressure Sensor harness connector.
   3. Turn the ignition on.
   4. Measure the voltage of the (K68) Intake Air Pressure Sensor Signal circuit at the Intake Air Pressure Sensor harness connector.

   Is there any voltage present?

   Yes

   - Repair the (K68) Intake Air Pressure Sensor Signal circuit for a short to voltage.
   - Perform the POWERTRAIN VERIFICATION TEST - 2.2L DIESEL. Refer to **PCM VERIFICATION TEST - 2.2L DIESEL** .

   No

   - Go To 3

3. **CHECK FOR THE (K68) INTAKE AIR PRESSURE SENSOR SIGNAL CIRCUIT SHORTED TO THE (F856) INTAKE AIR PRESSURE SENSOR 5-VOLT SUPPLY CIRCUIT**
   1. Turn the ignition off.
   2. Disconnect the PCM C1 harness connector.
   3. Measure the resistance between the (K68) Intake Air Pressure Sensor Signal circuit and the (F856) Intake Air Pressure Sensor 5-Volt Supply circuit at the Intake Air Pressure Sensor harness connector.

Is the resistance below 10k Ohms?

Yes

- Repair the short between the (K68) Intake Air Pressure Sensor Signal circuit and the (F856) Intake Air Pressure Sensor 5-Volt Supply circuit.
- Perform the POWERTRAIN VERIFICATION TEST - 2.2L DIESEL. Refer to **PCM VERIFICATION TEST - 2.2L DIESEL** .

No

- Go To 4

4. **CHECK THE (K915) SENSOR GROUND CIRCUIT FOR AN OPEN/HIGH RESISTANCE**
   1. Measure the resistance of the (K915) Sensor Ground circuit between the Intake Air Pressure Sensor harness connector and the Powertrain Control Module C1 harness connector.

      Is the resistance below 5.0 Ohms?

      Yes

      - Go To 5

      No

      - Repair the (K915) Sensor Ground circuit for an open or high resistance.
      - Perform the POWERTRAIN VERIFICATION TEST - 2.2L DIESEL. Refer to **PCM VERIFICATION TEST - 2.2L DIESEL** .
5. **CHECK THE INTAKE AIR PRESSURE SENSOR**
   1. Reconnect the Intake Air Pressure Sensor harness connector.
   2. Reconnect the PCM C1 harness connector.
   3. Turn the ignition on.
   4. With the scan tool, Clear DTCs.

5. Turn the ignition off.
6. Disconnect the Intake Air Pressure Sensor harness connector.
7. Turn the ignition on.
8. With the scan tool, view DTCs.

   Does the DTC P0107-MANIFOLD ABSOLUTE PRESSURE SENSOR CIRCUIT LOW display as active?

   Yes

   - Replace the Intake Air Pressure Sensor in accordance with the service information.
   - Perform the POWERTRAIN VERIFICATION TEST - 2.2L DIESEL. Refer to **PCM VERIFICATION TEST - 2.2L DIESEL** .

   No

   - Go To 6

6. **POWERTRAIN CONTROL MODULE**
   1. Using the wiring diagram/schematic as a guide, inspect the wiring and connectors between the Intake Air Pressure Sensor and the Powertrain Control Module.
   2. Look for any chafed, pierced, pinched, or partially broken wires.
   3. Look for broken, bent, pushed out or corroded terminals.
   4. Monitor the scan tool data relative to this circuit and wiggle test the wiring and connectors.
   5. Look for the data to change or for the DTC to reset during the wiggle test.
   6. Perform any Technical Service Bulletins that may apply.

   Were any problems found?

   Yes

   - Repair as necessary.
   - Perform the POWERTRAIN VERIFICATION TEST - 2.2L

DIESEL. Refer to **PCM VERIFICATION TEST - 2.2L DIESEL** .

No

- Replace the Powertrain Control Module in accordance with the service information. **Before removing the PCM, perform the "Replace PCM" routine in the Miscellaneous Functions tab of the scan tool.** . Refer to **REMOVAL** .
- Perform the POWERTRAIN VERIFICATION TEST - 2.2L DIESEL. Refer to **PCM VERIFICATION TEST - 2.2L DIESEL** .

P0111-INTAKE AIR TEMPERATURE SENSOR 1 PERFORMANCE

For a complete wiring diagram, **refer to appropriate SYSTEM WIRING DIAGRAMS article** .

THEORY OF OPERATION

The Mass Air Flow Sensor and Intake Air Temperature Sensor 1 are combined into one sensor. The Intake Air Temperature Sensor 1 is used by the Powertrain Control Module to sense the temperature of the air entering the intake system. The Intake Air Temperature Sensor functions as a typical 5-Volt sensor.

WHEN MONITORED

Battery voltage above 10.5 Volts, not in power latch phase, ASD/Main Relay on for 0.095 seconds, and Starter Relay off for 0.095 seconds.

SET CONDITION

The Powertrain Control Module detects that the (K21) Intake Air Temperature Sensor 1 signal is implausible.

POSSIBLE CAUSES

Possible Causes
(K21) INTAKE AIR TEMPERATURE SENSOR 1 SIGNAL CIRCUIT INTERMITTENT
HIGH RESISTANCE IN THE (K21) INTAKE AIR TEMPERATURE SENSOR 1 SIGNAL CIRCUIT

HIGH RESISTANCE IN THE (K900) SENSOR GROUND CIRCUIT
MASS AIR FLOW SENSOR
POWERTRAIN CONTROL MODULE (PCM)

Always perform the Pre-Diagnostic Troubleshooting procedure before proceeding. Refer to PRE-DIAGNOSTIC TROUBLESHOOTING PROCEDURE - 2.2L DIESEL .

DIAGNOSTIC TEST

1. **DTC IS ACTIVE**

   NOTE: If there are any 5-Volt reference DTCs present, repair those DTCs before proceeding with this test.

   1. Ignition on, engine not running.
   2. With the scan tool, clear DTCs in the Powertrain Control Module.
   3. Start the engine.
   4. With the scan tool, select View DTCs.

   Did this DTC reset?

   Yes

   - Go To 2

   No

   - Perform the INTERMITTENT CONDITION diagnostic procedure. Refer to **INTERMITTENT CONDITION - 2.2L DIESEL** .

2. **CHECK FOR HIGH RESISTANCE IN THE (K21) INTAKE AIR TEMPERATURE SENSOR 1 SIGNAL CIRCUIT**
   1. Turn the ignition off.
   2. Disconnect the Mass Air Flow Sensor harness connector.
   3. Disconnect the PCM C1 harness connector.
   4. Turn the ignition on.
   5. Measure the resistance of the (K21) Intake Air Temperature Sensor 1 Signal circuit between the Mass Air Flow Sensor harness connector and

the PCM C1 harness connector.

Is the resistance below 5.0 Ohms?

Yes

- Go To 3

No

- Repair the (K21) Intake Air Temperature Sensor 1 Signal circuit for an open or high resistance.
- Perform the POWERTRAIN VERIFICATION TEST - 2.2L DIESEL. Refer to **PCM VERIFICATION TEST - 2.2L DIESEL** .

3. **CHECK FOR HIGH RESISTANCE IN THE (K900) SENSOR GROUND CIRCUIT**
   1. Measure the resistance of the (K900) Sensor Ground circuit between the Mass Air Flow Sensor harness connector and the PCM C1 harness connector.

      Is the resistance below 5.0 Ohms?

      Yes

      - Go To 4

      No

      - Repair the (K900) Sensor Ground circuit for an open or high resistance.
      - Perform the POWERTRAIN VERIFICATION TEST - 2.2L DIESEL. Refer to **PCM VERIFICATION TEST - 2.2L DIESEL** .
4. **MASS AIR FLOW SENSOR**
   1. Turn the ignition off.
   2. Reconnect the PCM C1 harness connector.
   3. Reconnect the Mass Air Flow Sensor harness connector.
   4. Turn the ignition on.

5. With the scan tool, clear DTCs.
6. Turn the ignition off.
7. Disconnect the Mass Air Flow Sensor harness connector.
8. With the scan tool, view DTCs.

   Does the DTC P0112-INTAKE AIR TEMPERATURE SENSOR CIRCUIT LOW display as active?

   Yes

   - Replace the Mass Air Flow Sensor in accordance with the service information. With the scan tool, navigate to Miscellaneous Functions and perform the MAF Sensor Replacement Initialization routine.
   - Perform the POWERTRAIN VERIFICATION TEST - 2.2L DIESEL. Refer to **PCM VERIFICATION TEST - 2.2L DIESEL** .

   No

   - Go To 5

5. **POWERTRAIN CONTROL MODULE**
   1. Using the wiring diagram/schematic as a guide, inspect the wiring and connectors between the Mass Air Flow Sensor and the Powertrain Control Module.
   2. Look for any chafed, pierced, pinched, or partially broken wires.
   3. Look for broken, bent, pushed out or corroded terminals.
   4. Monitor the scan tool data relative to this circuit and wiggle test the wiring and connectors.
   5. Look for the data to change or for the DTC to reset during the wiggle test.
   6. Perform any Technical Service Bulletins that may apply.

   Were any problems found?

   Yes

   - Repair as necessary.

- Perform the POWERTRAIN VERIFICATION TEST - 2.2L DIESEL. Refer to **PCM VERIFICATION TEST - 2.2L DIESEL** .

No

- Replace the Powertrain Control Module. **Before removing the PCM, perform the "Replace PCM" routine in the Miscellaneous Functions tab of the scan tool.** . Refer to **REMOVAL** .
- Perform the POWERTRAIN VERIFICATION TEST - 2.2L DIESEL. Refer to **PCM VERIFICATION TEST - 2.2L DIESEL** .

P0112-INTAKE AIR TEMPERATURE SENSOR 1 CIRCUIT LOW

For a complete wiring diagram, **refer to appropriate SYSTEM WIRING DIAGRAMS article** .

THEORY OF OPERATION

The Mass Air Flow Sensor and Intake Air Temperature Sensor 1 are combined into one sensor. The two sensors use the same 5-Volt supply and sensor ground circuits. The Intake Air Temperature Sensor 1 is used by the Powertrain Control Module to sense the temperature of the air entering the intake system. The Intake Air Temperature Sensor functions as a typical 5-Volt sensor.

WHEN MONITORED

Battery voltage above 10.5 Volts, not in power latch phase, ASD/Main Relay on for 0.095 of a second, and Starter Relay off for 0.095 of a second.

SET CONDITION

The Powertrain Control Module detects that the (K21) Intake Air Temperature Sensor 1 signal is below 0.14 of a Volt for two seconds.

POSSIBLE CAUSES

Possible Causes
(K21) INTAKE AIR TEMPERATURE SENSOR 1 SIGNAL CIRCUIT SHORTED TO GROUND

(K21) INTAKE AIR TEMPERATURE SENSOR 1 SIGNAL CIRCUIT SHORTED TO THE (K900) SENSOR GROUND
MASS AIR FLOW SENSOR
POWERTRAIN CONTROL MODULE (PCM)

Always perform the Pre-Diagnostic Troubleshooting procedure before proceeding. Refer to PRE-DIAGNOSTIC TROUBLESHOOTING PROCEDURE - 2.2L DIESEL .

DIAGNOSTIC TEST

1. **DTC IS ACTIVE**

   NOTE: If there are any sensor reference voltage DTCs present, repair those DTCs before proceeding with this test.

   1. Ignition on, engine not running.
   2. With the scan tool, clear DTCs in the Powertrain Control Module.
   3. Start the engine.
   4. With the scan tool, select View DTCs.

   Did this DTC reset?

   Yes

   - Go To 2

   No

   - Perform the INTERMITTENT CONDITION diagnostic procedure. Refer to **INTERMITTENT CONDITION - 2.2L DIESEL** .

2. **CHECK THE (K21) INTAKE AIR TEMPERATURE SENSOR 1 SIGNAL CIRCUIT FOR A SHORT TO GROUND**
   1. Turn the ignition off.
   2. Disconnect the Mass Air Flow Sensor harness connector.
   3. Disconnect the PCM C1 harness connector.
   4. Measure the resistance between ground and the (K21) Intake Air

Temperature Sensor 1 Signal circuit at the Mass Air Flow Sensor harness connector.

Is the resistance below 10k Ohms?

Yes

- Repair the (K21) Intake Air Temperature Sensor 1 Signal circuit a short to ground.
- Perform the POWERTRAIN VERIFICATION TEST - 2.2L DIESEL. Refer to **PCM VERIFICATION TEST - 2.2L DIESEL** .

No

- Go To 3

3. **CHECK FOR THE (K21) INTAKE AIR TEMPERATURE SENSOR SIGNAL CIRCUIT SHORTED TO THE (K900) SENSOR GROUND CIRCUIT**
   1. Measure the resistance between the (K21) Intake Air Temperature Sensor 1 Signal circuit and the (K900) Sensor Ground circuit at the Mass Air Flow Sensor harness connector.

      Is the resistance below 10k Ohms?

      Yes

      - Repair the short circuit between the (K21) Intake Air Temperature Sensor 1 Signal circuit and the (K656) Sensor Ground circuit.
      - Perform the POWERTRAIN VERIFICATION TEST - 2.2L DIESEL. Refer to **PCM VERIFICATION TEST - 2.2L DIESEL** .

      No

      - Go To 4

4. **CHECK THE MASS AIR FLOW SENSOR**
   1. Turn the ignition off.
   2. Reconnect the PCM C1 harness connector.

3. Reconnect the Mass Air Flow Sensor harness connector.
4. Turn the ignition on.
5. With the scan tool, Clear DTCs.
6. Turn the ignition off.
7. Disconnect the Mass Air Flow Sensor harness connector.
8. Connect a jumper between the (F344) Fused Main Relay Output circuit and the (K21) Intake Air Temperature Sensor 1 Signal circuit at the Mass Air Flow Sensor harness connector.

NOTE: Be careful not to spread the terminals in the connector.

9. Turn the ignition on.
10. With the scan tool, view DTCs.

Does the DTC P0113-INTAKE AIR TEMPERATURE SENSOR CIRCUIT HIGH display as active?

Yes

- Replace the Mass Air Flow Sensor in accordance with the service information. With the scan tool, navigate to Miscellaneous Functions and perform the MAF Sensor Replacement Initialization routine.
- Perform the POWERTRAIN VERIFICATION TEST - 2.2L DIESEL. Refer to **PCM VERIFICATION TEST - 2.2L DIESEL** .

No

- Go To 5

5. **POWERTRAIN CONTROL MODULE**
   1. Using the wiring diagram/schematic as a guide, inspect the wiring and connectors between the Mass Air Flow Sensor and the Powertrain Control Module.
   2. Look for any chafed, pierced, pinched, or partially broken wires.
   3. Look for broken, bent, pushed out or corroded terminals.

4. Monitor the scan tool data relative to this circuit and wiggle test the wiring and connectors.
5. Look for the data to change or for the DTC to reset during the wiggle test.
6. Perform any Technical Service Bulletins that may apply.

Were any problems found?

Yes

- Repair as necessary.
- Perform the POWERTRAIN VERIFICATION TEST - 2.2L DIESEL. Refer to **PCM VERIFICATION TEST - 2.2L DIESEL** .

No

- Replace the Powertrain Control Module. **Before removing the PCM, perform the "Replace PCM" routine in the Miscellaneous Functions tab of the scan tool.** . Refer to **REMOVAL** .
- Perform the POWERTRAIN VERIFICATION TEST - 2.2L DIESEL. Refer to **PCM VERIFICATION TEST - 2.2L DIESEL** .

P0113-INTAKE AIR TEMPERATURE SENSOR 1 CIRCUIT HIGH

For a complete wiring diagram, **refer to appropriate SYSTEM WIRING DIAGRAMS article** .

THEORY OF OPERATION

The Mass Air Flow Sensor and Intake Air Temperature Sensor 1 are combined into one sensor. The two sensors use the same 5-Volt supply and sensor ground circuits. The Intake Air Temperature Sensor 1 is used by the Powertrain Control Module to sense the temperature of the air entering the intake system. The Intake Air Temperature Sensor functions as a typical 5-Volt sensor.

WHEN MONITORED

With the ignition on.

SET CONDITION

The (K21) Intake Air Temperature Sensor 1 Signal circuit voltage is above 4.9 Volts for two seconds.

POSSIBLE CAUSES

Possible Causes
(K21) INTAKE AIR TEMPERATURE SENSOR 1 SIGNAL CIRCUIT OPEN/HIGH RESISTANCE
(K21) INTAKE AIR TEMPERATURE SENSOR 1 SIGNAL CIRCUIT SHORTED TO VOLTAGE
(K900) SENSOR GROUND CIRCUIT OPEN/HIGH RESISTANCE
MASS AIR FLOW SENSOR
POWERTRAIN CONTROL MODULE (PCM)

Always perform the Pre-Diagnostic Troubleshooting procedure before proceeding. Refer to PRE-DIAGNOSTIC TROUBLESHOOTING PROCEDURE - 2.2L DIESEL .

DIAGNOSTIC TEST

1. **DTC IS ACTIVE**

NOTE: If there are any 5-Volt reference DTCs present, repair those before proceeding with this test.

1. Ignition on, engine not running.
2. With the scan tool, clear DTCs in the Powertrain Control Module.
3. Start the engine.
4. With the scan tool, select View DTCs.

Did this DTC reset?

Yes

- Go To 2

No

- Perform the INTERMITTENT CONDITION diagnostic procedure. Refer to **INTERMITTENT CONDITION - 2.2L DIESEL** .

2. **CHECK THE (K21) INTAKE AIR TEMPERATURE SENSOR 1 SIGNAL CIRCUIT FOR A SHORT TO VOLTAGE**
   1. Turn the ignition off.
   2. Disconnect the Mass Air Flow Sensor harness connector.
   3. Turn the ignition on.
   4. Measure the voltage of the (K21) Intake Air Temperature Sensor 1 Signal circuit at the Mass Air Flow Sensor harness connector.

   Is there any voltage present?

   Yes

   - Repair the (K21) Intake Air Temperature Sensor 1 Signal circuit for a short to voltage.
   - Perform the POWERTRAIN VERIFICATION TEST - 2.2L DIESEL. Refer to **PCM VERIFICATION TEST - 2.2L DIESEL** .

   No

   - Go To 3

3. **CHECK THE (K21) INTAKE AIR TEMPERATURE SENSOR 1 SIGNAL CIRCUIT FOR AN OPEN/HIGH RESISTANCE**
   1. Turn the ignition off.
   2. Disconnect the PCM C1 harness connector.
   3. Measure the resistance of the (K21) Intake Air Temperature Sensor 1 Signal circuit between the Mass Air Flow Sensor harness connector harness connector and the PCM C1 harness connector.

   Is the resistance below 5.0 Ohms?

   Yes

   - Go To 4

   No

- Repair the (K21) Intake Air Temperature Sensor 1 Signal circuit for an open circuit or high resistance.
- Perform the POWERTRAIN VERIFICATION TEST - 2.2L DIESEL. Refer to **PCM VERIFICATION TEST - 2.2L DIESEL** .

4. **CHECK THE (K900) SENSOR GROUND CIRCUIT FOR AN OPEN/HIGH RESISTANCE**
   1. Turn the ignition off.
   2. Disconnect the PCM C1 harness connector.
   3. Measure the resistance of the (K900) Sensor Ground circuit between the Mass Air Flow Sensor harness connector harness connector and the PCM C1 harness connector.

      Is the resistance below 5.0 Ohms?

      Yes

      - Go To 5

      No

      - Repair the (K900) Sensor Ground circuit for an open circuit or high resistance.
      - Perform the POWERTRAIN VERIFICATION TEST - 2.2L DIESEL. Refer to **PCM VERIFICATION TEST - 2.2L DIESEL** .
5. **CHECK THE MASS AIR FLOW SENSOR**
   1. Turn the ignition off.
   2. Reconnect the PCM C1 harness connector.
   3. Reconnect the Mass Air Flow Sensor harness connector.
   4. Turn the ignition on.
   5. With the scan tool, Clear DTCs.
   6. Turn the ignition off.
   7. Disconnect the Mass Air Flow Sensor harness connector.
   8. Turn the ignition on.
   9. With the scan tool, view DTCs.

Does the DTC P0112-INTAKE AIR TEMPERATURE SENSOR CIRCUIT LOW display as active?

Yes

- Replace the Mass Air Flow Sensor in accordance with the service information. With the scan tool, navigate to Miscellaneous Functions and perform the MAF Sensor Replacement Initialization routine.
- Perform the POWERTRAIN VERIFICATION TEST - 2.2L DIESEL. Refer to **PCM VERIFICATION TEST - 2.2L DIESEL** .

No

- Go To 6

6. **POWERTRAIN CONTROL MODULE**
   1. Using the wiring diagram/schematic as a guide, inspect the wiring and connectors between the Mass Air Flow Sensor and the Powertrain Control Module.
   2. Look for any chafed, pierced, pinched, or partially broken wires.
   3. Look for broken, bent, pushed out or corroded terminals.
   4. Monitor the scan tool data relative to this circuit and wiggle test the wiring and connectors.
   5. Look for the data to change or for the DTC to reset during the wiggle test.
   6. Perform any Technical Service Bulletins that may apply.

   Were any problems found?

   Yes

   - Repair as necessary.
   - Perform the POWERTRAIN VERIFICATION TEST - 2.2L DIESEL. Refer to **PCM VERIFICATION TEST - 2.2L DIESEL** .

   No

- Replace the Powertrain Control Module. **Before removing the PCM, perform the "Replace PCM" routine in the Miscellaneous Functions tab of the scan tool.** . Refer to **REMOVAL** .
- Perform the POWERTRAIN VERIFICATION TEST - 2.2L DIESEL. Refer to **PCM VERIFICATION TEST - 2.2L DIESEL** .

P0116-ENGINE COOLANT TEMPERATURE SENSOR PERFORMANCE

For a complete wiring diagram, **refer to appropriate SYSTEM WIRING DIAGRAMS article** .

THEORY OF OPERATION

The Engine Coolant Temperature (ECT) Sensor is located on the Thermostat Housing. The ECT is supplied a 5-Volt signal and a sensor ground from the Powertrain Control Module (PCM). The PCM uses the feedback information to determine the temperature of the engine coolant. This information is used by the PCM to determine when to cycle on the cooling fans. The low speed fan is cycled on at 98°C (208°F). The high speed fan is cycled on at 108°C (226°F). When the coolant temperature reaches 121°C (250°F), the Cluster coolant temperature warning lamp turns on and the Cluster chimes continuously. The A/C compressor is shut off at this coolant temperature.

WHEN MONITORED

Continuously with the ignition on.

SET CONDITION

The (K2) Engine Coolant Temperature Sensor (ECT) Signal is invalid for 0.1 seconds.

POSSIBLE CAUSES

Possible Causes
(K2) ENGINE COOLANT TEMPERATURE SENSOR SIGNAL CIRCUIT OPEN/HIGH RESISTANCE
(K914) ENGINE COOLANT TEMPERATURE SENSOR RETURN CIRCUIT OPEN/HIGH RESISTANCE

ENGINE COOLANT TEMPERATURE SENSOR
POWERTRAIN CONTROL MODULE (PCM)

Always perform the Pre-Diagnostic Troubleshooting procedure before proceeding. Refer to PRE-DIAGNOSTIC TROUBLESHOOTING PROCEDURE - 2.2L DIESEL .

DIAGNOSTIC TEST

1. **DTC IS ACTIVE**
   1. Ignition on, engine not running.
   2. With the scan tool, clear DTCs in the Powertrain Control Module.
   3. Start the engine and allow it to reach normal operating temperature.
   4. With the scan tool, select View DTCs.

      Is the status Active for this DTC?

      Yes

      - Go To 2

      No

      - Perform the INTERMITTENT CONDITION diagnostic procedure. Refer to **INTERMITTENT CONDITION - 2.2L DIESEL** .
2. **CHECK THE (K2) ENGINE COOLANT TEMPERATURE SENSOR SIGNAL CIRCUIT FOR AN OPEN/HIGH RESISTANCE**
   1. Turn the ignition off.
   2. Disconnect the Engine Coolant Temperature Sensor harness connector.
   3. Disconnect the Powertrain Control Module harness connector.
   4. Measure the resistance of the (K2) Engine Coolant Temperature Sensor Signal circuit between the ECT Sensor harness connector and the PCM C1 harness connector.

      Is the resistance below 5.0 Ohms?

      Yes

      - Go To 3

No

- Repair the (K2) Engine Coolant Temperature Sensor Signal circuit for an open or high resistance.
- Perform the POWERTRAIN VERIFICATION TEST - 2.2L. Refer to **PCM VERIFICATION TEST - 2.2L DIESEL** .

3. **CHECK THE (K914) ENGINE COOLANT TEMPERATURE SENSOR RETURN CIRCUIT AN OPEN/HIGH RESISTANCE**
   1. Measure the resistance of the (K914) Engine Coolant Temperature Sensor Return circuit between the ECT Sensor harness connector and the PCM C1 harness connector.

      Is the resistance below 5.0 Ohms?

      Yes

      - Go To 4

      No

      - Repair the (K914) Engine Coolant Temperature Sensor Return circuit for an open or high resistance.
      - Perform the POWERTRAIN VERIFICATION TEST - 2.2L. Refer to **PCM VERIFICATION TEST - 2.2L DIESEL** .
4. **POWERTRAIN CONTROL MODULE**
   1. Reconnect the PCM C1 harness connector.
   2. Reconnect the ECT Sensor harness connector.
   3. Turn the ignition on.
   4. With the scan tool, clear DTCs in the Powertrain Control Module.
   5. Disconnect the ECT Sensor harness connector.

      NOTE: With the ECT Sensor disconnected a P0118 ECT Sensor High DTC should set.

   6. Connect a jumper across the ECT Sensor harness connector.

      NOTE: With the ECT Sensor circuits shorted together a P0117 ECT Sensor Low DTC should set.

Did the scan tool display the proper DTC with the ECT Sensor disconnected and circuits shorted together?

Yes

- Replace the Engine Coolant Temperature Sensor in accordance with the service information.
- Perform the POWERTRAIN VERIFICATION TEST - 2.2L. Refer to **PCM VERIFICATION TEST - 2.2L DIESEL** .

No

- Replace the Powertrain Control Module. **Before removing the PCM, perform the "Replace PCM" routine in the Miscellaneous Functions tab of the scan tool.** . Refer to **REMOVAL** .
- Perform the POWERTRAIN VERIFICATION TEST - 2.2L. Refer to **PCM VERIFICATION TEST - 2.2L DIESEL** .

P0117-ENGINE COOLANT TEMPERATURE SENSOR CIRCUIT LOW

For a complete wiring diagram, **refer to appropriate SYSTEM WIRING DIAGRAMS article** .

THEORY OF OPERATION

The Engine Coolant Temperature (ECT) Sensor is located on the Thermostat Housing. The ECT is supplied a 5-Volt signal and a sensor ground from the Powertrain Control Module (PCM). The PCM uses the feedback information to determine the temperature of the engine coolant. This information is used by the PCM to determine when to cycle on the cooling fans. The low speed fan is cycled on at 98°C (208°F). The high speed fan is cycled on at 108°C (226°F). When the coolant temperature reaches 121°C (250°F), the Cluster coolant temperature warning lamp turns on and the Cluster chimes continuously. The A/C compressor is shut off at this coolant temperature.

WHEN MONITORED

With the ignition on.

SET CONDITION

The (K2) Engine Coolant Temperature Sensor Signal circuit voltage is below 0.25 Volts for 0.48 seconds.

POSSIBLE CAUSES

Possible Causes
(K2) ENGINE COOLANT TEMPERATURE SENSOR SIGNAL CIRCUIT SHORTED TO GROUND
(K2) ENGINE COOLANT TEMPERATURE SENSOR SIGNAL CIRCUIT SHORTED TO THE (K914) ENGINE COOLANT TEMPERATURE SENSOR GROUND CIRCUIT
ENGINE COOLANT TEMPERATURE SENSOR
POWERTRAIN CONTROL MODULE (PCM)

Always perform the Pre-Diagnostic Troubleshooting procedure before proceeding. Refer to PRE-DIAGNOSTIC TROUBLESHOOTING PROCEDURE - 2.2L DIESEL .

DIAGNOSTIC TEST

1. **DTC IS ACTIVE**
    1. Ignition on, engine not running.
    2. With the scan tool, clear DTCs in the PCM.
    3. Cycle the ignition key off and on several times, leaving the ignition on for at least 10.0 seconds at a time.
    4. With the scan tool, select View DTCs.

    Did the DTC return?

    Yes

    - Go To 2

    No

    - Perform the INTERMITTENT CONDITION diagnostic procedure. Refer to **INTERMITTENT CONDITION - 2.2L DIESEL** .
2. **CHECK THE (K2) ENGINE COOLANT TEMPERATURE SENSOR SIGNAL CIRCUIT FOR A SHORT TO GROUND**

1. Turn the ignition off.
2. Disconnect the Engine Coolant Temperature Sensor harness connector.
3. Disconnect the Powertrain Control Module harness connector.
4. Measure the resistance between ground and the (K2) Engine Coolant Temperature Sensor Signal circuit in the Engine Coolant Temperature Sensor harness connector.

   Is the resistance below 10k Ohms?

   Yes

   - Repair the (K2) Engine Coolant Temperature Sensor Signal circuit for a short to ground.
   - Perform the POWERTRAIN VERIFICATION TEST - 2.2L DIESEL. Refer to **PCM VERIFICATION TEST - 2.2L DIESEL** .

   No

   - Go To 3

3. **CHECK FOR THE (K2) ENGINE COOLANT TEMPERATURE SENSOR SIGNAL CIRCUIT SHORTED TO THE (K914) ENGINE COOLANT TEMPERATURE SENSOR GROUND CIRCUIT**
   1. Measure the resistance between the (K2) Engine Coolant Temperature Sensor Signal circuit and the (K914) Engine Coolant Temperature Sensor Ground circuit in the Engine Coolant Temperature Sensor harness connector.

      Is the resistance above 10k Ohms?

      Yes

      - Go To 4

      No

      - Repair the (K2) Engine Coolant Temperature Sensor Signal circuit for a short to the (K914) Engine Coolant Temperature Sensor Ground circuit.

- Perform the POWERTRAIN VERIFICATION TEST - 2.2L DIESEL. Refer to **PCM VERIFICATION TEST - 2.2L DIESEL** .

4. **ENGINE COOLANT TEMPERATURE SENSOR**
   1. Reconnect the Powertrain Control Module harness connector.
   2. Turn the ignition on.
   3. With the scan tool, Clear DTCs.
   4. With the scan tool, select View DTCs.

NOTE: The scan tool should display the P0118-ENGINE COOLANT TEMPERATURE SENSOR CIRCUIT HIGH DTC with the connector disconnected.

Does the scan tool display the DTCs as described above?

Yes

- Replace the Engine Coolant Temperature Sensor in accordance with the service information.
- Perform the POWERTRAIN VERIFICATION TEST - 2.2L DIESEL. Refer to **PCM VERIFICATION TEST - 2.2L DIESEL** .

No

- Go To 5

5. **POWERTRAIN CONTROL MODULE**
   1. Using the wiring diagram/schematic as a guide, inspect the wiring and connectors between the Engine Coolant Temperature Sensor and the Powertrain Control Module.
   2. Look for any chafed, pierced, pinched, or partially broken wires.
   3. Look for broken, bent, pushed out or corroded terminals.
   4. Monitor the scan tool data relative to this circuit and wiggle test the wiring and connectors.
   5. Look for the data to change or for the DTC to reset during the wiggle test.

6. Perform any Technical Service Bulletins that may apply.

   Were any problems found?

   Yes

   - Repair as necessary.
   - Perform the POWERTRAIN VERIFICATION TEST - 2.2L DIESEL. Refer to **PCM VERIFICATION TEST - 2.2L DIESEL** .

   No

   - Replace the Powertrain Control Module. **Before removing the PCM, perform the "Replace PCM" routine in the Miscellaneous Functions tab of the scan tool.** . Refer to **REMOVAL** .
   - Perform the POWERTRAIN VERIFICATION TEST - 2.2L DIESEL. Refer to **PCM VERIFICATION TEST - 2.2L DIESEL** .

P0118-ENGINE COOLANT TEMPERATURE SENSOR CIRCUIT HIGH

For a complete wiring diagram, **refer to appropriate SYSTEM WIRING DIAGRAMS article** .

THEORY OF OPERATION

The Engine Coolant Temperature (ECT) Sensor is located on the Thermostat Housing. The ECT is supplied a 5-Volt signal and a sensor ground from the Powertrain Control Module (PCM). The PCM uses the feedback information to determine the temperature of the engine coolant. This information is used by the PCM to determine when to cycle on the cooling fans. The low speed fan is cycled on at 98°C (208°F). The high speed fan is cycled on at 108°C (226°F). When the coolant temperature reaches 121°C (250°F), the Cluster coolant temperature warning lamp turns on and the Cluster chimes continuously. The A/C compressor is shut off at this coolant temperature.

WHEN MONITORED

With the ignition on.

SET CONDITION

The (K2) Engine Coolant Temperature Sensor Signal circuit voltage is above 4.98 Volts for 0.48 seconds.

POSSIBLE CAUSES

Possible Causes
(K2) ENGINE COOLANT TEMPERATURE SENSOR SIGNAL CIRCUIT SHORTED TO VOLTAGE
(K2) ENGINE COOLANT TEMPERATURE SENSOR SIGNAL CIRCUIT OPEN/HIGH RESISTANCE
(K914) ENGINE COOLANT TEMPERATURE SENSOR GROUND CIRCUIT OPEN/HIGH RESISTANCE
ENGINE COOLANT TEMPERATURE SENSOR
POWERTRAIN CONTROL MODULE (PCM)

Always perform the Pre-Diagnostic Troubleshooting procedure before proceeding. Refer to PRE-DIAGNOSTIC TROUBLESHOOTING PROCEDURE - 2.2L DIESEL .

DIAGNOSTIC TEST

1. **DTC IS ACTIVE**
    1. Ignition on, engine not running.
    2. With the scan tool, clear DTCs in the Powertrain Control Module.
    3. Cycle the ignition key off and on several times, leaving the ignition on for at least 10.0 seconds at a time.
    4. With the scan tool, View DTCs.

    Is the status Active for this DTC?

    Yes

    - Go To 2

    No

    - Perform the INTERMITTENT CONDITION diagnostic procedure. Refer to **INTERMITTENT CONDITION - 2.2L DIESEL** .

2. **CHECK THE (K2) ENGINE COOLANT TEMPERATURE SENSOR SIGNAL FOR A CIRCUIT SHORT TO VOLTAGE**
   1. Turn the ignition off.
   2. Disconnect the Engine Coolant Temperature Sensor connector.
   3. Disconnect the PCM C1 harness connector.
   4. Remove the Main Relay.
   5. Connect a jumper wire between cavity 87 and cavity 30 of the Main Relay Connector.
   6. Turn the ignition on.
   7. Measure the voltage of the (K2) Engine Coolant Temperature Sensor Signal circuit in the Engine Coolant Temperature Sensor harness connector.

      Is there any voltage present?

      Yes

      - Repair the (K2) Engine Coolant Temperature Sensor Signal circuit for a short to voltage.
      - Perform the POWERTRAIN VERIFICATION TEST - 2.2L DIESEL. Refer to **PCM VERIFICATION TEST - 2.2L DIESEL** .

      No

      - Go To 3
3. **CHECK THE (K2) ENGINE COOLANT TEMPERATURE SENSOR SIGNAL FOR AN OPEN/HIGH RESISTANCE**
   1. Turn the ignition off.

      NOTE: Remove the jumper and reinstall the Main Relay.

   2. Measure the resistance of the (K2) Engine Coolant Temperature Sensor Signal circuit between the Engine Coolant Temperature Sensor harness connector and the PCM C1 harness connector.

      Is the resistance below 5.0 Ohms?

Yes

- Go To 4

No

- Repair the (K2) Engine Coolant Temperature Sensor Signal circuit for an open or high resistance.
- Perform the POWERTRAIN VERIFICATION TEST - 2.2L DIESEL. Refer to **PCM VERIFICATION TEST - 2.2L DIESEL** .

4. **CHECK THE (K914) ENGINE COOLANT TEMPERATURE SENSOR GROUND CIRCUIT FOR AN OPEN/HIGH RESISTANCE**
   1. Measure the resistance of the (K914) Engine Coolant Temperature Sensor Ground circuit between the Engine Coolant Temperature Sensor harness connector and the PCM C1 harness connector.

      Is the resistance below 5.0 Ohms?

      Yes

      - Go To 5

      No

      - Repair the (K915) Engine Coolant Temperature Sensor Ground circuit for an open or high resistance.
      - Perform the POWERTRAIN VERIFICATION TEST - 2.2L DIESEL. Refer to **PCM VERIFICATION TEST - 2.2L DIESEL** .
5. **CHECK THE ENGINE COOLANT TEMPERATURE SENSOR**
   1. Turn the ignition off.
   2. Reconnect the PCM C1 harness connector.
   3. Turn the ignition on.
   4. With the scan tool, clear DTCs.
   5. Turn the ignition off.
   6. Connect a jumper wire between the (K914) Engine Coolant Temperature Sensor Ground circuit and the (K2) Engine Coolant

Temperature Sensor Signal circuit at the Engine Coolant Temperature Sensor harness connector.

NOTE: Be careful not to spread the terminals in the connector.

7. Turn the ignition on.
8. With the scan tool, view DTCs.

NOTE: The scan tool should display the P0117-ENGINE COOLANT TEMPERATURE SENSOR CIRCUIT LOW DTC with the jumper wire in place.

Does the scan tool display the DTC as described above?

Yes

- Replace the Engine Coolant Temperature Sensor in accordance with the service information.
- Perform the POWERTRAIN VERIFICATION TEST - 2.2L DIESEL. Refer to **PCM VERIFICATION TEST - 2.2L DIESEL** .

No

- Go To 6

6. **POWERTRAIN CONTROL MODULE**
   1. Using the wiring diagram/schematic as a guide, inspect the wiring and connectors between the Engine Coolant Temperature Sensor and the Powertrain Control Module.
   2. Look for any chafed, pierced, pinched, or partially broken wires.
   3. Look for broken, bent, pushed out or corroded terminals.
   4. Monitor the scan tool data relative to this circuit and wiggle test the wiring and connectors.
   5. Look for the data to change or for the DTC to reset during the wiggle test.
   6. Perform any Technical Service Bulletins that may apply.

Were any problems found?

Yes

- Repair as necessary.
- Perform the POWERTRAIN VERIFICATION TEST - 2.2L DIESEL. Refer to **PCM VERIFICATION TEST - 2.2L DIESEL** .

No

- Replace the Powertrain Control Module. **Before removing the PCM, perform the "Replace PCM" routine in the Miscellaneous Functions tab of the scan tool.** . Refer to **REMOVAL** .
- Perform the POWERTRAIN VERIFICATION TEST - 2.2L DIESEL. Refer to **PCM VERIFICATION TEST - 2.2L DIESEL** .

P0122-THROTTLE POSITION SENSOR 1 CIRCUIT LOW

For a complete wiring diagram, **refer to appropriate SYSTEM WIRING DIAGRAMS article** .

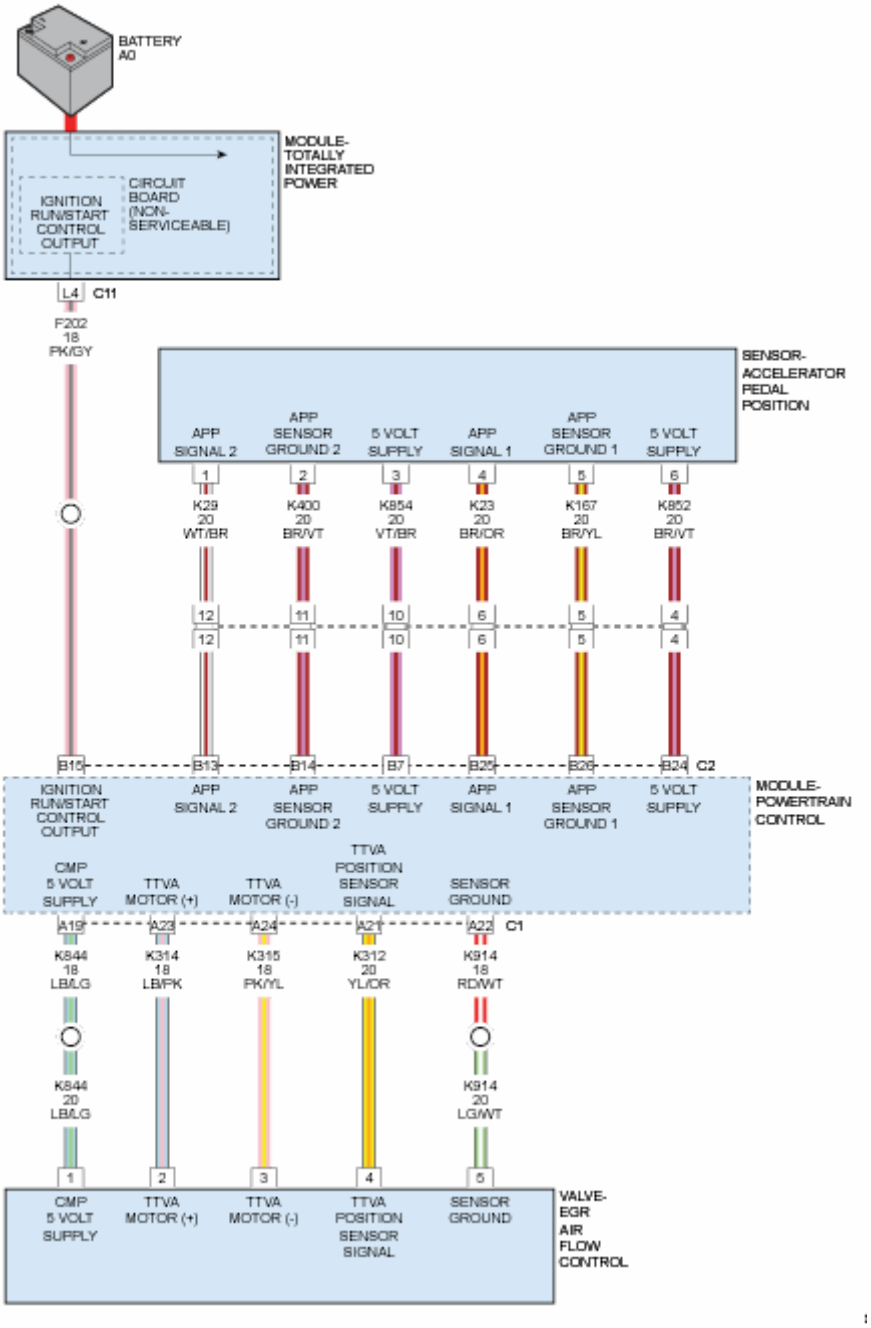

Fig. 12: APPS & EGR Airflow Control Valve Circuit Diagram
Courtesy of CHRYSLER GROUP, LLC

THEORY OF OPERATION

The Powertrain Control Module (PCM) actuates the EGR Airflow Control Valve via the Pulse Width Modulated (PWM) control circuits. The EGR Airflow Control Valve is actuated to control the air volume and the mixing ratio of the charge air and the recirculated exhaust gases to the Intake Manifold. This is accomplished by creating a vacuum which draws the recirculated exhaust gases

into the manifold. The position sensor is integrated into the EGR Airflow Control Valve, and is not serviceable separately. The EGR Airflow Control Valve Position Sensor functions as a typical three wire 5-Volt sensor. The PCM receives feedback as to the position of the valve from the position sensor via the signal wire. The EGR Airflow Control Valve is closed when the ignition is turned off to help provide a smooth engine shut down.

WHEN MONITORED

With the ignition on.

SET CONDITION

The Powertrain Control Module (PCM) detects that the (K312) EGR Airflow Control Valve Position Sensor circuit is below 0.3 Volts for 0.08 seconds.

POSSIBLE CAUSES

Possible Causes
(K312) EGR AIRFLOW CONTROL VALVE POSITION SENSOR CIRCUIT SHORTED TO GROUND
EGR AIRFLOW CONTROL VALVE
POWERTRAIN CONTROL MODULE (PCM)

Always perform the Pre-Diagnostic Troubleshooting procedure before proceeding. Refer to PRE-DIAGNOSTIC TROUBLESHOOTING PROCEDURE - 2.2L DIESEL .

DIAGNOSTIC TEST

1. **DTC IS ACTIVE**
    1. Ignition on, engine not running.
    2. With the scan tool, clear DTCs in the PCM.
    3. Cycle the ignition key off and on several times, leaving the ignition on for at least 10.0 seconds at a time.
    4. With the scan tool, select View DTCs.

    Did the DTC return?

    Yes

- Go To 2

No

- Perform the INTERMITTENT CONDITION diagnostic procedure. Refer to **INTERMITTENT CONDITION - 2.2L DIESEL** .

2. **CHECK THE (K312) EGR AIRFLOW CONTROL VALVE POSITION SENSOR CIRCUIT FOR A SHORT TO GROUND**
   1. Turn the ignition off.
   2. Disconnect the EGR Airflow Control Valve harness connector.
   3. Disconnect the Powertrain Control Module C1 harness connector.
   4. Measure the resistance between ground and the (K312) EGR Airflow Control Valve Position Sensor circuit at the EGR Airflow Control Valve harness connector.

   Is the resistance above 10k Ohms?

   Yes

   - Go To 3

   No

   - Repair the (K312) EGR Airflow Control Valve Position Sensor circuit for a short to ground.
   - Perform the POWERTRAIN VERIFICATION TEST - 2.2L DIESEL. Refer to **PCM VERIFICATION TEST - 2.2L DIESEL** .

3. **CHECK THE EGR AIRFLOW CONTROL VALVE**
   1. Reconnect the Powertrain Control Module C1 harness connector.
   2. Turn the ignition on.
   3. With the scan tool, clear DTCs.
   4. With the scan tool, select View DTCs.

   Did DTC P0122 become stored and P0123-THROTTLE POSITION SENSOR 1 CIRCUIT HIGH become active?

   Yes

- Replace the EGR Airflow Control Valve in accordance with the service information. With the scan tool, navigate to Miscellaneous Functions and perform the Throttle Valve Learn procedure.
- Perform the POWERTRAIN VERIFICATION TEST - 2.2L DIESEL. Refer to **PCM VERIFICATION TEST - 2.2L DIESEL** .

No

- Go To 4

4. **POWERTRAIN CONTROL MODULE**
   1. Using the wiring diagram/schematic as a guide, inspect the wiring and connectors between the EGR Airflow Control Valve and the Powertrain Control Module.
   2. Look for any chafed, pierced, pinched, or partially broken wires.
   3. Look for broken, bent, pushed out or corroded terminals.
   4. Monitor the scan tool data relative to this circuit and wiggle test the wiring and connectors.
   5. Look for the data to change or for the DTC to reset during the wiggle test.
   6. Perform any Technical Service Bulletins that may apply.

   Were any problems found?

   Yes

   - Repair as necessary.
   - Perform the POWERTRAIN VERIFICATION TEST - 2.2L DIESEL. Refer to **PCM VERIFICATION TEST - 2.2L DIESEL** .

   No

   - Replace the Powertrain Control Module. **Before removing the PCM, perform the "Replace PCM" routine in the Miscellaneous Functions tab of the scan tool.** . Refer to **REMOVAL** .
   - Perform the POWERTRAIN VERIFICATION TEST - 2.2L

DIESEL. Refer to **PCM VERIFICATION TEST - 2.2L DIESEL** .

P0123-THROTTLE POSITION SENSOR 1 CIRCUIT HIGH

For a complete wiring diagram, **refer to appropriate SYSTEM WIRING DIAGRAMS article** .

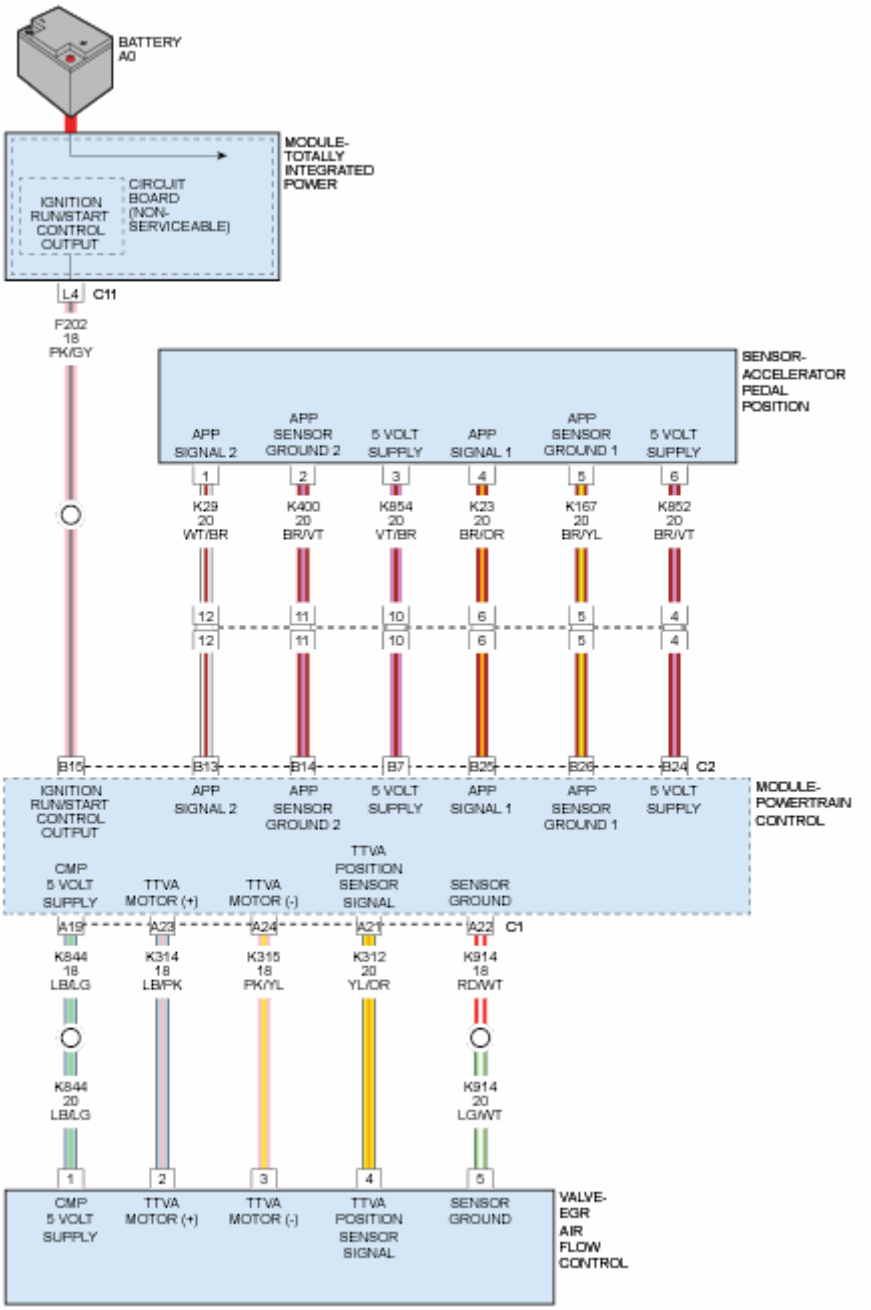

Fig. 13: APPS & EGR Airflow Control Valve Circuit Diagram
Courtesy of CHRYSLER GROUP, LLC

THEORY OF OPERATION

The Powertrain Control Module (PCM) actuates the EGR Airflow Control Valve via the Pulse Width Modulated (PWM) control circuits. The EGR Airflow Control Valve is actuated to control the air volume and the mixing ratio of the charge air and the recirculated exhaust gases to the Intake Manifold. This is accomplished by creating a vacuum which draws the recirculated exhaust gases into the manifold. The position sensor is integrated into the EGR Airflow Control Valve, and is not serviceable separately. The EGR Airflow Control Valve Position Sensor functions as a typical three wire 5-Volt sensor. The PCM receives feedback as to the position of the valve from the position sensor via the signal wire. The EGR Airflow Control Valve is closed when the ignition is turned off to help provide a smooth engine shut down.

WHEN MONITORED

With the ignition on.

SET CONDITION

The Powertrain Control Module (PCM) detects that the (K312) EGR Airflow Control Valve Position Sensor circuit is above 4.6 Volts for 0.08 seconds.

POSSIBLE CAUSES

Possible Causes
(K844) 5-VOLT SUPPLY CIRCUIT OPEN/HIGH RESISTANCE
(K844) 5-VOLT SUPPLY CIRCUIT SHORTED TO VOLTAGE
(K844) 5-VOLT SUPPLY CIRCUIT SHORTED TO GROUND
(K854) ACCELERATOR PEDAL POSITION SENSOR 5-VOLT SUPPLY CIRCUIT SHORTED TO VOLTAGE
(K854) ACCELERATOR PEDAL POSITION SENSOR 5-VOLT SUPPLY CIRCUIT SHORTED TO GROUND
(K914) SENSOR GROUND CIRCUIT OPEN/HIGH RESISTANCE
(K312) EGR AIRFLOW CONTROL VALVE POSITION SENSOR CIRCUIT SHORTED TO VOLTAGE
(K312) EGR AIRFLOW CONTROL VALVE POSITION SENSOR CIRCUIT OPEN/HIGH RESISTANCE
EGR AIRFLOW CONTROL VALVE
POWERTRAIN CONTROL MODULE (PCM)

Always perform the Pre-Diagnostic Troubleshooting procedure before proceeding. Refer to PRE-DIAGNOSTIC TROUBLESHOOTING PROCEDURE - 2.2L DIESEL .

DIAGNOSTIC TEST

1. **DTC IS ACTIVE**

   NOTE: If there are any 5-Volt Reference DTCs present, repair those DTCs before proceeding with this procedure.

   1. Ignition on, engine not running.
   2. With the scan tool, clear DTCs in the PCM.
   3. Cycle the ignition key off and on several times, leaving the ignition on for at least 10.0 seconds at a time.
   4. With the scan tool, select View DTCs.

   Did the DTC return?

   Yes

   - Go To 2

   No

   - Perform the INTERMITTENT CONDITION diagnostic procedure. Refer to **INTERMITTENT CONDITION - 2.2L DIESEL** .

2. **CHECK THE (K312) EGR AIRFLOW CONTROL VALVE POSITION SENSOR CIRCUIT FOR A SHORT TO VOLTAGE**
   1. Turn the ignition off.
   2. Disconnect the EGR Airflow Control Valve harness connector.
   3. Disconnect the Powertrain Control Module C1 harness connector.
   4. Remove the Main Relay.
   5. Connect a jumper wire between cavity 87 and cavity 30 of the Main Relay Connector.
   6. Turn the ignition on.
   7. Measure the voltage on the (K312) EGR Airflow Control Valve Position Sensor circuit at the EGR Airflow Control Valve harness

connector.

Is there any voltage present?

Yes

- Repair the (K312) EGR Airflow Control Valve Position Sensor circuit for a short to voltage.
- Perform the POWERTRAIN VERIFICATION TEST - 2.2L DIESEL. Refer to **PCM VERIFICATION TEST - 2.2L DIESEL** .

No

- Go To 3

3. **CHECK THE (K312) EGR AIRFLOW CONTROL VALVE POSITION SENSOR CIRCUIT FOR AN OPEN/HIGH RESISTANCE**
   1. Measure the resistance of the (K312) EGR Airflow Control Valve Position Sensor circuit at the EGR Airflow Control Valve harness connector.

      Is the resistance below 5.0 Ohms?

      Yes

      - Go To 4

      No

      - Repair the (K312) EGR Airflow Control Valve Position Sensor circuit for an open or high resistance.
      - Perform the POWERTRAIN VERIFICATION TEST - 2.2L DIESEL. Refer to **PCM VERIFICATION TEST - 2.2L DIESEL** .
4. **CHECK THE (K914) SENSOR GROUND CIRCUIT FOR AN OPEN/HIGH RESISTANCE**
   1. Measure the resistance of the (K914) Sensor Ground circuit at the EGR Airflow Control Valve harness connector.

Is the resistance below 5.0 Ohms?

Yes

- Go To 5

No

- Repair the (K914) Sensor Ground circuit for an open or high resistance.
- Perform the POWERTRAIN VERIFICATION TEST - 2.2L DIESEL. Refer to **PCM VERIFICATION TEST - 2.2L DIESEL** .

5. **CHECK THE EGR AIRFLOW CONTROL VALVE**
   1. Reconnect the Powertrain Control Module C1 harness connector.
   2. Turn the ignition on.
   3. With the scan tool, Clear DTCs.
   4. Turn the ignition off.
   5. Connect a jumper between ground and the (K312) EGR Airflow Control Valve Position Sensor circuit at the EGR Airflow Control Valve harness connector.

      NOTE: Be careful not to spread the terminals in the connector.

   6. Turn the ignition on.
   7. With the scan tool, select View DTCs.

      Did DTC P0123 become stored and P0122-THROTTLE POSITION SENSOR 1 CIRCUIT LOW become active?

      Yes

      - Replace the EGR Airflow Control Valve in accordance with the service information. With the scan tool, navigate to Miscellaneous Functions and perform the Throttle Valve Learn procedure.
      - Perform the POWERTRAIN VERIFICATION TEST - 2.2L DIESEL. Refer to **PCM VERIFICATION TEST - 2.2L**

DIESEL .

No

- Go To 6

6. **POWERTRAIN CONTROL MODULE**
   1. Using the wiring diagram/schematic as a guide, inspect the wiring and connectors between the EGR Airflow Control Valve and the Powertrain Control Module.
   2. Look for any chafed, pierced, pinched, or partially broken wires.
   3. Look for broken, bent, pushed out or corroded terminals.
   4. Monitor the scan tool data relative to this circuit and wiggle test the wiring and connectors.
   5. Look for the data to change or for the DTC to reset during the wiggle test.
   6. Perform any Technical Service Bulletins that may apply.

   Were any problems found?

   Yes

   - Repair as necessary.
   - Perform the POWERTRAIN VERIFICATION TEST - 2.2L DIESEL. Refer to **PCM VERIFICATION TEST - 2.2L DIESEL** .

   No

   - Replace the Powertrain Control Module. **Before removing the PCM, perform the "Replace PCM" routine in the Miscellaneous Functions tab of the scan tool.** . Refer to **REMOVAL** .
   - Perform the POWERTRAIN VERIFICATION TEST - 2.2L DIESEL. Refer to **PCM VERIFICATION TEST - 2.2L DIESEL** .

P0130-O2 SENSOR 1/1 CIRCUIT OPEN

For a complete wiring diagram, **refer to appropriate SYSTEM WIRING**

DIAGRAMS article .

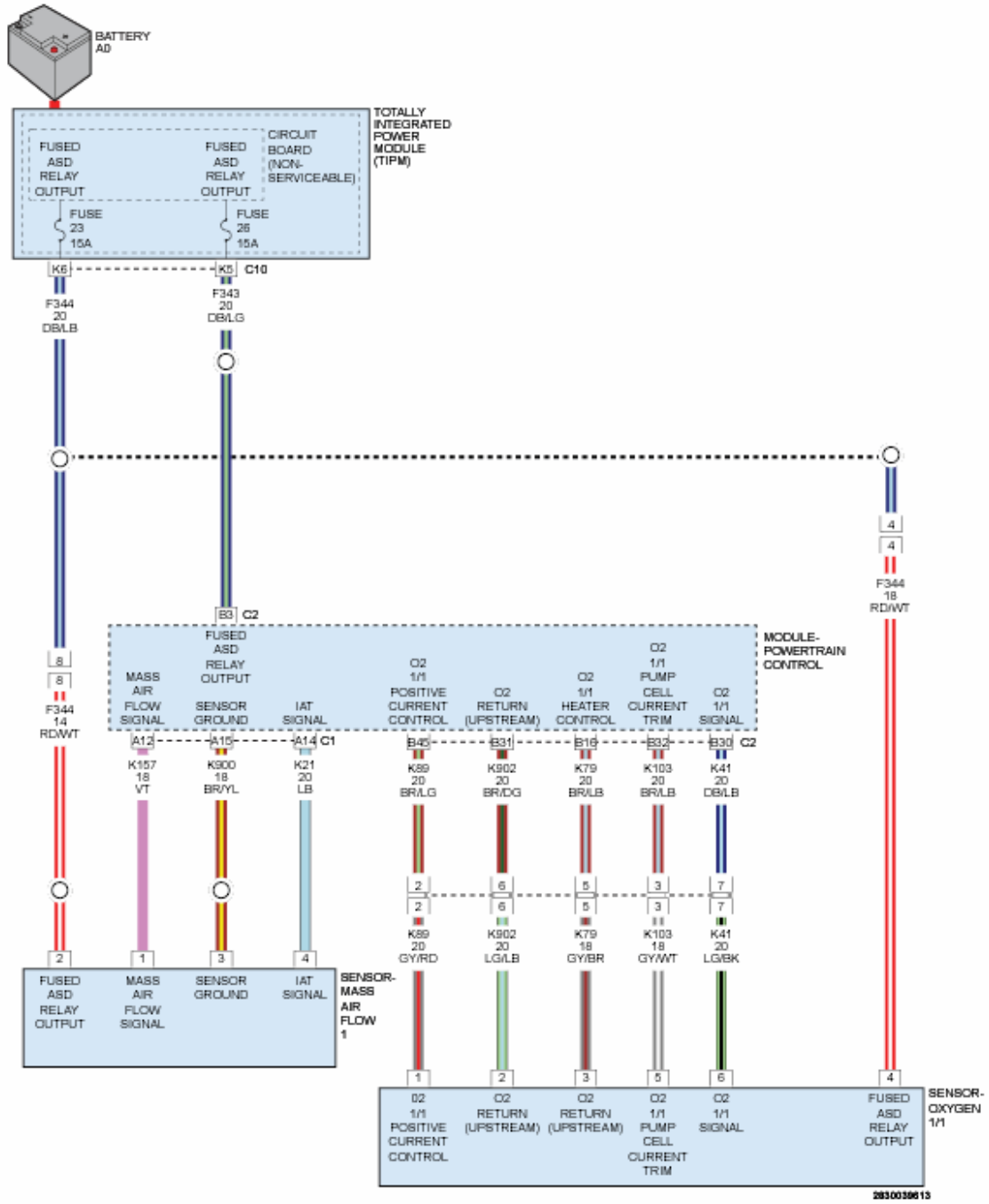

Fig. 14: O2 & MAF Sensors Circuit Diagram
Courtesy of CHRYSLER GROUP, LLC

THEORY OF OPERATION

The Powertrain Control Module (PCM) receives feedback from the Oxygen Sensor to monitor the oxygen content in the diesel engine exhaust. The PCM uses this information, along with input from other sensors to vary the rich/lean

fuel mixture of the intake air fuel mixture to adjust the system and meet emission standards.

WHEN MONITORED

With the ignition on and the O2 Sensor 1/1 at operating temperature.

SET CONDITION

The Powertrain Control Module (PCM) detects an open on the (K41) O2 Sensor 1/1 Signal circuit for 2.0 seconds.

POSSIBLE CAUSES

Possible Causes
(K41) O2 SENSOR 1/1 SIGNAL CIRCUIT OPEN/HIGH RESISTANCE
OXYGEN SENSOR
POWERTRAIN CONTROL MODULE (PCM)

Always perform the Pre-Diagnostic Troubleshooting procedure before proceeding. Refer to PRE-DIAGNOSTIC TROUBLESHOOTING PROCEDURE - 2.2L DIESEL .

DIAGNOSTIC TEST

1. **DTC IS ACTIVE**
    1. Ignition on, engine not running.
    2. With the scan tool, Clear DTCs in the Powertrain Control Module.
    3. Start the engine.
    4. Allow the engine to reach normal operating temperature.
    5. Monitor the scan tool for at least five minutes.
    6. With the scan tool, select View DTCs.

    Is the status Active for this DTC?

    Yes

    - Go To 2

    No

- Perform the INTERMITTENT CONDITION diagnostic procedure. Refer to **INTERMITTENT CONDITION - 2.2L DIESEL** .

2. **CHECK THE (K41) O2 SENSOR 1/1 SIGNAL CIRCUIT CONTROL CIRCUIT FOR AN OPEN/HIGH RESISTANCE**
   1. Turn the ignition off.
   2. Disconnect the O2 Sensor 1/1 harness connector.
   3. Disconnect the Powertrain Control Module harness connector.
   4. Measure the resistance of the (K41) O2 Sensor 1/1 Signal circuit between the O2 Sensor harness connector and the Powertrain Control Module harness connector.

      Is the resistance below 5.0 Ohms?

      Yes

      - Go To 3

      No

      - Repair the (K41) O2 Sensor 1/1 Signal circuit for an open or high resistance.
      - Perform the POWERTRAIN VERIFICATION TEST - 2.2L DIESEL. Refer to **PCM VERIFICATION TEST - 2.2L DIESEL** .

3. **OXYGEN SENSOR**
   1. Connect the Powertrain Control Module harness connector.
   2. Replace the Oxygen Sensor in accordance with the service information.
   3. Turn the ignition on.
   4. With the scan tool, navigate to Miscellaneous Functions and perform the O2 Sensor Replaced procedure.
   5. Start the engine.
   6. Allow the engine to reach normal operating temperature.
   7. Monitor the scan tool for at least five minutes.
   8. With the scan tool, select View DTCs.

      Is the status Active for this DTC?

Yes

- Go To 4

No

- Test Complete.
- Perform the POWERTRAIN VERIFICATION TEST - 2.2L DIESEL. Refer to **PCM VERIFICATION TEST - 2.2L DIESEL** .

4. **POWERTRAIN CONTROL MODULE**
   1. Using the wiring diagram/schematic as a guide, inspect the wiring and connectors between the Oxygen Sensor and the Powertrain Control Module.
   2. Look for any chafed, pierced, pinched, or partially broken wires.
   3. Look for broken, bent, pushed out or corroded terminals.
   4. Monitor the scan tool data relative to this circuit and wiggle test the wiring and connectors.
   5. Look for the data to change or for the DTC to reset during the wiggle test.
   6. Perform any Technical Service Bulletins that may apply.

   Were any problems found?

   Yes

   - Repair as necessary.
   - Perform the POWERTRAIN VERIFICATION TEST - 2.2L DIESEL. Refer to **PCM VERIFICATION TEST - 2.2L DIESEL** .

   No

   - Replace the Powertrain Control Module. **Before removing the PCM, perform the "Replace PCM" routine in the Miscellaneous Functions tab of the scan tool.** . Refer to **REMOVAL** .
   - Perform the POWERTRAIN VERIFICATION TEST - 2.2L

DIESEL. Refer to **PCM VERIFICATION TEST - 2.2L DIESEL** .

P0133-O2 SENSOR 1/1 SLOW RESPONSE

For a complete wiring diagram, **refer to appropriate SYSTEM WIRING DIAGRAMS article** .

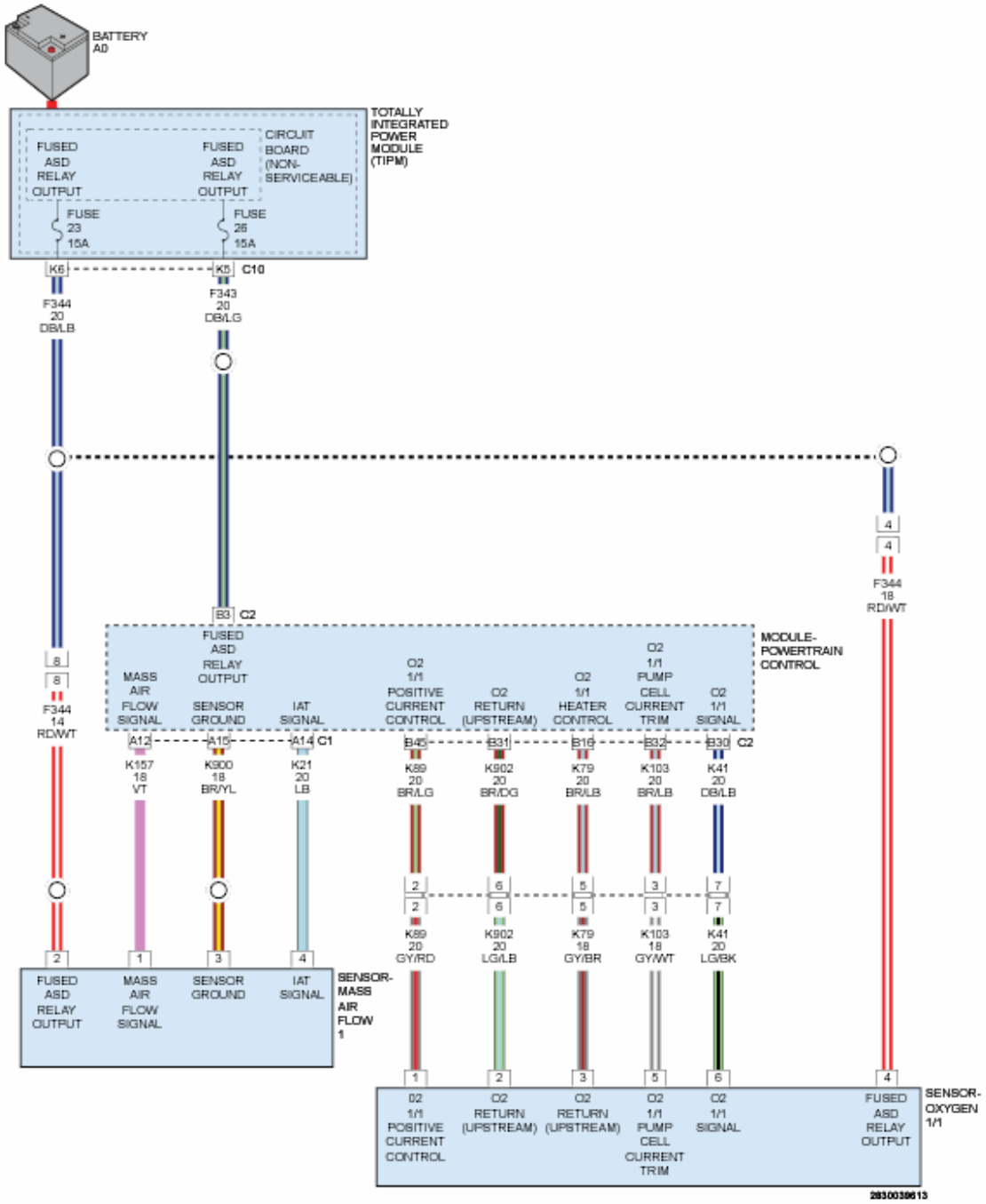

Fig. 15: O2 & MAF Sensors Circuit Diagram
Courtesy of CHRYSLER GROUP, LLC

THEORY OF OPERATION

The Powertrain Control Module (PCM) receives feedback from the Oxygen Sensor to monitor the oxygen content in the diesel engine exhaust. The PCM uses this information, along with input from other sensors to vary the rich/lean fuel mixture of the intake air fuel mixture to adjust the system and meet emission standards.

WHEN MONITORED

With the ignition on and the O2 Sensor 1/1 at operating temperature.

SET CONDITION

The Powertrain Control Module (PCM) detects a short to voltage on the (K902) O2 Sensor 1/1 Negative Current Control circuit for 2.0 seconds.

POSSIBLE CAUSES

Possible Causes
(K902) O2 SENSOR 1/1 NEGATIVE CURRENT CONTROL CIRCUIT SHORTED TO VOLTAGE
(K902) O2 SENSOR 1/1 NEGATIVE CURRENT CONTROL CIRCUIT SHORTED TO THE (F344) FUSED ASD RELAY OUTPUT 2 CIRCUIT
(K902) O2 SENSOR 1/1 NEGATIVE CURRENT CONTROL CIRCUIT OPEN OR HIGH RESISTANCE
(K89) O2 SENSOR 1/1 POSITIVE CURRENT CONTROL SHORTED TO VOLTAGE
(K103) O2 SENSOR 1/1 PUMP CELL CURRENT TRIM OPEN OR HIGH RESISTANCE
INTAKE AIR SYSTEM LEAK
EGR SYSTEM LEAK
EXHAUST SYSTEM LEAK
OXYGEN SENSOR
POWERTRAIN CONTROL MODULE (PCM)

Always perform the Pre-Diagnostic Troubleshooting procedure before proceeding. Refer to PRE-DIAGNOSTIC TROUBLESHOOTING PROCEDURE - 2.2L DIESEL .

DIAGNOSTIC TEST

1. **DTC IS ACTIVE**
   1. Ignition on, engine not running.
   2. With the scan tool, Clear DTCs in the Powertrain Control Module.
   3. Start the engine.
   4. Allow the engine to reach normal operating temperature.
   5. Monitor the scan tool for at least five minutes.
   6. With the scan tool, select View DTCs.

   Is the status Active for this DTC?

   Yes

   - Go To 2

   No

   - Perform the INTERMITTENT CONDITION diagnostic procedure. Refer to **INTERMITTENT CONDITION - 2.2L DIESEL** .
2. **CHECK THE (K902) O2 SENSOR 1/1 NEGATIVE CURRENT CONTROL CIRCUIT FOR A SHORT TO VOLTAGE**
   1. Turn the ignition off.
   2. Disconnect the Oxygen Sensor harness connector.
   3. Disconnect the PCM harness connector.
   4. Remove the ASD Relay from the TIPM.
   5. Connect a jumper wire between cavity 30 and cavity 87 of the ASD Relay Connector.
   6. Turn the ignition on.
   7. Measure the voltage of the (K902) O2 Sensor 1/1 Negative Current Control circuit in the Oxygen Sensor harness connector.

   Is there any voltage present?

   Yes

   - Repair the (K902) O2 Sensor 1/1 Negative Current Control circuit for a short to voltage.

- Perform the POWERTRAIN VERIFICATION TEST - 2.2L DIESEL. Refer to **PCM VERIFICATION TEST - 2.2L DIESEL** .

No

- Go To 3

3. **CHECK THE (K89) O2 SENSOR 1/1 POSITIVE CURRENT CONTROL FOR A SHORT TO VOLTAGE**
   1. Measure voltage on the (K89) O2 Sensor 1/1 Positive Current Control circuit in the Oxygen Sensor harness connector.

      Is there any voltage present?

      Yes

      - Repair the (K89) O2 Sensor 1/1 Positive Current Control circuit for a short to voltage.
      - Perform the POWERTRAIN VERIFICATION TEST - 2.2L DIESEL. Refer to **PCM VERIFICATION TEST - 2.2L DIESEL** .

      No

      Go To 4

4. **CHECK FOR THE (K902) O2 SENSOR 1/1 NEGATIVE CURRENT CONTROL CIRCUIT SHORTED TO THE (F344) FUSED ASD RELAY OUTPUT 2 CIRCUIT**
   1. Turn the ignition off.
   2. Remove the jumper wire and install the ASD Relay.
   3. Measure the resistance between the (K902) O2 Sensor 1/1 Negative Current Control circuit and the (F344) Fused ASD Relay Output 2 circuit in the Oxygen Sensor harness connector.

      Is the resistance above 10k Ohms?

      Yes

- Go To 5

No

- Repair the (K902) O2 Sensor 1/1 Negative Current Control circuit for a short to the (F344) Fused ASD Relay Output 2 circuit.
- Perform the POWERTRAIN VERIFICATION TEST - 2.2L DIESEL. Refer to **PCM VERIFICATION TEST - 2.2L DIESEL** .

5. **CHECK THE (K902) O2 SENSOR 1/1 NEGATIVE CURRENT CONTROL CIRCUIT FOR AN OPEN/HIGH RESISTANCE**
   1. Measure the resistance of the (K902) O2 Sensor 1/1 Negative Current Control circuit between the Oxygen Sensor harness connector and the PCM harness connector.

      Is the resistance below 5.0 Ohms?

      Yes

      - Go To 6

      No

      - Repair the (K902) O2 Sensor 1/1 Negative Current Control circuit for an open or high resistance.
      - Perform the POWERTRAIN VERIFICATION TEST - 2.2L DIESEL. Refer to **PCM VERIFICATION TEST - 2.2L DIESEL** .
6. **CHECK THE (K103) O2 SENSOR 1/1 PUMP CELL CURRENT TRIM FOR AN OPEN/HIGH RESISTANCE**
   1. Measure the resistance of the (K103) O2 Sensor 1/1 Pump Cell Current Trim circuit between the Oxygen Sensor harness connector and the PCM harness connector.

      Is the resistance below 5.0 Ohms?

      Yes

      - Go To 7

No

- Repair the (K103) O2 Sensor 1/1 Pump Cell Current Trim circuit for an open or high resistance.
- Perform the POWERTRAIN VERIFICATION TEST - 2.2L DIESEL. Refer to **PCM VERIFICATION TEST - 2.2L DIESEL** .

7. **CHECK THE INTAKE AIR SYSTEM**
   1. Check the Intake Air System for any signs of a leak or restriction.

   Were any Intake System problems found?

   Yes

   - Perform the appropriate repairs to the Intake Air System.
   - Perform the POWERTRAIN VERIFICATION TEST 2.2L. Refer to **PCM VERIFICATION TEST - 2.2L DIESEL** .

   No

   - Go To 8

8. **CHECK THE EXHAUST SYSTEM FOR LEAKS**
   1. Check the Exhaust System for any signs of a leak or restriction.

   Were any Exhaust System problems found?

   Yes

   - Perform the appropriate repairs to the Exhaust System.
   - Perform the POWERTRAIN VERIFICATION TEST 2.2L. Refer to **PCM VERIFICATION TEST - 2.2L DIESEL** .

   No

   - Go To 9

9. **CHECK FOR AN EGR LEAK**
   1. Look for visible signs (soot streaks) of an external EGR leak.

   Were any EGR leaks found?

Yes

- Perform the appropriate repairs to the EGR system.
- Perform the POWERTRAIN VERIFICATION TEST 2.2L. Refer to **PCM VERIFICATION TEST - 2.2L DIESEL** .

No

- Go To 10

10. **OXYGEN SENSOR**
    1. Reconnect the PCM harness connector.
    2. Replace the Oxygen Sensor in accordance with the service information.
    3. Turn the ignition on.
    4. With the scan tool, navigate to Miscellaneous Functions and perform the O2 Sensor Replace procedure.
    5. Start the engine.
    6. Allow the engine to reach normal operating temperature.
    7. Monitor the scan tool for at least five minutes.
    8. With the scan tool, select View DTCs.

    Is the status Active for this DTC?

    Yes

    - Go To 11

    No

    - Test Complete.
    - Perform the POWERTRAIN VERIFICATION TEST - 2.2L DIESEL. Refer to **PCM VERIFICATION TEST - 2.2L DIESEL** .

11. **POWERTRAIN CONTROL MODULE**
    1. Using the wiring diagram/schematic as a guide, inspect the wiring and connectors between the Oxygen Sensor and the Powertrain Control Module.
    2. Look for any chafed, pierced, pinched, or partially broken wires.

3. Look for broken, bent, pushed out or corroded terminals.
4. Monitor the scan tool data relative to this circuit and wiggle test the wiring and connectors.
5. Look for the data to change or for the DTC to reset during the wiggle test.
6. Perform any Technical Service Bulletins that may apply.

Were any problems found?

Yes

- Repair as necessary.
- Perform the POWERTRAIN VERIFICATION TEST - 2.2L DIESEL. Refer to **PCM VERIFICATION TEST - 2.2L DIESEL** .

No

- Replace the Powertrain Control Module. **Before removing the PCM, perform the "Replace PCM" routine in the Miscellaneous Functions tab of the scan tool.** . Refer to **REMOVAL** .
- Perform the POWERTRAIN VERIFICATION TEST - 2.2L DIESEL. Refer to **PCM VERIFICATION TEST - 2.2L DIESEL** .

P0135-O2 SENSOR 1/1 HEATER PERFORMANCE

For a complete wiring diagram, **refer to appropriate SYSTEM WIRING DIAGRAMS article** .

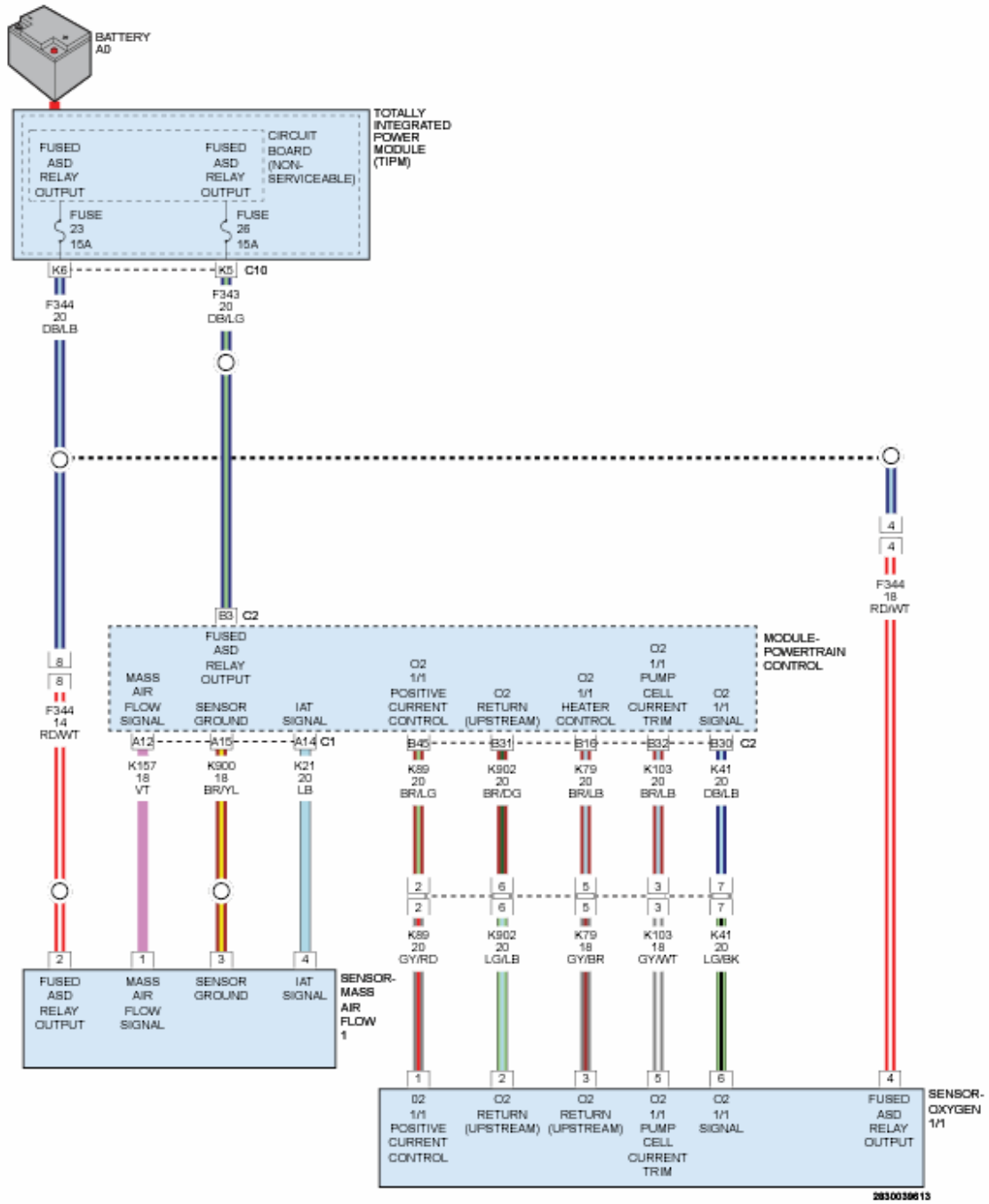

Fig. 16: O2 & MAF Sensors Circuit Diagram
Courtesy of CHRYSLER GROUP, LLC

THEORY OF OPERATION

The Powertrain Control Module (PCM) receives feedback from the Oxygen Sensor to monitor the oxygen content in the diesel engine exhaust. The PCM uses this information, along with input from other sensors to vary the rich/lean fuel mixture of the intake air fuel mixture to adjust the system and meet emission standards.

WHEN MONITORED

With the ignition on and the Oxygen Sensor Heater commanded on.

SET CONDITION

The Powertrain Control Module (PCM) detects an implausible voltage on the (K79) O2 1/1 Heater Control circuit for 2.0 seconds.

POSSIBLE CAUSES

Possible Causes
(K79) O2 SENSOR 1/1 HEATER CONTROL CIRCUIT SHORTED TO VOLTAGE
(K79) O2 SENSOR 1/1 HEATER CONTROL CIRCUIT SHORTED TO GROUND
(K79) O2 SENSOR 1/1 HEATER CONTROL CIRCUIT OPEN OR HIGH RESISTANCE
(K103) O2 SENSOR 1/1 PUMP CELL CURRENT TRIM SHORTED TO GROUND
(K89) O2 SENSOR 1/1 POSITIVE CURRENT CONTROL SHORTED TO GROUND
(F344) FUSED ASD RELAY OUTPUT CIRCUIT OPEN OR HIGH RESISTANCE
OXYGEN SENSOR
POWERTRAIN CONTROL MODULE (PCM)

Always perform the Pre-Diagnostic Troubleshooting procedure before proceeding. Refer to PRE-DIAGNOSTIC TROUBLESHOOTING PROCEDURE - 2.2L DIESEL .

DIAGNOSTIC TEST

1. **DTC IS ACTIVE**
    1. Ignition on, engine not running.
    2. With the scan tool, clear DTCs in the Powertrain Control Module.
    3. With the scan tool, actuate the Oxygen Sensor Heater.
    4. Monitor the scan tool for at least two minutes.
    5. With the scan tool, select View DTCs.

Is the status Active for this DTC?

Yes

- Go To 2

No

- Perform the INTERMITTENT CONDITION diagnostic procedure. Refer to **INTERMITTENT CONDITION - 2.2L DIESEL** .

2. **CHECK THE (K79) O2 SENSOR 1/1 HEATER CONTROL CIRCUIT FOR A SHORT TO VOLTAGE**
   1. Turn the ignition off.
   2. Disconnect the Oxygen Sensor harness connector.
   3. Disconnect the Powertrain Control Module harness connector.
   4. Remove the ASD Relay from the TIPM.
   5. Connect a jumper wire between cavity 30 and cavity 87 of the ASD Relay Connector.
   6. Turn the ignition on.
   7. Measure the voltage of the (K79) O2 Sensor 1/1 Heater Control circuit in the Oxygen Sensor harness connector.

   Is there any voltage present?

   Yes

   - Repair the (K79) O2 Sensor 1/1 Heater Control circuit for a short to voltage.
   - Perform the POWERTRAIN VERIFICATION TEST - 2.2L DIESEL. Refer to **PCM VERIFICATION TEST - 2.2L DIESEL** .

   No

   - Go To 3

3. **CHECK THE (K79) O2 SENSOR 1/1 HEATER CONTROL CIRCUIT FOR A SHORT TO GROUND**
   1. Turn the ignition off.

2. Remove the jumper wire and install the ASD Relay.
3. Measure the resistance between ground and the (K79) O2 Sensor 1/1 Heater Control circuit in the Oxygen Sensor harness connector.

   Is the resistance above 10k Ohms?

   Yes

   - Go To 4

   No

   - Repair the (K79) O2 Sensor 1/1 Heater Control circuit for a short to ground.
   - Perform the POWERTRAIN VERIFICATION TEST - 2.2L DIESEL. Refer to **PCM VERIFICATION TEST - 2.2L DIESEL** .

4. **CHECK THE (K103) O2 SENSOR 1/1 PUMP CELL CURRENT TRIM CIRCUIT FOR A SHORT TO GROUND**
   1. Measure the resistance between ground and the (K103) O2 Sensor 1/1 Pump Cell Current Trim circuit in the Oxygen Sensor harness connector.

      Is the resistance above 10k Ohms?

      Yes

      - Go To 5

      No

      - Repair the (K79) O2 Sensor 1/1 Heater Control circuit for a short to ground.
      - Perform the POWERTRAIN VERIFICATION TEST - 2.2L DIESEL. Refer to **PCM VERIFICATION TEST - 2.2L DIESEL** .

5. **CHECK THE (K89) O2 SENSOR 1/1 POSITIVE CURRENT CONTROL CIRCUIT FOR A SHORT TO GROUND**
   1. Measure the resistance between ground and the (K89) O2 Sensor 1/1

Positive Current Control circuit in the Oxygen Sensor harness connector.

Is the resistance above 10k Ohms?

Yes

- Go To 6

No

- Repair the (K89) O2 Sensor 1/1 Positive Current Control circuit for a short to ground.
- Perform the POWERTRAIN VERIFICATION TEST - 2.2L DIESEL. Refer to **PCM VERIFICATION TEST - 2.2L DIESEL** .

6. **CHECK THE (K79) O2 SENSOR 1/1 HEATER CONTROL CIRCUIT FOR AN OPEN/HIGH RESISTANCE**
   1. Measure the resistance of the (K79) O2 Sensor 1/1 Heater Control circuit between the Oxygen Sensor harness connector and the Powertrain Control Module harness connector.

      Is the resistance below 5.0 Ohms?

      Yes

      - Go To 7

      No

      - Repair the (K79) O2 Sensor 1/1 Heater Control circuit for an open or high resistance.
      - Perform the POWERTRAIN VERIFICATION TEST - 2.2L DIESEL. Refer to **PCM VERIFICATION TEST - 2.2L DIESEL** .
7. **CHECK THE (F344) FUSED ASD RELAY OUTPUT CIRCUIT FOR AN OPEN/HIGH RESISTANCE**
   1. Measure the resistance of the (F344) Fused ASD Relay Output circuit between the Oxygen Sensor harness connector and the TIPM C10

harness connector.

Is the resistance below 5.0 Ohms?

Yes

- Go To 8

No

- Repair the (F344) Fused ASD Relay Output circuit for an open circuit or high resistance.
- Perform the POWERTRAIN VERIFICATION TEST - 2.2L DIESEL. Refer to **PCM VERIFICATION TEST - 2.2L DIESEL** .

8. **CHECK THE OXYGEN SENSOR**
   1. Connect the Powertrain Control Module harness connector.
   2. Replace the Oxygen Sensor in accordance with the service information.
   3. Turn the ignition on.
   4. With the scan tool, navigate to Actuator Tests and perform the O2 Sensor Replace procedure.
   5. Start the engine.
   6. Allow the engine to reach normal operating temperature.
   7. Monitor the scan tool for at least two minutes.
   8. With the scan tool, select View DTCs.

   Is the status Active for this DTC?

   Yes

   - Go To 9

   No

   - Test Complete.
   - Perform the POWERTRAIN VERIFICATION TEST - 2.2L DIESEL. Refer to **PCM VERIFICATION TEST - 2.2L DIESEL** .

9. **POWERTRAIN CONTROL MODULE**
    1. Using the wiring diagram/schematic as a guide, inspect the wiring and connectors between the Oxygen Sensor and the Powertrain Control Module.
    2. Look for any chafed, pierced, pinched, or partially broken wires.
    3. Look for broken, bent, pushed out or corroded terminals.
    4. Perform any Technical Service Bulletins that may apply.

    Were any problems found?

    Yes

    - Repair as necessary.
    - Perform the POWERTRAIN VERIFICATION TEST - 2.2L DIESEL. Refer to **PCM VERIFICATION TEST - 2.2L DIESEL** .

    No

    - Replace the Powertrain Control Module. **Before removing the PCM, perform the "Replace PCM" routine in the Miscellaneous Functions tab of the scan tool.** . Refer to **REMOVAL** .
    - Perform the POWERTRAIN VERIFICATION TEST - 2.2L DIESEL. Refer to **PCM VERIFICATION TEST - 2.2L DIESEL** .

P015A-O2 SENSOR 1/1 DELAYED RESPONSE - RICH TO LEAN

For a complete wiring diagram, **refer to appropriate SYSTEM WIRING DIAGRAMS article** .

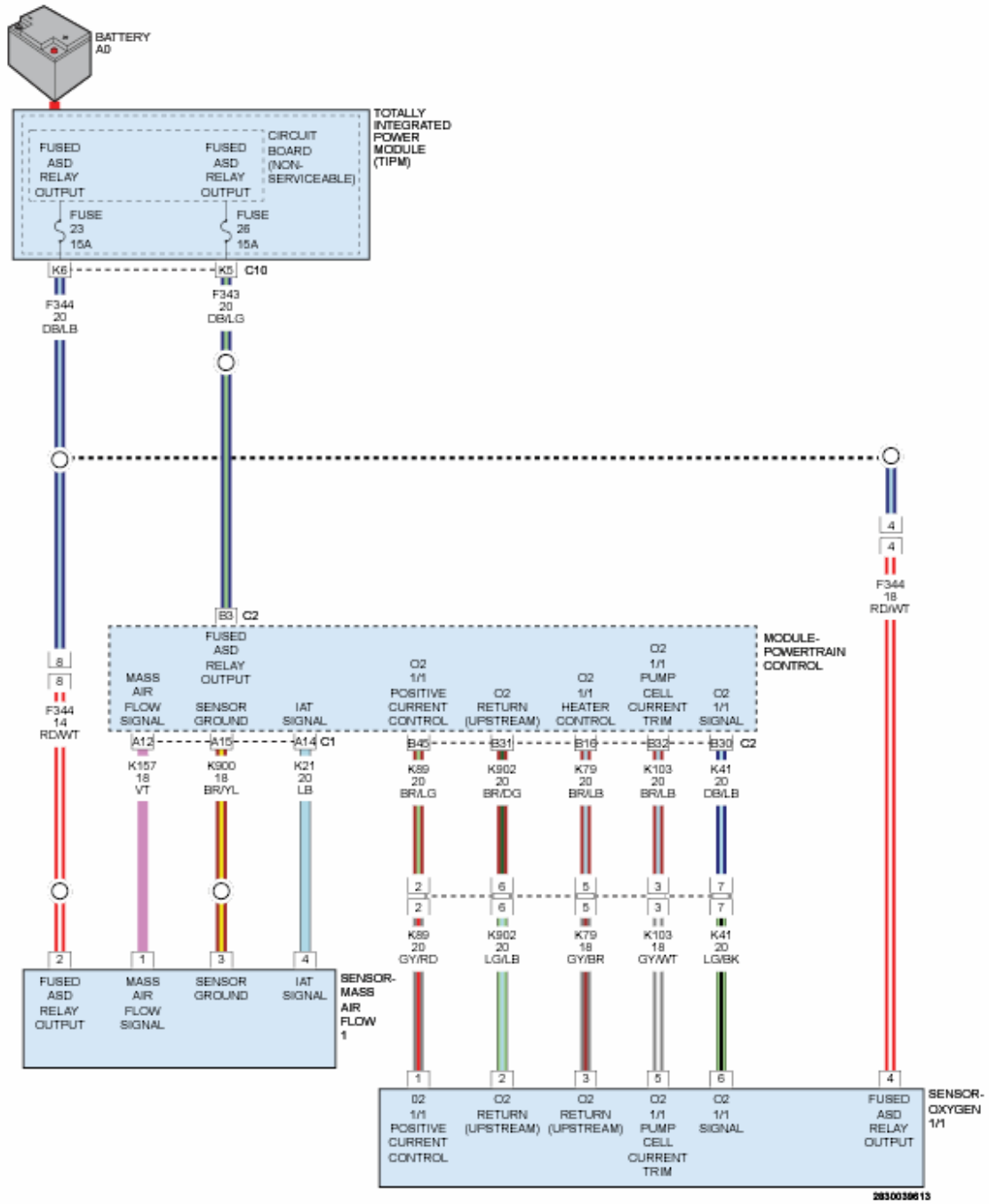

Fig. 17: O2 & MAF Sensors Circuit Diagram
Courtesy of CHRYSLER GROUP, LLC

THEORY OF OPERATION

The Powertrain Control Module (PCM) receives feedback from the Oxygen Sensor to monitor the oxygen content in the diesel engine exhaust. The PCM uses this information, along with input from other sensors to vary the rich/lean fuel mixture of the intake air fuel mixture to adjust the system and meet emission standards.

WHEN MONITORED

With the engine running, sufficient exhaust flow, in fuel cut off mode.

SET CONDITION

The Powertrain Control Module (PCM) detects that the time for the O2 Sensor pump current to change from 1.0 mA to 2.25 mA in more than 0.77 seconds.

POSSIBLE CAUSES

Possible Causes
FUEL DELIVERY SYSTEM FAILURE
INTAKE AIR SYSTEM LEAK
EGR SYSTEM LEAK
EXHAUST SYSTEM LEAK
OXYGEN SENSOR
POWERTRAIN CONTROL MODULE (PCM)

Always perform the Pre-Diagnostic Troubleshooting procedure before proceeding. Refer to PRE-DIAGNOSTIC TROUBLESHOOTING PROCEDURE - 2.2L DIESEL .

DIAGNOSTIC TEST

1. **DTC IS ACTIVE**

NOTE: If there are any cylinder misfire, Crank Sensor, MAF Sensor, or Fuel Injector DTCs stored with this fault, perform the diagnostics for those DTCs before proceeding with this test.

1. Ignition on, engine not running.
2. With the scan tool, Clear DTCs in the Powertrain Control Module.
3. With the scan tool, actuate the Oxygen Sensor Heater.
4. Monitor the scan tool for at least five minutes.
5. With the scan tool, select View DTCs.

Is the status Active for this DTC?

Yes

- Go To 2

No

- Perfrom the INTERMITTENT CONDITION diagnostic procedure. Refer to **INTERMITTENT CONDITION - 2.2L DIESEL** .

2. **CHECK THE FUEL DELIVERY SYSTEM**
   1. Perform the CHECKING THE FUEL DELIVERY SYSTEM diagnostic procedure. Refer to **DIAGNOSIS AND TESTING** .

   Were any fuel system problems found?

   Yes

   - Perform the appropriate repairs to the fuel system.
   - Perform the POWERTRAIN VERIFICATION TEST 2.2L. Refer to **PCM VERIFICATION TEST - 2.2L DIESEL** .

   No

   - Go To 3

3. **CHECK THE INTAKE AIR SYSTEM**
   1. Check the Intake Air System for any signs of a leak or restriction.

   Were any Intake System problems found?

   Yes

   - Perform the appropriate repairs to the Intake Air System.
   - Perform the POWERTRAIN VERIFICATION TEST 2.2L. Refer to **PCM VERIFICATION TEST - 2.2L DIESEL** .

   No

   - Go To 4

4. **CHECK THE EXHAUST SYSTEM FOR LEAKS**
   1. Check the Exhaust System for any signs of a leak or restriction.

Were any Exhaust System problems found?

Yes

- Perform the appropriate repairs to the Exhaust System.
- Perform the POWERTRAIN VERIFICATION TEST 2.2L. Refer to **PCM VERIFICATION TEST - 2.2L DIESEL** .

No

- Go To 5

5. **CHECK FOR AN EGR LEAK**
   1. Look for visible signs (soot streaks) of an external EGR leak.

   Were any EGR leaks found?

   Yes

   - Perform the appropriate repairs to the EGR system.
   - Perform the POWERTRAIN VERIFICATION TEST 2.2L. Refer to **PCM VERIFICATION TEST - 2.2L DIESEL** .

   No

   - Go To 6

6. **CHECK THE OXYGEN SENSOR**
   1. Connect the Powertrain Control Module harness connector.
   2. Replace the Oxygen Sensor in accordance with the service information.
   3. Turn the ignition on.
   4. With the scan tool, navigate to Miscellaneous Functions and perform the O2 Sensor Replace procedure.
   5. Start the engine.
   6. Allow the engine to reach normal operating temperature.
   7. Monitor the scan tool for at least five minutes.
   8. With the scan tool, select View DTCs.

   Is the status Active for this DTC?

Yes

- Go To 7

No

- Test Complete.
- Perform the POWERTRAIN VERIFICATION TEST - 2.2L DIESEL. Refer to **PCM VERIFICATION TEST - 2.2L DIESEL** .

7. **POWERTRAIN CONTROL MODULE**
   1. Using the wiring diagram/schematic as a guide, inspect the wiring and connectors between the Oxygen Sensor and the Powertrain Control Module.
   2. Look for any chafed, pierced, pinched, or partially broken wires.
   3. Look for broken, bent, pushed out or corroded terminals.
   4. Perform any Technical Service Bulletins that may apply.

   Were any problems found?

   Yes

   - Repair as necessary.
   - Perform the POWERTRAIN VERIFICATION TEST - 2.2L DIESEL. Refer to **PCM VERIFICATION TEST - 2.2L DIESEL** .

   No

   - Replace the Powertrain Control Module. **Before removing the PCM, perform the "Replace PCM" routine in the Miscellaneous Functions tab of the scan tool.** . Refer to **REMOVAL** .
   - Perform the POWERTRAIN VERIFICATION TEST - 2.2L DIESEL. Refer to **PCM VERIFICATION TEST - 2.2L DIESEL** .

P0181-FUEL TEMPERATURE SENSOR PERFORMANCE

For a complete wiring diagram, **refer to appropriate SYSTEM WIRING DIAGRAMS article** .

THEORY OF OPERATION

The Fuel Temperature Sensor (FTS) is located next to the fuel feed line on the High Pressure Pump. The FTS is supplied a 5-Volt signal and a sensor ground from the Powertrain Control Module (PCM). The PCM uses the feedback information to determine the temperature of the fuel flowing through the High Pressure Pump. Diesel fuel becomes more dense as the temperature of the fuel decreases and the PCM uses this information to adjust the fuel quantity in the system.

WHEN MONITORED

With the ignition on.

SET CONDITION

The (K156) Fuel Temperature Sensor Signal changes by more than 140°F (60°C) in one second.

POSSIBLE CAUSES

Possible Causes
(K156) FUEL TEMPERATURE SENSOR SIGNAL CIRCUIT OPEN/HIGH RESISTANCE
(K914) FUEL TEMPERATURE SENSOR RETURN CIRCUIT OPEN/HIGH RESISTANCE
FUEL TEMPERATURE SENSOR
POWERTRAIN CONTROL MODULE (PCM)

DIAGNOSTIC TEST

1. **CHECK THE FUEL TEMPERATURE SENSOR CONNECTOR**
    1. Turn the ignition off.
    2. Disconnect the Fuel Temperature Sensor harness connector.
    3. Inspect the connector for poor terminal contact, corrosion, damage or other problems.

    Is there any evidence of connector problems?

Yes

- Repair or replace as necessary.
- Perform the POWERTRAIN VERIFICATION TEST - 2.2L DIESEL. Refer to **PCM VERIFICATION TEST - 2.2L DIESEL** .

No

- Go To 2

2. **CHECK THE (K156) FUEL TEMPERATURE SENSOR SIGNAL CIRCUIT FOR AN OPEN/HIGH RESISTANCE**
   1. Disconnect the PCM C1 harness connector.
   2. Measure the resistance of the (K156) Fuel Temperature Sensor Signal circuit between the Fuel Temperature Sensor harness connector and the PCM C1 harness connector.

   Is the resistance below 5.0 Ohms?

   Yes

   - Go To 3

   No

   - Repair the (K156) Fuel Temperature Sensor Signal circuit for an open or high resistance.
   - Perform the POWERTRAIN VERIFICATION TEST - 2.2L DIESEL. Refer to **PCM VERIFICATION TEST - 2.2L DIESEL** .

3. **CHECK THE (K914) FUEL TEMPERATURE SENSOR RETURN CIRCUIT FOR AN OPEN/HIGH RESISTANCE**
   1. Measure the resistance of the (K914) Fuel Temperature Sensor Return circuit between the Fuel Temperature Sensor harness connector and the PCM C1 harness connector.

   Is the resistance below 5.0 Ohms?

   Yes

- Go To 4

No

- Repair the (K914) Fuel Temperature Sensor Return circuit for an open or high resistance.
- Perform the POWERTRAIN VERIFICATION TEST - 2.2L DIESEL. Refer to **PCM VERIFICATION TEST - 2.2L DIESEL** .

4. **CHECK THE FUEL TEMPERATURE SENSOR**

NOTE: Allow the engine to completely cool to ambient temperature.

1. Reconnect the PCM C1 harness connector.
2. Reconnect the Fuel Temperature Sensor harness connector.
3. Turn the ignition on.
4. With the scan tool, read and note the engine coolant temperature.
5. With the scan tool, read the fuel temperature and compare it to the engine coolant temperature reading.

Are the readings within 7°C (13°F) of each other?

Yes

- Perform the INTERMITTENT CONDITION diagnostic procedure. Refer to **INTERMITTENT CONDITION - 2.2L DIESEL** .

No

- Go To 5

5. **CHECK THE POWERTRAIN CONTROL MODULE**
   1. Replace the Fuel Temperature Sensor in accordance with the service information.
   2. With the scan tool, erase DTCs.
   3. Start the engine and allow it to reach operating temperature.
   4. With the scan tool, read DTCs.

Did DTC P0181 return?

Yes

- Replace the Powertrain Control Module. **Before removing the PCM, perform the "Replace PCM" routine in the Miscellaneous Functions tab of the scan tool.** . Refer to **REMOVAL** .
- Perform the POWERTRAIN VERIFICATION TEST - 2.2L DIESEL. Refer to **PCM VERIFICATION TEST - 2.2L DIESEL** .

No

- Test complete.
- Perform the POWERTRAIN VERIFICATION TEST - 2.2L DIESEL. Refer to **PCM VERIFICATION TEST - 2.2L DIESEL** .

P0182-FUEL TEMPERATURE SENSOR CIRCUIT LOW

For a complete wiring diagram, **refer to appropriate SYSTEM WIRING DIAGRAMS article** .

THEORY OF OPERATION

The Fuel Temperature Sensor (FTS) is located next to the fuel feed line on the High Pressure Pump. The FTS is supplied a 5-Volt signal and a sensor ground from the Powertrain Control Module (PCM). The PCM uses the feedback information to determine the temperature of the fuel flowing through the High Pressure Pump. Diesel fuel becomes more dense as the temperature of the fuel decreases and the PCM uses this information to adjust the fuel quantity in the system.

WHEN MONITORED

With the ignition on.

SET CONDITION

The (K156) Fuel Temperature Sensor Signal circuit voltage is below 0.1 Volts for two seconds.

POSSIBLE CAUSES

Possible Causes
(K156) FUEL TEMPERATURE SENSOR SIGNAL CIRCUIT SHORTED TO GROUND
(K156) FUEL TEMPERATURE SENSOR SIGNAL CIRCUIT SHORTED TO THE (K914) FUEL TEMPERATURE SENSOR RETURN CIRCUIT
FUEL TEMPERATURE SENSOR
POWERTRAIN CONTROL MODULE (PCM)

Always perform the Pre-Diagnostic Troubleshooting procedure before proceeding. Refer to PRE-DIAGNOSTIC TROUBLESHOOTING PROCEDURE - 2.2L DIESEL .

DIAGNOSTIC TEST

1. **DTC IS ACTIVE**
   1. Ignition on, engine not running.
   2. With the scan tool, clear DTCs in the Powertrain Control Module.
   3. Cycle the ignition key off and on several times, leaving the ignition on for at least 10.0 seconds at a time.
   4. Monitor the scan tool for at least two minutes.
   5. With the scan tool, select View DTCs.

      Is the status Active for this DTC?

      Yes

      - Go To 2

      No

      - Perform the INTERMITTENT CONDITION diagnostic procedure. Refer to **INTERMITTENT CONDITION - 2.2L DIESEL** .
2. **CHECK THE (K156) FUEL TEMPERATURE SENSOR SIGNAL CIRCUIT FOR A SHORT TO GROUND**
   1. Turn the ignition off.
   2. Disconnect the Fuel Temperature Sensor harness connector.

3. Disconnect the Powertrain Control Module C1 harness connector.
4. Measure the resistance between ground and the (K156) Fuel Temperature Sensor Signal circuit in the Fuel Temperature Sensor harness connector.

   Is the resistance below 10k Ohms?

   Yes

   - Repair the (K156) Fuel Temperature Sensor Signal circuit for a short to ground.
   - Perform the POWERTRAIN VERIFICATION TEST - 2.2L DIESEL. Refer to **PCM VERIFICATION TEST - 2.2L DIESEL** .

   No

   - Go To 3

3. **CHECK FOR THE (K156) FUEL TEMPERATURE SENSOR SIGNAL CIRCUIT SHORTED TO THE (K914) FUEL TEMPERATURE SENSOR RETURN CIRCUIT**
   1. Measure the resistance between the (K156) Fuel Temperature Sensor Signal circuit and the (K914) Fuel Temperature Sensor Return circuit at the Fuel Temperature Sensor harness connector.

      Is the resistance above 10k Ohms?

      Yes

      - Go To 4

      No

      - Repair the (K156) Fuel Temperature Sensor Signal circuit for a short to the (K914) Fuel Temperature Sensor Return circuit.
      - Perform the POWERTRAIN VERIFICATION TEST - 2.2L DIESEL. Refer to **PCM VERIFICATION TEST - 2.2L DIESEL** .
4. **CHECK THE FUEL TEMPERATURE SENSOR**

1. Reconnect the Fuel Temperature Sensor harness connector.
2. Reconnect the Powertrain Control Module C1 harness connector.
3. Turn the ignition on.
4. With the scan tool, clear DTCs.
5. Turn the ignition off.
6. Disconnect the Fuel Temperature Sensor harness connector.
7. Turn the ignition on.
8. With the scan tool, select View DTCs.

NOTE: The scan tool should display a P0183-Fuel Temperature Sensor Circuit High DTC with the Fuel Temperature Sensor connector disconnected.

Does the scan tool display the DTCs as described above?

Yes

- Replace the Fuel Temperature Sensor in accordance with the service information.
- Perform the POWERTRAIN VERIFICATION TEST - 2.2L DIESEL. Refer to **PCM VERIFICATION TEST - 2.2L DIESEL** .

No

- Go To 5

5. **POWERTRAIN CONTROL MODULE**
   1. Using the wiring diagram/schematic as a guide, inspect the wiring and connectors between the Fuel Temperature Sensor and the Powertrain Control Module.
   2. Look for any chafed, pierced, pinched, or partially broken wires.
   3. Look for broken, bent, pushed out or corroded terminals.
   4. Monitor the scan tool data relative to this circuit and wiggle test the wiring and connectors.
   5. Look for the data to change or for the DTC to reset during the wiggle

test.

6. Perform any Technical Service Bulletins that may apply.

   Were any problems found?

   Yes

   - Repair as necessary.
   - Perform the POWERTRAIN VERIFICATION TEST - 2.2L DIESEL. Refer to **PCM VERIFICATION TEST - 2.2L DIESEL** .

   No

   - Replace the Powertrain Control Module. **Before removing the PCM, perform the "Replace PCM" routine in the Miscellaneous Functions tab of the scan tool.** . Refer to **REMOVAL** .
   - Perform the POWERTRAIN VERIFICATION TEST - 2.2L DIESEL. Refer to **PCM VERIFICATION TEST - 2.2L DIESEL** .

P0183-FUEL TEMPERATURE SENSOR CIRCUIT HIGH

For a complete wiring diagram, **refer to appropriate SYSTEM WIRING DIAGRAMS article** .

THEORY OF OPERATION

The Fuel Temperature Sensor (FTS) is located next to the fuel feed line on the High Pressure Pump. The FTS is supplied a 5-Volt signal and a sensor ground from the Powertrain Control Module (PCM). The PCM uses the feedback information to determine the temperature of the fuel flowing through the High Pressure Pump. Diesel fuel becomes more dense as the temperature of the fuel decreases and the PCM uses this information to adjust the fuel quantity in the system.

WHEN MONITORED

With the ignition on.

SET CONDITION

The (K156) Fuel Temperature Sensor Signal circuit voltage is above 4.94 Volts for two seconds.

POSSIBLE CAUSES

Possible Causes
(K156) FUEL TEMPERATURE SENSOR SIGNAL CIRCUIT SHORTED TO VOLTAGE
(K916) FUEL TEMPERATURE SENSOR RETURN CIRCUIT SHORTED TO VOLTAGE
(K156) FUEL TEMPERATURE SENSOR SIGNAL CIRCUIT OPEN/HIGH RESISTANCE
(K916) FUEL TEMPERATURE SENSOR RETURN CIRCUIT OPEN/HIGH RESISTANCE
FUEL TEMPERATURE SENSOR
POWERTRAIN CONTROL MODULE (PCM)

Always perform the Pre-Diagnostic Troubleshooting procedure before proceeding. Refer to PRE-DIAGNOSTIC TROUBLESHOOTING PROCEDURE - 2.2L DIESEL .

DIAGNOSTIC TEST

1. **DTC IS ACTIVE**
    1. Ignition on, engine not running.
    2. With the scan tool, clear DTCs in the Powertrain Control Module.
    3. Cycle the ignition key off and on several times, leaving the ignition on for at least 10.0 seconds at a time.
    4. Monitor the scan tool for at least two minutes.
    5. With the scan tool, select View DTCs.

    Is the status Active for this DTC?

    Yes

    - Go To 2

No

- Perform the INTERMITTENT CONDITION diagnostic procedure. Refer to **INTERMITTENT CONDITION - 2.2L DIESEL** .

2. **CHECK THE (K156) FUEL TEMPERATURE SENSOR SIGNAL CIRCUIT FOR A SHORT TO VOLTAGE**
   1. Turn the ignition off.
   2. Disconnect the Fuel Temperature Sensor harness connector.
   3. Disconnect the Powertrain Control Module C1 harness connector.
   4. Remove the Main Relay.
   5. Connect a jumper wire between cavity 87 and cavity 30 of the Main Relay Connector.
   6. Turn the ignition on.
   7. Measure the voltage of the (K156) Fuel Temperature Sensor Signal circuit at the Fuel Temperature Sensor harness connector.

   Is there any voltage present?

   Yes

   - Repair the (K156) Fuel Temperature Sensor Signal circuit for a short to voltage.
   - Perform the POWERTRAIN VERIFICATION TEST - 2.2L DIESEL. Refer to **PCM VERIFICATION TEST - 2.2L DIESEL** .

   No

   - Go To 3

3. **CHECK THE (K916) FUEL TEMPERATURE SENSOR RETURN CIRCUIT FOR A SHORT TO VOLTAGE**

   NOTE: The jumper wire should still be in place.

   1. Measure the voltage of the (K916) Fuel Temperature Sensor Return circuit at the Fuel Temperature Sensor harness connector.

   Is there any voltage present?

Yes

- Repair the (K916) Fuel Temperature Sensor Return circuit for a short to voltage.
- Perform the POWERTRAIN VERIFICATION TEST - 2.2L DIESEL. Refer to **PCM VERIFICATION TEST - 2.2L DIESEL** .

No

- Go To 4

4. **CHECK THE (K156) FUEL TEMPERATURE SENSOR SIGNAL FOR AN OPEN/HIGH RESISTANCE**

NOTE: Remove the jumper wire.

1. Turn the ignition off.
2. Reinstall the Main Relay.
3. Measure the resistance of the (K156) Fuel Temperature Sensor Signal circuit between the Fuel Temperature Sensor harness connector and the Powertrain Control Module C1 harness connector.

   Is the resistance below 5.0 Ohms?

   Yes

   - Go To 5

   No

   - Repair the (K156) Fuel Temperature Sensor Signal circuit for an open or high resistance.
   - Perform the POWERTRAIN VERIFICATION TEST - 2.2L DIESEL. Refer to **PCM VERIFICATION TEST - 2.2L DIESEL** .

5. **CHECK THE (K916) FUEL TEMPERATURE SENSOR RETURN CIRCUIT FOR AN OPEN/HIGH RESISTANCE**
   1. Measure the resistance of the (K916) Fuel Temperature Sensor Return circuit between the Fuel Temperature Sensor harness connector and the

Powertrain Control Module C1 harness connector.

Is the resistance below 5.0 Ohms?

Yes

- Go To 6

No

- Repair the (K916) Fuel Temperature Sensor Ground circuit for an open or high resistance.
- Perform the POWERTRAIN VERIFICATION TEST - 2.2L DIESEL. Refer to **PCM VERIFICATION TEST - 2.2L DIESEL** .

6. **CHECK THE FUEL TEMPERATURE SENSOR**

NOTE: Remove the jumper wire.

1. Connect the Powertrain Control Module harness connector.
2. Connect a jumper wire between the (K916) Fuel Temperature Sensor Return circuit and the (K156) Fuel Temperature Sensor Signal circuit at the Fuel Temperature Sensor harness connector.
3. Turn the ignition on.
4. With the scan tool, Clear DTCs.
5. With the scan tool, select View DTCs.

NOTE: The scan tool should display a P0182-Fuel Temperature Sensor Circuit Low DTC with the jumper wire in place.

Does the scan tool display the DTCs as described above?

Yes

- Replace the Fuel Temperature Sensor in accordance with the service information.
- Perform the POWERTRAIN VERIFICATION TEST - 2.2L DIESEL. Refer to **PCM VERIFICATION TEST - 2.2L**

DIESEL .

No

- Go To 7

7. **POWERTRAIN CONTROL MODULE**
   1. Using the wiring diagram/schematic as a guide, inspect the wiring and connectors between the Fuel Temperature Sensor and the Powertrain Control Module.
   2. Look for any chafed, pierced, pinched, or partially broken wires.
   3. Look for broken, bent, pushed out or corroded terminals.
   4. Monitor the scan tool data relative to this circuit and wiggle test the wiring and connectors.
   5. Look for the data to change or for the DTC to reset during the wiggle test.
   6. Perform any Technical Service Bulletins that may apply.

   Were any problems found?

   Yes

   - Repair as necessary.
   - Perform the POWERTRAIN VERIFICATION TEST - 2.2L DIESEL. Refer to **PCM VERIFICATION TEST - 2.2L DIESEL** .

   No

   - Replace the Powertrain Control Module. **Before removing the PCM, perform the "Replace PCM" routine in the Miscellaneous Functions tab of the scan tool.** . Refer to **REMOVAL** .
   - Perform the POWERTRAIN VERIFICATION TEST - 2.2L DIESEL. Refer to **PCM VERIFICATION TEST - 2.2L DIESEL** .

P0190-FUEL RAIL PRESSURE SENSOR "A" CIRCUIT

For a complete wiring diagram, **refer to appropriate SYSTEM WIRING**

DIAGRAMS article .

THEORY OF OPERATION

The Fuel Rail Pressure Sensor is located on the High Pressure Fuel Rail. The Fuel Rail Pressure Sensor functions as a typical three wire 5-Volt sensor. The PCM uses the feedback information to determine and adjust the pressure in the high side of the fuel system. At light engine loads the high side fuel pressure will operate at approximately 250 bar (3626 psi). At higher engine loads the high side fuel pressure can reach 1800 bar (26107 psi).

WHEN MONITORED

With the ignition on.

SET CONDITION

The Powertrain Control Module (PCM) detects that the Fuel Rail Pressure Sensor Supply voltage or the Accelerator Pedal Position 1 Sensor is either shorted to voltage or ground.

POSSIBLE CAUSES

Possible Causes
(K350) FUEL RAIL PRESSURE SENSOR 5-VOLT SUPPLY CIRCUIT SHORTED TO VOLTAGE
(K852) ACCELERATOR PEDAL POSITION 1 SENSOR 5-VOLT SUPPLY CIRCUIT SHORTED TO VOLTAGE
(K350) FUEL RAIL PRESSURE SENSOR 5-VOLT SUPPLY CIRCUIT SHORTED TO GROUND
(K852) ACCELERATOR PEDAL POSITION 1 SENSOR 5-VOLT SUPPLY CIRCUIT SHORTED TO GROUND
ACCELERATOR PEDAL POSITION SENSOR
FUEL RAIL PRESSURE SENSOR
POWERTRAIN CONTROL MODULE (PCM)

DIAGNOSTIC TEST

1. **DTC IS ACTIVE**

NOTE: If there are any 5-Volt Reference DTCs present, repair

those DTCs before proceeding with this test.

1. Ignition on, engine not running.
2. With the scan tool, clear DTCs in the Powertrain Control Module.
3. Cycle the ignition off for 10.0 seconds.
4. Turn the ignition on.
5. With the scan tool, view DTCs.

   Did this DTC return?

   Yes

   - Go To 2

   No

   - Perform the INTERMITTENT CONDITION diagnostic procedure. Refer to **INTERMITTENT CONDITION - 2.2L DIESEL** .

2. **CHECK THE FUEL RAIL PRESSURE SENSOR**
   1. With the scan tool, clear DTCs in the Powertrain Control Module.
   2. Cycle the ignition off.
   3. Disconnect the Fuel Rail Pressure Sensor harness connector.
   4. Turn the ignition on.
   5. Measure the voltage on the (K350) Fuel Rail Pressure Sensor 5-Volt Supply circuit at the Fuel Rail Pressure Sensor harness connector.

      Does the voltage measure between 4.9 Volts and 5.1 Volts?

      Yes

      - Replace the Fuel Rail Pressure Sensor in accordance with the service information.
      - Perform the POWERTRAIN VERIFICATION TEST - 2.2L DIESEL. Refer to **PCM VERIFICATION TEST - 2.2L DIESEL** .

      No

- Go To 3

3. **CHECK THE ACCELERATOR PEDAL POSITION SENSOR**
   1. With the scan tool, clear DTCs in the Powertrain Control Module.
   2. Cycle the ignition off.
   3. Disconnect the Accelerator Pedal Position Sensor harness connector.
   4. Turn the ignition on.
   5. Measure the voltage on the (K852) Accelerator Pedal Position 1 Sensor 5-Volt Supply circuit at the Accelerator Pedal Position Sensor harness connector.

      Does the voltage measure between 4.9 Volts and 5.1 Volts?

      Yes

      - Replace the Accelerator Pedal Position Sensor in accordance with the service information.
      - Perform the POWERTRAIN VERIFICATION TEST - 2.2L DIESEL. Refer to **PCM VERIFICATION TEST - 2.2L DIESEL** .

      No

      - Go To 4

4. **POWERTRAIN CONTROL MODULE**
   1. Using the wiring diagram/schematic as a guide, inspect the wiring and connectors between the Fuel Rail Pressure Sensor, Accelerator Pedal Position and the Powertrain Control Module.
   2. Look for any chafed, pierced, pinched, or partially broken wires.
   3. Look for broken, bent, pushed out or corroded terminals.
   4. Monitor the scan tool data relative to this circuit and wiggle test the wiring and connectors.
   5. Look for the data to change or for the DTC to reset during the wiggle test.
   6. Perform any Technical Service Bulletins that may apply.

      Were any problems found?

Yes

- Repair as necessary.
- Perform the POWERTRAIN VERIFICATION TEST - 2.2L DIESEL. Refer to **PCM VERIFICATION TEST - 2.2L DIESEL** .

No

- Replace the Powertrain Control Module. **Before removing the PCM, perform the "Replace PCM" routine in the Miscellaneous Functions tab of the scan tool.** . Refer to **REMOVAL** .
- Perform the POWERTRAIN VERIFICATION TEST - 2.2L DIESEL. Refer to **PCM VERIFICATION TEST - 2.2L DIESEL** .

P0191-FUEL RAIL PRESSURE SENSOR "A" CIRCUIT PERFORMANCE

For a complete wiring diagram, **refer to appropriate SYSTEM WIRING DIAGRAMS article** .

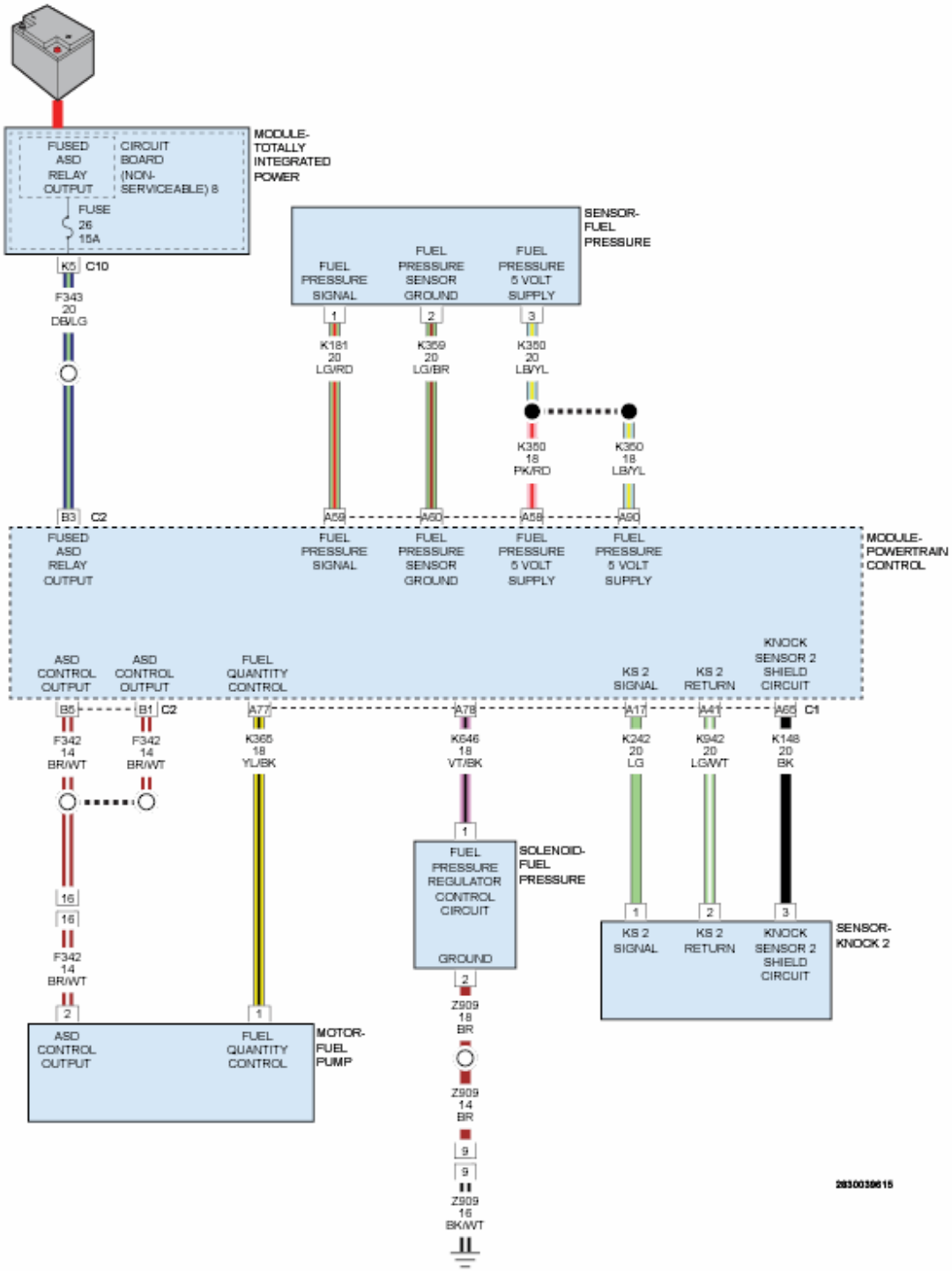

Fig. 18: Fuel System Circuit Diagram
Courtesy of CHRYSLER GROUP, LLC

THEORY OF OPERATION

The Fuel Rail Pressure Sensor is located on the High Pressure Fuel Rail. The Fuel Rail Pressure Sensor functions as a typical three wire 5-Volt sensor. The PCM uses the feedback information to determine and adjust the pressure in the

high side of the fuel system. At light engine loads the high side fuel pressure will operate at approximately 250 bar (3626 psi). At higher engine loads the high side fuel pressure can reach 1800 bar (26107 psi).

WHEN MONITORED

With the ignition on.

SET CONDITION

The Powertrain Control Module (PCM) detects that the Fuel Rail Pressure Sensor Signal is implausible for 0.4 seconds.

POSSIBLE CAUSES

Possible Causes
HIGH RESISTANCE IN THE (K181) FUEL RAIL PRESSURE SENSOR SIGNAL CIRCUIT
HIGH RESISTANCE IN THE (K350) FUEL RAIL PRESSURE SENSOR 5-VOLT SUPPLY CIRCUIT
HIGH RESISTANCE IN THE (K359) FUEL RAIL PRESSURE SENSOR RETURN CIRCUIT
FUEL DELIVERY SYSTEM FAILURE
FUEL RAIL PRESSURE SENSOR
POWERTRAIN CONTROL MODULE (PCM)

DIAGNOSTIC TEST

1. **DTC IS ACTIVE**
    1. Ignition on, engine not running.
    2. With the scan tool, clear DTCs in the Powertrain Control Module.
    3. Start the engine.
    4. With the scan tool, view DTCs.

    Did this DTC return?

    Yes

    - Go To 2

No

- Perform the INTERMITTENT CONDITION diagnostic procedure. Refer to **INTERMITTENT CONDITION - 2.2L DIESEL** .

2. **CHECK FOR HIGH RESISTANCE IN THE FUEL RAIL PRESSURE SENSOR CIRCUITS**
   1. Turn the ignition off.
   2. Disconnect the Fuel Rail Pressure Sensor harness connector.
   3. Disconnect the PCM C1 harness connector.
   4. Measure the resistance of the:
      - (K181) Fuel Rail Pressure Sensor Signal circuit between the Fuel Rail Pressure Sensor harness connector and the PCM C1 harness connector.
      - (K350) Fuel Rail Pressure Sensor 5-Volt Supply circuit between the Fuel Rail Pressure Sensor harness connector and the PCM C1 harness connector.
      - (K359) Fuel Rail Pressure Sensor Return circuit between the Fuel Rail Pressure Sensor harness connector and the PCM C1 harness connector.

   Is the resistance below 5.0 Ohms on all circuits?

   Yes

   - Go To 3

   No

   - Repair the Fuel Rail Pressure Sensor circuit that has more than 5.0 Ohms for an open or high resistance.
   - Perform the POWERTRAIN VERIFICATION TEST - 2.2L DIESEL. Refer to **PCM VERIFICATION TEST - 2.2L DIESEL** .

3. **CHECK THE FUEL DELIVERY SYSTEM**
   1. Reconnect the Powertrain Control Module C1 connector.
   2. Reconnect the Fuel Rail Pressure Sensor harness connector.
   3. Perform the CHECKING THE FUEL DELIVERY SYSTEM diagnostic

procedure. Refer to **DIAGNOSIS AND TESTING** .

Were any problems found with the Fuel Delivery System?

Yes

- Repair as necessary.
- Perform the POWERTRAIN VERIFICATION TEST - 2.2L DIESEL. Refer to **PCM VERIFICATION TEST - 2.2L DIESEL** .

No

- Go To 4

4. **FUEL RAIL PRESSURE SENSOR**
   1. Turn the ignition on.
   2. With the scan tool, Clear DTCs.
   3. Turn the ignition off.
   4. Disconnect the Fuel Rail Pressure Sensor harness connector.
   5. Turn the ignition on.
   6. With the scan tool, view DTCs.

NOTE: The scan tool should display a P0193-FUEL RAIL PRESSURE SENSOR "A" CIRCUIT HIGH DTC with the jumper wire in place.

Does the scan tool display P0193-FUEL RAIL PRESSURE SENSOR "A" CIRCUIT HIGH DTC as active?

Yes

- Replace the Fuel Rail Pressure Sensor in accordance with the service information.
- Perform the POWERTRAIN VERIFICATION TEST - 2.2L DIESEL. Refer to **PCM VERIFICATION TEST - 2.2L DIESEL** .

No

- Go To 5

5. **POWERTRAIN CONTROL MODULE**
   1. Using the wiring diagram/schematic as a guide, inspect the wiring and connectors between the Fuel Rail Pressure Sensor and the Powertrain Control Module.
   2. Look for any chafed, pierced, pinched, or partially broken wires.
   3. Look for broken, bent, pushed out or corroded terminals.
   4. Monitor the scan tool data relative to this circuit and wiggle test the wiring and connectors.
   5. Look for the data to change or for the DTC to reset during the wiggle test.
   6. Perform any Technical Service Bulletins that may apply.

   Were any problems found?

   Yes

   - Repair as necessary.
   - Perform the POWERTRAIN VERIFICATION TEST - 2.2L DIESEL. Refer to **PCM VERIFICATION TEST - 2.2L DIESEL** .

   No

   - Replace the Powertrain Control Module. **Before removing the PCM, perform the "Replace PCM" routine in the Miscellaneous Functions tab of the scan tool.** . Refer to **REMOVAL** .
   - Perform the POWERTRAIN VERIFICATION TEST - 2.2L DIESEL. Refer to **PCM VERIFICATION TEST - 2.2L DIESEL** .

P0192-FUEL RAIL PRESSURE SENSOR "A" CIRCUIT LOW

For a complete wiring diagram, **refer to appropriate SYSTEM WIRING DIAGRAMS article** .

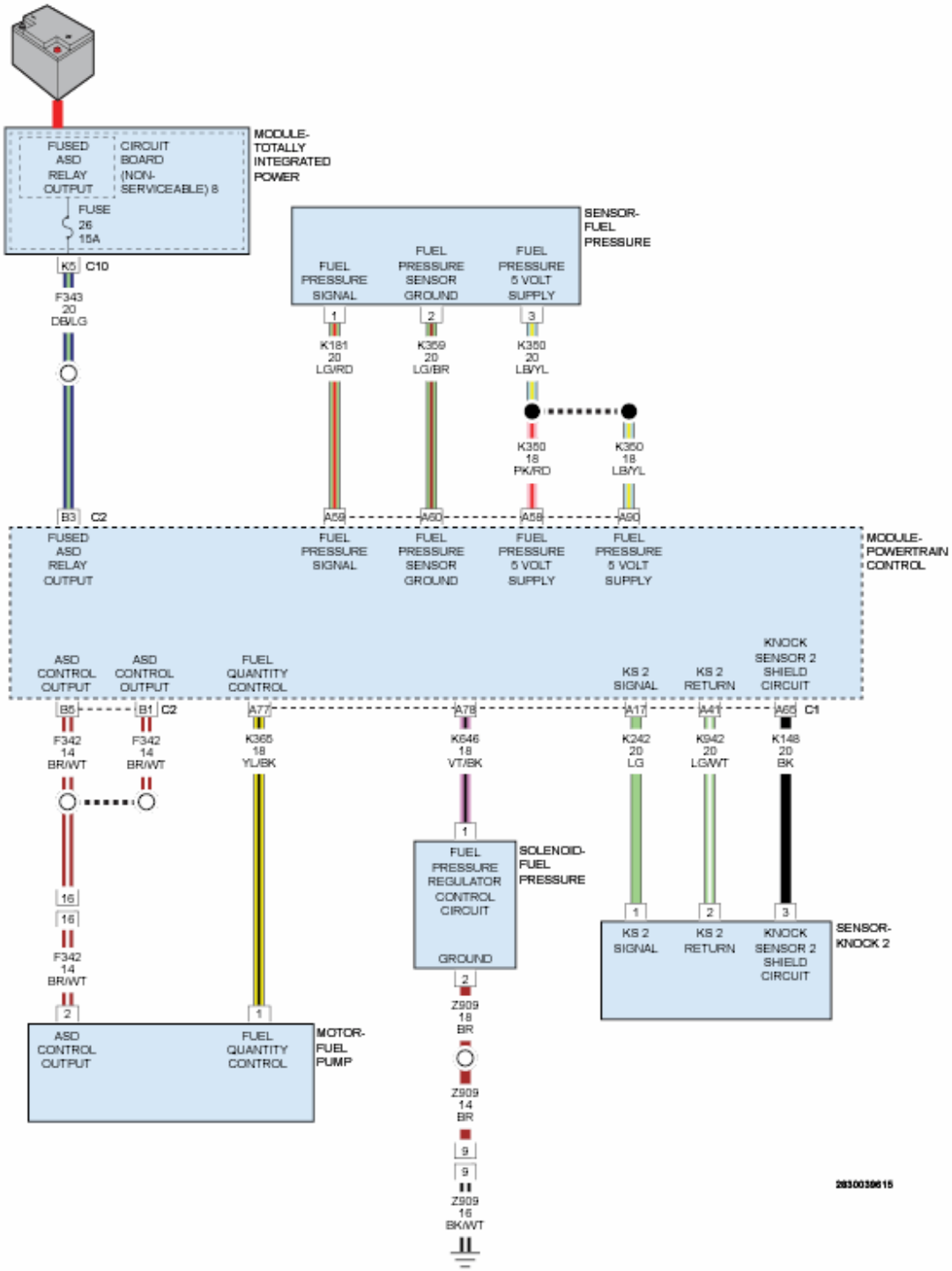

Fig. 19: Fuel System Circuit Diagram
Courtesy of CHRYSLER GROUP, LLC

THEORY OF OPERATION

The Fuel Rail Pressure Sensor is located on the High Pressure Fuel Rail. The Fuel Rail Pressure Sensor functions as a typical three wire 5-Volt sensor. The PCM uses the feedback information to determine and adjust the pressure in the

high side of the fuel system. At light engine loads the high side fuel pressure will operate at approximately 250 bar (3626 psi). At higher engine loads the high side fuel pressure can reach 1800 bar (26107 psi).

WHEN MONITORED

With the ignition on.

SET CONDITION

The (K181) Fuel Rail Pressure Sensor Signal circuit voltage is below 0.19 Volts for 0.4 seconds.

POSSIBLE CAUSES

Possible Causes
(K181) FUEL RAIL PRESSURE SENSOR SIGNAL CIRCUIT SHORTED TO GROUND
(K181) SIGNAL CIRCUIT SHORTED TO THE (K359) FUEL RAIL PRESSURE SENSOR RETURN CIRCUIT
FUEL RAIL PRESSURE SENSOR
POWERTRAIN CONTROL MODULE (PCM)

DIAGNOSTIC TEST

1. **DTC IS ACTIVE**
    1. Ignition on, engine not running.
    2. With the scan tool, clear DTCs in the Powertrain Control Module.
    3. Start the engine.
    4. With the scan tool, view DTCs.

    Did this DTC return?

    Yes

    - Go To 2

    No

    - Perform the INTERMITTENT CONDITION diagnostic procedure. Refer to **INTERMITTENT CONDITION - 2.2L DIESEL** .

2. **CHECK THE (K181) FUEL RAIL PRESSURE SENSOR SIGNAL CIRCUIT FOR A SHORT TO GROUND**
   1. Disconnect the Fuel Rail Pressure Sensor harness connector.
   2. Disconnect the PCM C1 harness connector.
   3. Measure the resistance between ground and the (K181) Fuel Rail Pressure Sensor Signal circuit at the Fuel Rail Pressure Sensor harness connector.

      Is the resistance below 10k Ohms?

      Yes

      - Repair the (K181) Fuel Rail Pressure Sensor Signal circuit for a short to ground.
      - Perform the POWERTRAIN VERIFICATION TEST - 2.2L DIESEL. Refer to **PCM VERIFICATION TEST - 2.2L DIESEL** .

      No

      - Go To 3
3. **CHECK FOR THE (K181) FUEL RAIL PRESSURE SENSOR SIGNAL CIRCUIT SHORTED TO THE (K359) FUEL RAIL PRESSURE SENSOR RETURN CIRCUIT**
   1. Measure the resistance between the (K181) Fuel Rail Pressure Sensor Signal circuit and the (K359) Fuel Rail Pressure Sensor Return circuit at the Fuel Rail Pressure Sensor harness connector.

      Is the resistance below 10k Ohms?

      Yes

      - Repair the short circuit between the (K181) Fuel Rail Pressure Sensor Signal circuit and the (K359) Fuel Rail Pressure Sensor Return circuit.
      - Perform the POWERTRAIN VERIFICATION TEST - 2.2L DIESEL. Refer to **PCM VERIFICATION TEST - 2.2L DIESEL** .

No

- Go To 4

4. **CHECK THE FUEL RAIL PRESSURE SENSOR**
   1. Reconnect the Fuel Rail Pressure Sensor harness connector.
   2. Reconnect the PCM C1 harness connector.
   3. Turn the ignition on.
   4. With the scan tool, erase PCM DTCs.
   5. Turn the ignition off.
   6. Disconnect the Fuel Rail Pressure Sensor harness connector.
   7. Turn the ignition on.
   8. With the scan tool, view DTCs.

   NOTE: The scan tool should display a P0193-FUEL RAIL PRESSURE SENSOR "A" CIRCUIT HIGH DTC with the sensor disconnected.

   Does the scan tool display P0193-FUEL RAIL PRESSURE SENSOR "A" CIRCUIT HIGH DTC as active?

   Yes

   - Replace the Fuel Rail Pressure Sensor in accordance with the service information.
   - Perform the POWERTRAIN VERIFICATION TEST - 2.2L DIESEL. Refer to **PCM VERIFICATION TEST - 2.2L DIESEL** .

   No

   - Go To 5

5. **POWERTRAIN CONTROL MODULE**
   1. Using the wiring diagram/schematic as a guide, inspect the wiring and connectors between the Fuel Rail Pressure Sensor and the Powertrain Control Module.
   2. Look for any chafed, pierced, pinched, or partially broken wires.
   3. Look for broken, bent, pushed out or corroded terminals.

4. Monitor the scan tool data relative to this circuit and wiggle test the wiring and connectors.
5. Look for the data to change or for the DTC to reset during the wiggle test.
6. Perform any Technical Service Bulletins that may apply.

Were any problems found?

Yes

- Repair as necessary.
- Perform the POWERTRAIN VERIFICATION TEST - 2.2L DIESEL. Refer to **PCM VERIFICATION TEST - 2.2L DIESEL** .

No

- Replace the Powertrain Control Module. **Before removing the PCM, perform the "Replace PCM" routine in the Miscellaneous Functions tab of the scan tool.** . Refer to **REMOVAL** .
- Perform the POWERTRAIN VERIFICATION TEST - 2.2L DIESEL. Refer to **PCM VERIFICATION TEST - 2.2L DIESEL** .

P0193-FUEL RAIL PRESSURE SENSOR "A" CIRCUIT HIGH

For a complete wiring diagram, **refer to appropriate SYSTEM WIRING DIAGRAMS article** .

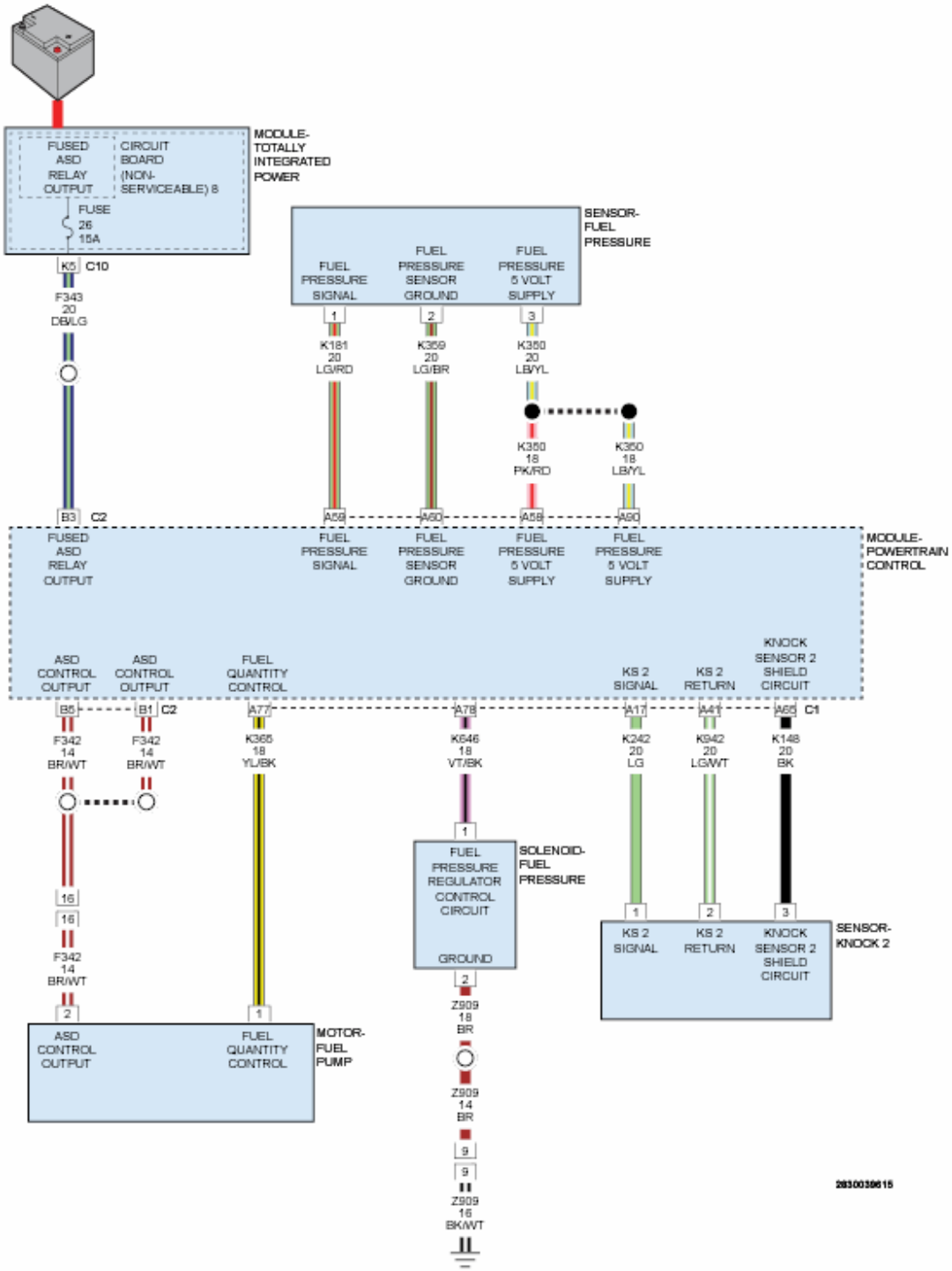

Fig. 20: Fuel System Circuit Diagram
Courtesy of CHRYSLER GROUP, LLC

THEORY OF OPERATION

The Fuel Rail Pressure Sensor is located on the High Pressure Fuel Rail. The Fuel Rail Pressure Sensor functions as a typical three wire 5-Volt sensor. The PCM uses the feedback information to determine and adjust the pressure in the

high side of the fuel system. At light engine loads the high side fuel pressure will operate at approximately 250 bar (3626 psi). At higher engine loads the high side fuel pressure can reach 1800 bar (26107 psi).

WHEN MONITORED

With the ignition on.

SET CONDITION

The (K181) Fuel Rail Pressure Sensor Signal circuit voltage is above 4.8 Volts for 0.4 seconds.

POSSIBLE CAUSES

Possible Causes
(K181) FUEL RAIL PRESSURE SENSOR SIGNAL CIRCUIT SHORTED TO VOLTAGE
(K181) FUEL RAIL PRESSURE SENSOR SIGNAL CIRCUIT OPEN/HIGH RESISTANCE
(K350) FUEL RAIL PRESSURE SENSOR 5-VOLT SUPPLY CIRCUIT OPEN/HIGH RESISTANCE
(K359) FUEL RAIL PRESSURE SENSOR RETURN CIRCUIT OPEN/HIGH RESISTANCE
FUEL RAIL PRESSURE SENSOR
POWERTRAIN CONTROL MODULE (PCM)

DIAGNOSTIC TEST

1. **DTC IS ACTIVE**
    1. Ignition on, engine not running.
    2. With the scan tool, clear DTCs in the Powertrain Control Module.
    3. Start the engine.
    4. With the scan tool, view DTCs.

    Did this DTC return?

    Yes

    - Go To 2

No

- Perform the INTERMITTENT CONDITION diagnostic procedure. Refer to **INTERMITTENT CONDITION - 2.2L DIESEL** .

2. **CHECK THE (K181) FUEL RAIL PRESSURE SENSOR SIGNAL CIRCUIT FOR A SHORT TO VOLTAGE**
   1. Turn the ignition off.
   2. Disconnect the Fuel Rail Pressure Sensor harness connector.
   3. Turn the ignition on.
   4. Measure the voltage of the (K181) Fuel Rail Pressure Sensor Signal circuit at the Fuel Rail Pressure Sensor harness connector.

   Is there any voltage present?

   Yes

   - Repair the (K181) Fuel Rail Pressure Sensor Signal circuit for a short to voltage.
   - Perform the POWERTRAIN VERIFICATION TEST - 2.2L DIESEL. Refer to **PCM VERIFICATION TEST - 2.2L DIESEL** .

   No

   - Go To 3

3. **CHECK THE (K181) FUEL RAIL PRESSURE SENSOR SIGNAL CIRCUIT FOR AN OPEN/HIGH RESISTANCE**
   1. Turn the ignition off.
   2. Disconnect the PCM C1 harness connector.
   3. Measure the resistance of the (K181) Fuel Rail Pressure Sensor Signal circuit between the Fuel Rail Pressure Sensor harness connector and the PCM C1 harness connector.

   Is the resistance below 5.0 Ohms?

   Yes

   - Go To 4

No

- Repair the (K181) Fuel Rail Pressure Sensor Signal circuit for an open or high resistance.
- Perform the POWERTRAIN VERIFICATION TEST - 2.2L DIESEL. Refer to **PCM VERIFICATION TEST - 2.2L DIESEL** .

4. **CHECK THE (K350) FUEL RAIL PRESSURE SENSOR 5-VOLT SUPPLY CIRCUIT FOR AN OPEN/HIGH RESISTANCE**
   1. Measure the resistance of the (K350) Fuel Rail Pressure Sensor 5-Volt Supply circuit between the Fuel Rail Pressure Sensor harness connector and the PCM C1 harness connector.

      Is the resistance below 5.0 Ohms?

      Yes

      - Go To 5

      No

      - Repair the (K350) Fuel Rail Pressure Sensor 5-Volt Supply circuit for an open or high resistance.
      - Perform the POWERTRAIN VERIFICATION TEST - 2.2L DIESEL. Refer to **PCM VERIFICATION TEST - 2.2L DIESEL** .
5. **CHECK THE (K359) FUEL RAIL PRESSURE SENSOR RETURN FOR AN OPEN/HIGH RESISTANCE**
   1. Measure the resistance of the (K359) Fuel Rail Pressure Sensor Return circuit between the Fuel Rail Pressure Sensor harness connector and the PCM C1 harness connector.

      Is the resistance below 5.0 Ohms?

      Yes

      - Go To 6

      No

- Repair the (K359) Fuel Rail Pressure Sensor Return circuit for an open or high resistance.
- Perform the POWERTRAIN VERIFICATION TEST - 2.2L DIESEL. Refer to **PCM VERIFICATION TEST - 2.2L DIESEL** .

6. **CHECK THE FUEL RAIL PRESSURE SENSOR**
   1. Reconnect the PCM C1 harness connector.
   2. Connect a jumper between the (K181) Fuel Rail Pressure Sensor Signal circuit and the (K359) Fuel Rail Pressure Sensor Return circuit at the Fuel Rail Pressure Sensor harness connector.
   3. Turn the ignition on.
   4. With the scan tool, View active DTCs.

      Does the scan tool display DTC P0192 as active or pending and P0193 as stored with the jumper in place?

      Yes

      - Replace the Fuel Rail Pressure Sensor in accordance with the service information.
      - Perform the POWERTRAIN VERIFICATION TEST - 2.2L DIESEL. Refer to **PCM VERIFICATION TEST - 2.2L DIESEL** .

      No

      - Go To 7

7. **POWERTRAIN CONTROL MODULE**
   1. Using the wiring diagram/schematic as a guide, inspect the wiring and connectors between the Fuel Rail Pressure Sensor and the Powertrain Control Module.
   2. Look for any chafed, pierced, pinched, or partially broken wires.
   3. Look for broken, bent, pushed out or corroded terminals.
   4. Monitor the scan tool data relative to this circuit and wiggle test the wiring and connectors.
   5. Look for the data to change or for the DTC to reset during the wiggle

test.

6. Perform any Technical Service Bulletins that may apply.

   Were any problems found?

   Yes

   - Repair as necessary.
   - Perform the POWERTRAIN VERIFICATION TEST - 2.2L DIESEL. Refer to **PCM VERIFICATION TEST - 2.2L DIESEL** .

   No

   - Replace the Powertrain Control Module. **Before removing the PCM, perform the "Replace PCM" routine in the Miscellaneous Functions tab of the scan tool.** . Refer to **REMOVAL** .
   - Perform the POWERTRAIN VERIFICATION TEST - 2.2L DIESEL. Refer to **PCM VERIFICATION TEST - 2.2L DIESEL** .

P0196-ENGINE OIL TEMPERATURE SENSOR CIRCUIT PERFORMANCE

For a complete wiring diagram, **refer to appropriate SYSTEM WIRING DIAGRAMS article** .

WHEN MONITORED

With the ignition on.

SET CONDITION

The Powertrain Control Module (PCM) detects an invalid Engine Oil Temperature Sensor Signal.

POSSIBLE CAUSES

POSSIBLE CAUSES
(G24) OIL TEMPERATURE SENSOR SIGNAL CIRCUIT OPEN INTERMITTENTLY

HIGH RESISTANCE IN THE (G24) OIL TEMPERATURE SENSOR SIGNAL CIRCUIT
HIGH RESISTANCE IN THE (K914) SENSOR GROUND CIRCUIT
ENGINE OIL TEMPERATURE SENSOR
POWERTRAIN CONTROL MODULE (PCM)

Always perform the Pre-Diagnostic Troubleshooting procedure before proceeding. Refer to PRE-DIAGNOSTIC TROUBLESHOOTING PROCEDURE - 2.2L DIESEL .

DIAGNOSTIC TEST

1. **DTC IS ACTIVE**
   1. Ignition on, engine not running.
   2. With the scan tool, erase DTCs in the PCM.
   3. Monitor the scan tool for at least two minutes.
   4. Cycle the ignition key off and on several times, leaving the ignition on for at least 10 seconds at a time.
   5. Start the engine.
   6. With the scan tool, view DTCs.

      Is the status active for this DTC?

      Yes

      - Go To 2

      No

      - Perform the INTERMITTENT CONDITION diagnostic procedure. Refer to **INTERMITTENT CONDITION - 2.2L DIESEL** .
2. **CHECK FOR HIGH RESISTANCE IN THE (G24) ENGINE OIL TEMPERATURE SENSOR SIGNAL CIRCUIT**
   1. Turn the ignition off.
   2. Disconnect the Engine Oil Temperature Sensor harness connector.
   3. Disconnect the PCM C1 harness connector.
   4. Measure the resistance between of the (G24) Engine Oil Temperature

Sensor Signal circuit between the Engine Oil Temperature Sensor harness connector and the PCM C1 harness connector.

Is the resistance below 5.0 Ohms?

Yes

- Go To 3

No

- Repair the (G24) Oil Temperature Sensor Signal circuit for an open or high resistance.
- Perform the POWERTRAIN VERIFICATION TEST - 2.2L DIESEL. Refer to **PCM VERIFICATION TEST - 2.2L DIESEL** .

3. **CHECK FOR HIGH RESISTANCE IN THE (K914) SENSOR GROUND CIRCUIT**
   1. Measure the resistance of the (K914) Sensor Ground circuit between the Engine Oil Temperature Sensor harness connector and the PCM C1 harness connector.

      Is the resistance below 5.0 Ohms?

      Yes

      - Go To 4

      No

      - Repair the (K914) Oil Temperature Sensor Signal circuit for an open or high resistance.
      - Perform the POWERTRAIN VERIFICATION TEST - 2.2L DIESEL. Refer to **PCM VERIFICATION TEST - 2.2L DIESEL** .
4. **CHECK THE ENGINE OIL TEMPERATURE SENSOR**
   1. Reconnect the Engine Oil Temperature Sensor harness connector.
   2. Reconnect the PCM C1 harness connector.
   3. Turn the ignition on.

4. With the scan tool, erase DTCs in the PCM.
5. Turn the ignition off.
6. Disconnect the Engine Oil Temperature Sensor harness connector.
7. Connect a jumper between the (G24) Oil Temperature Sensor Signal circuit and the (K914) Oil Temperature Sensor Signal circuit at the Engine Oil Temperature Sensor harness connector.

   NOTE: Be careful not to spread the terminals in the connector.

8. Turn the ignition on.
9. With the scan tool, view DTCs.

   Does the scan tool display P0197-ENGINE OIL TEMPERATURE SENSOR CIRCUIT LOW DTC as active?

   Yes

   - Replace the Engine Oil Temperature Sensor in accordance with the service information.
   - Perform the POWERTRAIN VERIFICATION TEST - 2.2L DIESEL. Refer to **PCM VERIFICATION TEST - 2.2L DIESEL** .

   No

   - Go To 5

5. **POWERTRAIN CONTROL MODULE**
   1. Using the wiring diagram/schematic as a guide, inspect the wiring and connectors between the Engine Oil Temperature Sensor and the Powertrain Control Module.
   2. Look for any chafed, pierced, pinched, or partially broken wires.
   3. Look for broken, bent, pushed out or corroded terminals.
   4. Monitor the scan tool data relative to this circuit and wiggle test the wiring and connectors.
   5. Look for the data to change or for the DTC to reset during the wiggle test.

6. Perform any technical service bulletins that may apply.

   Were any problems found?

   Yes

   - Repair as necessary.
   - Perform the POWERTRAIN VERIFICATION TEST - 2.2L DIESEL. Refer to **PCM VERIFICATION TEST - 2.2L DIESEL** .

   No

   - Replace the Powertrain Control Module. **Before removing the PCM, perform the "Replace PCM" routine in the Miscellaneous Functions tab of the scan tool.** . Refer to **REMOVAL** .
   - Perform the POWERTRAIN VERIFICATION TEST - 2.2L DIESEL. Refer to **PCM VERIFICATION TEST - 2.2L DIESEL** .

P0197-ENGINE OIL TEMPERATURE SENSOR CIRCUIT LOW

For a complete wiring diagram, **refer to appropriate SYSTEM WIRING DIAGRAMS article** .

WHEN MONITORED

With the ignition on.

SET CONDITION

The (G24) Oil Temperature Sensor Signal circuit voltage is below 0.19 Volts for two seconds.

POSSIBLE CAUSES

POSSIBLE CAUSES
(G24) ENGINE OIL TEMPERATURE SENSOR SIGNAL CIRCUIT SHORTED TO GROUND
(G24) ENGINE OIL TEMPERATURE SENSOR SIGNAL CIRCUIT

SHORTED TO THE (K914) SENSOR GROUND CIRCUIT
ENGINE OIL TEMPERATURE SENSOR
POWERTRAIN CONTROL MODULE (PCM)

Always perform the Pre-Diagnostic Troubleshooting procedure before proceeding. Refer to PRE-DIAGNOSTIC TROUBLESHOOTING PROCEDURE - 2.2L DIESEL .

DIAGNOSTIC TEST

1. **DTC IS ACTIVE**
   1. Ignition on, engine not running.
   2. With the scan tool, clear DTCs in the PCM.
   3. Turn the ignition on.
   4. With the scan tool, view DTCs.

   Is the status active for this DTC?

   Yes

   - Go To 2

   No

   - Perform the INTERMITTENT CONDITION diagnostic procedure. Refer to **INTERMITTENT CONDITION - 2.2L DIESEL** .
2. **CHECK THE ENGINE OIL TEMPERATURE SENSOR**
   1. With the scan tool, clear DTCs.
   2. Turn the ignition off.
   3. Disconnect the Engine Oil Temperature Sensor harness connector.
   4. Turn the ignition on.
   5. With the scan tool, view DTCs.

   NOTE: The scan tool should display a P0198-ENGINE OIL TEMPERATURE SENSOR CIRCUIT HIGH DTC with the Engine Oil Temperature Sensor harness connector disconnected.

Does the scan tool display P0198 as active or pending and P0197 as stored with the connector disconnected?

Yes

- Replace the Engine Oil Temperature Sensor in accordance with the service information.
- Perform the POWERTRAIN VERIFICATION TEST - 2.2L DIESEL. Refer to **PCM VERIFICATION TEST - 2.2L DIESEL** .

No

- Go To 3

3. **CHECK THE (G24) OIL TEMPERATURE SENSOR SIGNAL CIRCUIT FOR A SHORT TO GROUND**
   1. Turn the ignition off.
   2. Disconnect the Powertrain Control Module harness connector.
   3. Measure the resistance between ground and the (G24) Engine Oil Temperature Sensor Signal circuit at the Engine Oil Temperature Sensor harness connector.

   Is the resistance below 10k Ohms?

   Yes

   - Repair the (G24) Oil Temperature Sensor Signal circuit for a short to ground.
   - Perform the POWERTRAIN VERIFICATION TEST - 2.2L DIESEL. Refer to **PCM VERIFICATION TEST - 2.2L DIESEL** .

   No

   - Go To 4

4. **CHECK FOR THE (G24) OIL TEMPERATURE SENSOR SIGNAL CIRCUIT SHORTED TO (K914) OIL TEMPERATURE SENSOR GROUND CIRCUIT**
   1. Measure the resistance between the (G24) Oil Temperature Sensor

signal circuit and the (K914) Sensor Ground circuit at the Engine Oil Temperature Sensor harness connector.

Is the resistance below 10k Ohms?

Yes

- Repair the short between the (G24) Oil Temperature Sensor Signal circuit and the (K914) Sensor Ground circuit.
- Perform the POWERTRAIN VERIFICATION TEST - 2.2L DIESEL. Refer to **PCM VERIFICATION TEST - 2.2L DIESEL** .

No

- Go To 5

5. **POWERTRAIN CONTROL MODULE**
   1. Using the wiring diagram/schematic as a guide, inspect the wiring and connectors between the Engine Oil Temperature Sensor and the Powertrain Control Module.
   2. Look for any chafed, pierced, pinched, or partially broken wires.
   3. Look for broken, bent, pushed out or corroded terminals.
   4. Monitor the scan tool data relative to this circuit and wiggle test the wiring and connectors.
   5. Look for the data to change or for the DTC to reset during the wiggle test.
   6. Perform any technical service bulletins that may apply.

   Were any problems found?

   Yes

   - Repair as necessary.
   - Perform the POWERTRAIN VERIFICATION TEST - 2.2L DIESEL. Refer to **PCM VERIFICATION TEST - 2.2L DIESEL** .

   No

- Replace the Powertrain Control Module. **Before removing the PCM, perform the "Replace PCM" routine in the Miscellaneous Functions tab of the scan tool.** . Refer to **REMOVAL** .
- Perform the POWERTRAIN VERIFICATION TEST - 2.2L DIESEL. Refer to **PCM VERIFICATION TEST - 2.2L DIESEL** .

P0198-ENGINE OIL TEMPERATURE SENSOR CIRCUIT HIGH

For a complete wiring diagram, **refer to appropriate SYSTEM WIRING DIAGRAMS article** .

WHEN MONITORED

With the ignition on.

SET CONDITION

The (G24) Oil Temperature Sensor Signal circuit voltage is above 4.95 Volts for two seconds.

POSSIBLE CAUSES

POSSIBLE CAUSES
(G24) ENGINE OIL TEMPERATURE SENSOR SIGNAL CIRCUIT SHORTED TO VOLTAGE
(G24) ENGINE OIL TEMPERATURE SENSOR SIGNAL CIRCUIT OPEN/HIGH RESISTANCE
(K914) SENSOR GROUND CIRCUIT OPEN/HIGH RESISTANCE
ENGINE OIL TEMPERATURE SENSOR
POWERTRAIN CONTROL MODULE (PCM)

Always perform the Pre-Diagnostic Troubleshooting procedure before proceeding. Refer to PRE-DIAGNOSTIC TROUBLESHOOTING PROCEDURE - 2.2L DIESEL .

DIAGNOSTIC TEST

1. **DTC IS ACTIVE**
    1. Ignition on, engine not running.

2. With the scan tool, clear DTCs in the PCM.
3. Turn the ignition on.
4. With the scan tool, view DTCs.

   Is the status active for this DTC?

   Yes

   - Go To 2

   No

   - Perform the INTERMITTENT CONDITION diagnostic procedure. Refer to **INTERMITTENT CONDITION - 2.2L DIESEL** .

2. **CHECK THE (G24) OIL TEMPERATURE SENSOR SIGNAL CIRCUIT FOR A SHORT TO VOLTAGE**
   1. Turn the ignition off.
   2. Disconnect the Oil Temperature Sensor harness connector.
   3. Disconnect the PCM C1 harness connector.
   4. Remove the ASD relay from the PDC.
   5. Connect a jumper wire between cavity 30 and cavity 87 of the ASD relay connector.
   6. Turn the ignition on.
   7. Measure the voltage of the (G24) Oil Temperature Sensor Signal circuit in the Engine Oil Temperature Sensor harness connector.

      Is there any voltage present?

      Yes

      - Repair the (G24) Engine Oil Temperature Sensor Signal circuit for a short to voltage.
      - Perform the POWERTRAIN VERIFICATION TEST - 2.2L DIESEL. Refer to **PCM VERIFICATION TEST - 2.2L DIESEL** .

      No

- Go To 3

3. **CHECK THE ENGINE OIL TEMPERATURE SENSOR**
   1. Turn the ignition off.
   2. Remove the jumper wire and install the ASD relay.
   3. Reconnect the PCM C1 harness connector.
   4. Connect a jumper wire between the (K914) Sensor Ground circuit and the (G24) Engine Oil Temperature Sensor Signal circuit at the Engine Oil Temperature Sensor harness connector.

      NOTE: Be careful not to spread the terminals in the connector.

   5. Turn the ignition on.
   6. With the scan tool, clear DTCs.
   7. With the scan tool, view DTCs.

      NOTE: The scan tool should display a P0197-ENGINE OIL TEMPERATURE SENSOR CIRCUIT LOW DTC with the jumper wire in place.

   Does the scan tool display P0197-ENGINE OIL TEMPERATURE SENSOR CIRCUIT LOW DTC as active?

   Yes

   - Replace the Engine Oil Temperature Sensor in accordance with the service information.
   - Perform the POWERTRAIN VERIFICATION TEST - 2.2L DIESEL. Refer to **PCM VERIFICATION TEST - 2.2L DIESEL** .

   No

   - Go To 4

4. **CHECK THE (G24) ENGINE OIL TEMPERATURE SENSOR SIGNAL CIRCUIT FOR AN OPEN/HIGH RESISTANCE**
   1. Turn the ignition off.

2. Disconnect the PCM C1 harness connector.
3. Measure the resistance of the (G24) Engine Oil Temperature Sensor Signal circuit between the Engine Oil Temperature Sensor harness connector and the PCM C1 harness connector.

   Is the resistance below 5.0 Ohms?

   Yes

   - Go To 5

   No

   - Repair the (G24) Engine Oil Temperature Sensor Signal circuit for an open or high resistance.
   - Perform the POWERTRAIN VERIFICATION TEST - 2.2L DIESEL. Refer to **PCM VERIFICATION TEST - 2.2L DIESEL** .

5. **CHECK THE (K914) SENSOR GROUND CIRCUIT FOR AN OPEN/HIGH RESISTANCE**
   1. Measure the resistance of the (K914) Sensor Ground circuit between the Engine Oil Temperature Sensor harness connector and the PCM C1 harness connector.

      Is the resistance below 5.0 Ohms?

      Yes

      - Go To 6

      No

      - Repair the (K914) Sensor Ground circuit for an open or high resistance.
      - Perform the POWERTRAIN VERIFICATION TEST - 2.2L DIESEL. Refer to **PCM VERIFICATION TEST - 2.2L DIESEL** .

6. **POWERTRAIN CONTROL MODULE**
   1. Using the wiring diagram/schematic as a guide, inspect the wiring and

connectors between the Engine Oil Temperature Sensor and the Engine Control Module.

- Look for any chafed, pierced, pinched, or partially broken wires.
- Look for broken, bent, pushed out or corroded terminals.
- Monitor the scan tool data relative to this circuit and wiggle test the wiring and connectors.
- Look for the data to change or for the DTC to reset during the wiggle test.
- Perform any technical service bulletins that may apply.

Were any problems found?

Yes

- Repair as necessary.
- Perform the POWERTRAIN VERIFICATION TEST - 2.2L DIESEL. Refer to **PCM VERIFICATION TEST - 2.2L DIESEL** .

No

- Replace the Powertrain Control Module. **Before removing the PCM, perform the "Replace PCM" routine in the Miscellaneous Functions tab of the scan tool.** . Refer to **REMOVAL** .
- Perform the POWERTRAIN VERIFICATION TEST - 2.2L DIESEL. Refer to **PCM VERIFICATION TEST - 2.2L DIESEL** .

P0201-FUEL INJECTOR 1 CIRCUIT/OPEN

For a complete wiring diagram, **refer to appropriate SYSTEM WIRING DIAGRAMS article** .

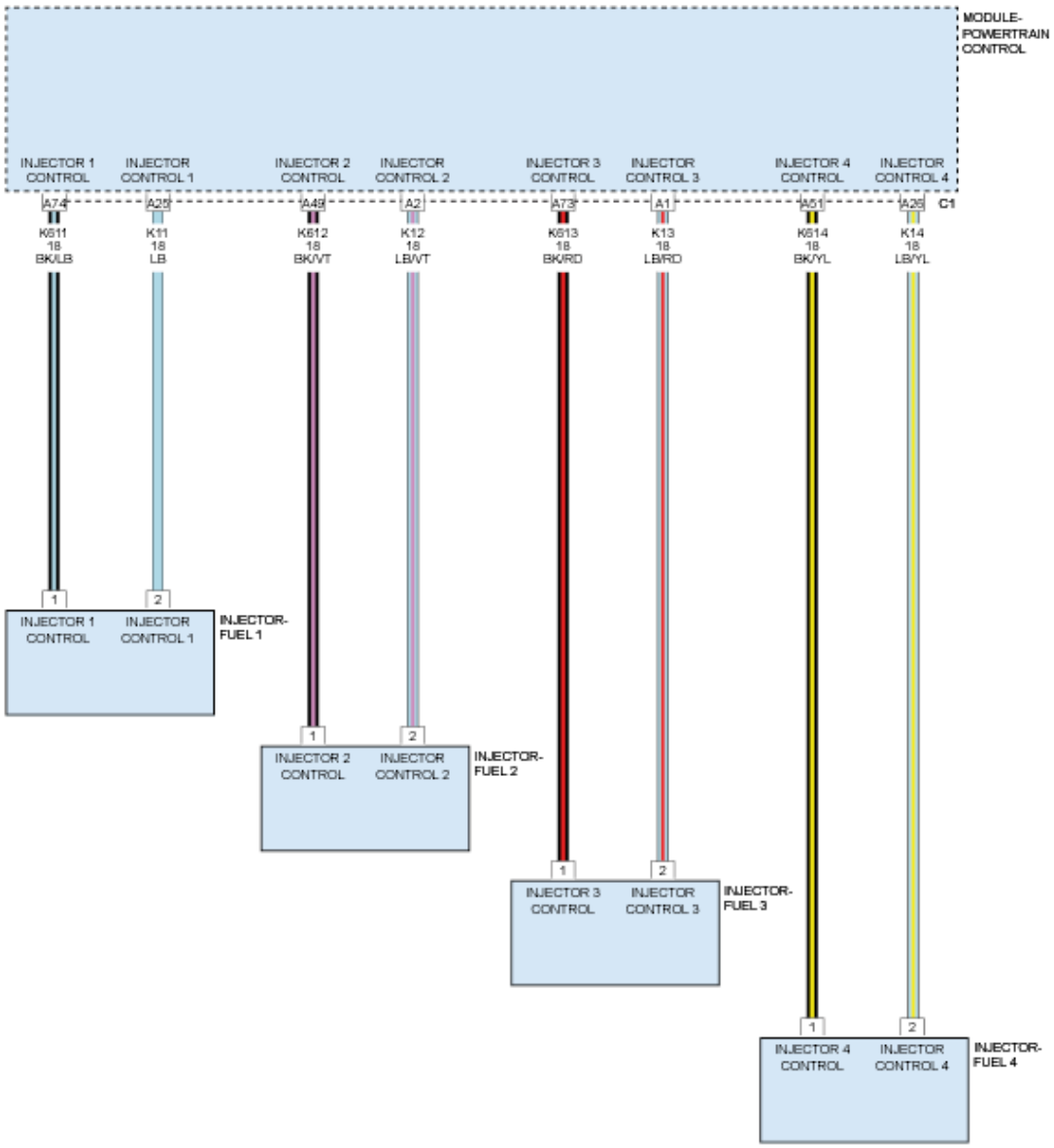

Fig. 21: Fuel Injector Circuit Diagram
Courtesy of CHRYSLER GROUP, LLC

WHEN MONITORED

With the engine running, battery voltage between 6.0 Volts and 16.0 Volts.

SET CONDITION

The Powertrain Control Module (PCM) detects an open in the Fuel Injector 1 circuit.

POSSIBLE CAUSES

Possible Causes
(K11) FUEL INJECTOR 1 LOW-SIDE CONTROL CIRCUIT OPEN/HIGH RESISTANCE
(K611) FUEL INJECTOR 1 HIGH-SIDE CONTROL CIRCUIT OPEN/HIGH RESISTANCE
FUEL INJECTOR 1
POWERTRAIN CONTROL MODULE (PCM)

Always perform the Pre-Diagnostic Troubleshooting procedure before proceeding. Refer to PRE-DIAGNOSTIC TROUBLESHOOTING PROCEDURE - 2.2L DIESEL .

DIAGNOSTIC TEST

1. **DTC IS ACTIVE**
   1. Ignition on, engine not running.
   2. With the scan tool, erase DTCs in the PCM.
   3. Attempt to start the engine and test drive the vehicle.
   4. With the scan tool, view DTCs.

      Is the status Active for this DTC?

      Yes

      - Go To 2

      No

      - Perform the INTERMITTENT CONDITION diagnostic procedure. Refer to **INTERMITTENT CONDITION - 2.2L DIESEL** .
2. **CHECK THE (K11) FUEL INJECTOR 1 LOW-SIDE SUPPLY CIRCUIT FOR AN OPEN/HIGH RESISTANCE**
   1. Disconnect the Fuel Injector 1 harness connector.
   2. Disconnect the PCM C1 harness connector.
   3. Measure the resistance of the (K11) Fuel Injector 1 Low-Side Supply circuit between the Fuel Injector 1 harness connector and the PCM C1 harness connector.

Is the resistance below 5.0 Ohms?

Yes

- Go To 3

No

- Repair the (K11) Fuel Injector Low-Side 1 Supply circuit for an open or high resistance.
- Perform the POWERTRAIN VERIFICATION TEST - 2.2L DIESEL. Refer to **PCM VERIFICATION TEST - 2.2L DIESEL** .

3. **CHECK THE (K611) FUEL INJECTOR 1 HIGH-SIDE CONTROL CIRCUIT FOR AN OPEN/HIGH RESISTANCE**
   1. Measure the resistance of the (K611) Fuel Injector 1 High-Side Control circuit between the Fuel Injector 1 harness connector and the PCM C1 harness connector.

      Is the resistance below 5.0 Ohms?

      Yes

      - Go To 4

      No

      - Repair the (K611) Fuel Injector 1 High-Side Control circuit for an open or high resistance.
      - Perform the POWERTRAIN VERIFICATION TEST - 2.2L DIESEL. Refer to **PCM VERIFICATION TEST - 2.2L DIESEL** .
4. **CHECK THE FUEL INJECTOR**
   1. Measure the resistance through Fuel Injector 1.

      Is the resistance below 5.0 Ohms?

      Yes

      - Go To 5

No

- Replace Fuel Injector 1 in accordance with the service information. Program the new Fuel Injector 1 correction code with the scan tool into the PCM. The new Fuel Injector correction code is located on top of the injector and consists of 20 alphanumeric characters in two lines of 10 alphanumeric characters.
- Perform the POWERTRAIN VERIFICATION TEST - 2.2L DIESEL. Refer to **PCM VERIFICATION TEST - 2.2L DIESEL** .

5. **POWERTRAIN CONTROL MODULE**
   1. Using the wiring diagram/schematic as a guide, inspect the wiring and connectors between the Fuel Injector and the Powertrain Control Module.
   2. Look for any chafed, pierced, pinched, or partially broken wires.
   3. Look for broken, bent, pushed out or corroded terminals.
   4. Monitor the scan tool data relative to this circuit and wiggle test the wiring and connectors.
   5. Look for the data to change or for the DTC to reset during the wiggle test.
   6. Perform any Technical Service Bulletins that may apply.

   Were any problems found?

   Yes

   - Repair as necessary.
   - Perform the POWERTRAIN VERIFICATION TEST - 2.2L DIESEL. Refer to **PCM VERIFICATION TEST - 2.2L DIESEL** .

   No

   - Replace the Powertrain Control Module. **Before removing the PCM, perform the "Replace PCM" routine in the Miscellaneous Functions tab of the scan tool.** . Refer to **REMOVAL** .
   - Perform the POWERTRAIN VERIFICATION TEST - 2.2L

DIESEL. Refer to **PCM VERIFICATION TEST - 2.2L DIESEL** .

P0202-FUEL INJECTOR 2 CIRCUIT/OPEN

For a complete wiring diagram, **refer to appropriate SYSTEM WIRING DIAGRAMS article** .

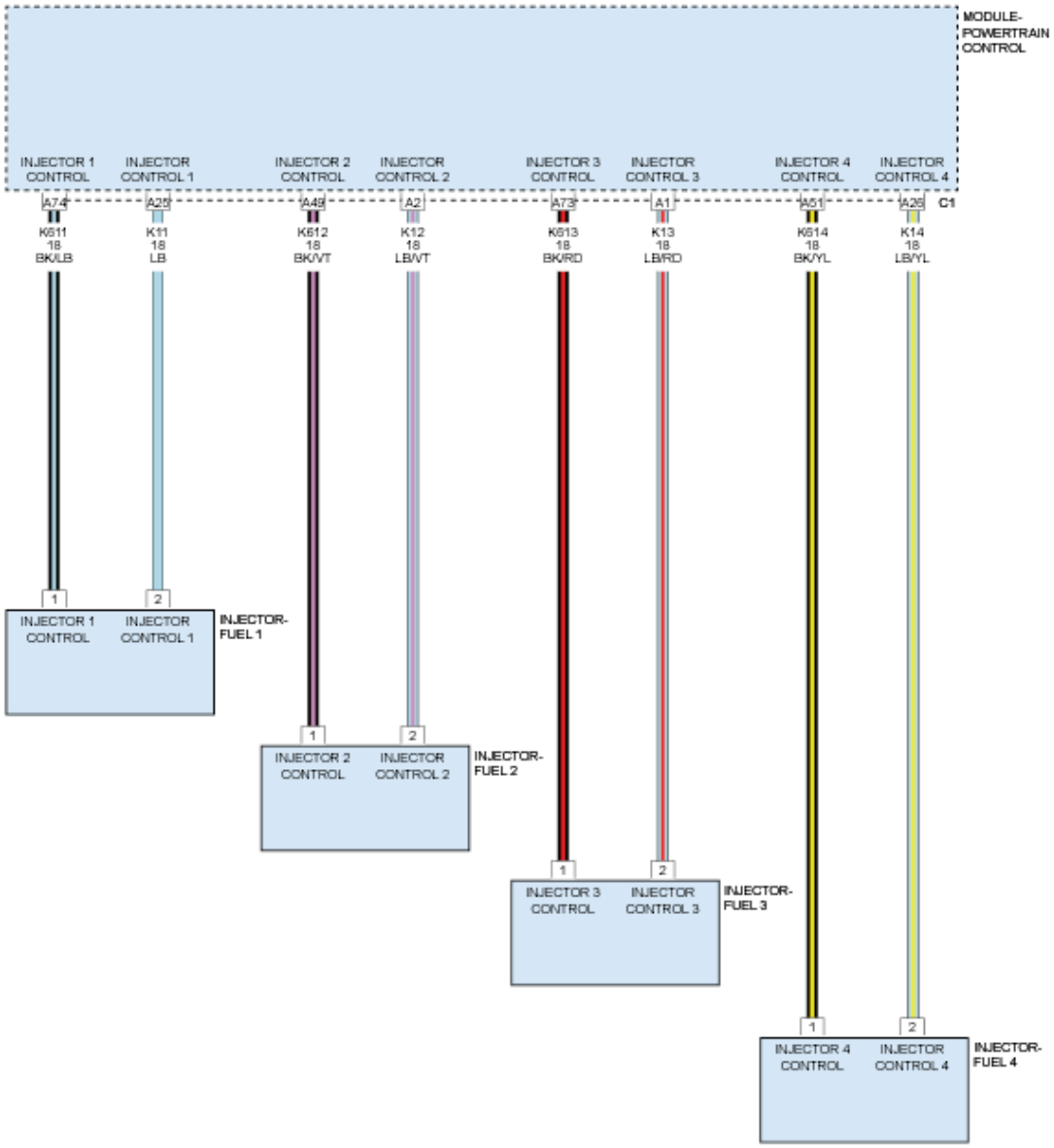

Fig. 22: Fuel Injector Circuit Diagram
Courtesy of CHRYSLER GROUP, LLC

WHEN MONITORED

With the engine running, battery voltage between 6.0 Volts and 16.0 Volts.

SET CONDITION

The Powertrain Control Module (PCM) detects an open in the Fuel Injector 2 circuit.

POSSIBLE CAUSES

Possible Causes
(K12) FUEL INJECTOR 2 LOW-SIDE SUPPLY CIRCUIT OPEN/HIGH RESISTANCE
(K612) FUEL INJECTOR 2 HIGH-SIDE CONTROL CIRCUIT OPEN/HIGH RESISTANCE
FUEL INJECTOR 2
POWERTRAIN CONTROL MODULE (PCM)

Always perform the Pre-Diagnostic Troubleshooting procedure before proceeding. Refer to PRE-DIAGNOSTIC TROUBLESHOOTING PROCEDURE - 2.2L DIESEL .

DIAGNOSTIC TEST

1. **DTC IS ACTIVE**
   1. Ignition on, engine not running.
   2. With the scan tool, erase DTCs in the PCM.
   3. Attempt to start the engine and test drive the vehicle.
   4. With the scan tool, view DTCs.

      Is the status Active for this DTC?

      Yes

      - Go To 2

      No

      - Perform the INTERMITTENT CONDITION diagnostic procedure. Refer to **INTERMITTENT CONDITION - 2.2L DIESEL** .
2. **CHECK THE (K12) FUEL INJECTOR LOW-SIDE SUPPLY CIRCUIT FOR AN OPEN/HIGH RESISTANCE**
   1. Disconnect the Fuel Injector 2 harness connector.

2. Disconnect the PCM C1 harness connector.
3. Measure the resistance of the (K12) Fuel Injector Low-Side Supply circuit between the Fuel Injector 2 harness connector and the PCM C1 harness connector.

   Is the resistance below 5.0 Ohms?

   Yes

   - Go To 3

   No

   - Repair the (K12) Fuel Injector 2 Low-Side Supply circuit for an open or high resistance.
   - Perform the POWERTRAIN VERIFICATION TEST - 2.2L DIESEL. Refer to **PCM VERIFICATION TEST - 2.2L DIESEL** .

3. **CHECK THE (K612) FUEL INJECTOR 2 HIGH-SIDE CONTROL CIRCUIT FOR AN OPEN/HIGH RESISTANCE**
   1. Measure the resistance of the (K612) Fuel Injector 2 High-Side Control circuit between the Fuel Injector 2 harness connector and the PCM C1 harness connector.

      Is the resistance below 5.0 Ohms?

      Yes

      - Go To 4

      No

      - Repair the (K612) Fuel Injector 2 High-Side Control circuit for an open or high resistance.
      - Perform the POWERTRAIN VERIFICATION TEST - 2.2L DIESEL. Refer to **PCM VERIFICATION TEST - 2.2L DIESEL** .

4. **CHECK THE FUEL INJECTOR**
   1. Measure the resistance through Fuel Injector 2.

Is the resistance below 5.0 Ohms?

Yes

- Go To 5

No

- Replace Fuel Injector 2 in accordance with the service information. Program the new Fuel Injector 2 correction code with the scan tool into the PCM. The new Fuel Injector correction code is located on top of the injector and consists of 20 alphanumeric characters in two lines of 10 alphanumeric characters.
- Perform the POWERTRAIN VERIFICATION TEST - 2.2L DIESEL. Refer to **PCM VERIFICATION TEST - 2.2L DIESEL** .

5. **POWERTRAIN CONTROL MODULE**
   1. Using the wiring diagram/schematic as a guide, inspect the wiring and connectors between the Fuel Injector and the Powertrain Control Module.
   2. Look for any chafed, pierced, pinched, or partially broken wires.
   3. Look for broken, bent, pushed out or corroded terminals.
   4. Monitor the scan tool data relative to this circuit and wiggle test the wiring and connectors.
   5. Look for the data to change or for the DTC to reset during the wiggle test.
   6. Perform any Technical Service Bulletins that may apply.

   Were any problems found?

   Yes

   - Repair as necessary.
   - Perform the POWERTRAIN VERIFICATION TEST - 2.2L DIESEL. Refer to **PCM VERIFICATION TEST - 2.2L DIESEL** .

   No

- Replace the Powertrain Control Module. **Before removing the PCM, perform the "Replace PCM" routine in the Miscellaneous Functions tab of the scan tool.** . Refer to **REMOVAL** .
- Perform the POWERTRAIN VERIFICATION TEST - 2.2L DIESEL. Refer to **PCM VERIFICATION TEST - 2.2L DIESEL** .

P0203-FUEL INJECTOR 3 CIRCUIT/OPEN

For a complete wiring diagram, **refer to appropriate SYSTEM WIRING DIAGRAMS article** .

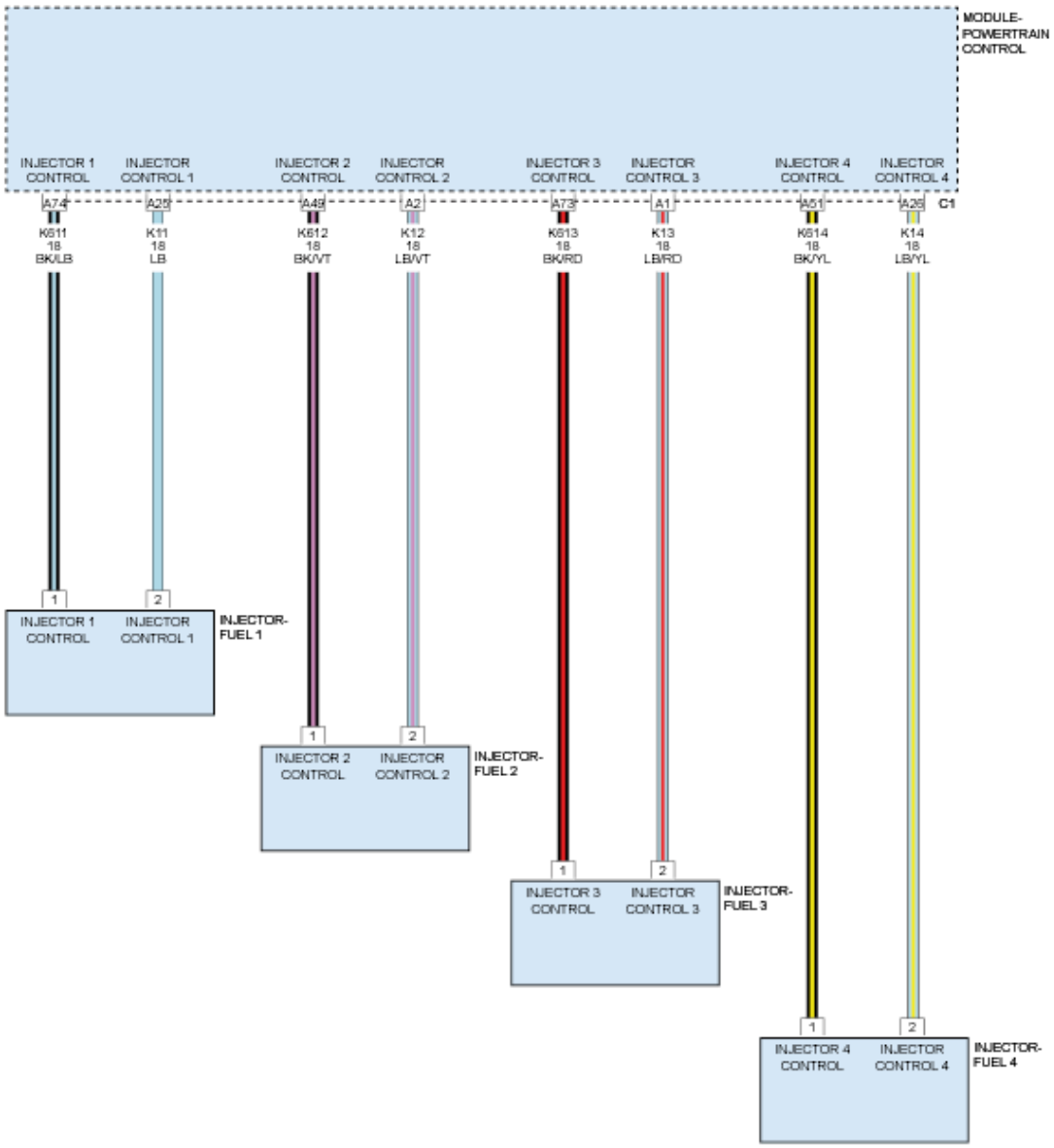

Fig. 23: Fuel Injector Circuit Diagram
Courtesy of CHRYSLER GROUP, LLC

WHEN MONITORED

With the engine running, battery voltage between 6.0 Volts and 16.0 Volts.

SET CONDITION

The Powertrain Control Module (PCM) detects an open in the Fuel Injector 3 circuit.

POSSIBLE CAUSES

Possible Causes
(K13) FUEL INJECTOR 3 LOW-SIDE SUPPLY CIRCUIT OPEN/HIGH RESISTANCE
(K613) FUEL INJECTOR 3 HIGH-SIDE CONTROL CIRCUIT OPEN/HIGH RESISTANCE
FUEL INJECTOR 3
POWERTRAIN CONTROL MODULE (PCM)

Always perform the Pre-Diagnostic Troubleshooting procedure before proceeding. Refer to PRE-DIAGNOSTIC TROUBLESHOOTING PROCEDURE - 2.2L DIESEL .

DIAGNOSTIC TEST

1. **DTC IS ACTIVE**
    1. Ignition on, engine not running.
    2. With the scan tool, erase DTCs in the PCM.
    3. Attempt to start the engine and test drive the vehicle.
    4. With the scan tool, view DTCs.

    Is the status Active for this DTC?

    Yes

    - Go To 2

    No

- Perform the INTERMITTENT CONDITION diagnostic procedure. Refer to **INTERMITTENT CONDITION - 2.2L DIESEL** .

2. **CHECK THE (K13) FUEL INJECTOR 3 LOW-SIDE SUPPLY CIRCUIT FOR AN OPEN/HIGH RESISTANCE**
   1. Disconnect the Fuel Injector 3 harness connector.
   2. Disconnect the PCM C1 harness connector.
   3. Measure the resistance of the (K13) Fuel Injector Low-Side Supply circuit between the Fuel Injector 3 harness connector and the PCM C1 harness connector.

      Is the resistance below 5.0 Ohms?

      Yes

      - Go To 3

      No

      - Repair the (K13) Fuel Injector Low-Side Supply circuit for an open or high resistance.
      - Perform the POWERTRAIN VERIFICATION TEST - 2.2L DIESEL. Refer to **PCM VERIFICATION TEST - 2.2L DIESEL** .

3. **CHECK THE (K613) FUEL INJECTOR 3 HIGH-SIDE CONTROL CIRCUIT FOR AN OPEN/HIGH RESISTANCE**
   1. Measure the resistance of the (K613) Fuel Injector 3 High-Side Control circuit between the Fuel Injector 1 harness connector and the PCM C1 harness connector.

      Is the resistance below 5.0 Ohms?

      Yes

      - Go To 4

      No

      - Repair the (K613) Fuel Injector 3 High-Side Control circuit for an open or high resistance.

- Perform the POWERTRAIN VERIFICATION TEST - 2.2L DIESEL. Refer to **PCM VERIFICATION TEST - 2.2L DIESEL** .

4. **CHECK THE FUEL INJECTOR**
   1. Measure the resistance through Fuel Injector 3.

      Is the resistance below 5.0 Ohms?

      Yes

      - Go To 5

      No

      - Replace Fuel Injector 3 in accordance with the service information. Program the new Fuel Injector 3 correction code with the scan tool into the PCM. The new Fuel Injector correction code is located on top of the injector and consists of 20 alphanumeric characters in two lines of 10 alphanumeric characters.
      - Perform the POWERTRAIN VERIFICATION TEST - 2.2L DIESEL. Refer to **PCM VERIFICATION TEST - 2.2L DIESEL** .
5. **POWERTRAIN CONTROL MODULE**
   1. Using the wiring diagram/schematic as a guide, inspect the wiring and connectors between the Fuel Injector and the Powertrain Control Module.
   2. Look for any chafed, pierced, pinched, or partially broken wires.
   3. Look for broken, bent, pushed out or corroded terminals.
   4. Monitor the scan tool data relative to this circuit and wiggle test the wiring and connectors.
   5. Look for the data to change or for the DTC to reset during the wiggle test.
   6. Perform any Technical Service Bulletins that may apply.

      Were any problems found?

      Yes

- Repair as necessary.
- Perform the POWERTRAIN VERIFICATION TEST - 2.2L DIESEL. Refer to **PCM VERIFICATION TEST - 2.2L DIESEL** .

No

- Replace the Powertrain Control Module. **Before removing the PCM, perform the "Replace PCM" routine in the Miscellaneous Functions tab of the scan tool.** . Refer to **REMOVAL** .
- Perform the POWERTRAIN VERIFICATION TEST - 2.2L DIESEL. Refer to **PCM VERIFICATION TEST - 2.2L DIESEL** .

P0204-FUEL INJECTOR 4 CIRCUIT/OPEN

For a complete wiring diagram, **refer to appropriate SYSTEM WIRING DIAGRAMS article** .

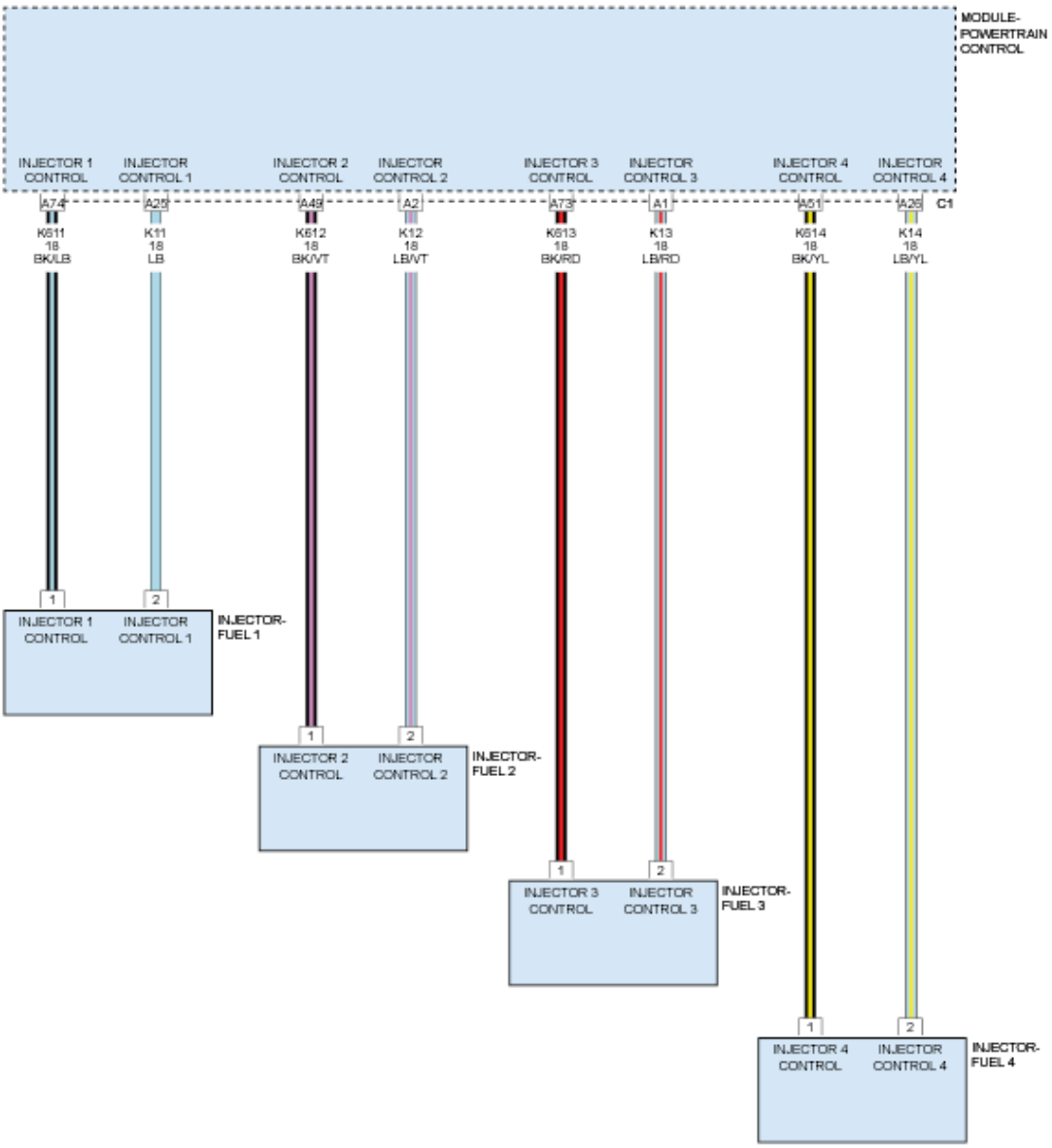

Fig. 24: Fuel Injector Circuit Diagram
Courtesy of CHRYSLER GROUP, LLC

WHEN MONITORED

With the engine running, battery voltage between 6.0 Volts and 16.0 Volts.

SET CONDITION

The Powertrain Control Module (PCM) detects an open in the Fuel Injector 4 circuit.

POSSIBLE CAUSES

Possible Causes
(K14) FUEL INJECTOR 4 LOW-SIDE CONTROL CIRCUIT OPEN/HIGH RESISTANCE
(K614) FUEL INJECTOR 4 HIGH-SIDE CONTROL CIRCUIT OPEN/HIGH RESISTANCE
FUEL INJECTOR 4
POWERTRAIN CONTROL MODULE (PCM)

Always perform the Pre-Diagnostic Troubleshooting procedure before proceeding. Refer to PRE-DIAGNOSTIC TROUBLESHOOTING PROCEDURE - 2.2L DIESEL .

DIAGNOSTIC TEST

1. **DTC IS ACTIVE**
   1. Ignition on, engine not running.
   2. With the scan tool, erase DTCs in the PCM.
   3. Attempt to start the engine and test drive the vehicle.
   4. With the scan tool, view DTCs.

      Is the status Active for this DTC?

      Yes

      - Go To 2

      No

      - Perform the INTERMITTENT CONDITION diagnostic procedure. Refer to **INTERMITTENT CONDITION - 2.2L DIESEL** .
2. **CHECK THE (K14) FUEL INJECTOR 4 LOW-SIDE SUPPLY CIRCUIT FOR AN OPEN/HIGH RESISTANCE**
   1. Disconnect the Fuel Injector 4 harness connector.
   2. Disconnect the PCM C1 harness connector.
   3. Measure the resistance of the (K14) Fuel Injector 4 Low-Side Supply circuit between the Fuel Injector 4 harness connector and the PCM C1 harness connector.

Is the resistance below 5.0 Ohms?

Yes

- Go To 3

No

- Repair the (K14) Fuel Injector 4 Low-Side Supply circuit for an open or high resistance.
- Perform the POWERTRAIN VERIFICATION TEST - 2.2L DIESEL. Refer to **PCM VERIFICATION TEST - 2.2L DIESEL** .

3. **CHECK THE (K614) FUEL INJECTOR 4 HIGH-SIDE CONTROL CIRCUIT FOR AN OPEN/HIGH RESISTANCE**
   1. Measure the resistance of the (K614) Fuel Injector 4 High-Side Control circuit between the Fuel Injector 4 harness connector and the PCM C1 harness connector.

      Is the resistance below 5.0 Ohms?

      Yes

      - Go To 4

      No

      - Repair the (K614) Fuel Injector 4 High-Side Control circuit for an open or high resistance.
      - Perform the POWERTRAIN VERIFICATION TEST - 2.2L DIESEL. Refer to **PCM VERIFICATION TEST - 2.2L DIESEL** .
4. **CHECK THE FUEL INJECTOR**
   1. Measure the resistance through Fuel Injector 4.

      Is the resistance below 5.0 Ohms?

      Yes

      - Go To 5

No

- Replace Fuel Injector 4 in accordance with the Service Information. Program the new Fuel Injector 4 correction code with the scan tool into the PCM. The new Fuel Injector correction code is located on top of the injector and consists of 20 alphanumeric characters in two lines of 10 alphanumeric characters.
- Perform the POWERTRAIN VERIFICATION TEST - 2.2L DIESEL. Refer to **PCM VERIFICATION TEST - 2.2L DIESEL** .

5. **POWERTRAIN CONTROL MODULE**
   1. Using the wiring diagram/schematic as a guide, inspect the wiring and connectors between the Fuel Injector and the Powertrain Control Module.
   2. Look for any chafed, pierced, pinched, or partially broken wires.
   3. Look for broken, bent, pushed out or corroded terminals.
   4. Monitor the scan tool data relative to this circuit and wiggle test the wiring and connectors.
   5. Look for the data to change or for the DTC to reset during the wiggle test.
   6. Perform any Technical Service Bulletins that may apply.

   Were any problems found?

   Yes

   - Repair as necessary.
   - Perform the POWERTRAIN VERIFICATION TEST - 2.2L DIESEL. Refer to **PCM VERIFICATION TEST - 2.2L DIESEL** .

   No

   - Replace the Powertrain Control Module. **Before removing the PCM, perform the "Replace PCM" routine in the Miscellaneous Functions tab of the scan tool.** . Refer to **REMOVAL** .
   - Perform the POWERTRAIN VERIFICATION TEST - 2.2L

DIESEL. Refer to **PCM VERIFICATION TEST - 2.2L DIESEL** .

P0219-ENGINE OVERSPEED

For a complete wiring diagram, **refer to appropriate SYSTEM WIRING DIAGRAMS article** .

WHEN MONITORED

With the engine running.

SET CONDITION

The Powertrain Control Module (PCM) detects that engine speed is above 6000 RPM for 0.64 of a second.

POSSIBLE CAUSES

Possible Causes
INCORRECT GEAR CHOSEN FOR VEHICLE SPEED
ENGINE OIL LEVEL TOO HIGH
EXCESSIVE OIL BEING INTRODUCED INTO INTAKE SYSTEM
LOSS OF SYNCHRONIZATION BETWEEN CRANK AND CAM SENSORS CAUSING INCORRECT SPEED CALCULATION

Always perform the Pre-Diagnostic Troubleshooting procedure before proceeding. Refer to PRE-DIAGNOSTIC TROUBLESHOOTING PROCEDURE - 2.2L DIESEL .

DIAGNOSTIC TEST

1. **CHECK ENGINE OIL LEVEL**
    1. Turn the ignition off.
    2. Check the engine oil level.

    Is the engine oil overfilled?

    Yes

    - Adjust oil to the proper level.

- Perform the POWERTRAIN VERIFICATION TEST - 2.2L DIESEL. Refer to **PCM VERIFICATION TEST - 2.2L DIESEL** .

No

- Go To 2

2. **CHECK CRANK/CAM SENSOR SYNCHRONIZATION**

NOTE: If there are any DTCs stored for the Crank Sensor or Cam Sensor, perform those diagnostics before proceeding with this test procedure.

1. Start the engine.
2. With the scan tool, check the Crank/Cam Sensor Sync.
3. Wiggle test the wiring harness and connectors while observing the scan tool.

Did the Crank Sensor and Cam Sensor lose Sync while wiggle testing the wiring?

Yes

- Repair the intermittent connection.
- Perform the POWERTRAIN VERIFICATION TEST - 2.2L DIESEL. Refer to **PCM VERIFICATION TEST - 2.2L DIESEL** .

No

- Go To 3

3. **CHECK FOR EXCESSIVE OIL BEING INTRODUCED INTO INTAKE SYSTEM**

NOTE: If excessive oil is introduced into the intake system due to an engine mechanical failure, a runaway condition may result causing loss of control of the engine speed.

1. Remove the air intake hose.
2. Inspect the intake system for signs of excessive oil in the intake system.

   Was excessive oil found?

   Yes

   - Diagnose and repair the engine for point of entry of excessive oil.
   - Perform the POWERTRAIN VERIFICATION TEST - 2.2L DIESEL. Refer to **PCM VERIFICATION TEST - 2.2L DIESEL** .

   No

   - Perform the INTERMITTENT CONDITION diagnostic procedure. Refer to **INTERMITTENT CONDITION - 2.2L DIESEL** .

P0236-TURBO BOOST PRESSURE SENSOR PERFORMANCE

For a complete wiring diagram, **refer to appropriate SYSTEM WIRING DIAGRAMS article** .

THEORY OF OPERATION

The Boost Pressure Actuator is part of the Turbocharger assembly. The Boost Pressure Actuator is supplied with a fused ignition power and ground circuit, as well as a Pulse Width Modulated (PWM) signal form the Powertrain Control Module (PCM) to control how much boost pressure is generated. The higher the voltage that is supplied to the actuator, the greater the variable veins of the Turbocharger are opened. The greater the veins are opened, the greater the boost that is generated. The boost pressure is monitored by the Powertrain Control Module (PCM) using the Boost Pressure Sensor, which is located in the Intake Manifold. The Boost Pressure Sensor is supplied 5 Volts and ground by the PCM. The Boost Pressure Sensor sends feedback to the PCM on the sensor signal wire. The PCM uses this information to make adjustments to the position of the Boost Pressure Actuator.

WHEN MONITORED

With the ignition on.

SET CONDITION

The Powertrain Control Module (PCM) detects that the (K37) Boost Pressure Sensor Signal circuit is implausible for one second.

POSSIBLE CAUSES

Possible Causes
HIGH RESISTANCE IN THE (K37) BOOST PRESSURE SENSOR SIGNAL CIRCUIT
HIGH RESISTANCE IN THE (F586) 5-VOLT SUPPLY CIRCUIT
HIGH RESISTANCE IN THE (K915) SENSOR GROUND CIRCUIT
BOOST PRESSURE SENSOR
POWERTRAIN CONTROL MODULE (PCM)

Always perform the Pre-Diagnostic Troubleshooting procedure before proceeding. Refer to PRE-DIAGNOSTIC TROUBLESHOOTING PROCEDURE - 2.2L DIESEL .

DIAGNOSTIC TEST

1. **CHECK FOR ACTIVE DTC**
   1. Turn the ignition on.
   2. With the scan tool, erase PCM DTCs.
   3. Turn the ignition off, wait 30 seconds, then start and idle the engine for at least 30 seconds.
   4. With the scan tool, read PCM DTCs.

   Did this DTC return?

   Yes

   - Go To 2

   No

   - Perform the INTERMITTENT CONDITION diagnostic procedure. Refer to **INTERMITTENT CONDITION - 2.2L DIESEL** .
2. **CHECK FOR HIGH RESISTANCE IN THE (K37) BOOST PRESSURE SENSOR SIGNAL CIRCUIT**

1. Turn the ignition off.
2. Disconnect the Boost Pressure Sensor harness connector.
3. Disconnect the PCM C1 harness connector.
4. Measure the resistance of the (K37) Boost Pressure Sensor Signal circuit between the Boost Pressure Sensor harness connector and the PCM C1 harness connector.

   Is the resistance below 5.0 Ohms?

   Yes

   - Go To 3

   No

   - Repair the (K37) Boost Pressure Sensor Signal circuit for an open or high resistance.
   - Perform the POWERTRAIN VERIFICATION TEST - 2.2L DIESEL. Refer to **PCM VERIFICATION TEST - 2.2L DIESEL** .

3. **CHECK FOR HIGH RESISTANCE IN THE (F586) 5-VOLT SUPPLY CIRCUIT**
   1. Measure the resistance of the (F586) 5-Volt Supply circuit between the Boost Pressure Sensor harness connector and the PCM C1 harness connector.

      Is the resistance below 5.0 Ohms?

      Yes

      - Go To 4

      No

      - Repair the (F586) 5-Volt Supply circuit for an open or high resistance.
      - Perform the POWERTRAIN VERIFICATION TEST - 2.2L DIESEL. Refer to **PCM VERIFICATION TEST - 2.2L DIESEL** .

4. **CHECK FOR HIGH RESISTANCE IN THE (K915) SENSOR GROUND CIRCUIT**
   1. Measure the resistance of the (K915) Sensor Ground circuit between the Boost Pressure Sensor harness connector and the PCM C1 harness connector.

      Is the resistance below 5.0 Ohms?

      Yes

      - Go To 5

      No

      - Repair the (K915) Sensor Ground circuit for an open or high resistance.
      - Perform the POWERTRAIN VERIFICATION TEST - 2.2L DIESEL. Refer to **PCM VERIFICATION TEST - 2.2L DIESEL** .
5. **CHECK THE BOOST PRESSURE SENSOR**
   1. Reconnect the Boost Pressure Sensor harness connector.
   2. Reconnect the PCM C1 harness connector.
   3. Turn the ignition on.
   4. With the scan tool, erase PCM DTCs.
   5. Turn the ignition off.
   6. Disconnect the Boost Pressure Sensor harness connector.
   7. Connect a jumper between the (K37) Boost Pressure Sensor Signal circuit and the (F856) 5-Volt Supply circuit.

      NOTE: Be careful not to spread the terminals.

   8. Turn the ignition on.
   9. With the scan tool, view PCM DTCs.

      NOTE: The scan tool should display the P0238-TURBO BOOST PRESSURE SENSOR CIRCUIT HIGH DTC with the jumper connected.

Does the scan tool display P0238-TURBO BOOST PRESSURE SENSOR CIRCUIT HIGH DTC as active?

Yes

- Replace the Boost Pressure Sensor in accordance with the service information.
- Perform the POWERTRAIN VERIFICATION TEST - 2.2L DIESEL. Refer to **PCM VERIFICATION TEST - 2.2L DIESEL** .

No

- Go To 6

6. **POWERTRAIN CONTROL MODULE**
   1. Using the wiring diagram/schematic as a guide, inspect the wiring and connectors between the Boost Pressure Sensor and the Powertrain Control Module.
   2. Look for any chafed, pierced, pinched, or partially broken wires.
   3. Look for broken, bent, pushed out or corroded terminals.
   4. Monitor the scan tool data relative to this circuit and wiggle test the wiring and connectors.
   5. Look for the data to change or for the DTC to reset during the wiggle test.
   6. Perform any technical service bulletins that may apply.

   Were any problems found?

   Yes

   - Repair as necessary.
   - Perform the POWERTRAIN VERIFICATION TEST - 2.2L DIESEL. Refer to **PCM VERIFICATION TEST - 2.2L DIESEL** .

   No

   - Replace the Powertrain Control Module. **Before removing the**

PCM, perform the "Replace PCM" routine in the Miscellaneous Functions tab of the scan tool. . Refer to **REMOVAL** .

- Perform the POWERTRAIN VERIFICATION TEST - 2.2L DIESEL. Refer to **PCM VERIFICATION TEST - 2.2L DIESEL** .

P0237-TURBO BOOST PRESSURE SENSOR CIRCUIT LOW

For a complete wiring diagram, **refer to appropriate SYSTEM WIRING DIAGRAMS article** .

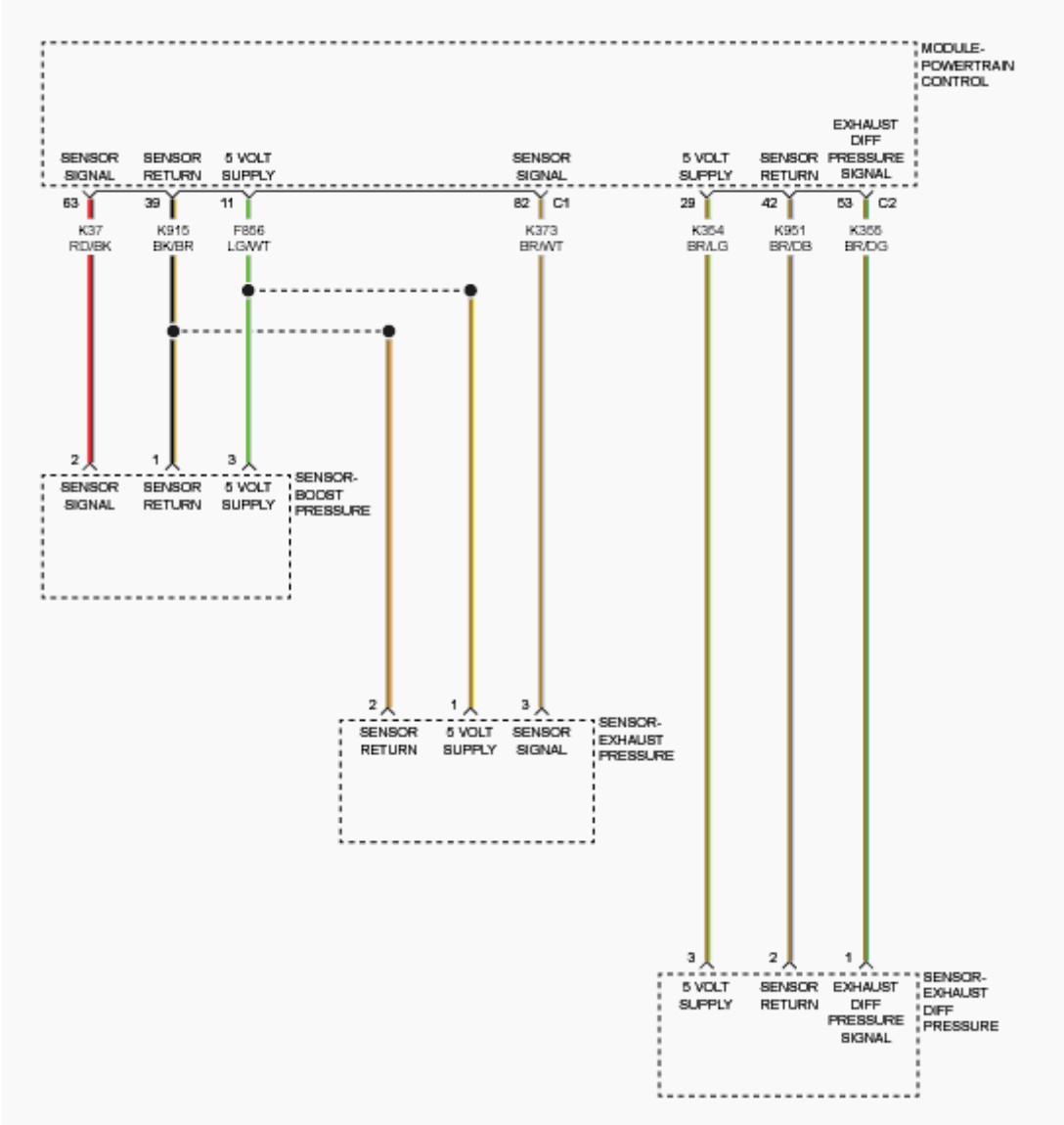

Fig. 25: Boost, Exhaust & Exhaust Diff Pressure Sensors Circuit Diagram
Courtesy of CHRYSLER GROUP, LLC

THEORY OF OPERATION

The Boost Pressure Actuator is part of the Turbocharger assembly. The Boost Pressure Actuator is supplied with a fused ignition power and ground circuit, as well as a Pulse Width Modulated (PWM) signal form the Powertrain Control Module (PCM) to control how much boost pressure is generated. The higher the voltage that is supplied to the actuator, the greater the variable veins of the Turbocharger are opened. The greater the veins are opened, the greater the boost that is generated. The boost pressure is monitored by the Powertrain Control Module (PCM) using the Boost Pressure Sensor, which is located in the Intake Manifold. The Boost Pressure Sensor is supplied 5 Volts and ground by the PCM. The Boost Pressure Sensor sends feedback to the PCM on the sensor signal wire. The PCM uses this information to make adjustments to the position of the Boost Pressure Actuator.

WHEN MONITORED

With the ignition on.

SET CONDITION

The (K37) Boost Pressure Sensor Signal circuit voltage is below 0.20 Volts for 0.48 seconds.

POSSIBLE CAUSES

Possible Causes
(K354) DIFFERENTIAL PRESSURE SENSOR 5-VOLT SUPPLY CIRCUIT SHORTED TO GROUND
(F856) 5-VOLT SUPPLY CIRCUIT OPEN
(F856) 5-VOLT SUPPLY CIRCUIT SHORTED TO GROUND
(K37) BOOST PRESSURE SENSOR SIGNAL CIRCUIT SHORTED TO GROUND
(K37) BOOST PRESSURE SENSOR SIGNAL CIRCUIT OPEN/HIGH RESISTANCE
BOOST PRESSURE SENSOR
POWERTRAIN CONTROL MODULE (PCM)

Always perform the Pre-Diagnostic Troubleshooting procedure before proceeding. Refer to PRE-DIAGNOSTIC TROUBLESHOOTING

PROCEDURE - 2.2L DIESEL .

DIAGNOSTIC TEST

1. **DTC IS ACTIVE**

   NOTE: If there are any 5-Volt Reference DTCs present, repair those DTCs before proceeding with this test.

   1. Turn the ignition on.
   2. With the scan tool, erase PCM DTCs.
   3. Turn the ignition off, wait 30 seconds, then start and idle the engine for at least two minutes.
   4. With the scan tool, view PCM DTCs.

   Is the status Active for this DTC?

   Yes

   - Go To 2

   No

   - Perform the INTERMITTENT CONDITION diagnostic procedure. Refer to **INTERMITTENT CONDITION - 2.2L DIESEL** .

2. **CHECK THE (F856) 5-VOLT SUPPLY CIRCUIT**
   1. Turn the ignition off.
   2. Disconnect the Boost Pressure Sensor harness connector.
   3. Turn the ignition on.
   4. Measure the voltage of the (F856) 5-Volt Supply circuit at the Boost Pressure Sensor harness connector.

   Does the measurement read 5.0 Volts?

   Yes

   - Go To 3

   No

- Repair the (F856) 5-Volt Supply circuit for an open or short to ground.
- Perform the POWERTRAIN VERIFICATION TEST - 2.2L DIESEL. Refer to **PCM VERIFICATION TEST - 2.2L DIESEL** .

3. **CHECK THE (K37) BOOST PRESSURE SENSOR SIGNAL CIRCUIT FOR A SHORT TO GROUND**
   1. Turn the ignition off.
   2. Disconnect the PCM C1 harness connector.
   3. Measure the resistance between ground and the (K37) Boost Pressure Sensor Signal circuit at the Boost Pressure Sensor harness connector.

      Is the resistance above 10k Ohms?

      Yes

      - Go To 4

      No

      - Repair the (K37) Boost Pressure Sensor Signal circuit for a short to ground.
      - Perform the POWERTRAIN VERIFICATION TEST - 2.2L DIESEL. Refer to **PCM VERIFICATION TEST - 2.2L DIESEL** .
4. **CHECK THE (K37) BOOST PRESSURE SENSOR SIGNAL CIRCUIT FOR AN OPEN/HIGH RESISTANCE**
   1. Measure the resistance of the (K37) Boost Pressure Sensor Signal circuit between the Intake Air Temp/Boost Pressure Sensor harness connector and the Powertrain Control Module harness connector.

      Is the resistance below 5.0 Ohms?

      Yes

      - Go To 5

      No

- Repair the (K37) Boost Pressure Sensor Signal circuit for an open or high resistance.
- Perform the POWERTRAIN VERIFICATION TEST - 2.2L DIESEL. Refer to **PCM VERIFICATION TEST - 2.2L DIESEL** .

5. **CHECK THE BOOST PRESSURE SENSOR**
   1. Reconnect the Boost Pressure Sensor harness connector.
   2. Reconnect the PCM C1 harness connector.
   3. Turn the ignition on.
   4. With the scan tool, Clear DTCs.
   5. Turn the ignition off.
   6. Disconnect the Boost Pressure Sensor harness connector.
   7. Connect a jumper between the (K37) Boost Pressure Sensor Signal circuit and the (F856) 5-Volt Supply circuit.

      NOTE: Be careful not to spread the terminals.

   8. Turn the ignition on.
   9. With the scan tool, view PCM DTCs.

      NOTE: The scan tool should display the P0238-TURBO BOOST PRESSURE SENSOR CIRCUIT HIGH DTC with the jumper connected.

      Does the scan tool display P0238-TURBO BOOST PRESSURE SENSOR CIRCUIT HIGH DTC as active?

      Yes

      - Replace the Boost Pressure Sensor in accordance with the service information.
      - Perform the POWERTRAIN VERIFICATION TEST - 2.2L DIESEL. Refer to **PCM VERIFICATION TEST - 2.2L DIESEL** .

      No

- Go To 6

6. **POWERTRAIN CONTROL MODULE**
   1. Using the wiring diagram/schematic as a guide, inspect the wiring and connectors between the Boost Pressure Sensor and the Powertrain Control Module.
   2. Look for any chafed, pierced, pinched, or partially broken wires.
   3. Look for broken, bent, pushed out or corroded terminals.
   4. Monitor the scan tool data relative to this circuit and wiggle test the wiring and connectors.
   5. Look for the data to change or for the DTC to reset during the wiggle test.
   6. Perform any Technical Service Bulletins that may apply.

   Were any problems found?

   Yes

   - Repair as necessary.
   - Perform the POWERTRAIN VERIFICATION TEST. Refer to **PCM VERIFICATION TEST - 2.2L DIESEL** .

   No

   - Replace the Powertrain Control Module. **Before removing the PCM, perform the "Replace PCM" routine in the Miscellaneous Functions tab of the scan tool.** . Refer to **REMOVAL** .
   - Perform the POWERTRAIN VERIFICATION TEST. Refer to **PCM VERIFICATION TEST - 2.2L DIESEL** .

P0238-TURBO BOOST PRESSURE SENSOR CIRCUIT HIGH

For a complete wiring diagram, **refer to appropriate SYSTEM WIRING DIAGRAMS article** .

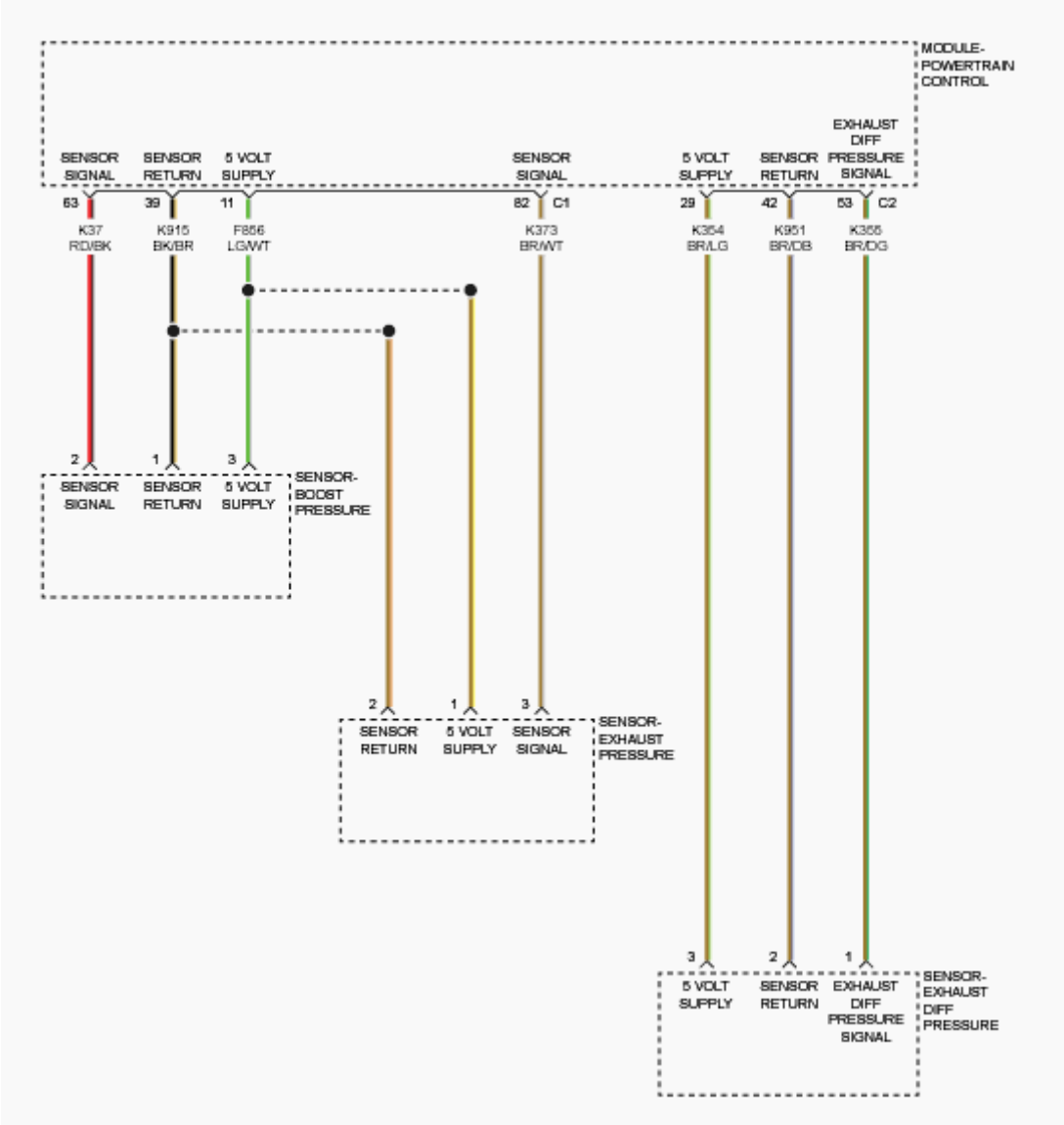

Fig. 26: Boost, Exhaust & Exhaust Diff Pressure Sensors Circuit Diagram
Courtesy of CHRYSLER GROUP, LLC

THEORY OF OPERATION

The Boost Pressure Actuator is part of the Turbocharger assembly. The Boost Pressure Actuator is supplied with a fused ignition power and ground circuit, as well as a Pulse Width Modulated (PWM) signal form the Powertrain Control Module (PCM) to control how much boost pressure is generated. The higher the voltage that is supplied to the actuator, the greater the variable veins of the Turbocharger are opened. The greater the veins are opened, the greater the boost that is generated. The boost pressure is monitored by the Powertrain Control Module (PCM) using the Boost Pressure Sensor, which is located in the Intake Manifold. The Boost Pressure Sensor is supplied 5 Volts and ground by the PCM. The Boost Pressure Sensor sends feedback to the PCM on the sensor

signal wire. The PCM uses this information to make adjustments to the position of the Boost Pressure Actuator.

WHEN MONITORED

With the ignition on.

SET CONDITION

The (K37) Boost Pressure Sensor Signal circuit voltage is above 4.85 Volts for 0.5 seconds.

POSSIBLE CAUSES

Possible Causes
(F586) 5-VOLT SUPPLY CIRCUIT SHORTED TO VOLTAGE
(K354) DIFFERENTIAL PRESSURE SENSOR 5-VOLT SUPPLY CIRCUIT SHORTED TO VOLTAGE
(K37) BOOST PRESSURE SENSOR SIGNAL CIRCUIT SHORTED TO VOLTAGE
(K37) BOOST PRESSURE SENSOR SIGNAL CIRCUIT SHORTED TO THE (F856) 5-VOLT SUPPLY CIRCUIT
(K915) SENSOR GROUND CIRCUIT OPEN/HIGH RESISTANCE
BOOST PRESSURE SENSOR
POWERTRAIN CONTROL MODULE (PCM)

Always perform the Pre-Diagnostic Troubleshooting procedure before proceeding. Refer to PRE-DIAGNOSTIC TROUBLESHOOTING PROCEDURE - 2.2L DIESEL .

DIAGNOSTIC TEST

1. **DTC IS ACTIVE**

NOTE: If there are any 5-Volt Reference DTCs present, repair those DTCs before proceeding with this test.

1. Turn the ignition on.
2. With the scan tool, erase PCM DTCs.
3. Turn the ignition off, wait 30 seconds, then start and idle the engine for

at least two minutes.

4. With the scan tool, view PCM DTCs.

   Is the status Active for this DTC?

   Yes

   - Go To 2

   No

   - Perform the INTERMITTENT CONDITION diagnostic procedure. Refer to **INTERMITTENT CONDITION - 2.2L DIESEL** .

2. **(F856) 5-VOLT SUPPLY CIRCUIT SHORTED TO VOLTAGE**
   1. Turn the ignition off.
   2. Disconnect the Boost Pressure Sensor harness connector.
   3. Disconnect the PCM C1 harness connector.
   4. Remove the Main Relay.
   5. Connect a jumper wire between cavity 87 and cavity 30 of the Main Relay Connector.
   6. Turn the ignition on.
   7. Measure the voltage of the (F856) 5-Volt Supply circuit at the Boost Pressure Sensor harness connector.

      Is there any voltage present?

      Yes

      - Repair the (F856) 5-Volt Supply circuit for a short to voltage.
      - Perform the POWERTRAIN VERIFICATION TEST - 2.2L DIESEL. Refer to **PCM VERIFICATION TEST - 2.2L DIESEL** .

      No

      - Go To 3

3. **(K37) BOOST PRESSURE SENSOR SIGNAL CIRCUIT SHORTED TO VOLTAGE**

NOTE: The jumper wire should still be in place.

1. Measure the voltage of the (K37) Boost Pressure Sensor Signal circuit at the Boost Pressure Sensor harness connector.

   Is there any voltage present?

   Yes

   - Repair the (K37) Boost Pressure Sensor Signal circuit for a short to voltage.
   - Perform the POWERTRAIN VERIFICATION TEST - 2.2L DIESEL. Refer to **PCM VERIFICATION TEST - 2.2L DIESEL** .

   No

   - Go To 4

4. **CHECK THE (K915) SENSOR GROUND CIRCUIT FOR AN OPEN/HIGH RESISTANCE**
   1. Turn the ignition off.
   2. Remove the jumper wire and install the Main Relay.
   3. Measure the resistance of the (K915) Ground circuit at the Boost Pressure Sensor harness connector.

      Is the resistance below 5.0 Ohms?

      Yes

      - Repair the (K915) Sensor Ground circuit for an open or high resistance.
      - Perform the POWERTRAIN VERIFICATION TEST - 2.2L DIESEL. Refer to **PCM VERIFICATION TEST - 2.2L DIESEL** .

      No

      - Go To 5

5. **CHECK THE BOOST PRESSURE SENSOR**

1. Reconnect the Boost Pressure Sensor harness connector.
2. Reconnect the PCM C1 harness connector.
3. Turn the ignition on.
4. With the scan tool, clear DTCs.
5. Turn the ignition off.
6. Disconnect the Boost Pressure Sensor harness connector.
7. Connect a jumper between the (K915) Ground circuit and the (K37) Boost Pressure Sensor Signal circuit at the Boost Pressure Sensor harness connector.

NOTE: Be careful not to spread the terminals.

8. Turn the ignition on.
9. With the scan tool, clear DTCs.
10. With the scan tool, select View DTCs.

NOTE: The scan tool should display the P0237-TURBO BOOST PRESSURE SENSOR CIRCUIT LOW DTC with the jumper connected.

Does the scan tool display P0237-TURBO BOOST PRESSURE SENSOR CIRCUIT LOW DTC as active?

Yes

- Replace the Boost Pressure Sensor in accordance with the service information.
- Perform the POWERTRAIN VERIFICATION TEST - 2.2L DIESEL. Refer to **PCM VERIFICATION TEST - 2.2L DIESEL** .

No

- Go To 6

6. **POWERTRAIN CONTROL MODULE**
   1. Using the wiring diagram/schematic as a guide, inspect the wiring and connectors between the Boost Pressure Sensor and the Powertrain

Control Module.

2. Look for any chafed, pierced, pinched, or partially broken wires.
3. Look for broken, bent, pushed out or corroded terminals.
4. Monitor the scan tool data relative to this circuit and wiggle test the wiring and connectors.
5. Look for the data to change or for the DTC to reset during the wiggle test.
6. Perform any Technical Service Bulletins that may apply.

Were any problems found?

Yes

- Repair as necessary.
- Perform the POWERTRAIN VERIFICATION TEST. Refer to **PCM VERIFICATION TEST - 2.2L DIESEL** .

No

- Replace the Powertrain Control Module. **Before removing the PCM, perform the "Replace PCM" routine in the Miscellaneous Functions tab of the scan tool.** . Refer to **REMOVAL** .
- Perform the POWERTRAIN VERIFICATION TEST - 2.2L DIESEL. Refer to **PCM VERIFICATION TEST - 2.2L DIESEL** .

P0252-INJECTION PUMP METERING CONTROL CIRCUIT PERFORMANCE

For a complete wiring diagram, **refer to appropriate SYSTEM WIRING DIAGRAMS article** .

THEORY OF OPERATION

The Fuel Quantity Solenoid (FQS) is located on the High Pressure Delivery Pump. The Powertrain Control Module (PCM) sends a Pulse Width Modulated (PWM) signal to the FQS to control the amount of fuel that is directed to the pumping chambers in the High Pressure Delivery Pump. The FQS is normally closed when not being controlled by the PCM. The Fuel Quantity Solenoid

works in tandem with the Fuel Pressure Regulator (FPR) to control the fuel pressure in the fuel rail. During engine cranking, the FQS is fully opened to allow maximum fuel flow and the FPR is closed to allow pressure to build quickly. After the engine starts, the FPR is primarily closed and the high side pressure is regulated using the FQS. The FPR is primarily used to help control spikes in the high pressure side during deceleration or if the FQS is not able to react quickly enough to the demands of the system.

WHEN MONITORED

With the engine running and the Powertrain Control Module (PCM) attempting to govern the Fuel Quantity Solenoid.

SET CONDITION

The Powertrain Control Module (PCM) determines that the Fuel Control Actuator current demand is 250 mA above or below a calculated amount.

POSSIBLE CAUSES

Possible Causes
HIGH RESISTANCE IN THE (K365) FUEL QUANTITY SOLENOID CONTROL CIRCUIT
FUEL SYSTEM LEAK OR RESTRICTION
RESTRICTED FUEL FILTER
LEAKING FUEL PRESSURE REGULATOR
LEAKING FUEL INJECTOR
FUEL QUANTITY SOLENOID STICKING

Always perform the Pre-Diagnostic Troubleshooting procedure before proceeding. Refer to PRE-DIAGNOSTIC TROUBLESHOOTING PROCEDURE - 2.2L DIESEL .

DIAGNOSTIC TEST

1. **CHECK FOR ACTIVE DTC**
    1. Turn the ignition on.
    2. Crank or start the engine.
    3. With the scan tool, View DTCs.

Is the status Active for this DTC?

Yes

- Go To 2

No

- Perform the INTERMITTENT CONDITION diagnostic procedure. Refer to **INTERMITTENT CONDITION - 2.2L DIESEL** .

2. **CHECK FOR HIGH RESISTANCE IN THE (K365) FUEL QUANTITY SOLENOID CONTROL CIRCUIT**
   1. Turn the ignition off.
   2. Disconnect the Fuel Quantity Solenoid harness connector.
   3. Disconnect the PCM C1 harness connector.
   4. Measure the resistance of the (K365) Fuel Quantity Solenoid Control circuit between the Fuel Quantity Solenoid harness connector and the PCM C1 harness connector.

   Is the resistance below 5.0 Ohms?

   Yes

   - Go To 3

   No

   - Repair the (K365) Fuel Quantity Solenoid Control circuit for an open or high resistance.
   - Perform the POWERTRAIN VERIFICATION TEST - 2.2L DIESEL. Refer to **PCM VERIFICATION TEST - 2.2L DIESEL** .

3. **CHECK THE FUEL DELIVERY SYSTEM**
   1. Perform the CHECKING THE FUEL DELIVERY SYSTEM diagnostic procedure. Refer to **DIAGNOSIS AND TESTING** .

   Were any problems found?

   View repair

- Repair as necessary

P0261-FUEL INJECTOR 1 CIRCUIT LOW

For a complete wiring diagram, **refer to appropriate SYSTEM WIRING DIAGRAMS article** .

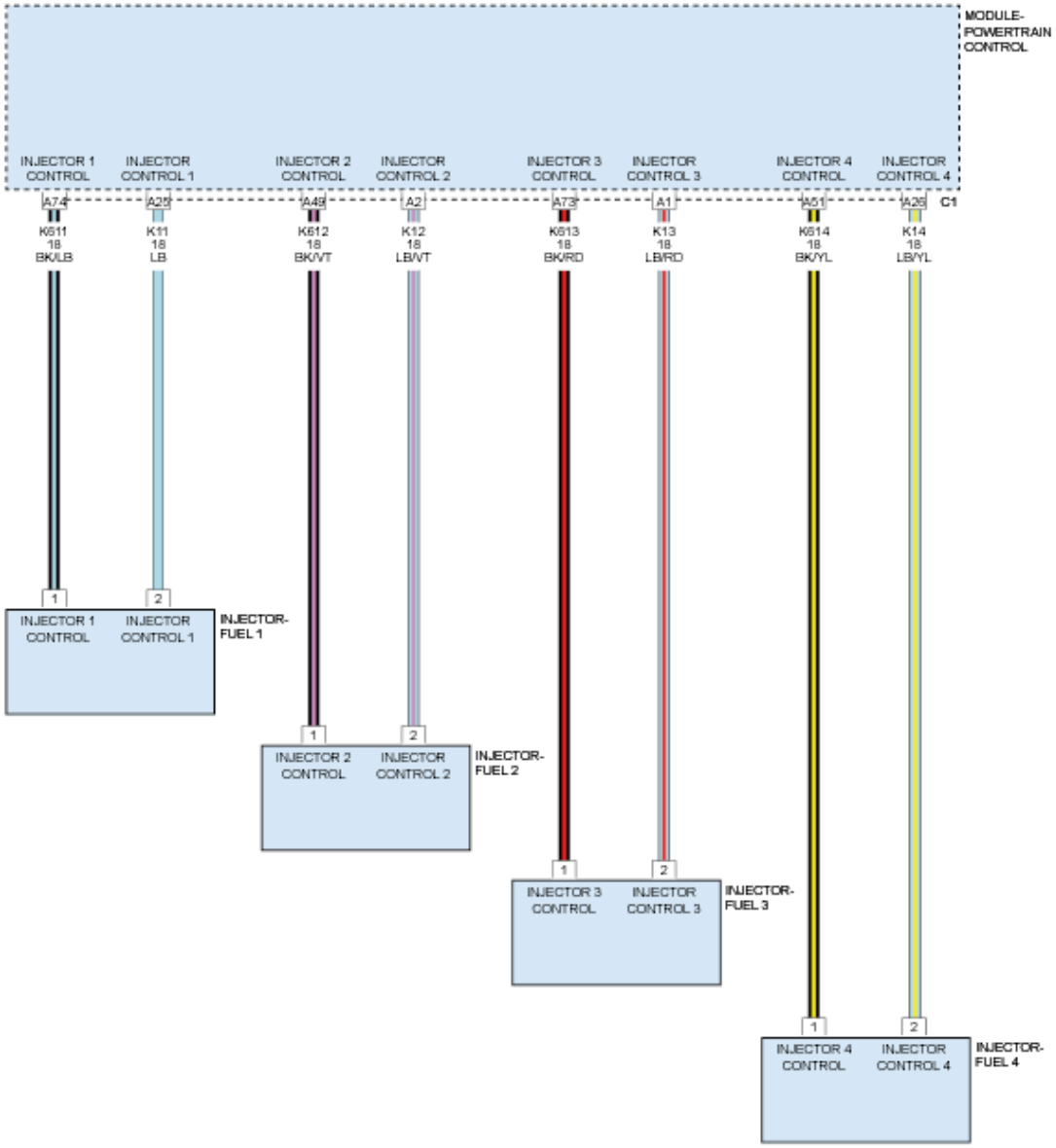

Fig. 27: Fuel Injector Circuit Diagram
Courtesy of CHRYSLER GROUP, LLC

WHEN MONITORED

With the engine running and the battery voltage between 6.0 Volts and 16.0 Volts.

SET CONDITION

The Powertrain Control Module (PCM) detects a short circuit between the (K11) Fuel Injector 1 Low-Side Control circuit and the (K611) Fuel Injector 1 High-Side Control circuit.

POSSIBLE CAUSES

Possible Causes
(K11) FUEL INJECTOR 1 LOW-SIDE CONTROL SHORTED TO THE (K611) FUEL INJECTOR 1 HIGH-SIDE CONTROL
FUEL INJECTOR
POWERTRAIN CONTROL MODULE (PCM)

Always perform the Pre-Diagnostic Troubleshooting procedure before proceeding. Refer to PRE-DIAGNOSTIC TROUBLESHOOTING PROCEDURE - 2.2L DIESEL .

DIAGNOSTIC TEST

1. **CHECK FOR ACTIVE DTC**
   1. Turn the ignition on.
   2. With the scan tool, clear DTCs in the Powertrain Control Module.
   3. Turn the ignition off for 10 seconds.
   4. Turn the ignition on.
   5. With the scan tool, select View DTCs.

   Is the status Active for this DTC?

   Yes

   - Go To 2

   No

   - Perform the INTERMITTENT CONDITION diagnostic procedure. Refer to **INTERMITTENT CONDITION - 2.2L DIESEL** .
2. **CHECK FOR THE (K11) FUEL INJECTOR 1 HIGH-SIDE CONTROL SHORTED TO THE (K611) FUEL INJECTOR 1 LOW-SIDE CONTROL**

1. Turn the ignition off.
2. Disconnect the Fuel Injector 1 harness connector.
3. Disconnect the PCM C1 harness connector.
4. Measure the resistance between the (K11) Fuel Injector 1 High-Side Control circuit and the (K611) Fuel Injector 1 Low-Side Control circuit at the Fuel Injector 1 harness connector.

   Is the resistance above 10k Ohms?

   Yes

   - Go To 3

   No

   - Repair the short between the (K11) Fuel Injector 1 High-Side Control circuit and the (K611) Fuel Injector 1 Low-Side Control circuit.
   - Perform the POWERTRAIN VERIFICATION TEST - 2.2L DIESEL. Refer to **PCM VERIFICATION TEST - 2.2L DIESEL** .

3. **CHECK THE FUEL INJECTOR**
   1. Reconnect the Fuel Injector 1 harness connector.
   2. Reconnect the PCM C1 harness connector.
   3. Turn the ignition on.
   4. With the scan tool, clear DTCs in the Powertrain Control Module.
   5. Turn the ignition off.
   6. Disconnect the Fuel Injector 1 harness connector.
   7. Turn the ignition on.
   8. With the scan tool, select View DTCs.

   NOTE: DTC P0261 will not return with the harness connector disconnected if the Fuel Injector is shorted internally.

   Does DTC P0261 return?

Yes

- Go To 4

No

- Replace Fuel Injector 1 in accordance with the service information. Program the new Fuel Injector 1 correction code with the scan tool into the PCM. The new Fuel Injector correction code is located on top of the injector and consists of 20 alphanumeric characters in two lines of 10 alphanumeric characters.
- Perform the POWERTRAIN VERIFICATION TEST - 2.2L DIESEL. Refer to **PCM VERIFICATION TEST - 2.2L DIESEL** .

4. **POWERTRAIN CONTROL MODULE**
   1. Using the wiring diagram/schematic as a guide, inspect the wiring and connectors between the Fuel Injector and the Powertrain Control Module.
   2. Look for any chafed, pierced, pinched, or partially broken wires.
   3. Look for broken, bent, pushed out or corroded terminals.
   4. Monitor the scan tool data relative to this circuit and wiggle test the wiring and connectors.
   5. Look for the data to change or for the DTC to reset during the wiggle test.
   6. Perform any technical service bulletins that may apply.

   Were any problems found?

   Yes

   - Repair as necessary.
   - Perform the POWERTRAIN VERIFICATION TEST - 2.2L DIESEL. Refer to **PCM VERIFICATION TEST - 2.2L DIESEL** .

   No

   - Replace the Powertrain Control Module. **Before removing the**

PCM, perform the "Replace PCM" routine in the Miscellaneous Functions tab of the scan tool. . Refer to **REMOVAL** .

- Perform the POWERTRAIN VERIFICATION TEST - 2.2L DIESEL. Refer to **PCM VERIFICATION TEST - 2.2L DIESEL** .

P0263-CYLINDER 1 CONTRIBUTION/BALANCE

For a complete wiring diagram, **refer to appropriate SYSTEM WIRING DIAGRAMS article** .

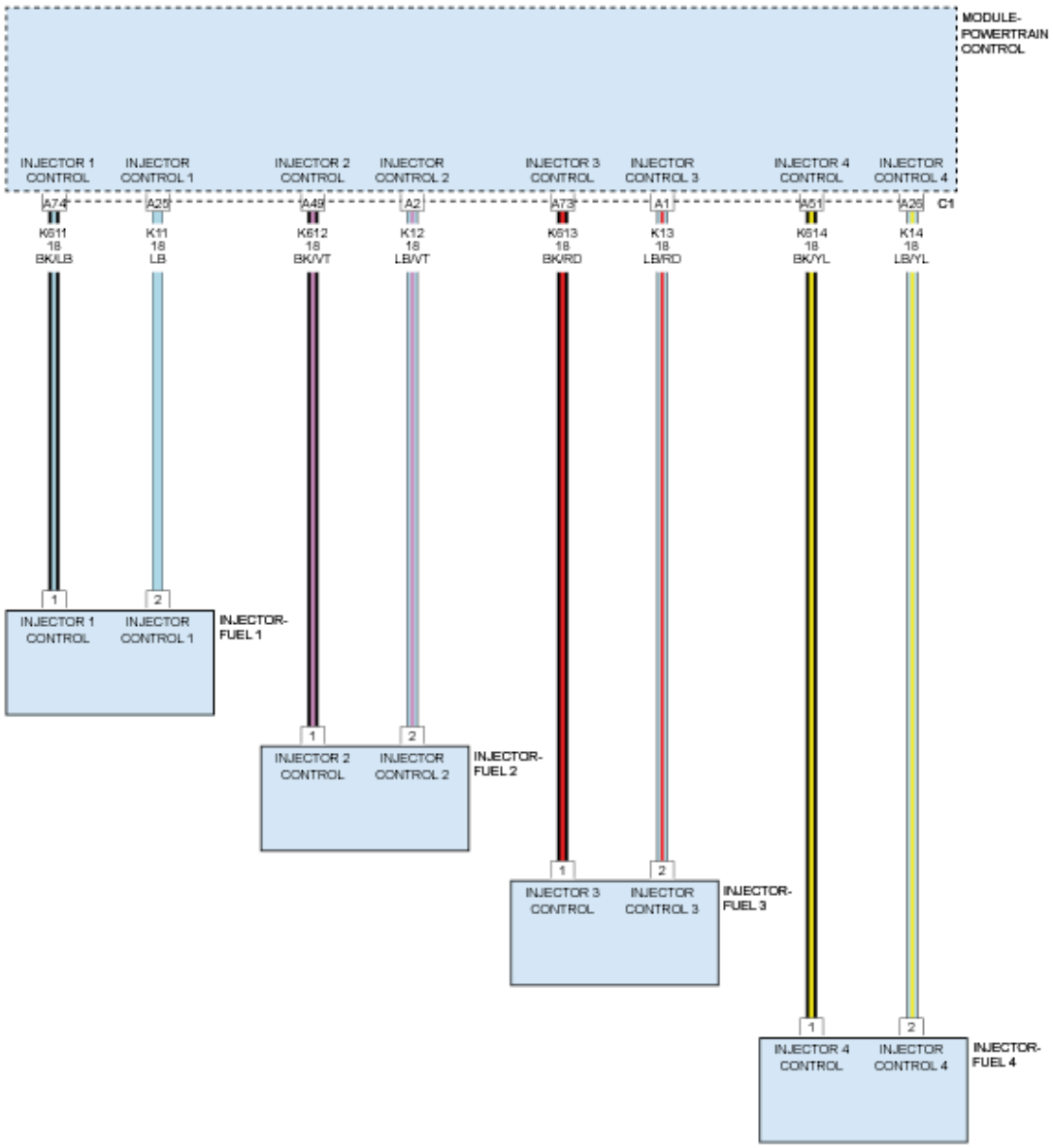

Fig. 28: Fuel Injector Circuit Diagram

Courtesy of CHRYSLER GROUP, LLC

WHEN MONITORED

With the engine running for at least five seconds.

SET CONDITION

The Powertrain Control Module (PCM) detects that the total Fuel Injector circuit resistance is either above 0.37 Ohms or below 0.14 Ohms for 0.16 seconds.

POSSIBLE CAUSES

Possible Causes
FUEL INJECTOR CORRECTION CODE NOT ENTERED CORRECTLY INTO PCM
HIGH RESISTANCE IN THE (K11) FUEL INJECTOR 1 HIGH-SIDE CONTROL CIRCUIT
HIGH RESISTANCE IN THE (K611) FUEL INJECTOR 1 LOW-SIDE CONTROL CIRCUIT
(K11) FUEL INJECTOR 1 HIGH-SIDE CONTROL CIRCUIT SHORTED TO GROUND
(K611) FUEL INJECTOR 1 LOW-SIDE CONTROL CIRCUIT SHORTED TO GROUND
FUEL INJECTOR
FUEL SYSTEM FAILURE
INTAKE SYSTEM LEAK OR RESTRICTION
ENGINE MECHANICAL FAILURE
POWERTRAIN CONTROL MODULE (PCM)

Always perform the Pre-Diagnostic Troubleshooting procedure before proceeding. Refer to PRE-DIAGNOSTIC TROUBLESHOOTING PROCEDURE - 2.2L DIESEL .

DIAGNOSTIC TEST

1. **CHECK THE FUEL INJECTOR CORRECTION CODES IN THE PCM**

NOTE: If there are any Fuel Injector DTCs present, perform

the diagnostics for those DTCs before proceeding with this test procedure.

1. Turn the ignition off.
2. Locate and record the correction codes for the Fuel Injectors. The injector correction codes are located on top of the injectors and consists of 20 alphanumeric characters in two lines of 10 alphanumeric characters.
3. Turn the ignition on, engine not running.
4. With the scan tool, read the Fuel Injector correction codes stored in the PCM.
5. Compare Fuel Injector correction codes with the codes programmed in the scan tool.

   Are the Fuel Injectors calibrated correctly?

   Yes

   - Go To 2

   No

   - Program the Fuel Injector correction codes with the scan tool into the PCM. The Fuel Injector correction codes are located on top of the injectors and consist of 20 alphanumeric characters in two lines of 10 alphanumeric characters.
   - Perform the POWERTRAIN VERIFICATION TEST - 2.2L DIESEL. Refer to **PCM VERIFICATION TEST - 2.2L DIESEL** .

2. **CHECK THE TOTAL CIRCUIT RESISTANCE OF FUEL INJECTOR 1**
   1. Turn the ignition off.
   2. Disconnect the PCM C1 harness connector.

      NOTE: Be sure to zero your Ohmmeter before the next step.

   3. Measure the circuit resistance of Fuel Injector 1 from the (K11) Fuel

Injector 1 Low-Side Control circuit to the (K611) Fuel Injector 1 High-Side Control circuit at the PCM C1 harness connector.

NOTE: The total circuit resistance through the Fuel Injector and wiring should be between 0.14 of an Ohm and 0.37 of an Ohm.

What is the total circuit resistance reading?

Total resistance is above 0.37 of an Ohm.

- Go To 3

Total resistance is below 0.14 of an Ohm.

- Go To 5

Total resistance is between 0.14 of an Ohm and 0.37 of an Ohm.

- Wiggle test the wiring harness and connectors while observing the Ohmmeter. If the resistance changes below 0.14 Ohms or above 0.37 Ohms, repair the intermittent connection in the wiring harness. If the wiring checks out OK, replace and program the Powertrain Control Module in accordance with the service information.
- Perform the POWERTRAIN VERIFICATION TEST - 2.2L DIESEL. Refer to **PCM VERIFICATION TEST - 2.2L DIESEL** .

3. **CHECK THE FUEL INJECTOR CONTROL CIRCUITS FOR HIGH RESISTANCE**
   1. Disconnect the Fuel Injector 1 harness connector.

      NOTE: Be sure to zero your Ohmmeter before the next step.

   2. Measure the resistance of the:
      - (K11) Fuel Injector 1 Low-Side Control circuit between the Fuel Injector 1 harness connector and the PCM C1 harness connector.
      - (K611) Fuel Injector 1 High-Side Control circuit between the Fuel

Injector 1 harness connector and the PCM C1 harness connector.

Is the resistance below 0.1 of an Ohm for both circuits?

Yes

- Go To 4

No

- Repair the high resistance in the Fuel Injector circuit that measured above 0.1 of an Ohm.
- Perform the POWERTRAIN VERIFICATION TEST - 2.2L DIESEL. Refer to **PCM VERIFICATION TEST - 2.2L DIESEL** .

4. **CHECK THE FUEL INJECTOR RESISTANCE**
   1. Disconnect all of the Fuel Injector harness connectors.

      NOTE: Be sure to zero your Ohmmeter before the next step.

   2. Measure and record the resistance through each Fuel Injector.

      NOTE: The resistance should be the same through all four injectors (Approximately 0.25 Ohms).

   Is the resistance reading the same for all four Fuel Injectors?

   Yes

   - Go To 7

   No

   - Replace the Fuel Injector that did not match the others in accordance with the service information. Program the new Fuel Injector correction code with the scan tool into the PCM. The new Fuel Injector correction code is located on top of the injector and consists of 20 alphanumeric characters in two lines of 10 alphanumeric characters.

- Perform the POWERTRAIN VERIFICATION TEST - 2.2L DIESEL. Refer to **PCM VERIFICATION TEST - 2.2L DIESEL** .

5. **CHECK THE FUEL INJECTOR CONTROL CIRCUITS FOR SHORT TO GROUND**
   1. Disconnect the Fuel Injector 1 harness connector.

      NOTE: Be sure to zero your Ohmmeter before the next step.

   2. Measure the resistance between ground and the:
      - (K11) Fuel Injector 1 Low-Side Control circuit at the Fuel Injector 1 harness connector.
      - (K611) Fuel Injector 1 High-Side Control circuit at the Fuel Injector 1 harness connector.

      NOTE: Their should be no continuity.

      Is there any continuity to ground?

      Yes

      - Repair the Fuel Injector circuit that measured continuity to ground.
      - Perform the POWERTRAIN VERIFICATION TEST - 2.2L DIESEL. Refer to **PCM VERIFICATION TEST - 2.2L DIESEL** .

      No

      - Go To 6

6. **CHECK THE FUEL INJECTOR RESISTANCE**
   1. Disconnect all of the Fuel Injector harness connectors.

      NOTE: Be sure to zero your Ohmmeter before the next step.

   2. Measure the resistance through each Fuel Injector.

NOTE: The resistance should be the same through all four injectors (Approximately 0.25 of an Ohm).

Is the resistance reading the same for all four Fuel Injectors?

Yes

- Go To 7

No

- Replace the Fuel Injector that did not match the others in accordance with the service information. Program the new Fuel Injector correction code with the scan tool into the PCM. The new Fuel Injector correction code is located on top of the injector and consists of 20 alphanumeric characters in two lines of 10 alphanumeric characters.
- Perform the POWERTRAIN VERIFICATION TEST - 2.2L DIESEL. Refer to **PCM VERIFICATION TEST - 2.2L DIESEL** .

7. **CHECK THE INTAKE SYSTEM FOR LEAKS OR RESTRICTIONS**
   1. Check the entire intake system for a leak or restriction.

   Were any problems found?

   Yes

   - Perform the appropriate repair in accordance with the service information.
   - Perform the POWERTRAIN VERIFICATION TEST - 2.2L DIESEL. Refer to **PCM VERIFICATION TEST - 2.2L DIESEL** .

   No

   - Go To 8

8. **CHECK THE FUEL DELIVERY SYSTEM**
   1. Perform the CHECKING THE FUEL DELIVERY SYSTEM diagnostic procedure. Refer to **DIAGNOSIS AND TESTING** .

Were any problems found?

Yes

- Perform the appropriate repair in accordance with the service information.
- Perform the POWERTRAIN VERIFICATION TEST - 2.2L DIESEL. Refer to **PCM VERIFICATION TEST - 2.2L DIESEL** .

No

- Go To 9

9. **CHECK THE ENGINE MECHANICAL SYSTEM**
   1. Perform the CHECKING THE ENGINE MECHANICAL SYSTEM diagnostic procedure. Refer to **DIAGNOSIS AND TESTING** .

   Were any problems found?

   Yes

   - Perform the appropriate repair in accordance with the service information.
   - Perform the POWERTRAIN VERIFICATION TEST - 2.2L DIESEL. Refer to **PCM VERIFICATION TEST - 2.2L DIESEL** .

   No

   - Go To 10

10. **POWERTRAIN CONTROL MODULE**
    1. Turn the ignition off.
    2. Replace the Fuel Injector in accordance with the service information. Program the correction code for this injector into the Powertrain Control Module.

    NOTE: The new Fuel Injector correction code is located on top of the injector and consists of 20 alphanumeric characters in two lines of 10

alphanumeric characters.

3. Turn the ignition on.
4. With the scan tool, Erase DTCs.
5. Start the engine. Allow the engine to reach normal operating
6. Monitor the scan tool for at least two minutes.
7. With the scan tool, View DTCs.

Did the DTC return as active?

Yes

- Replace the Powertrain Control Module. **Before removing the PCM, perform the "Replace PCM" routine in the Miscellaneous Functions tab of the scan tool.** . Refer to **REMOVAL** .
- Perform the POWERTRAIN VERIFICATION TEST - 2.2L DIESEL. Refer to **PCM VERIFICATION TEST - 2.2L DIESEL** .

No

- Repair is complete.
- Perform the POWERTRAIN VERIFICATION TEST - 2.2L DIESEL. Refer to **PCM VERIFICATION TEST - 2.2L DIESEL** .

P0264-FUEL INJECTOR 2 CIRCUIT LOW

For a complete wiring diagram, **refer to appropriate SYSTEM WIRING DIAGRAMS article** .

WHEN MONITORED

With the engine running and the battery voltage between 6.0 Volts and 16.0 Volts.

SET CONDITION

The Powertrain Control Module (PCM) detects a short circuit between the (K12)

Fuel Injector 2 Low-Side Control circuit and the (K612) Fuel Injector 2 High-Side Control circuit.

POSSIBLE CAUSES

Possible Causes
(K12) FUEL INJECTOR 2 LOW-SIDE CONTROL SHORTED TO THE (K612) FUEL INJECTOR 2 HIGH-SIDE CONTROL
FUEL INJECTOR
POWERTRAIN CONTROL MODULE (PCM)

Always perform the Pre-Diagnostic Troubleshooting procedure before proceeding. Refer to PRE-DIAGNOSTIC TROUBLESHOOTING PROCEDURE - 2.2L DIESEL .

DIAGNOSTIC TEST

1. **CHECK FOR ACTIVE DTC**
   1. Turn the ignition on.
   2. With the scan tool, clear DTCs in the Powertrain Control Module.
   3. Turn the ignition off for 10 seconds.
   4. Turn the ignition on.
   5. With the scan tool, select View DTCs.

   Is the status Active for this DTC?

   Yes

   - Go To 2

   No

   - Perform the INTERMITTENT CONDITION diagnostic procedure. Refer to **INTERMITTENT CONDITION - 2.2L DIESEL** .
2. **CHECK FOR THE (K12) FUEL INJECTOR 2 LOW-SIDE CONTROL SHORTED TO THE (K612) FUEL INJECTOR 2 HIGH-SIDE CONTROL**
   1. Disconnect the PCM C1 harness connector.
   2. Disconnect the Fuel Injector 2 harness connector.

3. Measure the resistance between the (K12) Fuel Injector 2 Low-Side Control circuit and the (K612) Fuel Injector 2 High-Side Control circuit at the Fuel Injector 2 harness connector.

   Is the resistance below 10k Ohms?

   Yes

   - Repair the short between the (K12) Fuel Injector 2 Low-Side Control circuit and the (K612) Fuel Injector 2 High-Side Control circuit.
   - Perform the POWERTRAIN VERIFICATION TEST - 2.2L DIESEL. Refer to **PCM VERIFICATION TEST - 2.2L DIESEL** .

   No

   - Go To 3

3. **CHECK THE FUEL INJECTOR**
   1. With the scan tool, clear DTCs in the Powertrain Control Module.
   2. Turn the ignition off.
   3. Disconnect the Fuel Injector 2 harness connector.
   4. Turn the ignition on.
   5. With the scan tool, select View DTCs.

   NOTE: DTC P0264 will not return with the harness connector disconnected if the Fuel Injector is shorted internally.

   Does DTC P0264 return?

   Yes

   - Go To 4

   No

   - Replace Fuel Injector 2 in accordance with the Service Information. Program the new Fuel Injector 2 correction code with

the scan tool into the PCM. The new Fuel Injector correction code is located on top of the injector and consists of 20 alphanumeric characters in two lines of 10 alphanumeric characters.

- Perform the POWERTRAIN VERIFICATION TEST - 2.2L DIESEL. Refer to **PCM VERIFICATION TEST - 2.2L DIESEL** .

4. **POWERTRAIN CONTROL MODULE**
   1. Using the wiring diagram/schematic as a guide, inspect the wiring and connectors between the Fuel Injector and the Powertrain Control Module.
   2. Look for any chafed, pierced, pinched, or partially broken wires.
   3. Look for broken, bent, pushed out or corroded terminals.
   4. Monitor the scan tool data relative to this circuit and wiggle test the wiring and connectors.
   5. Look for the data to change or for the DTC to reset during the wiggle test.
   6. Perform any technical service bulletins that may apply.

   Were any problems found?

   Yes

   - Repair as necessary.
   - Perform the POWERTRAIN VERIFICATION TEST - 2.2L DIESEL. Refer to **PCM VERIFICATION TEST - 2.2L DIESEL** .

   No

   - Replace the Powertrain Control Module. **Before removing the PCM, perform the "Replace PCM" routine in the Miscellaneous Functions tab of the scan tool.** . Refer to **REMOVAL** .
   - Perform the POWERTRAIN VERIFICATION TEST - 2.2L DIESEL. Refer to **PCM VERIFICATION TEST - 2.2L DIESEL** .

P0266-CYLINDER 2 CONTRIBUTION/BALANCE

For a complete wiring diagram, **refer to appropriate SYSTEM WIRING DIAGRAMS article** .

WHEN MONITORED

With the engine running for at least five seconds.

SET CONDITION

The Powertrain Control Module (PCM) detects that the total Fuel Injector circuit resistance is either above 0.37 Ohms or below 0.14 Ohms for 0.16 seconds.

POSSIBLE CAUSES

Possible Causes
FUEL INJECTOR CORRECTION CODE NOT ENTERED CORRECTLY INTO PCM
HIGH RESISTANCE IN THE (K12) FUEL INJECTOR 2 HIGH-SIDE CONTROL CIRCUIT
HIGH RESISTANCE IN THE (K612) FUEL INJECTOR 2 LOW-SIDE CONTROL CIRCUIT
(K12) FUEL INJECTOR 2 HIGH-SIDE CONTROL CIRCUIT SHORTED TO GROUND
(K612) FUEL INJECTOR 2 LOW-SIDE CONTROL CIRCUIT SHORTED TO GROUND
FUEL INJECTOR
FUEL SYSTEM FAILURE
INTAKE SYSTEM LEAK OR RESTRICTION
ENGINE MECHANICAL FAILURE
POWERTRAIN CONTROL MODULE (PCM)

Always perform the Pre-Diagnostic Troubleshooting procedure before proceeding. Refer to PRE-DIAGNOSTIC TROUBLESHOOTING PROCEDURE - 2.2L DIESEL .

DIAGNOSTIC TEST

1. **CHECK THE FUEL INJECTOR CORRECTION CODES IN THE PCM**

NOTE: If there are any Fuel Injector DTCs present, perform the diagnostics for those DTCs before proceeding with this test procedure.

1. Turn the ignition off.
2. Locate and record the correction codes for the Fuel Injectors. The injector correction codes are located on top of the injectors and consists of 20 alphanumeric characters in two lines of 10 alphanumeric characters.
3. Turn the ignition on, engine not running.
4. With the scan tool, read the Fuel Injector correction codes stored in the PCM.
5. Compare Fuel Injector correction codes with the codes programmed in the scan tool.

   Are the Fuel Injectors calibrated correctly?

   Yes

   - Go To 2

   No

   - Program the Fuel Injector correction codes with the scan tool into the PCM. The Fuel Injector correction codes are located on top of the injectors and consist of 20 alphanumeric characters in two lines of 10 alphanumeric characters.
   - Perform the POWERTRAIN VERIFICATION TEST - 2.2L DIESEL. Refer to **PCM VERIFICATION TEST - 2.2L DIESEL** .

2. **CHECK THE TOTAL CIRCUIT RESISTANCE OF FUEL INJECTOR 2**
   1. Turn the ignition off.
   2. Disconnect the PCM C1 harness connector.

   NOTE: Be sure to zero your Ohmmeter before the next step.

3. Measure the circuit resistance of Fuel Injector 2 from the (K12) Fuel Injector 2 Low-Side Control circuit to the (K612) Fuel Injector 2 High-Side Control circuit at the PCM C1 harness connector.

NOTE: The total circuit resistance through the Fuel Injector and wiring should be between 0.14 of an Ohm and 0.37 of an Ohm.

What is the total circuit resistance reading?

Total resistance is above 0.37 of an Ohm.

- Go To 3

Total resistance is below 0.14 of an Ohm.

- Go To 5

Total resistance is between 0.14 of an Ohm and 0.37 of an Ohm.

- Wiggle test the wiring harness and connectors while observing the Ohmmeter. If the resistance changes below 0.14 of an Ohm or above 0.37 of an Ohm, repair the intermittent connection in the wiring harness. If the wiring checks out OK, replace and program the Powertrain Control Module in accordance with the service information.
- Perform the POWERTRAIN VERIFICATION TEST - 2.2L DIESEL. Refer to **PCM VERIFICATION TEST - 2.2L DIESEL** .

3. **CHECK THE FUEL INJECTOR CONTROL CIRCUITS FOR HIGH RESISTANCE**
   1. Disconnect the Fuel Injector 2 harness connector.

NOTE: Be sure to zero your Ohmmeter before the next step.

   2. Measure the resistance of the:
      - (K12) Fuel Injector 2 Low-Side Control circuit between the Fuel Injector 2 harness connector and the PCM C1 harness connector.

- (K612) Fuel Injector 2 High-Side Control circuit between the Fuel Injector 2 harness connector and the PCM C1 harness connector.

Is the resistance below 0.1 of an Ohm for both circuits?

Yes

- Go To 4

No

- Repair the high resistance in the Fuel Injector circuit that measured above of an 0.1 Ohm.
- Perform the POWERTRAIN VERIFICATION TEST - 2.2L DIESEL. Refer to **PCM VERIFICATION TEST - 2.2L DIESEL** .

4. **CHECK THE FUEL INJECTOR RESISTANCE**
   1. Disconnect all of the Fuel Injector harness connectors.

      NOTE: Be sure to zero your Ohmmeter before the next step.

   2. Measure and record the resistance through each Fuel Injector.

      NOTE: The resistance should be the same through all four injectors (Approximately 0.25 of an Ohm).

   Is the resistance reading the same for all four Fuel Injectors?

   Yes

   - Go To 7

   No

   - Replace the Fuel Injector that did not match the others in accordance with the service information. Program the new Fuel Injector correction code with the scan tool into the PCM. The new Fuel Injector correction code is located on top of the injector and consists of 20 alphanumeric characters in two lines of 10

alphanumeric characters.

- Perform the POWERTRAIN VERIFICATION TEST - 2.2L DIESEL. Refer to **PCM VERIFICATION TEST - 2.2L DIESEL** .

5. **CHECK THE FUEL INJECTOR CONTROL CIRCUITS FOR SHORT TO GROUND**
   1. Disconnect the Fuel Injector 2 harness connector.

      NOTE: Be sure to zero your Ohmmeter before the next step.

   2. Measure the resistance between ground and the:
      - (K12) Fuel Injector 2 Low-Side Control circuit at the Fuel Injector 2 harness connector.
      - (K612) Fuel Injector 2 High-Side Control circuit at the Fuel Injector 2 harness connector.

      NOTE: Their should be no continuity.

      Is there any continuity to ground?

      Yes

      - Repair the Fuel Injector circuit that measured continuity to ground.
      - Perform the POWERTRAIN VERIFICATION TEST - 2.2L DIESEL. Refer to **PCM VERIFICATION TEST - 2.2L DIESEL** .

      No

      - Go To 6

6. **CHECK THE FUEL INJECTOR RESISTANCE**
   1. Disconnect all of the Fuel Injector harness connectors.

      NOTE: Be sure to zero your Ohmmeter before the next step.

   2. Measure the resistance through each Fuel Injector.

NOTE: The resistance should be the same through all four injectors (Approximately 0.25 of an Ohm).

Is the resistance reading the same for all four Fuel Injectors?

Yes

- Go To 7

No

- Replace the Fuel Injector that did not match the others in accordance with the service information. Program the new Fuel Injector correction code with the scan tool into the PCM. The new Fuel Injector correction code is located on top of the injector and consists of 20 alphanumeric characters in two lines of 10 alphanumeric characters.
- Perform the POWERTRAIN VERIFICATION TEST - 2.2L DIESEL. Refer to **PCM VERIFICATION TEST - 2.2L DIESEL** .

7. **CHECK THE INTAKE SYSTEM FOR LEAKS OR RESTRICTIONS**
   1. Check the entire intake system for a leak or restriction.

   Were any problems found?

   Yes

   - Perform the appropriate repair in accordance with the service information.
   - Perform the POWERTRAIN VERIFICATION TEST - 2.2L DIESEL. Refer to **PCM VERIFICATION TEST - 2.2L DIESEL** .

   No

   - Go To 8

8. **CHECK THE FUEL DELIVERY SYSTEM**
   1. Perform the CHECKING THE FUEL DELIVERY SYSTEM diagnostic procedure. Refer to **DIAGNOSIS AND TESTING** .

Were any problems found?

Yes

- Perform the appropriate repair in accordance with the service information.
- Perform the POWERTRAIN VERIFICATION TEST - 2.2L DIESEL. Refer to **PCM VERIFICATION TEST - 2.2L DIESEL** .

No

- Go To 9

9. **CHECK THE ENGINE MECHANICAL SYSTEM**
   1. Perform the CHECKING THE ENGINE MECHANICAL SYSTEM diagnostic procedure. Refer to **DIAGNOSIS AND TESTING** .

   Were any problems found?

   Yes

   - Perform the appropriate repair in accordance with the service information.
   - Perform the POWERTRAIN VERIFICATION TEST - 2.2L DIESEL. Refer to **PCM VERIFICATION TEST - 2.2L DIESEL** .

   No

   - Go To 10

10. **POWERTRAIN CONTROL MODULE**
    1. Turn the ignition off.
    2. Replace the Fuel Injector in accordance with the service information. Program the correction code for this injector into the Powertrain Control Module.

    NOTE: The new Fuel Injector correction code is located on top of the injector and consists of 20 alphanumeric characters in two lines of 10

alphanumeric characters.

3. Turn the ignition on.
4. With the scan tool, Erase DTCs.
5. Start the engine. Allow the engine to reach normal operating
6. Monitor the scan tool for at least two minutes.
7. With the scan tool, View DTCs.

Did the DTC return as active?

Yes

- Replace the Powertrain Control Module. **Before removing the PCM, perform the "Replace PCM" routine in the Miscellaneous Functions tab of the scan tool.** . Refer to **REMOVAL** .
- Perform the POWERTRAIN VERIFICATION TEST - 2.2L DIESEL. Refer to **PCM VERIFICATION TEST - 2.2L DIESEL** .

No

- Repair is complete.
- Perform the POWERTRAIN VERIFICATION TEST - 2.2L DIESEL. Refer to **PCM VERIFICATION TEST - 2.2L DIESEL** .

P0267-FUEL INJECTOR 3 CIRCUIT LOW

For a complete wiring diagram, **refer to appropriate SYSTEM WIRING DIAGRAMS article** .

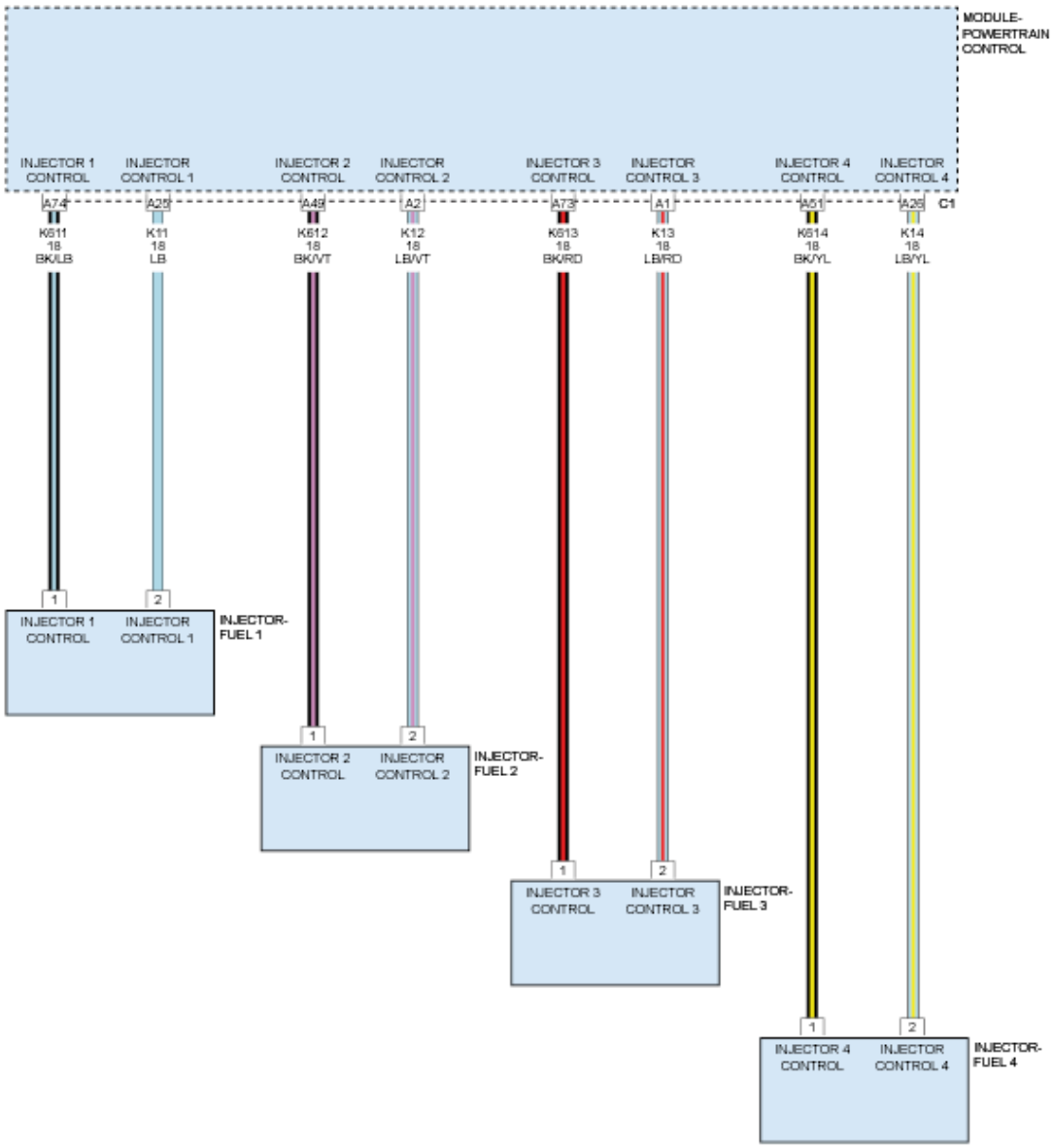

Fig. 29: Fuel Injector Circuit Diagram
Courtesy of CHRYSLER GROUP, LLC

WHEN MONITORED

With the engine running and the battery voltage between 6.0 Volts and 16.0 Volts.

SET CONDITION

The Powertrain Control Module (PCM) detects a short circuit between the (K13) Fuel Injector 3 Low-Side Control circuit and the (K613) Fuel Injector 3 High-Side Control circuit.

POSSIBLE CAUSES

Possible Causes
(K13) FUEL INJECTOR 3 LOW-SIDE CONTROL SHORTED TO THE (K613) FUEL INJECTOR 3 HIGH-SIDE CONTROL
FUEL INJECTOR
POWERTRAIN CONTROL MODULE (PCM)

Always perform the Pre-Diagnostic Troubleshooting procedure before proceeding. Refer to PRE-DIAGNOSTIC TROUBLESHOOTING PROCEDURE - 2.2L DIESEL .

DIAGNOSTIC TEST

1. **CHECK FOR ACTIVE DTC**
   1. Turn the ignition on.
   2. With the scan tool, clear DTCs in the Powertrain Control Module.
   3. Turn the ignition off for 10 seconds.
   4. Turn the ignition on.
   5. With the scan tool, select View DTCs.

   Is the status Active for this DTC?

   Yes

   - Go To 2

   No

   - Perform the INTERMITTENT CONDITION diagnostic procedure. Refer to **INTERMITTENT CONDITION - 2.2L DIESEL** .
2. **CHECK FOR THE (K13) FUEL INJECTOR 3 LOW-SIDE CONTROL SHORTED TO THE (K613) FUEL INJECTOR 3 HIGH-SIDE CONTROL**
   1. Disconnect the PCM C1 harness connector.
   2. Disconnect the Fuel Injector 3 harness connector.
   3. Measure the resistance between the (K13) Fuel Injector 3 Low-Side Control circuit and the (K613) Fuel Injector 3 High-Side Control circuit

at the Fuel Injector 3 harness connector.

Is the resistance below 10k Ohms?

Yes

- Repair the short between the (K13) Fuel Injector 3 Low-Side Control circuit and the (K613) Fuel Injector 3 High-Side Control circuit.
- Perform the POWERTRAIN VERIFICATION TEST - 2.2L DIESEL. Refer to **PCM VERIFICATION TEST - 2.2L DIESEL** .

No

- Go To 3

3. **CHECK THE FUEL INJECTOR**
   1. With the scan tool, clear DTCs in the Powertrain Control Module.
   2. Turn the ignition off.
   3. Disconnect the Fuel Injector 3 harness connector.
   4. Turn the ignition on.
   5. With the scan tool, select View DTCs.

NOTE: DTC P0267 will not return with the harness connector disconnected if the Fuel Injector is shorted internally.

Does DTC P0267 return?

Yes

- Go To 4

No

- Replace Fuel Injector 3 in accordance with the Service Information. Program the new Fuel Injector 3 correction code with the scan tool into the PCM. The new Fuel Injector correction code is located on top of the injector and consists of 20 alphanumeric

characters in two lines of 10 alphanumeric characters.

- Perform the POWERTRAIN VERIFICATION TEST - 2.2L DIESEL. Refer to **PCM VERIFICATION TEST - 2.2L DIESEL** .

4. **POWERTRAIN CONTROL MODULE**
   1. Using the wiring diagram/schematic as a guide, inspect the wiring and connectors between the Fuel Injector and the Powertrain Control Module.
   2. Look for any chafed, pierced, pinched, or partially broken wires.
   3. Look for broken, bent, pushed out or corroded terminals.
   4. Monitor the scan tool data relative to this circuit and wiggle test the wiring and connectors.
   5. Look for the data to change or for the DTC to reset during the wiggle test.
   6. Perform any technical service bulletins that may apply.

   Were any problems found?

   Yes

   - Repair as necessary.
   - Perform the POWERTRAIN VERIFICATION TEST - 2.2L DIESEL. Refer to **PCM VERIFICATION TEST - 2.2L DIESEL** .

   No

   - Replace the Powertrain Control Module. **Before removing the PCM, perform the "Replace PCM" routine in the Miscellaneous Functions tab of the scan tool.** . Refer to **REMOVAL** .
   - Perform the POWERTRAIN VERIFICATION TEST - 2.2L DIESEL. Refer to **PCM VERIFICATION TEST - 2.2L DIESEL** .

P0269-CYLINDER 3 CONTRIBUTION/BALANCE

For a complete wiring diagram, **refer to appropriate SYSTEM WIRING**

DIAGRAMS article .

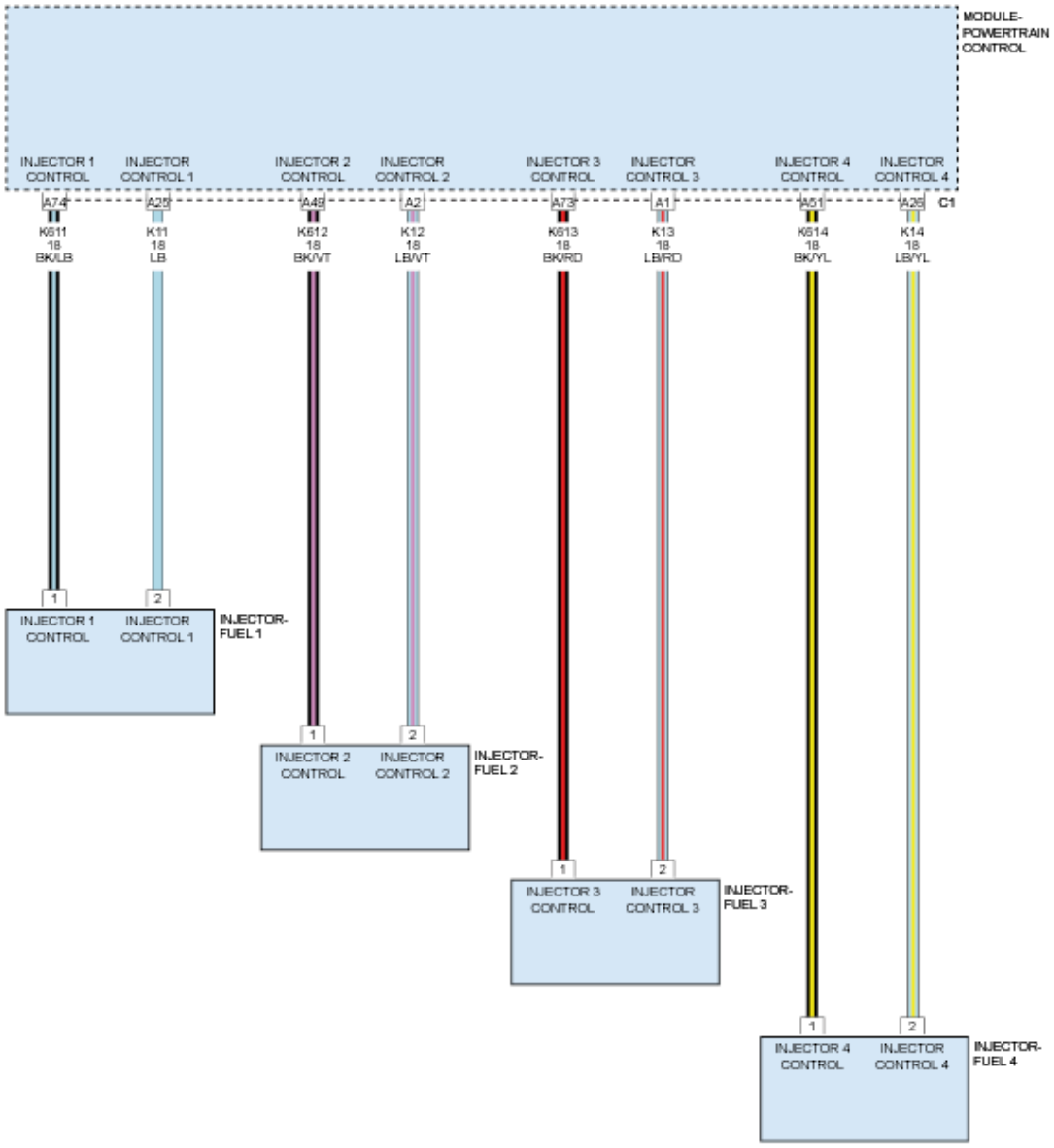

Fig. 30: Fuel Injector Circuit Diagram
Courtesy of CHRYSLER GROUP, LLC

WHEN MONITORED

With the engine running for at least five seconds.

SET CONDITION

The Powertrain Control Module (PCM) detects that the total Fuel Injector circuit resistance is either above 0.37 Ohms or below 0.14 Ohms for 0.16 seconds.

POSSIBLE CAUSES

Possible Causes
FUEL INJECTOR CORRECTION CODE NOT ENTERED CORRECTLY INTO PCM
HIGH RESISTANCE IN THE (K13) FUEL INJECTOR 3 HIGH-SIDE CONTROL CIRCUIT
HIGH RESISTANCE IN THE (K613) FUEL INJECTOR 3 LOW-SIDE CONTROL CIRCUIT
(K13) FUEL INJECTOR 3 HIGH-SIDE CONTROL CIRCUIT SHORTED TO GROUND
(K613) FUEL INJECTOR 3 LOW-SIDE CONTROL CIRCUIT SHORTED TO GROUND
FUEL INJECTOR
FUEL SYSTEM FAILURE
INTAKE SYSTEM LEAK OR RESTRICTION
ENGINE MECHANICAL FAILURE
POWERTRAIN CONTROL MODULE

Always perform the Pre-Diagnostic Troubleshooting procedure before proceeding. Refer to PRE-DIAGNOSTIC TROUBLESHOOTING PROCEDURE - 2.2L DIESEL .

DIAGNOSTIC TEST

1. **CHECK THE FUEL INJECTOR CORRECTION CODES IN THE PCM**

   NOTE: If there are any Fuel Injector DTCs present, perform the diagnostics for those DTCs before proceeding with this test procedure.

   1. Turn the ignition off.
   2. Locate and record the correction codes for the Fuel Injectors. The injector correction codes are located on top of the injectors and consists of 20 alphanumeric characters in two lines of 10 alphanumeric characters.
   3. Turn the ignition on, engine not running.

4. With the scan tool, read the Fuel Injector correction codes stored in the PCM.
5. Compare Fuel Injector correction codes with the codes programmed in the scan tool.

   Are the Fuel Injectors calibrated correctly?

   Yes

   - Go To 2

   No

   - Program the Fuel Injector correction codes with the scan tool into the PCM. The Fuel Injector correction codes are located on top of the injectors and consist of 20 alphanumeric characters in two lines of 10 alphanumeric characters.
   - Perform the POWERTRAIN VERIFICATION TEST - 2.2L DIESEL. Refer to **PCM VERIFICATION TEST - 2.2L DIESEL** .

2. **CHECK THE TOTAL CIRCUIT RESISTANCE OF FUEL INJECTOR 2**
   1. Turn the ignition off.
   2. Disconnect the PCM C1 harness connector.

      NOTE: Be sure to zero your Ohmmeter before the next step.

   3. Measure the circuit resistance of Fuel Injector 3 from the (K13) Fuel Injector 3 Low-Side Control circuit to the (K613) Fuel Injector 3 High-Side Control circuit at the PCM C1 harness connector.

      NOTE: The total circuit resistance through the Fuel Injector and wiring should be between 0.14 of an Ohm and 0.37 of an Ohm.

      What is the total circuit resistance reading?

      Total resistance is above 0.37 Ohms.

- Go To 3

Total resistance is below 0.14 Ohms.

- Go To 5

Total resistance is between 0.14 Ohms and 0.37 Ohms.

- Wiggle test the wiring harness and connectors while observing the Ohmmeter. If the resistance changes below 0.14 of an Ohm or above 0.37 of an Ohm, repair the intermittent connection in the wiring harness. If the wiring checks out OK, replace and program the Powertrain Control Module in accordance with the service information.
- Perform the POWERTRAIN VERIFICATION TEST - 2.2L DIESEL. Refer to **PCM VERIFICATION TEST - 2.2L DIESEL** .

3. **CHECK THE FUEL INJECTOR CONTROL CIRCUITS FOR HIGH RESISTANCE**
   1. Disconnect the Fuel Injector 3 harness connector.

      NOTE: Be sure to zero your Ohmmeter before the next step.

   2. Measure the resistance of the:
      - (K13) Fuel Injector 3 Low-Side Control circuit between the Fuel Injector 3 harness connector and the PCM C1 harness connector.
      - (K613) Fuel Injector 3 High-Side Control circuit between the Fuel Injector 3 harness connector and the PCM C1 harness connector.

      Is the resistance below 0.1 of an Ohm for both circuits?

      Yes

      - Go To 4

      No

      - Repair the high resistance in the Fuel Injector circuit that measured

above 0.1 Ohm.

- Perform the POWERTRAIN VERIFICATION TEST - 2.2L DIESEL. Refer to **PCM VERIFICATION TEST - 2.2L DIESEL** .

4. **CHECK THE FUEL INJECTOR RESISTANCE**
   1. Disconnect all of the Fuel Injector harness connectors.

      NOTE: Be sure to zero your Ohmmeter before the next step.

   2. Measure and record the resistance through each Fuel Injector.

      NOTE: The resistance should be the same through all four injectors (Approximately 0.25 Ohms.

      Is the resistance reading the same for all four Fuel Injectors?

      Yes

      - Go To 7

      No

      - Replace the Fuel Injector that did not match the others in accordance with the service information. Program the new Fuel Injector correction code with the scan tool into the PCM. The new Fuel Injector correction code is located on top of the injector and consists of 20 alphanumeric characters in two lines of 10 alphanumeric characters.
      - Perform the POWERTRAIN VERIFICATION TEST - 2.2L DIESEL. Refer to **PCM VERIFICATION TEST - 2.2L DIESEL** .

5. **CHECK THE FUEL INJECTOR CONTROL CIRCUITS FOR SHORT TO GROUND**
   1. Disconnect the Fuel Injector 3 harness connector.

      NOTE: Be sure to zero your Ohmmeter before the next step.

2. Measure the resistance between ground and the:
   - (K13) Fuel Injector 3 Low-Side Control circuit at the Fuel Injector 3 harness connector.
   - (K613) Fuel Injector 3 High-Side Control circuit at the Fuel Injector 3 harness connector.

NOTE: Their should be no continuity.

Is there any continuity to ground?

Yes

- Repair the Fuel Injector circuit that measured continuity to ground.
- Perform the POWERTRAIN VERIFICATION TEST - 2.2L DIESEL. Refer to **PCM VERIFICATION TEST - 2.2L DIESEL** .

No

- Go To 6

6. **CHECK THE FUEL INJECTOR RESISTANCE**
   1. Disconnect all of the Fuel Injector harness connectors.

NOTE: Be sure to zero your Ohmmeter before the next step.

   2. Measure the resistance through each Fuel Injector.

NOTE: The resistance should be the same through all four injectors (Approximately 0.25 Ohms.

Is the resistance reading the same for all four Fuel Injectors?

Yes

- Go To 7

No

- Replace the Fuel Injector that did not match the others in accordance with the service information. Program the new Fuel Injector correction code with the scan tool into the PCM. The new Fuel Injector correction code is located on top of the injector and consists of 20 alphanumeric characters in two lines of 10 alphanumeric characters.
- Perform the POWERTRAIN VERIFICATION TEST - 2.2L DIESEL. Refer to **PCM VERIFICATION TEST - 2.2L DIESEL** .

7. **CHECK THE INTAKE SYSTEM FOR LEAKS OR RESTRICTIONS**
   1. Check the entire intake system for a leak or restriction.

      Were any problems found?

      Yes

      - Perform the appropriate repair in accordance with the service information.
      - Perform the POWERTRAIN VERIFICATION TEST - 2.2L DIESEL. Refer to **PCM VERIFICATION TEST - 2.2L DIESEL** .

      No

      - Go To 8
8. **CHECK THE FUEL DELIVERY SYSTEM**
   1. Perform the CHECKING THE FUEL DELIVERY SYSTEM diagnostic procedure. Refer to **DIAGNOSIS AND TESTING** .

      Were any problems found?

      Yes

      - Perform the appropriate repair in accordance with the service information.
      - Perform the POWERTRAIN VERIFICATION TEST - 2.2L DIESEL. Refer to **PCM VERIFICATION TEST - 2.2L DIESEL** .

No

- Go To 9

9. **CHECK THE ENGINE MECHANICAL SYSTEM**
   1. Perform the CHECKING THE ENGINE MECHANICAL SYSTEM diagnostic procedure. Refer to **DIAGNOSIS AND TESTING** .

   Were any problems found?

   Yes

   - Perform the appropriate repair in accordance with the service information.
   - Perform the POWERTRAIN VERIFICATION TEST - 2.2L DIESEL. Refer to **PCM VERIFICATION TEST - 2.2L DIESEL** .

   No

   - Go To 10

10. **POWERTRAIN CONTROL MODULE**
    1. Turn the ignition off.
    2. Replace the Fuel Injector in accordance with the service information. Program the correction code for this injector into the Powertrain Control Module.

    NOTE: The new Fuel Injector correction code is located on top of the injector and consists of 20 alphanumeric characters in two lines of 10 alphanumeric characters.

    3. Turn the ignition on.
    4. With the scan tool, Erase DTCs.
    5. Start the engine. Allow the engine to reach normal operating
    6. Monitor the scan tool for at least two minutes.
    7. With the scan tool, View DTCs.

    Did the DTC return as active?

Yes

- Replace the Powertrain Control Module. **Before removing the PCM, perform the "Replace PCM" routine in the Miscellaneous Functions tab of the scan tool.** . Refer to **REMOVAL** .
- Perform the POWERTRAIN VERIFICATION TEST - 2.2L DIESEL. Refer to **PCM VERIFICATION TEST - 2.2L DIESEL** .

No

- Repair is complete.
- Perform the POWERTRAIN VERIFICATION TEST - 2.2L DIESEL. Refer to **PCM VERIFICATION TEST - 2.2L DIESEL** .

P0270-FUEL INJECTOR 4 CIRCUIT LOW

For a complete wiring diagram, **refer to appropriate SYSTEM WIRING DIAGRAMS article** .

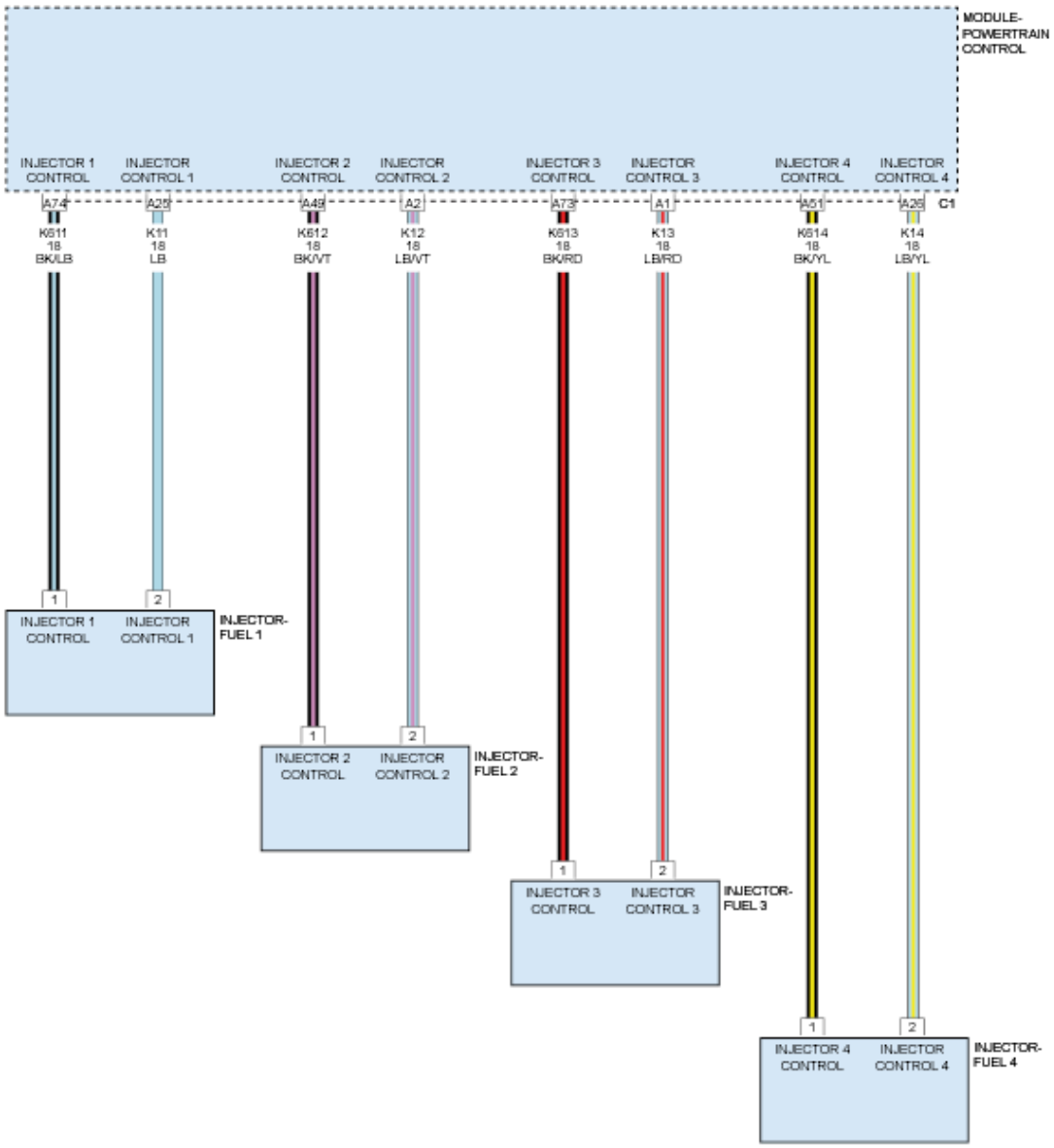

Fig. 31: Fuel Injector Circuit Diagram
Courtesy of CHRYSLER GROUP, LLC

WHEN MONITORED

With the engine running and the battery voltage between 6.0 Volts and 16.0 Volts.

SET CONDITION

The Powertrain Control Module (PCM) detects a short circuit between the (K14) Fuel Injector 4 Low-Side Control circuit and the (K614) Fuel Injector 4 High-Side Control circuit.

POSSIBLE CAUSES

Possible Causes
(K14) FUEL INJECTOR 4 LOW-SIDE CONTROL SHORTED TO THE (K614) FUEL INJECTOR 4 HIGH-SIDE CONTROL
FUEL INJECTOR
POWERTRAIN CONTROL MODULE (PCM)

Always perform the Pre-Diagnostic Troubleshooting procedure before proceeding. Refer to PRE-DIAGNOSTIC TROUBLESHOOTING PROCEDURE - 2.2L DIESEL .

DIAGNOSTIC TEST

1. **CHECK FOR ACTIVE DTC**
   1. Turn the ignition on.
   2. With the scan tool, clear DTCs in the Powertrain Control Module.
   3. Turn the ignition off for 10 seconds.
   4. Turn the ignition on.
   5. With the scan tool, select View DTCs.

   Is the status Active for this DTC?

   Yes

   - Go To 2

   No

   - Perform the INTERMITTENT CONDITION diagnostic procedure. Refer to **INTERMITTENT CONDITION - 2.2L DIESEL** .
2. **CHECK FOR THE (K14) FUEL INJECTOR 4 LOW-SIDE CONTROL SHORTED TO THE (K614) FUEL INJECTOR 4 HIGH-SIDE CONTROL**
   1. Disconnect the PCM C1 harness connector.
   2. Disconnect the Fuel Injector 4 harness connector.
   3. Measure the resistance between the (K14) Fuel Injector 4 Low-Side Control circuit and the (K614) Fuel Injector 4 High-Side Control circuit

at the Fuel Injector 4 harness connector.

Is the resistance below 10k Ohms?

Yes

- Repair the short between the (K14) Fuel Injector 4 Low-Side Control circuit and the (K614) Fuel Injector 4 High-Side Control circuit.
- Perform the POWERTRAIN VERIFICATION TEST - 2.2L DIESEL. Refer to **PCM VERIFICATION TEST - 2.2L DIESEL** .

No

- Go To 3

3. **CHECK THE FUEL INJECTOR**
   1. With the scan tool, clear DTCs in the Powertrain Control Module.
   2. Turn the ignition off.
   3. Disconnect the Fuel Injector 4 harness connector.
   4. Turn the ignition on.
   5. With the scan tool, select View DTCs.

NOTE: DTC P0270 will not return with the harness connector disconnected if the Fuel Injector is shorted internally.

Does DTC P0270 return?

Yes

- Go To 4

No

- Replace Fuel Injector 4 in accordance with the service information. Program the new Fuel Injector 4 correction code with the scan tool into the PCM. The new Fuel Injector correction code is located on top of the injector and consists of 20 alphanumeric characters in

two lines of 10 alphanumeric characters.

- Perform the POWERTRAIN VERIFICATION TEST - 2.2L DIESEL. Refer to **PCM VERIFICATION TEST - 2.2L DIESEL** .

4. **POWERTRAIN CONTROL MODULE**
   1. Using the wiring diagram/schematic as a guide, inspect the wiring and connectors between the Fuel Injector and the Powertrain Control Module.
   2. Look for any chafed, pierced, pinched, or partially broken wires.
   3. Look for broken, bent, pushed out or corroded terminals.
   4. Monitor the scan tool data relative to this circuit and wiggle test the wiring and connectors.
   5. Look for the data to change or for the DTC to reset during the wiggle test.
   6. Perform any technical service bulletins that may apply.

   Were any problems found?

   Yes

   - Repair as necessary.
   - Perform the POWERTRAIN VERIFICATION TEST - 2.2L DIESEL. Refer to **PCM VERIFICATION TEST - 2.2L DIESEL** .

   No

   - Replace the Powertrain Control Module. **Before removing the PCM, perform the "Replace PCM" routine in the Miscellaneous Functions tab of the scan tool.** . Refer to **REMOVAL** .
   - Perform the POWERTRAIN VERIFICATION TEST - 2.2L DIESEL. Refer to **PCM VERIFICATION TEST - 2.2L DIESEL** .

P0272-CYLINDER 4 CONTRIBUTION/BALANCE

For a complete wiring diagram, **refer to appropriate SYSTEM WIRING**

DIAGRAMS article .

WHEN MONITORED

With the engine running for at least five seconds.

SET CONDITION

The Powertrain Control Module (PCM) detects that the total Fuel Injector circuit resistance is either above 0.37 Ohms or below 0.14 Ohms for 0.16 seconds.

POSSIBLE CAUSES

Possible Causes
FUEL INJECTOR CORRECTION CODE NOT ENTERED CORRECTLY INTO PCM
HIGH RESISTANCE IN THE (K14) FUEL INJECTOR 4 HIGH-SIDE CONTROL CIRCUIT
HIGH RESISTANCE IN THE (K614) FUEL INJECTOR 4 LOW-SIDE CONTROL CIRCUIT
(K14) FUEL INJECTOR 4 HIGH-SIDE CONTROL CIRCUIT SHORTED TO GROUND
(K614) FUEL INJECTOR 4 LOW-SIDE CONTROL CIRCUIT SHORTED TO GROUND
FUEL INJECTOR
FUEL SYSTEM FAILURE
INTAKE SYSTEM LEAK OR RESTRICTION
ENGINE MECHANICAL FAILURE
POWERTRAIN CONTROL MODULE

Always perform the Pre-Diagnostic Troubleshooting procedure before proceeding. Refer to PRE-DIAGNOSTIC TROUBLESHOOTING PROCEDURE - 2.2L DIESEL .

DIAGNOSTIC TEST

1. **CHECK THE FUEL INJECTOR CORRECTION CODES IN THE PCM**

NOTE: If there are any Fuel Injector DTCs present, perform

the diagnostics for those DTCs before proceeding with this test procedure.

1. Turn the ignition off.
2. Locate and record the correction codes for the Fuel Injectors. The injector correction codes are located on top of the injectors and consists of 20 alphanumeric characters in two lines of 10 alphanumeric characters.
3. Turn the ignition on, engine not running.
4. With the scan tool, read the Fuel Injector correction codes stored in the PCM.
5. Compare Fuel Injector correction codes with the codes programmed in the scan tool.

   Are the Fuel Injectors calibrated correctly?

   Yes

   - Go To 2

   No

   - Program the Fuel Injector correction codes with the scan tool into the PCM. The Fuel Injector correction codes are located on top of the injectors and consist of 20 alphanumeric characters in two lines of 10 alphanumeric characters.
   - Perform the POWERTRAIN VERIFICATION TEST - 2.2L DIESEL. Refer to **PCM VERIFICATION TEST - 2.2L DIESEL** .

2. **CHECK THE TOTAL CIRCUIT RESISTANCE OF FUEL INJECTOR 4**
   1. Turn the ignition off.
   2. Disconnect the PCM C1 harness connector.

      NOTE: Be sure to zero your Ohmmeter before the next step.

   3. Measure the circuit resistance of Fuel Injector 4 from the (K14) Fuel

Injector 4 Low-Side Control circuit to the (K614) Fuel Injector 4 High-Side Control circuit at the PCM C1 harness connector.

NOTE: The total circuit resistance through the Fuel Injector and wiring should be between 0.14 of an Ohm and 0.37 of an Ohm.

What is the total circuit resistance reading?

Total resistance is above 0.37 of an Ohm.

- Go To 3

Total resistance is below 0.14 of an Ohm.

- Go To 5

Total resistance is between 0.14 of an Ohm and 0.37 of an Ohm.

- Wiggle test the wiring harness and connectors while observing the Ohmmeter. If the resistance changes below 0.14 of an Ohm or above 0.37 of an Ohm, repair the intermittent connection in the wiring harness. If the wiring checks out OK, replace and program the Powertrain Control Module in accordance with the service information.
- Perform the POWERTRAIN VERIFICATION TEST - 2.2L DIESEL. Refer to **PCM VERIFICATION TEST - 2.2L DIESEL** .

3. **CHECK THE FUEL INJECTOR CONTROL CIRCUITS FOR HIGH RESISTANCE**
   1. Disconnect the Fuel Injector 4 harness connector.

      NOTE: Be sure to zero your Ohmmeter before the next step.

   2. Measure the resistance of the:
      - (K14) Fuel Injector 4 Low-Side Control circuit between the Fuel Injector 4 harness connector and the PCM C1 harness connector.
      - (K614) Fuel Injector 4 High-Side Control circuit between the Fuel

Injector 4 harness connector and the PCM C1 harness connector.

Is the resistance below 0.1 of an Ohm for both circuits?

Yes

- Go To 4

No

- Repair the high resistance in the Fuel Injector circuit that measured above 0.1 of an Ohm.
- Perform the POWERTRAIN VERIFICATION TEST - 2.2L DIESEL. Refer to **PCM VERIFICATION TEST - 2.2L DIESEL** .

4. **CHECK THE FUEL INJECTOR RESISTANCE**
   1. Disconnect all of the Fuel Injector harness connectors.

      NOTE: Be sure to zero your Ohmmeter before the next step.

   2. Measure and record the resistance through each Fuel Injector.

      NOTE: The resistance should be the same through all four injectors (Approximately 0.25 of an Ohm).

   Is the resistance reading the same for all four Fuel Injectors?

   Yes

   - Go To 7

   No

   - Replace the Fuel Injector that did not match the others in accordance with the service information. Program the new Fuel Injector correction code with the scan tool into the PCM. The new Fuel Injector correction code is located on top of the injector and consists of 20 alphanumeric characters in two lines of 10 alphanumeric characters.

- Perform the POWERTRAIN VERIFICATION TEST - 2.2L DIESEL. Refer to **PCM VERIFICATION TEST - 2.2L DIESEL** .

5. **CHECK THE FUEL INJECTOR CONTROL CIRCUITS FOR SHORT TO GROUND**
   1. Disconnect the Fuel Injector 4 harness connector.

      NOTE: Be sure to zero your Ohmmeter before the next step.

   2. Measure the resistance between ground and the:
      - (K14) Fuel Injector 4 Low-Side Control circuit at the Fuel Injector 4 harness connector.
      - (K614) Fuel Injector 4 High-Side Control circuit at the Fuel Injector 4 harness connector.

      NOTE: Their should be no continuity.

      Is there any continuity to ground?

      Yes

      - Repair the Fuel Injector circuit that measured continuity to ground.
      - Perform the POWERTRAIN VERIFICATION TEST - 2.2L DIESEL. Refer to **PCM VERIFICATION TEST - 2.2L DIESEL** .

      No

      - Go To 6

6. **CHECK THE FUEL INJECTOR RESISTANCE**
   1. Disconnect all of the Fuel Injector harness connectors.

      NOTE: Be sure to zero your Ohmmeter before the next step.

   2. Measure the resistance through each Fuel Injector.

NOTE: The resistance should be the same through all four injectors (Approximately 0.25 of an Ohm).

Is the resistance reading the same for all four Fuel Injectors?

Yes

- Go To 7

No

- Replace the Fuel Injector that did not match the others in accordance with the service information. Program the new Fuel Injector correction code with the scan tool into the PCM. The new Fuel Injector correction code is located on top of the injector and consists of 20 alphanumeric characters in two lines of 10 alphanumeric characters.
- Perform the POWERTRAIN VERIFICATION TEST - 2.2L DIESEL. Refer to **PCM VERIFICATION TEST - 2.2L DIESEL** .

7. **CHECK THE INTAKE SYSTEM FOR LEAKS OR RESTRICTIONS**
   1. Check the entire intake system for a leak or restriction.

   Were any problems found?

   Yes

   - Perform the appropriate repair in accordance with the service information.
   - Perform the POWERTRAIN VERIFICATION TEST - 2.2L DIESEL. Refer to **PCM VERIFICATION TEST - 2.2L DIESEL** .

   No

   - Go To 8

8. **CHECK THE FUEL DELIVERY SYSTEM**
   1. Perform the CHECKING THE FUEL DELIVERY SYSTEM diagnostic procedure. Refer to **DIAGNOSIS AND TESTING** .

Were any problems found?

Yes

- Perform the appropriate repair in accordance with the service information.
- Perform the POWERTRAIN VERIFICATION TEST - 2.2L DIESEL. Refer to **PCM VERIFICATION TEST - 2.2L DIESEL** .

No

- Go To 9

9. **CHECK THE ENGINE MECHANICAL SYSTEM**
   1. Perform the CHECKING THE ENGINE MECHANICAL SYSTEM diagnostic procedure. Refer to **DIAGNOSIS AND TESTING** .

   Were any problems found?

   Yes

   - Perform the appropriate repair in accordance with the service information.
   - Perform the POWERTRAIN VERIFICATION TEST - 2.2L DIESEL. Refer to **PCM VERIFICATION TEST - 2.2L DIESEL** .

   No

   - Go To 10

10. **POWERTRAIN CONTROL MODULE**
    1. Turn the ignition off.
    2. Replace the Fuel Injector in accordance with the service information. Program the correction code for this injector into the Powertrain Control Module.

    NOTE: The new Fuel Injector correction code is located on top of the injector and consists of 20 alphanumeric characters in two lines of 10

alphanumeric characters.

3. Turn the ignition on.
4. With the scan tool, erase DTCs.
5. Start the engine. Allow the engine to reach normal operating
6. Monitor the scan tool for at least two minutes.
7. With the scan tool, View DTCs.

Did the DTC return as active?

Yes

- Replace the Powertrain Control Module. **Before removing the PCM, perform the "Replace PCM" routine in the Miscellaneous Functions tab of the scan tool.** . Refer to **REMOVAL** .
- Perform the POWERTRAIN VERIFICATION TEST - 2.2L DIESEL. Refer to **PCM VERIFICATION TEST - 2.2L DIESEL** .

No

- Repair is complete.
- Perform the POWERTRAIN VERIFICATION TEST - 2.2L DIESEL. Refer to **PCM VERIFICATION TEST - 2.2L DIESEL** .

P029A-CYLINDER 1 - FUEL TRIM AT MAX LIMIT

For a complete wiring diagram, **refer to appropriate SYSTEM WIRING DIAGRAMS article** .

WHEN MONITORED

With the engine running.

SET CONDITION

The Powertrain Control Module (PCM) detects that the Fuel Injector beyond it's maximum correctable limit.

POSSIBLE CAUSES

Possible Causes
FUEL INJECTOR CORRECTION CODE NOT ENTERED CORRECTLY INTO PCM
KNOCK SENSOR 1 NOT TORQUED CORRECTLY
POOR CONNECTION AT THE KNOCK SENSOR 1 HARNESS CONNECTOR
LOW CYLINDER COMPRESSION
FUEL INJECTOR

Always perform the Pre-Diagnostic Troubleshooting procedure before proceeding. Refer to PRE-DIAGNOSTIC TROUBLESHOOTING PROCEDURE - 2.2L DIESEL .

DIAGNOSTIC TEST

1. **CHECK FOR ACTIVE DTC**
   1. Turn the ignition on.
   2. With the scan tool, clear DTCs in the Powertrain Control Module.
   3. Turn the ignition off for 10.0 seconds.
   4. Turn the ignition on.
   5. With the scan tool, select View DTCs.

   Is the status Active for this DTC?

   Yes

   - Go To 2

   No

   - Perform the INTERMITTENT CONDITION diagnostic procedure. Refer to **INTERMITTENT CONDITION - 2.2L DIESEL** .
2. **CHECK THE FUEL INJECTOR CORRECTION CODES IN THE PCM**

NOTE: If there are any Fuel Injector DTCs present, perform the diagnostics for those DTCs before proceeding

with this test procedure.

1. Turn the ignition off.
2. Locate and record the correction codes for the Fuel Injectors. The injector correction codes are located on top of the injectors and consists of 20 alphanumeric characters in two lines of 10 alphanumeric characters.
3. Turn the ignition on, engine not running.
4. With the scan tool, read the Fuel Injector correction codes stored in the PCM.
5. Compare Fuel Injector correction codes with the codes programmed in the scan tool.

   Are the Fuel Injectors calibrated correctly?

   Yes

   - Go To 3

   No

   - Program the Fuel Injector correction codes with the scan tool into the PCM. The Fuel Injector correction codes are located on top of the injectors and consist of 20 alphanumeric characters in two lines of 10 alphanumeric characters.
   - Perform the POWERTRAIN VERIFICATION TEST - 2.2L DIESEL. Refer to **PCM VERIFICATION TEST - 2.2L DIESEL** .

3. **CHECK THE KNOCK SENSOR CONNECTOR**
   1. Disconnect the Knock Sensor 1 harness connector.
   2. Visually inspect the harness connector and sensor for corroded, spread, or damaged terminals.

      Were any problems found?

      Yes

      - Repair as necessary.

- Perform the POWERTRAIN VERIFICATION TEST - 2.2L DIESEL. Refer to **PCM VERIFICATION TEST - 2.2L DIESEL** .

No

- Go To 4

4. **CHECK THE KNOCK SENSOR TORQUE**
   1. Check the torque on the Knock Sensor 1 retaining bolt.

      NOTE: The Knock Sensor torque spec, is 20 Nm +/- 1.6 Nm.

      Is the Knock Sensor bolt torque correct?

      Yes

      - Go To 5

      No

      - Torque the Knock Sensor retaining bolt to proper specification in accordance with the service information.
      - Perform the POWERTRAIN VERIFICATION TEST - 2.2L DIESEL. Refer to **PCM VERIFICATION TEST - 2.2L DIESEL** .

5. **CHECK THE ENGINE MECHANICAL SYSTEM**
   1. Perform the CHECKING THE ENGINE MECHANICAL SYSTEM diagnostic procedure. Refer to **DIAGNOSIS AND TESTING** .

      Were any problems found?

      Yes

      - Perform the appropriate repair in accordance with the service information.
      - Perform the POWERTRAIN VERIFICATION TEST - 2.2L DIESEL. Refer to **PCM VERIFICATION TEST - 2.2L DIESEL** .

No

- Replace the Fuel Injector in accordance with the service information. Program the Fuel Injector correction code with the scan tool into the PCM. The Fuel Injector correction code is located on top of the injectors and consist of 20 alphanumeric characters in two lines of 10 alphanumeric characters.
- Perform the POWERTRAIN VERIFICATION TEST - 2.2L DIESEL. Refer to **PCM VERIFICATION TEST - 2.2L DIESEL** .

P029B-CYLINDER 1- FUEL TRIM AT MIN LIMIT

For a complete wiring diagram, **refer to appropriate SYSTEM WIRING DIAGRAMS article** .

WHEN MONITORED

With the engine running.

SET CONDITION

The Powertrain Control Module (PCM) detects that the Fuel Injector beyond it's maximum correctable limit.

POSSIBLE CAUSES

Possible Causes
FUEL INJECTOR CORRECTION CODE NOT ENTERED CORRECTLY INTO PCM
KNOCK SENSOR 1 NOT TORQUED CORRECTLY
POOR CONNECTION AT THE KNOCK SENSOR 1 HARNESS CONNECTOR
HIGH CYLINDER COMPRESSION DUE TO EXCESSIVE SOOT BUILD-UP
FUEL INJECTOR

Always perform the Pre-Diagnostic Troubleshooting procedure before proceeding. Refer to PRE-DIAGNOSTIC TROUBLESHOOTING PROCEDURE - 2.2L DIESEL .

DIAGNOSTIC TEST

1. **CHECK FOR ACTIVE DTC**
   1. Turn the ignition on.
   2. With the scan tool, clear DTCs in the Powertrain Control Module.
   3. Turn the ignition off for 10.0 seconds.
   4. Turn the ignition on.
   5. With the scan tool, select View DTCs.

   Is the status Active for this DTC?

   Yes

   - Go To 2

   No

   - Perform the INTERMITTENT CONDITION diagnostic procedure. Refer to **INTERMITTENT CONDITION - 2.2L DIESEL** .
2. **CHECK THE FUEL INJECTOR CORRECTION CODES IN THE PCM**

   NOTE: If there are any Fuel Injector DTCs present, perform the diagnostics for those DTCs before proceeding with this test procedure.

   1. Turn the ignition off.
   2. Locate and record the correction codes for the Fuel Injectors. The injector correction codes are located on top of the injectors and consists of 20 alphanumeric characters in two lines of 10 alphanumeric characters.
   3. Turn the ignition on, engine not running.
   4. With the scan tool, read the Fuel Injector correction codes stored in the PCM.
   5. Compare Fuel Injector correction codes with the codes programmed in the scan tool.

   Are the Fuel Injectors calibrated correctly?

Yes

- Go To 3

No

- Program the Fuel Injector correction codes with the scan tool into the PCM. The Fuel Injector correction codes are located on top of the injectors and consist of 20 alphanumeric characters in two lines of 10 alphanumeric characters.
- Perform the POWERTRAIN VERIFICATION TEST - 2.2L DIESEL. Refer to **PCM VERIFICATION TEST - 2.2L DIESEL** .

3. **CHECK THE KNOCK SENSOR CONNECTOR**
   1. Disconnect the Knock Sensor 1 harness connector.
   2. Visually inspect the harness connector and sensor for corroded, spread, or damaged terminals.

   Were any problems found?

   Yes

   - Repair as necessary.
   - Perform the POWERTRAIN VERIFICATION TEST - 2.2L DIESEL. Refer to **PCM VERIFICATION TEST - 2.2L DIESEL** .

   No

   - Go To 4
4. **CHECK THE KNOCK SENSOR TORQUE**
   1. Check the torque on the Knock Sensor 1 retaining bolt.

   NOTE: The Knock Sensor torque spec, is 20 Nm +/- 1.6 Nm.

   Is the Knock Sensor bolt torque correct?

   Yes

- Go To 5

No

- Torque the Knock Sensor retaining bolt to proper specification in accordance with the service information.
- Perform the POWERTRAIN VERIFICATION TEST - 2.2L DIESEL. Refer to **PCM VERIFICATION TEST - 2.2L DIESEL** .

5. **CHECK THE ENGINE MECHANICAL SYSTEM**
   1. Perform the CHECKING THE ENGINE MECHANICAL SYSTEM diagnostic procedure. Refer to **DIAGNOSIS AND TESTING** .

   Were any problems found?

   Yes

   - Perform the appropriate repair in accordance with the service information.
   - Perform the POWERTRAIN VERIFICATION TEST - 2.2L DIESEL. Refer to **PCM VERIFICATION TEST - 2.2L DIESEL** .

   No

   - Replace the Fuel Injector in accordance with the service information. Program the Fuel Injector correction code with the scan tool into the PCM. The Fuel Injector correction code is located on top of the injectors and consist of 20 alphanumeric characters in two lines of 10 alphanumeric characters.
   - Perform the POWERTRAIN VERIFICATION TEST - 2.2L DIESEL. Refer to **PCM VERIFICATION TEST - 2.2L DIESEL** .

P029E-CYLINDER 2- FUEL TRIM AT MAX LIMIT

For a complete wiring diagram, **refer to appropriate SYSTEM WIRING DIAGRAMS article** .

WHEN MONITORED

With the engine running.

SET CONDITION

The Powertrain Control Module (PCM) detects that the Fuel Injector beyond it's maximum correctable limit.

POSSIBLE CAUSES

Possible Causes
FUEL INJECTOR CORRECTION CODE NOT ENTERED CORRECTLY INTO PCM
KNOCK SENSOR 1 NOT TORQUED CORRECTLY
POOR CONNECTION AT THE KNOCK SENSOR 1 HARNESS CONNECTOR
LOW CYLINDER COMPRESSION
FUEL INJECTOR

Always perform the Pre-Diagnostic Troubleshooting procedure before proceeding. Refer to PRE-DIAGNOSTIC TROUBLESHOOTING PROCEDURE - 2.2L DIESEL .

DIAGNOSTIC TEST

1. **CHECK FOR ACTIVE DTC**
    1. Turn the ignition on.
    2. With the scan tool, clear DTCs in the Powertrain Control Module.
    3. Turn the ignition off for 10.0 seconds.
    4. Turn the ignition on.
    5. With the scan tool, select View DTCs.

    Is the status Active for this DTC?

    Yes

    - Go To 2

    No

    - Perform the INTERMITTENT CONDITION diagnostic procedure.

Refer to **INTERMITTENT CONDITION - 2.2L DIESEL** .

2. **CHECK THE FUEL INJECTOR CORRECTION CODES IN THE PCM**

NOTE: If there are any Fuel Injector DTCs present, perform the diagnostics for those DTCs before proceeding with this test procedure.

1. Turn the ignition off.
2. Locate and record the correction codes for the Fuel Injectors. The injector correction codes are located on top of the injectors and consists of 20 alphanumeric characters in two lines of 10 alphanumeric characters.
3. Turn the ignition on, engine not running.
4. With the scan tool, read the Fuel Injector correction codes stored in the PCM.
5. Compare Fuel Injector correction codes with the codes programmed in the scan tool.

Are the Fuel Injectors calibrated correctly?

Yes

- Go To 3

No

- Program the Fuel Injector correction codes with the scan tool into the PCM. The Fuel Injector correction codes are located on top of the injectors and consist of 20 alphanumeric characters in two lines of 10 alphanumeric characters.
- Perform the POWERTRAIN VERIFICATION TEST - 2.2L DIESEL. Refer to **PCM VERIFICATION TEST - 2.2L DIESEL** .

3. **CHECK THE KNOCK SENSOR CONNECTOR**
   1. Disconnect the Knock Sensor 1 harness connector.
   2. Visually inspect the harness connector and sensor for corroded, spread, or damaged terminals.

Were any problems found?

Yes

- Repair as necessary.
- Perform the POWERTRAIN VERIFICATION TEST - 2.2L DIESEL. Refer to **PCM VERIFICATION TEST - 2.2L DIESEL** .

No

- Go To 4

4. **CHECK THE KNOCK SENSOR TORQUE**
   1. Check the torque on the Knock Sensor 1 retaining bolt.

      NOTE: The Knock Sensor torque spec, is 20 Nm +/- 1.6 Nm.

      Is the Knock Sensor bolt torque correct?

      Yes

      - Go To 5

      No

      - Torque the Knock Sensor retaining bolt to proper specification in accordance with the service information.
      - Perform the POWERTRAIN VERIFICATION TEST - 2.2L DIESEL. Refer to **PCM VERIFICATION TEST - 2.2L DIESEL** .

5. **CHECK THE ENGINE MECHANICAL SYSTEM**
   1. Perform the CHECKING THE ENGINE MECHANICAL SYSTEM diagnostic procedure. Refer to **DIAGNOSIS AND TESTING** .

      Were any problems found?

      Yes

- Perform the appropriate repair in accordance with the service information.
- Perform the POWERTRAIN VERIFICATION TEST - 2.2L DIESEL. Refer to **PCM VERIFICATION TEST - 2.2L DIESEL** .

No

- Replace the Fuel Injector in accordance with the service information. Program the Fuel Injector correction code with the scan tool into the PCM. The Fuel Injector correction code is located on top of the injectors and consist of 20 alphanumeric characters in two lines of 10 alphanumeric characters.
- Perform the POWERTRAIN VERIFICATION TEST - 2.2L DIESEL. Refer to **PCM VERIFICATION TEST - 2.2L DIESEL** .

P029F-CYLINDER 2- FUEL TRIM AT MIN LIMIT

For a complete wiring diagram, **refer to appropriate SYSTEM WIRING DIAGRAMS article** .

WHEN MONITORED

With the engine running.

SET CONDITION

The Powertrain Control Module (PCM) detects that the Fuel Injector beyond it's maximum correctable limit.

POSSIBLE CAUSES

Possible Causes
FUEL INJECTOR CORRECTION CODE NOT ENTERED CORRECTLY INTO PCM
KNOCK SENSOR 1 NOT TORQUED CORRECTLY
POOR CONNECTION AT THE KNOCK SENSOR 1 HARNESS CONNECTOR
HIGH CYLINDER COMPRESSION DUE TO EXCESSIVE SOOT

BUILD-UP
FUEL INJECTOR

Always perform the Pre-Diagnostic Troubleshooting procedure before proceeding. Refer to PRE-DIAGNOSTIC TROUBLESHOOTING PROCEDURE - 2.2L DIESEL .

DIAGNOSTIC TEST

1. **CHECK FOR ACTIVE DTC**
   1. Turn the ignition on.
   2. With the scan tool, clear DTCs in the Powertrain Control Module.
   3. Turn the ignition off for 10.0 seconds.
   4. Turn the ignition on.
   5. With the scan tool, select View DTCs.

   Is the status Active for this DTC?

   Yes

   - Go To 2

   No

   - Perform the INTERMITTENT CONDITION diagnostic procedure. Refer to **INTERMITTENT CONDITION - 2.2L DIESEL** .
2. **CHECK THE FUEL INJECTOR CORRECTION CODES IN THE PCM**

   NOTE: If there are any Fuel Injector DTCs present, perform the diagnostics for those DTCs before proceeding with this test procedure.

   1. Turn the ignition off.
   2. Locate and record the correction codes for the Fuel Injectors. The injector correction codes are located on top of the injectors and consists of 20 alphanumeric characters in two lines of 10 alphanumeric characters.

3. Turn the ignition on, engine not running.
4. With the scan tool, read the Fuel Injector correction codes stored in the PCM.
5. Compare Fuel Injector correction codes with the codes programmed in the scan tool.

   Are the Fuel Injectors calibrated correctly?

   Yes

   - Go To 3

   No

   - Program the Fuel Injector correction codes with the scan tool into the PCM. The Fuel Injector correction codes are located on top of the injectors and consist of 20 alphanumeric characters in two lines of 10 alphanumeric characters.
   - Perform the POWERTRAIN VERIFICATION TEST - 2.2L DIESEL. Refer to **PCM VERIFICATION TEST - 2.2L DIESEL** .

3. **CHECK THE KNOCK SENSOR CONNECTOR**
   1. Disconnect the Knock Sensor 1 harness connector.
   2. Visually inspect the harness connector and sensor for corroded, spread, or damaged terminals.

      Were any problems found?

      Yes

      - Repair as necessary.
      - Perform the POWERTRAIN VERIFICATION TEST - 2.2L DIESEL. Refer to **PCM VERIFICATION TEST - 2.2L DIESEL** .

      No

      - Go To 4
4. **CHECK THE KNOCK SENSOR TOROUE**

1. Check the torque on the Knock Sensor 1 retaining bolt.

NOTE: The Knock Sensor torque spec, is 20 Nm +/- 1.6 Nm.

Is the Knock Sensor bolt torque correct?

Yes

- Go To 5

No

- Torque the Knock Sensor retaining bolt to proper specification in accordance with the service information.
- Perform the POWERTRAIN VERIFICATION TEST - 2.2L DIESEL. Refer to **PCM VERIFICATION TEST - 2.2L DIESEL** .

5. **CHECK THE ENGINE MECHANICAL SYSTEM**
   1. Perform the CHECKING THE ENGINE MECHANICAL SYSTEM diagnostic procedure. Refer to **DIAGNOSIS AND TESTING** .

   Were any problems found?

   Yes

   - Perform the appropriate repair in accordance with the service information.
   - Perform the POWERTRAIN VERIFICATION TEST - 2.2L DIESEL. Refer to **PCM VERIFICATION TEST - 2.2L DIESEL** .

   No

   - Replace the Fuel Injector in accordance with the service information. Program the Fuel Injector correction code with the scan tool into the PCM. The Fuel Injector correction code is located on top of the injectors and consist of 20 alphanumeric characters in two lines of 10 alphanumeric characters.

- Perform the POWERTRAIN VERIFICATION TEST - 2.2L DIESEL. Refer to **PCM VERIFICATION TEST - 2.2L DIESEL** .

P02A2-CYLINDER 3- FUEL TRIM AT MAX LIMIT

For a complete wiring diagram, **refer to appropriate SYSTEM WIRING DIAGRAMS article** .

WHEN MONITORED

With the engine running.

SET CONDITION

The Powertrain Control Module (PCM) detects that the Fuel Injector beyond it's maximum correctable limit.

POSSIBLE CAUSES

Possible Causes
FUEL INJECTOR CORRECTION CODE NOT ENTERED CORRECTLY INTO PCM
KNOCK SENSOR 2 NOT TORQUED CORRECTLY
POOR CONNECTION AT THE KNOCK SENSOR 2 HARNESS CONNECTOR
LOW CYLINDER COMPRESSION
FUEL INJECTOR

Always perform the Pre-Diagnostic Troubleshooting procedure before proceeding. Refer to PRE-DIAGNOSTIC TROUBLESHOOTING PROCEDURE - 2.2L DIESEL .

DIAGNOSTIC TEST

1. **CHECK FOR ACTIVE DTC**
    1. Turn the ignition on.
    2. With the scan tool, clear DTCs in the Powertrain Control Module.
    3. Turn the ignition off for 10.0 seconds.
    4. Turn the ignition on.

5. With the scan tool, select View DTCs.

   Is the status Active for this DTC?

   Yes

   - Go To 2

   No

   - Perform the INTERMITTENT CONDITION diagnostic procedure. Refer to **INTERMITTENT CONDITION - 2.2L DIESEL** .

2. **CHECK THE FUEL INJECTOR CORRECTION CODES IN THE PCM**

   NOTE: If there are any Fuel Injector DTCs present, perform the diagnostics for those DTCs before proceeding with this test procedure.

   1. Turn the ignition off.
   2. Locate and record the correction codes for the Fuel Injectors. The injector correction codes are located on top of the injectors and consists of 20 alphanumeric characters in two lines of 10 alphanumeric characters.
   3. Turn the ignition on, engine not running.
   4. With the scan tool, read the Fuel Injector correction codes stored in the PCM.
   5. Compare Fuel Injector correction codes with the codes programmed in the scan tool.

      Are the Fuel Injectors calibrated correctly?

      Yes

      - Go To 3

      No

      - Program the Fuel Injector correction codes with the scan tool into

the PCM. The Fuel Injector correction codes are located on top of the injectors and consist of 20 alphanumeric characters in two lines of 10 alphanumeric characters.

- Perform the POWERTRAIN VERIFICATION TEST - 2.2L DIESEL. Refer to **PCM VERIFICATION TEST - 2.2L DIESEL** .

3. **CHECK THE KNOCK SENSOR CONNECTOR**
   1. Disconnect the Knock Sensor 2 harness connector.
   2. Visually inspect the harness connector and sensor for corroded, spread, or damaged terminals.

   Were any problems found?

   Yes

   - Repair as necessary.
   - Perform the POWERTRAIN VERIFICATION TEST - 2.2L DIESEL. Refer to **PCM VERIFICATION TEST - 2.2L DIESEL** .

   No

   - Go To 4

4. **CHECK THE KNOCK SENSOR TORQUE**
   1. Check the torque on the Knock Sensor 2 retaining bolt.

   NOTE: The Knock Sensor torque spec, is 20 Nm +/- 1.6 Nm.

   Is the Knock Sensor bolt torque correct?

   Yes

   - Go To 5

   No

   - Torque the Knock Sensor retaining bolt to proper specification in accordance with the service information.

- Perform the POWERTRAIN VERIFICATION TEST - 2.2L DIESEL. Refer to **PCM VERIFICATION TEST - 2.2L DIESEL** .

5. **CHECK THE ENGINE MECHANICAL SYSTEM**
   1. Perform the CHECKING THE ENGINE MECHANICAL SYSTEM diagnostic procedure. Refer to **DIAGNOSIS AND TESTING** .

      Were any problems found?

      Yes

      - Perform the appropriate repair in accordance with the service information.
      - Perform the POWERTRAIN VERIFICATION TEST - 2.2L DIESEL. Refer to **PCM VERIFICATION TEST - 2.2L DIESEL** .

      No

      - Replace the Fuel Injector in accordance with the service information. Program the Fuel Injector correction code with the scan tool into the PCM. The Fuel Injector correction code is located on top of the injectors and consist of 20 alphanumeric characters in two lines of 10 alphanumeric characters.
      - Perform the POWERTRAIN VERIFICATION TEST - 2.2L DIESEL. Refer to **PCM VERIFICATION TEST - 2.2L DIESEL** .

P02A3-CYLINDER 3- FUEL TRIM AT MIN LIMIT

For a complete wiring diagram, **refer to appropriate SYSTEM WIRING DIAGRAMS article** .

WHEN MONITORED

With the engine running.

SET CONDITION

The Powertrain Control Module (PCM) detects that the Fuel Injector beyond it's maximum correctable limit.

POSSIBLE CAUSES

Possible Causes
FUEL INJECTOR CORRECTION CODE NOT ENTERED CORRECTLY INTO PCM
KNOCK SENSOR 2 NOT TORQUED CORRECTLY
POOR CONNECTION AT THE KNOCK SENSOR 2 HARNESS CONNECTOR
HIGH CYLINDER COMPRESSION DUE TO EXCESSIVE SOOT BUILD-UP
FUEL INJECTOR

Always perform the Pre-Diagnostic Troubleshooting procedure before proceeding. Refer to PRE-DIAGNOSTIC TROUBLESHOOTING PROCEDURE - 2.2L DIESEL .

DIAGNOSTIC TEST

1. **CHECK FOR ACTIVE DTC**
   1. Turn the ignition on.
   2. With the scan tool, clear DTCs in the Powertrain Control Module.
   3. Turn the ignition off for 10.0 seconds.
   4. Turn the ignition on.
   5. With the scan tool, select View DTCs.

   Is the status Active for this DTC?

   Yes

   - Go To 2

   No

   - Perform the INTERMITTENT CONDITION diagnostic procedure. Refer to **INTERMITTENT CONDITION - 2.2L DIESEL** .
2. **CHECK THE FUEL INJECTOR CORRECTION CODES IN THE PCM**

NOTE: If there are any Fuel Injector DTCs present, perform

the diagnostics for those DTCs before proceeding with this test procedure.

1. Turn the ignition off.
2. Locate and record the correction codes for the Fuel Injectors. The injector correction codes are located on top of the injectors and consists of 20 alphanumeric characters in two lines of 10 alphanumeric characters.
3. Turn the ignition on, engine not running.
4. With the scan tool, read the Fuel Injector correction codes stored in the PCM.
5. Compare Fuel Injector correction codes with the codes programmed in the scan tool.

   Are the Fuel Injectors calibrated correctly?

   Yes

   - Go To 3

   No

   - Program the Fuel Injector correction codes with the scan tool into the PCM. The Fuel Injector correction codes are located on top of the injectors and consist of 20 alphanumeric characters in two lines of 10 alphanumeric characters.
   - Perform the POWERTRAIN VERIFICATION TEST - 2.2L DIESEL. Refer to **PCM VERIFICATION TEST - 2.2L DIESEL** .

3. **CHECK THE KNOCK SENSOR CONNECTOR**
   1. Disconnect the Knock Sensor 2 harness connector.
   2. Visually inspect the harness connector and sensor for corroded, spread, or damaged terminals.

      Were any problems found?

      Yes

- Repair as necessary.
- Perform the POWERTRAIN VERIFICATION TEST - 2.2L DIESEL. Refer to **PCM VERIFICATION TEST - 2.2L DIESEL** .

No

- Go To 4

4. **CHECK THE KNOCK SENSOR TORQUE**
   1. Check the torque on the Knock Sensor 2 retaining bolt.

      NOTE: The Knock Sensor torque spec, is 20 Nm +/- 1.6 Nm.

      Is the Knock Sensor bolt torque correct?

      Yes

      - Go To 5

      No

      - Torque the Knock Sensor retaining bolt to proper specification in accordance with the service information.
      - Perform the POWERTRAIN VERIFICATION TEST - 2.2L DIESEL. Refer to **PCM VERIFICATION TEST - 2.2L DIESEL** .

5. **CHECK THE ENGINE MECHANICAL SYSTEM**
   1. Perform the CHECKING THE ENGINE MECHANICAL SYSTEM diagnostic procedure. Refer to **DIAGNOSIS AND TESTING** .

      Were any problems found?

      Yes

      - Perform the appropriate repair in accordance with the service information.
      - Perform the POWERTRAIN VERIFICATION TEST - 2.2L DIESEL. Refer to **PCM VERIFICATION TEST - 2.2L**

DIESEL .

No

- Replace the Fuel Injector in accordance with the service information. Program the Fuel Injector correction code with the scan tool into the PCM. The Fuel Injector correction code is located on top of the injectors and consist of 20 alphanumeric characters in two lines of 10 alphanumeric characters.
- Perform the POWERTRAIN VERIFICATION TEST - 2.2L DIESEL. Refer to **PCM VERIFICATION TEST - 2.2L DIESEL** .

P02A6-CYLINDER 4- FUEL TRIM AT MAX LIMIT

For a complete wiring diagram, **refer to appropriate SYSTEM WIRING DIAGRAMS article** .

WHEN MONITORED

With the engine running.

SET CONDITION

The Powertrain Control Module detects that the Fuel Injector beyond it's maximum correctable limit.

POSSIBLE CAUSES

Possible Causes
FUEL INJECTOR CORRECTION CODE NOT ENTERED CORRECTLY INTO PCM
KNOCK SENSOR 2 NOT TORQUED CORRECTLY
POOR CONNECTION AT THE KNOCK SENSOR 2 HARNESS CONNECTOR
LOW CYLINDER COMPRESSION
FUEL INJECTOR

Always perform the Pre-Diagnostic Troubleshooting procedure before proceeding. Refer to PRE-DIAGNOSTIC TROUBLESHOOTING PROCEDURE - 2.2L DIESEL .

DIAGNOSTIC TEST

1. **CHECK FOR ACTIVE DTC**
   1. Turn the ignition on.
   2. With the scan tool, clear DTCs in the Powertrain Control Module.
   3. Turn the ignition off for 10.0 seconds.
   4. Turn the ignition on.
   5. With the scan tool, select View DTCs.

   Is the status Active for this DTC?

   Yes

   - Go To 2

   No

   - Perform the INTERMITTENT CONDITION diagnostic procedure. Refer to **INTERMITTENT CONDITION - 2.2L DIESEL** .
2. **CHECK THE FUEL INJECTOR CORRECTION CODES IN THE PCM**

   NOTE: If there are any Fuel Injector DTCs present, perform the diagnostics for those DTCs before proceeding with this test procedure.

   1. Turn the ignition off.
   2. Locate and record the correction codes for the Fuel Injectors. The injector correction codes are located on top of the injectors and consists of 20 alphanumeric characters in two lines of 10 alphanumeric characters.
   3. Turn the ignition on, engine not running.
   4. With the scan tool, read the Fuel Injector correction codes stored in the PCM.
   5. Compare Fuel Injector correction codes with the codes programmed in the scan tool.

   Are the Fuel Injectors calibrated correctly?

Yes

- Go To 3

No

- Program the Fuel Injector correction codes with the scan tool into the PCM. The Fuel Injector correction codes are located on top of the injectors and consist of 20 alphanumeric characters in two lines of 10 alphanumeric characters.
- Perform the POWERTRAIN VERIFICATION TEST - 2.2L DIESEL. Refer to **PCM VERIFICATION TEST - 2.2L DIESEL** .

3. **CHECK THE KNOCK SENSOR CONNECTOR**
   1. Disconnect the Knock Sensor 2 harness connector.
   2. Visually inspect the harness connector and sensor for corroded, spread, or damaged terminals.

   Were any problems found?

   Yes

   - Repair as necessary.
   - Perform the POWERTRAIN VERIFICATION TEST - 2.2L DIESEL. Refer to **PCM VERIFICATION TEST - 2.2L DIESEL** .

   No

   - Go To 4
4. **CHECK THE KNOCK SENSOR TORQUE**
   1. Check the torque on the Knock Sensor 2 retaining bolt.

   NOTE: The Knock Sensor torque spec, is 20 Nm +/- 1.6 Nm.

   Is the Knock Sensor bolt torque correct?

   Yes

- Go To 5

No

- Torque the Knock Sensor retaining bolt to proper specification in accordance with the service information.
- Perform the POWERTRAIN VERIFICATION TEST - 2.2L DIESEL. Refer to **PCM VERIFICATION TEST - 2.2L DIESEL** .

5. **CHECK THE ENGINE MECHANICAL SYSTEM**
   1. Perform the CHECKING THE ENGINE MECHANICAL SYSTEM diagnostic procedure. Refer to **DIAGNOSIS AND TESTING** .

   Were any problems found?

   Yes

   - Perform the appropriate repair in accordance with the service information.
   - Perform the POWERTRAIN VERIFICATION TEST - 2.2L DIESEL. Refer to **PCM VERIFICATION TEST - 2.2L DIESEL** .

   No

   - Replace the Fuel Injector in accordance with the service information. Program the Fuel Injector correction code with the scan tool into the PCM. The Fuel Injector correction code is located on top of the injectors and consist of 20 alphanumeric characters in two lines of 10 alphanumeric characters.
   - Perform the POWERTRAIN VERIFICATION TEST - 2.2L DIESEL. Refer to **PCM VERIFICATION TEST - 2.2L DIESEL** .

P02A7-CYLINDER 4- FUEL TRIM AT MIN LIMIT

For a complete wiring diagram, **refer to appropriate SYSTEM WIRING DIAGRAMS article** .

WHEN MONITORED

With the engine running.

SET CONDITION

The Powertrain Control Module (PCM) detects that the Fuel Injector beyond it's minimum correctable limit.

POSSIBLE CAUSES

Possible Causes
FUEL INJECTOR CORRECTION CODE NOT ENTERED CORRECTLY INTO PCM
KNOCK SENSOR 1 NOT TORQUED CORRECTLY
POOR CONNECTION AT THE KNOCK SENSOR 2 HARNESS CONNECTOR
HIGH CYLINDER COMPRESSION DUE TO EXCESSIVE SOOT BUILD-UP
FUEL INJECTOR

Always perform the Pre-Diagnostic Troubleshooting procedure before proceeding. Refer to PRE-DIAGNOSTIC TROUBLESHOOTING PROCEDURE - 2.2L DIESEL .

DIAGNOSTIC TEST

1. **CHECK FOR ACTIVE DTC**
    1. Turn the ignition on.
    2. With the scan tool, clear DTCs in the Powertrain Control Module.
    3. Turn the ignition off for 10.0 seconds.
    4. Turn the ignition on.
    5. With the scan tool, select View DTCs.

    Is the status Active for this DTC?

    Yes

    - Go To 2

    No

- Perform the INTERMITTENT CONDITION diagnostic procedure. Refer to **INTERMITTENT CONDITION - 2.2L DIESEL** .

2. **CHECK THE FUEL INJECTOR CORRECTION CODES IN THE PCM**

NOTE: If there are any Fuel Injector DTCs present, perform the diagnostics for those DTCs before proceeding with this test procedure.

1. Turn the ignition off.
2. Locate and record the correction codes for the Fuel Injectors. The injector correction codes are located on top of the injectors and consists of 20 alphanumeric characters in two lines of 10 alphanumeric characters.
3. Turn the ignition on, engine not running.
4. With the scan tool, read the Fuel Injector correction codes stored in the PCM.
5. Compare Fuel Injector correction codes with the codes programmed in the scan tool.

Are the Fuel Injectors calibrated correctly?

Yes

- Go To 3

No

- Program the Fuel Injector correction codes with the scan tool into the PCM. The Fuel Injector correction codes are located on top of the injectors and consist of 20 alphanumeric characters in two lines of 10 alphanumeric characters.
- Perform the POWERTRAIN VERIFICATION TEST - 2.2L DIESEL. Refer to **PCM VERIFICATION TEST - 2.2L DIESEL** .

3. **CHECK THE KNOCK SENSOR CONNECTOR**
   1. Disconnect the Knock Sensor 2 harness connector.

2. Visually inspect the harness connector and sensor for corroded, spread, or damaged terminals.

   Were any problems found?

   Yes

   - Repair as necessary.
   - Perform the POWERTRAIN VERIFICATION TEST - 2.2L DIESEL. Refer to **PCM VERIFICATION TEST - 2.2L DIESEL** .

   No

   - Go To 4

4. **CHECK THE KNOCK SENSOR TORQUE**
   1. Check the torque on the Knock Sensor 2 retaining bolt.

      NOTE: The Knock Sensor torque spec, is 20 Nm +/- 1.6 Nm.

      Is the Knock Sensor bolt torque correct?

      Yes

      - Go To 5

      No

      - Torque the Knock Sensor retaining bolt to proper specification in accordance with the service information.
      - Perform the POWERTRAIN VERIFICATION TEST - 2.2L DIESEL. Refer to **PCM VERIFICATION TEST - 2.2L DIESEL** .

5. **CHECK THE ENGINE MECHANICAL SYSTEM**
   1. Perform the CHECKING THE ENGINE MECHANICAL SYSTEM diagnostic procedure. Refer to **DIAGNOSIS AND TESTING** .

      Were any problems found?

Yes

- Perform the appropriate repair in accordance with the service information.
- Perform the POWERTRAIN VERIFICATION TEST - 2.2L DIESEL. Refer to **PCM VERIFICATION TEST - 2.2L DIESEL** .

No

- Replace the Fuel Injector in accordance with the service information. Program the Fuel Injector correction code with the scan tool into the PCM. The Fuel Injector correction code is located on top of the injectors and consist of 20 alphanumeric characters in two lines of 10 alphanumeric characters.
- Perform the POWERTRAIN VERIFICATION TEST - 2.2L DIESEL. Refer to **PCM VERIFICATION TEST - 2.2L DIESEL** .

P0326-KNOCK SENSOR 1 CIRCUIT PERFORMANCE

For a complete wiring diagram, **refer to appropriate SYSTEM WIRING DIAGRAMS article** .

THEORY OF OPERATION

The two Knock Sensors, located on the engine near the below the Intake Manifold are used by the Powertrain Control Module (PCM) to monitor the fuel injectors. The PCM uses the feedback information to determine that the Fuel Injectors are injecting at the correct time. The feedback from the Knock Sensors can also help the PCM determine injector drift for each injector and adjust the injector on time accordingly. Knock Sensor 1 monitors injectors one and two. Knock Sensor 2 monitors injectors three and four.

WHEN MONITORED

With the engine running and the battery voltage is between 10.0 Volts and 16.0 Volts.

SET CONDITION

The Powertrain Control Module (PCM) detects that the (K42) Knock Sensor 1 Signal circuit is implausible.

POSSIBLE CAUSES

Possible Causes
FUEL INJECTOR CORRECTION CODE NOT ENTERED CORRECTLY INTO PCM
KNOCK SENSOR 1 NOT TORQUED CORRECTLY
(K42) KNOCK SENSOR 1 SIGNAL CIRCUIT SHORTED TO VOLTAGE
(K942) KNOCK SENSOR 1 RETURN CIRCUIT SHORTED TO VOLTAGE
(K42) KNOCK SENSOR 1 SIGNAL CIRCUIT SHORTED TO GROUND
(K942) KNOCK SENSOR 1 RETURN CIRCUIT SHORTED TO GROUND
(K42) KNOCK SENSOR 1 SIGNAL CIRCUIT SHORTED TO THE (K942) KNOCK SENSOR 1 RETURN CIRCUIT
(K42) KNOCK SENSOR 1 SIGNAL CIRCUIT SHORTED TO THE (K147) KNOCK SENSOR 1 SHIELD CIRCUIT
(K42) KNOCK SENSOR 1 SIGNAL CIRCUIT OPEN/HIGH RESISTANCE
(K942) KNOCK SENSOR 1 RETURN CIRCUIT OPEN/HIGH RESISTANCE
(K147) KNOCK SENSOR 1 SHIELD CIRCUIT OPEN/HIGH RESISTANCE
KNOCK SENSOR
POWERTRAIN CONTROL MODULE (PCM)
FUEL QUALITY OR DELIVERY SYSTEM FAILURE
BASE ENGINE FAILURE

Always perform the Pre-Diagnostic Troubleshooting procedure before proceeding. Refer to PRE-DIAGNOSTIC TROUBLESHOOTING PROCEDURE - 2.2L DIESEL .

DIAGNOSTIC TEST

1. **CHECK FOR ACTIVE DTC**

NOTE: If there are any fuel system, Crank Sensor, or Fuel Injector DTCs present, perform the diagnostics for those DTCs before proceeding with this test procedure.

1. Turn the ignition on.
2. With the scan tool, clear DTCs in the PCM.
3. Test drive the vehicle.
4. With the scan tool, view DTCs.

   Is the status Active for this DTC?

   Yes

   - Go To 2

   No

   - Perform the INTERMITTENT CONDITION diagnostic procedure. Refer to **INTERMITTENT CONDITION - 2.2L DIESEL** .

2. **CHECK THE FUEL INJECTOR CORRECTION CODES IN THE PCM**

NOTE: If there are any Fuel Injector DTCs present, perform the diagnostics for those DTCs before proceeding with this test procedure.

1. Turn the ignition off.
2. Locate and record the correction codes for the Fuel Injectors. The injector correction codes are located on top of the injectors and consists of 20 alphanumeric characters in two lines of 10 alphanumeric characters.
3. Turn the ignition on, engine not running.
4. With the scan tool, read the Fuel Injector correction codes stored in the PCM.
5. Compare Fuel Injector correction codes with the codes programmed in the scan tool.

Are the Fuel Injectors calibrated correctly?

Yes

- Go To 3

No

- Program the Fuel Injector correction codes with the scan tool into the PCM. The Fuel Injector correction codes are located on top of the injectors and consist of 20 alphanumeric characters in two lines of 10 alphanumeric characters.
- Perform the POWERTRAIN VERIFICATION TEST - 2.2L DIESEL. Refer to **PCM VERIFICATION TEST - 2.2L DIESEL** .

3. **CHECK THE KNOCK SENSOR TORQUE**
   1. Check the torque on the Knock Sensor 2 retaining bolt.

NOTE: The Knock Sensor torque spec, is 20 Nm +/- 1.6 Nm.

Is the Knock Sensor bolt torque correct?

Yes

- Go To 4

No

- Torque the Knock Sensor retaining bolt to proper specification in accordance with the service information.
- Perform the POWERTRAIN VERIFICATION TEST - 2.2L DIESEL. Refer to **PCM VERIFICATION TEST - 2.2L DIESEL** .

4. **CHECK THE (K42) KNOCK SENSOR 1 SIGNAL CIRCUIT FOR A SHORT TO VOLTAGE**
   1. Turn the ignition off.
   2. Disconnect the Knock Sensor 1 harness connector.

3. Turn the ignition on.
4. Measure the voltage on the (K42) Knock Sensor 1 Signal circuit at the Knock Sensor 1 harness connector.

   Is the voltage reading above 5.1 Volts?

   Yes

   - Repair the (K42) Knock Sensor 1 Signal circuit for a short to voltage.
   - Perform the POWERTRAIN VERIFICATION TEST - 2.2L DIESEL. Refer to **PCM VERIFICATION TEST - 2.2L DIESEL** .

   No

   - Go To 5

5. **CHECK THE (K942) KNOCK SENSOR 1 RETURN CIRCUIT FOR A SHORT TO VOLTAGE**
   1. Measure the voltage on the (K942) Knock Sensor 1 Return circuit at the Knock Sensor 1 harness connector.

      Is there any voltage present?

      Yes

      - Repair the (K942) Knock Sensor 1 Return circuit for a short to voltage.
      - Perform the POWERTRAIN VERIFICATION TEST - 2.2L DIESEL. Refer to **PCM VERIFICATION TEST - 2.2L DIESEL** .

      No

      - Go To 6

6. **CHECK THE (K42) KNOCK SENSOR 1 SIGNAL CIRCUIT FOR A SHORT TO GROUND**
   1. Turn the ignition off.
   2. Disconnect the PCM C1 harness connector.

3. Measure the resistance between ground and the (K42) Knock Sensor 1 Signal circuit at the Knock Sensor 1 harness connector.

   Is the resistance reading below 10k Ohms?

   Yes

   - Repair the (K42) Knock Sensor 1 Signal circuit for a short to ground.
   - Perform the POWERTRAIN VERIFICATION TEST - 2.2L DIESEL. Refer to **PCM VERIFICATION TEST - 2.2L DIESEL** .

   No

   - Go To 7

7. **CHECK THE (K942) KNOCK SENSOR 1 RETURN CIRCUIT FOR A SHORT TO GROUND**
   1. Measure the resistance between ground and the (K942) Knock Sensor 1 Return circuit at the Knock Sensor 1 harness connector.

      Is the resistance reading below 10k Ohms?

      Yes

      - Repair the (K942) Knock Sensor 1 Return circuit for a short to ground.
      - Perform the POWERTRAIN VERIFICATION TEST - 2.2L DIESEL. Refer to **PCM VERIFICATION TEST - 2.2L DIESEL** .

      No

      - Go To 8

8. **CHECK FOR THE (K42) KNOCK SENSOR 1 SIGNAL CIRCUIT SHORTED TO THE (K942) KNOCK SENSOR 1 RETURN CIRCUIT**
   1. Measure the resistance between the (K42) Knock Sensor 1 Signal circuit and the (K942) Knock Sensor 1 Return circuit at the Knock Sensor 1 harness connector.

Is the resistance reading above 10k Ohms?

Yes

- Go To 9

No

- Repair the short between the (K42) Knock Sensor 1 Signal circuit and the (K942) Knock Sensor 1 Return circuit.
- Perform the POWERTRAIN VERIFICATION TEST - 2.2L DIESEL. Refer to **PCM VERIFICATION TEST - 2.2L DIESEL** .

9. **CHECK FOR THE (K42) KNOCK SENSOR 1 SIGNAL CIRCUIT SHORTED TO THE (K147) KNOCK SENSOR 1 SHIELD CIRCUIT**
   1. Measure the resistance between the (K42) Knock Sensor 1 Signal circuit and the (K147) Knock Sensor 1 Shield circuit at the Knock Sensor 1 harness connector.

      Is the resistance reading above 10k Ohms?

      Yes

      - Go To 10

      No

      - Repair the short between the (K42) Knock Sensor 1 Signal circuit and the (K147) Knock Sensor 1 Shield circuit.
      - Perform the POWERTRAIN VERIFICATION TEST - 2.2L DIESEL. Refer to **PCM VERIFICATION TEST - 2.2L DIESEL** .
10. **CHECK THE (K42) KNOCK SENSOR 1 SIGNAL CIRCUIT FOR AN OPEN/HIGH RESISTANCE**
    1. Measure the resistance of the (K42) Knock Sensor 1 Signal circuit between the Knock Sensor 1 harness connector and the PCM C1 harness connector.

       Is the resistance below 5.0 Ohms?

Yes

- Go To 11

No

- Repair the (K42) Knock Sensor 1 Signal circuit for an open or high resistance.
- Perform the POWERTRAIN VERIFICATION TEST - 2.2L DIESEL. Refer to **PCM VERIFICATION TEST - 2.2L DIESEL** .

11. **CHECK THE (K942) KNOCK SENSOR 1 RETURN CIRCUIT FOR AN OPEN/HIGH RESISTANCE**
    1. Measure the resistance of the (K942) Knock Sensor 1 Return circuit between the Knock Sensor 1 harness connector and the PCM C1 harness connector.

    Is the resistance below 5.0 Ohms?

    Yes

    - Go To 12

    No

    - Repair the (K942) Knock Sensor 1 Return circuit for an open or high resistance.
    - Perform the POWERTRAIN VERIFICATION TEST - 2.2L DIESEL. Refer to **PCM VERIFICATION TEST - 2.2L DIESEL** .

12. **CHECK THE (K147) KNOCK SENSOR 1 SHIELD CIRCUIT FOR AN OPEN/HIGH RESISTANCE**
    1. Measure the resistance of the (K147) Knock Sensor 1 Shield circuit between the Knock Sensor 1 harness connector and the PCM C1 harness connector.

    Is the resistance below 5.0 Ohms?

    Yes

- Go To 13

No

- Repair the (K147) Knock Sensor 1 Shield circuit for an open or high resistance.
- Perform the POWERTRAIN VERIFICATION TEST - 2.2L DIESEL. Refer to **PCM VERIFICATION TEST - 2.2L DIESEL** .

13. **CHECK THE INTAKE SYSTEM**
    1. Turn the ignition off.
    2. Inspect the air filter for excessive dirt, soiling or other problems that may cause restricted air flow.
    3. Inspect all air intake and Turbocharger related hoses/tubes and connections.

    Were any leaks or restrictions found in the intake or Turbocharger systems?

    Yes

    - Repair the Intake or Turbocharger system as necessary.
    - Perform the POWERTRAIN VERIFICATION TEST - 2.2L DIESEL. Refer to **PCM VERIFICATION TEST - 2.2L DIESEL** .

    No

    - Go To 14

14. **CHECK THE SUPPLY SIDE FUEL DELIVERY SYSTEM**
    1. Perform the CHECKING THE FUEL DELIVERY SYSTEM diagnostic procedure. Refer to **DIAGNOSIS AND TESTING** .

    Were there any problems with the Fuel Delivery System?

    Yes

    - Repair as necessary in accordance with the service information.

- Perform the POWERTRAIN VERIFICATION TEST - 2.2L DIESEL. Refer to **PCM VERIFICATION TEST - 2.2L DIESEL** .

No

- Go To 15

15. **BASE ENGINE**
    1. Check for any base engine mechanical failures such as:
        - Cylinder Compression Test. Refer to **COMPRESSION TESTING ENGINE** .
        - engine valves worn or sticking
        - weak or broken valve springs
        - valve timing/timing belt alignment
        - leaking Fuel Injectors
        - damaged Crankshaft Position Sensor or intermittent connection.

    Were any base engine failure found?

    Yes

    - Repair as necessary in accordance with the service information.
    - Perform the POWERTRAIN VERIFICATION TEST - 2.2L DIESEL. Refer to **PCM VERIFICATION TEST - 2.2L DIESEL** .

    No

    - Go To 16

16. **KNOCK SENSOR**
    1. Replace the Knock Sensor in accordance with the service information.
    2. Reconnect the Knock Sensor harness connector.
    3. Reconnect the PCM C1 harness connector.
    4. Turn the ignition on.
    5. With the scan tool, clear DTCs in the PCM.
    6. Test drive the vehicle.

7. With the scan tool, view DTCs.

   Did the DTC return?

   Yes

   - Replace the Powertrain Control Module. **Before removing the PCM, perform the "Replace PCM" routine in the Miscellaneous Functions tab of the scan tool.** . Refer to **REMOVAL** .
   - Perform the POWERTRAIN VERIFICATION TEST - 2.2L DIESEL. Refer to **PCM VERIFICATION TEST - 2.2L DIESEL** .

   No

   - Test complete.
   - Perform the POWERTRAIN VERIFICATION TEST - 2.2L DIESEL. Refer to **PCM VERIFICATION TEST - 2.2L DIESEL** .

P032B-KNOCK SENSOR 3 CIRCUIT/RANGE PERFORMANCE - BANK 1

For a complete wiring diagram, **refer to appropriate SYSTEM WIRING DIAGRAMS article** .

THEORY OF OPERATION

The two Knock Sensors, located on the engine near the below the Intake Manifold are used by the Powertrain Control Module (PCM) to monitor the fuel injectors. The PCM uses the feedback information to determine that the Fuel Injectors are injecting at the correct time. The feedback from the Knock Sensors can also help the PCM determine injector drift for each injector and adjust the injector on time accordingly. Knock Sensor 1 monitors injectors one and two. Knock Sensor 2 monitors injectors three and four.

WHEN MONITORED

With the engine running and the battery voltage is between 10.0 Volts and 16.0 Volts.

SET CONDITION

The Powertrain Control Module (PCM) detects that the (K242) Knock Sensor 2 Signal circuit is implausible.

POSSIBLE CAUSES

Possible Causes
FUEL INJECTOR CORRECTION CODE NOT ENTERED CORRECTLY INTO PCM
KNOCK SENSOR 2 NOT TORQUED CORRECTLY
(K242) KNOCK SENSOR 2 SIGNAL CIRCUIT SHORTED TO VOLTAGE
(K924) KNOCK SENSOR 2 RETURN CIRCUIT SHORTED TO VOLTAGE
(K242) KNOCK SENSOR 2 SIGNAL CIRCUIT SHORTED TO GROUND
(K924) KNOCK SENSOR 2 RETURN CIRCUIT SHORTED TO GROUND
(K242) KNOCK SENSOR 2 SIGNAL CIRCUIT SHORTED TO THE (K924) KNOCK SENSOR 2 RETURN CIRCUIT
(K242) KNOCK SENSOR 2 SIGNAL CIRCUIT SHORTED TO THE (K148) KNOCK SENSOR 2 SHIELD CIRCUIT
(K242) KNOCK SENSOR 2 SIGNAL CIRCUIT OPEN/HIGH RESISTANCE
(K924) KNOCK SENSOR 2 RETURN CIRCUIT OPEN/HIGH RESISTANCE
(K148) KNOCK SENSOR 2 SHIELD CIRCUIT OPEN/HIGH RESISTANCE
KNOCK SENSOR
POWERTRAIN CONTROL MODULE (PCM)
FUEL QUALITY OR DELIVERY SYSTEM FAILURE
BASE ENGINE FAILURE

Always perform the Pre-Diagnostic Troubleshooting procedure before proceeding. Refer to PRE-DIAGNOSTIC TROUBLESHOOTING PROCEDURE - 2.2L DIESEL .

DIAGNOSTIC TEST

1. **CHECK FOR ACTIVE DTC**

NOTE: If there are any fuel system, Crank Sensor, or Fuel Injector DTCs present, perform the diagnostics for those DTCs before proceeding with this test procedure.

1. Turn the ignition on.
2. With the scan tool, clear DTCs in the PCM.
3. Test drive the vehicle.
4. With the scan tool, view DTCs.

Is the status Active for this DTC?

Yes

- Go To 2

No

- Perform the INTERMITTENT CONDITION diagnostic procedure. Refer to **INTERMITTENT CONDITION - 2.2L DIESEL** .

2. **CHECK THE FUEL INJECTOR CORRECTION CODES IN THE PCM**

NOTE: If there are any Fuel Injector DTCs present, perform the diagnostics for those DTCs before proceeding with this test procedure.

1. Turn the ignition off.
2. Locate and record the correction codes for the Fuel Injectors. The injector correction codes are located on top of the injectors and consists of 20 alphanumeric characters in two lines of 10 alphanumeric characters.
3. Turn the ignition on, engine not running.
4. With the scan tool, read the Fuel Injector correction codes stored in the PCM.
5. Compare Fuel Injector correction codes with the codes programmed in

the scan tool.

Are the Fuel Injectors calibrated correctly?

Yes

- Go To 3

No

- Program the Fuel Injector correction codes with the scan tool into the PCM. The Fuel Injector correction codes are located on top of the injectors and consist of 20 alphanumeric characters in two lines of 10 alphanumeric characters.
- Perform the POWERTRAIN VERIFICATION TEST - 2.2L DIESEL. Refer to **PCM VERIFICATION TEST - 2.2L DIESEL** .

3. **CHECK THE KNOCK SENSOR TORQUE**
   1. Check the torque on the Knock Sensor 2 retaining bolt.

NOTE: The Knock Sensor torque spec, is 20 Nm +/- 1.6 Nm.

Is the Knock Sensor bolt torque correct?

Yes

- Go To 4

No

- Torque the Knock Sensor retaining bolt to proper specification in accordance with the service information.
- Perform the POWERTRAIN VERIFICATION TEST - 2.2L DIESEL. Refer to **PCM VERIFICATION TEST - 2.2L DIESEL** .

4. **CHECK THE (K242) KNOCK SENSOR 2 SIGNAL CIRCUIT FOR A SHORT TO VOLTAGE**
   1. Turn the ignition off.

2. Disconnect the Knock Sensor 2 harness connector.
3. Turn the ignition on.
4. Measure the voltage on the (K242) Knock Sensor 2 Signal circuit at the Knock Sensor 2 harness connector.

   Is the voltage reading above 5.1 Volts?

   Yes

   - Repair the (K242) Knock Sensor 2 Signal circuit for a short to voltage.
   - Perform the POWERTRAIN VERIFICATION TEST - 2.2L DIESEL. Refer to **PCM VERIFICATION TEST - 2.2L DIESEL** .

   No

   - Go To 5

5. **CHECK THE (K924) KNOCK SENSOR 2 RETURN CIRCUIT FOR A SHORT TO VOLTAGE**
   1. Measure the voltage on the (K924) Knock Sensor 2 Return circuit at the Knock Sensor 2 harness connector.

      Is there any voltage present?

      Yes

      - Repair the (K924) Knock Sensor 2 Return circuit for a short to voltage.
      - Perform the POWERTRAIN VERIFICATION TEST - 2.2L DIESEL. Refer to **PCM VERIFICATION TEST - 2.2L DIESEL** .

      No

      - Go To 6

6. **CHECK THE (K242) KNOCK SENSOR 2 SIGNAL CIRCUIT FOR A SHORT TO GROUND**
   1. Turn the ignition off.

2. Disconnect the PCM C1 harness connector.
3. Measure the resistance between ground and the (K242) Knock Sensor 2 Signal circuit at the Knock Sensor 2 harness connector.

   Is the resistance reading above 10k Ohms?

   Yes

   - Go To 7

   No

   - Repair the (K242) Knock Sensor 2 Signal circuit for a short to ground.
   - Perform the POWERTRAIN VERIFICATION TEST - 2.2L DIESEL. Refer to **PCM VERIFICATION TEST - 2.2L DIESEL** .

7. **CHECK THE (K924) KNOCK SENSOR 2 RETURN CIRCUIT FOR A SHORT TO GROUND**
   1. Measure the resistance between ground and the (K924) Knock Sensor 2 Return circuit at the Knock Sensor 2 harness connector.

      Is the resistance reading above 10k Ohms?

      Yes

      - Go To 8

      No

      - Repair the (K924) Knock Sensor 2 Return circuit for a short to ground.
      - Perform the POWERTRAIN VERIFICATION TEST - 2.2L DIESEL. Refer to **PCM VERIFICATION TEST - 2.2L DIESEL** .

8. **CHECK FOR THE (K242) KNOCK SENSOR 2 SIGNAL CIRCUIT SHORTED TO THE (K924) KNOCK SENSOR 2 RETURN CIRCUIT**
   1. Measure the resistance between the (K242) Knock Sensor 2 Signal circuit and the (K924) Knock Sensor 2 Return circuit at the Knock

Sensor 2 harness connector.

Is the resistance reading above 10k Ohms?

Yes

- Go To 9

No

- Repair the short between the (K242) Knock Sensor 2 Signal circuit and the (K924) Knock Sensor 2 Return circuit.
- Perform the POWERTRAIN VERIFICATION TEST - 2.2L DIESEL. Refer to **PCM VERIFICATION TEST - 2.2L DIESEL** .

9. **CHECK FOR THE (K242) KNOCK SENSOR 2 SIGNAL CIRCUIT SHORTED TO THE (K148) KNOCK SENSOR 2 SHIELD CIRCUIT**
   1. Measure the resistance between the (K242) Knock Sensor 2 Signal circuit and the (K148) Knock Sensor 2 Shield circuit at the KNOCK SENSOR 2 harness connector.

      Is the resistance reading above 10k Ohms?

      Yes

      - Go To 10

      No

      - Repair the short between the (K242) Knock Sensor 2 Signal circuit and the (K148) Knock Sensor 2 Shield circuit.
      - Perform the POWERTRAIN VERIFICATION TEST - 2.2L DIESEL. Refer to **PCM VERIFICATION TEST - 2.2L DIESEL** .
10. **CHECK THE (K242) KNOCK SENSOR 2 SIGNAL CIRCUIT FOR AN OPEN/HIGH RESISTANCE**
    1. Measure the resistance of the (K242) Knock Sensor 2 Signal circuit between the Knock Sensor 2 harness connector and the PCM C1 harness connector.

Is the resistance below 5.0 Ohms?

Yes

- Go To 11

No

- Repair the (K242) Knock Sensor 2 Signal circuit for an open or high resistance.
- Perform the POWERTRAIN VERIFICATION TEST - 2.2L DIESEL. Refer to **PCM VERIFICATION TEST - 2.2L DIESEL** .

11. **CHECK THE (K924) KNOCK SENSOR 2 RETURN CIRCUIT FOR AN OPEN/HIGH RESISTANCE**
    1. Measure the resistance of the (K924) Knock Sensor 2 Return circuit between the Knock Sensor 2 harness connector and the PCM C1 harness connector.

    Is the resistance below 5.0 Ohms?

    Yes

    - Go To 12

    No

    - Repair the (K924) KNOCK Sensor 2 Return circuit for an open or high resistance.
    - Perform the POWERTRAIN VERIFICATION TEST - 2.2L DIESEL. Refer to **PCM VERIFICATION TEST - 2.2L DIESEL** .

12. **CHECK THE (K148) KNOCK SENSOR 2 SHIELD CIRCUIT FOR AN OPEN/HIGH RESISTANCE**
    1. Measure the resistance of the (K148) Knock Sensor 2 Shield circuit between the Knock Sensor 2 harness connector and the PCM C1 harness connector.

    Is the resistance below 5.0 Ohms?

Yes

- Go To 13

No

- Repair the (K148) Knock Sensor 2 Shield circuit for an open or high resistance.
- Perform the POWERTRAIN VERIFICATION TEST - 2.2L DIESEL. Refer to **PCM VERIFICATION TEST - 2.2L DIESEL** .

13. **CHECK THE INTAKE SYSTEM**
    1. Turn the ignition off.
    2. Inspect the air filter for excessive dirt, soiling or other problems that may cause restricted air flow.
    3. Inspect all air intake and Turbocharger related hoses/tubes and connections.

    Were any leaks or restrictions found in the intake or Turbocharger systems?

    Yes

    - Repair the Intake or Turbocharger system as necessary.
    - Perform the POWERTRAIN VERIFICATION TEST - 2.2L DIESEL. Refer to **PCM VERIFICATION TEST - 2.2L DIESEL** .

    No

    - Go To 14
14. **CHECK THE SUPPLY SIDE FUEL DELIVERY SYSTEM**
    1. Perform the CHECKING THE FUEL DELIVERY SYSTEM diagnostic procedure. Refer to **DIAGNOSIS AND TESTING** .

    Were there any problems with the Fuel Delivery System?

    Yes

- Repair as necessary in accordance with the service information.
- Perform the POWERTRAIN VERIFICATION TEST - 2.2L DIESEL. Refer to **PCM VERIFICATION TEST - 2.2L DIESEL** .

No

- Go To 15

15. **BASE ENGINE**
    1. Check for any base engine mechanical failures such as:
        - Cylinder Compression Test. Refer to **COMPRESSION TESTING ENGINE** .
        - engine valves worn or sticking.
        - weak or broken valve springs.
        - valve timing/timing belt alignment.
        - leaking Fuel Injectors.
        - damaged Crankshaft Position Sensor or intermittent connection.

    Were any base engine failure found?

    Yes

    - Repair as necessary in accordance with the service information.
    - Perform the POWERTRAIN VERIFICATION TEST - 2.2L DIESEL. Refer to **PCM VERIFICATION TEST - 2.2L DIESEL** .

    No

    - Go To 16

16. **KNOCK SENSOR**
    1. Replace the Knock Sensor in accordance with the service information.
    2. Reconnect the Knock Sensor harness connector.
    3. Reconnect the PCM C1 harness connector.
    4. Turn the ignition on.
    5. With the scan tool, clear DTCs in the PCM.

6. Test drive the vehicle.
7. With the scan tool, view DTCs.

   Did the DTC return?

   Yes

   - Replace the Powertrain Control Module. **Before removing the PCM, perform the "Replace PCM" routine in the Miscellaneous Functions tab of the scan tool.** . Refer to **REMOVAL** .
   - Perform the POWERTRAIN VERIFICATION TEST - 2.2L DIESEL. Refer to **PCM VERIFICATION TEST - 2.2L DIESEL** .

   No

   - Test complete.
   - Perform the POWERTRAIN VERIFICATION TEST - 2.2L DIESEL. Refer to **PCM VERIFICATION TEST - 2.2L DIESEL** .

P0335-CRANKSHAFT POSITION SENSOR CIRCUIT

For a complete wiring diagram, **refer to appropriate SYSTEM WIRING DIAGRAMS article** .

WHEN MONITORED

With the engine cranking or running.

SET CONDITION

The Powertrain Control Module (PCM) does not receive a signal from the Crankshaft Position Sensor (CKP) when the Camshaft Position Sensor (CMP) indicates engine RPM.

POSSIBLE CAUSES

Possible Causes
(K24) CKP SENSOR SIGNAL CIRCUIT SHORTED TO VOLTAGE

(K925) CKP SENSOR RETURN CIRCUIT SHORTED TO VOLTAGE
(K925) CKP SENSOR RETURN CIRCUIT OPEN
(K24) CKP SENSOR SIGNAL CIRCUIT OPEN
CRANKSHAFT POSITION (CKP) SENSOR
POWERTRAIN CONTROL MODULE (PCM)

Always perform the Pre-Diagnostic Troubleshooting procedure before proceeding. Refer to PRE-DIAGNOSTIC TROUBLESHOOTING PROCEDURE - 2.2L DIESEL .

DIAGNOSTIC TEST

1. **VERIFY ACTIVE DTC**

NOTE: The Timing Belt/Chain must be correctly installed and operational before diagnosis can be made. Refer to the Service Information to ensure the timing belt is properly installed.

NOTE: If the PCM detects and stores a DTC, the PCM also stores the engine/vehicle operating conditions under which the DTC was set. Some of these conditions are displayed on the scan tool at the same time the DTC is displayed.

NOTE: Before erasing stored DTCs, record these conditions. Attempting to duplicate these conditions may assist when checking for an active DTC.

1. Turn the ignition on.
2. With the scan tool, erase the PCM DTCs.
3. Turn the ignition off for 10.0 seconds.
4. Start the engine or crank for at least seven seconds.
5. With the scan tool, view PCM DTCs.

Does the scan tool display this DTC?

Yes

- Go To 2

No

- Perform the INTERMITTENT CONDITION diagnostic procedure. Refer to **INTERMITTENT CONDITION - 2.2L DIESEL** .

2. **CHECK THE (K24) CRANKSHAFT POSITION SENSOR SIGNAL CIRCUIT FOR A SHORT TO VOLTAGE**
   1. Turn the ignition off.
   2. Disconnect the PCM C1 harness connector.
   3. Disconnect the CKP Sensor harness connector.
   4. Remove the Main Relay.
   5. Connect a jumper wire between cavity 87 and cavity 30 of the Main Relay connector.
   6. Turn the ignition on.
   7. Measure the voltage of the (K24) CKP Sensor Signal circuit at the CKP Sensor harness connector.

   Is there any voltage present?

   Yes

   - Repair the (K24) CKP Sensor Signal circuit for a short to voltage.
   - Perform the POWERTRAIN VERIFICATION TEST - 2.2L DIESEL. Refer to **PCM VERIFICATION TEST - 2.2L DIESEL** .

   No

   - Go To 3

3. **CHECK THE (K925) CRANKSHAFT POSITION SENSOR RETURN CIRCUIT FOR A SHORT TO VOLTAGE**
   1. Measure the voltage of the (K925) CKP Sensor Return circuit at the CKP Sensor harness connector.

   Is there any voltage present?

   Yes

- Repair the (K925) CKP Sensor Return circuit for a short to voltage.
- Perform the POWERTRAIN VERIFICATION TEST - 2.2L DIESEL. Refer to **PCM VERIFICATION TEST - 2.2L DIESEL** .

No

- Go To 4

4. **CHECK THE (K24) CRANKSHAFT POSITION SENSOR SIGNAL CIRCUIT FOR AN OPEN/HIGH RESISTANCE**
   1. Turn the ignition off
   2. Remove the jumper and reinstall the Main Relay.
   3. Measure the resistance of the (K24) CKP Sensor Signal circuit between the CKP Sensor harness connector and the PCM C1 harness connector.

      Is the resistance below 5.0 Ohms?

      Yes

      - Go To 5

      No

      - Repair the (K24) CKP Sensor Signal circuit for an open or high resistance.
      - Perform the POWERTRAIN VERIFICATION TEST - 2.2L DIESEL. Refer to **PCM VERIFICATION TEST - 2.2L DIESEL** .

5. **CHECK THE (K925) CRANKSHAFT POSITION SENSOR RETURN CIRCUIT FOR AN OPEN/HIGH RESISTANCE**
   1. Measure the resistance of the (K925) CKP Sensor Return circuit between the CKP Sensor harness connector and the PCM C1 harness connector.

      Is the resistance below 5.0 Ohms?

      Yes

- Go To 6

No

- Repair the (K925) CKP Sensor Return circuit for an open.
- Perform the POWERTRAIN VERIFICATION TEST - 2.2L DIESEL. Refer to **PCM VERIFICATION TEST - 2.2L DIESEL** .

6. **DAMAGED CRANKSHAFT POSITION SENSOR OR FLYWHEEL/FLEXPLATE**
   1. Remove the CKP Sensor.
   2. Inspect the CKP Sensor for conditions such as loose mounting screws, damage, or cracks.
   3. Inspect the Flywheel/Flexplate for conditions such as damaged, bent, debris or cracked teeth.

   Is there any evidence of these conditions?

   Yes

   - Repair as necessary.
   - Perform the POWERTRAIN VERIFICATION TEST - 2.2L DIESEL. Refer to **PCM VERIFICATION TEST - 2.2L DIESEL** .

   No

   - Go To 7
7. **CRANKSHAFT POSITION SENSOR**
   1. Replace the CKP Sensor in accordance with the Service Information.
   2. With the scan tool, erase the PCM DTCs.
   3. Start the engine or crank for at least seven seconds.
   4. With the scan tool, view PCM DTCs.

   Does the scan tool display this DTC?

   Yes

- Replace the Powertrain Control Module. **Before removing the PCM, perform the "Replace PCM" routine in the Miscellaneous Functions tab of the scan tool.** . Refer to **REMOVAL** .
- Perform the POWERTRAIN VERIFICATION TEST - 2.2L DIESEL. Refer to **PCM VERIFICATION TEST - 2.2L DIESEL** .

No

- Test Complete.
- Perform the POWERTRAIN VERIFICATION TEST - 2.2L DIESEL. Refer to **PCM VERIFICATION TEST - 2.2L DIESEL** .

P0336-CRANKSHAFT POSITION SENSOR PERFORMANCE

For a complete wiring diagram, **refer to appropriate SYSTEM WIRING DIAGRAMS article** .

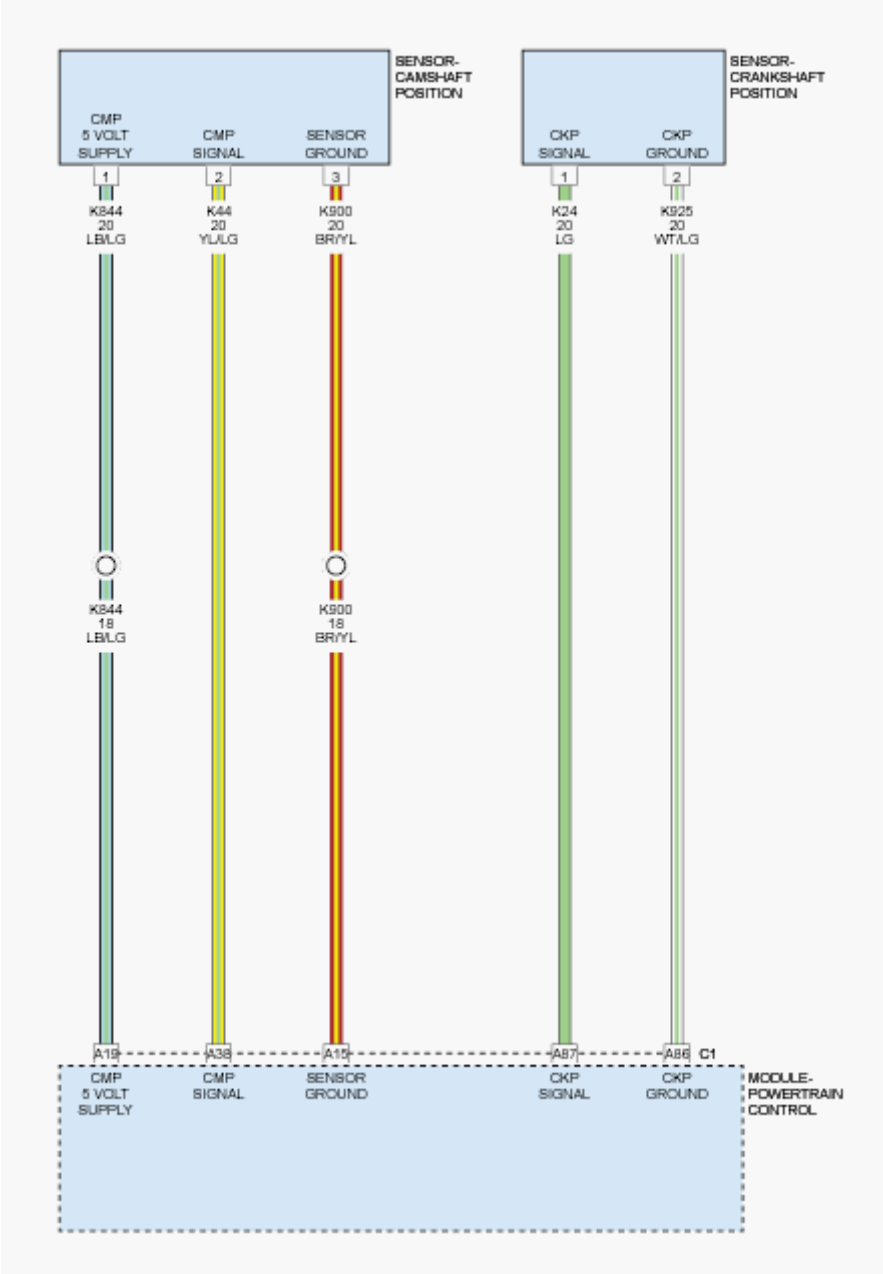

Fig. 32: Camshaft & Crankshaft Position Sensors Circuit Diagram
Courtesy of CHRYSLER GROUP, LLC

WHEN MONITORED

With the engine cranking or running.

SET CONDITION

The Powertrain Control Module (PCM) detects that the CKP Sensor Signal is missing.

POSSIBLE CAUSES

Possible Causes
(K24) CKP SENSOR SIGNAL CIRCUIT OPEN/HIGH RESISTANCE
(K925) CKP SENSOR RETURN CIRCUIT OPEN/HIGH RESISTANCE
DAMAGED OR MISSING TEETH ON CRANKSHAFT
CRANKSHAFT POSITION (CKP) SENSOR
POWERTRAIN CONTROL MODULE (PCM)

Always perform the Pre-Diagnostic Troubleshooting procedure before proceeding. Refer to PRE-DIAGNOSTIC TROUBLESHOOTING PROCEDURE - 2.2L DIESEL .

DIAGNOSTIC TEST

1. **VERIFY ACTIVE DTC**
   1. Turn the ignition on.
   2. With the scan tool, erase the PCM DTCs.
   3. Start the engine or crank for at least seven seconds.
   4. With the scan tool, read the PCM DTCs.

      Does the scan tool display this DTC?

      Yes

      - Go To 2

      No

      - Perform the INTERMITTENT CONDITION diagnostic procedure. Refer to **INTERMITTENT CONDITION - 2.2L DIESEL** .
2. **CHECK THE (K24) CKP SENSOR SIGNAL CIRCUIT FOR AN OPEN/HIGH RESISTANCE**
   1. Turn the ignition off.
   2. Disconnect the CKP Sensor harness connector.
   3. Disconnect the PCM C1 harness connectors.
   4. Measure the resistance of the (K24) CKP Sensor Signal circuit between the CKP Sensor harness connector and the PCM C1 harness connector.

      Is the resistance below 5.0 Ohms?

Yes

- Go To 3

No

- Repair the (K24) CKP Sensor Signal circuit for an open or high resistance.
- Perform the POWERTRAIN VERIFICATION TEST - 2.2L DIESEL. Refer to **PCM VERIFICATION TEST - 2.2L DIESEL** .

3. **CHECK THE (K925) CRANKSHAFT POSITION SENSOR RETURN CIRCUIT FOR AN OPEN/HIGH RESISTANCE**
   1. Turn the ignition off
   2. Measure the resistance of the (K925) CKP Sensor Return circuit between the CKP Sensor harness connector and the PCM C1 harness connector.

   Is the resistance below 5.0 Ohms?

   Yes

   - Go To 4

   No

   - Repair the (K925) CKP Sensor Return circuit for an open.
   - Perform the POWERTRAIN VERIFICATION TEST - 2.2L DIESEL. Refer to **PCM VERIFICATION TEST - 2.2L DIESEL** .

4. **DAMAGED CRANKSHAFT POSITION SENSOR OR FLYWHEEL/FLEXPLATE**
   1. Remove the CKP Sensor.
   2. Inspect the CKP Sensor for conditions such as loose mounting screws, damage, debris on magnet or cracks.
   3. Inspect the Flywheel/Flexplate for conditions such as damaged, bent, debris or cracked teeth.

Is there any evidence of these conditions?

Yes

- Repair as necessary.
- Perform the POWERTRAIN VERIFICATION TEST - 2.2L DIESEL. Refer to **PCM VERIFICATION TEST - 2.2L DIESEL** .

No

- Go To 5

5. **CRANKSHAFT POSITION SENSOR**
   1. Replace the CKP Sensor in accordance with the Service Information.
   2. With the scan tool, erase the PCM DTCs.
   3. Start the engine or crank for at least seven seconds.
   4. With the scan tool, view PCM DTCs.

   Does the scan tool display this DTC?

   Yes

   - Replace the Powertrain Control Module. **Before removing the PCM, perform the "Replace PCM" routine in the Miscellaneous Functions tab of the scan tool.** . Refer to **REMOVAL** .
   - Perform the POWERTRAIN VERIFICATION TEST - 2.2L DIESEL. Refer to **PCM VERIFICATION TEST - 2.2L DIESEL** .

   No

   - Test Complete.
   - Perform the POWERTRAIN VERIFICATION TEST - 2.2L DIESEL. Refer to **PCM VERIFICATION TEST - 2.2L DIESEL** .

P0339-CRANKSHAFT POSITION SENSOR INTERMITTENT

For a complete wiring diagram, **refer to appropriate SYSTEM WIRING DIAGRAMS article** .

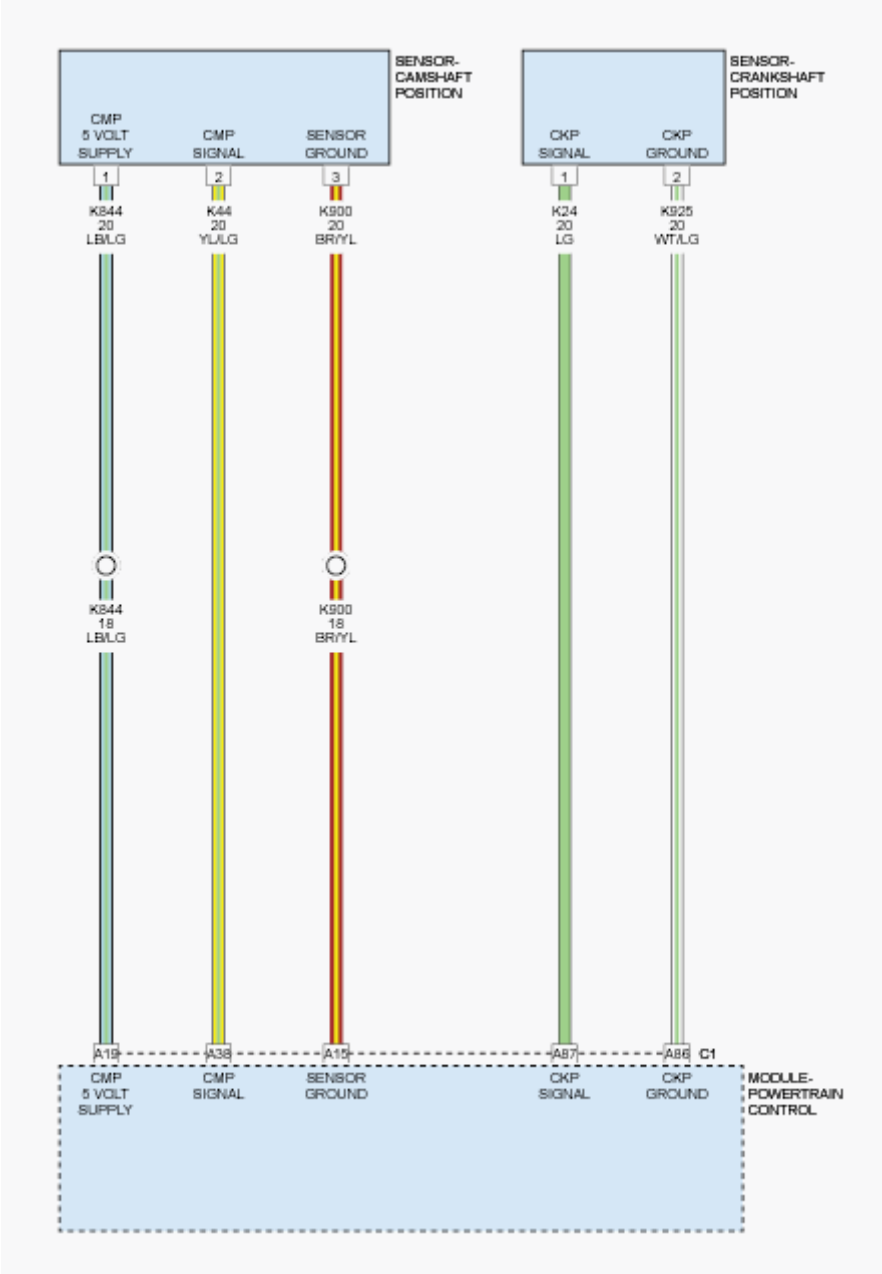

Fig. 33: Camshaft & Crankshaft Position Sensors Circuit Diagram
Courtesy of CHRYSLER GROUP, LLC

THEORY OF OPERATION

The Crankshaft Position (CKP) Sensor circuits consist of a Powertrain Control Module (PCM) supplied 5-Volt reference circuit, low reference circuit and an output signal circuit. The CKP Sensor is an internally magnetic biased digital output integrated circuit sensing device. The sensor detects magnetic flux

changes between the peaks and valleys of a tone wheel on the crankshaft. Each tooth on the tone wheel is spaced with missing teeth for the reference gap. The CKP Sensor produces an ON/OFF DC voltage of varying frequency, reference output pulses per crankshaft revolution. The frequency of the CKP Sensor output depends on the velocity of the crankshaft. The CKP Sensor sends a digital signal, which represents an image of the crankshaft tone wheel, to the PCM as each tooth on the wheel rotates past the CKP Sensor. The PCM uses each CKP signal pulse to determine crankshaft speed and decodes the crankshaft tone wheel reference gap to identify crankshaft position. This information is then used to sequence the ignition timing and fuel injection events for the engine. The PCM also uses CKP Sensor output information to determine the crankshaft relative position to the camshaft, to detect cylinder misfire and to control the CMP actuator if equipped.

WHEN MONITORED

With the engine cranking or running.

SET CONDITION

The Powertrain Control Module (PCM) detects a gap in the signal from the Crankshaft Position Sensor.

POSSIBLE CAUSES

Possible Causes
5-VOLT SUPPLY CIRCUIT SHORTED TO VOLTAGE
5-VOLT SUPPLY CIRCUIT SHORTED TO GROUND
5-VOLT SUPPLY CIRCUIT SHORTED TO THE CKP SENSOR GROUND CIRCUIT
5-VOLT SUPPLY CIRCUIT OPEN/HIGH RESISTANCE
CKP SIGNAL CIRCUIT SHORTED TO VOLTAGE
CKP SIGNAL CIRCUIT SHORTED TO GROUND
CKP SIGNAL CIRCUIT SHORTED TO THE CKP SENSOR GROUND CIRCUIT
CKP SIGNAL CIRCUIT OPEN/HIGH RESISTANCE
CKP SENSOR GROUND CIRCUIT OPEN/HIGH RESISTANCE
CRANKSHAFT POSITION SENSOR
POWERTRAIN CONTROL MODULE (PCM)

Always perform the Pre-Diagnostic Troubleshooting procedure before proceeding. Refer to PRE-DIAGNOSTIC TROUBLESHOOTING PROCEDURE - 2.2L DIESEL .

DIAGNOSTIC TEST

1. **CHECK FOR APPLICABLE TSB**
   1. Check for any applicable TSBs that may apply for this issue.

      Were any TSBs applicable?

      Yes

      - Perform the applicable TSB. Erase the DTC and perform the verification test.
      - Perform the POWERTRAIN VERIFICATION TEST - 2.2L DIESEL. Refer to **PCM VERIFICATION TEST - 2.2L DIESEL** .

      No

      - Go To 2
2. **DTC IS ACTIVE**
   1. Turn the ignition on.
   2. Read and copy the DTC's and Freeze Frame Data.
   3. Start the engine, or crank the engine for 10 seconds.

      NOTE: If the vehicle starts and runs, wiggle test the wiring and see if problem duplicates or the fault sets.

      Is the status Active for this DTC?

      Yes

      - Go To 5

      No

      - Go To 3

3. **WIRE HARNESS/CKP SENSOR INSPECTION**
   1. Turn the ignition off.
   2. Disconnect the harness connectors at the PCM and Crank Sensor and inspect for wire chaffing or rub conditions, terminals pushed out on the wiring connector, bent terminals at the PCM and Crank Sensor, water in the connector cavities, presence of corrosion on the terminals of the connectors or components.
   3. Visually inspect the mounting area of Crank Sensor for debris/damage or a loose sensor. Remove the Crank Sensor and inspect the end of the sensor for signs of damage or debris. Rotate the engine and if possible, inspect the target wheel for any signs of damage. Reinstall the Crank Sensor and ensure that the sensor is properly installed and torqued to proper specification.

   NOTE: Due to the fact that this DTC is set by an intermittent loss of the signal, the most likely cause is a poor connection at the Crank Sensor or PCM terminals, or a poor signal between the Crank Sensor and target wheel. Because of this, unplugging and reconnecting the harness connectors, or repositioning the Crank Sensor will often repair the condition that set the DTC.

   Were any problems found?

   Yes

   - Perform the appropriate repair.
   - Perform the POWERTRAIN VERIFICATION TEST - 2.2L DIESEL. Refer to **PCM VERIFICATION TEST - 2.2L DIESEL** .

   No

   - Go To 4
4. **CHECK THE VEHICLE'S REPAIR HISTORY**
   1. Check the history of the vehicle for previous crank sensor related DTCs within the past 90 days.

Did the repair history show that the vehicle was in dealership for a crank sensor fault within the past 90 days?

Yes

- Replace the Crank Sensor in accordance with the service information.
- Perform the POWERTRAIN VERIFICATION TEST - 2.2L DIESEL. Refer to **PCM VERIFICATION TEST - 2.2L DIESEL** .

No

- Test complete. Reconnect the harness connectors, and erase the DTC. The most likely cause was a poor connection at one of the harness connectors. Verify the DTC does not return.
- Perform the POWERTRAIN VERIFICATION TEST - 2.2L DIESEL. Refer to **PCM VERIFICATION TEST - 2.2L DIESEL** .

5. **CHECK THE (F855) 5-VOLT SUPPLY CIRCUIT VOLTAGE**
   1. Turn the ignition off.
   2. Disconnect the CKP Sensor harness connector.
   3. Turn the ignition on.
   4. Measure the voltage of the (F855) 5-Volt Supply circuit at the CKP Sensor harness connector.

   Is the voltage between 4.8 and 5.2 volts?

   Yes

   - Go To 6

   No, voltage is below 4.8 volts:

   - Repair the 5-Volt Supply circuit for an open or short to ground.
   - Perform the POWERTRAIN VERIFICATION TEST - 2.2L DIESEL. Refer to **PCM VERIFICATION TEST - 2.2L DIESEL** .

No, voltage is above 5.2 volts:

- Repair the 5-Volt Supply circuit for a short to voltage.
- Perform the POWERTRAIN VERIFICATION TEST - 2.2L DIESEL. Refer to **PCM VERIFICATION TEST - 2.2L DIESEL** .

6. **CHECK THE (K24) CKP SIGNAL CIRCUIT VOLTAGE**
   1. Measure the voltage of the (K24) CKP Signal circuit at the CKP Sensor harness connector.

      Is the voltage between 4.8 and 5.2 volts?

      Yes

      - Go To 7

      No

      - Go To 9

      No

      - Repair the CKP Sensor Signal circuit for a short to voltage.
      - Perform the POWERTRAIN VERIFICATION TEST. Refer to **PCM VERIFICATION TEST - 2.2L DIESEL** .
7. **CHECK THE (K925) SENSOR GROUND CIRCUIT FOR AN OPEN/HIGH RESISTANCE**
   1. Turn the ignition off.
   2. Disconnect the PCM C2 harness connector.
   3. Measure the resistance of the (K925) CKP Sensor Ground circuit between the CKP Sensor harness connector and the PCM C2 harness connector.

      Is the resistance below 5.0 Ohms?

      Yes

      - Go To 8

No

- Repair the (K925) CKP Sensor Ground circuit for an open or high resistance.
- Perform the POWERTRAIN VERIFICATION TEST - 2.2L DIESEL. Refer to **PCM VERIFICATION TEST - 2.2L DIESEL** .

8. **TONE WHEEL/PULSE RING INSPECTION**
   1. Turn the ignition off.
   2. Disconnect the battery ground cable.
   3. Remove the CKP Sensor.
   4. Visually inspect the sensor mounting location for damage, foreign material.
   5. Rotate the engine and if possible inspect the target wheel for any signs of damage.

   Were any problems found?

   Yes

   - Repair Issues in mounting location. Repair or replace the Tone Wheel/Pulse Ring as necessary.
   - Perform the POWERTRAIN VERIFICATION TEST - 2.2L DIESEL. Refer to **PCM VERIFICATION TEST - 2.2L DIESEL** .

   No

   - Replace the Crank Position Sensor in accordance with the service information.
   - Perform the POWERTRAIN VERIFICATION TEST - 2.2L DIESEL. Refer to **PCM VERIFICATION TEST - 2.2L DIESEL** .

9. **CHECK THE (K24) CKP SIGNAL CIRCUIT FOR A SHORT TO GROUND**
   1. Turn the ignition off.
   2. Disconnect the PCM C2 harness connector.

3. Measure the resistance between ground and the (K24) CKP Signal circuit at the Crankshaft Position Sensor harness connector.

   Is the resistance above 10K Ohms?

   Yes

   - Go To 10

   No

   - Repair the (K24) CKP Signal circuit for a short to ground.
   - Perform the POWERTRAIN VERIFICATION TEST - 2.2L DIESEL. Refer to **PCM VERIFICATION TEST - 2.2L DIESEL** .

10. **CHECK THE (K24) CKP SIGNAL CIRCUIT FOR AN OPEN/HIGH RESISTANCE**
    1. Measure the resistance of the (K24) CKP Signal circuit between the Crankshaft Position Sensor harness connector and the PCM C2 harness connector.

       Is the resistance below 5.0 Ohms?

       Yes

       - Go To 11

       No

       - Repair the (K24) CKP Signal circuit for an open circuit or high resistance.
       - Perform the POWERTRAIN VERIFICATION TEST - 2.2L DIESEL. Refer to **PCM VERIFICATION TEST - 2.2L DIESEL** .

11. **POWERTRAIN CONTROL MODULE (PCM)**
    1. Using the wiring diagram/schematic as a guide, inspect the wiring and connectors between the Crankshaft Position Sensor and the Powertrain Control Module (PCM).
    2. Look for any chafed, pierced, pinched, or partially broken wires.

3. Look for broken, bent, pushed out or corroded terminals. Verify that there is good pin to terminal contact in the CKP Sensor and Powertrain Control Module connectors.
4. Monitor the scan tool data relative to this circuit and wiggle test the wiring and connectors.
5. Look for the data to change or for the DTC to reset during the wiggle test.

NOTE: Due to the fact that this DTC is set by an intermittent loss of the signal, the most likely cause is a poor connection at the Crank Sensor or PCM terminals, or a poor signal between the Crank Sensor and target wheel. Because of this, unplugging and reconnecting the harness connectors, or repositioning the Crank Sensor will often repair the condition that set the DTC.

Were any problems found?

Yes

- Perform the appropriate repair.
- Perform the POWERTRAIN VERIFICATION TEST - 2.2L DIESEL. Refer to **PCM VERIFICATION TEST - 2.2L DIESEL** .

No

- Replace the Powertrain Control Module. **Before removing the PCM, perform the "Replace PCM" routine in the Miscellaneous Functions tab of the scan tool.** . Refer to **REMOVAL** .
- Perform the POWERTRAIN VERIFICATION TEST - 2.2L DIESEL. Refer to **PCM VERIFICATION TEST - 2.2L DIESEL** .

P0341-CAMSHAFT POSITION SENSOR PERFORMANCE - BANK 1 SENSOR 1

For a complete wiring diagram, **refer to appropriate SYSTEM WIRING**

DIAGRAMS article .

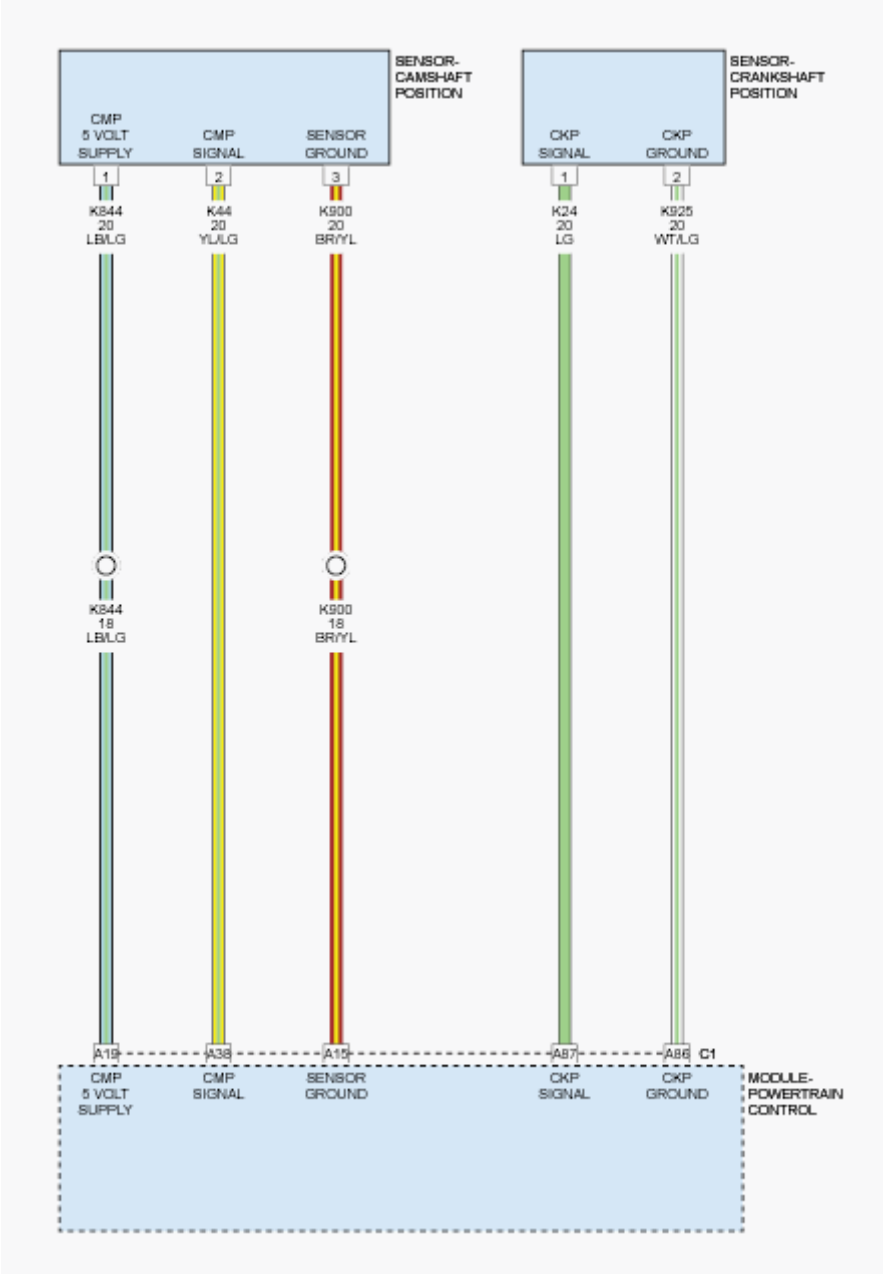

Fig. 34: Camshaft & Crankshaft Position Sensors Circuit Diagram
Courtesy of CHRYSLER GROUP, LLC

WHEN MONITORED

With the engine cranking or running. Engine speed above 50 RPM. No Sensor Supply DTCs present.

SET CONDITION

The Powertrain Control Module (PCM) does not receive a signal from the

Camshaft Position Sensor (CMP) when the Crankshaft Position Sensor indicates engine RPM.

POSSIBLE CAUSES

Possible Causes
(K844) CMP 5-VOLT SUPPLY CIRCUIT INTERMITTENTLY OPEN/SHORTED TO GROUND/SHORTED TO VOLTAGE
(K44) CMP SIGNAL CIRCUIT INTERMITTENTLY OPEN/SHORTED TO GROUND/SHORTED TO VOLTAGE
(K900) CMP GROUND CIRCUIT INTERMITTENTLY OPEN/SHORTED TO VOLTAGE
DAMAGED CMP SENSOR OR CAMSHAFT
CAMSHAFT POSITION (CMP) SENSOR
POWERTRAIN CONTROL MODULE (PCM)

Always perform the Pre-Diagnostic Troubleshooting procedure before proceeding. Refer to PRE-DIAGNOSTIC TROUBLESHOOTING PROCEDURE - 2.2L DIESEL .

DIAGNOSTIC TEST

1. **CHECK THE WIRING HARNESS**

NOTE: If DTC P0697-SENSOR REFERENCE VOLTAGE 3 is present, perform the diagnostic procedure for that test before proceeding.

NOTE: The Timing Belt/Chain must be correctly installed and operational before diagnosis can be made. Refer to the Service Information to ensure the timing belt is properly installed.

1. Turn the ignition on.
2. With the scan tool, erase the PCM DTCs.
3. Start the engine.
4. While observing the scan tool, wiggle test the wiring harness and connectors.

Does the scan tool display this DTC?

Yes

- Using the wiring diagram/schematic as a guide, inspect the wiring and connectors between the CMP Sensor and the Powertrain Control Module for an intermittent open, short to ground, or short to voltage. If no problems are found, Go To 2

No

- Perform the INTERMITTENT CONDITION diagnostic procedure. Refer to **INTERMITTENT CONDITION - 2.2L DIESEL** .

2. **CHECK THE CAMSHAFT AND CMP SENSOR**
   1. Turn the ignition of.
   2. Remove the CMP Sensor.
   3. Inspect the CMP Sensor for conditions such as loose mounting screws, debris, or cracks.
   4. Inspect the camshaft for conditions such as damage, debris or cracked teeth.

   Is there any evidence of these conditions?

   Yes

   - Repair as necessary.
   - Perform the POWERTRAIN VERIFICATION TEST - 2.2L DIESEL. Refer to **PCM VERIFICATION TEST - 2.2L DIESEL** .

   No

   - Go To 3

3. **POWERTRAIN CONTROL MODULE**
   1. Replace the Camshaft Position Sensor.
   2. With the scan tool, erase the PCM DTCs.
   3. Start the engine.
   4. While observing the scan tool, wiggle test the wiring harness and

connectors.

Does the scan tool display this DTC?

Yes

- Replace the Powertrain Control Module. **Before removing the PCM, perform the "Replace PCM" routine in the Miscellaneous Functions tab of the scan tool.** . Refer to **REMOVAL** .
- Perform the POWERTRAIN VERIFICATION TEST - 2.2L DIESEL. Refer to **PCM VERIFICATION TEST - 2.2L DIESEL** .

No

- Test complete.
- Perform the POWERTRAIN VERIFICATION TEST - 2.2L DIESEL. Refer to **PCM VERIFICATION TEST - 2.2L DIESEL** .

P0344-CAMSHAFT POSITION SENSOR INTERMITTENT - BANK 1 SENSOR 1

For a complete wiring diagram, **refer to appropriate SYSTEM WIRING DIAGRAMS article** .

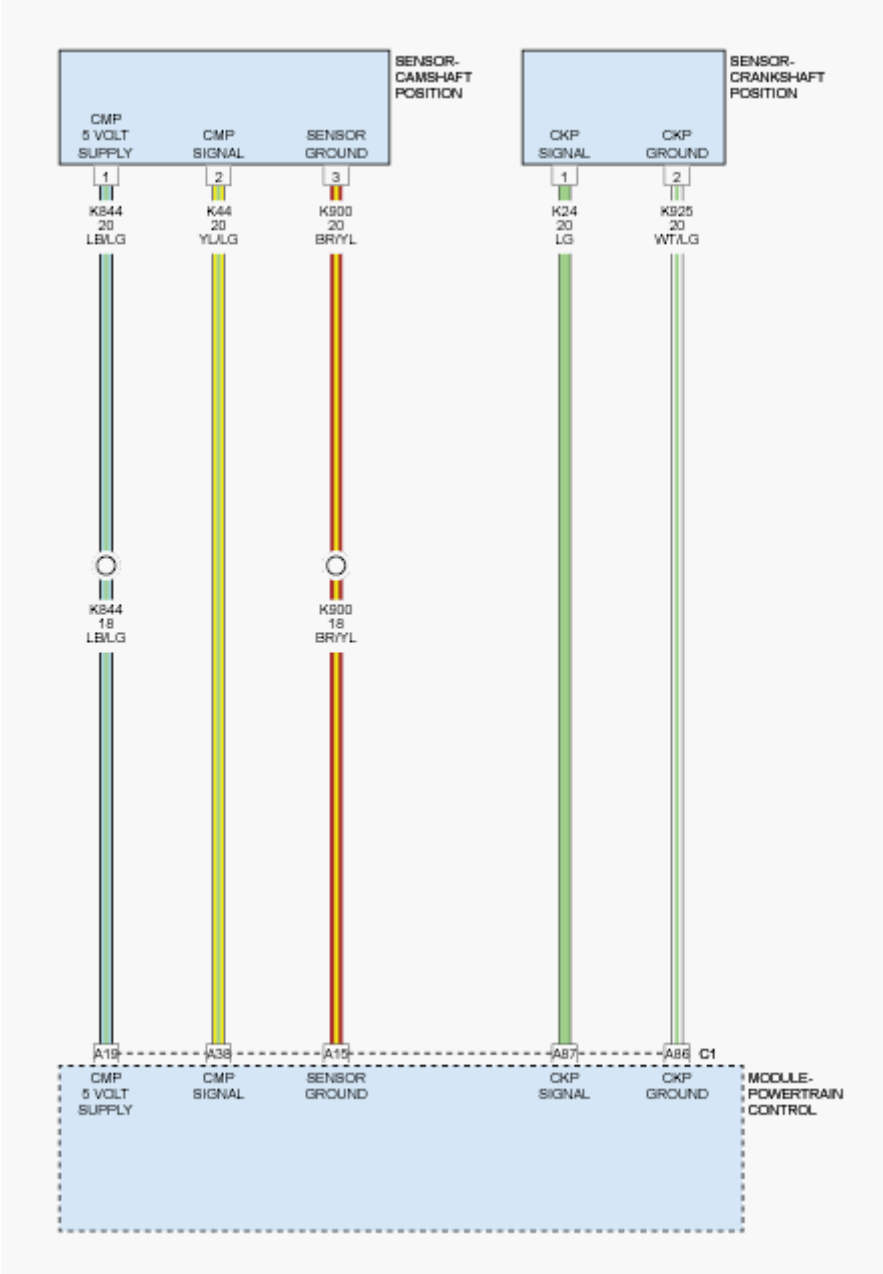

Fig. 35: Camshaft & Crankshaft Position Sensors Circuit Diagram
Courtesy of CHRYSLER GROUP, LLC

WHEN MONITORED

With the engine cranking or running.

SET CONDITION

The Powertrain Control Module (PCM) does not receive a signal from the Camshaft Position Sensor (CMP) when the Crankshaft Position Sensor indicates engine RPM.

POSSIBLE CAUSES

Possible Causes
(K44) CAMSHAFT POSITION SENSOR SIGNAL CIRCUIT SHORTED TO VOLTAGE
(K44) CMP SENSOR SIGNAL CIRCUIT OPEN
(K44) CMP SENSOR SIGNAL CIRCUIT SHORTED TO GROUND
(K844) CMP 5-VOLT SUPPLY CIRCUIT OPEN
(K844) CMP 5-VOLT SUPPLY CIRCUIT SHORTED TO GROUND
(K900) CMP SENSOR GROUND CIRCUIT OPEN
(K844) CMP 5-VOLT SUPPLY CIRCUIT SHORTED TO THE (K944) CMP SENSOR GROUND CIRCUIT
(K44) CMP SENSOR SIGNAL CIRCUIT SHORTED TO THE (K944) CMP SENSOR GROUND CIRCUIT
DAMAGED CMP SENSOR OR CAMSHAFT
CAMSHAFT POSITION (CMP) SENSOR
POWERTRAIN CONTROL MODULE (PCM)

Always perform the Pre-Diagnostic Troubleshooting procedure before proceeding. Refer to PRE-DIAGNOSTIC TROUBLESHOOTING PROCEDURE - 2.2L DIESEL .

DIAGNOSTIC TEST

1. **VERIFY ACTIVE DTC**

NOTE: If DTC P0697-SENSOR REFERENCE VOLTAGE 3 is present, perform the diagnostic procedure for that test before proceeding.

NOTE: The Timing Belt/Chain must be correctly installed and operational before diagnosis can be made. Refer to the Service Information to ensure the timing belt is properly installed.

1. Turn the ignition on.
2. With the scan tool, erase the PCM DTCs.
3. Start or crank the engine for at least seven seconds.

4. With the scan tool, read the PCM DTCs.

   Does the scan tool display this DTC?

   Yes

   - Go To 2

   No

   - Perform the INTERMITTENT CONDITION diagnostic procedure. Refer to **INTERMITTENT CONDITION - 2.2L DIESEL** .

2. **CHECKING THE (K844) CAMSHAFT POSITION SENSOR 5-VOLT SUPPLY CIRCUIT**
   1. Turn the ignition off.
   2. Disconnect the CMP Sensor harness connector.
   3. Turn the ignition on.
   4. Measure the voltage of the (K844) CMP Sensor 5-Volt Supply circuit at the CMP Sensor harness connector.

   NOTE: The (K844) CMP Sensor 5-Volt Supply circuit should read 5.0 Volts +/-.05 of a Volt with the connector disconnected and the ignition on.

   Is the voltage measuring 5.0 Volts?

   Voltage is above 5.0 Volts:

   - Repair the (K844) CMP 5-Volt Supply circuit for a short to voltage.
   - Perform the POWERTRAIN VERIFICATION TEST - 2.2L DIESEL. Refer to **PCM VERIFICATION TEST - 2.2L DIESEL** .

   Voltage is below 5.0 Volts:

   - Repair the (K844) CMP 5-Volt Supply circuit for an open circuit or short to ground.
   - Perform the POWERTRAIN VERIFICATION TEST - 2.2L

DIESEL. Refer to **PCM VERIFICATION TEST - 2.2L DIESEL** .

Voltage measurement is 5.0 Volts:

- Go To 3

3. **CHECK THE (K44) CAMSHAFT POSITION SENSOR SIGNAL CIRCUIT FOR A SHORT TO VOLTAGE**
   1. Turn the ignition off.
   2. Disconnect the PCM C1 harness connector.
   3. Remove the Main Relay.
   4. Connect a jumper wire between cavity 87 and cavity 30 of the Main Relay connector.
   5. Turn the ignition on.
   6. Measure the voltage of the (K44) CMP Position Sensor Signal circuit at the CMP Sensor harness connector.

   Is there any voltage present?

   Yes

   - Repair the (K44) Camshaft Position Sensor Signal circuit for a short to voltage.
   - Perform the POWERTRAIN VERIFICATION TEST - 2.2L DIESEL. Refer to **PCM VERIFICATION TEST - 2.2L DIESEL** .

   No

   - Go To 4

4. **CHECK THE (K44) CAMSHAFT POSITION SENSOR SIGNAL CIRCUIT FOR AN OPEN/HIGH RESISTANCE**

   NOTE: Remove the jumper and reinstall the Main Relay.

   1. Turn the ignition off.
   2. Measure the resistance of the (K44) CMP Sensor Signal circuit between the CMP Sensor harness connector and the PCM C1 harness connector.

Is the resistance below 5.0 Ohms?

Yes

- Go To 5

No

- Repair the (K44) CMP Sensor Signal circuit for an open
- Perform the POWERTRAIN VERIFICATION TEST - 2.2L DIESEL. Refer to **PCM VERIFICATION TEST - 2.2L DIESEL** .

5. **CHECK THE (K900) CAMSHAFT POSITION SENSOR GROUND CIRCUIT FOR AN OPEN/HIGH RESISTANCE**
   1. Measure the resistance of the (K900) CMP Sensor Ground circuit between the CMP Sensor harness connector and the PCM C1 harness connector.

      Is the resistance below 5.0 Ohms?

      Yes

      - Go To 6

      No

      - Repair the (K900) CMP Sensor Ground circuit for an open.
      - Perform the POWERTRAIN VERIFICATION TEST - 2.2L DIESEL. Refer to **PCM VERIFICATION TEST - 2.2L DIESEL** .
6. **CHECK THE (K44) CAMSHAFT POSITION SENSOR SIGNAL CIRCUIT FOR A SHORT TO GROUND**
   1. Measure the resistance between ground and the (K44) CMP Sensor Signal circuit at the CMP Sensor harness connector.

      Is the resistance above 10k Ohms?

      Yes

      - Go To 7

No

- Repair the (K44) CMP Sensor Signal circuit for a short to ground.
- Perform the POWERTRAIN VERIFICATION TEST - 2.2L DIESEL. Refer to **PCM VERIFICATION TEST - 2.2L DIESEL** .

7. **CHECK FOR THE (K44) CAMSHAFT POSITION SENSOR SIGNAL CIRCUIT SHORTED TO THE (K944) CAMSHAFT POSITION SENSOR GROUND CIRCUIT**
   1. Measure the resistance between the (K44) CMP Sensor Signal circuit and the (K944) CMP Sensor Ground circuit at the CMP Sensor harness connector.

      Is the resistance above 10k Ohms?

      Yes

      - Go To 8

      No

      - Repair the (K44) CMP Sensor Signal circuit and the (K944) CMP Sensor Ground circuit for a short together.
      - Perform the POWERTRAIN VERIFICATION TEST - 2.2L DIESEL. Refer to **PCM VERIFICATION TEST - 2.2L DIESEL** .

8. **CHECK FOR THE (K844) CAMSHAFT POSITION SENSOR 5-VOLT SUPPLY CIRCUIT SHORTED TO THE (K944) CAMSHAFT POSITION SENSOR GROUND CIRCUIT**
   1. Measure the resistance between the (K844) CMP Sensor 5-Volt Supply circuit and the (K944) CMP Sensor Ground circuit at the CMP Sensor harness connector.

      Is the resistance above 10k Ohms?

      Yes

      - Go To 9

No

- Repair the (K844) CMP Sensor 5-Volt Supply Circuit and (K944) CMP Sensor Ground circuits for a short together.
- Perform the POWERTRAIN VERIFICATION TEST - 2.2L DIESEL. Refer to **PCM VERIFICATION TEST - 2.2L DIESEL** .

9. **CHECK FOR A DAMAGED CAMSHAFT POSITION SENSOR OR CAMSHAFT**
   1. Remove the CMP Sensor.
   2. Inspect the CMP Sensor for conditions such as loose mounting screws, debris, or cracks.
   3. Inspect the camshaft for conditions such as damage, debris or cracked teeth.

   Is there any evidence of these conditions?

   Yes

   - Repair as necessary.
   - Perform the POWERTRAIN VERIFICATION TEST. Refer to **PCM VERIFICATION TEST - 2.2L DIESEL** .

   No

   - Go To 10

10. **POWERTRAIN CONTROL MODULE**
    1. Replace the Camshaft Position Sensor in accordance with the Service Information.
    2. Reconnect the CMP Sensor harness connector.
    3. Reconnect the PCM C1 harness connector.
    4. Turn the ignition on.
    5. With the scan tool, erase the PCM DTCs.
    6. Start or crank the engine for at least seven seconds.
    7. With the scan tool, read the PCM DTCs.

    Does the scan tool display this DTC?

Yes

- Using the wiring diagram/schematic as a guide, inspect the wiring and connectors between the CMP Sensor and the Powertrain Control Module. If no problems are found, replace the Powertrain Control Module. **Before removing the PCM, perform the "Replace PCM" routine in the Miscellaneous Functions tab of the scan tool.** . Refer to **REMOVAL** .
- Perform the POWERTRAIN VERIFICATION TEST - 2.2L DIESEL. Refer to **PCM VERIFICATION TEST - 2.2L DIESEL** .

No

- Test complete.
- Perform the POWERTRAIN VERIFICATION TEST - 2.2L DIESEL. Refer to **PCM VERIFICATION TEST - 2.2L DIESEL** .

P0400-EGR SYSTEM FLOW MALFUNCTION

For a complete wiring diagram, **refer to appropriate SYSTEM WIRING DIAGRAMS article** .

THEORY OF OPERATION

The Powertrain Control Module (PCM) actuates the EGR Valve via the Pulse Width Modulated (PWM) control circuits. The EGR Airflow Control Valve is actuated to control the air volume and the mixing ratio of the charge air and the recirculated exhaust gases to the Intake Manifold. This is accomplished by creating a vacuum which draws the recirculated exhaust gases into the manifold. The EGR Position Sensor is integrated into the EGR Valve, and is not serviceable separately. The EGR Position Sensor functions as a typical three wire 5-Volt sensor. The PCM receives feedback as to the position of the valve from the position sensor via the signal wire.

WHEN MONITORED

With the engine running, EGR Valve activated, EGR Cooler Bypass off, and DPF regeneration is not active.

SET CONDITION

The Powertrain Control Module (PCM) detects that the EGR flow rate is not within a calibrated range.

POSSIBLE CAUSES

Possible Causes
HIGH RESISTANCE IN THE (K157) MASS AIR FLOW SENSOR SIGNAL CIRCUIT
HIGH RESISTANCE IN THE (K37) BOOST PRESSURE SENSOR SIGNAL CIRCUIT
LEAK OR RESTRICTION IN THE INTAKE AIR SYSTEM OR EXHAUST SYSTEM
EGR VALVE
POWERTRAIN CONTROL MODULE (PCM)

Always perform the Pre-Diagnostic Troubleshooting procedure before proceeding. Refer to PRE-DIAGNOSTIC TROUBLESHOOTING PROCEDURE - 2.2L DIESEL .

DIAGNOSTIC TEST

1. **DTC IS ACTIVE**
    1. Ignition on, engine not running.
    2. With the scan tool, view and record the Freeze Frame Data in the Powertrain Control Module.
    3. With the scan tool, clear DTCs in the Powertrain Control Module.
    4. Start the engine and test drive the vehicle. Attempt to duplicate the conditions recorded in the Freeze Frame Data.
    5. With the scan tool, select View DTCs.

    Is the status Active for this DTC?

    Yes

    - Go To 2

    No

- Perform the INTERMITTENT CONDITION diagnostic procedure. Refer to **INTERMITTENT CONDITION - 2.2L DIESEL** .

2. **CHECK FOR HIGH RESISTANCE IN THE (K157) MASS AIR FLOW SENSOR SIGNAL CIRCUIT**
   1. Turn the ignition off.
   2. Disconnect the Mass Air Flow Sensor harness connector.
   3. Disconnect the PCM C1 harness connector.
   4. Measure the resistance of the (K157) Mass Air Flow Sensor Signal circuit between the Mass Air Flow Sensor harness connector and the PCM C1 harness connector.

      Is the resistance below 5.0 Ohms?

      Yes

      - Go To 3

      No

      - Repair the (K157) Mass Air Flow Sensor Signal circuit for an open or high resistance.
      - Perform the POWERTRAIN VERIFICATION TEST - 2.2L DIESEL. Refer to **PCM VERIFICATION TEST - 2.2L DIESEL** .

3. **CHECK FOR HIGH RESISTANCE IN THE (K37) BOOST PRESSURE SENSOR SIGNAL CIRCUIT**
   1. Measure the resistance of the (K37) Boost Pressure Sensor Signal circuit between the Mass Air Flow Sensor harness connector and the PCM C1 harness connector.

      Is the resistance below 5.0 Ohms?

      Yes

      - Go To 4

      No

      - Repair the (K157) Boost Pressure Sensor Signal circuit for an open

or high resistance.

- Perform the POWERTRAIN VERIFICATION TEST - 2.2L DIESEL. Refer to **PCM VERIFICATION TEST - 2.2L DIESEL** .

4. **CHECK FOR INTAKE AND EXHAUST SYSTEM LEAKS OR RESTRICTIONS**
   1. Inspect the exhaust system for damaged components that could cause exhaust flow blockage.
   2. Inspect all air intake, crankcase vent and turbocharger related hoses/tubes and connections for damage, air leaks or blockage.
   3. Inspect the air filter for excessive dirt, soiling or other problems that may cause restricted air flow.

   Were any problems found?

   Yes

   - Repair or replace as necessary.
   - Perform the POWERTRAIN VERIFICATION TEST - 2.2L DIESEL. Refer to **PCM VERIFICATION TEST - 2.2L DIESEL** .

   No

   - Go To 5

5. **EGR VALVE ASSEMBLY**
   1. Turn the ignition off.
   2. Reconnect the Powertrain Control Module C1 harness connector.
   3. Replace the EGR Valve Assembly in accordance with the service information.
   4. Ignition on, engine not running.
   5. With the scan tool, clear DTCs in the Powertrain Control Module.
   6. Start the engine and test drive the vehicle. Attempt to duplicate the conditions recorded in the Freeze Frame Data.
   7. With the scan tool, select View DTCs.

   Is the status Active for this DTC?

Yes

- Go To 6

No

- Test complete.
- Perform the POWERTRAIN VERIFICATION TEST - 2.2L DIESEL. Refer to **PCM VERIFICATION TEST - 2.2L DIESEL** .

6. **POWERTRAIN CONTROL MODULE**
   1. Using the wiring diagram/schematic as a guide, inspect the wiring and connectors between the EGR Valve Assembly and the Powertrain Control Module.
   2. Look for any chafed, pierced, pinched, or partially broken wires.
   3. Look for broken, bent, pushed out or corroded terminals.
   4. Monitor the scan tool data relative to this circuit and wiggle test the wiring and connectors.
   5. Look for the data to change or for the DTC to reset during the wiggle test.
   6. Perform any Technical Service Bulletins that may apply.

   Were any problems found?

   Yes

   - Repair as necessary.
   - Perform the POWERTRAIN VERIFICATION TEST - 2.2L DIESEL. Refer to **PCM VERIFICATION TEST - 2.2L DIESEL** .

   No

   - Replace the Powertrain Control Module. **Before removing the PCM, perform the "Replace PCM" routine in the Miscellaneous Functions tab of the scan tool.** . Refer to **REMOVAL** .
   - Perform the POWERTRAIN VERIFICATION TEST - 2.2L

DIESEL. Refer to **PCM VERIFICATION TEST - 2.2L DIESEL** .

P0403-EGR CONTROL CIRCUIT OPEN

For a complete wiring diagram, **refer to appropriate SYSTEM WIRING DIAGRAMS article**

THEORY OF OPERATION

The Powertrain Control Module (PCM) actuates the EGR Valve via the Pulse Width Modulated (PWM) control circuits. The EGR Airflow Control Valve is actuated to control the air volume and the mixing ratio of the charge air and the recirculated exhaust gases to the Intake Manifold. This is accomplished by creating a vacuum which draws the recirculated exhaust gases into the manifold. The EGR Position Sensor is integrated into the EGR Valve, and is not serviceable separately. The EGR Position Sensor functions as a typical three wire 5-Volt sensor. The PCM receives feedback as to the position of the valve from the position sensor via the signal wire.

WHEN MONITORED

With the ignition on and the EGR Solenoid command off.

SET CONDITION

The Powertrain Control Module (PCM) does not detect voltage on either the EGR Valve Control circuit for 2.0 seconds.

POSSIBLE CAUSES

Possible Causes
(K682) EGR VALVE CONTROL (+) CIRCUIT OPEN OR HIGH RESISTANCE
(K684) EGR VALVE CONTROL (-) CIRCUIT OPEN OR HIGH RESISTANCE
EGR VALVE ASSEMBLY
POWERTRAIN CONTROL MODULE (PCM)

Always perform the Pre-Diagnostic Troubleshooting procedure before proceeding. Refer to PRE-DIAGNOSTIC TROUBLESHOOTING

PROCEDURE - 2.2L DIESEL .

DIAGNOSTIC TEST

1. **DTC IS ACTIVE**
   1. Ignition on, engine not running.
   2. With the scan tool, clear DTCs in the Powertrain Control Module.
   3. Start the engine and test drive the vehicle.
   4. Monitor the scan tool for at least two minutes.
   5. With the scan tool, select View DTCs.

   Is the status Active for this DTC?

   Yes

   - Go To 2

   No

   - Perform the INTERMITTENT CONDITION diagnostic procedure. Refer to **INTERMITTENT CONDITION - 2.2L DIESEL** .
2. **CHECK THE (K682) EGR VALVE CONTROL (+) CIRCUIT FOR AN OPEN/HIGH RESISTANCE**
   1. Disconnect the EGR Valve Assembly harness connector.
   2. Disconnect the Powertrain Control Module C1 harness connector.
   3. Measure the resistance of the (K682) EGR Valve Control (+) circuit between the EGR Valve Assembly harness connector and the Powertrain Control Module C1 harness connector.

   Is the resistance below 5.0 Ohms?

   Yes

   - Go To 3

   No

   - Repair the (K682) EGR Valve Control (+) circuit for an open circuit or high resistance.

- Perform the POWERTRAIN VERIFICATION TEST - 2.2L DIESEL. Refer to **PCM VERIFICATION TEST - 2.2L DIESEL** .

3. **CHECK THE (K684) EGR VALVE CONTROL (-) CIRCUIT FOR AN OPEN/HIGH RESISTANCE**
   1. Measure the resistance of the (K684) EGR Valve Control (-) circuit between the EGR Valve Assembly harness connector and the Powertrain Control Module C1 harness connector.

      Is the resistance below 5.0 Ohms?

      Yes

      - Go To 4

      No

      - Repair the (K684) EGR Valve Control (-) circuit for an open or high resistance.
      - Perform the POWERTRAIN VERIFICATION TEST - 2.2L DIESEL. Refer to **PCM VERIFICATION TEST - 2.2L DIESEL** .
4. **EGR VALVE ASSEMBLY**
   1. Turn the ignition off.
   2. Reconnect the Powertrain Control Module C1 harness connector.
   3. Replace the EGR Valve Assembly in accordance with the service information.
   4. Ignition on, engine not running.
   5. With the scan tool, clear DTCs in the Powertrain Control Module.
   6. Start the engine and test drive the vehicle.
   7. Monitor the scan tool for at least two minutes.
   8. With the scan tool, select View DTCs.

      Is the status Active for this DTC?

      Yes

- Go To 5

No

- Test complete.
- Perform the POWERTRAIN VERIFICATION TEST - 2.2L DIESEL. Refer to **PCM VERIFICATION TEST - 2.2L DIESEL** .

5. **POWERTRAIN CONTROL MODULE**
   1. Using the wiring diagram/schematic as a guide, inspect the wiring and connectors between the EGR Valve Assembly and the Powertrain Control Module.
   2. Look for any chafed, pierced, pinched, or partially broken wires.
   3. Look for broken, bent, pushed out or corroded terminals.
   4. Perform any Technical Service Bulletins that may apply.

   Were any problems found?

   Yes

   - Repair as necessary.
   - Perform the POWERTRAIN VERIFICATION TEST - 2.2L DIESEL. Refer to **PCM VERIFICATION TEST - 2.2L DIESEL** .

   No

   - Replace the Powertrain Control Module. **Before removing the PCM, perform the "Replace PCM" routine in the Miscellaneous Functions tab of the scan tool.** . Refer to **REMOVAL** .
   - Perform the POWERTRAIN VERIFICATION TEST - 2.2L DIESEL. Refer to **PCM VERIFICATION TEST - 2.2L DIESEL** .

P0404-EGR POSITION SENSOR PERFORMANCE

For a complete wiring diagram, **refer to appropriate SYSTEM WIRING DIAGRAMS article** .

THEORY OF OPERATION

The Powertrain Control Module (PCM) actuates the EGR Valve via the Pulse Width Modulated (PWM) control circuits. The EGR Airflow Control Valve is actuated to control the air volume and the mixing ratio of the charge air and the recirculated exhaust gases to the Intake Manifold. This is accomplished by creating a vacuum which draws the recirculated exhaust gases into the manifold. The EGR Position Sensor is integrated into the EGR Valve, and is not serviceable separately. The EGR Position Sensor functions as a typical three wire 5-Volt sensor. The PCM receives feedback as to the position of the valve from the position sensor via the signal wire.

WHEN MONITORED

With the engine running and the EGR Valve Control commanded on.

SET CONDITION

The Powertrain Control Module (PCM) detects an implausible voltage on the EGR Control circuit for 0.5 seconds.

POSSIBLE CAUSES

Possible Causes
(K682) EGR CONTROL (+) CIRCUIT SHORTED TO VOLTAGE
(K684) EGR CONTROL (-) CIRCUIT SHORTED TO VOLTAGE
(K682) EGR CONTROL (+) CIRCUIT SHORTED TO GROUND
(K684) EGR CONTROL (-) CIRCUIT SHORTED TO GROUND
(K682) EGR CONTROL (+) CIRCUIT OPEN OR HIGH RESISTANCE
(K684) EGR CONTROL (-) CIRCUIT OPEN OR HIGH RESISTANCE
EGR VALVE ASSEMBLY
POWERTRAIN CONTROL MODULE (PCM)

Always perform the Pre-Diagnostic Troubleshooting procedure before proceeding. Refer to PRE-DIAGNOSTIC TROUBLESHOOTING PROCEDURE - 2.2L DIESEL .

DIAGNOSTIC TEST

1. **DTC IS ACTIVE**
    1. Ignition on, engine not running.

2. With the scan tool, clear DTCs in the Powertrain Control Module.
3. Start the engine and test drive the vehicle.
4. Monitor the scan tool for at least two minutes.
5. With the scan tool, select View DTCs.

   Is the status Active for this DTC?

   Yes

   - Go To 2

   No

   - Perform the INTERMITTENT CONDITION diagnostic procedure. Refer to **INTERMITTENT CONDITION - 2.2L DIESEL** .

2. **CHECK THE (K682) EGR CONTROL (+) CIRCUIT FOR A SHORT TO VOLTAGE**
   1. Turn the ignition off.
   2. Disconnect the EGR Valve Assembly harness connector.
   3. Disconnect the Powertrain Control Module C1 harness connector.
   4. Remove the Main Relay.
   5. Connect a jumper wire between cavity 87 and cavity 30 of the Main Relay Connector.
   6. Turn the ignition on.
   7. Measure the voltage of the (K682) EGR Control (+) circuit in the EGR Valve Assembly harness connector.

      Is there any voltage present?

      Yes

      - Repair the (K682) EGR Control (+) circuit for a short to voltage.
      - Perform the POWERTRAIN VERIFICATION TEST - 2.2L DIESEL. Refer to **PCM VERIFICATION TEST - 2.2L DIESEL** .

      No

- Go To 3

3. **CHECK THE (K684) EGR CONTROL (-) CIRCUIT FOR A SHORT TO VOLTAGE**
   1. Measure the voltage of the (K684) EGR Control (-) circuit in the EGR Valve Assembly harness connector.

      Is there any voltage present?

      Yes

      - Repair the (K684) EGR Control (-) circuit for a short to voltage.
      - Perform the POWERTRAIN VERIFICATION TEST - 2.2L DIESEL. Refer to **PCM VERIFICATION TEST - 2.2L DIESEL** .

      No

      - Go To 4

4. **CHECK THE (K682) EGR CONTROL (+) CIRCUIT FOR A SHORT TO GROUND**
   1. Turn the ignition off.
   2. Measure the resistance between ground and the (K682) EGR Control (+) circuit in the EGR Valve Assembly harness connector.

      Is the resistance above 10k Ohms?

      Yes

      - Go To 5

      No

      - Repair the (K682) EGR Control (+) circuit for a short to ground.
      - Perform the POWERTRAIN VERIFICATION TEST - 2.2L DIESEL. Refer to **PCM VERIFICATION TEST - 2.2L DIESEL** .

5. **CHECK THE (K684) EGR CONTROL (-) CIRCUIT FOR A SHORT TO GROUND**

1. Measure the resistance between ground and the (K684) EGR Control (-) circuit in the EGR Valve Assembly harness connector.

   Is the resistance above 10k Ohms?

   Yes

   - Go To 6

   No

   - Repair the (K684) EGR Control (-) circuit for a short to ground.
   - Perform the POWERTRAIN VERIFICATION TEST - 2.2L DIESEL. Refer to **PCM VERIFICATION TEST - 2.2L DIESEL** .

6. **CHECK THE (K682) EGR CONTROL (+) CIRCUIT FOR AN OPEN/HIGH RESISTANCE**
   1. Measure the resistance of the (K682) EGR Control (+) circuit between the EGR Valve Assembly harness connector and the Powertrain Control Module C1 harness connector.

      Is the resistance below 5.0 Ohms?

      Yes

      - Go To 7

      No

      - Repair the (K682) EGR Control (+) circuit for an open or high resistance.
      - Perform the POWERTRAIN VERIFICATION TEST - 2.2L DIESEL. Refer to **PCM VERIFICATION TEST - 2.2L DIESEL** .

7. **CHECK THE (K684) EGR CONTROL (-) CIRCUIT FOR AN OPEN/HIGH RESISTANCE**
   1. Measure the resistance of the (K684) EGR Control (-) circuit between the EGR Valve Assembly harness connector and the Powertrain Control Module C1 harness connector.

Is the resistance below 5.0 Ohms?

Yes

- Go To 8

No

- Repair the (K684) EGR Control (-) circuit for an open or high resistance.
- Perform the POWERTRAIN VERIFICATION TEST - 2.2L DIESEL. Refer to **PCM VERIFICATION TEST - 2.2L DIESEL** .

8. **EGR VALVE ASSEMBLY**
   1. Turn the ignition off.
   2. Connect the Powertrain Control Module C1 harness connector.
   3. Replace the EGR Valve Assembly in accordance with the service information.
   4. Ignition on, engine not running.
   5. With the scan tool, Clear DTCs in the Powertrain Control Module.
   6. Start the engine and test drive the vehicle.
   7. Monitor the scan tool for at least two minutes.
   8. With the scan tool, select View DTCs.

   Is the status Active for this DTC?

   Yes

   - Go To 9

   No

   - Test complete.
   - Perform the POWERTRAIN VERIFICATION TEST - 2.2L DIESEL. Refer to **PCM VERIFICATION TEST - 2.2L DIESEL** .
9. **POWERTRAIN CONTROL MODULE**

1. Using the wiring diagram/schematic as a guide, inspect the wiring and connectors between the EGR Valve Assembly and the Powertrain Control Module.
2. Look for any chafed, pierced, pinched, or partially broken wires.
3. Look for broken, bent, pushed out or corroded terminals.
4. Monitor the scan tool data relative to this circuit and wiggle test the wiring and connectors.
5. Look for the data to change or for the DTC to reset during the wiggle test.
6. Perform any Technical Service Bulletins that may apply.

   Were any problems found?

   Yes

   - Repair as necessary.
   - Perform the POWERTRAIN VERIFICATION TEST - 2.2L DIESEL. Refer to **PCM VERIFICATION TEST - 2.2L DIESEL** .

   No

   - Replace the Powertrain Control Module. **Before removing the PCM, perform the "Replace PCM" routine in the Miscellaneous Functions tab of the scan tool.** . Refer to **REMOVAL** .
   - Perform the POWERTRAIN VERIFICATION TEST - 2.2L DIESEL. Refer to **PCM VERIFICATION TEST - 2.2L DIESEL** .

P0426-CATALYST TEMPERATURE SENSOR CIRCUIT PERFORMANCE - BANK 1 SENSOR 1

For a complete wiring diagram, **refer to appropriate SYSTEM WIRING DIAGRAMS article** .

THEORY OF OPERATION

The Powertrain Control Module (PCM) monitors the exhaust gas temperatures in the aftertreatment system by receiving feedback from the Exhaust Gas

Temperature (EGT) Sensors. The Exhaust Gas Temperature Sensors function as typical two wire 5-Volt sensor. The PCM uses this information to monitor the temperatures during normal engine operation as well as during regeneration of the Diesel Particulate Filter (DPF) so as not to cause any damage to the exhaust aftertreatment system components.

WHEN MONITORED

With the ignition on.

SET CONDITION

The Powertrain Control Module (PCM) detects that the (K372) Exhaust Gas Temperature Sensor 2 Signal circuit is implausible.

POSSIBLE CAUSES

Possible Causes
HIGH RESISTANCE IN THE (K372) EXHAUST GAS TEMPERATURE SENSOR 2 SIGNAL CIRCUIT
HIGH RESISTANCE IN THE (K951) SENSOR GROUND CIRCUIT
EXHAUST GAS TEMPERATURE SENSOR
POWERTRAIN CONTROL MODULE (PCM)

Always perform the Pre-Diagnostic Troubleshooting procedure before proceeding. Refer to PRE-DIAGNOSTIC TROUBLESHOOTING PROCEDURE - 2.2L DIESEL .

DIAGNOSTIC TEST

1. **DTC IS ACTIVE**
    1. Ignition on, engine not running.
    2. With the scan tool, Clear DTCs in the PCM.
    3. Cycle the ignition key off and on several times, leaving the ignition on for at least 10 seconds at a time.
    4. Start the engine.
    5. Allow the engine to reach normal operating temperature.
    6. With the scan tool, select View DTCs.

    Is the status Active for this DTC?

Yes

- Go To 2

No

- Perform the INTERMITTENT CONDITION diagnostic procedure. Refer to **INTERMITTENT CONDITION - 2.2L DIESEL** .

2. **CHECK FOR HIGH RESISTANCE IN THE (K372) EXHAUST GAS TEMPERATURE SENSOR 2 SIGNAL CIRCUIT**
   1. Turn the ignition off.
   2. Disconnect the Exhaust Gas Temperature Sensor harness connector.
   3. Disconnect the PCM C2 harness connector.
   4. Measure the resistance of the (K372) Exhaust Gas Temperature Sensor 2 Signal circuit between the Exhaust Gas Temperature Sensor harness connector and the PCM C2 harness connector.

   Is the resistance below 5.0 Ohms?

   Yes

   - Go To 3

   No

   - Repair the (K372) Exhaust Gas Temperature Sensor 2 Signal circuit for an open or high resistance.
   - Perform the POWERTRAIN VERIFICATION TEST - 2.2L DIESEL. Refer to **PCM VERIFICATION TEST - 2.2L DIESEL** .

3. **CHECK FOR HIGH RESISTANCE IN THE (K951) SENSOR GROUND CIRCUIT**
   1. Measure the resistance of the (K951) Sensor Ground circuit between the Exhaust Gas Temperature Sensor harness connector and the PCM C2 harness connector.

   Is the resistance below 5.0 Ohms?

   Yes

- Go To 4

No

- Repair the (K951) Sensor Ground circuit for an open or high resistance.
- Perform the POWERTRAIN VERIFICATION TEST - 2.2L DIESEL. Refer to **PCM VERIFICATION TEST - 2.2L DIESEL** .

4. **CHECK THE EXHAUST GAS TEMPERATURE SENSOR**
   1. Reconnect the Exhaust Gas Temperature Sensor harness connector.
   2. Reconnect the PCM C2 harness connector.
   3. With the scan tool, Clear DTCs in the PCM.
   4. Disconnect the Exhaust Gas Temperature Sensor harness connector.
   5. Connect a jumper between the (K372) Exhaust Gas Temperature Sensor 2 Signal circuit and the (K951) Sensor Ground circuit at the Exhaust Gas Temperature Sensor harness connector.

      NOTE: Be careful not to spread the terminals in the connector.

   6. Turn the ignition on.
   7. With the scan tool, view DTCs.

      NOTE: The scan tool should display a P0427-CATALYST TEMPERATURE SENSOR CIRCUIT LOW DTC with the jumper in place.

   Does the scan tool should display the P0427-CATALYST TEMPERATURE SENSOR CIRCUIT LOW DTC as active?

   Yes

   - Replace the Exhaust Gas Temperature Sensor in accordance with the service information.
   - Perform the POWERTRAIN VERIFICATION TEST - 2.2L DIESEL. Refer to **PCM VERIFICATION TEST - 2.2L**

DIESEL .

No

- Go To 5

5. **POWERTRAIN CONTROL MODULE**
   1. Using the wiring diagram/schematic as a guide, inspect the wiring and connectors at the Exhaust Gas Temperature Sensor and the Powertrain Control Module.
      - Look for any chafed, pierced, pinched, or partially broken wires.
      - Look for broken, bent, pushed out or corroded terminals.
      - Monitor the scan tool data relative to this circuit and wiggle test the wiring and connectors.
      - Look for the data to change or for the DTC to reset during the wiggle test.
      - Perform any Technical Service Bulletins that may apply.

      Were any problems found?

      Yes

      - Repair as necessary.
      - Perform the POWERTRAIN VERIFICATION TEST - 2.2L DIESEL. Refer to **PCM VERIFICATION TEST - 2.2L DIESEL** .

      No

      - Replace the Powertrain Control Module. **Before removing the PCM, perform the "Replace PCM" routine in the Miscellaneous Functions tab of the scan tool.** . Refer to **REMOVAL** .
      - Perform the POWERTRAIN VERIFICATION TEST - 2.2L DIESEL. Refer to **PCM VERIFICATION TEST - 2.2L DIESEL** .

P0427-CATALYST TEMPERATURE SENSOR CIRCUIT LOW - BANK 1 SENSOR 1

For a complete wiring diagram **refer to appropriate SYSTEM WIRING**

DIAGRAMS article

THEORY OF OPERATION

The Powertrain Control Module (PCM) monitors the exhaust gas temperatures in the aftertreatment system by receiving feedback from the Exhaust Gas Temperature (EGT) Sensors. The Exhaust Gas Temperature Sensors function as typical two wire 5-Volt sensor. The PCM uses this information to monitor the temperatures during normal engine operation as well as during regeneration of the Diesel Particulate Filter (DPF) so as not to cause any damage to the exhaust aftertreatment system components.

WHEN MONITORED

With the ignition on.

SET CONDITION

The (K372) Exhaust Gas Temperature Sensor 2 Signal circuit is below 0.2 Volts for two seconds.

POSSIBLE CAUSES

Possible Causes
(K372) EXHAUST GAS TEMPERATURE SENSOR 2 SIGNAL CIRCUIT SHORTED TO GROUND
(K372) EXHAUST GAS TEMPERATURE SENSOR 2 SIGNAL CIRCUIT SHORTED TO THE (K951) SENSOR GROUND CIRCUIT
EXHAUST GAS TEMPERATURE SENSOR
POWERTRAIN CONTROL MODULE (PCM)

Always perform the Pre-Diagnostic Troubleshooting procedure before proceeding. Refer to PRE-DIAGNOSTIC TROUBLESHOOTING PROCEDURE - 2.2L DIESEL .

DIAGNOSTIC TEST

1. **DTC IS ACTIVE**
    1. Ignition on, engine not running.
    2. With the scan tool, clear DTCs in the PCM.
    3. Cycle the ignition key off and on several times, leaving the ignition on

for at least 10 seconds at a time.

4. Start the engine.
5. Allow the engine to reach normal operating temperature.
6. With the scan tool, select View DTCs.

Is the status Active for this DTC?

Yes

- Go To 2

No

- Perform the INTERMITTENT CONDITION diagnostic procedure. Refer to **INTERMITTENT CONDITION - 2.2L DIESEL** .

2. **CHECK THE (K372) EXHAUST GAS TEMPERATURE SENSOR 2 SIGNAL CIRCUIT FOR A SHORT TO GROUND**
   1. Disconnect the Exhaust Gas Temperature Sensor harness connector.
   2. Disconnect the PCM C2 harness connector.
   3. Measure the resistance between ground and the (K372) Exhaust Gas Temperature Sensor 2 Signal circuit at the Exhaust Gas Temperature Sensor harness connector.

   Is the resistance above 10k Ohms?

   Yes

   - Go To 3

   No

   - Repair the (K372) Exhaust Gas Temperature Sensor 2 Signal circuit for a short to ground.
   - Perform the POWERTRAIN VERIFICATION TEST - 2.2L DIESEL. Refer to **PCM VERIFICATION TEST - 2.2L DIESEL** .

3. **CHECK FOR THE (K372) EXHAUST GAS TEMPERATURE SENSOR 2 SIGNAL CIRCUIT SHORTED TO THE (K951) SENSOR GROUND CIRCUIT**

1. Measure the resistance between the (K372) Exhaust Gas Temperature Sensor 2 Signal circuit and the (K951) Sensor Ground circuit at the Exhaust Gas Temperature Sensor harness connector.

   Is the resistance above 10k Ohms?

   Yes

   - Go To 4

   No

   - Repair the short between the (K372) Exhaust Gas Temperature Sensor 2 Signal circuit and the (K951) Sensor Ground circuit.
   - Perform the POWERTRAIN VERIFICATION TEST - 2.2L DIESEL. Refer to **PCM VERIFICATION TEST - 2.2L DIESEL** .

4. **CHECK THE EXHAUST GAS TEMPERATURE SENSOR**
   1. Reconnect the Exhaust Gas Temperature Sensor harness connector.
   2. Reconnect the PCM C2 harness connector.
   3. Turn the ignition on.
   4. With the scan tool, Clear DTCs in the PCM.
   5. Turn the ignition off.
   6. Disconnect the Exhaust Gas Temperature Sensor harness connector.
   7. Turn the ignition on.
   8. With the scan tool, view DTCs.

   NOTE: The scan tool should display the P0428-CATALYST TEMPERATURE SENSOR CIRCUIT HIGH DTC with the connector disconnected.

   Does the scan tool should display P0428-CATALYST TEMPERATURE SENSOR CIRCUIT HIGH DTC as active?

   Yes

   - Replace the Exhaust Gas Temperature Sensor in accordance with the service information.

- Perform the POWERTRAIN VERIFICATION TEST - 2.2L DIESEL. Refer to **PCM VERIFICATION TEST - 2.2L DIESEL** .

No

- Go To 5

5. **POWERTRAIN CONTROL MODULE**
   1. Using the wiring diagram/schematic as a guide, inspect the wiring and connectors at the Exhaust Gas Temperature Sensor and the Powertrain Control Module.
      - Look for any chafed, pierced, pinched, or partially broken wires.
      - Look for broken, bent, pushed out or corroded terminals.
      - Monitor the scan tool data relative to this circuit and wiggle test the wiring and connectors.
      - Look for the data to change or for the DTC to reset during the wiggle test.
      - Perform any Technical Service Bulletins that may apply.

      Were any problems found?

      Yes

      - Repair as necessary.
      - Perform the POWERTRAIN VERIFICATION TEST - 2.2L DIESEL. Refer to **PCM VERIFICATION TEST - 2.2L DIESEL** .

      No

      - Replace the Powertrain Control Module. **Before removing the PCM, perform the "Replace PCM" routine in the Miscellaneous Functions tab of the scan tool.** . Refer to **REMOVAL** .
      - Perform the POWERTRAIN VERIFICATION TEST - 2.2L DIESEL. Refer to **PCM VERIFICATION TEST - 2.2L DIESEL** .

P0428-CATALYST TEMPERATURE SENSOR CIRCUIT HIGH - BANK 1 SENSOR 1

For a complete wiring diagram, **refer to appropriate SYSTEM WIRING DIAGRAMS article** .

THEORY OF OPERATION

The Powertrain Control Module (PCM) monitors the exhaust gas temperatures in the aftertreatment system by receiving feedback from the Exhaust Gas Temperature (EGT) Sensors. The Exhaust Gas Temperature Sensors function as typical two wire 5-Volt sensor. The PCM uses this information to monitor the temperatures during normal engine operation as well as during regeneration of the Diesel Particulate Filter (DPF) so as not to cause any damage to the exhaust aftertreatment system components.

WHEN MONITORED

With the ignition on.

SET CONDITION

The (K372) Exhaust Gas Temperature Sensor 2 Signal circuit is above 4.8 Volts for two seconds.

POSSIBLE CAUSES

Possible Causes
(K372) EXHAUST GAS TEMPERATURE SENSOR 2 SIGNAL CIRCUIT SHORTED TO VOLTAGE
(K372) EXHAUST GAS TEMPERATURE SENSOR 2 SIGNAL CIRCUIT OPEN/HIGH RESISTANCE
(K951) SENSOR GROUND CIRCUIT OPEN/HIGH RESISTANCE
EXHAUST GAS TEMPERATURE SENSOR
POWERTRAIN CONTROL MODULE (PCM)

Always perform the Pre-Diagnostic Troubleshooting procedure before proceeding. Refer to PRE-DIAGNOSTIC TROUBLESHOOTING PROCEDURE - 2.2L DIESEL .

DIAGNOSTIC TEST

1. **DTC IS ACTIVE**

1. Ignition on, engine not running.
2. With the scan tool, Clear DTCs in the PCM.
3. Cycle the ignition key off and on several times, leaving the ignition on for at least 10 seconds at a time.
4. Start the engine.
5. Allow the engine to reach normal operating temperature.
6. With the scan tool, select View DTCs.

   Is the status Active for this DTC?

   Yes

   - Go To 2

   No

   - Perform the INTERMITTENT CONDITION diagnostic procedure. Refer to **INTERMITTENT CONDITION - 2.2L DIESEL** .

2. **CHECK THE (K372) EXHAUST GAS TEMPERATURE SENSOR 2 SIGNAL CIRCUIT FOR A SHORT TO VOLTAGE**
   1. Turn the ignition off.
   2. Disconnect the Exhaust Gas Temperature Sensor harness connector.
   3. Disconnect the PCM C2 harness connector.
   4. Remove the ASD Relay from the PDC.
   5. Connect a jumper wire between cavity 30 and cavity 87 of the ASD Relay Connector.
   6. Turn the ignition on.
   7. Measure the voltage of the (K372) Exhaust Gas Temperature Sensor 2 Signal circuit at the Exhaust Gas Temperature Sensor harness connector.

      Is there any voltage present?

      Yes

      - Repair the (K372) Exhaust Gas Temperature Sensor 2 Signal circuit for a short to voltage.

- Perform the POWERTRAIN VERIFICATION TEST - 2.2L DIESEL. Refer to **PCM VERIFICATION TEST - 2.2L DIESEL** .

No

- Go To 3

3. **CHECK THE (K372) EXHAUST GAS TEMPERATURE SENSOR 2 SIGNAL CIRCUIT FOR AN OPEN/HIGH RESISTANCE**
   1. Turn the ignition off.
   2. Measure the resistance of the (K372) Exhaust Gas Temperature Sensor 2 Signal circuit between the Exhaust Gas Temperature Sensor harness connector and the PCM C2 harness connector.

   Is the resistance below 5.0 Ohms?

   Yes

   - Go To 4

   No

   - Repair the (K372) Exhaust Gas Temperature Sensor 2 Signal circuit for an open or high resistance.
   - Perform the POWERTRAIN VERIFICATION TEST - 2.2L DIESEL. Refer to **PCM VERIFICATION TEST - 2.2L DIESEL** .
4. **CHECK THE (K951) SENSOR GROUND CIRCUIT FOR AN OPEN/HIGH RESISTANCE**
   1. Measure the resistance of the (K951) Sensor Ground circuit between the Exhaust Gas Temperature Sensor harness connector and the PCM C2 harness connector.

   Is the resistance below 5.0 Ohms?

   Yes

   - Go To 5

No

- Repair the (K951) Sensor Ground circuit for an open or high resistance.
- Perform the POWERTRAIN VERIFICATION TEST - 2.2L DIESEL. Refer to **PCM VERIFICATION TEST - 2.2L DIESEL** .

5. **CHECK THE EXHAUST GAS TEMPERATURE SENSOR**
   1. Reconnect the Exhaust Gas Temperature Sensor harness connector.
   2. Reconnect the PCM C2 harness connector.
   3. With the scan tool, Clear DTCs in the PCM.
   4. Disconnect the Exhaust Gas Temperature Sensor harness connector.
   5. Connect a jumper between the (K372) Exhaust Gas Temperature Sensor 2 Signal circuit and the (K951) Sensor Ground circuit at the Exhaust Gas Temperature Sensor harness connector.

      NOTE: Be careful not to spread the terminals in the connector.

   6. Turn the ignition on.
   7. With the scan tool, view DTCs.

      NOTE: The scan tool should display a P0427-CATALYST TEMPERATURE SENSOR CIRCUIT LOW DTC with the jumper in place.

   Does the scan tool should display the P0427-CATALYST TEMPERATURE SENSOR CIRCUIT LOW DTC as active?

   Yes

   - Replace the Exhaust Gas Temperature Sensor in accordance with the service information.
   - Perform the POWERTRAIN VERIFICATION TEST - 2.2L DIESEL. Refer to **PCM VERIFICATION TEST - 2.2L DIESEL** .

   No

- Go To 6

6. **POWERTRAIN CONTROL MODULE**
   1. Using the wiring diagram/schematic as a guide, inspect the wiring and connectors at the Exhaust Gas Temperature Sensor and the Powertrain Control Module.
      - Look for any chafed, pierced, pinched, or partially broken wires.
      - Look for broken, bent, pushed out or corroded terminals.
      - Monitor the scan tool data relative to this circuit and wiggle test the wiring and connectors.
      - Look for the data to change or for the DTC to reset during the wiggle test.
      - Perform any Technical Service Bulletins that may apply.

      Were any problems found?

      Yes

      - Repair as necessary.
      - Perform the POWERTRAIN VERIFICATION TEST - 2.2L DIESEL. Refer to **PCM VERIFICATION TEST - 2.2L DIESEL** .

      No

      - Replace the Powertrain Control Module. **Before removing the PCM, perform the "Replace PCM" routine in the Miscellaneous Functions tab of the scan tool.** . Refer to **REMOVAL** .
      - Perform the POWERTRAIN VERIFICATION TEST - 2.2L DIESEL. Refer to **PCM VERIFICATION TEST - 2.2L DIESEL** .

P042F-EXHAUST GAS RECIRCULATION CONTROL STUCK CLOSED

For a complete wiring diagram, **refer to appropriate SYSTEM WIRING DIAGRAMS article** .

THEORY OF OPERATION

The Powertrain Control Module (PCM) actuates the EGR Valve via the Pulse Width Modulated (PWM) control circuits. The EGR Airflow Control Valve is actuated to control the air volume and the mixing ratio of the charge air and the recirculated exhaust gases to the Intake Manifold. This is accomplished by creating a vacuum which draws the recirculated exhaust gases into the manifold. The EGR Position Sensor is integrated into the EGR Valve, and is not serviceable separately. The EGR Position Sensor functions as a typical three wire 5-Volt sensor. The PCM receives feedback as to the position of the valve from the position sensor via the signal wire.

WHEN MONITORED

With the ignition on.

SET CONDITION

The Powertrain Control Module (PCM) detects that the EGR Valve Control circuit is not within a calibrated range.

POSSIBLE CAUSES

Possible Causes
(K852) ACCELERATOR PEDAL POSITION SENSOR 1 5-VOLT SUPPLY CIRCUIT SHORTED TO VOLTAGE
(K350) FUEL RAIL PRESSURE SENSOR 5-VOLT SUPPLY CIRCUIT SHORTED TO VOLTAGE
(K682) EGR VALVE CONTROL (+) CIRCUIT SHORTED TO VOLTAGE
(K684) EGR VALVE CONTROL (-) CIRCUIT SHORTED TO VOLTAGE
(K682) EGR VALVE CONTROL (+) CIRCUIT OPEN/HIGH RESISTANCE
(K684) EGR CONTROL (-) CIRCUIT OPEN/HIGH RESISTANCE
(K682) EGR VALVE CONTROL (+) CIRCUIT SHORTED TO GROUND
(K684) EGR VALVE CONTROL (-) CIRCUIT SHORTED TO GROUND
EGR VALVE
POWERTRAIN CONTROL MODULE (PCM)

Always perform the Pre-Diagnostic Troubleshooting procedure before proceeding. Refer to PRE-DIAGNOSTIC TROUBLESHOOTING

PROCEDURE - 2.2L DIESEL .

DIAGNOSTIC TEST

1. **DTC IS ACTIVE**

   NOTE: If there are any 5-Volt Reference DTCs present, repair those DTCs before proceeding with this test procedure.

   1. Ignition on, engine not running.
   2. With the scan tool, clear DTCs in the Powertrain Control Module.
   3. Start the engine and test drive the vehicle.
   4. Monitor the scan tool for at least two minutes.
   5. With the scan tool, select View DTCs.

   Is the status Active for this DTC?

   Yes

   - Go To 2

   No

   - Perform the INTERMITTENT CONDITION diagnostic procedure. Refer to **INTERMITTENT CONDITION - 2.2L DIESEL** .

2. **CHECK THE (K684) EGR CONTROL (-) CIRCUIT FOR A SHORT TO VOLTAGE**
   1. Turn the ignition off.
   2. Disconnect the EGR Valve Assembly harness connector.
   3. Disconnect the Powertrain Control Module C1 harness connector.
   4. Remove the Main Relay.
   5. Connect a jumper wire between cavity 87 and cavity 30 of the Main Relay Connector.
   6. Turn the ignition on.
   7. Measure the voltage of the (K684) EGR Control (-) circuit in the EGR Valve Assembly harness connector.

Is there any voltage present?

Yes

- Repair the (K684) EGR Control (-) circuit for a short to voltage.
- Perform the POWERTRAIN VERIFICATION TEST - 2.2L DIESEL. Refer to **PCM VERIFICATION TEST - 2.2L DIESEL** .

No

- Go To 3

3. **CHECK THE (K682) EGR CONTROL (+) CIRCUIT FOR A SHORT TO VOLTAGE**
   1. Measure the voltage of the (K682) EGR Control (+) circuit in the EGR Valve Assembly harness connector.

   Is there any voltage present?

   Yes

   - Repair the (K682) EGR Control (+) circuit for a short to voltage.
   - Perform the POWERTRAIN VERIFICATION TEST - 2.2L DIESEL. Refer to **PCM VERIFICATION TEST - 2.2L DIESEL** .

   No

   - Go To 4

4. **CHECK THE (K684) EGR CONTROL (-) CIRCUIT FOR AN OPEN/HIGH RESISTANCE**
   1. Turn the ignition off.
   2. Remove the jumper wire.
   3. Measure the resistance of the (K684) EGR Control (-) circuit between the EGR Valve Assembly harness connector and the Powertrain Control Module C1 harness connector.

   Is the resistance below 5.0 Ohms?

Yes

- Go To 5

No

- Repair the (K684) EGR Control (-) circuit for an open or high resistance.
- Perform the POWERTRAIN VERIFICATION TEST - 2.2L DIESEL. Refer to **PCM VERIFICATION TEST - 2.2L DIESEL** .

5. **CHECK THE (K682) EGR CONTROL (+) CIRCUIT FOR AN OPEN/HIGH RESISTANCE**
   1. Measure the resistance of the (K682) EGR Control (+) circuit between the EGR Valve Assembly harness connector and the Powertrain Control Module C1 harness connector.

      Is the resistance below 5.0 Ohms?

      Yes

      - Go To 6

      No

      - Repair the (K682) EGR Control (+) circuit for an open or high resistance.
      - Perform the POWERTRAIN VERIFICATION TEST - 2.2L DIESEL. Refer to **PCM VERIFICATION TEST - 2.2L DIESEL** .

6. **CHECK THE (K684) EGR CONTROL (-) CIRCUIT FOR A SHORT TO GROUND**
   1. Turn the ignition off.
   2. Measure the resistance between ground and the (K684) EGR Control (-) circuit at the EGR Valve Assembly harness connector.

      Is the resistance above 10k Ohms?

      Yes

- Go To 7

No

- Repair the (K684) EGR Control (-) circuit for a short to ground.
- Perform the POWERTRAIN VERIFICATION TEST - 2.2L DIESEL. Refer to **PCM VERIFICATION TEST - 2.2L DIESEL** .

7. **CHECK THE (K682) EGR CONTROL (+) CIRCUIT FOR A SHORT TO GROUND**
   1. Measure the resistance between ground and the (K682) EGR Control (+) circuit at the EGR Valve Assembly harness connector.

      Is the resistance above 10k Ohms?

      Yes

      - Go To 8

      No

      - Repair the (K682) EGR Control (+) circuit for a short to ground.
      - Perform the POWERTRAIN VERIFICATION TEST - 2.2L DIESEL. Refer to **PCM VERIFICATION TEST - 2.2L DIESEL** .
8. **EGR VALVE ASSEMBLY**
   1. Turn the ignition off.
   2. Reconnect the Powertrain Control Module C1 harness connector.
   3. Replace the EGR Valve Assembly in accordance with the service information.
   4. Ignition on, engine not running.
   5. With the scan tool, Clear DTCs in the Powertrain Control Module.
   6. Start the engine and test drive the vehicle.
   7. Monitor the scan tool for at least two minutes.
   8. With the scan tool, select View DTCs.

      Is the status Active for this DTC?

Yes

- Go To 9

No

- Test complete.
- Perform the POWERTRAIN VERIFICATION TEST - 2.2L DIESEL. Refer to **PCM VERIFICATION TEST - 2.2L DIESEL** .

9. **POWERTRAIN CONTROL MODULE**
   1. Using the wiring diagram/schematic as a guide, inspect the wiring and connectors between the EGR Valve Assembly and the Powertrain Control Module.
   2. Look for any chafed, pierced, pinched, or partially broken wires.
   3. Look for broken, bent, pushed out or corroded terminals.
   4. Monitor the scan tool data relative to this circuit and wiggle test the wiring and connectors.
   5. Look for the data to change or for the DTC to reset during the wiggle test.
   6. Perform any Technical Service Bulletins that may apply.

   Were any problems found?

   Yes

   - Repair as necessary.
   - Perform the POWERTRAIN VERIFICATION TEST - 2.2L DIESEL. Refer to **PCM VERIFICATION TEST - 2.2L DIESEL** .

   No

   - Replace the Powertrain Control Module. **Before removing the PCM, perform the "Replace PCM" routine in the Miscellaneous Functions tab of the scan tool.** . Refer to **REMOVAL** .
   - Perform the POWERTRAIN VERIFICATION TEST - 2.2L

DIESEL. Refer to **PCM VERIFICATION TEST - 2.2L DIESEL** .

2014 ENGINE PERFORMANCE

Powertrain Control Module (PCM) - Electrical Diagnostics, 2.2L Diesel - Compass & Patriot

DIAGNOSIS AND TESTING

P0461-FUEL LEVEL SENSOR 1 PERFORMANCE

For a complete wiring diagram, **refer to appropriate SYSTEM WIRING DIAGRAMS article** .

WHEN MONITORED

With the ignition on.

SET CONDITION

The Powertrain Control Module (PCM) detects an implausible fuel level signal over the CAN BUS from the Cluster for 3.2 seconds.

POSSIBLE CAUSES

Possible Causes
(N4) FUEL LEVEL SENSOR SIGNAL CIRCUIT SHORTED TO VOLTAGE
(N4) FUEL LEVEL SENSOR SIGNAL CIRCUIT SHORTED TO GROUND
(N4) FUEL LEVEL SENSOR SIGNAL CIRCUIT OPEN/HIGH RESISTANCE
(Z210) FUEL LEVEL SENSOR GROUND CIRCUIT OPEN/HIGH RESISTANCE
FUEL LEVEL SENSOR
CLUSTER

Always perform the Pre-Diagnostic Troubleshooting procedure before proceeding. Refer to PRE-DIAGNOSTIC TROUBLESHOOTING PROCEDURE - 2.2L DIESEL .

DIAGNOSTIC TEST

1. **DTC IS ACTIVE**
    1. Ignition on, engine not running.

2. With the scan tool, Clear DTCs in the Powertrain Control Module (PCM).
3. Monitor the scan tool for at least two minutes.
4. With the scan tool, select View DTCs.

   Is the status active for this DTC?

   Yes

   - Go To 2

   No

   - Perform the INTERMITTENT CONDITION diagnostic procedure. Refer to **INTERMITTENT CONDITION - 2.2L DIESEL** .

2. **CHECK THE (N4) FUEL LEVEL SENSOR SIGNAL CIRCUIT FOR A SHORT TO VOLTAGE**
   1. Turn the ignition off.
   2. Disconnect the Fuel Pump Module Assembly harness connector.
   3. Disconnect the Cluster C2 harness connector.
   4. Remove the ASD Relay from the PDC.
   5. Connect a jumper wire between cavity 30 and cavity 87 of the ASD Relay Connector.
   6. Turn the ignition on.
   7. Measure the voltage of the (N4) Fuel Level Sensor Signal circuit at the Fuel Pump Module Assembly harness connector.

      Is there any voltage present?

      Yes

      - Repair the (N4) Fuel Level Sensor Signal circuit for a short to voltage.
      - Perform the POWERTRAIN VERIFICATION TEST - 2.2L DIESEL. Refer to **PCM VERIFICATION TEST - 2.2L DIESEL** .

      No

- Go To 3

3. **CHECK THE (N4) FUEL LEVEL SENSOR SIGNAL CIRCUIT FOR A SHORT TO GROUND**
   1. Turn the ignition off.
   2. Disconnect the Cluster C2 harness connector.
   3. Measure the resistance between ground and the (N4) Fuel Level Sensor Signal circuit at the Fuel Pump Module Assembly harness connector.

      Is the resistance above 10k Ohms?

      Yes

      - Go To 4

      No

      - Repair the (N4) Fuel Level Sensor Signal circuit for a short to ground.
      - Perform the POWERTRAIN VERIFICATION TEST - 2.2L DIESEL. Refer to **PCM VERIFICATION TEST - 2.2L DIESEL** .

4. **CHECK THE (N4) FUEL LEVEL SENSOR SIGNAL CIRCUIT FOR AN OPEN/HIGH RESISTANCE**
   1. Measure the resistance of the (N4) Fuel Level Sensor Signal circuit between the Fuel Pump Module Assembly harness connector and the Cluster C2 harness connector.

      Is the resistance below 5.0 Ohms?

      Yes

      - Go To 5

      No

      - Repair the (N4) Fuel Level Sensor Signal circuit for an open circuit or high resistance.
      - Perform the POWERTRAIN VERIFICATION TEST - 2.2L DIESEL. Refer to **PCM VERIFICATION TEST - 2.2L**

DIESEL .

5. **CHECK THE (Z210) FUEL LEVEL SENSOR GROUND CIRCUIT FOR AN OPEN/HIGH RESISTANCE**
   1. Measure the resistance of the (Z210) Fuel Level Sensor Ground circuit between the Fuel Pump Module Assembly harness connector and the Cluster C2 harness connector.

      Is the resistance below 5.0 Ohms?

      Yes

      - Go To 6

      No

      - Repair the (Z210) Fuel Level Sensor Ground circuit for an open circuit or high resistance.
      - Perform the POWERTRAIN VERIFICATION TEST - 2.2L DIESEL. Refer to **PCM VERIFICATION TEST - 2.2L DIESEL** .
6. **FUEL LEVEL SENSOR**
   1. Replace the Fuel Level Sensor in accordance with the service information.
   2. Turn the ignition on, engine not running.
   3. With the scan tool, clear DTCs in the Powertrain Control Module.
   4. Monitor the scan tool for at least two minutes.
   5. With the scan tool, select View DTCs.

      Did the DTC return?

      Yes

      - Replace the Cluster in accordance with the service information.
      - Perform the BODY VERIFICATION TEST. Refer to **STANDARD PROCEDURE** .

      No

- Repair is complete.
- Perform the POWERTRAIN VERIFICATION TEST - 2.2L DIESEL. Refer to **PCM VERIFICATION TEST - 2.2L DIESEL** .

P046C-EXHAUST GAS RECIRCULATION SENSOR 1 PERFORMANCE

For a complete wiring diagram **refer to appropriate SYSTEM WIRING DIAGRAMS article** .

THEORY OF OPERATION

The Powertrain Control Module (PCM) actuates the EGR Valve via the Pulse Width Modulated (PWM) control circuits. The EGR Airflow Control Valve is actuated to control the air volume and the mixing ratio of the charge air and the recirculated exhaust gases to the Intake Manifold. This is accomplished by creating a vacuum which draws the recirculated exhaust gases into the manifold. The EGR Position Sensor is integrated into the EGR Valve, and is not serviceable separately. The EGR Position Sensor functions as a typical three wire 5-Volt sensor. The PCM receives feedback as to the position of the valve from the position sensor via the signal wire.

WHEN MONITORED

With the ignition on.

SET CONDITION

The Powertrain Control Module detects that the (K683) EGR Valve Position Sensor Signal circuit is either above 4.89 Volts or below 0.24 Volts for 0.10 seconds.

POSSIBLE CAUSES

Possible Causes
(K844) 5-VOLT SUPPLY CIRCUIT OPEN
(K844) 5-VOLT SUPPLY CIRCUIT SHORTED TO VOLTAGE
(K844) 5-VOLT SUPPLY CIRCUIT SHORTED TO GROUND
(K854) ACCELERATOR PEDAL POSITION SENSOR 2 5-VOLT SUPPLY CIRCUIT SHORTED TO VOLTAGE
(K854) ACCELERATOR PEDAL POSITION SENSOR 2 5-VOLT

SUPPLY CIRCUIT SHORTED TO GROUND
(K683) EGR VALVE POSITION SENSOR SIGNAL CIRCUIT SHORTED TO VOLTAGE
(K683) EGR VALVE POSITION SENSOR SIGNAL CIRCUIT SHORTED TO GROUND
(K683) EGR VALVE POSITION SENSOR SIGNAL CIRCUIT OPEN/HIGH RESISTANCE
(K683) EGR VALVE POSITION SENSOR SIGNAL FAILED IN RANGE
(K914) SENSOR GROUND CIRCUIT OPEN/HIGH RESISTANCE
EGR VALVE
POWERTRAIN CONTROL MODULE (PCM)

Always perform the Pre-Diagnostic Troubleshooting procedure before proceeding. Refer to PRE-DIAGNOSTIC TROUBLESHOOTING PROCEDURE - 2.2L DIESEL .

DIAGNOSTIC TEST

1. **DTC IS ACTIVE**

NOTE: If there are any 5-Volt Reference DTCs present, diagnose those DTCs before proceeding with this test procedure.

1. Ignition on, engine not running.
2. With the scan tool, clear DTCs in the Powertrain Control Module.
3. Monitor the scan tool for at least two minutes.
4. Cycle the ignition key off for 30 seconds.
5. Turn the ignition on.
6. With the scan tool, select View DTCs.

Is the status Active for this DTC?

Yes

- Go To 2

No

- Perform the INTERMITTENT CONDITION diagnostic procedure. Refer to **INTERMITTENT CONDITION - 2.2L DIESEL** .

2. **CHECK THE (K683) EGR VALVE POSITION SENSOR SIGNAL CIRCUIT FOR A SHORT TO VOLTAGE**
   1. Turn the ignition off.
   2. Disconnect the EGR Valve harness connector.
   3. Disconnect the PCM C1 harness connector.
   4. Remove the ASD/Main Relay from the PDC.
   5. Connect a jumper wire between cavity 30 and cavity 87 of the ASD Relay Connector.
   6. Turn the ignition on.
   7. Measure the voltage of the (K683) EGR Valve Position Sensor Signal circuit at the EGR Valve harness connector.

   Is there any voltage present?

   Yes

   - Repair the (K683) EGR Valve Position Sensor Signal circuit for a short to voltage.
   - Perform the POWERTRAIN VERIFICATION TEST - 2.2L DIESEL. Refer to **PCM VERIFICATION TEST - 2.2L DIESEL** .

   No

   - Go To 3

3. **CHECK THE (K683) EGR VALVE POSITION SENSOR SIGNAL CIRCUIT FOR A SHORT TO GROUND**
   1. Turn the ignition off.
   2. Measure the resistance between ground and the (K683) EGR Valve Position Sensor Signal circuit at the EGR Valve harness connector.

   Is the resistance above 10k Ohms?

   Yes

- Go To 4

No

- Repair the (K683) EGR Valve Position Sensor Signal circuit for a short to ground.
- Perform the POWERTRAIN VERIFICATION TEST - 2.2L DIESEL. Refer to **PCM VERIFICATION TEST - 2.2L DIESEL** .

4. **CHECK THE (K683) EGR VALVE POSITION SENSOR SIGNAL CIRCUIT FOR AN OPEN/HIGH RESISTANCE**
   1. Turn the ignition off.
   2. Measure the resistance of the (K683) EGR Valve Position Sensor Signal circuit between the EGR Valve harness connector and the PCM C1 harness connector.

      Is the resistance below 5.0 Ohms?

      Yes

      - Go To 5

      No

      - Repair the (K683) EGR Valve Position Sensor Signal circuit for an open or high resistance.
      - Perform the POWERTRAIN VERIFICATION TEST - 2.2L DIESEL. Refer to **PCM VERIFICATION TEST - 2.2L DIESEL** .
5. **CHECK THE (K914) SENSOR GROUND CIRCUIT FOR AN OPEN/HIGH RESISTANCE**
   1. Measure the resistance of the (K914) Sensor Ground circuit between the EGR Valve harness connector and the PCM C1 harness connector.

      Is the resistance below 5.0 Ohms?

      Yes

      - Go To 6

No

- Repair the (K914) Sensor Ground circuit for an open or high resistance.
- Perform the POWERTRAIN VERIFICATION TEST - 2.2L DIESEL. Refer to **PCM VERIFICATION TEST - 2.2L DIESEL** .

6. **CHECK THE EGR VALVE ASSEMBLY**
   1. Reconnect the Powertrain Control Module C1 harness connector.
   2. Turn the ignition on.
   3. With the scan tool, actuate the EGR Positioner to 100%.
   4. Using a 12-Volt test light connected to 12 Volts, check both the (K682) EGR Control (+) circuit and the (K684) EGR Control (-) circuit in the EGR Valve Assembly harness connector.

NOTE: The test light should be illuminated and bright. Compare the brightness to that of a direct connection to the battery.

NOTE: The circuits will remain actuated by the controller for 30 seconds. Be certain the actuation is active when checking the circuit.

Is the test light illuminated and bright when checking both circuits?

Yes

- Replace the EGR Valve Assembly in accordance with the service information.
- Perform the POWERTRAIN VERIFICATION TEST - 2.2L DIESEL. Refer to **PCM VERIFICATION TEST - 2.2L DIESEL** .

No

- Go To 7

7. **POWERTRAIN CONTROL MODULE**
   1. Using the wiring diagram/schematic as a guide, inspect the wiring and

connectors between the EGR Valve and the Powertrain Control Module.

- Look for any chafed, pierced, pinched, or partially broken wires.
- Look for broken, bent, pushed out or corroded terminals.
- Monitor the scan tool data relative to this circuit and wiggle test the wiring and connectors.
- Look for the data to change or for the DTC to reset during the wiggle test.
- Perform any Technical Service Bulletins that may apply.

Were any problems found?

Yes

- Repair as necessary.
- Perform the POWERTRAIN VERIFICATION TEST - 2.2L DIESEL. Refer to **PCM VERIFICATION TEST - 2.2L DIESEL** .

No

- Replace the Powertrain Control Module. **Before removing the PCM, perform the "Replace PCM" routine in the Miscellaneous Functions tab of the scan tool.** . Refer to **REMOVAL** .
- Perform the POWERTRAIN VERIFICATION TEST - 2.2L DIESEL. Refer to **PCM VERIFICATION TEST - 2.2L DIESEL** .

P0471-EXHAUST PRESSURE SENSOR 1 PERFORMANCE

For a complete wiring diagram, **refer to appropriate SYSTEM WIRING DIAGRAMS article** .

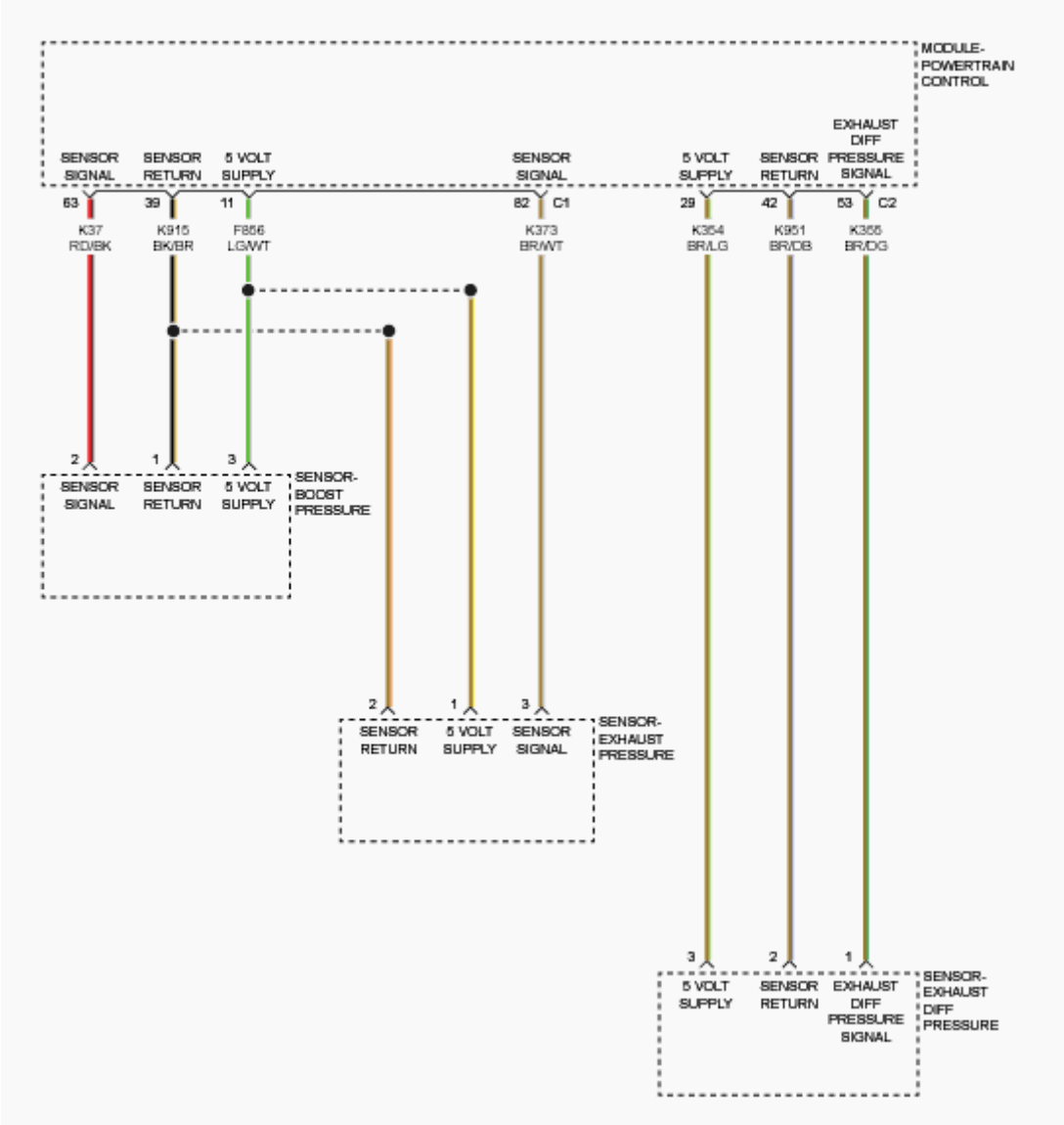

Fig. 1: Boost, Exhaust & Exhaust Diff Pressure Sensors Circuit Diagram
Courtesy of CHRYSLER GROUP, LLC

THEORY OF OPERATION

The Exhaust Gas Pressure Sensor is located at the left rear on the EGR pipe and functions as a typical three wire sensor. The Powertrain Control Module (PCM) monitors the exhaust back pressure information from the Exhaust Gas Pressure Sensor at the sensor signal circuit. The information is used to protect the engine and Turbocharger assembly.

WHEN MONITORED

With the ignition on, or with engine running under a low load.

SET CONDITION

The Powertrain Control Module (PCM) detects that the Exhaust Gas Pressure Sensor Signal is implausible.

POSSIBLE CAUSES

Possible Causes
HIGH RESISTANCE IN THE (F856) 5-VOLT SUPPLY CIRCUIT
HIGH RESISTANCE IN THE (K373) EXHAUST GAS PRESSURE SENSOR SIGNAL CIRCUIT
HIGH RESISTANCE IN THE (K915) SENSOR GROUND CIRCUIT
LEAKING OR RESTRICTED EXHAUST DIFFERENTIAL PRESSURE SENSOR HOSES OR TUBES
EXHAUST PRESSURE SENSOR
POWERTRAIN CONTROL MODULE (PCM)

Always perform the Pre-Diagnostic Troubleshooting procedure before proceeding. Refer to PRE-DIAGNOSTIC TROUBLESHOOTING PROCEDURE - 2.2L DIESEL .

DIAGNOSTIC TEST

1. **DTC IS ACTIVE**

NOTE: If P0641-SENSOR REFERENCE VOLTAGE 1 is present, perform the diagnostics for P0641 to repair the (F856) 5-Volt Supply circuit for an open or short to ground before proceeding with this test procedure.

1. Ignition on, engine not running.
2. With the scan tool, Clear DTCs in the PCM.
3. Cycle the ignition key off and on several times, leaving the ignition on for at least 10 seconds at a time.
4. Start the engine.
5. Allow the engine to reach normal operating temperature.
6. With the scan tool, select View DTCs.

Is the status Active for this DTC?

Yes

- Go To 2

No

- Perform the INTERMITTENT CONDITION diagnostic procedure. Refer to **INTERMITTENT CONDITION - 2.2L DIESEL** .

2. **CHECK FOR HIGH RESISTANCE IN THE (K373) EXHAUST GAS PRESSURE SENSOR SIGNAL CIRCUIT**
   1. Turn the ignition off.
   2. Disconnect the Exhaust Gas Pressure Sensor harness connector.
   3. Disconnect the PCM C1 harness connector.
   4. Measure the resistance of the (K373) Exhaust Gas Pressure Sensor Signal circuit between the Exhaust Gas Pressure Sensor harness connector and the PCM C1 harness connector.

   Is the resistance below 5.0 Ohms?

   Yes

   - Go To 3

   No

   - Repair the (K373) Exhaust Gas Pressure Sensor Signal circuit for an open or high resistance.
   - Perform the POWERTRAIN VERIFICATION TEST - 2.2L DIESEL. Refer to **PCM VERIFICATION TEST - 2.2L DIESEL** .

3. **CHECK FOR HIGH RESISTANCE IN THE (K915) SENSOR GROUND CIRCUIT**
   1. Measure the resistance of the (K915) Sensor Ground circuit between the Exhaust Gas Pressure Sensor harness connector and the PCM C1 harness connector.

   Is the resistance below 5.0 Ohms?

   Yes

   - Go To 4

No

- Repair the (K915) Sensor Ground circuit for an open or high resistance.
- Perform the POWERTRAIN VERIFICATION TEST - 2.2L DIESEL. Refer to **PCM VERIFICATION TEST - 2.2L DIESEL** .

4. **EXHAUST GAS PRESSURE SENSOR**
   1. Turn the ignition off.
   2. Reconnect the Exhaust Gas Pressure Sensor harness connector.
   3. Reconnect the PCM C1 harness connector.
   4. Turn the ignition on.
   5. With the scan tool, Clear DTCs.
   6. Turn the ignition off.
   7. Disconnect the Exhaust Gas Pressure Sensor harness connector.
   8. Connect a jumper wire between the (K373) Exhaust Gas Pressure Sensor Signal circuit and the (K915) Sensor Ground circuit in the Exhaust Gas Pressure Sensor harness connector.
   9. Turn the ignition on.
   10. With the scan tool, Clear DTCs.
   11. With the scan tool, select View DTCs.

NOTE: The scan tool should display the P0472-EXHAUST GAS PRESSURE SENSOR LOW DTC with the jumper in place.

Does the scan tool display P0472-EXHAUST GAS PRESSURE SENSOR LOW DTC as active?

Yes

- Replace the Exhaust Gas Pressure Sensor in accordance with the service information.
- Perform the POWERTRAIN VERIFICATION TEST - 2.2L DIESEL. Refer to **PCM VERIFICATION TEST - 2.2L DIESEL** .

No

- Go To 5

5. **POWERTRAIN CONTROL MODULE**
   1. Using the wiring diagram/schematic as a guide, inspect the wiring and connectors at the Exhaust Gas Pressure Sensor and the Powertrain Control Module.
      - Look for any chafed, pierced, pinched, or partially broken wires.
      - Look for broken, bent, pushed out or corroded terminals.
      - Monitor the scan tool data relative to this circuit and wiggle test the wiring and connectors.
      - Look for the data to change or for the DTC to reset during the wiggle test.
      - Perform any Technical Service Bulletins that may apply.

      Were any problems found?

      Yes

      - Repair as necessary.
      - Perform the POWERTRAIN VERIFICATION TEST - 2.2L DIESEL. Refer to **PCM VERIFICATION TEST - 2.2L DIESEL** .

      No

      - Replace the Powertrain Control Module. **Before removing the PCM, perform the "Replace PCM" routine in the Miscellaneous Functions tab of the scan tool.** . Refer to **REMOVAL** .
      - Perform the POWERTRAIN VERIFICATION TEST - 2.2L DIESEL. Refer to **PCM VERIFICATION TEST - 2.2L DIESEL** .

P0472-EXHAUST PRESSURE SENSOR 1 LOW

For a complete wiring diagram, **refer to appropriate SYSTEM WIRING DIAGRAMS article** .

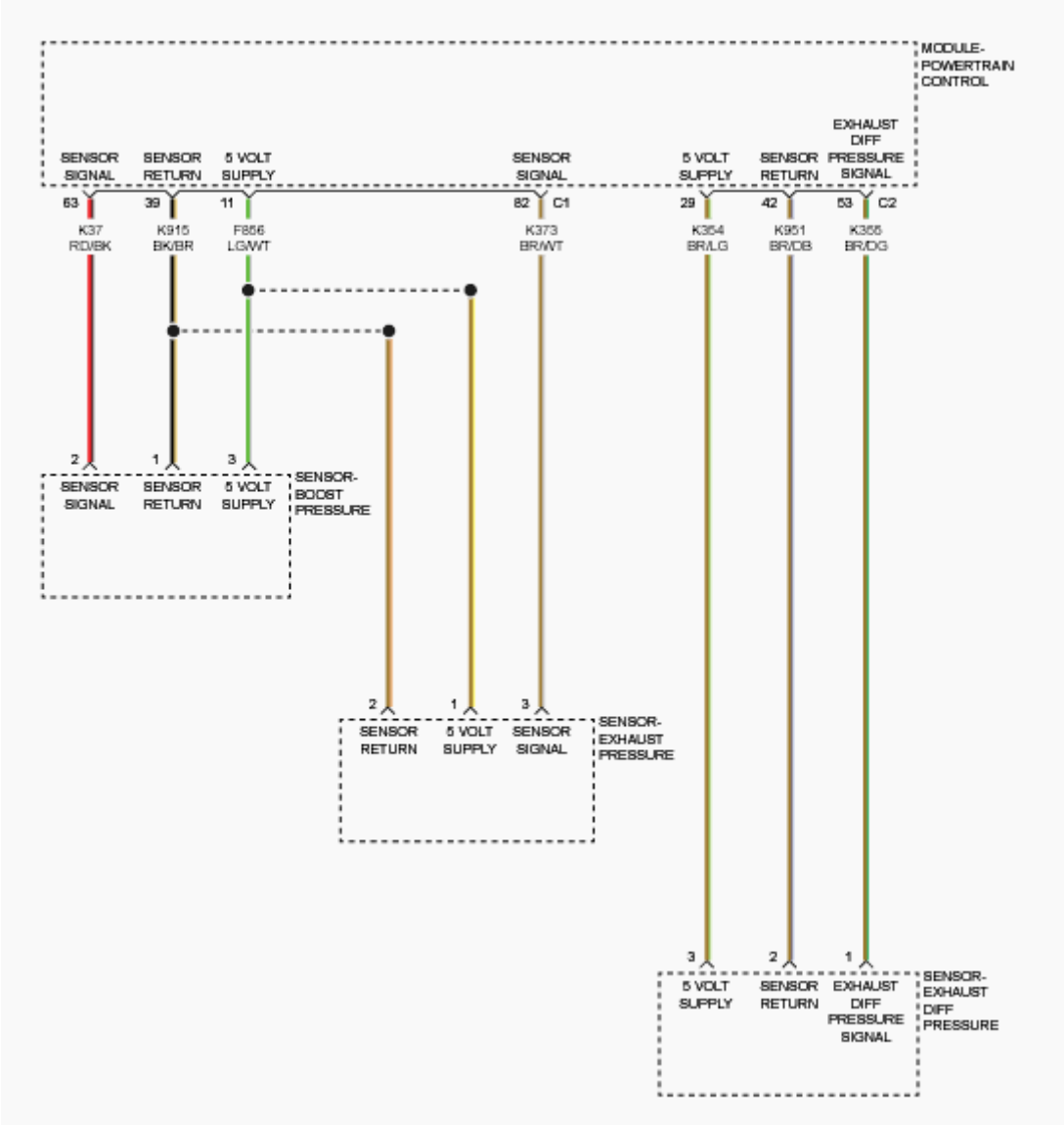

Fig. 2: Boost, Exhaust & Exhaust Diff Pressure Sensors Circuit Diagram
Courtesy of CHRYSLER GROUP, LLC

THEORY OF OPERATION

The Exhaust Gas Pressure Sensor is located at the left rear on the EGR pipe and functions as a typical three wire sensor. The Powertrain Control Module (PCM) monitors the exhaust back pressure information from the Exhaust Gas Pressure Sensor at the sensor signal circuit. The information is used to protect the engine and Turbocharger assembly.

WHEN MONITORED

With the ignition on.

SET CONDITION

The (K373) Exhaust Gas Pressure Sensor Signal circuit is below 0.2 Volts for 0.20 seconds.

POSSIBLE CAUSES

Possible Causes
(F856) 5-VOLT SUPPLY 2 CIRCUIT OPEN/HIGH RESISTANCE
(F856) 5-VOLT SUPPLY 2 CIRCUIT SHORTED TO GROUND
(K354) 5-VOLT SUPPLY 1 CIRCUIT SHORTED TO GROUND
(K373) EXHAUST GAS PRESSURE SENSOR SIGNAL CIRCUIT OPEN/HIGH RESISTANCE
(K373) EXHAUST GAS PRESSURE SENSOR SIGNAL CIRCUIT SHORTED TO GROUND
(K373) EXHAUST GAS PRESSURE SENSOR SIGNAL CIRCUIT SHORTED TO THE (K915) SENSOR GROUND CIRCUIT
EXHAUST PRESSURE SENSOR
POWERTRAIN CONTROL MODULE (PCM)

Always perform the Pre-Diagnostic Troubleshooting procedure before proceeding. Refer to PRE-DIAGNOSTIC TROUBLESHOOTING PROCEDURE - 2.2L DIESEL .

DIAGNOSTIC TEST

1. **DTC IS ACTIVE**

NOTE: Repair any SENSOR REFERENCE VOLTAGE DTCs that are present before proceeding with this test procedure.

1. Ignition on, engine not running.
2. With the scan tool, clear DTCs in the PCM.
3. Cycle the ignition key off and on several times, leaving the ignition on.
4. With the scan tool, select View DTCs.

Is the status Active for this DTC?

Yes

- Go To 2

No

- Perform the INTERMITTENT CONDITION diagnostic procedure. Refer to **INTERMITTENT CONDITION - 2.2L DIESEL** .

2. **CHECK THE (K373) EXHAUST GAS PRESSURE SENSOR SIGNAL CIRCUIT FOR AN OPEN/HIGH RESISTANCE**
   1. Turn the ignition off.
   2. Disconnect the Exhaust Gas Pressure Sensor harness connector.
   3. Disconnect the PCM C1 harness connector.
   4. Measure the resistance of the (K373) Exhaust Gas Pressure Sensor Signal circuit between the Exhaust Gas Pressure Sensor harness connector and the PCM C1 harness connector.

   Is the resistance below 5.0 Ohms?

   Yes

   - Go To 3

   No

   - Repair the (K373) Exhaust Gas Pressure Sensor Signal circuit for an open or high resistance.
   - Perform the POWERTRAIN VERIFICATION TEST - 2.2L DIESEL. Refer to **PCM VERIFICATION TEST - 2.2L DIESEL** .

3. **CHECK THE (K373) EXHAUST GAS PRESSURE SENSOR SIGNAL CIRCUIT FOR A SHORT TO GROUND**
   1. Measure the resistance between ground and the (K373) Exhaust Gas Pressure Sensor Signal circuit at the Exhaust Gas Pressure Sensor harness connector.

   Is the resistance above 10k Ohms?

   Yes

   - Go To 4

No

- Repair the (K373) Exhaust Gas Pressure Sensor Signal circuit for a short to ground.
- Perform the POWERTRAIN VERIFICATION TEST - 2.2L DIESEL. Refer to **PCM VERIFICATION TEST - 2.2L DIESEL** .

4. **CHECK FOR THE (K373) EXHAUST GAS PRESSURE SENSOR SIGNAL CIRCUIT SHORTED TO THE (K915) SENSOR GROUND CIRCUIT**
   1. Measure the resistance between the (K373) Exhaust Gas Pressure Sensor Signal circuit and the (K915) Sensor Ground circuit at the Exhaust Gas Pressure Sensor harness connector.

      Is the resistance below 10k Ohms?

      Yes

      - Go To 5

      No

      - Repair the short between the (K373) Exhaust Gas Pressure Sensor Signal circuit and the (K915) Sensor Ground circuit.
      - Perform the POWERTRAIN VERIFICATION TEST - 2.2L DIESEL. Refer to **PCM VERIFICATION TEST - 2.2L DIESEL** .
5. **EXHAUST GAS PRESSURE SENSOR**
   1. Turn the ignition off.
   2. Reconnect the Exhaust Gas Pressure Sensor harness connector.
   3. Reconnect the PCM C1 harness connector.
   4. Turn the ignition on.
   5. With the scan tool, clear DTCs.
   6. Turn the ignition off.
   7. Disconnect the Exhaust Gas Pressure Sensor harness connector.
   8. Turn the ignition on.
   9. With the scan tool, select View DTCs.

NOTE: The scan tool should display the P0472-EXHAUST GAS PRESSURE SENSOR HIGH DTC with the connector disconnected.

Does the scan tool display P0473-EXHAUST GAS PRESSURE SENSOR HIGH DTC as active?

Yes

- Replace the Exhaust Gas Pressure Sensor in accordance with the service information.
- Perform the POWERTRAIN VERIFICATION TEST - 2.2L DIESEL. Refer to **PCM VERIFICATION TEST - 2.2L DIESEL** .

No

- Go To 6

6. **POWERTRAIN CONTROL MODULE**
   1. Using the wiring diagram/schematic as a guide, inspect the wiring and connectors at the Exhaust Gas Pressure Sensor and the Powertrain Control Module.
      - Look for any chafed, pierced, pinched, or partially broken wires.
      - Look for broken, bent, pushed out or corroded terminals.
      - Monitor the scan tool data relative to this circuit and wiggle test the wiring and connectors.
      - Look for the data to change or for the DTC to reset during the wiggle test.
      - Perform any Technical Service Bulletins that may apply.

      Were any problems found?

      Yes

      - Repair as necessary.
      - Perform the POWERTRAIN VERIFICATION TEST - 2.2L DIESEL. Refer to **PCM VERIFICATION TEST - 2.2L DIESEL** .

No

- Replace the Powertrain Control Module. **Before removing the PCM, perform the "Replace PCM" routine in the Miscellaneous Functions tab of the scan tool.** . Refer to **REMOVAL** .
- Perform the POWERTRAIN VERIFICATION TEST - 2.2L DIESEL. Refer to **PCM VERIFICATION TEST - 2.2L DIESEL** .

P0473-EXHAUST PRESSURE SENSOR 1 HIGH

For a complete wiring diagram, **refer to appropriate SYSTEM WIRING DIAGRAMS article** .

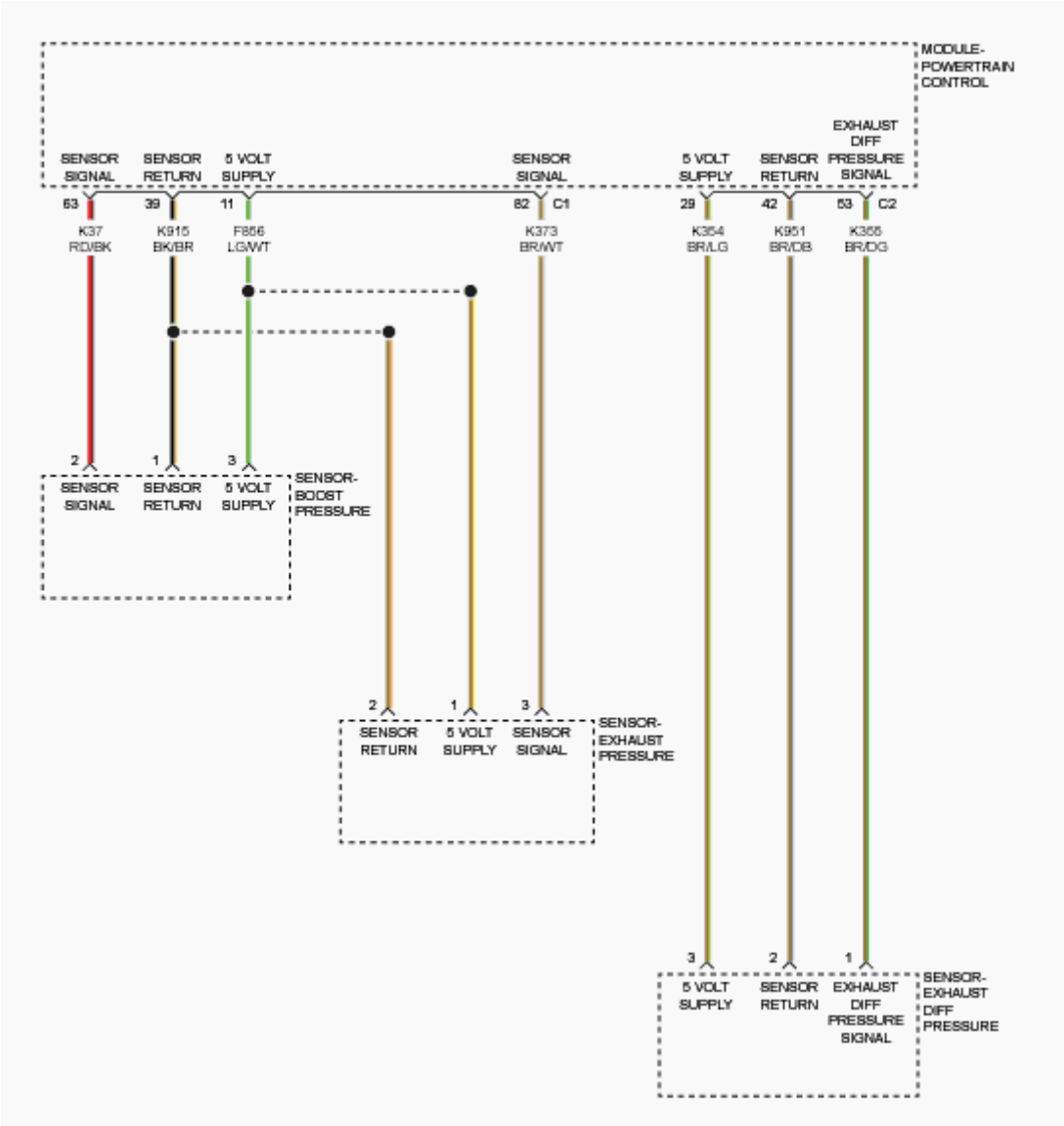

Fig. 3: Boost, Exhaust & Exhaust Diff Pressure Sensors Circuit Diagram
Courtesy of CHRYSLER GROUP, LLC

THEORY OF OPERATION

The Exhaust Gas Pressure Sensor is located at the left rear on the EGR pipe and functions as a typical three wire sensor. The Powertrain Control Module (PCM) monitors the exhaust back pressure information from the Exhaust Gas Pressure Sensor at the sensor signal circuit. The information is used to protect the engine and Turbocharger assembly.

WHEN MONITORED

With the ignition on.

SET CONDITION

The (K373) Exhaust Gas Pressure Sensor Signal circuit is above 4.8 Volts for 0.20 seconds.

POSSIBLE CAUSES

Possible Causes
(F856) 5-VOLT SUPPLY 2 CIRCUIT SHORTED TO VOLTAGE
(K354) 5-VOLT SUPPLY 1 CIRCUIT SHORTED TO VOLTAGE
(K373) EXHAUST GAS PRESSURE SENSOR SIGNAL CIRCUIT SHORTED TO VOLTAGE
(K915) SENSOR GROUND CIRCUIT OPEN/HIGH RESISTANCE
EXHAUST PRESSURE SENSOR
POWERTRAIN CONTROL MODULE (PCM)

Always perform the Pre-Diagnostic Troubleshooting procedure before proceeding. Refer to PRE-DIAGNOSTIC TROUBLESHOOTING PROCEDURE - 2.2L DIESEL .

DIAGNOSTIC TEST

1. **DTC IS ACTIVE**

NOTE: Repair any SENSOR REFERENCE VOLTAGE DTCs that are present before proceeding with this test

procedure.

1. Ignition on, engine not running.
2. With the scan tool, Clear DTCs in the PCM.
3. Cycle the ignition key off and on several times, leaving the ignition on.
4. With the scan tool, select View DTCs.

   Is the status Active for this DTC?

   Yes

   - Go To 2

   No

   - Perform the INTERMITTENT CONDITION diagnostic procedure. Refer to **INTERMITTENT CONDITION - 2.2L DIESEL** .

2. **CHECK THE (K373) EXHAUST GAS PRESSURE SENSOR SIGNAL CIRCUIT FOR A SHORT TO VOLTAGE**
   1. Turn the ignition off.
   2. Disconnect the Exhaust Gas Pressure Sensor harness connector.
   3. Disconnect the PCM C1 harness connector.
   4. Remove the ASD/Main Relay from the PDC.
   5. Connect a jumper wire between cavity 30 and cavity 87 of the ASD Relay Connector.
   6. Turn the ignition on.
   7. Measure the voltage of the (K373) Exhaust Gas Pressure Sensor Signal circuit at the Exhaust Gas Pressure Sensor harness connector.

      Is there any voltage present?

      Yes

      - Repair the (K373) Exhaust Gas Pressure Sensor Signal circuit for a short to voltage.
      - Perform the POWERTRAIN VERIFICATION TEST - 2.2L DIESEL. Refer to **PCM VERIFICATION TEST - 2.2L**

DIESEL .

No

- Go To 3

3. **CHECK THE (K915) SENSOR GROUND CIRCUIT FOR AN OPEN/HIGH RESISTANCE**
   1. Turn the ignition off.
   2. Remove the jumper wire and reinstall the ASD/Main Relay.
   3. Measure the resistance of the (K915) Sensor Ground circuit between the Exhaust Gas Pressure Sensor harness connector and the PCM C1 harness connector.

   Is the resistance below 5.0 Ohms?

   Yes

   - Go To 4

   No

   - Repair the (K915) Sensor Ground circuit for an open or high resistance.
   - Perform the POWERTRAIN VERIFICATION TEST - 2.2L DIESEL. Refer to **PCM VERIFICATION TEST - 2.2L DIESEL** .

4. **CHECK THE EXHAUST GAS PRESSURE SENSOR**
   1. Reconnect the Exhaust Gas Pressure Sensor harness connector.
   2. Reconnect the PCM C1 harness connector.
   3. Turn the ignition on.
   4. With the scan tool, Clear DTCs.
   5. Turn the ignition off.
   6. Disconnect the Exhaust Gas Pressure Sensor harness connector.
   7. Connect a jumper between the (K373) Exhaust Gas Pressure Sensor Signal circuit and the (K915) Sensor Ground circuit in the Exhaust Gas Pressure Sensor harness connector.

NOTE: Be careful not to spread the terminals in the connector.

8. Turn the ignition on.
9. With the scan tool, select View DTCs.

NOTE: The scan tool should display the P0472-EXHAUST GAS PRESSURE SENSOR LOW DTC with the jumper in place.

Does the scan tool display P0472-EXHAUST GAS PRESSURE SENSOR LOW DTC as active?

Yes

- Replace the Exhaust Gas Pressure Sensor in accordance with the service information.
- Perform the POWERTRAIN VERIFICATION TEST - 2.2L DIESEL. Refer to **PCM VERIFICATION TEST - 2.2L DIESEL** .

No

- Go To 5

5. **POWERTRAIN CONTROL MODULE**
   1. Using the wiring diagram/schematic as a guide, inspect the wiring and connectors at the Exhaust Gas Pressure Sensor and the Powertrain Control Module.
      - Look for any chafed, pierced, pinched, or partially broken wires.
      - Look for broken, bent, pushed out or corroded terminals.
      - Monitor the scan tool data relative to this circuit and wiggle test the wiring and connectors.
      - Look for the data to change or for the DTC to reset during the wiggle test.
      - Perform any Technical Service Bulletins that may apply.

   Were any problems found?

Yes

- Repair as necessary.
- Perform the POWERTRAIN VERIFICATION TEST - 2.2L DIESEL. Refer to **PCM VERIFICATION TEST - 2.2L DIESEL** .

No

- Replace the Powertrain Control Module. **Before removing the PCM, perform the "Replace PCM" routine in the Miscellaneous Functions tab of the scan tool.** . Refer to **REMOVAL** .
- Perform the POWERTRAIN VERIFICATION TEST - 2.2L DIESEL. Refer to **PCM VERIFICATION TEST - 2.2L DIESEL** .

P0483-FAN PERFORMANCE

For a complete wiring diagram, **refer to appropriate SYSTEM WIRING DIAGRAMS article** .

WHEN MONITORED

With the ignition on. Battery voltage greater than 10.0 Volts.

SET CONDITION

The Powertrain Control Module (PCM) receives a CAN Bus message from the Totally Integrated Power Module (TIPM) indicating an open or shorted circuit on the Radiator Fan Medium/High Relay Control circuit.

POSSIBLE CAUSES

Possible Causes
FUSED B+ CIRCUITS
(N112) RADIATOR FAN RELAY CONTROL CIRCUIT OPEN
(N112) RADIATOR FAN RELAY CONTROL CIRCUIT SHORTED TO GROUND
RADIATOR FAN MEDIUM/HIGH RELAY
TOTALLY INTEGRATED POWER MODULE

Always perform the Pre-Diagnostic Troubleshooting procedure before proceeding. Refer to PRE-DIAGNOSTIC TROUBLESHOOTING PROCEDURE - 2.2L DIESEL .

DIAGNOSTIC TEST

1. **RADIATOR FAN MEDIUM/HIGH RELAY OPERATION**
   1. Ignition on, engine not running.
   2. With a scan tool, select Radiator Cooling Fan Relay 2 Control State, to actuate the Radiator Fan Medium/High Relay.

      Is the Cooling Fan Relay operating?

      Yes

      - Perform the INTERMITTENT CONDITION diagnostic procedure. Refer to **INTERMITTENT CONDITION - 2.2L DIESEL** .

      No

      - Go To 2
2. **FUSED B+ CIRCUITS**
   1. Turn the ignition off.
   2. Remove the Radiator Medium/High Fan Relay.
   3. Turn the ignition on.
   4. Using a 12-Volt test light connected to ground, probe the (A935) and (A16) Fused B+ circuits in the Relay connection.

      Does the test light illuminate brightly?

      Yes

      - Go To 4

      No

      - Go To 3
3. **RADIATOR FAN LOW/HIGH CONTROL RELAY SHORTED INTERNALLY**

1. With the test light still at the Fused B+ circuits (Radiator Medium/High Fan Relay), remove the Radiator Fan Low/High Control Relay.

   When the relay is removed, does the test light illuminate brightly?

   Yes

   - Replace the Radiator Fan Low/High Control Relay.
   - Perform the BODY VERIFICATION TEST. Refer to **STANDARD PROCEDURE** .

   No

   - Repair the open or short to ground in the Fused B+ circuits. Inspect the related fuse and repair as necessary.
   - Perform the BODY VERIFICATION TEST. Refer to **STANDARD PROCEDURE** .

4. **CHECK THE (N112) RADIATOR FAN RELAY CONTROL CIRCUIT**
   1. Disconnect the TIPM C-11 harness connector.
   2. Turn the ignition on, engine not running.
   3. With a scan tool, select Radiator Cooling Fan Relay 2 Control State and then Toggle, to actuate the Radiator Fan Medium/High Relay.
   4. Using a 12-Volt test light connected to battery voltage, probe the (N112) Radiator Fan High Relay Control circuit in the TIPM C-11 harness connector.

      Does the test light illuminate and flash on and off?

      Yes

      - Replace the Radiator Fan Medium/High Relay.
      - Perform the BODY VERIFICATION TEST. Refer to **STANDARD PROCEDURE** .

      No

      - Go To 5

5. **CHECK THE (N112) RADIATOR FAN RELAY CONTROL CIRCUIT FOR AN OPEN/HIGH RESISTANCE**
   1. Turn the ignition off.
   2. Measure the resistance of the (N112) Radiator Fan Relay Control circuit from the Relay connection to the TIPM C-11 harness connector.

      Is the resistance below 5.0 Ohms?

      Yes

      - Go To 6

      No

      - Replace the Power Distribution Center (PDC) in accordance with the service information.
      - Perform the BODY VERIFICATION TEST. Refer to **STANDARD PROCEDURE** .
6. **CHECK THE (N112) RADIATOR FAN RELAY CONTROL CIRCUIT FOR A SHORT TO GROUND**
   1. Measure the resistance between ground and the (N112) Radiator Fan Relay Control circuit at the Relay connection.

      Is the resistance above 10k Ohms?

      Yes

      - Replace the Totally Integrated Power Module in accordance with the service information.
      - Perform the BODY VERIFICATION TEST. Refer to **STANDARD PROCEDURE** .

      No

      - Go To 7
7. **RADIATOR FAN LOW/HIGH CONTROL RELAY SHORTED INTERNALLY**
   1. With the probe still at the (N112) Radiator Fan Control circuit, remove the Radiator Fan Low/High Control Relay.

Is the resistance above 10k Ohms?

Yes

- Replace the Radiator Fan Low/High Control Relay.
- Perform the BODY VERIFICATION TEST. Refer to **STANDARD PROCEDURE** .

No

- Repair the short to ground in the (N112) Radiator Fan High Control circuit.
- Perform the BODY VERIFICATION TEST. Refer to **STANDARD PROCEDURE** .

P0489-EXHAUST GAS RECIRCULATION CONTROL CIRCUIT LOW

For a complete wiring diagram, **refer to appropriate SYSTEM WIRING DIAGRAMS article** .

THEORY OF OPERATION

The Powertrain Control Module (PCM) actuates the EGR Valve via the Pulse Width Modulated (PWM) control circuits. The EGR Airflow Control Valve is actuated to control the air volume and the mixing ratio of the charge air and the recirculated exhaust gases to the Intake Manifold. This is accomplished by creating a vacuum which draws the recirculated exhaust gases into the manifold. The EGR Position Sensor is integrated into the EGR Valve, and is not serviceable separately. The EGR Position Sensor functions as a typical three wire 5-Volt sensor. The PCM receives feedback as to the position of the valve from the position sensor via the signal wire.

WHEN MONITORED

With the engine running and the EGR Valve command on.

SET CONDITION

The Powertrain Control Module (PCM) detects a short to ground in the EGR Valve Control circuit for 0.1 seconds.

POSSIBLE CAUSES

Possible Causes
(K682) EGR VALVE CONTROL (+) CIRCUIT SHORTED TO GROUND
(K684) EGR VALVE CONTROL (-) CIRCUIT SHORTED TO GROUND
EGR VALVE
POWERTRAIN CONTROL MODULE (PCM)

Always perform the Pre-Diagnostic Troubleshooting procedure before proceeding. Refer to PRE-DIAGNOSTIC TROUBLESHOOTING PROCEDURE - 2.2L DIESEL .

DIAGNOSTIC TEST

1. **DTC IS ACTIVE**
   1. Ignition on, engine not running.
   2. With the scan tool, clear DTCs in the Powertrain Control Module.
   3. Start the engine and test drive the vehicle.
   4. Monitor the scan tool for at least two minutes.
   5. With the scan tool, select View DTCs.

   Is the status Active for this DTC?

   Yes

   - Go To 2

   No

   - Perform the INTERMITTENT CONDITION diagnostic procedure. Refer to **INTERMITTENT CONDITION - 2.2L DIESEL** .
2. **CHECK THE (K682) EGR VALVE CONTROL (+) CIRCUIT FOR A SHORT TO GROUND**
   1. Turn the ignition off.
   2. Disconnect the EGR Valve harness connector.
   3. Disconnect the Powertrain Control Module C1 harness connector.
   4. Measure the resistance between ground and the (K682) EGR Valve Control (+) circuit at the EGR Valve harness connector.

   Is the resistance above 10k Ohms?

Yes

- Go To 3

No

- Repair the (K682) EGR Valve Control (+) circuit for a short to ground.
- Perform the POWERTRAIN VERIFICATION TEST - 2.2L DIESEL. Refer to **PCM VERIFICATION TEST - 2.2L DIESEL** .

3. **CHECK THE (K684) EGR VALVE CONTROL (-) CIRCUIT FOR A SHORT TO GROUND**
   1. Measure the resistance between ground and the (K684) EGR Valve Control (-) circuit at the EGR Valve harness connector.

      Is the resistance above 10k Ohms?

      Yes

      - Go To 4

      No

      - Repair the (K684) EGR Valve Control (-) circuit for a short to ground.
      - Perform the POWERTRAIN VERIFICATION TEST - 2.2L DIESEL. Refer to **PCM VERIFICATION TEST - 2.2L DIESEL** .
4. **EGR VALVE ASSEMBLY**
   1. Turn the ignition off.
   2. Connect the Powertrain Control Module C1 harness connector.
   3. Replace the EGR Valve Assembly in accordance with the service information.
   4. Ignition on, engine not running.
   5. With the scan tool, Clear DTCs in the Powertrain Control Module.
   6. Start the engine and test drive the vehicle.
   7. Monitor the scan tool for at least two minutes.

8. With the scan tool, select View DTCs.

   Is the status Active for this DTC?

   Yes

   - Go To 5

   No

   - Test complete.
   - Perform the POWERTRAIN VERIFICATION TEST - 2.2L DIESEL. Refer to **PCM VERIFICATION TEST - 2.2L DIESEL** .

5. **POWERTRAIN CONTROL MODULE**
   1. Using the wiring diagram/schematic as a guide, inspect the wiring and connectors between the EGR Valve Assembly and the Powertrain Control Module.
   2. Look for any chafed, pierced, pinched, or partially broken wires.
   3. Look for broken, bent, pushed out or corroded terminals.
   4. Monitor the scan tool data relative to this circuit and wiggle test the wiring and connectors.
   5. Look for the data to change or for the DTC to reset during the wiggle test.
   6. Perform any Technical Service Bulletins that may apply.

   Were any problems found?

   Yes

   - Repair as necessary.
   - Perform the POWERTRAIN VERIFICATION TEST - 2.2L DIESEL. Refer to **PCM VERIFICATION TEST - 2.2L DIESEL** .

   No

   - Replace the Powertrain Control Module. **Before removing the**

PCM, perform the "Replace PCM" routine in the Miscellaneous Functions tab of the scan tool. . Refer to **REMOVAL** .

- Perform the POWERTRAIN VERIFICATION TEST - 2.2L DIESEL. Refer to **PCM VERIFICATION TEST - 2.2L DIESEL** .

P0490-EXHAUST GAS RECIRCULATION CONTROL CIRCUIT HIGH

For a complete wiring diagram, **refer to appropriate SYSTEM WIRING DIAGRAMS article** .

THEORY OF OPERATION

The Powertrain Control Module (PCM) actuates the EGR Valve via the Pulse Width Modulated (PWM) control circuits. The EGR Airflow Control Valve is actuated to control the air volume and the mixing ratio of the charge air and the recirculated exhaust gases to the Intake Manifold. This is accomplished by creating a vacuum which draws the recirculated exhaust gases into the manifold. The EGR Position Sensor is integrated into the EGR Valve, and is not serviceable separately. The EGR Position Sensor functions as a typical three wire 5-Volt sensor. The PCM receives feedback as to the position of the valve from the position sensor via the signal wire.

WHEN MONITORED

With the engine running and the EGR Valve command on.

SET CONDITION

The Powertrain Control Module (PCM) detects a short to voltage in the EGR Valve Control circuit for 0.1 seconds.

POSSIBLE CAUSES

Possible Causes
(K682) EGR VALVE CONTROL (+) CIRCUIT SHORTED TO VOLTAGE
(K684) EGR VALVE CONTROL (-) CIRCUIT SHORTED TO VOLTAGE
EGR VALVE
POWERTRAIN CONTROL MODULE (PCM)

Always perform the Pre-Diagnostic Troubleshooting procedure before proceeding. Refer to PRE-DIAGNOSTIC TROUBLESHOOTING PROCEDURE - 2.2L DIESEL .

DIAGNOSTIC TEST

1. **DTC IS ACTIVE**
   1. Ignition on, engine not running.
   2. With the scan tool, clear DTCs in the Powertrain Control Module.
   3. Start the engine and test drive the vehicle.
   4. Monitor the scan tool for at least two minutes.
   5. With the scan tool, select View DTCs.

      Is the status Active for this DTC?

      Yes

      - Go To 2

      No

      - Perform the INTERMITTENT CONDITION diagnostic procedure. Refer to **INTERMITTENT CONDITION - 2.2L DIESEL** .
2. **CHECK THE (K684) EGR VALVE CONTROL (-) CIRCUIT FOR A SHORT TO VOLTAGE**
   1. Turn the ignition off.
   2. Disconnect the EGR Valve harness connector.
   3. Disconnect the Powertrain Control Module (PCM) harness connector.
   4. Remove the ASD/Main Relay from the PDC.
   5. Connect a jumper wire between cavity 30 and cavity 87 of the ASD Relay Connector.
   6. Turn the ignition on.
   7. Measure the voltage on the (K684) EGR Valve Control (-) circuit at the EGR Valve harness connector.

      Is there any voltage present?

      Yes

- Repair the (K684) EGR Valve Control (-) circuit for a short to voltage.
- Perform the POWERTRAIN VERIFICATION TEST - 2.2L DIESEL. Refer to **PCM VERIFICATION TEST - 2.2L DIESEL** .

No

- Go To 3

3. **CHECK THE (K682) EGR VALVE CONTROL (+) CIRCUIT FOR A SHORT TO VOLTAGE**
   1. Measure the voltage on the (K682) EGR Valve Control (+) circuit between the EGR Valve harness connector.

      Is there any voltage present?

      Yes

      - Repair the (K682) EGR Valve Control (+) circuit for a short to voltage.
      - Perform the POWERTRAIN VERIFICATION TEST - 2.2L DIESEL. Refer to **PCM VERIFICATION TEST - 2.2L DIESEL** .

      No

      - Go To 4

4. **EGR VALVE ASSEMBLY**
   1. Turn the ignition off.
   2. Reconnect the Powertrain Control Module C1 harness connector.
   3. Replace the EGR Valve Assembly in accordance with the service information.
   4. Ignition on, engine not running.
   5. With the scan tool, clear DTCs in the Powertrain Control Module.
   6. Start the engine and test drive the vehicle.
   7. Monitor the scan tool for at least two minutes.
   8. With the scan tool, select View DTCs.

Is the status Active for this DTC?

Yes

- Go To 5

No

- Test complete.
- Perform the POWERTRAIN VERIFICATION TEST - 2.2L DIESEL. Refer to **PCM VERIFICATION TEST - 2.2L DIESEL** .

5. **POWERTRAIN CONTROL MODULE**
   1. Using the wiring diagram/schematic as a guide, inspect the wiring and connectors between the EGR Valve Assembly and the Powertrain Control Module.
   2. Look for any chafed, pierced, pinched, or partially broken wires.
   3. Look for broken, bent, pushed out or corroded terminals.
   4. Monitor the scan tool data relative to this circuit and wiggle test the wiring and connectors.
   5. Look for the data to change or for the DTC to reset during the wiggle test.
   6. Perform any Technical Service Bulletins that may apply.

   Were any problems found?

   Yes

   - Repair as necessary.
   - Perform the POWERTRAIN VERIFICATION TEST - 2.2L DIESEL. Refer to **PCM VERIFICATION TEST - 2.2L DIESEL** .

   No

   - Replace the Powertrain Control Module. **Before removing the PCM, perform the "Replace PCM" routine in the Miscellaneous Functions tab of the scan tool.** . Refer to

REMOVAL .

- Perform the POWERTRAIN VERIFICATION TEST - 2.2L DIESEL. Refer to **PCM VERIFICATION TEST - 2.2L DIESEL** .

P0500-00-VEHICLE SPEED SENSOR 1 CIRCUIT

For a complete wiring diagram, **refer to appropriate SYSTEM WIRING DIAGRAMS article** .

WHEN MONITORED

Continuously while the system is active.

SET CONDITION

There is an error in the vehicle speed message received over the CAN Bus from the Anti-lock Brake Module.

POSSIBLE CAUSES

Possible Causes
CAN BUS OPEN OR SHORTED CONDITION
ANTI-LOCK BRAKE MODULE
POWERTRAIN CONTROL MODULE (PCM)

Always perform the Pre-Diagnostic Troubleshooting procedure before proceeding. Refer to PRE-DIAGNOSTIC TROUBLESHOOTING PROCEDURE - 2.2L DIESEL .

DIAGNOSTIC TEST

1. **VEHICLE SPEED SIGNAL DTC SET IN PCM**
    1. Turn the ignition on.
    2. With the scan tool, select view DTCs in the Powertrain Control Module (PCM).

    Is the status Active for P0500?

    Yes

    - Refer to the **DTC INDEX** and perform the appropriate diagnostic

procedure.

No

- Go To 2

2. **ANTI-LOCK BRAKE MODULE DTCS PRESENT**
   1. With the scan tool, select view DTCs in the Anti-Lock Brake Module.

      Are there any DTCs present in the Anti-lock Brake Module?

      Yes

      - Refer to **DIAGNOSIS AND TESTING** and perform the appropriate diagnostic procedure.

      No

      - Go To 3

3. **INTERMITTENT VEHICLE SPEED SIGNAL**
   1. At this time, no DTCs are present.
   2. Inspect the related wiring harness. Look for any chafed, pierced, pinched, or partially broken wires.
   3. Inspect the related wire harness connectors. Look for broken, bent, pushed out, or corroded terminals.
   4. Using the schematics as a guide, wiggle test the related circuit(s) while monitoring the scan tool data relative to the vehicle speed sensor circuit (s). Look for the data to change or for a DTC to set.
   5. Perform any technical service bulletins that may apply.

      Were any problems found?

      Yes

      - Repair as necessary.
      - Perform the ABS VERIFICATION TEST. Refer to **STANDARD PROCEDURE** .

      No

- Test Complete.

P0504-BRAKE SWITCH "A"/"B" CORRELATION

For a complete wiring diagram, **refer to appropriate SYSTEM WIRING DIAGRAMS article** .

WHEN MONITORED

The vehicle must be driven from 0 mph to 25 mph (40 km/h) and then brake back to 0 mph. The accelerator pedal must be greater than 20% during acceleration.

SET CONDITION

When one of the Brake Switch inputs to the PCM does not change for four consecutive drive cycles in the enable condition.

POSSIBLE CAUSES

Possible Causes
(F202) IGNITION RUN/START CIRCUIT OPEN
(B16) BRAKE SWITCH SIGNAL 2 CIRCUIT SHORTED TO VOLTAGE
(B16) BRAKE SWITCH SIGNAL 2 CIRCUIT OPEN
(B15) BRAKE SWITCH SIGNAL 1 CIRCUIT SHORTED TO GROUND
(B15) BRAKE SWITCH SIGNAL 1 CIRCUIT OPEN
(Z906) BRAKE SWITCH GROUND CIRCUIT OPEN
BRAKE SWITCH
POWERTRAIN CONTROL MODULE

Always perform the Pre-Diagnostic Troubleshooting procedure before proceeding. Refer to PRE-DIAGNOSTIC TROUBLESHOOTING PROCEDURE - 2.2L DIESEL .

DIAGNOSTIC TEST

1. **CHECK THE (F202) IGNITION RUN/START CIRCUIT FOR AN OPEN**

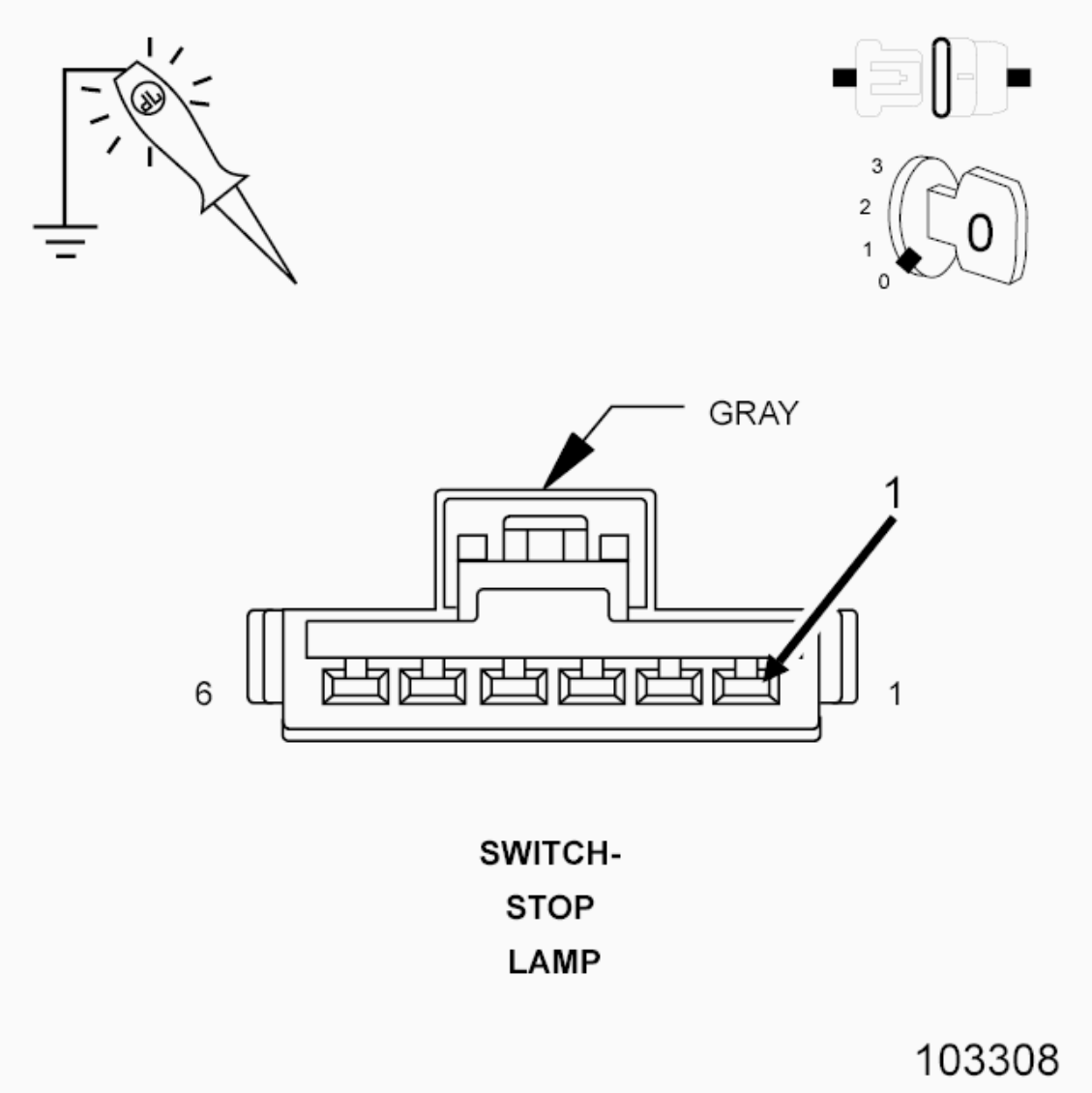

Fig. 4: Checking Ignition Run/Start Circuit For Open
Courtesy of CHRYSLER GROUP, LLC

1. Turn the ignition off.
2. Disconnect the Brake Switch harness connector.
3. Turn the ignition on.
4. Using a 12-Volt test light connected to ground, check the (F202) Ignition Run/Start circuit.

   Does the test light illuminate brightly?

   Yes

   - Go To 2

No

- Repair the (F202) Ignition Run/Start circuit for an open or high resistance.
- Perform the POWERTRAIN VERIFICATION TEST - 2.2L DIESEL. Refer to **PCM VERIFICATION TEST - 2.2L DIESEL** .

2. **CHECK THE (B16) BRAKE SWITCH SIGNAL 2 CIRCUIT FOR A SHORT TO VOLTAGE**

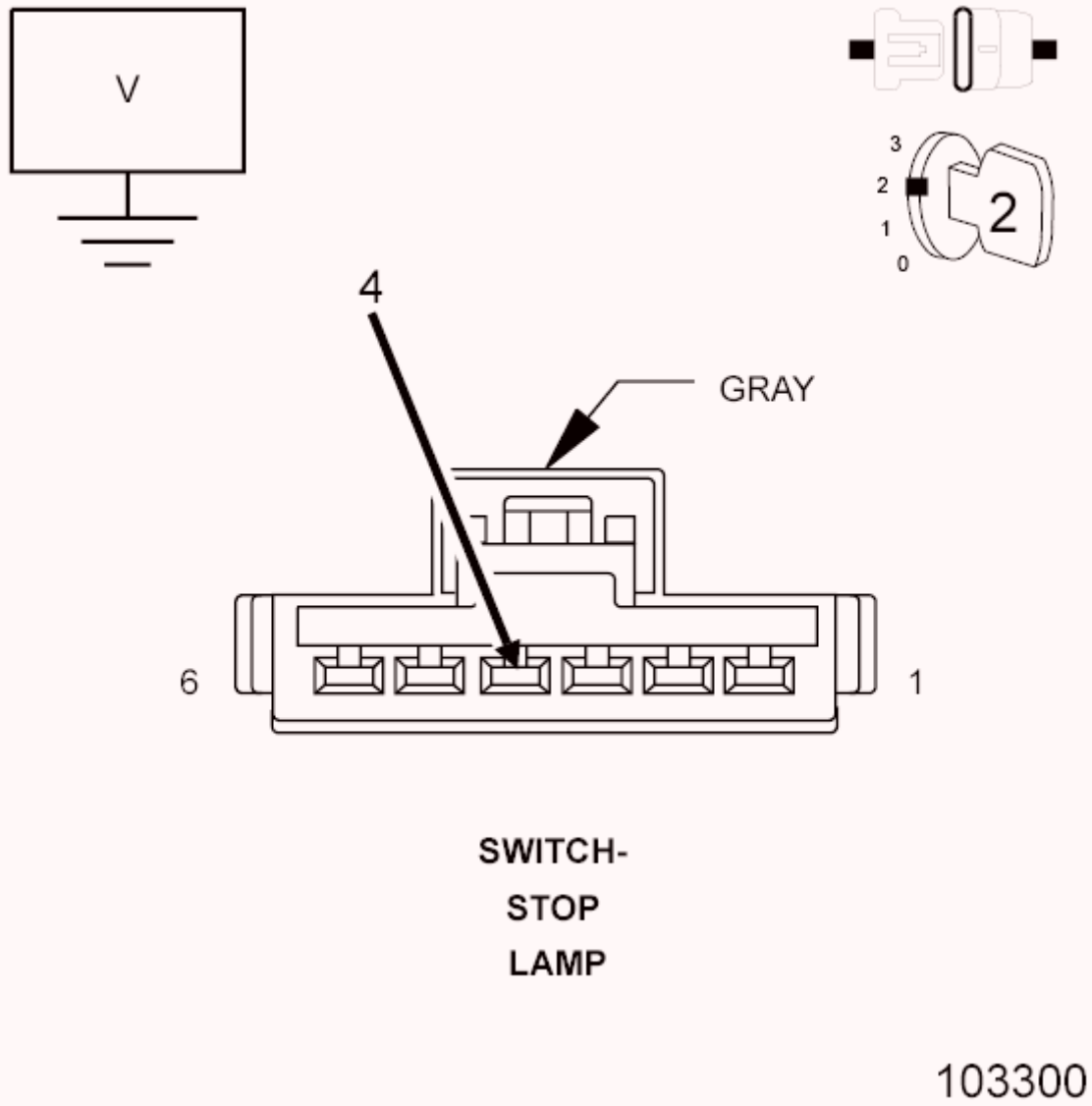

Fig. 5: Checking Brake Switch Signal 2 Circuit For Short To Voltage
Courtesy of CHRYSLER GROUP, LLC

1. Measure the voltage between the (B16) Brake Switch Signal 2 circuit and ground at the Brake Switch harness connector.

Is the voltage above 9.0 Volts?

Yes

- Repair the (B16) Brake Switch Signal 2 circuit for a short to voltage.
- Perform the POWERTRAIN VERIFICATION TEST - 2.2L DIESEL. Refer to **PCM VERIFICATION TEST - 2.2L DIESEL** .

No

- Go To 3

3. **CHECK THE (Z906) STOP LAMP SWITCH GROUND CIRCUIT FOR AN OPEN**

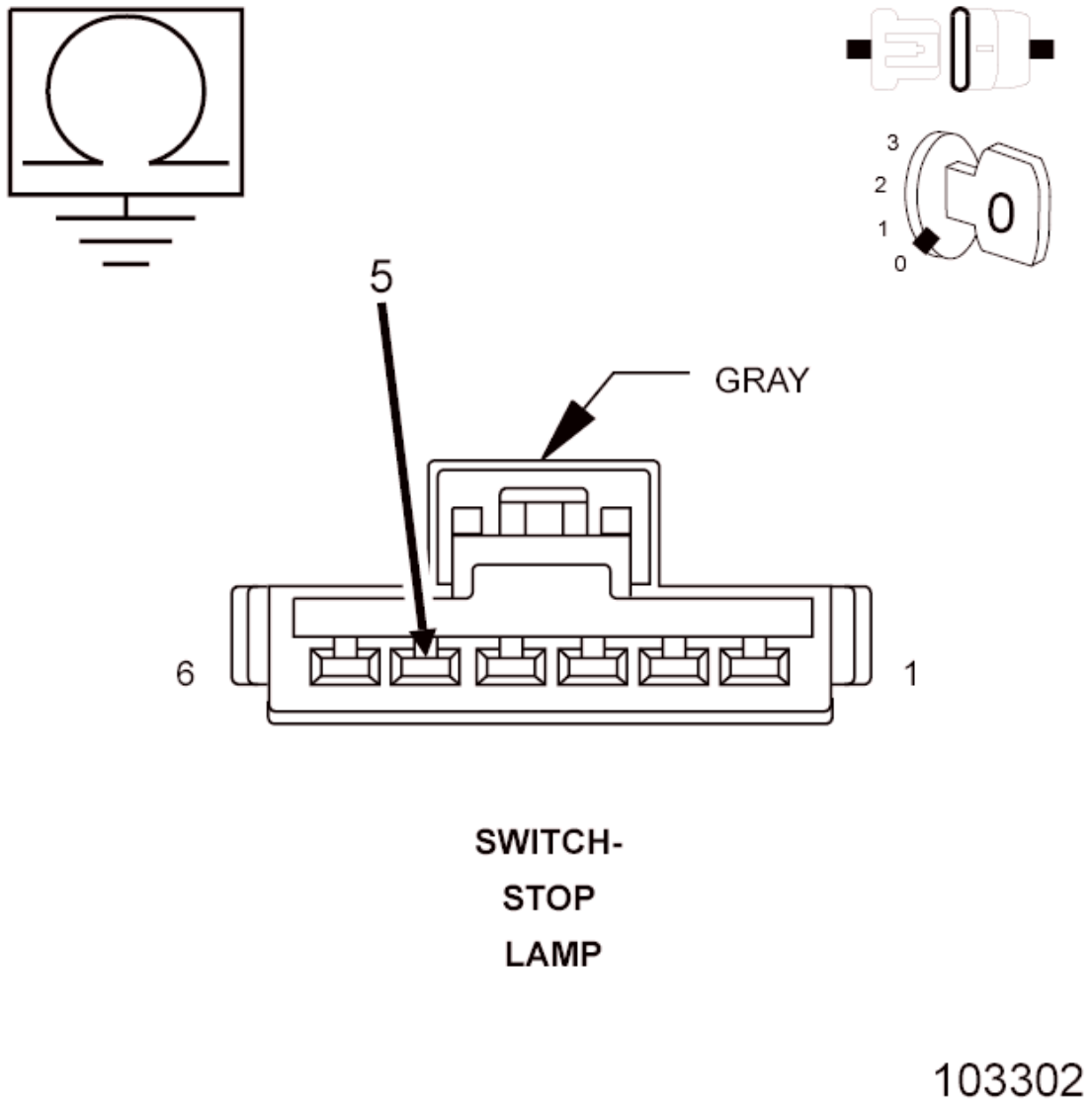

Fig. 6: Checking Stop Lamp Switch Ground Circuit For An Open
Courtesy of CHRYSLER GROUP, LLC

1. Turn the ignition off.
2. Measure the resistance between ground and the (Z906) Stop Lamp Switch Ground circuit at the Stop Lamp Switch harness connector.

   Is the resistance below 5.0 Ohms?

   Yes

   - Go To 4

   No

- Repair the (Z906) Stop Lamp Switch Ground circuit for an open or high resistance.
- Perform the POWERTRAIN VERIFICATION TEST - 2.2L DIESEL. Refer to **PCM VERIFICATION TEST - 2.2L DIESEL** .

4. **CHECK THE (B15) BRAKE SWITCH SIGNAL 1 CIRCUIT FOR AN OPEN**
   1. Turn the ignition off.
   2. Disconnect the PCM C2 harness connector.
   3. Measure the resistance between ground and the (B15) Brake Switch Signal 1 circuit at the Brake Switch harness connector.

      Is the resistance below 5.0 Ohms?

      Yes

      - Go To 5

      No

      - Repair the (B15) Brake Switch Signal 1 circuit for an open or high resistance.
      - Perform the POWERTRAIN VERIFICATION TEST - 2.2L DIESEL. Refer to **PCM VERIFICATION TEST - 2.2L DIESEL** .
5. **CHECK THE (B16) BRAKE SWITCH SIGNAL 2 CIRCUIT FOR AN OPEN**
   1. Measure the resistance between ground and the (B16) Brake Switch Signal 2 circuit at the Brake Switch harness connector.

      Is the resistance below 5.0 Ohms?

      Yes

      - Go To 6

      No

      - Repair the (B16) Brake Switch Signal 2 circuit for an open or high

resistance.

- Perform the POWERTRAIN VERIFICATION TEST - 2.2L DIESEL. Refer to **PCM VERIFICATION TEST - 2.2L DIESEL** .

6. **CHECK THE (B15) BRAKE SWITCH SIGNAL 1 CIRCUIT FOR A SHORT TO GROUND**
   1. Measure the resistance between ground and the (B15) Brake Switch Signal 1 circuit at the Stop Lamp Switch harness connector.

      Is the resistance above 10k Ohms?

      Yes

      - Go To 7

      No

      - Repair the (B15) Brake Switch Signal 1 circuit for a short to ground.
      - Perform the POWERTRAIN VERIFICATION TEST - 2.2L DIESEL. Refer to **PCM VERIFICATION TEST - 2.2L DIESEL** .
7. **POWERTRAIN CONTROL MODULE**
   1. Replace the Brake Switch in accordance with the service information.
   2. Reconnect the Brake Switch harness connector.
   3. Reconnect the PCM C2 harness connector.
   4. Turn the ignition on.
   5. With the scan tool, Erase DTCs.
   6. Test drive the vehicle according to the When Monitored conditions in this test.
   7. With the scan tool, View DTCs.

      Did the DTC return?

      Yes

      - Replace the Powertrain Control Module. **Before removing the PCM, perform the "Replace PCM" routine in the**

Miscellaneous Functions tab of the scan tool. . Refer to **REMOVAL** .

- Perform the POWERTRAIN VERIFICATION TEST. Refer to **PCM VERIFICATION TEST - 2.2L DIESEL** .

No

- Repair complete.
- Perform the POWERTRAIN VERIFICATION TEST. Refer to **PCM VERIFICATION TEST - 2.2L DIESEL** .

P0532-A/C PRESSURE SENSOR CIRCUIT LOW

For a complete wiring diagram, **refer to appropriate SYSTEM WIRING DIAGRAMS article** .

WHEN MONITORED

With the ignition on.

SET CONDITION

The Powertrain Control Module (PCM) receives a message from the Totally Integrated Power Module (TIPM) over the CAN BUS that the A/C Pressure Sensor signal is below 0.06 of a Volt for 1.28 seconds.

POSSIBLE CAUSES

Possible Causes
(C18) A/C PRESSURE SENSOR SIGNAL CIRCUIT SHORTED TO GROUND
A/C PRESSURE SENSOR
TOTALLY INTEGRATED POWER MODULE (TIPM)

Always perform the Pre-Diagnostic Troubleshooting procedure before proceeding. Refer to PRE-DIAGNOSTIC TROUBLESHOOTING PROCEDURE - 2.2L DIESEL .

DIAGNOSTIC TEST

1. **DTC IS ACTIVE**

1. Ignition on, engine not running.
2. With the scan tool, clear DTCs in the Powertrain Control Module.
3. Start the engine and turn on the A/C system.
4. Monitor the scan tool for at least two minutes.
5. With the scan tool, select View DTCs.

   Is the status Active for this DTC?

   Yes

   - Go To 2

   No

   - Perform the INTERMITTENT CONDITION diagnostic procedure. Refer to **INTERMITTENT CONDITION - 2.2L DIESEL** .

2. **CHECK THE (C18) A/C PRESSURE SENSOR SIGNAL CIRCUIT FOR A SHORT TO GROUND**
   1. Turn the ignition off.
   2. Disconnect the A/C Pressure Sensor harness connector.
   3. Disconnect the TIPM C5 harness connector.
   4. Measure the resistance between ground and the (C18) A/C Pressure Sensor Signal circuit at the A/C Pressure Sensor harness connector.

      Is the resistance above 10k Ohms?

      Yes

      - Go To 3

      No

      - Repair the (C18) A/C Pressure Sensor Signal circuit for a short to ground.
      - Perform the POWERTRAIN VERIFICATION TEST - 2.2L DIESEL. Refer to **PCM VERIFICATION TEST - 2.2L DIESEL** .

3. **A/C PRESSURE SENSOR**

1. Turn the ignition off.
2. Reconnect the TIPM C5 harness connector.
3. Reconnect the Pressure Sensor harness connector.
4. Turn the ignition on.
5. With the scan tool, Clear DTCs.
6. Disconnect the Pressure Sensor harness connector.
7. With the scan tool, select View DTCs.
8. The scan tool should display P0533-A/C PRESSURE SENSOR CIRCUIT LOW DTC with the A/C Pressure Sensor harness connector disconnected.

   Is the P0533-A/C PRESSURE SENSOR CIRCUIT LOW DTC Active with the A/C Pressure Sensor harness connector disconnected?

   Yes

   - Replace the A/C Pressure Sensor in accordance with the service information.
   - Perform the POWERTRAIN VERIFICATION TEST - 2.2L DIESEL. Refer to **PCM VERIFICATION TEST - 2.2L DIESEL** .

   No

   - Go To 4

4. **TOTALLY INTEGRATED CONTROL MODULE**
   1. Using the wiring diagram/schematic as a guide, inspect the wiring and connectors between the A/C Pressure Sensor and the Totally Integrated Power Module.
   2. Look for any chafed, pierced, pinched, or partially broken wires.
   3. Look for broken, bent, pushed out or corroded terminals.
   4. Perform any Technical Service Bulletins that may apply.

   Were any problems found?

   Yes

- Repair as necessary.
- Perform the POWERTRAIN VERIFICATION TEST - 2.2L DIESEL. Refer to **PCM VERIFICATION TEST - 2.2L DIESEL** .

No

- Replace the Totally Integrated Power Module in accordance with the service information.
- Perform the BODY VERIFICATION TEST. Refer to **STANDARD PROCEDURE** .

P0533-A/C PRESSURE SENSOR CIRCUIT HIGH

For a complete wiring diagram, **refer to appropriate SYSTEM WIRING DIAGRAMS article** .

WHEN MONITORED

With the ignition on.

SET CONDITION

The Powertrain Control Module (PCM) receives a message from the Totally Integrated Power Module (TIPM) over the CAN BUS that the A/C Pressure Sensor signal is above 4.94 Volts for 1.28 seconds.

POSSIBLE CAUSES

Possible Causes
(C18) A/C PRESSURE SENSOR SIGNAL CIRCUIT SHORTED TO VOLTAGE
(C18) A/C PRESSURE SENSOR SIGNAL CIRCUIT OPEN/HIGH RESISTANCE
A/C PRESSURE SENSOR
TOTALLY INTEGRATED POWER MODULE (TIPM)

Always perform the Pre-Diagnostic Troubleshooting procedure before proceeding. Refer to PRE-DIAGNOSTIC TROUBLESHOOTING PROCEDURE - 2.2L DIESEL .

DIAGNOSTIC TEST

1. **DTC IS ACTIVE**
   1. Ignition on, engine not running.
   2. With the scan tool, clear DTCs in the Powertrain Control Module.
   3. Start the engine and turn on the A/C system.
   4. Monitor the scan tool for at least two minutes.
   5. With the scan tool, select View DTCs.

   Is the status Active for this DTC?

   Yes

   - Go To 2

   No

   - Perform the INTERMITTENT CONDITION diagnostic procedure. Refer to **INTERMITTENT CONDITION - 2.2L DIESEL** .
2. **CHECK THE (C18) A/C PRESSURE SENSOR SIGNAL CIRCUIT FOR A SHORT TO VOLTAGE**
   1. Turn the ignition off.
   2. Disconnect the A/C Pressure Sensor harness connector.
   3. Turn the ignition on.
   4. Measure the voltage on the (C18) A/C Pressure Sensor Signal circuit at the A/C Pressure Sensor harness connector.

   Is the voltage reading above 5.1 Volts?

   Yes

   - Repair the (C18) A/C Pressure Sensor Signal circuit for a short to voltage.
   - Perform the POWERTRAIN VERIFICATION TEST - 2.2L DIESEL. Refer to **PCM VERIFICATION TEST - 2.2L DIESEL** .

   No

- Go To 3

3. **CHECK THE (C18) A/C PRESSURE SENSOR SIGNAL CIRCUIT FOR AN OPEN/HIGH RESISTANCE**
   1. Turn the ignition off.
   2. Disconnect the TIPM C5 harness connector.
   3. Measure the resistance of the (C18) A/C Pressure Sensor Signal circuit between the A/C Pressure Sensor harness connector and the TIPM C5 harness connector.

      Is the resistance below 5.0 Ohms?

      Yes

      - Go To 4

      No

      - Repair the (C18) A/C Pressure Sensor Signal circuit for an open or high resistance.
      - Perform the POWERTRAIN VERIFICATION TEST - 2.2L DIESEL. Refer to **PCM VERIFICATION TEST - 2.2L DIESEL** .

4. **CHECK THE A/C PRESSURE SENSOR**
   1. Reconnect the TIPM C5 harness connector.
   2. Reconnect the A/C Pressure Sensor harness connector.
   3. Turn the ignition on.
   4. With the scan tool, Clear DTCs.
   5. Turn the ignition off.
   6. Disconnect the A/C Pressure Sensor harness connector.
   7. Connect a jumper between ground and the (C18) A/C Pressure Sensor Signal circuit at the A/C Pressure Sensor harness connector.
   8. Turn the ignition on.
   9. With the scan tool, select View DTCs.
   10. The scan tool should display P0533-A/C PRESSURE SENSOR CIRCUIT LOW DTC with the jumper wire in place.

Is the P0533-A/C PRESSURE SENSOR CIRCUIT LOW DTC active with the jumper wire in place?

Yes

- Replace the A/C Pressure Sensor in accordance with the service information.
- Perform the POWERTRAIN VERIFICATION TEST - 2.2L DIESEL. Refer to **PCM VERIFICATION TEST - 2.2L DIESEL** .

No

- Go To 5

5. **TOTALLY INTEGRATED CONTROL MODULE**
   1. Using the wiring diagram/schematic as a guide, inspect the wiring and connectors between the A/C Pressure Sensor and the Totally Integrated Power Module.
   2. Look for any chafed, pierced, pinched, or partially broken wires.
   3. Look for broken, bent, pushed out or corroded terminals.
   4. Perform any Technical Service Bulletins that may apply.

   Were any problems found?

   Yes

   - Repair as necessary.
   - Perform the POWERTRAIN VERIFICATION TEST - 2.2L DIESEL. Refer to **PCM VERIFICATION TEST - 2.2L DIESEL** .

   No

   - Replace the Totally Integrated Power Module in accordance with the service information.
   - Perform the BODY VERIFICATION TEST. Refer to **STANDARD PROCEDURE** .

P053A-CRANKCASE VENT HEATER CONTROL CIRCUIT OPEN

For a complete wiring diagram, **refer to appropriate SYSTEM WIRING DIAGRAMS article** .

WHEN MONITORED

With the engine running.

SET CONDITION

The Powertrain Control Module (PCM) detects an open on the (N116) Crankcase Vent Heater Control circuit for 40.0 seconds.

POSSIBLE CAUSES

Possible Causes
(N116) CRANKCASE VENT HEATER CONTROL CIRCUIT OPEN
CRANKCASE VENT HEATER
POWERTRAIN CONTROL MODULE (PCM)

Always perform the Pre-Diagnostic Troubleshooting procedure before proceeding. Refer to PRE-DIAGNOSTIC TROUBLESHOOTING PROCEDURE - 2.2L DIESEL .

DIAGNOSTIC TEST

1. **DTC IS ACTIVE**
    1. Ignition on, engine not running.
    2. With the scan tool, clear DTCs in the Powertrain Control Module.
    3. Start the engine.
    4. Monitor the scan tool for at least five minutes.
    5. With the scan tool, select View DTCs.

    Is the status Active for this DTC?

    Yes

    - Go To 2

    No

    - Perform the INTERMITTENT CONDITION diagnostic procedure.

Refer to **INTERMITTENT CONDITION - 2.2L DIESEL** .

2. **CHECK THE (N116) CRANKCASE VENT HEATER CONTROL CIRCUIT FOR AN OPEN**
   1. Disconnect the Crankcase Vent Heater harness connector.
   2. Disconnect the Powertrain Control Module C1 harness connector.
   3. Measure the resistance of the (N116) Crankcase Vent Heater Control circuit between the Crankcase Vent Heater harness connector and the Powertrain Control Module harness connector.

      Is the resistance below 5.0 Ohms?

      Yes

      - Go To 3

      No

      - Repair the (N116) Crankcase Vent Heater Control circuit for an open or high resistance.
      - Perform the POWERTRAIN VERIFICATION TEST - 2.2L DIESEL. Refer to **PCM VERIFICATION TEST - 2.2L DIESEL** .
3. **CHECK THE CRANKCASE VENT HEATER FOR AN OPEN**
   1. Measure the resistance across the terminals of the Crankcase Vent Heater.

      Is the resistance below 100.0 Ohms?

      Yes

      - Go To 4

      No

      - Replace the Crankcase Vent Heater in accordance with the service information.
      - Perform the POWERTRAIN VERIFICATION TEST - 2.2L DIESEL. Refer to **PCM VERIFICATION TEST - 2.2L DIESEL** .

4. **POWERTRAIN CONTROL MODULE**
    1. Using the wiring diagram/schematic as a guide, inspect the wiring and connectors between the Crankcase Vent Heater and the Powertrain Control Module.
    2. Look for any chafed, pierced, pinched, or partially broken wires.
    3. Look for broken, bent, pushed out or corroded terminals.
    4. Monitor the scan tool data relative to this circuit and wiggle test the wiring and connectors.
    5. Look for the data to change or for the DTC to reset during the wiggle test.
    6. Perform any Technical Service Bulletins that may apply.

    Were any problems found?

    Yes

    - Repair as necessary.
    - Perform the POWERTRAIN VERIFICATION TEST - 2.2L DIESEL. Refer to **PCM VERIFICATION TEST - 2.2L DIESEL** .

    No

    - Replace the Powertrain Control Module. **Before removing the PCM, perform the "Replace PCM" routine in the Miscellaneous Functions tab of the scan tool.** . Refer to **REMOVAL** .
    - Perform the POWERTRAIN VERIFICATION TEST - 2.2L DIESEL. Refer to **PCM VERIFICATION TEST - 2.2L DIESEL** .

P053B-CRANKCASE VENT HEATER CONTROL CIRCUIT LOW

For a complete wiring diagram, **refer to appropriate SYSTEM WIRING DIAGRAMS article** .

WHEN MONITORED

With the engine running.

SET CONDITION

The Powertrain Control Module (PCM) detects a short to ground on the (N116) Crankcase Vent Heater Control circuit for 40.0 seconds.

POSSIBLE CAUSES

Possible Causes
(N116) CRANKCASE VENT HEATER CONTROL CIRCUIT SHORTED TO GROUND
(F344) FUSED MAIN RELAY OUTPUT CIRCUIT OPEN/HIGH RESISTANCE
CRANKCASE VENT HEATER
POWERTRAIN CONTROL MODULE (PCM)

Always perform the Pre-Diagnostic Troubleshooting procedure before proceeding. Refer to PRE-DIAGNOSTIC TROUBLESHOOTING PROCEDURE - 2.2L DIESEL .

DIAGNOSTIC TEST

1. **DTC IS ACTIVE**

NOTE: Diagnose and repair any system voltage or Main Relay DTCs before continuing with this test.

1. Ignition on, engine not running.
2. With the scan tool, clear DTCs in the Powertrain Control Module.
3. Start the engine.
4. Monitor the scan tool for at least five minutes.
5. With the scan tool, select View DTCs.

Is the status Active for this DTC?

Yes

- Go To 2

No

- Perform the INTERMITTENT CONDITION diagnostic procedure. Refer to **INTERMITTENT CONDITION - 2.2L DIESEL** .

2. **CHECK THE (F344) FUSED MAIN RELAY OUTPUT CIRCUIT FOR AN OPEN/HIGH RESISTANCE**
   1. Turn the ignition off.
   2. Disconnect the Piston Cooling Valve harness connector.
   3. Turn the ignition on.
   4. Using a 12-Volt test light connected to ground, check the (F344) Fused Main Relay Output circuit at the Piston Cooling Valve harness connector.

   NOTE: The test light should be illuminated and bright. Compare the brightness to that of a direct connection to the battery.

   Is the test light illuminated and bright?

   Yes

   - Go To 3

   No

   - Repair the (F344) Fused Main Relay Output circuit for an open circuit or high resistance.
   - Perform the POWERTRAIN VERIFICATION TEST - 2.2L DIESEL. Refer to **PCM VERIFICATION TEST - 2.2L DIESEL** .

3. **CHECK THE (N116) CRANKCASE VENT HEATER CONTROL CIRCUIT FOR A SHORT TO GROUND**
   1. Disconnect the Crankcase Vent Heater harness connector.
   2. Disconnect the Powertrain Control Module C1 harness connector.
   3. Measure the resistance between ground and the (N116) Crankcase Vent Heater Control circuit.

   Is the resistance above 10k Ohms?

Yes

- Go To 4

No

- Repair the (N116) Crankcase Vent Heater Control circuit for a short to ground.
- Perform the POWERTRAIN VERIFICATION TEST - 2.2L DIESEL. Refer to **PCM VERIFICATION TEST - 2.2L DIESEL** .

4. **CHECK THE CRANKCASE VENT HEATER FOR AN INTERNAL SHORT TO GROUND**
   1. Measure the resistance between ground and either terminal of the Crankcase Vent Heater.

      Is the resistance above 10k Ohms?

      Yes

      - Go To 5

      No

      - Replace the Crankcase Vent Heater in accordance with the service information.
      - Perform the POWERTRAIN VERIFICATION TEST - 2.2L DIESEL. Refer to **PCM VERIFICATION TEST - 2.2L DIESEL** .
5. **POWERTRAIN CONTROL MODULE**
   1. Using the wiring diagram/schematic as a guide, inspect the wiring and connectors between the Crankcase Vent Heater and the Powertrain Control Module.
   2. Look for any chafed, pierced, pinched, or partially broken wires.
   3. Look for broken, bent, pushed out or corroded terminals.
   4. Monitor the scan tool data relative to this circuit and wiggle test the wiring and connectors.
   5. Look for the data to change or for the DTC to reset during the wiggle

test.

6. Perform any Technical Service Bulletins that may apply.

   Were any problems found?

   Yes

   - Repair as necessary.
   - Perform the POWERTRAIN VERIFICATION TEST - 2.2L DIESEL. Refer to **PCM VERIFICATION TEST - 2.2L DIESEL** .

   No

   - Replace the Powertrain Control Module. **Before removing the PCM, perform the "Replace PCM" routine in the Miscellaneous Functions tab of the scan tool.** . Refer to **REMOVAL** .
   - Perform the POWERTRAIN VERIFICATION TEST - 2.2L DIESEL. Refer to **PCM VERIFICATION TEST - 2.2L DIESEL** .

P053C-CRANKCASE VENT HEATER CONTROL CIRCUIT HIGH

For a complete wiring diagram, **refer to appropriate SYSTEM WIRING DIAGRAMS article** .

WHEN MONITORED

With the engine running.

SET CONDITION

The Powertrain Control Module (PCM) detects a short to battery voltage on the (N116) Crankcase Vent Heater Control circuit for 40.0 seconds.

POSSIBLE CAUSES

Possible Causes
(N116) CRANKCASE VENT HEATER CONTROL CIRCUIT SHORTED TO VOLTAGE

POWERTRAIN CONTROL MODULE (PCM)

Always perform the Pre-Diagnostic Troubleshooting procedure before proceeding. Refer to PRE-DIAGNOSTIC TROUBLESHOOTING PROCEDURE - 2.2L DIESEL .

DIAGNOSTIC TEST

1. **DTC IS ACTIVE**

   NOTE: Diagnose and repair any system voltage or Main Relay DTCs before continuing with this test.

   1. Ignition on, engine not running.
   2. With the scan tool, clear DTCs in the Powertrain Control Module.
   3. Start the engine.
   4. Monitor the scan tool for at least five minutes.
   5. With the scan tool, select View DTCs.

   Is the status Active for this DTC?

   Yes

   - Go To 2

   No

   - Perform the INTERMITTENT CONDITION diagnostic procedure. Refer to **INTERMITTENT CONDITION - 2.2L DIESEL** .

2. **CHECK THE (N116) CRANKCASE VENT HEATER CONTROL CIRCUIT FOR A SHORT TO VOLTAGE**
   1. Turn the engine off.
   2. Disconnect the Crankcase Vent Heater harness connector.
   3. Remove the Main Relay.
   4. Connect a jumper wire between cavity 30 and cavity 87 of the Main Relay connector.
   5. Turn the ignition on.
   6. Measure for voltage on the (N116) Crankcase Vent Heater Control

circuit at the Crankcase Vent Heater harness connector.

Is there any voltage present?

Yes

- Repair the (N116) Crankcase Vent Heater Control circuit for a short to voltage.
- Perform the POWERTRAIN VERIFICATION TEST - 2.2L DIESEL. Refer to **PCM VERIFICATION TEST - 2.2L DIESEL** .

No

- Go To 3

3. **POWERTRAIN CONTROL MODULE**
   1. Using the wiring diagram/schematic as a guide, inspect the wiring and connectors between the Crankcase Vent Heater and the Powertrain Control Module.
   2. Look for any chafed, pierced, pinched, or partially broken wires.
   3. Look for broken, bent, pushed out or corroded terminals.
   4. Monitor the scan tool data relative to this circuit and wiggle test the wiring and connectors.
   5. Look for the data to change or for the DTC to reset during the wiggle test.
   6. Perform any Technical Service Bulletins that may apply.

   Were any problems found?

   Yes

   - Repair as necessary.
   - Perform the POWERTRAIN VERIFICATION TEST - 2.2L DIESEL. Refer to **PCM VERIFICATION TEST - 2.2L DIESEL** .

   No

   - Replace the Powertrain Control Module. **Before removing the**

PCM, perform the "Replace PCM" routine in the Miscellaneous Functions tab of the scan tool. . Refer to **REMOVAL** .

- Perform the POWERTRAIN VERIFICATION TEST - 2.2L DIESEL. Refer to **PCM VERIFICATION TEST - 2.2L DIESEL** .

P0545-EXHAUST GAS TEMPERATURE SENSOR CIRCUIT LOW - BANK 1 SENSOR 1

For a complete wiring diagram, **refer to appropriate SYSTEM WIRING DIAGRAMS article** .

THEORY OF OPERATION

The Powertrain Control Module (PCM) monitors the exhaust gas temperatures in the aftertreatment system by receiving feedback from the Exhaust Gas Temperature (EGT) Sensors. The Exhaust Gas Temperature Sensors function as typical two wire 5-Volt sensors. The PCM uses this information to monitor the temperatures during normal engine operation as well as during regeneration of the Diesel Particulate Filter (DPF) so as not to cause any damage to the exhaust aftertreatment system components.

WHEN MONITORED

With the ignition on.

SET CONDITION

The Powertrain Control Module (PCM) detects that the (K353) Exhaust Temperature Sensor 1/1 Signal circuit is below 0.5 Volts for 2.0 seconds.

POSSIBLE CAUSES

Possible Causes
(K353) EXHAUST TEMPERATURE SENSOR 1/1 SIGNAL CIRCUIT SHORTED TO GROUND
(K353) EXHAUST TEMPERATURE SENSOR 1/1 SIGNAL CIRCUIT SHORTED TO (K916) EXHAUST TEMPERATURE SENSOR 1/1 GROUND
EXHAUST TEMPERATURE SENSOR 1/1
POWERTRAIN CONTROL MODULE (PCM)

Always perform the Pre-Diagnostic Troubleshooting procedure before proceeding. Refer to PRE-DIAGNOSTIC TROUBLESHOOTING PROCEDURE - 2.2L DIESEL .

DIAGNOSTIC TEST

1. **DTC IS ACTIVE**
   1. Ignition on, engine not running.
   2. With the scan tool, Clear DTCs in the Powertrain Control Module.
   3. Monitor the scan tool for at least two minutes.
   4. Cycle the ignition key off and on several times, leaving the ignition on for at least 10 seconds at a time.
   5. Start the engine.
   6. Allow the engine to reach normal operating temperature.
   7. With the scan tool, select View DTCs.

      Is the status Active for this DTC?

      Yes

      - Go To 2

      No

      - Perform the INTERMITTENT CONDITION diagnostic procedure. Refer to **INTERMITTENT CONDITION - 2.2L DIESEL** .
2. **CHECK THE (K353) EXHAUST TEMPERATURE SENSOR 1/1 SIGNAL CIRCUIT FOR A SHORT TO GROUND**
   1. Turn the ignition off.
   2. Disconnect the Exhaust Temperature Sensor 1/1 harness connector.
   3. Disconnect the Powertrain Control Module harness connector.
   4. Measure the resistance between ground and the (K353) Exhaust Temperature Sensor 1/1 Signal circuit in the Exhaust Temperature Sensor 1/1 harness connector.

      Is the resistance above 10k Ohms?

      Yes

- Go To 3

No

- Repair the (K353) Exhaust Temperature Sensor 1/1 Signal circuit for a short to ground.
- Perform the POWERTRAIN VERIFICATION TEST - 2.2L DIESEL. Refer to **PCM VERIFICATION TEST - 2.2L DIESEL** .

3. **CHECK FOR THE (K353) EXHAUST TEMPERATURE SENSOR 1/1 SIGNAL CIRCUIT SHORTED TO (K916) EXHAUST TEMPERATURE SENSOR 1/1 GROUND CIRCUIT**
   1. Measure the resistance between the (K353) Exhaust Temperature Sensor 1/1 Signal circuit and the (K916) Exhaust Temperature Sensor 1/1 Ground circuit in the Exhaust Temperature Sensor 1/1 harness connector.

      Is the resistance above 10k Ohms?

      Yes

      - Go To 4

      No

      - Repair the (K353) Exhaust Temperature Sensor 1/1 Signal circuit for a short to the (K916) Exhaust Temperature Sensor 1/1 Ground circuit.
      - Perform the POWERTRAIN VERIFICATION TEST - 2.2L DIESEL. Refer to **PCM VERIFICATION TEST - 2.2L DIESEL** .
4. **CHECK THE EXHAUST TEMPERATURE SENSOR 1/1**
   1. Reconnect the Powertrain Control Module connector.
   2. Turn the ignition on.
   3. With the scan tool, clear DTCs.
   4. With the scan tool, select View DTCs.
   5. Monitor the scan tool for at least two minutes.

NOTE: The scan tool should display the Exhaust Temperature Sensor 1/1 high voltage or open circuit DTC with the Exhaust Temperature Sensor 1/1 connector disconnected.

Does the scan tool display the DTC as described above?

Yes

- Replace the Exhaust Temperature Sensor 1/1 in accordance with the service information.
- Perform the POWERTRAIN VERIFICATION TEST - 2.2L DIESEL. Refer to **PCM VERIFICATION TEST - 2.2L DIESEL** .

No

- Go To 5

5. **POWERTRAIN CONTROL MODULE**
   1. Using the wiring diagram/schematic as a guide, inspect the wiring and connectors between the Exhaust Temperature Sensor 1/1 and the Powertrain Control Module.
   2. Look for any chafed, pierced, pinched, or partially broken wires.
   3. Look for broken, bent, pushed out or corroded terminals.
   4. Monitor the scan tool data relative to this circuit and wiggle test the wiring and connectors.
   5. Look for the data to change or for the DTC to reset during the wiggle test.
   6. Perform any Technical Service Bulletins that may apply.

   Were any problems found?

   Yes

   - Repair as necessary.
   - Perform the POWERTRAIN VERIFICATION TEST - 2.2L DIESEL. Refer to **PCM VERIFICATION TEST - 2.2L DIESEL** .

No

- Replace the Powertrain Control Module. **Before removing the PCM, perform the "Replace PCM" routine in the Miscellaneous Functions tab of the scan tool.** . Refer to **REMOVAL** .
- Perform the POWERTRAIN VERIFICATION TEST - 2.2L DIESEL. Refer to **PCM VERIFICATION TEST - 2.2L DIESEL** .

P0546-EXHAUST GAS TEMPERATURE SENSOR CIRCUIT HIGH - BANK 1 SENSOR 1

For a complete wiring diagram, **refer to appropriate SYSTEM WIRING DIAGRAMS article** .

THEORY OF OPERATION

The Powertrain Control Module (PCM) monitors the exhaust gas temperatures in the aftertreatment system by receiving feedback from the Exhaust Gas Temperature (EGT) Sensors. The Exhaust Gas Temperature Sensors function as typical two wire 5-Volt sensors. The PCM uses this information to monitor the temperatures during normal engine operation as well as during regeneration of the Diesel Particulate Filter (DPF) so as not to cause any damage to the exhaust aftertreatment system components.

WHEN MONITORED

With the ignition on.

SET CONDITION

The Powertrain Control Module (PCM) detects that the Exhaust Temperature Sensor 1/1 Signal is open or shorted to voltage.

POSSIBLE CAUSES

Possible Causes
(K353) EXHAUST TEMPERATURE SENSOR 1/1 SIGNAL CIRCUIT SHORTED TO VOLTAGE
(K353) EXHAUST TEMPERATURE SENSOR 1/1 SIGNAL CIRCUIT OPEN OR HIGH RESISTANCE

(K916) EXHAUST TEMPERATURE SENSOR 1/1 GROUND CIRCUIT OPEN OR HIGH RESISTANCE
EXHAUST TEMPERATURE SENSOR 1/1
POWERTRAIN CONTROL MODULE

Always perform the Pre-Diagnostic Troubleshooting procedure before proceeding. Refer to PRE-DIAGNOSTIC TROUBLESHOOTING PROCEDURE - 2.2L DIESEL .

DIAGNOSTIC TEST

1. **DTC IS ACTIVE**
   1. Ignition on, engine not running.
   2. With the scan tool, Clear DTCs in the Powertrain.
   3. Monitor the scan tool for at least two minutes.
   4. Cycle the ignition key off and on several times, leaving the ignition on for at least 10 seconds at a time.
   5. Start the engine.
   6. Allow the engine to reach normal operating temperature.
   7. With the scan tool, select View DTCs.

      Is the status Active for this DTC?

      Yes

      - Go To 2

      No

      - Perform the INTERMITTENT CONDITION diagnostic procedure. Refer to **INTERMITTENT CONDITION - 2.2L DIESEL** .
2. **CHECK THE (K353) EXHAUST TEMPERATURE SENSOR 1/1 SIGNAL CIRCUIT FOR A SHORT TO VOLTAGE**
   1. Turn the ignition off.
   2. Disconnect the Exhaust Temperature Sensor 1/1 harness connector.
   3. Disconnect the Powertrain Control Module harness connector.
   4. Remove the Main Relay.

5. Connect a jumper wire between cavity 30 and cavity 87 of the Main Relay connector.
6. Turn the ignition on.
7. Measure the voltage of the (K353) Exhaust Temperature Sensor 1/1 Signal circuit in the Exhaust Temperature Sensor 1/1 harness connector.

   Is there any voltage present?

   Yes

   - Repair the (K353) Exhaust Temperature Sensor 1/1 Signal circuit for a short to voltage.
   - Perform the POWERTRAIN VERIFICATION TEST - 2.2L DIESEL. Refer to **PCM VERIFICATION TEST - 2.2L DIESEL** .

   No

   - Go To 3

3. **CHECK THE (K353) EXHAUST TEMPERATURE SENSOR 1/1 SIGNAL FOR AN OPEN/HIGH RESISTANCE**
   1. Turn the ignition off.
   2. Remove the jumper wire and install the Main Relay.
   3. Measure the resistance of the (K353) Exhaust Temperature Sensor 1/1 Signal circuit between the Exhaust Temperature Sensor 1/1 harness connector and the Powertrain Control Module harness connector.

      Is the resistance below 5.0 Ohms?

      Yes

      - Go To 4

      No

      - Repair the (K353) Exhaust Temperature Sensor 1/1 Signal circuit for an open or high resistance.
      - Perform the POWERTRAIN VERIFICATION TEST - 2.2L DIESEL. Refer to **PCM VERIFICATION TEST - 2.2L**

DIESEL .

4. **CHECK THE (K916) EXHAUST TEMPERATURE SENSOR 1/1 GROUND CIRCUIT FOR AN OPEN/HIGH RESISTANCE**
   1. Measure the resistance of the (K916) Sensor Ground circuit between the Exhaust Temperature Sensor 1/1 harness connector and the Powertrain Control Module harness connector.

      Is the resistance below 5.0 Ohms?

      Yes

      - Go To 5

      No

      - Repair the (K916) Exhaust Temperature Sensor 1/1 Ground circuit for an open or high resistance.
      - Perform the POWERTRAIN VERIFICATION TEST - 2.2L DIESEL. Refer to **PCM VERIFICATION TEST - 2.2L DIESEL** .
5. **EXHAUST TEMPERATURE SENSOR 1/1**
   1. Connect the Powertrain Control Module harness connector.
   2. Connect a jumper wire between the (K353) Exhaust Temperature Sensor 1/1 Signal circuit and the (K916) Exhaust Temperature Sensor 1/1 Ground circuit in the Exhaust Temperature Sensor 1/1 harness connector.
   3. Turn the ignition on.
   4. With the scan tool, Clear DTCs.
   5. With the scan tool, select View DTCs.

      NOTE: The scan tool should display a P0545-EXHAUST TEMPERATURE SENSOR 1/1 LOW DTC with the jumper wire in place.

      Does the scan tool display the DTC as described above?

      Yes

- Replace the Exhaust Temperature Sensor 1/1 in accordance with the Service Information.
- Perform the POWERTRAIN VERIFICATION TEST - 2.2L DIESEL. Refer to **PCM VERIFICATION TEST - 2.2L DIESEL** .

No

- Go To 6

6. **POWERTRAIN CONTROL MODULE**
   1. Using the wiring diagram/schematic as a guide, inspect the wiring and connectors between the Exhaust Temperature Sensor 1/1 and the Powertrain Control Module.
   2. Look for any chafed, pierced, pinched, or partially broken wires.
   3. Look for broken, bent, pushed out or corroded terminals.
   4. Monitor the scan tool data relative to this circuit and wiggle test the wiring and connectors.
   5. Look for the data to change or for the DTC to reset during the wiggle test.
   6. Perform any Technical Service Bulletins that may apply.

   Were any problems found?

   Yes

   - Repair as necessary.
   - Perform the POWERTRAIN VERIFICATION TEST - 2.2L DIESEL. Refer to **PCM VERIFICATION TEST - 2.2L DIESEL** .

   No

   - Replace the Powertrain Control Module. **Before removing the PCM, perform the "Replace PCM" routine in the Miscellaneous Functions tab of the scan tool.** . Refer to **REMOVAL** .
   - Perform the POWERTRAIN VERIFICATION TEST - 2.2L DIESEL. Refer to **PCM VERIFICATION TEST - 2.2L**

DIESEL .

P0560-BATTERY SYSTEM VOLTAGE

For a complete wiring diagram, **refer to appropriate SYSTEM WIRING DIAGRAMS article** .

WHEN MONITORED

With the ignition on or the engine running.

SET CONDITION

The Powertrain Control Module (PCM) detects a fault on the analog to digital conversion circuit.

POSSIBLE CAUSES

Possible Causes
(K20) GENERATOR FIELD CONTROL CIRCUIT OPEN
(K20) GENERATOR FIELD CONTROL CIRCUIT SHORTED TO GROUND
CORRODED BATTERY TERMINALS/CABLES
BATTERY
PCM POWER OR GROUND CIRCUITS OPEN
GENERATOR
POWERTRAIN CONTROL MODULE (PCM)

Always perform the Pre-Diagnostic Troubleshooting procedure before proceeding. Refer to PRE-DIAGNOSTIC TROUBLESHOOTING PROCEDURE - 2.2L DIESEL .

DIAGNOSTIC TEST

1. **CHECK FOR ACTIVE DTC**

NOTE: This DTC may be caused by a charging system problem. Refer to the Service Information and verify proper charging system operation before continuing. If there are Generator DTCs present, perform the diagnostics for the Generator DTCs before

proceeding with this test procedure.

1. Turn the ignition on.
2. With the scan tool, erase PCM DTCs.
3. Start the engine and allow it to idle.
4. Monitor the scan tool for at least two minutes.
5. With the scan tool, read PCM DTCs.

   Did this DTC return?

   Yes

   - Go To 2

   No

   - Perform the INTERMITTENT CONDITION diagnostic procedure. Refer to **INTERMITTENT CONDITION - 2.2L DIESEL** .

2. **CHECK THE BATTERY TERMINALS/CABLES**
   1. Turn the ignition off.
   2. Remove the battery cables from the battery terminals.
   3. Visually inspect the battery cables and terminals for signs of corrosion or poor connection.

      Was there any signs of corrosion present?

      Yes

      - Repair as necessary.
      - Perform the POWERTRAIN VERIFICATION TEST - 2.2L DIESEL. Refer to **PCM VERIFICATION TEST - 2.2L DIESEL** .

      No

      - Go To 3

3. **CHECK THE BATTERY**
   1. Test the battery with an approved Mopar Midtronics battery tester.

Did the battery pass?

Yes

- Go To 4

No

- Replace the battery in accordance with the service information.
- Perform the POWERTRAIN VERIFICATION TEST - 2.2L DIESEL. Refer to **PCM VERIFICATION TEST - 2.2L DIESEL** .

4. **CHECK PCM POWER AND GROUND CIRCUITS**
   1. Perform the CHECKING THE PCM POWER AND GROUND CIRCUITS diagnostic proecdure. Refer to **DIAGNOSIS AND TESTING** .

      Were any problems found with the PCM powers and grounds?

      Yes

      - Repair as necessary.
      - Perform the POWERTRAIN VERIFICATION TEST. Refer to **PCM VERIFICATION TEST - 2.2L DIESEL** .

      No

      - Go To 5
5. **GENERATOR**
   1. Turn the ignition off.
   2. Replace the Generator in accordance with the service information.
   3. Turn the ignition on.
   4. With the scan tool, erase PCM DTCs.
   5. Test drive the vehicle.
   6. With the scan tool, read PCM DTCs.

      Did the DTC return?

Yes

- Replace the Powertrain Control Module. **Before removing the PCM, perform the "Replace PCM" routine in the Miscellaneous Functions tab of the scan tool.** . Refer to **REMOVAL** .
- Perform the POWERTRAIN VERIFICATION TEST - 2.2L DIESEL. Refer to **PCM VERIFICATION TEST - 2.2L DIESEL** .

No

- Repair is complete.
- Perform the POWERTRAIN VERIFICATION TEST - 2.2L DIESEL. Refer to **PCM VERIFICATION TEST - 2.2L DIESEL** .

P0562-BATTERY/SYSTEM VOLTAGE LOW

For a complete wiring diagram, **refer to appropriate SYSTEM WIRING DIAGRAMS article** .

WHEN MONITORED

With the ignition on.

SET CONDITION

The Powertrain Control Module (PCM) detects that the actual Battery voltage is one Volt below setpoint.

POSSIBLE CAUSES

Possible Causes
(K20) GENERATOR FIELD CONTROL CIRCUIT OPEN
(K20) GENERATOR FIELD CONTROL CIRCUIT SHORTED TO GROUND
CORRODED BATTERY TERMINALS/CABLES
BATTERY
CHECKING PCM POWER AND GROUNDS

GENERATOR
POWERTRAIN CONTROL MODULE (PCM)

Always perform the Pre-Diagnostic Troubleshooting procedure before proceeding. Refer to PRE-DIAGNOSTIC TROUBLESHOOTING PROCEDURE - 2.2L DIESEL .

DIAGNOSTIC TEST

1. **CHECK FOR ACTIVE DTC**

   NOTE: This DTC may be caused by a charging system problem. Refer to the Service Information and verify proper charging system operation before continuing. If there are Generator DTCs present, perform the diagnostics for the Generator DTCs before proceeding with this test procedure.

   1. Turn the ignition on.
   2. With the scan tool, erase PCM DTCs.
   3. Start the engine and allow it to idle.
   4. Monitor the scan tool for at least two minutes.
   5. With the scan tool, read PCM DTCs.

   Did this DTC return?

   Yes

   - Go To 2

   No

   - Perform the INTERMITTENT CONDITION diagnostic procedure. Refer to **INTERMITTENT CONDITION - 2.2L DIESEL** .

2. **CHECK THE BATTERY TERMINALS/CABLES**
   1. Turn the ignition off.
   2. Remove the battery cables from the battery terminals.
   3. Visually inspect the battery cables and terminals for signs of corrosion

or poor connection.

Was there any signs of corrosion present?

Yes

- Repair as necessary.
- Perform the POWERTRAIN VERIFICATION TEST - 2.2L DIESEL. Refer to **PCM VERIFICATION TEST - 2.2L DIESEL** .

No

- Go To 3

3. **CHECK THE BATTERY**
   1. Test the battery with an approved Mopar Midtronics battery tester.

   Did the battery pass?

   Yes

   - Go To 4

   No

   - Replace the battery in accordance with the service information.
   - Perform the POWERTRAIN VERIFICATION TEST - 2.2L DIESEL. Refer to **PCM VERIFICATION TEST - 2.2L DIESEL** .

4. **CHECK PCM POWER AND GROUND CIRCUITS**
   1. Reconnect the battery cables.
   2. Reconnect the Generator harness connector.
   3. Perform the CHECKING THE PCM POWER AND GROUND CIRCUITS diagnostic procedure. Refer to **DIAGNOSIS AND TESTING** .

   Were any problems found with the PCM powers and grounds?

   Yes

- Repair as necessary.
- Perform the POWERTRAIN VERIFICATION TEST - 2.2L DIESEL. Refer to **PCM VERIFICATION TEST - 2.2L DIESEL** .

No

- Go To 5

5. **GENERATOR**
   1. Turn the ignition off.
   2. Replace the Generator in accordance with the service information.
   3. Turn the ignition on.
   4. With the scan tool, erase PCM DTCs.
   5. Test drive the vehicle.
   6. With the scan tool, read PCM DTCs.

   Did the DTC return?

   Yes

   - Replace the Powertrain Control Module. **Before removing the PCM, perform the "Replace PCM" routine in the Miscellaneous Functions tab of the scan tool.** . Refer to **REMOVAL** .
   - Perform the POWERTRAIN VERIFICATION TEST - 2.2L DIESEL. Refer to **PCM VERIFICATION TEST - 2.2L DIESEL** .

   No

   - Repair is complete.
   - Perform the POWERTRAIN VERIFICATION TEST - 2.2L DIESEL. Refer to **PCM VERIFICATION TEST - 2.2L DIESEL** .

P0563-BATTERY/SYSTEM VOLTAGE HIGH

For a complete wiring diagram, **refer to appropriate SYSTEM WIRING**

DIAGRAMS article .

WHEN MONITORED

With the ignition on.

SET CONDITION

The Powertrain Control Module (PCM) detects that the actual Battery voltage is one Volt above the setpoint for two seconds.

POSSIBLE CAUSES

Possible Causes
(K20) GENERATOR FIELD CONTROL CIRCUIT SHORTED TO BATTERY
CHECKING PCM POWER AND GROUNDS
GENERATOR
POWERTRAIN CONTROL MODULE (PCM)

Always perform the Pre-Diagnostic Troubleshooting procedure before proceeding. Refer to PRE-DIAGNOSTIC TROUBLESHOOTING PROCEDURE - 2.2L DIESEL .

DIAGNOSTIC TEST

1. **CHECK FOR ACTIVE DTC**

   NOTE: This DTC may be caused by a charging system problem. Refer to the Service Information and verify proper charging system operation before continuing.

   1. Turn the ignition on.
   2. With the scan tool, erase PCM DTCs.
   3. Test drive the vehicle.
   4. With the scan tool, read PCM DTCs.

   Did this DTC return?

   Yes

- Go To 2

No

- Perform the INTERMITTENT CONDITION diagnostic procedure. Refer to **INTERMITTENT CONDITION - 2.2L DIESEL** .

2. **CHECK PCM POWER AND GROUNDS**
   1. Perform the CHECKING THE PCM POWER AND GROUND CIRCUITS diagnostic procedure. Refer to **DIAGNOSIS AND TESTING** .

      Were any problem found with the PCM powers and grounds?

      Yes

      - Repair as necessary.
      - Perform the POWERTRAIN VERIFICATION TEST - 2.2L DIESEL. Refer to **PCM VERIFICATION TEST - 2.2L DIESEL** .

      No

      - Go To 3

3. **GENERATOR**
   1. Turn the ignition off.
   2. Replace the Generator in accordance with the service information.
   3. Turn the ignition on.
   4. With the scan tool, erase PCM DTCs.
   5. Test drive the vehicle.
   6. With the scan tool, read PCM DTCs.

      Did the DTC return?

      Yes

      - Replace the Powertrain Control Module. **Before removing the PCM, perform the "Replace PCM" routine in the Miscellaneous Functions tab of the scan tool.** . Refer to

REMOVAL .

- Perform the POWERTRAIN VERIFICATION TEST - 2.2L DIESEL. Refer to **PCM VERIFICATION TEST - 2.2L DIESEL** .

No

- Repair is complete.
- Perform the POWERTRAIN VERIFICATION TEST - 2.2L DIESEL. Refer to **PCM VERIFICATION TEST - 2.2L DIESEL** .

P0565-SPEED CONTROL ON SIGNAL

For a complete wiring diagram, **refer to appropriate SYSTEM WIRING DIAGRAMS article** .

WHEN MONITORED

With the ignition on.

SET CONDITION

The Powertrain Control Module (PCM) detects that the On/Off Control Switch is stuck in the On position for one minute.

POSSIBLE CAUSES

Possible Causes
SPEED CONTROL SWITCH ON/OFF BUTTON PHYSICALLY STUCK

Always perform the Pre-Diagnostic Troubleshooting procedure before proceeding. Refer to PRE-DIAGNOSTIC TROUBLESHOOTING PROCEDURE - 2.2L DIESEL .

DIAGNOSTIC TEST

CHECK FOR ACTIVE DTC

1. Turn the ignition on.
2. With the scan tool, erase PCM DTCs.
3. Test drive the vehicle for at least two minutes.

4. Turn the ignition on.
5. With the scan tool, read PCM DTCs.

   Did this DTC return?

   Yes

   - Replace the Speed Control Switch in accordance with the service information.
   - Perform the POWERTRAIN VERIFICATION TEST - 2.2L DIESEL. Refer to **PCM VERIFICATION TEST - 2.2L DIESEL** .

   No

   - Perform the INTERMITTENT CONDITION diagnostic procedure. Refer to **INTERMITTENT CONDITION - 2.2L DIESEL** .

P0567-SPEED CONTROL RESUME SIGNAL

For a complete wiring diagram, **refer to appropriate SYSTEM WIRING DIAGRAMS article** .

WHEN MONITORED

With the ignition on.

SET CONDITION

The Powertrain Control Module (PCM) detects that the Resume Control Switch is stuck in the On position for one minute.

POSSIBLE CAUSES

Possible Causes
SPEED CONTROL SWITCH RESUME BUTTON PHYSICALLY STUCK

Always perform the Pre-Diagnostic Troubleshooting procedure before proceeding. Refer to PRE-DIAGNOSTIC TROUBLESHOOTING PROCEDURE - 2.2L DIESEL .

DIAGNOSTIC TEST

CHECK FOR ACTIVE DTC

1. Turn the ignition on.
2. With the scan tool, erase PCM DTCs.
3. Test drive the vehicle for at least two minutes.
4. Turn the ignition on.
5. With the scan tool, read PCM DTCs.

   Did this DTC return?

   Yes

   - Replace the Speed Control Switch in accordance with the service information.
   - Perform the POWERTRAIN VERIFICATION TEST - 2.2L DIESEL. Refer to **PCM VERIFICATION TEST - 2.2L DIESEL** .

   No

   - Perform the INTERMITTENT CONDITION diagnostic procedure. Refer to **INTERMITTENT CONDITION - 2.2L DIESEL** .

P0571-BRAKE SWITCH 1 PERFORMANCE

For a complete wiring diagram, **refer to appropriate SYSTEM WIRING DIAGRAMS article** .

WHEN MONITORED

With the ignition on.

SET CONDITION

The Powertrain Control Module (PCM) detects that the vehicle has stopped and no brake switch signal was received.

POSSIBLE CAUSES

Possible Causes
(B15) BRAKE SWITCH SIGNAL 1 CIRCUIT SHORTED TO VOLTAGE
(B15) BRAKE SWITCH SIGNAL 1 CIRCUIT SHORTED TO GROUND

(B15) BRAKE SWITCH SIGNAL 1 CIRCUIT OPEN
(B16) BRAKE SWITCH SIGNAL 2 OPEN
(B16) BRAKE SWITCH SIGNAL 2 SHORTED TO GROUND
POWERTRAIN CONTROL MODULE (PCM)

Always perform the Pre-Diagnostic Troubleshooting procedure before proceeding. Refer to PRE-DIAGNOSTIC TROUBLESHOOTING PROCEDURE - 2.2L DIESEL .

DIAGNOSTIC TEST

1. **CHECK THE BRAKE SWITCH SIGNAL 1 STATUS**
   1. Turn the ignition on.
   2. While observing the BRAKE SWITCH SIGNAL 1 status on the scan tool display, press and release the brake pedal several times.

      Does the scan tool display BRAKE SWITCH SIGNAL 1: PRESSED and RELEASED for the appropriate pedal position?

      Yes

      - Go To 2

      No

      - Go To 7
2. **CHECK THE BRAKE SWITCH SIGNAL 2 STATUS**
   1. While observing the BRAKE SWITCH SIGNAL 2 status on the scan tool display, press and release the brake pedal several times.

      Does the scan tool display BRAKE SWITCH SIGNAL 2: PRESSED and RELEASED for the appropriate pedal position?

      Yes

      - Go To 3

      No

      - Go To 4

3. **INTERMITTENT CONDITION**

WARNING: When the engine is operating, do not stand in direct line with the fan. Do not put your hands near the pulleys, belts, or fan. Do not wear loose clothing.

NOTE: The conditions that set the DTC are not present at this time. The following list may help in identifying the intermittent condition.

1. With the engine running at normal operating temperature, monitor the scan tool parameters related to the DTC while wiggling the wiring harness. Look for parameter values to change and/or a DTC to set.
2. Review the DTC When Monitored and Set Conditions. If possible, try to duplicate the conditions under which the DTC was set.
3. Perform any Technical Service Bulletins (TSB) that may apply.
4. Visually inspect the related wiring harness. Look for any chafed, pierced, pinched, or partially broken wires.
5. Visually inspect the related wiring harness connectors. Look for broken, bent, pushed out, or corroded terminals.

Were any of the above conditions present?

Yes

- Repair as necessary.
- Perform the POWERTRAIN VERIFICATION TEST - 2.2L DIESEL. Refer to **PCM VERIFICATION TEST - 2.2L DIESEL** .

No

- Test Complete.

4. **CHECK THE (B16) BRAKE SWITCH SIGNAL 2 CIRCUIT FOR AN OPEN/HIGH RESISTANCE**
   1. Turn the ignition off.
   2. Disconnect the Stop Lamp Switch harness connector.

3. Disconnect the PCM harness connector.
4. Measure the resistance of the (B16) Brake Switch Signal 2 circuit between the Stop Lamp Switch harness connector and the PCM harness connector.

   Is the resistance below 5.0 Ohms?

   Yes

   - Go To 5

   No

   - Repair the (B16) Brake Switch Signal 2 circuit for an open or high resistance.
   - Perform the POWERTRAIN VERIFICATION TEST - 2.2L DIESEL. Refer to **PCM VERIFICATION TEST - 2.2L DIESEL** .

5. **CHECK THE (B16) BRAKE SWITCH SIGNAL 2 CIRCUIT FOR A SHORT TO GROUND**
   1. Measure the resistance between ground and the (B16) Brake Switch Signal 2 circuit at the Stop Lamp Switch harness connector.

      Is the resistance above 10K Ohms?

      Yes

      - Go To 6

      No

      - Repair the (B16) Brake Switch Signal 2 circuit for a short to ground.
      - Perform the POWERTRAIN VERIFICATION TEST - 2.2L DIESEL. Refer to **PCM VERIFICATION TEST - 2.2L DIESEL** .

6. **CHECK THE BRAKE SWITCH**
   1. Measure the resistance between terminal 3 and terminal 4 of the Stop Lamp Switch harness connector with the brake pedal depressed.

Is the resistance below 10.0 Ohms?

Yes

- Replace the Powertrain Control Module. **Before removing the PCM, perform the "Replace PCM" routine in the Miscellaneous Functions tab of the scan tool.** . Refer to **REMOVAL** .
- Perform the POWERTRAIN VERIFICATION TEST - 2.2L DIESEL. Refer to **PCM VERIFICATION TEST - 2.2L DIESEL** .

No

- Replace Stop Lamp Switch in accordance with the service information.
- Perform the POWERTRAIN VERIFICATION TEST - 2.2L DIESEL. Refer to **PCM VERIFICATION TEST - 2.2L DIESEL** .

7. **CHECK THE (B15) BRAKE SWITCH SIGNAL 1 CIRCUIT FOR A SHORT TO VOLTAGE**
   1. Turn the ignition off.
   2. Disconnect the PCM harness connectors.
   3. Remove the Main Relay.
   4. Connect a jumper wire between cavity 87 and cavity 30 of the Main Relay connector.
   5. Turn the ignition on.
   6. Measure the voltage between the (B15) Brake Switch Signal 1 circuit and ground.

   Is there any voltage present?

   Yes

   - Repair the (B15) Brake Switch Signal 1 circuit for a short to voltage.
   - Perform the POWERTRAIN VERIFICATION TEST - 2.2L DIESEL. Refer to **PCM VERIFICATION TEST - 2.2L**

DIESEL .

No

- Go To 8

8. **CHECK THE (B15) BRAKE SWITCH SIGNAL 1 CIRCUIT FOR AN OPEN/HIGH RESISTANCE**
   1. Turn the ignition off.
   2. Disconnect the Stop Lamp Switch harness connector.
   3. Measure the resistance of the (B15) Brake Switch Signal 1 circuit between the Stop Lamp Switch harness connector and the PCM harness connector.

   Is the resistance below 5.0 Ohms?

   Yes

   - Go To 9

   No

   - Repair the (B15) Brake Switch Signal 1 circuit for an open or high resistance.
   - Perform the POWERTRAIN VERIFICATION TEST - 2.2L DIESEL. Refer to **PCM VERIFICATION TEST - 2.2L DIESEL** .

9. **CHECK THE (B15) BRAKE SWITCH SIGNAL 1 CIRCUIT FOR A SHORT TO GROUND**
   1. Measure the resistance between ground and the (B15) Brake Switch Signal 1 circuit at the Stop Lamp Switch harness connector.

   Is the resistance above 10k Ohms?

   Yes

   - Go To 10

   No

- Repair the (B15) Brake Switch Signal 1 circuit for a short to ground.
- Perform the POWERTRAIN VERIFICATION TEST - 2.2L DIESEL. Refer to **PCM VERIFICATION TEST - 2.2L DIESEL** .

10. **CHECK THE BRAKE SWITCH**
    1. Measure the resistance between terminal 5 and terminal 6 of the Stop Lamp Switch harness connector with the brake pedal depressed.

       Is the resistance below 10.0 Ohms?

       Yes

       - Replace the Powertrain Control Module. **Before removing the PCM, perform the "Replace PCM" routine in the Miscellaneous Functions tab of the scan tool.** . Refer to **REMOVAL** .
       - Perform the POWERTRAIN VERIFICATION TEST - 2.2L DIESEL. Refer to **PCM VERIFICATION TEST - 2.2L DIESEL** .

       No

       - Replace the Stop Lamp Switch in accordance with the service information.
       - Perform the POWERTRAIN VERIFICATION TEST - 2.2L DIESEL. Refer to **PCM VERIFICATION TEST - 2.2L DIESEL** .

P0579-SPEED CONTROL SWITCH 1 PERFORMANCE

For a complete wiring diagram, **refer to appropriate SYSTEM WIRING DIAGRAMS article** .

WHEN MONITORED

With the ignition on.

SET CONDITION

The S/C Switch 1 Signal is above 4.98 Volts for 0.16 of a second.

POSSIBLE CAUSES

Possible Causes
(V71) S/C SWITCH 1 SIGNAL CIRCUIT SHORTED TO VOLTAGE
(V71) S/C SWITCH 1 SIGNAL CIRCUIT OPEN/HIGH RESISTANCE
(V937) S/C SWITCH GROUND CIRCUIT OPEN/HIGH RESISTANCE
SPEED CONTROL SWITCH
CLOCKSPRING
POWERTRAIN CONTROL MODULE (PCM)

Always perform the Pre-Diagnostic Troubleshooting procedure before proceeding. Refer to PRE-DIAGNOSTIC TROUBLESHOOTING PROCEDURE - 2.2L DIESEL .

DIAGNOSTIC TEST

1. **CHECK THE (V937) S/C SWITCH GROUND CIRCUIT FOR AN OPEN/HIGH RESISTANCE**
   1. Turn the ignition on.
   2. With the scan tool, View DTCs.

NOTE: If DTCs P0581-SPEED CONTROL SWITCH 1 CIRCUIT HIGH and P0593-SPEED CONTROL SWITCH 2 CIRCUIT HIGH are both active, the (V937) S/C Switch Ground circuit is open.

Are DTCs P0581 and P0593 both active together?

Yes

- Repair the (V937) S/C Switch Ground circuit for an open or high resistance.
- Perform the POWERTRAIN VERIFICATION TEST - 2.2L. Refer to **PCM VERIFICATION TEST - 2.2L DIESEL** .

No

- Go To 2

2. **(V71) S/C SWITCH 1 SIGNAL CIRCUIT SHORTED TO VOLTAGE**
   1. Turn the ignition off.
   2. Disconnect the Powertrain Control Module harness connector.
   3. Remove the Main Relay.
   4. Connect a jumper wire between cavity 87 and cavity 30 of the Main Relay connector.
   5. Turn the ignition on.
   6. Measure the voltage on the (V71) S/C Switch 1 Signal circuit.

   Is there any voltage present?

   Yes

   - Repair the (V71) S/C Switch 1 Signal circuit for a short to voltage.
   - Perform the POWERTRAIN VERIFICATION TEST - 2.2L. Refer to **PCM VERIFICATION TEST - 2.2L DIESEL** .

   No

   - Go To 3

3. **CHECK THE SPEED CONTROL SWITCH**
   1. Turn the ignition off.
   2. Disconnect the Speed Control Switch harness connector.
   3. Reconnect the Powertrain Control Module harness connector.
   4. Connect a jumper wire between the (V71) S/C Switch 1 Signal circuit and the (V937) S/C Switch Ground circuit at the Speed Control Switch harness connector.
   5. Turn the ignition on.
   6. With the scan tool, View DTCs.

   Does the scan tool display P0580-SPEED CONTROL SWITCH 1 CIRCUIT LOW AS ACTIVE?

   Yes

   - Replace the Speed Control Switches in accordance with the service

information.

- Perform the POWERTRAIN VERIFICATION TEST - 2.2L. Refer to **PCM VERIFICATION TEST - 2.2L DIESEL** .

No

- Go To 4

4. **CHECK THE CLOCKSPRING**
   1. Turn the ignition off.
   2. Disconnect the Clockspring harness connector.
   3. Connect a jumper wire between the (V71) S/C Switch 1 Signal circuit and the (V937) S/C Switch Ground circuit at the Clockspring harness connector.
   4. Turn the ignition on.
   5. With the scan tool, View DTCs.

   Does the scan tool display P0580-SPEED CONTROL SWITCH 1 CIRCUIT LOW AS ACTIVE?

   Yes

   - Replace the Clockspring in accordance with the service information.
   - Perform the POWERTRAIN VERIFICATION TEST - 2.2L. Refer to **PCM VERIFICATION TEST - 2.2L DIESEL** .

   No

   - Go To 5

5. **CHECK THE (V71) S/C SWITCH 1 SIGNAL CIRCUIT FOR AN OPEN/HIGH RESISTANCE**
   1. Turn the ignition off.
   2. Disconnect the Powertrain Control Module harness connector.
   3. Measure the resistance of the (V71) S/C Switch 1 Signal circuit between the Speed Control Switch harness connector and the Powertrain Control Module harness connector.

   Is the resistance below 5.0 Ohms?

Yes

- Go To 6

No

- Repair the (V71) S/C Switch 1 Signal circuit for an open or high resistance.
- Perform the POWERTRAIN VERIFICATION TEST - 2.2L. Refer to **PCM VERIFICATION TEST - 2.2L DIESEL** .

6. **POWERTRAIN CONTROL MODULE**
   1. Using the wiring diagram/schematic as a guide, inspect the wiring and connectors between the Speed Control Switch and the Powertrain Control Module.
   2. Look for any chafed, pierced, pinched or partially broken wires.
   3. Look for broken, bent, pushed out or corroded terminals.
   4. Perform any Technical Service Bulletins that may apply.

   Were any problems found?

   Yes

   - Repair as necessary.
   - Perform the POWERTRAIN VERIFICATION TEST - 2.2L. Refer to **PCM VERIFICATION TEST - 2.2L DIESEL** .

   No

   - Replace the Powertrain Control Module. **Before removing the PCM, perform the "Replace PCM" routine in the Miscellaneous Functions tab of the scan tool.** . Refer to **REMOVAL** .
   - Perform the POWERTRAIN VERIFICATION TEST - 2.2L. Refer to **PCM VERIFICATION TEST - 2.2L DIESEL** .

P0580-SPEED CONTROL SWITCH 1 CIRCUIT LOW

For a complete wiring diagram, **refer to appropriate SYSTEM WIRING DIAGRAMS article** .

WHEN MONITORED

With the ignition on.

SET CONDITION

The S/C Switch 1 Signal is below 0.05 of a Volt for 0.16 of a second.

POSSIBLE CAUSES

Possible Causes
(V71) S/C SWITCH 1 SIGNAL CIRCUIT SHORTED TO GROUND
SPEED CONTROL SWITCH
CLOCKSPRING
POWERTRAIN CONTROL MODULE (PCM)

Always perform the Pre-Diagnostic Troubleshooting procedure before proceeding. Refer to PRE-DIAGNOSTIC TROUBLESHOOTING PROCEDURE - 2.2L DIESEL .

DIAGNOSTIC TEST

1. **S/C SWITCH VOLTAGES OUT OF RANGE**

KEY	SIGNAL 1		SIGNAL 2	
	LO LIMIT	HIGH LIMIT	LO LIMIT	HIGH LIMIT
RELEASED	4.32	4.79	4.32	4.79
ON-OFF	0.89	1.00	3.58	3.98
SET/DECEL	3.24	3.60	1.34	1.50
RESUME-ACCEL	3.86	4.29	2.18	2.44
CANCEL	1.74	1.95	2.94	3.28

   1. Turn the ignition on.
   2. Using the scan tool, monitor the S/C Switch 1 Signal voltages.
   3. Press each button while noting the voltage readings for each circuit.

   Are the S/C Switch 1 Signal voltages within the ranges specified in the table when each button is pressed?

Yes

Perform the INTERMITTENT CONDITION diagnostic procedure. Refer to **INTERMITTENT CONDITION - 2.2L DIESEL** .

No

- Go To 2

2. **CHECK THE SPEED CONTROL SWITCH**
   1. Turn the ignition off.
   2. Disconnect the Speed Control Switch harness connector.
   3. Turn the ignition on.
   4. Using the scan tool, monitor the S/C Switch 1 Signal Voltage.

   Does the scan tool display 5.0 Volts with the Speed Control Switch disconnected?

   Yes

   - Replace the Speed Control Switch in accordance with the service information.
   - Perform the POWERTRAIN VERIFICATION TEST - 2.2L DIESEL. Refer to **PCM VERIFICATION TEST - 2.2L DIESEL** .

   No

   - Go To 3

3. **CHECK THE CLOCKSPRING**
   1. Turn the ignition off.
   2. Disconnect the Clockspring harness connector.
   3. Turn the ignition on.
   4. Using the scan tool, monitor the S/C Switch 1 Signal Voltage.

   Does the scan tool display 5.0 Volts with the Clockspring disconnected?

   Yes

- Replace the Clockspring in accordance with the service information.
- Perform the POWERTRAIN VERIFICATION TEST - 2.2L DIESEL. Refer to **PCM VERIFICATION TEST - 2.2L DIESEL** .

No

- Go To 4

4. **CHECK THE (V71) S/C SWITCH 1 SIGNAL CIRCUIT FOR A SHORT TO GROUND**
   1. Turn the ignition off.
   2. Disconnect the PCM harness connector.
   3. Measure the resistance between ground and the (V71) S/C Switch 1 Signal circuit at the Clockspring harness connector.

      Is the resistance above 10k Ohms?

      Yes

      - Go To 5

      No

      - Repair the (V71) S/C Switch 1 Signal circuit for a short to ground.
      - Perform the POWERTRAIN VERIFICATION TEST - 2.2L DIESEL. Refer to **PCM VERIFICATION TEST - 2.2L DIESEL** .
5. **POWERTRAIN CONTROL MODULE**
   1. Using the wiring diagram/schematic as a guide, inspect the wiring and connectors between the Speed Control Switch and the Powertrain Control Module.
   2. Look for any chafed, pierced, pinched or partially broken wires.
   3. Look for broken, bent, pushed out or corroded terminals.
   4. Perform any Technical Service Bulletins that may apply.

      Were any problems found?

Yes

- Repair as necessary.
- Perform the POWERTRAIN VERIFICATION TEST - 2.2L DIESEL. Refer to **PCM VERIFICATION TEST - 2.2L DIESEL** .

No

- Replace the Powertrain Control Module. **Before removing the PCM, perform the "Replace PCM" routine in the Miscellaneous Functions tab of the scan tool.** . Refer to **REMOVAL** .
- Perform the POWERTRAIN VERIFICATION TEST - 2.2L DIESEL. Refer to **PCM VERIFICATION TEST - 2.2L DIESEL** .

P0581-SPEED CONTROL SWITCH 1 CIRCUIT HIGH

For a complete wiring diagram, **refer to appropriate SYSTEM WIRING DIAGRAMS article** .

WHEN MONITORED

With the ignition on.

SET CONDITION

The S/C Switch 1 Signal is above 4.98 Volts for 0.16 of a second.

POSSIBLE CAUSES

Possible Causes
(V71) S/C SWITCH 1 SIGNAL CIRCUIT SHORTED TO VOLTAGE
(V71) S/C SWITCH 1 SIGNAL CIRCUIT OPEN/HIGH RESISTANCE
(V937) S/C SWITCH GROUND CIRCUIT OPEN/HIGH RESISTANCE
SPEED CONTROL SWITCH
CLOCKSPRING
POWERTRAIN CONTROL MODULE (PCM)

Always perform the Pre-Diagnostic Troubleshooting procedure before

proceeding. Refer to PRE-DIAGNOSTIC TROUBLESHOOTING PROCEDURE - 2.2L DIESEL .

DIAGNOSTIC TEST

1. **CHECK THE (V937) S/C SWITCH GROUND CIRCUIT FOR AN OPEN/HIGH RESISTANCE**
   1. Turn the ignition on.
   2. With the scan tool, View DTCs.

      NOTE: If DTCs P0581-SPEED CONTROL SWITCH 1 CIRCUIT HIGH and P0593-SPEED CONTROL SWITCH 2 CIRCUIT HIGH are both active, the (V937) S/C Switch Ground circuit is open.

      Are DTCs P0581 and P0593 both active together?

      Yes

      - Repair the (V937) S/C Switch Ground circuit for an open or high resistance.
      - Perform the POWERTRAIN VERIFICATION TEST - 2.2L. Refer to **PCM VERIFICATION TEST - 2.2L DIESEL** .

      No

      - Go To 2
2. **(V71) S/C SWITCH 1 SIGNAL CIRCUIT SHORTED TO VOLTAGE**
   1. Turn the ignition off.
   2. Disconnect the Powertrain Control Module harness connector.
   3. Remove the Main Relay.
   4. Connect a jumper wire between cavity 87 and cavity 30 of the Main Relay connector.
   5. Turn the ignition on.
   6. Measure the voltage on the (V71) S/C Switch 1 Signal circuit.

      Is there any voltage present?

Yes

- Repair the (V71) S/C Switch 1 Signal circuit for a short to voltage.
- Perform the POWERTRAIN VERIFICATION TEST - 2.2L. Refer to **PCM VERIFICATION TEST - 2.2L DIESEL** .

No

- Go To 3

3. **CHECK THE SPEED CONTROL SWITCH**
   1. Turn the ignition off.
   2. Disconnect the Speed Control Switch harness connector.
   3. Reconnect the Powertrain Control Module harness connector.
   4. Connect a jumper wire between the (V71) S/C Switch 1 Signal circuit and the (V937) S/C Switch Ground circuit at the Speed Control Switch harness connector.
   5. Turn the ignition on.
   6. With the scan tool, View DTCs.

   Does the scan tool display P0580-SPEED CONTROL SWITCH 1 CIRCUIT LOW AS ACTIVE?

   Yes

   - Replace the Speed Control Switches in accordance with the service information.
   - Perform the POWERTRAIN VERIFICATION TEST - 2.2L. Refer to **PCM VERIFICATION TEST - 2.2L DIESEL** .

   No

   - Go To 4

4. **CHECK THE CLOCKSPRING**
   1. Turn the ignition off.
   2. Disconnect the Clockspring harness connector.
   3. Connect a jumper wire between the (V71) S/C Switch 1 Signal circuit and the (V937) S/C Switch Ground circuit at the Clockspring harness

connector.

4. Turn the ignition on.
5. With the scan tool, View DTCs.

   Does the scan tool display P0580-SPEED CONTROL SWITCH 1 CIRCUIT LOW AS ACTIVE?

   Yes

   - Replace the Clockspring in accordance with the service information.
   - Perform the POWERTRAIN VERIFICATION TEST - 2.2L. Refer to **PCM VERIFICATION TEST - 2.2L DIESEL** .

   No

   - Go To 5

5. **CHECK THE (V71) S/C SWITCH 1 SIGNAL CIRCUIT FOR AN OPEN/HIGH RESISTANCE**
   1. Turn the ignition off.
   2. Disconnect the Powertrain Control Module harness connector.
   3. Measure the resistance of the (V71) S/C Switch 1 Signal circuit between the Speed Control Switch harness connector and the Powertrain Control Module harness connector.

      Is the resistance below 5.0 Ohms?

      Yes

      - Go To 6

      No

      - Repair the (V71) S/C Switch 1 Signal circuit for an open or high resistance.
      - Perform the POWERTRAIN VERIFICATION TEST - 2.2L. Refer to **PCM VERIFICATION TEST - 2.2L DIESEL** .

6. **POWERTRAIN CONTROL MODULE**

1. Using the wiring diagram/schematic as a guide, inspect the wiring and connectors between the Speed Control Switch and the Powertrain Control Module.
2. Look for any chafed, pierced, pinched or partially broken wires.
3. Look for broken, bent, pushed out or corroded terminals.
4. Perform any Technical Service Bulletins that may apply.

Were any problems found?

Yes

- Repair as necessary.
- Perform the POWERTRAIN VERIFICATION TEST - 2.2L. Refer to **PCM VERIFICATION TEST - 2.2L DIESEL** .

No

- Replace the Powertrain Control Module. **Before removing the PCM, perform the "Replace PCM" routine in the Miscellaneous Functions tab of the scan tool.** . Refer to **REMOVAL** .
- Perform the POWERTRAIN VERIFICATION TEST - 2.2L. Refer to **PCM VERIFICATION TEST - 2.2L DIESEL** .

P0585-SPEED CONTROL SWITCH 1/2 CORRELATION

For a complete wiring diagram, **refer to appropriate SYSTEM WIRING DIAGRAMS article** .

WHEN MONITORED

With the ignition on and no other S/C Switch DTCs present.

SET CONDITION

The (V71) S/C Switch 1 Signal and (V72) S/C Switch 2 Signal do not indicate the same S/C Switch position for 0.16 of a second.

POSSIBLE CAUSES

Possible Causes

HIGH RESISTANCE IN THE (V71) S/C SWITCH 1 SIGNAL CIRCUIT
HIGH RESISTANCE IN THE (V72) S/C SWITCH 2 SIGNAL CIRCUIT
HIGH RESISTANCE IN THE (V937) S/C SWITCH GROUND CIRCUIT
CLOCKSPRING
SPEED CONTROL SWITCH
POWERTRAIN CONTROL MODULE (PCM)

Always perform the Pre-Diagnostic Troubleshooting procedure before proceeding. Refer to PRE-DIAGNOSTIC TROUBLESHOOTING PROCEDURE - 2.2L DIESEL .

DIAGNOSTIC TEST

1. **S/C SWITCH VOLTAGES OUT OF RANGE**

KEY	SIGNAL 1		SIGNAL 2	
	LO LIMIT	HIGH LIMIT	LO LIMIT	HIGH LIMIT
RELEASED	4.32	4.79	4.32	4.79
ON-OFF	0.89	1.00	3.58	3.98
SET/DECEL	3.24	3.60	1.34	1.50
RESUME-ACCEL	3.86	4.29	2.18	2.44
CANCEL	1.74	1.95	2.94	3.28

1. Turn the ignition on.
2. With the scan tool, monitor the S/C Switch signal voltages.
3. Press each button while noting the voltage readings for each circuit.

   Do the S/C Switch voltages fall within the ranges specified in the table when each button is pressed?

   Yes

   - Perform the INTERMITTENT CONDITION diagnostic procedure. Refer to **INTERMITTENT CONDITION - 2.2L DIESEL** .

   NOTE: If P0585-SPEED CONTROL SWITCH 1/2 CORRELATION DTC is not active, it is

possible that the customer accidentally partially pressed a cruise control switch, activating only one of the cruise switches. If only one of the two cruise control switches is pressed for 0.16 seconds, then P0585 will be set.

No

- Go To 2

2. **CHECK FOR HIGH RESISTANCE IN THE SPEED CONTROL SWITCH CIRCUITS**
   1. Turn the ignition off.
   2. Disconnect the Speed Control Switch harness connector.
   3. Disconnect the Powertrain Control Module harness connector.
   4. Measure the resistance of the (V71) S/C Switch 1 Signal circuit between the Speed Control Switch harness connector and the Powertrain Control Module harness connector.
   5. Measure the resistance of the (V72) S/C Switch 2 Signal circuit between the Speed Control Switch harness connector and the Powertrain Control Module harness connector.
   6. Measure the resistance of the (V937) S/C Switch Ground circuit between the Speed Control Switch harness connector and the Powertrain Control Module harness connector.

   Is the resistance below 5.0 Ohms for ALL measurements?

   Yes

   - Go To 4

   No

   - Go To 3

3. **CHECK THE CLOCKSPRING**
   1. Disconnect the Clockspring harness connector.
   2. Measure the resistance of the circuit that measured above 5.0 Ohms

between the Speed Control Switch harness connector and the Powertrain Control Module harness connector.

Is the resistance below 5.0 Ohms?

Yes

- Replace the Clockspring in accordance with the service information.
- Perform the POWERTRAIN VERIFICATION TEST - 2.2L DIESEL. Refer to **PCM VERIFICATION TEST - 2.2L DIESEL** .

No

- Repair the circuit for an open or high resistance.
- Perform the POWERTRAIN VERIFICATION TEST - 2.2L DIESEL. Refer to **PCM VERIFICATION TEST - 2.2L DIESEL** .

4. **CHECK THE SPEED CONTROL SWITCH**
   1. Turn the ignition off.
   2. Reconnect the Powertrain Control Module harness connector.
   3. Turn the ignition on.
   4. With the scan tool, monitor the S/C Switch Voltage.
   5. While monitoring the scan tool, connect a jumper wire between the (V71) S/C Switch 1 Signal circuit and the (V937) S/C Switch Ground circuit in the S/C Switch harness connector.
   6. While monitoring the scan tool, connect a jumper wire between the (V72) S/C Switch 2 Signal circuit and the (V937) S/C Switch Ground circuit in the S/C Switch harness connector.

   Does the scan tool display below 0.1 Volt for each circuit with the jumper wire in place?

   Yes

   - Replace the Speed Control Switch in accordance with the service information.

- Perform the POWERTRAIN VERIFICATION TEST - 2.2L DIESEL. Refer to **PCM VERIFICATION TEST - 2.2L DIESEL** .

No

- Go To 5

5. **POWERTRAIN CONTROL MODULE**
   1. Using the wiring diagram/schematic as a guide, inspect the wiring and connectors between the Speed Control Switch and the Powertrain Control Module.
   2. Look for any chafed, pierced, pinched, or partially broken wires.
   3. Look for broken, bent, pushed out or corroded terminals.
   4. Perform any Technical Service Bulletins that may apply.

   Were any problems found?

   Yes

   - Repair as necessary.
   - Perform the POWERTRAIN VERIFICATION TEST - 2.2L DIESEL. Refer to **PCM VERIFICATION TEST - 2.2L DIESEL** .

   No

   - Replace the Powertrain Control Module. **Before removing the PCM, perform the "Replace PCM" routine in the Miscellaneous Functions tab of the scan tool.** . Refer to **REMOVAL** .
   - Perform the POWERTRAIN VERIFICATION TEST - 2.2L DIESEL. Refer to **PCM VERIFICATION TEST - 2.2L DIESEL** .

P0589-SPEED CONTROL SWITCH 2

For a complete wiring diagram, **refer to appropriate SYSTEM WIRING DIAGRAMS article** .

WHEN MONITORED

With the ignition on.

SET CONDITION

The S/C Switch 2 Signal is above 4.98 Volts for 0.16 of a second.

POSSIBLE CAUSES

Possible Causes
(V72) S/C SWITCH 2 SIGNAL CIRCUIT SHORTED TO VOLTAGE
(V72) S/C SWITCH 2 SIGNAL CIRCUIT OPEN/HIGH RESISTANCE
(V937) S/C SWITCH GROUND CIRCUIT OPEN/HIGH RESISTANCE
SPEED CONTROL SWITCH
CLOCKSPRING
POWERTRAIN CONTROL MODULE (PCM)

Always perform the Pre-Diagnostic Troubleshooting procedure before proceeding. Refer to PRE-DIAGNOSTIC TROUBLESHOOTING PROCEDURE - 2.2L DIESEL .

DIAGNOSTIC TEST

1. **CHECK THE (V937) S/C SWITCH GROUND CIRCUIT FOR AN OPEN/HIGH RESISTANCE**
   1. Turn the ignition on.
   2. With the scan tool, View DTCs.

NOTE: If DTCs P0581-SPEED CONTROL SWITCH 1 CIRCUIT HIGH and P0593-SPEED CONTROL SWITCH 2 CIRCUIT HIGH are both active, the (V937) S/C Switch Ground circuit is open.

Are DTCs P0581 and P0593 both active together?

Yes

- Repair the (V937) S/C Switch Ground circuit for an open or high resistance.

- Perform the POWERTRAIN VERIFICATION TEST - 2.2L. Refer to **PCM VERIFICATION TEST - 2.2L DIESEL** .

No

- Go To 2

2. **(V72) S/C SWITCH 2 SIGNAL CIRCUIT SHORTED TO VOLTAGE**
   1. Turn the ignition off.
   2. Disconnect the Powertrain Control Module harness connector.
   3. Remove the Main Relay.
   4. Connect a jumper wire between cavity 87 and cavity 30 of the Main Relay connector.
   5. Turn the ignition on.
   6. Measure the voltage on the (V72) S/C Switch 2 Signal circuit.

   Is there any voltage present?

   Yes

   - Repair the (V72) S/C Switch 2 Signal circuit for a short to voltage.
   - Perform the POWERTRAIN VERIFICATION TEST - 2.2L. Refer to **PCM VERIFICATION TEST - 2.2L DIESEL** .

   No

   - Go To 3

3. **CHECK THE SPEED CONTROL SWITCH**
   1. Turn the ignition off.
   2. Disconnect the Speed Control Switch harness connector.
   3. Reconnect the Powertrain Control Module harness connector.
   4. Connect a jumper wire between the (V72) S/C Switch 2 Signal circuit and the (V937) S/C Switch Ground circuit at the Speed Control Switch harness connector.
   5. Turn the ignition on.
   6. With the scan tool, View DTCs.

   Does the scan tool display P0592-SPEED CONTROL SWITCH 2

CIRCUIT LOW AS ACTIVE?

Yes

- Replace the Speed Control Switches in accordance with the service information.
- Perform the POWERTRAIN VERIFICATION TEST - 2.2L. Refer to **PCM VERIFICATION TEST - 2.2L DIESEL** .

No

- Go To 4

4. **CHECK THE CLOCKSPRING**
   1. Turn the ignition off.
   2. Disconnect the Clockspring harness connector.
   3. Connect a jumper wire between the (V72) S/C Switch 2 Signal circuit and the (V937) S/C Switch Ground circuit at the Clockspring harness connector.
   4. Turn the ignition on.
   5. With the scan tool, View DTCs.

   Does the scan tool display P0592-SPEED CONTROL SWITCH 2 CIRCUIT LOW AS ACTIVE?

   Yes

   - Replace the Clockspring in accordance with the service information.
   - Perform the POWERTRAIN VERIFICATION TEST - 2.2L. Refer to **PCM VERIFICATION TEST - 2.2L DIESEL** .

   No

   - Go To 5

5. **CHECK THE (V72) S/C SWITCH 2 SIGNAL CIRCUIT FOR AN OPEN/HIGH RESISTANCE**
   1. Turn the ignition off.
   2. Disconnect the Powertrain Control Module harness connector.

3. Measure the resistance of the (V72) S/C Switch 2 Signal circuit between the Speed Control Switch harness connector and the Powertrain Control Module harness connector.

   Is the resistance below 5.0 Ohms?

   Yes

   - Go To 6

   No

   - Repair the (V72) S/C Switch 2 Signal circuit for an open or high resistance.
   - Perform the POWERTRAIN VERIFICATION TEST - 2.2L. Refer to **PCM VERIFICATION TEST - 2.2L DIESEL** .

6. **POWERTRAIN CONTROL MODULE**
   1. Using the wiring diagram/schematic as a guide, inspect the wiring and connectors between the Speed Control Switch and the Powertrain Control Module.
   2. Look for any chafed, pierced, pinched or partially broken wires.
   3. Look for broken, bent, pushed out or corroded terminals.
   4. Perform any Technical Service Bulletins that may apply.

   Were any problems found?

   Yes

   - Repair as necessary.
   - Perform the POWERTRAIN VERIFICATION TEST - 2.2L. Refer to **PCM VERIFICATION TEST - 2.2L DIESEL** .

   No

   - Replace the Powertrain Control Module. **Before removing the PCM, perform the "Replace PCM" routine in the Miscellaneous Functions tab of the scan tool.** . Refer to **REMOVAL** .
   - Perform the POWERTRAIN VERIFICATION TEST - 2.2L. Refer

to **PCM VERIFICATION TEST - 2.2L DIESEL** .

P0590-SPEED CONTROL SWITCH 2 STUCK

For a complete wiring diagram, **refer to appropriate SYSTEM WIRING DIAGRAMS article** .

WHEN MONITORED

With the ignition on.

SET CONDITION

The Powertrain Control Module PCM detects that the S/C Switch 2 is physically stuck for one minute.

POSSIBLE CAUSES

Possible Causes
SPEED CONTROL SWITCH

Always perform the Pre-Diagnostic Troubleshooting procedure before proceeding. Refer to PRE-DIAGNOSTIC TROUBLESHOOTING PROCEDURE - 2.2L DIESEL .

DIAGNOSTIC TEST

ACTIVE DTC

1. Turn the ignition on.
2. With the scan tool, View DTCs.

   Is the DTC active?

   Yes

   - This DTC indicates that the Speed Control Switch is physically stuck in the On position.
   - Replace the Speed Control Switch in accordance with the service information.
   - Perform the POWERTRAIN VERIFICATION TEST - 2.2L. Refer to **PCM VERIFICATION TEST - 2.2L DIESEL** .

No

- Perform the INTERMITTENT CONDITION diagnostic procedure. Refer to **INTERMITTENT CONDITION - 2.2L DIESEL** .

P0592-SPEED CONTROL SWITCH 2 CIRCUIT LOW

For a complete wiring diagram, **refer to appropriate SYSTEM WIRING DIAGRAMS article** .

WHEN MONITORED

With the ignition on.

SET CONDITION

The S/C Switch 2 Signal is below 0.05 Volts for 0.16 of a second.

POSSIBLE CAUSES

Possible Causes
(V72) S/C SWITCH 2 SIGNAL CIRCUIT SHORTED TO GROUND
SPEED CONTROL SWITCH
CLOCLKSPRING
POWERTRAIN CONTROL MODULE (PCM)

Always perform the Pre-Diagnostic Troubleshooting procedure before proceeding. Refer to PRE-DIAGNOSTIC TROUBLESHOOTING PROCEDURE - 2.2L DIESEL .

DIAGNOSTIC TEST

1. **S/C SWITCH VOLTAGES OUT OF RANGE**

KEY	SIGNAL 1		SIGNAL 2	
	LO LIMIT	HIGH LIMIT	LO LIMIT	HIGH LIMIT
RELEASED	4.32	4.79	4.32	4.79
ON-OFF	0.89	1.00	3.58	3.98
SET/DECEL	3.24	3.60	1.34	1.50
RESUME-ACCEL	3.86	4.29	2.18	2.44

CANCEL	1.74	1.95	2.94	3.28

1. Turn the ignition on.
2. Using the scan tool, monitor the S/C Switch 2 Signal voltages.
3. Press each button while noting the voltage readings for each circuit.

   Are the S/C Switch 1 Signal voltages within the ranges specified in the table when each button is pressed?

   Yes

   - Perform the INTERMITTENT CONDITION diagnostic procedure. Refer to **INTERMITTENT CONDITION - 2.2L DIESEL** .

   No

   - Go To 2

2. **CHECK THE SPEED CONTROL SWITCH**
   1. Turn the ignition off.
   2. Disconnect the Speed Control Switch harness connector.
   3. Turn the ignition on.
   4. Using the scan tool, monitor the (V72) S/C Switch 2 Signal Voltage.

      Does the scan tool display 5.0 Volts with the Speed Control Switch disconnected?

      Yes

      - Replace the Speed Control Switch in accordance with the service information.
      - Perform the POWERTRAIN VERIFICATION TEST - 2.2L DIESEL. Refer to **PCM VERIFICATION TEST - 2.2L DIESEL** .

      No

      - Go To 3

3. **CHECK THE CLOCKSPRING**

1. Turn the ignition off.
2. Disconnect the Clockspring harness connector.
3. Turn the ignition on.
4. Using the scan tool, monitor the (V72) S/C Switch 2 Signal Voltage.

   Does the scan tool display 5.0 Volts with the Clockspring disconnected?

   Yes

   - Replace the Clockspring in accordance with the service information.
   - Perform the POWERTRAIN VERIFICATION TEST - 2.2L DIESEL. Refer to **PCM VERIFICATION TEST - 2.2L DIESEL** .

   No

   - Go To 4

4. **CHECK THE (V72) S/C SWITCH 2 SIGNAL CIRCUIT FOR A SHORT TO GROUND**
   1. Turn the ignition off.
   2. Disconnect the PCM harness connector.
   3. Measure the resistance between ground and the (V72) S/C Switch 2 Signal circuit at the Clockspring harness connector.

      Is the resistance above 10k Ohms?

      Yes

      - Go To 5

      No

      - Repair the (V72) S/C Switch 2 Signal circuit for a short to ground.
      - Perform the POWERTRAIN VERIFICATION TEST - 2.2L DIESEL. Refer to **PCM VERIFICATION TEST - 2.2L DIESEL** .

5. **POWERTRAIN CONTROL MODULE**
    1. Using the wiring diagram/schematic as a guide, inspect the wiring and connectors between the Speed Control Switch and the Powertrain Control Module.
    2. Look for any chafed, pierced, pinched or partially broken wires.
    3. Look for broken, bent, pushed out or corroded terminals.
    4. Perform any Technical Service Bulletins that may apply.

    Were any problems found?

    Yes

    - Repair as necessary.
    - Perform the POWERTRAIN VERIFICATION TEST - 2.2L DIESEL. Refer to **PCM VERIFICATION TEST - 2.2L DIESEL** .

    No

    - Replace the Powertrain Control Module. **Before removing the PCM, perform the "Replace PCM" routine in the Miscellaneous Functions tab of the scan tool.** . Refer to **REMOVAL** .
    - Perform the POWERTRAIN VERIFICATION TEST - 2.2L DIESEL. Refer to **PCM VERIFICATION TEST - 2.2L DIESEL** .

P0593-SPEED CONTROL SWITCH 2 CIRCUIT HIGH

For a complete wiring diagram, **refer to appropriate SYSTEM WIRING DIAGRAMS article** .

WHEN MONITORED

With the ignition on.

SET CONDITION

The S/C Switch 2 Signal is above 4.98 Volts for 0.16 of a second.

POSSIBLE CAUSES

Possible Causes
(V72) S/C SWITCH 2 SIGNAL CIRCUIT SHORTED TO VOLTAGE
(V72) S/C SWITCH 2 SIGNAL CIRCUIT OPEN/HIGH RESISTANCE
(V937) S/C SWITCH GROUND CIRCUIT OPEN/HIGH RESISTANCE
SPEED CONTROL SWITCH
CLOCKSPRING
POWERTRAIN CONTROL MODULE (PCM)

Always perform the Pre-Diagnostic Troubleshooting procedure before proceeding. Refer to PRE-DIAGNOSTIC TROUBLESHOOTING PROCEDURE - 2.2L DIESEL .

DIAGNOSTIC TEST

1. **CHECK THE (V937) S/C SWITCH GROUND CIRCUIT FOR AN OPEN/HIGH RESISTANCE**
   1. Turn the ignition on.
   2. With the scan tool, View DTCs.

      NOTE: If DTCs P0581-SPEED CONTROL SWITCH 1 CIRCUIT HIGH and P0593-SPEED CONTROL SWITCH 2 CIRCUIT HIGH are both active, the (V937) S/C Switch Ground circuit is open.

      Are DTCs P0581 and P0593 both active together?

      Yes

      - Repair the (V937) S/C Switch Ground circuit for an open or high resistance.
      - Perform the POWERTRAIN VERIFICATION TEST - 2.2L. Refer to **PCM VERIFICATION TEST - 2.2L DIESEL** .

      No

      - Go To 2
2. **(V72) S/C SWITCH 2 SIGNAL CIRCUIT SHORTED TO VOLTAGE**
   1. Turn the ignition off.

2. Disconnect the Powertrain Control Module harness connector.
3. Remove the Main Relay.
4. Connect a jumper wire between cavity 87 and cavity 30 of the Main Relay connector.
5. Turn the ignition on.
6. Measure the voltage on the (V72) S/C Switch 2 Signal circuit.

   Is there any voltage present?

   Yes

   - Repair the (V72) S/C Switch 2 Signal circuit for a short to voltage.
   - Perform the POWERTRAIN VERIFICATION TEST - 2.2L. Refer to **PCM VERIFICATION TEST - 2.2L DIESEL** .

   No

   - Go To 3

3. **CHECK THE SPEED CONTROL SWITCH**
   1. Turn the ignition off.
   2. Disconnect the Speed Control Switch harness connector.
   3. Reconnect the Powertrain Control Module harness connector.
   4. Connect a jumper wire between the (V72) S/C Switch 2 Signal circuit and the (V937) S/C Switch Ground circuit at the Speed Control Switch harness connector.
   5. Turn the ignition on.
   6. With the scan tool, View DTCs.

      Does the scan tool display P0592-SPEED CONTROL SWITCH 2 CIRCUIT LOW AS ACTIVE?

      Yes

      - Replace the Speed Control Switches in accordance with the service information.
      - Perform the POWERTRAIN VERIFICATION TEST - 2.2L. Refer to **PCM VERIFICATION TEST - 2.2L DIESEL** .

No

- Go To 4

4. **CHECK THE CLOCKSPRING**
   1. Turn the ignition off.
   2. Disconnect the Clockspring harness connector.
   3. Connect a jumper wire between the (V72) S/C Switch 2 Signal circuit and the (V937) S/C Switch Ground circuit at the Clockspring harness connector.
   4. Turn the ignition on.
   5. With the scan tool, View DTCs.

   Does the scan tool display P0592-SPEED CONTROL SWITCH 2 CIRCUIT LOW AS ACTIVE?

   Yes

   - Replace the Clockspring in accordance with the service information.
   - Perform the POWERTRAIN VERIFICATION TEST - 2.2L. Refer to **PCM VERIFICATION TEST - 2.2L DIESEL** .

   No

   - Go To 5

5. **CHECK THE (V72) S/C SWITCH 2 SIGNAL CIRCUIT FOR AN OPEN/HIGH RESISTANCE**
   1. Turn the ignition off.
   2. Disconnect the Powertrain Control Module harness connector.
   3. Measure the resistance of the (V72) S/C Switch 2 Signal circuit between the Speed Control Switch harness connector and the Powertrain Control Module harness connector.

   Is the resistance below 5.0 Ohms?

   Yes

   - Go To 6

No

- Repair the (V72) S/C Switch 2 Signal circuit for an open or high resistance.
- Perform the POWERTRAIN VERIFICATION TEST - 2.2L. Refer to **PCM VERIFICATION TEST - 2.2L DIESEL** .

6. **POWERTRAIN CONTROL MODULE**
   1. Using the wiring diagram/schematic as a guide, inspect the wiring and connectors between the Speed Control Switch and the Powertrain Control Module.
   2. Look for any chafed, pierced, pinched or partially broken wires.
   3. Look for broken, bent, pushed out or corroded terminals.
   4. Perform any Technical Service Bulletins that may apply.

   Were any problems found?

   Yes

   - Repair as necessary.
   - Perform the POWERTRAIN VERIFICATION TEST - 2.2L. Refer to **PCM VERIFICATION TEST - 2.2L DIESEL** .

   No

   - Replace the Powertrain Control Module. **Before removing the PCM, perform the "Replace PCM" routine in the Miscellaneous Functions tab of the scan tool.** . Refer to **REMOVAL** .
   - Perform the POWERTRAIN VERIFICATION TEST - 2.2L. Refer to **PCM VERIFICATION TEST - 2.2L DIESEL** .

P0597-THERMOSTAT HEATER CONTROL CIRCUIT OPEN

For a complete wiring diagram, **refer to appropriate SYSTEM WIRING DIAGRAMS article** .

WHEN MONITORED

With the engine running.

SET CONDITION

The Powertrain Control Module (PCM) detects an open on the (K223) Cooling Thermostat Actuator Control circuit for five seconds.

POSSIBLE CAUSES

Possible Causes
(K223) COOLING THERMOSTAT ACTUATOR CONTROL CIRCUIT OPEN
COOLING THERMOSTAT ACTUATOR
POWERTRAIN CONTROL MODULE (PCM)

Always perform the Pre-Diagnostic Troubleshooting procedure before proceeding. Refer to PRE-DIAGNOSTIC TROUBLESHOOTING PROCEDURE - 2.2L DIESEL .

DIAGNOSTIC TEST

1. **DTC IS ACTIVE**
   1. Ignition on, engine not running.
   2. With the scan tool, clear DTCs in the Powertrain Control Module.
   3. Start the engine.
   4. Monitor the scan tool for at least five minutes.
   5. With the scan tool, select View DTCs.

      Is the status Active for this DTC?

      Yes

      - Go To 2

      No

      - Perform the INTERMITTENT CONDITION diagnostic procedure. Refer to **INTERMITTENT CONDITION - 2.2L DIESEL** .
2. **CHECK THE (K223) COOLING THERMOSTAT ACTUATOR CONTROL CIRCUIT FOR AN OPEN/HIGH RESISTANCE**
   1. Disconnect the Cooling Thermostat Actuator harness connector.

2. Disconnect the Powertrain Control Module C1 harness connector.
3. Measure the resistance of the (K223) Cooling Thermostat Actuator Control circuit between the Cooling Thermostat Actuator harness connector and the Powertrain Control Module C1 harness connector.

   Is the resistance below 5.0 Ohms?

   Yes

   - Go To 3

   No

   - Repair the (K223) Cooling Thermostat Actuator Control circuit for an open or high resistance.
   - Perform the POWERTRAIN VERIFICATION TEST - 2.2L DIESEL. Refer to **PCM VERIFICATION TEST - 2.2L DIESEL** .

3. **CHECK THE COOLING THERMOSTAT ACTUATOR FOR AN OPEN/HIGH RESISTANCE**
   1. Measure the resistance across the terminals of the Cooling Thermostat Actuator.

      Is the resistance below 100.0 Ohms?

      Yes

      - Go To 4

      No

      - Replace the Cooling Thermostat Actuator in accordance with the service information.
      - Perform the POWERTRAIN VERIFICATION TEST - 2.2L DIESEL. Refer to **PCM VERIFICATION TEST - 2.2L DIESEL** .

4. **POWERTRAIN CONTROL MODULE**
   1. Using the wiring diagram/schematic as a guide, inspect the wiring and connectors between the Cooling Thermostat Actuator and the

Powertrain Control Module.

2. Look for any chafed, pierced, pinched, or partially broken wires.
3. Look for broken, bent, pushed out or corroded terminals.
4. Monitor the scan tool data relative to this circuit and wiggle test the wiring and connectors.
5. Look for the data to change or for the DTC to reset during the wiggle test.
6. Perform any Technical Service Bulletins that may apply.

Were any problems found?

Yes

- Repair as necessary.
- Perform the POWERTRAIN VERIFICATION TEST - 2.2L DIESEL. Refer to **PCM VERIFICATION TEST - 2.2L DIESEL** .

No

- Replace the Powertrain Control Module. **Before removing the PCM, perform the "Replace PCM" routine in the Miscellaneous Functions tab of the scan tool.** . Refer to **REMOVAL** .
- Perform the POWERTRAIN VERIFICATION TEST - 2.2L DIESEL. Refer to **PCM VERIFICATION TEST - 2.2L DIESEL** .

P0598-THERMOSTAT HEATER CONTROL CIRCUIT LOW

For a complete wiring diagram, **refer to appropriate SYSTEM WIRING DIAGRAMS article** .

WHEN MONITORED

With the engine running.

SET CONDITION

The Powertrain Control Module (PCM) detects a short to ground on the (K223)

Cooling Thermostat Actuator Control circuit for five seconds.

POSSIBLE CAUSES

Possible Causes
(F344) FUSED MAIN RELAY OUTPUT CIRCUIT OPEN/HIGH RESISTANCE
(K223) COOLING THERMOSTAT ACTUATOR CONTROL CIRCUIT SHORTED TO GROUND
COOLING THERMOSTAT ACTUATOR
POWERTRAIN CONTROL MODULE (PCM)

Always perform the Pre-Diagnostic Troubleshooting procedure before proceeding. Refer to PRE-DIAGNOSTIC TROUBLESHOOTING PROCEDURE - 2.2L DIESEL .

DIAGNOSTIC TEST

1. **DTC IS ACTIVE**

NOTE: Diagnose and repair any system voltage or Main Relay DTCs before continuing with this test.

1. Ignition on, engine not running.
2. With the scan tool, clear DTCs in the Powertrain Control Module.
3. Start the engine.
4. Monitor the scan tool for at least five minutes.
5. With the scan tool, select View DTCs.

Is the status Active for this DTC?

Yes

- Go To2

No

- Perform the INTERMITTENT CONDITION diagnostic procedure. Refer to **INTERMITTENT CONDITION - 2.2L DIESEL** .

2. **CHECK THE (F344) FUSED MAIN RELAY OUTPUT CIRCUIT FOR AN OPEN/HIGH RESISTANCE**
   1. Turn the ignition off.
   2. Disconnect the Cooling Thermostat Actuator harness connector.
   3. Turn the ignition on, engine not running.
   4. Using a 12-Volt test light connected to ground, check the (F344) Fused Main Relay Output circuit at the Cooling Thermostat Actuator harness connector.

      NOTE: The test light should illuminate brightly. Compare the brightness to that of a connection of direct battery.

      Is the test light illuminated brightly?

      Yes

      - Go To 3

      No

      - Repair the (F344) Fused Main Relay Output circuit for an open or high resistance.
      - Perform the POWERTRAIN VERIFICATION TEST - 2.2L DIESEL. Refer to **PCM VERIFICATION TEST - 2.2L DIESEL** .
3. **CHECK THE (K223) COOLING THERMOSTAT ACTUATOR CONTROL CIRCUIT FOR SHORT TO GROUND**
   1. Turn the ignition off.
   2. Disconnect the Powertrain Control Module C1 harness connector.
   3. Measure the resistance between ground and the (K223) Cooling Thermostat Actuator Control circuit at the Cooling Thermostat Actuator harness connector.

      Is the resistance above 10k Ohms?

      Yes

- Go To 4

No

- Repair the (K223) Cooling Thermostat Actuator Control circuit for a short to ground.
- Perform the POWERTRAIN VERIFICATION TEST - 2.2L DIESEL. Refer to **PCM VERIFICATION TEST - 2.2L DIESEL** .

4. **CHECK THE COOLING THERMOSTAT ACTUATOR FOR SHORT TO GROUND**
   1. Measure the resistance between ground and either terminal of the Cooling Thermostat Actuator.

      Is the resistance above 10k Ohms?

      Yes

      - Go To 5

      No

      - Replace the Cooling Thermostat Actuator in accordance with the service information.
      - Perform the POWERTRAIN VERIFICATION TEST - 2.2L DIESEL. Refer to **PCM VERIFICATION TEST - 2.2L DIESEL** .
5. **POWERTRAIN CONTROL MODULE**
   1. Using the wiring diagram/schematic as a guide, inspect the wiring and connectors between the Cooling Thermostat Actuator and the Powertrain Control Module.
   2. Look for any chafed, pierced, pinched, or partially broken wires.
   3. Look for broken, bent, pushed out or corroded terminals.
   4. Monitor the scan tool data relative to this circuit and wiggle test the wiring and connectors.
   5. Look for the data to change or for the DTC to reset during the wiggle test.

6. Perform any Technical Service Bulletins that may apply.

   Were any problems found?

   Yes

   - Repair as necessary.
   - Perform the POWERTRAIN VERIFICATION TEST - 2.2L DIESEL. Refer to **PCM VERIFICATION TEST - 2.2L DIESEL** .

   No

   - Replace the Powertrain Control Module. **Before removing the PCM, perform the "Replace PCM" routine in the Miscellaneous Functions tab of the scan tool.** . Refer to **REMOVAL** .
   - Perform the POWERTRAIN VERIFICATION TEST - 2.2L DIESEL. Refer to **PCM VERIFICATION TEST - 2.2L DIESEL** .

P0599-THERMOSTAT HEATER CONTROL CIRCUIT HIGH

For a complete wiring diagram, **refer to appropriate SYSTEM WIRING DIAGRAMS article** .

WHEN MONITORED

With the engine running.

SET CONDITION

The Powertrain Control Module (PCM) detects a short to voltage on the (K223) Cooling Thermostat Actuator Control circuit for five seconds.

POSSIBLE CAUSES

Possible Causes
(K223) COOLING THERMOSTAT ACTUATOR CONTROL CIRCUIT SHORTED TO VOLTAGE
(K223) COOLING THERMOSTAT ACTUATOR CONTROL CIRCUIT

SHORTED TO THE (F344) ASD/MAIN RELAY OUTPUT CIRCUIT
POWERTRAIN CONTROL MODULE (PCM)

Always perform the Pre-Diagnostic Troubleshooting procedure before proceeding. Refer to PRE-DIAGNOSTIC TROUBLESHOOTING PROCEDURE - 2.2L DIESEL .

DIAGNOSTIC TEST

1. **DTC IS ACTIVE**

   NOTE: Diagnose and repair any system voltage or Main Relay DTCs before continuing with this test.

   1. Ignition on, engine not running.
   2. With the scan tool, clear DTCs in the Powertrain Control Module.
   3. Start the engine.
   4. Monitor the scan tool for at least five minutes.
   5. With the scan tool, select View DTCs.

   Is the status Active for this DTC?

   Yes

   - Go To 2

   No

   - Perform the INTERMITTENT CONDITION diagnostic procedure. Refer to **INTERMITTENT CONDITION - 2.2L DIESEL** .

2. **CHECK THE (K223) COOLING THERMOSTAT ACTUATOR CONTROL CIRCUIT FOR SHORT TO VOLTAGE**
   1. Turn the ignition off.
   2. Disconnect the Cooling Thermostat Actuator harness connector.
   3. Turn the ignition on.
   4. Measure the voltage at the (K223) Cooling Thermostat Actuator Control circuit at the Cooling Thermostat Actuator harness connector.

Is there any voltage present?

Yes

- Repair the (K223) Cooling Thermostat Actuator Control circuit for a short to voltage.
- Perform the POWERTRAIN VERIFICATION TEST - 2.2L DIESEL. Refer to **PCM VERIFICATION TEST - 2.2L DIESEL** .

No

- Go To 3

3. **CHECK THE (K223) COOLING THERMOSTAT ACTUATOR CONTROL CIRCUIT FOR SHORT TO THE (F344) ASD/MAIN RELAY OUTPUT CIRCUIT**
   1. Turn the ignition off.
   2. Disconnect the Powertrain Control Module C1 harness connector.
   3. Measure the resistance between the (K223) Cooling Thermostat Actuator Control circuit and the (F344) ASD/Main Relay Output circuit at the Cooling Thermostat Actuator harness connector.

   Is the resistance above 10k Ohms?

   Yes

   - Go To 4

   No

   - Repair the short between the (K223) Cooling Thermostat Actuator Control circuit and the (F344) ASD/Main Relay Output circuit.
   - Perform the POWERTRAIN VERIFICATION TEST - 2.2L DIESEL. Refer to **PCM VERIFICATION TEST - 2.2L DIESEL** .
4. **POWERTRAIN CONTROL MODULE**
   1. Using the wiring diagram/schematic as a guide, inspect the wiring and connectors between the Cooling Thermostat Actuator and the Powertrain Control Module.

2. Look for any chafed, pierced, pinched, or partially broken wires.
3. Look for broken, bent, pushed out or corroded terminals.
4. Monitor the scan tool data relative to this circuit and wiggle test the wiring and connectors.
5. Look for the data to change or for the DTC to reset during the wiggle test.
6. Perform any Technical Service Bulletins that may apply.

Were any problems found?

Yes

- Repair as necessary.
- Perform the POWERTRAIN VERIFICATION TEST - 2.2L DIESEL. Refer to **PCM VERIFICATION TEST - 2.2L DIESEL** .

No

- Replace the Powertrain Control Module. **Before removing the PCM, perform the "Replace PCM" routine in the Miscellaneous Functions tab of the scan tool.** . Refer to **REMOVAL** .
- Perform the POWERTRAIN VERIFICATION TEST - 2.2L DIESEL. Refer to **PCM VERIFICATION TEST - 2.2L DIESEL** .

P0601-INTERNAL MEMORY CHECKSUM INVALID

For a complete wiring diagram, **refer to appropriate SYSTEM WIRING DIAGRAMS article** .

WHEN MONITORED

With the ignition on.

SET CONDITION

The Powertrain Control Module (PCM) detects a calculation error.

POSSIBLE CAUSES

Possible Causes
CHECKING PCM POWER AND GROUNDS POWERTRAIN CONTROL MODULE (PCM)

Always perform the Pre-Diagnostic Troubleshooting procedure before proceeding. Refer to PRE-DIAGNOSTIC TROUBLESHOOTING PROCEDURE - 2.2L DIESEL .

DIAGNOSTIC TEST

1. **DTC IS ACTIVE**

NOTE: If the PCM detects and stores a DTC, the PCM also stores the engine/vehicle operating conditions under which the DTC was set. Some of these conditions are displayed on the scan tool at the same time the DTC is displayed. Before erasing stored DTCs, record these conditions. Attempting to duplicate these conditions may assist when checking for an active DTC.

NOTE: If there are other DTCs set with this DTC, repair other DTCs before continuing with this diagnostic procedure.

NOTE: This code can be caused by an intermittent problem in the wiring and connectors to the Powertrain Control Module. Inspect the Powertrain Control Module harness connector and associated wiring for signs of poor terminal contact.

1. Ignition on, engine not running.
2. With the scan tool, clear DTCs in the Powertrain Control Module.
3. Monitor the scan tool for at least two minutes.
4. Cycle the ignition key off and on several times, leaving the ignition on for at least 10 seconds at a time.
5. Start the engine.
6. Perform several engine run cycles, turning the ignition off for at least

20 seconds between each engine run cycle leaving the ignition on.

7. With the scan tool, select View DTCs.

   Is the status Active for this DTC?

   Yes

   - Go To 2

   No

   - Perform the INTERMITTENT DTC diagnostic procedure. Refer to **INTERMITTENT CONDITION - 2.2L DIESEL** .

2. **CHECK PCM POWER AND GROUNDS**
   1. Perform the CHECKING THE PCM POWER AND GROUND diagnostic procedure. Refer to **DIAGNOSIS AND TESTING** .

      Were any problem found with the PCM powers and grounds?

      Yes

      - Repair as necessary.
      - Perform the POWERTRAIN VERIFICATION TEST - 2.2L DIESEL. Refer to **PCM VERIFICATION TEST - 2.2L DIESEL** .

      No

      - Go To 3

3. **POWERTRAIN CONTROL MODULE**
   1. Using the wiring diagram/schematic as a guide, inspect the wiring and connectors for the Powertrain Control Module.
   2. Look for any chafed, pierced, pinched, or partially broken wires.
   3. Look for broken, bent, pushed out or corroded terminals.
   4. Monitor the scan tool data relative to this circuit and wiggle test the wiring and connectors.
   5. Look for the data to change or for the DTC to reset during the wiggle test.

6. Perform any Technical Service Bulletins that may apply.

   Were any problems found?

   Yes

   - Repair as necessary.
   - Perform the POWERTRAIN VERIFICATION TEST - 2.2L DIESEL. Refer to **PCM VERIFICATION TEST - 2.2L DIESEL** .

   No

   - Replace the Powertrain Control Module. **Before removing the PCM, perform the "Replace PCM" routine in the Miscellaneous Functions tab of the scan tool.** . Refer to **REMOVAL** .
   - Perform the POWERTRAIN VERIFICATION TEST - 2.2L DIESEL. Refer to **PCM VERIFICATION TEST - 2.2L DIESEL** .

P0604-INTERNAL CONTROL MODULE RAM

For a complete wiring diagram, **refer to appropriate SYSTEM WIRING DIAGRAMS article** .

WHEN MONITORED

With the ignition on.

SET CONDITION

The Powertrain Control Module (PCM) detects an internal failure. A byte in RAM cannot be set and reset.

POSSIBLE CAUSES

Possible Causes
CHECK THE PCM POWERS AND GROUNDS POWERTRAIN CONTROL MODULE (PCM)

Always perform the Pre-Diagnostic Troubleshooting procedure before proceeding. Refer to PRE-DIAGNOSTIC TROUBLESHOOTING PROCEDURE - 2.2L DIESEL .

DIAGNOSTIC TEST

1. **DTC IS ACTIVE**

NOTE: If the PCM detects and stores a DTC, the PCM also stores the engine/vehicle operating conditions under which the DTC was set. Some of these conditions are displayed on the scan tool at the same time the DTC is displayed. Before erasing stored DTCs, record these conditions. Attempting to duplicate these conditions may assist when checking for an active DTC.

NOTE: If there are other DTCs set with this DTC, repair other DTCs before continuing with this diagnostic procedure.

NOTE: This code can be caused by an intermittent problem in the wiring and connectors to the Powertrain Control Module. Inspect the Powertrain Control Module harness connector and associated wiring for signs of poor terminal contact.

1. Ignition on, engine not running.
2. With the scan tool, clear DTCs in the Powertrain Control Module.
3. Monitor the scan tool for at least two minutes.
4. Cycle the ignition key off and on several times, leaving the ignition on for at least 10 seconds at a time.
5. Start the engine.
6. Perform several engine run cycles, turning the ignition off for at least 20 seconds between each engine run cycle leaving the ignition on.
7. With the scan tool, select View DTCs.

Is the status Active for this DTC?

Yes

- Go To 2

No

- Perform the INTERMITTENT DTC diagnostic procedure. Refer to **INTERMITTENT CONDITION - 2.2L DIESEL** .

2. **CHECK PCM POWER AND GROUNDS**
   1. Perform the CHECKING THE PCM POWER AND GROUND diagnostic procedure. Refer to **DIAGNOSIS AND TESTING** .

   Were any problem found with the PCM powers and grounds?

   Yes

   - Repair as necessary.
   - Perform the POWERTRAIN VERIFICATION TEST - 2.2L DIESEL. Refer to **PCM VERIFICATION TEST - 2.2L DIESEL** .

   No

   - Go To 3

3. **POWERTRAIN CONTROL MODULE**
   1. Using the wiring diagram/schematic as a guide, inspect the wiring and connectors for the Powertrain Control Module.
   2. Look for any chafed, pierced, pinched, or partially broken wires.
   3. Look for broken, bent, pushed out or corroded terminals.
   4. Monitor the scan tool data relative to this circuit and wiggle test the wiring and connectors.
   5. Look for the data to change or for the DTC to reset during the wiggle test.
   6. Perform any Technical Service Bulletins that may apply.

   Were any problems found?

   Yes

- Repair as necessary.
- Perform the POWERTRAIN VERIFICATION TEST - 2.2L DIESEL. Refer to **PCM VERIFICATION TEST - 2.2L DIESEL** .

No

- Replace the Powertrain Control Module. **Before removing the PCM, perform the "Replace PCM" routine in the Miscellaneous Functions tab of the scan tool.** . Refer to **REMOVAL** .
- Perform the POWERTRAIN VERIFICATION TEST - 2.2L DIESEL. Refer to **PCM VERIFICATION TEST - 2.2L DIESEL** .

P0605-INTERNAL CONTROL MODULE ROM

For a complete wiring diagram, **refer to appropriate SYSTEM WIRING DIAGRAMS article** .

WHEN MONITORED

With the ignition on.

SET CONDITION

The Powertrain Control Module (PCM) detects an internal failure. PCM memory corrupt or defective.

POSSIBLE CAUSES

Possible Causes
CHECKING PCM POWER AND GROUNDS POWERTRAIN CONTROL MODULE (PCM)

Always perform the Pre-Diagnostic Troubleshooting procedure before proceeding. Refer to PRE-DIAGNOSTIC TROUBLESHOOTING PROCEDURE - 2.2L DIESEL .

DIAGNOSTIC TEST

1. **DTC IS ACTIVE**

NOTE: If the PCM detects and stores a DTC, the PCM also stores the engine/vehicle operating conditions under which the DTC was set. Some of these conditions are displayed on the scan tool at the same time the DTC is displayed. Before erasing stored DTCs, record these conditions. Attempting to duplicate these conditions may assist when checking for an active DTC.

NOTE: If there are other DTCs set with this DTC, repair other DTCs before continuing with this diagnostic procedure.

NOTE: This code can be caused by an intermittent problem in the wiring and connectors to the Powertrain Control Module. Inspect the Powertrain Control Module harness connector and associated wiring for signs of poor terminal contact.

1. Ignition on, engine not running.
2. With the scan tool, clear DTCs in the Powertrain Control Module.
3. Monitor the scan tool for at least two minutes.
4. Cycle the ignition key off and on several times, leaving the ignition on for at least 10 seconds at a time.
5. Start the engine.
6. Perform several engine run cycles, turning the ignition off for at least 20 seconds between each engine run cycle leaving the ignition on.
7. With the scan tool, select View DTCs.

   Is the status Active for this DTC?

   Yes

   - Go To 2

   No

   - Perform the INTERMITTENT DTC diagnostic procedure. Refer to

INTERMITTENT CONDITION - 2.2L DIESEL .

2. **CHECK PCM POWER AND GROUNDS**
   1. Perform the CHECKING THE PCM POWER AND GROUND diagnostic procedure. Refer to **DIAGNOSIS AND TESTING** .

      Were any problem found with the PCM powers and grounds?

      Yes

      - Repair as necessary.
      - Perform the POWERTRAIN VERIFICATION TEST - 2.2L DIESEL. Refer to **PCM VERIFICATION TEST - 2.2L DIESEL** .

      No

      - Go To 3
3. **POWERTRAIN CONTROL MODULE**
   1. Using the wiring diagram/schematic as a guide, inspect the wiring and connectors for the Powertrain Control Module.
   2. Look for any chafed, pierced, pinched, or partially broken wires.
   3. Look for broken, bent, pushed out or corroded terminals.
   4. Monitor the scan tool data relative to this circuit and wiggle test the wiring and connectors.
   5. Look for the data to change or for the DTC to reset during the wiggle test.
   6. Perform any Technical Service Bulletins that may apply.

      Were any problems found?

      Yes

      - Repair as necessary.
      - Perform the POWERTRAIN VERIFICATION TEST - 2.2L DIESEL. Refer to **PCM VERIFICATION TEST - 2.2L DIESEL** .

      No

- Replace the Powertrain Control Module. **Before removing the PCM, perform the "Replace PCM" routine in the Miscellaneous Functions tab of the scan tool.** . Refer to **REMOVAL** .
- Perform the POWERTRAIN VERIFICATION TEST - 2.2L DIESEL. Refer to **PCM VERIFICATION TEST - 2.2L DIESEL** .

P0607-ECU INTERNAL PERFORMANCE

For a complete wiring diagram, **refer to appropriate SYSTEM WIRING DIAGRAMS article** .

WHEN MONITORED

With the ignition on.

SET CONDITION

The Powertrain Control Module (PCM) detects an internal failure.

POSSIBLE CAUSES

Possible Causes
CHECKING PCM POWER AND GROUNDS POWERTRAIN CONTROL MODULE (PCM)

Always perform the Pre-Diagnostic Troubleshooting procedure before proceeding. Refer to PRE-DIAGNOSTIC TROUBLESHOOTING PROCEDURE - 2.2L DIESEL .

DIAGNOSTIC TEST

1. **DTC IS ACTIVE**

NOTE: If the PCM detects and stores a DTC, the PCM also stores the engine/vehicle operating conditions under which the DTC was set. Some of these conditions are displayed on the scan tool at the same time the DTC is displayed. Before erasing stored DTCs, record these conditions. Attempting to duplicate these

conditions may assist when checking for an active DTC.

NOTE: If there are other DTCs set with this DTC, repair other DTCs before continuing with this diagnostic procedure.

NOTE: This code can be caused by an intermittent problem in the wiring and connectors to the Powertrain Control Module. Inspect the Powertrain Control Module harness connector and associated wiring for signs of poor terminal contact.

1. Ignition on, engine not running.
2. With the scan tool, clear DTCs in the Powertrain Control Module.
3. Monitor the scan tool for at least two minutes.
4. Cycle the ignition key off and on several times, leaving the ignition on for at least 10 seconds at a time.
5. Start the engine.
6. Perform several engine run cycles, turning the ignition off for at least 20 seconds between each engine run cycle leaving the ignition on.
7. With the scan tool, select View DTCs.

   Is the status Active for this DTC?

   Yes

   - Go To 2

   No

   - Perform the INTERMITTENT DTC diagnostic procedure. Refer to **INTERMITTENT CONDITION - 2.2L DIESEL** .

2. **CHECK PCM POWER AND GROUNDS**
   1. Perform the CHECKING THE PCM POWER AND GROUND diagnostic procedure. Refer to **DIAGNOSIS AND TESTING** .

      Were any problem found with the PCM powers and grounds?

Yes

- Repair as necessary.
- Perform the POWERTRAIN VERIFICATION TEST - 2.2L DIESEL. Refer to **PCM VERIFICATION TEST - 2.2L DIESEL** .

No

- Go To 3

3. **POWERTRAIN CONTROL MODULE**
   1. Using the wiring diagram/schematic as a guide, inspect the wiring and connectors for the Powertrain Control Module.
   2. Look for any chafed, pierced, pinched, or partially broken wires.
   3. Look for broken, bent, pushed out or corroded terminals.
   4. Monitor the scan tool data relative to this circuit and wiggle test the wiring and connectors.
   5. Look for the data to change or for the DTC to reset during the wiggle test.
   6. Perform any Technical Service Bulletins that may apply.

   Were any problems found?

   Yes

   - Repair as necessary.
   - Perform the POWERTRAIN VERIFICATION TEST - 2.2L DIESEL. Refer to **PCM VERIFICATION TEST - 2.2L DIESEL** .

   No

   - Replace the Powertrain Control Module. **Before removing the PCM, perform the "Replace PCM" routine in the Miscellaneous Functions tab of the scan tool.** . Refer to **REMOVAL** .
   - Perform the POWERTRAIN VERIFICATION TEST - 2.2L DIESEL. Refer to **PCM VERIFICATION TEST - 2.2L**

DIESEL .

P060A-INTERNAL CONTROL MODULE MONITORING PROCESSOR PERFORMANCE

For a complete wiring diagram, **refer to appropriate SYSTEM WIRING DIAGRAMS article** .

WHEN MONITORED

With the ignition on.

SET CONDITION

Powertrain Control Module (PCM) calculation error or memory corruption.

POSSIBLE CAUSES

Possible Causes
CHECKING PCM POWER AND GROUNDS POWERTRAIN CONTROL MODULE (PCM)

Always perform the Pre-Diagnostic Troubleshooting procedure before proceeding. Refer to PRE-DIAGNOSTIC TROUBLESHOOTING PROCEDURE - 2.2L DIESEL .

DIAGNOSTIC TEST

1. **DTC IS ACTIVE**

NOTE: If the PCM detects and stores a DTC, the PCM also stores the engine/vehicle operating conditions under which the DTC was set. Some of these conditions are displayed on the scan tool at the same time the DTC is displayed. Before erasing stored DTCs, record these conditions. Attempting to duplicate these conditions may assist when checking for an active DTC.

NOTE: If there are other DTCs set with this DTC, repair other DTCs before continuing with this diagnostic procedure.

NOTE: This code can be caused by an intermittent problem in the wiring and connectors to the Powertrain Control Module. Inspect the Powertrain Control Module harness connector and associated wiring for signs of poor terminal contact.

1. Ignition on, engine not running.
2. With the scan tool, clear DTCs in the Powertrain Control Module.
3. Monitor the scan tool for at least two minutes.
4. Cycle the ignition key off and on several times, leaving the ignition on for at least 10 seconds at a time.
5. Start the engine.
6. Perform several engine run cycles, turning the ignition off for at least 20 seconds between each engine run cycle leaving the ignition on.
7. With the scan tool, select View DTCs.

   Is the status Active for this DTC?

   Yes

   - Go To 2

   No

   - Perform the INTERMITTENT DTC diagnostic procedure. Refer to **INTERMITTENT CONDITION - 2.2L DIESEL** .

2. **CHECK PCM POWER AND GROUNDS**
   1. Perform the CHECKING THE PCM POWER AND GROUND diagnostic procedure. Refer to **DIAGNOSIS AND TESTING** .

      Were any problem found with the PCM powers and grounds?

      Yes

      - Repair as necessary.
      - Perform the POWERTRAIN VERIFICATION TEST - 2.2L DIESEL. Refer to **PCM VERIFICATION TEST - 2.2L DIESEL** .

No

- Go To 3

3. **POWERTRAIN CONTROL MODULE**
   1. Using the wiring diagram/schematic as a guide, inspect the wiring and connectors for the Powertrain Control Module.
   2. Look for any chafed, pierced, pinched, or partially broken wires.
   3. Look for broken, bent, pushed out or corroded terminals.
   4. Monitor the scan tool data relative to this circuit and wiggle test the wiring and connectors.
   5. Look for the data to change or for the DTC to reset during the wiggle test.
   6. Perform any Technical Service Bulletins that may apply.

   Were any problems found?

   Yes

   - Repair as necessary.
   - Perform the POWERTRAIN VERIFICATION TEST - 2.2L DIESEL. Refer to **PCM VERIFICATION TEST - 2.2L DIESEL** .

   No

   - Replace the Powertrain Control Module. **Before removing the PCM, perform the "Replace PCM" routine in the Miscellaneous Functions tab of the scan tool.** . Refer to **REMOVAL** .
   - Perform the POWERTRAIN VERIFICATION TEST - 2.2L DIESEL. Refer to **PCM VERIFICATION TEST - 2.2L DIESEL** .

P060B-ETC A/D GROUND PERFORMANCE

For a complete wiring diagram, **refer to appropriate SYSTEM WIRING DIAGRAMS article** .

WHEN MONITORED

With the ignition on and DTC P0641 not set.

SET CONDITION

Powertrain Control Module (PCM) detects that the internal reference voltage in below 4.5 Volts or above 5.5 Volts.

POSSIBLE CAUSES

Possible Causes
(K852) APP SENSOR 1 5-VOLT SUPPLY CIRCUIT SHORTED TO GROUND
(K350) FUEL RAIL PRESSURE SENSOR 5-VOLT SUPPLY SHORTED TO GROUND
CHECKING PCM POWER AND GROUNDS
POWERTRAIN CONTROL MODULE (PCM)

Always perform the Pre-Diagnostic Troubleshooting procedure before proceeding. Refer to PRE-DIAGNOSTIC TROUBLESHOOTING PROCEDURE - 2.2L DIESEL .

DIAGNOSTIC TEST

1. **DTC IS ACTIVE**

NOTE: If there are any 5-Volt Reference DTCs set with this DTC, diagnose the 5-Volt Reference DTCs before continuing with this diagnostic procedure.

1. Ignition on, engine not running.
2. With the scan tool, clear DTCs in the Powertrain Control Module.
3. Monitor the scan tool for at least two minutes.
4. Cycle the ignition key off and on several times, leaving the ignition on for at least 10 seconds at a time.
5. Start the engine.
6. Perform several engine run cycles, turning the ignition off for at least 20 seconds between each engine run cycle leaving the ignition on.
7. With the scan tool, select View DTCs.

Is the status Active for this DTC?

Yes

- Go To 2

No

- Perform the INTERMITTENT DTC diagnostic procedure. Refer to **INTERMITTENT CONDITION - 2.2L DIESEL** .

2. **CHECK PCM POWER AND GROUNDS**
   1. Perform the CHECKING THE PCM POWER AND GROUND diagnostic procedure. Refer to **DIAGNOSIS AND TESTING** .

      Were any problem found with the PCM powers and grounds?

      Yes

      - Repair as necessary.
      - Perform the POWERTRAIN VERIFICATION TEST - 2.2L DIESEL. Refer to **PCM VERIFICATION TEST - 2.2L DIESEL** .

      No

      - Go To 3

3. **POWERTRAIN CONTROL MODULE**
   1. Using the wiring diagram/schematic as a guide, inspect the wiring and connectors for the Powertrain Control Module.
   2. Look for any chafed, pierced, pinched, or partially broken wires.
   3. Look for broken, bent, pushed out or corroded terminals.
   4. Monitor the scan tool data relative to this circuit and wiggle test the wiring and connectors.
   5. Look for the data to change or for the DTC to reset during the wiggle test.
   6. Perform any Technical Service Bulletins that may apply.

      Were any problems found?

Yes

- Repair as necessary.
- Perform the POWERTRAIN VERIFICATION TEST - 2.2L DIESEL. Refer to **PCM VERIFICATION TEST - 2.2L DIESEL** .

No

- Replace the Powertrain Control Module. **Before removing the PCM, perform the "Replace PCM" routine in the Miscellaneous Functions tab of the scan tool.** . Refer to **REMOVAL** .
- Perform the POWERTRAIN VERIFICATION TEST - 2.2L DIESEL. Refer to **PCM VERIFICATION TEST - 2.2L DIESEL** .

P060D-INTERNAL CONTROL MODULE ACCELERATOR PEDAL POSITION PERFORMANCE

For a complete wiring diagram, **refer to appropriate SYSTEM WIRING DIAGRAMS article** .

WHEN MONITORED

With the ignition on and no speed control DTCs set.

SET CONDITION

The Powertrain Control Module (PCM) detects an internal calculation error.

POSSIBLE CAUSES

Possible Causes
CHECKING PCM POWER AND GROUNDS POWERTRAIN CONTROL MODULE (PCM)

Always perform the Pre-Diagnostic Troubleshooting procedure before proceeding. Refer to PRE-DIAGNOSTIC TROUBLESHOOTING PROCEDURE - 2.2L DIESEL .

DIAGNOSTIC TEST

1. **DTC IS ACTIVE**

NOTE: If there are other DTCs set with this DTC, repair other DTCs before continuing with this diagnostic procedure.

1. Ignition on, engine not running.
2. With the scan tool, clear DTCs in the Powertrain Control Module.
3. Monitor the scan tool for at least two minutes.
4. Cycle the ignition key off and on several times, leaving the ignition on for at least 10 seconds at a time.
5. Start the engine.
6. Perform several engine run cycles, turning the ignition off for at least 20 seconds between each engine run cycle leaving the ignition on.
7. With the scan tool, select View DTCs.

Is the status Active for this DTC?

Yes

- Go To 2

No

- Perform the INTERMITTENT DTC diagnostic procedure. Refer to **INTERMITTENT CONDITION - 2.2L DIESEL** .

2. **CHECK PCM POWER AND GROUNDS**

1. Perform the CHECKING THE PCM POWER AND GROUND diagnostic procedure. Refer to **DIAGNOSIS AND TESTING** .

Were any problem found with the PCM powers and grounds?

Yes

- Repair as necessary.
- Perform the POWERTRAIN VERIFICATION TEST - 2.2L DIESEL. Refer to **PCM VERIFICATION TEST - 2.2L DIESEL** .

No

- Go To 3

3. **POWERTRAIN CONTROL MODULE**
   1. Using the wiring diagram/schematic as a guide, inspect the wiring and connectors for the Powertrain Control Module.
   2. Look for any chafed, pierced, pinched, or partially broken wires.
   3. Look for broken, bent, pushed out or corroded terminals.
   4. Monitor the scan tool data relative to this circuit and wiggle test the wiring and connectors.
   5. Look for the data to change or for the DTC to reset during the wiggle test.
   6. Perform any Technical Service Bulletins that may apply.

   Were any problems found?

   Yes

   - Repair as necessary.
   - Perform the POWERTRAIN VERIFICATION TEST - 2.2L DIESEL. Refer to **PCM VERIFICATION TEST - 2.2L DIESEL** .

   No

   - Replace the Powertrain Control Module. **Before removing the PCM, perform the "Replace PCM" routine in the Miscellaneous Functions tab of the scan tool.** . Refer to **REMOVAL** .
   - Perform the POWERTRAIN VERIFICATION TEST - 2.2L DIESEL. Refer to **PCM VERIFICATION TEST - 2.2L DIESEL** .

P060F-INTERNAL CONTROL MODULE ECT PERFORMANCE

For a complete wiring diagram, **refer to appropriate SYSTEM WIRING DIAGRAMS article** .

WHEN MONITORED

With the ignition on.

SET CONDITION

The Powertrain Control Module (PCM) detects an internal failure.

POSSIBLE CAUSES

Possible Causes
(K2) ENGINE COOLANT TEMPERATURE SENSOR SIGNAL CIRCUIT OPEN/HIGH RESISTANCE
CHECKING PCM POWER AND GROUNDS
POWERTRAIN CONTROL MODULE (PCM)

Always perform the Pre-Diagnostic Troubleshooting procedure before proceeding. Refer to PRE-DIAGNOSTIC TROUBLESHOOTING PROCEDURE - 2.2L DIESEL .

DIAGNOSTIC TEST

1. **DTC IS ACTIVE**

NOTE: If there are other DTCs set with this DTC, repair other DTCs before continuing with this diagnostic procedure.

1. Ignition on, engine not running.
2. With the scan tool, clear DTCs in the Powertrain Control Module.
3. Monitor the scan tool for at least two minutes.
4. Cycle the ignition key off and on several times, leaving the ignition on for at least 10 seconds at a time.
5. Start the engine.
6. Perform several engine run cycles, turning the ignition off for at least 20 seconds between each engine run cycle leaving the ignition on.
7. With the scan tool, select View DTCs.

Is the status Active for this DTC?

Yes

- Go To 2

No

- Perform the INTERMITTENT DTC diagnostic procedure. Refer to **INTERMITTENT CONDITION - 2.2L DIESEL** .

2. **CHECK PCM POWER AND GROUNDS**
   1. Perform the CHECKING THE PCM POWER AND GROUND diagnostic procedure. Refer to **DIAGNOSIS AND TESTING** .

      Were any problem found with the PCM powers and grounds?

      Yes

      - Repair as necessary.
      - Perform the POWERTRAIN VERIFICATION TEST - 2.2L DIESEL. Refer to **PCM VERIFICATION TEST - 2.2L DIESEL** .

      No

      - Go To 3

3. **CHECK THE (K2) ENGINE COOLANT TEMPERATURE SENSOR SIGNAL CIRCUIT FOR AN OPEN/HIGH RESISTANCE**
   1. Disconnect the Engine Coolant Temperature Sensor harness connector.
   2. Disconnect the Powertrain Control Module (PCM) C1 harness connector.
   3. Measure the resistance of the (K2) Engine Coolant Temperature Sensor Signal circuit between the Engine Coolant Temperature Sensor harness connector and the PCM C1 harness connector.

      Is the resistance below 5.0 Ohms?

      Yes

      - Go To 4

      No

- Repair the (K2) Engine Coolant Temperature Sensor Signal circuit for an open or high resistance.
- Perform the POWERTRAIN VERIFICATION TEST - 2.2L DIESEL. Refer to **PCM VERIFICATION TEST - 2.2L DIESEL** .

4. **POWERTRAIN CONTROL MODULE**
   1. Using the wiring diagram/schematic as a guide, inspect the wiring and connectors for the Powertrain Control Module.
   2. Look for any chafed, pierced, pinched, or partially broken wires.
   3. Look for broken, bent, pushed out or corroded terminals.
   4. Monitor the scan tool data relative to this circuit and wiggle test the wiring and connectors.
   5. Look for the data to change or for the DTC to reset during the wiggle test.
   6. Perform any Technical Service Bulletins that may apply.

   Were any problems found?

   Yes

   - Repair as necessary.
   - Perform the POWERTRAIN VERIFICATION TEST - 2.2L DIESEL. Refer to **PCM VERIFICATION TEST - 2.2L DIESEL** .

   No

   - Replace the Powertrain Control Module. **Before removing the PCM, perform the "Replace PCM" routine in the Miscellaneous Functions tab of the scan tool.** . Refer to **REMOVAL** .
   - Perform the POWERTRAIN VERIFICATION TEST - 2.2L DIESEL. Refer to **PCM VERIFICATION TEST - 2.2L DIESEL** .

P0615-STARTER CONTROL CIRCUIT/OPEN

For a complete wiring diagram, **refer to appropriate SYSTEM WIRING**

DIAGRAMS article .

WHEN MONITORED

With the ignition on and the Starter command off.

SET CONDITION

The Powertrain Control Module (PCM) does not detect voltage on the (T752) Engine Starter Control circuit for one second.

POSSIBLE CAUSES

Possible Causes
(T752) STARTER CONTROL CIRCUIT OPEN OR HIGH RESISTANCE
TOTALLY INTEGRATED POWER MODULE (TIPM)

Always perform the Pre-Diagnostic Troubleshooting procedure before proceeding. Refer to PRE-DIAGNOSTIC TROUBLESHOOTING PROCEDURE - 2.2L DIESEL .

DIAGNOSTIC TEST

1. **DTC IS ACTIVE**
    1. Ignition on, engine not running.
    2. With the scan tool, clear DTCs in the Powertrain Control Module.
    3. Attempt to start the engine several times.
    4. Monitor the scan tool for at least two minutes.
    5. With the scan tool, select View DTCs.

    Is the status Active for this DTC?

    Yes

    - Go To 2

    No

    - Perform the INTERMITTENT CONDITION diagnostic procedure. Refer to **INTERMITTENT CONDITION - 2.2L DIESEL** .
2. **CHECK THE (T752) STARTER CONTROL CIRCUIT FOR AN**

OPEN/HIGH RESISTANCE

1. Measure the resistance of the (T752) Starter Control circuit between the TIPM C2 harness connector and the PCM harness connector.

   Is the resistance below 5.0 Ohms?

   Yes

   - Replace and program the TIPM in accordance with the service information.
   - Perform the BODY VERIFICATION TEST. Refer to **STANDARD PROCEDURE** .

   No

   - Repair the (T752) Starter Control circuit for an open circuit or high resistance.
   - Perform the POWERTRAIN VERIFICATION TEST - 2.2L DIESEL. Refer to **PCM VERIFICATION TEST - 2.2L DIESEL** .

P0616-STARTER CONTROL CIRCUIT LOW

For a complete wiring diagram, **refer to appropriate SYSTEM WIRING DIAGRAMS article** .

WHEN MONITORED

With the ignition on and the Starter command off.

SET CONDITION

The Powertrain Control Module (PCM) detects a short to ground on the (T752) Engine Starter Control circuit for one second.

POSSIBLE CAUSES

Possible Causes
(T752) STARTER CONTROL CIRCUIT SHORTED TO GROUND
TOTALLY INTEGRATED POWER MODULE (TIPM)

Always perform the Pre-Diagnostic Troubleshooting procedure before proceeding. Refer to PRE-DIAGNOSTIC TROUBLESHOOTING PROCEDURE - 2.2L DIESEL .

DIAGNOSTIC TEST

1. **DTC IS ACTIVE**
   1. Ignition on, engine not running.
   2. With the scan tool, clear DTCs in the Powertrain Control Module.
   3. Attempt to start the engine several times.
   4. Monitor the scan tool for at least two minutes.
   5. With the scan tool, select View DTCs.

   Is the status Active for this DTC?

   Yes

   - Go To 2

   No

   - Perform the INTERMITTENT CONDITION diagnostic procedure. Refer to **INTERMITTENT CONDITION - 2.2L DIESEL** .
2. **CHECK THE (T752) STARTER CONTROL CIRCUIT FOR A SHORT TO GROUND**
   1. Turn the ignition off.
   2. Disconnect the TIPM C2 harness connector.
   3. Disconnect the Powertrain Control Module harness connectors.
   4. Measure the resistance between ground and the (T752) Starter Control circuit in the TIPM harness connector.

   Is the resistance above 10k Ohms?

   Yes

   - Replace and program the TIPM in accordance with the service information.
   - Perform the BODY VERIFICATION TEST. Refer to

STANDARD PROCEDURE .

No

- Repair the (T752) Starter Control circuit for a short to ground.
- Perform the POWERTRAIN VERIFICATION TEST - 2.2L DIESEL. Refer to **PCM VERIFICATION TEST - 2.2L DIESEL** .

P0617-STARTER CONTROL CIRCUIT HIGH

For a complete wiring diagram, **refer to appropriate SYSTEM WIRING DIAGRAMS article** .

WHEN MONITORED

With the ignition on and the Starter command on.

SET CONDITION

The Powertrain Control Module (PCM) detects a short circuit on the (T752) Engine Starter Control circuit for at 0.5 of a second.

POSSIBLE CAUSES

Possible Causes
(T752) STARTER RELAY CONTROL CIRCUIT SHORTED TO VOLTAGE
TOTALLY INTEGRATED POWER MODULE

Always perform the Pre-Diagnostic Troubleshooting procedure before proceeding. Refer to PRE-DIAGNOSTIC TROUBLESHOOTING PROCEDURE - 2.2L DIESEL .

DIAGNOSTIC TEST

1. **DTC IS ACTIVE**
    1. Ignition on, engine not running.
    2. With the scan tool, clear DTCs in the Powertrain Control Module.
    3. Attempt to start the engine several times.
    4. Monitor the scan tool for at least two minutes.

5. With the scan tool, select View DTCs.

   Is the status Active for this DTC?

   Yes

   - Go To 2

   No

   - Perform the INTERMITTENT CONDITION diagnostic procedure. Refer to **INTERMITTENT CONDITION - 2.2L DIESEL** .

2. **CHECK THE (T752) STARTER CONTROL CIRCUIT FOR A SHORT TO VOLTAGE**
   1. Turn the ignition off.
   2. Disconnect the TIPM C2 harness connector.
   3. Disconnect the PCM harness connectors.
   4. Remove the Main Relay.
   5. Connect a jumper wire between cavity 87 and cavity 30 of the Main Relay Connector.
   6. Turn the ignition on.
   7. Measure the voltage of the (T752) Starter Control circuit in the TIPM harness connector.

      Is there any voltage present?

      Yes

      - Repair the (T752) Starter Control circuit for a short to voltage.
      - Perform the POWERTRAIN VERIFICATION TEST - 2.2L DIESEL. Refer to **PCM VERIFICATION TEST - 2.2L DIESEL** .

      No

      - Replace and program the TIPM in accordance with the service information.
      - Perform the BODY VERIFICATION TEST. Refer to

STANDARD PROCEDURE .

P061B-INTERNAL CONTROL MODULE TORQUE CALCULATION PERFORMANCE

For a complete wiring diagram, **refer to appropriate SYSTEM WIRING DIAGRAMS article** .

WHEN MONITORED

With the engine running.

SET CONDITION

The Powertrain Control Module (PCM) detects a difference between the calculated torque curve and the torque demand calculation.

POSSIBLE CAUSES

Possible Causes
(K852) ACCELERATOR PEDAL POSITION SENSOR 1 5-VOLT SUPPLY CIRCUIT SHORTED TO VOLTAGE
(K852) ACCELERATOR PEDAL POSITION SENSOR 1 5-VOLT SUPPLY CIRCUIT SHORTED TO GROUND
(K350) RAIL PRESSURE SENSOR 5-VOLT SUPPLY CIRCUIT SHORTED TO VOLTAGE
(K350) RAIL PRESSURE SENSOR 5-VOLT SUPPLY CIRCUIT SHORTED TO GROUND
POWERTRAIN CONTROL MODULE (PCM)

Always perform the Pre-Diagnostic Troubleshooting procedure before proceeding. Refer to PRE-DIAGNOSTIC TROUBLESHOOTING PROCEDURE - 2.2L DIESEL .

DIAGNOSTIC TEST

1. **DTC IS ACTIVE**

NOTE: If there are any 5-Volt reference or fuel system DTCs set with this DTC, repair those DTCs before continuing with this diagnostic procedure.

1. Ignition on, engine not running.
2. With the scan tool, clear DTCs in the Powertrain Control Module.
3. Monitor the scan tool for at least two minutes.
4. Cycle the ignition key off and on several times, leaving the ignition on for at least 10 seconds at a time.
5. Start the engine.
6. Perform several engine run cycles, turning the ignition off for at least 20 seconds between each engine run cycle leaving the ignition on.
7. With the scan tool, select View DTCs.

   Is the status Active for this DTC?

   Yes

   - Go To 2

   No

   - Perform the INTERMITTENT DTC diagnostic procedure. Refer to **INTERMITTENT CONDITION - 2.2L DIESEL** .

2. **CHECK PCM POWER AND GROUNDS**
   1. Perform the CHECKING THE PCM POWER AND GROUND diagnostic procedure. Refer to **DIAGNOSIS AND TESTING** .

      Were any problem found with the PCM powers and grounds?

      Yes

      - Repair as necessary.
      - Perform the POWERTRAIN VERIFICATION TEST - 2.2L DIESEL. Refer to **PCM VERIFICATION TEST - 2.2L DIESEL** .

      No

      - Go To 3

3. **POWERTRAIN CONTROL MODULE**
   1. Using the wiring diagram/schematic as a guide, inspect the wiring and

connectors for the Powertrain Control Module.
2. Look for any chafed, pierced, pinched, or partially broken wires.
3. Look for broken, bent, pushed out or corroded terminals.
4. Monitor the scan tool data relative to this circuit and wiggle test the wiring and connectors.
5. Look for the data to change or for the DTC to reset during the wiggle test.
6. Perform any Technical Service Bulletins that may apply.

Were any problems found?

Yes

- Repair as necessary.
- Perform the POWERTRAIN VERIFICATION TEST - 2.2L DIESEL. Refer to **PCM VERIFICATION TEST - 2.2L DIESEL** .

No

- Replace the Powertrain Control Module. **Before removing the PCM, perform the "Replace PCM" routine in the Miscellaneous Functions tab of the scan tool.** . Refer to **REMOVAL** .
- Perform the POWERTRAIN VERIFICATION TEST - 2.2L DIESEL. Refer to **PCM VERIFICATION TEST - 2.2L DIESEL** .

P061C-INTERNAL CONTROL MODULE RPM PERFORMANCE

For a complete wiring diagram, **refer to appropriate SYSTEM WIRING DIAGRAMS article** .

WHEN MONITORED

With the engine running.

SET CONDITION

The Powertrain Control Module (PCM) detects an internal failure. The Crank

Sensor and Cam Sensor signals are missing or erratic.

POSSIBLE CAUSES

Possible Causes
CHECKING PCM POWER AND GROUNDS POWERTRAIN CONTROL MODULE (PCM)

Always perform the Pre-Diagnostic Troubleshooting procedure before proceeding. Refer to PRE-DIAGNOSTIC TROUBLESHOOTING PROCEDURE - 2.2L DIESEL .

DIAGNOSTIC TEST

1. **DTC IS ACTIVE**

NOTE: If there are other DTCs set with this DTC, repair other DTCs before continuing with this diagnostic procedure.

1. Ignition on, engine not running.
2. With the scan tool, clear DTCs in the Powertrain Control Module.
3. Monitor the scan tool for at least two minutes.
4. Cycle the ignition key off and on several times, leaving the ignition on for at least 10 seconds at a time.
5. Start the engine.
6. Perform several engine run cycles, turning the ignition off for at least 20 seconds between each engine run cycle leaving the ignition on.
7. With the scan tool, select View DTCs.

Is the status Active for this DTC?

Yes

- Go To 2

No

- Perform the INTERMITTENT DTC diagnostic procedure. Refer to

INTERMITTENT CONDITION - 2.2L DIESEL .

2. **CHECK PCM POWER AND GROUNDS**
   1. Perform the CHECKING THE PCM POWER AND GROUND diagnostic procedure. Refer to **DIAGNOSIS AND TESTING** .

      Were any problem found with the PCM powers and grounds?

      Yes

      - Repair as necessary.
      - Perform the POWERTRAIN VERIFICATION TEST - 2.2L DIESEL. Refer to **PCM VERIFICATION TEST - 2.2L DIESEL** .

      No

      - Go To 3
3. **POWERTRAIN CONTROL MODULE**
   1. Using the wiring diagram/schematic as a guide, inspect the wiring and connectors for the Powertrain Control Module.
   2. Look for any chafed, pierced, pinched, or partially broken wires.
   3. Look for broken, bent, pushed out or corroded terminals.
   4. Monitor the scan tool data relative to this circuit and wiggle test the wiring and connectors.
   5. Look for the data to change or for the DTC to reset during the wiggle test.
   6. Perform any Technical Service Bulletins that may apply.

      Were any problems found?

      Yes

      - Repair as necessary.
      - Perform the POWERTRAIN VERIFICATION TEST - 2.2L DIESEL. Refer to **PCM VERIFICATION TEST - 2.2L DIESEL** .

      No

- Replace the Powertrain Control Module. **Before removing the PCM, perform the "Replace PCM" routine in the Miscellaneous Functions tab of the scan tool.** . Refer to **REMOVAL** .
- Perform the POWERTRAIN VERIFICATION TEST - 2.2L DIESEL. Refer to **PCM VERIFICATION TEST - 2.2L DIESEL** .

P0627-FUEL PUMP CONTROL CIRCUIT OPEN

For a complete wiring diagram, **refer to appropriate SYSTEM WIRING DIAGRAMS article** .

WHEN MONITORED

With the ignition on and the engine not running.

SET CONDITION

The Powertrain Control Module (PCM) detects an open on the (K31) Fuel Pump Control circuit for 0.32 of a second.

POSSIBLE CAUSES

Possible Causes
(K31) FUEL PUMP CONTROL CIRCUIT OPEN/HIGH RESISTANCE
TOTALLY INTEGRATED POWER MODULE (TIPM)

Always perform the Pre-Diagnostic Troubleshooting procedure before proceeding. Refer to PRE-DIAGNOSTIC TROUBLESHOOTING PROCEDURE - 2.2L DIESEL .

DIAGNOSTIC TEST

1. **DTC IS ACTIVE**
    1. Ignition on, engine not running.
    2. With the scan tool, clear DTCs in the Powertrain Control Module.
    3. With the scan tool, actuate the Fuel Pump.
    4. Monitor the scan tool for at least two minutes.
    5. With the scan tool, select View DTCs.

Is the status Active for this DTC?

Yes

- Go To 2

No

- Perform the INTERMITTENT CONDITION diagnostic procedure. Refer to **INTERMITTENT CONDITION - 2.2L DIESEL** .

2. **CHECK THE (K31) FUEL PUMP CONTROL CIRCUIT FOR AN OPEN/HIGH RESISTANCE**
   1. Turn the ignition off.
   2. Disconnect the TIPM C2 harness connector.
   3. Disconnect the Powertrain Control Module C2 harness connector.
   4. Measure the resistance of the (K31) Fuel Pump Control circuit between the TIPM harness connector and the PCM harness connector.

   Is the resistance below 5.0 Ohms?

   Yes

   - Replace and program the TIPM in accordance with the service information.
   - Perform the BODY VERIFICATION TEST. Refer to **STANDARD PROCEDURE** .

   No

   - Repair the (K31) Fuel Pump Control circuit for an open or high resistance.
   - Perform the POWERTRAIN VERIFICATION TEST - 2.2L DIESEL. Refer to **PCM VERIFICATION TEST - 2.2L DIESEL** .

P0628-FUEL PUMP CONTROL CIRCUIT LOW

For a complete wiring diagram, **refer to appropriate SYSTEM WIRING DIAGRAMS article** .

WHEN MONITORED

With the ignition on and the engine not running.

SET CONDITION

The Powertrain Control Module (PCM) detects a short to ground on the (K31) Fuel Pump Control circuit for 0.32 of a second.

POSSIBLE CAUSES

Possible Causes
(K31) FUEL PUMP CONTROL CIRCUIT SHORTED TO GROUND
TOTALLY INTEGRATED POWER MODULE (TIPM)

Always perform the Pre-Diagnostic Troubleshooting procedure before proceeding. Refer to PRE-DIAGNOSTIC TROUBLESHOOTING PROCEDURE - 2.2L DIESEL .

DIAGNOSTIC TEST

1. **DTC IS ACTIVE**
    1. Ignition on, engine not running.
    2. With the scan tool, clear DTCs in the Powertrain Control Module.
    3. With the scan tool, actuate the Fuel Pump.
    4. Monitor the scan tool for at least two minutes.
    5. With the scan tool, select View DTCs.

    Is the status Active for this DTC?

    Yes

    - Go To 2

    No

    - Perform the INTERMITTENT CONDITION diagnostic procedure. Refer to **INTERMITTENT CONDITION - 2.2L DIESEL** .
2. **CHECK THE (K31) FUEL PUMP CONTROL CIRCUIT FOR A SHORT TO GROUND**

1. Turn the ignition off.
2. Disconnect the TIPM C2 harness connector.
3. Disconnect the Powertrain Control Module C2 harness connectors.
4. Measure the resistance between ground and the (K31) Fuel Pump Control circuit in the TIPM harness connector.

   Is the resistance above 10k Ohms?

   Yes

   - Replace and program the TIPM in accordance with the service information.
   - Perform the BODY VERIFICATION TEST - 2.2L DIESEL. Refer to **STANDARD PROCEDURE** .

   No

   - Repair the (K31) Fuel Pump Control circuit for a short to ground.
   - Perform the POWERTRAIN VERIFICATION TEST - 2.2L DIESEL. Refer to **PCM VERIFICATION TEST - 2.2L DIESEL** .

P0629-FUEL PUMP CONTROL CIRCUIT HIGH

For a complete wiring diagram, **refer to appropriate SYSTEM WIRING DIAGRAMS article** .

WHEN MONITORED

With the ignition on and the engine not running.

SET CONDITION

The Powertrain Control Module (PCM) detects a short to voltage on the (K31) Fuel Pump Relay Control circuit for 0.32 of a second.

POSSIBLE CAUSES

Possible Causes
(K31) FUEL PUMP RELAY CONTROL CIRCUIT SHORTED TO VOLTAGE

TOTALLY INTEGRATED POWER MODULE (TIPM)

Always perform the Pre-Diagnostic Troubleshooting procedure before proceeding. Refer to PRE-DIAGNOSTIC TROUBLESHOOTING PROCEDURE - 2.2L DIESEL .

DIAGNOSTIC TEST

1. **DTC IS ACTIVE**
   1. Ignition on, engine not running.
   2. With the scan tool, Clear DTCs in the Powertrain Control Module.
   3. Monitor the scan tool for at least two minutes.
   4. With the scan tool, select View DTCs.

      Is the status Active for this DTC?

      Yes

      - Go To 2

      No

      - Perform the INTERMITTENT CONDITION diagnostic procedure. Refer to **INTERMITTENT CONDITION - 2.2L DIESEL** .
2. **CHECK THE (K31) FUEL PUMP CONTROL CIRCUIT FOR A SHORT TO VOLTAGE**
   1. Turn the ignition off.
   2. Disconnect the TIPM C2 harness connector.
   3. Disconnect the PCM C2 harness connector.
   4. Remove the Main Relay.
   5. Connect a jumper wire between cavity 87 and cavity 30 of the Main Relay Connector.
   6. Turn the ignition on.
   7. Measure the voltage of the (K31) Fuel Pump Control circuit in the TIPM harness connector.

      Is there any voltage present?

Yes

- Repair the (K31) Fuel Pump Control circuit for a short to voltage.
- Perform the POWERTRAIN VERIFICATION TEST - 2.2L DIESEL. Refer to **PCM VERIFICATION TEST - 2.2L DIESEL** .

No

- Replace and program the TIPM in accordance with the service information.
- Perform the POWERTRAIN VERIFICATION TEST - 2.2L DIESEL. Refer to **PCM VERIFICATION TEST - 2.2L DIESEL** .

P062B-INTERNAL CONTROL MODULE FUEL INJECTOR CONTROL PERFORMANCE

For a complete wiring diagram, **refer to appropriate SYSTEM WIRING DIAGRAMS article** .

WHEN MONITORED

With the ignition on and the engine running.

SET CONDITION

The Powertrain Control Module (PCM) detects an error in fuel injection timing or quantity

POSSIBLE CAUSES

Possible Causes
CHECKING PCM POWER AND GROUNDS POWERTRAIN CONTROL MODULE (PCM)

Always perform the Pre-Diagnostic Troubleshooting procedure before proceeding. Refer to PRE-DIAGNOSTIC TROUBLESHOOTING PROCEDURE - 2.2L DIESEL .

DIAGNOSTIC TEST

1. **DTC IS ACTIVE**

NOTE: If there are other DTCs set with this DTC, repair other DTCs before continuing with this diagnostic procedure.

1. Ignition on, engine not running.
2. With the scan tool, clear DTCs in the Powertrain Control Module.
3. Monitor the scan tool for at least two minutes.
4. Cycle the ignition key off and on several times, leaving the ignition on for at least 10 seconds at a time.
5. Start the engine.
6. Perform several engine run cycles, turning the ignition off for at least 20 seconds between each engine run cycle leaving the ignition on.
7. With the scan tool, select View DTCs.

   Is the status Active for this DTC?

   Yes

   - Go To 2

   No

   - Perform the INTERMITTENT DTC diagnostic procedure. Refer to **INTERMITTENT CONDITION - 2.2L DIESEL** .

2. **CHECK PCM POWER AND GROUNDS**
   1. Perform the CHECKING THE PCM POWER AND GROUND diagnostic procedure. Refer to **DIAGNOSIS AND TESTING** .

      Were any problem found with the PCM powers and grounds?

      Yes

      - Repair as necessary.
      - Perform the POWERTRAIN VERIFICATION TEST - 2.2L DIESEL. Refer to **PCM VERIFICATION TEST - 2.2L DIESEL** .

      No

- Go To 3

3. **POWERTRAIN CONTROL MODULE**
   1. Using the wiring diagram/schematic as a guide, inspect the wiring and connectors for the Powertrain Control Module.
   2. Look for any chafed, pierced, pinched, or partially broken wires.
   3. Look for broken, bent, pushed out or corroded terminals.
   4. Monitor the scan tool data relative to this circuit and wiggle test the wiring and connectors.
   5. Look for the data to change or for the DTC to reset during the wiggle test.
   6. Perform any Technical Service Bulletins that may apply.

   Were any problems found?

   Yes

   - Repair as necessary.
   - Perform the POWERTRAIN VERIFICATION TEST - 2.2L DIESEL. Refer to **PCM VERIFICATION TEST - 2.2L DIESEL** .

   No

   - Replace the Powertrain Control Module. **Before removing the PCM, perform the "Replace PCM" routine in the Miscellaneous Functions tab of the scan tool.** . Refer to **REMOVAL** .
   - Perform the POWERTRAIN VERIFICATION TEST - 2.2L DIESEL. Refer to **PCM VERIFICATION TEST - 2.2L DIESEL** .

P062C-ETC LEVEL 2 MPH PERFORMANCE

For a complete wiring diagram, **refer to appropriate SYSTEM WIRING DIAGRAMS article** .

WHEN MONITORED

With the ignition on.

SET CONDITION

The Powertrain Control Module detects an internal failure.

POSSIBLE CAUSES

Possible Causes
CHECKING PCM POWER AND GROUNDS POWERTRAIN CONTROL MODULE (PCM)

Always perform the Pre-Diagnostic Troubleshooting procedure before proceeding. Refer to PRE-DIAGNOSTIC TROUBLESHOOTING PROCEDURE - 2.2L DIESEL .

DIAGNOSTIC TEST

1. **DTC IS ACTIVE**

NOTE: If there are other DTCs set with this DTC, repair other DTCs before continuing with this diagnostic procedure.

1. Ignition on, engine not running.
2. With the scan tool, clear DTCs in the Powertrain Control Module.
3. Monitor the scan tool for at least two minutes.
4. Cycle the ignition key off and on several times, leaving the ignition on for at least 10 seconds at a time.
5. Start the engine.
6. Perform several engine run cycles, turning the ignition off for at least 20 seconds between each engine run cycle leaving the ignition on.
7. With the scan tool, select View DTCs.

Is the status Active for this DTC?

Yes

- Go To 2

No

- Perform the INTERMITTENT DTC diagnostic procedure. Refer to **INTERMITTENT CONDITION - 2.2L DIESEL** .

2. **CHECK PCM POWER AND GROUNDS**
   1. Perform the CHECKING THE PCM POWER AND GROUND diagnostic procedure. Refer to **DIAGNOSIS AND TESTING** .

      Were any problem found with the PCM powers and grounds?

      Yes

      - Repair as necessary.
      - Perform the POWERTRAIN VERIFICATION TEST - 2.2L DIESEL. Refer to **PCM VERIFICATION TEST - 2.2L DIESEL** .

      No

      - Go To 3

3. **POWERTRAIN CONTROL MODULE**
   1. Using the wiring diagram/schematic as a guide, inspect the wiring and connectors for the Powertrain Control Module.
   2. Look for any chafed, pierced, pinched, or partially broken wires.
   3. Look for broken, bent, pushed out or corroded terminals.
   4. Monitor the scan tool data relative to this circuit and wiggle test the wiring and connectors.
   5. Look for the data to change or for the DTC to reset during the wiggle test.
   6. Perform any Technical Service Bulletins that may apply.

      Were any problems found?

      Yes

      - Repair as necessary.
      - Perform the POWERTRAIN VERIFICATION TEST - 2.2L DIESEL. Refer to **PCM VERIFICATION TEST - 2.2L DIESEL** .

No

- Replace the Powertrain Control Module. **Before removing the PCM, perform the "Replace PCM" routine in the Miscellaneous Functions tab of the scan tool.** . Refer to **REMOVAL** .
- Perform the POWERTRAIN VERIFICATION TEST - 2.2L DIESEL. Refer to **PCM VERIFICATION TEST - 2.2L DIESEL** .

P062D-FUEL INJECTOR DRIVER CIRCUIT PERFORMANCE BANK 1

For a complete wiring diagram, **refer to appropriate SYSTEM WIRING DIAGRAMS article** .

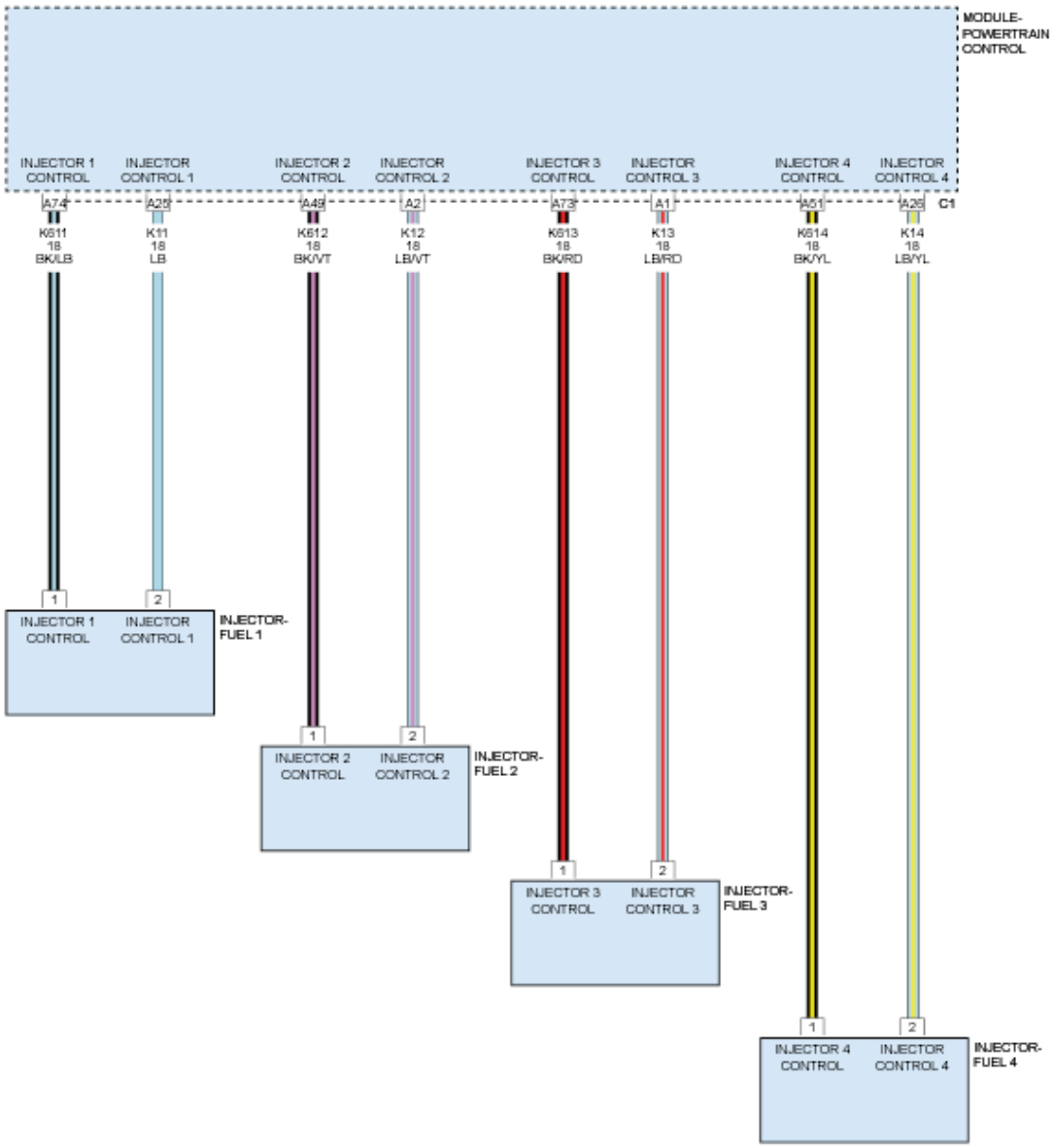

Fig. 7: Fuel Injector Circuit Diagram
Courtesy of CHRYSLER GROUP, LLC

WHEN MONITORED

With the ignition on and the engine running.

SET CONDITION

The Powertrain Control Module detects that the cylinder balancing correction for any injector is not within range.

POSSIBLE CAUSES

Possible Causes
CHECKING PCM POWER AND GROUNDS POWERTRAIN CONTROL MODULE (PCM)

Always perform the Pre-Diagnostic Troubleshooting procedure before proceeding. Refer to PRE-DIAGNOSTIC TROUBLESHOOTING PROCEDURE - 2.2L DIESEL .

DIAGNOSTIC TEST

1. **DTC IS ACTIVE**

   NOTE: If there are other DTCs set with this DTC repair other DTCs before continuing with this diagnostic procedure.

   1. Ignition on, engine not running.
   2. With the scan tool, clear DTCs in the Powertrain Control Module.
   3. Monitor the scan tool for at least two minutes.
   4. Cycle the ignition key off and on several times, leaving the ignition on for at least 10 seconds at a time.
   5. Start the engine.
   6. Perform several engine run cycles, turning the ignition off for at least 20 seconds between each engine run cycle leaving the ignition on.
   7. With the scan tool, select View DTCs.

   Is the status Active for this DTC?

   Yes

   - Go To 2

   No

   - Perform the INTERMITTENT DTC diagnostic procedure. Refer to **INTERMITTENT CONDITION - 2.2L DIESEL** .

2. **CHECK POWER AND GROUNDS**
   1. Perform the CHECKING THE PCM POWER AND GROUND

diagnostic procedure. Refer to **DIAGNOSIS AND TESTING** .

Were any problem found with the PCM powers and grounds?

Yes

- Repair as necessary.
- Perform the POWERTRAIN VERIFICATION TEST - 2.2L DIESEL. Refer to **PCM VERIFICATION TEST - 2.2L DIESEL** .

No

- Go To 3

3. **POWERTRAIN CONTROL MODULE**
   1. Using the wiring diagram/schematic as a guide, inspect the wiring and connectors for the Powertrain Control Module.
   2. Look for any chafed, pierced, pinched, or partially broken wires.
   3. Look for broken, bent, pushed out or corroded terminals.
   4. Monitor the scan tool data relative to this circuit and wiggle test the wiring and connectors.
   5. Look for the data to change or for the DTC to reset during the wiggle test.
   6. Perform any Technical Service Bulletins that may apply.

   Were any problems found?

   Yes

   - Repair as necessary.
   - Perform the POWERTRAIN VERIFICATION TEST - 2.2L DIESEL. Refer to **PCM VERIFICATION TEST - 2.2L DIESEL** .

   No

   - Replace the Powertrain Control Module. **Before removing the PCM, perform the "Replace PCM" routine in the Miscellaneous Functions tab of the scan tool.** . Refer to

REMOVAL .

- Perform the POWERTRAIN VERIFICATION TEST - 2.2L DIESEL. Refer to **PCM VERIFICATION TEST - 2.2L DIESEL** .

P062F-INTERNAL CONTROL MODULE EEPROM ERROR

For a complete wiring diagram, **refer to appropriate SYSTEM WIRING DIAGRAMS article** .

WHEN MONITORED

With the ignition on.

SET CONDITION

The Powertrain Control Module detects an internal failure.

POSSIBLE CAUSES

Possible Causes
CHECKING PCM POWER AND GROUNDS FUEL INJECTOR CORRECTION CODES NOT PROGRAMMED INTO THE POWERTRAIN CONTROL MODULE POWERTRAIN CONTROL MODULE (PCM)

Always perform the Pre-Diagnostic Troubleshooting procedure before proceeding. Refer to PRE-DIAGNOSTIC TROUBLESHOOTING PROCEDURE - 2.2L DIESEL .

DIAGNOSTIC TEST

1. **DTC IS ACTIVE**

NOTE: If there are other DTCs set with this DTC, repair other DTCs before continuing with this diagnostic procedure.

1. Ignition on, engine not running.
2. With the scan tool, clear DTCs in the Powertrain Control Module.
3. Monitor the scan tool for at least two minutes.

4. Cycle the ignition key off and on several times, leaving the ignition on for at least 10 seconds at a time.
5. Start the engine.
6. Perform several engine run cycles, turning the ignition off for at least 20 seconds between each engine run cycle leaving the ignition on.
7. With the scan tool, select View DTCs.

   Is the status Active for this DTC?

   Yes

   - Go To 2

   No

   - Perform the INTERMITTENT DTC diagnostic procedure. Refer to **INTERMITTENT CONDITION - 2.2L DIESEL** .

2. **CHECK FOR FUEL INJECTOR CORRECTION CODES NOT PROGRAMMED INTO THE POWERTRAIN CONTROL MODULE**
   1. With the scan tool, check for the Fuel Injector correction codes programmed into the Powertrain Control Module for each Fuel Injector.

      Are the correction codes for the Fuel Injectors programmed into the Powertrain Control Module?

      Yes

      - Go To 3

      No

      - Using the scan tool, program the Fuel Injector correction codes into the PCM.
      - Perform the POWERTRAIN VERIFICATION TEST - 2.2L DIESEL. Refer to **PCM VERIFICATION TEST - 2.2L DIESEL** .
3. **CHECK PCM POWER AND GROUNDS**
   1. Perform the CHECKING THE PCM POWER AND GROUND diagnostic procedure. Refer to **DIAGNOSIS AND TESTING** .

Were any problem found with the PCM powers and grounds?

Yes

- Repair as necessary.
- Perform the POWERTRAIN VERIFICATION TEST - 2.2L DIESEL. Refer to **PCM VERIFICATION TEST - 2.2L DIESEL** .

No

- Go To 4

4. **POWERTRAIN CONTROL MODULE**
   1. Using the wiring diagram/schematic as a guide, inspect the wiring and connectors for the Powertrain Control Module.
   2. Look for any chafed, pierced, pinched, or partially broken wires.
   3. Look for broken, bent, pushed out or corroded terminals.
   4. Monitor the scan tool data relative to this circuit and wiggle test the wiring and connectors.
   5. Look for the data to change or for the DTC to reset during the wiggle test.
   6. Perform any Technical Service Bulletins that may apply.

   Were any problems found?

   Yes

   - Repair as necessary.
   - Perform the POWERTRAIN VERIFICATION TEST - 2.2L DIESEL. Refer to **PCM VERIFICATION TEST - 2.2L DIESEL** .

   No

   - Replace the Powertrain Control Module. **Before removing the PCM, perform the "Replace PCM" routine in the Miscellaneous Functions tab of the scan tool.** . Refer to **REMOVAL** .

- Perform the POWERTRAIN VERIFICATION TEST - 2.2L DIESEL. Refer to **PCM VERIFICATION TEST - 2.2L DIESEL** .

P0633-SKIM SECRET KEY NOT STORED IN PCM

For a complete wiring diagram, **refer to appropriate SYSTEM WIRING DIAGRAMS article** .

WHEN MONITORED

With the ignition on, mileage above 13 km (8 miles).

SET CONDITION

The secret key code is not stored in the Powertrain Control Module (PCM).

POSSIBLE CAUSES

Possible Causes
POWERTRAIN CONTROL MODULE (PCM) WAS REPLACED AND TRANSFER OF SECRET KEY CODE FROM THE WIRELESS CONTROL MODULE WAS NOT COMPLETED

Always perform the Pre-Diagnostic Troubleshooting procedure before proceeding. Refer to PRE-DIAGNOSTIC TROUBLESHOOTING PROCEDURE - 2.2L DIESEL .

DIAGNOSTIC TEST

POWERTRAIN CONTROL MODULE PROGRAMMING

1. This DTC will set if the PCM is replaced and the secret key code is not transferred from into the PCM from the WCM.

   Information only

   View repair

   - With the scan tool, transfer the secret key code from the WCM to the PCM.

P0638-ELECTRONIC THROTTLE CONTROL PERFORMANCE-BANK 1

For a complete wiring diagram, **refer to appropriate SYSTEM WIRING DIAGRAMS article** .

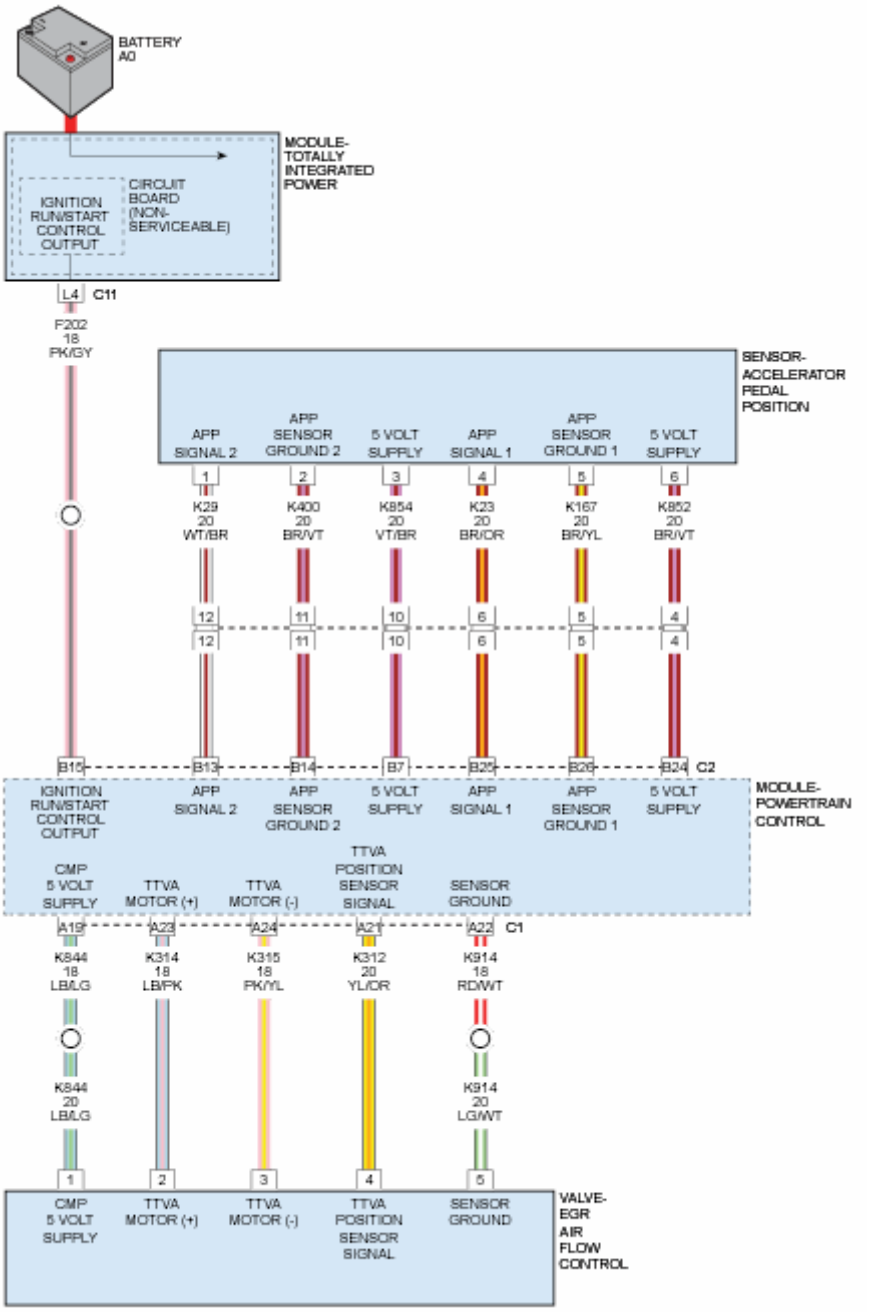

Fig. 8: APPS & EGR Airflow Control Valve Circuit Diagram
Courtesy of CHRYSLER GROUP, LLC

THEORY OF OPERATION

The Powertrain Control Module (PCM) actuates the EGR Airflow Control Valve via the Pulse Width Modulated (PWM) control circuits. The EGR Airflow Control Valve is actuated to control the air volume and the mixing ratio of the

charge air and the recirculated exhaust gases to the Intake Manifold. This is accomplished by creating a vacuum which draws the recirculated exhaust gases into the manifold. The position sensor is integrated into the EGR Airflow Control Valve, and is not serviceable separately. The EGR Airflow Control Valve Position Sensor functions as a typical three wire 5-Volt sensor. The PCM receives feedback as to the position of the valve from the position sensor via the signal wire. The EGR Airflow Control Valve is closed when the ignition is turned off to help provide a smooth engine shut down.

WHEN MONITORED

With the ignition on and the EGR Air Flow Control Valve learning complete.

SET CONDITION

The Powertrain Control Module (PCM) detects that the EGR Air Flow Control Valve current draw is above 2.8 Amps or that the EGR Air Flow Control Valve has exceeded it's learned value limits.

POSSIBLE CAUSES

Possible Causes
EGR AIR FLOW CONTROL VALVE STICKING/BINDING
(K315) EGR AIR FLOW CONTROL VALVE (-) CONTROL CIRCUIT OPEN/HIGH RESISTANCE
(K314) EGR AIR FLOW CONTROL VALVE (+) CONTROL CIRCUIT OPEN/HIGH RESISTANCE
(K315) EGR AIR FLOW CONTROL VALVE (-) CONTROL CIRCUIT FOR A SHORT TO GROUND
(K312) EGR AIR FLOW CONTROL VALVE POSITION SIGNAL CIRCUIT OPEN/HIGH RESISTANCE
EGR AIR FLOW CONTROL VALVE
POWERTRAIN CONTROL MODULE (PCM)

Always perform the Pre-Diagnostic Troubleshooting procedure before proceeding. Refer to PRE-DIAGNOSTIC TROUBLESHOOTING PROCEDURE - 2.2L DIESEL .

DIAGNOSTIC TEST

1. **DTC IS ACTIVE**
    1. Ignition on, engine not running.
    2. With the scan tool, clear DTCs in the Powertrain Control Module.
    3. With the scan tool, actuate the EGR Air Flow Control Valve.
    4. Monitor the scan tool for at least two minutes.
    5. With the scan tool, select View DTCs.

    Is the status Active for this DTC?

    Yes

    - Go To 2

    No

    - Perform the INTERMITTENT CONDITION diagnostic procedure. Refer to **INTERMITTENT CONDITION - 2.2L DIESEL** .
2. **CHECK THE EGR AIR FLOW CONTROL VALVE**
    1. Stop actuation of the EGR Air Flow Control Valve.
    2. Turn the ignition off.
    3. Remove the Air intake hose at the EGR Air Flow Control Valve.
    4. Check the EGR Air Flow Control Valve for binding or obstructions.

    Were any problems found?

    Yes

    - Perform the appropriate repair.
    - Perform the POWERTRAIN VERIFICATION TEST - 2.2L DIESEL. Refer to **PCM VERIFICATION TEST - 2.2L DIESEL** .

    No

    - Go To 3
3. **CHECK FOR HIGH RESISTANCE IN THE (K315) EGR AIR FLOW CONTROL VALVE (-) CONTROL CIRCUIT**

1. Disconnect the EGR Air Flow Control Valve harness connector.
2. Disconnect the Powertrain Control Module C1 harness connector.
3. Measure the resistance of the (K315) EGR Air Flow Control Valve (-) Control circuit between the EGR Air Flow Control Valve harness connector and the Powertrain Control Module harness connector.

   Is the resistance below 5.0 Ohms?

   Yes

   - Go To 4

   No

   - Repair the (K315) EGR Air Flow Control Valve (-) Control circuit for high resistance.
   - Perform the POWERTRAIN VERIFICATION TEST - 2.2L DIESEL. Refer to **PCM VERIFICATION TEST - 2.2L DIESEL** .

4. **CHECK FOR HIGH RESISTANCE IN THE (K314) EGR AIR FLOW CONTROL VALVE (+) CONTROL CIRCUIT**
   1. Measure the resistance of the (K314) EGR Air Flow Control Valve (+) Control circuit between the EGR Air Flow Control Valve harness connector and the Powertrain Control Module harness connector.

      Is the resistance below 5.0 Ohms?

      Yes

      - Go To 5

      No

      - Repair the (K314) EGR Air Flow Control Valve (+) Control circuit for high resistance.
      - Perform the POWERTRAIN VERIFICATION TEST - 2.2L DIESEL. Refer to **PCM VERIFICATION TEST - 2.2L DIESEL** .

5. **CHECK FOR HIGH RESISTANCE IN THE (K312) EGR AIR FLOW**

CONTROL VALVE POSITION SIGNAL CIRCUIT

1. Measure the resistance of the (K312) EGR Air Flow Control Valve Position Signal circuit between the EGR Air Flow Control Valve harness connector and the Powertrain Control Module harness connector.

   Is the resistance below 5.0 Ohms?

   Yes

   - Go To6

   No

   - Repair the (K312) EGR Air Flow Control Valve Position Signal circuit for high resistance.
   - Perform the POWERTRAIN VERIFICATION TEST - 2.2L DIESEL. Refer to **PCM VERIFICATION TEST - 2.2L DIESEL** .

6. **CHECK THE (K315) EGR AIR FLOW CONTROL VALVE (-) CONTROL CIRCUIT FOR A SHORT TO GROUND**

   1. Measure the resistance between ground and the (K315) EGR Air Flow Control Valve (-) Control circuit at the EGR Air Flow Control Valve harness connector.

      Is the resistance above 10k Ohms?

      Yes

      - Go To 7

      No

      - Repair the (K315) EGR Air Flow Control Valve (-) Control circuit for a short to ground.
      - Perform the POWERTRAIN VERIFICATION TEST - 2.2L DIESEL. Refer to **PCM VERIFICATION TEST - 2.2L DIESEL** .

7. **EGR AIR FLOW CONTROL VALVE**

1. Reconnect the Powertrain Control Module C1 harness connector.
2. Replace the EGR Air Flow Control Valve in accordance with the service information.
3. Turn the ignition on.
4. With the scan tool, navigate to Misc. Functions and perform the Throttle Valve Learn procedure.
5. With the scan tool, clear DTCs in the Powertrain Control Module.
6. With the scan tool, actuate the EGR Air Flow Control Valve.
7. Monitor the scan tool for at least two minutes.
8. With the scan tool, select View DTCs.

   Did the DTC return?

   Yes

   - Go To 8

   No

   - Repair is complete.
   - Perform the POWERTRAIN VERIFICATION TEST - 2.2L DIESEL. Refer to **PCM VERIFICATION TEST - 2.2L DIESEL** .

8. **POWERTRAIN CONTROL MODULE**
   1. Using the wiring diagram/schematic as a guide, inspect the wiring and connectors between the EGR Air Flow Control Valve and the Powertrain Control Module.
   2. Look for any chafed, pierced, pinched, or partially broken wires.
   3. Look for broken, bent, pushed out or corroded terminals.
   4. Perform any Technical Service Bulletins that may apply.

      Were any problems found?

      Yes

      - Repair as necessary.
      - Perform the POWERTRAIN VERIFICATION TEST - 2.2L

DIESEL. Refer to **PCM VERIFICATION TEST - 2.2L DIESEL** .

No

- Replace the Powertrain Control Module. **Before removing the PCM, perform the "Replace PCM" routine in the Miscellaneous Functions tab of the scan tool.** . Refer to **REMOVAL** .
- Perform the POWERTRAIN VERIFICATION TEST - 2.2L DIESEL. Refer to **PCM VERIFICATION TEST - 2.2L DIESEL** .

P063A-GENERATOR VOLTAGE SENSE CIRCUIT

For a complete wiring diagram, **refer to appropriate SYSTEM WIRING DIAGRAMS article** .

WHEN MONITORED

With the engine running.

SET CONDITION

The Powertrain Control Module (PCM) detects a two Volt difference between the (A804) Generator Feedback Sense circuit voltage and Battery voltage.

POSSIBLE CAUSES

Possible Causes
(A804) GENERATOR FEEDBACK SENSE CIRCUIT OPEN/HIGH RESISTANCE
(A804) GENERATOR FEEDBACK SENSE CIRCUIT SHORTED TO GROUND
GENERATOR
POWERTRAIN CONTROL MODULE (PCM)

Always perform the Pre-Diagnostic Troubleshooting procedure before proceeding. Refer to PRE-DIAGNOSTIC TROUBLESHOOTING PROCEDURE - 2.2L DIESEL .

DIAGNOSTIC TEST

1. **DTC IS ACTIVE**
   1. Ignition on, engine not running.
   2. With the scan tool, clear DTCs in the Powertrain Control Module.
   3. Start the engine.
   4. Monitor the scan tool for at least two minutes.
   5. With the scan tool, select View DTCs.

   Is the status Active for this DTC?

   Yes

   - Go To 2

   No

   - Perform the INTERMITTENT CONDITION diagnostic procedure. Refer to **INTERMITTENT CONDITION - 2.2L DIESEL** .
2. **CHECK THE (A804) GENERATOR FEEDBACK SENSE CIRCUIT FOR AN OPEN/HIGH RESISTANCE**
   1. Disconnect the Generator C2 harness connector.
   2. Disconnect the Powertrain Control Module C1 harness connector.
   3. Measure the resistance of the (A804) Generator Feedback Sense circuit between the Generator C2 harness connector and the Powertrain Control Module C1 harness connector.

   Is the resistance below 5.0 Ohms?

   Yes

   - Go To 3

   No

   - Repair the (A804) Generator Feedback Sense circuit for an open circuit or high resistance.
   - Perform the POWERTRAIN VERIFICATION TEST - 2.2L DIESEL. Refer to **PCM VERIFICATION TEST - 2.2L DIESEL** .

3. **CHECK THE (A804) GENERATOR FEEDBACK SENSE CIRCUIT FOR A SHORT TO GROUND**
   1. Measure the resistance between ground and the (A804) Generator Feedback Sense circuit at the Powertrain Control Module C1 harness connector.

      Is the resistance above 10k Ohms?

      Yes

      - Go To 4

      No

      - Repair the (A804) Generator Feedback Sense circuit for a short to ground.
      - Perform the POWERTRAIN VERIFICATION TEST - 2.2L DIESEL. Refer to **PCM VERIFICATION TEST - 2.2L DIESEL** .
4. **GENERATOR**
   1. Turn the ignition off.
   2. Replace the Generator in accordance with the service information.
   3. Turn the ignition on.
   4. With the scan tool, erase PCM DTCs.
   5. Test drive the vehicle.
   6. With the scan tool, read PCM DTCs.

      Did the DTC return?

      Yes

      - Replace the Powertrain Control Module. **Before removing the PCM, perform the "Replace PCM" routine in the Miscellaneous Functions tab of the scan tool.** . Refer to **REMOVAL** .
      - Perform the POWERTRAIN VERIFICATION TEST - 2.2L DIESEL. Refer to **PCM VERIFICATION TEST - 2.2L DIESEL** .

No

- Repair is complete.
- Perform the POWERTRAIN VERIFICATION TEST - 2.2L DIESEL. Refer to **PCM VERIFICATION TEST - 2.2L DIESEL** .

P063D-GENERATOR VOLTAGE SENSE HIGH

For a complete wiring diagram, **refer to appropriate SYSTEM WIRING DIAGRAMS article** .

WHEN MONITORED

With the engine running.

SET CONDITION

The Powertrain Control Module (PCM) detects that the (A804) Generator Feedback Sense circuit is 2.0 Volts greater than Battery voltage for three seconds.

POSSIBLE CAUSES

Possible Causes
CORRODED BATTERY TERMINALS/CABLES
(K20) GENERATOR FIELD CONTROL CIRCUIT SHORTED TO VOLTAGE
(A804) GENERATOR FEEDBACK SENSE CIRCUIT SHORTED TO VOLTAGE
BATTERY
POWERTRAIN CONTROL MODULE (PCM)

Always perform the Pre-Diagnostic Troubleshooting procedure before proceeding. Refer to PRE-DIAGNOSTIC TROUBLESHOOTING PROCEDURE - 2.2L DIESEL .

DIAGNOSTIC TEST

1. **CHECK FOR ACTIVE DTC**
    1. Turn the ignition on.

2. With the scan tool, erase PCM DTCs.
3. Test drive the vehicle.
4. With the scan tool, read PCM DTCs.

   Did this DTC return?

   Yes

   - Go To 2

   No

   - Perform the INTERMITTENT CONDITION diagnostic procedure. Refer to **INTERMITTENT CONDITION - 2.2L DIESEL** .

2. **CHECK THE BATTERY TERMINALS/CABLES**
   1. Turn the ignition off.
   2. Remove the battery cables from the battery terminals.
   3. Visually inspect the battery cables and terminals for signs of corrosion or poor connection.

      Was there any signs of corrosion present?

      Yes

      - Repair as necessary.
      - Perform the POWERTRAIN VERIFICATION TEST - 2.2L DIESEL. Refer to **PCM VERIFICATION TEST - 2.2L DIESEL** .

      No

      - Go To 3

3. **CHECK THE BATTERY**
   1. Test the battery with an approved Mopar Midtronics battery tester.

      Did the battery pass the load test?

      Yes

- Go To 4

No

- Replace the battery in accordance with the service information.
- Perform the POWERTRAIN VERIFICATION TEST - 2.2L DIESEL. Refer to **PCM VERIFICATION TEST - 2.2L DIESEL** .

4. **CHECK THE (K20) GENERATOR FIELD CONTROL CIRCUIT FOR A SHORT TO VOLTAGE**
   1. Turn the ignition off.
   2. Reconnect the battery cables to the battery terminals.
   3. Disconnect the Generator C2 harness connector.
   4. Disconnect the PCM C1 harness connector.
   5. Remove the Main Relay.
   6. Connect a jumper wire between cavity B7 and cavity B9 of the Main Relay connector.
   7. Turn the ignition on.
   8. Measure the voltage on the (K20) Generator Field Control circuit at the Generator C2 harness connector.

   Is there any voltage present?

   Yes

   - Repair the (K20) Generator Field Control circuit for a short to voltage.
   - Perform the POWERTRAIN VERIFICATION TEST - 2.2L DIESEL. Refer to **PCM VERIFICATION TEST - 2.2L DIESEL** .

   No

   - Go To 5

5. **CHECK THE (A804) GENERATOR FEEDBACK SENSE CIRCUIT FOR A SHORT TO VOLTAGE**
   1. Reconnect the PCM C1 harness connector.

2. Start the engine.
3. Measure the voltage on the (A804) Generator Feedback Sense circuit at the Generator harness connector.

   Is there any voltage present?

   Yes

   - Repair the (A804) Generator Feedback Sense circuit for a short to voltage.
   - Perform the POWERTRAIN VERIFICATION TEST - 2.2L DIESEL. Refer to **PCM VERIFICATION TEST - 2.2L DIESEL** .

   No

   - Go To 6

6. **CHECK PCM POWER AND GROUND CIRCUITS**
   1. Turn the ignition off.
   2. Reconnect the Generator C2 harness connector.
   3. Perform the CHECKING THE PCM POWER AND GROUND diagnostic procedure. Refer to **DIAGNOSIS AND TESTING** .

      Were any problem found with the PCM powers and grounds?

      Yes

      - Repair as necessary.
      - Perform the POWERTRAIN VERIFICATION TEST - 2.2L DIESEL. Refer to **PCM VERIFICATION TEST - 2.2L DIESEL** .

      No

      - Go To 7

7. **GENERATOR**
   1. Turn the ignition off.
   2. Replace the Generator in accordance with the service information.

3. Turn the ignition on.
4. With the scan tool, erase PCM DTCs.
5. Test drive the vehicle.
6. With the scan tool, read PCM DTCs.

Did the DTC return?

Yes

- Replace the Powertrain Control Module. **Before removing the PCM, perform the "Replace PCM" routine in the Miscellaneous Functions tab of the scan tool.** . Refer to **REMOVAL** .
- Perform the POWERTRAIN VERIFICATION TEST - 2.2L DIESEL. Refer to **PCM VERIFICATION TEST - 2.2L DIESEL** .

No

- Repair is complete.
- Perform the POWERTRAIN VERIFICATION TEST - 2.2L DIESEL. Refer to **PCM VERIFICATION TEST - 2.2L DIESEL** .

P0641-SENSOR REFERENCE VOLTAGE 1 CIRCUIT

For a complete wiring diagram, **refer to appropriate SYSTEM WIRING DIAGRAMS article** .

THEORY OF OPERATION

The Powertrain Control Module (PCM) contains 3 internal 5-Volt Sensor Supply sources. Each 5-Volt Supply source is split into parallel circuits to provide 5.0 Volts to multiple sensors. Sensor Supply 1 provides 5.0 Volts to the Accelerator Pedal Position Sensor 1 and the Rail Pressure Sensor.

WHEN MONITORED

With the ignition on.

SET CONDITION

The Powertrain Control Module (PCM) detects that the voltage on the 5-Volt Sensor Supply 1 circuit is below 4.7 Volts or above 5.3 Volts for 0.16 of a second.

POSSIBLE CAUSES

Possible Causes
(K852) ACCELERATOR PEDAL POSITION SENSOR 1 5-VOLT SUPPLY CIRCUIT SHORTED TO VOLTAGE
(K852) ACCELERATOR PEDAL POSITION SENSOR 1 5-VOLT SUPPLY CIRCUIT SHORTED TO GROUND
(K350) RAIL PRESSURE SENSOR 5-VOLT SUPPLY CIRCUIT SHORTED TO VOLTAGE
(K350) RAIL PRESSURE SENSOR 5-VOLT SUPPLY CIRCUIT SHORTED TO GROUND
ACCELERATOR PEDAL POSITION SENSOR
RAIL PRESSURE SENSOR
POWERTRTAIN CONTROL MODULE (PCM)

Always perform the Pre-Diagnostic Troubleshooting procedure before proceeding. Refer to PRE-DIAGNOSTIC TROUBLESHOOTING PROCEDURE - 2.2L DIESEL .

DIAGNOSTIC TEST

1. **CHECK FOR ACTIVE DTC**
    1. Turn the ignition on.
    2. With the scan tool, erase PCM DTCs.
    3. Turn the ignition off for 10 seconds.
    4. Turn the ignition on.
    5. With the scan tool, View DTCs.

    Is the status Active for this DTC?

    Yes

    - Go To 2

    No

- Perform the INTERMITTENT CONDITION diagnostic procedure. Refer to **INTERMITTENT CONDITION - 2.2L DIESEL** .

2. **CHECK THE ACCELERATOR PEDAL POSITION SENSOR**
   1. Turn the ignition off.
   2. Disconnect the Accelerator Pedal Position Sensor harness connector.
   3. Turn the ignition on.
   4. Measure the voltage on the (K852) 5-Volt Supply circuit at the Accelerator Pedal Position Sensor harness connector.

   Is the voltage between 4.7 and 5.3 Volts?

   Yes

   - Replace the Accelerator Pedal Position Sensor in accordance with the service information.
   - Perform the POWERTRAIN VERIFICATION TEST - 2.2L DIESEL. Refer to **PCM VERIFICATION TEST - 2.2L DIESEL** .

   No

   - Go To 3

3. **CHECK THE RAIL PRESSURE SENSOR**
   1. Turn the ignition off.
   2. Disconnect the Rail Pressure Sensor harness connector.
   3. Turn the ignition on.
   4. Measure the voltage on the (K350) 5-Volt Supply circuit at the Rail Pressure Sensor harness connector.

   Is the voltage between 4.7 and 5.3 Volts?

   Yes

   - Replace the Rail Pressure Sensor in accordance with the service information.
   - Perform the POWERTRAIN VERIFICATION TEST - 2.2L DIESEL. Refer to **PCM VERIFICATION TEST - 2.2L**

DIESEL .

No, voltage is below 4.7 Volts,

- Go To 4

No, voltage is above 5.3 Volts,

- Go To 6

4. **CHECK THE (K852) ACCELERATOR PEDAL POSITION SENSOR 5-VOLT SUPPLY CIRCUIT FOR A SHORT TO GROUND**
   1. Turn the ignition off.
   2. Disconnect the PCM harness connectors.
   3. Measure the resistance between ground and the (K852) Accelerator Pedal Position Sensor 5-Volt Supply circuit at the PCM C2 harness connector.

   Is the resistance above 10k Ohms?

   Yes

   - Go To 5

   No

   - Repair the (K852) Accelerator Pedal Position Sensor 5-Volt Supply circuit for a short to ground.
   - Perform the POWERTRAIN VERIFICATION TEST - 2.2L DIESEL. Refer to **PCM VERIFICATION TEST - 2.2L DIESEL** .
5. **CHECK THE (K350) RAIL PRESSURE SENSOR 5-VOLT SUPPLY CIRCUIT FOR A SHORT TO GROUND**
   1. Measure the resistance between ground and the (K350) Rail Pressure Sensor 5-Volt Supply circuit at the PCM C1 harness connector.

   Is the resistance above 10k Ohms?

   Yes

- Go To 8

No

- Repair the (K350) Rail Pressure Sensor 5-Volt Supply circuit for a short to ground.
- Perform the POWERTRAIN VERIFICATION TEST - 2.2L DIESEL. Refer to **PCM VERIFICATION TEST - 2.2L DIESEL** .

6. **CHECK THE (K852) ACCELERATOR PEDAL POSITION SENSOR 5-VOLT SUPPLY CIRCUIT FOR A SHORT TO VOLTAGE**
   1. Turn the ignition off.
   2. Remove the Main Relay.
   3. Connect a jumper wire between cavity 30 and cavity 87 of the Main Relay connector.
   4. Turn the ignition on.
   5. Measure the voltage on the (K852) Accelerator Pedal Position Sensor 5-Volt Supply circuit at the PCM C2 harness connector.

   Is there any voltage present?

   Yes

   - Repair the (K852) Accelerator Pedal Position Sensor 5-Volt Supply circuit for a short to voltage.
   - Perform the POWERTRAIN VERIFICATION TEST - 2.2L DIESEL. Refer to **PCM VERIFICATION TEST - 2.2L DIESEL** .

   No

   - Go To 7
7. **CHECK THE (K350) RAIL PRESSURE SENSOR 5-VOLT SUPPLY CIRCUIT FOR A SHORT TO VOLTAGE**
   1. Measure the voltage on the (K350) Rail Pressure Sensor 5-Volt Supply circuit at the PCM C1 harness connector.

   Is there any voltage present?

Yes

- Repair the (K350) Rail Pressure Sensor 5-Volt Supply circuit for a short to voltage.
- Perform the POWERTRAIN VERIFICATION TEST - 2.2L DIESEL. Refer to **PCM VERIFICATION TEST - 2.2L DIESEL** .

No

- Go To 8

8. **POWERTRAIN CONTROL MODULE**
   1. Turn the ignition off.
   2. Look for any chafed, pierced, pinched, or partially broken wires.
   3. Look for broken, bent, pushed out or corroded terminals.
   4. Perform any Technical Service Bulletins that may apply.

   Were any problems found?

   Yes

   - Repair as necessary.
   - Perform the POWERTRAIN VERIFICATION TEST - 2.2L DIESEL. Refer to **PCM VERIFICATION TEST - 2.2L DIESEL** .

   No

   - Replace the Powertrain Control Module. **Before removing the PCM, perform the "Replace PCM" routine in the Miscellaneous Functions tab of the scan tool.** . Refer to **REMOVAL** .
   - Perform the POWERTRAIN VERIFICATION TEST - 2.2L DIESEL. Refer to **PCM VERIFICATION TEST - 2.2L DIESEL** .

P0645-A/C CONTROL CIRCUIT/OPEN

For a complete wiring diagram, **refer to appropriate SYSTEM WIRING**

DIAGRAMS article .

WHEN MONITORED

With the ignition on, Powertrain Control Module (PCM) powered up, battery voltage above 10.5 Volts, and starter relay inactive.

SET CONDITION

The Powertrain Control Module (PCM) detects an open circuit on the pulse width modulated (C28) A/C Clutch Control circuit for 0.32 seconds.

POSSIBLE CAUSES

Possible Causes
(F343) FUSED ASD/MAIN RELAY SUPPLY CIRCUIT OPEN
(C28) A/C CLUTCH CONTROL CIRCUIT OPEN/HIGH RESISTANCE
TOTALLY INTEGRATED POWER MODULE (TIPM)
POWERTRAIN CONTROL MODULE (PCM)

Always perform the Pre-Diagnostic Troubleshooting procedure before proceeding. Refer to PRE-DIAGNOSTIC TROUBLESHOOTING PROCEDURE - 2.2L DIESEL .

DIAGNOSTIC TEST

1. **DTC IS ACTIVE**

NOTE: If there are any ASD/Main Relay DTCs present, diagnose those DTCs before proceeding with this test procedure.

1. Ignition on, engine not running.
2. With the scan tool, clear DTCs in the Powertrain Control Module.
3. With the scan tool, actuate the A/C Compressor.
4. Monitor the scan tool for at least two minutes.
5. With the scan tool, select View DTCs.

Is the status Active for this DTC?

Yes

- Go To 2

No

- Perform the INTERMITTENT CONDITION diagnostic procedure. Refer to **INTERMITTENT CONDITION - 2.2L DIESEL** .

2. **CHECK THE (C28) A/C CLUTCH CONTROL CIRCUIT FOR AN OPEN/HIGH RESISTANCE**
   1. Disconnect the TIPM C1 harness connector.
   2. Disconnect the PCM C2 harness connector.
   3. Measure the resistance of the (C28) A/C Clutch Control circuit between the TIPM harness connector and the PCM C2 harness connector.

   Is the resistance below 5.0 Ohms?

   Yes

   - Go To 3

   No

   - Repair the (C28) A/C Clutch Control circuit for an open or high resistance.
   - Perform the POWERTRAIN VERIFICATION TEST - 2.2L DIESEL. Refer to **PCM VERIFICATION TEST - 2.2L DIESEL** .

3. **TOTALLY INTEGRATED POWER MODULE**
   1. Turn the ignition off.
   2. Reconnect the PCM C2 harness connector.
   3. Disconnect the TIPM C1 harness connector.
   4. Backprobe the (C28) A/C Clutch Control circuit at the TIPM C1 harness connector and connect a jumper to ground.

   NOTE: Take caution not to spread the terminals.

   5. Turn the ignition on.
   6. With the scan tool, Clear DTCs.

7. With the scan tool, select View DTCs.

NOTE: The scan tool should display DTC P0646-A/C CLUTCH CONTROL CIRCUIT LOW with the (C28) A/C Compressor Control circuit shorted to ground.

Is the DTC P0645 Active with the (C28) A/C Compressor Control circuit shorted to ground?

Yes

- Replace the Totally Integrated Power Module in accordance with the service information.
- Perform the POWERTRAIN VERIFICATION TEST - 2.2L DIESEL. Refer to **PCM VERIFICATION TEST - 2.2L DIESEL** .

No

- Go To 4

4. **POWERTRAIN CONTROL MODULE**
   1. Using the wiring diagram/schematic as a guide, inspect the wiring and connectors between the Totally Integrated Power Module and the Powertrain Control Module.
   2. Look for any chafed, pierced, pinched, or partially broken wires.
   3. Look for broken, bent, pushed out or corroded terminals.
   4. Perform any Technical Service Bulletins that may apply.

   Were any problems found?

   Yes

   - Repair as necessary.
   - Perform the POWERTRAIN VERIFICATION TEST - 2.2L DIESEL. Refer to **PCM VERIFICATION TEST - 2.2L DIESEL** .

No

- Replace the Powertrain Control Module. **Before removing the PCM, perform the "Replace PCM" routine in the Miscellaneous Functions tab of the scan tool.** . Refer to **REMOVAL** .
- Perform the POWERTRAIN VERIFICATION TEST - 2.2L DIESEL. Refer to **PCM VERIFICATION TEST - 2.2L DIESEL** .

P0646-A/C CLUTCH CONTROL CIRCUIT LOW

For a complete wiring diagram, **refer to appropriate SYSTEM WIRING DIAGRAMS article** .

WHEN MONITORED

With the ignition on, Powertrain Control Module (PCM) powered up, battery voltage above 10.5 Volts, and starter relay inactive.

SET CONDITION

The Powertrain Control Module (PCM) detects a short to ground on the pulse width modulated (C28) A/C Compressor Control circuit for 0.32 seconds.

POSSIBLE CAUSES

Possible Causes
(C28) A/C CLUTCH CONTROL CIRCUIT SHORTED TO GROUND
TOTALLY INTEGRATED POWER MODULE (TIPM)
POWERTRAIN CONTROL MODULE (PCM)

Always perform the Pre-Diagnostic Troubleshooting procedure before proceeding. Refer to PRE-DIAGNOSTIC TROUBLESHOOTING PROCEDURE - 2.2L DIESEL .

DIAGNOSTIC TEST

1. **DTC IS ACTIVE**
    1. Ignition on, engine not running.
    2. With the scan tool, clear DTCs in the Powertrain Control Module.

3. With the scan tool, actuate the A/C Compressor.
4. Monitor the scan tool for at least two minutes.
5. With the scan tool, select View DTCs.

   Is the status Active for this DTC?

   Yes

   - Go To 2

   No

   - Perform the INTERMITTENT CONDITION diagnostic procedure. Refer to **INTERMITTENT CONDITION - 2.2L DIESEL** .

2. **CHECK THE (C28) A/C CLUTCH CONTROL CIRCUIT FOR A SHORT TO GROUND**
   1. Turn the ignition off.
   2. Disconnect the TIPM C1 harness connector.
   3. Disconnect the PCM C2 harness connector.
   4. Measure the resistance between ground and the (C28) A/C Clutch Control circuit at the A/C Compressor harness connector.

      Is the resistance above 10k Ohms?

      Yes

      - Go To 3

      No

      - Repair the (C28) A/C Clutch Control circuit for a short to ground.
      - Perform the POWERTRAIN VERIFICATION TEST - 2.2L DIESEL. Refer to **PCM VERIFICATION TEST - 2.2L DIESEL** .

3. **CHECK THE TOTALLY INTEGRATED POWER MODULE**
   1. Reconnect the PCM C2 harness connector.
   2. Turn the ignition on.
   3. With the scan tool, Erase DTCs.

4. With the scan tool, select View DTCs.

NOTE: The scan tool should display P0645-A/C CLUTCH CONTROL CIRCUIT OPEN DTC with the TIPM C1 harness connector disconnected.

Is the P0645 DTC Active with the TIPM C1 harness connector disconnected?

Yes

- Replace the Totally Integrated Power Module in accordance with the service information.
- Perform the POWERTRAIN VERIFICATION TEST - 2.2L DIESEL. Refer to **PCM VERIFICATION TEST - 2.2L DIESEL** .

No

- Go To 4

4. **POWERTRAIN CONTROL MODULE**
   1. Using the wiring diagram/schematic as a guide, inspect the wiring and connectors between the Totally Integrated Power Module and the Powertrain Control Module.
   2. Look for any chafed, pierced, pinched, or partially broken wires.
   3. Look for broken, bent, pushed out or corroded terminals.
   4. Perform any Technical Service Bulletins that may apply.

   Were any problems found?

   Yes

   - Repair as necessary.
   - Perform the POWERTRAIN VERIFICATION TEST - 2.2L DIESEL. Refer to **PCM VERIFICATION TEST - 2.2L DIESEL** .

   No

- Replace the Powertrain Control Module. **Before removing the PCM, perform the "Replace PCM" routine in the Miscellaneous Functions tab of the scan tool.** . Refer to **REMOVAL** .
- Perform the POWERTRAIN VERIFICATION TEST - 2.2L DIESEL. Refer to **PCM VERIFICATION TEST - 2.2L DIESEL** .

P0647-A/C CONTROL CIRCUIT HIGH

For a complete wiring diagram, **refer to appropriate SYSTEM WIRING DIAGRAMS article** .

WHEN MONITORED

With the ignition on, PCM powered up, battery voltage above 10.5 Volts, and starter relay inactive.

SET CONDITION

The Powertrain Control Module (PCM) detects a short to voltage on the pulse width modulated (C28) A/C Clutch Control circuit for 0.32 seconds.

POSSIBLE CAUSES

Possible Causes
(C28) A/C CLUTCH CONTROL CIRCUIT SHORTED TO VOLTAGE
TOTALLY INTEGRATED POWER MODULE (TIPM)
POWERTRAIN CONTROL MODULE (PCM)

Always perform the Pre-Diagnostic Troubleshooting procedure before proceeding. Refer to PRE-DIAGNOSTIC TROUBLESHOOTING PROCEDURE - 2.2L DIESEL .

DIAGNOSTIC TEST

1. **DTC IS ACTIVE**
    1. Ignition on, engine not running.
    2. With the scan tool, clear DTCs in the Powertrain Control Module.
    3. With the scan tool, actuate the A/C Compressor.

4. Monitor the scan tool for at least two minutes.
5. With the scan tool, select View DTCs.

   Is the status Active for this DTC?

   Yes

   - Go To 2

   No

   - Perform the INTERMITTENT CONDITION diagnostic procedure. Refer to **INTERMITTENT CONDITION - 2.2L DIESEL** .

2. **CHECK THE (C28) A/C CLUTCH CONTROL CIRCUIT FOR A SHORT TO VOLTAGE**
   1. Turn the ignition off.
   2. Disconnect the TIPM C1 harness connector.
   3. Disconnect the PCM C2 harness connector.
   4. Remove the Main Relay.
   5. Connect a jumper wire between cavity 87 and cavity 30 of the Main Relay Connector.
   6. Turn the ignition on.
   7. Measure the voltage of the (C28) A/C Clutch Control circuit at the TIPM C1 harness connector.

      Is there any voltage present?

      Yes

      - Repair the (C28) A/C Clutch Control circuit for a short to voltage.
      - Perform the POWERTRAIN VERIFICATION TEST - 2.2L DIESEL. Refer to **PCM VERIFICATION TEST - 2.2L DIESEL** .

      No

      - Go To 3

3. **CHECK THE TOTALLY INTEGRATED POWER MODULE**

1. Reconnect the PCM C2 harness connector.
2. Turn the ignition on.
3. With the scan tool, clear DTCs.
4. With the scan tool, select View DTCs.

NOTE: The scan tool should display P0645-A/C CLUTCH CONTROL CIRCUIT OPEN DTC with the TIPM C1 harness connector disconnected.

Is the P0645 DTC active with the TIPM C1 harness connector disconnected?

Yes

- Replace the Totally Integrated Power Module in accordance with the service information.
- Perform the POWERTRAIN VERIFICATION TEST - 2.2L DIESEL. Refer to **PCM VERIFICATION TEST - 2.2L DIESEL** .

No

- Go To 4

4. **POWERTRAIN CONTROL MODULE**
   1. Using the wiring diagram/schematic as a guide, inspect the wiring and connectors between the Totally Integrated Power Module and the Powertrain Control Module.
   2. Look for any chafed, pierced, pinched, or partially broken wires.
   3. Look for broken, bent, pushed out or corroded terminals.
   4. Perform any Technical Service Bulletins that may apply.

   Were any problems found?

   Yes

   - Repair as necessary.
   - Perform the POWERTRAIN VERIFICATION TEST - 2.2L DIESEL. Refer to **PCM VERIFICATION TEST - 2.2L**

DIESEL .

No

- Replace the Powertrain Control Module. **Before removing the PCM, perform the "Replace PCM" routine in the Miscellaneous Functions tab of the scan tool.** . Refer to **REMOVAL** .
- Perform the POWERTRAIN VERIFICATION TEST - 2.2L DIESEL. Refer to **PCM VERIFICATION TEST - 2.2L DIESEL** .

P0651-SENSOR REFERENCE VOLTAGE 2 CIRCUIT

For a complete wiring diagram, **refer to appropriate SYSTEM WIRING DIAGRAMS article** .

THEORY OF OPERATION

The Powertrain Control Module (PCM) contains 2 internal 5-Volt Sensor Supply sources. Each 5-Volt Supply source is split into parallel circuits to provide 5.0 Volts to multiple sensors. Sensor Supply 2 provides 5.0 Volts to the Intake Air Pressure Sensor, the Boost Pressure Sensor, Exhaust Gas Pressure Sensor, and the Differential Pressure Sensor.

WHEN MONITORED

With the ignition on.

SET CONDITION

The Powertrain Control Module (PCM) detects that the voltage on the 5-Volt Sensor Supply 2 circuit is below 4.7 Volts or above 5.3 Volts for 0.16 of a second.

POSSIBLE CAUSES

Possible Causes
(K354) DIFFERENTIAL PRESSURE SENSOR 5-VOLT SUPPLY CIRCUIT SHORTED TO VOLTAGE
(F856) 5-VOLT SUPPLY CIRCUIT SHORTED TO VOLTAGE
(K354) DIFFERENTIAL PRESSURE SENSOR 5-VOLT SUPPLY

CIRCUIT SHORTED TO GROUND
(F856) 5-VOLT SUPPLY CIRCUIT SHORTED TO GROUND
DIFFERENTIAL PRESSURE SENSOR
INTAKE AIR PRESSURE SENSOR
BOOST PRESSURE SENSOR
EXHAUST GAS PRESSURE SENSOR
POWERTRAIN CONTROL MODULE (PCM)

Always perform the Pre-Diagnostic Troubleshooting procedure before proceeding. Refer to PRE-DIAGNOSTIC TROUBLESHOOTING PROCEDURE - 2.2L DIESEL .

DIAGNOSTIC TEST

1. **CHECK FOR ACTIVE DTC**
   1. Turn the ignition on.
   2. With the scan tool, erase PCM DTCs.
   3. Turn the ignition off for 10.0 seconds.
   4. Turn the ignition on.
   5. With the scan tool, select View DTCs.

   Is the status Active for this DTC?

   Yes

   - Go To 2

   No

   - Perform the INTERMITTENT CONDITION diagnostic procedure. Refer to **INTERMITTENT CONDITION - 2.2L DIESEL** .
2. **CHECK THE DIFFERENTIAL PRESSURE SENSOR**
   1. Turn the ignition off.
   2. Disconnect the Differential Pressure Sensor harness connector.
   3. Turn the ignition on.
   4. Measure the voltage on the (K354) Differential Pressure Sensor 5-Volt Supply circuit at the Differential Pressure Sensor harness connector.

Is the voltage between 4.7 and 5.3 Volts?

Yes

- Replace the Differential Pressure Sensor in accordance with the service information.
- Perform the POWERTRAIN VERIFICATION TEST - 2.2L DIESEL. Refer to **PCM VERIFICATION TEST - 2.2L DIESEL** .

No

- Go To 3

3. **CHECK THE INTAKE AIR PRESSURE SENSOR**
   1. Turn the ignition off.
   2. Disconnect the Intake Air Pressure Sensor harness connector.
   3. Turn the ignition on.
   4. Measure the voltage on the (F856) 5-Volt Supply circuit at the Intake Air Pressure Sensor harness connector.

   Is the voltage between 4.7 and 5.3 Volts?

   Yes

   - Replace the Intake Air Pressure Sensor in accordance with the service information.
   - Perform the POWERTRAIN VERIFICATION TEST - 2.2L DIESEL. Refer to **PCM VERIFICATION TEST - 2.2L DIESEL** .

   No

   - Go To 4

4. **CHECK THE BOOST PRESSURE SENSOR**
   1. Turn the ignition off.
   2. Disconnect the Boost Pressure Sensor harness connector.
   3. Turn the ignition on.
   4. Measure the voltage on the (F856) 5-Volt Supply circuit at the Intake

Air Pressure Sensor harness connector.

Is the voltage between 4.7 and 5.3 Volts?

Yes

- Replace the Boost Pressure Sensor in accordance with the service information.
- Perform the POWERTRAIN VERIFICATION TEST - 2.2L DIESEL. Refer to **PCM VERIFICATION TEST - 2.2L DIESEL** .

No

- Go To 5

5. **CHECK THE EXHAUST GAS PRESSURE SENSOR**
   1. Turn the ignition off.
   2. Disconnect the Exhaust Gas Pressure Sensor harness connector.
   3. Turn the ignition on.
   4. Measure the voltage on the (F856) 5-Volt Supply circuit at the Exhaust Gas Pressure Sensor harness connector.

   Is the voltage between 4.7 and 5.3 Volts?

   Yes

   - Replace the Exhaust Gas Pressure Sensor in accordance with the service information.
   - Perform the POWERTRAIN VERIFICATION TEST - 2.2L DIESEL. Refer to **PCM VERIFICATION TEST - 2.2L DIESEL** .

   No, voltage is below 4.7 Volts,

   - Go To 8

   No, voltage is above 5.3 Volts,

   - Go To 6

6. **CHECK THE (K354) DIFFERENTIAL PRESSURE SENSOR 5-VOLT SUPPLY CIRCUIT FOR A SHORT TO VOLTAGE**
   1. Turn the ignition off.
   2. Disconnect the PCM harness connectors.
   3. Remove the Main Relay.
   4. Connect a jumper wire between cavity 87 and cavity 30 of the Main Relay connector.
   5. Turn the ignition on.
   6. Measure the voltage of the (K354) Differential Pressure Sensor 5-Volt Supply circuit at the Differential Pressure Sensor harness connector.

      Is there any voltage present?

      Yes

      - Repair the (K354) Differential Pressure Sensor 5-Volt Supply circuit for a short to voltage.
      - Perform the POWERTRAIN VERIFICATION TEST - 2.2L DIESEL. Refer to **PCM VERIFICATION TEST - 2.2L DIESEL** .

      No

      - Go To 7
7. **CHECK THE (F856) 5-VOLT SUPPLY CIRCUIT FOR A SHORT TO VOLTAGE**
   1. Measure the voltage of the (F856) 5-Volt Supply circuit at the Intake Air Pressure Sensor harness connector.

      Is there any voltage present?

      Yes

      - Repair the (F856) 5-Volt Supply circuit for a short to voltage.
      - Perform the POWERTRAIN VERIFICATION TEST. Refer to **PCM VERIFICATION TEST - 2.2L DIESEL** .

      No

- Go To 10

8. **CHECK THE (K354) DIFFERENTIAL PRESSURE SENSOR 5-VOLT SUPPLY CIRCUIT FOR A SHORT TO GROUND**
   1. Turn the ignition off.
   2. Measure the resistance between ground and the (K354) Differential Pressure Sensor 5-Volt Supply circuit at the Differential Pressure Sensor harness connector.

      Is the resistance above 10k Ohms?

      Yes

      - Go To 9

      No

      - Repair the (K354) Differential Pressure Sensor 5-Volt Supply circuit for a short to ground.
      - Perform the POWERTRAIN VERIFICATION TEST - 2.2L DIESEL. Refer to **PCM VERIFICATION TEST - 2.2L DIESEL** .
9. **CHECK THE (F856) 5-VOLT SUPPLY CIRCUIT FOR A SHORT TO GROUND**
   1. Measure the resistance between ground and the (F856) 5-Volt Supply circuit at the Intake Air Pressure Sensor harness connector.

      Is the resistance above 10k Ohms?

      Yes

      - Go To 10

      No

      - Repair the (F856) 5-Volt Supply circuit for a short to ground.
      - Perform the POWERTRAIN VERIFICATION TEST - 2.2L DIESEL. Refer to **PCM VERIFICATION TEST - 2.2L DIESEL** .
10. **POWERTRAIN CONTROL MODULE**

1. Turn the ignition off.
2. Inspect the (F856) 5-Volt Supply circuit between the Boost Pressure Sensor and the PCM.
3. Inspect the (F856) 5-Volt Supply circuit between the Intake Air Temperature and the PCM.
4. Inspect the (F856) 5-Volt Supply circuit between the Exhaust Gas Pressure Sensor and the PCM.
5. Inspect the (K354) Differential Pressure Sensor 5-Volt Supply circuit between the Differential Pressure Sensor and the PCM.
6. Look for any chafed, pierced, pinched, or partially broken wires.
7. Look for broken, bent, pushed out or corroded terminals.
8. Perform any Technical Service Bulletins that may apply.

Were any problems found?

Yes

- Repair as necessary.
- Perform the POWERTRAIN VERIFICATION TEST. Refer to **PCM VERIFICATION TEST - 2.2L DIESEL** .

No

- Replace the Powertrain Control Module. **Before removing the PCM, perform the "Replace PCM" routine in the Miscellaneous Functions tab of the scan tool.** . Refer to **REMOVAL** .
- Perform the POWERTRAIN VERIFICATION TEST. Refer to **PCM VERIFICATION TEST - 2.2L DIESEL** .

P0670-GLOW PLUG CONTROL MODULE CONTROL CIRCUIT OPEN

For a complete wiring diagram, **refer to appropriate SYSTEM WIRING DIAGRAMS article** .

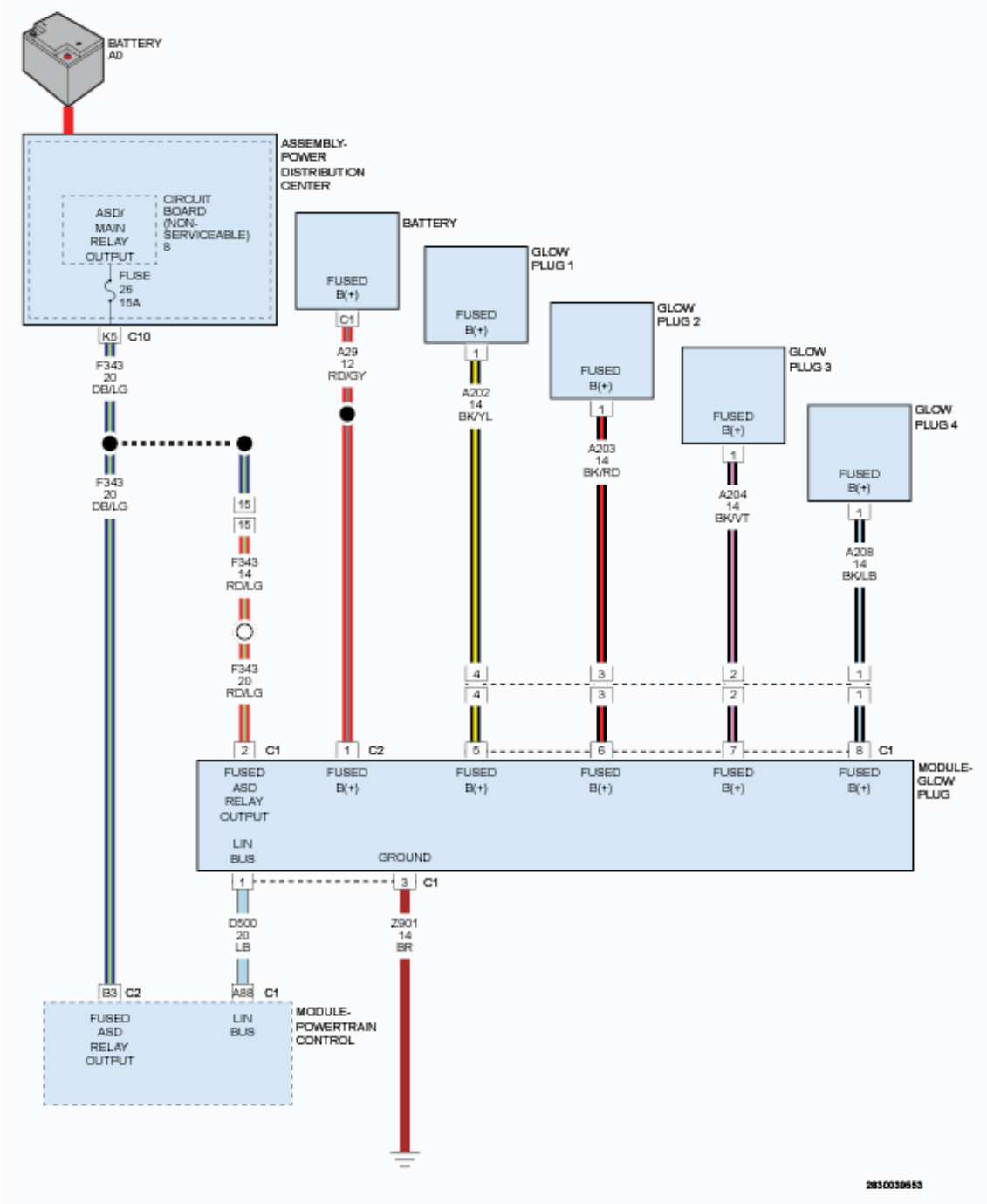

Fig. 9: Glow Plug Circuit Diagram
Courtesy of CHRYSLER GROUP, LLC

WHEN MONITORED

With the ignition on.

SET CONDITION

The Powertrain Control Module (PCM) receives a signal from the Glow Plug Module Control that the (A29) Battery 12-Volt Supply circuit is open.

POSSIBLE CAUSES

Possible Causes
(A29) BATTERY 12-VOLT SUPPLY CIRCUIT SHORTED TO GROUND
(A29) BATTERY 12-VOLT SUPPLY CIRCUIT OPEN
GLOW PLUG MODULE

Always perform the Pre-Diagnostic Troubleshooting procedure before proceeding. Refer to PRE-DIAGNOSTIC TROUBLESHOOTING PROCEDURE - 2.2L DIESEL .

DIAGNOSTIC TEST

1. **DTC IS ACTIVE**
   1. Ignition on, engine not running.
   2. With the scan tool, clear DTCs in the Powertrain Control Module.
   3. With the scan tool, actuate the Glow Plugs.
   4. Monitor the scan tool for at least two minutes.
   5. Cycle the ignition key off and on several times, leaving the ignition on for at least 10.0 seconds at a time.
   6. Start the engine.
   7. Allow the engine to reach normal operating temperature.
   8. Test drive the vehicle.
   9. With the scan tool, select View DTCs.

   Is the status Active for this DTC?

   Yes

   - Go To 2

   No

   - Perform the INTERMITTENT CONDITION diagnostic procedure. Refer to **INTERMITTENT CONDITION - 2.2L DIESEL** .
2. **CHECK THE (A29) BATTERY 12-VOLT SUPPLY CIRCUIT**
   1. Turn the ignition off.
   2. Disconnect the Glow Plug Module harness connector.

3. Measure the voltage on the (A29) Battery 12-Volt Supply circuit at the Glow Plug Module harness connector.

   Is the voltage reading equal to battery voltage?

   Yes

   - Replace the Glow Plug Control Module in accordance with service information.
   - Perform the POWERTRAIN VERIFICATION TEST 2.2L DIESEL. Refer to **PCM VERIFICATION TEST - 2.2L DIESEL** .

   No

   - Repair the (A29) Battery 12-Volt Supply circuit for an open circuit. If the Fuse is blown, check for a short to ground and repair as necessary.
   - Perform the POWERTRAIN VERIFICATION TEST 2.2L DIESEL. Refer to **PCM VERIFICATION TEST - 2.2L DIESEL** .

P0671-CYLINDER 1 GLOW PLUG CIRCUIT

For a complete wiring diagram, **refer to appropriate SYSTEM WIRING DIAGRAMS article** .

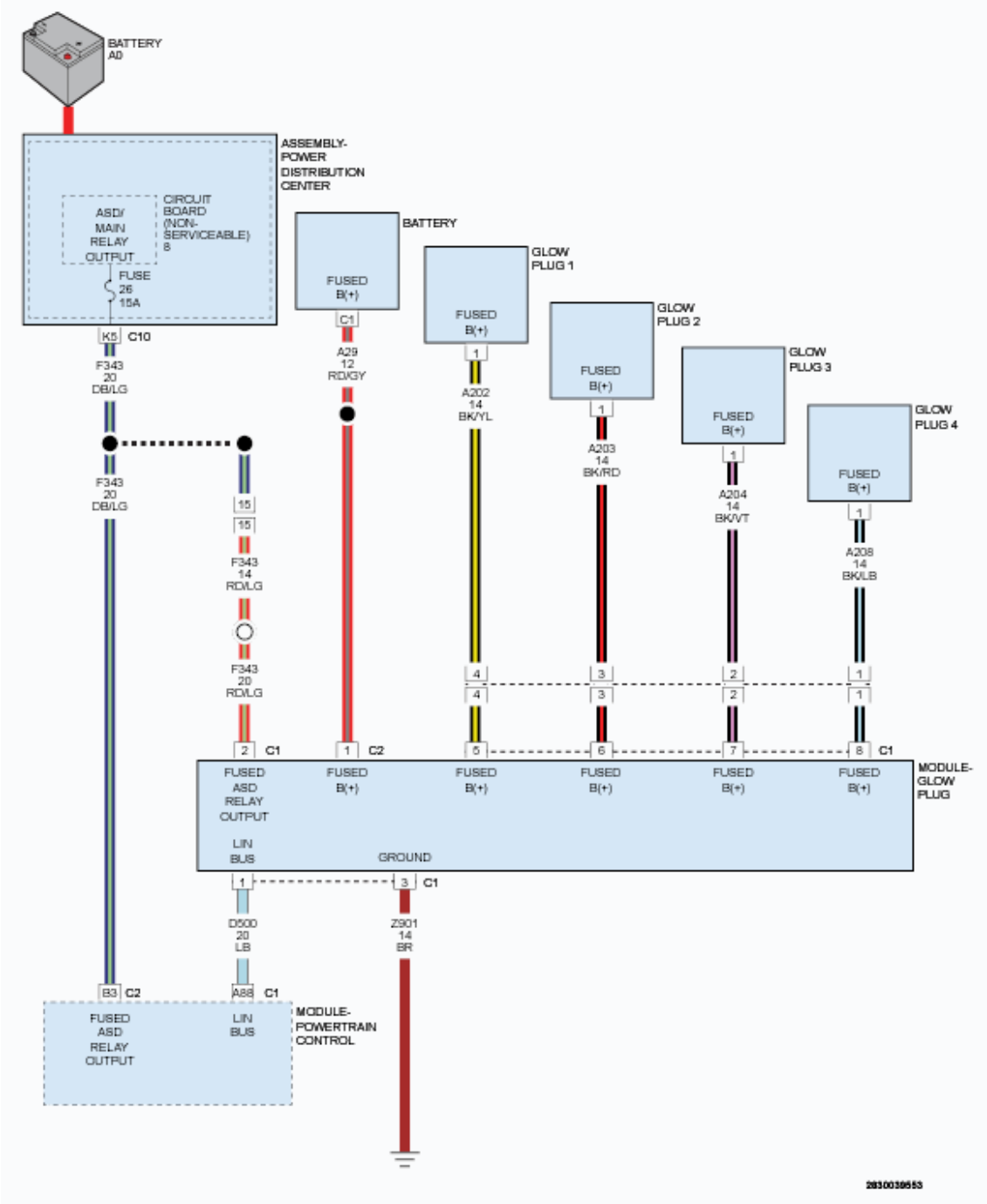

Fig. 10: Glow Plug Circuit Diagram
Courtesy of CHRYSLER GROUP, LLC

WHEN MONITORED

With the ignition on and the Glow Plug Module Glow Plug command on.

SET CONDITION

The Powertrain Control Module (PCM) receives a signal from the Glow Plug Module Control that the (A202) Glow Plug 1 Control circuit open or shorted to

ground.

POSSIBLE CAUSES

Possible Causes
(A202) GLOW PLUG 1 CONTROL CIRCUIT OPEN
(A202) GLOW PLUG 1 CONTROL CIRCUIT SHORTED TO GROUND
GLOW PLUG 1
GLOW PLUG MODULE

Always perform the Pre-Diagnostic Troubleshooting procedure before proceeding. Refer to PRE-DIAGNOSTIC TROUBLESHOOTING PROCEDURE - 2.2L DIESEL .

DIAGNOSTIC TEST

1. **CHECK FOR ACTIVE DTC**
   1. Ignition on, engine not running.
   2. With the scan tool, clear DTCs in the Powertrain Control Module (PCM).
   3. With the scan tool, Actuate the Glow Plugs for 30 seconds.
   4. With the scan tool, read the PCM DTCs.

   Did this DTC return?

   Yes

   - Go To 2

   No

   - Perform the INTERMITTENT CONDITION diagnostic procedure. Refer to **INTERMITTENT CONDITION - 2.2L DIESEL** .
2. **CHECK THE (A202) GLOW PLUG 1 CONTROL CIRCUIT FOR AN OPEN**
   1. Turn the ignition off.
   2. Disconnect the Glow Plug 1 harness connector.
   3. Disconnect the Glow Plug Module harness connector.

4. Measure the resistance of the (A202) Glow Plug 1 Control circuit between the Glow Plug 1 harness connector and the Glow Plug Module harness connector.

   Is the resistance below 5.0 Ohms?

   Yes

   - Go To 3

   No

   - Repair the (A202) Glow Plug 1 Control circuit for an open or high resistance.
   - Perform the POWERTRAIN VERIFICATION TEST 2.2L DIESEL. Refer to **PCM VERIFICATION TEST - 2.2L DIESEL** .

3. **CHECK THE (A202) GLOW PLUG 1 CONTROL CIRCUIT FOR A SHORT TO GROUND**
   1. Measure the resistance between ground and the (A202) Glow Plug 1 Control circuit at the Glow Plug 1 harness connector.

      Is the resistance above 10k Ohms?

      Yes

      - Go To 4

      No

      - Repair the (A202) Glow Plug 1 Control circuit for a short to ground.
      - Perform the POWERTRAIN VERIFICATION TEST 2.2L DIESEL. Refer to **PCM VERIFICATION TEST - 2.2L DIESEL** .

4. **GLOW PLUG 1**
   1. Measure the resistance through the Glow Plug 1 by measuring between ground and the Glow Plug terminal.

Is the resistance between 0.2 and 1.0 Ohm?

Yes

- Go To 5

No

- Replace Glow Plug 1 in accordance with the service information.
- Perform the POWERTRAIN VERIFICATION TEST 2.2L DIESEL. Refer to **PCM VERIFICATION TEST - 2.2L DIESEL** .

5. **GLOW PLUG MODULE**
   1. Using the wiring diagram/schematic as a guide, inspect the wiring and connectors between the Glow Plug and the Glow Plug Module.
   2. Look for any chafed, pierced, pinched, or partially broken wires.
   3. Look for broken, bent, pushed out or corroded terminals.
   4. Perform any Technical Service Bulletins that may apply.

   Were any problems found?

   Yes

   - Repair as necessary.
   - Perform the POWERTRAIN VERIFICATION TEST 2.2L DIESEL. Refer to **PCM VERIFICATION TEST - 2.2L DIESEL** .

   No

   - Replace the Glow Plug Module in accordance with the service information.
   - Perform the POWERTRAIN VERIFICATION TEST 2.2L DIESEL. Refer to **PCM VERIFICATION TEST - 2.2L DIESEL** .

P0672-CYLINDER 2 GLOW PLUG CIRCUIT

For a complete wiring diagram, **refer to appropriate SYSTEM WIRING**

DIAGRAMS article .

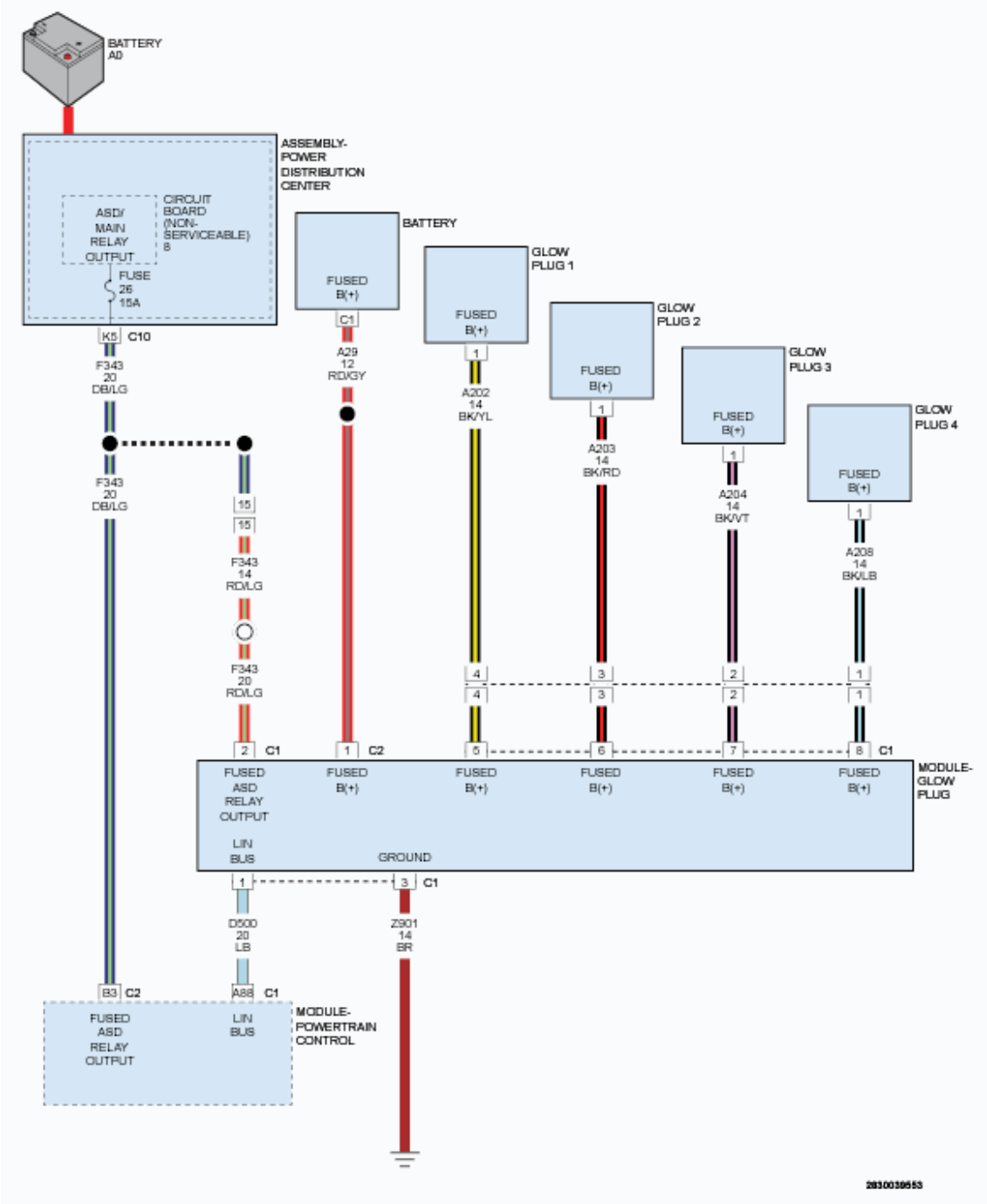

Fig. 11: Glow Plug Circuit Diagram
Courtesy of CHRYSLER GROUP, LLC

WHEN MONITORED

With the ignition on and the Glow Plug Module Glow Plug command on.

SET CONDITION

The Powertrain Control Module (PCM) receives a signal from the Glow Plug Module Control that the (A203) Glow Plug 2 Control circuit open or shorted to ground.

POSSIBLE CAUSES

Possible Causes
(A203) GLOW PLUG 2 CONTROL CIRCUIT OPEN
(A203) GLOW PLUG 2 CONTROL CIRCUIT SHORTED TO GROUND
GLOW PLUG 2
GLOW PLUG MODULE

Always perform the Pre-Diagnostic Troubleshooting procedure before proceeding. Refer to PRE-DIAGNOSTIC TROUBLESHOOTING PROCEDURE - 2.2L DIESEL .

DIAGNOSTIC TEST

1. **CHECK FOR ACTIVE DTC**
   1. Ignition on, engine not running.
   2. With the scan tool, clear DTCs in the Powertrain Control Module (PCM).
   3. With the scan tool, Actuate the Glow Plugs for 30 seconds.
   4. With the scan tool, read the PCM DTCs.

      Did this DTC set again?

      Yes

      - Go To 2

      No

      - Perform the INTERMITTENT CONDITION diagnostic procedure. Refer to **INTERMITTENT CONDITION - 2.2L DIESEL** .
2. **CHECK THE (A203) GLOW PLUG 2 CONTROL CIRCUIT FOR AN OPEN**
   1. Turn the ignition off.
   2. Disconnect the Glow Plug 2 harness connector.

3. Disconnect the Glow Plug Module harness connector.
4. Measure the resistance of the (A203) Glow Plug 2 Control circuit between the Glow Plug 2 harness connector and the Glow Plug Module harness connector.

   Is the resistance below 5.0 Ohms?

   Yes

   - Go To 3

   No

   - Repair the (A203) Glow Plug 2 Control circuit for an open/high resistance.
   - Perform the POWERTRAIN VERIFICATION TEST 2.2L DIESEL. Refer to **PCM VERIFICATION TEST - 2.2L DIESEL** .

3. **CHECK THE (A203) GLOW PLUG 2 CONTROL CIRCUIT FOR A SHORT TO GROUND**
   1. Measure the resistance between ground and the (A203) Glow Plug 2 Control circuit at the Glow Plug 2 harness connector.

      Is the resistance above 10k Ohms?

      Yes

      - Go To 4

      No

      - Repair the (A203) Glow Plug 2 Control circuit for a short to ground.
      - Perform the POWERTRAIN VERIFICATION TEST 2.2L DIESEL. Refer to **PCM VERIFICATION TEST - 2.2L DIESEL** .
4. **GLOW PLUG 2**
   1. Measure the resistance through the Glow Plug 2 by measuring between ground and the Glow Plug terminal.

Is the resistance between 0.2 and 1.0 Ohm?

Yes

- Go To 5

No

- Replace Glow Plug 2 in accordance with the service information.
- Perform the POWERTRAIN VERIFICATION TEST 2.2L DIESEL. Refer to **PCM VERIFICATION TEST - 2.2L DIESEL** .

5. **GLOW PLUG MODULE**
   1. Using the wiring diagram/schematic as a guide, inspect the wiring and connectors between the Glow Plug and the Glow Plug Module.
   2. Look for any chafed, pierced, pinched, or partially broken wires.
   3. Look for broken, bent, pushed out or corroded terminals.
   4. Perform any Technical Service Bulletins that may apply.

   Were any problems found?

   Yes

   - Repair as necessary.
   - Perform the POWERTRAIN VERIFICATION TEST 2.2L DIESEL. Refer to **PCM VERIFICATION TEST - 2.2L DIESEL** .

   No

   - Replace the Glow Plug Module in accordance with the service information.
   - Perform the POWERTRAIN VERIFICATION TEST 2.2L DIESEL. Refer to **PCM VERIFICATION TEST - 2.2L DIESEL** .

P0673-CYLINDER 3 GLOW PLUG CIRCUIT

For a complete wiring diagram, **refer to appropriate SYSTEM WIRING**

DIAGRAMS article ,

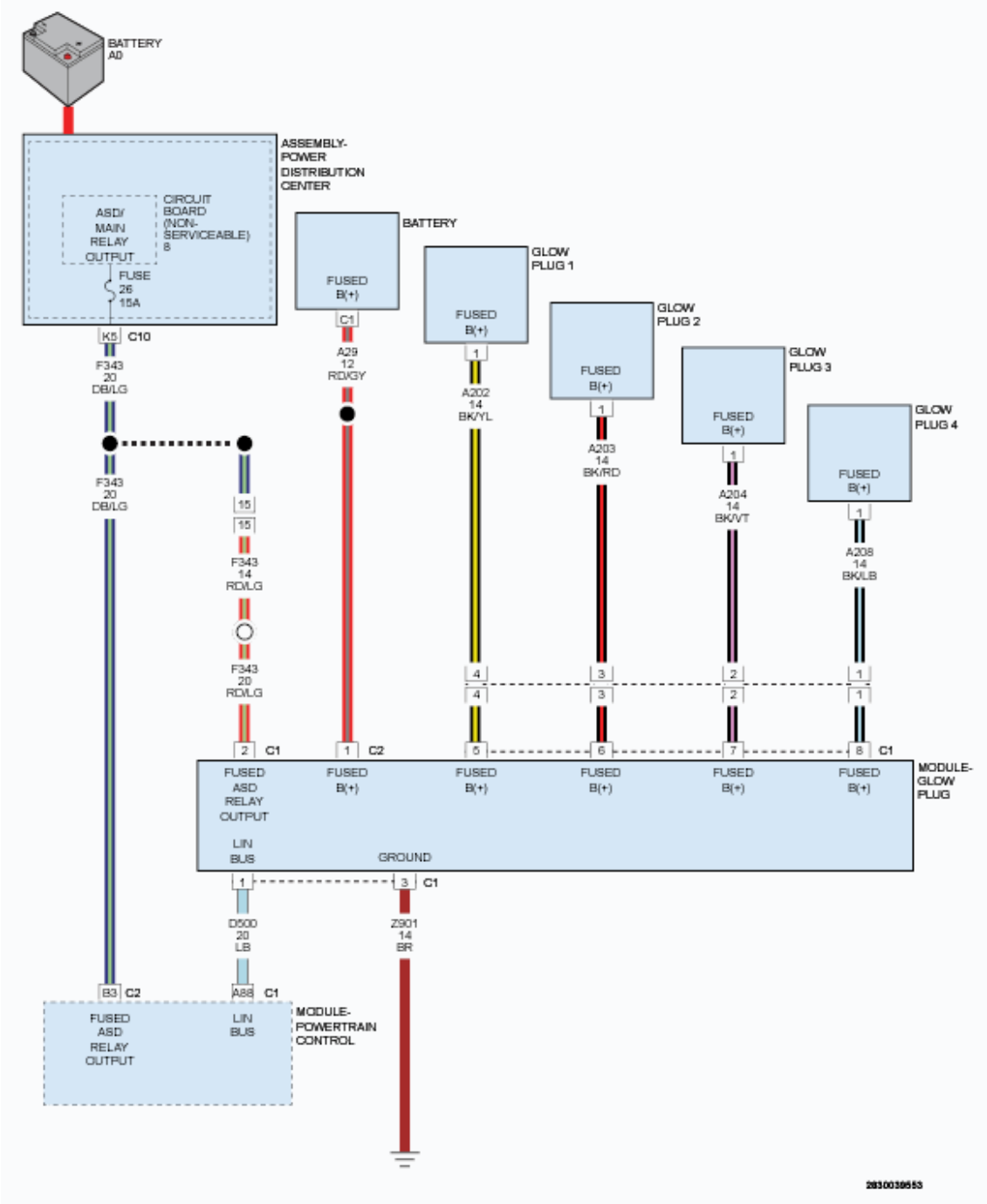

Fig. 12: Glow Plug Circuit Diagram
Courtesy of CHRYSLER GROUP, LLC

WHEN MONITORED

With the ignition on and the Glow Plug Module Glow Plug command on.

SET CONDITION

The Powertrain Control Module (PCM) receives a signal from the Glow Plug Module Control that the (A204) Glow Plug 3 Control circuit open or shorted to ground.

POSSIBLE CAUSES

Possible Causes
(A204) GLOW PLUG 3 CONTROL CIRCUIT OPEN
(A204) GLOW PLUG 3 CONTROL CIRCUIT SHORTED TO GROUND
GLOW PLUG3
GLOW PLUG MODULE

Always perform the Pre-Diagnostic Troubleshooting procedure before proceeding. Refer to PRE-DIAGNOSTIC TROUBLESHOOTING PROCEDURE - 2.2L DIESEL .

DIAGNOSTIC TEST

1. **CHECK FOR ACTIVE DTC**
    1. Ignition on, engine not running.
    2. With the scan tool, clear DTCs in the Powertrain Control Module (PCM).
    3. With the scan tool, Actuate the Glow Plugs for 30 seconds.
    4. With the scan tool, read the PCM DTCs.

    Did this DTC set again?

    Yes

    - Go To 2

    No

    - Refer to the INTERMITTENT CONDITION diagnostic procedure. Refer to **INTERMITTENT CONDITION - 2.2L DIESEL** .
2. **(A204) GLOW PLUG 3 CONTROL CIRCUIT OPEN**
    1. Turn the ignition off.
    2. Disconnect the Glow Plug 3 harness connector.
    3. Disconnect the Glow Plug Module harness connector.

4. Measure the resistance of the (A204) Glow Plug 3 Control circuit between the Glow Plug 3 harness connector and the Glow Plug Module harness connector.

   Is the resistance below 5.0 ohms?

   Yes

   - Go To 3

   No

   - Repair the (A204) Glow Plug 3 Control circuit for an open.
   - Perform the POWERTRAIN VERIFICATION TEST 2.2L DIESEL. Refer to **PCM VERIFICATION TEST - 2.2L DIESEL** .

3. **(A204) GLOW PLUG 3 CONTROL CIRCUIT SHORTED TO GROUND**
   1. Measure the resistance between ground and the (A204) Glow Plug 3 Control circuit at the Glow Plug 3 harness connector.

      Is the resistance below 10K Ohms?

      Yes

      - Repair the (A204) Glow Plug 3 Control circuit for a short to ground.
      - Perform the POWERTRAIN VERIFICATION TEST 2.2L DIESEL. Refer to **PCM VERIFICATION TEST - 2.2L DIESEL** .

      No

      - Go To 4

4. **GLOW PLUG 3**
   1. Measure the resistance through the Glow Plug 3 by measuring between ground and the Glow Plug terminal.

      Is the resistance between 0.2 and 1.0 Ohm?

Yes

- Go To 5

No

- Replace Glow Plug 3 in accordance with the service information.
- Perform the POWERTRAIN VERIFICATION TEST 2.2L DIESEL. Refer to **PCM VERIFICATION TEST - 2.2L DIESEL** .

5. **GLOW PLUG MODULE**
   1. Using the wiring diagram/schematic as a guide, inspect the wiring and connectors between the Glow Plug and the Glow Plug Module.
   2. Look for any chafed, pierced, pinched, or partially broken wires.
   3. Look for broken, bent, pushed out or corroded terminals.
   4. Perform any Technical Service Bulletins that may apply.

   Were any problems found?

   Yes

   - Repair as necessary.
   - Perform the POWERTRAIN VERIFICATION TEST 2.2L DIESEL. Refer to **PCM VERIFICATION TEST - 2.2L DIESEL** .

   No

   - Replace the Glow Plug Module in accordance with the service information.
   - Perform the POWERTRAIN VERIFICATION TEST 2.2L DIESEL. Refer to **PCM VERIFICATION TEST - 2.2L DIESEL** .

P0674-CYLINDER 4 GLOW PLUG CIRCUIT

For a complete wiring diagram, **refer to appropriate SYSTEM WIRING DIAGRAMS article** .

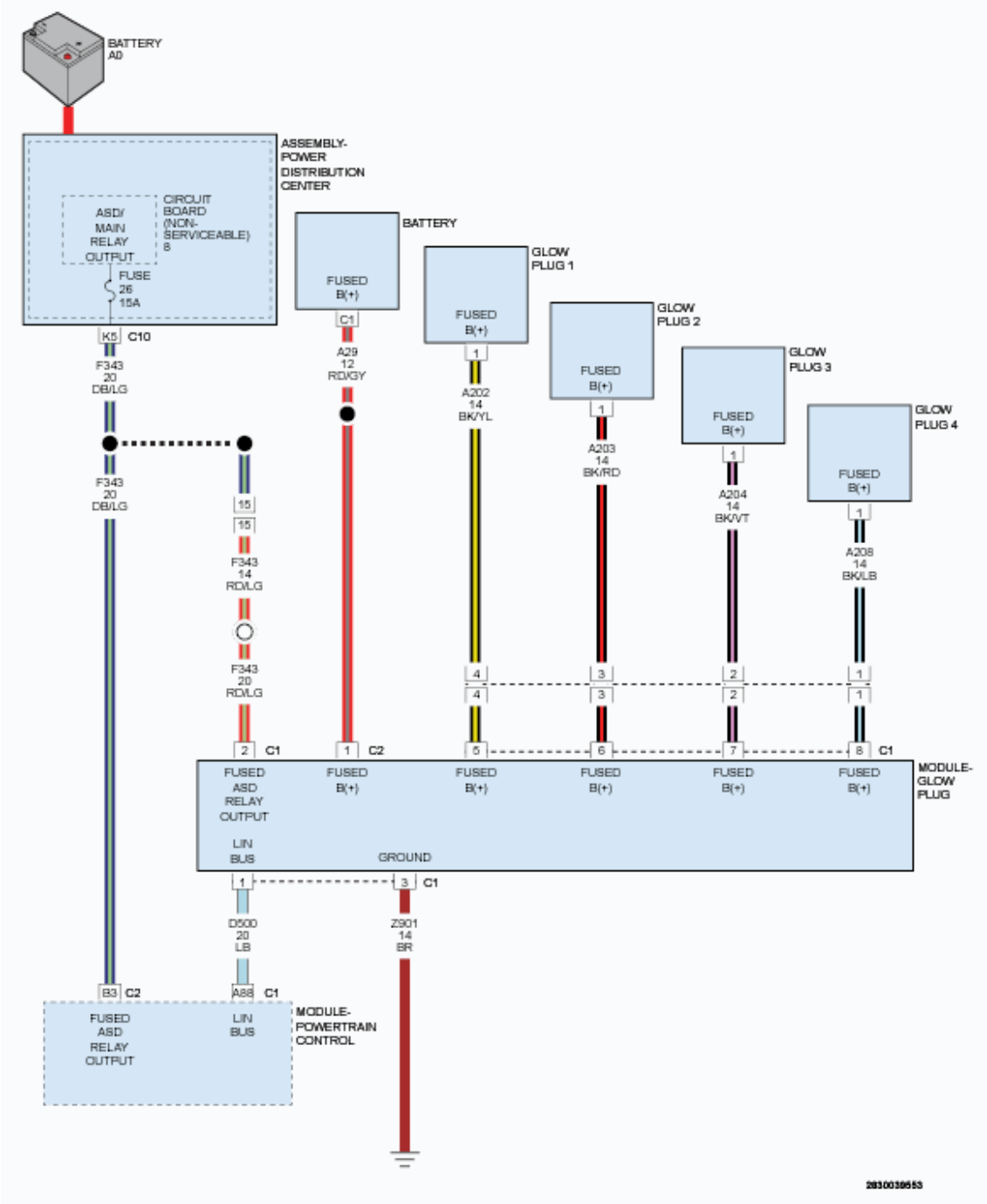

Fig. 13: Glow Plug Circuit Diagram
Courtesy of CHRYSLER GROUP, LLC

WHEN MONITORED

With the ignition on and the Glow Plug Module Glow Plug command on.

SET CONDITION

The Powertrain Control Module (PCM) receives a signal from the Glow Plug Module Control that the (A208) Glow Plug 4 Control circuit open or shorted to

ground.

POSSIBLE CAUSES

Possible Causes
(A208) GLOW PLUG 4 CONTROL CIRCUIT OPEN
(A208) GLOW PLUG 4 CONTROL CIRCUIT SHORTED TO GROUND
GLOW PLUG 4
GLOW PLUG MODULE

Always perform the Pre-Diagnostic Troubleshooting procedure before proceeding. Refer to PRE-DIAGNOSTIC TROUBLESHOOTING PROCEDURE - 2.2L DIESEL .

DIAGNOSTIC TEST

1. **CHECK FOR ACTIVE DTC**
   1. Ignition on, engine not running.
   2. With the scan tool, clear DTCs in the Powertrain Control Module (PCM).
   3. With the scan tool, Actuate the Glow Plugs for 30 seconds.
   4. With the scan tool, read the PCM DTCs.

      Did this DTC set again?

      Yes

      - Go To 2

      No

      - Perform the INTERMITTENT CONDITION diagnostic procedure. Refer to **INTERMITTENT CONDITION - 2.2L DIESEL** .
2. **(A208) GLOW PLUG 4 CONTROL CIRCUIT OPEN**
   1. Turn the ignition off.
   2. Disconnect Glow Plug 4 harness connector.
   3. Disconnect the Glow Plug Module harness connector.
   4. Measure the resistance of the (A208) Glow Plug Control circuit

between the Glow Plug 4 harness connector and the Glow Plug Module harness connector.

Is the resistance below 5.0 Ohms for each circuit?

Yes

- Go To 3

No

- Repair the (A208) Glow Plug 4 Control circuit for an open.
- Perform the POWERTRAIN VERIFICATION TEST 2.2L DIESEL. Refer to **PCM VERIFICATION TEST - 2.2L DIESEL** .

3. **(A208) GLOW PLUG 4 CONTROL CIRCUIT SHORTED TO GROUND**
   1. Measure the resistance between ground and the (A208) Glow Plug Control circuit at the Glow Plug 4 harness connector.

      Is the resistance above 10k Ohms for any of the measurements?

      Yes

      - Go To 4

      No

      - Repair the (A208) Glow Plug 4 Control circuit for a short to ground.
      - Perform the POWERTRAIN VERIFICATION TEST 2.2L DIESEL. Refer to **PCM VERIFICATION TEST - 2.2L DIESEL** .
4. **GLOW PLUG 4**
   1. Measure the resistance through the Glow Plug 4 by measuring between ground and the Glow Plug terminal.

      Is the resistance between 0.2 and 1.0 Ohm?

      Yes

- Go To 5

No

- Replace Glow Plug 4 in accordance with the service information.
- Perform the POWERTRAIN VERIFICATION TEST 2.2L DIESEL. Refer to **PCM VERIFICATION TEST - 2.2L DIESEL** .

5. **GLOW PLUG MODULE**
   1. Using the wiring diagram/schematic as a guide, inspect the wiring and connectors between the Glow Plug and the Glow Plug Module.
   2. Look for any chafed, pierced, pinched, or partially broken wires.
   3. Look for broken, bent, pushed out or corroded terminals.
   4. Perform any Technical Service Bulletins that may apply.

   Were any problems found?

   Yes

   - Repair as necessary.
   - Perform the POWERTRAIN VERIFICATION TEST 2.2L DIESEL. Refer to **PCM VERIFICATION TEST - 2.2L DIESEL** .

   No

   - Replace the Glow Plug Module in accordance with the service information.
   - Perform the POWERTRAIN VERIFICATION TEST 2.2L DIESEL. Refer to **PCM VERIFICATION TEST - 2.2L DIESEL** .

P0685-ASD/MAIN CONTROL CIRCUIT

For a complete wiring diagram, **refer to appropriate SYSTEM WIRING DIAGRAMS article** .

WHEN MONITORED

When the ignition is turned off, during after-run mode of operation.

SET CONDITION

The Powertrain Control Module (PCM) determines that the Main Relay has shut off before the AFTER-RUN mode of operation has been completed.

POSSIBLE CAUSES

Possible Causes
(K51) MAIN RELAY CONTROL CIRCUIT OPEN
(K51) MAIN RELAY CONTROL CIRCUIT SHORTED TO VOLTAGE
(K51) MAIN RELAY CONTROL CIRCUIT SHORTED TO GROUND
LOSS OF POWERTRAIN CONTROL MODULE POWERS OR GROUNDS
MAIN RELAY
POWERTRAIN CONTROL MODULE (PCM)

Always perform the Pre-Diagnostic Troubleshooting procedure before proceeding. Refer to PRE-DIAGNOSTIC TROUBLESHOOTING PROCEDURE - 2.2L DIESEL .

DIAGNOSTIC TEST

1. **CHECK FOR OTHER DTCS**
    1. Turn the ignition on.
    2. With the scan tool, check for additional DTCs.

    Are other DTCs present?

    Yes

    - Perform the diagnostics for the other DTCs before continuing.
    - Perform the POWERTRAIN VERIFICATION TEST - 2.2L DIESEL. Refer to **PCM VERIFICATION TEST - 2.2L DIESEL** .

    No

    - Go To 2

2. **CLEAR CODE AND CHECK IF THE DTC RESETS**
   1. With the scan tool, erase PCM DTCs.
   2. Perform several ignition key cycles, pausing for at least 10 seconds between each cycle.
   3. Turn the ignition on.
   4. With the scan tool, read PCM DTCs.

   Did this DTC Return?

   Yes

   - Go To 3

   No

   - Perform the INTERMITTENT CONDITION diagnostic procedure. Refer to **INTERMITTENT CONDITION - 2.2L DIESEL** .
3. **SUBSTITUTE THE MAIN RELAY**
   1. Turn the ignition off.
   2. Install a known good relay in place of the Main Relay.
   3. Turn the ignition on.
   4. With the scan tool, erase PCM DTCs.
   5. Perform several ignition key cycles, pausing for at least 10.0 seconds between each cycle.
   6. Turn the ignition on.
   7. With the scan tool, read PCM DTCs.

   Did this DTC return?

   Yes

   - Go To 4

   No

   - Replace the Main Relay in accordance with the service information.

- Perform the POWERTRAIN VERIFICATION TEST - 2.2L DIESEL. Refer to **PCM VERIFICATION TEST - 2.2L DIESEL** .

4. **CHECK PCM POWER AND GROUNDS**
   1. Perform the CHECKING THE PCM POWER AND GROUND diagnostic procedure. Refer to **DIAGNOSIS AND TESTING** .

      Were any problem found with the PCM powers and grounds?

      Yes

      - Repair as necessary.
      - Perform the POWERTRAIN VERIFICATION TEST - 2.2L DIESEL. Refer to **PCM VERIFICATION TEST - 2.2L DIESEL** .

      No

      - Go To 5

5. **CHECK THE (K51) MAIN RELAY CONTROL CIRCUIT FOR A SHORT TO VOLTAGE**
   1. Reconnect the PCM harness connectors.
   2. Turn the ignition off.
   3. Remove the Main Relay.
   4. Turn the ignition on.
   5. Measure the voltage an the (K51) Main Relay Control circuit at terminal 85 of the Main Relay connector.

      Is there any voltage present?

      Yes

      - Repair the (K51) Main Relay Control circuit for a short to voltage.
      - Perform the POWERTRAIN VERIFICATION TEST - 2.2L DIESEL. Refer to **PCM VERIFICATION TEST - 2.2L DIESEL** .

      No

- Go To 6

6. **CHECK THE (K51) MAIN RELAY CONTROL CIRCUIT FOR A SHORT TO GROUND**
   1. Turn the ignition off.
   2. Remove the Main Relay.
   3. Disconnect the PCM C2 harness connector.
   4. Measure the resistance between ground and the (K51) Main Relay Control circuit at terminal 85 of the Main Relay connector.

      Is the resistance above 10k Ohms?

      Yes

      - Go To 7

      No

      - Repair the (K51) Main Relay Control circuit for a short to ground.
      - Perform the POWERTRAIN VERIFICATION TEST - 2.2L DIESEL. Refer to **PCM VERIFICATION TEST - 2.2L DIESEL** .

7. **CHECK THE (K51) MAIN RELAY CONTROL CIRCUIT FOR AN OPEN/HIGH RESISTANCE**
   1. Measure the resistance of the (K51) Main Relay Control circuit between the PCM harness connector and the Main Relay connector.

      Is the resistance below 5.0 Ohms?

      Yes

      - Repair the Main Relay Control circuit for an open or high resistance.
      - Perform the POWERTRAIN VERIFICATION TEST - 2.2L DIESEL. Refer to **PCM VERIFICATION TEST - 2.2L DIESEL** .

      No

- Replace the Powertrain Control Module. **Before removing the PCM, perform the "Replace PCM" routine in the Miscellaneous Functions tab of the scan tool.** . Refer to **REMOVAL** .
- Perform the POWERTRAIN VERIFICATION TEST - 2.2L DIESEL. Refer to **PCM VERIFICATION TEST - 2.2L DIESEL** .

P0688-ASD/MAIN RELAY CONTROL SENSE

For a complete wiring diagram, **refer to appropriate SYSTEM WIRING DIAGRAMS article** .

WHEN MONITORED

With ignition key on. Battery voltage greater than 10.0 Volts.

SET CONDITION

The Powertrain Control Module (PCM) detects an open or short to ground in the ASD Relay control circuit. One Trip Fault. Three good trips to turn off the MIL.

POSSIBLE CAUSES

POSSIBLE CAUSES
FUSED B+ CIRCUITS
ASD RELAY
POWERTRAIN CONTROL MODULE (PCM)

Always perform the Pre-Diagnostic Troubleshooting procedure before proceeding. Refer to PRE-DIAGNOSTIC TROUBLESHOOTING PROCEDURE - 2.2L DIESEL .

DIAGNOSTIC TEST

1. **CHECK FOR OTHER DTCS**
    1. Turn the ignition on.
    2. With the scan tool, check for additional DTCs.

    Are other DTCs present?

Yes

- Perform the diagnostics for the other DTCs before continuing.
- Perform the POWERTRAIN VERIFICATION TEST 2.2L DIESEL. Refer to **PCM VERIFICATION TEST - 2.2L DIESEL** .

No

- Go To 2

2. **CLEAR CODE AND CHECK IF THE DTC RESETS**
   1. With the scan tool, erase PCM DTCs.
   2. Perform several ignition key cycles, pausing for at least 10.0 seconds between each cycle.
   3. Turn the ignition on.
   4. With the scan tool, read PCM DTCs.

   Did this DTC return?

   Yes

   - Go To 3

   No

   - Perform the INTERMITTENT CONDITION diagnostic procedure. Refer to **INTERMITTENT CONDITION - 2.2L DIESEL** .

3. **MAIN RELAY**
   1. Turn the ignition off.
   2. Install a known good relay in place of the Main Relay.
   3. Turn the ignition on.
   4. With the scan tool, erase PCM DTCs.
   5. Perform several ignition key cycles, pausing for at least 10 seconds between each cycle.
   6. Turn the ignition on.
   7. With the scan tool, read PCM DTCs.

Did this DTC set again?

Yes

- Go To 4

No

- Replace the Main Relay in accordance with the service information.
- Perform the POWERTRAIN VERIFICATION TEST 2.2L DIESEL. Refer to **PCM VERIFICATION TEST - 2.2L DIESEL** .

4. **CHECK PCM POWER AND GROUNDS**
   1. Perform the CHECKING THE PCM POWER AND GROUND diagnostic procedure. Refer to **DIAGNOSIS AND TESTING** .

   Were any problem found with the PCM powers and grounds?

   Yes

   - Repair as necessary.
   - Perform the POWERTRAIN VERIFICATION TEST - 2.2L DIESEL. Refer to **PCM VERIFICATION TEST - 2.2L DIESEL** .

   No

   - Replace the Powertrain Control Module. **Before removing the PCM, perform the "Replace PCM" routine in the Miscellaneous Functions tab of the scan tool.** . Refer to **REMOVAL** .
   - Perform the POWERTRAIN VERIFICATION TEST - 2.2L DIESEL. Refer to **PCM VERIFICATION TEST - 2.2L DIESEL** .

P0697-SENSOR REFERENCE VOLTAGE 3 CIRCUIT

For a complete wiring diagram, **refer to appropriate SYSTEM WIRING DIAGRAMS article** .

THEORY OF OPERATION

The Powertrain Control Module (PCM) contains 3 internal 5-Volt Sensor Supply sources. Each 5-Volt Supply source is split into parallel circuits to provide 5.0 Volts to multiple sensors. Sensor Supply 3 provides 5.0 Volts to the Accelerator Pedal Position Sensor 2, Camshaft Position Sensor, EGR Airflow Control Valve Position Sensor, EGR Valve Position Sensor, and the Intake Swirl Valve Position Sensor.

WHEN MONITORED

With the ignition on.

SET CONDITION

The PCM detects that the voltage on the 5-Volt Sensor Supply 3 circuit is below 4.7 Volts or above 5.3 Volts for 0.16 seconds.

POSSIBLE CAUSES

Possible Causes
(K854) ACCELERATOR PEDAL POSITION SENSOR 2 5-VOLT SUPPLY CIRCUIT SHORTED TO VOLTAGE
(K844) 5-VOLT SUPPLY CIRCUIT SHORTED TO VOLTAGE
(K854) ACCELERATOR PEDAL POSITION SENSOR 2 5-VOLT SUPPLY CIRCUIT SHORTED TO GROUND
(K844) 5-VOLT SUPPLY CIRCUIT SHORTED TO GROUND
ACCELERATOR PEDAL POSITION SENSOR
CAMSHAFT POSITION SENSOR (CMP)
EGR AIRFLOW CONTROL VALVE
EGR VALVE
INTAKE SWIRL VALVE
POWERTRAIN CONTROL MODULE (PCM)

Always perform the Pre-Diagnostic Troubleshooting procedure before proceeding. Refer to PRE-DIAGNOSTIC TROUBLESHOOTING PROCEDURE - 2.2L DIESEL .

DIAGNOSTIC TEST

1. **CHECK FOR ACTIVE DTC**

1. Turn the ignition on.
2. With the scan tool, erase PCM DTCs.
3. Turn the ignition off for 10.0 seconds.
4. Turn the ignition on.
5. With the scan tool, View DTCs.

   Is the status Active for this DTC?

   Yes

   - Go To 2

   No

   - Perform the INTERMITTENT CONDITION diagnostic procedure. Refer to **INTERMITTENT CONDITION - 2.2L DIESEL** .

2. **CHECK THE ACCELERATOR PEDAL POSITION SENSOR**
   1. Turn the ignition off.
   2. Disconnect the Accelerator Pedal Position Sensor (APPS) harness connector.
   3. Turn the ignition on.
   4. Measure the voltage on the (K854) APPS 2 5-Volt Supply circuit at the Accelerator Pedal Position Sensor harness connector.

      Is the voltage between 4.7 and 5.3 Volts?

      Yes

      - Replace the Accelerator Pedal Position Sensor in accordance with the service information.
      - Perform the POWERTRAIN VERIFICATION TEST - 2.2L DIESEL. Refer to **PCM VERIFICATION TEST - 2.2L DIESEL** .

      No

      - Go To 3
3. **CHECK THE CAMSHAFT POSITION SENSOR**

1. Turn the ignition off.
2. Disconnect the Camshaft Position Sensor (CMP) harness connector.
3. Turn the ignition on.
4. Measure the voltage on the (K844) 5-Volt Supply circuit at the CMP Sensor harness connector.

   Is the voltage between 4.7 and 5.3 Volts?

   Yes

   - Replace the Camshaft Position Sensor in accordance with the service information.
   - Perform the POWERTRAIN VERIFICATION TEST - 2.2L DIESEL. Refer to **PCM VERIFICATION TEST - 2.2L DIESEL** .

   No

   - Go To 4

4. **CHECK THE EGR AIRFLOW CONTROL VALVE**
   1. Turn the ignition off.
   2. Disconnect the EGR Airflow Control Valve harness connector.
   3. Turn the ignition on.
   4. Measure the voltage on the (K844) 5-Volt Supply circuit at the EGR Airflow Control Valve harness connector.

      Is the voltage between 4.7 and 5.3 Volts?

      Yes

      - Replace the EGR Airflow Control Valve in accordance with the service information. With the scan tool, navigate to Miscellaneous Procedures and perform the Throttle Valve Learn procedure.
      - Perform the POWERTRAIN VERIFICATION TEST - 2.2L DIESEL. Refer to **PCM VERIFICATION TEST - 2.2L DIESEL** .

      No

- Go To 5

5. **CHECK THE EGR VALVE**
   1. Turn the ignition off.
   2. Disconnect the EGR Valve harness connector.
   3. Turn the ignition on.
   4. Measure the voltage on the (K844) 5-Volt Supply circuit at the EGR Valve harness connector.

      Is the voltage between 4.7 and 5.3 Volts?

      Yes

      - Replace the EGR Valve in accordance with the service information.
      - Perform the POWERTRAIN VERIFICATION TEST - 2.2L DIESEL. Refer to **PCM VERIFICATION TEST - 2.2L DIESEL** .

      No

      - Go To 6

6. **CHECK THE INTAKE SWIRL VALVE**
   1. Turn the ignition off.
   2. Disconnect the Intake Swirl Valve harness connector.
   3. Turn the ignition on.
   4. Measure the voltage on the (K844) 5-Volt Supply circuit at the Intake Swirl Valve harness connector.

      Is the voltage between 4.7 and 5.3 Volts?

      Yes

      - Replace the Intake Swirl Valve in accordance with the service information. With the scan tool, navigate to Miscellaneous Procedures and perform the Throttle Valve Learn procedure.
      - Perform the POWERTRAIN VERIFICATION TEST - 2.2L DIESEL. Refer to **PCM VERIFICATION TEST - 2.2L**

DIESEL .

No, voltage is below 4.7 Volts,

- Go To 7

No, voltage is above 5.3 Volts,

- Go To 9

7. **CHECK THE (K854) ACCELERATOR PEDAL POSITION SENSOR 5-VOLT SUPPLY FOR A SHORT TO GROUND**
   1. Turn the ignition off.
   2. Disconnect the Powertrain Control Module harness connectors.
   3. Measure the resistance between ground and the (K854) APPS 2 5-Volt Supply circuit at the APPS harness connector.

   Is the resistance above 10k Ohms?

   Yes

   - Go To 8

   No

   - Repair the (K854) APPS 2 5-Volt Supply circuit for a short to ground.
   - Perform the POWERTRAIN VERIFICATION TEST - 2.2L DIESEL. Refer to **PCM VERIFICATION TEST - 2.2L DIESEL** .

8. **CHECK THE (K844) 5-VOLT SUPPLY FOR A SHORT TO GROUND**
   1. Turn the ignition off.
   2. Disconnect the Powertrain Control Module harness connectors.
   3. Measure the resistance between ground and the (K844) 5-Volt Supply circuit at the CMP Sensor harness connector.

   Is the resistance above 10k Ohms?

   Yes

- Go To 9

No

- Repair the (K844) 5-Volt Supply circuit for a short to ground.
- Perform the POWERTRAIN VERIFICATION TEST - 2.2L DIESEL. Refer to **PCM VERIFICATION TEST - 2.2L DIESEL** .

9. **CHECK THE (K854) ACCELERATOR PEDAL POSITION SENSOR 5-VOLT SUPPLY FOR A SHORT TO VOLTAGE**
   1. Turn the ignition off.
   2. Remove the Main Relay.
   3. Connect a jumper wire between cavity 30 and cavity 87 of the Main Relay connector.
   4. Turn the ignition on.
   5. Measure the voltage on the (K854) APPS 2 5-Volt Supply circuit at the APPS harness connector.

   Is there any voltage present?

   Yes

   - Repair the (K854) APPS 2 5-Volt Supply circuit for a short to voltage.
   - Perform the POWERTRAIN VERIFICATION TEST - 2.2L DIESEL. Refer to **PCM VERIFICATION TEST - 2.2L DIESEL** .

   No

   - Go To 10

10. **CHECK THE (K844) 5-VOLT SUPPLY FOR A SHORT TO VOLTAGE**
    1. Measure the voltage on the (K844) 5-Volt Supply circuit at the APPS harness connector.

    Is there any voltage present?

Yes

- Repair the (K844) 5-Volt Supply circuit for a short to voltage.
- Perform the POWERTRAIN VERIFICATION TEST - 2.2L DIESEL. Refer to **PCM VERIFICATION TEST - 2.2L DIESEL** .

No

- Go To 11

11. **POWERTRAIN CONTROL MODULE**
    1. Turn the ignition off.
    2. Look for any chafed, pierced, pinched, or partially broken wires.
    3. Look for broken, bent, pushed out or corroded terminals.
    4. Perform any Technical Service Bulletins that may apply.

    Were any problems found?

    Yes

    - Repair as necessary.
    - Perform the POWERTRAIN VERIFICATION TEST - 2.2L DIESEL. Refer to **PCM VERIFICATION TEST - 2.2L DIESEL** .

    No

    - Replace the Powertrain Control Module. **Before removing the PCM, perform the "Replace PCM" routine in the Miscellaneous Functions tab of the scan tool.** . Refer to **REMOVAL** .
    - Perform the POWERTRAIN VERIFICATION TEST - 2.2L DIESEL. Refer to **PCM VERIFICATION TEST - 2.2L DIESEL** .

P0703-BRAKE SWITCH 2 PERFORMANCE

For a complete wiring diagram, **refer to appropriate SYSTEM WIRING DIAGRAMS article** .

WHEN MONITORED

With the ignition on.

SET CONDITION

The Powertrain Control Module (PCM) detects a short to voltage on the (B16) Brake Switch 2 Signal circuit. Fault sets immediately.

POSSIBLE CAUSES

Possible Causes
(B16) BRAKE SWITCH 2 CIRCUIT SHORTED TO VOLTAGE
BRAKE SWITCH
POWERTRAIN CONTROL MODULE (PCM)

Always perform the Pre-Diagnostic Troubleshooting procedure before proceeding. Refer to PRE-DIAGNOSTIC TROUBLESHOOTING PROCEDURE - 2.2L DIESEL .

DIAGNOSTIC TEST

1. **CHECK FOR ACTIVE DTC**
    1. Turn the ignition on.
    2. With the scan tool, erase PCM DTCs.
    3. Turn the ignition off for 10.0 seconds.
    4. Turn the ignition on.
    5. With the scan tool, select View DTCs.

    Is the status Active for this DTC?

    Yes

    - Go To 2

    No

    - Perform the INTERMITTENT CONDITION diagnostic procedure. Refer to **INTERMITTENT CONDITION - 2.2L DIESEL** .
2. **CHECK THE BRAKE SWITCH**

1. Turn the ignition off.
2. Disconnect the Brake Switch harness connector.
3. Turn the ignition on.
4. With the scan tool, select View DTCs.

   Did the status change to stored for this DTC?

   Yes

   - Replace the Brake Switch in accordance with the service information.
   - Perform the POWERTRAIN VERIFICATION TEST - 2.2L DIESEL. Refer to **PCM VERIFICATION TEST - 2.2L DIESEL** .

   No

   - Go To 3

3. **CHECK THE (B16) BRAKE SWITCH 2 CIRCUIT FOR A SHORT TO VOLTAGE**
   1. Turn the ignition on.
   2. Measure for voltage on the (B16) Brake Switch 2 circuit at the Brake Switch harness connector.

      Is there any voltage present?

      Yes

      - Repair the (B16) Brake Switch 2 circuit for a short to voltage.
      - Perform the POWERTRAIN VERIFICATION TEST - 2.2L DIESEL. Refer to **PCM VERIFICATION TEST - 2.2L DIESEL** .

      No

      - Go To 4

4. **POWERTRAIN CONTROL MODULE**
   1. Turn the ignition off.

2. Inspect the (B16) Brake Switch 2 circuit between the Brake Switch and the Powertrain Control Module.
3. Look for any chafed, pierced, pinched, or partially broken wires.
4. Look for broken, bent, pushed out or corroded terminals.
5. Perform any Technical Service Bulletins that may apply.

Were any problems found?

Yes

- Repair as necessary.
- Perform the POWERTRAIN VERIFICATION TEST - 2.2L DIESEL. Refer to **PCM VERIFICATION TEST - 2.2L DIESEL** .

No

- Replace the Powertrain Control Module. **Before removing the PCM, perform the "Replace PCM" routine in the Miscellaneous Functions tab of the scan tool.** . Refer to **REMOVAL** .
- Perform the POWERTRAIN VERIFICATION TEST - 2.2L DIESEL. Refer to **PCM VERIFICATION TEST - 2.2L DIESEL** .

P0730-INCORRECT GEAR RATIO

For a complete wiring diagram, **refer to appropriate SYSTEM WIRING DIAGRAMS article** .

WHEN MONITORED

When the vehicle is driven over 15 km/h and when engine speed is greater than 1000 RPM.

SET CONDITION

When the Powertrain Control Module detects a change in the vehicle to engine speed ratio.

POSSIBLE CAUSES

Possible Causes
TIRE/WHEEL SIZES DO NOT MATCH THE PROGRAMMED TIRE/WHEEL SIZE FOR THE VEHICLE
ABS MODULE IS TRANSMITTING INCORRECT WHEEL SPEED
POWERTRAIN CONTROL MODULE (PCM)

Always perform the Pre-Diagnostic Troubleshooting procedure before proceeding. Refer to PRE-DIAGNOSTIC TROUBLESHOOTING PROCEDURE - 2.2L DIESEL .

DIAGNOSTIC TEST

1. **DTC IS ACTIVE**
   1. Ignition on, engine not running.
   2. With the scan tool, clear DTCs in the Powertrain Control Module.
   3. With the scan tool, select View DTCs.

   Is the status Active for this DTC?

   Yes

   - Go To 2

   No

   - Perform the INTERMITTENT DTC diagnostic procedure. Refer to **INTERMITTENT CONDITION - 2.2L DIESEL** .
2. **CHECK THE PROGRAMMING OF THE TIRE SIZES**
   1. With the scan tool, record the tire size programmed into the TIPM.
   2. Record the size of all four tires on the vehicle.

   Do all four tires match the size programmed into the TIPM?

   Yes

   - Go To 3

   No

- Program the correct tire size into the TIPM. If the tires are different sizes, replace the tires as needed to make all tires the same size and program the correct tire size into the TIPM.
- Perform the POWERTRAIN VERIFICATION TEST - 2.2L DIESEL. Refer to **PCM VERIFICATION TEST - 2.2L DIESEL** .

3. **CHECK THE ABS WHEEL SPEED**
   1. With the scan tool, View DTCs in the ABS Module.

      Are there any DTCs present in the ABS Module?

      Yes

      - Refer to **DIAGNOSIS AND TESTING** and perform the appropriate diagnostic procedure.
      - Perform the ABS VERIFICATION TEST. Refer to **STANDARD PROCEDURE** .

      No

      - Go To 4
4. **POWERTRAIN CONTROL MODULE**
   1. Using the wiring diagram/schematic as a guide, inspect the wiring and connectors at the Powertrain Control Module.
   2. Look for any chafed, pierced, pinched, or partially broken wires.
   3. Look for broken, bent, pushed out or corroded terminals.
   4. Monitor the scan tool data relative to this circuit and wiggle test the wiring and connectors.
   5. Look for the data to change or for the DTC to reset during the wiggle test.
   6. Perform any Technical Service Bulletins that may apply.

      Were any problems found?

      Yes

      - Repair as necessary.

- Perform the POWERTRAIN VERIFICATION TEST - 2.2L DIESEL. Refer to **PCM VERIFICATION TEST - 2.2L DIESEL** .

No

- Replace the Powertrain Control Module. **Before removing the PCM, perform the "Replace PCM" routine in the Miscellaneous Functions tab of the scan tool.** . Refer to **REMOVAL** .
- Perform the POWERTRAIN VERIFICATION TEST - 2.2L DIESEL. Refer to **PCM VERIFICATION TEST - 2.2L DIESEL** .

P0830-CLUTCH PEDAL SWITCH CIRCUIT

For a complete wiring diagram, **refer to appropriate SYSTEM WIRING DIAGRAMS article** .

WHEN MONITORED

With the ignition on.

SET CONDITION

The Powertrain Control Module (PCM) detects an incoherent Clutch Interlock Switch Signal for 0.16 seconds.

POSSIBLE CAUSES

Possible Causes
(T141) CLUTCH INTERLOCK SWITCH SIGNAL CIRCUIT SHORTED TO GROUND
(T26) CLUTCH UPSTOP SIGNAL CIRCUIT SHORTED TO GROUND
(Z932) GROUND CIRCUIT OPEN OR HIGH RESISTANCE
CLUTCH INTERLOCK SWITCH
POWERTRAIN CONTROL MODULE (PCM)

Always perform the Pre-Diagnostic Troubleshooting procedure before proceeding. Refer to PRE-DIAGNOSTIC TROUBLESHOOTING PROCEDURE - 2.2L DIESEL .

DIAGNOSTIC TEST

1. **DTC IS ACTIVE**
   1. Ignition on, engine not running.
   2. With the scan tool, clear DTCs in the Powertrain Control Module.
   3. Press and hold the clutch pedal for 10 seconds.
   4. With the scan tool, select View DTCs.

   Is the status Active for this DTC?

   Yes

   - Go To 2

   No

   - Perform the INTERMITTENT CONDITION diagnostic procedure. Refer to **INTERMITTENT CONDITION - 2.2L DIESEL** .
2. **(Z925) GROUND CIRCUIT OPEN OR HIGH RESISTANCE**
   1. Turn the ignition off.
   2. Disconnect the Clutch Interlock Switch harness connector.
   3. Using a 12-Volt test light connected to 12 Volts, check the (Z925) Ground circuit between the Clutch Interlock Switch harness connector.

   NOTE: The test light should be illuminated and bright. Compare the brightness to that of a direct connection to the battery.

   Is the test light illuminated and bright?

   Yes

   - Go To 3

   No

   - Repair the (Z925) Ground for an open or high resistance.
   - Perform the POWERTRAIN VERIFICATION TEST - 2.2L DIESEL. Refer to **PCM VERIFICATION TEST - 2.2L**

DIESEL .

3. **(T141) CLUTCH INTERLOCK SWITCH SIGNAL CIRCUIT SHORTED TO GROUND**
   1. Measure the resistance between ground and the (T141) Clutch Interlock Switch Signal circuit at the Clutch Interlock Switch harness connector.

      Is the resistance above 10k Ohms?

      Yes

      - Go To 4

      No

      - Repair the (T141) Clutch Interlock Switch Signal circuit for a short to ground.
      - Perform the POWERTRAIN VERIFICATION TEST - 2.2L DIESEL. Refer to **PCM VERIFICATION TEST - 2.2L DIESEL** .
4. **CHECK THE (T26) CLUTCH UPSTOP SWITCH SIGNAL CIRCUIT FOR A SHORT TO GROUND**
   1. Measure the resistance between ground and the (T26) Clutch Upstop Switch Signal circuit at the Clutch Interlock Switch harness connector.

      Is the resistance above 10k Ohms?

      Yes

      - Go To 5

      No

      - Repair the (T141) Clutch Interlock Switch Signal circuit for a short to ground.
      - Perform the POWERTRAIN VERIFICATION TEST - 2.2L DIESEL. Refer to **PCM VERIFICATION TEST - 2.2L DIESEL** .
5. **CLUTCH INTERLOCK SWITCH**
   1. Connect a jumper wire between the (Z925) Ground circuit and the

(T141) Clutch Interlock Switch Signal circuit in the Clutch Interlock Switch harness connector.

2. Turn the ignition on.
3. With the scan tool, monitor the Clutch Interlock status.

NOTE: The scan tool should display the Clutch Interlock status as pressed with the jumper wire in place and not pressed with the jumper wire removed.

Does the scan tool display the status as described above?

Yes

- Replace the Clutch Interlock Switch in accordance with the Service Information.
- Perform the POWERTRAIN VERIFICATION TEST - 2.2L DIESEL. Refer to **PCM VERIFICATION TEST - 2.2L DIESEL** .

No

- Go To 6

6. **POWERTRAIN CONTROL MODULE**
   1. Using the wiring diagram/schematic as a guide, inspect the wiring and connectors between the Clutch Interlock Switch and the Powertrain Control Module.
   2. Look for any chafed, pierced, pinched, or partially broken wires.
   3. Look for broken, bent, pushed out or corroded terminals.
   4. Monitor the scan tool data relative to this circuit and wiggle test the wiring and connectors.
   5. Look for the data to change or for the DTC to reset during the wiggle test.
   6. Perform any Technical Service Bulletins that may apply.

   Were any problems found?

   Yes

- Repair as necessary.
- Perform the POWERTRAIN VERIFICATION TEST - 2.2L DIESEL. Refer to **PCM VERIFICATION TEST - 2.2L DIESEL** .

No

- Replace the Powertrain Control Module. **Before removing the PCM, perform the "Replace PCM" routine in the Miscellaneous Functions tab of the scan tool.** . Refer to **REMOVAL** .
- Perform the POWERTRAIN VERIFICATION TEST - 2.2L DIESEL. Refer to **PCM VERIFICATION TEST - 2.2L DIESEL** .

P0A5B-GENERATOR CURRENT SENSOR CIRCUIT LOW

For a complete wiring diagram, **refer to appropriate SYSTEM WIRING DIAGRAMS article** .

WHEN MONITORED

With the engine running.

SET CONDITION

The Powertrain Control Module (PCM) detects that the (K20) Generator Field Control circuit voltage is below 0.07 Volts for 0.16 seconds.

POSSIBLE CAUSES

Possible Causes
(K20) GENERATOR FIELD CONTROL CIRCUIT OPEN
(K20) GENERATOR FIELD CONTROL CIRCUIT SHORTED TO GROUND
GENERATOR
POWERTRAIN CONTROL MODULE (PCM)

Always perform the Pre-Diagnostic Troubleshooting procedure before proceeding. Refer to PRE-DIAGNOSTIC TROUBLESHOOTING PROCEDURE - 2.2L DIESEL .

DIAGNOSTIC TEST

1. **CHECK FOR ACTIVE DTC**
   1. Turn the ignition on.
   2. With the scan tool, erase PCM DTCs.
   3. Test drive the vehicle.
   4. With the scan tool, read PCM DTCs.

   Did this DTC return?

   Yes

   - Go To 2

   No

   - Perform the INTERMITTENT CONDITION diagnostic procedure. Refer to **INTERMITTENT CONDITION - 2.2L DIESEL** .
2. **CHECK THE (K20) GENERATOR FIELD CONTROL CIRCUIT FOR A SHORT TO GROUND**
   1. Turn the ignition off.
   2. Disconnect the Generator C2 harness connector.
   3. Disconnect the PCM C1 harness connector.
   4. Measure the resistance between ground and the (K20) Generator Field Control circuit at the Generator C2 harness connector.

   Is the resistance above 10k Ohms?

   Yes

   - Go To 3

   No

   - Repair the (K20) Generator Field Control circuit for a short to ground.
   - Perform the POWERTRAIN VERIFICATION TEST - 2.2L DIESEL. Refer to **PCM VERIFICATION TEST - 2.2L DIESEL** .

3. **CHECK THE (K20) GENERATOR FIELD CONTROL CIRCUIT FOR AN OPEN/HIGH RESISTANCE**
   1. Measure the resistance of the (K20) Generator Field Control circuit between the Generator C2 harness connector and the PCM C1 harness connector.

      Is the resistance below 5.0 Ohms?

      Yes

      - Go To 4

      No

      - Repair the (K20) Generator Field Control circuit for an open or high resistance.
      - Perform the POWERTRAIN VERIFICATION TEST - 2.2L DIESEL. Refer to **PCM VERIFICATION TEST - 2.2L DIESEL** .
4. **GENERATOR**
   1. Replace the Generator in accordance with the service information.
   2. Reconnect the Generator C2 harness connector.
   3. Reconnect the PCM C1 harness connector.
   4. Turn the ignition on.
   5. With the scan tool, erase PCM DTCs.
   6. Test drive the vehicle.
   7. With the scan tool, read PCM DTCs.

      Did this DTC return?

      Yes

      - Go To 5

      No

      - Repair is complete.
      - Perform the POWERTRAIN VERIFICATION TEST - 2.2L

DIESEL. Refer to **PCM VERIFICATION TEST - 2.2L DIESEL** .

5. **POWERTRAIN CONTROL MODULE**
   1. Using the wiring diagram/schematic as a guide, inspect the Powertrain Control Module wiring and connectors.
   2. Look for any chafed, pierced, pinched, or partially broken wires.
   3. Look for broken, bent, pushed out or corroded terminals.
   4. Monitor the scan tool data relative to this circuit and wiggle test the wiring and connectors.
   5. Look for the data to change or for the DTC to reset during the wiggle test.
   6. Check for proper PCM power supply from the ignition switch and the Main relay. Check the PCM for proper ground supply.
   7. Perform any Technical Service Bulletins that may apply.

   Were any problems found?

   Yes

   - Repair as necessary.
   - Perform the POWERTRAIN VERIFICATION TEST - 2.2L DIESEL. Refer to **PCM VERIFICATION TEST - 2.2L DIESEL** .

   No

   - Replace the Powertrain Control Module. **Before removing the PCM, perform the "Replace PCM" routine in the Miscellaneous Functions tab of the scan tool.** . Refer to **REMOVAL** .
   - Perform the POWERTRAIN VERIFICATION TEST - 2.2L DIESEL. Refer to **PCM VERIFICATION TEST - 2.2L DIESEL** .

P0A5C-GENERATOR CURRENT SENSOR CIRCUIT HIGH

For a complete wiring diagram, **refer to appropriate SYSTEM WIRING DIAGRAMS article** .

WHEN MONITORED

With the engine running.

SET CONDITION

The Powertrain Control Module (PCM) detects that the (K20) Generator Field Control circuit is shorted to voltage.

POSSIBLE CAUSES

Possible Causes
(K20) GENERATOR FIELD CONTROL CIRCUIT SHORTED TO VOLTAGE
GENERATOR
POWERTRAIN CONTROL MODULE (PCM)

Always perform the Pre-Diagnostic Troubleshooting procedure before proceeding. Refer to PRE-DIAGNOSTIC TROUBLESHOOTING PROCEDURE - 2.2L DIESEL .

DIAGNOSTIC TEST

1. **CHECK FOR ACTIVE DTC**
   1. Turn the ignition on.
   2. With the scan tool, erase PCM DTCs.
   3. Test drive the vehicle.
   4. With the scan tool, read PCM DTCs.

   Did this DTC return?

   Yes

   - Go To 2

   No

   - Perform the INTERMITTENT CONDITION diagnostic procedure. Refer to **INTERMITTENT CONDITION - 2.2L DIESEL** .
2. **CHECK THE (K20) GENERATOR FIELD CONTROL CIRCUIT FOR A SHORT TO VOLTAGE**

1. Turn the ignition off.
2. Disconnect the Generator C2 harness connector.
3. Disconnect the PCM C1 harness connector.
4. Remove the Main Relay.
5. Connect a jumper wire between cavity 87 and cavity 30 of the Main Relay connector.
6. Turn the ignition on.
7. Measure the voltage on the (K20) Generator Field Control circuit at the Generator C2 harness connector.

   Is there any voltage present?

   Yes

   - Repair the (K20) Generator Field Control circuit for a short to voltage.
   - Perform the POWERTRAIN VERIFICATION TEST - 2.2L DIESEL. Refer to **PCM VERIFICATION TEST - 2.2L DIESEL** .

   No

   - Go To 3

3. **CHECK THE GENERATOR**
   1. Measure the voltage on the (K20) Generator Field Control circuit at the Generator terminal.

      Is there any voltage present?

      Yes

      - Replace the Generator in accordance with the service information.
      - Perform the POWERTRAIN VERIFICATION TEST - 2.2L DIESEL. Refer to **PCM VERIFICATION TEST - 2.2L DIESEL** .

      No

- Go To 4

4. **POWERTRAIN CONTROL MODULE**
   1. Using the wiring diagram/schematic as a guide, inspect the Powertrain Control Module wiring and connectors.
   2. Look for any chafed, pierced, pinched, or partially broken wires.
   3. Look for broken, bent, pushed out or corroded terminals.
   4. Monitor the scan tool data relative to this circuit and wiggle test the wiring and connectors.
   5. Look for the data to change or for the DTC to reset during the wiggle test.
   6. Check for proper PCM power supply from the ignition switch and the Main relay. Check the PCM for proper ground supply.
   7. Perform any Technical Service Bulletins that may apply.

   Were any problems found?

   Yes

   - Repair as necessary.
   - Perform the POWERTRAIN VERIFICATION TEST - 2.2L DIESEL. Refer to **PCM VERIFICATION TEST - 2.2L DIESEL** .

   No

   - Replace the Powertrain Control Module. **Before removing the PCM, perform the "Replace PCM" routine in the Miscellaneous Functions tab of the scan tool.** . Refer to **REMOVAL** .
   - Perform the POWERTRAIN VERIFICATION TEST - 2.2L DIESEL. Refer to **PCM VERIFICATION TEST - 2.2L DIESEL** .

P1614-ECU RESET/RECOVERY OCCURRED

For a complete wiring diagram, **refer to appropriate SYSTEM WIRING DIAGRAMS article** .

WHEN MONITORED

With the ignition on, engine running.

SET CONDITION

A reset has been triggered by the Powertrain Control Module (PCM).

POSSIBLE CAUSES

Possible Causes
LOSS OF POWERTRAIN CONTROL MODULE POWERS OR GROUNDS
POWERTRAIN CONTROL MODULE (PCM)

Always perform the Pre-Diagnostic Troubleshooting procedure before proceeding. Refer to PRE-DIAGNOSTIC TROUBLESHOOTING PROCEDURE - 2.2L DIESEL .

DIAGNOSTIC TEST

1. **DTC IS ACTIVE**

NOTE: Diagnose and repair any system voltage or Main Relay DTCs before continuing with this test.

1. Ignition on, engine not running.
2. With the scan tool, clear DTCs in the Powertrain Control Module.
3. Start the engine and test drive the vehicle.
4. With the scan tool, select View DTCs.

Is the status Active for this DTC?

Yes

- Go To 2

No

- Perform the INTERMITTENT CONDITION diagnostic procedure. Refer to **INTERMITTENT CONDITION - 2.2L DIESEL** .

2. **CHECK PCM POWER AND GROUNDS**

NOTE: Diagnose and repair any system voltage or Main Relay DTCs before continuing with this test.

1. Perform the CHECKING THE PCM POWER AND GROUND diagnostic procedure. Refer to **DIAGNOSIS AND TESTING** .

   Were any problem found with the PCM powers and grounds?

   Yes

   - Repair as necessary.
   - Perform the POWERTRAIN VERIFICATION TEST - 2.2L DIESEL. Refer to **PCM VERIFICATION TEST - 2.2L DIESEL** .

   No

   - Go To 3

3. **POWERTRAIN CONTROL MODULE**
   1. Using the wiring diagram/schematic as a guide, inspect the wiring and connectors for the Powertrain Control Module.
   2. Look for any chafed, pierced, pinched, or partially broken wires.
   3. Look for broken, bent, pushed out or corroded terminals.
   4. Monitor the scan tool data relative to this circuit and wiggle test the wiring and connectors.
   5. Look for the data to change or for the DTC to reset during the wiggle test.
   6. Perform any Technical Service Bulletins that may apply.

   Were any problems found?

   Yes

   - Repair as necessary.
   - Perform the POWERTRAIN VERIFICATION TEST - 2.2L DIESEL. Refer to **PCM VERIFICATION TEST - 2.2L**

DIESEL .

No

- Replace the Powertrain Control Module. **Before removing the PCM, perform the "Replace PCM" routine in the Miscellaneous Functions tab of the scan tool.** . Refer to **REMOVAL** .
- Perform the POWERTRAIN VERIFICATION TEST - 2.2L DIESEL. Refer to **PCM VERIFICATION TEST - 2.2L DIESEL** .

P1649-GLOW PLUG MODULE POWER SUPPLY CIRCUIT

For a complete wiring diagram, **refer to appropriate SYSTEM WIRING DIAGRAMS article** .

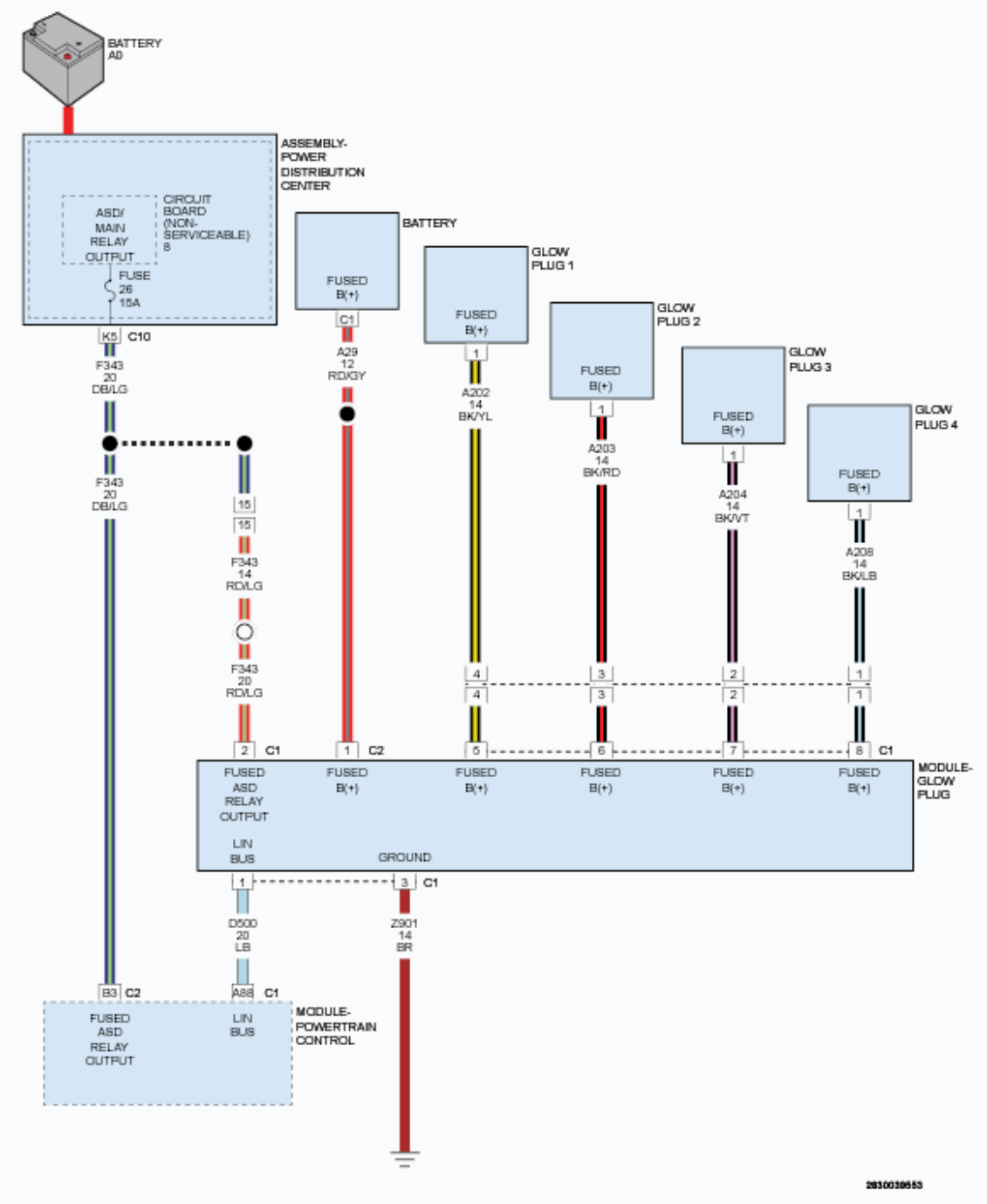

Fig. 14: Glow Plug Circuit Diagram
Courtesy of CHRYSLER GROUP, LLC

WHEN MONITORED

With the ignition on.

SET CONDITION

The Glow Plug Control Module reports a power supply circuit fault to the Powertrain Control Module (PCM).

POSSIBLE CAUSES

Possible Causes
(F343) FUSED ASD/MAIN RELAY OUTPUT CIRCUIT OPEN/HIGH RESISTANCE
(A29) FUSED B+ CIRCUIT OPEN/HIGH RESISTANCE
(Z924) GROUND CIRCUIT OPEN/HIGH RESISTANCE
GLOW PLUG MODULE

Always perform the Pre-Diagnostic Troubleshooting procedure before proceeding. Refer to PRE-DIAGNOSTIC TROUBLESHOOTING PROCEDURE - 2.2L DIESEL .

DIAGNOSTIC TEST

1. **DTC IS ACTIVE**

   NOTE: Diagnose and repair any system voltage or Main Relay DTCs before continuing with this test.

   1. Ignition on, engine not running.
   2. With the scan tool, clear DTCs in the Powertrain Control Module.
   3. With the scan tool, actuate the Glow Plugs.
   4. Monitor the scan tool for at least two minutes.
   5. With the scan tool, select View DTCs.

   Is the status Active for this DTC?

   Yes

   - Go To 2

   No

   - Perform the INTERMITTENT CONDITION diagnostic procedure. Refer to **INTERMITTENT CONDITION - 2.2L DIESEL** .

2. **CHECK THE (F343) FUSED ASD/MAIN RELAY OUTPUT CIRCUIT FOR AN OPEN/HIGH RESISTANCE**
   1. Turn the ignition off.

2. Disconnect the Glow Plug Module harness connector.
3. Turn the ignition on.
4. Using a 12-Volt test light connected to ground, check the (K343) Fused ASD/Main Relay Output circuit in the Glow Plug Module harness connector.

NOTE: The test light should be illuminated and bright. Compare the brightness to that of a direct connection to the battery.

Is the test light illuminated and bright?

Yes

- Go To 3

No

- Repair the (K343) Fused ASD/Main Relay Output circuit for an open or high resistance.
- Perform the POWERTRAIN VERIFICATION TEST - 2.2L DIESEL. Refer to **PCM VERIFICATION TEST - 2.2L DIESEL** .

3. **CHECK THE (A29) FUSED B+ CIRCUIT FOR AN OPEN/HIGH RESISTANCE**
   1. Turn the ignition off.
   2. Using a 12-Volt test light connected to ground, check the (A29) Fused B+ circuit in the Glow Plug Module harness connector.

NOTE: The test light should be illuminated and bright. Compare the brightness to that of a direct connection to the battery.

Is the test light illuminated and bright?

Yes

- Go To 4

No

- Repair the (A29) Fused B+ circuit for an open or high resistance.
- Perform the POWERTRAIN VERIFICATION TEST - 2.2L DIESEL. Refer to **PCM VERIFICATION TEST - 2.2L DIESEL** .

4. **CHECK THE (Z924) GROUND CIRCUIT FOR AN OPEN/HIGH RESISTANCE**
   1. Using a 12-Volt test light connected to B+, check the (Z924) Ground circuit in the Glow Plug Module harness connector.

NOTE: The test light should be illuminated and bright. Compare the brightness to that of a direct connection to the battery.

Is the test light illuminated and bright?

Yes

- Replace the Glow Plug Module in accordance with the service information.
- Perform the POWERTRAIN VERIFICATION TEST - 2.2L DIESEL. Refer to **PCM VERIFICATION TEST - 2.2L DIESEL** .

No

- Repair the (Z924) Ground circuit for an open or high resistance.
- Perform the POWERTRAIN VERIFICATION TEST - 2.2L DIESEL. Refer to **PCM VERIFICATION TEST - 2.2L DIESEL** .

P1946-CRASH EVENT DETECTED - ENGINE SHUTDOWN

For a complete wiring diagram, **refer to appropriate SYSTEM WIRING DIAGRAMS article** .

WHEN MONITORED

With the ignition on.

SET CONDITION

The Airbag Control Module reported a crash event to the Powertrain Control Module (PCM).

POSSIBLE CAUSES

Possible Causes
A CRASH EVENT OCCURRED

Always perform the Pre-Diagnostic Troubleshooting procedure before proceeding. Refer to PRE-DIAGNOSTIC TROUBLESHOOTING PROCEDURE - 2.2L DIESEL .

DIAGNOSTIC TEST

DTC IS ACTIVE

1. Ignition on, engine not running.
2. With the scan tool, select View DTCs.

   Is the status Active for this DTC?

   Yes

   - Perform the appropriate repairs and erase the DTC. **Fault codes U0100, and U0106 will set with this DTC. Do not attempt to repairs these faults as they are erroneously set.**

   No

   - Perform the INTERMITTENT DTC diagnostic procedure. Refer to **INTERMITTENT CONDITION - 2.2L DIESEL** .

P1961-PISTON COOLING CONTROL CIRCUIT OPEN

For a complete wiring diagram, **refer to appropriate SYSTEM WIRING DIAGRAMS article** .

WHEN MONITORED

With the ignition on.

SET CONDITION

The Powertrain Control Module (PCM) detects an open in the (K549) Piston Cooling Valve Control circuit.

POSSIBLE CAUSES

Possible Causes
(K549) PISTON COOLING VALVE CONTROL CIRCUIT OPEN/HIGH RESISTANCE
PISTON COOLING VALVE
POWERTRAIN CONTROL MODULE (PCM)

Always perform the Pre-Diagnostic Troubleshooting procedure before proceeding. Refer to PRE-DIAGNOSTIC TROUBLESHOOTING PROCEDURE - 2.2L DIESEL .

DIAGNOSTIC TEST

1. **DTC IS ACTIVE**
   1. Ignition on, engine not running.
   2. With the scan tool, clear DTCs in the Powertrain Control Module.
   3. Start the engine.
   4. Monitor the scan tool for up to five minutes.
   5. With the scan tool, select View DTCs.

      Is the status Active for this DTC?

      Yes

      - Go To 2

      No

      - Perform the INTERMITTENT CONDITION diagnostic procedure. Refer to **INTERMITTENT CONDITION - 2.2L DIESEL** .
2. **CHECK THE (K549) PISTON COOLING VALVE CONTROL CIRCUIT FOR AN OPEN/HIGH RESISTANCE**
   1. Turn the ignition off.

2. Disconnect the Piston Cooling Valve harness connector.
3. Disconnect the PCM C1 harness connector.
4. Measure the resistance of the (K549) Piston Cooling Valve Control circuit between the Piston Cooling Valve harness connector and the PCM C1 harness connector.

   Is the resistance below 5.0 Ohms?

   Yes

   - Go To 3

   No

   - Repair the (K549) Piston Cooling Valve Control circuit for an open or high resistance.
   - Perform the POWERTRAIN VERIFICATION TEST - 2.2L DIESEL. Refer to **PCM VERIFICATION TEST - 2.2L DIESEL** .

3. **CHECK THE PISTON COOLING VALVE FOR AN OPEN/HIGH RESISTANCE**
   1. Measure the resistance across the terminals of the Piston Cooling Valve.

      Is the resistance below 100.0 Ohms?

      Yes

      - Go To 4

      No

      - Replace the Piston Cooling Valve in accordance with the service information.
      - Perform the POWERTRAIN VERIFICATION TEST - 2.2L DIESEL. Refer to **PCM VERIFICATION TEST - 2.2L DIESEL** .

4. **POWERTRAIN CONTROL MODULE**
   1. Using the wiring diagram/schematic as a guide, inspect the wiring and

connectors between the Piston Cooling Valve and the Powertrain Control Module.

2. Look for any chafed, pierced, pinched, or partially broken wires.
3. Look for broken, bent, pushed out or corroded terminals.
4. Monitor the scan tool data relative to this circuit and wiggle test the wiring and connectors.
5. Look for the data to change or for the DTC to reset during the wiggle test.
6. Perform any Technical Service Bulletins that may apply.

Were any problems found?

Yes

- Repair as necessary.
- Perform the POWERTRAIN VERIFICATION TEST - 2.2L DIESEL. Refer to **PCM VERIFICATION TEST - 2.2L DIESEL** .

No

- Replace the Powertrain Control Module. **Before removing the PCM, perform the "Replace PCM" routine in the Miscellaneous Functions tab of the scan tool.** . Refer to **REMOVAL** .
- Perform the POWERTRAIN VERIFICATION TEST - 2.2L DIESEL. Refer to **PCM VERIFICATION TEST - 2.2L DIESEL** .

P1962-PISTON COOLING CONTROL CIRCUIT LOW

For a complete wiring diagram, **refer to appropriate SYSTEM WIRING DIAGRAMS article** .

WHEN MONITORED

With the engine running.

SET CONDITION

The Powertrain Control Module (PCM) detects a short to ground in the (K549) Piston Cooling Valve Control circuit.

POSSIBLE CAUSES

Possible Causes
(K549) PISTON COOLING VALVE CONTROL CIRCUIT SHORTED TO GROUND
PISTON COOLING VALVE
POWERTRAIN CONTROL MODULE (PCM)

Always perform the Pre-Diagnostic Troubleshooting procedure before proceeding. Refer to PRE-DIAGNOSTIC TROUBLESHOOTING PROCEDURE - 2.2L DIESEL .

DIAGNOSTIC TEST

1. **DTC IS ACTIVE**
   1. Ignition on, engine not running.
   2. With the scan tool, clear DTCs in the Powertrain Control Module.
   3. Start the engine.
   4. Monitor the scan tool for up to five minutes.
   5. With the scan tool, select View DTCs.

      Is the status Active for this DTC?

      Yes

      - Go To 2

      No

      - Perform the INTERMITTENT CONDITION diagnostic procedure. Refer to **INTERMITTENT CONDITION - 2.2L DIESEL** .
2. **CHECK THE (K549) PISTON COOLING VALVE CONTROL CIRCUIT FOR A SHORT TO GROUND**
   1. Turn the ignition off.
   2. Disconnect the Piston Cooling Valve harness connector.
   3. Disconnect the PCM C1 harness connector.

4. Measure the resistance between ground and the (K549) Piston Cooling Valve Control circuit at the Piston Cooling Valve harness connector.

   Is the resistance above 10k Ohms?

   Yes

   - Go To 3

   No

   - Repair the (K549) Piston Cooling Valve Control circuit for a short to ground.
   - Perform the POWERTRAIN VERIFICATION TEST - 2.2L DIESEL. Refer to **PCM VERIFICATION TEST - 2.2L DIESEL** .

3. **CHECK THE PISTON COOLING VALVE**
   1. Measure the resistance between ground and either terminal of the Piston Cooling Valve.

      Is the resistance above 10k Ohms?

      Yes

      - Go To 4

      No

      - Replace the Piston Cooling Valve in accordance with the service information.
      - Perform the POWERTRAIN VERIFICATION TEST - 2.2L DIESEL. Refer to **PCM VERIFICATION TEST - 2.2L DIESEL** .

4. **POWERTRAIN CONTROL MODULE**
   1. Using the wiring diagram/schematic as a guide, inspect the wiring and connectors between the Piston Cooling Valve and the Powertrain Control Module.
   2. Look for any chafed, pierced, pinched, or partially broken wires.
   3. Look for broken, bent, pushed out or corroded terminals.

4. Monitor the scan tool data relative to this circuit and wiggle test the wiring and connectors.
5. Look for the data to change or for the DTC to reset during the wiggle test.
6. Perform any Technical Service Bulletins that may apply.

Were any problems found?

Yes

- Repair as necessary.
- Perform the POWERTRAIN VERIFICATION TEST - 2.2L DIESEL. Refer to **PCM VERIFICATION TEST - 2.2L DIESEL** .

No

- Replace the Powertrain Control Module. **Before removing the PCM, perform the "Replace PCM" routine in the Miscellaneous Functions tab of the scan tool.** . Refer to **REMOVAL** .
- Perform the POWERTRAIN VERIFICATION TEST - 2.2L DIESEL. Refer to **PCM VERIFICATION TEST - 2.2L DIESEL** .

P1963-PISTON COOLING CONTROL CIRCUIT HIGH

For a complete wiring diagram, **refer to appropriate SYSTEM WIRING DIAGRAMS article** .

WHEN MONITORED

With the engine running.

SET CONDITION

The Powertrain Control Module (PCM) detects a short to voltage in the (K549) Piston Cooling Valve Control circuit.

POSSIBLE CAUSES

Possible Causes
(K549) PISTON COOLING VALVE CONTROL CIRCUIT SHORTED TO VOLTAGE
POWERTRAIN CONTROL MODULE (PCM)

Always perform the Pre-Diagnostic Troubleshooting procedure before proceeding. Refer to PRE-DIAGNOSTIC TROUBLESHOOTING PROCEDURE - 2.2L DIESEL .

DIAGNOSTIC TEST

1. **DTC IS ACTIVE**

   NOTE: Diagnose and repair any system voltage or Main Relay DTCs before continuing with this test.

   1. Ignition on, engine not running.
   2. With the scan tool, clear DTCs in the Powertrain Control Module.
   3. Start the engine.
   4. Monitor the scan tool for up to five minutes.
   5. With the scan tool, select View DTCs.

   Is the status Active for this DTC?

   Yes

   - Go To 2

   No

   - Perform the INTERMITTENT CONDITION diagnostic procedure. Refer to **INTERMITTENT CONDITION - 2.2L DIESEL** .

2. **CHECK THE (K549) PISTON COOLING VALVE CONTROL CIRCUIT FOR A SHORT TO VOLTAGE**
   1. Turn the ignition off.
   2. Disconnect the Piston Cooling Valve harness connector.
   3. Remove the Main Relay.
   4. Connect a jumper wire between cavity 30 and cavity 87 of the Main

Relay connector.

5. Turn the ignition on.
6. Measure for voltage on the (K549) Piston Cooling Valve Control circuit at the Piston Cooling Valve harness connector.

   Is there any voltage present?

   Yes

   - Repair the (K549) Piston Cooling Valve Control circuit for a short to voltage.
   - Perform the POWERTRAIN VERIFICATION TEST - 2.2L DIESEL. Refer to **PCM VERIFICATION TEST - 2.2L DIESEL** .

   No

   - Go To 3

3. **POWERTRAIN CONTROL MODULE**
   1. Using the wiring diagram/schematic as a guide, inspect the wiring and connectors between the Piston Cooling Valve and the Powertrain Control Module.
   2. Look for any chafed, pierced, pinched, or partially broken wires.
   3. Look for broken, bent, pushed out or corroded terminals.
   4. Monitor the scan tool data relative to this circuit and wiggle test the wiring and connectors.
   5. Look for the data to change or for the DTC to reset during the wiggle test.
   6. Perform any Technical Service Bulletins that may apply.

      Were any problems found?

      Yes

      - Repair as necessary.
      - Perform the POWERTRAIN VERIFICATION TEST - 2.2L DIESEL. Refer to **PCM VERIFICATION TEST - 2.2L DIESEL** .

No

- Replace the Powertrain Control Module. **Before removing the PCM, perform the "Replace PCM" routine in the Miscellaneous Functions tab of the scan tool.** . Refer to **REMOVAL** .
- Perform the POWERTRAIN VERIFICATION TEST - 2.2L DIESEL. Refer to **PCM VERIFICATION TEST - 2.2L DIESEL** .

P2006-INTAKE MANIFOLD RUNNER (SWIRL) CONTROL STUCK CLOSED - BANK 1

For a complete wiring diagram, **refer to appropriate SYSTEM WIRING DIAGRAMS article** .

WHEN MONITORED

With the ignition on and the Intake Swirl Valve Actuator is not in learning mode.

SET CONDITION

The Powertrain Control Module (PCM) detects that the Intake Swirl Valve Actuator duty cycle is above 98% or below -48% for 0.48 of a second indicating a Intake Swirl Valve Actuator that is stuck.

POSSIBLE CAUSES

Possible Causes
(K603) INTAKE SWIRL VALVE ACTUATOR (+) CONTROL CIRCUIT SHORTED TO VOLTAGE
(K601) INTAKE SWIRL VALVE ACTUATOR (-) CONTROL CIRCUIT SHORTED TO VOLTAGE
(K603) INTAKE SWIRL VALVE ACTUATOR (+) CONTROL CIRCUIT OPEN/HIGH RESISTANCE
(K601) INTAKE SWIRL VALVE ACTUATOR (-) CONTROL CIRCUIT OPEN/HIGH RESISTANCE
(K603) INTAKE SWIRL VALVE ACTUATOR (+) CONTROL CIRCUIT SHORTED TO GROUND
(K601) INTAKE SWIRL VALVE ACTUATOR (-) CONTROL CIRCUIT SHORTED TO GROUND

INTAKE SWIRL VALVE ACTUATOR IS PHYSICALLY STUCK
POWERTRAIN CONTROL MODULE (PCM)

Always perform the Pre-Diagnostic Troubleshooting procedure before proceeding. Refer to PRE-DIAGNOSTIC TROUBLESHOOTING PROCEDURE - 2.2L DIESEL .

DIAGNOSTIC TEST

1. **DTC IS ACTIVE**
    1. Ignition on, engine not running.
    2. With the scan tool, clear DTCs in the Powertrain Control Module (PCM).
    3. With the scan tool, actuate the Intake Swirl Valve Actuator.
    4. Monitor the scan tool for at least two minutes.
    5. With the scan tool, select View DTCs.

    Is the status Active for this DTC?

    Yes

    - Go To 2

    No

    - Perform the INTERMITTENT CONDITION diagnostic procedure. Refer to **INTERMITTENT CONDITION - 2.2L DIESEL** .
2. **OTHER DTCS**
    1. With the scan tool, select View DTCs.

    Are there any other Intake Swirl Valve Actuator DTCs present?

    Yes

    - Repair the other Swirl Valve Actuator DTCs before proceeding.

    No

    - Go To 3

3. **CHECK THE INTAKE SWIRL VALVE ACTUATOR**
   1. Turn the ignition off.
   2. Physically check the Intake Swirl Servo Motor operation.

      Does the Intake Swirl Valve Actuator move freely?

      Yes

      - Go To 4

      No

      - Replace the Intake Swirl Valve Actuator in accordance with the service information. With the scan tool, navigate to Miscellaneous Procedures and perform the Swirl Control Learn routine.
      - Perform the POWERTRAIN VERIFICATION TEST - 2.2L DIESEL. Refer to **PCM VERIFICATION TEST - 2.2L DIESEL** .
4. **POWERTRAIN CONTROL MODULE**
   1. Using the wiring diagram/schematic as a guide, inspect the wiring and connectors between the Intake Swirl Valve Actuator and the Powertrain Control Module.
   2. Look for any chafed, pierced, pinched, or partially broken wires.
   3. Look for broken, bent, pushed out or corroded terminals.
   4. Perform any Technical Service Bulletins that may apply.

      Were any problems found?

      Yes

      - Repair as necessary.
      - Perform the POWERTRAIN VERIFICATION TEST - 2.2L DIESEL. Refer to **PCM VERIFICATION TEST - 2.2L DIESEL** .

      No

      - Replace the Powertrain Control Module. **Before removing the**

PCM, perform the "Replace PCM" routine in the Miscellaneous Functions tab of the scan tool. . Refer to **REMOVAL** .

- Perform the POWERTRAIN VERIFICATION TEST - 2.2L DIESEL. Refer to **PCM VERIFICATION TEST - 2.2L DIESEL** .

P2008-INTAKE MANIFOLD RUNNER (SWIRL) CONTROL CIRCUIT OPEN

For a complete wiring diagram, **refer to appropriate SYSTEM WIRING DIAGRAMS article** .

WHEN MONITORED

With the ignition on and the Intake Swirl Valve Actuator commanded off.

SET CONDITION

The Powertrain Control Module (PCM) detects that the Intake Swirl Valve Actuator Control circuit is open for 0.1 of a second.

POSSIBLE CAUSES

Possible Causes
(K603) INTAKE SWIRL VALVE ACTUATOR (+) CONTROL CIRCUIT SHORTED TO VOLTAGE
(K601) INTAKE SWIRL VALVE ACTUATOR (-) CONTROL CIRCUIT SHORTED TO VOLTAGE
(K603) INTAKE SWIRL VALVE ACTUATOR (+) CONTROL CIRCUIT OPEN/HIGH RESISTANCE
(K601) INTAKE SWIRL VALVE ACTUATOR (-) CONTROL CIRCUIT OPEN/HIGH RESISTANCE
INTAKE SWIRL VALVE ACTUATOR
POWERTRAIN CONTROL MODULE (PCM)

Always perform the Pre-Diagnostic Troubleshooting procedure before proceeding. Refer to PRE-DIAGNOSTIC TROUBLESHOOTING PROCEDURE - 2.2L DIESEL .

DIAGNOSTIC TEST

1. **DTC IS ACTIVE**
   1. Ignition on, engine not running.
   2. With the scan tool, clear DTCs in the Powertrain Control Module.
   3. With the scan tool, actuate the Intake Swirl Valve Actuator.
   4. Monitor the scan tool for at least two minutes.
   5. With the scan tool, select View DTCs.

   Is the status Active for this DTC?

   Yes

   - Go To 2

   No

   - Perform the INTERMITTENT CONDITION diagnostic procedure. Refer to **INTERMITTENT CONDITION - 2.2L DIESEL** .
2. **CHECK THE (K603) INTAKE SWIRL VALVE ACTUATOR (+) CONTROL CIRCUIT FOR A SHORT TO VOLTAGE**
   1. Turn the ignition off.
   2. Disconnect the Intake Swirl Valve Actuator harness connector.
   3. Disconnect the Powertrain Control Module C1 harness connector.
   4. Remove the Main Relay.
   5. Connect a jumper wire between cavity 87 and cavity 30 of the Main Relay Connector.
   6. Turn the ignition on.
   7. Measure the voltage of the (K603) Intake Swirl Valve Actuator (+) Control circuit in the Intake Swirl Valve Actuator harness connector.

   Is there any voltage present?

   Yes

   - Repair the (K603) Intake Swirl Valve Actuator (+) Control circuit for a short to voltage.
   - Perform the POWERTRAIN VERIFICATION TEST - 2.2L DIESEL. Refer to **PCM VERIFICATION TEST - 2.2L**

DIESEL .

No

- Go To 3

3. **CHECK THE (K601) INTAKE SWIRL VALVE ACTUATOR (-) CONTROL CIRCUIT FOR A SHORT TO VOLTAGE**
   1. Measure the voltage of the (K601) Intake Swirl Valve Actuator (-) Control circuit in the Intake Swirl Valve Actuator harness connector.

      Is there any voltage present?

      Yes

      - Repair the (K601) Intake Swirl Valve Actuator (-) Control circuit for a short to voltage.
      - Perform the POWERTRAIN VERIFICATION TEST - 2.2L DIESEL. Refer to **PCM VERIFICATION TEST - 2.2L DIESEL** .

      No

      - Go To 4

4. **CHECK THE (K603) INTAKE SWIRL VALVE ACTUATOR (+) CONTROL CIRCUIT FOR AN OPEN/HIGH RESISTANCE**
   1. Turn the ignition off.
   2. Measure the resistance of the (K603) Intake Swirl Valve Actuator Control circuit between the Intake Swirl Valve Actuator harness connector and the PCM C1 harness connector.

      Is the resistance below 5.0 Ohms?

      Yes

      - Go To 5

      No

      - Repair the (K603) Intake Swirl Valve Actuator Control circuit for an open or high resistance.

- Perform the POWERTRAIN VERIFICATION TEST - 2.2L DIESEL. Refer to **PCM VERIFICATION TEST - 2.2L DIESEL** .

5. **CHECK THE (K601) INTAKE SWIRL VALVE ACTUATOR (-) CONTROL CIRCUIT FOR AN OPEN/HIGH RESISTANCE**
   1. Measure the resistance of the (K601) Intake Swirl Valve Actuator Control circuit between the Intake Swirl Valve Actuator harness connector and the PCM C1 harness connector.

      Is the resistance below 5.0 Ohms?

      Yes

      - Go To 6

      No

      - Repair the (K601) Intake Swirl Valve Actuator Control circuit for an open or high resistance.
      - Perform the POWERTRAIN VERIFICATION TEST - 2.2L DIESEL. Refer to **PCM VERIFICATION TEST - 2.2L DIESEL** .
6. **CHECK THE INTAKE SWIRL VALVE ACTUATOR**
   1. Measure the resistance through the Intake Swirl Valve Actuator.

      Is the resistance below 15.0 Ohms?

      Yes

      - Go To 7

      No

      - Replace the Intake Swirl Valve Actuator in accordance with the service information. With the scan tool, navigate to Miscellaneous Procedures and perform the Swirl Control Learn routine.
      - Perform the POWERTRAIN VERIFICATION TEST - 2.2L DIESEL. Refer to **PCM VERIFICATION TEST - 2.2L DIESEL** .

7. **POWERTRAIN CONTROL MODULE**
    1. Using the wiring diagram/schematic as a guide, inspect the wiring and connectors between the Intake Swirl Valve Actuator and the Powertrain Control Module.
    2. Look for any chafed, pierced, pinched, or partially broken wires.
    3. Look for broken, bent, pushed out or corroded terminals.
    4. Perform any Technical Service Bulletins that may apply.

    Were any problems found?

    Yes

    - Repair as necessary.
    - Perform the POWERTRAIN VERIFICATION TEST - 2.2L DIESEL. Refer to **PCM VERIFICATION TEST - 2.2L DIESEL** .

    No

    - Replace the Powertrain Control Module. **Before removing the PCM, perform the "Replace PCM" routine in the Miscellaneous Functions tab of the scan tool.** . Refer to **REMOVAL** .
    - Perform the POWERTRAIN VERIFICATION TEST - 2.2L DIESEL. Refer to **PCM VERIFICATION TEST - 2.2L DIESEL** .

P2009-INTAKE MANIFOLD RUNNER (SWIRL) CONTROL CIRCUIT LOW

For a complete wiring diagram, **refer to appropriate SYSTEM WIRING DIAGRAMS article** .

WHEN MONITORED

With the ignition on.

SET CONDITION

The Powertrain Control Module (PCM) detects that the Intake Swirl Valve Actuator Control circuit is shorted to ground for 0.1 of a second.

POSSIBLE CAUSES

Possible Causes
(K603) INTAKE SWIRL VALVE ACTUATOR (+) CONTROL CIRCUIT SHORTED TO GROUND
(K601) INTAKE SWIRL VALVE ACTUATOR (-) CONTROL CIRCUIT SHORTED TO GROUND
INTAKE SWIRL VALVE ACTUATOR
POWERTRAIN CONTROL MODULE (PCM)

Always perform the Pre-Diagnostic Troubleshooting procedure before proceeding. Refer to PRE-DIAGNOSTIC TROUBLESHOOTING PROCEDURE - 2.2L DIESEL .

DIAGNOSTIC TEST

1. **DTC IS ACTIVE**
   1. Ignition on, engine not running.
   2. With the scan tool, clear DTCs in the Powertrain Control Module.
   3. With the scan tool, actuate the Intake Swirl Valve Actuator.
   4. Monitor the scan tool for at least two minutes.
   5. With the scan tool, select View DTCs.

   Is the status Active for this DTC?

   Yes

   - Go To 2

   No

   - Perform the INTERMITTENT CONDITION diagnostic procedure. Refer to **INTERMITTENT CONDITION - 2.2L DIESEL** .
2. **CHECK THE (K603) INTAKE SWIRL VALVE ACTUATOR (+) CONTROL CIRCUIT FOR A SHORT TO GROUND**
   1. Turn the ignition off.
   2. Disconnect the Intake Swirl Valve Actuator harness connector.
   3. Disconnect the Powertrain Control Module C1 harness connector.

4. Measure the resistance between ground and the (K603) Intake Swirl Valve Actuator (+) Control circuit at the Intake Swirl Valve Actuator harness connector.

   Is the resistance above 10K Ohms?

   Yes

   - Go To 3

   No

   - Repair the (K603) Intake Swirl Valve Actuator (+) Control circuit for a short to ground.
   - Perform the POWERTRAIN VERIFICATION TEST - 2.2L. Refer to **PCM VERIFICATION TEST - 2.2L DIESEL** .

3. **CHECK THE (K601) INTAKE SWIRL VALVE ACTUATOR (-) CONTROL CIRCUIT FOR A SHORT TO GROUND**
   1. Measure the resistance between ground and the (K601) Intake Swirl Valve Actuator (-) Control circuit at the Intake Swirl Valve Actuator harness connector.

      Is the resistance above 10k Ohms?

      Yes

      - Go To 4

      No

      - Repair the (K601) Intake Swirl Valve Actuator (-) Control circuit for a short to ground.
      - Perform the POWERTRAIN VERIFICATION TEST - 2.2L. Refer to **PCM VERIFICATION TEST - 2.2L DIESEL** .

4. **INTAKE SWIRL VALVE ACTUATOR**
   1. Measure the resistance between ground and either terminal of the Intake Swirl Valve Actuator.

      Is the resistance above 10k Ohms?

Yes

- Replace the Intake Swirl Valve Actuator in accordance with the service information. With the scan tool, navigate to Miscellaneous Procedures and perform the Swirl Control Learn routine.
- Perform the POWERTRAIN VERIFICATION TEST - 2.2L. Refer to **PCM VERIFICATION TEST - 2.2L DIESEL** .

No

- Go To 5

5. **POWERTRAIN CONTROL MODULE**
   1. Using the wiring diagram/schematic as a guide, inspect the wiring and connectors between the Intake Swirl Valve Actuator and the Powertrain Control Module.
   2. Look for any chafed, pierced, pinched, or partially broken wires.
   3. Look for broken, bent, pushed out or corroded terminals.
   4. Perform any Technical Service Bulletins that may apply.

   Were any problems found?

   Yes

   - Repair as necessary.
   - Perform the POWERTRAIN VERIFICATION TEST - 2.2L. Refer to **PCM VERIFICATION TEST - 2.2L DIESEL** .

   No

   - Replace the Powertrain Control Module. **Before removing the PCM, perform the "Replace PCM" routine in the Miscellaneous Functions tab of the scan tool.** . Refer to **REMOVAL** .
   - Perform the POWERTRAIN VERIFICATION TEST - 2.2L. Refer to **PCM VERIFICATION TEST - 2.2L DIESEL** .

P2010-INTAKE MANIFOLD RUNNER (SWIRL) CONTROL CIRCUIT HIGH

For a complete wiring diagram, **refer to appropriate SYSTEM WIRING**

DIAGRAMS article .

WHEN MONITORED

With the ignition on.

SET CONDITION

The Powertrain Control Module (PCM) detects that the Intake Swirl Valve Actuator Control circuit is shorted to voltage for 0.1 of a second.

POSSIBLE CAUSES

Possible Causes
FUSED ASD/MAIN RELAY POWER SUPPLY TO PCM CIRCUITS OPEN
(K603) INTAKE SWIRL VALVE ACTUATOR (+) CONTROL CIRCUIT SHORTED TO VOLTAGE
(K601) INTAKE SWIRL VALVE ACTUATOR (-) CONTROL CIRCUIT SHORTED TO VOLTAGE
(K603) INTAKE SWIRL VALVE ACTUATOR (+) CONTROL CIRCUIT OPEN/HIGH RESISTANCE
(K601) INTAKE SWIRL VALVE ACTUATOR (-) CONTROL CIRCUIT OPEN/HIGH RESISTANCE
INTAKE SWIRL VALVE ACTUATOR
POWERTRAIN CONTROL MODULE (PCM)

Always perform the Pre-Diagnostic Troubleshooting procedure before proceeding. Refer to PRE-DIAGNOSTIC TROUBLESHOOTING PROCEDURE - 2.2L DIESEL .

DIAGNOSTIC TEST

1. **DTC IS ACTIVE**

NOTE: If there are Main Relay DTCs present, diagnose those DTCs before proceeding with this test procedure.

1. Ignition on, engine not running.
2. With the scan tool, clear DTCs in the Powertrain Control Module.

3. With the scan tool, actuate the Intake Swirl Valve Actuator.
4. Monitor the scan tool for at least two minutes.
5. With the scan tool, select View DTCs.

   Is the status Active for this DTC?

   Yes

   - Go To 2

   No

   - Perform the INTERMITTENT CONDITION diagnostic procedure. Refer to **INTERMITTENT CONDITION - 2.2L DIESEL** .

2. **CHECK THE (K603) INTAKE SWIRL VALVE ACTUATOR (+) CONTROL CIRCUIT FOR A SHORT TO VOLTAGE**
   1. Turn the ignition off.
   2. Disconnect the Intake Swirl Valve Actuator harness connector.
   3. Disconnect the Powertrain Control Module C1 harness connector.
   4. Remove the Main Relay.
   5. Connect a jumper wire between cavity 87 and cavity 30 of the Main Relay Connector.
   6. Turn the ignition on.
   7. Measure the voltage of the (K603) Intake Swirl Valve Actuator (+) Control circuit in the Intake Swirl Valve Actuator harness connector.

      Is there any voltage present?

      Yes

      - Repair the (K603) Intake Swirl Valve Actuator (+) Control circuit for a short to voltage.
      - Perform the POWERTRAIN VERIFICATION TEST - 2.2L DIESEL. Refer to **PCM VERIFICATION TEST - 2.2L DIESEL** .

      No

- Go To 3

3. **CHECK THE (K601) INTAKE SWIRL VALVE ACTUATOR (-) CONTROL CIRCUIT FOR A SHORT TO VOLTAGE**
   1. Measure the voltage of the (K601) Intake Swirl Valve Actuator (-) Control circuit in the Intake Swirl Valve Actuator harness connector.

      Is there any voltage present?

      Yes

      - Repair the (K601) Intake Swirl Valve Actuator (-) Control circuit for a short to voltage.
      - Perform the POWERTRAIN VERIFICATION TEST - 2.2L DIESEL. Refer to **PCM VERIFICATION TEST - 2.2L DIESEL** .

      No

      - Go To 4

4. **CHECK THE (K603) INTAKE SWIRL VALVE ACTUATOR (+) CONTROL CIRCUIT FOR AN OPEN/HIGH RESISTANCE**
   1. Turn the ignition off.
   2. Measure the resistance of the (K603) Intake Swirl Valve Actuator Control circuit between the Intake Swirl Valve Actuator harness connector and the PCM C1 harness connector.

      Is the resistance below 5.0 Ohms?

      Yes

      - Go To 5

      No

      - Repair the (K603) Intake Swirl Valve Actuator Control circuit for an open or high resistance.
      - Perform the POWERTRAIN VERIFICATION TEST - 2.2L DIESEL. Refer to **PCM VERIFICATION TEST - 2.2L DIESEL** .

5. **CHECK THE (K601) INTAKE SWIRL VALVE ACTUATOR (-) CONTROL CIRCUIT FOR AN OPEN/HIGH RESISTANCE**
   1. Measure the resistance of the (K601) Intake Swirl Valve Actuator Control circuit between the Intake Swirl Valve Actuator harness connector and the PCM C1 harness connector.

      Is the resistance below 5.0 Ohms?

      Yes

      - Go To 6

      No

      - Repair the (K601) Intake Swirl Valve Actuator Control circuit for an open or high resistance.
      - Perform the POWERTRAIN VERIFICATION TEST - 2.2L DIESEL. Refer to **PCM VERIFICATION TEST - 2.2L DIESEL** .
6. **INTAKE SWIRL VALVE ACTUATOR**
   1. Turn the ignition off.
   2. Reconnect the Powertrain Control Module C1 harness connector.
   3. Replace the Intake Swirl Valve Actuator in accordance with the service information.
   4. Turn the ignition on.
   5. With the scan tool, navigate to Miscellaneous Procedures and perform the Swirl Control Learn routine.
   6. With the scan tool, clear DTCs in the Powertrain Control Module.
   7. With the scan tool, actuate the Intake Swirl Valve Actuator.
   8. Monitor the scan tool for at least two minutes.
   9. With the scan tool, select View DTCs.

      Did the DTC return?

      Yes

      - Go To 7

No

- Repair is complete.
- Perform the POWERTRAIN VERIFICATION TEST - 2.2L DIESEL. Refer to **PCM VERIFICATION TEST - 2.2L DIESEL** .

7. **POWERTRAIN CONTROL MODULE**
   1. Using the wiring diagram/schematic as a guide, inspect the wiring and connectors between the Intake Swirl Valve Actuator and the Powertrain Control Module.
   2. Look for any chafed, pierced, pinched, or partially broken wires.
   3. Look for broken, bent, pushed out or corroded terminals.
   4. Perform any Technical Service Bulletins that may apply.

   Were any problems found?

   Yes

   - Repair as necessary.
   - Perform the POWERTRAIN VERIFICATION TEST - 2.2L DIESEL. Refer to **PCM VERIFICATION TEST - 2.2L DIESEL** .

   No

   - Replace the Powertrain Control Module. **Before removing the PCM, perform the "Replace PCM" routine in the Miscellaneous Functions tab of the scan tool.** . Refer to **REMOVAL** .
   - Perform the POWERTRAIN VERIFICATION TEST - 2.2L DIESEL. Refer to **PCM VERIFICATION TEST - 2.2L DIESEL** .

P200A-INTAKE MANIFOLD RUNNER (SWIRL) PERFORMANCE - BANK 1

For a complete wiring diagram, **refer to appropriate SYSTEM WIRING DIAGRAMS article** .

WHEN MONITORED

With the ignition on and the Intake Swirl Valve Actuator learning complete.

SET CONDITION

The Powertrain Control Module (PCM) detects excessive current draw on the Intake Swirl Valve Actuator Control circuit or the Intake Swirl Valve Actuator learned open and closed values are outside of a calibrated range.

POSSIBLE CAUSES

Possible Causes
(K601) INTAKE SWIRL VALVE ACTUATOR (-) CONTROL CIRCUIT SHORTED TO VOLTAGE
(K602) INTAKE SWIRL VALVE POSITION SIGNAL CIRCUIT SHORTED TO VOLTAGE
(K602) INTAKE SWIRL VALVE POSITION SIGNAL CIRCUIT OPEN/HIGH RESISTANCE
(K844) 5-VOLT SUPPLY CIRCUIT SHORTED TO VOLTAGE
(K844) 5-VOLT SUPPLY CIRCUIT OPEN
LOSS OF ASD/MAIN RELAY POWER SUPPLY TO PCM
FAULTY INTAKE SWIRL VALVE ACTUATOR SIGNAL CIRCUIT
INTAKE SWIRL VALVE ACTUATOR
POWERTRAIN CONTROL MODULE (PCM)

Always perform the Pre-Diagnostic Troubleshooting procedure before proceeding. Refer to PRE-DIAGNOSTIC TROUBLESHOOTING PROCEDURE - 2.2L DIESEL .

DIAGNOSTIC TEST

1. **DTC IS ACTIVE**

NOTE: If there are any 5-Volt Reference, ASD/Main relay or other Intake Swirl Valve Position Sensor DTCs present, repair those DTCs before proceeding with this test procedure.

1. Ignition on, engine not running.
2. With the scan tool, clear DTCs in the Powertrain Control Module.

3. With the scan tool, actuate the Intake Swirl Valve Actuator.
4. Monitor the scan tool for at least two minutes.
5. With the scan tool, select View DTCs.

   Is the status Active for this DTC?

   Yes

   - Go To 2

   No

   - Perform the INTERMITTENT CONDITION diagnostic procedure. Refer to **INTERMITTENT CONDITION - 2.2L DIESEL** .

2. **CHECK FOR HIGH RESISTANCE IN THE (K603) INTAKE SWIRL VALVE ACTUATOR (+) CONTROL CIRCUIT**
   1. Turn the ignition off.
   2. Disconnect the Intake Swirl Valve Actuator harness connector.
   3. Disconnect the Powertrain Control Module C1 harness connector.
   4. Measure the resistance of the (K603) Intake Swirl Valve Actuator Control circuit between the Intake Swirl Valve Actuator harness connector and the PCM C1 harness connector.

   Is the resistance below 5.0 Ohms?

   Yes

   - Go To 3

   No

   - Repair the (K603) Intake Swirl Valve Actuator Control circuit for an open or high resistance.
   - Perform the POWERTRAIN VERIFICATION TEST - 2.2L DIESEL. Refer to **PCM VERIFICATION TEST - 2.2L DIESEL** .

3. **CHECK FOR HIGH RESISTANCE IN THE (K601) INTAKE SWIRL VALVE ACTUATOR (-) CONTROL CIRCUIT**

1. Measure the resistance of the (K601) Intake Swirl Valve Actuator Control circuit between the Intake Swirl Valve Actuator harness connector and the PCM C1 harness connector.

   Is the resistance below 5.0 Ohms?

   Yes

   - Go To 4

   No

   - Repair the (K601) Intake Swirl Valve Actuator Control circuit for an open or high resistance.
   - Perform the POWERTRAIN VERIFICATION TEST - 2.2L DIESEL. Refer to **PCM VERIFICATION TEST - 2.2L DIESEL** .

4. **CHECK THE INTAKE SWIRL VALVE ACTUATOR**
   1. Measure the resistance through the Intake Swirl Valve Actuator.

      Is the resistance below 15.0 Ohms?

      Yes

      - Go To 5

      No

      - Replace the Intake Swirl Valve Actuator in accordance with the service information. With the scan tool, navigate to Miscellaneous Procedures and perform the Swirl Control Learn routine.
      - Perform the POWERTRAIN VERIFICATION TEST - 2.2L DIESEL. Refer to **PCM VERIFICATION TEST - 2.2L DIESEL** .

5. **POWERTRAIN CONTROL MODULE**
   1. Using the wiring diagram/schematic as a guide, inspect the wiring and connectors between the Intake Swirl Valve Actuator and the Powertrain Control Module.
   2. Look for any chafed, pierced, pinched, or partially broken wires.

3. Look for broken, bent, pushed out or corroded terminals.
4. Perform any Technical Service Bulletins that may apply.

Were any problems found?

Yes

- Repair as necessary.
- Perform the POWERTRAIN VERIFICATION TEST - 2.2L DIESEL. Refer to **PCM VERIFICATION TEST - 2.2L DIESEL** .

No

- Replace the Powertrain Control Module. **Before removing the PCM, perform the "Replace PCM" routine in the Miscellaneous Functions tab of the scan tool.** . Refer to **REMOVAL** .
- Perform the POWERTRAIN VERIFICATION TEST - 2.2L DIESEL. Refer to **PCM VERIFICATION TEST - 2.2L DIESEL** .

P2015-INTAKE MANIFOLD RUNNER (SWIRL) POSITION SENSOR PERFORMANCE

For a complete wiring diagram, **refer to appropriate SYSTEM WIRING DIAGRAMS article** .

WHEN MONITORED

With the ignition on and the Intake Swirl Valve Actuator commanded on.

SET CONDITION

The Powertrain Control Module (PCM) detects that the (K602) Intake Swirl Valve Position Signal circuit is implausible for 0.16 of a second.

POSSIBLE CAUSES

Possible Causes
(K602) INTAKE SWIRL VALVE POSITION SIGNAL CIRCUIT SHORTED TO VOLTAGE

(K602) INTAKE SWIRL VALVE POSITION SIGNAL CIRCUIT SHORTED TO GROUND
(K602) INTAKE SWIRL VALVE POSITION SIGNAL CIRCUIT OPEN/HIGH RESISTANCE
(K914) SENSOR GROUND CIRCUIT OPEN/HIGH RESISTANCE
(K844) 5-VOLT SUPPLY CIRCUIT OPEN
(K844) 5-VOLT SUPPLY CIRCUIT SHORTED TO VOLTAGE
(K844) 5-VOLT SUPPLY CIRCUIT SHORTED TO GROUND
(K29) ACCELERATOR PEDAL POSITION (APP) SENSOR 2 SIGNAL CIRCUIT SHORTED TO VOLTAGE
(K29) ACCELERATOR PEDAL POSITION (APP) SENSOR 2 SIGNAL CIRCUIT SHORTED TO GROUND
INTAKE SWIRL VALVE ACTUATOR
POWERTRAIN CONTROL MODULE (PCM)

Always perform the Pre-Diagnostic Troubleshooting procedure before proceeding. Refer to PRE-DIAGNOSTIC TROUBLESHOOTING PROCEDURE - 2.2L DIESEL .

DIAGNOSTIC TEST

1. **DTC IS ACTIVE**

NOTE: Repair any 5-Volt reference DTCs that are present before continuing with this test procedure.

1. Ignition on, engine not running.
2. With the scan tool, clear DTCs in the Powertrain Control Module (PCM).
3. With the scan tool, actuate the Intake Swirl Valve Actuator.
4. Monitor the scan tool for at least two minutes.
5. With the scan tool, select View DTCs.

Is the status Active for this DTC?

Yes

- Go To 3

No

- Perform the INTERMITTENT CONDITION diagnostic procedure. Refer to **INTERMITTENT CONDITION - 2.2L DIESEL** .

2. **CHECK THE (K29) APP SENSOR 1 SIGNAL CIRCUIT FOR A SHORT TO VOLTAGE**
   1. Turn the ignition off.
   2. Disconnect the Accelerator Pedal Position Sensor harness connector.
   3. Disconnect the Powertrain Control Module C2 harness connector.
   4. Remove the Main Relay.
   5. Connect a jumper wire between cavity 87 and cavity 30 of the Main Relay connector.
   6. Turn the ignition on.
   7. Measure for voltage on the (K29) APP Sensor 2 Signal circuit at the Accelerator Pedal Position Sensor harness connector.

   Is there any voltage present?

   Yes

   - Repair the (K29) APP Sensor 2 Signal circuit for a short to voltage.
   - Perform the POWERTRAIN VERIFICATION TEST - 2.2L. Refer to **PCM VERIFICATION TEST - 2.2L DIESEL** .

   No

   - Go To 3

3. **CHECK THE (K602) INTAKE SWIRL VALVE POSITION SIGNAL CIRCUIT FOR A SHORT TO VOLTAGE**
   1. Turn the ignition off.
   2. Disconnect the Intake Swirl Valve Actuator harness connector.
   3. Disconnect the Powertrain Control Module C1 harness connector.
   4. Turn the ignition on.
   5. Measure the voltage of the (K602) Intake Swirl Valve Position Signal circuit at the Intake Swirl Valve Actuator harness connector.

   Is there any voltage present?

Yes

- Repair the (K602) Intake Swirl Valve Position Signal circuit for a short to voltage.
- Perform the POWERTRAIN VERIFICATION TEST - 2.2L DIESEL. Refer to **PCM VERIFICATION TEST - 2.2L DIESEL** .

No

- Go To 4

4. **CHECK THE (K602) INTAKE SWIRL VALVE POSITION SIGNAL CIRCUIT FOR A SHORT TO GROUND**
   1. Turn the ignition off.
   2. Remove the jumper wire.
   3. Measure the resistance between ground and the (K602) Intake Swirl Valve Position Signal circuit at the Intake Swirl Valve Actuator harness connector.

   Is the resistance above 10k Ohms?

   Yes

   - Go To 5

   No

   - Repair the (K602) Intake Swirl Valve Position Signal circuit for a short to ground.
   - Perform the POWERTRAIN VERIFICATION TEST - 2.2L DIESEL. Refer to **PCM VERIFICATION TEST - 2.2L DIESEL** .

5. **CHECK THE (K29) APP 2 SENSOR SIGNAL CIRCUIT FOR A SHORT TO GROUND**
   1. Measure the resistance between ground and the (K29) APP Sensor 2 Signal circuit at the Accelerator Pedal Position Sensor harness connector.

   Is the resistance above 10k Ohms?

Yes

- Go To 6

No

- Repair the (K29) APP Sensor 2 Signal circuit for a short to ground.
- Perform the POWERTRAIN VERIFICATION TEST - 2.2L. Refer to **PCM VERIFICATION TEST - 2.2L DIESEL** .

6. **CHECK THE (K602) INTAKE SWIRL VALVE POSITION SIGNAL CIRCUIT FOR AN OPEN/HIGH RESISTANCE**
   1. Measure the resistance of the (K602) Intake Swirl Valve Position Signal circuit between the Intake Swirl Valve Actuator harness connector and the Powertrain Control Module C1 harness connector.

      Is the resistance below 5.0 Ohms?

      Yes

      - Go To 7

      No

      - Repair the (K602) Intake Swirl Valve Position Signal circuit for an open or high resistance.
      - Perform the POWERTRAIN VERIFICATION TEST - 2.2L DIESEL. Refer to **PCM VERIFICATION TEST - 2.2L DIESEL** .
7. **CHECK THE (K914) SENSOR GROUND CIRCUIT FOR AN OPEN/HIGH RESISTANCE**
   1. Measure the resistance of the (K914) Sensor Ground circuit between the Intake Swirl Valve Actuator harness connector and the Powertrain Control Module C1 harness connector.

      Is the resistance below 5.0 Ohms?

      Yes

      - Go To 8

No

- Repair the (K914) Sensor Ground circuit for an open or high resistance.
- Perform the POWERTRAIN VERIFICATION TEST - 2.2L DIESEL. Refer to **PCM VERIFICATION TEST - 2.2L DIESEL** .

8. **INTAKE SWIRL VALVE ACTUATOR**
   1. Reconnect the Powertrain Control Module C1 harness connector.
   2. Replace the Intake Swirl Valve Actuator in accordance with the service information.
   3. Turn the ignition on.
   4. With the scan tool, navigate to Miscellaneous Procedures and perform the Swirl Control Learn routine.
   5. With the scan tool, clear DTCs in the Powertrain Control Module (PCM).
   6. With the scan tool, actuate the Intake Swirl Valve Actuator.
   7. Monitor the scan tool for at least two minutes.
   8. With the scan tool, select View DTCs.

   Did the DTC return?

   Yes

   - Go To 9

   No

   - Repair is complete.
   - Perform the POWERTRAIN VERIFICATION TEST - 2.2L DIESEL. Refer to **PCM VERIFICATION TEST - 2.2L DIESEL** .

9. **POWERTRAIN CONTROL MODULE**
   1. Using the wiring diagram/schematic as a guide, inspect the wiring and connectors between the Intake Swirl Valve Actuator and the Powertrain Control Module.
   2. Look for any chafed, pierced, pinched, or partially broken wires.

3. Look for broken, bent, pushed out or corroded terminals.
4. Perform any Technical Service Bulletins that may apply.

Were any problems found?

Yes

- Repair as necessary.
- Perform the POWERTRAIN VERIFICATION TEST - 2.2L DIESEL. Refer to **PCM VERIFICATION TEST - 2.2L DIESEL** .

No

- Replace the Powertrain Control Module. **Before removing the PCM, perform the "Replace PCM" routine in the Miscellaneous Functions tab of the scan tool.** . Refer to **REMOVAL** .
- Perform the POWERTRAIN VERIFICATION TEST - 2.2L DIESEL. Refer to **PCM VERIFICATION TEST - 2.2L DIESEL** .

2014 ENGINE PERFORMANCE

Powertrain Control Module (PCM) - Electrical Diagnostics, 2.2L Diesel - Compass & Patriot

DIAGNOSIS AND TESTING

P2016-INTAKE MANIFOLD RUNNER (SWIRL) POSITION SENSOR CIRCUIT LOW

For a complete wiring diagram, **refer to appropriate SYSTEM WIRING DIAGRAMS article** .

WHEN MONITORED

With the ignition on and the Intake Swirl Valve Actuator commanded on.

SET CONDITION

The Powertrain Control Module (PCM) detects that the (K602) Intake Swirl Valve Position Signal circuit is below 0.24 of a Volt for 0.16 of a second.

POSSIBLE CAUSES

Possible Causes
(K602) INTAKE SWIRL VALVE POSITION SIGNAL CIRCUIT SHORTED TO GROUND
(K602) INTAKE SWIRL VALVE POSITION SIGNAL CIRCUIT SHORTED TO THE (K914) SENSOR GROUND
INTAKE SWIRL VALVE ACTUATOR
POWERTRAIN CONTROL MODULE (PCM)

Always perform the Pre-Diagnostic Troubleshooting procedure before proceeding. Refer to PRE-DIAGNOSTIC TROUBLESHOOTING PROCEDURE - 2.2L DIESEL .

DIAGNOSTIC TEST

1. **DTC IS ACTIVE**
    1. Ignition on, engine not running.
    2. With the scan tool, Clear DTCs in the Powertrain Control Module (PCM).
    3. With the scan tool, actuate the Intake Swirl Servo Motor.
    4. Monitor the scan tool for at least two minutes.

5. With the scan tool, select View DTCs.

   Is the status Active for this DTC?

   Yes

   - Go To 2

   No

   - Perform the INTERMITTENT CONDITION diagnostic procedure. Refer to **INTERMITTENT CONDITION - 2.2L DIESEL** .

2. **CHECK THE (K602) INTAKE SWIRL VALVE POSITION SIGNAL CIRCUIT FOR A SHORT TO GROUND**
   1. Turn the ignition off.
   2. Disconnect the Intake Swirl Valve Actuator harness connector.
   3. Disconnect the PCM C1 harness connector.
   4. Measure the resistance between ground and the (K602) Intake Swirl Valve Position Signal circuit at the Intake Swirl Valve Actuator harness connector.

      Is the resistance above 10k Ohms?

      Yes

      - Go To 3

      No

      - Repair the (K602) Intake Swirl Valve Position Signal circuit for a short to ground.
      - Perform the POWERTRAIN VERIFICATION TEST - 2.2L DIESEL. Refer to **PCM VERIFICATION TEST - 2.2L DIESEL** .

3. **CHECK FOR THE (K602) INTAKE SWIRL VALVE POSITION SIGNAL CIRCUIT SHORTED TO THE (K914) SENSOR GROUND**
   1. Measure the resistance between the (K602) Intake Swirl Valve Position Signal circuit and the (K914) Sensor Ground circuit at the Intake Swirl Valve Actuator harness connector.

Is the resistance above 10k Ohms?

Yes

- Go To 4

No

- Repair the short between the (K602) Intake Swirl Valve Position Signal circuit and the (K914) Sensor Ground circuit.
- Perform the POWERTRAIN VERIFICATION TEST - 2.2L DIESEL. Refer to **PCM VERIFICATION TEST - 2.2L DIESEL** .

4. **INTAKE SWIRL VALVE ACTUATOR**
   1. Measure the resistance between ground and either terminal of the Intake Swirl Valve Actuator.

      Is the resistance above 10k Ohms?

      Yes

      - Go To 5

      No

      - Replace the Intake Swirl Servo Motor in accordance with the service information. With the scan tool, navigate to Miscellaneous Procedures and perform the Swirl Control Learn routine.
      - Perform the POWERTRAIN VERIFICATION TEST - 2.2L DIESEL. Refer to **PCM VERIFICATION TEST - 2.2L DIESEL** .
5. **POWERTRAIN CONTROL MODULE**
   1. Using the wiring diagram/schematic as a guide, inspect the wiring and connectors between the Intake Swirl Valve Actuator and the Powertrain Control Module.
   2. Look for any chafed, pierced, pinched, or partially broken wires.
   3. Look for broken, bent, pushed out or corroded terminals.
   4. Perform any Technical Service Bulletins that may apply.

Were any problems found?

Yes

- Repair as necessary.
- Perform the POWERTRAIN VERIFICATION TEST - 2.2L DIESEL. Refer to **PCM VERIFICATION TEST - 2.2L DIESEL** .

No

- Replace the Powertrain Control Module. **Before removing the PCM, perform the "Replace PCM" routine in the Miscellaneous Functions tab of the scan tool.** . Refer to **REMOVAL** .
- Perform the POWERTRAIN VERIFICATION TEST - 2.2L DIESEL. Refer to **PCM VERIFICATION TEST - 2.2L DIESEL** .

P2017-INTAKE MANIFOLD RUNNER (SWIRL) POSITION SENSOR CIRCUIT HIGH

For a complete wiring diagram, **refer to appropriate SYSTEM WIRING DIAGRAMS article** .

WHEN MONITORED

With the ignition on and the Intake Swirl Valve Actuator commanded on.

SET CONDITION

The Powertrain Control Module (PCM) detects that the (K602) Intake Swirl Valve Position Signal circuit is above 4.88 Volts for 0.16 of a second.

POSSIBLE CAUSES

Possible Causes
(K602) INTAKE SWIRL VALVE POSITION SIGNAL CIRCUIT SHORTED TO VOLTAGE
(K914) SENSOR GROUND CIRCUIT OPEN/HIGH RESISTANCE
INTAKE SWIRL VALVE ACTUATOR
POWERTRAIN CONTROL MODULE (PCM)

Always perform the Pre-Diagnostic Troubleshooting procedure before proceeding. Refer to PRE-DIAGNOSTIC TROUBLESHOOTING PROCEDURE - 2.2L DIESEL .

DIAGNOSTIC TEST

1. **DTC IS ACTIVE**
   1. Ignition on, engine not running.
   2. With the scan tool, clear DTCs in the Powertrain Control Module (PCM).
   3. With the scan tool, actuate the Intake Swirl Valve Actuator.
   4. Monitor the scan tool for at least two minutes.
   5. With the scan tool, select View DTCs.

   Is the status Active for this DTC?

   Yes

   - Go To 2

   No

   - Perform the INTERMITTENT CONDITION diagnostic procedure. Refer to **INTERMITTENT CONDITION - 2.2L DIESEL** .
2. **CHECK THE (K602) INTAKE SWIRL VALVE POSITION SIGNAL CIRCUIT FOR A SHORT TO VOLTAGE**
   1. Turn the ignition off.
   2. Disconnect the Intake Swirl Valve Actuator harness connector.
   3. Disconnect the Powertrain Control Module C1 harness connector.
   4. Remove the Main Relay.
   5. Connect a jumper wire between cavity 87 and cavity 30 of the Main Relay Connector.
   6. Turn the ignition on.
   7. Measure the voltage of the (K602) Intake Swirl Valve Position Signal circuit at the Intake Swirl Valve Actuator harness connector.

   Is there any voltage present?

Yes

- Repair the (K602) Intake Swirl Valve Position Signal circuit for a short to voltage.
- Perform the POWERTRAIN VERIFICATION TEST - 2.2L DIESEL. Refer to **PCM VERIFICATION TEST - 2.2L DIESEL** .

No

- Go To 3

3. **CHECK THE (K914) SENSOR GROUND CIRCUIT FOR AN OPEN/HIGH RESISTANCE**
   1. Turn the ignition off.
   2. Remove the jumper wire.
   3. Measure the resistance of the (K914) Sensor Ground circuit between the Intake Swirl Valve Actuator harness connector and the Powertrain Control Module C1 harness connector.

   Is the resistance below 5.0 Ohms?

   Yes

   - Go To 4

   No

   - Repair the (K914) Sensor Ground circuit for an open or high resistance.
   - Perform the POWERTRAIN VERIFICATION TEST - 2.2L DIESEL. Refer to **PCM VERIFICATION TEST - 2.2L DIESEL** .

4. **INTAKE SWIRL VALVE ACTUATOR**
   1. Reconnect the Powertrain Control Module C1 harness connector.
   2. Replace the Intake Swirl Valve Actuator in accordance with the service information.
   3. Turn the ignition on.
   4. With the scan tool, navigate to Miscellaneous Procedures and perform

the Swirl Control Learn routine.

5. With the scan tool, clear DTCs in the Powertrain Control Module (PCM).
6. With the scan tool, actuate the Intake Swirl Valve Actuator.
7. Monitor the scan tool for at least two minutes.
8. With the scan tool, select View DTCs.

Did the DTC return?

Yes

- Go To 5

No

- Repair is complete.
- Perform the POWERTRAIN VERIFICATION TEST - 2.2L DIESEL. Refer to **PCM VERIFICATION TEST - 2.2L DIESEL** .

5. **POWERTRAIN CONTROL MODULE**
   1. Using the wiring diagram/schematic as a guide, inspect the wiring and connectors between the Intake Swirl Valve Actuator and the Powertrain Control Module.
   2. Look for any chafed, pierced, pinched, or partially broken wires.
   3. Look for broken, bent, pushed out or corroded terminals.
   4. Perform any Technical Service Bulletins that may apply.

   Were any problems found?

   Yes

   - Repair as necessary.
   - Perform the POWERTRAIN VERIFICATION TEST - 2.2L DIESEL. Refer to **PCM VERIFICATION TEST - 2.2L DIESEL** .

   No

- Replace the Powertrain Control Module. **Before removing the PCM, perform the "Replace PCM" routine in the Miscellaneous Functions tab of the scan tool.** . Refer to **REMOVAL** .
- Perform the POWERTRAIN VERIFICATION TEST - 2.2L DIESEL. Refer to **PCM VERIFICATION TEST - 2.2L DIESEL** .

P2073-MANIFOLD ABSOLUTE PRESSURE/MASS AIR FLOW - THROTTLE POSITION

For a complete wiring diagram, **refer to appropriate SYSTEM WIRING DIAGRAMS article** .

WHEN MONITORED

With the engine running at idle.

SET CONDITION

The Powertrain Control Module (PCM) detects that the Mass Air Flow Sensor (MAF) has drifted beyond it's learned limit at idle.

POSSIBLE CAUSES

Possible Causes
AIR FILTER INCORRECT (AFTERMARKET) OR NOT INSTALLED PROPERLY
INLET AIR PRESSURE SENSOR OR BOOST PRESSURE SENSOR OUT OF RANGE
TEMPERATURE SENSOR OUT OF RANGE
INTAKE AIR SYSTEM LEAK
MASS AIR FLOW SENSOR
POWERTRAIN CONTROL MODULE (PCM)

Always perform the Pre-Diagnostic Troubleshooting procedure before proceeding. Refer to PRE-DIAGNOSTIC TROUBLESHOOTING PROCEDURE - 2.2L DIESEL .

DIAGNOSTIC TEST

1. **DTC IS ACTIVE**

1. Start the engine and allow it to idle for at least two minutes.
2. With the scan tool, select View DTCs.

   Is the DTC active?

   Yes

   - Go To 2

   No

   - Perform the INTERMITTENT CONDITION diagnostic procedure. Refer to **INTERMITTENT CONDITION - 2.2L DIESEL** .

2. **CHECK THE AIR FILTER**
   1. Turn the ignition off.
   2. Visually inspect the Air Filter.

      NOTE: A non OEM Air Filter, or an Air Filter that is not installed with the correct orientation will cause this DTC to set. Look for any service bulletins that may apply for additional information.

      Were any problems found with the Air Filter?

      Yes

      - Go To 3

      No

      - Perform the INTERMITTENT CONDITION diagnostic procedure. Refer to **INTERMITTENT CONDITION - 2.2L DIESEL** .

3. **CHECKING THE PRESSURE SENSORS**
   1. Turn the ignition off and wait for pressure sensor readings to stabilize.
   2. With the scan tool, monitor the pressure readings of the Boost Pressure Sensor, and Intake Air Pressure Sensor to the Barometric Pressure Sensor.
   3. Monitor the scan tool for at least two minutes.

NOTE: The readings should be comparable with barometric pressure with the engine not running.

Are the Boost Pressure Sensor, and Intake Air Pressure Sensor readings comparable with barometric pressure?

Yes

- Go To 4

No

- Replace the sensor that was reading out of range. The Barometric Pressure Sensor is located within the PCM and is not serviceable separately. If the Barometric Pressure Sensor is faulty, replace and program the Powertrain Control Module in accordance with the service information.
- Perform the POWERTRAIN VERIFICATION TEST - 2.2L. Refer to **PCM VERIFICATION TEST - 2.2L DIESEL** .

4. **CHECKING THE TEMPERATURE SENSORS**

NOTE: Let the vehicle cold soak before performing this test.

1. Turn the ignition on, engine not running.
2. With the scan tool, monitor the temperature readings of the Intake Air Temperature Sensor 1, the Intake Air Temperature Sensor 2 (Boost), and the Exhaust Temperature Sensor 1.
3. Monitor the scan tool for at least two minutes.

NOTE: The readings should be comparable with the engine cold.

Are the Intake Air Temperature Sensor 1, the Intake Air Temperature Sensor 2 (Boost), and the Exhaust Temperature Sensor 1 readings comparable?

Yes

- Go To 5

No

- Replace the sensor that was reading out of range. The Intake Air Temperature Sensor 1 is incorporated within the Mass Air Flow Sensor and cannot be changed separately. If the Intake Air Temperature Sensor 1 is faulty, replace the Mass Air Flow Sensor. With the scan tool, navigate to Miscellaneous Functions and perform the MAF Learn routine.
- Perform the POWERTRAIN VERIFICATION TEST - 2.2L. Refer to **PCM VERIFICATION TEST - 2.2L DIESEL** .

5. **CHECK THE INTAKE AIR SYSTEM**
   1. Check the Intake Air System for any signs of a leak or restriction.

      Were any Intake System problems found?

      Yes

      - Perform the appropriate repairs to the Intake Air System.
      - Perform the POWERTRAIN VERIFICATION TEST 2.2L. Refer to **PCM VERIFICATION TEST - 2.2L DIESEL** .

      No

      - Go To 6
6. **MASS AIR FLOW SENSOR**
   1. Replace the Mass Air Flow Sensor in accordance with the service information.
   2. With the scan tool, navigate to Miscellaneous Functions and perform the MAF Sensor Replacement Initialization routine.
   3. Turn the ignition on.
   4. With the scan tool, Clear DTCs.
   5. Start the engine.
   6. Allow the engine to idle for at least two minutes.
   7. With the scan tool, select View DTCs.

      Did the DTC return?

      Yes

- Replace the Powertrain Control Module. **Before removing the PCM, perform the "Replace PCM" routine in the Miscellaneous Functions tab of the scan tool.** . Refer to **REMOVAL** .
- Perform the POWERTRAIN VERIFICATION TEST - 2.2L. Refer to **PCM VERIFICATION TEST - 2.2L DIESEL** .

No

- Test complete.
- Perform the POWERTRAIN VERIFICATION TEST - 2.2L. Refer to **PCM VERIFICATION TEST - 2.2L DIESEL** .

P2074-MANIFOLD ABSOLUTE PRESSURE/MASS AIR FLOW - THROTTLE POSITION CORRELATION AT HIGHER LOAD

For a complete wiring diagram, **refer to appropriate SYSTEM WIRING DIAGRAMS article** .

WHEN MONITORED

With the engine running at idle.

SET CONDITION

The Powertrain Control Module (PCM) detects that the Mass Air Flow Sensor (MAF) has drifted beyond it's learned limit above idle.

POSSIBLE CAUSES

Possible Causes
AIR FILTER INCORRECT (AFTERMARKET) OR NOT INSTALLED PROPERLY
INLET AIR PRESSURE SENSOR OR BOOST PRESSURE SENSOR OUT OF RANGE
TEMPERATURE SENSOR OUT OF RANGE
INTAKE AIR SYSTEM LEAK
MASS AIR FLOW SENSOR
POWERTRAIN CONTROL MODULE (PCM)

Always perform the Pre-Diagnostic Troubleshooting procedure before

proceeding. Refer to PRE-DIAGNOSTIC TROUBLESHOOTING PROCEDURE - 2.2L DIESEL .

DIAGNOSTIC TEST

1. **DTC IS ACTIVE**
   1. Start the engine and raise the engine RPM above idle for at least two minutes.
   2. With the scan tool, select View DTCs.

      Is the DTC active?

      Yes

      - Go To 2

      No

      - Perform the INTERMITTENT CONDITION diagnostic procedure. Refer to **INTERMITTENT CONDITION - 2.2L DIESEL** .
2. **CHECK THE AIR FILTER**
   1. Turn the ignition off.
   2. Visually inspect the Air Filter.

      NOTE: A non OEM Air Filter, or an Air Filter that is not installed with the correct orientation will cause this DTC to set. Look for any service bulletins that may apply for additional information.

      Were any problems found with the Air Filter?

      Yes

      - Go To 3

      No

      - Perform the INTERMITTENT CONDITION diagnostic procedure. Refer to **INTERMITTENT CONDITION - 2.2L DIESEL** .
3. **CHECKING THE PRESSURE SENSORS**

1. Turn the ignition off and wait for pressure sensor readings to stabilize.
2. With the scan tool, monitor the pressure readings of the Boost Pressure Sensor, and Intake Air Pressure Sensor to the Barometric Pressure Sensor.
3. Monitor the scan tool for at least two minutes.

NOTE: The readings should be comparable with barometric pressure with the engine not running.

Are the Boost Pressure Sensor, and Intake Air Pressure Sensor readings comparable with barometric pressure?

Yes

- Go To 4

No

- Replace the sensor that was reading out of range. The Barometric Pressure Sensor is located within the PCM and is not serviceable separately. If the Barometric Pressure Sensor is faulty, replace and program the Powertrain Control Module in accordance with the service information.
- Perform the POWERTRAIN VERIFICATION TEST - 2.2L. Refer to **PCM VERIFICATION TEST - 2.2L DIESEL** .

4. **CHECKING THE TEMPERATURE SENSORS**

NOTE: Let the vehicle cold soak before performing this test.

1. Turn the ignition on, engine not running.
2. With the scan tool, monitor the temperature readings of the Intake Air Temperature Sensor 1, the Intake Air Temperature Sensor 2 (Boost), and the Exhaust Temperature Sensor 1.
3. Monitor the scan tool for at least two minutes.

NOTE: The readings should be comparable with the engine cold.

Are the Intake Air Temperature Sensor 1, the Intake Air Temperature Sensor 2 (Boost), and the Exhaust Temperature Sensor 1 readings comparable?

Yes

- Go To 5

No

- Replace the sensor that was reading out of range. The Intake Air Temperature Sensor 1 is incorporated within the Mass Air Flow Sensor and cannot be changed separately. If the Intake Air Temperature Sensor 1 is faulty, replace the Mass Air Flow Sensor. With the scan tool, navigate to Miscellaneous Functions and perform the MAF Learn routine.
- Perform the POWERTRAIN VERIFICATION TEST - 2.2L. Refer to **PCM VERIFICATION TEST - 2.2L DIESEL** .

5. **CHECK THE INTAKE AIR SYSTEM**
   1. Check the Intake Air System for any signs of a leak or restriction.

   Were any Intake System problems found?

   Yes

   - Perform the appropriate repairs to the Intake Air System.
   - Perform the POWERTRAIN VERIFICATION TEST 2.2L. Refer to **PCM VERIFICATION TEST - 2.2L DIESEL** .

   No

   - Go To 6

6. **MASS AIR FLOW SENSOR**
   1. Replace the Mass Air Flow Sensor in accordance with the service information.
   2. With the scan tool, navigate to Miscellaneous Functions and perform the MAF Sensor Replacement Initialization routine.
   3. Turn the ignition on.

4. With the scan tool, Clear DTCs.
5. Start the engine.
6. Raise the engine RPM above idle for at least two minutes.
7. With the scan tool, select View DTCs.

Did the DTC return?

Yes

- Replace the Powertrain Control Module. **Before removing the PCM, perform the "Replace PCM" routine in the Miscellaneous Functions tab of the scan tool.** . Refer to **REMOVAL** .
- Perform the POWERTRAIN VERIFICATION TEST - 2.2L. Refer to **PCM VERIFICATION TEST - 2.2L DIESEL** .

No

- Test complete.
- Perform the POWERTRAIN VERIFICATION TEST - 2.2L. Refer to **PCM VERIFICATION TEST - 2.2L DIESEL** .

P2080-EXHAUST GAS TEMPERATURE SENSOR CIRCUIT PERFORMANCE

For a complete wiring diagram, **refer to appropriate SYSTEM WIRING DIAGRAMS article** .

WHEN MONITORED

At ignition on before engine crank, cold plausibility test can be performed and with no Coolant Temperature Sensor, Boost Temperature Sensor, or Ambient Temperature Sensor DTCs.

SET CONDITION

The Powertrain Control Module (PCM) detects that the (K353) Exhaust Temperature Sensor 1/1 Signal circuit voltage is implausible.

POSSIBLE CAUSES

Possible Causes

HIGH RESISTANCE IN THE (K353) EXHAUST TEMPERATURE SENSOR 1/1 SIGNAL CIRCUIT
HIGH RESISTANCE IN THE (K951) EXHAUST TEMPERATURE SENSOR 1/1 GROUND CIRCUIT
EXHAUST TEMPERATURE SENSOR 1/1
POWERTRAIN CONTROL MODULE (PCM)

Always perform the Pre-Diagnostic Troubleshooting procedure before proceeding. Refer to PRE-DIAGNOSTIC TROUBLESHOOTING PROCEDURE - 2.2L DIESEL .

DIAGNOSTIC TEST

1. **DTC IS ACTIVE**
   1. Ignition on, engine not running.

      NOTE: Let the vehicle cold soak before performing this test.

   2. With the scan tool, monitor the temperature readings of the Exhaust Temperature Sensor 1/1, Coolant Temperature Sensor, Boost Temperature Sensor, and Ambient Temperature Sensor.
   3. Monitor the scan tool for at least two minutes.
   4. Cycle the ignition key off and on several times, leaving the ignition on for at least 10.0 seconds at a time.
   5. Start the engine.
   6. Allow the engine to reach normal operating temperature.
   7. With the scan tool, select View DTCs.

      Is the Exhaust Temperature Sensor 1/1 reading comparable with the Coolant Temperature Sensor, Boost Temperature Sensor, and Ambient Temperature Sensor?

      Yes

      - Perform the INTERMITTENT CONDITION diagnostic procedure. Refer to **INTERMITTENT CONDITION - 2.2L DIESEL** .

No

- Go To 2

2. **CHECK FOR HIGH RESISTANCE IN THE (K353) EXHAUST TEMPERATURE SENSOR 1/1 SIGNAL CIRCUIT**
   1. Turn the ignition off.
   2. Disconnect the Exhaust Temperature Sensor 1/1 harness connector.
   3. Disconnect the Powertrain Control Module C1 harness connector.
   4. Measure the resistance on the (K353) Exhaust Temperature Sensor 1/1 Signal circuit between the Exhaust Temperature Sensor 1/1 harness connector and the PCM C1 harness connector.

   Is the resistance below 5.0 Ohms?

   Yes

   - Go To 3

   No

   - Repair the (K353) Exhaust Temperature Sensor 1/1 Signal circuit for an open or high resistance.
   - Perform the POWERTRAIN VERIFICATION TEST - 2.2L DIESEL. Refer to **PCM VERIFICATION TEST - 2.2L DIESEL** .

3. **CHECK FOR HIGH RESISTANCE IN THE (K951) EXHAUST TEMPERATURE SENSOR 1/1 GROUND CIRCUIT**
   1. Measure the resistance of the (K951) Exhaust Temperature Sensor 1/1 Ground circuit between the Exhaust Temperature Sensor 1/1 harness connector and the PCM C1 harness connector.

   Is the resistance below 5.0 Ohms?

   Yes

   - Go To 4

   No

- Repair the (K951) Exhaust Temperature Sensor 1/1 Ground circuit for an open or high resistance.
- Perform the POWERTRAIN VERIFICATION TEST - 2.2L DIESEL. Refer to **PCM VERIFICATION TEST - 2.2L DIESEL** .

4. **EXHAUST TEMPERATURE SENSOR 1/1**
   1. Reconnect the Powertrain Control Module C1 harness connector.
   2. Replace the Exhaust Temperature Sensor 1/1 in accordance with the service information.
   3. Turn the ignition on.
   4. With the scan tool, Clear DTCs.
   5. Start the engine.
   6. Allow the engine to reach normal operating temperature.
   7. With the scan tool, select View DTCs.

   Is the status Active for this DTC?

   Yes

   - Replace the Powertrain Control Module. **Before removing the PCM, perform the "Replace PCM" routine in the Miscellaneous Functions tab of the scan tool.** . Refer to **REMOVAL** .
   - Perform the POWERTRAIN VERIFICATION TEST - 2.2L DIESEL. Refer to **PCM VERIFICATION TEST - 2.2L DIESEL** .

   No

   - Test complete.
   - Perform the POWERTRAIN VERIFICATION TEST - 2.2L DIESEL. Refer to **PCM VERIFICATION TEST - 2.2L DIESEL** .

P2100-ELECTRONIC THROTTLE CONTROL MOTOR CIRCUIT OPEN - BANK 1

For a complete wiring diagram, **refer to appropriate SYSTEM WIRING DIAGRAMS article** .

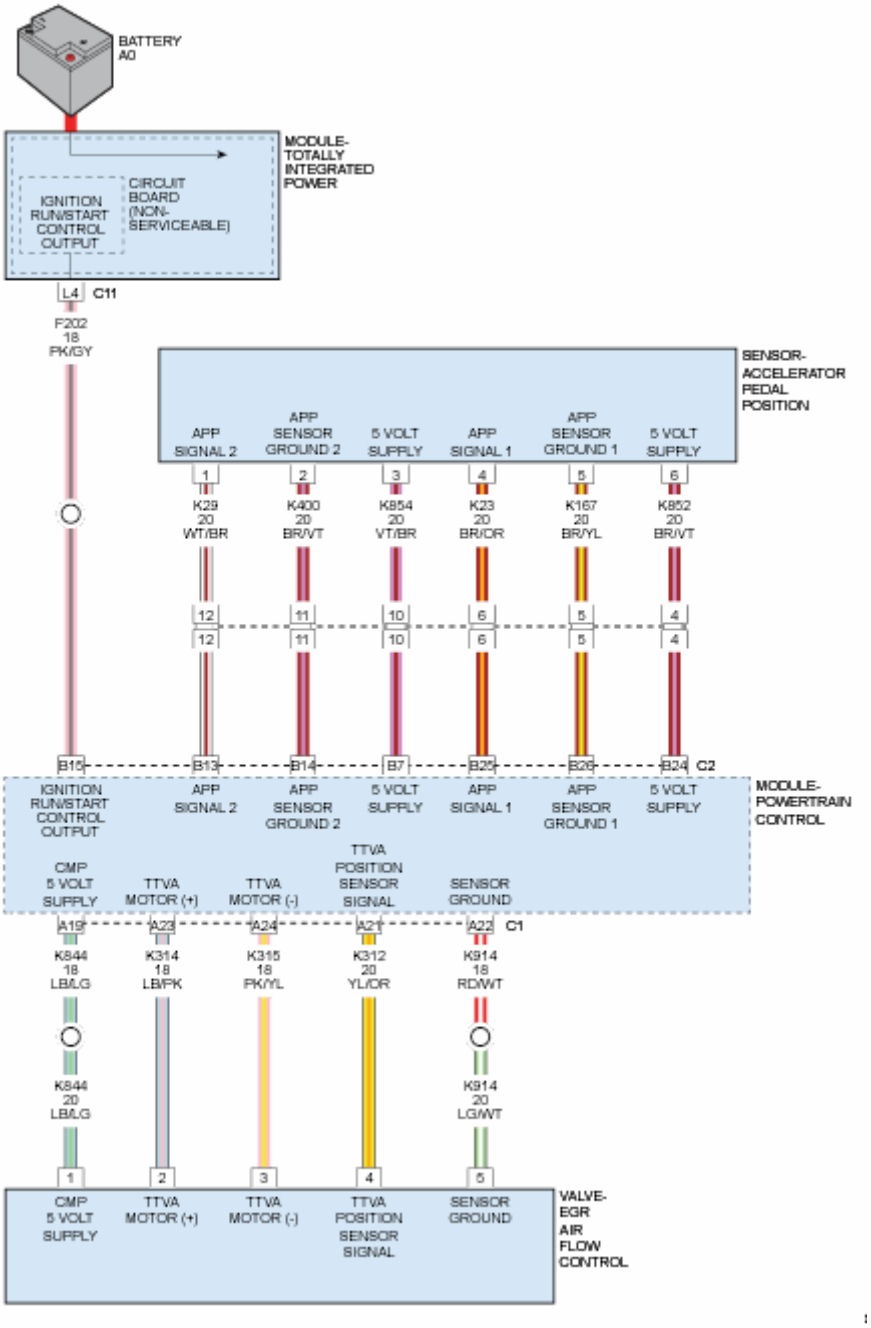

Fig. 1: APPS & EGR Airflow Control Valve Circuit Diagram
Courtesy of CHRYSLER GROUP, LLC

WHEN MONITORED

With the ignition on.

SET CONDITION

The Powertrain Control Module (PCM) detects that the EGR Airflow Control Valve circuit is open for 0.1 of a second.

POSSIBLE CAUSES

Possible Causes
(K314) EGR AIRFLOW CONTROL VALVE (+) CONTROL CIRCUIT OPEN/HIGH RESISTANCE
(K315) EGR AIRFLOW CONTROL VALVE (-) CONTROL CIRCUIT OPEN/HIGH RESISTANCE
EGR AIRFLOW CONTROL VALVE
POWERTRAIN CONTROL MODULE (PCM)

Always perform the Pre-Diagnostic Troubleshooting procedure before proceeding. Refer to PRE-DIAGNOSTIC TROUBLESHOOTING PROCEDURE - 2.2L DIESEL .

DIAGNOSTIC TEST

1. **DTC IS ACTIVE**
   1. Ignition on, engine not running.
   2. With the scan tool, clear DTCs in the PCM.
   3. Cycle the ignition key off and on several times, leaving the ignition on for at least 10.0 seconds at a time.
   4. With the scan tool, select View DTCs.

      Did the DTC return?

      Yes

      - Go To 2

      No

      - Perform the INTERMITTENT CONDITION diagnostic procedure. Refer to **INTERMITTENT CONDITION - 2.2L DIESEL** .
2. **CHECK THE (K314) EGR AIRFLOW CONTROL VALVE (+) CONTROL CIRCUIT FOR AN OPEN/HIGH RESISTANCE**
   1. Turn the ignition off.
   2. Disconnect the EGR Airflow Control Valve harness connector.
   3. Disconnect the Powertrain Control Module C1 harness connector.

4. Measure the resistance of the (K314) EGR Airflow Control Valve (+) Control circuit between the EGR Airflow Control Valve harness connector and the Powertrain Control Module C1 harness connector.

   Is the resistance below 5.0 Ohms?

   Yes

   - Go To 3

   No

   - Repair the (K314) EGR Airflow Control Valve (+) Control circuit for an open or high resistance.
   - Perform the POWERTRAIN VERIFICATION TEST - 2.2L DIESEL. Refer to **PCM VERIFICATION TEST - 2.2L DIESEL** .

3. **CHECK THE (K315) EGR AIR FLOW CONTROL VALVE (-) CONTROL CIRCUIT FOR AN OPEN/HIGH RESISTANCE**
   1. Disconnect the EGR Air Flow Control Valve harness connector.
   2. Disconnect the Powertrain Control Module harness connector.
   3. Measure the resistance of the (K315) EGR Air Flow Control Valve (-) Control circuit between the EGR Air Flow Control Valve harness connector and the Powertrain Control Module harness connector.

      Is the resistance below 5.0 Ohms?

      Yes

      - Go To 4

      No

      - Repair the (K315) EGR Air Flow Control Valve (-) Control circuit for an open or high resistance.
      - Perform the POWERTRAIN VERIFICATION TEST - 2.2L DIESEL. Refer to **PCM VERIFICATION TEST - 2.2L DIESEL** .

4. **CHECK THE EGR AIRFLOW CONTROL VALVE**

1. Replace the EGR Airflow Control Valve in accordance with the service information.
2. Turn the ignition on.
3. With the scan tool, navigate to Miscellaneous Procedures and perform the Throttle Valve Learn procedure.
4. Turn the ignition off.
5. Reconnect the Powertrain Control Module C1 harness connector.
6. Turn the ignition on.
7. With the scan tool, Clear DTCs.
8. Cycle the ignition key off and on several times, leaving the ignition on for at least 10 seconds at a time.
9. With the scan tool, select View DTCs.

   Did the DTC return?

   Yes

   - Go To 5

   No

   - Repair is complete.
   - Perform the POWERTRAIN VERIFICATION TEST - 2.2L DIESEL. Refer to **PCM VERIFICATION TEST - 2.2L DIESEL** .

5. **POWERTRAIN CONTROL MODULE**
   1. Using the wiring diagram/schematic as a guide, inspect the wiring and connectors between the EGR Airflow Control Valve and the Powertrain Control Module.
   2. Look for any chafed, pierced, pinched, or partially broken wires.
   3. Look for broken, bent, pushed out or corroded terminals.
   4. Monitor the scan tool data relative to this circuit and wiggle test the wiring and connectors.
   5. Look for the data to change or for the DTC to reset during the wiggle test.
   6. Perform any Technical Service Bulletins that may apply.

Were any problems found?

Yes

- Repair as necessary.
- Perform the POWERTRAIN VERIFICATION TEST - 2.2L DIESEL. Refer to **PCM VERIFICATION TEST - 2.2L DIESEL** .

No

- Replace the Powertrain Control Module. **Before removing the PCM, perform the "Replace PCM" routine in the Miscellaneous Functions tab of the scan tool.** . Refer to **REMOVAL** .
- Perform the POWERTRAIN VERIFICATION TEST - 2.2L DIESEL. Refer to **PCM VERIFICATION TEST - 2.2L DIESEL** .

P2101-ELECTRONIC THROTTLE CONTROL MOTOR CIRCUIT PERFORMANCE

For a complete wiring diagram, **refer to appropriate SYSTEM WIRING DIAGRAMS article** .

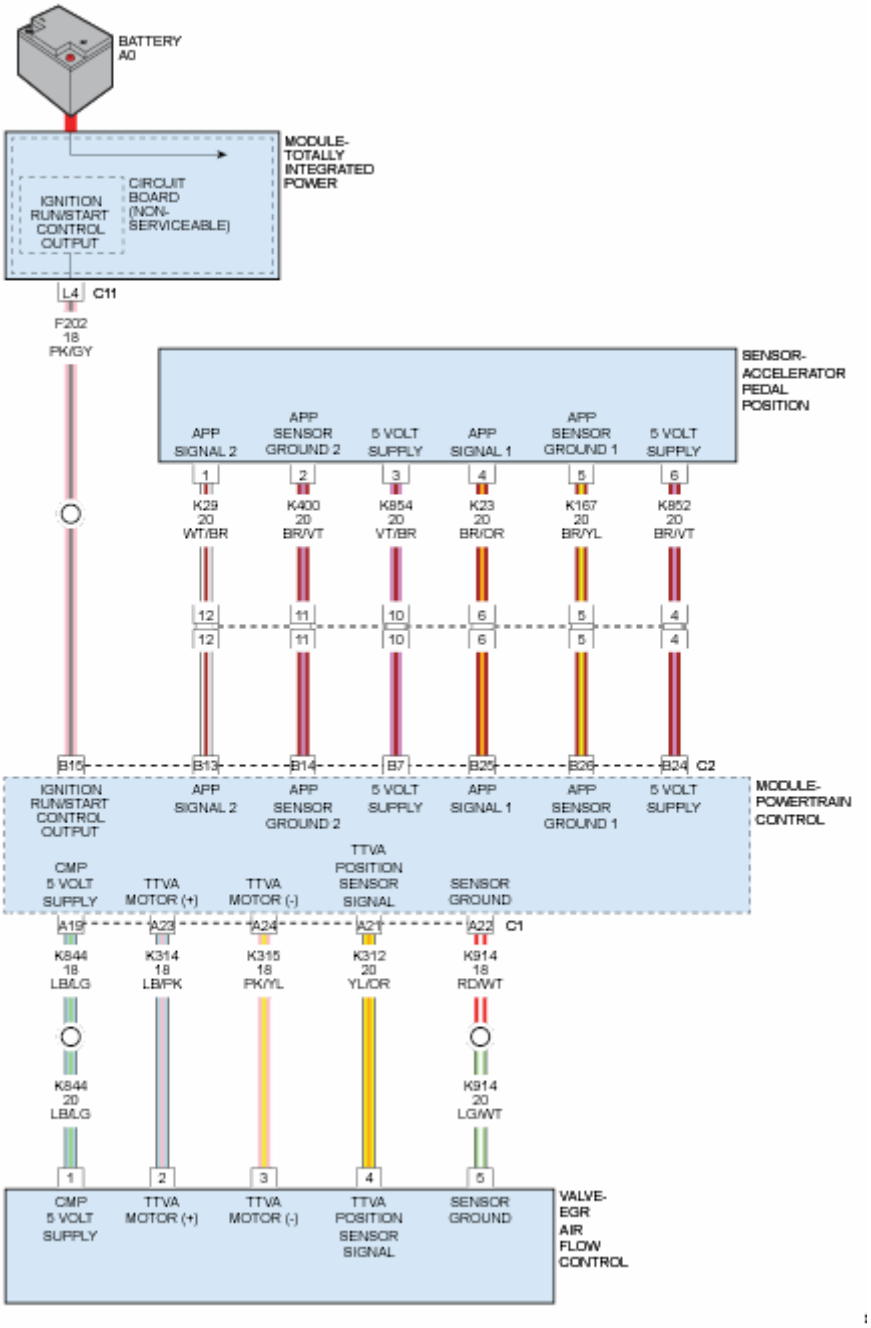

Fig. 2: APPS & EGR Airflow Control Valve Circuit Diagram
Courtesy of CHRYSLER GROUP, LLC

WHEN MONITORED

With the ignition on.

SET CONDITION

The Powertrain Control Module (PCM) detects an over temperature condition on the EGR Airflow Control Valve Control circuit due to a high mechanical

resistance or low electrical resistance condition in the EGR Airflow Control Valve.

POSSIBLE CAUSES

Possible Causes
EGR AIRFLOW CONTROL VALVE BINDING MECHANICALLY
EGR AIRFLOW CONTROL VALVE
POWERTRAIN CONTROL MODULE (PCM)

Always perform the Pre-Diagnostic Troubleshooting procedure before proceeding. Refer to PRE-DIAGNOSTIC TROUBLESHOOTING PROCEDURE - 2.2L DIESEL .

DIAGNOSTIC TEST

1. **DTC IS ACTIVE**

   NOTE: If there are any other EGR Airflow Control Valve Control circuit DTCs present, diagnose those DTCs before proceeding with this diagnostic procedure.

   1. Ignition on, engine not running.
   2. With the scan tool, clear DTCs in the PCM.
   3. Cycle the ignition key off and on several times, leaving the ignition on for at least 10.0 seconds at a time.
   4. With the scan tool, select View DTCs.

   Did the DTC return?

   Yes

   - Go To 2

   No

   - Perform the INTERMITTENT CONDITION diagnostic procedure. Refer to **INTERMITTENT CONDITION - 2.2L DIESEL** .

2. **CHECK THE EGR AIRFLOW CONTROL VALVE**
   1. Turn the ignition off.

2. Remove the Intake Air Hose from the EGR Airflow Control Valve Control.
3. Check the EGR Airflow Control Valve Control for any binding or sticking condition.

   Were any problems found?

   Yes

   - Go To 3

   No

   - Perform the appropriate repair.
   - Perform the POWERTRAIN VERIFICATION TEST - 2.2L DIESEL. Refer to **PCM VERIFICATION TEST - 2.2L DIESEL** .

3. **CHECK THE EGR AIRFLOW CONTROL VALVE**
   1. Replace the EGR Airflow Control Valve in accordance with the service information.
   2. Turn the ignition on.
   3. With the scan tool, navigate to Miscellaneous Procedures and perform the Throttle Valve Learn procedure.
   4. Turn the ignition off.
   5. Reconnect the Powertrain Control Module C1 harness connector.
   6. Turn the ignition on.
   7. With the scan tool, Clear DTCs.
   8. Cycle the ignition key off and on several times, leaving the ignition on for at least 10 seconds at a time.
   9. With the scan tool, select View DTCs.

   Did the DTC return?

   Yes

   - Go To 4

No

- Repair is complete.
- Perform the POWERTRAIN VERIFICATION TEST - 2.2L DIESEL. Refer to **PCM VERIFICATION TEST - 2.2L DIESEL** .

4. **POWERTRAIN CONTROL MODULE**
   1. Using the wiring diagram/schematic as a guide, inspect the wiring and connectors between the EGR Airflow Control Valve and the Powertrain Control Module.
   2. Look for any chafed, pierced, pinched, or partially broken wires.
   3. Look for broken, bent, pushed out or corroded terminals.
   4. Monitor the scan tool data relative to this circuit and wiggle test the wiring and connectors.
   5. Look for the data to change or for the DTC to reset during the wiggle test.
   6. Perform any Technical Service Bulletins that may apply.

   Were any problems found?

   Yes

   - Repair as necessary.
   - Perform the POWERTRAIN VERIFICATION TEST - 2.2L DIESEL. Refer to **PCM VERIFICATION TEST - 2.2L DIESEL** .

   No

   - Replace the Powertrain Control Module. **Before removing the PCM, perform the "Replace PCM" routine in the Miscellaneous Functions tab of the scan tool.** . Refer to **REMOVAL** .
   - Perform the POWERTRAIN VERIFICATION TEST - 2.2L DIESEL. Refer to **PCM VERIFICATION TEST - 2.2L DIESEL** .

P2102-ELECTRONIC THROTTLE CONTROL MOTOR CIRCUIT LOW

For a complete wiring diagram, **refer to appropriate SYSTEM WIRING DIAGRAMS article** .

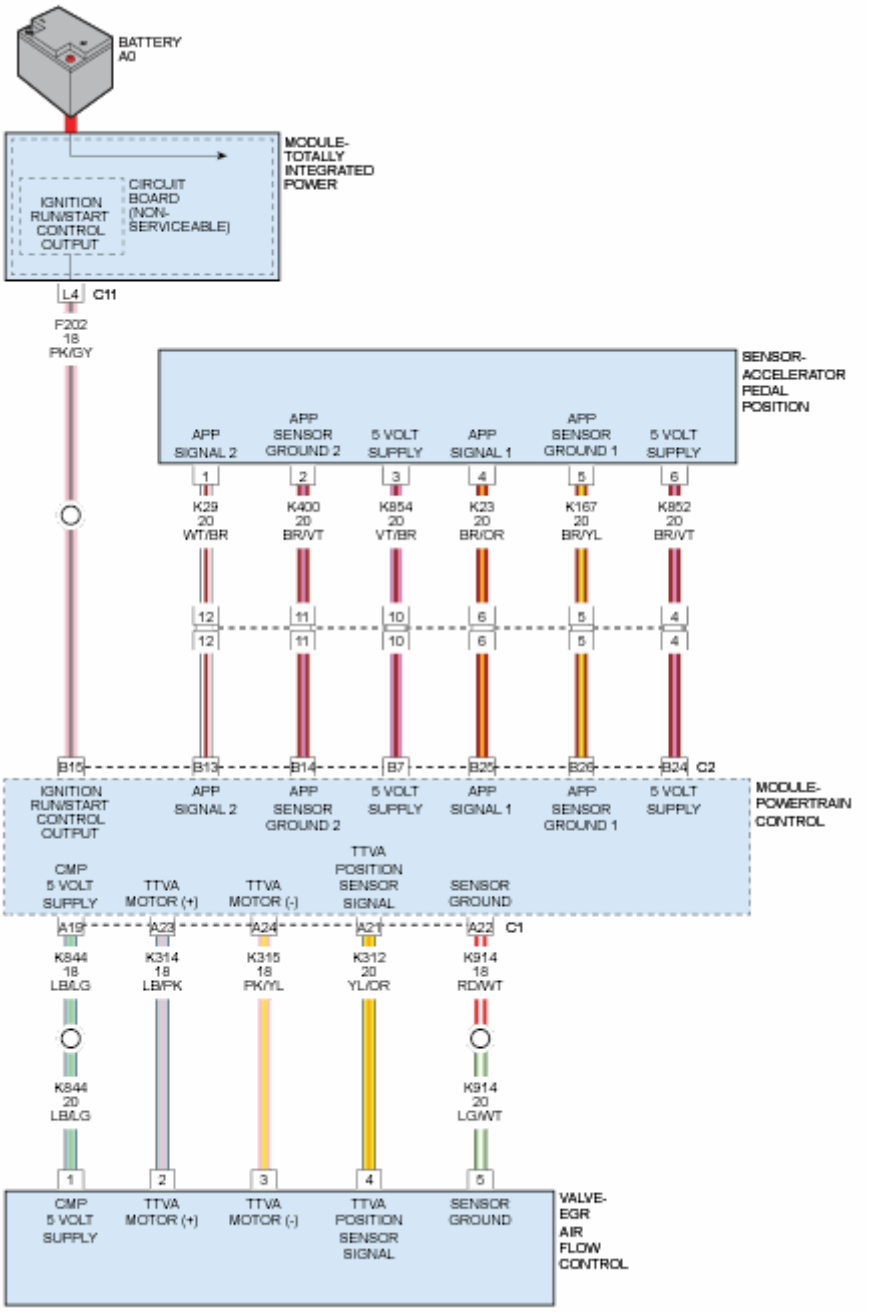

Fig. 3: APPS & EGR Airflow Control Valve Circuit Diagram
Courtesy of CHRYSLER GROUP, LLC

WHEN MONITORED

With the ignition on.

SET CONDITION

The Powertrain Control Module (PCM) detects that the EGR Airflow Control Valve circuit is shorted to ground for 0.1 of a second.

POSSIBLE CAUSES

Possible Causes
(K314) EGR AIRFLOW CONTROL VALVE (+) CONTROL CIRCUIT SHORTED TO GROUND
(K315) EGR AIRFLOW CONTROL VALVE (-) CONTROL CIRCUIT SHORTED TO GROUND
EGR AIRFLOW CONTROL VALVE
POWERTRAIN CONTROL MODULE (PCM)

Always perform the Pre-Diagnostic Troubleshooting procedure before proceeding. Refer to PRE-DIAGNOSTIC TROUBLESHOOTING PROCEDURE - 2.2L DIESEL .

DIAGNOSTIC TEST

1. **DTC IS ACTIVE**
   1. Ignition on, engine not running.
   2. With the scan tool, clear DTCs in the PCM.
   3. Cycle the ignition key off and on several times, leaving the ignition on.
   4. With the scan tool, select View DTCs.

      Did the DTC return?

      Yes

      - Go To 2

      No

      - Perform the INTERMITTENT CONDITION diagnostic procedure. Refer to **INTERMITTENT CONDITION - 2.2L DIESEL** .
2. **CHECK THE (K314) EGR AIRFLOW CONTROL VALVE (+) CONTROL CIRCUIT FOR A SHORT TO GROUND**
   1. Turn the ignition off.
   2. Disconnect the EGR Airflow Control Valve harness connector.

3. Disconnect the Powertrain Control Module C1 harness connector.
4. Measure the resistance between ground and the (K314) EGR Airflow Control Valve (+) Control circuit at the EGR Airflow Control Valve harness connector.

   Is the resistance above 10k Ohms?

   Yes

   - Go To 3

   No

   - Repair the (K314) EGR Airflow Control Valve (+) Control circuit for a short to ground.
   - Perform the POWERTRAIN VERIFICATION TEST - 2.2L DIESEL. Refer to **PCM VERIFICATION TEST - 2.2L DIESEL** .

3. **CHECK THE (K315) EGR AIRFLOW CONTROL VALVE (-) CONTROL CIRCUIT FOR A SHORT TO GROUND**
   1. Measure the resistance between ground and the (K315) EGR Airflow Control Valve (-) Control circuit at the EGR Airflow Control Valve harness connector.

      Is the resistance above 10k Ohms?

      Yes

      - Go To 4

      No

      - Repair the (K315) EGR Airflow Control Valve (-) Control circuit for a short to ground.
      - Perform the POWERTRAIN VERIFICATION TEST - 2.2L DIESEL. Refer to **PCM VERIFICATION TEST - 2.2L DIESEL** .
4. **CHECK THE EGR AIRFLOW CONTROL VALVE**
   1. Replace the EGR Airflow Control Valve in accordance with the service

information.

2. Turn the ignition on.
3. With the scan tool, navigate to Miscellaneous Procedures and perform the Throttle Valve Learn procedure.
4. Turn the ignition off.
5. Reconnect the Powertrain Control Module C1 harness connector.
6. Turn the ignition on.
7. With the scan tool, Clear DTCs.
8. Cycle the ignition key off and on several times, leaving the ignition on for at least 10 seconds at a time.
9. With the scan tool, select View DTCs.

   Did the DTC return?

   Yes

   - Go To 5

   No

   - Repair is complete.
   - Perform the POWERTRAIN VERIFICATION TEST - 2.2L DIESEL. Refer to **PCM VERIFICATION TEST - 2.2L DIESEL** .

5. **POWERTRAIN CONTROL MODULE**
   1. Using the wiring diagram/schematic as a guide, inspect the wiring and connectors between the EGR Airflow Control Valve and the Powertrain Control Module.
   2. Look for any chafed, pierced, pinched, or partially broken wires.
   3. Look for broken, bent, pushed out or corroded terminals.
   4. Monitor the scan tool data relative to this circuit and wiggle test the wiring and connectors.
   5. Look for the data to change or for the DTC to reset during the wiggle test.
   6. Perform any Technical Service Bulletins that may apply.

Were any problems found?

Yes

- Repair as necessary.
- Perform the POWERTRAIN VERIFICATION TEST - 2.2L DIESEL. Refer to **PCM VERIFICATION TEST - 2.2L DIESEL** .

No

- Replace the Powertrain Control Module. **Before removing the PCM, perform the "Replace PCM" routine in the Miscellaneous Functions tab of the scan tool.** . Refer to **REMOVAL** .
- Perform the POWERTRAIN VERIFICATION TEST - 2.2L DIESEL. Refer to **PCM VERIFICATION TEST - 2.2L DIESEL** .

P2103-ELECTRONIC THROTTLE CONTROL MOTOR CIRCUIT HIGH

For a complete wiring diagram, **refer to appropriate SYSTEM WIRING DIAGRAMS article** .

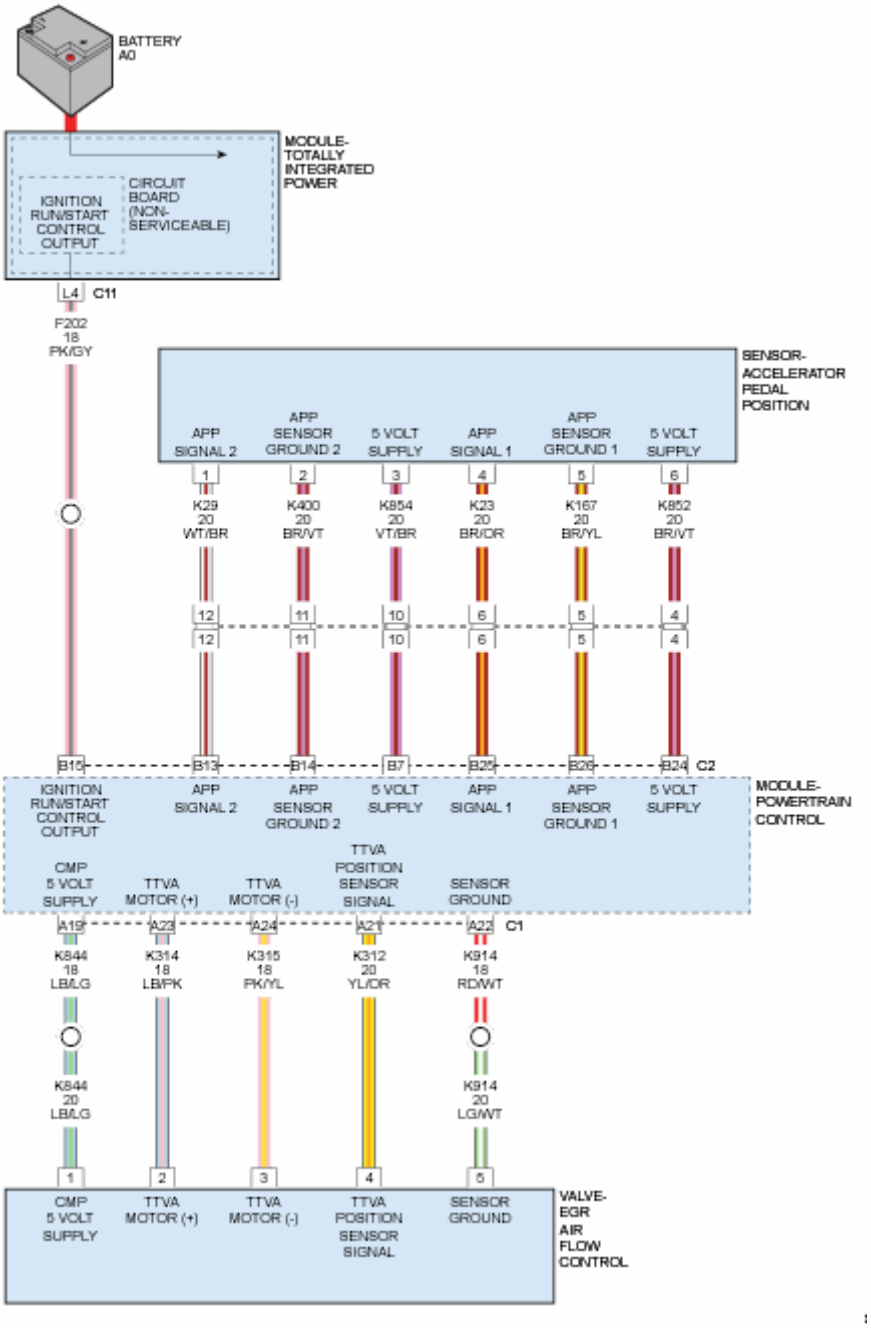

Fig. 4: APPS & EGR Airflow Control Valve Circuit Diagram
Courtesy of CHRYSLER GROUP, LLC

WHEN MONITORED

With the ignition on.

SET CONDITION

The Powertrain Control Module (PCM) detects that the EGR Airflow Control Valve Control circuit is shorted to voltage for 0.1 of a second.

POSSIBLE CAUSES

Possible Causes
(K314) EGR AIRFLOW CONTROL VALVE (+) CONTROL CIRCUIT SHORTED TO VOLTAGE
(K315) EGR AIRFLOW CONTROL VALVE (-) CONTROL CIRCUIT SHORTED TO VOLTAGE
EGR AIRFLOW CONTROL VALVE
POWERTRAIN CONTROL MODULE (PCM)

Always perform the Pre-Diagnostic Troubleshooting procedure before proceeding. Refer to PRE-DIAGNOSTIC TROUBLESHOOTING PROCEDURE - 2.2L DIESEL .

DIAGNOSTIC TEST

1. **DTC IS ACTIVE**
   1. Ignition on, engine not running.
   2. With the scan tool, clear DTCs in the PCM.
   3. Cycle the ignition key off and on several times, leaving the ignition on for at least 10 seconds at a time.
   4. With the scan tool, select View DTCs.

      Did the DTC return?

      Yes

      - Go To 2

      No

      - Perform the INTERMITTENT CONDITION diagnostic procedure. Refer to **INTERMITTENT CONDITION - 2.2L DIESEL** .
2. **CHECK THE (K314) EGR AIRFLOW CONTROL VALVE (+) CONTROL CIRCUIT FOR A SHORT TO VOLTAGE**
   1. Turn the ignition off.
   2. Disconnect the EGR Airflow Control Valve harness connector.
   3. Disconnect the Powertrain Control Module C1 harness connector.

4. Remove the ASD/Main Relay.
5. Connect a jumper between cavity 87 and cavity 30 of the Main Relay connector.
6. Turn the ignition on.
7. Measure the voltage on the (K314) EGR Airflow Control Valve (+) Control circuit at the EGR Airflow Control Valve harness connector.

   Is there any voltage present?

   Yes

   - Repair the (K314) EGR Airflow Control Valve (+) Control circuit for a short to voltage.
   - Perform the POWERTRAIN VERIFICATION TEST - 2.2L DIESEL. Refer to **PCM VERIFICATION TEST - 2.2L DIESEL** .

   No

   - Go To 3

3. **CHECK THE (K315) EGR AIRFLOW CONTROL VALVE (-) CONTROL CIRCUIT FOR A SHORT TO VOLTAGE**
   1. Measure the voltage on the (K315) EGR Airflow Control Valve (-) Control circuit at the EGR Airflow Control Valve harness connector.

      Is there any voltage present?

      Yes

      - Repair the (K315) EGR Airflow Control Valve (-) Control circuit for a short to voltage.
      - Perform the POWERTRAIN VERIFICATION TEST - 2.2L DIESEL. Refer to **PCM VERIFICATION TEST - 2.2L DIESEL** .

      No

      - Go To 4

4. **CHECK THE EGR AIRFLOW CONTROL VALVE**

1. Replace the EGR Airflow Control Valve in accordance with the service information.
2. Turn the ignition on.
3. With the scan tool, navigate to Miscellaneous Procedures and perform the Throttle Valve Learn procedure.
4. Turn the ignition off.
5. Reconnect the Powertrain Control Module C1 harness connector.
6. Turn the ignition on.
7. With the scan tool, Clear DTCs.
8. Cycle the ignition key off and on several times, leaving the ignition on for at least 10 seconds at a time.
9. With the scan tool, select View DTCs.

   Did the DTC return?

   Yes

   - Go To 5

   No

   - Repair is complete.
   - Perform the POWERTRAIN VERIFICATION TEST - 2.2L DIESEL. Refer to **PCM VERIFICATION TEST - 2.2L DIESEL** .

5. **POWERTRAIN CONTROL MODULE**
   1. Using the wiring diagram/schematic as a guide, inspect the wiring and connectors between the EGR Airflow Control Valve and the Powertrain Control Module.
   2. Look for any chafed, pierced, pinched, or partially broken wires.
   3. Look for broken, bent, pushed out or corroded terminals.
   4. Monitor the scan tool data relative to this circuit and wiggle test the wiring and connectors.
   5. Look for the data to change or for the DTC to reset during the wiggle test.
   6. Perform any Technical Service Bulletins that may apply.

Were any problems found?

Yes

- Repair as necessary.
- Perform the POWERTRAIN VERIFICATION TEST - 2.2L DIESEL. Refer to **PCM VERIFICATION TEST - 2.2L DIESEL** .

No

- Replace the Powertrain Control Module. **Before removing the PCM, perform the "Replace PCM" routine in the Miscellaneous Functions tab of the scan tool.** . Refer to **REMOVAL** .
- Perform the POWERTRAIN VERIFICATION TEST - 2.2L DIESEL. Refer to **PCM VERIFICATION TEST - 2.2L DIESEL** .

P2112-THROTTLE ACTUATOR "A" CONTROL SYSTEM - STUCK CLOSED

For a complete wiring diagram, **refer to appropriate SYSTEM WIRING DIAGRAMS article** .

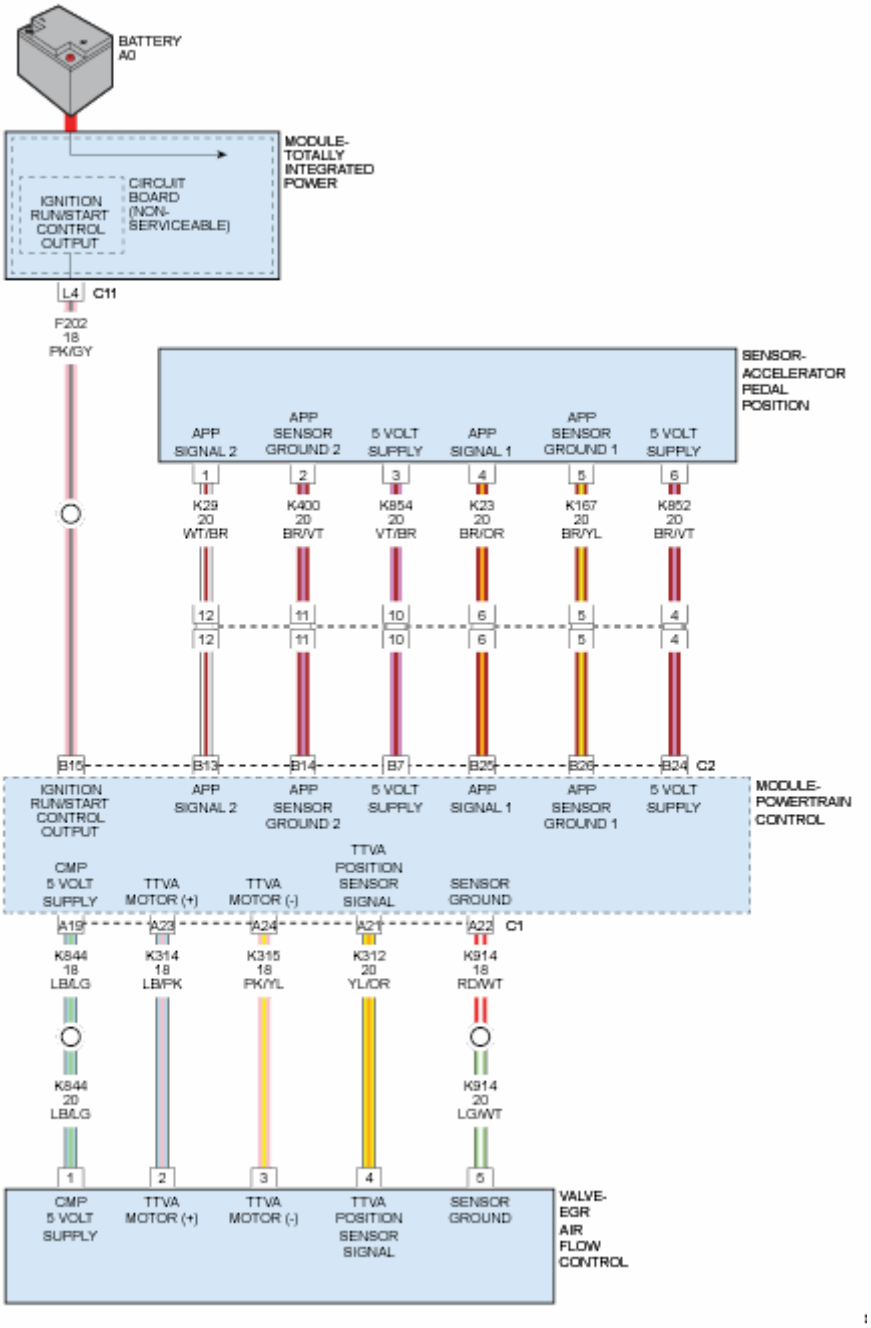

Fig. 5: APPS & EGR Airflow Control Valve Circuit Diagram
Courtesy of CHRYSLER GROUP, LLC

WHEN MONITORED

With the ignition on.

SET CONDITION

When the Powertrain Control Module commands the EGR Airflow Control Valve to change, and detects through the EGR Airflow Control Valve Position

Sensor that the valve did not move.

POSSIBLE CAUSES

Possible Causes
(K314) EGR AIRFLOW CONTROL VALVE (+) CONTROL CIRCUIT SHORTED TO VOLTAGE
(K315) EGR AIRFLOW CONTROL VALVE (-) CONTROL CIRCUIT SHORTED TO VOLTAGE
(K314) EGR AIRFLOW CONTROL VALVE (+) CONTROL CIRCUIT OPEN/HIGH RESISTANCE
(K315) EGR AIRFLOW CONTROL VALVE (-) CONTROL CIRCUIT OPEN/HIGH RESISTANCE
(K314) EGR AIRFLOW CONTROL VALVE (+) CONTROL CIRCUIT SHORTED TO GROUND
HIGH RESISTANCE IN THE (K312) EGR AIRFLOW CONTROL VALVE POSITION SENSOR CIRCUIT
EGR AIRFLOW CONTROL VALVE BINDING
EGR AIRFLOW CONTROL VALVE
POWERTRAIN CONTROL MODULE (PCM)

Always perform the Pre-Diagnostic Troubleshooting procedure before proceeding. Refer to PRE-DIAGNOSTIC TROUBLESHOOTING PROCEDURE - 2.2L DIESEL .

DIAGNOSTIC TEST

1. **DTC IS ACTIVE**
    1. Ignition on, engine not running.
    2. With the scan tool, clear DTCs in the PCM.
    3. Cycle the ignition key off and on several times, leaving the ignition.
    4. With the scan tool, select View DTCs.

    Did the DTC return?

    Yes

    - Go To 2

No

- Perform the INTERMITTENT CONDITION diagnostic procedure. Refer to **INTERMITTENT CONDITION - 2.2L DIESEL** .

2. **CHECK THE (K314) EGR AIRFLOW CONTROL VALVE (+) CONTROL CIRCUIT FOR A SHORT TO VOLTAGE**
   1. Turn the ignition off.
   2. Disconnect the EGR Airflow Control Valve harness connector.
   3. Disconnect the Powertrain Control Module C1 harness connector.
   4. Remove the ASD/Main Relay.
   5. Connect a jumper between cavity 87 and cavity 30 of the Main Relay connector.
   6. Turn the ignition on.
   7. Measure the voltage on the (K314) EGR Airflow Control Valve (+) Control circuit at the EGR Airflow Control Valve harness connector.

   Is there any voltage present?

   Yes

   - Repair the (K314) EGR Airflow Control Valve (+) Control circuit for a short to voltage.
   - Perform the POWERTRAIN VERIFICATION TEST - 2.2L DIESEL. Refer to **PCM VERIFICATION TEST - 2.2L DIESEL** .

   No

   - Go To 3

3. **CHECK THE (K315) EGR AIRFLOW CONTROL VALVE (-) CONTROL CIRCUIT FOR A SHORT TO VOLTAGE**
   1. Measure the voltage on the (K315) EGR Airflow Control Valve (-) Control circuit at the EGR Airflow Control Valve harness connector.

   Is there any voltage present?

   Yes

- Repair the (K315) EGR Airflow Control Valve (-) Control circuit for a short to voltage.
- Perform the POWERTRAIN VERIFICATION TEST - 2.2L DIESEL. Refer to **PCM VERIFICATION TEST - 2.2L DIESEL** .

No

- Go To 4

4. **CHECK THE (K314) EGR AIRFLOW CONTROL VALVE (+) CONTROL CIRCUIT FOR A SHORT TO GROUND**
   1. Turn the ignition off.
   2. Measure the resistance between ground and the (K314) EGR Airflow Control Valve (+) Control circuit at the EGR Airflow Control Valve harness connector.

      Is the resistance above 10k Ohms?

      Yes

      - Go To 5

      No

      - Repair the (K314) EGR Airflow Control Valve (+) Control circuit for a short to ground.
      - Perform the POWERTRAIN VERIFICATION TEST - 2.2L DIESEL. Refer to **PCM VERIFICATION TEST - 2.2L DIESEL** .
5. **CHECK THE (K314) EGR AIRFLOW CONTROL VALVE (+) CONTROL CIRCUIT FOR AN OPEN/HIGH RESISTANCE**
   1. Measure the resistance of the (K314) EGR Airflow Control Valve (+) Control circuit between the EGR Airflow Control Valve harness connector and the Powertrain Control Module C1 harness connector.

      Is the resistance below 5.0 Ohms?

      Yes

- Go To 6

No

- Repair the (K314) EGR Airflow Control Valve (+) Control circuit for an open or high resistance.
- Perform the POWERTRAIN VERIFICATION TEST - 2.2L DIESEL. Refer to **PCM VERIFICATION TEST - 2.2L DIESEL** .

6. **CHECK THE (K315) EGR AIR FLOW CONTROL VALVE (-) CONTROL CIRCUIT FOR AN OPEN/HIGH RESISTANCE**
   1. Measure the resistance of the (K315) EGR Air Flow Control Valve (-) Control circuit between the EGR Air Flow Control Valve harness connector and the PCM C1 harness connector.

      Is the resistance below 5.0 Ohms?

      Yes

      - Go To 7

      No

      - Repair the (K315) EGR Air Flow Control Valve (-) Control circuit for an open or high resistance.
      - Perform the POWERTRAIN VERIFICATION TEST - 2.2L DIESEL. Refer to **PCM VERIFICATION TEST - 2.2L DIESEL** .
7. **CHECK FOR HIGH RESISTANCE IN THE (K312) EGR AIRFLOW CONTROL VALVE POSITION SENSOR CIRCUIT**
   1. Measure the resistance of the (K312) EGR Airflow Control Valve Position Sensor circuit between the EGR Airflow Control Valve harness connector and the PCM C1 harness connector.

      Is the resistance below 5.0 Ohms?

      Yes

      - Go To 8

No

- Repair the high resistance in the (K312) EGR Airflow Control Valve Position Sensor circuit.
- Perform the POWERTRAIN VERIFICATION TEST - 2.2L DIESEL. Refer to **PCM VERIFICATION TEST - 2.2L DIESEL** .

8. **CHECK THE EGR AIRFLOW CONTROL VALVE**
   1. Replace the EGR Airflow Control Valve in accordance with the service information.
   2. Turn the ignition on.
   3. With the scan tool, navigate to Miscellaneous Procedures and perform the Throttle Valve Learn procedure.
   4. Turn the ignition off.
   5. Reconnect the Powertrain Control Module C1 harness connector.
   6. Turn the ignition on.
   7. With the scan tool, Clear DTCs.
   8. Cycle the ignition key off and on several times, leaving the ignition on for at least 10 seconds at a time.
   9. With the scan tool, select View DTCs.

   Did the DTC return?

   Yes

   - Go To 9

   No

   - Repair is complete.
   - Perform the POWERTRAIN VERIFICATION TEST - 2.2L DIESEL. Refer to **PCM VERIFICATION TEST - 2.2L DIESEL** .

9. **POWERTRAIN CONTROL MODULE**
   1. Using the wiring diagram/schematic as a guide, inspect the wiring and connectors between the EGR Airflow Control Valve and the Powertrain Control Module.

2. Look for any chafed, pierced, pinched, or partially broken wires.
3. Look for broken, bent, pushed out or corroded terminals.
4. Monitor the scan tool data relative to this circuit and wiggle test the wiring and connectors.
5. Look for the data to change or for the DTC to reset during the wiggle test.
6. Perform any Technical Service Bulletins that may apply.

Were any problems found?

Yes

- Repair as necessary.
- Perform the POWERTRAIN VERIFICATION TEST - 2.2L DIESEL. Refer to **PCM VERIFICATION TEST - 2.2L DIESEL** .

No

- Replace the Powertrain Control Module. **Before removing the PCM, perform the "Replace PCM" routine in the Miscellaneous Functions tab of the scan tool.** . Refer to **REMOVAL** .
- Perform the POWERTRAIN VERIFICATION TEST - 2.2L DIESEL. Refer to **PCM VERIFICATION TEST - 2.2L DIESEL** .

P2119-THROTTLE ACTUATOR CONTROL THROTTLE BODY PERFORMANCE

For a complete wiring diagram, **refer to appropriate SYSTEM WIRING DIAGRAMS article** .

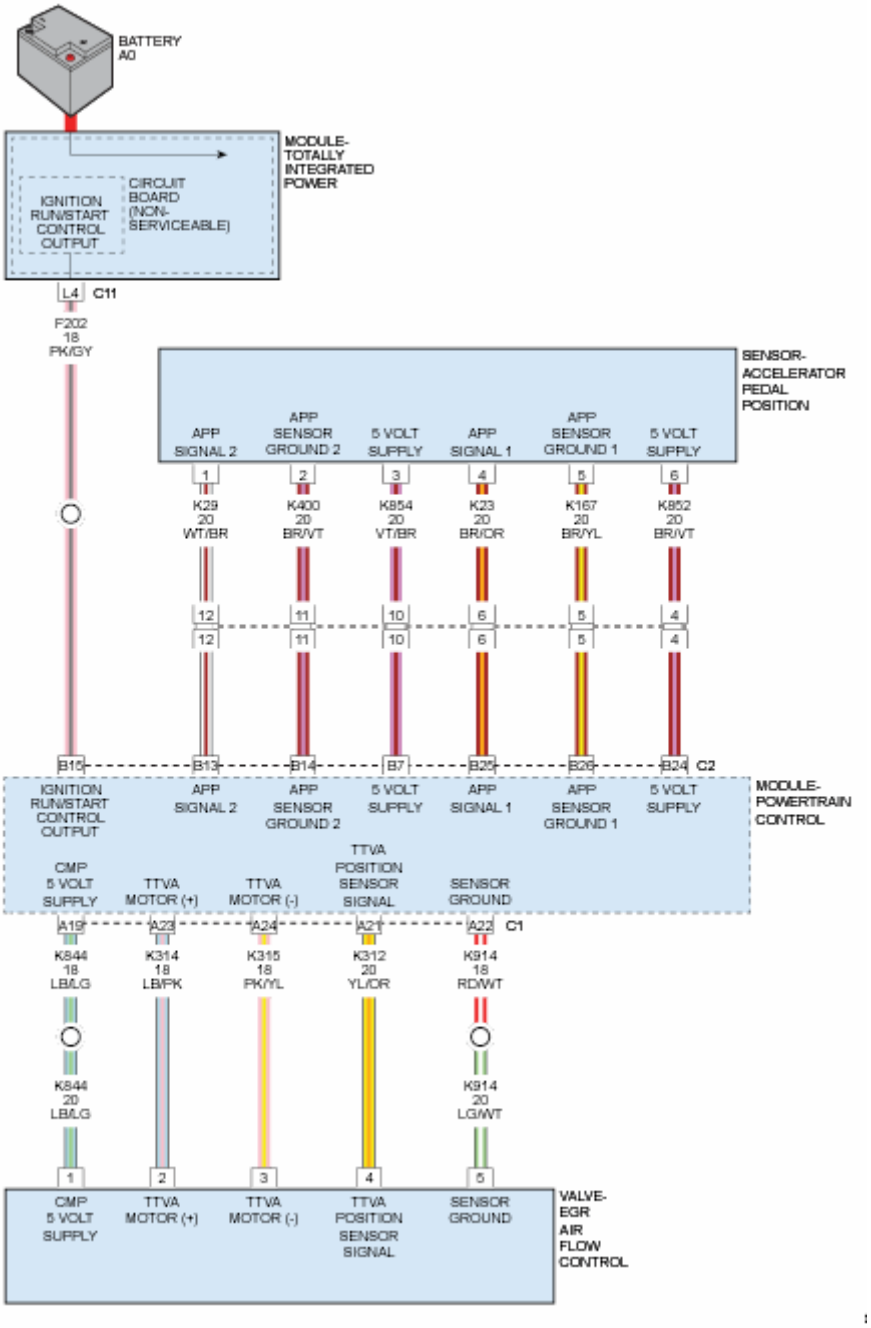

Fig. 6: APPS & EGR Airflow Control Valve Circuit Diagram
Courtesy of CHRYSLER GROUP, LLC

WHEN MONITORED

With the ignition on and the ambient temperature between 10°C (50°F) and 100° C (212°F).

SET CONDITION

The Powertrain Control Module (PCM) drives throttle to the middle position. At

the middle position the throttle is released by the PCM with a duty cycle fixed at 0%. If the throttle position remains higher than 30% after 0.03 of a second, the spring is detected as missing or broken by the PCM.

POSSIBLE CAUSES

Possible Causes
(K314) EGR AIRFLOW CONTROL VALVE (+) CONTROL CIRCUIT SHORTED TO VOLTAGE
(K315) EGR AIRFLOW CONTROL VALVE (-) CONTROL CIRCUIT SHORTED TO VOLTAGE
(K315) EGR AIRFLOW CONTROL VALVE (-) CONTROL CIRCUIT OPEN/HIGH RESISTANCE
ASD/MAIN RELAY POWER 12-VOLT SUPPLY TO PCM OPEN
EGR AIRFLOW CONTROL VALVE
POWERTRAIN CONTROL MODULE (PCM)

Always perform the Pre-Diagnostic Troubleshooting procedure before proceeding. Refer to PRE-DIAGNOSTIC TROUBLESHOOTING PROCEDURE - 2.2L DIESEL .

DIAGNOSTIC TEST

1. **DTC IS ACTIVE**

NOTE: If there are any ASD/Main Relay DTCs present, diagnose those DTCs before proceeding with this test procedure.

1. Ignition on, engine not running.
2. With the scan tool, clear DTCs in the PCM.
3. Cycle the ignition key off and on several times, leaving the ignition on for at least 10 seconds at a time.
4. With the scan tool, select View DTCs.

Did the DTC return?

Yes

- Go To 2

No

- Perform the INTERMITTENT CONDITION diagnostic procedure. Refer to **INTERMITTENT CONDITION - 2.2L DIESEL** .

2. **CHECK THE ASD/MAIN RELAY 12-VOLT SUPPLY TO THE PCM**
   1. Turn the ignition off.
   2. Disconnect the Powertrain Control Module C2 harness connector.
   3. Remove the ASD/Main Relay.
   4. Connect a jumper between cavity 87 and cavity 30 of the Main Relay connector.
   5. Turn the ignition on.
   6. With a 12-Volt test light connected to ground, probe all three ASD/Main Relay 12-Volt Supply circuits at the Powertrain Control Module C2 harness connector.

   NOTE: The test light should illuminate brightly. Compare the brightness of the test light to that of a connection to direct battery.

   Does the test light illuminate bright?

   Yes

   - Go To 3

   No

   - Repair the ASD/Main Relay 12-Volt Supply circuits for an open or high resistance.
   - Perform the POWERTRAIN VERIFICATION TEST - 2.2L DIESEL. Refer to **PCM VERIFICATION TEST - 2.2L DIESEL** .

3. **CHECK THE (K314) EGR AIRFLOW CONTROL VALVE (+) CONTROL CIRCUIT FOR A SHORT TO VOLTAGE**
   1. Turn the ignition off.

2. Disconnect the EGR Airflow Control Valve harness connector.
3. Disconnect the Powertrain Control Module C1 harness connector.
4. Turn the ignition on.
5. Measure the voltage on the (K314) EGR Airflow Control Valve (+) Control circuit at the EGR Airflow Control Valve harness connector.

   Is there any voltage present?

   Yes

   - Repair the (K314) EGR Airflow Control Valve (+) Control circuit for a short to ground.
   - Perform the POWERTRAIN VERIFICATION TEST - 2.2L DIESEL. Refer to **PCM VERIFICATION TEST - 2.2L DIESEL** .

   No

   - Go To 4

4. **CHECK THE (K315) EGR AIRFLOW CONTROL VALVE (-) CONTROL CIRCUIT FOR A SHORT TO VOLTAGE**
   1. Measure the voltage on the (K315) EGR Airflow Control Valve (-) Control circuit at the EGR Airflow Control Valve harness connector.

      Is there any voltage present?

      Yes

      - Repair the (K315) EGR Airflow Control Valve (-) Control circuit for a short to ground.
      - Perform the POWERTRAIN VERIFICATION TEST - 2.2L DIESEL. Refer to **PCM VERIFICATION TEST - 2.2L DIESEL** .

      No

      - Go To 5

5. **CHECK THE (K315) EGR AIR FLOW CONTROL VALVE (-) CONTROL CIRCUIT FOR AN OPEN/HIGH RESISTANCE**

1. Turn the ignition off.
2. Measure the resistance of the (K315) EGR Air Flow Control Valve (-) Control circuit between the EGR Air Flow Control Valve harness connector and the Powertrain Control Module harness connector.

   Is the resistance below 5.0 Ohms?

   Yes

   - Go To 6

   No

   - Repair the (K315) EGR Air Flow Control Valve (-) Control circuit for high resistance.
   - Perform the POWERTRAIN VERIFICATION TEST - 2.2L DIESEL. Refer to **PCM VERIFICATION TEST - 2.2L DIESEL** .

6. **CHECK THE EGR AIRFLOW CONTROL VALVE**
   1. Replace the EGR Airflow Control Valve in accordance with the service information.
   2. Turn the ignition on.
   3. With the scan tool, navigate to Miscellaneous Procedures and perform the Throttle Valve Learn procedure.
   4. Turn the ignition off.
   5. Reconnect the Powertrain Control Module harness connectors.
   6. Turn the ignition on.
   7. With the scan tool, Clear DTCs.
   8. Cycle the ignition key off and on several times, leaving the ignition on for at least 10 seconds at a time.
   9. With the scan tool, select View DTCs.

      Did the DTC return?

      Yes

      - Go To 7

No

- Repair is complete.
- Perform the POWERTRAIN VERIFICATION TEST - 2.2L DIESEL. Refer to **PCM VERIFICATION TEST - 2.2L DIESEL** .

7. **POWERTRAIN CONTROL MODULE**
   1. Using the wiring diagram/schematic as a guide, inspect the wiring and connectors between the EGR Airflow Control Valve and the Powertrain Control Module.
   2. Look for any chafed, pierced, pinched, or partially broken wires.
   3. Look for broken, bent, pushed out or corroded terminals.
   4. Monitor the scan tool data relative to this circuit and wiggle test the wiring and connectors.
   5. Look for the data to change or for the DTC to reset during the wiggle test.
   6. Perform any Technical Service Bulletins that may apply.

   Were any problems found?

   Yes

   - Repair as necessary.
   - Perform the POWERTRAIN VERIFICATION TEST - 2.2L DIESEL. Refer to **PCM VERIFICATION TEST - 2.2L DIESEL** .

   No

   - Replace the Powertrain Control Module. **Before removing the PCM, perform the "Replace PCM" routine in the Miscellaneous Functions tab of the scan tool.** . Refer to **REMOVAL** .
   - Perform the POWERTRAIN VERIFICATION TEST - 2.2L DIESEL. Refer to **PCM VERIFICATION TEST - 2.2L DIESEL** .

P2120-ACCELERATOR PEDAL POSITION SENSOR 1 CIRCUIT

For a complete wiring diagram, **refer to appropriate SYSTEM WIRING DIAGRAMS article** .

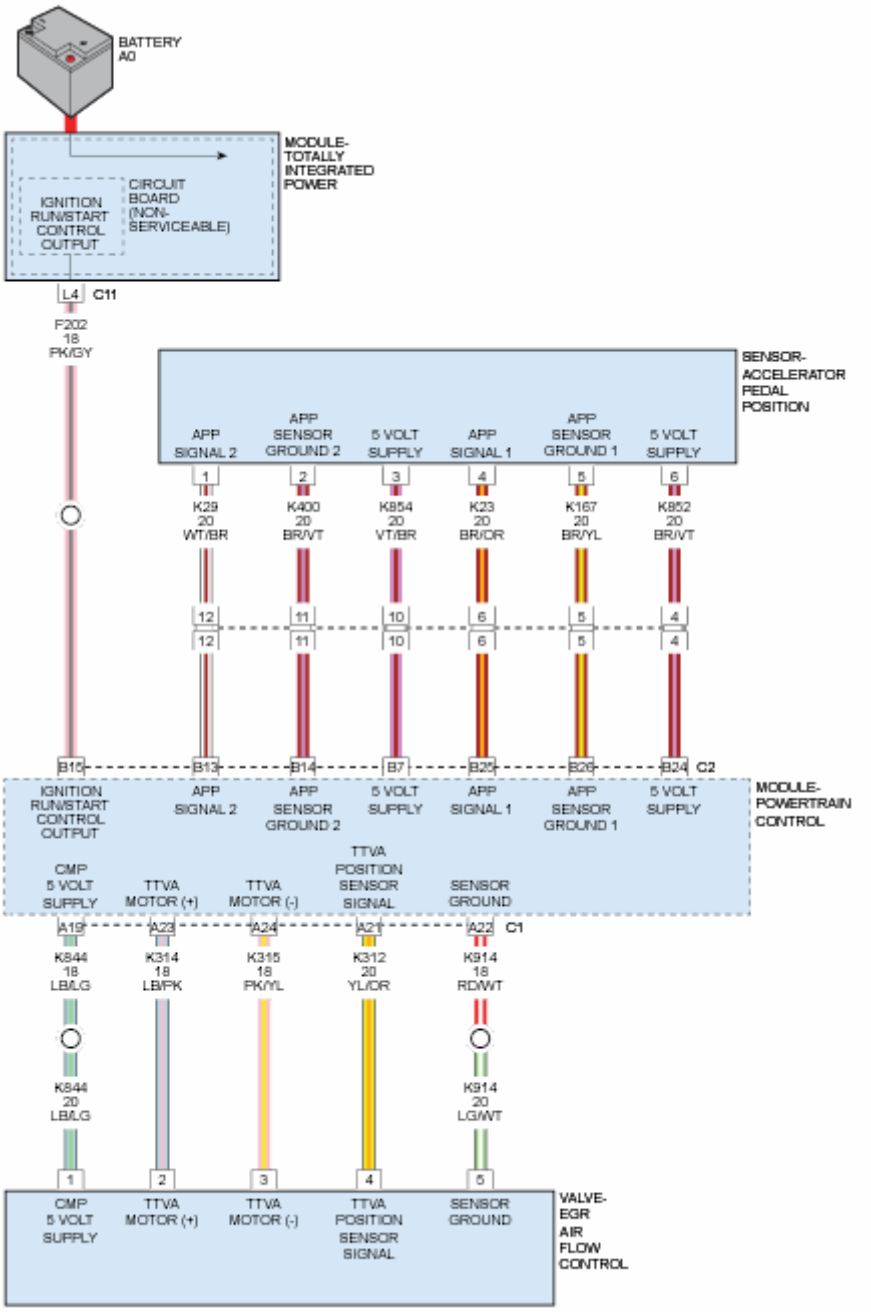

Fig. 7: APPS & EGR Airflow Control Valve Circuit Diagram
Courtesy of CHRYSLER GROUP, LLC

WHEN MONITORED

With the ignition on.

SET CONDITION

Accelerator Pedal Position (APP) Sensor 1 voltage supply is not within range (4.75 - 5.25 Volts).

POSSIBLE CAUSES

Possible Causes
(K852) ACCELERATOR PEDAL POSITION SENSOR 1 5-VOLT SUPPLY CIRCUIT SHORTED TO VOLTAGE
(K852) ACCELERATOR PEDAL POSITION SENSOR 1 5-VOLT SUPPLY CIRCUIT SHORTED TO GROUND
(K350) RAIL PRESSRE SENSOR 5-VOLT SUPPLY CIRCUIT SHORTED TO GROUND
ACCELERATOR PEDAL POSITION SENSOR
POWERTRAIN CONTROL MODULE (PCM)

Always perform the Pre-Diagnostic Troubleshooting procedure before proceeding. Refer to PRE-DIAGNOSTIC TROUBLESHOOTING PROCEDURE - 2.2L DIESEL .

DIAGNOSTIC TEST

1. **DTC IS ACTIVE**

NOTE: If any Sensor Reference DTCs are present, perform the applicable diagnostic procedure before continuing with this test.

1. Ignition on, engine not running.
2. With the scan tool, clear DTCs in the Powertrain Control Module (PCM).
3. Fully depress and release the Accelerator Pedal several times.
4. With the scan tool, select View DTCs.

Is the status Active for this DTC?

Yes

- Go To 2

No

- Perform the INTERMITTENT CONDITION diagnostic procedure. Refer to **INTERMITTENT CONDITION - 2.2L DIESEL** .

2. **CHECK THE 5-VOLT SUPPLY CIRCUIT**
   1. Turn the ignition off.
   2. Disconnect the APP Sensor harness connector.
   3. Turn the ignition on.
   4. Measure the voltage on the (K852) APP Sensor 1 5-Volt Supply circuit at the APP Sensor harness connector.

      Does the voltage measure between 4.75 and 5.25 Volts?

      Yes

      - Go To 3

      No

      - Repair the (K852) APP Sensor 1 5-Volt Supply circuit.
      - Perform the POWERTRAIN VERIFICATION TEST - 2.2L DIESEL. Refer to **PCM VERIFICATION TEST - 2.2L DIESEL** .

3. **CHECK THE ACCELERATOR PEDAL POSITION SENSOR**
   1. Turn the ignition off.
   2. Connect a jumper wire between the (K167) Accelerator Pedal Position Sensor 1 Ground circuit and the (K23) Accelerator Pedal Position Sensor 1 Signal circuit at the APP Sensor harness connector.
   3. Turn the ignition on.
   4. With the scan tool, clear DTCs.
   5. Fully depress and release the Accelerator Pedal several times.
   6. With the scan tool, select View DTCs.

      NOTE: The scan tool should display an Accelerator Pedal Position Sensor 1 Low DTC with the jumper wire in place.

   7. Turn the ignition off.

8. Connect the jumper wire between the (K852) Accelerator Pedal Position Sensor 1 5-Volt Supply circuit and the (K23) Accelerator Pedal Position Sensor 1 Signal circuit in the APP Sensor harness connector.
9. Turn the ignition on.
10. With the scan tool, Clear DTCs.
11. Fully depress and release the Accelerator Pedal several times.
12. With the scan tool, select View DTCs.

NOTE: The scan tool should display an Accelerator Pedal Position Sensor 1 High DTC with the jumper wire in place.

Does the scan tool display the DTCs as described in BOTH cases listed above?

Yes

- Replace the Accelerator Pedal Position Sensor in accordance with the service information.
- Perform the POWERTRAIN VERIFICATION TEST - 2.2L DIESEL. Refer to **PCM VERIFICATION TEST - 2.2L DIESEL** .

No

- Go To 4

4. **POWERTRAIN CONTROL MODULE**
   1. Using the wiring diagram/schematic as a guide, inspect the wiring and connectors between the Accelerator Pedal Position Sensor and the Powertrain Control Module.
   2. Look for any chafed, pierced, pinched, or partially broken wires.
   3. Look for broken, bent, pushed out or corroded terminals.
   4. Monitor the scan tool data relative to this circuit and wiggle test the wiring and connectors.
   5. Look for the data to change or for the DTC to reset during the wiggle test.

6. Perform any Technical Service Bulletins that may apply.

   Were any problems found?

   Yes

   - Repair as necessary.
   - Perform the POWERTRAIN VERIFICATION TEST - 2.2L DIESEL. Refer to **PCM VERIFICATION TEST - 2.2L DIESEL** .

   No

   - Replace the Powertrain Control Module. **Before removing the PCM, perform the "Replace PCM" routine in the Miscellaneous Functions tab of the scan tool.** . Refer to **REMOVAL** .
   - Perform the POWERTRAIN VERIFICATION TEST - 2.2L DIESEL. Refer to **PCM VERIFICATION TEST - 2.2L DIESEL** .

P2122-ACCELERATOR PEDAL POSITION SENSOR 1 CIRCUIT LOW

For a complete wiring diagram, **refer to appropriate SYSTEM WIRING DIAGRAMS article** .

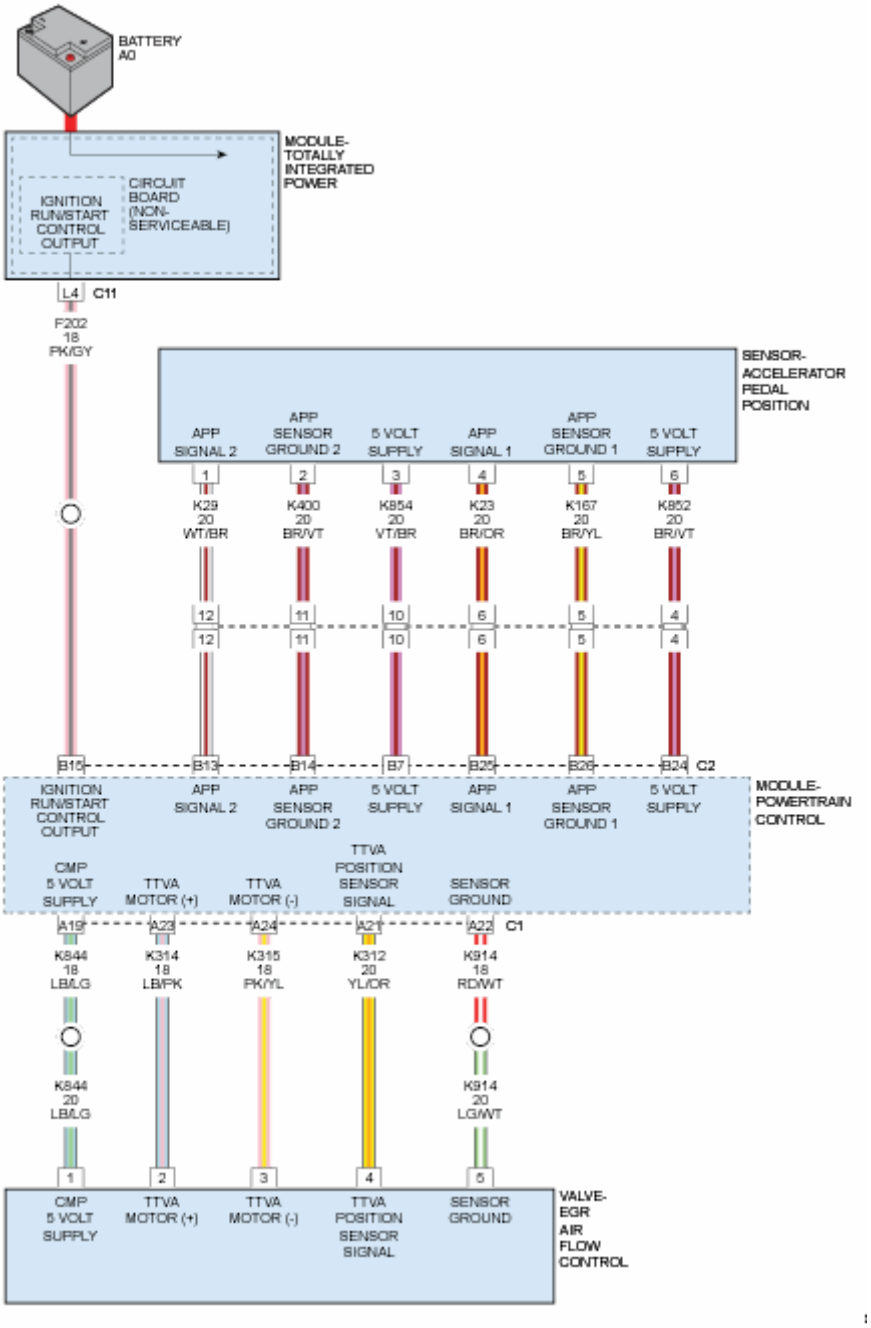

Fig. 8: APPS & EGR Airflow Control Valve Circuit Diagram
Courtesy of CHRYSLER GROUP, LLC

WHEN MONITORED

With the ignition on and DTCs P2120 and P2125 are not set.

SET CONDITION

The APP Sensor 1 Signal circuit voltage is below 4.01% for 0.14 of a second.

POSSIBLE CAUSES

Possible Causes
(K350) RAIL PRESSURE SENSOR 5 VOLT SUPPLY CIRCUIT SHORTED TO VOLTAGE
(K852) ACCELERATOR PEDAL POSITION SENSOR 1 5-VOLT SUPPLY CIRCUIT SHORTED TO VOLTAGE
(K852) ACCELERATOR PEDAL POSITION SENSOR 1 5-VOLT SUPPLY CIRCUIT OPEN/HIGH RESISTANCE
(K23) ACCELERATOR PEDAL POSITION SENSOR 1 SIGNAL CIRCUIT OPEN/HIGH RESISTANCE
(K23) ACCELERATOR PEDAL POSITION SENSOR 1 SIGNAL CIRCUIT SHORTED TO GROUND
(K23) ACCELERATOR PEDAL POSITION SENSOR 1 SIGNAL CIRCUIT SHORTED TO THE SENSOR GROUND CIRCUIT
ACCELERATOR PEDAL POSITION SENSOR
POWERTRAIN CONTROL MODULE (PCM)

Always perform the Pre-Diagnostic Troubleshooting procedure before proceeding. Refer to PRE-DIAGNOSTIC TROUBLESHOOTING PROCEDURE - 2.2L DIESEL .

DIAGNOSTIC TEST

1. **DTC IS ACTIVE**

NOTE: If a Sensor reference DTC is also present, perform that diagnostic procedure before continuing with this test.

NOTE: The APP Sensor is a device that contains two separate potentiometer type sensors. Each sensor has its own 5-Volt supply circuit, sensor ground circuit and signal circuit. The APP Sensor no longer incorporates a low-idle switch.

NOTE: The APP Sensor 2 signal should always be approximately 1/2 the voltage of the APP Sensor 1 signal.

1. Ignition on, engine not running.
2. With the scan tool, clear DTCs in the Powertrain Control Module.
3. Fully depress and release the Accelerator Pedal several times.
4. With the scan tool, select View DTCs.

Is the status Active for this DTC?

Yes

- Go To 2

No

- Perform the INTERMITTENT CONDITION diagnostic procedure. Refer to **INTERMITTENT CONDITION - 2.2L DIESEL** .

2. **CHECK THE (K852) APP 1 SENSOR 5-VOLT SUPPLY CIRCUIT FOR AN OPEN/HIGH RESISTANCE**
   1. Turn the ignition off.
   2. Disconnect the Powertrain Control Module C2 harness connector.
   3. Disconnect the Accelerator Pedal Position Sensor harness connector.
   4. Measure the resistance of the (K852) APP Sensor 1 5-Volt Supply circuit between the Accelerator Pedal Position Sensor harness connector and the Powertrain Control Module C2 harness connector.

   Is the resistance below 5.0 Ohms?

   Yes

   - Go To 3

   No

   - Repair the (K852) APP Sensor 1 5-Volt Supply circuit for an open or high resistance.
   - Perform the POWERTRAIN VERIFICATION TEST - 2.2L. Refer to **PCM VERIFICATION TEST - 2.2L DIESEL** .

3. **CHECK THE (K23) APP 1 SENSOR SIGNAL CIRCUIT FOR AN OPEN/HIGH RESISTANCE**

1. Measure the resistance of the (K23) APP Sensor 1 Signal circuit between the Accelerator Pedal Position Sensor harness connector and the Powertrain Control Module C2 harness connector.

   Is the resistance below 5.0 Ohms?

   Yes

   - Go To 4

   No

   - Repair the (K23) APP Sensor 1 Signal circuit for an open or high resistance.
   - Perform the POWERTRAIN VERIFICATION TEST - 2.2L. Refer to **PCM VERIFICATION TEST - 2.2L DIESEL** .

4. **CHECK THE (K23) APP 1 SENSOR SIGNAL CIRCUIT FOR A SHORT TO GROUND**
   1. Measure the resistance between ground and the (K23) APP Sensor 1 Signal circuit at the Accelerator Pedal Position Sensor harness connector.

      Is the resistance above 10k Ohms?

      Yes

      - Go To 5

      No

      - Repair the (K23) APP Sensor 1 Signal circuit for a short to ground.
      - Perform the POWERTRAIN VERIFICATION TEST - 2.2L. Refer to **PCM VERIFICATION TEST - 2.2L DIESEL** .

5. **CHECK FOR THE (K23) ACCELERATOR PEDAL POSITION SENSOR 1 SIGNAL CIRCUIT SHORTED TO THE SENSOR GROUND CIRCUITS**
   1. Measure the resistance between the (K23) APP Sensor 1 Signal circuit and the (K167) Accelerator Pedal Position Sensor 1 Sensor Ground circuit in the Accelerator Pedal Position Sensor harness connector.

2. Measure the resistance between the (K23) APP Sensor 1 Signal circuit and the (K400) Accelerator Pedal Position Sensor 2 Sensor Ground circuit in the Accelerator Pedal Position Sensor harness connector.

   Is the resistance above 10k Ohms for both measurements?

   Yes

   - Go To 6

   No

   - Repair the (K23) APP Sensor 1 Signal circuit for a short to the circuit that measured below 10k Ohms.
   - Perform the POWERTRAIN VERIFICATION TEST - 2.2L. Refer to **PCM VERIFICATION TEST - 2.2L DIESEL** .

6. **ACCELERATOR PEDAL POSITION SENSOR**
   1. Reconnect the Powertrain Control Module harness connector.
   2. Turn the ignition on.
   3. With the scan tool, Clear stored DTCs.
   4. Turn the ignition off.
   5. Connect a jumper wire between the (K852) APP Sensor 1 5-Volt Supply circuit and the (K23) APP Sensor 1 Signal circuit in the Accelerator Pedal Position Sensor harness connector.
   6. Fully depress and release the Accelerator Pedal several times.
   7. With the scan tool, select View DTCs.

   NOTE: The scan tool should display an Accelerator Pedal Position Sensor 1 High DTC with the jumper wire in place.

   Does the scan tool display the DTC as described above?

   Yes

   - Replace the Accelerator Pedal Position Sensor in accordance with the service information.
   - Perform the POWERTRAIN VERIFICATION TEST - 2.2L. Refer

to **PCM VERIFICATION TEST - 2.2L DIESEL** .

No

- Go To 7

7. **POWERTRAIN CONTROL MODULE**
   1. Using the wiring diagram/schematic as a guide, inspect the wiring and connectors between the Accelerator Pedal Position Sensor and the Powertrain Control Module.
   2. Look for any chafed, pierced, pinched, or partially broken wires.
   3. Look for broken, bent, pushed out or corroded terminals.
   4. Monitor the scan tool data relative to this circuit and wiggle test the wiring and connectors.
   5. Look for the data to change or for the DTC to reset during the wiggle test.
   6. Perform any Technical Service Bulletins that may apply.

   Were any problems found?

   Yes

   - Repair as necessary.
   - Perform the POWERTRAIN VERIFICATION TEST - 2.2L. Refer to **PCM VERIFICATION TEST - 2.2L DIESEL** .

   No

   - Replace the Powertrain Control Module. **Before removing the PCM, perform the "Replace PCM" routine in the Miscellaneous Functions tab of the scan tool.** . Refer to **REMOVAL** .
   - Perform the POWERTRAIN VERIFICATION TEST - 2.2L. Refer to **PCM VERIFICATION TEST - 2.2L DIESEL** .

P2123-ACCELERATOR PEDAL POSITION SENSOR 1 CIRCUIT HIGH

For a complete wiring diagram, **refer to appropriate SYSTEM WIRING DIAGRAMS article** .

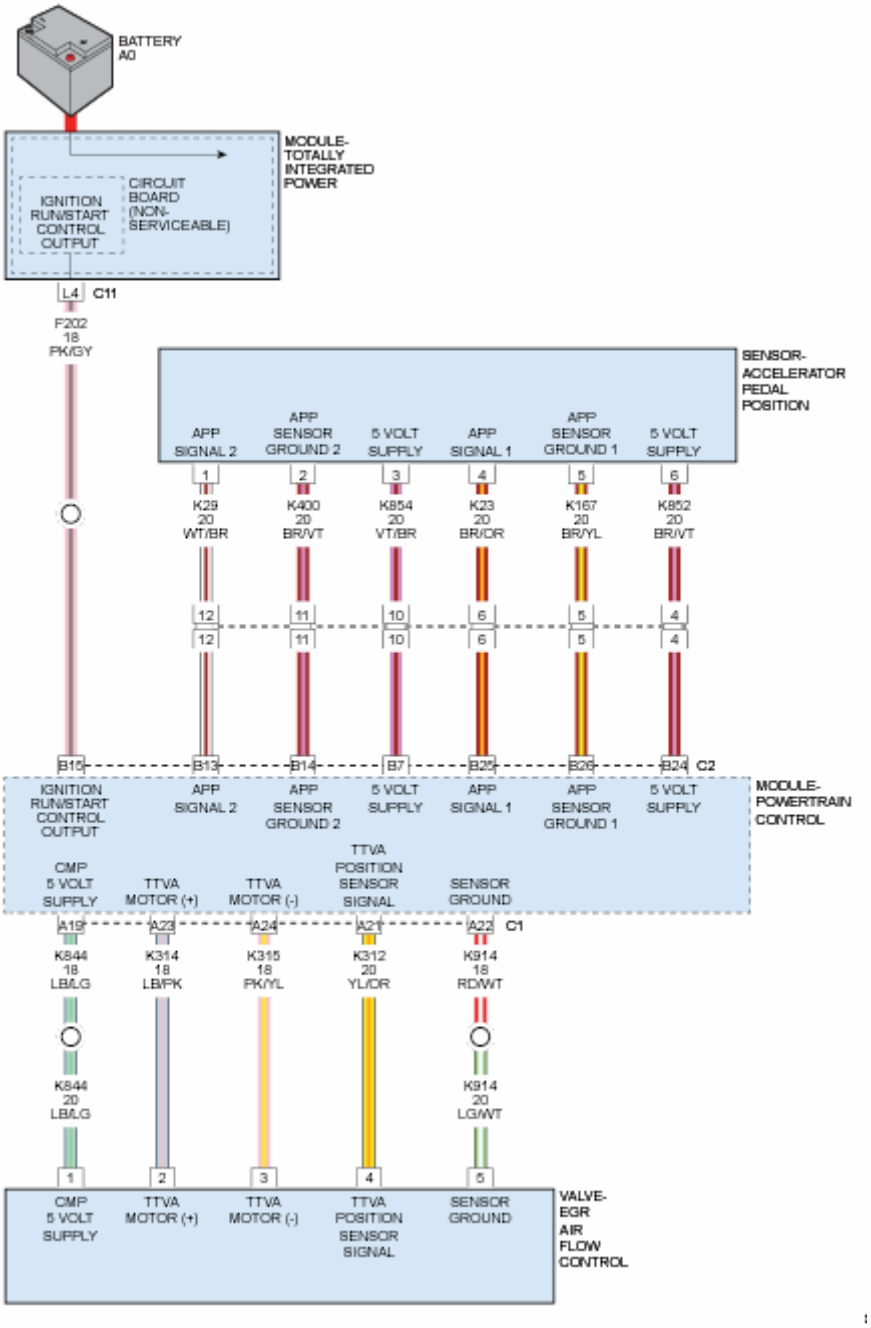

Fig. 9: APPS & EGR Airflow Control Valve Circuit Diagram
Courtesy of CHRYSLER GROUP, LLC

WHEN MONITORED

With the ignition on and DTCs P2120 and P2125 are not set.

SET CONDITION

The APP Sensor 1 Signal circuit voltage is above 95.6% for 0.14 of a second.

POSSIBLE CAUSES

Possible Causes
(K23) ACCELERATOR PEDAL POSITION SENSOR 1 SIGNAL CIRCUIT SHORTED TO VOLTAGE
(K23) ACCELERATOR PEDAL POSITION SENSOR 1 SIGNAL CIRCUIT SHORTED TO THE (K852) ACCELERATOR PEDAL POSITION SENSOR 1 5-VOLT SUPPLY CIRCUIT OR (K854) ACCELERATOR PEDAL POSITION SENSOR 2 5-VOLT SUPPLY CIRCUIT
(K167) ACCELERATOR PEDAL POSITION SENSOR 1 SENSOR GROUND CIRCUIT OPEN/HIGH RESISTANCE
ACCELERATOR PEDAL POSITION SENSOR
POWERTRAIN CONTROL MODULE (PCM)

Always perform the Pre-Diagnostic Troubleshooting procedure before proceeding. Refer to PRE-DIAGNOSTIC TROUBLESHOOTING PROCEDURE - 2.2L DIESEL .

DIAGNOSTIC TEST

1. **DTC IS ACTIVE**

NOTE: If any Sensor reference or supply voltage DTCs are present, perform the applicable diagnostic procedure before continuing with this test.

NOTE: The APP Sensor is a device that contains two separate potentiometer type sensors. Each sensor has its own 5-Volt supply circuit, sensor ground circuit and signal circuit. The APP Sensor no longer incorporates a low-idle switch.

NOTE: The APP Sensor 2 signal should always be approximately 1/2 the voltage of the APP Sensor 1 signal.

1. Ignition on, engine not running.
2. With the scan tool, clear DTCs in the Powertrain Control Module.
3. Fully depress and release the Accelerator Pedal several times.

4. With the scan tool, select View DTCs.

   Is the status Active for this DTC?

   Yes

   - Go To 2

   No

   - Perform the INTERMITTENT CONDITION diagnostic procedure. Refer to **INTERMITTENT CONDITION - 2.2L DIESEL** .

2. **CHECK THE (K23) APP SENSOR 1 SIGNAL CIRCUIT FOR A SHORT TO VOLTAGE**
   1. Turn the ignition off.
   2. Disconnect the Accelerator Pedal Position Sensor harness connector.
   3. Disconnect the Powertrain Control Module C2 harness connector.
   4. Remove the Main Relay.
   5. Connect a jumper wire between cavity 87 and cavity 30 of the Main Relay connector.
   6. Turn the ignition on.
   7. Measure for voltage on the (K23) APP Sensor 1 Signal circuit at the Accelerator Pedal Position Sensor harness connector.

      Is there any voltage present?

      Yes

      - Repair the (K23) APP Sensor 1 Signal circuit for a short to voltage.
      - Perform the POWERTRAIN VERIFICATION TEST - 2.2L. Refer to **PCM VERIFICATION TEST - 2.2L DIESEL** .

      No

      - Go To 3

3. **CHECK FOR THE (K23) APP SENSOR 1 SIGNAL CIRCUIT SHORTED TO THE 5-VOLT SUPPLY CIRCUIT**
   1. Turn the ignition off.

2. Remove the jumper wire.
3. Measure the resistance between the (K23) APP Sensor 1 Signal circuit and the (K852) Accelerator Pedal Position Sensor 1 5-Volt Supply circuit in the Accelerator Pedal Position Sensor harness connector.
4. Measure the resistance between the (K23) APP Sensor 1 Signal circuit and the (K854) Accelerator Pedal Position Sensor 2 5-Volt Supply circuit in the Accelerator Pedal Position Sensor harness connector.

   Is the resistance above 10k Ohms for both measurements?

   Yes

   - Go To 4

   No

   - Repair the shorted (K23) APP Sensor 1 Signal circuit.
   - Perform the POWERTRAIN VERIFICATION TEST - 2.2L. Refer to **PCM VERIFICATION TEST - 2.2L DIESEL** .

4. **CHECK THE (K167) APP SENSOR 1 SENSOR GROUND CIRCUIT FOR AN OPEN/HIGH RESISTANCE**
   1. Measure the resistance of the (K167) APP Sensor 1 Sensor Ground circuit between the Accelerator Pedal Position Sensor harness connector and the Powertrain Control Module C2 harness connector.

      Is the resistance below 5.0 Ohms?

      Yes

      - Go To 5

      No

      - Repair the (K167) APP Sensor 1 Sensor Ground circuit for an open or high resistance.
      - Perform the POWERTRAIN VERIFICATION TEST - 2.2L. Refer to **PCM VERIFICATION TEST - 2.2L DIESEL** .

5. **CHECK THE ACCELERATOR PEDAL POSITION SENSOR**
   1. Install the Main Relay.

2. Reconnect the Powertrain Control Module harness connector.
3. Turn the ignition on.
4. With the scan tool, clear stored DTCs.
5. Turn the ignition off.
6. Connect a jumper wire between the (K167) Accelerator Pedal Position Sensor 1 Sensor Ground circuit and the (K23) Accelerator Pedal Position Sensor 1 Signal circuit in the Accelerator Pedal Position Sensor harness connector.
7. Turn the ignition on.
8. Fully depress and release the Accelerator Pedal several times.
9. With the scan tool, select View DTCs.

NOTE: The scan tool should display an Accelerator Pedal Position Sensor 1 Low DTC with the jumper wire in place.

Does the scan tool display the DTC as described above?

Yes

- Replace the Accelerator Pedal Position Sensor in accordance with the service information.
- Perform the POWERTRAIN VERIFICATION TEST - 2.2L. Refer to **PCM VERIFICATION TEST - 2.2L DIESEL** .

No

- Go To 6

6. **POWERTRAIN CONTROL MODULE**
   1. Using the wiring diagram/schematic as a guide, inspect the wiring and connectors between the Accelerator Pedal Position Sensor and the Powertrain Control Module.
   2. Look for any chafed, pierced, pinched, or partially broken wires.
   3. Look for broken, bent, pushed out or corroded terminals.
   4. Monitor the scan tool data relative to this circuit and wiggle test the wiring and connectors.

5. Look for the data to change or for the DTC to reset during the wiggle test.
6. Perform any Technical Service Bulletins that may apply.

Were any problems found?

Yes

- Repair as necessary.
- Perform the POWERTRAIN VERIFICATION TEST - 2.2L. Refer to **PCM VERIFICATION TEST - 2.2L DIESEL** .

No

- Replace the Powertrain Control Module. **Before removing the PCM, perform the "Replace PCM" routine in the Miscellaneous Functions tab of the scan tool.** . Refer to **REMOVAL** .
- Perform the POWERTRAIN VERIFICATION TEST - 2.2L. Refer to **PCM VERIFICATION TEST - 2.2L DIESEL** .

P2125-ACCELERATOR PEDAL POSITION SENSOR 2 CIRCUIT

For a complete wiring diagram, **refer to appropriate SYSTEM WIRING DIAGRAMS article** .

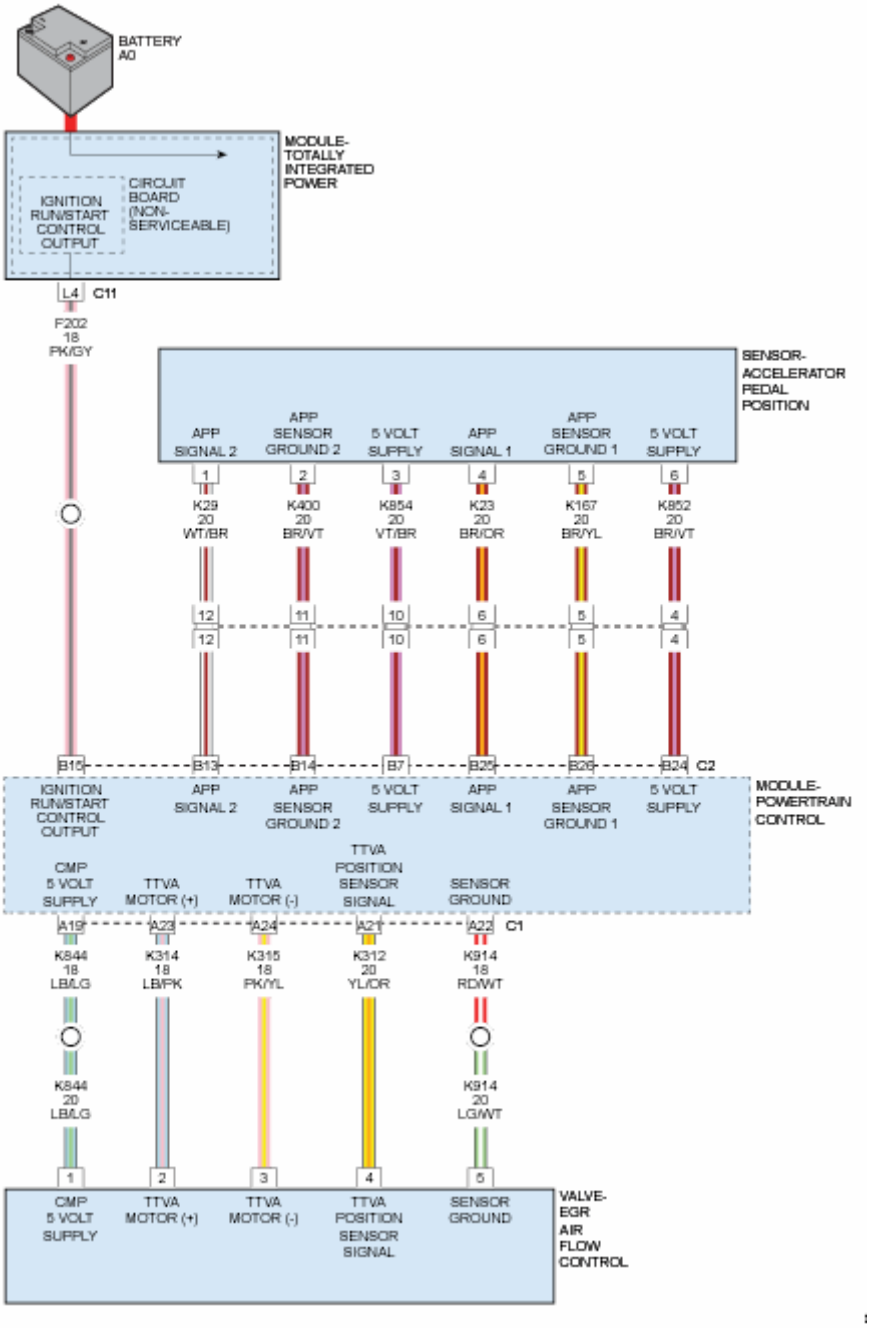

Fig. 10: APPS & EGR Airflow Control Valve Circuit Diagram
Courtesy of CHRYSLER GROUP, LLC

WHEN MONITORED

With the ignition on.

SET CONDITION

Accelerator Pedal Position (APP) Sensor 2 voltage supply is not within range (4.75 - 5.25 Volts).

POSSIBLE CAUSES

Possible Causes
(K852) ACCELERATOR PEDAL POSITION SENSOR 1 5-VOLT SUPPLY CIRCUIT OPEN
(K854) ACCELERATOR PEDAL POSITION SENSOR 2 5-VOLT SUPPLY CIRCUIT SHORTED TO VOLTAGE
(K854) ACCELERATOR PEDAL POSITION SENSOR 2 5-VOLT SUPPLY CIRCUIT SHORTED TO GROUND
(K350) RAIL PRESSRE SENSOR 5-VOLT SUPPLY CIRCUIT SHORTED TO GROUND
ACCELERATOR PEDAL POSITION SENSOR
POWERTRAIN CONTROL MODULE (PCM)

Always perform the Pre-Diagnostic Troubleshooting procedure before proceeding. Refer to PRE-DIAGNOSTIC TROUBLESHOOTING PROCEDURE - 2.2L DIESEL .

DIAGNOSTIC TEST

1. **DTC IS ACTIVE**

NOTE: If any Sensor reference DTCs are present, perform the applicable diagnostic procedure before continuing with this test.

1. Ignition on, engine not running.
2. With the scan tool, clear DTCs in the Powertrain Control Module (PCM).
3. Fully depress and release the Accelerator Pedal several times.
4. With the scan tool, select View DTCs.

Is the status Active for this DTC?

Yes

- Go To 2

No

- Perform the INTERMITTENT CONDITION diagnostic procedure. Refer to **INTERMITTENT CONDITION - 2.2L DIESEL** .

2. **CHECK THE 5-VOLT SUPPLY CIRCUITS**
   1. Turn the ignition off.
   2. Disconnect the APP Sensor harness connector.
   3. Turn the ignition on.
   4. Measure the voltage on the (K854) APP Sensor 2 5-Volt Supply circuit at the APP Sensor harness connector.
   5. Measure the voltage on the (K852) APP Sensor 1 5-Volt Supply circuit at the APP Sensor harness connector.

   Does the voltage measure between 4.75 and 5.25 Volts?

   Yes

   - Go To 3

   No

   - Repair the APP Sensor 5-Volt Supply circuit that did not measure between 4.75 and 5.25 Volts.
   - Perform the POWERTRAIN VERIFICATION TEST - 2.2L DIESEL. Refer to **PCM VERIFICATION TEST - 2.2L DIESEL** .

3. **CHECK THE ACCELERATOR PEDAL POSITION SENSOR**
   1. Turn the ignition off.
   2. Connect a jumper wire between the (K400) Accelerator Pedal Position Sensor 2 Ground circuit and the (K29) Accelerator Pedal Position Sensor 2 Signal circuit at the APP Sensor harness connector.
   3. Turn the ignition on.
   4. With the scan tool, clear DTCs.
   5. Fully depress and release the Accelerator Pedal several times.
   6. With the scan tool, select View DTCs.

NOTE: The scan tool should display an Accelerator Pedal Position Sensor 2 Low DTC with the jumper

wire in place.

7. Turn the ignition off.
8. Connect the jumper wire between the (K854) Accelerator Pedal Position Sensor 2 5-Volt Supply circuit and the (K29) Accelerator Pedal Position Sensor 2 Signal circuit at the APP Sensor harness connector.
9. Turn the ignition on.
10. With the scan tool, clear DTCs.
11. Fully depress and release the Accelerator Pedal several times.
12. With the scan tool, select View DTCs.

NOTE: The scan tool should display an Accelerator Pedal Position Sensor 1 High DTC with the jumper wire in place.

Does the scan tool display the DTCs as described in BOTH cases listed above?

Yes

- Replace the Accelerator Pedal Position Sensor in accordance with the service information.
- Perform the POWERTRAIN VERIFICATION TEST - 2.2L DIESEL. Refer to **PCM VERIFICATION TEST - 2.2L DIESEL** .

No

- Go To 4

4. **POWERTRAIN CONTROL MODULE**
   1. Using the wiring diagram/schematic as a guide, inspect the wiring and connectors between the Accelerator Pedal Position Sensor and the Powertrain Control Module.
   2. Look for any chafed, pierced, pinched, or partially broken wires.
   3. Look for broken, bent, pushed out or corroded terminals.
   4. Monitor the scan tool data relative to this circuit and wiggle test the

wiring and connectors.

5. Look for the data to change or for the DTC to reset during the wiggle test.
6. Perform any Technical Service Bulletins that may apply.

Were any problems found?

Yes

- Repair as necessary.
- Perform the POWERTRAIN VERIFICATION TEST - 2.2L DIESEL. Refer to **PCM VERIFICATION TEST - 2.2L DIESEL** .

No

- Replace the Powertrain Control Module. **Before removing the PCM, perform the "Replace PCM" routine in the Miscellaneous Functions tab of the scan tool.** . Refer to **REMOVAL** .
- Perform the POWERTRAIN VERIFICATION TEST - 2.2L DIESEL. Refer to **PCM VERIFICATION TEST - 2.2L DIESEL** .

P2126-ACCELERATOR PEDAL POSITION SENSOR 2 PERFORMANCE

For a complete wiring diagram, **refer to appropriate SYSTEM WIRING DIAGRAMS article** .

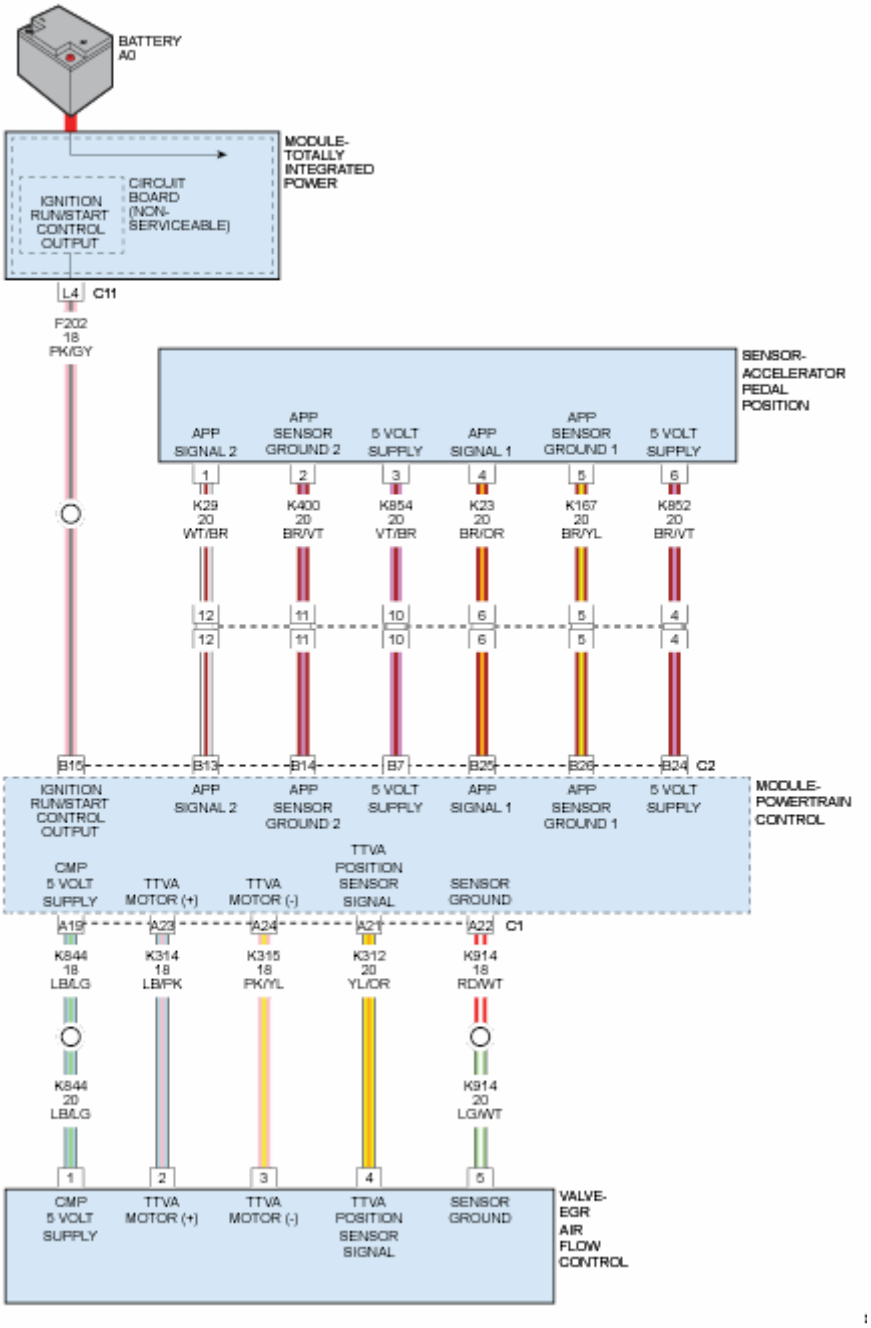

Fig. 11: APPS & EGR Airflow Control Valve Circuit Diagram
Courtesy of CHRYSLER GROUP, LLC

WHEN MONITORED

With the ignition on and no 5-Volt reference DTCs set.

SET CONDITION

APP Sensor 2 signal remains higher than 5%.

POSSIBLE CAUSES

Possible Causes
ACCELERATOR PEDAL STICKING/OBSTRUCTED
(K29) ACCELERATOR PEDAL POSITION SENSOR 2 SIGNAL CIRCUIT INTERMITTENTLY SHORTED TO VOLTAGE
(K29) ACCELERATOR PEDAL POSITION SENSOR 2 SIGNAL CIRCUIT SHORTED TO GROUND
ACCELERATOR PEDAL POSITION SENSOR
POWERTRAIN CONTROL MODULE (PCM)

Always perform the Pre-Diagnostic Troubleshooting procedure before proceeding. Refer to PRE-DIAGNOSTIC TROUBLESHOOTING PROCEDURE - 2.2L DIESEL .

DIAGNOSTIC TEST

NOTE: The APP Sensor is a device that contains two separate potentiometer type sensors. Each sensor has its own 5-Volt supply circuit, sensor ground circuit and signal circuit.

NOTE: The APP Sensor 2 signal should always be approximately 1/2 the voltage of the APP Sensor 1 signal.

NOTE: If any Sensor Reference DTCs are present, perform the applicable diagnostic procedure before continuing with this test.

1. **DTC IS ACTIVE**
    1. Ignition on, engine not running.
    2. With the scan tool, clear DTCs in the Powertrain Control Module.
    3. Fully depress and release the Accelerator Pedal several times.
    4. With the scan tool, select View DTCs.

    Is the status Active for this DTC?

    Yes

- Go To 2

No

- Perform the INTERMITTENT CONDITION diagnostic procedure. Refer to **INTERMITTENT CONDITION - 2.2L DIESEL** .

2. **CHECK THE ACCELERATOR PEDAL FOR BINDING OR OBSTRUCTION**
   1. Turn the ignition off.
   2. Check the Accelerator Pedal operation.

   Does the Accelerator Pedal move freely with no obstructions?

   Yes

   - Go To 3

   No

   - Perform the appropriate repair.
   - Perform the POWERTRAIN VERIFICATION TEST - 2.2L DIESEL. Refer to **PCM VERIFICATION TEST - 2.2L DIESEL** .

3. **CHECK THE (K29) APP SENSOR 1 SIGNAL CIRCUIT FOR A SHORT TO VOLTAGE**
   1. Turn the ignition off.
   2. Disconnect the Accelerator Pedal Position Sensor harness connector.
   3. Disconnect the Powertrain Control Module C2 harness connector.
   4. Remove the Main Relay.
   5. Connect a jumper wire between cavity 87 and cavity 30 of the Main Relay connector.
   6. Turn the ignition on.
   7. While wiggle testing the wiring harness, measure for voltage on the (K29) APP Sensor 2 Signal circuit at the Accelerator Pedal Position Sensor harness connector.

   Is there any voltage present?

Yes

- Repair the (K29) APP Sensor 2 Signal circuit for an intermittent short to voltage.
- Perform the POWERTRAIN VERIFICATION TEST - 2.2L. Refer to **PCM VERIFICATION TEST - 2.2L DIESEL** .

No

- Go To 4

4. **CHECK THE (K29) APP 2 SENSOR SIGNAL CIRCUIT FOR A SHORT TO GROUND**
   1. Turn the ignition off.
   2. Measure the resistance between ground and the (K29) APP Sensor 2 Signal circuit at the Accelerator Pedal Position Sensor harness connector.

      Is the resistance above 10k Ohms?

      Yes

      - Go To 5

      No

      - Repair the (K29) APP Sensor 2 Signal circuit for a short to ground.
      - Perform the POWERTRAIN VERIFICATION TEST - 2.2L. Refer to **PCM VERIFICATION TEST - 2.2L DIESEL** .
5. **ACCELERATOR PEDAL POSITION SENSOR**
   1. Replace the Accelerator Pedal Position Sensor in accordance with the Service Information.
   2. With the scan tool, Clear DTCs.
   3. Turn the ignition on.
   4. Fully depress and release the Accelerator Pedal several times.
   5. With the scan tool, select View DTCs.

      Did the DTC return?

Yes

- Go To 6

No

- Repair is complete.
- Perform the POWERTRAIN VERIFICATION TEST - 2.2L DIESEL. Refer to **PCM VERIFICATION TEST - 2.2L DIESEL** .

6. **POWERTRAIN CONTROL MODULE**
   1. Using the wiring diagram/schematic as a guide, inspect the wiring and connectors between the Accelerator Pedal Position Sensor and the Powertrain Control Module.
   2. Look for any chafed, pierced, pinched, or partially broken wires.
   3. Look for broken, bent, pushed out or corroded terminals.
   4. Monitor the scan tool data relative to this circuit and wiggle test the wiring and connectors.
   5. Look for the data to change or for the DTC to reset during the wiggle test.
   6. Perform any Technical Service Bulletins that may apply.

   Were any problems found?

   Yes

   - Repair as necessary.
   - Perform the POWERTRAIN VERIFICATION TEST - 2.2L DIESEL. Refer to **PCM VERIFICATION TEST - 2.2L DIESEL** .

   No

   - Replace the Powertrain Control Module. **Before removing the PCM, perform the "Replace PCM" routine in the Miscellaneous Functions tab of the scan tool.** . Refer to **REMOVAL** .
   - Perform the POWERTRAIN VERIFICATION TEST - 2.2L

DIESEL. Refer to **PCM VERIFICATION TEST - 2.2L DIESEL** .

P2127-ACCELERATOR PEDAL POSITION SENSOR 2 CIRCUIT LOW

For a complete wiring diagram, **refer to appropriate SYSTEM WIRING DIAGRAMS article** .

THEORY OF OPERATION

The Electronic Throttle Control (ETC) system uses two Accelerator Pedal Position (APP) Sensors to monitor the accelerator pedal position. The APP Sensors 1 and 2 are integrated into one assembly located at the pedal assembly. Each sensor has a 5-volt reference circuit, a low reference circuit, and a signal circuit. The Powertrain Control Module (PCM) reads the two signals individually and then compares the two signals as a redundant check of the throttle position. One of the sensors will fluctuate between 0 volts and 5.0 volts and the other sensor will fluctuate between 0 volts and 2.5 volts. The fluctuation of the two sensors should move proportionately. E.G. When operating properly, the voltage reading of the sensor operating on the 5.0 volt scale will always approximately two time the voltage reading of the sensor on the 2.5 volts scale.

WHEN MONITORED

With the ignition on and battery voltage greater than 10.4 Volts.

SET CONDITION

The Powertrain Control Module (PCM) detects that the APP Sensor 2 input voltage is below the minimum acceptable value. Acceleration rate and Engine output are limited. One trip fault and the code will set within 5 seconds. ETC light is flashing.

POSSIBLE CAUSES

Possible Causes
5-VOLT SUPPLY CIRCUIT OPEN OR SHORTED TO GROUND
APP SENSOR 2 SIGNAL CIRCUIT OPEN
APP SENSOR 2 SIGNAL CIRCUIT SHORTED TO GROUND
APP SENSOR 2 SIGNAL CIRCUIT SHORTED TO THE APP SENSOR 1 RETURN CIRCUIT

APP SENSOR 2 SIGNAL CIRCUIT SHORTED TO THE APP SENSOR 2 RETURN CIRCUIT
APP SENSOR 2 GROUND CIRCUIT OPEN OR HIGH RESISTANCE
APP SENSOR
POWERTRAIN CONTROL MODULE (PCM)

Always perform the Pre-Diagnostic Troubleshooting procedure before proceeding. Refer to PRE-DIAGNOSTIC TROUBLESHOOTING PROCEDURE - 2.2L DIESEL .

DIAGNOSTIC TEST

NOTE: The APP Sensor is a device that contains two separate potentiometer type sensors. Each sensor has its own 5-Volt supply circuit, sensor ground circuit and signal circuit.

NOTE: The APP Sensor 2 signal should always be approximately 1/2 the voltage of the APP Sensor 1 signal.

NOTE: If any Sensor Reference DTCs are present, perform the applicable diagnostic procedure before continuing with this test.

1. **DTC IS ACTIVE**
   1. Ignition on, engine not running.
   2. With the scan tool, clear DTCs in the Powertrain Control Module.
   3. Fully depress and release the Accelerator Pedal several times.
   4. With the scan tool, select View DTCs.

   Is the status Active for this DTC?

   Yes

   - Go To 2

   No

- Perform the INTERMITTENT CONDITION diagnostic procedure. Refer to **INTERMITTENT CONDITION - 2.2L DIESEL** .

2. **CHECK THE (K854) APP 2 SENSOR 5-VOLT SUPPLY CIRCUIT FOR AN OPEN/HIGH RESISTANCE**
   1. Turn the ignition off.
   2. Disconnect the Powertrain Control Module C2 harness connector.
   3. Disconnect the Accelerator Pedal Position Sensor harness connector.
   4. Measure the resistance of the (K854) APP Sensor 2 5-Volt Supply circuit between the Accelerator Pedal Position Sensor harness connector and the Powertrain Control Module C2 harness connector.

   Is the resistance below 5.0 Ohms?

   Yes

   - Go To 3

   No

   - Repair the (K854) APP Sensor 2 5-Volt Supply circuit for an open or high resistance.
   - Perform the POWERTRAIN VERIFICATION TEST - 2.2L. Refer to **PCM VERIFICATION TEST - 2.2L DIESEL** .

3. **CHECK THE (K29) APP 2 SENSOR SIGNAL CIRCUIT FOR AN OPEN/HIGH RESISTANCE**
   1. Measure the resistance of the (K29) APP Sensor 2 Signal circuit between the Accelerator Pedal Position Sensor harness connector and the Powertrain Control Module C2 harness connector.

   Is the resistance below 5.0 Ohms?

   Yes

   - Go To 4

   No

   - Repair the (K29) APP Sensor 2 Signal circuit for an open or high resistance.

- Perform the POWERTRAIN VERIFICATION TEST - 2.2L. Refer to **PCM VERIFICATION TEST - 2.2L DIESEL** .

4. **CHECK THE (K29) APP 2 SENSOR SIGNAL CIRCUIT FOR A SHORT TO GROUND**
   1. Measure the resistance between ground and the (K29) APP Sensor 2 Signal circuit at the Accelerator Pedal Position Sensor harness connector.

      Is the resistance above 10k Ohms?

      Yes

      - Go To 5

      No

      - Repair the (K29) APP Sensor 2 Signal circuit for a short to ground.
      - Perform the POWERTRAIN VERIFICATION TEST - 2.2L. Refer to **PCM VERIFICATION TEST - 2.2L DIESEL** .
5. **CHECK FOR THE (K29) ACCELERATOR PEDAL POSITION SENSOR 2 SIGNAL CIRCUIT SHORTED TO THE SENSOR GROUND CIRCUITS**
   1. Measure the resistance between the (K29) APP Sensor 2 Signal circuit and the (K167) Accelerator Pedal Position Sensor 1 Sensor Ground circuit in the Accelerator Pedal Position Sensor harness connector.
   2. Measure the resistance between the (K29) APP Sensor 2 Signal circuit and the (K400) Accelerator Pedal Position Sensor 2 Sensor Ground circuit in the Accelerator Pedal Position Sensor harness connector.

      Is the resistance above 10k Ohms for both measurements?

      Yes

      - Go To 6

      No

      - Repair the (K29) APP Sensor 2 Signal circuit for a short to the circuit that measured below 10k Ohms.

- Perform the POWERTRAIN VERIFICATION TEST - 2.2L. Refer to **PCM VERIFICATION TEST - 2.2L DIESEL** .

6. **ACCELERATOR PEDAL POSITION SENSOR**
   1. Reconnect the Powertrain Control Module C2 harness connector.
   2. Turn the ignition on.
   3. With the scan tool, Clear stored DTCs.
   4. Turn the ignition off.
   5. Connect a jumper wire between the (K854) APP Sensor 2 5-Volt Supply circuit and the (K29) APP Sensor 2 Signal circuit in the Accelerator Pedal Position Sensor harness connector.
   6. Fully depress and release the Accelerator Pedal several times.
   7. With the scan tool, select View DTCs.

NOTE: The scan tool should display an Accelerator Pedal Position Sensor 2 High DTC with the jumper wire in place.

Does the scan tool display the DTC as described above?

Yes

- Replace the Accelerator Pedal Position Sensor in accordance with the service information.
- Perform the POWERTRAIN VERIFICATION TEST - 2.2L. Refer to **PCM VERIFICATION TEST - 2.2L DIESEL** .

No

- Go To 7

7. **POWERTRAIN CONTROL MODULE**
   1. Using the wiring diagram/schematic as a guide, inspect the wiring and connectors between the Accelerator Pedal Position Sensor and the Powertrain Control Module.
   2. Look for any chafed, pierced, pinched, or partially broken wires.
   3. Look for broken, bent, pushed out or corroded terminals.
   4. Monitor the scan tool data relative to this circuit and wiggle test the

wiring and connectors.

5. Look for the data to change or for the DTC to reset during the wiggle test.
6. Perform any Technical Service Bulletins that may apply.

Were any problems found?

Yes

- Repair as necessary.
- Perform the POWERTRAIN VERIFICATION TEST - 2.2L. Refer to **PCM VERIFICATION TEST - 2.2L DIESEL** .

No

- Replace the Powertrain Control Module. **Before removing the PCM, perform the "Replace PCM" routine in the Miscellaneous Functions tab of the scan tool.** . Refer to **REMOVAL** .
- Perform the POWERTRAIN VERIFICATION TEST - 2.2L. Refer to **PCM VERIFICATION TEST - 2.2L DIESEL** .

P2128-ACCELERATOR PEDAL POSITION SENSOR 2 CIRCUIT HIGH

For a complete wiring diagram, **refer to appropriate SYSTEM WIRING DIAGRAMS article** .

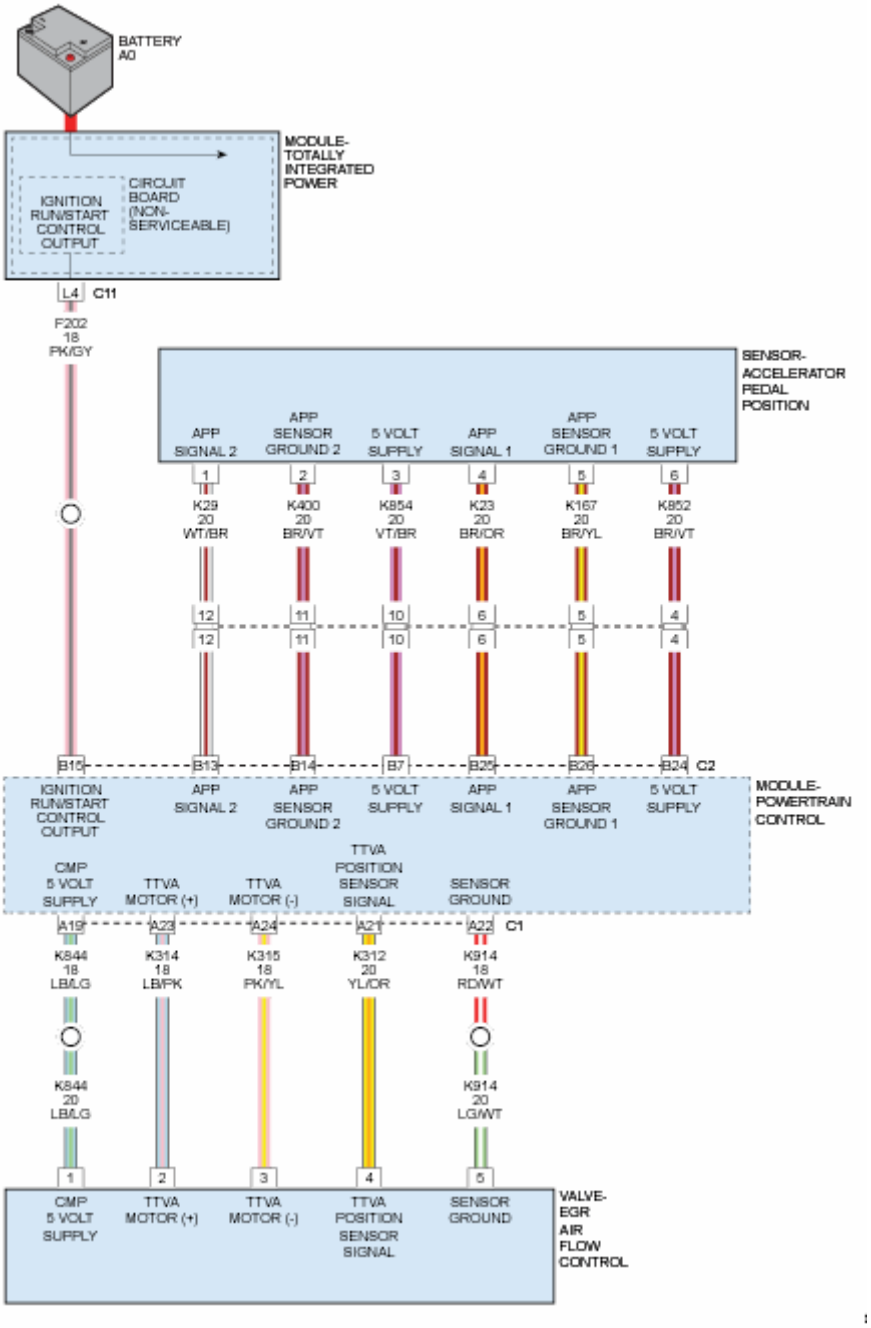

Fig. 12: APPS & EGR Airflow Control Valve Circuit Diagram
Courtesy of CHRYSLER GROUP, LLC

WHEN MONITORED

With the ignition on and DTCs P2120 and P2125 are not set.

SET CONDITION

The APP Sensor 2 Signal circuit voltage is above 99.02% for 0.14 of a second.

POSSIBLE CAUSES

Possible Causes
(K29) ACCELERATOR PEDAL POSITION SENSOR 2 SIGNAL CIRCUIT SHORTED TO VOLTAGE
(K29) ACCELERATOR PEDAL POSITION SENSOR 2 SIGNAL CIRCUIT SHORTED TO THE (K852) ACCELERATOR PEDAL POSITION SENSOR 1 5-VOLT SUPPLY CIRCUIT OR (K854) ACCELERATOR PEDAL POSITION SENSOR 2 5-VOLT SUPPLY CIRCUIT
(K400) ACCELERATOR PEDAL POSITION SENSOR 2 SENSOR GROUND CIRCUIT OPEN/HIGH RESISTANCE
ACCELERATOR PEDAL POSITION SENSOR
POWERTRAIN CONTROL MODULE (PCM)

Always perform the Pre-Diagnostic Troubleshooting procedure before proceeding. Refer to PRE-DIAGNOSTIC TROUBLESHOOTING PROCEDURE - 2.2L DIESEL .

DIAGNOSTIC TEST

NOTE: The APP Sensor is a device that contains two separate potentiometer type sensors. Each sensor has its own 5-Volt supply circuit, sensor ground circuit and signal circuit.

NOTE: The APP Sensor 2 signal should always be approximately 1/2 the voltage of the APP Sensor 1 signal.

NOTE: If any Sensor Reference DTCs are present, perform the applicable diagnostic procedure before continuing with this test.

1. **DTC IS ACTIVE**
    1. Ignition on, engine not running.
    2. With the scan tool, clear DTCs in the Powertrain Control Module.
    3. Fully depress and release the Accelerator Pedal several times.
    4. With the scan tool, select View DTCs.

Is the status Active for this DTC?

Yes

- Go To 2

No

- Perform the INTERMITTENT CONDITION diagnostic procedure. Refer to **INTERMITTENT CONDITION - 2.2L DIESEL** .

2. **CHECK THE (K29) APP SENSOR 1 SIGNAL CIRCUIT FOR A SHORT TO VOLTAGE**
   1. Turn the ignition off.
   2. Disconnect the Accelerator Pedal Position Sensor harness connector.
   3. Disconnect the Powertrain Control Module C2 harness connector.
   4. Remove the Main Relay.
   5. Connect a jumper wire between cavity 87 and cavity 30 of the Main Relay connector.
   6. Turn the ignition on.
   7. Measure for voltage on the (K29) APP Sensor 2 Signal circuit at the Accelerator Pedal Position Sensor harness connector.

   Is there any voltage present?

   Yes

   - Repair the (K29) APP Sensor 2 Signal circuit for a short to voltage.
   - Perform the POWERTRAIN VERIFICATION TEST - 2.2L. Refer to **PCM VERIFICATION TEST - 2.2L DIESEL** .

   No

   - Go To 3

3. **CHECK FOR THE (K29) APP SENSOR 2 SIGNAL CIRCUIT SHORTED TO THE 5-VOLT SUPPLY CIRCUIT**
   1. Turn the ignition off.
   2. Remove the jumper wire.

3. Measure the resistance between the (K29) APP Sensor 2 Signal circuit and the (K852) Accelerator Pedal Position Sensor 1 5-Volt Supply circuit in the Accelerator Pedal Position Sensor harness connector.
4. Measure the resistance between the (K29) APP Sensor 2 Signal circuit and the (K854) Accelerator Pedal Position Sensor 2 5-Volt Supply circuit in the Accelerator Pedal Position Sensor harness connector.

   Is the resistance above 10k Ohms for both measurements?

   Yes

   - Go To 4

   No

   - Repair the shorted (K29) APP Sensor 2 Signal circuit.
   - Perform the POWERTRAIN VERIFICATION TEST - 2.2L. Refer to **PCM VERIFICATION TEST - 2.2L DIESEL** .

4. **CHECK THE (K400) APP SENSOR 2 SENSOR GROUND CIRCUIT FOR AN OPEN/HIGH RESISTANCE**
   1. Measure the resistance of the (K400) APP Sensor 2 Sensor Ground circuit between the Accelerator Pedal Position Sensor harness connector and the Powertrain Control Module C2 harness connector.

      Is the resistance below 5.0 Ohms?

      Yes

      - Go To 5

      No

      - Repair the (K400) APP Sensor 2 Sensor Ground circuit for an open or high resistance.
      - Perform the POWERTRAIN VERIFICATION TEST - 2.2L. Refer to **PCM VERIFICATION TEST - 2.2L DIESEL** .

5. **CHECK THE ACCELERATOR PEDAL POSITION SENSOR**
   1. Install the Main Relay.
   2. Reconnect the Powertrain Control Module harness connector.

3. Turn the ignition on.
4. With the scan tool, Clear stored DTCs.
5. Turn the ignition off.
6. Connect a jumper wire between the (K400) Accelerator Pedal Position Sensor 1 Sensor Ground circuit and the (K29) Accelerator Pedal Position Sensor 1 Signal circuit in the Accelerator Pedal Position Sensor harness connector.
7. Turn the ignition on.
8. Fully depress and release the Accelerator Pedal several times.
9. With the scan tool, select View DTCs.

NOTE: The scan tool should display an Accelerator Pedal Position Sensor 2 Low DTC with the jumper wire in place.

Does the scan tool display the DTC as described above?

Yes

- Replace the Accelerator Pedal Position Sensor in accordance with the service information.
- Perform the POWERTRAIN VERIFICATION TEST - 2.2L. Refer to **PCM VERIFICATION TEST - 2.2L DIESEL** .

No

- Go To 6

6. **POWERTRAIN CONTROL MODULE**
   1. Using the wiring diagram/schematic as a guide, inspect the wiring and connectors between the Accelerator Pedal Position Sensor and the Powertrain Control Module.
   2. Look for any chafed, pierced, pinched, or partially broken wires.
   3. Look for broken, bent, pushed out or corroded terminals.
   4. Monitor the scan tool data relative to this circuit and wiggle test the wiring and connectors.
   5. Look for the data to change or for the DTC to reset during the wiggle

test.

6. Perform any Technical Service Bulletins that may apply.

   Were any problems found?

   Yes

   - Repair as necessary.
   - Perform the POWERTRAIN VERIFICATION TEST - 2.2L. Refer to **PCM VERIFICATION TEST - 2.2L DIESEL** .

   No

   - Replace the Powertrain Control Module. **Before removing the PCM, perform the "Replace PCM" routine in the Miscellaneous Functions tab of the scan tool.** . Refer to **REMOVAL** .
   - Perform the POWERTRAIN VERIFICATION TEST - 2.2L. Refer to **PCM VERIFICATION TEST - 2.2L DIESEL** .

P2138-ACCELERATOR PEDAL POSITION SENSOR 1/2 CORRELATION

For a complete wiring diagram, **refer to appropriate SYSTEM WIRING DIAGRAMS article** .

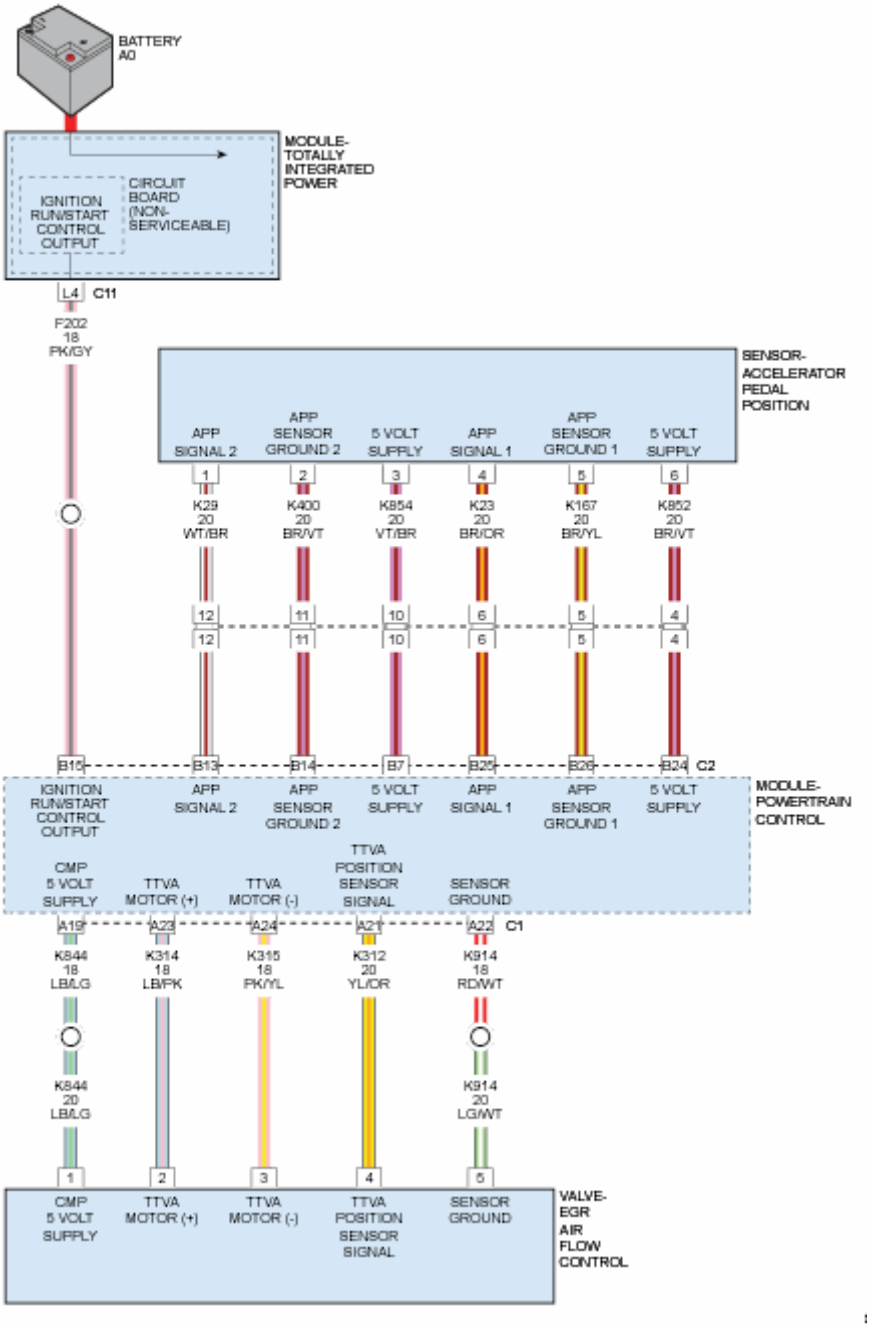

Fig. 13: APPS & EGR Airflow Control Valve Circuit Diagram
Courtesy of CHRYSLER GROUP, LLC

THEORY OF OPERATION

The Accelerator Pedal Position Sensor contains two independent three wire sensors. Each sensor provides independent pedal position signals to the PCM. The raw voltage signal from APP 1 sensor is 2 times the raw voltage signal from APP 2. Although the raw voltage signals differ, the scan tool converts and displays these voltages as matching percentages of pedal travel.

WHEN MONITORED

With the ignition on. No other APP DTCs set. No Sensor Reference Voltage DTCs set.

SET CONDITION

APP Sensor 1 and APP Sensor 2 signals do not agree for 0.18 of a second.

POSSIBLE CAUSES

Possible Causes
(K852) ACCELERATOR PEDAL POSITION SENSOR 1 - 5-VOLT SUPPLY CIRCUIT OPEN/HIGH RESISTANCE
(K23) ACCELERATOR PEDAL POSITION SENSOR 1 SIGNAL CIRCUIT OPEN/HIGH RESISTANCE
(K167) ACCELERATOR PEDAL POSITION SENSOR 1 SENSOR GROUND CIRCUIT OPEN/HIGH RESISTANCE
(K854) ACCELERATOR PEDAL POSITION SENSOR 2 - 5 VOLT SUPPLY CIRCUIT OPEN/HIGH RESISTANCE
(K29) ACCELERATOR PEDAL POSITION SENSOR 2 SIGNAL CIRCUIT OPEN/HIGH RESISTANCE
(K400) ACCELERATOR PEDAL POSITION SENSOR 2 SENSOR GROUND CIRCUIT OPEN/HIGH RESISTANCE
ACCELERATOR PEDAL POSITION SENSOR

Always perform the Pre-Diagnostic Troubleshooting procedure before proceeding. Refer to PRE-DIAGNOSTIC TROUBLESHOOTING PROCEDURE - 2.2L DIESEL .

DIAGNOSTIC TEST

NOTE: The APP Sensor is a device that contains two separate potentiometer type sensors. Each sensor has its own 5-Volt supply circuit, sensor ground circuit and signal circuit.

NOTE: The APP Sensor 2 signal should always be approximately 1/2 the voltage of the APP Sensor 1 signal.

NOTE: If any Sensor Reference DTCs are present, perform the applicable diagnostic procedure before continuing with this test.

1. **DTC IS ACTIVE**
   1. Ignition on, engine not running.
   2. With the scan tool, clear DTCs in the Powertrain Control Module (PCM).
   3. Test drive the vehicle.
   4. With the scan tool, select View DTCs.

   Is the status Active for this DTC?

   Yes

   - Go To 2

   No

   - Perform the INTERMITTENT CONDITION diagnostic procedure. Refer to **INTERMITTENT CONDITION - 2.2L DIESEL** .
2. **CHECK THE ACCELERATOR PEDAL POSITION SENSOR CIRCUITS FOR HIGH RESISTANCE**
   1. Turn the ignition off.
   2. Disconnect the APP Sensor harness connector.
   3. Disconnect the PCM C2 harness connectors.
   4. Measure the resistance of the (K852) Accelerator Pedal Position Sensor 1 5-Volt Supply circuit between the APP Sensor harness connector and the PCM C2 harness connector.
   5. Measure the resistance of the (K23) Accelerator Pedal Position Sensor 1 Signal circuit between the APP Sensor harness connector and the PCM C2 harness connector.
   6. Measure the resistance of the (K167) Accelerator Pedal Position Sensor 1 Sensor Ground circuit between the APP Sensor harness connector and the PCM C2 harness connector.
   7. Measure the resistance of the (K854) Accelerator Pedal Position Sensor 2 5-Volt Supply circuit between the APP Sensor harness connector and

the PCM C2 harness connector.

8. Measure the resistance of the (K29) Accelerator Pedal Position Sensor 2 Signal circuit between the APP Sensor harness connector and the PCM C2 harness connector.
9. Measure the resistance of the (K400) Accelerator Pedal Position Sensor 2 Sensor Ground circuit between the APP Sensor harness connector and the PCM C2 harness connector.

Is the resistance below 5.0 Ohms for each of the circuits?

Yes

- Replace the Accelerator Pedal Position Sensor in accordance with the service information.
- Perform the POWERTRAIN VERIFICATION TEST - 2.2L DIESEL. Refer to **PCM VERIFICATION TEST - 2.2L DIESEL** .

No

- Repair the circuit that measured above 5.0 Ohms for an open or high resistance.
- Perform the POWERTRAIN VERIFICATION TEST - 2.2L DIESEL. Refer to **PCM VERIFICATION TEST - 2.2L DIESEL** .

P2147-FUEL INJECTOR GROUP 1 SUPPLY VOLTAGE CIRCUIT LOW

For a complete wiring diagram, **refer to appropriate SYSTEM WIRING DIAGRAMS article** .

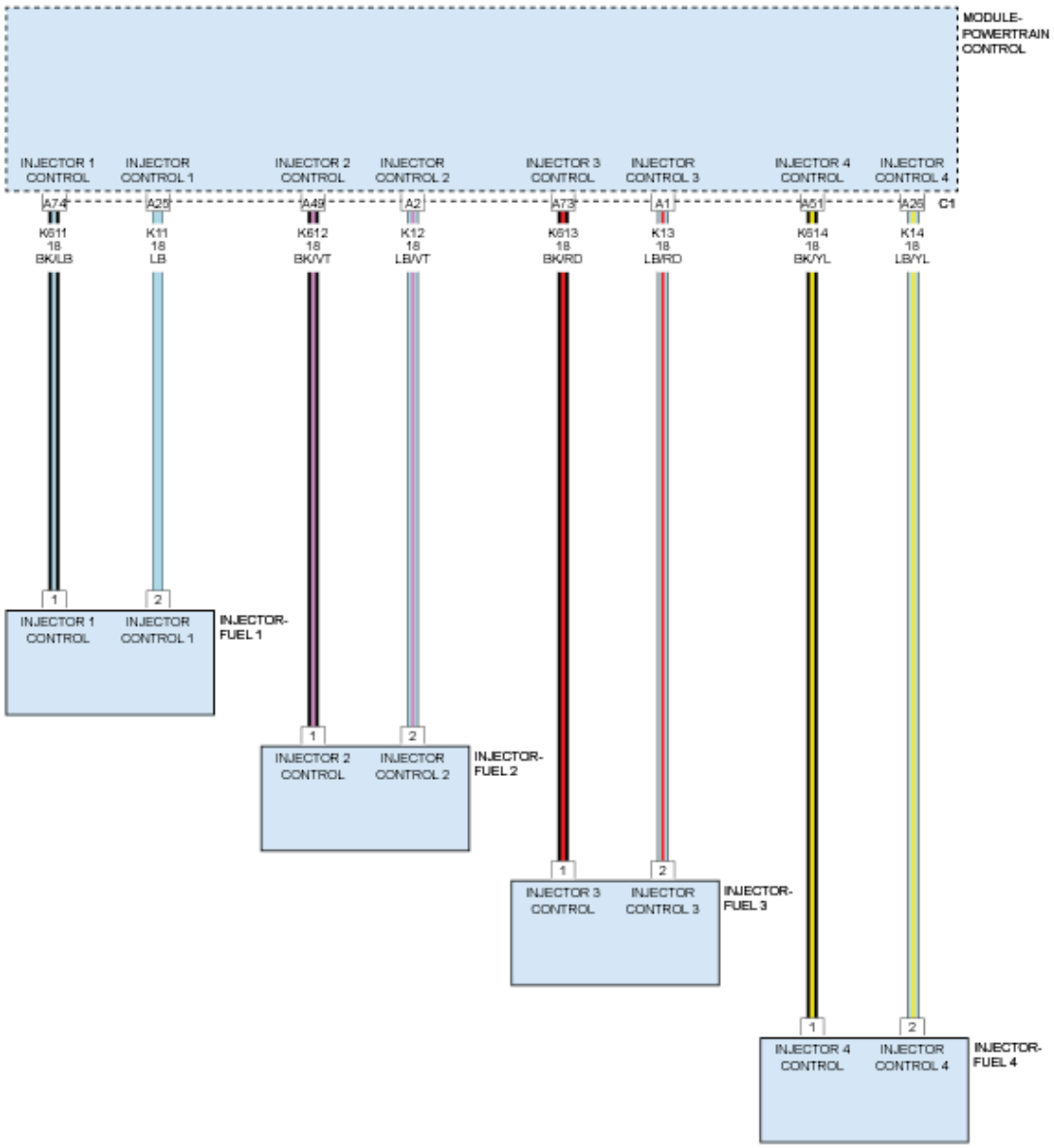

Fig. 14: Fuel Injector Circuit Diagram
Courtesy of CHRYSLER GROUP, LLC

WHEN MONITORED

With the engine running.

SET CONDITION

The Powertrain Control Module (PCM) detects that the high side driver circuit for Fuel Injector 1 and Fuel Injector 4 is below 0.8 of a Volt for 0.16 of a second.

POSSIBLE CAUSES

Possible Causes
(K11) FUEL INJECTOR 1 HIGH-SIDE CONTROL CIRCUIT SHORTED TO GROUND
(K611) FUEL INJECTOR 1 LOW-SIDE CONTROL CIRCUIT SHORTED TO GROUND
(K14) FUEL INJECTOR 4 HIGH-SIDE CONTROL CIRCUIT SHORTED TO GROUND
(K614) FUEL INJECTOR 4 LOW-SIDE CONTROL CIRCUIT SHORTED TO GROUND
POWERTRAIN CONTROL MODULE (PCM)

Always perform the Pre-Diagnostic Troubleshooting procedure before proceeding. Refer to PRE-DIAGNOSTIC TROUBLESHOOTING PROCEDURE - 2.2L DIESEL .

DIAGNOSTIC TEST

1. **DTC IS ACTIVE**
   1. Ignition on, engine not running.
   2. With the scan tool, clear DTCs in the Powertrain Control Module.
   3. Attempt to start the engine and test drive the vehicle.
   4. With the scan tool, select View DTCs.

      Is the status Active for this DTC?

      Yes

      - Go To 2

      No

      - Perform the INTERMITTENT CONDITION diagnostic procedure. Refer to **INTERMITTENT CONDITION - 2.2L DIESEL** .
2. **CHECK FOR A FUEL INJECTOR HIGH-SIDE CONTROL CIRCUIT SHORTED TO GROUND**
   1. Turn the ignition off.
   2. Disconnect Fuel Injector 1 and Fuel Injector 4 harness connectors.
   3. Disconnect the Powertrain Control Module harness connectors.

4. Measure the resistance between ground and the Fuel Injector High-Side Control circuit at both Fuel Injector harness connectors.

   Is the resistance above 10k Ohms on both circuits?

   Yes

   - Go To 3

   No

   - Repair the Fuel Injector High-Side Control circuit which did not measure above 10k Ohms for a short to ground.
   - Perform the POWERTRAIN VERIFICATION TEST - 2.2L DIESEL. Refer to **PCM VERIFICATION TEST - 2.2L DIESEL** .

3. **CHECK FOR A FUEL INJECTOR LOW-SIDE CONTROL CIRCUIT SHORTED TO GROUND**
   1. Measure the resistance between ground and the Fuel Injector Low-Side Control circuit at both Fuel Injector harness connectors.

      Is the resistance below above 10k Ohms on both circuits?

      Yes

      - Go To 4

      No

      - Repair the Fuel Injector Low-Side Control circuit which did not measure above 10k Ohms for a short to ground.
      - Perform the POWERTRAIN VERIFICATION TEST - 2.2L DIESEL. Refer to **PCM VERIFICATION TEST - 2.2L DIESEL** .

4. **POWERTRAIN CONTROL MODULE**
   1. Using the wiring diagram/schematic as a guide, inspect the wiring and connectors between each Fuel Injector and the Powertrain Control Module.
   2. Look for any chafed, pierced, pinched, or partially broken wires.

3. Look for broken, bent, pushed out or corroded terminals.
4. Monitor the scan tool data relative to this circuit and wiggle test the wiring and connectors.
5. Look for the data to change or for the DTC to reset during the wiggle test.
6. Perform any Technical Service Bulletins that may apply.

Were any problems found?

Yes

- Repair as necessary.
- Perform the POWERTRAIN VERIFICATION TEST. Refer to **PCM VERIFICATION TEST - 2.2L DIESEL** .

No

- Replace the Powertrain Control Module. **Before removing the PCM, perform the "Replace PCM" routine in the Miscellaneous Functions tab of the scan tool.** . Refer to **REMOVAL** .
- Perform the POWERTRAIN VERIFICATION TEST. Refer to **PCM VERIFICATION TEST - 2.2L DIESEL** .

P2148-FUEL INJECTOR GROUP 1 SUPPLY VOLTAGE CIRCUIT HIGH

For a complete wiring diagram, **refer to appropriate SYSTEM WIRING DIAGRAMS article** .

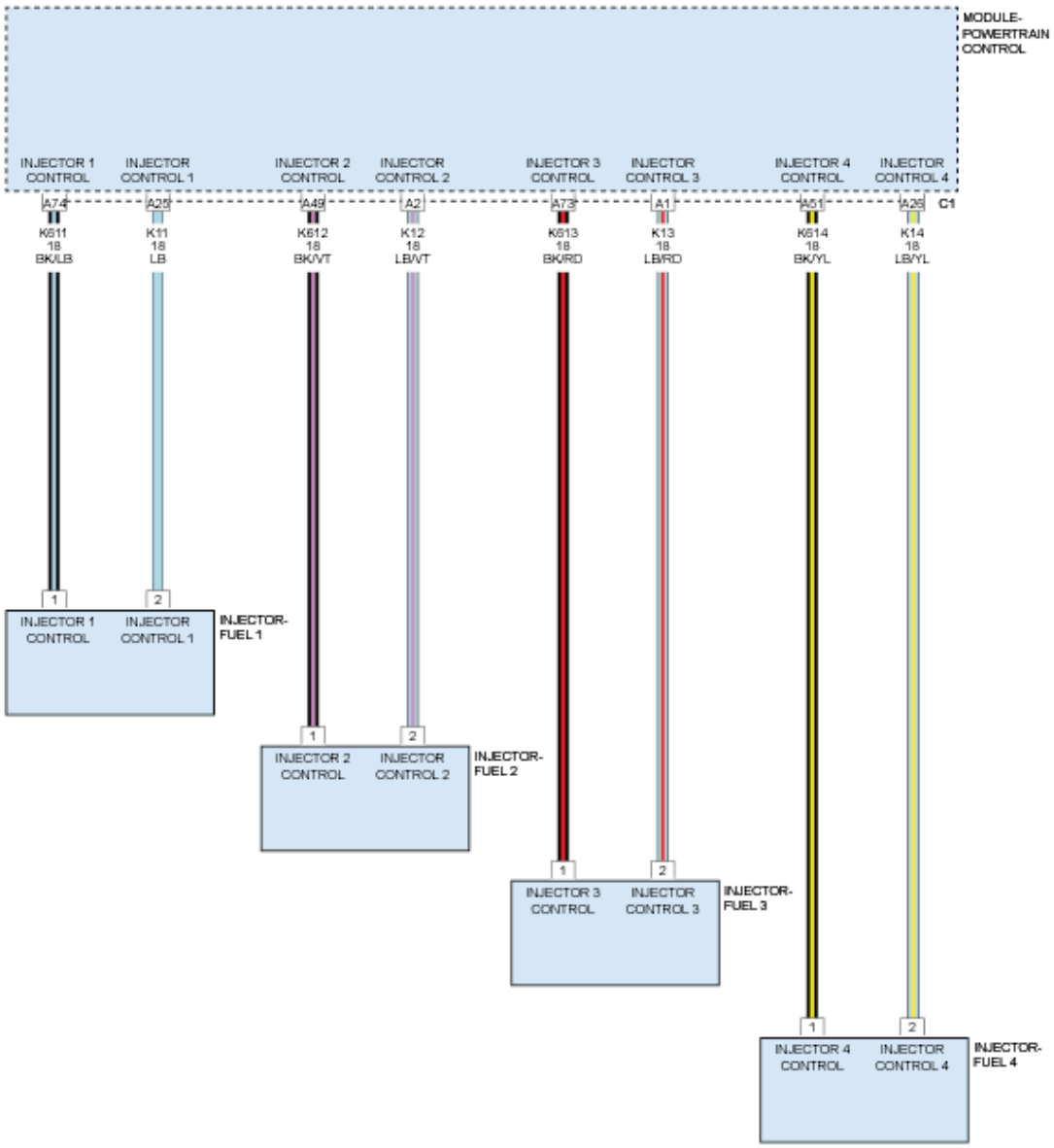

Fig. 15: Fuel Injector Circuit Diagram
Courtesy of CHRYSLER GROUP, LLC

WHEN MONITORED

With the ignition on and Battery voltage greater than 6.0 of a Volt.

SET CONDITION

The Powertrain Control Module (PCM) detects that the high side driver circuit for Fuel Injector 1 and Fuel Injector 4 is above 3.0 Volts for 0.16 of a second.

POSSIBLE CAUSES

Possible Causes
(K11) FUEL INJECTOR 1 HIGH-SIDE CONTROL CIRCUIT SHORTED TO VOLTAGE
(K611) FUEL INJECTOR 1 LOW-SIDE CONTROL CIRCUIT SHORTED TO VOLTAGE
(K14) FUEL INJECTOR 4 HIGH-SIDE CONTROL CIRCUIT SHORTED TO VOLTAGE
(K614) FUEL INJECTOR 4 LOW-SIDE CONTROL CIRCUIT SHORTED TO VOLTAGE
POWERTRAIN CONTROL MODULE (PCM)

Always perform the Pre-Diagnostic Troubleshooting procedure before proceeding. Refer to PRE-DIAGNOSTIC TROUBLESHOOTING PROCEDURE - 2.2L DIESEL .

DIAGNOSTIC TEST

1. **DTC IS ACTIVE**
   1. Ignition on, engine not running.
   2. With the scan tool, clear DTCs in the Powertrain Control Module.
   3. Attempt to start the engine and test drive the vehicle.
   4. With the scan tool, select View DTCs.

      Is the status Active for this DTC?

      Yes

      - Go To 2

      No

      - Perform the INTERMITTENT CONDITION diagnostic procedure. Refer to **INTERMITTENT CONDITION - 2.2L DIESEL** .
2. **CHECK FOR A FUEL INJECTOR HIGH-SIDE CONTROL CIRCUIT SHORTED TO VOLTAGE**
   1. Turn the ignition off.
   2. Disconnect Fuel Injector 1 and Fuel Injector 4 harness connectors.
   3. Disconnect the PCM C1 harness connector.

4. Remove the Main Relay.
5. Connect a jumper wire between cavity 87 and cavity 30 of the Main Relay Connector.
6. Turn the ignition on.
7. Measure the voltage of the Fuel Injector High-Side Control circuit at both Fuel Injector harness connectors.

   Is there voltage present?

   Yes

   - Repair the Fuel Injector High-Side Control circuit that has voltage present for a short to voltage.
   - Perform the POWERTRAIN VERIFICATION TEST - 2.2L DIESEL. Refer to **PCM VERIFICATION TEST - 2.2L DIESEL** .

   No

   - Go To 3

3. **CHECK FOR A FUEL INJECTOR LOW-SIDE CONTROL CIRCUIT SHORTED TO VOLTAGE**

   NOTE: The jumper wire should still be in place.

   1. Measure the voltage of the Fuel Injector Low-Side Control circuit at both Fuel Injector harness connectors.

      Is there voltage present?

      Yes

      - Repair the Fuel Injector Low-Side Control circuit that has voltage present for a short to voltage.
      - Perform the POWERTRAIN VERIFICATION TEST - 2.2L DIESEL. Refer to **PCM VERIFICATION TEST - 2.2L DIESEL** .

      No

- Go To 4

4. **POWERTRAIN CONTROL MODULE**
   1. Using the wiring diagram/schematic as a guide, inspect the wiring and connectors between the Fuel Injectors and the Powertrain Control Module.
   2. Look for any chafed, pierced, pinched, or partially broken wires.
   3. Look for broken, bent, pushed out or corroded terminals.
   4. Monitor the scan tool data relative to this circuit and wiggle test the wiring and connectors.
   5. Look for the data to change or for the DTC to reset during the wiggle test.
   6. Perform any Technical Service Bulletins that may apply.

   Were any problems found?

   Yes

   - Repair as necessary.
   - Perform the POWERTRAIN VERIFICATION TEST - 2.2L DIESEL. Refer to **PCM VERIFICATION TEST - 2.2L DIESEL** .

   No

   - Replace the Powertrain Control Module. **Before removing the PCM, perform the "Replace PCM" routine in the Miscellaneous Functions tab of the scan tool.** . Refer to **REMOVAL** .
   - Perform the POWERTRAIN VERIFICATION TEST - 2.2L DIESEL. Refer to **PCM VERIFICATION TEST - 2.2L DIESEL** .

P2150-FUEL INJECTOR GROUP 2 SUPPLY VOLTAGE CIRCUIT LOW

For a complete wiring diagram, **refer to appropriate SYSTEM WIRING DIAGRAMS article** .

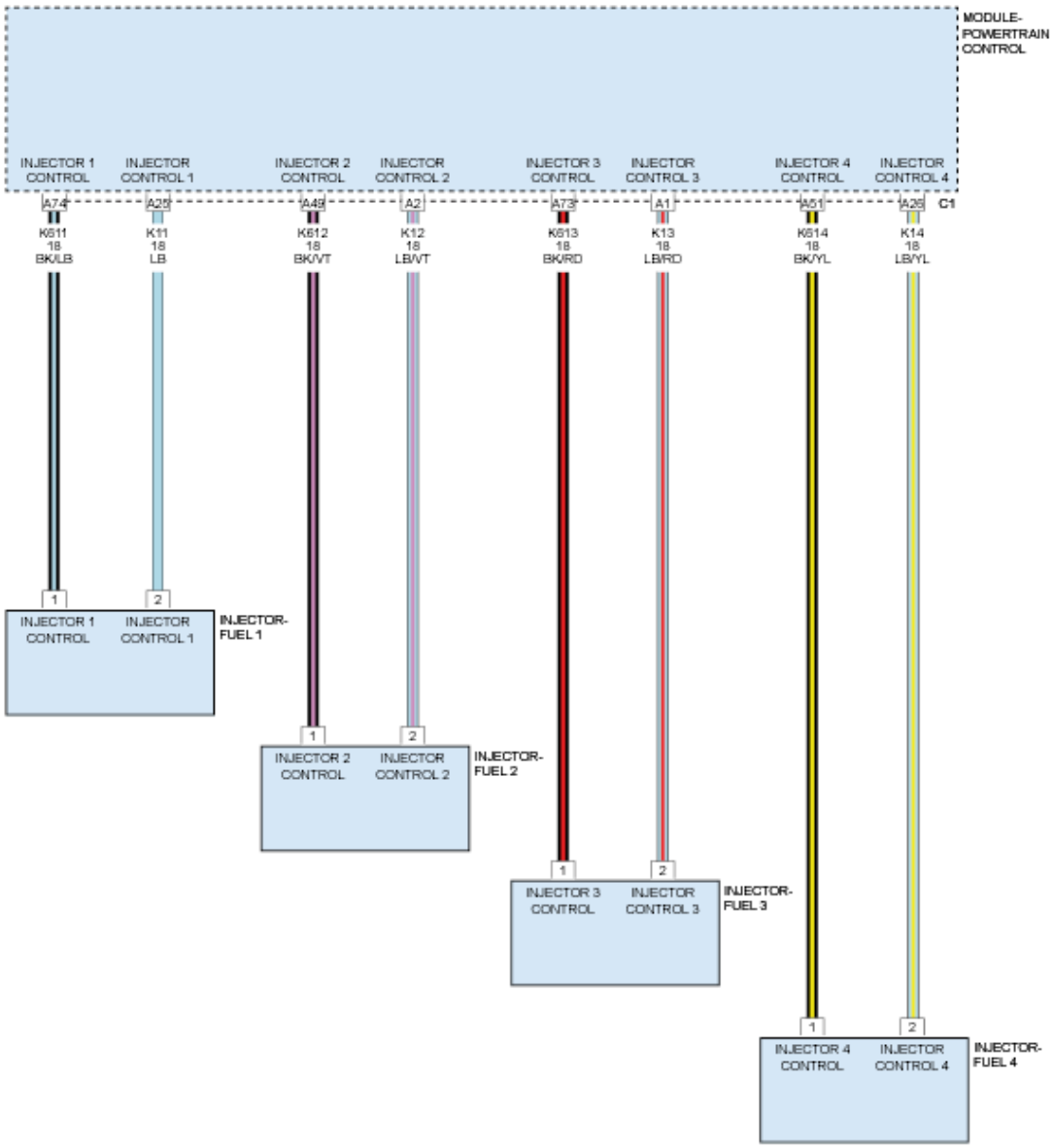

Fig. 16: Fuel Injector Circuit Diagram
Courtesy of CHRYSLER GROUP, LLC

WHEN MONITORED

With the engine running.

SET CONDITION

The Powertrain Control Module (PCM) detects that the high side driver circuit for Fuel Injector 2 and Fuel Injector 3 is below 0.8 of a Volt for 0.16 of a second.

POSSIBLE CAUSES

Possible Causes
(K12) FUEL INJECTOR 2 HIGH-SIDE CONTROL CIRCUIT SHORTED TO GROUND
(K612) FUEL INJECTOR 2 LOW-SIDE CONTROL CIRCUIT SHORTED TO GROUND
(K13) FUEL INJECTOR 3 HIGH-SIDE CONTROL CIRCUIT SHORTED TO GROUND
(K613) FUEL INJECTOR 3 LOW-SIDE CONTROL CIRCUIT SHORTED TO GROUND
POWERTRAIN CONTROL MODULE (PCM)

Always perform the Pre-Diagnostic Troubleshooting procedure before proceeding. Refer to PRE-DIAGNOSTIC TROUBLESHOOTING PROCEDURE - 2.2L DIESEL .

DIAGNOSTIC TEST

1. **DTC IS ACTIVE**
   1. Ignition on, engine not running.
   2. With the scan tool, clear DTCs in the Powertrain Control Module.
   3. Attempt to start the engine and test drive the vehicle.
   4. With the scan tool, select View DTCs.

      Is the status Active for this DTC?

      Yes

      - Go To 2

      No

      - Perform the INTERMITTENT CONDITION diagnostic procedure. Refer to **INTERMITTENT CONDITION - 2.2L DIESEL** .
2. **CHECK FOR A FUEL INJECTOR HIGH-SIDE CONTROL CIRCUIT SHORTED TO GROUND**
   1. Turn the ignition off.
   2. Disconnect Fuel Injector 2 and Fuel Injector 3 harness connectors.
   3. Disconnect the Powertrain Control Module harness connectors.

4. Measure the resistance between ground and the Fuel Injector High-Side Control circuit at both Fuel Injector harness connectors.

   Is the resistance above 10k Ohms on both circuits?

   Yes

   - Repair the Fuel Injector High-Side Control circuit which did not measure above 10k Ohms for a short to ground.
   - Perform the POWERTRAIN VERIFICATION TEST - 2.2L DIESEL. Refer to **PCM VERIFICATION TEST - 2.2L DIESEL** .

   No

   - Go To 3

3. **CHECK FOR A FUEL INJECTOR LOW-SIDE CONTROL CIRCUIT SHORTED TO GROUND**
   1. Measure the resistance between ground and the Fuel Injector Low-Side Control circuit at both Fuel Injector harness connectors.

      Is the resistance above 10k Ohms on both circuits?

      Yes

      - Repair the Fuel Injector Low-Side Control circuit which did not measure above 10k Ohms for a short to ground.
      - Perform the POWERTRAIN VERIFICATION TEST - 2.2L DIESEL. Refer to **PCM VERIFICATION TEST - 2.2L DIESEL** .

      No

      - Go To 4

4. **POWERTRAIN CONTROL MODULE**
   1. Using the wiring diagram/schematic as a guide, inspect the wiring and connectors between each Fuel Injector and the Powertrain Control Module.
   2. Look for any chafed, pierced, pinched, or partially broken wires.

3. Look for broken, bent, pushed out or corroded terminals.
4. Monitor the scan tool data relative to this circuit and wiggle test the wiring and connectors.
5. Look for the data to change or for the DTC to reset during the wiggle test.
6. Perform any Technical Service Bulletins that may apply.

Were any problems found?

Yes

- Repair as necessary.
- Perform the POWERTRAIN VERIFICATION TEST - 2.2L DIESEL. Refer to **PCM VERIFICATION TEST - 2.2L DIESEL** .

No

- Replace the Powertrain Control Module. **Before removing the PCM, perform the "Replace PCM" routine in the Miscellaneous Functions tab of the scan tool.** . Refer to **REMOVAL** .
- Perform the POWERTRAIN VERIFICATION TEST - 2.2L DIESEL. Refer to **PCM VERIFICATION TEST - 2.2L DIESEL** .

P2151-FUEL INJECTOR GROUP 1 SUPPLY VOLTAGE CIRCUIT HIGH

For a complete wiring diagram, **refer to appropriate SYSTEM WIRING DIAGRAMS article** .

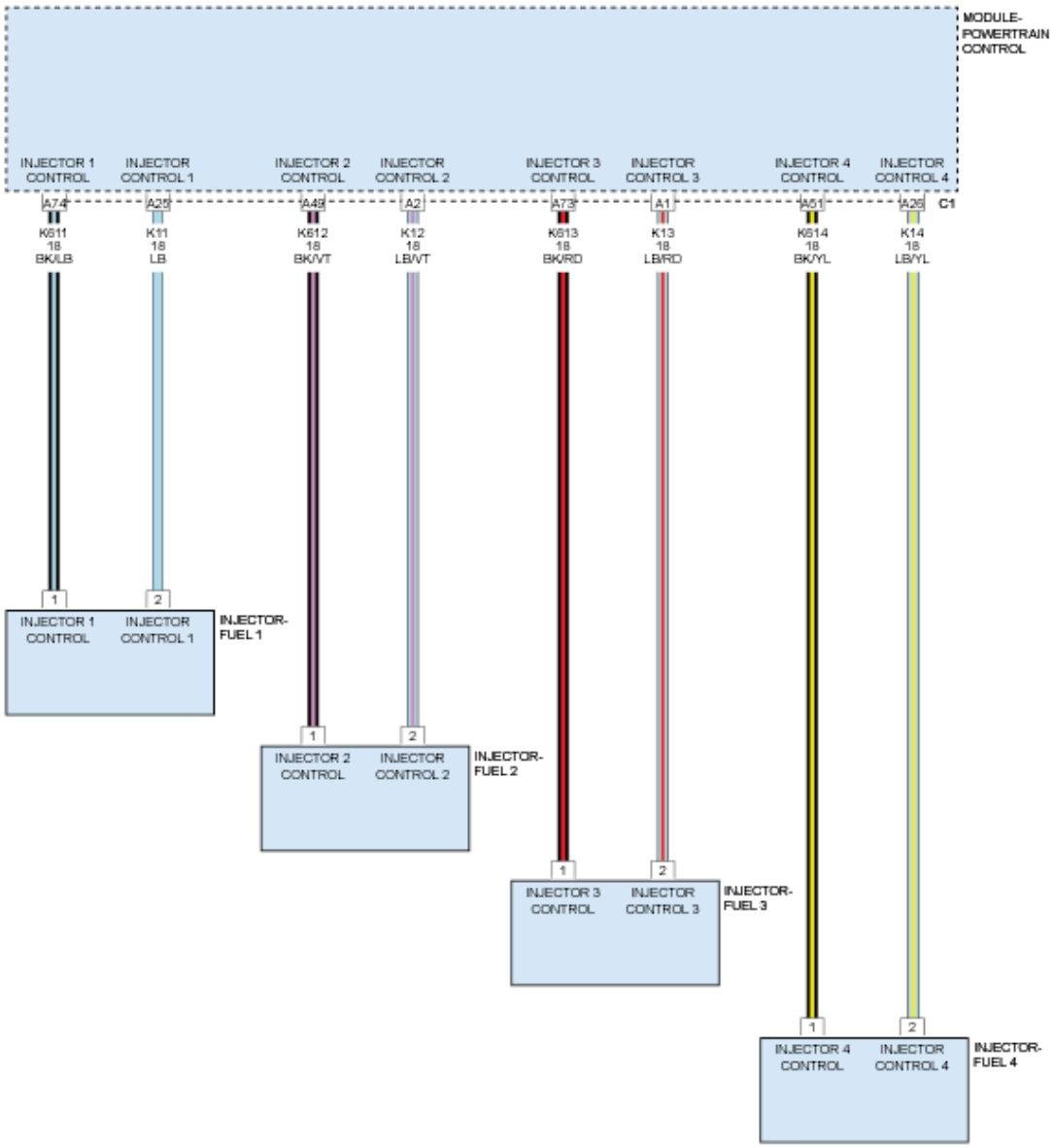

Fig. 17: Fuel Injector Circuit Diagram
Courtesy of CHRYSLER GROUP, LLC

WHEN MONITORED

With the ignition on and Battery voltage greater than 6.0 of a Volt.

SET CONDITION

The Powertrain Control Module (PCM) detects that the High-Side driver circuit for Fuel Injector 2 and Fuel Injector 3 is above 3.0 of a Volt for 0.16 of a second.

POSSIBLE CAUSES

Possible Causes
(K12) FUEL INJECTOR 2 HIGH-SIDE CONTROL CIRCUIT SHORTED TO VOLTAGE
(K612) FUEL INJECTOR 2 LOW-SIDE CONTROL CIRCUIT SHORTED TO VOLTAGE
(K13) FUEL INJECTOR 3 HIGH-SIDE CONTROL CIRCUIT SHORTED TO VOLTAGE
(K613) FUEL INJECTOR 3 LOW-SIDE CONTROL CIRCUIT SHORTED TO VOLTAGE
POWERTRAIN CONTROL MODULE (PCM)

Always perform the Pre-Diagnostic Troubleshooting procedure before proceeding. Refer to PRE-DIAGNOSTIC TROUBLESHOOTING PROCEDURE - 2.2L DIESEL .

DIAGNOSTIC TEST

1. **DTC IS ACTIVE**
   1. Ignition on, engine not running.
   2. With the scan tool, clear DTCs in the Powertrain Control Module.
   3. Attempt to start the engine and test drive the vehicle.
   4. With the scan tool, select View DTCs.

      Is the status Active for this DTC?

      Yes

      - Go To 2

      No

      - Perform the INTERMITTENT CONDITION diagnostic procedure. Refer to **INTERMITTENT CONDITION - 2.2L DIESEL** .
2. **CHECK FOR A FUEL INJECTOR HIGH-SIDE CONTROL CIRCUIT SHORTED TO VOLTAGE**
   1. Turn the ignition off.
   2. Disconnect Fuel Injector 2 and Fuel Injector 3 harness connectors.
   3. Disconnect the PCM harness connectors.

4. Remove the ASD/Main Relay.
5. Connect a jumper wire between cavity 30 and cavity 87 of the Main Relay Connector.
6. Turn the ignition on.
7. Measure the voltage of the Fuel Injector High-Side Control circuit at both Fuel Injector harness connectors.

   Is there voltage present?

   Yes

   - Repair the Fuel Injector High-Side Control circuit that has voltage present for a short to voltage.
   - Perform the POWERTRAIN VERIFICATION TEST - 2.2L DIESEL. Refer to **PCM VERIFICATION TEST - 2.2L DIESEL** .

   No

   - Go To 3

3. **CHECK FOR A FUEL INJECTOR LOW-SIDE CONTROL CIRCUIT SHORTED TO VOLTAGE**

   NOTE: The jumper wire should still be in place.

   1. Measure the voltage of the Fuel Injector Low-Side Control circuit at both Fuel Injector harness connectors.

      Is there voltage present on any of the circuits?

      Yes

      - Repair the Fuel Injector Low-Side Control circuit that has voltage present for a short to voltage.
      - Perform the POWERTRAIN VERIFICATION TEST - 2.2L DIESEL. Refer to **PCM VERIFICATION TEST - 2.2L DIESEL** .

      No

- Go To 4

4. **POWERTRAIN CONTROL MODULE**
   1. Using the wiring diagram/schematic as a guide, inspect the wiring and connectors between the Fuel Injectors and the Powertrain Control Module.
   2. Look for any chafed, pierced, pinched, or partially broken wires.
   3. Look for broken, bent, pushed out or corroded terminals.
   4. Monitor the scan tool data relative to this circuit and wiggle test the wiring and connectors.
   5. Look for the data to change or for the DTC to reset during the wiggle test.
   6. Perform any Technical Service Bulletins that may apply.

   Were any problems found?

   Yes

   - Repair as necessary.
   - Perform the POWERTRAIN VERIFICATION TEST - 2.2L DIESEL. Refer to **PCM VERIFICATION TEST - 2.2L DIESEL** .

   No

   - Replace the Powertrain Control Module. **Before removing the PCM, perform the "Replace PCM" routine in the Miscellaneous Functions tab of the scan tool.** . Refer to **REMOVAL** .
   - Perform the POWERTRAIN VERIFICATION TEST - 2.2L DIESEL. Refer to **PCM VERIFICATION TEST - 2.2L DIESEL** .

P2195-O2 SENSOR 1/1 STUCK LEAN

For a complete wiring diagram, **refer to appropriate SYSTEM WIRING DIAGRAMS article** .

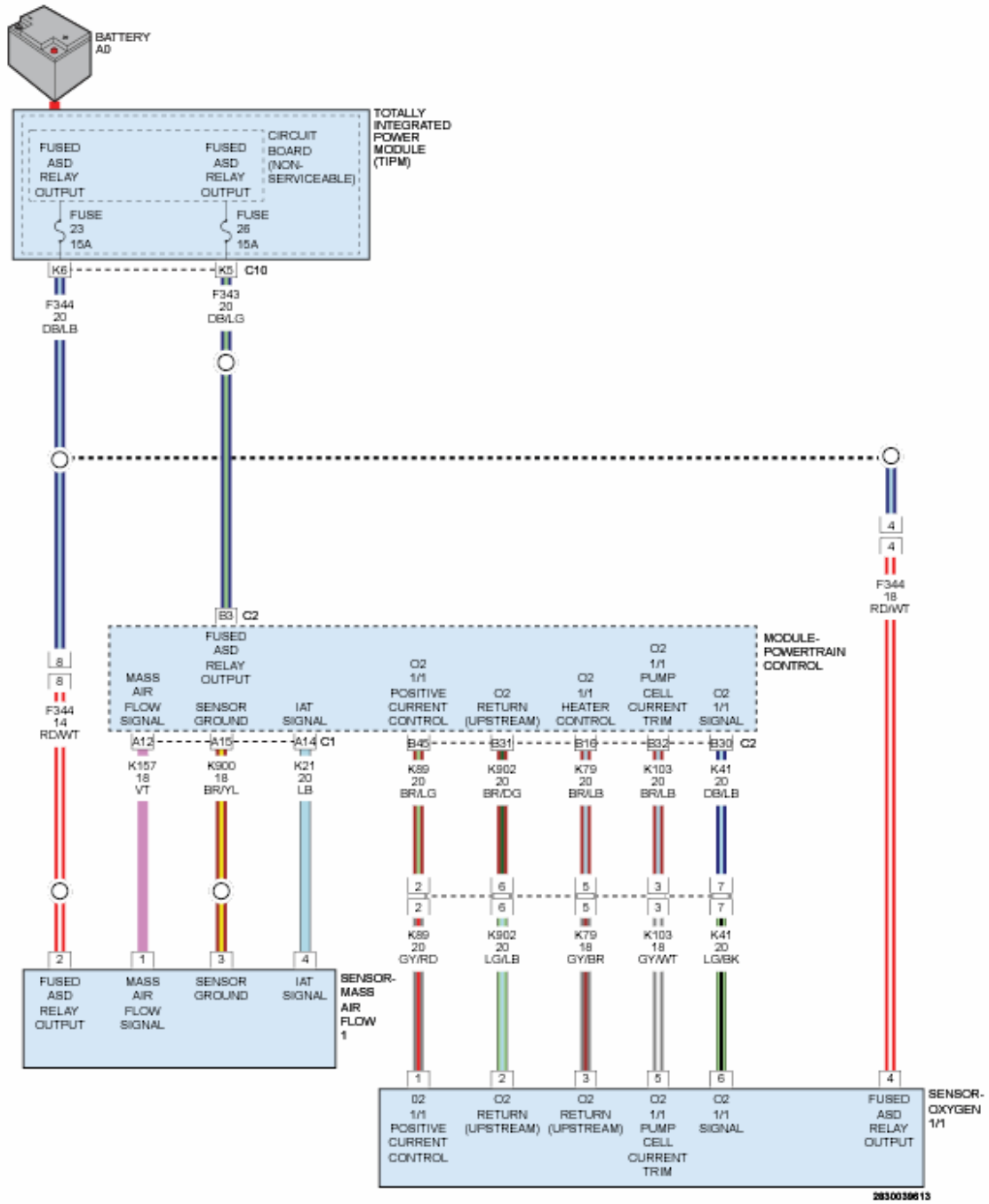

Fig. 18: O2 & MAF Sensors Circuit Diagram
Courtesy of CHRYSLER GROUP, LLC

WHEN MONITORED

With the ignition on and the engine running.

SET CONDITION

The Powertrain Control Module (PCM) detects that the O2 Sensor correction offset is too high.

POSSIBLE CAUSES

Possible Causes
FUEL DELIVERY SYSTEM FAILURE
INTAKE AIR SYSTEM LEAK
EGR SYSTEM FAILURE
EXHAUST SYSTEM LEAK
OXYGEN SENSOR
POWERTRAIN CONTROL MODULE (PCM)

Always perform the Pre-Diagnostic Troubleshooting procedure before proceeding. Refer to PRE-DIAGNOSTIC TROUBLESHOOTING PROCEDURE - 2.2L DIESEL .

DIAGNOSTIC TEST

1. **DTC IS ACTIVE**

NOTE: If there are any cylinder misfire, Crank Sensor, MAF Sensor, or Fuel Injector DTCs stored with this fault, perform the diagnostics for those DTCs before proceeding with this test.

1. Ignition on, engine not running.
2. With the scan tool, Clear DTCs in the Powertrain Control Module.
3. Start the engine.
4. Allow the engine to reach normal operating temperature.
5. Monitor the scan tool for at least five minutes.
6. With the scan tool, select View DTCs.

Is the status Active for this DTC?

Yes

- Go To 2

No

- Perform the INTERMITTENT CONDITION diagnostic procedure.

Refer to **INTERMITTENT CONDITION - 2.2L DIESEL** .

2. **CHECK THE FUEL DELIVERY SYSTEM**
   1. Perform the CHECKING THE FUEL DELIVERY SYSTEM diagnostic procedure. Refer to **DIAGNOSIS AND TESTING** .

      Were any fuel system problems found?

      Yes

      - Perform the appropriate repairs to the fuel system.
      - Perform the POWERTRAIN VERIFICATION TEST 2.2L. Refer to **PCM VERIFICATION TEST - 2.2L DIESEL** .

      No

      - Go To 3
3. **CHECK THE INTAKE AIR SYSTEM**
   1. Check the Intake Air System for any signs of a leak or restriction.

      Were any fuel system problems found?

      Yes

      - Perform the appropriate repairs to the Intake Air System.
      - Perform the POWERTRAIN VERIFICATION TEST 2.2L. Refer to **PCM VERIFICATION TEST - 2.2L DIESEL** .

      No

      - Go To 4
4. **CHECK THE EXHAUST SYSTEM FOR LEAKS**
   1. Check the Exhaust System for any signs of a leak or restriction.

      Were any Exhaust System problems found?

      Yes

      - Perform the appropriate repairs to the Exhaust System.
      - Perform the POWERTRAIN VERIFICATION TEST 2.2L. Refer

to **PCM VERIFICATION TEST - 2.2L DIESEL** .

No

- Go To 5

5. **CHECK THE EGR SYSTEM**
   1. Look for visible signs (soot streaks) of an external EGR leak.
   2. With the scan tool, navigate to Miscellaneous Functions, and perform the EGR/ECU Self Test procedure.

      Were any problems found with the EGR system?

      Yes

      - Perform the appropriate repairs to the EGR system.
      - Perform the POWERTRAIN VERIFICATION TEST 2.2L. Refer to **PCM VERIFICATION TEST - 2.2L DIESEL** .

      No

      - Go To 6

6. **OXYGEN SENSOR**
   1. Turn the ignition off.
   2. Connect the Powertrain Control Module harness connector.
   3. Replace the Oxygen Sensor in accordance with the service information.
   4. Turn the ignition on.
   5. With the scan tool, navigate to Actuator Tests and perform the O2 Sensor Replaced procedure.
   6. Start the engine.
   7. Allow the engine to reach normal operating temperature.
   8. Monitor the scan tool for at least five minutes.
   9. With the scan tool, select View DTCs.

      Is the status Active for this DTC?

      Yes

- Go To 7

No

- Test Complete.
- Perform the POWERTRAIN VERIFICATION TEST - 2.2L DIESEL. Refer to **PCM VERIFICATION TEST - 2.2L DIESEL** .

7. **POWERTRAIN CONTROL MODULE**
   1. Using the wiring diagram/schematic as a guide, inspect the wiring and connectors between the Oxygen Sensor and the Powertrain Control Module.
   2. Look for any chafed, pierced, pinched, or partially broken wires.
   3. Look for broken, bent, pushed out or corroded terminals.
   4. Monitor the scan tool data relative to this circuit and wiggle test the wiring and connectors.
   5. Look for the data to change or for the DTC to reset during the wiggle test.
   6. Perform any Technical Service Bulletins that may apply.

   Were any problems found?

   Yes

   - Repair as necessary.
   - Perform the POWERTRAIN VERIFICATION TEST - 2.2L DIESEL. Refer to **PCM VERIFICATION TEST - 2.2L DIESEL** .

   No

   - Replace the Powertrain Control Module. **Before removing the PCM, perform the "Replace PCM" routine in the Miscellaneous Functions tab of the scan tool.** . Refer to **REMOVAL** .
   - Perform the POWERTRAIN VERIFICATION TEST - 2.2L DIESEL. Refer to **PCM VERIFICATION TEST - 2.2L DIESEL** .

P2196-O2 SENSOR 1/1 STUCK RICH

For a complete wiring diagram, **refer to appropriate SYSTEM WIRING DIAGRAMS article** .

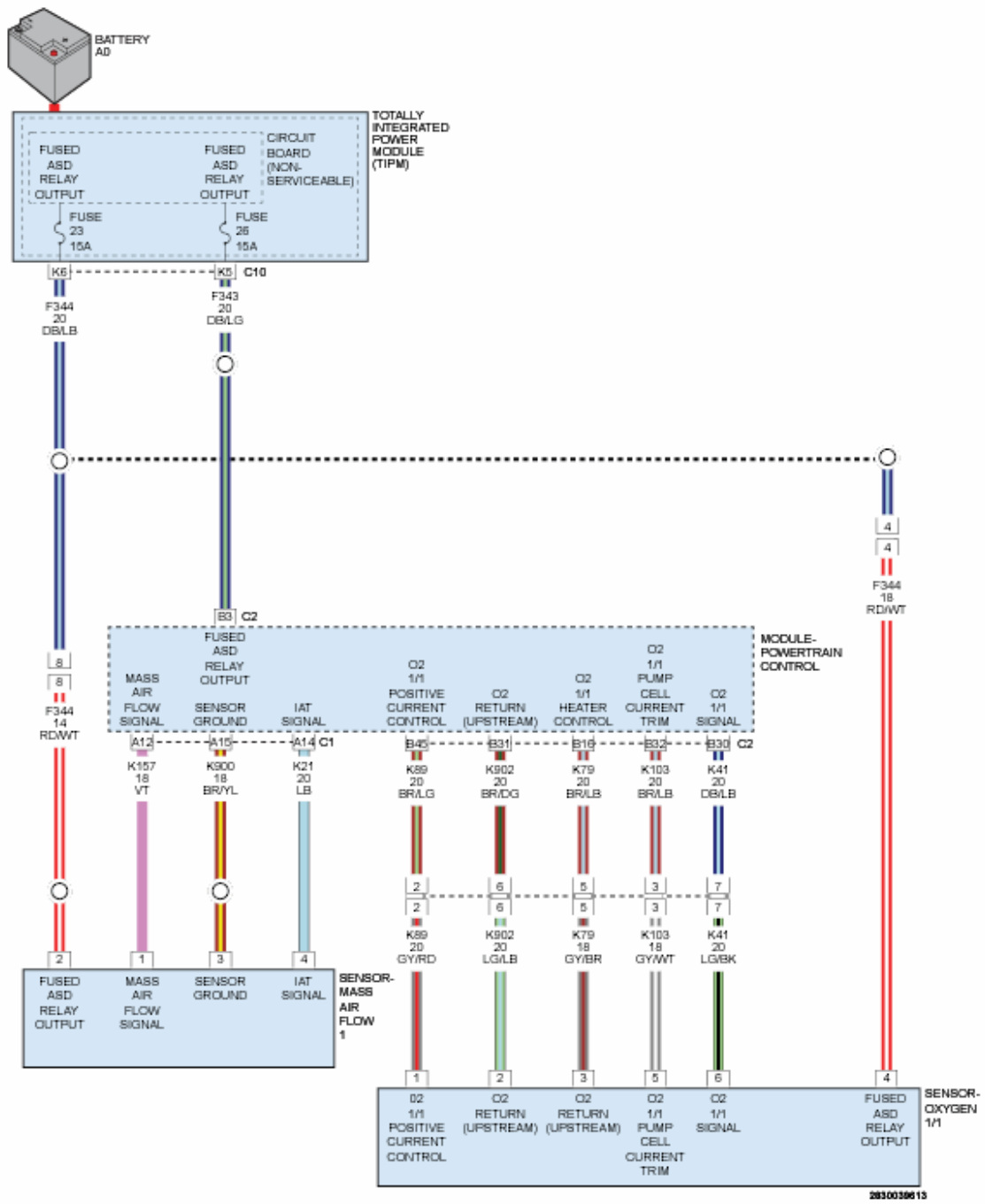

Fig. 19: O2 & MAF Sensors Circuit Diagram
Courtesy of CHRYSLER GROUP, LLC

WHEN MONITORED

With the ignition on and the O2 1/1 Sensor at operating temperature.

SET CONDITION

The Powertrain Control Module (PCM) detects that the O2 Sensor correction offset is too low.

POSSIBLE CAUSES

Possible Causes
FUEL DELIVERY SYSTEM FAILURE
INTAKE AIR SYSTEM LEAK
EGR SYSTEM SYSTEM
EXHAUST SYSTEM LEAK
OXYGEN SENSOR
POWERTRAIN CONTROL MODULE (PCM)

Always perform the Pre-Diagnostic Troubleshooting procedure before proceeding. Refer to PRE-DIAGNOSTIC TROUBLESHOOTING PROCEDURE - 2.2L DIESEL .

DIAGNOSTIC TEST

1. **DTC IS ACTIVE**

NOTE: If there are any cylinder misfire, Crank Sensor, MAF Sensor, or Fuel Injector DTCs stored with this fault, perform the diagnostics for those DTCs before proceeding with this test.

1. Ignition on, engine not running.
2. With the scan tool, Clear DTCs in the Powertrain Control Module.
3. Start the engine.
4. Allow the engine to reach normal operating temperature.
5. Monitor the scan tool for at least five minutes.
6. With the scan tool, select View DTCs.

Is the status Active for this DTC?

Yes

- Go To 2

No

- Perform the INTERMITTENT CONDITION diagnostic procedure. Refer to **INTERMITTENT CONDITION - 2.2L DIESEL** .

2. **CHECK THE FUEL DELIVERY SYSTEM**
   1. Perform the CHECKING THE FUEL DELIVERY SYSTEM diagnostic procedure. Refer to **DIAGNOSIS AND TESTING** .

      Were any fuel system problems found?

      Yes

      - Perform the appropriate repairs to the fuel system.
      - Perform the POWERTRAIN VERIFICATION TEST 2.2L. Refer to **PCM VERIFICATION TEST - 2.2L DIESEL** .

      No

      - Go To 3

3. **CHECK THE INTAKE AIR SYSTEM**
   1. Check the Intake Air System for any signs of a leak or restriction.

      Were any Intake System problems found?

      Yes

      - Perform the appropriate repairs to the Intake Air System.
      - Perform the POWERTRAIN VERIFICATION TEST 2.2L. Refer to **PCM VERIFICATION TEST - 2.2L DIESEL** .

      No

      - Go To 4

4. **CHECK THE EXHAUST SYSTEM**
   1. Check the Exhaust System for any signs of a leak or restriction.

      Were any Exhaust System problems found?

Yes

- Perform the appropriate repairs to the Exhaust System.
- Perform the POWERTRAIN VERIFICATION TEST 2.2L. Refer to **PCM VERIFICATION TEST - 2.2L DIESEL** .

No

- Go To 5

5. **CHECK THE EGR SYSTEM**
   1. Look for visible signs (soot streaks) of an external EGR leak.
   2. With the scan tool, navigate to Miscellaneous Functions, and perform the EGR/ECU Self Test procedure.

   Were any problems found with the EGR system?

   Yes

   - Perform the appropriate repairs to the EGR system.
   - Perform the POWERTRAIN VERIFICATION TEST 2.2L. Refer to **PCM VERIFICATION TEST - 2.2L DIESEL** .

   No

   - Go To 6

6. **OXYGEN SENSOR**
   1. Turn the ignition off.
   2. Connect the Powertrain Control Module harness connector.
   3. Replace the Oxygen Sensor in accordance with the service information.
   4. Turn the ignition on.
   5. With the scan tool, navigate to Actuator Tests and perform the O2 Sensor Replaced procedure.
   6. Start the engine.
   7. Allow the engine to reach normal operating temperature.
   8. Monitor the scan tool for at least five minutes.
   9. With the scan tool, select View DTCs.

Is the status Active for this DTC?

Yes

- Go To 7

No

- Test Complete.
- Perform the POWERTRAIN VERIFICATION TEST - 2.2L DIESEL. Refer to **PCM VERIFICATION TEST - 2.2L DIESEL** .

7. **POWERTRAIN CONTROL MODULE**
   1. Using the wiring diagram/schematic as a guide, inspect the wiring and connectors between the Oxygen Sensor and the Powertrain Control Module.
   2. Look for any chafed, pierced, pinched, or partially broken wires.
   3. Look for broken, bent, pushed out or corroded terminals.
   4. Monitor the scan tool data relative to this circuit and wiggle test the wiring and connectors.
   5. Look for the data to change or for the DTC to reset during the wiggle test.
   6. Perform any Technical Service Bulletins that may apply.

   Were any problems found?

   Yes

   - Repair as necessary.
   - Perform the POWERTRAIN VERIFICATION TEST - 2.2L DIESEL. Refer to **PCM VERIFICATION TEST - 2.2L DIESEL** .

   No

   - Replace the Powertrain Control Module. **Before removing the PCM, perform the "Replace PCM" routine in the Miscellaneous Functions tab of the scan tool.** . Refer to

REMOVAL .

- Perform the POWERTRAIN VERIFICATION TEST - 2.2L DIESEL. Refer to **PCM VERIFICATION TEST - 2.2L DIESEL** .

P2226-BAROMETRIC PRESSURE SENSOR

For a complete wiring diagram, **refer to appropriate SYSTEM WIRING DIAGRAMS article** .

WHEN MONITORED

With the ignition on.

SET CONDITION

The Powertrain Control Module (PCM) detects that a Barometric Pressure Sensor fault was detected for 1.6 seconds.

POSSIBLE CAUSES

Possible Causes
POWERTRAIN CONTROL MODULE (PCM)

Always perform the Pre-Diagnostic Troubleshooting procedure before proceeding. Refer to PRE-DIAGNOSTIC TROUBLESHOOTING PROCEDURE - 2.2L DIESEL .

DIAGNOSTIC TEST

DTC ACTIVE

NOTE: The Barometric Pressure Sensor is located inside the Powertrain Control Module and is not serviceable separate.

1. Turn the ignition on, engine not running.
2. Monitor the scan tool for at least two minutes.
3. With the scan tool, select View DTCs.

   Is the DTC Active or Stored?

Active

- Replace the Powertrain Control Module. **Before removing the PCM, perform the "Replace PCM" routine in the Miscellaneous Functions tab of the scan tool.** . Refer to **REMOVAL** .
- Perform the POWERTRAIN VERIFICATION TEST - 2.2L DIESEL. Refer to **PCM VERIFICATION TEST - 2.2L DIESEL** .

Stored

- If this is the first occurrence of a Barometric Pressure Sensor DTC, erase the DTC and deliver the vehicle back to the customer. **If the vehicle was in for service previously with a Stored Barometric Pressure Sensor DTC,** replace the Powertrain Control Module. **Before removing the PCM, perform the "Replace PCM" routine in the Miscellaneous Functions tab of the scan tool.** . Refer to **REMOVAL** .
- Perform the POWERTRAIN VERIFICATION TEST - 2.2L DIESEL. Refer to **PCM VERIFICATION TEST - 2.2L DIESEL** .

P2227-BAROMETRIC PRESSURE CIRCUIT PERFORMANCE

For a complete wiring diagram, **refer to appropriate SYSTEM WIRING DIAGRAMS article** .

WHEN MONITORED

With the ignition on.

SET CONDITION

The Powertrain Control Module (PCM) detects that the absolute value of the filtered Barometric Pressure Sensor signal is above 1.5 bar/second for 1.6 seconds.

POSSIBLE CAUSES

Possible Causes
POWERTRAIN CONTROL MODULE (PCM)

Always perform the Pre-Diagnostic Troubleshooting procedure before

proceeding. Refer to PRE-DIAGNOSTIC TROUBLESHOOTING PROCEDURE - 2.2L DIESEL .

DIAGNOSTIC TEST

DTC ACTIVE

NOTE: The Barometric Pressure Sensor is located inside the Powertrain Control Module and is not serviceable separate.

1. Turn the ignition on, engine not running.
2. Monitor the scan tool for at least two minutes.
3. With the scan tool, select View DTCs.

   Is the DTC Active or Stored?

   Active

   - Replace the Powertrain Control Module. **Before removing the PCM, perform the "Replace PCM" routine in the Miscellaneous Functions tab of the scan tool.** . Refer to **REMOVAL** .
   - Perform the POWERTRAIN VERIFICATION TEST - 2.2L DIESEL. Refer to **PCM VERIFICATION TEST - 2.2L DIESEL** .

   Stored

   - If this is the first occurrence of a Barometric Pressure Sensor DTC, erase the DTC and deliver the vehicle back to the customer. **If the vehicle was in for service previously with a Stored Barometric Pressure Sensor DTC,** replace the Powertrain Control Module. **Before removing the PCM, perform the "Replace PCM" routine in the Miscellaneous Functions tab of the scan tool.** . Refer to **REMOVAL** .
   - Perform the POWERTRAIN VERIFICATION TEST - 2.2L DIESEL. Refer to **PCM VERIFICATION TEST - 2.2L DIESEL** .

P2228-BAROMETRIC PRESSURE CIRCUIT LOW

For a complete wiring diagram, **refer to appropriate SYSTEM WIRING**

DIAGRAMS article .

WHEN MONITORED

With the ignition on.

SET CONDITION

The Powertrain Control Module (PCM) detects that the Barometric Pressure Sensor signal is below 2.22 Volts for 1.6 seconds.

POSSIBLE CAUSES

Possible Causes
POWERTRAIN CONTROL MODULE (PCM)

Always perform the Pre-Diagnostic Troubleshooting procedure before proceeding. Refer to PRE-DIAGNOSTIC TROUBLESHOOTING PROCEDURE - 2.2L DIESEL .

DIAGNOSTIC TEST

DTC ACTIVE

NOTE: The Barometric Pressure Sensor is located inside the Powertrain Control Module and is not serviceable separate.

1. Turn the ignition on, engine not running.
2. Monitor the scan tool for at least two minutes.
3. With the scan tool, select View DTCs.

   Is the DTC Active or Stored?

   Active

   - Replace the Powertrain Control Module. **Before removing the PCM, perform the "Replace PCM" routine in the Miscellaneous Functions tab of the scan tool.** . Refer to **REMOVAL** .
   - Perform the POWERTRAIN VERIFICATION TEST - 2.2L DIESEL. Refer to **PCM VERIFICATION TEST - 2.2L DIESEL** .

Stored

- If this is the first occurrence of a Barometric Pressure Sensor DTC, erase the DTC and deliver the vehicle back to the customer. **If the vehicle was in for service previously with a Stored Barometric Pressure Sensor DTC,** replace the Powertrain Control Module. **Before removing the PCM, perform the "Replace PCM" routine in the Miscellaneous Functions tab of the scan tool.** . Refer to **REMOVAL** .
- Perform the POWERTRAIN VERIFICATION TEST - 2.2L DIESEL. Refer to **PCM VERIFICATION TEST - 2.2L DIESEL** .

P2229-BAROMETRIC PRESSURE CIRCUIT HIGH

For a complete wiring diagram, **refer to appropriate SYSTEM WIRING DIAGRAMS article** .

WHEN MONITORED

With the ignition on.

SET CONDITION

The Powertrain Control Module (PCM) detects that the Barometric Pressure Sensor signal is above 4.98 Volts for 1.6 seconds.

POSSIBLE CAUSES

Possible Causes
POWERTRAIN CONTROL MODULE (PCM)

Always perform the Pre-Diagnostic Troubleshooting procedure before proceeding. Refer to PRE-DIAGNOSTIC TROUBLESHOOTING PROCEDURE - 2.2L DIESEL .

DIAGNOSTIC TEST

DTC ACTIVE

NOTE: The Barometric Pressure Sensor is located inside the Powertrain Control Module and is not serviceable separate.

1. Turn the ignition on, engine not running.
2. Monitor the scan tool for at least two minutes.
3. With the scan tool, select View DTCs.

   Is the DTC Active or Stored?

   Active

   - Replace the Powertrain Control Module. **Before removing the PCM, perform the "Replace PCM" routine in the Miscellaneous Functions tab of the scan tool.** . Refer to **REMOVAL** .
   - Perform the POWERTRAIN VERIFICATION TEST - 2.2L DIESEL. Refer to **PCM VERIFICATION TEST - 2.2L DIESEL** .

   Stored

   - If this is the first occurrence of a Barometric Pressure Sensor DTC, erase the DTC and deliver the vehicle back to the customer. **If the vehicle was in for service previously with a Stored Barometric Pressure Sensor DTC,** replace the Powertrain Control Module in accordance with the service information. Refer to **REMOVAL** .
   - Perform the POWERTRAIN VERIFICATION TEST - 2.2L DIESEL. Refer to **PCM VERIFICATION TEST - 2.2L DIESEL** .

P2237-O2 SENSOR 1/1 PUMP CELL CURRENT CIRCUIT OPEN

For a complete wiring diagram, **refer to appropriate SYSTEM WIRING DIAGRAMS article** .

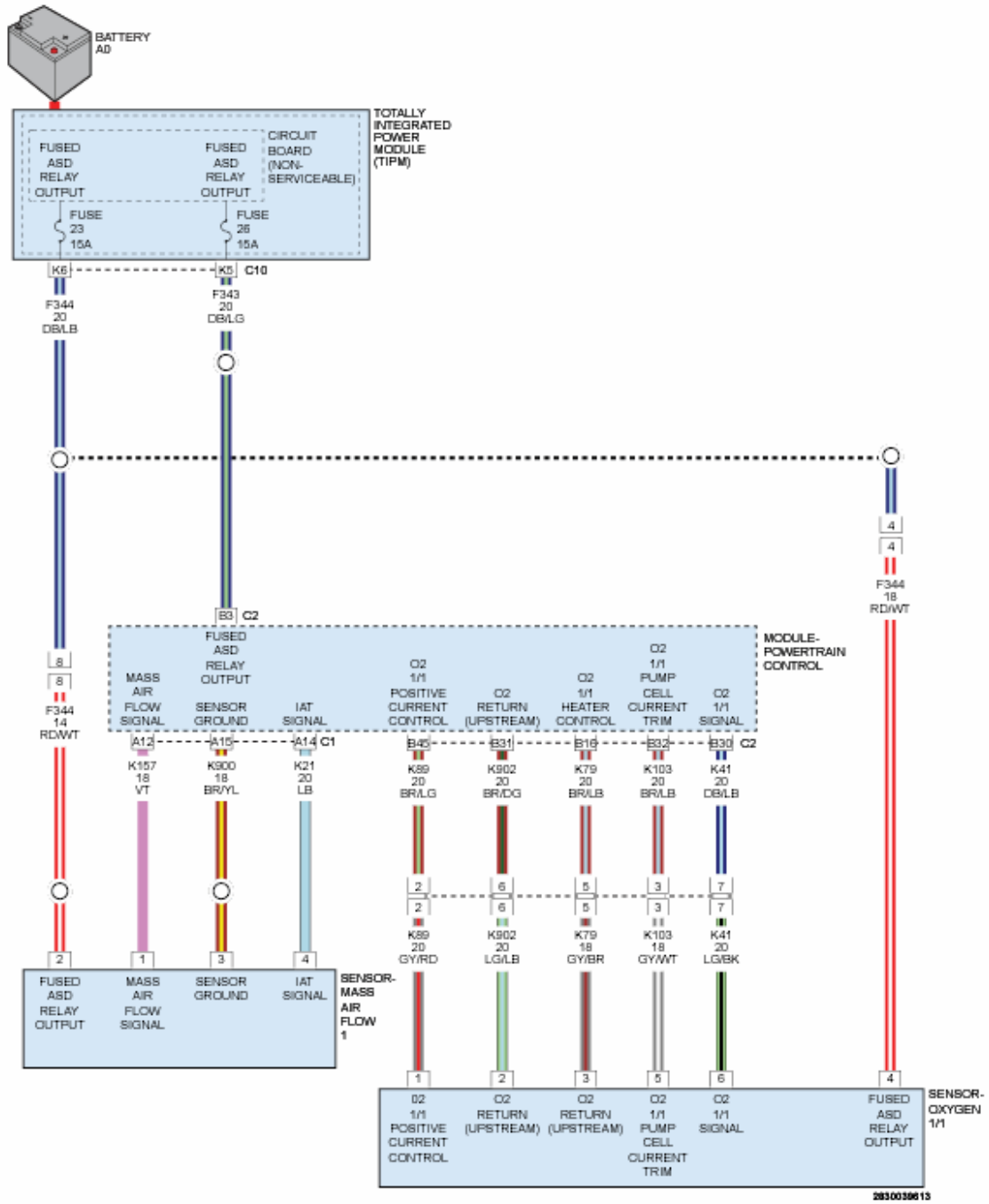

Fig. 20: O2 & MAF Sensors Circuit Diagram
Courtesy of CHRYSLER GROUP, LLC

WHEN MONITORED

With the ignition on and the O2 Sensor 1/1 at operating temperature.

SET CONDITION

The Powertrain Control Module (PCM) detects an open on the (K89) O2 Sensor 1/1 Positive Current Control circuit for 2.0 seconds.

POSSIBLE CAUSES

Possible Causes
(K89) O2 SENSOR 1/1 POSITIVE CURRENT CONTROL CIRCUIT OPEN/HIGH RESISTANCE
OXYGEN SENSOR
POWERTRAIN CONTROL MODULE (PCM)

Always perform the Pre-Diagnostic Troubleshooting procedure before proceeding. Refer to PRE-DIAGNOSTIC TROUBLESHOOTING PROCEDURE - 2.2L DIESEL .

DIAGNOSTIC TEST

1. **DTC IS ACTIVE**
    1. Ignition on, engine not running.
    2. With the scan tool, clear DTCs in the Powertrain Control Module.
    3. Start the engine.
    4. Allow the engine to reach normal operating temperature.
    5. Monitor the scan tool for at least five minutes.
    6. With the scan tool, select View DTCs.

    Is the status Active for this DTC?

    Yes

    - Go To 2

    No

    - Perform the INTERMITTENT CONDITION diagnostic procedure. Refer to **INTERMITTENT CONDITION - 2.2L DIESEL** .
2. **CHECK THE (K89) O2 SENSOR 1/1 POSITIVE CURRENT CONTROL CIRCUIT FOR AN OPEN/HIGH RESISTANCE**
    1. Turn the ignition off.
    2. Disconnect the Oxygen Sensor harness connector.
    3. Disconnect the Powertrain Control Module C2 harness connector.
    4. Measure the resistance of the (K89) O2 Sensor 1/1 Positive Current

Control circuit between the Oxygen Sensor harness connector and the Powertrain Control Module C2 harness connector.

Is the resistance below 5.0 Ohms?

Yes

- Go To 3

No

- Repair the (K89) 02 Sensor 1/1 Positive Current Control circuit for an open or high resistance.
- Perform the POWERTRAIN VERIFICATION TEST - 2.2L DIESEL. Refer to **PCM VERIFICATION TEST - 2.2L DIESEL** .

3. **OXYGEN SENSOR**
   1. Turn the ignition off.
   2. Connect the Powertrain Control Module harness connector.
   3. Replace the Oxygen Sensor in accordance with the service information.
   4. Turn the ignition on.
   5. With the scan tool, navigate to Miscellaneous Functions and perform the O2 Sensor Replaced procedure.
   6. Start the engine.
   7. Allow the engine to reach normal operating temperature.
   8. Monitor the scan tool for at least five minutes.
   9. With the scan tool, select View DTCs.

   Is the status Active for this DTC?

   Yes

   - Go To 4

   No

   - Test Complete.
   - Perform the POWERTRAIN VERIFICATION TEST - 2.2L

DIESEL. Refer to **PCM VERIFICATION TEST - 2.2L DIESEL** .

4. **POWERTRAIN CONTROL MODULE**
   1. Using the wiring diagram/schematic as a guide, inspect the wiring and connectors between the Oxygen Sensor and the Powertrain Control Module.
   2. Look for any chafed, pierced, pinched, or partially broken wires.
   3. Look for broken, bent, pushed out or corroded terminals.
   4. Monitor the scan tool data relative to this circuit and wiggle test the wiring and connectors.
   5. Look for the data to change or for the DTC to reset during the wiggle test.
   6. Perform any Technical Service Bulletins that may apply.

   Were any problems found?

   Yes

   - Repair as necessary.
   - Perform the POWERTRAIN VERIFICATION TEST - 2.2L DIESEL. Refer to **PCM VERIFICATION TEST - 2.2L DIESEL** .

   No

   - Replace the Powertrain Control Module. **Before removing the PCM, perform the "Replace PCM" routine in the Miscellaneous Functions tab of the scan tool.** . Refer to **REMOVAL** .
   - Perform the POWERTRAIN VERIFICATION TEST - 2.2L DIESEL. Refer to **PCM VERIFICATION TEST - 2.2L DIESEL** .

P2238-O2 SENSOR 1/1 PUMP CELL CURRENT CIRCUIT LOW

For a complete wiring diagram, **refer to appropriate SYSTEM WIRING DIAGRAMS article** .

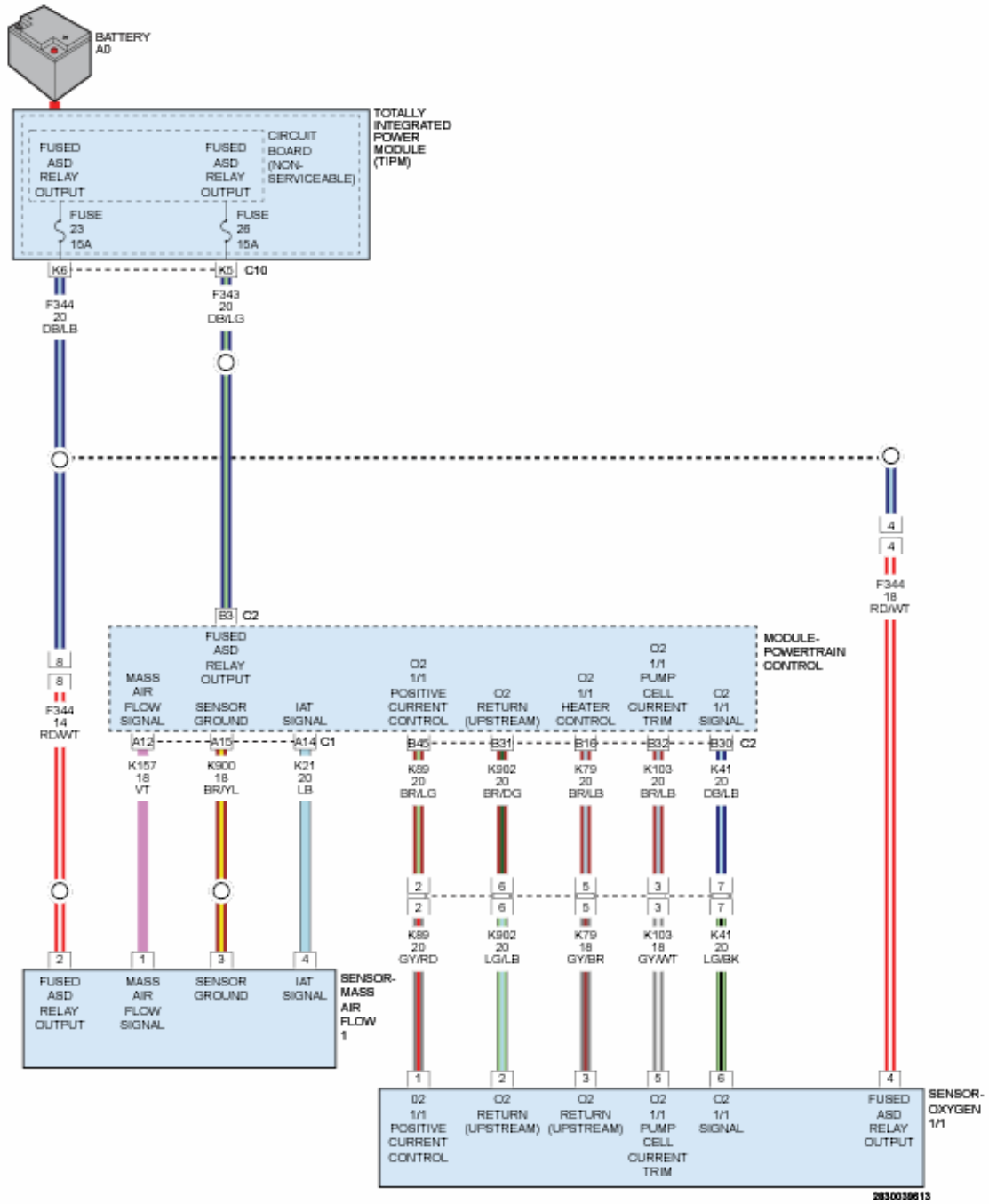

Fig. 21: O2 & MAF Sensors Circuit Diagram
Courtesy of CHRYSLER GROUP, LLC

WHEN MONITORED

With the ignition on Battery voltage above 10.0 Volts and the O2 1/1 Sensor at operating temperature.

SET CONDITION

The Powertrain Control Module (PCM) detects that the (K89) O2 Sensor 1/1

Positive Current Control circuit current is less than -2.2 mA for 2.0 seconds.

POSSIBLE CAUSES

Possible Causes
OXYGEN SENSOR
POWERTRAIN CONTROL MODULE (PCM)

Always perform the Pre-Diagnostic Troubleshooting procedure before proceeding. Refer to PRE-DIAGNOSTIC TROUBLESHOOTING PROCEDURE - 2.2L DIESEL .

DIAGNOSTIC TEST

1. **DTC IS ACTIVE**
   1. Ignition on, engine not running.
   2. With the scan tool, clear DTCs in the Powertrain Control Module.
   3. Start the engine.
   4. Allow the engine to reach normal operating temperature.
   5. Monitor the scan tool for at least five minutes.
   6. With the scan tool, select View DTCs.

      Is the status Active for this DTC?

      Yes

      - Go To 2

      No

      - Perform the INTERMITTENT CONDITION diagnostic procedure. Refer to **INTERMITTENT CONDITION - 2.2L DIESEL** .
2. **OXYGEN SENSOR**
   1. Turn the ignition off.
   2. Replace the Oxygen Sensor in accordance with the service information.
   3. Turn the ignition on.
   4. With the scan tool, navigate to Miscellaneous Functions and perform the O2 Sensor Replaced procedure.

5. Start the engine.
6. Allow the engine to reach normal operating temperature.
7. Monitor the scan tool for at least five minutes.
8. With the scan tool, select View DTCs.

   Is the status Active for this DTC?

   Yes

   - Go To 3

   No

   - Test Complete.
   - Perform the POWERTRAIN VERIFICATION TEST - 2.2L. Refer to **PCM VERIFICATION TEST - 2.2L DIESEL** .

3. **POWERTRAIN CONTROL MODULE**
   1. Using the wiring diagram/schematic as a guide, inspect the wiring and connectors between the Oxygen Sensor and the Powertrain Control Module.
   2. Look for any chafed, pierced, pinched, or partially broken wires.
   3. Look for broken, bent, pushed out or corroded terminals.
   4. Monitor the scan tool data relative to this circuit and wiggle test the wiring and connectors.
   5. Look for the data to change or for the DTC to reset during the wiggle test.
   6. Perform any Technical Service Bulletins that may apply.

      Were any problems found?

      Yes

      - Repair as necessary.
      - Perform the POWERTRAIN VERIFICATION TEST - 2.2L. Refer to **PCM VERIFICATION TEST - 2.2L DIESEL** .

      No

- Replace the Powertrain Control Module. **Before removing the PCM, perform the "Replace PCM" routine in the Miscellaneous Functions tab of the scan tool.** . Refer to **REMOVAL** .
- Perform the POWERTRAIN VERIFICATION TEST - 2.2L. Refer to **PCM VERIFICATION TEST - 2.2L DIESEL** .

P2239-O2 SENSOR 1/1 PUMP CELL CURRENT CIRCUIT HIGH

For a complete wiring diagram, **refer to appropriate SYSTEM WIRING DIAGRAMS article** .

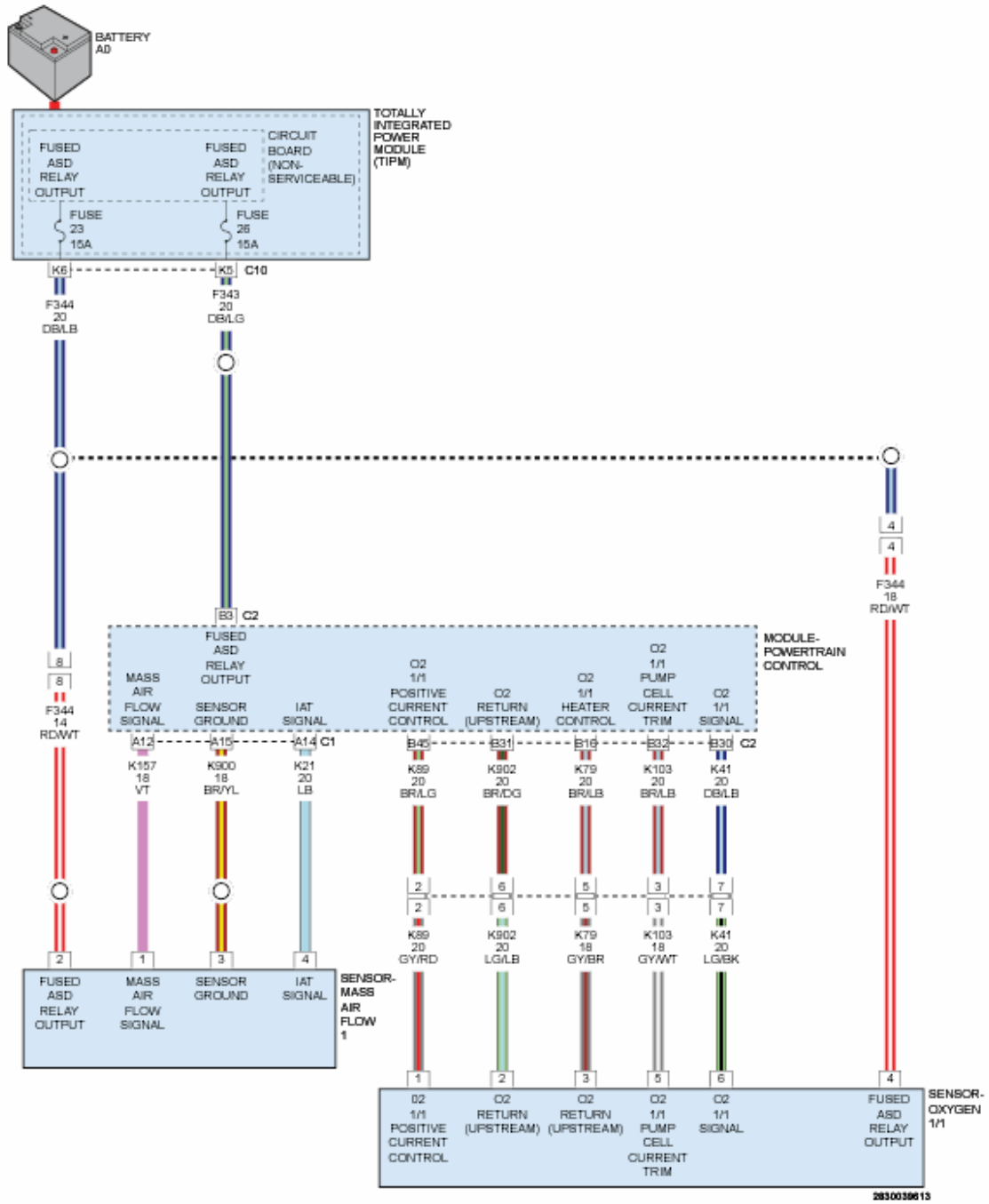

Fig. 22: O2 & MAF Sensors Circuit Diagram
Courtesy of CHRYSLER GROUP, LLC

WHEN MONITORED

With the ignition on and the O2 Sensor 1/1 at operating temperature.

SET CONDITION

The Powertrain Control Module (PCM) detects that the (K89) O2 Sensor 1/1 Positive Current Control circuit current is above 3.19 mA for 2.0 seconds.

POSSIBLE CAUSES

Possible Causes
OXYGEN SENSOR
POWERTRAIN CONTROL MODULE (PCM)

Always perform the Pre-Diagnostic Troubleshooting procedure before proceeding. Refer to PRE-DIAGNOSTIC TROUBLESHOOTING PROCEDURE - 2.2L DIESEL .

DIAGNOSTIC TEST

1. **DTC IS ACTIVE**
    1. Ignition on, engine not running.
    2. With the scan tool, clear DTCs in the Powertrain Control Module.
    3. Start the engine.
    4. Allow the engine to reach normal operating temperature.
    5. Monitor the scan tool for at least five minutes.
    6. With the scan tool, select View DTCs.

    Is the status Active for this DTC?

    Yes

    - Go To 2

    No

    - Perform the INTERMITTENT CONDITION diagnostic procedure. Refer to **INTERMITTENT CONDITION - 2.2L DIESEL** .
2. **OXYGEN SENSOR**
    1. Turn the ignition off.
    2. Replace the Oxygen Sensor in accordance with the service information.
    3. Turn the ignition on.
    4. With the scan tool, navigate to Miscellaneous Functions and perform the O2 Sensor Replaced procedure.
    5. Start the engine.
    6. Allow the engine to reach normal operating temperature.

7. Monitor the scan tool for at least five minutes.
8. With the scan tool, select View DTCs.

   Is the status Active for this DTC?

   Yes

   - Go To 3

   No

   - Test Complete.
   - Perform the POWERTRAIN VERIFICATION TEST - 2.2L. Refer to **PCM VERIFICATION TEST - 2.2L DIESEL** .

3. **POWERTRAIN CONTROL MODULE**
   1. Using the wiring diagram/schematic as a guide, inspect the wiring and connectors between the Oxygen Sensor and the Powertrain Control Module.
   2. Look for any chafed, pierced, pinched, or partially broken wires.
   3. Look for broken, bent, pushed out or corroded terminals.
   4. Monitor the scan tool data relative to this circuit and wiggle test the wiring and connectors.
   5. Look for the data to change or for the DTC to reset during the wiggle test.
   6. Perform any Technical Service Bulletins that may apply.

      Were any problems found?

      Yes

      - Repair as necessary.
      - Perform the POWERTRAIN VERIFICATION TEST - 2.2L. Refer to **PCM VERIFICATION TEST - 2.2L DIESEL** .

      No

      - Replace the Powertrain Control Module. **Before removing the PCM, perform the "Replace PCM" routine in the**

Miscellaneous Functions tab of the scan tool. . Refer to **REMOVAL** .

- Perform the POWERTRAIN VERIFICATION TEST - 2.2L. Refer to **PCM VERIFICATION TEST - 2.2L DIESEL** .

P2243-O2 SENSOR 1/1 REFERENCE VOLTAGE CIRCUIT/OPEN

For a complete wiring diagram, **refer to appropriate SYSTEM WIRING DIAGRAMS article** .

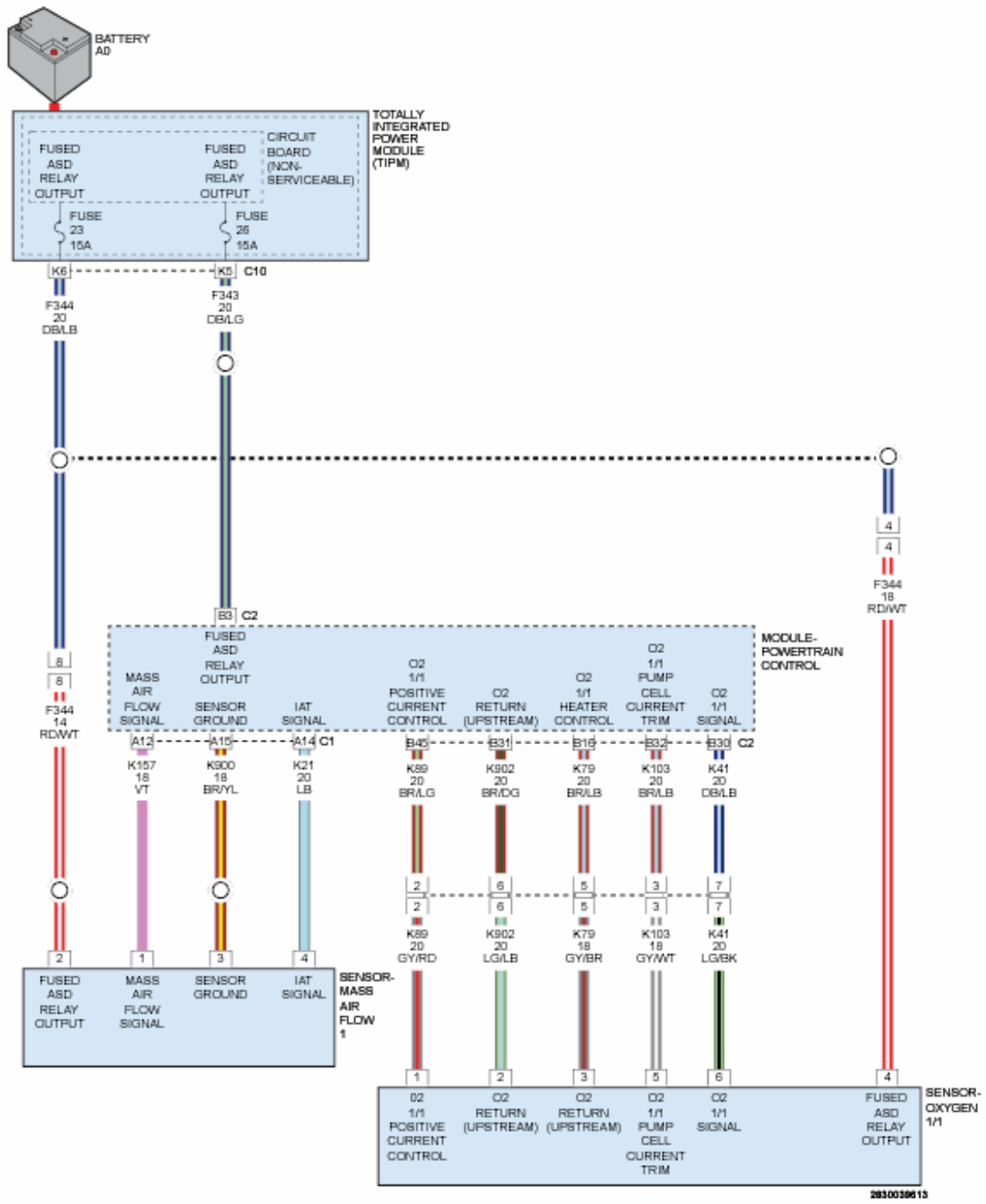

Fig. 23: O2 & MAF Sensors Circuit Diagram
Courtesy of CHRYSLER GROUP, LLC

WHEN MONITORED

With the ignition on and the O2 Sensor 1/1 at operating temperature.

SET CONDITION

The Powertrain Control Module (PCM) detects an open on the (K41) O2 Sensor 1/1 Reference Signal circuit for 2.0 seconds.

POSSIBLE CAUSES

Possible Causes
(K41) O2 SENSOR 1/1 REFERENCE SIGNAL CIRCUIT OPEN/HIGH RESISTANCE
(K902) O2 SENSOR 1/1 GROUND CIRCUIT OPEN/HIGH RESISTANCE
OXYGEN SENSOR
POWERTRAIN CONTROL MODULE (PCM)

Always perform the Pre-Diagnostic Troubleshooting procedure before proceeding. Refer to PRE-DIAGNOSTIC TROUBLESHOOTING PROCEDURE - 2.2L DIESEL .

DIAGNOSTIC TEST

1. **DTC IS ACTIVE**
    1. Ignition on, engine not running.
    2. With the scan tool, clear DTCs in the Powertrain Control Module.
    3. Start the engine.
    4. Allow the engine to reach normal operating temperature.
    5. Monitor the scan tool for at least five minutes.
    6. With the scan tool, select View DTCs.

    Is the status Active for this DTC?

    Yes

    - Go To 2

No

- Perform the INTERMITTENT CONDITION diagnostic procedure. Refer to **INTERMITTENT CONDITION - 2.2L DIESEL** .

2. **CHECK THE (K41) O2 SENSOR 1/1 REFERENCE SIGNAL CIRCUIT FOR AN OPEN/HIGH RESISTANCE**
   1. Turn the ignition off.
   2. Disconnect the O2 Sensor 1/1 harness connector.
   3. Disconnect the PCM C2 harness connector.
   4. Measure the resistance of the (K41) O2 Sensor 1/1 Reference Signal circuit between the Oxygen Sensor harness connector and the Powertrain Control Module C2 harness connector.

   Is the resistance below 5.0 Ohms?

   Yes

   - Go To 3

   No

   - Repair the (K41) O2 Sensor 1/1 Reference Signal circuit for an open or high resistance.
   - Perform the POWERTRAIN VERIFICATION TEST - 2.2L. Refer to **PCM VERIFICATION TEST - 2.2L DIESEL** .

3. **CHECK THE (K902) O2 SENSOR 1/1 GROUND CIRCUIT FOR AN OPEN/HIGH RESISTANCE**
   1. Measure the resistance of the (K902) O2 Sensor 1/1 Ground circuit between the Oxygen Sensor harness connector and the Powertrain Control Module C2 harness connector.

   Is the resistance below 5.0 Ohms?

   Yes

   - Go To 4

   No

- Repair the (K902) O2 Sensor 1/1 Ground circuit for an open or high resistance.
- Perform the POWERTRAIN VERIFICATION TEST - 2.2L. Refer to **PCM VERIFICATION TEST - 2.2L DIESEL** .

4. **OXYGEN SENSOR**
   1. Turn the ignition off.
   2. Connect the Powertrain Control Module harness connector.
   3. Replace the Oxygen Sensor in accordance with the service information.
   4. Turn the ignition on.
   5. With the scan tool, navigate to Miscellaneous Functions and perform the O2 Sensor Replaced procedure.
   6. Start the engine.
   7. Allow the engine to reach normal operating temperature.
   8. Monitor the scan tool for at least five minutes.
   9. With the scan tool, select View DTCs.

      Is the status Active for this DTC?

      Yes

      - Go To 5

      No

      - Test Complete.
      - Perform the POWERTRAIN VERIFICATION TEST - 2.2L. Refer to **PCM VERIFICATION TEST - 2.2L DIESEL** .

5. **POWERTRAIN CONTROL MODULE**
   1. Using the wiring diagram/schematic as a guide, inspect the wiring and connectors between the Oxygen Sensor and the Powertrain Control Module.
   2. Look for any chafed, pierced, pinched, or partially broken wires.
   3. Look for broken, bent, pushed out or corroded terminals.
   4. Monitor the scan tool data relative to this circuit and wiggle test the wiring and connectors.

5. Look for the data to change or for the DTC to reset during the wiggle test.
6. Perform any Technical Service Bulletins that may apply.

Were any problems found?

Yes

- Repair as necessary.
- Perform the POWERTRAIN VERIFICATION TEST - 2.2L. Refer to **PCM VERIFICATION TEST - 2.2L DIESEL** .

No

- Replace the Powertrain Control Module. **Before removing the PCM, perform the "Replace PCM" routine in the Miscellaneous Functions tab of the scan tool.** . Refer to **REMOVAL** .
- Perform the POWERTRAIN VERIFICATION TEST - 2.2L. Refer to **PCM VERIFICATION TEST - 2.2L DIESEL** .

P2245-O2 SENSOR 1/1 REFERENCE VOLTAGE CIRCUIT LOW

For a complete wiring diagram, **refer to appropriate SYSTEM WIRING DIAGRAMS article** .

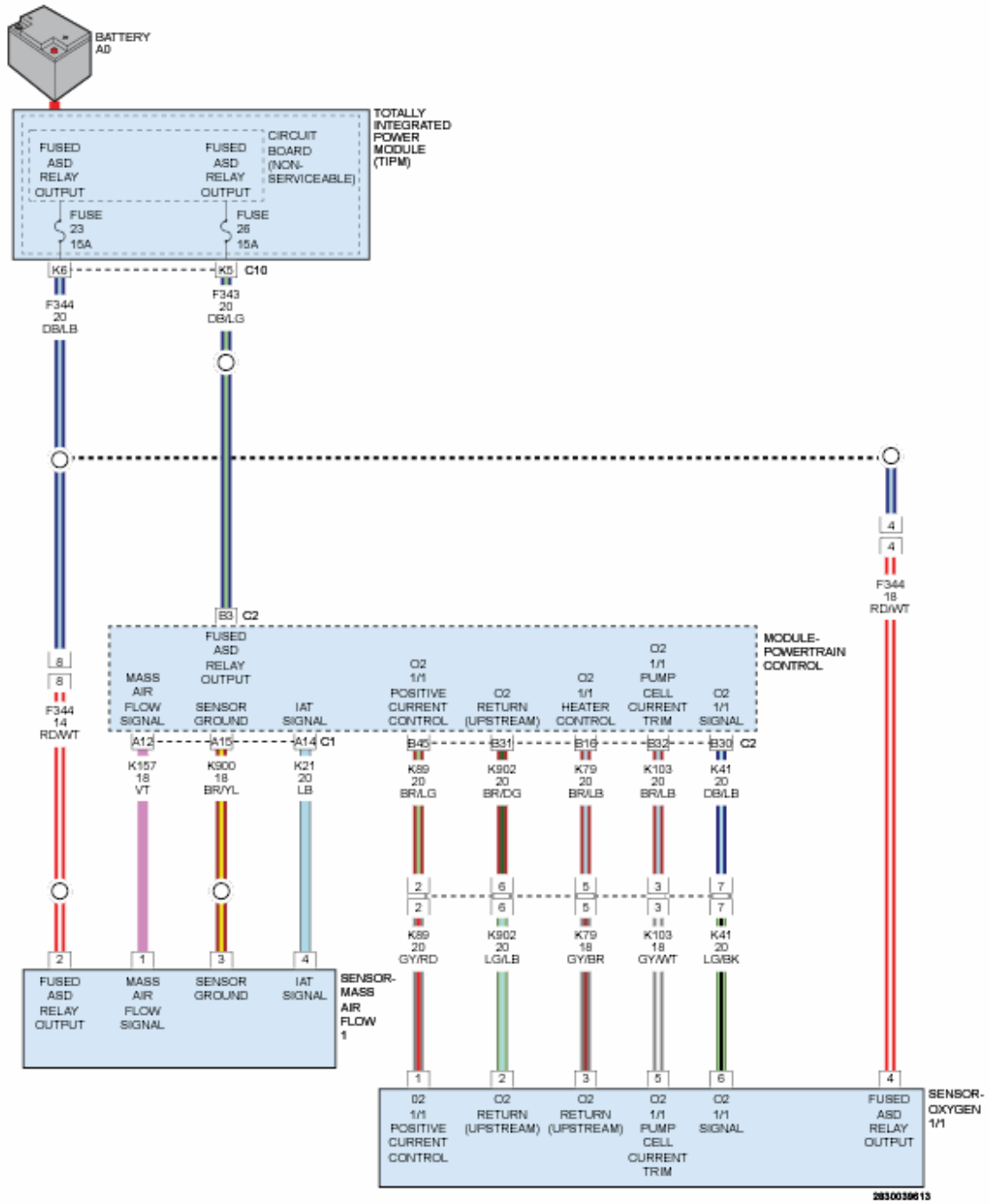

Fig. 24: O2 & MAF Sensors Circuit Diagram
Courtesy of CHRYSLER GROUP, LLC

WHEN MONITORED

With the ignition on and the O2 1/1 Sensor at operating temperature.

SET CONDITION

The Powertrain Control Module (PCM) detects a short to ground on the (K41) O2 Sensor 1/1 Reference Signal circuit for 2.0 seconds.

POSSIBLE CAUSES

Possible Causes
(K41) O2 SENSOR 1/1 REFERENCE SIGNAL CIRCUIT SHORTED TO GROUND
OXYGEN SENSOR
POWERTRAIN CONTROL MODULE (PCM)

Always perform the Pre-Diagnostic Troubleshooting procedure before proceeding. Refer to PRE-DIAGNOSTIC TROUBLESHOOTING PROCEDURE - 2.2L DIESEL .

DIAGNOSTIC TEST

1. **DTC IS ACTIVE**
    1. Ignition on, engine not running.
    2. With the scan tool, clear DTCs in the Powertrain Control Module (PCM).
    3. Start the engine.
    4. Allow the engine to reach normal operating temperature.
    5. Monitor the scan tool for at least five minutes.
    6. With the scan tool, select View DTCs.

    Is the status Active for this DTC?

    Yes

    - Go To 2

    No

    - Perform the INTERMITTENT CONDITION diagnostic procedure. Refer to **INTERMITTENT CONDITION - 2.2L DIESEL** .
2. **CHECK THE (K41) O2 SENSOR 1/1 REFERENCE SIGNAL CIRCUIT FOR A SHORT TO GROUND**
    1. Turn the ignition off.
    2. Disconnect the Oxygen Sensor harness connector.
    3. Disconnect the Powertrain Control Module harness connector.

4. Measure the resistance between ground and the (K41) O2 Sensor 1/1 Reference Signal circuit in the Oxygen Sensor harness connector.

   Is the resistance above 10k Ohms?

   Yes

   - Go To 3

   No

   - Repair the (K41) O2 Sensor 1/1 Reference Signal circuit for a short to ground.
   - Perform the POWERTRAIN VERIFICATION TEST - 2.2L. Refer to **PCM VERIFICATION TEST - 2.2L DIESEL** .

3. **OXYGEN SENSOR**
   1. Turn the ignition off.
   2. Reconnect the Powertrain Control Module C2 harness connector.
   3. Replace the Oxygen Sensor in accordance with the service information.
   4. Turn the ignition on.
   5. With the scan tool, navigate to Miscellaneous Functions and perform the O2 Sensor Replaced procedure.
   6. Start the engine.
   7. Allow the engine to reach normal operating temperature.
   8. Monitor the scan tool for at least five minutes.
   9. With the scan tool, select View DTCs.

   Is the status Active for this DTC?

   Yes

   - Go To 4

   No

   - Test Complete.
   - Perform the POWERTRAIN VERIFICATION TEST - 2.2L. Refer to **PCM VERIFICATION TEST - 2.2L DIESEL** .

4. **POWERTRAIN CONTROL MODULE**
    1. Using the wiring diagram/schematic as a guide, inspect the wiring and connectors between the Oxygen Sensor and the Powertrain Control Module.
    2. Look for any chafed, pierced, pinched, or partially broken wires.
    3. Look for broken, bent, pushed out or corroded terminals.
    4. Monitor the scan tool data relative to this circuit and wiggle test the wiring and connectors.
    5. Look for the data to change or for the DTC to reset during the wiggle test.
    6. Perform any Technical Service Bulletins that may apply.

    Were any problems found?

    Yes

    - Repair as necessary.
    - Perform the POWERTRAIN VERIFICATION TEST - 2.2L. Refer to **PCM VERIFICATION TEST - 2.2L DIESEL** .

    No

    - Replace the Powertrain Control Module. **Before removing the PCM, perform the "Replace PCM" routine in the Miscellaneous Functions tab of the scan tool.** . Refer to **REMOVAL** .
    - Perform the POWERTRAIN VERIFICATION TEST - 2.2L. Refer to **PCM VERIFICATION TEST - 2.2L DIESEL** .

P2246-O2 SENSOR 1/1 REFERENCE VOLTAGE CIRCUIT HIGH

For a complete wiring diagram, **refer to appropriate SYSTEM WIRING DIAGRAMS article** .

WHEN MONITORED

With the ignition on and the O2 Sensor 1/1 at operating temperature.

SET CONDITION

The Powertrain Control Module (PCM) detects a short to voltage on the (K41) O2 Sensor 1/1 Reference Signal circuit for 2.0 seconds.

POSSIBLE CAUSES

Possible Causes
(K41) O2 SENSOR 1/1 REFERENCE SIGNAL CIRCUIT SHORTED TO VOLTAGE
OXYGEN SENSOR
POWERTRAIN CONTROL MODULE (PCM)

Always perform the Pre-Diagnostic Troubleshooting procedure before proceeding. Refer to PRE-DIAGNOSTIC TROUBLESHOOTING PROCEDURE - 2.2L DIESEL .

DIAGNOSTIC TEST

1. **DTC IS ACTIVE**
   1. Ignition on, engine not running.
   2. With the scan tool, clear DTCs in the Powertrain Control Module.
   3. Start the engine.
   4. Allow the engine to reach normal operating temperature.
   5. Monitor the scan tool for at least five minutes.
   6. With the scan tool, select View DTCs.

      Is the status Active for this DTC?

      Yes

      - Go To 2

      No

      - Perform the INTERMITTENT CONDITION diagnostic procedure. Refer to **INTERMITTENT CONDITION - 2.2L DIESEL** .
2. **CHECK THE (K41) O2 SENSOR 1/1 REFERENCE SIGNAL CIRCUIT FOR A SHORT TO VOLTAGE**
   1. Turn the ignition off.
   2. Disconnect the Oxygen Sensor connector.

3. Disconnect the Powertrain Control Module C2 harness connector.
4. Remove the ASD/Main Relay.
5. Connect a jumper wire between cavity 87 and cavity 30 of the Main Relay Connector.
6. Turn the ignition on.
7. Measure the voltage of the (K41) O2 Sensor 1/1 Reference Signal circuit at the Oxygen Sensor harness connector.

   Is there any voltage present?

   Yes

   - Repair the (K41) O2 1/1 Reference Signal circuit for a short to voltage.
   - Perform the POWERTRAIN VERIFICATION TEST - 2.2L. Refer to **PCM VERIFICATION TEST - 2.2L DIESEL** .

   No

   - Go To 3

3. **OXYGEN SENSOR**
   1. Turn the ignition off.
   2. Reconnect the Powertrain Control Module C2 harness connector.
   3. Replace the Oxygen Sensor in accordance with the service information.
   4. Turn the ignition on.
   5. With the scan tool, navigate to Miscellaneous Functions and perform the O2 Sensor Replaced procedure.
   6. Start the engine.
   7. Allow the engine to reach normal operating temperature.
   8. Monitor the scan tool for at least five minutes.
   9. With the scan tool, select View DTCs.

   Is the status Active for this DTC?

   Yes

   - Go To 4

No

- Test Complete.
- Perform the POWERTRAIN VERIFICATION TEST - 2.2L. Refer to **PCM VERIFICATION TEST - 2.2L DIESEL** .

4. **POWERTRAIN CONTROL MODULE**
   1. Using the wiring diagram/schematic as a guide, inspect the wiring and connectors between the Oxygen Sensor and the Powertrain Control Module.
   2. Look for any chafed, pierced, pinched, or partially broken wires.
   3. Look for broken, bent, pushed out or corroded terminals.
   4. Monitor the scan tool data relative to this circuit and wiggle test the wiring and connectors.
   5. Look for the data to change or for the DTC to reset during the wiggle test.
   6. Perform any Technical Service Bulletins that may apply.

   Were any problems found?

   Yes

   - Repair as necessary.
   - Perform the POWERTRAIN VERIFICATION TEST - 2.2L. Refer to **PCM VERIFICATION TEST - 2.2L DIESEL** .

   No

   - Replace the Powertrain Control Module. **Before removing the PCM, perform the "Replace PCM" routine in the Miscellaneous Functions tab of the scan tool.** . Refer to **REMOVAL** .
   - Perform the POWERTRAIN VERIFICATION TEST - 2.2L. Refer to **PCM VERIFICATION TEST - 2.2L DIESEL** .

P2251-O2 SENSOR 1/1 NEGATIVE CURRENT CONTROL CIRCUIT/OPEN

For a complete wiring diagram, **refer to appropriate SYSTEM WIRING DIAGRAMS article** .

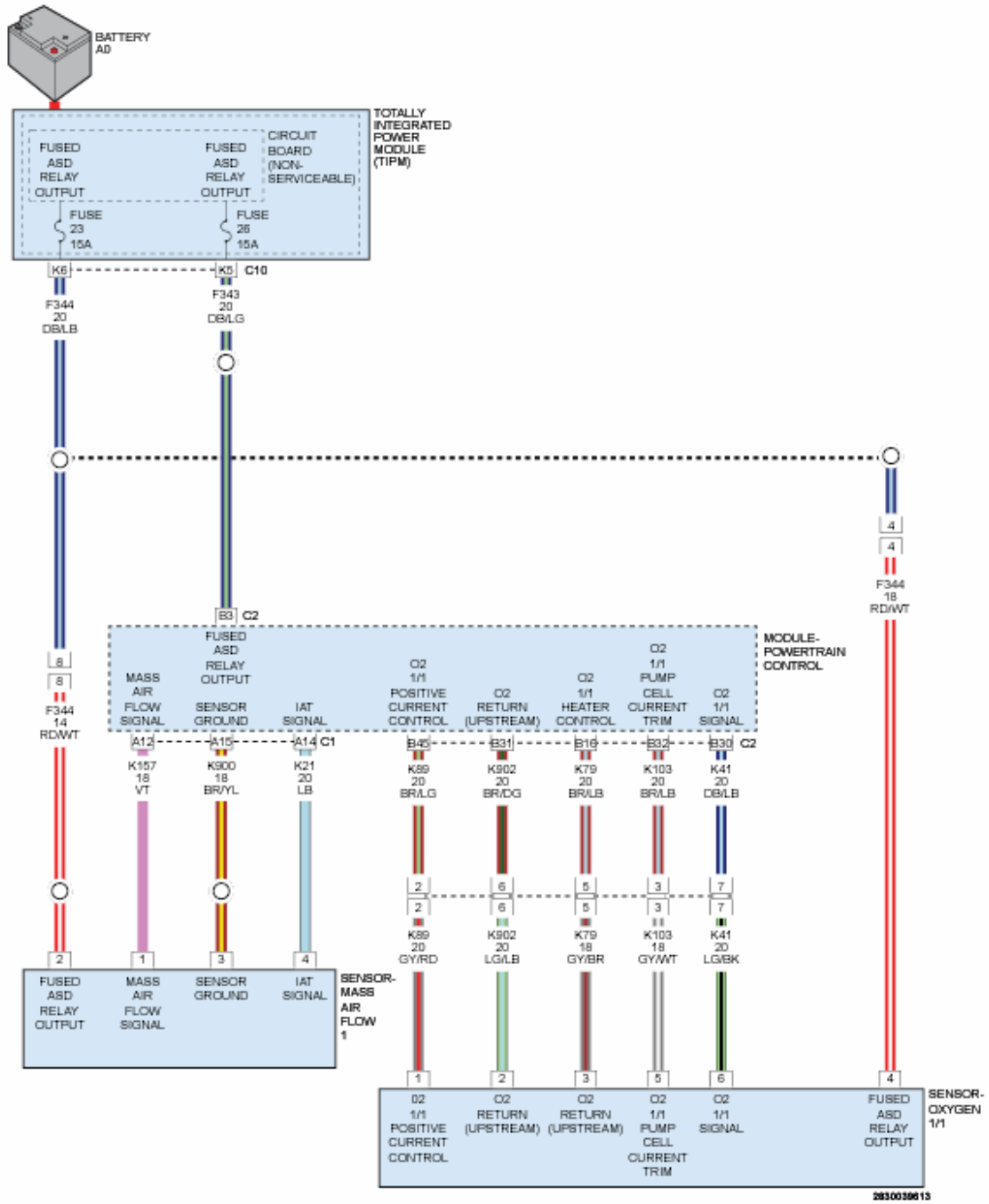

Fig. 25: O2 & MAF Sensors Circuit Diagram
Courtesy of CHRYSLER GROUP, LLC

WHEN MONITORED

With the ignition on, the O2 1/1 Sensor at operating temperature, and battery voltage above 10.5 Volts.

SET CONDITION

The Powertrain Control Module (PCM) detects an open on the (K902) O2 Sensor

1/1 Ground circuit for 2.0 seconds.

POSSIBLE CAUSES

Possible Causes
(K902) O2 SENSOR 1/1 GROUND CIRCUIT OPEN/HIGH RESISTANCE
OXYGEN SENSOR
POWERTRAIN CONTROL MODULE (PCM)

Always perform the Pre-Diagnostic Troubleshooting procedure before proceeding. Refer to PRE-DIAGNOSTIC TROUBLESHOOTING PROCEDURE - 2.2L DIESEL .

DIAGNOSTIC TEST

1. **DTC IS ACTIVE**
    1. Ignition on, engine not running.
    2. With the scan tool, Clear DTCs in the Powertrain Control Module.
    3. Start the engine.
    4. Allow the engine to reach normal operating temperature.
    5. Monitor the scan tool for at least five minutes.
    6. With the scan tool, select View DTCs.

    Is the status Active for this DTC?

    Yes

    - Go To 2

    No

    - Perform the INTERMITTENT CONDITION diagnostic procedure. Refer to **INTERMITTENT CONDITION - 2.2L DIESEL** .
2. **CHECK THE (K902) O2 SENSOR 1/1 GROUND CIRCUIT FOR AN OPEN/HIGH RESISTANCE**
    1. Turn the ignition off.
    2. Disconnect the Oxygen Sensor harness connector.
    3. Disconnect the Powertrain Control Module C2 harness connector.

4. Measure the resistance of the (K902) O2 Sensor 1/1 Ground circuit between the Oxygen Sensor harness connector and the Powertrain Control Module C2 harness connector.

   Is the resistance below 5.0 Ohms?

   Yes

   - Go To 3

   No

   - Repair the (K902) O2 Sensor 1/1 Ground circuit for an open or high resistance.
   - Perform the POWERTRAIN VERIFICATION TEST - 2.2L DIESEL. Refer to **PCM VERIFICATION TEST - 2.2L DIESEL** .

3. **OXYGEN SENSOR**
   1. Turn the ignition off.
   2. Reconnect the Powertrain Control Module C2 harness connector.
   3. Replace the Oxygen Sensor in accordance with the service information.
   4. Turn the ignition on.
   5. With the scan tool, navigate to Miscellaneous Functions and perform the O2 Sensor Replaced procedure.
   6. Start the engine.
   7. Allow the engine to reach normal operating temperature.
   8. Monitor the scan tool for at least five minutes.
   9. With the scan tool, select View DTCs.

   Is the status Active for this DTC?

   Yes

   - Go To 4

   No

   - Test Complete.

- Perform the POWERTRAIN VERIFICATION TEST - 2.2L DIESEL. Refer to **PCM VERIFICATION TEST - 2.2L DIESEL** .

4. **POWERTRAIN CONTROL MODULE**
   1. Using the wiring diagram/schematic as a guide, inspect the wiring and connectors between the Oxygen Sensor and the Powertrain Control Module.
   2. Look for any chafed, pierced, pinched, or partially broken wires.
   3. Look for broken, bent, pushed out or corroded terminals.
   4. Monitor the scan tool data relative to this circuit and wiggle test the wiring and connectors.
   5. Look for the data to change or for the DTC to reset during the wiggle test.
   6. Perform any Technical Service Bulletins that may apply.

   Were any problems found?

   Yes

   - Repair as necessary.
   - Perform the POWERTRAIN VERIFICATION TEST - 2.2L DIESEL. Refer to **PCM VERIFICATION TEST - 2.2L DIESEL** .

   No

   - Replace the Powertrain Control Module. **Before removing the PCM, perform the "Replace PCM" routine in the Miscellaneous Functions tab of the scan tool.** . Refer to **REMOVAL** .
   - Perform the POWERTRAIN VERIFICATION TEST - 2.2L DIESEL. Refer to **PCM VERIFICATION TEST - 2.2L DIESEL** .

P2252-O2 SENSOR 1/1 NEGATIVE CURRENT CONTROL CIRCUIT LOW

For a complete wiring diagram, **refer to appropriate SYSTEM WIRING DIAGRAMS article** .

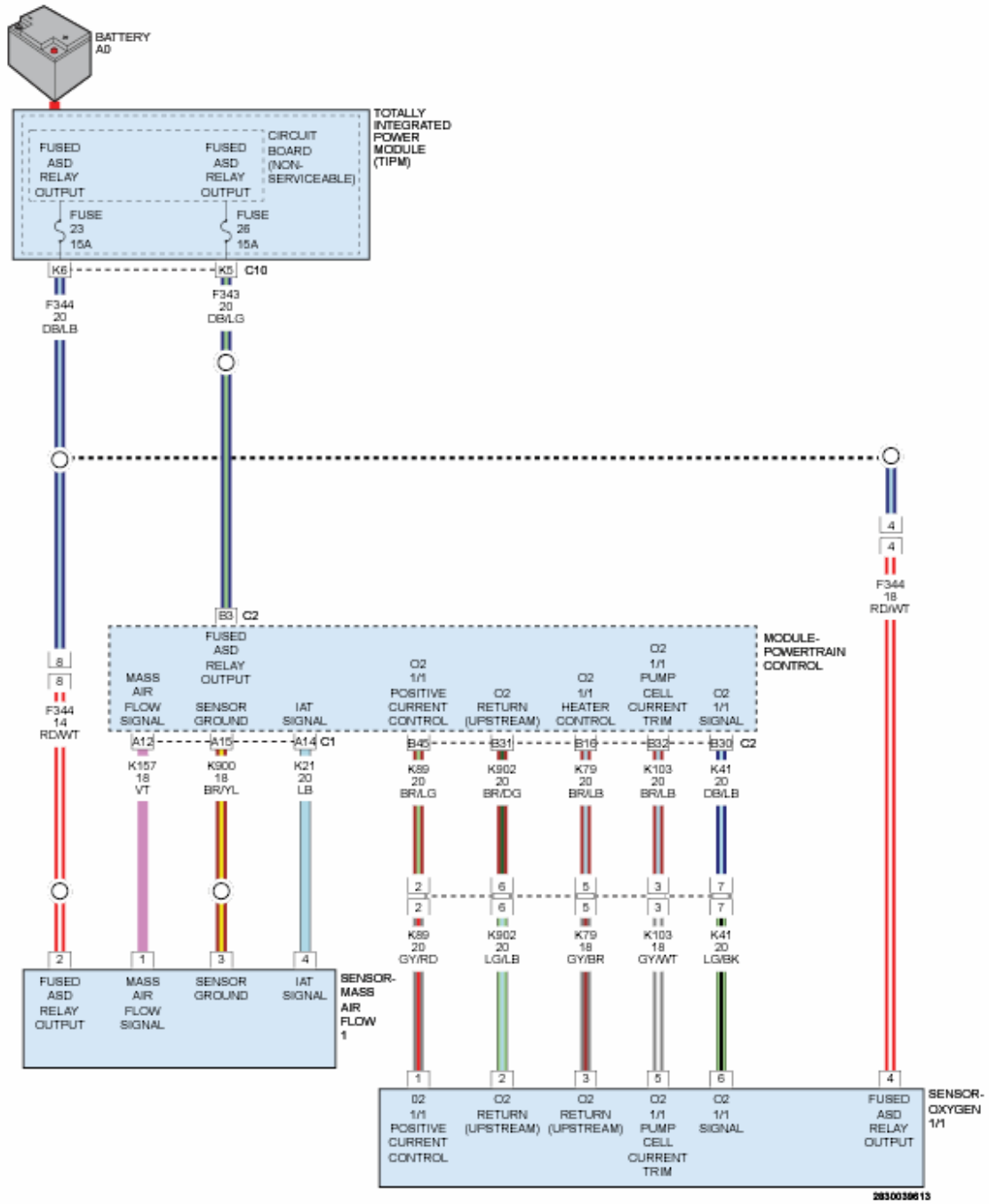

Fig. 26: O2 & MAF Sensors Circuit Diagram
Courtesy of CHRYSLER GROUP, LLC

WHEN MONITORED

With the ignition on, the O2 1/1 Sensor at operating temperature, and battery voltage above 10.5 Volts.

SET CONDITION

The Powertrain Control Module (PCM) detects a short to ground on the (K902)

O2 Sensor 1/1 Ground circuit for 2.0 seconds.

POSSIBLE CAUSES

Possible Causes
(K902) O2 SENSOR 1/1 GROUND CIRCUIT SHORTED TO GROUND
OXYGEN SENSOR
POWERTRAIN CONTROL MODULE (PCM)

Always perform the Pre-Diagnostic Troubleshooting procedure before proceeding. Refer to PRE-DIAGNOSTIC TROUBLESHOOTING PROCEDURE - 2.2L DIESEL .

DIAGNOSTIC TEST

1. **DTC IS ACTIVE**
   1. Ignition on, engine not running.
   2. With the scan tool, clear DTCs in the Powertrain Control Module.
   3. Start the engine.
   4. Allow the engine to reach normal operating temperature.
   5. Monitor the scan tool for at least five minutes.
   6. With the scan tool, select View DTCs.

      Is the status Active for this DTC?

      Yes

      - Go To 2

      No

      - Perform the INTERMITTENT CONDITION diagnostic procedure. Refer to **INTERMITTENT CONDITION - 2.2L DIESEL** .
2. **CHECK THE (K902) O2 SENSOR 1/1 GROUND CIRCUIT FOR A SHORT TO GROUND**
   1. Turn the ignition off.
   2. Disconnect the Oxygen Sensor harness connector.
   3. Disconnect the Powertrain Control Module C2 harness connector.

4. Measure the resistance between ground and the (K902) O2 Sensor 1/1 Ground circuit at the Oxygen Sensor harness connector.

   Is the resistance above 10k Ohms?

   Yes

   - Go To 3

   No

   - Repair the (K902) O2 Sensor 1/1 Ground circuit for a short to ground.
   - Perform the POWERTRAIN VERIFICATION TEST - 2.2L DIESEL. Refer to **PCM VERIFICATION TEST - 2.2L DIESEL** .

3. **OXYGEN SENSOR**
   1. Turn the ignition off.
   2. Reconnect the Powertrain Control Module C2 harness connector.
   3. Replace the Oxygen Sensor in accordance with the service information.
   4. Turn the ignition on.
   5. With the scan tool, navigate to Miscellaneous Functions and perform the O2 Sensor Replaced procedure.
   6. Start the engine.
   7. Allow the engine to reach normal operating temperature.
   8. Monitor the scan tool for at least five minutes.
   9. With the scan tool, select View DTCs.

   Did the DTC return?

   Yes

   - Go To 4

   No

   - Test Complete.
   - Perform the POWERTRAIN VERIFICATION TEST - 2.2L

DIESEL. Refer to **PCM VERIFICATION TEST - 2.2L DIESEL** .

4. **POWERTRAIN CONTROL MODULE**
   1. Using the wiring diagram/schematic as a guide, inspect the wiring and connectors between the Oxygen Sensor and the Powertrain Control Module.
   2. Look for any chafed, pierced, pinched, or partially broken wires.
   3. Look for broken, bent, pushed out or corroded terminals.
   4. Monitor the scan tool data relative to this circuit and wiggle test the wiring and connectors.
   5. Look for the data to change or for the DTC to reset during the wiggle test.
   6. Perform any Technical Service Bulletins that may apply.

   Were any problems found?

   Yes

   - Repair as necessary.
   - Perform the POWERTRAIN VERIFICATION TEST - 2.2L DIESEL. Refer to **PCM VERIFICATION TEST - 2.2L DIESEL** .

   No

   - Replace the Powertrain Control Module. **Before removing the PCM, perform the "Replace PCM" routine in the Miscellaneous Functions tab of the scan tool.** . Refer to **REMOVAL** .
   - Perform the POWERTRAIN VERIFICATION TEST - 2.2L DIESEL. Refer to **PCM VERIFICATION TEST - 2.2L DIESEL** .

P2253-O2 SENSOR 1/1 NEGATIVE CURRENT CONTROL CIRCUIT HIGH

For a complete wiring diagram, **refer to appropriate SYSTEM WIRING DIAGRAMS article** .

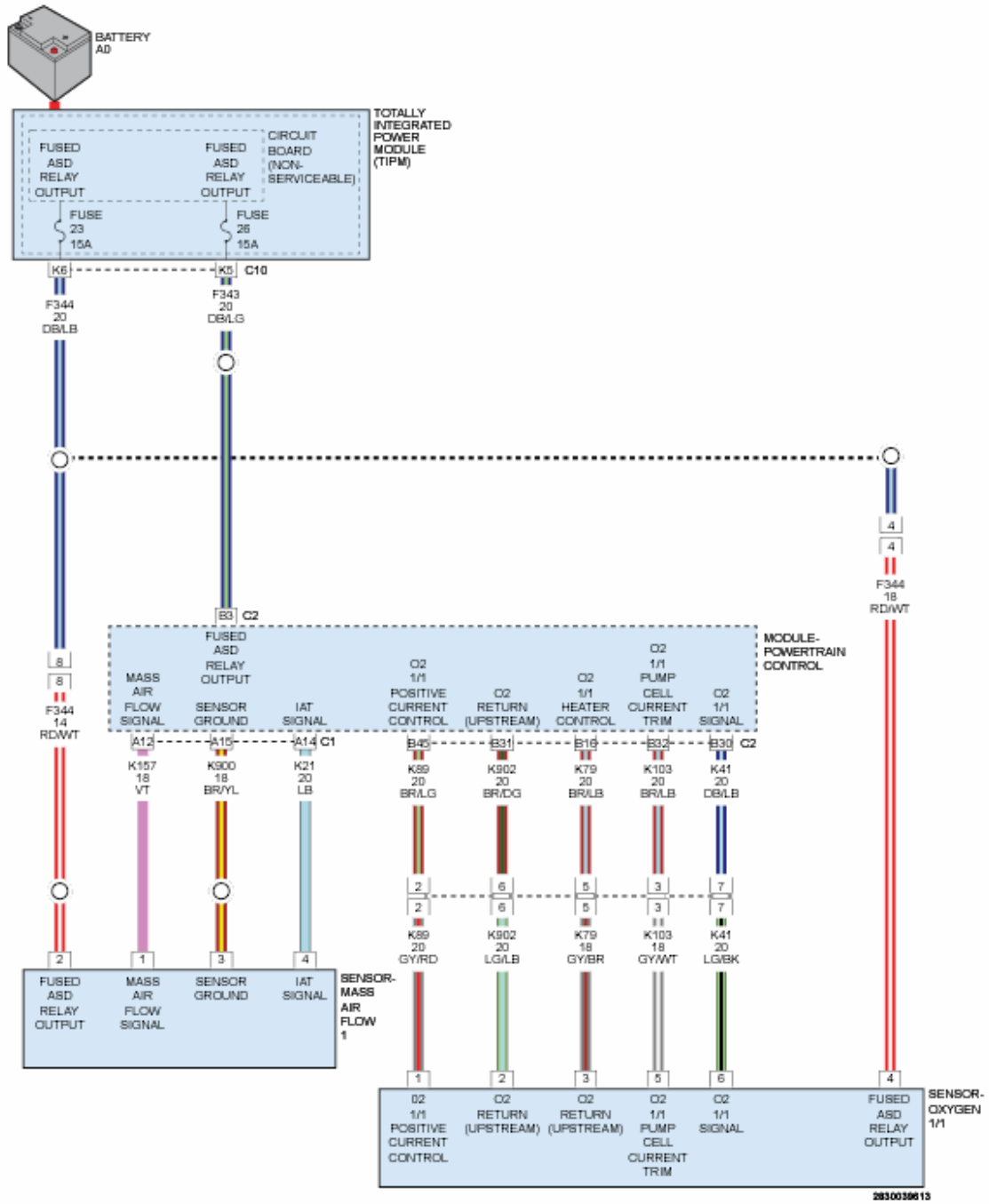

Fig. 27: O2 & MAF Sensors Circuit Diagram
Courtesy of CHRYSLER GROUP, LLC

WHEN MONITORED

With the ignition on, the O2 1/1 Sensor at operating temperature, and battery voltage above 10.5 Volts.

SET CONDITION

The Powertrain Control Module (PCM) detects a short to voltage on the (K902)

O2 Sensor 1/1 Ground circuit for 2.0 seconds.

POSSIBLE CAUSES

Possible Causes
(K902) O2 SENSOR 1/1 GROUND CIRCUIT SHORTED TO VOLTAGE
OXYGEN SENSOR
POWERTRAIN CONTROL MODULE (PCM)

Always perform the Pre-Diagnostic Troubleshooting procedure before proceeding. Refer to PRE-DIAGNOSTIC TROUBLESHOOTING PROCEDURE - 2.2L DIESEL .

DIAGNOSTIC TEST

1. **DTC IS ACTIVE**
    1. Ignition on, engine not running.
    2. With the scan tool, Clear DTCs in the Powertrain Control Module.
    3. Start the engine.
    4. Allow the engine to reach normal operating temperature.
    5. Monitor the scan tool for at least five minutes.
    6. With the scan tool, select View DTCs.

    Is the status Active for this DTC?

    Yes

    - Go To 2

    No

    - Perform the INTERMITTENT CONDITION diagnostic procedure. Refer to **INTERMITTENT CONDITION - 2.2L DIESEL** .
2. **CHECK THE (K902) O2 SENSOR 1/1 GROUND CIRCUIT FOR A SHORT TO VOLTAGE**
    1. Turn the ignition off.
    2. Disconnect the Oxygen Sensor connector.
    3. Disconnect the Powertrain Control Module C2 harness connector.

4. Remove the ASD/Main Relay.
5. Connect a jumper wire between cavity 87 and cavity 30 of the Main Relay Connector.
6. Turn the ignition on.
7. Measure the voltage of the (K902) O2 Sensor 1/1 Ground circuit at the Oxygen Sensor harness connector.

   Is there any voltage present?

   Yes

   - Repair the (K902) O2 Sensor 1/1 Ground circuit for a short to voltage.
   - Perform the POWERTRAIN VERIFICATION TEST - 2.2L DIESEL. Refer to **PCM VERIFICATION TEST - 2.2L DIESEL** .

   No

   - Go To 3

3. **OXYGEN SENSOR**
   1. Turn the ignition off.
   2. Reconnect the Powertrain Control Module C2 harness connector.
   3. Replace the Oxygen Sensor in accordance with the service information.
   4. Turn the ignition on.
   5. With the scan tool, navigate to Miscellaneous Functions and perform the O2 Sensor Replaced procedure.
   6. Start the engine.
   7. Allow the engine to reach normal operating temperature.
   8. Monitor the scan tool for at least five minutes.
   9. With the scan tool, select View DTCs.

   Is the status Active for this DTC?

   Yes

   - Go To 4

No

- Test Complete.
- Perform the POWERTRAIN VERIFICATION TEST - 2.2L DIESEL. Refer to **PCM VERIFICATION TEST - 2.2L DIESEL** .

4. **POWERTRAIN CONTROL MODULE**
   1. Using the wiring diagram/schematic as a guide, inspect the wiring and connectors between the Oxygen Sensor and the Powertrain Control Module.
   2. Look for any chafed, pierced, pinched, or partially broken wires.
   3. Look for broken, bent, pushed out or corroded terminals.
   4. Monitor the scan tool data relative to this circuit and wiggle test the wiring and connectors.
   5. Look for the data to change or for the DTC to reset during the wiggle test.
   6. Perform any Technical Service Bulletins that may apply.

   Were any problems found?

   Yes

   - Repair as necessary.
   - Perform the POWERTRAIN VERIFICATION TEST - 2.2L DIESEL. Refer to **PCM VERIFICATION TEST - 2.2L DIESEL** .

   No

   - Replace the Powertrain Control Module. **Before removing the PCM, perform the "Replace PCM" routine in the Miscellaneous Functions tab of the scan tool.** . Refer to **REMOVAL** .
   - Perform the POWERTRAIN VERIFICATION TEST - 2.2L DIESEL. Refer to **PCM VERIFICATION TEST - 2.2L DIESEL** .

P2279-INTAKE AIR SYSTEM LEAK

For a complete wiring diagram, **refer to appropriate SYSTEM WIRING DIAGRAMS article** .

WHEN MONITORED

With the ignition on and the engine running. Coolant temperature above 60°C (140°F) and throttle position less than 10%.

SET CONDITION

The Powertrain Control Module (PCM) compares the current Mass Air Flow reading with a theoretical Mass Air Flow value based on EGR rate. This DTC is logged if the current value is deemed to be implausible to the theoretical value for 6.5 seconds.

POSSIBLE CAUSES

Possible Causes
AIR FILTER INCORRECT (AFTERMARKET) OR NOT INSTALLED PROPERLY
INTAKE AIR SYSTEM LEAK
MASS AIR FLOW SENSOR OUT OF RANGE
POWERTRAIN CONTROL MODULE (PCM)

Always perform the Pre-Diagnostic Troubleshooting procedure before proceeding. Refer to PRE-DIAGNOSTIC TROUBLESHOOTING PROCEDURE - 2.2L DIESEL .

DIAGNOSTIC TEST

1. **DTC IS ACTIVE**

NOTE: If there are any circuit fault DTCs for the Mass Airflow Sensor present, diagnose those DTCs before proceeding with this test procedure.

1. Ignition on, engine not running.
2. With the scan tool, clear DTCs in the Powertrain Control Module.
3. Start the engine.
4. Allow the engine to reach normal operating temperature.

5. Monitor the scan tool for at least two minutes.
6. With the scan tool, select View DTCs.

Is the status Active for this DTC?

Yes

- Go To 2

No

- Perform the INTERMITTENT CONDITION diagnostic procedure. Refer to **INTERMITTENT CONDITION - 2.2L DIESEL** .

2. **CHECK THE AIR FILTER**
   1. Turn the ignition off.
   2. Visually inspect the Air Filter.

NOTE: A non OEM Air Filter, or an Air Filter that is not installed with the correct orientation will cause this DTC to set. Look for any service bulletins that may apply for additional information.

Were any problems found with the Air Filter?

Yes

- Go To 3

No

- Perform the INTERMITTENT CONDITION diagnostic procedure. Refer to **INTERMITTENT CONDITION - 2.2L DIESEL** .

3. **CHECK THE INTAKE AIR SYSTEM**
   1. Turn the ignition off.
   2. Check the Intake Air System for any signs of a leak or restriction.

Were any fuel system problems found?

Yes

- Perform the appropriate repairs to the Intake Air System.
- Perform the POWERTRAIN VERIFICATION TEST 2.2L. Refer to **PCM VERIFICATION TEST - 2.2L DIESEL** .

No

- Go To 4

4. **MASS AIR FLOW SENSOR**
   1. Replace the Mass Air Flow Sensor in accordance with the service information.
   2. With the scan tool, navigate to Miscellaneous Functions and perform the MAF Sensor Replacement Initialization routine.
   3. Start the engine.
   4. Allow the engine to reach normal operating temperature.
   5. Monitor the scan tool for at least two minutes.
   6. With the scan tool, select View DTCs.

   Is the status Active for this DTC?

   Yes

   - Go To 5

   No

   - Test Complete.
   - Perform the POWERTRAIN VERIFICATION TEST - 2.2L. Refer to **PCM VERIFICATION TEST - 2.2L DIESEL** .
5. **POWERTRAIN CONTROL MODULE**
   1. Using the wiring diagram/schematic as a guide, inspect the wiring and connectors between the Mass Air Flow Sensor and the Powertrain Control Module.
   2. Look for any chafed, pierced, pinched, or partially broken wires.
   3. Look for broken, bent, pushed out or corroded terminals.
   4. Monitor the scan tool data relative to this circuit and wiggle test the wiring and connectors.

5. Look for the data to change or for the DTC to reset during the wiggle test.
6. Perform any Technical Service Bulletins that may apply.

Were any problems found?

Yes

- Repair as necessary.
- Perform the POWERTRAIN VERIFICATION TEST - 2.2L. Refer to **PCM VERIFICATION TEST - 2.2L DIESEL** .

No

- Replace the Powertrain Control Module. **Before removing the PCM, perform the "Replace PCM" routine in the Miscellaneous Functions tab of the scan tool.** . Refer to **REMOVAL** .
- Perform the POWERTRAIN VERIFICATION TEST - 2.2L. Refer to **PCM VERIFICATION TEST - 2.2L DIESEL** .

P2428-EXHAUST GAS TEMPERATURE TOO HIGH - BANK 1

For a complete wiring diagram, **refer to appropriate SYSTEM WIRING DIAGRAMS article** .

WHEN MONITORED

With the ignition on.

SET CONDITION

The Powertrain Control Module (PCM) detects that the exhaust temperature is above 845°C (1553°F).

POSSIBLE CAUSES

Possible Causes
(K353) EXHAUST GAS TEMPERATURE SENSOR 1 CIRCUIT SHORTED TO VOLTAGE
(K353) EXHAUST GAS TEMPERATURE SENSOR 1 CIRCUIT

SHORTED TO GROUND
(K353) EXHAUST GAS TEMPERATURE SENSOR 1 CIRCUIT OPEN/HIGH RESISTANCE
(K916) SENSOR GROUND CIRCUIT OPEN/HIGH RESISTANCE

Always perform the Pre-Diagnostic Troubleshooting procedure before proceeding. Refer to PRE-DIAGNOSTIC TROUBLESHOOTING PROCEDURE - 2.2L DIESEL .

DIAGNOSTIC TEST

1. **DTC IS ACTIVE**
   1. Ignition on, engine not running.
   2. With the scan tool, clear DTCs in the Powertrain Control Module.
   3. Start the engine.
   4. Allow the engine to reach normal operating temperature.
   5. With the scan tool, select View DTCs.

   NOTE: If there are DTCs present for the Exhaust Gas Temperature Sensors, Repair those DTCs before proceeding with this test.

   Is the status Active for this DTC?

   Yes

   - Go To 2

   No

   - Perform the INTERMITTENT CONDITION diagnostic procedure. Refer to **INTERMITTENT CONDITION - 2.2L DIESEL** .
2. **CHECK THE (K353) EXHAUST TEMPERATURE SENSOR 1/1 SIGNAL CIRCUIT FOR A SHORT TO VOLTAGE**
   1. Turn the ignition off.
   2. Disconnect the Exhaust Temperature Sensor 1/1 harness connector.
   3. Disconnect the Powertrain Control Module C1 harness connector.
   4. Remove the Main Relay.

5. Connect a jumper wire between cavity 30 and cavity 87 of the Main Relay connector.
6. Turn the ignition on.
7. Measure the voltage of the (K353) Exhaust Temperature Sensor 1/1 Signal circuit in the Exhaust Temperature Sensor 1/1 harness connector.

   Is there any voltage present?

   Yes

   - Repair the (K353) Exhaust Temperature Sensor 1/1 Signal circuit for a short to voltage.
   - Perform the POWERTRAIN VERIFICATION TEST 2.2L. Refer to **PCM VERIFICATION TEST - 2.2L DIESEL** .

   No

   - Go To 3

3. **CHECK THE (K353) EXHAUST TEMPERATURE SENSOR 1/1 SIGNAL CIRCUIT FOR A SHORT TO GROUND**
   1. Turn the ignition off.
   2. Remove the jumper wire and install the Main Relay.
   3. Measure the resistance between ground and the (K353) Exhaust Temperature Sensor 1/1 Signal circuit in the Exhaust Temperature Sensor 1/1 harness connector.

      Is the resistance above 10k Ohms?

      Yes

      - Go To 4

      No

      - Repair the (K353) Exhaust Temperature Sensor 1/1 Signal circuit for a short to ground.
      - Perform the POWERTRAIN VERIFICATION TEST 2.2L. Refer to **PCM VERIFICATION TEST - 2.2L DIESEL** .

4. **CHECK THE (K353) EXHAUST TEMPERATURE SENSOR 1/1 SIGNAL FOR AN OPEN/HIGH RESISTANCE**
   1. Measure the resistance of the (K353) Exhaust Temperature Sensor 1/1 Signal circuit between the Exhaust Temperature Sensor 1/1 harness connector and the Powertrain Control Module harness connector.

      Is the resistance below 5.0 Ohms?

      Yes

      - Go To 5

      No

      - Repair the (K353) Exhaust Temperature Sensor 1/1 Signal circuit for an open or high resistance.
      - Perform the POWERTRAIN VERIFICATION TEST 2.2L. Refer to **PCM VERIFICATION TEST - 2.2L DIESEL** .
5. **CHECK THE (K914) EXHAUST TEMPERATURE SENSOR 1/1 GROUND CIRCUIT FOR AN OPEN/HIGH RESISTANCE**
   1. Measure the resistance of the (K914) Sensor Ground circuit between the Exhaust Temperature Sensor 1/1 harness connector and the Powertrain Control Module harness connector.

      Is the resistance below 5.0 Ohms?

      Yes

      - Go To 6

      No

      - Repair the (K914) Exhaust Temperature Sensor 1/1 Ground circuit for an open or high resistance.
      - Perform the POWERTRAIN VERIFICATION TEST 2.2L. Refer to **PCM VERIFICATION TEST - 2.2L DIESEL** .
6. **EXHAUST TEMPERATURE SENSOR 1/1**
   1. Reconnect the Powertrain Control Module harness connector.
   2. Replace the Exhaust Temperature Sensor in accordance with the service

information.

3. Turn the ignition on.
4. With the scan tool, clear DTCs.
5. With the scan tool, select View DTCs.

Did the DTC return?

Yes

- Go To 7

No

- Repair complete.
- Perform the POWERTRAIN VERIFICATION TEST 2.2L. Refer to **PCM VERIFICATION TEST - 2.2L DIESEL** .

7. **POWERTRAIN CONTROL MODULE**
   1. Using the wiring diagram/schematic as a guide, inspect the wiring and connectors between the Exhaust Temperature Sensor 1/1 and the Powertrain Control Module.
   2. Look for any chafed, pierced, pinched, or partially broken wires.
   3. Look for broken, bent, pushed out or corroded terminals.
   4. Monitor the scan tool data relative to this circuit and wiggle test the wiring and connectors.
   5. Look for the data to change or for the DTC to reset during the wiggle test.
   6. Perform any Technical Service Bulletins that may apply.

   Were any problems found?

   Yes

   - Repair as necessary.
   - Perform the POWERTRAIN VERIFICATION TEST 2.2L. Refer to **PCM VERIFICATION TEST - 2.2L DIESEL** .

   No

- Replace the Powertrain Control Module. **Before removing the PCM, perform the "Replace PCM" routine in the Miscellaneous Functions tab of the scan tool.** . Refer to **REMOVAL** .
- Perform the POWERTRAIN VERIFICATION TEST 2.2L. Refer to **PCM VERIFICATION TEST - 2.2L DIESEL** .

P242F-DIESEL PARTICULATE FILTER RESTRICTION - ASH ACCUMULATION

For a complete wiring diagram, **refer to appropriate SYSTEM WIRING DIAGRAMS article** .

WHEN MONITORED

Ignition on.

SET CONDITION

The Powertrain Control Module (PCM) detects that the ash accumulation is greater than 9.0 Grams.

POSSIBLE CAUSES

Possible Causes
INTAKE SYSTEM RESTRICTION OR LEAK
EXHAUST SYSTEM RESTRICTION OR LEAK
EGR SYSTEM FAILURE
FUEL DELIVERY SYSTEM PERFORMANCE
DIESEL PARTICULATE FILTER

Always perform the Pre-Diagnostic Troubleshooting procedure before proceeding. Refer to PRE-DIAGNOSTIC TROUBLESHOOTING PROCEDURE - 2.2L DIESEL .

DIAGNOSTIC TEST

1. **DTC IS ACTIVE**
    1. Ignition on, engine not running.
    2. With the scan tool, clear DTCs in the Powertrain Control Module.
    3. Start the engine.

4. Allow the engine to reach normal operating temperature.
5. With the scan tool, select View DTCs.

NOTE: If there are DTCs present for the Exhaust Gas Pressures Sensors, Repair those DTCs before proceeding with this test.

Is the status Active for this DTC?

Yes

- Go To 2

No

- Perform the INTERMITTENT CONDITION diagnostic procedure. Refer to **INTERMITTENT CONDITION - 2.2L DIESEL** .

2. **CHECK THE INTAKE SYSTEM**
   1. Turn the ignition off.
   2. Inspect the air filter for excessive dirt, soiling or other problems that may cause restricted air flow.
   3. Inspect all air intake and Turbocharger related hoses/tubes and connections.

   Were any leaks or restrictions found in the intake or Turbocharger systems?

   Yes

   - Repair the intake or Turbocharger system as necessary.
   - Perform the POWERTRAIN VERIFICATION TEST - 2.2L DIESEL. Refer to **PCM VERIFICATION TEST - 2.2L DIESEL** .

   No

   - Go To 3
3. **CHECK THE EXHAUST SYSTEM**

1. Inspect the exhaust system for damaged components that could cause exhaust flow blockage or leak.

   Were any leaks or restrictions found in the exhaust system?

   Yes

   - Repair the exhaust system as necessary.
   - Perform the POWERTRAIN VERIFICATION TEST - 2.2L DIESEL. Refer to **PCM VERIFICATION TEST - 2.2L DIESEL** .

   No

   - Go To 4

4. **CHECK THE EGR SYSTEM**
   1. Look for visible signs (soot streaks) of an external EGR leak.
   2. With the scan tool, navigate to Miscellaneous Functions, and perform the EGR/ECU Self Test procedure.

      Were any problems found with the EGR system?

      Yes

      - Perform the appropriate repairs to the EGR system.
      - Perform the POWERTRAIN VERIFICATION TEST - 2.2L DIESEL. Refer to **PCM VERIFICATION TEST - 2.2L DIESEL** .

      No

      - Go To 5

5. **CHECK THE FUEL DELIVERY SYSTEM**
   1. Perform the CHECKING THE FUEL DELIVERY SYSTEM diagnostic procedure. Refer to **DIAGNOSIS AND TESTING** .

      Were any fuel system issues found?

      Yes

- Repair the fuel delivery system as necessary. Perform a regeneration of the Diesel Particulate Filter.
- Perform the POWERTRAIN VERIFICATION TEST - 2.2L DIESEL. Refer to **PCM VERIFICATION TEST - 2.2L DIESEL** .

No

- Go To 6

6. **CHECK THE DIESEL PARTICULATE FILTER**
   1. With the scan tool, navigate to Miscellaneous Functions and perform the Diesel Particulate Filter Regeneration procedure.
   2. Turn the ignition on, engine not running.
   3. With the scan tool, clear DTCs in the Powertrain Control Module.
   4. Start the engine.
   5. Allow the engine to idle for up to five minutes.
   6. With the scan tool, select View DTCs.

   Did the DTC return?

   Yes

   - Replace the Diesel Particulate Filter in accordance with the service information. With the scan tool, navigate to Miscellaneous Functions and perform the New DPF Initialization procedure.
   - Perform the POWERTRAIN VERIFICATION TEST - 2.2L DIESEL. Refer to **PCM VERIFICATION TEST - 2.2L DIESEL** .

   No

   - Test complete.
   - Perform the POWERTRAIN VERIFICATION TEST - 2.2L DIESEL. Refer to **PCM VERIFICATION TEST - 2.2L DIESEL** .

P244A-DIESEL PARTICULATE FILTER DIFFERENTIAL PRESSURE TOO LOW

For a complete wiring diagram, **refer to appropriate SYSTEM WIRING DIAGRAMS article** .

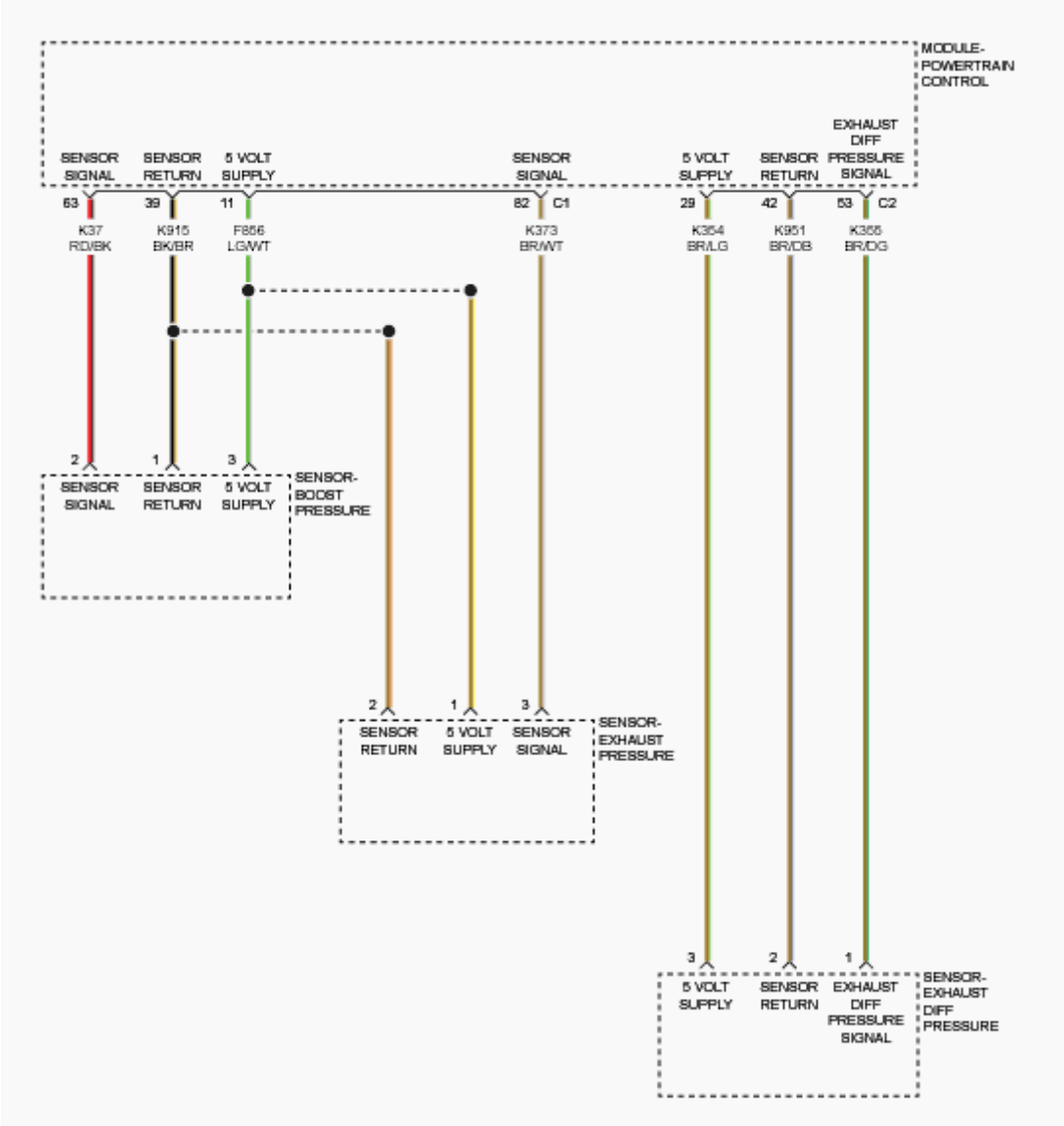

Fig. 28: Boost, Exhaust & Exhaust Diff Pressure Sensors Circuit Diagram
Courtesy of CHRYSLER GROUP, LLC

THEORY OF OPERATION

The Diesel Particulate Filter is an inline canister filter located in the exhaust system between the engine and the muffler. This Diesel Particulate Filter captures and stores ash particles created by the diesel combustion process. This filter is monitored by the Powertrain Control Module (PCM) using the Exhaust Differential Pressure Sensor. The sensor sends a delta pressure reading comparing the exhaust system pressure before and after the Diesel Particulate Filter through tube connections directly to the exhaust pipe. As ash and soot

accumulate in the filter, the exhaust pressure at the inlet side of the filter increases as compared to the pressure at the outlet side of the filter.

WHEN MONITORED

With the engine running.

SET CONDITION

The Powertrain Control Module (PCM) detects delta pressure at the Diesel Particulate Filter is too low.

POSSIBLE CAUSES

Possible Causes
LEAKING EXHAUST SYSTEM
HIGH RESISTANCE IN EXHAUST DIFFERENTIAL PRESSURE SENSOR CIRCUITS
HOSE OR TUBE CONNECTIONS TO THE EXHAUST DIFFERENTIAL PRESSURE SENSOR BROKEN OR KINKED
HOSES REVERSED AT THE EXHAUST DIFFERENTIAL PRESSURE SENSOR
EXHAUST DIFFERENTIAL PRESSURE SENSOR
DIESEL PARTICULATE FILTER

Always perform the Pre-Diagnostic Troubleshooting procedure before proceeding. Refer to PRE-DIAGNOSTIC TROUBLESHOOTING PROCEDURE - 2.2L DIESEL .

DIAGNOSTIC TEST

1. **CHECKING FOR OTHER DTCS**

   NOTE: This DTC indicates that the Diesel Particulate Filter, tubes or hoses are missing or damaged.

   1. Turn the ignition on.
   2. With the scan tool, read the PCM DTCs.

   Are there other DTCs set in the PCM?

Yes

- Repair other DTCs before continuing with this test.
- Perform the POWERTRAIN VERIFICATION TEST 2.2L DIESEL. Refer to **PCM VERIFICATION TEST - 2.2L DIESEL** .

No

- Go To 2

2. **VISUAL INSPECTION**
   1. Inspect that the aftertreatment Diesel Particulate Filter has not been tampered with or removed.

      Tampering or removal of the aftertreatment system has been detected?

      Yes

      - Install the correct aftertreatment system for the vehicle.
      - Perform the POWERTRAIN VERIFICATION TEST 2.2L DIESEL. Refer to **PCM VERIFICATION TEST - 2.2L DIESEL** .

      No

      - Go To 3

3. **CHECK THE EXHAUST DIFFERENTIAL PRESSURE SENSOR HOSES AND TUBES**
   1. Turn the ignition off.
   2. Visually inspect the entire exhaust system for bent, crushed or otherwise damaged tubes.
   3. Inspect the exhaust system for exhaust leaks.
   4. Visually inspect the Exhaust Differential Pressure Sensor hoses and tubes for physical damage. Make sure any tubes and/or hoses connected to the sensor are in good working condition, clear of any restrictions and properly connected at all ends.

      Were any problems found?

Yes

- Repair or replace as necessary.
- Perform the POWERTRAIN VERIFICATION TEST 2.2L DIESEL. Refer to **PCM VERIFICATION TEST - 2.2L DIESEL** .

No

- Go To 4

4. **CHECK FOR THE EXHAUST DIFFERENTIAL PRESSURE SENSOR HOSES REVERSED**
   1. Start the engine.
   2. With the scan tool, monitor the Exhaust Pressure Sensor delta pressure reading.

NOTE: The delta pressure should have a positive pressure reading. A negative reading indicates the hoses are reversed.

Is the Exhaust Pressure Sensor reading a positive value?

Yes

- Repair or replace as necessary.
- Perform the POWERTRAIN VERIFICATION TEST 2.2L DIESEL. Refer to **PCM VERIFICATION TEST - 2.2L DIESEL** .

No

- Go To 5

5. **EXHAUST DIFFERENTIAL PRESSURE SENSOR CIRCUIT HIGH RESISTANCE**
   1. Turn the ignition off.
   2. Disconnect the Exhaust Differential Pressure Sensor harness connector.
   3. Disconnect the PCM C2 harness connector.
   4. Measure the resistance of the:

- (K354) Exhaust Differential Pressure Sensor Supply circuit between the Exhaust Differential Pressure Sensor harness connector and the PCM harness connector.
- (K355) Exhaust Differential Pressure Sensor Signal circuit between the Exhaust Differential Pressure Sensor harness connector and the PCM harness connector.
- (K951) Exhaust Differential Pressure Sensor Return circuit between the Exhaust Differential Pressure Sensor harness connector and the PCM harness connector.

Is the resistance below 5.0 Ohms for each circuit?

Yes

- Go To 6

No

- Repair the circuit(s) that measured above 5.0 Ohms for high resistance.
- Perform the POWERTRAIN VERIFICATION TEST 2.2L DIESEL. Refer to **PCM VERIFICATION TEST - 2.2L DIESEL** .

6. **DIESEL PARTICULATE FILTER**
   1. Turn the ignition off.
   2. Remove and inspect the Diesel Particulate Filter for internal cracks or damage.

   Is the Diesel Particulate Filter internally damaged?

   Yes

   - Replace the Diesel Particulate Filter in accordance with the service information. With the scan tool, navigate to Miscellaneous Functions and perform the New DPF Initialization procedure.
   - Perform the POWERTRAIN VERIFICATION TEST 2.2L DIESEL. Refer to **PCM VERIFICATION TEST - 2.2L DIESEL** .

No

- Replace the Exhaust Differential Pressure Sensor in accordance with the service information.
- Perform the POWERTRAIN VERIFICATION TEST 2.2L DIESEL. Refer to **PCM VERIFICATION TEST - 2.2L DIESEL** .

P244B-DIESEL PARTICULATE FILTER DIFFERENTIAL PRESSURE TOO HIGH

For a complete wiring diagram, **refer to appropriate SYSTEM WIRING DIAGRAMS article** .

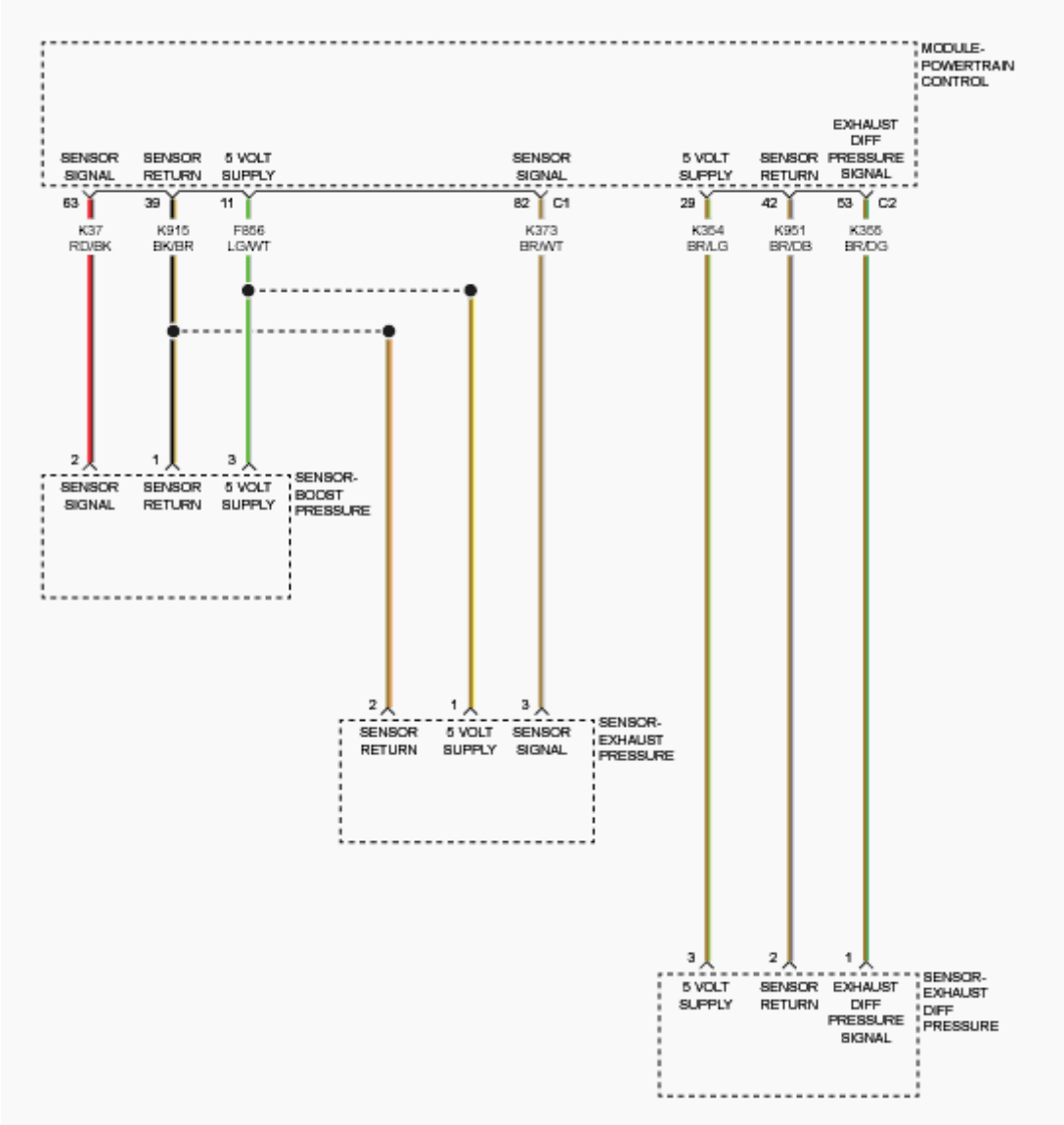

Fig. 29: Boost, Exhaust & Exhaust Diff Pressure Sensors Circuit Diagram
Courtesy of CHRYSLER GROUP, LLC

THEORY OF OPERATION

The Diesel Particulate Filter is an inline canister filter located in the exhaust system between the engine and the muffler. This Diesel Particulate Filter captures and stores ash particles created by the diesel combustion process. This filter is monitored by the Powertrain Control Module (PCM) using the Exhaust Differential Pressure Sensor. The sensor sends a delta pressure reading comparing the exhaust system pressure before and after the Diesel Particulate Filter through tube connections directly to the exhaust pipe. As ash and soot accumulate in the filter, the exhaust pressure at the inlet side of the filter increases as compared to the pressure at the outlet side of the filter.

WHEN MONITORED

With the engine running.

SET CONDITION

The Powertrain Control Module (PCM) detects pressure at the Diesel Particulate Filter above 950 hpa for 10.0 seconds.

POSSIBLE CAUSES

Possible Causes
LEAKING EXHAUST SYSTEM
HOSE OR TUBE CONNECTIONS TO THE EXHAUST DIFFERENTIAL PRESSURE SENSOR BROKEN OR KINKED
HIGH RESISTANCE IN EXHAUST DIFFERENTIAL PRESSURE SENSOR CIRCUITS
EXHAUST DIFFERENTIAL PRESSURE SENSOR
DIESEL PARTICULATE FILTER

Always perform the Pre-Diagnostic Troubleshooting procedure before proceeding. Refer to PRE-DIAGNOSTIC TROUBLESHOOTING PROCEDURE - 2.2L DIESEL .

DIAGNOSTIC TEST

1. **CHECKING FOR OTHER DTCS**

NOTE: This DTC indicates that the soot level in the Diesel

Particulate Filter is too high. This occurs normally on high mileage vehicles. However, if there is an EGR system problem, turbocharger problem or oil consumption problem with the engine, this DTC can occur on a low mileage vehicle

1. Turn the ignition on.
2. With the scan tool, read the PCM DTCs.

   Are there other DTCs set in the PCM?

   Yes

   - Repair other DTCs before continuing with this test.
   - Perform the POWERTRAIN VERIFICATION TEST 2.2L DIESEL. Refer to **PCM VERIFICATION TEST - 2.2L DIESEL** .

   No

   - Go To 2

2. **CHECK THE EXHAUST DIFFERENTIAL PRESSURE SENSOR HOSES AND TUBES**
   1. Turn the ignition off.
   2. Visually inspect the entire exhaust system for bent, crushed or otherwise damaged tubes.
   3. Inspect the exhaust system for exhaust leaks.
   4. Visually inspect the Exhaust Differential Pressure Sensor hoses and tubes for physical damage. Make sure any tubes and/or hoses connected to the sensor are in good working condition, clear of any restrictions and properly connected at all ends.

      Were any problems found?

      Yes

      - Repair or replace as necessary.
      - Perform the POWERTRAIN VERIFICATION TEST 2.2L

DIESEL. Refer to **PCM VERIFICATION TEST - 2.2L DIESEL** .

No

- Go To 3

3. **EXHAUST DIFFERENTIAL PRESSURE SENSOR CIRCUIT HIGH RESISTANCE**
   1. Turn the ignition off.
   2. Disconnect the Exhaust Differential Pressure Sensor harness connector.
   3. Disconnect the PCM C2 harness connector.
   4. Measure the resistance of the:
      - (K354) Exhaust Differential Pressure Sensor Supply circuit between the Exhaust Differential Pressure Sensor harness connector and the PCM harness connector.
      - (K355) Exhaust Differential Pressure Sensor Signal circuit between the Exhaust Differential Pressure Sensor harness connector and the PCM harness connector.
      - (K951) Exhaust Differential Pressure Sensor Return circuit between the Exhaust Differential Pressure Sensor harness connector and the PCM harness connector.

   Is the resistance below 5.0 Ohms for each circuit?

   Yes

   - Go To 4

   No

   - Repair the circuit(s) that measured above 5.0 Ohms for high resistance.
   - Perform the POWERTRAIN VERIFICATION TEST 2.2L DIESEL. Refer to **PCM VERIFICATION TEST - 2.2L DIESEL** .
4. **PARTICULATE FILTER REGENERATION**
   1. Reconnect the Exhaust Differential Pressure Sensor harness connector.

2. Reconnect the PCM C2 harness connector.
3. Turn the ignition on.
4. With the scan tool, clear DTCs in the Powertrain Control Module.
5. Start and idle the engine.
6. With the scan tool, navigate to Miscellaneous Functions and perform the Diesel Particulate Filter Regeneration procedure.
7. After this procedure is complete, turn the ignition off for 60 seconds.
8. Test drive the vehicle.
9. With the scan tool, Read DTCs in the Powertrain Control Module.

   Is the status Active for this DTC?

   Yes

   - Go To 5

   No

   - Test complete.
   - Perform the POWERTRAIN VERIFICATION TEST 2.2L DIESEL. Refer to **PCM VERIFICATION TEST - 2.2L DIESEL** .

5. **DIESEL PARTICULATE FILTER**
   1. Turn the ignition off.
   2. Replace the Exhaust Differential Pressure Sensor in accordance with the service information.
   3. Turn the ignition on.
   4. With the scan tool, clear DTCs in the Powertrain Control Module.
   5. Test drive the vehicle.
   6. With the scan tool, Read DTCs in the Powertrain Control Module.

      Is the status Active for this DTC?

      Yes

      - Replace the Diesel Particulate Filter in accordance with the service information. With the scan tool, navigate to Miscellaneous

Functions and perform the New DPF Initialization procedure.

- Perform the POWERTRAIN VERIFICATION TEST 2.2L DIESEL. Refer to **PCM VERIFICATION TEST - 2.2L DIESEL** .

No

- Test complete.
- Perform the POWERTRAIN VERIFICATION TEST 2.2L DIESEL. Refer to **PCM VERIFICATION TEST - 2.2L DIESEL** .

P2453-DIESEL PARTICULATE FILTER DIFFERENTIAL PRESSURE SENSOR CIRCUIT PERFORMANCE

For a complete wiring diagram, **refer to appropriate SYSTEM WIRING DIAGRAMS article** .

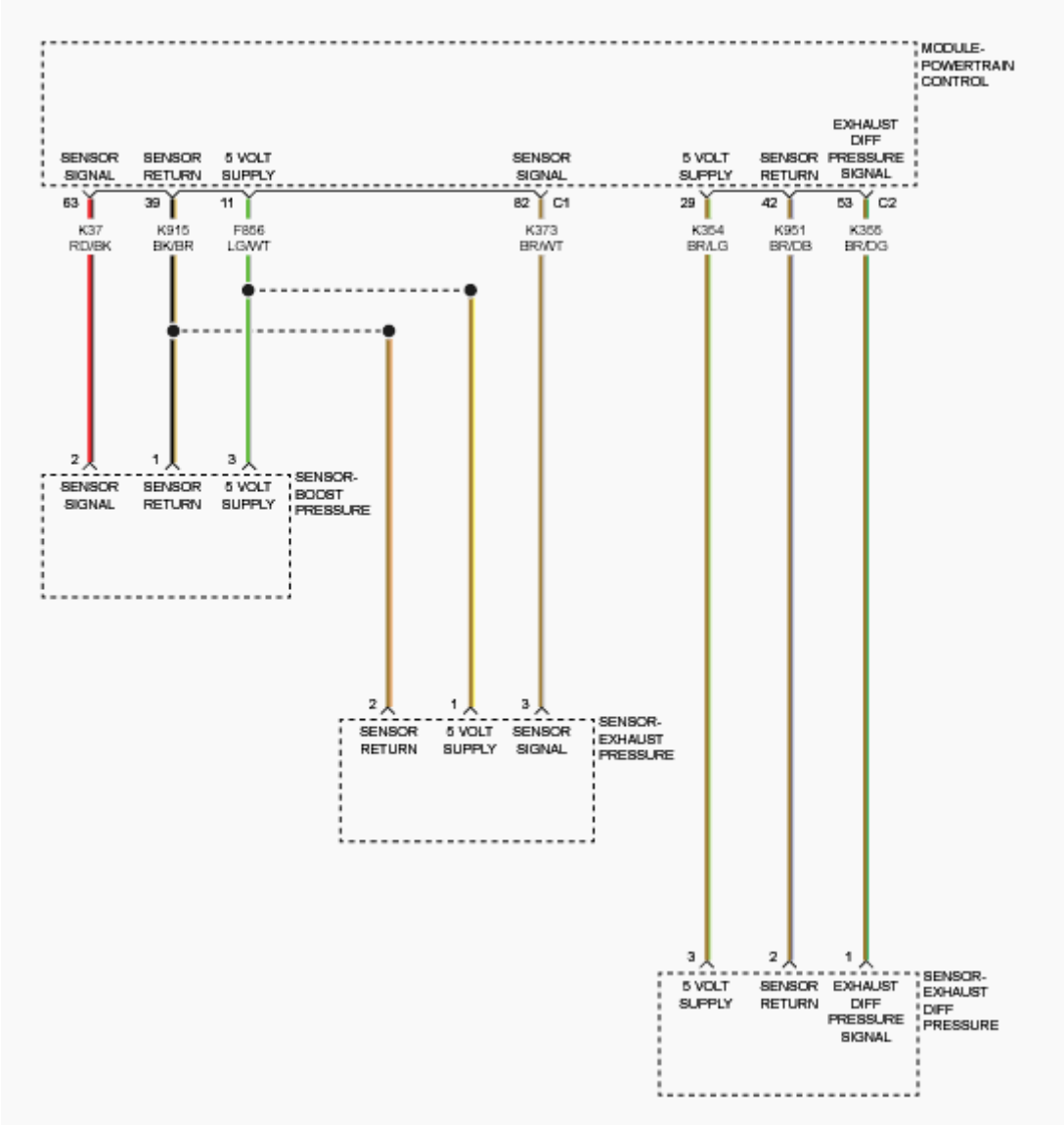

Fig. 30: Boost, Exhaust & Exhaust Diff Pressure Sensors Circuit Diagram
Courtesy of CHRYSLER GROUP, LLC

THEORY OF OPERATION

The Diesel Particulate Filter is an inline canister filter located in the exhaust system between the engine and the muffler. This Diesel Particulate Filter captures and stores ash particles created by the diesel combustion process. This filter is monitored by the PCM using the Exhaust Differential Pressure Sensor. The sensor sends a delta pressure reading comparing the exhaust system pressure before and after the Diesel Particulate Filter through tube connections directly to the exhaust pipe. As ash and soot accumulate in the filter, the exhaust pressure at the inlet side of the filter increases as compared to the pressure at the outlet side of the filter.

WHEN MONITORED

With the ignition on, engine stopped, delta pressure sensor signal valid and no Exhaust Differential Pressure Sensor DTCs have been detected.

SET CONDITION

The Differential Pressure Sensor Signal is below negative 0.04 bar or above positive 0.04 bar.

POSSIBLE CAUSES

Possible Causes
HIGH RESISTANCE IN THE (K354) EXHAUST DIFFERENTIAL PRESSURE SENSOR 5 VOLT SUPPLY CIRCUIT
HIGH RESISTANCE IN THE (K355) EXHAUST DIFFERENTIAL PRESSURE SENSOR SIGNAL CIRCUIT
(K951) EXHAUST DIFFERENTIAL PRESSURE SENSOR GROUND CIRCUIT OPEN OR HIGH RESISTANCE
EXHAUST DIFFERENTIAL PRESSURE SENSOR
POWERTRAIN CONTROL MODULE (PCM)

Always perform the Pre-Diagnostic Troubleshooting procedure before proceeding. Refer to PRE-DIAGNOSTIC TROUBLESHOOTING PROCEDURE - 2.2L DIESEL .

DIAGNOSTIC TEST

1. **DTC IS ACTIVE**

NOTE: If any Sensor Reference or Sensor Supply voltage DTCs are present, perform the applicable diagnostic procedure before continuing with this test.

1. Ignition on, engine not running.
2. With the scan tool, clear DTCs in the Powertrain Control Module.
3. Monitor the scan tool for at least two minutes.
4. Cycle the ignition key off and on several times, leaving the ignition on for at least 10 seconds at a time.
5. Start the engine.

6. Allow the engine to reach normal operating temperature.
7. With the scan tool, select View DTCs.

   Is the status Active for this DTC?

   Yes

   - Go To 2

   No

   - Perform the INTERMITTENT CONDITION diagnostic procedure. Refer to **INTERMITTENT CONDITION - 2.2L DIESEL** .

2. **CHECK THE EXHAUST DIFFERENTIAL PRESSURE SENSOR CIRCUITS FOR HIGH RESISTANCE**
   1. Turn the ignition off.
   2. Disconnect the Exhaust Differential Pressure Sensor harness connector.
   3. Disconnect the PCM C2 harness connector.
   4. Measure the resistance of the:
      - (K354) Exhaust Differential Pressure Sensor Supply circuit between the Exhaust Differential Pressure Sensor harness connector and the PCM C2 harness connector.
      - (K355) Exhaust Differential Pressure Sensor Signal circuit between the Exhaust Differential Pressure Sensor harness connector and the PCM C2 harness connector.
      - (K951) Exhaust Differential Pressure Sensor Return circuit between the Exhaust Differential Pressure Sensor harness connector and the PCM C2 harness connector.

   Is the resistance below 5.0 Ohms for each circuit?

   Yes

   - Go To 3

   No

   - Repair the circuit(s) that measured above 5.0 Ohms for high

resistance.

- Perform the POWERTRAIN VERIFICATION TEST 2.2L DIESEL. Refer to **PCM VERIFICATION TEST - 2.2L DIESEL** .

3. **CHECK THE EXHAUST DIFFERENTIAL PRESSURE SENSOR**
   1. Turn the ignition off.
   2. Reconnect the Powertrain Control Module C2 harness connector.
   3. Connect a jumper between the (K355) Exhaust Differential Pressure Sensor Signal circuit and the (K951) Exhaust Differential Pressure Sensor Ground circuit in the Exhaust Differential Pressure Sensor harness connector.
   4. Turn the ignition on.
   5. With the scan tool, clear DTCs.
   6. With the scan tool, select View DTCs.

NOTE: The scan tool should display an P2454-Exhaust Differential Pressure Sensor Low DTC with the jumper wire in place.

Does the scan tool display P2454-Exhaust Differential Pressure Sensor Low DTC as Active?

Yes

- Replace the Exhaust Differential Pressure Sensor.
- Perform the POWERTRAIN VERIFICATION TEST 2.2L DIESEL. Refer to **PCM VERIFICATION TEST - 2.2L DIESEL** .

No

- Go To 4

4. **POWERTRAIN CONTROL MODULE**
   1. Using the wiring diagram/schematic as a guide, inspect the wiring and connectors between the Exhaust Differential Pressure Sensor and the Powertrain Control Module.
   2. Look for any chafed, pierced, pinched, or partially broken wires.

3. Look for broken, bent, pushed out or corroded terminals.
4. Monitor the scan tool data relative to this circuit and wiggle test the wiring and connectors.
5. Look for the data to change or for the DTC to reset during the wiggle test.
6. Perform any Technical Service Bulletins that may apply.

Were any problems found?

Yes

- Repair as necessary.
- Perform the POWERTRAIN VERIFICATION TEST 2.2L DIESEL. Refer to **PCM VERIFICATION TEST - 2.2L DIESEL** .

No

- Replace and program the Powertrain Control Module in accordance with the service information. Refer to **REMOVAL** .
- Perform the POWERTRAIN VERIFICATION TEST 2.2L DIESEL. Refer to **PCM VERIFICATION TEST - 2.2L DIESEL** .

P2454-DIESEL PARTICULATE FILTER DIFFERENTIAL PRESSURE SENSOR CIRCUIT LOW

For a complete wiring diagram, **refer to appropriate SYSTEM WIRING DIAGRAMS article** .

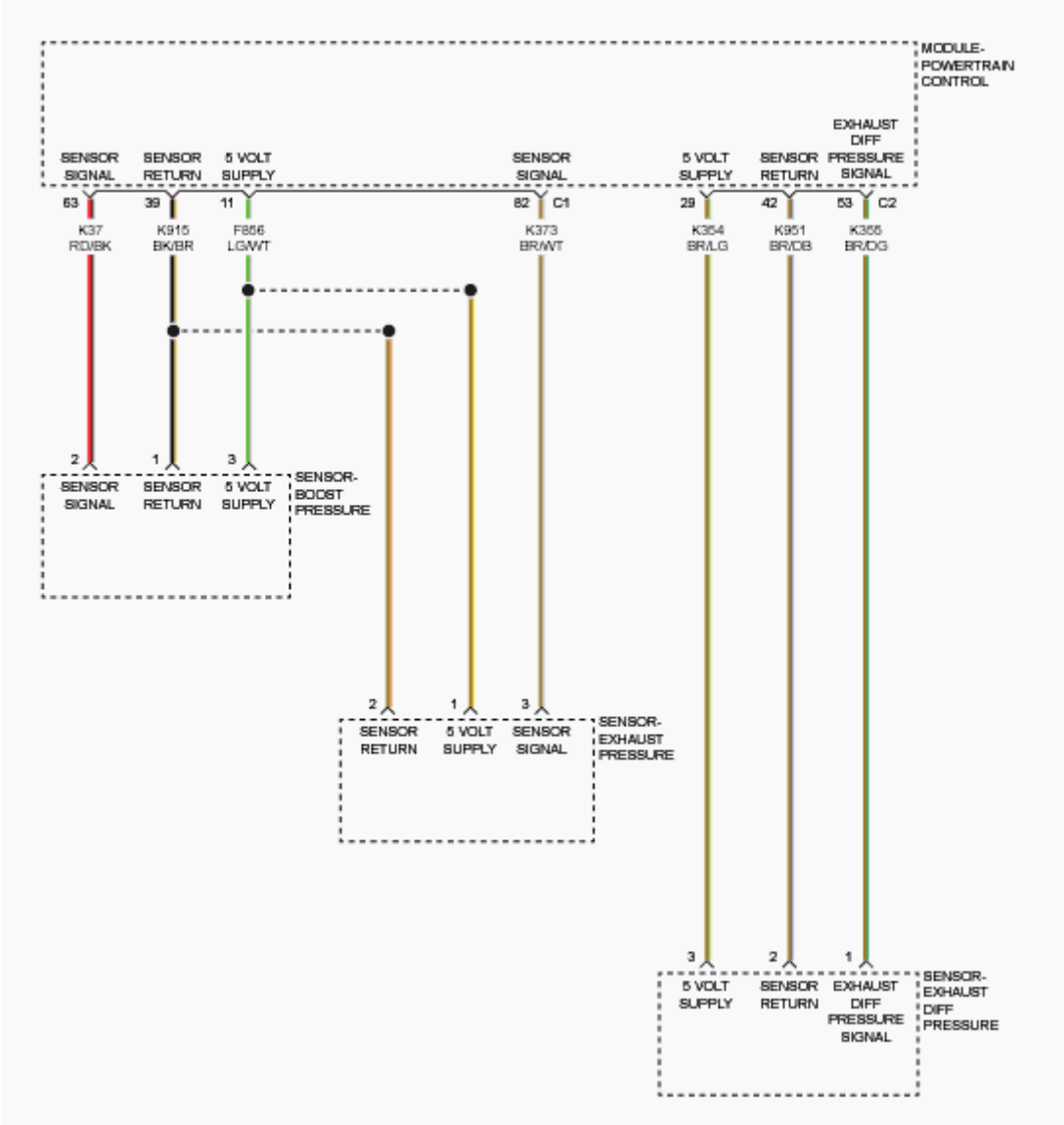

Fig. 31: Boost, Exhaust & Exhaust Diff Pressure Sensors Circuit Diagram
Courtesy of CHRYSLER GROUP, LLC

THEORY OF OPERATION

The Diesel Particulate Filter is an inline canister filter located in the exhaust system between the engine and the muffler. This Diesel Particulate Filter captures and stores ash particles created by the diesel combustion process. This filter is monitored by the PCM using the Exhaust Differential Pressure Sensor. The sensor sends a delta pressure reading comparing the exhaust system pressure before and after the Diesel Particulate Filter through tube connections directly to the exhaust pipe. As ash and soot accumulate in the filter, the exhaust pressure at the inlet side of the filter increases as compared to the pressure at the outlet side of the filter.

WHEN MONITORED

With the ignition on.

SET CONDITION

The (K355) Exhaust Differential Pressure Sensor signal is below 0.15 of a Volt for 0.5 of a second.

POSSIBLE CAUSES

Possible Causes
(K354) EXHAUST DIFFERENTIAL PRESSURE SENSOR 5 VOLT SUPPLY CIRCUIT SHORTED TO GROUND
(K355) EXHAUST DIFFERENTIAL PRESSURE SENSOR SIGNAL CIRCUIT SHORTED TO GROUND
(K354) EXHAUST DIFFERENTIAL PRESSURE SENSOR 5 VOLT SUPPLY CIRCUIT SHORTED TO (K951) EXHAUST DIFFERENTIAL PRESSURE SENSOR GROUND CIRCUIT
(K355) EXHAUST DIFFERENTIAL PRESSURE SENSOR SIGNAL CIRCUIT SHORTED TO (K951) EXHAUST DIFFERENTIAL PRESSURE SENSOR GROUND CIRCUIT
(K354) EXHAUST DIFFERENTIAL PRESSURE SENSOR 5 VOLT SUPPLY CIRCUIT OPEN OR HIGH RESISTANCE
(K355) EXHAUST DIFFERENTIAL PRESSURE SENSOR SIGNAL CIRCUIT OPEN OR HIGH RESISTANCE
EXHAUST DIFFERENTIAL PRESSURE SENSOR
POWERTRAIN CONTROL MODULE (PCM)

Always perform the Pre-Diagnostic Troubleshooting procedure before proceeding. Refer to PRE-DIAGNOSTIC TROUBLESHOOTING PROCEDURE - 2.2L DIESEL .

DIAGNOSTIC TEST

1. **DTC IS ACTIVE**

NOTE: If any Sensor Reference or Sensor Supply voltage DTCs are present, perform the applicable diagnostic procedure before continuing with this test.

1. Ignition on, engine not running.
2. With the scan tool, Clear DTCs in the Powertrain Control Module.
3. Monitor the scan tool for at least two minutes.
4. Cycle the ignition key off and on several times, leaving the ignition on for at least 10.0 seconds at a time.
5. Start the engine.
6. Allow the engine to reach normal operating temperature.
7. With the scan tool, select View DTCs.

   Is the status Active for this DTC?

   Yes

   - Go To 2

   No

   - Perform the INTERMITTENT CONDITION diagnostic procedure. Refer to **INTERMITTENT CONDITION - 2.2L DIESEL** .

2. **CHECK THE (K354) EXHAUST DIFFERENTIAL PRESSURE SENSOR 5-VOLT SUPPLY CIRCUIT VOLTAGE**
   1. Turn the ignition off.
   2. Disconnect the Exhaust Differential Pressure Sensor harness connector.
   3. Turn the ignition on.
   4. Measure the voltage of the (K354) Exhaust Differential Pressure Sensor 5 Volt Supply circuit at the Exhaust Differential Pressure Sensor harness connector.

      Is the voltage reading between 4.9 Volts and 5.1 Volts?

      Yes

      - Go To 6

      No

      - Go To 3

3. **CHECK THE (K354) EXHAUST DIFFERENTIAL PRESSURE**

SENSOR 5 VOLT SUPPLY CIRCUIT FOR A SHORT TO GROUND

1. Turn the ignition off.
2. Disconnect the Powertrain Control Module C2 harness connector.
3. Measure the resistance between ground and the (K354) Exhaust Differential Pressure Sensor 5 Volt Supply circuit at the Exhaust Differential Pressure Sensor harness connector.

   Is the resistance above 10k Ohms?

   Yes

   - Go To 4

   No

   - Repair the (K354) Exhaust Differential Pressure Sensor 5-Volt Supply circuit for a short to ground.
   - Perform the POWERTRAIN VERIFICATION TEST 2.2L DIESEL. Refer to **PCM VERIFICATION TEST - 2.2L DIESEL** .

4. **CHECK FOR THE (K354) EXHAUST DIFFERENTIAL PRESSURE SENSOR 5-VOLT SUPPLY CIRCUIT SHORTED TO (K951) EXHAUST DIFFERENTIAL PRESSURE SENSOR GROUND CIRCUIT**

   1. Measure the resistance between the (K354) Exhaust Differential Pressure Sensor 5-Volt Supply circuit and the (K951) Exhaust Differential Pressure Sensor Ground circuit in the Exhaust Differential Pressure Sensor harness connector.

      Is the resistance above 10k Ohms?

      Yes

      - Go To 5

      No

      - Repair the (K354) Exhaust Differential Pressure Sensor 5-Volt Supply circuit for a short to the (K951) Exhaust Differential

Pressure Sensor Ground circuit.

- Perform the POWERTRAIN VERIFICATION TEST 2.2L DIESEL. Refer to **PCM VERIFICATION TEST - 2.2L DIESEL** .

5. **CHECK THE (K354) EXHAUST DIFFERENTIAL PRESSURE SENSOR 5-VOLT SUPPLY CIRCUIT FOR AN OPEN/HIGH RESISTANCE**
   1. Measure the resistance of the (K354) Exhaust Differential Pressure Sensor 5-Volt Supply circuit between the Exhaust Differential Pressure Sensor harness connector and the Powertrain Control Module C2 harness connector.

      Is the resistance below 5.0 Ohms?

      Yes

      - Go To 10

      No

      - Repair the (K354) Exhaust Differential Pressure Sensor 5-Volt Supply circuit for an open or high resistance.
      - Perform the POWERTRAIN VERIFICATION TEST 2.2L DIESEL. Refer to **PCM VERIFICATION TEST - 2.2L DIESEL** .
6. **CHECK THE (K355) EXHAUST DIFFERENTIAL PRESSURE SENSOR SIGNAL CIRCUIT FOR A SHORT TO GROUND**
   1. Turn the ignition off.
   2. Disconnect the Powertrain Control Module C2 harness connector.
   3. Measure the resistance between ground and the (K355) Exhaust Differential Pressure Sensor Signal circuit in the Exhaust Differential Pressure Sensor harness connector.

      Is the resistance above 10k Ohms?

      Yes

      - Go To 7

No

- Repair the (K355) Exhaust Differential Pressure Sensor Signal circuit for a short to ground.
- Perform the POWERTRAIN VERIFICATION TEST 2.2L DIESEL. Refer to **PCM VERIFICATION TEST - 2.2L DIESEL** .

7. **CHECK FOR THE (K355) EXHAUST DIFFERENTIAL PRESSURE SENSOR SIGNAL CIRCUIT SHORTED TO (K951) EXHAUST DIFFERENTIAL PRESSURE SENSOR GROUND CIRCUIT**
   1. Measure the resistance between the (K355) Exhaust Differential Pressure Sensor Signal circuit and the (K951) Exhaust Differential Pressure Sensor Ground circuit in the Exhaust Differential Pressure Sensor harness connector.

      Is the resistance above 10k Ohms?

      Yes

      - Go To 8

      No

      - Repair the (K355) Exhaust Differential Pressure Sensor Signal circuit for a short to the (K951) Exhaust Differential Pressure Sensor Ground circuit.
      - Perform the POWERTRAIN VERIFICATION TEST 2.2L DIESEL. Refer to **PCM VERIFICATION TEST - 2.2L DIESEL** .

8. **CHECK THE (K355) EXHAUST DIFFERENTIAL PRESSURE SENSOR SIGNAL CIRCUIT FOR AN OPEN/HIGH RESISTANCE**
   1. Measure the resistance of the (K355) Exhaust Differential Pressure Sensor Signal circuit between the Exhaust Differential Pressure Sensor harness connector and the Powertrain Control Module harness connector.

      Is the resistance below 5.0 Ohms?

      Yes

- Go To 9

No

- Repair the (K355) Exhaust Differential Pressure Sensor Signal circuit for an open or high resistance.
- Perform the POWERTRAIN VERIFICATION TEST 2.2L DIESEL. Refer to **PCM VERIFICATION TEST - 2.2L DIESEL** .

9. **CHECK THE EXHAUST DIFFERENTIAL PRESSURE SENSOR**
   1. Turn the ignition off.
   2. Connect the Powertrain Control Module harness connector.
   3. Connect a jumper wire between the (K354) Exhaust Differential Pressure Sensor 5-Volt Supply circuit and the (K355) Exhaust Differential Pressure Sensor Signal circuit in the Exhaust Differential Pressure Sensor harness connector.
   4. Turn the ignition on.
   5. With the scan tool, Clear DTCs.
   6. With the scan tool, select View DTCs.

NOTE: The scan tool should display an Exhaust Differential Pressure Sensor High DTC with the Exhaust Differential Pressure Sensor harness connector disconnected and the jumper wire in place.

Does the scan tool display P2455-Exhaust Differential Pressure Sensor High DTC as Active?

Yes

- Replace the Exhaust Differential Pressure Sensor in accordance with the service information.
- Perform the POWERTRAIN VERIFICATION TEST 2.2L DIESEL. Refer to **PCM VERIFICATION TEST - 2.2L DIESEL** .

No

- Go To 10

10. **POWERTRAIN CONTROL MODULE**
    1. Using the wiring diagram/schematic as a guide, inspect the wiring and connectors between the Exhaust Differential Pressure Sensor and the Powertrain Control Module.
    2. Look for any chafed, pierced, pinched, or partially broken wires.
    3. Look for broken, bent, pushed out or corroded terminals.
    4. Monitor the scan tool data relative to this circuit and wiggle test the wiring and connectors.
    5. Look for the data to change or for the DTC to reset during the wiggle test.
    6. Perform any Technical Service Bulletins that may apply.

    Were any problems found?

    Yes

    - Repair as necessary.
    - Perform the POWERTRAIN VERIFICATION TEST 2.2L DIESEL. Refer to **PCM VERIFICATION TEST - 2.2L DIESEL** .

    No

    - Replace and program the Powertrain Control Module in accordance with the service information. Refer to **REMOVAL** .
    - Perform the POWERTRAIN VERIFICATION TEST 2.2L DIESEL. Refer to **PCM VERIFICATION TEST - 2.2L DIESEL** .

P2455-DIESEL PARTICULATE FILTER DIFFERENTIAL PRESSURE SENSOR CIRCUIT HIGH

For a complete wiring diagram, **refer to appropriate SYSTEM WIRING DIAGRAMS article** .

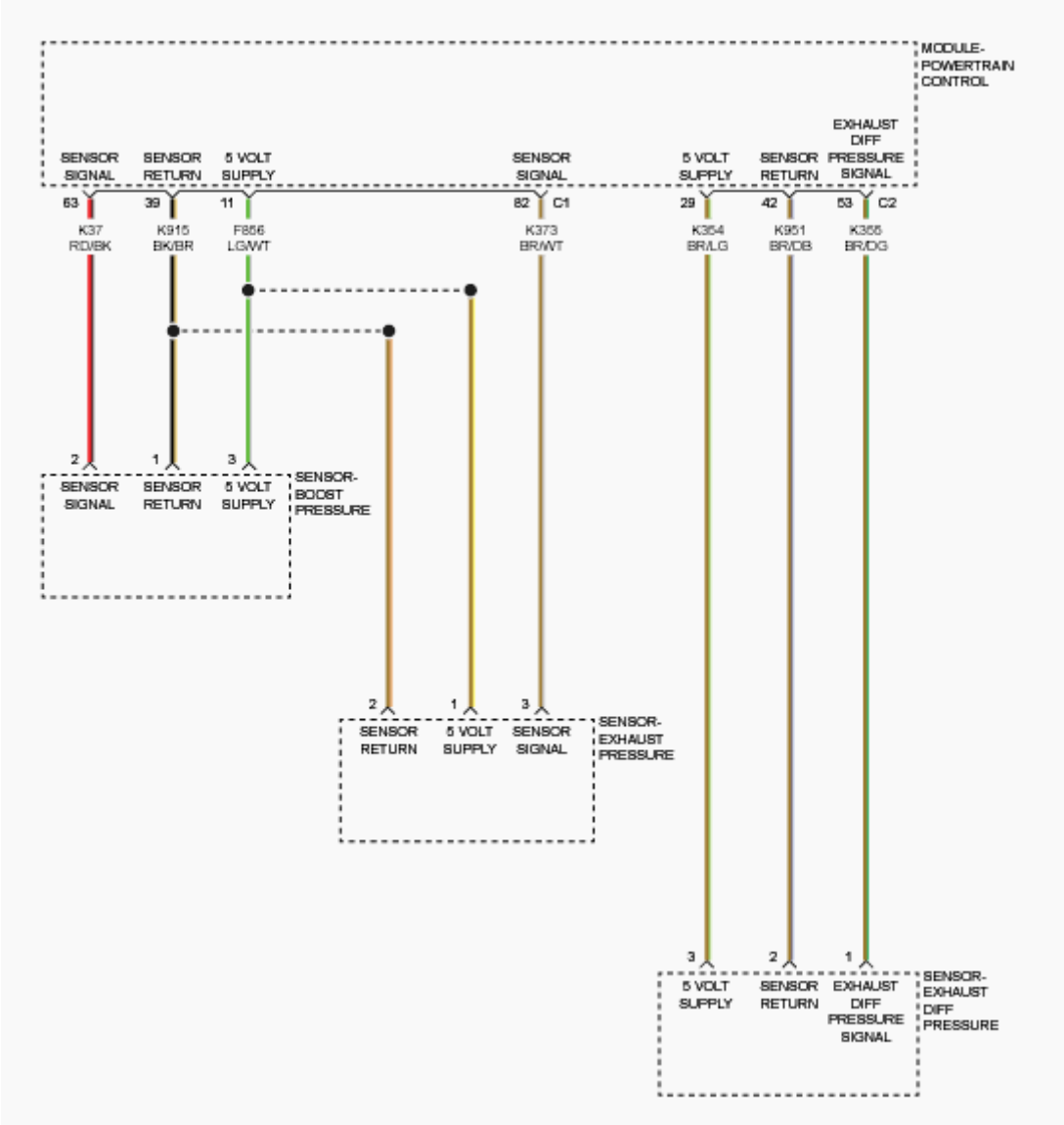

Fig. 32: Boost, Exhaust & Exhaust Diff Pressure Sensors Circuit Diagram
Courtesy of CHRYSLER GROUP, LLC

THEORY OF OPERATION

The Diesel Particulate Filter is an inline canister filter located in the exhaust system between the engine and the muffler. This Diesel Particulate Filter captures and stores ash particles created by the diesel combustion process. This filter is monitored by the Powertrain Control Module (PCM) using the Exhaust Differential Pressure Sensor. The sensor sends a delta pressure reading comparing the exhaust system pressure before and after the Diesel Particulate Filter through tube connections directly to the exhaust pipe. As ash and soot accumulate in the filter, the exhaust pressure at the inlet side of the filter increases as compared to the pressure at the outlet side of the filter.

WHEN MONITORED

With the ignition on.

SET CONDITION

The (K355) Exhaust Differential Pressure Sensor signal is above 4.59 Volts for 0.5 of a second.

POSSIBLE CAUSES

Possible Causes
(K354) EXHAUST DIFFERENTIAL PRESSURE SENSOR 5-VOLT SUPPLY CIRCUIT SHORTED TO VOLTAGE
(K355) EXHAUST DIFFERENTIAL PRESSURE SENSOR SIGNAL CIRCUIT SHORTED TO VOLTAGE
EXHAUST DIFFERENTIAL PRESSURE SENSOR
POWERTRAIN CONTROL MODULE (PCM)

Always perform the Pre-Diagnostic Troubleshooting procedure before proceeding. Refer to PRE-DIAGNOSTIC TROUBLESHOOTING PROCEDURE - 2.2L DIESEL .

DIAGNOSTIC TEST

1. **DTC IS ACTIVE**

NOTE: If any Sensor Reference or Sensor Supply voltage DTCs are present, perform the applicable diagnostic procedure before continuing with this test.

1. Ignition on, engine not running.
2. With the scan tool, clear DTCs in the Powertrain Control Module.
3. Monitor the scan tool for at least two minutes.
4. Cycle the ignition key off and on several times, leaving the ignition on for at least 10.0 seconds at a time.
5. Start the engine.
6. Allow the engine to reach normal operating temperature.
7. With the scan tool, select View DTCs.

Is the status Active for this DTC?

Yes

- Go To 2

No

- Perform the INTERMITTENT CONDITION diagnostic procedure. Refer to **INTERMITTENT CONDITION - 2.2L DIESEL** .

2. **CHECK THE (K354) EXHAUST DIFFERENTIAL PRESSURE SENSOR 5-VOLT SUPPLY CIRCUIT FOR A SHORT TO VOLTAGE**
   1. Turn the ignition off.
   2. Disconnect the Exhaust Differential Pressure Sensor harness connector.
   3. Disconnect the Powertrain Control Module C2 harness connector.
   4. Remove the Main Relay.
   5. Connect a jumper wire between cavity 87 and cavity 30 of the Main Relay Connector.
   6. Turn the ignition on.
   7. Measure the voltage of the (K354) Exhaust Differential Pressure Sensor 5-Volt Supply circuit in the Exhaust Differential Pressure Sensor harness connector.

   Is there any voltage present?

   Yes

   - Repair the (K354) Exhaust Differential Pressure Sensor 5-Volt Supply circuit for a short to voltage.
   - Perform the POWERTRAIN VERIFICATION TEST 2.2L DIESEL. Refer to **PCM VERIFICATION TEST - 2.2L DIESEL** .

   No

   - Go To 3

3. **CHECK THE (K355) EXHAUST DIFFERENTIAL PRESSURE SENSOR SIGNAL CIRCUIT FOR A SHORT TO VOLTAGE**

NOTE: The jumper wire should still be in place.

1. Measure the voltage of the (K355) Exhaust Differential Pressure Sensor Signal circuit in the Exhaust Differential Pressure Sensor harness connector.

   Is there any voltage present?

   Yes

   - Repair the (K355) Exhaust Differential Pressure Sensor Signal circuit for a short to voltage.
   - Perform the POWERTRAIN VERIFICATION TEST 2.2L DIESEL. Refer to **PCM VERIFICATION TEST - 2.2L DIESEL** .

   No

   - Go To 4

4. **CHECK THE EXHAUST DIFFERENTIAL PRESSURE SENSOR**

NOTE: Remove the jumper wire.

1. Turn the ignition off.
2. Reconnect the Powertrain Control Module C2 harness connector.
3. Reinstall the Main Relay.
4. Connect a jumper wire between the (K951) Exhaust Differential Pressure Sensor Ground circuit and the (K355) Exhaust Differential Pressure Sensor Signal circuit in the Exhaust Differential Pressure Sensor harness connector.
5. Turn the ignition on.
6. With the scan tool, clear DTCs.
7. With the scan tool, select View DTCs.

NOTE: The scan tool should display an P2454-Exhaust Differential Pressure Sensor Low DTC with the jumper wire in place.

Does the scan tool display P2454-Exhaust Differential Pressure Sensor Low DTC as Active?

Yes

- Replace the Exhaust Differential Pressure Sensor in accordance with the service information.
- Perform the POWERTRAIN VERIFICATION TEST 2.2L DIESEL. Refer to **PCM VERIFICATION TEST - 2.2L DIESEL** .

No

- Go To 5

5. **POWERTRAIN CONTROL MODULE**
   1. Using the wiring diagram/schematic as a guide, inspect the wiring and connectors between the Exhaust Differential Pressure Sensor and the Powertrain Control Module.
   2. Look for any chafed, pierced, pinched, or partially broken wires.
   3. Look for broken, bent, pushed out or corroded terminals.
   4. Monitor the scan tool data relative to this circuit and wiggle test the wiring and connectors.
   5. Look for the data to change or for the DTC to reset during the wiggle test.
   6. Perform any Technical Service Bulletins that may apply.

   Were any problems found?

   Yes

   - Repair as necessary.
   - Perform the POWERTRAIN VERIFICATION TEST 2.2L DIESEL. Refer to **PCM VERIFICATION TEST - 2.2L DIESEL** .

   No

   - Replace the Powertrain Control Module. **Before removing the**

PCM, perform the "Replace PCM" routine in the Miscellaneous Functions tab of the scan tool. . Refer to **REMOVAL** .

- Perform the POWERTRAIN VERIFICATION TEST 2.2L DIESEL. Refer to **PCM VERIFICATION TEST - 2.2L DIESEL** .

P2459-DIESEL PARTICULATE FILTER REGENERATION FREQUENCY

For a complete wiring diagram, **refer to appropriate SYSTEM WIRING DIAGRAMS article** .

THEORY OF OPERATION

The Diesel Particulate Filter is an inline canister filter located in the exhaust system between the engine and the muffler. This Diesel Particulate Filter captures and stores ash particles created by the diesel combustion process. This filter is monitored by the Powertrain Control Module (PCM) using the Exhaust Differential Pressure Sensor. The sensor sends a delta pressure reading comparing the exhaust system pressure before and after the Diesel Particulate Filter through tube connections directly to the exhaust pipe. As ash and soot accumulate in the filter, the exhaust pressure at the inlet side of the filter increases as compared to the pressure at the outlet side of the filter.

WHEN MONITORED

With the ignition on.

SET CONDITION

The PCM determines that the percentage of time spent in DPF Regeneration mode as compared to the time not in DPF Regeneration mode is equal to 100% at 1999 km (1242 miles) or less, or the percentage is equal to 25% at 4999 km (3106 miles) or less, or the percentage is equal to 15% at 5000 km (3106 miles) or higher. The mileage is based on distance traveled since last Diesel Particulate Filter change.

POSSIBLE CAUSES

Possible Causes
INTAKE SYSTEM RESTRICTION OR LEAK

EXHAUST SYSTEM RESTRICTION OR LEAK
EGR SYSTEM FAILURE
FUEL DELIVERY SYSTEM PERFORMANCE
DIESEL PARTICULATE FILTER

Always perform the Pre-Diagnostic Troubleshooting procedure before proceeding. Refer to PRE-DIAGNOSTIC TROUBLESHOOTING PROCEDURE - 2.2L DIESEL .

DIAGNOSTIC TEST

1. **DTC IS ACTIVE**
   1. Ignition on, engine not running.
   2. With the scan tool, Clear DTCs in the Powertrain Control Module.
   3. Start the engine.
   4. Allow the engine to reach normal operating temperature.
   5. With the scan tool, select View DTCs.

   NOTE: If there are DTCs present for the Exhaust Gas Pressures Sensors, Repair those DTCs before proceeding with this test.

   Is the status Active for this DTC?

   Yes

   - Go To 2

   No

   - Perform the INTERMITTENT CONDITION diagnostic procedure. Refer to **INTERMITTENT CONDITION - 2.2L DIESEL** .
2. **CHECK THE INTAKE SYSTEM**
   1. Turn the ignition off.
   2. Inspect the air filter for excessive dirt, soiling or other problems that may cause restricted air flow.
   3. Inspect all air intake and Turbocharger related hoses/tubes and connections.

Were any leaks or restrictions found in the intake or Turbocharger systems?

Yes

- Repair the intake or Turbocharger system as necessary.
- Perform the POWERTRAIN VERIFICATION TEST - 2.2L DIESEL. Refer to **PCM VERIFICATION TEST - 2.2L DIESEL** .

No

- Go To 3

3. **CHECK THE EXHAUST SYSTEM**
   1. Inspect the exhaust system for damaged components that could cause exhaust flow blockage or leak.

      Were any leaks or restrictions found in the exhaust system?

      Yes

      - Repair the exhaust system as necessary.
      - Perform the POWERTRAIN VERIFICATION TEST - 2.2L DIESEL. Refer to **PCM VERIFICATION TEST - 2.2L DIESEL** .

      No

      - Go To 4

4. **CHECK THE EGR SYSTEM**
   1. Look for visible signs (soot streaks) of an external EGR leak.
   2. With the scan tool, navigate to Miscellaneous Functions, and perform the EGR/ECU Self Test procedure.

      Were any problems found with the EGR system?

      Yes

      - Perform the appropriate repairs to the EGR system.

- Perform the POWERTRAIN VERIFICATION TEST - 2.2L DIESEL. Refer to **PCM VERIFICATION TEST - 2.2L DIESEL** .

No

- Go To 5

5. **CHECK THE FUEL DELIVERY SYSTEM**
   1. Perform the CHECKING THE FUEL DELIVERY SYSTEM diagnostic procedure. Refer to **DIAGNOSIS AND TESTING** .

      Were any fuel system issues found?

      Yes

      - Repair the fuel delivery system as necessary. Perform a regeneration of the Diesel Particulate Filter.
      - Perform the POWERTRAIN VERIFICATION TEST - 2.2L DIESEL. Refer to **PCM VERIFICATION TEST - 2.2L DIESEL** .

      No

      - Go To 6

6. **CHECK THE DIESEL PARTICULATE FILTER**
   1. With the scan tool, navigate to Miscellaneous Functions and perform the DPF Regeneration procedure.
   2. Turn the ignition on, engine not running.
   3. With the scan tool, Clear DTCs in the Powertrain Control Module.
   4. Start the engine.
   5. Allow the engine to idle for up to five minutes.
   6. With the scan tool, select View DTCs.

      Did the DTC return?

      Yes

      - Replace the Diesel Particulate Filter in accordance with the service

information. With the scan tool, navigate to Miscellaneous Functions and perform the New DPF Initialization procedure.
- Perform the POWERTRAIN VERIFICATION TEST - 2.2L DIESEL. Refer to **PCM VERIFICATION TEST - 2.2L DIESEL** .

No

- Test complete.
- Perform the POWERTRAIN VERIFICATION TEST - 2.2L DIESEL. Refer to **PCM VERIFICATION TEST - 2.2L DIESEL** .

P245A-EGR COOLER BYPASS CONTROL CIRCUIT OPEN

For a complete wiring diagram, **refer to appropriate SYSTEM WIRING DIAGRAMS article** .

WHEN MONITORED

With the ignition on and the engine running.

SET CONDITION

The Powertrain Control Module (PCM) detects an open circuit on the (K670) EGR Cooler Bypass Control circuit.

POSSIBLE CAUSES

Possible Causes
(F344) MAIN RELAY OUTPUT CIRCUITS OPEN
(K670) EGR COOLER BYPASS CONTROL CIRCUIT OPEN
EGR COOLER BYPASS ACTUATOR
POWERTRAIN CONTROL MODULE (PCM)

DIAGNOSTIC TEST

1. **CHECK FOR ACTIVE DTC**
    1. Ignition on, engine not running.
    2. Monitor the scan tool for at least two minutes.
    3. Cycle the ignition key off and on several times, leaving the ignition on

for at least 10.0 seconds at a time.

4. Start the engine.
5. Allow the engine to reach normal operating temperature.
6. With the scan tool, select View DTCs.

Is the status Active for this DTC?

Yes

- Go To 2

No

- Perform the INTERMITTENT CONDITION diagnostic procedure. Refer to **INTERMITTENT CONDITION - 2.2L DIESEL** .

2. **CHECKING FOR OTHER DTCS**
   1. An open MAIN Relay power supply to the PCM will cause multiple DTCs including this DTC to set.
   2. Check the PCM for other DTCs. If other DTCs set along with this DTC, and perform the CHECKING THE ECM POWER AND GROUND CIRCUITS diagnostic procedure before continuing. Refer to **DIAGNOSIS AND TESTING** .

   Are all of the PCM power and ground circuits functioning properly?

   Yes

   - Go To 3

   No

   - Repair the PCM power or ground circuits as necessary.
   - Perform the POWERTRAIN VERIFICATION TEST - 2.2L DIESEL. Refer to **PCM VERIFICATION TEST - 2.2L DIESEL** .

3. **CHECK THE (F344) MAIN RELAY OUTPUT CIRCUIT FOR AN OPEN**
   1. Turn the ignition off.

2. Disconnect the EGR Cooler Bypass harness connector.
3. Turn the ignition on.
4. Using a 12-Volt test light connected to ground, check the (F344) Main Relay Output circuit.

   Does the test light illuminate brightly on all circuits?

   Yes

   - Go To 4

   No

   - Repair the (F344) Main Relay Output circuit for an open.
   - Perform the POWERTRAIN VERIFICATION TEST - 2.2L DIESEL. Refer to **PCM VERIFICATION TEST - 2.2L DIESEL** .

4. **CHECK THE (K670) EGR COOLER BYPASS CONTROL CIRCUIT FOR AN OPEN**
   1. Turn the ignition off.
   2. Disconnect the PCM C1 harness connector.
   3. Measure the resistance of the (K670) EGR Cooler Bypass Control circuit between the EGR Cooler Bypass harness connector and the PCM C1 harness connector.

      Is the resistance below 5.0 Ohms?

      Yes

      - Go To 5

      No

      - Repair the (K670) EGR Cooler Bypass Control circuit for an open.
      - Perform the POWERTRAIN VERIFICATION TEST - 2.2L DIESEL. Refer to **PCM VERIFICATION TEST - 2.2L DIESEL** .

5. **EGR COOLER BYPASS ACTUATOR**

1. Reconnect the PCM C1 harness connector.
2. Connect a jumper between ground and the (K670) EGR Cooler Bypass Control circuit at the EGR Cooler Bypass harness connector.

   NOTE: Be careful not to spread the terminals in the connector.

3. Turn the ignition on.
4. With the scan tool, read PCM DTCs.

   Does the scan tool display P245C-EGR Cooler Bypass Control Circuit Low DTC as active?

   Yes

   - Replace the EGR Cooler Bypass Actuator in accordance with the service information.
   - Perform the POWERTRAIN VERIFICATION TEST - 2.2L DIESEL. Refer to **PCM VERIFICATION TEST - 2.2L DIESEL** .

   No

   - Replace the Powertrain Control Module. **Before removing the PCM, perform the "Replace PCM" routine in the Miscellaneous Functions tab of the scan tool.** . Refer to **REMOVAL** .
   - Perform the POWERTRAIN VERIFICATION TEST - 2.2L DIESEL. Refer to **PCM VERIFICATION TEST - 2.2L DIESEL** .

P245C-EGR COOLER BYPASS CONTROL CIRCUIT LOW

For a complete wiring diagram, **refer to appropriate SYSTEM WIRING DIAGRAMS article** .

WHEN MONITORED

With the ignition on engine running.

SET CONDITION

The Powertrain Control Module (PCM) detects a short to ground on (K670) EGR Cooler Bypass Control circuit for 2.0 seconds.

POSSIBLE CAUSES

Possible Causes
(F344) MAIN RELAY OUTPUT CIRCUITS OPEN
(K670) EGR COOLER BYPASS CONTROL CIRCUIT SHORTED TO GROUND
EGR COOLER BYPASS ACTUATOR
POWERTRAIN CONTROL MODULE (PCM)

DIAGNOSTIC TEST

1. **CHECK FOR ACTIVE DTC**
   1. Turn the ignition on.
   2. With the scan tool, erase PCM DTCs.
   3. Start the engine and let run for at least two minutes.
   4. With the scan tool, read PCM DTCs.

   Did this DTC return?

   Yes

   - Go To 2

   No

   - Perform the INTERMITTENT CONDITION diagnostic procedure. Refer to **INTERMITTENT CONDITION - 2.2L DIESEL** .
2. **CHECK FOR OTHER DTCS**
   1. An open MAIN Relay power supply to the PCM will cause multiple DTCs including this DTC to set.
   2. Check the PCM for other DTCs. If other DTCs set along with this DTC, and perform the CHECKING THE ECM POWER AND GROUND CIRCUITS diagnostic procedure before continuing. Refer to **DIAGNOSIS AND TESTING** .

If the PCM power and ground circuits are functioning properly continue with this test.

Yes

- Go To 3

No

- Repair the PCM power or ground circuits as necessary.
- Perform the POWERTRAIN VERIFICATION TEST - 2.2L DIESEL. Refer to **PCM VERIFICATION TEST - 2.2L DIESEL** .

3. **CHECK THE (F344) MAIN RELAY OUTPUT CIRCUIT FOR AN OPEN**
   1. Turn the ignition off.
   2. Disconnect the EGR Cooler Bypass harness connector.
   3. Turn the ignition on.
   4. Using a 12-volt test light connected to ground, check the (F344) Main Relay Output circuit.

   Does the test light illuminate brightly on all circuits?

   Yes

   - Go To 4

   No

   - Repair the (F344) Main Relay Output circuit for an open.
   - Perform the POWERTRAIN VERIFICATION TEST - 2.2L DIESEL. Refer to **PCM VERIFICATION TEST - 2.2L DIESEL** .
4. **CHECK THE (K670) EGR COOLER BYPASS CONTROL CIRCUIT FOR A SHORT TO GROUND**
   1. Turn the ignition off.
   2. Disconnect the PCM C1 harness connector.
   3. Measure the resistance between ground and the (K670) EGR Cooler

Bypass Control circuit.

Is the resistance above 10k Ohms?

Yes

- Go To5

No

- Repair the (K670) EGR Cooler Bypass Control circuit for a short to ground.
- Perform the POWERTRAIN VERIFICATION TEST - 2.2L DIESEL. Refer to **PCM VERIFICATION TEST - 2.2L DIESEL** .

5. **CHECK THE EGR COOLER BYPASS ACTUATOR FOR AN INTERNAL SHORT TO GROUND**
   1. Measure the resistance between ground and either terminal of the EGR Cooler Bypass Actuator.

      Is the resistance above 10K Ohms?

      Yes

      - Go To 6

      No

      - Replace the EGR Cooler Bypass Actuator in accordance with the service information.
      - Perform the POWERTRAIN VERIFICATION TEST - 2.2L DIESEL. Refer to **PCM VERIFICATION TEST - 2.2L DIESEL** .
6. **POWERTRAIN CONTROL MODULE**
   1. Using the wiring diagram/schematic as a guide, inspect the wiring and connectors between the EGR Cooler Bypass Actuator and the Powertrain Control Module.
   2. Look for any chafed, pierced, pinched, or partially broken wires.
   3. Look for broken, bent, pushed out or corroded terminals.

4. Monitor the scan tool data relative to this circuit and wiggle test the wiring and connectors.
5. Look for the data to change or for the DTC to reset during the wiggle test.
6. Perform any Technical Service Bulletins that may apply.

Were any problems found?

Yes

- Repair as necessary.
- Perform the POWERTRAIN VERIFICATION TEST - 2.2L DIESEL. Refer to **PCM VERIFICATION TEST - 2.2L DIESEL** .

No

- Replace the Powertrain Control Module. **Before removing the PCM, perform the "Replace PCM" routine in the Miscellaneous Functions tab of the scan tool.** . Refer to **REMOVAL** .
- Perform the POWERTRAIN VERIFICATION TEST - 2.2L DIESEL. Refer to **PCM VERIFICATION TEST - 2.2L DIESEL** .

P245D-EGR COOLER BYPASS CONTROL CIRCUIT HIGH

For a complete wiring diagram, **refer to appropriate SYSTEM WIRING DIAGRAMS article** .

WHEN MONITORED

With the ignition on engine running.

SET CONDITION

The Powertrain Control Module (PCM) detects a short to voltage on the (K670) EGR Cooler Bypass Control circuit.

POSSIBLE CAUSES

Possible Causes
(K670) EGR COOLER BYPASS CONTROL CIRCUIT SHORTED TO VOLTAGE
EGR COOLER BYPASS ACTUATOR
POWERTRAIN CONTROL MODULE (PCM)

DIAGNOSTIC TEST

1. **CHECK FOR ACTIVE DTC**
   1. Turn the ignition on.
   2. With the scan tool, erase PCM DTCs.
   3. Perform several ignition cycles, turning the ignition off for at least 10.0 seconds between each ignition cycle.
   4. With the scan tool, read PCM DTCs.

   Did this DTC set again?

   Yes

   - Go To 2

   No

   - Perform the INTERMITTENT CONDITION diagnostic procedure. Refer to **INTERMITTENT CONDITION - 2.2L DIESEL** .
2. **CHECK THE (K670) EGR COOLER BYPASS CONTROL CIRCUIT FOR A SHORT TO VOLTAGE**
   1. Turn the ignition off.
   2. Disconnect the EGR Cooler Bypass harness connector.
   3. Turn the ignition on.
   4. Measure the voltage on the (K670) EGR Cooler Bypass Control circuit.

   Is there any voltage present?

   Yes

   - Repair the (K670) EGR Cooler Bypass Control circuit for a short to voltage.

- Perform the POWERTRAIN VERIFICATION TEST - 2.2L DIESEL. Refer to **PCM VERIFICATION TEST - 2.2L DIESEL** .

No

- Go To 3

3. **CHECK THE EGR COOLER BYPASS ACTUATOR**
   1. Connect a jumper between ground and the (K670) EGR Cooler Bypass Control circuit at the EGR Cooler Bypass harness connector.

      NOTE: Be careful not to spread the terminals in the connector.

   2. With the scan tool, read PCM DTCs.

      NOTE: The scan tool should display the P245C-EGR Cooler Bypass Control Circuit Low DTC as active.

      Does the scan tool display the P245C-EGR Cooler Bypass Control Circuit Low DTC as active?

      Yes

      - Replace the EGR Cooler Bypass Actuator in accordance with the service information.
      - Perform the POWERTRAIN VERIFICATION TEST - 2.2L DIESEL. Refer to **PCM VERIFICATION TEST - 2.2L DIESEL** .

      No

      - Replace the Powertrain Control Module. **Before removing the PCM, perform the "Replace PCM" routine in the Miscellaneous Functions tab of the scan tool.** . Refer to **REMOVAL** .
      - Perform the POWERTRAIN VERIFICATION TEST - 2.2L DIESEL. Refer to **PCM VERIFICATION TEST - 2.2L DIESEL** .

P2463-DIESEL PARTICULATE FILTER - SOOT ACCUMULATION

For a complete wiring diagram, **refer to appropriate SYSTEM WIRING DIAGRAMS article** .

THEORY OF OPERATION

The Diesel Particulate Filter is an inline canister filter located in the exhaust system between the engine and the muffler. This Diesel Particulate Filter captures and stores ash particles created by the diesel combustion process. This filter is monitored by the PCM using the Exhaust Differential Pressure Sensor. The sensor sends a delta pressure reading comparing the exhaust system pressure before and after the Diesel Particulate Filter through tube connections directly to the exhaust pipe. As ash and soot accumulate in the filter, the exhaust pressure at the inlet side of the filter increases as compared to the pressure at the outlet side of the filter.

WHEN MONITORED

With the ignition on.

SET CONDITION

The Powertrain Control Module (PCM) detects a Diesel Particulate Filter load of more than 250 percent for 10.0 seconds.

POSSIBLE CAUSES

Possible Causes
ENGINE OR FUEL SYSTEM FAILURE CAUSING EXCESSIVE SOOT OUTPUT
EXHAUST TEMPERATURES NOT HIGH ENOUGH TO ACTIVELY REGENERATE THE AFTERTREATMENT PARTICULATE FILTER.
DIESEL PARTICULATE FILTER RESTRICTED

Always perform the Pre-Diagnostic Troubleshooting procedure before proceeding. Refer to PRE-DIAGNOSTIC TROUBLESHOOTING PROCEDURE - 2.2L DIESEL .

DIAGNOSTIC TEST

1. **DTC IS ACTIVE**

NOTE: This DTC indicates that the soot level in the Diesel Particulate Filter is high and regeneration of the Diesel Particulate Filter is necessary. If there are faults against the temperature or pressure sensors, DPF regeneration will be disabled. Repair any other faults before proceeding with this test procedure.

1. Ignition on, engine not running.
2. With the scan tool, clear DTCs in the Powertrain Control Module.
3. Monitor the scan tool for at least two minutes.
4. Cycle the ignition key off and on several times, leaving the ignition on for at least 10.0 seconds at a time.
5. Start the engine.
6. Allow the engine to reach normal operating temperature.
7. With the scan tool, select View DTCs.

   Is the status Active for this DTC?

   Yes

   - Go To 2

   No

   - Perform the INTERMITTENT CONDITION diagnostic procedure. Refer to **INTERMITTENT CONDITION - 2.2L DIESEL** .

2. **CHECK FOR BASE ENGINE FAILURES**
   1. Perform a check of the following systems:
      - Check the Intake and Turbocharger systems for leaks or restrictions, including the air filter.
      - Inspect the Exhaust system for damaged components that could cause exhaust flow blockage or leak.
      - Perform the CHECKING THE EGR SYSTEM diagnostic procedure. Refer to **DIAGNOSIS AND TESTING** .
      - Perform the CHECKING THE FUEL DELIVERY SYSTEM diagnostic procedure. Refer to **DIAGNOSIS AND TESTING** .

Were any problems found?

Yes

- Repair as necessary.
- Perform the POWERTRAIN VERIFICATION TEST - 2.2L DIESEL. Refer to **PCM VERIFICATION TEST - 2.2L DIESEL** .

No

- Go To 3

3. **CHECK THE EXHAUST TEMPERATURE SENSORS**
   1. Turn the ignition off for five minutes.
   2. Turn the ignition on.
   3. With the scan tool check the temperature values of the Exhaust Temperature Sensors.

   Are the Exhaust Temperature Sensors reading within 25°C (77°F) of each other?

   Yes

   - Go To 4

   No

   - Replace the Exhaust Temperature Sensor that is out of range as compared to the others.
   - Perform the POWERTRAIN VERIFICATION TEST - 2.2L DIESEL. Refer to **PCM VERIFICATION TEST - 2.2L DIESEL** .

4. **CHECK THE DIESEL PARTICULATE FILTER**
   1. With the scan tool, navigate to Miscellaneous Functions and perform the DPF Regeneration procedure.
   2. Turn the ignition on, engine not running.
   3. With the scan tool, clear DTCs in the Powertrain Control Module.
   4. Start the engine.

5. Allow the engine to idle for at least five minutes.
6. With the scan tool, select View DTCs.

Did the DTC return?

Yes

- Replace the Diesel Particulate Filter in accordance with the service information. With the scan tool, navigate to Miscellaneous Functions and perform the New DPF Initialization procedure.
- Perform the POWERTRAIN VERIFICATION TEST - 2.2L DIESEL. Refer to **PCM VERIFICATION TEST - 2.2L DIESEL** .

No

- Test complete.
- Perform the POWERTRAIN VERIFICATION TEST - 2.2L DIESEL. Refer to **PCM VERIFICATION TEST - 2.2L DIESEL** .

P2600-ELECTRIC COOLANT PUMP CONTROL CIRCUIT OPEN

For a complete wiring diagram, **refer to appropriate SYSTEM WIRING DIAGRAMS article** .

WHEN MONITORED

With the ignition on and the engine running.

SET CONDITION

The Powertrain Control Module (PCM) detects an open circuit on the (K501) Electric Coolant Pump Control circuit for 4.0 seconds.

POSSIBLE CAUSES

Possible Causes
(F344) MAIN RELAY OUTPUT CIRCUIT OPEN
(K501) ELECTRIC COOLANT PUMP CONTROL CIRCUIT OPEN/HIGH RESISTANCE

ELECTRIC COOLANT PUMP
POWERTRAIN CONTROL MODULE (PCM)

Always perform the Pre-Diagnostic Troubleshooting procedure before proceeding. Refer to PRE-DIAGNOSTIC TROUBLESHOOTING PROCEDURE - 2.2L DIESEL .

DIAGNOSTIC TEST

1. **DTC IS ACTIVE**
   1. Ignition on, engine not running.
   2. Monitor the scan tool for at least two minutes.
   3. Cycle the ignition key off and on several times, leaving the ignition on for at least 10.0 seconds at a time.
   4. Start the engine.
   5. Allow the engine to reach normal operating temperature.
   6. With the scan tool, select View DTCs.

   Is the status Active for this DTC?

   Yes

   - Go To 2

   No

   - Perform the INTERMITTENT CONDITION diagnostic procedure. Refer to **INTERMITTENT CONDITION - 2.2L DIESEL** .
2. **CHECKING FOR OTHER DTCS**
   1. An open MAIN Relay power supply to the PCM will cause multiple DTCs including this DTC to set.
   2. Check the PCM for other DTCs. If other DTCs are set with this DTC perform the CHECKING THE ECM POWER AND GROUND CIRCUITS test before continuing. Refer to **DIAGNOSIS AND TESTING** .

   Are all of the PCM power and ground circuits functioning properly?

Yes

- Go To 3

No

- Repair the PCM power or ground circuits as necessary.
- Perform the POWERTRAIN VERIFICATION TEST - 2.2L DIESEL. Refer to **PCM VERIFICATION TEST - 2.2L DIESEL** .

3. **CHECK THE (F344) MAIN RELAY OUTPUT CIRCUIT FOR AN OPEN**
   1. Turn the ignition off.
   2. Disconnect the Electric Coolant Pump harness connector.
   3. Turn the ignition on.
   4. Using a 12-Volt test light connected to ground, check the (F344) Main Relay Output circuit.

   Does the test light illuminate brightly on all circuits?

   Yes

   - Go To 4

   No

   - Repair the (F344) Main Relay Output circuit for an open or high resistance.
   - Perform the POWERTRAIN VERIFICATION TEST - 2.2L DIESEL. Refer to **PCM VERIFICATION TEST - 2.2L DIESEL** .

4. **CHECK THE (K501) ELECTRIC COOLANT PUMP CONTROL CIRCUIT FOR AN OPEN OPEN/HIGH RESISTANCE**
   1. Turn the ignition off.
   2. Disconnect the PCM C1 harness connector.
   3. Measure the resistance of the (K501) Electric Coolant Pump Control circuit between the Electric Coolant Pump harness connector and the PCM C1 harness connector.

Is the resistance below 5.0 Ohms?

Yes

- Go To5

No

- Repair the (K501) Electric Coolant Pump Control circuit for an open or high resistance.
- Perform the POWERTRAIN VERIFICATION TEST - 2.2L DIESEL. Refer to **PCM VERIFICATION TEST - 2.2L DIESEL** .

5. **CHECK THE ELECTRIC COOLANT PUMP**
   1. Reconnect the PCM C1 harness connector.
   2. Connect a jumper between ground and the (K501) Electric Coolant Pump Control circuit at the Electric Coolant Pump harness connector.

      NOTE: Be careful not to spread the terminals in the connector.

   3. Turn the ignition on.
   4. With the scan tool, read PCM DTCs.

      NOTE: The scan tool should display a P2602-ELECTRIC COOLANT PUMP CIRCUIT LOW DTC as active with the jumper wire in place.

   Does the scan tool display the P2602-ELECTRIC COOLANT PUMP CIRCUIT LOW DTC as active?

   Yes

   - Replace the Electric Coolant Pump in accordance with the service information.
   - Perform the POWERTRAIN VERIFICATION TEST - 2.2L DIESEL. Refer to **PCM VERIFICATION TEST - 2.2L DIESEL** .

No

- Go To 6

6. **POWERTRAIN CONTROL MODULE**
   1. Using the wiring diagram/schematic as a guide, inspect the wiring and connectors between the Electric Coolant Pump and the Powertrain Control Module.
   2. Look for any chafed, pierced, pinched, or partially broken wires.
   3. Look for broken, bent, pushed out or corroded terminals.
   4. Monitor the scan tool data relative to this circuit and wiggle test the wiring and connectors.
   5. Look for the data to change or for the DTC to reset during the wiggle test.
   6. Perform any Technical Service Bulletins that may apply.

   Were any problems found?

   Yes

   - Repair as necessary.
   - Perform the POWERTRAIN VERIFICATION TEST - 2.2L DIESEL. Refer to **PCM VERIFICATION TEST - 2.2L DIESEL** .

   No

   - Replace the Powertrain Control Module. **Before removing the PCM, perform the "Replace PCM" routine in the Miscellaneous Functions tab of the scan tool.** . Refer to **REMOVAL** .
   - Perform the POWERTRAIN VERIFICATION TEST - 2.2L DIESEL. Refer to **PCM VERIFICATION TEST - 2.2L DIESEL** .

P2602-ELECTRIC COOLANT PUMP CONTROL CIRCUIT LOW

For a complete wiring diagram, **refer to appropriate SYSTEM WIRING DIAGRAMS article** .

WHEN MONITORED

With the ignition on and the engine running.

SET CONDITION

The Powertrain Control Module (PCM) detects a short to ground on the (K501) Electric Coolant Pump Control circuit for 4.0 seconds.

POSSIBLE CAUSES

Possible Causes
(K343) MAIN RELAY OUTPUT CIRCUITS OPEN
(K501) ELECTRIC COOLANT PUMP CONTROL CIRCUIT SHORTED TO GROUND
ELECTRIC COOLANT PUMP
POWERTRAIN CONTROL MODULE (PCM)

DIAGNOSTIC TEST

1. **DTC IS ACTIVE**
    1. Ignition on, engine not running.
    2. Monitor the scan tool for at least two minutes.
    3. Cycle the ignition key off and on several times, leaving the ignition on for at least 10.0 seconds at a time.
    4. Start the engine.
    5. Allow the engine to reach normal operating temperature.
    6. With the scan tool, select View DTCs.

    Is the status Active for this DTC?

    Yes

    - Go To 2

    No

    - Perform the INTERMITTENT CONDITION diagnostic procedure. Refer to **INTERMITTENT CONDITION - 2.2L DIESEL** .
2. **CHECKING FOR OTHER DTCS**

1. An open Main Relay power supply to the PCM will cause multiple DTCs including this DTC to set.
2. Check the PCM for other DTCs. If other DTCs are set with this DTC perform the CHECKING THE ECM POWER AND GROUND CIRCUITS test before continuing. Refer to **DIAGNOSIS AND TESTING** .

   Are all of the PCM power and ground circuits functioning properly?

   Yes

   - Go To 3

   No

   - Repair the PCM power or ground circuits as necessary.
   - Perform the POWERTRAIN VERIFICATION TEST - 2.2L DIESEL. Refer to **PCM VERIFICATION TEST - 2.2L DIESEL** .

3. **CHECK THE (F343) MAIN RELAY OUTPUT CIRCUIT FOR AN OPEN**
   1. Turn the ignition off.
   2. Disconnect the Electric Coolant Pump harness connector.
   3. Turn the ignition on.
   4. Using a 12-Volt test light connected to ground, check the (F343) Main Relay Output circuit.

      Does the test light illuminate brightly on all circuits?

      Yes

      - Go To 4

      No

      - Repair the (F343) Main Relay Output circuit for an open or high resistance.
      - Perform the POWERTRAIN VERIFICATION TEST - 2.2L DIESEL. Refer to **PCM VERIFICATION TEST - 2.2L**

DIESEL .

4. **CHECK THE (K501) ELECTRIC COOLANT PUMP CONTROL CIRCUIT FOR A SHORT TO GROUND**
   1. Turn the ignition off.
   2. Disconnect the PCM C1 harness connector.
   3. Measure the resistance between ground and (K501) Electric Coolant Pump Control circuit at Electric Coolant Pump harness connector.

      Is the resistance above 10k Ohms?

      Yes

      - Go To 5

      No

      - Repair the (K501) Electric Coolant Pump Control circuit for a short to ground.
      - Perform the POWERTRAIN VERIFICATION TEST - 2.2L DIESEL. Refer to **PCM VERIFICATION TEST - 2.2L DIESEL** .
5. **CHECK THE ELECTRIC COOLANT PUMP FOR AN INTERNAL SHORT TO GROUND**
   1. Measure the resistance between ground and either terminal of the Electric Coolant Pump.

      Is the resistance above 10k Ohms?

      Yes

      - Go To 6

      No

      - Replace the Electric Coolant Pump in accordance with the service information.
      - Perform the POWERTRAIN VERIFICATION TEST - 2.2L DIESEL. Refer to **PCM VERIFICATION TEST - 2.2L DIESEL** .

6. **POWERTRAIN CONTROL MODULE**
    1. Using the wiring diagram/schematic as a guide, inspect the wiring and connectors between the Electric Coolant Pump and the Powertrain Control Module.
    2. Look for any chafed, pierced, pinched, or partially broken wires.
    3. Look for broken, bent, pushed out or corroded terminals.
    4. Monitor the scan tool data relative to this circuit and wiggle test the wiring and connectors.
    5. Look for the data to change or for the DTC to reset during the wiggle test.
    6. Perform any Technical Service Bulletins that may apply.

    Were any problems found?

    Yes

    - Repair as necessary.
    - Perform the POWERTRAIN VERIFICATION TEST - 2.2L DIESEL. Refer to **PCM VERIFICATION TEST - 2.2L DIESEL** .

    No

    - Replace the Powertrain Control Module. **Before removing the PCM, perform the "Replace PCM" routine in the Miscellaneous Functions tab of the scan tool.** . Refer to **REMOVAL** .
    - Perform the POWERTRAIN VERIFICATION TEST - 2.2L DIESEL. Refer to **PCM VERIFICATION TEST - 2.2L DIESEL** .

P2603-ELECTRIC COOLANT PUMP CONTROL CIRCUIT HIGH

For a complete wiring diagram, **refer to appropriate SYSTEM WIRING DIAGRAMS article** .

WHEN MONITORED

With the ignition on and the engine running.

SET CONDITION

The Powertrain Control Module (PCM) detects a short to voltage on the (K501) Electric Coolant Pump Control circuit for 4.0 seconds.

POSSIBLE CAUSES

Possible Causes
(K501) ELECTRIC COOLANT PUMP CONTROL CIRCUIT SHORTED TO VOLTAGE
ELECTRIC COOLANT PUMP
POWERTRAIN CONTROL MODULE (PCM)

DIAGNOSTIC TEST

1. **DTC IS ACTIVE**
   1. Ignition on, engine not running.
   2. Monitor the scan tool for at least two minutes.
   3. Cycle the ignition key off and on several times, leaving the ignition on for at least 10.0 seconds at a time.
   4. Start the engine.
   5. Allow the engine to reach normal operating temperature.
   6. With the scan tool, select View DTCs.

   Is the status Active for this DTC?

   Yes

   - Go To 2

   No

   - Perform the INTERMITTENT CONDITION diagnostic procedure. Refer to **INTERMITTENT CONDITION - 2.2L DIESEL** .
2. **CHECK THE (K501) ELECTRIC COOLANT PUMP CONTROL CIRCUIT FOR A SHORT TO VOLTAGE**
   1. Turn the ignition off.
   2. Disconnect the Electric Coolant Pump harness connector.
   3. Turn the ignition on.

4. Measure the voltage on the (K501) Electric Coolant Pump Control circuit.

   Is there any voltage present?

   Yes

   - Repair the (K501) Electric Coolant Pump Control circuit for a short to voltage.
   - Perform the POWERTRAIN VERIFICATION TEST - 2.2L DIESEL. Refer to **PCM VERIFICATION TEST - 2.2L DIESEL** .

   No

   - Go To 3

3. **CHECK THE ELECTRIC COOLANT PUMP**
   1. Connect a jumper between ground and the (K501) Electric Coolant Pump Control circuit at the Electric Coolant Pump harness connector.

      NOTE: Be careful not to spread the terminals in the connector.

   2. With the scan tool, read PCM DTCs.

      NOTE: The scan tool should display the P2602-Electric Coolant Pump Control Circuit Low DTC as active.

      Does the scan tool display the P2602-Electric Coolant Pump Control Circuit Low DTC as active?

      Yes

      - Replace the Electric Coolant Pump in accordance with the service information.
      - Perform the POWERTRAIN VERIFICATION TEST - 2.2L DIESEL. Refer to **PCM VERIFICATION TEST - 2.2L DIESEL** .

No

- Replace the Powertrain Control Module. **Before removing the PCM, perform the "Replace PCM" routine in the Miscellaneous Functions tab of the scan tool.** . Refer to **REMOVAL** .
- Perform the POWERTRAIN VERIFICATION TEST - 2.2L DIESEL. Refer to **PCM VERIFICATION TEST - 2.2L DIESEL** .

P2626-O2 SENSOR 1/1 PUMP CELL CURRENT TRIM CIRCUIT OPEN

For a complete wiring diagram, **refer to appropriate SYSTEM WIRING DIAGRAMS article** .

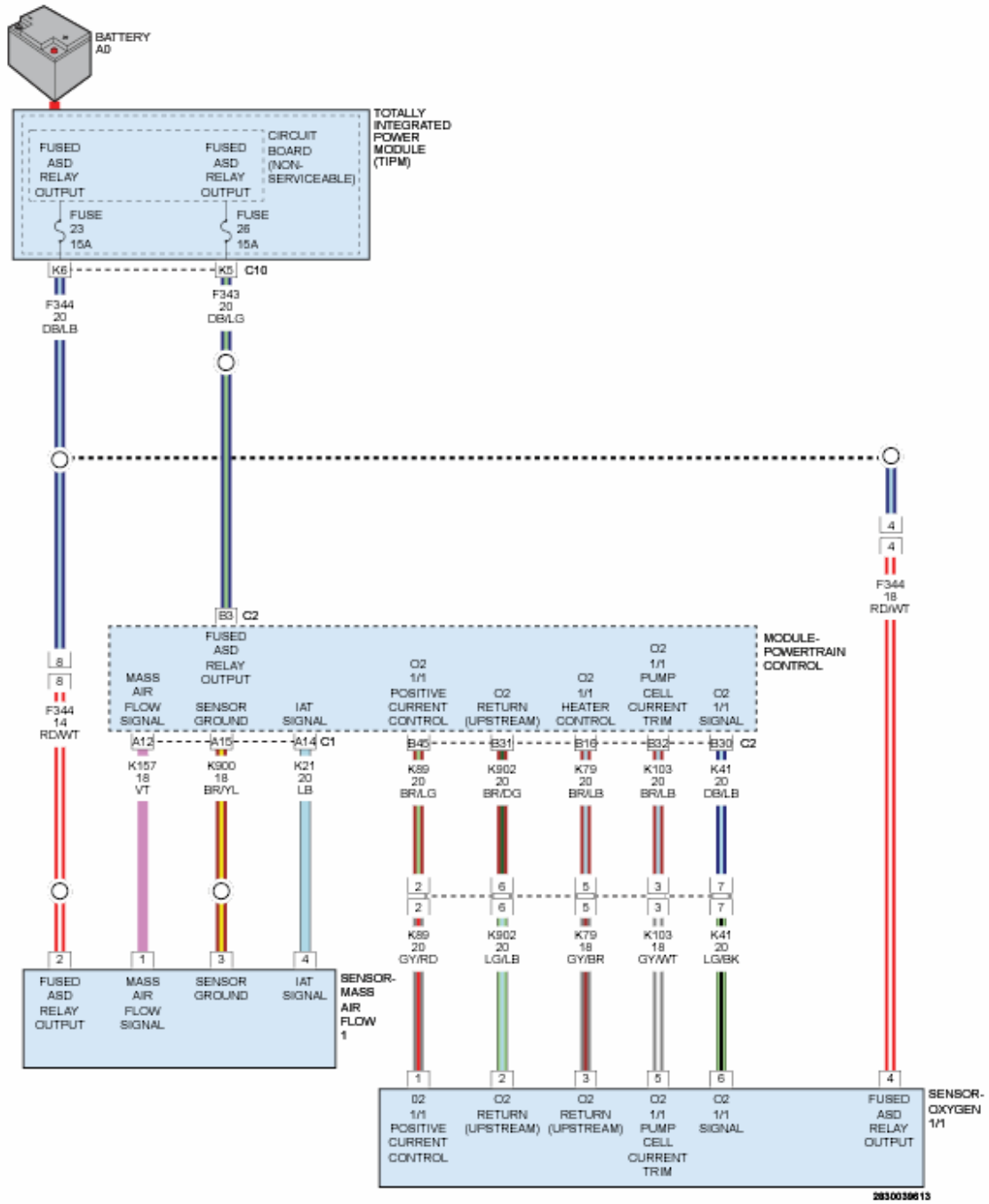

Fig. 33: O2 & MAF Sensors Circuit Diagram
Courtesy of CHRYSLER GROUP, LLC

WHEN MONITORED

With the ignition on.

SET CONDITION

The Powertrain Control Module (PCM) detects a short to ground on the (K103) O2 Sensor 1/1 Pump Cell Current Trim circuit for 2.0 seconds.

POSSIBLE CAUSES

Possible Causes
(K103) O2 SENSOR 1/1 PUMP CELL CURRENT TRIM CIRCUIT OPEN/HIGH RESISTANCE
OXYGEN SENSOR
POWERTRAIN CONTROL MODULE (PCM)

Always perform the Pre-Diagnostic Troubleshooting procedure before proceeding. Refer to PRE-DIAGNOSTIC TROUBLESHOOTING PROCEDURE - 2.2L DIESEL .

DIAGNOSTIC TEST

1. **DTC IS ACTIVE**
    1. Ignition on, engine not running.
    2. With the scan tool, clear DTCs in the Powertrain Control Module (PCM).
    3. Start the engine.
    4. Allow the engine to reach normal operating temperature.
    5. Monitor the scan tool for at least five minutes.
    6. With the scan tool, select View DTCs.

    Is the status Active for this DTC?

    Yes

    - Go To 2

    No

    - Perform the INTERMITTENT CONDITION diagnostic procedure. Refer to **INTERMITTENT CONDITION - 2.2L DIESEL** .
2. **CHECK THE (K103) O2 SENSOR 1/1 PUMP CELL CURRENT TRIM CIRCUIT FOR AN OPEN/HIGH RESISTANCE**
    1. Turn the ignition off.
    2. Disconnect the O2 Sensor harness connector.
    3. Disconnect the PCM C2 harness connector.

4. Measure the resistance of the (K103) O2 Sensor 1/1 Pump Cell Current Trim circuit between the Oxygen Sensor harness connector and the PCM C2 harness connector.

   Is the resistance below 5.0 Ohms?

   Yes

   - Go To 3

   No

   - Repair the (K103) O2 Sensor 1/1 Pump Cell Current Trim circuit for an open or high resistance.
   - Perform the POWERTRAIN VERIFICATION TEST - 2.2L DIESEL. Refer to **PCM VERIFICATION TEST - 2.2L DIESEL** .

3. **OXYGEN SENSOR**
   1. Turn the ignition off.
   2. Reconnect the PCM C2 harness connector.
   3. Replace the Oxygen Sensor in accordance with the service information.
   4. Turn the ignition on.
   5. With the scan tool, navigate to Miscellaneous Functions and perform the O2 Sensor Replaced procedure.
   6. Start the engine.
   7. Allow the engine to reach normal operating temperature.
   8. Monitor the scan tool for at least five minutes.
   9. With the scan tool, select View DTCs.

   Is the status Active for this DTC?

   Yes

   - Go To 4

   No

   - Test Complete.

- Perform the POWERTRAIN VERIFICATION TEST - 2.2L DIESEL. Refer to **PCM VERIFICATION TEST - 2.2L DIESEL** .

4. **POWERTRAIN CONTROL MODULE**
   1. Using the wiring diagram/schematic as a guide, inspect the wiring and connectors between the Oxygen Sensor and the Powertrain Control Module.
   2. Look for any chafed, pierced, pinched, or partially broken wires.
   3. Look for broken, bent, pushed out or corroded terminals.
   4. Monitor the scan tool data relative to this circuit and wiggle test the wiring and connectors.
   5. Look for the data to change or for the DTC to reset during the wiggle test.
   6. Perform any Technical Service Bulletins that may apply.

   Were any problems found?

   Yes

   - Repair as necessary.
   - Perform the POWERTRAIN VERIFICATION TEST - 2.2L DIESEL. Refer to **PCM VERIFICATION TEST - 2.2L DIESEL** .

   No

   - Replace the Powertrain Control Module. **Before removing the PCM, perform the "Replace PCM" routine in the Miscellaneous Functions tab of the scan tool.** . Refer to **REMOVAL** .
   - Perform the POWERTRAIN VERIFICATION TEST - 2.2L DIESEL. Refer to **PCM VERIFICATION TEST - 2.2L DIESEL** .

P2627-O2 SENSOR 1/1 PUMP CELL CURRENT TRIM CIRCUIT LOW

For a complete wiring diagram, **refer to appropriate SYSTEM WIRING DIAGRAMS article** .

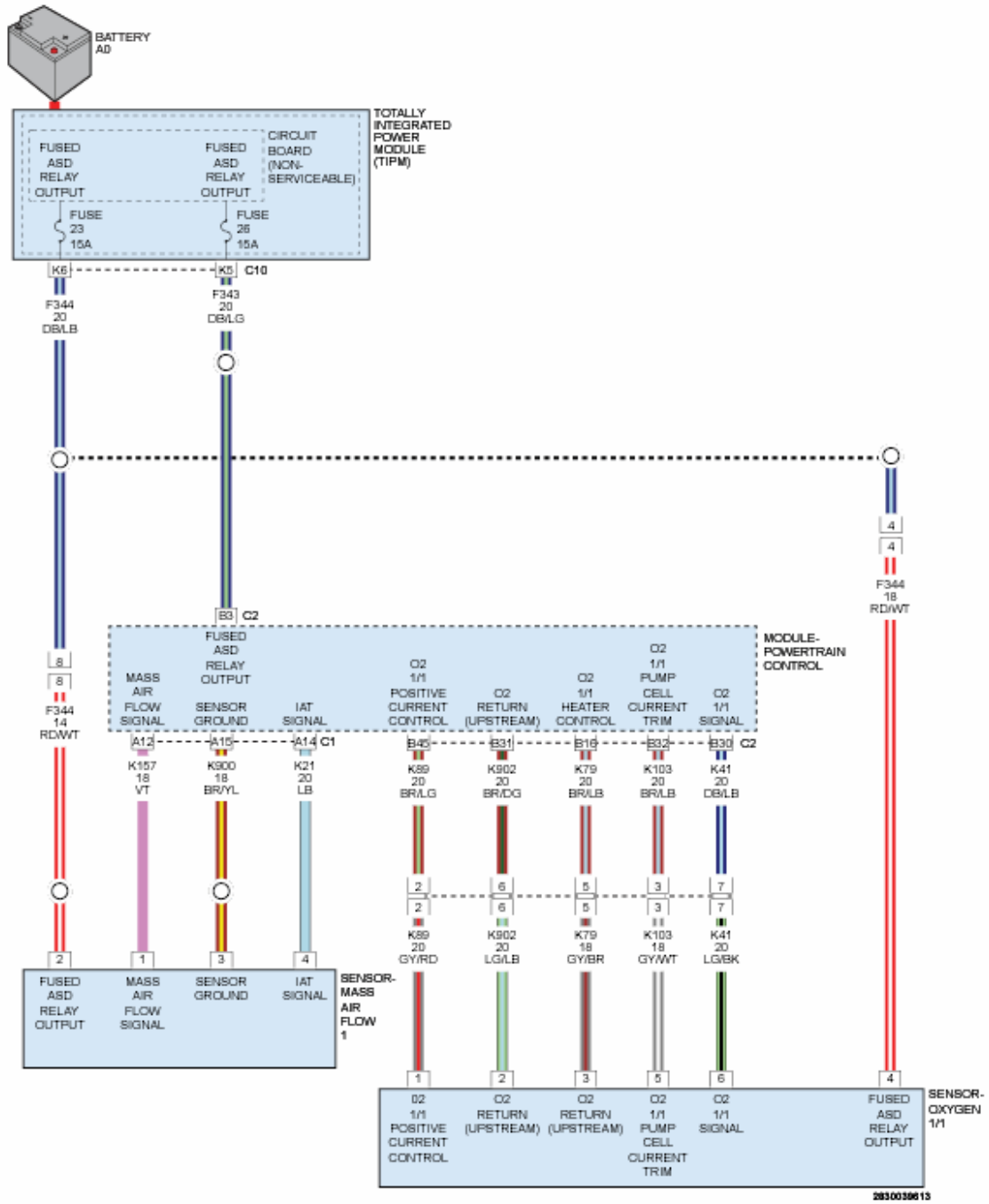

Fig. 34: O2 & MAF Sensors Circuit Diagram
Courtesy of CHRYSLER GROUP, LLC

WHEN MONITORED

With the ignition on.

SET CONDITION

The Powertrain Control Module (PCM) detects a short to ground on the (K103) O2 Sensor 1/1 Negative Current Control circuit or the (K89) O2 Sensor 1/1

Positive Current Control circuit for 2.0 seconds.

POSSIBLE CAUSES

Possible Causes
(K103) O2 SENSOR 1/1 NEGATIVE CURRENT CONTROL CIRCUIT SHORTED TO GROUND
(K89) O2 SENSOR 1/1 POSITIVE CURRENT CONTROL CIRCUIT SHORTED TO GROUND
(K103) O2 SENSOR 1/1 NEGATIVE CURRENT CONTROL CIRCUIT SHORTED TO THE (K902) O2 1/1 SENSOR GROUND CIRCUIT
(K89) O2 SENSOR 1/1 POSITIVE CURRENT CONTROL CIRCUIT SHORTED TO THE (K902) O2 1/1 SENSOR GROUND CIRCUIT
OXYGEN SENSOR
POWERTRAIN CONTROL MODULE (PCM)

Always perform the Pre-Diagnostic Troubleshooting procedure before proceeding. Refer to PRE-DIAGNOSTIC TROUBLESHOOTING PROCEDURE - 2.2L DIESEL .

DIAGNOSTIC TEST

1. **DTC IS ACTIVE**
    1. Ignition on, engine not running.
    2. With the scan tool, Clear DTCs in the Powertrain Control Module.
    3. Start the engine.
    4. Allow the engine to reach normal operating temperature.
    5. Monitor the scan tool for at least five minutes.
    6. With the scan tool, select View DTCs.

    Is the status Active for this DTC?

    Yes

    - Go To 2

    No

    - Perform the INTERMITTENT CONDITION diagnostic procedure.

Refer to **INTERMITTENT CONDITION - 2.2L DIESEL** .

2. **CHECK THE (K103) O2 SENSOR 1/1 NEGATIVE CURRENT CONTROL CIRCUIT FOR A SHORT TO GROUND**
   1. Turn the ignition off.
   2. Disconnect the Oxygen Sensor harness connector.
   3. Disconnect the PCM C2 harness connector.
   4. Measure the resistance between ground and the (K103) O2 Sensor 1/1 Negative Current Control circuit in the Oxygen Sensor harness connector.

      Is the resistance above 10k Ohms?

      Yes

      - Go To 3

      No

      - Repair the (K103) O2 Sensor 1/1 Negative Current Control circuit for a short to ground.
      - Perform the POWERTRAIN VERIFICATION TEST - 2.2L. Refer to **PCM VERIFICATION TEST - 2.2L DIESEL** .
3. **CHECK THE (K89) O2 SENSOR 1/1 POSITIVE CURRENT CONTROL CIRCUIT FOR A SHORT TO GROUND**
   1. Measure the resistance between ground and the (K89) O2 Sensor 1/1 Positive Current Control circuit at the Oxygen Sensor harness connector.

      Is the resistance above 10k Ohms?

      Yes

      - Go To 4

      No

      - Repair the (K89) O2 Sensor 1/1 Positive Current Control circuit for a short to ground.
      - Perform the POWERTRAIN VERIFICATION TEST - 2.2L. Refer

to **PCM VERIFICATION TEST - 2.2L DIESEL** .

4. **CHECK FOR THE (K103) O2 SENSOR 1/1 NEGATIVE CURRENT CONTROL CIRCUIT SHORTED TO THE (K902) O2 1/1 SENSOR GROUND CIRCUIT**
   1. Measure the resistance between the (K103) O2 Sensor 1/1 Negative Current Control circuit and the (K902) O2 1/1 Sensor Ground circuit at the Oxygen Sensor harness connector.

      Is the resistance above 10k Ohms?

      Yes

      - Go To 5

      No

      - Repair the (K103) O2 Sensor 1/1 Negative Current Control circuit for a short to the (K902) O2 1/1 Heater Control circuit.
      - Perform the POWERTRAIN VERIFICATION TEST - 2.2L. Refer to **PCM VERIFICATION TEST - 2.2L DIESEL** .
5. **CHECK FOR THE (K89) O2 SENSOR 1/1 POSITIVE CURRENT CONTROL CIRCUIT SHORTED TO THE (K902) O2 1/1 SENSOR GROUND CIRCUIT**
   1. Measure the resistance between the (K89) O2 Sensor 1/1 Positive Current Control circuit and the (K902) O2 1/1 Sensor Ground circuit at the Oxygen Sensor harness connector.

      Is the resistance above 10k Ohms?

      Yes

      - Go To 6

      No

      - Repair the (K89) O2 Sensor 1/1 Positive Current Control circuit for a short to the (K902) O2 1/1 Heater Control circuit.
      - Perform the POWERTRAIN VERIFICATION TEST - 2.2L. Refer to **PCM VERIFICATION TEST - 2.2L DIESEL** .

6. **OXYGEN SENSOR**
    1. Turn the ignition off.
    2. Reconnect the Powertrain Control Module C2 harness connector.
    3. Replace the Oxygen Sensor in accordance with the service information.
    4. Turn the ignition on.
    5. With the scan tool, navigate to Miscellaneous Functions and perform the O2 Sensor Replaced procedure.
    6. Start the engine.
    7. Allow the engine to reach normal operating temperature.
    8. Monitor the scan tool for at least five minutes.
    9. With the scan tool, select View DTCs.

    Is the status Active for this DTC?

    Yes

    - Go To 7

    No

    - Test Complete.
    - Perform the POWERTRAIN VERIFICATION TEST - 2.2L. Refer to **PCM VERIFICATION TEST - 2.2L DIESEL** .
7. **POWERTRAIN CONTROL MODULE**
    1. Using the wiring diagram/schematic as a guide, inspect the wiring and connectors between the Oxygen Sensor and the Powertrain Control Module.
    2. Look for any chafed, pierced, pinched, or partially broken wires.
    3. Look for broken, bent, pushed out or corroded terminals.
    4. Monitor the scan tool data relative to this circuit and wiggle test the wiring and connectors.
    5. Look for the data to change or for the DTC to reset during the wiggle test.
    6. Perform any Technical Service Bulletins that may apply.

    Were any problems found?

Yes

- Repair as necessary.
- Perform the POWERTRAIN VERIFICATION TEST - 2.2L. Refer to **PCM VERIFICATION TEST - 2.2L DIESEL** .

No

- Replace the Powertrain Control Module. **Before removing the PCM, perform the "Replace PCM" routine in the Miscellaneous Functions tab of the scan tool.** . Refer to **REMOVAL** .
- Perform the POWERTRAIN VERIFICATION TEST - 2.2L. Refer to **PCM VERIFICATION TEST - 2.2L DIESEL** .

P2628-O2 SENSOR 1/1 PUMP CELL CURRENT TRIM CIRCUIT HIGH

For a complete wiring diagram, **refer to appropriate SYSTEM WIRING DIAGRAMS article** .

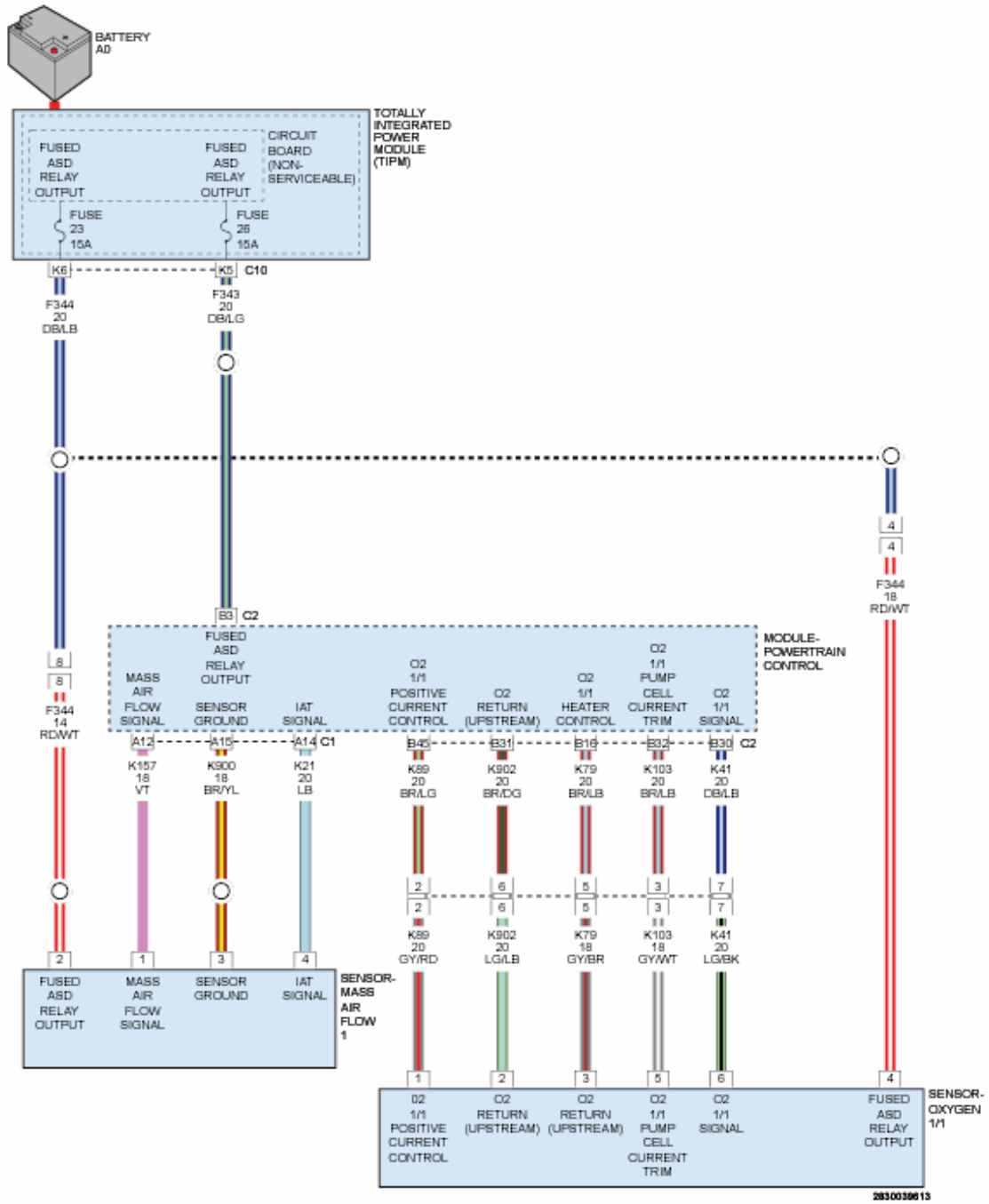

Fig. 35: O2 & MAF Sensors Circuit Diagram
Courtesy of CHRYSLER GROUP, LLC

WHEN MONITORED

With the ignition on.

SET CONDITION

The Powertrain Control Module (PCM) detects a short to voltage on the (K103) O2 Sensor 1/1 Negative Current Control circuit for 2.0 seconds.

POSSIBLE CAUSES

Possible Causes
(K103) O2 SENSOR 1/1 NEGATIVE CURRENT CONTROL CIRCUIT SHORTED TO VOLTAGE
(K89) O2 SENSOR 1/1 POSITIVE CURRENT CONTROL CIRCUIT SHORTED TO VOLTAGE
OXYGEN SENSOR
POWERTRAIN CONTROL MODULE (PCM)

Always perform the Pre-Diagnostic Troubleshooting procedure before proceeding. Refer to PRE-DIAGNOSTIC TROUBLESHOOTING PROCEDURE - 2.2L DIESEL .

DIAGNOSTIC TEST

1. **DTC IS ACTIVE**
   1. Ignition on, engine not running.
   2. With the scan tool, clear DTCs in the Powertrain Control Module.
   3. Start the engine.
   4. Allow the engine to reach normal operating temperature.
   5. Monitor the scan tool for at least five minutes.
   6. With the scan tool, select View DTCs.

   Is the status Active for this DTC?

   Yes

   - Go To 2

   No

   - Perform the INTERMITTENT CONDITION diagnostic procedure. Refer to **INTERMITTENT CONDITION - 2.2L DIESEL** .
2. **CHECK THE (K103) O2 SENSOR 1/1 PUMP CELL CURRENT TRIM CIRCUIT FOR A SHORT TO VOLTAGE**
   1. Turn the ignition off.
   2. Disconnect the Oxygen Sensor connector.

3. Disconnect the Powertrain Control Module harness connector.
4. Remove the Main Relay.
5. Connect a jumper wire between cavity 87 and cavity 30 of the Main Relay Connector.
6. Turn the ignition on.
7. Measure the voltage of the (K103) O2 Sensor 1/1 Negative Current Control circuit at the Oxygen Sensor harness connector.

   Is there any voltage present?

   Yes

   - Repair the (K103) O2 Sensor 1/1 Negative Current Control circuit for a short to voltage.
   - Perform the POWERTRAIN VERIFICATION TEST - 2.2L. Refer to **PCM VERIFICATION TEST - 2.2L DIESEL** .

   No

   - Go To 3

3. **CHECK THE (K89) O2 SENSOR 1/1 POSITIVE CURRENT CONTROL CIRCUIT FOR A SHORT TO VOLTAGE**
   1. Measure the voltage of the (K89) O2 Sensor 1/1 Positive Current Control circuit at the Oxygen Sensor harness connector.

      Is there any voltage present?

      Yes

      - Repair the (K89) O2 Sensor 1/1 Positive Current Control circuit for a short to voltage.
      - Perform the POWERTRAIN VERIFICATION TEST - 2.2L. Refer to **PCM VERIFICATION TEST - 2.2L DIESEL** .

      No

      - Go To 4

4. **OXYGEN SENSOR**

1. Turn the ignition off.
2. Reconnect the Powertrain Control Module harness connector.
3. Replace the Oxygen Sensor in accordance with the service information.
4. Turn the ignition on.
5. With the scan tool, navigate to Miscellaneous Functions and perform the O2 Sensor Replaced procedure.
6. Start the engine.
7. Allow the engine to reach normal operating temperature.
8. Monitor the scan tool for at least five minutes.
9. With the scan tool, select View DTCs.

   Is the status Active for this DTC?

   Yes

   - Go To 5

   No

   - Test Complete.
   - Perform the POWERTRAIN VERIFICATION TEST - 2.2L. Refer to **PCM VERIFICATION TEST - 2.2L DIESEL** .

5. **POWERTRAIN CONTROL MODULE**
   1. Using the wiring diagram/schematic as a guide, inspect the wiring and connectors between the Oxygen Sensor and the Powertrain Control Module.
   2. Look for any chafed, pierced, pinched, or partially broken wires.
   3. Look for broken, bent, pushed out or corroded terminals.
   4. Monitor the scan tool data relative to this circuit and wiggle test the wiring and connectors.
   5. Look for the data to change or for the DTC to reset during the wiggle test.
   6. Perform any Technical Service Bulletins that may apply.

   Were any problems found?

Yes

- Repair as necessary.
- Perform the POWERTRAIN VERIFICATION TEST - 2.2L. Refer to **PCM VERIFICATION TEST - 2.2L DIESEL** .

No

- Replace the Powertrain Control Module. **Before removing the PCM, perform the "Replace PCM" routine in the Miscellaneous Functions tab of the scan tool.** . Refer to **REMOVAL** .
- Perform the POWERTRAIN VERIFICATION TEST - 2.2L. Refer to **PCM VERIFICATION TEST - 2.2L DIESEL** .

P268C-CYLINDER 1 INJECTOR DATA INCOMPATIBLE

For a complete wiring diagram, **refer to appropriate SYSTEM WIRING DIAGRAMS article** .

WHEN MONITORED

With the ignition on.

SET CONDITION

The Powertrain Control Module (PCM) detects that the injector correction code has not been written for this cylinder.

POSSIBLE CAUSES

Possible Causes
NO FUEL INJECTOR CORRECTION CODE ENTERED INTO PCM FOR THIS CYLINDER
POWERTRAIN CONTROL MODULE (PCM)

Always perform the Pre-Diagnostic Troubleshooting procedure before proceeding. Refer to PRE-DIAGNOSTIC TROUBLESHOOTING PROCEDURE - 2.2L DIESEL .

DIAGNOSTIC TEST

PROGRAM THE FUEL INJECTOR CORRECTION CODE IN THE PCM

NOTE: If there are any Fuel Injector DTCs present, perform the diagnostics for those DTCs before proceeding with this test procedure.

1. Turn the ignition off.
2. Locate and record the correction codes for the Fuel Injector. The injector correction code Is located on top of the injector and consists of 20 alphanumeric characters in two lines of 10 alphanumeric characters.
3. Turn the ignition on, engine not running.
4. With the scan tool, attempt to calibrate the Fuel Injector correction code into the PCM.

   Did the Fuel Injector calibrate correctly in the PCM?

   Yes

   - Repair complete.
   - Perform the POWERTRAIN VERIFICATION TEST - 2.2L DIESEL. Refer to **PCM VERIFICATION TEST - 2.2L DIESEL** .

   No

   - Replace the Powertrain Control Module. **Before removing the PCM, perform the "Replace PCM" routine in the Miscellaneous Functions tab of the scan tool.** . Refer to **REMOVAL** .
   - Perform the POWERTRAIN VERIFICATION TEST - 2.2L DIESEL. Refer to **PCM VERIFICATION TEST - 2.2L DIESEL** .

P268D-CYLINDER 2 INJECTOR DATA INCOMPATIBLE

For a complete wiring diagram, **refer to appropriate SYSTEM WIRING DIAGRAMS article** .

WHEN MONITORED

With the ignition on.

SET CONDITION

The Powertrain Control Module (PCM) detects that the injector correction code has not been written for this cylinder.

POSSIBLE CAUSES

Possible Causes
NO FUEL INJECTOR CORRECTION CODE ENTERED INTO PCM FOR THIS CYLINDER
POWERTRAIN CONTROL MODULE (PCM)

Always perform the Pre-Diagnostic Troubleshooting procedure before proceeding. Refer to PRE-DIAGNOSTIC TROUBLESHOOTING PROCEDURE - 2.2L DIESEL .

DIAGNOSTIC TEST

PROGRAM THE FUEL INJECTOR CORRECTION CODE IN THE PCM

NOTE: If there are any Fuel Injector DTCs present, perform the diagnostics for those DTCs before proceeding with this test procedure.

1. Turn the ignition off.
2. Locate and record the correction codes for the Fuel Injector. The injector correction code Is located on top of the injector and consists of 20 alphanumeric characters in two lines of 10 alphanumeric characters.
3. Turn the ignition on, engine not running.
4. With the scan tool, attempt to calibrate the Fuel Injector correction code into the PCM.

   Did the Fuel Injector calibrate correctly in the PCM?

   Yes

   - Repair complete.
   - Perform the POWERTRAIN VERIFICATION TEST - 2.2L DIESEL. Refer to **PCM VERIFICATION TEST - 2.2L DIESEL** .

   No

- Replace the Powertrain Control Module. **Before removing the PCM, perform the "Replace PCM" routine in the Miscellaneous Functions tab of the scan tool.** . Refer to **REMOVAL** .
- Perform the POWERTRAIN VERIFICATION TEST - 2.2L DIESEL. Refer to **PCM VERIFICATION TEST - 2.2L DIESEL** .

P268E-CYLINDER 3 INJECTOR DATA INCOMPATIBLE

For a complete wiring diagram, **refer to appropriate SYSTEM WIRING DIAGRAMS article** .

WHEN MONITORED

With the ignition on.

SET CONDITION

The Powertrain Control Module (PCM) detects that the injector correction code has not been written for this cylinder.

POSSIBLE CAUSES

Possible Causes
NO FUEL INJECTOR CORRECTION CODE ENTERED INTO PCM FOR THIS CYLINDER
POWERTRAIN CONTROL MODULE (PCM)

Always perform the Pre-Diagnostic Troubleshooting procedure before proceeding. Refer to PRE-DIAGNOSTIC TROUBLESHOOTING PROCEDURE - 2.2L DIESEL .

DIAGNOSTIC TEST

PROGRAM THE FUEL INJECTOR CORRECTION CODE IN THE PCM

NOTE: If there are any Fuel Injector DTCs present, perform the diagnostics for those DTCs before proceeding with this test procedure.

1. Turn the ignition off.
2. Locate and record the correction codes for the Fuel Injector. The injector

correction code Is located on top of the injector and consists of 20 alphanumeric characters in two lines of 10 alphanumeric characters.

3. Turn the ignition on, engine not running.
4. With the scan tool, attempt to calibrate the Fuel Injector correction code into the PCM.

Did the Fuel Injector calibrated correctly in the PCM?

Yes

- Repair complete.
- Perform the POWERTRAIN VERIFICATION TEST - 2.2L DIESEL. Refer to **PCM VERIFICATION TEST - 2.2L DIESEL** .

No

- Replace the Powertrain Control Module. **Before removing the PCM, perform the "Replace PCM" routine in the Miscellaneous Functions tab of the scan tool.** . Refer to **REMOVAL** .
- Perform the POWERTRAIN VERIFICATION TEST - 2.2L DIESEL. Refer to **PCM VERIFICATION TEST - 2.2L DIESEL** .

P268F-CYLINDER 4 INJECTOR DATA INCOMPATIBLE

For a complete wiring diagram, **refer to appropriate SYSTEM WIRING DIAGRAMS article** .

WHEN MONITORED

With the ignition on.

SET CONDITION

The Powertrain Control Module (PCM) detects that the injector correction code has not been written for this cylinder.

POSSIBLE CAUSES

Possible Causes
NO FUEL INJECTOR CORRECTION CODE ENTERED INTO PCM FOR THIS CYLINDER

POWERTRAIN CONTROL MODULE (PCM)

Always perform the Pre-Diagnostic Troubleshooting procedure before proceeding. Refer to PRE-DIAGNOSTIC TROUBLESHOOTING PROCEDURE - 2.2L DIESEL .

DIAGNOSTIC TEST

PROGRAM THE FUEL INJECTOR CORRECTION CODE IN THE PCM

NOTE: If there are any Fuel Injector DTCs present, perform the diagnostics for those DTCs before proceeding with this test procedure.

1. Turn the ignition off.
2. Locate and record the correction codes for the Fuel Injector. The injector correction code Is located on top of the injector and consists of 20 alphanumeric characters in two lines of 10 alphanumeric characters.
3. Turn the ignition on, engine not running.
4. With the scan tool, attempt to calibrate the Fuel Injector correction code into the PCM.

   Did the Fuel Injector calibrated correctly in the PCM?

   Yes

   - Repair complete.
   - Perform the POWERTRAIN VERIFICATION TEST - 2.2L DIESEL. Refer to **PCM VERIFICATION TEST - 2.2L DIESEL** .

   No

   - Replace the Powertrain Control Module. **Before removing the PCM, perform the "Replace PCM" routine in the Miscellaneous Functions tab of the scan tool.** . Refer to **REMOVAL** .
   - Perform the POWERTRAIN VERIFICATION TEST - 2.2L DIESEL. Refer to **PCM VERIFICATION TEST - 2.2L DIESEL** .

P2A00-O2 SENSOR 1/1 CIRCUIT PERFORMANCE

For a complete wiring diagram, **refer to appropriate SYSTEM WIRING DIAGRAMS article** .

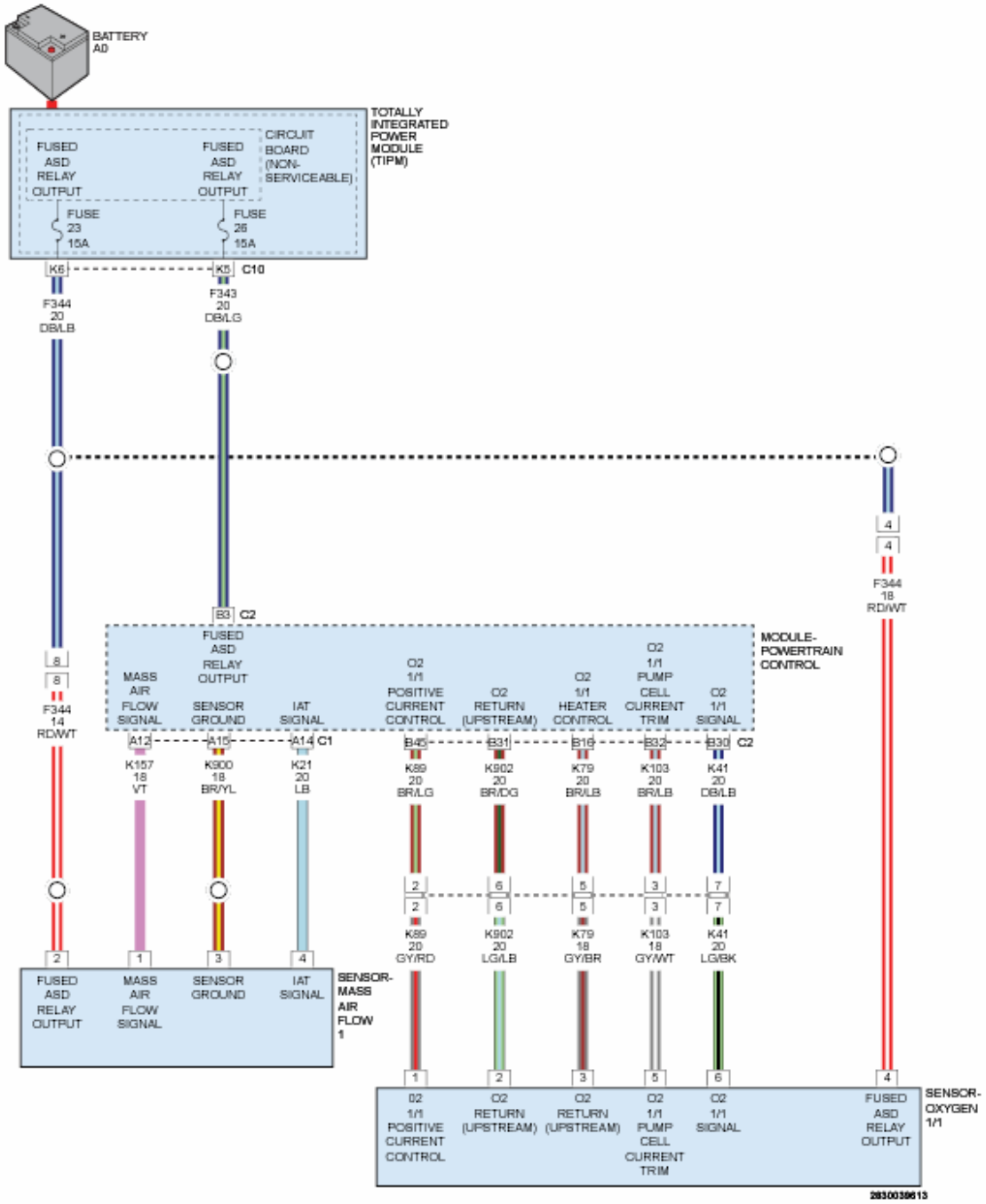

Fig. 36: O2 & MAF Sensors Circuit Diagram
Courtesy of CHRYSLER GROUP, LLC

WHEN MONITORED

With the engine running.

SET CONDITION

The Powertrain Control Module (PCM) detects that the O2 Sensor feedback indicates that the oxygen content is above or below a calibrated level.

POSSIBLE CAUSES

Possible Causes
FUEL DELIVERY SYSTEM FAILURE
INTAKE AIR SYSTEM LEAK
EGR SYSTEM LEAK
EXHAUST SYSTEM LEAK
ENGINE MISFIRE
OXYGEN SENSOR
POWERTRAIN CONTROL MODULE (PCM)

Always perform the Pre-Diagnostic Troubleshooting procedure before proceeding. Refer to PRE-DIAGNOSTIC TROUBLESHOOTING PROCEDURE - 2.2L DIESEL .

DIAGNOSTIC TEST

1. **DTC IS ACTIVE**

NOTE: If there are any cylinder misfire, Crank Sensor, MAF Sensor, or Fuel Injector DTCs stored with this fault, perform the diagnostics for those DTCs before proceeding with this test.

1. Ignition on, engine not running.
2. With the scan tool, Clear DTCs in the Powertrain Control Module.
3. Start the engine.
4. Allow the engine to reach normal operating temperature.
5. Monitor the scan tool for at least five minutes.
6. With the scan tool, select View DTCs.

Is the status Active for this DTC?

Yes

- Go To 2

No

- Perform the INTERMITTENT CONDITION diagnostic procedure. Refer to **INTERMITTENT CONDITION - 2.2L DIESEL** .

2. **CHECK THE FUEL DELIVERY SYSTEM**
   1. Perform the CHECKING THE FUEL DELIVERY SYSTEM diagnostic procedure. Refer to **DIAGNOSIS AND TESTING** .

   Were any fuel system problems found?

   Yes

   - Perform the appropriate repairs to the fuel system.
   - Perform the POWERTRAIN VERIFICATION TEST 2.2L. Refer to **PCM VERIFICATION TEST - 2.2L DIESEL** .

   No

   - Go To 3

3. **CHECK THE INTAKE AIR SYSTEM**
   1. Check the Intake Air System for any signs of a leak or restriction.

   Were any Intake System problems found?

   Yes

   - Perform the appropriate repairs to the Intake Air System.
   - Perform the POWERTRAIN VERIFICATION TEST 2.2L. Refer to **PCM VERIFICATION TEST - 2.2L DIESEL** .

   No

   - Go To 4

4. **CHECK THE EXHAUST SYSTEM FOR LEAKS**
   1. Check the Exhaust System for any signs of a leak or restriction.

   Were any Exhaust System problems found?

   Yes

- Perform the appropriate repairs to the Exhaust System.
- Perform the POWERTRAIN VERIFICATION TEST 2.2L. Refer to **PCM VERIFICATION TEST - 2.2L DIESEL** .

No

- Go To 5

5. **CHECK FOR AN EGR LEAK**
   1. Look for visible signs (soot streaks) of an external EGR leak.
   2. With the scan tool, navigate to Miscellaneous Functions, and perform the EGR/ECU Self Test procedure.

      Were any problems found with the EGR system?

      Yes

      - Perform the appropriate repairs to the EGR system.
      - Perform the POWERTRAIN VERIFICATION TEST 2.2L. Refer to **PCM VERIFICATION TEST - 2.2L DIESEL** .

      No

      - Go To 6

6. **OXYGEN SENSOR**
   1. Turn the ignition off.
   2. Connect the Powertrain Control Module harness connector.
   3. Replace the Oxygen Sensor in accordance with the service information.
   4. Turn the ignition on.
   5. With the scan tool, navigate to Miscellaneous Functions and perform the O2 Sensor Replaced procedure.
   6. Start the engine.
   7. Allow the engine to reach normal operating temperature.
   8. Monitor the scan tool for at least five minutes.
   9. With the scan tool, select View DTCs.

      Is the status Active for this DTC?

Yes

- Go To 7

No

- Test Complete.
- Perform the POWERTRAIN VERIFICATION TEST 2.2L. Refer to **PCM VERIFICATION TEST - 2.2L DIESEL** .

7. **POWERTRAIN CONTROL MODULE**
   1. Using the wiring diagram/schematic as a guide, inspect the wiring and connectors between the Oxygen Sensor and the Powertrain Control Module.
   2. Look for any chafed, pierced, pinched, or partially broken wires.
   3. Look for broken, bent, pushed out or corroded terminals.
   4. Monitor the scan tool data relative to this circuit and wiggle test the wiring and connectors.
   5. Look for the data to change or for the DTC to reset during the wiggle test.
   6. Perform any Technical Service Bulletins that may apply.

   Were any problems found?

   Yes

   - Repair as necessary.
   - Perform the POWERTRAIN VERIFICATION TEST 2.2L. Refer to **PCM VERIFICATION TEST - 2.2L DIESEL** .

   No

   - Replace the Powertrain Control Module. **Before removing the PCM, perform the "Replace PCM" routine in the Miscellaneous Functions tab of the scan tool.** . Refer to **REMOVAL** .
   - Perform the POWERTRAIN VERIFICATION TEST 2.2L. Refer to **PCM VERIFICATION TEST - 2.2L DIESEL** .

U0002-CAN C BUS OFF PERFORMANCE

For a complete wiring diagram, **refer to appropriate SYSTEM WIRING DIAGRAMS article** .

POSSIBLE CAUSES

Possible Causes
CAN BUS OPEN OR SHORTED CONDITION
TOTALLY INTEGRATED POWER MODULE (TIPM)
POWERTRAIN CONTROL MODULE (PCM)

Always perform the Pre-Diagnostic Troubleshooting procedure before proceeding. Refer to PRE-DIAGNOSTIC TROUBLESHOOTING PROCEDURE - 2.2L DIESEL .

DIAGNOSTIC TEST

DTC IS ACTIVE

1. Ignition on, engine not running.
2. With the scan tool, clear DTCs in the Powertrain Control Module (PCM).
3. Monitor the scan tool for at least two minutes.
4. Cycle the ignition key off and on several times, leaving the ignition on for at least 10 seconds at a time.
5. Start the engine.
6. Allow the engine to reach normal operating temperature.
7. With the scan tool, select View DTCs.

   Is the status active for this DTC?

   Yes

   - Refer to the **DTC INDEX** for the appropriate diagnostic procedure.

   No

   - Perform the INTERMITTENT DTC diagnostic procedure. Refer to **INTERMITTENT CONDITION - 2.2L DIESEL** .

U0101-LOST COMMUNICATION WITH TCM

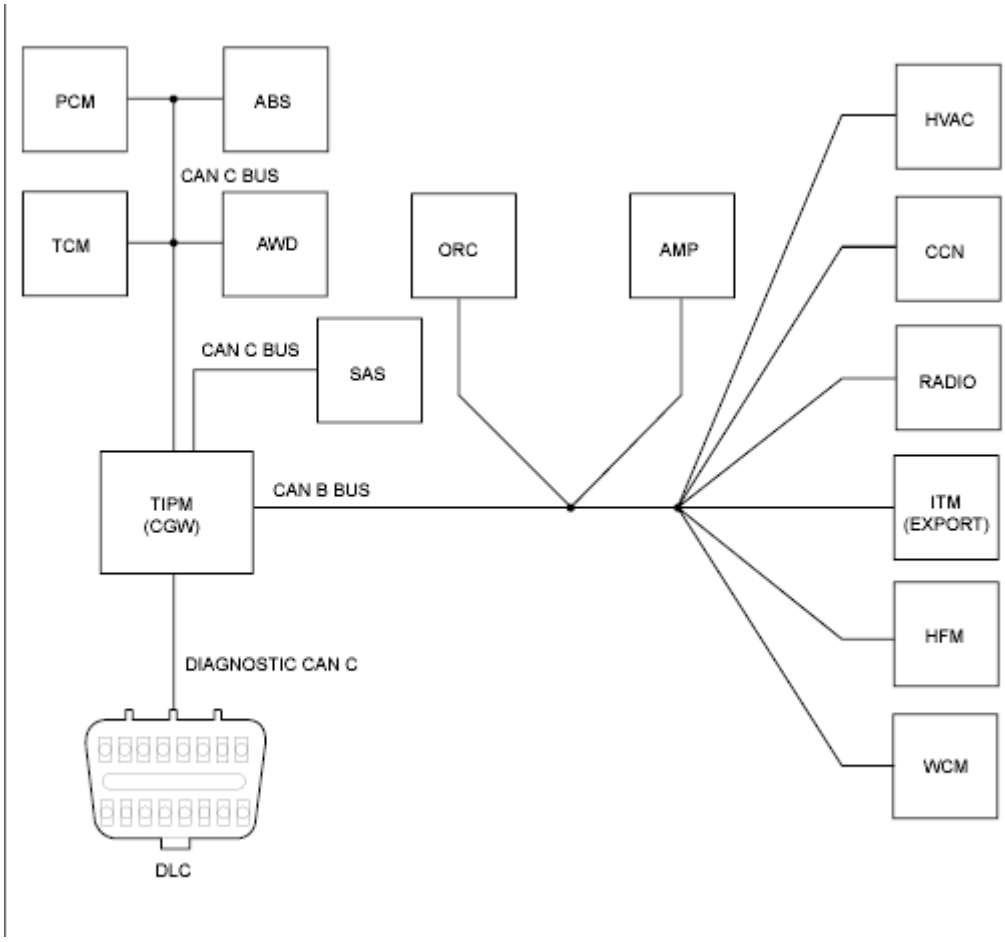

Fig. 37: CAN Communication Diagram
Courtesy of CHRYSLER GROUP, LLC

For a complete wiring diagram, **refer to appropriate SYSTEM WIRING DIAGRAMS article** .

WHEN MONITORED

With the ignition on.

Battery voltage between 10.0 and 16.0 Volts.

Ignition Off Draw (IOD) fuse installed.

Totally Integrated Power Module (TIPM) is configured correctly.

SET CONDITION

Bus messages not received from the Transmission Control Module (TCM) for

approximately 500 ms.

POSSIBLE CAUSES

Possible Causes
CAN B OR CAN C BUS CIRCUITS OPEN OR SHORTED
DTCs RELATED TO BATTERY VOLTAGE, IGNITION, OR VIN MESSAGES
TIPM NOT CONFIGURED CORRECTLY
TRANSMISSION CONTROL MODULE (TCM)
TCM POWER AND GROUND
MODULE THAT SET THIS DTC

DIAGNOSTIC TEST

1. **VERIFY THE DIAGNOSTIC TROUBLE CODE (DTC) IS ACTIVE**

   NOTE: Make sure the IOD fuse is installed and battery voltage is between 10.0 and 16.0 Volts before proceeding.

   NOTE: Check for any TSB(s) related to the condition. If a TSB applies, perform the procedure outlined in the TSB before continuing.

   1. Using the scan tool, read active DTCs.

      Is this DTC active?

      Yes

      - Go To 2

      No

      - Refer to **DIAGNOSIS AND TESTING** and perform the Stored Lost Communication DTCs diagnostic procedure.

2. **CHECK FOR ANY OF THE FOLLOWING ACTIVE DTCS**
   1. Using the scan tool, read all active DTCs from all modules.

NOTE: Check for TIPM configuration, CAN B or C hardware electrical, VIN Missing/Mismatch, battery or ignition related DTCs.

Does the scan tool display any active DTCs to the conditions listed above?

Yes

- Perform the appropriate diagnostic procedure.

No

- Go To 3

3. **VERIFY THAT THE TCM IS ACTIVE ON THE BUS**
   1. Turn the ignition on.
   2. Using the scan tool, select ECU View.
   3. Verify that the TCM is active on the bus.

   Is the TCM active on the bus?

   Yes

   - Go To 4

   No

   - Refer to **DIAGNOSIS AND TESTING** and perform the No Response from TCM diagnostic procedure.

4. **CHECK FOR ADDITIONAL COMMUNICATION RELATED DTCS**
   1. Using the scan tool, select Network View and select Advanced.

   Is there more than one module with active DTCs "Logged Against" the TCM?

   Yes

   - Replace/update the Transmission Control Module in accordance with the service information.

- Perform the CVT-VERIFICATION TEST. Refer to **CVT VERIFICATION TEST** .

No

- Replace/update the module that set this DTC in accordance with the service information.
- Perform the BODY VERIFICATION TEST. Refer to **STANDARD PROCEDURE** .

U0106-LOST COMMUNICATION WITH GLOW PLUG CONTROL MODULE

For a complete wiring diagram, **refer to appropriate SYSTEM WIRING DIAGRAMS article** .

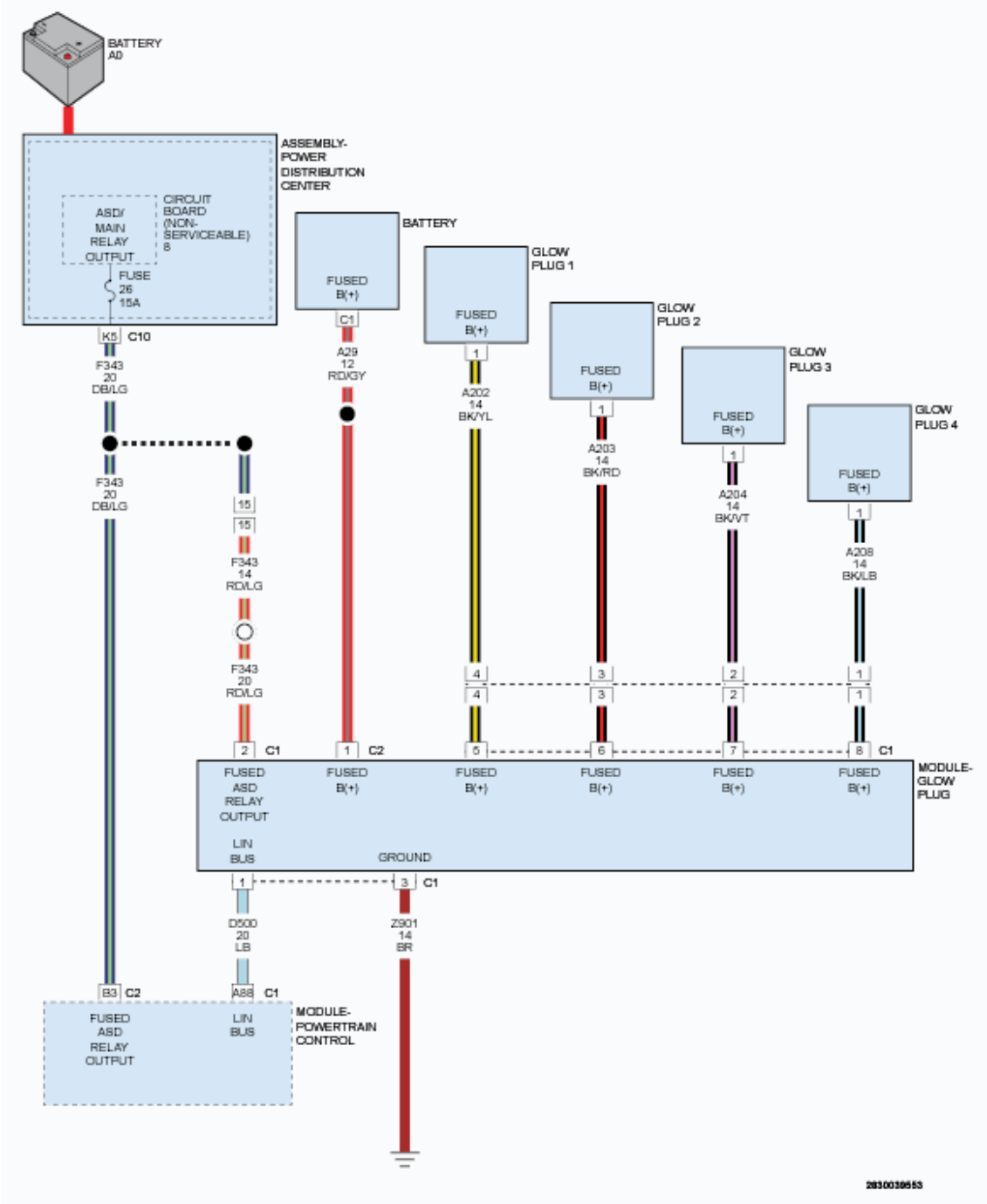

Fig. 38: Glow Plug Circuit Diagram
Courtesy of CHRYSLER GROUP, LLC

WHEN MONITORED

With the ignition on.

Battery voltage between 10.0 and 18.0 Volts.

Ignition Off Draw (IOD) fuse installed.

Totally Integrated Power Module (TIPM) is configured correctly.

SET CONDITION

Bus messages not received from the Glow Plug Control Module (GPCM) for ten seconds.

POSSIBLE CAUSES

Possible Causes
(D500) LIN BUS CIRCUIT SHORTED TO VOLTAGE
(D500) LIN BUS CIRCUIT SHORTED TO GROUND
(D500) LIN BUS CIRCUIT OPEN
GLOW PLUG CONTROL MODULE (GPCM)
GPCM POWER AND GROUND
POWERTRAIN CONTROL MODULE

DIAGNOSTIC TEST

1. **VERIFY THE DIAGNOSTIC TROUBLE CODE (DTC) IS ACTIVE**

NOTE: Make sure the IOD fuse is installed and battery voltage is between 10.0 and 18.0 Volts before proceeding.

NOTE: Check for any TSB(s) related to the condition. If a TSB applies, perform the procedure outlined in the TSB before continuing.

1. Turn the ignition on.
2. Using the scan tool, read active DTCs.

   Is this DTC active?

   Yes

   - Go To 2

   No

- Perform the STORED LOST COMMUNICATION DTCS diagnostic procedure. Refer to **DIAGNOSIS AND TESTING** .

2. **CHECK THE (D500) LIN BUS CIRCUIT FOR A SHORT TO VOLTAGE**
   1. Turn the ignition off.
   2. Disconnect the GPCM harness connector.
   3. Disconnect the PCM C1 harness connector.
   4. Remove the ASD/Main Relay.
   5. Connect a jumper wire between cavity 30 and cavity 87 of the Main Relay Connector.
   6. Turn the ignition on.
   7. Measure the voltage on the (D500) LIN BUS circuit at the GPCM harness connector.

   Is there any voltage present?

   Yes

   - Repair the (D500) LIN BUS circuit for a short to voltage.
   - Perform the POWERTRAIN VERIFICATION TEST 2.2L. Refer to **PCM VERIFICATION TEST - 2.2L DIESEL** .

   No

   - Go To 3

3. **CHECK THE (D500) LIN BUS CIRCUIT FOR A SHORT TO GROUND**
   1. Turn the ignition off.
   2. Measure the resistance between ground and the (D500) LIN BUS circuit at the GPCM harness connector.

   Is the resistance above 10k Ohms?

   Yes

   - Go To 4

No

- Repair the (D500) LIN BUS circuit for a short to ground.
- Perform the POWERTRAIN VERIFICATION TEST 2.2L. Refer to **PCM VERIFICATION TEST - 2.2L DIESEL** .

4. **CHECK THE (D500) LIN BUS CIRCUIT FOR AN OPEN**
   1. Measure the resistance of the (D500) LIN BUS circuit between the GPCM harness connector and the PCM C1 harness connector.

      Is the resistance below 5.0 Ohms

      Yes

      - Go To 5

      No

      - Repair the (D500) LIN BUS circuit for a short to ground.
      - Perform the POWERTRAIN VERIFICATION TEST 2.2L. Refer to **PCM VERIFICATION TEST - 2.2L DIESEL** .

5. **GLOW PLUG CONTROL MODULE**
   1. Replace the Glow Plug Control Module in accordance with the service information.
   2. Turn the ignition on.
   3. With the scan tool, Erase DTCs.
   4. Cycle the ignition off for ten seconds.
   5. Turn the ignition on.
   6. With the scan tool, View DTCs.

      Did the DTC return?

      Yes

      - Replace the Powertrain Control Module. **Before removing the PCM, perform the "Replace PCM" routine in the Miscellaneous Functions tab of the scan tool.** . Refer to **REMOVAL** .
      - Perform the POWERTRAIN VERIFICATION TEST 2.2L. Refer

to **PCM VERIFICATION TEST - 2.2L DIESEL** .

No

- Repair is complete.
- Perform the POWERTRAIN VERIFICATION TEST 2.2L. Refer to **PCM VERIFICATION TEST - 2.2L DIESEL** .

U0121-LOST COMMUNICATION WITH ANTI-LOCK BRAKE MODULE

For a complete wiring diagram, **refer to appropriate SYSTEM WIRING DIAGRAMS article**

WHEN MONITORED

With the ignition on.

Battery voltage between 10.0 and 17.0 Volts.

Airbag fuse installed.

Totally Integrated Power Module (TIPM) is configured correctly.

SET CONDITION

The PCM doesn't receive a Bus Message from the Anti-lock Brake Module.

POSSIBLE CAUSES

Possible Causes
CAN BUS OPEN OR SHORTED CONDITION
ANTI-LOCK BRAKE MODULE
POWERTRAIN CONTROL MODULE (PCM)

Always perform the Pre-Diagnostic Troubleshooting procedure before proceeding. Refer to PRE-DIAGNOSTIC TROUBLESHOOTING PROCEDURE - 2.2L DIESEL .

DIAGNOSTIC TEST

DTC IS ACTIVE

1. Ignition on, engine not running.

2. With the scan tool, clear DTCs in the Powertrain Control Module (PCM).
3. Monitor the scan tool for at least two minutes.
4. Cycle the ignition key off and on several times, leaving the ignition on for at least 10 seconds at a time.
5. With the scan tool, select View DTCs.

   Is the status Active for this DTC?

   Yes

   - Perform the appropriate diagnostic procedure. Refer to the **DTC INDEX** .

   No

   - Perform the STORED LOST COMMUNICATION DTCS diagnostic procedure. Refer to **DIAGNOSIS AND TESTING** .

U0141-LOST COMMUNICATION WITH IPM (FCM/TIPM)

For a complete wiring diagram, **refer to appropriate SYSTEM WIRING DIAGRAMS article** .

WHEN MONITORED

Continuously when the ignition is on.

The battery voltage between 10.0 and 16.0 Volts.

Ignition Off Draw (IOD) fuse installed.

Totally Integrated Power Module (TIPM) is configured correctly.

SET CONDITION

Bus messages not received from the Totally Integrated Power Module (TIPM) for approximately two to five seconds.

POSSIBLE CAUSES

Possible Causes
CAN BUS CIRCUITS OPEN OR SHORTED

DTCS RELATED TO BATTERY VOLTAGE, IGNITION, OR VIN MESSAGES
TOTALLY INTEGRATED POWER MODULE POWER AND GROUND
TIPM NOT CONFIGURED CORRECTLY
TOTALLY INTEGRATED POWER MODULE (TIPM)
MODULE THAT SET THIS DTC

DIAGNOSTIC TEST

VERIFY DTC IS ACTIVE

NOTE: Make sure the IOD fuse is installed and the battery is fully charged before proceeding.

1. Turn the ignition on.
2. With the scan tool, read active DTCs.

   Is this DTC active?

   Yes

   - Refer to **U0141-LOST COMMUNICATION WITH IPM (FCM/TIPM)** and perform the U0141-Lost Communication with IPM (FCM/TIPM) diagnostic procedure.

   No

   - Refer to **DIAGNOSIS AND TESTING** and perform the Stored Lost Communication DTCs diagnostic procedure.

U0146-LOST COMMUNICATION WITH CENTRAL GATEWAY

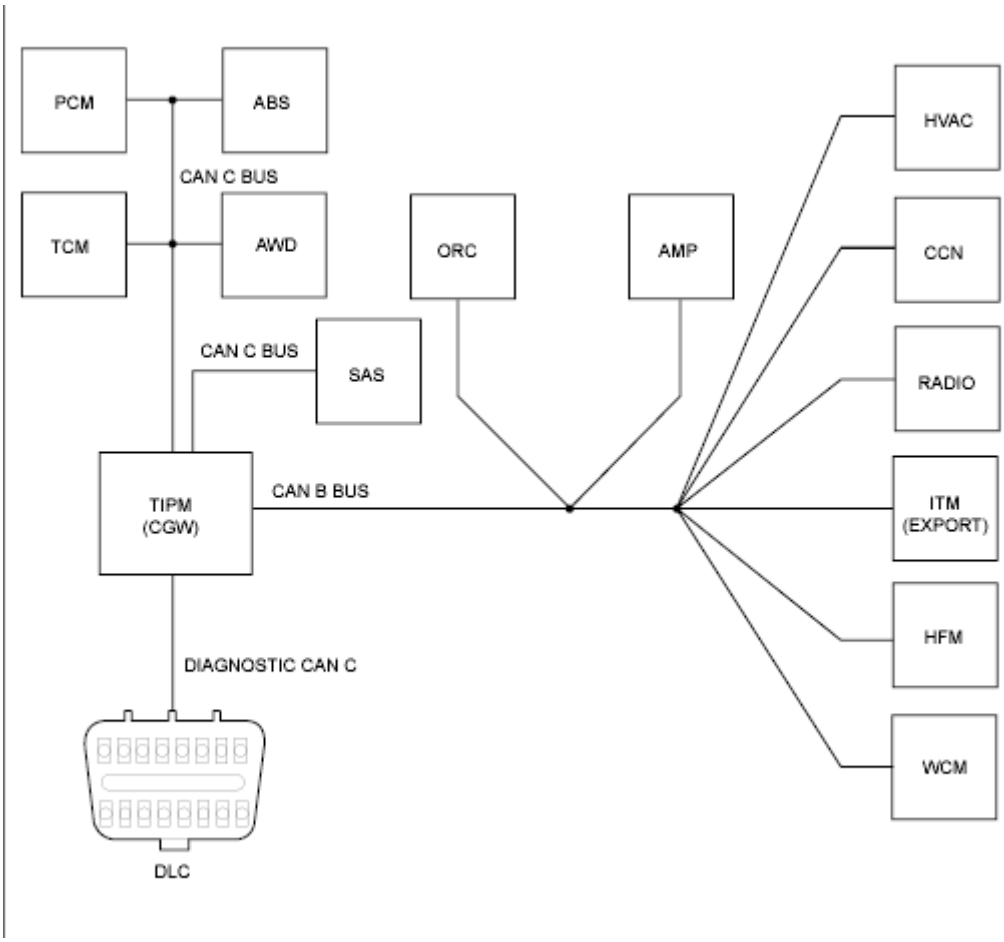

Fig. 39: CAN Communication Diagram
Courtesy of CHRYSLER GROUP, LLC

For a complete wiring diagram, **refer to appropriate SYSTEM WIRING DIAGRAMS article** .

WHEN MONITORED

With the ignition on.

Battery voltage between 10.0 and 17.0 Volts.

Ignition Off Draw (IOD) fuse installed.

Totally Integrated Power Module (TIPM) is configured correctly.

SET CONDITION

Bus messages not received from the Totally Integrated Power Module (TIPM) for approximately two seconds.

POSSIBLE CAUSES

Possible Causes
CAN B OR CAN C BUS CIRCUITS OPEN OR SHORTED
DTCs RELATED TO BATTERY VOLTAGE, IGNITION, OR VIN MESSAGES
TIPM NOT CONFIGURED CORRECTLY
TOTALLY INTEGRATED POWER MODULE (TIPM)
TIPM POWER AND GROUND
MODULE THAT SET THIS DTC

DIAGNOSTIC TEST

1. **VERIFY THE DIAGNOSTIC TROUBLE CODE (DTC) IS ACTIVE**

   NOTE: Make sure the IOD fuse is installed and battery voltage is between 10.0 and 17.0 Volts before proceeding.

   NOTE: Check for any TSB(s) related to the condition. If a TSB applies, perform the procedure outlined in the TSB before continuing.

   1. Using the scan tool, read active DTCs.

      Is this DTC active?

      Yes

      - Go To 2

      No

      - Perform the STORED LOST COMMUNICATION DTCS diagnostic procedure. Refer to **DIAGNOSIS AND TESTING** .

2. **VERIFY THAT THE TIPM IS ACTIVE ON THE BUS**
   1. Turn the ignition on.
   2. Using the scan tool, select ECU View.
   3. Verify that the TIPM is active on the bus.

Is the TIPM active on the bus?

Yes

- Go To 3

No

- Refer to **DIAGNOSIS AND TESTING** and perform the No Response from TIPM diagnostic procedure.

3. **CHECK FOR ANY OF THE FOLLOWING ACTIVE DTCS**
   1. Using the scan tool, read all active DTCs from all modules.

NOTE: Check for TIPM configuration, CAN B or C hardware electrical, VIN Missing/Mismatch, battery or ignition related DTCs.

Does the scan tool display any active DTCs to the conditions listed above?

Yes

- Perform the appropriate diagnostic procedure.

No

- Go To 4

4. **CHECK FOR ADDITIONAL COMMUNICATION RELATED DTCS**
   1. Using the scan tool, select Network View and select Advanced.

Is there more than one module with active DTCs "Logged Against" the TIPM ?

Yes

- Replace/update the Totally Integrated Power Module in accordance with the service information.
- Perform the BODY VERIFICATION TEST. Refer to **STANDARD PROCEDURE** .

No

- Replace/update the module that set this DTC in accordance with the service information.
- Perform the POWERTRAIN VERIFICATION TEST - 2.2L. Refer to **PCM VERIFICATION TEST - 2.2L DIESEL** .

U0155-LOST COMMUNICATION WITH CLUSTER/CCN

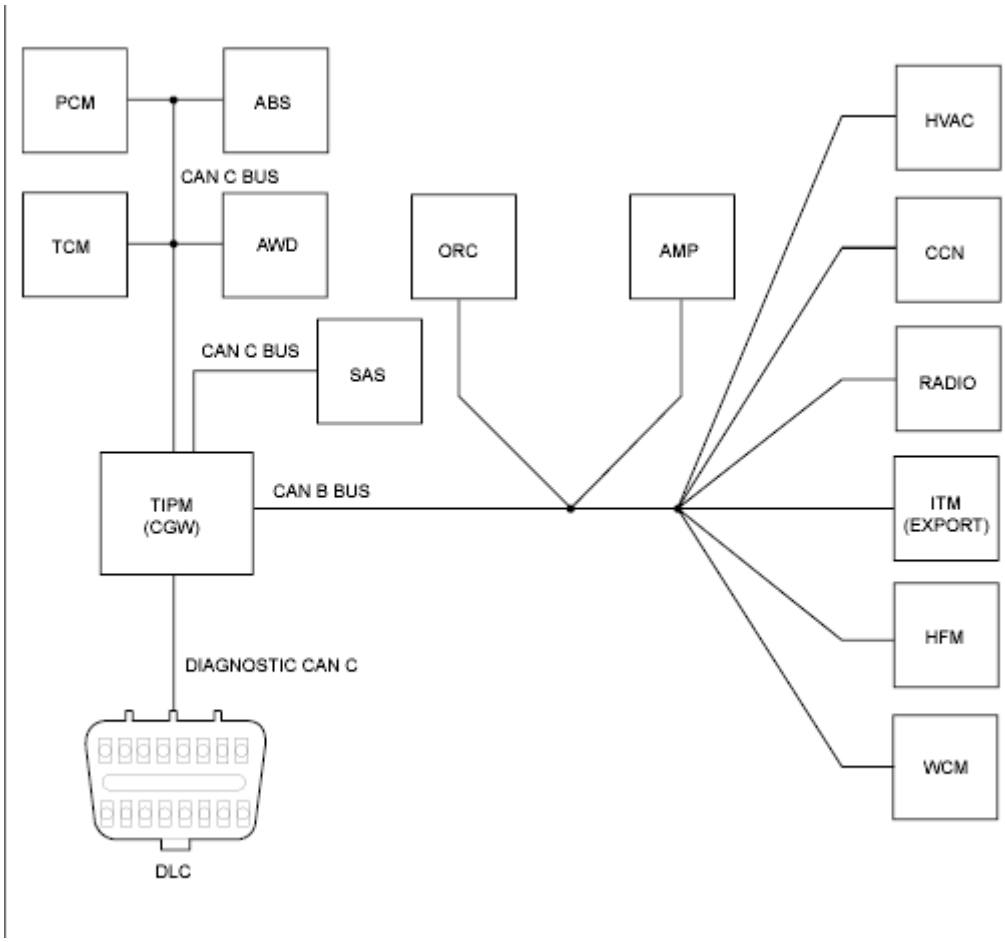

Fig. 40: CAN Communication Diagram
Courtesy of CHRYSLER GROUP, LLC

For a complete wiring diagram, **refer to appropriate SYSTEM WIRING DIAGRAMS article** .

WHEN MONITORED

With the ignition on.

Battery voltage between 10.0 and 17.0 Volts.

Ignition Off Draw (IOD) fuse installed.

Totally Integrated Power Module (TIPM) is configured correctly.

SET CONDITION

Bus messages not received from the Cluster (CCN) for 0.66 seconds.

POSSIBLE CAUSES

Possible Causes
CAN B BUS CIRCUITS OPEN OR SHORTED
DTCS RELATED TO BATTERY VOLTAGE, IGNITION, OR VIN MESSAGES
CLUSTER (CCN) POWER AND GROUND
CLUSTER (CCN)
POWERTRAIN CONTROL MODULE (PCM)

DIAGNOSTIC TEST

DTC IS ACTIVE

1. Ignition on, engine not running.
2. With the scan tool, clear DTCs in the Powertrain Control Module (PCM).
3. Monitor the scan tool for at least two minutes.
4. Cycle the ignition key off and on several times, leaving the ignition on for at least 10 seconds at a time.
5. With the scan tool, select View DTCs.

   Is the status Active for this DTC?

   Yes

   - Perform the appropriate diagnostic procedure. Refer to the **DTC INDEX** .

   No

   - Perform the STORED LOST COMMUNICATION DTCS diagnostic procedure. Refer to **DIAGNOSIS AND TESTING** .

U0164-LOST COMMUNICATION WITH HVAC CONTROL MODULE

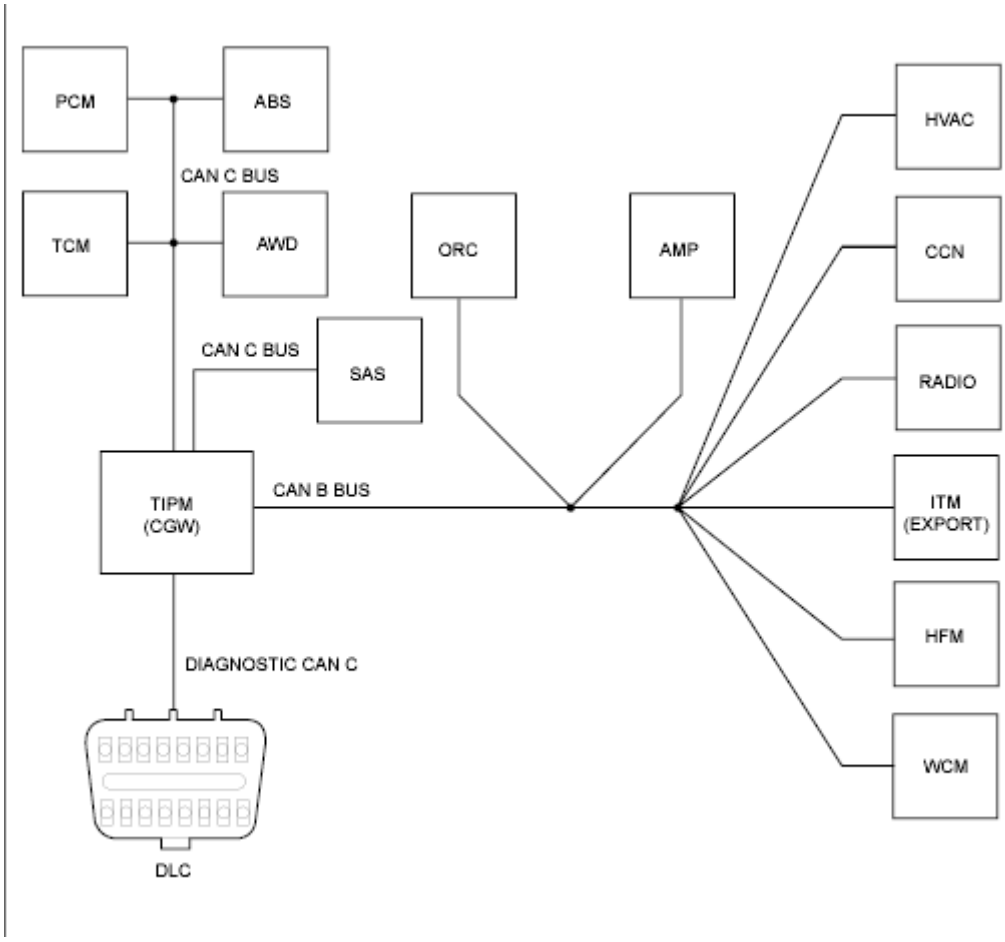

Fig. 41: CAN Communication Diagram
Courtesy of CHRYSLER GROUP, LLC

For a complete wiring diagram, **refer to appropriate SYSTEM WIRING DIAGRAMS article** .

WHEN MONITORED

With the ignition on.

Battery voltage between 10.0 and 17.0 Volts.

Ignition Off Draw (IOD) fuse installed.

Totally Integrated Power Module (TIPM) is configured correctly.

SET CONDITION

Bus messages not received from the A/C Heater Control (HVAC) for

approximately two seconds.

POSSIBLE CAUSES

Possible Causes
CAN B BUS CIRCUITS OPEN OR SHORTED
DTCS RELATED TO BATTERY VOLTAGE, IGNITION, OR VIN MESSAGES
TIPM NOT CONFIGURED CORRECTLY
A/C HEATER CONTROL
A/C HEATER CONTROL POWER AND GROUND
MODULE THAT SET THIS DTC

DIAGNOSTIC TEST

DTC IS ACTIVE

1. Ignition on, engine not running.
2. With the scan tool, clear DTCs in the Powertrain Control Module (PCM).
3. Monitor the scan tool for at least two minutes.
4. Cycle the ignition key off and on several times, leaving the ignition on for at least 10 seconds at a time.
5. With the scan tool, select View DTCs.

   Is the status Active for this DTC?

   Yes

   - Perform the appropriate diagnostic procedure. Refer to the **DTC INDEX** .

   No

   - Perform the STORED LOST COMMUNICATION DTCS diagnostic procedure. Refer to **DIAGNOSIS AND TESTING** .

U0168-LOST COMMUNICATION WITH VEHICLE SECURITY CONTROL MODULE

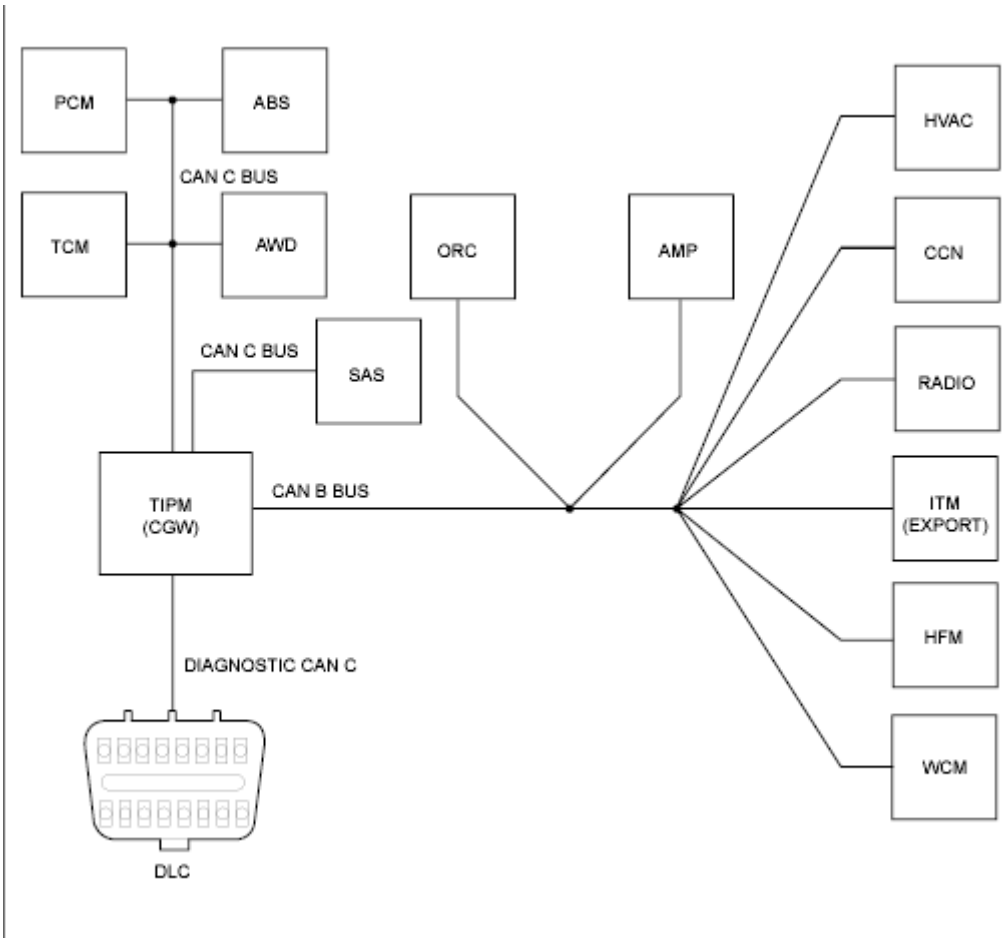

Fig. 42: CAN Communication Diagram
Courtesy of CHRYSLER GROUP, LLC

For a complete wiring diagram, **refer to appropriate SYSTEM WIRING DIAGRAMS article** .

WHEN MONITORED

With the ignition on.

Battery voltage between 10.0 and 17.0 Volts.

Ignition Off Draw (IOD) fuse installed.

Totally Integrated Power Module (TIPM) is configured correctly.

SET CONDITION

Bus messages not received from the Wireless Control Module (WCM) for approximately 500 ms.

POSSIBLE CAUSES

Possible Causes
CAN B OR CAN C BUS CIRCUITS OPEN OR SHORTED
DTCs RELATED TO BATTERY VOLTAGE, IGNITION, OR VIN MESSAGES
TIPM NOT CONFIGURED CORRECTLY
WIRELESS CONTROL MODULE (WCM)
WCM POWER AND GROUND
MODULE THAT SET THIS DTC

DIAGNOSTIC TEST

DTC IS ACTIVE

1. Ignition on, engine not running.
2. With the scan tool, clear DTCs in the Powertrain Control Module (PCM).
3. Monitor the scan tool for at least two minutes.
4. Cycle the ignition key off and on several times, leaving the ignition on for at least 10 seconds at a time.
5. With the scan tool, select View DTCs.

   Is the status Active for this DTC?

   Yes

   - Refer to **U0168-LOST COMMUNICATION WITH VEHICLE SECURITY CONTROL MODULE** and perform the U0168-Lost Communication with Vehicle Security Control Module diagnostic procedure.

   No

   - Perform the STORED LOST COMMUNICATION DTCS diagnostic procedure. Refer to **DIAGNOSIS AND TESTING** .

U0212-LOST COMMUNICATION WITH SCM

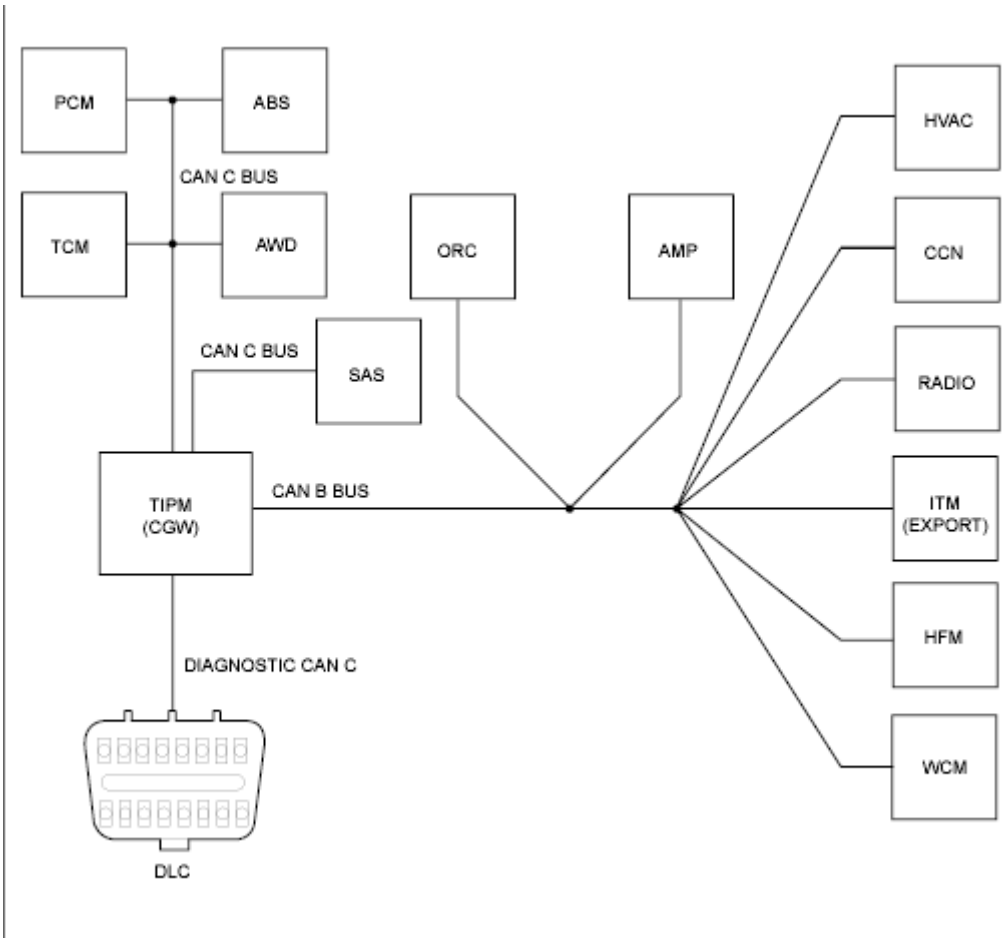

Fig. 43: CAN Communication Diagram
Courtesy of CHRYSLER GROUP, LLC

For a complete wiring diagram, **refer to appropriate SYSTEM WIRING DIAGRAMS article** .

WHEN MONITORED

With the ignition on.

Battery voltage between 10.0 and 17.0 volts.

Ignition Off Draw (IOD) fuse installed.

Totally Integrated Power Module (TIPM) is configured correctly.

SET CONDITION

Bus messages not received from the Steering Angle Sensor (SAS) for approximately two seconds.

POSSIBLE CAUSES

Possible Causes
CAN B BUS CIRCUITS OPEN OR SHORTED
DTCS RELATED TO BATTERY VOLTAGE, IGNITION, OR VIN MESSAGES
TIPM NOT CONFIGURED CORRECTLY
STEERING ANGLE SENSOR
MODULE THAT SET THIS DTC

DIAGNOSTIC TEST

1. **VERIFY THE DIAGNOSTIC TROUBLE CODE (DTC) IS ACTIVE**

   NOTE: Make sure the IOD fuse is installed and battery voltage is between 10.0 and 17.0 Volts before proceeding.

   1. Using the scan tool, read active DTCs.

      Is this DTC active?

      Yes

      - Go To 2

      No

      - Perform the STORED LOST COMMUNICATION DTCS diagnostic procedure. Refer to **DIAGNOSIS AND TESTING** .

2. **CHECK FOR ANY OF THE FOLLOWING ACTIVE DTCS**
   1. Using the scan tool, read active DTCs from all modules.

      NOTE: Check for TIPM configuration, CAN B or C hardware electrical, VIN Missing/Mismatch, battery or ignition related DTCs.

      Does the scan tool display any active DTCs to the conditions listed above?

Yes

- Go to the **DTC INDEX** and perform the appropriate diagnostic procedure.

No

- Go To 3

3. **VERIFY THAT THE SAS IS ACTIVE ON THE BUS**
   1. Turn the ignition on.
   2. Using the scan tool, select ECU View.
   3. Verify that the SAS is active on the bus.

   Is the SAS active on the bus?

   Yes

   - Go To 4

   No

   - Refer to **DIAGNOSIS AND TESTING** and perform the No Response from the SAS diagnostic procedure.

4. **CHECK FOR ADDITIONAL COMMUNICATION RELATED DTCS**
   1. Using the scan tool, select Network View and select Advanced.

   Is there more than one module with active DTCs "Logged Against" the SAS?

   Yes

   - Replace the Steering Angle Sensor in accordance with the service information.
   - Perform the BODY VERIFICATION TEST. Refer to **STANDARD PROCEDURE** .

   No

   - Replace/update the module that set the DTC in accordance with the service information

- Perform the appropriate verification test for the module being replaced. If there is no verification test for the associated module perform the BODY VERIFICATION TEST. Refer to **STANDARD PROCEDURE** .

U0402-IMPLAUSIBLE DATA RECEIVED FROM TCM

For a complete wiring diagram, **refer to appropriate SYSTEM WIRING DIAGRAMS article** .

WHEN MONITORED

Continuously while the system is active.

SET CONDITION

The Powertrain Control Module (PCM) has received implausible data over the CAN BUS from the Transmission Control Module (TCM).

POSSIBLE CAUSES

Possible Causes
ALL WHEEL DRIVE CONTROL MODULE
POWERTRAIN CONTROL MODULE (PCM)

Always perform the Pre-Diagnostic Troubleshooting procedure before proceeding. Refer to PRE-DIAGNOSTIC TROUBLESHOOTING PROCEDURE - 2.2L DIESEL .

DIAGNOSTIC TEST

1. **ACTIVE DTC**

NOTE: Diagnose all CAN B and C communication DTCs before continuing.

1. Ignition on, engine not running.
2. With a scan tool, view DTCs.

Is the status active for this DTC?

Yes

- Go To 2

No

- Perform the STORED LOST COMMUNICATION DTCS diagnostic procedure. Refer to **DIAGNOSIS AND TESTING** .

2. **COMMUNICATION DTCS PRESENT IN THE TRANSMISSION CONTROL MODULE**
   1. With a scan tool check for DTCs in the Transmission Control Module.

      Are there any CAN BUS DTCs active in the Transmission Control Module at this time?

      Yes

      - Refer to the **DTC INDEX** for the appropriate diagnostic procedure.
      - Perform the CVT-VERIFICATION TEST. Refer to **CVT VERIFICATION TEST** .

      No

      - Replace the Powertrain Control Module. **Before removing the PCM, perform the "Replace PCM" routine in the Miscellaneous Functions tab of the scan tool.** . Refer to **REMOVAL** .
      - Perform the POWERTRAIN VERIFICATION TEST 2.2L. Refer to **PCM VERIFICATION TEST - 2.2L DIESEL** .

U0415-IMPLAUSIBLE DATA RECEIVED FROM ABS

For a complete wiring diagram, **refer to appropriate SYSTEM WIRING DIAGRAMS article** .

WHEN MONITORED

Continuously while the system is active.

SET CONDITION

The Powertrain Control Module (PCM) has received implausible data over the

CAN BUS from the Anti-lock Brake Module.

POSSIBLE CAUSES

Possible Causes
ANTI-LOCK BRAKE MODULE
POWERTRAIN CONTROL MODULE (ECM)

Always perform the Pre-Diagnostic Troubleshooting procedure before proceeding. Refer to PRE-DIAGNOSTIC TROUBLESHOOTING PROCEDURE - 2.2L DIESEL .

DIAGNOSTIC TEST

1. **ACTIVE DTC**

   NOTE: Diagnose all CAN B and C communication DTCs before continuing.

   1. Ignition on, engine not running.
   2. With a scan tool, view DTCs.

      Is the status Active for this DTC?

      Yes

      - Go To 2

      No

      - Perform the STORED LOST COMMUNICATION DTCS diagnostic procedure. Refer to **DIAGNOSIS AND TESTING** .

2. **COMMUNICATION DTCS PRESENT IN THE ANTI-LOCK BRAKE MODULE**
   1. With a scan tool check for DTCs in the Anti-lock Brake Module.

      Are there any CAN BUS DTCs active in the Anti-lock Brake Module at this time?

      Yes

- Refer to **DIAGNOSIS AND TESTING** for the appropriate diagnostic procedure.
- Perform the ABS VERIFICATION TEST. Refer to **STANDARD PROCEDURE** .

No

- Replace the Powertrain Control Module. **Before removing the PCM, perform the "Replace PCM" routine in the Miscellaneous Functions tab of the scan tool.** . Refer to **REMOVAL** .
- Perform the POWERTRAIN VERIFICATION TEST - 2.2L. Refer to **PCM VERIFICATION TEST - 2.2L DIESEL** .

U0424-IMPLAUSIBLE DATA RECEIVED FROM HVAC CONTROL MODULE

For a complete wiring diagram, **refer to appropriate SYSTEM WIRING DIAGRAMS article** .

WHEN MONITORED

Continuously while the system is active.

SET CONDITION

The Powertrain Control Module (PCM) has received implausible data over the CAN BUS from the HVAC Module.

POSSIBLE CAUSES

Possible Causes
HVAC MODULE
POWERTRAIN CONTROL MODULE (PCM)

Always perform the Pre-Diagnostic Troubleshooting procedure before proceeding. Refer to PRE-DIAGNOSTIC TROUBLESHOOTING PROCEDURE - 2.2L DIESEL .

DIAGNOSTIC TEST

1. **ACTIVE DTC**

NOTE: Diagnose all CAN B and C communication DTCs before continuing.

1. Ignition on, engine not running.
2. With a scan tool, view DTCs.

   Is the status Active for this DTC?

   Yes

   - Go To 2

   No

   - Perform the STORED LOST COMMUNICATION DTCS diagnostic procedure. Refer to **DIAGNOSIS AND TESTING** .

2. **COMMUNICATION DTCS PRESENT IN THE HVAC MODULE**
   1. With a scan tool check for DTCs in the HVAC Module.

      Are there any CAN bus DTCs active in the HVAC Module at this time?

      Yes

      - Perform the appropriate diagnostic procedure. Refer to **DIAGNOSIS AND TESTING** .
      - Perform the HVAC VERIFICATION TEST. Refer to **STANDARD PROCEDURE** .

      No

      - Replace the Powertrain Control Module. **Before removing the PCM, perform the "Replace PCM" routine in the Miscellaneous Functions tab of the scan tool.** . Refer to **REMOVAL** .
      - Perform the POWERTRAIN VERIFICATION TEST - 2.2L. Refer to **PCM VERIFICATION TEST - 2.2L DIESEL** .

U0427-IMPLAUSIBLE DATA RECEIVED FROM VEHICLE SECURITY CONTROL MODULE

For a complete wiring diagram, **refer to appropriate SYSTEM WIRING**

DIAGRAMS article .

WHEN MONITORED

Continuously while the system is active.

SET CONDITION

The Powertrain Control Module has received implausible data over the CAN BUS from the Wireless Control Module.

POSSIBLE CAUSES

Possible Causes
WIRELESS CONTROL MODULE (WCM)
POWERTRAIN CONTROL MODULE (PCM)

Always perform the Pre-Diagnostic Troubleshooting procedure before proceeding. Refer to PRE-DIAGNOSTIC TROUBLESHOOTING PROCEDURE - 2.2L DIESEL .

DIAGNOSTIC TEST

1. **ACTIVE DTC**

   NOTE: Diagnose all CAN B and C communication DTCs before continuing.

   1. Ignition on, engine not running.
   2. With a scan tool, view DTCs.

      Is the status Active for this DTC?

      Yes

      - Go To 2

      No

      - Perform the STORED LOST COMMUNICATION DTCS diagnostic procedure. Refer to **DIAGNOSIS AND TESTING** .
2. **COMMUNICATION DTCS PRESENT IN THE WIRELESS**

CONTROL MODULE

1. With a scan tool, check for DTCs in the Wireless Control Module.

   Are there any CAN BUS DTCs active in the Wireless Control Module at this time?

   Yes

   - Perform the appropriate diagnostic procedure. Refer to **DIAGNOSIS AND TESTING** .
   - Perform the WIRELESS CONTROL MODULE VERIFICATION TEST. Refer to **STANDARD PROCEDURE** .

   No

   - Replace the Powertrain Control Module. **Before removing the PCM, perform the "Replace PCM" routine in the Miscellaneous Functions tab of the scan tool.** . Refer to **REMOVAL** .
   - Perform the POWERTRAIN VERIFICATION TEST - 2.2L. Refer to **PCM VERIFICATION TEST - 2.2L DIESEL** .

U0429-IMPLAUSIBLE DATA RECEIVED FROM SCM

For a complete wiring diagram, **refer to appropriate SYSTEM WIRING DIAGRAMS article** .

WHEN MONITORED

Continuously while the system is active.

SET CONDITION

The Powertrain Control Module (PCM) has received implausible data over the bus from the Steering Angle Sensor.

POSSIBLE CAUSES

Possible Causes
STEERING ANGLE SENSOR
POWERTRAIN CONTROL MODULE (PCM)

Always perform the Pre-Diagnostic Troubleshooting procedure before proceeding. Refer to PRE-DIAGNOSTIC TROUBLESHOOTING PROCEDURE - 2.2L DIESEL .

DIAGNOSTIC TEST

1. **ACTIVE DTC**

   NOTE: Diagnose all CAN B and C communication DTCs before continuing.

   1. Ignition on, engine not running.
   2. With a scan tool, view DTCs.

      Is the status Active for this DTC?

      Yes

      - Go To 2

      No

      - Perform the STORED LOST COMMUNICATION DTCS diagnostic procedure. Refer to **DIAGNOSIS AND TESTING** .

2. **DTCS PRESENT LOGGED AGAINST THE STEERING ANGLE SENSOR**
   1. With a scan tool, check for DTCs logged against the Steering Angle Sensor in other modules.

      Are there any Steering Angle Sensor DTCs active in the at this time?

      Yes

      - Replace the Steering Angle Sensor in accordance with the service information.
      - Perform the POWERTRAIN VERIFICATION TEST - 2.2L. Refer to **PCM VERIFICATION TEST - 2.2L DIESEL** .

      No

- Replace the Powertrain Control Module. **Before removing the PCM, perform the "Replace PCM" routine in the Miscellaneous Functions tab of the scan tool.** . Refer to **REMOVAL** .
- Perform the POWERTRAIN VERIFICATION TEST - 2.2L. Refer to **PCM VERIFICATION TEST - 2.2L DIESEL** .

U0431-IMPLAUSIBLE DATA RECEIVED FROM TIPM

For a complete wiring diagram, **refer to appropriate SYSTEM WIRING DIAGRAMS article** .

WHEN MONITORED

Continuously while the system is active.

SET CONDITION

The Powertrain Control Module has received implausible data over the CAN BUS from the Totally Integrated Power Module (TIPM).

POSSIBLE CAUSES

Possible Causes
TOTALLY INTEGRATED POWER MODULE (TIPM)
POWERTRAIN CONTROL MODULE (PCM)

Always perform the Pre-Diagnostic Troubleshooting procedure before proceeding. Refer to PRE-DIAGNOSTIC TROUBLESHOOTING PROCEDURE - 2.2L DIESEL .

DIAGNOSTIC TEST

1. **ACTIVE DTC**

NOTE: Diagnose all CAN B and C communication DTCs before continuing.

1. Ignition on, engine not running.
2. With a scan tool, view DTCs.

Is the status Active for this DTC?

Yes

- Go To 2

No

- Perform the STORED LOST COMMUNICATION DTCs diagnostic procedure. Refer to **DIAGNOSIS AND TESTING** .

2. **COMMUNICATION DTCS PRESENT IN THE TOTALLY INTEGRATED POWER MODULE (TIPM)**
   1. With a scan tool, check for DTCs in the Totally Integrated Control Module (TIPM).

      Are there any CAN BUS DTCs active in the Totally Integrated Power Module (TIPM) at this time?

      Yes

      - Perform the appropriate diagnostic procedure. Refer to the **TOTALLY INTEGRATED POWER MODULE (TIPM) - DIAGNOSTIC CODE INDEX** .
      - Perform the BODY VERIFICATION TEST. Refer to **STANDARD PROCEDURE** .

      No

      - Replace and program the Powertrain Control Module (PCM) in accordance with the service information. Refer to **REMOVAL** .
      - Perform the POWERTRAIN VERIFICATION TEST - 2.2L. Refer to **PCM VERIFICATION TEST - 2.2L DIESEL** .

U1113-LOST A/C PRESSURE MESSAGE

For a complete wiring diagram, **refer to appropriate SYSTEM WIRING DIAGRAMS article** .

WHEN MONITORED

Continuously while the system is active.

SET CONDITION

The Powertrain Control Module (PCM) does not receive an A/C pressure message from the Totally Integrated Power Module.

POSSIBLE CAUSES

Possible Causes
CAN BUS OPEN OR SHORTED CONDITION
TOTALLY INTEGRATED POWER MODULE (TIPM)

Always perform the Pre-Diagnostic Troubleshooting procedure before proceeding. Refer to PRE-DIAGNOSTIC TROUBLESHOOTING PROCEDURE - 2.2L DIESEL .

DIAGNOSTIC TEST

ACTIVE DTC

NOTE: Diagnose all CAN B and C communication DTCs before continuing.

1. Ignition on, engine not running.
2. With a scan tool, view DTCs.

   Is the status Active for this DTC?

   Yes

   - Replace the Totally Integrated Power Module in accordance with the service information.
   - Perform the BODY VERIFICATION TEST. Refer to **STANDARD PROCEDURE** .

   No

   - Perform the INTERMITTENT CONDITION diagnostic procedure. Refer to **INTERMITTENT CONDITION - 2.2L DIESEL** .

U1433-IMPLAUSIBLE IGNITION SWITCH STATUS MESSAGE RECEIVED

For a complete wiring diagram, **refer to appropriate SYSTEM WIRING DIAGRAMS article** .

WHEN MONITORED

With the ignition on.

SET CONDITION

The Powertrain Control Module detects an implausible ignition switch signal from the Totally Integrated Power Module (TIPM).

POSSIBLE CAUSES

Possible Causes
(K51) ASD/MAIN RELAY CONTROL CIRCUIT OPEN/HIGH RESISTANCE
(F202) FUSED IGNITION SWITCH OUTPUT CIRCUIT SHORTED TO GROUND
(F202) FUSED IGNITION SWITCH OUTPUT CIRCUIT OPEN/HIGH RESISTANCE
TOTALLY INTEGRATED POWER MODULE (TIPM)
POWERTRAIN CONTROL MODULE (PCM)

Always perform the Pre-Diagnostic Troubleshooting procedure before proceeding. Refer to PRE-DIAGNOSTIC TROUBLESHOOTING PROCEDURE - 2.2L DIESEL .

DIAGNOSTIC TEST

1. **ACTIVE DTC**

NOTE: If there are any Main Relay DTCs present, diagnose those DTCs before proceeding with this test procedure.

1. Ignition on, engine not running.
2. With a scan tool, view DTCs.

Is the status Active for this DTC?

Yes

- Go To 2

No

- Perform the INTERMITTENT DTC diagnostic procedure. Refer to **INTERMITTENT CONDITION - 2.2L DIESEL** .

2. **CHECK THE (K51) ASD/MAIN RELAY CONTROL CIRCUIT FOR AN OPEN/HIGH RESISTANCE**
   1. Turn the ignition off.
   2. Disconnect the PCM C2 harness connector.
   3. Remove the ASD/Main Relay.
   4. Measure the resistance of the (K51) ASD/Main Relay Control circuit between the ASD/Main Relay connector (terminal 86) and the PCM C2 harness connector.

   Is the resistance below 5.0 Ohms?

   Yes

   - Go To 3

   No

   - Repair the (K51) ASD/Main Relay Control circuit for an open or high resistance.
   - Perform the POWERTRAIN VERIFICATION TEST - 2.2L. Refer to **PCM VERIFICATION TEST - 2.2L DIESEL** .

3. **CHECK THE (F202) FUSED IGNITION SWITCH OUTPUT CIRCUIT FOR AN OPEN/HIGH RESISTANCE**
   1. Disconnect the TIPM C11 harness connector.
   2. Measure the resistance of the (F202) Fused Ignition Switch Output circuit between the PCM C2 harness connector and the TIPM C11 harness connector.

   Is the resistance below 5.0 Ohms?

   Yes

- Go To 4

No

- Replace and program the Engine Control Module in accordance with the Service Information. Refer to **REMOVAL** .
- Perform the POWERTRAIN VERIFICATION TEST - 2.2L. Refer to **PCM VERIFICATION TEST - 2.2L DIESEL** .

4. **CHECK THE (F202) FUSED IGNITION SWITCH OUTPUT CIRCUIT FOR A SHORT TO GROUND**
   1. Disconnect the TIPM C11 harness connector.
   2. Measure the resistance between ground and the (F202) Fused Ignition Switch Output circuit between at the PCM C2 harness connector.

      Is the resistance above 10k Ohms?

      Yes

      - Go To 5

      No

      - Repair the (F202) Fused Ignition Switch Output circuit for a short to ground.
      - Perform the POWERTRAIN VERIFICATION TEST - 2.2L. Refer to **PCM VERIFICATION TEST - 2.2L DIESEL** .
5. **TOTALLY INTEGRATED POWER MODULE**
   1. Reconnect the TIPM C11 harness connector.
   2. Reconnect the PCM C2 harness connector.
   3. Reinstall the ASD/Main Relay.
   4. Disconnect the Brake Switch harness connector.
   5. Turn the ignition on.
   6. Using a 12-Volt test light connected to ground, probe the (F202) Fused Ignition Switch Output circuit at the Brake Switch harness connector.

      Does the test light illuminate brightly?

Yes

- Replace the Powertrain Control Module. **Before removing the PCM, perform the "Replace PCM" routine in the Miscellaneous Functions tab of the scan tool.** . Refer to **REMOVAL** .
- Perform the POWERTRAIN VERIFICATION TEST - 2.2L. Refer to **PCM VERIFICATION TEST - 2.2L DIESEL** .

No

- Replace the Totally Integrated Power Module in accordance with the service information.
- Perform the BODY VERIFICATION TEST. Refer to **STANDARD PROCEDURE** .

U1601-ECU APPLICATION SOFTWARE CODE 1 MISSING OR CORRUPTED

For a complete wiring diagram, **refer to appropriate SYSTEM WIRING DIAGRAMS article** .

WHEN MONITORED

With the ignition on.

SET CONDITION

The Powertrain Control Module was replaced and not reprogrammed, or the reprogramming of the current Powertrain Control Module was interrupted before it was complete.

POSSIBLE CAUSES

Possible Causes
POWERTRAIN CONTROL MODULE NOT PROGRAMMED PROPERLY

Always perform the Pre-Diagnostic Troubleshooting procedure before proceeding. Refer to PRE-DIAGNOSTIC TROUBLESHOOTING PROCEDURE - 2.2L DIESEL .

DIAGNOSTIC TEST

ACTIVE DTC

1. Ignition on, engine not running.
2. With a scan tool, view DTCs.

   Is the status Active for this DTC?

   Yes

   - With a scan tool, reprogram the Powertrain Control Module to the latest software version in accordance with the service information. Refer to **PCM/ECM/TCM PROGRAMMING** .
   - Perform the POWERTRAIN VERIFICATION TEST - 2.2L. Refer to **PCM VERIFICATION TEST - 2.2L DIESEL** .

   No

   - Perform the INTERMITTENT DTC diagnostic procedure. Refer to **INTERMITTENT CONDITION - 2.2L DIESEL** .

U1600-ECU APPLICATION SOFTWARE CODE 1 MISSING OR CORRUPTED

For a complete wiring diagram, **refer to appropriate SYSTEM WIRING DIAGRAMS article** .

WHEN MONITORED

With the ignition on.

SET CONDITION

The Powertrain Control Module was reprogrammed with a corrupted flash file, or the reprogramming of the Powertrain Control Module was interrupted before it was complete.

POSSIBLE CAUSES

Possible Causes
POWERTRAIN CONTROL MODULE NOT PROGRAMMED PROPERLY

Always perform the Pre-Diagnostic Troubleshooting procedure before

proceeding. Refer to PRE-DIAGNOSTIC TROUBLESHOOTING PROCEDURE - 2.2L DIESEL .

DIAGNOSTIC TEST

ACTIVE DTC

1. Ignition on, engine not running.
2. With a scan tool, view DTCs.

   Is the status Active for this DTC?

   Yes

   - With a scan tool, reprogram the Powertrain Control Module to the latest software version in accordance with the service information. Refer to **PCM/ECM/TCM PROGRAMMING** .
   - Perform the POWERTRAIN VERIFICATION TEST - 2.2L. Refer to **PCM VERIFICATION TEST - 2.2L DIESEL** .

   No

   - Perform the INTERMITTENT DTC diagnostic procedure. Refer to **INTERMITTENT CONDITION - 2.2L DIESEL** .

U1606-ECU APPLICATION SOFTWARE DATA 1 MISSING OR CORRUPTED

For a complete wiring diagram, **refer to appropriate SYSTEM WIRING DIAGRAMS article** .

WHEN MONITORED

With the ignition on.

SET CONDITION

The Powertrain Control Module was replaced and not reprogrammed, or the reprogramming of the current Powertrain Control Module was interrupted before it was complete.

POSSIBLE CAUSES

Possible Causes

POWERTRAIN CONTROL MODULE NOT PROGRAMMED PROPERLY

Always perform the Pre-Diagnostic Troubleshooting procedure before proceeding. Refer to PRE-DIAGNOSTIC TROUBLESHOOTING PROCEDURE - 2.2L DIESEL .

DIAGNOSTIC TEST

ACTIVE DTC

1. Ignition on, engine not running.
2. With a scan tool, view DTCs.

   Is the status Active for this DTC?

   Yes

   - With a scan tool, reprogram the Powertrain Control Module to the latest software version in accordance with the service information. Refer to **PCM/ECM/TCM PROGRAMMING** .
   - Perform the POWERTRAIN VERIFICATION TEST - 2.2L. Refer to **PCM VERIFICATION TEST - 2.2L DIESEL** .

   No

   - Perform the INTERMITTENT DTC diagnostic procedure. Refer to **INTERMITTENT CONDITION - 2.2L DIESEL** .

U160B-ECU BOOT SOFTWARE 1 MISSING OR CORRUPTED

For a complete wiring diagram, **refer to appropriate SYSTEM WIRING DIAGRAMS article** .

WHEN MONITORED

With the ignition on.

SET CONDITION

The Powertrain Control Module detects an internal failure.

POSSIBLE CAUSES

Possible Causes
POWERTRAIN CONTROL MODULE (PCM)

Always perform the Pre-Diagnostic Troubleshooting procedure before proceeding. Refer to PRE-DIAGNOSTIC TROUBLESHOOTING PROCEDURE - 2.2L DIESEL .

DIAGNOSTIC TEST

ACTIVE DTC

1. Ignition on, engine not running.
2. With a scan tool, view DTCs.

   Is the status Active for this DTC?

   Yes

   - Replace the Powertrain Control Module. **Before removing the PCM, perform the "Replace PCM" routine in the Miscellaneous Functions tab of the scan tool.** . Refer to **REMOVAL** .
   - Perform the POWERTRAIN VERIFICATION TEST - 2.2L. Refer to **PCM VERIFICATION TEST - 2.2L DIESEL** .

   No

   - Perform the INTERMITTENT DTC diagnostic procedure. Refer to **INTERMITTENT CONDITION - 2.2L DIESEL** .

U160E-ECU HARDWARE INTERNAL - BOOT

For a complete wiring diagram, **refer to appropriate SYSTEM WIRING DIAGRAMS article** .

WHEN MONITORED

With the ignition on.

SET CONDITION

The Powertrain Control Module detects an internal failure.

POSSIBLE CAUSES

Possible Causes
POWERTRAIN CONTROL MODULE (PCM)

Always perform the Pre-Diagnostic Troubleshooting procedure before proceeding. Refer to PRE-DIAGNOSTIC TROUBLESHOOTING PROCEDURE - 2.2L DIESEL .

DIAGNOSTIC TEST

ACTIVE DTC

1. Ignition on, engine not running.
2. With a scan tool, view DTCs.

   Is the status Active for this DTC?

   Yes

   - Replace the Powertrain Control Module. **Before removing the PCM, perform the "Replace PCM" routine in the Miscellaneous Functions tab of the scan tool.** . Refer to **REMOVAL** .
   - Perform the POWERTRAIN VERIFICATION TEST - 2.2L. Refer to **PCM VERIFICATION TEST - 2.2L DIESEL** .

   No

   - Perform the INTERMITTENT DTC diagnostic procedure. Refer to **INTERMITTENT CONDITION - 2.2L DIESEL** .

2014 ENGINE PERFORMANCE

Powertrain Control Module (PCM) - Electrical Diagnostics, 2.2L Diesel - Compass & Patriot

DIAGNOSTIC CODE INDEX

DIAGNOSTIC CODE INDEX

DTC	Description
B10B3	CABIN HEATER 1 CONTROL CIRCUIT
B10B7	CABIN HEATER 2 CONTROL CIRCUIT
P0001	FUEL QUANTITY REGULATOR CONTROL CIRCUIT OPEN
P0003	FUEL QUANTITY REGULATOR CONTROL CIRCUIT LOW
P0004	FUEL QUANTITY REGULATOR CONTROL CIRCUIT HIGH
P0045	TURBOCHARGER BOOST CONTROL CIRCUIT/OPEN
P0046	TURBOCHARGER BOOST CONTROL CIRCUIT PERFORMANCE
P0047	TURBOCHARGER BOOST CONTROL CIRCUIT LOW
P0048	TURBOCHARGER BOOST CONTROL CIRCUIT HIGH
P0072	AMBIENT AIR TEMPERATURE SENSOR CIRCUIT LOW
P0073	AMBIENT AIR TEMPERATURE SENSOR CIRCUIT HIGH
P0087	FUEL RAIL PRESSURE TOO LOW
P0088	FUEL RAIL PRESSURE TOO HIGH
P0089-00	FUEL PRESSURE 1 CONTROL PERFORMANCE
P0090	FUEL PRESSURE REGULATOR 1 CONTROL CIRCUIT OPEN
P0091	FUEL PRESSURE REGULATOR 1 CONTROL CIRCUIT LOW
P0092	FUEL PRESSURE REGULATOR 1 CONTROL CIRCUIT HIGH
P0096	INTAKE AIR TEMPERATURE SENSOR 2 CIRCUIT PERFORMANCE
P0097	INTAKE AIR TEMPERATURE SENSOR 2 CIRCUIT

	LOW
P0098	INTAKE AIR TEMPERATURE SENSOR 2 CIRCUIT HIGH
P0100	MASS AIR FLOW SENSOR "A"
P0102	MASS AIR FLOW SENSOR CIRCUIT LOW
P0103	MASS AIR FLOW SENSOR CIRCUIT HIGH
P0105	ATMOSPHERIC PRESSURE/BAROMETRIC PRESSURE SENSOR CIRCUIT
P0106	MANIFOLD ABSOLUTE PRESSURE SENSOR PERFORMANCE
P0107	MANIFOLD ABSOLUTE PRESSURE SENSOR CIRCUIT LOW
P0108	MANIFOLD ABSOLUTE PRESSURE SENSOR CIRCUIT HIGH
P0111	INTAKE AIR TEMPERATURE SENSOR 1 PERFORMANCE
P0112	INTAKE AIR TEMPERATURE SENSOR 1 CIRCUIT LOW
P0113	INTAKE AIR TEMPERATURE SENSOR 1 CIRCUIT HIGH
P0116	ENGINE COOLANT TEMPERATURE SENSOR PERFORMANCE
P0117	ENGINE COOLANT TEMPERATURE SENSOR CIRCUIT LOW
P0118	ENGINE COOLANT TEMPERATURE SENSOR CIRCUIT HIGH
P0122	THROTTLE POSITION SENSOR 1 CIRCUIT LOW
P0123	THROTTLE POSITION SENSOR 1 CIRCUIT HIGH
P0130	O2 SENSOR 1/1 CIRCUIT OPEN
P0133	O2 SENSOR 1/1 SLOW RESPONSE
P0135	O2 SENSOR 1/1 HEATER PERFORMANCE
P015A	O2 SENSOR 1/1 DELAYED RESPONSE - RICH TO LEAN
P0181	FUEL TEMPERATURE SENSOR PERFORMANCE
P0182	FUEL TEMPERATURE SENSOR CIRCUIT LOW

P0183	FUEL TEMPERATURE SENSOR CIRCUIT HIGH
P0190	FUEL RAIL PRESSURE SENSOR "A" CIRCUIT
P0191	FUEL RAIL PRESSURE SENSOR "A" CIRCUIT PERFORMANCE
P0192	FUEL RAIL PRESSURE SENSOR "A" CIRCUIT LOW
P0193	FUEL RAIL PRESSURE SENSOR "A" CIRCUIT HIGH
P0196	ENGINE OIL TEMPERATURE SENSOR CIRCUIT PERFORMANCE
P0197	ENGINE OIL TEMPERATURE SENSOR CIRCUIT LOW
P0198	ENGINE OIL TEMPERATURE SENSOR CIRCUIT HIGH
P0201	FUEL INJECTOR 1 CIRCUIT/OPEN
P0202	FUEL INJECTOR 2 CIRCUIT/OPEN
P0203	FUEL INJECTOR 3 CIRCUIT/OPEN
P0204	FUEL INJECTOR 4 CIRCUIT/OPEN
P0219	ENGINE OVERSPEED
P0236	TURBO BOOST PRESSURE SENSOR PERFORMANCE
P0237	TURBO BOOST PRESSURE SENSOR CIRCUIT LOW
P0238	TURBO BOOST PRESSURE SENSOR CIRCUIT HIGH
P0252	INJECTION PUMP METERING CONTROL CIRCUIT PERFORMANCE
P0261	FUEL INJECTOR 1 CIRCUIT LOW
P0263	CYLINDER 1 CONTRIBUTION/BALANCE
P0264	FUEL INJECTOR 2 CIRCUIT LOW
P0266	CYLINDER 2 CONTRIBUTION/BALANCE
P0267	FUEL INJECTOR 3 CIRCUIT LOW
P0269	CYLINDER 3 CONTRIBUTION/BALANCE
P0270	FUEL INJECTOR 4 CIRCUIT LOW
P0272	CYLINDER 4 CONTRIBUTION/BALANCE
P029A	CYLINDER 1 - FUEL TRIM AT MAX LIMIT
P029B	CYLINDER 1- FUEL TRIM AT MIN LIMIT
P029E	CYLINDER 2- FUEL TRIM AT MAX LIMIT
P029F	CYLINDER 2- FUEL TRIM AT MIN LIMIT
P02A2	CYLINDER 3- FUEL TRIM AT MAX LIMIT
P02A3	CYLINDER 3- FUEL TRIM AT MIN LIMIT

P02A6	CYLINDER 4- FUEL TRIM AT MAX LIMIT
P02A7	CYLINDER 4- FUEL TRIM AT MIN LIMIT
P0326	KNOCK SENSOR 1 CIRCUIT PERFORMANCE
P032B	KNOCK SENSOR 3 CIRCUIT/RANGE PERFORMANCE - BANK 1
P0335	CRANKSHAFT POSITION SENSOR CIRCUIT
P0336	CRANKSHAFT POSITION SENSOR PERFORMANCE
P0339	CRANKSHAFT POSITION SENSOR INTERMITTENT
P0341	CAMSHAFT POSITION SENSOR PERFORMANCE - BANK 1 SENSOR 1
P0344	CAMSHAFT POSITION SENSOR INTERMITTENT - BANK 1 SENSOR 1
P0400	EGR SYSTEM FLOW MALFUNCTION
P0403	EGR CONTROL CIRCUIT OPEN
P0404	EGR POSITION SENSOR PERFORMANCE
P0426	CATALYST TEMPERATURE SENSOR CIRCUIT PERFORMANCE - BANK 1 SENSOR 1
P0427	CATALYST TEMPERATURE SENSOR CIRCUIT LOW - BANK 1 SENSOR 1
P0428	CATALYST TEMPERATURE SENSOR CIRCUIT HIGH - BANK 1 SENSOR 1
P042F	EXHAUST GAS RECIRCULATION CONTROL STUCK CLOSED
P0461	FUEL LEVEL SENSOR 1 PERFORMANCE
P046C	EXHAUST GAS RECIRCULATION SENSOR 1 PERFORMANCE
P0471	EXHAUST PRESSURE SENSOR 1 PERFORMANCE
P0472	EXHAUST PRESSURE SENSOR 1 LOW
P0473	EXHAUST PRESSURE SENSOR 1 HIGH
P0483	FAN PERFORMANCE
P0489	EXHAUST GAS RECIRCULATION CONTROL CIRCUIT LOW
P0490	EXHAUST GAS RECIRCULATION CONTROL CIRCUIT HIGH
P0500-00	VEHICLE SPEED SENSOR 1 CIRCUIT

P0504	BRAKE SWITCH "A"/"B" CORRELATION
P0532	A/C PRESSURE SENSOR CIRCUIT LOW
P0533	A/C PRESSURE SENSOR CIRCUIT HIGH
P053A	CRANKCASE VENT HEATER CONTROL CIRCUIT OPEN
P053B	CRANKCASE VENT HEATER CONTROL CIRCUIT LOW
P053C	CRANKCASE VENT HEATER CONTROL CIRCUIT HIGH
P0545	EXHAUST GAS TEMPERATURE SENSOR CIRCUIT LOW - BANK 1 SENSOR 1
P0546	EXHAUST GAS TEMPERATURE SENSOR CIRCUIT HIGH - BANK 1 SENSOR 1
P0560	BATTERY SYSTEM VOLTAGE
P0562	BATTERY/SYSTEM VOLTAGE LOW
P0563	BATTERY/SYSTEM VOLTAGE HIGH
P0565	SPEED CONTROL ON SIGNAL
P0567	SPEED CONTROL RESUME SIGNAL
P0571	BRAKE SWITCH 1 PERFORMANCE
P0579	SPEED CONTROL SWITCH 1 PERFORMANCE
P0580	SPEED CONTROL SWITCH 1 CIRCUIT LOW
P0581	SPEED CONTROL SWITCH 1 CIRCUIT HIGH
P0585	SPEED CONTROL SWITCH 1/2 CORRELATION
P0589	SPEED CONTROL SWITCH 2
P0590	SPEED CONTROL SWITCH 2 STUCK
P0592	SPEED CONTROL SWITCH 2 CIRCUIT LOW
P0593	SPEED CONTROL SWITCH 2 CIRCUIT HIGH
P0597	THERMOSTAT HEATER CONTROL CIRCUIT OPEN
P0598	THERMOSTAT HEATER CONTROL CIRCUIT LOW
P0599	THERMOSTAT HEATER CONTROL CIRCUIT HIGH
P0601	INTERNAL MEMORY CHECKSUM INVALID
P0604	INTERNAL CONTROL MODULE RAM
P0605	INTERNAL CONTROL MODULE ROM
P0607	ECU INTERNAL PERFORMANCE
P060A	INTERNAL CONTROL MODULE MONITORING

	PROCESSOR PERFORMANCE
P060B	ETC A/D GROUND PERFORMANCE
P060D	INTERNAL CONTROL MODULE ACCELERATOR PEDAL POSITION PERFORMANCE
P060F	INTERNAL CONTROL MODULE ECT PERFORMANCE
P0615	STARTER CONTROL CIRCUIT/OPEN
P0616	STARTER CONTROL CIRCUIT LOW
P0617	STARTER CONTROL CIRCUIT HIGH
P061B	INTERNAL CONTROL MODULE TORQUE CALCULATION PERFORMANCE
P061C	INTERNAL CONTROL MODULE RPM PERFORMANCE
P0627	FUEL PUMP CONTROL CIRCUIT OPEN
P0628	FUEL PUMP CONTROL CIRCUIT LOW
P0629	FUEL PUMP CONTROL CIRCUIT HIGH
P062B	INTERNAL CONTROL MODULE FUEL INJECTOR CONTROL PERFORMANCE
P062C	ETC LEVEL 2 MPH PERFORMANCE
P062D	FUEL INJECTOR DRIVER CIRCUIT PERFORMANCE BANK 1
P062F	INTERNAL CONTROL MODULE EEPROM ERROR
P0633	SKIM SECRET KEY NOT STORED IN PCM
P0638	ELECTRONIC THROTTLE CONTROL PERFORMANCE-BANK 1
P063A	GENERATOR VOLTAGE SENSE CIRCUIT
P063D	GENERATOR VOLTAGE SENSE HIGH
P0641	SENSOR REFERENCE VOLTAGE 1 CIRCUIT
P0645	A/C CONTROL CIRCUIT/OPEN
P0646	A/C CLUTCH CONTROL CIRCUIT LOW
P0647	A/C CONTROL CIRCUIT HIGH
P0651	SENSOR REFERENCE VOLTAGE 2 CIRCUIT
P0670	GLOW PLUG CONTROL MODULE CONTROL CIRCUIT OPEN
P0671	CYLINDER 1 GLOW PLUG CIRCUIT
P0672	CYLINDER 2 GLOW PLUG CIRCUIT
P0673	CYLINDER 3 GLOW PLUG CIRCUIT

P0674	CYLINDER 4 GLOW PLUG CIRCUIT
P0685	ASD/MAIN CONTROL CIRCUIT
P0688	ASD/MAIN RELAY CONTROL SENSE
P0697	SENSOR REFERENCE VOLTAGE 3 CIRCUIT
P0703	BRAKE SWITCH 2 PERFORMANCE
P0730	INCORRECT GEAR RATIO
P0830	CLUTCH PEDAL SWITCH CIRCUIT
P0A5B	GENERATOR CURRENT SENSOR CIRCUIT LOW
P0A5C	GENERATOR CURRENT SENSOR CIRCUIT HIGH
P1614	ECU RESET/RECOVERY OCCURRED
P1649	GLOW PLUG MODULE POWER SUPPLY CIRCUIT
P1946	CRASH EVENT DETECTED - ENGINE SHUTDOWN
P1961	PISTON COOLING CONTROL CIRCUIT OPEN
P1962	PISTON COOLING CONTROL CIRCUIT LOW
P1963	PISTON COOLING CONTROL CIRCUIT HIGH
P2006	INTAKE MANIFOLD RUNNER (SWIRL) CONTROL STUCK CLOSED - BANK 1
P2008	INTAKE MANIFOLD RUNNER (SWIRL) CONTROL CIRCUIT OPEN
P2009	INTAKE MANIFOLD RUNNER (SWIRL) CONTROL CIRCUIT LOW
P2010	INTAKE MANIFOLD RUNNER (SWIRL) CONTROL CIRCUIT HIGH
P200A	INTAKE MANIFOLD RUNNER (SWIRL) PERFORMANCE - BANK 1
P2015	INTAKE MANIFOLD RUNNER (SWIRL) POSITION SENSOR PERFORMANCE
P2016	INTAKE MANIFOLD RUNNER (SWIRL) POSITION SENSOR CIRCUIT LOW
P2017	INTAKE MANIFOLD RUNNER (SWIRL) POSITION SENSOR CIRCUIT HIGH
P2073	MANIFOLD ABSOLUTE PRESSURE/MASS AIR FLOW - THROTTLE POSITION
P2074	MANIFOLD ABSOLUTE PRESSURE/MASS AIR FLOW - THROTTLE POSITION CORRELATION AT HIGHER

	LOAD
P2080	EXHAUST GAS TEMPERATURE SENSOR CIRCUIT PERFORMANCE
P2100	ELECTRONIC THROTTLE CONTROL MOTOR CIRCUIT OPEN - BANK 1
P2101	ELECTRONIC THROTTLE CONTROL MOTOR CIRCUIT PERFORMANCE
P2102	ELECTRONIC THROTTLE CONTROL MOTOR CIRCUIT LOW
P2103	ELECTRONIC THROTTLE CONTROL MOTOR CIRCUIT HIGH
P2112	THROTTLE ACTUATOR "A" CONTROL SYSTEM - STUCK CLOSED
P2119	THROTTLE ACTUATOR CONTROL THROTTLE BODY PERFORMANCE
P2120	ACCELERATOR PEDAL POSITION SENSOR 1 CIRCUIT
P2122	ACCELERATOR PEDAL POSITION SENSOR 1 CIRCUIT LOW
P2123	ACCELERATOR PEDAL POSITION SENSOR 1 CIRCUIT HIGH
P2125	ACCELERATOR PEDAL POSITION SENSOR 2 CIRCUIT
P2126	ACCELERATOR PEDAL POSITION SENSOR 2 PERFORMANCE
P2127	ACCELERATOR PEDAL POSITION SENSOR 2 CIRCUIT LOW
P2128	ACCELERATOR PEDAL POSITION SENSOR 2 CIRCUIT HIGH
P2138	ACCELERATOR PEDAL POSITION SENSOR 1/2 CORRELATION
P2147	FUEL INJECTOR GROUP 1 SUPPLY VOLTAGE CIRCUIT LOW
P2148	FUEL INJECTOR GROUP 1 SUPPLY VOLTAGE CIRCUIT HIGH
P2150	FUEL INJECTOR GROUP 2 SUPPLY VOLTAGE

	CIRCUIT LOW
P2151	FUEL INJECTOR GROUP 1 SUPPLY VOLTAGE CIRCUIT HIGH
P2195	O2 SENSOR 1/1 STUCK LEAN
P2196	O2 SENSOR 1/1 STUCK RICH
P2226	BAROMETRIC PRESSURE SENSOR
P2227	BAROMETRIC PRESSURE CIRCUIT PERFORMANCE
P2228	BAROMETRIC PRESSURE CIRCUIT LOW
P2229	BAROMETRIC PRESSURE CIRCUIT HIGH
P2237	O2 SENSOR 1/1 PUMP CELL CURRENT CIRCUIT OPEN
P2238	O2 SENSOR 1/1 PUMP CELL CURRENT CIRCUIT LOW
P2239	O2 SENSOR 1/1 PUMP CELL CURRENT CIRCUIT HIGH
P2243	O2 SENSOR 1/1 REFERENCE VOLTAGE CIRCUIT/OPEN
P2245	O2 SENSOR 1/1 REFERENCE VOLTAGE CIRCUIT LOW
P2246	O2 SENSOR 1/1 REFERENCE VOLTAGE CIRCUIT HIGH
P2251	O2 SENSOR 1/1 NEGATIVE CURRENT CONTROL CIRCUIT/OPEN
P2252	O2 SENSOR 1/1 NEGATIVE CURRENT CONTROL CIRCUIT LOW
P2253	O2 SENSOR 1/1 NEGATIVE CURRENT CONTROL CIRCUIT HIGH
P2279	INTAKE AIR SYSTEM LEAK
P2428	EXHAUST GAS TEMPERATURE TOO HIGH - BANK 1
P242F	DIESEL PARTICULATE FILTER RESTRICTION - ASH ACCUMULATION
P244A	DIESEL PARTICULATE FILTER DIFFERENTIAL PRESSURE TOO LOW
P244B	DIESEL PARTICULATE FILTER DIFFERENTIAL PRESSURE TOO HIGH
P2453	DIESEL PARTICULATE FILTER DIFFERENTIAL PRESSURE SENSOR CIRCUIT PERFORMANCE
P2454	DIESEL PARTICULATE FILTER DIFFERENTIAL PRESSURE SENSOR CIRCUIT LOW

P2455	DIESEL PARTICULATE FILTER DIFFERENTIAL PRESSURE SENSOR CIRCUIT HIGH
P2459	DIESEL PARTICULATE FILTER REGENERATION FREQUENCY
P245A	EGR COOLER BYPASS CONTROL CIRCUIT OPEN
P245C	EGR COOLER BYPASS CONTROL CIRCUIT LOW
P245D	EGR COOLER BYPASS CONTROL CIRCUIT HIGH
P2463	DIESEL PARTICULATE FILTER - SOOT ACCUMULATION
P2600	ELECTRIC COOLANT PUMP CONTROL CIRCUIT OPEN
P2602	ELECTRIC COOLANT PUMP CONTROL CIRCUIT LOW
P2603	ELECTRIC COOLANT PUMP CONTROL CIRCUIT HIGH
P2626	O2 SENSOR 1/1 PUMP CELL CURRENT TRIM CIRCUIT OPEN
P2627	O2 SENSOR 1/1 PUMP CELL CURRENT TRIM CIRCUIT LOW
P2628	O2 SENSOR 1/1 PUMP CELL CURRENT TRIM CIRCUIT HIGH
P268C	CYLINDER 1 INJECTOR DATA INCOMPATIBLE
P268D	CYLINDER 2 INJECTOR DATA INCOMPATIBLE
P268E	CYLINDER 3 INJECTOR DATA INCOMPATIBLE
P268F	CYLINDER 4 INJECTOR DATA INCOMPATIBLE
P2A00	O2 SENSOR 1/1 CIRCUIT PERFORMANCE
U0002	CAN C BUS OFF PERFORMANCE
U0101	LOST COMMUNICATION WITH TCM
U0106	LOST COMMUNICATION WITH GLOW PLUG CONTROL MODULE
U0121	LOST COMMUNICATION WITH ANTI-LOCK BRAKE MODULE
U0141	LOST COMMUNICATION WITH IPM (FCM/TIPM)
U0146	LOST COMMUNICATION WITH CENTRAL GATEWAY
U0155	LOST COMMUNICATION WITH CLUSTER/CCN
U0164	LOST COMMUNICATION WITH HVAC CONTROL

	MODULE
U0168	LOST COMMUNICATION WITH VEHICLE SECURITY CONTROL MODULE
U0212	LOST COMMUNICATION WITH SCM
U0402	IMPLAUSIBLE DATA RECEIVED FROM TCM
U0415	IMPLAUSIBLE DATA RECEIVED FROM ABS
U0424	IMPLAUSIBLE DATA RECEIVED FROM HVAC CONTROL MODULE
U0427	IMPLAUSIBLE DATA RECEIVED FROM VEHICLE SECURITY CONTROL MODULE
U0429	IMPLAUSIBLE DATA RECEIVED FROM SCM
U0431	IMPLAUSIBLE DATA RECEIVED FROM TIPM
U1113	LOST A/C PRESSURE MESSAGE
U1433	IMPLAUSIBLE IGNITION SWITCH STATUS MESSAGE RECEIVED
U1601	ECU APPLICATION SOFTWARE CODE 1 MISSING OR CORRUPTED
U1600	ECU APPLICATION SOFTWARE CODE 1 MISSING OR CORRUPTED
U1606	ECU APPLICATION SOFTWARE DATA 1 MISSING OR CORRUPTED
U160B	ECU BOOT SOFTWARE 1 MISSING OR CORRUPTED
U160E	ECU HARDWARE INTERNAL - BOOT

2014 ENGINE

Starting - Non-DTC Based Diagnostics - Compass & Patriot

DIAGNOSIS AND TESTING

ENGINE CRANKS BUT DOES NOT START

For a complete wiring diagram, **refer to appropriate SYSTEM WIRING DIAGRAMS article** .

POSSIBLE CAUSES

Possible Causes
NO START PRE-TEST
POWERTRAIN FUSES OPEN
SECONDARY INDICATORS PRESENT
ENGINE MECHANICAL PROBLEM
FUEL CONTAMINATION

DIAGNOSTIC TEST

1. **NO START PRE-TEST**

NOTE: The following list of items must be checked before continuing with any no start tests.

1. The battery must be fully charged and in good condition. A low charged battery may produce invalid test results. If the battery is low, charge the battery and then attempt to start the vehicle by cranking the engine for 15 seconds, 3 consecutive times. This will allow any DTCs to set that may have been erased due to a dead battery.
2. Attempt to communicate with the PCM using the scan tool. If the PCM is experiencing a no response condition, for the proper Loss of Communication diagnostic procedure. Refer to **DIAGNOSIS AND TESTING** .
3. Read the PCM DTCs with the scan tool. If any DTCs are present, they must be repaired before continuing with any other No Start diagnostic tests. Perform the appropriate diagnostic procedure.
4. Inspect all fuses in the TIPM and the Junction Box. If an open fuse(s) is

found, check the related circuit(s) for a short to ground or high resistance.

5. Using a test light, check the Powers and Ground to the PCM. The test light must illuminate brightly as if jumpered across a battery.
6. Attempt to communicate with the Instrument Cluster and VTSS. If you are unable to establish communications perform the appropriate diagnostic procedures.
7. The Wireless Control Module (WCM) must be operating properly. Check for proper communication with the scan tool and check for DTCs that may be stored in the WCM. Repair the DTC(s) before continuing.
8. If no DTCs are found, using the scan tool, select Clear PCM (BATT Disconnect).
9. Crank the engine several times. Using the scan tool, read DTCs. If a DTC is present perform the DTC diagnostics before continuing. refer to **DTC INDEX** .

   Were any problems found?

   Yes

   - Repair as necessary.
   - Perform the PCM VERIFICATION Test. Refer to **POWERTRAIN VERIFICATION TEST** .

   No

   - Go To 2

2. **OPEN FUSE**
   1. Check for any open fuses in both TIPM or Junction Block that may be related to the no start condition.

      NOTE: If an open fuse is found, inspect the related circuit(s) for a short to ground or high resistance.

      Are any of the fuses open?

      Yes

- Replace the open fuse and check the related circuit(s) for a short to ground.
- Perform the PCM VERIFICATION Test. Refer to **POWERTRAIN VERIFICATION TEST** .

No

- Go To 3

3. **SECONDARY INDICATORS PRESENT**

NOTE: Diagnose only the Secondary Indicators that would cause a no start.

1. Ignition on, engine not running.
2. With the scan tool, check the Secondary Indicators while cranking the engine that would cause a no start condition.

   Are there any Secondary Indicators present while cranking the engine?

   Yes

   - Refer to the appropriate Engine Electrical Diagnostics information and perform the tests related to the no start secondary indicator that is reported by the scan tool.
   - Perform the PCM VERIFICATION Test. Refer to **POWERTRAIN VERIFICATION TEST** .

   No

   - Go To 4

4. **POSSIBLE MECHANICAL PROBLEMS**
   1. Check for any of the following conditions/mechanical problems:
      - ENGINE VALVE TIMING - must be within specifications, check for broken timing components.
      - ENGINE COMPRESSION - must be within specifications.
      - ENGINE EXHAUST SYSTEM - must be free of any restrictions or leaks.

Are there any engine mechanical problems?

Yes

- Repair as necessary.
- Perform the PCM VERIFICATION Test. Refer to **POWERTRAIN VERIFICATION TEST** .

No

- Go To 5

5. **FUEL PUMP DELIVERY**
   1. Verify that the Fuel tank is not empty before continuing.
   2. Follow the diagnostics for Checking Fuel Delivery in **DIAGNOSIS AND TESTING** Gas or **DIAGNOSIS AND TESTING** Diesel.

   Was the No Start condition solved after following the above diagnostic test?

   Yes

   - Test Complete.

   No

   - Check for contamination/water in the fuel. Make sure the fuel being used in this vehicle meets manufactures Fuel Requirement, refer to the appropriate service information .
   - Perform the PCM VERIFICATION Test. Refer to **POWERTRAIN VERIFICATION TEST** .

INTERMITTENT NO START CONDITION

For a complete wiring diagram **refer to appropriate SYSTEM WIRING DIAGRAMS article**

POSSIBLE CAUSES

Possible Causes
ACTIVE OR STORED VEHICLE DTCS

VEHICLE POWER AND GROUND CIRCUITS
VEHICLE POWER CIRCUITS
FAULTY WIRING, CONNECTORS, TERMINALS

DIAGNOSTIC TEST

1. **CHECK ALL VEHICLE MODULES FOR DTCS**
   1. Turn the ignition on.
   2. With the scan tool, check for active and stored DTCs.

      Does the scan tool display any active or stored DTCs?

      Yes

      - Using the appropriate diagnostic procedures, diagnose and repair all active and stored DTCs.

      No

      - Go To 2
2. **ATTEMPT TO DUPLICATE NO START CONDITION**
   1. Attempt to duplicate the no start condition per the customer scenario.

      Were you able to duplicate the no start condition?

      Yes

      - Perform the NO CRANK CONDITION diagnostic procedure. Refer to **DIAGNOSIS AND TESTING**.

      No

      - No component replacement is necessary at this time.
      - Using the wiring diagrams as a guide, check all vehicle powers, grounds, and related connectors. Check all related splices and connectors for signs of water intrusion, corrosion, pushed out or bent terminals and correct pin tension.

NO RESPONSE WITH A NO START CONDITION

For a complete wiring diagram, **refer to appropriate SYSTEM WIRING DIAGRAMS article** .

POSSIBLE CAUSES

POSSIBLE CAUSES
(A931) FUSED B+ CIRCUIT (PCM)
(F202) FUSED IGNITION SWITCH OUTPUT (RUN-START) CIRCUITS (PCM)
(Z932) PCM GROUND CIRCUITS (PCM)
(K51) ASD RELAY CONTROL CIRCUIT
(A14) FUSED B+ CIRCUIT (ASD RELAY)
(A935) FUSED B+ CIRCUIT (ASD RELAY)
(K542) ASD RELAY OUTPUT CIRCUIT (TO TIPM)
(F342) ASD RELAY OUTPUT CIRCUIT (TO PCM)
TOTALLY INTEGRATED POWER MODULE (TIPM)
POWERTRAIN CONTROL MODULE (PCM)

DIAGNOSTIC TEST.

1. **(A931) FUSED B+ CIRCUIT (PCM)**

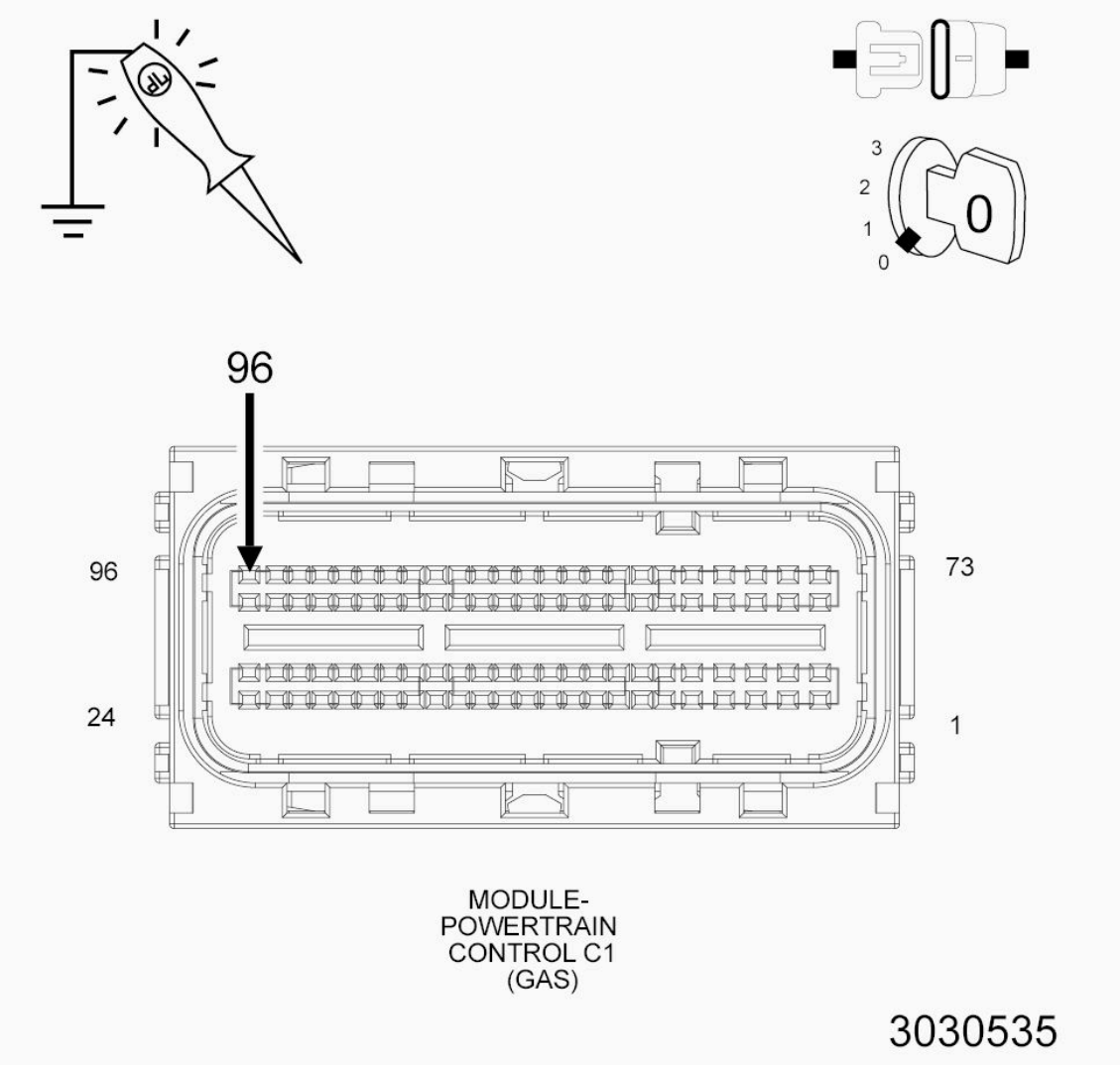

Fig. 1: Checking PCM Fused B+ Circuit
Courtesy of CHRYSLER GROUP, LLC

NOTE: The scan tool and cable must be operating properly for the results of this test to be valid.

NOTE: Make sure the ignition switch was on while trying to communicate with the PCM.

1. Turn the ignition off.
2. Disconnect the C1 PCM harness connectors.

NOTE: When checking circuits at the Powertrain Control Module (PCM), be careful not to damage or distort the connector terminals. Improper measurement

technique could result in poor pin to terminal contact.

3. Using a 12-volt test light connected to ground, probe the (A931) Fused B+ circuit in the PCM C1 harness connector.

NOTE: The test light should be illuminated and bright. Compared the brightness to that of a direct connection to the battery.

Does the test light illuminate brightly?

Yes

- Go To 2

No

- Repair the open or short to ground in the (A931) Fused B+ circuit. Inspect and replace fuses as necessary.
- Perform the POWERTRAIN VERIFICATION TEST. Refer to **POWERTRAIN VERIFICATION TEST** .

2. **(F202) IGNITION SWITCH OUTPUT (RUN-START) CIRCUITS (PCM)**

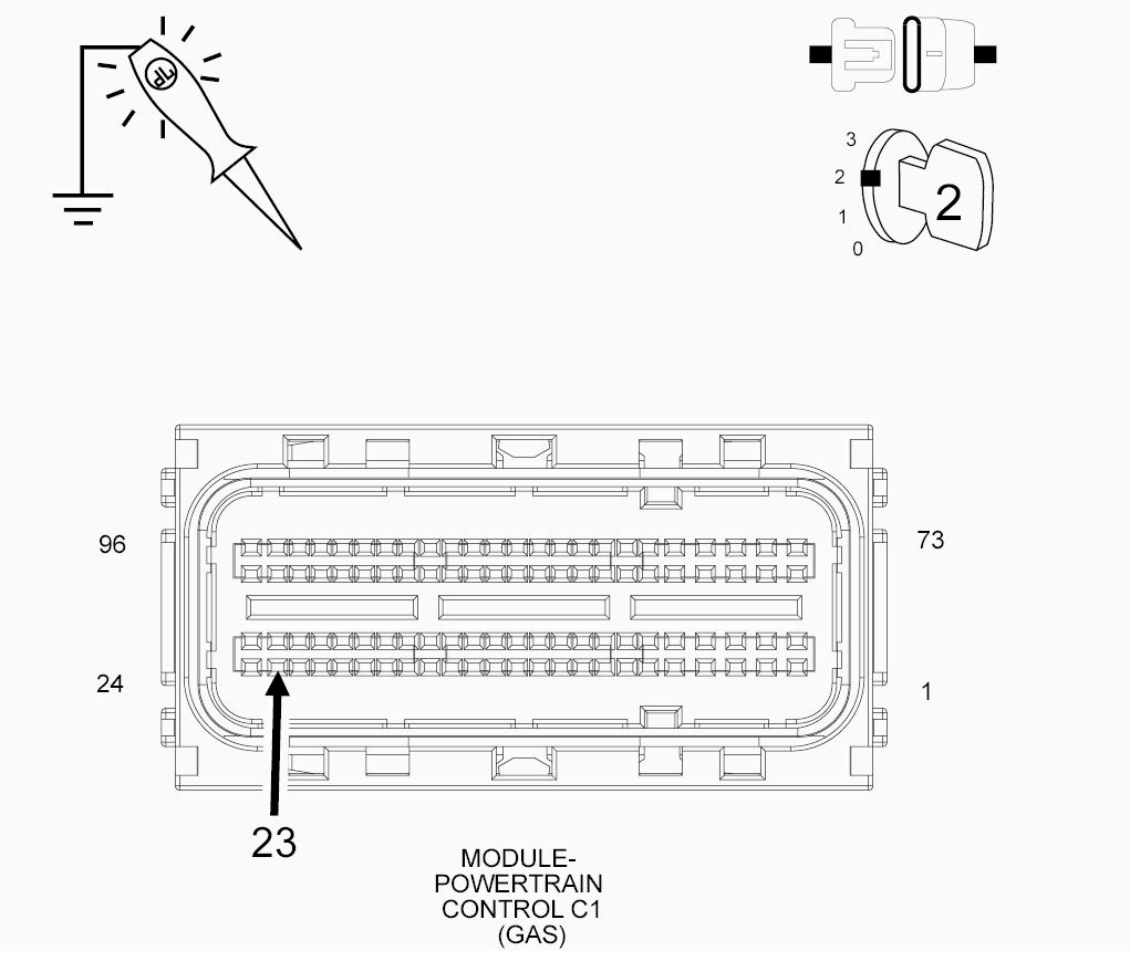

Fig. 2: Checking Ignition Switch Output Circuit For An Open Or Short To Ground
Courtesy of CHRYSLER GROUP, LLC

1. Turn the ignition on.

NOTE: When checking circuits at the Powertrain Control Module (PCM), be careful not to damage or distort the connector terminals. Improper measurement technique could result in poor pin to terminal contact.

2. Using a 12-volt test light connected to ground, probe the (F202) Fused Ignition Switch Output circuit in the PCM C1 harness connector.
3. Turn the ignition to run.

NOTE: The test light should be illuminated and bright. Compared the brightness to that of a direct

connection to the battery.

Does the test light illuminate brightly?

Yes

- Go To 3

No

- Repair the (F202) Ignition Switch Output circuits. Inspect and replace fuses as necessary.
- Perform the POWERTRAIN VERIFICATION TEST. Refer to **POWERTRAIN VERIFICATION TEST** .

3. **(Z932) GROUND CIRCUITS (PCM)**

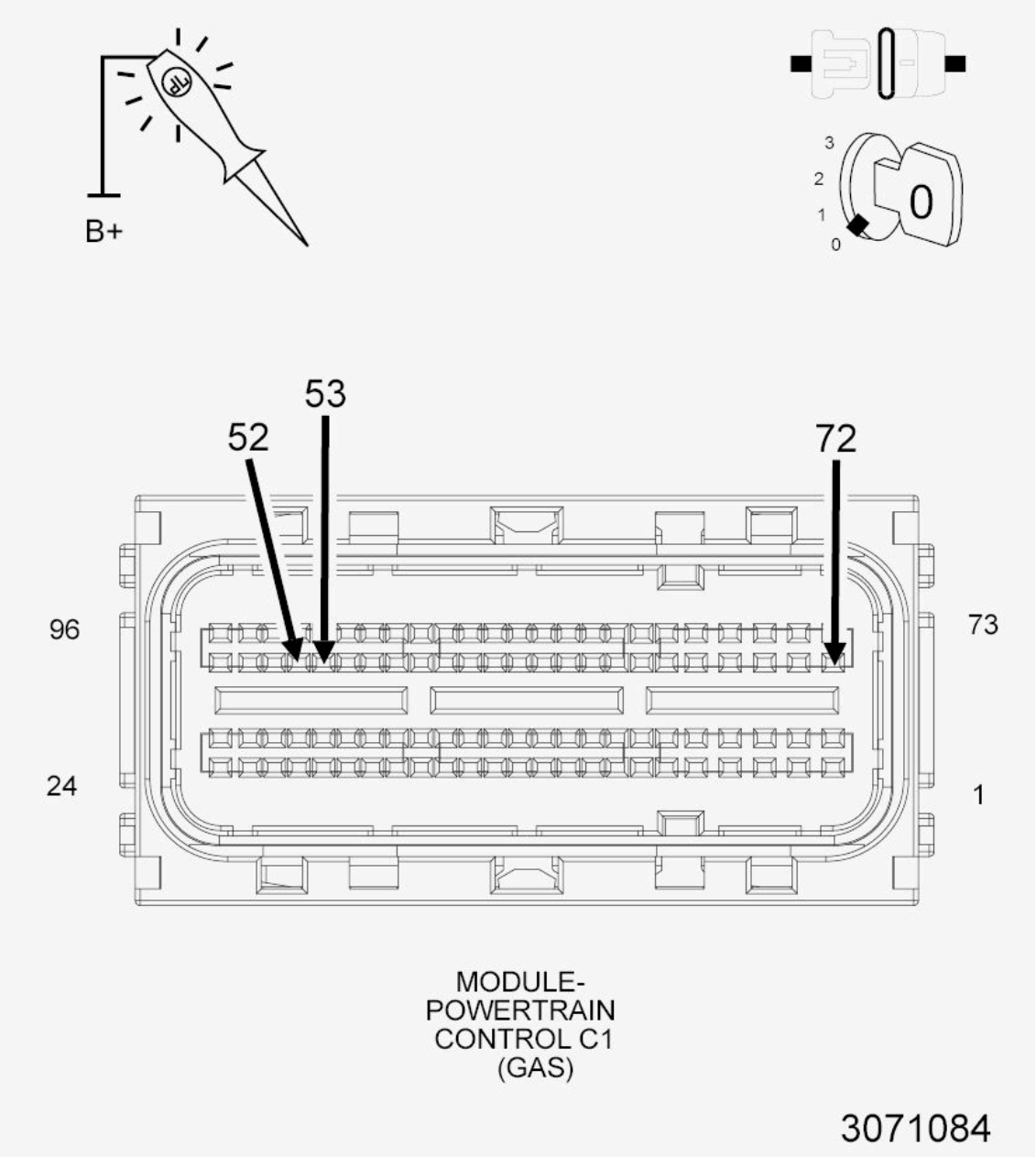

Fig. 3: Checking Powertrain Control Module (PCM) Circuit
Courtesy of CHRYSLER GROUP, LLC

1. Turn the ignition off.

NOTE: When checking circuits at the Powertrain Control Module (PCM), be careful not to damage or distort the connector terminals. Improper measurement technique could result in poor pin to terminal contact.

2. Using a 12-volt test light connected to battery voltage, probe both the

(Z932) PCM ground circuits

NOTE: The test light should be illuminated and bright. Compared the brightness to that of a direct connection to the battery.

Does the test light illuminate brightly at both terminals?

Yes

- Go To 4

No

- Repair the Ground circuit(s).
- Perform the POWERTRAIN VERIFICATION TEST. Refer to **POWERTRAIN VERIFICATION TEST** .

4. **(A14) FUSED B+ CIRCUIT (ASD RELAY)**

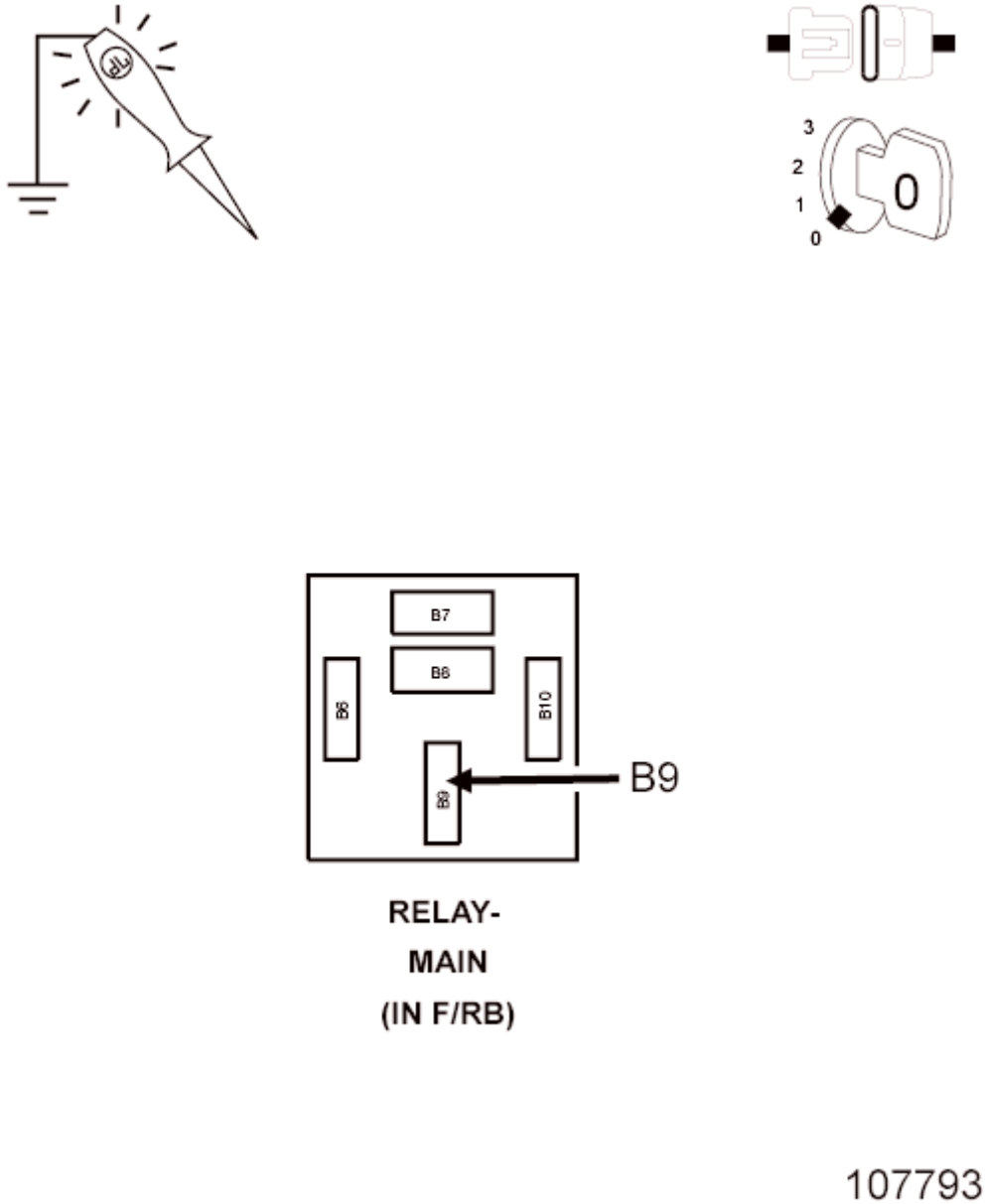

Fig. 4: Checking Fused B+ Circuit A14 At Main Relay
Courtesy of CHRYSLER GROUP, LLC

1. Turn the ignition off.
2. Remove the ASD/Main Relay.
3. Using a 12-volt test light connected to ground, probe the (A14) Fused B+ circuit at the ASD Relay terminal.

NOTE: The test light should be illuminated and bright. Compared the brightness to that of a direct connection to the battery.

Does the Test. light illuminate brightly?

Yes

- Go To 5

No

- Repair the (A14) Fused B+ circuit.
- Perform the POWERTRAIN VERIFICATION TEST. Refer to **POWERTRAIN VERIFICATION TEST** .

5. **(A935) FUSED B+ CIRCUIT (ASD RELAY)**

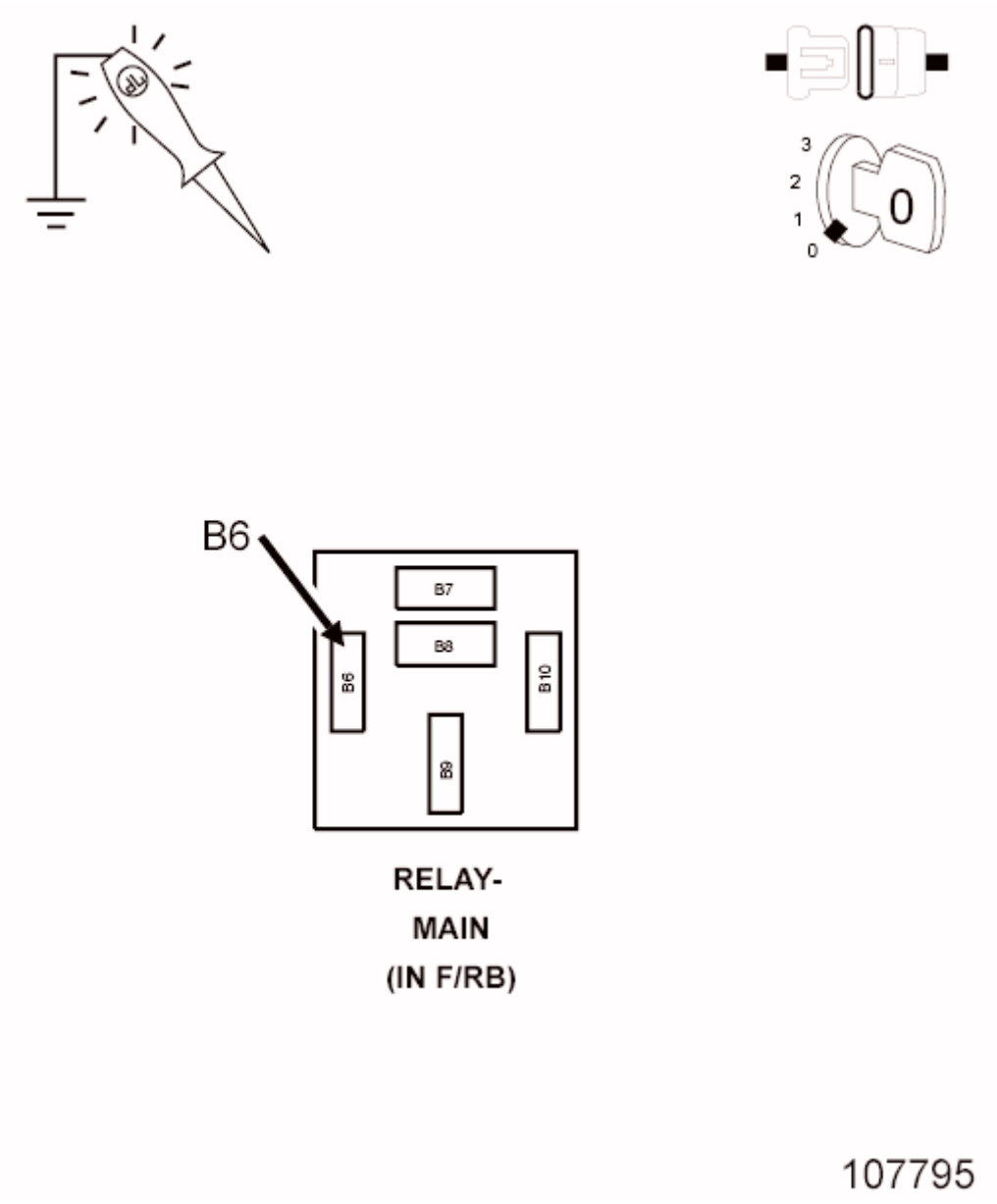

Fig. 5: Checking Fused B+ Circuit At Main Relay
Courtesy of CHRYSLER GROUP, LLC

1. Using a 12-volt test light connected to ground, probe the (A935) Fused B+ circuit at the ASD/Main Relay terminal.

   NOTE: The test light should be illuminated and bright. Compared the brightness to that of a direct connection to the battery.

   Does the test light illuminate brightly?

   Yes

   - Go To 6

   No

   - Repair the (A935) Fused B+ circuit.
   - Perform the POWERTRAIN VERIFICATION TEST. Refer to **POWERTRAIN VERIFICATION TEST** .

6. **(F342) ASD RELAY OUTPUT CIRCUITS**

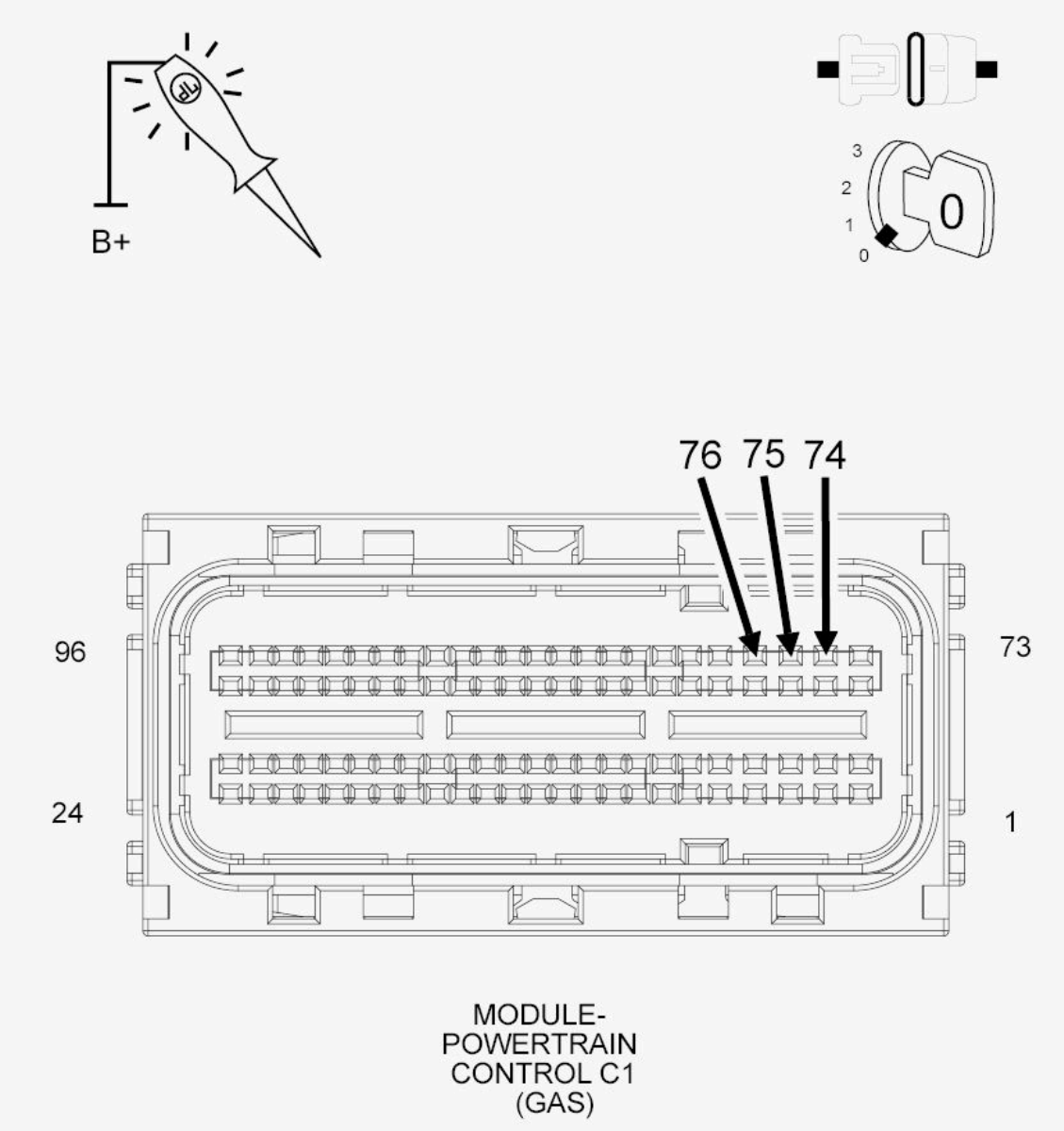

Fig. 6: Checking ASD Relay Output Circuits
Courtesy of CHRYSLER GROUP, LLC

1. Turn the ignition on.
2. Using a jumper wire, jumper across the ASD Relay from (K542) ASD Relay Output circuit and the (A14) Fused B+ circuit.

NOTE: When checking circuits at the Powertrain Control Module (PCM), be careful not to damage or distort the connector terminals. Improper measurement technique could result in poor pin to terminal contact.

3. With a 12-volt test light connected to ground, probe the (F342) ASD Relay Output circuits in the PCM C1 harness connector.

NOTE: The test light should be illuminated and bright. Compared the brightness to that of a direct connection to the battery.

Does the test light illuminate brightly at both terminals?

Yes

- Go To 8

No

- Go To 7

7. **(K542) ASD RELAY OUTPUT CIRCUIT**

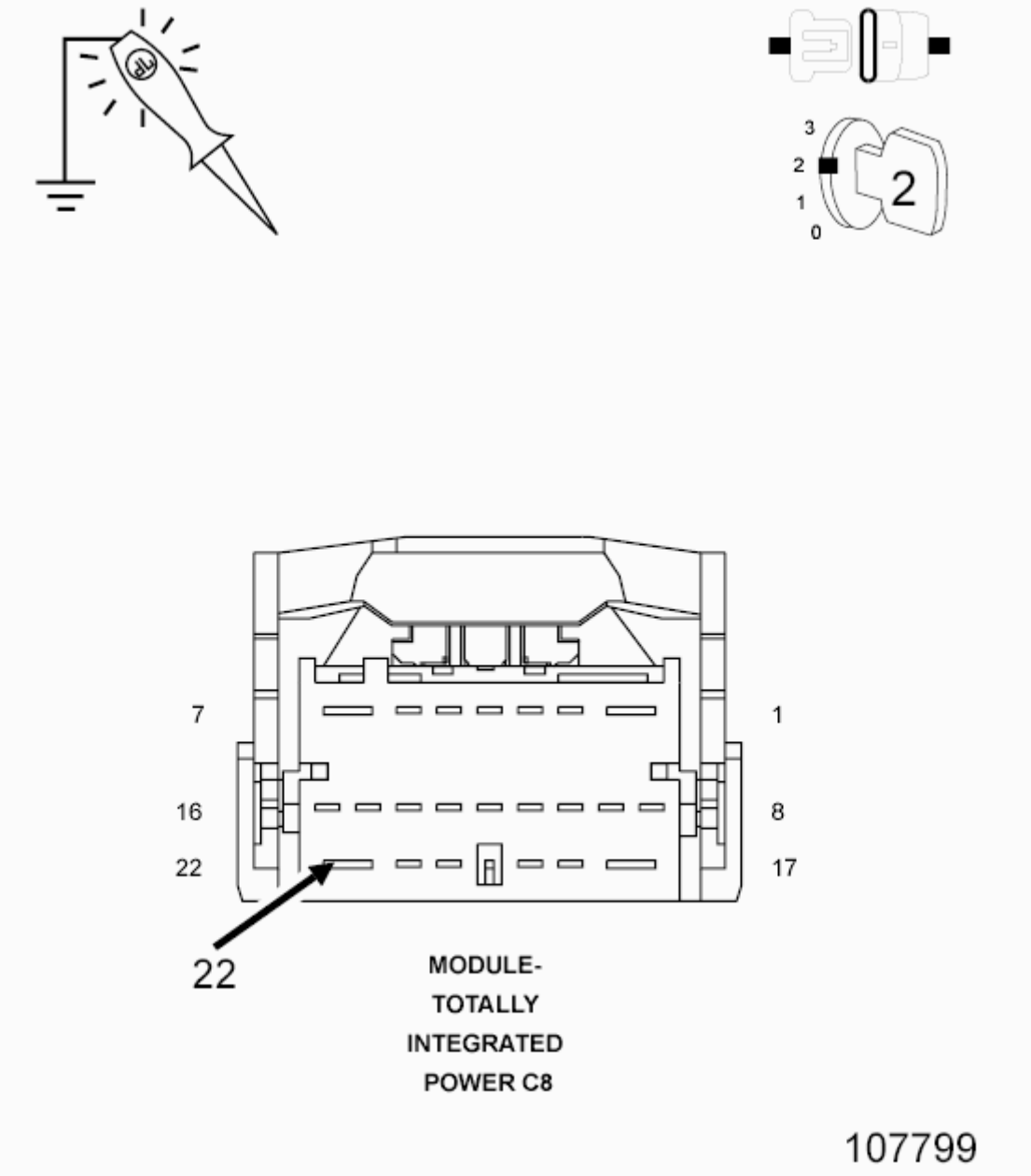

Fig. 7: Checking Main Relay Output Circuit Using 12-Volt Test Light Connected To Ground
Courtesy of CHRYSLER GROUP, LLC

1. Jumper wire still installed.
2. Disconnect the C8 TIPM harness connector.
3. Using a 12-volt test light connected to ground, probe the (K542) ASD Relay Output circuit in the TIPM harness connector.

NOTE: The test light should be illuminated and bright. Compared the brightness to that of a direct

connection to the battery.

Does the test light illuminate brightly?

Yes

- Repair the (F342) ASD Relay Output circuit(s).
- Perform the POWERTRAIN VERIFICATION TEST. Refer to **POWERTRAIN VERIFICATION TEST** .

No

- Repair the (K542) ASD Relay Output circuit between the TIPM and the ASD Relay. Inspect the related fuses.
- Perform the POWERTRAIN VERIFICATION TEST. Refer to **POWERTRAIN VERIFICATION TEST** .

8. **ASD RELAY OUTPUT**
   1. Turn the ignition off.
   2. Remove one end of the jumper wire.
   3. Connect the PCM harness connector.
   4. Turn the ignition on.
   5. Return the jumper wire across the ASD Relay.
   6. Using a scan tool, attempt to communication with the PCM.

   Were you able to communication with the PCM?

   Yes

   - Go To 9

   No

   - Go To 11
9. **ASD RELAY**

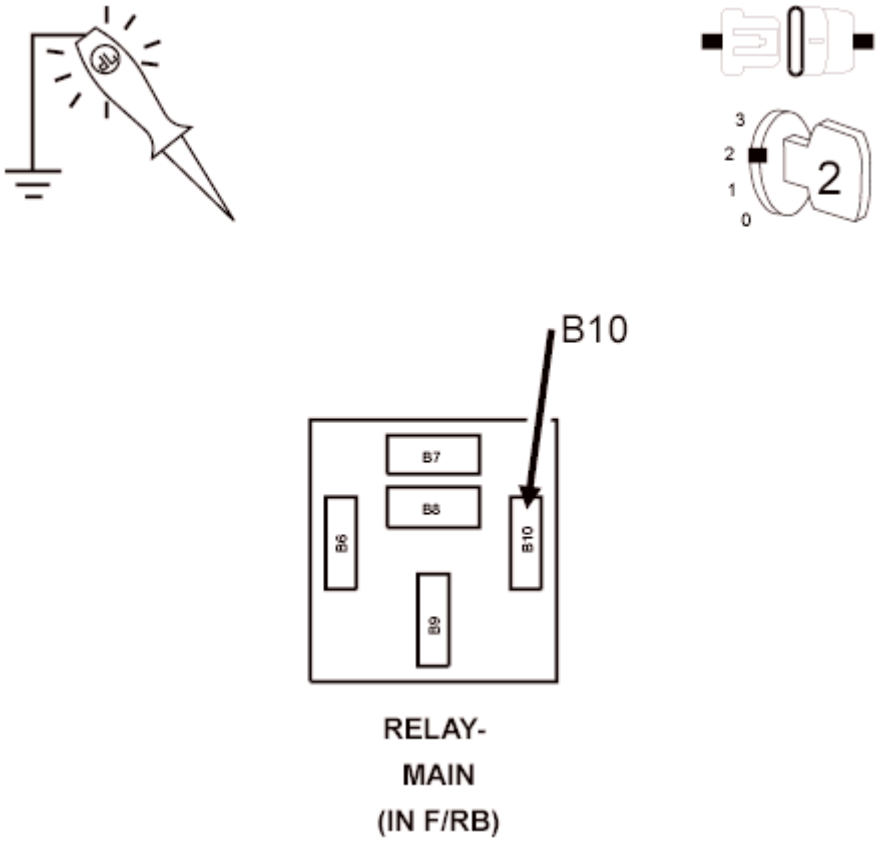

Fig. 8: Checking Main Relay Output Circuit
Courtesy of CHRYSLER GROUP, LLC

NOTE: To continue the following test, leave the jumper wire in place with the ignition on.

1. Using the scan tool, actuate the ASD/Main Relay.
2. Using a 12-volt test light connected to battery voltage, probe the (K51) ASD Relay Control circuit in the ASD/Main Relay connector.

   Does the Test. light illuminate and flash on and off?

   Yes

   - Replace the ASD/Main Relay.
   - Perform the POWERTRAIN VERIFICATION TEST. Refer to **POWERTRAIN VERIFICATION TEST** .

   No

- Go To 10

10. **(K51) ASD RELAY CONTROL CIRCUIT**

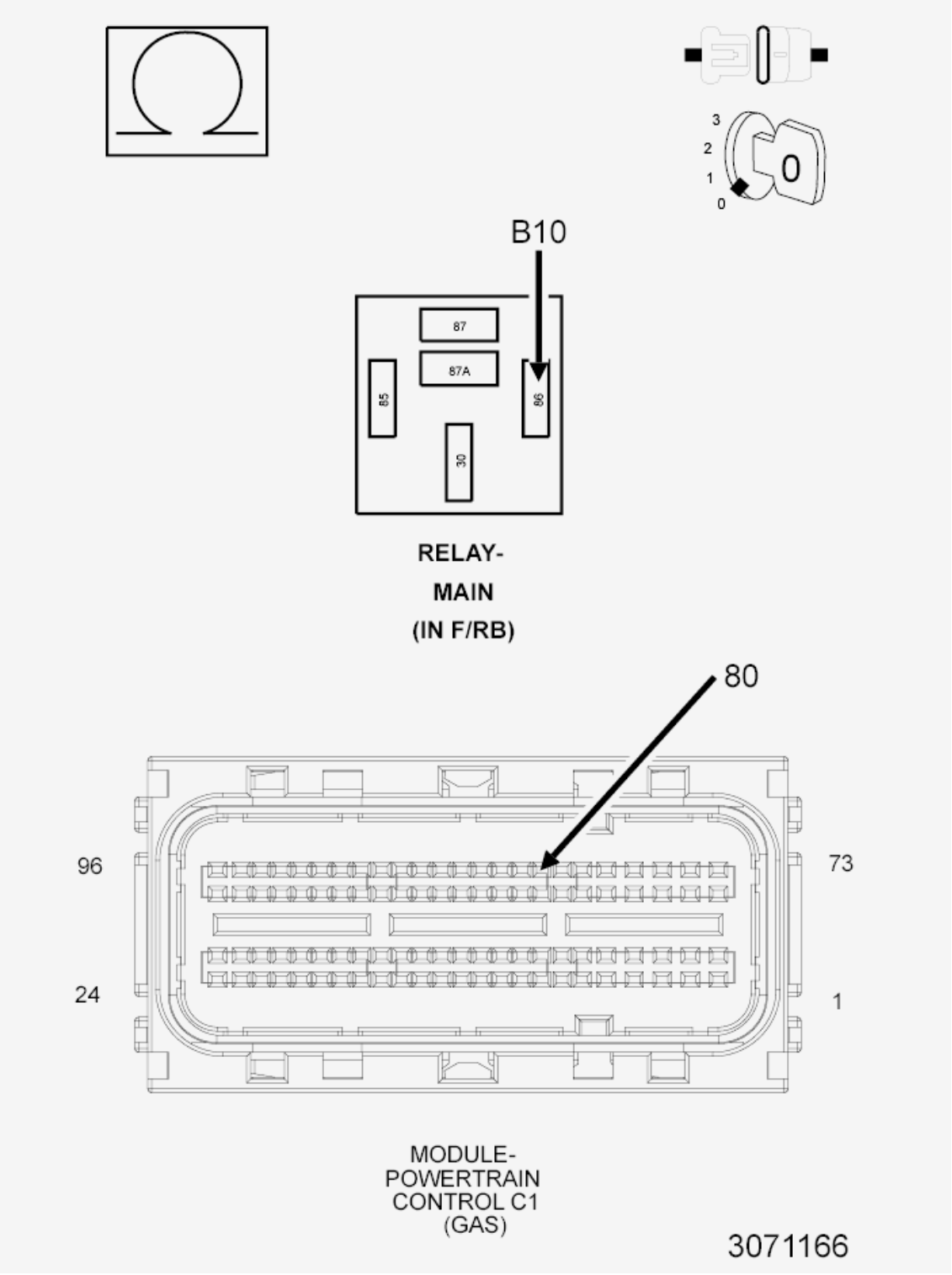

Fig. 9: Checking ASD Relay Control Circuit
Courtesy of CHRYSLER GROUP, LLC

1. Turn the ignition off.
2. Disconnect the C1 PCM harness connector.

NOTE: When checking circuits at the Powertrain Control Module (PCM), be careful not to damage or distort the connector terminals. Improper measurement technique could result in poor pin to terminal contact.

3. Measure the resistance of the (K51) ASD Relay Control circuit between the PCM C1 harness connector and the ASD/Main Relay connector.

   Is the resistance below 5.0 Ohms?

   Yes

   - Repair the open in the (K51) ASD Relay Control circuit.
   - Perform the POWERTRAIN VERIFICATION TEST. Refer to **POWERTRAIN VERIFICATION TEST** .

   No

   - Replace and program the Powertrain Control Module (PCM) in accordance with the Service Information. Refer to **MODULE, POWERTRAIN CONTROL, REMOVAL** .
   - Perform the POWERTRAIN VERIFICATION TEST. Refer to **POWERTRAIN VERIFICATION TEST** .

11. **(D65) CAN C BUS (+) CIRCUIT OPEN**

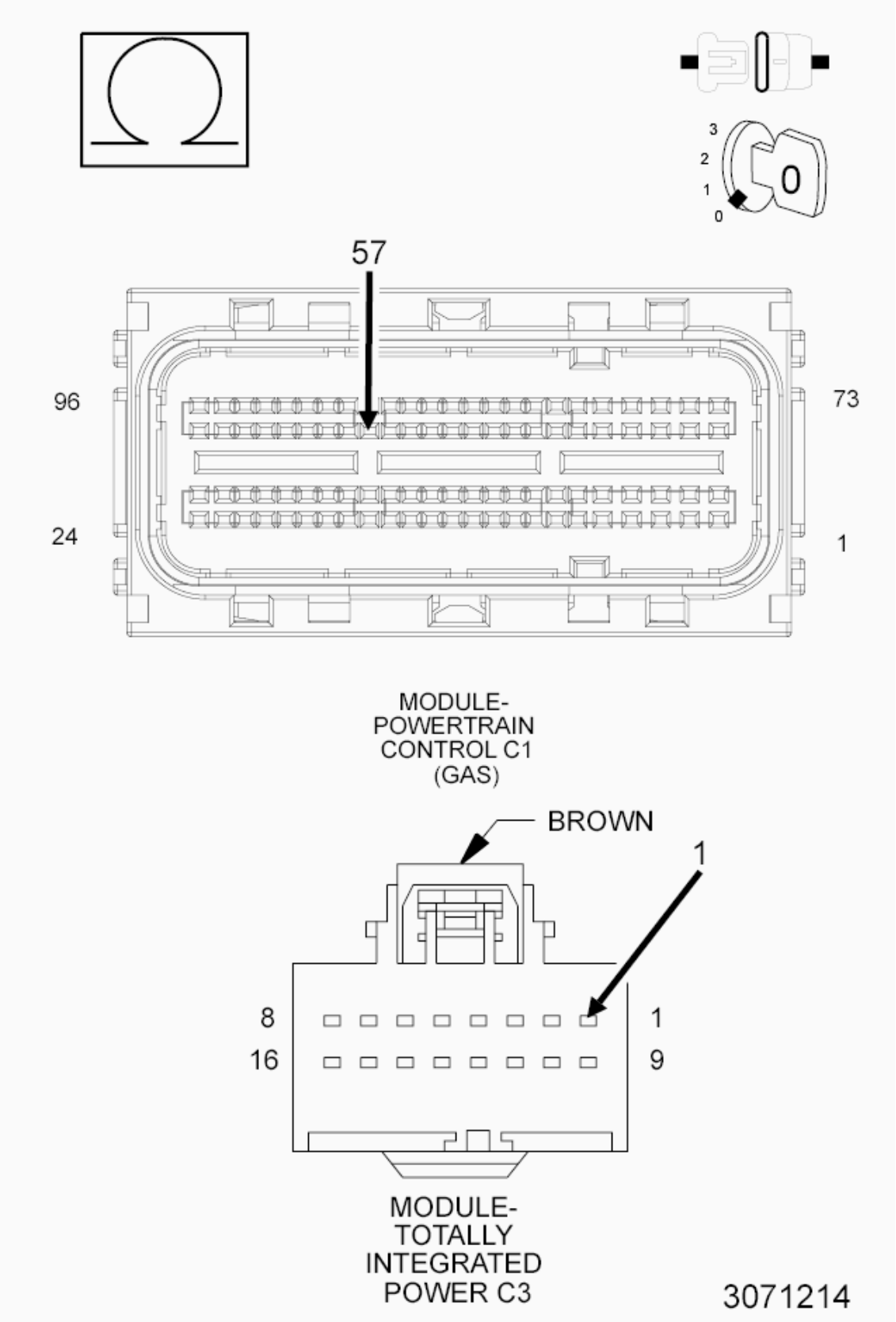

Fig. 10: Checking CAN C BUS (+) Circuit For Open
Courtesy of CHRYSLER GROUP, LLC

1. Turn the ignition off.
2. Disconnect the TIPM C3 harness connector.

NOTE: When checking circuits at the Powertrain Control Module (PCM), be careful not to damage or distort the connector terminals. Improper measurement technique could result in poor pin to terminal contact.

3. Measure the resistance of the (D65) CAN C Bus (+) circuit between the TIPM C3 harness connector and the PCM C1 harness connector.

   Is the resistance below 5.0 Ohms?

   Yes

   - Go To 12

   No

   - Repair the (D65) CAN C Bus (+) circuit for an open.
   - Perform the POWERTRAIN VERIFICATION TEST. Refer to **POWERTRAIN VERIFICATION TEST** .

12. **(D64) CAN C BUS (-) CIRCUIT OPEN**

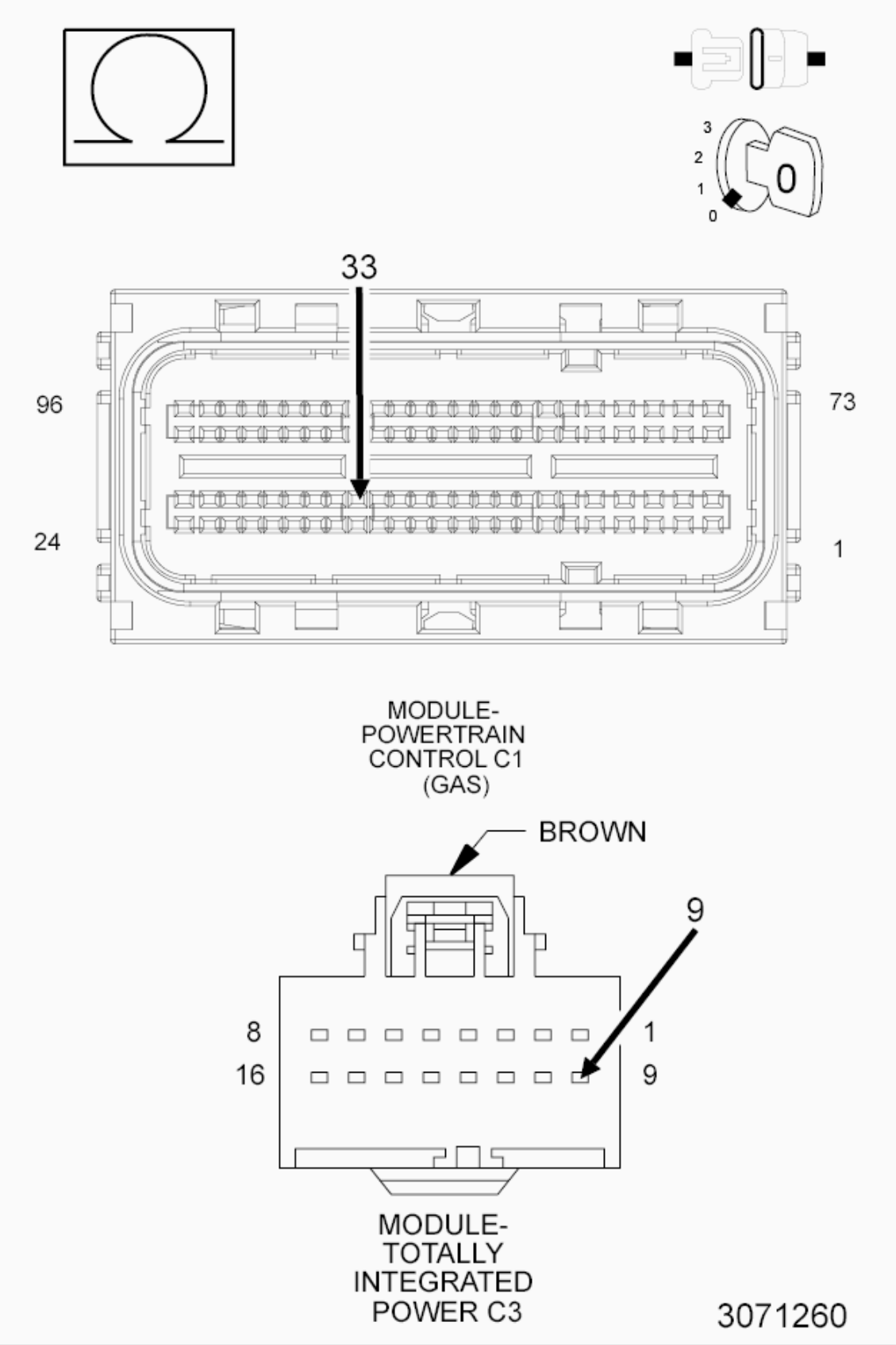

Fig. 11: Checking CAN C BUS (-) Circuit For Open
Courtesy of CHRYSLER GROUP, LLC

NOTE: When checking circuits at the Powertrain Control Module (PCM), be careful not to damage or distort the connector terminals. Improper measurement technique could result in poor pin to terminal contact.

1. Measure the resistance of the (D64) CAN C Bus (-) circuit between the TIPM C3 harness connector and the PCM C1 harness connector.

   Is the resistance below 5.0 Ohms?

   Yes

   - Replace and program the Powertrain Control Module (PCM) in accordance with the Service Information. Refer to **MODULE, POWERTRAIN CONTROL, REMOVAL** .
   - Perform the POWERTRAIN VERIFICATION TEST. Refer to **POWERTRAIN VERIFICATION TEST** .

   No

   - Repair the (D64) CAN C Bus (-) circuit for an open.
   - Perform the POWERTRAIN VERIFICATION TEST. Refer to **POWERTRAIN VERIFICATION TEST** .

NO CRANK (TIPM - WCM EQUIPPED)

For a complete wiring diagram, **refer to appropriate SYSTEM WIRING DIAGRAMS article** .

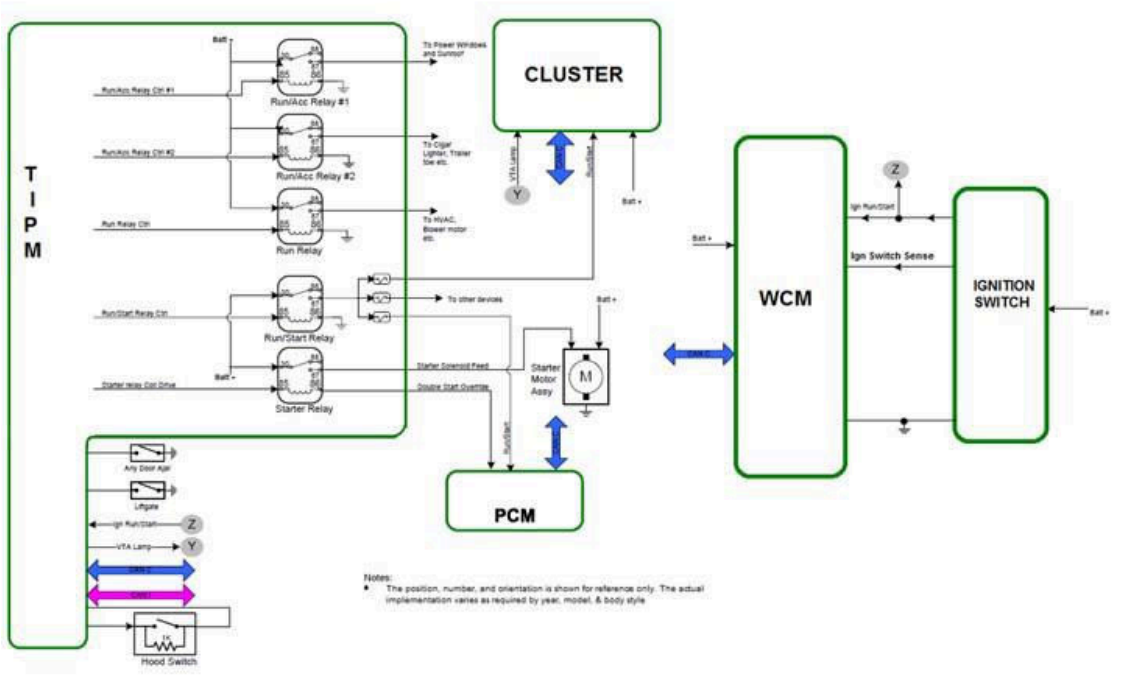

Fig. 12: TIPM - WCM Circuit Diagram
Courtesy of CHRYSLER GROUP, LLC

THEORY OF OPERATION

TIPM and WCM Operation

The TIPM and WCM require two signals to verify the ignition is in the run or start position. The WCM receives a signal from the Ignition Switch on the G20 Ignition Switch Sense circuit which is a muxed voltage. At the same time the Ignition Switch supplies a 12 volt signal on the F20 circuit to the WCM and TIPM. This is a second signal to the WCM and one of the signals to the TIPM. The Ignition Switch status can be monitored in both the WCM and TIPM data display screens as the Ignition Run/Start under the "Sensor" value. The run or start position voltage on the F20 circuit should be at or close to battery voltage.

Once the WCM confirms the signals received on the F20 and G20 circuits, the WCM busses the Ignition Run/Start status to the TIPM. The TIPM monitors the CAN C bussed input information as the second signal/verification on the Ignition Run/Start status. The bussed messages can be monitored in both the WCM and

TIPM data display screens.

The F20 and the bussed message information received by the TIPM regarding the Ignition Run/Start status must agree to enable starting. Once the vehicle is in operation, the loss of only one ignition signal will not cause the vehicle to turn off as long as the other feed still indicates a "run status".

The G20 circuit approximate key position voltages and status can be viewed in the data display screen of the WCM and compared to the values listed below:

- Open Circuit = 5v
- Key Out = 4.6v
- Key In /Lock = 4.04v
- Accessory = 3.2v
- Unlock = 2.2v
- Run = 1.12v
- Start = 0.41v
- Short/Grd = 0.00v

Diagnostic Aids

NOTE: The No Crank Diagnostic serves as an aid in diagnosing the concern and is intended to be used as a general guide, since each condition can be different.

The No Crank Diagnostic Test assumes all of the following to be true:

- The condition is currently present.
- The TCM, PCM, WCM, and TIPM are at the latest calibration (part number) levels.
- There are no active DTCs.
- There are no applicable Recalls.
- There are no applicable TSBs
- There are no PCM inhibits (i.e. RPM, Trans Range, Clutch)
- The Keys/FOBs complete function and operation is correct.
- All battery cables and connections are clean and tight.

- There are no open fuses.
- The battery is fully charged and can pass a load test from the GR8 tester.
- The engine rotates freely.
- Any aftermarket equipment/wiring that has been added was installed and is operating correctly

Starter Relay Operation

In a no crank condition the Starter Relay can be missing power at pin 85, feed at pin 30, controlled ground at pin 86 or output at pin 87. Further explanation of how a relay operates is listed below.

- Pin 85 receives power from the TIPM once the parameters for the Ignition Switch position and status, and all inhibit monitors (i.e. clutch switch, RPM, etc.) are satisfied.
- Pin 30 is a constant B+ feed.
- Pin 86 is a controlled ground by a module (i.e. PCM or BCM). Once power is sent from the TIPM to the pin 85 of the relay it passes through a coil and leaves the relay through pin 86 to control module.
- Pin 87 is an output circuit to the Starter solenoid. Once the circuit on pin 86 is grounded by the control module, the coil winding in the relay magnetically pulls the internal switch closed. When the internal switch is closed the power at pin 30 is sent to pin 87 of the relay.

DIAGNOSTIC TEST

1. **STARTER RELAY CHECK**
    1. When attempting to start the vehicle, listen and if needed feel for a click at the starter relay.

        NOTE: Some starter relays are internal to a module and may not be accessible, making it more difficult to hear, or feel the clicking response. It is possible for a poor ground or Trans Range Sensor position could be lost causing the starter to click once.

        Did you hear an audible click at the relay or starter?

Yes

- Go To 9

No

- Go To 2

2. **STARTER RELAY INPUT CHECK**
   1. Using a 12 volt test light/DVOM to check for power at/going to pin 85 of the starter relay.

      Is there Power/12 volts at pin 85?

      Yes

      - Go To 8

      No

      - Go To 3

3. **WCM OPERATION**
   1. Using the scan tool, confirm the ignition switch status changes in the WCM under the data display screen, when using the key in the ignition.

      Does the ignition switch status on the data screen match the physical position of the key in the Ignition?

      Yes

      - Go To 5

      No

      - Go To 4

4. **REMOTE START ANTENNA**

   NOTE: If the vehicle is not equipped with Remote Start, proceed to the next test step.

   1. Turn the ignition off.

2. Disconnect the Remote Start Antenna from the WCM.
3. Using one Key and sitting in the driver's seat, attempt to start the vehicle.

   Did the vehicle start?

   Yes

   - Replace the Remote Start Antenna in accordance with the Service Information.
   - Perform the BODY VERIFICATION TEST. Refer to **STANDARD PROCEDURE - BODY VERIFICATION TEST** .

   No

   - Go To 5

5. **TIPM IGNITION STATUS**
   1. Using the scan tool, confirm the ignition switch status changes in the TIPM under the data display screen for the "Bussed Input" and "Sensor" values.

      NOTE: The change of status in the TIPM for the "Sensor" value validates the voltage activity (with very low amperage) of the F20 circuit.

      In the TIPM, do both values for the ignition switch status match; and do they match those in the WCM?

      Yes

      - Go To 6

      No

      - If the status of the Ignition Switch position is not changing under the "Sensor" value, check the F20 circuit at the WCM and TIPM for battery voltage with a DVOM (not a test light). The Ignition switch sends the voltage to the WCM and TIPM simultaneously on the F20 circuit.

- If only one module (WCM or TIPM) receives Battery voltage on the F20 circuit, repair or replace the circuit for a short/open/high resistance in accordance with Service Information.
- If there is NO Battery voltage at the WCM and TIPM on the F20 circuit, then check for voltage on the F20 circuit at the Ignition Switch. If there is voltage on the F20 circuit at the Ignition Switch repair or replace the circuit for a short/open/high resistance. If there is no voltage on the F20 circuit when checked at the ignition switch, verify the power and ground for the Ignition Switch. If no problem found replace the switch and verify the repair.
- In the data display screen of the WCM, if the status of the Ignition Switch Sense voltage was not changing further diagnosis is needed on the G20 Ignition Switch Sense circuit for a short/open/high resistance in accordance with Service Information.
- In the data display screen of the TIPM, if the status of the Ignition Switch Sense voltage was not changing under the "Bussed Input" value, further diagnosis is needed on the communication for the WCM, Bus circuits, Connections and the TIPM for the cause.

6. **PCM IGNITION, TRANS RANGE/CLUTCH SWITCH STATUS VERIFICATION**
   1. Using the scan tool confirm there are no inhibits that have been triggered in the PCM (i.e. Ignition Switch, Trans Range or Clutch Switch) and any switch inputs (filtered states) relating to the starting system function and operate correctly under the data display screen.

      Does the PCM show any inhibits (**not DTCs**) for starting (**not remote starting**)?

      Yes

      - Correct the inhibit reason listed.
      - If no problem can be found then verify all power, ground and bus circuits to the PCM and replace in accordance with Service Information. Refer to **MODULE, POWERTRAIN CONTROL, REMOVAL** .

      No

- Go To 7

7. **TIPM TO STARTER RELAY CHECK**
   1. At this time if all the correct inputs for the ignition switch status are correct in the WCM, TIPM and PCM, verify both powers (pin 30 and 85) to the Starter Relay in the crank position.

      Are both power supplies present at the relay when the ignition is in the crank position?

      Yes

      - Go To 8

      No

      - If, there is no power to pin 30 or 85, no DTCs, TSBs, Recalls, or Inhibits replace the TIPM in accordance with appropriate Service Information.

8. **STARTER RELAY CONTROL CIRCUIT CHECK**
   1. Using a test light/DVOM determine if the Starter Control circuit at pin 86 of the relay is missing (at the relay if equipped with a removable relay or wiring to the internal relay) when turning the ignition to the crank position.

      Was the Starter Control circuit for pin 86 being grounded when the ignition was in the crank position?

      Yes

      - Go To 10

      No

      - Verify the Starter Relay Control circuit from pin 86, that there are no shorts, opens or high resistance on the wiring going from the Starter Relay in the TIPM to the PCM, Starter Solenoid and Starter.
      - Verify the cables do not have excessive resistance by performing a voltage drop on the battery cables.

9. **STARTER RELAY OUTPUT CIRCUIT CHECK**

NOTE: At this point in the test, when the key is in the crank position power has been verified at Pin 30 & 85, along with the control circuit being grounded for pin 86.

1. Remove Starter Relay Output circuit connector from the Starter solenoid.
2. Reinstall/Connect the starter relay into the TIPM.
3. Using a test light/DVOM and ignition in the crank position check for power at pin 87 (If equipped with a removable relay or wiring to the internal relay) of the relay and at the connection to the starter.

   Was there power at pin 87 for the output circuit?

   Yes

   - Go To 10

   No

   - If power is missing to pin 30 of the starter relay the TIPM is suspect. Verify all power, ground, communication circuits and connections to the TIPM before replacing in accordance with service information.
   - If power is missing at pin 87 of the starter relay and the relay is replaceable, change out the relay and recheck the concern. If a known good relay causes no change, check the Starter Output circuit from pin 87 of the relay to the starter for an open, short, excessive resistance, or poor connections to the solenoid or starter.
   - Verify and Inspect the Starter to ensure it is free of corrosion, oil, and there is no damage, or binding conditions.
   - Verify that all wiring, cables and connections are clean and tight.

10. **STARTER RELAY OUTPUT CIRCUIT CHECK**
    1. Load test the Starter Relay output circuit going from the TIPM to the Starter.

       Does the starter relay output circuit pass the load test?

Yes

- Verify that all connections are clean, tight and there is no damage to starter when fully inspected. If no problem found then replace the Starter in accordance with Service Information. Refer to **STARTER, REMOVAL** .

No

- Adjust the shift cable in accordance with the Service Information. Perform the POWERTRAIN VERIFICATION TEST. Refer to **POWERTRAIN VERIFICATION TEST** .

REMOTE START INOPERATIVE (TIPM - WCM EQUIPPED)

For a complete wiring diagram, **refer to appropriate SYSTEM WIRING DIAGRAMS article** .

THEORY OF OPERATION

The customer may notice that the signal range of the Remote Keyless Entry (RKE) system is reduced. This condition may be due to the RKE antenna where the RKE key fob may need to be closer than 3 meters (10 feet) before the functions available on the key fob will operate. The diagnostic flow chart is provided as a diagnostic aid for the dealer technician.

It is necessary to confirm the correct sales code(s) are present in the Standard and Optional Equipment sections of DealerCONNECT to determine if a factory or a Mopar Accessory Remote Start kit was installed. If the vehicle has a Mopar Accessory Remote Start kit, verify that at least 20 minutes has elapsed since the sales codes were added to DealerCONNECT. Once it has been confirmed that the proper sales codes have been added and the allotted time has passed, verify the vehicle has been configured properly using the scan tool. Also make sure that the system shows as enabled in the TIPM, and that the temporary remote start override is set to disabled.

For any further assistance on diagnosing the installed Mopar Accessory kit contact the Mopar Accessories group at 800-84-MOPAR (66787).

DIAGNOSTIC TEST

1. **REMOTE START FUNCTION**

NOTE: In some cases the vehicle will start then stall, indicating a fuel level concern (less than a quarter of a tank). Before proceeding verify there is enough fuel in the tank for the vehicle to run.

1. Use the FOB to start the vehicle.

   Does the vehicle start when using the FOB?

   Yes

   - At this time the Remote Start is functioning properly. Check for any related Starting, Communication, or Ignition related DTCs that may inhibit the Remote Starting feature. Check the TIPM for any previous Remote Start Inhibits and mileage that were stored. Inhibits may be found under the system tests or miscellaneous functions tab.

   No

   - Go To 2

2. **REMOTE START VISUAL ASSESSMENT**
   1. When the FOB buttons are pressed for Remote Start usage the Horn should sound and the exterior parking lights should flash.

      Does the horn sound and the exterior parking lights flash?

      Yes

      - Go To 3

      No

      - Go To 4

3. **CHECKING TIPM INHIBITS**

NOTE: Since the horn sounds and the parking lights flash, this verifies the TIPM is receiving the CAN BUS message from the WCM. It also verifies the RF signal for Remote Start from the FOB to the WCM is

operating correctly.

1. Using the scan tool, check the Remote Start inhibits of the TIPM or any ACTIVE DTCs listed in all modules.

   NOTE: Inhibits may be found under the system tests or miscellaneous functions tab. The fuel level may not be a listed inhibit.

   Are there any Remote Start inhibits or any ACTIVE DTCs listed in the entire vehicle?

   Yes

   - Refer to **DIAGNOSIS AND TESTING** for a complete list of Remote Start inhibits.
   - For any ACTIVE DTCs perform the appropriate diagnostic procedure in **DTC INDEX** .

   No

   - Check for any related TSBs prior to replacing the TIPM. If no related TSBs are found, then replace the TIPM in accordance with appropriate Service Information.

4. **RKE FUNCTION SHORT RANGE**
   1. Standing next to the Driver door, note the RKE function of the FOB?

      Does the RKE function?

      Yes

      - Go To 5

      No

      - Go To 7

5. **RKE FUNCTION MID RANGE**
   1. Standing 20 feet from the vehicle, operate the RKE function of the FOB.

Does the RKE function at 20 feet?

Yes

- Go To 6

No

- Go To 7

6. **RKE FUNCTION LONG RANGE**
   1. Standing 100 feet from the vehicle, operate the RKE function of the FOB.

      Does the RKE Function at 100 feet?

      Yes

      - Go To 9

      No

      - Go To 7

7. **FOB SIGNAL STRENGTH**
   1. Use the RF Tester 9001 to check the signal strength of the FOB.

      Does the FOB pass?

      Yes

      - Go To 10

      No

      - Go To 8

8. **CHECKING THE FOB**
   1. Replace the battery in the FOB with a known good battery and recheck the signal from the FOB with the RF Tester 9001.

      Does the FOBs pass?

Yes

- Go To 9

No

- Check for any related TSBs prior to replacing the FOB. If no related TSBs are found, then replace the FOB in accordance with Service Information. Refer to **TRANSMITTER, INTEGRATED KEY FOB, STANDARD PROCEDURE** .

9. **CHECKING FOR ACTIVE DTCs**

NOTE: Since the RKE portion of the FOB is operational, it verifies that the WCM is capable of receiving signals and communicating to operate the locks.

1. Use the scan tool to check for ACTIVE DTCs.

   Did the diagnostic scan tool show any ACTIVE DTCs in the entire vehicle

   Yes

   - Diagnose the DTCs in accordance with Service Information before proceeding with the Remote Start Inoperative concern.

   No

   - Go To 10

10. **CHECKING THE WCM**

NOTE: Even though the RKE function of the system may work with no concern, the TIPM is either not receiving a message or is receiving a corrupt message from the WCM for the remote start operation.

1. While sitting in the driver's seat and using the scan tool, monitor the WCM on the data display screen for changes when the Remote Start button of the FOBs is pressed.

Did the status change when the Remote Start button of the FOB is pressed?

Yes

- Go To 11

No

- Disconnect the Remote Start antenna. With the FOB next to the WCM attempt to start the vehicle and monitor the scan tool for a change in the status. If the status changes or the vehicle starts replace the Remote Start antenna. If there is no change in the status, check for any related TSBs. If no related TSBs are found, then replace the WCM in accordance with Service Information. Refer to **MODULE, SENTRY KEY IMMOBILIZER (SKREEM), REMOVAL** .

11. **CHECKING TIPM INHIBITS**

NOTE: Since neither the parking lights flash nor will the horn will sound when the FOB is used, it is not known if the TIPM is the concern or if an "Inhibit" may be stopping the request from taking place.

1. Use the diagnostic scan tool to check for any Remote Start inhibits listed in the TIPM. This may be found under the system tests or miscellaneous functions tab.

   Were there any Remote Start Inhibits listed in the TIPM?

   Yes

   - Perform the REMOTE START SYSTEM Diagnosing and Testing. Refer to **DIAGNOSIS AND TESTING** .

   No

   - If, this has had a Mopar Accessory kit installed verify the correct Sales Code for Remote Start has been added to Dealer Connect and a Restore Vehicle Configuration has been performed. Confirm the

system is enabled; and the temporary Remote Start override is set to disabled in the TIPM and contact the Mopar Accessories group (800-84-Mopar) for further details before proceeding.

- If, this has a factory installed Remote Start check for any related TSBs prior to replacing the TIPM. If no related TSBs are found, then replace the TIPM in accordance with appropriate Service Information.

2014 ENGINE

Starting - Service Information - Compass & Patriot

DESCRIPTION

DESCRIPTION

The starting system consists of:

- Starter motor (including an integral starter solenoid)

Other components to be considered as part of starting system are:

- Battery
- Battery cables
- Ignition switch and key lock cylinder
- Clutch pedal position switch (manual transmission)
- Park/neutral position switch (automatic transmission)
- Wire harnesses and connections.

The Battery, Starting, and Charging systems operate in conjunction with one another, and must be tested as a complete system. For correct operation of starting/charging systems, all components used in these 3 systems must perform within specifications. When attempting to diagnose any of these systems, it is important that you keep their interdependency in mind.

The diagnostic procedures used in this service information include the most basic conventional diagnostic methods, to the more sophisticated On-Board Diagnostics (OBD) built into the Powertrain Control Module (PCM). Use of an induction-type milliampere ammeter, volt/ohmmeter, battery charger, carbon pile rheostat (load tester), and 12-volt test lamp may be required.

OPERATION

OPERATION

These components form two separate circuits. A high amperage circuit that feeds the starter motor up to 300+ amps, and a control circuit that operates on less than 20 amps.

The PCM controls a double start over-ride safety that does not allow the starter to be engaged if the engine is already running.

DIAGNOSIS AND TESTING

REMOTE START SYSTEM

Before attempting to diagnose a problem with the remote starting system, first be sure the starter motor and starter solenoid are working properly. The starter should operate with the use of the standard ignition key in the ignition switch. Any starter or solenoid problems must be repaired first.

Also be sure the engine will easily start and run with the use of the standard ignition key in the ignition switch. Any engine running, idling or driveability problems must be repaired first.

Also note that the remote start system will automatically be cancelled if any of the following occur:

- IF THE ENGINE STALLS OR RPM EXCEEDS 2500
- NORMAL TIME OUT RUN MODE (15 MINUTES)
- CUSTOMER MOVES IGNITION INTO RUN/START
- ANY VEHICLE DOOR AJAR
- TRUNK/LIFTGATE AJAR
- HOOD AJAR
- START COUNTER REACHED
- LOW RPM SHUTDOWN
- KEY IN IGNITION
- BRAKE PRESSED
- THE HAZARD SWITCH IS PRESSED
- NOT IN PARK OR NEUTRAL
- VEHICLE SPEED HIGH
- VTA ALARM TRIGGERED
- PANIC MODE ACTIVATED
- BATTERY VOLTAGE HIGH
- BATTERY VOLTAGE LOW

- LOSS OF BATTERY VOLTAGE
- MIL ON
- LOW OIL PRESSURE
- COOLANT TEMPERATURE HIGH
- CRANK NO START
- RKE OFF MESSAGE
- VEHICLE NOT CONFIGURED
- HOOD SWITCH NOT INSTALLED OR INOPERATIVE
- NO AUTOMATIC TRANSMISSION
- INVALID KEY
- IGNITION SNA
- IGNITION NOT IN LOCK
- VEHICLE IN SHIPPING MODE
- VEHICLE NOT PROGRAMMED

STARTING SYSTEM

The battery, starting, and charging systems operate in conjunction with one another, and must be tested as a complete system. For correct starting/charging system operation, all of the components involved in these three systems must perform within specifications.

STARTING SYSTEM DIAGNOSIS

CONDITION	POSSIBLE CAUSE	CORRECTION
STARTER FAILS TO OPERATE	1. Battery discharged or inoperative	1. Charge and test battery. Refer to **DIAGNOSIS AND TESTING** . Replace battery, if required.
	2. Starter motor or solenoid inoperative	2. Test the starter motor and solenoid. Refer to **STARTER, DIAGNOSIS AND TESTING**. Replace starter motor, if required.
	3. Starter relay inoperative	3. See appropriate Wiring Information. Test and replace the starter relay, if required

	4. Clutch pedal position switch inoperative (if equipped with manual transmission)	4. See appropriate Clutch Pedal Position Switch service information. Test and adjust or replace switch, if required.
	5. Park/Neutral position switch inoperative (if equipped with automatic transmission)	5. See appropriate Park/Neutral Position Switch service information. Test and adjust or replace switch, if required.
	6. Ignition switch inoperative	6. Test the Ignition Switch and Key Lock Cylinder. Replace ignition switch if required.
	7. Starting circuit wiring inoperative	7. See appropriate Wiring Information. Test and repair starter feed and/or control circuits, if required.
STARTER ENGAGES, BUT FAILS TO TURN ENGINE	1. Battery discharged or inoperative	1. Charge and test battery. Refer to **DIAGNOSIS AND TESTING** . Replace battery if required.
	2. Starter motor or solenoid inoperative	2. Test the starter motor and solenoid. Refer to **STARTER, DIAGNOSIS AND TESTING**. Replace starter motor if required.
	3. Starting circuit wiring inoperative	3. See appropriate Wiring Information. Test and repair starter feed and/or control circuits, if required.
	4. Engine seized	4. See appropriate ENGINE service information. Test and repair engine as required.
STARTER ENGAGES, BUT THEN	1. Starter motor or solenoid inoperative	1. Test the starter motor and solenoid. Refer to **STARTER, DIAGNOSIS AND TESTING**.

DISENGAGES BEFORE ENGINE STARTS		Replace starter motor, if required.
	2. Starter ring gear damaged	2. Remove starter motor and inspect starter ring gear. Refer to **STARTER, REMOVAL**. Replace starter ring gear, if required.
STARTER DOES NOT DISENGAGE	1. Starter motor incorrectly installed or solenoid inoperative	1. Inspect and test the starter motor and solenoid. Refer to **STARTER, DIAGNOSIS AND TESTING**. Replace starter motor, if required.
	2. Starter relay inoperative	2. See appropriate Wiring Information. Test and replace the starter relay, if required.
	3. Ignition switch inoperative	3. Test the Ignition Switch and Key Lock Cylinder. Replace ignition switch, if required.

STARTING SYSTEM TESTING

COLD CRANKING TEST

NOTE: See appropriate Wiring Information for complete starter wiring circuit diagrams.

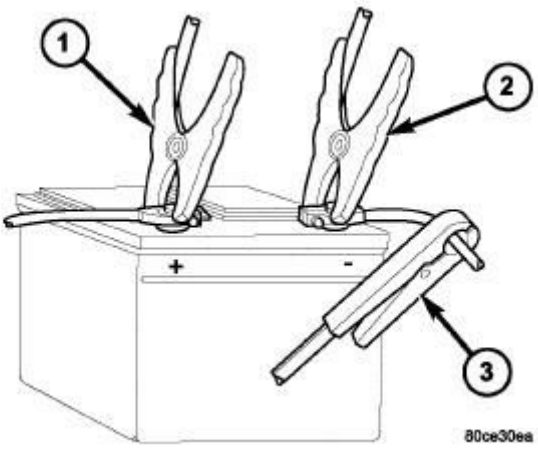

Fig. 1: Connecting Volt-Ampere Tester To Battery Terminals - Typical
Courtesy of CHRYSLER GROUP, LLC

1. Fully charge and load-test the battery. Refer to **DIAGNOSIS AND TESTING** .
2. Connect volt-ampere tester leads (1 and 2 to the battery terminals. Connect volt-ampere tester lead (3) around the positive battery cable. See instructions provided by manufacturer of volt-ampere tester being used. **Note: Certain diesel equipped models use dual batteries. If equipped with dual battery system, tester should be connected to battery on left side of vehicle only. Also, tester current reading must be taken from positive battery cable lead that connects to starter motor.**
3. Place transmission in Park or Neutral with the parking brake set (depending on transmission application).
4. If equipped with manual transmission, block clutch pedal in fully depressed position.
5. Verify that all lamps and accessories are turned off.
6. To prevent a gasoline engine from starting, remove Automatic ShutDown (ASD) relay. To prevent a diesel engine from starting, remove Fuel Pump Relay. See appropriate Wiring Information for relay locations.

WARNING: Attempt to start engine a few times before proceeding with following step.

NOTE: A cold engine will increase starter current (amperage) draw reading, and reduce battery voltage reading.

7. Rotate and hold ignition switch in Start position. Note cranking voltage and current (amperage) draw readings shown on volt-ampere tester.
   a. If voltage reads below 9.6 volts, see starter motor diagnosis and testing. Refer to **STARTER, DIAGNOSIS AND TESTING**. If starter motor is OK, see appropriate ENGINE Service Information for further diagnosis and testing of the engine. If starter motor is not OK, replace the starter motor. Refer to **REMOVAL** and **INSTALLATION**.
   b. See **FEED CIRCUIT TEST** if voltage reads above 9.6 volts and current (amperage) draw reads below specifications.
   c. See **FEED CIRCUIT TEST** if voltage reads 12.5 volts or greater and starter motor does not turn or turns very slowly.

FEED CIRCUIT TEST

NOTE: See appropriate Wiring Information for complete starter wiring circuit diagrams.

The starter feed circuit test (voltage drop method) will determine if there is excessive resistance in high-amperage feed circuit.

When performing these tests, it is important to remember that voltage drop is giving an indication of resistance between two points at which voltmeter probes are attached.

Example: When testing resistance of positive battery cable, touch voltmeter leads to positive battery cable clamp and cable connector at starter solenoid. If you probe positive battery terminal post and cable connector at starter solenoid, you are reading combined voltage drop in positive battery cable clamp-to-terminal post connection and positive battery cable.

The following procedure requires a voltmeter accurate to 1/10 (0.10) volt. Before proceeding, be certain that the following are accomplished:

- Fully charge and load-test the battery. Refer to **DIAGNOSIS AND TESTING** .
- Place transmission in Park or Neutral with the parking brake set (depending on transmission application).
- If equipped with manual transmission, block clutch pedal in fully depressed position.
- Verify that all lamps and accessories are turned off.
- To prevent a gasoline engine from starting, remove Automatic ShutDown (ASD) relay. To prevent a diesel engine from starting, remove Fuel Pump Relay. See appropriate Wiring Information for relay locations.

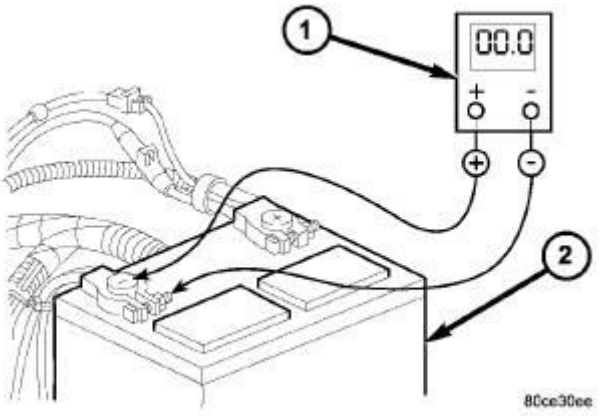

Fig. 2: Testing Battery Negative Connection Resistance - Typical
Courtesy of CHRYSLER GROUP, LLC

1 - VOLTMETER 2 - BATTERY

NOTE: Certain diesel equipped models use dual batteries. If equipped with dual battery system, this procedure must be performed twice, once for each battery.

1. Connect positive lead of voltmeter (1) to negative battery cable terminal post. Connect negative lead of voltmeter to negative battery cable clamp. Rotate and hold ignition switch in Start position. Observe voltmeter. If voltage is detected, correct poor contact between cable clamp and terminal post.

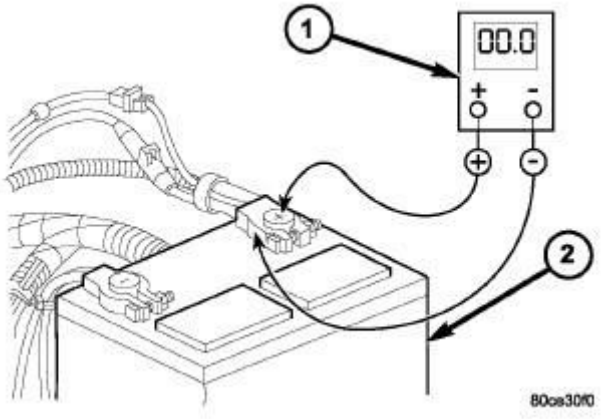

Fig. 3: Testing Battery Positive Connection Resistance - Typical

Courtesy of CHRYSLER GROUP, LLC

1 - VOLTMETER 2 - BATTERY

NOTE: Certain diesel equipped models use dual batteries. If equipped with dual battery system, this procedure must be performed twice, once for each battery.

2. Connect positive lead of voltmeter to positive battery terminal post. Connect negative lead of voltmeter to battery positive cable clamp. Rotate and hold ignition switch in Start position. Observe voltmeter. If voltage is detected, correct poor contact between cable clamp and terminal post.

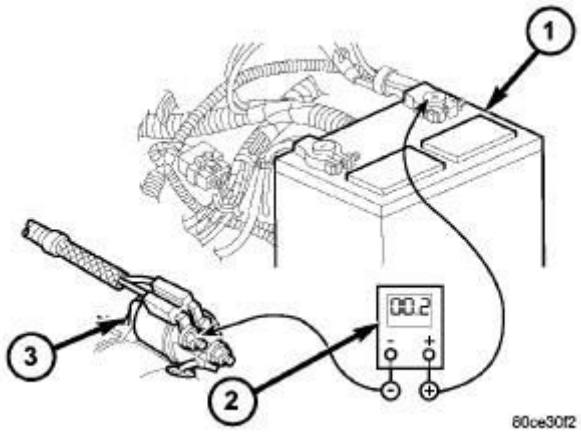

Fig. 4: Testing Battery Positive Cable Resistance - Typical
Courtesy of CHRYSLER GROUP, LLC

1 - BATTERY 2 - VOLTMETER 3 - STARTER MOTOR

NOTE: Certain diesel equipped models use dual batteries. If equipped with dual battery system, this procedure must be performed twice, once for each battery.

3. Connect voltmeter (2) to measure between positive terminal post on battery (1) and the battery terminal stud on the starter solenoid (3). Rotate and hold ignition switch in Start position. Observe voltmeter. If reading is above 0.2

volt, clean and tighten battery cable connection at solenoid and repeat test. If reading is still above 0.2 volt, replace the positive battery cable.

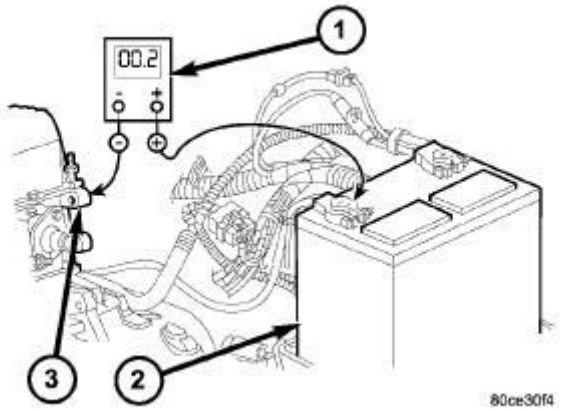

Fig. 5: Testing Ground Circuit Resistance - Typical
Courtesy of CHRYSLER GROUP, LLC

1 - VOLTMETER
2 - BATTERY
3 - ENGINE GROUND

NOTE: Certain diesel equipped models use dual batteries. If equipped with dual battery system, this procedure must be performed twice, once for each battery.

4. Connect voltmeter (1) to measure between negative terminal post on battery (2) and a good clean ground on engine block (3). Rotate and hold ignition switch in Start position. Observe voltmeter. If reading is above 0.2 volt, clean and tighten negative battery cable attachment on engine block and repeat test. If reading is still above 0.2 volt, replace the negative battery cable.

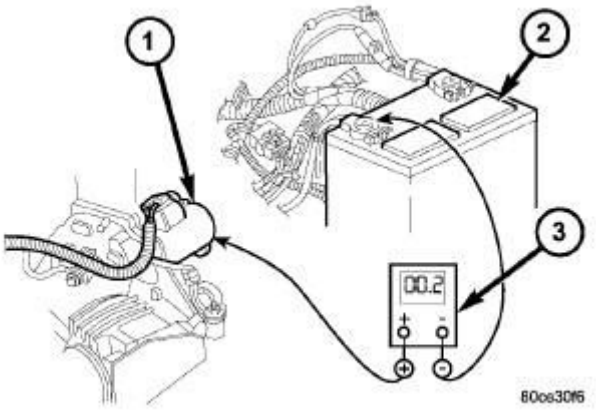

Fig. 6: Testing Starter Ground - Typical
Courtesy of CHRYSLER GROUP, LLC

1 - STARTER MOTOR
2 - BATTERY
3 - VOLTMETER

NOTE: Certain diesel equipped models use dual batteries. If equipped with dual battery system, this procedure must be performed twice, once for each battery.

5. Connect positive lead of voltmeter (3) to starter housing (1). Connect negative lead of voltmeter to negative terminal post on battery (2). Rotate and hold ignition switch in Start position. Observe voltmeter. If reading is above 0.2 volt, correct poor starter to engine block ground contact.
6. If equipped with dual battery system (certain diesel equipped models), connect positive lead of voltmeter to positive battery cable clamp on battery located on left side of vehicle. Connect negative lead of voltmeter to positive battery terminal post on battery located on right side of vehicle. Rotate and hold ignition switch in Start position. Observe voltmeter. If reading is above 0.2 volt, clean and tighten battery cables at both batteries and repeat test. If reading is still above 0.2 volt, replace positive battery cable.
7. If resistance tests detect no feed circuit problems, inspect and test the starter motor and solenoid. Refer to **STARTER, DIAGNOSIS AND TESTING**.

SPECIFICATIONS

STARTER MOTOR

Engine Application	Power Rating	Cranking Amperage Draw Test
2.0, 2.4L	1.2 Kilowatt / 1.6 Horsepower	150 - 280 Amperes
* Test at operating temperature. Cold engine, tight (new) engine, or heavy oil will increase starter amperage draw.		
** The starter is equipped with permanent magnets. Never strike the starter case to attempt to loosen a sticking/stuck armature as permanent magnets may crack or break.		

TORQUE

DESCRIPTION	N.m	Ft. Lbs.	In. Lbs.
Starter Mounting Bolts	54	40	-
Starter Solenoid Battery Nut	10	-	90
Power Steering Lines	61	45	-

STARTER

DIAGNOSIS AND TESTING

DIAGNOSIS AND TESTING - STARTER MOTOR

NOTE: This test can only be performed with starter motor removed from vehicle.

Correct starter motor operation can be confirmed by performing the following free running bench test. Refer to **SPECIFICATIONS** for starter motor specifications.

1. Remove starter motor from vehicle. Refer to **REMOVAL** and **INSTALLATION**.
2. Mount starter motor securely in a soft-jawed bench vise. The vise jaws should be clamped on the mounting flange of starter motor. Never clamp on starter motor by field frame.
3. Connect a suitable volt-ampere tester and a 12-volt battery to starter motor

in series, and set ammeter to 100 ampere scale. See instructions provided by manufacturer of volt-ampere tester being used.

4. Install jumper wire from solenoid terminal to solenoid battery terminal. The starter motor should operate. If starter motor fails to operate, replace faulty starter motor assembly.
5. Adjust carbon pile load of tester to obtain free running test voltage. Refer to **SPECIFICATIONS** for starter motor free running test voltage specifications.
6. Note reading on ammeter and compare reading to free running test maximum amperage draw. Refer to **SPECIFICATIONS** for starter motor free running test maximum amperage draw specifications.
7. If ammeter reading exceeds maximum amperage draw specification, replace faulty starter motor assembly.

STARTER SOLENOID

NOTE: Certain vehicles with certain engines may require starter motor removal for the following test.

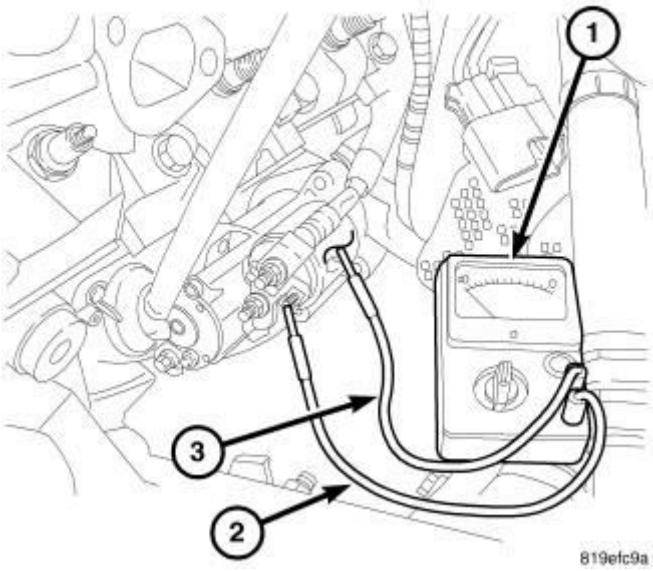

Fig. 7: Solenoid Continuity Test
Courtesy of CHRYSLER GROUP, LLC

1. If necessary, remove starter motor from vehicle. Refer to **REMOVAL** and **INSTALLATION**.

2. Disconnect solenoid connector wiring from starter motor.
3. Check for continuity between solenoid terminal (2) and solenoid case (3). There should be continuity. If not OK, replace faulty starter motor assembly.

REMOVAL

2.2L DIESEL

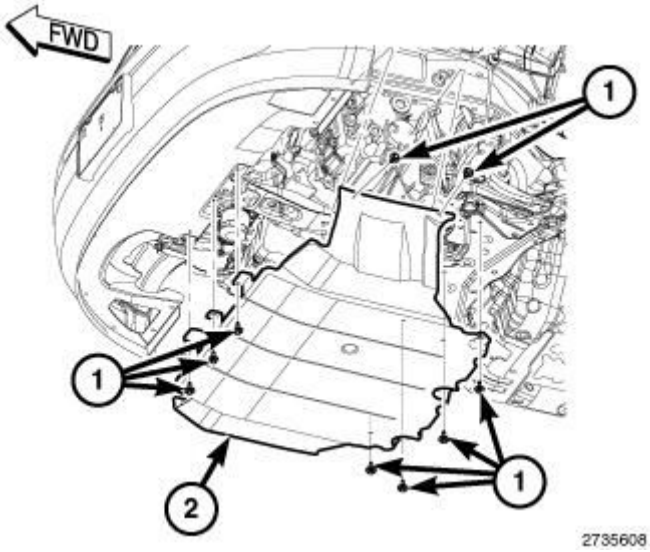

Fig. 8: Identifying Bolts & Belly Pan
Courtesy of CHRYSLER GROUP, LLC

1. Disconnect and isolate the negative battery cable.
2. If equipped, remove the belly pan (2).

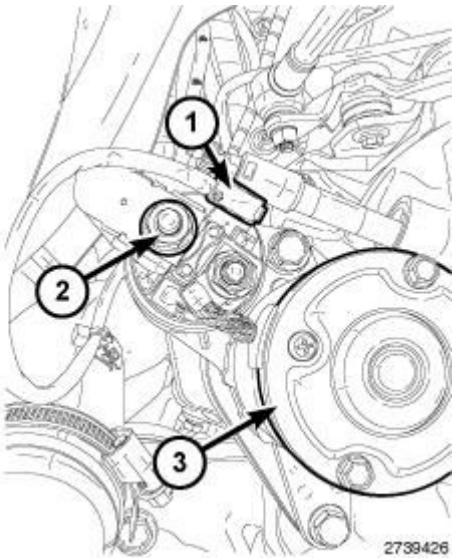

Fig. 9: Identifying Electrical Connector, B+ Cable & Starter
Courtesy of CHRYSLER GROUP, LLC

3. Disconnect the electrical connector (1) and the B+ cable (2) from the starter (3).

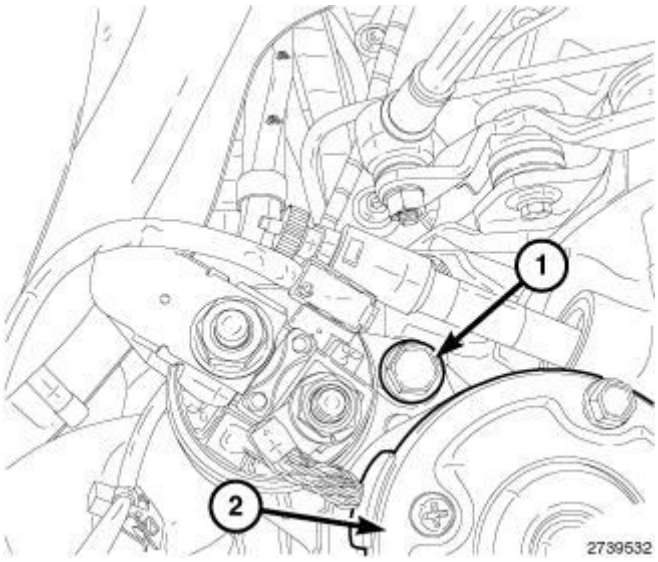

Fig. 10: Identifying Upper Starter Mounting Bolt
Courtesy of CHRYSLER GROUP, LLC

4. Remove the upper starter mounting bolt.

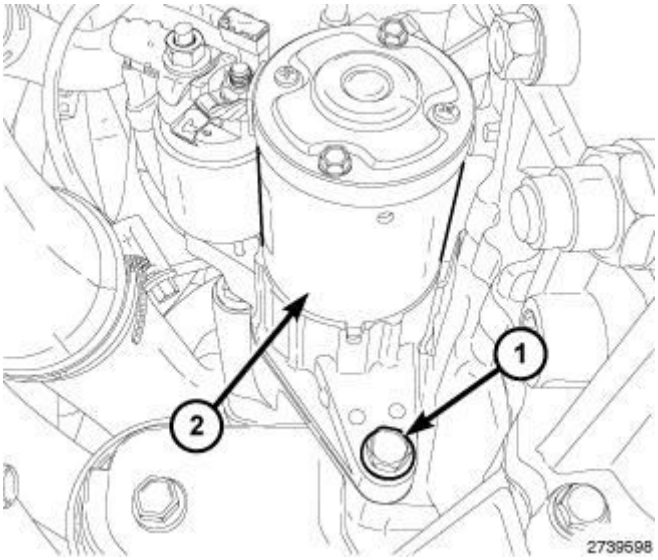

Fig. 11: Identifying Lower Starter Mounting Bolt & Starter
Courtesy of CHRYSLER GROUP, LLC

5. Remove the lower starter mounting bolt (1) and remove the starter (2).

REMOVAL

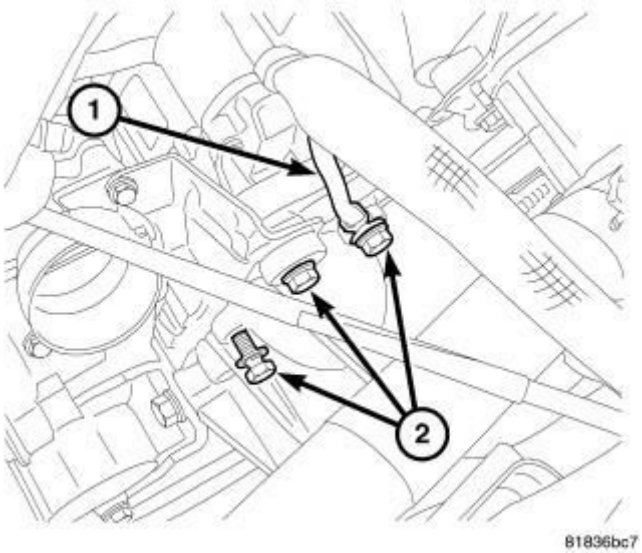

Fig. 12: Mounting Bolts
Courtesy of CHRYSLER GROUP, LLC

1. Remove air cleaner box and air tube.
2. Disconnect and isolate the battery negative cable
3. Remove starter motor mounting bolt.

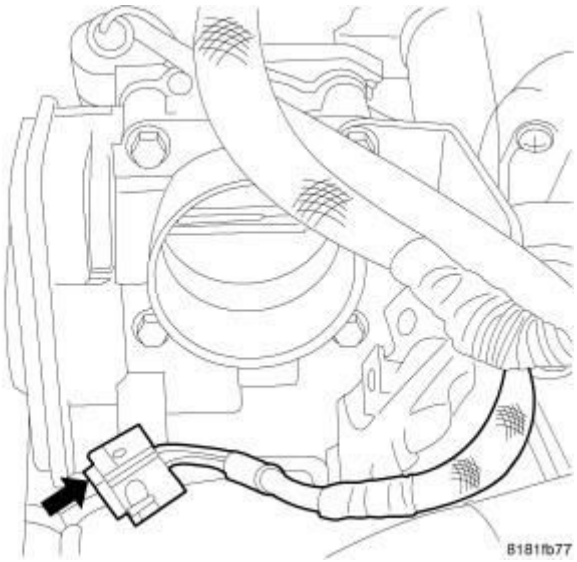

Fig. 13: Throttle Body Electrical Connector
Courtesy of CHRYSLER GROUP, LLC

4. Disconnect the electrical connector at throttle body.

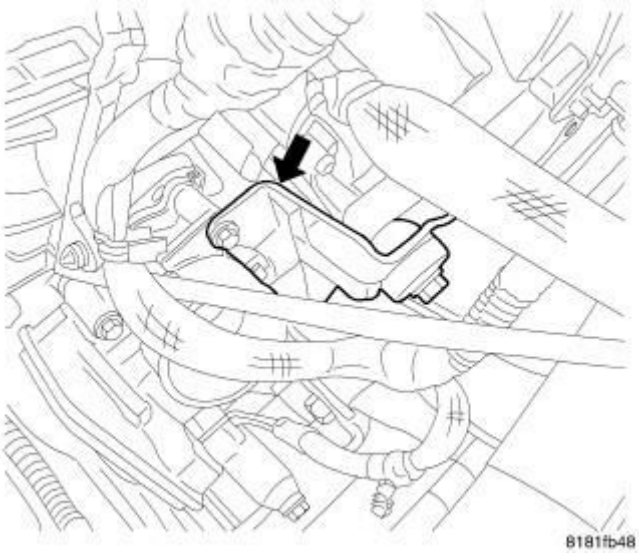

Fig. 14: Throttle Body Bracket
Courtesy of CHRYSLER GROUP, LLC

5. Remove throttle body bolts and remove throttle body.

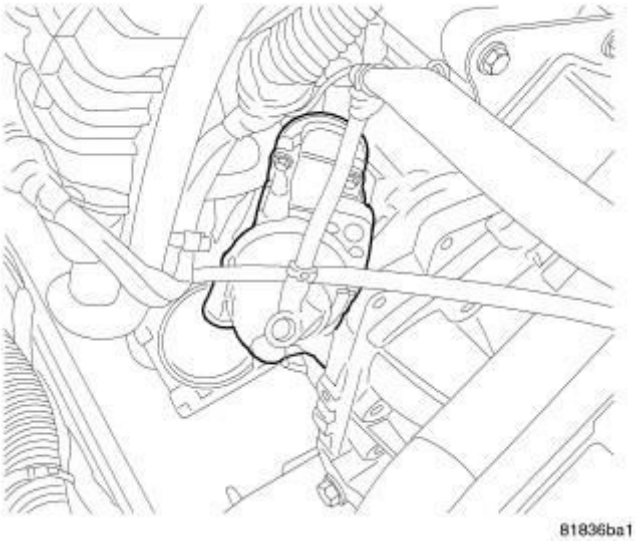

Fig. 15: Rotating Starter
Courtesy of CHRYSLER GROUP, LLC

6. Push starter under intake manifold.
7. Tip starter nose toward cooling module.
8. Pull starter up and out.

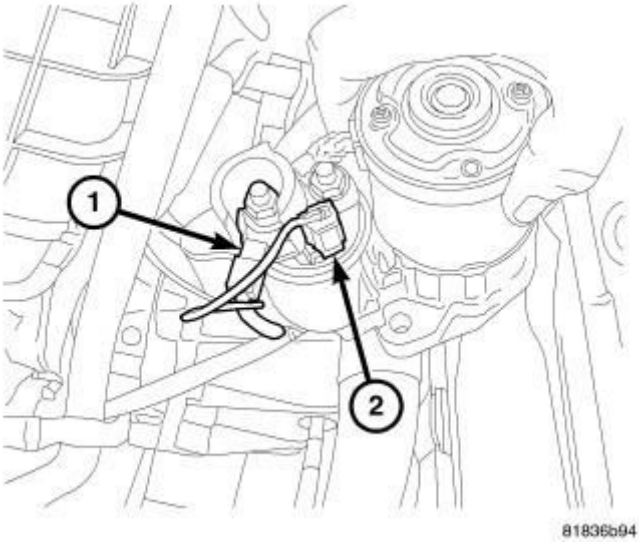

Fig. 16: Starter Electrical Connectors
Courtesy of CHRYSLER GROUP, LLC

9. Disconnect starter motor wiring.
10. Remove starter motor from vehicle.

INSTALLATION

2.2L DIESEL

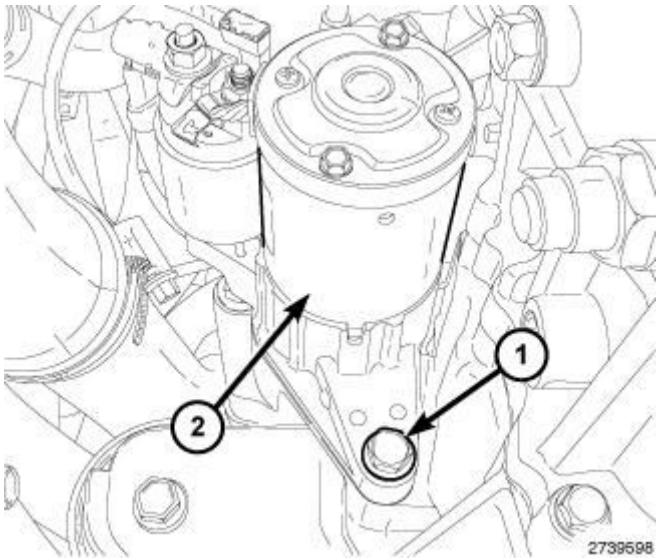

Fig. 17: Identifying Lower Starter Mounting Bolt & Starter
Courtesy of CHRYSLER GROUP, LLC

1. Install the lower starter mounting bolt (1) and remove the starter (2).

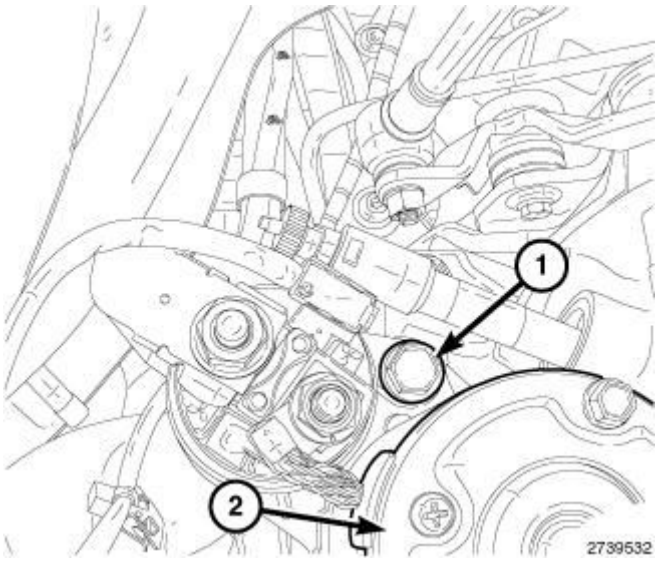

Fig. 18: Identifying Upper Starter Mounting Bolt
Courtesy of CHRYSLER GROUP, LLC

2. Install the upper starter mounting bolt.

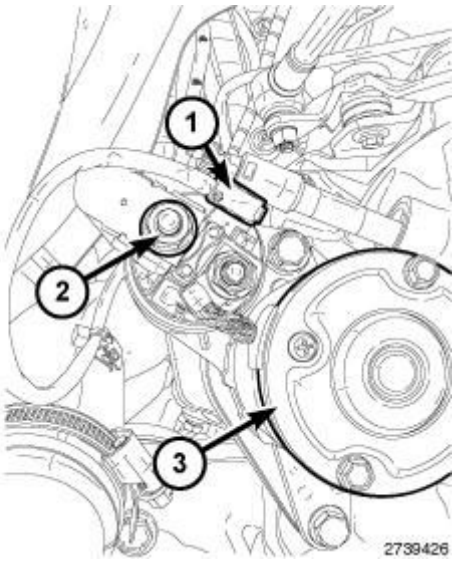

Fig. 19: Identifying Electrical Connector, B+ Cable & Starter
Courtesy of CHRYSLER GROUP, LLC

3. Connect the electrical connector (1) and the B+ cable (2) from the starter (3).

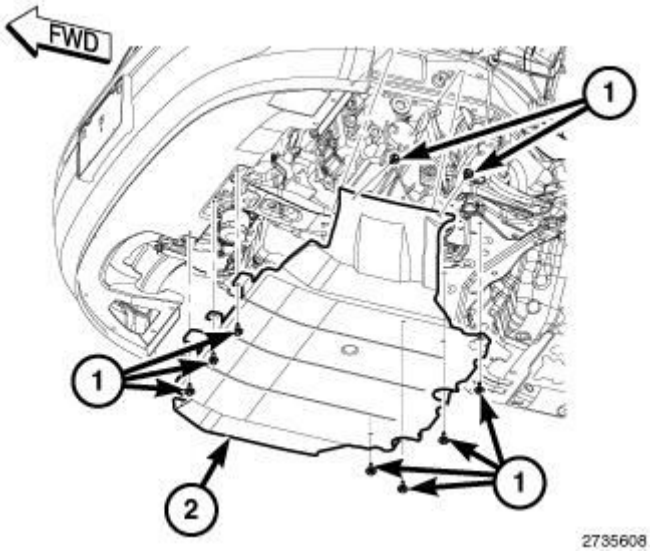

Fig. 20: Identifying Bolts & Belly Pan
Courtesy of CHRYSLER GROUP, LLC

4. If equipped, install the belly pan (2).
5. Connect the negative battery cable.

INSTALLATION

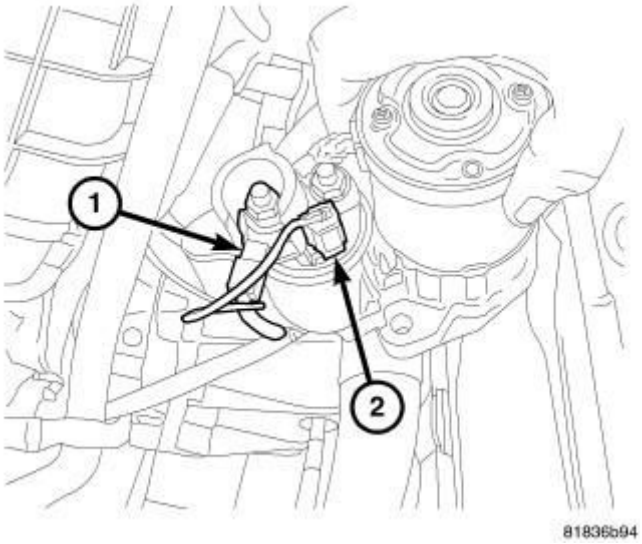

Fig. 21: Starter Electrical Connectors
Courtesy of CHRYSLER GROUP, LLC

1. Connect starter motor wiring. Tighten battery cable nut to 10 N.m (90 in. lbs.).

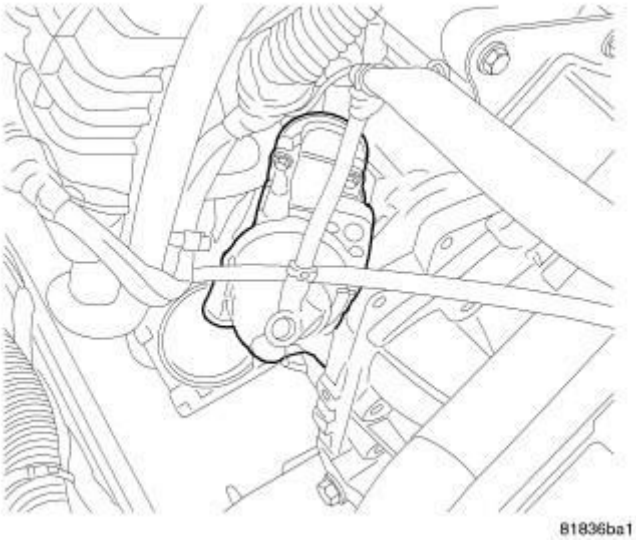

Fig. 22: Rotating Starter
Courtesy of CHRYSLER GROUP, LLC

2. Install starter motor into vehicle lower engine compartment.

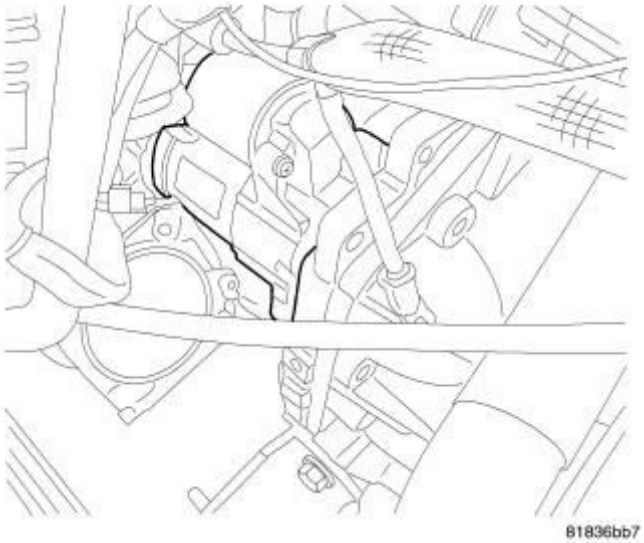

Fig. 23: Installing Starter
Courtesy of CHRYSLER GROUP, LLC

3. Loose install starter into position.

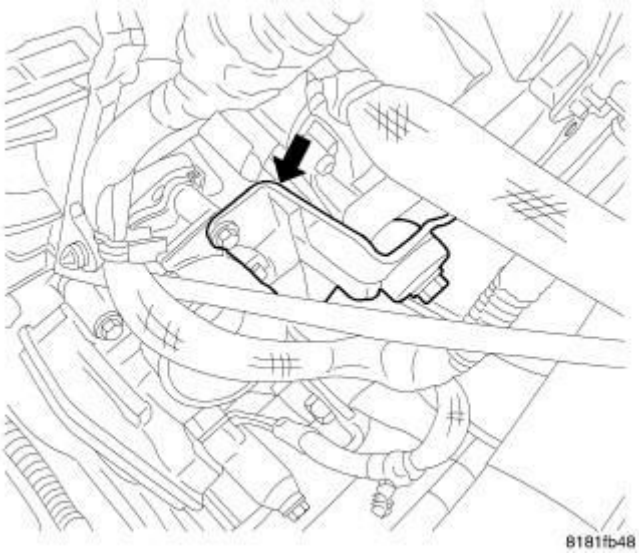

Fig. 24: Throttle Body Bracket
Courtesy of CHRYSLER GROUP, LLC

4. Install throttle body
5. Install throttle body bracket.

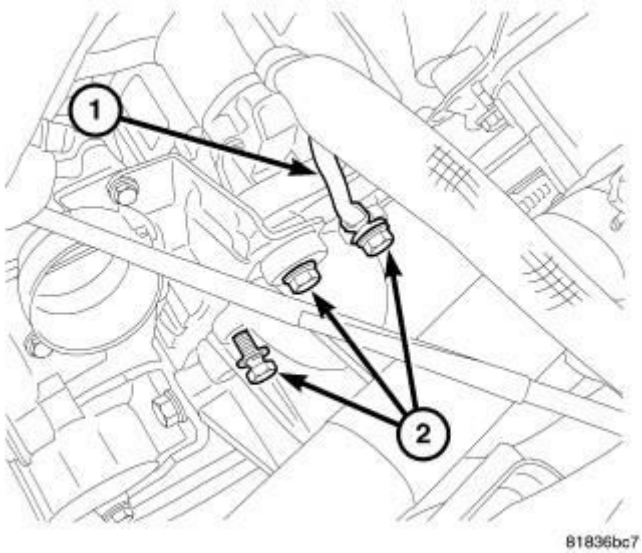

Fig. 25: Mounting Bolts
Courtesy of CHRYSLER GROUP, LLC

6. Install starter motor mounting bolts and tighten to 54 N.m (40 ft. lbs.).

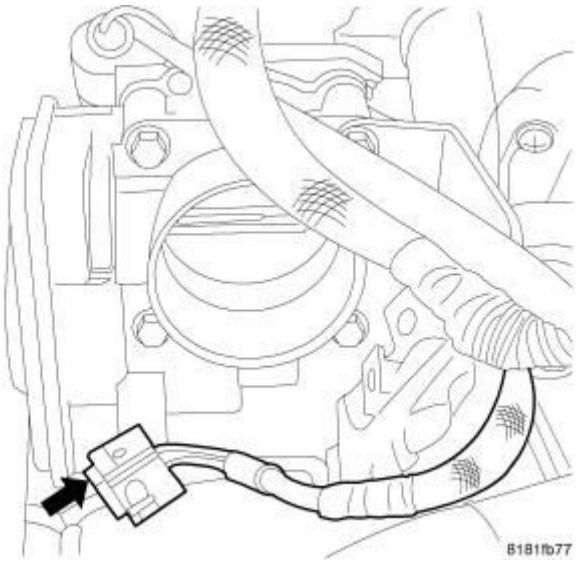

Fig. 26: Throttle Body Electrical Connector
Courtesy of CHRYSLER GROUP, LLC

7. Connect throttle body electrical connector.
8. Install air cleaner box and inlet tube.
9. Connect battery negative cable.

2014 GENERAL INFORMATION

Circuit Testing Procedures - Non-DTC-Based Diagnostics - Compass & Patriot

WARNING

GENERAL WARNINGS

WARNINGS provide information to prevent personal injury and vehicle damage. Below is a list of general warnings that should be followed any time a vehicle is being serviced.

WARNING: **Always wear safety glasses for eye protection.**

WARNING: **Use safety stands anytime a procedure requires being under a vehicle.**

WARNING: **Be sure that the ignition switch is always in the off position, unless the procedure requires it to be on.**

WARNING: **Set the parking brake when working on any vehicle. An automatic transmission should be in park. A manual transmission should be in neutral.**

WARNING: **Operate the engine only in a well-ventilated area.**

WARNING: **Keep away from moving parts when the engine is running, especially the fan and belts.**

WARNING: **To prevent serious burns, avoid contact with hot parts such as the radiator, exhaust manifold(s), tail pipe, catalytic converter and muffler.**

WARNING: **Do not allow flame or sparks near the battery. Gases are always present in and around the battery.**

WARNING: Always remove rings, watches, loose hanging jewelry and avoid loose clothing.

DESCRIPTION

CIRCUIT FUNCTIONS

All circuits in the wiring diagrams use an alpha/numeric code to identify the wire and its function. To identify which circuit code applies to a system, refer to the Circuit Identification Code Chart.

NOTE: This chart shows the main circuits only and does not show the secondary codes that may apply to some models.

CIRCUIT IDENTIFICATION CODE CHART

CIRCUIT CODE	FUNCTION
A	BATTERY FEED
B	BRAKE CONTROLS
C	CLIMATE CONTROLS
D	DIAGNOSTIC CIRCUITS
E	DIMMING ILLUMINATION CIRCUITS
F	FUSED CIRCUITS
G	MONITORING CIRCUITS (GAUGES)
H	MULTIPLE
I	NOT USED
J	OPEN
K	POWERTRAIN CONTROL MODULE
L	EXTERIOR LIGHTING
M	INTERIOR LIGHTING
N	MULTIPLE
O	NOT USED
P	POWER OPTION (BATTERY FEED)
Q	POWER OPTIONS (IGNITION FEED)
R	PASSIVE RESTRAINT
S	SUSPENSION/STEERING

T	TRANSMISSION/TRANSAXLE/ TRANSFER CASE
U	OPEN
V	SPEED CONTROL, WIPER/WASHER
W	WIPERS
X	AUDIO SYSTEMS
Y	TEMPORARY
Z	GROUNDS

CIRCUIT INFORMATION

Each wire shown in the wiring diagrams contains a code which identifies the main circuit, a specific portion of the main circuit, gauge of wire, and color.

As an example, circuit **A 2 18 LB/YL** is decoded in the following manner:

Circuit Type:	**A** (Battery Feed Circuit)
Circuit Level:	**2** (Level Two)
Wire Size:	**18** (Eighteen Gauge Wire)
Wire Color:	**LB/YL** (Light Blue with Yellow Tracer)

WIRE COLOR CODE CHART

COLOR CODE	COLOR
BL	BLUE
BK	BLACK
BR	BROWN
DB	DARK BLUE
DG	DARK GREEN
GY	GRAY
LB	LIGHT BLUE
LG	LIGHT GREEN
OR	ORANGE
PK	PINK
RD	RED

TN	TAN
VT	VIOLET
WT	WHITE
YL	YELLOW
*	WITH TRACER

DIAGNOSIS AND TESTING

WIRING HARNESS TESTING

TROUBLESHOOTING TOOLS

When diagnosing a problem in an electrical circuit there are several common tools necessary. These tools are listed and explained below:

Voltmeter

The voltmeter is used to measure the electrical pressure or the voltage difference between two points. A voltmeter reads available voltages such as battery voltage, generator output voltage, and voltage drop across a component or conductor. A high voltage drop may indicate a high resistance in the circuit. The voltmeter can be used to locate an open circuit and circuits with an unintentional ground. Observing polarity, always connect a voltmeter in parallel to the existing circuit. If the leads are reversed on a digital multimeter, a minus sign appears in the display.

CAUTION: Most of the electrical components used in today's vehicles are Solid State. When checking voltages in these circuits, use a meter with a 10 - megohm or greater impedance rating.

Ohmmeter

The ohmmeter is used to measure the resistance of a component or the resistance between two points in a circuit in ohms, and to check a portion of the circuit for continuity. Some meters have a built-in tone to indicate that the circuit has continuity. No resistance indicates a short circuit or unintentional ground whereas resistance that is higher than specification indicates a high resistance in the circuit such as a loose, dirty or corroded connection, or a defective component. An "OL" reading means that the circuit or component had infinite

resistance; an open circuit or defective component is indicated. Ohmmeters have an internal battery and must never be connected to a power circuit. Connecting an ohmmeter to a powered circuit causes the meter fuse to blow and can damage its dry cell battery. Ohmmeters can be connected into a circuit without regard to polarity, unless the circuit contains a diode. When using an ohmmeter, the component or portion of the circuit must be isolated from other components or branches to avoid false readings.

CAUTION: Most of the electrical components used in today's vehicles are Solid State. When checking resistance in these circuits use a meter with a 10 - megohm or greater impedance rating. In addition, make sure the power is disconnected from the circuit. Circuits that are powered up by the vehicle's electrical system can cause damage to the equipment and provide false readings.

Ammeter

Amperage or current is the measure of the rate of electron "flow" in a circuit. It is measured in the unit of the Ampere, simply called an Amp (A). In order to measure current in a circuit, the circuit must be broken or opened, and an ammeter must be inserted in series (in-line) with the circuit so that all the current that flows through the circuit will have to go through the meter. When measuring current in this manner, it requires the meter be made part of the circuit, this type of measurement is more difficult than measuring either voltage or resistance.

When an ammeter is placed in series with a circuit, it ideally drops no voltage as current goes through it. In other words, it acts very much like a piece of wire, with very little resistance from one test probe to the other. Consequently, an ammeter will act as a short circuit if placed in parallel (across the terminals of) a substantial source of voltage. If this is done, a surge in current will result, potentially damaging the meter. Ammeters are generally protected from excessive current by means of a small fuse located inside the meter housing. If the ammeter is accidently connected across a substantial voltage source, the resultant surge in current will "blow" the fuse and render the meter incapable of measuring current until the fuse is replaced.

Consult the owner's manual of the particular model of meter you own for details

on measuring current.

CAUTION: Do not crank the engine or turn on any accessories that may draw more than 10 Amps. You may open the protective fuse in the multimeter.

12-Volt Test Light

The 12-Volt test light when properly used, is one of the best and quickest pieces of test equipment available for troubleshooting 12-volt power systems. It's especially good for times when there are only two voltages, battery voltage and no voltage. For example, if you're checking to see if you have 12-volts on the Battery(+), the test light will immediately tell you if voltage is present or not.

With any test equipment, you should confirm that it's in good working order before you begin testing. For a test light, you have to have a voltage source. Connect the test light's ground clip to a good ground and touch it to a point where you believe that there is 12-volt supply. If the light doesn't light up, check the light by connecting it directly across the battery. Initially, make sure that you have the ground clip on the negative battery terminal. If you touch the probe to the positive terminal, the test light should light up. If it doesn't and the battery is not completely dead, the test light isn't working properly. The test light must be in proper working order before any circuit testing can occur.

Jumper Wire

The sole purpose of the jumper wire is to complete a circuit. It is nothing more than a suitable length of insulated wire with terminals or connectors on each end. Jumper wires may be bought or made with various sizes of wire and styles of terminals including alligator clips, spade lugs and pin plugs, and should include a fuse device of some type for circuit and component protection. A jumper wire is used to verify a faulty conductor by substituting a known good one. It is jumped across a suspicious conductor in the circuit. If the circuit works with the jumper, but not without, there is an open somewhere in the area being jumped. A jumper wire is ONLY used to bypass a faulty conductor (including switches and connectors). NEVER bypass a load device with a jumper wire. The circuit needs the resistance from the load device and shorting across it causes high current flow, which could damage other components.

WARNING: Never use a jumper wire across a load, such as a motor, connected between a battery feed and ground.

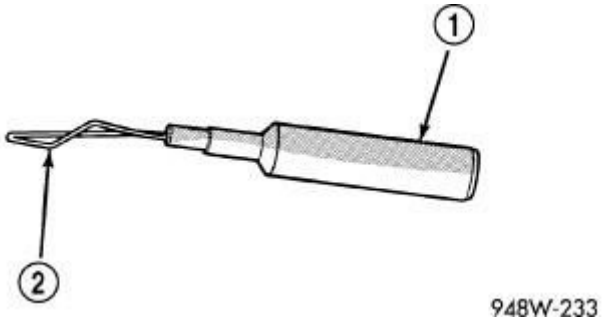

Fig. 1: Probing Tool
Courtesy of CHRYSLER GROUP, LLC

1 - SPECIAL TOOL 6801 2 - PROBING END

Probing Tools

These tools are used for probing terminals in connectors. Select the proper size tool from Special Tool Package (special tool #6807, Terminal Tools), and insert the probing end (2) into the terminal being tested. Use the other end of the tool (1) to insert the meter probe.

INTERMITTENT AND POOR CONNECTIONS

Most intermittent electrical problems are caused by faulty electrical connections or wiring. It is also possible for a sticking component or relay to cause a problem.

Before condemning a component or wiring assembly, check the following items:

- Connectors are fully seated
- Spread terminals, or terminal push out
- Terminals in the wiring assembly are fully seated into the connector/component and locked into position
- Dirt or corrosion on the terminals. Any amount of corrosion or dirt could cause an intermittent problem

- Damaged connector/component casing exposing the item to dirt or moisture
- Wire insulation that has rubbed through causing a short to ground
- Some or all of the wiring strands broken inside of the insulation
- Wiring broken inside of the insulation

TROUBLESHOOTING WIRING PROBLEMS

When troubleshooting wiring problems there are six steps which can aid in the procedure. The steps are listed and explained below. Always check for non-factory items added to the vehicle before doing any diagnosis. If the vehicle is equipped with these items, disconnect them to verify these add-on items are not the cause of the problem.

Perform the following Six Step Diagnosis Process:

1. Verify the problem.
2. Verify any related symptoms. Do this by performing operational checks on components that are in the same circuit (Refer to **SYSTEM WIRING DIAGRAMS**).
3. Analyze the symptoms. Use the wiring diagrams to determine what the circuit is doing, where the problem most likely is occurring and where the diagnosis will continue.
4. Isolate the problem area.
5. Repair the problem area.
6. Verify the proper operation. For this step, check for proper operation of all items on the repaired circuit (Refer to **SYSTEM WIRING DIAGRAMS**).

NOTE: The Six Step Diagnosis Process used by Chrysler is a time proven process. The basic concepts of this process have been used by others for problem solving for many years. The successful application of this process requires a solid understanding of the conditions that affect each step, and when its time to advance to the next step. These conditions based on experience formulate what is known as "Best Practices".

STANDARD PROCEDURE

CHECK A 12-VOLT FUSED BATTERY B(+) CIRCUIT FOR VOLTAGE

THEORY OF OPERATION

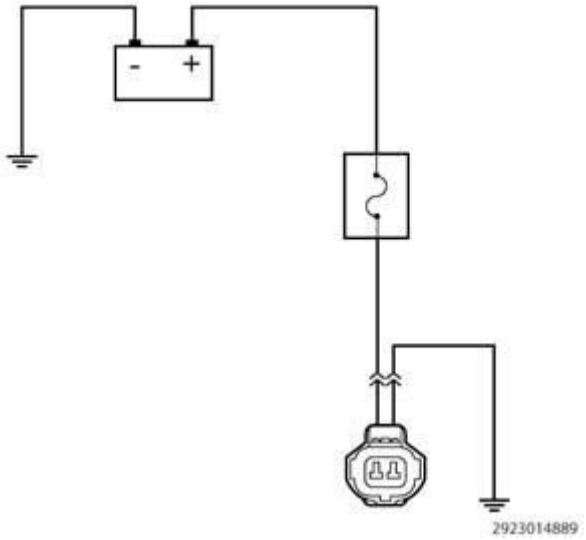

Fig. 2: Checking 12-Volt Fused Battery B(+) Circuit For Voltage
Courtesy of CHRYSLER GROUP, LLC

The purpose of the following procedure(s) is to demonstrate how to check the voltage of a 12-volt fused battery B(+) circuit with a test light or voltmeter.

NOTE: The circuit shown is an example, and is intended for demonstrational purpose only.

The following are circuit tests covered in this procedure:

- Testing 12-Volt Fused Battery B(+) Circuit Voltage With A Test Light
- Testing 12-Volt Fused Battery B(+) Circuit Voltage With A Voltmeter

NOTE: Perform the following test using a known good test light or functioning multimeter.

Below is a list of possible causes that could be related to a No Voltage condition.

Possible Causes
OPEN CIRCUIT (CHAFED, PIERCED, PINCHED OR BROKEN WIRES)
OPEN FUSE

OPEN IN-LINE CONNECTOR (BENT, PUSHED OUT OR CORRODED TERMINALS)

TEST PROCEDURES

1. TESTING 12-VOLT FUSED BATTERY B(+) CIRCUIT VOLTAGE WITH A TEST LIGHT

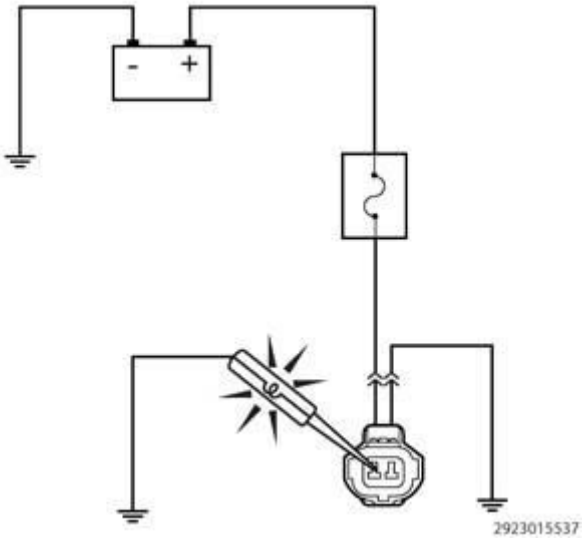

Fig. 3: Checking 12-Volt Fused Battery B(+) Circuit Voltage With A Test Light
Courtesy of CHRYSLER GROUP, LLC

NOTE: Before testing any circuits, first verify the 12-volt test light is operating properly. Connect the 12-volt test light to battery ground or to any other known good ground. Touch the lead of the test light to Battery(+). If the test light is operational, it should illuminate brightly.

1. Turn the ignition off.
2. Disconnect the wire harness connector from the component that is being tested.

NOTE: Check connectors - Clean/repair as necessary.

3. At this time, leave all in-line connectors connected.
4. Connect the 12-volt test light to a known good ground.

5. Use the test light lead to carefully probe the Battery or Ignition voltage circuit in the harness connector.
6. First check with the ignition off, next check with the ignition on, and lastly check while cranking the engine.

   Does the test light illuminate brightly?

   Yes

   - The circuit is not open at this time or the condition that originally caused the open may not be present at this time. Continue to monitor the test light and wiggle the wire harness and connectors to check for an intermittent open or excessive resistance condition.
   - Use the wiring diagram as a guide to trace the circuits and look for any in-line connectors where the open could occur intermittently.
   - Look for any chafed, pierced, pinched, or partially broken wires.
   - Look for broken, bent, pushed out or corroded terminals. Verify that there is good pin to terminal contact in the related wire harness connectors.
   - Perform any Technical Service Bulletins (TSBs) that may apply.

   No

   - Repair the open in the circuit. Use the wiring diagram as a guide to trace the circuit and look for any in-line connectors where the open could occur.
   - One method to help isolate the open is to disconnect any in-line connectors and measure the resistance from one side of the in-line connector to the matching component harness connector. If the open goes away, the open is on the other side of the in-line connector.
   - If this is a fused circuit, make sure to inspect the fuse. If the fuse is open, check the circuit for a short to ground before installing a new fuse. The circuit may have a short to ground causing the fuse to open. This short to ground could be in the wire harness or in one of the components the circuit is supplying voltage to.

2. TESTING 12-VOLT FUSED BATTERY B(+) CIRCUIT VOLTAGE WITH A VOLTMETER

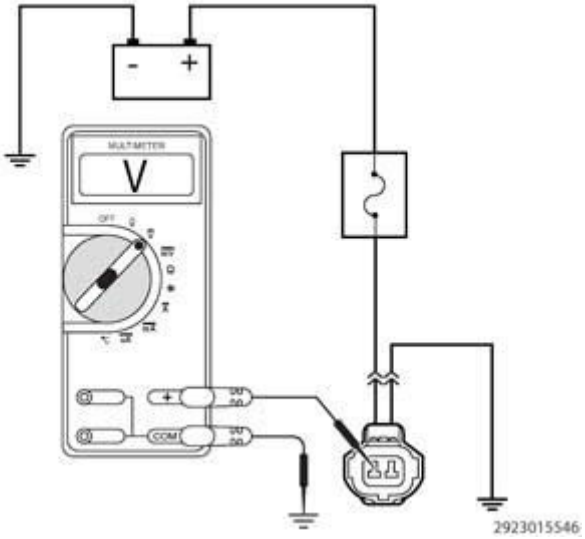

Fig. 4: Checking Testing 12-Volt Fused Battery B(+) Circuit Voltage With A Voltmeter
Courtesy of CHRYSLER GROUP, LLC

NOTE: The connector displayed in the graphics are only an example.

1. Turn the ignition off.
2. Disconnect the wire harness connector from the component that is being tested.

NOTE: Check connectors - Clean/repair as necessary.

3. At this time leave all in-line connectors connected.
4. Use a multimeter set to measure DC voltage.
5. Connect the ground lead of the meter to a known good ground.
6. Use the positive lead of the multimeter and probe the circuit that is being checked for voltage.
7. Ignition on, engine not running.

   Is the voltage within specifications for this circuit?

   Yes

   - The circuit is functioning properly or the condition that originally caused the open or short may not be present at this time. Continue

to measure the voltage and wiggle the wire harness and connectors while checking for an intermittent open or short.

- Use the wiring diagram as a guide to trace the circuits and look for any in-line connectors where the short could occur intermittently.
- Look for any chafed, pierced, pinched, or partially broken wires.
- Look for broken, bent, pushed out or corroded terminals. Verify that there is good pin to terminal contact in the related wire harness connectors.
- Perform any Technical Service Bulletins (TSBs) that may apply.

No

- Repair the open or short to ground in the circuit. Use the wiring diagram as a guide to trace the circuits and look for any in-line connectors where the short could occur.
- One method to help isolate the open or short is to disconnect any in-line connectors that the circuit being checked runs through and check for the voltage again. If the voltage is present, the open or short is on the other side of the in-line connector.

CHECK A 12-VOLT SWITCHED BATTERY B(+) CIRCUIT FOR VOLTAGE

THEORY OF OPERATION

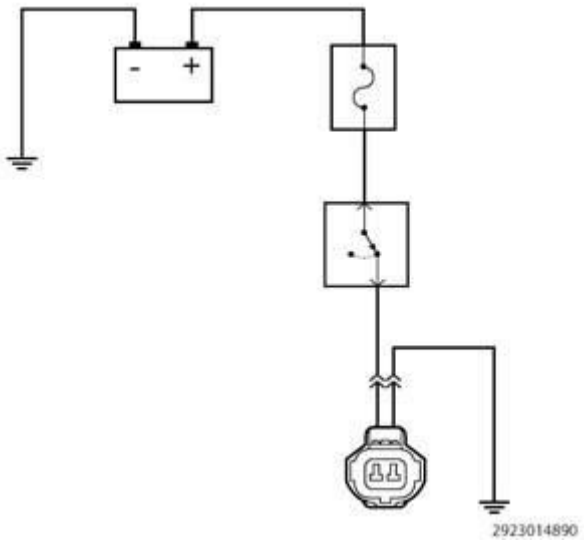

Fig. 5: Checking 12-Volt Switched Battery B(+) Circuit For Voltage
Courtesy of CHRYSLER GROUP, LLC

The purpose of the following procedure is to demonstrate how to check the voltage of a 12-Volt switched battery B(+) circuit with a test light or voltmeter.

NOTE: The circuit shown is an example, and is intended for demonstrational purpose only.

The following are circuit tests covered in this procedure:

- Testing 12-Volt Switched Battery B(+) Circuit Voltage With A Test Light
- Testing 12-Volt Switched Battery B(+) Circuit Voltage With A Voltmeter

NOTE: Perform the following test using a known good test light or functioning multimeter.

Below is a list of possible causes that could be related to a No Voltage condition.

Possible Causes
OPEN CIRCUIT (CHAFED, PIERCED, PINCHED OR BROKEN WIRES)
OPEN FUSE
OPEN IN-LINE CONNECTOR (BENT, PUSHED OUT OR CORRODED TERMINALS)

TEST PROCEDURES

1. **TESTING 12-VOLT SWITCHED BATTERY B(+) CIRCUIT VOLTAGE WITH A TEST LIGHT**

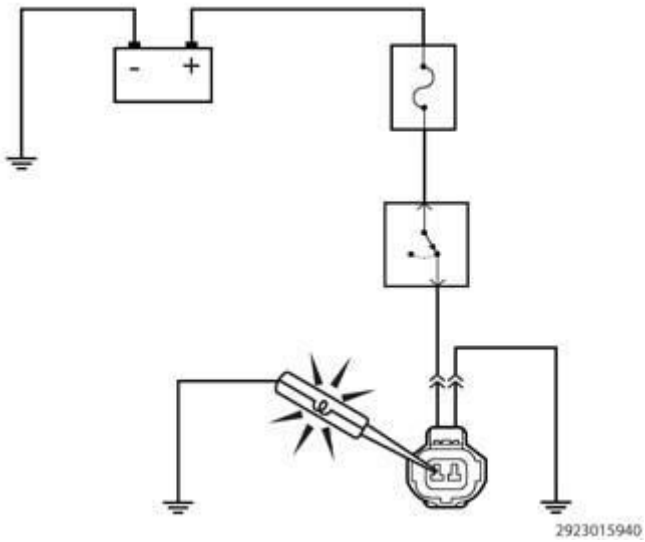

Fig. 6: Testing 12-Volt Switched Battery B(+) Circuit Voltage With A Test Light
Courtesy of CHRYSLER GROUP, LLC

NOTE: Before testing any circuits, first verify the 12-volt test light is operating properly. Connect the 12-volt test light to battery ground or to any other known good ground. Touch the lead of the test light to Battery(+). If the test light is operational, it should illuminate brightly.

1. Turn the ignition off.
2. Disconnect the wire harness connector from the component that is being tested.

NOTE: Check connectors - Clean/repair as necessary.

3. At this time, leave all in-line connectors connected.
4. Connect the 12-volt test light to a known good ground.
5. Use the test light lead to carefully probe the Battery or Ignition voltage circuit in the harness connector.
6. First check with the ignition off, next check with the ignition on, and lastly check while cranking the engine.

Does the test light illuminate brightly?

Yes

- The circuit is not open at this time or the condition that originally caused the open may not be present at this time. Continue to monitor the test light and wiggle the wire harness and connectors to check for an intermittent open or excessive resistance condition.
- Use the wiring diagram as a guide to trace the circuits and look for any in-line connectors where the open could occur intermittently.
- Look for any chafed, pierced, pinched, or partially broken wires.
- Look for broken, bent, pushed out or corroded terminals. Verify that there is good pin to terminal contact in the related wire harness connectors.

- Perform any Technical Service Bulletins (TSBs) that may apply.

No

- Repair the open in the circuit. Use the wiring diagram as a guide to trace the circuit and look for any in-line connectors where the open could occur.
- One method to help isolate the open is to disconnect any in-line connectors and measure the resistance from one side of the in-line connector to the matching component harness connector. If the open goes away, the open is on the other side of the in-line connector.
- If this is a fused circuit, make sure to inspect the fuse. If the fuse is open, check the circuit for a short to ground before installing a new fuse. The circuit may have a short to ground causing the fuse to open. This short to ground could be in the wire harness or in one of the components the circuit is supplying voltage to.

2. **TESTING 12-VOLT SWITCHED BATTERY B(+) CIRCUIT VOLTAGE WITH A VOLTMETER**

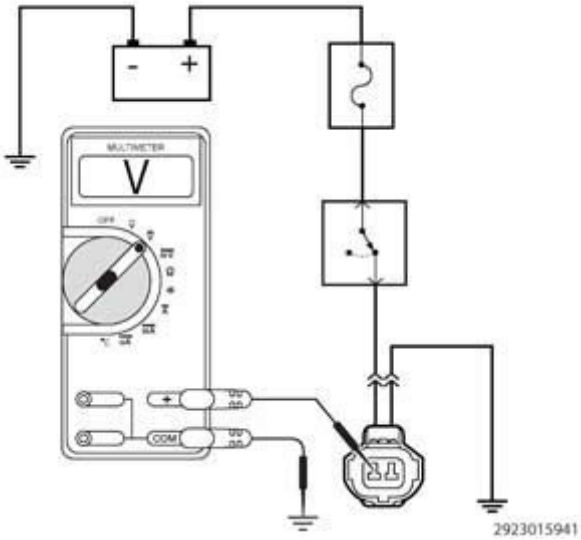

Fig. 7: Testing 12-Volt Switched Battery B(+) Circuit Voltage With A Voltmeter
Courtesy of CHRYSLER GROUP, LLC

NOTE: The connector displayed in the graphics are only an example.

1. Turn the ignition off.
2. Disconnect the wire harness connector from the component that is being tested.

NOTE: Check connectors - Clean/repair as necessary.

3. At this time leave all in-line connectors connected.
4. Use a multimeter set to measure DC voltage.
5. Connect the ground lead of the meter to a known good ground.
6. Use the positive lead of the multimeter and probe the circuit that is being checked for voltage.
7. Ignition on, engine not running.

Is the voltage within specifications for this circuit?

Yes

- The circuit is functioning properly or the condition that originally caused the open or short may not be present at this time. Continue to measure the voltage and wiggle the wire harness and connectors while checking for an intermittent open or short.
- Use the wiring diagram as a guide to trace the circuits and look for any in-line connectors where the short could occur intermittently.
- Look for any chafed, pierced, pinched, or partially broken wires.
- Look for broken, bent, pushed out or corroded terminals. Verify that there is good pin to terminal contact in the related wire harness connectors.
- Perform any Technical Service Bulletins (TSBs) that may apply.

No

- Repair the open or short to ground in the circuit. Use the wiring diagram as a guide to trace the circuits and look for any in-line connectors where the short could occur.
- One method to help isolate the open or short is to disconnect any in-line connectors that the circuit being checked runs through and check for the voltage again. If the voltage is present, the open or

short is on the other side of the in-line connector.

CHECK A 5-VOLT SUPPLY CIRCUIT FOR VOLTAGE

THEORY OF OPERATION

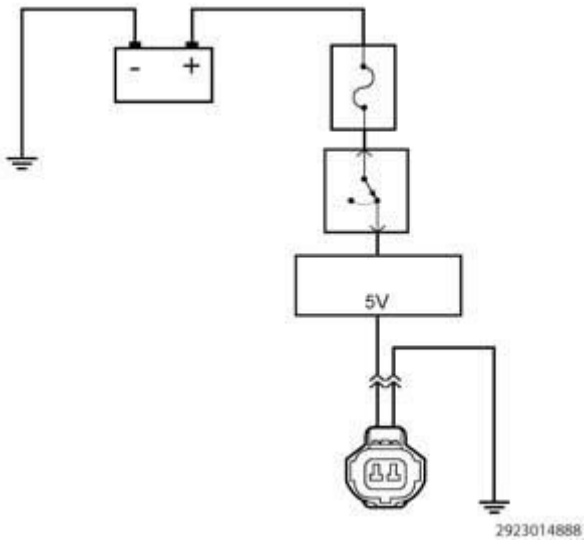

Fig. 8: Checking 5-Volt Supply Circuit For Voltage
Courtesy of CHRYSLER GROUP, LLC

The purpose of the following procedure is to demonstrate how to check the voltage of a 5-Volt supply circuit with a voltmeter.

NOTE: The circuit shown is an example, and is intended for demonstrational purpose only.

The following are circuit tests covered in this procedure:

- Testing A 5-Volt Supply Circuit For Voltage
- Testing A 5-Volt Supply Circuit And Sensor Ground Circuit

NOTE: Perform the following test using a known good multimeter.

Below is a list of possible causes that could be related to a No Voltage condition.

Possible Causes
OPEN CIRCUIT (CHAFED, PIERCED, PINCHED OR BROKEN WIRES)
OPEN IN-LINE CONNECTOR (BENT, PUSHED OUT OR CORRODED

TERMINALS)
ELECTRONIC CONTROL MODULE (5-VOLT SUPPLY OUTPUT)

TEST PROCEDURES

1. **TESTING A 5-VOLT SUPPLY CIRCUIT FOR VOLTAGE**

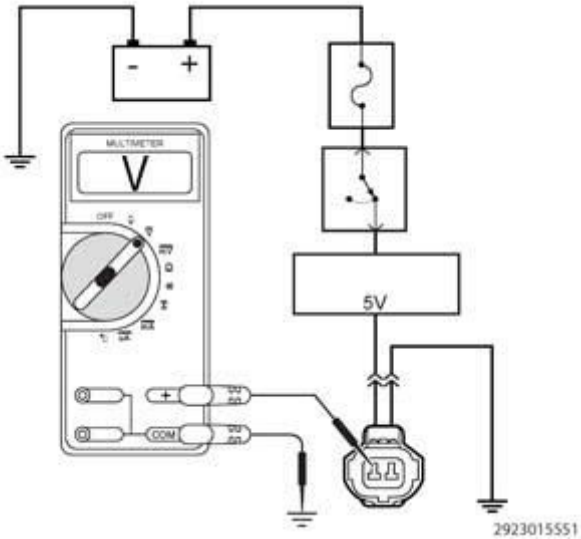

Fig. 9: Checking 5-Volt Supply Circuit For Voltage
Courtesy of CHRYSLER GROUP, LLC

1. Turn the ignition off.
2. Disconnect the sensor harness connector.

NOTE: Check connectors - Clean/repair as necessary.

3. Turn the ignition on.
4. Set the multimeter to measure DC voltage.
5. Connect the negative lead of the multimeter to a known good ground.
6. With the positive lead of the multimeter, carefully probe the 5-volt supply circuit.

   Is the voltage between 4.7 and 5.2 volts?

   Yes

   - Go To 2

No

- Check the 5-volt supply circuit for an open or short to ground. For further assistance, perform the appropriate Sensor Reference Voltage DTC diagnostic procedure.

2. **TESTING A 5-VOLT SUPPLY CIRCUIT AND SENSOR GROUND CIRCUIT**

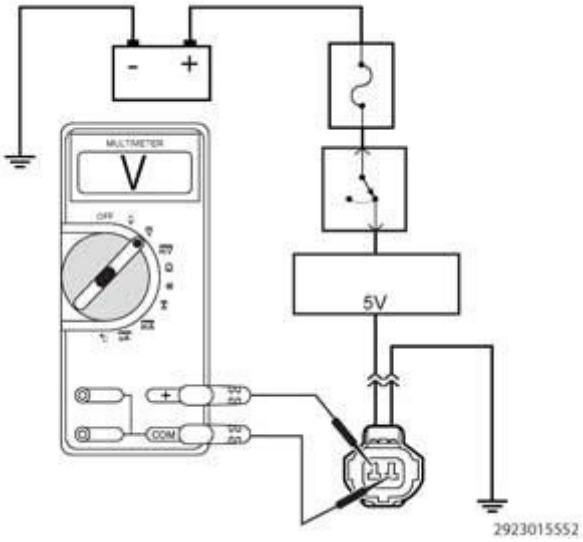

Fig. 10: Checking 5-Volt Supply Circuit And Sensor Ground Circuit
Courtesy of CHRYSLER GROUP, LLC

1. With the multimeter set to measure DC voltage.
2. Move the negative lead of the multimeter to carefully probe the sensor ground or sensor return circuit in the harness connector.
3. With the positive lead of the multimeter, carefully probe the 5-volt supply circuit.

Is the voltage between 4.7 and 5.2 volts?

Yes

- At this time the 5-volt supply and sensor ground circuit are working properly. Continue to measure the voltage between the wires, wiggle the wire harness and connectors while checking for an intermittent condition.
- Use the wiring diagram as a guide to trace the circuits and look for any in-line connectors where the open could occur intermittently.

- Look for any chafed, pierced, pinched, or partially broken wires.
- Look for broken, bent, pushed out or corroded terminals. Verify that there is good pin to terminal contact in the related wire harness connectors.
- Perform any Technical Service Bulletins (TSBs) that may apply.

No

- Repair the open or excessive resistance in the Sensor Ground (Sensor Return) circuit.

CHECK A CIRCUIT FOR A SHORT TO GROUND

THEORY OF OPERATION

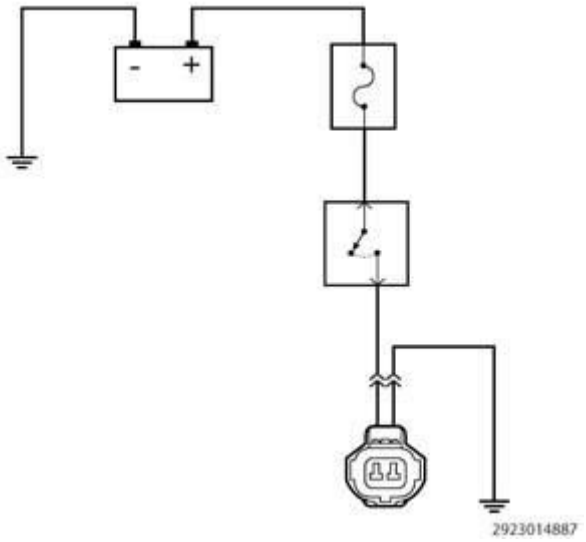

Fig. 11: Checking Circuit For A Short To Ground
Courtesy of CHRYSLER GROUP, LLC

The purpose of the following procedure is to demonstrate how to check a circuit for a Short to Ground.

NOTE: The circuit shown is an example, and is intended for demonstrational purpose only.

The following are circuit tests covered in this procedure:

- Testing For A Short To Ground Using An Ohmmeter

NOTE: Perform the following test using a known good multimeter.

Below is a list of possible causes that could be related to a Short to Ground condition.

Possible Causes
SHORTED CIRCUIT (CHAFED, PIERCED OR PINCHED WIRES)
SHORTED IN-LINE CONNECTOR (BENT, PUSHED OUT OR CORRODED TERMINALS)

TEST PROCEDURES

TESTING FOR A SHORT TO GROUND USING AN OHMMETER

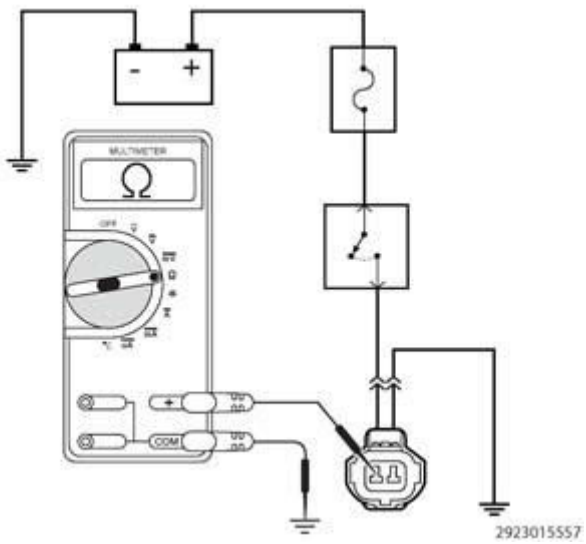

Fig. 12: Checking For A Short To Ground Using An Ohmmeter
Courtesy of CHRYSLER GROUP, LLC

NOTE: Before measuring the resistance of any circuit, first measure the resistance between the two leads of the multimeter. Take this value and subtract it from the value recorded when measuring the resistance of the circuit being checked (The meter leads can add 0.5 ohm or more of total resistance).

1. Turn the ignition off.
2. Disconnect the wire harness connectors from the module and component for

the suspected circuit being shorted to ground.

NOTE: Check connectors - Clean/repair as necessary.

3. With the component wire harness connectors disconnected, use a meter set to measure Ohms (?), and measure the resistance between the circuit and a known good ground.
4. Use the negative lead of the meter and touch a known good ground.
5. Use the positive lead of the meter and carefully probe the circuit suspected of having the short.

Is the resistance to ground below 10k ohms ?

Yes

- Repair the short to ground. Use the wiring diagram as a guide to follow the path of the circuit.
- One method to help isolate the short is to disconnect any in-line connectors that the circuit being tested runs through and measure for the short again. If the short goes away, the short is on the other side of the in-line connector.

No

- The circuit is not shorted to ground or the condition that originally caused the short may not be present at this time. Continue to measure the resistance, wiggle the wire harness and connectors while checking for an intermittent short.
- Use the wiring diagram as a guide to trace the circuits and look for any in-line connectors where the short could occur intermittently.
- Look for any chafed, pierced, pinched, or partially broken wires.
- Look for broken, bent, pushed out or corroded terminals. Verify that there is good pin to terminal contact in the related wire harness connectors.
- Perform any Technical Service Bulletins (TSBs) that may apply.

CHECK A CIRCUIT FOR A SHORT TO VOLTAGE

THEORY OF OPERATION

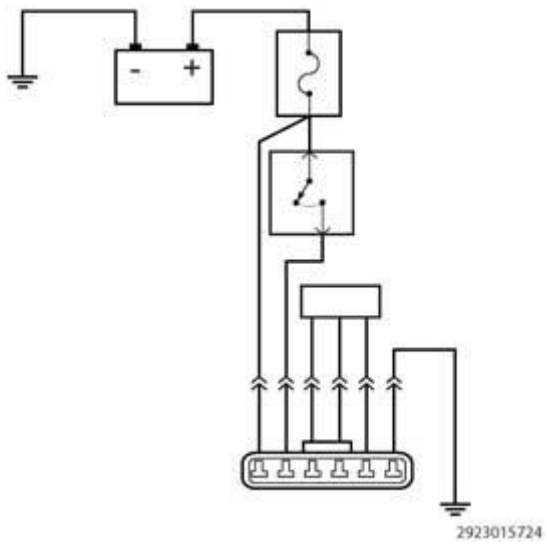

Fig. 13: Battery Circuit Diagram
Courtesy of CHRYSLER GROUP, LLC

The purpose of the following procedure is to demonstrate different methods of checking for a short to voltage in a circuit. When diagnosing a DTC it might be necessary to verify that proper voltage is on a circuit or that a circuit is not shorted high.

NOTE: The circuit shown is an example, and is intended for demonstrational purpose only.

The following are circuit tests covered in this procedure:

- Testing For A Short To Battery Voltage Using A Voltmeter
- Testing For A Short To Switched Battery Voltage Using A Voltmeter
- Testing For A Short To Battery Voltage Using A 12-Volt Test Light
- Testing For A Short To Switched Battery Voltage Using A 12-Volt Test Light

NOTE: Perform the following test using a known good test light or functioning multimeter.

Below is a list of possible causes that could be related to a Short To Voltage condition.

Possible Causes

SHORTED CIRCUIT (CHAFED, PIERCED OR PINCHED WIRES)
SHORTED IN-LINE CONNECTOR (BENT, PUSHED OUT OR CORRODED TERMINALS)

TEST PROCEDURES

1. **TESTING FOR A SHORT TO BATTERY VOLTAGE USING A TEST LIGHT**

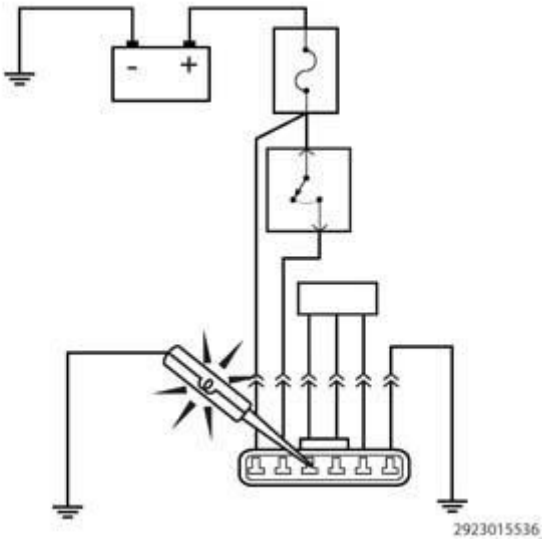

Fig. 14: Checking For A Short To Battery Voltage Using A Test Light
Courtesy of CHRYSLER GROUP, LLC

NOTE: Before testing any circuits, first verify the 12-volt test light is operating properly. Connect the 12-volt test light to battery ground or to any other known good ground. Touch the lead of the test light to Battery(+). If the test light is operational, it should illuminate brightly.

1. Turn the ignition off.
2. Disconnect the wire harness connectors of all components that contain the circuits that are suspected of having the short.

NOTE: Check connectors - Clean/repair as necessary.

3. At this time leave all in-line connectors connected.
4. Connect the 12-volt test light to a known good ground.

5. Use the lead of the test light and carefully probe the circuit suspected of having the short.

WARNING: When the engine is operating, do not stand in direct line with the fan. Do not put your hands near the pulleys, belts or fan. Do not wear loose clothing. Failure to follow these instructions may result in possible serious or fatal injury.

6. First, check with the ignition off, next with the ignition on, and lastly while cranking the engine.

   Does the test light illuminate brightly?

   Yes

   - Repair the short to voltage. Use the wiring diagram as a guide to trace the circuits and look for any in-line connectors where the short could occur.
   - One method to help isolate the short is to disconnect any in-line connectors that the circuit being checked runs through and check for the short again. If the short goes away, the short is on the other side of the in-line connector.

   No

   - The circuit is not shorted to voltage or the condition that originally caused the short may not be present at this time. Continue to measure the resistance and wiggle the wire harness to check for an intermittent short.

NOTE: By disconnecting the wire harness connectors you may have eliminated the source of the voltage causing the short. Use the wiring diagram as a guide, check to see if there are any battery circuits in the same wire harness as the circuit you are testing. It is necessary to check for a short to those

circuits using an ohmmeter. Refer to STANDARD PROCEDURE and perform the Check for a Short Between Multiple Circuits diagnostic procedure.

- Use the wiring diagram as a guide to trace the circuits and look for any in-line connectors where the short could occur intermittently.
- Look for any chafed, pierced, pinched, or partially broken wires.
- Look for broken, bent, pushed out or corroded terminals. Verify that there is good pin to terminal contact in the related component and wire harness connectors.
- Perform any Technical Service Bulletins (TSBs) that may apply.

2. **TESTING FOR A SHORT TO SWITCHED IGNITION VOLTAGE USING A TEST LIGHT**

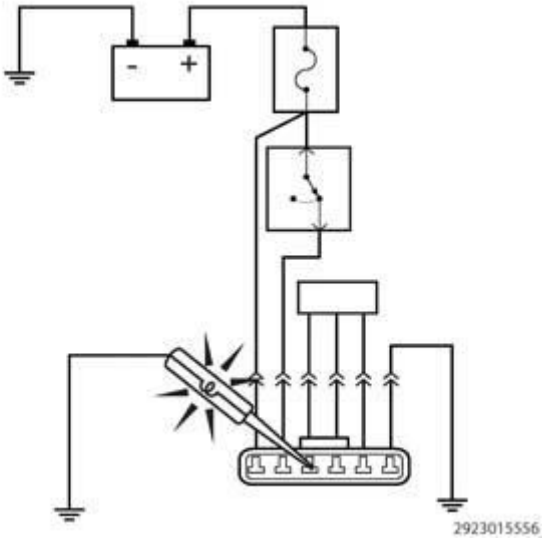

Fig. 15: Checking For A Short To Switched Ignition Voltage Using A Test Light
Courtesy of CHRYSLER GROUP, LLC

NOTE: Before testing any circuits, first verify the 12-volt test light is operating properly. Connect the 12-volt test light to battery ground or to any other known good ground. Touch the lead of the test light to Battery(+). If the test light is operational, it should illuminate brightly.

1. Turn the ignition off.
2. Disconnect the wire harness connectors of all components that contain the circuits that are suspected of having the short.

NOTE: Check connectors - Clean/repair as necessary.

3. At this time leave all in-line connectors connected.
4. Connect the 12-volt test light to a known good ground.
5. Use the lead of the test light and carefully probe the circuit suspected of having the short.

WARNING: When the engine is operating, do not stand in direct line with the fan. Do not put your hands near the pulleys, belts or fan. Do not wear loose clothing. Failure to follow these instructions may result in possible serious or fatal injury.

6. First, check with the ignition off, next with the ignition on, and lastly while cranking the engine.

   Does the test light illuminate brightly?

   Yes

   - Repair the short to voltage. Use the wiring diagram as a guide to trace the circuits and look for any in-line connectors where the short could occur.
   - One method to help isolate the short is to disconnect any in-line connectors that the circuit being checked runs through and check for the short again. If the short goes away, the short is on the other side of the in-line connector.

   No

   - The circuit is not shorted to voltage or the condition that originally caused the short may not be present at this time. Continue to measure the resistance and wiggle the wire harness to check for an intermittent short.

NOTE: By disconnecting the wire harness connectors you may have eliminated the source of the voltage causing the short. Use the wiring diagram as a guide, check to see if there are any battery circuits in the same wire harness as the circuit you are testing. It is necessary to check for a short to those circuits using an ohmmeter. Refer to STANDARD PROCEDURE and perform the Check for a Short Between Multiple Circuits diagnostic procedure.

- Use the wiring diagram as a guide to trace the circuits and look for any in-line connectors where the short could occur intermittently.
- Look for any chafed, pierced, pinched, or partially broken wires.
- Look for broken, bent, pushed out or corroded terminals. Verify that there is good pin to terminal contact in the related component and wire harness connectors.
- Perform any Technical Service Bulletins (TSBs) that may apply.

3. **TESTING FOR A SHORT TO BATTERY VOLTAGE USING A VOLTMETER**

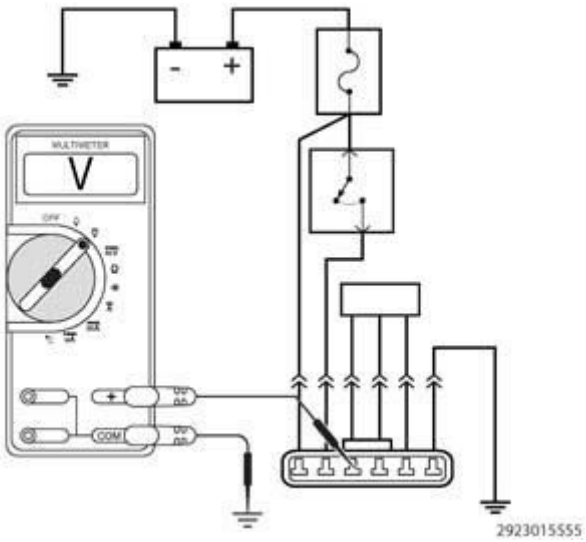

Fig. 16: Checking For A Short To Battery Voltage Using A Voltmeter
Courtesy of CHRYSLER GROUP, LLC

1. Turn the ignition off.

2. Disconnect the wire harness connectors of the components that contain the circuit that is suspected as having a short.

NOTE: Check connectors - Clean/repair as necessary.

3. At this time leave all in-line connectors connected.
4. With all the component wire harness connectors disconnected, use a multimeter set to measure DC voltage.
5. Connect the ground lead of the meter to a known good ground.
6. Use the positive lead of the multimeter and probe the circuit that is being checked for a short.

Is there any voltage present?

Yes

- Repair the short to battery voltage. Use the wiring diagram as a guide to trace the circuits and look for any in-line connectors where the short could occur.
- One method to help isolate the short is to disconnect any in-line connectors that the circuit being checked runs through and measure for the short again. If the short goes away, the short is on the other side of the in-line connector.

No

- The circuit is not shorted to voltage or the condition that originally caused the short may not be present at this time. Continue to measure the voltage and wiggle the wire harness to check for an intermittent short.

NOTE: By disconnecting the wire harness connectors you may have eliminated the source of the voltage causing the short. Use the wiring diagram as a guide, check to see if there are any battery circuits in the same wire harness as the circuit you are testing. It is necessary to check for a short to those

circuits using an ohmmeter. Refer to STANDARD PROCEDURE and perform the Check for a Short Between Multiple Circuits diagnostic procedure.

- Use the wiring diagram as a guide to trace the circuits and look for any in-line connectors where the short could occur intermittently.
- Look for any chafed, pierced, pinched, or partially broken wires.
- Look for broken, bent, pushed out or corroded terminals. Verify that there is good pin to terminal contact in the related wire harness connectors.
- Perform any Technical Service Bulletins (TSBs) that may apply.

4. **TESTING FOR A SHORT TO SWITCHED IGNITION VOLTAGE USING A VOLTMETER**

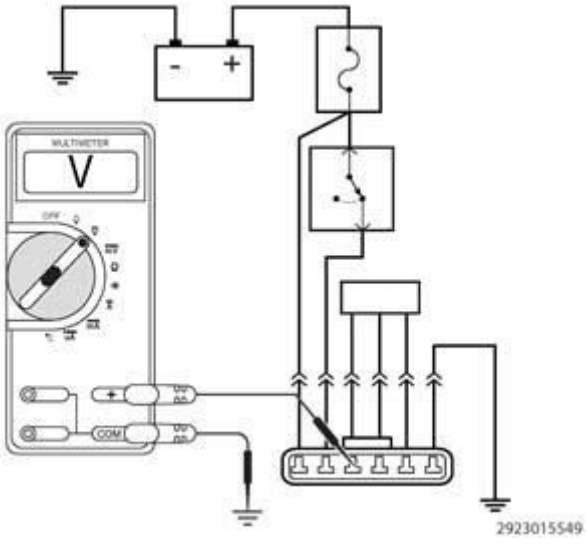

Fig. 17: Checking For A Short To Switched Ignition Voltage Using A Voltmeter
Courtesy of CHRYSLER GROUP, LLC

1. Turn the ignition off.
2. Disconnect the wire harness connectors of all components that contain the circuits that are suspected as being shorted.

NOTE: Check connectors - Clean/repair as necessary.

3. At this time leave all in-line connectors connected.

4. With all the component wire harness connectors disconnected, use a multimeter set to measure DC voltage.
5. Connect the ground lead of the meter to a known good ground.
6. Use the positive lead of the multimeter and probe the circuit suspected of having the short.
7. Ignition on, engine not running.

Is any voltage present?

Yes

- Repair the short to ignition voltage. Use the wiring diagram as a guide to trace the circuits and look for any in-line connectors where the short could occur.
- One method to help isolate the short is to disconnect any in-line connectors that the circuit being checked runs through and check for the short again. If the short goes away, the short is on the other side of the in-line connector.

No

- The circuit is not shorted to voltage or the condition that originally caused the short may not be present at this time. Continue to measure the voltage and wiggle the wire harness to check for an intermittent short.

NOTE: By disconnecting the wire harness connectors you may have eliminated the source of the voltage causing the short. Use the wiring diagram as a guide, check to see if there are any battery circuits in the same wire harness as the circuit you are testing. It is necessary to check for a short to those circuits using an ohmmeter. Refer to STANDARD PROCEDURE and perform the Check for a Short Between Multiple Circuits diagnostic procedure.

- Use the wiring diagram as a guide to trace the circuits and look for any in-line connectors where the short could occur intermittently.
- Look for any chafed, pierced, pinched, or partially broken wires.
- Look for broken, bent, pushed out or corroded terminals. Verify that there is good pin to terminal contact in the related wire harness connectors.
- Perform any Technical Service Bulletins (TSBs) that may apply.

CHECK FOR AN OPEN GROUND CIRCUIT

THEORY OF OPERATION

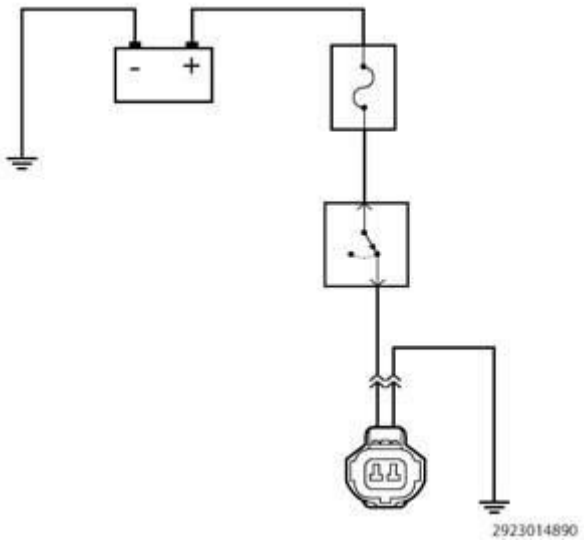

Fig. 18: Checking 12-Volt Switched Battery B(+) Circuit For Voltage
Courtesy of CHRYSLER GROUP, LLC

The purpose of the following procedure is to demonstrate how to check the operation of a generic ground circuit with a test light.

NOTE: The circuit shown is an example, and is intended for demonstrational purpose only.

The following are circuit tests covered in this procedure:

- Testing Ground Circuit With Test Light

NOTE: Perform the following test using a known good test light.

Possible Causes
OPEN GROUND CIRCUIT (CHAFED, PIERCED, PINCHED OR BROKEN WIRE)
OPEN IN-LINE CONNECTOR (BENT, PUSHED OUT OR CORRODED TERMINALS)

TEST PROCEDURES

TESTING GROUND CIRCUIT WITH TEST LIGHT

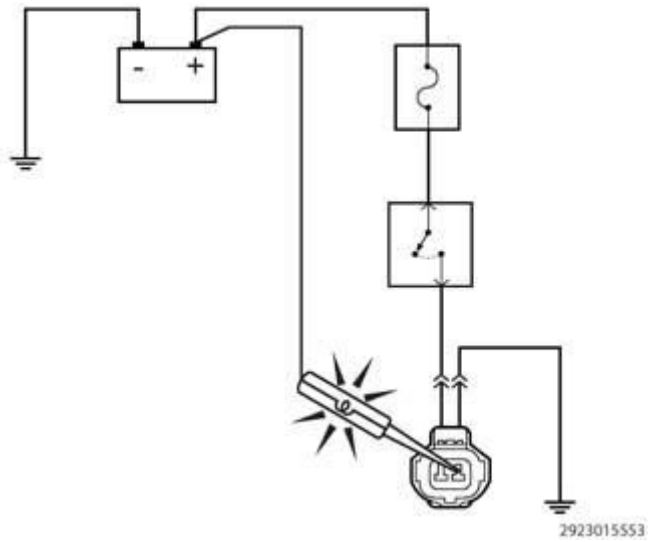

Fig. 19: Checking Ground Circuit With Test Light
Courtesy of CHRYSLER GROUP, LLC

NOTE: Before testing any circuits, first verify the 12-volt test light is operating properly. Connect the 12-volt test light to battery ground or to any other known good ground. Touch the lead of the test light to Battery(+). If the test light is operational, it should illuminate brightly.

1. Turn the ignition off.
2. Disconnect the wire harness connectors of the components that contain the ground circuit suspected of containing excessive resistance.

NOTE: Check connectors - Clean/repair as necessary.

3. At this time leave all in-line connectors connected.
4. With all the component wire harness connectors disconnected, connect the

12-volt test light to Battery(+).

5. Use the test light lead to lightly probe the ground circuit in the harness connector.

   Does the test light illuminate brightly?

   Yes

   - The suspected ground circuit is not open or the condition that originally caused the open or excessive resistance is not present at this time. Another way to check for an open would be to use an ohmmeter and measure the resistance of the ground circuit. While continuing to measure the resistance of the circuit, wiggle the wire harness and connectors to check for an intermittent open or poor connection.
   - Use the wiring diagram as a guide to trace the circuits and look for any in-line connectors where the open could occur intermittently.
   - Look for any chafed, pierced, pinched, or partially broken wires.
   - Look for broken, bent, pushed out or corroded terminals. Verify that there is good pin to terminal contact in the related wire harness connectors.
   - Perform any Technical Service Bulletins (TSBs) that may apply.

   No

   - Repair the open in the ground circuit. Use the wiring diagram as a guide to trace the circuit and look for any in-line connectors where the open could occur.
   - One method to help isolate the open is to disconnect any in-line connectors and measure the resistance from one side of the in-line connector to the matching component harness connector. If the open goes away, the open is on the other side of the in-line connector.

CHECK FOR A SHORT BETWEEN MULTIPLE CIRCUITS

THEORY OF OPERATION

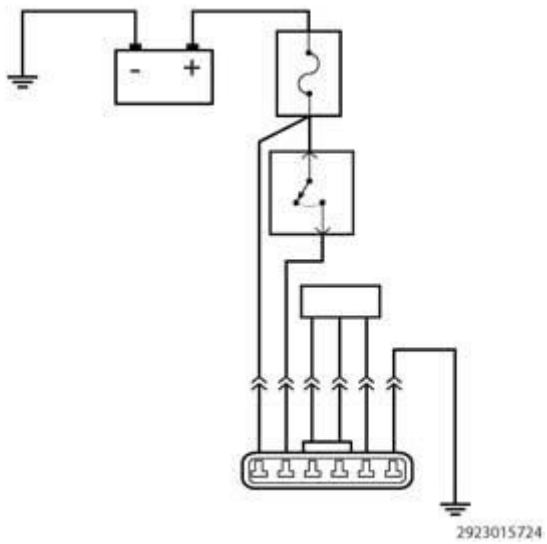

Fig. 20: Battery Circuit Diagram
Courtesy of CHRYSLER GROUP, LLC

The purpose of the following procedure is to demonstrate how to check for a short circuit between multiple circuits.

NOTE: The circuit shown is an example, and is intended for demonstrational purpose only.

The following are circuit tests covered in this procedure:

- Testing For A Short Between Multiple Circuits

NOTE: Perform the following test using a known good multimeter.

Below is a list of possible causes that could be related to a Multiple Short condition.

Possible Causes
SHORTED CIRCUIT (CHAFED, PIERCED OR PINCHED WIRES)
SHORTED IN-LINE CONNECTOR (BENT, PUSHED OUT OR CORRODED TERMINALS)

TEST PROCEDURES

TESTING FOR A SHORT BETWEEN MULTIPLE CIRCUITS

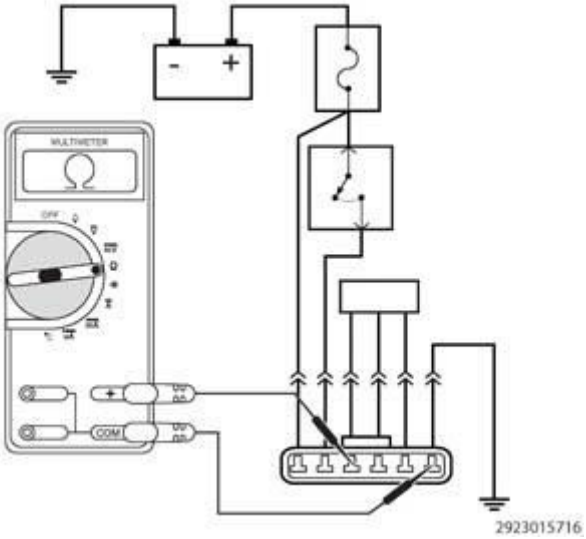

Fig. 21: Checking For A Short Between Multiple Circuits
Courtesy of CHRYSLER GROUP, LLC

NOTE: Before measuring the resistance of any circuit, first measure the resistance between the two leads of the multimeter. Take this value and subtract it from the value recorded when measuring the resistance of the circuit being checked (The meter leads can add 0.5 ohm or more of total resistance).

1. Turn the ignition off.
2. Disconnect the wire harness connectors of the components that contain the circuits that are suspected of being shorted together.

NOTE: Check connectors - Clean/repair as necessary.

3. At this time leave all in-line connectors connected.
4. With all the component wire harness connectors disconnected, use a multimeter set to Ohms (?), and measure the resistance between the applicable circuits in one of the harness connectors.
5. Use one lead of the multimeter and carefully probe the circuit suspected of being shorted.
6. Use the other lead of the meter and one at a time, carefully probe the other circuits in the harness connector.

   Is the resistance below 10k ohms when probing any two circuits?

Yes

- Repair the short between the circuits. Use the wiring diagram as a guide to trace the circuits and look for any in-line connectors where the short could occur.
- One method to help isolate the short is to disconnect any in-line connectors that the circuit being tested runs through and measure for the short again. If the short goes away, the short is on the other side of the in-line connector.

No

- The circuit is not shorted or the condition that originally caused the short may not be present at this time. Continue to measure the resistance and wiggle the wire harness and connectors while checking for an intermittent short.

NOTE: By disconnecting the wire harness connectors you may have eliminated the source that was causing the short.

- Use the wiring diagram as a guide to trace the circuits and look for any in-line connectors where the short could occur intermittently.
- Look for any chafed, pierced, pinched, or partially broken wires.
- Look for broken, bent, pushed out or corroded terminals. Verify that there is good pin to terminal contact in the related wire harness connectors.
- Perform any Technical Service Bulletins (TSBs) that may apply.

CHECK THE RESISTANCE OF A CIRCUIT USING AN OHMMETER

THEORY OF OPERATION

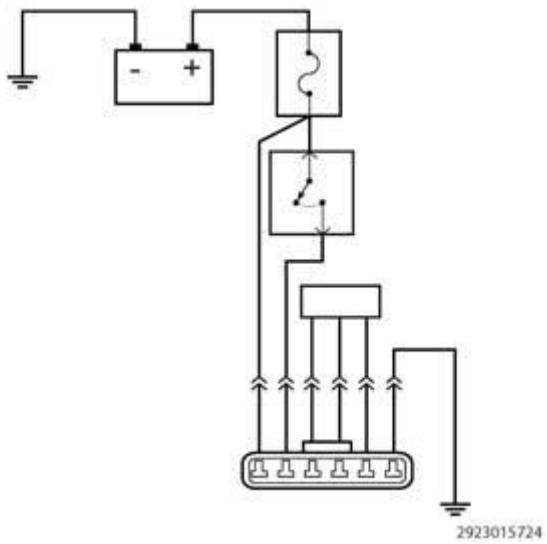

Fig. 22: Battery Circuit Diagram
Courtesy of CHRYSLER GROUP, LLC

The purpose of the following procedure is to demonstrate how to check the resistance of a circuit with an ohmmeter.

NOTE: The circuit shown is an example, and is intended for demonstrational purpose only.

The following are circuit tests covered in this procedure:

- Testing For An Open Circuit Using An Ohmmeter

NOTE: Perform the following test using a known good multimeter.

Below is a list of possible causes that could be related to an Open Circuit condition.

Possible Causes
OPEN CIRCUIT (CHAFED, PIERCED, PINCHED OR BROKEN WIRES)
OPEN IN-LINE CONNECTOR (BENT, PUSHED OUT OR CORRODED TERMINALS)

TEST PROCEDURES

TESTING FOR AN OPEN CIRCUIT USING AN OHMMETER

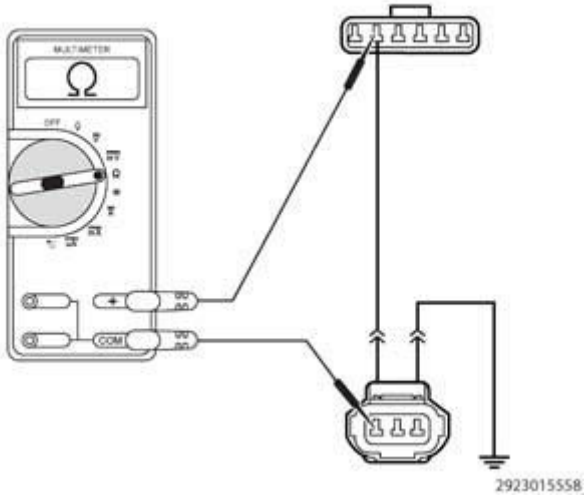

Fig. 23: Checking For An Open Circuit Using An Ohmmeter
Courtesy of CHRYSLER GROUP, LLC

NOTE: Before measuring the resistance of any circuit, first measure the resistance between the two leads of the multimeter. Take this value and subtract it from the value recorded when measuring the resistance of the circuit being checked (The meter leads can add 0.5 ohm or more of total resistance).

1. Turn the ignition off.
2. Disconnect the wire harness connectors of the components that contain the circuit suspected of being open.

NOTE: Check connectors - Clean/repair as necessary.

3. At this time leave all in-line connectors connected.
4. With the component wire harness connectors disconnected, use a multimeter set to Ohms (?), and measure the resistance of the circuit.
5. Use one lead of the meter and probe the circuit in one harness connector.
6. Use the other lead of the meter and probe the same circuit in the other harness connector.

Is the resistance in the circuit below 10k ohms?

Yes

- The circuit does not contain any excessive resistance or the condition that originally caused the excessive resistance may not be present at this time. Continue to measure the resistance of the circuit, wiggle the wire harness and connectors to check for an intermittent open or poor connection.
- Use the wiring diagram as a guide to trace the circuits and look for any in-line connectors where the open could occur intermittently.
- Look for any chafed, pierced, pinched, or partially broken wires.
- Look for broken, bent, pushed out or corroded terminals. Verify that there is good pin to terminal contact in the related wire harness connectors.
- Perform any Technical Service Bulletins (TSBs) that may apply.

No

- Repair the excessive resistance in the circuit between the two wire harness connectors. Using the wiring diagram as a guide, trace the circuit and check for any in-line connectors where the open or excessive resistance could occur.
- One method to help isolate the open is to disconnect any in-line connectors and measure the resistance from one side of the in-line connector to the matching component harness connector. If the open or excessive resistance is not present, the open or excessive resistance is on the other side of the in-line connector.

CHECK FOR EXCESSIVE CURRENT DRAW

THEORY OF OPERATION

What is current draw?

Current draw, or parasitic draw is an electrical load that draws current from the battery when the ignition is turned off. Some are considered normal, some above normal. Normal draw comes from various electronic devices connected to battery positive at all times. Many vehicle modules draw a few mA (milliamps) as a means to "Keep Alive Memory". Whether it's the clock in the radio or the last known position of the memory mirrors, these tiny amounts of current typically will only add up to 20 or 30 mA. The vehicle can sit parked for days, even a few weeks without any problems of excessive battery drain that might prevent

starting. As long as the vehicle is driven periodically in order for the alternator to recharge the battery there is no problem. A problem may occur, in situations such as new vehicles in dealer stock or long term airport parking situations.

Below are some examples of modules and components that require keep alive memory:

- Powertrain Control Module (PCM)
- Body Control Module (BCM)
- Memory Seat Module (MSM)
- Radio

What is excessive current draw?

Excessive current draw can be determined by an ammeter reading in excess of 50 mA. The typical "normal" current draw will not exceed 20 or 30 mA.

How to locate the problem?

Locating the problem involves a process of elimination. If the problem is not obvious, like the trunk light staying on, you will have to start troubleshooting:

- Start by removing one fuse at a time until you see the reading on the meter drop off (be careful to reinstall the fuses in their proper location).
- Once you've determined the high-draw circuit, there still may be a half-dozen loads, each individually drawing current from the battery.
- To zero in on that circuit or circuits, use the schematic diagram and disconnect each device on the circuit one-at-a-time and check the meter.
- When the milliamp reading drops off significantly, you've found the problem.

Perform the following test to determine where the cause of the draw is located.

Possible Causes
INSTALLED AFTERMARKET ACCESSORIES (AUDIO SYSTEMS, VEHICLE ALARMS, ETC.)
COURTESY LIGHTS REMAINING ON (INTERIOR, TRUNK, HOOD, ETC.)

BATTERY CHARGERS PLUGGED INTO THE CIGARETTE LIGHTER/POWER OUTLETS

TEST PROCEDURES

TESTING FOR PARASITIC DRAW

NOTE: For a more accurate current draw reading, wait 20 minutes to make sure all modules have powered down before continuing. Some modules may stay powered up longer than others.

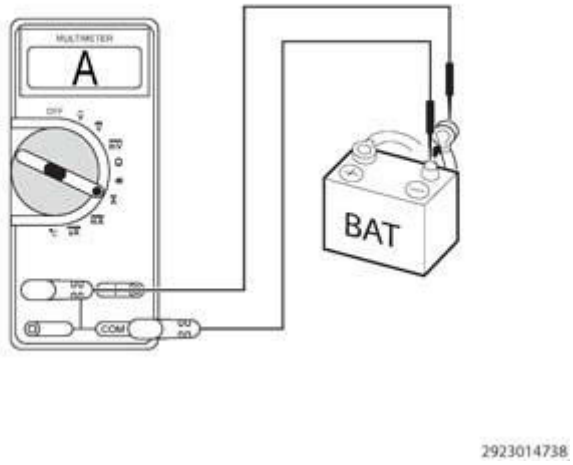

Fig. 24: Checking For Parasitic Draw Using Multimeter
Courtesy of CHRYSLER GROUP, LLC

Turn the ignition off.

1. Disconnect the Negative battery cable (ground).
2. Using a multimeter, set the multimeter leads up to properly measure Amperage.
3. Connect the ground lead that is plugged into the COM port of the multimeter to the Negative battery post/terminal.
4. Connect the other lead of the multimeter that is plugged into the Amp port of the multimeter to the Negative battery cable.

CAUTION: Do not crank the engine or turn on any accessories that may draw more than 10

Amps. You may open the protective fuse in the multimeter.

5. While monitoring the amperage reading on the multimeter, begin to remove fuses (one at a time) from each fuse location on the vehicle and see if the amperage drops.

NOTE:

- **Only remove one fuse at a time until the cause of the voltage draw is determined.**
- **Many vehicles have multiple fuse locations on the vehicle.**

6. If the amperage does not drop, install the fuse you just removed and remove the next fuse.

   Does the amperage drop to between 0.02 to 0.04 of an Amp when removing any fuses?

   Yes

   - Use the wiring diagram as a guide to help indicate what components or modules are powered by the fuse.
   - At this point you can install the fuse and begin disconnecting the components powered by the fuse.
     - When the amperage drops after disconnecting a component this will indicate which component is at fault.
     - It is important to know how long some modules are designed to remain awake.
     - You don't want to replace a component that is operating normally.
     - The condition that originally caused the draw may not be present at this time.

   No

   - The condition that originally caused the draw may not be present at this time.
   - Look for any chafed, pierced, pinched, or partially broken wires.
   - Look for broken, bent, pushed out or corroded ground terminals.

- Perform any Technical Service Bulletins (TSBs) that may apply.

CIRCUIT LOAD TESTING PROCEDURE

THEORY OF OPERATION

A circuit load test can be performed to test the ability of a circuit to carry the current required to operate a connected device. A circuit load test should be performed after a circuit has passed a resistance test using a DVOM and the circuit is still suspected of a failure.

- A single copper wire strand will carry enough current to light a test light bulb, while showing very low resistance using a DVOM.
- Some test lights are insufficient for load testing because of the very low resistance bulb being used.
- The Load Test tool listed below will require higher current flow to power the bulb; and this will test the ability of the circuit to carry a load.
- This test will indicate if the circuit being tested can carry the current required to operate a connected device.

WARNING: To avoid possible serious or fatal injury, DO NOT load test any air bag/restraint system components or circuits using the procedures listed here. Refer to the Service Information for proper air bag/restraint system testing procedures.

CAUTION: Do not load test any circuits with components still connected to the circuit.

NOTE: Depending upon the location of the circuit in question, this test may require jumper wires.

NOTE: Use the wiring diagrams as a guide to trace the circuits and look for any in-line connectors where the circuit failure could occur intermittently. Look for any chafed, pierced, pinched, or partially broken wires. Look for broken, bent, pushed out or corroded terminals - clean/repair as necessary. Verify that there is good pin to terminal contact in the related wire harness connectors.

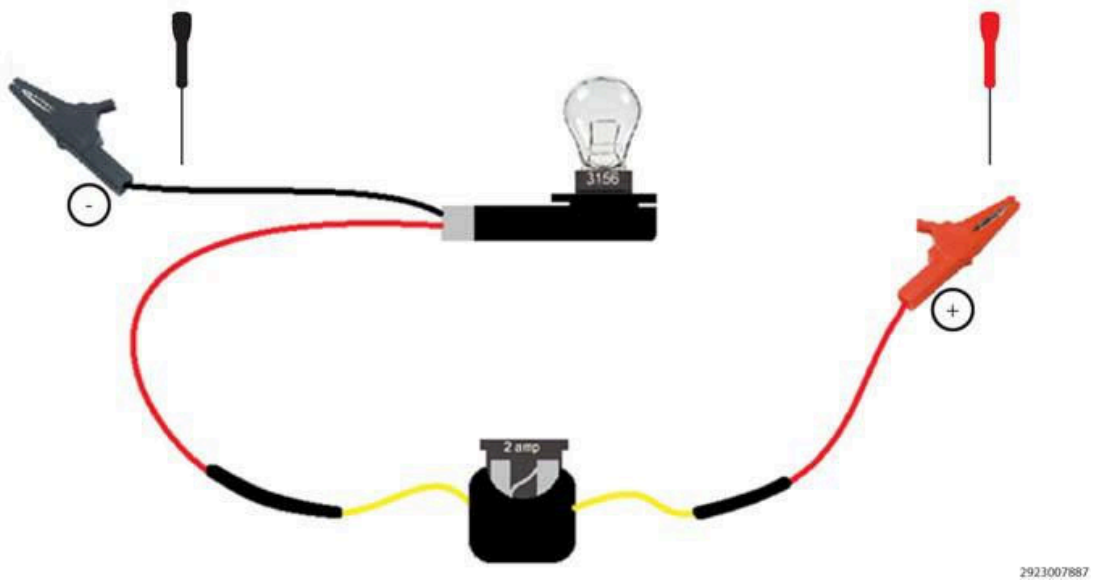

Fig. 25: Checking Good Pin To Terminal Contact
Courtesy of CHRYSLER GROUP, LLC

Here is an example of a simple tool you can build to test a circuit`s ability to carry a load.

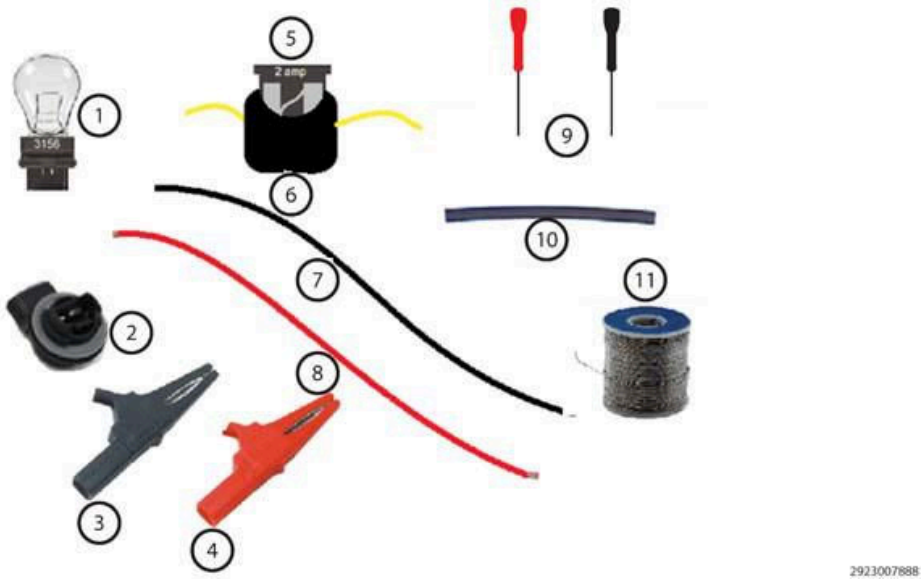

Fig. 26: Load Test Tool Components
Courtesy of CHRYSLER GROUP, LLC

The following is a list of components required to build a load test tool:

1. 3156 Bulb
2. 3156 Bulb socket

3. Negative alligator clip with covers
4. Positive alligator clip with covers
5. 2 Amp mini fuse
6. Mini fuse holder
7. 2' to 4' of Black 16ga wire
8. 2' to 4' of Red 16ga wire
9. Approved back probe tool
10. Shrink tubing
11. Solder

LOAD TESTING A GROUND CIRCUIT

DIAGNOSTIC LOAD TEST (GROUND CIRCUIT)

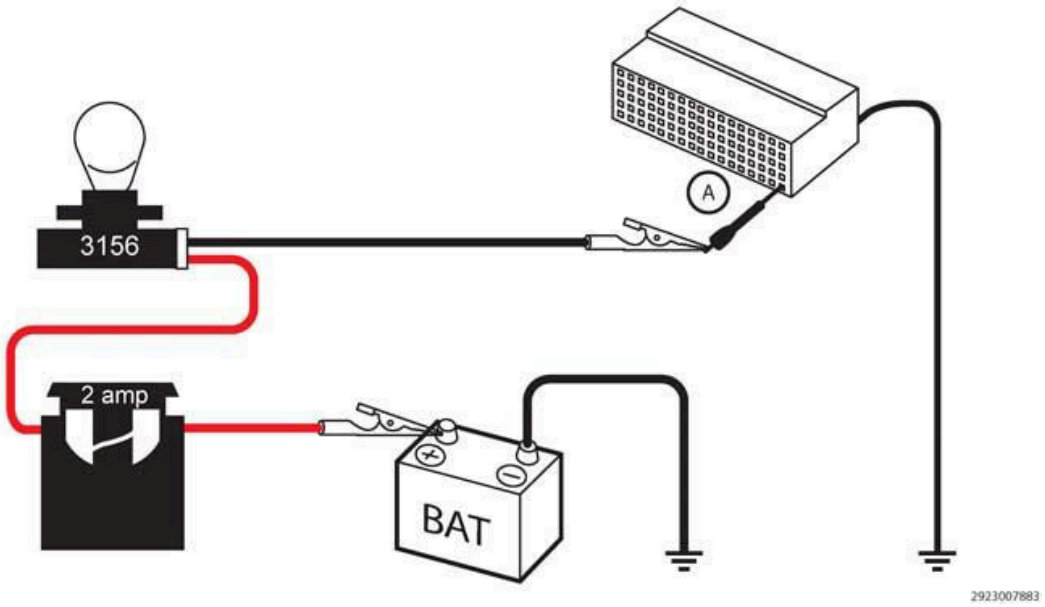

Fig. 27: Performing Diagnostic Load Test (Ground Circuit)
Courtesy of CHRYSLER GROUP, LLC

1. Disconnect the connector from the device(s) to gain access and isolate the terminal for the circuit being tested.
2. Connect the positive lead of the load test tool to the positive side of the battery.
3. Using an approved connector back probe tool, connect the negative lead of the load test tool to the circuit being tested at point (A).

CAUTION: Use only approved connector back probe tools when back probing a connector so as not to cause damage to the terminals or insulation of the connector. Damage to the terminals can cause poor terminal contact or retention. Damage to the insulation can introduce corrosion due to water infiltration.

Does the bulb light bright, when compared to a direct battery connection?

Yes

- The circuit being tested can carry a load, check other circuits, connectors and terminals for concerns.

No

- Repair the circuit, connector or terminal that has an open or excessive resistance.
- Perform any related Recalls or Technical Service Bulletins (TSBs) that may apply.

LOAD TESTING A BATTERY OR IGNITION FEED CIRCUIT

DIAGNOSTIC LOAD TEST (BATTERY/IGNITION FEED CIRCUIT)

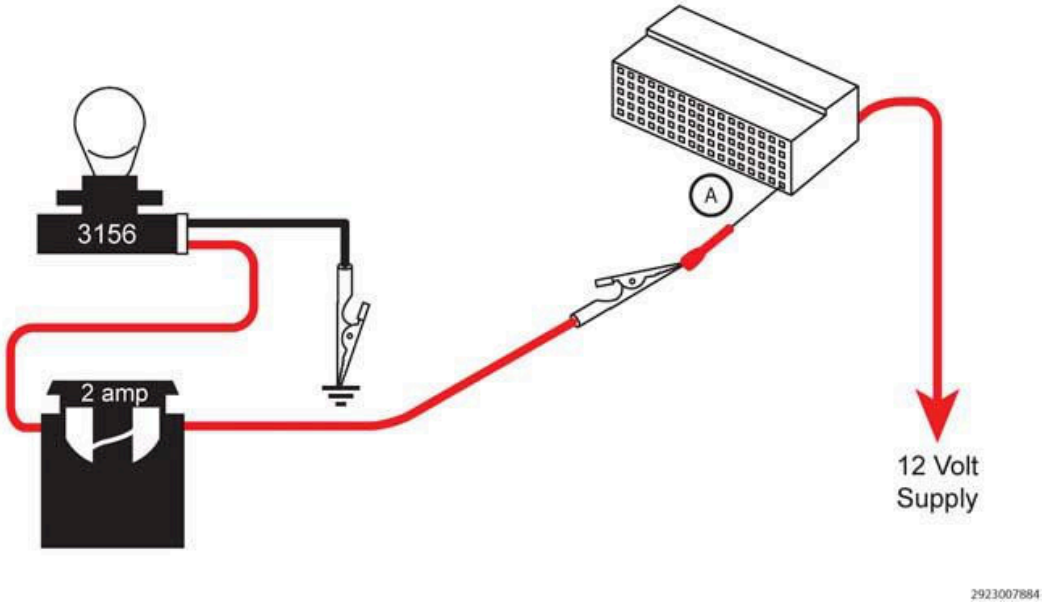

Fig. 28: Performing Diagnostic Load Test (Battery/Ignition Feed Circuit)

Courtesy of CHRYSLER GROUP, LLC

1. Disconnect the connector from the device(s) to gain access and isolate the terminal for the circuit being tested.
2. Using an approved connector back probe tool, connect the positive lead of the load test tool to the circuit being tested at point (A).
3. Connect the negative lead of the load test tool to the negative side of the battery or ground.

CAUTION: Use only approved connector back probe tools when back probing a connector so as not to cause damage to the terminals or insulation of the connector. Damage to the terminals can cause poor terminal contact or retention. Damage to the insulation can introduce corrosion due to water infiltration.

Does the bulb light bright, when compared to a direct battery connection?

Yes

- The circuit being tested can carry a load, check other circuits, connectors and terminals for concerns.

No

- Repair the circuit, connector or terminal that has an open or excessive resistance.
- Perform any related Recalls or Technical Service Bulletins (TSBs) that may apply.

LOAD TESTING A BATTERY OR IGNITION FEED CIRCUIT AND GROUND CIRCUIT

DIAGNOSTIC LOAD TEST (BATTERY FEED & GROUND CIRCUIT)

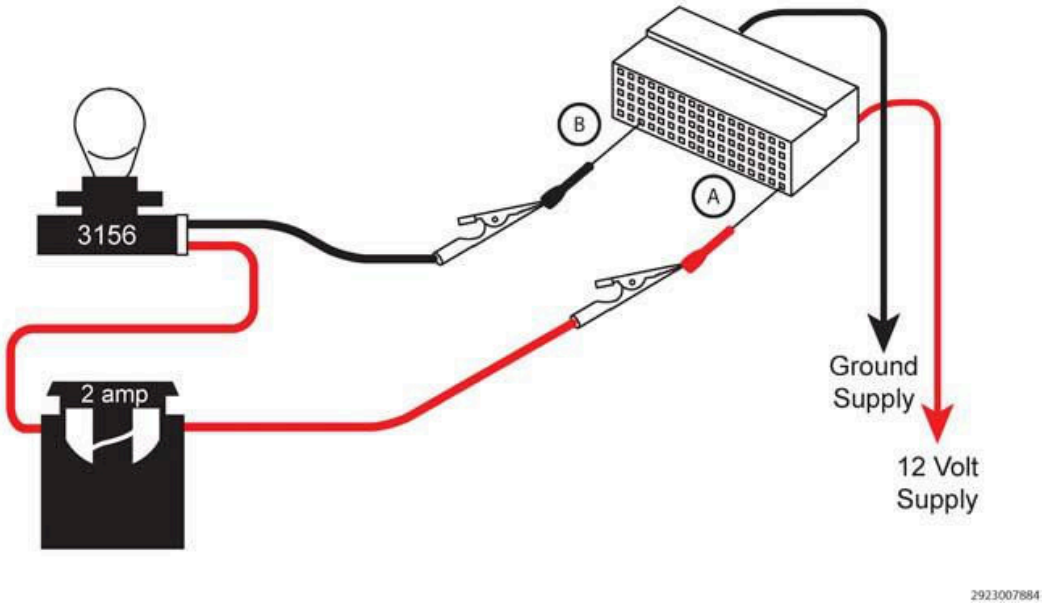

Fig. 29: Performing Diagnostic Load Test (Battery Feed & Ground Circuit)
Courtesy of CHRYSLER GROUP, LLC

1. Disconnect the connector from the device(s) to gain access and isolate the terminal for the circuit being tested.
2. Using an approved connector back probe tool, connect the positive lead of the load test tool to the circuit being tested at point (A).
3. Using an approved connector back probe tool, connect the negative lead of the load test tool to the circuit being tested at point (B).

CAUTION: Use only approved connector back probe tools when back probing a connector so as not to cause damage to the terminals or insulation of the connector. Damage to the terminals can cause poor terminal contact or retention. Damage to the insulation can introduce corrosion due to water infiltration.

Does the bulb light bright, when compared to a direct battery connection?

Yes

- The circuit being tested can carry a load, check other circuits, connectors and terminals for concerns.

No

- Test the circuits individually to determine which circuit is the cause of the test failure.
- Repair the circuit, connector or terminal that has an open or excessive resistance.
- Perform any related Recalls or Technical Service Bulletins (TSBs) that may apply.

LOAD TESTING A CIRCUIT FOR AN OPEN OR HIGH RESISTANCE

DIAGNOSTIC LOAD TEST (OPEN/HIGH RESISTANCE CIRCUIT)

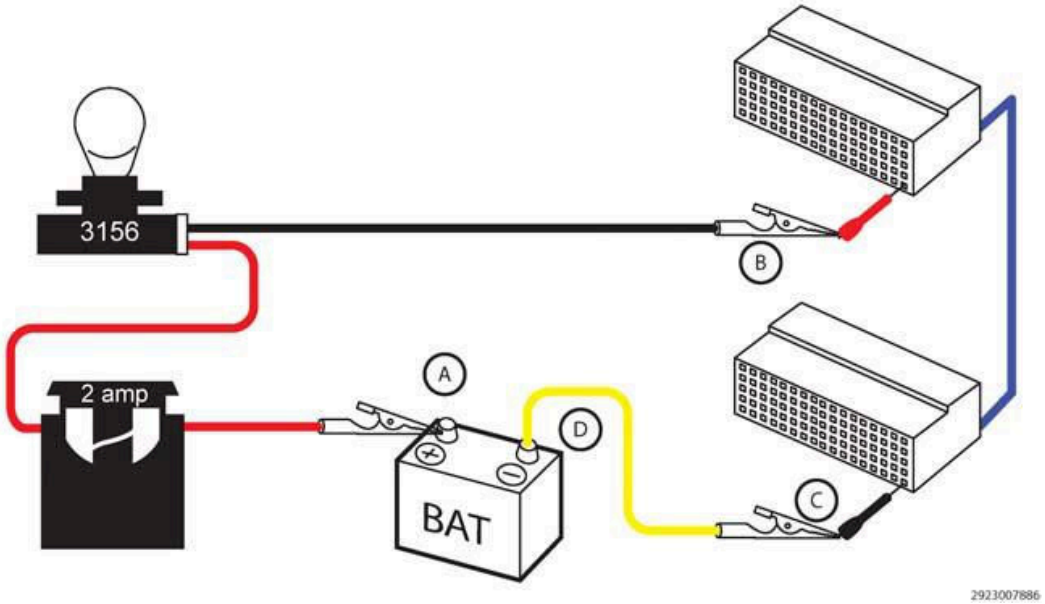

Fig. 30: Performing Diagnostic Load Test (Open/High Resistance Circuit)
Courtesy of CHRYSLER GROUP, LLC

1. Disconnect all components from the circuit being tested.
2. Connect the positive lead of the load test tool to the positive side of the battery (A).
3. Using an approved connector back probe tool, connect the negative lead of the load test tool to the circuit being tested at point (B).
4. Using an approved connector back probe tool, connect a jumper wire to the circuit being tested at point (C).
5. Then connect the other end of the jumper wire to the negative side of the battery or ground (D).

CAUTION: Use only approved connector back probe tools

when back probing a connector so as not to cause damage to the terminals or insulation of the connector. Damage to the terminals can cause poor terminal contact or retention. Damage to the insulation can introduce corrosion due to water infiltration.

Does the bulb light bright, when compared to a direct battery connection?

Yes

- The circuit being tested can carry a load, check other circuits, connectors and terminals for concerns.

No

- Repair the circuit, connector or terminal that has an open or excessive resistance.
- Perform any related Recalls or Technical Service Bulletins (TSBs) that may apply.

VOLTAGE DROP TEST PROCEDURE

THEORY OF OPERATION

Voltage drop is the reduction in voltage in an electrical circuit between the voltage source and load components. The wires and connectors of a circuit should contain almost no resistance and **all** the voltage should be consumed through the load. The "load" is the component using the power, such as a light, starter, or blower motor. If a circuit has excessive resistance, it prevents the wire from carrying sufficient current under high load conditions. A voltage drop test is an effective way to locate excessive resistance in connections and circuits.

To preform a voltage drop test, a Digital Volt Ohm Meter (DVOM) is used to measure the voltage drop across a live circuit or connection while it is under the load. If the circuit or connection being tested has excessive resistance, the DVOM will measure the voltage that the resistance is using. **Little or no voltage drop should be read, ideally less than 0.2 of a volt** , anything greater indicates excessive resistance and the circuit or connection should be inspected for cleaning or repair.

Possible Causes
EXCESSIVE CIRCUIT RESISTANCE (CHAFED, PIERCED OR CORRODED WIRES)
HIGH RESISTANCE WITH IN-LINE CONNECTOR (BENT, PUSHED OUT OR CORRODED TERMINALS)

TEST PROCEDURES

TESTING FOR VOLTAGE DROP

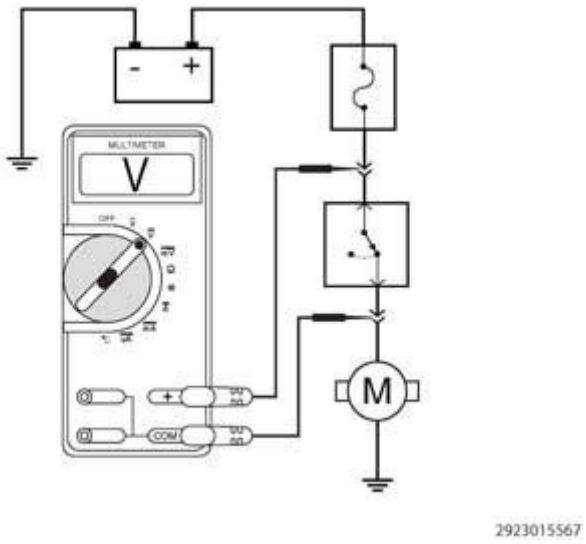

Fig. 31: Testing for Voltage Drop
Courtesy of CHRYSLER GROUP, LLC

1. Turn the ignition off.
2. Use the wiring diagram as a guide, trace the circuit being tested and locate the components related to the circuit.
3. Set the multimeter to measure DC voltage.
4. Carefully back probe the two component harness connectors of the circuit being tested.

WARNING: When the engine is operating, do not stand in direct line with the fan. Do not put your hands near the pulleys, belts or fan. Do not wear loose clothing. Failure to follow these instructions may result in possible serious or fatal injury.

NOTE: If you are testing the starting circuit, disable the engine so the engine does not start.

5. Crank the engine for five seconds if you are testing the starting circuit and monitor the multimeter voltage reading.
6. For circuits that don't require the engine running, turn the ignition on.
7. For circuits that require the engine running, start the engine.

NOTE: If the circuit you are checking needs to be operating, such as the Blower Motor or a Lamp, do so now.

8. Monitor the voltage reading.
9. The voltmeter will show the difference in voltage between the two points.

Is the voltage less than 0.2 of a Volt?

Yes

- At this time the circuit is functioning properly. Continue to measure the voltage between the components and wiggle the wire harness and connectors while checking for an intermittent condition.
- Use the wiring diagram as a guide to trace the circuits and look for any in-line connectors where the excessive resistance could occur intermittently.
- Look for any chafed, pierced, pinched, or partially broken wires.
- Look for broken, bent, pushed out or corroded terminals. Verify that there is good pin to terminal contact in the related wire harness connectors.
- Perform any Technical Service Bulletins (TSBs) that may apply.

No

- Repair the excessive resistance in the circuit.
- Use the wiring diagram as a guide to trace the circuit and look for any in-line connectors where the excessive resistance may occur.
- Look for any chafed, pierced, pinched, or partially broken wires.
- Look for broken, bent, pushed out or corroded terminals. Verify that

there is good pin to terminal contact in the related wire harness connectors.

- Perform any Technical Service Bulletins (TSBs) that may apply.

ELECTROSTATIC DISCHARGE (ESD) SENSITIVE DEVICES

Fig. 32: Electrostatic Discharge Symbol
Courtesy of CHRYSLER GROUP, LLC

All ESD sensitive components are solid state and a symbol is used to indicate this. When handling any component with this symbol, comply with the following procedures to reduce the possibility of electrostatic charge build up on the body and inadvertent discharge into the component. If it is not known whether the component is ESD sensitive, assume that it is.

Perform the following procedure when handling ESD sensitive components:

1. Always touch a known good ground before handling the component. This should be repeated while handling the component and more frequently after sliding across a seat, sitting down from a standing position, or walking a distance.
2. Avoid touching electrical terminals of the component, unless instructed to do so by a written procedure.
3. When using a voltmeter, be sure to connect the ground lead first.
4. Do not remove the component from its protective packing until it is time to install the component.
5. Before removing the component from its package, ground the package to a known good ground on the vehicle.

WIRE SPLICING

YouTube	A multimedia supplement to the instructions contained in this article is available.

	To view the multimedia example of the condition described go to; **http://www.youtube.com/user/Mitchell1Tips then type "A00612784.vid1" into the "Search Channel" box.**

CAUTION: If additional wire is needed when making a splice repair to any wire, it is important that the same or next larger size wire gauge be used. Refer to the appropriate wiring diagram for the original wire gauge size.

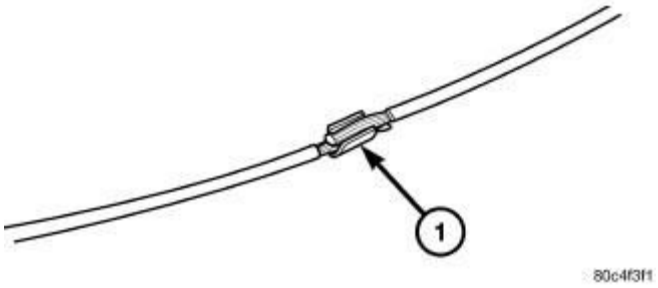

Fig. 33: Splice Band
Courtesy of CHRYSLER GROUP, LLC

1. Remove 13 millimeters (0.50 inch) of insulation from each wire that needs to be spliced.
2. Place a piece of adhesive sealant-lined heat shrink tubing (Part Number 04778570 or equivalent) over the wire on one side of the splice. Be certain the length of tubing will be sufficient to cover and seal the entire repair area.
3. Place the strands of the wires being spliced so that they are overlapping each other within the splice band (1).

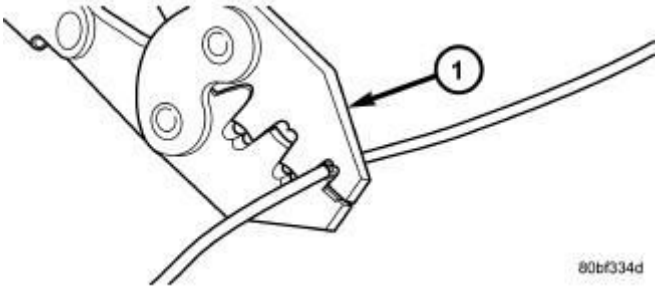

Fig. 34: Crimping Tool
Courtesy of CHRYSLER GROUP, LLC

4. Using a crimping tool (1) (MOPAR Part Number 05019912AA, Miller Special Tool Number (special tool #10042, Crimper, Wire/Terminal) or equivalent) crimp the splice band and wires together securely.

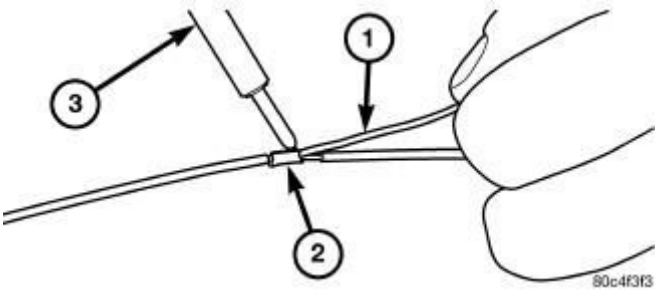

Fig. 35: Solder Splice
Courtesy of CHRYSLER GROUP, LLC

CAUTION: Never use acid core solder for electrical wiring repairs.

5. Using Rosin Core type solder (1) only and a suitable soldering iron (3), solder the wire and splice band connection (2) together.

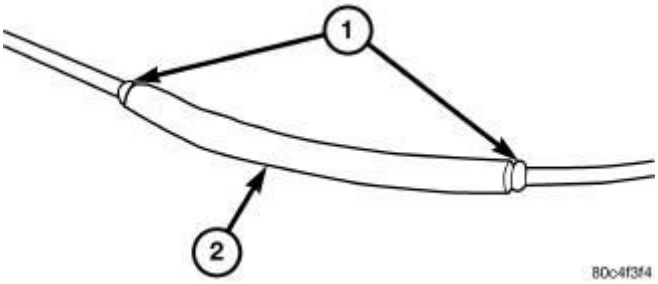

Fig. 36: Heat Shrink Tube
Courtesy of CHRYSLER GROUP, LLC

6. Center the heat shrink tubing (2) over the splice joint repair and heat using a suitable heat gun. Heat the joint until the tubing is tightly sealed and sealant (1) begins to ooze out of both ends of the tubing.

REMOVAL

CONNECTOR TERMINAL REMOVAL

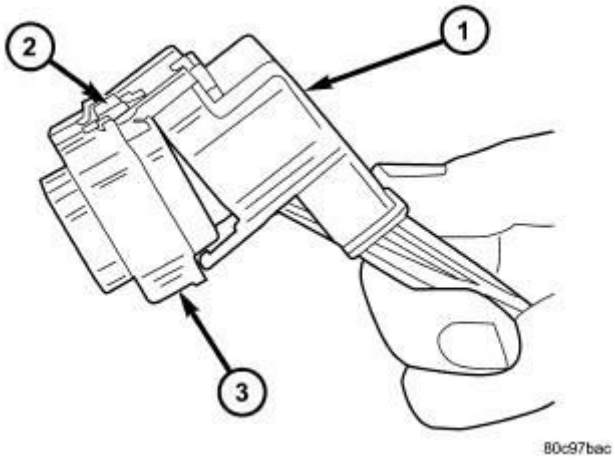

Fig. 37: Removal Of Dress Cover
Courtesy of CHRYSLER GROUP, LLC

1 - DRESS COVER
2 - CONNECTOR LOCK
3 - CONNECTOR

1. Disconnect battery.
2. Release Connector Lock (2).
3. Disconnect the connector (3) being repaired from its mating half/component.
4. Remove the dress cover (if applicable) (1).

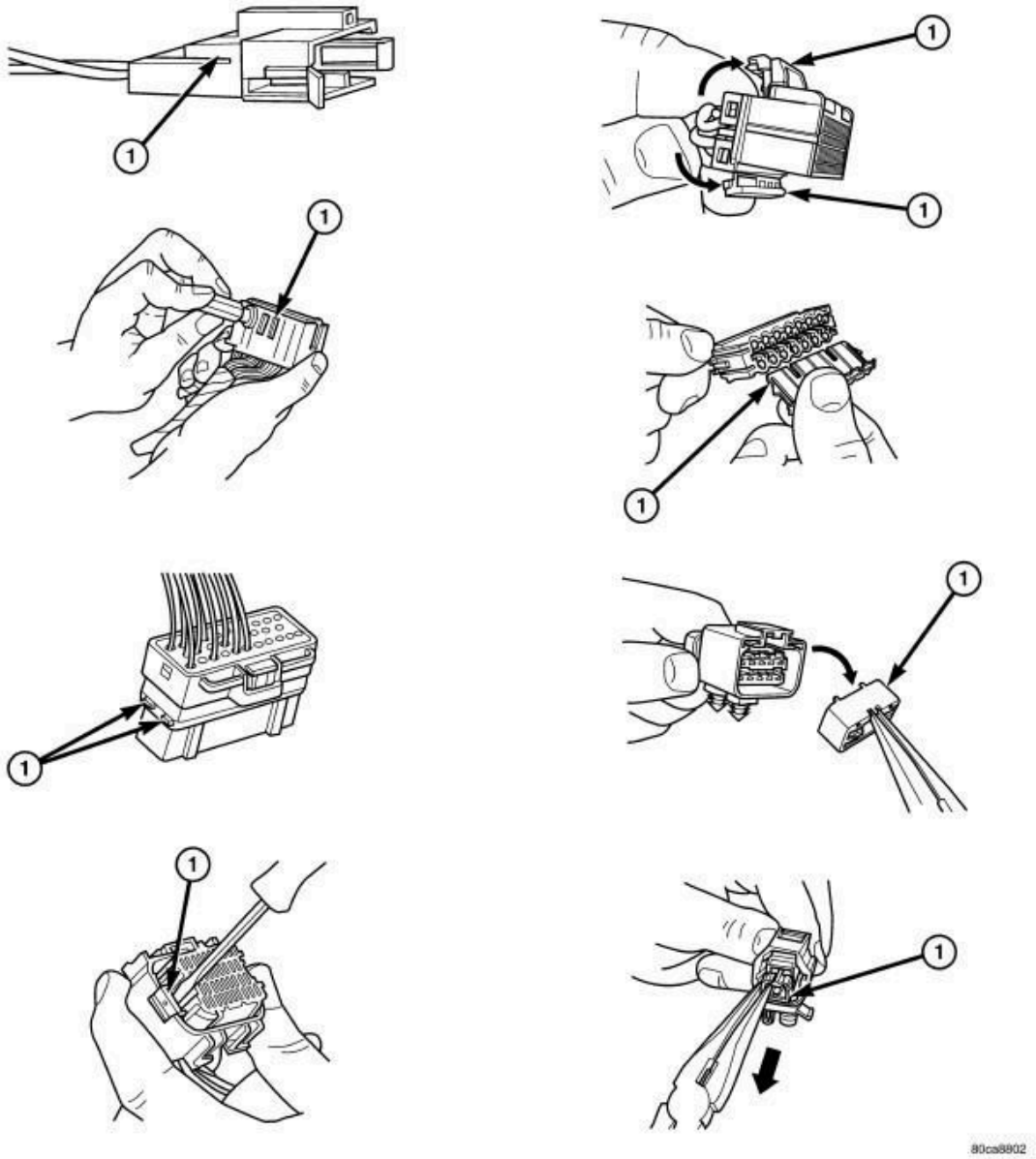

Fig. 38: Connector Secondary Terminal Lock
Courtesy of CHRYSLER GROUP, LLC

1 - Secondary Terminal Lock

5. Release the Secondary Terminal Lock, if required (1).

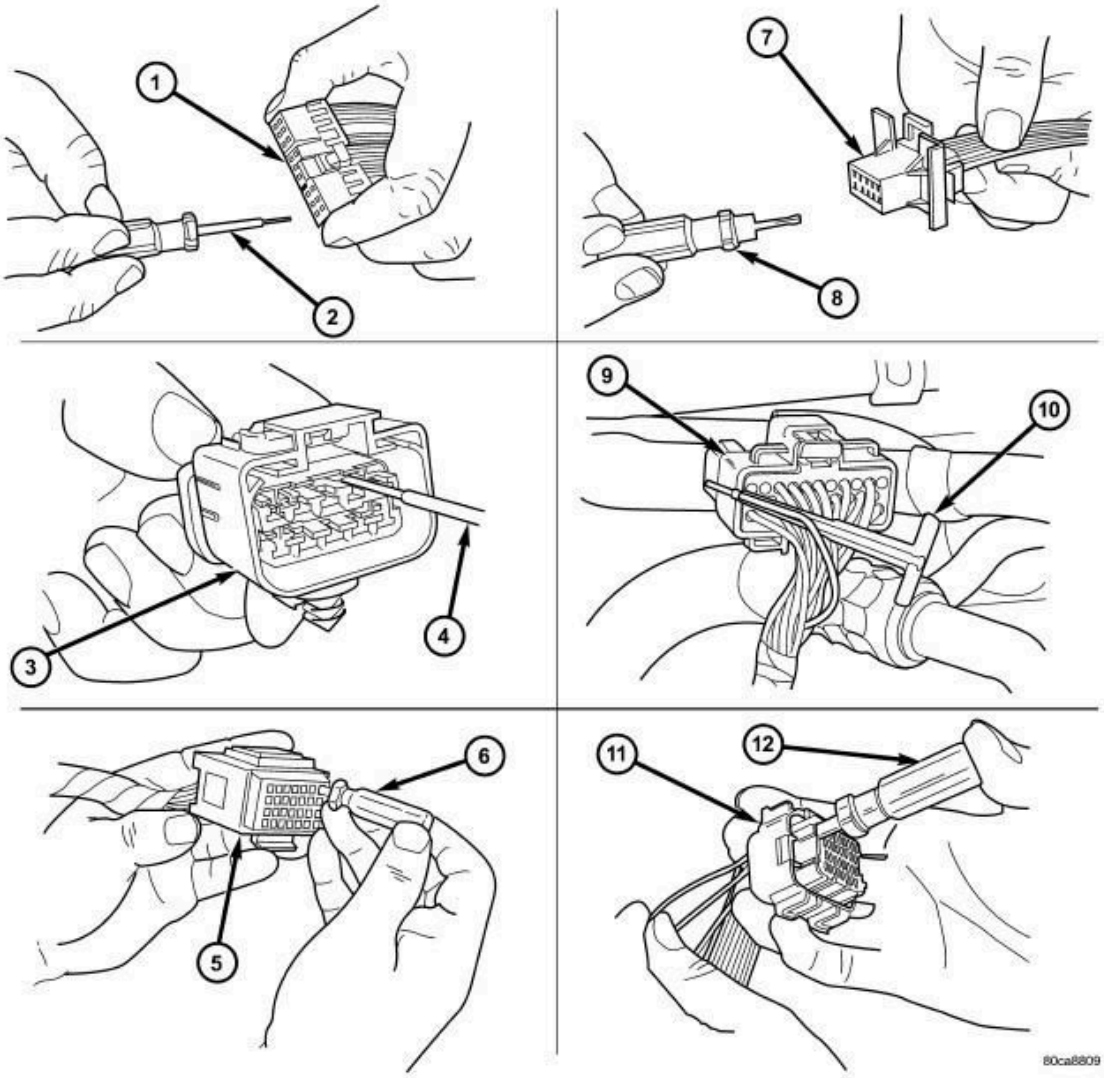

Fig. 39: Terminal Removal
Courtesy of CHRYSLER GROUP, LLC

1 - TYPICAL CONNECTOR
2 - PICK FROM TERMINAL REMOVER KIT 10300
3 - APEX CONNECTOR
4 - PICK FROM TERMINAL REMOVER KIT 10300
5 - AUGAT CONNECTOR
6 - ELECTRICAL TERMINAL REMOVAL TOOL
7 - MOLEX CONNECTOR
8 - PICK FROM TERMINAL REMOVER KIT 10300
9 - THOMAS AND BETTS CONNECTOR
10 - TERMINAL REMOVER
11 - CONNECTOR

12 - ELECTRICAL TERMINAL REMOVER

6. Position the connector locking finger away from the terminal using the proper special tool. Pull on the wire to remove the terminal from the connector.

INSTALLATION

CONNECTOR TERMINAL INSTALLATION

1. Select a wire from the terminal repair kit that best matches the color and gauge of the wire being repaired.
2. Cut the repair wire to the proper length and remove one-half (1/2) inch of insulation.
3. Splice the repair wire to the wire harness (refer to **WIRE SPLICING**).
4. Insert the repaired wire into the connector.
5. Install the connector locking wedge, if required, and reconnect the connector to its mating half/component.
6. Re-tape the wire harness starting at 1-1/2 inches behind the connector and 2 inches past the repair.
7. Connect battery and test all affected systems.

2014 GENERAL INFORMATION

Vehicle Quick Reference - Compass & Patriot

CAPACITIES AND RECOMMENDED FLUIDS

DESCRIPTION

ENGINE OIL

WARNING: New or used engine oil can be irritating to the skin. Avoid prolonged or repeated skin contact with engine oil. Contaminants in used engine oil, caused by internal combustion, can be hazardous to your health. Thoroughly wash exposed skin with soap and water. Do not wash skin with gasoline, diesel fuel, thinner, or solvents, health problems can result. Do not pollute, dispose of used engine oil properly. Contact your government agency for location of collection center in your area.

When service is required, Chrysler Corporation recommends that only Mopar® brand parts, lubricants and chemicals be used. Mopar® provides the best engineered products for servicing Chrysler Corporation vehicles.

LUBRICANT BEARING DESIGNATION

Only lubricants bearing designations defined by the following organization should be used:

- Society of Automotive Engineers (SAE)
- American Petroleum Institute (API)
- National Lubricating Grease Institute (NLGI)
- Association des Constructeurs Europ e ens d' Automobiles (European Automobile Manufacturers Association) (ACEA)

API CERTIFICATION AND LICENSE SYMBOL

9400-9

Fig. 1: Identifying American Petroleum Institute Certified Symbol
Courtesy of CHRYSLER GROUP, LLC

Use an engine oil that is API Certified and Licensed to display the certification mark. Mopar ® provides engine oils that meet or exceed, Material Standard MS-6395 requirement.

SAE VISCOSITY

Refer to the engine oil filler cap for the preferred engine oil viscosity grade for each vehicle. The viscosity grade is also listed in the vehicle quick reference specifications. Refer to **CAPACITIES AND RECOMMENDED FLUIDS, SPECIFICATIONS**. SAE viscosity grades are used to specify the correct viscosity oil for an engine. Use only Multi-Viscosity oils. These are specified with a dual SAE viscosity grade which indicates the cold (5W) to hot (20) temperature performance range of the oil.

CONTAINER IDENTIFICATION

9400-9

Fig. 2: Identifying American Petroleum Institute Certified Symbol
Courtesy of CHRYSLER GROUP, LLC

The Engine Oil Certification Mark was developed and trademarked by the API to refer customers to those engine oils preferred by the automobile manufacturers. This symbol means that the oil has been certified and licensed by the American Petroleum Institute (API). This certification mark will only be found on the front of the oil containers. Those oils that do not display the "Mark" on the front of the container should not be used.

Chrysler only recommends API Certified engine oils that meet the requirements of Material Standard MS-6395. Use Mopar or an equivalent oil meeting the specification MS-6395.

SYNTHETIC ENGINE OILS

There are a number of engine oils being promoted as either synthetic or semi-synthetic. If you choose to use such a product, use **only** those oils that are certified by the American Petroleum Institute (API) to display the "Certification Mark" and show SAE viscosity grade recommended for each vehicle. Follow the service schedule that describes your driving type.

ENGINE OIL ADDITIVES/SUPPLEMENTS

The manufacturer **does not recommend** the addition of any engine oil additives/supplements to the specified engine oil. Engine oil additives/supplements should not be used to enhance engine oil performance. Engine oil additives/supplements should not be used to extend engine oil change intervals. No additive is known to be safe for engine durability and can degrade emission components. Additives can contain undesirable materials that harm the long term durability of engines and emission systems by:

- Increasing the level of Phosphorus and Sulfur in the engine oil. The API Certified Engine Oils control the Phosphorus and Sulfur contents of the oil to levels that reduce the contamination effect on the vehicle's emission control system.
- Altering the viscosity characteristics of the engine oil so that it no longer meets the requirements of the specified viscosity grade.
- Creating potential for an undesirable additive compatibility interaction in the engine crankcase. The engine oils contain a performance additive system carefully developed to optimize the oil's performance in the engine. The addition of supplements may cause the oil to thicken prematurely, cause excessive deposit build-up and potentially shorten engine life.

ENGINE COOLANT

GAS ENGINES

WARNING: Antifreeze is an ethylene-glycol base coolant and is harmful if swallowed or inhaled. If swallowed, drink two glasses of water and induce vomiting. If

inhaled, move to fresh air area. Seek medical attention immediately. Do not store in open or unmarked containers. Wash skin and clothing thoroughly after coming in contact with ethylene-glycol. Keep out of reach of children. Dispose of glycol base coolant properly, contact your dealer or government agency for location of collection center in your area. Do not open a cooling system when the engine is at operating temperature or hot under pressure, personal injury can result. Avoid radiator cooling fan when engine compartment related service is performed, personal injury can result.

CAUTION: Mixing of engine coolant (antifreeze) other than specified Organic Additive Technology (OAT) engine coolant (antifreeze), may result in engine damage and may decrease corrosion protection. Organic Additive Technology (OAT) engine coolant is different and should not be mixed with Hybrid Organic Additive Technology (HOAT) engine coolant (antifreeze). If a non-OAT engine coolant (antifreeze) is introduced into the cooling system in an emergency, it should be replaced with the specified engine coolant (antifreeze) as soon as possible.

YouTube	A multimedia supplement to the instructions contained in this article is available. To view the multimedia example of the condition described go to; **http://www.youtube.com/user/Mitchell1Tips then type, "A00612692.vid1" into the "Search Channel" box.**

The cooling system is designed around the coolant. The coolant must accept heat from engine metal, in the cylinder head area near the exhaust valves and engine block. Then coolant carries the heat to the radiator where the tube/fin radiator can

transfer the heat to the air.

The use of aluminum cylinder blocks, cylinder heads, and water pumps requires special corrosion protection. Mopar® Antifreeze/Coolant, or the equivalent ethylene-glycol base coolant with organic corrosion inhibitors (called OAT, for Organic Additive Technology) is recommended. This coolant offers the best engine cooling without corrosion when mixed with 50% ethylene-glycol and 50% distilled water to obtain a freeze point of -37°C (-35°F). If it loses color or becomes contaminated, drain, flush, and replace with fresh properly mixed coolant solution.

DIESEL ENGINE

The cooling system is designed around the coolant. The coolant must accept heat from engine metal, in the cylinder head area near the exhaust valves and engine block. Then coolant carries the heat to the radiator where the tube/fin radiator can transfer the heat to the air.

The use of aluminum cylinder blocks, cylinder heads, and water pumps requires special corrosion protection. Mopar® Antifreeze/Coolant, 5 Year/100, 000 Mile Formula (MS-9769), or the equivalent ethylene glycol based coolant with hybrid organic corrosion inhibitors (called HOAT, for Hybrid Organic Additive Technology) is recommended. This coolant offers the best engine cooling without corrosion when mixed with 50% Ethylene Glycol and 50% distilled water to obtain a freeze point of -37°C (-35°F). If it loses color or becomes contaminated, drain, flush, and replace with fresh properly mixed coolant solution.

CAUTION: Mopar® Antifreeze/Coolant, 5 Year/160, 000 km (100, 000 Mile) Formula (MS-9769) may not be mixed with any other type of antifreeze. Doing so will reduce the corrosion protection and may result in premature water pump seal failure. If non-HOAT coolant is introduced into the cooling system in an emergency, it should be replaced with the specified coolant as soon as possible.

TRANSMISSION PTU AND RDA FLUIDS

NOTE: Refer to the maintenance schedules in the Owner's

Manual for the recommended maintenance (fluid/filter change) intervals for this transaxle.

NOTE: All transaxles have a common transmission and differential sump. Filling the transaxle accommodates the differential as well.

TRANSMISSION - PTU AND RDA FLUIDS

Mopar ® CVT+4 is required in the CVT automatic transaxles.

Mopar ® CVT+4 when new is green in color. As the vehicle is driven, the ATF will begin to look darker in color and may eventually become brown. **This is normal.** A dark brown/black fluid accompanied with a burnt odor and/or deterioration in shift quality may indicate fluid deterioration or transmission component failure.

BG6 and T355 Manual transaxles require the use of Mopar ® ATF+4 (Automatic Transmission Fluid).

PTU and RDA use Mopar ® Gear AND Axle Lubricant SAE 80W-90 API GL 5 or equivalent non-synthetic product.

FLUID ADDITIVES

Chrysler strongly recommends against the addition of any fluids to the transmission, other than those automatic transmission fluids listed above. Exceptions to this policy are the use of special dyes to aid in detecting fluid leaks.

Various "special" additives and supplements exist that claim to improve shift feel and/or quality. These additives and others also claim to improve converter clutch operation and inhibit overheating, oxidation, varnish, and sludge. These claims have not been supported to the satisfaction of Chrysler and these additives **must not be used.** The use of transmission "sealers" should also be avoided, since they may adversely affect the integrity of transmission seals.

FUEL REQUIREMENTS

Your engine is designed to meet all emissions regulations and provide excellent fuel economy and performance when using high quality unleaded gasoline

having an octane rating of 87. The use of premium gasoline is not recommended. The use of premium gasoline will provide no benefit over high quality regular gasoline, and in some circumstances may result in poorer performance.

Light spark knock at low engine speeds is not harmful to your engine. However, continued heavy spark knock at high speeds can cause damage and immediate service is required. Engine damage resulting from operation with a heavy spark knock may not be covered by the new vehicle warranty.

Poor quality gasoline can cause problems such as hard starting, stalling and hesitations. If you experience these symptoms, try another brand of gasoline before considering service for the vehicle.

Over 40 auto manufacturers world-wide have issued and endorsed consistent gasoline specifications (the Worldwide Fuel Charter, WWFC) to define fuel properties necessary to deliver enhanced emissions, performance and durability for your vehicle. We recommend the use of gasoline that meet the WWFC specifications if they are available.

REFORMULATED GASOLINE

Many areas of the country require the use of cleaner burning gasoline referred to as "reformulated" gasoline. Reformulated gasoline contain oxygenates, and are specifically blended to reduce vehicle emissions and improve air quality.

We strongly support the use of reformulated gasoline. Properly blended reformulated gasoline will provide excellent performance and durability for the engine and fuel system components.

GASOLINE/OXYGENATE BLENDS

Some fuel suppliers blend unleaded gasoline with oxygenates such as 10% ethanol, MTBE, and ETBE. Oxygenates are required in some areas of the country during the winter months to reduce carbon monoxide emissions. Fuels blended with these oxygenates may be used in your vehicle.

CAUTION: DO NOT use gasoline containing METHANOL. Gasoline containing methanol may damage critical fuel system components.

MMT IN GASOLINE

MMT is a manganese-containing metallic additive that is blended into some gasoline to increase octane. Gasoline blended with MMT provide no performance advantage beyond gasoline of the same octane number without MMT. Gasoline blended with MMT reduce spark plug life and reduce emission system performance in some vehicles. We recommend that gasoline free of MMT be used in your vehicle. The MMT content of gasoline may not be indicated on the gasoline pump; therefore, you should ask your gasoline retailer whether or not his/her gasoline contains MMT.

It is even more important to look for gasoline without MMT in Canada because MMT can be used at levels higher than allowed in the United States. MMT is prohibited in Federal and California reformulated gasoline.

SULFUR IN GASOLINE

If you live in the northeast United States, your vehicle may have been designed to meet California low emission standards with Cleaner-Burning California reformulated gasoline with low sulfur. If such fuels are not available in states adopting California emission standards, your vehicles will operate satisfactorily on fuels meeting federal specifications, but emission control system performance may be adversely affected. Gasoline sold outside of California is permitted to have higher sulfur levels which may affect the performance of the vehicle's catalytic converter. This may cause the Malfunction Indicator Lamp (MIL), Check Engine or Service Engine Soon light to illuminate. We recommend that you try a different brand of unleaded gasoline having lower sulfur to determine if the problem is fuel related prior to returning your vehicle to an authorized dealer for service.

CAUTION: If the Malfunction Indicator Lamp (MIL), Check Engine or Service Engine Soon light is flashing, immediate service is required; see on-board diagnostics system Service Information .

MATERIALS ADDED TO FUEL

All gasoline sold in the United States and Canada is required to contain effective detergent additives. Use of additional detergents or other additives is not needed under normal conditions.

FUEL SYSTEM CAUTIONS

CAUTION: Follow these guidelines to maintain your vehicle's performance:

- The use of leaded gas is prohibited by Federal law. Using leaded gasoline can impair engine performance, damage the emission control system, and could result in loss of warranty coverage.
- An out-of-tune engine, or certain fuel or ignition malfunctions, can cause the catalytic converter to overheat. If you notice a pungent burning odor or some light smoke, your engine may be out of tune or malfunctioning and may require immediate service. Contact your dealer for service assistance.
- When pulling a heavy load or driving a fully loaded vehicle when the humidity is low and the temperature is high, use a premium unleaded fuel to help prevent spark knock. If spark knock persists, lighten the load, or engine piston damage may result.
- The use of fuel additives which are now being sold as octane enhancers is not recommended. Most of these products contain high concentrations of methanol. Fuel system damage or vehicle performance problems resulting from the use of such fuels or additives is not the responsibility of Chrysler Corporation and may not be covered under the new vehicle warranty.

NOTE: Intentional tampering with emissions control systems can result in civil penalties being assessed against you.

BRAKE FLUID

The brake fluid used in this vehicle must conform to DOT 3 specifications and SAE J1703 standards. No other type of brake fluid is recommended or approved for usage in the vehicle brake system. Use only Mopar® Brake Fluid or equivalent from a tightly sealed container.

CAUTION: Never use reclaimed brake fluid or fluid from a container which has been left open. An open container of brake fluid will absorb moisture from the air and contaminate the fluid.

CAUTION: Never use any type of a petroleum-based fluid in the brake hydraulic system. Use of such type fluids will result in seal damage of the vehicle brake

hydraulic system causing a failure of the vehicle brake system. Petroleum based fluids would be items such as engine oil, transmission fluid, power steering fluid, etc.

POWER STEERING FLUID

The recommended fluid for the power steering system is Mopar® Power Steering fluid + 4 or Mopar® ATF+4 Automatic Transmission Fluid. Both Fluids have the same material standard specifications (MS-9602).

Mopar® ATF+4 (and Mopar® Power Steering fluid + 4), when new, is red in color. ATF+4 is dyed red so it can be identified from other fluids used in the vehicle such as engine oil or antifreeze. The red color is not permanent and is not an indicator of fluid condition. As the vehicle is driven, ATF+4 will begin to look darker in color and may eventually become brown. **THIS IS NORMAL** . ATF+4 also has a unique odor that may change with age. Consequently, odor and color cannot be used to indicate the fluid condition or the need for a fluid change.

The power steering system is filled-for-life at the factory and requires no regular maintenance. Although not required at specific intervals, the fluid level may be checked periodically. Check the fluid level anytime there is a system noise or fluid leak suspected. Refer to **FLUID, STANDARD PROCEDURE** .

A/C REFRIGERANT

The refrigerant used in this air conditioning system is a HydroFluoroCarbon (HFC), type R-134a. Unlike R-12, which is a ChloroFluoroCarbon (CFC), R-134a refrigerant does not contain ozone-depleting chlorine. R-134a refrigerant is a nontoxic, nonflammable, clear and colorless liquefied gas.

CAUTION: R-134a refrigerant is not compatible with R-12 refrigerant in an A/C system. Even a small amount of R-12 refrigerant added to an R-134a refrigerant system will cause A/C compressor failure.

The A/C refrigerant system is filled-for-life at the factory and requires no regular maintenance. Although not required at specific intervals, the charge level should be checked if system performance deteriorates or if a noise or leak is suspected. Refer to **DIAGNOSIS AND TESTING** .

SPECIFICATIONS

SPECIFICATIONS

ENGINE

Description	Type	Part Number	Capacities	
			U.S.	Metric
Cooling System				
(1) Engine Coolant (2.0L and 2.4L Engines)	MOPAR® Antifreeze/Coolant 10 Year/150, 000 Mile Formula OAT (Organic Additive Technology) meeting the requirements of Chrysler Material Standard MS-12106	1 Gallon - 68163848AA (concentrate) 68163849AA (50/50)	7.2 Quarts	6.8 Liters
(1) Diesel Engine Coolant (2.2L Turbo Engine - OM651)	MOPAR® Antifreeze/Coolant 5 Year/100, 000 Mile Formula HOAT (Hybrid Organic Additive Technology)	1 Gallon - 05066386AA	10 Quarts	9.5 Liters
Engine Oil with Filter				
(2) Engine Oil (2.0L and 2.4L Engines)	MOPAR® SAE 5W-20 engine oil or equivalent Pennzoil® or Shell Helix®	1 Quart - 04761872AC 5 Quarts - 04761851AD	4.5 Quarts	4.26 Liters
	For best performance and maximum protection under all types of operating conditions, the manufacturer only recommends full synthetic engine oils approved to MB			

(2) Engine Oil (2.2L Turbo Diesel Engine - OM651)	228.51, MB 229.31 or MB 229.51 and meeting the requirements of Chrysler Material Standard MS-10725. The manufacturer recommends the use of a full synthetic engine oil, such as low SPAsh Multigrade 0W-30, 0W-40, 5W-30, 5W-40, 10W-30, 10W-40.	N/A	8.0 Quarts	7.5 Liters
Engine Oil Filter (2.0L and 2.4L Engines)	MOPAR® Engine Oil Filter	04892339AA	N/A	N/A
Engine Oil Filter (2.2L Turbo Diesel Engine - OM651)	MOPAR® Engine Oil Filter	68091826AA	N/A	N/A
Fuel (approximate)				
Fuel Selection (2.0L and 2.4L Engines)	87 Octane Unleaded Fuel, Domestic 91 Octane Unleaded Fuel, Export	N/A	13.6 Gallons	51.5 Liters
Fuel Selection (2.2L Turbo Diesel Engine - OM651)	Use only the best quality fuel with a calculated Cetane Index of 50 or higher. In addition, the manufacturer recommends using diesel fuel with a	N/A	13.6 Gallons	51.5 Liters

	sulfur content of less than or equal to 15 ppm.			
A/C Refrigerant System				
Refrigerant	R-134a	82300101AB	1.31 Pounds	595 Grams
(1) System fill capacity includes heater and coolant recovery bottle filled to MAX level.				
(2) For countries that use the ACEA European Oil Categories for Service Fill Oils, use the recommended engine oil that meets the requirements of ACEA C3, and approved to MB 229.31 or MB 229.51 only. Refer to your engine oil filler cap for correct SAE grade.				
CAUTION: **Nominal refill capacities are shown. A variation may be observed from vehicle to vehicle due to manufacturing tolerance and refill procedure.**				

SPARK PLUGS

Description	Type	Part Number	Gap	
			U.S.	Metric
Spark Plugs (2.0L and 2.4L Engines)	NGK® Nickel	04606823AB (ZFR5F-11)	0.043 in	1.10 mm

TRANSMISSION AND DRIVELINE

Description	Type	Part Number	Capacities	
			U.S.	Metric
Automatic				
CVT - Service Fill	MOPAR® CVT+4 Automatic Transmission Fluid	1 Quart - 05191184AA 1 Gallon - 05191185AA	14.8 Pints	7.0 Liters
(1) CVT - Overhaul Fill	MOPAR® CVT+4 Automatic Transmission Fluid	1 Quart - 05191184AA 1 Gallon - 05191185AA	17.1 Pints	8.1 Liters

6F24	SK Energy ATF SP-4 Transmission Fluid	1 Quart - 68171866AA	Factory Fill - 7.5 Quarts	Factory Fill - 7.1L
		1 Gallon - 68171869AA	Service Fill - Fill to COLD mark	
Manual				
NV T355	MOPAR® ATF+4 Automatic Transmission Fluid	1 Quart - 05013457AA	2.5 - 2.8 Quarts	2.4 - 2.7 Liters
		1 Gallon - 05013458AA		
AISIN BG6	MOPAR® ATF+4 Automatic Transmission Fluid	1 Quart - 05013457AA	2.1 Quarts	2.0 Liters
		1 Gallon - 05013458AA		
Driveline				
POWER TRANSFER UNIT	MOPAR® MS 9020, SAE 80W90 Gear Lube	1 Quart - 04874468	18.2 Ounces	0.53 Liters
REAR DRIVE ASSEMBLY	MOPAR® MS 9020, SAE 80W90 Gear Lube	1 Quart - 04874468	16.2 Ounces	0.47 Liters

(1) Dry fill capacity. Depending on type and size of internal cooler, length and inside diameter of cooler lines, or use of an auxiliary cooler, these figures may vary. Refer to the appropriate service information for the correct procedures.

CAUTION:
Nominal refill capacities are shown. A variation may be observed from vehicle to vehicle due to manufacturing tolerance and refill procedure.

CHASSIS

Description	Type	Part Number	Capacities	
			U.S.	Metric

Chassis Systems				
(1) Brake Master Cylinder	MOPAR® Brake Fluid DOT 3, SAE J1703.	12 oz. Bottle - 04318080AB 32 oz. Bottle - 04318081AB	N/A	N/A
(2) Power Steering Reservoir	MOPAR® Power Steering Fluid +4	1 Quart - 05013457AA	N/A	N/A
(1) If MOPAR® Brake Fluid DOT 3 is not available, then MOPAR® Brake and Clutch Fluid DOT 4 (P/N 04549625AC), is acceptable.				
(2) If MOPAR® Power Steering Fluid +4 is not available, then MOPAR® ATF +4 Automatic Transmission Fluid (P/N 05166226AA), is acceptable.				
CAUTION: **Nominal refill capacities are shown. A variation may be observed from vehicle to vehicle due to manufacturing tolerance and refill procedure.**				

FLUID FILL AND CHECK LOCATIONS

DESCRIPTION

DESCRIPTION

The fluid check/fill point locations are located in each applicable Service Information .

FUSE - RELAY LOCATIONS AND TYPES

SPECIFICATIONS

SPECIFICATIONS

INTEGRATED POWER MODULE (IPM)

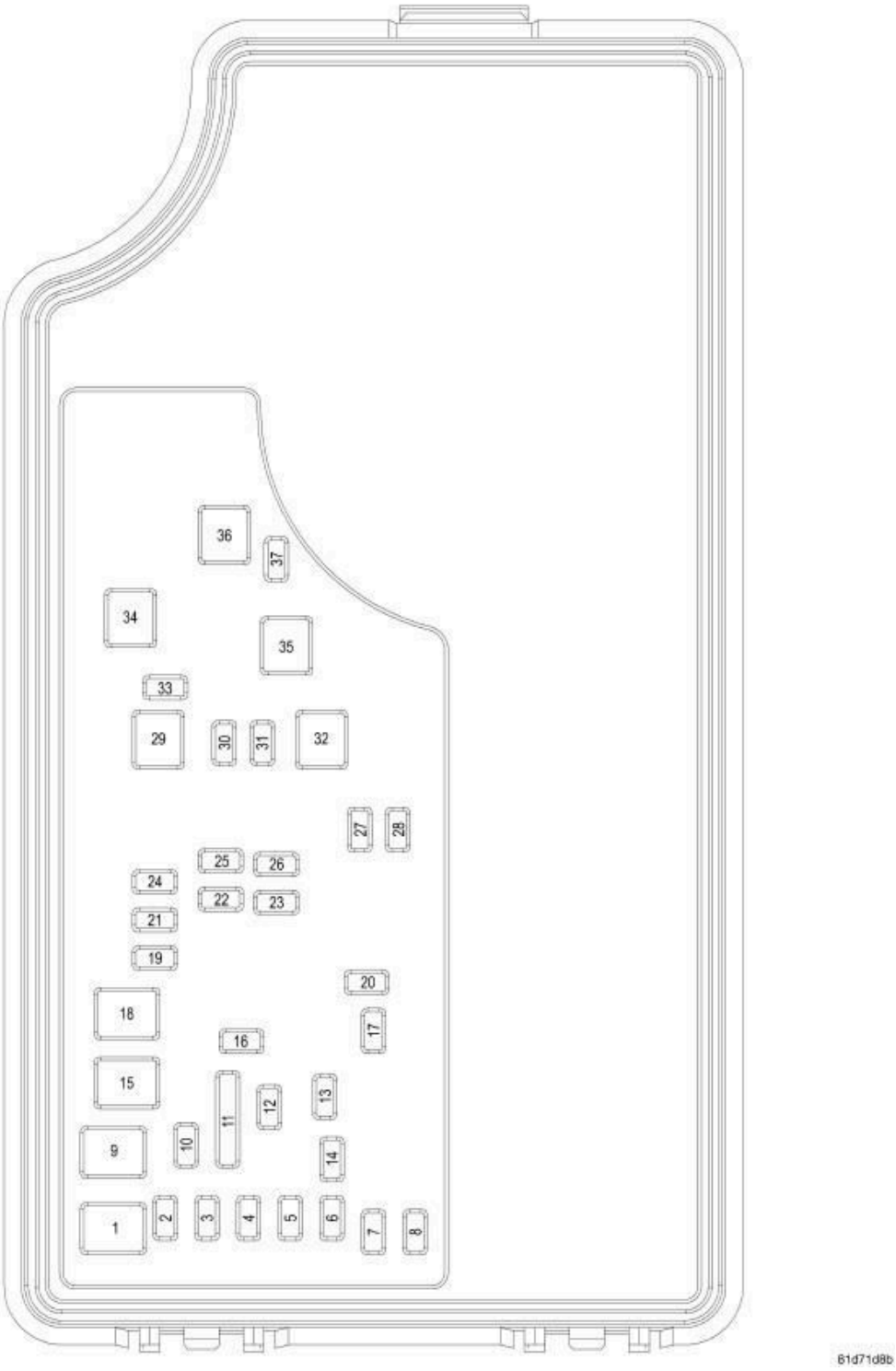

Fig. 3: Integrated Power Module (IPM)
Courtesy of CHRYSLER GROUP, LLC

An Integrated Power Module (IPM) is located in the engine compartment near the air cleaner assembly. This center contains cartridge fuses and mini-fuses. A label that identifies each component may be printed on the inside of the cover. Refer to "Engine Compartment" of the Owner's Manual for the underhood

location of the IPM.

SPECIFICATIONS

Cavity	Cartridge Fuse	Mini-Fuse	Description
1	Empty		Empty
2		15 Amp Lt Blue	AWD/4WD Control Module - If Equipped
3		10 Amp Red	Rear Center Brake Light Switch
4		10 Amp Red	Ignition Switch/Occupant Classification Module
5		20 Amp Yellow	Trailer Tow - If Equipped
6		10 Amp Red	Power Mirror/Steering Control Satellite Radio/Hands-Free Phone
7		30 Amp Green	Ignition Off Draw
8		30 Amp Green	Ignition Off Draw
9	40 Amp Green		Power Seats
10		20 Amp Yellow	Power Locks/Interior Lighting
11		15 Amp Lt Blue	Power Outlet
12		20 Amp Yellow	115V AC Inverter - If equipped
13		20 Amp Yellow	Cigar Lighter
14		10 Amp Red	Instrument Cluster
15	40 Amp Green		Radiator Fan
16		15 Amp Lt Blue	Dome Lamp/Sunroof/Rear Wiper Motor
17		10 Amp Red	Wireless Control Module
18	40 Amp Green		Auto Shutdown Relay
19		20 Amp	Radio Amplifiers

		Yellow	
20		15 Amp Lt Blue	Radio
21		10 Amp Red	Intrusion Module/Siren - If Equipped
22		10 Amp Red	Heating, AC/Compass
23		15 Amp Lt Blue	Auto Shutdown Relay
24		15 Amp Lt Blue	Power Sunroof - If Equipped
25		10 Amp Red	Heated Mirror - If Equipped
26		15 Amp Lt Blue	Auto Shutdown Relay
27		10 Amp Red	Airbag Control Module
28		10 Amp Red	Airbag Control Module/Occupant Classification Module
29			Hot Car (No Fuse Required)
30		20 Amp Yellow	Heated Seats - If Equipped
31		10 Amp Red	Headlamp Washer - If Equipped
32	30 Amp Pink		Auto Shutdown Relay
33		10 Amp Red	J1962 Conn/Powertrain Control Module
34	30 Amp Pink		Antilock Brake Valve
35	40 Amp Green		Antilock Brake Pump
36	30 Amp Pink		Headlamp/Washer Control/Smart Glass - If Equipped
37		25 Amp Natural	Diesel Fuel Heater - If Equipped

CAUTION: When installing the IPM cover, it is important to ensure the cover is properly positioned and fully latched. Failure to do so may allow water to get into the IPM, and possibly result in an electrical system failure.

CAUTION: When replacing a blown fuse, it is important to use only a fuse having the correct amperage rating. The use of a fuse with a rating other than indicated may result in a dangerous electrical system overload. If a properly rated fuse continues to blow, it indicates a problem in the circuit that must be corrected.

HOISTING

STANDARD PROCEDURE

STANDARD PROCEDURE - HOISTING

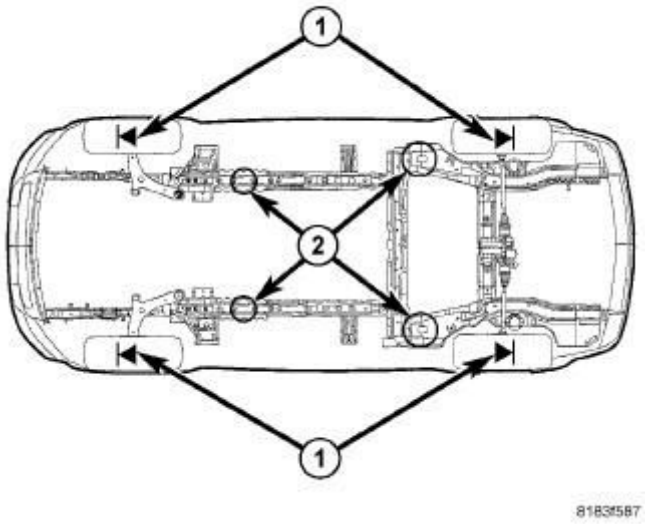

Fig. 4: Hoisting Points
Courtesy of CHRYSLER GROUP, LLC

1 - DRIVE ON LIFT
2 - FRAME CONTACT LIFT (SINGLE POST)
2 - CHASSIS LIFT (DUAL POST)
2 - OUTBOARD LIFT (DUAL LIFT)
2 - FLOOR JACK

Refer to Owner's Manual provided with vehicle for proper emergency jacking procedures.

WARNING: The hoisting and jack lifting points provided are

for a complete vehicle. When the engine or rear suspension is removed from a vehicle, the center of gravity is altered making some hoisting conditions unstable. Properly support or secure vehicle to hoisting device when these conditions exist.

CAUTION: Do not position hoisting device on suspension components, damage to vehicle can result.

Do not attempt to raise one entire side of the vehicle by placing a floor jack midway between the front and rear wheels. This practice may result in permanent damage to the body.

When properly positioned, a floor jack can be used to lift the vehicle and support the raised vehicle with jack stands.

A floor jack or any lifting device, must never be used on any part of the underbody other then the described areas.

JUMP STARTING

STANDARD PROCEDURE

STANDARD PROCEDURE - JUMP STARTING

WARNING: Review all safety precautions and warnings in battery/starting/charging Service Information . Do not jump start a frozen battery, personal injury can result. Do not jump start when maintenance free battery indicator dot is yellow or bright color. Do not jump start a vehicle when the battery fluid is below the top of lead plates. Do not allow jumper cable clamps to touch each other when connected to a booster source. Do not use open flame near battery. Remove metallic jewelry worn on hands or wrists to avoid injury by accidental arcing of battery current. When using a high output boosting device, do not allow battery

voltage to exceed 16 volts. Refer to instructions provided with device being used.

CAUTION: When using another vehicle as a booster, do not allow vehicles to touch. Electrical systems can be damaged on either vehicle.

TO JUMP START A DISABLED VEHICLE:

WARNING: Take care to avoid the radiator cooling fan whenever the hood is raised. It can start anytime the ignition switch is on. You can be hurt by the fan.

WARNING: Do not attempt to push or tow your vehicle to get it started. Vehicles equipped with an automatic transaxle cannot be started this way and may be damaged. Unburned fuel could enter the catalytic converter and once the engine has started, ignite and damage the converter and vehicle. If the vehicle has a discharged battery, booster cables may be used to obtain a start from another vehicle. This type of start can be dangerous if done improperly, so follow this procedure carefully.

WARNING: Wear eye protection and remove any metal jewelry such as watch bands or bracelets that might make an inadvertent electrical contact. You could be seriously injured.

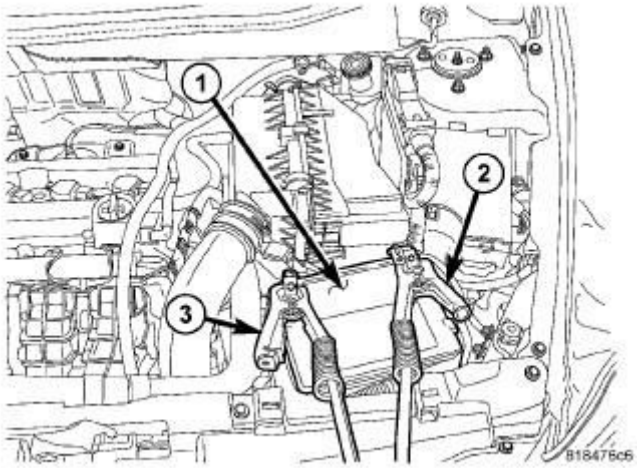

Fig. 5: Jump Start
Courtesy of CHRYSLER GROUP, LLC

1. Raise hood on disabled vehicle and visually inspect engine compartment for:
   - Battery cable clamp condition, clean if necessary.
   - Frozen battery.
   - Yellow or white color test indicator, if equipped.
   - Generator drive belt condition and tension.
   - Fuel fumes or leakage, correct if necessary.

CAUTION: If the cause of starting problem on disabled vehicle is severe, damage to booster vehicle charging system can result.

2. Wear eye protection and remove any metal jewelry such as watch bands or bracelets that might make an inadvertent electrical contact.
3. When boosting from a battery in another vehicle, park that vehicle within booster cable reach but without letting the vehicles touch. Set parking brake, place automatic transaxle in PARK (manual transaxle in NEUTRAL) and turn ignition to OFF for both vehicles.
4. Turn off the heater, radio and all unnecessary electrical loads.
5. Remove the air intake duct covering the battery, using the two finger screws on the cover.
6. Connect one end of a jumper cable to the positive terminal of the booster battery. Connect the other end of the jumper cable to the positive terminal (2) of the discharged battery (1).

WARNING: Battery fluid is a corrosive acid solution; do not allow battery fluid to contact eyes, skin or clothing. Don't lean over battery when attaching clamps or allow the clamps to touch each other. If acid splashes in eyes or on skin, flush the contaminated area immediately with large quantities of water.

A battery generates hydrogen gas which is flammable and explosive. Keep flame or spark away from the vent holes. Do not use a booster battery or any other booster source with an output that exceeds 12 volts.

7. Connect the other cable, first to the negative terminal of the booster battery and then to the negative terminal (3) of the discharged battery (1). Make sure you have a good contact.
8. If the vehicle is equipped with Sentry Key Immobilizer, turn the ignition switch to the ON position for 3 seconds before moving the ignition switch to the START position.
9. Start the engine in the vehicle that has the booster battery, let the engine idle a few minutes, then start the engine in the vehicle with the discharged battery.

CAUTION: Do not crank starter motor on disabled vehicle for more than 15 seconds, starter will overheat and could fail.

10. Allow battery in disabled vehicle to charge to at least 12.4 volts (75% charge) before attempting to start engine. If engine does not start within 15 seconds, stop cranking engine and allow starter to cool (15 minutes), before cranking again.
11. When removing the jumper cables, reverse the sequence exactly. Be careful of the moving belts and fan.

MAINTENANCE SCHEDULES

DESCRIPTION

MAINTENANCE SCHEDULES - NAFTA AND PUERTO RICO

The Scheduled Maintenance services listed in this Service Information must be done at the times or mileages specified to protect your vehicle warranty and ensure the best vehicle performance and reliability. More frequent maintenance may be needed for vehicles in severe operating conditions, such as dusty areas and very short trip driving. Inspection and service should also be done anytime a malfunction is suspected.

Your vehicle is equipped with an automatic oil change indicator system. The oil change indicator system will remind you that it is time to take your vehicle in for scheduled maintenance

Based on engine operation conditions, the oil change indicator message will illuminate. This means that service is required for your vehicle. Operating conditions such as frequent short-trips, trailer tow, extremely hot or cold ambient temperatures, and E85 fuel usage will influence when the "Oil Change Required" message is displayed. Severe Operating Conditions can cause the change oil message to illuminate as early as 3, 500 miles (5, 600 km) since last reset. Have your vehicle serviced as soon as possible, within the next 500 miles (805 km).

NOTE: Under no circumstances should oil change intervals exceed 10, 000 miles (16 000 km) or twelve months, whichever comes first.

Once A Month Or Before A Long Trip:

- Check engine oil level
- Check windshield washer fluid level
- Check the tire inflation pressures and look for unusual wear or damage
- Check the fluid levels of the coolant reservoir, brake master cylinder, power steering and transmission as needed
- Check function of all interior and exterior lights

At Every Oil Change Interval As Indicated By Oil Change Indicator System:

- Change oil and filter.
- Rotate the tires. **Rotate at the first sign of irregular wear, even if it**

occurs before the oil indicator system turns on.

- Inspect battery and clean and tighten terminals as required.
- Inspect automatic transmission fluid if equipped with dipstick.
- Inspect brake pads, shoes, rotors, drums, hoses and park brake.
- Inspect engine cooling system protection and hoses.
- Inspect exhaust system.
- Inspect engine air cleaner if using in dusty or off-road conditions.

CAUTION: Failure to perform the required maintenance items may result in damage to the vehicle.

OIL CHANGE INDICATOR- RESET

The vehicle is equipped with an engine oil change indicator system. The "Oil Change Required" message flashes in the EVIC display for approximately ten seconds after a single chime has sounded, to indicate the next scheduled oil change interval. The engine oil change indicator system is duty cycle based, which means the engine oil change interval may fluctuate depending upon your personal driving style.

Unless reset, this message continues to display each time you turn the ignition switch to the ON/RUN position. To turn off the message temporarily, press and release the Menu button. To reset the oil change indicator system (after performing the scheduled maintenance) perform the following procedure:

1. Turn the ignition switch to the "ON" position. Do not start the engine.
2. Fully press the accelerator pedal slowly three times within ten seconds.
3. Turn the ignition switch to the "LOCK" position.

NOTE: If the indicator message illuminates when you start the vehicle, the oil change indicator system did not reset. If necessary, repeat this procedure.

REQUIRED MAINTENANCE INTERVALS

Refer to the Maintenance Schedules below for the required maintenance intervals.

Mileage or time														

passed (whichever comes first)	20,000	30,000	40,000	50,000	60,000	70,000	80,000	90,000	100,000	110,000	120,000	130,000	140,000	150,000
Or Years:	**2**	**3**	**4**	**5**	**6**	**7**	**8**	**9**	**10**	**11**	**12**	**13**	**14**	**15**
Or Kilometers:	**32,000**	**48,000**	**64,000**	**80,000**	**96,000**	**112,000**	**128,000**	**144,000**	**160,000**	**176,000**	**192,000**	**208,000**	**224,000**	**240,000**
Additional Inspections														
Inspect the CV joints.	X		X		X		X		X		X		X	
Inspect front suspension, boot seals. tie rod ends, and replace if necessary.	X		X		X		X		X		X		X	
Inspect the brake linings, parking brake function.	X		X		X		X		X		X		X	
Additional Maintenance														
Replace engine air cleaner filter.		X			X			X			X			X
Replace air conditioning/cabin air filter.	X		X		X		X		X		X		X	
Replace spark plugs **		X			X			X			X			X
Flush and replace the engine coolant at 10 years or 150, 000 miles (240, 000 km) whichever comes first.									X					X
Replace rear drive assembly (RDA) fluid.					X						X			
Replace power transfer unit					X						X			

(PTU) fluid.														
Change automatic transmission fluid and filter if using your vehicle for any of the following: police, taxi, fleet, or frequent trailer towing. (CVT Only)					X									
Change the automatic transmission fluid and filter. (CVT Only)											X			
Change the automatic transmission fluid and filter (6-speed only) if you frequently drive: on rough or unpaved roads, on mountain roads, on short trips, in heavy city traffic during hot weather, or if you use the vehicle for police, taxi, fleet, or frequent trailer towing.											X			
Change the manual transmission fluid if using your vehicle for any of														

the following: trailer towing, heavy loading, taxi, police, delivery service (commercial service), off-road, desert operation or more than 50% of your driving is at sustained high speeds during hot weather, above 90°F (32°C).				X					X					X
Inspect and replace PCV valve if necessary.									X					

** The spark plug change interval is mileage based only, yearly intervals do not apply.

MAINTENANCE SCHEDULES - CHINA

The Scheduled Maintenance services listed in this Service Information must be done at the times or mileages specified to protect your vehicle warranty and ensure the best vehicle performance and reliability. More frequent maintenance may be needed for vehicles in severe operating conditions, such as dusty areas and very short trip driving. Inspection and service should also be done anytime a malfunction is suspected.

Your vehicle is equipped with an automatic oil change indicator system. The oil change indicator system will remind you that it is time to take your vehicle in for scheduled maintenance

On Electronic Vehicle Information Center (EVIC) equipped vehicles, "Oil Change Required" will be displayed in the EVIC and a single chime will sound, indicating that an oil change is necessary.

On Non-EVIC equipped vehicles, "Change Oil" will flash in the instrument cluster odometer and a single chime will sound, indicating that an oil change is

necessary.

The oil change indicator message will illuminate approximately 11 200 km after the most recent oil change was performed. Have your vehicle serviced as soon as possible, within 800 km.

NOTE: The oil change indicator message will not monitor the time since the last oil change. Change the vehicle's oil if it has been 12 months since the last oil change, even if the oil change indicator message is NOT illuminated.

NOTE: Change your engine oil more often if you drive your vehicle off road for an extended period of time.

NOTE: Under no circumstances should oil change intervals exceed 12 000 km or 12 months, whichever comes first.

At Each Stop for Fuel

- Check the engine oil level about five minutes after a fully warmed engine is shut off. Checking the oil level while the vehicle is on level ground will improve the accuracy of the oil level reading. Add oil only when the level is at or below the ADD or MIN mark.
- Check the windshield washer solvent and add if required.

Once a Month

- Check the tire pressure and look for unusual wear or damage.
- Inspect the battery and clean and tighten the terminals as required.
- Check the fluid levels of coolant reservoir, brake master cylinder, and power steering and add as needed.
- Check all the lights and other electrical items for correct operation.

At Each Oil Change

- Change the engine oil filter.
- Inspect the brake hoses and lines.

CAUTION: Failure to perform the required maintenance items may result in damage to the vehicle.

OIL CHANGE INDICATOR- RESET

The vehicle is equipped with an engine oil change indicator system. The "Oil Change Required" message flashes in the EVIC display for approximately ten seconds after a single chime has sounded, to indicate the next scheduled oil change interval. The engine oil change indicator system is duty cycle based, which means the engine oil change interval may fluctuate depending upon your personal driving style.

Unless reset, this message continues to display each time you turn the ignition switch to the ON/RUN position. To turn off the message temporarily, press and release the Menu button. To reset the oil change indicator system (after performing the scheduled maintenance) perform the following procedure:

1. Turn the ignition switch to the "ON" position. Do not start the engine.
2. Fully press the accelerator pedal slowly three times within ten seconds.
3. Turn the ignition switch to the "LOCK" position.

NOTE: If the indicator message illuminates when you start the vehicle, the oil change indicator system did not reset. If necessary, repeat this procedure.

REQUIRED MAINTENANCE INTERVALS

Perform Maintenance Every (Where time and mileage are listed, follow the interval that occurs first.)			Maintenance Items
Miles	Kilometers	Months	
7500	12000	12	• Change the engine oil and engine oil filter.++ • Rotate tires.
15000	24000	24	• Change the engine oil and engine oil filter.++ • Rotate tires.

			• If using your vehicle for any of the following: Dusty or off-road conditions. Inspect the engine air cleaner filter; replace if necessary. • Inspect the brake linings; replace if necessary. • Replace the air conditioning filter. • Inspect exhaust system. Perform the first inspection at 24 000 km or 24 months.
22500	36000	36	• Change the engine oil and engine oil filter.++ • Rotate tires. • Inspect the CV joints. • Replace the spark plugs (2.0L, 2.4L engines). * * The spark plug interval is mileage based only, yearly intervals do not apply.
30000	48000	48	• Change the engine oil and engine oil filter.++ • Rotate tires. • Replace the engine air cleaner filter. • Adjust the parking brake on vehicles equipped with four-wheel disc brakes. • Inspect the brake linings; replace if necessary. • Replace the air conditioning filter. • Inspect exhaust system. • Inspect the front suspension, tie rod ends and boot seals; replace if necessary.

37500	60000	60	• Change the engine oil and engine oil filter.++ • Rotate tires.
45000	72000	72	• Change the engine oil and engine oil filter.++ • Rotate tires. • If using your vehicle for any of the following: Dusty or off-road conditions. Inspect the engine air cleaner filter; replace if necessary. • Inspect the CV joints. • Inspect the brake linings; replace if necessary. • Replace the air conditioning filter. • Replace the spark plugs (2.0L, 2.4L engines). * * The spark plug interval is mileage based only, yearly intervals do not apply.
52500	84000	84	• Change the engine oil and engine oil filter.++ • Rotate tires.
60000	96000	96	• Change the engine oil and engine oil filter.++ • Rotate tires. • Replace the engine air cleaner filter. • Adjust the parking brake on vehicles equipped with four-wheel disc brakes. • Inspect the brake linings; replace if necessary. • Replace the air conditioning filter.

			• Inspect exhaust system. • Inspect the front suspension, tie rod ends and boot seals; replace if necessary. • Inspect rear drive assembly (RDA) fluid, add as needed. Drain and replace fluid if vehicle is used for any of the following: frequent trailer towing, heavy loading, taxi, police, delivery service (commercial service), off-road, desert operation or more than 50% of your driving is at sustained speeds during hot weather, above 90°F (32°C). • Inspect power transfer unit (PTU) fluid, add as needed. Drain and replace fluid if vehicle is used for any of the following: frequent trailer towing, heavy loading, taxi, police, delivery service (commercial service), off-road, desert operation or more than 50% of your driving is at sustained speeds during hot weather, above 90°F (32°C). • Change the automatic transmission fluid and filter (6- speed only) if you frequently drive: on rough or unpaved roads, on mountain roads, on short trips, in heavy city traffic during hot weather, or while towing a trailer, or if you use the vehicle for police, taxi, or in a commercial fleet. • Change the automatic transmission fluid and filter (CVT only) if using

			your vehicle for any of the following: police, taxi, fleet, or frequent trailer towing.
67500	108000	108	• Change the engine oil and engine oil filter.++ • Rotate tires. • Inspect the CV joints. • Replace the spark plugs (2.0L, 2.4L engines). * * The spark plug interval is mileage based only, yearly intervals do not apply.
75000	120000	120	• Change the engine oil and engine oil filter.++ • Rotate tires. • If using your vehicle for any of the following: Dusty or off-road conditions. Inspect the engine air cleaner filter; replace if necessary. • Inspect the brake linings; replace if necessary. • Replace the air conditioning filter.
82500	132000	132	• Change the engine oil and engine oil filter.++ • Rotate tires.
90000	144000	144	• Change the engine oil and engine oil filter.++ • Rotate tires. • Replace the engine air cleaner filter. • Inspect and replace PCV valve if necessary. + • Adjust the parking brake on vehicles equipped with four-wheel

			disc brakes. • Inspect the brake linings; replace if necessary. • Replace the air conditioning filter. • Inspect the CV joints. • Inspect exhaust system. • Inspect the front suspension, tie rod ends and boot seals; replace if necessary. • Replace the spark plugs (2.0L, 2.4L engines). * * The spark plug interval is mileage based only, yearly intervals do not apply.
97500	156000	156	• Change the engine oil and engine oil filter.++ • Rotate tires.
105000	168000	168	• Change the engine oil and engine oil filter.++ • Rotate tires. • If using your vehicle for any of the following: Dusty or off-road conditions. Inspect the engine air cleaner filter; replace if necessary. • Inspect the brake linings; replace if necessary. • Replace the air conditioning filter.
112500	180000	180	• Change the engine oil and engine oil filter.++ • Rotate tires. • Inspect the CV joints. • Replace the spark plugs (2.0L, 2.4L engines). *

			* The spark plug interval is mileage based only, yearly intervals do not apply.
120000	192000	192	• Change the engine oil and engine oil filter.++ • Rotate tires. • Replace the engine air cleaner filter. • Adjust the parking brake on vehicles equipped with four-wheel disc brakes. • Inspect the brake linings; replace if necessary. • Replace the air conditioning filter. • Inspect exhaust system. • Inspect the front suspension, tie rod ends and boot seals; replace if necessary. • Inspect rear drive assembly (RDA) fluid, add as needed. Drain and replace fluid if vehicle is used for any of the following: frequent trailer towing, heavy loading, taxi, police, delivery service (commercial service), off-road, desert operation or more than 50% of your driving is at sustained speeds during hot weather, above 90°F (32°C). • Inspect power transfer unit (PTU) fluid, add as needed. Drain and replace fluid if vehicle is used for any of the following: frequent trailer towing, heavy loading, taxi, police, delivery service (commercial service), off-road,

			desert operation or more than 50% of your driving is at sustained speeds during hot weather, above 90°F (32°C). • Change the automatic transmission fluid and filter (6- speed only) if you frequently drive: on rough or unpaved roads, on mountain roads, on short trips, in heavy city traffic during hot weather, or while towing a trailer, or if you use the vehicle for police, taxi, or in a commercial fleet. • Change the automatic transmission fluid and filter (CVT only) if using your vehicle for any of the following: police, taxi, fleet, or frequent trailer towing. • Replace the accessory drive belt (s).
127500	204000	204	• Change the engine oil and engine oil filter.++ • Rotate tires.
135000	216000	216	• Change the engine oil and engine oil filter.++ • Rotate tires. • If using your vehicle for any of the following: Dusty or off-road conditions. Inspect the engine air cleaner filter; replace if necessary. • Inspect the CV joints. • Inspect the brake linings; replace if necessary. • Replace the air conditioning filter. • Replace the spark plugs (2.0L,

			2.4L engines). * * The spark plug interval is mileage based only, yearly intervals do not apply.
142500	228000	228	• Change the engine oil and engine oil filter.++ • Rotate tires.
150000	240000	240	• Change the engine oil and engine oil filter.++ • Rotate tires. • Replace the engine air cleaner filter. • Adjust the parking brake on vehicles equipped with four-wheel disc brakes. • Inspect the brake linings; replace if necessary. • Replace the air conditioning filter. • Inspect exhaust system. • Inspect the front suspension, tie rod ends and boot seals; replace if necessary. • Flush and replace the engine coolant.

+ This maintenance is recommended by the manufacturer to the owner, but is not required to maintain emissions warranty.

WARNING:

- **You can be badly injured working on or around a motor vehicle. Do only service work for which you have the knowledge and the right equipment. If you have any doubt about your ability to perform a service job, take your vehicle to a competent mechanic.**

- **Failure to properly inspect and maintain your vehicle could result in a component malfunction and effect vehicle handling and performance. This could cause an accident**

Failure to follow these instructions may result in possible serious or fatal injury.

MAINTENANCE SCHEDULES - EUROPE/UK - GASOLINE

The Scheduled Maintenance services listed in this Service Information must be done at the times or mileages specified to protect your vehicle warranty and ensure the best vehicle performance and reliability. More frequent maintenance may be needed for vehicles in severe operating conditions, such as dusty areas and very short trip driving. Inspection and service should also be done anytime a malfunction is suspected.

Your vehicle is equipped with an automatic oil change indicator system. The oil change indicator system will remind you that it is time to take your vehicle in for scheduled maintenance

On Electronic Vehicle Information Center (EVIC) equipped vehicles, "Oil Change Required" will be displayed in the EVIC and a single chime will sound, indicating that an oil change is necessary.

On Non-EVIC equipped vehicles, "Change Oil" will flash in the instrument cluster odometer and a single chime will sound, indicating that an oil change is necessary.

The oil change indicator message will illuminate approximately 7, 000 miles (11 200 km) after the most recent oil change was performed. Have your vehicle serviced as soon as possible, within 500 miles (800 km). However, an earlier oil change at 4, 500 miles (7, 500 km) may be required if the vehicle is operated under "Severe Duty Conditions" later in this Service Information .

NOTE: The oil change indicator message will not monitor the time since the last oil change. Change the vehicle's oil if it has been 12 months since the last oil change, even if the oil change indicator message is NOT illuminated.

NOTE: Change your engine oil more often if you drive your vehicle off road for an extended period of time.

NOTE: Under no circumstances should oil change intervals exceed 7, 500 miles (12 000 km) or 12 months, whichever comes first.

At Each Stop for Fuel

- Check the engine oil level about five minutes after a fully warmed engine is shut off. Checking the oil level while the vehicle is on level ground will improve the accuracy of the oil level reading. Add oil only when the level is at or below the ADD or MIN mark.
- Check the windshield washer solvent and add if required.

Once a Month

- Check the tire pressure and look for unusual wear or damage.
- Inspect the battery and clean and tighten the terminals as required.
- Check the fluid levels of coolant reservoir, brake master cylinder, and power steering and add as needed.
- Check all the lights and other electrical items for correct operation.

At Each Oil Change

- Change the engine oil filter.
- Inspect the brake hoses and lines.

CAUTION: Failure to perform the required maintenance items may result in damage to the vehicle.

OIL CHANGE INDICATOR- RESET

The vehicle is equipped with an engine oil change indicator system. The "Oil Change Required" message flashes in the EVIC display for approximately ten seconds after a single chime has sounded, to indicate the next scheduled oil change interval. The engine oil change indicator system is duty cycle based, which means the engine oil change interval may fluctuate depending upon your personal driving style.

Unless reset, this message continues to display each time you turn the ignition switch to the ON/RUN position. To turn off the message temporarily, press and release the Menu button. To reset the oil change indicator system (after performing the scheduled maintenance) perform the following procedure:

1. Turn the ignition switch to the "ON" position. Do not start the engine.
2. Fully press the accelerator pedal slowly three times within ten seconds.
3. Turn the ignition switch to the "LOCK" position.

NOTE: If the indicator message illuminates when you start the vehicle, the oil change indicator system did not reset. If necessary, repeat this procedure.

REQUIRED MAINTENANCE INTERVALS

Perform Maintenance Every (Where time and mileage are listed, follow the interval that occurs first.)			Maintenance Items
Miles	Kilometers	Months	
7500	12000	12	• Change the engine oil and engine oil filter.++ • Rotate tires.
15000	24000	24	• Change the engine oil and engine oil filter.++ • Rotate tires. • If using your vehicle for any of the following: Dusty or off-road conditions. Inspect the engine air cleaner filter; replace if necessary. • Inspect the brake linings; replace if necessary. • Replace the air conditioning filter. • Inspect exhaust system. Perform the first inspection at 15, 000 (24 000 km) or 24 months.

22500	36000	36	• Change the engine oil and engine oil filter.++ • Rotate tires. • Inspect the CV joints. • Replace the spark plugs (2.0L, 2.4L engines only). * * The spark plug interval is mileage based only, yearly intervals do not apply.
30000	48000	48	• Change the engine oil and engine oil filter.++ • Rotate tires. • Replace the engine air cleaner filter. • Adjust the parking brake on vehicles equipped with four-wheel disc brakes. • Inspect the brake linings; replace if necessary. • Replace the air conditioning filter. • Inspect exhaust system. • Inspect the front suspension, tie rod ends and boot seals; replace if necessary.
37500	60000	60	• Change the engine oil and engine oil filter.++ • Rotate tires.
45000	72000	72	• Change the engine oil and engine oil filter.++ • Rotate tires. • If using your vehicle for any of the following: Dusty or off-road conditions. Inspect the engine air

			cleaner filter; replace if necessary. • Inspect the CV joints. • Inspect the brake linings; replace if necessary. • Replace the air conditioning filter. • Replace the spark plugs (2.0L, 2.4L engines only). * * The spark plug interval is mileage based only, yearly intervals do not apply. • Change the manual transmission fluid if using your vehicle for any of the following: trailer towing, heavy loading, taxi, police, delivery service (commercial service), off-road, desert operation or more than 50% of your driving is at sustained speeds during hot weather, above 90°F (32°C).
52500	84000	84	• Change the engine oil and engine oil filter.++ • Rotate tires.
60000	96000	96	• Change the engine oil and engine oil filter.++ • Rotate tires. • Replace the engine air cleaner filter. • Adjust the parking brake on vehicles equipped with four-wheel disc brakes. • Inspect the brake linings; replace if necessary. • Replace the air conditioning filter. • Inspect exhaust system.

			• Inspect the front suspension, tie rod ends and boot seals; replace if necessary. • Inspect rear drive assembly (RDA) fluid, add as needed. Drain and replace fluid if vehicle is used for any of the following: frequent trailer towing, heavy loading, taxi, police, delivery service (commercial service), off-road, desert operation or more than 50% of your driving is at sustained speeds during hot weather, above 90°F (32°C). • Inspect power transfer unit (PTU) fluid, add as needed. Drain and replace fluid if vehicle is used for any of the following: frequent trailer towing, heavy loading, taxi, police, delivery service (commercial service), off-road, desert operation or more than 50% of your driving is at sustained speeds during hot weather, above 90°F (32°C). • Change the automatic transmission fluid and filter if you frequently drive: on rough or unpaved roads, on mountain roads, on short trips, in heavy city traffic during hot weather, or while towing a trailer, or if you use the vehicle for police, taxi, or in a commercial fleet.
67500	108000	108	• Change the engine oil and engine oil filter.++ • Rotate tires. • Inspect the CV joints.

			• Replace the spark plugs (2.0L engine, 2.4L, engine). * * The spark plug interval is mileage based only, yearly intervals do not apply.
75000	120000	120	• Change the engine oil and engine oil filter.++ • Rotate tires. • If using your vehicle for any of the following: Dusty or off-road conditions. Inspect the engine air cleaner filter; replace if necessary. • Inspect the brake linings; replace if necessary. • Replace the air conditioning filter.
82500	132000	132	• Change the engine oil and engine oil filter.++ • Rotate tires.
90000	144000	144	• Change the engine oil and engine oil filter.++ • Rotate tires. • Replace the engine air cleaner filter. • Replace the spark plugs (2.0L, 2.4L engines only). * * The spark plug interval is mileage based only, yearly intervals do not apply. • Inspect and replace PCV valve if necessary. + • Adjust the parking brake on vehicles equipped with four-wheel disc brakes.

			• Inspect the brake linings; replace if necessary. • Replace the air conditioning filter. • Inspect exhaust system. • Inspect the CV joints. • Inspect the front suspension, tie rod ends and boot seals; replace if necessary.
97500	156000	156	• Change the engine oil and engine oil filter.++ • Rotate tires.
105000	168000	168	• Change the engine oil and engine oil filter.++ • Rotate tires. • If using your vehicle for any of the following: Dusty or off-road conditions. Inspect the engine air cleaner filter; replace if necessary. • Inspect the brake linings; replace if necessary. • Replace the air conditioning filter. • Change the manual transmission fluid if using your vehicle for any of the following: trailer towing, heavy loading, taxi, police, delivery service (commercial service), off-road, desert operation or more than 50% of your driving is at sustained speeds during hot weather, above 90°F (32°C).
112500	180000	180	• Change the engine oil and engine oil filter.++ • Rotate tires. • Inspect the CV joints.

			• Replace the spark plugs (2.0L, 2.4L engines only). * * The spark plug interval is mileage based only, yearly intervals do not apply.
120000	192000	192	• Change the engine oil and engine oil filter.++ • Rotate tires. • Replace the engine air cleaner filter. • Adjust the parking brake on vehicles equipped with four-wheel disc brakes. • Inspect the brake linings; replace if necessary. • Replace the air conditioning filter. • Inspect exhaust system. • Inspect the front suspension, tie rod ends and boot seals; replace if necessary. • Inspect rear drive assembly (RDA) fluid, add as needed. Drain and replace fluid if vehicle is used for any of the following: frequent trailer towing, heavy loading, taxi, police, delivery service (commercial service), off-road, desert operation or more than 50% of your driving is at sustained speeds during hot weather, above 90°F (32°C). • Inspect power transfer unit (PTU) fluid, add as needed. Drain and replace fluid if vehicle is used for any of the following: frequent

			trailer towing, heavy loading, taxi, police, delivery service (commercial service), off-road, desert operation or more than 50% of your driving is at sustained speeds during hot weather, above 90°F (32°C). • Change the manual transmission fluid. • Change the automatic transmission fluid and filter if you frequently drive: on rough or unpaved roads, on mountain roads, on short trips, in heavy city traffic during hot weather, or while towing a trailer, or if you use the vehicle for police, taxi, or in a commercial fleet. • Change the automatic transmission fluid and filter (CVT only). • Replace the accessory drive belt (s).
127500	204000	204	• Change the engine oil and engine oil filter.++ • Rotate tires.
135000	216000	216	• Change the engine oil and engine oil filter.++ • Rotate tires. • If using your vehicle for any of the following: Dusty or off-road conditions. Inspect the engine air cleaner filter; replace if necessary. • Inspect the CV joints. • Inspect the brake linings; replace if necessary. • Replace the air conditioning filter.

			• Replace the spark plugs (2.0L, 2.4L engines only). * * The spark plug interval is mileage based only, yearly intervals do not apply.
142500	228000	228	• Change the engine oil and engine oil filter.++ • Rotate tires.
150000	240000	240	• Change the engine oil and engine oil filter.++ • Rotate tires. • Replace the engine air cleaner filter. • Adjust the parking brake on vehicles equipped with four-wheel disc brakes. • Inspect the brake linings; replace if necessary. • Replace the air conditioning filter. • Inspect the CV joints. • Inspect exhaust system. • Inspect the front suspension, tie rod ends and boot seals; replace if necessary. • Flush and replace the engine coolant.

+ This maintenance is recommended by the manufacturer to the owner, but is not required to maintain emissions warranty.

Severe Duty Conditions

++ Change the engine oil and engine oil filter at every 4500 miles (7, 500 km) or 12 months if using your vehicle under any of the following conditions:

- Stop and go driving
- Driving in dusty conditions
- Short trips of less than 10 miles (16 km).
- Trailer towing
- Taxi, police, or delivery service (commercial service).
- Off road or desert operation

WARNING:

- **You can be badly injured working on or around a motor vehicle. Do only service work for which you have the knowledge and the right equipment. If you have any doubt about your ability to perform a service job, take your vehicle to a competent mechanic.**
- **Failure to properly inspect and maintain your vehicle could result in a component malfunction and effect vehicle handling and performance. This could cause an accident**

Failure to follow these instructions may result in possible serious or fatal injury.

MAINTENANCE SCHEDULE - EUROPE/UK - DIESEL

NOTE: **Under no circumstances should oil change intervals exceed 15, 000 miles (24 000 km) or one year, whichever comes first.**

At Each Stop for Fuel

- Check the engine oil level and add as required.
- Check the windshield washer solvent and add if required.

Once a Month

- Check the tire pressure and look for unusual wear or damage.
- Inspect the battery and clean and tighten the terminals as required.
- Check the fluid levels of coolant reservoir, brake master cylinder, and power

steering and add as needed.
- Check all the lights and other electrical items for correct operation.

At Each Oil Change

- Change the engine oil filter.
- Inspect the brake linings, hoses and calipers.
- Replace the engine air cleaner filter.
- Inspect the exhaust system.
- Inspect the CV joints and suspension components.
- Check the coolant level, hoses, and clamps.
- Inspect the accessory drive belt(s).

CAUTION: Failure to perform the required maintenance items may result in damage to the vehicle.

REQUIRED MAINTENANCE INTERVALS- DIESEL ENGINE

Perform Maintenance Every (Where time and mileage are listed, follow the interval that occurs first.)			Maintenance Items
Miles	Kilometers	Months	
15000	24000	12	• Change the engine oil and engine oil filter. • Rotate tires. • Replace the engine air cleaner filter. • Inspect the brake linings. • Replace the air conditioning filter (if equipped). • Inspect the CV joints.
30000	48000	24	• Change the engine oil and engine oil filter. • Rotate tires.

			• Replace the engine air cleaner filter. • Replace fuel filter. • Inspect the brake linings. • Replace the air conditioning filter (if equipped). • Inspect the CV joints. • Inspect the exhaust system. • Inspect the front suspension, tie rod ends and boot seals, replace if necessary. • Adjust the parking brake on vehicles equipped with four wheel disc brakes.
45000	72000	36	• Change the engine oil and engine oil filter. • Rotate tires. • Replace the engine air cleaner filter. • Change manual transmission fluid if using your vehicle for any of the following: trailer towing, heavy loading, taxi, police, delivery service (commercial service), off-road, desert operation or more than 50% of your driving is at sustained speeds during hot weather, above 90°F (32°C). • Inspect the brake linings. • Replace the air conditioning filter (if equipped). • Inspect the CV joints.
60000	96000	48	• Change the engine oil and engine oil filter.

			• Rotate tires. • Replace the engine air cleaner filter. • Replace fuel filter. • Inspect the brake linings. • Adjust the parking brake on vehicles equipped with four wheel disc brakes. • Replace the air conditioning filter (if equipped). • Inspect the CV joints. • Inspect rear drive assembly (RDA) fluid, add as needed. Drain and replace fluid if vehicle is used for any of the following: frequent trailer towing, heavy loading, taxi, police, delivery service (commercial service), off-road, desert operation or more than 50% of your driving is at sustained speeds during hot weather, above 90°F (32°C). • Inspect power transfer unit (PTU) fluid, add as needed. Drain and replace fluid if vehicle is used for any of the following: frequent trailer towing, heavy loading, taxi, police, delivery service (commercial service), off-road, desert operation or more than 50% of your driving is at sustained speeds during hot weather, above 90°F (32°C).
75000	120000	60	• Change the engine oil and engine oil filter. • Rotate tires.

			• Replace the engine air cleaner filter. • Inspect the brake linings. • Replace the air conditioning filter (if equipped). • Inspect the CV joints. • Inspect the exhaust system. • Inspect the front suspension, tie rod ends and boot seals, replace if necessary.
90000	144000	72	• Change the engine oil and engine oil filter. • Rotate tires. • Replace the engine air cleaner filter. • Replace fuel filter. • Inspect the brake linings. • Adjust the parking brake on vehicles equipped with four-wheel disc brakes. • Replace the air conditioning filter (if equipped). • Inspect the CV joints.
105000	168000	84	• Change the engine oil and engine oil filter. • Rotate tires. • Replace the engine air cleaner filter. • Flush and replace engine coolant. • Inspect the brake linings. • Replace the air conditioning filter (if equipped). • Inspect the CV joints.

			• Change manual transmission fluid if using your vehicle for any of the following: trailer towing, heavy loading, taxi, police, delivery service (commercial service), off-road, desert operation or more than 50% of your driving is at sustained speeds during hot weather, above 90°F (32°C).
120000	192000	96	• Change the engine oil and engine oil filter. • Rotate tires. • Replace the engine air cleaner filter. • Replace fuel filter. • Inspect the brake linings. • Replace the air conditioning filter (if equipped). • Change manual transmission fluid. • Inspect the CV joints. • Inspect the exhaust system. • Inspect the front suspension, tie rod ends and boot seals, replace if necessary. • Adjust the parking brake on vehicles equipped with four-wheel disc brakes. • Inspect rear drive assembly (RDA) fluid, add as needed. Drain and replace fluid if vehicle is used for any of the following: frequent trailer towing, heavy loading, taxi, police, delivery service (commercial service), off-road, desert operation or more than 50%

			of your driving is at sustained speeds during hot weather, above 90°F (32°C). • Inspect power transfer unit (PTU) fluid, add as needed. Drain and replace fluid if vehicle is used for any of the following: frequent trailer towing, heavy loading, taxi, police, delivery service (commercial service), off-road, desert operation or more than 50% of your driving is at sustained speeds during hot weather, above 90°F (32°C).

WARNING:

- **Failure to properly inspect and maintain the vehicle could result in a component malfunction and effect vehicle handling and performance. This could cause an accident and may result in possible serious or fatal injury.**

MAINTENANCE SCHEDULES - LATIN AMERICA - GASOLINE

The Scheduled Maintenance services listed in this Service Information must be done at the times or mileages specified to protect your vehicle warranty and ensure the best vehicle performance and reliability. More frequent maintenance may be needed for vehicles in severe operating conditions, such as dusty areas and very short trip driving. Inspection and service should also be done anytime a malfunction is suspected.

Your vehicle is equipped with an automatic oil change indicator system. The oil change indicator system will remind you that it is time to take your vehicle in for scheduled maintenance

On Electronic Vehicle Information Center (EVIC) equipped vehicles, "Oil Change Required" will be displayed in the EVIC and a single chime will sound, indicating that an oil change is necessary.

On Non-EVIC equipped vehicles, "Change Oil" will flash in the instrument cluster odometer and a single chime will sound, indicating that an oil change is necessary.

The oil change indicator message will illuminate approximately 7, 000 miles (11 200 km) after the most recent oil change was performed. Have your vehicle serviced as soon as possible, within 500 miles (800 km). However, an earlier oil change at 4, 500 miles (7, 500 km) may be required if the vehicle is operated under "Severe Duty Conditions" later in this Service Information .

NOTE: The oil change indicator message will not monitor the time since the last oil change. Change the vehicle's oil if it has been 12 months since the last oil change, even if the oil change indicator message is NOT illuminated.

NOTE: Change your engine oil more often if you drive your vehicle off road for an extended period of time.

NOTE: Under no circumstances should oil change intervals exceed 7, 500 miles (12 000 km) or 12 months, whichever comes first.

At Each Stop for Fuel

- Check the engine oil level about five minutes after a fully warmed engine is shut off. Checking the oil level while the vehicle is on level ground will improve the accuracy of the oil level reading. Add oil only when the level is at or below the ADD or MIN mark.
- Check the windshield washer solvent and add if required.

Once a Month

- Check the tire pressure and look for unusual wear or damage.
- Inspect the battery and clean and tighten the terminals as required.
- Check the fluid levels of coolant reservoir, brake master cylinder, and power steering and add as needed.
- Check all the lights and other electrical items for correct operation.

At Each Oil Change

- Change the engine oil filter.
- Inspect the brake hoses and lines.

CAUTION: Failure to perform the required maintenance items may result in damage to the vehicle.

OIL CHANGE INDICATOR- RESET

The vehicle is equipped with an engine oil change indicator system. The "Oil Change Required" message flashes in the EVIC display for approximately ten seconds after a single chime has sounded, to indicate the next scheduled oil change interval. The engine oil change indicator system is duty cycle based, which means the engine oil change interval may fluctuate depending upon your personal driving style.

Unless reset, this message continues to display each time you turn the ignition switch to the ON/RUN position. To turn off the message temporarily, press and release the Menu button. To reset the oil change indicator system (after performing the scheduled maintenance) perform the following procedure:

1. Turn the ignition switch to the "ON" position. Do not start the engine.
2. Fully press the accelerator pedal slowly three times within ten seconds.
3. Turn the ignition switch to the "LOCK" position.

NOTE: If the indicator message illuminates when you start the vehicle, the oil change indicator system did not reset. If necessary, repeat this procedure.

REQUIRED MAINTENANCE INTERVALS

Perform Maintenance Every (Where time and mileage are listed, follow the interval that occurs first.)			Maintenance Items
Miles	Kilometers	Months	
7500	12000	12	• Change the engine oil and engine oil filter.++ • Rotate tires.

15000	24000	24	• Change the engine oil and engine oil filter.++ • Rotate tires. • If using your vehicle for any of the following: Dusty or off-road conditions. Inspect the engine air cleaner filter; replace if necessary. • Inspect the brake linings; replace if necessary. • Replace the air conditioning filter. • Inspect exhaust system. Perform the first inspection at 15, 000 (24 000 km) or 24 months.
22500	36000	36	• Change the engine oil and engine oil filter.++ • Rotate tires. • Inspect the CV joints. • Replace the spark plugs (2.0L, 2.4L engines only). * * The spark plug interval is mileage based only, yearly intervals do not apply.
30000	48000	48	• Change the engine oil and engine oil filter.++ • Rotate tires. • Replace the engine air cleaner filter. • Adjust the parking brake on vehicles equipped with four-wheel disc brakes. • Inspect the brake linings; replace if necessary. • Replace the air conditioning filter. • Inspect exhaust system.

			• Inspect the front suspension, tie rod ends and boot seals; replace if necessary.
37500	60000	60	• Change the engine oil and engine oil filter.++ • Rotate tires.
45000	72000	72	• Change the engine oil and engine oil filter.++ • Rotate tires. • If using your vehicle for any of the following: Dusty or off-road conditions. Inspect the engine air cleaner filter; replace if necessary. • Inspect the CV joints. • Inspect the brake linings; replace if necessary. • Replace the air conditioning filter. • Replace the spark plugs (2.0L, 2.4L engines only). * * The spark plug interval is mileage based only, yearly intervals do not apply. • Change the manual transmission fluid if using your vehicle for any of the following: trailer towing, heavy loading, taxi, police, delivery service (commercial service), off-road, desert operation or more than 50% of your driving is at sustained speeds during hot weather, above 90°F (32°C).
52500	84000	84	• Change the engine oil and engine oil filter.++ • Rotate tires.

60000	96000	96	• Change the engine oil and engine oil filter.++ • Rotate tires. • Replace the engine air cleaner filter. • Adjust the parking brake on vehicles equipped with four-wheel disc brakes. • Inspect the brake linings; replace if necessary. • Replace the air conditioning filter. • Inspect exhaust system. • Inspect the front suspension, tie rod ends and boot seals; replace if necessary. • Inspect rear drive assembly (RDA) fluid, add as needed. Drain and replace fluid if vehicle is used for any of the following: frequent trailer towing, heavy loading, taxi, police, delivery service (commercial service), off-road, desert operation or more than 50% of your driving is at sustained speeds during hot weather, above 90°F (32°C). • Inspect power transfer unit (PTU) fluid, add as needed. Drain and replace fluid if vehicle is used for any of the following: frequent trailer towing, heavy loading, taxi, police, delivery service (commercial service), off-road, desert operation or more than 50% of your driving is at sustained speeds during hot weather, above

			90°F (32°C). • Change the automatic transmission fluid and filter if you frequently drive: on rough or unpaved roads, on mountain roads, on short trips, in heavy city traffic during hot weather, or while towing a trailer, or if you use the vehicle for police, taxi, or in a commercial fleet.
67500	108000	108	• Change the engine oil and engine oil filter.++ • Rotate tires. • Inspect the CV joints. • Replace the spark plugs (2.0L engine, 2.4L, engine). * * The spark plug interval is mileage based only, yearly intervals do not apply.
75000	120000	120	• Change the engine oil and engine oil filter.++ • Rotate tires. • If using your vehicle for any of the following: Dusty or off-road conditions. Inspect the engine air cleaner filter; replace if necessary. • Inspect the brake linings; replace if necessary. • Replace the air conditioning filter.
82500	132000	132	• Change the engine oil and engine oil filter.++ • Rotate tires.
90000	144000	144	• Change the engine oil and engine oil filter.++ • Rotate tires.

			• Replace the engine air cleaner filter. • Replace the spark plugs (2.0L, 2.4L engines only). * * The spark plug interval is mileage based only, yearly intervals do not apply. • Inspect and replace PCV valve if necessary. + • Adjust the parking brake on vehicles equipped with four-wheel disc brakes. • Inspect the brake linings; replace if necessary. • Replace the air conditioning filter. • Inspect exhaust system. • Inspect the CV joints. • Inspect the front suspension, tie rod ends and boot seals; replace if necessary.
97500	156000	156	• Change the engine oil and engine oil filter.++ • Rotate tires.
105000	168000	168	• Change the engine oil and engine oil filter.++ • Rotate tires. • If using your vehicle for any of the following: Dusty or off-road conditions. Inspect the engine air cleaner filter; replace if necessary. • Inspect the brake linings; replace if necessary. • Replace the air conditioning filter.

			• Change the manual transmission fluid if using your vehicle for any of the following: trailer towing, heavy loading, taxi, police, delivery service (commercial service), off-road, desert operation or more than 50% of your driving is at sustained speeds during hot weather, above 90°F (32°C).
112500	180000	180	• Change the engine oil and engine oil filter.++ • Rotate tires. • Inspect the CV joints. • Replace the spark plugs (2.0L, 2.4L engines only). * * The spark plug interval is mileage based only, yearly intervals do not apply.
120000	192000	192	• Change the engine oil and engine oil filter.++ • Rotate tires. • Replace the engine air cleaner filter. • Adjust the parking brake on vehicles equipped with four-wheel disc brakes. • Inspect the brake linings; replace if necessary. • Replace the air conditioning filter. • Inspect exhaust system. • Inspect the front suspension, tie rod ends and boot seals; replace if necessary. • Inspect rear drive assembly (RDA)

			fluid, add as needed. Drain and replace fluid if vehicle is used for any of the following: frequent trailer towing, heavy loading, taxi, police, delivery service (commercial service), off-road, desert operation or more than 50% of your driving is at sustained speeds during hot weather, above 90°F (32°C). • Inspect power transfer unit (PTU) fluid, add as needed. Drain and replace fluid if vehicle is used for any of the following: frequent trailer towing, heavy loading, taxi, police, delivery service (commercial service), off-road, desert operation or more than 50% of your driving is at sustained speeds during hot weather, above 90°F (32°C). • Change the manual transmission fluid. • Change the automatic transmission fluid and filter if you frequently drive: on rough or unpaved roads, on mountain roads, on short trips, in heavy city traffic during hot weather, or while towing a trailer, or if you use the vehicle for police, taxi, or in a commercial fleet. • Change the automatic transmission fluid and filter (CVT only). • Replace the accessory drive belt (s).
127500	204000	204	• Change the engine oil and engine oil filter.++

			• Rotate tires.
135000	216000	216	• Change the engine oil and engine oil filter.++ • Rotate tires. • If using your vehicle for any of the following: Dusty or off-road conditions. Inspect the engine air cleaner filter; replace if necessary. • Inspect the CV joints. • Inspect the brake linings; replace if necessary. • Replace the air conditioning filter. • Replace the spark plugs (2.0L, 2.4L engines only). * * The spark plug interval is mileage based only, yearly intervals do not apply.
142500	228000	228	• Change the engine oil and engine oil filter.++ • Rotate tires.
150000	240000	240	• Change the engine oil and engine oil filter.++ • Rotate tires. • Replace the engine air cleaner filter. • Adjust the parking brake on vehicles equipped with four-wheel disc brakes. • Inspect the brake linings; replace if necessary. • Replace the air conditioning filter. • Inspect the CV joints. • Inspect exhaust system.

			• Inspect the front suspension, tie rod ends and boot seals; replace if necessary. • Flush and replace the engine coolant.

+ This maintenance is recommended by the manufacturer to the owner, but is not required to maintain emissions warranty.

Severe Duty Conditions

++ Change the engine oil and engine oil filter at every 4500 miles (7, 500 km) or 12 months if using your vehicle under any of the following conditions:

- Stop and go driving
- Driving in dusty conditions
- Short trips of less than 10 miles (16 km).
- Trailer towing
- Taxi, police, or delivery service (commercial service).
- Off road or desert operation

WARNING:

- **You can be badly injured working on or around a motor vehicle. Do only service work for which you have the knowledge and the right equipment. If you have any doubt about your ability to perform a service job, take your vehicle to a competent mechanic.**
- **Failure to properly inspect and maintain your vehicle could result in a component malfunction and effect vehicle handling and performance. This could cause an accident**

Failure to follow these instructions may result in possible serious or fatal injury.

MAINTENANCE SCHEDULE - LATIN AMERICA - DIESEL

NOTE: Under no circumstances should oil change intervals

exceed 15, 000 miles (24 000 km) or one year, whichever comes first.

At Each Stop for Fuel

- Check the engine oil level and add as required.
- Check the windshield washer solvent and add if required.

Once a Month

- Check the tire pressure and look for unusual wear or damage.
- Inspect the battery and clean and tighten the terminals as required.
- Check the fluid levels of coolant reservoir, brake master cylinder, and power steering and add as needed.
- Check all the lights and other electrical items for correct operation.

At Each Oil Change

- Change the engine oil filter.
- Inspect the brake linings, hoses and calipers.
- Replace the engine air cleaner filter.
- Inspect the exhaust system.
- Inspect the CV joints and suspension components.
- Check the coolant level, hoses, and clamps.
- Inspect the accessory drive belt(s).

CAUTION: Failure to perform the required maintenance items may result in damage to the vehicle.

REQUIRED MAINTENANCE INTERVALS- DIESEL ENGINE

Perform Maintenance Every (Where time and mileage are listed, follow the interval that occurs first.)			Maintenance Items
Miles	Kilometers	Months	
15000	24000	12	• Change the engine oil and engine

			oil filter. • Rotate tires. • Replace the engine air cleaner filter. • Inspect the brake linings. • Replace the air conditioning filter (if equipped). • Inspect the CV joints.
30000	48000	24	• Change the engine oil and engine oil filter. • Rotate tires. • Replace the engine air cleaner filter. • Replace fuel filter. • Inspect the brake linings. • Replace the air conditioning filter (if equipped). • Inspect the CV joints. • Inspect the exhaust system. • Inspect the front suspension, tie rod ends and boot seals, replace if necessary. • Adjust the parking brake on vehicles equipped with four wheel disc brakes.
45000	72000	36	• Change the engine oil and engine oil filter. • Rotate tires. • Replace the engine air cleaner filter. • Change manual transmission fluid if using your vehicle for any of the following: trailer towing, heavy loading, taxi, police, delivery

			service (commercial service), off-road, desert operation or more than 50% of your driving is at sustained speeds during hot weather, above 90°F (32°C). • Inspect the brake linings. • Replace the air conditioning filter (if equipped). • Inspect the CV joints.
60000	96000	48	• Change the engine oil and engine oil filter. • Rotate tires. • Replace the engine air cleaner filter. • Replace fuel filter. • Inspect the brake linings. • Adjust the parking brake on vehicles equipped with four wheel disc brakes. • Replace the air conditioning filter (if equipped). • Inspect the CV joints. • Inspect rear drive assembly (RDA) fluid, add as needed. Drain and replace fluid if vehicle is used for any of the following: frequent trailer towing, heavy loading, taxi, police, delivery service (commercial service), off-road, desert operation or more than 50% of your driving is at sustained speeds during hot weather, above 90°F (32°C). • Inspect power transfer unit (PTU) fluid, add as needed. Drain and

			replace fluid if vehicle is used for any of the following: frequent trailer towing, heavy loading, taxi, police, delivery service (commercial service), off-road, desert operation or more than 50% of your driving is at sustained speeds during hot weather, above 90°F (32°C).
75000	120000	60	• Change the engine oil and engine oil filter. • Rotate tires. • Replace the engine air cleaner filter. • Inspect the brake linings. • Replace the air conditioning filter (if equipped). • Inspect the CV joints. • Inspect the exhaust system. • Inspect the front suspension, tie rod ends and boot seals, replace if necessary.
90000	144000	72	• Change the engine oil and engine oil filter. • Rotate tires. • Replace the engine air cleaner filter. • Replace fuel filter. • Inspect the brake linings. • Adjust the parking brake on vehicles equipped with four-wheel disc brakes. • Replace the air conditioning filter (if equipped). • Inspect the CV joints.

105000	168000	84	• Change the engine oil and engine oil filter. • Rotate tires. • Replace the engine air cleaner filter. • Flush and replace engine coolant. • Inspect the brake linings. • Replace the air conditioning filter (if equipped). • Inspect the CV joints. • Change manual transmission fluid if using your vehicle for any of the following: trailer towing, heavy loading, taxi, police, delivery service (commercial service), off-road, desert operation or more than 50% of your driving is at sustained speeds during hot weather, above 90°F (32°C).
120000	192000	96	• Change the engine oil and engine oil filter. • Rotate tires. • Replace the engine air cleaner filter. • Replace fuel filter. • Inspect the brake linings. • Replace the air conditioning filter (if equipped). • Change manual transmission fluid. • Inspect the CV joints. • Inspect the exhaust system. • Inspect the front suspension, tie rod ends and boot seals, replace if necessary.

			• Adjust the parking brake on vehicles equipped with four-wheel disc brakes. • Inspect rear drive assembly (RDA) fluid, add as needed. Drain and replace fluid if vehicle is used for any of the following: frequent trailer towing, heavy loading, taxi, police, delivery service (commercial service), off-road, desert operation or more than 50% of your driving is at sustained speeds during hot weather, above 90°F (32°C). • Inspect power transfer unit (PTU) fluid, add as needed. Drain and replace fluid if vehicle is used for any of the following: frequent trailer towing, heavy loading, taxi, police, delivery service (commercial service), off-road, desert operation or more than 50% of your driving is at sustained speeds during hot weather, above 90°F (32°C).

WARNING:

- **Failure to properly inspect and maintain the vehicle could result in a component malfunction and effect vehicle handling and performance. This could cause an accident and may result in possible serious or fatal injury.**

INSPECTION

INSPECTION

The following steps outline the dealer inspection procedure required every 5

years for vehicles covered under the terms of the Lifetime Powertrain Warranty. Refer to the appropriate warranty information for additional terms and coverages applicable to the Lifetime Powertrain Warranty.

1. Lift the vehicle on a suitable hoist.
2. Check all Powertrain components for leaks or physical damage. Note any concerns.
3. Lower the vehicle and check the level and condition of the engine oil.
4. Connect a diagnostic scan tool and check for any active Powertrain Diagnostic Trouble Codes (DTC).

NEW VEHICLE PREPARATION INSTRUCTIONS

STANDARD PROCEDURE

STANDARD PROCEDURE - NEW VEHICLE PREPARATION

VEHICLE READINESS

DESCRIPTION	ACTION
Keep All Protective Transit Film and Wheel Covers & Films on vehicle until sold, or up to 180 Days	Keep All Protective Transit Film and Wheel Covers & Films on vehicle until sold, or up to 180 Days.
Install Ignition Off Draw (IOD) Fuse	Locate and install/connect Ignition Off Draw fuse or connector.
Inflate tire pressure to maximum side wall pressure (except heavy duty trucks)	Increase the tire pressure to maximum sidewall pressure if vehicle is going into lot storage.
Install all "Shipped Loose" items	Install all "Shipped Loose" items
Install Front License Plate Bracket (if required)	Install Front License Plate Bracket
Install Roof Rack	Install Roof Rack
Install Antenna	Install Antenna

UNDERHOOD

DESCRIPTION	ACTION
	Verify the operation of the hood release system including the inside hood release lever and the outside

Hood Latch and Safety Catch - Adjust as Needed	hood secondary safety catch. Adjust if necessary. The safety catch prevents the hood from going to the full open position until it is manually released. To test the safety catch, unlatch the hood with the interior hood release lever and attempt to raise the hood without operating the safety catch.
Battery State-of-Charge - document voltage	Check the battery state of charge by connecting a digital voltmeter at the jump-start locations. The battery voltage should be at least 12.4 volts. If charging is necessary, follow the appropriate Service Information procedures and recharge the battery. Record voltage on New Vehicle Prep (NVP) form.
Loose Attachments, Routing and Clearance	Inspect the following for routing, loose attachments, connections, and clearance. Reroute and tighten as required: Brake Lines, Fuel Lines, Power Steering Hoses, Vacuum Hoses, Clutch Lines, Refrigerant Lines, Wiring, Belts.
All Fluid Levels	Refer to the Owner's Manual or appropriate Service Information for proper fluid level inspection locations.
No Fluid Leaks present	Visually inspect the underhood area to make sure absence of fluid leaks. Check clamps for tightness an full engagement.

UNDER VEHICLE

DESCRIPTION	ACTION
	Raise the vehicle on an appropriate hoist and check the following:

No Fluid Leaks present	Loose Attachments, Routing Clearance and Damage, Absence of Fluid Leaks. Refer to appropriate Service Information for proper lift points. Check clamps for tightness and full engagement.
Loose Attachments, Routing, Clearance, Damage	Raise the vehicle on an appropriate hoist and check the following: Loose Attachments, Routing Clearance and Damage, Absence of Fluid Leaks. Refer to appropriate Service Information for proper lift points. Check clamps for tightness and full engagement.

ROAD TEST

DESCRIPTION	ACTION
Perform Road Test, Mileage: Before _____ After _____	Record mileage before and after road test.
Engine Starts with All Keys	Start vehicle with all sets of keys.
All Warning Lights and Gauges / No DTCs	Verify all warning lights and gauges are operating properly, and no fault codes exist.
Engine Starts Only in Park & Neutral	Verify engine will only start while automatic transmission is in park or neutral.
Service and Parking Brakes	Apply the service brakes while the car is in motion. Be sure the brake operation is smooth and positive. Make sure the vehicle stops in a straight line and without pulling to one side. Make sure there is no shudder or vibration when braking. Make sure that the parking brake is easy to operate. Make sure the parking brake does not drag.
	Make sure that the vehicle will only

Brake Transmission Shift Interlock (Automatic)	start when the brake is depressed on vehicles with automatic transmission.
Clutch / Manual Transmission Shifting (Manual)	Check for smooth shifting. Make sure shift lever operates easily and smoothly. Check for proper syncronization. The gears should not grind.
Automatic Transmission Shifting	Make sure that the park lock mechanism holds the vehicle. With the vehicle on a grade, put the automatic transmission in park and slowly release the service brake to check the operation of the park mechanism. Make sure the shift lever operates easily and smoothly. Check for smooth shifting. Check for proper upshifting and downshifting.
Autostick (if equipped)	Verify that Autostick feature allows proper shifting through the gears.

ROAD TEST

DESCRIPTION	ACTION
Engine Performance - Cold	The engine should: start properly, idle smoothly and at proper speed, be free from stumbling or hesitation, produce sufficient power, be free of unusual noises, operate within the proper temperature range, and stop when the ignition key is shut off or stop button is depressed.
Engine Performance - Warm	The engine should: start properly, idle smoothly and at proper speed, be free from stumbling or hesitation, produce sufficient power, be free of unusual noises, operate within the proper temperature range, and stop when the ignition key is shut off or stop button

	is depressed.
Steering and Handling	Check that the power assist works properly. Make sure that the steering wheel does not vibrate abnormally at idle or road speed. Make sure that the steering wheel is centered when traveling in a straight line. Check that the vehicle does not drift to either side on flat road surfaces. Make sure that the vehicle does not vibrate or shake abnormally.
Noise, Vibration, Squeaks, or Rattles	Check that the vehicle is free of noise, vibrations, squeaks, or rattles. Tighten any loose fasteners.
Heater / Defrost - Front	Check the heater operation after the vehicle has reached operating temperature. Operate blower motor at all speeds. Operate the system in all modes. Check for hot air at all appropriate outlets. Check for temperature control operation.
Air Conditioning	Make sure that the A/C system cools properly. Operate blower motor at all speeds. Check for cool air at all temperature outlets. Operate the system in all modes.
Defrost - Rear	Make sure that the electric heated rear defroster operates correctly. Turn on and feel for warmth.
Cruise Control (if equipped)	Check the "on/off" switch. Check the "set" operation. Check the "resume" function. Check the "accelerate" and "decelerate" function. Check the "cancel" button. Check the brake/clutch release function. If equipped, verify operation of Adaptive Cruise Control function.

Set Compass Variance / Calculation (if equipped)	Refer to the appropriate service information on TechCONNECT for information regarding compass setting procedures.
Transfer Case (if equipped)	Shift the transfer case through all ranges to make sure all shifting is smooth and operates properly.
Tire Pressure Monitoring System	Verify that Tire Pressure Monitoring Indicator Light is not illuminated when tires are above minimum inflation recommendations. Make sure that indicator lamp is not flashing/chiming.

INTERIOR

DESCRIPTION	ACTION
Visually Inspect Interior Parts for Damage, Fit, etc.	From the interior of the vehicle, open and close all doors to make sure ease of operation. Fully open and close the glove box to make sure proper operation. Fully open and close the console door to make sure proper operation. Check interior panels for proper fit and free from damage.
All Interior Lamps and Horn	Operate and visually inspect all interior lights and switches, including: Dome/Map lamps, and if equipped the following: vanity mirror lamps, glove box lamps, ash tray lamp, cigar lighter lamp, radio lamps, door mounted lamps, illuminated entry system. Make sure that the horn operates properly.
Rear View Mirror	Check that the rearview mirror's day/night function Is operating properly.

Front and Rear Wipers and Washers	Activate front windshield wipers, and if equipped, rear window wipers and check for proper operation at all speeds. Activate the front and if equipped, the rear washer. Check the spray pattern for proper operation and aim. Check the intermittent wipe feature for proper operation.
All interior Door Locks including Child Locks	Check all interior door locks for proper operation, including rear child safety door locks if equipped. Place in the unlocked position.

INTERIOR

DESCRIPTION	ACTION
Steering Wheel Mounted Controls	Check all steering wheel controls for proper operation.
Cigar Lighter (if equipped)	Check cigar lighter for proper operation.
Power Windows and Window Lock Switch	Fully open and close all power windows to make sure proper operation and sealing. Make sure that the windows operate properly at each door. Verify that window lock button is operating properly.
Outside Power Mirrors	Check power mirrors for proper operation.
Power Heated Mirrors (if equipped)	Check power heated mirrors for proper operation.
Seats and Seat Belts - All Adjustments	Check for correct installation and operation of seat and shoulder belts, and retractors. Check that the restraint system safety labels regarding the use of seatbelts and airbags are in place. Fully cycle the seats for proper adjustments and

	verify that each seat is securely mounted. Fold down and latch the rear seats. Pull forward to check that the latches operate correctly. Check for proper head restraint operation.
Power Sunroof (if equipped)	Cycle sunroof. Make sure that the sunroof opens and closes easily. Verify proper operation of one touch open/close feature if equipped.
Set Clock(s)	Set all clocks to correct time. Refer to Owner's Manual for information regarding clock setting procedures.
Audio System	Turn the radio on and check reception in both AM and FM modes. Check that the CD player operates properly. Check for good sound quality from all speakers.
Satellite Radio (if equipped)	Turn on satellite radio and verify reception.
Power Outlet(s)	Check all power outlets for proper operation.
Integrated Child Seat / Belt	Check the child restraints and child seats for proper operation.
Heated Seats (if equipped)	Check for proper operation of heated seats on all power levels, on all equipped seats.

EXTERIOR

DESCRIPTION	ACTION
Inspect Body and Paint for Damage and Fit/ Finish	Inspect the body exterior for damage, loose or missing items. During the inspection, make sure that no vehicle damage occurred from the time the vehicle was received and the beginning of the New Vehicle Preparation.

Exterior Lamps - Headlamps, Turn Signals, Hazards, Park/Tail/License Plate, Trunk Lights, etc.	Operate and visually inspect the following: Headlamps (High/Low Beams), turn signals, hazard warning flashers, parking/tail/license plate lamps, reverse/back up lamps, fog lamps, stop lamps including center mounted stop lamp, daytime running lamps (if equipped), clearance lamps, cargo bed lamps, any other lamps.
Lock and Unlock all doors with all mechanical keys	Verify all doors lock and unlock with all mechanical keys.
Doors, Liftgate and Tailgate - Adjust Strikers as Needed	Open each door/liftgate/tailgate from the outside to check outside door handle operation. Check the door detent. Partially close all doors to check the open-door detent. Close all doors/liftgates/tailgates to check the operation of latches and strikers. Adjust strikers as required. Verify liftgate/tailgate ease of operation.
Security Alarm Test (if equipped)	Lock doors using the Remote Keyless Entry Transmitter. Verify the operation of the Vehicle Security System warning lamp.
Remote Keyless Entry (if equipped)	Verify that doors unlock properly using all key FOBS.
Remote Start (if equipped)	Verify that engine starts with all keys when using Remote Keyless Entry Transmitter.

VEHICLE STORAGE

DESCRIPTION	ACTION
Keep all protective transit film, wheel covers and films on vehicle until sold	Keep all protective transit film, wheel covers and films on vehicle until sold.
Inflate tire pressure to maximum side	Inflate tire pressure to maximum side wall pressure (except heavy

wall pressure	duty trucks.)
Remove ignition off draw (IOD) Fuse	Remove fuse before storing vehicle to conserve battery.

FINAL DETAIL & INSPECTION

DESCRIPTION	ACTION
Perform all incomplete recalls and RRTs	Perform all incomplete recalls and RRTs.
Remove interior and exterior Transportation Protective Covers	Remove exterior protective coatings/coverings from vehicle, remove interior protective covers, grease markings on door jambs, unnecessary labels, etc.
Inspect paint and body, touch up as needed	Make sure that the body is free from paint chips or scratches. Touch up any chips/scratches using thin layers of paint. Make sure that the body is free from dings and dents.
Install IOD Fuse	Install fuse prior to delivery.
Test and record battery state of charge	Check the battery state of charge by connecting a digital voltmeter at the jump-start locations. The battery voltage should be at least 12.4 volts. If charging is necessary, follow the appropriate Service Information procedures and recharge the battery. Record voltage on New Vehicle Prep (NVP) form.
Adjust tire pressures including spare to door placard	Adjust tire pressures including spare to door placard.
Wash and clean vehicle exterior	Wash the entire vehicle. Clean the tire sidewalls and wheel/wheel covers (use non - acidic wheel cleaner). Clean exterior/interior glass surfaces.
Clean vehicle interior	Inspect the interior trim, seats, carpeting, and moldings. Clean as necessary.

TOWING

STANDARD PROCEDURE

STANDARD PROCEDURE - VEHICLE TOWING

A vehicle equipped with SAE approved wheel lift type towing equipment can be used to tow MK vehicles. When towing a 4WD vehicle using a wheel lift towing device, use tow dollies under the opposite end of the vehicle. A vehicle with a flatbed device can also be used to transport a disabled vehicle.

SAFETY PRECAUTIONS

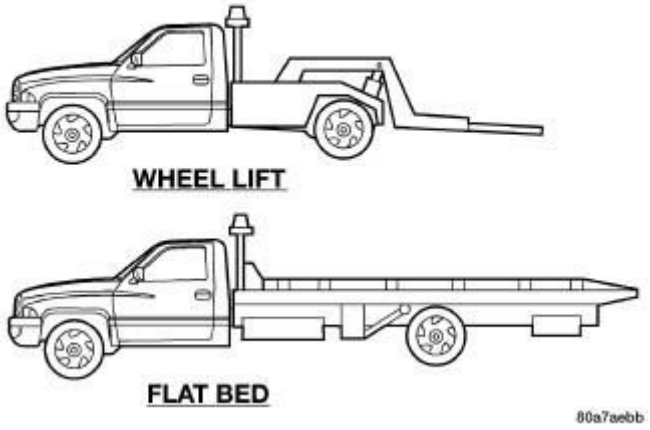

Fig. 6: Identifying Wheel Lift And Flat Bed
Courtesy of CHRYSLER GROUP, LLC

CAUTION: The following safety precautions must be observed when towing a vehicle:

- Secure loose and protruding parts.
- Always use a safety chain system that is independent of the lifting and towing equipment.
- Do not allow towing equipment to contact the disabled vehicle's fuel tank.
- Do not allow anyone under the disabled vehicle while it is lifted by the towing device.
- Do not allow passengers to ride in a vehicle being towed.
- Always observe state and local laws regarding towing regulations.
- Do not tow a vehicle in a manner that could jeopardize the safety of the operator, pedestrians or other motorists.

- Do not attach tow chains, T-hooks, or J-hooks to a bumper, steering linkage, drive shafts or a non-reinforced frame hole.
- Do not tow a heavily loaded vehicle. Use a flatbed device to transport a loaded vehicle.

TOWING A DISABLED VEHICLE

With Ignition Key

AUTOMATIC AND MANUAL TRANSAXLE

Front-wheel-drive vehicles must have the front wheels elevated; all-wheel-drive vehicles must be hauled on a flatbed truck.

ALL TRANSAXLES

If the vehicle being towed requires steering, the ignition switch must be in the ACCESSORY position, not in the LOCK position.

Do not attempt to use sling type equipment when towing. When securing vehicle to flat bed truck, do not attach to front or rear suspension components. Damage to your vehicle may result from improper towing.

If it is necessary to use the accessories while being towed (wipers, defrosters, etc.), the key must be in the ON position, not the ACCESSORY position. Make certain the transaxle remains in NEUTRAL.

WITHOUT THE IGNITION KEY

Special care must be taken when the vehicle is towed with the ignition in the LOCK position. A dolly should be used under the front wheels if the rear wheels are raised. Proper towing equipment is necessary to prevent damage to the vehicle.

Battery power is required to release the brake/transmission interlock system. There is a removable plug in the right side of the shifter housing that allows you to insert your finger to override the system.

TOWING THIS VEHICLE BEHIND ANOTHER VEHICLE (FLAT TOWING WITH ALL FOUR WHEELS ON THE GROUND)

CAUTION: DO NOT flat tow this vehicle. Damage to the drivetrain will result.

2014 HVAC

Heating & Air Conditioning - Electrical Diagnostics - Compass & Patriot

DIAGNOSTIC CODE INDEX

DIAGNOSTIC CODE INDEX

DTC	Description
B1000-92	A/C SWITCH REQUEST INPUT - PERFORMANCE OR INCORRECT OPERATION
B1009-92	RECIRCULATION SWITCH REQUEST INPUT - PERFORMANCE OR INCORRECT OPERATION
B1015-92	EBL / REAR DEFROST SWITCH REQUEST INPUT - PERFORMANCE OR INCORRECT OPERATION
B1030-11	EVAPORATOR TEMPERATURE SENSOR - CIRCUIT SHORT TO GROUND
B1030-12	EVAPORATOR TEMPERATURE SENSOR - CIRCUIT SHORT TO BATTERY
B1033-11	INFRARED TEMPERATURE SENSOR - CIRCUIT SHORT TO GROUND
B1033-12	INFRARED TEMPERATURE SENSOR - CIRCUIT SHORT TO BATTERY
B1033-92	INFRARED TEMPERATURE SENSOR - PERFORMANCE OR INCORRECT OPERATION
B1033-96	INFRARED TEMPERATURE SENSOR - COMPONENT INTERNAL FAILURE
B1058-11	RECIRCULATION DOOR CONTROL - CIRCUIT SHORT TO GROUND
B1058-12	RECIRCULATION DOOR CONTROL - CIRCUIT SHORT TO BATTERY
B1058-13	RECIRCULATION DOOR CONTROL - CIRCUIT OPEN
B1058-92	RECIRCULATION DOOR CONTROL - PERFORMANCE OR INCORRECT OPERATION
B105C-00	RECIRCULATION DOOR TRAVEL RANGE TOO SMALL
B105D-00	RECIRCULATION DOOR TRAVEL RANGE TOO LARGE

B10B2-00	A/C COOL DOWN TEST PERFORMANCE
B11C2-11	FRONT MODE DOOR 1 CONTROL - CIRCUIT SHORT TO GROUND
B11C2-12	FRONT MODE DOOR 1 CONTROL - CIRCUIT SHORT TO BATTERY
B11C2-13	FRONT MODE DOOR 1 CONTROL - CIRCUIT OPEN
B11C2-92	FRONT MODE DOOR 1 CONTROL - PERFORMANCE OR INCORRECT OPERATION
B11C3-00	FRONT MODE DOOR 1 TRAVEL RANGE TOO SMALL
B11C4-00	FRONT MODE DOOR 1 TRAVEL RANGE TOO LARGE
B11CB-11	MAIN/LEFT TEMPERATURE DOOR CONTROL - CIRCUIT SHORT TO GROUND
B11CB-12	MAIN/LEFT TEMPERATURE DOOR CONTROL - CIRCUIT SHORT TO BATTERY
B11CB-13	MAIN/LEFT TEMPERATURE DOOR CONTROL - CIRCUIT OPEN
B11CB-92	MAIN/LEFT TEMPERATURE DOOR CONTROL - PERFORMANCE OR INCORRECT OPERATION
B11CC-00	MAIN/LEFT TEMPERATURE DOOR TRAVEL TOO SMALL
B11CD-00	MAIN/LEFT TEMPERATURE DOOR TRAVEL TOO LARGE
B11D9-92	BLOWER SPEED KNOB REQUEST INPUT - PERFORMANCE OR INCORRECT OPERATION
B210A-84	SYSTEM VOLTAGE LOW - SIGNAL BELOW ALLOWABLE RANGE
B210B-85	SYSTEM VOLTAGE HIGH - SIGNAL ABOVE ALLOWABLE RANGE
B210D-84	BATTERY VOLTAGE LOW - SIGNAL BELOW ALLOWABLE RANGE
B210E-85	BATTERY VOLTAGE HIGH - SIGNAL ABOVE ALLOWABLE RANGE
B2214-00	(HVAC) CLIMATE CONTROL INTERNAL
B222A-00	VEHICLE LINE MISMATCH
U0010-00	CAN INTERIOR BUS
U0141-00	LOST COMMUNICATION WITH IPM (FCM/TIPM)

U0155-00	LOST COMMUNICATION WITH CLUSTER/CCN

DIAGNOSIS AND TESTING

B1000-92-A/C SWITCH REQUEST INPUT - PERFORMANCE OR INCORRECT OPERATION

For a complete wiring diagram, **refer to appropriate SYSTEM WIRING DIAGRAMS article** .

THEORY OF OPERATION

The HVAC A/C Heater Control contains various switches and knobs that are used to change the systems operation. Many of the switches are momentary switches which are normally open or in the Off position and the status changes when the switch button or knob is pushed or turned. An active Diagnostic trouble Code (DTC) indicates that the switch is stuck in an On position. A stored DTC indicates that the switch was stuck in a On position for more than two minutes but has since returned to its normal state of Off.

WHEN MONITORED

With the ignition on.

SET CONDITION

If the A/C On/Off Control Switch is stuck in an On position for more than two minutes. This DTC has a de-maturing time of one second. If the DTCs status changes from active to stored, the DTC will stay in memory for 100 ignition cycles.

POSSIBLE CAUSES

Possible Causes
OBJECT HOLDING SWITCH IN AN ON POSITION A/C HEATER CONTROL

Always perform the HVAC Pre-Diagnostic Troubleshooting procedure before proceeding. Refer to STANDARD PROCEDURE.

DIAGNOSTIC TEST

1. **INSPECT FOR OBJECT HOLDING SWITCH IN AN ON POSITION**

1. Inspect the A/C Heater Control for an object or debris holding the A/C On/Off Control Switch in an On position.

   NOTE: Using the scan tool you can read the On/Off status of the control switch.

   Is the A/C On/Off control switch being held in or stuck On?

   Yes

   - Clean or repair the A/C Heater Control as necessary. If you are unable to clean the switch to where the switch can work properly, replace and program the A/C Heater Control in accordance with the Service Information.
   - Perform the HVAC VERIFICATION TEST. Refer to **STANDARD PROCEDURE**.

   No

   - Go To 2

2. **A/C HEATER CONTROL**
   1. Turn the ignition on.
   2. Using the scan tool, erase HVAC DTCs.
   3. Turn the ignition off for 10 seconds, and then turn the ignition on and wait a minimum of two minutes.
   4. Using the scan tool, read HVAC DTCs.

   Does the scan tool display this DTC as Active or is the status of the switch reading On?

   Yes

   - Replace and program the A/C Heater Control in accordance with the Service Information.
   - Perform the HVAC VERIFICATION TEST. Refer to **STANDARD PROCEDURE**.

   No

- Test complete.
- Perform the HVAC VERIFICATION TEST. Refer to **STANDARD PROCEDURE**.

B1009-92-RECIRCULATION SWITCH REQUEST INPUT - PERFORMANCE OR INCORRECT OPERATION

For a complete wiring diagram, **refer to appropriate SYSTEM WIRING DIAGRAMS article** .

THEORY OF OPERATION

The HVAC A/C Heater Control contains various switches and knobs that are used to change the systems operation. Many of the switches are momentary switches which are normally open or in the Off position and the status changes when the switch button or knob is pushed or turned. An active DTC indicates that the switch is stuck in an On position. A stored Diagnostic trouble Code (DTC) indicates that the switch was stuck in a On position for more than two minutes but has since returned to its normal state of Off.

WHEN MONITORED

With the ignition on.

SET CONDITION

If the Recirculation mode switch is stuck in a On position for more than two minutes. This DTC has a de-maturing time of one second. If the DTCs status changes from active to stored, the DTC will stay in memory for 100 ignition cycles.

POSSIBLE CAUSES

Possible Causes
OBJECT HOLDING SWITCH IN AN ON POSITION A/C HEATER CONTROL

Always perform the HVAC Pre-Diagnostic Troubleshooting procedure before proceeding. Refer to STANDARD PROCEDURE.

DIAGNOSTIC TEST

1. **INSPECT FOR OBJECT HOLDING SWITCH IN AN ON POSITION**
   1. Inspect the A/C Heater Control for an object or debris holding the Recirculation mode switch in an On position.

      NOTE: Using the scan tool you can read the On/Off status of the control switch.

      Is the Recirculation mode switch being held in or stuck On?

      Yes

      - Clean or repair the A/C Heater Control as necessary. If you are unable to clean the switch to where the switch can work properly, replace and program the A/C Heater Control in accordance with the Service Information.
      - Perform the HVAC VERIFICATION TEST. Refer to **STANDARD PROCEDURE**.

      No

      - Go To 2
2. **A/C HEATER CONTROL**
   1. Turn the ignition on.
   2. Using the scan tool, erase HVAC DTCs.
   3. Turn the ignition off for 10 seconds, and then turn the ignition on and wait a minimum of two minutes.
   4. Using the scan tool, read HVAC DTCs.

      Does the scan tool display this DTC as Active or is the status of the switch reading On?

      Yes

      - Replace and program the A/C Heater Control in accordance with the Service Information.
      - Perform the HVAC VERIFICATION TEST. Refer to **STANDARD PROCEDURE**.

No

- Test complete.
- Perform the HVAC VERIFICATION TEST. Refer to **STANDARD PROCEDURE**.

B1015-92-EBL / REAR DEFROST SWITCH REQUEST INPUT - PERFORMANCE OR INCORRECT OPERATION

For a complete wiring diagram, **refer to appropriate SYSTEM WIRING DIAGRAMS article** .

THEORY OF OPERATION

The HVAC A/C Heater Control contains various switches and knobs that are used to change the systems operation. Many of the switches are momentary switches which are normally open or in the Off position and the status changes when the switch button or knob is pushed or turned. An active DTC indicates that the switch is stuck in an On position. A stored Diagnostic Trouble Code (DTC) indicates that the switch was stuck in a On position for more than two minutes but has since returned to its normal state of Off.

WHEN MONITORED

With the ignition on.

SET CONDITION

If the Electric Back light (EBL) Electronic Rear Defrost switch is stuck in an On position for more than two minutes. This DTC has a de-maturing time of one second. If the DTCs status changes from active to stored, the DTC will stay in memory for 100 ignition cycles.

POSSIBLE CAUSES

Possible Causes
OBJECT HOLDING SWITCH IN AN ON POSITION A/C HEATER CONTROL

Always perform the HVAC Pre-Diagnostic Troubleshooting procedure before proceeding. Refer to STANDARD PROCEDURE.

DIAGNOSTIC TEST

1. **INSPECT FOR OBJECT HOLDING SWITCH IN AN ON POSITION**
   1. Inspect the A/C Heater Control for an object or debris holding the (EBL) Electronic Rear Defrost switch in an On position.

      NOTE: Using the scan tool you can read the On/Off status of the control switch.

      Is the (EBL) Electronic Rear Defrost switch being held in or stuck in an On?

      Yes

      - Clean or repair the A/C Heater Control as necessary. If you are unable to clean the switch to where the switch can work properly, replace and program the A/C Heater Control in accordance with the Service Information.
      - Perform the HVAC VERIFICATION TEST. Refer to **STANDARD PROCEDURE**.

      No

      - Go To 2
2. **A/C HEATER CONTROL**
   1. Turn the ignition on.
   2. Using the scan tool, erase HVAC DTCs.
   3. Turn the ignition off for 10 seconds, and then turn the ignition on and wait a minimum of two minutes.
   4. Using the scan tool, read HVAC DTCs.

      Does the scan tool display this DTC as Active or is the status of the switch reading On?

      Yes

      - Replace and program the A/C Heater Control in accordance with the Service Information.
      - Perform the HVAC VERIFICATION TEST. Refer to **STANDARD PROCEDURE**.

No

- Test complete.
- Perform the HVAC VERIFICATION TEST. Refer to **STANDARD PROCEDURE**.

B1030-11-EVAPORATOR TEMPERATURE SENSOR - CIRCUIT SHORT TO GROUND

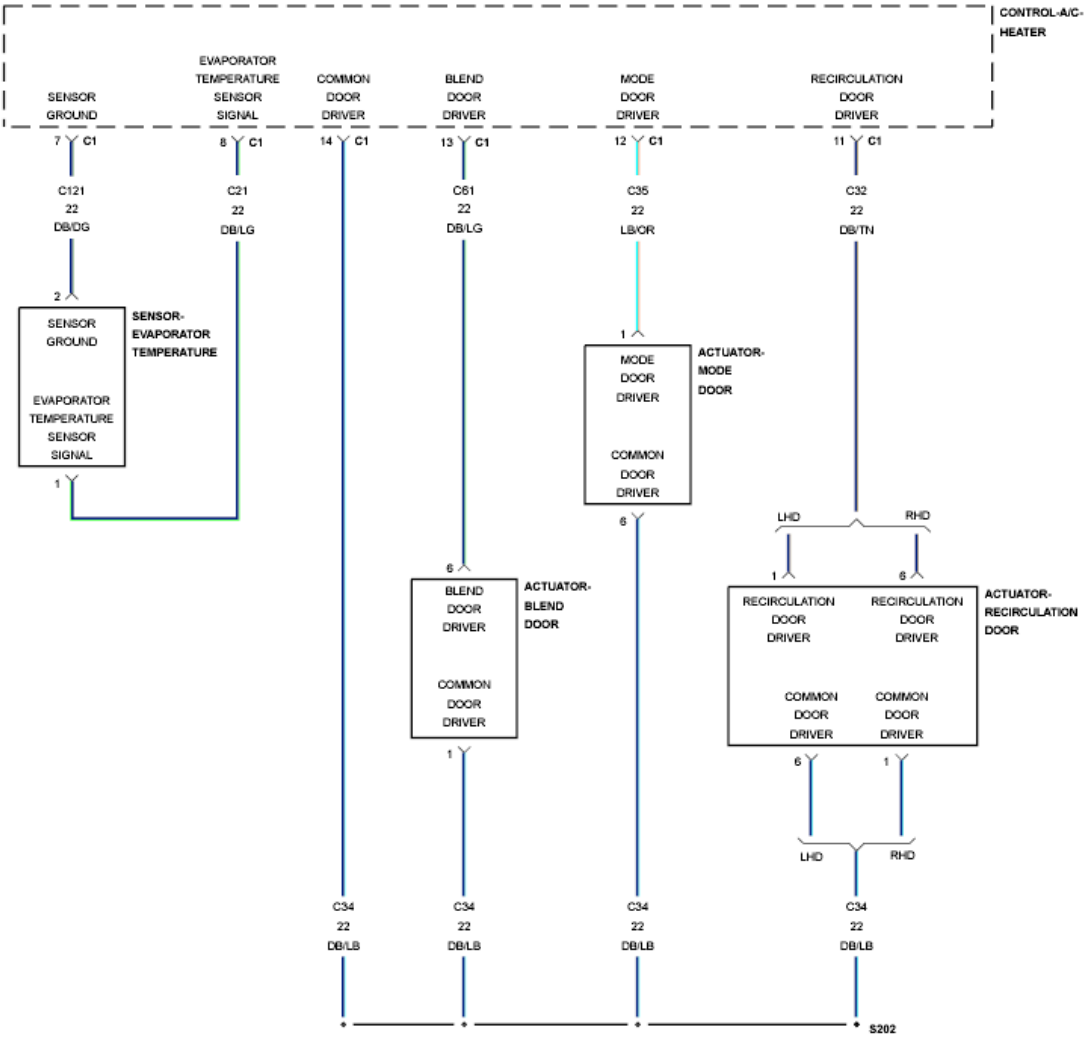

Fig. 1: Evaporator Temperature Sensor Circuit Schematic
Courtesy of CHRYSLER GROUP, LLC

For a complete wiring diagram, **refer to appropriate SYSTEM WIRING DIAGRAMS article** .

WHEN MONITORED

With the ignition on.

SET CONDITION

The Evaporator Temperature Sensor voltage input to the A/C Heater Control is equal to or below 0.9 of a volt for a continuous period of 1.2 seconds. If the A/C Heater Control detects a valid voltage, the Diagnostic Trouble Code (DTC) will change from active to stored and will stay stored for 100 ignition cycles.

POSSIBLE CAUSES

Possible Causes
(C21) EVAPORATOR TEMPERATURE SENSOR SIGNAL CIRCUIT SHORTED TO GROUND
EVAPORATOR TEMPERATURE SENSOR
A/C HEATER CONTROL

Always perform the HVAC Pre-Diagnostic Troubleshooting procedure before proceeding. Refer to STANDARD PROCEDURE.

DIAGNOSTIC TEST

1. **CHECK IF THE DTC IS ACTIVE**
   1. Ignition on, engine not running.
   2. Using the scan tool, read HVAC DTCs.

      Is this DTC active?

      Yes

      - Go To 2

      No

      - Go To 5
2. **CHECK (C21) EVAPORATOR TEMPERATURE SENSOR SIGNAL CIRCUIT FOR A SHORT TO GROUND**

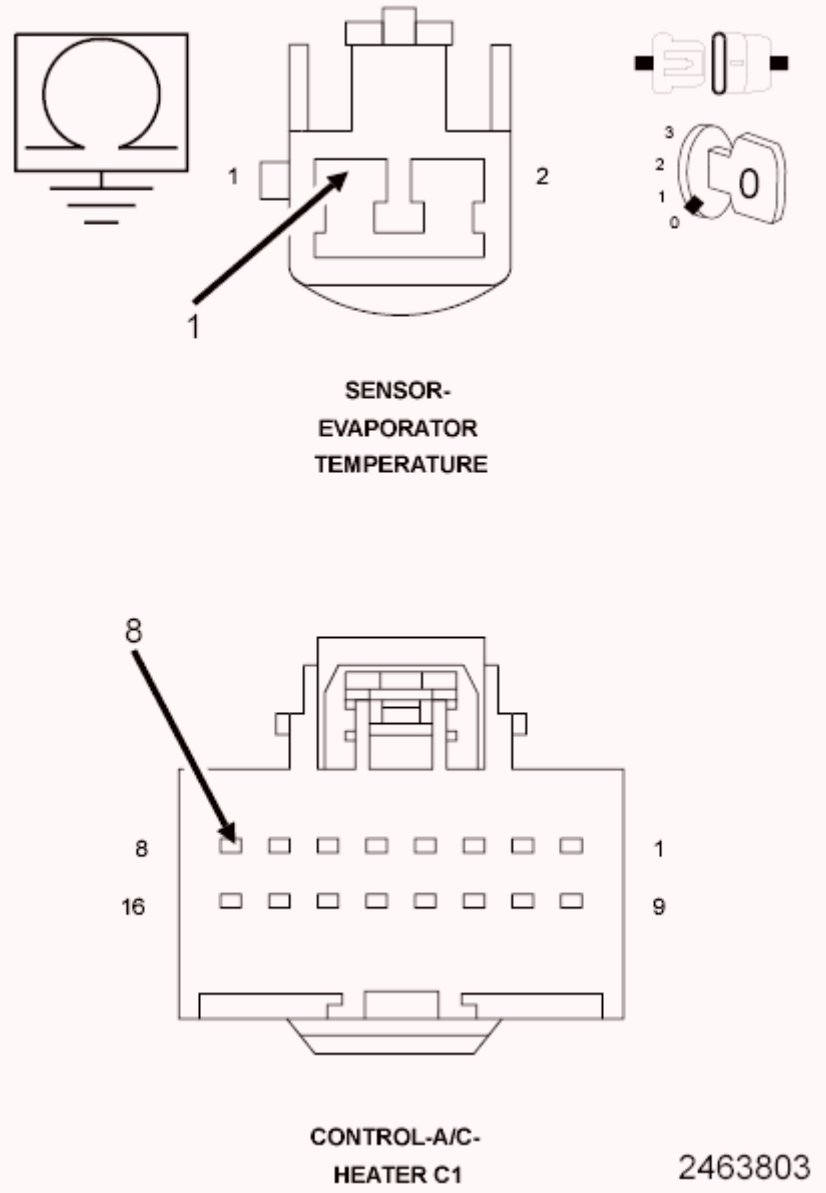

Fig. 2: Checking Evaporator Temperature Sensor Signal Circuit For A Short To Ground
Courtesy of CHRYSLER GROUP, LLC

1. Turn the ignition off to the lock position.
2. Disconnect the A/C Heater Control C1 harness connector.
3. Disconnect the Evaporator Temperature Sensor harness connector.
4. Measure the resistance between ground and the (C21) Evaporator Temperature Sensor Signal circuit.

   Is the resistance below 100k Ohms?

   Yes

- Repair the (C21) Evaporator Temperature Sensor Signal circuit for a short to ground.
- Perform the HVAC VERIFICATION TEST. Refer to **STANDARD PROCEDURE**.

No

- Go To 3

3. **CHECK (C21) EVAPORATOR TEMPERATURE SENSOR SIGNAL CIRCUIT FOR A SHORT TO THE (C121) SENSOR GROUND CIRCUIT**

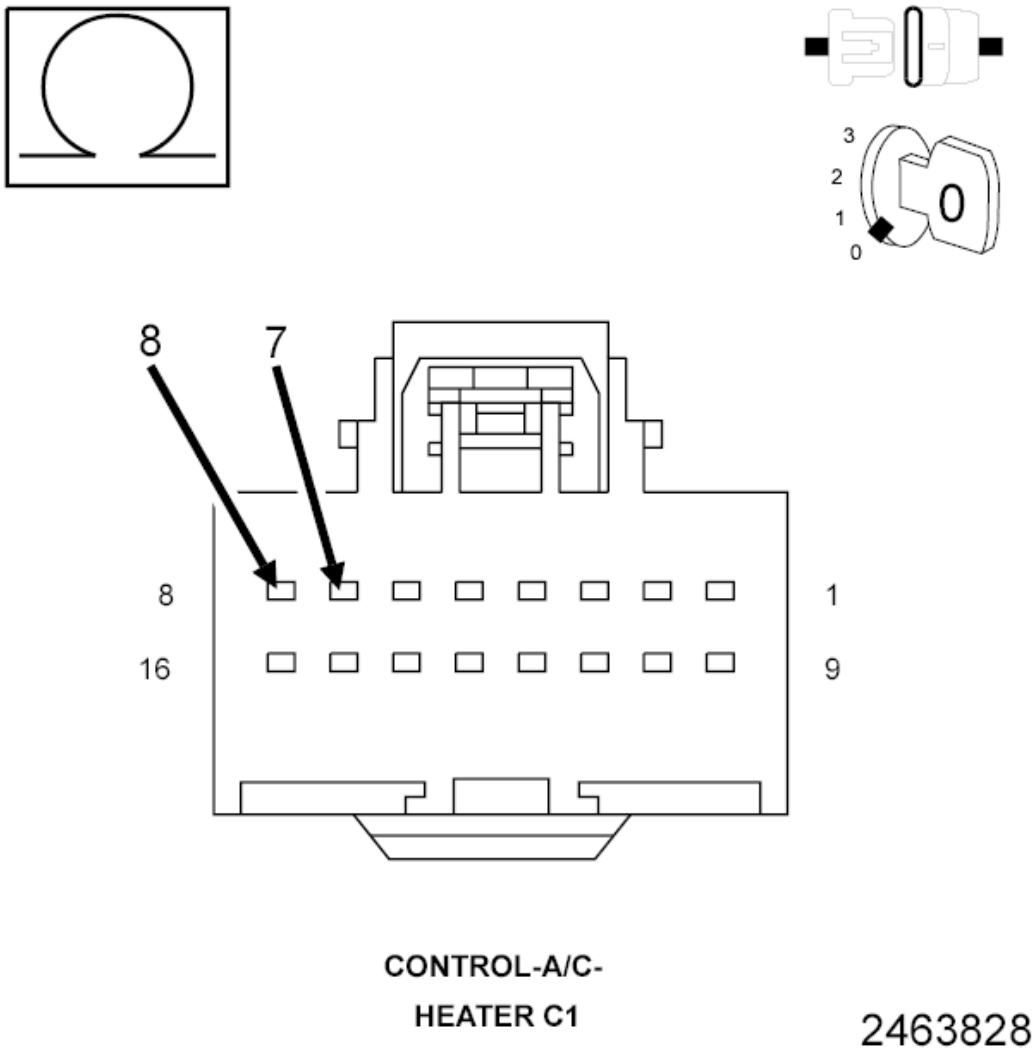

Fig. 3: Measuring Resistance Between Evaporator Temperature Sensor Signal Circuit & Sensor Ground Circuit
Courtesy of CHRYSLER GROUP, LLC

1. Measure the resistance between the (C21) Evaporator Temperature Sensor Signal circuit and the (C121) Sensor Ground circuit.

   Is the resistance below 100k Ohms?

   Yes

   - Repair the (C21) Evaporator Temperature Sensor Signal circuit for a short to (C121) Sensor Ground circuit.
   - Perform the HVAC VERIFICATION TEST. Refer to **STANDARD PROCEDURE**.

   No

   - Go To 4

4. **CHECK THE EVAPORATOR TEMPERATURE SENSOR**
   1. Replace the Evaporator Temperature Sensor in Accordance with the Service Information.
   2. Cycle the ignition off for 30 seconds then back on.
   3. With the scan tool, read HVAC DTCs.

      Does this DTC reset?

      Yes

      - Replace and program the A/C Heater Control in accordance with the Service Information.
      - Perform the HVAC VERIFICATION TEST. Refer to **STANDARD PROCEDURE**.

      No

      - Test complete.
      - Perform the HVAC VERIFICATION TEST. Refer to **STANDARD PROCEDURE**.

5. **CHECK THE WIRING AND CONNECTORS**
   1. The conditions necessary to set the DTC are not present at this time.
   2. Using the scan tool, check the Environmental Data to help identify the

conditions in which the DTC was set.

3. Using the wiring diagrams as a guide, check all related splices and connectors for signs of water intrusion, corrosion, pushed out or bent terminals, and correct pin tension.
4. Wiggle the wiring and connectors while checking for shorted and open circuits.

Were there any problems found?

Yes

- Repair as necessary.
- Perform the HVAC VERIFICATION TEST. Refer to **STANDARD PROCEDURE**.

No

- Test complete.

B1030-12-EVAPORATOR TEMPERATURE SENSOR - CIRCUIT SHORT TO BATTERY

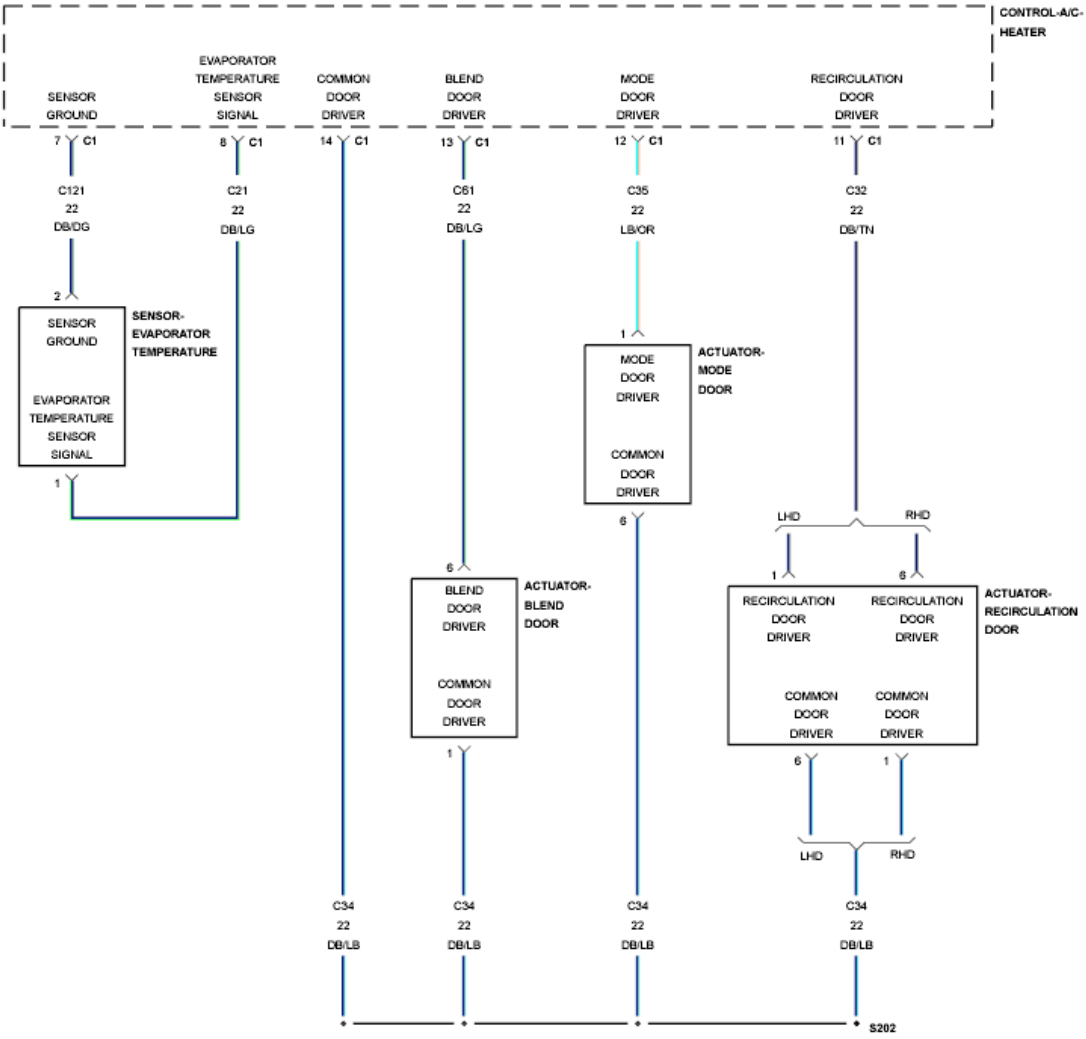

Fig. 4: Evaporator Temperature Sensor Circuit Schematic
Courtesy of CHRYSLER GROUP, LLC

For a complete wiring diagram, **refer to appropriate SYSTEM WIRING DIAGRAMS article** .

THEORY OF OPERATION

The Evaporator Temperature Sensor resistance changes in conjunction to temperature. The sensor thermistor forms the lower half of a voltage divider and the upper half of the voltage divider is provided by a pull up resistor to 5.0 volts.

WHEN MONITORED

With the ignition on.

SET CONDITION

The Evaporator Temperature Sensor voltage input to the A/C Heater Control is equal to or above 4.8 volts for a continuous period of two seconds. If the A/C Heater Control detects a valid voltage, the DTC will change from Active to Stored and will stay in the controllers memory for 100 ignition cycles.

POSSIBLE CAUSES

Possible Causes
(C21) EVAPORATOR TEMPERATURE SENSOR SIGNAL CIRCUIT SHORTED TO VOLTAGE
(C21) EVAPORATOR TEMPERATURE SENSOR SIGNAL CIRCUIT OPEN
(C121) SENSOR GROUND CIRCUIT OPEN
EVAPORATOR TEMPERATURE SENSOR
A/C HEATER CONTROL

Always perform the HVAC Pre-Diagnostic Troubleshooting procedure before proceeding. Refer to STANDARD PROCEDURE.

DIAGNOSTIC TEST

1. **CHECK (C21) EVAPORATOR TEMPERATURE SENSOR SIGNAL CIRCUIT VOLTAGE**
   1. Ignition on, engine not running.
   2. With the scan tool, read HVAC DTCs.

      Is this DTC active?

      Yes

      - Go To 2

      No

      - Go To 7
2. **CHECK THE (C21) EVAPORATOR TEMPERATURE SENSOR SIGNAL CIRCUIT VOLTAGE**

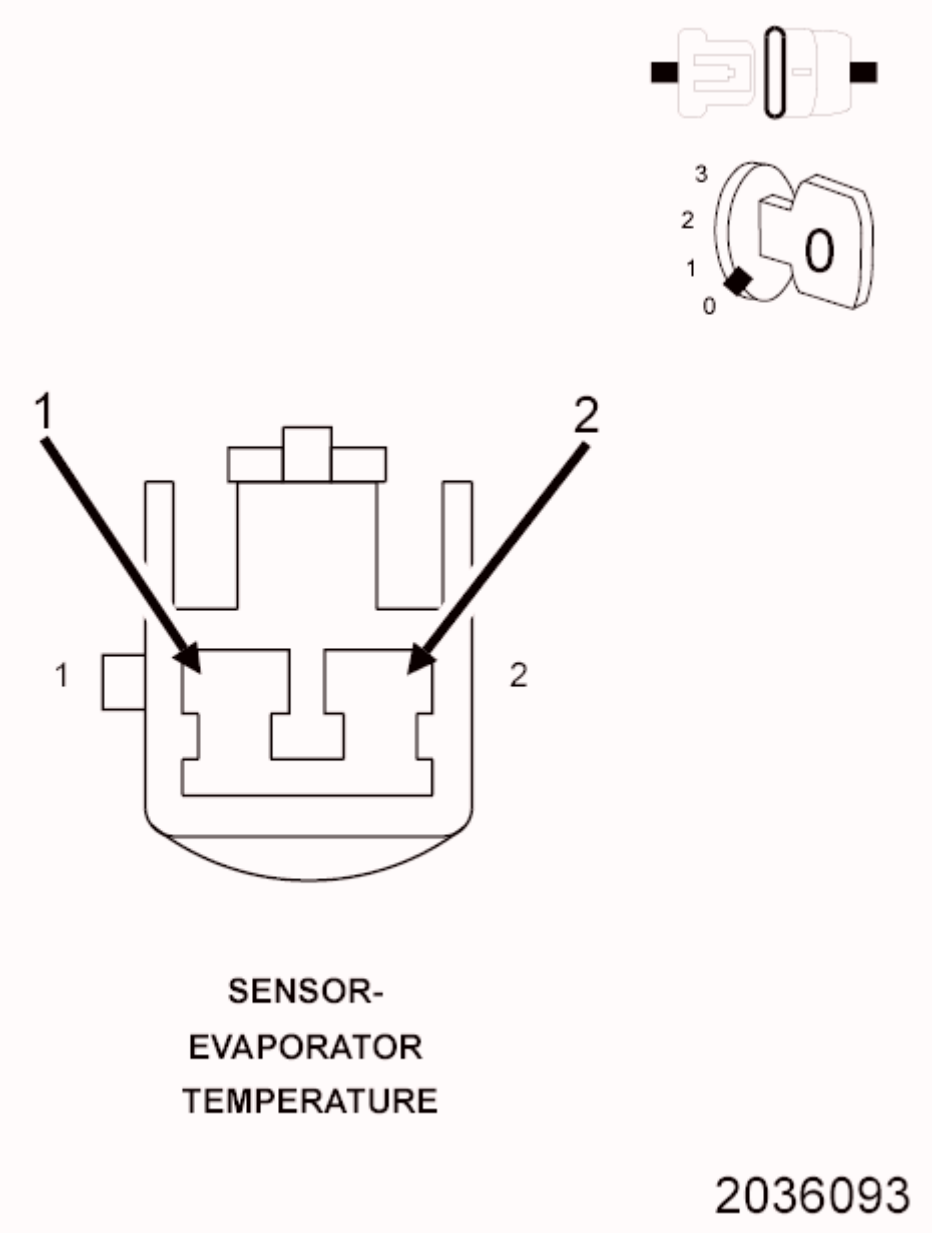

Fig. 5: Checking Evaporator Temperature Sensor Signal Circuit Voltage
Courtesy of CHRYSLER GROUP, LLC

1. Turn the ignition off to the lock position.
2. Disconnect the Evaporator Temperature Sensor harness connector.

NOTE: Due to the small terminal and pin size of the Evaporator Temperature Sensor and harness connector, make sure to not damage the terminals in this process.

3. Connect a jumper wire between the (C21) Evaporator Temperature Sensor Signal circuit and the (C121) Sensor Ground circuit in the Evaporator Temperature Sensor harness connector.
4. Ignition on, engine not running.
5. With the scan tool, read the Evaporator Temperature Sensor voltage.

   Is the voltage below 0.1 of a volt?

   Yes

   - Replace the Evaporator Temperature Sensor in accordance with the Service Information.
   - Perform the HVAC VERIFICATION TEST. Refer to **STANDARD PROCEDURE**.

   No

   - Go To 3

3. **CHECK THE (C21) EVAPORATOR TEMPERATURE SENSOR SIGNAL CIRCUIT FOR A SHORT TO VOLTAGE**

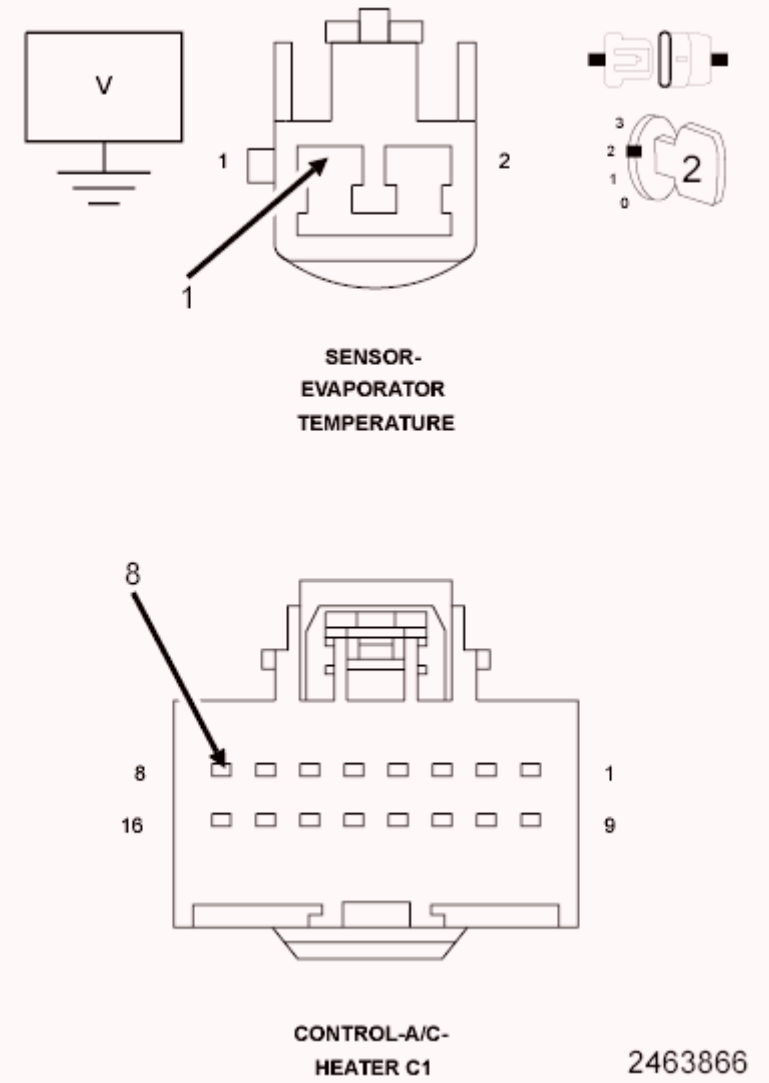

Fig. 6: Measuring Voltage Of Evaporator Temperature Sensor Signal Circuit
Courtesy of CHRYSLER GROUP, LLC

1. Turn the ignition off to the lock position.
2. Disconnect the jumper wire from the Evaporator Temperature Sensor harness connector.
3. Disconnect the A/C Heater Control C1 harness connector.
4. Ignition on, engine not running.
5. Measure the voltage of the (C21) Evaporator Temperature Sensor Signal circuit

   Is there any voltage present?

   Yes

- Repair the (C21) Evaporator Temperature Sensor Signal circuit for a short to voltage.
- Perform the HVAC VERIFICATION TEST. Refer to **STANDARD PROCEDURE**.

No

- Go To 4

4. **CHECK THE (C21) EVAPORATOR TEMPERATURE SENSOR SIGNAL CIRCUIT FOR AN OPEN**

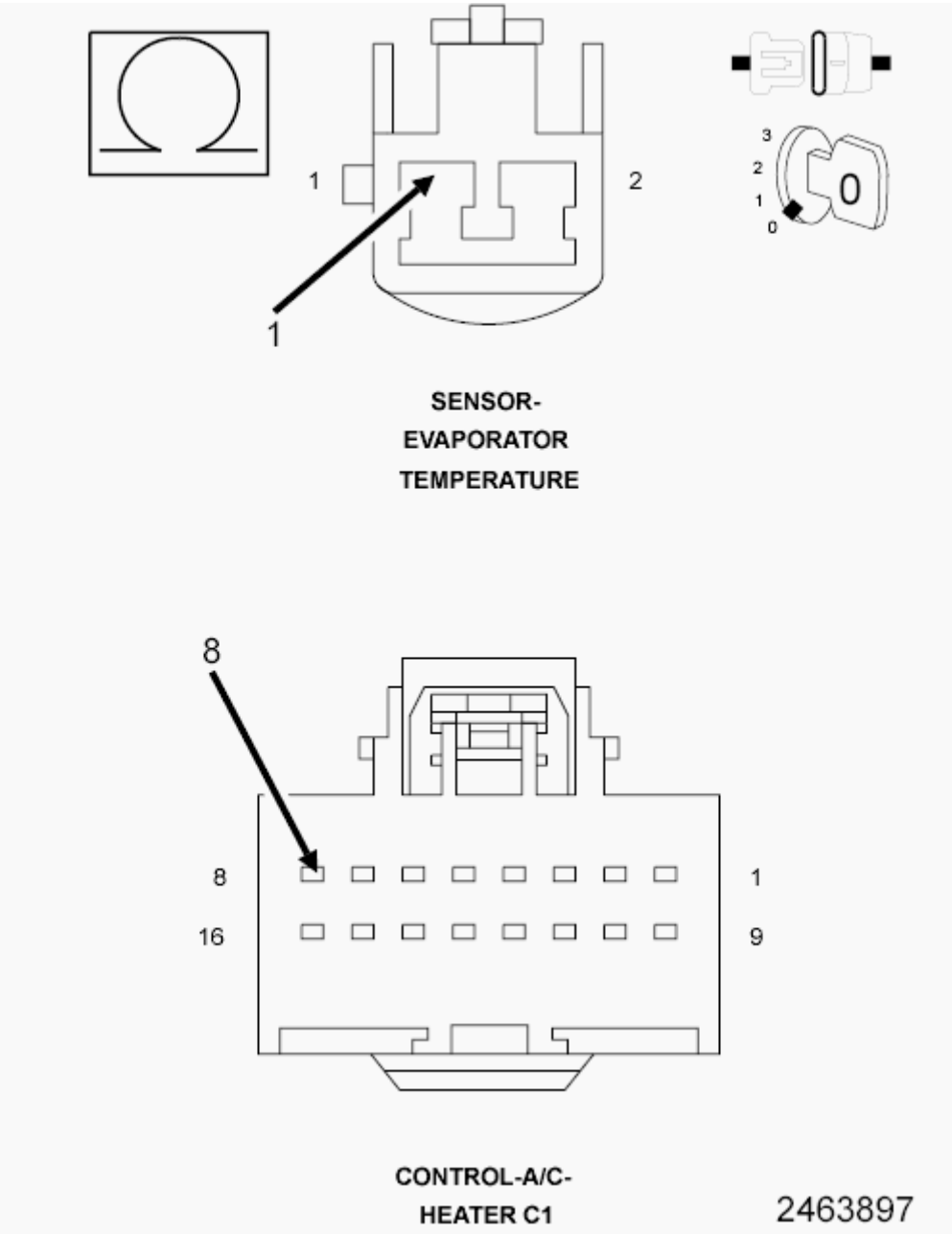

Fig. 7: Checking Evaporator Temperature Sensor Signal Circuit For An Open
Courtesy of CHRYSLER GROUP, LLC

1. Turn the ignition off to the lock position.
2. Measure the resistance of the (C21) Evaporator Temperature Sensor Signal circuit between the A/C Heater Control C1 harness connector and the Evaporator Temperature Sensor harness connector.

   Is the resistance above 1.0 Ohm?

   Yes

   - Repair the (C21) Evaporator Temperature Sensor Signal circuit for an open or high resistance.
   - Perform the HVAC VERIFICATION TEST. Refer to **STANDARD PROCEDURE**.

   No

   - Go To 5

5. **CHECK THE (C121) SENSOR GROUND CIRCUIT FOR AN OPEN**

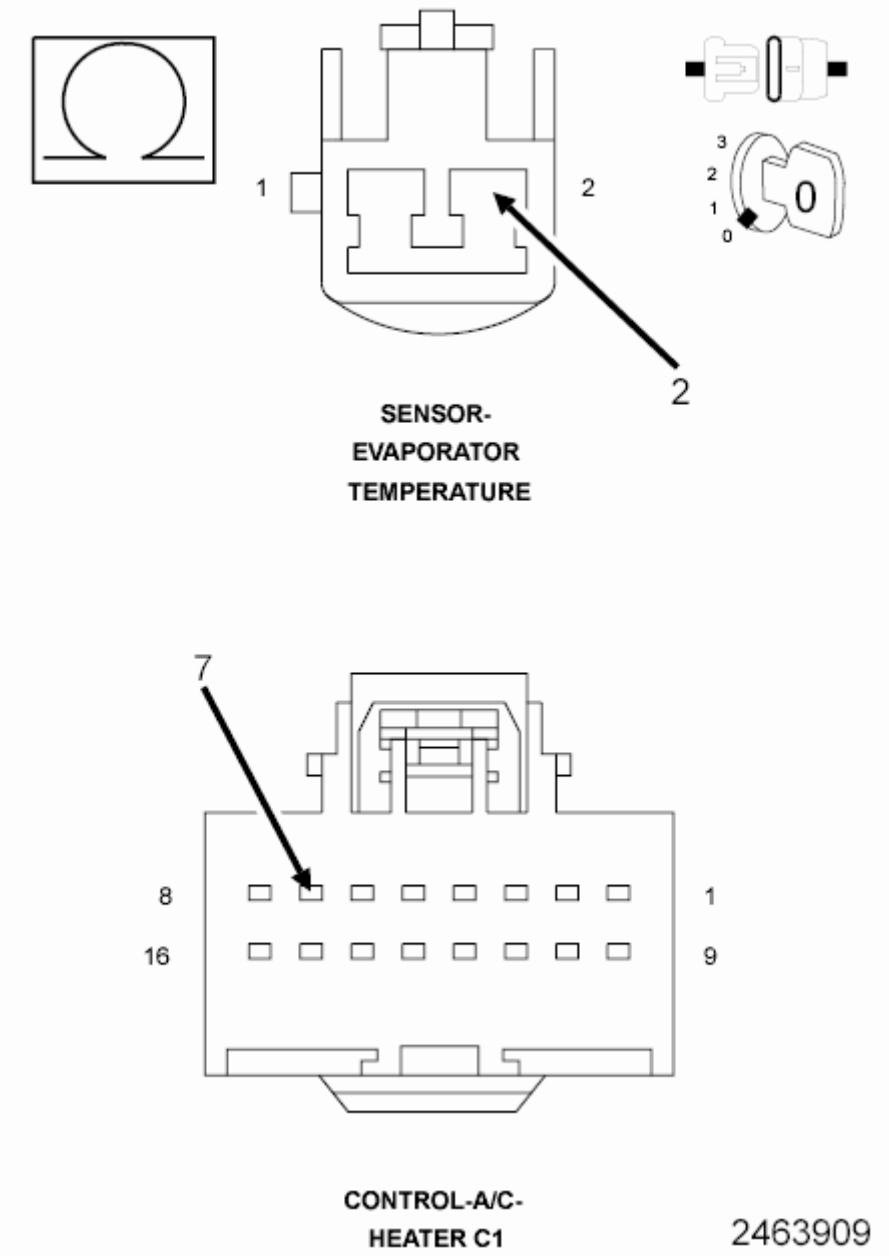

Fig. 8: Checking Sensor Ground Circuit For An Open
Courtesy of CHRYSLER GROUP, LLC

1. Measure the resistance of the (C121) Sensor Ground circuit between the A/C Heater Control C1 harness connector and the Evaporator Temperature Sensor harness connector.

   Is the resistance above 1.0 Ohm?

   Yes

   - Repair the (C121) Sensor Ground circuit for an open.

- Perform the HVAC VERIFICATION TEST. Refer to **STANDARD PROCEDURE**.

No

- Go To 6

6. **CHECK THE EVAPORATOR TEMPERATURE SENSOR**
   1. Replace the Evaporator Temperature Sensor in Accordance with the Service Information.
   2. Cycle the ignition off for 30 seconds then back on.
   3. With the scan tool, read HVAC DTCs.

   Does this DTC reset?

   Yes

   - Replace and program the A/C Heater Control in accordance with the Service Information.
   - Perform the HVAC VERIFICATION TEST. Refer to **STANDARD PROCEDURE**.

   No

   - Test complete.
   - Perform the HVAC VERIFICATION TEST. Refer to **STANDARD PROCEDURE**.

7. **CHECK THE WIRING AND CONNECTORS**
   1. The conditions necessary to set the DTC are not present at this time.
   2. With the scan tool, check the Environmental Data to help identify the conditions in which the DTC was set.
   3. Using the wiring diagrams as a guide, check all related splices and connectors for signs of water intrusion, corrosion, pushed out or bent terminals, and correct pin tension.
   4. Wiggle the wiring and connectors while checking for shorted and open circuits.

   Were there any problems found?

Yes

- Repair as necessary.
- Perform the HVAC VERIFICATION TEST. Refer to **STANDARD PROCEDURE**.

No

- Test complete.

B1033-11-INFRARED TEMPERATURE SENSOR - CIRCUIT SHORT TO GROUND

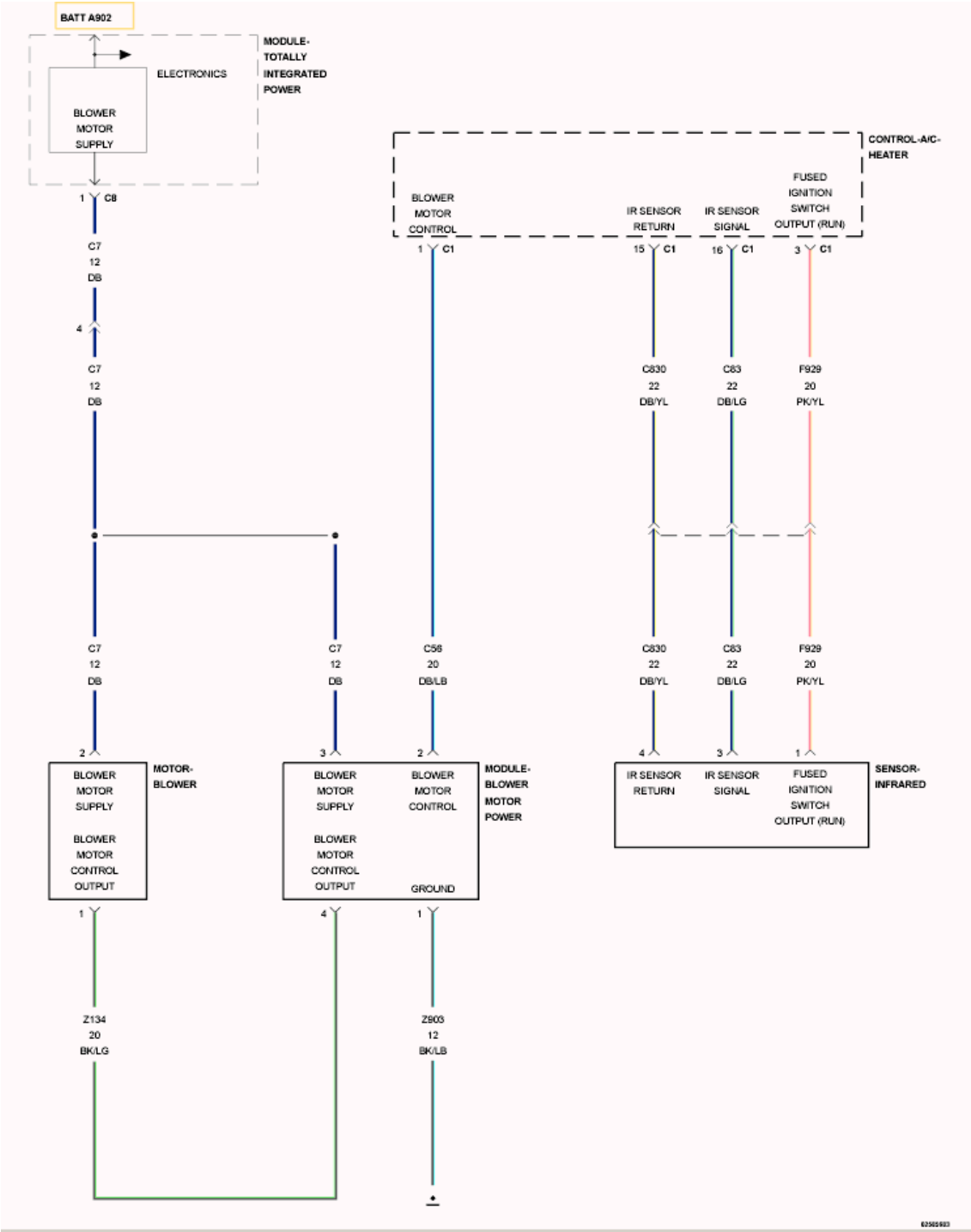

Fig. 9: Infrared Temperature Sensor Circuit Schematic
Courtesy of CHRYSLER GROUP, LLC

For a complete wiring diagram, **refer to appropriate SYSTEM WIRING DIAGRAMS article** .

WHEN MONITORED

With the ignition on.

SET CONDITION

When the Infrared (IR) Temperature Sensor Pulse Width Modulated (PWM) signal to the A/C Heater Control is less than a predetermined value for a continuous period of 1200 msec. If the A/C Heater Control detects a valid PWM signal, the DTC will change from active to stored and will stay stored for 100 ignition cycles.

POSSIBLE CAUSES

Possible Causes
(F929) FUSED IGNITION SWITCH OUTPUT (RUN) CIRCUIT OPEN
(C83) IR SENSOR SIGNAL CIRCUIT SHORTED TO GROUND
INFRARED SENSOR
A/C HEATER CONTROL

Always perform the HVAC Pre-Diagnostic Troubleshooting procedure before proceeding. Refer to STANDARD PROCEDURE.

DIAGNOSTIC TEST

1. **CHECK IF DTC IS ACTIVE**
   1. Ignition on, engine not running.
   2. With the scan tool, read HVAC DTCs.

      Is this DTC active?

      Yes

      - Go To 2

      No

      - Go To 5
2. **CHECK THE (F929) FUSED IGNITION SWITCH OUTPUT (RUN) CIRCUIT FOR AN OPEN**

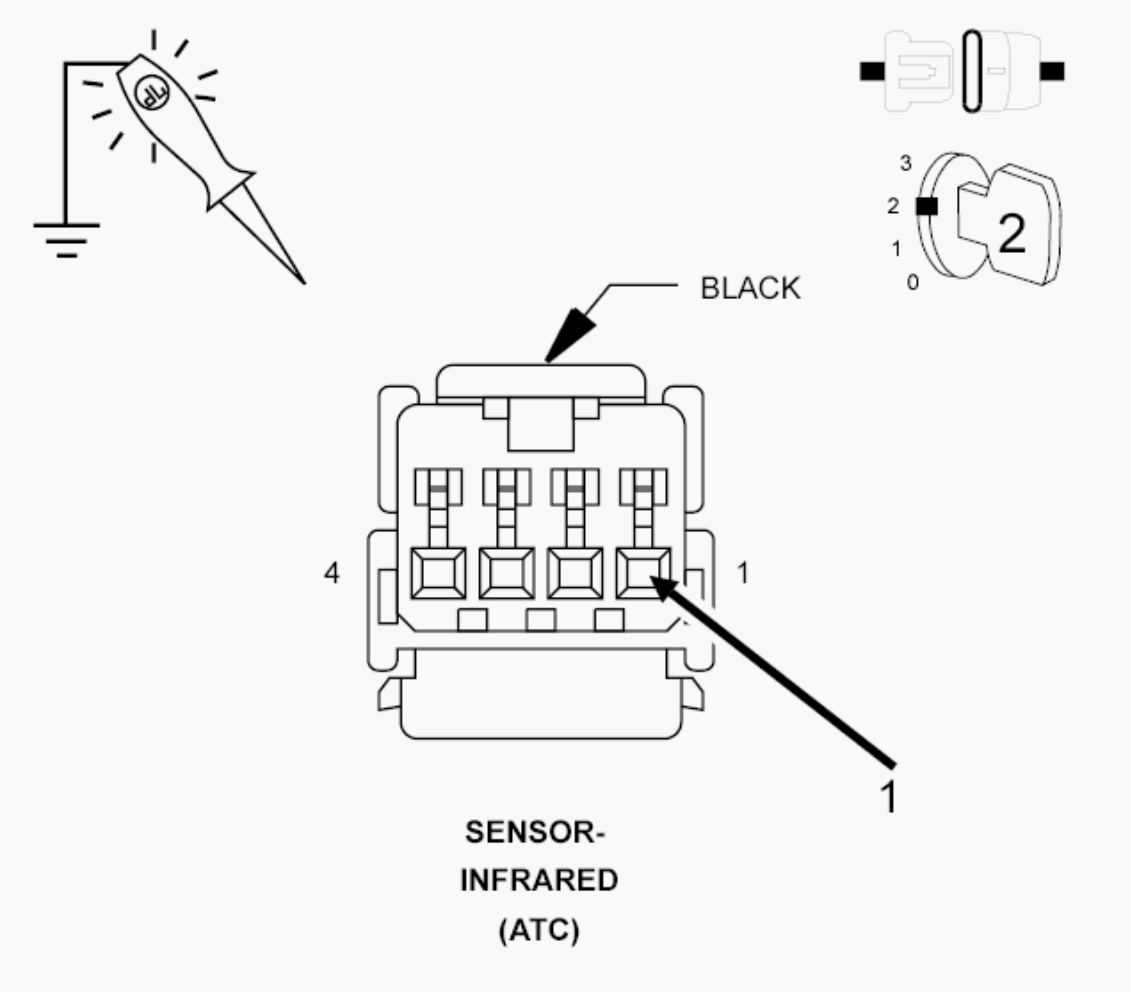

Fig. 10: Checking Ignition Switch Output (Run-Start) Circuit For Open
Courtesy of CHRYSLER GROUP, LLC

1. Turn the ignition off to the lock position.
2. Disconnect the Infrared Sensor harness connector.
3. Ignition on, engine not running.
4. With a test light connected to ground, check the (F929) Fused Ignition Switch Output (Run) circuit.

NOTE: The test light must illuminate brightly. Compare the brightness to that of a direct connection to the battery.

Does the test light illuminate brightly?

Yes

- Go To 3

No

- Repair the (F929) Fused Ignition Switch Output (Run) circuit for an open.
- Perform the HVAC VERIFICATION TEST. Refer to **STANDARD PROCEDURE**.

3. **CHECK THE (C83) IR SENSOR SIGNAL CIRCUIT FOR A SHORT TO GROUND**

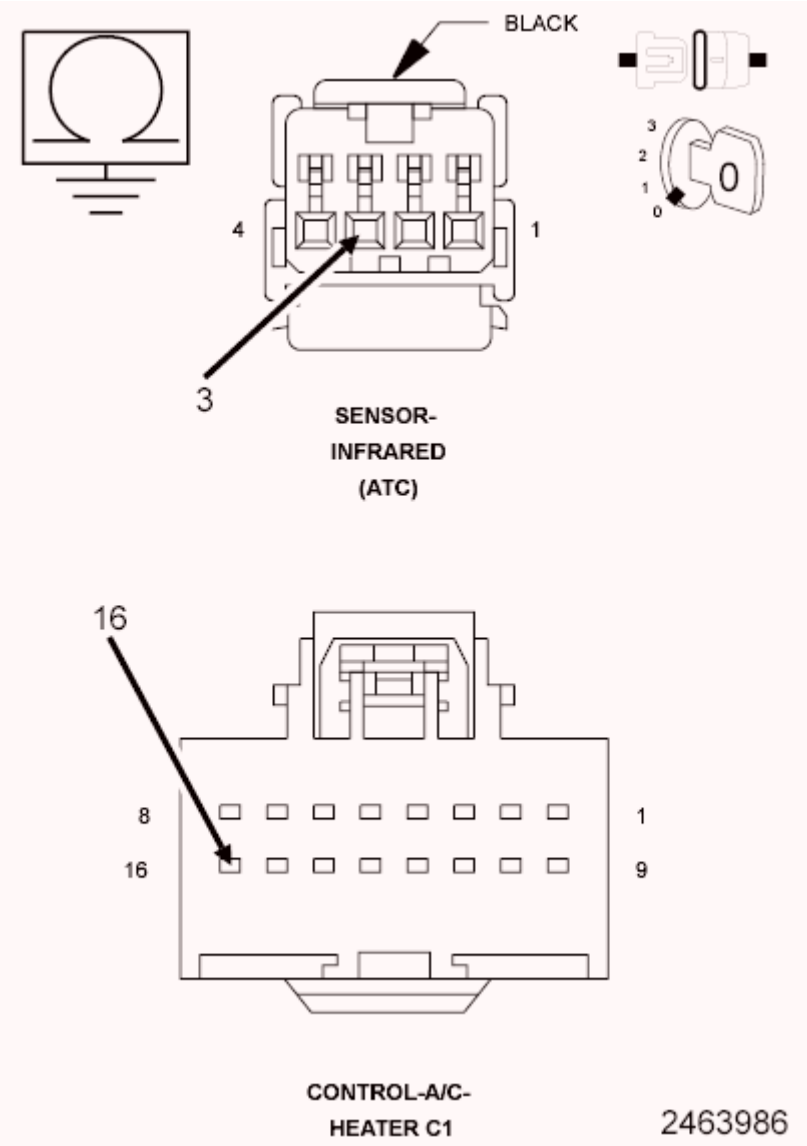

Fig. 11: Checking IR Sensor Signal Circuit For A Short To Ground
Courtesy of CHRYSLER GROUP, LLC

1. Turn the ignition off to the lock position.
2. Disconnect the A/C Heater Control harness connector.
3. Measure the resistance between ground and the (C83) IR Sensor Signal circuit.

   Is the resistance below 100k Ohms?

   Yes

   - Repair the (C83) IR Sensor Signal circuit for a short to ground.
   - Perform the HVAC VERIFICATION TEST. Refer to **STANDARD PROCEDURE**.

   No

   - Go To 4

4. **CHECK THE INFRARED SENSOR**
   1. Replace the Infrared Sensor in accordance with the Service Information.
   2. Perform the HVAC VERIFICATION TEST. Refer to **STANDARD PROCEDURE**.

      Did the DTC reset performing the HVAC Verification Test?

      Yes

      - Replace and program the A/C Heater Control in accordance with the Service Information.
      - Perform the HVAC VERIFICATION TEST. Refer to **STANDARD PROCEDURE**.

      No

      - Test complete.

5. **CHECK THE WIRING AND CONNECTORS**
   1. The conditions necessary to set the DTC are not present at this time.
   2. Using the schematics as a guide, inspect the wiring and connectors specific to this circuit.

3. Using the wiring diagrams as a guide, check all related splices and connectors for signs of water intrusion, corrosion, pushed out or bent terminals, and correct pin tension.
4. With the scan tool, check the Environmental Data to help identify the conditions in which the DTC was set.

   Were there any problems found?

   Yes

   - Repair as necessary.
   - Perform the HVAC VERIFICATION TEST. Refer to **STANDARD PROCEDURE**.

   No

   - Test complete.

B1033-12-INFRARED TEMPERATURE SENSOR - CIRCUIT SHORT TO BATTERY

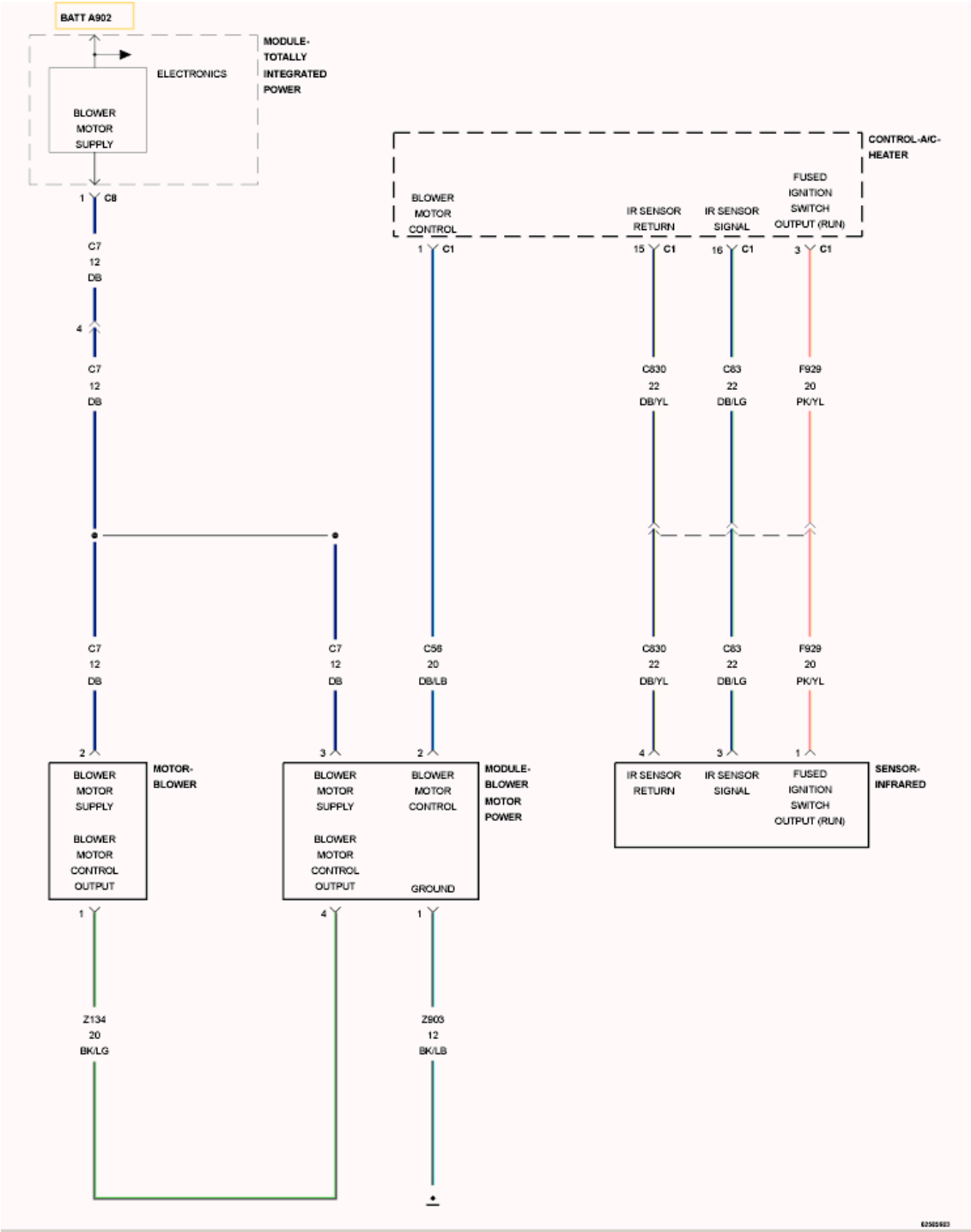

Fig. 12: Infrared Temperature Sensor Circuit Schematic
Courtesy of CHRYSLER GROUP, LLC

For a complete wiring diagram, **refer to appropriate SYSTEM WIRING DIAGRAMS article** .

WHEN MONITORED

With the ignition on.

SET CONDITION

When the Infrared (IR) Temperature Sensor Pulse Width Modulated (PWM) signal to the A/C Heater Control is greater than a predetermined value for a continuous period of 1200 msec. If the A/C Heater Control detects a valid PWM signal, the DTC will change from active to stored and will stay stored for 100 ignition cycles.

POSSIBLE CAUSES

Possible Causes
(C83) IR SENSOR SIGNAL CIRCUIT SHORTED TO VOLTAGE
(C830) IR SENSOR RETURN CIRCUIT SHORTED TO VOLTAGE
(C830) IR SENSOR RETURN CIRCUIT OPEN
INFRARED TEMPERATURE SENSOR
A/C HEATER CONTROL

Always perform the HVAC Pre-Diagnostic Troubleshooting procedure before proceeding. Refer to STANDARD PROCEDURE.

DIAGNOSTIC TEST

1. **CHECK IF DTC IS ACTIVE**
   1. Ignition on, engine not running.
   2. With the scan tool, read HVAC DTCs.

      Is this DTC active?

      Yes

      - Go To 2

      No

      - Go To 6
2. **CHECK THE (C83) IR SENSOR SIGNAL CIRCUIT FOR A SHORT TO VOLTAGE**

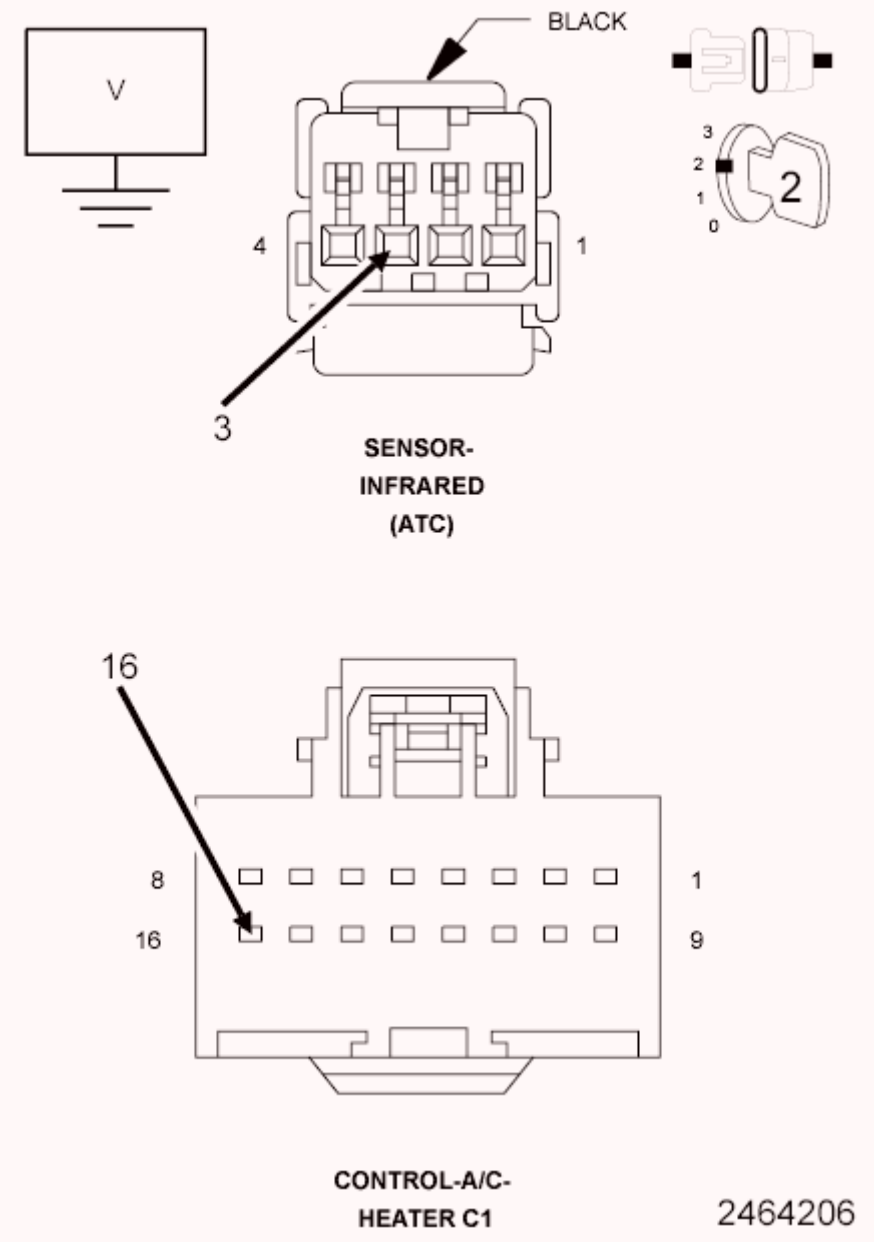

Fig. 13: Checking IR Sensor Signal Circuit For A Short To Voltage
Courtesy of CHRYSLER GROUP, LLC

1. Turn the ignition off to the lock position.
2. Disconnect the A/C Heater Control harness connector.
3. Disconnect the Infrared Sensor harness connector.
4. Ignition on, engine not running.
5. Measure the voltage of the (C83) IR Sensor Signal circuit.

   Is there any voltage present?

   Yes

- Repair the (C83) IR Sensor Signal circuit for a short to voltage.
- Perform the HVAC VERIFICATION TEST. Refer to **STANDARD PROCEDURE**.

No

- Go To 3

3. **CHECK THE (C830) IR SENSOR RETURN CIRCUIT FOR A SHORT TO VOLTAGE**

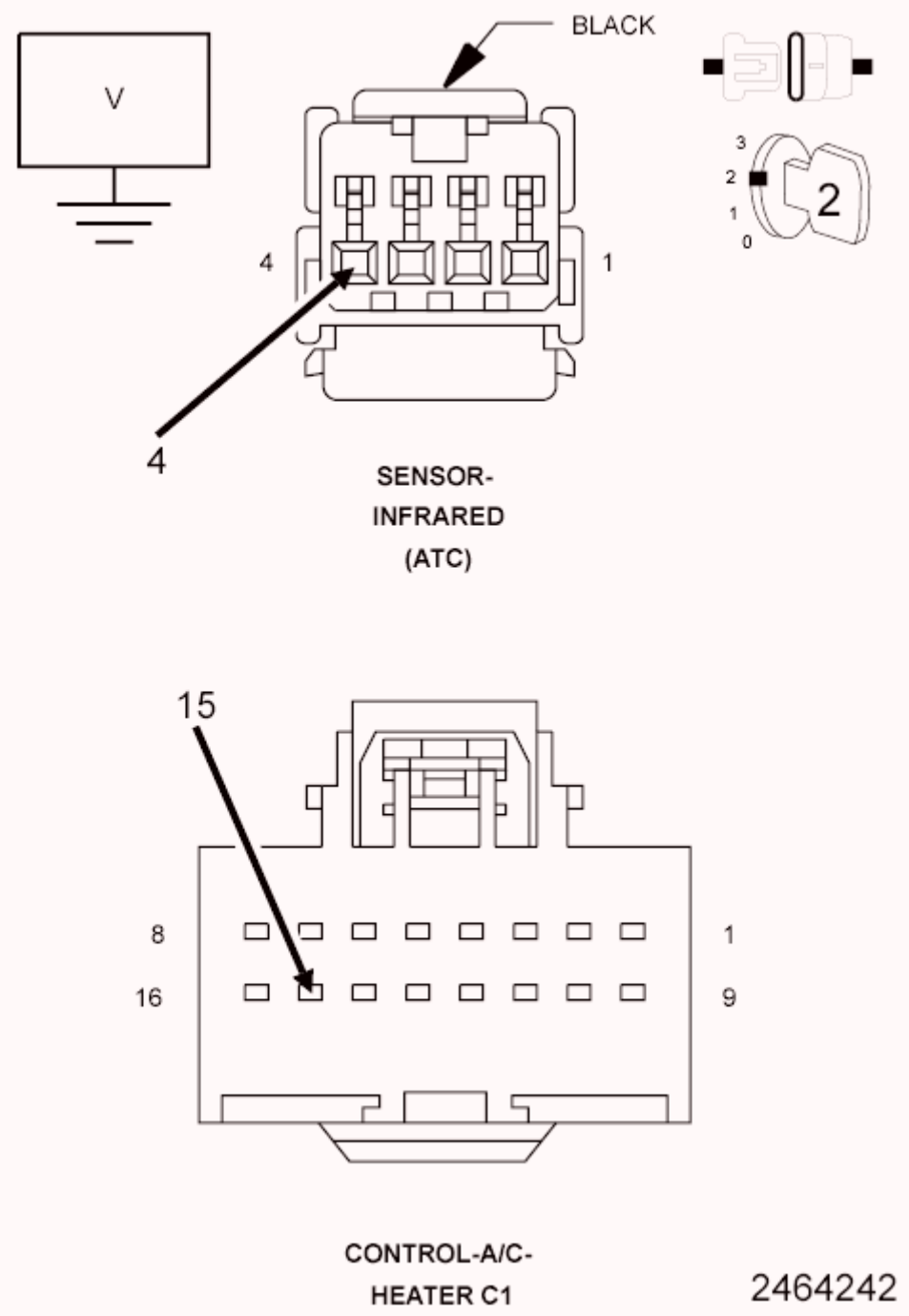

Fig. 14: Checking IR Sensor Return Circuit For A Short To Voltage
Courtesy of CHRYSLER GROUP, LLC

1. Measure the voltage of the (C830) IR Sensor Return circuit.

   Is there any voltage present?

   Yes

   - Repair the (C830) IR Sensor Return circuit for a short to voltage.

- Perform the HVAC VERIFICATION TEST. Refer to **STANDARD PROCEDURE**.

No

- Go To 4

4. **CHECK THE (C830) IR SENSOR RETURN CIRCUIT FOR AN OPEN**

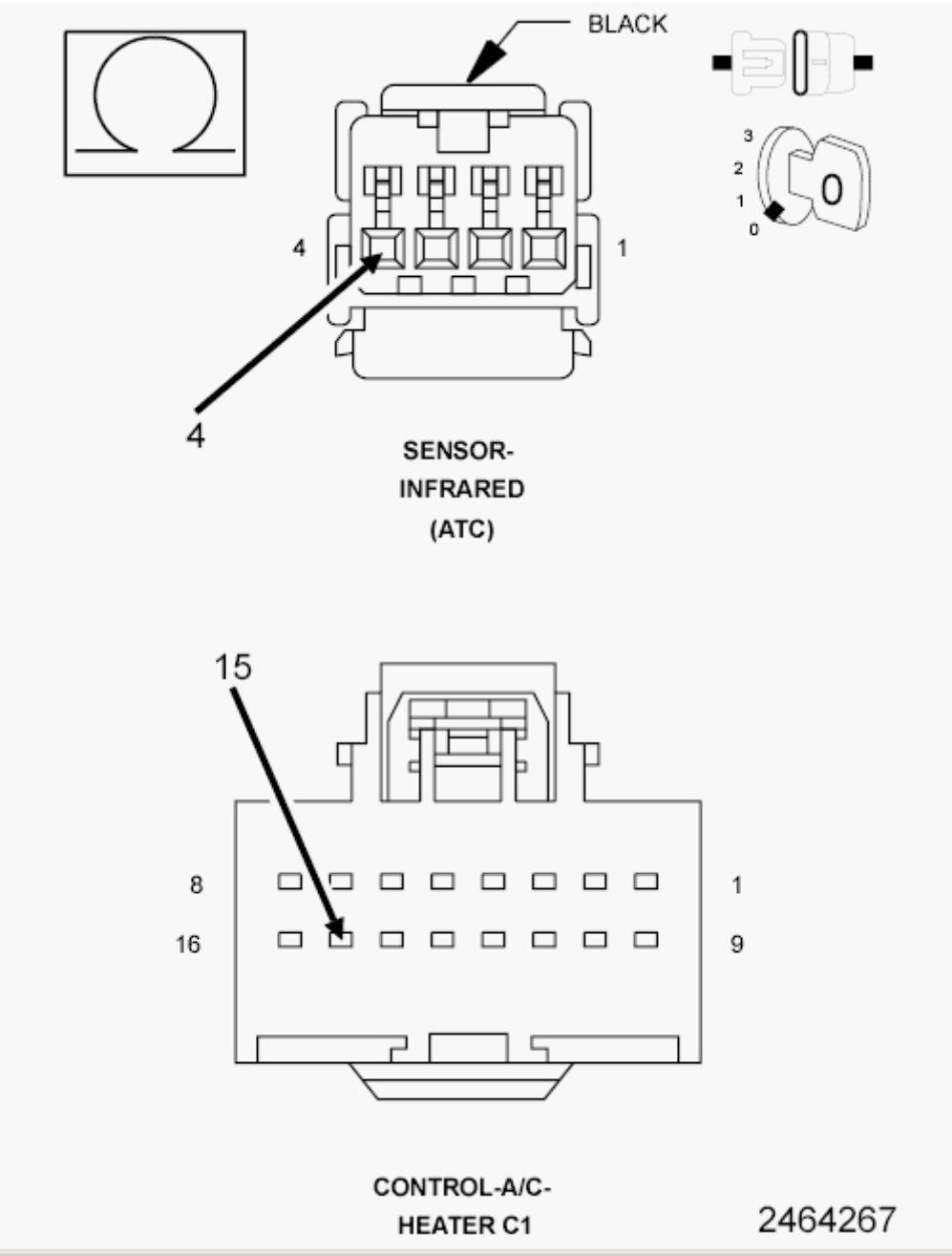

Fig. 15: Checking IR Sensor Return Circuit For An Open
Courtesy of CHRYSLER GROUP, LLC

1. Turn the ignition off to the lock position.
2. Measure the resistance of the (C830) IR Sensor Return circuit between the A/C Heater Control harness connector and the Infrared Sensor harness connector.

   Is the resistance above 5.0 Ohms?

   Yes

   - Repair the (C830) IR Sensor Return circuit for an open.
   - Perform the HVAC VERIFICATION TEST. Refer to **STANDARD PROCEDURE**.

   No

   - Go To 5

5. **CHECK THE INFRARED SENSOR**
   1. Replace the Infrared Sensor in accordance with the Service Information.
   2. Perform the HVAC VERIFICATION TEST. Refer to **STANDARD PROCEDURE**.

      Did the DTC reset performing the HVAC Verification Test?

      Yes

      - Replace and program the A/C Heater Control in accordance with the Service Information.
      - Perform the HVAC VERIFICATION TEST. Refer to **STANDARD PROCEDURE**.

      No

      - Test complete.

6. **CHECK THE WIRING AND CONNECTORS**
   1. The conditions necessary to set the DTC are not present at this time.
   2. With the scan tool, check the Environmental Data to help identify the conditions in which the DTC was set.

3. Using the wiring diagrams as a guide, check all related splices and connectors for signs of water intrusion, corrosion, pushed out or bent terminals, and correct pin tension.
4. Wiggle the wiring and connectors while checking for shorted and open circuits.

   Were there any problems found?

   Yes

   - Repair as necessary.
   - Perform the HVAC VERIFICATION TEST. Refer to **STANDARD PROCEDURE**.

   No

   - Test complete.

B1033-92-INFRARED TEMPERATURE SENSOR - PERFORMANCE OR INCORRECT OPERATION

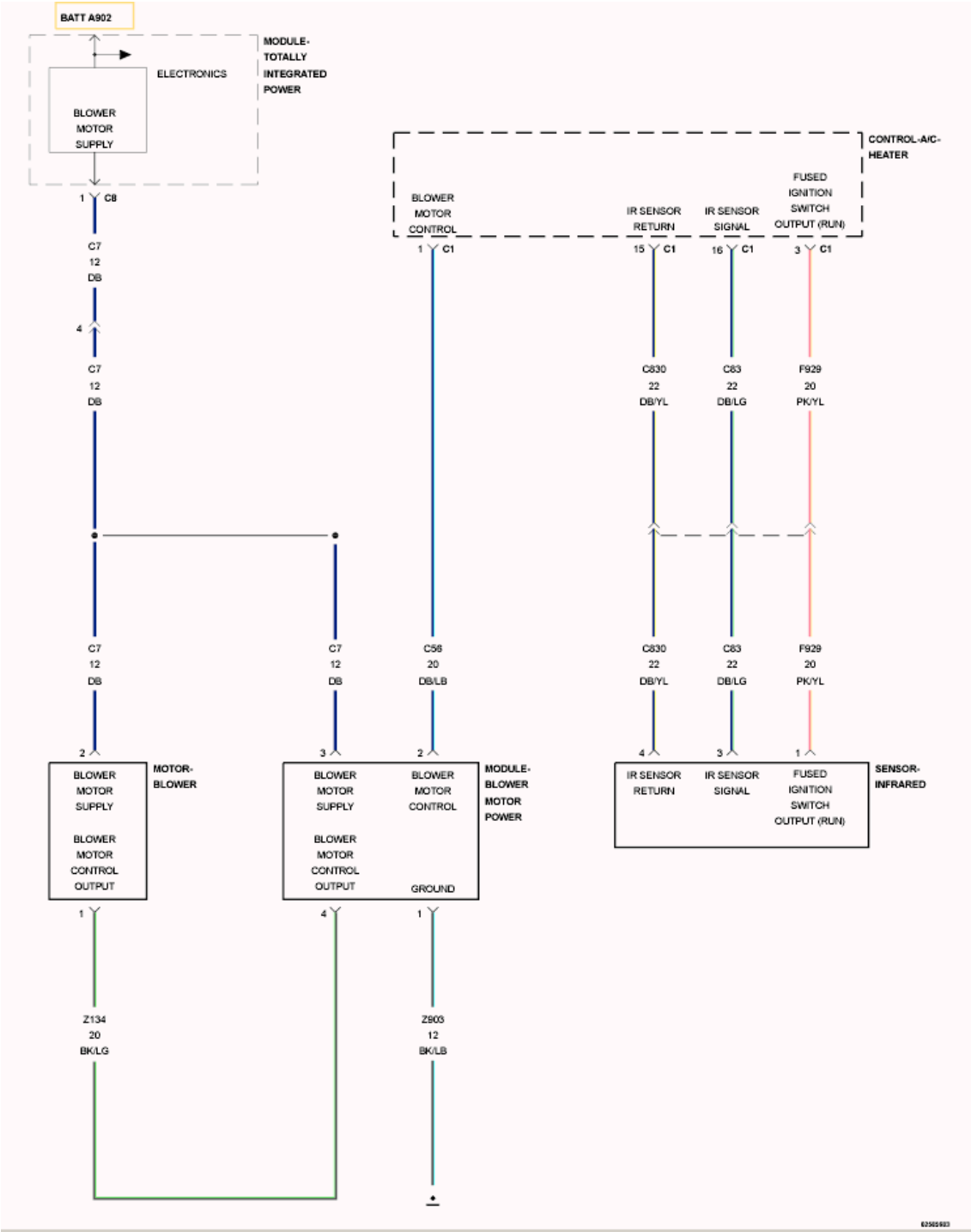

Fig. 16: Infrared Temperature Sensor Circuit Schematic
Courtesy of CHRYSLER GROUP, LLC

For a complete wiring diagram, **refer to appropriate SYSTEM WIRING DIAGRAMS article** .

WHEN MONITORED

With the ignition on.

SET CONDITION

When the Infrared (IR) Temperature Sensor Pulse Width Modulated (PWM) signal to the A/C Heater Control is greater than 84.3% for a continuous period of 123 msec. or more. If the A/C Heater Control detects a valid PWM signal, the DTC will change from active to stored and will stay stored for 100 ignition cycles.

POSSIBLE CAUSES

Possible Causes
(C83) IR SENSOR SIGNAL CIRCUIT SHORTED TO VOLTAGE
(C830) IR SENSOR RETURN CIRCUIT SHORTED TO VOLTAGE
(C830) IR SENSOR RETURN CIRCUIT OPEN
INFRARED TEMPERATURE SENSOR
A/C HEATER CONTROL

Always perform the HVAC Pre-Diagnostic Troubleshooting procedure before proceeding. Refer to STANDARD PROCEDURE.

DIAGNOSTIC TEST

1. **CHECK IF DTC IS ACTIVE**
    1. Ignition on, engine not running.
    2. With the scan tool, read HVAC DTCs.

    Is this DTC active?

    Yes

    - Go To 2

    No

    - Go To 6
2. **CHECK THE (C83) IR SENSOR SIGNAL CIRCUIT FOR A SHORT TO VOLTAGE**

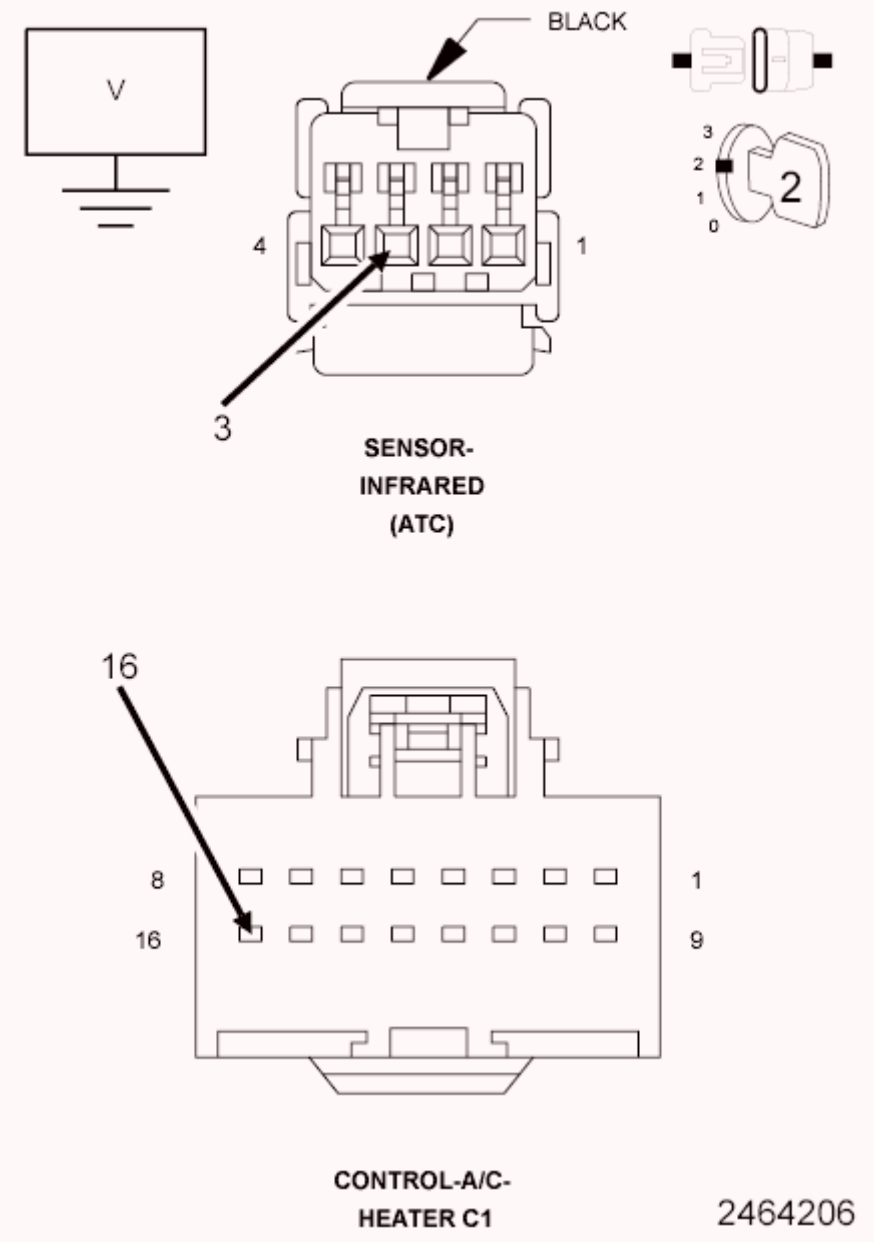

Fig. 17: Checking IR Sensor Signal Circuit For A Short To Voltage
Courtesy of CHRYSLER GROUP, LLC

1. Turn the ignition off to the lock position.
2. Disconnect the A/C Heater Control harness connector.
3. Disconnect the Infrared Sensor harness connector.
4. Ignition on, engine not running.
5. Measure the voltage of the (C83) IR Sensor Signal circuit.

   Is there any voltage present?

   Yes

- Repair the (C83) IR Sensor Signal circuit for a short to voltage.
- Perform the HVAC VERIFICATION TEST. Refer to **STANDARD PROCEDURE**.

No

- Go To 3

3. **CHECK THE (C830) IR SENSOR RETURN CIRCUIT FOR A SHORT TO VOLTAGE**

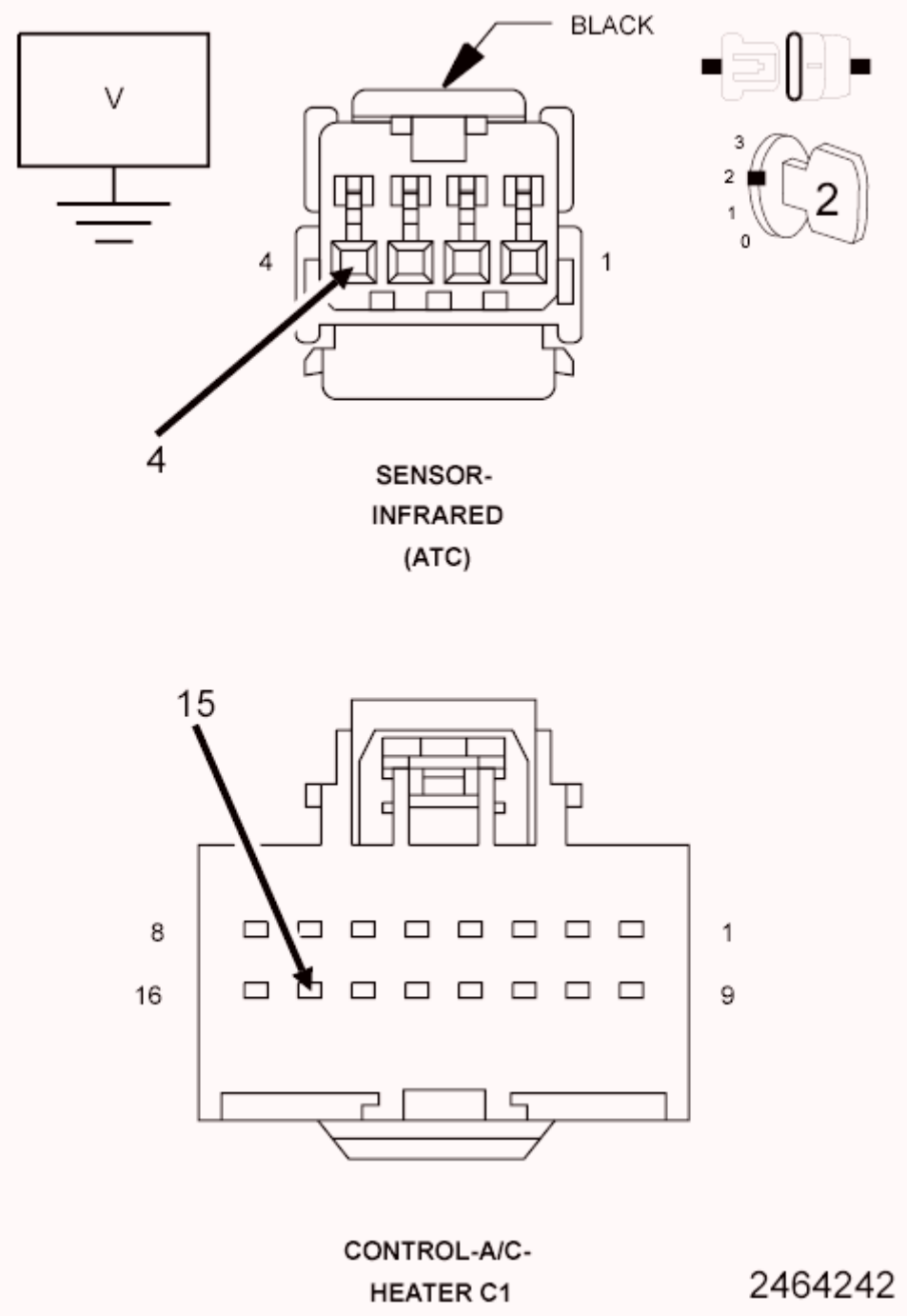

Fig. 18: Checking IR Sensor Return Circuit For A Short To Voltage
Courtesy of CHRYSLER GROUP, LLC

1. Measure the voltage of the (C830) IR Sensor Return circuit.

   Is there any voltage present?

   Yes

   - Repair the (C830) IR Sensor Return circuit for a short to voltage.

- Perform the HVAC VERIFICATION TEST. Refer to **STANDARD PROCEDURE**.

No

- Go To 4

4. **CHECK THE (C830) IR SENSOR RETURN CIRCUIT FOR AN OPEN**

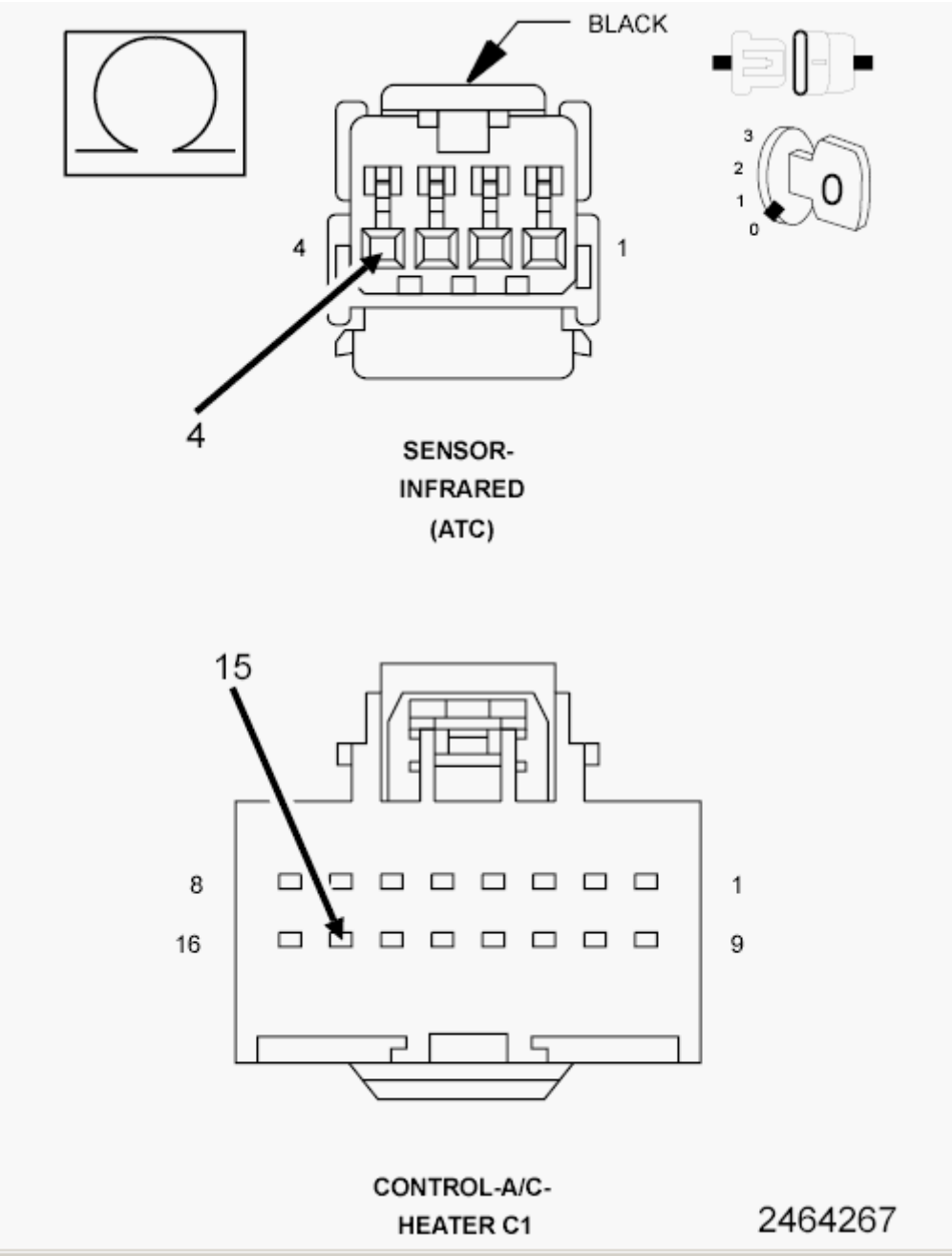

Fig. 19: Checking IR Sensor Return Circuit For An Open
Courtesy of CHRYSLER GROUP, LLC

1. Turn the ignition off to the lock position.
2. Measure the resistance of the (C830) IR Sensor Return circuit between the A/C Heater Control harness connector and the Infrared Sensor harness connector.

   Is the resistance above 5.0 Ohms?

   Yes

   - Repair the (C830) IR Sensor Return circuit for an open.
   - Perform the HVAC VERIFICATION TEST. Refer to **STANDARD PROCEDURE**.

   No

   - Go To 5

5. **CHECK THE INFRARED SENSOR**
   1. Replace the Infrared Sensor in accordance with the Service Information.
   2. Perform the HVAC VERIFICATION TEST. Refer to **STANDARD PROCEDURE**.

      Did the DTC reset performing the HVAC Verification Test?

      Yes

      - Replace and program the A/C Heater Control in accordance with the Service Information.
      - Perform the HVAC VERIFICATION TEST. Refer to **STANDARD PROCEDURE**.

      No

      - Test complete.

6. **CHECK THE WIRING AND CONNECTORS**
   1. The conditions necessary to set the DTC are not present at this time.
   2. With the scan tool, check the Environmental Data to help identify the conditions in which the DTC was set.

3. Using the wiring diagrams as a guide, check all related splices and connectors for signs of water intrusion, corrosion, pushed out or bent terminals, and correct pin tension.
4. Wiggle the wiring and connectors while checking for shorted and open circuits.

Were there any problems found?

Yes

- Repair as necessary.
- Perform the HVAC VERIFICATION TEST. Refer to **STANDARD PROCEDURE**.

No

- Test complete.

B1033-96-INFRARED TEMPERATURE SENSOR - COMPONENT INTERNAL FAILURE

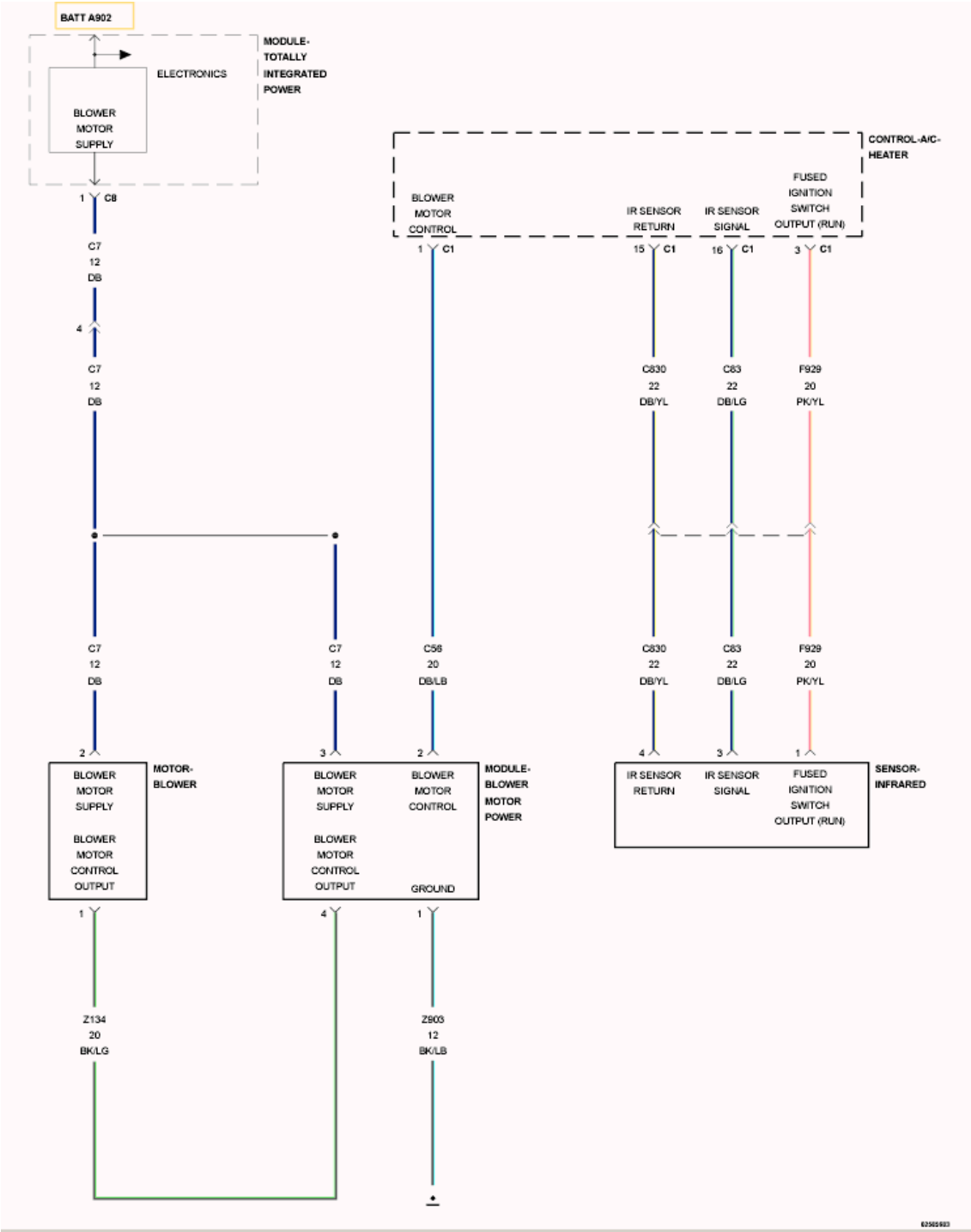

Fig. 20: Infrared Temperature Sensor Circuit Schematic
Courtesy of CHRYSLER GROUP, LLC

For a complete wiring diagram, **refer to appropriate SYSTEM WIRING DIAGRAMS article** .

WHEN MONITORED

With the ignition on.

SET CONDITION

When the Infrared (IR) Temperature Sensor Pulse Width Modulated (PWM) signal to the A/C Heater Control is out of range for a continuous period of 1200 msec. or more. If the A/C Heater Control detects a valid PWM signal, the DTC will change from active to stored and will stay stored for 100 ignition cycles.

POSSIBLE CAUSES

Possible Causes
INFRARED TEMPERATURE SENSOR
A/C HEATER CONTROL

Always perform the HVAC Pre-Diagnostic Troubleshooting procedure before proceeding. Refer to STANDARD PROCEDURE.

DIAGNOSTIC TEST

1. **CHECK IF DTC IS ACTIVE**
   1. Ignition on, engine not running.
   2. With the scan tool, read HVAC DTCs.

      Is this DTC active?

      Yes

      - Go To 2

      No

      - Go To 4
2. **CHECK IF THE INFRARED TEMPERATURE SENSOR IS PROPERLY CONNECTED**
   1. Turn the ignition off to the lock position.
   2. Check the connector to Infrared Temperature Sensor for proper connection and the terminals for damage or corrosion.

      Is the Infrared Temperature Sensor connector properly connected and terminals undamaged or corroded?

Yes

- Go To 3

No

- Repair connector and terminals as necessary.
- Perform the HVAC VERIFICATION TEST. Refer to **STANDARD PROCEDURE**.

3. **CHECK THE INFRARED SENSOR**
   1. Replace the Infrared Sensor in accordance with the Service Information.
   2. Perform the HVAC VERIFICATION TEST. Refer to **STANDARD PROCEDURE**.

   Did the DTC reset performing the HVAC Verification Test?

   Yes

   - Replace and program the A/C Heater Control in accordance with the Service Information.
   - Perform the HVAC VERIFICATION TEST. Refer to **STANDARD PROCEDURE**.

   No

   - Test complete.

4. **CHECK THE WIRING AND CONNECTORS**
   1. The conditions necessary to set the DTC are not present at this time.
   2. With the scan tool, check the Environmental Data to help identify the conditions in which the DTC was set.
   3. Using the wiring diagrams as a guide, check all related splices and connectors for signs of water intrusion, corrosion, pushed out or bent terminals, and correct pin tension.
   4. Wiggle the wiring and connectors while checking for shorted and open circuits.

   Were there any problems found?

Yes

- Repair as necessary.
- Perform the HVAC VERIFICATION TEST. Refer to **STANDARD PROCEDURE**.

No

- Test complete.

B1058-11-RECIRCULATION DOOR CONTROL - CIRCUIT SHORT TO GROUND

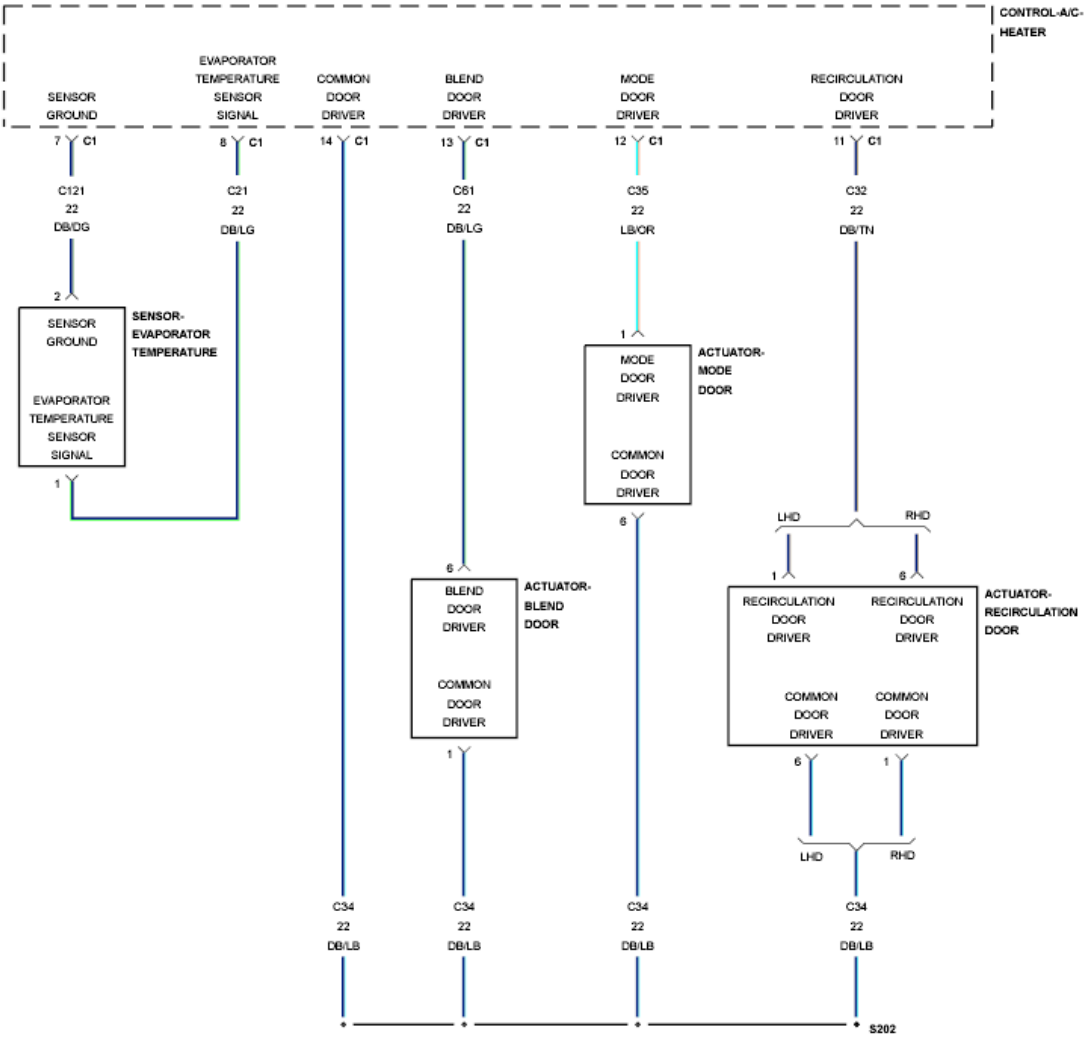

Fig. 21: Evaporator Temperature Sensor Circuit Schematic
Courtesy of CHRYSLER GROUP, LLC

For a complete wiring diagram, **refer to appropriate SYSTEM WIRING DIAGRAMS article** .

THEORY OF OPERATION

After the initial installation of the A/C Heater Control, the controller is calibrated to each individual blend/mode door actuator. These calibrations are stored as in the number of pulses it takes to move the door from one stop to another. The A/C Heater Control drives the Door Actuators by the use of Door Driver circuit and a Common Door Driver circuit and monitors all door actuator pulses to detect door movement in both directions. Most of the door actuators share a common door driver circuit but each door actuator has its own unique driver circuit. Due to shared circuitry, similar Diagnostic Trouble Codes (DTCs) can set at the same time for multiple actuators depending upon the type of circuit malfunction, its location, and the direction the actuator is moving when the malfunction is present.

WHEN MONITORED

Continuously with the ignition on.

SET CONDITION

The A/C Heater Control detects a short to ground on the Recirculation Door Driver circuit. If the A/C Heater Control detects valid current draw, the DTC will change from Active to Stored and will stay in the controllers memory for 100 ignition cycles.

POSSIBLE CAUSES

Possible Causes
(C32) RECIRCULATION DOOR DRIVER CIRCUIT SHORTED TO GROUND
(C34) COMMON DOOR DRIVER CIRCUIT SHORTED TO GROUND
RECIRCULATION DOOR ACTUATOR
A/C HEATER CONTROL

Always perform the HVAC Pre-Diagnostic Troubleshooting procedure before proceeding. Refer to STANDARD PROCEDURE.

DIAGNOSTIC TEST

1. **CHECK IF DTC IS ACTIVE**
    1. Ignition on, engine not running.

2. With the scan tool, read HVAC DTCs.

   Is this DTC active?

   Yes

   - Go To 3

   No

   - Go To 2

2. **PERFORM HVAC ACTUATOR CALIBRATION TEST**
   1. With the scan tool, perform the HVAC Actuator Calibration Test.

      Did this DTC change from Stored to Active while performing the HVAC Actuator Calibration Test?

      Yes

      - Go To 3

      No

      - Go To 6

3. **CHECK THE (C32) RECIRCULATION DOOR DRIVER CIRCUIT FOR A SHORT TO GROUND**

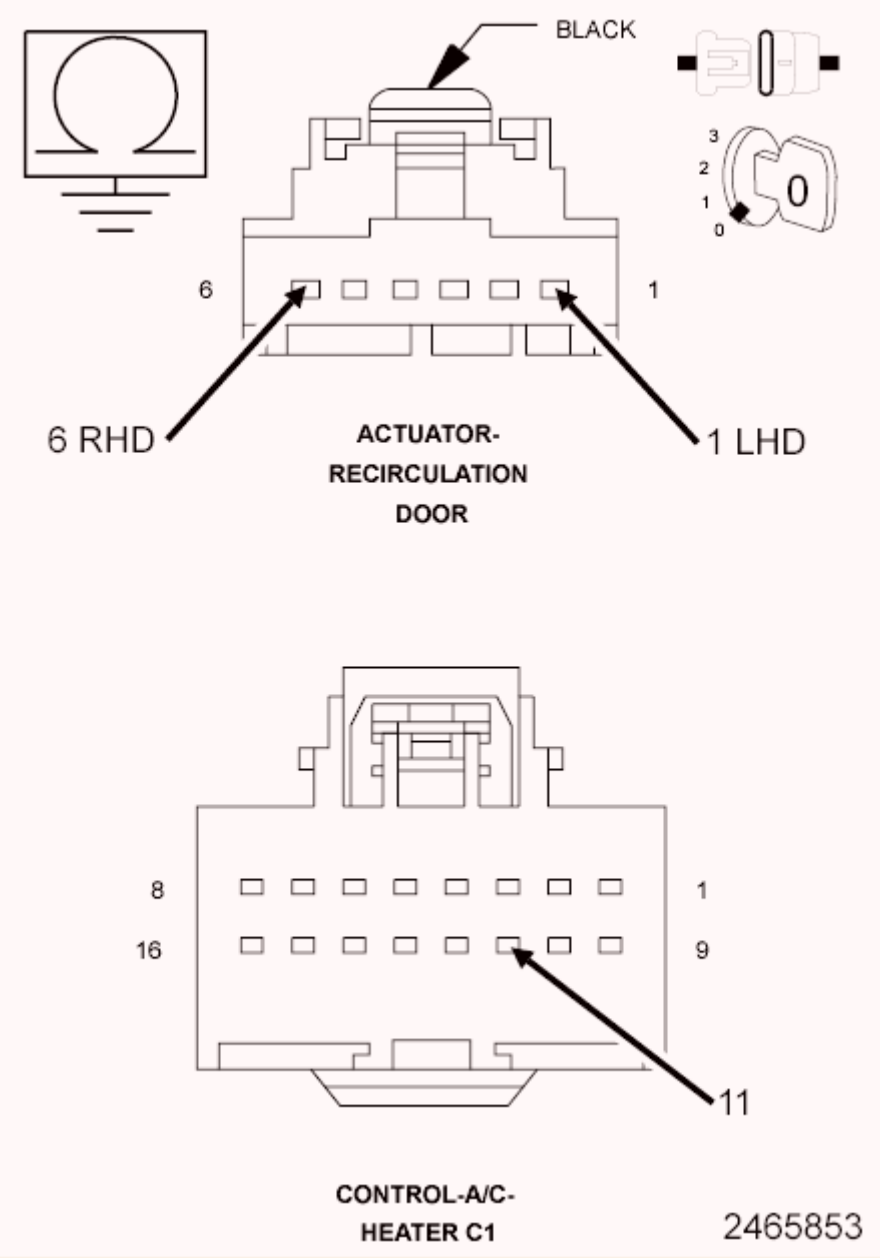

Fig. 22: Checking Recirculation Door Driver Circuit For A Short To Ground
Courtesy of CHRYSLER GROUP, LLC

1. Turn the ignition off to the lock position.
2. Disconnect the A/C Heater Control C1 harness connector.
3. Disconnect the Recirculation Door Actuator harness connector.
4. Measure the resistance between ground and the (C32) Recirculation Door Driver circuit.

   Is the resistance below 100k Ohms?

Yes

- Repair the (C32) Recirculation Door Driver circuit for a short to ground.
- Perform the HVAC VERIFICATION TEST. Refer to **STANDARD PROCEDURE**.

No

- Go To 4

4. **CHECK THE (C34) COMMON DOOR DRIVER CIRCUIT FOR A SHORT TO GROUND**

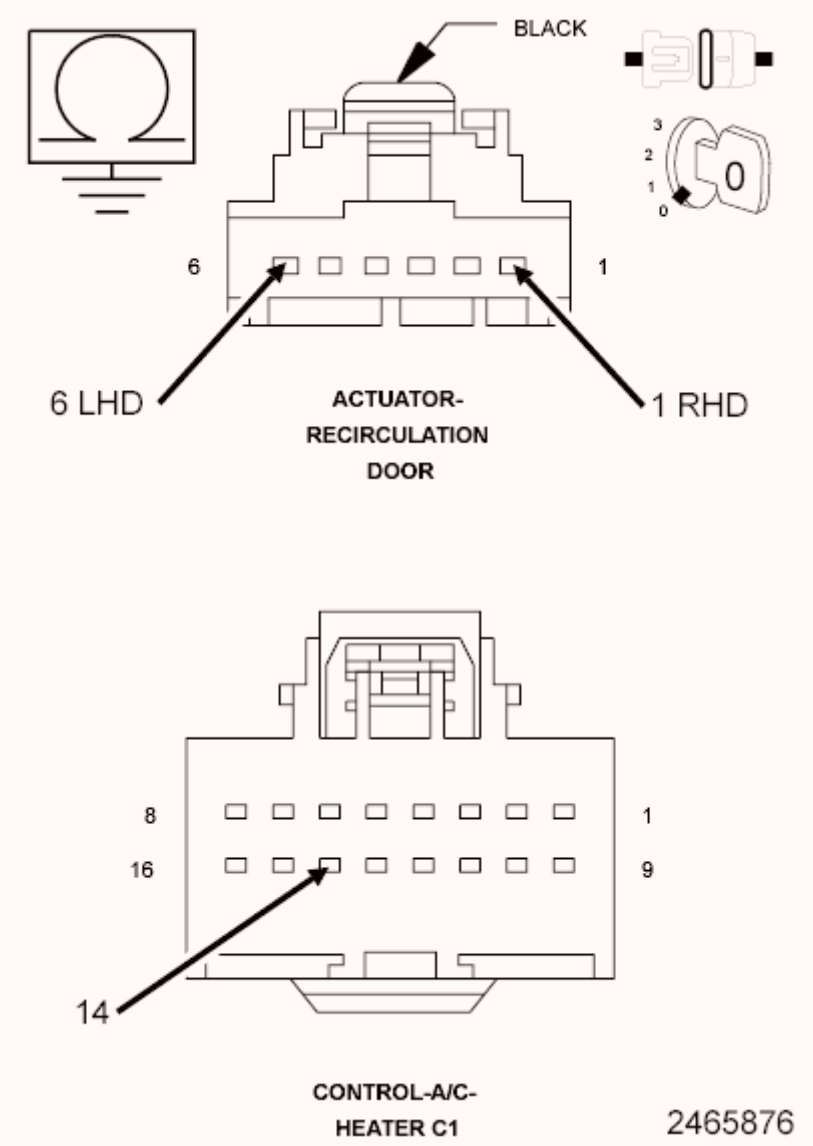

Fig. 23: Checking Common Door Driver Circuit For A Short To

Ground
Courtesy of CHRYSLER GROUP, LLC

1. Measure the resistance between ground and the (C34) Common Door Driver circuit.

   Is the resistance below 100k Ohms?

   Yes

   - Repair the (C34) Common Door Driver circuit for a short to ground.
   - Perform the HVAC VERIFICATION TEST. Refer to **STANDARD PROCEDURE**.

   No

   - Go To 5

5. **CHECK THE RECIRCULATION DOOR ACTUATOR**
   1. Replace the Recirculation Door Actuator in accordance with the Service Information.
   2. With the scan tool, erase HVAC DTCs and perform the HVAC Actuator Calibration Test.

      Did this DTC reset?

      Yes

      - Replace and program the A/C Heater Control in accordance with the Service Information.
      - Perform the HVAC VERIFICATION TEST. Refer to **STANDARD PROCEDURE**.

      No

      - Test complete.
      - Perform the HVAC VERIFICATION TEST. Refer to **STANDARD PROCEDURE**.
6. **CHECK THE WIRING AND CONNECTORS**

1. The conditions necessary to set the DTC are not present at this time.
2. With the scan tool, check the Environmental Data to help identify the conditions in which the DTC was set.
3. Using the wiring diagrams as a guide, check all related splices and connectors for signs of water intrusion, corrosion, pushed out or bent terminals, and correct pin tension.
4. Wiggle the wiring and connectors while checking for shorted and open circuits.

   Were there any problems found?

   Yes

   - Repair as necessary.
   - Perform the HVAC VERIFICATION TEST. Refer to **STANDARD PROCEDURE**.

   No

   - Test complete.

B1058-12-RECIRCULATION DOOR CONTROL - CIRCUIT SHORT TO BATTERY

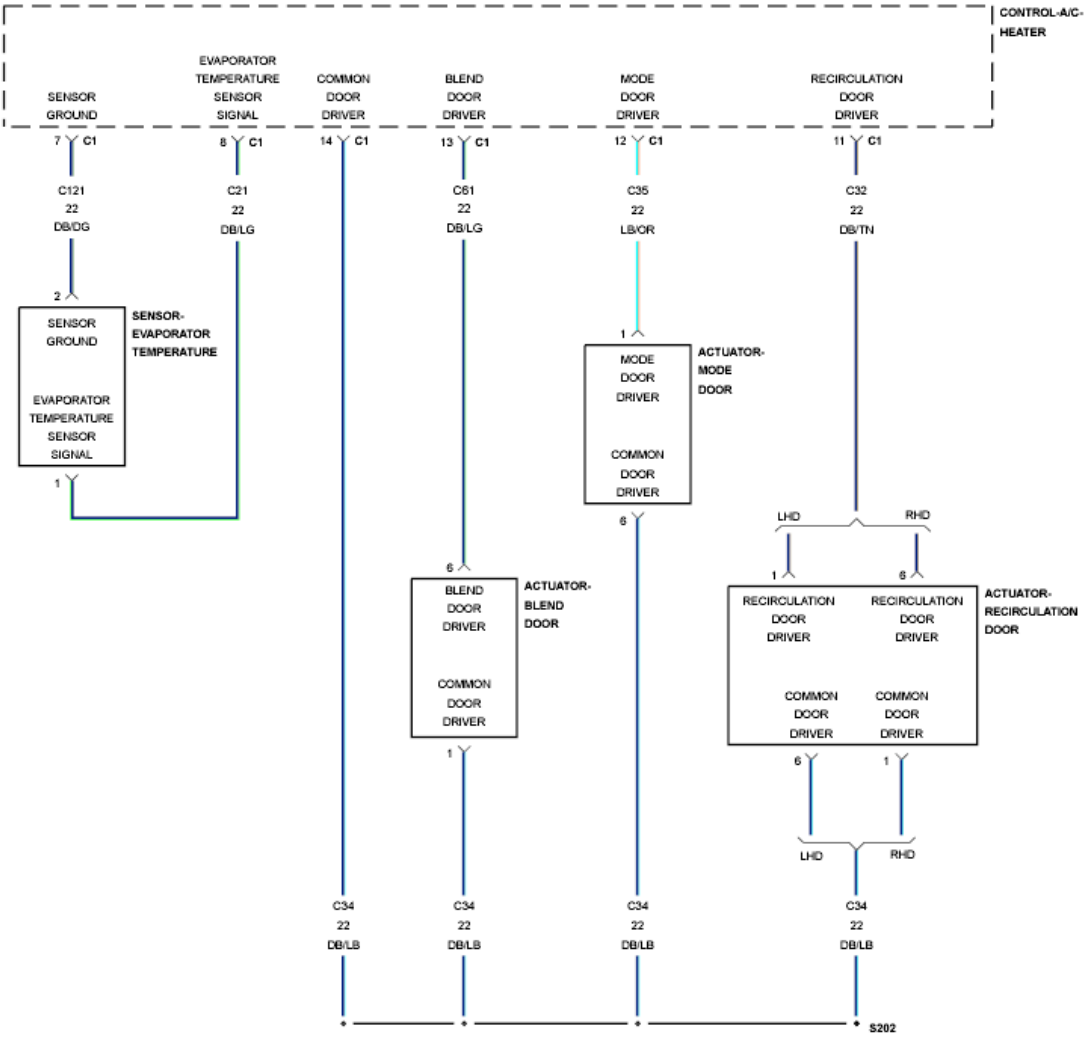

Fig. 24: Evaporator Temperature Sensor Circuit Schematic
Courtesy of CHRYSLER GROUP, LLC

For a complete wiring diagram, **refer to appropriate SYSTEM WIRING DIAGRAMS article** .

THEORY OF OPERATION

After the initial installation of the A/C Heater Control, the controller is calibrated to each individual blend/mode door actuator. These calibrations are stored as in the number of pulses it takes to move the door from one stop to another. The A/C Heater Control drives the Door Actuators by the use of Door Driver circuit and a Common Door Driver circuit and monitors all door actuator pulses to detect door movement in both directions. Most of the door actuators share a common door driver circuit but each door actuator has its own unique driver circuit. Due to shared circuitry, similar Diagnostic Trouble Codes (DTCs) can set at the same

time for multiple actuators depending upon the type of circuit malfunction, its location, and the direction the actuator is moving when the malfunction is present.

WHEN MONITORED

Continuously with the ignition on.

SET CONDITION

The A/C Heater Control detects a short voltage on the Recirculation Door control circuit. If the A/C Heater Control detects a valid voltage, the DTC will change from Active to Stored and will stay in the controllers memory for 100 ignition cycles.

POSSIBLE CAUSES

Possible Causes
(C32) RECIRCULATION DOOR DRIVER CIRCUIT SHORTED TO VOLTAGE
(C34) COMMON DOOR DRIVER CIRCUIT SHORTED TO VOLTAGE
RECIRCULATION DOOR ACTUATOR
A/C HEATER CONTROL

Always perform the HVAC Pre-Diagnostic Troubleshooting procedure before proceeding. Refer to STANDARD PROCEDURE.

DIAGNOSTIC TEST

1. **CHECK IF DTC IS ACTIVE**
    1. Ignition on, engine not running.
    2. With the scan tool, read HVAC DTCs.

    Is this DTC active?

    Yes

    - Go To 3

    No

- Go To 2

2. **PERFORM HVAC ACTUATOR CALIBRATION TEST**
   1. With the scan tool, perform the HVAC Actuator Calibration Test.

      Did this DTC change from Stored to Active while performing the HVAC Actuator Calibration Test?

      Yes

      - Go To 3

      No

      - Go To 6

3. **CHECK THE (C32) RECIRCULATION DOOR DRIVER CIRCUIT FOR A SHORT TO VOLTAGE**

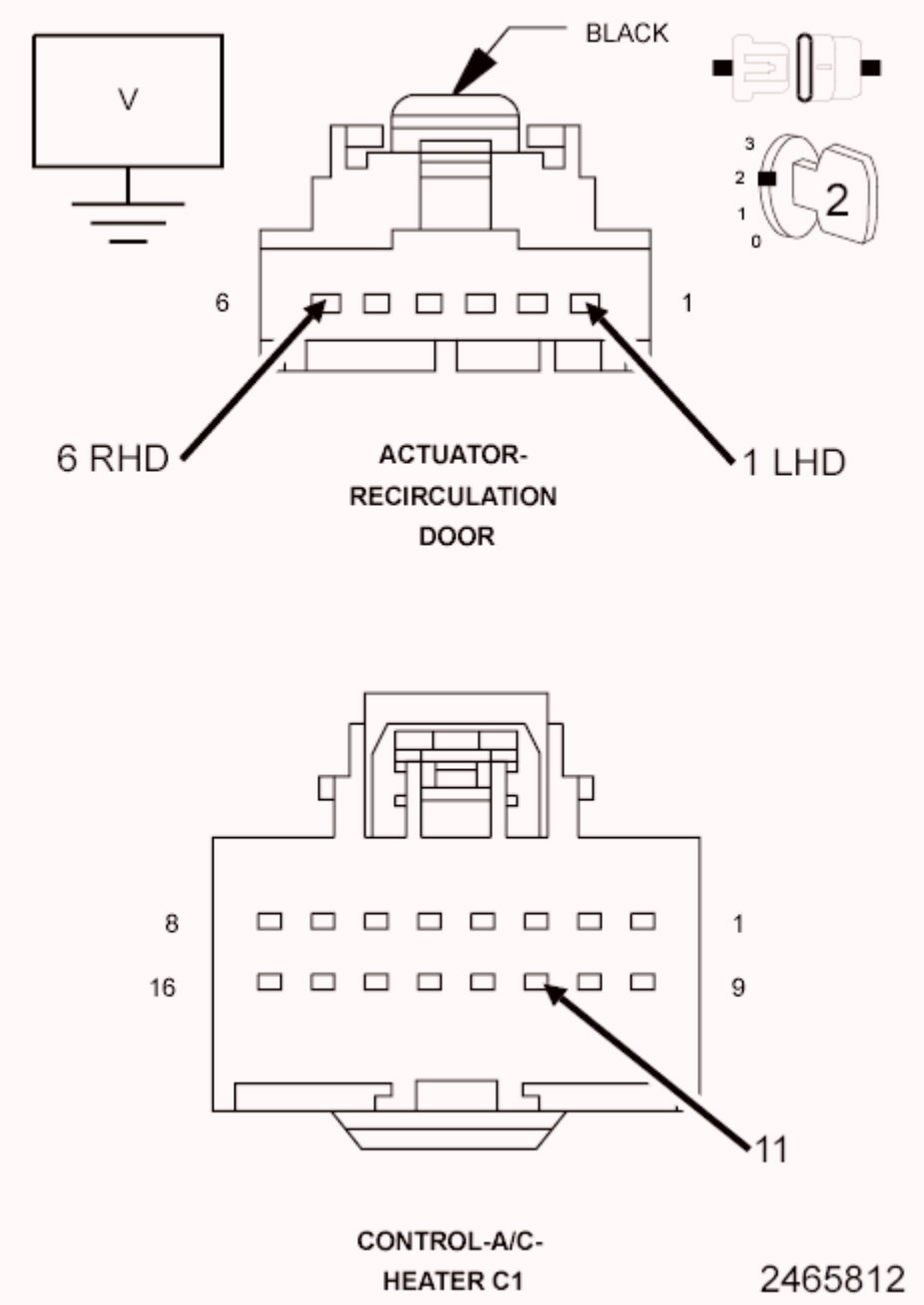

Fig. 25: Checking Recirculation Door Driver Circuit For A Short To Voltage
Courtesy of CHRYSLER GROUP, LLC

1. Turn the ignition off to the lock position.
2. Disconnect the A/C Heater Control C1 harness connector.
3. Disconnect the Recirculation Door Actuator harness connector.
4. Ignition on, engine not running.
5. Measure the voltage of the (C32) Recirculation Door Driver circuit.

Is there any voltage present?

Yes

- Repair the (C32) Recirculation Door Driver circuit for a short to voltage.
- Perform the HVAC VERIFICATION TEST. Refer to **STANDARD PROCEDURE**.

No

- Go To 4

4. **CHECK THE (C34) COMMON DOOR DRIVER CIRCUIT FOR A SHORT TO VOLTAGE**

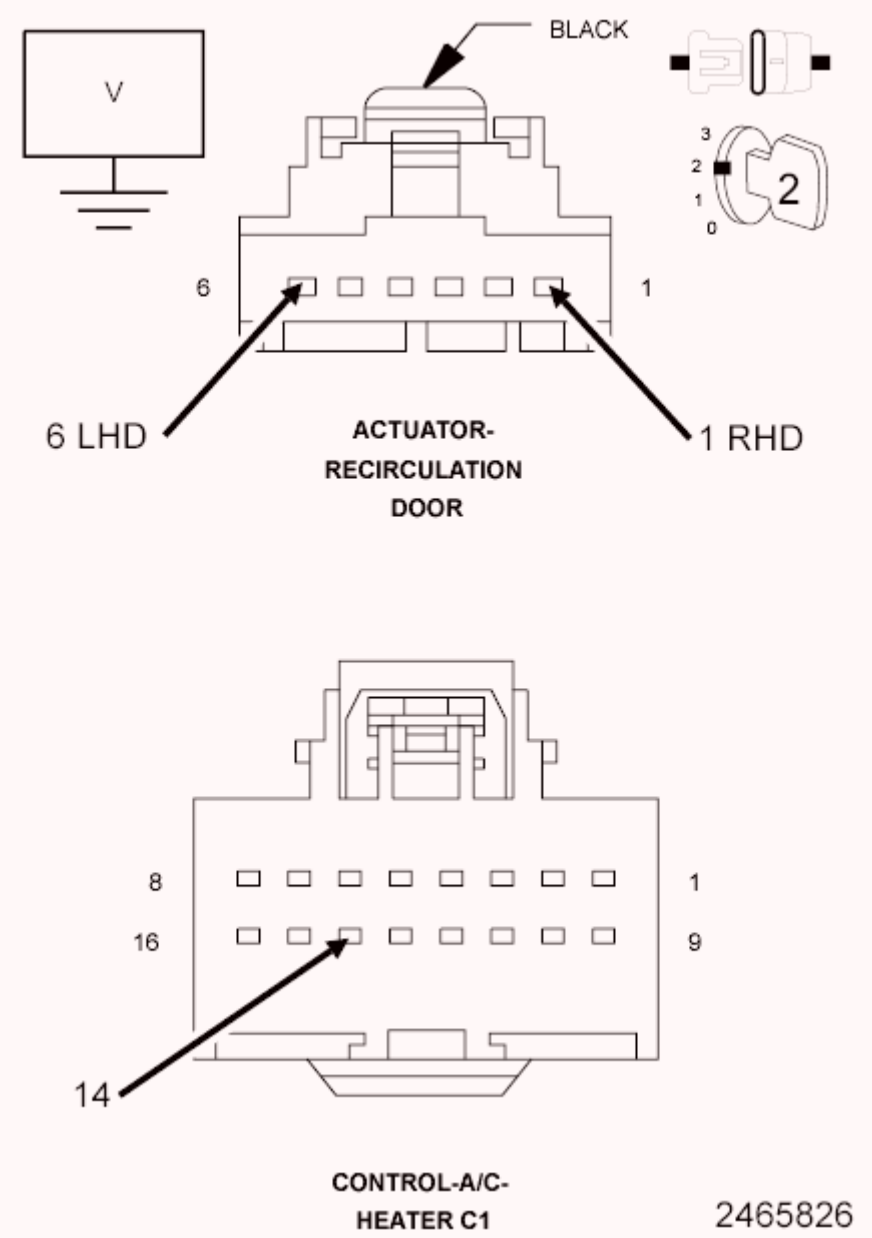

Fig. 26: Checking Common Door Driver Circuit For A Short To Voltage
Courtesy of CHRYSLER GROUP, LLC

1. Measure the voltage of the (C34) Common Door Driver circuit.

   Is there any voltage present?

   Yes

   - Repair the (C34) Common Door Driver circuit for a short to voltage.
   - Perform the HVAC VERIFICATION TEST. Refer to

STANDARD PROCEDURE.

No

- Go To 5

5. **CHECK THE RECIRCULATION DOOR ACTUATOR**
   1. Turn the ignition off to the lock position.
   2. Replace the Recirculation Door Actuator in accordance with the Service Information.
   3. With the scan tool, erase HVAC DTCs and perform the HVAC Actuator Calibration Test.

   Did this DTC reset?

   Yes

   - Replace and program the A/C Heater Control in accordance with the Service Information.
   - Perform the HVAC VERIFICATION TEST. Refer to **STANDARD PROCEDURE**.

   No

   - Test complete.
   - Perform the HVAC VERIFICATION TEST. Refer to **STANDARD PROCEDURE**.

6. **CHECK THE WIRING AND CONNECTORS**
   1. The conditions necessary to set the DTC are not present at this time.
   2. With the scan tool, check the Environmental Data to help identify the conditions in which the DTC was set.
   3. Using the wiring diagrams as a guide, check all related splices and connectors for signs of water intrusion, corrosion, pushed out or bent terminals, and correct pin tension.
   4. Wiggle the wiring and connectors while checking for shorted and open circuits.

   Were there any problems found?

Yes

- Repair as necessary.
- Perform the HVAC VERIFICATION TEST. Refer to **STANDARD PROCEDURE**.

No

- Test complete.

B1058-13-RECIRCULATION DOOR CONTROL - CIRCUIT OPEN

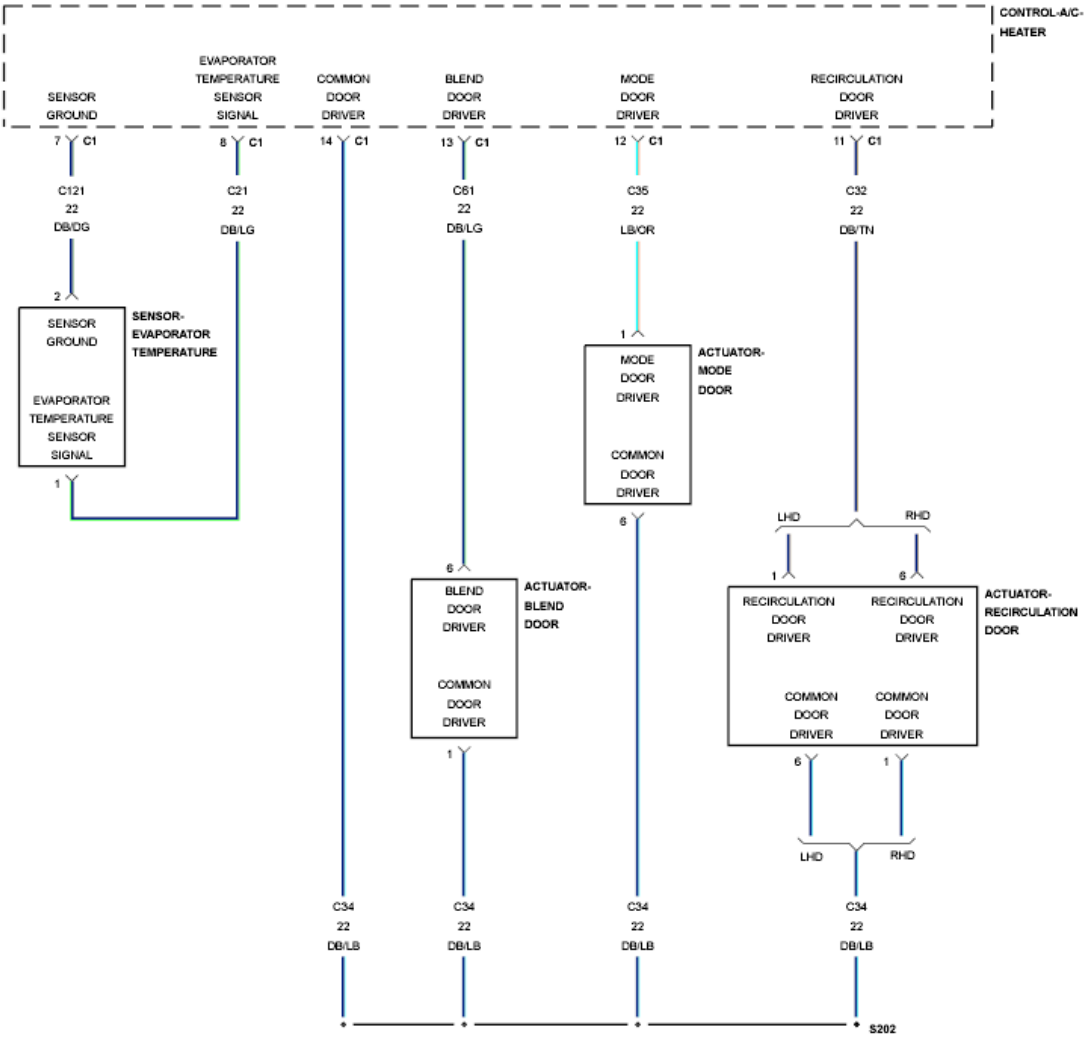

Fig. 27: Evaporator Temperature Sensor Circuit Schematic
Courtesy of CHRYSLER GROUP, LLC

For a complete wiring diagram, **refer to appropriate SYSTEM WIRING DIAGRAMS article** .

THEORY OF OPERATION

After the initial installation of the A/C Heater Control, the controller is calibrated to each individual blend/mode door actuator. These calibrations are stored as in the number of pulses it takes to move the door from one stop to another. The A/C Heater Control drives the Door Actuators by the use of Door Driver circuit and a Common Door Driver circuit and monitors all door actuator pulses to detect door movement in both directions. Most of the door actuators share a common door driver circuit but each door actuator has its own unique driver circuit. Due to shared circuitry, similar Diagnostic Trouble Codes (DTCs) can set at the same time for multiple actuators depending upon the type of circuit malfunction, its location, and the direction the actuator is moving when the malfunction is present.

WHEN MONITORED

Continuously with the ignition on.

SET CONDITION

The A/C Heater Control detects an open in the Recirculation Door control circuit. If the A/C Heater Control detects a valid current draw, the DTC will change from Active to Stored and will stay in the controllers memory for 100 ignition cycles.

POSSIBLE CAUSES

Possible Causes
(C32) RECIRCULATION DOOR DRIVER CIRCUIT OPEN
(C34) COMMON DOOR DRIVER CIRCUIT OPEN
RECIRCULATION DOOR ACTUATOR
A/C HEATER CONTROL

Always perform the HVAC Pre-Diagnostic Troubleshooting procedure before proceeding. Refer to STANDARD PROCEDURE.

DIAGNOSTIC TEST

1. **CHECK IF DTC IS ACTIVE**
    1. Ignition on, engine not running.
    2. With the scan tool, read HVAC DTCs.

Is this DTC active?

Yes

- Go To 3

No

- Go To 2

2. **PERFORM HVAC ACTUATOR CALIBRATION TEST**
   1. With the scan tool, perform the HVAC Actuator Calibration Test.

      Did this DTC change from Stored to Active while performing the HVAC Actuator Calibration Test?

      Yes

      - Go To 3

      No

      - Go To 6

3. **CHECK THE RECIRCULATION DOOR ACTUATOR**

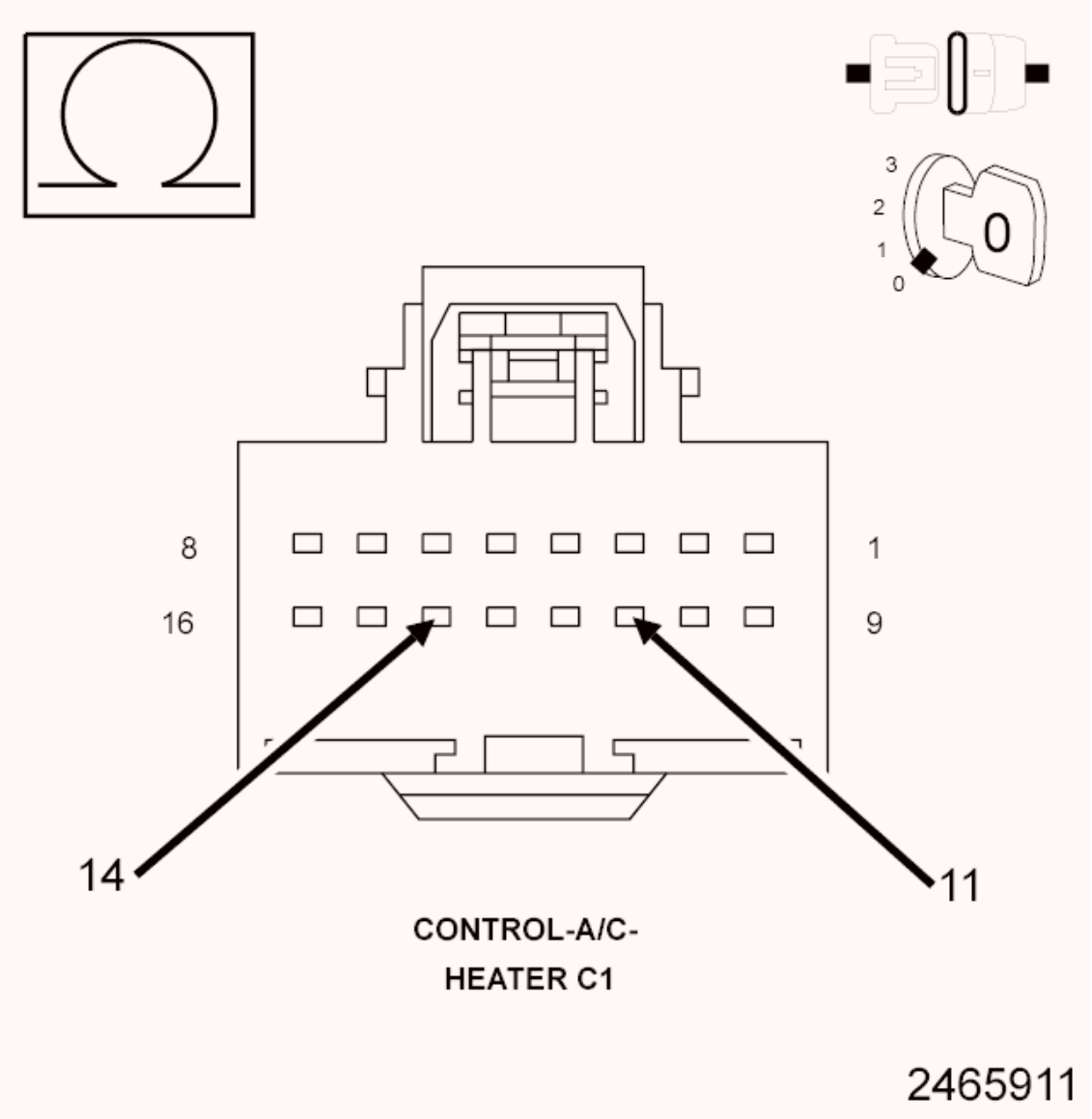

Fig. 28: Checking Recirculation Door Actuator
Courtesy of CHRYSLER GROUP, LLC

1. Turn the ignition off to the lock position.
2. Disconnect the A/C Heater Control C1 harness connector.
3. Measure the resistance between the (C32) Recirculation Door Driver circuit and the (C34) Common Door Driver circuit.

   Is the resistance 38.0 Ohms (± 5.0 Ohms)?

   Yes

   - Replace and program the A/C Heater Control in accordance with the Service Information.

- Perform the HVAC VERIFICATION TEST. Refer to **STANDARD PROCEDURE**.

No

- Go To 4

4. **CHECK THE (C32) RECIRCULATION DOOR DRIVER CIRCUIT FOR AN OPEN**

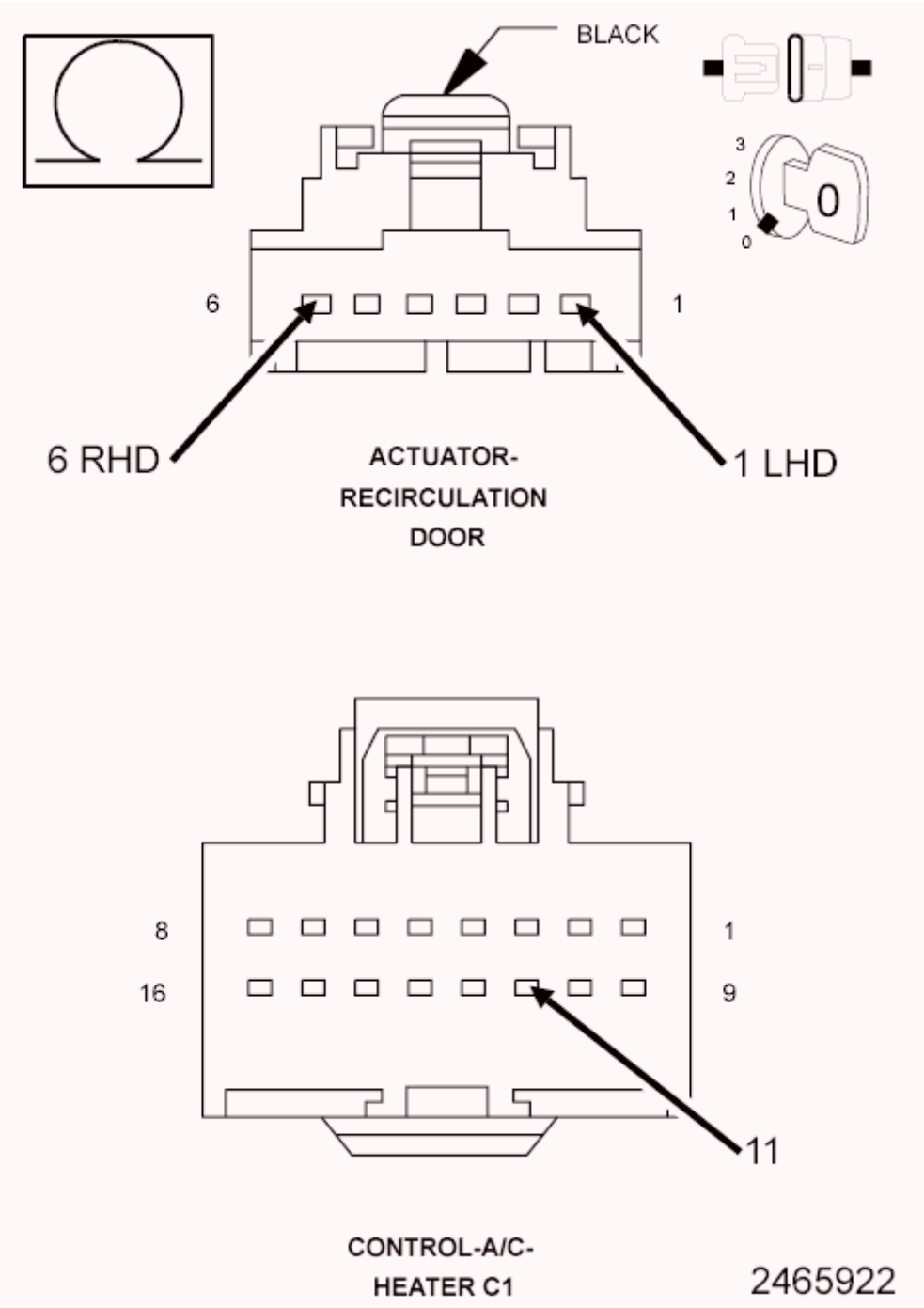

Fig. 29: Checking Recirculation Door Driver Circuit For An Open
Courtesy of CHRYSLER GROUP, LLC

1. Turn the ignition off to the lock position.
2. Disconnect the Recirculation Door Actuator harness connector.
3. Measure the resistance of the (C32) Recirculation Door Driver circuit between the A/C Heater Control C1 harness connector and the Recirculation Door Actuator harness connector.

   Is the resistance above 1.0 Ohm?

   Yes

   - Repair the (C32) Recirculation Door Driver circuit for an open or high resistance.
   - Perform the HVAC VERIFICATION TEST. Refer to **STANDARD PROCEDURE**.

   No

   - Go To 5

5. **CHECK THE (C34) COMMON DOOR DRIVER CIRCUIT FOR AN OPEN**

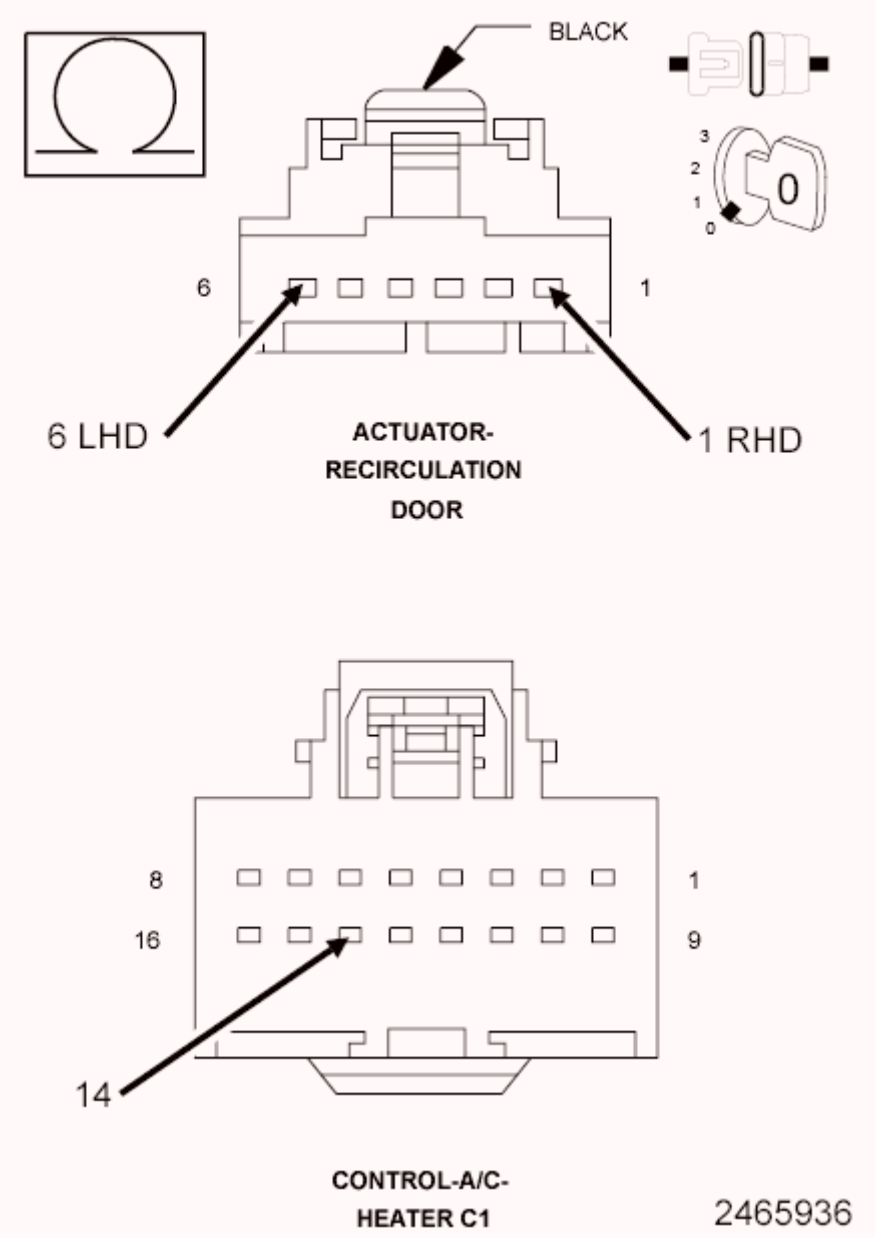

Fig. 30: Checking Common Door Driver Circuit For An Open
Courtesy of CHRYSLER GROUP, LLC

1. Measure the resistance of the (C34) Common Door Driver circuit between the A/C Heater Control C1 harness connector and the Recirculation Door Actuator harness connector.

   Is the resistance above 1.0 Ohm?

   Yes

   - Repair the (C34) Common Door Driver circuit for an open or high resistance.

- Perform the HVAC VERIFICATION TEST. Refer to **STANDARD PROCEDURE**.

No

- Replace the Recirculation Door Actuator in accordance with the Service Information.
- Perform the HVAC VERIFICATION TEST. Refer to **STANDARD PROCEDURE**.

6. **CHECK THE WIRING AND CONNECTORS**
   1. The conditions necessary to set the DTC are not present at this time.
   2. With the scan tool, check the Environmental Data to help identify the conditions in which the DTC was set.
   3. Using the wiring diagrams as a guide, check all related splices and connectors for signs of water intrusion, corrosion, pushed out or bent terminals, and correct pin tension.
   4. Wiggle the wiring and connectors while checking for shorted and open circuits.

   Were there any problems found?

   Yes

   - Repair as necessary.
   - Perform the HVAC VERIFICATION TEST. Refer to **STANDARD PROCEDURE**.

   No

   - Test complete.

B1058-92-RECIRCULATION DOOR CONTROL - PERFORMANCE OR INCORRECT OPERATION

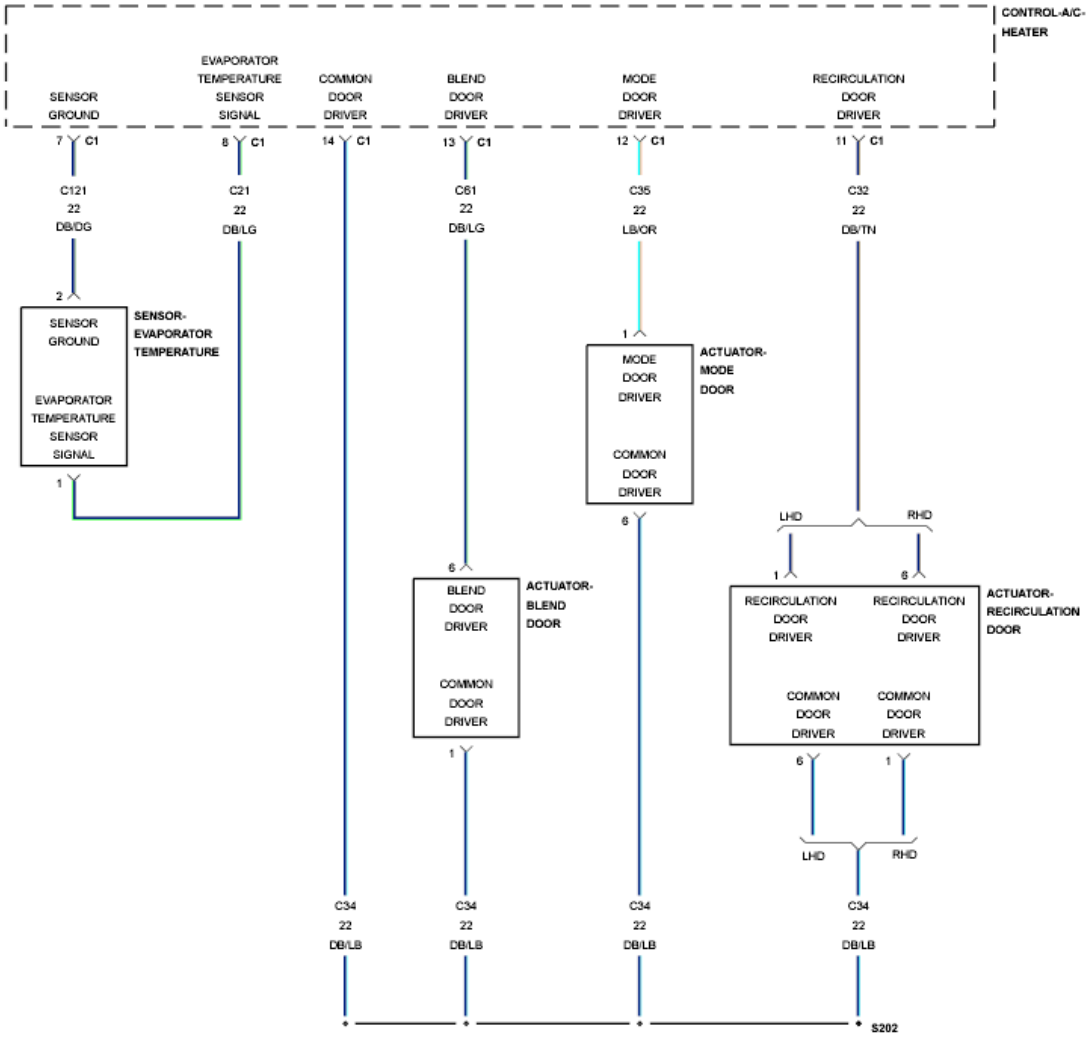

Fig. 31: Evaporator Temperature Sensor Circuit Schematic
Courtesy of CHRYSLER GROUP, LLC

For a complete wiring diagram, **refer to appropriate SYSTEM WIRING DIAGRAMS article** .

THEORY OF OPERATION

After the initial installation of the A/C Heater Control, the controller is calibrated to each individual blend/mode door actuator. These calibrations are stored as in the number of pulses it takes to move the door from one stop to another. The A/C Heater Control drives the Door Actuators by the use of Door Driver circuit and a Common Door Driver circuit and monitors all door actuator pulses to detect door movement in both directions. Most of the door actuators share a common door driver circuit but each door actuator has its own unique driver circuit. Due to shared circuitry, similar Diagnostic Trouble Codes (DTCs) can set at the same

time for multiple actuators depending upon the type of circuit malfunction, its location, and the direction the actuator is moving when the malfunction is present.

WHEN MONITORED

With the ignition on and an actuator movement is commanded by the A/C Heater Control or during an HVAC Actuator Calibration Test.

SET CONDITION

If an actuator move is commanded by A/C Heater Control and no feedback pulses are detected in either clockwise or counterclockwise movement for the period of 15 seconds. If the A/C Heater Control detects valid feedback pulses for 15 seconds, the DTC will change from Active to Stored and will stay in the controllers memory for 100 ignition cycles.

POSSIBLE CAUSES

Possible Causes
(C32) RECIRCULATION DOOR DRIVER CIRCUIT SHORTED TO VOLTAGE
(C32) RECIRCULATION DOOR DRIVER CIRCUIT SHORTED TO GROUND
(C34) COMMON DOOR DRIVER CIRCUIT SHORTED TO VOLTAGE
(C34) COMMON DOOR DRIVER CIRCUIT SHORTED TO GROUND
RECIRCULATION DOOR BINDING
RECIRCULATION DOOR ACTUATOR
A/C HEATER CONTROL

Always perform the HVAC Pre-Diagnostic Troubleshooting procedure before proceeding. Refer to STANDARD PROCEDURE.

DIAGNOSTIC TEST

1. **CHECK IF DTC IS ACTIVE**
    1. Ignition on, engine not running.
    2. Using the scan tool, read HVAC DTCs.

    Is this DTC active?

Yes

- Go To 2

No

- Go To 9

2. **PERFORM HVAC ACTUATOR CALIBRATION TEST**
   1. Using the scan tool, perform the HVAC Actuator Calibration Test.

      Did any other HVAC DTCs set while performing the Actuator Calibration Test?

      Yes

      - Refer to **DIAGNOSIS AND TESTING** and perform the appropriate diagnostic procedure.

      No

      - Go To 3

3. **CHECK THE (C32) RECIRCULATION DOOR DRIVER CIRCUIT FOR A SHORT TO VOLTAGE**

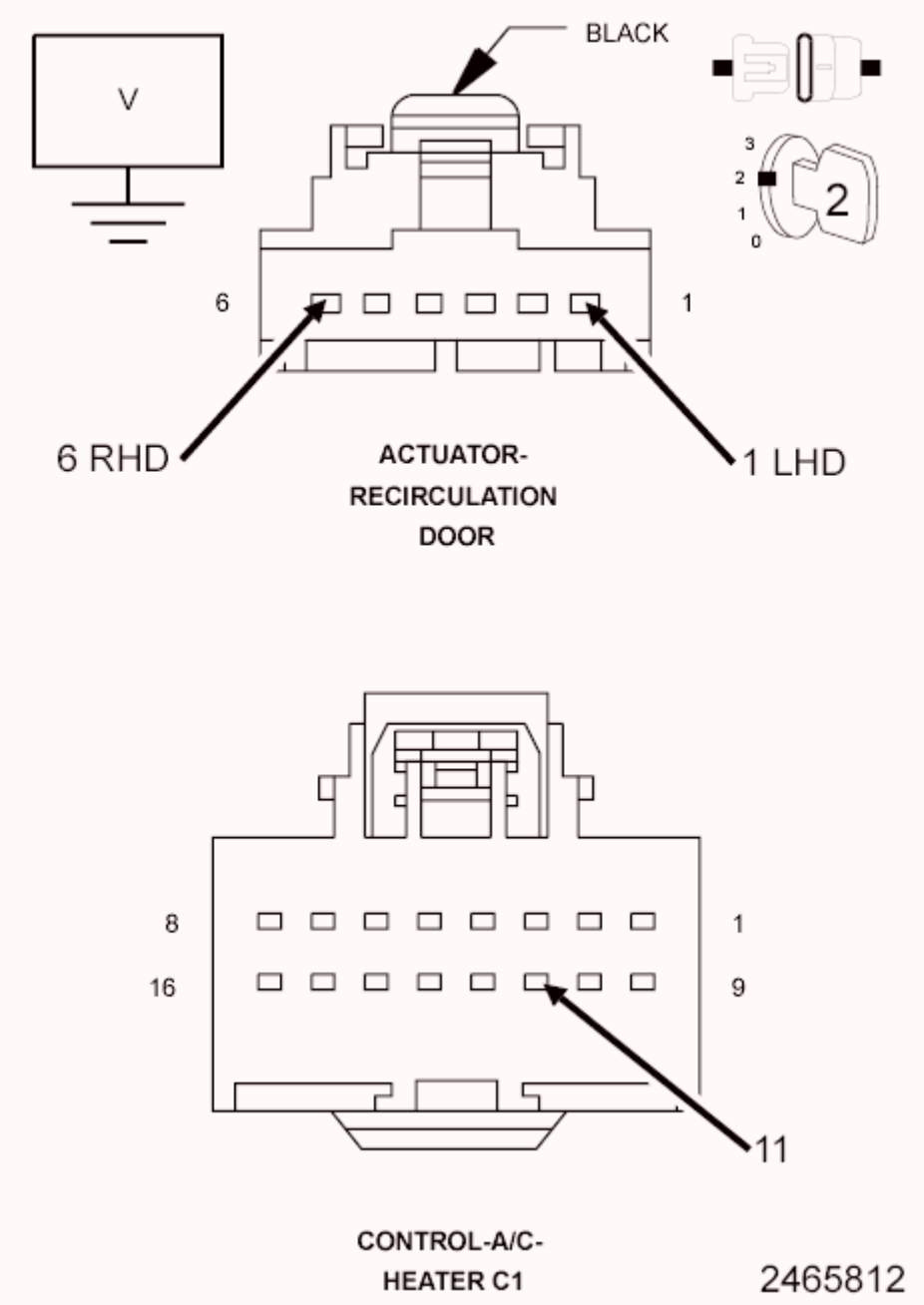

Fig. 32: Checking Recirculation Door Driver Circuit For A Short To Voltage
Courtesy of CHRYSLER GROUP, LLC

1. Turn the ignition off to the lock position.
2. Disconnect the A/C Heater Control C1 harness connector.
3. Disconnect the Recirculation Door Actuator harness connector.
4. Ignition on, engine not running.
5. Measure the voltage of the (C32) Recirculation Door Driver circuit.

Is there any voltage present?

Yes

- Repair the (C32) Recirculation Door Driver circuit for a short to voltage.
- Perform the HVAC VERIFICATION TEST. Refer to **STANDARD PROCEDURE**.

No

- Go To 4

4. **CHECK THE (C34) COMMON DOOR DRIVER CIRCUIT FOR A SHORT TO VOLTAGE**

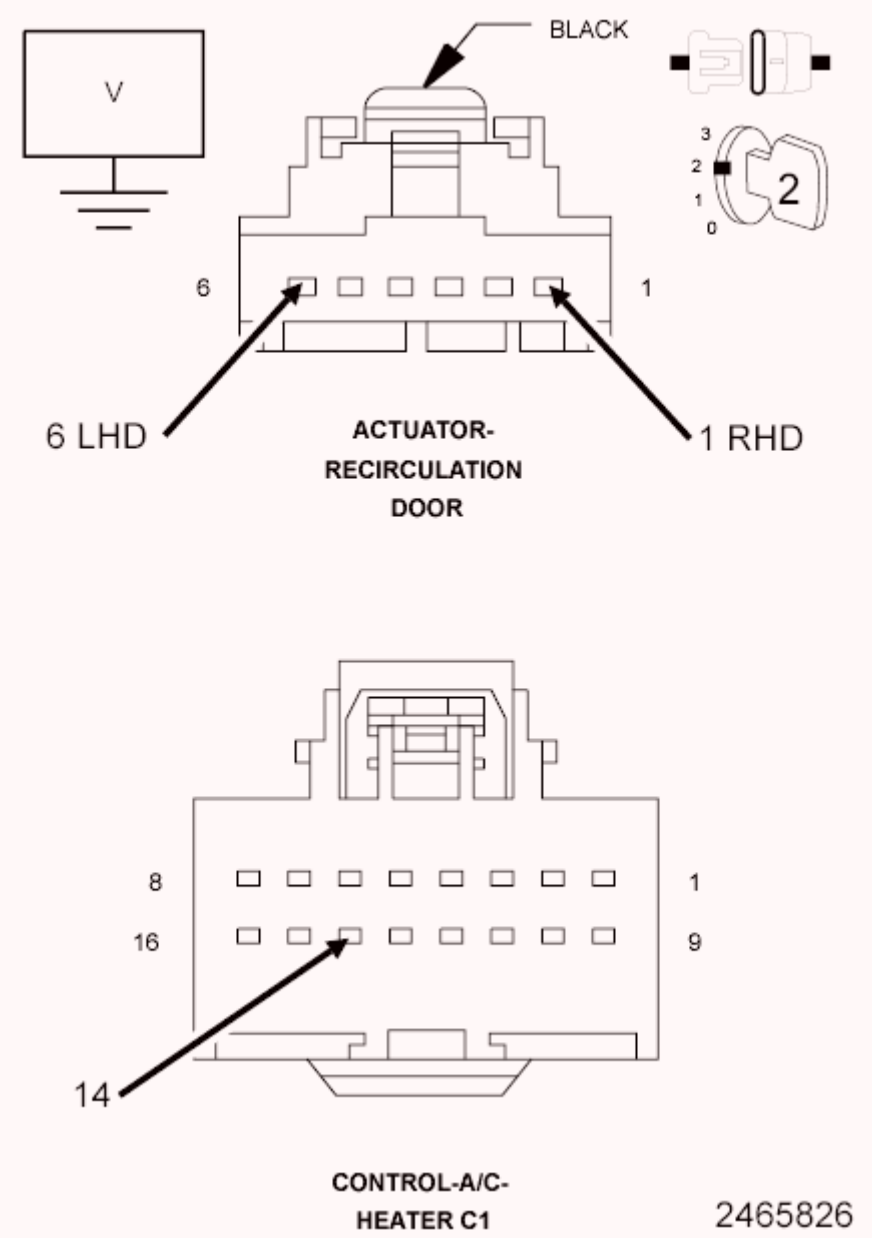

Fig. 33: Checking Common Door Driver Circuit For A Short To Voltage
Courtesy of CHRYSLER GROUP, LLC

1. Measure the voltage of the (C34) Common Door Driver circuit.

   Is there any voltage present?

   Yes

   - Repair the (C34) Common Door Driver circuit for a short to voltage.
   - Perform the HVAC VERIFICATION TEST. Refer to

STANDARD PROCEDURE.

No

- Go To 5

5. **CHECK THE (C32) RECIRCULATION DOOR DRIVER CIRCUIT FOR A SHORT TO GROUND**

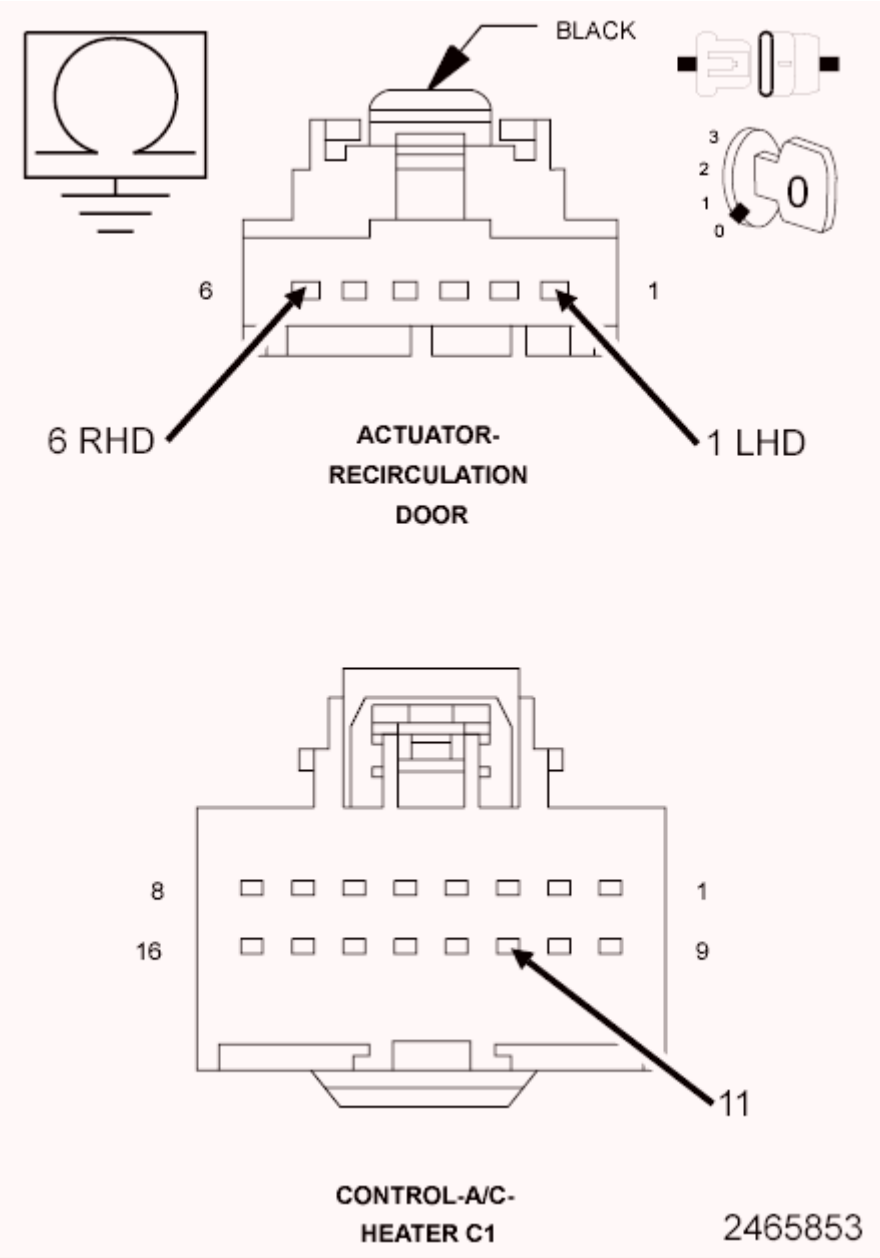

Fig. 34: Checking Recirculation Door Driver Circuit For A Short To Ground
Courtesy of CHRYSLER GROUP, LLC

1. Turn the ignition off to the lock position.
2. Measure the resistance between ground and the (C32) Recirculation Door Driver circuit.

   Is the resistance below 100k Ohms?

   Yes

   - Repair the (C32) Recirculation Door Driver circuit for a short to ground.
   - Perform the HVAC VERIFICATION TEST. Refer to **STANDARD PROCEDURE**.

   No

   - Go To 6

6. **CHECK THE (C34) COMMON DOOR DRIVER CIRCUIT FOR A SHORT TO GROUND**

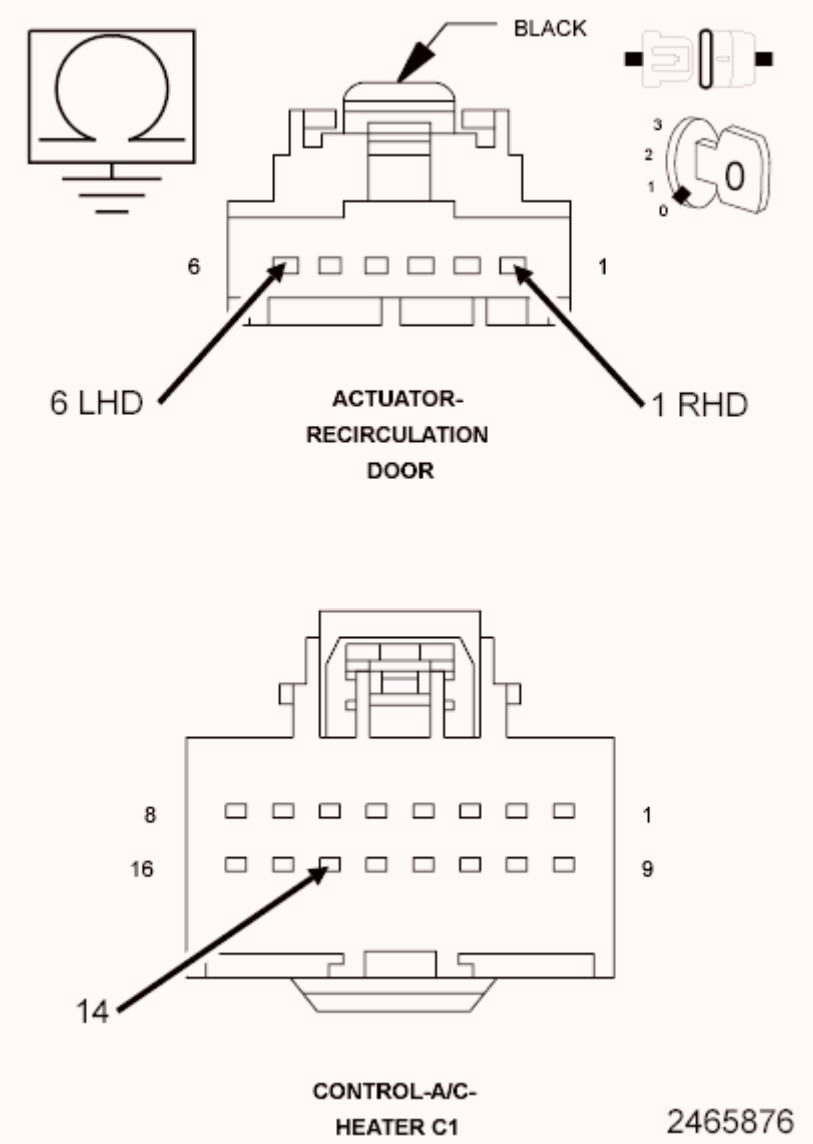

Fig. 35: Checking Common Door Driver Circuit For A Short To Ground
Courtesy of CHRYSLER GROUP, LLC

1. Measure the resistance between ground and the (C34) Common Door Driver circuit.

   Is the resistance below 100k Ohms?

   Yes

   - Repair the (C34) Common Door Driver circuit for a short to ground.
   - Perform the HVAC VERIFICATION TEST. Refer to **STANDARD PROCEDURE**.

No

- Go To 7

7. **CHECK THE RECIRCULATION DOOR**
   1. Remove the Recirculation Door Actuator and check the Recirculation Door for binding and full travel.

      Were there any problems found?

      Yes

      - Repair or replace the Recirculation Door as necessary in accordance with the Service Information.
      - Perform the HVAC VERIFICATION TEST. Refer to **STANDARD PROCEDURE**.

      No

      - Go To 8

8. **CHECK THE RECIRCULATION DOOR ACTUATOR**
   1. Replace the Recirculation Door Actuator in accordance with the Service Information.
   2. Using the scan tool, erase HVAC DTCs and perform the HVAC Actuator Calibration Test.

      Did this DTC reset?

      Yes

      - Replace and program the A/C Heater Control in accordance with the Service Information.
      - Perform the HVAC VERIFICATION TEST. Refer to **STANDARD PROCEDURE**.

      No

      - Test complete.
      - Perform the HVAC VERIFICATION TEST. Refer to **STANDARD PROCEDURE**.

9. **CHECK THE WIRING AND CONNECTORS**
    1. The conditions necessary to set the DTC are not present at this time.
    2. Using the scan tool, check the Environmental Data to help identify the conditions in which the DTC was set.
    3. Using the wiring diagrams as a guide, check all related splices and connectors for signs of water intrusion, corrosion, pushed out or bent terminals, and correct pin tension.
    4. Wiggle the wiring and connectors while checking for shorted and open circuits.

    Were there any problems found?

    Yes

    - Repair as necessary.
    - Perform the HVAC VERIFICATION TEST. Refer to **STANDARD PROCEDURE**.

    No

    - Test complete.

B105C-00-RECIRCULATION DOOR TRAVEL RANGE TOO SMALL

For a complete wiring diagram, **refer to appropriate SYSTEM WIRING DIAGRAMS article** .

THEORY OF OPERATION

After the initial installation of the A/C Heater Control, the controller is calibrated to each individual blend/mode door actuator. These calibrations are stored as in the number of pulses it takes to move the door from one stop to another. The A/C Heater Control drives the Door Actuators by the use of Door Driver circuit and a Common Door Driver circuit and monitors all door actuator pulses to detect door movement in both directions. Most of the door actuators share a common door driver circuit but each door actuator has its own unique driver circuit. Due to shared circuitry, similar Diagnostic trouble Codes (DTCs) can set at the same time for multiple actuators depending upon the type of circuit malfunction, its location, and the direction the actuator is moving when the malfunction is present.

WHEN MONITORED

When ever an Actuator Calibration Test is performed.

SET CONDITION

The A/C Heater Control uses a pulse feedback to the controller to detect the total door movement range. If the amount of pulses required to move the door completely in both directions is less than what the controller has stored in its memory, this DTC will set. If an Actuator Calibration Test is performed and the A/C Heater Control detects a valid range of the door movement span in both directions, the DTC will change from Active to Stored and will stay in the controllers memory for 100 ignition cycles.

POSSIBLE CAUSES

Possible Causes
RELATED DTCS PRESENT
RECIRCULATION DOOR BINDING
RECIRCULATION DOOR ACTUATOR
A/C HEATER CONTROL

Always perform the HVAC Pre-Diagnostic Troubleshooting procedure before proceeding. Refer to STANDARD PROCEDURE.

DIAGNOSTIC TEST

1. **CHECK FOR RELATED DTCS**
    1. Ignition on, engine not running.
    2. Using the scan tool, read HVAC DTCs.

    Are there any Door Control Circuit Short to Voltage, Short to Ground or Open DTCs present?

    Yes

    - Refer to **DIAGNOSIS AND TESTING** and perform the appropriate diagnostic procedure.

    No

- Go To 2

2. **CHECK IF DTC IS ACTIVE**
   1. Ignition on, engine not running.
   2. Using the scan tool, read HVAC DTCs.

   Is this DTC active?

   Yes

   - Go To 4

   No

   - Go To 3

3. **PERFORM HVAC ACTUATOR CALIBRATION TEST**
   1. Using the scan tool, perform the HVAC Actuator Calibration Test.

   Did this DTC change from Stored to Active while performing the HVAC Actuator Calibration Test?

   Yes

   - Go To 4

   No

   - Go To 6

4. **CHECK THE RECIRCULATION DOOR**
   1. Remove the Recirculation Door Actuator and check the Recirculation Door for binding and full travel.

   Were there any problems found?

   Yes

   - Repair or replace the Recirculation Door as necessary in accordance with the Service Information.
   - Perform the HVAC VERIFICATION TEST. Refer to **STANDARD PROCEDURE**.

No

- Go To 5

5. **CHECK THE RECIRCULATION DOOR ACTUATOR**
   1. Replace the Recirculation Door Actuator in accordance with the Service Information.
   2. Using the scan tool, erase HVAC DTCs.
   3. Using the scan tool, perform the HVAC Actuator Calibration Test.

   Did this DTC reset during HVAC Actuator Calibration Test?

   Yes

   - Replace and program the A/C Heater Control in accordance with the Service Information.
   - Perform the HVAC VERIFICATION TEST. Refer to **STANDARD PROCEDURE**.

   No

   - Test complete.
   - Perform the HVAC VERIFICATION TEST. Refer to **STANDARD PROCEDURE**.

6. **CHECK THE WIRING AND CONNECTORS**
   1. The conditions necessary to set the DTC are not present at this time.
   2. Using the scan tool, check the Environmental Data to help identify the conditions in which the DTC was set.
   3. Using the wiring diagrams as a guide, check all related splices and connectors for signs of water intrusion, corrosion, pushed out or bent terminals, and correct pin tension.
   4. Wiggle the wiring and connectors while checking for shorted and open circuits.

   Were there any problems found?

   Yes

   - Repair as necessary.

- Perform the HVAC VERIFICATION TEST. Refer to **STANDARD PROCEDURE**.

No

- Test complete.

B105D-00-RECIRCULATION DOOR TRAVEL RANGE TOO LARGE

For a complete wiring diagram, **refer to appropriate SYSTEM WIRING DIAGRAMS article** .

THEORY OF OPERATION

After the initial installation of the A/C Heater Control, the controller is calibrated to each individual blend/mode door actuator. These calibrations are stored as in the number of pulses it takes to move the door from one stop to another. The A/C Heater Control drives the Door Actuators by the use of Door Driver circuit and a Common Door Driver circuit and monitors all door actuator pulses to detect door movement in both directions. Most of the door actuators share a common door driver circuit but each door actuator has its own unique driver circuit. Due to shared circuitry, similar Diagnostic trouble Codes (DTCs) can set at the same time for multiple actuators depending upon the type of circuit malfunction, its location, and the direction the actuator is moving when the malfunction is present.

WHEN MONITORED

When ever an Actuator Calibration Test is performed.

SET CONDITION

The A/C Heater Control uses a pulse feedback to the controller to detect the total door movement range. If the amount of pulses required to move the door completely in both directions is greater than what the controller has stored in its memory, this DTC will set. If an Actuator Calibration Test is performed or during normal operation and the A/C Heater Control detects a valid range of the door movement span in both directions, the DTC will change from Active to Stored and will stay in the controllers memory for 100 ignition cycles.

POSSIBLE CAUSES

Possible Causes
RELATED DTCS PRESENT
RECIRCULATION DOOR STOPS
RECIRCULATION DOOR
RECIRCULATION DOOR ACTUATOR
A/C HEATER CONTROL

Always perform the HVAC Pre-Diagnostic Troubleshooting procedure before proceeding. Refer to STANDARD PROCEDURE.

DIAGNOSTIC TEST

1. **CHECK FOR RELATED DTCS**
   1. Ignition on, engine not running.
   2. With the scan tool, read HVAC DTCs.

   Are there any Door Control Circuit Short to Voltage, Short to Ground or Open DTCs present?

   Yes

   - Refer to **DIAGNOSIS AND TESTING** and perform the appropriate diagnostic procedure.

   No

   - Go To 2
2. **CHECK IF DTC IS ACTIVE**
   1. Ignition on, engine not running.
   2. With the scan tool, read HVAC DTCs.

   Is this DTC active?

   Yes

   - Go To 4

   No

- Go To 3

3. **PERFORM HVAC ACTUATOR CALIBRATION TEST**
   1. With the scan tool, perform the HVAC Actuator Calibration Test.

      Did this DTC change from Stored to Active while performing the HVAC Actuator Calibration Test?

      Yes

      - Go To 4

      No

      - Go To 6

4. **CHECK THE RECIRCULATION DOOR**
   1. Remove the Recirculation Door Actuator and check the Recirculation Door stops, linkage (stripped or cracked) and door.

      Were there any problems found?

      Yes

      - Repair or replace the Recirculation Door as necessary in accordance with the Service Information.
      - Perform the HVAC VERIFICATION TEST. Refer to **STANDARD PROCEDURE**.

      No

      - Go To 5

5. **CHECK THE RECIRCULATION DOOR ACTUATOR**
   1. Replace the Recirculation Door Actuator in accordance with the Service Information.
   2. With the scan tool, erase HVAC DTCs and perform the HVAC Actuator Calibration Test.

      Did this DTC reset?

      Yes

- Replace and program the A/C Heater Control in accordance with the Service Information.
- Perform the HVAC VERIFICATION TEST. Refer to **STANDARD PROCEDURE**.

No

- Test complete.
- Perform the HVAC VERIFICATION TEST. Refer to **STANDARD PROCEDURE**.

6. **CHECK THE WIRING AND CONNECTORS**
   1. The conditions necessary to set the DTC are not present at this time.
   2. With the scan tool, check the Environmental Data to help identify the conditions in which the DTC was set.
   3. Using the wiring diagrams as a guide, check all related splices and connectors for signs of water intrusion, corrosion, pushed out or bent terminals, and correct pin tension.
   4. Wiggle the wiring and connectors while checking for shorted and open circuits.

   Were there any problems found?

   Yes

   - Repair as necessary.
   - Perform the HVAC VERIFICATION TEST. Refer to **STANDARD PROCEDURE**.

   No

   - Test complete.

B10B2-00-A/C COOL DOWN TEST PERFORMANCE

For a complete wiring diagram, **refer to appropriate SYSTEM WIRING DIAGRAMS article** .

THEORY OF OPERATION

The A/C Heater Controller has software to enable it to perform an A/C Cool Down Test by a command using a scan tool. This test checks for evaporator temperature drop over a predetermined time. If the test fails, this DTC will set. However, certain test conditions are required to perform this test. Failure to run this test within those parameters can result in failure of the test.

WHEN MONITORED

With ever an A/C Cooldown Test is performed.

SET CONDITION

This DTC is set whenever the A/C Cooldown Test is performed and the desired temperature drop is not achieved by the system. The DTC will go to stored after a successful A/C Cooldown Test.

POSSIBLE CAUSES

Possible Causes
A/C SYSTEM WORKING IMPROPERLY

Always perform the HVAC Pre-Diagnostic Troubleshooting procedure before proceeding. Refer to STANDARD PROCEDURE.

DIAGNOSTIC TEST

CONDITIONS FOR A/C COOLDOWN TEST

1. The following condition must be met before running the A/C Cooldown test.
    - No Powertrain Control Module (PCM) DTCs present.
    - No Communication DTCs present.
    - Condenser cooling fan working properly.
    - No active HVAC evaporator temperature sensor, sun sensor, recirculation, mode, or blend door actuator DTCs present.
    - The refrigerant system must be fully charged.
    - The blower motor must operate correctly in all speeds.
    - The evaporator temperature must be above 12.7° C (55° F).
    - The A/C compressor must be turned off.
    - Blower must be on high.

Are all of the above conditions met before running the A/C Cooldown Test?

Yes

- Go to the appropriate Service Information for additional Cooldown Test related diagnostic information and testing procedures and repair as necessary.

  NOTE: Run the Cooldown Test again after any repairs are performed.

- If the Cooldown Test passes, testing is complete.

No

- Run the A/C Cooldown test again with the above test conditions.

B11C2-11-FRONT MODE DOOR 1 CONTROL - CIRCUIT SHORT TO GROUND

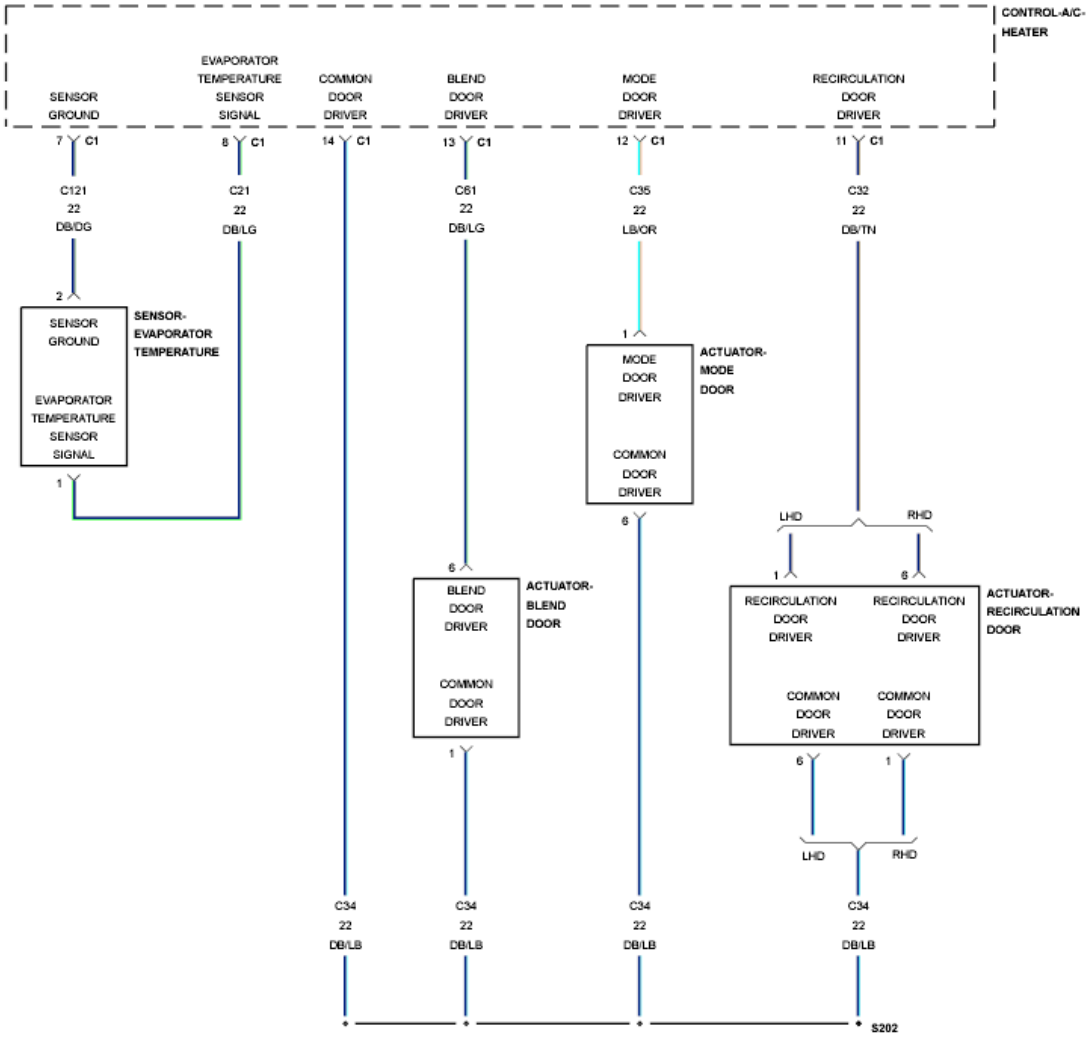

Fig. 36: Evaporator Temperature Sensor Circuit Schematic
Courtesy of CHRYSLER GROUP, LLC

For a complete wiring diagram, **refer to appropriate SYSTEM WIRING DIAGRAMS article** .

THEORY OF OPERATION

After the initial installation of the A/C Heater Control, the controller is calibrated to each individual blend/mode door actuator. These calibrations are stored as in the number of pulses it takes to move the door from one stop to another. The A/C Heater Control drives the Door Actuators by the use of Door Driver circuit and a Common Door Driver circuit and monitors all door actuator pulses to detect door movement in both directions. Most of the door actuators share a common door driver circuit but each door actuator has its own unique driver circuit. Due to shared circuitry, similar Diagnostic Trouble Codes (DTCs) can set at the same

time for multiple actuators depending upon the type of circuit malfunction, its location, and the direction the actuator is moving when the malfunction is present.

WHEN MONITORED

Continuously with the ignition on.

SET CONDITION

The A/C Heater Control detects a short to ground on the Mode Door control circuit. If the A/C Heater Control detects valid current draw, the DTC will change from Active to Stored and will stay in the controllers memory for 100 ignition cycles.

POSSIBLE CAUSES

Possible Causes
(C35) MODE DOOR DRIVER CIRCUIT SHORTED TO GROUND
(C34) COMMON DOOR DRIVER CIRCUIT SHORTED TO GROUND
MODE DOOR ACTUATOR
A/C HEATER CONTROL

Always perform the HVAC Pre-Diagnostic Troubleshooting procedure before proceeding. Refer to STANDARD PROCEDURE.

DIAGNOSTIC TEST

1. **CHECK IF DTC IS ACTIVE**
    1. Ignition on, engine not running.
    2. With the scan tool, read HVAC DTCs.

    Is this DTC active?

    Yes

    - Go To 3

    No

    - Go To 2

2. **PERFORM HVAC ACTUATOR CALIBRATION TEST**
   1. With the scan tool, perform the HVAC Actuator Calibration Test.

      Did this DTC change from Stored to Active while performing the HVAC Actuator Calibration Test?

      Yes

      - Go To 3

      No

      - Go To 6
3. **CHECK THE (C35) MODE DOOR DRIVER CIRCUIT FOR A SHORT TO GROUND**

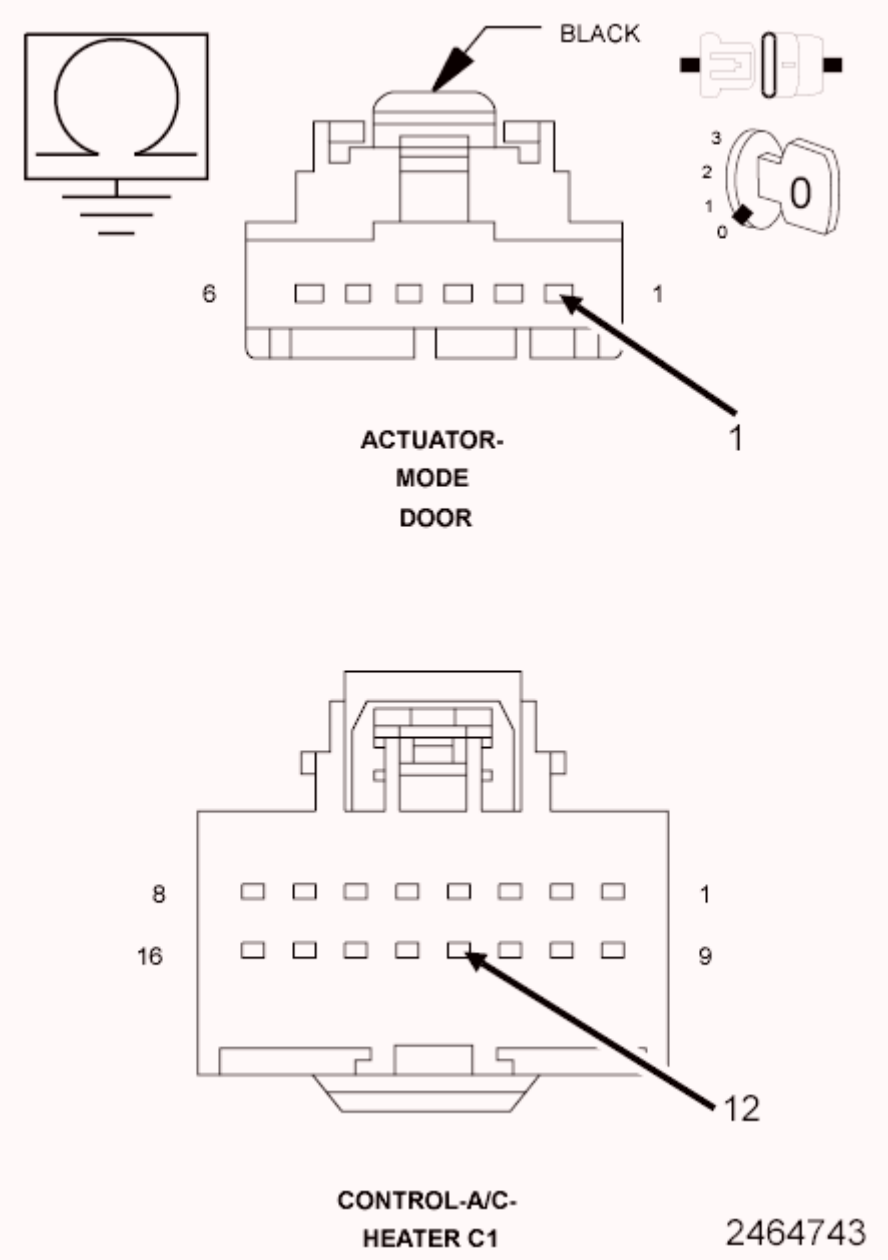

Fig. 37: Checking Mode Door Driver Circuit For A Short To Ground
Courtesy of CHRYSLER GROUP, LLC

1. Turn the ignition off to the lock position.
2. Disconnect the A/C Heater Control C1 harness connector.
3. Disconnect the Mode Door Actuator harness connector.
4. Measure the resistance between ground and the (C35) Mode Door Driver circuit.

   Is the resistance below 100k Ohms?

   Yes

- Repair the (C35) Mode Door Driver circuit for a short to ground.
- Perform the HVAC VERIFICATION TEST. Refer to **STANDARD PROCEDURE**.

No

- Go To 4

4. **CHECK THE (C34) COMMON DOOR DRIVER CIRCUIT FOR A SHORT TO GROUND**

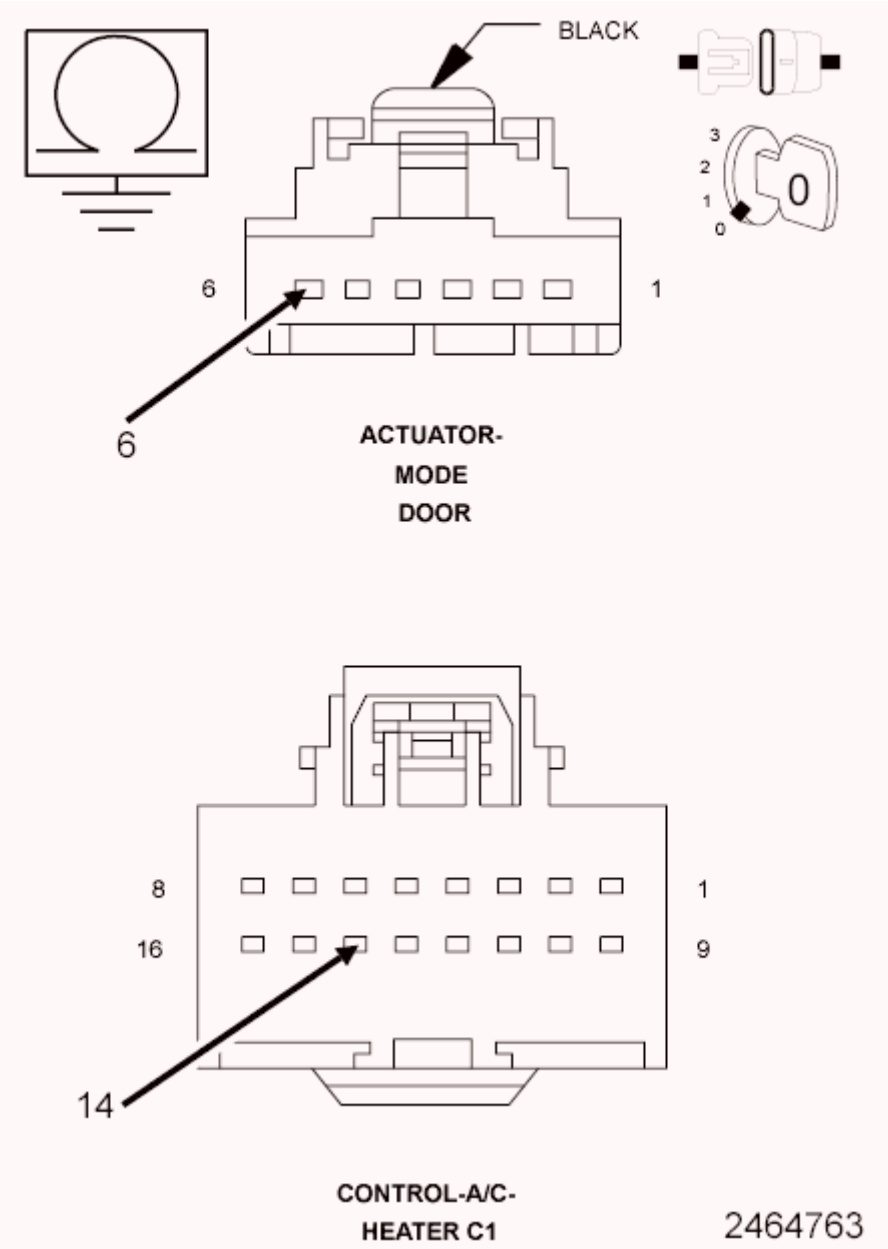

Fig. 38: Checking Common Door Driver Circuit For A Short To Ground

Courtesy of CHRYSLER GROUP, LLC

1. Measure the resistance between ground and the (C34) Common Door Driver circuit.

   Is the resistance below 100k Ohms?

   Yes

   - Repair the (C34) Common Door Driver circuit for a short to ground.
   - Perform the HVAC VERIFICATION TEST. Refer to **STANDARD PROCEDURE**.

   No

   - Go To 5

5. **CHECK THE MODE DOOR ACTUATOR**
   1. Replace the Mode Door Actuator in accordance with the Service Information.
   2. With the scan tool, erase HVAC DTCs and perform the HVAC Actuator Calibration Test.

      Did this DTC reset?

      Yes

      - Replace and program the A/C Heater Control in accordance with the Service Information.
      - Perform the HVAC VERIFICATION TEST. Refer to **STANDARD PROCEDURE**.

      No

      - Test complete.
      - Perform the HVAC VERIFICATION TEST. Refer to **STANDARD PROCEDURE**.

6. **CHECK THE WIRING AND CONNECTORS**
   1. The conditions necessary to set the DTC are not present at this time.

2. With the scan tool, check the Environmental Data to help identify the conditions in which the DTC was set.
3. Using the wiring diagrams as a guide, check all related splices and connectors for signs of water intrusion, corrosion, pushed out or bent terminals, and correct pin tension.
4. Wiggle the wiring and connectors while checking for shorted and open circuits.

   Were there any problems found?

   Yes

   - Repair as necessary.
   - Perform the HVAC VERIFICATION TEST. Refer to **STANDARD PROCEDURE**.

   No

   - Test complete.

B11C2-12-FRONT MODE DOOR 1 CONTROL - CIRCUIT SHORT TO BATTERY

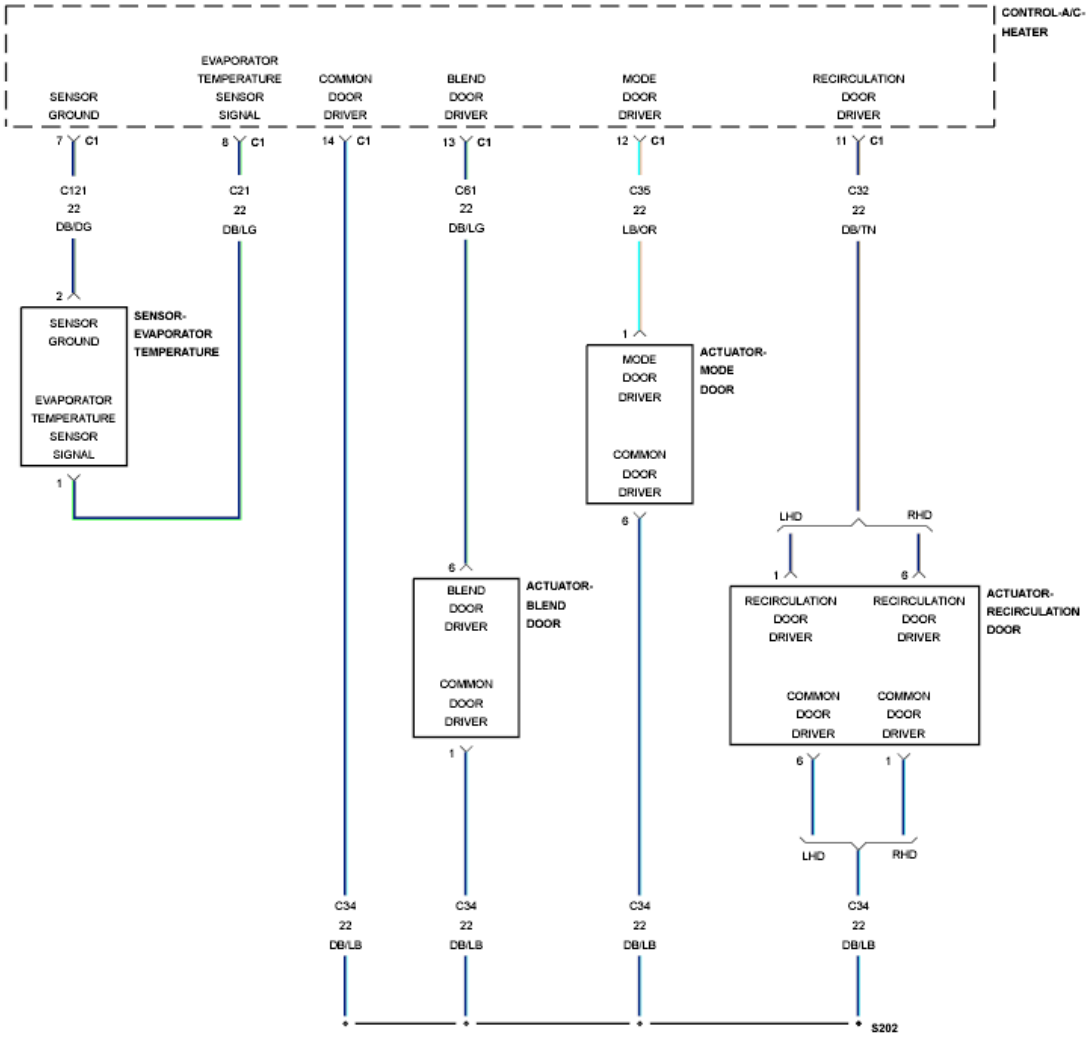

Fig. 39: Evaporator Temperature Sensor Circuit Schematic
Courtesy of CHRYSLER GROUP, LLC

For a complete wiring diagram, **refer to appropriate SYSTEM WIRING DIAGRAMS article** .

THEORY OF OPERATION

After the initial installation of the A/C Heater Control, the controller is calibrated to each individual blend/mode door actuator. These calibrations are stored as in the number of pulses it takes to move the door from one stop to another. The A/C Heater Control drives the Door Actuators by the use of Door Driver circuit and a Common Door Driver circuit and monitors all door actuator pulses to detect door movement in both directions. Most of the door actuators share a common door driver circuit but each door actuator has its own unique driver circuit. Due to shared circuitry, similar Diagnostic Trouble Codes (DTCs) can set at the same

time for multiple actuators depending upon the type of circuit malfunction, its location, and the direction the actuator is moving when the malfunction is present.

WHEN MONITORED

Continuously with the ignition on.

SET CONDITION

The A/C Heater Control detects a short voltage on the Mode Door control circuit. If the A/C Heater Control detects a valid voltage, the DTC will change from Active to Stored and will stay in the controllers memory for 100 ignition cycles.

POSSIBLE CAUSES

Possible Causes
(C35) MODE DOOR DRIVER CIRCUIT SHORTED TO VOLTAGE
(C34) COMMON DOOR DRIVER CIRCUIT SHORTED TO VOLTAGE
MODE DOOR ACTUATOR
A/C HEATER CONTROL

Always perform the HVAC Pre-Diagnostic Troubleshooting procedure before proceeding. Refer to STANDARD PROCEDURE.

DIAGNOSTIC TEST

1. **CHECK IF DTC IS ACTIVE**
    1. Ignition on, engine not running.
    2. With the scan tool, read HVAC DTCs.

    Is this DTC active?

    Yes

    - Go To 3

    No

    - Go To 2
2. **PERFORM HVAC ACTUATOR CALIBRATION TEST**

1. With the scan tool, perform the HVAC Actuator Calibration Test.

   Did this DTC change from Stored to Active while performing the HVAC Actuator Calibration Test?

   Yes

   - Go To 3

   No

   - Go To 6

3. **CHECK THE (C35) MODE DOOR DRIVER CIRCUIT FOR A SHORT TO VOLTAGE**

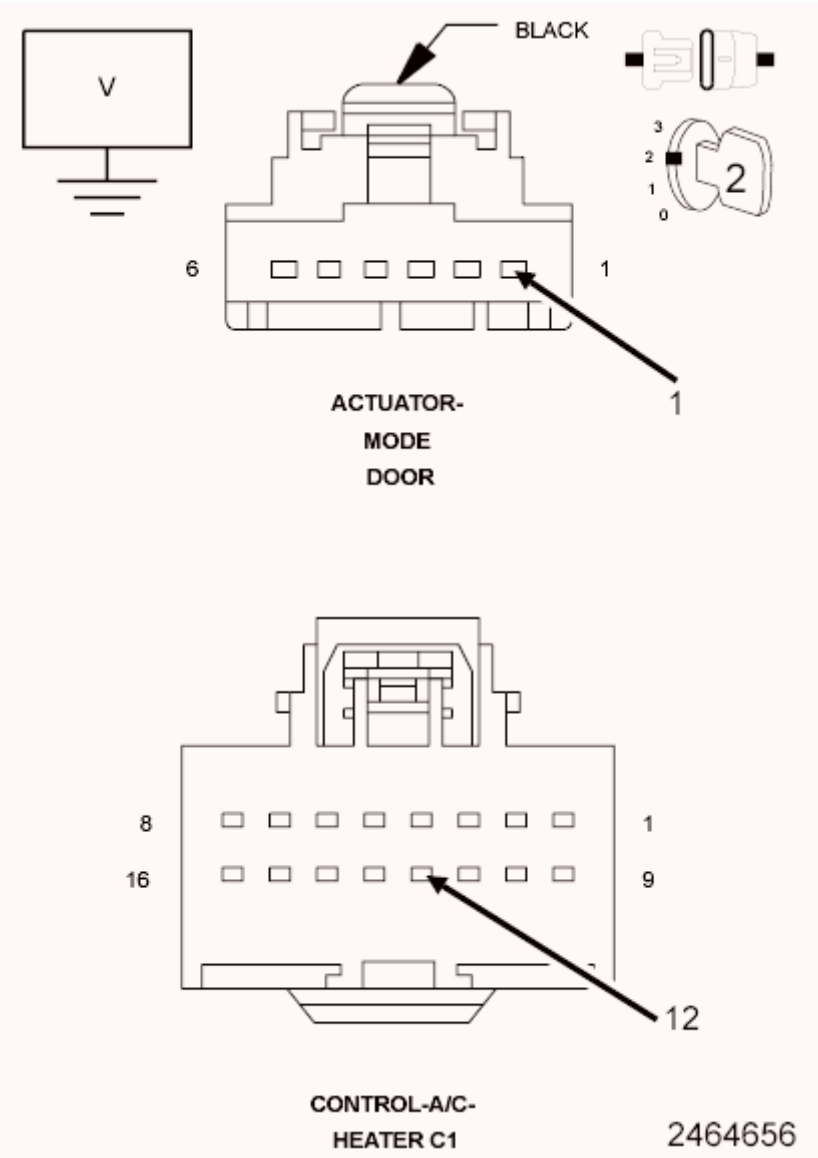

Fig. 40: Checking Mode Door Driver Circuit For A Short To Voltage
Courtesy of CHRYSLER GROUP, LLC

1. Turn the ignition off to the lock position.
2. Disconnect the A/C Heater Control C1 harness connector.
3. Disconnect the Mode Door Actuator harness connector.
4. Ignition on, engine not running.
5. Measure the voltage of the (C35) Mode Door Driver circuit.

   Is there any voltage present?

   Yes

   - Repair the (C35) Mode Door Driver circuit for a short to voltage.
   - Perform the HVAC VERIFICATION TEST. Refer to **STANDARD PROCEDURE**.

   No

   - Go To 4

4. **CHECK THE (C34) COMMON DOOR DRIVER CIRCUIT FOR A SHORT TO VOLTAGE**

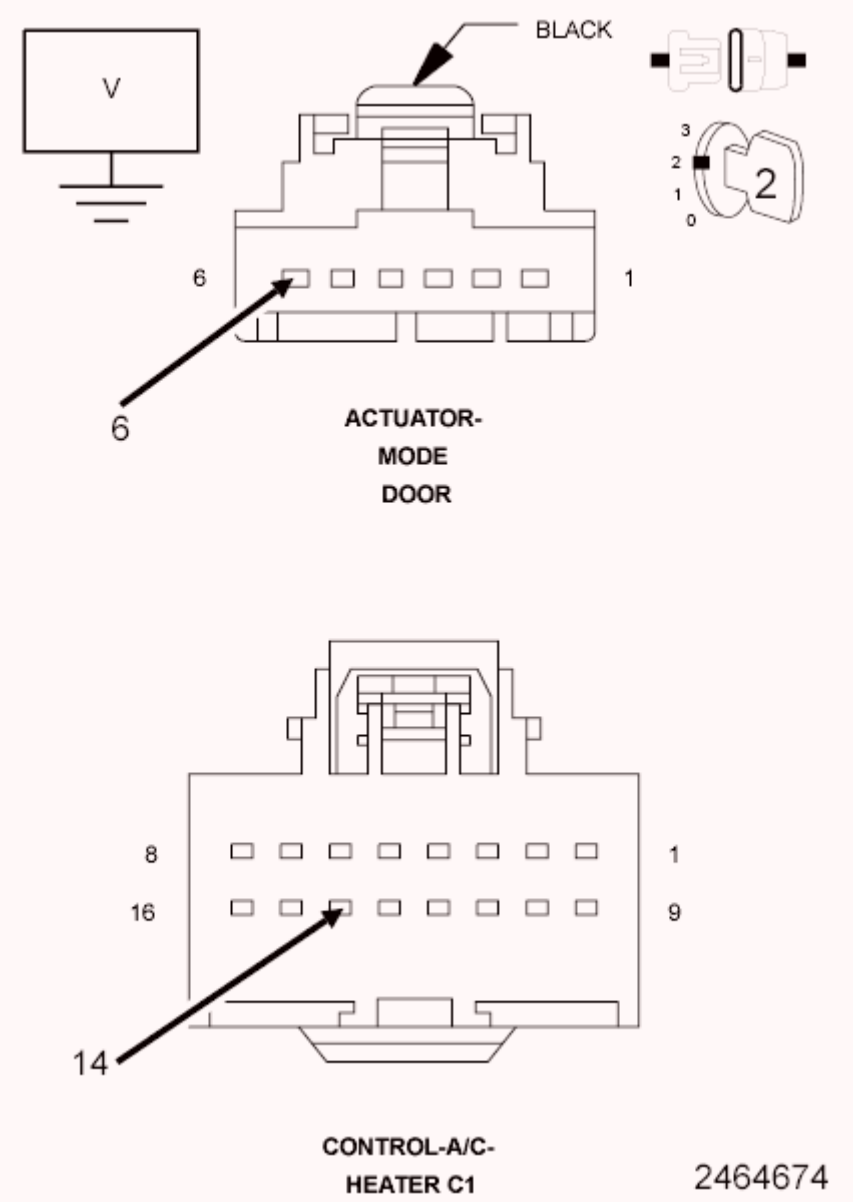

Fig. 41: Checking Common Door Driver Circuit For A Short To Voltage
Courtesy of CHRYSLER GROUP, LLC

1. Measure the voltage of the (C34) Common Door Driver circuit.

   Is there any voltage present?

   Yes

   - Repair the (C34) Common Door Driver circuit for a short to voltage.
   - Perform the HVAC VERIFICATION TEST. Refer to

STANDARD PROCEDURE.

No

- Go To 5

5. **CHECK THE MODE DOOR ACTUATOR**
   1. Turn the ignition off to the lock position.
   2. Replace the Mode Door Actuator in accordance with the Service Information.
   3. With the scan tool, erase HVAC DTCs and perform the HVAC Actuator Calibration Test.

   Did this DTC reset?

   Yes

   - Replace and program the A/C Heater Control in accordance with the Service Information.
   - Perform the HVAC VERIFICATION TEST. Refer to **STANDARD PROCEDURE**.

   No

   - Test complete.
   - Perform the HVAC VERIFICATION TEST. Refer to **STANDARD PROCEDURE**.

6. **CHECK THE WIRING AND CONNECTORS**
   1. The conditions necessary to set the DTC are not present at this time.
   2. With the scan tool, check the Environmental Data to help identify the conditions in which the DTC was set.
   3. Using the wiring diagrams as a guide, check all related splices and connectors for signs of water intrusion, corrosion, pushed out or bent terminals, and correct pin tension.
   4. Wiggle the wiring and connectors while checking for shorted and open circuits.

   Were there any problems found?

Yes

- Repair as necessary.
- Perform the HVAC VERIFICATION TEST. Refer to **STANDARD PROCEDURE**.

No

- Test complete.

B11C2-13-FRONT MODE DOOR 1 CONTROL - CIRCUIT OPEN

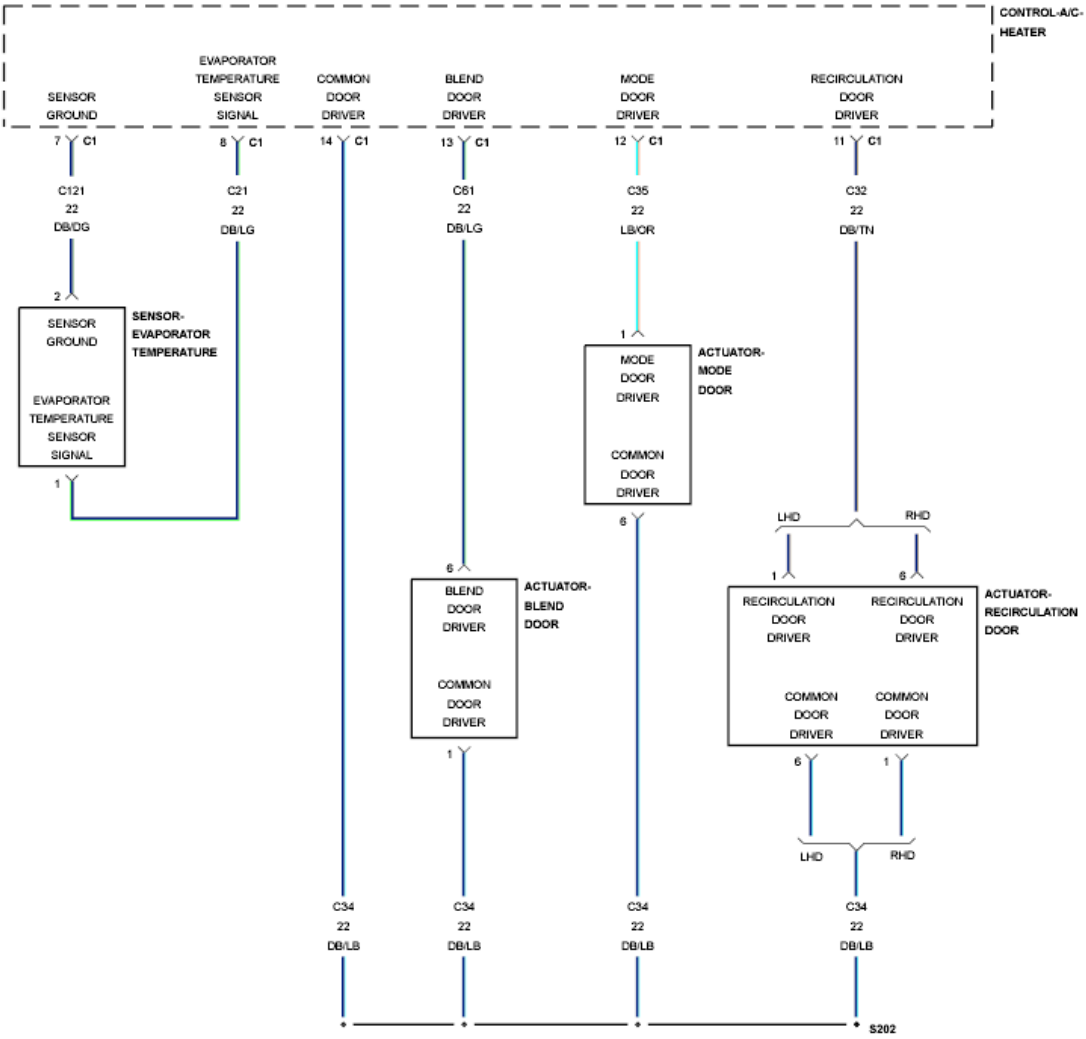

Fig. 42: Evaporator Temperature Sensor Circuit Schematic
Courtesy of CHRYSLER GROUP, LLC

For a complete wiring diagram, **refer to appropriate SYSTEM WIRING DIAGRAMS article .**

THEORY OF OPERATION

After the initial installation of the A/C Heater Control, the controller is calibrated to each individual blend/mode door actuator. These calibrations are stored as in the number of pulses it takes to move the door from one stop to another. The A/C Heater Control drives the Door Actuators by the use of Door Driver circuit and a Common Door Driver circuit and monitors all door actuator pulses to detect door movement in both directions. Most of the door actuators share a common door driver circuit but each door actuator has its own unique driver circuit. Due to shared circuitry, similar Diagnostic Trouble Codes (DTCs) can set at the same time for multiple actuators depending upon the type of circuit malfunction, its location, and the direction the actuator is moving when the malfunction is present.

WHEN MONITORED

Continuously with the ignition on.

SET CONDITION

The A/C Heater Control detects an open in the Mode Door control circuit. If the A/C Heater Control detects a valid current draw, the DTC will change from Active to Stored and will stay in the controllers memory for 100 ignition cycles.

POSSIBLE CAUSES

Possible Causes
(C35) MODE DOOR DRIVER CIRCUIT OPEN
(C34) COMMON DOOR DRIVER CIRCUIT OPEN
MODE DOOR ACTUATOR
A/C HEATER CONTROL

Always perform the HVAC Pre-Diagnostic Troubleshooting procedure before proceeding. Refer to STANDARD PROCEDURE.

DIAGNOSTIC TEST

1. **CHECK IF DTC IS ACTIVE**
    1. Ignition on, engine not running.
    2. With the scan tool, read HVAC DTCs.

Is this DTC active?

Yes

- Go To 3

No

- Go To 2

2. **PERFORM HVAC ACTUATOR CALIBRATION TEST**
   1. With the scan tool, perform the HVAC Actuator Calibration Test.

      Did this DTC change from Stored to Active while performing the HVAC Actuator Calibration Test?

      Yes

      - Go To 3

      No

      - Go To 6

3. **CHECK THE MODE DOOR ACTUATOR**

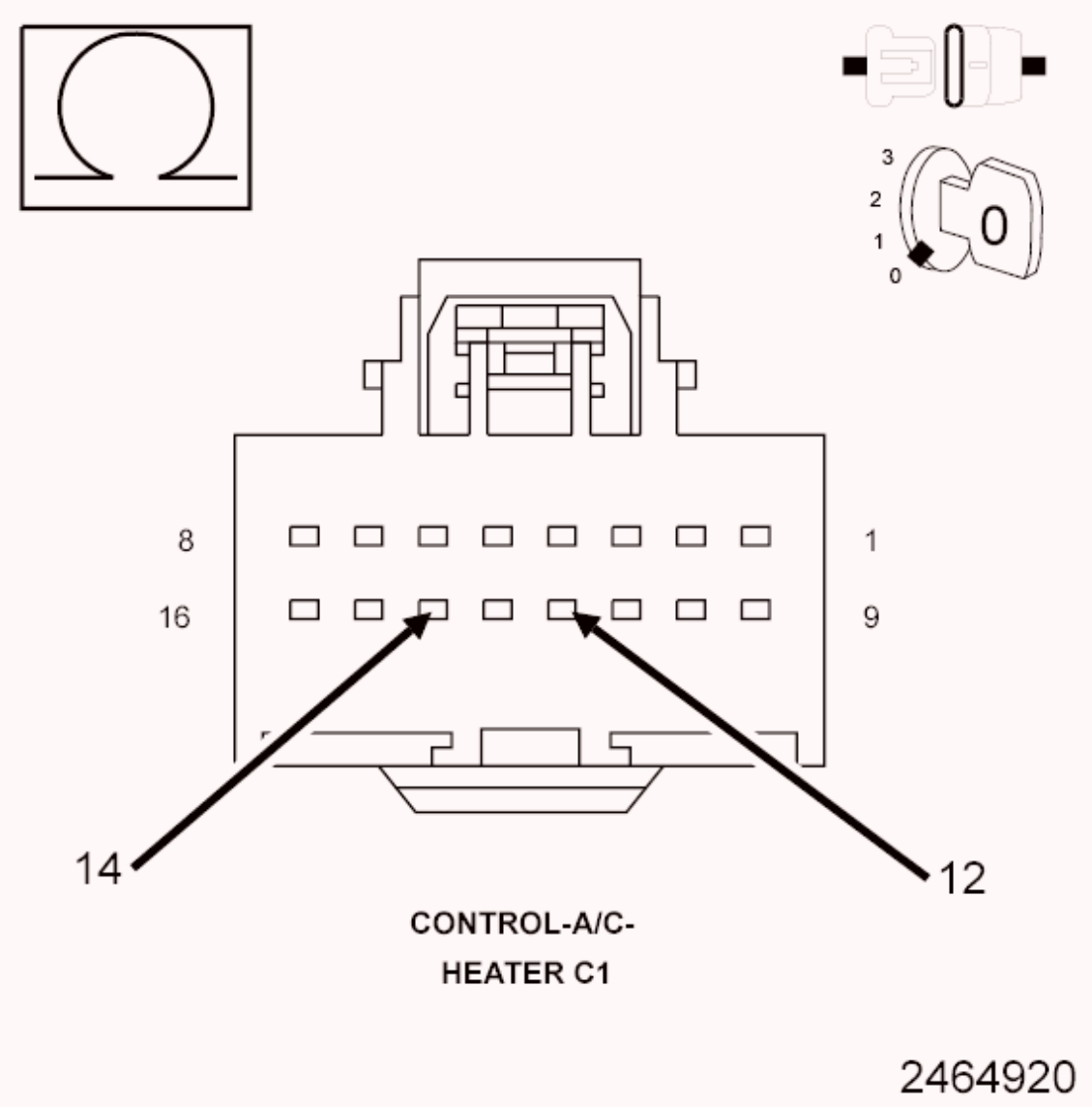

Fig. 43: Checking The Mode Door Actuator
Courtesy of CHRYSLER GROUP, LLC

1. Turn the ignition off to the lock position.
2. Disconnect the A/C Heater Control C1 harness connector.
3. Measure the resistance between the (C35) Mode Door Driver circuit and the (C34) Common Door Driver circuit.

   Is the resistance 38.0 Ohms (± 5.0 Ohms)?

   Yes

   - Replace and program the A/C Heater Control in accordance with the Service Information.

- Perform the HVAC VERIFICATION TEST. Refer to **STANDARD PROCEDURE**.

No

- Go To 4

4. **CHECK THE (C35) MODE DOOR DRIVER CIRCUIT FOR AN OPEN**

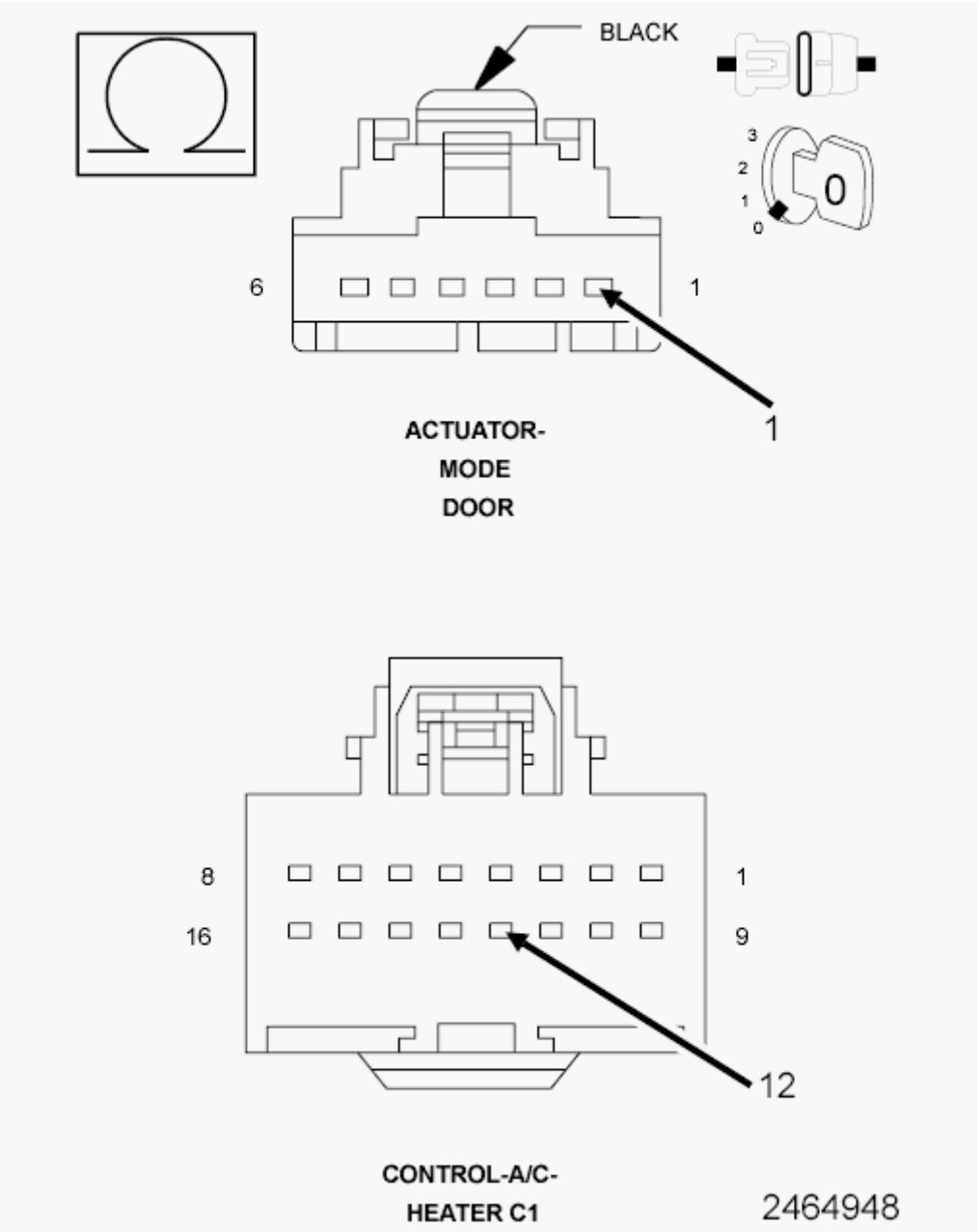

Fig. 44: Checking Mode Door Driver Circuit For An Open
Courtesy of CHRYSLER GROUP, LLC

1. Turn the ignition off to the lock position.
2. Disconnect the Mode Door Actuator harness connector.
3. Measure the resistance of the (C35) Mode Door Driver circuit between the A/C Heater Control C1 harness connector and the Mode Door Actuator harness connector.

   Is the resistance above 1.0 Ohm?

   Yes

   - Repair the (C35) Mode Door Driver circuit for an open or high resistance.
   - Perform the HVAC VERIFICATION TEST. Refer to **STANDARD PROCEDURE**.

   No

   - Go To 5

5. **CHECK THE (C34) COMMON DOOR DRIVER CIRCUIT FOR AN OPEN**

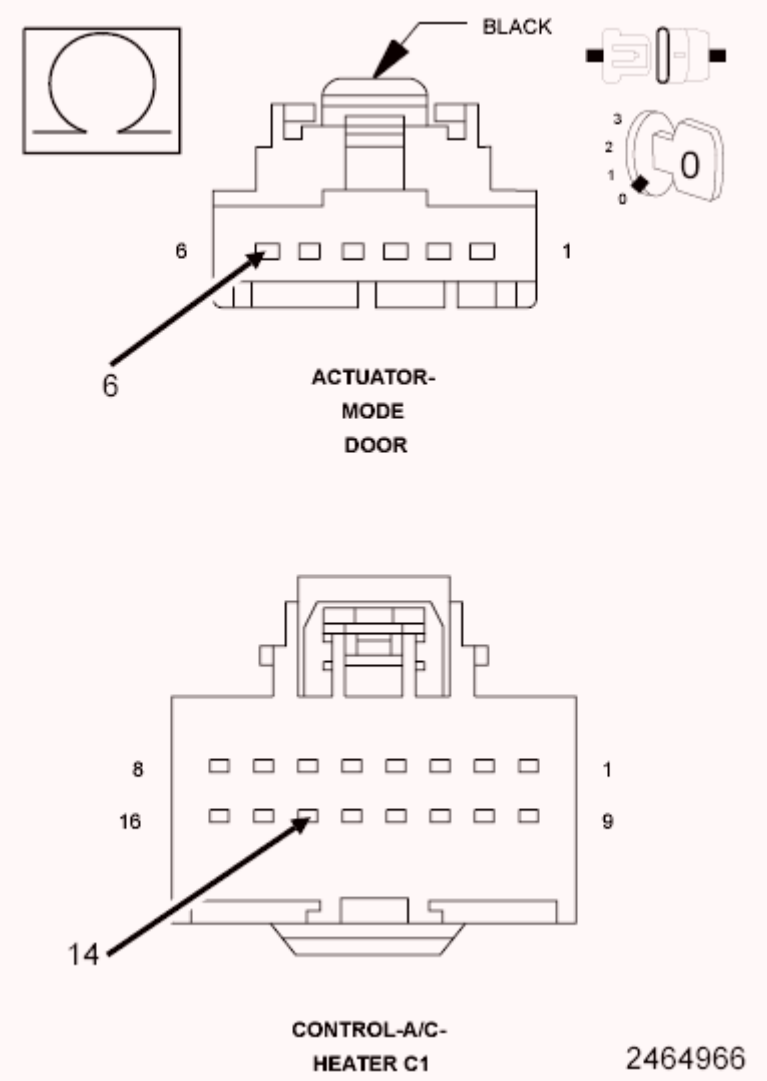

Fig. 45: Checking Common Door Driver Circuit For An Open
Courtesy of CHRYSLER GROUP, LLC

1. Measure the resistance of the (C34) Common Door Driver circuit between the A/C Heater Control C1 harness connector and the Mode Door Actuator harness connector.

   Is the resistance above 1.0 Ohm?

   Yes

   - Repair the (C34) Common Door Driver circuit for an open or high resistance.
   - Perform the HVAC VERIFICATION TEST. Refer to **STANDARD PROCEDURE**.

No

- Replace the Mode Door Actuator in accordance with the Service Information.
- Perform the HVAC VERIFICATION TEST. Refer to **STANDARD PROCEDURE**.

6. **CHECK THE WIRING AND CONNECTORS**
   1. The conditions necessary to set the DTC are not present at this time.
   2. With the scan tool, check the Environmental Data to help identify the conditions in which the DTC was set.
   3. Using the wiring diagrams as a guide, check all related splices and connectors for signs of water intrusion, corrosion, pushed out or bent terminals, and correct pin tension.
   4. Wiggle the wiring and connectors while checking for shorted and open circuits.

   Were there any problems found?

   Yes

   - Repair as necessary.
   - Perform the HVAC VERIFICATION TEST. Refer to **STANDARD PROCEDURE**.

   No

   - Test complete.

B11C2-92-FRONT MODE DOOR 1 CONTROL - PERFORMANCE OR INCORRECT OPERATION

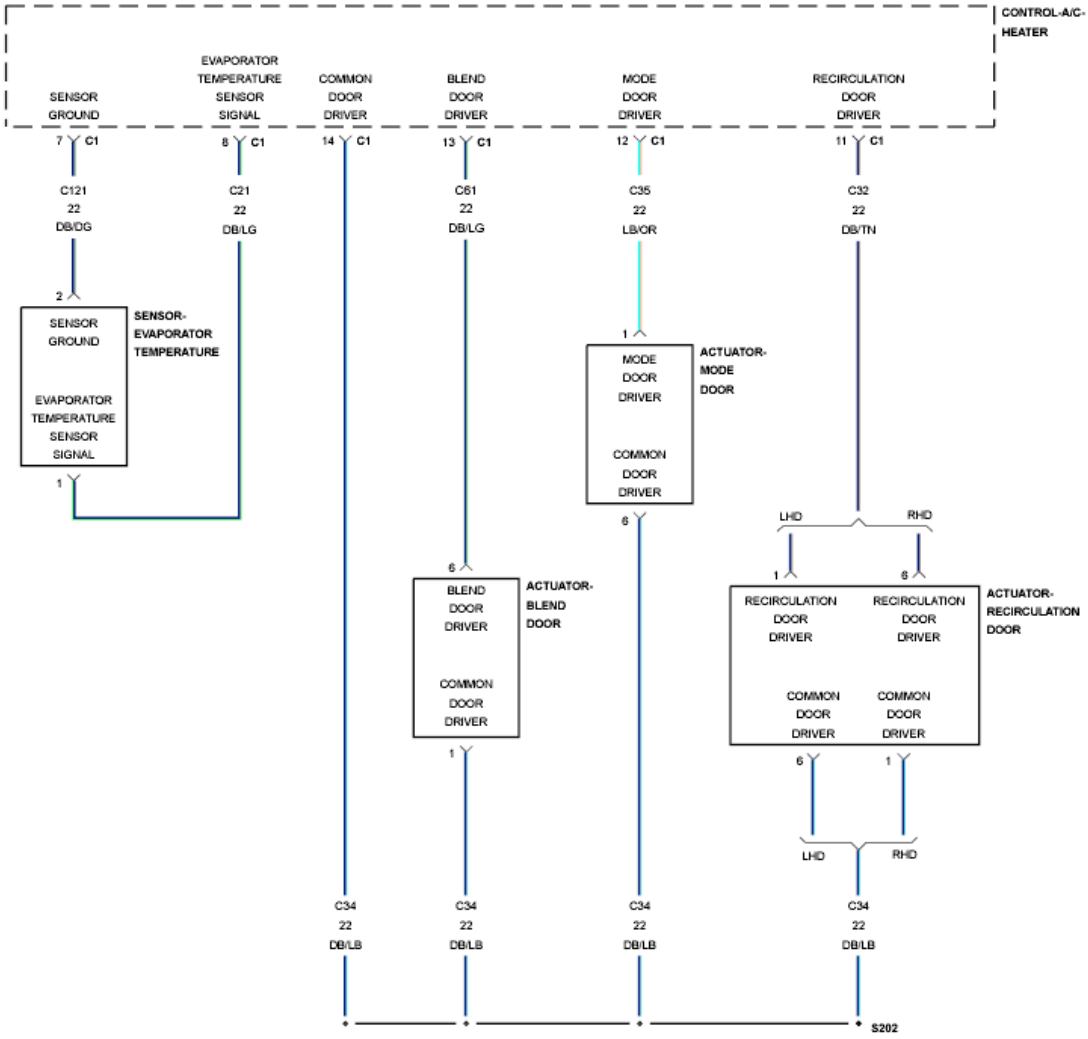

Fig. 46: Evaporator Temperature Sensor Circuit Schematic
Courtesy of CHRYSLER GROUP, LLC

For a complete wiring diagram, **refer to appropriate SYSTEM WIRING DIAGRAMS article** .

THEORY OF OPERATION

After the initial installation of the A/C Heater Control, the controller is calibrated to each individual blend/mode door actuator. These calibrations are stored as in the number of pulses it takes to move the door from one stop to another. The A/C Heater Control drives the Door Actuators by the use of Door Driver circuit and a Common Door Driver circuit and monitors all door actuator pulses to detect door movement in both directions. Most of the door actuators share a common door driver circuit but each door actuator has its own unique driver circuit. Due to shared circuitry, similar Diagnostic Trouble Codes (DTCs) can set at the same

time for multiple actuators depending upon the type of circuit malfunction, its location, and the direction the actuator is moving when the malfunction is present.

WHEN MONITORED

With the ignition on and an actuator movement is commanded by the A/C Heater Control or during an HVAC Actuator Calibration Test.

SET CONDITION

If an actuator move is commanded by A/C Heater Control and no feedback pulses are detected in either clockwise or counterclockwise movement for the period of 15 seconds. If the A/C Heater Control detects valid feedback pulses for 15 seconds, the DTC will change from Active to Stored and will stay in the controllers memory for 100 ignition cycles.

POSSIBLE CAUSES

Possible Causes
(C35) MODE DOOR DRIVER CIRCUIT SHORTED TO VOLTAGE
(C35) MODE DOOR DRIVER CIRCUIT SHORTED TO GROUND
(C34) COMMON DOOR DRIVER CIRCUIT SHORTED TO VOLTAGE
(C34) COMMON DOOR DRIVER CIRCUIT SHORTED TO GROUND
MODE DOOR BINDING
MODE DOOR ACTUATOR
A/C HEATER CONTROL

Always perform the HVAC Pre-Diagnostic Troubleshooting procedure before proceeding. Refer to STANDARD PROCEDURE.

DIAGNOSTIC TEST

1. **CHECK IF DTC IS ACTIVE**
    1. Ignition on, engine not running.
    2. Using the scan tool, read HVAC DTCs.

    Is this DTC active?

    Yes

- Go To 2

No

- Go To 9

2. **PERFORM HVAC ACTUATOR CALIBRATION TEST**
   1. Using the scan tool, perform the HVAC Actuator Calibration Test.

      Did any other HVAC DTCs set while performing the Actuator Calibration Test?

      Yes

      - Refer to **DIAGNOSIS AND TESTING** and perform the appropriate diagnostic procedure.

      No

      - Go To 3

3. **CHECK THE (C35) MODE DOOR DRIVER CIRCUIT FOR A SHORT TO VOLTAGE**

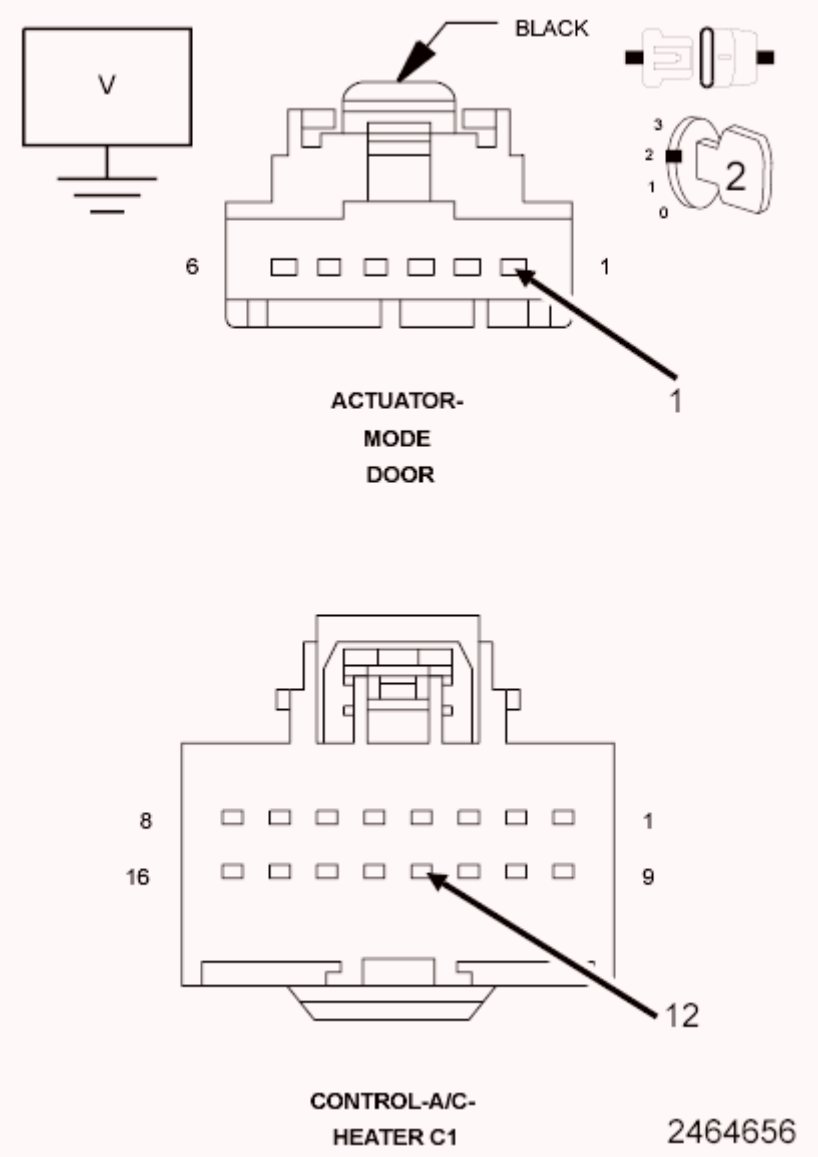

Fig. 47: Checking Mode Door Driver Circuit For A Short To Voltage
Courtesy of CHRYSLER GROUP, LLC

1. Turn the ignition off to the lock position.
2. Disconnect the A/C Heater Control C1 harness connector.
3. Disconnect the Mode Door Actuator harness connector.
4. Ignition on, engine not running.
5. Measure the voltage of the (C35) Mode Door Driver circuit.

   Is there any voltage present?

   Yes

   - Repair the (C35) Mode Door Driver circuit for a short to voltage.

- Perform the HVAC VERIFICATION TEST. Refer to **STANDARD PROCEDURE**.

No

- Go To 4

4. **CHECK THE (C34) COMMON DOOR DRIVER CIRCUIT FOR A SHORT TO VOLTAGE**

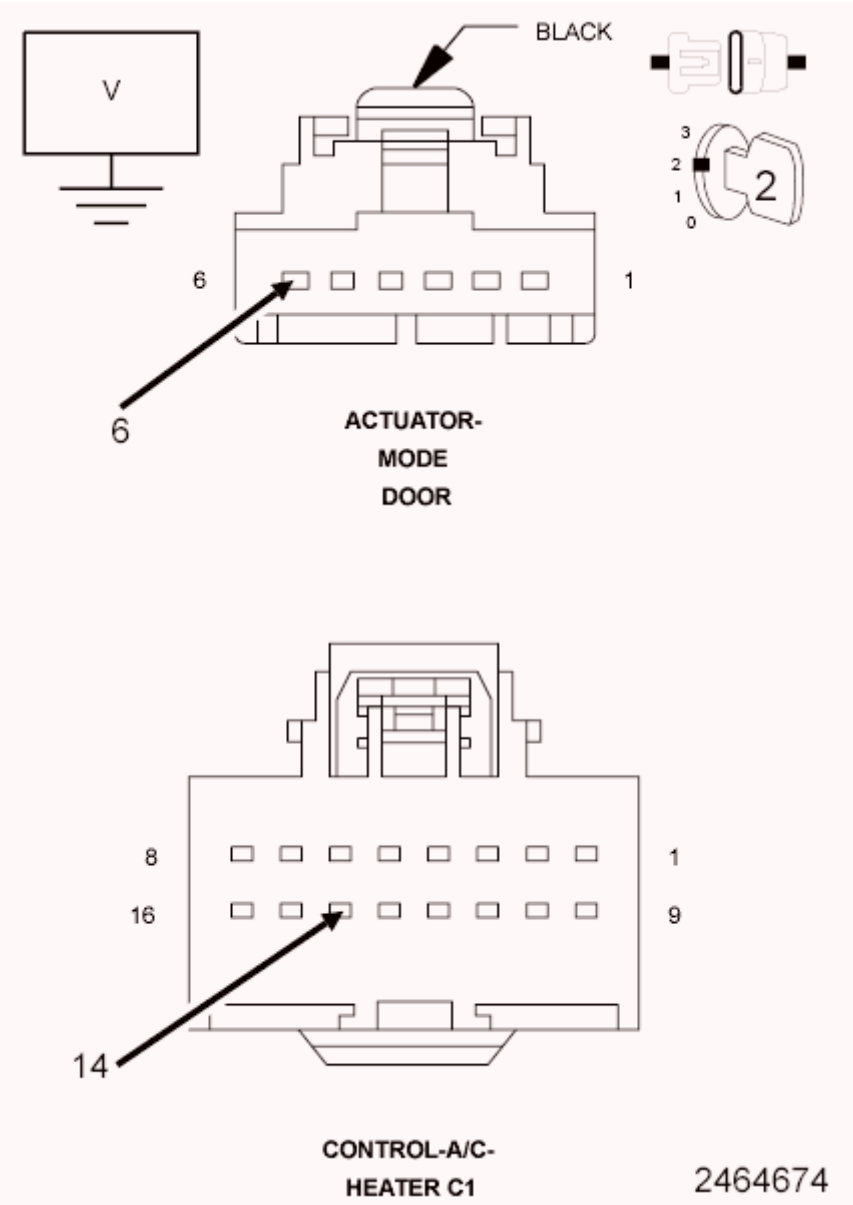

Fig. 48: Checking Common Door Driver Circuit For A Short To Voltage
Courtesy of CHRYSLER GROUP, LLC

1. Measure the voltage of the (C34) Common Door Driver circuit.

   Is there any voltage present?

   Yes

   - Repair the (C34) Common Door Driver circuit for a short to voltage.
   - Perform the HVAC VERIFICATION TEST. Refer to **STANDARD PROCEDURE**.

   No

   - Go To 5

5. **CHECK THE (C35) MODE DOOR DRIVER CIRCUIT FOR A SHORT TO GROUND**

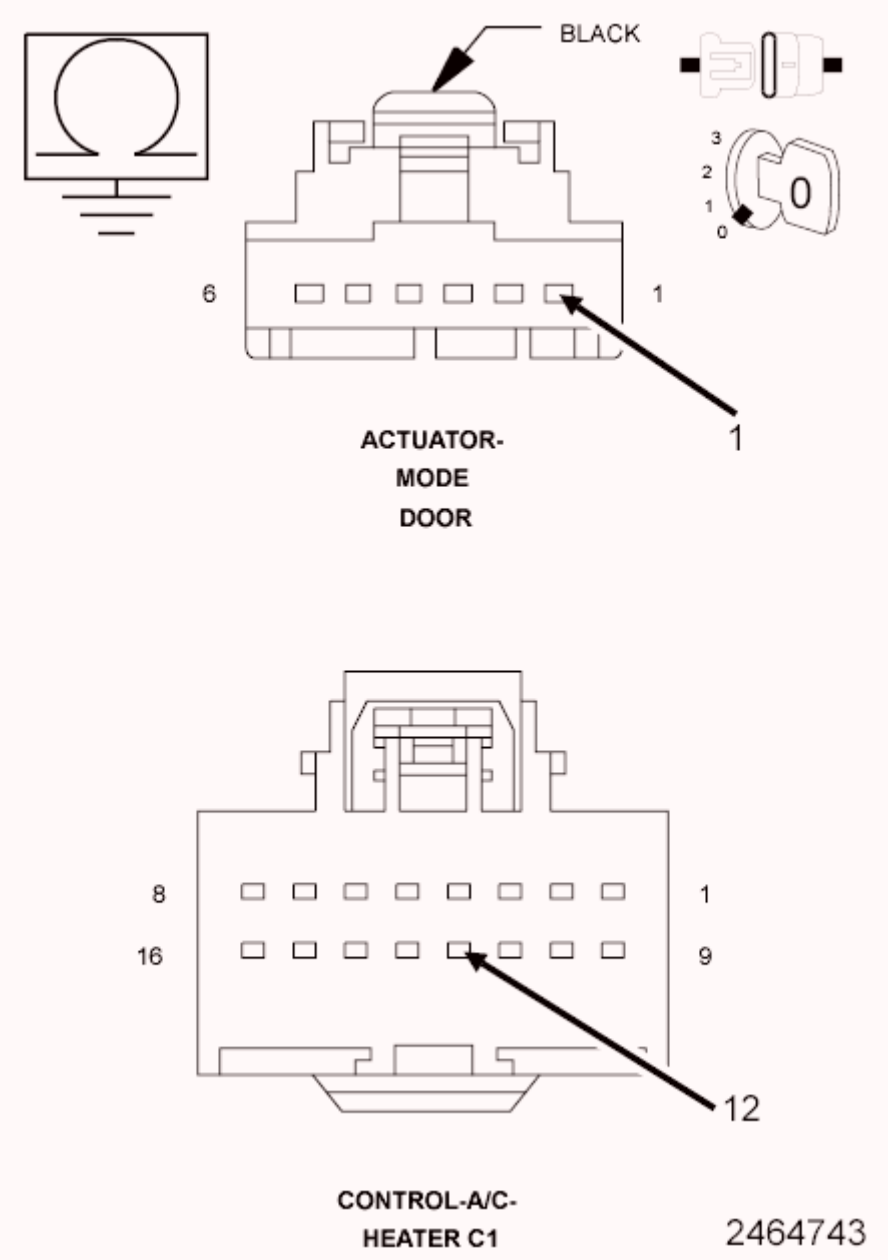

Fig. 49: Checking Mode Door Driver Circuit For A Short To Ground
Courtesy of CHRYSLER GROUP, LLC

1. Turn the ignition off to the lock position.
2. Measure the resistance between ground and the (C35) Mode Door Driver circuit.

   Is the resistance below 100k Ohms?

   Yes

   - Repair the (C35) Mode Door Driver circuit for a short to ground.

- Perform the HVAC VERIFICATION TEST. Refer to **STANDARD PROCEDURE**.

No

- Go To 6

6. **CHECK THE (C34) COMMON DOOR DRIVER CIRCUIT FOR A SHORT TO GROUND**

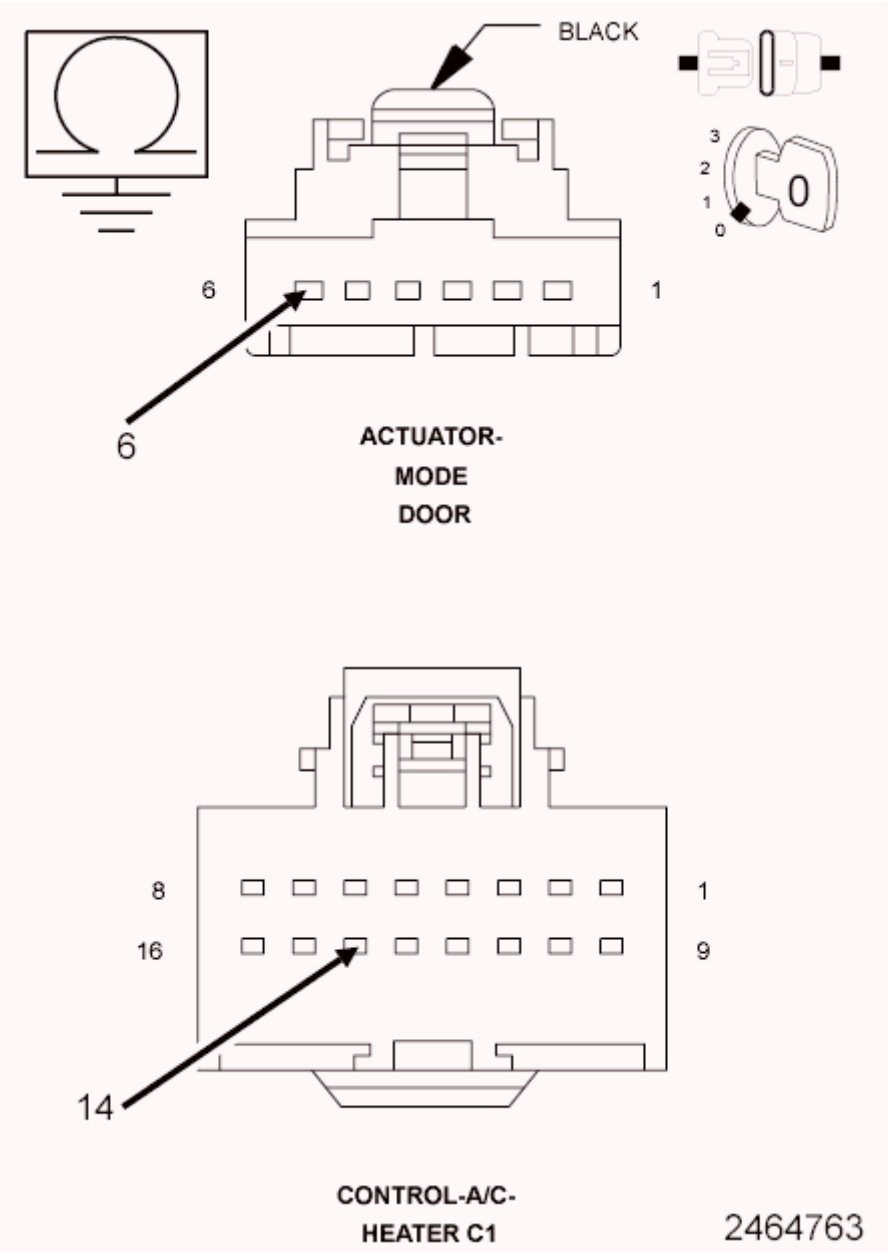

Fig. 50: Checking Common Door Driver Circuit For A Short To Ground
Courtesy of CHRYSLER GROUP, LLC

1. Measure the resistance between ground and the (C34) Common Door Driver circuit.

   Is the resistance below 100k Ohms?

   Yes

   - Repair the (C34) Common Door Driver circuit for a short to ground.
   - Perform the HVAC VERIFICATION TEST. Refer to **STANDARD PROCEDURE**.

   No

   - Go To 7

7. **CHECK THE MODE DOOR**
   1. Remove the Mode Door Actuator and check the Mode Door for binding and full travel.

      Were there any problems found?

      Yes

      - Repair or replace the Mode Door as necessary in accordance with the Service Information.
      - Perform the HVAC VERIFICATION TEST. Refer to **STANDARD PROCEDURE**.

      No

      - Go To 8

8. **CHECK THE MODE DOOR ACTUATOR**
   1. Replace the Mode Door Actuator in accordance with the Service Information.
   2. Using the scan tool, erase HVAC DTCs and perform the HVAC Actuator Calibration Test.

      Did this DTC reset?

Yes

- Replace and program the A/C Heater Control in accordance with the Service Information.
- Perform the HVAC VERIFICATION TEST. Refer to **STANDARD PROCEDURE**.

No

- Test complete.
- Perform the HVAC VERIFICATION TEST. Refer to **STANDARD PROCEDURE**.

9. **CHECK THE WIRING AND CONNECTORS**
   1. The conditions necessary to set the DTC are not present at this time.
   2. Using the scan tool, check the Environmental Data to help identify the conditions in which the DTC was set.
   3. Using the wiring diagrams as a guide, check all related splices and connectors for signs of water intrusion, corrosion, pushed out or bent terminals, and correct pin tension.
   4. Wiggle the wiring and connectors while checking for shorted and open circuits.

   Were there any problems found?

   Yes

   - Repair as necessary.
   - Perform the HVAC VERIFICATION TEST. Refer to **STANDARD PROCEDURE**.

   No

   - Test complete.

B11C3-00-FRONT MODE DOOR 1 TRAVEL RANGE TOO SMALL

For a complete wiring diagram, **refer to appropriate SYSTEM WIRING DIAGRAMS article** .

THEORY OF OPERATION

After the initial installation of the A/C Heater Control, the controller is calibrated to each individual blend/mode door actuator. These calibrations are stored as in the number of pulses it takes to move the door from one stop to another. The A/C Heater Control drives the Door Actuators by the use of Door Driver circuit and a Common Door Driver circuit and monitors all door actuator pulses to detect door movement in both directions. Most of the door actuators share a common door driver circuit but each door actuator has its own unique driver circuit. Due to shared circuitry, similar Diagnostic Trouble Codes (DTCs) can set at the same time for multiple actuators depending upon the type of circuit malfunction, its location, and the direction the actuator is moving when the malfunction is present.

WHEN MONITORED

When ever an Actuator Calibration Test is performed.

SET CONDITION

The A/C Heater Control uses a pulse feedback to the controller to detect the total door movement range. If the amount of pulses required to move the door completely in both directions is less than what the controller has stored in its memory, this DTC will set. If an Actuator Calibration Test is performed and the A/C Heater Control detects a valid range of the door movement span in both directions, the DTC will change from Active to Stored and will stay in the controllers memory for 100 ignition cycles.

POSSIBLE CAUSES

Possible Causes
RELATED DTCS PRESENT
MODE DOOR BINDING
MODE DOOR ACTUATOR
A/C HEATER CONTROL

Always perform the HVAC Pre-Diagnostic Troubleshooting procedure before proceeding. Refer to STANDARD PROCEDURE.

DIAGNOSTIC TEST

1. **CHECK FOR RELATED DTCS**
    1. Ignition on, engine not running.

2. Using the scan tool, read HVAC DTCs.

   Are there any Door Control Circuit Short to Voltage, Short to Ground or Open DTCs present?

   Yes

   - Refer to **DIAGNOSIS AND TESTING** and perform the appropriate diagnostic procedure.

   No

   - Go To 2

2. **CHECK IF DTC IS ACTIVE**
   1. Ignition on, engine not running.
   2. Using the scan tool, read HVAC DTCs.

      Is this DTC active?

      Yes

      - Go To 4

      No

      - Go To 3

3. **PERFORM HVAC ACTUATOR CALIBRATION TEST**
   1. Using the scan tool, perform the HVAC Actuator Calibration Test.

      Did this DTC change from Stored to Active while performing the HVAC Actuator Calibration Test?

      Yes

      - Go To 4

      No

      - Go To 6

4. **CHECK THE MODE DOOR**

1. Remove the Mode Door Actuator and check the Mode Door for binding and full travel.

   Were there any problems found?

   Yes

   - Repair or replace the Mode Door as necessary in accordance with the Service Information.
   - Perform the HVAC VERIFICATION TEST. Refer to **STANDARD PROCEDURE**.

   No

   - Go To 5

5. **CHECK THE MODE DOOR ACTUATOR**
   1. Replace the Mode Door Actuator in accordance with the Service Information.
   2. Using the scan tool, erase HVAC DTCs.
   3. Using the scan tool, perform the HVAC Actuator Calibration Test.

      Did this DTC reset during HVAC Actuator Calibration Test?

      Yes

      - Replace and program the A/C Heater Control in accordance with the Service Information.
      - Perform the HVAC VERIFICATION TEST. Refer to **STANDARD PROCEDURE**.

      No

      - Test complete.

6. **CHECK THE WIRING AND CONNECTORS**
   1. The conditions necessary to set the DTC are not present at this time.
   2. Using the scan tool, check the Environmental Data to help identify the conditions in which the DTC was set.
   3. Using the wiring diagrams as a guide, check all related splices and

connectors for signs of water intrusion, corrosion, pushed out or bent terminals, and correct pin tension.

4. Wiggle the wiring and connectors while checking for shorted and open circuits.

   Were there any problems found?

   Yes

   - Repair as necessary.
   - Perform the HVAC VERIFICATION TEST. Refer to **STANDARD PROCEDURE**.

   No

   - Test complete.

B11C4-00-FRONT MODE DOOR 1 TRAVEL RANGE TOO LARGE

For a complete wiring diagram, **refer to appropriate SYSTEM WIRING DIAGRAMS article** .

THEORY OF OPERATION

After the initial installation of the A/C Heater Control, the controller is calibrated to each individual blend/mode door actuator. These calibrations are stored as in the number of pulses it takes to move the door from one stop to another. The A/C Heater Control drives the Door Actuators by the use of Door Driver circuit and a Common Door Driver circuit and monitors all door actuator pulses to detect door movement in both directions. Most of the door actuators share a common door driver circuit but each door actuator has its own unique driver circuit. Due to shared circuitry, similar Diagnostic trouble Codes (DTCs) can set at the same time for multiple actuators depending upon the type of circuit malfunction, its location, and the direction the actuator is moving when the malfunction is present.

WHEN MONITORED

When ever an Actuator Calibration Test is performed.

SET CONDITION

The A/C Heater Control uses a pulse feedback to the controller to detect the total door movement range. If the amount of pulses required to move the door completely in both directions is greater than what the controller has stored in its memory, this DTC will set. If an Actuator Calibration Test is performed or during normal operation and the A/C Heater Control detects a valid range of the door movement span in both directions, the DTC will change from Active to Stored and will stay in the controllers memory for 100 ignition cycles.

POSSIBLE CAUSES

Possible Causes
RELATED DTCS PRESENT
MODE DOOR STOPS
MODE DOOR
MODE DOOR ACTUATOR
A/C HEATER CONTROL

Always perform the HVAC Pre-Diagnostic Troubleshooting procedure before proceeding. Refer to STANDARD PROCEDURE.

DIAGNOSTIC TEST

1. **CHECK FOR RELATED DTCS**
    1. Ignition on, engine not running.
    2. With the scan tool, read HVAC DTCs.

    Are there any Door Control Circuit Short to Voltage, Short to Ground or Open DTCs present?

    Yes

    - Refer to **DIAGNOSIS AND TESTING** and perform the appropriate diagnostic procedure.

    No

    - Go To 2
2. **CHECK IF DTC IS ACTIVE**
    1. Ignition on, engine not running.

2. With the scan tool, read HVAC DTCs.

   Is this DTC active?

   Yes

   - Go To 4

   No

   - Go To 3

3. **PERFORM HVAC ACTUATOR CALIBRATION TEST**
   1. With the scan tool, perform the HVAC Actuator Calibration Test.

      Did this DTC change from Stored to Active while performing the HVAC System Test?

      Yes

      - Go To 4

      No

      - Go To 6

4. **CHECK THE MODE DOOR**
   1. Remove the Mode Door Actuator and check the Mode Door stops, linkage (stripped or cracked) and door.

      Were there any problems found?

      Yes

      - Repair or replace the Mode Door as necessary in accordance with the Service Information.
      - Perform the HVAC VERIFICATION TEST. Refer to **STANDARD PROCEDURE**.

      No

      - Go To 5

5. **CHECK THE MODE DOOR ACTUATOR**
   1. Replace the Mode Door Actuator in accordance with the Service Information.
   2. With the scan tool, erase HVAC DTCs and perform the HVAC Actuator Calibration Test.

      Did this DTC reset?

      Yes

      - Replace and program the A/C Heater Control in accordance with the Service Information.
      - Perform the HVAC VERIFICATION TEST. Refer to **STANDARD PROCEDURE**.

      No

      - Test complete.
      - Perform the HVAC VERIFICATION TEST. Refer to **STANDARD PROCEDURE**.
6. **CHECK THE WIRING AND CONNECTORS**
   1. The conditions necessary to set the DTC are not present at this time.
   2. With the scan tool, check the Environmental Data to help identify the conditions in which the DTC was set.
   3. Using the wiring diagrams as a guide, check all related splices and connectors for signs of water intrusion, corrosion, pushed out or bent terminals, and correct pin tension.
   4. Wiggle the wiring and connectors while checking for shorted and open circuits.

      Were there any problems found?

      Yes

      - Repair as necessary.
      - Perform the HVAC VERIFICATION TEST. Refer to **STANDARD PROCEDURE**.

No

- Test complete.

B11CB-11-MAIN/LEFT TEMPERATURE DOOR CONTROL - CIRCUIT SHORT TO GROUND

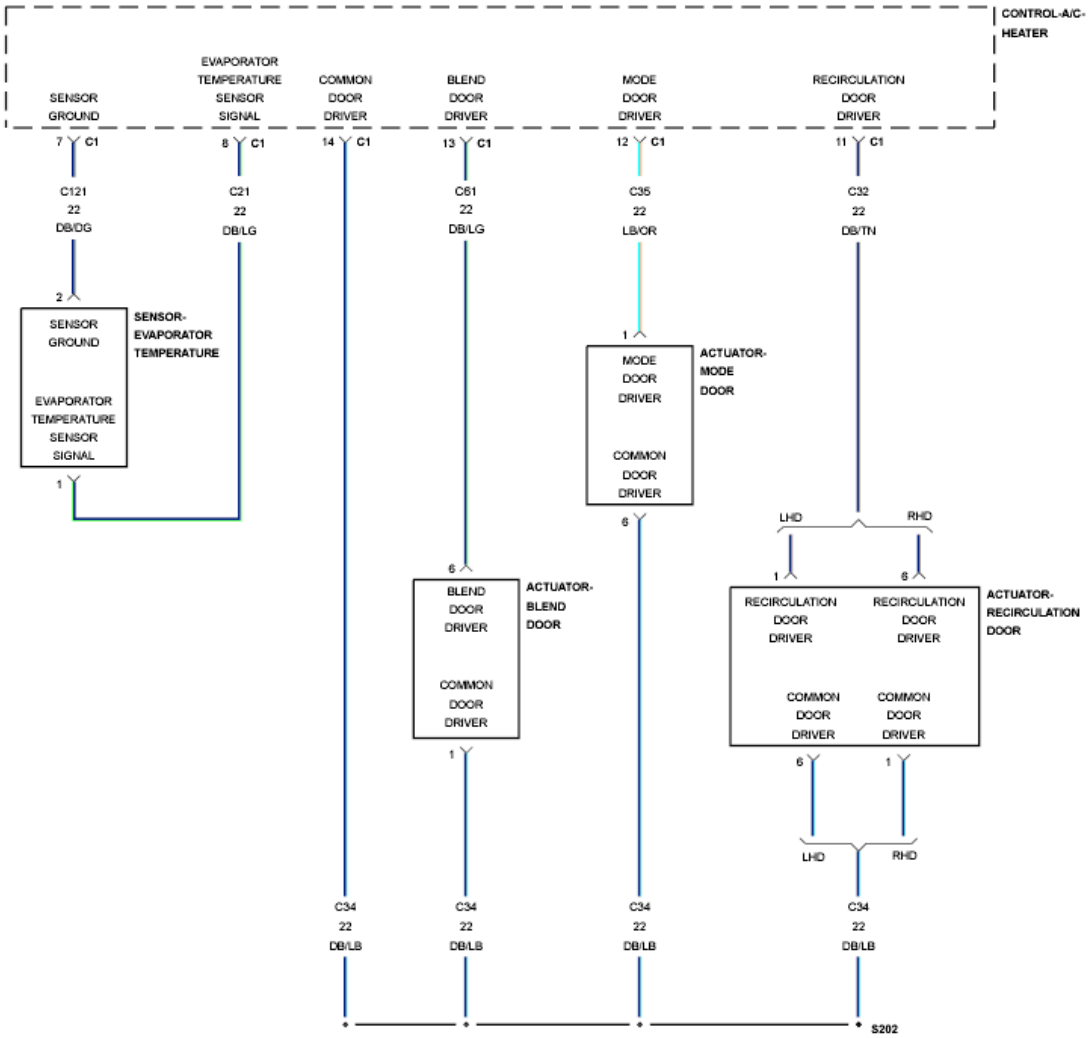

Fig. 51: Evaporator Temperature Sensor Circuit Schematic
Courtesy of CHRYSLER GROUP, LLC

For a complete wiring diagram, **refer to appropriate SYSTEM WIRING DIAGRAMS article** .

THEORY OF OPERATION

After the initial installation of the A/C Heater Control, the controller is calibrated to each individual blend/mode door actuator. These calibrations are stored as in the number of pulses it takes to move the door from one stop to another. The A/C

Heater Control drives the Door Actuators by the use of Door Driver circuit and a Common Door Driver circuit and monitors all door actuator pulses to detect door movement in both directions. Most of the door actuators share a common door driver circuit but each door actuator has its own unique driver circuit. Due to shared circuitry, similar Diagnostic Trouble Codes (DTCs) can set at the same time for multiple actuators depending upon the type of circuit malfunction, its location, and the direction the actuator is moving when the malfunction is present.

WHEN MONITORED

Continuously with the ignition on.

SET CONDITION

The A/C Heater Control detects a short to ground on the Blend Door control circuit. If the A/C Heater Control detects valid current draw, the DTC will change from Active to Stored and will stay in the controllers memory for 100 ignition cycles.

POSSIBLE CAUSES

Possible Causes
(C61) BLEND DOOR DRIVER CIRCUIT SHORTED TO GROUND
(C34) COMMON DOOR DRIVER CIRCUIT SHORTED TO GROUND
BLEND DOOR ACTUATOR
A/C HEATER CONTROL

Always perform the HVAC Pre-Diagnostic Troubleshooting procedure before proceeding. Refer to STANDARD PROCEDURE.

DIAGNOSTIC TEST

1. **CHECK IF DTC IS ACTIVE**
    1. Ignition on, engine not running.
    2. Using the scan tool, read HVAC DTCs.

    Is this DTC active?

    Yes

- Go To 3

No

- Go To 2

2. **PERFORM HVAC ACTUATOR CALIBRATION TEST**
   1. Using the scan tool, perform the HVAC Actuator Calibration Test.

      Did this DTC change from Stored to Active while performing the HVAC Actuator Calibration Test?

      Yes

      - Go To 3

      No

      - Go To 6

3. **CHECK THE (C61) BLEND DOOR DRIVER CIRCUIT FOR A SHORT TO GROUND**

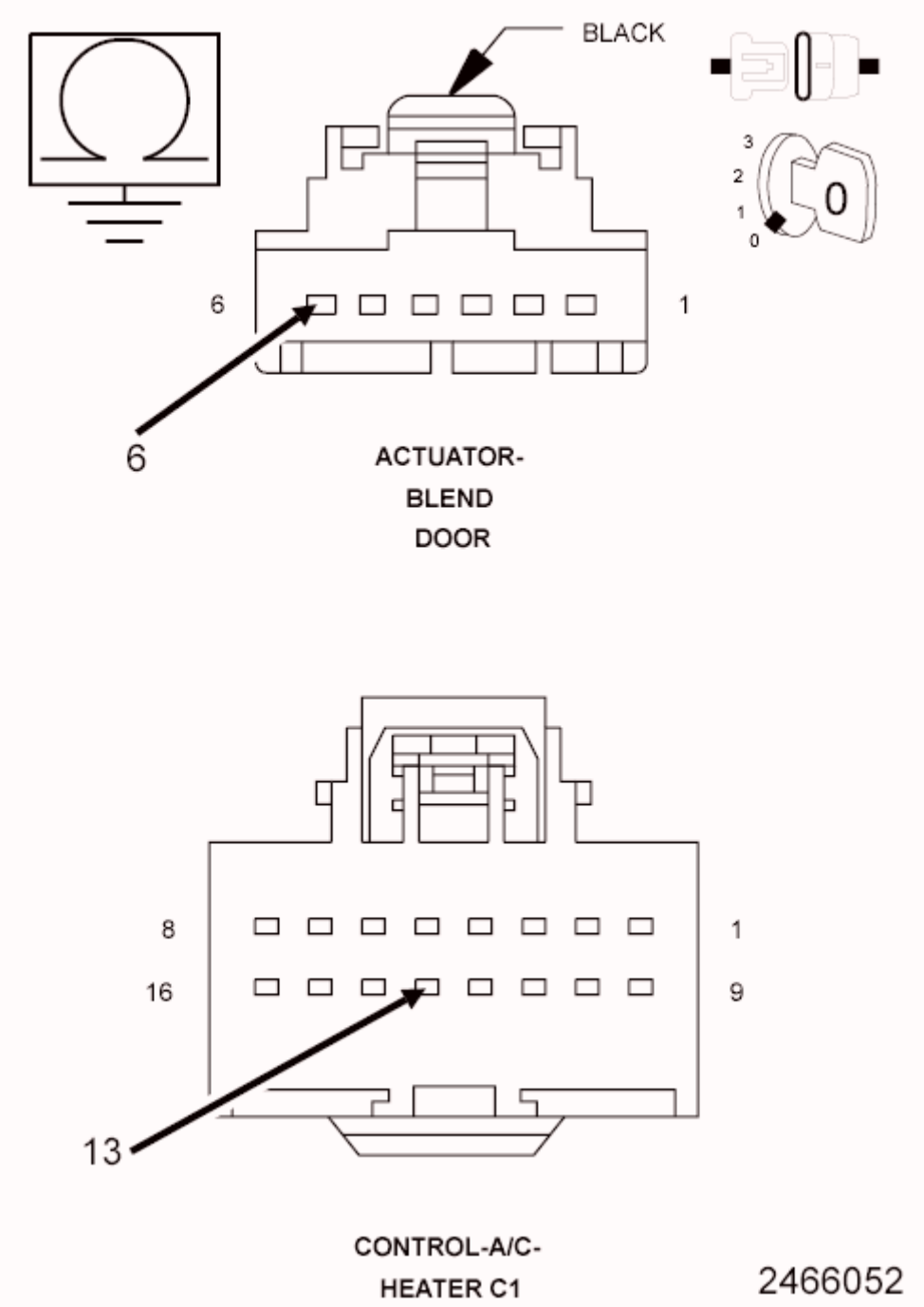

Fig. 52: Checking Blend Door Driver Circuit For A Short To Ground
Courtesy of CHRYSLER GROUP, LLC

1. Turn the ignition off to the lock position.
2. Disconnect the A/C Heater Control C1 harness connector.
3. Disconnect the Blend Door Actuator harness connector.
4. Measure the resistance between ground and the (C61) Blend Door Driver circuit.

Is the resistance below 100k Ohms?

Yes

- Repair the (C61) Blend Door Driver circuit for a short to ground.
- Perform the HVAC VERIFICATION TEST. Refer to **STANDARD PROCEDURE**.

No

- Go To 4

4. **CHECK THE (C34) COMMON DOOR DRIVER CIRCUIT FOR A SHORT TO GROUND**

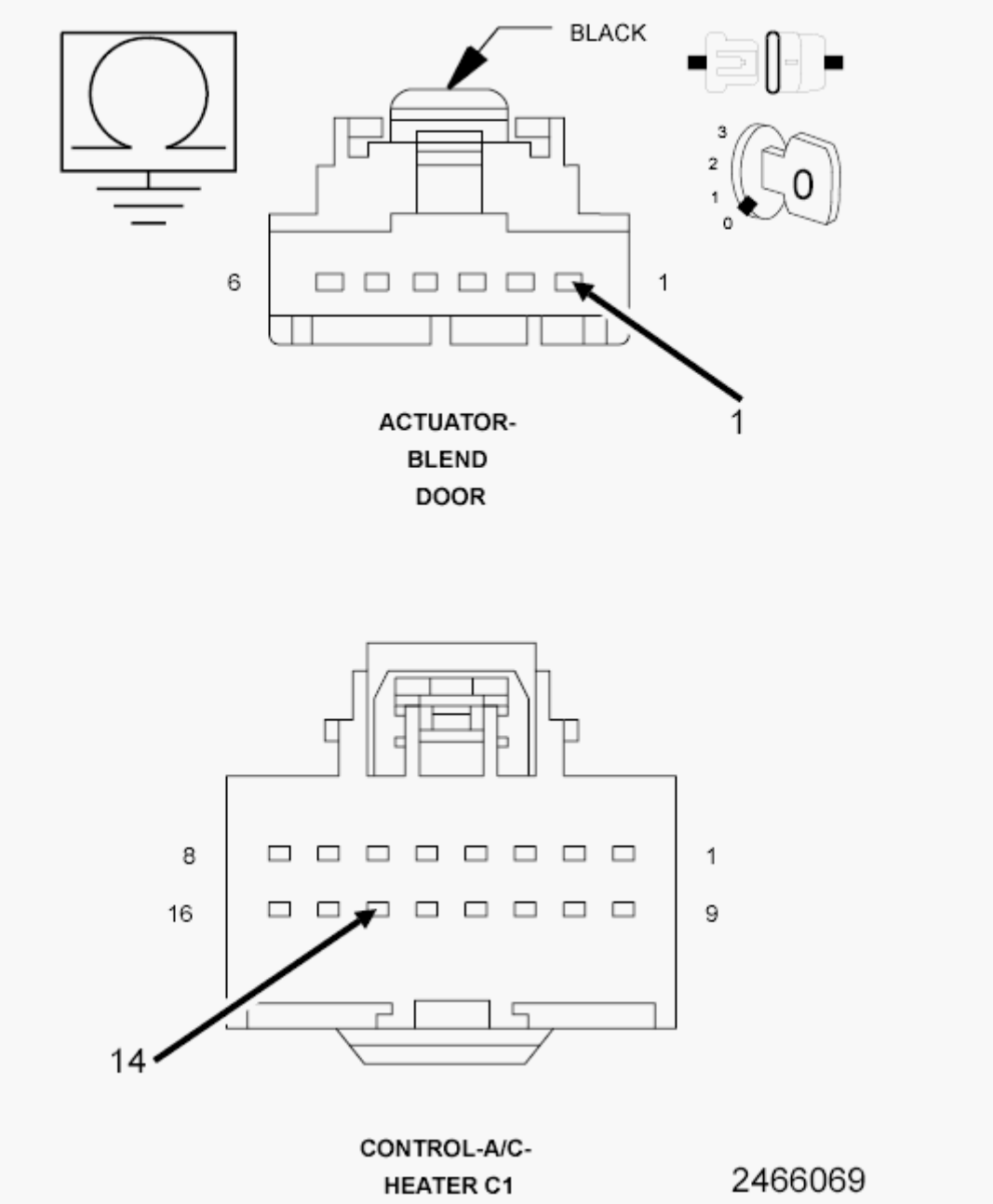

Fig. 53: Checking Common Door Driver Circuit For A Short To Ground
Courtesy of CHRYSLER GROUP, LLC

1. Measure the resistance between ground and the (C34) Common Door Driver circuit.

   Is the resistance below 100k Ohms?

   Yes

   - Repair the (C34) Common Door Driver circuit for a short to

ground.

- Perform the HVAC VERIFICATION TEST. Refer to **STANDARD PROCEDURE**.

No

- Go To 5

5. **CHECK THE BLEND DOOR ACTUATOR**
   1. Replace the Blend Door Actuator in accordance with the Service Information.
   2. Using the scan tool, erase HVAC DTCs and perform the HVAC Actuator Calibration Test.

      Did this DTC reset?

      Yes

      - Replace and program the A/C Heater Control in accordance with the Service Information.
      - Perform the HVAC VERIFICATION TEST. Refer to **STANDARD PROCEDURE**.

      No

      - Test complete.
      - Perform the HVAC VERIFICATION TEST. Refer to **STANDARD PROCEDURE**.
6. **CHECK THE WIRING AND CONNECTORS**
   1. The conditions necessary to set the DTC are not present at this time.
   2. Using the scan tool, check the Environmental Data to help identify the conditions in which the DTC was set.
   3. Using the wiring diagrams as a guide, check all related splices and connectors for signs of water intrusion, corrosion, pushed out or bent terminals, and correct pin tension.
   4. Wiggle the wiring and connectors while checking for shorted and open circuits.

      Were there any problems found?

Yes

- Repair as necessary.
- Perform the HVAC VERIFICATION TEST. Refer to **STANDARD PROCEDURE**.

No

- Test complete.

B11CB-12-MAIN/LEFT TEMPERATURE DOOR CONTROL - CIRCUIT SHORT TO BATTERY

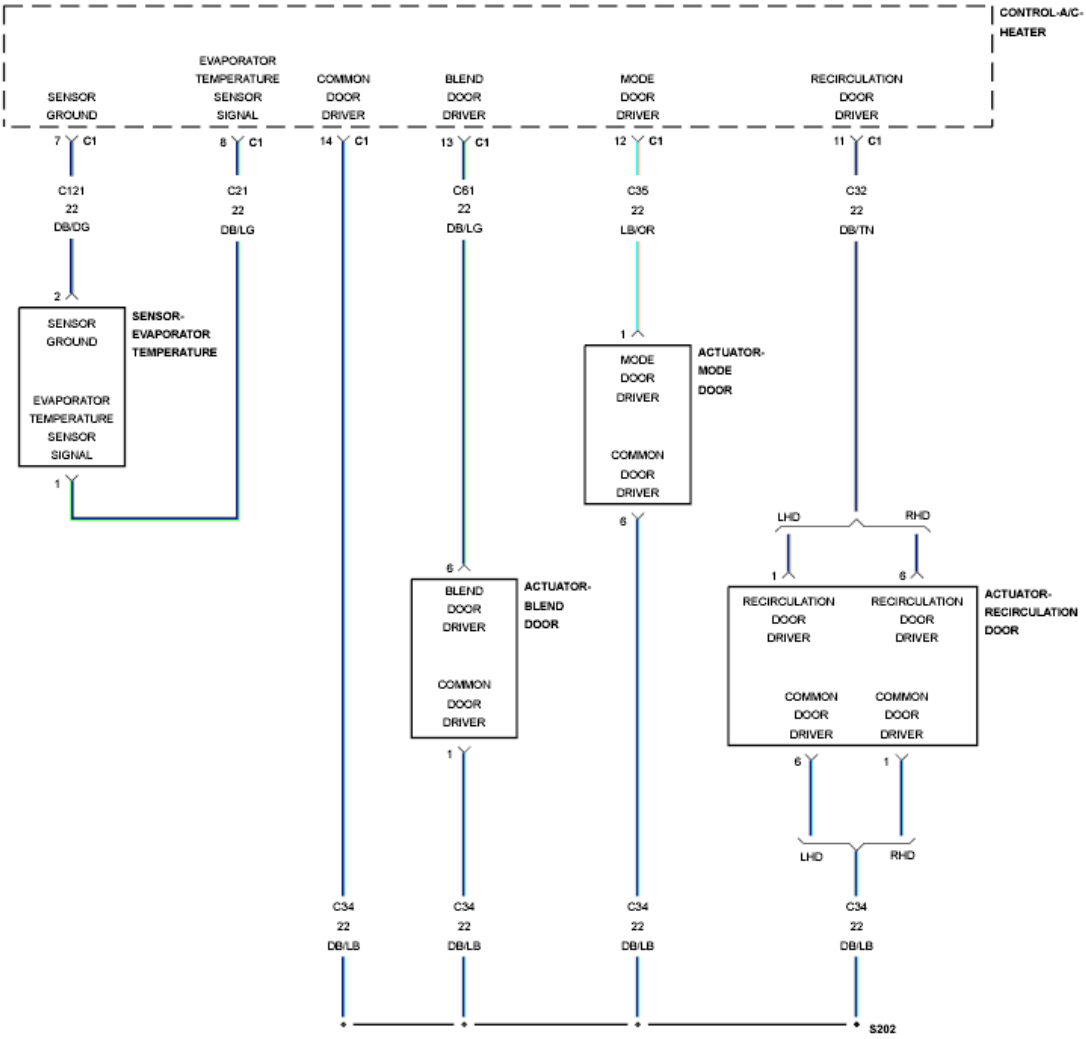

Fig. 54: Evaporator Temperature Sensor Circuit Schematic
Courtesy of CHRYSLER GROUP, LLC

For a complete wiring diagram, **refer to appropriate SYSTEM WIRING DIAGRAMS article** .

THEORY OF OPERATION

After the initial installation of the A/C Heater Control, the controller is calibrated to each individual blend/mode door actuator. These calibrations are stored as in the number of pulses it takes to move the door from one stop to another. The A/C Heater Control drives the Door Actuators by the use of Door Driver circuit and a Common Door Driver circuit and monitors all door actuator pulses to detect door movement in both directions. Most of the door actuators share a common door driver circuit but each door actuator has its own unique driver circuit. Due to shared circuitry, similar Diagnostic Trouble Codes (DTCs) can set at the same time for multiple actuators depending upon the type of circuit malfunction, its location, and the direction the actuator is moving when the malfunction is present.

WHEN MONITORED

Continuously with the ignition on.

SET CONDITION

The A/C Heater Control detects a short voltage on the Blend Door control circuit. If the A/C Heater Control detects a valid voltage, the DTC will change from Active to Stored and will stay in the controllers memory for 100 ignition cycles.

POSSIBLE CAUSES

Possible Causes
(C61) BLEND DOOR DRIVER CIRCUIT SHORTED TO VOLTAGE
(C34) COMMON DOOR DRIVER CIRCUIT SHORTED TO VOLTAGE
BLEND DOOR ACTUATOR
A/C HEATER CONTROL

Always perform the HVAC Pre-Diagnostic Troubleshooting procedure before proceeding. Refer to STANDARD PROCEDURE.

DIAGNOSTIC TEST

1. **CHECK IF DTC IS ACTIVE**
    1. Ignition on, engine not running.
    2. Using the scan tool, read HVAC DTCs.

Is this DTC active?

Yes

- Go To 3

No

- Go To 2

2. **PERFORM HVAC ACTUATOR CALIBRATION TEST**
   1. Using the scan tool, perform the HVAC Actuator Calibration Test.

      Did this DTC change from Stored to Active while performing the HVAC Actuator Calibration Test?

      Yes

      - Go To 3

      No

      - Go To 6

3. **CHECK THE (C61) BLEND DOOR DRIVER CIRCUIT FOR A SHORT TO VOLTAGE**

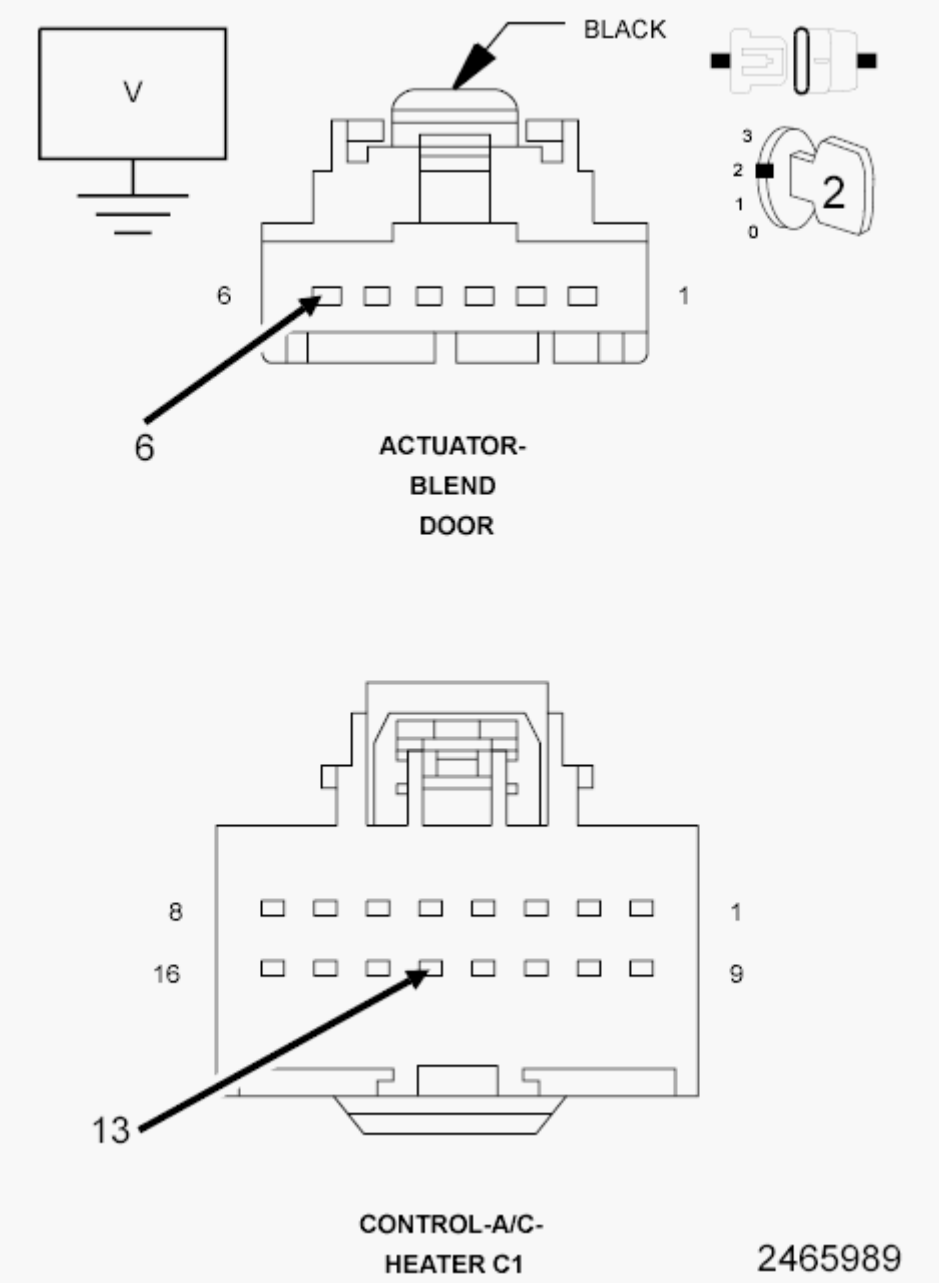

Fig. 55: Checking Blend Door Driver Circuit For A Short To Voltage
Courtesy of CHRYSLER GROUP, LLC

1. Turn the ignition off to the lock position.
2. Disconnect the A/C Heater Control C1 harness connector.
3. Disconnect the Blend Door Actuator harness connector.
4. Ignition on, engine not running.
5. Measure the voltage of the (C61) Blend Door Driver circuit.

   Is there any voltage present?

Yes

- Repair the (C61) Blend Door Driver circuit for a short to voltage.
- Perform the HVAC VERIFICATION TEST. Refer to **STANDARD PROCEDURE**.

No

- Go To 4

4. **CHECK THE (C34) COMMON DOOR DRIVER CIRCUIT FOR A SHORT TO VOLTAGE**

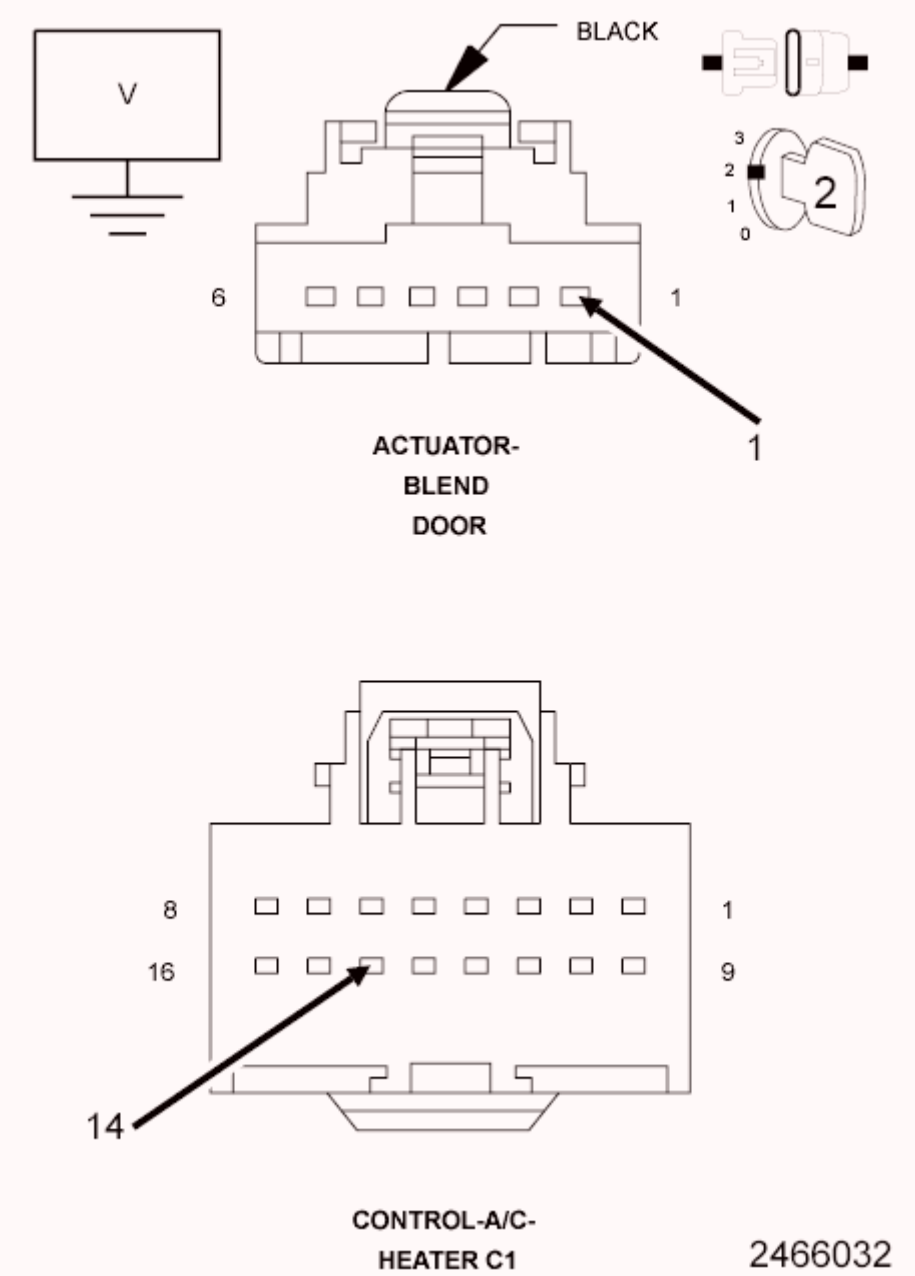

Fig. 56: Checking Common Door Driver Circuit For A Short To Voltage
Courtesy of CHRYSLER GROUP, LLC

1. Measure the voltage of the (C34) Common Door Driver circuit.

   Is there any voltage present?

   Yes

   - Repair the (C34) Common Door Driver circuit for a short to voltage.
   - Perform the HVAC VERIFICATION TEST. Refer to **STANDARD PROCEDURE**.

   No

   - Go To 5

5. **CHECK THE BLEND DOOR ACTUATOR**
   1. Replace the Blend Door Actuator in accordance with the Service Information.
   2. With the scan tool, erase HVAC DTCs and perform the HVAC Actuator Calibration Test.

      Did this DTC reset?

      Yes

      - Replace and program the A/C Heater Control in accordance with the Service Information.
      - Perform the HVAC VERIFICATION TEST. Refer to **STANDARD PROCEDURE**.

      No

      - Test complete.
      - Perform the HVAC VERIFICATION TEST. Refer to **STANDARD PROCEDURE**.

6. **CHECK THE WIRING AND CONNECTORS**

1. The conditions necessary to set the DTC are not present at this time.
2. With the scan tool, check the Environmental Data to help identify the conditions in which the DTC was set.
3. Using the wiring diagrams as a guide, check all related splices and connectors for signs of water intrusion, corrosion, pushed out or bent terminals, and correct pin tension.
4. Wiggle the wiring and connectors while checking for shorted and open circuits.

Were there any problems found?

Yes

- Repair as necessary.
- Perform the HVAC VERIFICATION TEST. Refer to **STANDARD PROCEDURE**.

No

- Test complete.

B11CB-13-MAIN/LEFT TEMPERATURE DOOR CONTROL - CIRCUIT OPEN

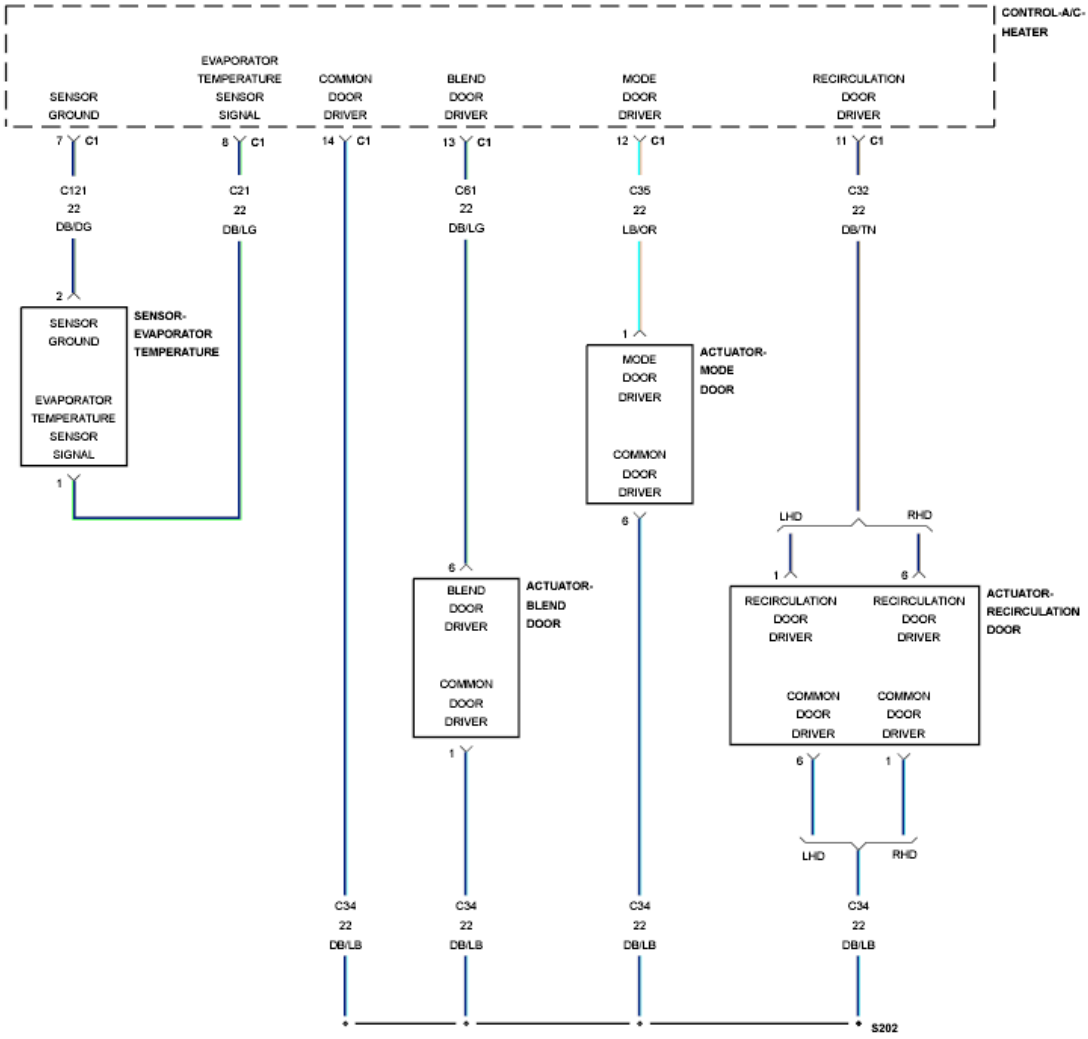

Fig. 57: Evaporator Temperature Sensor Circuit Schematic
Courtesy of CHRYSLER GROUP, LLC

For a complete wiring diagram, **refer to appropriate SYSTEM WIRING DIAGRAMS article** .

THEORY OF OPERATION

After the initial installation of the A/C Heater Control, the controller is calibrated to each individual blend/mode door actuator. These calibrations are stored as in the number of pulses it takes to move the door from one stop to another. The A/C Heater Control drives the Door Actuators by the use of Door Driver circuit and a Common Door Driver circuit and monitors all door actuator pulses to detect door movement in both directions. Most of the door actuators share a common door driver circuit but each door actuator has its own unique driver circuit. Due to shared circuitry, similar Diagnostic Trouble Codes (DTCs) can set at the same

time for multiple actuators depending upon the type of circuit malfunction, its location, and the direction the actuator is moving when the malfunction is present.

WHEN MONITORED

Continuously with the ignition on.

SET CONDITION

The A/C Heater Control detects an open in the Blend Door control circuit. If the A/C Heater Control detects a valid current draw, the DTC will change from Active to Stored and will stay in the controllers memory for 100 ignition cycles.

POSSIBLE CAUSES

Possible Causes
(C61) BLEND DOOR DRIVER CIRCUIT OPEN
(C34) COMMON DOOR DRIVER CIRCUIT OPEN
BLEND DOOR ACTUATOR
A/C HEATER CONTROL

Always perform the HVAC Pre-Diagnostic Troubleshooting procedure before proceeding. Refer to STANDARD PROCEDURE.

DIAGNOSTIC TEST

1. **CHECK IF DTC IS ACTIVE**
    1. Ignition on, engine not running.
    2. Using the scan tool, read HVAC DTCs.

    Is this DTC active?

    Yes

    - Go To 3

    No

    - Go To 2
2. **PERFORM HVAC ACTUATOR CALIBRATION TEST**

1. Using the scan tool, perform the HVAC Actuator Calibration Test.

   Did this DTC change from Stored to Active while performing the HVAC Actuator Calibration Test?

   Yes

   - Go To 3

   No

   - Go To 6

3. **CHECK THE BLEND DOOR ACTUATOR**

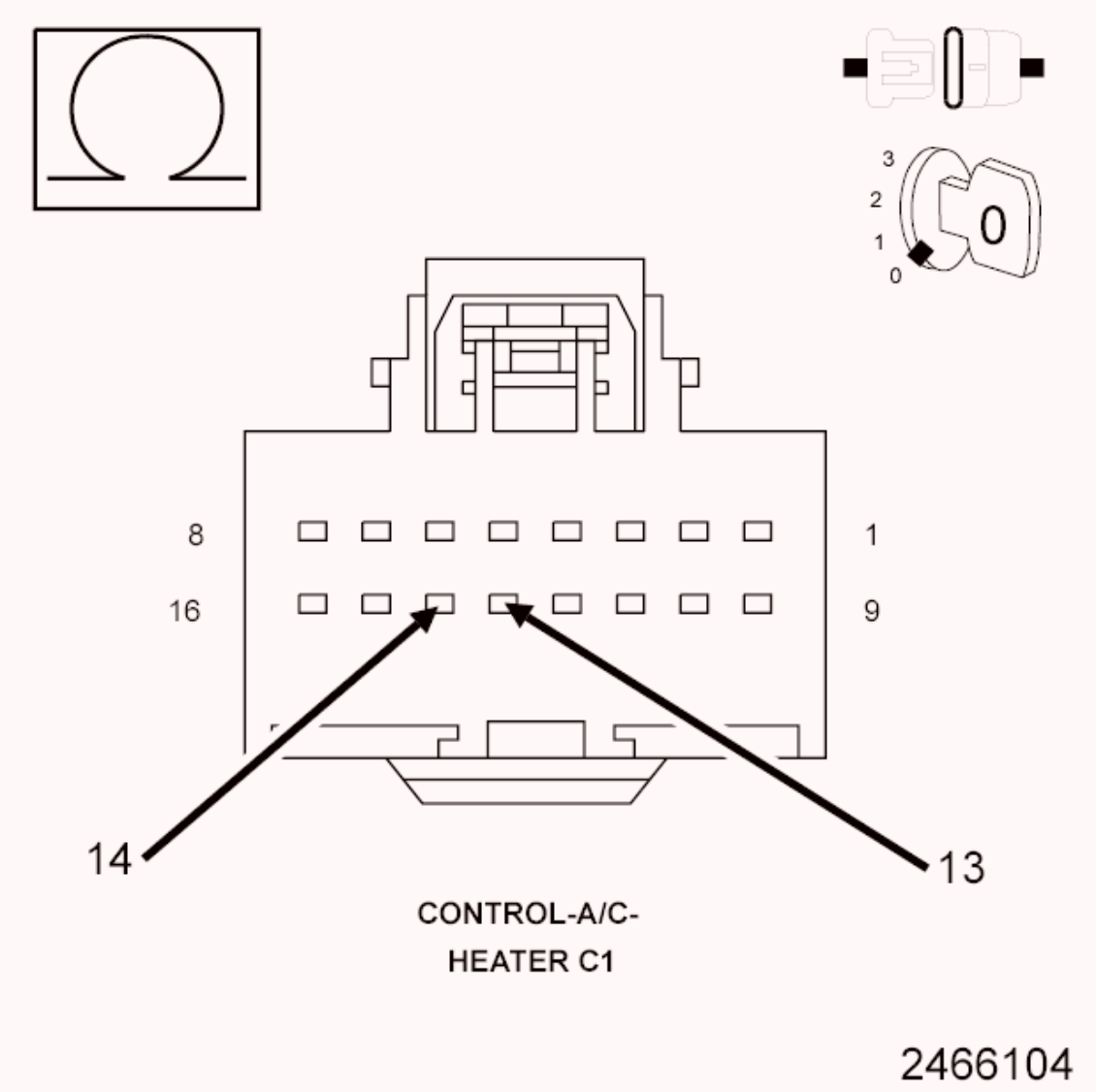

Fig. 58: Checking The Blend Door Actuator

Courtesy of CHRYSLER GROUP, LLC

1. Turn the ignition off to the lock position.
2. Disconnect the A/C Heater Control C1 harness connector.
3. Measure the resistance between the (C61) Blend Door Driver circuit and the (C34) Common Door Driver circuit.

   Is the resistance 38.0 Ohms (± 5.0 Ohms)?

   Yes

   - Replace and program the A/C Heater Control in accordance with the Service Information.
   - Perform the HVAC VERIFICATION TEST. Refer to **STANDARD PROCEDURE**.

   No

   - Go To 4

4. **CHECK THE (C61) BLEND DOOR DRIVER CIRCUIT FOR AN OPEN**

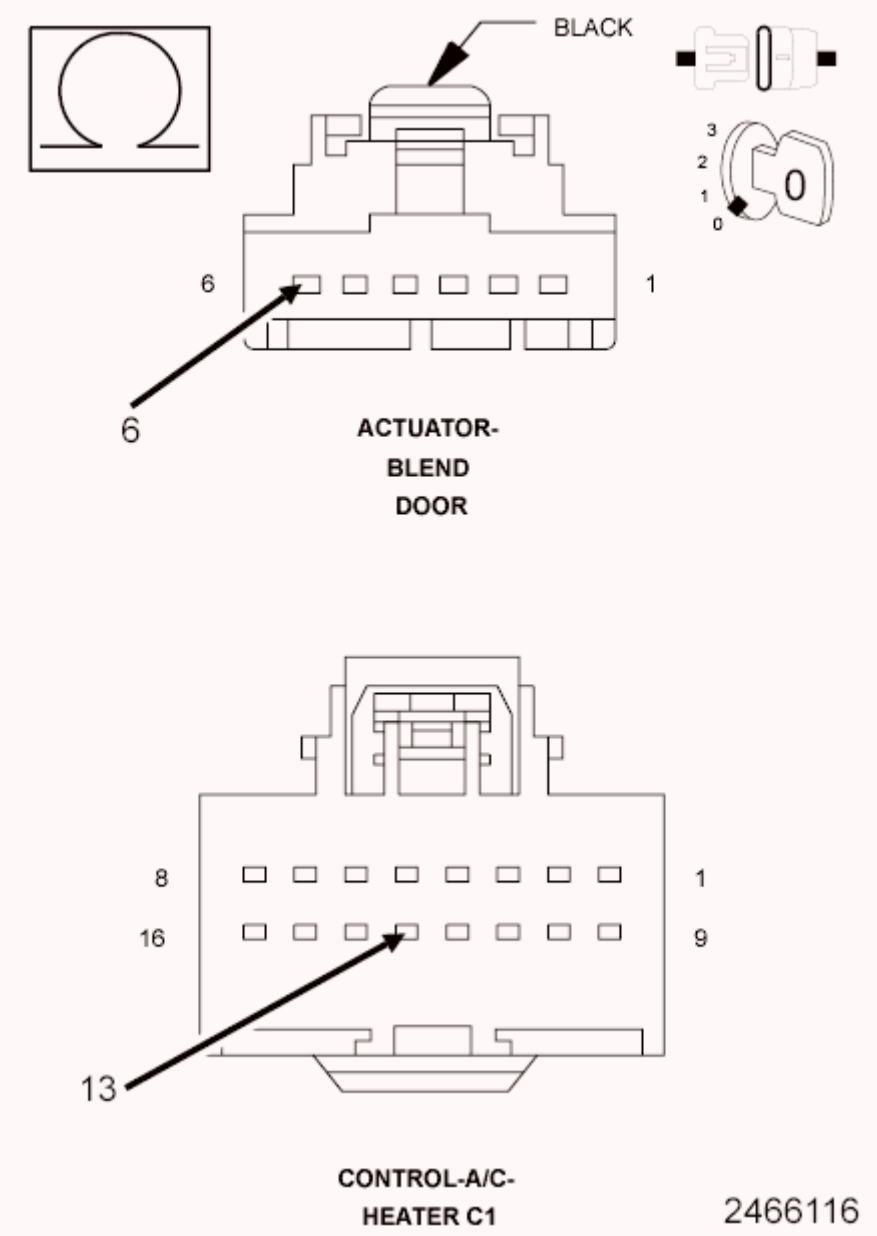

Fig. 59: Checking Blend Door Driver Circuit For An Open
Courtesy of CHRYSLER GROUP, LLC

1. Turn the ignition off to the lock position.
2. Disconnect the Blend Door Actuator harness connector.
3. Measure the resistance of the (C61) Blend Door Driver circuit between the A/C Heater Control C1 harness connector and the Blend Door Actuator harness connector.

   Is the resistance above 1.0 Ohm?

   Yes

- Repair the (C61) Blend Door Driver circuit for an open or high resistance.
- Perform the HVAC VERIFICATION TEST. Refer to **STANDARD PROCEDURE**.

No

- Go To 5

5. **CHECK THE (C34) COMMON DOOR DRIVER CIRCUIT FOR AN OPEN**

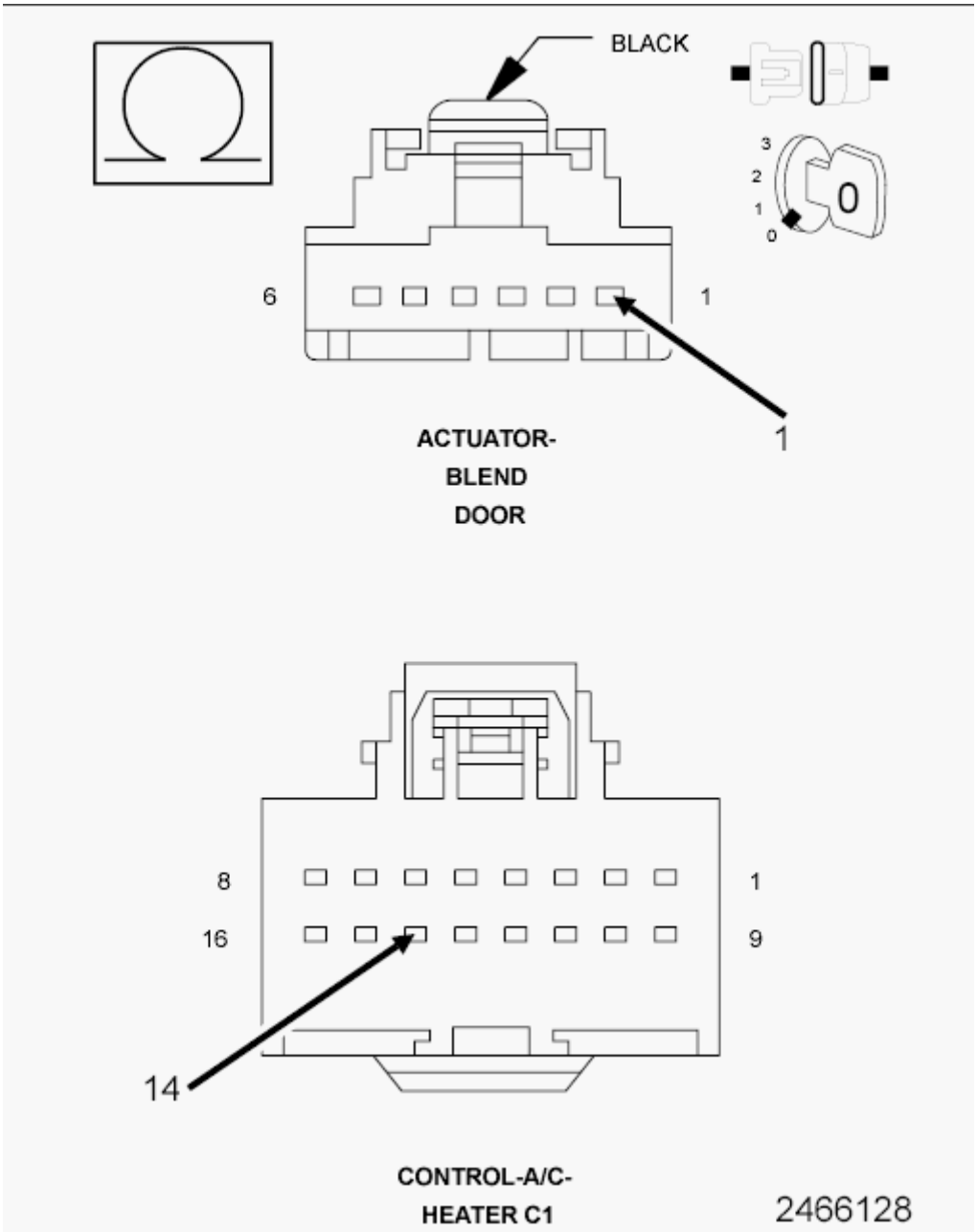

Fig. 60: Checking Common Door Driver Circuit For An Open
Courtesy of CHRYSLER GROUP, LLC

1. Measure the resistance of the (C34) Common Door Driver circuit between the A/C Heater Control C1 harness connector and the Blend Door Actuator harness connector.

   Is the resistance above 1.0 Ohm?

   Yes

   - Repair the (C34) Common Door Driver circuit for an open or high resistance.
   - Perform the HVAC VERIFICATION TEST. Refer to **STANDARD PROCEDURE**.

   No

   - Replace the Blend Door Actuator in accordance with the Service Information.
   - Perform the HVAC VERIFICATION TEST. Refer to **STANDARD PROCEDURE**.

6. **CHECK THE WIRING AND CONNECTORS**
   1. The conditions necessary to set the DTC are not present at this time.
   2. Using the scan tool, check the Environmental Data to help identify the conditions in which the DTC was set.
   3. Using the wiring diagrams as a guide, check all related splices and connectors for signs of water intrusion, corrosion, pushed out or bent terminals, and correct pin tension.
   4. Wiggle the wiring and connectors while checking for shorted and open circuits.

      Were there any problems found?

      Yes

      - Repair as necessary.
      - Perform the HVAC VERIFICATION TEST. Refer to **STANDARD PROCEDURE**.

No

- Test complete.

B11CB-92-MAIN/LEFT TEMPERATURE DOOR CONTROL - PERFORMANCE OR INCORRECT OPERATION

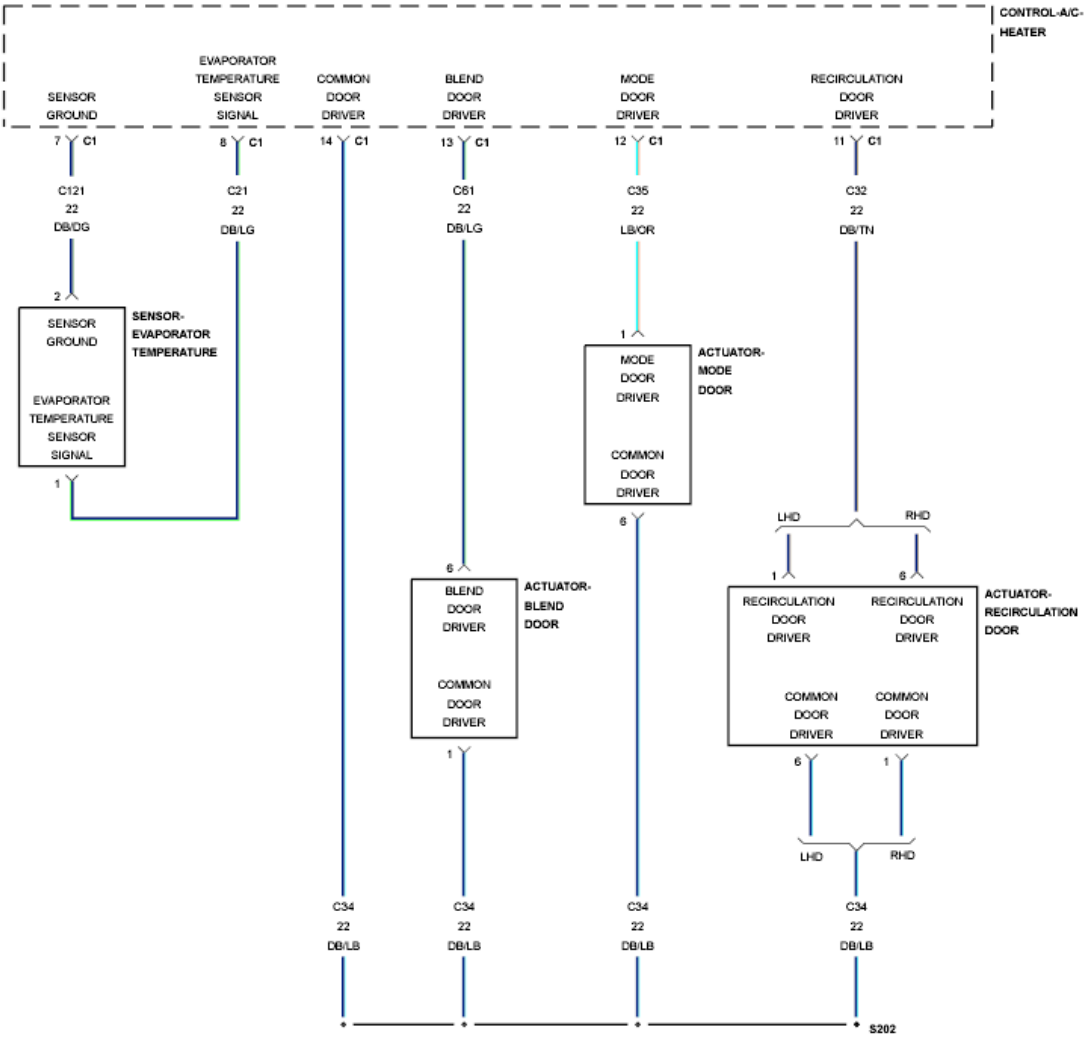

Fig. 61: Evaporator Temperature Sensor Circuit Schematic
Courtesy of CHRYSLER GROUP, LLC

For a complete wiring diagram, **refer to appropriate SYSTEM WIRING DIAGRAMS article** .

THEORY OF OPERATION

After the initial installation of the A/C Heater Control, the controller is calibrated to each individual blend/mode door actuator. These calibrations are stored as in

the number of pulses it takes to move the door from one stop to another. The A/C Heater Control drives the Door Actuators by the use of Door Driver circuit and a Common Door Driver circuit and monitors all door actuator pulses to detect door movement in both directions. Most of the door actuators share a common door driver circuit but each door actuator has its own unique driver circuit. Due to shared circuitry, similar Diagnostic Trouble Codes (DTCs) can set at the same time for multiple actuators depending upon the type of circuit malfunction, its location, and the direction the actuator is moving when the malfunction is present.

WHEN MONITORED

With the ignition on and an actuator movement is commanded by the A/C Heater Control or during an HVAC Actuator Calibration Test.

SET CONDITION

If an actuator move is commanded by A/C Heater Control and no feedback pulses are detected in either clockwise or counterclockwise movement for the period of 15 seconds. If the A/C Heater Control detects valid feedback pulses for 15 seconds, the DTC will change from Active to Stored and will stay in the controllers memory for 100 ignition cycles.

POSSIBLE CAUSES

Possible Causes
(C61) BLEND DOOR DRIVER CIRCUIT SHORTED TO VOLTAGE
(C61) BLEND DOOR DRIVER CIRCUIT SHORTED TO GROUND
(C34) COMMON DOOR DRIVER CIRCUIT SHORTED TO VOLTAGE
(C34) COMMON DOOR DRIVER CIRCUIT SHORTED TO GROUND
BLEND DOOR BINDING
BLEND DOOR ACTUATOR
A/C HEATER CONTROL

Always perform the HVAC Pre-Diagnostic Troubleshooting procedure before proceeding. Refer to STANDARD PROCEDURE.

DIAGNOSTIC TEST

1. **CHECK IF DTC IS ACTIVE**

1. Ignition on, engine not running.
2. Using the scan tool, read HVAC DTCs.

   Is this DTC active?

   Yes

   - Go To 2

   No

   - Go To 9

2. **PERFORM HVAC ACTUATOR CALIBRATION TEST**
   1. Using the scan tool, perform the HVAC Actuator Calibration Test.

      Did any other HVAC DTCs set while performing the Actuator Calibration Test?

      Yes

      - Refer to **DIAGNOSIS AND TESTING** and perform the appropriate diagnostic procedure.

      No

      - Go To 3

3. **CHECK THE (C61) BLEND DOOR DRIVER CIRCUIT FOR A SHORT TO VOLTAGE**

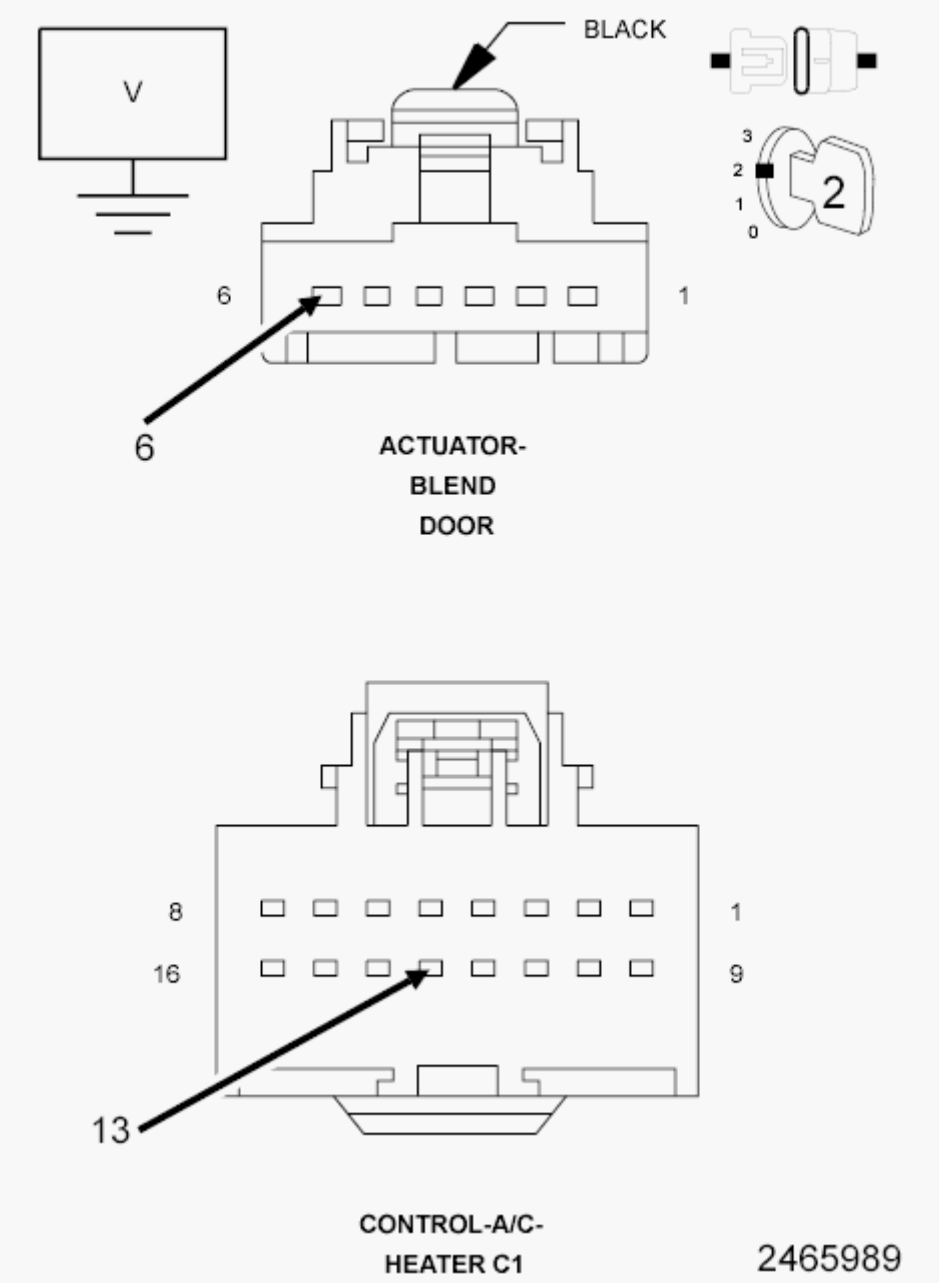

Fig. 62: Checking Blend Door Driver Circuit For A Short To Voltage
Courtesy of CHRYSLER GROUP, LLC

1. Turn the ignition off to the lock position.
2. Disconnect the A/C Heater Control C1 harness connector.
3. Disconnect the Blend Door Actuator harness connector.
4. Ignition on, engine not running.
5. Measure the voltage of the (C61) Blend Door Driver circuit.

   Is there any voltage present?

Yes

- Repair the (C61) Blend Door Driver circuit for a short to voltage.
- Perform the HVAC VERIFICATION TEST. Refer to **STANDARD PROCEDURE**.

No

- Go To 4

4. **CHECK THE (C34) COMMON DOOR DRIVER CIRCUIT FOR A SHORT TO VOLTAGE**

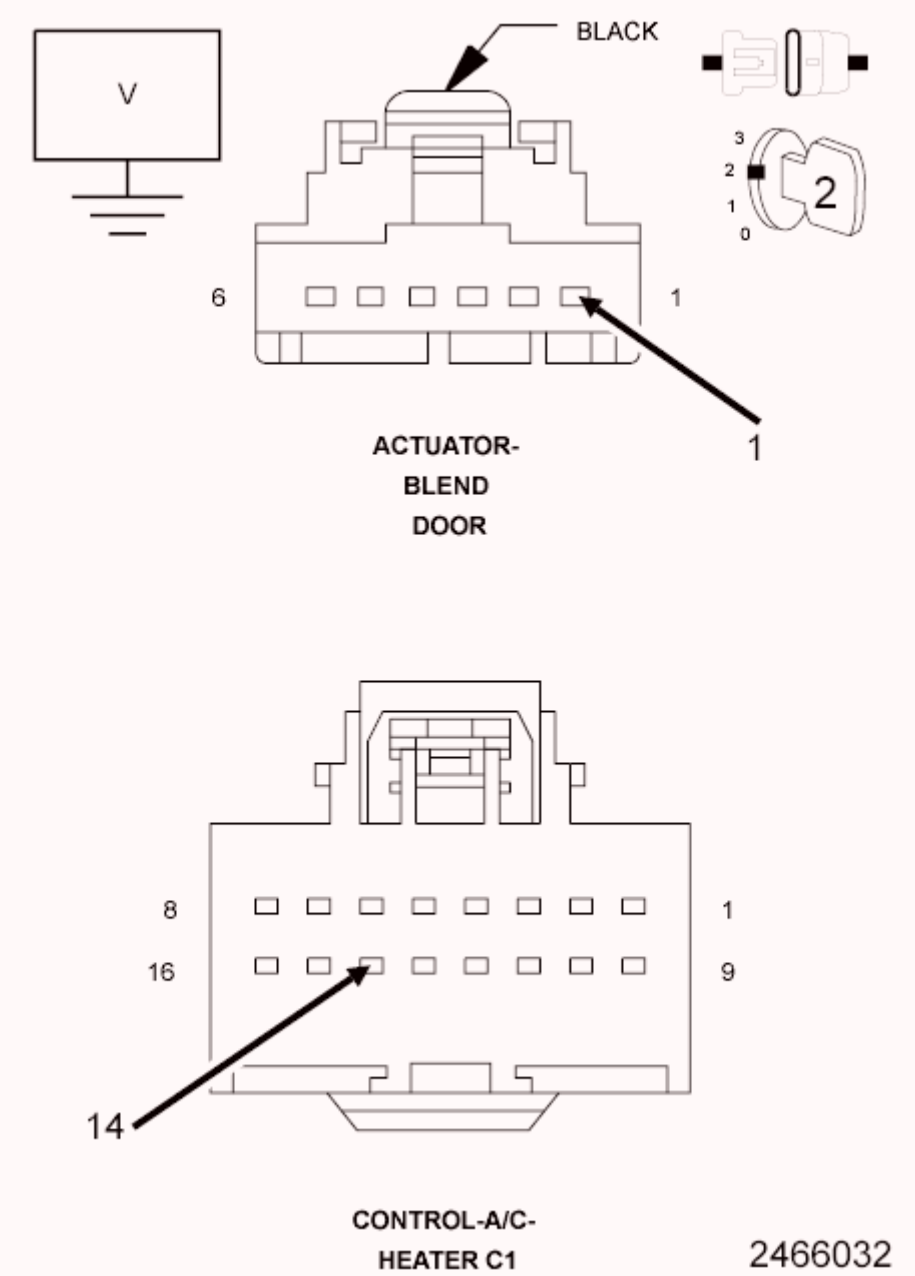

Fig. 63: Checking Common Door Driver Circuit For A Short To Voltage
Courtesy of CHRYSLER GROUP, LLC

1. Measure the voltage of the (C34) Common Door Driver circuit.

   Is there any voltage present?

   Yes

   - Repair the (C34) Common Door Driver circuit for a short to voltage.
   - Perform the HVAC VERIFICATION TEST. Refer to **STANDARD PROCEDURE**.

   No

   - Go To 5

5. **CHECK THE (C61) BLEND DOOR DRIVER CIRCUIT FOR A SHORT TO GROUND**

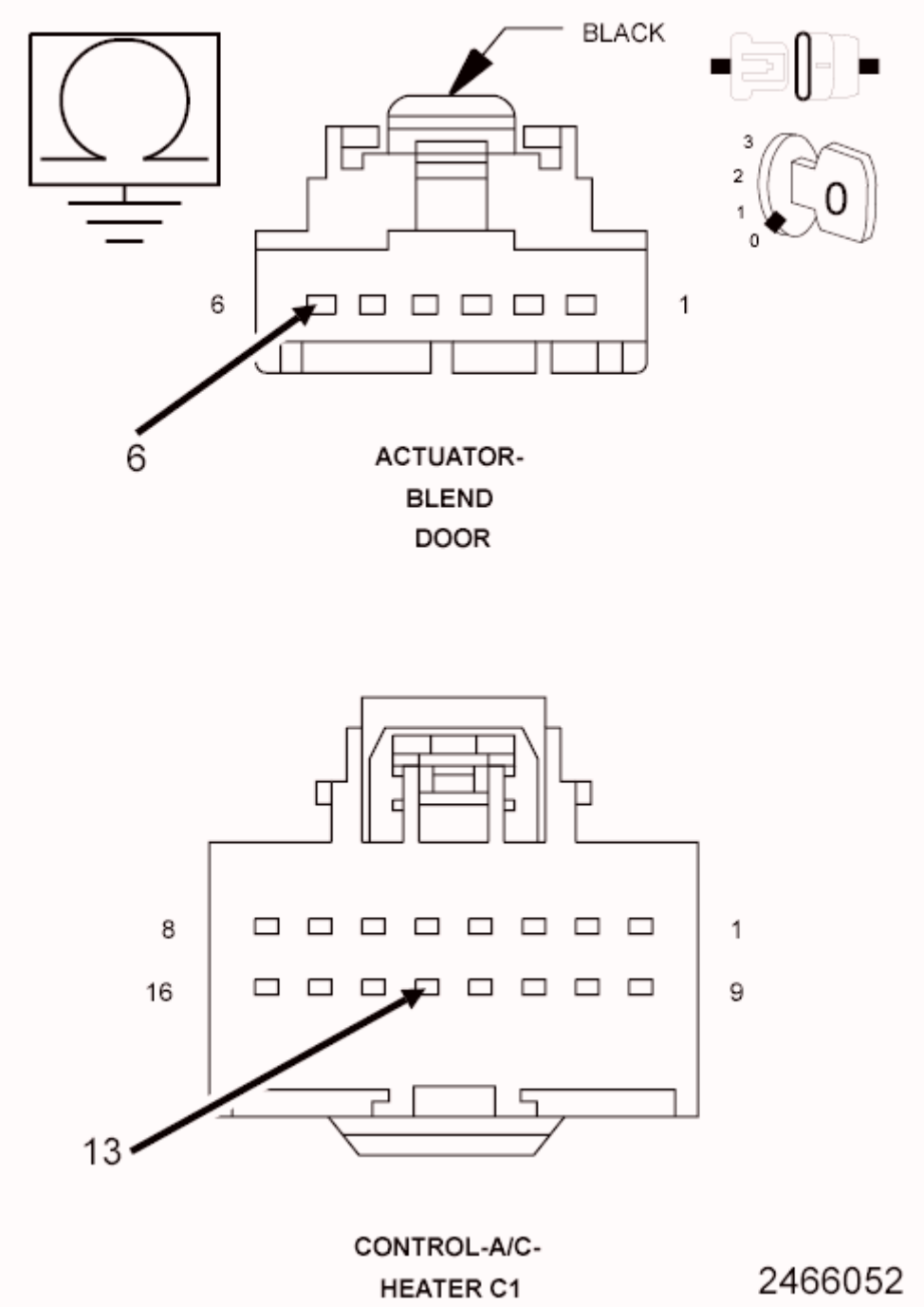

Fig. 64: Checking Blend Door Driver Circuit For A Short To Ground
Courtesy of CHRYSLER GROUP, LLC

1. Turn the ignition off to the lock position.
2. Measure the resistance between ground and the (C61) Blend Door Driver circuit.

   Is the resistance below 100k Ohms?

   Yes

- Repair the (C61) Blend Door Driver circuit for a short to ground.
- Perform the HVAC VERIFICATION TEST. Refer to **STANDARD PROCEDURE**.

No

- Go To 6

6. **CHECK THE (C34) COMMON DOOR DRIVER CIRCUIT FOR A SHORT TO GROUND**

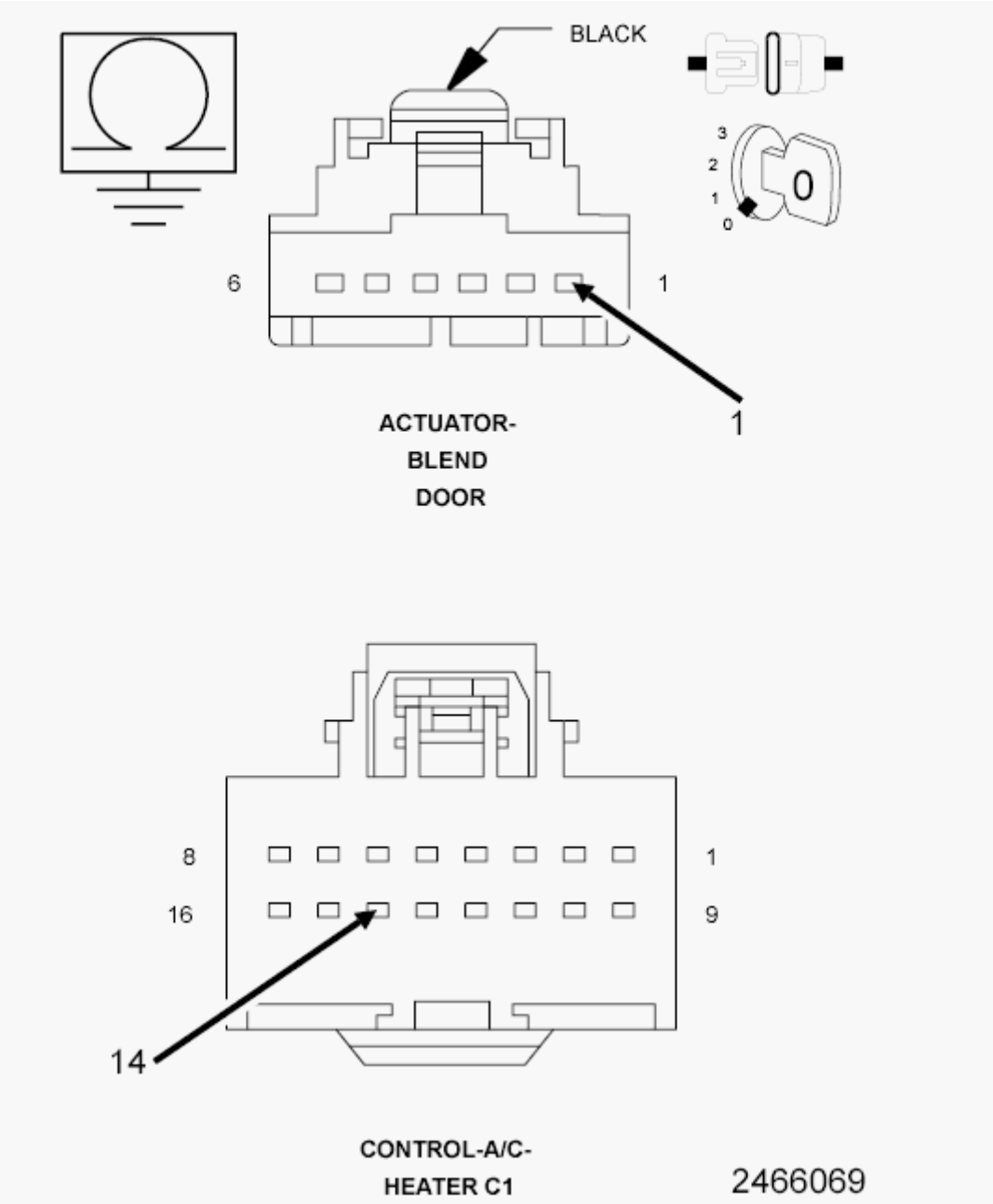

Fig. 65: Checking Common Door Driver Circuit For A Short To

Ground
Courtesy of CHRYSLER GROUP, LLC

1. Measure the resistance between ground and the (C34) Common Door Driver circuit.

   Is the resistance below 100k Ohms?

   Yes

   - Repair the (C34) Common Door Driver circuit for a short to ground.
   - Perform the HVAC VERIFICATION TEST. Refer to **STANDARD PROCEDURE**.

   No

   - Go To 7

7. **CHECK THE BLEND DOOR**
   1. Remove the Blend Door Actuator and check the Blend Door for binding and full travel.

      Were there any problems found?

      Yes

      - Repair or replace the Blend Door as necessary in accordance with the Service Information.
      - Perform the HVAC VERIFICATION TEST. Refer to **STANDARD PROCEDURE**.

      No

      - Go To 8

8. **CHECK THE BLEND DOOR ACTUATOR**
   1. Replace the Blend Door Actuator in accordance with the Service Information.
   2. Using the scan tool, erase HVAC DTCs and perform the HVAC Actuator Calibration Test.

Did this DTC reset?

Yes

- Replace and program the A/C Heater Control in accordance with the Service Information.
- Perform the HVAC VERIFICATION TEST. Refer to **STANDARD PROCEDURE**.

No

- Test complete.
- Perform the HVAC VERIFICATION TEST. Refer to **STANDARD PROCEDURE**.

9. **CHECK THE WIRING AND CONNECTORS**
   1. The conditions necessary to set the DTC are not present at this time.
   2. Using the scan tool, check the Environmental Data to help identify the conditions in which the DTC was set.
   3. Using the wiring diagrams as a guide, check all related splices and connectors for signs of water intrusion, corrosion, pushed out or bent terminals, and correct pin tension.
   4. Wiggle the wiring and connectors while checking for shorted and open circuits.

   Were there any problems found?

   Yes

   - Repair as necessary.
   - Perform the HVAC VERIFICATION TEST. Refer to **STANDARD PROCEDURE**.

   No

   - Test complete.

B11CC-00-MAIN/LEFT TEMPERATURE DOOR TRAVEL TOO SMALL

For a complete wiring diagram, **refer to appropriate SYSTEM WIRING**

DIAGRAMS article .

THEORY OF OPERATION

After the initial installation of the A/C Heater Control, the controller is calibrated to each individual blend/mode door actuator. These calibrations are stored as in the number of pulses it takes to move the door from one stop to another. The A/C Heater Control drives the Door Actuators by the use of Door Driver circuit and a Common Door Driver circuit and monitors all door actuator pulses to detect door movement in both directions. Most of the door actuators share a common door driver circuit but each door actuator has its own unique driver circuit. Due to shared circuitry, similar Diagnostic trouble Codes (DTCs) can set at the same time for multiple actuators depending upon the type of circuit malfunction, its location, and the direction the actuator is moving when the malfunction is present.

WHEN MONITORED

When ever an Actuator Calibration Test is performed.

SET CONDITION

The A/C Heater Control uses a pulse feedback to the controller to detect the total door movement range. If the amount of pulses required to move the door completely in both directions is less than what the controller has stored in its memory, this DTC will set. If an Actuator Calibration Test is performed and the A/C Heater Control detects a valid range of the door movement span in both directions, the DTC will change from Active to Stored and will stay in the controllers memory for 100 ignition cycles.

POSSIBLE CAUSES

Possible Causes
RELATED DTCS PRESENT
BLEND DOOR BINDING
BLEND DOOR ACTUATOR
A/C HEATER CONTROL

Always perform the HVAC Pre-Diagnostic Troubleshooting procedure before proceeding. Refer to STANDARD PROCEDURE.

DIAGNOSTIC TEST

1. **CHECK FOR RELATED DTCS**
    1. Ignition on, engine not running.
    2. With the scan tool, read HVAC DTCs.

    Are there any Door Control Circuit Short to Voltage, Short to Ground or Open DTCs present?

    Yes

    - Refer to **DIAGNOSIS AND TESTING** and perform the appropriate diagnostic procedure.

    No

    - Go To 2
2. **CHECK IF DTC IS ACTIVE**
    1. Ignition on, engine not running.
    2. With the scan tool, read HVAC DTCs.

    Is this DTC active?

    Yes

    - Go To 4

    No

    - Go To 3
3. **PERFORM HVAC ACTUATOR CALIBRATION TEST**
    1. With the scan tool, perform the HVAC Actuator Calibration Test.

    Did this DTC change from Stored to Active while performing the HVAC Actuator Calibration Test?

    Yes

    - Go To 4

    No

- Go To 6

4. **CHECK THE BLEND DOOR**
   1. Remove the Blend Door Actuator and check the Blend Door for binding and full travel.

      Were there any problems found?

      Yes

      - Repair or replace the Blend Door as necessary in accordance with the Service Information.
      - Perform the HVAC VERIFICATION TEST. Refer to **STANDARD PROCEDURE**.

      No

      - Go To 5

5. **CHECK THE BLEND DOOR ACTUATOR**
   1. Replace the Blend Door Actuator in accordance with the Service Information.
   2. With the scan tool, erase HVAC DTCs.
   3. With the scan tool, perform the HVAC Actuator Calibration Test.

      Did this DTC reset during HVAC Actuator Calibration Test?

      Yes

      - Replace and program the A/C Heater Control in accordance with the Service Information.
      - Perform the HVAC VERIFICATION TEST. Refer to **STANDARD PROCEDURE**.

      No

      - Test complete.
      - Perform the HVAC VERIFICATION TEST. Refer to **STANDARD PROCEDURE**.

6. **CHECK THE WIRING AND CONNECTORS**

1. The conditions necessary to set the DTC are not present at this time.
2. With the scan tool, check the Environmental Data to help identify the conditions in which the DTC was set.
3. Using the wiring diagrams as a guide, check all related splices and connectors for signs of water intrusion, corrosion, pushed out or bent terminals, and correct pin tension.
4. Wiggle the wiring and connectors while checking for shorted and open circuits.

   Were there any problems found?

   Yes

   - Repair as necessary.
   - Perform the HVAC VERIFICATION TEST. Refer to **STANDARD PROCEDURE**.

   No

   - Test complete.

B11CD-00-MAIN/LEFT TEMPERATURE DOOR TRAVEL TOO LARGE

For a complete wiring diagram, **refer to appropriate SYSTEM WIRING DIAGRAMS article** .

THEORY OF OPERATION

After the initial installation of the A/C Heater Control, the controller is calibrated to each individual blend/mode door actuator. These calibrations are stored as in the number of pulses it takes to move the door from one stop to another. The A/C Heater Control drives the Door Actuators by the use of Door Driver circuit and a Common Door Driver circuit and monitors all door actuator pulses to detect door movement in both directions. Most of the door actuators share a common door driver circuit but each door actuator has its own unique driver circuit. Due to shared circuitry, similar Diagnostic trouble Codes (DTCs) can set at the same time for multiple actuators depending upon the type of circuit malfunction, its location, and the direction the actuator is moving when the malfunction is present.

WHEN MONITORED

When ever an Actuator Calibration Test is performed.

SET CONDITION

The A/C Heater Control uses a pulse feedback to the controller to detect the total door movement range. If the amount of pulses required to move the door completely in both directions is greater than what the controller has stored in its memory, this DTC will set. If an Actuator Calibration Test is performed or during normal operation and the A/C Heater Control detects a valid range of the door movement span in both directions, the DTC will change from Active to Stored and will stay in the controllers memory for 100 ignition cycles.

POSSIBLE CAUSES

Possible Causes
RELATED DTCS PRESENT
BLEND DOOR STOPS
BLEND DOOR
BLEND DOOR ACTUATOR
A/C HEATER CONTROL

Always perform the HVAC Pre-Diagnostic Troubleshooting procedure before proceeding. Refer to STANDARD PROCEDURE.

DIAGNOSTIC TEST

1. **CHECK FOR RELATED DTCS**
    1. Ignition on, engine not running.
    2. With the scan tool, read HVAC DTCs.

    Are there any Door Control Circuit Short to Voltage, Short to Ground or Open DTCs present?

    Yes

    - Refer to **DIAGNOSIS AND TESTING** and perform the appropriate diagnostic procedure.

    No

- Go To 2

2. **CHECK IF DTC IS ACTIVE**
   1. Ignition on, engine not running.
   2. With the scan tool, read HVAC DTCs.

   Is this DTC active?

   Yes

   - Go To 4

   No

   - Go To 3

3. **PERFORM HVAC ACTUATOR CALIBRATION TEST**
   1. With the scan tool, perform the HVAC Actuator Calibration Test.

   Did this DTC change from Stored to Active while performing the HVAC System Test?

   Yes

   - Go To 4

   No

   - Go To 6

4. **CHECK THE BLEND DOOR**
   1. Remove the Blend Door Actuator and check the Blend Door stops, linkage (stripped or cracked) and door.

   Were there any problems found?

   Yes

   - Repair or replace the Blend Door as necessary in accordance with the Service Information.
   - Perform the HVAC VERIFICATION TEST. Refer to **STANDARD PROCEDURE**.

No

- Go To 5

5. **CHECK THE BLEND DOOR ACTUATOR**
   1. Replace the Blend Door Actuator in accordance with the Service Information.
   2. With the scan tool, erase HVAC DTCs and perform the HVAC Actuator Calibration Test.

   Did this DTC reset?

   Yes

   - Replace and program the A/C Heater Control in accordance with the Service Information.
   - Perform the HVAC VERIFICATION TEST. Refer to **STANDARD PROCEDURE**.

   No

   - Test complete.
   - Perform the HVAC VERIFICATION TEST. Refer to **STANDARD PROCEDURE**.

6. **CHECK THE WIRING AND CONNECTORS**
   1. The conditions necessary to set the DTC are not present at this time.
   2. With the scan tool, check the Environmental Data to help identify the conditions in which the DTC was set.
   3. Using the wiring diagrams as a guide, check all related splices and connectors for signs of water intrusion, corrosion, pushed out or bent terminals, and correct pin tension.
   4. Wiggle the wiring and connectors while checking for shorted and open circuits.

   Were there any problems found?

   Yes

   - Repair as necessary.

- Perform the HVAC VERIFICATION TEST. Refer to **STANDARD PROCEDURE**.

No

- Test complete.

B11D9-92-BLOWER SPEED KNOB REQUEST INPUT - PERFORMANCE OR INCORRECT OPERATION

For a complete wiring diagram, **refer to appropriate SYSTEM WIRING DIAGRAMS article** .

THEORY OF OPERATION

The A/C Heater Control constantly monitors the Blower Motor switch or dial for proper operation. If the monitored voltage on that circuit drops below or rises above a predetermined value, a DTC will set.

WHEN MONITORED

With the ignition on.

SET CONDITION

If the internal blower circuit is less than 0.05 of a volt or greater than 4.95 volts for a period of 1200 msec.

POSSIBLE CAUSES

Possible Causes
A/C HEATER CONTROL

Always perform the HVAC Pre-Diagnostic Troubleshooting procedure before proceeding. Refer to STANDARD PROCEDURE.

DIAGNOSTIC TEST

REPLACE THE A/C HEATER CONTROL

This DTC detects a problem with an internal circuit in the controller and is non serviceable.

Repair

- Replace and program the A/C Heater Control in accordance with the Service Information.
- Perform the HVAC VERIFICATION TEST. Refer to **STANDARD PROCEDURE**.

B210A-84-SYSTEM VOLTAGE LOW - SIGNAL BELOW ALLOWABLE RANGE

For a complete wiring diagram, **refer to appropriate SYSTEM WIRING DIAGRAMS article** .

THEORY OF OPERATION

The A/C Heater Control constantly monitors battery and ignition voltage as well as battery voltage derived from BUS communication to ensure proper operation. If the voltage to the controller is out of range it could cause damage to the controller or its respective components. If the voltage of either circuit drops below or rises above a predetermined calibration a DTC will set.

WHEN MONITORED

Continuously with the ignition on.

SET CONDITION

If the controller system voltage or ignition voltage broadcast over the BUS is lower than monitored controller voltage the for period of 60 seconds.

POSSIBLE CAUSES

Possible Causes
RELATED TIPM DTCS PRESENT
RELATED CHARGING SYSTEM DTCS PRESENT
RELATED HVAC DTCS PRESENT
OTHER CONTROLLERS REPORTING UNDER VOLTAGE CONDITION
A/C HEATER CONTROL

Always perform the HVAC Pre-Diagnostic Troubleshooting procedure before proceeding. Refer to STANDARD PROCEDURE.

DIAGNOSTIC TEST

1. **CHECK FOR TIPM DTCS**
   1. Ignition on, engine not running.
   2. With the scan tool, read DTCs.

   Are there any Totally Integrated Power Module (TIPM) DTCs present?

   Yes

   - Refer to **DIAGNOSIS AND TESTING** and perform the appropriate diagnostic procedure.

   No

   - Go To 2
2. **CHECK FOR POWERTRAIN CONTROL MODULE DTCS**
   1. With the scan tool, read DTCs.

   Are there any Powertrain Control Module (PCM) charging system DTCs present?

   Yes

   - Refer to **DTC INDEX** and perform the appropriate diagnostic procedure.

   No

   - Go To 3
3. **CHECK FOR HVAC DTCS**
   1. With the scan tool, read HVAC DTCs.

   Is the DTC B210D-84-Battery Voltage Low - Signal Below Allowable Range present also?

   Yes

   - Refer to **DIAGNOSIS AND TESTING** and perform the diagnostic procedure for DTC B210D-84-Battery Voltage Low -

Signal Below Allowable Range.

No

- Go To 4

4. **CHECK IF THE DTC IS ACTIVE**
   1. With the scan tool, read HVAC DTCs.

      NOTE: It can take up to 60 seconds or more for this DTC to mature.

      Is this DTC active?

      Yes

      - Go To 5

      No

      - Go To 6

5. **CHECK IF OTHER CONTROLLERS ARE REPORTING AN OVER VOLTAGE CONDITION**
   1. With the scan tool, read DTCs.

      Are any other controllers reporting an over voltage condition?

      Yes

      - Go To **DTC INDEX** and perform the appropriate diagnostic procedure.

      No

      - Replace and program the A/C Heater Control in accordance with the Service Information.
      - Perform the HVAC VERIFICATION TEST. Refer to **STANDARD PROCEDURE**.

6. **CHECK THE WIRING AND CONNECTORS**
   1. The conditions necessary to set the DTC are not present at this time.

2. With the scan tool, check the Environmental Data to help identify the conditions in which the DTC was set.
3. Using the wiring diagrams as a guide, check all related splices and connectors for signs of water intrusion, corrosion, pushed out or bent terminals, and correct pin tension.
4. Wiggle the wiring and connectors while checking for shorted and open circuits.

   Were there any problems found?

   Yes

   - Repair as necessary.
   - Perform the HVAC VERIFICATION TEST. Refer to **STANDARD PROCEDURE**.

   No

   - Test complete.

B210B-85-SYSTEM VOLTAGE HIGH - SIGNAL ABOVE ALLOWABLE RANGE

For a complete wiring diagram, **refer to appropriate SYSTEM WIRING DIAGRAMS article** .

THEORY OF OPERATION

The A/C Heater Control constantly monitors battery and ignition voltage as well as battery voltage derived from BUS communication to ensure proper operation. If the voltage to the controller is out of range it could cause damage to the controller or its respective components. If the voltage of either circuit drops below or rises above a predetermined calibration a DTC will set.

WHEN MONITORED

Continuously with the ignition on.

SET CONDITION

If the controller system voltage or ignition voltage broadcast over the BUS is higher than monitored controller voltage the for period of 60 seconds.

POSSIBLE CAUSES

Possible Causes
RELATED TIPM DTCS PRESENT
RELATED CHARGING SYSTEM DTCS PRESENT
RELATED HVAC DTCS PRESENT
OTHER CONTROLLERS REPORTING OVER VOLTAGE CONDITION
A/C HEATER CONTROL

Always perform the HVAC Pre-Diagnostic Troubleshooting procedure before proceeding. Refer to STANDARD PROCEDURE.

DIAGNOSTIC TEST

1. **CHECK FOR TIPM DTCS**
   1. Ignition on, engine not running.
   2. With the scan tool, read DTCs.

   Are there any Totally Integrated Power Module (TIPM) DTCs present?

   Yes

   - Refer to **DIAGNOSIS AND TESTING** and perform the appropriate diagnostic procedure.

   No

   - Go To 2
2. **CHECK FOR POWERTRAIN CONTROL MODULE DTCS**
   1. With the scan tool, read DTCs.

   Are there any Powertrain Control Module (PCM) charging system DTCs present?

   Yes

   - Refer to **DTC INDEX** and perform the appropriate diagnostic procedure.

   No

- Go To 3

3. **CHECK FOR HVAC DTCS**
   1. With the scan tool, read HVAC DTCs.

      Is the DTC B210E-85-Battery Voltage High - Signal Above Allowable Range present also?

      Yes

      - Refer to **DIAGNOSIS AND TESTING** and perform the diagnostic procedure for B210E-85-Battery Voltage High - Signal Above Allowable Range.

      No

      - Go To 4

4. **CHECK IF THE DTC IS ACTIVE**
   1. With the scan tool, read HVAC DTCs.

      NOTE: It can take up to 60 seconds or more for this DTC to mature.

      Is this DTC active?

      Yes

      - Go To 5

      No

      - Go To 6

5. **CHECK IF OTHER CONTROLLERS ARE REPORTING AN OVER VOLTAGE CONDITION**
   1. With the scan tool, read DTCs.

      Are any other controllers reporting an over voltage condition?

      Yes

- Go to **DTC INDEX** and perform the appropriate diagnostic procedure.

No

- Replace and program the A/C Heater Control in accordance with the Service Information.
- Perform HVAC VERIFICATION TEST. Refer to **STANDARD PROCEDURE**.

6. **CHECK THE WIRING AND CONNECTORS**
   1. The conditions necessary to set the DTC are not present at this time.
   2. With the scan tool, check the Environmental Data to help identify the conditions in which the DTC was set.
   3. Using the wiring diagrams as a guide, check all related splices and connectors for signs of water intrusion, corrosion, pushed out or bent terminals, and correct pin tension.
   4. Wiggle the wiring and connectors while checking for shorted and open circuits.

   Were there any problems found?

   Yes

   - Repair as necessary.
   - Perform HVAC VERIFICATION TEST. Refer to **STANDARD PROCEDURE**.

   No

   - Test complete.

B210D-84-BATTERY VOLTAGE LOW - SIGNAL BELOW ALLOWABLE RANGE

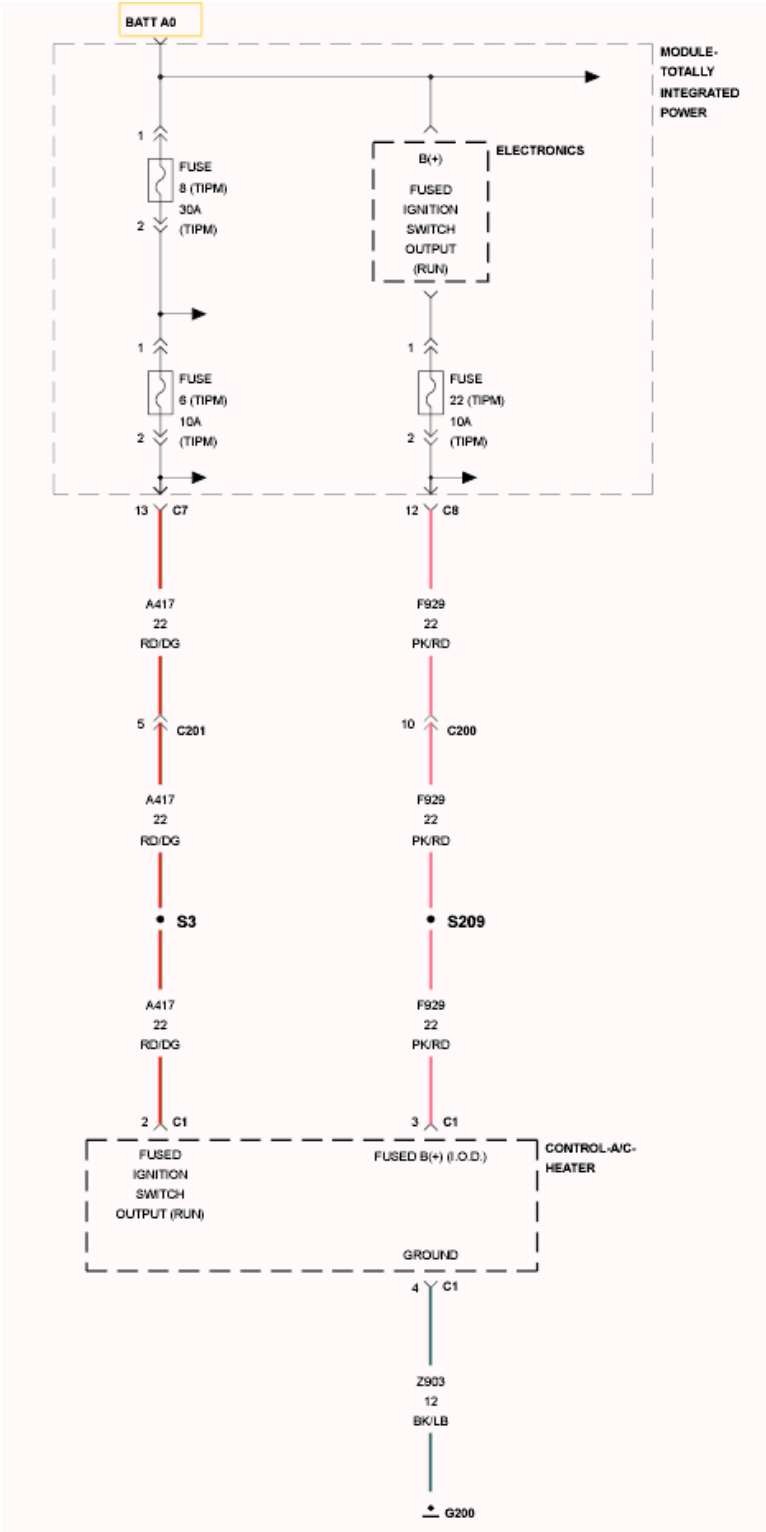

Fig. 66: Battery/Power Supply Circuit Schematic
Courtesy of CHRYSLER GROUP, LLC

For a complete wiring diagram, **refer to appropriate SYSTEM WIRING DIAGRAMS article** .

THEORY OF OPERATION

The A/C Heater Control constantly monitors battery and ignition voltage to ensure proper operation. If the voltage to the controller is out of range it could cause damage to the controller or its respective components. If the voltage of either circuit drops below or rises above a predetermined calibration a Diagnostic Trouble Code (DTC) will set.

WHEN MONITORED

With the ignition on.

SET CONDITION

If the controller battery voltage is less than or equal to 10.0 volts for period of five seconds.

POSSIBLE CAUSES

Possible Causes
RELATED CHARGING SYSTEM DTCS PRESENT
(F929) FUSED IGNITION SWITCH OUTPUT CIRCUIT OPEN
(A417) FUSED B(+) CIRCUIT OPEN
(Z903) GROUND CIRCUIT OPEN
A/C HEATER CONTROL

Always perform the HVAC Pre-Diagnostic Troubleshooting procedure before proceeding. Refer to STANDARD PROCEDURE.

DIAGNOSTIC TEST

1. **CHECK FOR CHARGING SYSTEM DTCS**
    1. Using the scan tool, read PCM DTCs.

       Are there any charging system DTCs present in the Powertrain Control Module (PCM)?

       Yes

       - Refer to **DTC INDEX** and perform the appropriate diagnostic procedure.

       No

- Go To 2

2. **CHECK FOR TOTALLY INTEGRATED POWER MODULE DTCS**
   1. Using the scan tool, read TIPM DTCs.

      Are there any TIPM DTCS present?

      Yes

      - Refer to **DIAGNOSIS AND TESTING** and perform the appropriate diagnostic procedure.

      No

      - Go To 3

3. **CHECK IF THE DTC IS ACTIVE**
   1. Using the scan tool, read HVAC DTCs.

      Is this DTC active?

      Yes

      - Go To 4

      No

      - Go To 7

4. **CHECK THE (F929) FUSED IGNITION SWITCH OUTPUT CIRCUIT FOR AN OPEN**

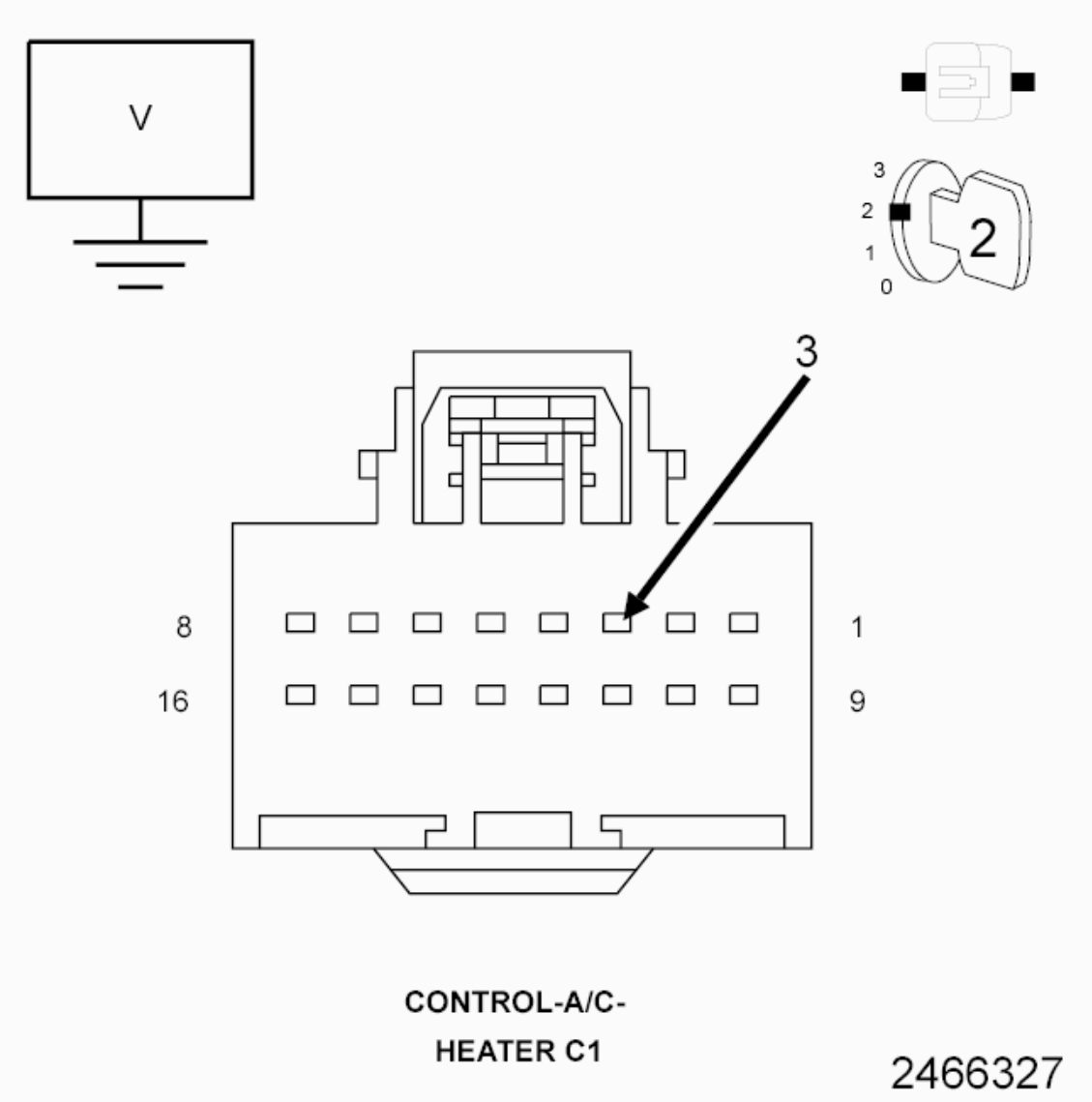

Fig. 67: Measuring Voltage Of Fused Ignition Switch Output Circuit For An Open
Courtesy of CHRYSLER GROUP, LLC

1. Ignition on, engine not running.
2. While back probing, measure the voltage of the (F929) Fused Ignition Switch Output circuit in the A/C Heater Control C1 harness connector.

   Is the voltage 10.0 volts or below?

   Yes

   - Repair the (F929) Fused Ignition Switch Output circuit for an open or high resistance.

NOTE: If the fuse is open, make sure to check for a short to ground on the (F929) Fused Ignition Switch Output circuit.

- Perform the HVAC VERIFICATION TEST. Refer to **STANDARD PROCEDURE**.

No

- Go To 5

5. **CHECK THE (A417) FUSED B(+) CIRCUIT FOR AN OPEN**

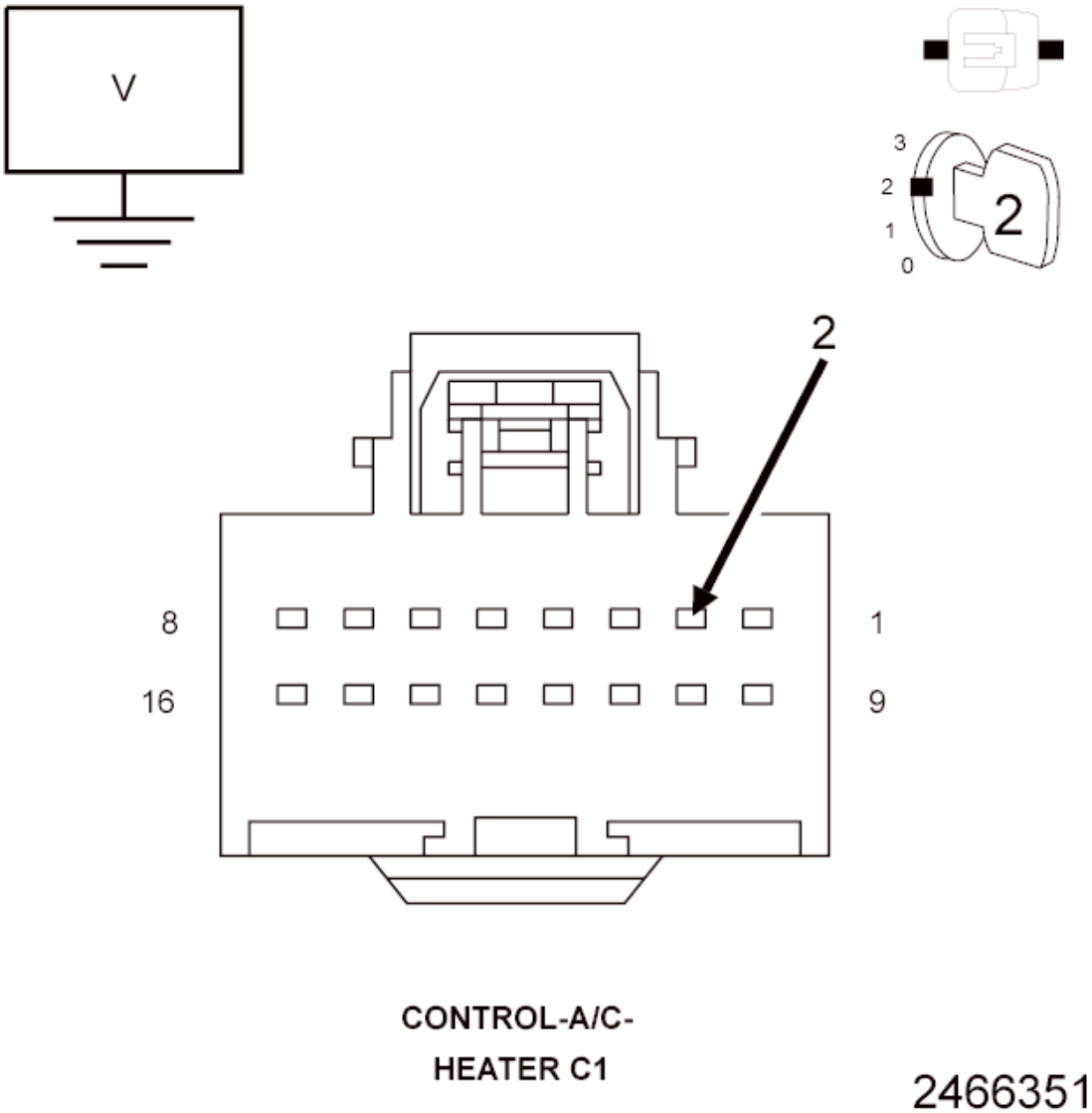

Fig. 68: Checking Fused B(+) Circuit For An Open
Courtesy of CHRYSLER GROUP, LLC

1. Ignition on, engine not running.
2. While back probing, measure the voltage of the (A417) Fused B (+) circuit in the A/C Heater Control C1 harness connector.

   Is the voltage 10.0 volts or below?

   Yes

   - Repair the (A417) Fused B (+) circuit for an open or high resistance.

     NOTE: Make sure to check if the IOD fuse is installed. If the fuse is open, make sure to check for a short to ground.

   - Perform the HVAC VERIFICATION TEST. Refer to **STANDARD PROCEDURE**.

   No

   - Go To 6

6. **CHECK THE (Z903) GROUND CIRCUIT FOR AN OPEN**

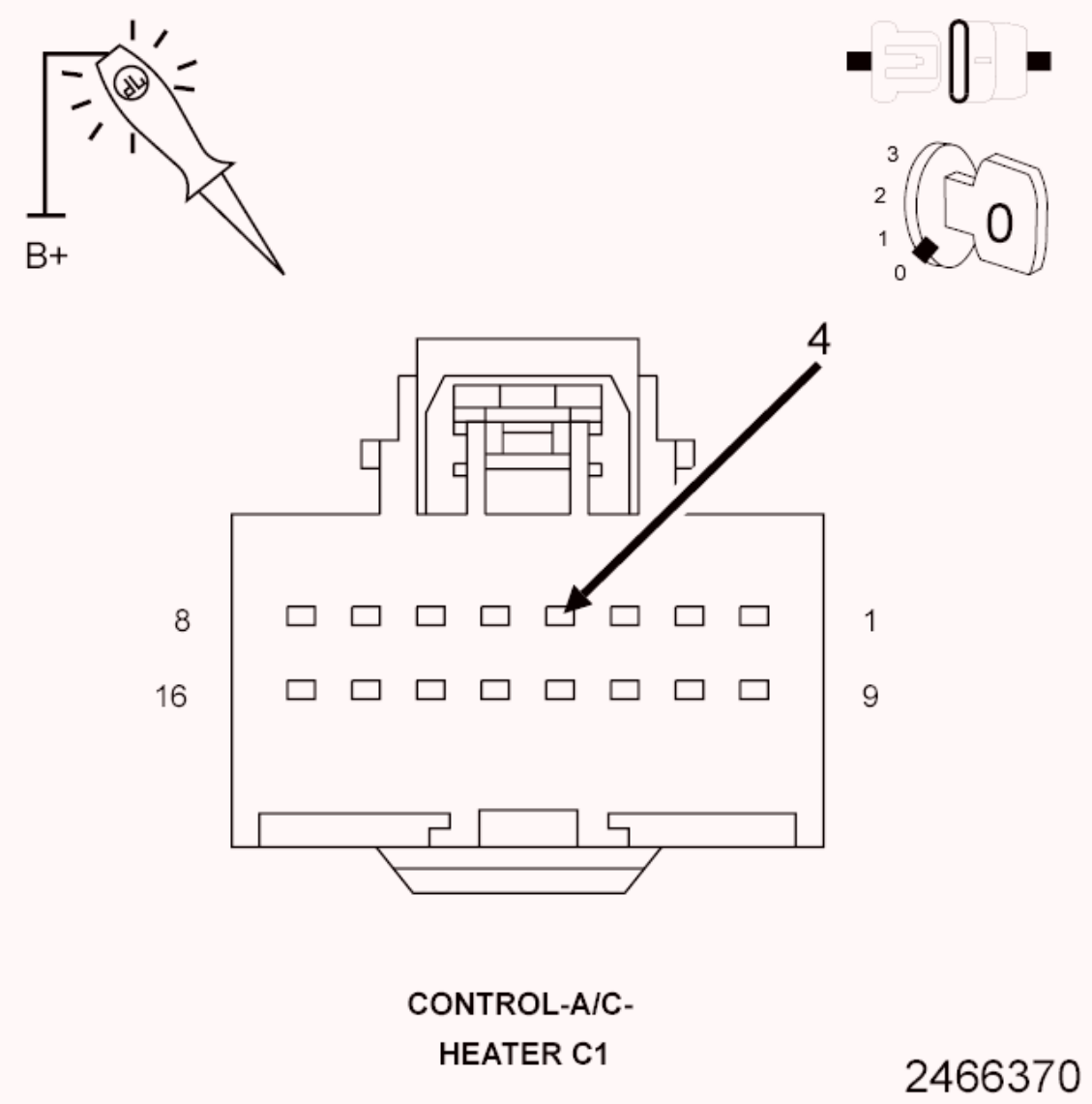

Fig. 69: Checking Ground Circuit For An Open
Courtesy of CHRYSLER GROUP, LLC

1. Turn the ignition off to the lock position.
2. Disconnect the A/C Heater Control C1 harness connector.
3. Using a 12-volt test light connected to 12-volts, check the (Z903) Ground circuit.

NOTE: The test light must illuminate brightly. Compare the brightness to that of a direct connection to the battery.

Does the test light illuminate brightly?

Yes

- Replace and program the A/C Heater Control in accordance with the Service Information.
- Perform the HVAC VERIFICATION TEST. Refer to **STANDARD PROCEDURE**.

No

- Repair the (Z903) Ground circuit for an open.
- Perform the HVAC VERIFICATION TEST. Refer to **STANDARD PROCEDURE**.

7. **CHECK THE WIRING AND CONNECTORS**
   1. The conditions necessary to set the DTC are not present at this time.
   2. Using the scan tool, check the Environmental Data to help identify the conditions in which the DTC was set.
   3. Using the wiring diagrams as a guide, check all related splices and connectors for signs of water intrusion, corrosion, pushed out or bent terminals, and correct pin tension.
   4. Wiggle the wiring and connectors while checking for shorted and open circuits.

   Were there any problems found?

   Yes

   - Repair as necessary.
   - Perform the HVAC VERIFICATION TEST. Refer to **STANDARD PROCEDURE**.

   No

   - Test complete.

B210E-85-BATTERY VOLTAGE HIGH - SIGNAL ABOVE ALLOWABLE RANGE

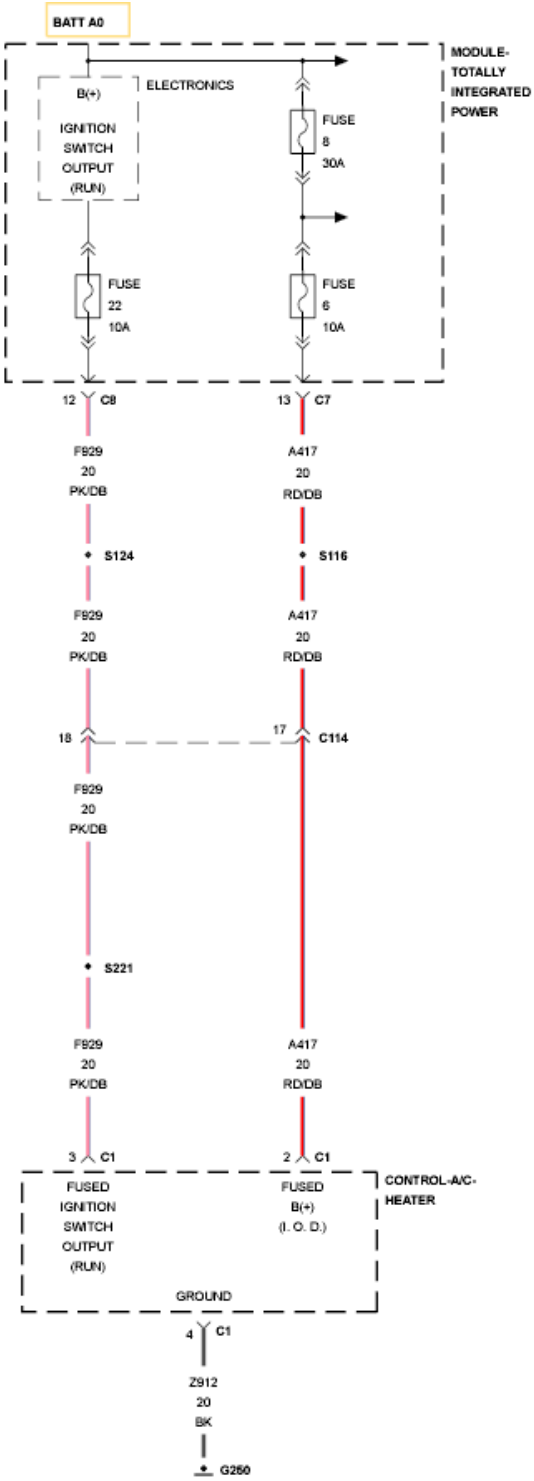

Fig. 70: Battery/Power Supply Circuit Schematic
Courtesy of CHRYSLER GROUP, LLC

For a complete wiring diagram, **refer to appropriate SYSTEM WIRING DIAGRAMS article** .

THEORY OF OPERATION

The A/C Heater Control constantly monitors battery and ignition voltage to make sure proper operation. If the voltage to the controller is out of range it could cause damage to the controller or its respective components. If the voltage of either circuit drops below or rises above a predetermined calibration a Diagnostic Trouble Code (DTC) will set.

WHEN MONITORED

With the ignition on.

SET CONDITION

If the controller battery voltage is higher than 16.0 volts for period of one second.

POSSIBLE CAUSES

Possible Causes
RELATED CHARGING SYSTEM DTCS PRESENT
A/C HEATER CONTROL

Always perform the HVAC Pre-Diagnostic Troubleshooting procedure before proceeding. Refer to STANDARD PROCEDURE.

DIAGNOSTIC TEST

1. **CHECK FOR CHARGING SYSTEM DTCS**
   1. Using the scan tool, read PCM DTCs.

      Are there any charging system DTCs present in the Powertrain Control Module (PCM)?

      Yes

      - Refer to **DTC INDEX** and perform the appropriate diagnostic procedure.

      No

      - Go To 2
2. **CHECK FOR TOTALLY INTEGRATED POWER MODULE DTCS**
   1. Using the scan tool, read TIPM DTCs.

Are there any TIPM DTCs present?

Yes

- Refer to **DIAGNOSIS AND TESTING** and perform the appropriate diagnostic procedure.

No

- Go To 3

3. **CHECK IF THE DTC IS ACTIVE**
   1. Using the scan tool, read HVAC DTCs.

   Is this DTC active?

   Yes

   - Go To 4

   No

   - Go To 5

4. **CHECK IF OTHER CONTROLLER ARE REPORTING AN OVER VOLTAGE CONDITION**
   1. Ignition on, engine not running.
   2. With the scan tool read DTCs.

   Are any other controllers reporting an over voltage condition?

   Yes

   - Go to **DTC INDEX** and perform the appropriate diagnostic procedure.

   No

   - Replace and program the A/C Heater Control in accordance with the Service Information.
   - Perform the HVAC VERIFICATION TEST. Refer to **STANDARD PROCEDURE**.

5. **CHECK THE WIRING AND CONNECTORS**
   1. The conditions necessary to set the DTC are not present at this time.
   2. Using the scan tool, check the Environmental Data to help identify the conditions in which the DTC was set.
   3. Using the wiring diagrams as a guide, check all related splices and connectors for signs of water intrusion, corrosion, pushed out or bent terminals, and correct pin tension.
   4. Wiggle the wiring and connectors while checking for shorted and open circuits.

   Were there any problems found?

   Yes

   - Repair as necessary.
   - Perform the HVAC VERIFICATION TEST. Refer to **STANDARD PROCEDURE**.

   No

   - Test complete.

B2214-00-(HVAC) CLIMATE CONTROL INTERNAL

For a complete wiring diagram, **refer to appropriate SYSTEM WIRING DIAGRAMS article** .

WHEN MONITORED

With the ignition on.

SET CONDITION

If the A/C Heater Control has an internal fault. This Diagnostic Trouble Code (DTC) has a maturing time of five seconds and a de-maturing time of 10 seconds. If the DTCs status changes from active to stored it will stay in memory for 100 ignition cycles.

POSSIBLE CAUSES

Possible Causes

A/C HEATER CONTROL

Always perform the HVAC Pre-Diagnostic Troubleshooting procedure before proceeding. Refer to STANDARD PROCEDURE.

DIAGNOSTIC TEST

CHECK THE A/C HEATER CONTROL

Repair

- Check for any controller software updates if applicable. If an update is available, reprogram the controller with the latest software. If no software updates are available, replace and program the A/C Heater Control in accordance with the Service Information.
- Perform the HVAC VERIFICATION TEST. Refer to **STANDARD PROCEDURE**.

B222A-00-VEHICLE LINE MISMATCH

For a complete wiring diagram, **refer to appropriate SYSTEM WIRING DIAGRAMS article** .

THEORY OF OPERATION

The A/C Heater Controller checks for vehicle configuration using communication over the BUS. If the stored configuration does not match the configuration stored in the controller this DTC will set.

WHEN MONITORED

With the ignition on.

SET CONDITION

If the stored configuration does not match the configuration stored in the controller.

POSSIBLE CAUSES

Possible Causes
VEHICLE CONFIGURATION NOT STORED IN THE TOTALLY INTEGRATED POWER MODULE (TIPM)

CONTROL MODULE INSTALLED IN INCORRECT VEHICLE A/C HEATER CONTROL

Always perform the HVAC Pre-Diagnostic Troubleshooting procedure before proceeding. Refer to STANDARD PROCEDURE.

DIAGNOSTIC TEST

CHECK THE VEHICLE CONFIGURATION

NOTE: The DTC must be active and no BUS communication DTCs present before performing this test. If BUS communication DTCs are present, perform there respective test first. If the DTC is stored, erase the DTC and cycle the ignition. If the DTC resets and changes to active, then proceed.

1. With the scan tool, check the vehicle configuration stored in the Totally Integrated Power Module (TIPM).
2. With the scan tool, check the vehicle configuration stored in the A/C Heater Control (HVAC).

   Pick the answer that best describes your findings:

   TIPM has wrong or no vehicle configuration

   - With the scan tool, program the proper vehicle configuration in the TIPM.
   - Perform the HVAC VERIFICATION TEST. Refer to **STANDARD PROCEDURE**.

   HVAC has wrong vehicle configuration but TIPM has correct configuration.

   - Replace the A/C Heater Control in accordance with the Service Information.
   - Perform the HVAC VERIFICATION TEST. Refer to **STANDARD PROCEDURE**.

   HVAC and TIPM have proper calibration and the DTC is active in the

HVAC.

- Check if other modules such as the Powertrain Control Module (PCM) have the wrong configuration stored in the controller and reprogram or replace as necessary. If all other modules show the proper configuration, replace the A/C Heater Control in accordance with the Service Information.
- Perform the HVAC VERIFICATION TEST. Refer to **STANDARD PROCEDURE**.

U0010-00-CAN INTERIOR BUS

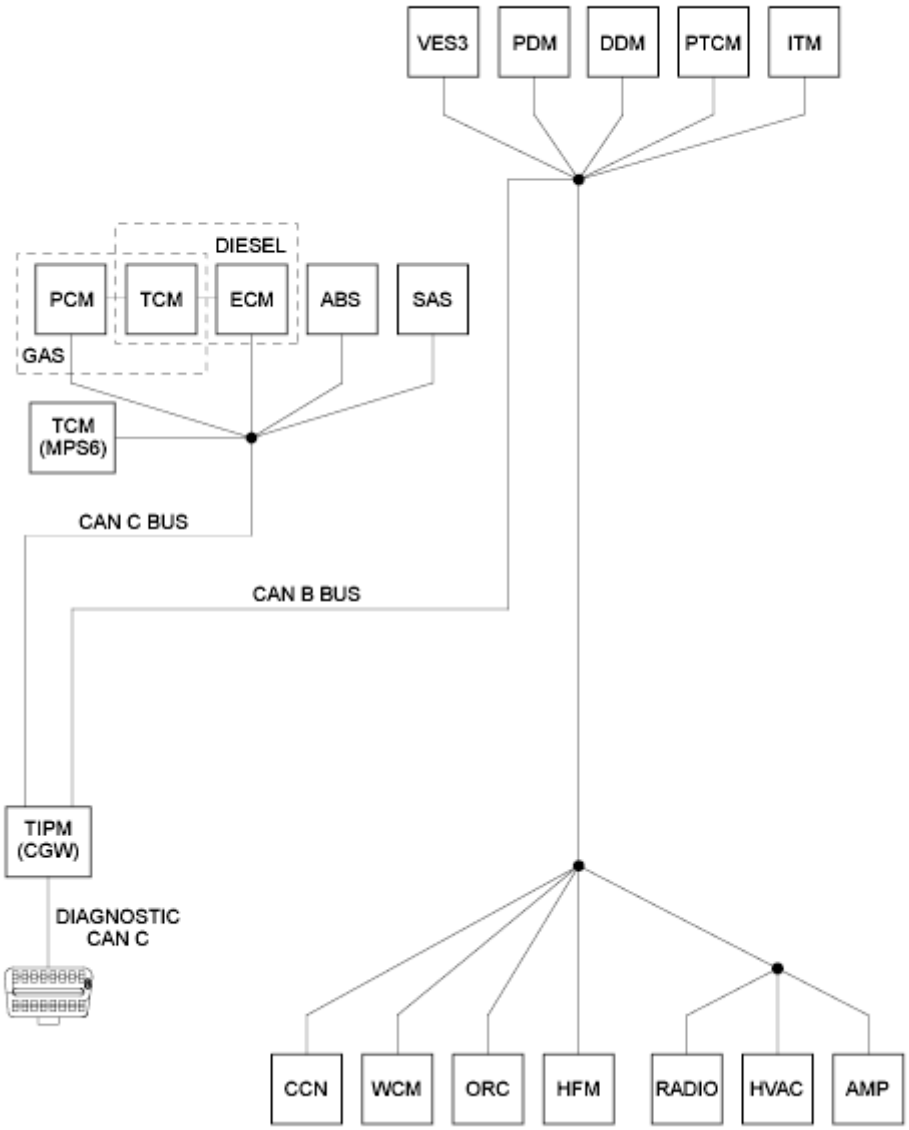

Fig. 71: CAN B & C BUS Module Diagram
Courtesy of CHRYSLER GROUP, LLC

For a complete wiring diagram, **refer to appropriate SYSTEM WIRING DIAGRAMS article** .

WHEN MONITORED

Continuously when the ignition is on.

Battery voltage between 10 and 16 Volts.

Ignition Off Draw (IOD) fuse installed.

Totally Integrated Power Module (TIPM) is configured correctly.

SET CONDITION

The A/C Heater Control detects a short to ground or a short to voltage on the CAN Bus circuits.

POSSIBLE CAUSES

Possible Causes
BUS CIRCUITS SHORTED TO GROUND OR VOLTAGE
DTCS RELATED TO BATTERY VOLTAGE, IGNITION, OR VIN MESSAGES
TIPM NOT CONFIGURED CORRECTLY
TOTALLY INTEGRATED POWER MODULE (TIPM)
TIPM POWER AND GROUND
A/C HEATER CONTROL

DIAGNOSTIC TEST

VERIFY DIAGNOSTIC TROUBLE CODE (DTC) IS ACTIVE

NOTE: Make sure the IOD fuse is installed and battery voltage is between 10 and 16 Volts before proceeding.

1. Using the scan tool, read HVAC DTCs.

Is this DTC active?

Yes

- Refer to **DIAGNOSIS AND TESTING** and perform the U0010-CAN Interior Bus diagnostic procedure.

No

- Refer to **DIAGNOSIS AND TESTING** and perform the Stored Lost Communication DTCs diagnostic procedure.

U0141-00-LOST COMMUNICATION WITH IPM (FCM/TIPM)

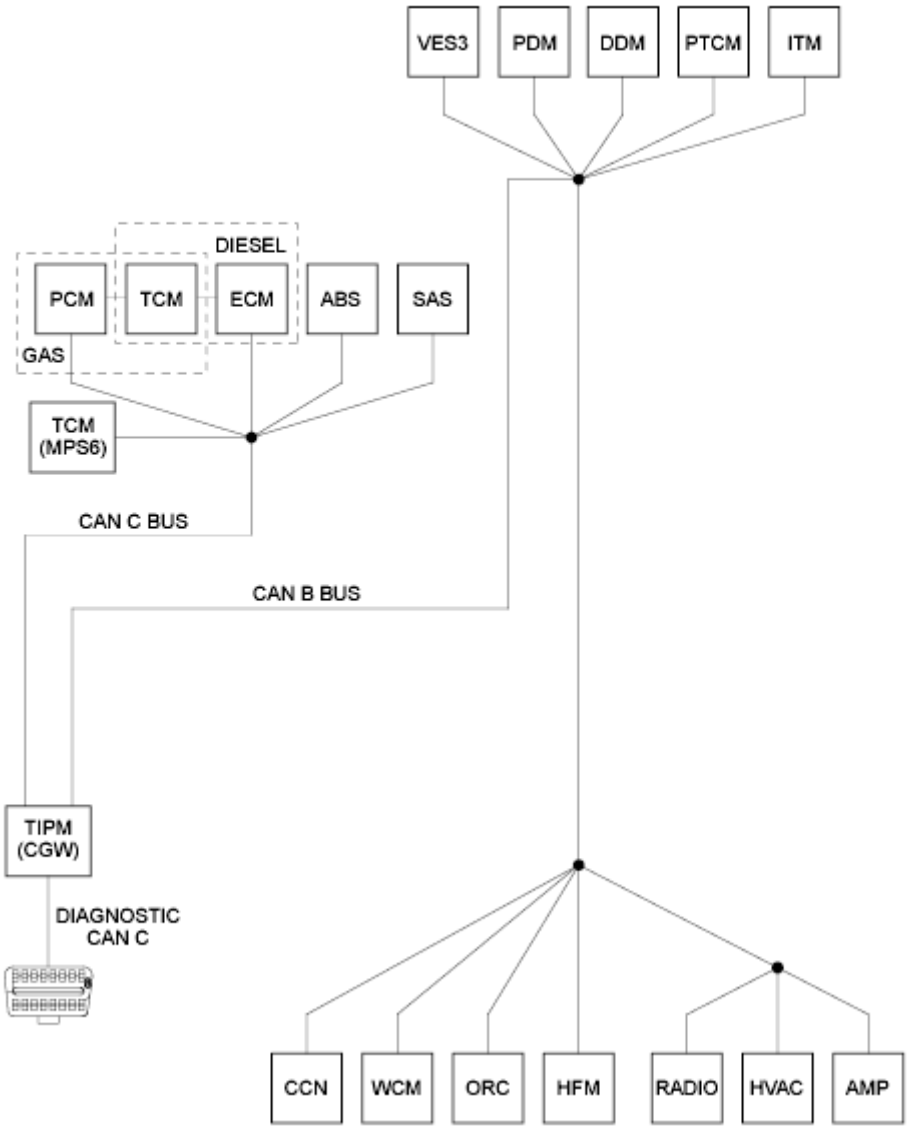

Fig. 72: CAN B & C BUS Module Diagram
Courtesy of CHRYSLER GROUP, LLC

For a complete wiring diagram, **refer to appropriate SYSTEM WIRING DIAGRAMS article** .

WHEN MONITORED

Continuously when the ignition is on.

12-volt battery voltage between 10 and 16 Volts.

Ignition Off Draw (IOD) fuse installed.

Totally Integrated Power Module (TIPM) is configured correctly.

SET CONDITION

Bus messages not received from the Totally Integrated Power Module (TIPM) for three seconds.

POSSIBLE CAUSES

Possible Causes
BUS CIRCUITS OPEN OR SHORTED
DTCS RELATED TO BATTERY VOLTAGE, IGNITION, OR VIN MESSAGES
FCM/TIPM NOT CONFIGURED CORRECTLY
TIPM POWER AND GROUND
TOTALLY INTEGRATED POWER MODULE
A/C HEATER CONTROL

DIAGNOSTIC TEST

VERIFY DIAGNOSTIC TROUBLE CODE (DTC) IS ACTIVE

NOTE: Make sure the IOD fuse is installed and 12-volt battery voltage is between 10 and 16 Volts before proceeding.

1. Using the scan tool, read active HVAC DTCs.

   Is this DTC active?

   Yes

   - Refer to **DIAGNOSIS AND TESTING** and perform the diagnostic procedure for U0141-Lost Communication With IPM (FCM/TIPM).

   No

   - Refer to **DIAGNOSIS AND TESTING** and perform the Stored Lost Communication DTC diagnostic procedure.

U0155-00-LOST COMMUNICATION WITH CLUSTER/CCN

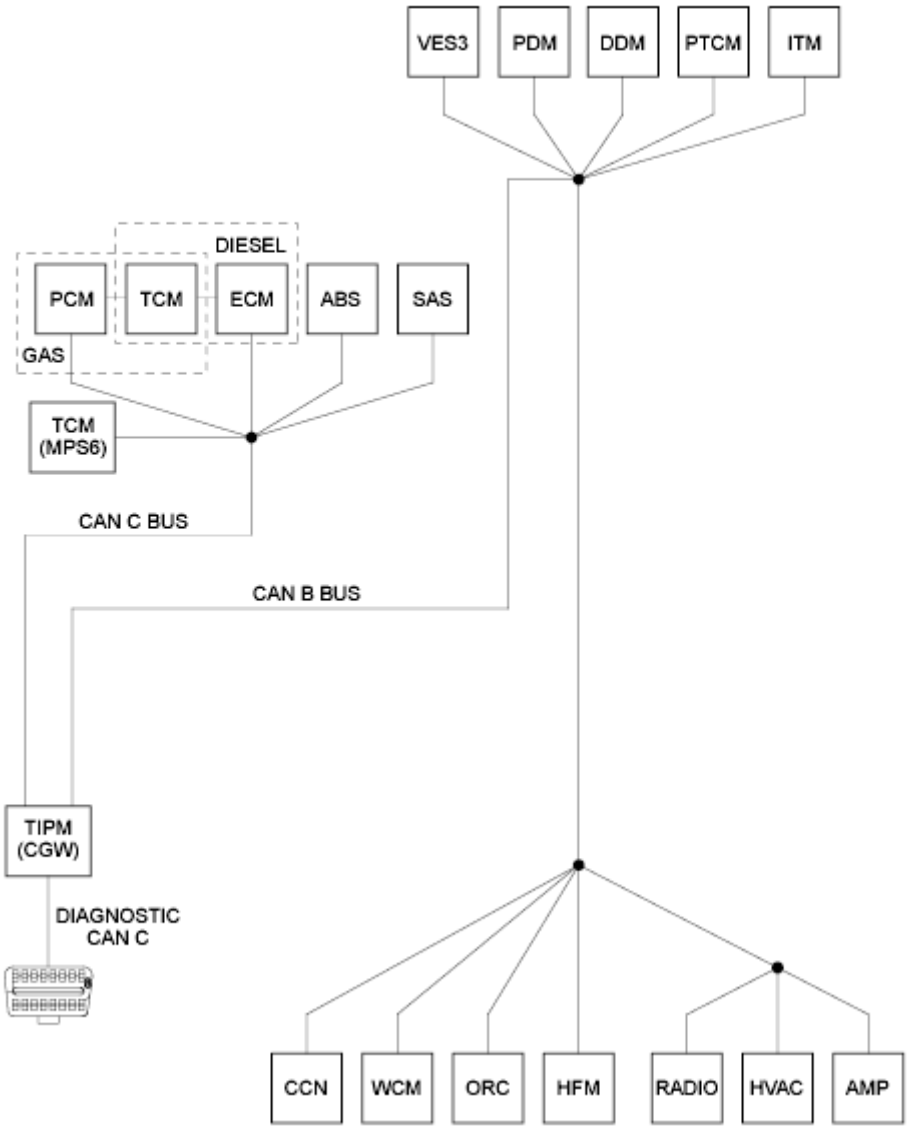

Fig. 73: CAN B & C BUS Module Diagram
Courtesy of CHRYSLER GROUP, LLC

For a complete wiring diagram, **refer to appropriate SYSTEM WIRING DIAGRAMS article** .

WHEN MONITORED

With the ignition on.

Battery voltage between 10 and 16 Volts.

Ignition Off Draw (IOD) fuse installed.

Totally Integrated Power Module (TIPM) is configured correctly.

SET CONDITION

Bus messages not received from the Cluster/CCN for approximately two to five seconds.

POSSIBLE CAUSES

Possible Causes
BUS CIRCUITS OPEN OR SHORTED
DTCS RELATED TO BATTERY VOLTAGE, IGNITION, OR VIN MESSAGES
FCM/TIPM NOT CONFIGURED CORRECTLY
TIPM NOT CONFIGURED CORRECTLY
CLUSTER/CCN POWER AND GROUND
CLUSTER/CCN
A/C HEATER CONTROL

DIAGNOSTIC TEST

VERIFY DIAGNOSTIC TROUBLE CODE (DTC) IS ACTIVE

NOTE: Make sure the IOD fuse is installed and 12-volt battery voltage is between 10 and 16 Volts before proceeding.

1. Using the scan tool, read active HVAC DTCs.

   Is this DTC active?

   Yes

   - Refer to **DIAGNOSIS AND TESTING** and perform the diagnostic procedure for U0155-Lost Communication With Cluster/CCN.

   No

   - Refer to **DIAGNOSIS AND TESTING** and perform the Stored Lost Communication DTC diagnostic procedure.

STANDARD PROCEDURE

HVAC VERIFICATION TEST

Perform the following procedures to verify that the repair(s) are valid:

1. Make sure that all accessories are turned off.
2. Make sure that the battery is fully charged.
3. Turn the ignition off to the lock position.
4. Disconnect all jumper wires and reconnect all previously disconnected components and connectors.
5. With the scan tool, record and erase all Diagnostic Trouble Codes (DTCs) from ALL modules.
6. Turn the ignition off, remove the scan tool from the DLC (Data Link Connector). Open the door and close the door. Wait a minimum 30 seconds, then turn the ignition on. Reconnect the scan tool.

   NOTE: Disconnecting the scan tool and opening and closing the door will allow the controller to enter into sleep mode.

7. With the scan tool perform the HVAC Actuator Calibration Test.
8. Start and run the engine for two minutes while operating all functions of the system that caused the original concern.
9. With the scan tool, check for DTCs in all modules.

Is the original condition still present or are there any other HVAC DTCs present?

Yes

- Refer to **DIAGNOSIS AND TESTING** and perform the appropriate diagnostic procedure.

No

- Repair is complete.

HVAC SYSTEM TEST

For a complete wiring diagram, **refer to appropriate SYSTEM WIRING**

DIAGRAMS article .

THEORY OF OPERATION

The HVAC System Test provides a starting point in the diagnostic process by identifying the appropriate diagnostic procedure or system test to perform when diagnosing a given symptom, condition, or Diagnostic Trouble Code (DTC). It also provides a means for testing the entire HVAC system by utilizing the A/C Heater Control's On-Board System Tests. The HVAC System Tests can also assist in diagnosing stored DTCs.

DIAGNOSTIC TEST

1. **HVAC SYSTEM TEST**

   NOTE: Diagnose and repair all active DTCs before diagnosing and repairing stored DTCs. If active DTCs are present, see DTC INDEX and perform the appropriate diagnostic procedure.

   Make a selection based on the symptom, condition, or DTC that you want to diagnose.

   scan tool Indicates HVAC Not Active On Bus

   - Refer to **DIAGNOSIS AND TESTING** and perform the No Response from HVAC diagnostic procedure.

   Blower Motor Inoperative

   - Refer to **MOTOR, BLOWER, DIAGNOSIS AND TESTING** for Blower Motor diagnostic procedures.

   Actuator Calibration Test

   - Go To 4

   A/C System Performance (Cooldown) Test

   - Go To 2
2. **A/C COOLDOWN TEST**

1. **The following are prerequisites of the A/C Cooldown Test. Verify that the:**
   - Refrigerant system has an adequate charge. Check and repair as necessary before proceeding in accordance with the Service Information. Refer to **DIAGNOSIS AND TESTING** .
   - Blower motor operates correctly in all speeds. Diagnose and repair all blower related faults before proceeding.
   - Work area ambient temperature is above 16° C (60° F) before proceeding. Move the vehicle to a warmer work area if necessary.
   - Evaporator temperature is above 13° C (55° F) before proceeding.
   - A/C compressor is not running. If the compressor is running, turn the A/C off and allow the evaporator to warm up before proceeding.

   NOTE: Running the AC Cooldown test will cause the A/C status indicator to flash. One or more status messages will display on the scan tool after running the Cooldown Test. These messages will clear after paging back out of this test function. Therefore, it is important to note all messages before doing so.

2. Start the engine.
3. Turn the Blower control to the high speed position.
4. With the scan tool in HVAC, select System Tests and then select Cooldown test. Allow the test to run to completion.

   Does the scan tool display a status message that indicates a fault has occurred?

   Yes

   - See **DIAGNOSTIC CODE INDEX** and perform the appropriate diagnostic procedure based on vehicle HVAC system.

   No

   - Go To 3

3. MODE SWITCH AND DOOR ACTUATOR CIRCUIT TEST

NOTE: If at anytime a DTC becomes active during this test, proceed to the conclusion question. If multiple DTCs are active, diagnose those that relate to a short circuit first.

1. Start the engine and turn the Blower control to the low speed position.
2. Set the Blend control (single-zone) or Driver and Passenger Blend control (dual-zone) to the full cold position.
3. Monitor the scan tool for active HVAC DTCs while performing the following test steps.
   - If equipped, press the A/C mode switch on, wait 30 seconds, and then press it off.
   - On Dual-Zone systems, press the Recirculation mode switch on, wait 30 seconds, and then press it off.
   - If equipped, press the EBL mode switch on, wait 30 seconds, and then press it off.
   - Move the Blend control (single-zone) or Driver Blend control (dual-zone) from full cold to full hot, wait 30 seconds, and then move it back to full cold.
   - If equipped, move the Passenger Blend control from full cold to full hot, wait 30 seconds, and then moved it back to full cold.
   - Turn the Mode select control to the defrost position, wait 30 seconds, and then turn it to the panel position (dual-zone) or panel / recirculation position (single-zone). Wait 30 seconds before proceeding.

Does the scan tool display any active DTCs?

Yes

- See **DIAGNOSTIC CODE INDEX** and perform the appropriate diagnostic procedure based on vehicle HVAC system.

No

- Go To 4

4. **ACTUATOR CALIBRATION TEST**
   1. Ignition on, engine not running.
   2. Using the scan tool, select Actuator Calibration Test. When the test is complete, read HVAC DTCs.

      Does the scan tool display any DTCs?

      Yes

      - See **DIAGNOSTIC CODE INDEX** and perform the appropriate diagnostic procedure based on vehicle HVAC system.

      No

      - Test Complete.

HVAC PRE-DIAGNOSTIC TROUBLESHOOTING PROCEDURE

For a complete wiring diagram, **refer to appropriate SYSTEM WIRING DIAGRAMS article** .

Perform the following steps prior to any diagnostic procedure(s):

- Testing should only be performed with the battery fully charged to avoid false diagnosis.
- With the scan tool, read Powertrain Control Module (PCM) Diagnostic Trouble Codes (DTCs). If PCM DTCs are present, and perform the appropriate diagnostic procedure(s) before proceeding. Refer to **DTC INDEX** .
- Depending on the vehicle configuration, with the scan tool, read Totally Integrated Power Module (TIPM) DTCs. If TIPM DTCs are present, and perform the appropriate diagnostic procedure(s) before proceeding. Refer to **DIAGNOSIS AND TESTING** .
- With the scan tool, read HVAC DTCs. Record all Stored, Active, and Pending DTC information.
- With the scan tool, read the Environmental Data. Use this data to help identify the conditions in which the DTC was set.
- Refer to the WHEN MONITORED and SET CONDITIONS for this DTC. DTCs can set at ignition on, at start up, or operating under specific

conditions.

- Using the wiring diagram as a guide, inspect the wiring and connectors related to this circuit and clean/repair as necessary.
- Check for controller software updates if applicable. Some conditions can be corrected by upgrading the controller software.

NOTE: If the controller is updated with new software, with the scan tool, perform a HVAC Actuator Calibration Test.

- Check for Service Information Tune-ups or Service Bulletins for any possible causes that may apply.

Did any of the above procedures repair the vehicle?

Yes

- Testing is complete.
- Perform the HVAC VERIFICATION TEST. Refer to **STANDARD PROCEDURE**.

No

- Refer to **DIAGNOSIS AND TESTING** and perform the appropriate diagnostic procedure.

HEATING-A/C SYSTEM DIAGNOSTICS

ON-BOARD DIAGNOSTICS

CAUTION: Do not exchange A/C Heater Controls from vehicle to vehicle. Software versions differ between models and model years. Installing an A/C Heater Control with software that is incompatible for a given vehicle can result in either improper or failed HVAC system operation.

NOTE: Always inspect the IOD fuse prior to diagnosing any heating-A/C system concerns. Make sure the fuse is functional and fully seated into the terminals of the totally

integrated power module (TIPM) located in the engine compartment.

The A/C-heater control communicates on the controller area network (CAN) B bus and is fully addressable with a scan tool.

The A/C-heater control's primary means of fault detection is through active and stored diagnostic trouble codes (DTCs). Active DTCs are those which currently exist in the system. The condition causing the fault must be repaired in order to clear this type of DTC. Stored DTCs are those which occurred in the system since the A/C-heater control received the last clear diagnostic info message. All DTCs must be read with a scan tool (refer to **DIAGNOSIS AND TESTING** for the diagnostic test procedures).

The A/C-heater control's secondary means of fault detection is through system tests. These tests include the HVAC System Test, the A/C Cooldown Test, the Actuator Calibration Function, and for MTC Systems, the Actuator DTC Detection Test. Refer to appropriate System Tests in this Diagnostic Information for a detailed description of each test.

SYSTEM TESTS

HVAC SYSTEM TEST

The HVAC System Test provides a starting point in the diagnostic process by identifying the appropriate system test to perform when diagnosing a given condition or DTC. It also provides a means for testing the entire HVAC system by utilizing the A/C-heater control's On-Board System Tests. The On-Board System Tests can also assist in diagnosing stored DTCs.

A/C COOLDOWN TEST

A/C COOLDOWN TEST

The A/C Cooldown Test:

- is actuated with a scan tool.
- tests A/C system performance based on evaporator temperature sensor input.
- will fail if evaporator starting temperature is below 18° C (65° F) when initiating the test.
- will pass if the evaporator temperature drops 11° C (20° F).

- indicates test outcome by displaying one or more test status messages on the scan tool. These messages will clear after paging back out of this test function. Therefore, is it important to note all of the messages before doing so.
- will cause the A/C status indicator to flash while the test is running.

ACTUATOR CALIBRATION FUNCTION

The Actuator Calibration function:

- is actuated with a scan tool.
- homes and repositions door actuators.
- monitors for door span faults. Door span faults (XXX Door Travel Range Too Large or XXX Door Travel Range Too Small) will only display after calibration.
- will cause the electric backlight (EBL) status indicator to flash while the test is running.

ACTUATOR DTC DETECTION TEST

The Actuator DTC Detection Test:

- is actuated with a scan tool.
- supplements the continuous diagnostics on the actuator drive system.
- monitors for shorted actuator circuits allowing service to easily diagnose and troubleshoot up to three simultaneous shorts. Shorted actuator circuit faults (XXX Control Circuit High or XXX Control Circuit Low) will only display after running the Actuator DTC Detection Test.

After repairing each DTC, cycle the ignition switch, and then rerun the Actuator DTC Detection test to ensure that no new DTCs exist. If multiple DTCs are present, beginning with the common circuits, diagnose and repair all short high faults and then short low faults. When the test returns passed, proceed with troubleshooting by clearing faults and running the Actuator Calibration function as a final check of proper system operation.

2014 HVAC

Heating & Air Conditioning - Service Information - Compass & Patriot

DESCRIPTION

DESCRIPTION

An electronic Manual Temperature Control (MTC) single zone type heating-A/C system, electronic MTC heater-only system and an electronic Automatic Temperature Control (ATC) single zone type heating-A/C system are available on this model, depending on market.

To maintain the performance level of the Heating, Ventilation and Air Conditioning (HVAC) system, the engine cooling system must be properly maintained. The use of a bug screen is not recommended. Any obstructions in front of the radiator or A/C condenser will reduce the performance of the A/C and engine cooling systems.

The engine cooling system includes the radiator, thermostat, radiator hoses and the engine coolant pump. See **ENGINE COOLING SYSTEM** for more information before opening or attempting any service to the engine cooling system.

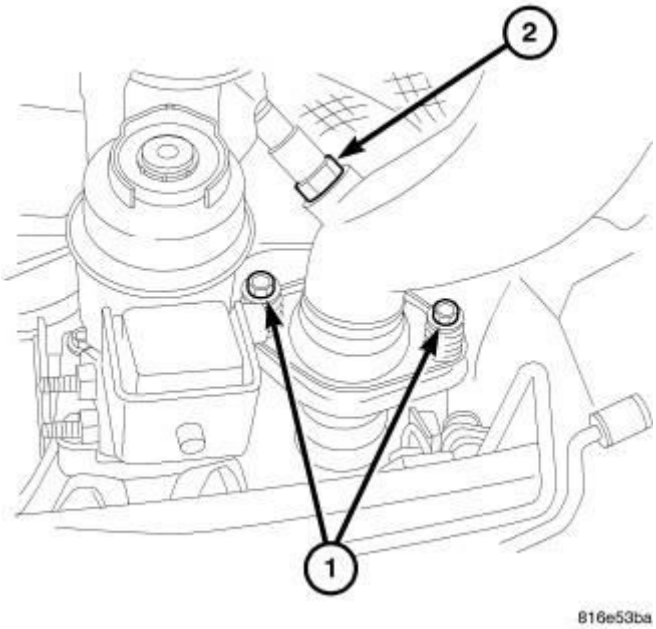

Fig. 1: HVAC Housing Components
Courtesy of CHRYSLER GROUP, LLC

The heating-A/C system combines A/C, heating, and ventilating capabilities in a single HVAC housing mounted within the passenger compartment beneath the instrument panel. All vehicles are equipped with a common HVAC housing that includes the following.

- Blend-air door and actuator (1)
- Evaporator temperature sensor (2) (when A/C equipped)
- A/C evaporator (3) (when A/C equipped)
- Mode-air doors (4)
- Mode door actuator (5)
- Recirculation-air door and actuator (6) (when A/C equipped)
- Cabin air filter (7) (when equipped)
- Blower motor (8)
- Blower motor power module (9)
- Heater core (10)

On heater-only systems, the A/C evaporator is omitted from the HVAC housing and is replaced with an air restrictor plate.

NOTE: An electric positive temperature coefficient (PTC) heater is used on vehicles when equipped with the 2.2L diesel engine. The PTC heater unit compensates for the lower engine coolant temperatures produced by the diesel engine. The PTC heater unit is mounted in the HVAC air distribution housing, downstream of the heater core. For more information. Refer to UNIT, HEATER, DESCRIPTION.

Based upon the system mode selected, conditioned air can exit the HVAC housing through one or a combination of the three main housing outlets: defrost, panel or floor. The defrost and panel outlets are located on the top of the HVAC air distribution housing and the floor outlets are located on each side of the distribution housing. Once the conditioned air exits the HVAC housing, it is further directed through molded plastic ducts to the various outlets within the vehicle interior. These outlets and their locations are as follows:

- **Defroster Outlet** - A single large defroster outlet is located in the center of the instrument panel, near the base of the windshield.

- **Side Window Demister Outlets** - There are two side window demister outlets, one is located at each outboard end of the instrument panel top cover, near the belt line at the A-pillars.
- **Panel Outlets** - There are four panel outlets in the instrument panel, one located near each outboard end of the instrument panel facing the rear of the vehicle and two located near the top of the instrument panel center bezel.
- **Front Floor Outlets** - There are two front floor outlets, one located on each side the floor panel center tunnel behind the instrument panel.
- **Rear Seat Floor Outlets** - There are two rear seat floor outlets, one located on each side of the floor panel near the front of each rear seat foot well.

OPERATION

OPERATION

The Manual Temperature Control (MTC) heating-A/C system, MTC heater-only system and the Automatic Temperature Control (ATC) heating-A/C system are blend-air type systems. In a blend-air system, a blend-air door controls the amount of conditioned air that is allowed to flow through, or around, the heater core. The temperature control determines the discharge air temperature by operating the blend door actuator, which moves the blend-air door. This design allows almost immediate control of output air temperature.

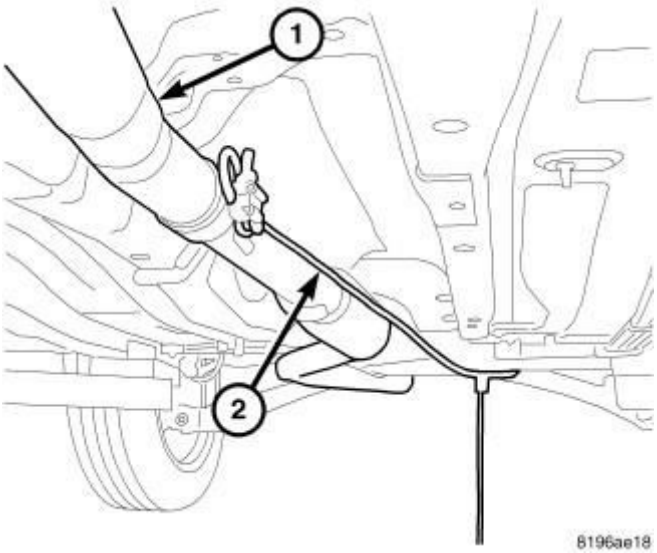

Fig. 2: Blend Air System Schematic
Courtesy of CHRYSLER GROUP, LLC

NOTE: Typical blend-air type HVAC system shown in illustration.

The heating-A/C system pulls outside (ambient) air through the fresh air intake (4) located at the cowl panel at the base of the windshield and into the air inlet housing above the heating, ventilation and air conditioning (HVAC) housing. On models equipped with A/C, the air passes through the A/C evaporator (7). Air flow is then directed either through or around the heater core (2). This is done by adjusting the position of the blend-air door (3) with the temperature control located on the A/C-heater control in the instrument panel. Air flow is then directed out the floor outlet (8), instrument panel outlet (10) or the defroster outlet (1) in various combinations by adjusting the position of the mode-air doors (9 and 11) using the mode control located on the A/C-heater control. The mode control uses a control cable to operate the mode-air doors.

The velocity of the air flow out of the outlets can be adjusted with the blower speed control located on the A/C-heater control.

The fresh air intake can be shut off by pressing the Recirculation button on the A/C-heater control. This will operate the electrically actuated recirculation-air door (5), which closes off the fresh air intake. With the fresh air intake closed, the conditioned air within the vehicle is pulled back into the HVAC housing through the recirculation air intake (6) located within the passenger compartment.

The A/C compressor can be engaged by pressing the A/C (snowflake) button on the A/C-heater control. It will automatically engage when the mode control is set in any Mix to Defrost position. This will remove heat and humidity from the air before it is directed through or around the heater core. The mode control on the A/C-heater control is used to direct the conditioned air to the selected system outlets.

The front and rear floor outlets receive airflow from the HVAC housing through the front and rear floor ducts. The front floor outlets are integral to the molded plastic front floor ducts, which are secured to each side of the HVAC housing. Two molded plastic rear seat ducts are attached to the two molded plastic rear floor ducts, which are secured to the rear of the HVAC housing. The rear seat ducts direct airflow beneath the carpet to the outlets located near the front of each rear seat foot well. None of the floor outlets can be adjusted.

The panel outlets receive airflow from the HVAC housing through the center air distribution duct and molded plastic panel outlet ducts. The airflow from each of

the panel outlets is adjustable. A thumbwheel located at the bottom of each panel outlet grille is used to adjust a center diffuser that changes the airflow direction, and a knob on the outer edge of each panel outlet grille opens or closes a shutter to turn airflow on or off through that outlet.

The defroster outlet receives airflow from the HVAC housing through the molded plastic defroster duct, which is secured to the top of the instrument panel. The airflow from the defroster outlet is directed by fixed vanes in the defroster outlet grille and cannot be adjusted.

The side window demister outlets receive airflow from the HVAC housing through the defroster duct and molded plastic demister ducts. The airflow from the side window demister outlets is directed by fixed vanes in the demister outlet grilles and cannot be adjusted. The side window demister outlet grilles are integral to the instrument panel cover and direct air from the HVAC housing through the outlets on the top corners of the instrument panel. The demisters operate when the mode control is set in any Floor to Defrost position.

DIAGNOSIS AND TESTING

A/C PERFORMANCE

The A/C system is designed to provide the passenger compartment with low temperature and low humidity air. The A/C evaporator, located in the HVAC housing is cooled to temperatures near the freezing point. As warm damp air passes over the fins of the A/C evaporator, the air transfers its heat to the refrigerant in the evaporator coils and the moisture in the air condenses on the evaporator fins. During periods of high heat and humidity, an A/C system will be more effective in the Recirculation mode (max-A/C). With the system in the Recirculation mode, only air from the passenger compartment passes through the A/C evaporator. As the passenger compartment air dehumidifies, the A/C system performance levels rise.

Humidity has an important bearing on the temperature of the air delivered to the interior of the vehicle. It is important to understand the effect that humidity has on the performance of the A/C system. When humidity is high, the A/C evaporator has to perform a double duty. It must lower the air temperature, and it must lower the temperature of the moisture in the air that condenses on the evaporator fins. Condensing the moisture in the air transfers heat energy into the evaporator fins and coils. This reduces the amount of heat the A/C evaporator

can absorb from the air. High humidity greatly reduces the ability of the A/C evaporator to lower the temperature of the air.

However, evaporator capacity used to reduce the amount of moisture in the air is not wasted. Wringing some of the moisture out of the air entering the vehicle adds to the comfort of the passengers. Although, an owner may expect too much from their A/C system on humid days. A performance test is the best way to determine whether the system is performing up to design standards. This test also provides valuable clues as to the possible cause of trouble with the A/C system. The ambient air temperature in the location where the vehicle will be tested must be a minimum of 21° C (70° F) for this test.

A/C PERFORMANCE TEST

WARNING: Review the warnings and cautions for this system before performing the procedure. Failure to follow these instructions may result in serious injury or death.

CAUTION: The use of an A/C recycling/charging station for purposes of determining the actual charge level of an A/C system is not recommend. Service recycling/charging stations do not reflect the correct amount of refrigerant charge in the A/C system after a single "reclaim" cycle. Tests have shown that it can take two or more "reclaim" cycles to remove all of the refrigerant charge, depending on the equipment being used. Use only the following procedure for determining the proper charge level.

NOTE: When connecting the service equipment coupling to the line fitting, verify that the valve of the coupling is fully closed. This will reduce the amount of effort required to make the connection.

1. Check for Diagnostic Trouble Codes (DTCs) using a scan tool. If no DTCs are found in the Powertrain Control Module (PCM) or Engine Control Module (ECM) (depending on engine application), Gateway Module or the

Totally Integrated Power Module (TIPM), go to 2. If any DTCs are found, repair as required, then proceed to 2.

2. Connect a tachometer and a manifold gauge set or an A/C recycling/charging station.

NOTE: The ambient air temperature of the vehicle and the location where the vehicle will be tested must be a minimum of 21° C (70° F) before performing this test. Place the vehicle in the testing area until the temperature within the vehicle reaches a minimum of 21° C (70° F).

3. Operate the heating-A/C system under the following conditions.
   - Engine at idle and operating temperature
   - Doors or windows open
   - Transaxle in Park or Neutral with parking brake set (depending on transaxle application)
   - A/C-heater controls set to Recirculation mode (max-A/C), full cool, panel mode, high blower and A/C on.
4. Insert a thermometer in the driver side center panel air outlet and operate the vehicle a minimum of ten minutes to allow the thermometer temperature to stabilize.

NOTE: This procedure requires the technician to know what the temperature and relative humidity is at the time of the test. The temperature must be combined with the relative humidity to calculate the apparent ambient temperature ("feels like" temperature), when the temperatures are above 21° C (70° F). Use the current ambient temperature and the relative humidity in your location. This information can be obtained from multiple sources, such as the Internet or local news media.

5. Compare the air temperature at the center panel outlet and the A/C system pressures to the A/C Performance Temperature and Pressure chart.

A/C PERFORMANCE TEMPERATURE AND PRESSURE

Ambient Temperature (Apparent)	**21° C (70° F)**	**27° C (80° F)**	**32° C (90° F)**	**38° C (100° F)**	**43° C (110° F)**
Air Temperature at Center Panel Outlet	6 -15° C (42 - 59° F)	7 -18° C (45 - 64° F)	9 - 21° C (48 - 69° F)	11 - 22° C (52 - 72° F)	13 - 24° C (56 - 75° F)
A/C High Side Pressure	1034 - 1896 kPa (150 - 275 psi)	1207 - 2068 kPa (175 - 300 psi)	1379 - 2241 kPa (200 - 325 psi)	1551 - 2413 kPa (225 - 350 psi)	1724 - 2241 kPa (250 - 375 psi)
A/C Low Side Pressure	214 - 365 kPa (31 - 53 psi)	248 - 407 kPa (36 - 59 psi)	283 - 476 kPa (41 - 69 psi)	317 - 483 kPa (46 - 70 psi)	359 - 496 kPa (52 - 72 psi)

6. If the air outlet temperature or the A/C system pressures are not within specifications, see the **A/C SYSTEM DIAGNOSIS** table.

A/C SYSTEM DIAGNOSIS

Condition	Possible Causes	Correction
Equal refrigerant pressures	1. No refrigerant in the refrigerant system	1. See **DIAGNOSIS AND TESTING - REFRIGERANT SYSTEM LEAKS**. Test the refrigerant system for leaks. Repair, evacuate and charge the refrigerant system if required.
	2. Inoperative A/C compressor or clutch (depending on compressor application)	2. See **COMPRESSOR, A/C**. Test the compressor and/or clutch and replace if required.
	3. Improperly installed or inoperative A/C pressure transducer	3. See **TRANSDUCER, A/C PRESSURE**. Test the transducer and replace if required.
	4. Inoperative A/C-heater control, PCM/ECM	4. See **DTC INDEX** . Test the A/C-heater control, PCM/ECM (depending on engine

	(depending on engine application), Gateway Module or TIPM	application), Gateway Module and TIPM and replace if required.
Normal refrigerant pressures, but A/C Performance Test air temperatures at center panel outlet are too high	1. Excessive refrigerant oil in system	1. See **STANDARD PROCEDURE - REFRIGERANT OIL LEVEL**. Recover the refrigerant from the refrigerant system and inspect the refrigerant oil content. Restore the refrigerant oil to the proper level if required.
	2. Blend door actuator improperly installed or inoperative	2. See **ACTUATOR, BLEND DOOR**. Inspect the actuator for proper operation. Replace the actuator as required.
	3. Blend door inoperative or sealing improperly	3. See **HOUSING, HVAC**. Inspect the blend door for proper operation and sealing. Repair if required.
The low side pressure is normal or slightly low, and the high side pressure is too low	1. Low refrigerant system charge	1. See **DIAGNOSIS AND TESTING - REFRIGERANT SYSTEM LEAKS**. Test the refrigerant system for leaks. Repair, evacuate and charge the refrigerant system if required.
	2. Refrigerant flow through A/C evaporator is restricted	2. See **EVAPORATOR, A/C**. Replace the restricted A/C evaporator if required.
	3. Refrigerant flow through refrigerant lines is restricted	3. See **PLUMBING**. Inspect the refrigerant lines for kinks, tight bends or improper routing. Correct the routing or replace the refrigerant line if required.
	4. Inoperative A/C	4. See **COMPRESSOR, A/C**.

	compressor	Replace the compressor if required.
The low side pressure is normal or slightly high, and the high side pressure is too high	1. Inoperative radiator cooling fan	1. See **ENGINE COOLING SYSTEM** . Test the radiator cooling fan and replace if required.
	2. A/C condenser air flow restricted	2. See **CONDENSER, A/C**. Check the A/C condenser for damaged fins, foreign objects obstructing air flow through the condenser fins and missing or improperly installed air seals. Clean, repair or replace components as required.
	3. Refrigerant flow through the A/C receiver/drier is restricted	3. See **DRIER, A/C RECEIVER**. Replace the restricted receiver/drier if required.
	4. Refrigerant flow through refrigerant lines is restricted	4. See **PLUMBING**. Inspect the refrigerant lines for kinks, tight bends or improper routing. Correct the routing or replace the refrigerant line if required.
	5. Refrigerant system overcharged	5. See **REFRIGERANT SYSTEM CHARGE**. Recover the refrigerant from the refrigerant system. Charge the refrigerant system to the proper level if required.
	6. Air in the refrigerant system	6. See **DIAGNOSIS AND TESTING - REFRIGERANT SYSTEM LEAKS**. Test the refrigerant system for leaks. Repair, evacuate and charge the refrigerant system if required.
	7. Engine overheating	7. See **ENGINE COOLING SYSTEM** . Test the engine

		cooling system and repair if required.
The low side pressure is too high, and the high side pressure is too low	1. Accessory drive belt slipping	1. See **ENGINE COOLING SYSTEM** . Inspect the accessory drive belt condition and tension. Replace the accessory drive belt or tensioner if required.
	2. Inoperative A/C expansion valve	2. See **VALVE, A/C EXPANSION**. Test the expansion valve and replace if required.
	3. Inoperative A/C compressor	3. See **COMPRESSOR, A/C**. Replace the compressor if required.
The low side pressure is too low, and the high side pressure is too high	1. Restricted refrigerant flow through the refrigerant lines	1. See **PLUMBING**. Inspect the refrigerant lines for kinks, tight bends or improper routing. Correct the routing or replace the refrigerant line if required.
	2. Restricted refrigerant flow through the A/C expansion valve	2. See **VALVE, A/C EXPANSION**. Test the expansion valve and replace if required.
	3. Restricted refrigerant flow through the A/C condenser	3. See **CONDENSER, A/C**. Replace the restricted condenser if required.

HEATER PERFORMANCE

Before performing the following tests, see **ENGINE COOLING SYSTEM** for the procedures to check the engine coolant level and flow, engine coolant reserve/recovery system operation, accessory drive belt condition and tension, radiator air flow and the fan drive operation.

WARNING: **Do not remove radiator cap when engine is hot. Failure to follow this instruction may result in**

serious injury.

If vehicle has been run recently, wait 15 minutes before removing the radiator cap. Place a rag over the cap and turn it to the first safety stop. Allow pressure to escape through the overflow tube. When the system pressure stabilizes, remove the cap completely.

MAXIMUM HEATER OUTPUT

Engine coolant is delivered to and from the heater core through two heater hoses. With the engine idling at normal operating temperature, set the temperature control to the full hot position, the mode control to the floor position, and the blower motor control to the highest speed position. Using a test thermometer, check the temperature of the air being discharged at the front floor outlets. Compare the test thermometer reading to the Heater Temperature Reference chart.

HEATER TEMPERATURE REFERENCE

Ambient Temperature		Minimum Floor Outlet Temperature	
Celsius	**Fahrenheit**	**Celsius**	**Fahrenheit**
16°	60°	54°	130°
21°	70°	56°	132°
27°	80°	57°	134°
32°	90°	58°	136°

See **ENGINE COOLING SYSTEM** if the heater outlet air temperature is below the minimum specification. Both of the heater hoses should be hot to the touch. The coolant return heater hose should be slightly cooler than the coolant supply heater hose. If the return hose is much cooler than the supply hose, locate and repair the engine coolant flow obstruction in the cooling system.

OBSTRUCTED COOLANT FLOW

Possible locations or causes of obstructed coolant flow are as follows:

- Low coolant level
- Inoperative water pump
- Inoperative thermostat

- Pinched or kinked heater hoses
- Improper heater hose routing
- Plugged heater hoses or supply and return ports at the cooling system connections
- Plugged heater core

If proper coolant flow through the cooling system is verified, and heater outlet air temperature is low, a mechanical problem may exist.

MECHANICAL PROBLEMS

Possible causes of insufficient heat due to mechanical problems are as follows:

- Obstructed cowl air intake
- Obstructed heater system outlets
- Inoperative engine thermostat
- Inoperative blower motor system
- Inoperative A/C-heater control
- Inoperative blend door actuator
- Inoperative, obstructed or improperly installed blend-air door

TEMPERATURE CONTROL

If the heater outlet air temperature cannot be adjusted with the temperature control on the A/C-heater control, the following could require service:

- Inoperative A/C-heater control
- Inoperative blend door actuator
- Inoperative, obstructed or improperly installed blend-air door
- Improper engine coolant temperature

STANDARD PROCEDURE

STANDARD PROCEDURE - A/C EVAPORATOR CLEANING

Some vehicle operators may experience a musty odor from the A/C system, primarily at start up in hot and humid climates. This odor may be the result of microbial growth on the cooling coil. During normal A/C system operation, condensation forms in and around the A/C cooling coil. When airborne pollutants

mix with this condensation, bacteria and fungi growth begins and odor may result.

If the vehicle operator experiences a musty odor when operating the A/C system, perform the following procedure:

WARNING: Always use eye protection, rubber gloves and protective clothing when performing the following procedure. Avoid continuous breathing of vapors from evaporator coil cleaning and sealing fluids. Avoid contact with skin and eyes. Failure to follow these instruction may result in possible serious or fatal injury.

1. On models equipped with a cabin air filter, remove the filter and inspect for dirt and debris. Refer to **FILTER, CABIN AIR, REMOVAL**. Discard the used cabin filter if required.
2. Remove the cowl panel cover.
3. Clean any dirt and debris that may be present at the HVAC fresh air inlet screen and at the top of the cowl panel.
4. Install the cowl panel cover.
5. Raise and support the vehicle.
6. Inspect the evaporator drain hose or tube (depending on application) for foreign material that may be blocking the drain and repair as necessary.
7. Once drain operation has been verified;
   - when equipped with a rubber drain hose, temporarily pinch the drain hose closed using an appropriate pair of heater hose pliers.
   - when equipped with a solid plastic drain tube, obtain an appropriate size rubber or plastic cap or plug and temporarily cap or plug the drain tube.
8. Lower the vehicle.
9. Place a protective cover over the front passenger side floor and seat area.
10. Remove the blower motor. Refer to **MOTOR, BLOWER, REMOVAL**.
11. Remove the blower motor power module. Refer to **MODULE, POWER, BLOWER MOTOR, REMOVAL**.
12. Clean any dirt and debris that may be present inside the HVAC blower

motor housing and all readily accessible areas inside the HVAC housing. If necessary, use a vacuum with a small flexible hose, and take caution not to damage the evaporator core fins.

13. Using PSE Flex Spray Delivery Tool 534-62637 or equivalent, completely coat the entire surface of A/C evaporator with three bottles of Mopar® Cooling Coil Cleaner through the blower motor and power module or resistor openings. Be sure to use all of the coil cleaner in each container.
14. Allow the vehicle to sit for 30 minutes.
15. Raise and support the vehicle.

WARNING: **Excess cooling coil cleaner will drain from the evaporator housing when the clamp, cap or plug is removed from the evaporator drain hose or tube. Always use eye protection, rubber gloves and protective clothing. Avoid continuous breathing of vapors from evaporator coil cleaning fluid. Avoid contact with skin and eyes. Failure to follow these instruction may result in possible serious or fatal injury.**

16. Remove the previously installed clamp, cap or plug from the evaporator drain hose or tube and allow excess coil cleaner to drain from the HVAC housing.
17. Lower the vehicle.
18. Refill the three empty coil cleaner bottles with clean tap water.
19. Using PSE Flex Spray Delivery Tool 534-62637 or equivalent, completely rinse the entire surface of A/C evaporator with the three bottles of clean tap water through the blower motor and power module or resistor openings. Be sure to use all of the water in each container.
20. Install the blower motor. Refer to **MOTOR, BLOWER, INSTALLATION**.
21. Install the blower motor power module. Refer to **MODULE, POWER, BLOWER MOTOR, INSTALLATION**.
22. Disconnect the wire harness connector from the A/C compressor to disable compressor operation. Refer to **COMPRESSOR, A/C, REMOVAL**.

23. Start the engine
24. Adjust all the windows so they are open approximately 8 mm (0.5 in.).
25. Set the A/C-heater controls to the following:
    - air distribution to Panel and Recirculation mode
    - temperature to full heat
26. Allow the vehicle to run for 20 minutes.
27. Turn the engine off.
28. Raise and support the vehicle.
29. Inspect the evaporator drain hose or tube (depending on application) for foreign material that may have blocked the drain during evaporator coil cleaning and repair as necessary.
30. Once drain operation has been verified;
    - when equipped with a rubber drain hose, temporarily pinch the drain hose closed using an appropriate pair of heater hose pliers.
    - when equipped with a solid plastic drain tube, obtain an appropriate size rubber or plastic cap or plug and temporarily cap or plug the drain tube.
31. Lower the vehicle.
32. Remove the blower motor. Refer to **MOTOR, BLOWER, REMOVAL**.
33. Remove the blower motor power module. Refer to **MODULE, POWER, BLOWER MOTOR, REMOVAL**.
34. Using PSE Flex Spray Delivery Tool 534-62637 or equivalent, completely coat the entire surface of A/C evaporator with one bottle of Mopar® Cooling Coil Coating through the blower motor and power module or resistor openings. Be sure to use all of the coil coating in the container.

NOTE: Be sure to thoroughly clean out the spray delivery tool with warm water once coil coating is complete to prevent damage to the tool.

35. Refill the empty bottles with clean warm tap water and completely rinse out the PSE Flex Spray Delivery Tool 534-62637, or equivalent.
36. Allow the vehicle to sit for 30 minutes.
37. Install the blower motor. Refer to **MOTOR, BLOWER, INSTALLATION**.

38. Install the blower motor power module. Refer to **MODULE, POWER, BLOWER MOTOR, INSTALLATION**.
39. Raise and support the vehicle.

WARNING: Excess cooling coil coating will drain from the evaporator housing when the clamp, cap or plug is removed from the evaporator drain hose or tube. Always use eye protection, rubber gloves and protective clothing. Avoid continuous breathing of vapors from evaporator coil sealing fluid. Avoid contact with skin and eyes. Failure to follow these instruction may result in possible serious or fatal injury.

40. Remove the previously installed clamp, cap or plug from the evaporator drain hose or tube and allow excess coil coating to drain from the HVAC housing.
41. Lower the vehicle.
42. Start the engine
43. Adjust all the windows so they are open approximately 8 mm (0.5 in.).
44. Set the A/C-heater controls to the following:
    - air distribution to Panel and Recirculation mode
    - temperature to full heat
45. Allow the vehicle to run for 20 minutes.
46. Turn vehicle off.
47. Remove protective cover from front passenger side floor and seat area.
48. On models equipped with a cabin air filter, install the filter. Refer to **FILTER, CABIN AIR, INSTALLATION**.
49. Connect the wire harness connector to the A/C compressor. Refer to **COMPRESSOR, A/C, INSTALLATION**.
50. Verify proper A/C-heater system operation.

SPECIFICATIONS

A/C SYSTEM

A/C SYSTEM SPECIFICATIONS

Item	Description	Notes
A/C Compressor	Denso 10SRE18 fixed displacement - All 2.2L Diesel engine models Denso 6SEU16 variable displacement - All Gasoline engine models	ND-8 PAG oil
A/C Clutch Air Gap (2.2L Diesel engine models)	0.35 - 0.60 mm (0.014 - 0.024 in.)	
A/C Clutch Coil Draw (2.2L Diesel engine models)	3.2 - 3.3 amps	@ 12V ± 0.5V @ 21° C (70° F)
A/C Clutch Coil Resistance (2.2L Diesel engine models)	3.6 ± 0.2 ohms	When measured across coil lead connector
Freeze-up Control	Evaporator temperature sensor	Input to A/C-heater control, HVAC housing mounted - sets compressor to destroke/disengage 2° C (36° F) below evaporator target temperature (minimum 5° C (41° F) and activates/engages compressor when within 1° C (34° F) of evaporator target temperature
High psi Control	A/C pressure transducer	Input to PCM/ECM, discharge line mounted - sets compressor to destroke/disengage above 3130 kPa (454 psi) and below 200 kPa (29 psi)
Low psi Control		Input to PCM/ECM, discharge line mounted - sets compressor

	A/C pressure transducer	to destroke/disengage below 200 kPa (29 psi), activates/engages compressor above 234 -262 kPa (34 - 38 psi)
R-134a Refrigerant Charge Capacity	595 g (1.31 lbs.)	Also see A/C Underhood Specification Label located in the engine compartment

FASTENER TORQUE

FASTENER TORQUE SPECIFICATIONS

Description	N.m	Ft. Lbs.	In. Lbs.
All Screws NOT Listed Below	2	-	17
A/C Compressor to Engine Bolts	25	18	-
A/C Receiver/Drier to Frame Rail Bolts	15	11	-
A/C Expansion Valve to Evaporator Bolts	11	-	97
A/C Liquid Lines to A/C Receiver/Drier Nut/Bolt	5	-	44
A/C Suction Line Junction Block Nut	5	-	44
Air Distribution Housing Halves Screws	1.2	-	10
Air Distribution Housing to HVAC Housing Screws	1.2	-	10
Air Inlet Housing to HVAC Housing Screws	1.2	-	10
Blend Door Lever Screw	0.6	-	5
Blower Motor Screws	1.2	-	10
Center Duct Screws	2.2	-	20
Defroster Duct Support Screws	3	-	27

Defroster Duct Screws	2.2	-	20
Demister Duct Screws	2.2	-	20
Flange to HVAC Housing Screw	1.2	-	10
Heat Shield to Dash Panel Nuts	1	-	10
HVAC Housing Halves Screws	1.2	-	10
HVAC Housing to Dash Panel Nut	4.5	-	40
Lower Condenser Bracket to Radiator Bolts	4.5	-	40
Mode Door Cam Screw	0.6	-	5
PTC Heater Unit to Housing Screws	1.2	-	10
Rear Seat Floor Duct Screw	2.2	-	20
Refrigerant Lines to A/C Expansion Valve Bolt	25	18	-
Refrigerant Lines to A/C Compressor Nuts	20	15	-
Refrigerant Lines to A/C Condenser Nuts	5	-	44
Refrigerant Line Bracket to Strut Tower Nut	4.5	-	40

SPECIAL TOOLS

SPECIAL TOOLS

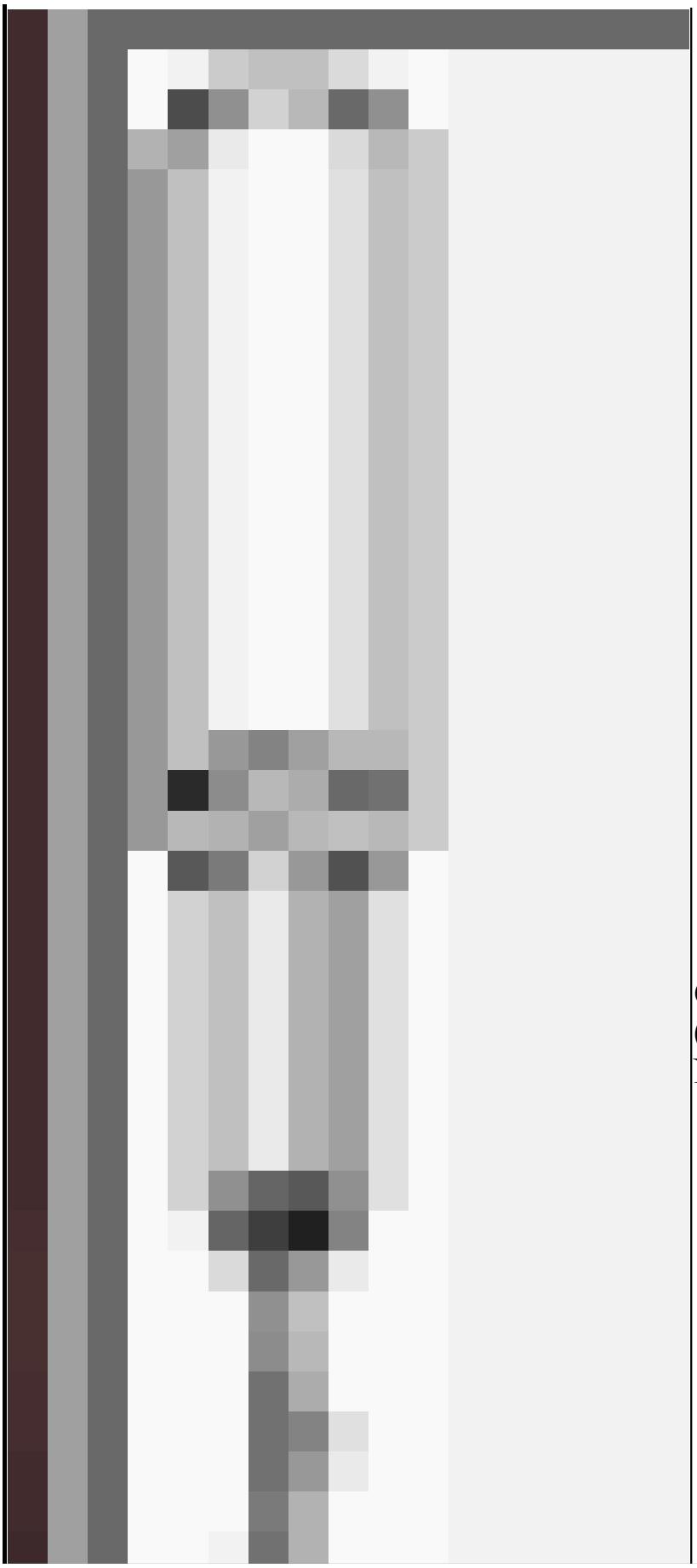

6801 - Terminal Probe (Originally Shipped In Kit Number(s) 10190.)

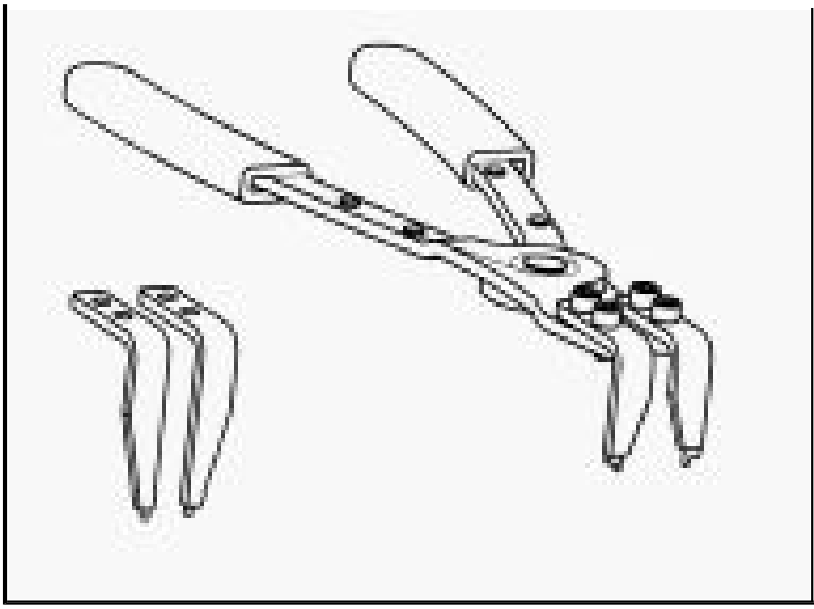	9764 - Pliers, A/C Snap Ring (Originally Shipped In Kit Number(s) 9909.)

CONTROLS

ACTUATOR, BLEND DOOR

DESCRIPTION

DESCRIPTION

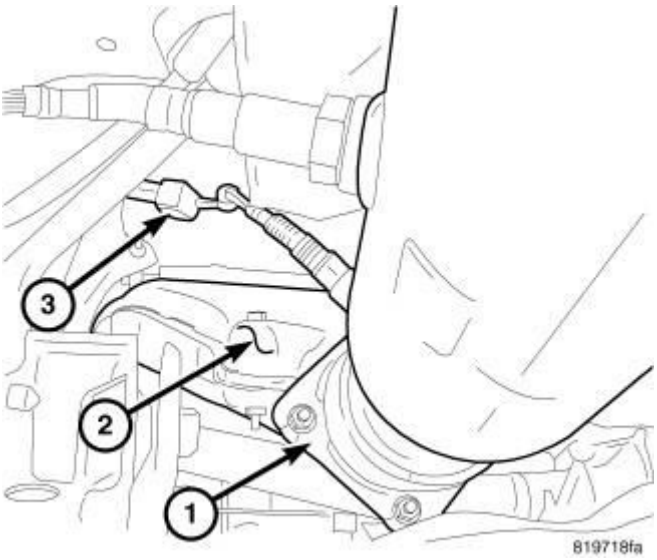

Fig. 3: Identifying Actuator Components
Courtesy of CHRYSLER GROUP, LLC

The blend door actuator (1) for the heating-A/C system is a reversible, 12-volt Direct Current (DC) servo motor, which is mechanically connected to the blend-air door. The blend door actuator is located on the left side of the HVAC air distribution housing.

The blend door actuator is contained within a black molded plastic housing with an integral wire connector receptacle (2). An output shaft (3) with splines connect it to the blend door linkage and integral mounting tabs (4) allow the actuator to be secured to the HVAC housing. The blend door actuator does not require mechanical indexing to the blend-air door, as it is electronically calibrated by the A/C-heater control.

The A/C-heater control must be recalibrated each time an actuator motor is replaced. Refer to **STANDARD PROCEDURE** .

The blend door actuator is interchangeable with the actuator for the mode-air doors and the recirculation-air door.

OPERATION

OPERATION

The blend door actuator is connected to the A/C-heater control through the vehicle electrical system by a dedicated two-wire lead and connector of the instrument panel wire harness. The blend door actuator can move the blend-air door in two directions. When the A/C-heater control pulls the voltage on one side of the motor connection high and the other connection low, the blend-air door will move in one direction. When the A/C-heater control reverses the polarity of the voltage to the motor, the blend-air door moves in the opposite direction. Once the A/C-heater control makes the voltage to both connections high or both connections low, the blend-air door stops and will not move.

The A/C-heater control uses a pulse-count positioning system to monitor the operation and relative position of the blend door actuator and the blend-air door. The A/C-heater control learns the blend-air door stop positions during the calibration procedure and will store a diagnostic trouble code (DTC) for any problems it detects in the blend door actuator circuits. Refer to **DIAGNOSIS AND TESTING** .

The blend door actuator cannot be adjusted or repaired and must be replaced if inoperative or damaged.

REMOVAL

REMOVAL

WARNING: Disable the airbag system before attempting any

steering wheel, steering column or instrument panel component diagnosis or service. Disconnect and isolate the negative battery (ground) cable, then wait two minutes for the airbag system capacitor to discharge before performing further diagnosis or service. This is the only sure way to disable the airbag system. Failure to follow these instructions may result in accidental airbag deployment and possible serious or fatal injury.

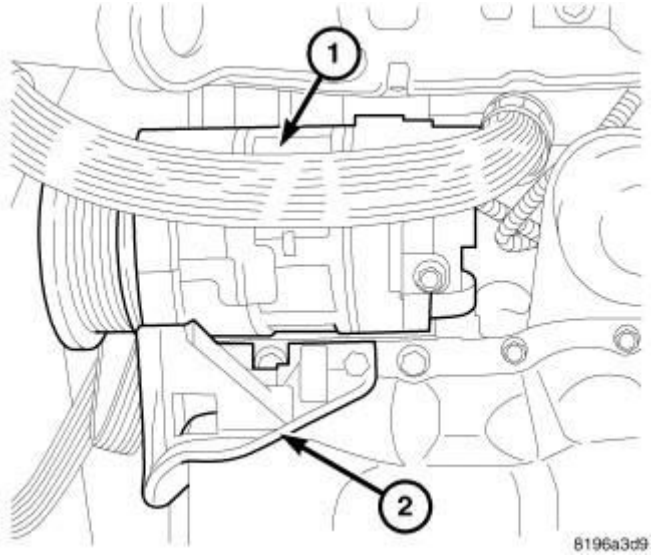

Fig. 4: Removing/Installing Blend Door Actuator
Courtesy of CHRYSLER GROUP, LLC

NOTE: LHD model shown in illustration, RHD model similar.

1. Disconnect and isolate the negative battery cable.
2. On RHD models, remove the two push-pins and silencer panel from the passenger side of the instrument panel.
3. On RHD models, remove the glove box bin. Refer to **GLOVE BOX, INSTRUMENT PANEL, REMOVAL** .
4. Disconnect the wire harness connector (1) from the blend door actuator (2) located on the left side of the HVAC air distribution housing (3).
5. Remove the two screws (4) that secure the blend door actuator to the air distribution housing and remove the actuator.

INSTALLATION

INSTALLATION

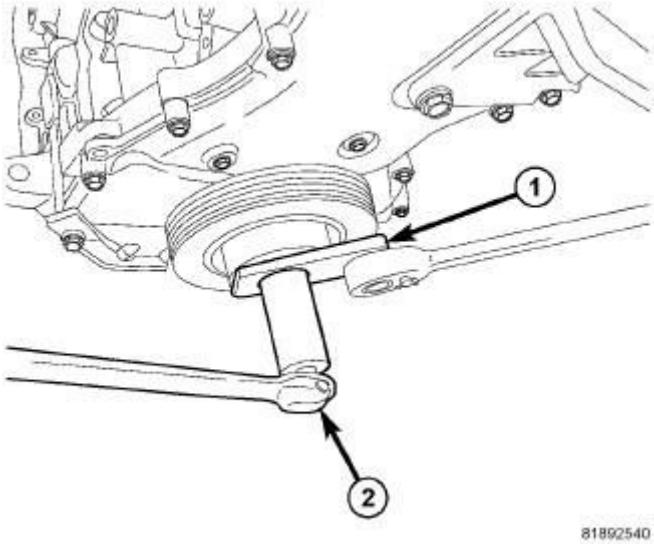

Fig. 5: Removing/Installing Blend Door Actuator
Courtesy of CHRYSLER GROUP, LLC

NOTE: LHD model shown in illustration, RHD model similar.

1. Position the blend door actuator (2) onto the left side of the HVAC air distribution housing (3). If necessary, rotate the actuator slightly to align the splines on the actuator output shaft with those in the blend air door linkage.
2. Install the two screws (4) that secure the blend door actuator to the air distribution housing. Tighten the screws to 2 N.m (17 in. lbs.).
3. Connect the wire harness connector (1) to the blend door actuator.
4. On RHD models, install the glove box bin. Refer to **GLOVE BOX, INSTRUMENT PANEL, INSTALLATION** .
5. On RHD models, install the silencer panel and two push-pins.
6. Reconnect the negative battery cable.
7. Initiate the Actuator Calibration function using a scan tool. Refer to **STANDARD PROCEDURE** .

ACTUATOR, MODE DOOR

DESCRIPTION

DESCRIPTION

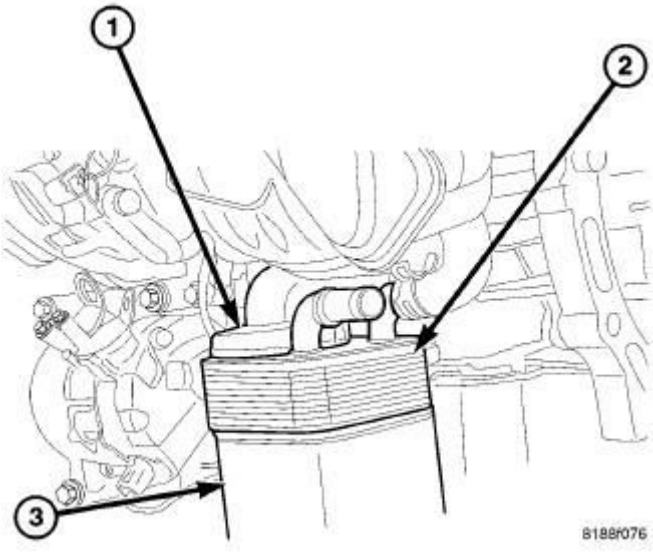

Fig. 6: Identifying Actuator Components
Courtesy of CHRYSLER GROUP, LLC

The mode door actuator (1) for the heating-A/C system is a reversible, 12-volt Direct Current (DC) servo motor, which is mechanically connected to the mode-air doors. The mode door actuator is located on the right side of the HVAC air distribution housing.

The mode door actuator is contained within a black molded plastic housing with an integral wire connector receptacle (2). An output shaft with splines (3) connect it to mode door linkage and integral mounting tabs (4) allow the actuator to be secured to the air distribution housing. The mode door actuator does not require mechanical indexing to the mode-air doors, as it is electronically calibrated by the A/C-heater control.

The A/C-heater control must be recalibrated each time an actuator motor is replaced. Refer to **STANDARD PROCEDURE** .

The mode door actuator is interchangeable with the actuators for the recirculation and blend-air doors.

OPERATION

OPERATION

The mode door actuator is connected to the A/C-heater control through the vehicle electrical system by a dedicated two-wire lead and connector of the instrument panel wire harness. The mode door actuator can move the mode-air

door in two directions. When the A/C-heater control pulls the voltage on one side of the motor connection high and the other connection low, the mode-air door will move in one direction. When the A/C-heater control reverses the polarity of the voltage to the motor, the mode-air door moves in the opposite direction. Once the A/C-heater control makes the voltage to both connections high or both connections low, the mode-air door stops and will not move.

The A/C-heater control uses a pulse-count positioning system to monitor the operation and relative position of the mode door actuator and the mode-air door. The A/C-heater control learns the mode-air door stop positions during the calibration procedure and will store a diagnostic trouble code (DTC) for any problems it detects in the mode door actuator circuits. Refer to **DIAGNOSIS AND TESTING** .

The mode door actuator cannot be adjusted or repaired and it must be replaced if inoperative or damaged.

REMOVAL

REMOVAL

WARNING: **Disable the airbag system before attempting any steering wheel, steering column or instrument panel component diagnosis or service. Disconnect and isolate the negative battery (ground) cable, then wait two minutes for the airbag system capacitor to discharge before performing further diagnosis or service. This is the only sure way to disable the airbag system. Failure to follow these instructions may result in accidental airbag deployment and possible serious or fatal injury.**

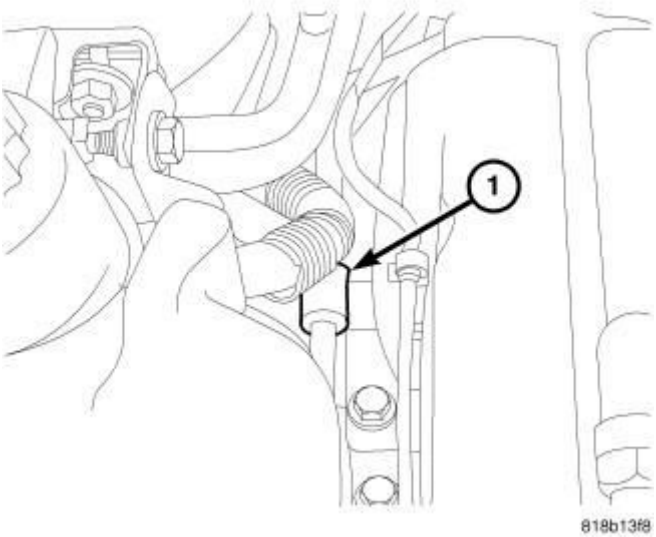

Fig. 7: Mode Door Actuator, Connector, Bracket & Screws
Courtesy of CHRYSLER GROUP, LLC

NOTE: LHD model shown in illustration, RHD model similar.

1. Disconnect and isolate the negative battery cable.
2. On LHD models, remove the two push-pins and silencer panel from the passenger side of the instrument panel.
3. On LHD models, remove the glove box bin. Refer to **GLOVE BOX, INSTRUMENT PANEL, REMOVAL** .
4. Remove the floor distribution duct from the right side of the HVAC air distribution housing. Refer to **DUCT, FLOOR DISTRIBUTION, REMOVAL**.
5. Remove the three screws (1) that secure the mode door actuator (2) to the bracket (4) located on the right side of the air distribution housing.
6. Disconnect the wire harness connector (3) from the mode door actuator and remove the actuator.

INSTALLATION

INSTALLATION

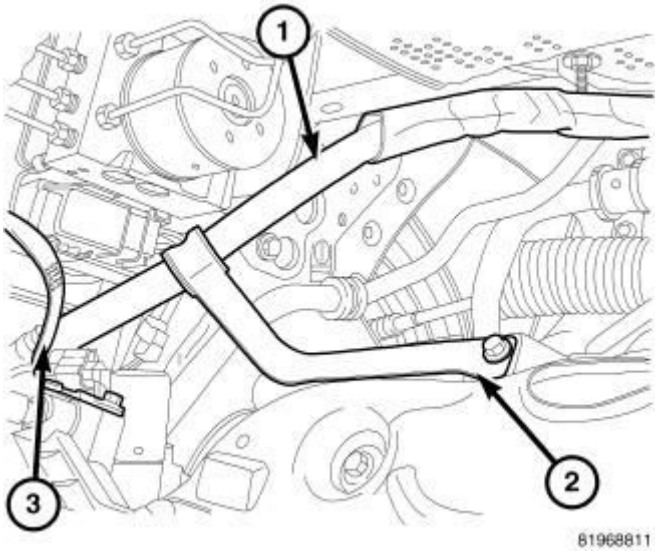

Fig. 8: Mode Door Actuator, Connector, Bracket & Screws
Courtesy of CHRYSLER GROUP, LLC

NOTE: LHD model shown in illustration, RHD model similar.

1. Position the mode door actuator (2) onto the bracket (4) located on the right side of the HVAC air distribution housing. If necessary, rotate the actuator slightly to align the splines on the actuator output shaft with those in the mode air door linkage.
2. Install the three screws (1) that secure the mode door actuator to the air distribution housing. Tighten the screws to 2 N.m (17 in. lbs.).
3. Connect the wire harness connector (3) to the mode door actuator.
4. Install the floor distribution duct onto the right side of the air distribution housing. Refer to **DUCT, FLOOR DISTRIBUTION, INSTALLATION**.
5. On LHD models, install the glove box bin. Refer to **GLOVE BOX, INSTRUMENT PANEL, INSTALLATION** .
6. On LHD models, install the silencer panel and two push-pins.
7. Reconnect the negative battery cable.
8. Initiate the Actuator Calibration function using a scan tool. Refer to **STANDARD PROCEDURE** .

ACTUATOR, RECIRCULATION DOOR

DESCRIPTION

DESCRIPTION

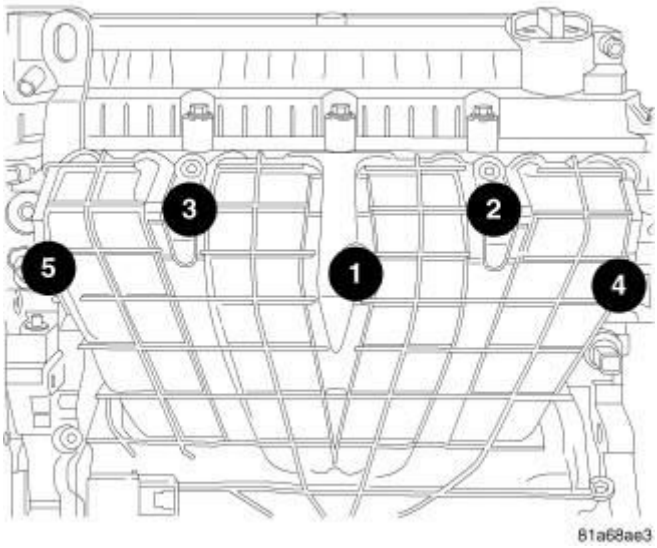

Fig. 9: Identifying Actuator Components
Courtesy of CHRYSLER GROUP, LLC

The recirculation door actuator (1) is a reversible, 12 volt direct current (DC) servo motor, which is connected directly to the pivot shaft lever of the recirculation-air door. The recirculation door actuator is located on the right side of the HVAC air inlet housing.

The recirculation door actuator is contained within a black molded plastic housing with an integral wire connector receptacle (2), an output shaft with splines (3) connect it to the recirculation door and three integral mounting tabs (4) allow the actuator to be secured to the air inlet housing. The recirculation door actuator does not require mechanical indexing to the recirculation-air door, as it is electronically calibrated by the A/C-heater control.

The A/C-heater control must be recalibrated each time an actuator motor is replaced. Refer to **STANDARD PROCEDURE** .

The recirculation door actuator is interchangeable with the actuators for the blend and mode-air doors.

OPERATION

OPERATION

The recirculation door actuator is connected to the A/C-heater control through the vehicle electrical system by a dedicated two-wire lead and connector of the instrument panel wire harness. The recirculation door actuator can move the recirculation-air door in two directions. When the A/C-heater control pulls the

voltage on one side of the motor connection high and the other connection low, the recirculation-air door will move in one direction. When the A/C-heater control reverses the polarity of the voltage to the motor, the recirculation-air door moves in the opposite direction. Once the A/C-heater control makes the voltage to both connections high or both connections low, the recirculation-air door stops and will not move.

The A/C-heater control uses a pulse-count positioning system to monitor the operation and relative position of the recirculation door actuator and the recirculation-air door. The A/C-heater control learns the recirculation-air door stop positions during the calibration procedure and will store a diagnostic trouble code (DTC) for any problems it detects in the recirculation door actuator circuits. Refer to **DIAGNOSIS AND TESTING** .

The recirculation door actuator cannot be adjusted or repaired and it must be replaced if inoperative or damaged.

REMOVAL

REMOVAL

WARNING: **Disable the airbag system before attempting any steering wheel, steering column or instrument panel component diagnosis or service. Disconnect and isolate the negative battery (ground) cable, then wait two minutes for the airbag system capacitor to discharge before performing further diagnosis or service. This is the only sure way to disable the airbag system. Failure to follow these instructions may result in accidental airbag deployment and possible serious or fatal injury.**

NOTE: Illustration shown with instrument panel removed for clarity.

NOTE: LHD model shown in illustration, RHD model similar.

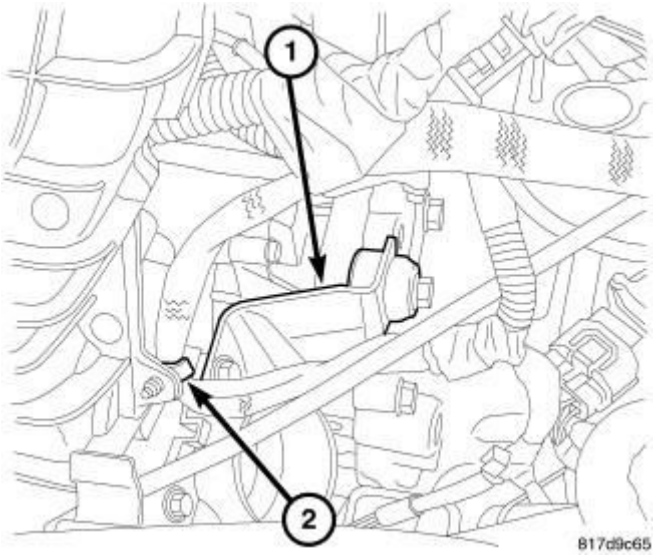

Fig. 10: Recirculation Door Actuator, HVAC Air Inlet Housing, Wire Harness Connector & Screws
Courtesy of CHRYSLER GROUP, LLC

1. Disconnect and isolate the negative battery cable.
2. Remove the two push-pins and silencer panel from the passenger side of the instrument panel.
3. Remove the glove box bin. Refer to **GLOVE BOX, INSTRUMENT PANEL, REMOVAL** .
4. Remove the two screws (1) that secure the recirculation door actuator (2) to the HVAC air inlet housing (3).
5. Disconnect the wire harness connector (4) from the recirculation door actuator and remove the actuator.

INSTALLATION

INSTALLATION

NOTE: Illustrations shown with instrument panel removed for clarity.

NOTE: LHD model shown in illustrations, RHD model similar.

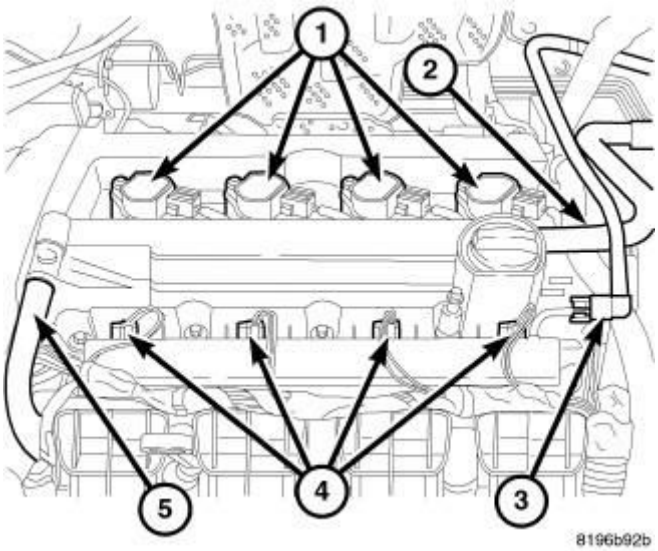

Fig. 11: Recirculation Door Actuator, HVAC Air Inlet Housing, Actuator Output Shaft & Recirculation Door Pivot Shaft Adapter
Courtesy of CHRYSLER GROUP, LLC

1. Install the recirculation door actuator (1) onto the HVAC air inlet housing (2). If necessary, rotate the actuator slightly to align the splines on the actuator output shaft (3) with those on the recirculation door pivot shaft adapter (4).

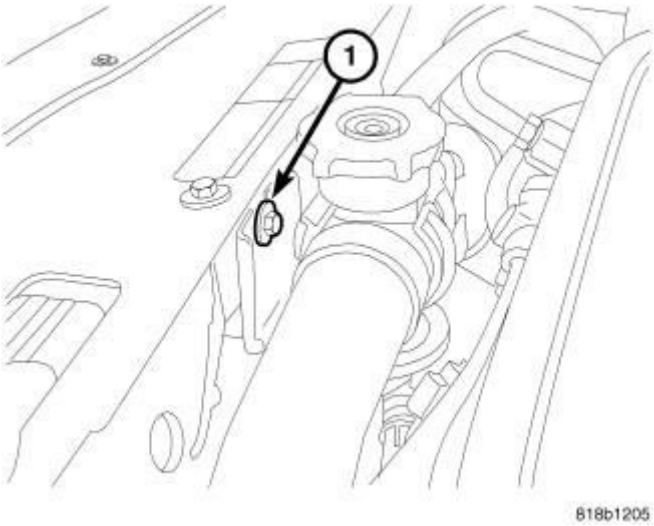

Fig. 12: Recirculation Door Actuator, HVAC Air Inlet Housing, Wire Harness Connector & Screws
Courtesy of CHRYSLER GROUP, LLC

2. Install the screws (1) that secure the recirculation door actuator (2) to the air inlet housing (3). Tighten the screws to 2 N.m (17 in. lbs.).

3. Connect the wire harness connector (4) to the recirculation door actuator.
4. Install the glove box bin. Refer to **GLOVE BOX, INSTRUMENT PANEL, INSTALLATION** .
5. Install the silencer panel and two push-pins.
6. Reconnect the negative battery cable.

CONTROL, A/C AND HEATER

DESCRIPTION

AUTOMATIC TEMPERATURE CONTROL (ATC) SYSTEM

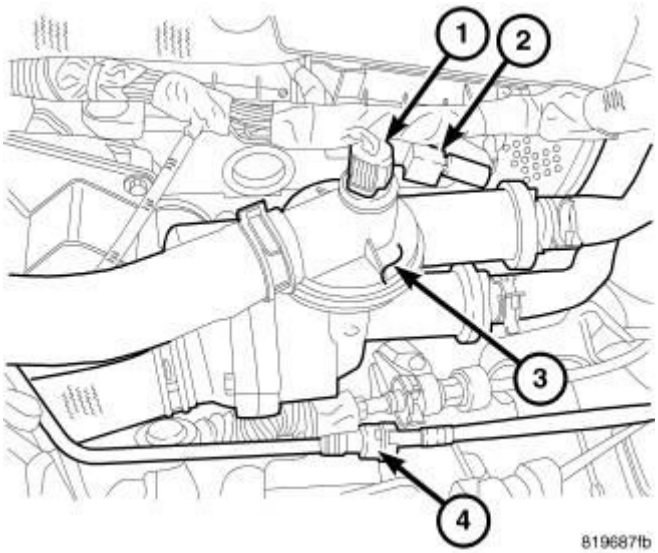

Fig. 13: ATC A/C Heater Control
Courtesy of CHRYSLER GROUP, LLC

The Automatic Temperature Control (ATC) single zone heating-A/C system uses electrically operated controls. These controls provide the vehicle operator with a number of setting options to help control the climate and comfort within the vehicle.

The A/C-heater control (1) for the ATC single zone system automatically maintains the interior comfort level desired by the vehicle operator. The ATC system uses an infrared sensor located in the front overhead console to measure the surface temperature of the driver and front seat passengers. Based on the sensor input, the ATC system automatically adjusts air temperature, airflow volume, airflow distribution and amount of inside air recirculation to maintain occupant comfort, even under changing outside weather conditions. All controls are identified by International Standardization Organization (ISO) graphic

symbols.

This ATC system offers several manual override features such as fan speed and airflow distribution. When the outside air contains smoke, odors, high humidity, or if rapid cooling is desired, the interior conditioned air can be recirculated within the vehicle.

The ATC A/C-heater control and integral computer is located in the instrument panel and contains:

- a rotary control for manual and automatic blower motor speed selection and for turning the heating-A/C system on and off (2). This control also contains a push button function for recirculating the conditioned air. The control contains an indicator lamp that illuminates when the heating-A/C system is in recirculation mode.
- a rotary control for temperature control of the discharged air (3). This control also contains a push button function for manually turning the A/C system on and off. The control contains an indicator lamp that illuminates when the A/C system is in operation.
- a rotary control for manual and automatic mode control of the discharged air (4). This control also contains a push button function for turning the rear window defogger system on and off. The control contains an indicator lamp that illuminates when the rear window defogger system is in operation.

The ATC A/C-heater control obtains vehicle speed, engine speed, engine coolant temperature, ambient temperature and refrigerant system head pressure data and is diagnosed using a scan tool. Refer to **DIAGNOSIS AND TESTING** .

Prior to replacing the A/C-heater control, check for any Diagnostic Trouble Codes (DTCs) related to the heating-A/C system and run the Actuator Calibration function using a scan tool to verify that the concern is not an air door calibration issue. Refer to **STANDARD PROCEDURE** .

The A/C-heater control cannot be adjusted or repaired and must be replaced if inoperative or damaged.

MANUAL TEMPERATURE CONTROL (MTC) SYSTEM

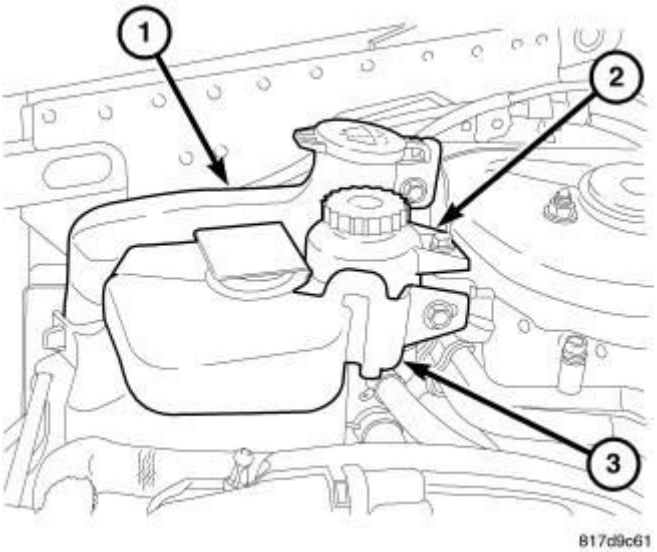

Fig. 14: A/C Heater Control
Courtesy of CHRYSLER GROUP, LLC

The Manual Temperature Control (MTC) single zone heating-A/C system uses electrically operated controls. These controls provide the vehicle operator with a number of setting options to help control the climate and comfort within the vehicle.

The A/C-heater control (1) for the MTC single zone system allows one temperature setting for the entire vehicle. All controls are identified by International Standardization Organization (ISO) graphic symbols.

The MTC A/C-heater control and integral computer is located in the instrument panel and contains:

- a rotary control for fan speed selection and for turning the heating-A/C system on and off (2). This control also contains a push button function for recirculating the conditioned air. The control contains an indicator lamp that illuminates when the heating-A/C system is in recirculation mode.
- a rotary control for temperature control of the discharged air (3). This control also contains a push button function for turning the A/C system on and off. The control contains an indicator lamp that illuminates when the A/C system is in operation.
- a rotary control for mode control of the discharged air (4). This control also contains a push button function for turning the rear window defogger system on and off. The control contains an indicator lamp that illuminates when the rear window defogger system is in operation.

The MTC A/C-heater control is diagnosed using a scan tool. Refer to **DIAGNOSIS AND TESTING** .

Prior to replacing the A/C-heater control, check for any Diagnostic Trouble Codes (DTCs) related to the heating-A/C system and run the Actuator Calibration function using a scan tool to verify that the concern is not an air door calibration issue. Refer to **STANDARD PROCEDURE** .

The A/C-heater control cannot be adjusted or repaired and must be replaced if inoperative or damaged.

REMOVAL

REMOVAL

WARNING: **Disable the airbag system before attempting any steering wheel, steering column or instrument panel component diagnosis or service. Disconnect and isolate the negative battery (ground) cable, then wait two minutes for the airbag system capacitor to discharge before performing further diagnosis or service. This is the only sure way to disable the airbag system. Failure to follow these instructions may result in accidental airbag deployment and possible serious or fatal injury.**

NOTE: **Take the proper precautions to protect the front face of the center bezel from cosmetic damage while performing this procedure.**

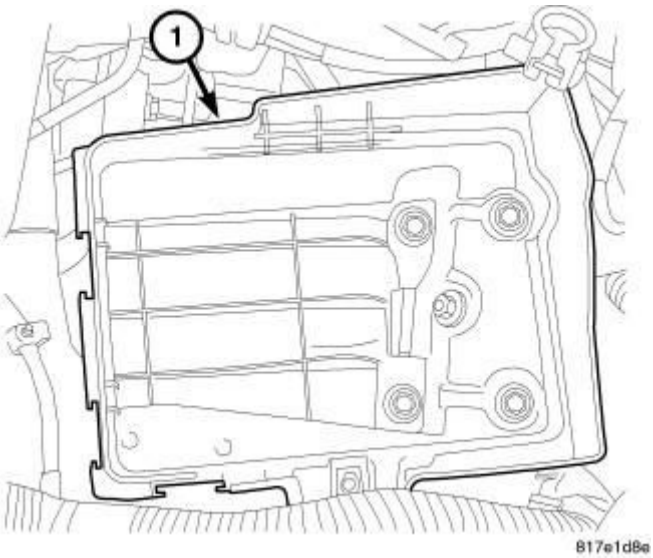

Fig. 15: A/C-Heater Control & Center Bezel With Four Screws
Courtesy of CHRYSLER GROUP, LLC

NOTE: MTC A/C-heater control shown in illustration, ATC A/C-heater control similar.

1. Disconnect and isolate the negative battery cable.
2. Remove the instrument panel center bezel (3) and place it on a workbench. Refer to **BEZEL, INSTRUMENT PANEL, CENTER, REMOVAL** .
3. Remove the four screws (1 and 4) that secure the A/C-heater control (2) to the back of the center bezel and remove the control.

INSTALLATION

INSTALLATION

NOTE: Take the proper precautions to protect the front face of the center bezel from cosmetic damage while performing this procedure.

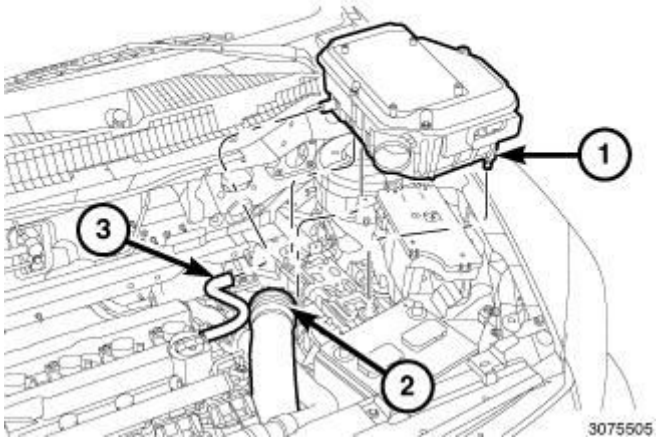

Fig. 16: A/C-Heater Control & Center Bezel With Four Screws
Courtesy of CHRYSLER GROUP, LLC

NOTE: MTC A/C-heater control shown in illustration, ATC A/C-heater control similar.

1. Position the A/C-heater control (2) onto the back of the center bezel (3).
2. Install the four screws (1 and 4) that secure the A/C-heater control to the bezel. Tighten the screws to 2 N.m (17 in. lbs.).
3. Install the center bezel. Refer to **BEZEL, INSTRUMENT PANEL, CENTER, INSTALLATION** .
4. Reconnect the negative battery cable.

NOTE: When installing a new A/C-heater control, or reinstalling the original control, the A/C-heater control will automatically run the Actuator Calibration function when the ignition switch is initially turned to ON. However, the Actuator Calibration function must be manually initiated using a scan tool if the A/C-heater control was previously installed in another vehicle.

5. If required, initiate the Actuator Calibration function using a scan tool. Refer to **STANDARD PROCEDURE** .

MODULE, POWER, BLOWER MOTOR

DESCRIPTION

DESCRIPTION

NOTE: ATC blower motor power module shown in illustration, MTC power module similar.

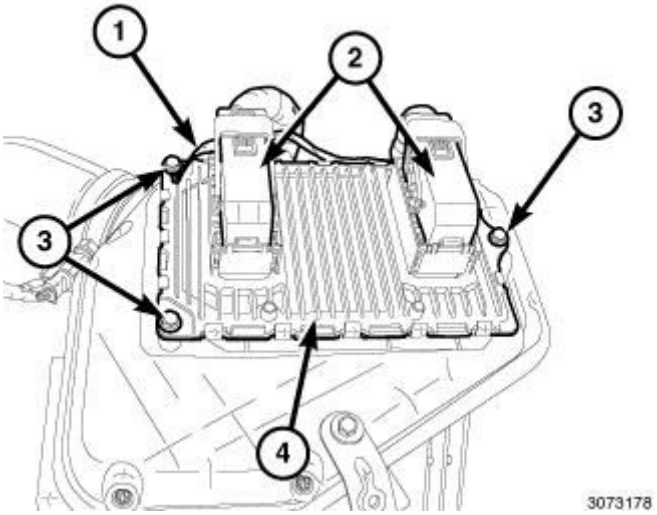

Fig. 17: Blower Motor Power Module
Courtesy of CHRYSLER GROUP, LLC

A blower motor power module is used on this model when equipped with either the Automatic Temperature Control (ATC) heating-A/C system, or the Manual Temperature Control (MTC) heating-A/C system.

The blower motor power module is mounted to the bottom of the HVAC housing, on the passenger side of the vehicle. The blower motor power module consists of a molded plastic mounting plate (1) with an integral connector receptacle (2). Concealed behind the mounting plate is the power module electronic circuitry (3) and a finned aluminum heat sink (4). The blower motor power module is accessed for service from under the instrument panel.

OPERATION

OPERATION

The blower motor power module is connected to the vehicle electrical system through a dedicated lead and connector of the instrument panel wire harness. A second lead and connector of the instrument panel wire harness is connected to the blower motor.

On the Automatic Temperature Control (ATC) system, the blower motor power module allows the microprocessor-based A/C-heater control to calculate and provide infinitely variable blower motor speeds based upon either manual blower switch input or the ATC programming.

On the Manual Temperature Control (ATC) system, the blower motor power module allows the microprocessor-based A/C-heater control to provide an infinite amount of blower motor speeds throughout its operating range, based upon blower switch input.

Both the ATC and MTC systems use a Pulse Width Modulated (PWM) circuit strategy. PWM voltage is applied to a comparator circuit which compares the PWM signal voltage to the blower motor feedback voltage. The resulting output drives the power module circuitry, which provides a linear output voltage to change or maintain the desired blower speed.

The blower motor power module is diagnosed using a scan tool. Refer to **DIAGNOSIS AND TESTING** .

The blower motor power module cannot be adjusted or repaired must be replaced if inoperative or damaged.

REMOVAL

REMOVAL

WARNING: **Disable the airbag system before attempting any steering wheel, steering column or instrument panel component diagnosis or service. Disconnect and isolate the negative battery (ground) cable, then wait two minutes for the airbag system capacitor to discharge before performing further diagnosis or service. This is the only sure way to disable the airbag system. Failure to follow these instructions may result in accidental airbag deployment and possible serious or fatal injury.**

WARNING: **The heat sink for the blower motor power module may get very hot during normal operation. If the**

blower motor was turned on prior to servicing the blower motor power module, wait five minutes to allow the heat sink to cool before performing diagnosis or service. Failure to follow these instructions may result in possible serious injury.

NOTE: ATC blower motor power module shown in illustration, MTC power module similar.

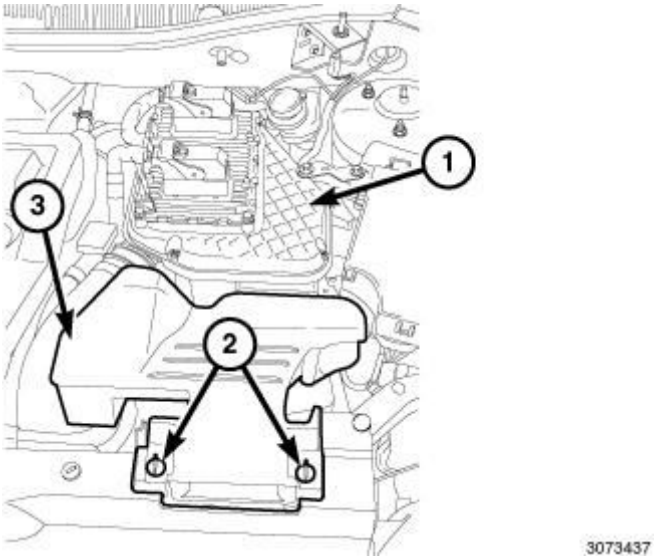

Fig. 18: Identifying Blower Motor Power Module
Courtesy of CHRYSLER GROUP, LLC

1. Disconnect and isolate the negative battery cable.
2. If equipped, remove the two push-pins and silencer panel from the passenger side of the instrument panel.
3. Disconnect the wire harness connector (1) from the blower motor power module (2).
4. Remove the two screws (4) that secure the blower motor power module to the HVAC housing (3) and remove the power module.

INSTALLATION

INSTALLATION

NOTE: ATC blower motor power module shown in illustration, MTC power module similar.

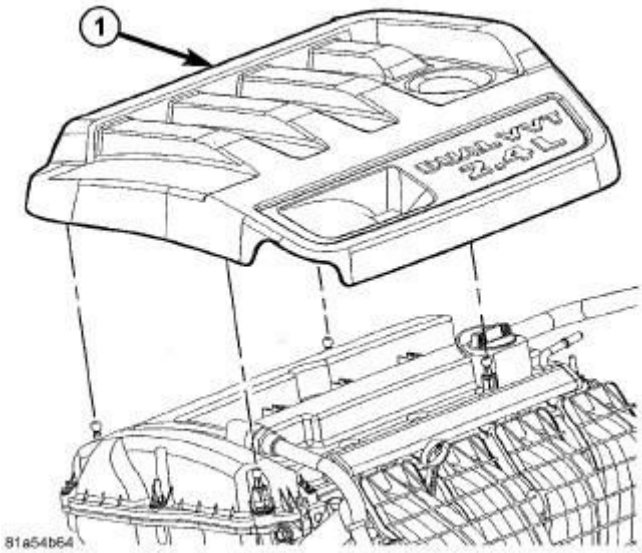

Fig. 19: Identifying Blower Motor Power Module
Courtesy of CHRYSLER GROUP, LLC

1. Position the blower motor power module (2) into the HVAC housing (3).
2. Install the two screws (4) that secure the blower motor power module to the HVAC housing. Tighten the screws to 1.2 N.m (10 in. lbs.).
3. Connect the wire harness connector (1) to the blower motor power module.
4. If equipped, install the passenger side silencer panel and two push-pins.
5. Reconnect the negative battery cable.

SENSOR, AMBIENT TEMPERATURE

DESCRIPTION

DESCRIPTION

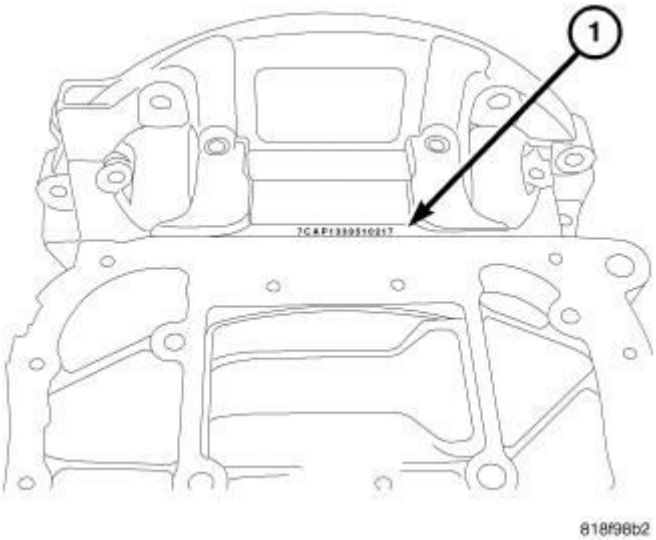

Fig. 20: Ambient Temperature Sensor
Courtesy of CHRYSLER GROUP, LLC

The ambient air temperature sensor is a variable resistor that monitors the air temperature outside of the vehicle. The ATC system uses the sensor data to maintain optimum passenger compartment temperature levels. The ambient air temperature sensor is mounted to the front bumper beam.

OPERATION

OPERATION

The ambient air temperature sensor is a variable resistor that operates on a five volt reference signal sent by the Totally Integrated Power Module (TIPM). The ambient air temperature sensor is connected to the TIPM through a two-wire lead and connector of the vehicle wire harness. The ambient air temperature sensor changes its internal resistance in response to changes in the outside air temperature, which either increases or decreases the reference signal voltage read by the TIPM. The TIPM converts and broadcasts the sensor data over the Controller Area Network (CAN) bus, where it is read by the Automatic Temperature Control (ATC) A/C-heater control, Powertrain Control Module (PCM), Cabin Compartment Node (CCN) and other vehicle control modules.

The ambient air temperature sensor is diagnosed using a scan tool. Refer to **DTC INDEX** .

The ambient air temperature sensor cannot be adjusted or repaired and must be replaced if inoperative or damaged. Refer to **SENSOR, AMBIENT TEMPERATURE, REMOVAL** .

SENSOR, EVAPORATOR TEMPERATURE

DESCRIPTION

DESCRIPTION

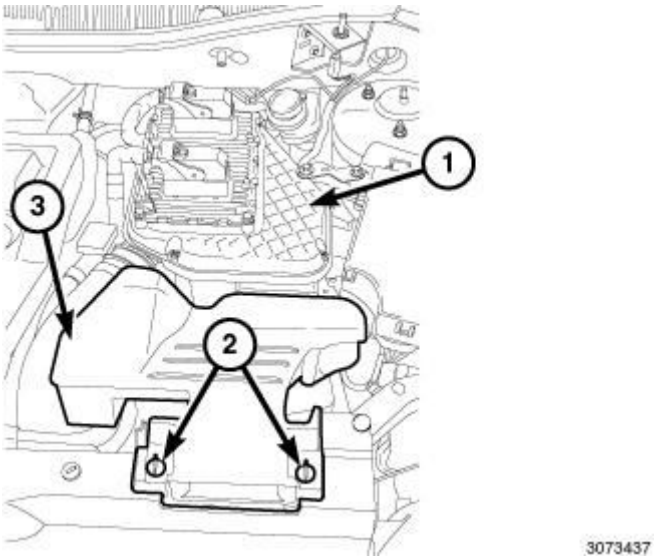

Fig. 21: Evaporator Temperature Sensor
Courtesy of CHRYSLER GROUP, LLC

The evaporator temperature sensor measures the temperature of the conditioned air downstream of the A/C evaporator. The evaporator temperature sensor is an electrical thermistor (1) mounted on the end of a molded plastic housing (2) that is inserted into the driver side of the HVAC housing near the coldest point of the A/C evaporator. The evaporator temperature sensor is retained in the HVAC housing by two integral retaining tabs (3) and is connected to the vehicle electrical system by use of a wire lead and connector (4) with two terminals.

OPERATION

OPERATION

The evaporator temperature sensor monitors the surface temperature of A/C evaporator and supplies an input signal to the A/C-heater control. The A/C-heater control uses the evaporator temperature sensor input signal to optimize A/C system performance and to protect the A/C system from evaporator freezing. The evaporator temperature sensor will change its internal resistance in response to the temperatures it monitors and is connected to the A/C-heater control through sensor ground circuit and a 5-volt reference signal circuit. As the temperature of the A/C evaporator decreases, the internal resistance of the evaporator temperature sensor decreases.

The A/C-heater control uses the monitored voltage reading as an indication of evaporator temperature. The A/C-heater control is programmed to respond to this input by requesting the powertrain control module (PCM) or the engine control module (ECM) (depending on engine application) to adjust the compressor swash plate angle as necessary to optimize A/C system performance and to protect the A/C system from evaporator freezing. Refer to **COMPRESSOR, A/C, OPERATION**.

The evaporator temperature sensor is diagnosed using a scan tool. Refer to **DIAGNOSIS AND TESTING** .

The evaporator temperature sensor cannot be adjusted or repaired and it must be replaced if inoperative or damaged.

REMOVAL

REMOVAL

WARNING: **Disable the airbag system before attempting any steering wheel, steering column or instrument panel component diagnosis or service. Disconnect and isolate the negative battery (ground) cable, then wait two minutes for the airbag system capacitor to discharge before performing further diagnosis or service. This is the only sure way to disable the airbag system. Failure to follow these instructions may result in accidental airbag deployment and possible serious or fatal injury.**

Fig. 22: Evaporator Temperature Sensor, HVAC Housing & Retaining Tabs
Courtesy of CHRYSLER GROUP, LLC

NOTE: Illustration shown with air distribution housing removed for clarity.

NOTE: It is not necessary to remove and disassemble the HVAC housing to service the evaporator temperature sensor. The evaporator temperature sensor can be removed for service from underneath the instrument panel.

1. Disconnect and isolate the negative battery cable.
2. Reach up under the driver side of the instrument panel and disconnect the electrical connector for the evaporator temperature sensor (1) from the instrument panel wire harness.
3. Remove the evaporator temperature sensor electrical connector from the side of the HVAC housing (2).
4. Using needle nose pliers, carefully pull the evaporator temperature sensor straight out of the side of the HVAC housing.
5. Route the electrical connector and wire lead of the evaporator temperature sensor out from under the heater core tubes and remove the sensor from the vehicle.

INSTALLATION

INSTALLATION

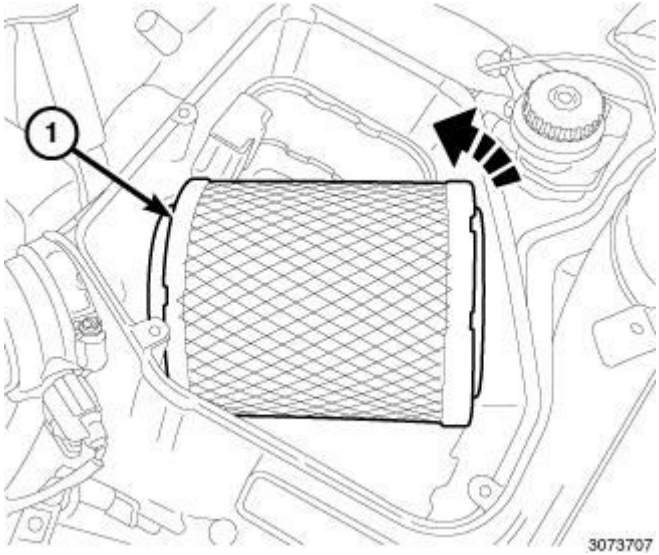

Fig. 23: Evaporator Temperature Sensor, HVAC Housing & Retaining Tabs
Courtesy of CHRYSLER GROUP, LLC

NOTE: Illustration shown with air distribution housing removed for clarity.

1. Route the electrical connector and wire lead of the evaporator temperature sensor (1) under the heater core tubes located on the driver side of the HVAC housing (2).
2. Install the evaporator temperature sensor into the driver side of the HVAC housing. Make sure the retaining tabs (3) are fully engaged to the housing.
3. Connect the electrical connector for the evaporator temperature sensor to the instrument panel wire harness.
4. Reconnect the negative battery cable.

SENSOR, INFRARED TEMPERATURE

DESCRIPTION

DESCRIPTION

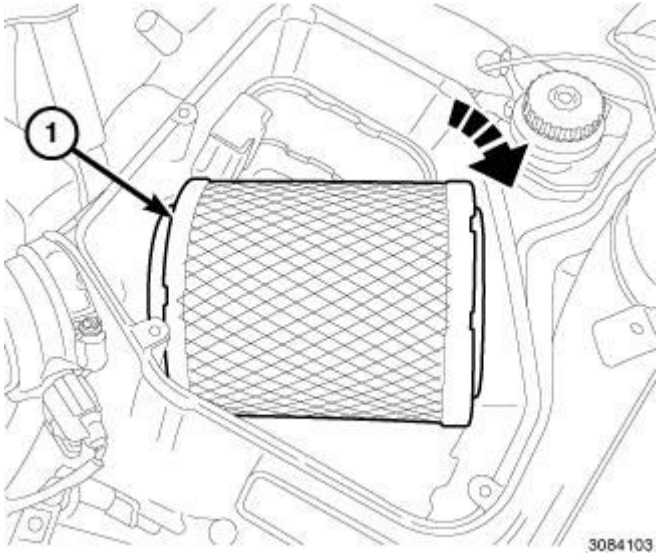

Fig. 24: Infrared Sensor
Courtesy of CHRYSLER GROUP, LLC

NOTE: Typical infrared temperature sensor shown in illustration.

The infrared temperature sensor consists of an infrared transducer concealed behind a clear lens (2) located in a molded plastic housing with an integral wire connector receptacle (1) and a mounting tab (3).

The infrared sensor is used only on models equipped with the Automatic Temperature Control (ATC) heating-A/C system.

OPERATION

OPERATION

The infrared sensor detects thermal radiation emitted by the driver and front passenger seat occupants and surroundings and converts its data into a linear Pulse Width Modulated (PWM) output signal which is read by the Automatic Temperature Control (ATC) A/C-heater control. The ATC A/C-heater control uses the infrared sensor data as one of the inputs necessary to automatically control the interior cabin temperature levels. By using thermal radiation (surface temperature) measurement, rather than an air temperature measurement, the ATC heating-A/C system is able to adjust itself to the comfort level as perceived by the occupants. This allows the ATC system to compensate for other ambient conditions affecting comfort levels, such as solar heat gain or evaporative heat loss.

The ATC system logic responds to the infrared sensor message by calculating

and adjusting the air flow temperature and air flow rate needed to properly obtain and maintain the selected comfort level temperature of the occupants. The A/C-heater control continually monitors the infrared sensor circuits, and will store Diagnostic Trouble Codes (DTCs) for any problem it detects.

The infrared sensor is diagnosed using a scan tool. Refer to **DIAGNOSIS AND TESTING** .

The infrared sensor cannot be adjusted or repaired and must be replaced if inoperative or damaged.

REMOVAL

REMOVAL

NOTE: Take the proper precautions to protect the front face of the overhead console from cosmetic damage while performing this procedure.

Fig. 25: Infrared Sensor, Overhead Console & Retaining Tabs
Courtesy of CHRYSLER GROUP, LLC

1. Disconnect and isolate the negative battery cable.
2. Remove the overhead console (4) from the headliner and place it on a workbench.
3. Remove the screw (1) that secures the infrared sensor (3) to the back of the overhead console.
4. Disengage the infrared sensor from the retaining tabs (2) on the overhead

console and remove the sensor.

INSTALLATION

INSTALLATION

NOTE: Take the proper precautions to protect the front face of the overhead console from cosmetic damage while performing this procedure.

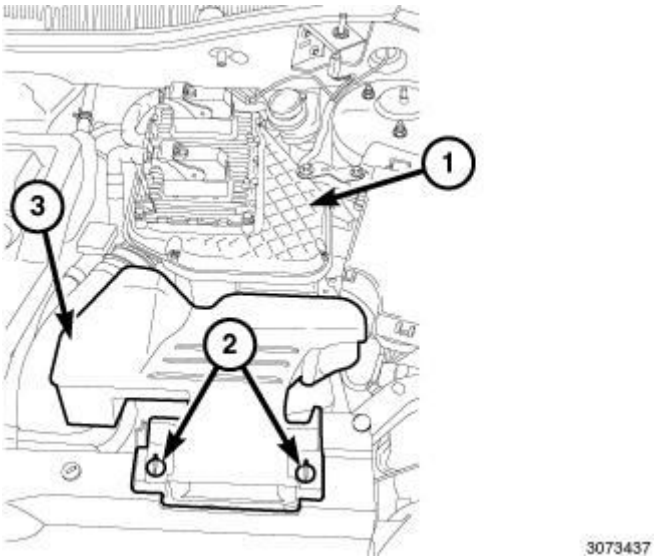

Fig. 26: Infrared Sensor, Overhead Console & Retaining Tabs
Courtesy of CHRYSLER GROUP, LLC

1. Position the infrared sensor (3) onto the back of the overhead console (4). Align the slot on the sensor with the retaining tabs (2) on the console.
2. Install the screw (1) that secures the infrared sensor to the overhead console. Tighten the screw to 1.2 N.m (10 in. lbs).
3. Install the overhead console. Make sure the retaining tabs are fully engaged to the headliner.
4. Reconnect the negative battery cable.

TRANSDUCER, A/C PRESSURE

DESCRIPTION

DESCRIPTION

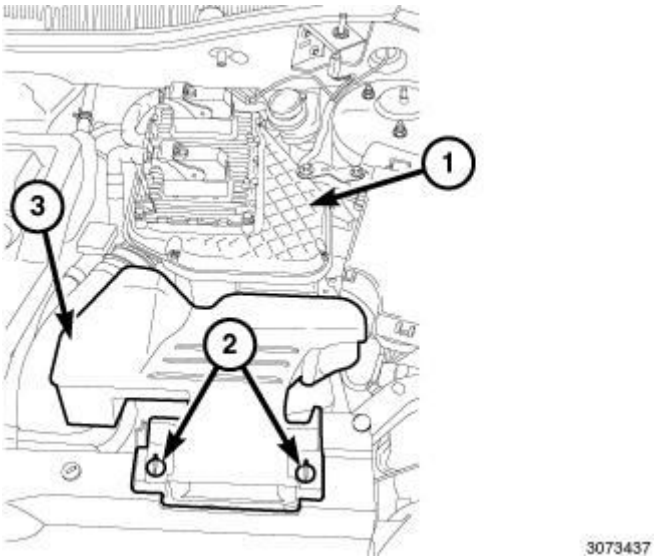

Fig. 27: A/C Pressure Transducer
Courtesy of CHRYSLER GROUP, LLC

The A/C pressure transducer (1) is a switch that is installed on a fitting located on the A/C discharge line. An internally threaded fitting on the A/C pressure transducer connects it to the externally threaded Schrader-type fitting on the A/C discharge line. A rubber O-ring seals the connection between the A/C pressure transducer and the discharge line fitting. The A/C pressure transducer is connected to the vehicle electrical system by a molded plastic connector with three terminals.

OPERATION

OPERATION

The A/C pressure transducer monitors the pressures in the high side of the refrigerant system through its connection to a fitting on the A/C discharge line. The internal resistance of the A/C pressure transducer changes in response to the pressures it monitors. The Totally Integrated Power Module (TIPM) provides a five volt reference signal and a sensor ground to the A/C pressure transducer. The TIPM then monitors the output voltage of the transducer on a sensor return circuit to determine refrigerant pressure and sends a message to the Powertrain Control Module (PCM) or Engine Control Module (ECM) (depending on engine application) over the Controller Area Network (CAN) C BUS. The PCM/ECM is programmed to respond to this and other sensor inputs by controlling the operation of the swash plate within the A/C compressor and the radiator cooling fan to help optimize A/C system performance and to protect the system components from damage. The PCM adjusts the swash plate to nearly a zero

degree angle (low compressor displacement) when high side pressure rises above 3130 kPa (454 psi) and readjusts the swash plate to a greater angle (higher compressor displacement) when high side pressure drops below 1999 kPa (290 psi). The A/C pressure transducer also reduces the swash plate angle if the high side pressure drops below 200 kPa (29 psi) and will increase the swash plate angle when the high side pressure rises above 234 - 262 kPa (34 - 38 psi). When the refrigerant pressure rises above 1655 kPa (240 psi) the PCM will actuate the cooling fan.

A Schrader-type valve in the A/C discharge line fitting permits the A/C pressure transducer to be removed or installed without disturbing the refrigerant in the A/C system.

The A/C pressure transducer is diagnosed using a scan tool. Refer to **DTC INDEX** .

The A/C pressure transducer cannot be adjusted or repaired and must be replaced if inoperative or damaged.

REMOVAL

REMOVAL

NOTE: It is not necessary to discharge the refrigerant system to replace the A/C pressure transducer.

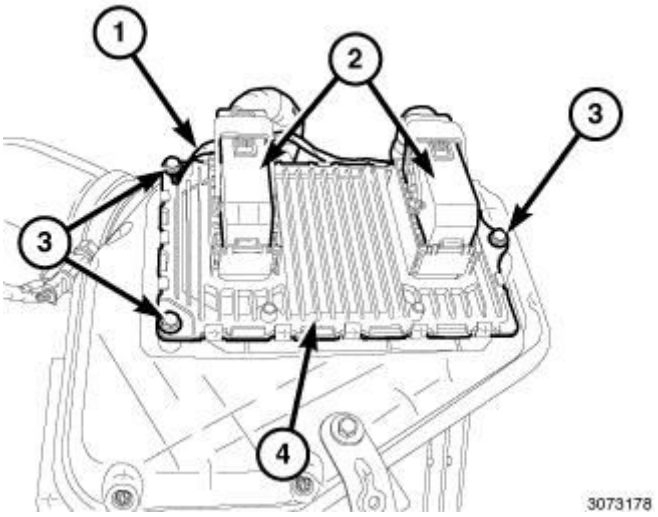

Fig. 28: A/C Pressure Transducer, Connector, Discharge Line & O-Ring
Courtesy of CHRYSLER GROUP, LLC

NOTE: Typical A/C pressure transducer shown in illustration.

1. Disconnect and isolate the negative battery cable.
2. Carefully pull the top of the fascia forward to gain access to the A/C pressure transducer (2). Refer to **FASCIA, FRONT, REMOVAL** .
3. Reach down through the opening between the A/C condenser and the front fascia and disconnect the wire harness connector (1) from the A/C pressure transducer located on the A/C discharge line (3).
4. Remove the A/C pressure transducer from the A/C discharge line and remove and discard the O-ring seal (4).

INSTALLATION

INSTALLATION

NOTE: Use only the specified O-ring as it is made of special material for R-134a. Use only refrigerant oil of the type required for the A/C compressor.

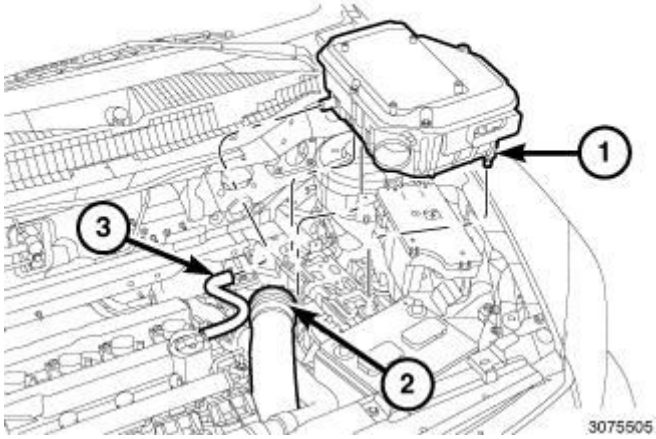

Fig. 29: A/C Pressure Transducer, Connector, Discharge Line & O-Ring
Courtesy of CHRYSLER GROUP, LLC

NOTE: Typical A/C pressure transducer shown in illustration.

1. Lubricate a new rubber O-ring seal (4) with clean refrigerant oil and install it onto the A/C discharge line (3).
2. Install the A/C pressure transducer (2) onto the A/C discharge line. Tighten

the A/C pressure transducer securely.

3. Connect the wire harness connector (1) to the A/C pressure transducer.
4. Reinstall the top of the front fascia. Refer to **FASCIA, FRONT, INSTALLATION** .
5. Reconnect the negative battery cable.

DISTRIBUTION

DUCT, DEFROSTER

REMOVAL

REMOVAL

WARNING: Disable the airbag system before attempting any steering wheel, steering column or instrument panel component diagnosis or service. Disconnect and isolate the negative battery (ground) cable, then wait two minutes for the airbag system capacitor to discharge before performing further diagnosis or service. This is the only sure way to disable the airbag system. Failure to follow these instructions may result in accidental airbag deployment and possible serious or fatal injury.

NOTE: Illustration shown with instrument panel removed from vehicle for clarity.

NOTE: LHD model shown in illustration, RHD model similar.

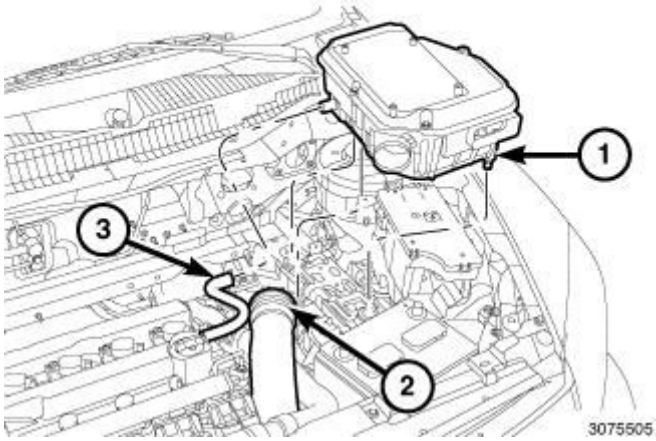

Fig. 30: Left & Right Demister Hoses, & Defroster Duct
Courtesy of CHRYSLER GROUP, LLC

1. Remove the upper and lower instrument panel cover. Refer to **COVER, INSTRUMENT PANEL, REMOVAL** .
2. Disconnect the left and right demister hoses (1 and 3) from the defroster duct (2) and position the hoses out of the way.
3. Remove the defroster duct from the top of the instrument panel (4).

INSTALLATION

INSTALLATION

NOTE: Illustration shown with instrument panel removed from vehicle for clarity.

NOTE: LHD model shown in illustration, RHD model similar.

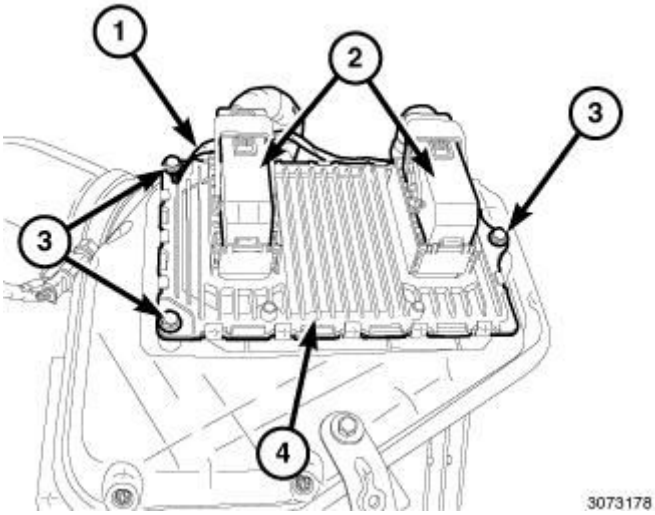

Fig. 31: Left & Right Demister Hoses, & Defroster Duct
Courtesy of CHRYSLER GROUP, LLC

1. Position the defroster duct (2) into the top of the instrument panel (4).
2. Connect the left and right demister hoses (1 and 3) to the defroster duct.
3. Install the lower and upper instrument panel covers. Refer to **COVER, INSTRUMENT PANEL, INSTALLATION** .

DUCT, FLOOR DISTRIBUTION

REMOVAL

REMOVAL

WARNING: Disable the airbag system before attempting any steering wheel, steering column or instrument panel component diagnosis or service. Disconnect and isolate the negative battery (ground) cable. Wait two minutes for the airbag system capacitor to discharge before performing further diagnosis or service. This is the only sure way to disable the airbag system. Failure to follow these instructions may result in possible serious or fatal injury.

NOTE: LHD model shown in illustrations, RHD model similar.

RIGHT FRONT FLOOR DUCT

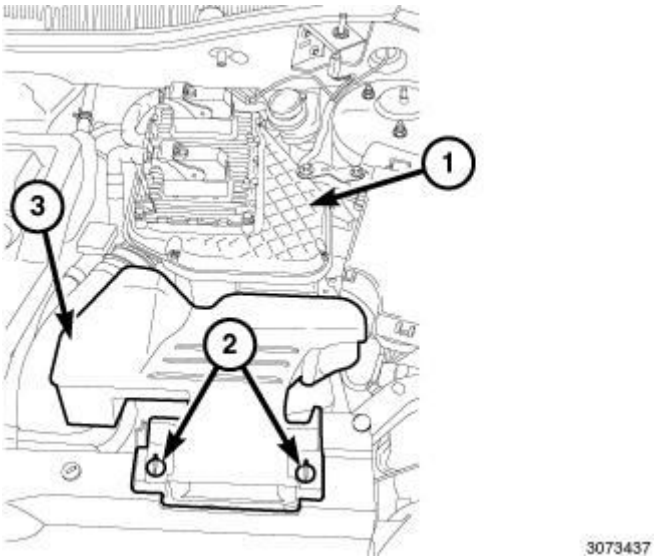

Fig. 32: Right Floor Duct & HVAC Housing
Courtesy of CHRYSLER GROUP, LLC

NOTE: Illustration shown with instrument panel removed for clarity.

1. On LHD models, remove the glove box bin. Refer to **GLOVE BOX, INSTRUMENT PANEL, REMOVAL** .
2. Disconnect the right floor duct (1) from the right side of the HVAC housing (2) and remove the duct.

LEFT FRONT FLOOR DUCT

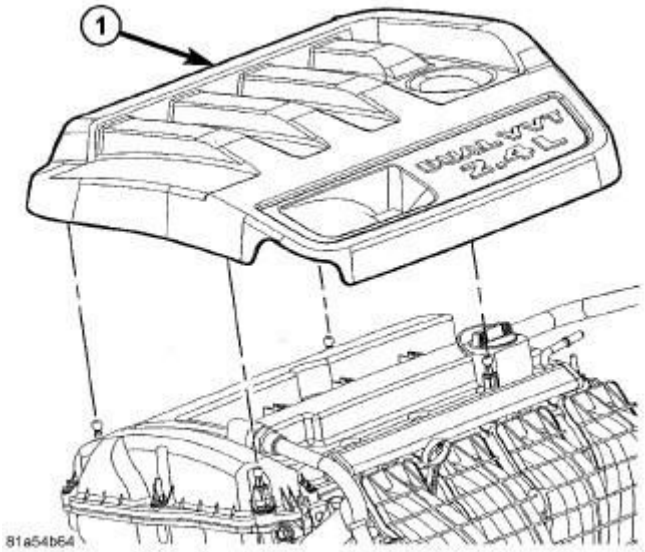

Fig. 33: Left Front Floor Duct, Shift Interlock Cable & Screw
Courtesy of CHRYSLER GROUP, LLC

NOTE: Illustration shown with instrument panel removed for clarity.

1. On RHD models, remove the glove box bin. Refer to **GLOVE BOX, INSTRUMENT PANEL, REMOVAL** .
2. On LHD models, disconnect the shift interlock cable (3) from the left floor duct (1) and position the cable out of the way.
3. Remove the screw (4) that secures the left floor duct to the left side of the HVAC housing (2).
4. Disconnect the left floor duct from the HVAC housing and remove the duct.

REAR FLOOR DISTRIBUTION DUCTS

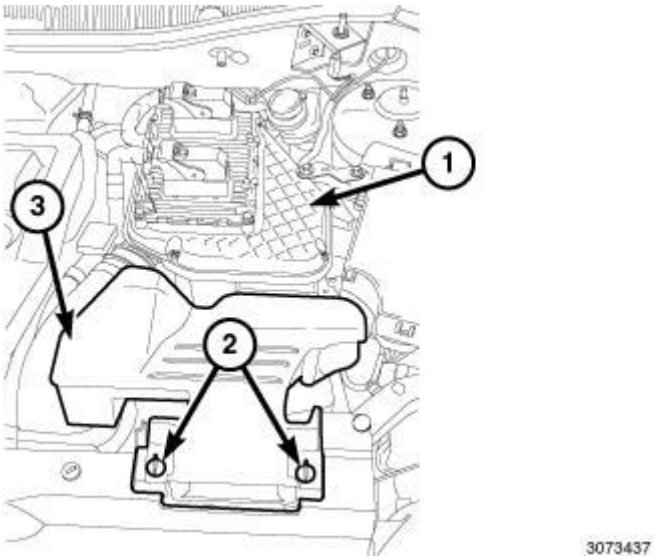

Fig. 34: Rear Floor Distribution Ducts
Courtesy of CHRYSLER GROUP, LLC

1. Remove the instrument panel. Refer to **PANEL, INSTRUMENT, REMOVAL** .
2. Remove the rear seat floor ducts.
3. Disconnect the left rear floor distribution duct (1) and the right rear floor distribution duct (2) as required from the HVAC housing (3) and remove the duct(s).

REAR SEAT FLOOR DUCTS

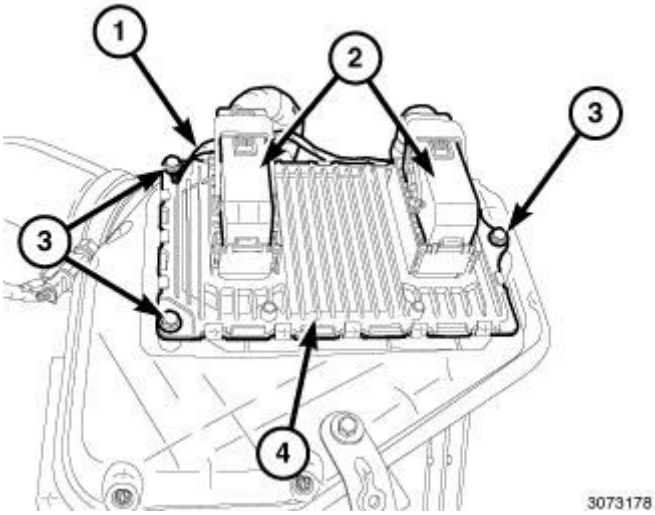

Fig. 35: Rear Seat Floor Ducts
Courtesy of CHRYSLER GROUP, LLC

NOTE: Right side rear floor duct shown in illustration, Left side duct similar.

1. Remove the center floor console. Refer to **HOUSING, SHIFTER, REMOVAL** .
2. Remove the front seat from the side of the vehicle being serviced. Refer to **SEAT, FRONT, REMOVAL** .
3. Pull the carpet back to gain access to the rear seat floor duct (2). Refer to **CARPET, PASSENGER, REMOVAL** .
4. Remove the screw (1) and disengage the retainer that secures the rear seat floor duct to the floor support (4).
5. Disconnect the rear seat floor duct from the rear floor distribution duct (3) and remove the rear seat duct(s).

INSTALLATION

INSTALLATION

NOTE: LHD model shown in illustrations, RHD model similar.

RIGHT FRONT FLOOR DUCT

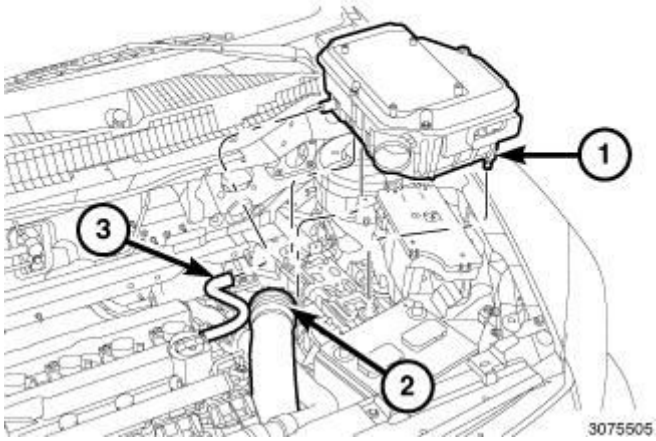

Fig. 36: Right Floor Duct & HVAC Housing
Courtesy of CHRYSLER GROUP, LLC

NOTE: Illustration shown with instrument panel removed for clarity.

1. Connect the right floor duct (1) to the right side of the HVAC housing (2). Make sure the duct is fully engaged to the housing.
2. On LHD models, install the glove box bin. Refer to **GLOVE BOX, INSTRUMENT PANEL, INSTALLATION** .

LEFT FRONT FLOOR DUCT

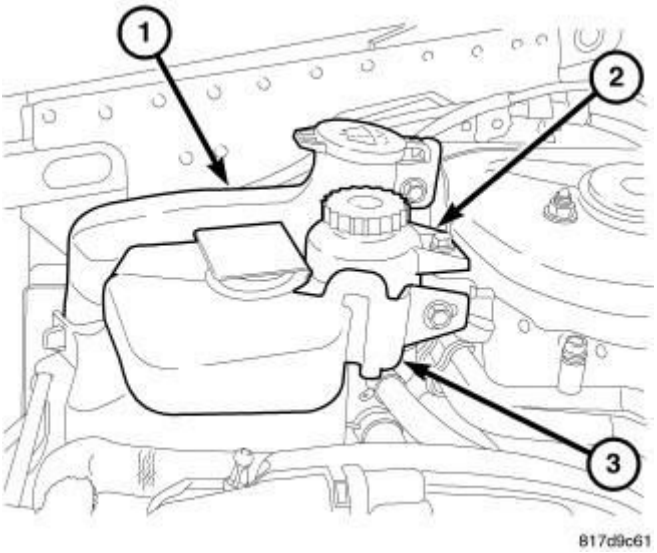

Fig. 37: Left Front Floor Duct, Shift Interlock Cable & Screw
Courtesy of CHRYSLER GROUP, LLC

NOTE: Illustration shown with instrument panel removed for clarity.

1. Connect the left floor duct (1) to the left side of the HVAC housing (2). Make sure the duct is fully engaged to the housing.
2. Install the screw (4) that secures the left floor duct to the HVAC housing. Tighten the screw to 2 N.m (17 in. lbs.).
3. On LHD models, connect the shift interlock cable (3) to the left floor duct.
4. On RHD models, install the glove box bin. Refer to **GLOVE BOX, INSTRUMENT PANEL, INSTALLATION** .

REAR FLOOR DISTRIBUTION DUCTS

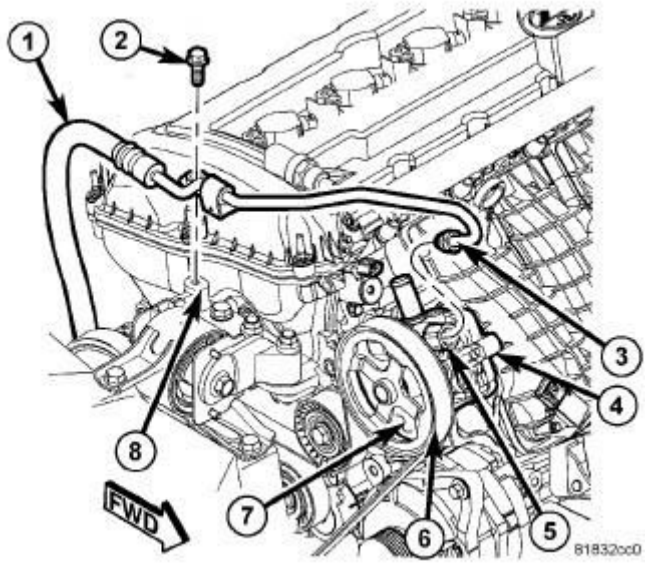

Fig. 38: Rear Floor Distribution Ducts
Courtesy of CHRYSLER GROUP, LLC

1. Connect the left rear floor distribution duct (1) and the right rear floor distribution duct (2) as required to the HVAC housing (3). Make sure the ducts are fully engaged to the housing.
2. Install the rear seat floor ducts.
3. Install the instrument panel. Refer to **PANEL, INSTRUMENT, INSTALLATION** .

REAR SEAT FLOOR DUCTS

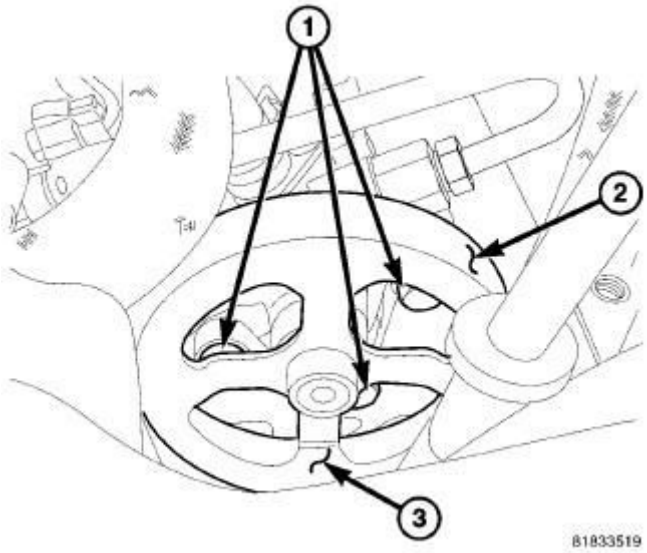

Fig. 39: Rear Seat Floor Ducts
Courtesy of CHRYSLER GROUP, LLC

NOTE: Right side rear floor duct shown in illustration, Left side duct similar.

1. Connect the rear seat floor duct (2) to the rear floor distribution duct (3). Make sure the ducts are fully engaged to each other.
2. Engage the retainer that secures the rear seat floor duct to the floor support (4) and install the retaining screw (1). Tighten the screw to 2.2 N.m (20 in. lbs.).
3. Reinstall the carpet. Refer to **CARPET, PASSENGER, INSTALLATION** .
4. Install the front seat to the side of the vehicle being serviced. Refer to **SEAT, FRONT, INSTALLATION** .
5. Install the center floor console. Refer to **HOUSING, SHIFTER, INSTALLATION** .

DUCT, INSTRUMENT PANEL

REMOVAL

REMOVAL

WARNING: Disable the airbag system before attempting any steering wheel, steering column or instrument

panel component diagnosis or service. Disconnect and isolate the negative battery (ground) cable, then wait two minutes for the airbag system capacitor to discharge before performing further diagnosis or service. This is the only sure way to disable the airbag system. Failure to follow these instructions may result in accidental airbag deployment and possible serious or fatal injury.

NOTE: LHD model shown in illustrations, RHD model similar.

NOTE: The driver side instrument panel duct is serviced only as an assembly with the inner driver side demister duct.

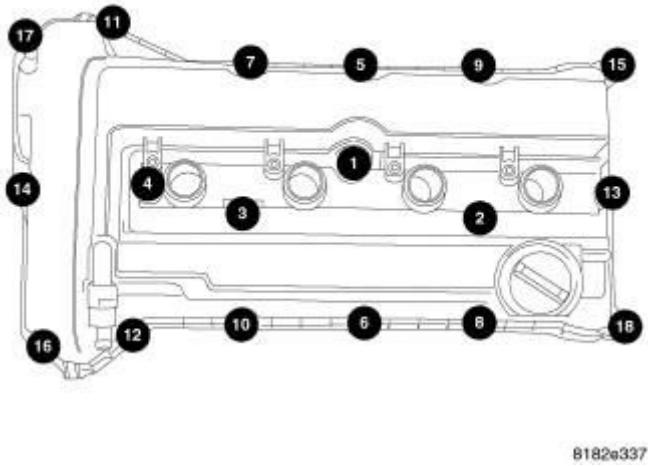

Fig. 40: Instrument Panel Duct
Courtesy of CHRYSLER GROUP, LLC

1. Remove the upper and lower instrument panel covers. Refer to **COVER, INSTRUMENT PANEL, REMOVAL** .
2. Remove the four screws (2 and 7) that secure the driver side demister duct (3) and the instrument panel duct (6) to the instrument panel support.
3. Disconnect the driver side demister hose (4) from the demister duct.
4. Disconnect the driver side instrument panel duct from the passenger side instrument panel duct (5).
5. Remove the instrument panel and demister duct assembly from the

instrument panel support.

6. If required, disconnect the outer demister duct (1) from the driver side demister duct.

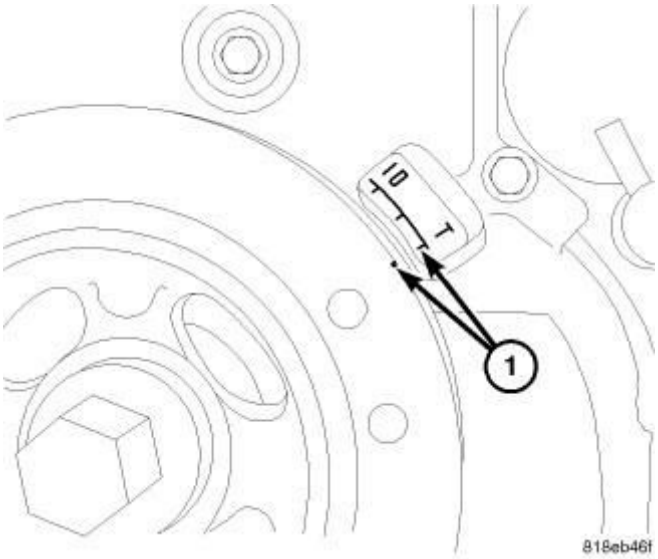

Fig. 41: Passenger Side Instrument Panel Duct
Courtesy of CHRYSLER GROUP, LLC

7. Remove the screw (1) that secures the passenger side instrument panel duct (2) to the instrument panel support.
8. Remove the passenger side instrument panel duct from the instrument panel support.

INSTALLATION

INSTALLATION

NOTE: LHD model shown in illustrations, RHD model similar.

NOTE: The driver side instrument panel duct is serviced only as an assembly with the inner driver side demister duct.

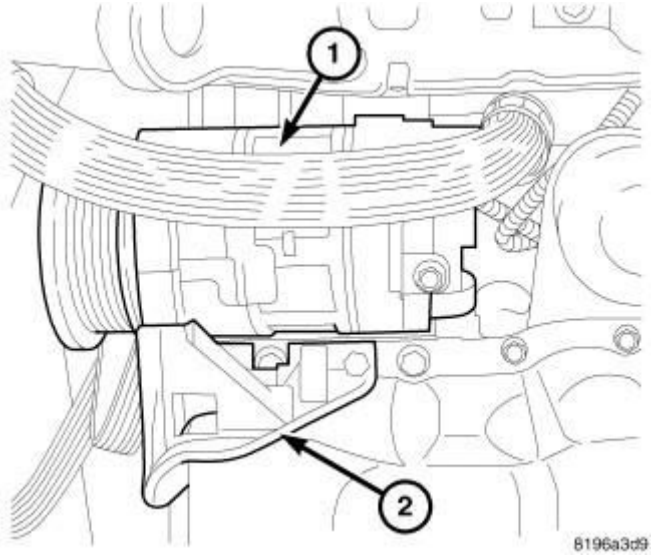

Fig. 42: Passenger Side Instrument Panel Duct
Courtesy of CHRYSLER GROUP, LLC

1. Position the passenger side instrument panel duct (2) onto the top of the instrument panel support.
2. Install the screw (1) that secures the passenger side instrument panel duct to the instrument panel support. Tighten the screw to 2.2 N.m (20 in. lbs.).

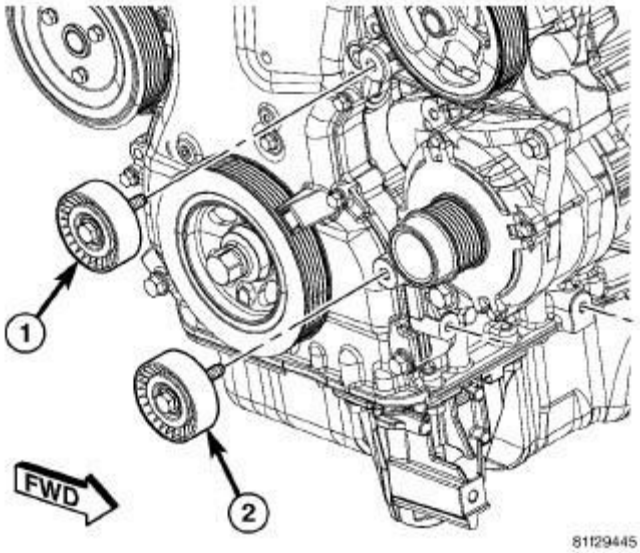

Fig. 43: Instrument Panel Duct
Courtesy of CHRYSLER GROUP, LLC

3. If removed, connect the outer demister duct (1) to the driver side demister duct (3).
4. Position the driver side instrument panel duct (6) and demister duct to the

instrument panel support and connect the driver side instrument panel duct to the passenger side instrument panel duct (5). Make sure the ducts are fully engaged to each other.

5. Connect the demister hose (4) to the driver side demister duct. Make sure the hose is fully engaged to the duct.
6. Install the four screws (2 and 7) that secure driver side instrument panel duct and demister duct to the instrument panel support. Tighten the screws to 2.2 N.m (20 in. lbs.).
7. Install the lower and upper instrument panel covers. Refer to **COVER, INSTRUMENT PANEL, INSTALLATION** .

DUCT, INSTRUMENT PANEL DEMISTER

REMOVAL

REMOVAL

WARNING: Disable the airbag system before attempting any steering wheel, steering column or instrument panel component diagnosis or service. Disconnect and isolate the negative battery (ground) cable, then wait two minutes for the airbag system capacitor to discharge before performing further diagnosis or service. This is the only sure way to disable the airbag system. Failure to follow these instructions may result in accidental airbag deployment and possible serious or fatal injury.

NOTE: LHD model shown in illustrations, RHD model similar.

DRIVER SIDE

NOTE: The inner driver side demister duct is serviced only as an assembly with the driver side instrument panel duct.

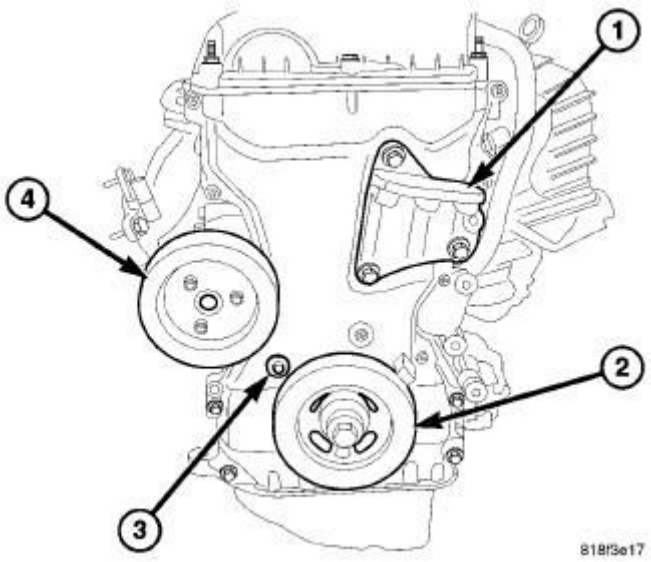

Fig. 44: Instrument Panel Duct
Courtesy of CHRYSLER GROUP, LLC

1. Remove the upper and lower instrument panel covers. Refer to **COVER, INSTRUMENT PANEL, REMOVAL** .
2. Remove the four screws (2 and 7) that secure the driver side demister duct (3) and the instrument panel duct (6) to the instrument panel support.
3. Disconnect the driver side demister hose (4) from the demister duct.
4. Disconnect the driver side instrument panel duct from the passenger side instrument panel duct (5).
5. Remove the instrument panel and demister duct assembly from the instrument panel support.
6. If required, disconnect the outer demister duct (1) from the driver side demister duct.

PASSENGER SIDE

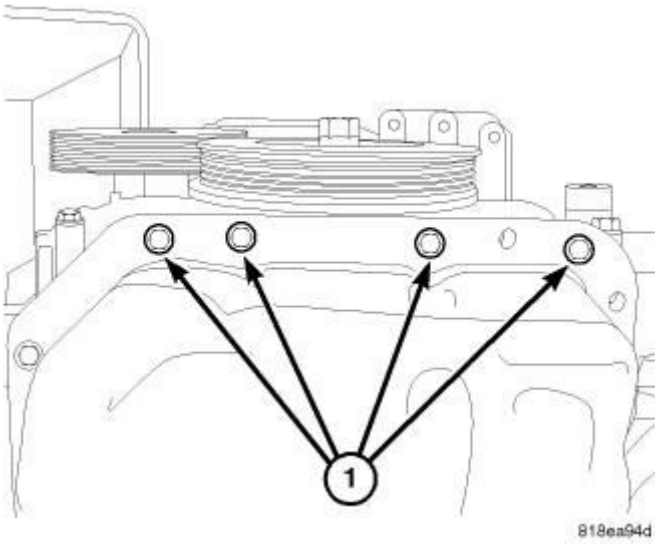

Fig. 45: Passenger Side Demister Duct
Courtesy of CHRYSLER GROUP, LLC

1. Remove the upper and lower instrument panel covers. Refer to **COVER, INSTRUMENT PANEL, REMOVAL** .
2. Disconnect the demister hose (1) from the passenger side demister duct (4).
3. Disengage the push-pin type fastener (3) that secures the passenger side demister duct to the instrument panel support.
4. Disengage the demister duct retaining tab (2) from the instrument panel support and remove the passenger side demister duct.

INSTALLATION

INSTALLATION

NOTE: LHD model shown in illustrations, RHD model similar.

DRIVER SIDE

NOTE: The inner driver side demister duct is serviced only as an assembly with the driver side instrument panel duct.

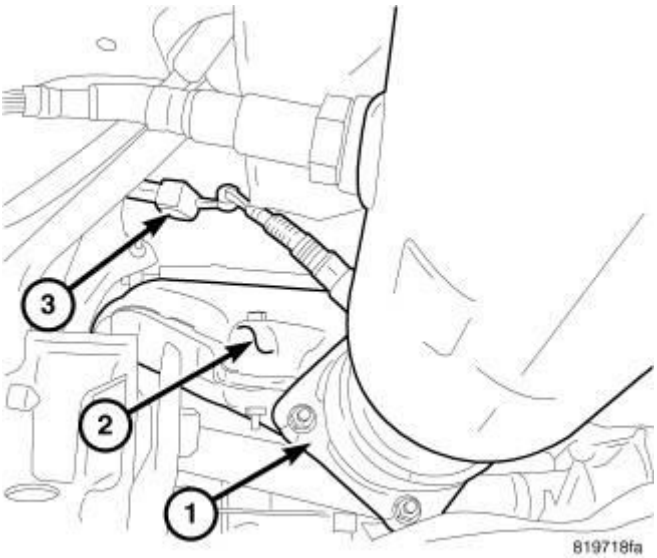

Fig. 46: Instrument Panel Duct
Courtesy of CHRYSLER GROUP, LLC

1. If removed, connect the outer demister duct (1) to the driver side demister duct (3).
2. Position the driver side instrument panel duct (6) and demister duct to the instrument panel support and connect the driver side instrument panel duct to the passenger side instrument panel duct (5). Make sure the ducts are fully engaged to each other.
3. Connect the demister hose (4) to the driver side demister duct. Make sure the hose is fully engaged to the duct.
4. Install the four screws (2 and 7) that secure driver side instrument panel duct and demister duct to the instrument panel support. Tighten the screws to 2.2 N.m (20 in. lbs.).
5. Install the lower and upper instrument panel covers. Refer to **COVER, INSTRUMENT PANEL, INSTALLATION** .

PASSENGER SIDE

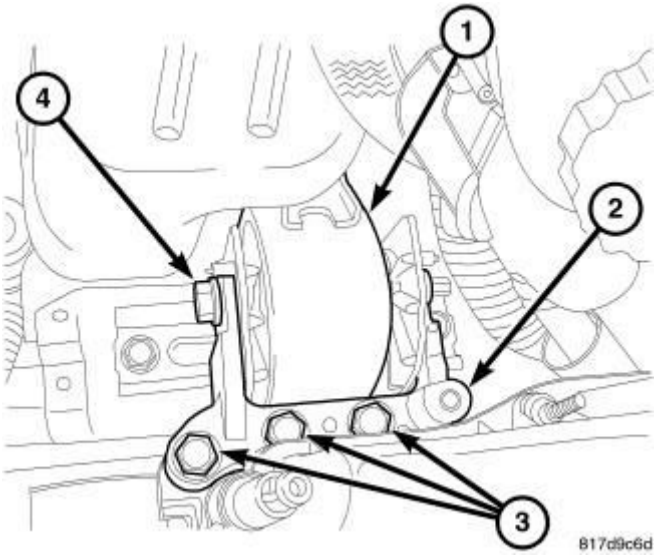

Fig. 47: Passenger Side Demister Duct
Courtesy of CHRYSLER GROUP, LLC

1. Position the passenger side demister duct (4) behind the instrument panel support. Rotate and tilt the duct as required.
2. Engage the demister duct retaining tab (2) to the instrument panel support.
3. Engage the push-pin type fastener (3) to the instrument panel support.
4. Connect the demister hose (1) to the demister duct. Make sure the hose is fully engaged to the duct.
5. Install the lower and upper instrument panel covers. Refer to **COVER, INSTRUMENT PANEL, INSTALLATION** .

FILTER, CABIN AIR

DESCRIPTION

DESCRIPTION

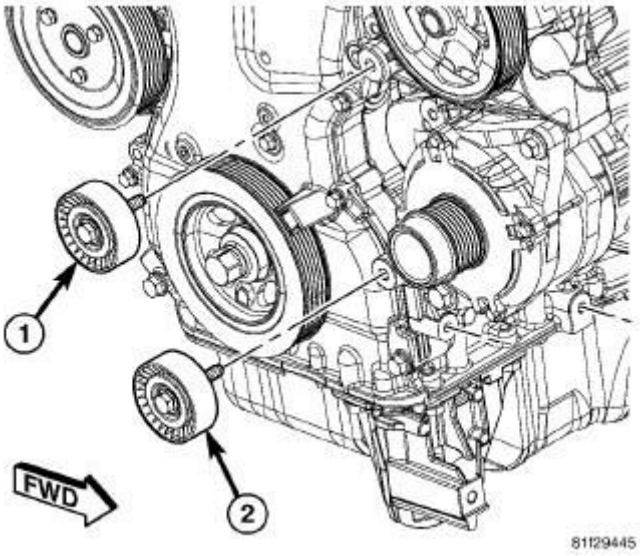

Fig. 48: Cabin Air Filter
Courtesy of CHRYSLER GROUP, LLC

Some models are equipped with a cabin air filter (1) that helps purify the outside air entering the HVAC housing. The filter is mounted in the passenger compartment, behind the glove box bin.

The filter should be replaced at least once a year or every 24, 000 km (15, 000 miles) and checked if heating-A/C system performance seems lower than expected. The cabin air filter is labeled with an arrow (2) to indicate the direction of air flow through the filter.

REMOVAL

REMOVAL

WARNING: **Disable the airbag system before attempting any steering wheel, steering column or instrument panel component diagnosis or service. Disconnect and isolate the negative battery (ground) cable, then wait two minutes for the airbag system capacitor to discharge before performing further diagnosis or service. This is the only sure way to disable the airbag system. Failure to follow these instructions may result in accidental airbag deployment and possible serious or fatal injury.**

WARNING: Always make sure the A/C-heater system is turned off and that the ignition switch is in the OFF position prior to servicing the cabin air filter. Never place fingers or other objects into the filter opening of the HVAC housing. Failure to follow this warning may result in serious injury.

NOTE: LHD model shown in illustrations, RHD model similar.

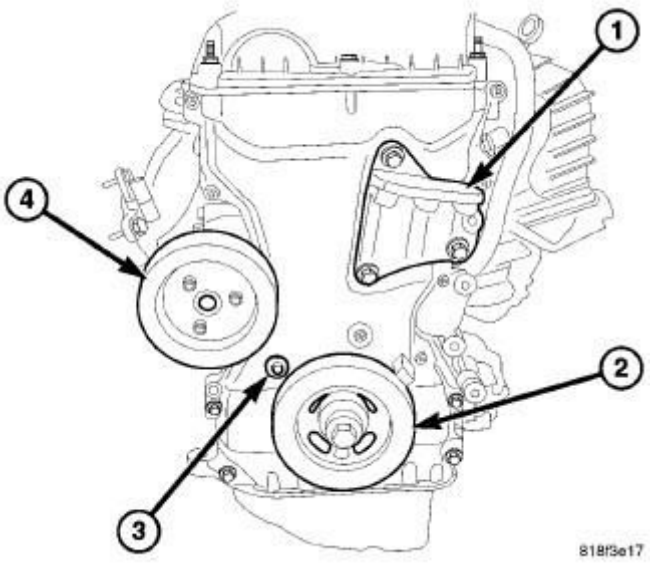

Fig. 49: Removing/Installing Cabin Air Filter Cover
Courtesy of CHRYSLER GROUP, LLC

NOTE: Illustration shown with instrument panel removed for clarity.

1. Remove the glove box bin. Refer to **GLOVE BOX, INSTRUMENT PANEL, REMOVAL** .
2. Disengage the two retaining tabs (1) that secure the cabin air filter cover (2) to the passenger side of the HVAC housing (3) and remove the cover.

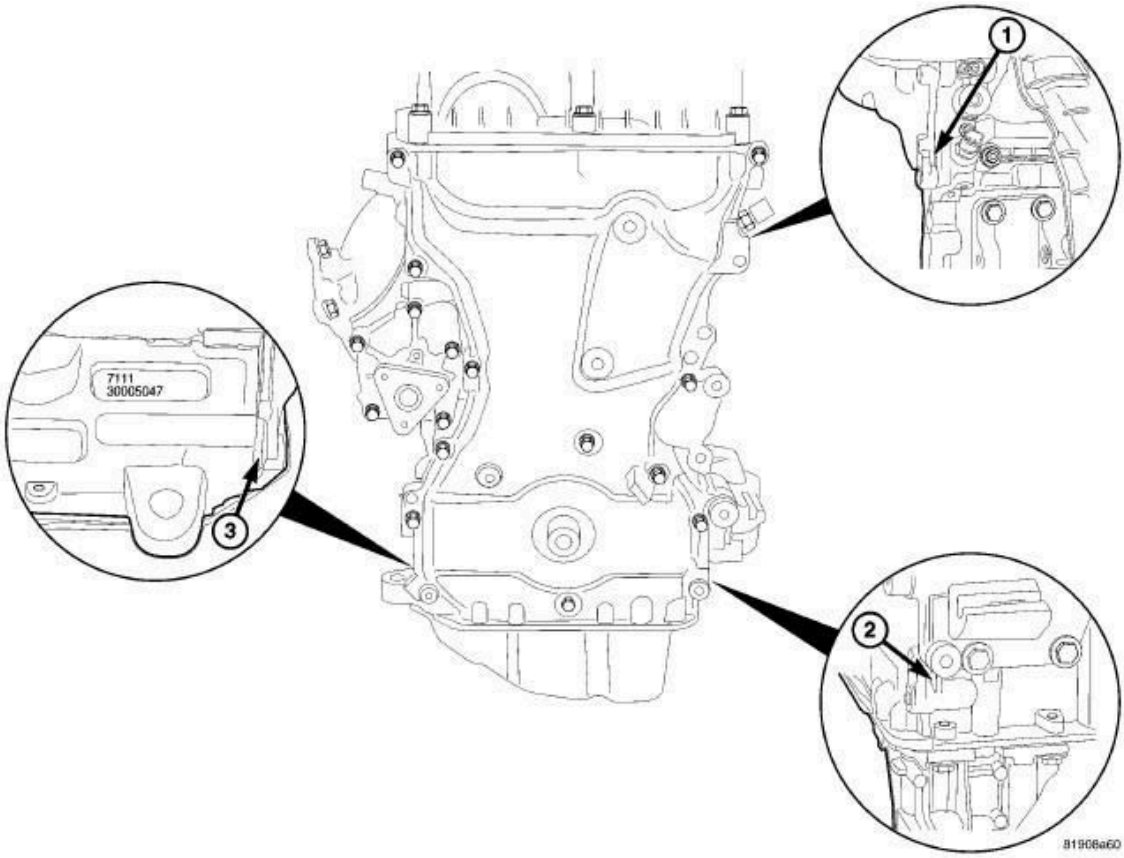

Fig. 50: Cabin Air Filter & HVAC Housing
Courtesy of CHRYSLER GROUP, LLC

3. Remove the cabin air filter (1) from the HVAC housing (2) by pulling the filter element straight out of the housing.

INSTALLATION

INSTALLATION

NOTE: The cabin air filter is labeled with an arrow to indicate air flow direction through the filter. Make sure to properly install the cabin air filter. Failure to properly install the filter will result in the need to replace the filter sooner than required by design.

NOTE: LHD model shown in illustrations, RHD model similar.

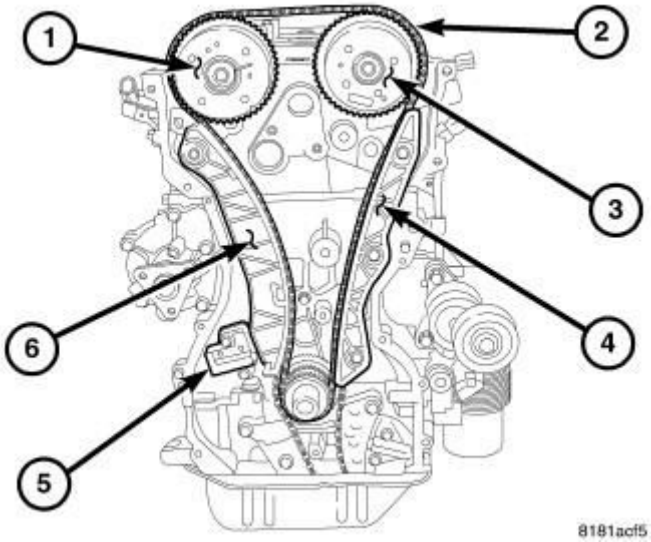

Fig. 51: Installing Cabin Air Filter
Courtesy of CHRYSLER GROUP, LLC

1. Install the cabin air filter (1) into the filter opening in the HVAC housing (2). Insert the cabin air filter directly into the housing with the arrow on the filter pointing to the floor.

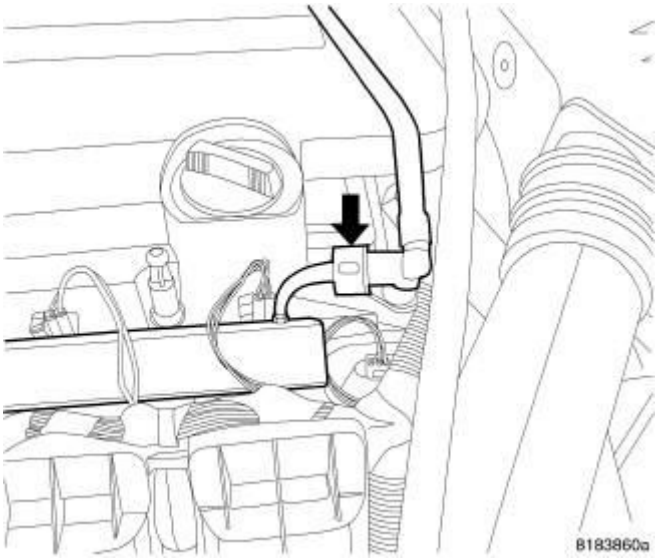

Fig. 52: Removing/Installing Cabin Air Filter Cover
Courtesy of CHRYSLER GROUP, LLC

2. Position the cabin air filter cover (2) to the HVAC housing (3) and engage the two retaining tabs (1) that secure the cover to the housing. Make sure the retaining tabs are fully engaged.
3. Install the glove box bin. Refer to **GLOVE BOX, INSTRUMENT PANEL, INSTALLATION** .

HOUSING, HVAC

DESCRIPTION

DESCRIPTION

NOTE: LHD model shown, RHD model similar.

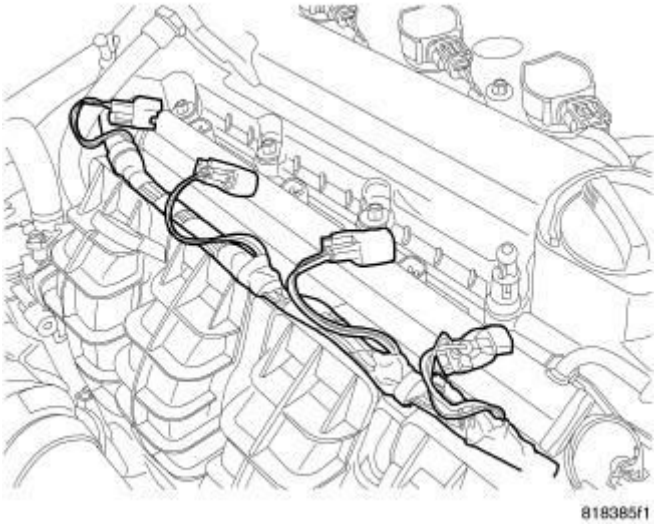

Fig. 53: HVAC Housing, Air Inlet Housing & Air Distribution Housing
Courtesy of CHRYSLER GROUP, LLC

All models use a common HVAC housing assembly. The HVAC housing assembly is mounted within the passenger compartment and consists of three separate housings:

- **HVAC housing** - The HVAC housing (1) is mounted to the dash panel behind the instrument panel and contains the A/C evaporator, when equipped with A/C. The HVAC housing consists of an upper and a lower housing that are attached together and has mounting provisions for the air inlet housing, air distribution housing, blower motor and blower motor resistor or power module (depending on application).
- **Air distribution housing** - The air distribution housing (2) is mounted to the rear of the HVAC housing and contains the heater core, blend-air and mode-air doors and door linkage.
- **Air inlet housing** - The air inlet housing (3) is mounted to the passenger side end of the HVAC housing. When equipped with A/C, the air inlet housing contains the recirculation-air door and recirculation door actuator.

The heating-A/C system is a blend-air type system. The blend-air door controls the amount of conditioned air that is allowed to flow through, or around, the heater core.

The A/C system is designed for the use of a non-CFC, R-134a refrigerant and uses an A/C evaporator to cool and dehumidify the incoming air prior to blending it with the heated air. The discharge air temperature is controlled by an electric blend door actuator, which moves the blend-air door. This allows an almost immediate control of the output air temperature of the system. The electric mode door actuator operates the mode-air doors, which direct the flow of the conditioned air out the various air outlets, depending on the mode selected. The blower motor controls the velocity of air flowing through the HVAC housing assembly by spinning the blower wheel within the HVAC housing at the selected speed by use of a blower motor resistor or power module (depending on application). When equipped with A/C, an electric recirculation door actuator operates the recirculation-air door, which closes off the fresh air intake and recirculates the air already inside the vehicle. The electric door actuators, blower motor resistor or power module (depending on application) and the blower motor are connected to the vehicle electrical system by the instrument panel wire harness.

The air distribution housing must be removed from the HVAC housing and disassembled for service of the blend-air and mode-air doors. The air inlet housing must be removed from HVAC housing and disassembled for service of the recirculation-air door. The HVAC housing must be removed from the vehicle and disassembled for service of the A/C evaporator.

REMOVAL

HOUSING-AIR DISTRIBUTION

WARNING: **Disable the airbag system before attempting any steering wheel, steering column or instrument panel component diagnosis or service. Disconnect and isolate the negative battery (ground) cable, then wait two minutes for the airbag system capacitor to discharge before performing further diagnosis or service. This is the only sure way to disable the airbag system. Failure to follow these instructions may result in**

accidental airbag deployment and possible serious or fatal injury.

WARNING: Review the warnings and cautions for this system before performing the procedure. Failure to follow these instructions may result in serious injury or death.

NOTE: The air distribution housing must be removed from the HVAC housing and disassembled for service of the blend-air and mode-air doors.

NOTE: LHD model with A/C shown in illustrations, RHD and heater-only models similar.

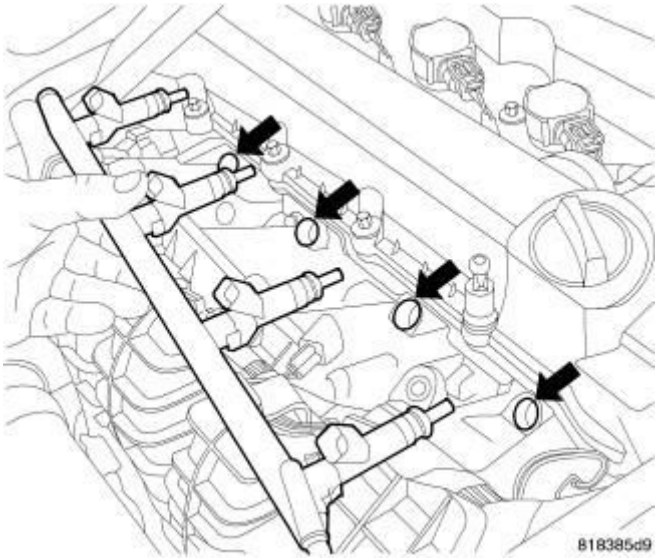

Fig. 54: Air Distribution Housing, Clips & Screws
Courtesy of CHRYSLER GROUP, LLC

1. Remove the HVAC housing assembly and place it on a workbench. Refer to **HOUSING, HVAC, REMOVAL**.
2. Remove the floor distribution ducts. Refer to **DUCT, FLOOR DISTRIBUTION, REMOVAL**.
3. Remove the heater core. Refer to **CORE, HEATER, REMOVAL**.
4. Remove the two metal retaining clips (3) that secure the bottom of air distribution housing (2) to the HVAC housing (4).
5. Remove the six screws (1) that secure the air distribution housing to the rear

of the HVAC housing.

6. Carefully disengage the one plastic retaining clip that secures the right side of the air distribution housing to the HVAC housing.
7. Remove the air distribution housing from the rear of the HVAC housing.
8. If required, disassemble the air distribution housing. Refer to **HOUSING, HVAC, DISASSEMBLY**.

HOUSING-AIR INLET

WARNING: Disable the airbag system before attempting any steering wheel, steering column or instrument panel component diagnosis or service. Disconnect and isolate the negative battery (ground) cable, then wait two minutes for the airbag system capacitor to discharge before performing further diagnosis or service. This is the only sure way to disable the airbag system. Failure to follow these instructions may result in accidental airbag deployment and possible serious or fatal injury.

WARNING: Review the warnings and cautions for this system before performing the procedure. Failure to follow these instructions may result in serious injury or death.

NOTE: The air inlet housing must be removed from HVAC housing and disassembled for service of the recirculation-air door.

NOTE: LHD model shown in illustration, RHD model similar.

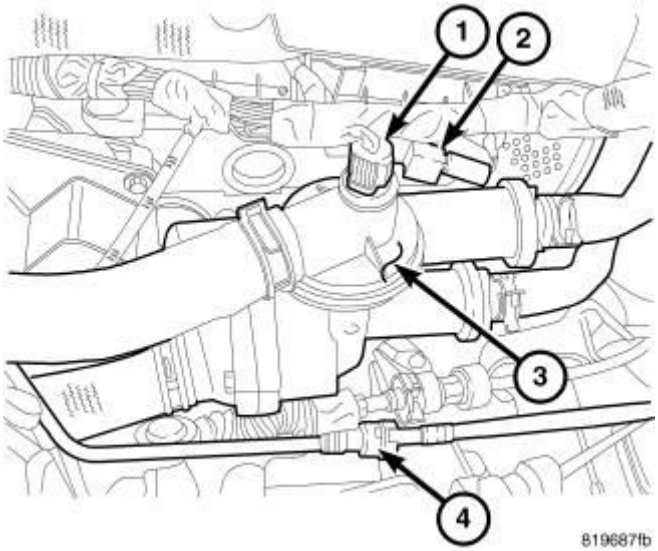

Fig. 55: Air Inlet Housing, HVAC Housing, Tabs & Screws
Courtesy of CHRYSLER GROUP, LLC

1. Remove the HVAC housing assembly and place it on a workbench. Refer to **HOUSING, HVAC, REMOVAL**.
2. If equipped, remove the cabin air filter. Refer to **FILTER, CABIN AIR, REMOVAL**.
3. Remove the four screws (1) that secure the air inlet housing (2) to the top of the HVAC housing (3).
4. Disengage the two plastic retaining tabs (4) that secure the air inlet housing to the HVAC housing and remove the inlet housing from the HVAC housing.
5. If required, disassemble the air inlet housing. Refer to **HOUSING, HVAC, DISASSEMBLY**.

HOUSING-HVAC

WARNING: **Disable the airbag system before attempting any steering wheel, steering column or instrument panel component diagnosis or service. Disconnect and isolate the negative battery (ground) cable. Wait two minutes for the airbag system capacitor to discharge before performing further diagnosis or service. This is the only sure way to disable the airbag system. Failure to follow these instructions may result in possible serious**

or fatal injury.

WARNING: Review the warnings and cautions for this system before performing the procedure. Failure to follow these instructions may result in serious injury or death.

NOTE: The HVAC housing must be removed from the vehicle and disassembled for service of the heater core, A/C evaporator, air intake housing and the mode-air and blend-air doors.

NOTE: LHD model shown in illustrations, RHD model similar.

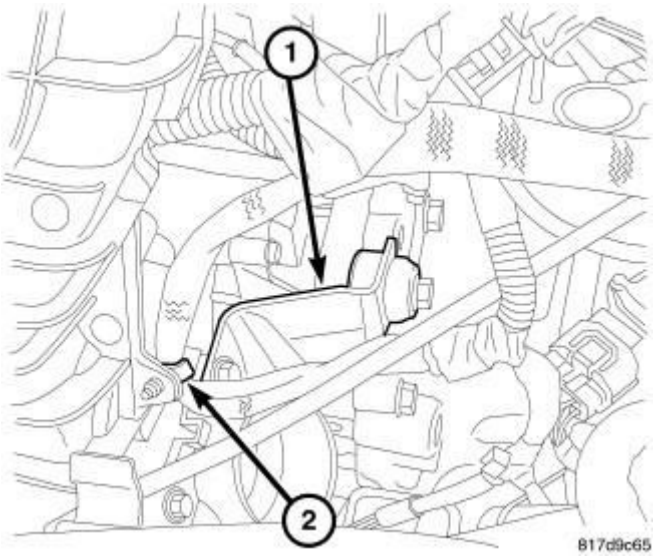

Fig. 56: Heat Shield
Courtesy of CHRYSLER GROUP, LLC

1. Disconnect and isolate the negative battery cable.
2. Recover the refrigerant from the refrigerant system. Refer to **PLUMBING, STANDARD PROCEDURE**.
3. Partially drain the engine cooling system. Refer to **STANDARD PROCEDURE** .
4. Remove the nuts (1) that secure the heat shield (3) to the studs (2) located on the dash panel in the engine compartment and remove the heat shield.

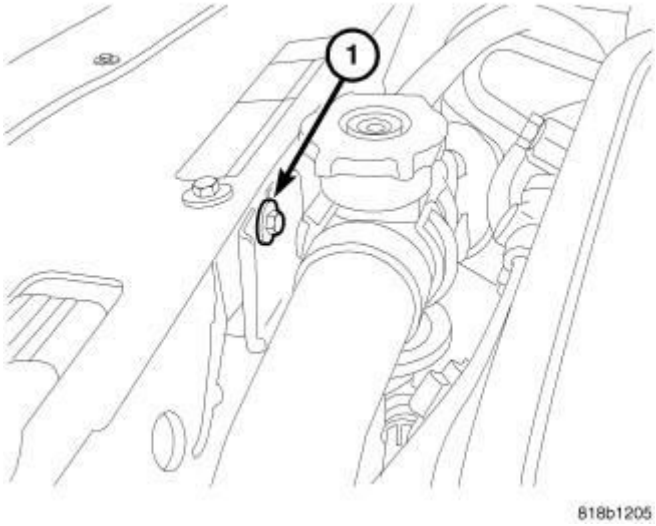

Fig. 57: A/C Liquid/Suction Line Assembly & Bolts
Courtesy of CHRYSLER GROUP, LLC

5. Remove the bolt (1) that secures the A/C liquid and suction line assembly (2) to the A/C expansion valve (3).
6. Disconnect the A/C liquid and suction line assembly from the A/C expansion valve and remove and discard the O-ring seals.
7. Install plugs in, or tape over the opened refrigerant line fittings and the expansion valve ports.
8. Disconnect the heater hoses (4) from the heater core tubes.
9. Install plugs in, or tape over the opened heater core tubes to prevent coolant spillage during housing removal.

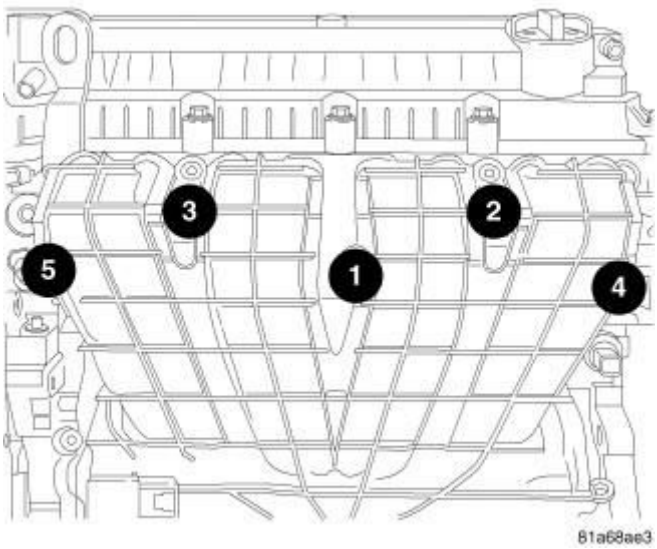

Fig. 58: HVAC Housing To Dash Panel Nut

Courtesy of CHRYSLER GROUP, LLC

NOTE: Make sure to remove the five bolts that secure the HVAC housing to the instrument panel support prior to removing the instrument panel from the vehicle.

10. Remove the instrument panel. Refer to **PANEL, INSTRUMENT, REMOVAL** .
11. Remove the rear floor ducts. Refer to **DUCT, FLOOR DISTRIBUTION, REMOVAL**.
12. Remove the condensation drain tube. Refer to **TUBE, CONDENSATION DRAIN, REMOVAL**.
13. Remove the nut (1) that secures the passenger side of the HVAC housing (2) to the dash panel (3).

NOTE: Use care to ensure that the interior is covered in case of loss of residual fluids from the heater and evaporator cores.

14. Pull the HVAC housing rearward and remove the HVAC housing assembly from the passenger compartment.

SCREEN-AIR INLET

NOTE: LHD model shown in illustration, RHD model similar.

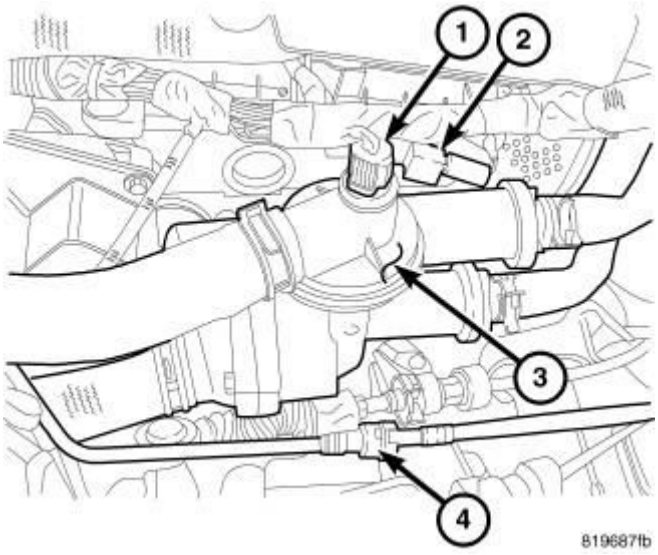

Fig. 59: HVAC Housing Air Inlet Screen, Cowl Panel & Push-In Retainers

Courtesy of CHRYSLER GROUP, LLC

1. Remove the cowl grille screen. Refer to **COVER, COWL PANEL, REMOVAL** .
2. Disengage the three push-in retainers (1) that secure the HVAC housing air inlet screen (2) to the cowl panel (3) and remove the screen.

DISASSEMBLY

HOUSING-AIR DISTRIBUTION

NOTE: The air distribution housing must be removed from the HVAC housing and disassembled for service of the blend-air and mode-air doors.

NOTE: LHD model with A/C shown in illustrations, RHD and heater-only models similar.

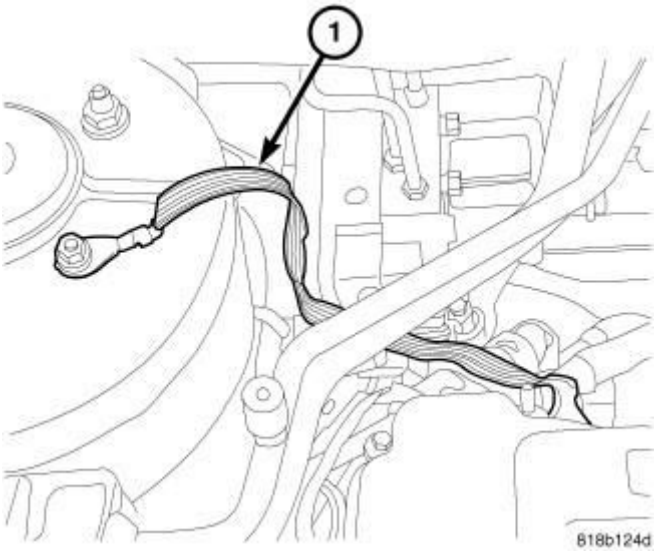

Fig. 60: HVAC Housing, Air Inlet Housing & Air Distribution Housing
Courtesy of CHRYSLER GROUP, LLC

1. Remove the HVAC housing assembly and place it on a workbench. Refer to **HOUSING, HVAC, REMOVAL**.
2. Remove the air distribution housing (2) from the HVAC housing (1). Refer to **HOUSING, HVAC, REMOVAL**.
3. If equipped with the 2.2L diesel engine, remove the electric Positive Temperature Coefficient (PTC) heater unit from the air distribution housing. Refer to **UNIT, HEATER, REMOVAL**.

4. Remove the heater core from the air distribution housing. Refer to **CORE, HEATER, REMOVAL**.

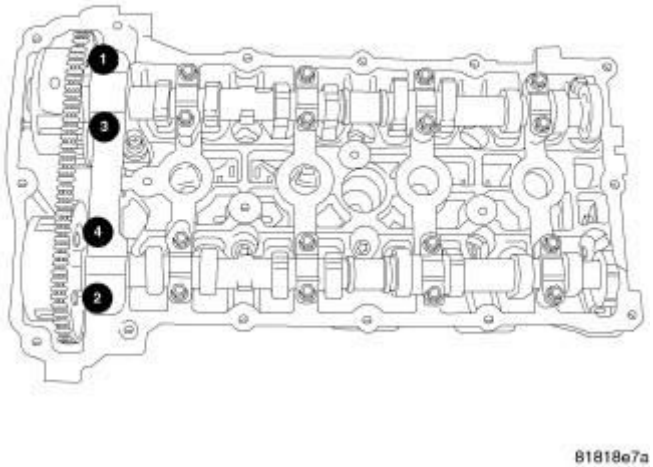

Fig. 61: Blend Door Actuator & Screws
Courtesy of CHRYSLER GROUP, LLC

5. Remove the screws (1) that secure the blend door actuator (2) to the left side of the air distribution housing (3) and remove the actuator.
6. If equipped with dual zone system, remove the screws that secure the other blend door actuator to the right side of the air distribution housing and remove the actuator. Refer to **ACTUATOR, BLEND DOOR, REMOVAL**.

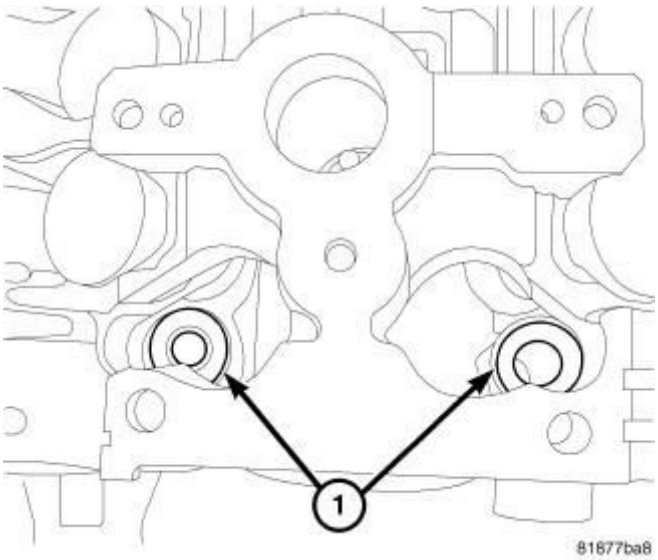

Fig. 62: Blend Door Levers
Courtesy of CHRYSLER GROUP, LLC

7. Remove the blend door lever (1) from the left side of the air distribution housing (2).

NOTE: To remove the blend door pivot lever, disengage the retaining tab on the lever and pull the lever straight off the pivot shaft.

8. Remove the blend door pivot lever (3) from the end of the blend door pivot shaft (4).

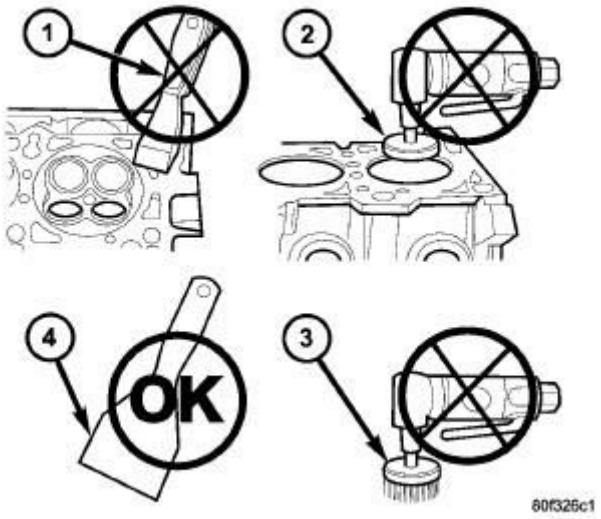

Fig. 63: Mode Door Actuator & Bracket
Courtesy of CHRYSLER GROUP, LLC

NOTE: It is not necessary to remove the mode door actuator from the bracket when servicing the air distribution housing.

9. Remove the three screws (1) that secure the mode door actuator (2) and bracket (3) to the right side of the air distribution housing (4) and remove the actuator and bracket as an assembly.

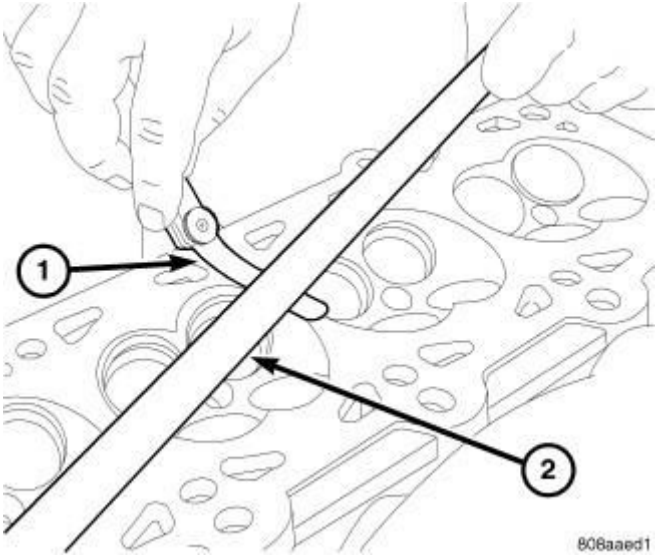

Fig. 64: Mode Door Cam
Courtesy of CHRYSLER GROUP, LLC

10. Remove the mode door cam (1) from the right side of the air distribution housing (2).

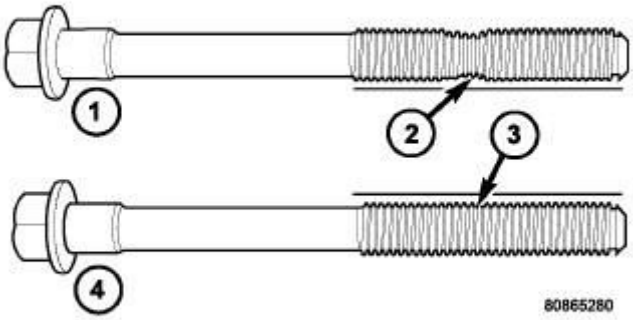

Fig. 65: Parting Line And Retainers
Courtesy of CHRYSLER GROUP, LLC

NOTE: If any foam seal on the air distribution housing outlets is deformed or damaged, the seal must be replaced.

11. Carefully cut the two foam seals (1) along the parting line (2) of the two

halves of the air distribution housing (3). If either seal is deformed or damaged, it must be replaced.

12. Remove the five screws (4) and one metal clip (5) that secure the two halves of the air distribution housing together.
13. Disengage the three plastic retaining tabs (6) that secure the two halves of the air distribution housing together and carefully separate the housing.

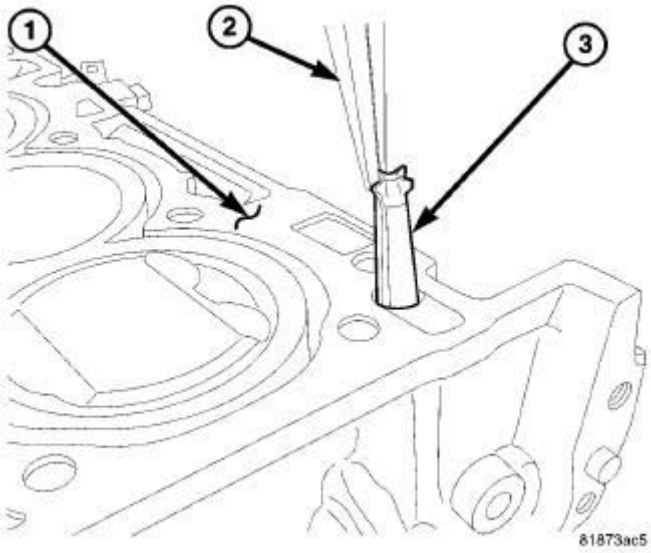

Fig. 66: Air Distribution Housing & Air Doors
Courtesy of CHRYSLER GROUP, LLC

NOTE: If a seal on an air door is deformed or damaged, the air door must be replaced.

14. Disengage the air door(s) (1, 2, 3 and 4) from the mode door levers and remove the air doors from the air distribution housing (5).

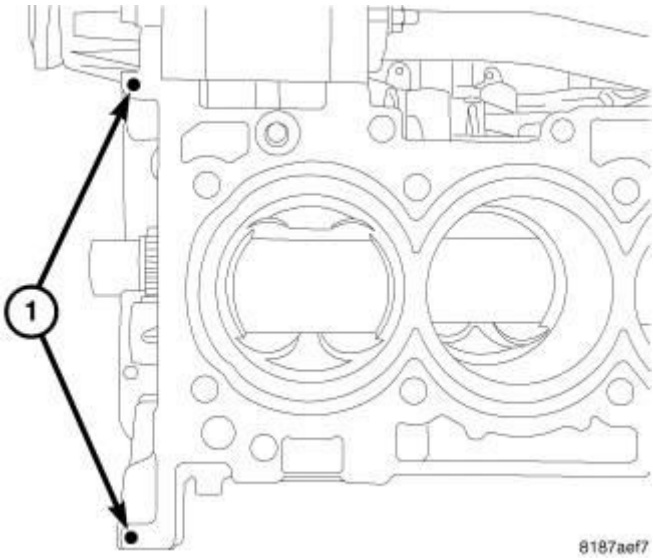

Fig. 67: Mode Door Levers
Courtesy of CHRYSLER GROUP, LLC

NOTE: To remove the mode door levers, disengage the retaining tabs on the inside of the air distribution housing and pull the levers straight out of the housing.

15. Remove the four mode door levers (1, 2, 3 and 4) from the right side of the air distribution housing (5).

HOUSING-AIR INLET

NOTE: The air inlet housing must be removed from HVAC housing and disassembled for service of the recirculation-air door.

NOTE: LHD model with A/C shown in illustrations, RHD models similar.

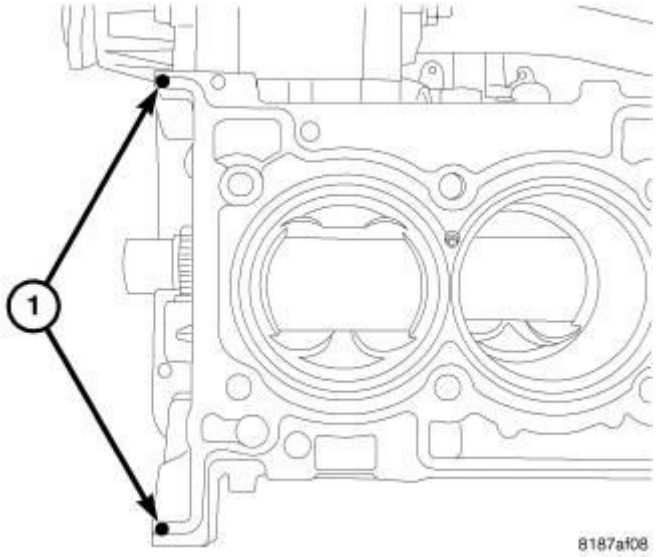

Fig. 68: HVAC Housing, Air Inlet Housing & Air Distribution Housing
Courtesy of CHRYSLER GROUP, LLC

1. Remove the HVAC housing assembly and place it on a workbench. Refer to **HOUSING, HVAC, REMOVAL**.
2. Remove the air inlet housing (3) from the HVAC housing (1). Refer to **HOUSING, HVAC, REMOVAL**.

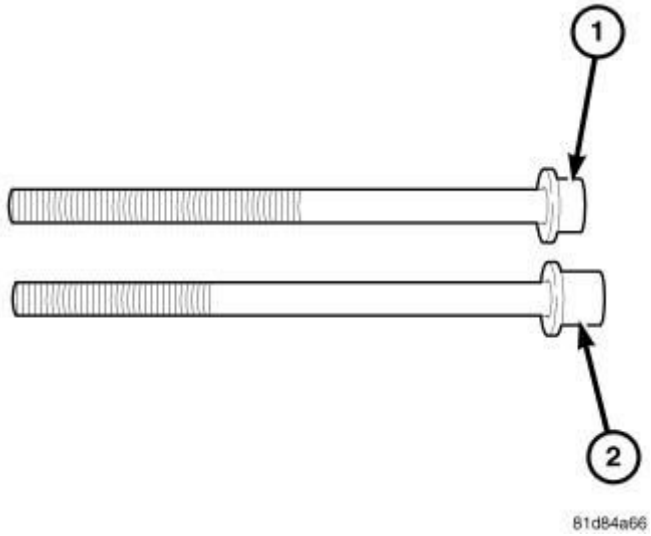

Fig. 69: Recirculation Door Actuator, HVAC Air Inlet Housing, Wire Harness Connector & Screws
Courtesy of CHRYSLER GROUP, LLC

3. Remove the two screws (1) that secure the recirculation door actuator (2) to the right side of the air inlet housing (3) and remove the actuator.

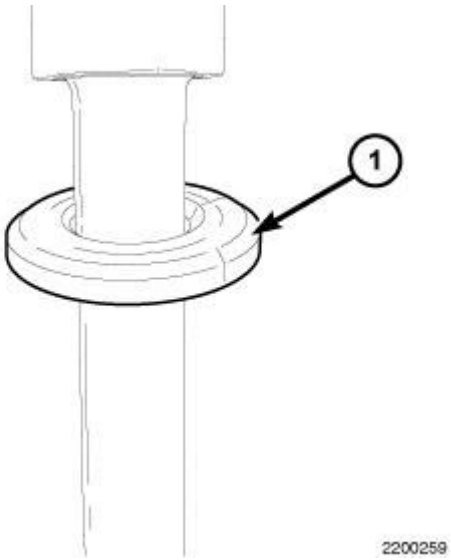

Fig. 70: Recirculation Air Screen & Air Inlet Housing
Courtesy of CHRYSLER GROUP, LLC

4. Carefully disengage the retaining tab (1) at each corner of the recirc air screen (2) and remove the screen from the air inlet housing (3).

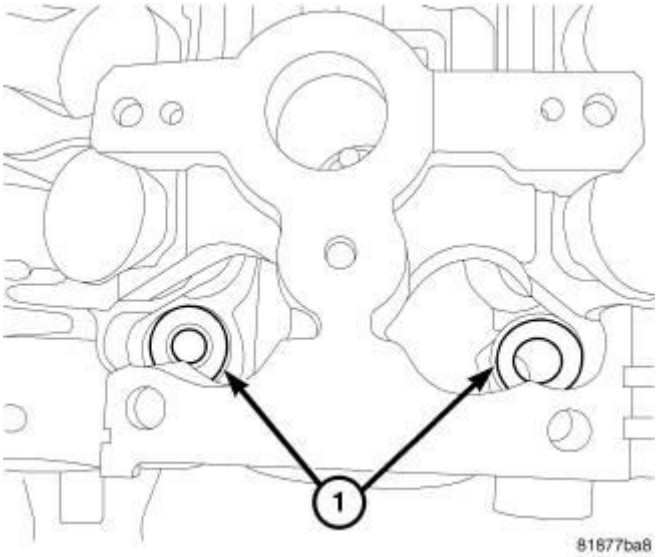

Fig. 71: Recirculation-Air Door, Air Inlet Housing & Recirculation Door Pivot Shaft Adapter
Courtesy of CHRYSLER GROUP, LLC

5. To remove the recirculation door pivot shaft adapter (3) from the right end of the recirculation-air door (1), first carefully push down on the tab of the door lever pivot shaft adapter located inside of the air inlet housing (2), then pull the pivot shaft adapter straight out of the end of the recirculation-air door pivot shaft.

NOTE: If the foam seal on the air inlet housing is deformed or damaged, the seal must be replaced.

NOTE: If a rubber seal on the recirculation air-door is deformed or damaged, the air-door must be replaced.

6. Carefully pinch the two ends of the recirculation air-door together and remove the air-door from the air inlet housing. If the seal on the recirculation air-door is deformed or damaged, the air-door must be replaced.

HOUSING-HVAC

NOTE: The HVAC housing must be removed from the vehicle and disassembled for service of the A/C evaporator.

NOTE: LHD model with A/C shown in illustrations, RHD and heater-only models similar.

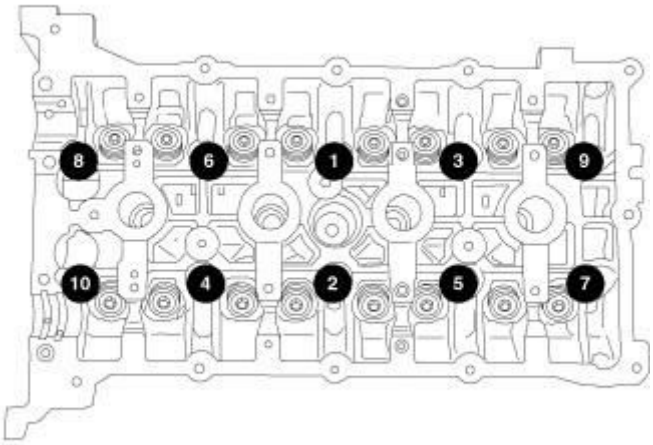

Fig. 72: HVAC Housing, Air Inlet Housing & Air Distribution Housing
Courtesy of CHRYSLER GROUP, LLC

1. Remove the HVAC housing assembly and place it on a workbench. Refer to **HOUSING, HVAC, REMOVAL**.
2. Remove the air distribution housing (2) from the HVAC housing (1). Refer to **HOUSING, HVAC, REMOVAL**.
3. Remove the air inlet housing (3) from the HVAC housing. Refer to

HOUSING, HVAC, REMOVAL.

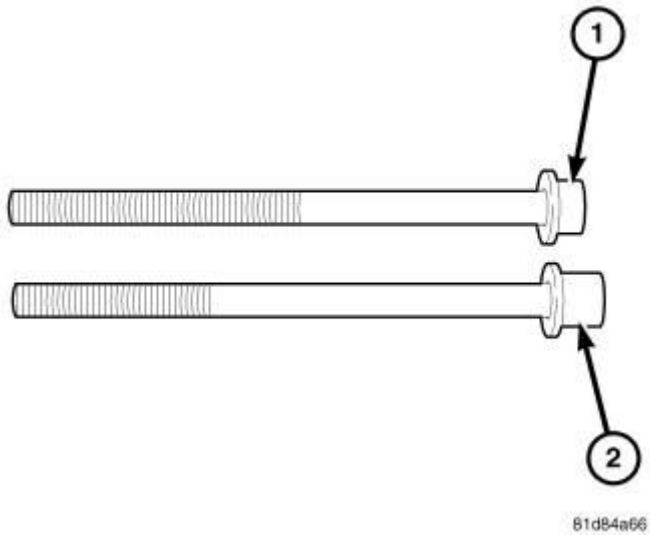

Fig. 73: Blower Motor And Resistor
Courtesy of CHRYSLER GROUP, LLC

4. Remove the three screws (1) that secure the blower motor (3) and the wire lead bracket (2), if equipped, to the bottom of the HVAC housing (4) and remove the blower motor.
5. Remove the two screws (5) that secure the blower motor resistor or power module (6), depending on application, to the bottom of the HVAC housing and remove the resistor or module.

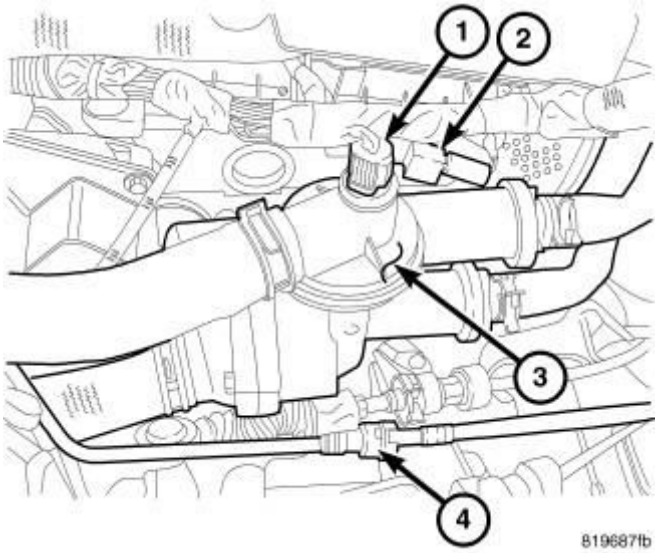

Fig. 74: Evaporator Temperature Sensor, HVAC Housing, Tabs & Needle Nose Pliers
Courtesy of CHRYSLER GROUP, LLC

6. Using needle nose pliers (1), disengage the two retaining tabs (2) that secure the evaporator temperature sensor (3) to the driver side of the HVAC housing (4) and remove the sensor.

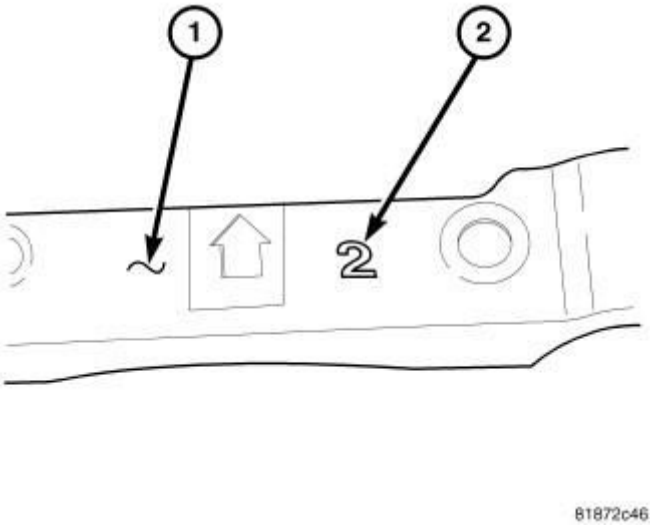

Fig. 75: Foam Seal And Plastic Flange, HVAC Housing, A/C Expansion Valve, Six Screws & Three Metal Clips
Courtesy of CHRYSLER GROUP, LLC

NOTE: If the foam seal or plastic flange is deformed or damaged, it must be replaced.

7. Remove the two bolts that secure the A/C expansion valve (6) to the A/C evaporator and remove the valve. Refer to **VALVE, A/C EXPANSION, REMOVAL**.
8. Remove and discard the O-ring seals and install plugs in, or tape over the opened expansion valve and evaporator tube ports.
9. Remove the foam seal and plastic flange (2) from the front of the two halves of the HVAC housing (4). Carefully release the four retaining tabs located at the back of the flange and pull the flange off of the evaporator tubes. If the seal or flange is deformed or damaged, it must be replaced.
10. Remove any residual sealer from the flange area at the front of the two halves of the HVAC housing.
11. Remove the six screws (3) and three metal clips (5) that secure the two halves of the HVAC housing together.
12. Disengage the eight plastic retaining tabs (1) that secure the two halves of the HVAC housing together and separate the housing.

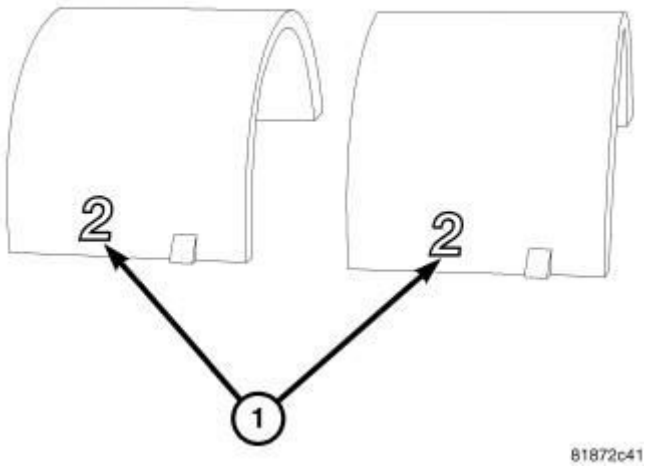

Fig. 76: A/C Evaporator, Foam Insulator & Lower Half Of HVAC Housing
Courtesy of CHRYSLER GROUP, LLC

NOTE: If the foam insulator around the A/C evaporator is deformed or damaged, the insulator must be replaced.

13. Carefully lift the A/C evaporator (1) and the foam insulator (2) out of the lower half of the HVAC housing (3).

ASSEMBLY

HOUSING-AIR DISTRIBUTION

NOTE: LHD model with A/C shown in illustrations, RHD and heater-only models similar.

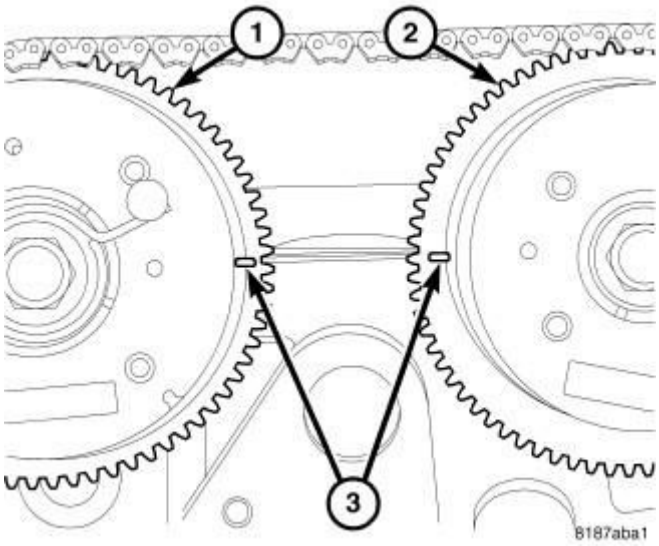

Fig. 77: Mode Door Levers
Courtesy of CHRYSLER GROUP, LLC

1. Install the four mode door levers (1, 2, 3 and 4) onto the right side of the air distribution housing (5) Make sure the lever retaining tabs are fully engaged to the housing.

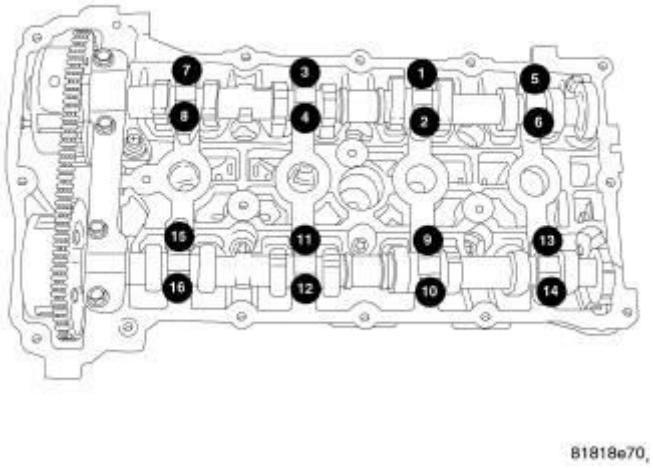

Fig. 78: Air Distribution Housing & Air Doors
Courtesy of CHRYSLER GROUP, LLC

NOTE: Properly position the air doors within the air distribution housing by first aligning the four mode door levers to the scribe lines located on the right outer side of the air distribution housing. Then, install the air doors onto the mode door levers with the UP

mark on each air door facing toward the top of the housing.

NOTE: If a seal on an air door is deformed or damaged, the air door must be replaced.

2. Align the four mode door levers to the scribe lines on the right outer side of the air distribution housing (5) and install the air door(s) (1, 2, 3 and 4) onto the mode door levers with the UP mark on each air door facing toward the top of the housing.

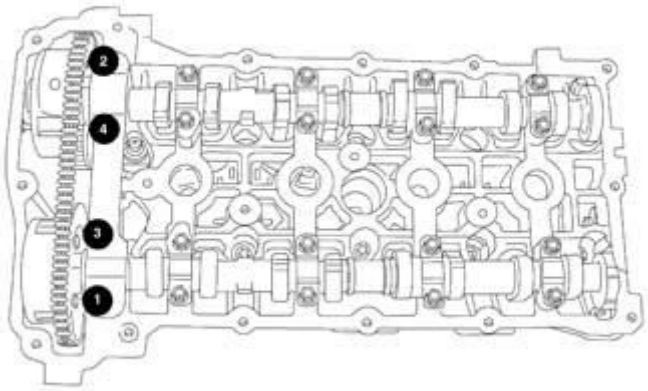

Fig. 79: Parting Line And Retainers
Courtesy of CHRYSLER GROUP, LLC

3. Align the air door(s) with the pivot shaft hole(s) in the air distribution housing (3) and install the two halves of the housing together. Make sure the three plastic retaining tabs (6) are fully engaged.
4. Install the five screws (4) and one metal clip (5) that secure the two halves of the air distribution housing together. Tighten the screws to 2.2 N.m (20 in lbs.). Make sure the metal clip is fully engaged to the housing halves.

NOTE: If any foam seal on the air distribution housing outlets is deformed or damaged, the seal must be replaced.

5. Inspect the foam seals (1), especially at the parting line (2). If a foam seal is deformed or damaged, it must be replaced.

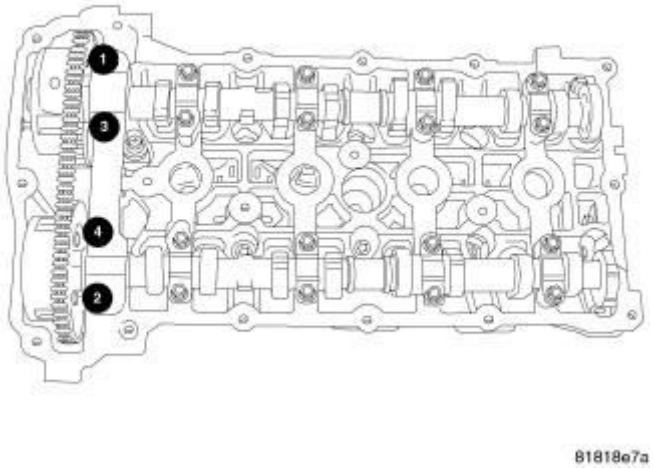

Fig. 80: Mode Door Cam
Courtesy of CHRYSLER GROUP, LLC

NOTE: Align the pins on the mode door levers with the grooves in the back of the mode door cam prior to installation of the cam.

6. Align the mode door levers on the right side of the air distribution housing (2) to the mode door cam (1) and install the cam onto the housing. Make sure the levers are correctly engaged to the cam.

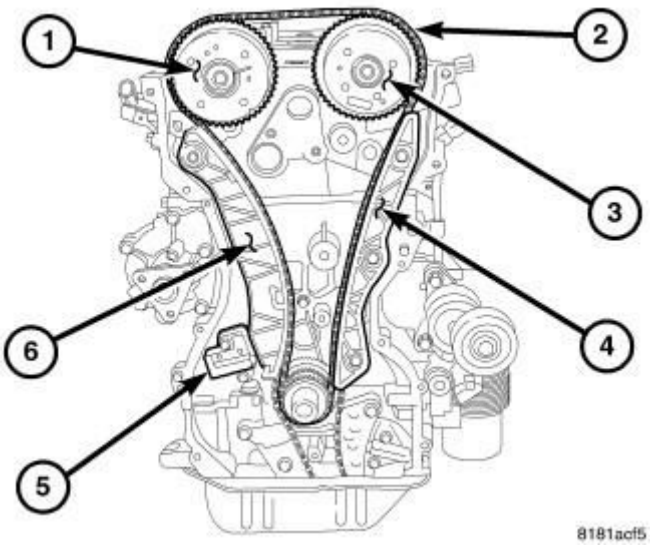

Fig. 81: Mode Door Actuator & Bracket
Courtesy of CHRYSLER GROUP, LLC

7. Position the mode door actuator (2) and bracket (3) onto the right side of the

HVAC air distribution housing (4). If necessary, rotate the actuator slightly to align the splines on the actuator output shaft with those in the mode door cam.

8. Install the screws (1) that secure the mode door actuator bracket to the air distribution housing. Tighten the screws to 2 N.m (17 in. lbs.).

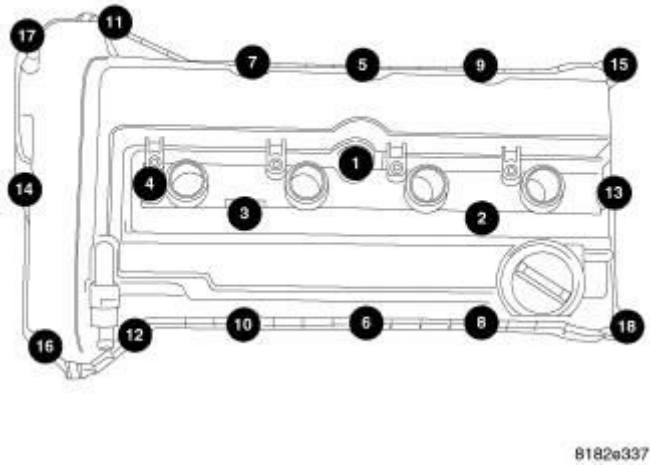

Fig. 82: Blend Door Levers
Courtesy of CHRYSLER GROUP, LLC

9. Install the blend door pivot lever (3) onto the end of the blend door pivot shaft (4) located on the left side of the air distribution housing (2). Make sure the lever retaining tab is fully engaged to the pivot shaft.

NOTE: Align the pin on the blend door lever with the groove in the pivot lever prior to installation of the blend door lever.

10. Install the blend door lever (1) onto the air distribution housing. Make sure the levers are correctly aligned to each other.

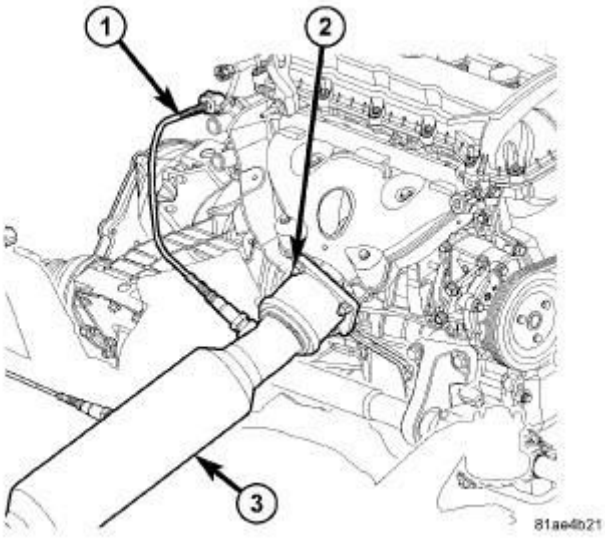

Fig. 83: Blend Door Actuator & Screws
Courtesy of CHRYSLER GROUP, LLC

11. Position the blend door actuator (2) onto the left side of the air distribution housing (3). If necessary, rotate the actuator slightly to align the splines on the actuator output shaft with those in the blend door lever.
12. Install the screws (1) that secure the blend door actuator to the air distribution housing. Tighten the screws to 2 N.m (17 in. lbs.).
13. If equipped with dual zone system, position the blend door actuator onto the right side of the air distribution housing and install the retaining screws. If necessary, rotate the actuator slightly to align the splines on the actuator output shaft with those in the blend door. Tighten the screws to 2 N.m (17 in. lbs.).

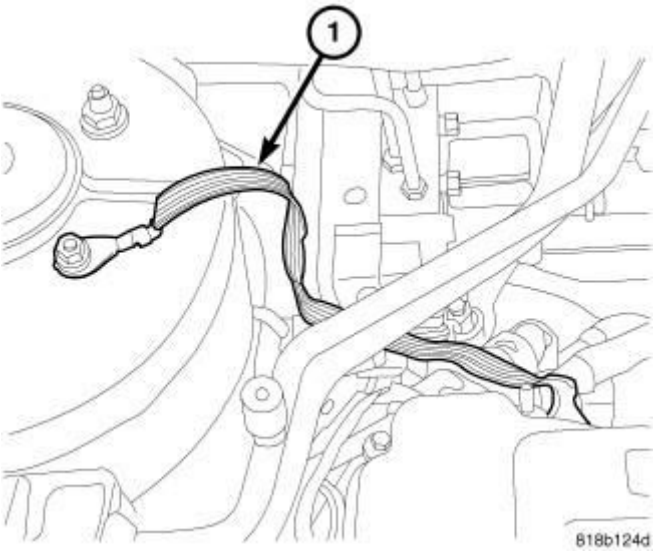

Fig. 84: HVAC Housing, Air Inlet Housing & Air Distribution Housing
Courtesy of CHRYSLER GROUP, LLC

14. If equipped with the 2.2L diesel engine, install the electric Positive Temperature Coefficient (PTC) heater unit into the air distribution housing. Refer to **UNIT, HEATER, INSTALLATION**.
15. Install the heater core into the air distribution housing (2). Refer to **CORE, HEATER, INSTALLATION**.
16. Install the air distribution housing onto the HVAC housing (1). Refer to **HOUSING, HVAC, INSTALLATION**.
17. Install the HVAC housing assembly. Refer to **HOUSING, HVAC, INSTALLATION**.

HOUSING-AIR INLET

NOTE: LHD model with A/C shown in illustrations, RHD and heater-only models similar.

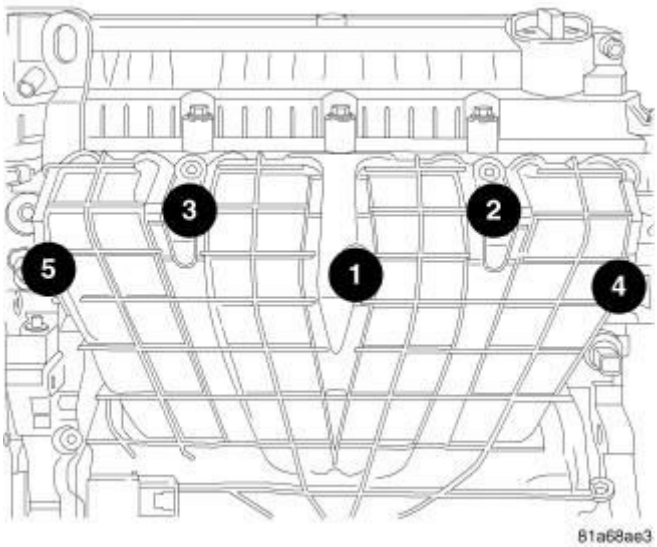

Fig. 85: Recirculation-Air Door, Air Inlet Housing & Recirculation Door Pivot Shaft Adapter
Courtesy of CHRYSLER GROUP, LLC

1. Carefully install the recirculation-air door (1) into the air inlet housing (2) by pinching the two ends of the air-door together and aligning the pivot shafts of the air-door to the pivot shaft holes in the air inlet housing.

NOTE: Install the recirculation door pivot shaft adapter by

carefully pushing it straight into the end of the recirculation door pivot shaft.

2. Install the recirculation door pivot shaft adapter (3) into the right side pivot shaft of the recirculation air-door. Make sure the adapter is fully engaged to the pivot shaft.

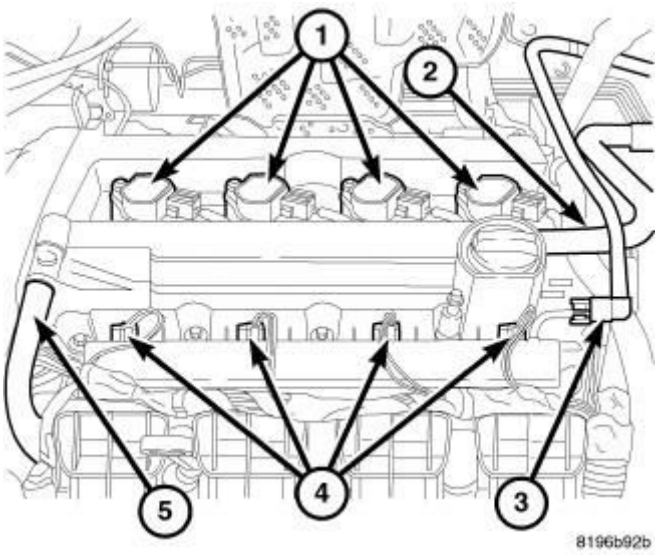

Fig. 86: Recirculation Air Screen & Air Inlet Housing
Courtesy of CHRYSLER GROUP, LLC

3. Position the recirc air screen (2) to the air inlet housing (3) and engage the retaining tab (1) at each corner of the screen. Make sure the retaining tabs are fully engaged to the housing.

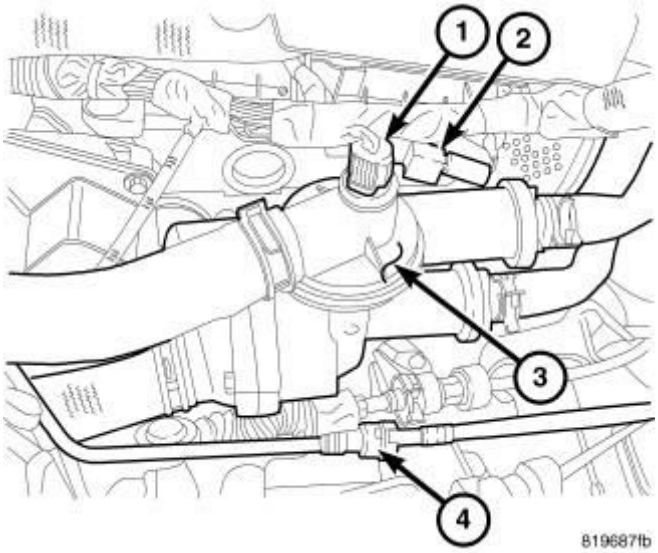

Fig. 87: Recirculation Door Actuator, HVAC Air Inlet Housing,

Actuator Output Shaft & Recirculation Door Pivot Shaft Adapter
Courtesy of CHRYSLER GROUP, LLC

4. Position the recirculation door actuator (1) to the right side of the HVAC air inlet housing (2).
5. Install the recirculation door actuator onto the air inlet housing. If necessary, rotate the actuator slightly to align the splines on the actuator output shaft (3) with those on the recirculation door pivot shaft adapter (4).

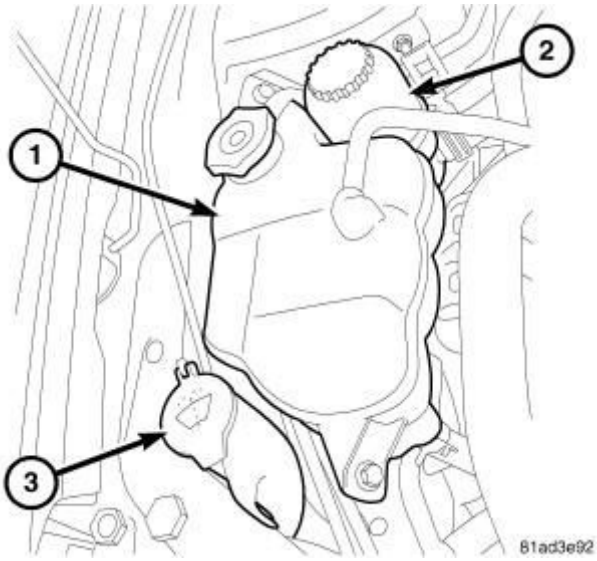

Fig. 88: Recirculation Door Actuator, HVAC Air Inlet Housing, Wire Harness Connector & Screws
Courtesy of CHRYSLER GROUP, LLC

6. Install the screws (1) that secure the recirculation door actuator (2) to the air inlet housing (3). Tighten the screws to 2 N.m (17 in. lbs.).

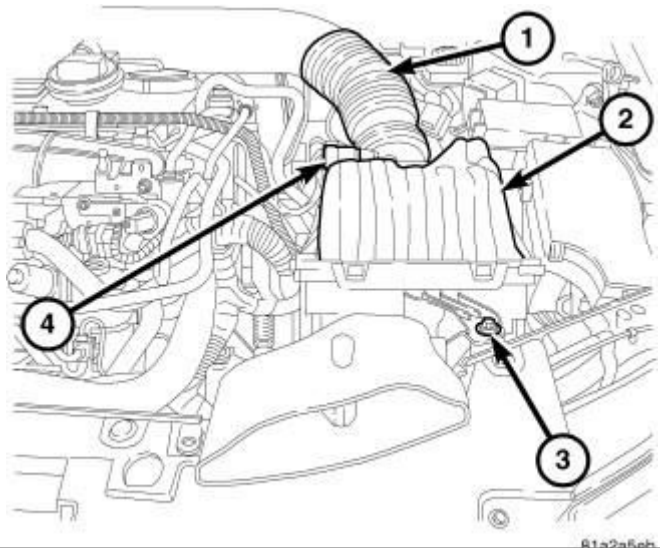

Fig. 89: HVAC Housing, Air Inlet Housing & Air Distribution Housing
Courtesy of CHRYSLER GROUP, LLC

7. Install the air inlet housing (3) onto the HVAC housing (1). Refer to **HOUSING, HVAC, INSTALLATION**.
8. Install the HVAC housing assembly. Refer to **HOUSING, HVAC, INSTALLATION**.

HOUSING-HVAC

NOTE: LHD model with A/C shown in illustrations, RHD and heater-only models similar.

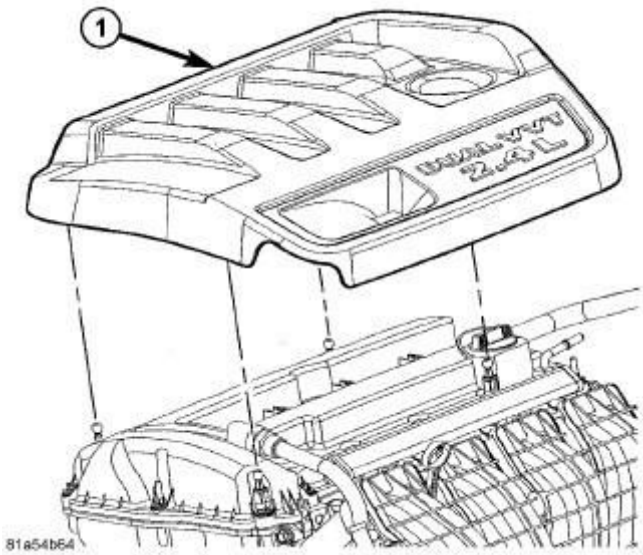

Fig. 90: A/C Evaporator, Foam Insulator & Lower Half Of HVAC Housing
Courtesy of CHRYSLER GROUP, LLC

NOTE: Make sure that the foam insulator is properly positioned around the A/C evaporator and in the HVAC housing.

1. Carefully install the A/C evaporator (1) and foam insulator (2) into the lower half of the HVAC housing (3).

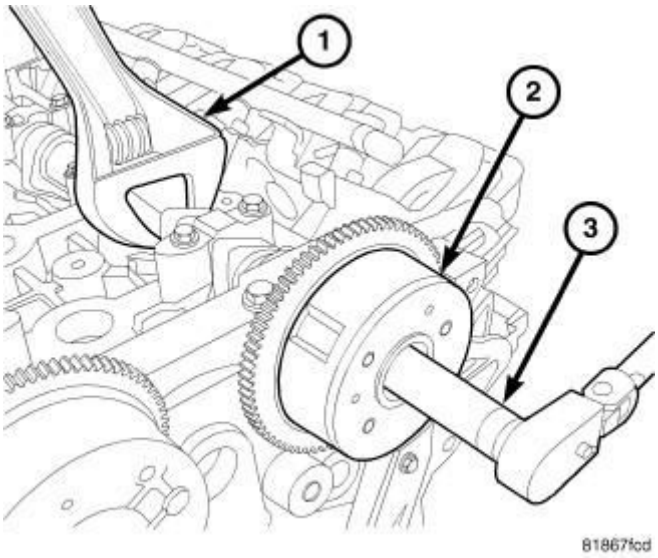

Fig. 91: Foam Seal And Plastic Flange, HVAC Housing, A/C Expansion Valve, Six Screws & Three Metal Clips
Courtesy of CHRYSLER GROUP, LLC

2. Install the two halves of the HVAC housing (4) together and engage the eight plastic retaining tabs (1). Make sure the retaining tabs are fully engaged.
3. Install the six screws (3) and three metal clips (5) that secure the two halves of the HVAC housing together. Tighten the screws to 1.2 N.m (10 in lbs.). Make sure the metal clips are fully engaged to the housing halves.
4. Install a bead of silicone sealer around the flange area at the front of the HVAC housing.

NOTE: If the foam seal or plastic flange is deformed or damaged, it must be replaced.

5. Install the plastic flange and foam seal (2) over the evaporator tubes and onto the front of the HVAC housing. Make sure the four flange retaining tabs are fully engaged to the housing.
6. Remove the tape or plugs from the expansion valve and evaporator ports.
7. Lubricate new O-ring seals with clean refrigerant oil and install them onto the evaporator tube fittings. Use only the specified O-ring seals as they are made of a special material for the R-134a system. Use only refrigerant oil of the type recommended for the A/C compressor in the vehicle.
8. Install the A/C expansion valve (6) and the two retaining bolts. Tighten the bolts to 11 N.m (97 in. lbs.). Refer to **VALVE, A/C EXPANSION,**

INSTALLATION.

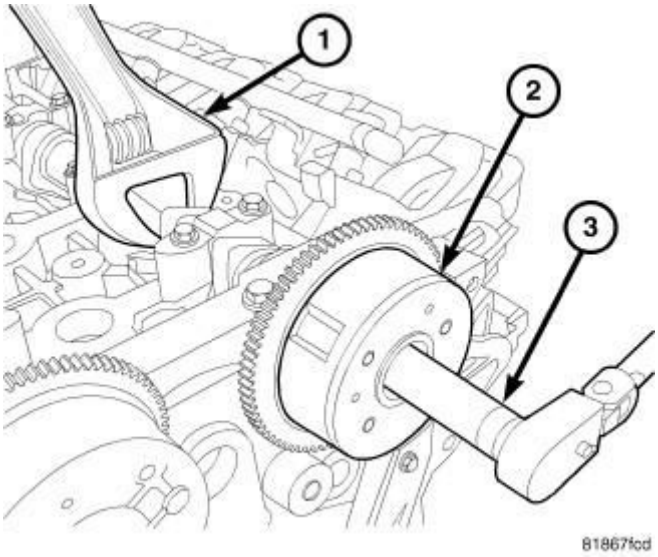

Fig. 92: Evaporator Temperature Sensor, HVAC Housing & Retaining Tabs
Courtesy of CHRYSLER GROUP, LLC

9. Install the evaporator temperature sensor (1) into the driver side of the HVAC housing (2). Make sure the retaining tabs (3) are fully engaged to the housing.

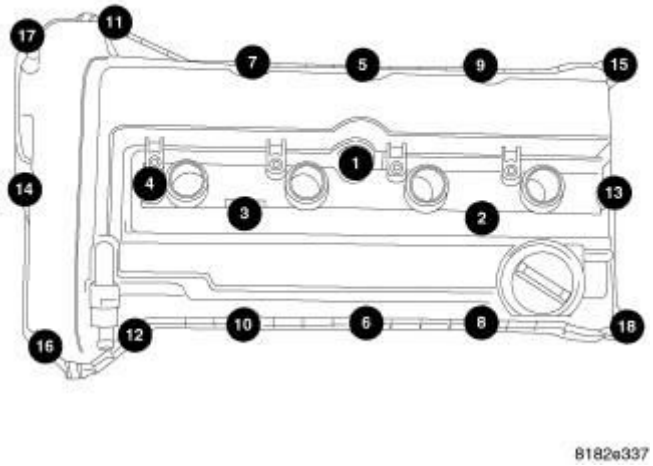

Fig. 93: Blower Motor And Resistor
Courtesy of CHRYSLER GROUP, LLC

10. Position the blower motor (3) into the bottom of the HVAC housing (4).
11. Install the wire lead bracket (2), if equipped, and the three screws (1) that

secure the blower motor to the HVAC housing. Tighten the screws to 1.2 N.m (10 in. lbs.).

12. Position the blower motor resistor or power module (6), depending on application, into the HVAC housing.
13. Install the two screws (5) that secure the blower motor resistor or power module to the HVAC housing. Tighten the screws to 1.2 N.m (10 in. lbs.).

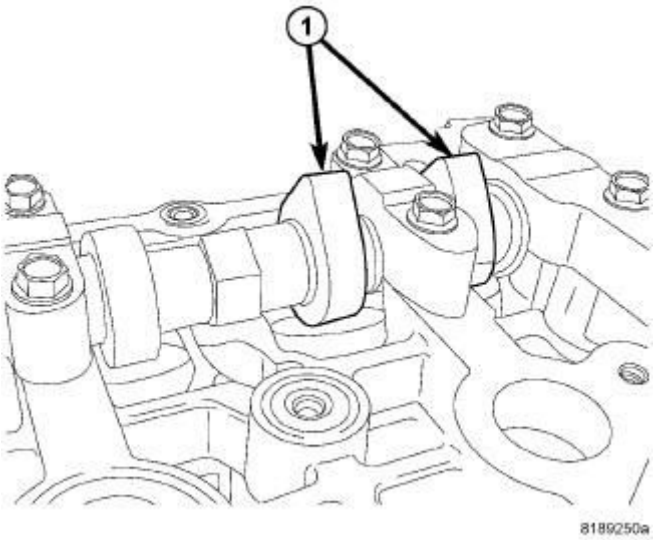

Fig. 94: HVAC Housing, Air Inlet Housing & Air Distribution Housing
Courtesy of CHRYSLER GROUP, LLC

14. Install the air inlet housing (3) onto the HVAC housing (1). Refer to **HOUSING, HVAC, INSTALLATION**.
15. Install the air distribution housing (2) onto the HVAC housing. Refer to **HOUSING, HVAC, INSTALLATION**.

NOTE: If the heater core is being replaced, flush the cooling system. Refer to STANDARD PROCEDURE .

16. Install the HVAC housing assembly. Refer to **HOUSING, HVAC, INSTALLATION**.

INSTALLATION

HOUSING-AIR DISTRIBUTION

NOTE: LHD model with A/C shown in illustrations, RHD and heater-only models similar.

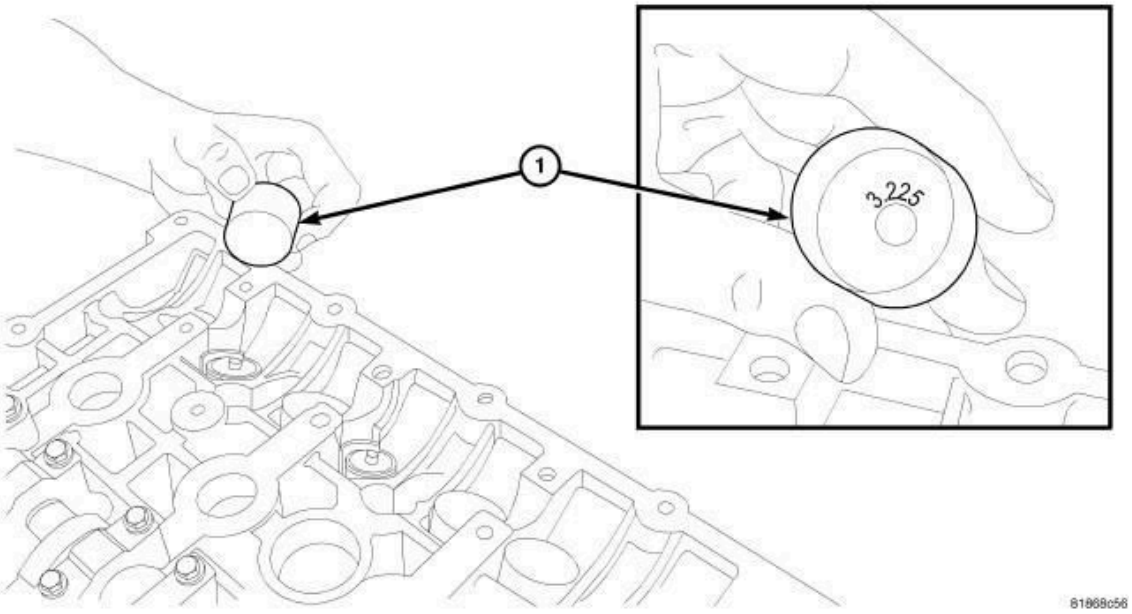

Fig. 95: Air Distribution Housing, Clips & Screws
Courtesy of CHRYSLER GROUP, LLC

1. Position the air distribution housing (2) onto the rear of the HVAC housing (4) and engage the one plastic retaining clip.
2. Install the six screws (1) that secure the air distribution housing to the HVAC housing. Tighten the screws to 1.2 N.m (10 in. lbs.).
3. Install the two metal retaining clips (3) that secure the bottom of the air distribution housing to the HVAC housing.
4. Install the heater core. Refer to **CORE, HEATER, INSTALLATION**.
5. Install the floor distribution ducts. Refer to **DUCT, FLOOR DISTRIBUTION, INSTALLATION**.

NOTE: If the heater core is being replaced, flush the cooling system. Refer to STANDARD PROCEDURE .

6. Install the HVAC housing assembly. Refer to **HOUSING, HVAC, INSTALLATION**.

HOUSING-AIR INLET

NOTE: LHD model shown in illustration, RHD model similar.

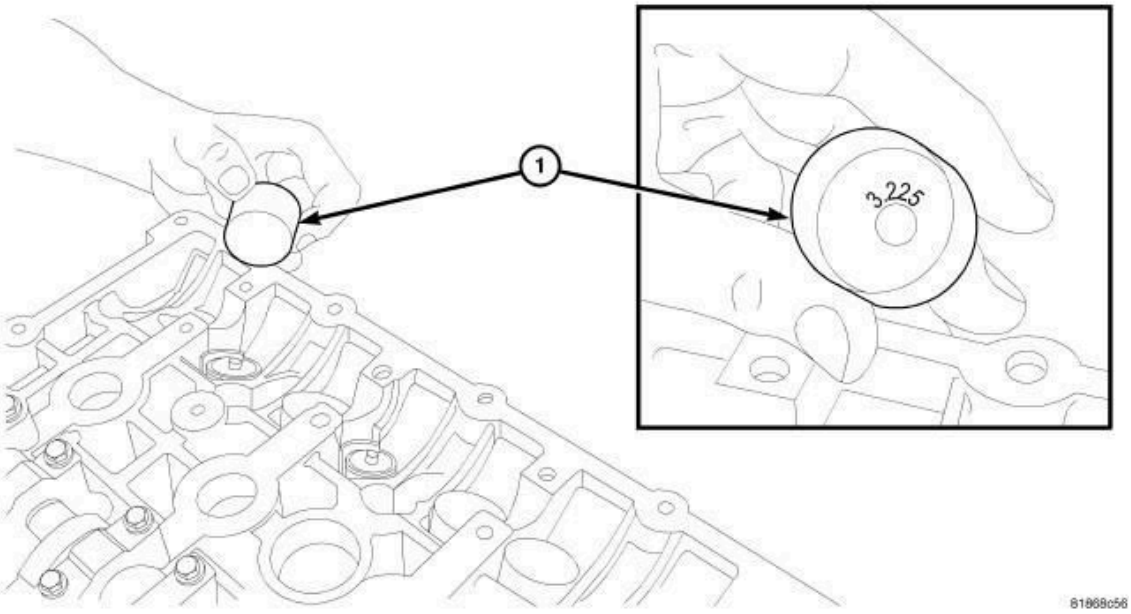

Fig. 96: Air Inlet Housing, HVAC Housing, Tabs & Screws
Courtesy of CHRYSLER GROUP, LLC

1. Install the air inlet housing (2) onto the top of the HVAC housing (3) and engage the two plastic retaining tabs (4). Make sure the retaining tabs are fully engaged.
2. Install the four screws (1) that secure the air inlet housing to the HVAC housing. Tighten the screws to 1.2 N.m (10 in. lbs.).
3. If equipped, install the cabin air filter. Refer to **FILTER, CABIN AIR, INSTALLATION**.
4. Install the HVAC housing assembly. Refer to **HOUSING, HVAC, INSTALLATION**.

HOUSING - HVAC

NOTE: LHD model shown in illustrations, RHD model similar.

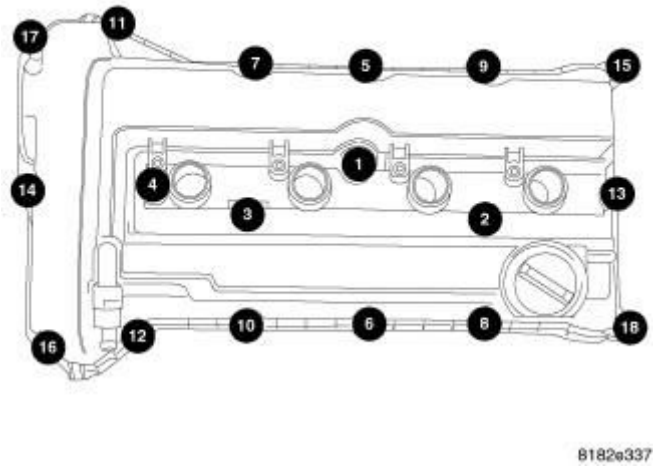

Fig. 97: HVAC Housing To Dash Panel Nut
Courtesy of CHRYSLER GROUP, LLC

1. Position the HVAC housing assembly (2) to the dash panel (3). Be certain that the passenger side of the HVAC housing is correctly located over the dash panel mounting stud.
2. Install the nut (1) that secures the HVAC housing to the passenger compartment side of dash panel. Tighten the nut to 4.5 N.m (40 in. lbs.).
3. Install the condensation drain tube. Refer to **TUBE, CONDENSATION DRAIN, INSTALLATION**.
4. Install the rear floor ducts. Refer to **DUCT, FLOOR DISTRIBUTION, INSTALLATION**.
5. Install the instrument panel. Refer to **PANEL, INSTRUMENT, INSTALLATION** .

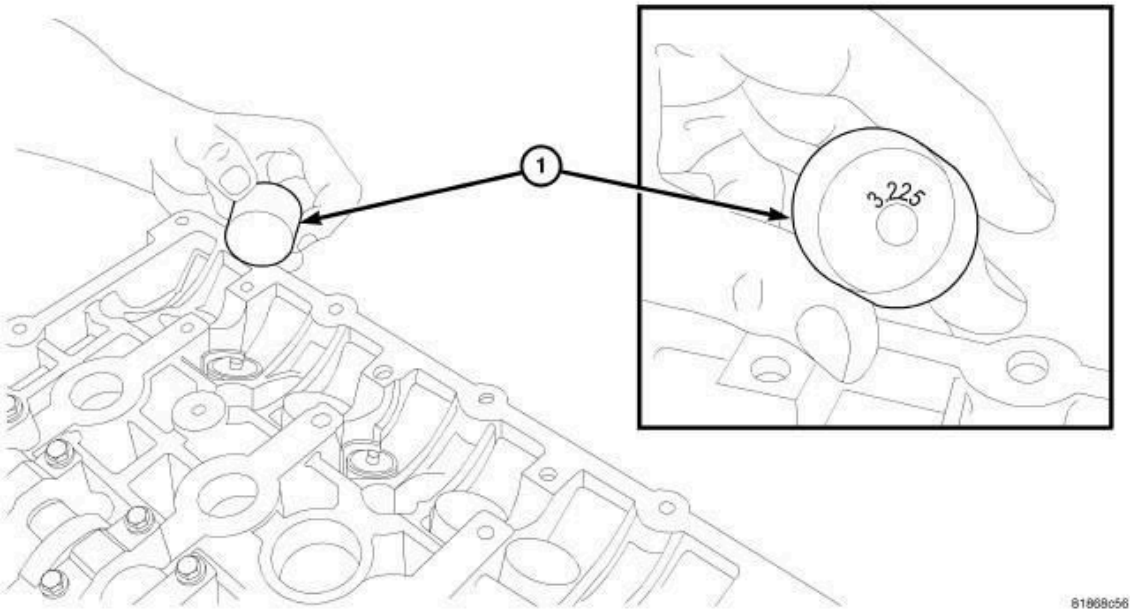

Fig. 98: A/C Liquid/Suction Line Assembly & Bolts
Courtesy of CHRYSLER GROUP, LLC

6. Remove the previously installed plugs or caps and connect the heater hoses (4) to the heater core tubes.
7. Remove the tape or plugs from the refrigerant line fittings and the expansion valve ports.
8. Lubricate new rubber O-rings seals with clean refrigerant oil and them onto the liquid and suction line fittings. Use only the specified O-ring seals as they are made of special materials compatible to the R-134a system. Use only refrigerant oil of the type recommended for the A/C compressor in the vehicle.
9. Connect the A/C liquid and suction line assembly (2) to the A/C expansion valve (3).
10. Install the bolt (1) that secures the A/C liquid and suction line assembly to the A/C expansion valve. Tighten the nut to 25 N.m (18 ft. lbs.).

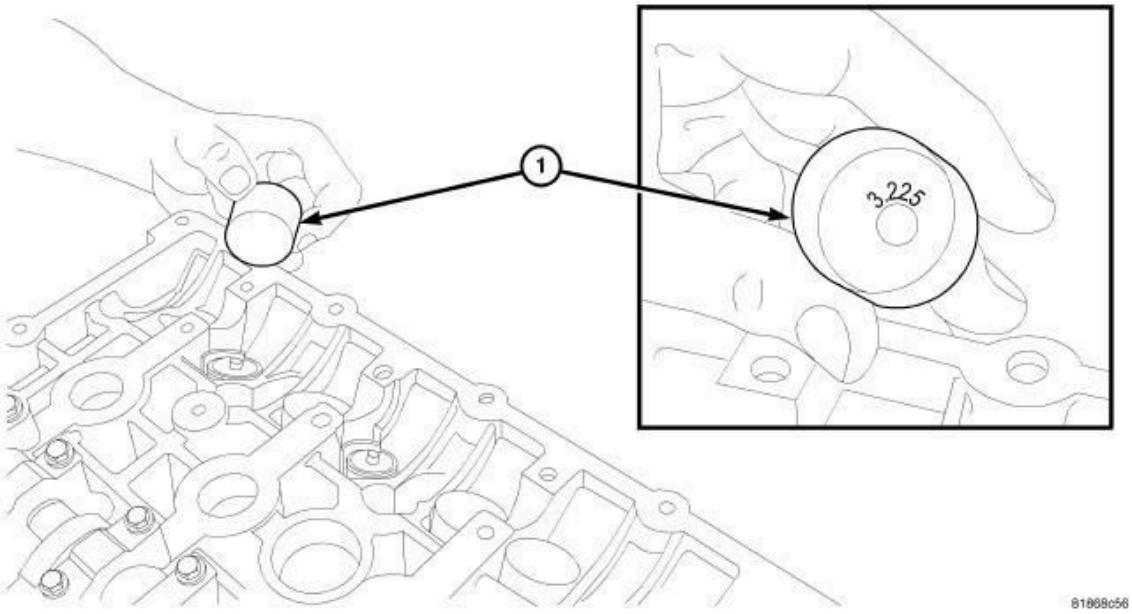

Fig. 99: Heat Shield
Courtesy of CHRYSLER GROUP, LLC

11. Position the heat shield (3) onto the studs (2) located on the dash panel in the engine compartment.
12. Install the nuts (1) that secure the heat shield to the dash panel. Tighten the nuts to 1 N.m (10 in. lbs.).
13. Reconnect the negative battery cable.
14. If the heater core is being replaced, flush the cooling system. Refer to **STANDARD PROCEDURE** .
15. Refill the engine cooling system. Refer to **STANDARD PROCEDURE** .
16. Evacuate and charge the refrigerant system. Refer to **PLUMBING, STANDARD PROCEDURE**.

SCREEN-AIR INLET

NOTE: LHD model shown in illustration, RHD model similar.

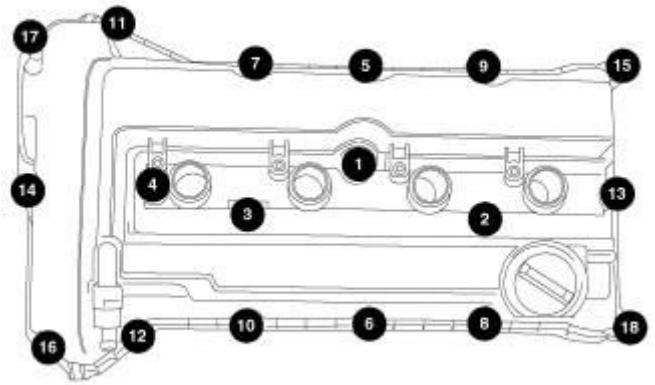

8182e337

Fig. 100: HVAC Housing Air Inlet Screen, Cowl Panel & Push-In Retainers
Courtesy of CHRYSLER GROUP, LLC

1. Position the HVAC housing air inlet screen (2) to the cowl panel (3) and fully engage the three push-in retainers (1) that secure the screen to the panel.
2. Install the cowl grille screen. Refer to **COVER, COWL PANEL, INSTALLATION** .

MOTOR, BLOWER

DESCRIPTION

DESCRIPTION

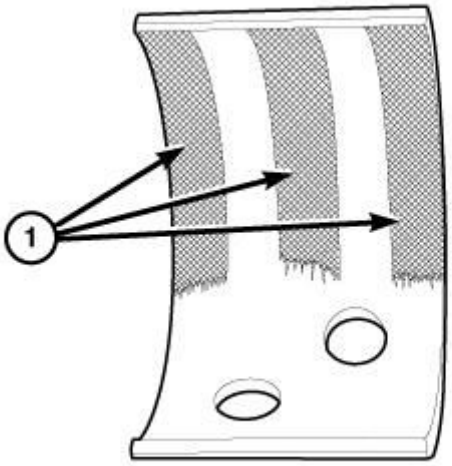

1528424

Fig. 101: Blower Motor, Blower Wheel, Harness Connector & Mounting Tabs

Courtesy of CHRYSLER GROUP, LLC

The blower motor (1) is used to control the velocity of air moving through the HVAC housing by spinning the blower wheel (2) within the HVAC air inlet housing at the selected speed.

The blower motor is a 12-volt, direct current (DC) motor mounted within a plastic housing with an integral wire harness connector (3) and three mounting tabs (4). The squirrel cage-type blower wheel is secured to the blower motor shaft and is positioned within the air inlet housing on the passenger side of the HVAC housing.

OPERATION

OPERATION

The blower motor controls the velocity of air moving through the HVAC housing by spinning the blower wheel within the HVAC air inlet housing at the selected speed.

Both the Manual Temperature Control (MTC) heating-A/C system and the Automatic Temperature Control (ATC) heating-A/C system have an electronic blower motor power module to control blower motor speed. The power module uses a Pulse Width Modulated (PWM) input from the A/C-heater control and a feedback signal from the blower motor to regulate the blower motor ground path. On both systems, the blower motor receives battery current through the Totally Integrated Power Module (TIPM) whenever the ignition switch is in the Run position, and the blower motor control is in any position except Off.

The blower motor can be accessed for service from underneath the instrument panel and is diagnosed using a scan tool. Refer to **DIAGNOSIS AND TESTING** .

The blower motor and blower motor wheel are factory balanced as an assembly and cannot be adjusted or repaired and must be replaced if inoperative or damaged.

DIAGNOSIS AND TESTING

DIAGNOSIS AND TESTING - BLOWER MOTOR

WARNING: Disable the airbag system before attempting any

steering wheel, steering column or instrument panel component diagnosis or service. Disconnect and isolate the negative battery (ground) cable and wait two minutes for the airbag system capacitor to discharge before performing further diagnosis or service. This is the only sure way to disable the airbag system. Failure to follow these instructions may result in accidental airbag deployment and possible serious or fatal injury.

To determine if an open condition exists within the blower motor circuit wiring, it is necessary to disconnect the negative battery cable and check for continuity within the blower motor circuits using an ohmmeter. See appropriate Wiring Information for circuit descriptions and diagrams.

NOISE

To determine if the blower motor is the source of the noise, simply switch the blower motor from Off to On. To verify that the blower motor is the source of the noise, unplug the blower motor wire harness connector and operate the heater-A/C system. If the noise goes away, possible causes include:

- Foreign material on fresh air inlet screen
- Foreign material in blower wheel
- Foreign material in HVAC housing
- Improper blower motor mounting
- Deformed or damaged blower wheel
- Worn blower motor bearings or brushes

VIBRATION

Possible causes of a blower motor vibration include:

- Improper blower motor mounting
- Foreign material in blower wheel
- Deformed or damaged blower wheel
- Worn blower motor bearings

OPERATION

Possible causes of an inoperative blower motor include:

- Open fuse
- Inoperative blower motor power module
- Inoperative A/C-heater control
- Inoperative blower motor
- Inoperative blower motor circuit wiring or wire harness connectors

REMOVAL

REMOVAL

NOTE: The blower motor is located on the bottom of the passenger side of the HVAC housing. The blower motor can be removed from the vehicle without having to remove the HVAC housing.

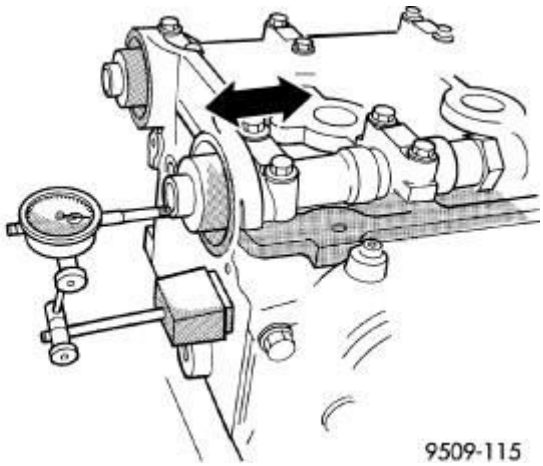

Fig. 102: Blower Motor, Bracket, Connector, Screws & HVAC Housing
Courtesy of CHRYSLER GROUP, LLC

NOTE: LHD model shown in illustration, RHD model similar.

1. Disconnect and isolate the negative battery cable.
2. If equipped, remove the silencer from below the passenger side of the instrument panel.
3. From underneath the instrument panel, disengage the connector lock and disconnect the instrument panel wire harness connector (1) from the blower motor (2).
4. Remove the three screws (3) that secure the blower motor and the wire lead

bracket (4) (if equipped) to the bottom of the HVAC housing (5) and remove the blower motor.

INSTALLATION

INSTALLATION

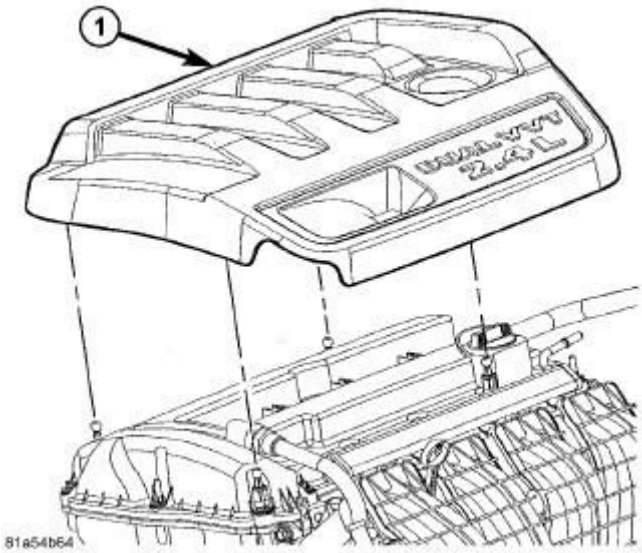

Fig. 103: Blower Motor, Bracket, Connector, Screws & HVAC Housing
Courtesy of CHRYSLER GROUP, LLC

NOTE: LHD model shown in illustration, RHD model similar.

1. Position the blower motor (2) into the bottom of the HVAC housing (5).
2. Install the three screws (3) that secure the blower motor and the wire lead bracket (4) (if equipped) to the HVAC housing. Tighten the screws to 1.2 N.m (10 in. lbs.).
3. Connect the instrument panel wire harness connector (1) to the blower motor and engage the connector lock.
4. If equipped, install the silencer below the passenger side of the instrument panel.
5. Reconnect the negative battery cable.

OUTLET, AIR

REMOVAL

REMOVAL

NOTE: Driver side air outlet shown in illustration, Other outlets similar.

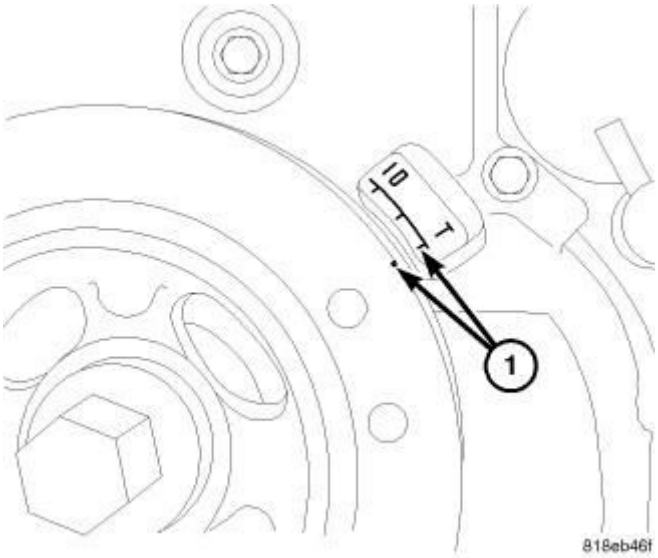

Fig. 104: Air Outlet & Screws
Courtesy of CHRYSLER GROUP, LLC

1. Depending on the air outlet being serviced, remove the instrument panel center bezel or the upper instrument panel cover. Refer to **BEZEL, INSTRUMENT PANEL, CENTER, REMOVAL** or **COVER, INSTRUMENT PANEL, REMOVAL** .

   NOTE: If the foam seal on the air outlet is deformed or damaged, it must be replaced.

2. Remove the three screws (1) that secure the air outlet (2) to the bezel or cover (3) and remove the outlet.

INSTALLATION

INSTALLATION

NOTE: Driver side air outlet shown in illustration, Other outlets similar.

NOTE: If the foam seal on the air outlet is deformed or damaged, it must be replaced.

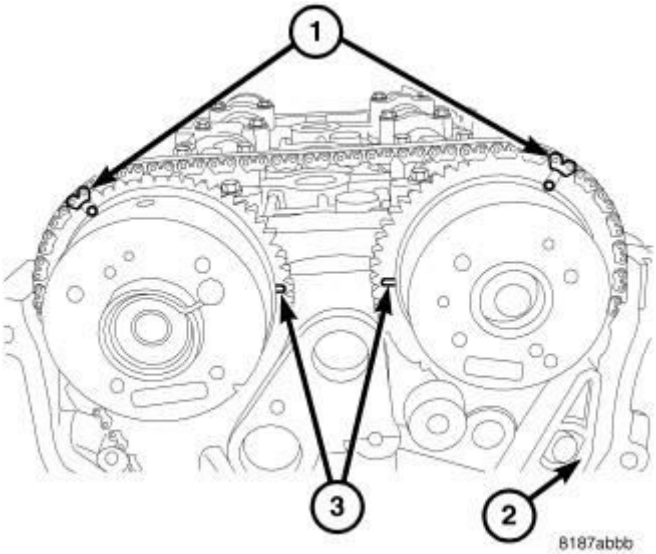

Fig. 105: Air Outlet & Screws
Courtesy of CHRYSLER GROUP, LLC

1. Position the air outlet (2) onto the bezel or cover (3).
2. Install the three screws (1) that secure the air outlet. Tighten the screws to 2 N.m (17 in. lbs.).
3. Depending on the outlet being serviced, install the upper instrument panel cover or the instrument panel center bezel. Refer to **COVER, INSTRUMENT PANEL, INSTALLATION** or **BEZEL, INSTRUMENT PANEL, CENTER, INSTALLATION** .

PLUMBING

WARNING

WARNING

WARNING: The A/C system contains refrigerant under high pressure. Repairs should only be performed by qualified service personnel. Serious or fatal injury may result from improper service procedures.

WARNING: Avoid breathing the refrigerant and refrigerant oil vapor or mist. Exposure may irritate the eyes, nose, and/or throat. Wear eye protection when servicing the A/C refrigerant system. Serious eye injury can result from direct contact with the

refrigerant. If eye contact occurs, seek medical attention immediately.

WARNING: Do not expose the refrigerant to open flame. Poisonous gas is created when refrigerant is burned. An electronic leak detector is recommended. Serious or fatal injury may result from improper service procedures.

WARNING: If accidental A/C system discharge occurs, ventilate the work area before resuming service. Large amounts of refrigerant released in a closed work area will displace the oxygen and cause suffocation and serious or fatal injury.

WARNING: The evaporation rate of R-134a refrigerant at average temperature and altitude is extremely high. As a result, anything that comes in contact with the refrigerant will freeze. Always protect the skin or delicate objects from direct contact with the refrigerant.

WARNING: The R-134a service equipment or the vehicle refrigerant system should not be pressure tested or leak tested with compressed air. Some mixtures of air and R-134a have been shown to be combustible at elevated pressures. These mixtures are potentially dangerous, and may result in fire or explosion causing property damage and serious or fatal injury.

WARNING: The engine cooling system is designed to develop internal pressures up to 145 kPa (21 psi). Do not remove or loosen the coolant pressure cap, cylinder block drain plugs, radiator drain, radiator hoses, heater hoses, or hose clamps while the engine cooling system is hot and under pressure. Allow the vehicle to cool for a minimum of 15

minutes before opening the cooling system for service. Failure to observe this warning can result in serious burns from the heated engine coolant.

CAUTION

CAUTION

CAUTION: Never add R-12 to a refrigerant system designed to use R-134a. Do not use R-12 equipment or parts on an R-134a A/C system. These refrigerants are not compatible and damage to the A/C system will result.

CAUTION: Never use R-12 refrigerant oil in an A/C system designed to use R-134a refrigerant oil. These refrigerant oils are not compatible and damage to the A/C system will result.

CAUTION: The use of A/C system sealers may result in damage to A/C refrigerant recovery/evacuation/recharging equipment and/or A/C system. Many federal, state/provincial and local regulations prohibit the recharge of A/C systems with known leaks. Chrysler LLC recommends the detection of A/C system leaks through the use of approved leak detectors and fluorescent leak detection dyes. Vehicles found with A/C system sealers should be treated as contaminated and replacement of the entire A/C refrigerant system is recommended. A/C systems found to be contaminated with A/C system sealers, A/C stop-leak products or seal conditioners voids the warranty for the A/C system.

CAUTION: Recover the refrigerant before opening any fitting or connection. Open the fittings with caution, even after the system has been discharged. Never open or loosen a connection before recovering the

refrigerant.

CAUTION: The internal parts of the A/C system will remain stable as long as moisture-free refrigerant and refrigerant oil is used. Abnormal amounts of dirt, moisture or air can upset the chemical stability. This may cause operational troubles or even serious damage if present in more than very small quantities. Before disconnecting a component, clean the outside of the fittings thoroughly to prevent contamination from entering the refrigerant system. Keep service tools and the work area clean. Do not open the refrigerant system or uncap a replacement component until you are ready to service the system. Immediately after disconnecting a component from the refrigerant system, seal the open fittings with a cap or plug. This will prevent contamination from entering the A/C system.

CAUTION: Refrigerant oil will absorb moisture from the atmosphere if left uncapped. Do not open a container of refrigerant oil until you are ready to use it. Replace the cap on the oil container immediately after using. Store refrigerant oil only in a clean, airtight, and moisture-free container.

CAUTION: Do NOT run the engine with a vacuum pump in operation or with a vacuum present within the A/C system when equipped with a variable displacement compressor. Failure to follow these instructions will result in serious A/C compressor damage.

CAUTION: Do not overcharge the refrigerant system. Overcharging will cause excessive compressor head pressure and can cause compressor noise and A/C system failure.

DIAGNOSIS AND TESTING

DIAGNOSIS AND TESTING - REFRIGERANT SYSTEM LEAKS

WARNING: Review the safety precautions and warnings in this Service Information before performing this procedure. Failure to follow these instructions may result in serious injury or death.

WARNING: Do not expose the refrigerant to open flame. Poisonous gas is created when refrigerant is burned. An electronic leak detector is recommended. Serious or fatal injury may result from improper service procedures.

WARNING: Use extreme care when working around a running engine. Keep hands and fingers clear of the radiator fan, accessory drive belt and all other moving components. Keep away when wearing loose clothing, jewelry or long hair that is not properly secured. Underhood components may become hot to the touch. Be careful not to come into contact with hot engine, A/C and engine cooling system components. Failure to follow these instructions may result in serious or fatal injury.

NOTE: Always conduct the A/C PERFORMANCE Test prior to searching for an A/C refrigerant leak. Refer to DIAGNOSIS AND TESTING.

NOTE: The A/C system in this vehicle comes equipped from the factory with fluorescent refrigerant leak detection dye installed in the refrigerant system.

When searching for a refrigerant leak in the A/C system, use an Ultra Violet (UV) light and an electronic leak detector that is designed for refrigerant used on this vehicle. It is important to use only high-quality refrigerant leak detection equipment to properly locate refrigerant system leaks, such as the equipment

listed in the teamPSE Service Equipment Catalog. When the use of additional leak detection dye is required, use only Chrysler LLC approved refrigerant leak detection dye, available through Mopar®.

LEAK TEST

1. Begin searching for refrigerant leaks using a high quality UV light to detect the fluorescent refrigerant leak detection dye.
   - Inspect all connections, plumbing fittings, brazed joints, hoses, hose crimps, service ports, compressor housing, pressure relief valve and A/C condenser for dye
   - Inspect the evaporator drain tube and condensate for presence of dye, which indicates a leak from the A/C evaporator
   - If equipped with rear A/C, inspect the underbody refrigerant lines, fittings, rear evaporator drain tube and condensate for presence of dye, which indicates a leak from the rear evaporator
   - If no leaks are found using a UV light, proceed to 2 2.
2. If a leak is not found with the leak detection dye, operate the heating and A/C system with the engine at idle under the following conditions for at least 15 minutes, then proceed to 3 3.
   - Doors or windows open
   - Transmission in Park or Neutral with the parking brake set (depending on transmission application)
   - A/C and heater controls set to outside air, full cool, panel mode, high blower and A/C compressor engaged (If the A/C compressor does not engage, go to **LOW OR EMPTY REFRIGERANT SYSTEM**.
   - If equipped with rear A/C, set rear controls to full cool and high blower
3. Shut the vehicle off and wait at least 5 minutes.
4. Insert the leak detector into the evaporator drain tube and the instrument panel air outlets, to check for evaporator leaks. Check the evaporator tubes at the A/C expansion valve, for leaks not visible behind the expansion valve. Check around the front of the A/C compressor, for compressor shaft seal leaks. Check between the A/C condenser and radiator for condenser leaks not previously visible.
5. If equipped with rear A/C, insert the leak detector into the rear evaporator drain tube and rear air outlets. Check the underbody A/C lines and fittings, evaporator tubes and rear A/C expansion valve.

LOW OR EMPTY REFRIGERANT SYSTEM

NOTE: This procedure should only be done after an A/C Performance Test has been conducted and a refrigerant system leak has NOT been found using the factory installed leak detection dye.

Do the following if the A/C compressor will not engage and a refrigerant leak in the A/C system is suspected. but cannot be found using the factory installed leak detection dye.

1. Recover, evacuate and recharge the refrigerant system. Refer to **PLUMBING, STANDARD PROCEDURE**.
2. Operate the heating and A/C system with the engine at idle under the following conditions for at least 15 minutes.
   - Doors or windows open
   - Transmission in Park or Neutral with the parking brake set (depending on transmission application)
   - A/C and heater controls set to outside air, full cool, panel mode, high blower and A/C compressor engaged
   - If equipped with rear A/C, set rear controls to full cool and high blower
3. Shut the vehicle off and return to. Refer to **LEAK TEST**.

STANDARD PROCEDURE

REFRIGERANT SYSTEM RECOVERY

WARNING: Review the warnings and cautions for this system before performing the procedure. Failure to follow these instructions may result in serious injury or death.

CAUTION: Various aftermarket manufacturers produce A/C system sealants that are designed to stop A/C refrigerant system leaks. The use of A/C system sealants may result in damage to A/C refrigerant recovery/evacuation/recharging equipment and/or the vehicle A/C system and are not recommended for use by Chrysler LLC.

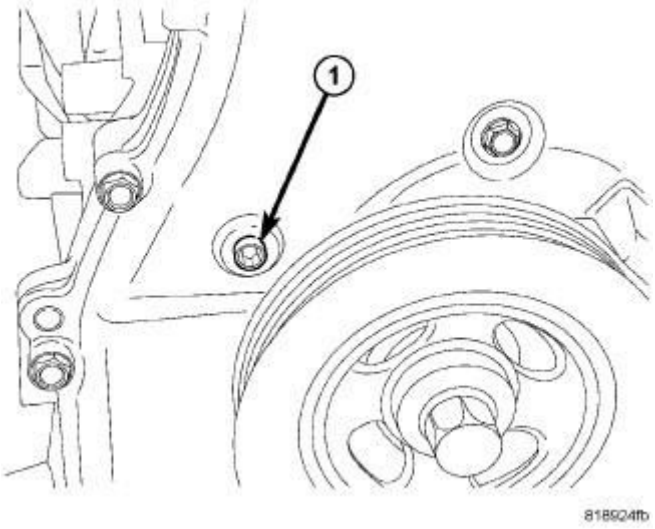

Fig. 106: Identifying R-134a Refrigerant Recovery/Recycling/Charging Station
Courtesy of CHRYSLER GROUP, LLC

When servicing the A/C system, an R-134a refrigerant recovery/recycling/charging station (1) that meets SAE standard J2788 must be used. Per SAE standard J2788, refrigerant recovery stations must recover 95% of the refrigerant system within 30 minutes at 21.1° C (70° F) and be able to measure the amount of refrigerant removed from the system to an accuracy of 28 grams (1 oz.). See the operating instructions supplied by the equipment manufacturer for proper care and use of this equipment.

NOTE: A/C system should be tested prior to refrigerant recovery if the use of A/C system sealants are suspected. These sealants have the potential to clog refrigerant recovery equipment and cause vehicle A/C component damage. Various tool manufacturers make tool kits that detect A/C system sealants. See the operating instructions supplied by the equipment manufacturer for proper care and use of this equipment.

If sealants are detected in an A/C system, the system should be treated as contaminated and replacement of the entire A/C refrigerant system is recommended. A/C systems found to be contaminated with A/C system sealers, A/C stop-leak products or seal conditioners void the warranty for the A/C system.

REFRIGERANT SYSTEM EVACUATE

CAUTION: Do NOT run the engine with a vacuum pump in operation or with a vacuum present within the A/C system. Failure to follow this caution will result in serious A/C compressor damage.

NOTE: Special effort must be used to prevent moisture from entering the A/C system oil. Moisture in the oil is very difficult to remove and will cause a reliability problem with the A/C compressor.

If an A/C compressor designed to use R-134a refrigerant is left open to the atmosphere for an extended period of time. It is recommended that the refrigerant oil be drained and replaced with new oil or a new A/C compressor be used. This will eliminate the possibility of contaminating the refrigerant system.

If the refrigerant system has been open to the atmosphere, it must be evacuated before the system can be filled. Moisture and air mixed with the refrigerant will raise the compressor head pressure above acceptable operating levels. This will reduce the performance of the A/C system and damage the A/C compressor. Moisture will boil at near room temperature when exposed to vacuum. To evacuate the refrigerant system:

NOTE: When connecting the service equipment coupling to the line fitting, verify that the valve of the coupling is fully closed. This will reduce the amount of effort required to make the connection.

1. Recover the refrigerant system. Refer to **PLUMBING, STANDARD PROCEDURE**.
2. With the engine OFF, connect a suitable charging station, refrigerant recovery machine or a manifold gauge set with vacuum pump and refrigerant recovery equipment. Refer to **PLUMBING, STANDARD PROCEDURE**. Do not operate the engine with a vacuum on the A/C system.
3. Open the suction and discharge valves and start the vacuum pump. The vacuum pump should run a minimum of 45 minutes prior to charge to eliminate all moisture in system. When the suction gauge reads to the lowest

degree of vacuum possible (approximately -88 kPa (- 26 in. Hg) or greater) for 30 minutes, close all valves and turn off vacuum pump. If the system fails to reach specified vacuum, the refrigerant system likely has a leak that must be corrected. If the refrigerant system maintains specified vacuum for at least 30 minutes, start the vacuum pump, open the suction and discharge valves. Then allow the system to evacuate an additional 10 minutes.

4. Close all valves. Turn off and disconnect the vacuum pump.
5. Charge the refrigerant system. Refer to **PLUMBING, STANDARD PROCEDURE**.

REFRIGERANT SYSTEM CHARGE

WARNING: Review the warnings and cautions for this system before performing the procedure. Failure to follow these instructions may result in serious injury or death.

NOTE: The Underhood HVAC Specification Label contains the refrigerant fill specification of the vehicle being serviced.

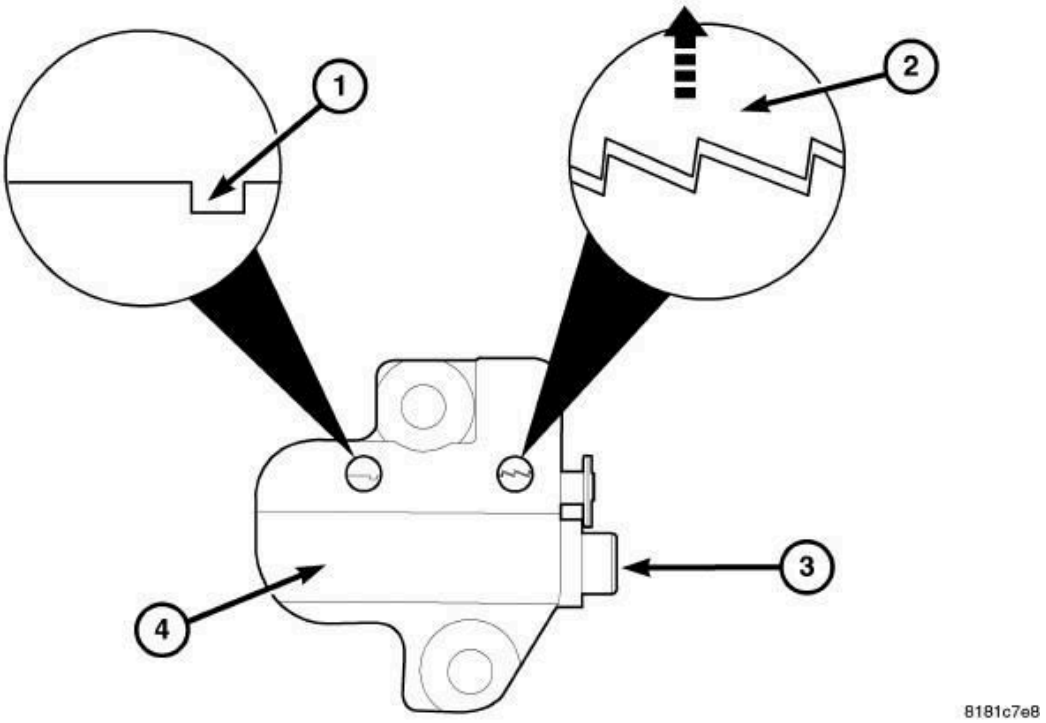

Fig. 107: Identifying R-134a Refrigerant Recovery/Recycling/Charging Station
Courtesy of CHRYSLER GROUP, LLC

After all refrigerant system leaks have been repaired and the refrigerant system has been evacuated, a refrigerant charge can be injected into the system.

Use an R-134a refrigerant recovery/recycling/charging station (1) that meets SAE Standard J2788 to charge the refrigerant system with R-134a refrigerant. See the operating instructions supplied by the equipment manufacturer for proper care and use of this equipment.

CHARGING PROCEDURE

CAUTION: A small amount of refrigerant oil is removed from the A/C system each time the refrigerant system is recovered and evacuated. Before charging the A/C system, you MUST replenish any oil lost during the recovery process. See the equipment manufacturer instructions for more information.

1. Evacuate the refrigerant system. Refer to **PLUMBING, STANDARD PROCEDURE**.
2. A manifold gauge set and an R-134a refrigerant recovery/recycling/charging station that meets SAE standard J2788 should be connected to the refrigerant system.
3. Measure the proper amount of refrigerant and heat it to 52° C (125° F) with the charging station. Refer to **REFRIGERANT, SPECIFICATIONS**. See the operating instructions supplied by the equipment manufacturer for proper use of this equipment.
4. Open both the suction and discharge valves, then open the charge valve to allow the heated refrigerant to flow into the system.
5. When the transfer of refrigerant has stopped, close both the suction and discharge valves.
6. If all of the refrigerant charge did not transfer from the dispensing device, open all of the windows in the vehicle and set the heating-A/C system controls so that the A/C compressor is operating and the blower motor is running at its lowest speed setting. Run the engine at a steady high idle (about 1400 RPM).
7. Open the low-side valve to allow the remaining refrigerant to transfer to the refrigerant system.

WARNING: Take care not to open the discharge (high pressure) valve at this time. Failure to follow this warning may result in possible serious or fatal injury.

8. Disconnect the charging station and manifold gauge set from the refrigerant system service ports.
9. Reinstall the caps onto the refrigerant system service ports.

COMPRESSOR, A/C

DESCRIPTION

COMPRESSOR, A/C - FIXED DISPLACEMENT

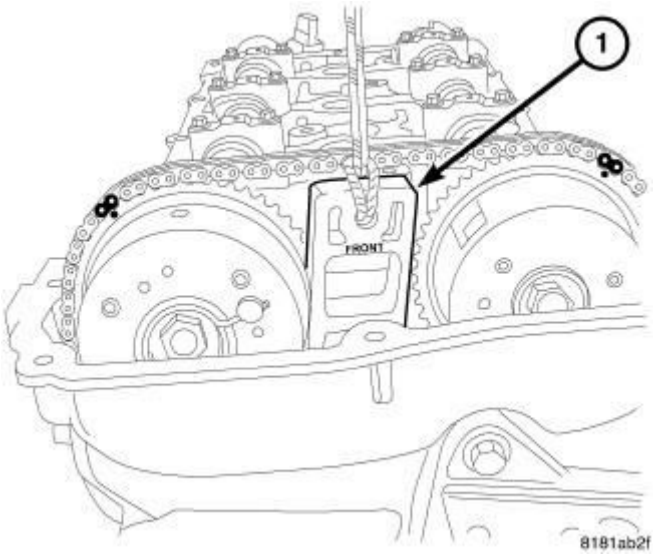

Fig. 108: A/C Compressor -Typical
Courtesy of CHRYSLER GROUP, LLC

2.2L Diesel models are equipped with a clutch operated Denso 10SRE18 A/C compressor (1) with a fixed displacement of 180 cubic centimeters (11 cubic inches). This A/C compressor is a reciprocating, swash plate-type compressor with five double-acting pistons. The A/C compressor has the suction and discharge ports (2) and the high pressure relief valve (3) located near the rear of the compressor.

The A/C compressor is secured to the engine with three bolts.

A label identifying the use of R-134a refrigerant and ND-8 PAG oil is located on the A/C compressor.

COMPRESSOR, A/C - VARIABLE DISPLACEMENT

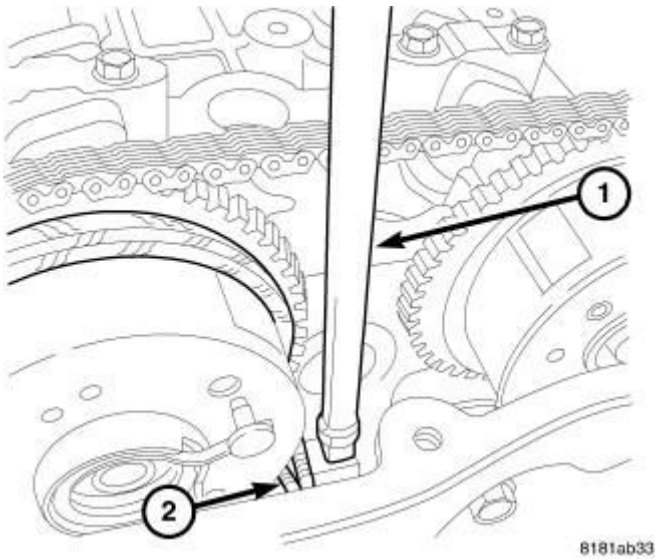

Fig. 109: A/C Compressor, Control Valve & High Pressure Relief Valve
Courtesy of CHRYSLER GROUP, LLC

All gasoline engine models use a Denso 6SEU16 clutchless, variable displacement, swashplate type A/C compressor (1). This A/C compressor has a total displacement of 160 cubic centimeters (9.7 cubic inches) and has a control valve (2) and high pressure relief valve (3) located on the back cover.

The A/C compressor is secured to the engine with three bolts.

A label identifying the use of R-134a refrigerant and ND-8 PAG oil is located on the A/C compressor.

CLUTCH - FIXED DISPLACEMENT A/C COMPRESSOR

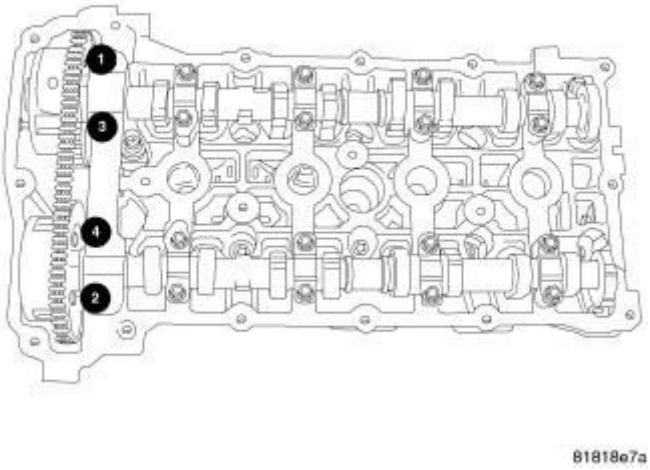

Fig. 110: A/C Compressor Clutch Components
Courtesy of CHRYSLER GROUP, LLC

NOTE: Typical A/C clutch assembly shown in illustration.

On 2.2L diesel engine equipped models, the clutch assembly for the Denso fixed displacement A/C compressor consists of a stationary electromagnetic A/C clutch coil (4), pulley bearing and pulley assembly (3), clutch plate (2) and shims (7). These components provide the means to engage and disengage the A/C compressor from the engine accessory drive belt.

The A/C clutch coil and the pulley bearing and pulley assembly are both retained on the nose of the A/C compressor with snap rings (5 and 6). The clutch plate is splined to the compressor shaft and secured with a bolt (1).

HUB AND PULLEY - VARIABLE DISPLACEMENT A/C COMPRESSOR

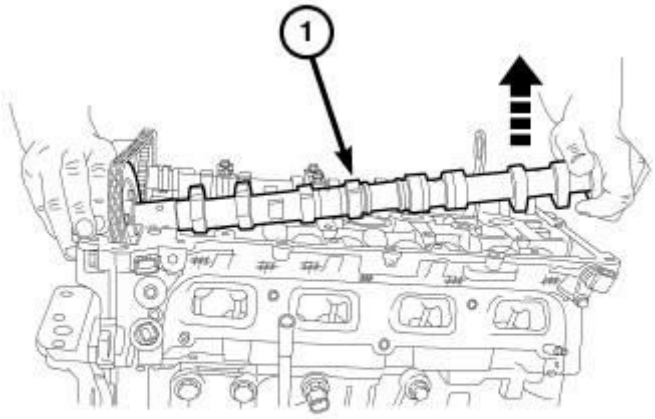

81819eca

Fig. 111: A/C Compressor Hub And Pulley Assembly
Courtesy of CHRYSLER GROUP, LLC

NOTE: Typical clutchless A/C compressor pulley and drive hub shown in illustration.

On all gasoline engine equipped models, the non-servicable hub and pulley assembly for the Denso 6SEU16 variable displacement A/C compressor provides the means to drive the A/C compressor using the engine accessory drive belt. The hub and pulley assembly consists of an aluminum drive hub (1) with composite tabs (2) that are positioned between rubber dampeners (3), which are located

inside of a composite pulley (4).

The A/C pulley has a bearing (5) that is retained to the nose of the A/C compressor with a snap ring (6). The drive hub and shim (7) are retained to the compressor shaft by use of left handed threads.

HIGH PRESSURE RELIEF VALVE

A high pressure relief valve is located on the compressor cylinder head at the rear of each A/C compressor. Refer to **COMPRESSOR, A/C, DESCRIPTION**. This mechanical valve is designed to vent refrigerant from the A/C system to protect against damage to the A/C compressor and other A/C system components caused by condenser air flow restriction or an overcharge of refrigerant.

OPERATION

COMPRESSOR, A/C - FIXED DISPLACEMENT

On 2.2L diesel engine equipped models, the Denso fixed displacement A/C compressor is driven by the engine through an electric clutch, drive pulley and belt arrangement. This A/C compressor is lubricated by refrigerant oil that is circulated throughout the refrigerant system with the refrigerant.

The A/C compressor draws in low-pressure refrigerant vapor from the A/C evaporator through the suction port, then compresses the refrigerant into a high-pressure, high-temperature refrigerant vapor that is pumped to the A/C condenser, through the compressor discharge port.

CAUTION: Be certain to adjust the refrigerant system oil level when replacing an A/C compressor. Failure to properly adjust the refrigerant oil level can prevent the A/C system from operating as designed and can cause serious A/C compressor damage.

The Denso fixed displacement A/C compressor cannot be repaired and must be replaced if inoperative or damaged. The compressor clutch, pulley and bearing assembly, and clutch coil are available for service if inoperative or damaged. If an internal failure of the A/C compressor has occurred, the A/C condenser/receiver/drier assembly must also be replaced. Refer to **CONDENSER, A/C, REMOVAL**.

COMPRESSOR, A/C - VARIABLE DISPLACEMENT

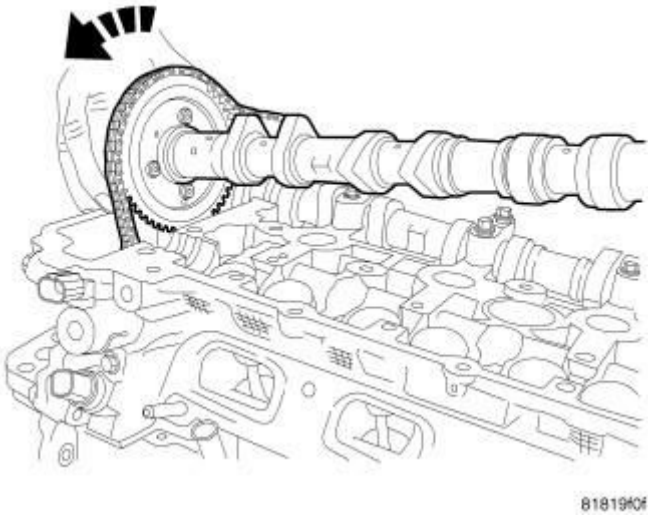

Fig. 112: Cut Away View Of Denso 6SEU16 A/C Compressor
Courtesy of CHRYSLER GROUP, LLC

NOTE: Typical variable displacement A/C compressor shown in illustration.

The Denso 6SEU16 A/C compressor used on all gasoline engine equipped models, is a variable displacement compressor (VDC) that is driven by the engine through a drive hub (1) and pulley (2). This A/C compressor does not require the use of an electromagnetic clutch, as the compressor uses an integral control solenoid (3) to reduce or increase the stroke of the five pistons (4) within the compressor by automatically adjusting the angle of the swashplate (5).

The A/C compressor draws in low-pressure refrigerant vapor from the A/C evaporator through its suction port. It then compresses the refrigerant into a high-pressure, high-temperature refrigerant vapor, which is then pumped to the A/C condenser through the compressor discharge port. The A/C compressor is lubricated by refrigerant oil that is circulated throughout the refrigerant system with the refrigerant.

The A/C compressor is controlled by the Powertrain Control Module (PCM). The PCM calculates compressor displacement required by A/C system load and demand by monitoring vehicle speed, A/C high side pressure, engine speed, evaporator temperature, accelerator pedal position, ambient temperature and A/C-heater request signals. The PCM then sends a Pulse Width Modulated (PWM) signal to the A/C compressor control solenoid to increase or decrease refrigerant flow through an orifice located within the compressor housing. The

amount of refrigerant allowed to pass through the orifice in the compressor determines the head pressure which controls the angle of the swashplate, which in turn, determines the amount of compressor displacement. When there is no demand for A/C, the swashplate is adjusted to nearly a zero degree angle, which removes compressor torque drag from the engine.

This A/C compressor will reduce the displacement of the compressor based on ambient air temperature. For example; as the outside temperature falls from 27° C (80° F) to 19° C (66° F), the amount of refrigerant flow required through the A/C orifice valve to keep the A/C evaporator cool becomes less, and the swashplate is adjusted to a lower angle, which reduces compressor displacement. However, due to the lower outside air temperature, panel air outlet temperature will not noticeably change.

The A/C compressor control system is diagnosed using a scan tool. Refer to **DIAGNOSIS AND TESTING** .

CAUTION: Do NOT run the engine with a vacuum pump in operation or with a vacuum present within the A/C system when equipped with a variable displacement A/C compressor. Failure to follow this caution will result in serious A/C compressor damage.

CAUTION: Be certain to adjust the refrigerant system oil level when replacing an A/C compressor. Failure to properly adjust the refrigerant oil level can prevent the A/C system from operating as designed and can cause serious A/C compressor damage.

NOTE: The compressor drive hub and the pulley and bearing assembly can not be serviced separately from the A/C compressor. In the event of drive hub or pulley and bearing assembly damage or failure, the A/C compressor, drive hub and pulley and bearing must be replaced as an assembly.

The A/C compressor cannot be adjusted or repaired and must be replaced if inoperative or damaged. If an internal failure of the A/C compressor has

occurred, the A/C condenser/receiver/drier assembly must also be replaced. Refer to **CONDENSER, A/C, REMOVAL**.

CLUTCH - FIXED DISPLACEMENT A/C COMPRESSOR

On 2.2L diesel engine equipped models, the clutch components for the Denso fixed displacement A/C compressor provide the means to engage and disengage the compressor from the engine accessory drive belt. When the electromagnetic A/C clutch coil is energized, it magnetically draws the clutch plate into contact with the clutch pulley and drives the compressor shaft. When the coil is not energized, the pulley freewheels on the clutch hub bearing, which is part of the pulley assembly.

A/C compressor clutch engagement is controlled by the Engine Control Module (ECM). When the A/C-heater control is set to any A/C position, it sends a request signal on the CAN-IHS bus to the Totally Integrated Power Module (TIPM), which then transfers the request on the CAN-C Bus to the ECM, which determines if operating conditions are correct for A/C clutch engagement. When all operating conditions have been met, the ECM sends a signal on a dedicated hardwired circuit back to the TIPM to energize the internal A/C clutch high side driver. When energized, the A/C clutch high side driver provides battery current to the A/C clutch coil.

The A/C clutch control system is diagnosed using a scan tool.

The A/C compressor clutch components cannot be adjusted or repaired and must be replaced if inoperative or damaged.

HUB AND PULLEY - VARIABLE DISPLACEMENT A/C COMPRESSOR

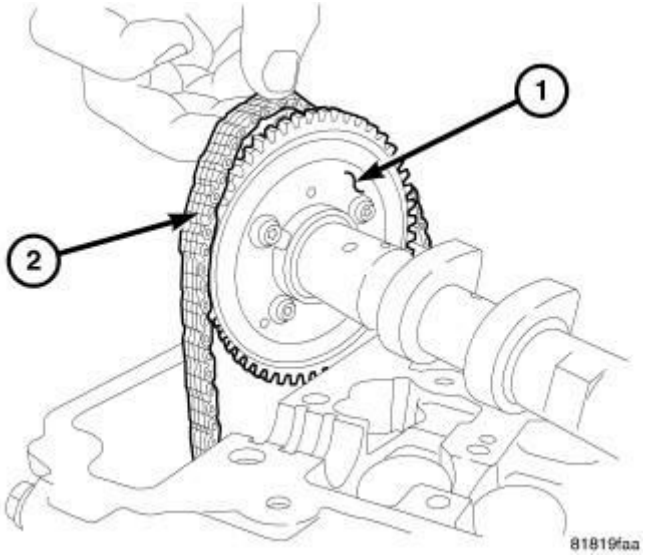

Fig. 113: A/C Compressor Hub
Courtesy of CHRYSLER GROUP, LLC

NOTE: Typical clutchless compressor pulley drive hub shown in illustration.

The design of the Denso 6SEU16 variable displacement A/C compressor used on all gasoline engine equipped models, does not require the use of an electromagnetic clutch, as the compressor is controlled by an integral control valve that allows refrigerant to bypass within the compressor. Refer to **COMPRESSOR, A/C, DESCRIPTION**.

The three bridges (1) located on compressor drive hub (2) are designed to break away in the event of compressor seizure. This action prevents damage to the serpentine accessory drive belt. Refer to **COMPRESSOR, A/C, INSPECTION**.

NOTE: The compressor drive hub and the pulley and bearing assembly can not be serviced separately from the A/C compressor. In the event of drive hub or pulley and bearing assembly damage or failure, the A/C compressor, drive hub and pulley and bearing must be replaced as an assembly.

The compressor drive hub and the pulley and bearing assembly can not be serviced separately from the A/C compressor. The A/C compressor must be replaced if the drive hub or pulley and bearing assembly is worn or damaged.

HIGH PRESSURE RELIEF VALVE

The high pressure relief valve vents refrigerant from the A/C system when a discharge pressure of 3445 to 4135 kPa (500 to 600 psi) or above is reached. The high pressure relief valve closes with a minimum discharge pressure of 2756 kPa (400 psi) is reached.

The high pressure relief valve should not open when the A/C system is operating correctly. If the high pressure relief valve vents refrigerant, there is most likely a problem within the A/C refrigerant system. The high pressure relief valve vents only enough refrigerant to reduce the A/C system pressure, and then re-seats itself. If the high pressure relief valve vents refrigerant, see the A/C System Diagnosis chart. Refer to **DIAGNOSIS AND TESTING**.

The high pressure relief valve is factory-calibrated and cannot be adjusted or repaired, and must not be removed or otherwise disturbed. The valve is only serviced as a part of the A/C compressor.

DIAGNOSIS AND TESTING

CLUTCH - FIXED DISPLACEMENT A/C COMPRESSOR

The compressor clutch coil electrical circuit for the Denso fixed displacement A/C compressor used on 2.2L diesel engine equipped models, is controlled by the Engine Control Module (ECM) through the Totally Integrated Power Module (TIPM) (see appropriate Wiring Information for complete HVAC wiring diagrams). Begin testing of a suspected compressor clutch coil problem by performing the preliminary checks.

COIL RESISTANCE TEST

1. Disconnect and isolate the negative battery cable.
2. Disconnect the wire harness connector from the A/C clutch coil connector.
3. Use an ohm meter and Back Probe Tool (special tool #6801, Terminal Probe) and measure the resistance of the clutch coil at the coil connector terminals.
4. See the **A/C CLUTCH COIL SPECIFICATIONS** chart for the acceptable A/C clutch coil resistance. Specifications apply for a work area temperature of 21° C (70° F).
    a. If the A/C clutch coil reading is below specifications, the coil is shorted and must be replaced.
    b. If the A/C clutch coil reading is above specifications, the coil is open

and must be replaced.

COIL CURRENT DRAW TEST

1. Verify the battery state of charge. Refer to **BATTERY, DIAGNOSIS AND TESTING** .
2. Connect an ammeter (0 to 10 ampere scale selected) in series with the clutch coil feed terminal using Back Probe Tool (special tool #6801, Terminal Probe). Connect a voltmeter (0 to 20 volt scale selected) to measure voltage across the battery and the clutch coil.
3. With the heater-A/C control in the A/C mode and the blower at low speed, start the engine and allow it to run at a normal idle speed.
4. The compressor clutch should engage immediately, and the clutch coil supply voltage should be within two volts of the battery voltage. If the coil supply voltage is OK, go to Step 5. If the coil supply voltage is not within two volts of battery voltage, test the clutch coil feed circuit for excessive voltage drop and repair as necessary.
5. See the **A/C CLUTCH COIL SPECIFICATIONS** chart for the acceptable A/C clutch coil current draw. Specifications apply for a work area temperature of 21° C (70° F). If voltage is more than 12.5 volts, add electrical loads by turning on electrical accessories until voltage reads below 12.5 volts.
   a. If the compressor clutch coil current reading is zero, the coil is open and must be replaced.
   b. If the compressor clutch coil current reading is above specifications, the coil is shorted and must be replaced.

A/C CLUTCH COIL SPECIFICATIONS

Coil Resistance	Current Draw
3.6 ± 0.2 ohms	3.2 - 3.3 amps @ 11.5 - 12.5 volts

PRELIMINARY CHECKS

1. Using a scan tool, check for Diagnostic Trouble Codes (DTCs) in the A/C-heater control, TIPM and ECM. If no DTCs are found, go to step 2. If any DTCs are found, repair as required.
2. If the A/C compressor clutch still will not engage, verify the refrigerant charge level. Refer to **DIAGNOSIS AND TESTING**. If the refrigerant

charge level is OK, go to **COIL RESISTANCE TEST** and/or **COIL CURRENT DRAW TEST** . If the refrigerant charge level is not OK, adjust the refrigerant charge as required.

A/C SYSTEM NOISE TESTING

When investigating an A/C system related noise, you must first know the conditions under which the noise occurs. These conditions include: weather, vehicle speed, transmission in gear or neutral, engine speed, engine temperature and any other special conditions. Noises that develop during A/C operation can often be misleading. For example: what sounds like a failed bearing, may be caused by loose bolts, nuts, mounting brackets or a loose A/C compressor.

NOTE: The A/C compressor must be replaced if any unusual noise is heard from the compressor itself.

1. Select a quiet area for testing. Duplicate the complaint conditions as much as possible. Turn the A/C system On and Off several times to clearly identify any compressor noise. On variable displacement compressors, listen to the A/C compressor while it is operating at maximum and minimum displacement. On fixed displacement compressors, listen to the compressor while the A/C clutch cycles on and off. Probe the A/C compressor with an engine stethoscope or a long screwdriver with the handle held to your ear to better localize the source of the noise. To duplicate high-ambient temperature conditions (high head pressure), restrict the air flow through the A/C condenser. Install a manifold gauge set or a scan tool to be certain that the discharge pressure does not exceed 2600 kPa (377 psi).

   NOTE: Drive belts are speed sensitive. At different engine speeds and depending upon drive belt tension, drive belts can develop noises that are mistaken for an A/C compressor noise. Improper drive belt tension can cause a misleading noise when a variable displacement A/C compressor is operating at maximum displacement, which may not occur when the compressor is at minimum displacement, or when a fixed displacement compressor clutch is engaged.

2. Check the condition of the accessory drive belt. Refer to **BELT,**

SERPENTINE, DIAGNOSIS AND TESTING .

NOTE: On variable displacement A/C compressors, the compressor must be replaced if the drive hub is broken or if the compressor shaft does not rotate smoothly.

3. When equipped with a variable displacement A/C compressor, check the compressor hub and pulley and bearing assembly. Be certain that the hub and pulley are properly aligned and that the pulley bearing is mounted securely to the A/C compressor. Refer to **COMPRESSOR, A/C, INSPECTION**.
4. When equipped with a fixed displacement A/C compressor, check the compressor clutch retainer. Be certain that the clutch coil is mounted securely to the compressor, and that the clutch plate and pulley are properly aligned and have the correct air gap. Refer to **COMPRESSOR, A/C, INSTALLATION**.

NOTE: The A/C compressor must be replaced if any debris or unusually discolored oil is found on the A/C compressor manifold.

5. Check the refrigerant system plumbing for incorrect routing, rubbing or interference, which can cause unusual noises. Also check the refrigerant lines and hoses for kinks or sharp bends that will restrict refrigerant flow, which can cause noises.
6. Loosen all of the compressor mounting hardware and retighten. Refer to **COMPRESSOR, A/C, REMOVAL**.

CAUTION: Do NOT run the engine with a vacuum pump in operation or with a vacuum present within the A/C system when equipped with the Denso 6SEU16 variable displacement compressor. Failure to follow this caution will result in serious A/C compressor damage.

7. If the noise is from opening and closing of the high pressure relief valve, recover, evacuate and recharge the refrigerant system. Refer to

PLUMBING, STANDARD PROCEDURE. If the high pressure relief valve still does not seat properly, replace the A/C compressor. Refer to **COMPRESSOR, A/C, REMOVAL**.

8. If the noise is from liquid refrigerant slugging in the A/C suction line, check the refrigerant system charge. Refer to **DIAGNOSIS AND TESTING**. If the refrigerant charge is OK, replace the A/C receiver/drier and check the refrigerant oil level. Refer to **DRIER, A/C RECEIVER, REMOVAL** and **OIL, REFRIGERANT, STANDARD PROCEDURE**.
9. If a slugging condition still exists after replacing the A/C receiver/drier, then replace the A/C compressor. Refer to **COMPRESSOR, A/C, REMOVAL**.

REMOVAL

CLUTCH - FIXED DISPLACEMENT A/C COMPRESSOR

WARNING: Review the warnings and cautions for this system before performing the procedure. Failure to follow these instructions may result in serious injury or death.

NOTE: The compressor clutch assembly can be serviced with the refrigerant system fully-charged.

NOTE: Typical A/C compressor and clutch assembly shown in illustrations.

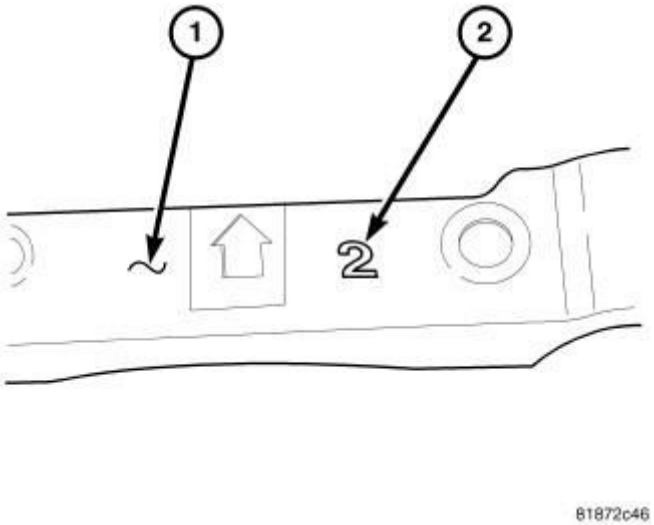

Fig. 114: Locating A/C Compressor Shaft Bolt

Courtesy of CHRYSLER GROUP, LLC

1. Disconnect and isolate the negative battery cable.
2. Remove the accessory drive belt. Refer to **BELT, SERPENTINE, REMOVAL** .
3. Disconnect the engine wire harness from the compressor clutch coil connector (1) located on the top of the A/C compressor (5).

NOTE: Some models (depending on application) may require the A/C compressor to be removed from its installed location and repositioned to gain access to the compressor shaft bolt and/or pulley and field coil snap rings. However, the refrigerant system can still remain fully charged.

4. If necessary, remove the bolts that secure the A/C compressor to the engine and reposition the compressor to gain access to the shaft bolt and/or pulley and clutch coil snap rings. Refer to **COMPRESSOR, A/C, REMOVAL**.
5. Carefully remove the compressor clutch coil connector and wire lead from the connector bracket (2).
6. Remove the compressor shaft bolt (3). A band-type oil filter wrench or a strap wrench may be used to hold the clutch plate (4) from rotating during bolt removal.

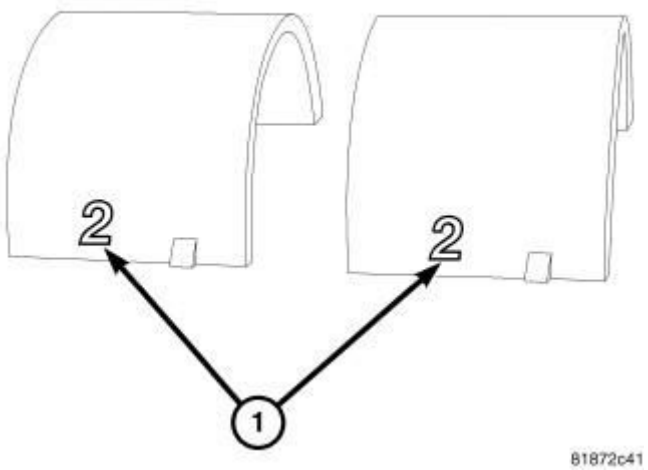

Fig. 115: Identifying Compressor Shaft, Clutch Plate & Shim
Courtesy of CHRYSLER GROUP, LLC

CAUTION: Do not pry between the clutch plate and the pulley and bearing assembly to remove the clutch plate from the compressor shaft as this may damage the clutch plate.

NOTE: Use care not to lose any clutch shim(s) during removal of the clutch plate, as they may be reused during the clutch plate installation process.

7. Tap the clutch plate (2) lightly with a plastic mallet to release it from the splines on the compressor shaft (1) and remove the clutch plate and shim(s) (3).

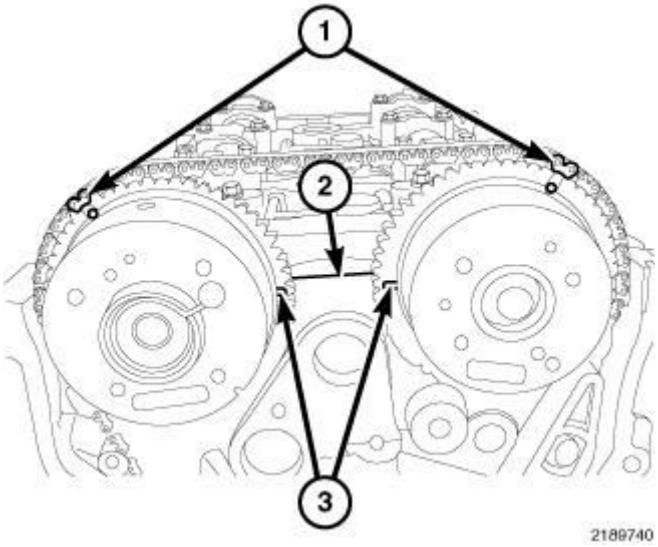

Fig. 116: Clutch Pulley & Snap Ring
Courtesy of CHRYSLER GROUP, LLC

8. Using A/C Snap Ring Pliers (special tool #9764, Pliers, A/C Snap Ring) (1) or equivalent, remove the snap ring (2) that secures the pulley and bearing assembly (3) to the front of the A/C compressor and remove the pulley and bearing assembly.

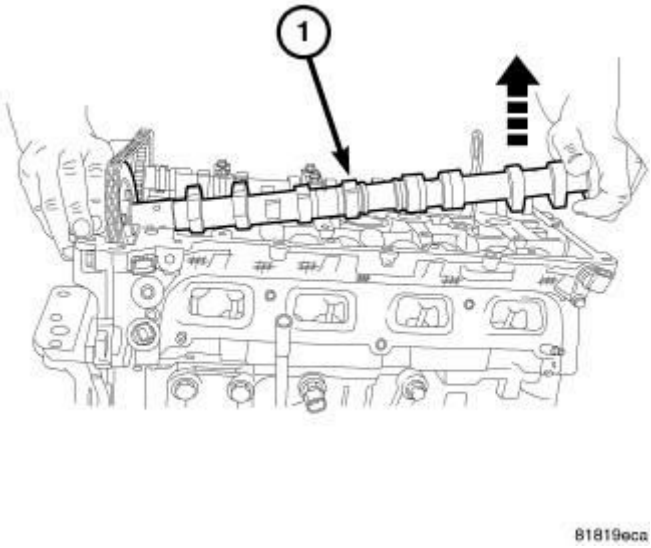

Fig. 117: Clutch Coil And Snap Ring
Courtesy of CHRYSLER GROUP, LLC

9. Using A/C Snap Ring Pliers (special tool #9764, Pliers, A/C Snap Ring) (1) or equivalent, remove the snap ring (4) that secures the compressor clutch coil (2) to the front of the A/C compressor (3) and remove the coil.

COMPRESSOR, A/C

WARNING: Review the warnings and cautions for this system before performing the procedure. Failure to follow these instructions may result in serious injury or death.

NOTE: Gasoline engine model shown in illustrations, Diesel engine model similar.

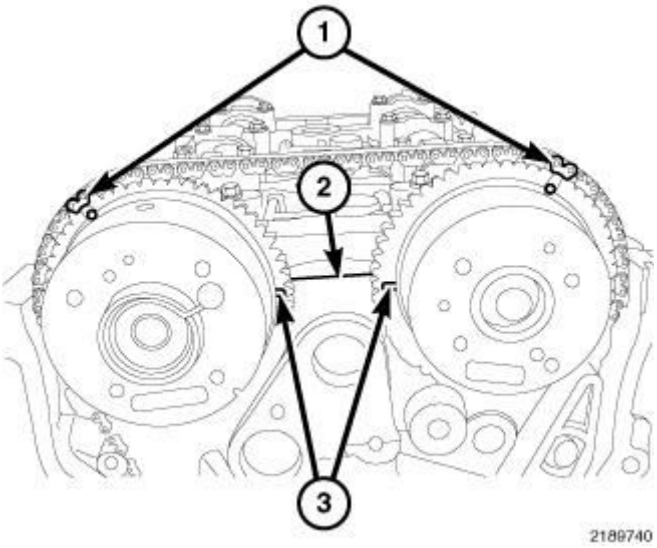

Fig. 118: A/C Compressor-Refrigerant Lines
Courtesy of CHRYSLER GROUP, LLC

1. Disconnect and isolate the negative battery cable.
2. Recover the refrigerant from the refrigerant system. Refer to **PLUMBING, STANDARD PROCEDURE**.
3. On gasoline engine models;
   a. raise and support the vehicle.
   b. remove the right front wheel. Refer to **REMOVAL** .
   c. position the front portion of the right front wheelhouse splash shield out of the way. Refer to **SHIELD, SPLASH, FRONT WHEELHOUSE, REMOVAL** .
   d. remove the drive belt splash shield.
4. Remove the accessory drive belt. Refer to **BELT, SERPENTINE, REMOVAL** .
5. Disconnect the compressor control valve wire lead (2) or clutch coil lead, depending on engine application, from the engine wire harness.
6. Remove the nuts (1) that secure the A/C discharge line (3) and the A/C suction line (4) to the A/C compressor (5).
7. Disconnect the A/C discharge and suction lines from the A/C compressor and remove and discard the O-ring seals and gaskets.

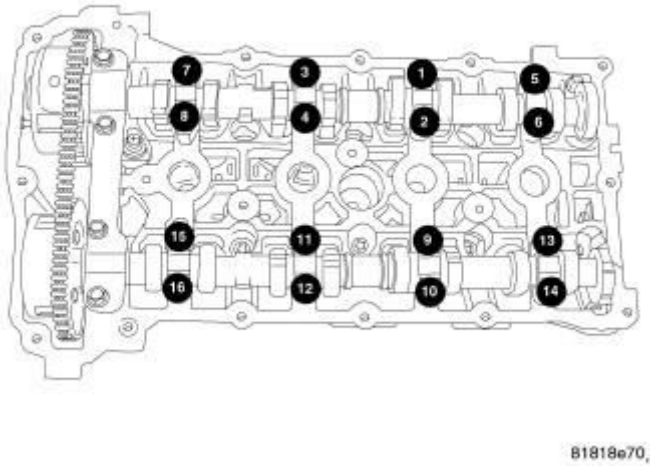

Fig. 119: Removing/Installing A/C Compressor
Courtesy of CHRYSLER GROUP, LLC

8. Support the A/C compressor (1) and remove the three bolts (2) that secure the compressor to the engine and remove the compressor.
9. Install plugs in, or tape over the opened refrigerant line fittings and compressor ports.

INSPECTION

CLUTCH INSPECTION - FIXED DISPLACEMENT A/C COMPRESSOR

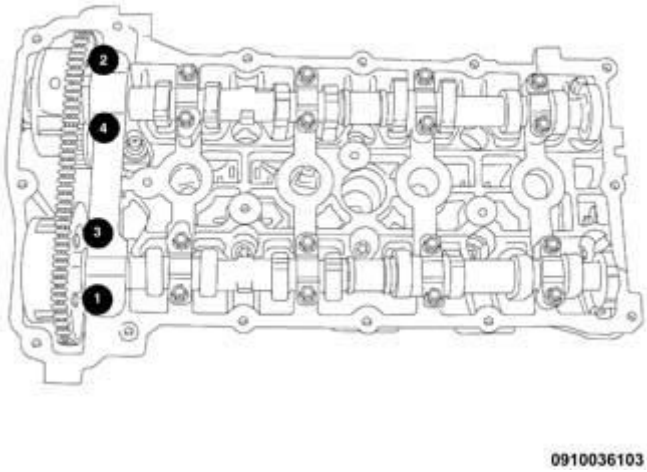

Fig. 120: Identifying Compressor Shaft, Clutch Plate & Shim
Courtesy of CHRYSLER GROUP, LLC

Examine the friction surfaces of the pulley and the clutch plate (2) for wear. The

pulley and clutch plate should be replaced if there is excessive wear or scoring.

If the friction surfaces are oily, inspect the shaft and nose area of the A/C compressor (1) for refrigerant oil. If refrigerant oil is found, the compressor shaft seal is leaking and the A/C compressor must be replaced.

Check the pulley bearing for roughness or excessive leakage of grease. Replace the pulley and clutch plate if required.

HUB AND PULLEY INSPECTION - VARIABLE DISPLACEMENT A/C COMPRESSOR

NOTE: The compressor drive hub and the pulley and bearing assembly can not be serviced separately from the A/C compressor. In the event of drive hub or pulley and bearing assembly damage or failure, the A/C compressor, drive hub and pulley and bearing must be replaced as an assembly.

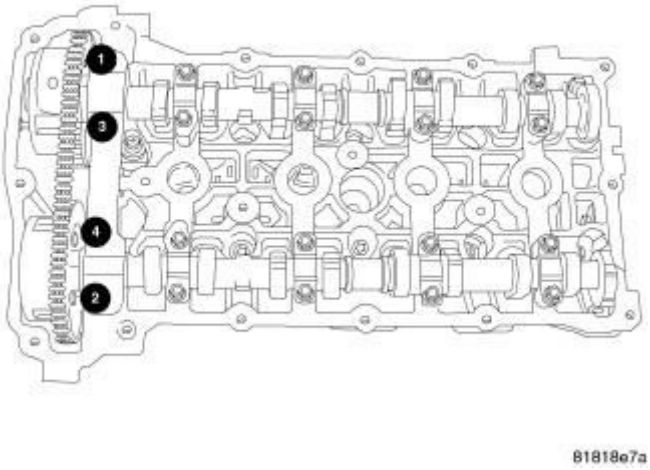

Fig. 121: Compressor Hub & Pulley Inspection
Courtesy of CHRYSLER GROUP, LLC

NOTE: Typical clutchless compressor drive hub and pulley and bearing assembly shown in illustration.

The bridges (1) located on the non-servicable compressor hub (2) are designed to break away in the event of compressor seizure. Examine the bridges for separation or cracks (3). Damage to the bridges are an indication of excessive compressor torque, which is most likely caused by compressor failure.

Check the non-servicable pulley bearing (4) for roughness or excessive noise. Check the pulley dampeners (5) for excessive play which can be caused by deterioration or damage. Inspect the belt surfaces of the non-servicable pulley (4) for wear. If the pulley surfaces are oily, inspect the shaft and nose area of the A/C compressor for refrigerant oil. If refrigerant oil is found, the compressor shaft seal is leaking and the A/C compressor must be replaced.

Replace the A/C compressor if wear or damage is found to the drive hub or pulley and bearing assembly. Refer to **COMPRESSOR, A/C, REMOVAL**.

INSTALLATION

CLUTCH - FIXED DISPLACEMENT A/C COMPRESSOR

NOTE: Typical A/C compressor and clutch assembly shown in illustrations.

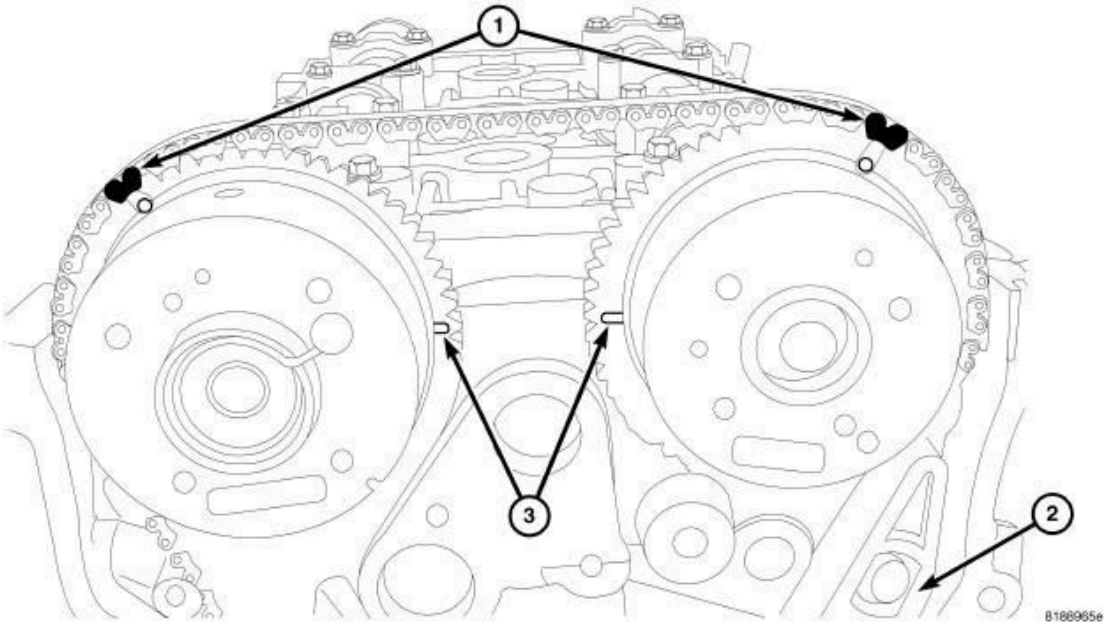

Fig. 122: Clutch Coil And Snap Ring
Courtesy of CHRYSLER GROUP, LLC

1. Align the dowel pin on the back of the compressor clutch coil (2) with the hole in the front of the A/C compressor (3) and position the coil onto the compressor. Be certain that the compressor clutch coil wire lead is properly routed so that it is not pinched between the A/C compressor and the coil.

CAUTION: The snap ring must be fully and properly seated in the groove or it will vibrate out,

resulting in a clutch failure and severe damage to the A/C compressor.

NOTE: A new snap ring must be used to secure the compressor clutch coil to the A/C compressor. The bevel side of the snap ring must face outward and both snap ring eyelets must be oriented to the right or to the left of the coil dowel pin location on the A/C compressor.

2. Using A/C Snap Ring Pliers (special tool #9764, Pliers, A/C Snap Ring) (1) or equivalent, install the snap ring (4) that secures the compressor clutch coil to the front of the A/C compressor. Be certain that the snap ring is fully and properly seated in the groove and oriented correctly.

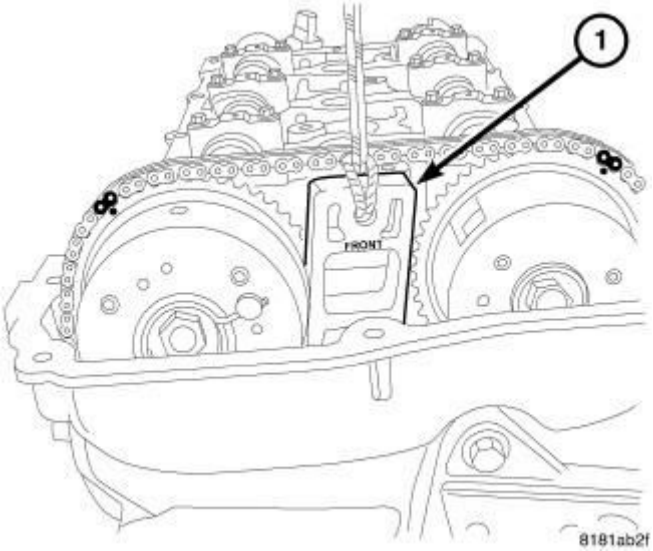

Fig. 123: Identifying Pulley & Bearing Assembly
Courtesy of CHRYSLER GROUP, LLC

CAUTION: Be certain to position the A/C clutch coil wire lead so that it is not damaged during A/C compressor pulley and bearing installation.

CAUTION: When installing the pulley and bearing assembly, DO NOT mar the friction surfaces of the pulley or premature failure of the A/C clutch will result.

3. Install the pulley and bearing assembly (1) onto the front of the A/C compressor. If necessary, tap the pulley gently with a block of wood (2) placed on the pulley friction surface.

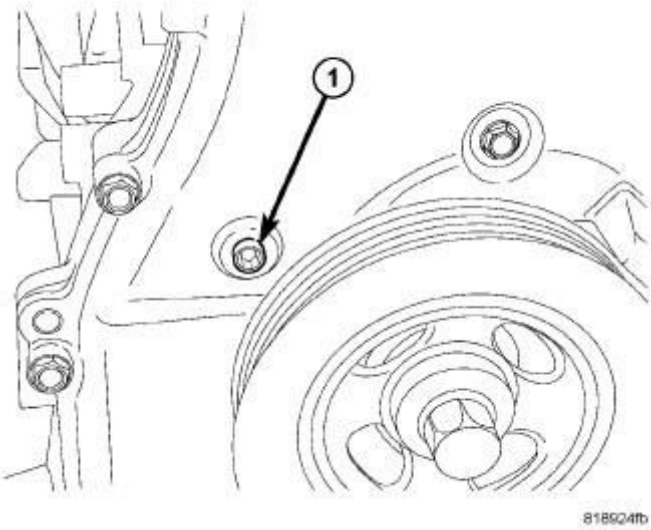

Fig. 124: Clutch Pulley & Snap Ring
Courtesy of CHRYSLER GROUP, LLC

CAUTION: The snap ring must be fully and properly seated in the groove or it will vibrate out, resulting in a clutch failure and severe damage to the A/C compressor.

NOTE: A new snap ring must be used to secure the pulley and bearing assembly to the A/C compressor. The bevel side of the snap ring must face outward.

4. Using A/C Snap Ring Pliers (special tool #9764, Pliers, A/C Snap Ring) (1) or equivalent, install the snap ring (2) that secures the pulley and bearing assembly (3) to the front of the A/C compressor. Be certain that the snap ring is fully and properly seated in the groove.

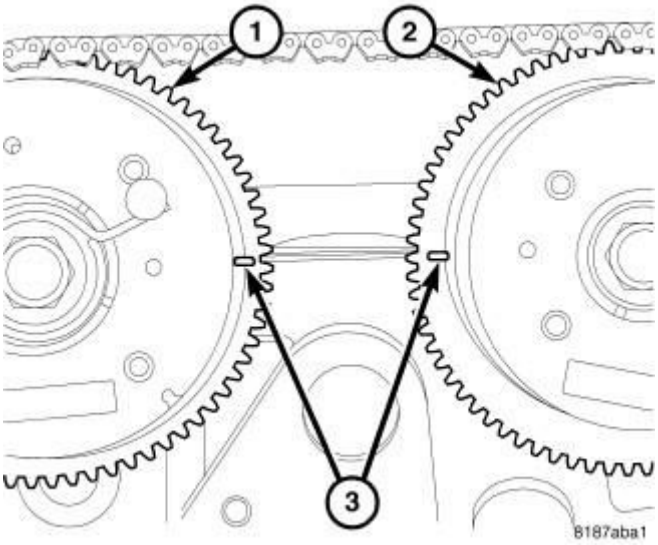

Fig. 125: Identifying Compressor Shaft, Clutch Plate & Shim
Courtesy of CHRYSLER GROUP, LLC

5. If the original clutch plate (2) and pulley and bearing assembly are to be reused, reinstall the original shim(s) (3) onto the compressor shaft (1). If a new clutch plate and pulley and bearing assembly are being used, install a trial stack of shims 2.54 mm (0.010 in.) thick onto the compressor shaft.

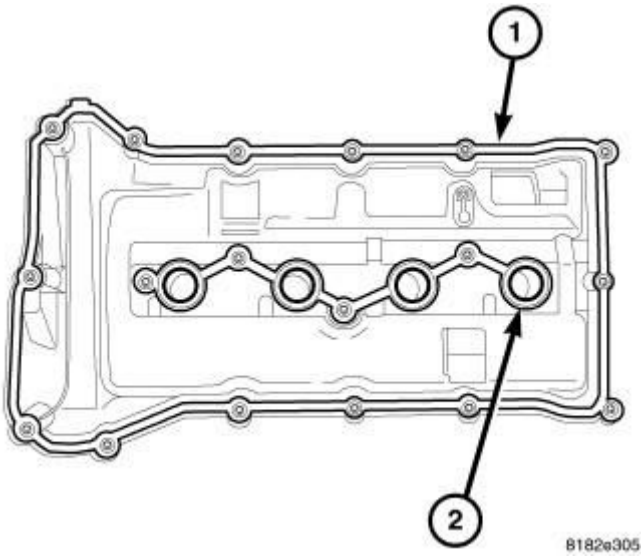

Fig. 126: Locating A/C Compressor Shaft Bolt
Courtesy of CHRYSLER GROUP, LLC

6. Install the clutch plate (4) onto the front of the A/C compressor (5).
7. Install the compressor shaft bolt (3). Tighten the bolt to 19 N.m (168 in. lbs.).

NOTE: The shims may compress after tightening the shaft bolt. Check the air gap in four or more places to verify the air gap is correct. Spin the pulley before performing a final check of the air gap.

NOTE: On models with the clutch plate recessed into the pulley, use a 90° wire gap gauge to measure the clutch air gap. On other models, use a blade type feeler gauge to measure the air gap.

8. With the clutch plate assembled tight against the shim(s), measure the air gap between the clutch plate and the pulley and bearing assembly. The air gap should be between 0.35 - 0.60 mm (0.014 - 0.024 in.). If the air gap is not between specifications, add or subtract shims as needed until the correct air gap is obtained.

CAUTION: Be certain that the compressor clutch coil wire lead is routed so that it is not pinched between the A/C compressor and the coil connector bracket.

9. Carefully route the compressor clutch coil wire lead behind the connector bracket (2).
10. Install the compressor clutch coil connector (1) onto the connector bracket.
11. Reinstall the A/C compressor onto the engine if removed for A/C clutch service. Refer to **COMPRESSOR, A/C, INSTALLATION**.
12. Connect the engine wire harness to the compressor clutch coil connector.
13. Install the accessory drive belt. Refer to **BELT, SERPENTINE, INSTALLATION** .
14. Reconnect the negative battery cable.

COMPRESSOR, A/C

CAUTION: Be certain to adjust the refrigerant system oil level when replacing an A/C compressor. Failure to properly adjust the refrigerant oil level can prevent the A/C system from operating as designed and can cause serious A/C compressor damage.

CAUTION: The A/C receiver/drier must be replaced if an internal failure of the A/C compressor has occurred. Failure to replace the A/C receiver drier can cause serious damage to the replacement A/C compressor.

CAUTION: On late model year gasoline engine equipped vehicles with automatic transaxle, the A/C condenser/receiver/drier assembly must be replaced if an internal failure of the A/C compressor has occurred. Failure to replace the A/C condenser/receiver/drier assembly can cause serious damage to the replacement A/C compressor.

NOTE: When replacing multiple A/C system components, see the REFRIGERANT OIL CAPACITIES chart to determine how much oil should be removed from the new A/C compressor. Refer to OIL, REFRIGERANT, STANDARD PROCEDURE.

NOTE: Replacement of the refrigerant line O-ring seals and gaskets is required anytime a refrigerant line is disconnected. Failure to replace the rubber O-ring seals and metal gaskets could result in a refrigerant system leak.

NOTE: Gasoline engine model shown in illustrations, Diesel engine model similar.

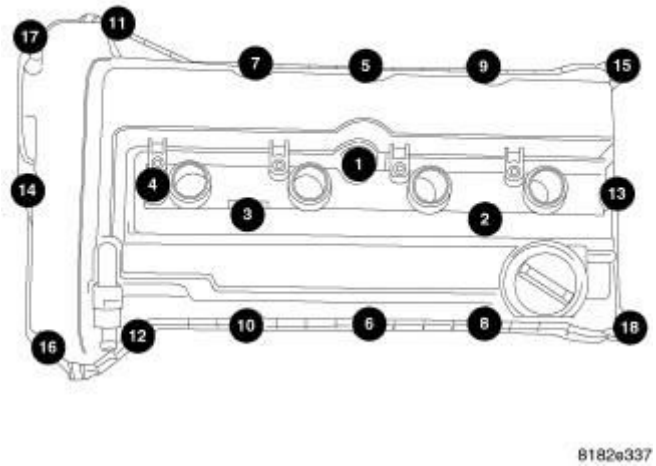

Fig. 127: Removing/Installing A/C Compressor
Courtesy of CHRYSLER GROUP, LLC

1. If the A/C compressor (1) is being replaced, refrigerant oil must first be drained from the new A/C compressor. When replacing multiple A/C system components, see the **REFRIGERANT OIL CAPACITIES** chart to determine how much oil should be added to the refrigerant system. Refer to **OIL, REFRIGERANT, STANDARD PROCEDURE**. Use only refrigerant oil of the type recommended for the A/C compressor in the vehicle.
2. Position the A/C compressor into the engine compartment.
3. Install the three bolts (2) that secure the A/C compressor to the engine. Tighten the bolts to 25 N.m (18 ft. lbs.).

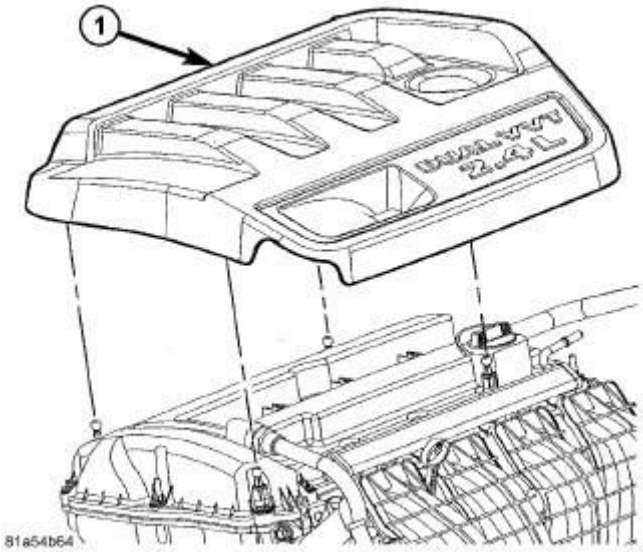

Fig. 128: A/C Compressor-Refrigerant Lines
Courtesy of CHRYSLER GROUP, LLC

4. Remove the tape or plugs from the compressor ports and the refrigerant line fittings.
5. Lubricate new rubber O-ring seals with clean refrigerant oil and install them and new gaskets onto the refrigerant line fittings. Use only the specified O-rings as they are made of a special material for the R-134a system. Use only refrigerant oil of the type recommended for the A/C compressor in the vehicle.
6. Connect the A/C discharge line (3) and the A/C suction line (4) to the A/C compressor (5).
7. Install the nuts (1) that secure the A/C suction and discharge lines to the A/C compressor. Tighten the nuts to 20 N.m (15 ft. lbs.).
8. Connect the compressor control valve wire lead (2) or clutch coil lead, depending on application, to the engine wire harness.
9. Install the accessory drive belt. Refer to **BELT, SERPENTINE, INSTALLATION** .
10. On gasoline engine models;
    a. install the drive belt splash shield.
    b. reposition the front portion of the right front wheelhouse splash shield. Refer to **SHIELD, SPLASH, FRONT WHEELHOUSE, INSTALLATION** .
    c. install the right front wheel. Refer to **INSTALLATION** .
11. Reconnect the negative battery cable.

CAUTION: Do NOT run the engine with a vacuum pump in operation or with a vacuum present within the A/C system when equipped with the Denso 6SEU16 variable displacement compressor. Failure to follow this caution will result in serious A/C compressor damage.

12. Evacuate and charge the refrigerant system. Refer to **PLUMBING, STANDARD PROCEDURE**.

CONDENSER, A/C

DESCRIPTION

DESCRIPTION

NOTE: A/C condenser for late model year gasoline engine with automatic transaxle shown in illustration, Other models similar.

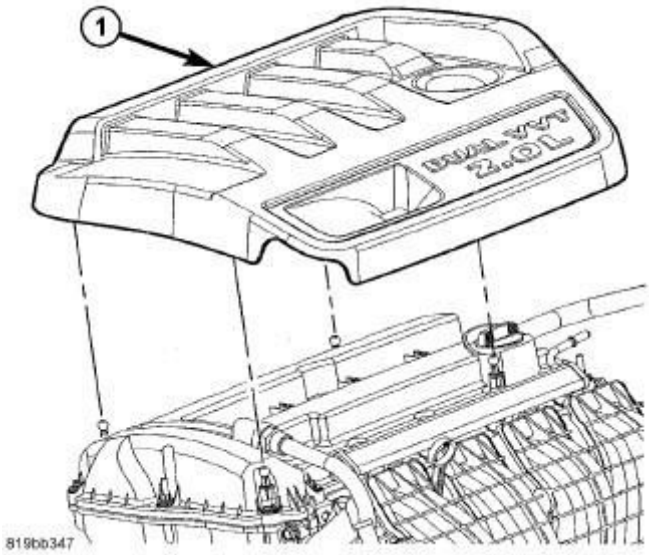

Fig. 129: A/C Condenser
Courtesy of CHRYSLER GROUP, LLC

The A/C condenser (1) is a heat exchanger that allows the high-pressure refrigerant gas being discharged from A/C compressor to give up its heat to the air passing over the condenser fins, which causes the refrigerant flowing through the condenser to cool and change to a liquid state. The A/C condenser is located at the front of the engine compartment, behind the grille.

The A/C condenser has tapping blocks for the A/C refrigerant lines (2) and the integral automatic transmission cooler (4), when equipped.

Early model year gasoline engine equipped vehicles with automatic transaxle have the A/C receiver/drier mounted to the right front frame rail. Refer to **DRIER, A/C RECEIVER, DESCRIPTION**. Late model year gasoline engine equipped vehicles with automatic transaxle have the A/C receiver/drier (3) mounted to the left end of the A/C condenser.

CAUTION: On late model year gasoline engine equipped

vehicles with automatic transaxle, the A/C condenser/receiver/drier assembly must be replaced if an internal failure of the A/C compressor has occurred. Failure to replace the A/C condenser/receiver/drier assembly can cause serious damage to the replacement A/C compressor.

OPERATION

OPERATION

When air passes through the fins of the A/C condenser, the high-pressure refrigerant gas within the A/C condenser gives up its heat. The refrigerant then condenses as it leaves the A/C condenser and becomes a high-pressure liquid. The volume of air flowing over the condenser fins is critical to the proper cooling performance of the A/C system. Therefore, it is important that there are no objects placed in front of the radiator grille openings at the front of the vehicle or foreign material on the condenser fins that might obstruct proper air flow. Also, any factory-installed air seals or shrouds must be properly reinstalled following radiator or A/C condenser service.

NOTE: Replacement of the refrigerant line O-ring seals and gaskets is required anytime a refrigerant line is disconnected. Failure to replace the rubber O-ring seals and metal gaskets could result in a refrigerant system leak.

The A/C condenser has no serviceable parts. The O-ring seals used on the connections are made from a special type of rubber not affected by R-134a refrigerant. The O-ring seals and gaskets must be replaced whenever a refrigerant line is disconnected from the A/C condenser.

The A/C condenser cannot be repaired and must be replaced if leaking or damaged.

REMOVAL

REMOVAL

WARNING: Review the warnings and cautions for this system

before performing the procedure. Failure to follow these instructions may result in serious injury or death.

CAUTION: On late model year gasoline engine equipped vehicles with automatic transaxle, the A/C condenser/receiver/drier assembly must be replaced if an internal failure of the A/C compressor has occurred. Failure to replace the A/C condenser/receiver/drier assembly can cause serious damage to the replacement A/C compressor.

CAUTION: Before removing the A/C condenser, note the location of each of the radiator/condenser air seals. These air seals are used to direct air through the A/C condenser and radiator. The air seals must be reinstalled in their proper locations in order for the A/C and engine cooling systems to perform as designed.

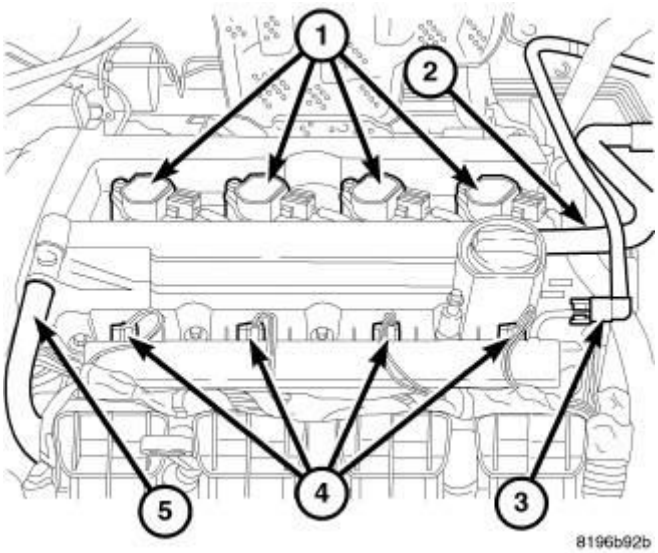

Fig. 130: Discharge Line To Condenser
Courtesy of CHRYSLER GROUP, LLC

1. Disconnect and isolate the negative battery cable.
2. Recover the refrigerant from the refrigerant system. Refer to **PLUMBING,**

STANDARD PROCEDURE.

3. If equipped with the 2.2L diesel engine, remove the front fascia. Refer to **FASCIA, FRONT, REMOVAL** .
4. If equipped with a gasoline engine, remove the upper radiator support and position it out of the way. Refer to **PANEL, CLOSURE, UPPER, REMOVAL** .
5. On gasoline engine equipped models, carefully push the radiator (1) slightly rearward to gain access to the A/C condenser (2).
6. Remove the nut (3) that secures the A/C discharge line (4) to the right side of the A/C condenser and remove and discard the O-ring seal and gasket.
7. Install plugs in, or tape over the opened discharge line fitting and the condenser inlet port.

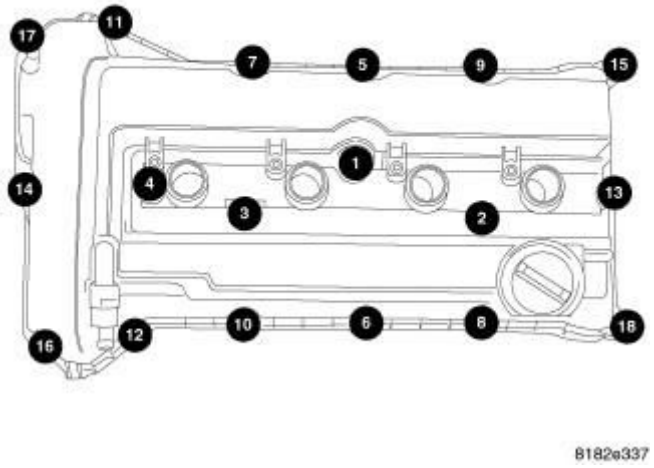

Fig. 131: Liquid Line To Condenser
Courtesy of CHRYSLER GROUP, LLC

NOTE: Illustration shown with front fascia removed for clarity.

8. Raise and support the vehicle.

NOTE: On gasoline engine equipped models, reach up through the opening in the bottom of the front fascia located in the right front corner of the vehicle to gain access to the A/C liquid line.

9. Remove the nut (1) that secures the A/C liquid line (2) to the right side of the A/C condenser (3).
10. Disconnect the A/C liquid line from the A/C condenser and remove and discard the O-ring seal and gasket.
11. Install plugs in, or tape over the opened liquid line fitting and the condenser outlet port.

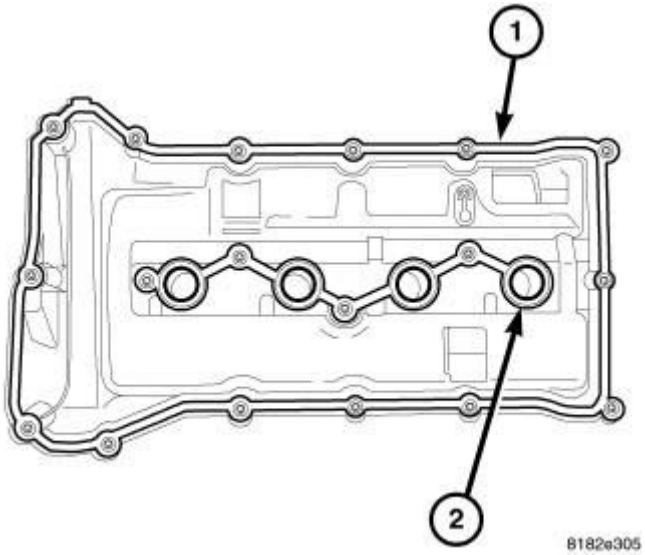

Fig. 132: Identifying A/C Condenser, Radiator & Upper Condenser Brackets
Courtesy of CHRYSLER GROUP, LLC

NOTE: A/C condenser for late model year gasoline engine with automatic transaxle shown in illustration, Other models similar.

NOTE: Illustration shown with front fascia and diesel engine charge air cooler (CAC) (when equipped) removed for clarity.

12. Remove the two bolts (3) that secure the lower condenser brackets to the radiator (5).
13. Lower the vehicle.
14. If equipped, disconnect the automatic transmission cooler lines (2) from the left side of the A/C condenser (1). Refer to **TUBES AND HOSES, TRANSMISSION OIL COOLER, STANDARD PROCEDURE** .
15. If equipped with the 2.2L diesel engine, remove the charge air cooler

(CAC).

16. Carefully lift the A/C condenser straight up and disengage the two upper condenser brackets (4) from the radiator and remove the condenser from the engine compartment.

INSTALLATION

INSTALLATION

CAUTION: Be certain to adjust the refrigerant oil level when servicing the A/C refrigerant system. Failure to properly adjust the refrigerant oil level will prevent the A/C system from operating as designed and can cause serious A/C compressor damage.

CAUTION: On late model year gasoline engine equipped vehicles with automatic transaxle, the A/C condenser/receiver/drier assembly must be replaced if an internal failure of the A/C compressor has occurred. Failure to replace the A/C condenser/receiver/drier assembly can cause serious damage to the replacement A/C compressor.

NOTE: If the A/C condenser is being replaced, add 10 milliliters (0.3 fluid ounce) of refrigerant oil to the refrigerant system. If the A/C condenser is equipped with an A/C receiver/drier, be sure to add an addition 30 milliliters (1.0 fluid ounce) of refrigerant oil. When replacing multiple A/C system components, see the REFRIGERANT OIL CAPACITIES chart to determine how much oil should be added to the refrigerant system. Refer to OIL, REFRIGERANT, STANDARD PROCEDURE. Use only refrigerant oil of the type recommended for the A/C compressor in the vehicle.

NOTE: Replacement of the refrigerant line O-ring seals and gaskets is required anytime a refrigerant line is disconnected. Failure to replace the rubber O-ring seals

and metal gaskets could result in a refrigerant system leak.

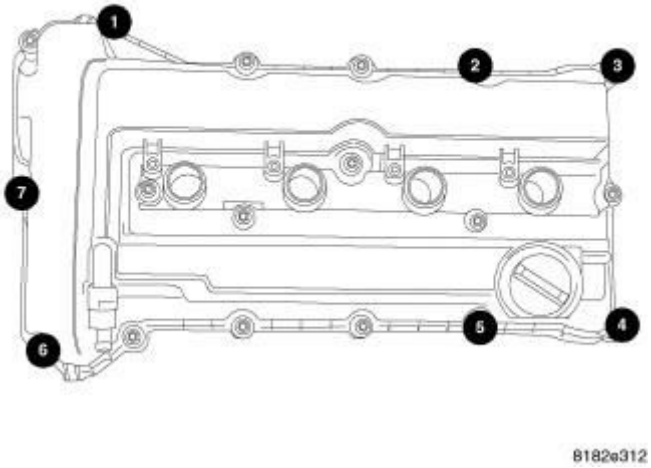

Fig. 133: Identifying A/C Condenser, Radiator & Upper Condenser Brackets
Courtesy of CHRYSLER GROUP, LLC

NOTE: A/C condenser for late model year gasoline engine with automatic transaxle shown in illustration, Other models similar.

NOTE: Illustration shown with front fascia and diesel engine charge air cooler (CAC) (when equipped) removed for clarity.

1. Carefully lower the A/C condenser (1) straight down in front of the radiator (5) and engage the upper condenser brackets (4) to the radiator.
2. If equipped with the 2.2L diesel engine, install the charge air cooler (CAC).
3. If equipped, connect the automatic transmission cooler lines (2) to the left side of the A/C condenser. Refer to **TUBES AND HOSES, TRANSMISSION OIL COOLER, STANDARD PROCEDURE** .
4. Raise and support the vehicle.
5. Install the two bolts (3) that secure the lower condenser brackets to the radiator. Tighten the bolts to 4.5 N.m (40 in. lbs.).

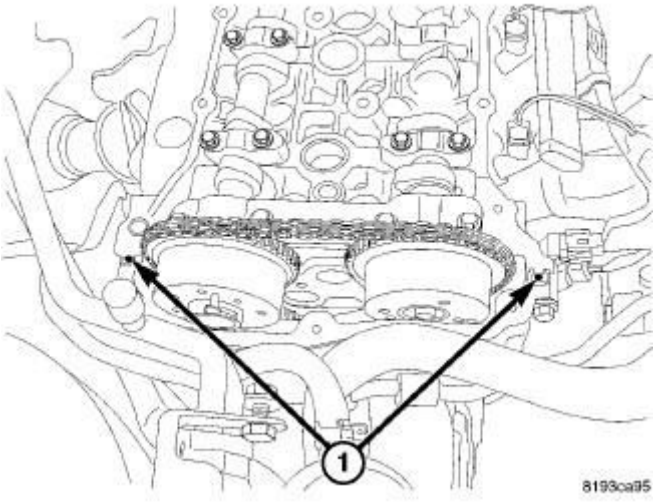

Fig. 134: Liquid Line To Condenser
Courtesy of CHRYSLER GROUP, LLC

NOTE: Illustration shown with front fascia removed for clarity.

NOTE: On gasoline engine equipped models, reach up through the opening in the bottom of the front fascia located in the right front corner of the vehicle to gain access to the A/C liquid line.

6. Remove the tape or plug from the liquid line fitting and the condenser outlet port.
7. Lubricate a new rubber O-ring seal with clean refrigerant oil and install it and a new gasket onto the liquid line fitting. Use only the specified O-ring as it is made of a special material for the R-134a system. Use only refrigerant oil of the type recommended for the A/C compressor in the vehicle.
8. Connect the A/C liquid line (2) to the A/C condenser (3) and install the retaining nut (1). Tighten the nut to 5 N.m (44 in. lbs.).

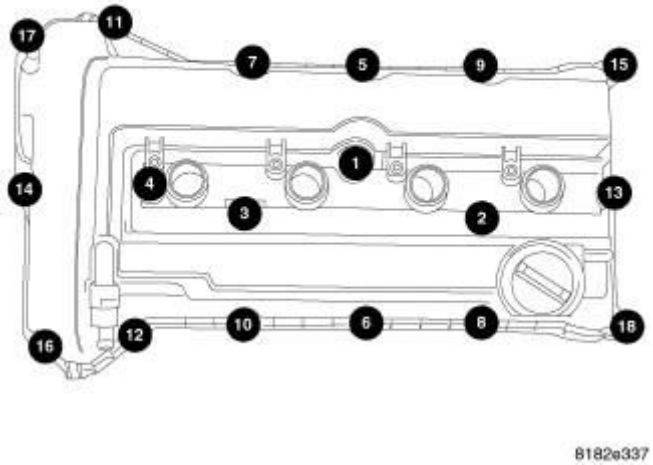

Fig. 135: Discharge Line To Condenser
Courtesy of CHRYSLER GROUP, LLC

9. Lower the vehicle.
10. Remove the tape or plug from the discharge line fitting and the condenser inlet port.
11. Lubricate a new rubber O-ring seal with clean refrigerant oil and install it and a new gasket onto the discharge line fitting. Use only the specified O-ring as it is made of a special material for the R-134a system. Use only refrigerant oil of the type recommended for the A/C compressor in the vehicle.
12. On gasoline engine equipped models, carefully push the radiator (1) slightly rearward to gain access to the A/C condenser (2).
13. Connect the A/C discharge line (4) to the A/C condenser and install the retaining nut (3). Tighten the nut to 5 N.m (44 in. lbs.).
14. If equipped with a gasoline engine, reposition and install the upper radiator support. Refer to **PANEL, CLOSURE, UPPER, INSTALLATION** .
15. If equipped with the 2.2L diesel engine, install the front fascia. Refer to **FASCIA, FRONT, INSTALLATION** .
16. Reconnect the negative battery cable.

CAUTION: Do NOT run the engine with a vacuum pump in operation or with a vacuum present within the A/C system. Failure to follow this caution will result in serious A/C compressor damage.

17. Evacuate the refrigerant system Refer to **PLUMBING, STANDARD PROCEDURE**.
18. If the A/C condenser is being replaced, add 10 milliliters (0.3 fluid ounce) of refrigerant oil to the refrigerant system. If the A/C condenser is equipped with an A/C receiver/drier, be sure to add an addition 30 milliliters (1.0 fluid ounce) of refrigerant oil. When replacing multiple A/C system components, see the **REFRIGERANT OIL CAPACITIES** chart to determine how much oil should be added to the refrigerant system. Refer to **OIL, REFRIGERANT, STANDARD PROCEDURE**. Use only refrigerant oil of the type recommended for the A/C compressor in the vehicle.
19. Charge the refrigerant system. Refer to **PLUMBING, STANDARD PROCEDURE**.

CORE, HEATER

DESCRIPTION

DESCRIPTION

NOTE: LHD model shown in illustration, RHD model similar.

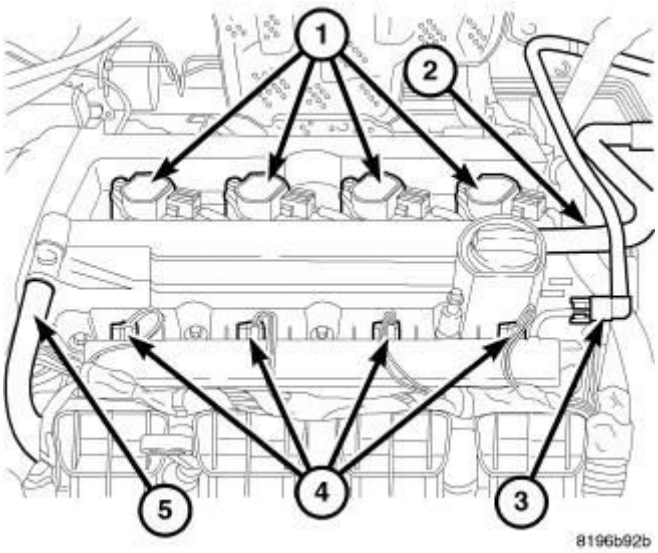

Fig. 136: Heater Core
Courtesy of CHRYSLER GROUP, LLC

The heater core (1) for the heating-A/C system is mounted within the HVAC air distribution housing, which is located behind the instrument panel. The heater core is a heat exchanger made of rows of tubes with fins and is positioned within the air distribution housing so that only the selected amount of air entering the

housing passes through the heater core before it is distributed through the heating-A/C system ducts and outlets. One end of the heater core is fitted with a tank (2) that includes the fittings for the heater core tubes (3).

The heater core can only be serviced by removing the HVAC housing from the vehicle.

OPERATION

OPERATION

Engine coolant is circulated through the heater hoses to the heater core at all times. As the coolant flows through the heater core, heat is removed from the engine and is transferred to the heater core tubes and fins. Air directed through the heater core picks up the heat from the heater core fins. The blend-air door allows control of the heater output air temperature by regulating the amount of air flowing through the heater core. The blower motor speed controls the volume of air flowing through the HVAC housing.

The heater core cannot be repaired and it must be replaced if inoperative, leaking or damaged.

REMOVAL

REMOVAL

WARNING: Review the warnings and cautions for this system before performing the procedure. Failure to follow these instructions may result in serious injury or death.

NOTE: The HVAC housing assembly must be removed from vehicle for service of the heater core.

NOTE: LHD model with A/C shown in illustration, RHD and heater-only models similar.

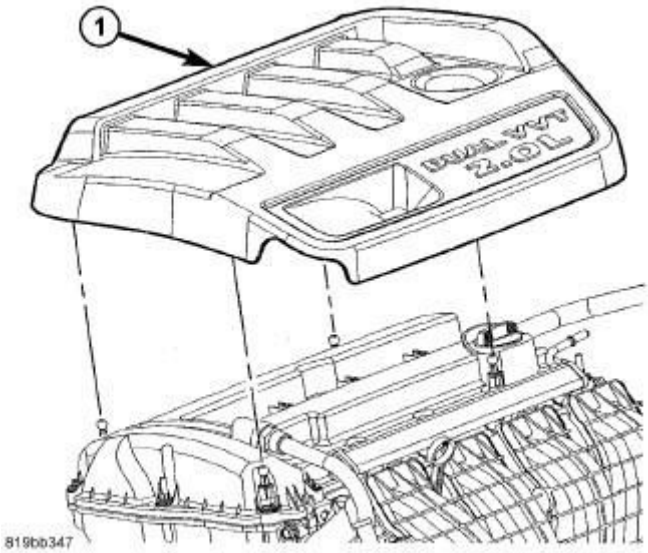

Fig. 137: Foam Seal, Flange, Air Distribution Housing, Heater Core, HVAC Housing & Screw
Courtesy of CHRYSLER GROUP, LLC

1. Remove the HVAC housing assembly and place it on a workbench. Refer to **HOUSING, HVAC, REMOVAL**.
2. Remove the left side front floor duct. Refer to **DUCT, FLOOR DISTRIBUTION, REMOVAL**.

NOTE: If the foam seal for the flange is deformed or damaged, it must be replaced.

3. Remove the foam seal (1) from the flange (2) located on the front of the HVAC housing (5).
4. Remove the screw (6) that secures the flange to the front of the HVAC housing and remove the flange.
5. On RHD models, remove the air distribution housing from the HVAC housing Refer to **HOUSING, HVAC, REMOVAL**.
6. Carefully pull the heater core (4) out of the driver side of the air distribution housing (3).

INSTALLATION

INSTALLATION

NOTE: LHD model with A/C shown in illustration, RHD and

heater-only models similar.

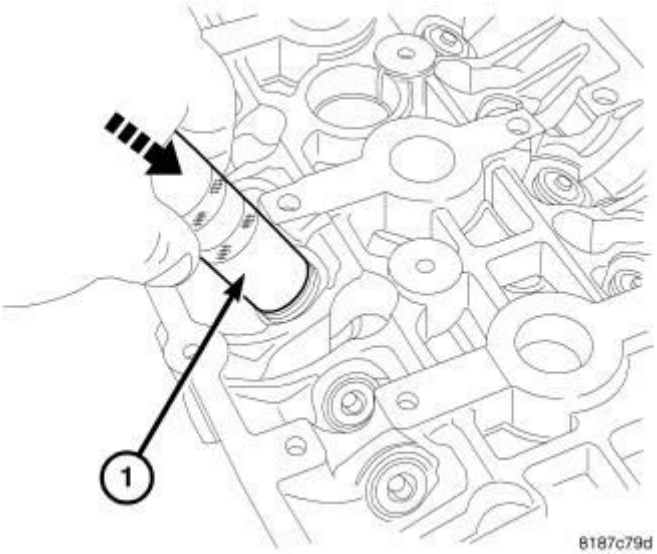

Fig. 138: Foam Seal, Flange, Air Distribution Housing, Heater Core, HVAC Housing & Screw
Courtesy of CHRYSLER GROUP, LLC

1. Carefully install the heater core (4) into the side of the air distribution housing (3).
2. On RHD models, install the air distribution housing onto the HVAC housing (5). Refer to **HOUSING, HVAC, INSTALLATION**.
3. Install the flange (2) that secures the heater core tubes to the front of the HVAC housing.
4. Install the screw (6) that secures the flange to the HVAC housing. Tighten the screw to 1.2 N.m (10 in. lbs.).

NOTE: If the foam seal for the flange is deformed or damaged, it must be replaced.

5. Install the foam seal (1) onto the flange.
6. Install the left side front floor duct. Refer to **DUCT, FLOOR DISTRIBUTION, INSTALLATION**.

NOTE: If the heater core is being replaced, flush the cooling system. Refer to STANDARD PROCEDURE .

7. Install the HVAC housing assembly. Refer to **HOUSING, HVAC,**

INSTALLATION.

CORE, SERVICE PORT VALVE

DESCRIPTION

DESCRIPTION

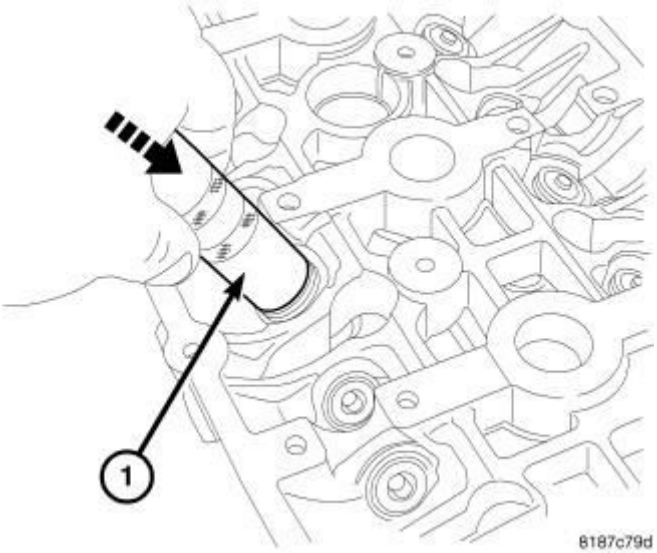

Fig. 139: High Side Service Port
Courtesy of CHRYSLER GROUP, LLC

Refrigerant system service ports are used to recover, recycle, evacuate, charge and test the A/C refrigerant system. Unique sizes are used on the two service ports for the R-134a refrigerant system to ensure the system is not accidentally contaminated with R-12 refrigerant or by service equipment used for R-12 refrigerant.

The high side service port (1) is located on the A/C discharge line (2) in front of the engine, below the upper radiator hose (3).

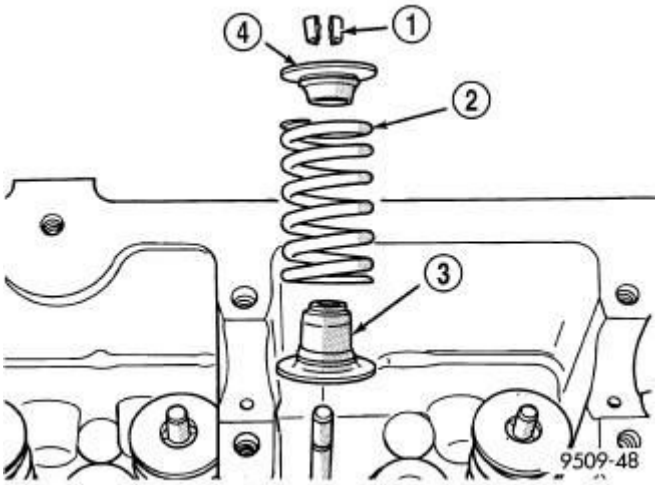

Fig. 140: Low Side Service Port
Courtesy of CHRYSLER GROUP, LLC

The low side service port (1) is located on the A/C liquid line (2) near the right front strut tower (3). Both the high side and low side A/C service port valve cores are serviceable.

NOTE: The protective cap aids in service port sealing and helps protect the refrigerant system from contamination. Remember to always reinstall the protective cap onto the service port when refrigerant system service is complete.

Each of the service ports has a threaded plastic protective cap installed over it from the factory. The service port caps are serviceable components.

REMOVAL

REMOVAL

WARNING: Review the warnings and cautions for this system before performing the procedure. Failure to follow these instructions may result in serious injury or death.

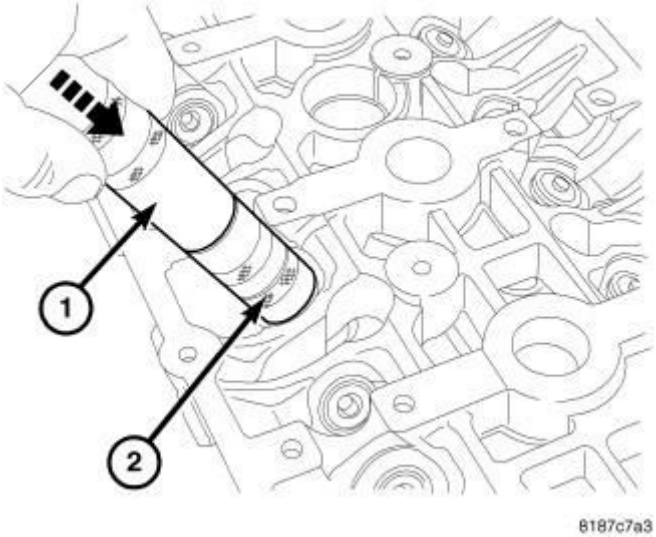

Fig. 141: Identifying A/C Service Port Components
Courtesy of CHRYSLER GROUP, LLC

NOTE: Typical A/C service port shown in illustration.

1. Remove the protective cap (1) from the service port (2).
2. Recover the refrigerant from the refrigerant system. Refer to **PLUMBING, STANDARD PROCEDURE**.
3. Using a Schrader-type valve core tool, remove the valve core (3) from the service port.
4. Install a plug in, or tape over the opened service port(s).

INSTALLATION

INSTALLATION

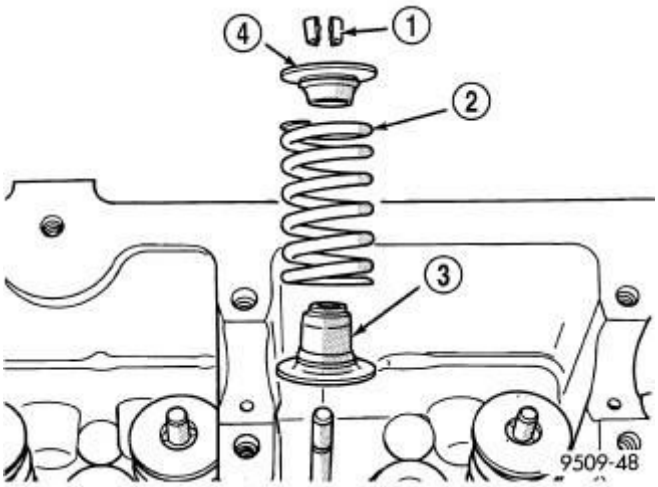

Fig. 142: Identifying A/C Service Port Components

Courtesy of CHRYSLER GROUP, LLC

NOTE: Typical A/C service port shown in illustration.

1. Lubricate the valve core (3) with clean refrigerant oil prior to installation. Use only refrigerant oil of the type recommended for the A/C compressor in the vehicle.
2. Remove the tape or plug from the service port (2).

CAUTION: A valve core that is not fully seated in the A/C service port can result in damage to the valve during refrigerant system evacuation and charge. Such damage may result in a loss of system refrigerant while uncoupling the charge adapters.

3. Using a Schrader-type valve core tool, install and tighten the valve core into the service port(s).

CAUTION: Do NOT run the engine with a vacuum pump in operation or with a vacuum present within the A/C system. Failure to follow this caution will result in serious A/C compressor damage.

4. Evacuate the refrigerant system. Refer to **PLUMBING, STANDARD PROCEDURE**.
5. Charge the refrigerant system. Refer to **PLUMBING, STANDARD PROCEDURE**.

NOTE: The protective cap helps aid in service port sealing and helps protect the refrigerant system from contamination. Remember to always reinstall the protective cap onto the service port when refrigerant system service is complete.

6. Install the protective cap (1) onto the service port.

DRIER, A/C RECEIVER

DESCRIPTION

DESCRIPTION

The A/C receiver/drier is part of the high-side of the A/C system. The A/C receiver/drier stores any unused refrigerant, filters and helps remove moisture from the refrigerant, and retains any refrigerant vapor that may leave the A/C condenser, until it becomes a liquid. The A/C receiver/drier is located on the right front frame rail or on the A/C condenser, depending on engine and transaxle application.

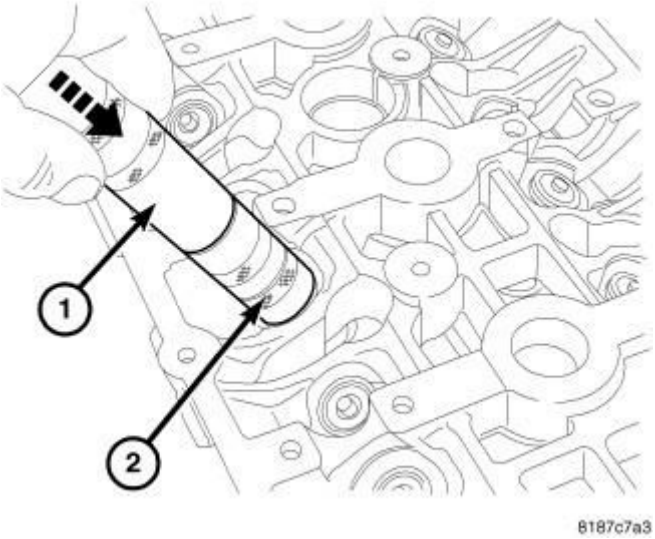

Fig. 143: Identifying A/C Receiver/Drier, A/C Liquid Line & Right Front Frame Rail
Courtesy of CHRYSLER GROUP, LLC

On all early model vehicles, the A/C receiver/drier (1) is mounted to the right front frame rail (4). On late model vehicles, only the gasoline and diesel engine models with manual or Constant Velocity Transaxle (CVT) have the A/C receiver/drier mounted to the frame rail. Late model gasoline engine equipped vehicles with automatic transaxle have the A/C receiver/drier mounted to the A/C condenser.

CAUTION: The A/C receiver/drier must be replaced if an internal failure of the A/C compressor has occurred. Failure to replace the A/C receiver drier can cause serious damage to the replacement A/C compressor.

The A/C liquid line (2) and jumper line (3) are attached to the A/C receiver/drier and the connections are sealed by use of metal gaskets with rubber O-ring seals.

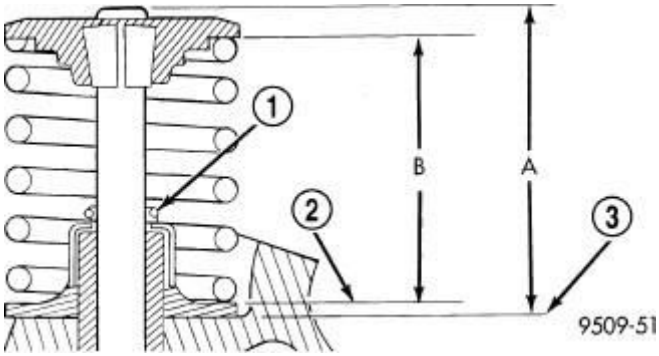

Fig. 144: A/C Receiver/Drier & Condenser
Courtesy of CHRYSLER GROUP, LLC

On late model gasoline engine equipped vehicles with automatic transaxle, the A/C receiver/drier (1) is mounted to the left end of the A/C condenser (2) and must be replaced with the condenser as an assembly.

CAUTION: On late model year gasoline engine equipped vehicles with automatic transaxle, the A/C condenser/receiver/drier assembly must be replaced if an internal failure of the A/C compressor has occurred. Failure to replace the A/C condenser/receiver/drier assembly can cause serious damage to the replacement A/C compressor.

OPERATION

OPERATION

The A/C receiver/drier performs a filtering action to prevent foreign material in the refrigerant from contaminating the A/C expansion valve. Refrigerant enters the A/C receiver/drier as a high-pressure, low temperature liquid. Desiccant inside the A/C receiver/drier absorbs any moisture which may have entered and become trapped within the refrigerant system. In addition, during periods of high demand operation of the A/C system, the A/C receiver/drier acts as a reservoir to store surplus refrigerant.

NOTE: Replacement of the refrigerant line O-ring seals and

gaskets is required anytime a refrigerant line is disconnected. Failure to replace the rubber O-ring seals and metal gaskets could result in a refrigerant system leak.

The A/C receiver/drier has no serviceable parts except for the O-ring seals and gaskets. The O-ring seals used on the connections are made from a special type of rubber not affected by R-134a refrigerant. The O-ring seals and gaskets must be replaced whenever the A/C receiver/drier is disconnected.

The A/C receiver/drier cannot be repaired and must be replaced if leaking or damaged, or if an internal failure of the A/C compressor has occurred.

REMOVAL

REMOVAL

WARNING: **Review the safety precautions and warnings in this Service Information before performing this procedure. Failure to follow these instructions may result in serious injury or death.**

NOTE: LHD model shown in illustration, RHD model similar.

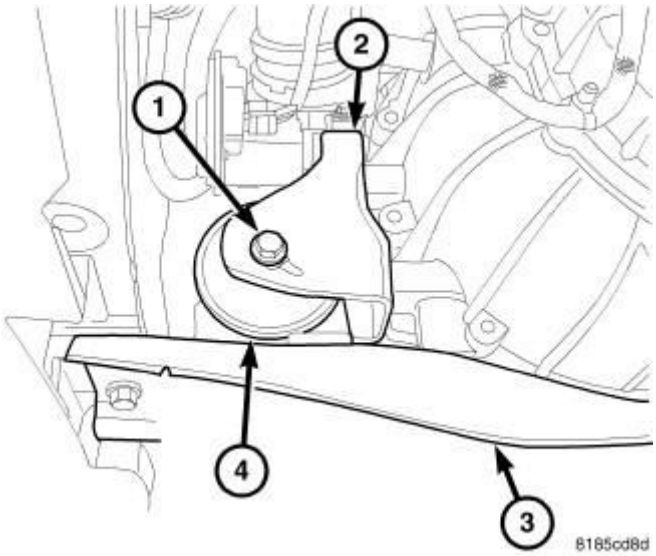

Fig. 145: Identifying A/C Receiver/Drier, Right Front Frame Rail & Retaining Bolts
Courtesy of CHRYSLER GROUP, LLC

1. Disconnect and isolate the negative battery cable.
2. Recover the refrigerant from the refrigerant system. Refer to **PLUMBING, STANDARD PROCEDURE**.
3. Raise and support the vehicle.
4. Remove the right front wheel. Refer to **REMOVAL** .
5. Position the front portion of the right front wheelhouse splash shield out of the way. Refer to **SHIELD, SPLASH, FRONT WHEELHOUSE, REMOVAL** .
6. Remove the nut (2) that secures the A/C refrigerant line (1) to the A/C receiver/drier (5).
7. Disconnect the A/C liquid line from the A/C receiver/drier and remove and discard the O-ring seal and gasket.
8. Remove the bolt (3) that secures the liquid jumper line (4) to the A/C receiver/drier.
9. Disconnect the jumper line from the A/C receiver/drier and remove and discard the O-ring seal and gasket.
10. Remove the A/C suction line from the plastic bracket located on the A/C receiver/drier.
11. Remove the two bolts (6) that secure the A/C receiver/drier to the right front frame rail (7) and remove the receiver/drier.
12. Install plugs in, or tape over the opened refrigerant line fittings and receiver/drier ports.

INSTALLATION

INSTALLATION

CAUTION: Be certain to adjust the refrigerant oil level when servicing the A/C refrigerant system. Failure to properly adjust the refrigerant oil level will prevent the A/C system from operating as designed and can cause serious A/C compressor damage.

NOTE: If only the A/C receiver/drier is being replaced, add 30 milliliters (1 fluid ounce) of refrigerant oil to the refrigerant system. Use only refrigerant oil of the type recommended for the A/C compressor in the vehicle.

NOTE: When replacing multiple A/C system components, see the REFRIGERANT OIL CAPACITIES chart to determine how much oil should be added to the refrigerant system. Refer to OIL, REFRIGERANT, STANDARD PROCEDURE.

NOTE: Replacement of the refrigerant line O-ring seals and gaskets is required anytime a refrigerant line is disconnected. Failure to replace the rubber O-ring seals and metal gaskets could result in a refrigerant system leak.

NOTE: LHD model shown in illustration, RHD model similar.

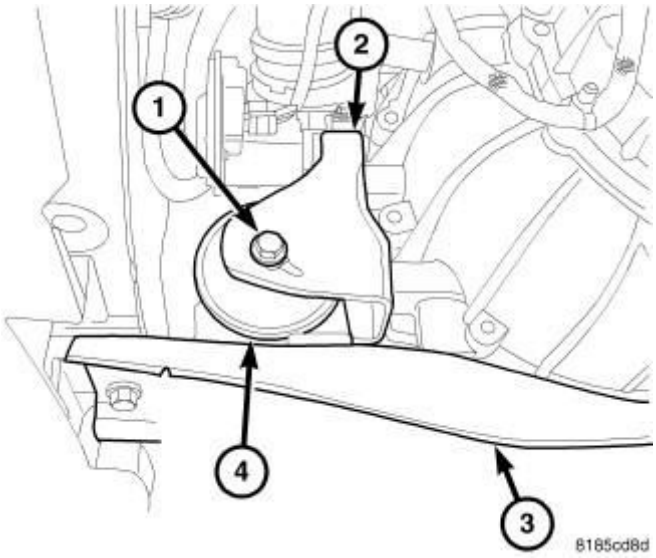

Fig. 146: Identifying A/C Receiver/Drier, Right Front Frame Rail & Retaining Bolts
Courtesy of CHRYSLER GROUP, LLC

1. Position the A/C receiver/drier (5) to the right front frame rail (7) and install the retaining bolts (6). Tighten the bolts to 15 N.m (11 ft. lbs.).
2. Install the A/C suction line into the plastic bracket on the A/C receiver/drier.
3. Remove the tape or plugs from the refrigerant line fittings and the receiver/drier ports.
4. Lubricate new O-ring seals and gaskets with clean refrigerant oil and install them onto the refrigerant line fittings. Use only the specified O-ring seals and gaskets as they are made of a special material for the R-134a system. Use only refrigerant oil of the type recommended for the A/C compressor in

the vehicle.

5. Connect the A/C liquid line (1) to the A/C receiver/drier and install the retaining nut (2). Tighten the nut to 5 N.m (44 in. lbs.).
6. Connect the liquid jumper line (4) to the A/C receiver/drier and install the retaining bolt (3). Tighten the bolt to 5 N.m (44 in. lbs.).
7. Reposition the right front wheel house splash shield to the body. Refer to **SHIELD, SPLASH, FRONT WHEELHOUSE, INSTALLATION** .
8. Install the right front wheel. Refer to **INSTALLATION** .
9. Lower the vehicle.
10. Reconnect the negative battery cable.

CAUTION: Do NOT run the engine with a vacuum pump in operation or with a vacuum present within the A/C system when equipped with the Denso 6SEU16 variable displacement compressor. Failure to follow this caution will result in serious A/C compressor damage.

11. Evacuate the refrigerant system Refer to **PLUMBING, STANDARD PROCEDURE**.
12. If the A/C receiver drier is being replaced, add 30 milliliters (1.0 fluid ounce) of refrigerant oil to the refrigerant system. When replacing multiple A/C system components, see the **REFRIGERANT OIL CAPACITIES** chart to determine how much oil should be added to the refrigerant system. Refer to **OIL, REFRIGERANT, STANDARD PROCEDURE**. Use only refrigerant oil of the type recommended for the A/C compressor in the vehicle.
13. Charge the A/C system. Refer to **PLUMBING, STANDARD PROCEDURE**.

EVAPORATOR, A/C

DESCRIPTION

DESCRIPTION

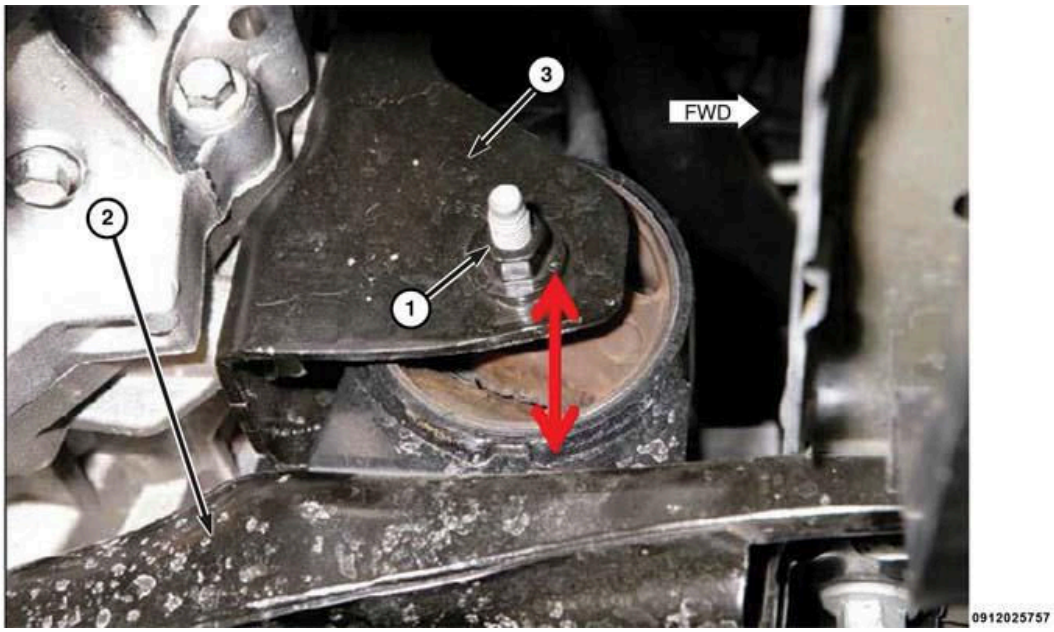

Fig. 147: A/C Evaporator, Insulator, Tapping Block, O-Ring Seals & A/C Evaporator Tubes
Courtesy of CHRYSLER GROUP, LLC

NOTE: LHD model shown in illustration, RHD model similar.

The A/C evaporator (1) for the heating-A/C system is mounted in the HVAC housing, which is located behind the instrument panel. The A/C evaporator and its insulator (2) are positioned within the HVAC housing so that all air entering the housing must pass over the evaporator fins before it is distributed through the heating-A/C system ducts and outlets.

A tapping block (3) and O-ring seals (4) are used to connect and seal the A/C evaporator tubes (5) to the A/C expansion valve.

The A/C evaporator can only be serviced by removing and disassembling the HVAC housing assembly.

OPERATION

OPERATION

Refrigerant enters the A/C evaporator from the A/C expansion valve as a low-temperature, low-pressure mixture of liquid and gas. As air flows over the fins of the A/C evaporator, the humidity in the air condenses on the fins, and the heat from the air is absorbed by the refrigerant. Heat absorption causes the refrigerant to boil and vaporize. The refrigerant becomes a low-pressure gas when it leaves

the A/C evaporator.

NOTE: Replacement of the refrigerant line O-ring seals and gaskets is required anytime a refrigerant line or expansion valve is disconnected. Failure to replace the rubber O-ring seals and metal gaskets could result in a refrigerant system leak.

The A/C evaporator has no serviceable parts except for the O-ring seals. The O-ring seals used on the connections are made from a special type of rubber not affected by refrigerant. The O-ring seals must be replaced whenever the A/C expansion valve is removed from the A/C evaporator.

The A/C evaporator cannot be repaired and must be replaced if leaking or damaged.

REMOVAL

REMOVAL

NOTE: The HVAC housing assembly must be removed from the vehicle and the air distribution housing removed for service of the A/C evaporator.

NOTE: LHD model shown in illustrations, RHD model similar.

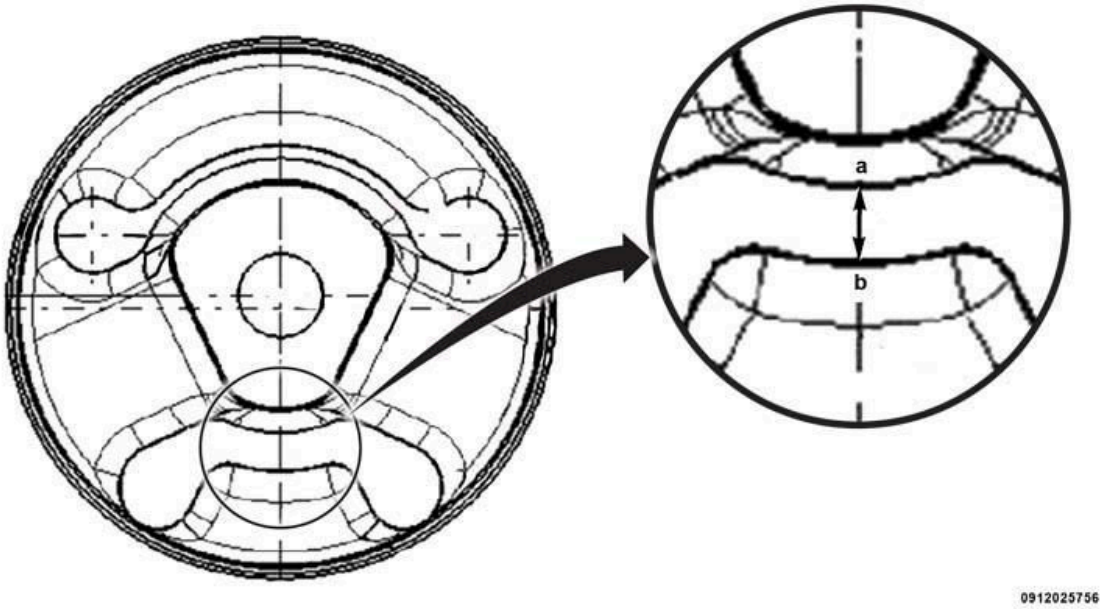

Fig. 148: A/C Expansion Valve, Foam Seal, Plastic Flange & HVAC Housing

Courtesy of CHRYSLER GROUP, LLC

1. Remove the HVAC housing assembly and place it on a workbench. Refer to **HOUSING, HVAC, REMOVAL**.
2. Remove the two bolts that secure the A/C expansion valve (1) to the A/C evaporator and remove the valve. Refer to **VALVE, A/C EXPANSION, REMOVAL**.
3. Remove and discard the O-ring seals and install plugs in, or tape over the opened expansion valve and evaporator tube ports.

NOTE: If the foam seal or plastic flange is deformed or damaged, it must be replaced.

4. Remove the foam seal and plastic flange (2) from the front of the two halves of the HVAC housing (3). Carefully release the four retaining tabs located at the back of the flange and pull the flange off of the evaporator tubes. If the seal or flange is deformed or damaged, it must be replaced.
5. Remove any residual sealer from the flange area at the front of the two halves of the HVAC housing.

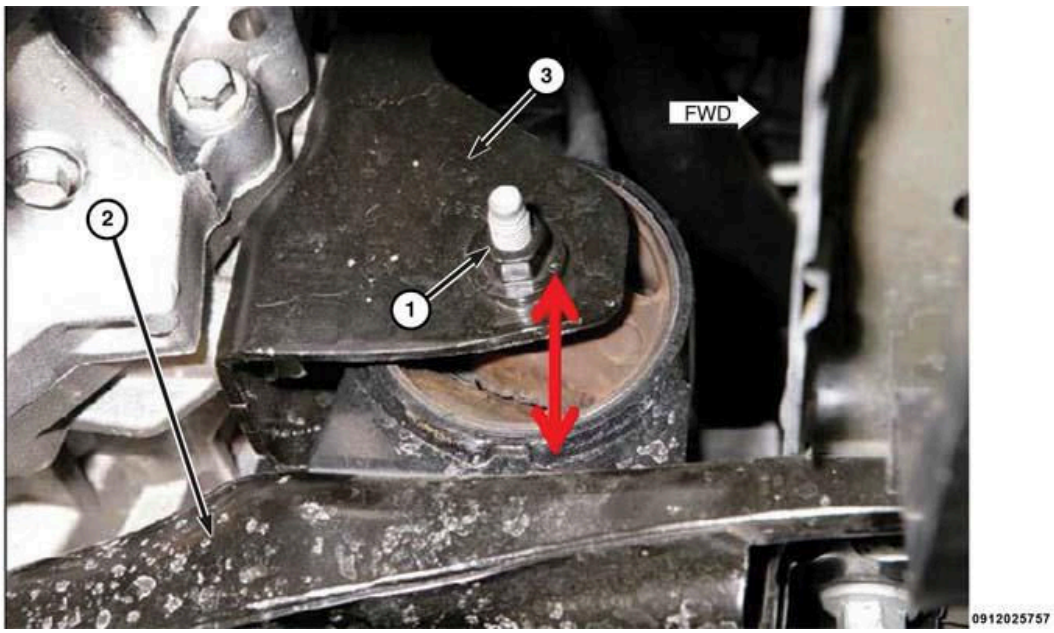

Fig. 149: HVAC Housing, Air Inlet Housing & Air Distribution Housing
Courtesy of CHRYSLER GROUP, LLC

6. Remove the air distribution housing (2) from the HVAC housing (1). Refer to **HOUSING, HVAC, REMOVAL**.

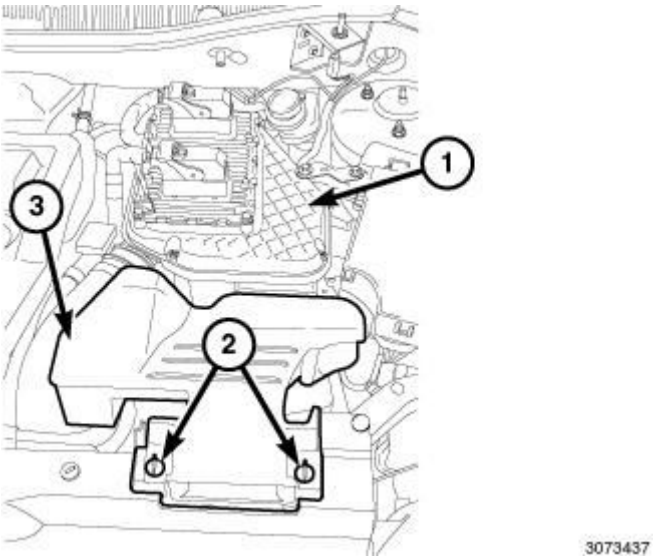

Fig. 150: Evaporator Temperature Sensor, HVAC Housing, Tabs & Needle Nose Pliers
Courtesy of CHRYSLER GROUP, LLC

7. Using needle nose pliers (1), disengage the two retaining tabs (2) that secure the evaporator temperature sensor (3) to the driver side of the HVAC housing (4) and remove the sensor.

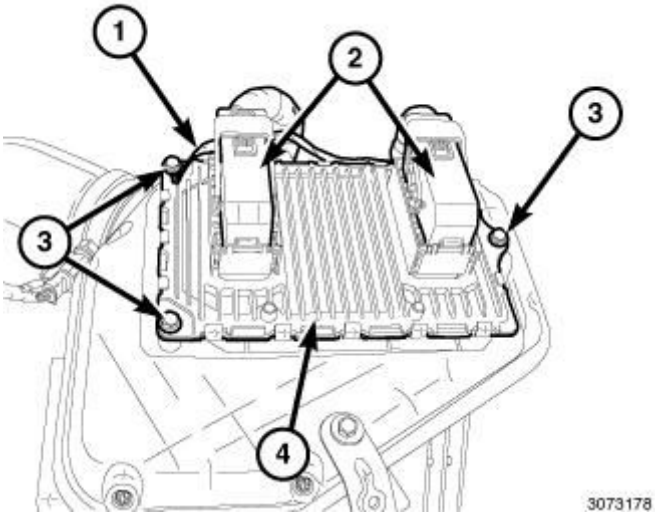

Fig. 151: A/C Evaporator & HVAC Housing
Courtesy of CHRYSLER GROUP, LLC

NOTE: If the foam insulator around the A/C evaporator is deformed or damaged, the insulator must be replaced.

8. Carefully tip the top of the A/C evaporator (1) rearward and remove the evaporator from the back of the HVAC housing (2).

INSTALLATION

INSTALLATION

CAUTION: Be certain to adjust the refrigerant oil level when servicing the A/C refrigerant system. Failure to properly adjust the refrigerant oil level will prevent the A/C system from operating as designed and can cause serious A/C compressor damage.

NOTE: When replacing multiple A/C system components, see the REFRIGERANT OIL CAPACITIES chart to determine how much oil should be added to the refrigerant system. Refer to OIL, REFRIGERANT, STANDARD PROCEDURE.

NOTE: If only the A/C evaporator is being replaced, add 20 milliliters (0.7 fluid ounce) of refrigerant oil to the refrigerant system. Use only refrigerant oil of the type recommended for the A/C compressor in the vehicle.

NOTE: Replacement of the refrigerant line O-ring seals and gaskets is required anytime a refrigerant line is disconnected. Failure to replace the rubber O-ring seals and metal gaskets could result in a refrigerant system leak.

NOTE: LHD model shown in illustrations, RHD model similar.

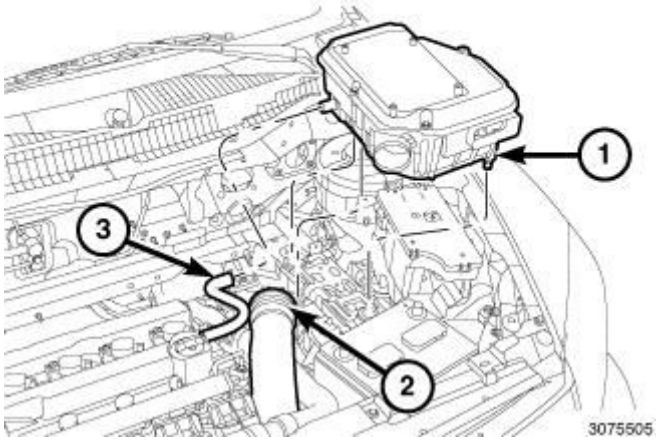

Fig. 152: A/C Evaporator & HVAC Housing
Courtesy of CHRYSLER GROUP, LLC

NOTE: Make sure that the foam insulator is properly positioned around the A/C evaporator and in the HVAC housing.

1. Carefully install the A/C evaporator (1) into the HVAC housing (2).

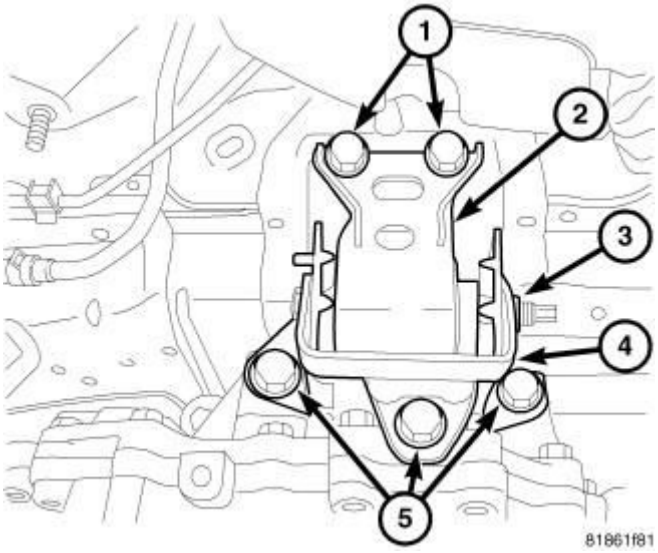

Fig. 153: Evaporator Temperature Sensor, HVAC Housing & Retaining Tabs
Courtesy of CHRYSLER GROUP, LLC

2. Install the evaporator temperature sensor (1) into the driver side of the HVAC housing (2). Make sure the retaining tabs (3) are fully engaged to the housing.

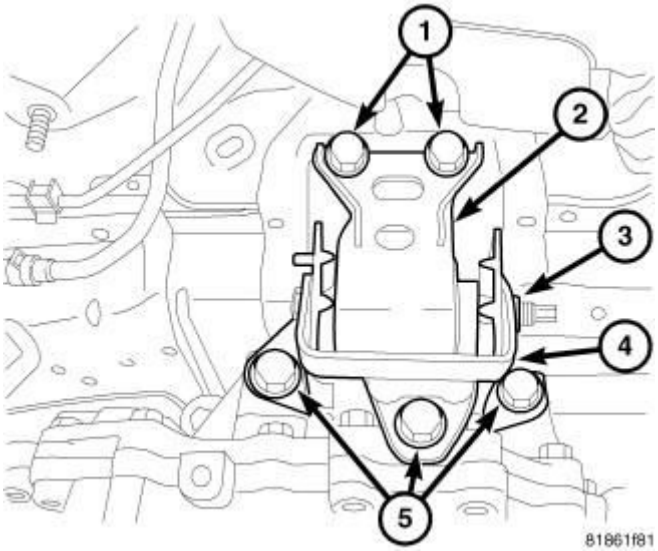

Fig. 154: HVAC Housing, Air Inlet Housing & Air Distribution Housing
Courtesy of CHRYSLER GROUP, LLC

3. Install the air distribution housing (2) onto the HVAC housing (1). Refer to **HOUSING, HVAC, INSTALLATION**.

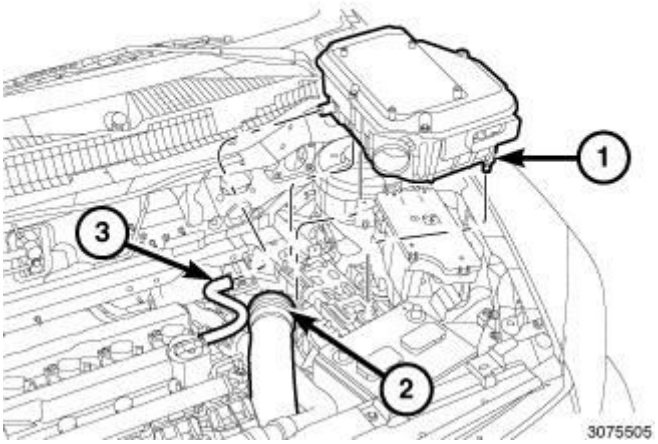

Fig. 155: A/C Expansion Valve, Foam Seal, Plastic Flange & HVAC Housing
Courtesy of CHRYSLER GROUP, LLC

4. Install a bead of silicone sealer around the flange area at the front of the HVAC housing (3).

NOTE: If the foam seal or plastic flange is deformed or damaged, it must be replaced.

5. Install the plastic flange and foam seal (2) over the evaporator tubes and onto the front of the HVAC housing. Make sure the four flange retaining tabs are fully engaged to the housing.
6. Remove the tape or plugs from the expansion valve and evaporator ports.
7. Lubricate new O-ring seals with clean refrigerant oil and install them onto the evaporator tube fittings. Use only the specified O-ring seals as they are made of a special material for the R-134a system. Use only refrigerant oil of the type recommended for the A/C compressor in the vehicle.
8. Install the A/C expansion valve (1) and the two retaining bolts. Tighten the bolts to 11 N.m (97 in. lbs.). Refer to **VALVE, A/C EXPANSION, INSTALLATION**.
9. Install the HVAC housing. Refer to **HOUSING, HVAC, INSTALLATION**.
10. If the A/C evaporator is being replaced, add 20 milliliters (0.7 fluid ounce) of refrigerant oil to the refrigerant system. When replacing multiple A/C system components, see the **REFRIGERANT OIL CAPACITIES** chart to determine how much oil should be added to the refrigerant system. Refer to **OIL, REFRIGERANT, STANDARD PROCEDURE**. Use only refrigerant oil of the type recommended for the A/C compressor in the vehicle.

LINE, A/C DISCHARGE

REMOVAL

REMOVAL

WARNING: Review the safety precautions and warnings in this Service Information before performing this procedure. Failure to follow these instructions may result in serious injury or death.

CAUTION: If replacing the A/C discharge line, be sure to use the discharge line designed for the A/C compressor in the vehicle. Failure to use the correct A/C discharge line may result in possible discharge line or compressor damage.

NOTE: It is not necessary to remove the front fascia for A/C

discharge line service.

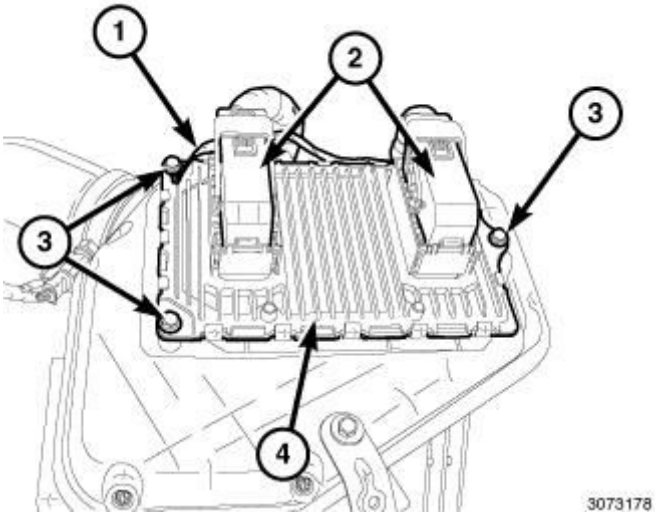

Fig. 156: A/C Discharge Line-Compressor
Courtesy of CHRYSLER GROUP, LLC

NOTE: Typical engine shown in illustration.

1. Disconnect and isolate the negative battery cable.
2. Recover the refrigerant from the refrigerant system. Refer to **PLUMBING, STANDARD PROCEDURE**.
3. On gasoline engine equipped models, raise and support the vehicle.
4. Remove the nut (1) that secures the A/C discharge line (2) to the A/C compressor (3).
5. Disconnect the A/C discharge line from the A/C compressor and remove and discard the O-ring seal and gasket.
6. Install plugs in, or tape over the opened discharge line fitting and the compressor port.

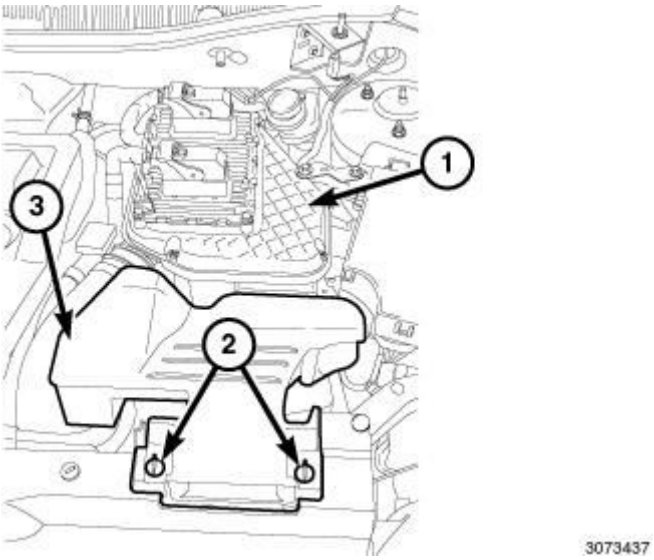

Fig. 157: A/C Discharge Line-Condenser
Courtesy of CHRYSLER GROUP, LLC

7. On gasoline engine equipped models, partially lower the vehicle.
8. On all models remove the upper radiator closure panel and carefully pull the top of the fascia forward to gain access to the A/C discharge line (3). Refer to **PANEL, CLOSURE, UPPER, REMOVAL** .
9. Reach down through the opening between the radiator and the front fascia and disconnect the wire harness connector (1) from the A/C pressure transducer (2).
10. Remove the nut (5) that secures the A/C discharge line to the right side of the A/C condenser (4).
11. Disconnect the A/C discharge line from the A/C condenser and remove and discard the O-ring seal and gasket.
12. Install plugs in, or tape over the discharge line fitting and the condenser port.
13. If necessary, remove the A/C pressure transducer from the A/C discharge line.

INSTALLATION

INSTALLATION

CAUTION: Be certain to adjust the refrigerant oil level when servicing the A/C refrigerant system. Failure to properly adjust the refrigerant oil level will prevent the A/C system from operating as designed and

can cause serious A/C compressor damage.

CAUTION: If replacing the A/C discharge line, be sure to use the discharge line designed for the A/C compressor in the vehicle. Failure to use the correct A/C discharge line may result in possible discharge line or compressor damage.

NOTE: When replacing multiple A/C system components, see the REFRIGERANT OIL CAPACITIES chart to determine how much oil should be added to the refrigerant system. Refer to OIL, REFRIGERANT, STANDARD PROCEDURE.

NOTE: Replacement of the refrigerant line O-ring seals and gaskets is required anytime a refrigerant line is disconnected. Failure to replace the rubber O-ring seals and metal gaskets may result in a refrigerant system leak.

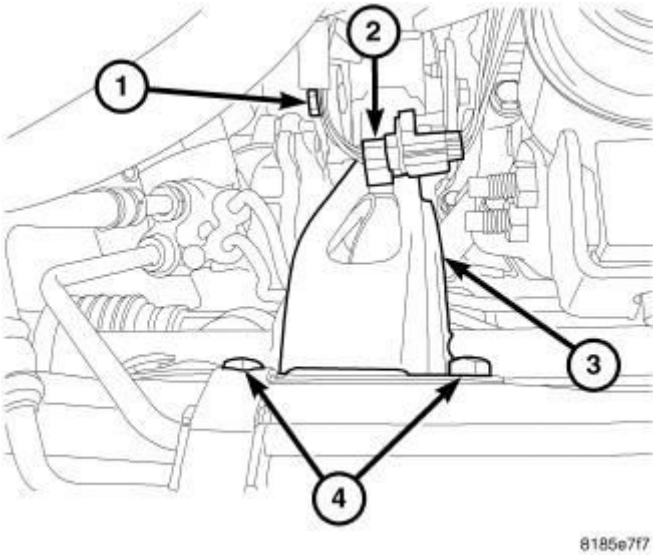

Fig. 158: A/C Discharge Line-Condenser
Courtesy of CHRYSLER GROUP, LLC

1. If removed, install the A/C pressure transducer (2) onto the A/C discharge line (3). Tighten the A/C pressure transducer securely.
2. Position the A/C discharge line into the engine compartment.
3. Remove the tape or plugs from the discharge line fitting and the condenser port.

4. Lubricate a new rubber O-ring seal with clean refrigerant oil and install it and a new gasket onto the discharge line fitting. Use only the specified O-ring as it is made of a special material for the R-134a system. Use only refrigerant oil of the type recommended for the A/C compressor in the vehicle.
5. Reach down through the opening between the radiator and the front fascia and connect the A/C discharge line to the A/C condenser (4).
6. Install the nut (5) that secures the A/C discharge line to the A/C condenser. Tighten the nut to 5 N.m (44 in. lbs.).
7. Connect the wire harness connector (1) to the A/C pressure transducer.
8. Install the upper radiator closure panel. Refer to **PANEL, CLOSURE, UPPER, INSTALLATION** .

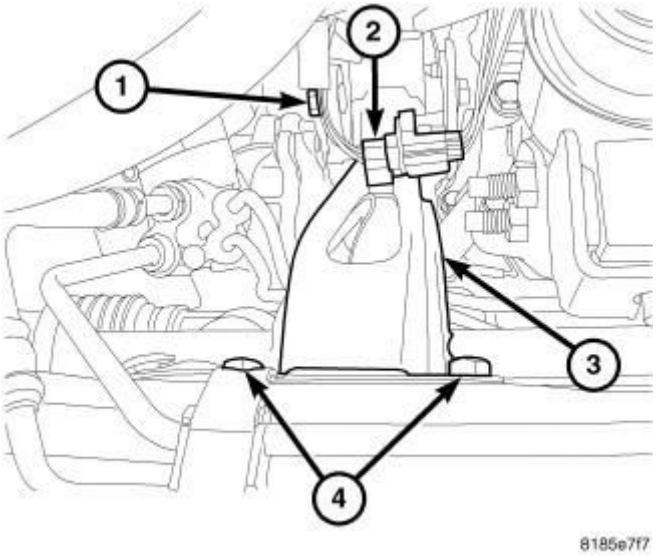

Fig. 159: A/C Discharge Line-Compressor
Courtesy of CHRYSLER GROUP, LLC

NOTE: Typical engine shown in illustration.

9. On gasoline engine equipped models, raise and support the vehicle.
10. Remove the tape or plugs from the discharge line fitting and the compressor port.
11. Lubricate a new rubber O-ring seal with clean refrigerant oil and install it and a new gasket onto the discharge line fitting. Use only the specified O-ring as it is made of a special material for the R-134a system. Use only refrigerant oil of the type recommended for the A/C compressor in the

vehicle.

12. Connect the A/C discharge line (2) to the A/C compressor (3).
13. Install the nut (1) that secures the A/C discharge line to the A/C compressor. Tighten the nut to 20 N.m (15 ft. lbs.).
14. On gasoline engine equipped models, lower the vehicle.
15. Reconnect the negative battery cable.

CAUTION: Do NOT run the engine with a vacuum pump in operation or with a vacuum present within the A/C system when equipped with the Denso 6SEU16 variable displacement compressor. Failure to follow this caution will result in serious A/C compressor damage.

16. Evacuate the refrigerant system. Refer to **PLUMBING, STANDARD PROCEDURE**.
17. Adjust the refrigerant oil level. Refer to **OIL, REFRIGERANT, STANDARD PROCEDURE**.
18. Charge the refrigerant system. Refer to **PLUMBING, STANDARD PROCEDURE**.

LINE, A/C LIQUID

REMOVAL

REMOVAL

WARNING: Review the warnings and cautions for this system before performing the procedure. Failure to follow these instructions may result in serious injury or death.

NOTE: Gasoline engine model shown in illustrations, Diesel engine model similar.

NOTE: LHD model shown in illustrations, RHD model similar.

LIQUID AND SUCTION LINE ASSEMBLY

NOTE: The A/C liquid line is serviced as an assembly with the rear portion of the A/C suction line.

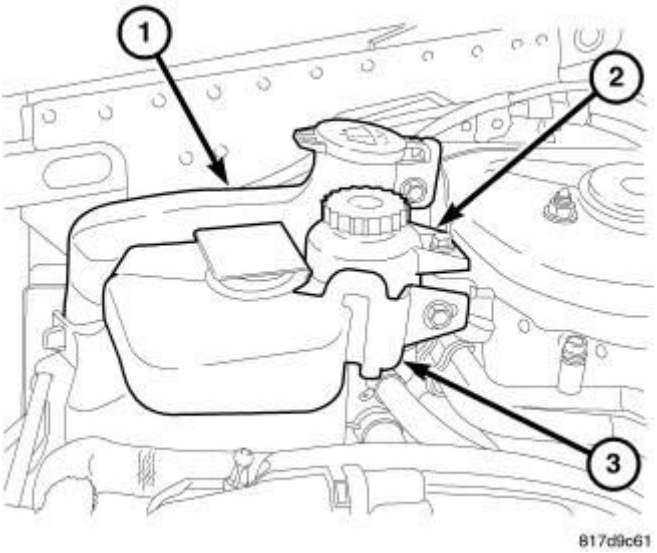

Fig. 160: Identifying A/C Receiver/Drier
Courtesy of CHRYSLER GROUP, LLC

1. Disconnect and isolate the negative battery cable.
2. Recover the refrigerant from the refrigerant system. Refer to **PLUMBING, STANDARD PROCEDURE**.
3. Raise and support the vehicle.
4. Remove the right front wheel. Refer to **REMOVAL** .
5. Position the front portion of the right front wheelhouse splash shield out of the way. Refer to **SHIELD, SPLASH, FRONT WHEELHOUSE, REMOVAL** .
6. Remove the nut (3) that secures the front portion of the A/C suction line (4) to the rear portion of the A/C suction line (2).
7. Disconnect the A/C suction lines and remove and discard the O-ring seal and gasket.
8. On all models, except late model year vehicles equipped with a gasoline engine and four speed automatic transaxle;
   a. disconnect the A/C suction line from the plastic bracket located on the A/C receiver/drier (6).
   b. remove the nut (5) that secures the A/C liquid line (1) to the A/C receiver/drier.
   c. disconnect the A/C liquid line from the A/C receiver/drier and remove

and discard the O-ring seal and gasket.

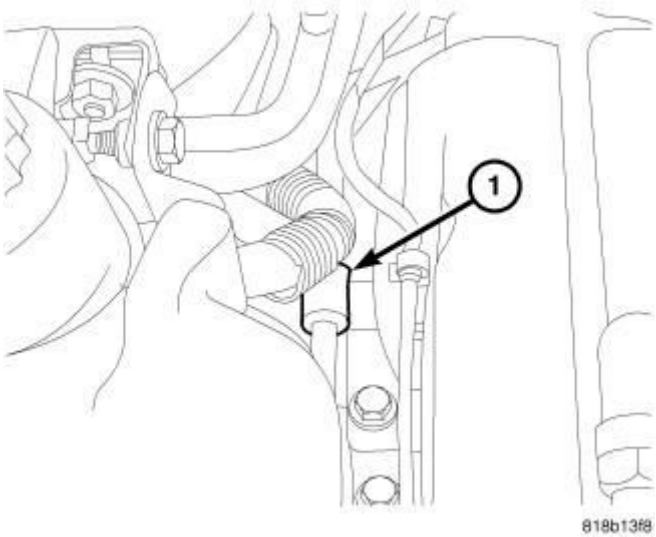

Fig. 161: Liquid Line To Condenser
Courtesy of CHRYSLER GROUP, LLC

NOTE: Illustration shown with front fascia removed for clarity.

9. On late model year vehicles equipped with a gasoline engine and four speed automatic transaxle;
   a. remove the A/C suction line bracket from the frame rail.
   b. remove the nut (1) that secures the A/C liquid line (2) to the A/C condenser (3).
   c. disconnect the A/C liquid line from the A/C condenser and remove and discard the O-ring seal and gasket.

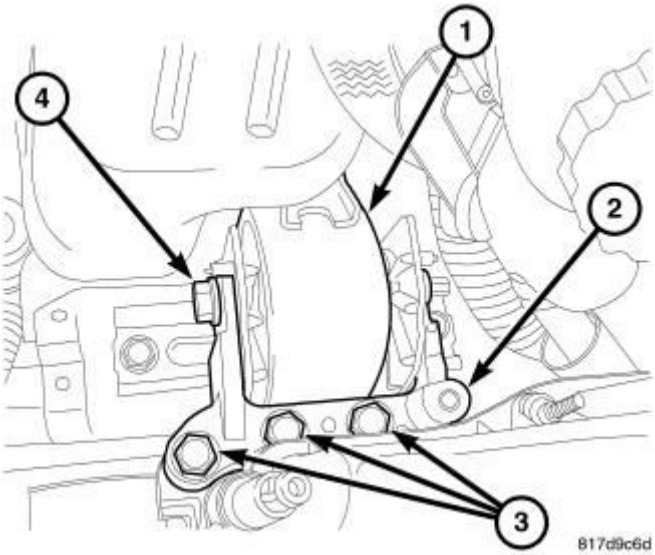

Fig. 162: Heat Shield
Courtesy of CHRYSLER GROUP, LLC

10. On all models, partially lower the vehicle.
11. Remove the nuts (1) that secure the heat shield (3) to the studs (2) located on the dash panel in the engine compartment and remove the heat shield.

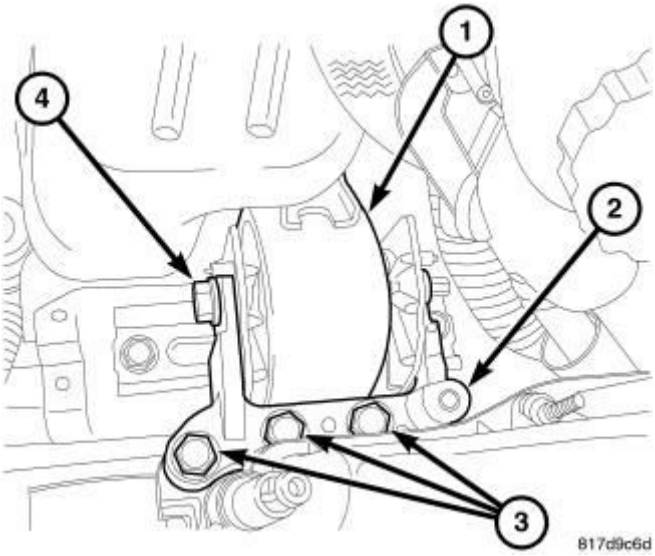

Fig. 163: A/C Liquid And Suction Line Assembly
Courtesy of CHRYSLER GROUP, LLC

NOTE: It is only necessary to position the windshield washer reservoir, power steering fluid reservoir and engine coolant reservoir out of the way. Draining of the washer fluid, power steering fluid and engine coolant is not required.

12. Position the windshield washer reservoir, power steering reservoir and the engine coolant reservoir out of the way.
13. Remove the nut (1) that secures the refrigerant line retaining bracket (2) to the right front strut tower (5).
14. On RHD models, disengage the retainers that secure the power brake booster vacuum supply hose to the dash panel and position the vacuum line out of the way.
15. Remove the bolt (3) that secures the A/C liquid and suction line assembly (4) to the A/C expansion valve (6).
16. Disconnect the A/C liquid and suction line assembly from the A/C expansion valve and remove and discard the O-ring seals.
17. Remove the A/C liquid and suction line assembly from the engine compartment.
18. Install plugs in, or tape over all the opened refrigerant line fittings, expansion valve and receiver/drier or condenser ports, as required.

FRONT JUMPER LINE

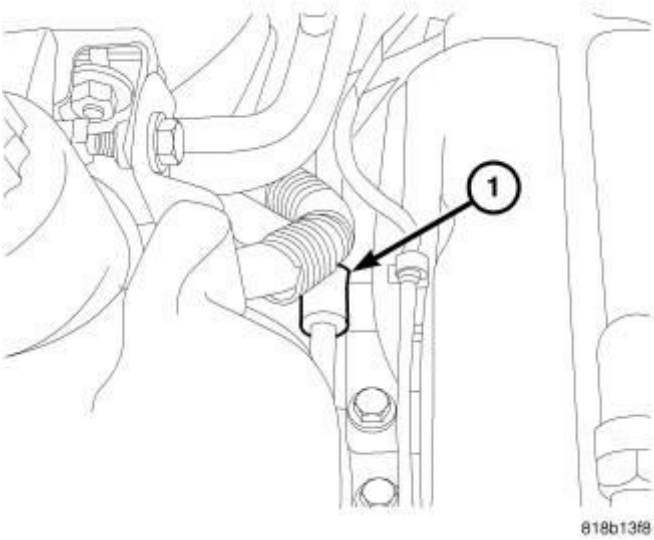

Fig. 164: Identifying A/C Receiver/Drier & Retaining Bolt
Courtesy of CHRYSLER GROUP, LLC

1. Disconnect and isolate the negative battery cable.
2. Recover the refrigerant from the refrigerant system. Refer to **PLUMBING, STANDARD PROCEDURE**.
3. Raise and support the vehicle.

4. Remove the right front wheel. Refer to **REMOVAL** .
5. Position the front portion of the right front wheelhouse splash shield out of the way. Refer to **SHIELD, SPLASH, FRONT WHEELHOUSE, REMOVAL** .
6. Remove the bolt (1) that secures the liquid jumper line (2) to the A/C receiver/drier (3).
7. Disconnect the jumper line from the A/C receiver/drier and remove and discard the O-ring seal and gasket.

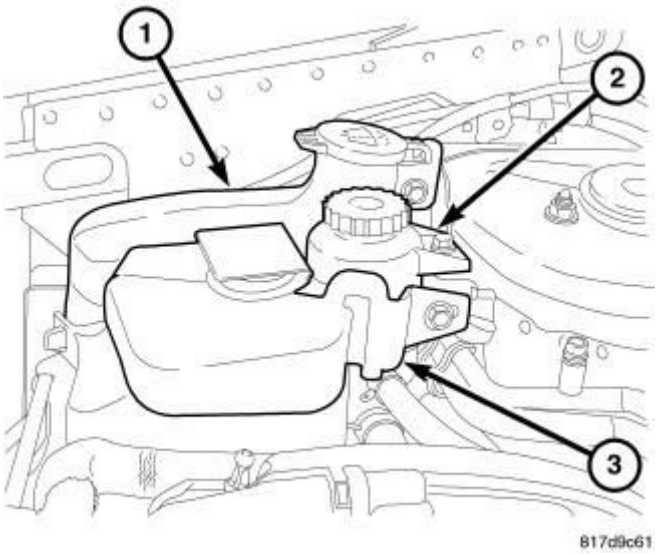

Fig. 165: Liquid Line To Condenser
Courtesy of CHRYSLER GROUP, LLC

NOTE: Illustration shown with front fascia removed for clarity.

8. Remove the nut (1) that secures the liquid jumper line (2) to the A/C condenser (3)
9. Disconnect the jumper line from the A/C condenser and remove and discard the O-ring seal and gasket.
10. Install plugs in, or tape over the opened jumper line fittings and the receiver/drier and condenser ports.

INSTALLATION

INSTALLATION

CAUTION: Be certain to adjust the refrigerant oil level when

servicing the A/C refrigerant system. Failure to properly adjust the refrigerant oil level will prevent the A/C system from operating as designed and can cause serious A/C compressor damage.

NOTE: When replacing multiple A/C system components, see the REFRIGERANT OIL CAPACITIES chart to determine how much oil should be added to the refrigerant system. Refer to OIL, REFRIGERANT, STANDARD PROCEDURE.

NOTE: Replacement of the refrigerant line O-ring seals and gaskets is required anytime a refrigerant line is disconnected. Failure to replace the rubber O-ring seals and metal gaskets could result in a refrigerant system leak.

NOTE: Gasoline engine model shown in illustrations, Diesel engine model similar.

NOTE: LHD model shown in illustrations, RHD model similar.

LIQUID AND SUCTION LINE ASSEMBLY

NOTE: The A/C liquid line is serviced as an assembly with the rear portion of the A/C suction line.

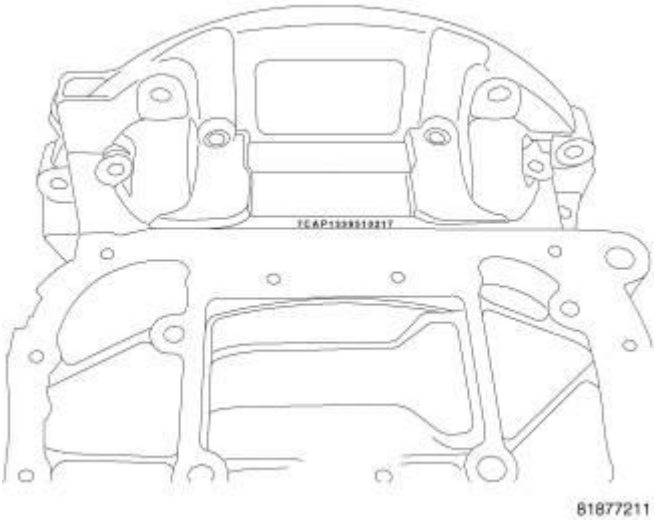

Fig. 166: A/C Liquid And Suction Line Assembly

Courtesy of CHRYSLER GROUP, LLC

1. Position the A/C liquid and suction line assembly (4) into the engine compartment.
2. Remove the tape or plugs from the refrigerant line fittings and the expansion valve ports.
3. Lubricate new rubber O-ring seals with clean refrigerant oil and install them onto the liquid and suction line fittings. Use only the specified O-ring seals as they are made of special materials compatible to the R-134a system. Use only refrigerant oil of the type recommended for the A/C compressor in the vehicle.
4. Connect the A/C liquid and suction line assembly to the A/C expansion valve (6).
5. Install the bolt (3) that secures the A/C liquid and suction line assembly to the A/C expansion valve. Tighten the bolt to 20 N.m (15 ft. lbs.).
6. On RHD models, engage the retainers that secure the power brake booster vacuum supply hose to the dash panel.
7. Install the nut (1) that secures the refrigerant line bracket (2) to the right front strut tower (5). Tighten the nut to 4.5 N.m (40 in. lbs.).
8. Install the windshield washer reservoir, power steering fluid reservoir and the engine coolant reservoir.

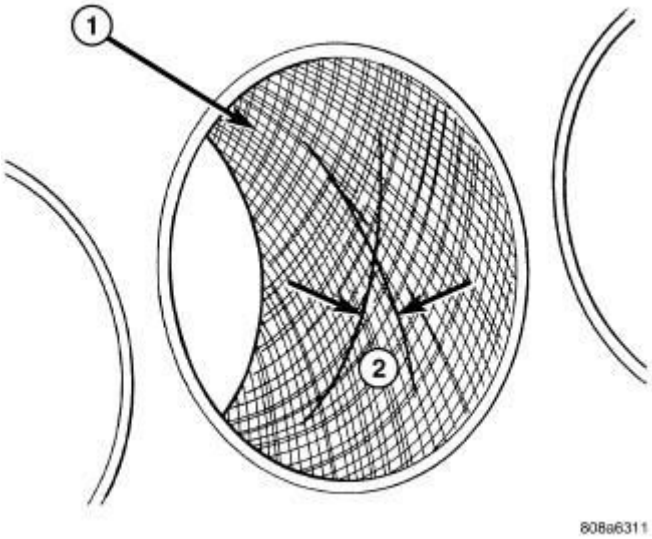

Fig. 167: Heat Shield
Courtesy of CHRYSLER GROUP, LLC

9. Position the heat shield (3) onto the studs (2) located on the dash panel in the engine compartment.
10. Install the three nuts (1) that secure the heat shield to the dash panel. Tighten the nuts to 1 N.m (10 in. lbs.).
11. On all models, raise and support the vehicle.

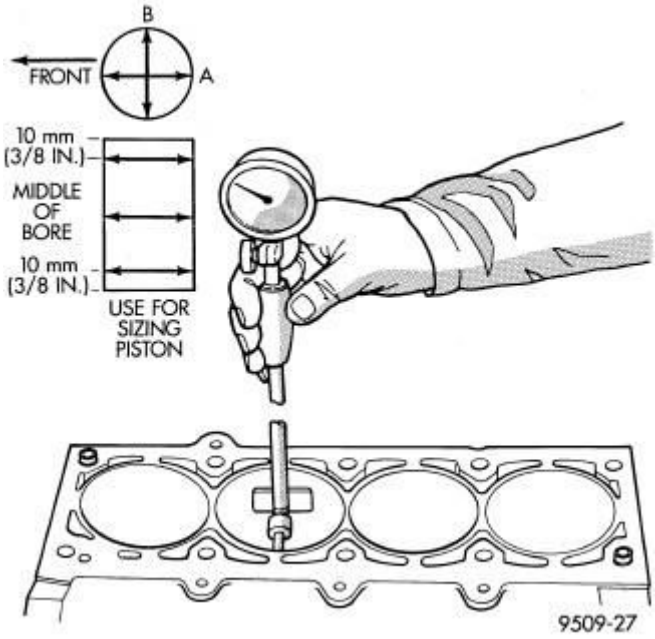

Fig. 168: Liquid Line To Condenser
Courtesy of CHRYSLER GROUP, LLC

NOTE: Illustration shown with front fascia removed for clarity.

12. On late model year vehicles equipped with a gasoline engine and four speed automatic transaxle;
    a. remove the tape or plugs from the liquid line fitting and the condenser port.
    b. lubricate a new rubber O-ring seal with clean refrigerant oil and install it and a new gasket onto the liquid line fitting. Use only the specified O-ring as it is made of a special material for the R-134a system. Use only refrigerant oil of the type recommended for the A/C compressor in the vehicle.
    c. connect the A/C liquid line (2) to the A/C condenser (3) and install the retaining nut (1). Tighten the nut to 5 N.m (44 in. lbs.).

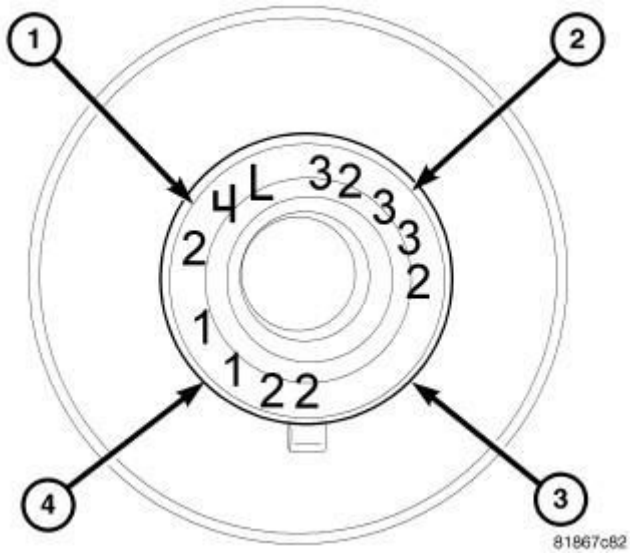

Fig. 169: Identifying A/C Receiver/Drier
Courtesy of CHRYSLER GROUP, LLC

13. Remove the tape or plugs from the suction line fittings.
14. Lubricate a new rubber O-ring seal with clean refrigerant oil and install it and new gasket onto the suction line fittings. Use only the specified O-ring as it is made of a special material for the R-134a system. Use only refrigerant oil of the type recommended for the A/C compressor in the vehicle.
15. Connect the front portion of the A/C suction line (4) to the rear portion of the A/C suction line (2) and install the retaining nut (3). Tighten the nut to 5 N.m (44 in. lbs.).
16. Install the A/C suction line into the plastic bracket on the A/C receiver/drier (6), or install the suction line retaining bracket to the right front frame rail, depending on engine and transaxle application.
17. On all models, except late model year vehicles equipped with a gasoline engine and four speed automatic transaxle;
    a. remove the tape or plugs from the liquid line fitting and the receiver/drier port.
    b. lubricate a new rubber O-ring seal with clean refrigerant oil and install it and a new gasket onto the liquid line fitting. Use only the specified O-ring as it is made of a special material for the R-134a system. Use only refrigerant oil of the type recommended for the A/C compressor in the vehicle.
    c. connect the A/C liquid line (1) to the A/C receiver/drier (6) and install

the retaining nut (5). Tighten the nut to 5 N.m (44 in. lbs.).

d. On all models;
e. reposition the right front wheel house splash shield to the body. Refer to **SHIELD, SPLASH, FRONT WHEELHOUSE, INSTALLATION** .
f. install the right front wheel. Refer to **INSTALLATION** .
g. Lower the vehicle.

18. Reconnect the negative battery cable.

CAUTION: Do NOT run the engine with a vacuum pump in operation or with a vacuum present within the A/C system. Failure to follow this caution will result in serious A/C compressor damage.

19. Evacuate the refrigerant system. Refer to **PLUMBING, STANDARD PROCEDURE**.
20. Adjust the refrigerant oil level. Refer to **OIL, REFRIGERANT, STANDARD PROCEDURE**.
21. Charge the A/C system. Refer to **PLUMBING, STANDARD PROCEDURE**.

FRONT JUMPER LINE

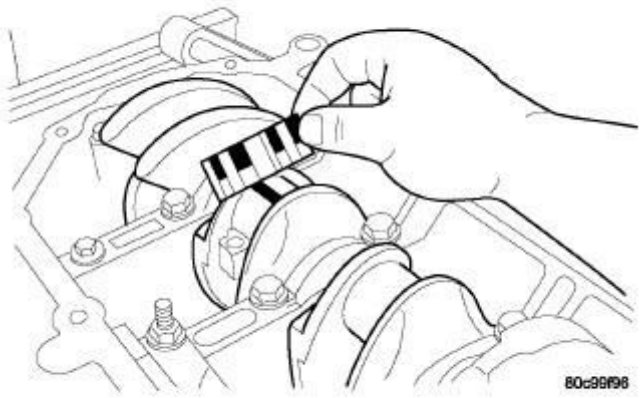

Fig. 170: Liquid Line To Condenser
Courtesy of CHRYSLER GROUP, LLC

NOTE: Illustration shown with front fascia removed for clarity.

1. Remove the tape or plugs from the jumper line fitting and the condenser port.
2. Lubricate a new rubber O-ring seal with clean refrigerant oil and install it and a new gasket onto the jumper line fitting. Use only the specified O-ring as it is made of a special material for the R-134a system. Use only refrigerant oil of the type recommended for the A/C compressor in the vehicle.
3. Connect the liquid jumper line (2) to the A/C condenser (3) and install the retaining nut (1). Tighten the nut to 5 N.m (44 in. lbs.).

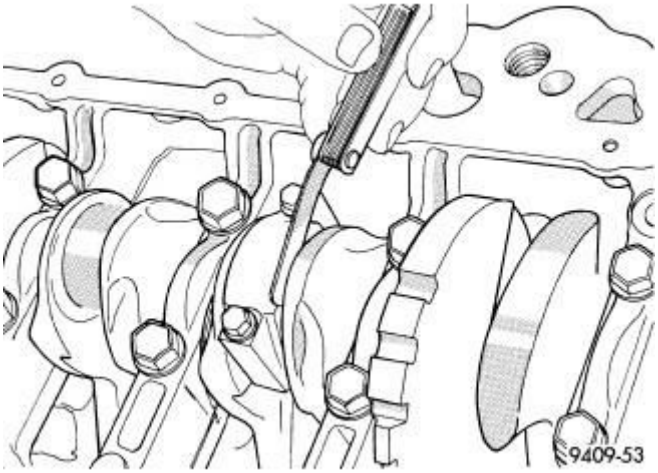

Fig. 171: Identifying A/C Receiver/Drier & Retaining Bolt
Courtesy of CHRYSLER GROUP, LLC

4. Remove the tape or plug from the jumper line fitting and receiver/drier port.
5. Lubricate a new rubber O-ring seal with clean refrigerant oil and install it and new gasket onto the jumper line fitting. Use only the specified O-ring as it is made of a special material for the R-134a system. Use only refrigerant oil of the type recommended for the A/C compressor in the vehicle.
6. Connect the liquid jumper line (2) to the A/C receiver/drier (3) and install the retaining bolt (3). Tighten the bolt to 5 N.m (44 in. lbs.).
7. Reposition the right front wheel house splash shield to the body. Refer to **SHIELD, SPLASH, FRONT WHEELHOUSE, INSTALLATION** .
8. install the right front wheel. Refer to **INSTALLATION** .
9. Lower the vehicle.

10. Reconnect the negative battery cable.

CAUTION: Do NOT run the engine with a vacuum pump in operation or with a vacuum present within the A/C system. Failure to follow this caution will result in serious A/C compressor damage.

11. Evacuate the refrigerant system. Refer to **PLUMBING, STANDARD PROCEDURE**.
12. Adjust the refrigerant oil level. Refer to **OIL, REFRIGERANT, STANDARD PROCEDURE**.
13. Charge the A/C system. Refer to **PLUMBING, STANDARD PROCEDURE**.

LINE, A/C SUCTION

REMOVAL

REMOVAL

WARNING: Review the warnings and cautions for this system before performing the procedure. Failure to follow these instructions may result in serious injury or death.

NOTE: Gasoline engine model shown in illustrations, Diesel engine model similar.

NOTE: LHD model shown in illustrations, RHD model similar.

SUCTION AND LIQUID LINE ASSEMBLY

NOTE: The rear portion of the A/C suction line is serviced as an assembly with the A/C liquid line.

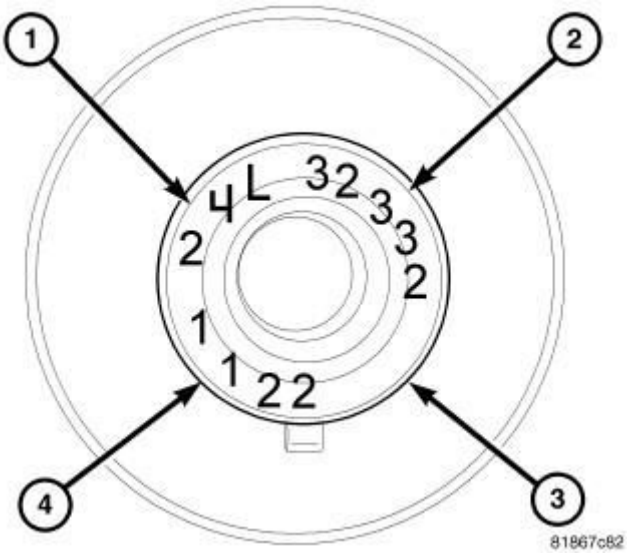

Fig. 172: Identifying A/C Receiver/Drier
Courtesy of CHRYSLER GROUP, LLC

1. Disconnect and isolate the negative battery cable.
2. Recover the refrigerant from the refrigerant system. Refer to **PLUMBING, STANDARD PROCEDURE**.
3. Raise and support the vehicle.
4. Remove the right front wheel. Refer to **REMOVAL** .
5. Position the front portion of the right front wheelhouse splash shield out of the way. Refer to **SHIELD, SPLASH, FRONT WHEELHOUSE, REMOVAL** .
6. Remove the nut (3) that secures the front portion of the A/C suction line (4) to the rear portion of the A/C suction line (2).
7. Disconnect the A/C suction lines and remove and discard the O-ring seal and gasket.
8. On all models, except late model year vehicles equipped with a gasoline engine and four speed automatic transaxle;
   a. disconnect the A/C suction line from the plastic bracket located on the A/C receiver/drier (6).
   b. remove the nut (5) that secures the A/C liquid line (1) to the A/C receiver/drier.
   c. disconnect the A/C liquid line from the A/C receiver/drier and remove and discard the O-ring seal and gasket.

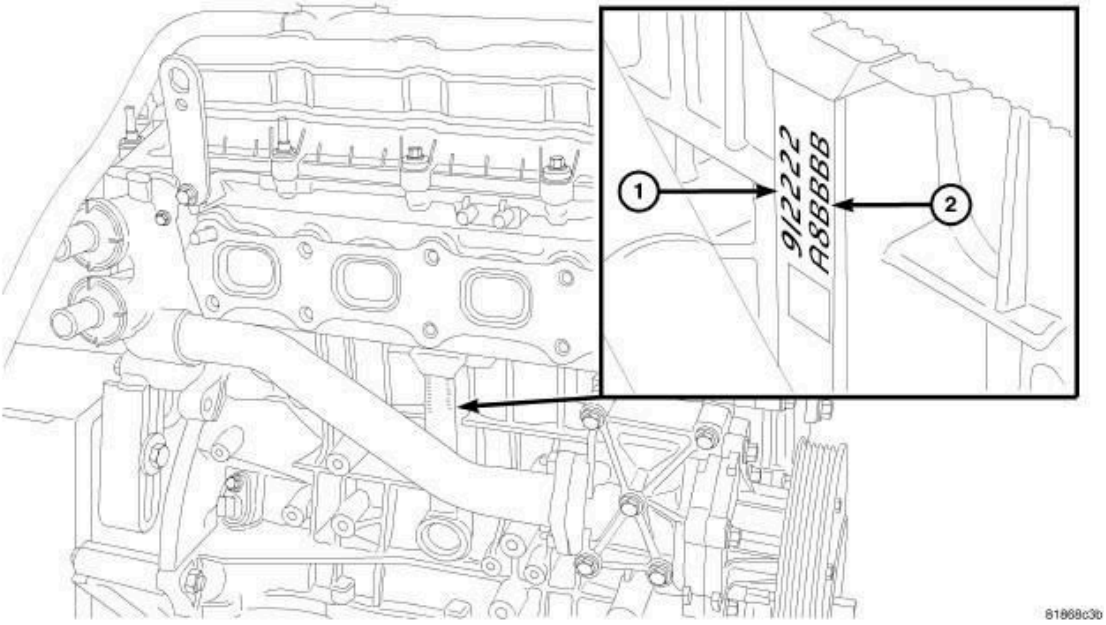

Fig. 173: Liquid Line To Condenser
Courtesy of CHRYSLER GROUP, LLC

NOTE: Illustration shown with front fascia removed for clarity.

9. On late model year vehicles equipped with a gasoline engine and four speed automatic transaxle;
   a. remove the A/C suction line bracket from the frame rail.
   b. remove the nut (1) that secures the A/C liquid line (2) to the A/C condenser (3).
   c. disconnect the A/C liquid line from the A/C condenser and remove and discard the O-ring seal and gasket.

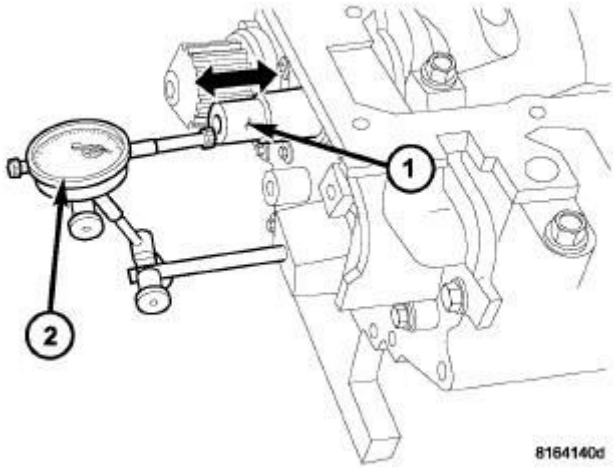

Fig. 174: Heat Shield
Courtesy of CHRYSLER GROUP, LLC

10. On all models, partially lower the vehicle.
11. Remove the nuts (1) that secure the heat shield (3) to the studs (2) located on the dash panel in the engine compartment and remove the heat shield.

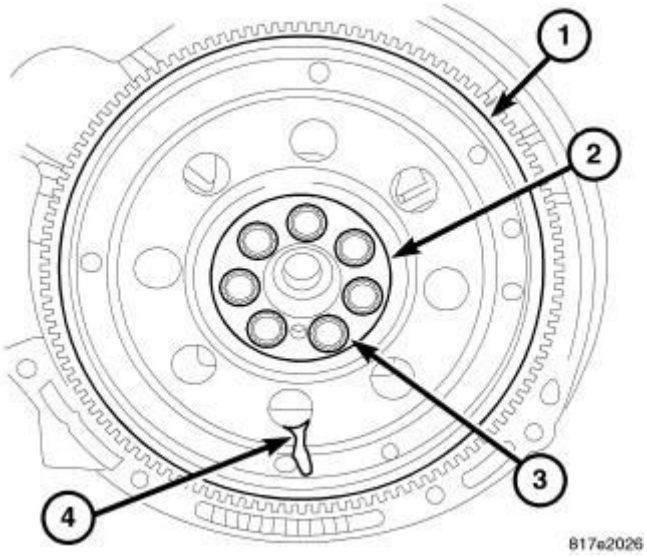

Fig. 175: A/C Liquid And Suction Line Assembly
Courtesy of CHRYSLER GROUP, LLC

NOTE: It is only necessary to position the windshield washer reservoir, power steering fluid reservoir and engine coolant reservoir out of the way. Draining of the washer fluid, power steering fluid and engine coolant

is not required.

12. Position the windshield washer reservoir, power steering reservoir and the engine coolant reservoir out of the way.
13. Remove the nut (1) that secures the refrigerant line retaining bracket (2) to the right front strut tower (5).
14. On RHD models, disengage the retainers that secure the power brake booster vacuum supply hose to the dash panel and position the vacuum line out of the way.
15. Remove the bolt (3) that secures the A/C suction and liquid line assembly (4) to the A/C expansion valve (6).
16. Disconnect the A/C suction and liquid line assembly from the A/C expansion valve and remove and discard the O-ring seals.
17. Remove the A/C suction and liquid line assembly from the engine compartment.
18. Install plugs in, or tape over all the opened refrigerant line fittings, expansion valve and receiver/drier or condenser ports, as required.

FRONT SUCTION LINE

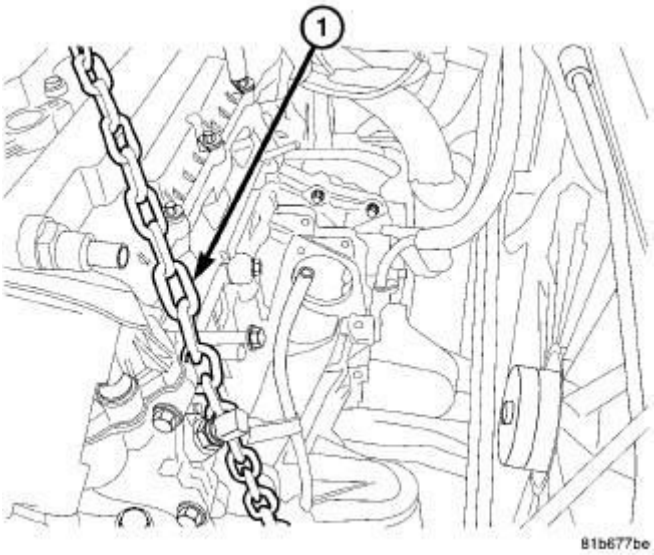

Fig. 176: Lower Suction Line-Compressor
Courtesy of CHRYSLER GROUP, LLC

1. Disconnect and isolate the negative battery cable.
2. Recover the refrigerant from the refrigerant system. Refer to **PLUMBING,**

STANDARD PROCEDURE.

3. On diesel engine models, remove the bolt that secures the right front impact sensor to the radiator support and position the sensor out of the way for clearance. Refer to **SENSOR, IMPACT, REMOVAL** .
4. On gasoline engine models;
   a. raise and support the vehicle.
   b. remove the right front wheel. Refer to **REMOVAL** .
   c. position the front portion of the right front wheelhouse splash shield out of the way. Refer to **SHIELD, SPLASH, FRONT WHEELHOUSE, REMOVAL** .
   d. remove the drive belt splash shield to gain access to the A/C suction line (2).
5. Remove the nut (1) that secures the A/C suction line to the A/C compressor (3).
6. Disconnect the A/C suction line from the A/C compressor.

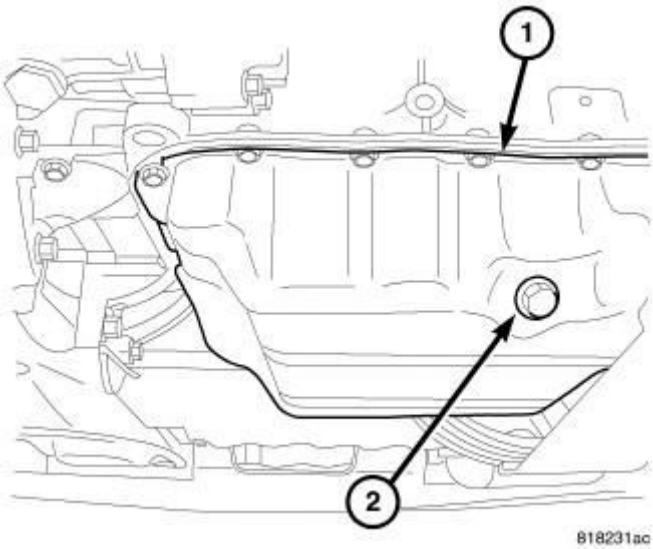

Fig. 177: Identifying A/C Suction Line & Retaining Nut
Courtesy of CHRYSLER GROUP, LLC

7. On diesel engine models;
   a. raise and support the vehicle.
   b. remove the right front wheel. Refer to **REMOVAL** .
   c. position the front portion of the right front wheelhouse splash shield out of the way. Refer to **SHIELD, SPLASH, FRONT WHEELHOUSE, REMOVAL** .

8. Remove the nut (2) that secures the front portion of the A/C suction line (3) to the rear portion of the A/C suction line (1) and disconnect the lines.
9. Remove the front portion of the A/C suction line from the engine compartment and remove and discard the O-ring seals and gaskets.
10. Install plugs in, or tape over the opened suction line fittings and compressor port.

INSTALLATION

INSTALLATION

CAUTION: Be certain to adjust the refrigerant oil level when servicing the A/C refrigerant system. Failure to properly adjust the refrigerant oil level will prevent the A/C system from operating as designed and can cause serious A/C compressor damage.

NOTE: When replacing multiple A/C system components, see the REFRIGERANT OIL CAPACITIES chart to determine how much oil should be added to the refrigerant system. Refer to OIL, REFRIGERANT, STANDARD PROCEDURE.

NOTE: Replacement of the refrigerant line O-ring seals and gaskets is required anytime a refrigerant line is disconnected. Failure to replace the rubber O-ring seals and metal gaskets could result in a refrigerant system leak.

NOTE: Gasoline engine model shown in illustrations, Diesel engine model similar.

NOTE: LHD model shown in illustrations, RHD model similar.

SUCTION AND LIQUID LINE ASSEMBLY

NOTE: The rear portion of the A/C suction line is serviced as an assembly with the A/C liquid line.

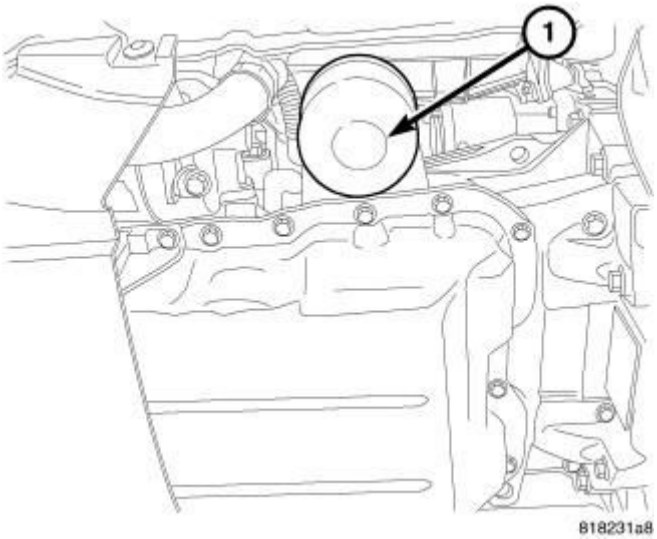

Fig. 178: A/C Liquid And Suction Line Assembly
Courtesy of CHRYSLER GROUP, LLC

1. Position the A/C suction and liquid line assembly (4) into the engine compartment.
2. Remove the tape or plugs from the refrigerant line fittings and the expansion valve ports.
3. Lubricate new rubber O-ring seals with clean refrigerant oil and install them onto the liquid and suction line fittings. Use only the specified O-ring seals as they are made of special materials compatible to the R-134a system. Use only refrigerant oil of the type recommended for the A/C compressor in the vehicle.
4. Connect the A/C suction and liquid line assembly to the A/C expansion valve (6).
5. Install the bolt (3) that secures the A/C liquid and suction line assembly to the A/C expansion valve. Tighten the bolt to 20 N.m (15 ft. lbs.).
6. On RHD models, engage the retainers that secure the power brake booster vacuum supply hose to the dash panel.
7. Install the nut (1) that secures the refrigerant line bracket (2) to the right front strut tower (5). Tighten the nut to 4.5 N.m (40 in. lbs.).
8. Install the windshield washer reservoir, power steering fluid reservoir and the engine coolant reservoir.

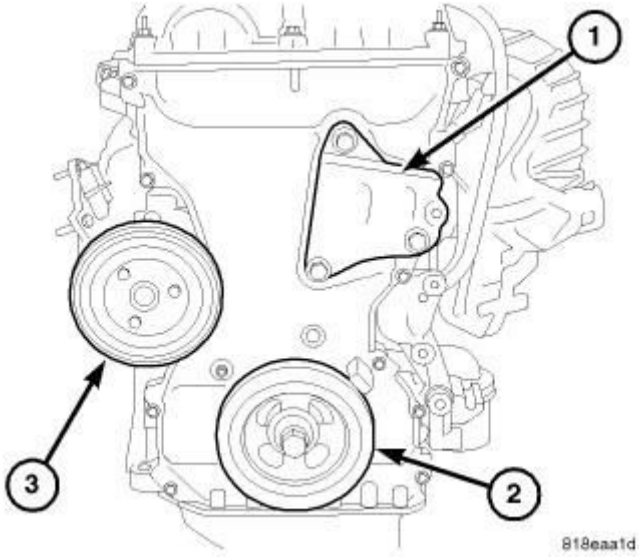

Fig. 179: Heat Shield
Courtesy of CHRYSLER GROUP, LLC

9. Position the heat shield (3) onto the studs (2) located on the dash panel in the engine compartment.
10. Install the three nuts (1) that secure the heat shield to the dash panel. Tighten the nuts to 1 N.m (10 in. lbs.).
11. On all models, raise and support the vehicle.

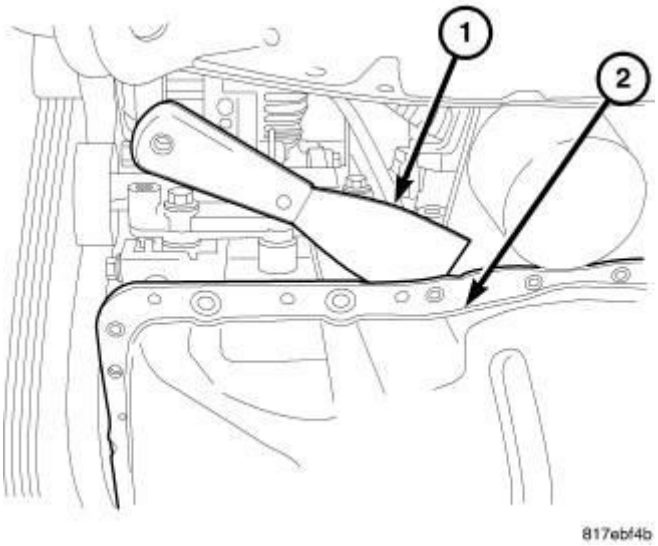

Fig. 180: Liquid Line To Condenser
Courtesy of CHRYSLER GROUP, LLC

NOTE: Illustration shown with front fascia removed for clarity.

12. On late model year vehicles equipped with a gasoline engine and four speed automatic transaxle;
    a. remove the tape or plugs from the liquid line fitting and the condenser port.
    b. lubricate a new rubber O-ring seal with clean refrigerant oil and install it and a new gasket onto the liquid line fitting. Use only the specified O-ring as it is made of a special material for the R-134a system. Use only refrigerant oil of the type recommended for the A/C compressor in the vehicle.
    c. connect the A/C liquid line (2) to the A/C condenser (3) and install the retaining nut (1). Tighten the nut to 5 N.m (44 in. lbs.).

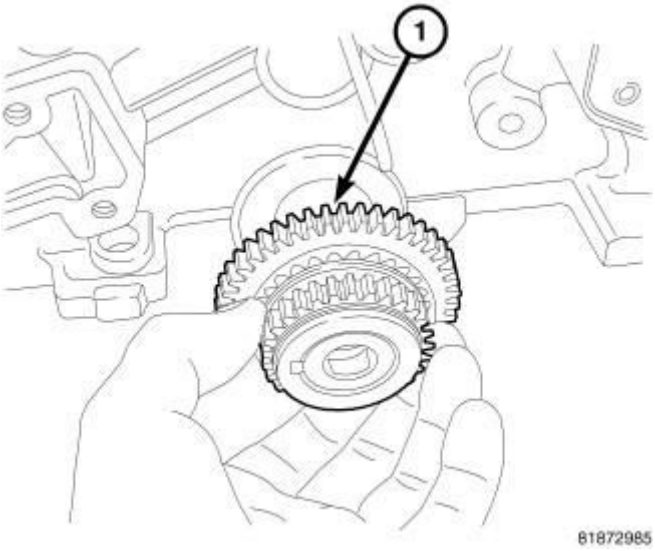

Fig. 181: Identifying A/C Receiver/Drier
Courtesy of CHRYSLER GROUP, LLC

13. Remove the tape or plugs from the suction line fittings.
14. Lubricate a new rubber O-ring seal with clean refrigerant oil and install it and new gasket onto the suction line fittings. Use only the specified O-ring as it is made of a special material for the R-134a system. Use only refrigerant oil of the type recommended for the A/C compressor in the vehicle.
15. Connect the front portion of the A/C suction line (4) to the rear portion of the A/C suction line (2) and install the retaining nut (3). Tighten the nut to 5 N.m (44 in. lbs.).
16. Install the A/C suction line into the plastic bracket on the A/C receiver/drier (6), or install the suction line retaining bracket to the right front frame rail.

depending on engine and transaxle application.

17. On all models, except late model year vehicles equipped with a gasoline engine and four speed automatic transaxle;
    a. remove the tape or plugs from the liquid line fitting and the receiver/drier port.
    b. lubricate a new rubber O-ring seal with clean refrigerant oil and install it and a new gasket onto the liquid line fitting. Use only the specified O-ring as it is made of a special material for the R-134a system. Use only refrigerant oil of the type recommended for the A/C compressor in the vehicle.
    c. connect the A/C liquid line (1) to the A/C receiver/drier (6) and install the retaining nut (5). Tighten the nut to 5 N.m (44 in. lbs.).
    d. On all models;
    e. reposition the right front wheel house splash shield to the body. Refer to **SHIELD, SPLASH, FRONT WHEELHOUSE, INSTALLATION** .
    f. install the right front wheel. Refer to **INSTALLATION** .
    g. Lower the vehicle.
18. Reconnect the negative battery cable.

CAUTION: Do NOT run the engine with a vacuum pump in operation or with a vacuum present within the A/C system. Failure to follow this caution will result in serious A/C compressor damage.

19. Evacuate the refrigerant system. Refer to **PLUMBING, STANDARD PROCEDURE**.
20. Adjust the refrigerant oil level. Refer to **OIL, REFRIGERANT, STANDARD PROCEDURE**.
21. Charge the A/C system. Refer to **PLUMBING, STANDARD PROCEDURE**.

FRONT SUCTION LINE

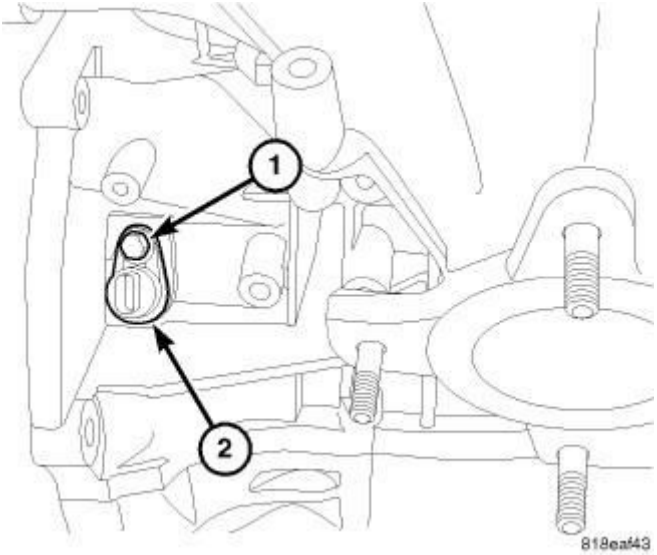

Fig. 182: Identifying A/C Suction Line & Retaining Nut
Courtesy of CHRYSLER GROUP, LLC

1. Remove the tape or plugs from the suction line fittings and compressor port.
2. Lubricate a new rubber O-ring seals with clean refrigerant oil and install them and new gaskets onto the suction line fittings. Use only the specified O-ring as it is made of a special material for the R-134a system. Use only refrigerant oil of the type recommended for the A/C compressor in the vehicle.
3. Position the front portion of the A/C suction line (3) into the engine compartment.
4. Connect the front portion of the A/C suction line to the rear portion of the A/C suction line (1) and install the retaining nut (2). Tighten the nut to 5 N.m (44 in. lbs.).
5. On diesel engine models;
   a. reposition the right front wheel house splash shield to the body. Refer to **SHIELD, SPLASH, FRONT WHEELHOUSE, INSTALLATION** .
   b. install the right front wheel. Refer to **INSTALLATION** .
   c. Lower the vehicle.

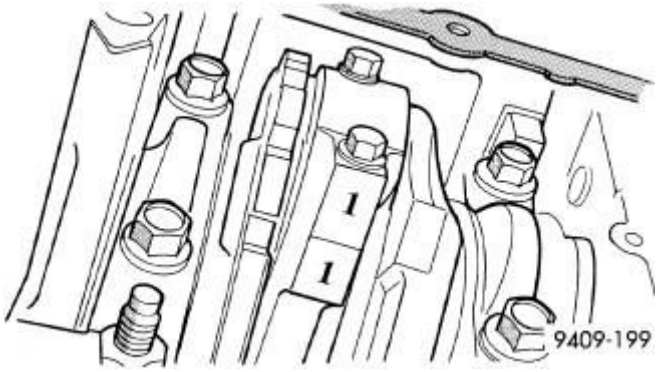

Fig. 183: Lower Suction Line-Compressor
Courtesy of CHRYSLER GROUP, LLC

6. Connect the A/C suction line (2) to the A/C compressor (3).
7. Install the nut (1) that secures the A/C suction line to the A/C compressor. Tighten the nut to 20 N.m (15 ft. lbs.).
8. On gasoline engine models;
   a. install the drive belt splash shield.
   b. reposition the right front wheel house splash shield to the body. Refer to **SHIELD, SPLASH, FRONT WHEELHOUSE, INSTALLATION** .
   c. install the right front wheel. Refer to **INSTALLATION** .
   d. Lower the vehicle.
9. On diesel engine models, install the right front impact sensor onto the radiator support. Refer to **SENSOR, IMPACT, INSTALLATION** .
10. Reconnect the negative battery cable.

CAUTION: Do NOT run the engine with a vacuum pump in operation or with a vacuum present within the A/C system. Failure to follow this caution will result in serious A/C compressor damage.

11. Evacuate the refrigerant system. Refer to **PLUMBING, STANDARD PROCEDURE**.
12. Adjust the refrigerant oil level. Refer to **OIL, REFRIGERANT, STANDARD PROCEDURE**.
13. Charge the A/C system. Refer to **PLUMBING, STANDARD PROCEDURE**.

OIL, REFRIGERANT

STANDARD PROCEDURE

STANDARD PROCEDURE - REFRIGERANT OIL LEVEL

When an A/C system is assembled at the factory, all components except the A/C compressor are refrigerant oil free. After the refrigerant system has been charged and operated, the refrigerant oil in the A/C compressor is dispersed throughout the refrigerant system. The A/C receiver/drier, A/C evaporator, A/C condenser and the A/C compressor will each retain a significant amount of the needed refrigerant oil.

It is important to have the correct amount of refrigerant oil in the A/C system. This ensures proper lubrication of the A/C compressor. Too little oil will result in damage to the A/C compressor, while too much oil will reduce the cooling capacity of the A/C system and consequently result in higher discharge air temperatures.

CAUTION: Be certain to adjust the refrigerant system oil level when replacing an A/C compressor. Drain the refrigerant oil from the A/C compressor using the procedures described below. Failure to properly drain the refrigerant oil from the A/C compressor can prevent the A/C system from operating as designed and cause serious compressor damage.

CAUTION: ND-8 PAG refrigerant oil is used in the A/C system. Only refrigerant oil of the same type should be used to service this R-134a A/C system. Do not use any other refrigerant oil. The refrigerant oil container should be kept tightly capped until it is ready for use and then tightly capped after use to prevent contamination from moisture and dirt. Refrigerant oil will quickly absorb any moisture it comes in contact with, therefore, special effort must be used to keep all R-134a system components moisture-free. Moisture in the refrigerant oil is very difficult to remove and will cause a reliability problem with the A/C compressor.

NOTE: Most reclaim/recycling equipment will measure the amount of refrigerant oil being removed during the recovery process. This amount of refrigerant oil should always be added back into the refrigerant system. Refer to the reclaim/recycling equipment manufacturers instructions.

It will not be necessary to check the oil level within the A/C refrigerant system or to add oil, unless there has been an oil loss. A refrigerant oil loss may occur due to component replacement or a rupture or leak from a refrigerant line, connector fitting, component or component seal. If a leak does occurs, add 30 milliliters (1 fluid ounce) of the recommended refrigerant oil to the refrigerant system after the repair has been made. Refrigerant oil loss will be evident at the leak point by the presence of a wet, shiny surface around the leak.

Refrigerant oil must be added when an A/C condenser, A/C receiver/drier or A/C evaporator is replaced. See the **REFRIGERANT OIL CAPACITIES** chart.

The refrigerant oil level in a new A/C compressor must first be adjusted to the proper amount prior to compressor installation. See the **COMPRESSOR OIL DRAIN PROCEDURE - FIXED DISPLACEMENT** or **COMPRESSOR OIL DRAIN PROCEDURE - VARIABLE DISPLACEMENT** .

REFRIGERANT OIL CAPACITIES

Component	ml.	oz.
Total System Fill	100	3.4
A/C Receiver/Drier	30	1.0
A/C Condenser	10	0.3
A/C Evaporator	10	0.3
A/C Compressor - Denso 6SEU16 Variable Displacement	50	1.7
	(See **COMPRESSOR OIL DRAIN PROCEDURE - VARIABLE DISPLACEMENT**)	
A/C Compressor - Denso 10SRE18 Fixed Displacement	Drain and measure the oil from the old compressor (See **COMPRESSOR OIL DRAIN PROCEDURE - FIXED DISPLACEMENT**).	

COMPRESSOR OIL DRAIN PROCEDURE - FIXED DISPLACEMENT

CAUTION: Be certain to adjust the refrigerant system oil level when replacing an A/C compressor. Failure to properly drain and measure the refrigerant oil from the A/C compressor can prevent the A/C system from operating as designed and cause serious compressor damage.

The Denso 10SRE18 A/C compressor is filled with refrigerant oil from the factory. Use the following procedure to drain and measure refrigerant oil from the 10SRE18 A/C compressor.

1. Position the original A/C compressor so that the refrigerant oil can drain out of the suction and discharge ports into a suitable clean measured container. Hold the original A/C compressor in this position until all of the refrigerant oil is drained from the compressor.
2. Drain all of the refrigerant oil from the replacement A/C compressor into a clean measured container.
3. Refill the replacement A/C compressor with the same amount of refrigerant oil that was drained out of the original compressor. Use only clean refrigerant oil of the type recommended for the A/C compressor in the vehicle.

CAUTION: Failure to properly adjust the refrigerant oil level prior to installation of a replacement compressor can prevent the A/C system from operating as designed and cause serious compressor damage.

4. Install the replacement A/C compressor onto the engine. Refer to **COMPRESSOR, A/C, INSTALLATION**.

COMPRESSOR OIL DRAIN PROCEDURE - VARIABLE DISPLACEMENT

CAUTION: Be certain to adjust the refrigerant system oil level when replacing an A/C compressor. The refrigerant oil in the Denso 6SEU16 A/C compressor can only be drained using the procedure described below.

Failure to properly drain the refrigerant oil from the A/C compressor can prevent the A/C system from operating as designed and cause serious compressor damage.

If the Denso 6SEU16 A/C compressor is being replaced, some refrigerant oil must first be drained from the replacement A/C compressor. The 6SEU16 A/C compressor is filled with 100 milliliters (3.4 oz.) from the factory. Drain 50 milliliters (1.7 oz.) of refrigerant oil from the replacement 6SEU16 compressor. Use the following procedure to drain and measure refrigerant oil from the 6SEU16 A/C compressor.

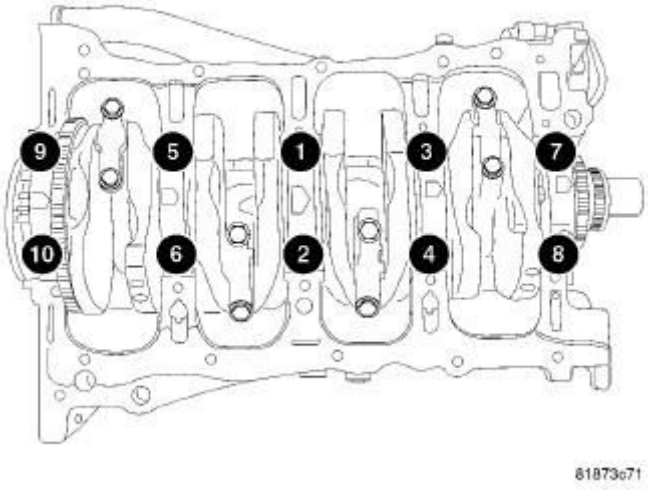

Fig. 184: A/C Compressor & Drain Plug
Courtesy of CHRYSLER GROUP, LLC

1. Place the replacement A/C compressor (2) on a workbench and remove the drain plug (1).

CAUTION: The 6SEU16 A/C compressor is filled with 100 milliliters (3.4 oz.) from the factory. Drain 50 milliliters (1.7 oz.) of refrigerant oil from the new 6SEU16 compressor when replacing only the compressor.

NOTE: When replacing multiple A/C system components, see the REFRIGERANT OIL CAPACITIES chart to

determine how much oil should be removed from the replacement A/C compressor (example: new 6SEU16 compressor and receiver/drier requires 80 ml. (2.7 oz.) of oil to be added to the system. 100 ml. (3.4 oz.) of oil is in replacement compressor. 100 ml. (3.4 oz.) minus 80 ml. (2.7 oz.) equals 20 ml. (0.7 oz.) of oil to be drained from replacement compressor).

2. Position the replacement A/C compressor so that the refrigerant oil can drain out of the drain port into a suitable clean measured container. Hold the replacement A/C compressor in this position until the required amount of refrigerant oil is drained from the compressor.

CAUTION: Failure to properly adjust the refrigerant oil level prior to installation of a replacement compressor can prevent the A/C system from operating as designed and cause serious compressor damage.

3. Reinstall the drain plug. Tighten the drain plug securely.
4. Install the replacement A/C compressor onto the engine. Refer to **COMPRESSOR, A/C, INSTALLATION**.

REFRIGERANT

SPECIFICATIONS

SPECIFICATIONS

REFRIGERANT CHARGE CAPACITY

Application	Capacity
All models	595 g (1.31 lbs.)

TUBE, CONDENSATION DRAIN

REMOVAL

REMOVAL

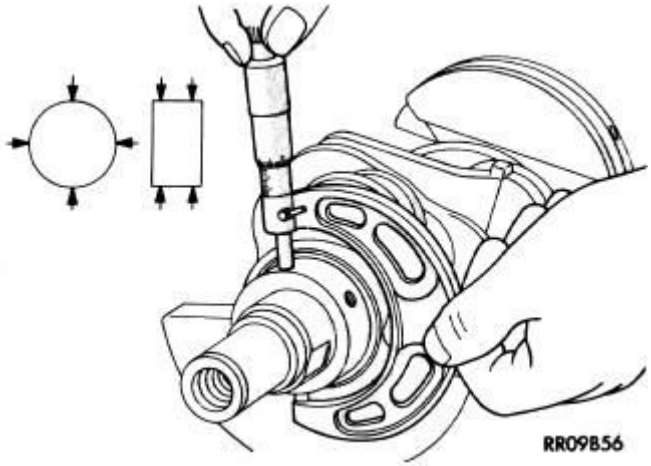

Fig. 185: Condensation Drain Tube
Courtesy of CHRYSLER GROUP, LLC

1. Pull back the floor carpet to gain access to the condensation drain tube (2) located on the left side of the vehicle at the front right of the foot well. Refer to **CARPET, PASSENGER, REMOVAL** .
2. Disconnect the condensation drain tube from the bottom of the HVAC housing (1).
3. Remove the condensate drain tube from the rubber grommet (3) in the front floor panel (4).
4. If required, remove the rubber grommet from the floor panel.

INSTALLATION

INSTALLATION

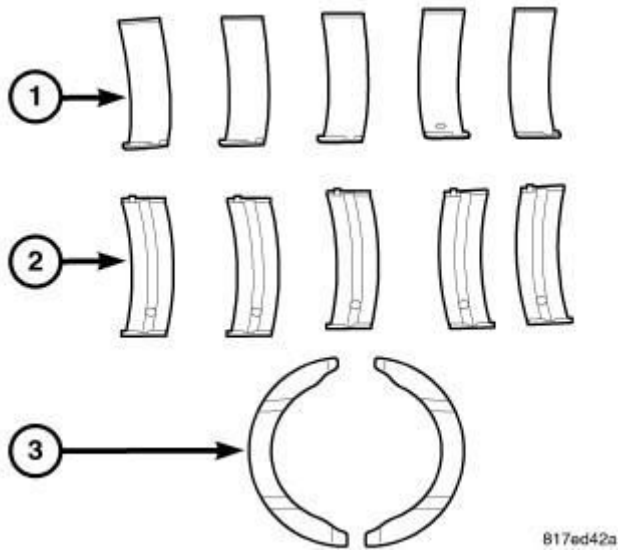

Fig. 186: Condensation Drain Tube

Courtesy of CHRYSLER GROUP, LLC

1. If removed, install the rubber grommet (3) onto the driver side front floor panel (4). Make sure the grommet is fully engaged to the floor panel.
2. Connect the condensation drain tube (2) onto the drain port located on the bottom of the HVAC housing (1).
3. Install the condensation drain tube into the rubber grommet.
4. Reinstall the floor carpet. Refer to **CARPET, PASSENGER, INSTALLATION** .

VALVE, A/C EXPANSION

DESCRIPTION

DESCRIPTION

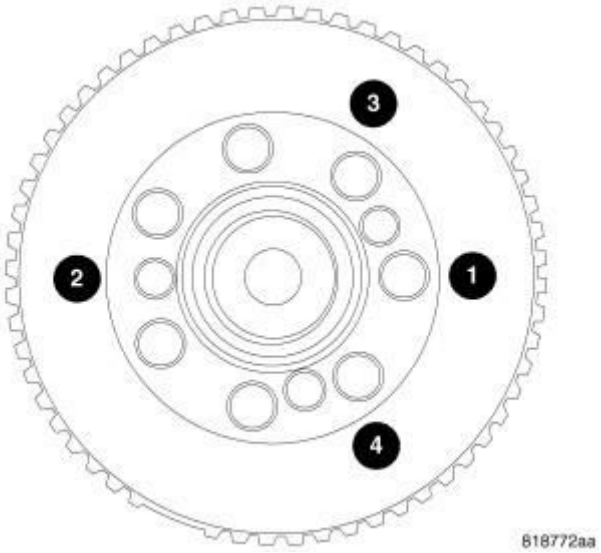

Fig. 187: A/C Expansion Valve
Courtesy of CHRYSLER GROUP, LLC

The A/C expansion valve controls the amount of refrigerant entering the A/C evaporator. The A/C expansion valve is of a thermostatic expansion valve (TXV) design and consists of an aluminum H-valve type body (1) with an inlet port (2), outlet port (3) and an integral thermal sensor (4).

The A/C expansion valve is located in the engine compartment at the dash panel, between the A/C refrigerant lines and the A/C evaporator.

OPERATION

OPERATION

The A/C expansion valve controls the high-pressure, low temperature liquid refrigerant from the A/C liquid line and converts it into a low-pressure, low-temperature mixture of liquid and gas before it enters the A/C evaporator. A mechanical sensor in the A/C expansion valve monitors the temperature and pressure of the refrigerant leaving the A/C evaporator through the A/C suction line, and adjusts the orifice size at the liquid line port to let the proper amount of refrigerant into the evaporator to meet the vehicle A/C cooling requirements. Controlling the refrigerant flow through the A/C evaporator ensures that none of the refrigerant leaving the A/C evaporator is still in a liquid state, which could damage the A/C compressor.

NOTE: Replacement of the refrigerant line O-ring seals is required anytime a refrigerant line is disconnected from the expansion valve, or if the expansion valve is removed. Failure to replace the rubber O-ring seals may result in a refrigerant system leak.

The A/C expansion valve is factory calibrated and cannot be adjusted or repaired and must be replaced if inoperative or damaged.

DIAGNOSIS AND TESTING

DIAGNOSIS AND TESTING - A/C EXPANSION VALVE

WARNING: Review the warnings and cautions for this system before performing the procedure. Failure to follow these instructions may result in serious injury or death.

NOTE: The A/C expansion valve should only be tested following testing of the A/C compressor.

NOTE: Liquid CO^2 is required to test the A/C expansion valve. This material is available from most welding supply facilities. Liquid CO^2 is also available from companies which service and sell fire extinguishers.

When testing the A/C expansion valve, the work area and the vehicle temperature must be 21° to 27°C (70° to 85°F). To test the expansion valve:

1. Connect a charging station or manifold gauge set to the refrigerant system service ports. Refer to **PLUMBING, STANDARD PROCEDURE**.
2. Verify the refrigerant system charge level by conducting the A/C Performance Test. Refer to **DIAGNOSIS AND TESTING**.
3. Close all doors, windows and vents to the passenger compartment.
4. Set the A/C-heater controls so that the A/C compressor is operating, the temperature control is in the highest temperature position, the mode-air doors is directing air output to the floor and the blower motor operating is operating at the highest speed.
5. Start the engine and allow it to idle. After the engine has reached normal operating temperature, allow the passenger compartment to heat up. This will create the need for maximum refrigerant flow into the A/C evaporator.
6. If the refrigerant charge is sufficient, the discharge (high pressure) gauge should read 827 kPa to 1655 kPa (120 psi to 240 psi). The suction (low pressure) gauge should read 207 kPa to 345 kPa (30 psi to 50 psi). If OK, go to 7. If not OK, replace the inoperative A/C expansion valve.

WARNING: Protect the skin and eyes from exposure to liquid CO^2 or personal injury can result.

7. If the suction (low pressure) gauge reads within the specified range, freeze the A/C expansion valve for 30 seconds using liquid CO^2 or another suitable super-cold material. **Do not spray R-134a or R-12 refrigerant on the A/C expansion valve for this test.** The suction (low pressure) gauge reading should drop by 69 kPa (10 psi). If OK, go to 8. If not OK, replace the inoperative A/C expansion valve. Refer to **VALVE, A/C EXPANSION, REMOVAL**.
8. Allow the A/C expansion valve to thaw. The suction (low pressure) gauge reading should stabilize at 207 kPa to 345 kPa (30 psi to 50 psi). If not OK, replace the inoperative A/C expansion valve. Refer to **VALVE, A/C EXPANSION, REMOVAL**.

REMOVAL

REMOVAL

WARNING: Review the warnings and cautions for this system before performing the procedure. Failure to follow these instructions may result in serious injury or death.

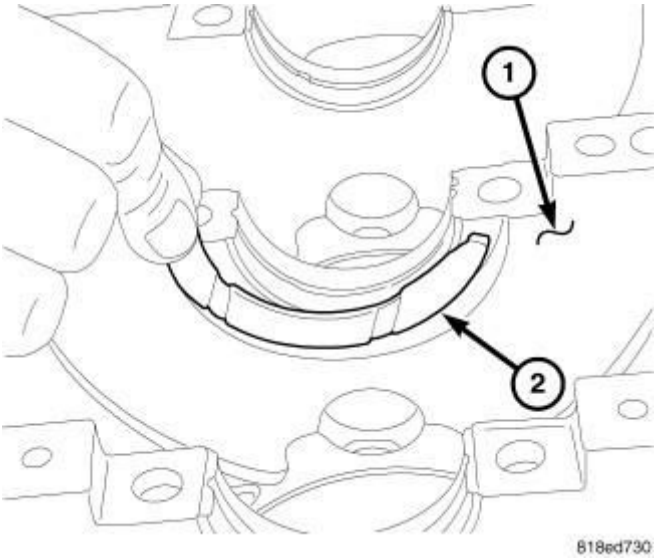

Fig. 188: Heat Shield
Courtesy of CHRYSLER GROUP, LLC

1. Disconnect and isolate the negative battery cable.
2. Recover the refrigerant from the refrigerant system. Refer to **PLUMBING, STANDARD PROCEDURE**.
3. Remove the nuts (1) that secure the heat shield (3) to the studs (2) located on the dash panel in the engine compartment and remove the heat shield.

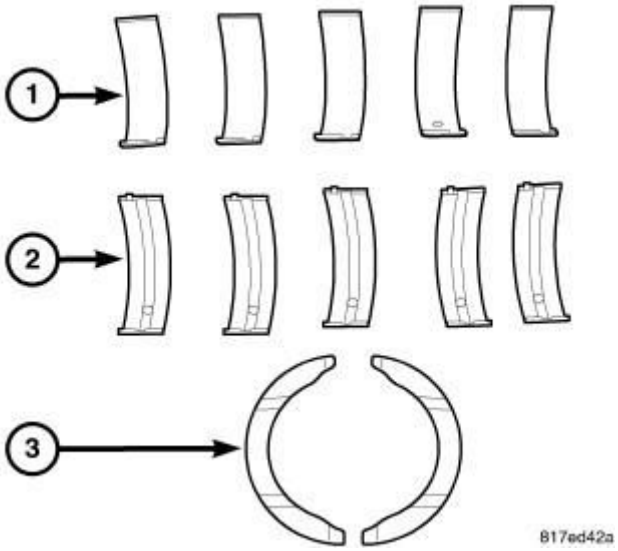

Fig. 189: Refrigerant Lines To Evaporator Bolt

Courtesy of CHRYSLER GROUP, LLC

4. Remove the bolt (1) that secures the A/C liquid and suction line assembly (2) to the A/C expansion valve (3).
5. Disconnect the A/C liquid and suction line assembly from the A/C expansion valve and remove and discard the O-ring seals.

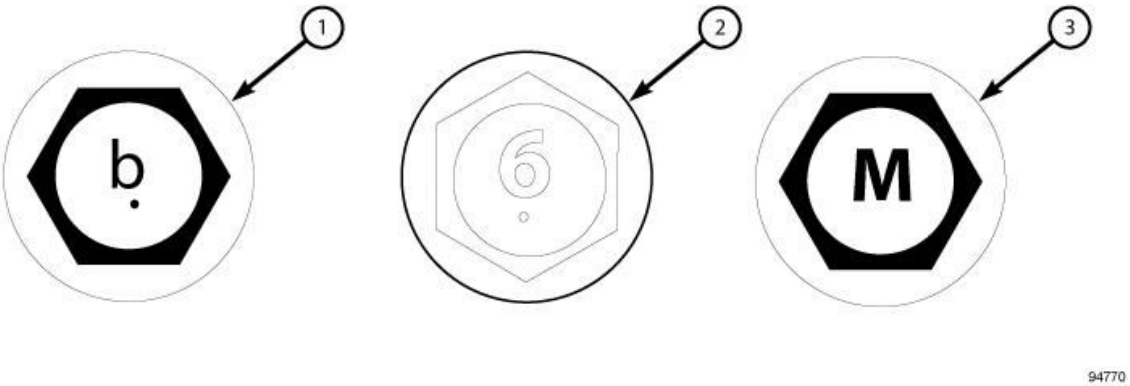

Fig. 190: Front Expansion Valve
Courtesy of CHRYSLER GROUP, LLC

6. Remove the two bolts (1) that secure the A/C expansion valve (2) to the evaporator tube tapping block (3).
7. Remove the A/C expansion valve from the tapping block and remove and discard the O-ring seals
8. Install plugs in, or tape over the opened refrigerant fittings and all expansion valve and evaporator tube ports.

INSTALLATION

INSTALLATION

CAUTION: Be certain to adjust the refrigerant oil level when servicing the A/C refrigerant system. Failure to properly adjust the refrigerant oil level will prevent the A/C system from operating as designed and can cause serious A/C compressor damage.

NOTE: When replacing multiple A/C system components, see the REFRIGERANT OIL CAPACITIES chart to determine how much oil should be added to the refrigerant system. Refer

to OIL, REFRIGERANT, STANDARD PROCEDURE.

NOTE: Replacement of the refrigerant line O-ring seals is required anytime a refrigerant line is disconnected from the expansion valve, or if the expansion valve is removed. Failure to replace the rubber O-ring seals may result in a refrigerant system leak.

NOTE: LHD model shown in illustrations, RHD model similar.

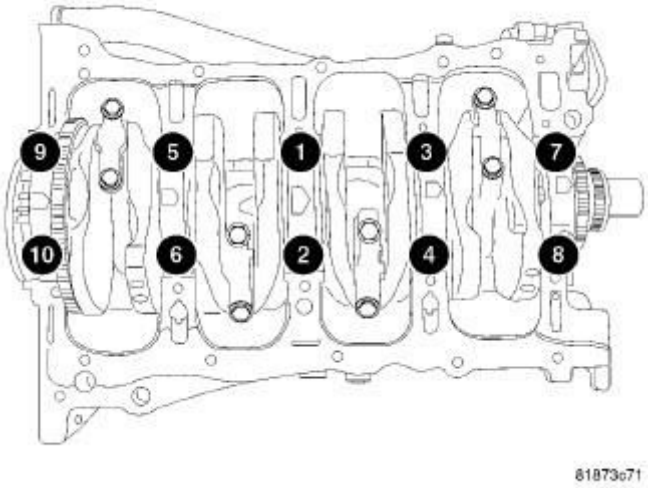

Fig. 191: Front Expansion Valve
Courtesy of CHRYSLER GROUP, LLC

1. Remove the tape or plugs from the opened refrigerant line fittings and all expansion valve and evaporator ports.
2. Lubricate new O-ring seals with clean refrigerant oil and install them onto the refrigerant line and evaporator tube fittings. Use only the specified O-ring seals as they are made of a special material for the R-134a system. Use only refrigerant oil of the type recommended for the A/C compressor in the vehicle.
3. Install the A/C expansion valve (2) onto the evaporator tube tapping block (3)
4. Install the two bolts (1) that secure the A/C expansion valve to the evaporator tube tapping block. Tighten the bolts to 11 N.m (97 in. lbs.).

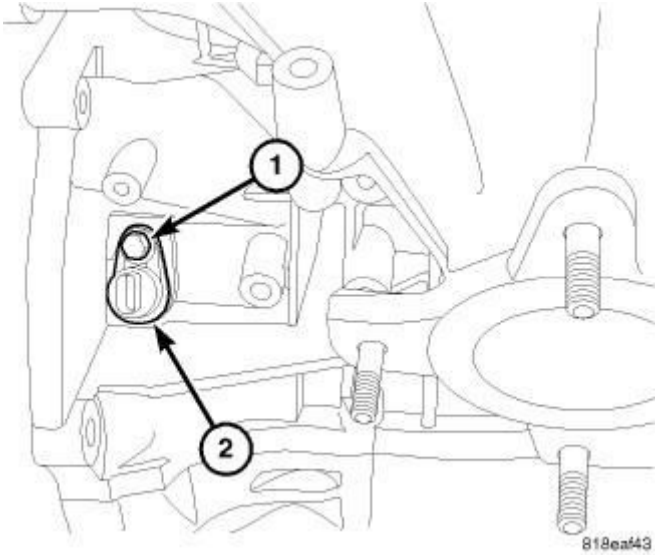

Fig. 192: Refrigerant Lines To Evaporator Bolt
Courtesy of CHRYSLER GROUP, LLC

5. Connect the A/C liquid and suction line assembly (2) to the A/C expansion valve (3).
6. Install the bolt (1) that secures the A/C liquid and suction line assembly to the A/C expansion valve. Tighten the bolt to 25 N.m (18 ft. lbs.).

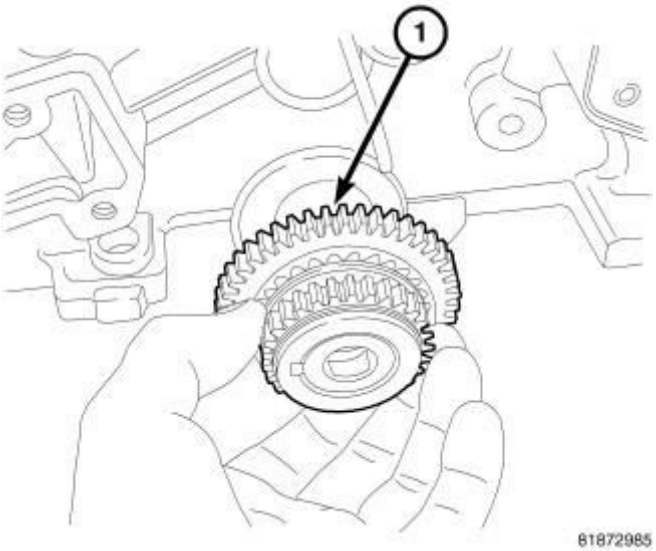

Fig. 193: Heat Shield
Courtesy of CHRYSLER GROUP, LLC

7. Position the heat shield (3) onto the studs (2) located on the dash panel in the engine compartment.
8. Install the nuts (1) that secure the heat shield to the dash panel. Tighten the nuts to 1 N.m (10 in. lbs.).

9. Reconnect the negative battery cable.
10. Evacuate the refrigerant system. Refer to **PLUMBING, STANDARD PROCEDURE**.
11. Adjust the refrigerant oil level, if required. Refer to **OIL, REFRIGERANT, STANDARD PROCEDURE**.
12. Charge the refrigerant system. Refer to **PLUMBING, STANDARD PROCEDURE**.

CABIN HEATER

RELAY, HEATER UNIT

DESCRIPTION

DESCRIPTION

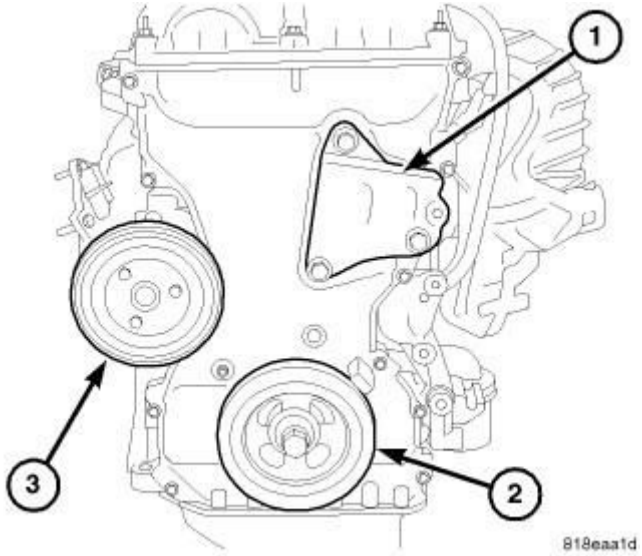

Fig. 194: Standard ISO-Type Relay
Courtesy of CHRYSLER GROUP, LLC

Two relays (1) are used for the electric Positive Temperature Coefficient (PTC) heater system when equipped with the 2.2L diesel engine. The relays are International Standards Organization (ISO)-type relays. Relays conforming to the ISO specifications have common physical dimensions, current capacities, terminal functions and patterns (2). The PTC relays are electromechanical devices that switch fused battery current directly to the heating elements of the PTC heater unit. The PTC relays are energized by control circuits of the Totally Integrated Power Module (TIPM).

The two PTC relays are located below the left front fender in the diesel accessory fuse/relay block.

REMOVAL

REMOVAL

NOTE: LHD model shown in illustration, RHD model similar.

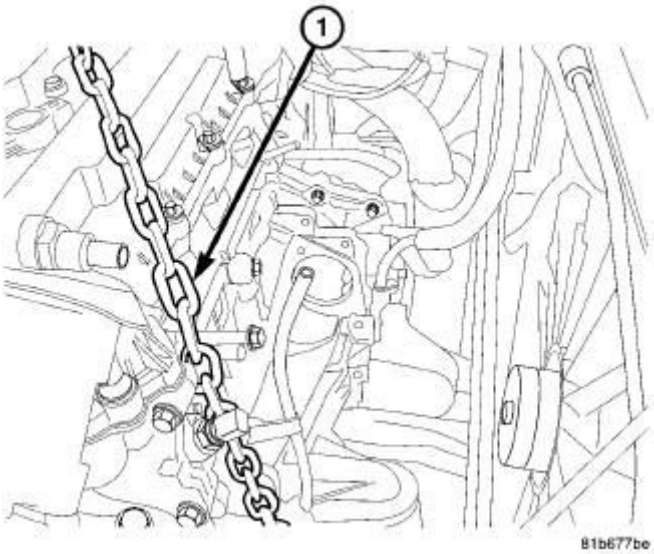

Fig. 195: Diesel Accessory Fuse/Relay Block
Courtesy of CHRYSLER GROUP, LLC

NOTE: Illustration shown with left front fender removed for clarity.

1. Disconnect and isolate the negative battery cable.
2. Remove the left front wheelhouse splash shield. Refer to **SHIELD, SPLASH, FRONT WHEELHOUSE, REMOVAL** .
3. Open the cover (1) of the diesel accessory fuse/relay block (2) located on the left front frame rail (3).
4. Remove the positive temperature coefficient (PTC) relays as necessary from the fuse/relay block.

INSTALLATION

INSTALLATION

NOTE: LHD model shown in illustration, RHD model similar.

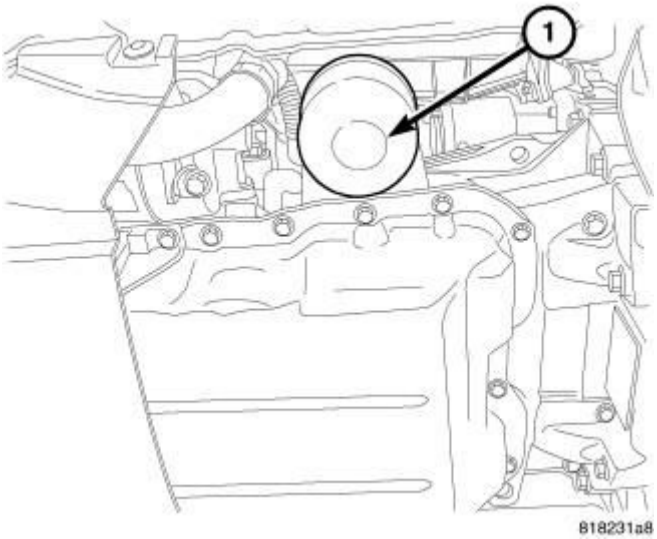

Fig. 196: Diesel Accessory Fuse/Relay Block
Courtesy of CHRYSLER GROUP, LLC

NOTE: Illustration shown with left front fender removed for clarity.

1. Position the positive temperature coefficient (PTC) relays as necessary into the proper receptacle of the diesel accessory fuse/relay block (2) located on the left front frame rail (3).
2. Align the PTC relay terminals with the terminal cavities in the fuse/relay block and push down firmly on each relay until the terminals are fully seated.
3. Close the cover (1) of the diesel accessory fuse/relay block.
4. Install the left front wheel house splash shield. Refer to **SHIELD, SPLASH, FRONT WHEELHOUSE, INSTALLATION** .
5. Reconnect the negative battery cable.

UNIT, HEATER

DESCRIPTION

DESCRIPTION

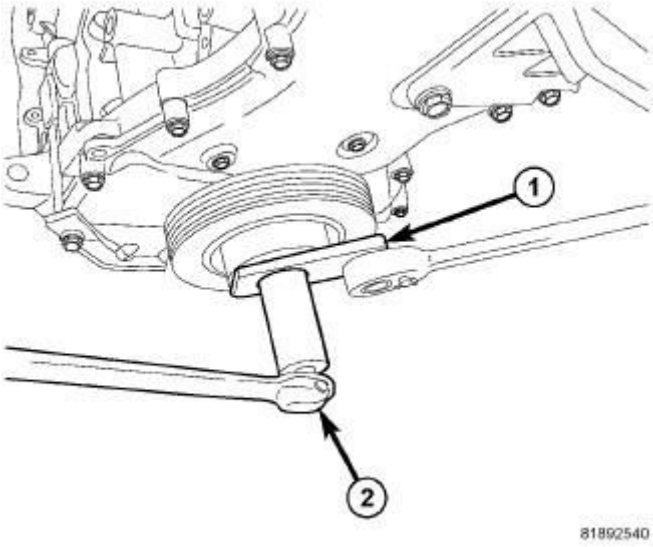

Fig. 197: PTC Heater Assembly
Courtesy of CHRYSLER GROUP, LLC

NOTE: LHD model shown in illustration, RHD model similar.

An electric Positive Temperature Coefficient (PTC) heater unit (1) is used on vehicles when equipped with the 2.2L diesel engine. The PTC heater unit aids in passenger compartment heating by compensating for the lower engine coolant temperatures produced by the diesel engine. The PTC heater unit is mounted in the HVAC air distribution housing, downstream of the heater core and is controlled by the diesel Engine Control Module (ECM) and the Totally Integrated Power Module (TIPM) through two relays in diesel accessory fuse/relay block located below the left front fender.

The PTC heater consists of a molded plastic mounting plate (2) with an integral wire connector receptacle (3). Concealed behind the mounting plate are four heating elements with fins (4) that transfer the heat produced by the PTC heater to the conditioned air flowing within the air distribution housing. Two retaining tabs (5) are molded onto the opposite end of the heater unit to support the heater unit inside the air distribution housing. The PTC heater unit is connected to the vehicle electrical system through the instrument panel wire harness.

The PTC heater unit is accessed for service by removing the instrument panel.

OPERATION

OPERATION

The Positive Temperature Coefficient (PTC) heater unit dissipates 1 kW of electrical power through four heating bars. The Engine Control Module (ECM) and the Totally Integrated Power module (TIPM) operate the two relays for the PTC heater unit. The PTC heater unit is split into two "banks". Each bank is driven separately based on alternator load. This allows for lower in-rush current and optimum battery charging. After a bank has been turned on, another bank can only be turned on 10 seconds after the previous. On average, the PTC banks are not switched more than 25 times for each vehicle start. The electrical power output is between 900-1050 W.

The control system for the PTC heater unit is diagnosed using a scan tool. Prior to replacing a PTC heater unit, check for any Diagnostic Trouble Codes (DTCs) related to the ECM, TIPM and heating-A/C system. See the appropriate Diagnostic Information.

The PTC heater unit cannot be adjusted or repaired and must be replaced if inoperative or damaged.

DIAGNOSIS AND TESTING

DIAGNOSIS AND TESTING - POSITIVE TEMPERATURE COEFFICIENT (PTC) HEATER UNIT

WARNING: **Disable the airbag system before attempting any steering wheel, steering column or instrument panel component diagnosis or service. Disconnect and isolate the negative battery (ground) cable, then wait two minutes for the airbag system capacitor to discharge before performing further diagnosis or service. This is the only sure way to disable the airbag system. Failure to follow these instructions may result in accidental airbag deployment and possible serious or fatal injury.**

NOTE: **See appropriate Wiring Information for circuit descriptions and diagrams. Wiring Information includes wiring diagrams, proper wire and connector repair procedures, further details on wire harness routing and retention, as well as pin-out and location views for the various wire harness connectors, splices and grounds.**

Prior to replacing the Positive Temperature Coefficient (PTC) heater unit, check for any Diagnostic Trouble Codes (DTCs) related to the Engine Control Module (ECM), Totally Integrated Power Module (TIPM) and the heating-A/C system. Repair as necessary.

1. Disconnect and isolate the negative battery cable.
2. Disconnect the wire harness connector from the PTC heater unit. Refer to **UNIT, HEATER, REMOVAL**.
3. Using an ohmmeter, check for continuity between all of the PTC heater unit terminals. In each case there should be continuity. If OK, repair the wire harness circuits between the PTC heater unit, PTC relays and the TIPM. If NOT OK, replace the PTC heater unit.

REMOVAL

REMOVAL

WARNING: **Review the warnings and cautions for this system before performing the procedure. Failure to follow these instructions may result in serious injury or death.**

WARNING: **Disable the airbag system before attempting any steering wheel, steering column or instrument panel component diagnosis or service. Disconnect and isolate the negative battery (ground) cable, then wait two minutes for the airbag system capacitor to discharge before performing further diagnosis or service. This is the only sure way to disable the airbag system. Failure to follow these instructions may result in accidental airbag deployment and possible serious or fatal injury.**

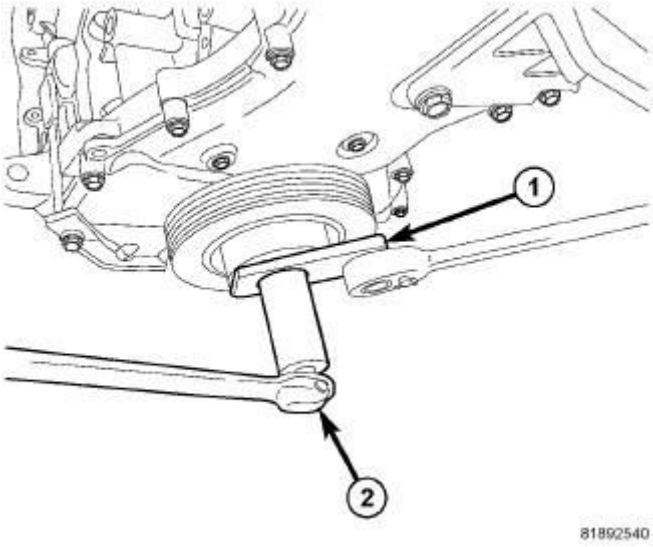

Fig. 198: Identifying PTC Heater Connector
Courtesy of CHRYSLER GROUP, LLC

NOTE: PTC heater shown in illustration removed from distribution housing for clarity.

1. Disconnect and isolate the negative battery cable.
2. Remove the instrument panel. Refer to **PANEL, INSTRUMENT, REMOVAL** .

NOTE: To disconnect the wire harness connector from the heater unit, pull downward on the connector lock while pulling the connector away from the heater unit.

3. Disengage the wire connector lock (2) that secures the wire harness connector (1) to the positive temperature coefficient (PTC) heater unit (3) located on the left side of the HVAC air distribution housing and disconnect the connector from the heater.

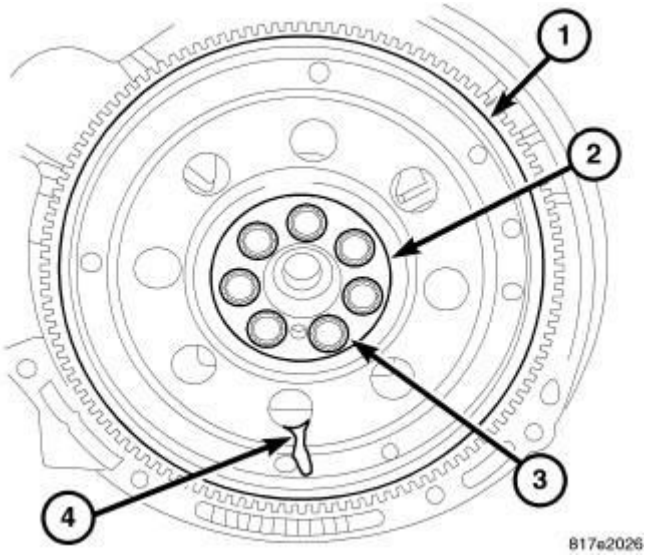

Fig. 199: PTC Heater Unit
Courtesy of CHRYSLER GROUP, LLC

NOTE: LHD model shown in illustration, RHD model similar.

4. Remove the two screws (1) that secure the PTC heater unit (2) to the left side of the HVAC air distribution housing (3).
5. Carefully remove the PTC heater unit from the air distribution housing by pulling it straight out of the housing.

INSTALLATION

INSTALLATION

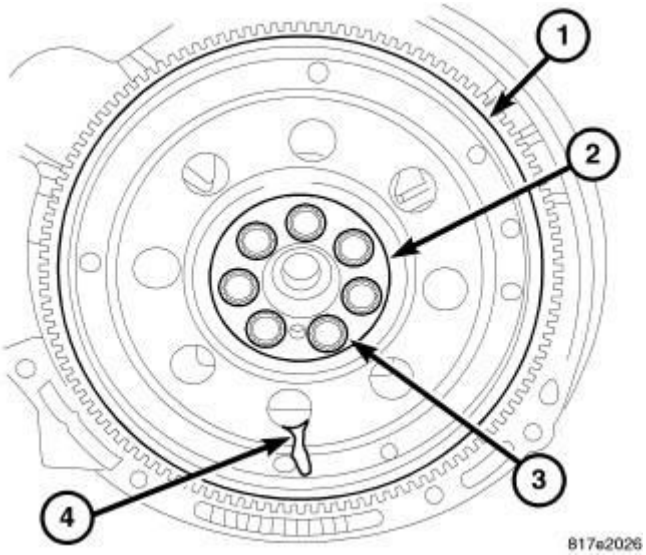

Fig. 200: PTC Heater Unit
Courtesy of CHRYSLER GROUP, LLC

NOTE: LHD model shown in illustration, RHD model similar.

1. Carefully install the positive temperature coefficient (PTC) heater unit (2) into the left side of the HVAC air distribution housing (3). Make sure to position the two locator tabs on the end of the heater unit into the molded locator indentations on the right side of the air distribution housing.
2. Install the two screws (1) that secure the PTC heater unit to the air distribution housing. Tighten the screws to 1.2 N.m (10 in. lbs.).

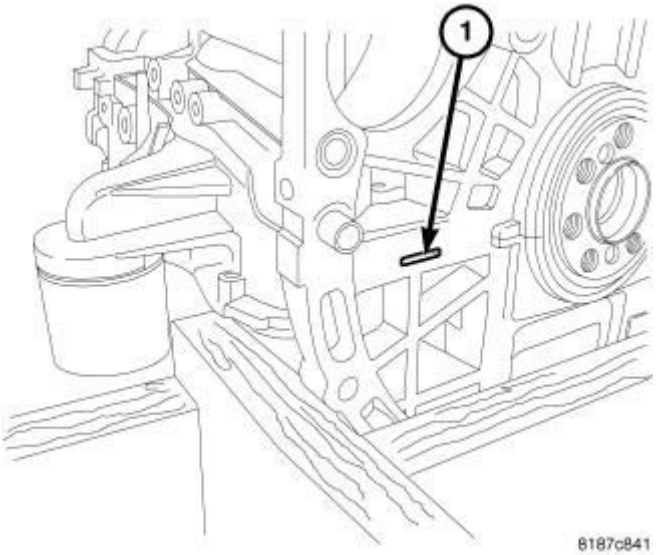

Fig. 201: Identifying PTC Heater Connector
Courtesy of CHRYSLER GROUP, LLC

NOTE: PTC heater shown in illustration removed from distribution housing for clarity.

3. Connect the wire harness connector (1) to the PTC heater unit (3) while pushing upward on the connector lock (2). Make sure the wire harness connector and lock are fully engaged.
4. Install the instrument panel. Refer to **PANEL, INSTRUMENT, INSTALLATION** .
5. Reconnect the negative battery cable.

2014 MANUAL TRANSMISSION

BG6 - Service Information - Compass & Patriot

DESCRIPTION

DESCRIPTION

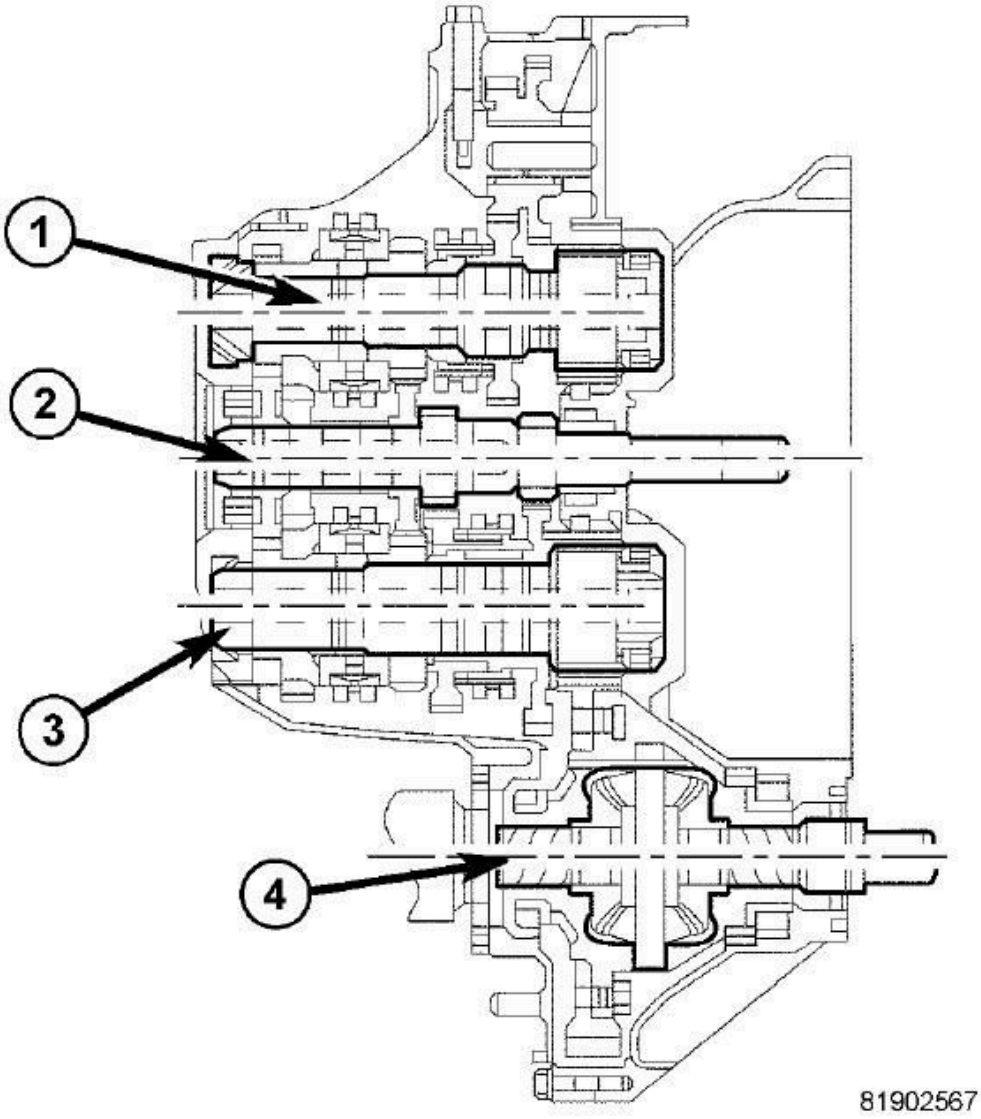

Fig. 1: BG6 Manual Transaxle
Courtesy of CHRYSLER GROUP, LLC

1 - OUTPUT SHAFT #2
2 - INPUT SHAFT
3 - OUTPUT SHAFT #1
4 - DIFFERENTIAL

The Aisin BG 6 6-speed transaxle is a constant-mesh transaxle that is synchronized in all gear ranges.

The BG 6 transaxle is a three-shaft design, as opposed to the more common two shaft configuration, to reduce overall length of the unit for easier packaging in the vehicle. The extra shaft is an output shaft. Ratios 1-4 are on one output shaft (2); ratios 5, 6 and Reverse are on the second shaft (1). Each output shaft has a different final drive ratio, which is also different from most transaxles. All ratios are synchronized.

Synchronizers are mounted on the output shafts (1, 3) to reduce the size of the transaxle. Triple-cone synchronizers on 1st through 3rd and dual-cone synchronizers 4th and 5th gears ensure that the rotating masses of gears, shafts and the clutch disc can accelerate quickly for fast, smooth shifting.

The four-plane shift mechanism is cable operated and incorporates a pull-up ring on the shift lever that must be lifted to engage Reverse. This prevents unintentional selection of Reverse when attempting to select 1st gear. Rubber isolation of the shift system at the transaxle minimizes noise carried along the cables to the car's interior.

GEAR RATIOS

GEAR	RATIO
1ST	3.54
2ND	2.05
3RD	1.37
4TH	0.97
5TH	0.90
6TH	0.79
REVERSE	3.83
Final Drive Ratio (FDR)	4.06 or 3.45*
Overall Top Gear	2.73
	*Gears 1-4 use the 4.06 final drive; gears 5th, 6th and Reverse use the 3.45 ratio.

DIAGNOSIS AND TESTING

DIAGNOSIS AND TESTING - COMMON PROBLEM CAUSES

The majority of transaxle malfunctions are a result of:

- Insufficient lubrication
- Incorrect lubricant
- Mis-assembled or damaged internal components
- Improper operation

HARD SHIFTING

Hard shifting may be caused by a mis-adjusted crossover cable. If hard shifting is accompanied by gear clash, synchronizer clutch and stop rings or gear teeth may be worn or damaged.

Mis-assembled synchronizer components also cause shifting problems. Incorrectly installed synchronizer sleeves, struts, or springs can cause shift problems.

Worn, damaged, mis-assembled or leaking hydraulic clutch release system/components can also cause difficult shifting or gear clash.

NOISY OPERATION

Transaxle noise is most often a result of worn or damaged components. Chipped, broken gear or synchronizer teeth, and brinnelled, spalled bearings all cause noise.

Abnormal wear and damage to the internal components is frequently the end result of insufficient lubricant.

SLIPS OUT OF GEAR

Transaxle disengagement may be caused by misaligned or damaged shift components, or worn teeth on the drive gears or synchronizer components. Incorrect assembly also causes gear disengagement.

LOW LUBRICANT LEVEL

Insufficient transaxle lubricant is usually the result of leaks, or inaccurate fluid level check or refill method. **Vehicle must be level to accurately check fluid level.** Leakage is evident by the presence of oil around the leak point. If leakage

is not evident, the condition is probably the result of an underfill.

If air-powered lubrication equipment is used to fill a transaxle, be sure the equipment is properly calibrated. Equipment out of calibration can lead to an under fill condition.

CLUTCH PROBLEMS

Worn, damaged, or misaligned clutch components can cause difficult shifting, gear clash, and noise.

A worn or damaged clutch disc, pressure plate, or a faulty slave cylinder can cause hard shifting and gear clash.

SPECIFICATIONS

SPECIFICATIONS

GENERAL SPECIFICATIONS

DESCRIPTION	SPECIFICATION
Transaxle Type	Constant-mesh, fully synchronized six speed with integral differential
Lubrication Method	Splash oil collected in oil troughs and distributed to mainshafts via gravity

GEAR RATIOS

GEAR	RATIO
1ST	3.538
2ND	2.045
3RD	1.367
4TH	0.974
5TH	0.897
6TH	0.791
REVERSE	3.831
Final Drive Ratio (FDR)	4.059 or 3.450*
Overall Top Gear	2.728
	*Gears 1-4 use the 4.059 final drive; gears 5th, 6th and Reverse use the 3.450 ratio.

TORQUE SPECIFICATIONS

DESCRIPTION	N.m	Ft. Lbs.	In. Lbs.
Bolt (4), Concentric Slave Cylinder (CSC)-to-Bellhousing Halve	Step 1 - 2 N.m	-	Step 1 - 18 In. Lbs.
	Step 2 - 5 N.m	-	Step 2 - 44 In. Lbs.
	Step 3 - 8.4 N.m	-	Step 3 - 74 In. Lbs.
Bolt, Differential Ring Gear-to-Carrier	106	78	-
Bolts, Shift Mechanism-to-Case	19	-	168
Bolts, Transaxle Case Halve-to-Bellhousing Halve	28	21	-
Plug, Detent	22	-	195
Plug, Transaxle Drain/Fill	43	32	381
Switch, Back-up Lamp	49	29	212
Bolts, Flywheel- to - Crankshaft	60 + 90*	44 + 90*	-
Bolts, Clutch cover-to-Flywheel	22	16	195
Bolts, Transaxle-to-engine	48	35	-
Bolt, Reverse Idler Gear Hold Down	11	-	97
Bolts, Oil slinger	9	-	80
Bolt, Output Shaft Hold Down	11	-	97
Bolts, Case	29	-	257
Bolts, Oil Baffle	9	-	80
Guide Pin, Shift Tower	30	-	277
Detent, Select	39	-	345
Detent, shift	29	-	277
Bolts, Shift Forks-to- Shift Rail	20	-	177

Plug, 27mm Rear Of Transmission Case	55	41	-

REMOVAL

DIESEL

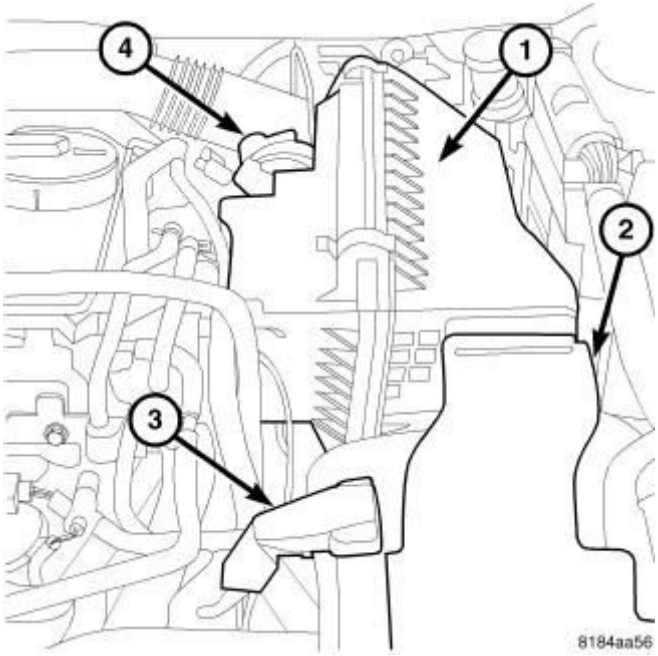

Fig. 2: Air Cleaner & Inlet Tube
Courtesy of CHRYSLER GROUP, LLC

1. Raise and support the vehicle.
2. Remove both front wheels.
3. Lower vehicle and remove battery tray. Refer to **TRAY, BATTERY, REMOVAL** .
4. Remove air cleaner housing assembly (1) and clean air hose. Refer to **BODY, AIR CLEANER, REMOVAL** .

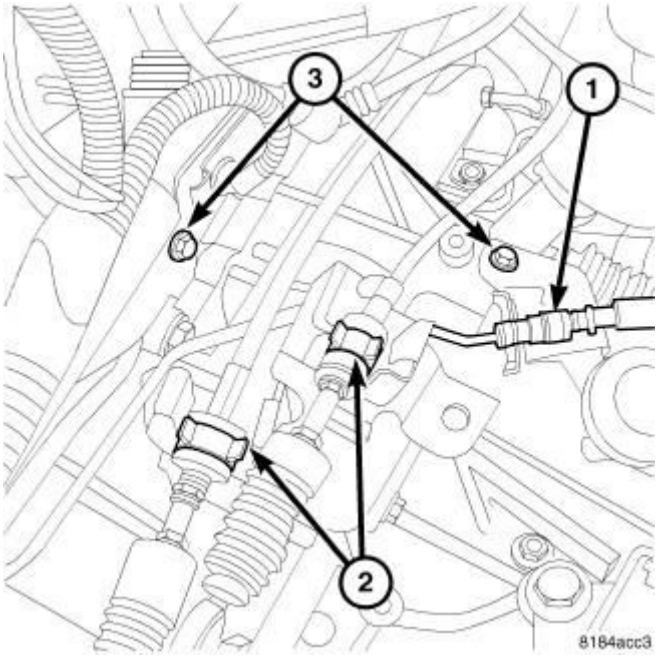

Fig. 3: Hydraulic Line
Courtesy of CHRYSLER GROUP, LLC

NOTE: Never loosen the shift cable bracket bolts for just cable removal. If the transmission is disassembled see ADJUSTMENTS procedure.

5. Release clips (2) at the shift cables and lift cables out of bracket slot.
6. Remove clip (1) to the hydraulic line for the clutch slave cylinder.
7. Disconnect hydraulic line and move out of the way.

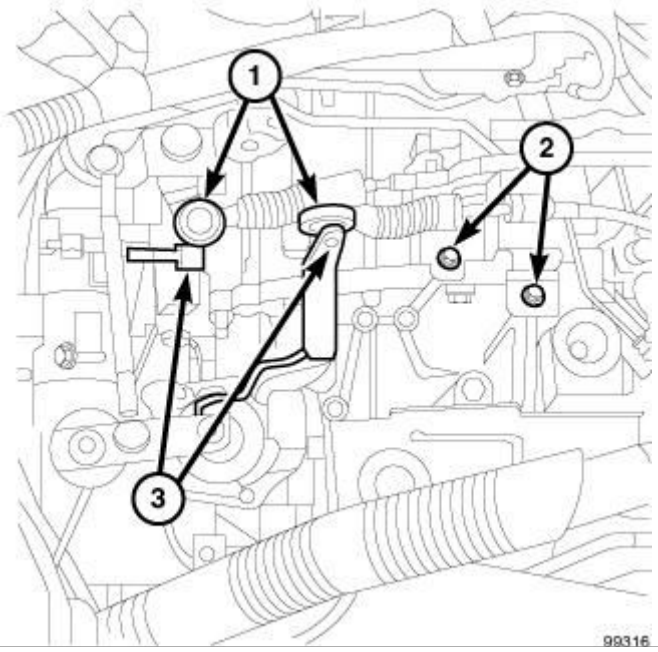

Fig. 4: Shift Cables And Bracket
Courtesy of CHRYSLER GROUP, LLC

CAUTION: Insure the shift levers are not deformed when removing cables.

8. Remove shift cables from shift levers (3) by tilting cable and prying from beneath with screwdriver tip.

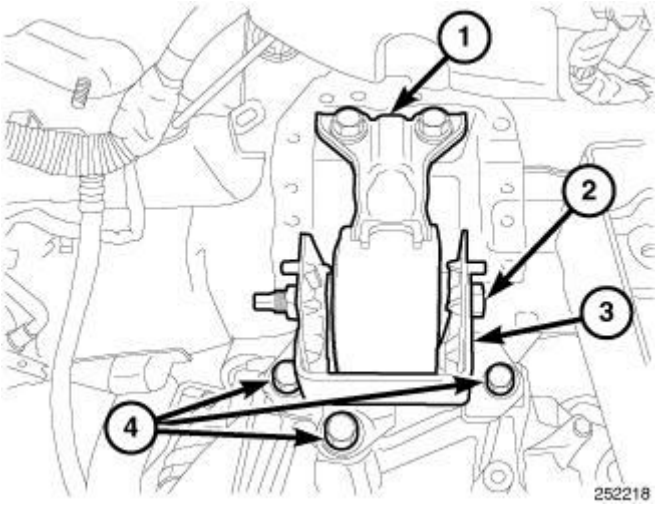

Fig. 5: Left Engine Mount
Courtesy of CHRYSLER GROUP, LLC

9. Support transmission with a floor jack.
10. Remove three transmission mount bolts (4) and lower transmission.

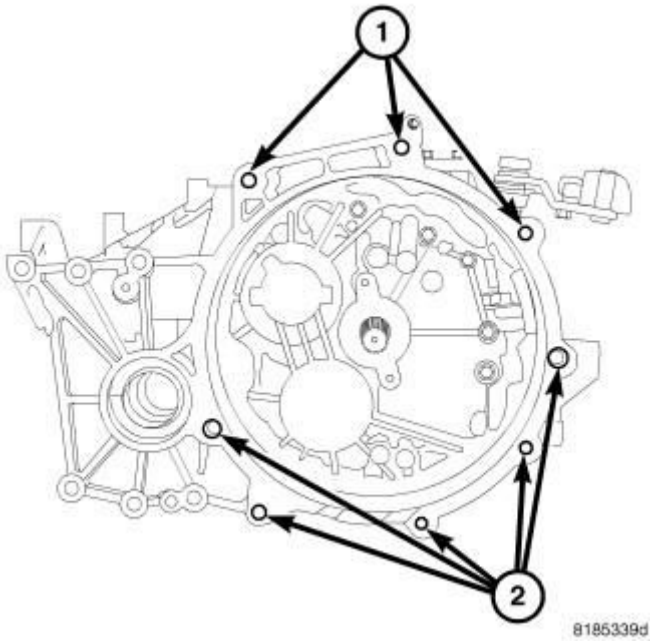

Fig. 6: Bellhousing Bolts
Courtesy of CHRYSLER GROUP, LLC

11. Remove the three upper bell housing bolts (1).
12. Remove the floor jack from the transmission.

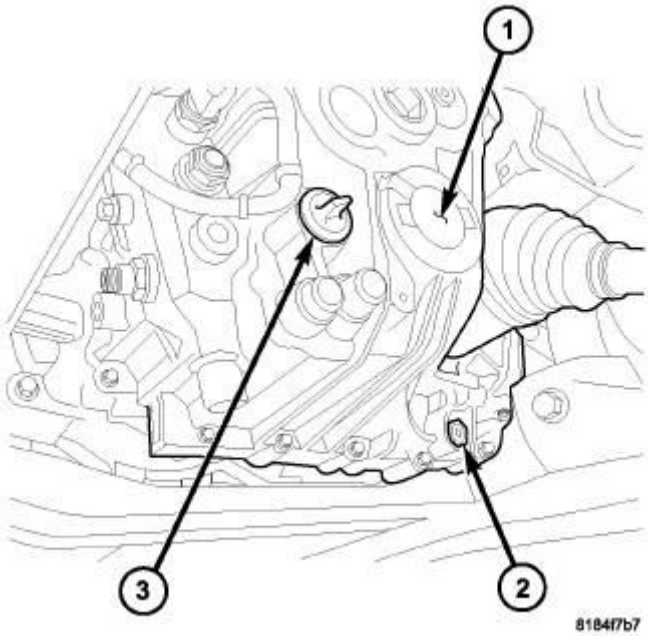

Fig. 7: Drain & Fill Plug
Courtesy of CHRYSLER GROUP, LLC

13. Raise and support the vehicle.

14. Remove front skid plate, if equipped.
15. Remove both left and right front lower splash shields.
16. Disconnect connector for the backup lights.
17. Remove the drain plug (2) and drain the transmission fluid.

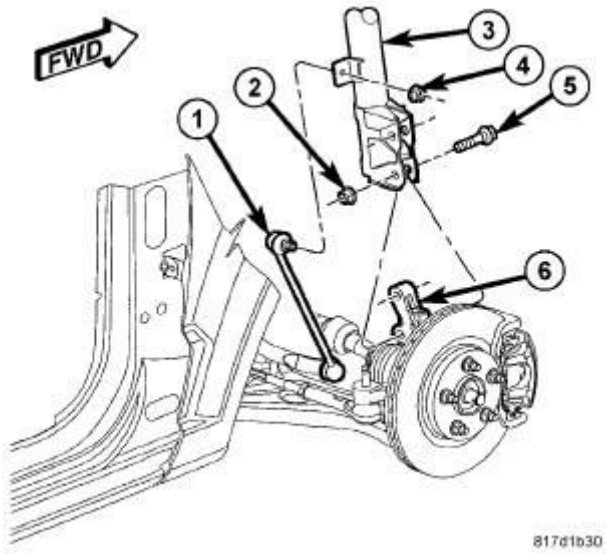

Fig. 8: Strut Mounting To Knuckle
Courtesy of CHRYSLER GROUP, LLC

18. Disconnect both swaybar link nuts (4) from the struts (3).
19. Remove the right and left halfshafts. Refer to **REMOVAL** .
20. Remove front fore and aft crossmember. Refer to **CROSSMEMBER, FRONT FORE AND AFT, REMOVAL** .
21. Remove propeller shaft. Refer to **REMOVAL** .

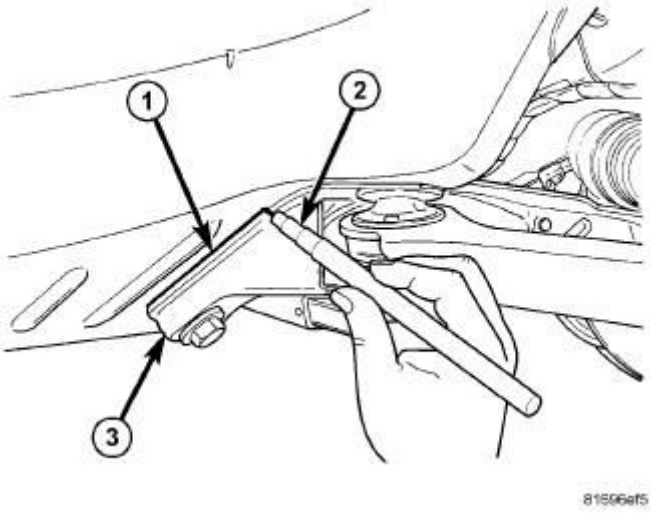

Fig. 9: Marking Crossmember Location
Courtesy of CHRYSLER GROUP, LLC

NOTE: Before lowering the front suspension crossmember, the location of the crossmember must be marked on the body of the vehicle. Do this so the crossmember can be relocated, upon reinstallation, against the body of vehicle in the same location as before removal. If the front suspension crossmember is not reinstalled in exactly the same location as before removal, the preset front wheel alignment settings (caster and camber) may be lost.

22. Mark the crossmember (3) to body location (1) using a grease pencil (2) or equivalent.

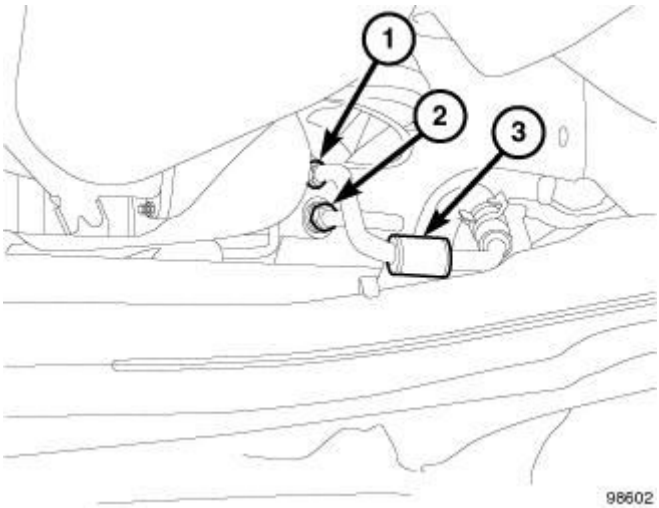

Fig. 10: Power Steering Return Line & Bracket Bolt
Courtesy of CHRYSLER GROUP, LLC

23. Remove power steering return line (1) bracket bolt (3).

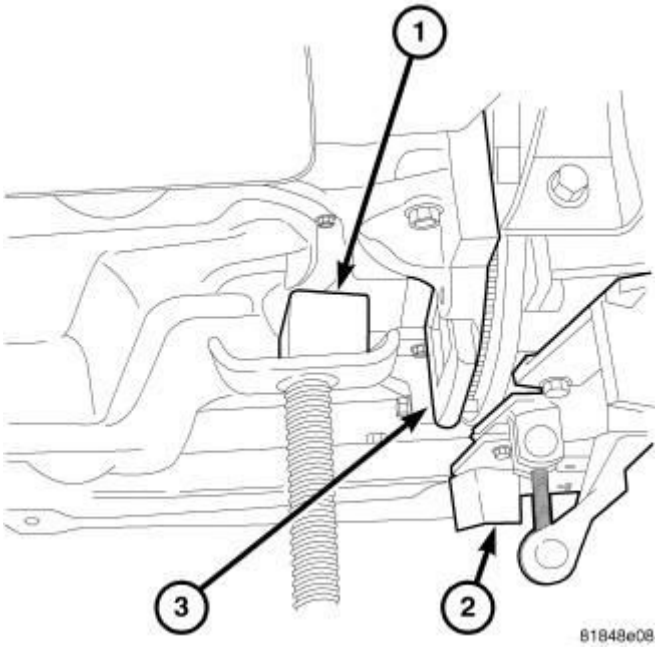

Fig. 11: Support Engine And Transaxle
Courtesy of CHRYSLER GROUP, LLC

24. Support the engine (3) with a screw jack (1).

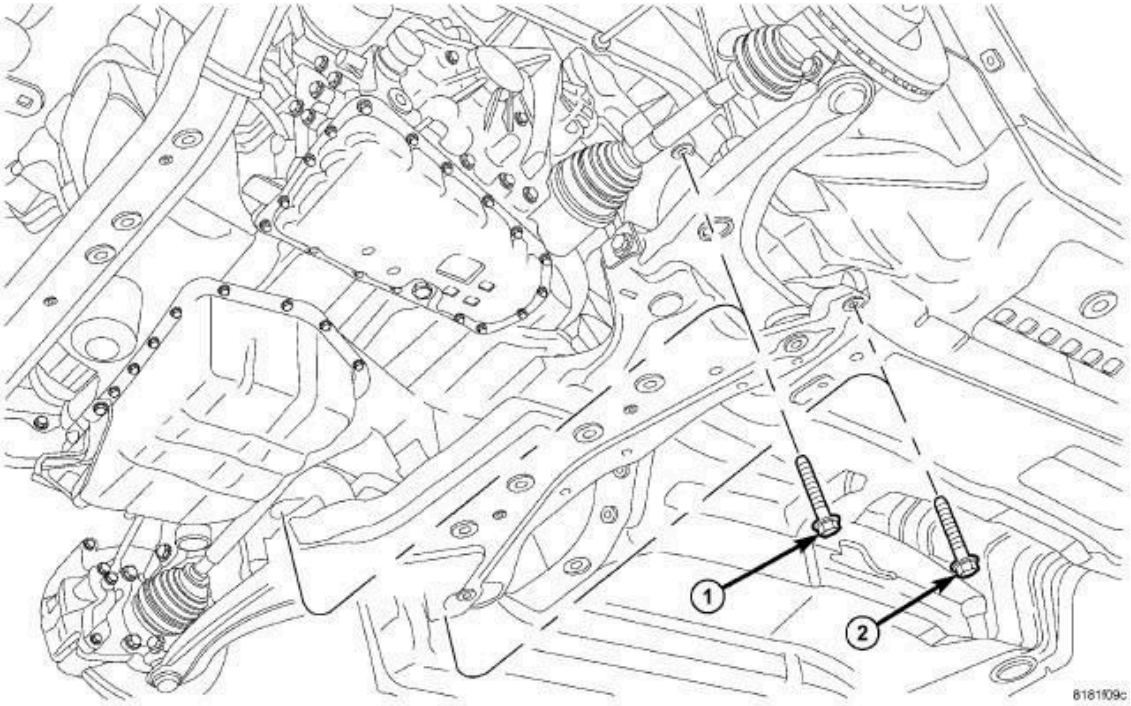

Fig. 12: Front Crossmember
Courtesy of CHRYSLER GROUP, LLC

25. Support front suspension crossmember with transmission jack.
26. Remove two front crossmember mounting bolts (1).
27. Loosen two rear crossmember mounting bolts (2).

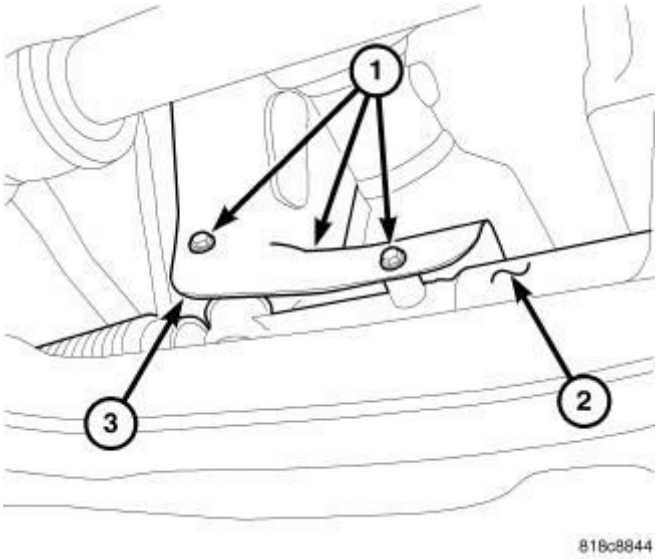

Fig. 13: Gear Shield
Courtesy of CHRYSLER GROUP, LLC

28. Lower transmission jack to allow crossmember to pivot down and remove three steering gear heat shield bolts (1) and remove heat shield (3).

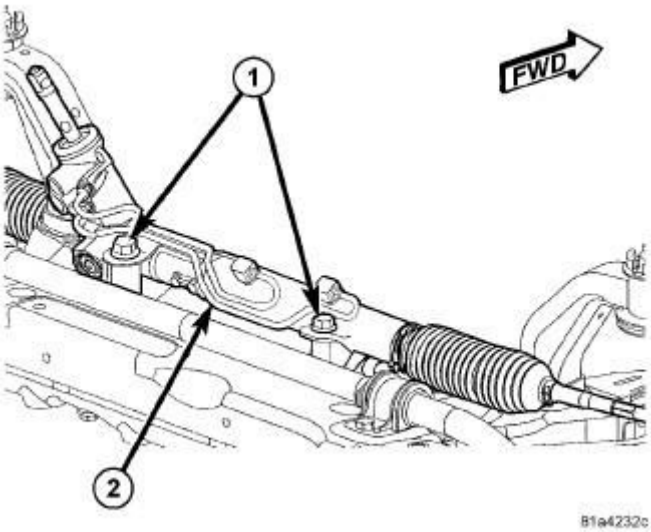

Fig. 14: Steering Gear & Bolts
Courtesy of CHRYSLER GROUP, LLC

29. Remove two steering gear (2) mounting bolts (1).

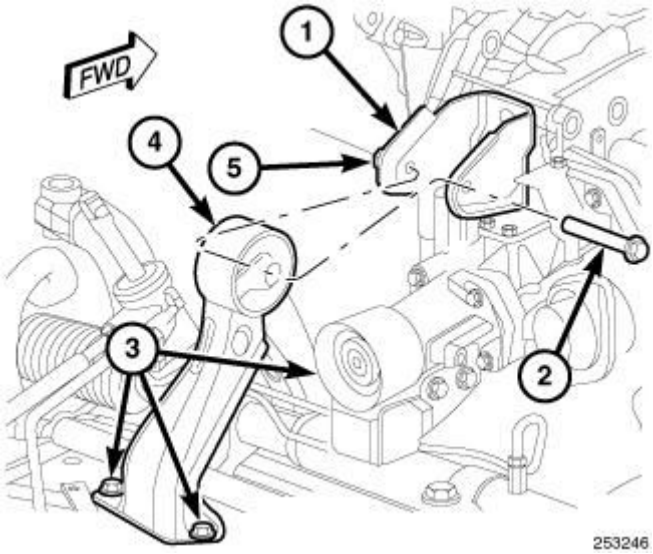

Fig. 15: Rear Roll Mount
Courtesy of CHRYSLER GROUP, LLC

30. Remove three engine roll mount bolts (3).
31. Lower crossmember from vehicle and secure the steering gear to bottom of vehicle.
32. Remove the rear engine roll mount through bolt (2) and remove engine roll mount (4).

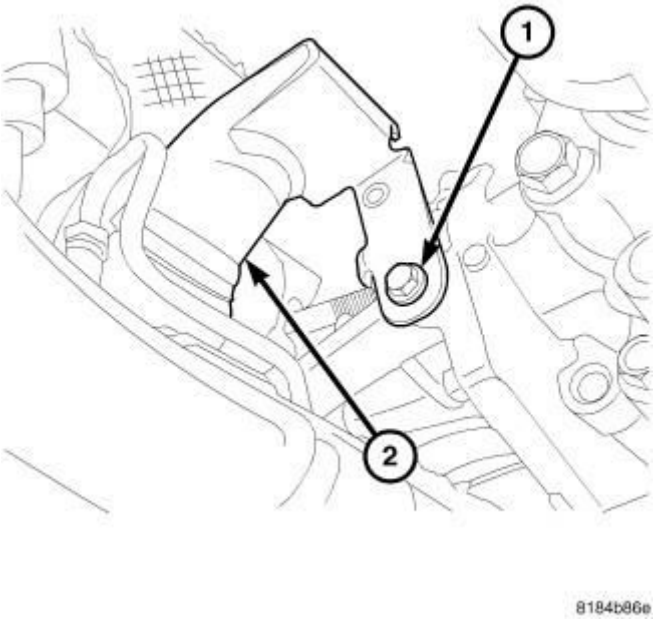

Fig. 16: Catalytic Converter Support Bracket
Courtesy of CHRYSLER GROUP, LLC

33. Remove the bolt (1) at the catalytic converter support bracket (2) to the Power Transfer Unit (PTU)

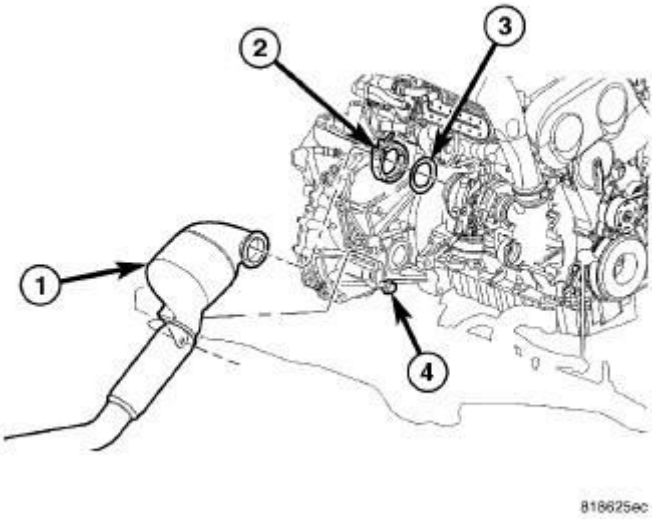

Fig. 17: Catalytic Converter - Diesel
Courtesy of CHRYSLER GROUP, LLC

NOTE: One thin metallic gasket (3) is between the catalytic converter and the exhaust pipe.

34. Remove catalytic converter mounting (banjo) clamp (2).
35. Move and support the catalytic converter (1) up and out of the way of the PTU.

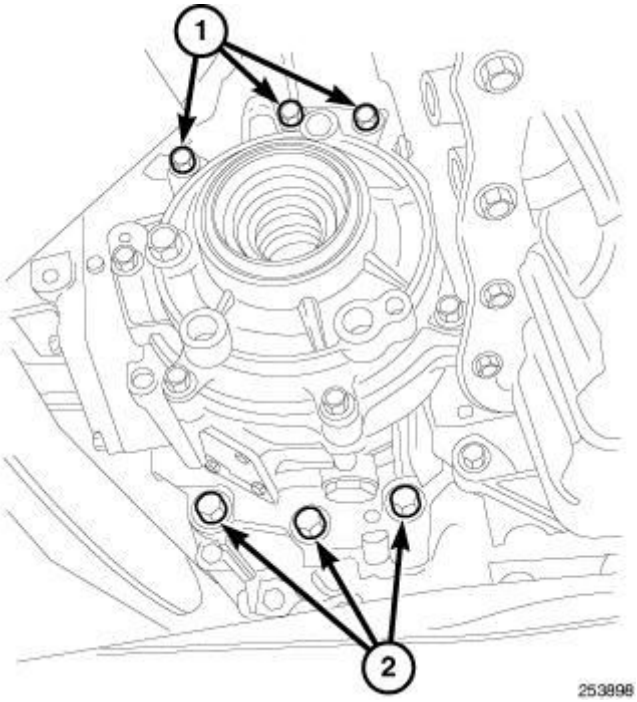

Fig. 18: PTU Mounting Bolts
Courtesy of CHRYSLER GROUP, LLC

36. Remove the six PTU mounting bolts.
37. Remove the PTU.
38. Remove and discard both O-rings that are between the PTU and the transmission.

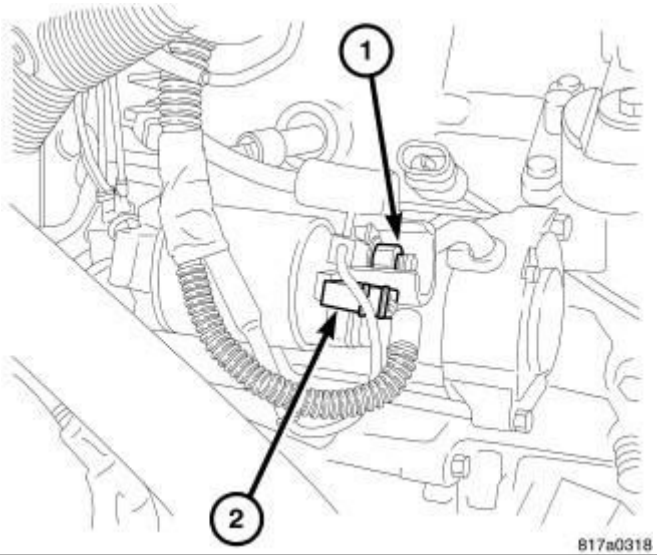

Fig. 19: Starter Electrical
Courtesy of CHRYSLER GROUP, LLC

39. Disconnect the battery cable (1) from the starter.
40. Disconnect the solenoid connector (2) from the starter.

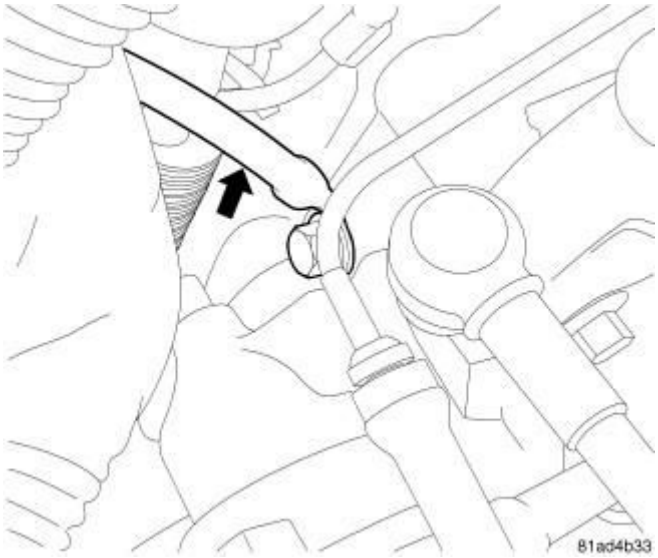

Fig. 20: Ground Cable
Courtesy of CHRYSLER GROUP, LLC

41. Remove the upper starter mounting bolt and the ground cable.

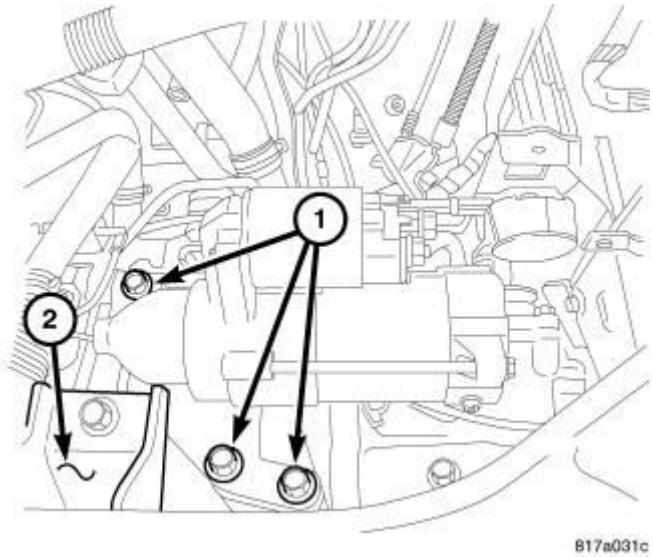

Fig. 21: Starter Bolts
Courtesy of CHRYSLER GROUP, LLC

42. Remove the two lower starter mounting bolts (1).

43. Remove the starter.

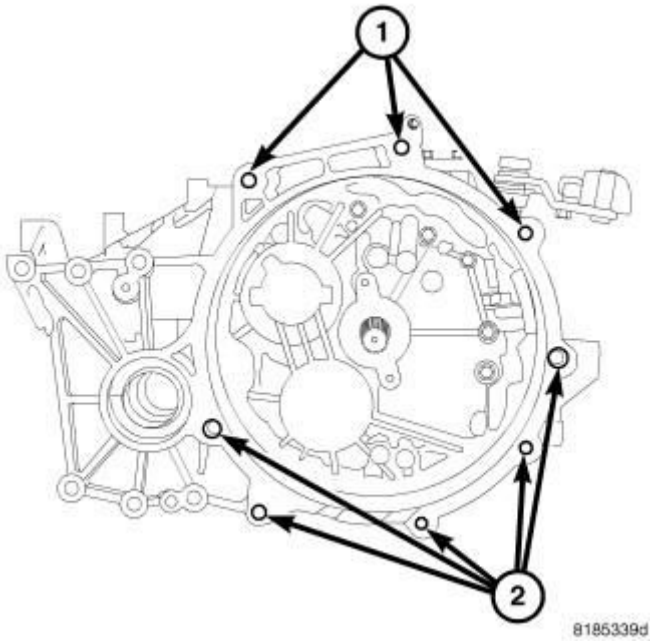

Fig. 22: Bellhousing Bolts
Courtesy of CHRYSLER GROUP, LLC

44. Support the transmission with a transmission jack.
45. Remove the lower transmission bellhousing bolts (2).
46. Lower the engine and transmission as needed and remove the transmission.

GASOLINE ENGINE

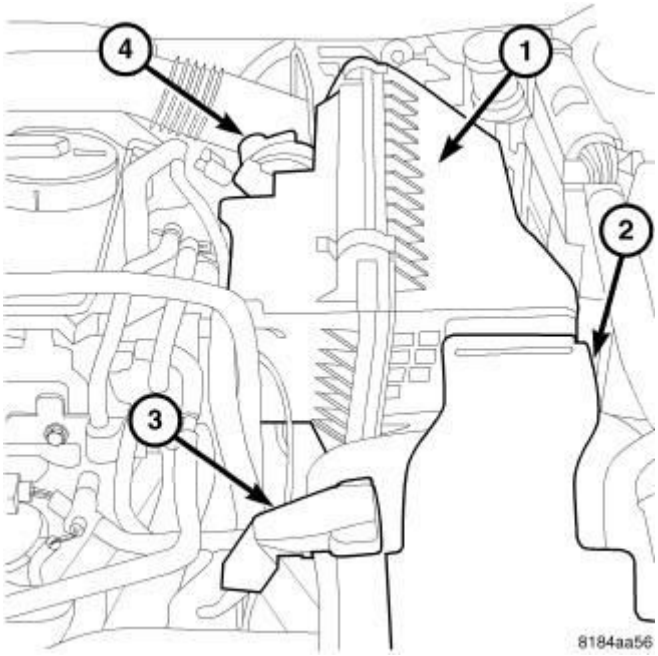

Fig. 23: Air Cleaner & Inlet Tube
Courtesy of CHRYSLER GROUP, LLC

1. Remove air inlet tube (4) and air cleaner assembly (1, 2).
2. Disconnect battery negative cable (3).

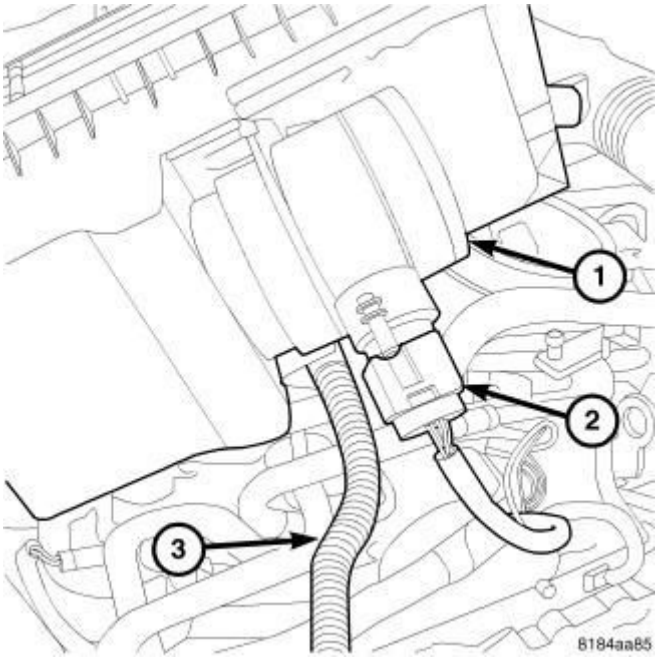

Fig. 24: Airflow Sensor
Courtesy of CHRYSLER GROUP, LLC

3. Unplug air flow sensor (2) at the air cleaner assembly (1).
4. Disconnect vacuum line at air cleaner assembly (1).
5. Remove the Battery Refer to **BATTERY, REMOVAL** .

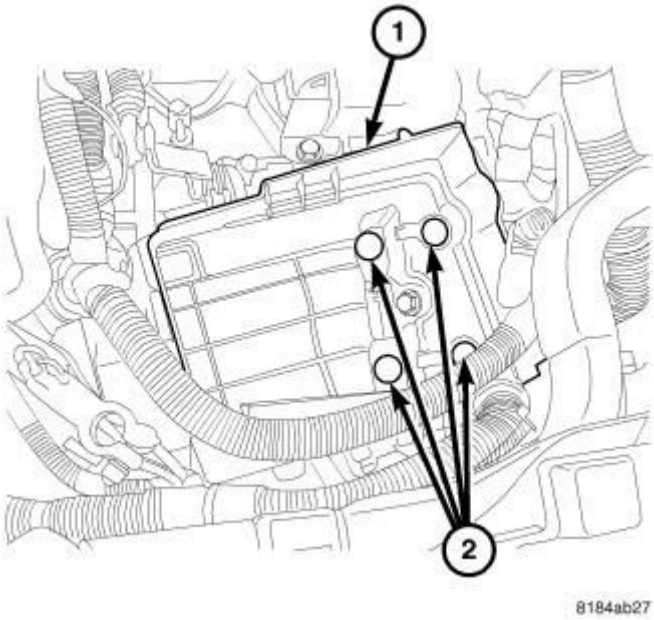

Fig. 25: Battery Tray
Courtesy of CHRYSLER GROUP, LLC

6. Remove the bolts (2) at the battery tray.
7. Remove the battery tray (1).

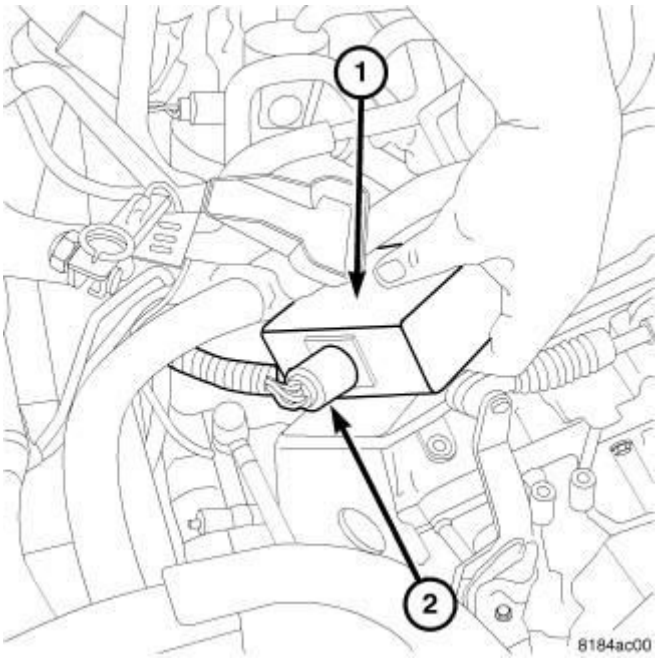

Fig. 26: Vacuum Control Module
Courtesy of CHRYSLER GROUP, LLC

8. Unplug electrical connector (2) at the vacuum control module (1).

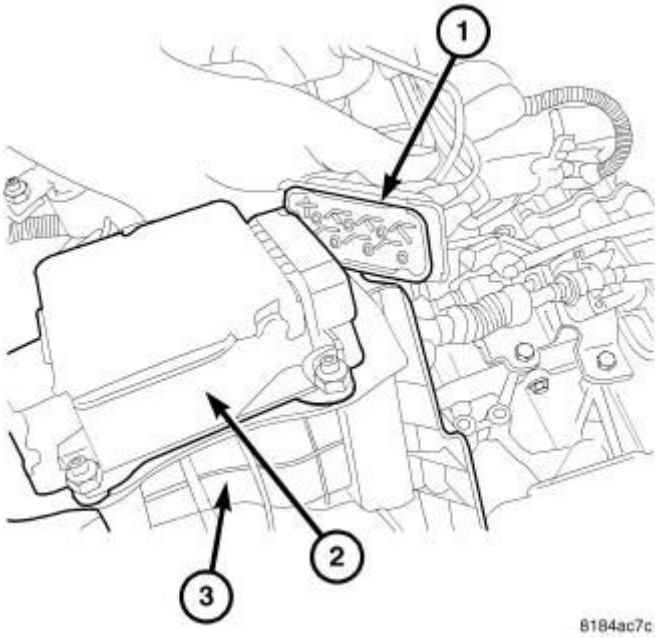

Fig. 27: Vacuum Lines
Courtesy of CHRYSLER GROUP, LLC

9. Unplug vacuum line connector (1).

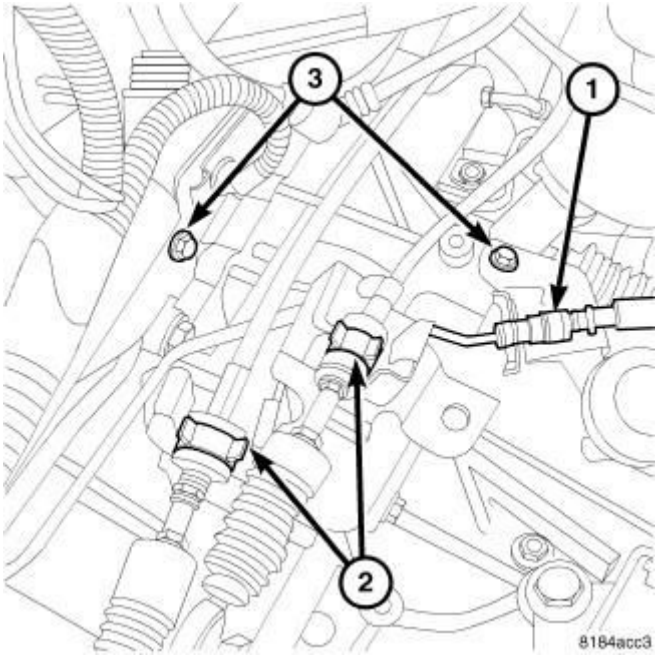

Fig. 28: Hydraulic Line
Courtesy of CHRYSLER GROUP, LLC

NOTE: Never loosen the shift cable bracket bolts for just cable removal. If the transmission is disassembled see ADJUSTMENTS procedure.

10. Remove clip (1) to the hydraulic clutch slave cylinder.
11. Release clips (2) at the shift cables and lift cables out of bracket slot.
12. Remove the bolts (3) at the clutch hydraulic line and move the line out of the way.

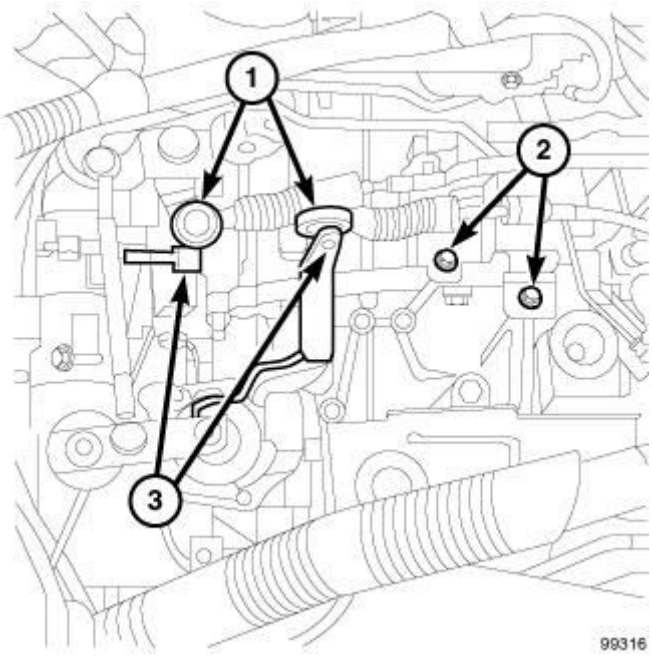

Fig. 29: Shift Cables And Bracket
Courtesy of CHRYSLER GROUP, LLC

CAUTION: Insure the shift levers are not deformed when removing cables.

13. Remove shift cables from shift levers (3) by tilting cable and prying from beneath with screwdriver tip.

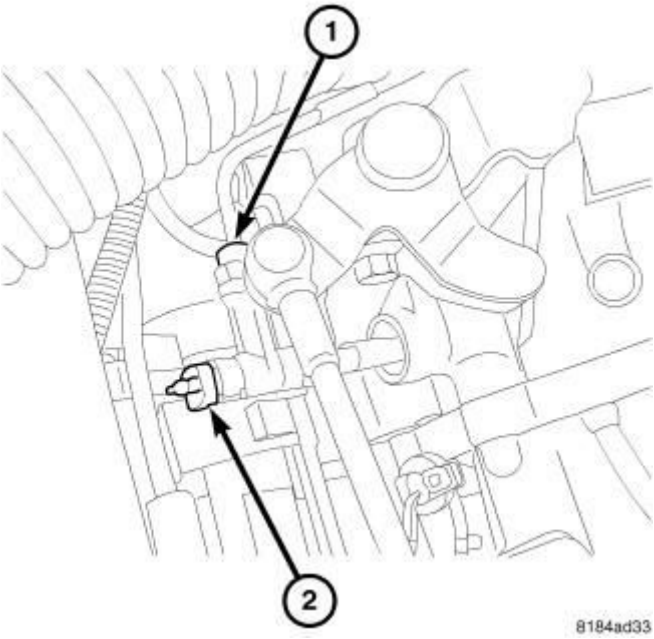

Fig. 30: Bleeder At Slave Cylinder
Courtesy of CHRYSLER GROUP, LLC

14. Remove hydraulic line (1) and the bleed adaptor (2) at the slave cylinder.
15. Unplug connectors and move wiring harness at the top of the transmission out of the way.

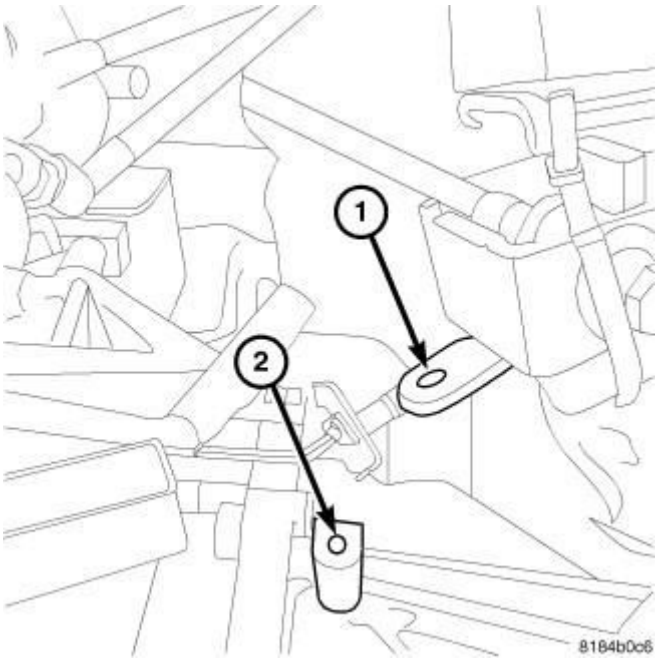

Fig. 31: Upper Mount
Courtesy of CHRYSLER GROUP, LLC

16. Support transmission with a jack.

17. Remove the bolt at the upper transmission mount (1) and lower transmission (2).

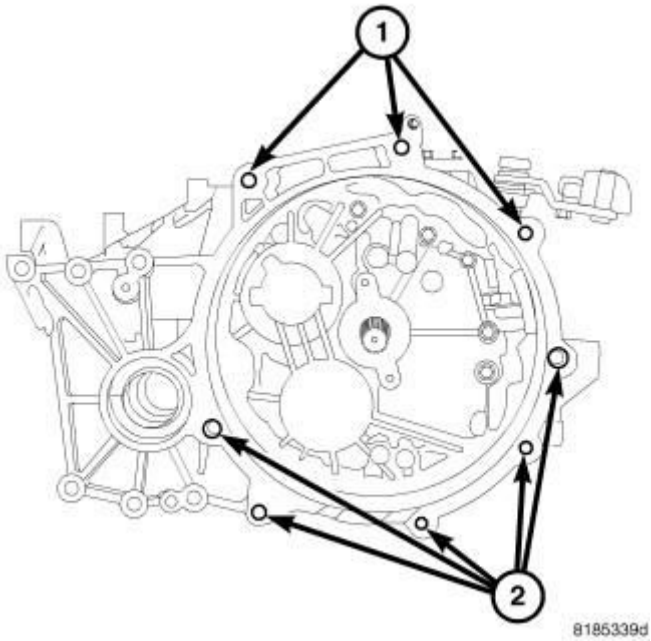

Fig. 32: Bellhousing Bolts
Courtesy of CHRYSLER GROUP, LLC

18. Remove the three upper bell housing bolts (1).
19. Remove the Jack from the transmission.

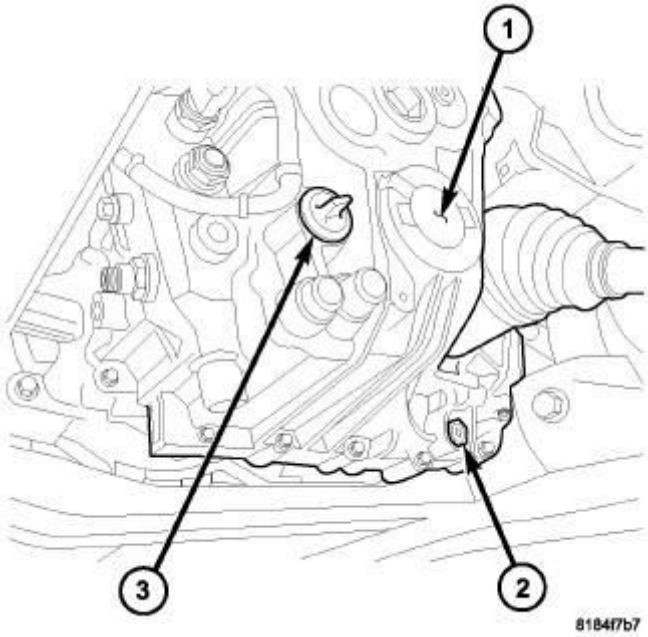

Fig. 33: Drain & Fill Plug

Courtesy of CHRYSLER GROUP, LLC

20. Raise the vehicle on the hoist.
21. Remove the drain plug (2) and drain the transmission fluid.
22. Remove both front wheels.
23. Remove the right and left halfshafts. Refer to **REMOVAL** .
24. Remove left front lower splash shield.
25. Remove propeller shaft. Refer to **REMOVAL** .

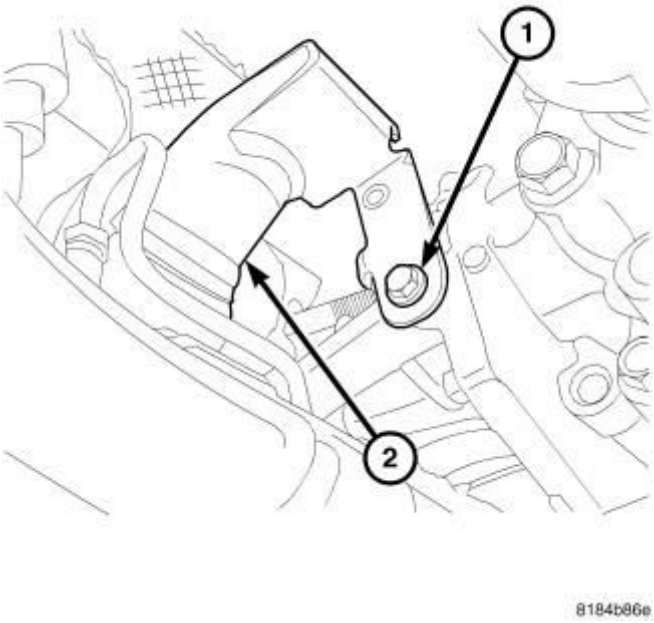

Fig. 34: Catalytic Converter Support Bracket
Courtesy of CHRYSLER GROUP, LLC

NOTE: One thin metallic gasket is between the catalytic converter and the exhaust pipe.

26. Remove the bolt (1) at the catalytic converter support bracket (2).
27. Remove catalytic converter mounting (banjo) clamp.
28. Move the catalytic converter out of the way. Refer to **REMOVAL** .
29. Remove the four PTU support brace mounting bolts.
30. Remove the PTU support bracket.
31. Remove the six PTU mounting bolts. Refer to **REMOVAL** .
32. Support engine and transmission with a jack.

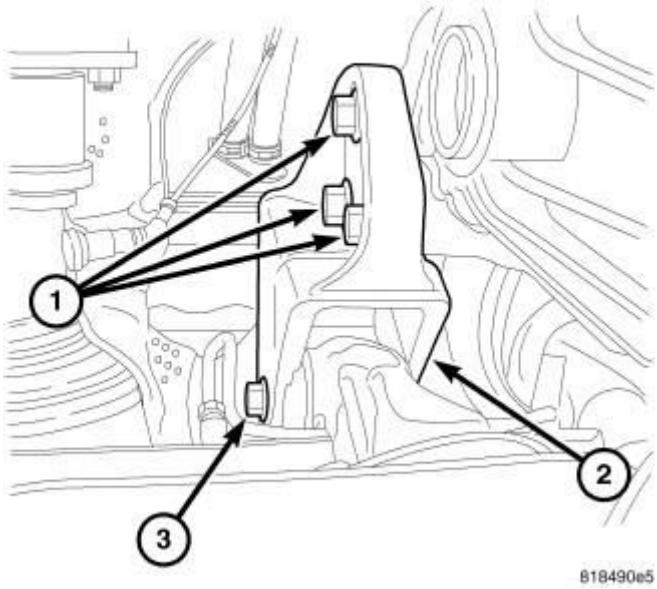

Fig. 35: Rear Mount
Courtesy of CHRYSLER GROUP, LLC

33. Remove rear transmission mount thorough bolt.
34. Remove the PTU. Refer to **REMOVAL** .
35. Remove the O-ring that is between the PTU and the transmission.
36. Remove the right front splash shield.

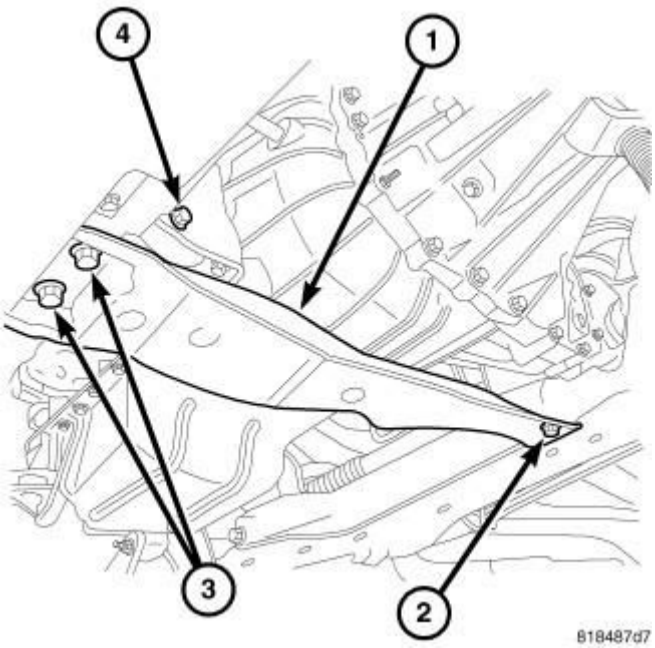

Fig. 36: Transmission Cross Member
Courtesy of CHRYSLER GROUP, LLC

37. Remove the front transmission mount through bolt.

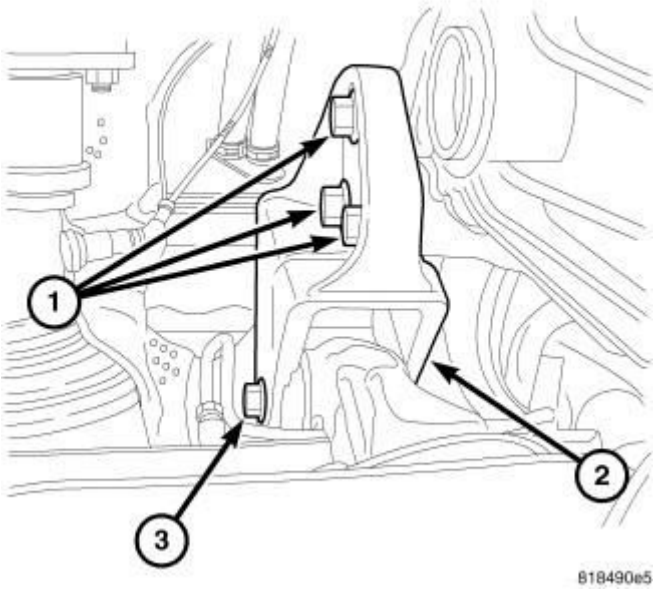

Fig. 37: Rear Mount
Courtesy of CHRYSLER GROUP, LLC

38. Remove the transmission crossmember bolts.
39. Remove the starter Refer to **STARTER, REMOVAL** .
40. Support the transmission with a transmission jack.
41. Remove the rear transmission mount retaining bolts.

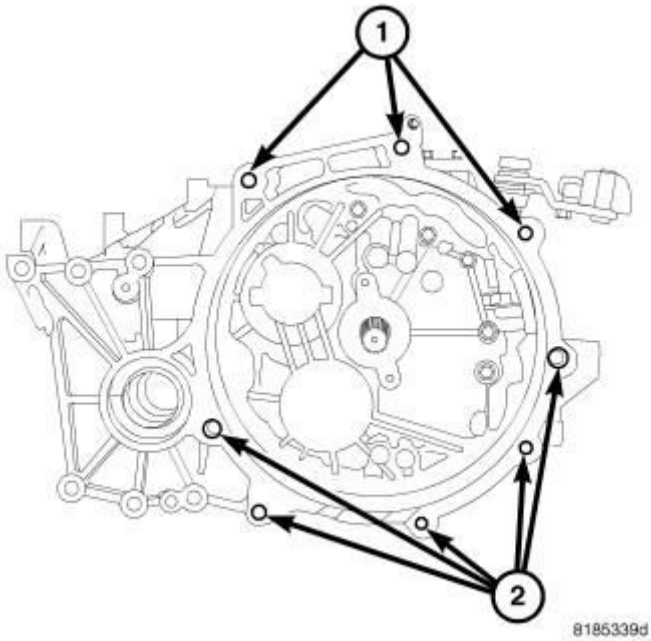

Fig. 38: Bellhousing Bolts
Courtesy of CHRYSLER GROUP, LLC

42. Remove the lower transmission bellhousing bolts.
43. Lower the transmission.

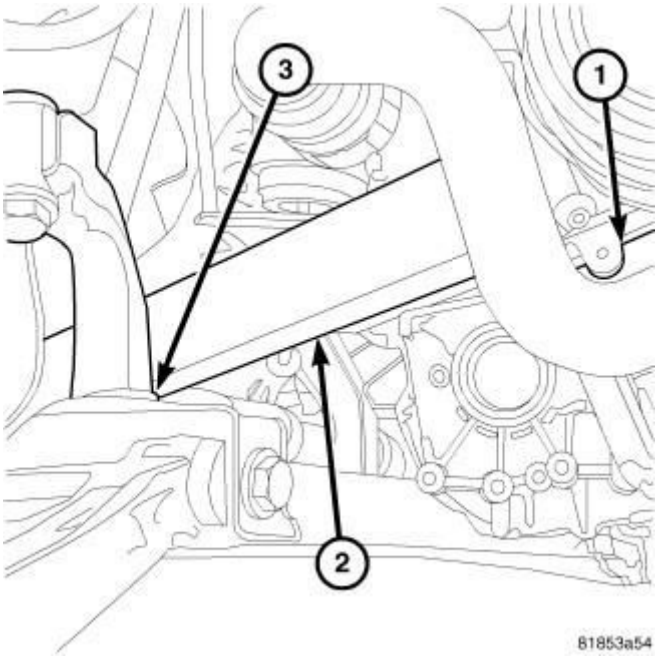

Fig. 39: Roll Engine Forward
Courtesy of CHRYSLER GROUP, LLC

NOTE: A block of wood may be used between the frame and the engine to help gain clearance.

44. Roll engine and transmission forward to gain clearance.
45. Remove the transmission.

DISASSEMBLY

DISASSEMBLY

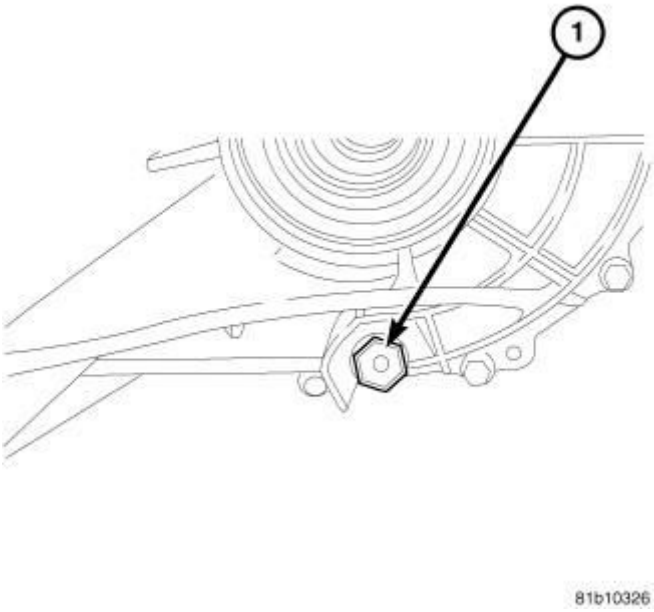

Fig. 40: Drain Plug
Courtesy of CHRYSLER GROUP, LLC

1. Remove drain plug (1) and allow transmission oil to drain.

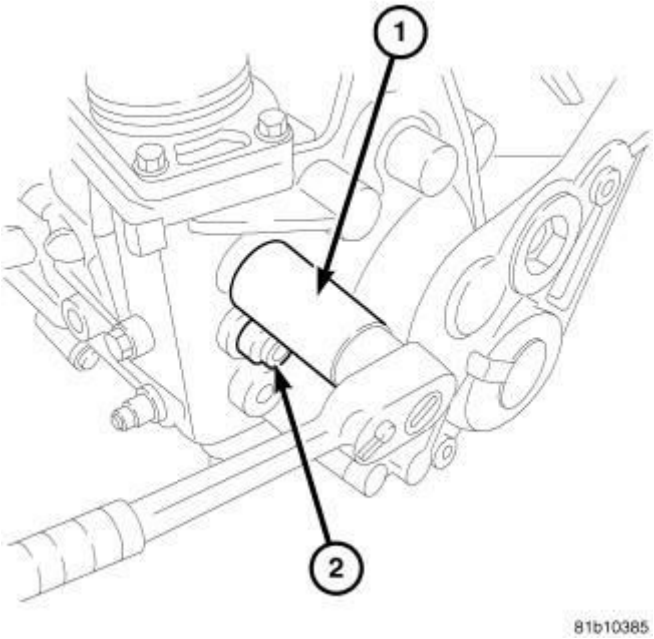

Fig. 41: Back- Up Lamp Switch
Courtesy of CHRYSLER GROUP, LLC

2. Remove backup lamp switch (1).

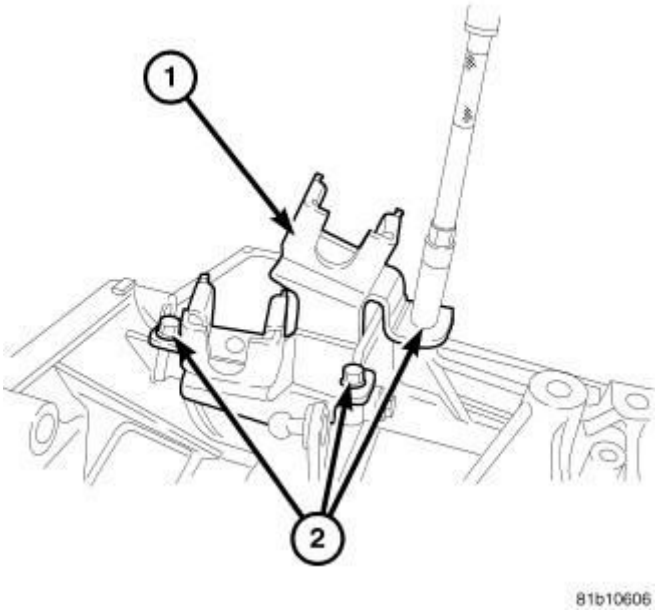

Fig. 42: Shift Cable Bracket
Courtesy of CHRYSLER GROUP, LLC

3. Remove the bolts (2) holding the shift cable bracket (1) to the transmission case.
4. Remove the bracket from the transmission (1).

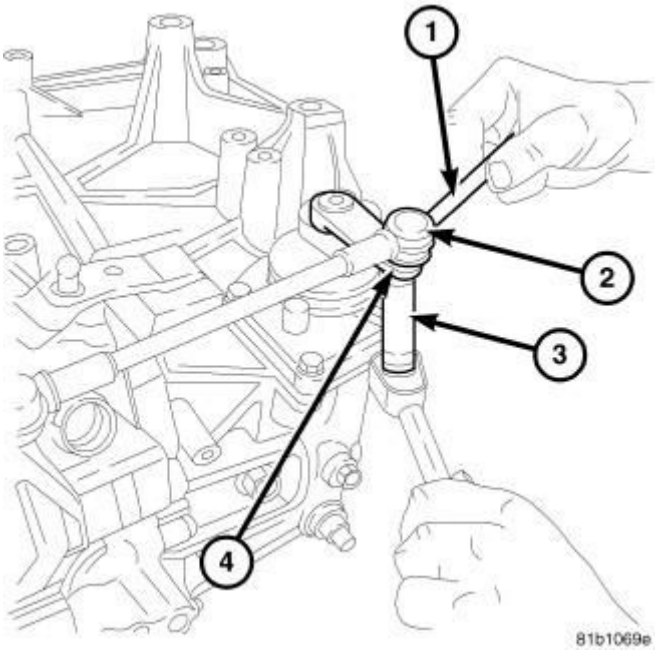

Fig. 43: Crossover Rod Nut
Courtesy of CHRYSLER GROUP, LLC

5. Remove the nut (4) holding the crossover rod (2) to the shift lever. Be sure

to use a wrench (1) to hold the ball stud to prevent it from rotating in the shift lever.

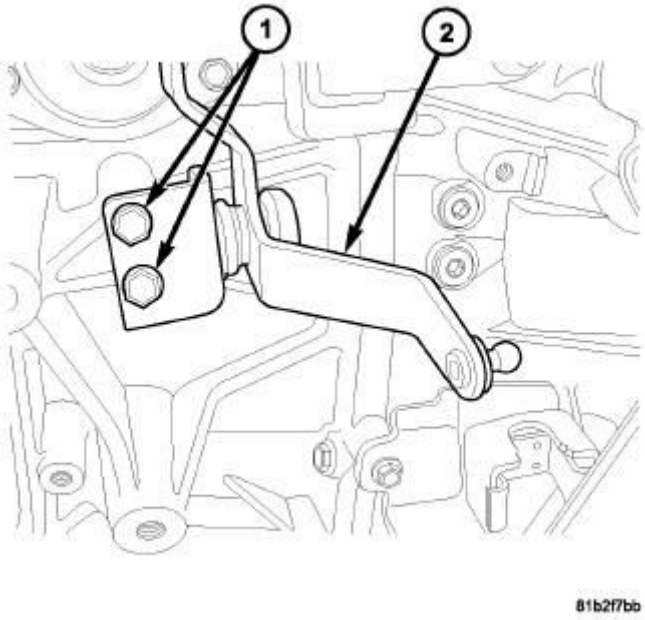

Fig. 44: Bell Crank
Courtesy of CHRYSLER GROUP, LLC

6. Remove bolts (1) holding crossover bellcrank (2) to the transmission case.
7. Remove the crossover bellcrank from the transmission.

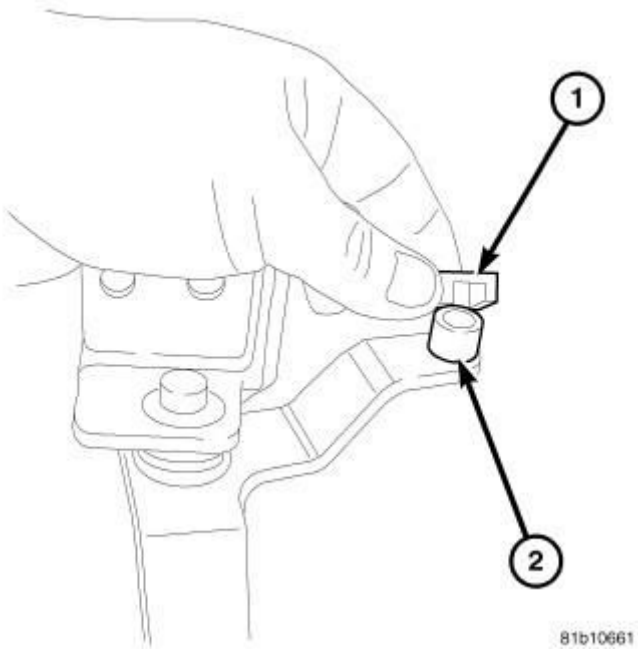

Fig. 45: Bell Crank Bushing

Courtesy of CHRYSLER GROUP, LLC

8. Be sure to locate the bell crank bushing on the bell crank or the shift lever and set aside for installation.

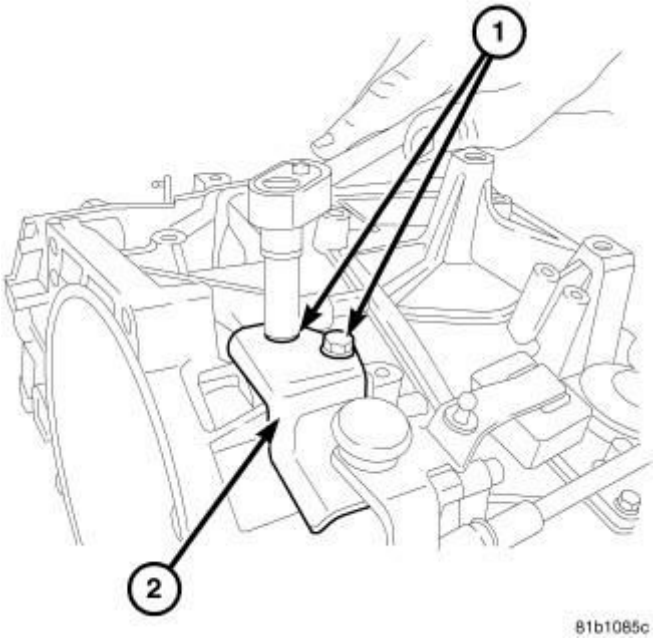

Fig. 46: Crossover Bracket
Courtesy of CHRYSLER GROUP, LLC

9. Remove the bolts (1) at the shift lever bracket (2).
10. Remove the shift lever bracket (2).

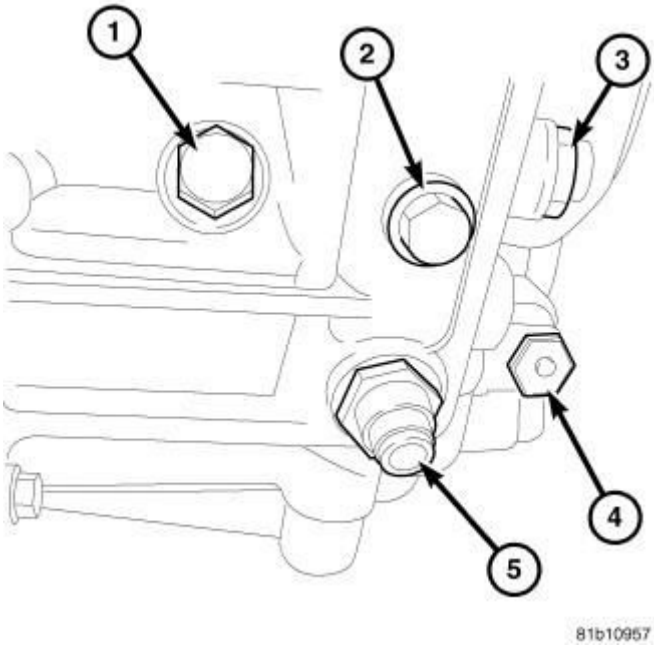

Fig. 47: Shift/Select Detents & Shift Guide Pin
Courtesy of CHRYSLER GROUP, LLC

11. Loosen and remove shift lock ball for the shift detent (5).
12. Loosen and remove shift lock ball for the select detent (3).
13. Loosen and remove shift guide pin (2).

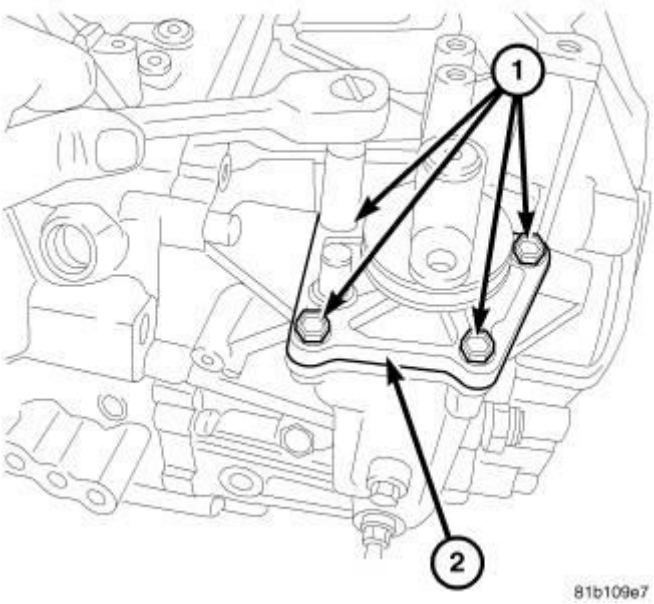

Fig. 48: Shift Lever Assembly
Courtesy of CHRYSLER GROUP, LLC

14. Remove the bolts holding the shift lever assembly to the transmission.

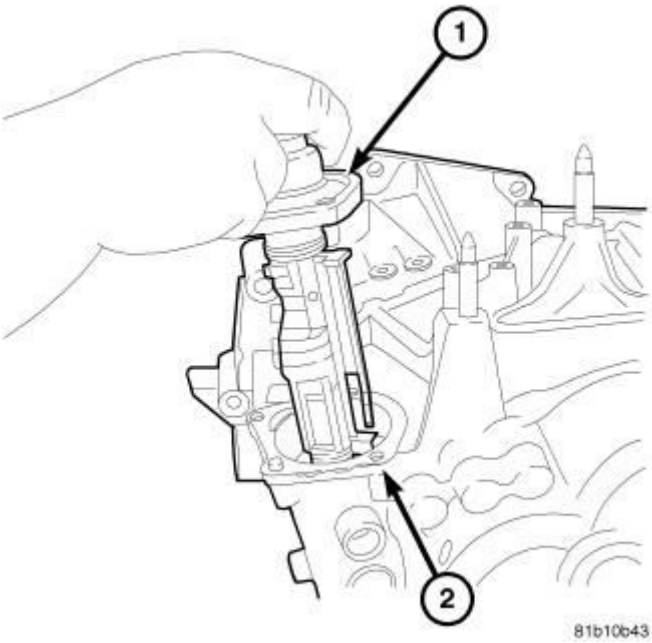

Fig. 49: Shift Lever Assembly
Courtesy of CHRYSLER GROUP, LLC

15. Remove the shift lever assembly from the transmission case.

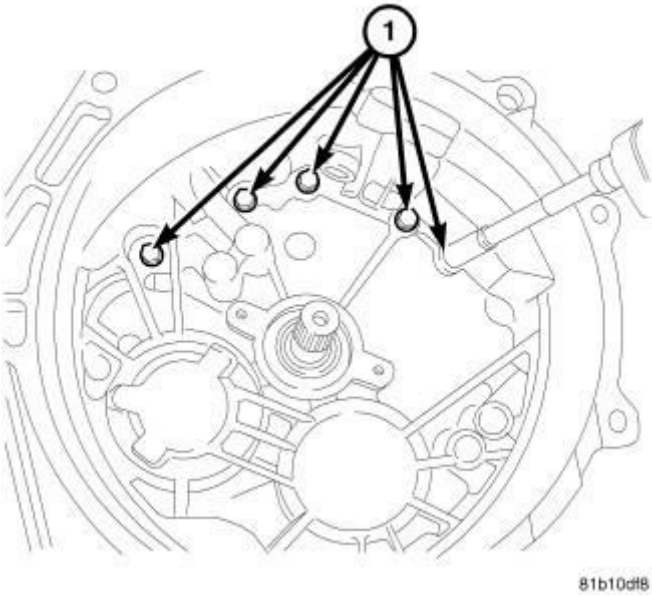

Fig. 50: Transmission Case To Clutch Housing Bolts (Inside Clutch Housing)
Courtesy of CHRYSLER GROUP, LLC

16. Remove the bolts (1) holding the transmission case to the clutch housing from inside the clutch housing.

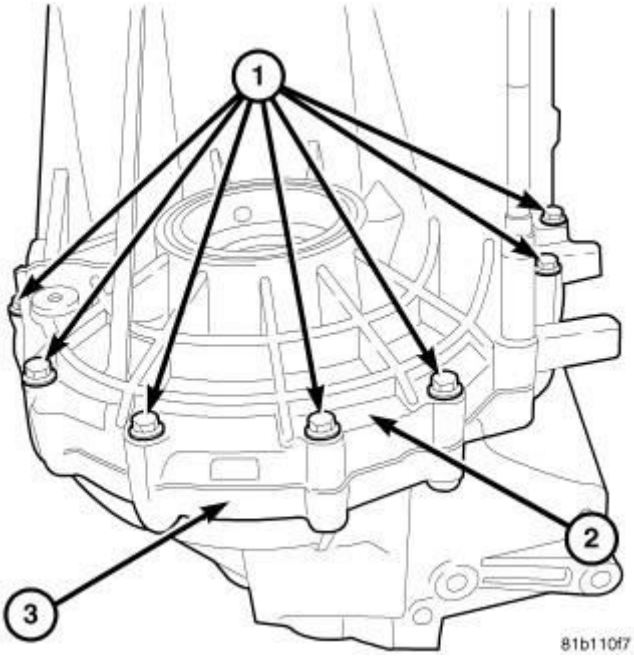

Fig. 51: Transmission Case To Clutch Housing Bolts (Transmission Case Side)
Courtesy of CHRYSLER GROUP, LLC

17. Remove the bolts (1) holding the transmission case (2) to the clutch housing (3) from the transmission case side.

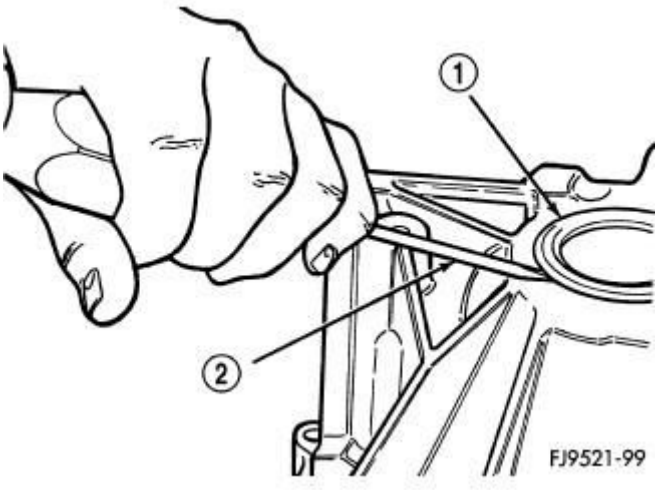

Fig. 52: Axle Shaft Seal Removal
Courtesy of CHRYSLER GROUP, LLC

18. Insert a flat-blade pry tool (2) at outer edge of axle shaft seals (1).
19. Tap on the pry tool (2) with a small hammer and remove both (case and bell housing sides) axle shaft seals (1).

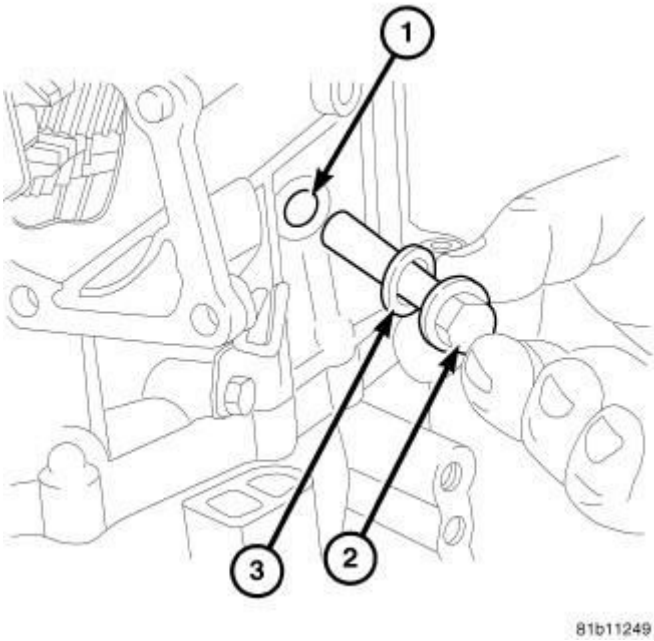

Fig. 53: Idler Shaft Anti-Rotation Bolt
Courtesy of CHRYSLER GROUP, LLC

20. Remove anti-rotation bolt (2) and discard old washer a new washer will be used during assembly.

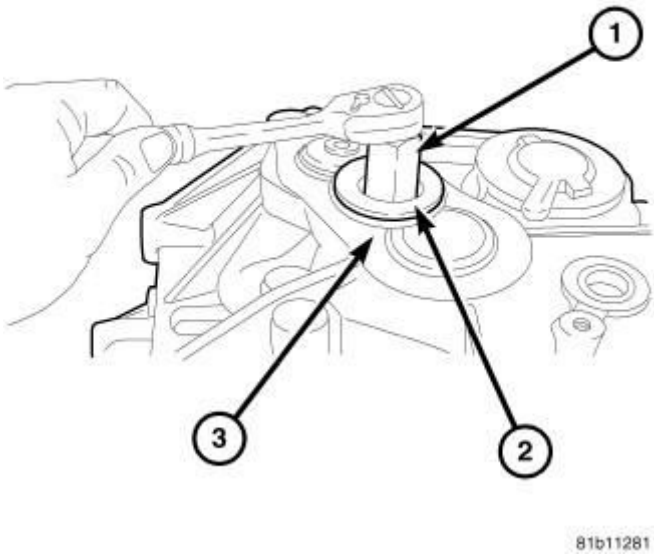

Fig. 54: 27mm Hex Adapter For Shaft Plug
Courtesy of CHRYSLER GROUP, LLC

21. Install a 27 mm (1 1/16 in.) hex adapter (1) into the shaft plug (2) at the rear of the transmission case (3).

22. Loosen and remove the shaft plug (2) in the rear of the transmission case.

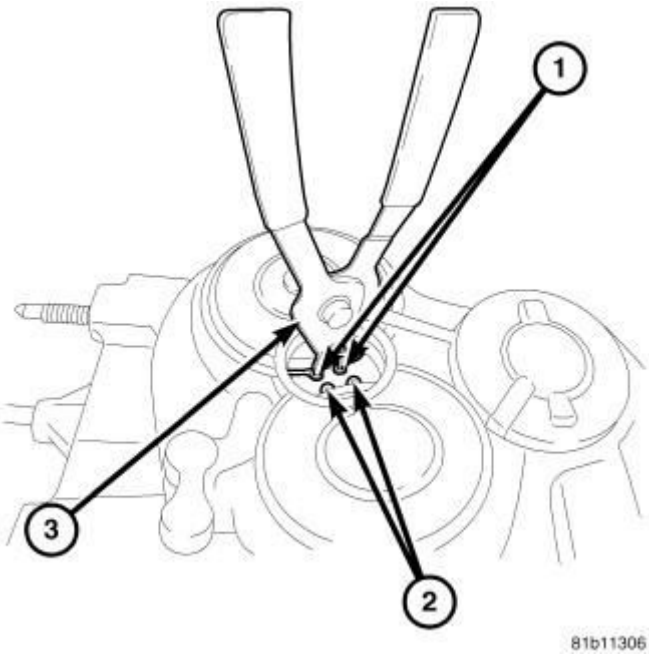

Fig. 55: Snap Rings At Rear Of Transmission Case
Courtesy of CHRYSLER GROUP, LLC

23. Using suitable snap-ring pliers (3), release the transmission shaft bearing snap-rings (1, 2) at the rear of the transmission case.

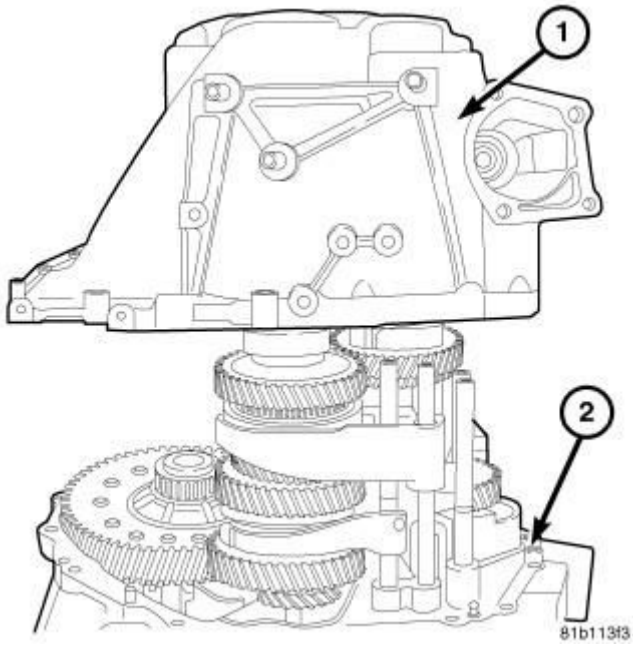

Fig. 56: Transmission Case Half & Clutch Housing
Courtesy of CHRYSLER GROUP, LLC

24. Remove the transmission case half (1) from the clutch housing (2).

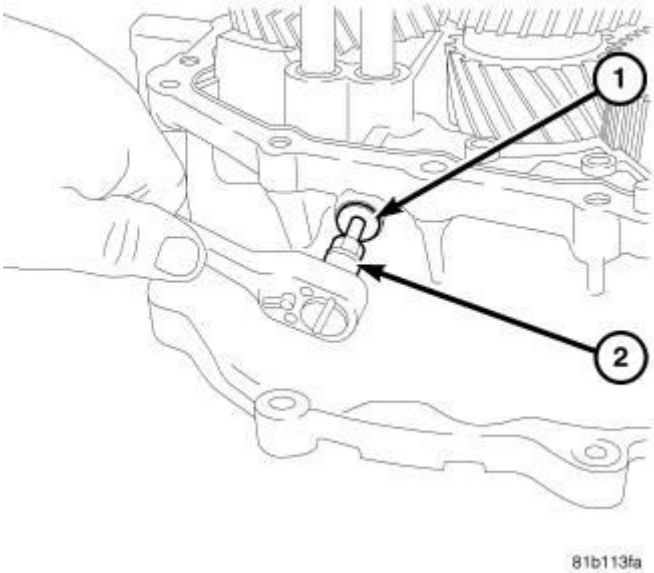

Fig. 57: Fifth & Sixth Gear Shift Rail Detent Plug
Courtesy of CHRYSLER GROUP, LLC

25. Remove fifth and sixth gear shift rail detent plug (1).

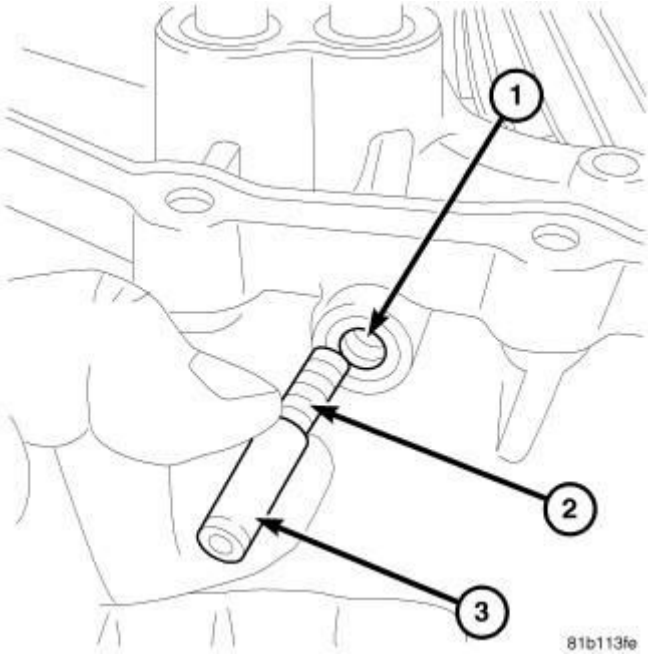

Fig. 58: Fifth & Sixth Gear Shift Rail Detent Spacer & Spring
Courtesy of CHRYSLER GROUP, LLC

26. Remove fifth and sixth gear shift rail detent spacer (3) and spring (2).

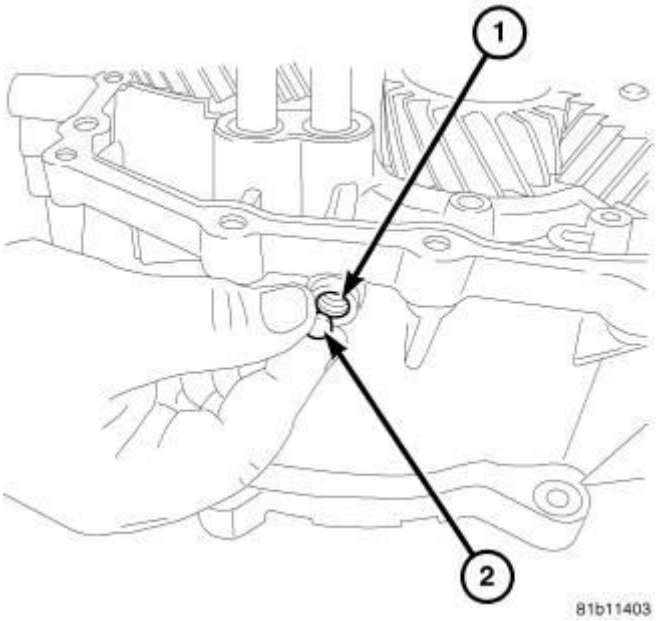

Fig. 59: Fifth & Sixth Gear Shift Rail Detent Ball
Courtesy of CHRYSLER GROUP, LLC

27. Remove fifth and sixth gear shift rail detent ball (2).

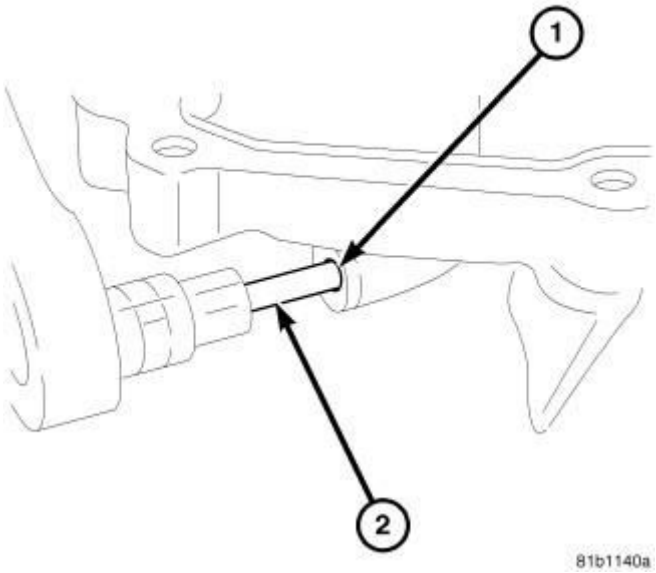

Fig. 60: Reverse Shift Rail Detent Plug
Courtesy of CHRYSLER GROUP, LLC

28. Remove reverse shift rail detent plug (1).

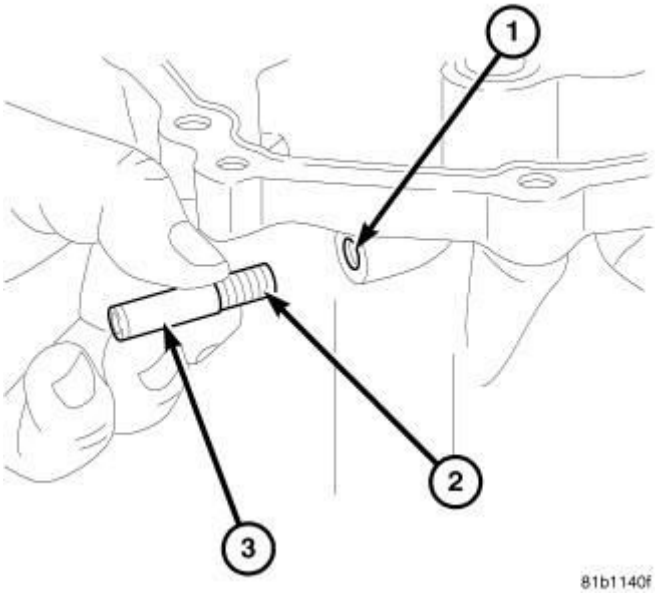

Fig. 61: Reverse Shift Rail Detent Spacer & Spring
Courtesy of CHRYSLER GROUP, LLC

29. Remove the reverse shift rail detent spacer (3) and spring (2).

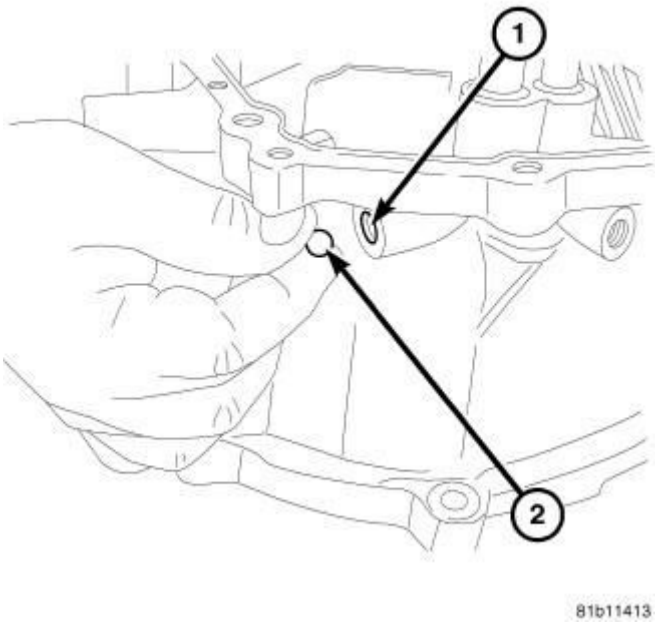

Fig. 62: Reverse Shift Rail Detent Ball
Courtesy of CHRYSLER GROUP, LLC

30. Remove the reverse shift rail detent ball (2).

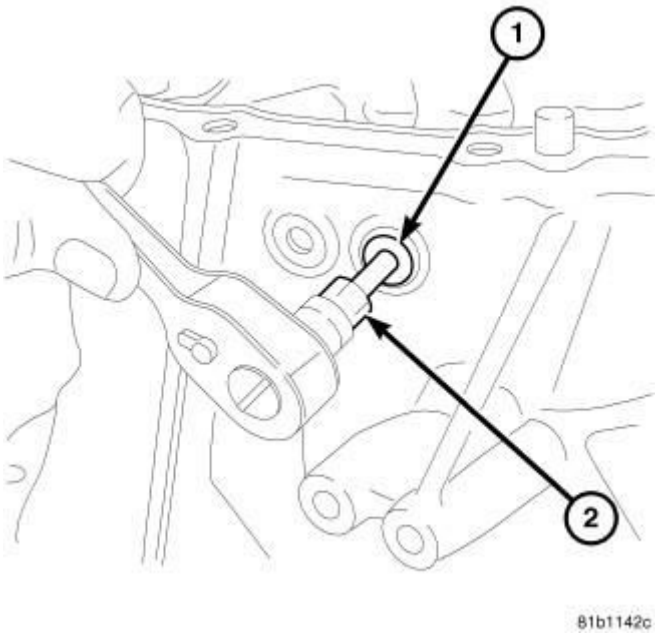

Fig. 63: Third & Fourth Gear Shift Rail Detent Plug
Courtesy of CHRYSLER GROUP, LLC

31. Remove third and fourth gear shift rail detent plug (1).

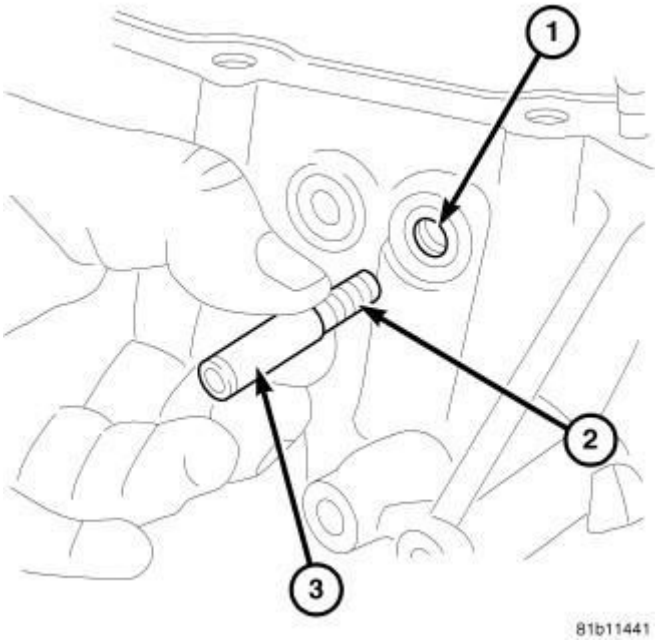

Fig. 64: Third & Fourth Gear Shift Rail Detent Spacer & Spring
Courtesy of CHRYSLER GROUP, LLC

32. Remove third and fourth gear shift rail detent spacer (3) and spring (2).
33. Remove third and fourth gear shift rail detent ball.

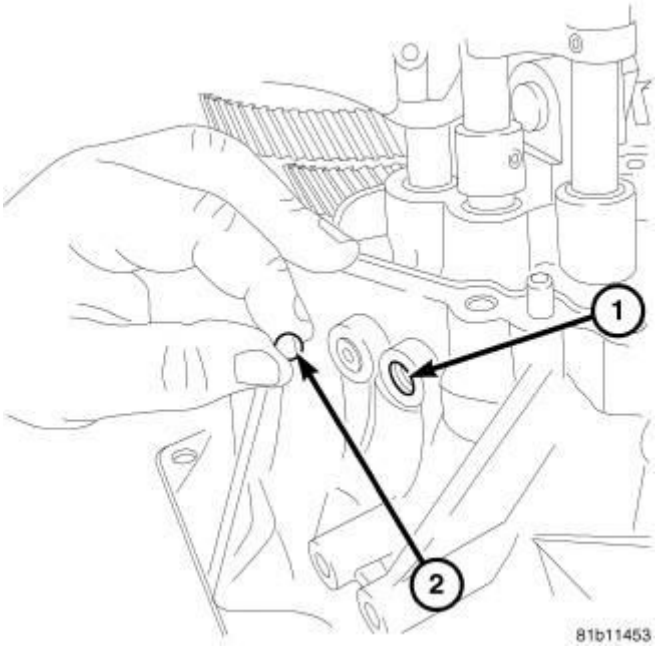

Fig. 65: Third & Fourth Gear Shift Rail Detent Ball
Courtesy of CHRYSLER GROUP, LLC

34. Remove third and fourth gear shift rail detent ball (2).

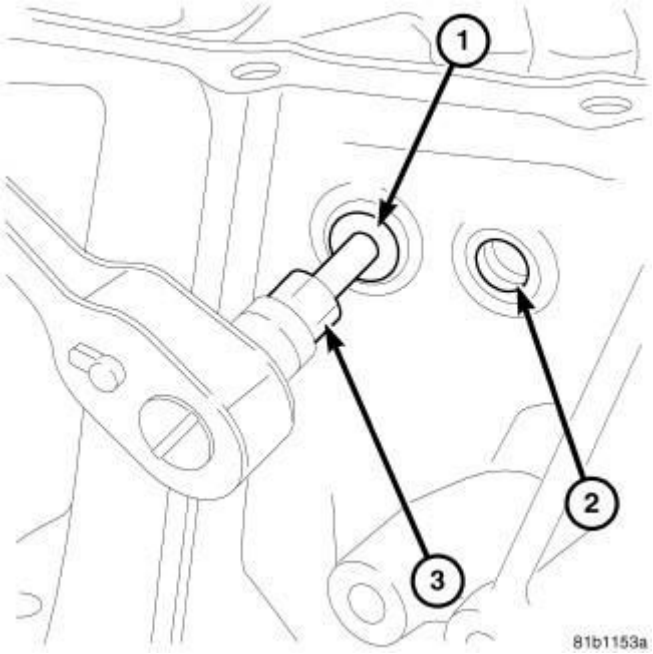

Fig. 66: First & Second Gear Shift Rail Detent Plug
Courtesy of CHRYSLER GROUP, LLC

35. Remove first and second gear shift rail detent plug (1).
36. Remove first and second gear shift rail detent spacer and spring.

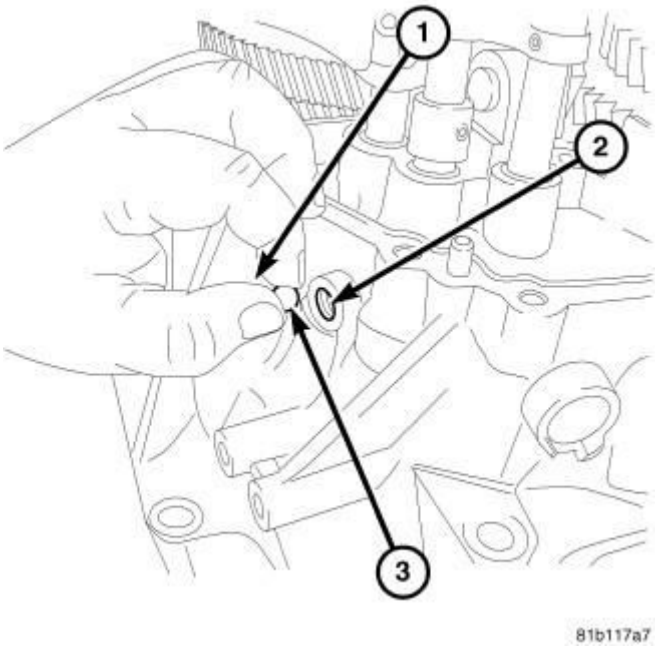

Fig. 67: First & Second Gear Shift Rail Detent Ball
Courtesy of CHRYSLER GROUP, LLC

37. Remove first and second gear shift rail detent ball (3).

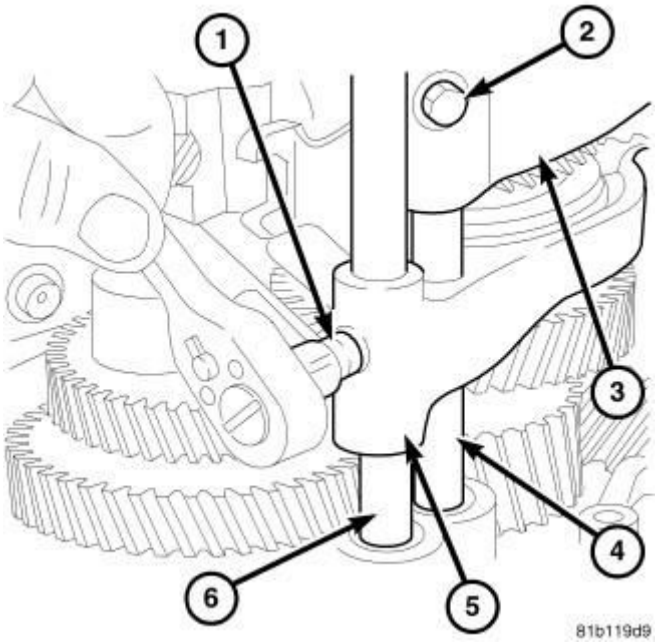

Fig. 68: Reverse Shift Fork To Shift Rail Bolt
Courtesy of CHRYSLER GROUP, LLC

38. Remove the bolt (1) holding the reverse shift fork (5) to the reverse shift rail (6).

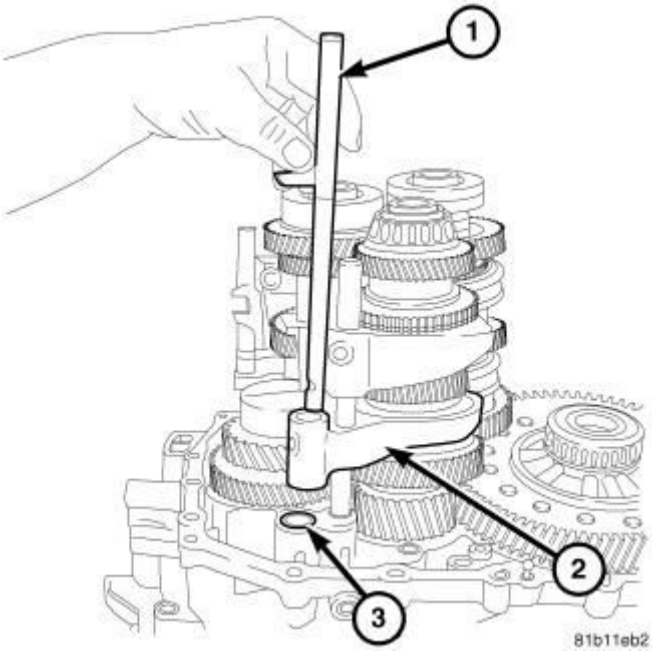

Fig. 69: Reverse Shift Rail
Courtesy of CHRYSLER GROUP, LLC

39. Remove the reverse shift rail from case and shift fork.

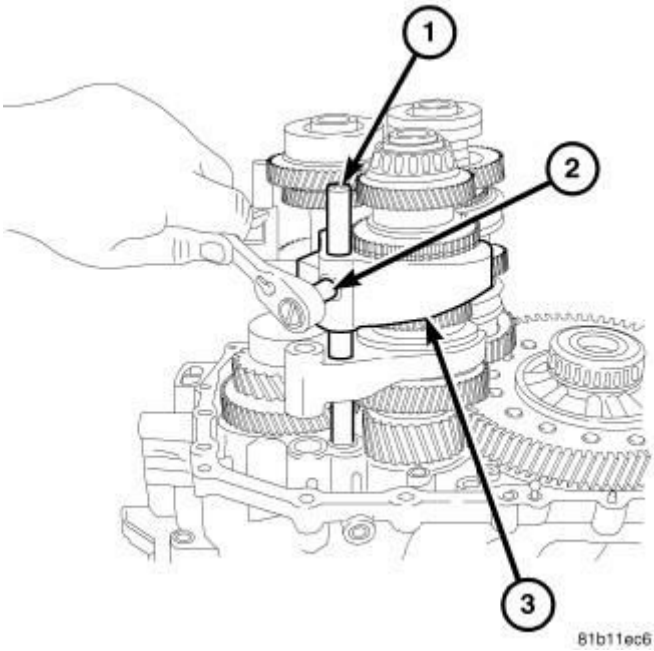

Fig. 70: Fifth & Sixth Gear Shift Fork & Shift Rail Bolt
Courtesy of CHRYSLER GROUP, LLC

40. Remove the bolt (2) holding the fifth and sixth gear shift fork (3) to the fifth and sixth gear shift rail (1).

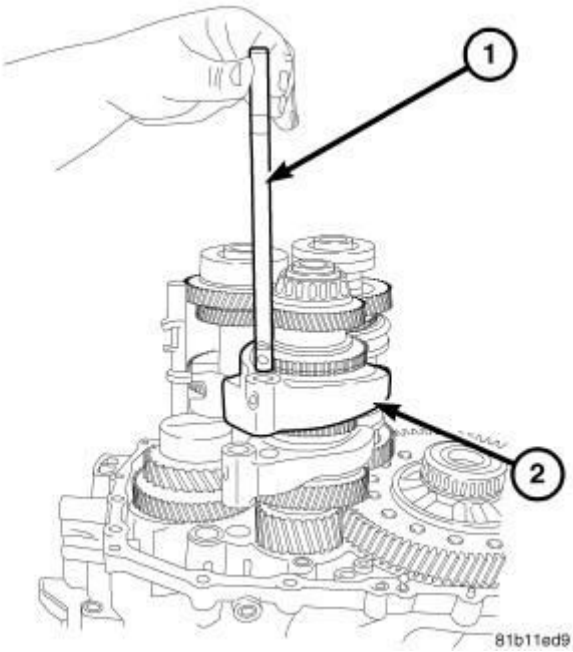

Fig. 71: Fifth & Sixth Gear Shift Rail
Courtesy of CHRYSLER GROUP, LLC

41. Remove the fifth and sixth gear shift rail (1) from case and shift fork (2).

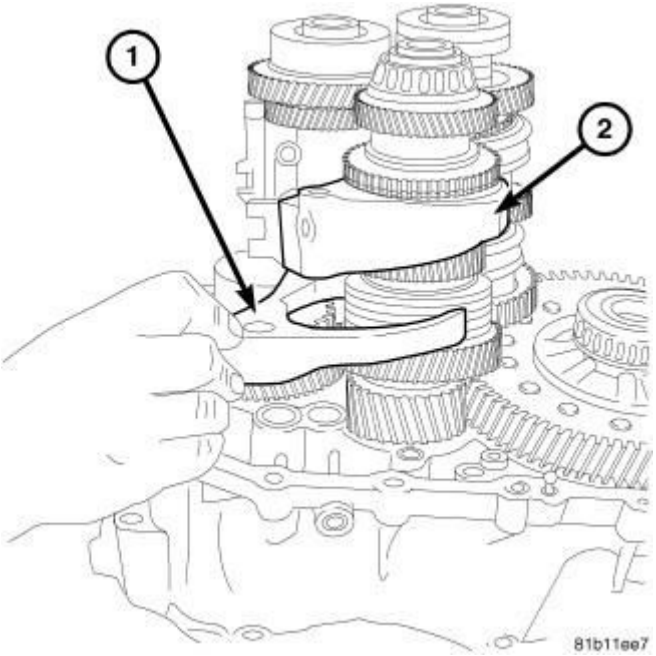

Fig. 72: Reverse Gear Shift Fork
Courtesy of CHRYSLER GROUP, LLC

42. Remove the reverse gear shift fork (1).

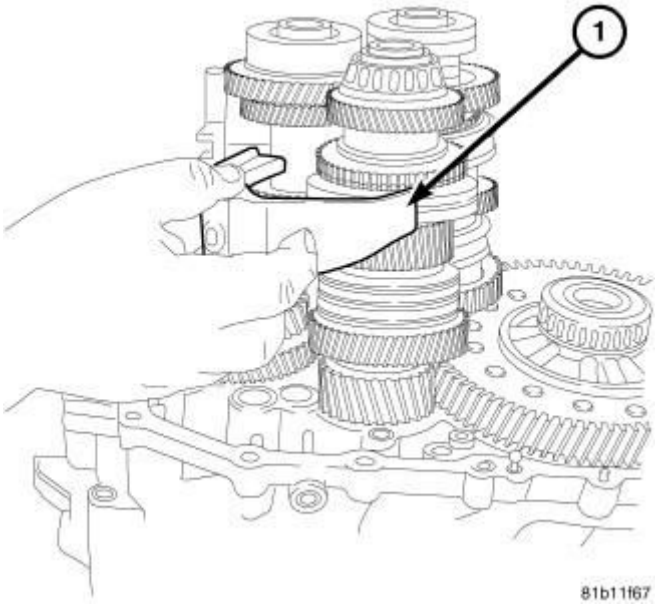

Fig. 73: Fifth & Sixth Gear Shift Fork
Courtesy of CHRYSLER GROUP, LLC

43. Remove the fifth and sixth gear shift fork (2).

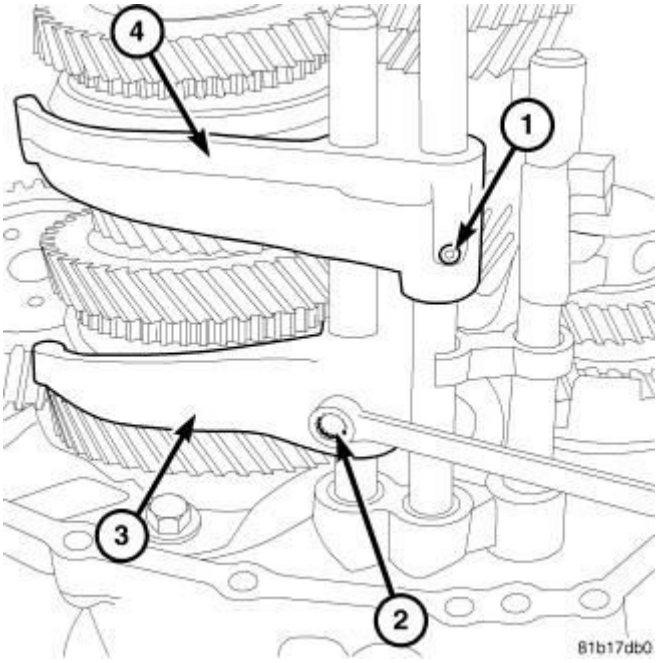

Fig. 74: First & Second Gear Shift Fork To Rail Bolt
Courtesy of CHRYSLER GROUP, LLC

44. Remove the bolt (2) holding the first and second gear shift fork (3) to the rail.

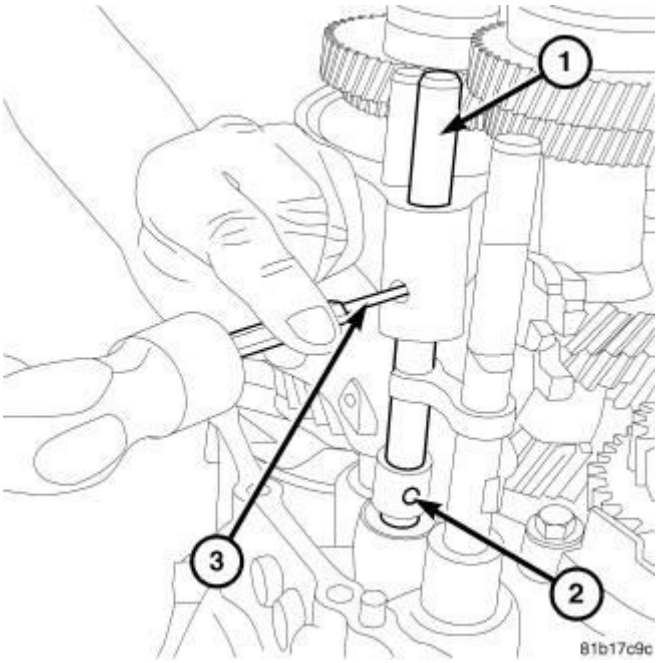

Fig. 75: Roll Pin At Third & Fourth Gear Shift Fork To Rail
Courtesy of CHRYSLER GROUP, LLC

45. Using a hammer and a punch (3) remove the roll pin at the third and fourth gear shift fork to rail (1).

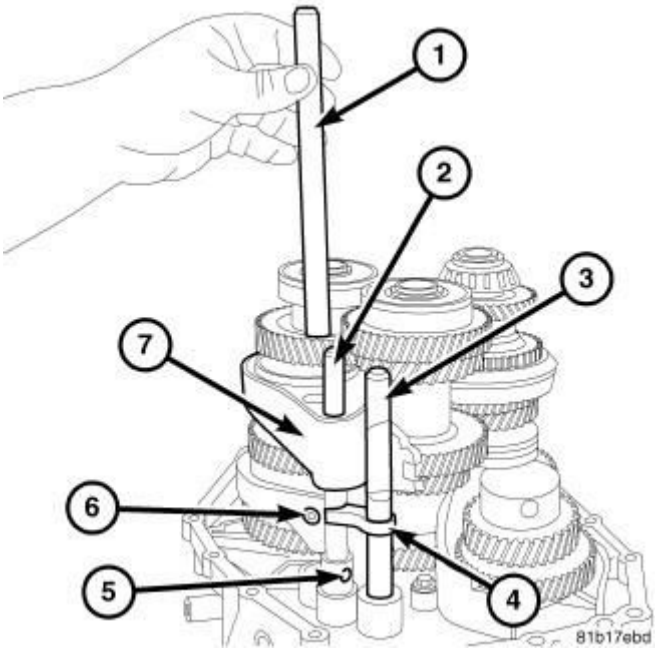

Fig. 76: First & Second Gear Shift Rail
Courtesy of CHRYSLER GROUP, LLC

46. Remove the first and second gear shift rail (1).

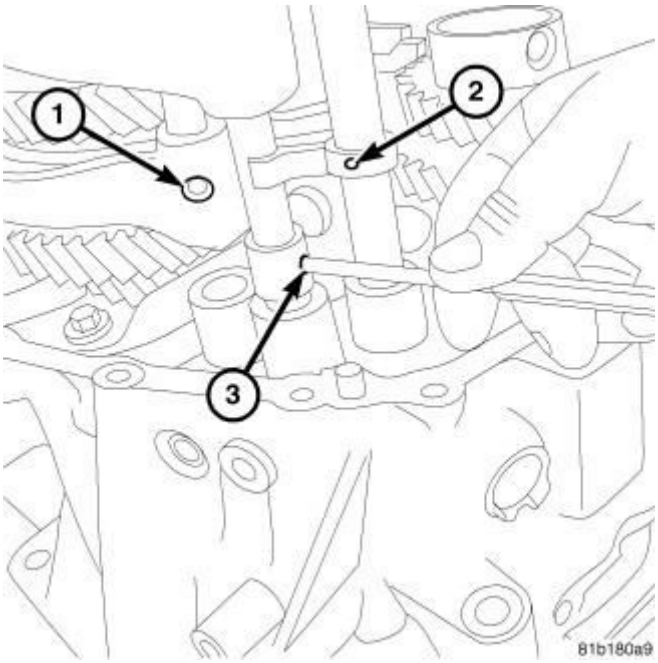

Fig. 77: Roll Pin At Third & Fourth Gear Shift Rail
Courtesy of CHRYSLER GROUP, LLC

47. Using a hammer and a punch (3) remove the roll pin at the third and fourth gear shift rail.

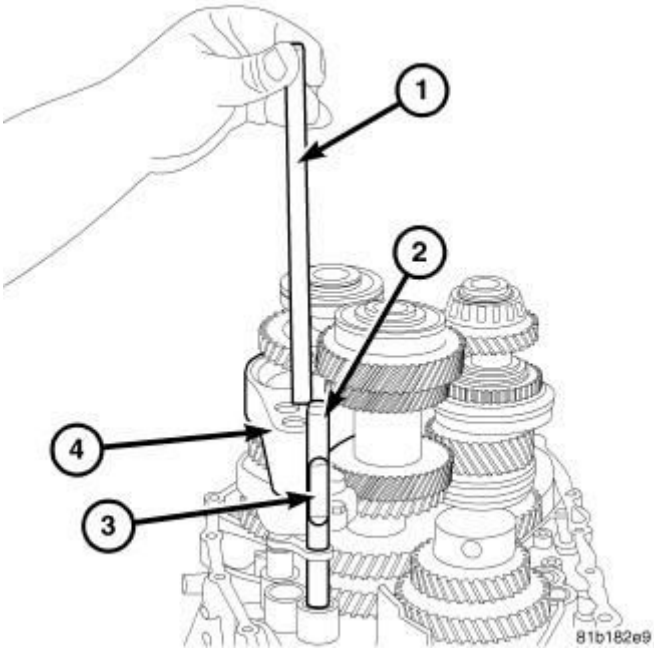

Fig. 78: Third & Fourth Gear Shift Rail
Courtesy of CHRYSLER GROUP, LLC

48. Remove the third and fourth gear shift rail (1) from case and shift fork (4).

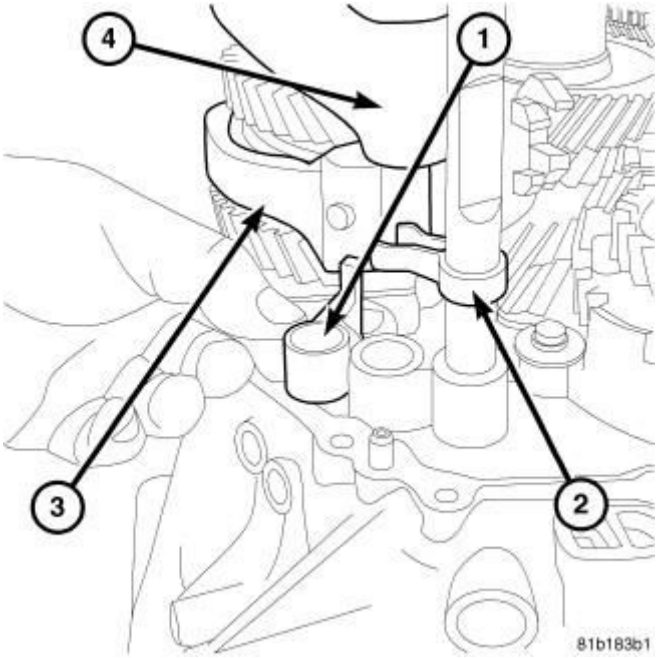

Fig. 79: Third & Fourth Gear Shift Bracket
Courtesy of CHRYSLER GROUP, LLC

49. Remove the third and fourth gear shift bracket (1).

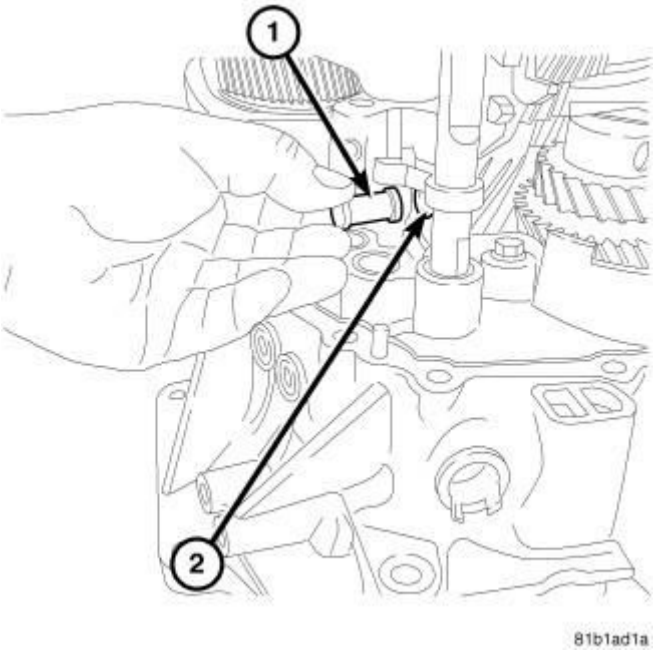

Fig. 80: Shift Rail Pin
Courtesy of CHRYSLER GROUP, LLC

50. Remove the E-clip and shift rail bracket pivot pin (1).

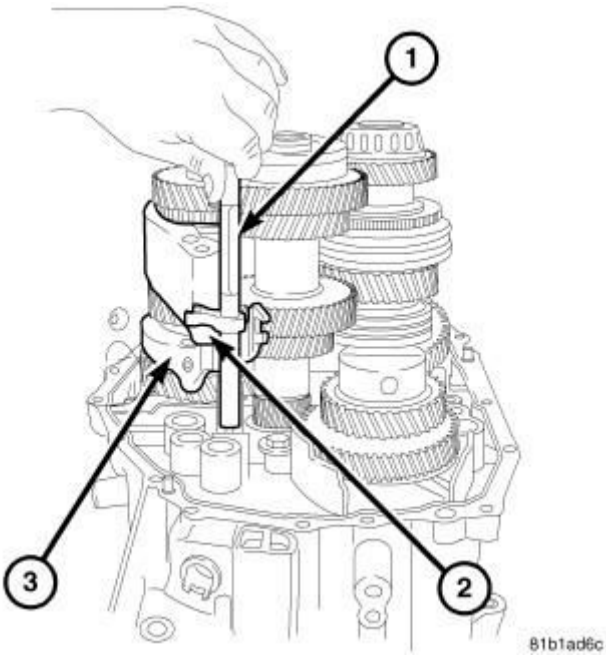

Fig. 81: Pivot Shaft
Courtesy of CHRYSLER GROUP, LLC

51. Remove the pivot shaft (1) from case.

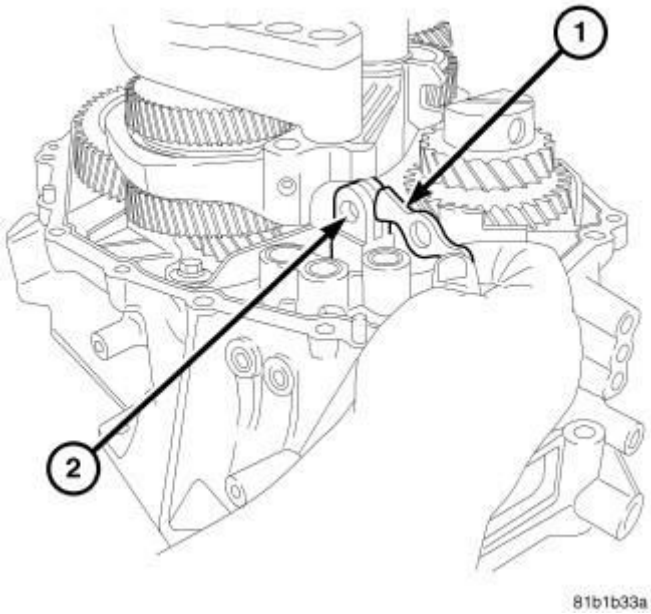

Fig. 82: Shift Rail Pivot Bracket
Courtesy of CHRYSLER GROUP, LLC

52. Remove the shift rail pivot bracket (1) from the stand (2).

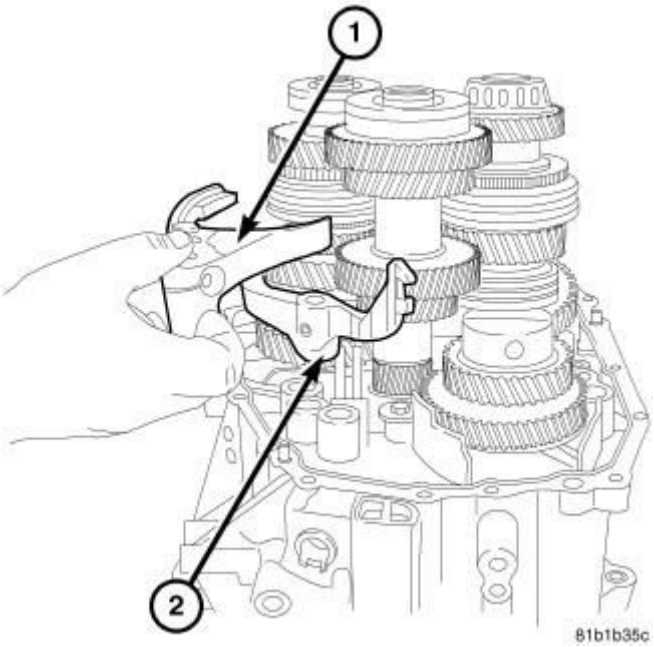

Fig. 83: Third & Fourth Gear Shift Fork & Synchronizer
Courtesy of CHRYSLER GROUP, LLC

53. Remove the third and fourth gear shift fork (1) from synchronizer.

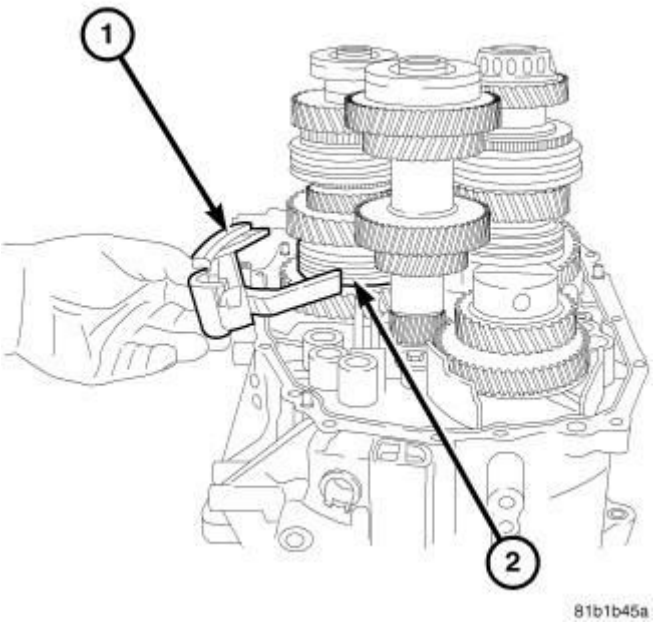

Fig. 84: First & Second Gear Shift Fork & Synchronizer
Courtesy of CHRYSLER GROUP, LLC

54. Remove the first and second gear shift fork (1) from synchronizer (2).

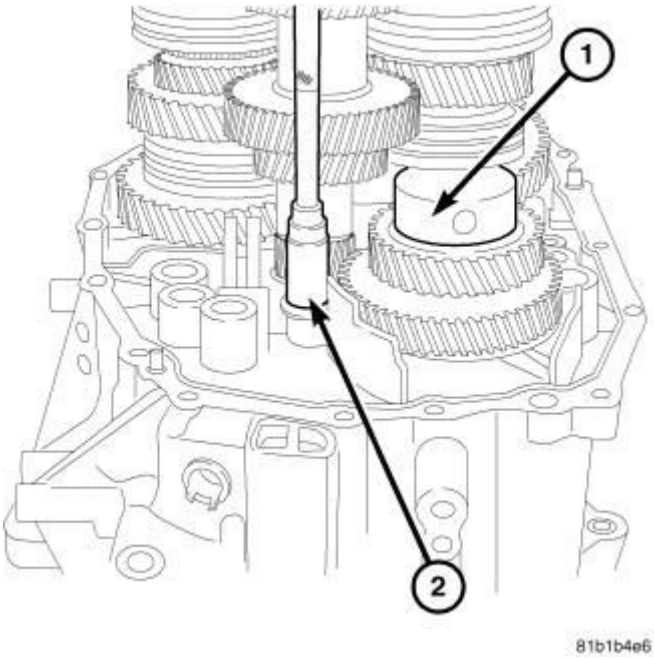

Fig. 85: Bolt At Reverse Idler Gear
Courtesy of CHRYSLER GROUP, LLC

55. Remove the reverse idler gear (1) hold down bolt (2).

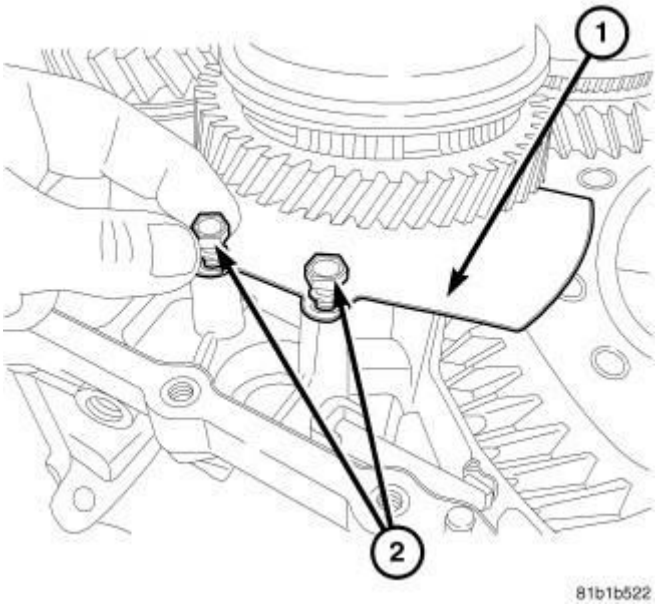

Fig. 86: Oil Slinger
Courtesy of CHRYSLER GROUP, LLC

56. Remove the bolts (2) at the oil slinger (1) and remove the oil slinger.

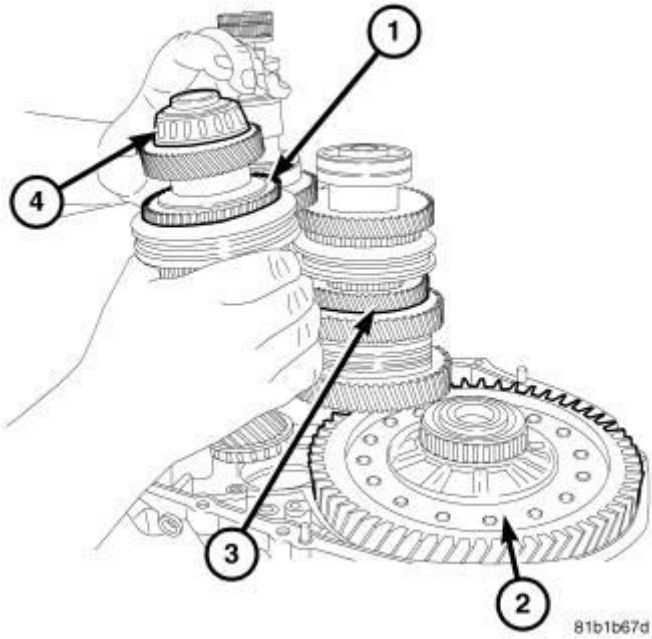

Fig. 87: Output Shaft #2
Courtesy of CHRYSLER GROUP, LLC

57. Remove the output shaft #2 (1) from case.

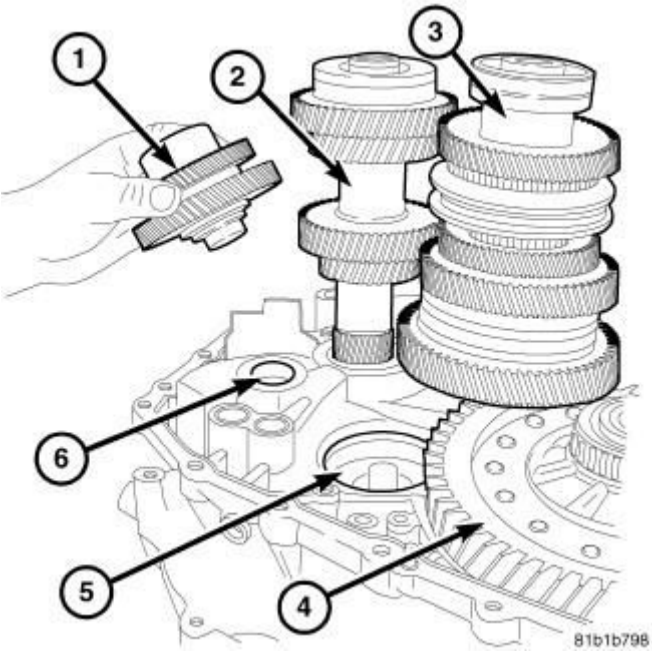

Fig. 88: Reverse Idler Gear
Courtesy of CHRYSLER GROUP, LLC

58. Remove the reverse idler gear (1), shaft, bearing and thrust washer from the case.

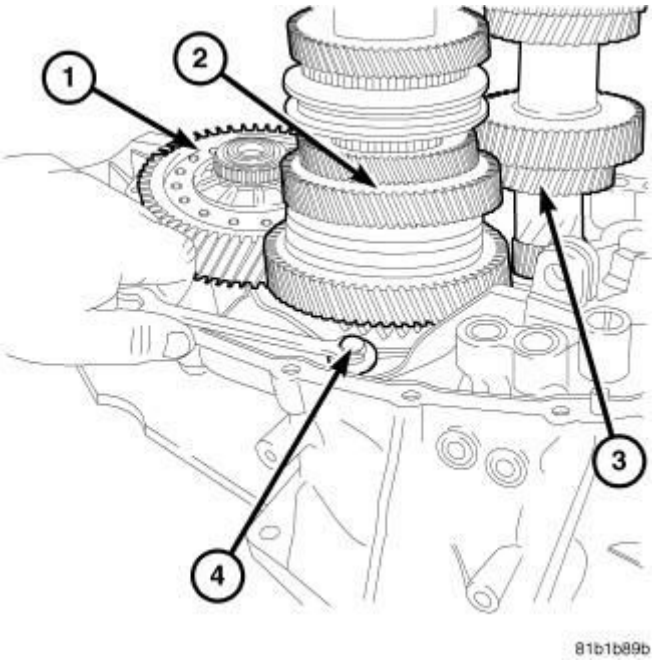

Fig. 89: Bolt At Output Shaft
Courtesy of CHRYSLER GROUP, LLC

59. Remove the output shaft (2) hold down bolt (4) from the case.

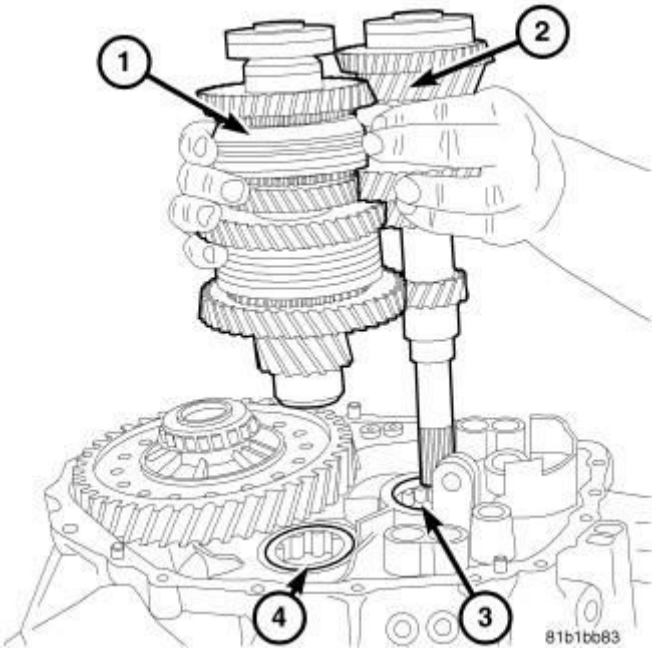

Fig. 90: Output And Input Shafts
Courtesy of CHRYSLER GROUP, LLC

60. Remove the output (1) and input (2) from case together.

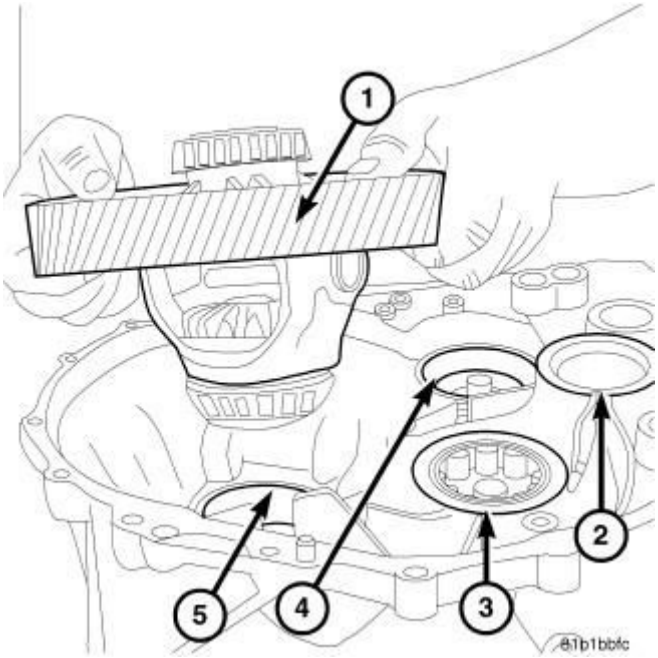

Fig. 91: Differential
Courtesy of CHRYSLER GROUP, LLC

61. Remove the differential (1) from the case (5).

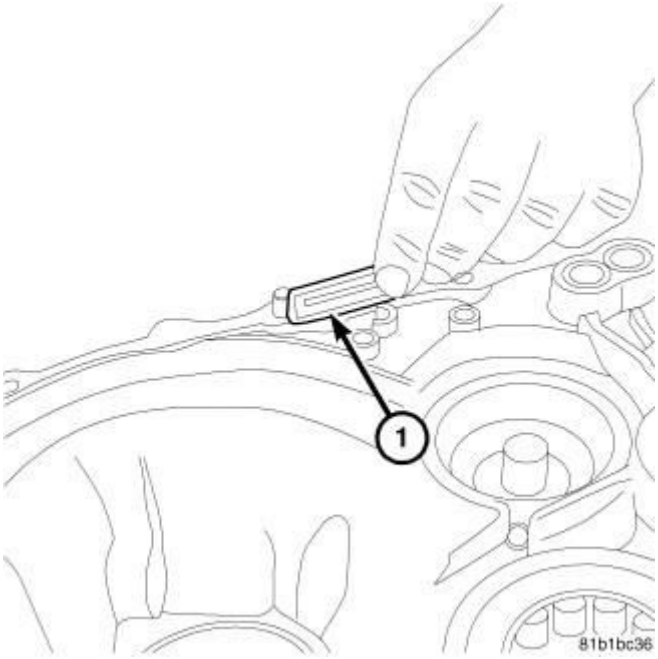

Fig. 92: Magnet
Courtesy of CHRYSLER GROUP, LLC

62. Remove the magnet (1) from the case.

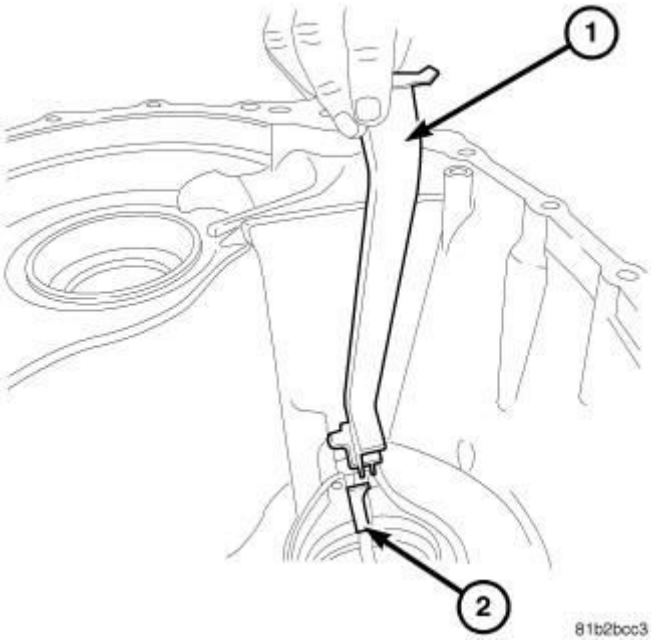

Fig. 93: Oil Feed Trough
Courtesy of CHRYSLER GROUP, LLC

63. Remove the oil feed trough (1) from the case.

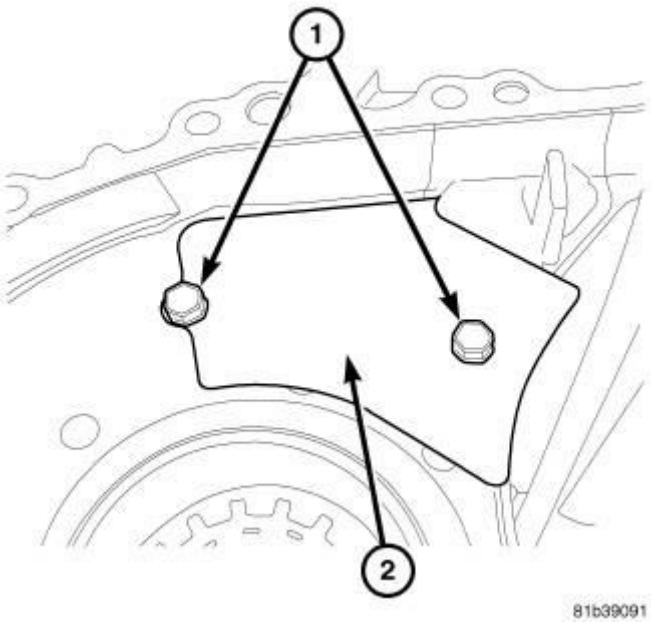

Fig. 94: Oil Baffle
Courtesy of CHRYSLER GROUP, LLC

64. Remove the bolts (1) holding the oil baffle.
65. Remove the oil baffle (2).

ASSEMBLY

ASSEMBLY

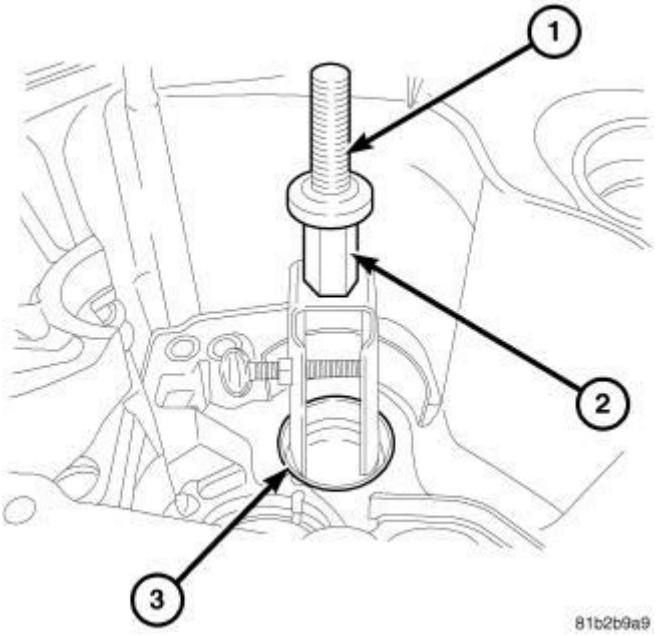

Fig. 95: Removing Output Shaft #2 Tapered Bearing Cup
Courtesy of CHRYSLER GROUP, LLC

NOTE: Always use ATF on all moving parts during this assembly procedure.

1. Use Bearing Cup Remover (special tool #9664, Remover, Bearing Cup) (2) and appropriate Slide Hammer (1) to remove the output shaft #2 tapered bearing cup (3) from the transmission rear case.

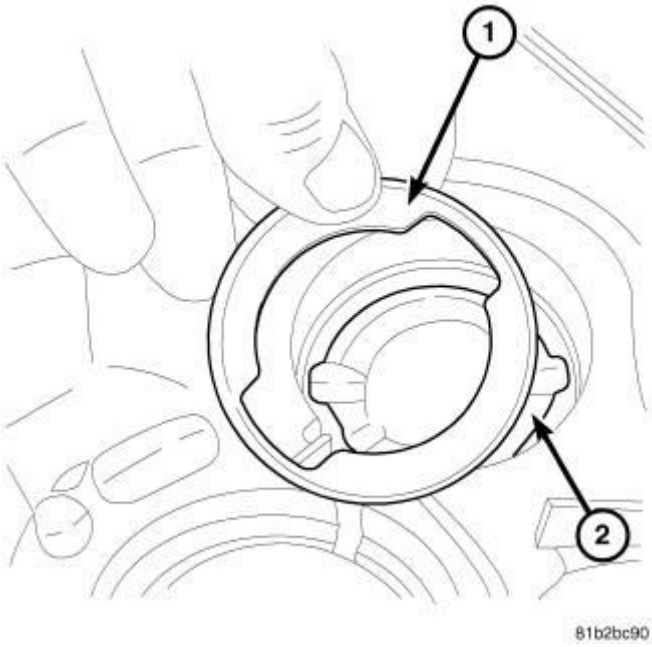

Fig. 96: Output Shaft #2 Bearing Cup Shim
Courtesy of CHRYSLER GROUP, LLC

2. Remove the output shaft #2 bearing cup shim (1) from the transmission rear case (2).

NOTE: A turning torque will determine the correct shim to be installed. This can be found at the end of the assembly procedure.

3. Install the correct output shaft #2 bearing cup shim into the transmission case.

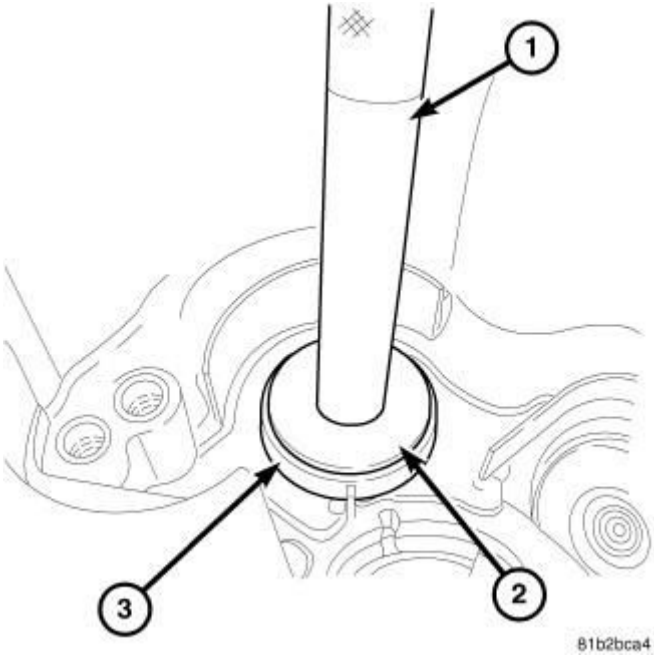

Fig. 97: Installing Output Shaft #2 Bearing Cup
Courtesy of CHRYSLER GROUP, LLC

4. Install the output shaft #2 bearing cup (3) into the transmission rear case using Handle (special tool #C-4171, Driver Handle, Universal) and Seal/Cup Installer (special tool #L-4520, Installer, Seal/Cup).

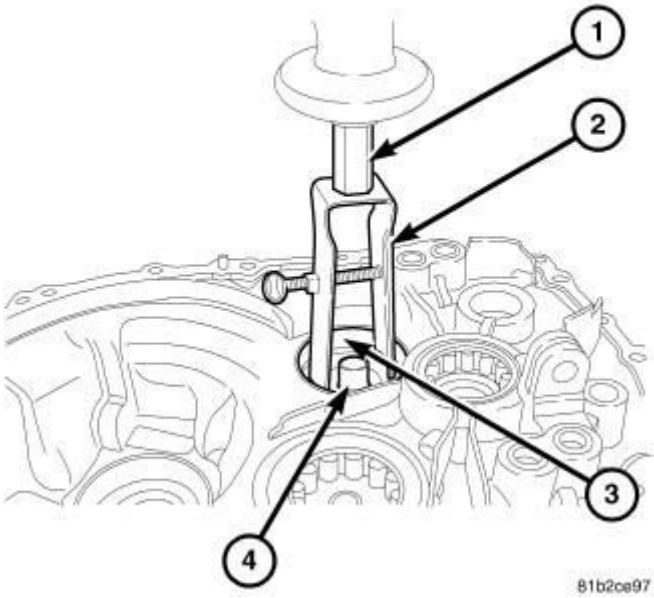

Fig. 98: Bearing Cup Remover & Output Shaft #2 Bearing Cup
Courtesy of CHRYSLER GROUP, LLC

5. Remove the output shaft #2 bearing cup (3) using Bearing Cup Remover

(special tool #9664, Remover, Bearing Cup) (2) and appropriate slide hammer (1).

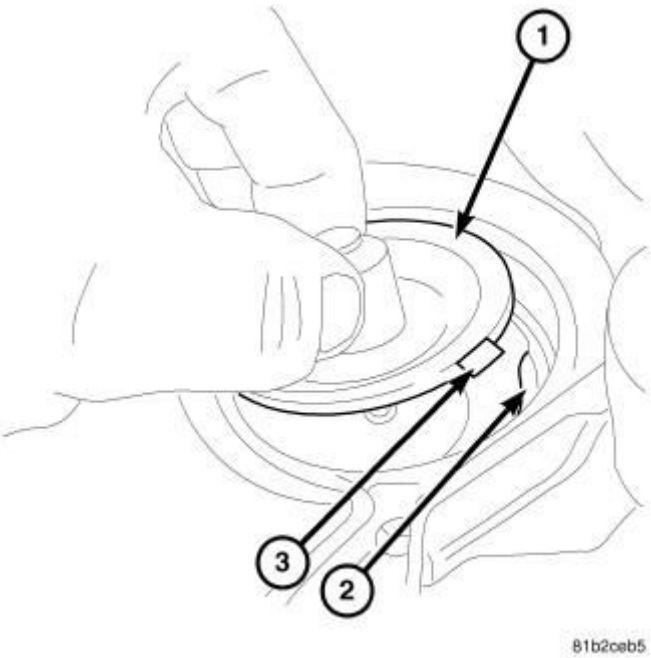

Fig. 99: Oil Slinger
Courtesy of CHRYSLER GROUP, LLC

6. Remove the oil slinger (1) under the output shaft # 2 cup on the bellhousing side.
7. Install the oil slinger (1) in the case (2) for the compounder shaft bearing cup on the bellhousing side, insure the tab (3) is lined up with cutout in case (2).

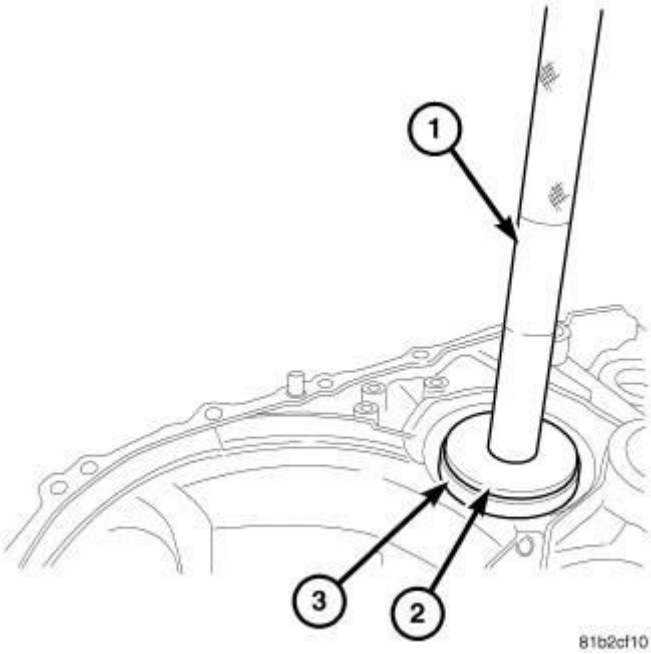

Fig. 100: Install Compounder Shaft Bearing Cup
Courtesy of CHRYSLER GROUP, LLC

8. Use Handle (special tool #C-4171, Driver Handle, Universal) and Bearing Cup Installer (special tool #D-144, Installer, Bearing Cup), inverted to install the compounder shaft cup on the bellhousing side case.

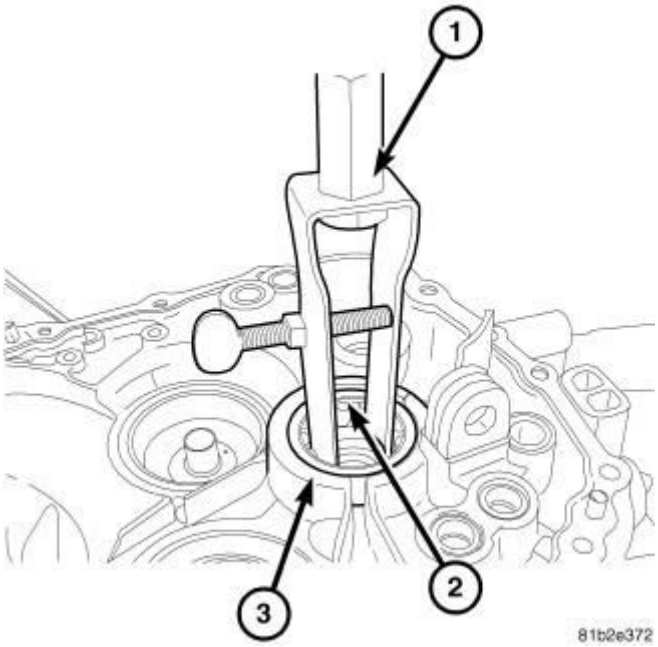

Fig. 101: Remove Input Shaft Case Bearing
Courtesy of CHRYSLER GROUP, LLC

9. Remove the input shaft case bearing (3) (bellhousing side) using Bearing

Cup Remover (special tool #7794-A, Remover, Seal) (1) and appropriate slide hammer.

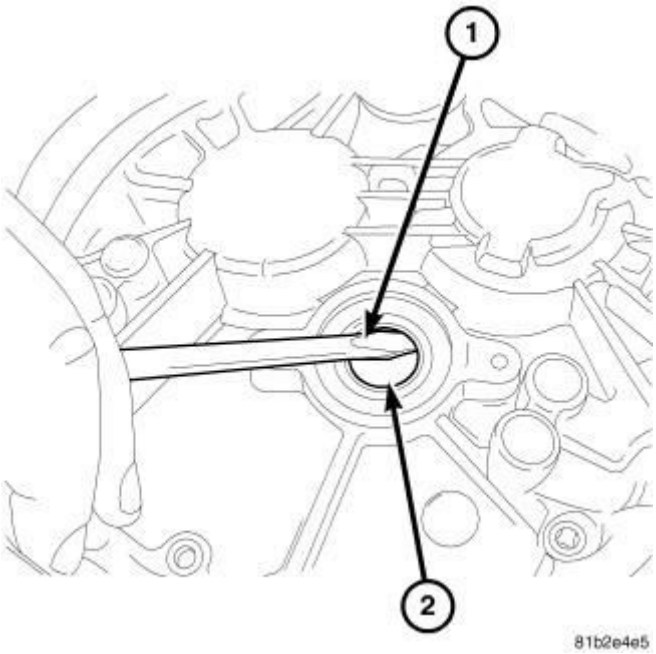

Fig. 102: Remove Input Shaft Seal
Courtesy of CHRYSLER GROUP, LLC

10. Using a screwdriver (1) remove the input shaft seal (2).

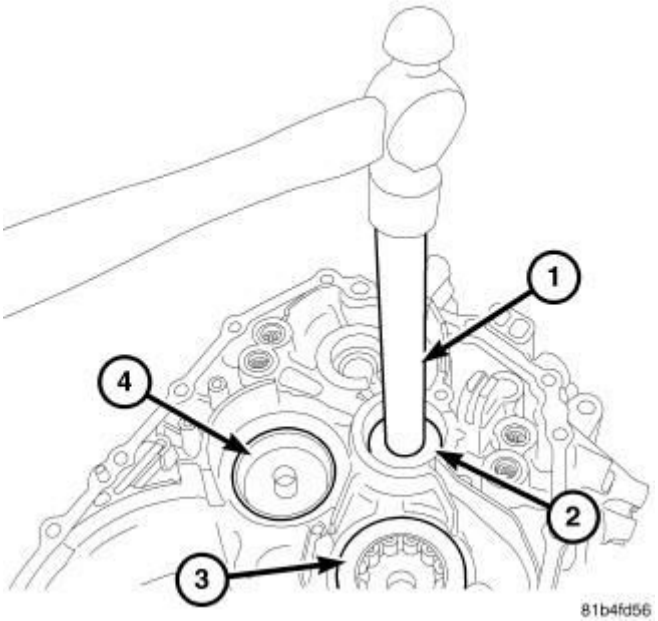

Fig. 103: Install Input Shaft Oil Seal
Courtesy of CHRYSLER GROUP, LLC

11. Using handle (special tool #C-4171, Driver Handle, Universal) and Installer (special tool #9935, Installer) (2) install the **new** input shaft oil seal.

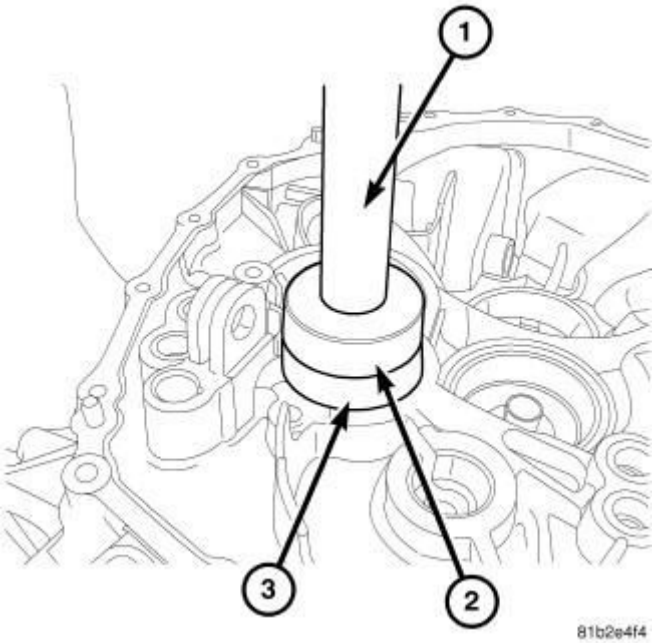

Fig. 104: Install Input Shaft Case Bearing
Courtesy of CHRYSLER GROUP, LLC

12. Install the input shaft case bearing (2) using Handle (special tool #C-4171, Driver Handle, Universal) (1) and Bearing Installer (special tool #C-4657, Installer, Seal) (2).

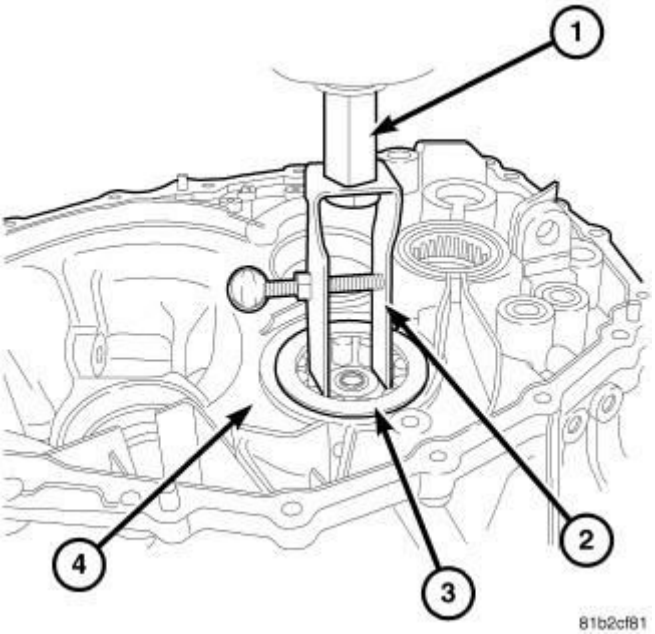

Fig. 105: Output Shaft Bearing From Case

Courtesy of CHRYSLER GROUP, LLC

13. Using Bearing Cup Remover (special tool #7794-A, Remover, Seal) (2) and appropriate slide hammer (1) remove the output shaft #1 bearing (3) from the case (1).

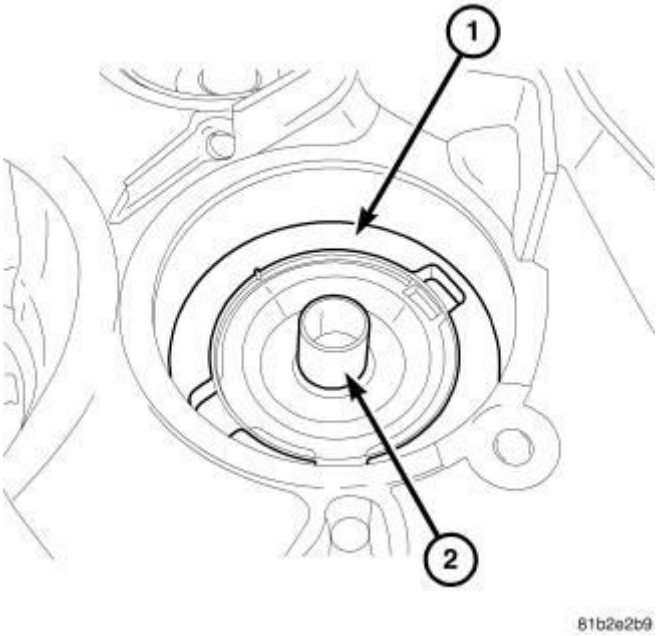

Fig. 106: Output Shaft Oil Slinger
Courtesy of CHRYSLER GROUP, LLC

14. Remove the output shaft oil slinger (2) from case.
15. Install the output shaft oil slinger (2) into the case, insure the tab (3) is lined up with cutout in case (2).

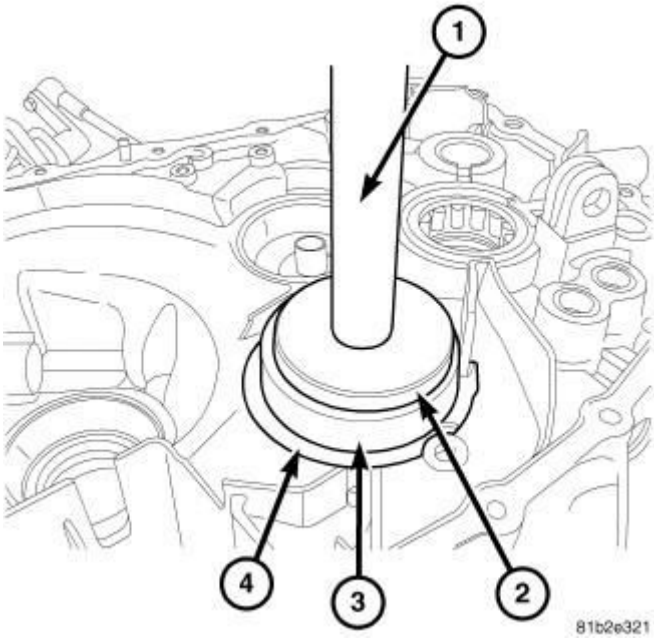

Fig. 107: Install Output Bearing To Case
Courtesy of CHRYSLER GROUP, LLC

16. Using Handle (special tool #C-4171, Driver Handle, Universal) (1) and Bearing Installer C- 4308 inverted (2) install output bearing (3) to case (4).

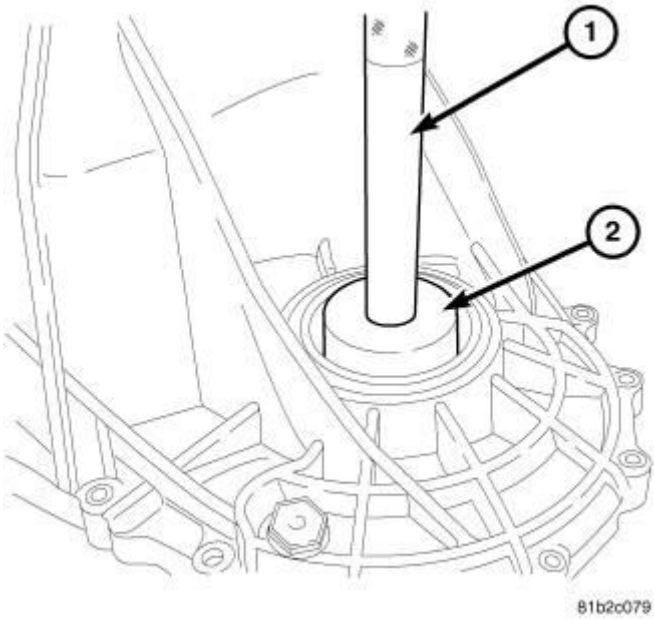

Fig. 108: Remove Diff Bearing Cup (Case Side)
Courtesy of CHRYSLER GROUP, LLC

17. Remove the case side differential bearing cup using Handle (special tool #C-4171, Driver Handle, Universal) (1) and Bearing Cup Installer (special tool

#9589, Installer, Bearing Cup) (2), inverted.

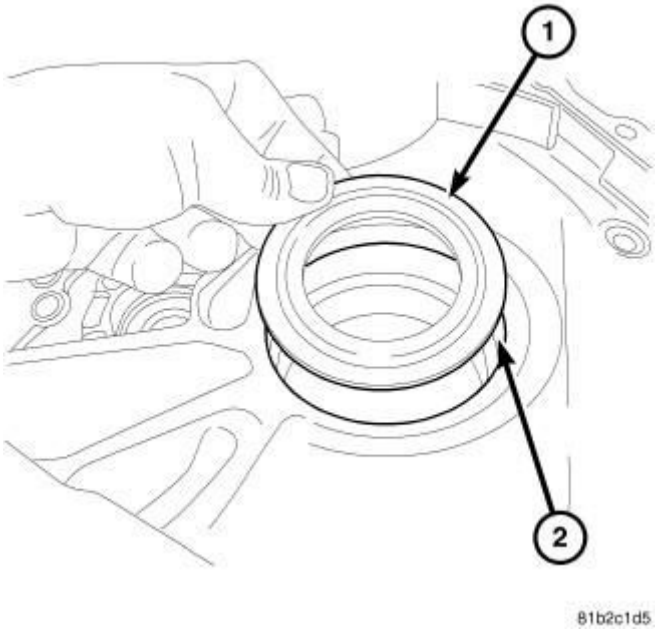

Fig. 109: Diff Bearing Cup Shim
Courtesy of CHRYSLER GROUP, LLC

18. Remove the case side differential bearing cup shim (1).

NOTE: The case side differential bearing cup shim (1) will be left out to find end play then installed to check turning torque later in the assembly procedure.

19. Install the correct case side differential bearing cup shim (1).

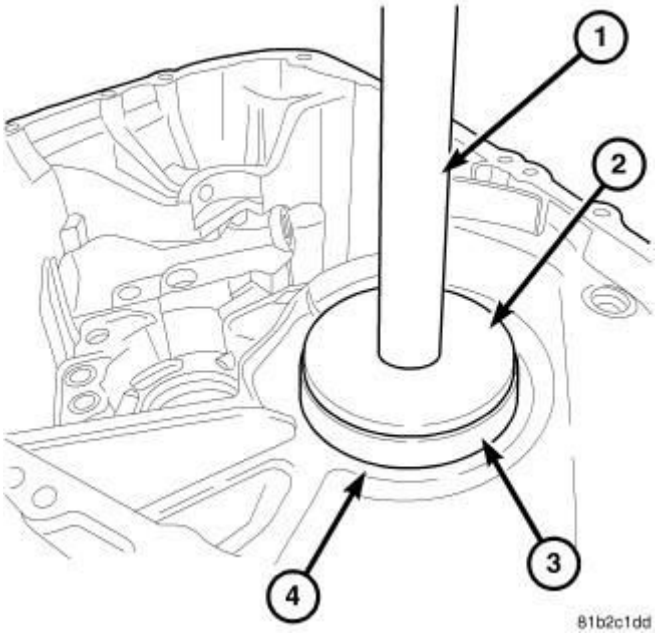

Fig. 110: Install Diff Bearing Cup
Courtesy of CHRYSLER GROUP, LLC

20. Install the case side differential bearing cup (3) using Handle (special tool #C-4171, Driver Handle, Universal) (1) and Bearing Cup Installer (special tool #D-111, Installer, Bearing Cup) (2).

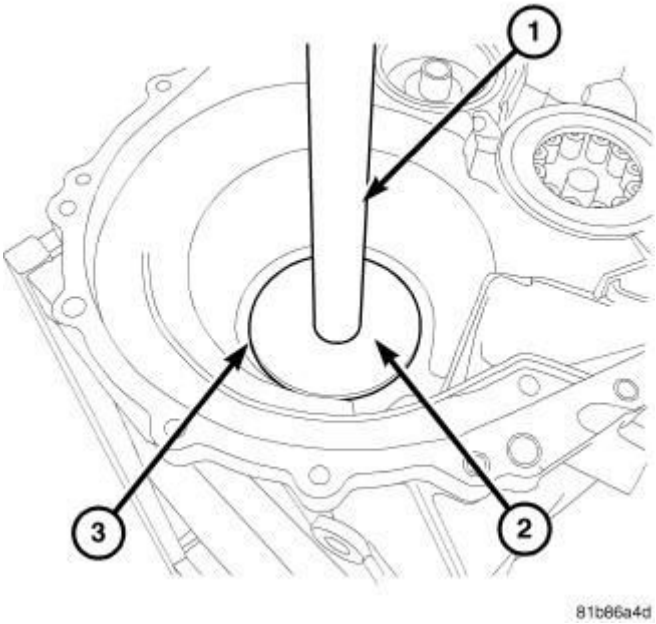

Fig. 111: Bell Housing Side Differential Bearing Cup
Courtesy of CHRYSLER GROUP, LLC

21. Install the bellhousing side differential bearing cup (3) using Handle (special

tool #C-4171, Driver Handle, Universal) (1) and Bearing Cup Installer (special tool #D-111, Installer, Bearing Cup) (2) on FWD transmissions and Bearing Cup Installer (special tool #8151, Installer, Bearing Cup) (2) on AWD transmissions.

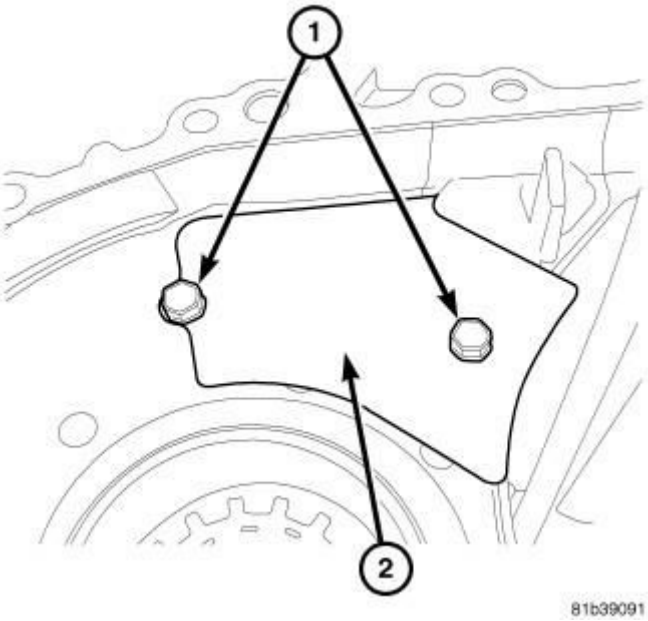

Fig. 112: Oil Baffle
Courtesy of CHRYSLER GROUP, LLC

22. Install oil baffle (2) and bolts (1), tighten bolts to 9 N.m (80 in. lbs.).

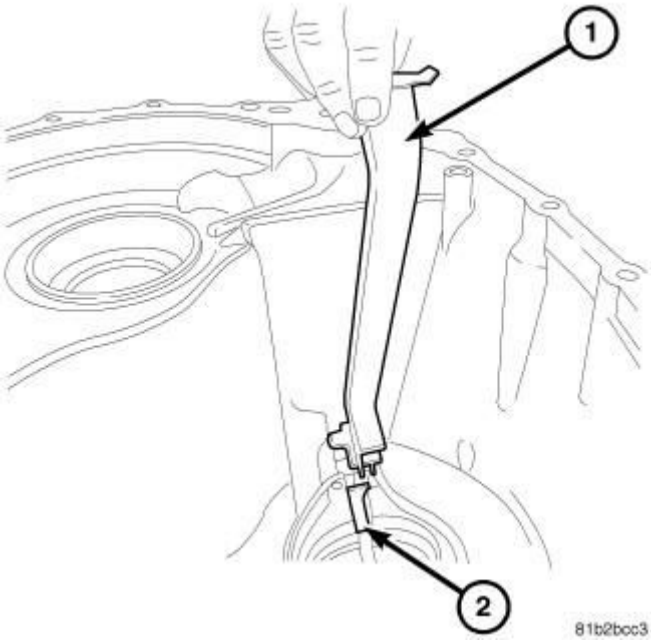

Fig. 113: Oil Feed Trough

Courtesy of CHRYSLER GROUP, LLC

23. Install the oil feed trough (1) into the case (2).

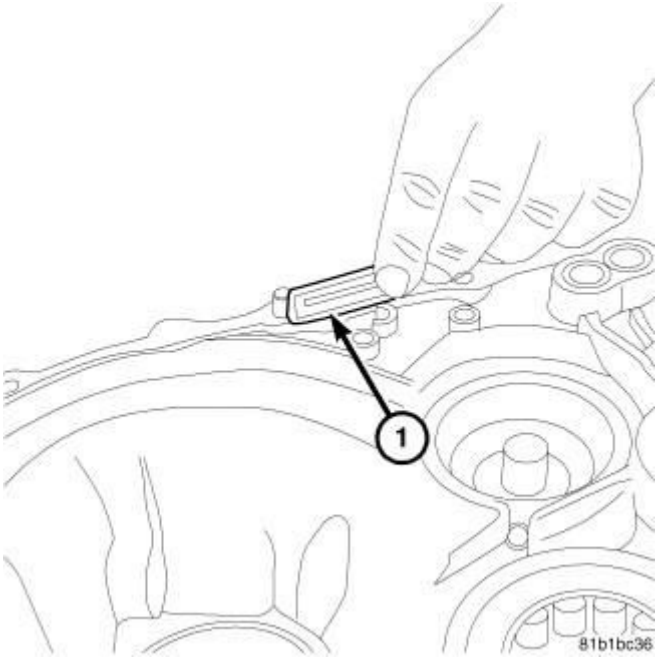

Fig. 114: Magnet
Courtesy of CHRYSLER GROUP, LLC

24. Install the magnet (1) into the case.

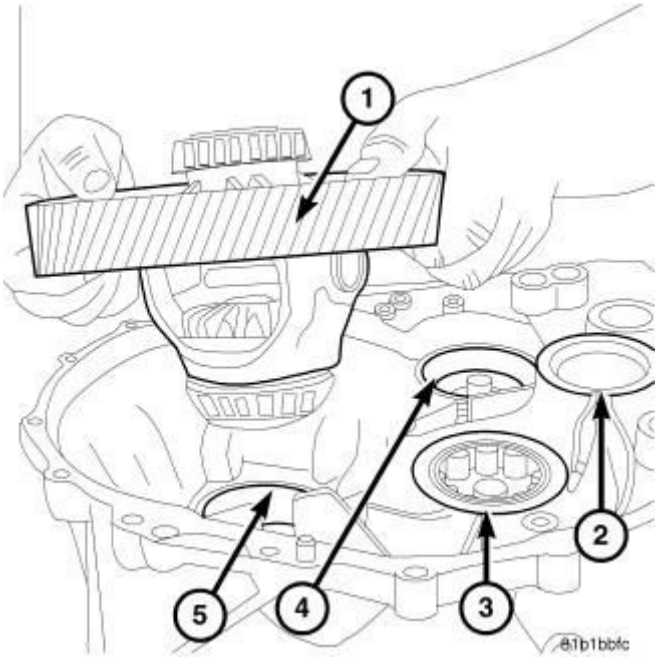

Fig. 115: Differential
Courtesy of CHRYSLER GROUP, LLC

25. Install the differential (1) into the case (5).
26. Verify differential bearing preload and turning torque. Refer to **DIFFERENTIAL BEARING PRELOAD ADJUSTMENT** procedure.

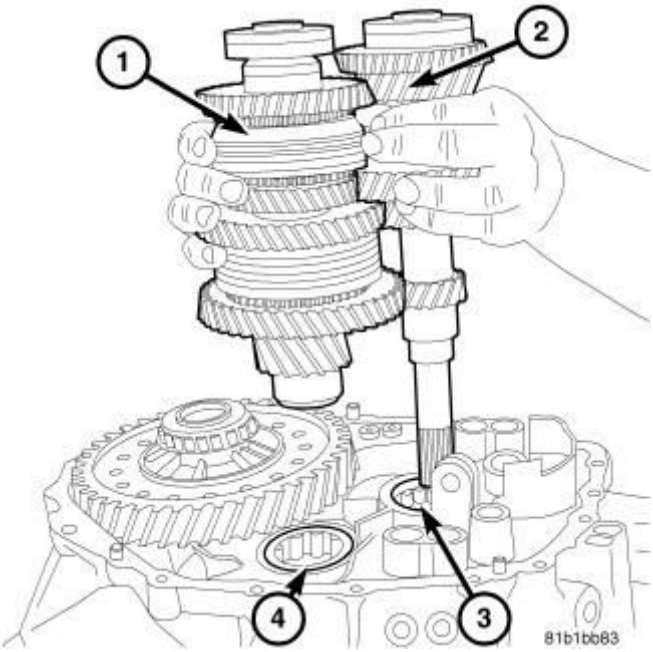

Fig. 116: Output And Input Shafts
Courtesy of CHRYSLER GROUP, LLC

27. Install the output # 1 (1) and input shaft (2) into case together.

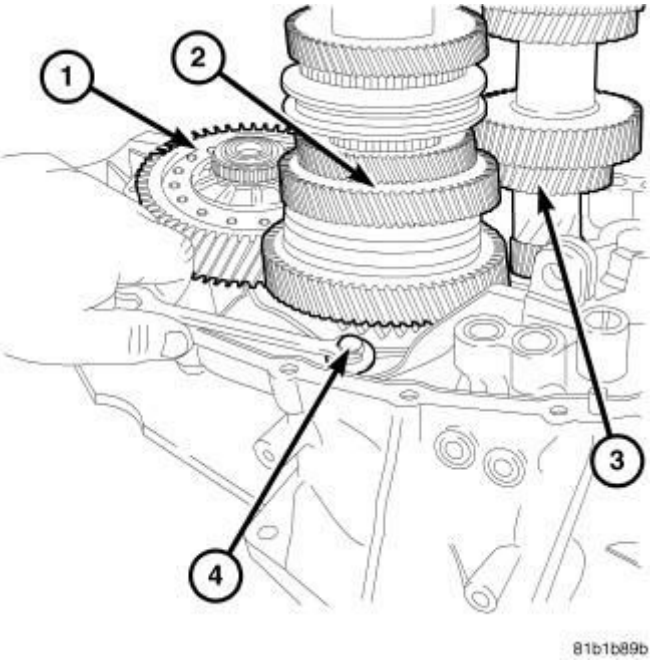

Fig. 117: Bolt At Output Shaft
Courtesy of CHRYSLER GROUP, LLC

28. Install the output shaft (2) hold down bolt (4) and tighten to 11 N.m (97 in. lbs.).

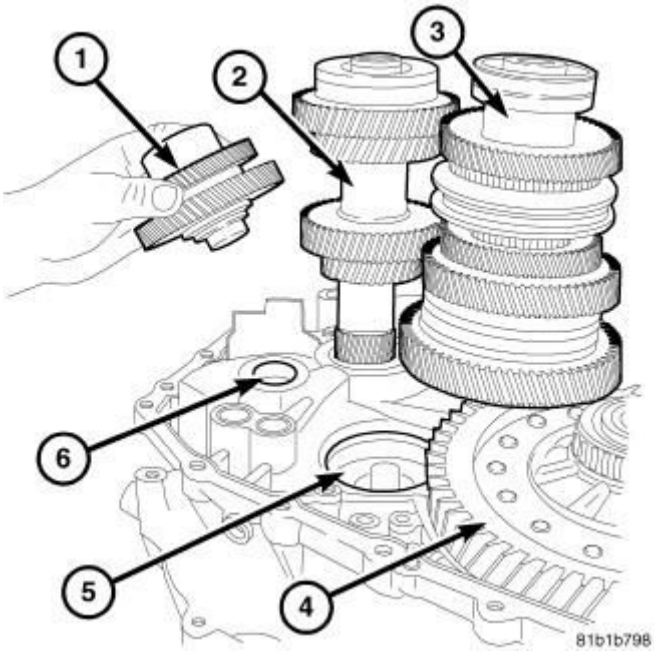

Fig. 118: Reverse Idler Gear
Courtesy of CHRYSLER GROUP, LLC

29. Install the reverse idler gear assembly (1) into the case (2).

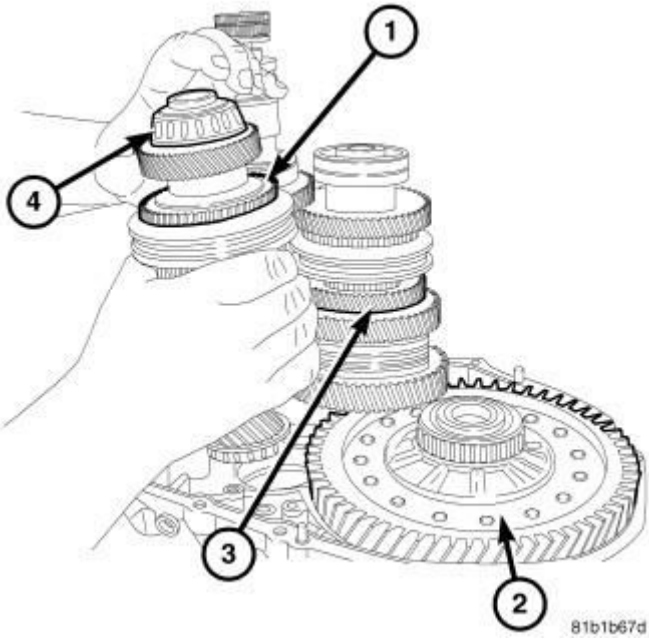

Fig. 119: Output Shaft #2
Courtesy of CHRYSLER GROUP, LLC

30. Install the output shaft # 2 (4) into case.

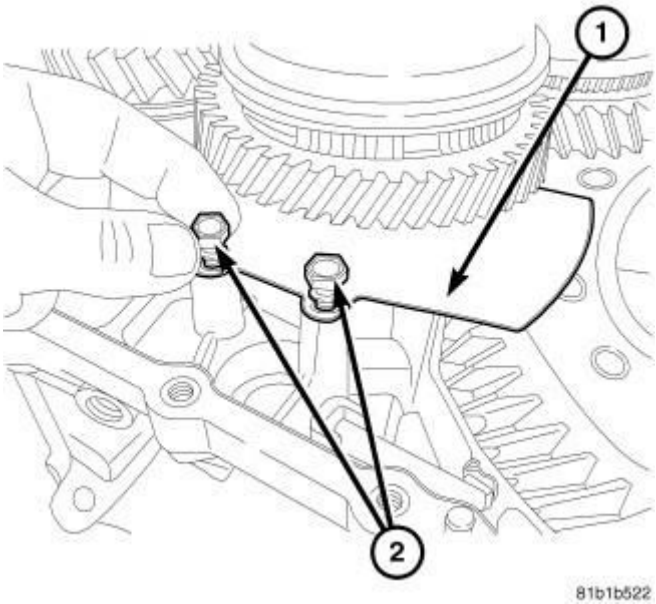

Fig. 120: Oil Slinger
Courtesy of CHRYSLER GROUP, LLC

31. Install the oil slinger (1) and bolts (2) tighten the bolts to 9 N.m (80 in. lbs.).

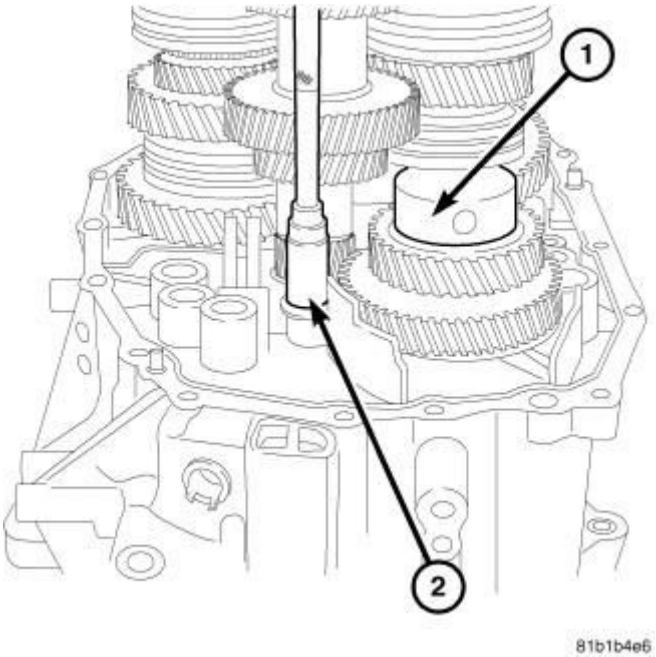

Fig. 121: Bolt At Reverse Idler Gear
Courtesy of CHRYSLER GROUP, LLC

NOTE: Clock the reverse idler (1) with hole as shown for

installation of anti-rotation bolt.

32. Install the reverse idler gear (1) hold down bolt (2) and tighten to 11 N.m (97 in. lbs.).

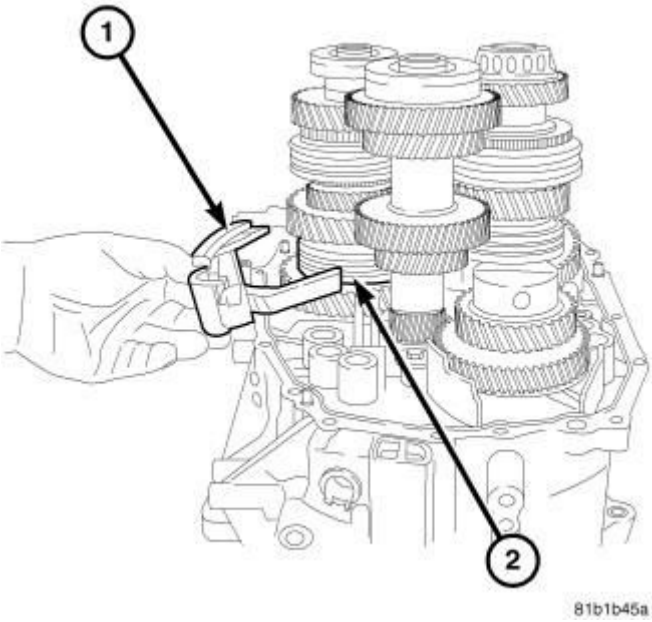

Fig. 122: First & Second Gear Shift Fork & Synchronizer
Courtesy of CHRYSLER GROUP, LLC

33. Install the first and second gear shift fork (1) onto the first and second gear synchronizer (2).

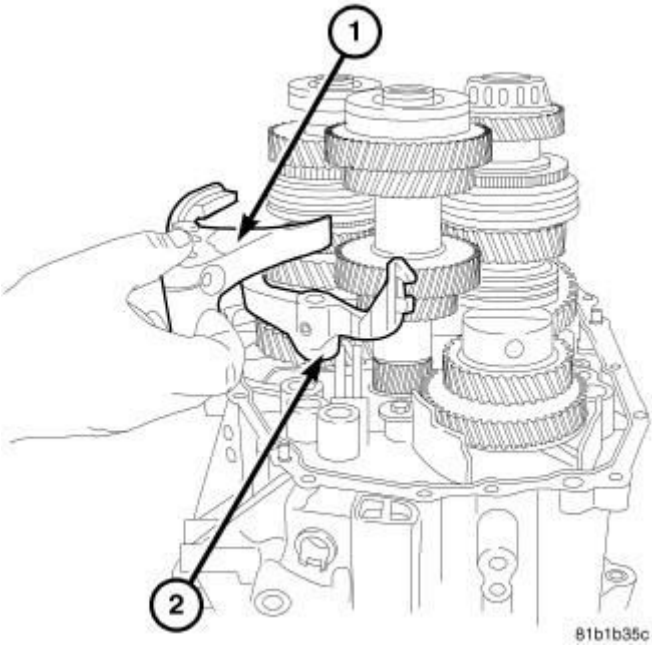

Fig. 123: Third & Fourth Gear Shift Fork & Synchronizer
Courtesy of CHRYSLER GROUP, LLC

34. Install the third and fourth gear shift fork (1) onto the third and fourth gear synchronizer.

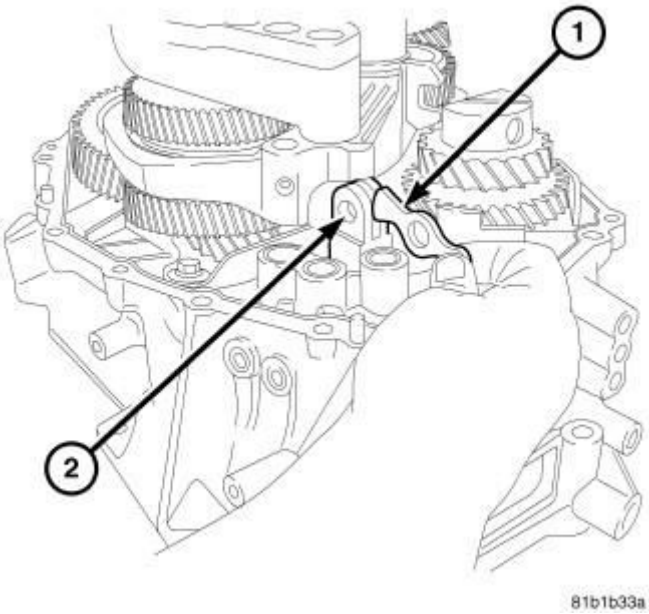

Fig. 124: Shift Rail Pivot Bracket
Courtesy of CHRYSLER GROUP, LLC

35. Install the shift rail arm (1) onto the stand (2).

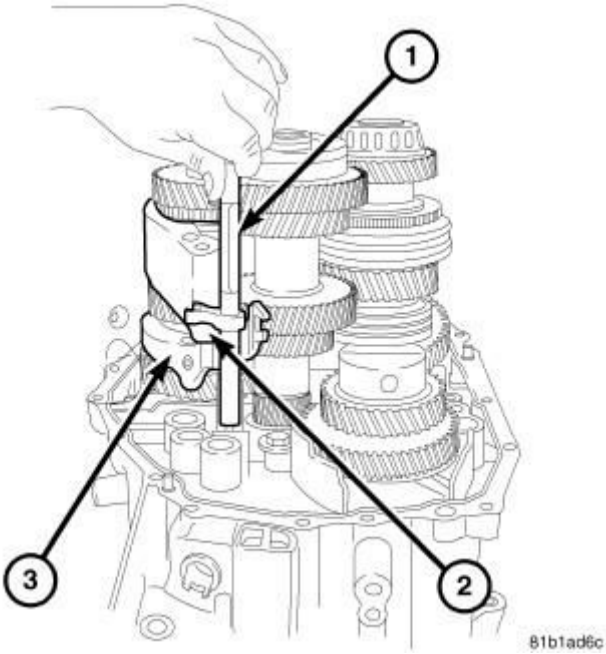

Fig. 125: Pivot Shaft
Courtesy of CHRYSLER GROUP, LLC

36. Install the pivot shaft (1) into the case.

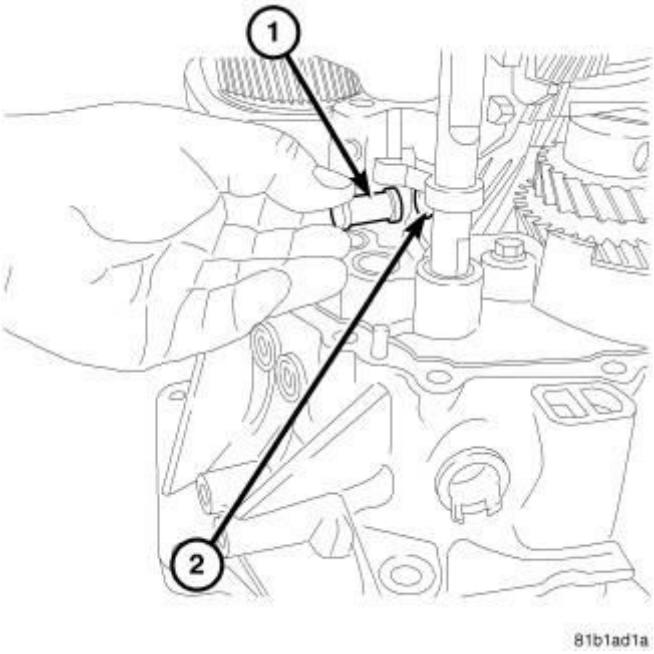

Fig. 126: Shift Rail Pin
Courtesy of CHRYSLER GROUP, LLC

37. Install the shift rail bracket pivot pin (1) and the **new** pivot pin E-clip (2).

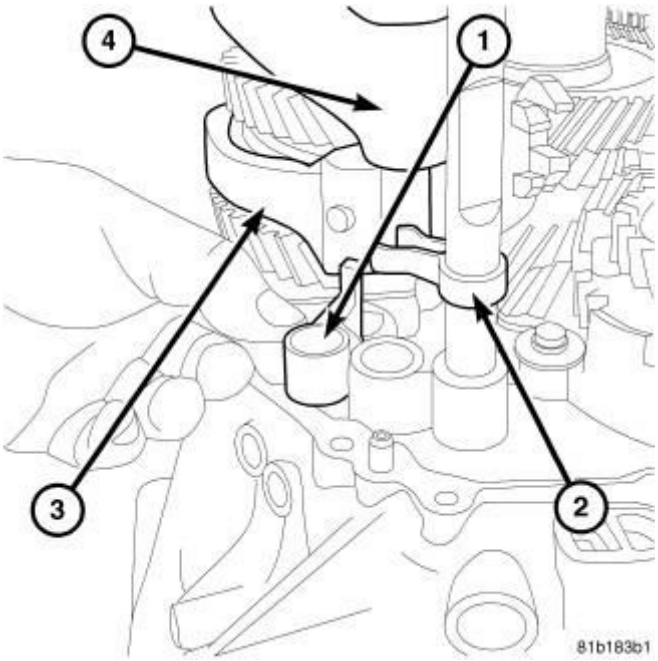

Fig. 127: Third & Fourth Gear Shift Bracket

Courtesy of CHRYSLER GROUP, LLC

38. Install the third and fourth gear shift bracket (1).

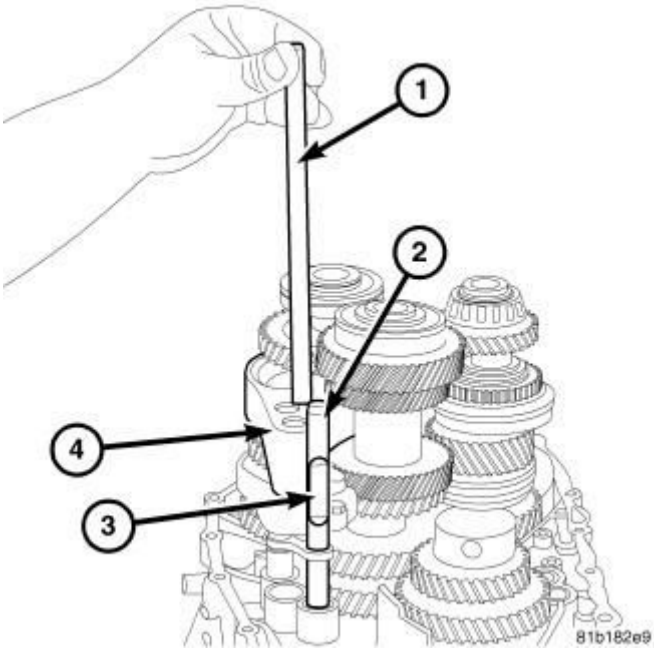

Fig. 128: Third & Fourth Gear Shift Rail
Courtesy of CHRYSLER GROUP, LLC

39. Install the third and fourth gear shift rail (1) into the case and shift fork (4).

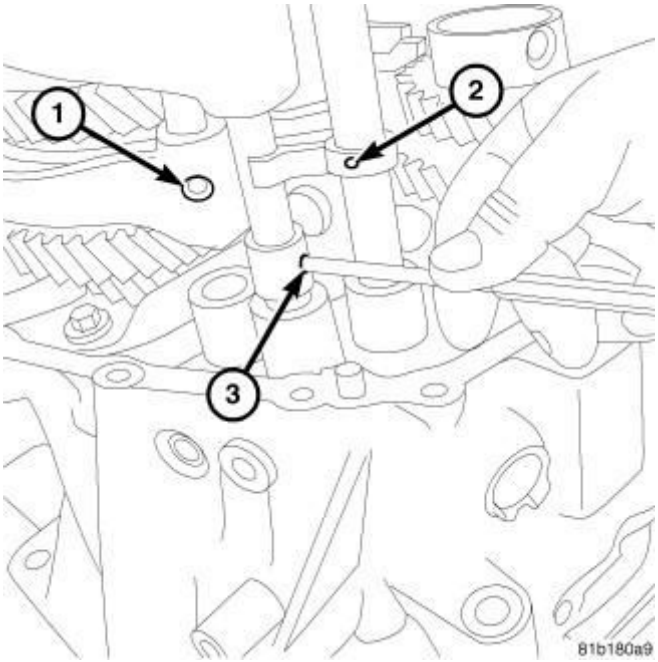

Fig. 129: Roll Pin At Third & Fourth Gear Shift Rail
Courtesy of CHRYSLER GROUP, LLC

40. Install the **new** roll pin at the third and fourth gear shift rail.

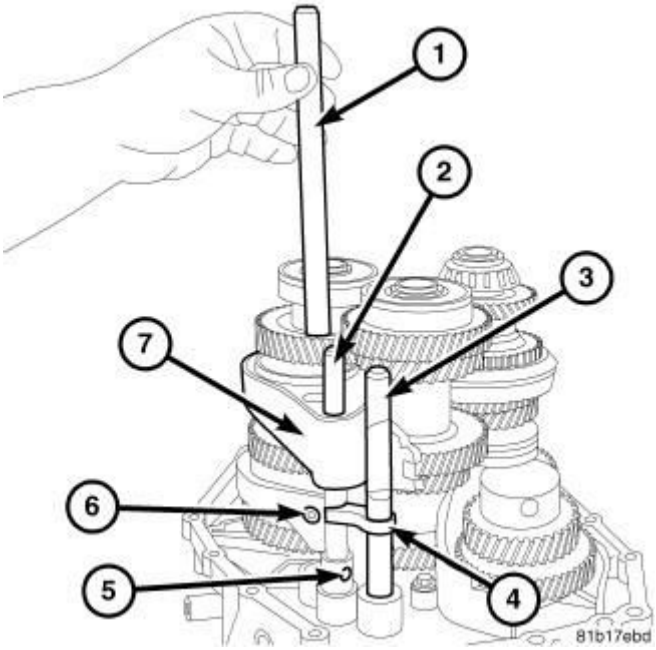

Fig. 130: First & Second Gear Shift Rail
Courtesy of CHRYSLER GROUP, LLC

41. Install the first and second gear shift rail (1).

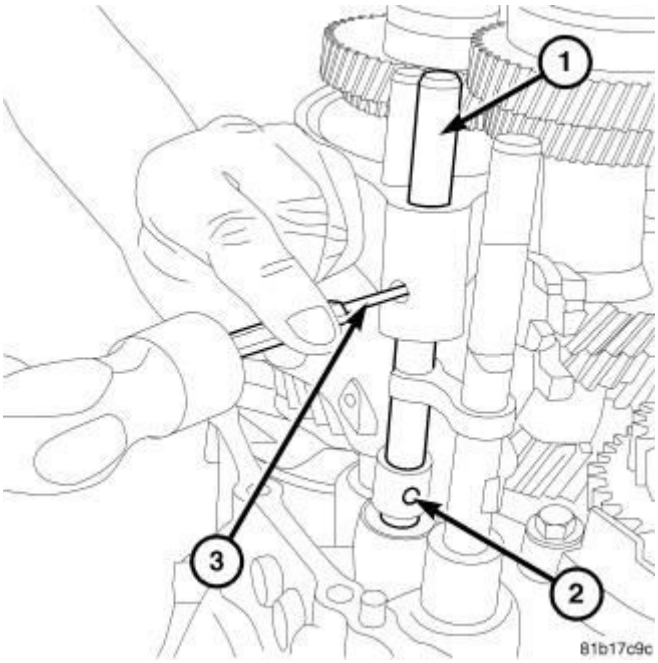

Fig. 131: Roll Pin At Third & Fourth Gear Shift Fork To Rail
Courtesy of CHRYSLER GROUP, LLC

42. Install the **new** roll pin at the third and fourth gear shift fork to rail (1).

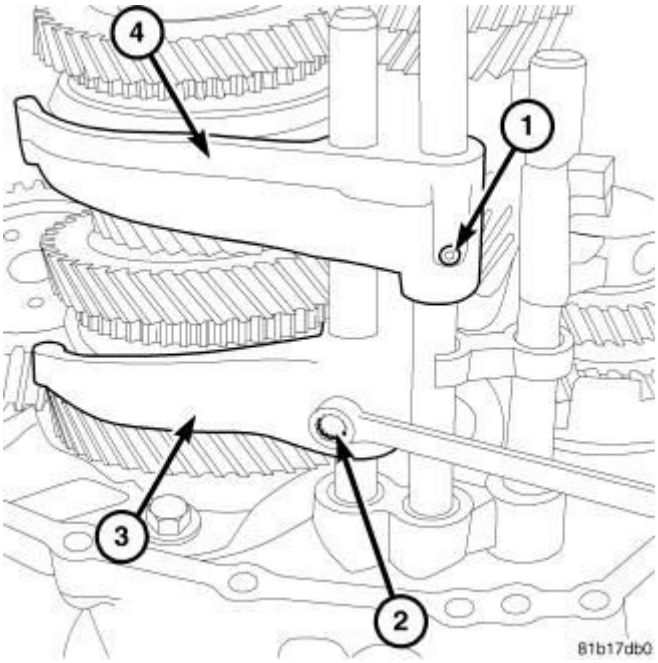

Fig. 132: First & Second Gear Shift Fork To Rail Bolt
Courtesy of CHRYSLER GROUP, LLC

43. Install the **new** bolt (2) holding the first and second gear shift fork (3) to the rail and tighten to 20 N.m (177 in. lbs.).

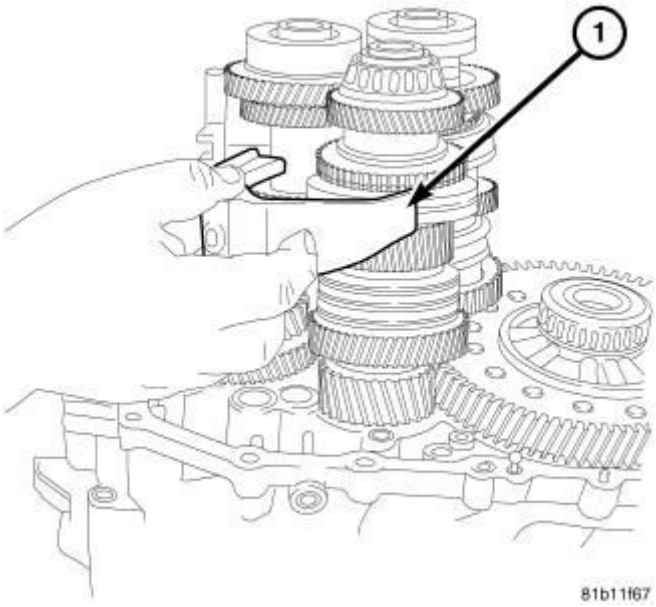

Fig. 133: Fifth & Sixth Gear Shift Fork
Courtesy of CHRYSLER GROUP, LLC

44. Install the fifth and sixth gear shift fork (2).

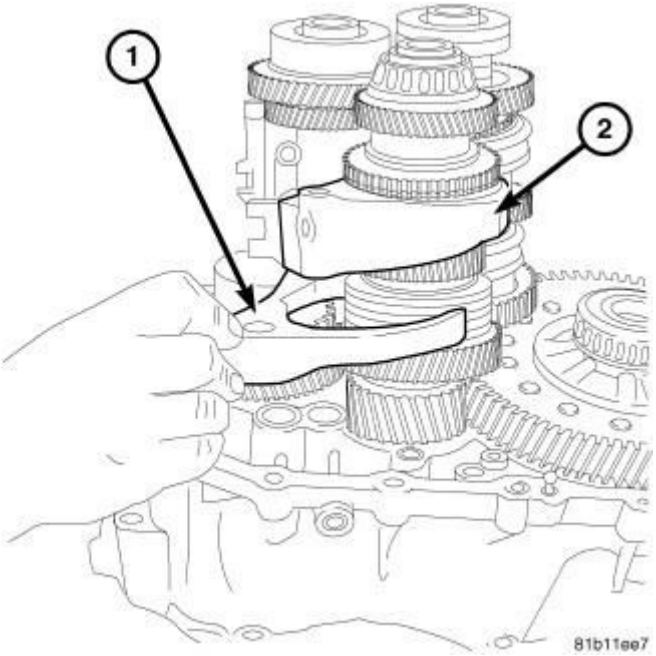

Fig. 134: Reverse Gear Shift Fork
Courtesy of CHRYSLER GROUP, LLC

45. Install the reverse gear shift fork (1).

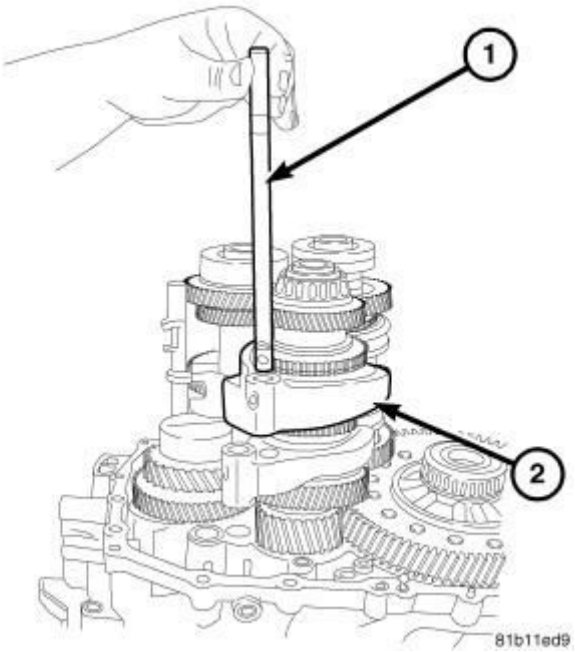

Fig. 135: Fifth & Sixth Gear Shift Rail
Courtesy of CHRYSLER GROUP, LLC

46. Install the fifth and sixth gear shift rail (1) into the case and shift fork (2).

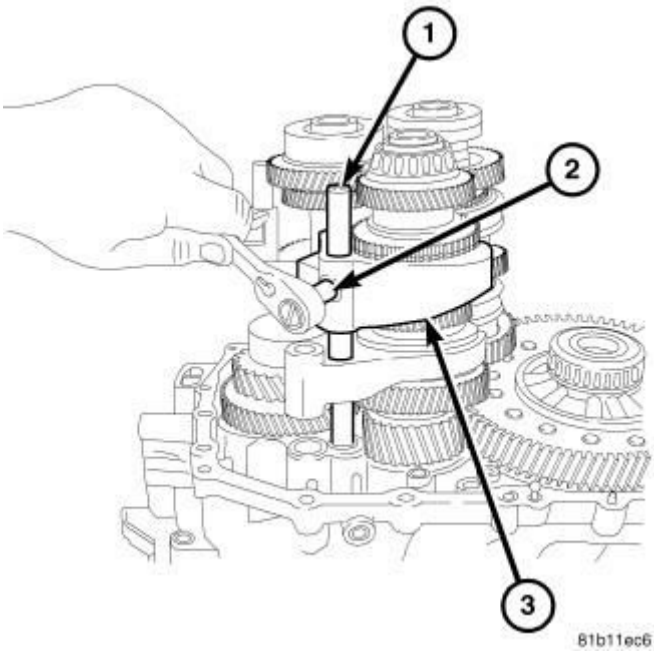

Fig. 136: Fifth & Sixth Gear Shift Fork & Shift Rail Bolt
Courtesy of CHRYSLER GROUP, LLC

47. Install the **new** bolt (2) holding the fifth and sixth gear shift fork (3) to the fifth and sixth gear shift rail (1) and tighten to 20 N.m (177 in. lbs.).

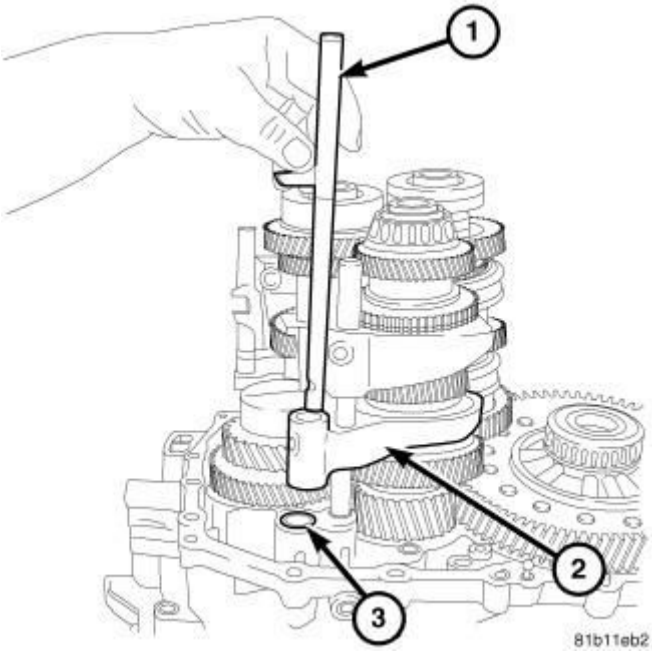

Fig. 137: Reverse Shift Rail
Courtesy of CHRYSLER GROUP, LLC

48. Install the reverse shift rail (1) into the case (3) and shift fork (2).

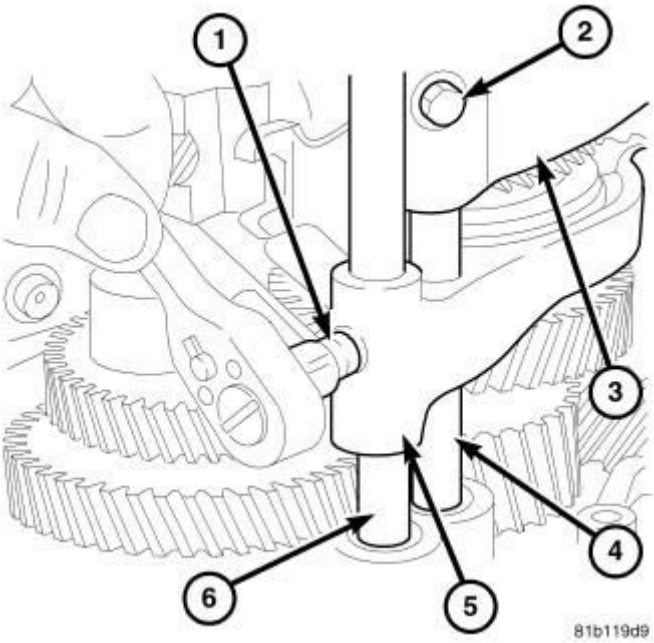

Fig. 138: Reverse Shift Fork To Shift Rail Bolt
Courtesy of CHRYSLER GROUP, LLC

49. Install the **new** bolt (1) holding the reverse shift fork (5) to the reverse shift rail (6) and tighten to 20 N.m (177 in. lbs.).

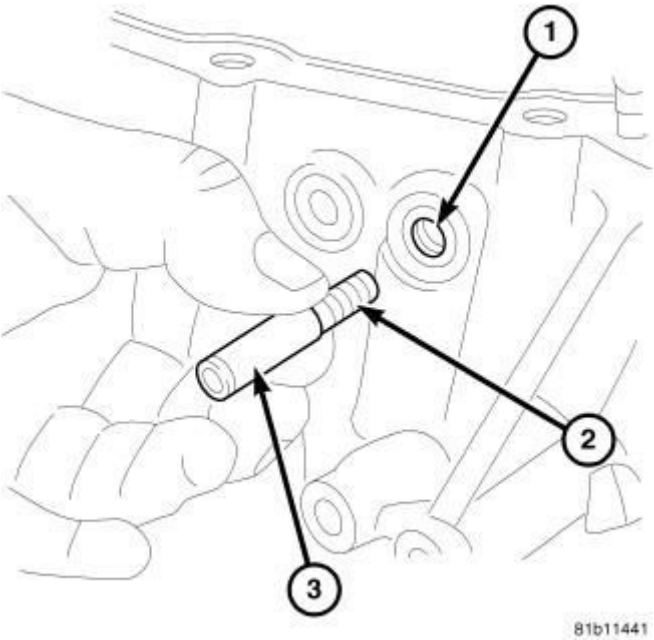

Fig. 139: Third & Fourth Gear Shift Rail Detent Spacer & Spring
Courtesy of CHRYSLER GROUP, LLC

50. Install third and fourth gear shift rail detent ball.
51. Install third and fourth gear shift rail detent spacer (3) and spring (2).

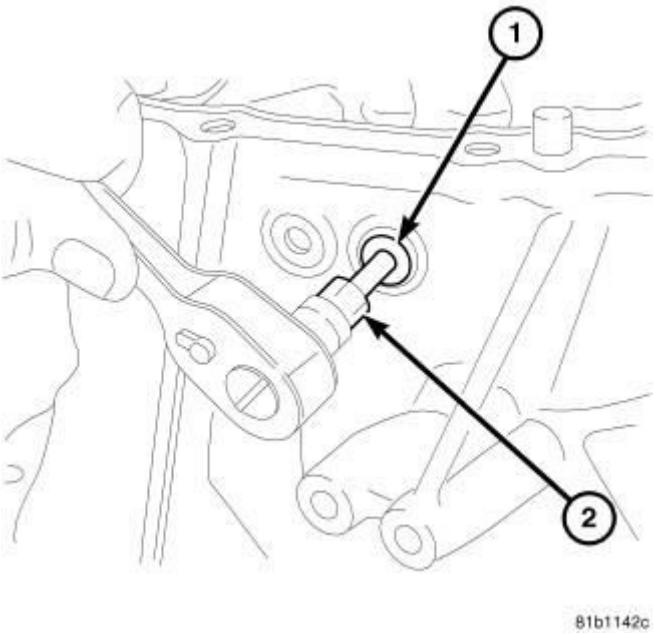

Fig. 140: Third & Fourth Gear Shift Rail Detent Plug
Courtesy of CHRYSLER GROUP, LLC

52. Install a **new** third and fourth gear shift rail detent plug (1) and tighten to 22 N.m (195 in. lbs.).

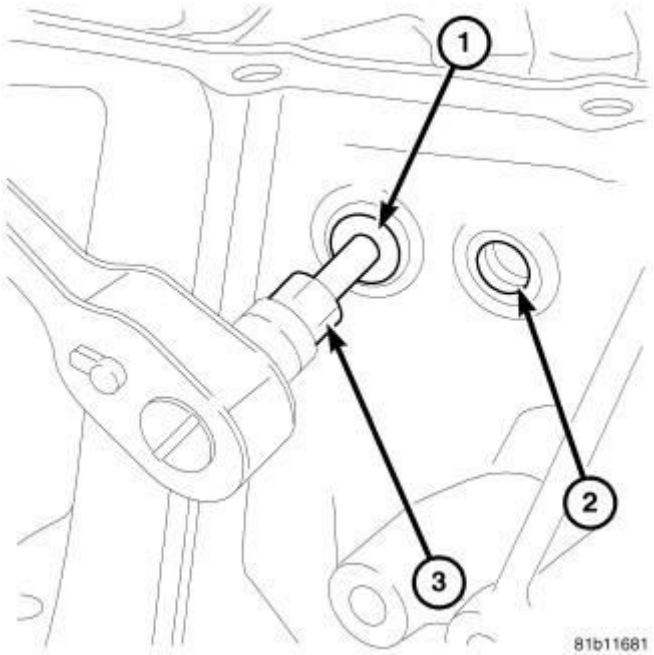

Fig. 141: First & Second Gear Shift Rail Detent Spacer & Spring
Courtesy of CHRYSLER GROUP, LLC

53. Install first and second gear shift rail detent ball.
54. Install first and second gear shift rail detent spacer and spring.

55. Install a **new** first and second gear shift rail detent plug (1) and tighten to 22 N.m (195 in. lbs.).

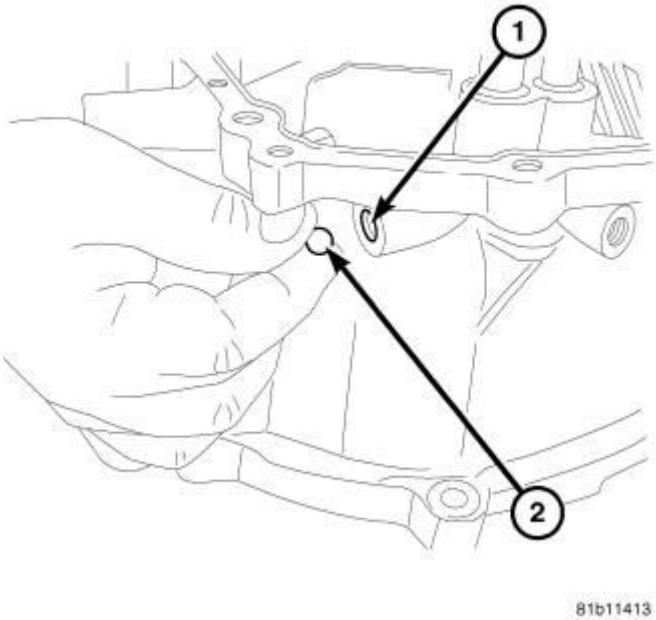

Fig. 142: Reverse Shift Rail Detent Ball
Courtesy of CHRYSLER GROUP, LLC

56. Install the reverse shift rail detent ball (2).

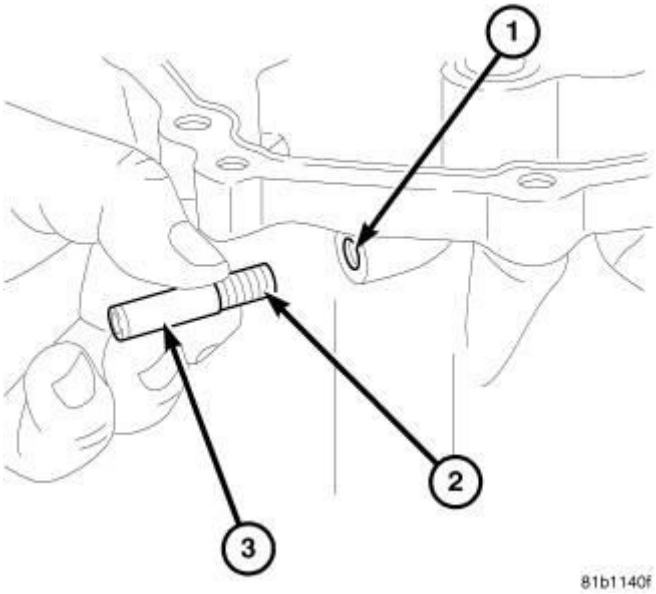

Fig. 143: Reverse Shift Rail Detent Spacer & Spring
Courtesy of CHRYSLER GROUP, LLC

57. Install the reverse shift rail detent spacer (3) and spring (2).

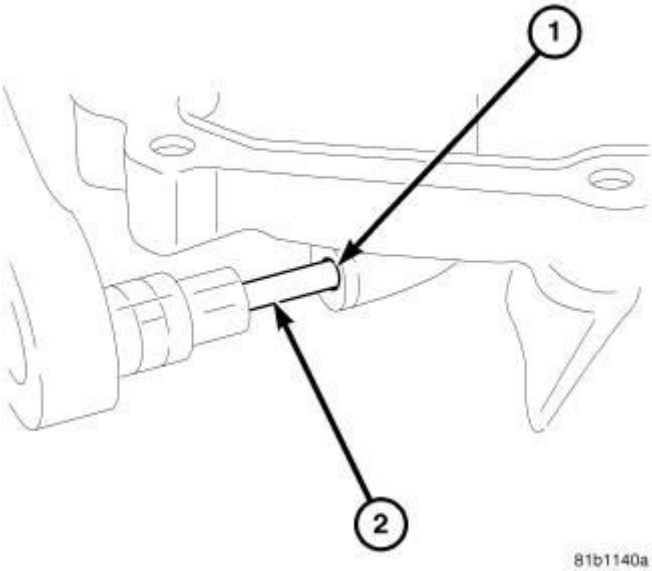

Fig. 144: Reverse Shift Rail Detent Plug
Courtesy of CHRYSLER GROUP, LLC

58. Install a **new** reverse shift rail detent plug (1) and tighten to 22 N.m (195 in. lbs.).

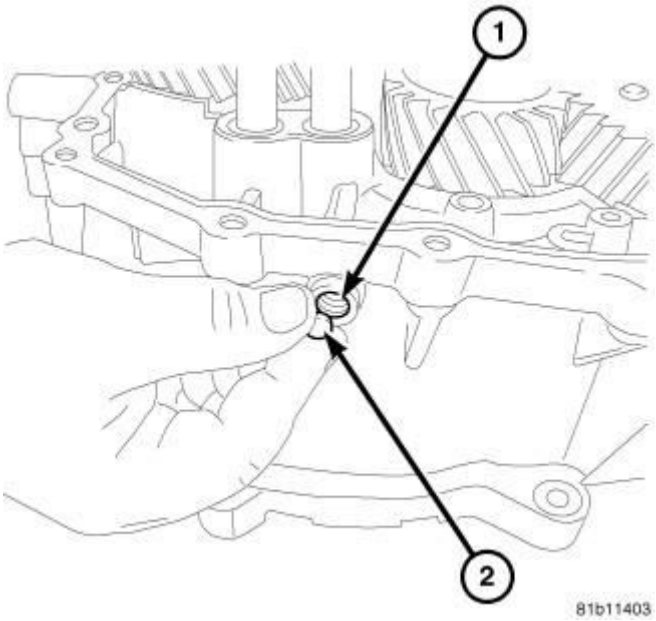

Fig. 145: Fifth & Sixth Gear Shift Rail Detent Ball
Courtesy of CHRYSLER GROUP, LLC

59. Install fifth and sixth gear shift rail detent ball (2).

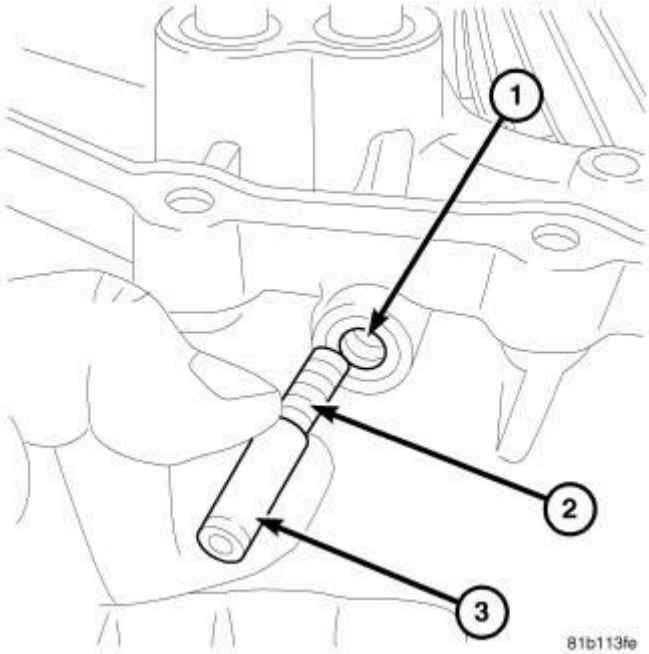

Fig. 146: Fifth & Sixth Gear Shift Rail Detent Spacer & Spring
Courtesy of CHRYSLER GROUP, LLC

60. Install fifth and sixth gear shift rail detent spacer (3) and spring (2).

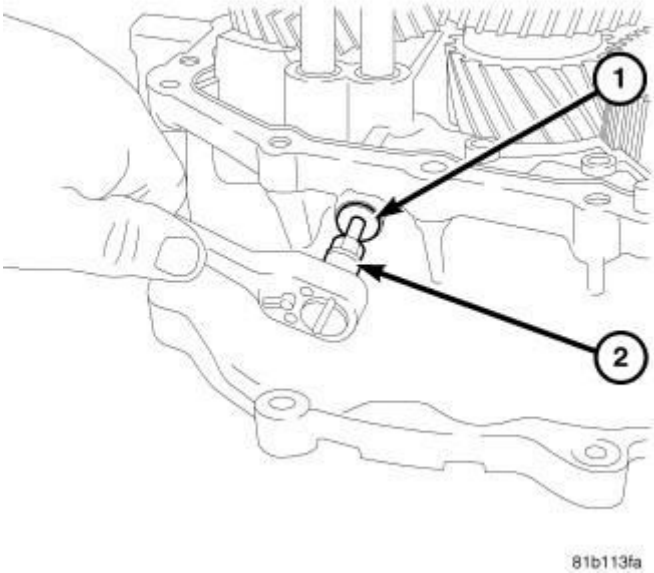

Fig. 147: Fifth & Sixth Gear Shift Rail Detent Plug
Courtesy of CHRYSLER GROUP, LLC

61. Install a **new** fifth and sixth gear shift rail detent plug (1) and tighten to 22

N.m (195 in. lbs.).

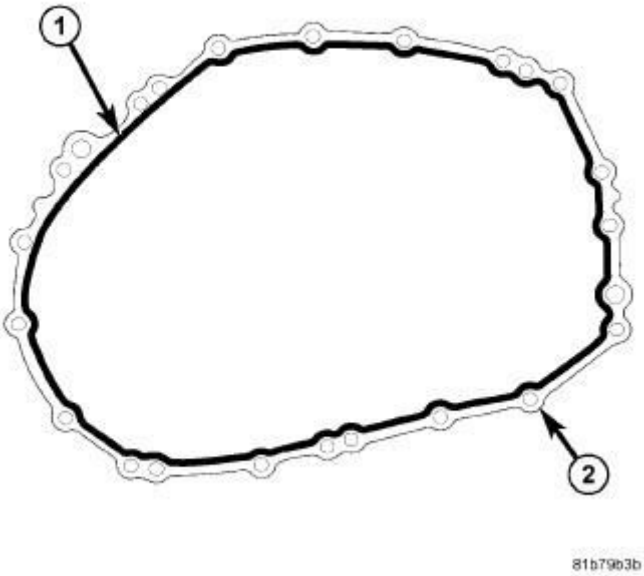

Fig. 148: Sealer
Courtesy of CHRYSLER GROUP, LLC

62. If this is the final assembly draw a bead (1) of MOPAR® Gasket Maker, Loctite® 518, or equivalent, on the flat surface of the case mating flange (2).

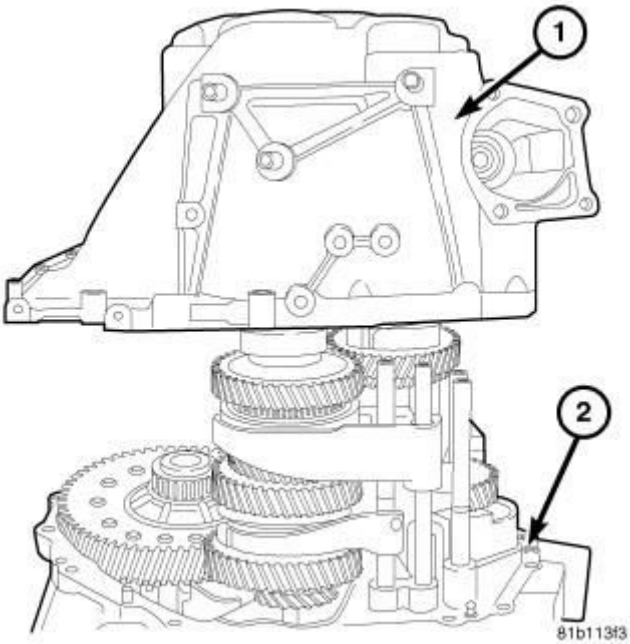

Fig. 149: Transmission Case Half & Clutch Housing
Courtesy of CHRYSLER GROUP, LLC

63. Install the transmission case half (1) onto the clutch housing (2).

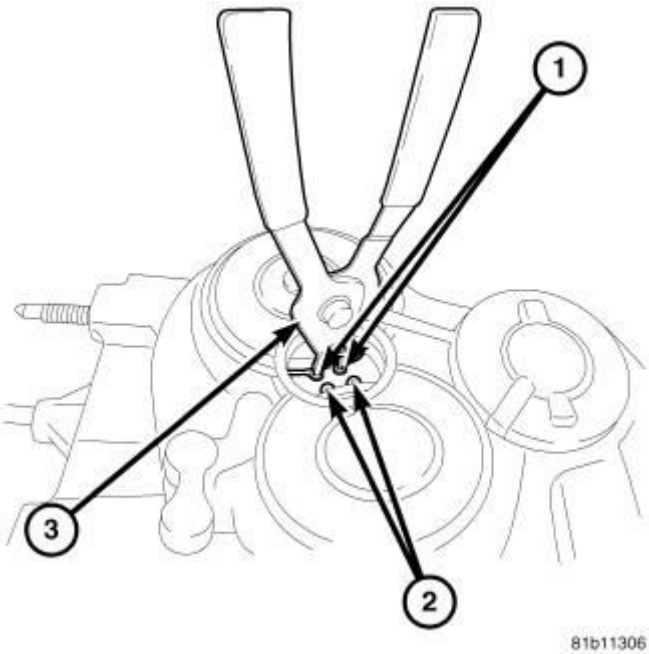

Fig. 150: Snap Rings At Rear Of Transmission Case
Courtesy of CHRYSLER GROUP, LLC

CAUTION: Insure snap rings are fully seated in bearings before installing case bolts.

64. Using suitable snap-ring pliers (3), expand the transmission shaft bearing snap-rings (1, 2) at the rear of the transmission case to allow the bearings fall into place.

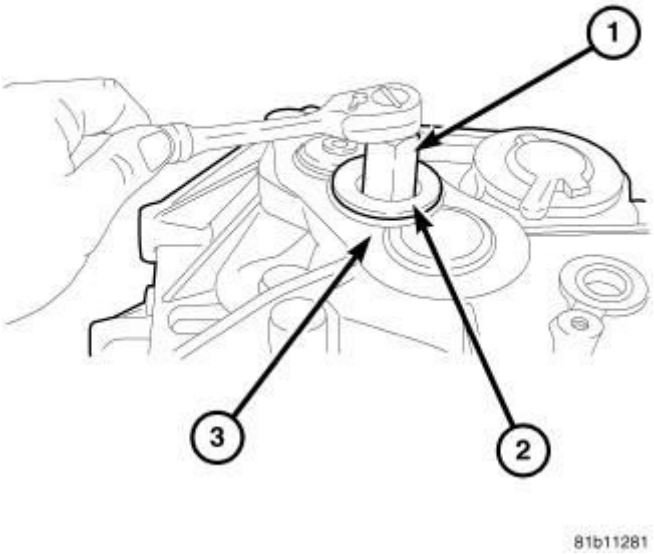

Fig. 151: 27mm Hex Adapter For Shaft Plug
Courtesy of CHRYSLER GROUP, LLC

NOTE: Always use a new washer anti-rotation bolt.

NOTE: Add MOPAR® Gasket Maker, Loctite® 518, or equivalent around inside flat of plug.

65. Install the **new** 27 mm the shaft plug (2) into the rear of the case.
66. Install a 27 mm (1 1/16 in.) hex adapter (1) into the shaft plug (2) at the rear of the transmission case (3) and tighten to 55 N.m (41 ft. lbs.).

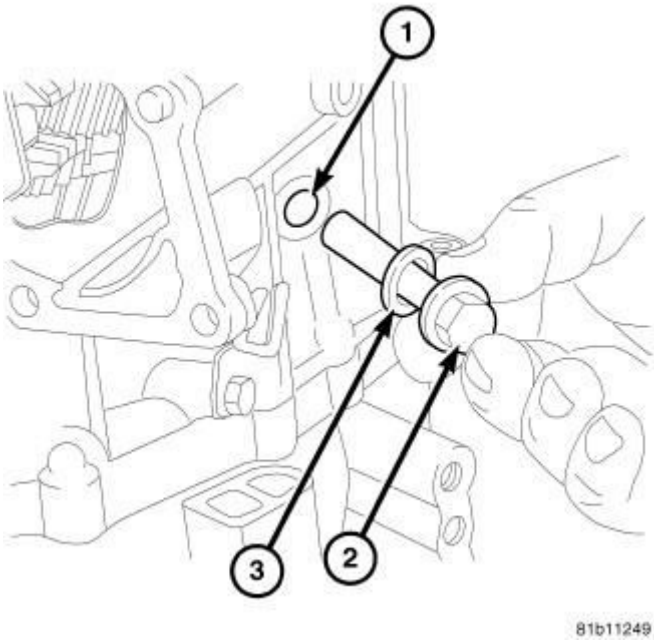

Fig. 152: Idler Shaft Anti-Rotation Bolt
Courtesy of CHRYSLER GROUP, LLC

NOTE: Always use a new washer anti-rotation bolt.

NOTE: Next step only to be used on final assembly.

67. Install anti-rotation bolt (2) and washer (3) tighten to 80 N.m (59 ft. lbs.).

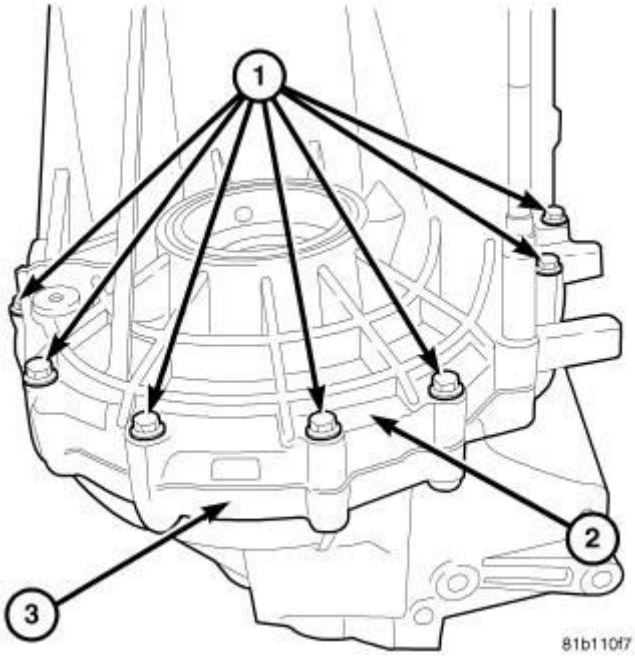

Fig. 153: Transmission Case To Clutch Housing Bolts (Transmission Case Side)

Courtesy of CHRYSLER GROUP, LLC

68. Install the bolts (1) holding the transmission case (2) to the clutch housing (3) on the transmission case side and tighten to 29 N.m (257 in. lbs.).

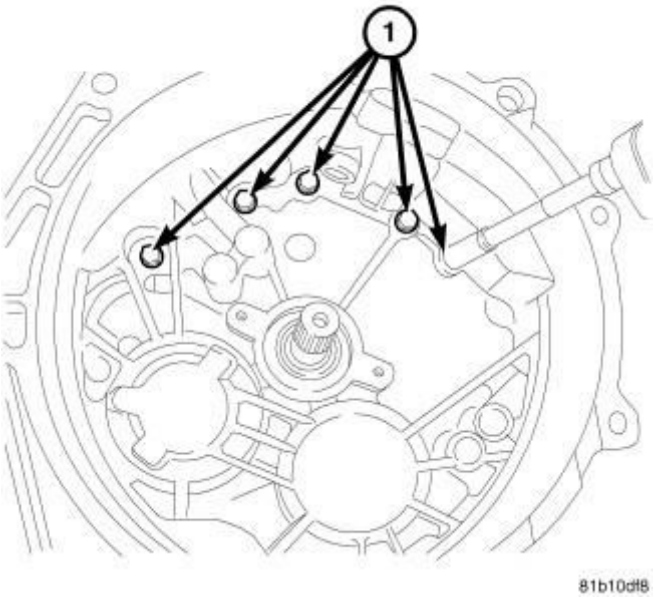

Fig. 154: Transmission Case To Clutch Housing Bolts (Inside Clutch Housing)
Courtesy of CHRYSLER GROUP, LLC

69. Install the bolts (1) holding the transmission case to the clutch housing on the inside of the clutch housing and tighten to 29 N.m (257 in. lbs.).

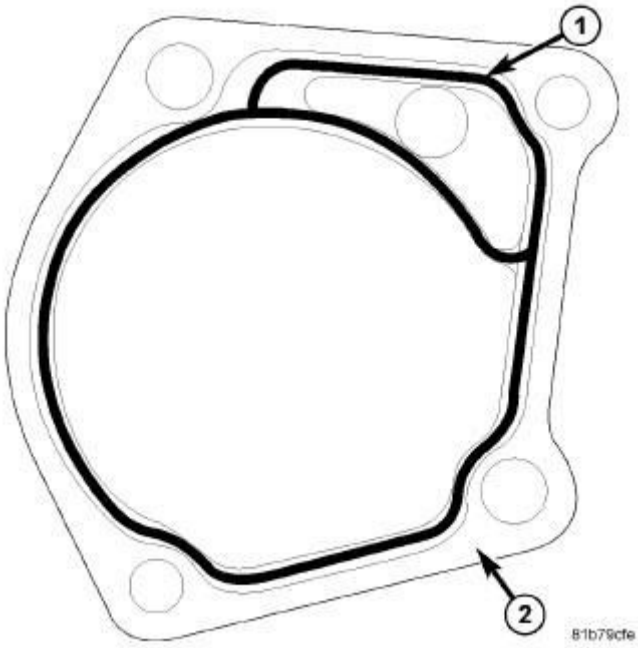

Fig. 155: Sealer
Courtesy of CHRYSLER GROUP, LLC

70. Add MOPAR® Gasket Maker, Loctite® 518, or equivalent around inside of all holes and on mating flange.

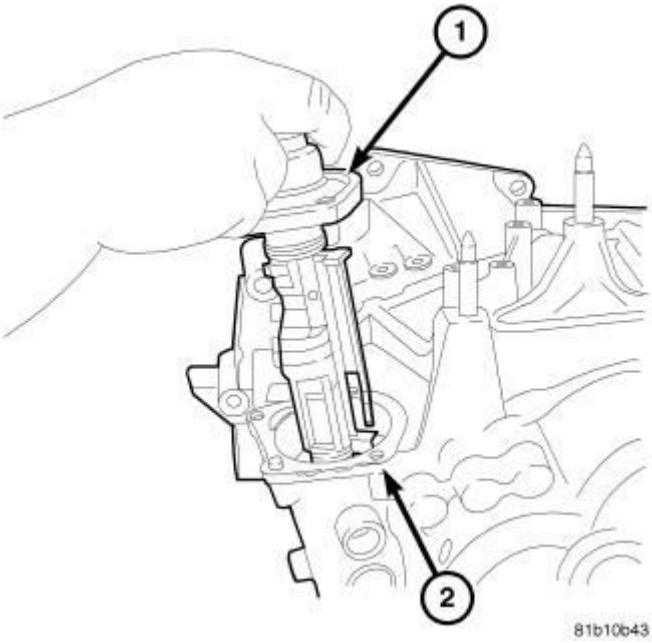

Fig. 156: Shift Lever Assembly
Courtesy of CHRYSLER GROUP, LLC

71. Install the shift lever assembly (1) into the transmission case (2).

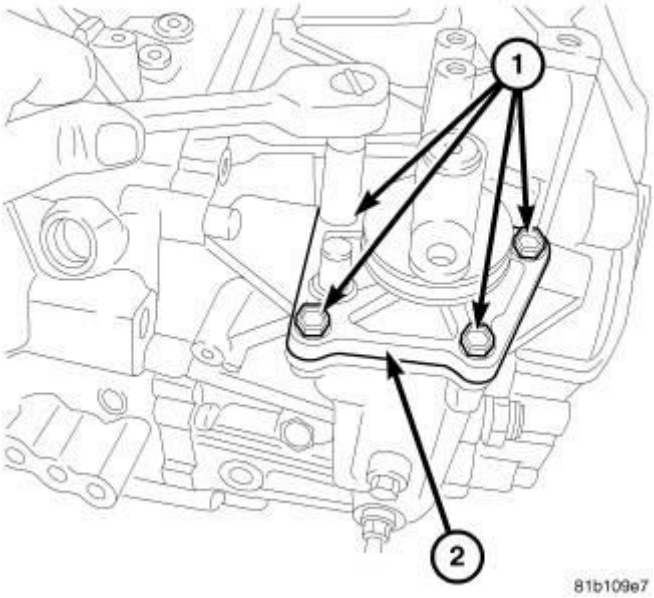

Fig. 157: Shift Lever Assembly
Courtesy of CHRYSLER GROUP, LLC

72. Install the **new** bolts (1) holding the shift lever assembly (2) to the transmission and tighten to 19 N.m (168 in. lbs.)

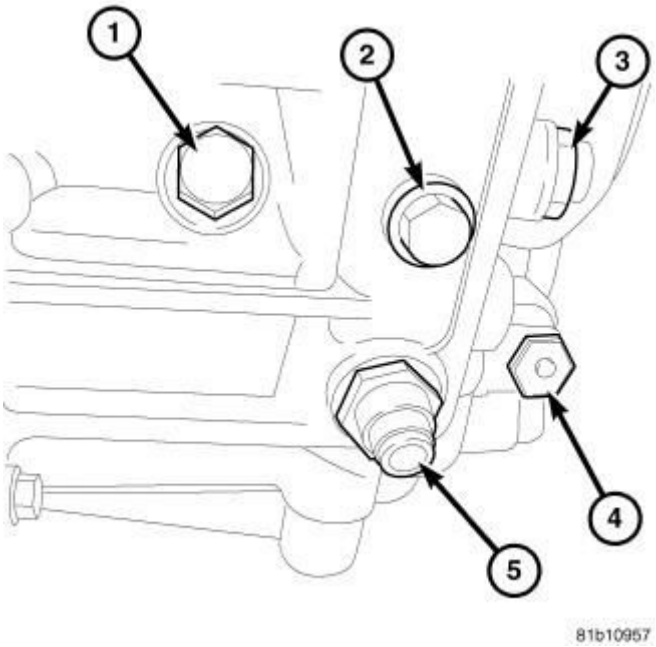

Fig. 158: Shift/Select Detent & Guide Pin
Courtesy of CHRYSLER GROUP, LLC

73. Install **new** shift tower lock ball for shift detent (5) and tighten to 29 N.m (277 in. lbs.).

74. Install **new** shift lock ball for the select detent (3) and tighten to 39 N.m (29 ft. lbs.).
75. Install **new** shift tower shift guide pin (2) and tighten to 30 N.m (257 in. lbs.).

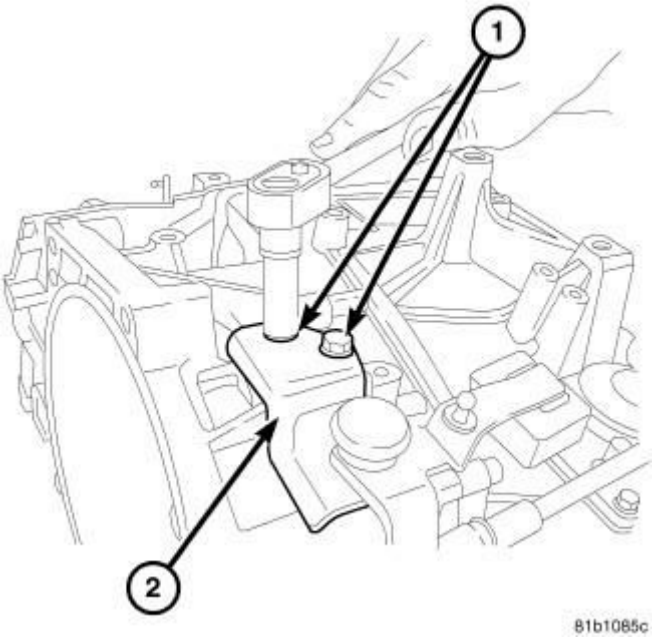

Fig. 159: Crossover Bracket
Courtesy of CHRYSLER GROUP, LLC

76. Install the shift bracket (2) and bolts, tighten to 19 N.m (168 in. lbs.)

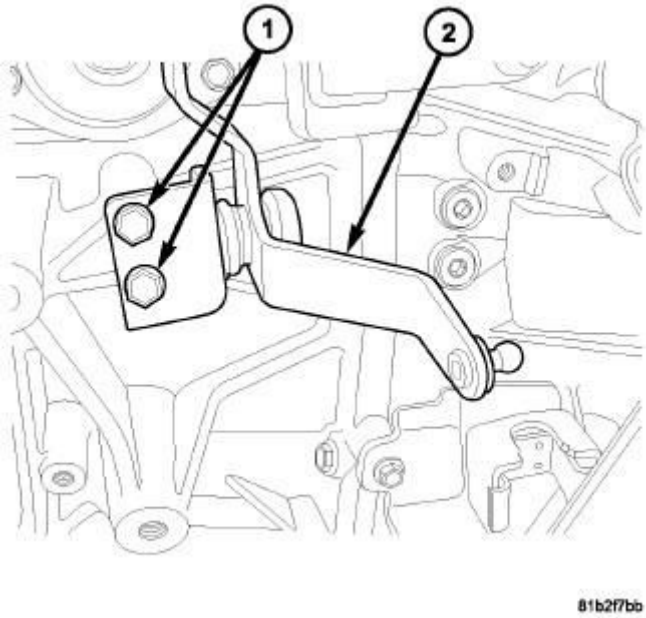

Fig. 160: Bell Crank
Courtesy of CHRYSLER GROUP, LLC

77. Install the crossover (1) onto the transmission.
78. Install the crossover bolts (1) and tighten to 19 N.m (168 in. lbs.)

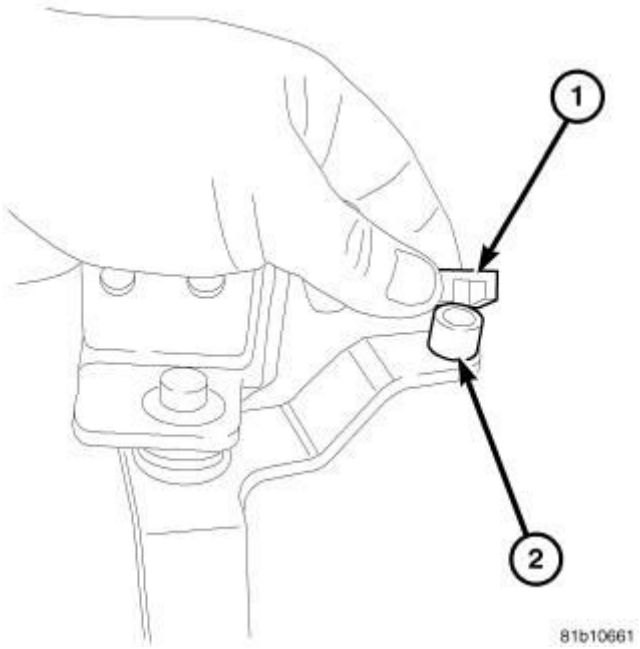

Fig. 161: Bell Crank Bushing
Courtesy of CHRYSLER GROUP, LLC

79. Apply a light coating of white grease on crossover bushing (1).
80. Install the crossover bushing (1) onto the crossover shaft (2).

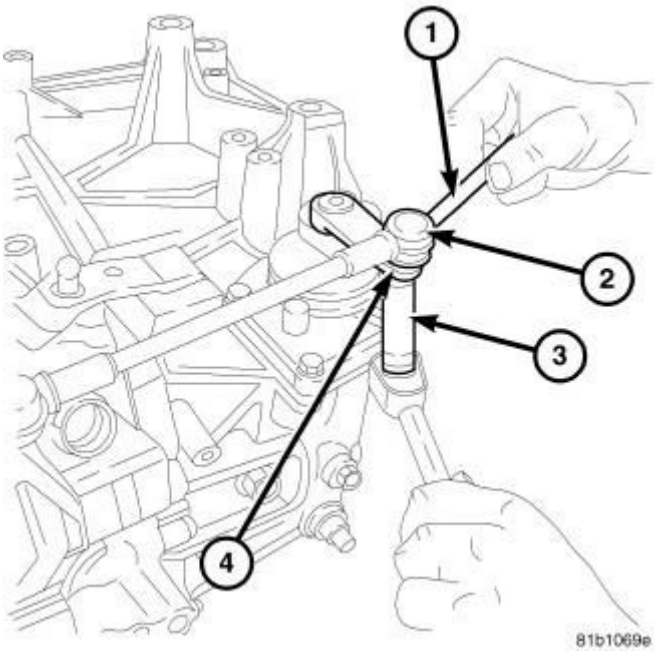

Fig. 162: Crossover Rod Nut
Courtesy of CHRYSLER GROUP, LLC

81. Install the nut (4) holding the crossover rod (2) to the shift lever. Be sure to use a wrench (1) to hold the ball stud to prevent it from rotating in the shift lever tighten to 12 N.m (106 in. lbs.).

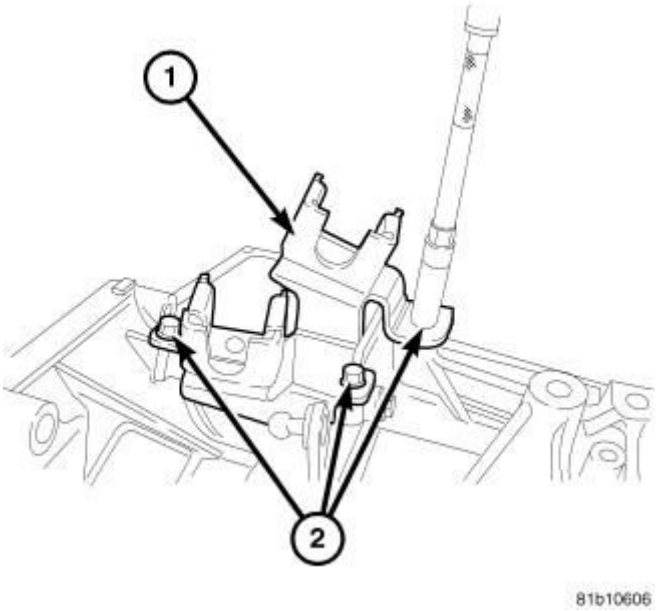

Fig. 163: Shift Cable Bracket
Courtesy of CHRYSLER GROUP, LLC

CAUTION: Be sure to verify bracket position after

installation.

82. Install the shift cable bracket (1) to the transmission case.
83. Install the bolts (2) holding the shift cable bracket (1) to the transmission case and tighten to 19 N.m (168 in. lbs.).

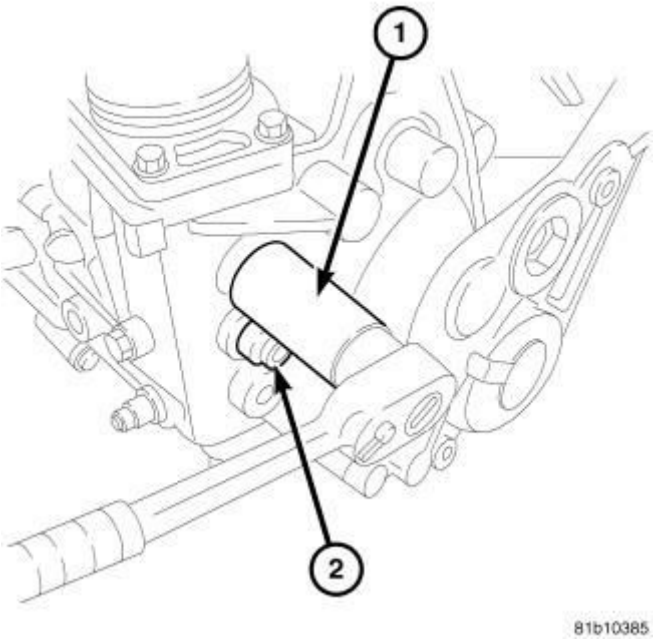

Fig. 164: Back- Up Lamp Switch
Courtesy of CHRYSLER GROUP, LLC

84. Install the backup lamp switch (1) with a **new** washer and tighten to 40 N.m (29 ft. lbs.).

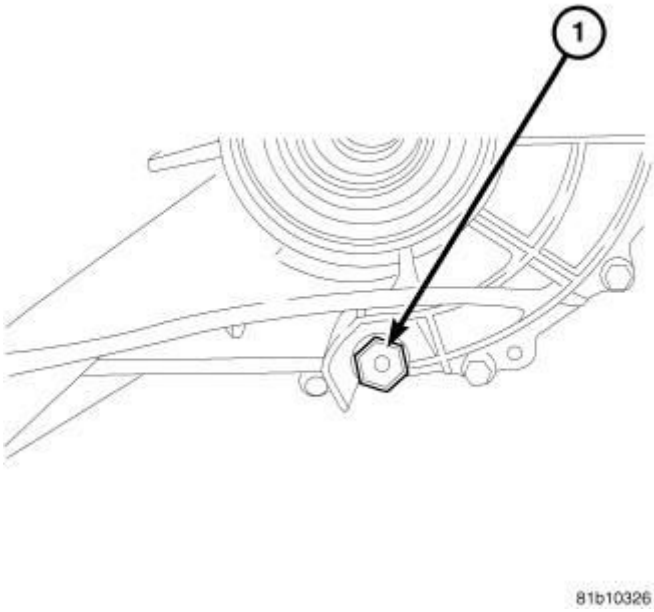

Fig. 165: Drain Plug
Courtesy of CHRYSLER GROUP, LLC

85. Install the drain plug (1) with a **new** gasket and tighten to 39 N.m (29 ft. lbs.).

BEARING ADJUSTMENT PROCEDURE

1. Use extreme care when removing and installing bearing cups and cones. Use only an arbor press for installation, as a hammer may not properly align the bearing cup or cone. Burrs or nicks on the bearing seat gives a false end-play reading while gauging for proper shims. Improperly seated bearing cups and cones are subject to low mileage failures.
2. Bearing cups and cones should be replaced if they show signs of pitting or heat distress. If distress is seen on either the cup or bearing rollers, both cup and cone must be replaced.
3. Bearing preload and drag torque specifications must be maintained to avoid premature bearing failures. Used (original) bearings may lose up to 50% of the original drag torque after break-in. All bearing adjustments must be made with no other component interference or gear intermesh.
4. Replace bearings as a pair: If one differential bearing is defective, replace both differential bearings, if one input shaft bearing is defective, replace both input shaft bearings.
5. Bearing cones must not be reused if removed.

6. Turning torque readings should be obtained while smoothly rotating in either direction.

DIFFERENTIAL BEARING PRELOAD ADJUSTMENT

NOTE: True bearing turning torque readings can be obtained only with the geartrain removed from the case.

1. Remove bearing cup and existing shim from clutch bellhousing case.
2. Press in new bearing cup into bellhousing case (or use a cup that has been ground down on the outer edge for ease of measurement).
3. Press in new bearing cup into gear case side.
4. Oil differential bearings with transmission fluid. Install differential assembly in transaxle gear case. Install clutch bellhousing over gear case. Install and tighten case bolts to 29 N.m (257 in. lbs.).
5. Position transaxle with bellhousing facing down on workbench with C-clamps. Position dial indicator.

NOTE: The dial indicator should be parallel to T-Handle to obtain the most accurate reading.

6. Apply a medium load to differential with Torque Tool (special tool #C-4995A, Tool, Differential Bearing Torque) (3) and a T-handle, in the downward direction. Roll differential assembly back and forth a number of times. This will settle the bearings. Zero the dial indicator (2). To obtain end play readings, apply a medium load in an upward direction while rolling differential assembly back and forth. Record end play.
7. The shim required for proper bearing preload is the **total of end play, plus (constant) preload of 0.18 mm (0.007 in.).** Never combine shims to obtain the required preload.
8. Remove case bolts. Remove clutch bellhousing differential bearing cup. Install shim(s) selected, then press the bearing cup into clutch bellhousing.
9. Install clutch bellhousing. Install and tighten case bolts to 29 N.m (257 in. lbs.).
10. Using Torque Tool (special tool #C-4995A, Tool, Differential Bearing Torque) (2) and an inch-pound torque wrench (1), check turning torque of the differential assembly. **The turning torque should be 1 to 3 N.m (9 to**

22 in. lbs.) If the turning torque is too high, install a 0.05 mm (0.002 inch) thinner shim. If the turning torque is too low, install a 0.05 mm (0.002 inch) thicker shim.

11. Recheck turning torque (1). Repeat until the proper turning torque is obtained.
12. Once proper turning torque has been established for the differential separate case halves, install output shaft # 2 assembly into case with the differential and recheck differential turning torque. **The turning torque should be 4 to 6 N.m (37 to 52 in. lbs.) If the turning torque is too high, install a 0.05 mm (0.002 inch) thinner shim. If the turning torque is too low, install a 0.05 mm (0.002 inch) thicker shim.**
13. Recheck total turning torque (1). Repeat until the proper turning torque is obtained.

    Once proper turning torque has been established, place gear case on the end plate. Draw a bead of MOPAR® Gasket Maker, Loctite® 518, or equivalent, on the flat surface of the case mating flange. Install clutch bellhousing onto gear case. Install and tighten case bolts to 29 N.m (257 in. lbs.).

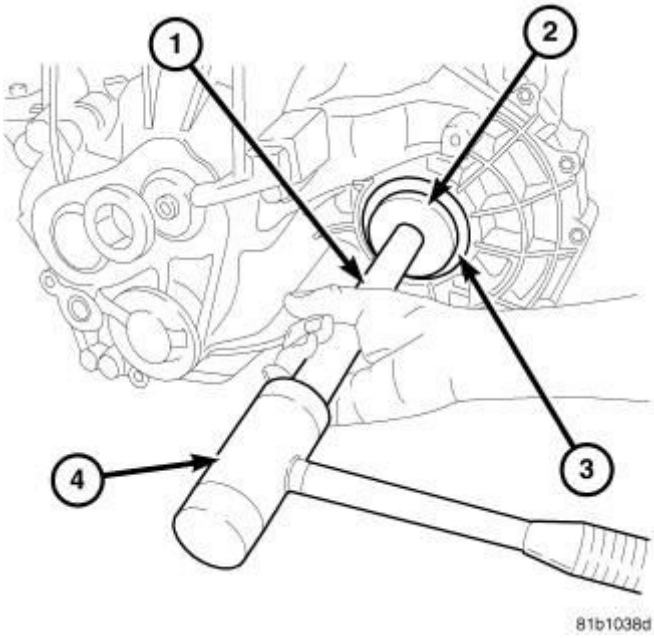

Fig. 166: Differential Side Seal
Courtesy of CHRYSLER GROUP, LLC

14. Install axle seal (case side) on Seal Installer (special tool #9928, Installer,

Differential Oil Seal) and Handle (special tool #C-4171, Driver Handle, Universal) and insert into axle shaft seal bore.

15. Tap seal into position until seated against transaxle case.

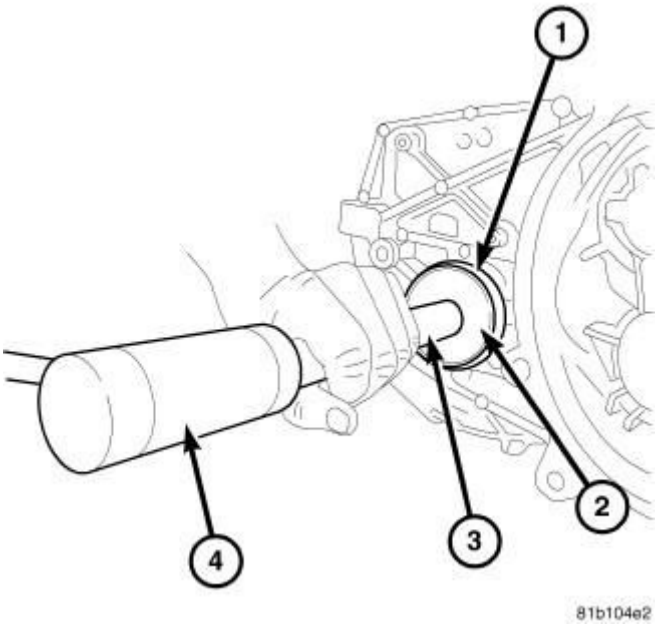

Fig. 167: Axle Seal And Handle
Courtesy of CHRYSLER GROUP, LLC

16. Install axle seal (bellhousing side) on Seal Installer (special tool #9928, Installer, Differential Oil Seal) and Handle (special tool #C-4171, Driver Handle, Universal) and insert into axle shaft seal bore.
17. Tap seal into position until seated against transaxle case.

INSTALLATION

DIESEL

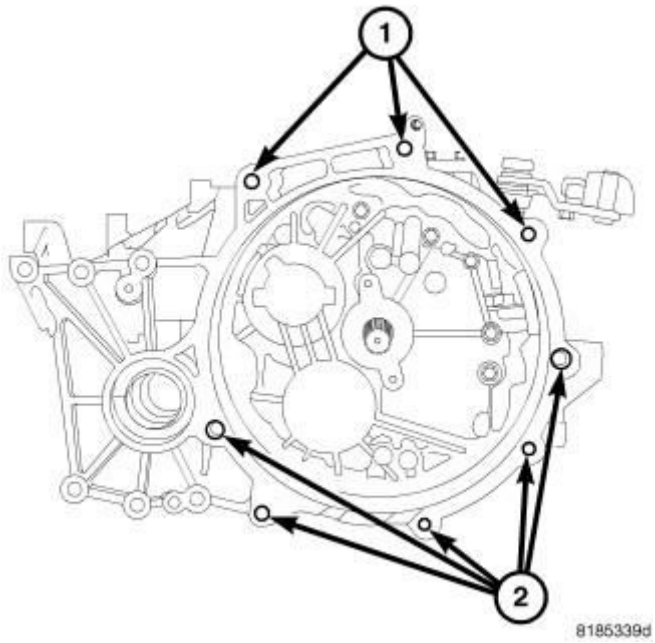

Fig. 168: Bellhousing Bolts
Courtesy of CHRYSLER GROUP, LLC

1. Lift transmission into position.
2. Install the lower transmission bolts (2) and tighten to 48 N.m (35 ft. lbs.) torque.

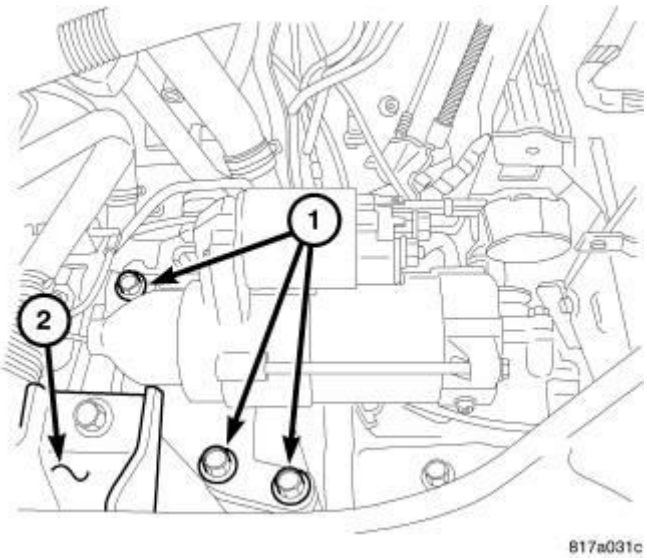

Fig. 169: Starter Bolts
Courtesy of CHRYSLER GROUP, LLC

3. Install the starter.
4. Install the two lower starter mounting bolts (1).

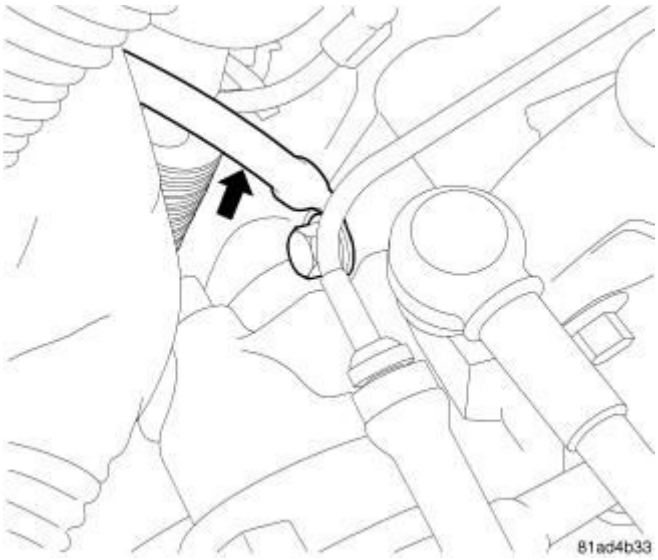

Fig. 170: Ground Cable
Courtesy of CHRYSLER GROUP, LLC

5. Install the upper starter mounting bolt and the ground cable.
6. Tighten all three bolts to 54 N.m (40 ft. lbs.).

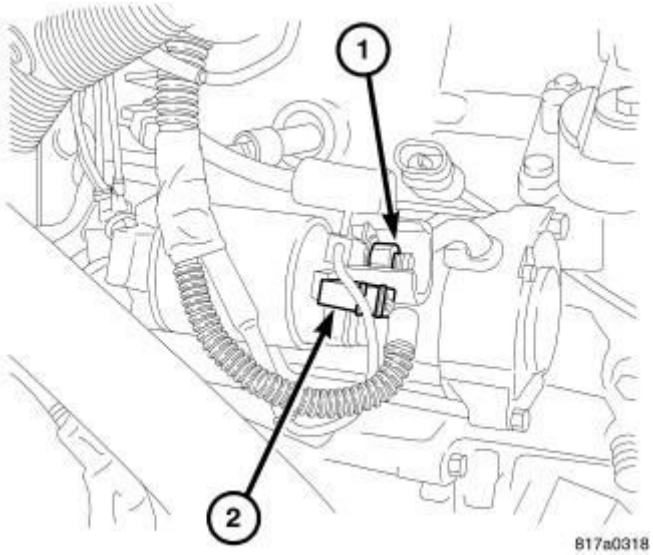

Fig. 171: Starter Electrical
Courtesy of CHRYSLER GROUP, LLC

7. Connect the battery cable (1) to the starter. Tighten nut to 10 N.m (90 in. lbs.).
8. Connect the solenoid connector (2) to the starter.

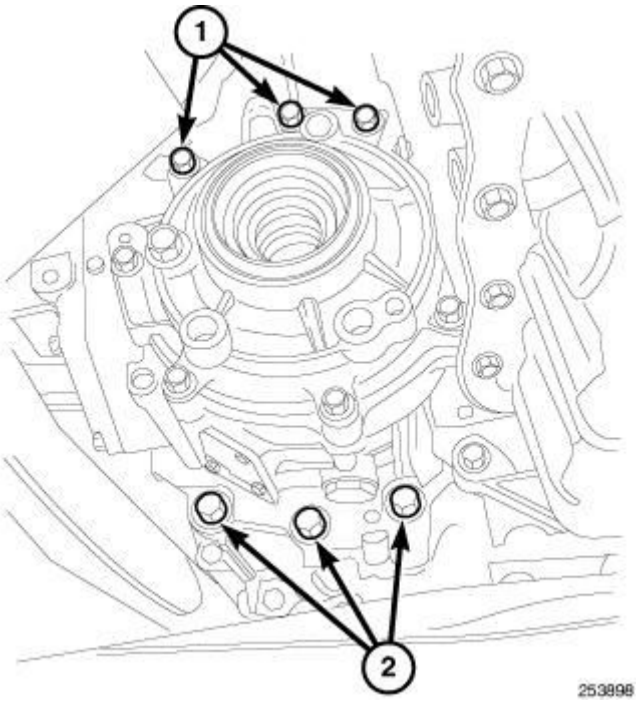

Fig. 172: PTU Mounting Bolts
Courtesy of CHRYSLER GROUP, LLC

NOTE: If equipped with a Power Transfer Unit (PTU), replace both O-rings in the PTU.

9. If equipped, install the PTU and mounting bolts (1 and 2). Tighten the bolts to 58 N.m (43 ft. lbs.).

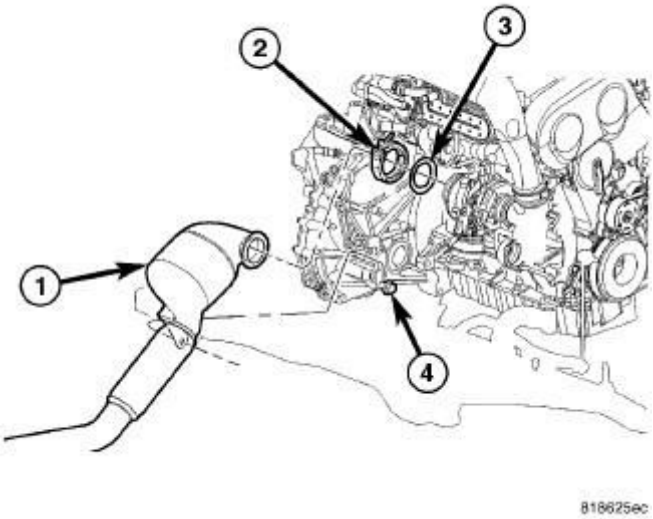

Fig. 173: Catalytic Converter - Diesel
Courtesy of CHRYSLER GROUP, LLC

NOTE: Insure that the metallic gasket is in place.

10. Position catalytic converter (1) in vehicle.
11. Install gasket (3) and catalytic converter mounting (banjo) clamp (2) and hand tighten clamp.

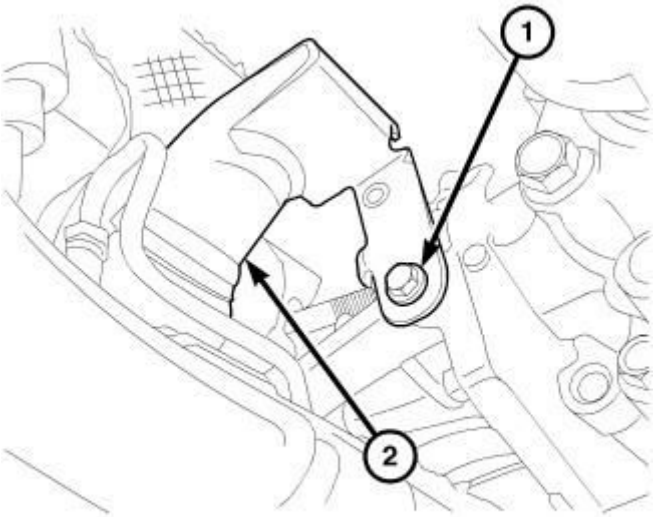

8184b86e

Fig. 174: Catalytic Converter Support Bracket
Courtesy of CHRYSLER GROUP, LLC

12. Install catalytic converter mounting bolt. Tighten bolt (1) to 28 N.m (250 in. lbs.).

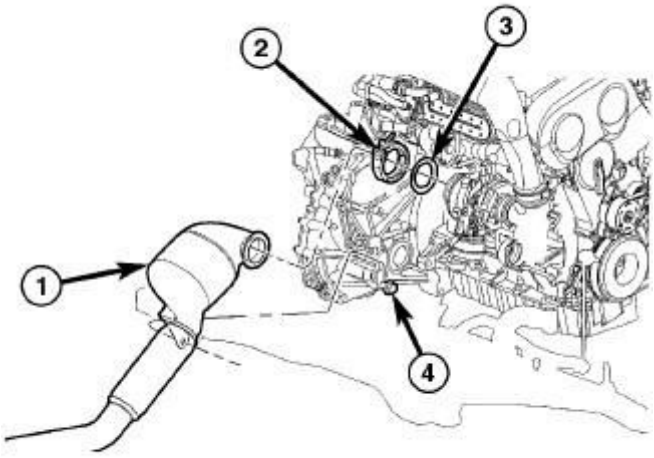

818625ec

Fig. 175: Catalytic Converter - Diesel
Courtesy of CHRYSLER GROUP, LLC

13. Tighten catalytic converter mounting (banjo) clamp (2) to 7 N.m (61.5 in. lbs.).

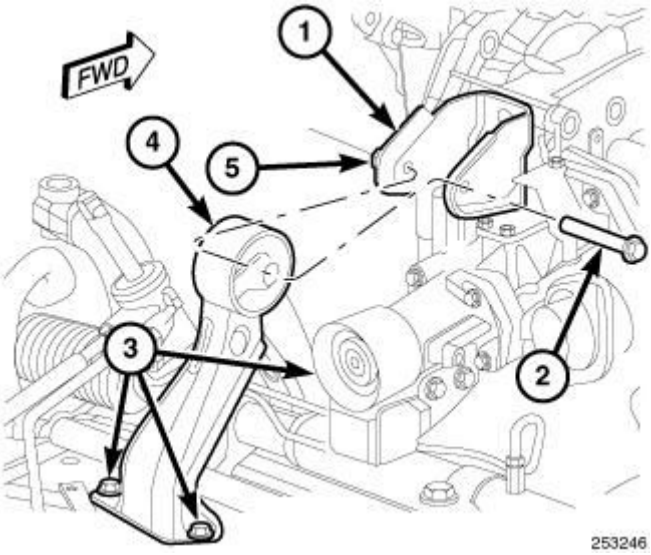

Fig. 176: Rear Roll Mount
Courtesy of CHRYSLER GROUP, LLC

14. Install the rear engine roll mount (4) and Install the through bolt (2) do not tighten at this time.
15. Raise crossmember up into place and reposition steering gear onto crossmember.
16. Install three rear engine roll mount bolts (3). Tighten bolts to 153 N.m (112 ft. lbs.).

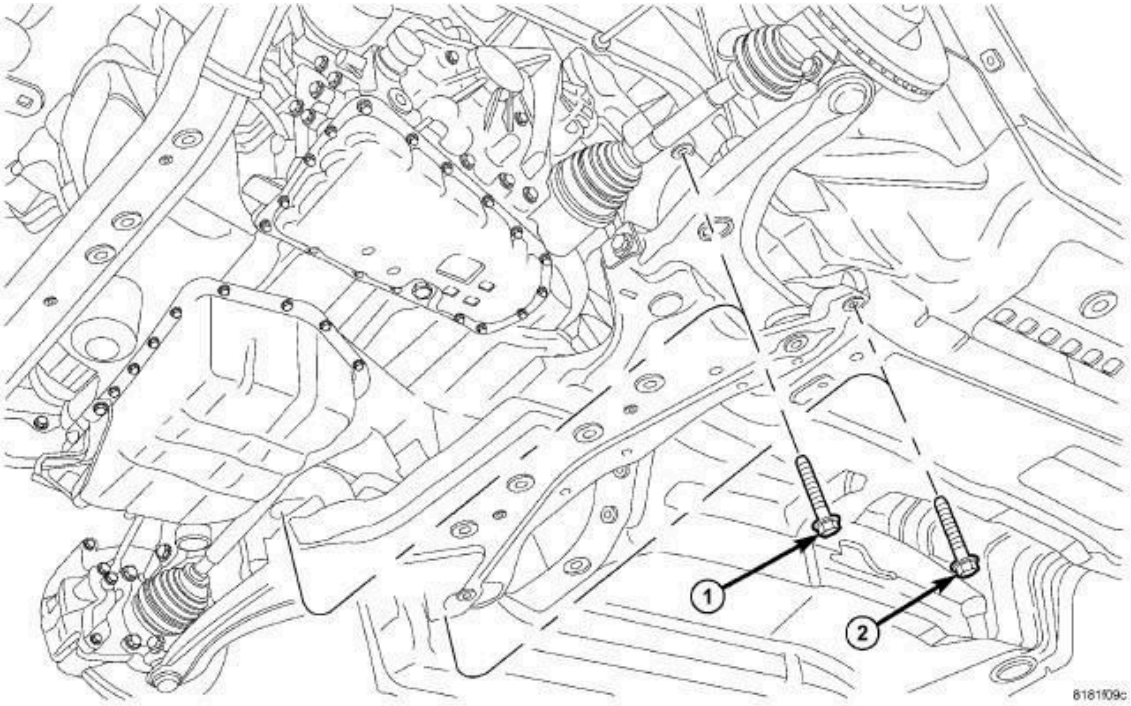

Fig. 177: Front Crossmember
Courtesy of CHRYSLER GROUP, LLC

17. Install two rear crossmember bolts (2). do not tighten at this time.

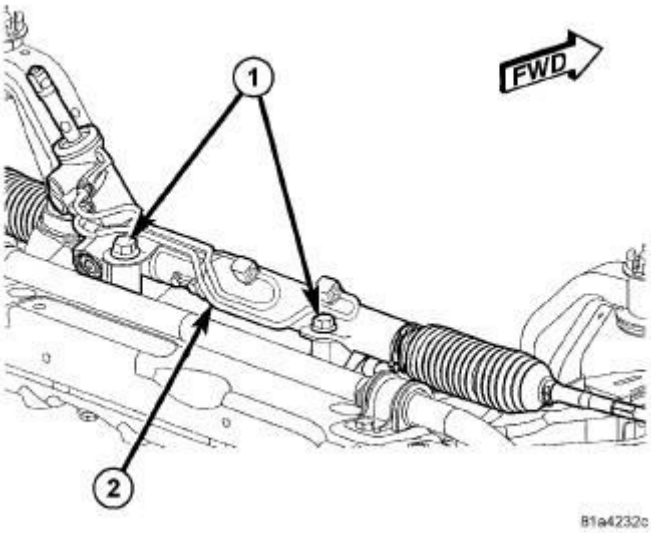

Fig. 178: Steering Gear & Bolts
Courtesy of CHRYSLER GROUP, LLC

18. Install two steering gear (2) mounting bolts (1). Tighten the bolts to 70 N.m (52 ft. lbs.).

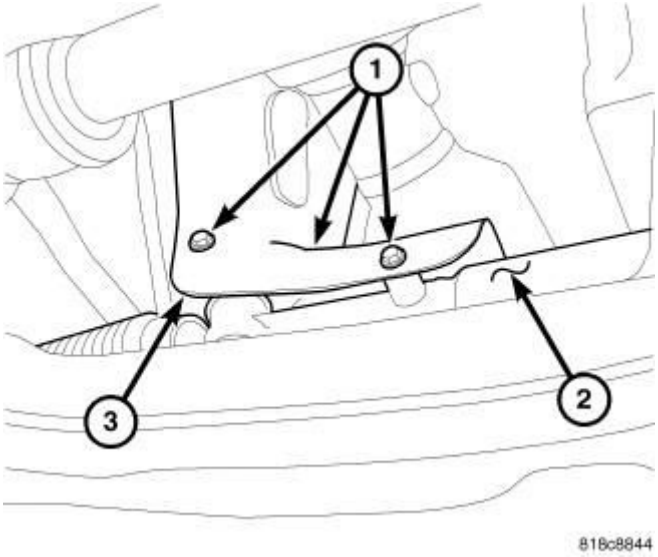

Fig. 179: Gear Shield
Courtesy of CHRYSLER GROUP, LLC

19. Position the heat shield (3) and install the three screws (1) securing the shield to the steering gear (2). Tighten the mounting screws (1) to 8 N.m (71 in. lbs.).

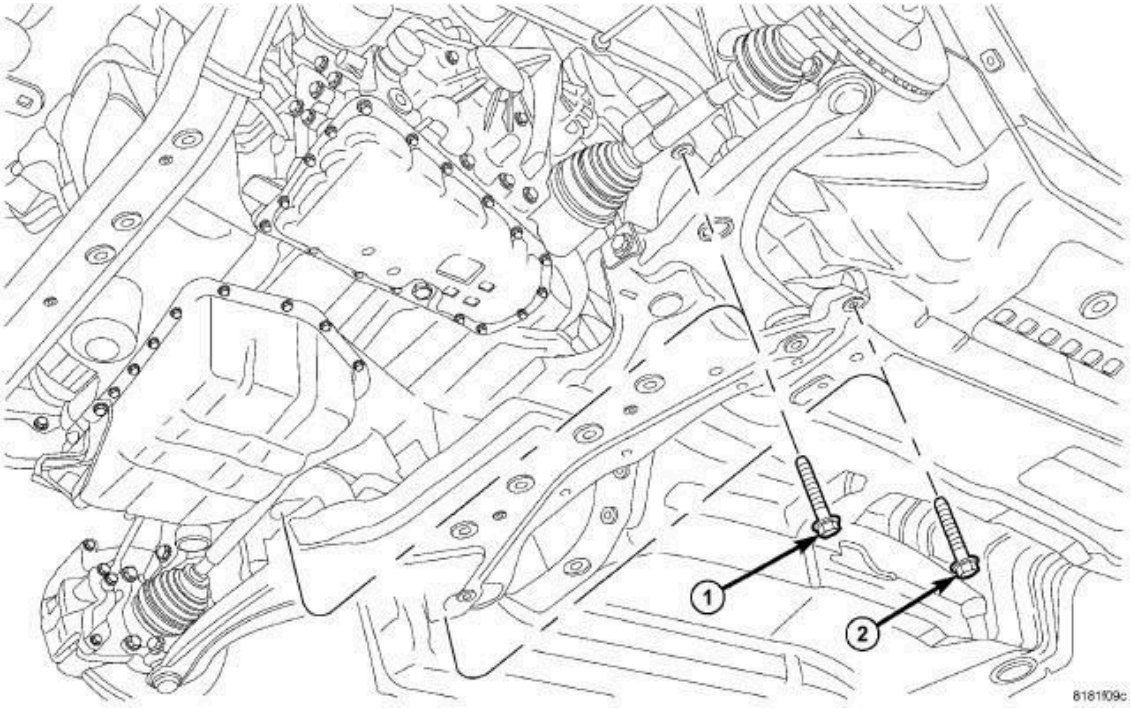

Fig. 180: Front Crossmember
Courtesy of CHRYSLER GROUP, LLC

20. Raise crossmember into position and install front bolts (1) and align crossmember to the marks made during removal.

21. Tighten the bolts (1 and 2) to 150 N.m (111 ft. lbs.).

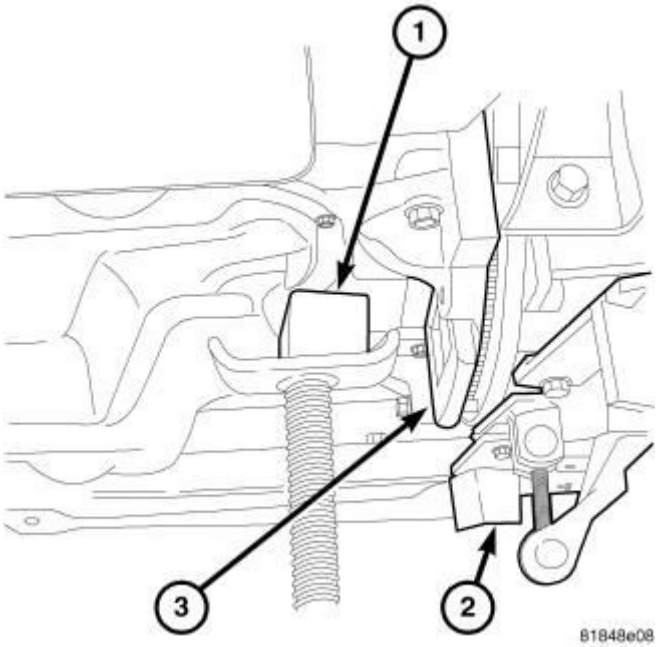

Fig. 181: Support Engine And Transaxle
Courtesy of CHRYSLER GROUP, LLC

22. Remove the screw jack (1) from the engine (3).

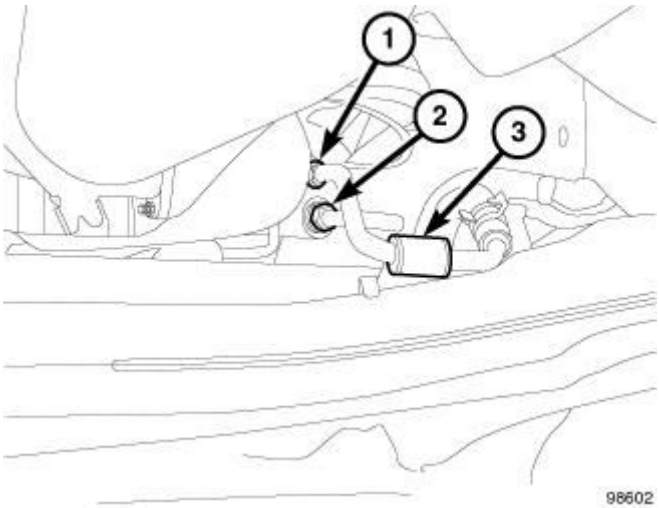

Fig. 182: Power Steering Return Line & Bracket Bolt
Courtesy of CHRYSLER GROUP, LLC

23. Install power steering return line (1) bracket bolt (3). Tighten bolt to 8 N.m (71 in. lbs.).

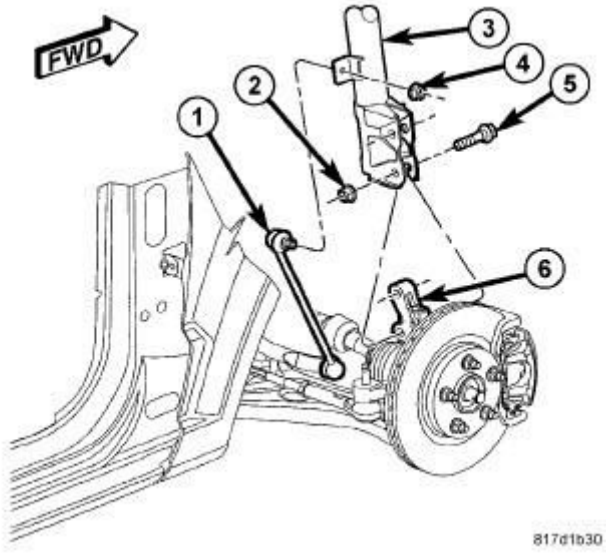

Fig. 183: Strut Mounting To Knuckle
Courtesy of CHRYSLER GROUP, LLC

NOTE: Never let propeller shaft hang with out support.

24. Install the propeller shaft. Refer to **INSTALLATION** .
25. Install the front fore and aft crossmember. Refer to **CROSSMEMBER, FRONT FORE AND AFT, INSTALLATION** .
26. Install the right and left halfshafts. Refer to **INSTALLATION** .
27. Install both swaybar links (1) to the struts (3). Install nuts (4) and tighten to 58 N.m (43 ft. lbs.).

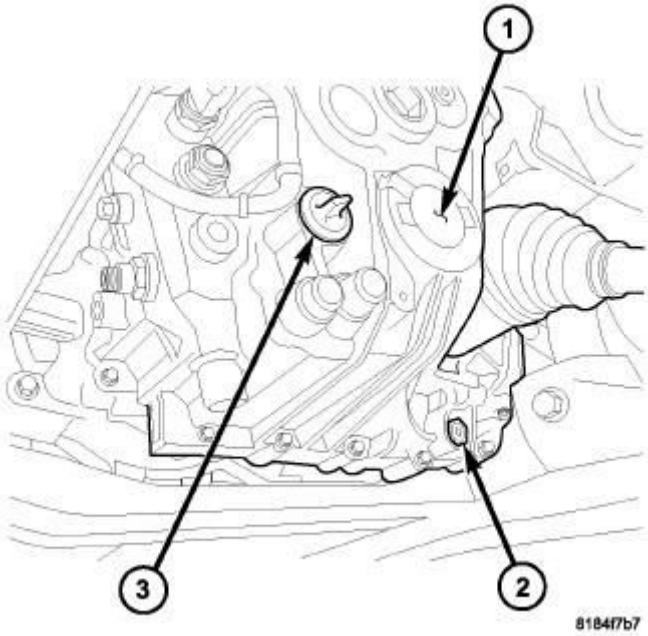

Fig. 184: Drain & Fill Plug
Courtesy of CHRYSLER GROUP, LLC

28. Fill transmission fluid to proper level.
29. Reconnect backup light switch.
30. Install both left and right front lower splash shields.
31. Install front skid plate, if equipped.

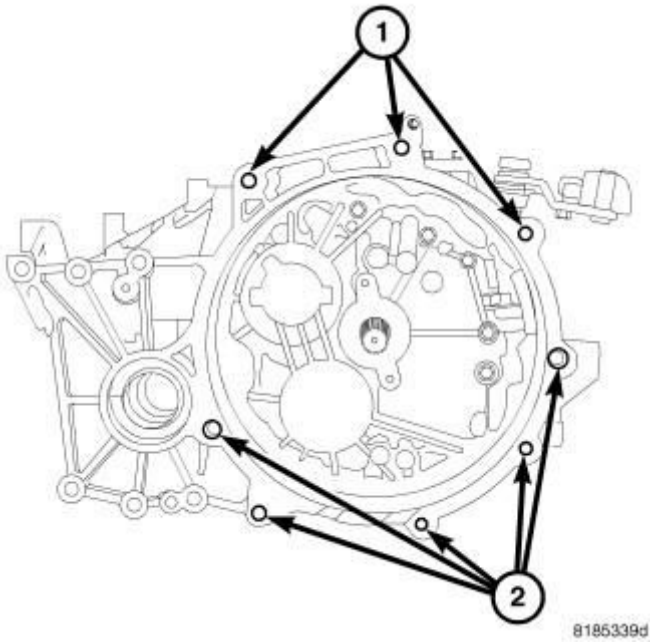

Fig. 185: Bellhousing Bolts

Courtesy of CHRYSLER GROUP, LLC

32. Lower vehicle and install the upper bell housing bolts and tighten to 48 N.m (35 ft. lbs.).

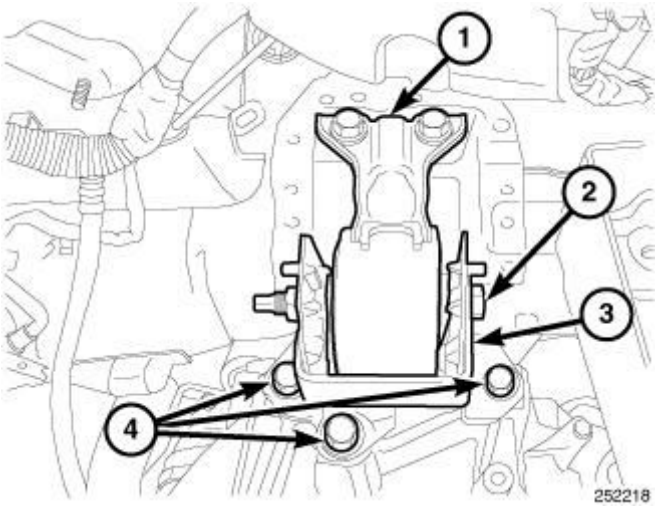

Fig. 186: Left Engine Mount
Courtesy of CHRYSLER GROUP, LLC

33. Raise transmission with a floor jack.
34. Install three transmission mount bolts (4) to transaxle and tighten bolts to 61 N.m (45 ft. lbs.).
35. Remove floor jack.

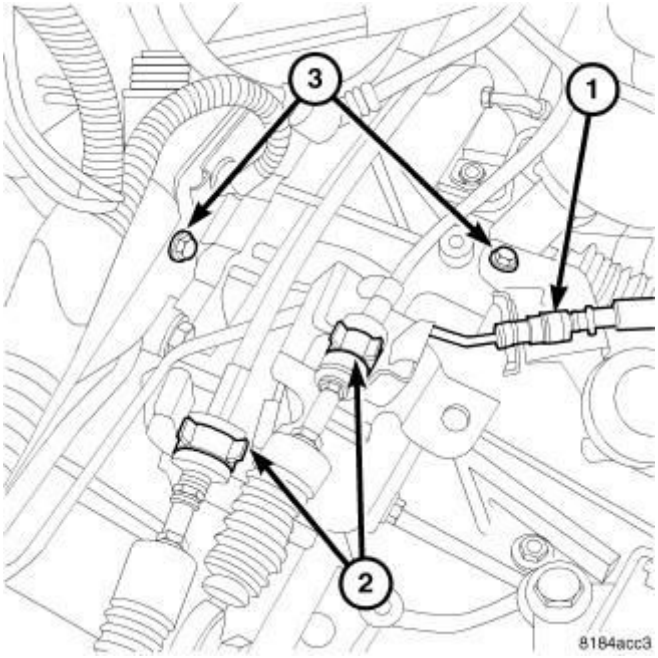

Fig. 187: Hydraulic Line

Courtesy of CHRYSLER GROUP, LLC

NOTE: The cable with the green clip is the inboard cable.

36. Install shift cables (2) into bracket until a click is heard.
37. Install the clutch hydraulic line to slave cylinder line (1).

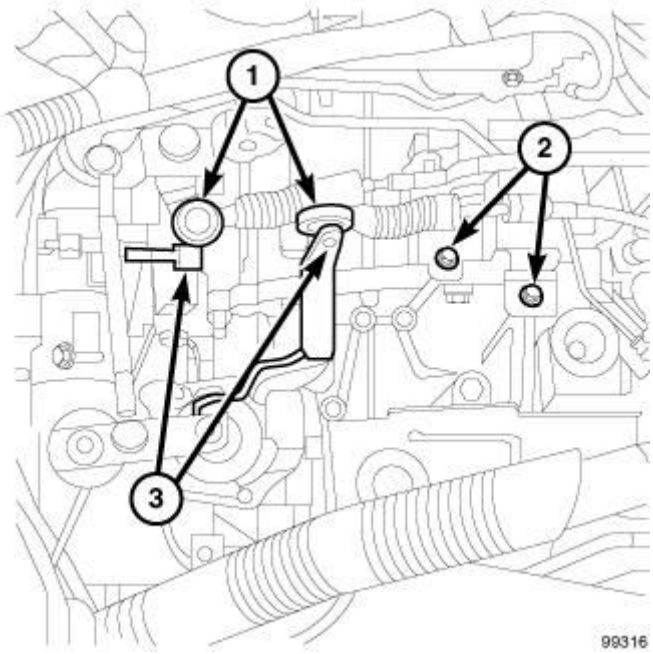

Fig. 188: Shift Cables And Bracket
Courtesy of CHRYSLER GROUP, LLC

38. Snap the ball-socket end fittings (1) onto the shift lever ball-studs (2).

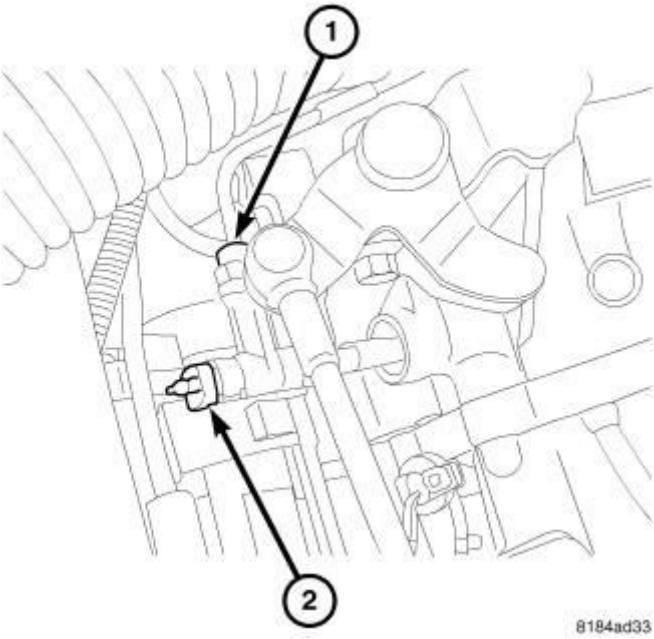

Fig. 189: Bleeder At Slave Cylinder
Courtesy of CHRYSLER GROUP, LLC

39. Bleed the slave cylinder (2). Refer to **STANDARD PROCEDURE** .

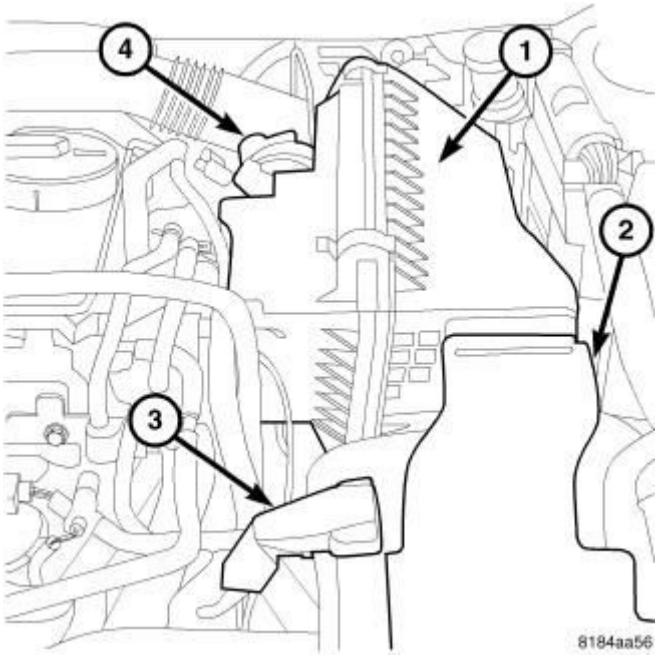

Fig. 190: Air Cleaner & Inlet Tube
Courtesy of CHRYSLER GROUP, LLC

40. Install the battery tray. Refer to **TRAY, BATTERY, INSTALLATION** .
41. Install air cleaner assembly (1). Refer to **BODY, AIR CLEANER, INSTALLATION** .

GASOLINE ENGINE

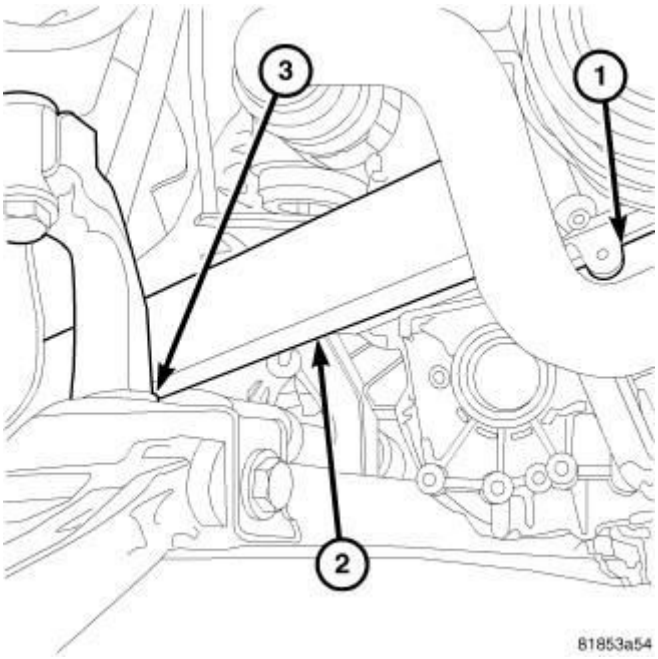

Fig. 191: Roll Engine Forward
Courtesy of CHRYSLER GROUP, LLC

1. With engine rolled forward, lift transmission into position.

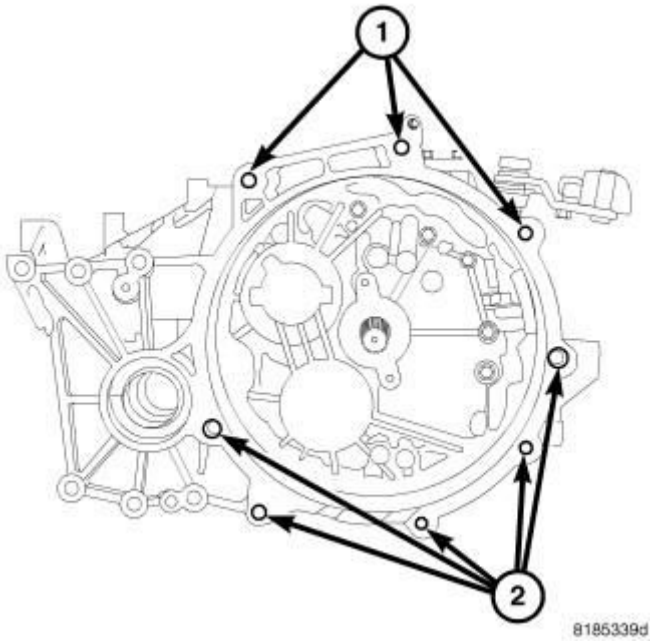

Fig. 192: Bellhousing Bolts
Courtesy of CHRYSLER GROUP, LLC

2. Install the lower transmission bolts (2) and tighten to 48 N.m (35 ft. lbs.) torque.

NOTE: If equipped with a PTU, install the O-ring into the PTU.

3. If equipped with a PTU, install the PTU. Refer to **INSTALLATION** .

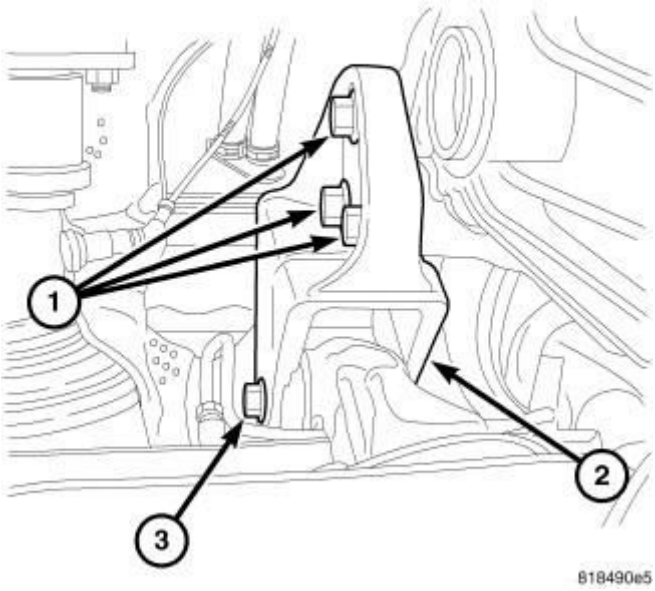

Fig. 193: Rear Mount
Courtesy of CHRYSLER GROUP, LLC

4. Roll engine and transmission back into place.
5. Install the rear transmission mount (2) into place.
6. Install rear transmission mount bolts (1) and tighten to 68 N.m (50 ft. lbs.).

NOTE: Do not install the rear transmission mount through bolt (3) at this time.

7. Support the transmission with a jack.
8. Install the starter. Refer to **STARTER, INSTALLATION** .

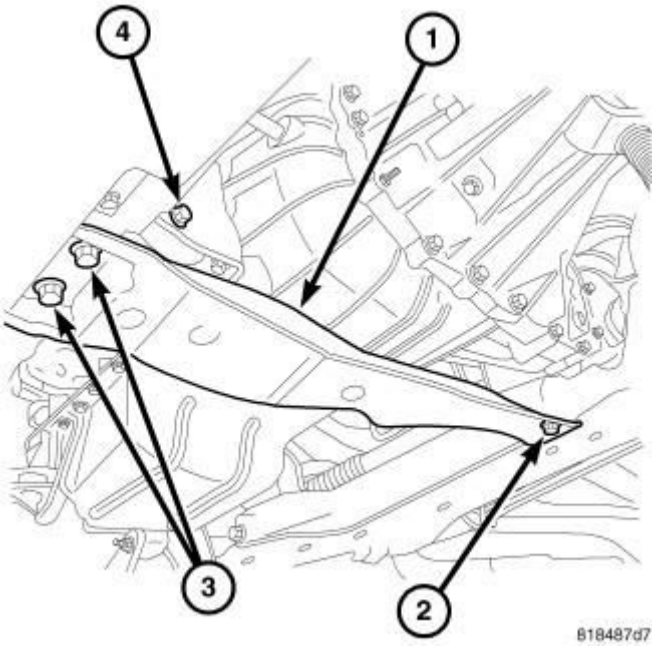

Fig. 194: Transmission Crossmember
Courtesy of CHRYSLER GROUP, LLC

9. Install the transmission cross member (1) and tighten bolts (2) and (3) to 68 N.m (50 ft. lbs.).
10. Install the front transmission mount through bolt (4) at this time and tighten to 68 N.m (50 ft. lbs.).

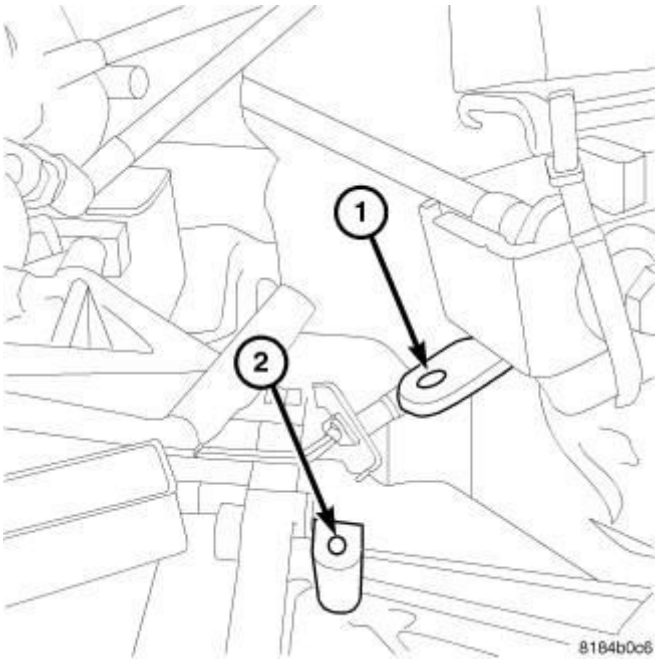

Fig. 195: Upper Mount
Courtesy of CHRYSLER GROUP, LLC

11. Install the upper transmission mount and tighten to 68 N.m (50 ft. lbs.).
12. Install the PTU support bracket and the four mounting bolts (if equipped) and tighten to 68 N.m (50 ft. lbs.).
13. Move the catalytic converter back into place.

NOTE: Insure that the metallic gasket is in place.

14. Install the catalytic converter banjo clamp and tighten.

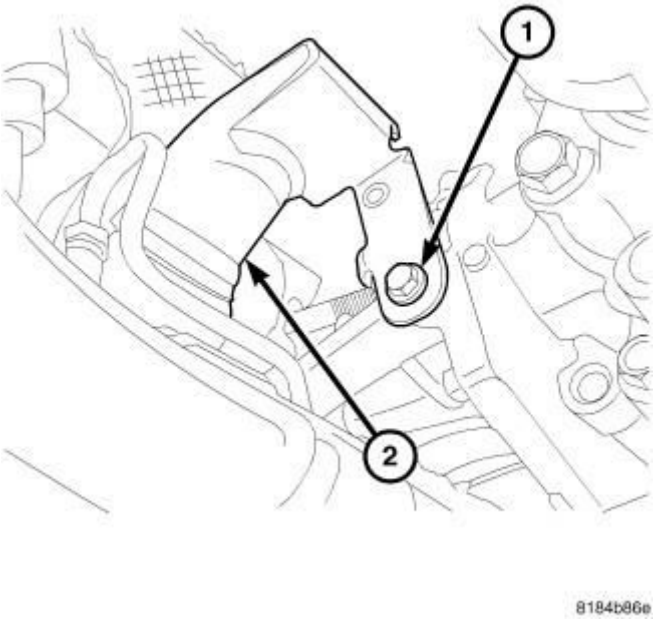

Fig. 196: Catalytic Converter Support Bracket
Courtesy of CHRYSLER GROUP, LLC

15. Install the bolt at catalytic converter support bracket and tighten to 28 N.m (250 in. lbs.).
16. Install the propeller shaft into place using marks to align. Refer to **INSTALLATION** .

NOTE: Never let propeller shaft hang with out support.

17. Install both left and right side splash shields.
18. Install left side halfshaft into transmission and the spindle.
19. Install half shafts. Refer to **INSTALLATION** .
20. Remove jacks.

21. Fill transmission fluid to proper level. Refer to **STANDARD PROCEDURE** .
22. Fill PTU to proper fluid level, If equipped. Refer to **STANDARD PROCEDURE** .

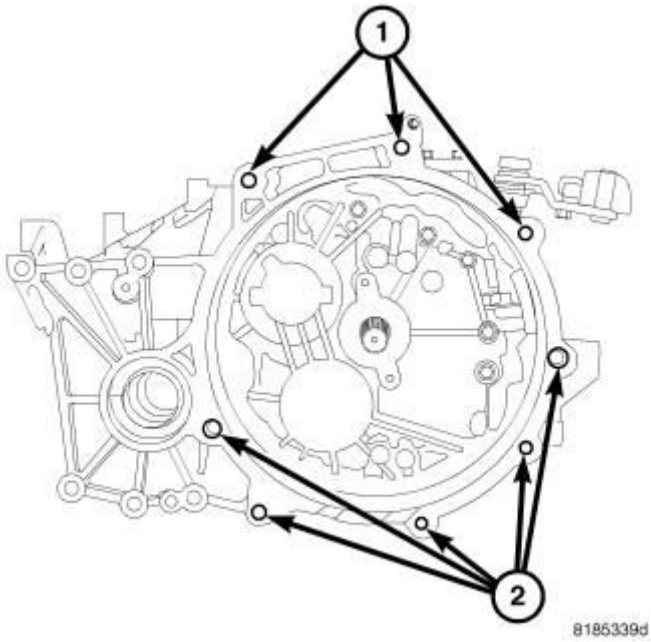

Fig. 197: Bellhousing Bolts
Courtesy of CHRYSLER GROUP, LLC

23. Lower vehicle and install the upper bell housing bolts and tighten to 48 N.m (35 ft. lbs.).
24. Connect all wiring harness connectors and insure correct wiring harness is routed correctly.

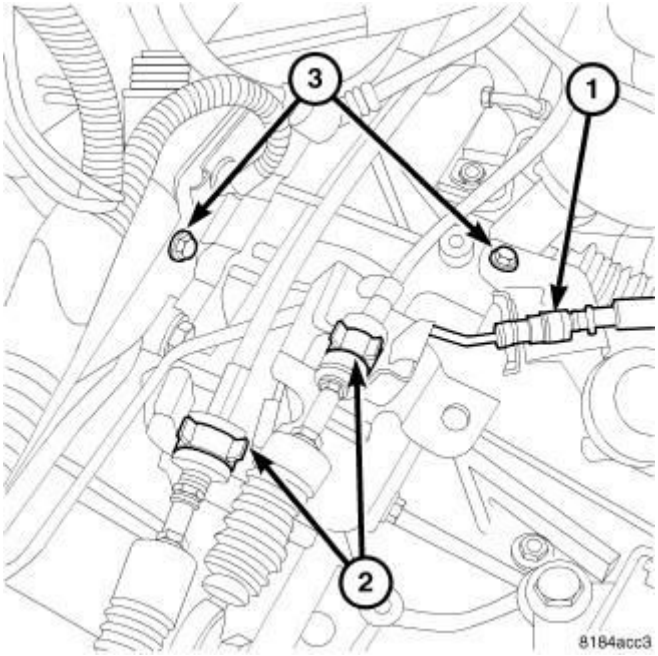

Fig. 198: Hydraulic Line
Courtesy of CHRYSLER GROUP, LLC

NOTE: The cable with the green clip is the inboard cable.

25. Install shift cables (2) into bracket until a click is heard.
26. Snap the ball-socket end fittings onto the shift lever ball-studs. The cable with the green clip installs at the inboard cable bracket slot.
27. Install the bolt for clutch hydraulic line and tighten to 11 N.m (105 in. lbs.).
28. Install the clutch hydraulic line to slave cylinder.

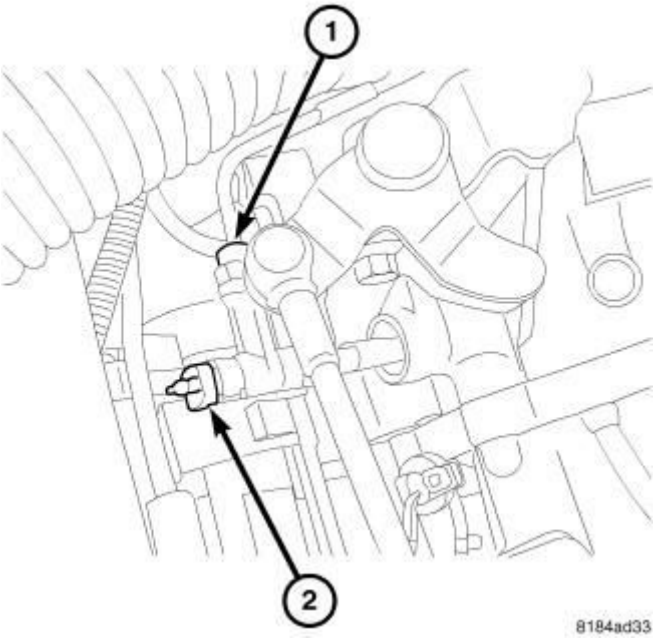

Fig. 199: Bleeder At Slave Cylinder
Courtesy of CHRYSLER GROUP, LLC

29. Install the bleed adaptor and clip at the slave cylinder.
30. Bleed the slave cylinder. Refer to **STANDARD PROCEDURE** .

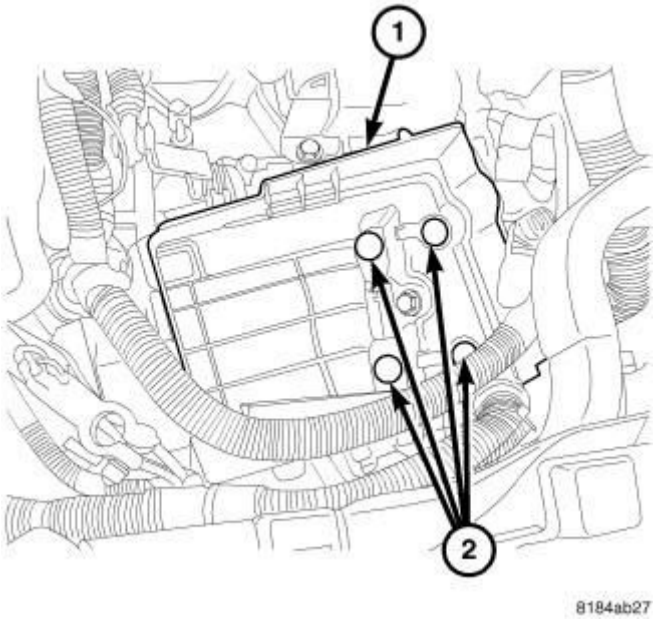

Fig. 200: Battery Tray
Courtesy of CHRYSLER GROUP, LLC

31. Install the battery tray.

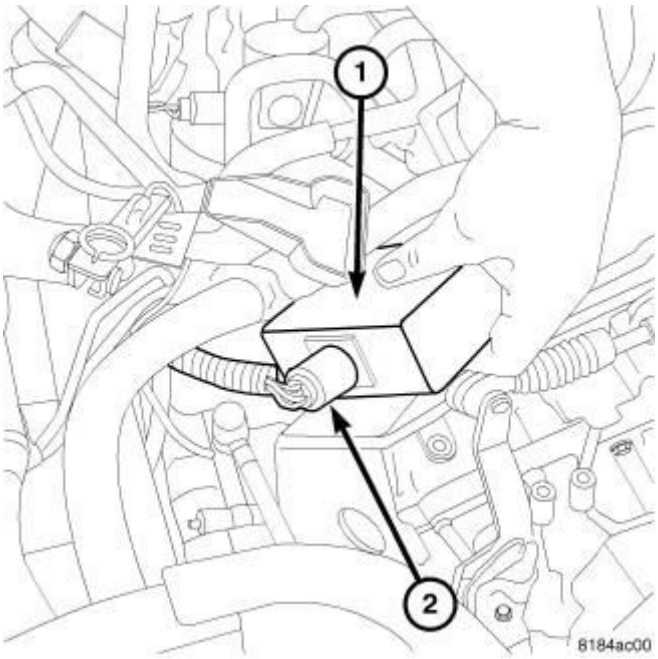

Fig. 201: Vacuum Control Module
Courtesy of CHRYSLER GROUP, LLC

32. Plug connectors in at vacuum control module.
33. Install the battery and connect the battery cables.

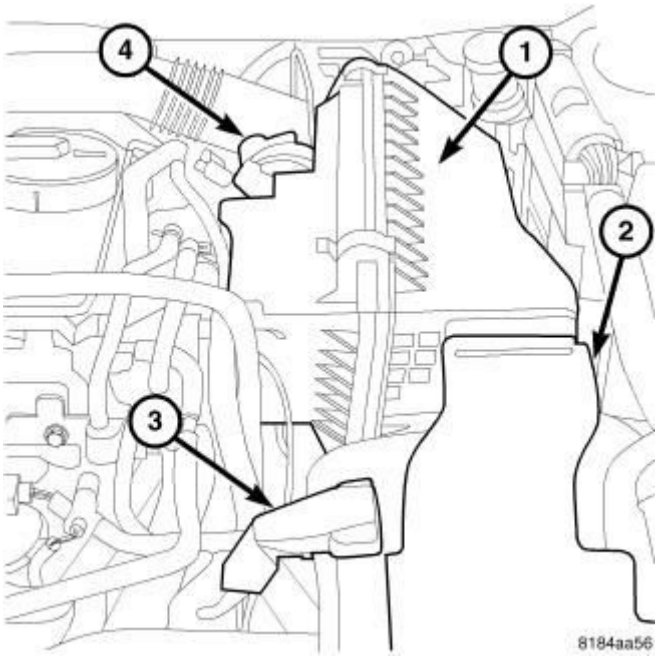

Fig. 202: Air Cleaner & Inlet Tube
Courtesy of CHRYSLER GROUP, LLC

34. Install air cleaner assembly.
35. install air inlet tube.

SPECIAL TOOLS

SPECIAL TOOLS

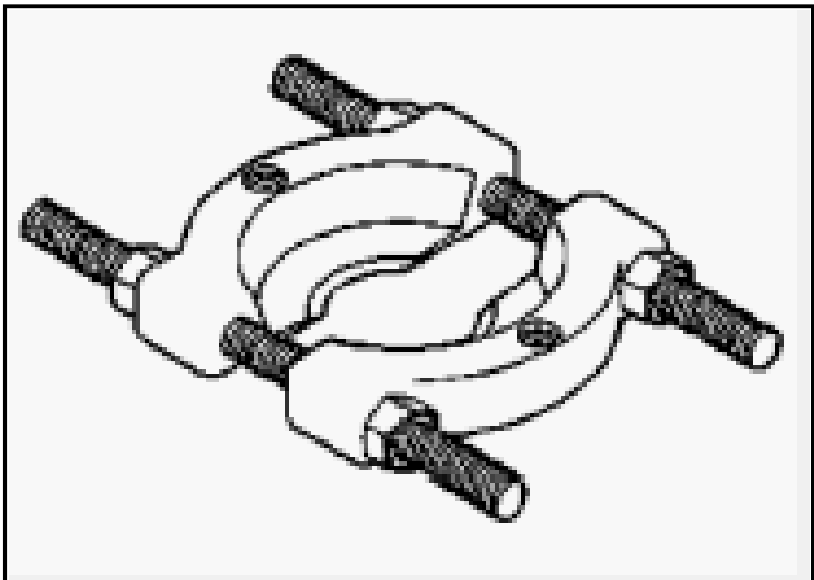	1130 - Splitter, Bearing/Gear (Originally Shipped In Kit Number(s) 6745, 6947, 6949, 9202, 9202A-CAN, 9202CC, 9299.)
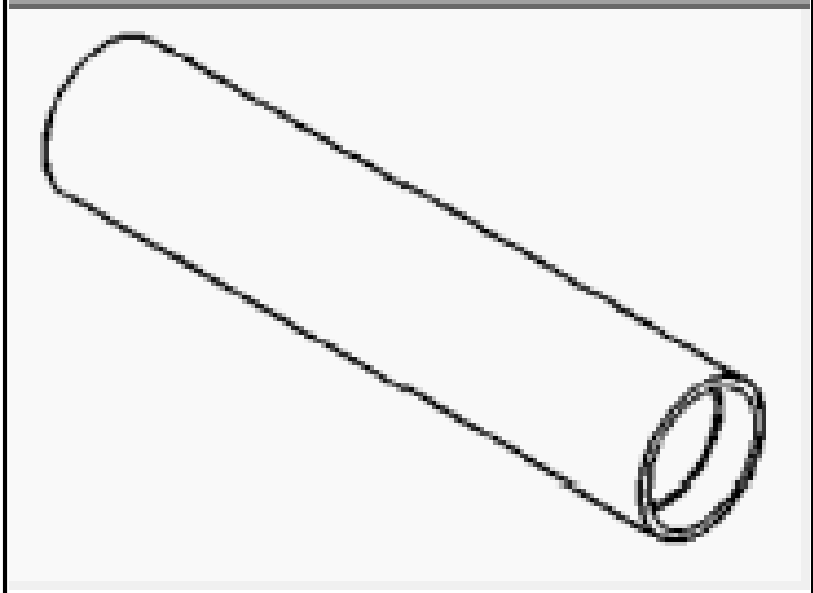	6052 - Installer, Bearing/Seal (Originally Shipped In Kit Number(s) 6303, 6672, 8853.)
	7794-A - Remover, Seal (Originally Shipped In Kit Number(s) 6645.)

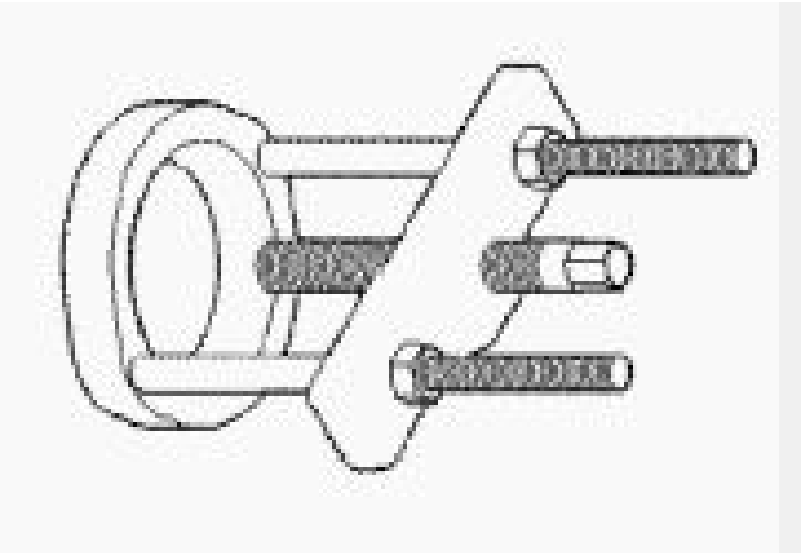

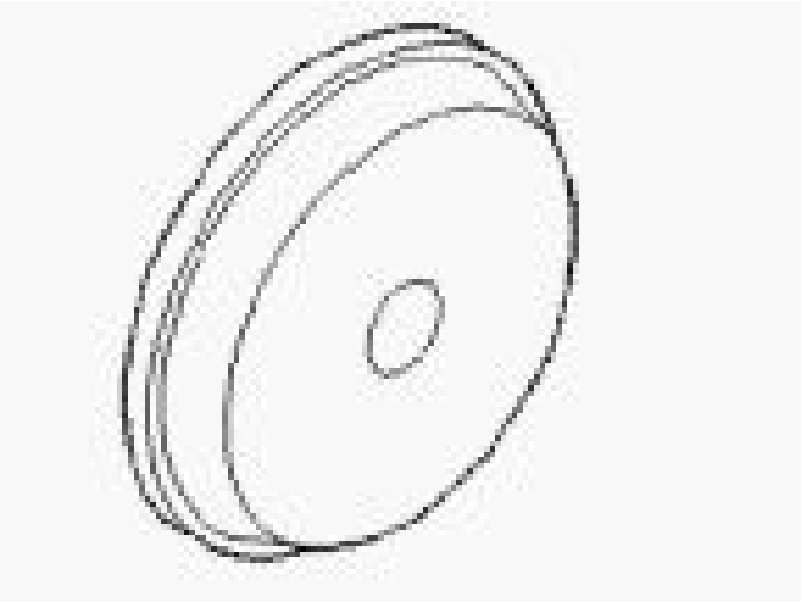

8151 - Installer, Bearing Cup
(Originally Shipped In Kit Number(s) 8104.)

8925-3 - Assembly, Press Fixture
(Originally Shipped In Kit Number(s) 8998, 8998CC.)

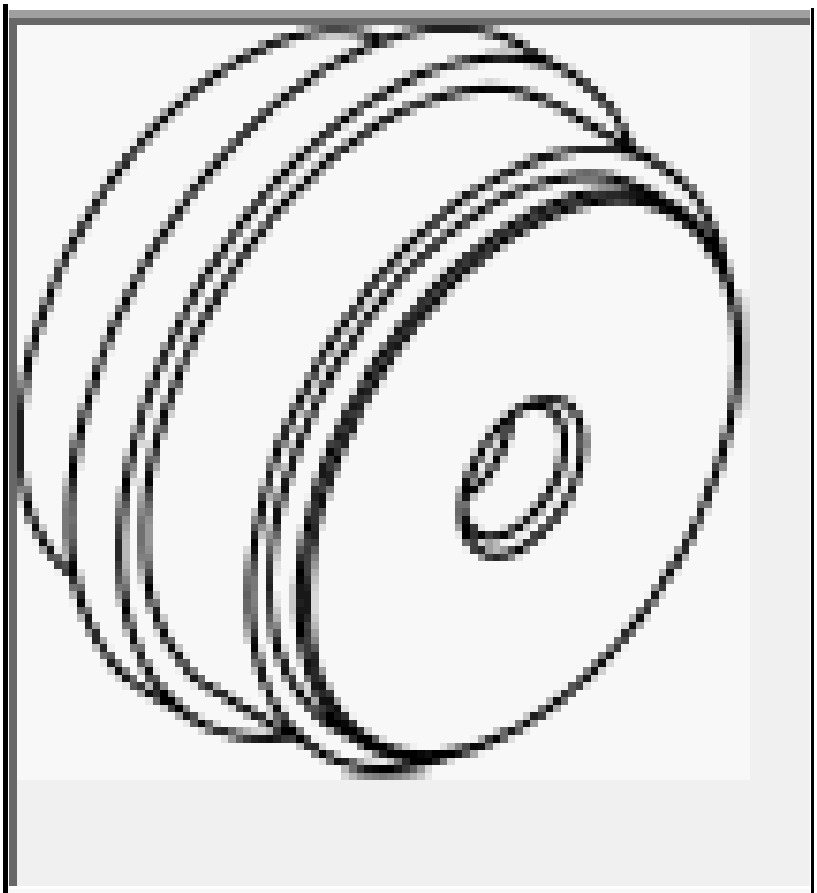

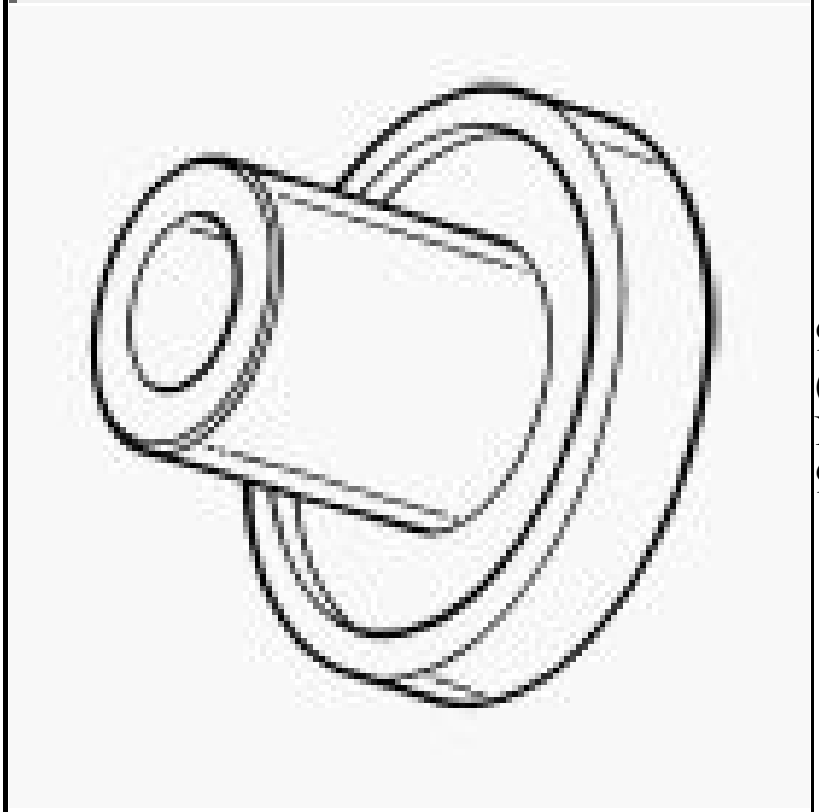

9523A - Installer, Bearing (Originally Shipped In Kit Number(s) 10175, 10175, 9541.)

	9589 - Installer, Bearing Cup (Originally Shipped In Kit Number(s) 9692.)
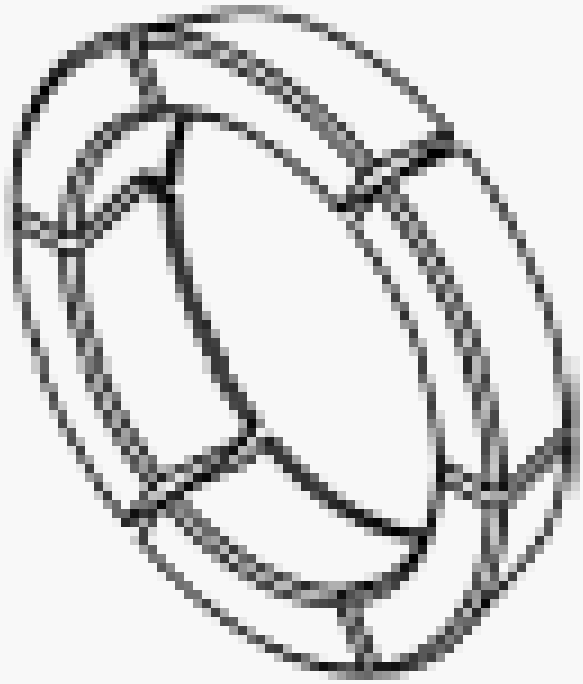	9613 - Adapters, Puller (Originally Shipped In Kit Number(s) 9690, 9720-SUP.)

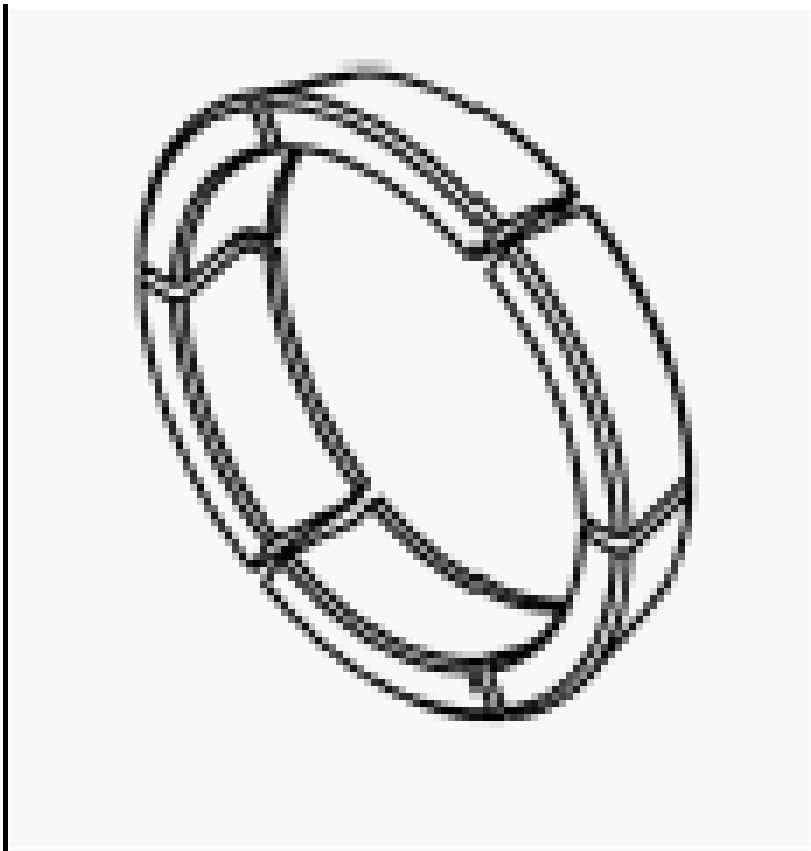

9614 - Adapters, Puller (Originally Shipped In Kit Number(s) 9690.)

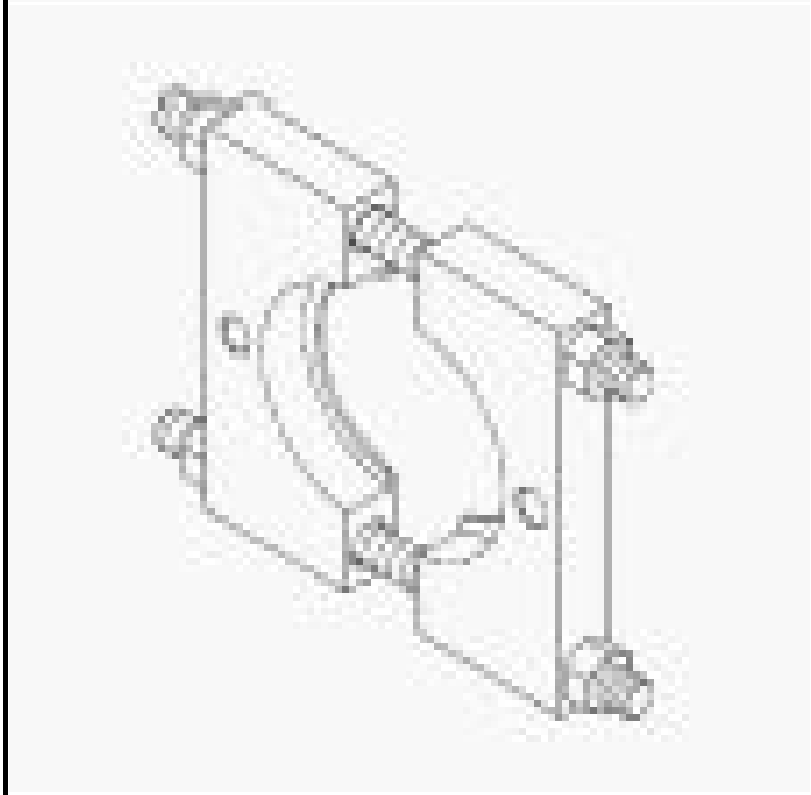

9647 - Puller (Originally Shipped In Kit Number(s) 9526, 9575, 9692.)

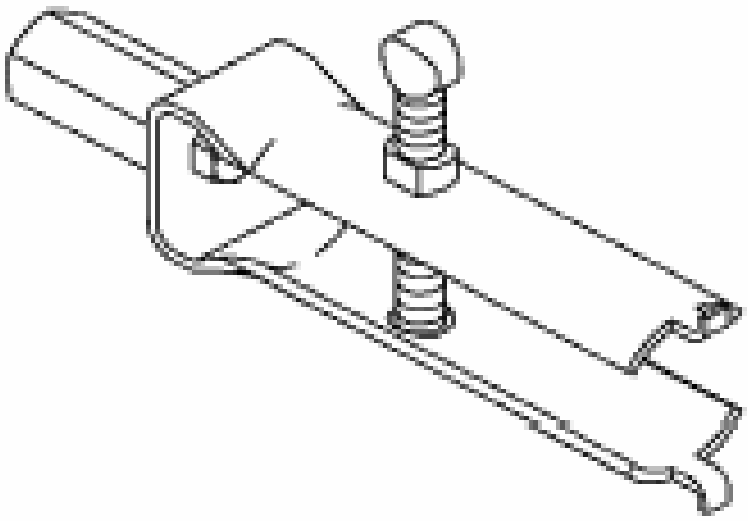	9664 - Remover, Bearing Cup (Originally Shipped In Kit Number(s) 9675, 9685, 9695.)
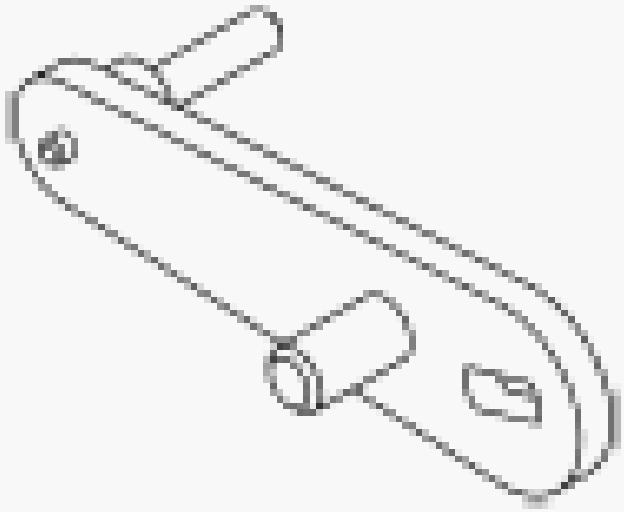	9928 - Installer, Differential Oil Seal (Originally Shipped In Kit Number(s) 9898.)
	9935 - Installer

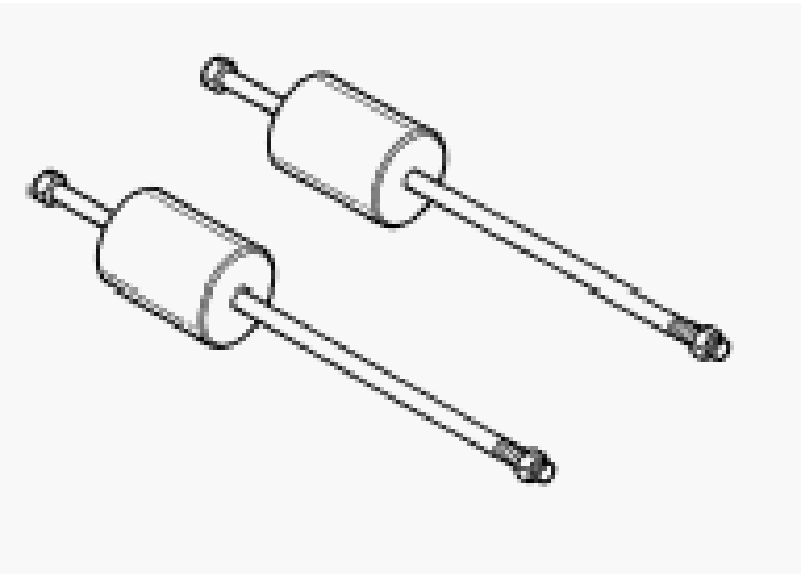	C-293-3 - Adapter, Bearing/Gear (Originally Shipped In Kit Number(s) 8418, 8837, C-293-M, C-4246-AL, DD-914-CLT-L.)
	C-293-37 - Block Set, Puller (Originally Shipped In Kit Number(s) 8418, 8562, C-

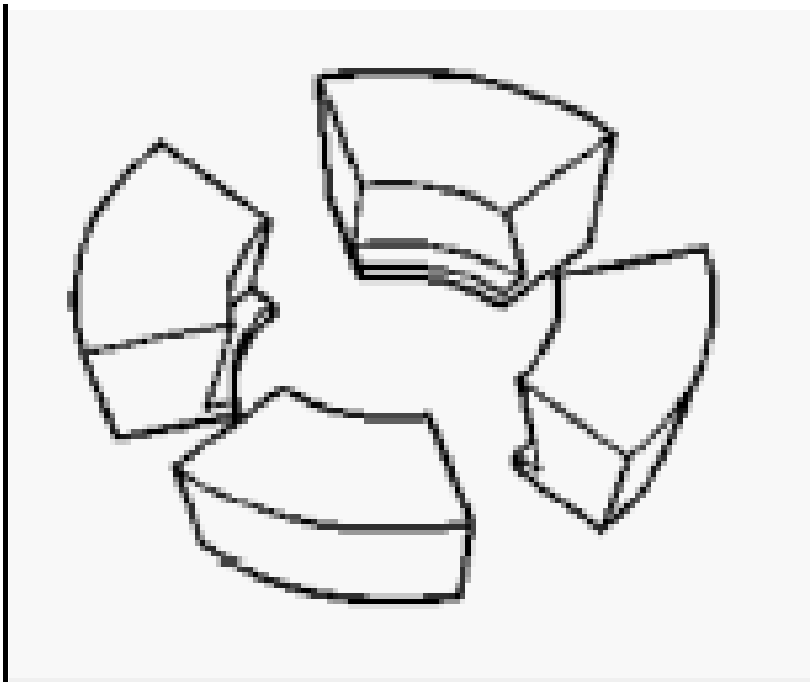	293-M, DD-914-CLT-L.)
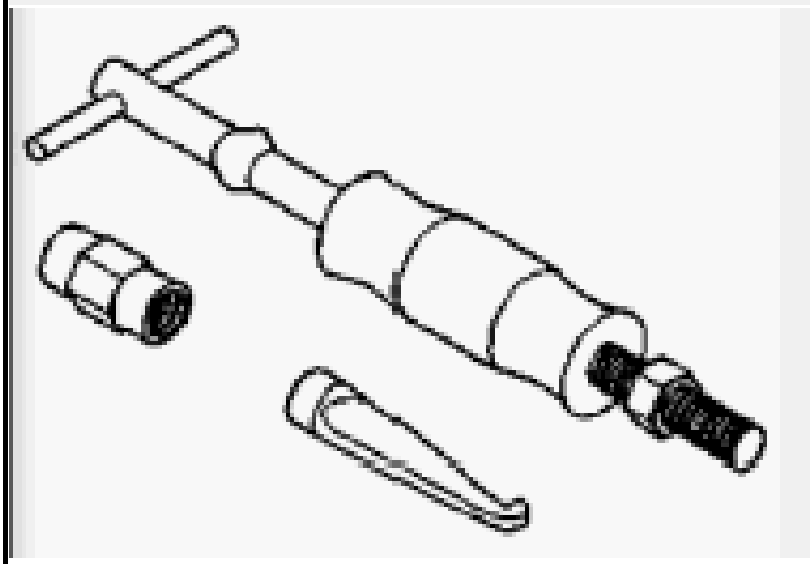	C-293-PA - Puller, Press (Originally Shipped In Kit Number(s) 8418, 8837, C-293-M.)
	C-3717 - Sleeve

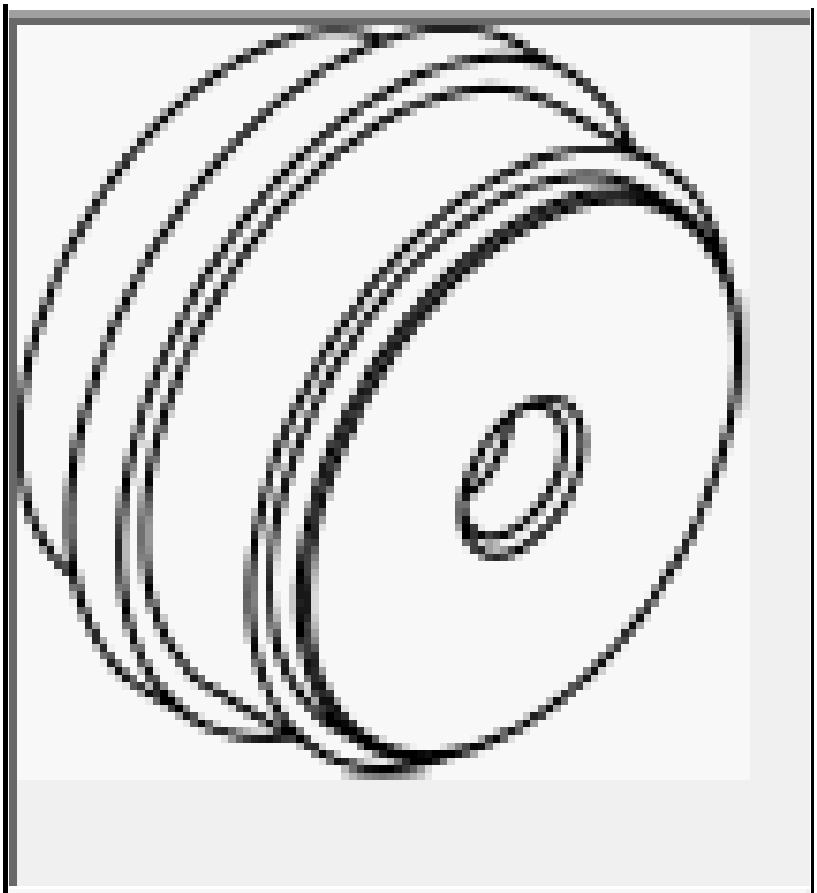

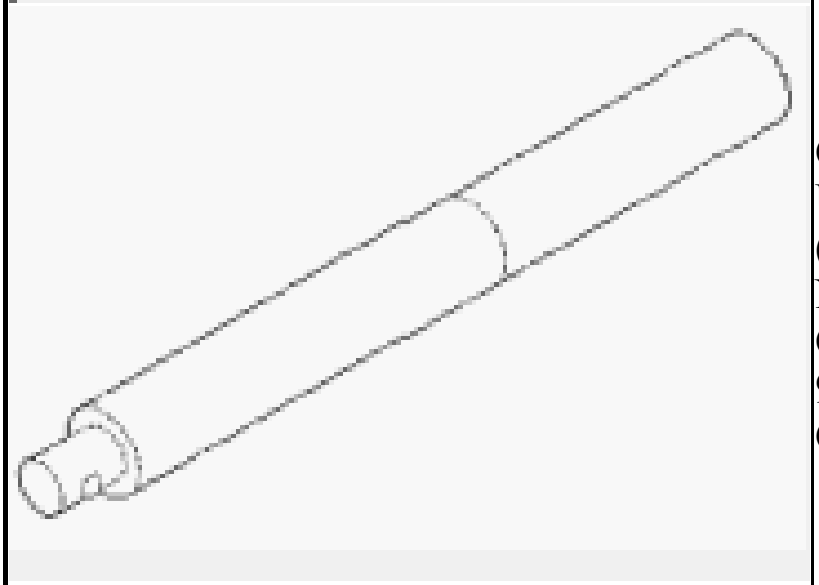

C-4171 - Driver Handle, Universal
(Originally Shipped In Kit Number(s) 9202, 9202A-CAN, 9202CC, 9299, 9299CC, 9299CC, 9300A-CAN.)

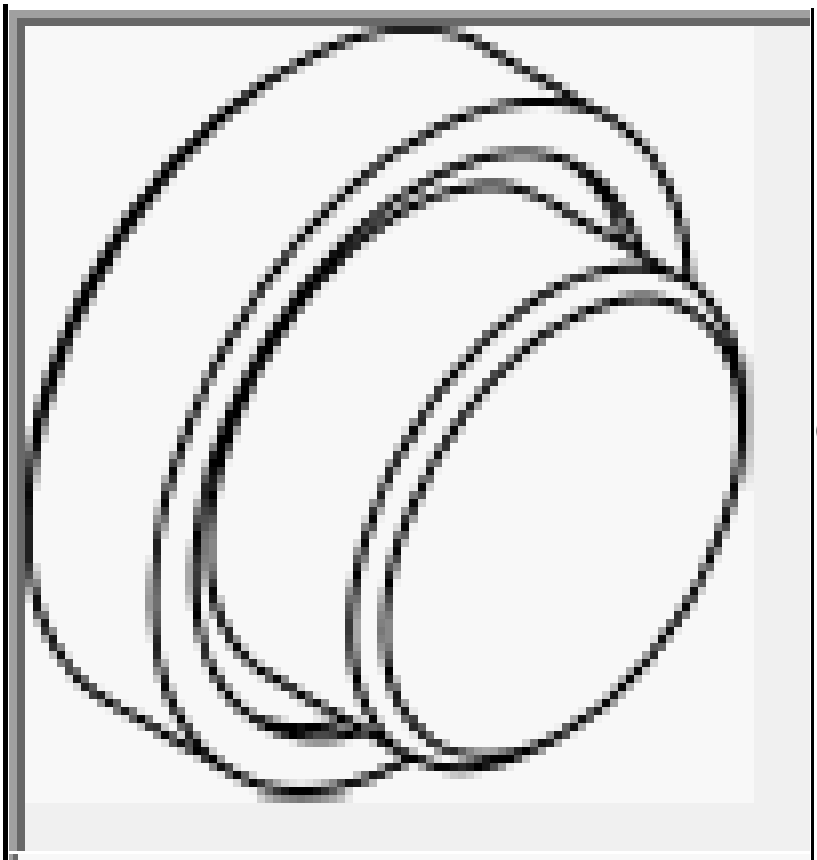	C-4657 - Installer, Seal
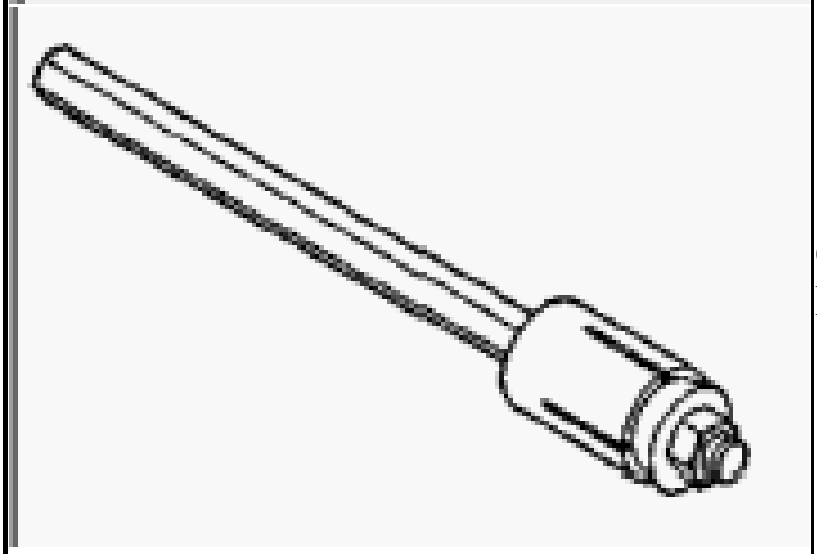	C-4995A - Tool, Differential Bearing Torque
	D-111 - Installer, Bearing Cup (Originally Shipped In Kit Number(s) 9925, 9926.)

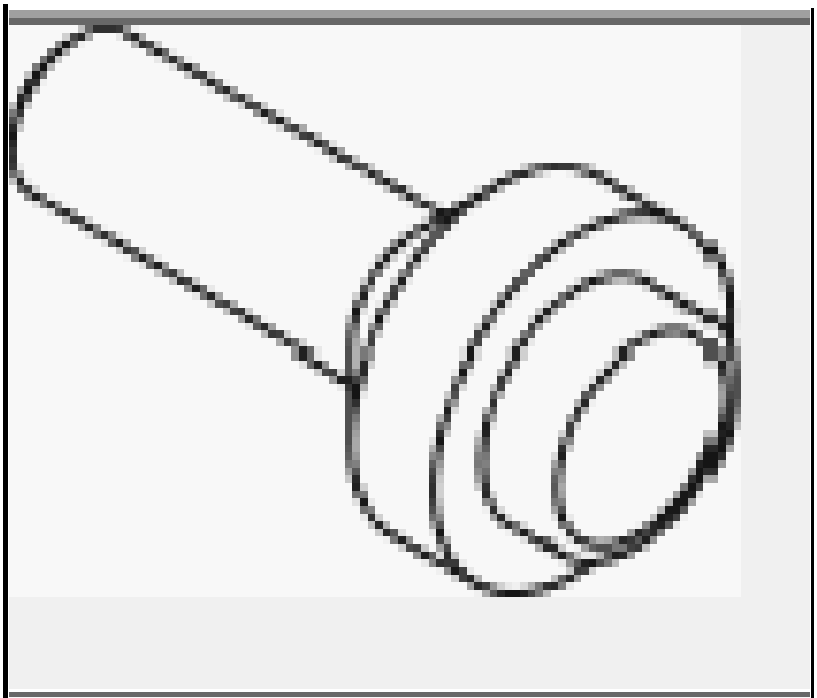

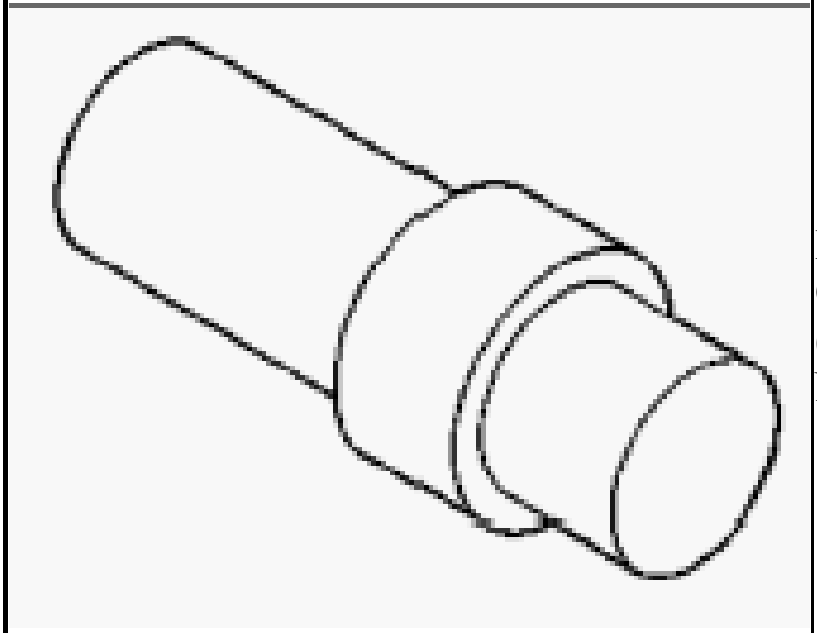

D-144 - Installer, Bearing Cup
(Originally Shipped In Kit Number(s) 8207, 8418.)

L-4520 - Installer, Seal/Cup
(Originally Shipped In Kit Number(s) 6822.)

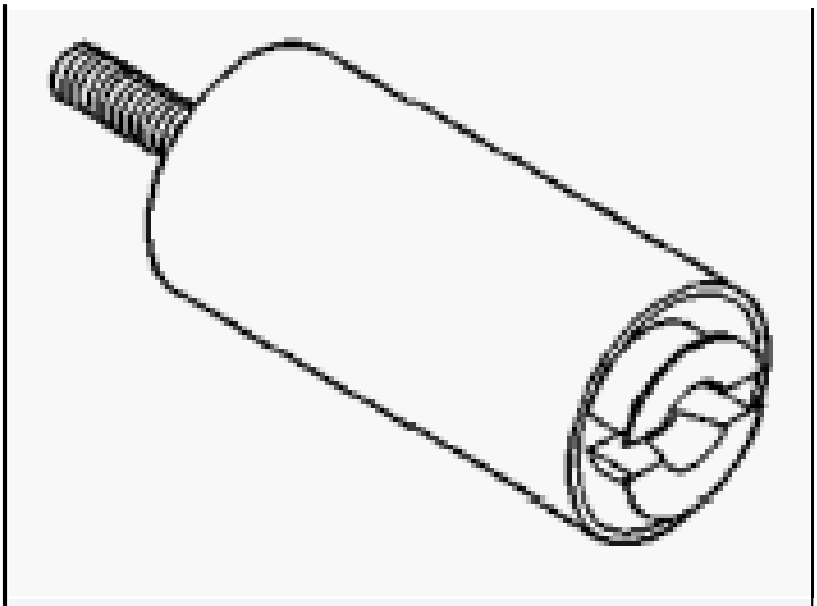

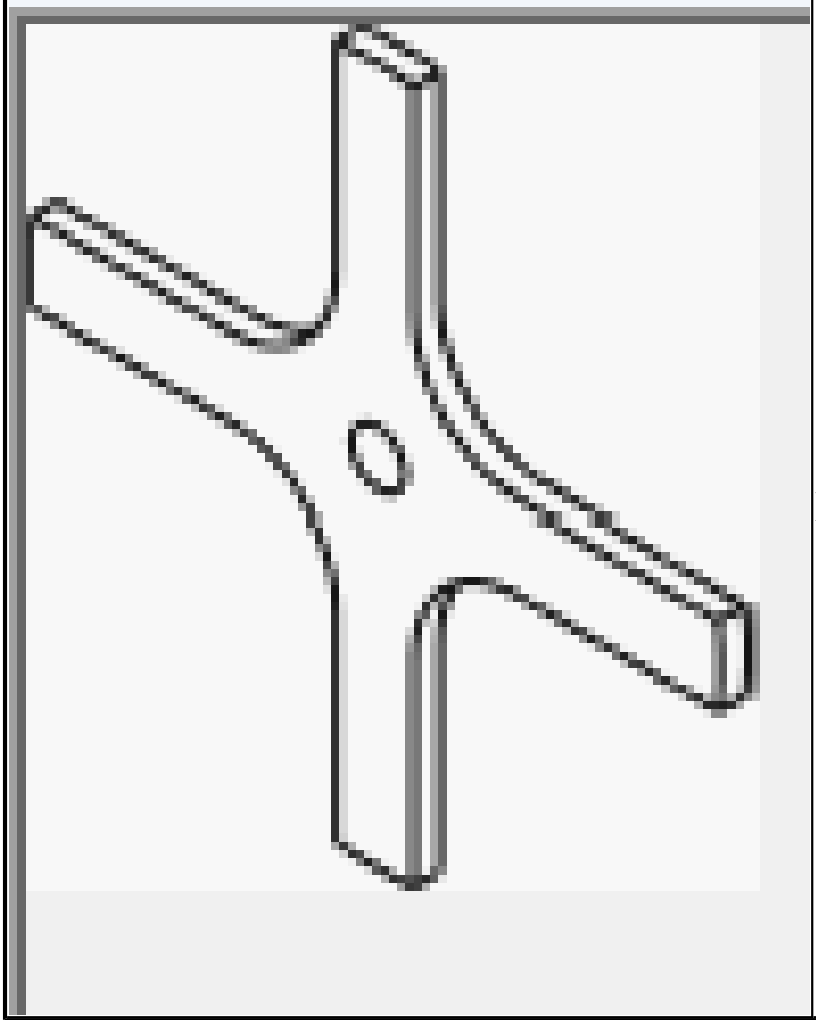

P-334 - Splitter, Bearing

BOOT, GEARSHIFT

REMOVAL

REMOVAL

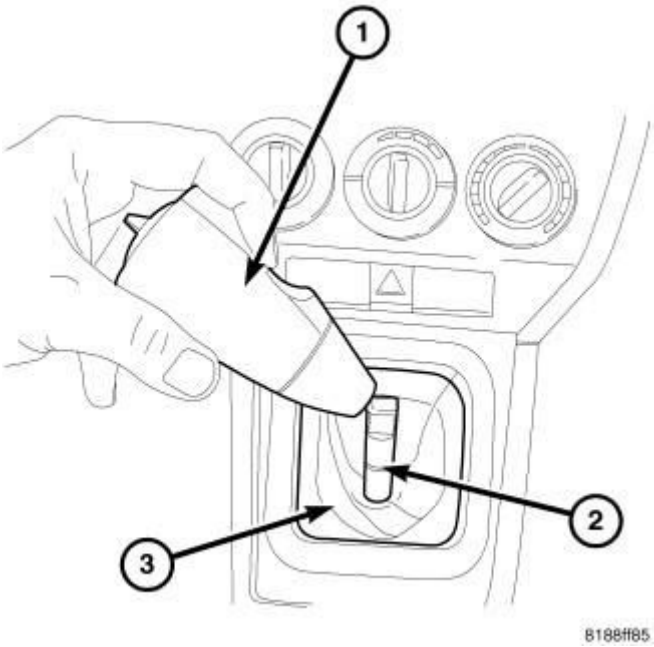

Fig. 203: Gearshift Knob
Courtesy of CHRYSLER GROUP, LLC

1. Firmly pull up on gearshift knob (1) with moderate force to remove from gearshift (2) mechanism.
2. Remove shifter boot/bezel (3) assembly from console by lifting up at mounting ring area.

INSTALLATION

INSTALLATION

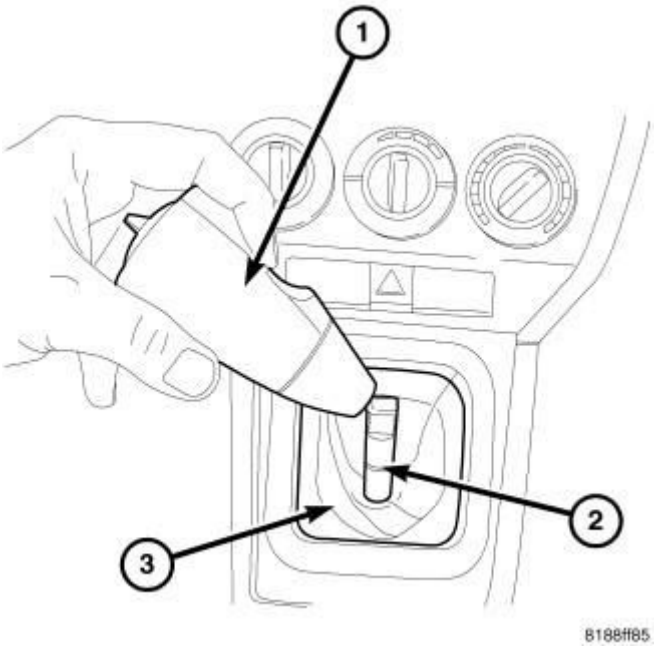

Fig. 204: Gearshift Knob
Courtesy of CHRYSLER GROUP, LLC

1. Position gearshift boot/bezel (3) over the gearshift mechanism (2) and apply hand pressure to engage and snap the boot into place.
2. Position gearshift knob (1) over the gearshift mechanism.
3. Apply firm pressure until the knob snaps into place.

CABLE, GEARSHIFT CONTROL

ADJUSTMENTS

ADJUSTMENTS

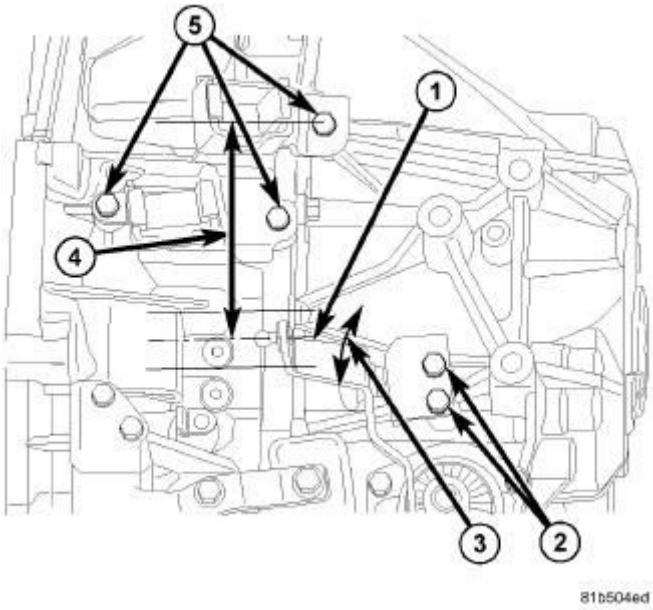

Fig. 205: Shift Adjustment
Courtesy of CHRYSLER GROUP, LLC

Increase the (4) distance to eliminate 2nd gear downshift blocking condition (3-2, or 4-2 blocking).

NOTE: Must verify reverse shift after adjusting.

Decrease the distance if shifter can not engage reverse.

1. Loosen select lever bracket bolts (2).

2. Adjust gage length fore/aft by pivoting bracket and re-securing. Torque to 21.4 +/- 5.2 Nm.

REMOVAL

REMOVAL

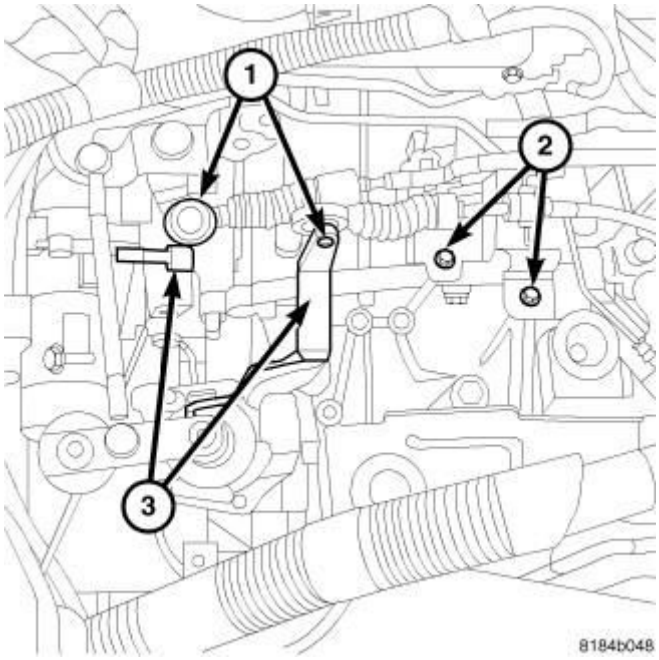

Fig. 206: Shift Cables And Bracket
Courtesy of CHRYSLER GROUP, LLC

1. Remove the shifter. Refer to **MECHANISM, GEARSHIFT, REMOVAL** .
2. Raise hood.
3. Remove the resonator.
4. Remove engine cover.
5. Remove air cleaner assembly.
6. Disconnect both battery cables. Refer to **BATTERY, REMOVAL** .
7. Remove battery hold down clamp and bolt, and remove battery.
8. Remove battery tray. Refer to **TRAY, BATTERY, REMOVAL** .
9. Disconnect cables (1) from the shift levers at the transaxle.

CAUTION: Pry up with equal force on both sides of shifter cable isolator bushings to avoid damaging cable isolator bushings.

10. Remove cable retaining clips and remove cables (1) from bracket (3).
11. Remove the Occupant Restraint Controller (ORC). Refer to **REMOVAL** .

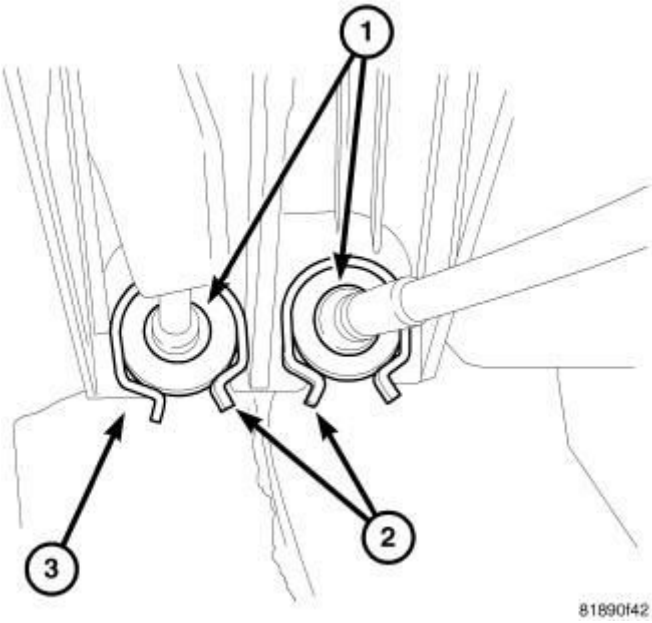

Fig. 207: Cable Retaining Clips & Cables
Courtesy of CHRYSLER GROUP, LLC

12. Remove cable clips at floor pan.
13. Remove cable assembly (1) from vehicle.

INSTALLATION

INSTALLATION

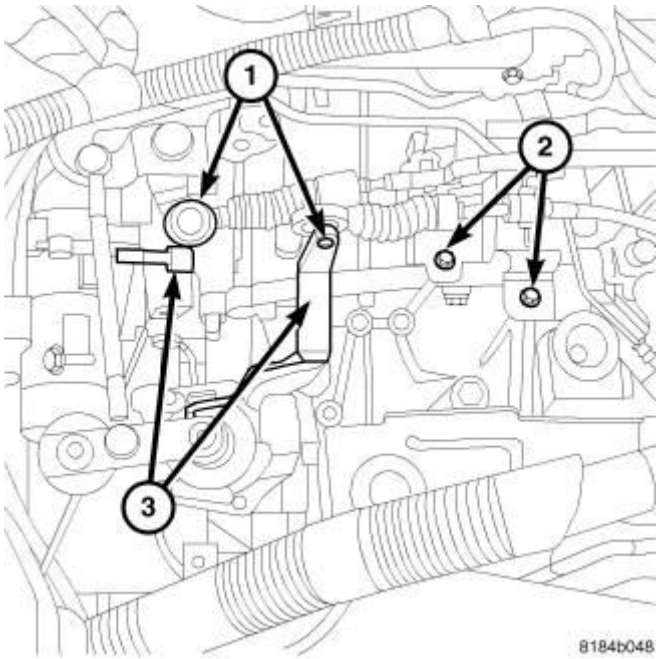

Fig. 208: Shift Cables And Bracket
Courtesy of CHRYSLER GROUP, LLC

CAUTION: Gearshift cable bushings must not be lubricated or the bushings will swell and split.

1. Install cable assembly through floor pan opening until grommet is seated.
2. Route transaxle end of cable assembly into engine compartment and over transaxle assembly.
3. Install cables (1) and NEW retaining clips to bracket.

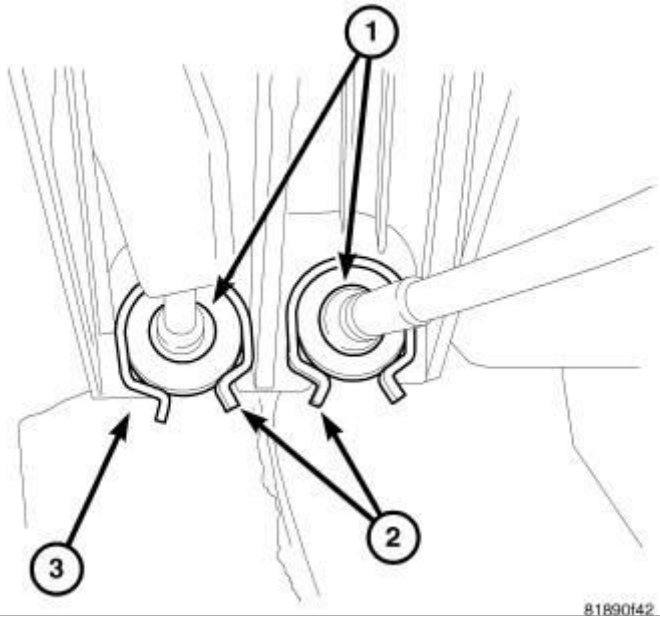

Fig. 209: Cable Retaining Clips & Cables
Courtesy of CHRYSLER GROUP, LLC

4. Install gearshift cables to mounting bracket and fasten with NEW clips (2). Make sure clips are installed flush to bracket.
5. Connect cables (1) to the shift levers (3) at the transaxle.
6. Install ORC. Refer to **MODULE, OCCUPANT RESTRAINT CONTROLLER, INSTALLATION** .
7. Install shifter. Refer to **MECHANISM, GEARSHIFT, INSTALLATION** .
8. Install battery tray.
9. Install battery and hold-down clamp.
10. Install the air cleaner assembly.
11. Connect battery cables.

DIFFERENTIAL, TRANSAXLE

DESCRIPTION

DESCRIPTION

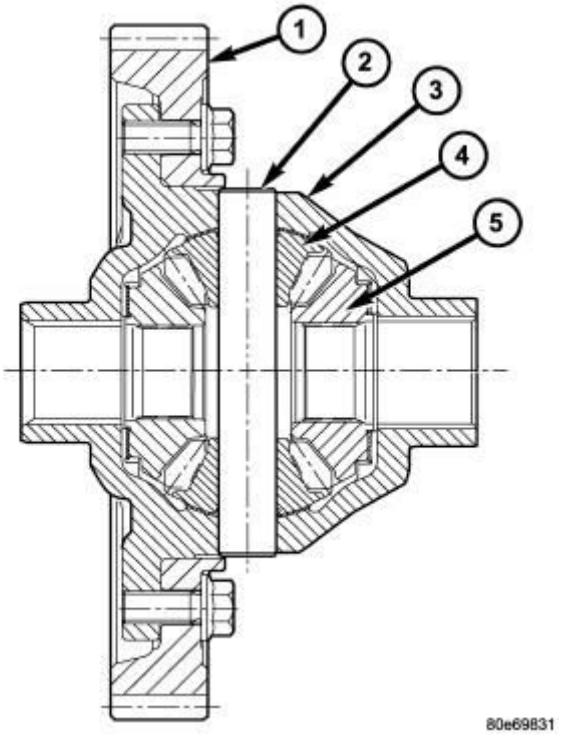

Fig. 210: Differential Assembly

Courtesy of CHRYSLER GROUP, LLC

1 - RING GEAR
2 - PINION SHAFT
3 - DIFFERENTIAL CASE
4 - PINION GEAR
5 - SIDE GEAR

The BG6 differential is a conventional open design, and is integral to the transaxle. It consists of a single-piece case (3), which houses pinion (4) and side gears (5). A pinion shaft (2) is retained by the differential ring gear (1) and roll pin, The differential case is supported in the transaxle by tapered roller bearings.

OPERATION

OPERATION

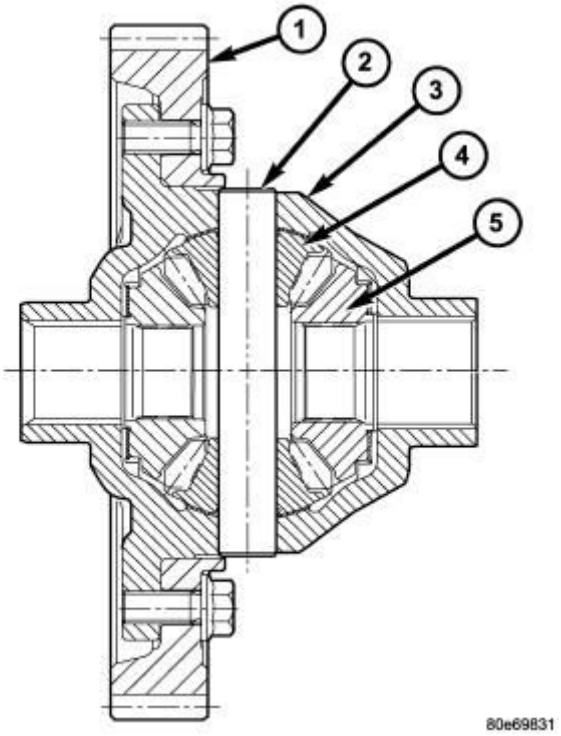

Fig. 211: Differential Assembly
Courtesy of CHRYSLER GROUP, LLC

1 - RING GEAR
2 - PINION SHAFT

3 - DIFFERENTIAL CASE
4 - PINION GEAR
5 - SIDE GEAR

The differential assembly is driven by the intermediate shaft via the ring gear (1). The ring gear drives the differential case (3), and the case drives the halfshafts through the differential gears. The differential pinion (4) and side gears (5) are supported in the case by pinion shafts and thrust washers. Differential pinion (4) and side gears (5) make it possible for front wheels to rotate at different speeds while cornering.

ADJUSTMENTS

ADJUSTMENTS

Once proper turning torque has been established, place gear case on the end plate. Draw a bead of MOPAR® Gasket Maker, Loctite® 518, or equivalent, on the flat surface of the case mating flange. Install clutch bellhousing onto gear case. Install and tighten case bolts to 29 N.m (257 in. lbs.).

BEARING ADJUSTMENT PROCEDURE

1. Use extreme care when removing and installing bearing cups and cones. Use only an arbor press for installation, as a hammer may not properly align the bearing cup or cone. Burrs or nicks on the bearing seat gives a false end-play reading while gauging for proper shims. Improperly seated bearing cups and cones are subject to low-mileage failure.
2. Bearing cups and cones should be replaced if they show signs of pitting or heat distress. If distress is seen on either the cup or bearing rollers, both cup and cone must be replaced.
3. Bearing preload and drag torque specifications must be maintained to avoid premature bearing failures. Used (original) bearings may lose up to 50% of the original drag torque after break-in. All bearing adjustments must be made with no other component interference or gear intermesh.
4. Replace bearings as a pair: If one differential bearing is defective, replace both differential bearings, if one input shaft bearing is defective, replace both input shaft bearings.
5. Bearing cones must not be reused if removed.
6. Turning-torque readings should be obtained while smoothly rotating in

either direction.

DIFFERENTIAL BEARING PRELOAD ADJUSTMENT

NOTE: True bearing turning-torque readings can be obtained only with the geartrain removed from the case.

1. Remove bearing cup and existing shim from clutch bellhousing case.
2. Press in new bearing cup into bellhousing case (or use a cup that has been ground down on the outer edge for ease of measurement).
3. Press in new bearing cup into gear case side.
4. Oil differential bearings with transmission fluid. Install differential assembly in transaxle gear case. Install clutch bellhousing over gear case. Install and tighten case bolts to 29 N.m (257 in. lbs.).
5. Position transaxle with bellhousing facing down on workbench with C-clamps. Position dial indicator.

NOTE: The dial indicator should be parallel to T-Handle to obtain the most accurate reading.

6. Apply a medium load to differential with Torque Tool (special tool #C-4995A, Tool, Differential Bearing Torque) (3) and a T-handle, in the downward direction. Roll differential assembly back and forth a number of times. This will settle the bearings. Zero the dial indicator (2). To obtain end play readings, apply a medium load in an upward direction while rolling differential assembly back and forth. Record end play.
7. The shim required for proper bearing preload is the **total of end play, plus (constant) preload of 0.18 mm (0.007 in.).** Never combine shims to obtain the required preload.
8. Remove case bolts. Remove clutch bellhousing differential bearing cup. Install shim(s) selected, then press the bearing cup into clutch bellhousing.
9. Install clutch bellhousing. Install and tighten case bolts to 29 N.m (257 in. lbs.).
10. Using Torque Tool (special tool #C-4995A, Tool, Differential Bearing Torque) (2) and an inch-pound torque wrench (1), check turning torque of the differential assembly. **The turning torque should be 9 to 22 in. lbs. If the turning torque is too high, install a 0.05 mm (0.002 inch) thinner shim. If the turning torque is too low, install a 0.05 mm (0.002 inch)**

thicker shim.

11. Recheck turning torque (1). Repeat until the proper turning torque is obtained.
12. Once proper turning torque has been established for the differential separate case halves, install counter shaft assembly into case with the differential and recheck differential turning torque. **The turning torque should be 37 to 52 in. lbs. If the turning torque is too high, install a 0.05 mm (0.002 inch) thinner shim. If the turning torque is too low, install a 0.05 mm (0.002 inch) thicker shim.**
13. Recheck total turning torque (1). Repeat until the proper turning torque is obtained.

REMOVAL

REMOVAL

1. The transaxle must be removed to gain access to and service the differential assembly. Refer to **REMOVAL** .
2. Disassemble transaxle and remove differential. Refer to **DISASSEMBLY** .

DISASSEMBLY

DISASSEMBLY

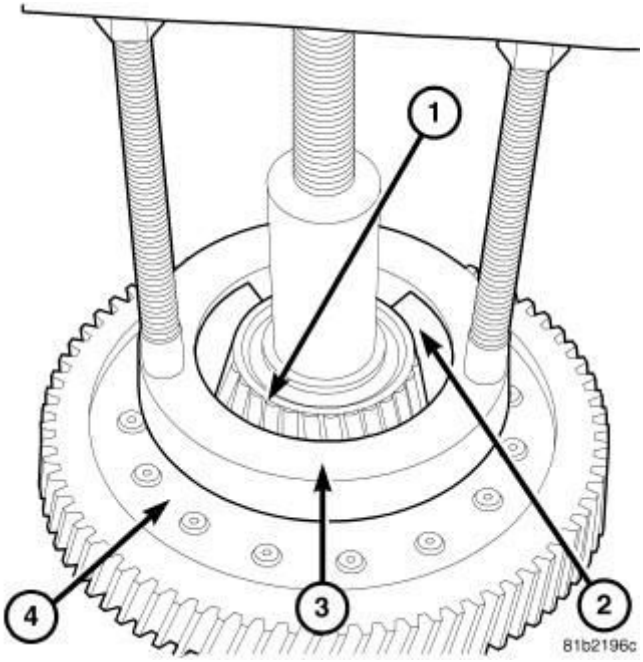

Fig. 212: Remove Diff Bearings
Courtesy of CHRYSLER GROUP, LLC

1. Use Plug (special tool #C-293-3, Adapter, Bearing/Gear), Puller/Press (special tool #C-293-PA, Puller, Press) (3), and Puller Adapters (special tool #9613, Adapters, Puller) (2) on ring gear side (4) to remove the pinion side bearing (1).

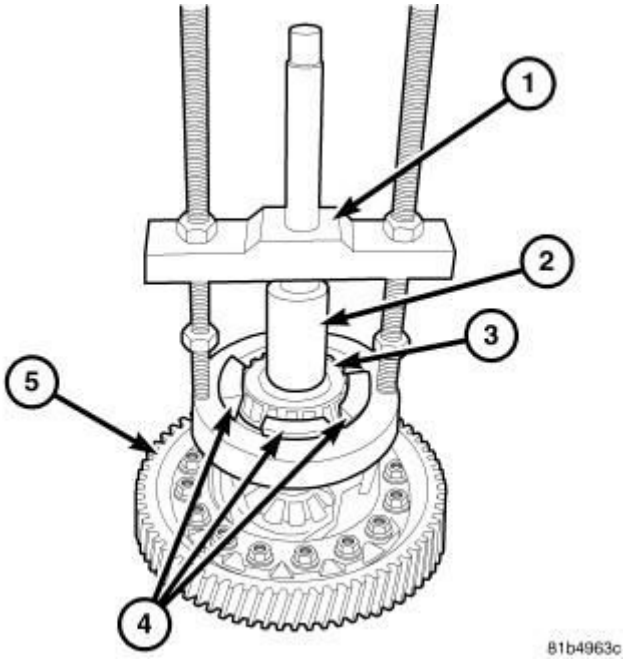

Fig. 213: Remove Diff Bearing Pinion Side
Courtesy of CHRYSLER GROUP, LLC

2. Use Plug (special tool #C-293-3, Adapter, Bearing/Gear), Puller/Press (special tool #C-293-PA, Puller, Press) (1) and Adapters (special tool #C-293-37, Block Set, Puller) (4) on pinion side with 2WD. Use Puller Adapters (special tool #9614, Adapters, Puller) (4), Puller/Press (special tool #C-293-PA, Puller, Press) (1) and Remover C-4656 as a plug on pinion side with a AWD to remove pinion side bearing (1).

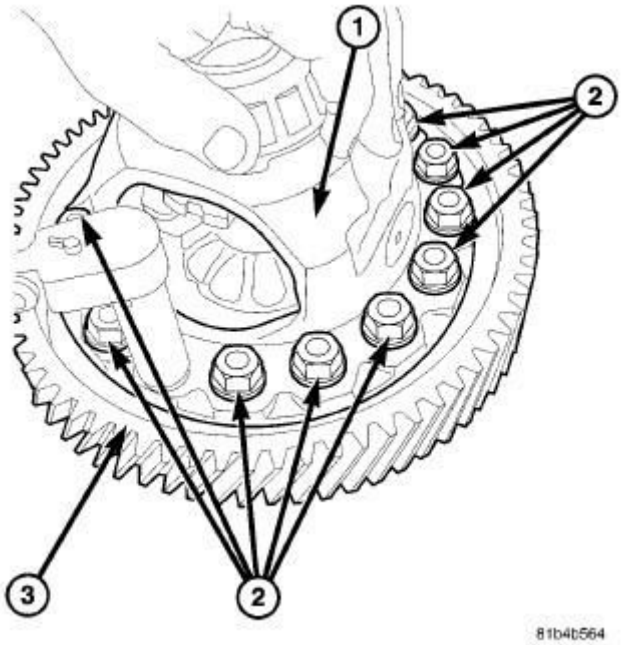

Fig. 214: Bolts At Ring Gear
Courtesy of CHRYSLER GROUP, LLC

3. Remove the bolts at the ring gear.
4. Remove the ring gear by taping with a soft face hammer.

ASSEMBLY

ASSEMBLY

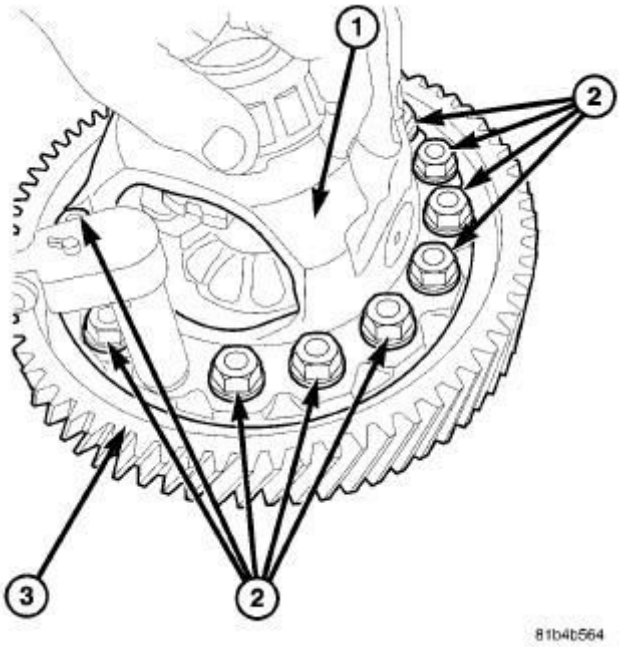

Fig. 215: Bolts At Ring Gear
Courtesy of CHRYSLER GROUP, LLC

1. Install differential ring gear. Install and torque ring gear-to-case bolts to 106 N.m (78 ft. lbs.).

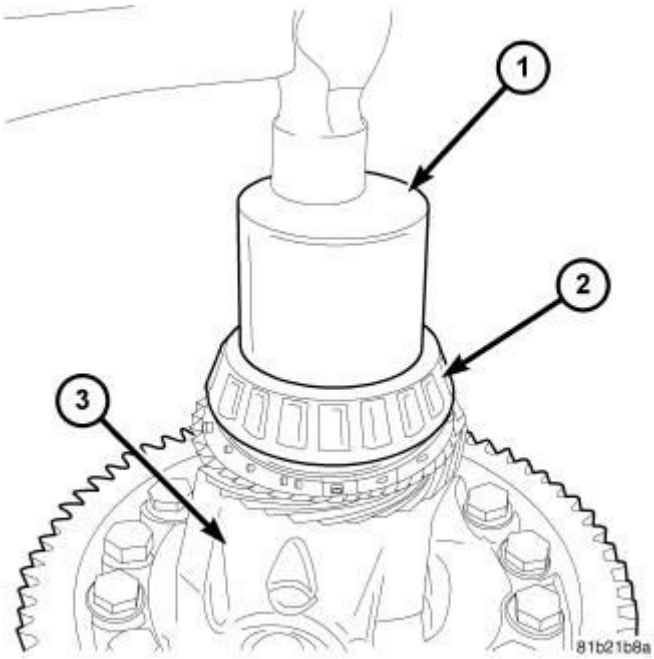

Fig. 216: Pinion Side Differential Bearing
Courtesy of CHRYSLER GROUP, LLC

2. Use Compressor Field Coil Remover (1) to install the pinion side differential bearing (2).

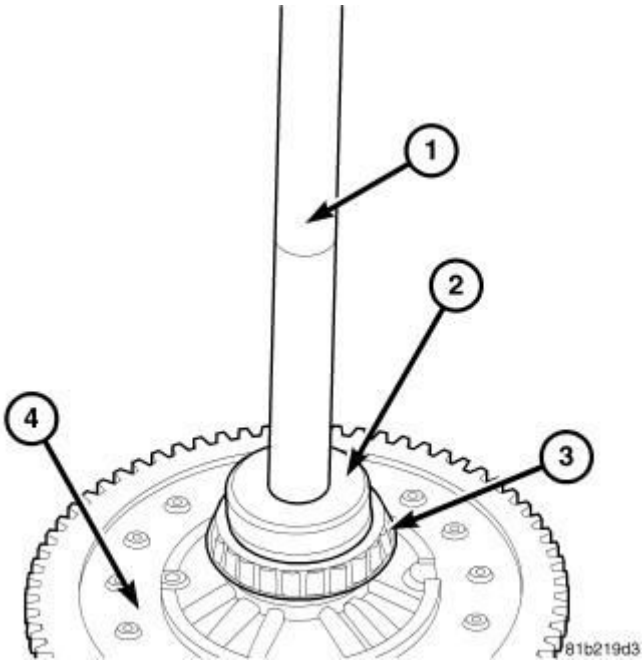

Fig. 217: Install Ring Gear Side Diff Bear
Courtesy of CHRYSLER GROUP, LLC

3. Use Universal Handle (special tool #C-4171, Driver Handle, Universal) (1) and Bearing Installer (special tool #9523A, Installer, Bearing) (2) to install the ring gear side differential bearing (3).

INSTALLATION

INSTALLATION

1. Differential installation is part of the transaxle assembly process. Be sure to use the same differential shim that was removed upon disassembly. Refer to **ASSEMBLY** .

FLUID

STANDARD PROCEDURE

FLUID LEVEL CHECKING

The fluid required for this transaxle is Mopar® ATF+4 (Automatic Transmission Fluid). Use of improper or substitute fluids can cause shift problems and/or transaxle failure.

1. Insure the vehicle is level, remove the fill plug and add fluid until the fluid just starts to trickle out.

FLUID DRAIN AND FILL

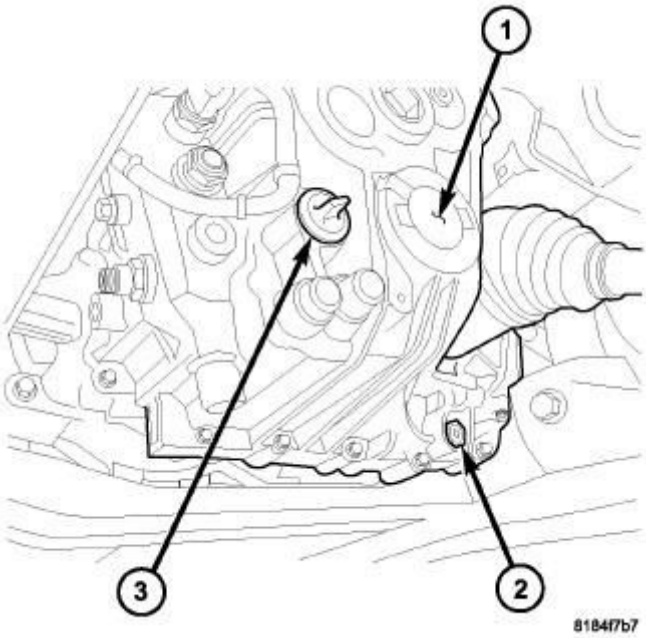

Fig. 218: Drain & Fill Plug
Courtesy of CHRYSLER GROUP, LLC

NOTE: The fluid required for this transaxle is Mopar® ATF+4 (Automatic Transmission Fluid). Use of improper or substitute fluids can cause shift problems and/or transaxle failure.

1. Raise vehicle on hoist.
2. Obtain suitable fluid collection container and place under transaxle.
3. Remove transaxle drain plug (2). Allow fluid to drain into container until empty.
4. Install the drain plug (2) with a **new** gasket and tighten to 39 N.m (29 ft. lbs.).
5. Remove transaxle rubber fill plug (3).
6. Add the appropriate amount of transaxle fluid to the transaxle. Refer to **CAPACITIES AND RECOMMENDED FLUIDS, SPECIFICATIONS** .
7. Install the transaxle rubber fill plug (3).

INPUT SHAFT, TRANSMISSION

DISASSEMBLY

DISASSEMBLY

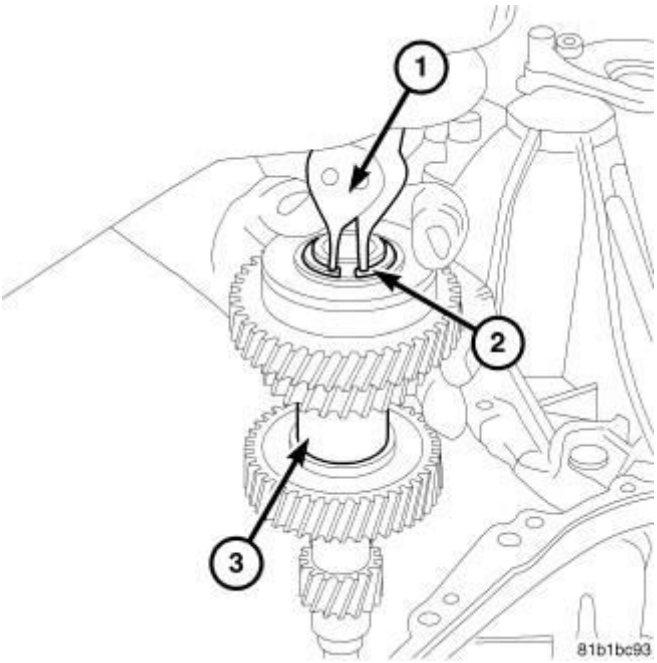

Fig. 219: Snap Ring At Input Shaft
Courtesy of CHRYSLER GROUP, LLC

1. Remove the snap ring (2) that retains the input shaft bearing and sixth gear to the shaft.

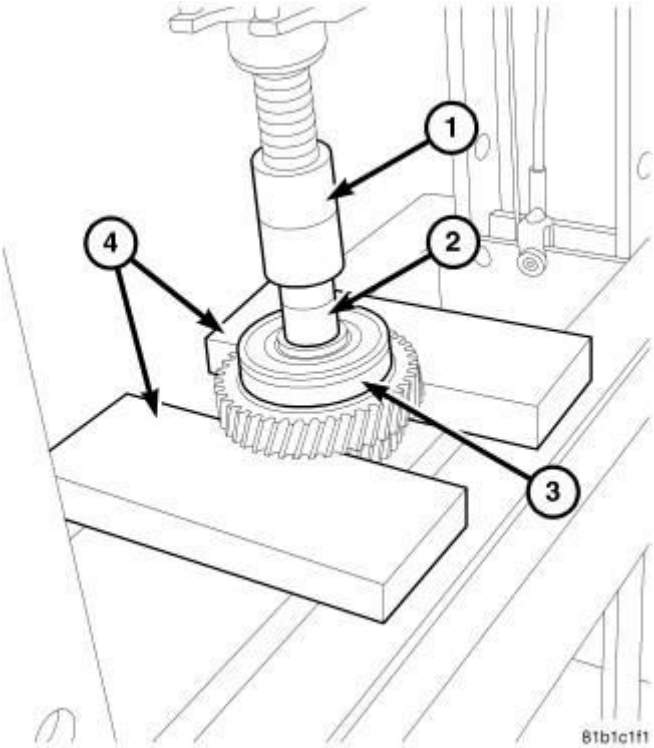

Fig. 220: Press Bearing From Input Shaft

Courtesy of CHRYSLER GROUP, LLC

2. Using a press (1) and steel blocks (4) remove sixth gear and the bearing (3) from the shaft.

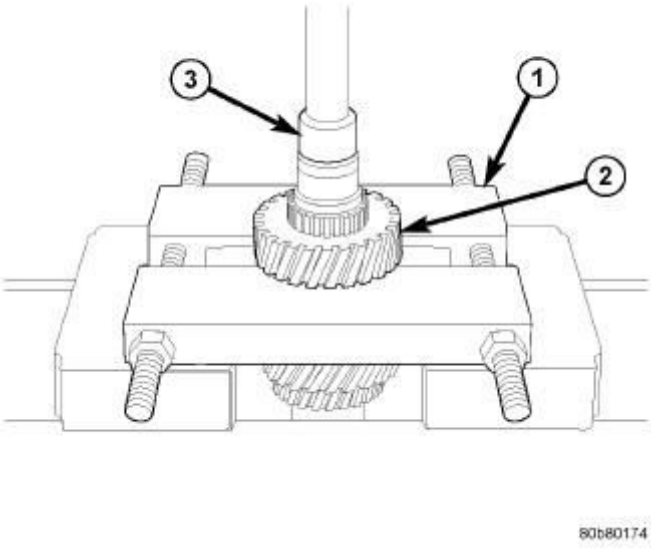

Fig. 221: Input 3rd Gear
Courtesy of CHRYSLER GROUP, LLC

3. Using a Press (3) and the Bearing Splitter (special tool #1130, Splitter, Bearing/Gear) (1) remove third gear (2) from shaft.
4. Remove the spacer.

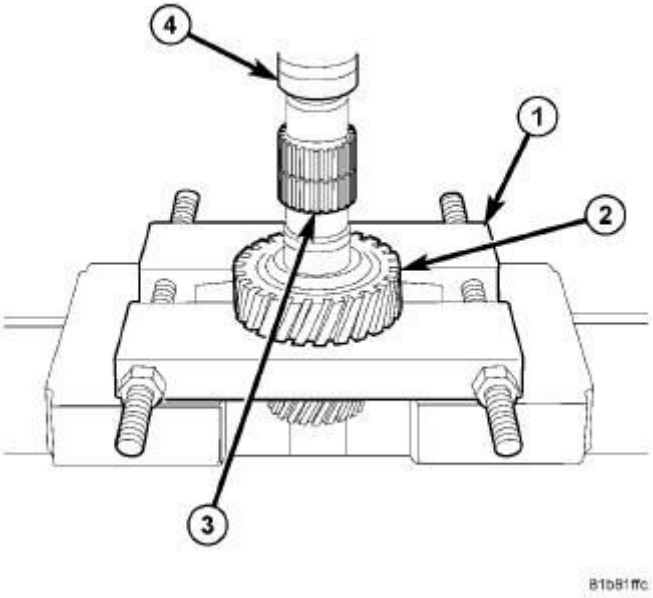

Fig. 222: Forth Gear Off Input Shaft
Courtesy of CHRYSLER GROUP, LLC

5. Using a Press (3) and the Bearing Splitter (special tool #1130, Splitter, Bearing/Gear) (1) remove forth gear (2) from shaft.

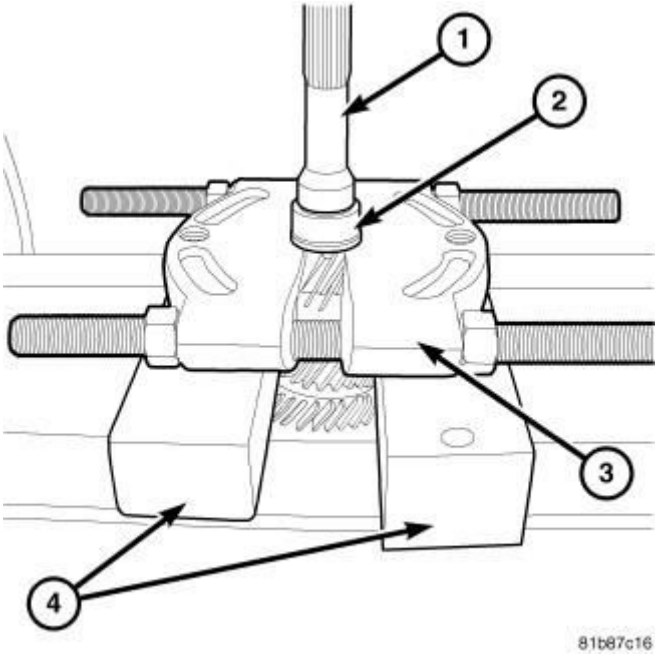

Fig. 223: Remove Input Shaft Race
Courtesy of CHRYSLER GROUP, LLC

6. Using a Press and the Bearing Splitter (special tool #1130, Splitter,

Bearing/Gear) (3) remove the input shaft bearing race (2).

ASSEMBLY

ASSEMBLY

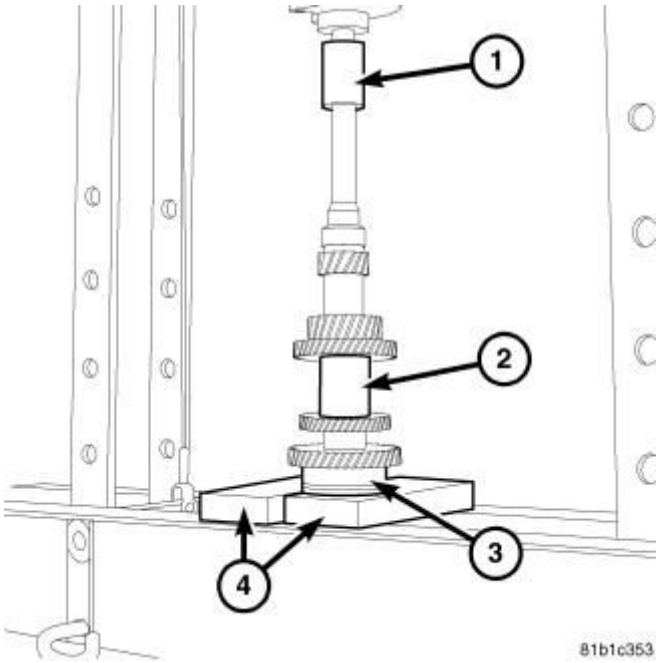

Fig. 224: Install Bearing On Input Shaft
Courtesy of CHRYSLER GROUP, LLC

1. Using a press (1) and steel blocks (4) install third gear and the bearing (3) onto the shaft.

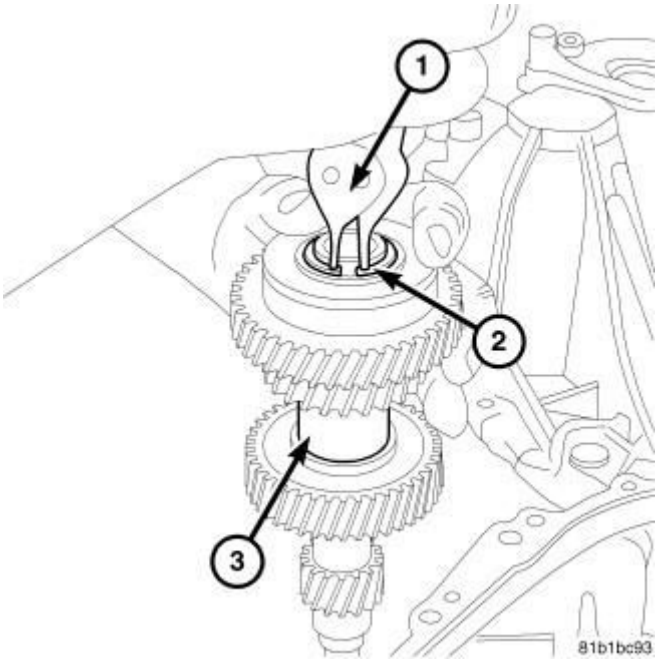

Fig. 225: Snap Ring At Input Shaft
Courtesy of CHRYSLER GROUP, LLC

2. Install the **new** snap ring (2) that retains the input shaft bearing and third gear to the shaft.

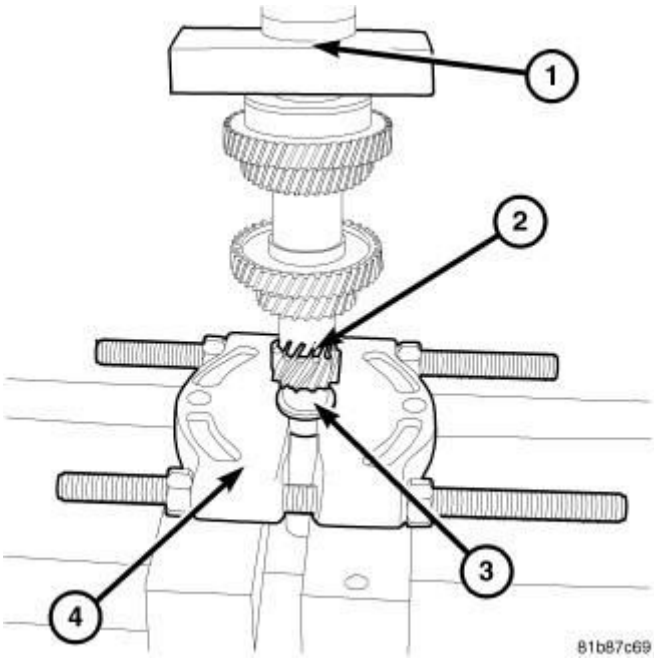

Fig. 226: Install Input Shaft Race
Courtesy of CHRYSLER GROUP, LLC

3. Using Bearing Splitter (special tool #1130, Splitter, Bearing/Gear) (4) and a Press (1) install the input shaft bearing race (3) onto the input shaft (2).

LEVER, SHIFT

REMOVAL

REMOVAL

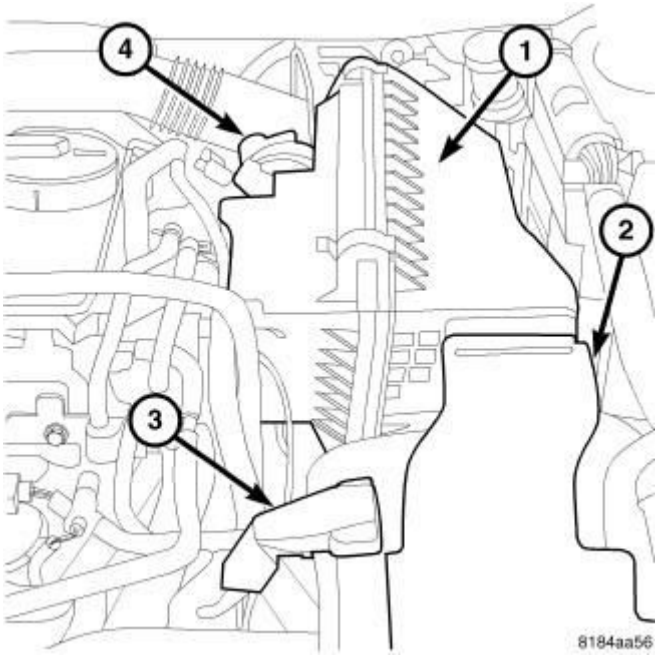

Fig. 227: Air Cleaner & Inlet Tube
Courtesy of CHRYSLER GROUP, LLC

Remove the engine cover.

1. Disconnect battery negative cable.
2. Remove air inlet tube (2) and air cleaner assembly (4).

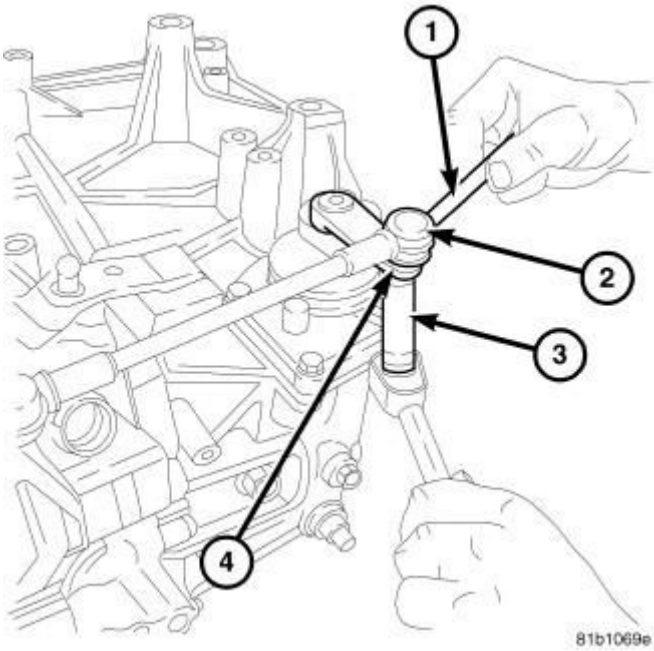

Fig. 228: Crossover Rod Nut
Courtesy of CHRYSLER GROUP, LLC

3. Remove the nut (4) holding the crossover rod (2) to the shift lever. Be sure to use a wrench (1) to hold the ball stud to prevent it from rotating in the shift lever.

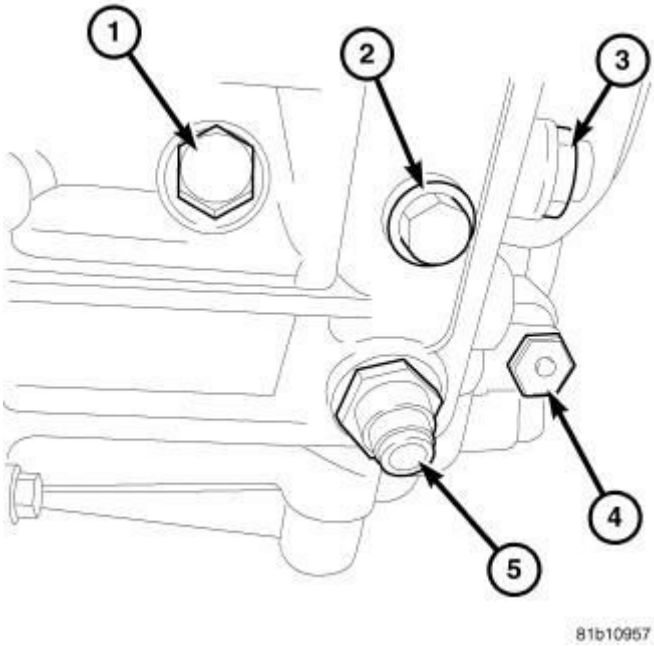

Fig. 229: Shift/Select Detents & Guide Pin
Courtesy of CHRYSLER GROUP, LLC

4. Loosen and remove shift tower ball for the shift detent (5).
5. Loosen and remove shift lock ball for the select detent (3).
6. Loosen and remove shift guide pin (2).

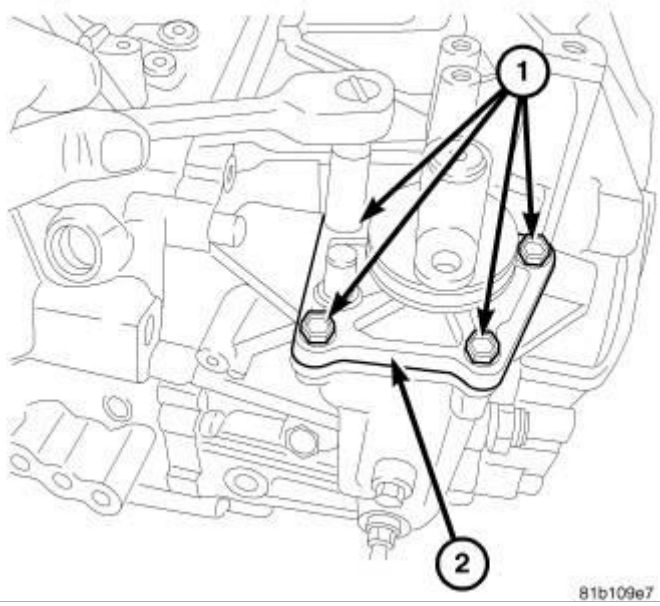

Fig. 230: Shift Lever Assembly
Courtesy of CHRYSLER GROUP, LLC

7. Remove the bolts holding the shift lever assembly to the transmission.

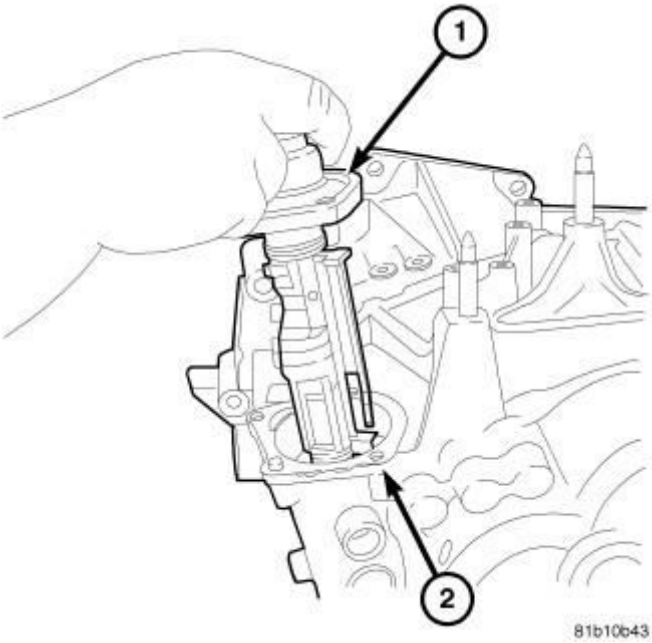

Fig. 231: Shift Lever Assembly
Courtesy of CHRYSLER GROUP, LLC

8. Remove the shift lever assembly from the transmission case.

INSTALLATION

INSTALLATION

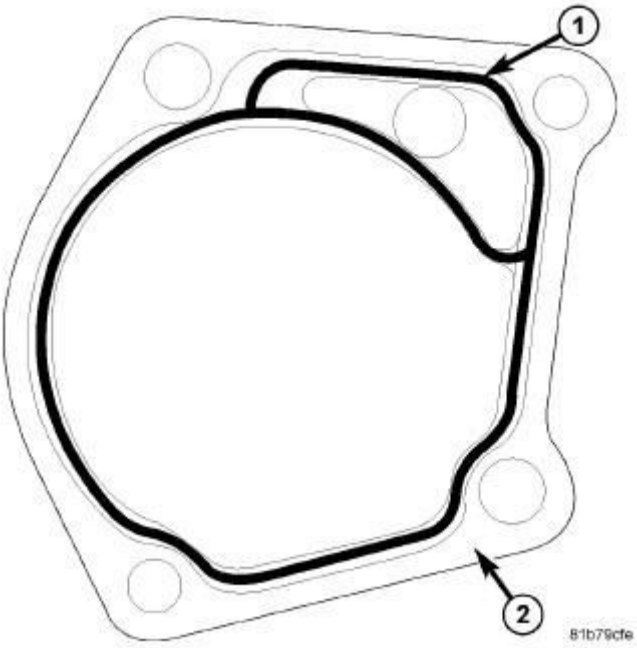

Fig. 232: Sealer
Courtesy of CHRYSLER GROUP, LLC

1. Add MOPAR® Gasket Maker, Loctite® 518, or equivalent around inside of all holes and on mating flange.

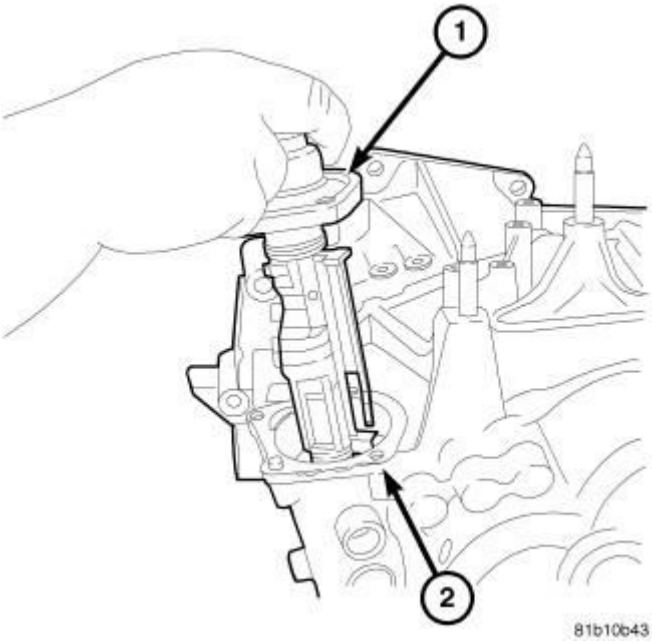

Fig. 233: Shift Lever Assembly
Courtesy of CHRYSLER GROUP, LLC

2. Install the shift lever assembly (1) into the transmission case (2).

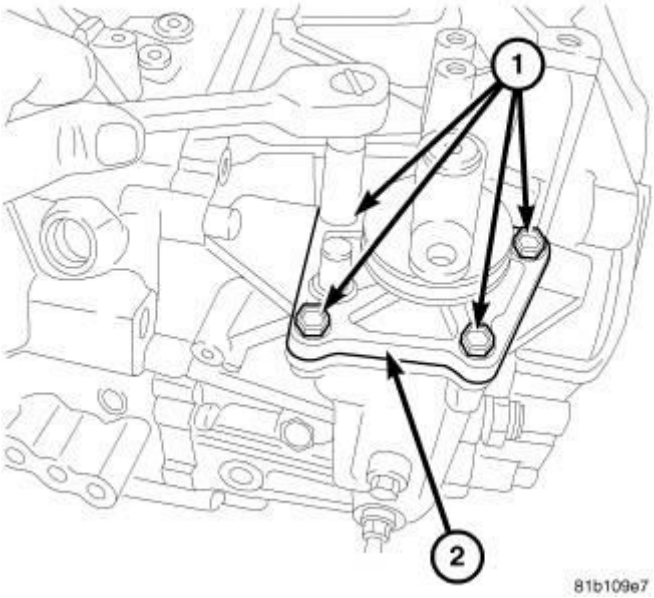

Fig. 234: Shift Lever Assembly
Courtesy of CHRYSLER GROUP, LLC

3. Install the **new** bolts (1) holding the shift lever assembly (2) to the transmission and tighten to 19 N.m (168 in. lbs.)

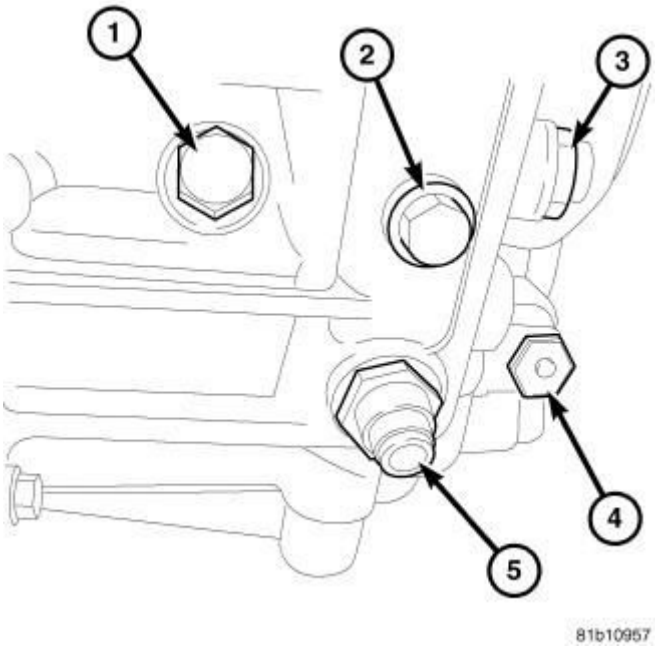

Fig. 235: Shift/Select Detents & Guide Pin
Courtesy of CHRYSLER GROUP, LLC

4. Install **new** shift tower lock ball for shift detent (5) and tighten to 29 N.m (277 in. lbs.).

5. Install **new** shift lock ball for the select detent (3) and tighten to 39 N.m (345 in. lbs.).
6. Install **new** shift tower shift guide pin (2) and tighten to 30 N.m (277 in. lbs.).

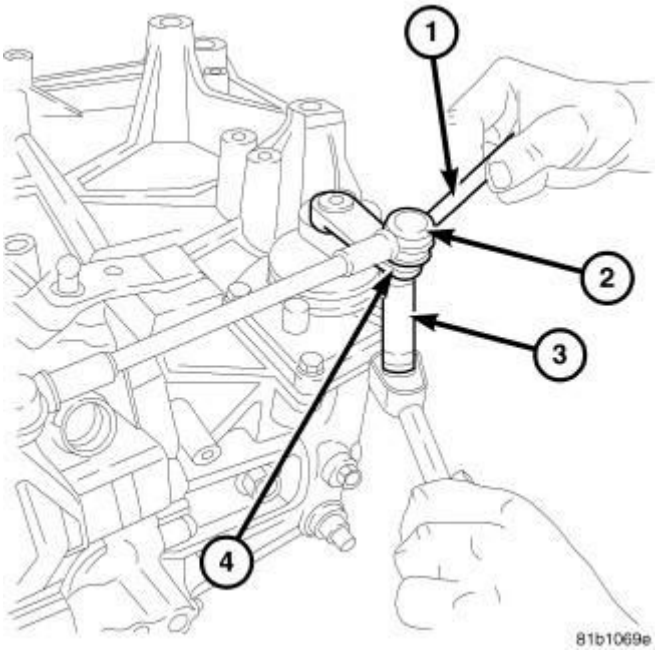

Fig. 236: Crossover Rod Nut
Courtesy of CHRYSLER GROUP, LLC

CAUTION: Be sure to verify bracket position after installation.

7. Install the nut (4) holding the crossover rod (2) to the shift lever. Be sure to use a wrench (1) to hold the ball stud to prevent it from rotating in the shift lever tighten to 12 N.m (106 in. lbs.).

MECHANISM, GEARSHIFT

REMOVAL

REMOVAL

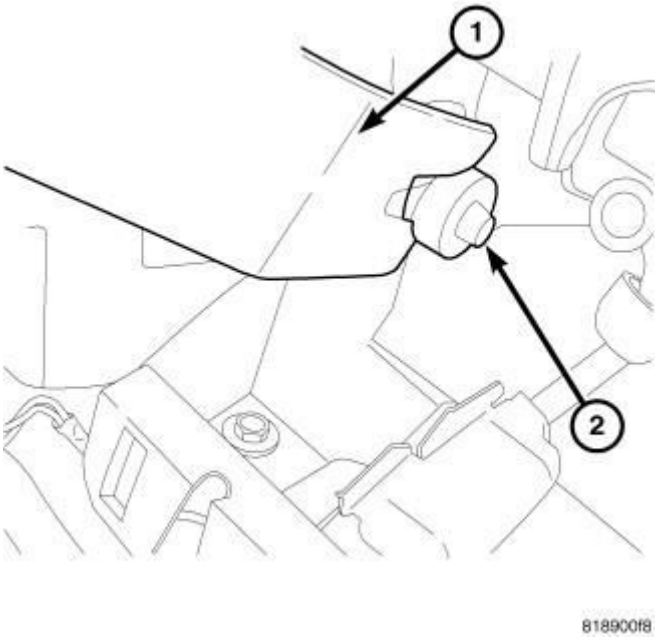

Fig. 237: Select Cable To Shifter Lever
Courtesy of CHRYSLER GROUP, LLC

1. Remove gear shift boot.
2. Remove the center console assembly (see **REMOVAL**). Remove rear power window switch (if equipped) and disconnect harness from console.

NOTE: Cable is pushed into a rubber grommet.

3. Remove select cable (2) from shift lever (1).

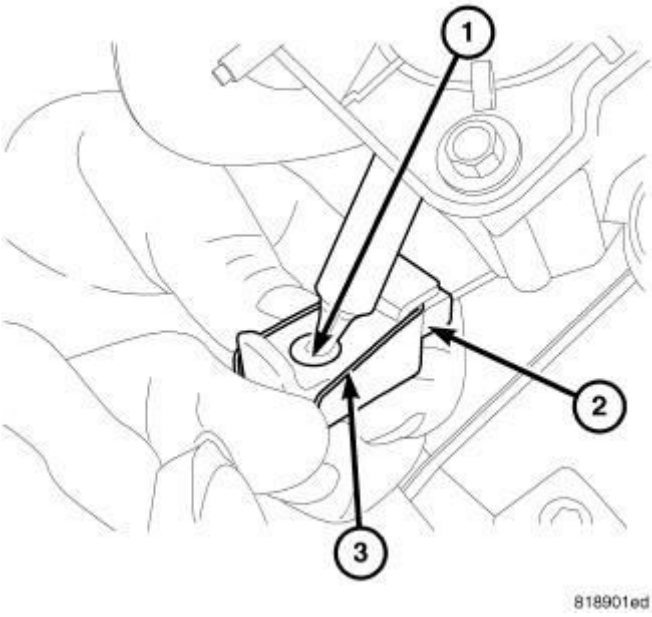

Fig. 238: Shift Cable Retaining Clip
Courtesy of CHRYSLER GROUP, LLC

4. Remove shift cable retaining clip (3) and disconnect cable (2) from the shift lever (1).

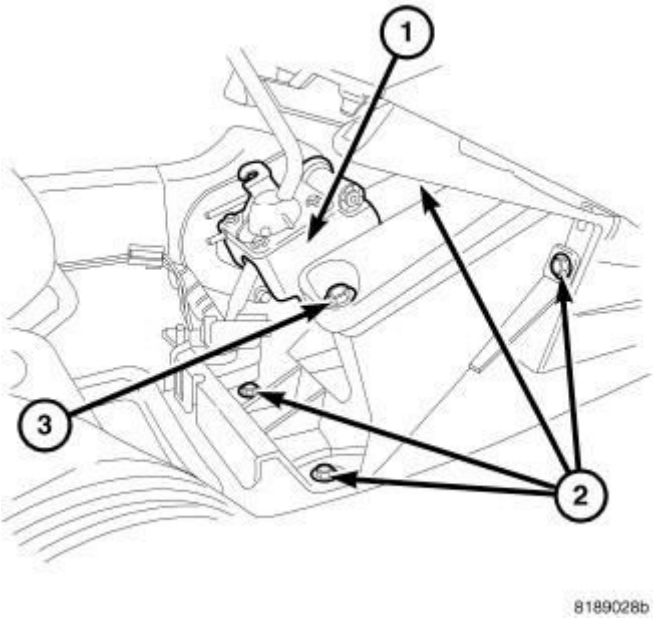

Fig. 239: Shifter Bolts
Courtesy of CHRYSLER GROUP, LLC

5. Remove the shifter assembly to riser bolts (3) and remove shifter from vehicle.

INSTALLATION

INSTALLATION

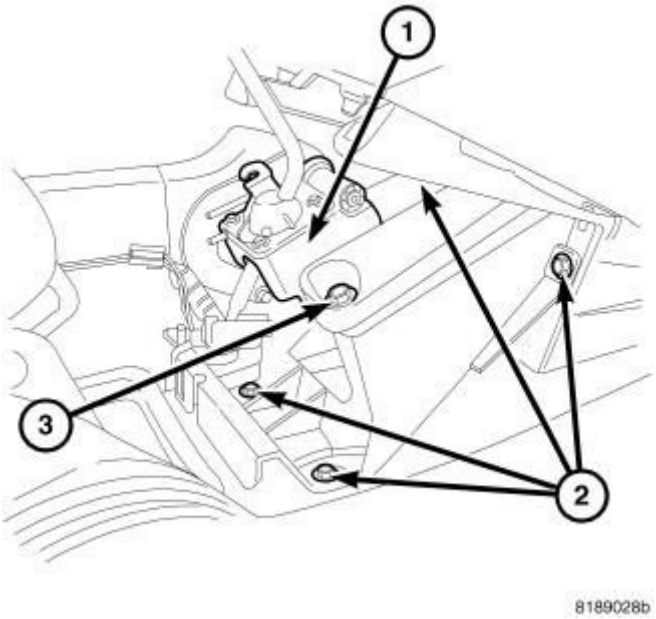

Fig. 240: Shifter Bolts
Courtesy of CHRYSLER GROUP, LLC

1. Install shifter assembly. (1) to riser. Install and tighten bolts (3) to 7 N.m (61 in. lbs.).

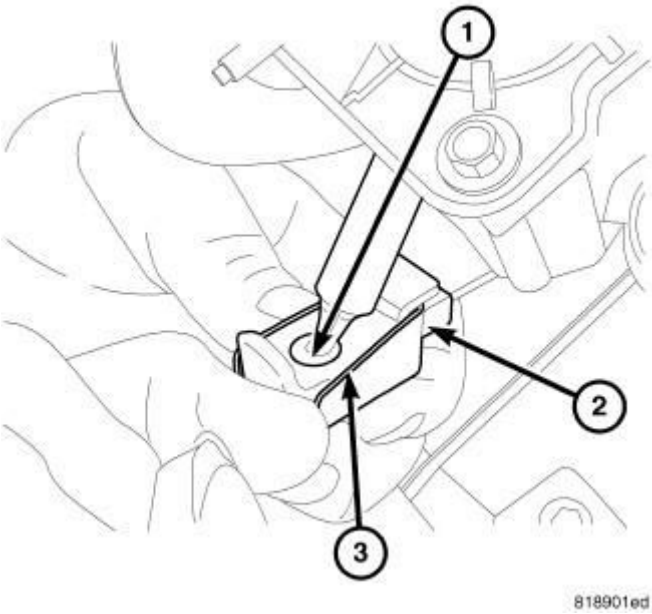

Fig. 241: Shift Cable Retaining Clip
Courtesy of CHRYSLER GROUP, LLC

2. Install shift cable (2) to shifter lever (1) and secure cable to shifter bracket with clip (3).

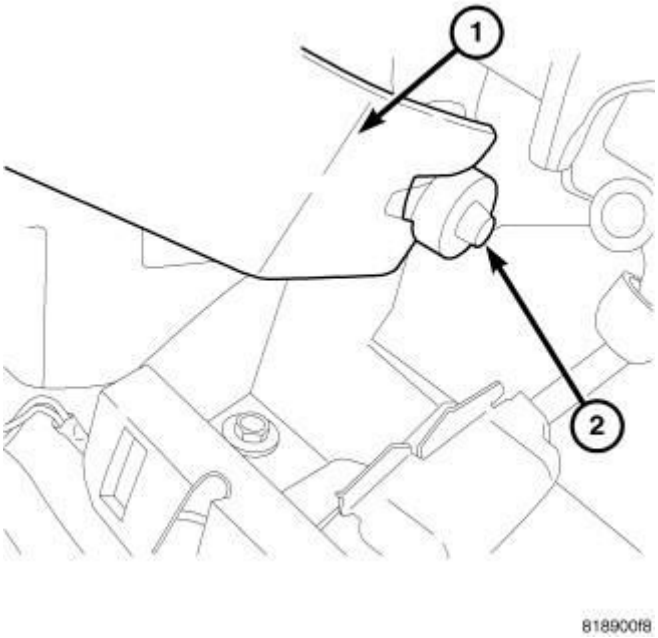

Fig. 242: Select Cable To Shifter Lever
Courtesy of CHRYSLER GROUP, LLC

3. Install select cable to shifter lever and secure cable to shifter bracket.
4. Install center console assembly. Install rear power window switch (if equipped) and fasten harness to console (see **INSTALLATION**).
5. Install gearshift boot.
6. Verify that shift pattern is aligned properly.

SEAL, AXLE DRIVE SHAFT

REMOVAL

REMOVAL

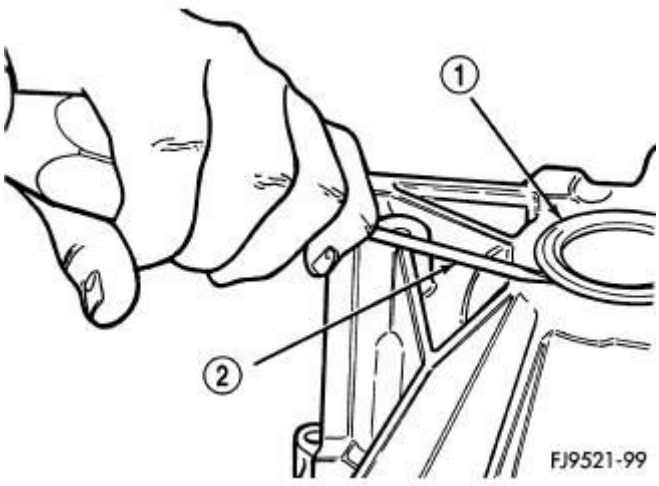

Fig. 243: Axle Shaft Seal Removal
Courtesy of CHRYSLER GROUP, LLC

1. Remove axle shaft. Refer to **REMOVAL** .
2. Insert a flat-blade pry tool (2) at outer edge of axle shaft seal (1).
3. Tap on the pry tool (2) with a small hammer and remove axle shaft seal (1).

INSTALLATION

INSTALLATION

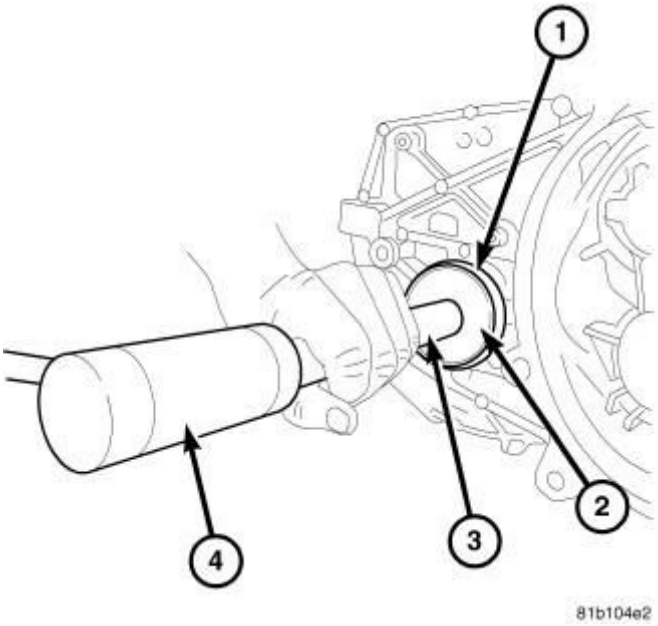

Fig. 244: Installing Axle Shaft Seal (Bellhousing Side)
Courtesy of CHRYSLER GROUP, LLC

1. Clean axle shaft seal bore of any excess sealant.
2. Align (bellhousing side) axle shaft seal with axle shaft seal bore.
3. Install axle seal on Seal Installer (special tool #9928, Installer, Differential Oil Seal) and Handle (special tool #C-4171, Driver Handle, Universal) and insert into axle shaft seal bore.
4. Tap seal into position until seated against transaxle case.

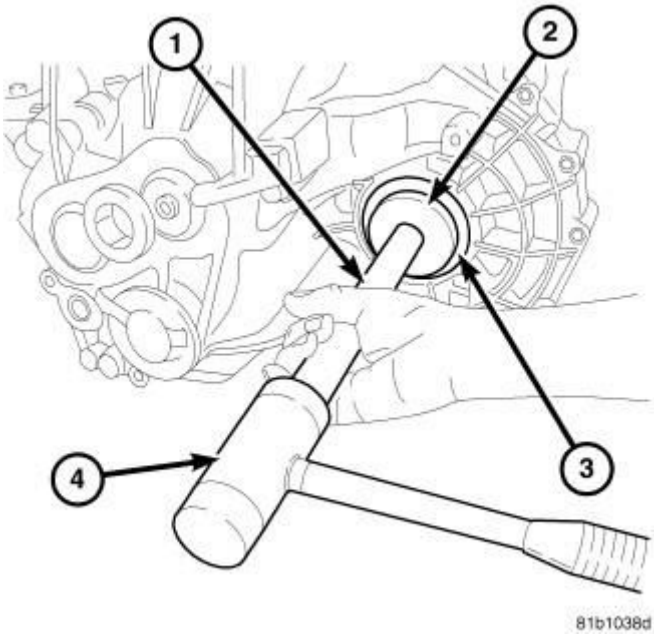

Fig. 245: Installing Axle Shaft Seal (Case Side)
Courtesy of CHRYSLER GROUP, LLC

5. Align axle shaft seal with axle shaft seal bore.
6. Install (case side) axle seal on Seal Installer 9934 and Handle (special tool #C-4171, Driver Handle, Universal) and insert into axle shaft seal bore.
7. Tap seal into position until seated against transaxle case.
8. Install axle shaft. Refer to **INSTALLATION** .
9. Check transaxle fluid level and adjust as necessary.

SHAFT, OUTPUT, NUMBER 1

DISASSEMBLY

DISASSEMBLY

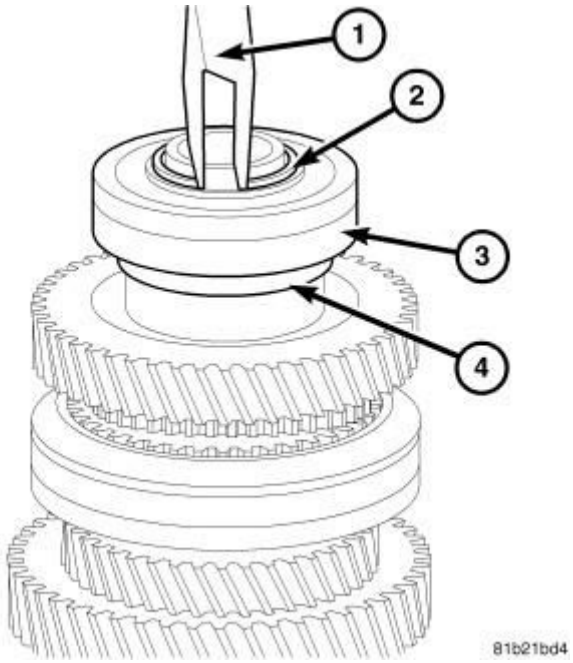

Fig. 246: Snap Ring At Output Shaft
Courtesy of CHRYSLER GROUP, LLC

1. Remove the snap ring (2) from the output shaft.

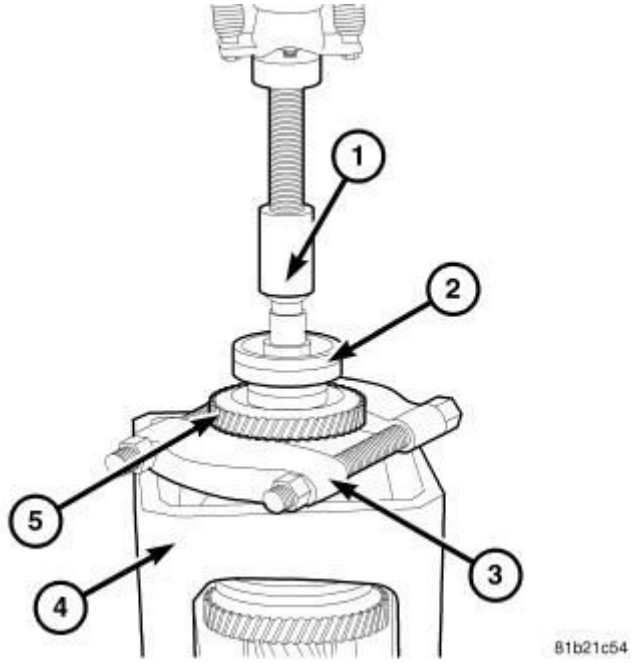

Fig. 247: Bearing Splitter, Cage, Press, Bearing & Third Gear
Courtesy of CHRYSLER GROUP, LLC

2. Use Bearing Splitter (special tool #P-334, Splitter, Bearing) (3), Cage (special tool #8925-3, Assembly, Press Fixture) (4) and a press (1) to remove bearing (2) and third gear (5) from output shaft.

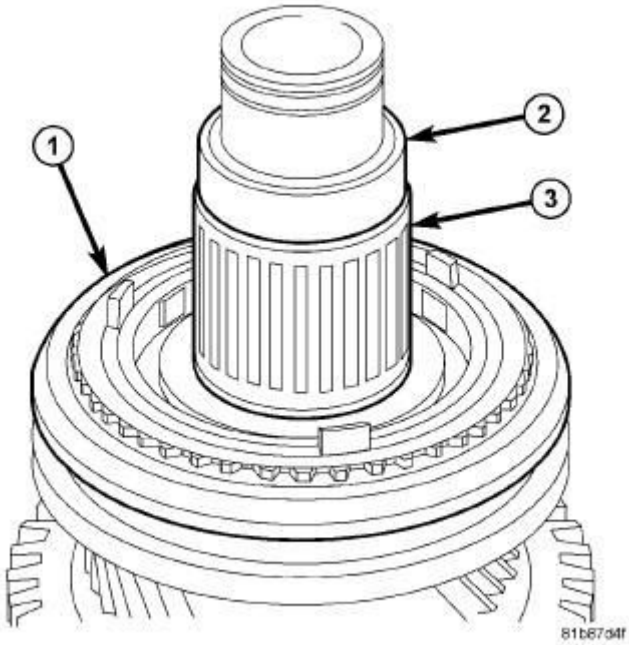

Fig. 248: Input Spacer & Bearing
Courtesy of CHRYSLER GROUP, LLC

3. Remove the spacer (2), ball, needle roller bearing (3) and synchronizer ring set (1).

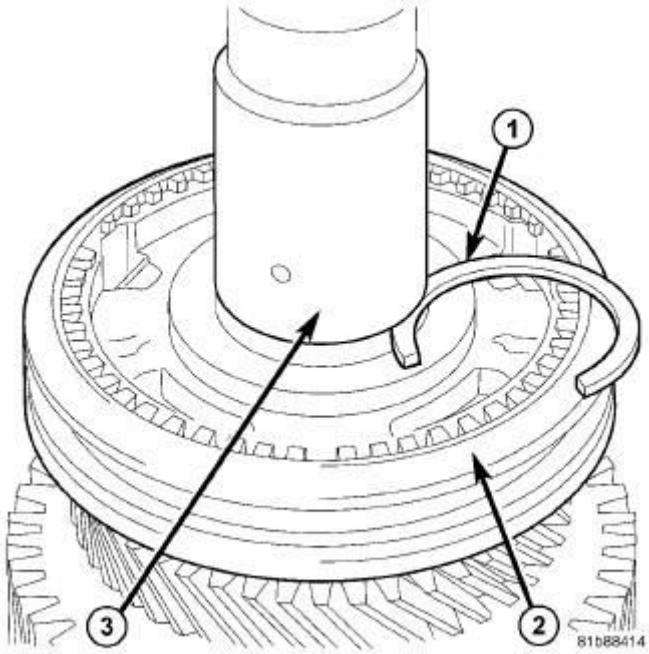

Fig. 249: Input Upper Snap Ring
Courtesy of CHRYSLER GROUP, LLC

4. Remove the shaft snap ring (1).

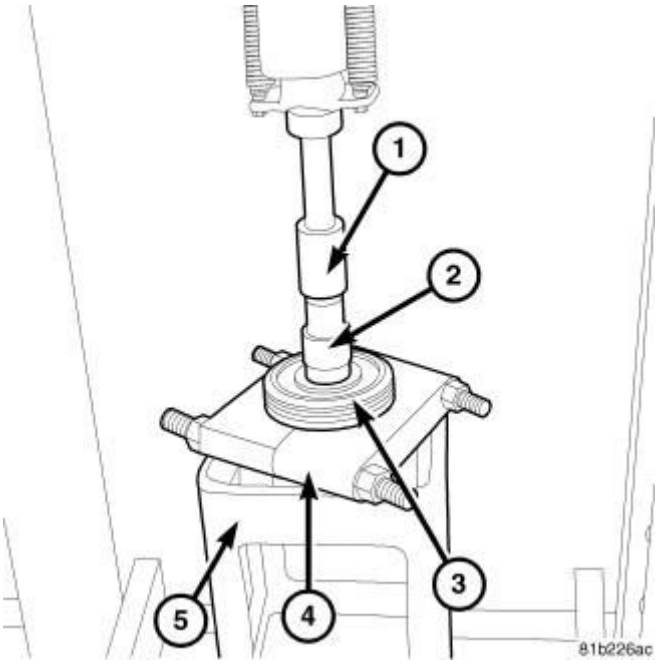

Fig. 250: Third/Fourth Gear Synchronizer & Output Shaft
Courtesy of CHRYSLER GROUP, LLC

5. Use Press Plate (special tool #9647, Puller) (4) and Cage (special tool #8925-3, Assembly, Press Fixture) (5) to remove third/forth gear synchronizer (3) from output shaft (2).

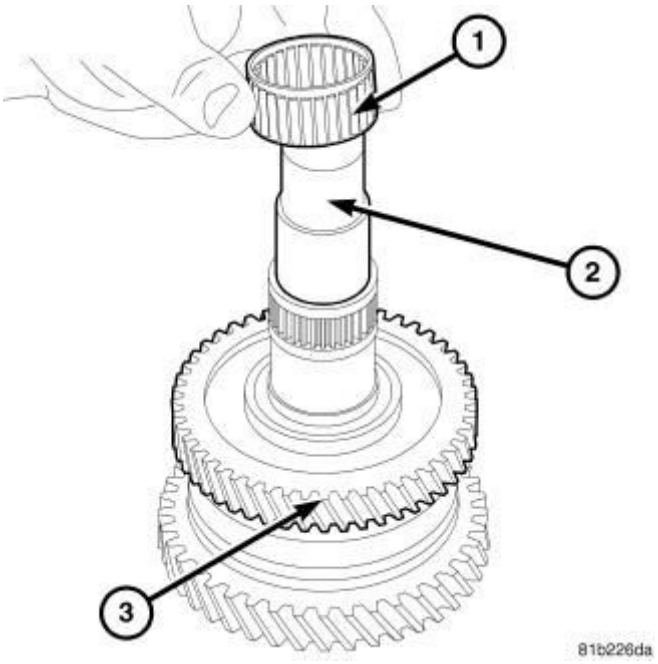

Fig. 251: Bearing & Output Shaft
Courtesy of CHRYSLER GROUP, LLC

6. Remove the bearing (1) from the output shaft (2).

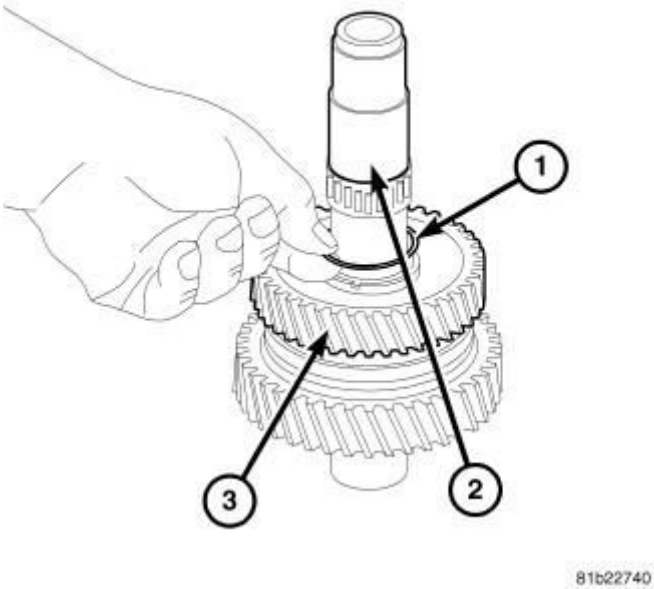

Fig. 252: C-Clip At Output Shaft
Courtesy of CHRYSLER GROUP, LLC

7. Remove the spacer and snap ring (1) from output shaft (2).

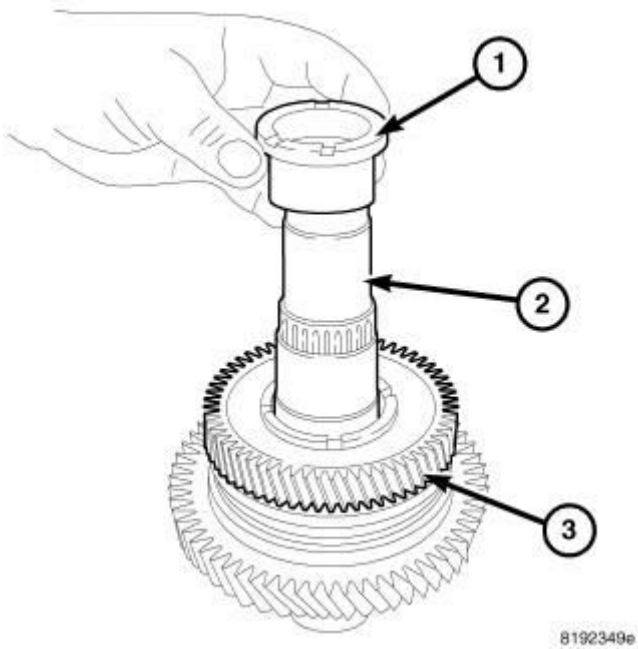

Fig. 253: Output Shaft Spacer
Courtesy of CHRYSLER GROUP, LLC

8. Remove the second gear inner race (1) from the output shaft (2).

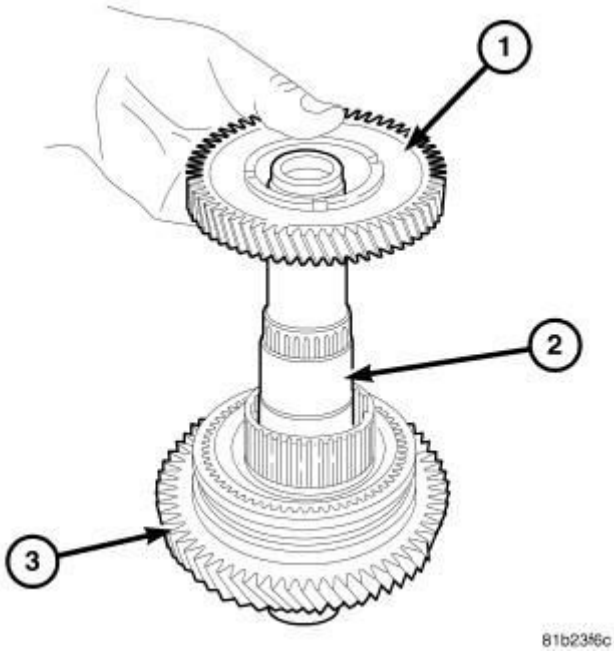

Fig. 254: Output Shaft & 2nd Gear
Courtesy of CHRYSLER GROUP, LLC

9. Remove second gear (1) from output shaft (2).
10. Remove the needle bearing.

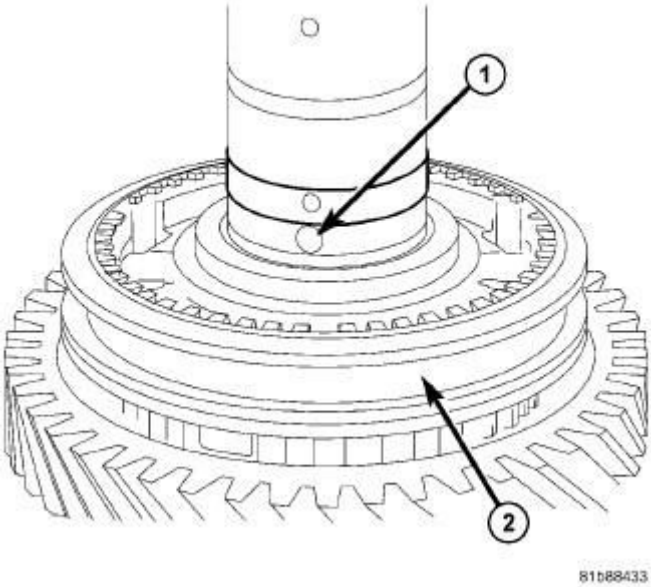

Fig. 255: Ball
Courtesy of CHRYSLER GROUP, LLC

11. Remove the ball (1).

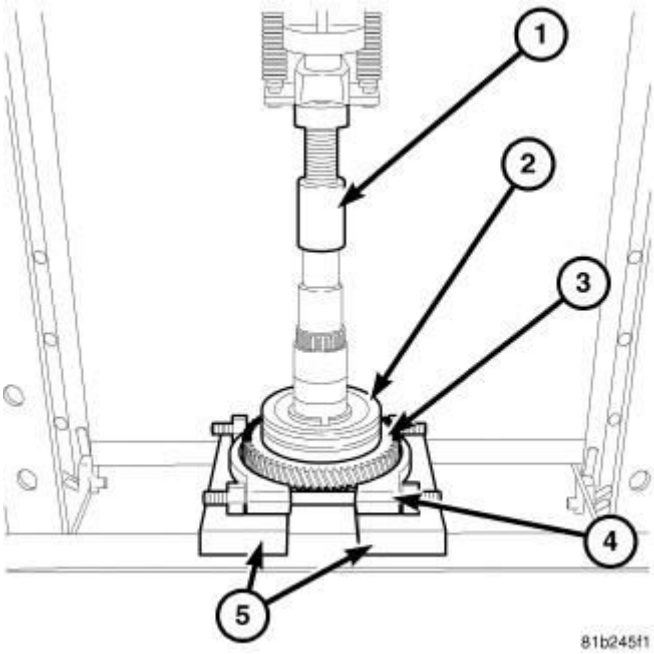

Fig. 256: First/Second Gear Synchronizer & First Gear
Courtesy of CHRYSLER GROUP, LLC

12. Use Bearing Splitter (special tool #P-334, Splitter, Bearing) (4) press off the first/second gear synchronizer (3) and first gear (3).

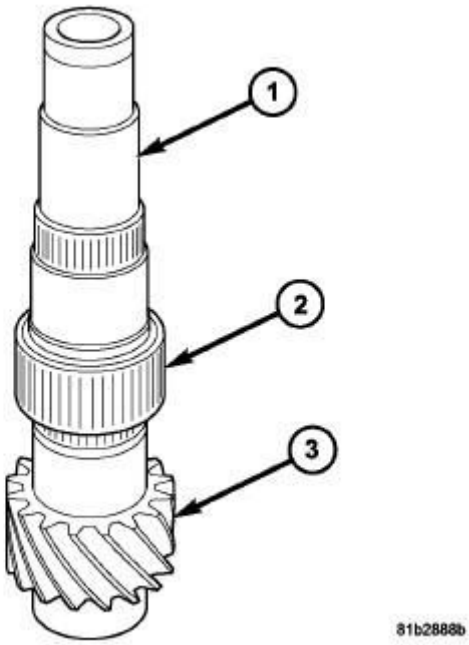

Fig. 257: First Gear Needle Bearing & Output Shaft
Courtesy of CHRYSLER GROUP, LLC

13. Remove the Needle bearing (2) from the output shaft (1).

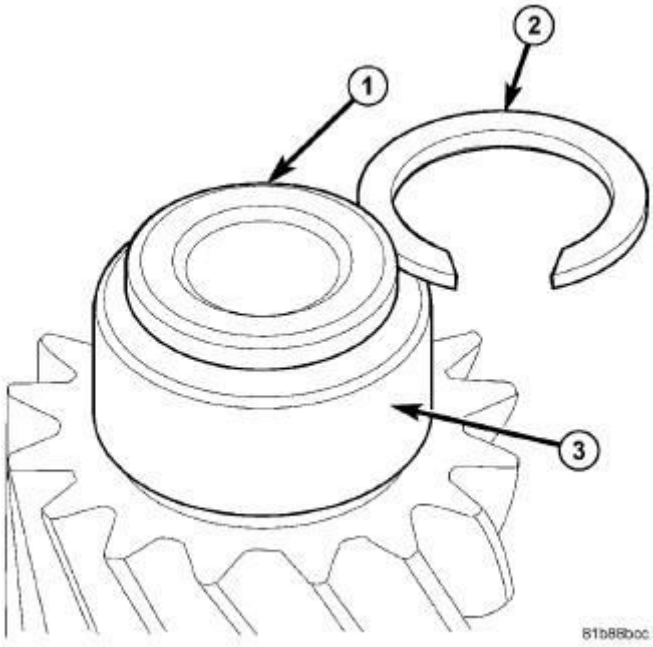

Fig. 258: Input Lower Snap Ring
Courtesy of CHRYSLER GROUP, LLC

14. Remove the shaft snap ring (2).

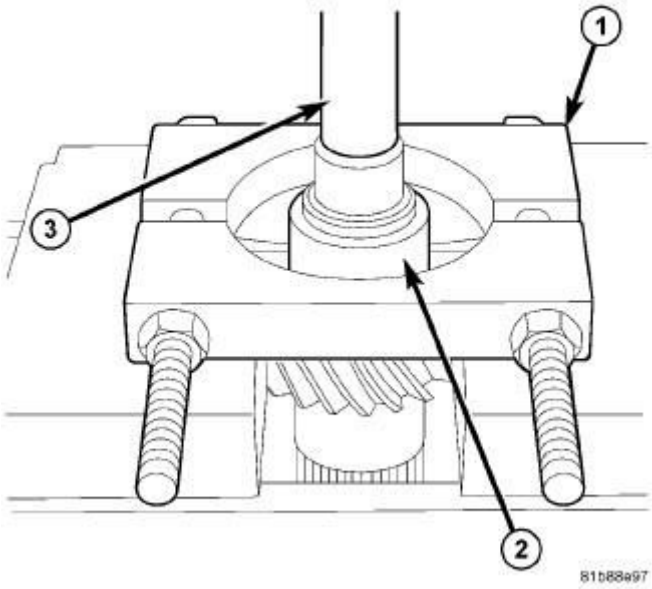

Fig. 259: Cylindrical Roller Bearing
Courtesy of CHRYSLER GROUP, LLC

15. Remove the cylindrical roller bearing (2) using Bearing Splitter (special tool

#1130, Splitter, Bearing/Gear) (1) and a Press.

ASSEMBLY

ASSEMBLY

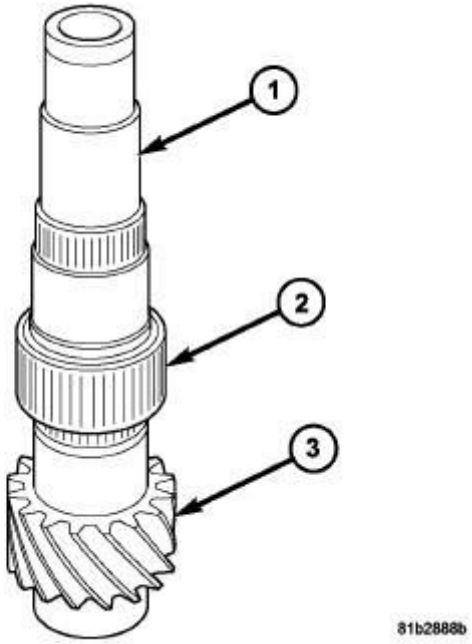

Fig. 260: First Gear Needle Bearing & Output Shaft
Courtesy of CHRYSLER GROUP, LLC

NOTE: Use ATF on all parts that are to be assembled in this procedure.

1. Install the first and first gear needle bearing (2) on the output shaft (1).

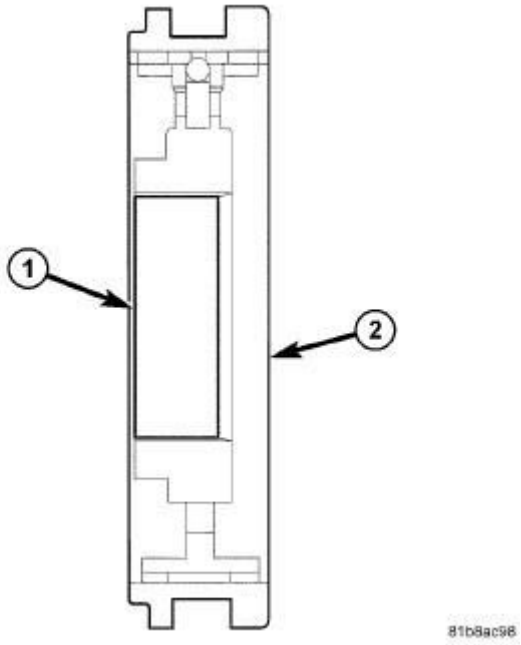

Fig. 261: Synchronizer
Courtesy of CHRYSLER GROUP, LLC

NOTE: Pay attention to the direction when inserting the 1st-2nd hub sleeve.

2. Install the 1st-2nd synchronizer onto the output shaft with (2) towards first gear.

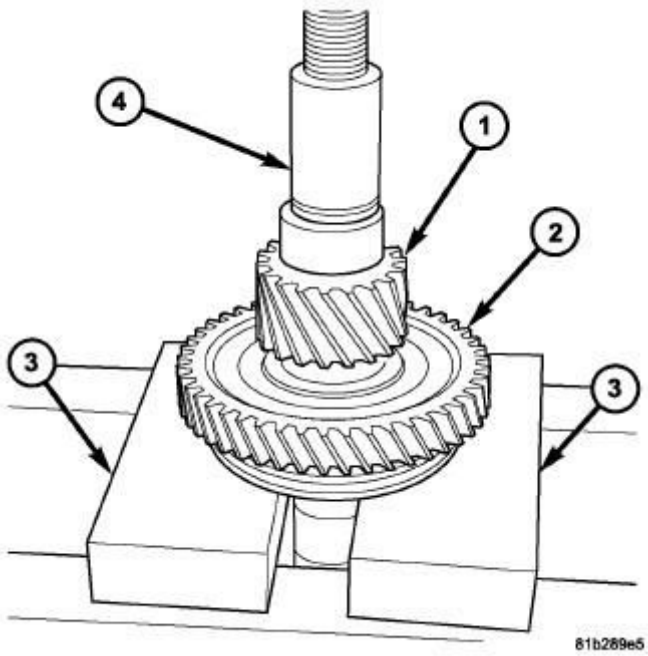

Fig. 262: First Gear & First/Second Gear Synchronizer
Courtesy of CHRYSLER GROUP, LLC

3. Using a press (4), install first gear (3) and first/second gear synchronizer onto output shaft.

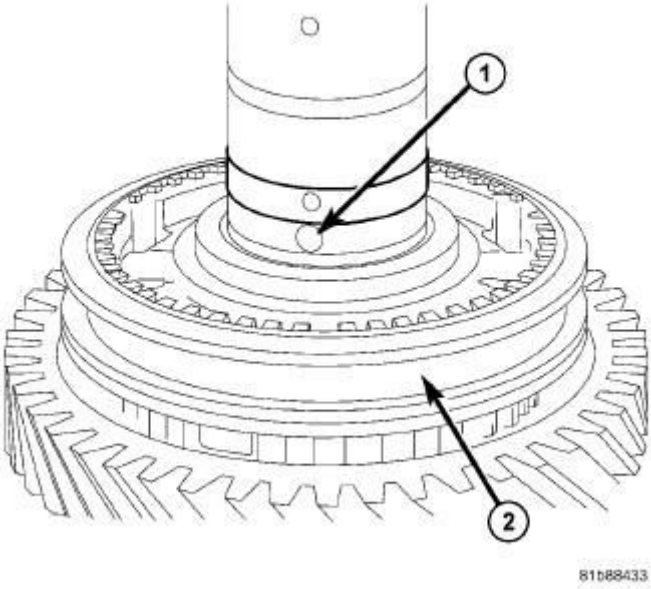

Fig. 263: Ball
Courtesy of CHRYSLER GROUP, LLC

4. Install the second ball (1).

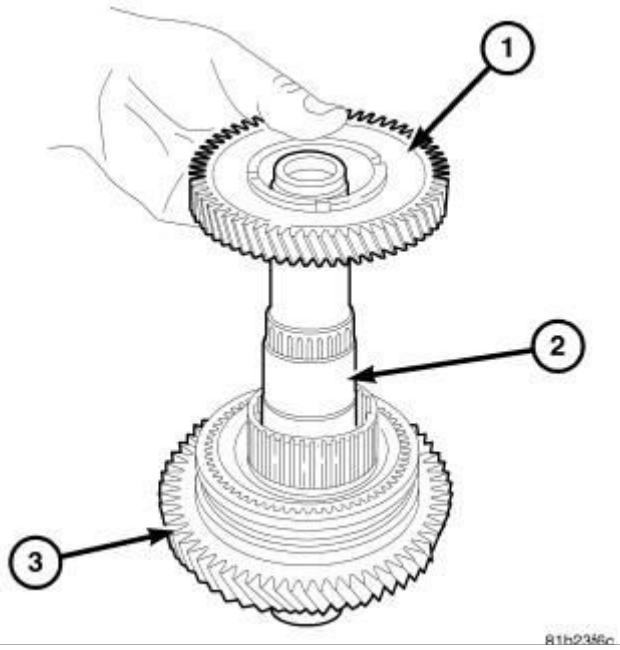

Fig. 264: Output Shaft & 2nd Gear
Courtesy of CHRYSLER GROUP, LLC

5. Install the needle bearing on the output shaft.
6. Install second gear (1) onto output shaft (2).

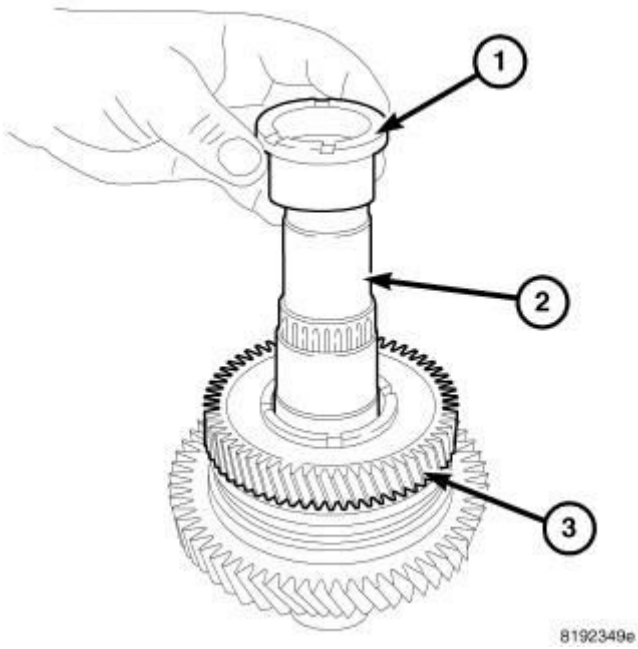

Fig. 265: Output Shaft Spacer
Courtesy of CHRYSLER GROUP, LLC

7. Install the inner race (1) onto the output shaft (2).

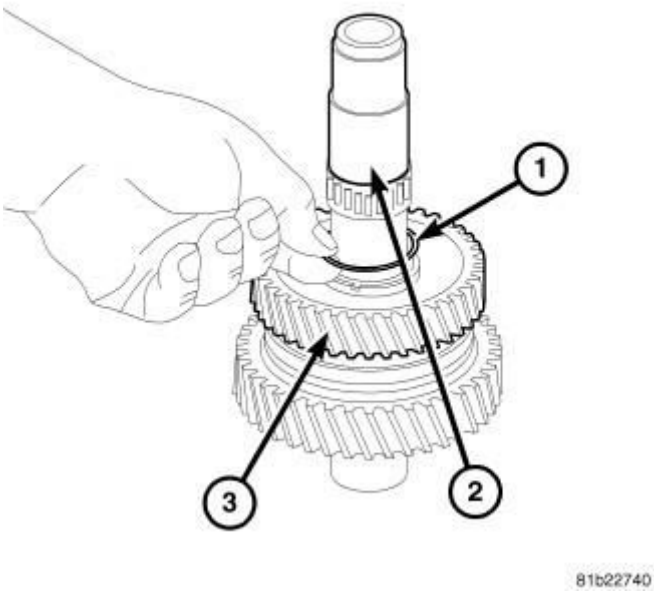

Fig. 266: C-Clip At Output Shaft
Courtesy of CHRYSLER GROUP, LLC

8. Install the **new** C- clip (1) onto output shaft (2).
9. Install the spacer.

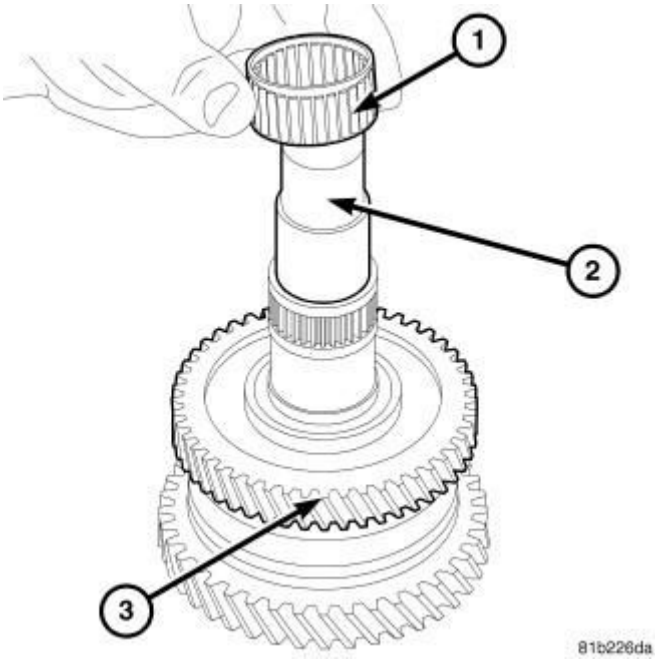

Fig. 267: Bearing & Output Shaft
Courtesy of CHRYSLER GROUP, LLC

10. Install the forth bearing (1) onto the output shaft (2).
11. Install forth gear onto output shaft.

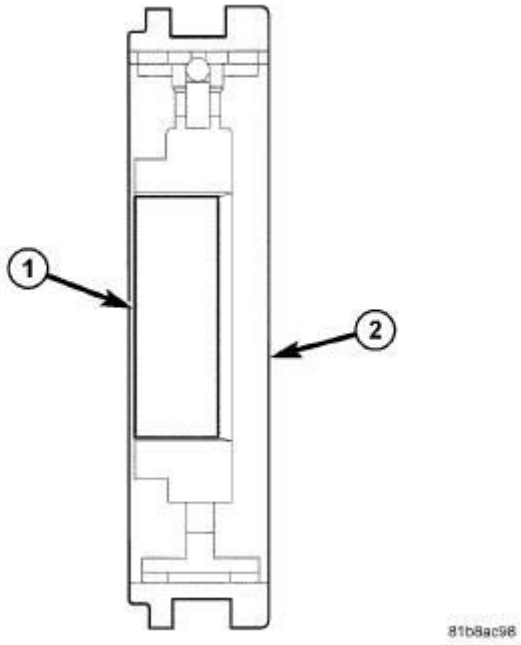

Fig. 268: Synchronizer
Courtesy of CHRYSLER GROUP, LLC

NOTE: Pay attention to the direction when inserting the 1st-2nd hub sleeve.

12. Install the third/forth gear synchronizer onto the output shaft with (2) towards forth gear.

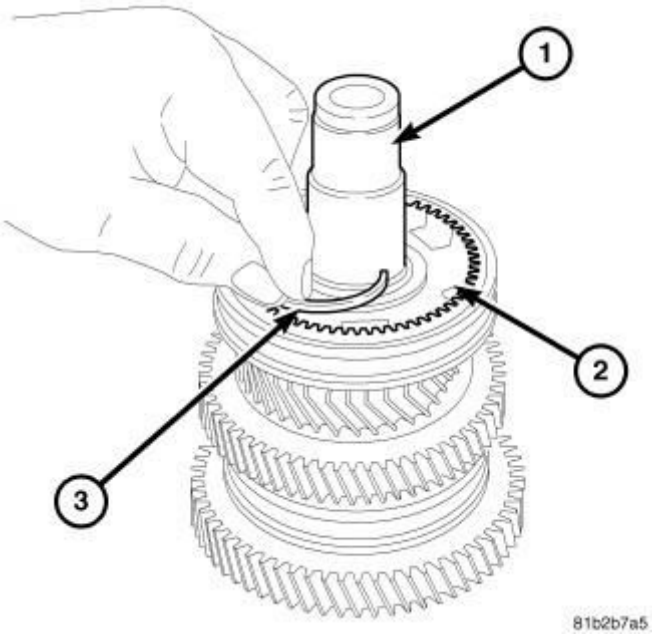

Fig. 269: Third/Fourth Gear Synchronizer

Courtesy of CHRYSLER GROUP, LLC

13. Using a press install third/forth gear synchronizer (2) onto output shaft (1).

NOTE: Always use the largest snap that will fit into the grove.

14. Install a **new** snap ring (3) to hold third/forth gear synchronizer (2) onto output shaft (1).

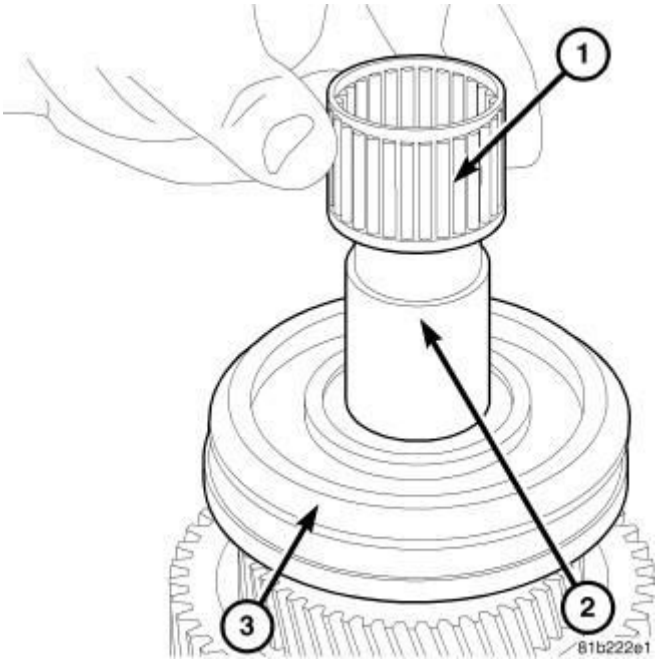

Fig. 270: Output Shaft Needle Bearing
Courtesy of CHRYSLER GROUP, LLC

15. Install the third needle bearing (1) onto output shaft (2).

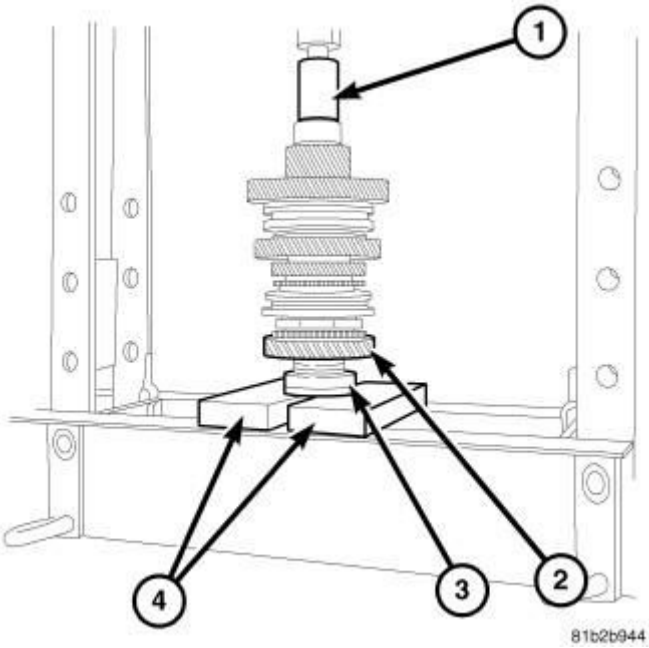

Fig. 271: 3rd Gear & Bearing Output Shaft
Courtesy of CHRYSLER GROUP, LLC

16. Install third gear (2) onto output shaft.
17. Install the ball, spacer and bearing (3) using a Press (1).

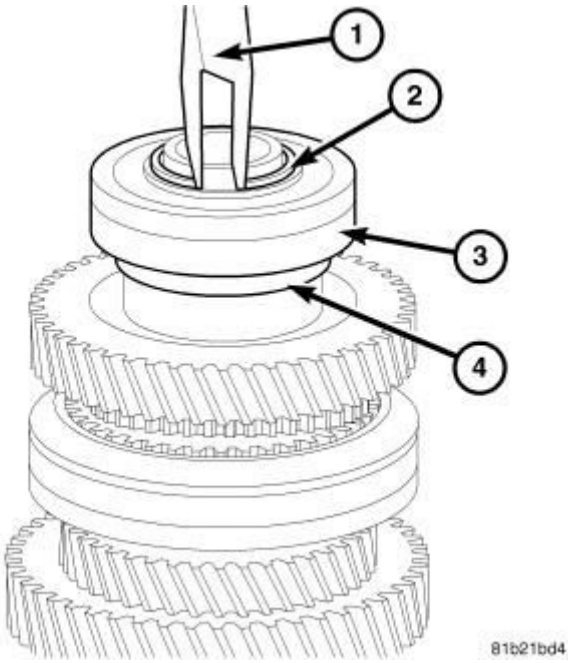

Fig. 272: Snap Ring At Output Shaft
Courtesy of CHRYSLER GROUP, LLC

NOTE: Always use the largest snap that will fit into the grove.

18. Install the **new** snap ring (2) from the output shaft.

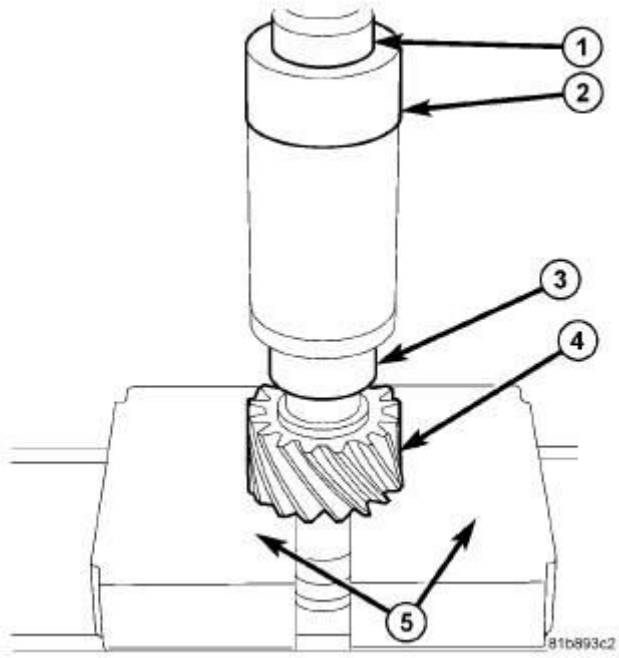

Fig. 273: Installing/Removing Cylindrical Roller Bearing Race
Courtesy of CHRYSLER GROUP, LLC

19. Using installer (special tool #6052, Installer, Bearing/Seal) (2) and a Press (1) install the cylindrical roller bearing race (3) on the input shaft.

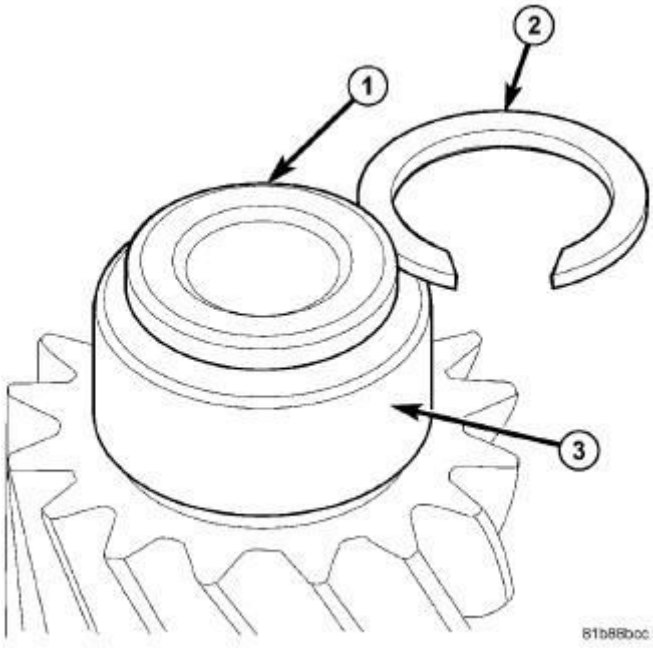

Fig. 274: Input Lower Snap Ring

Courtesy of CHRYSLER GROUP, LLC

20. Install the shaft snap ring (2).

SHAFT, OUTPUT, NUMBER 2

DISASSEMBLY

DISASSEMBLY

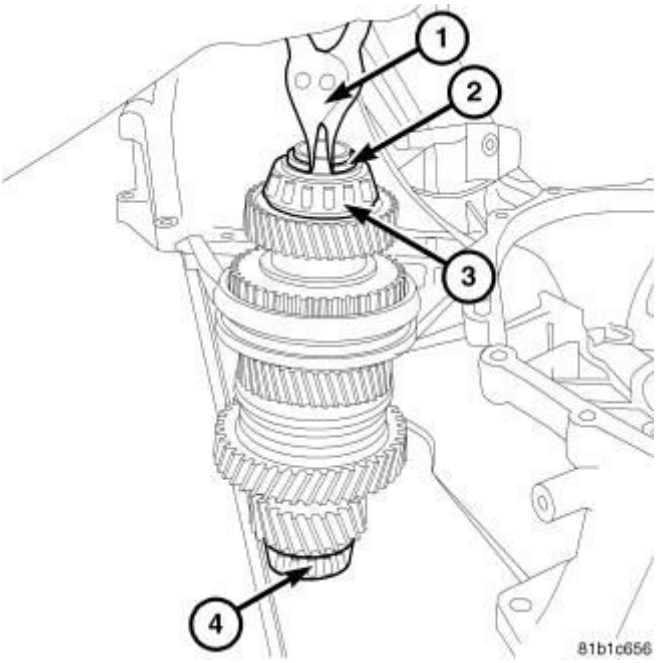

Fig. 275: Snap Ring At Output Shaft
Courtesy of CHRYSLER GROUP, LLC

1. Using Snap Ring Pliers (1) remove the snap ring (2) from the output shaft # 2.

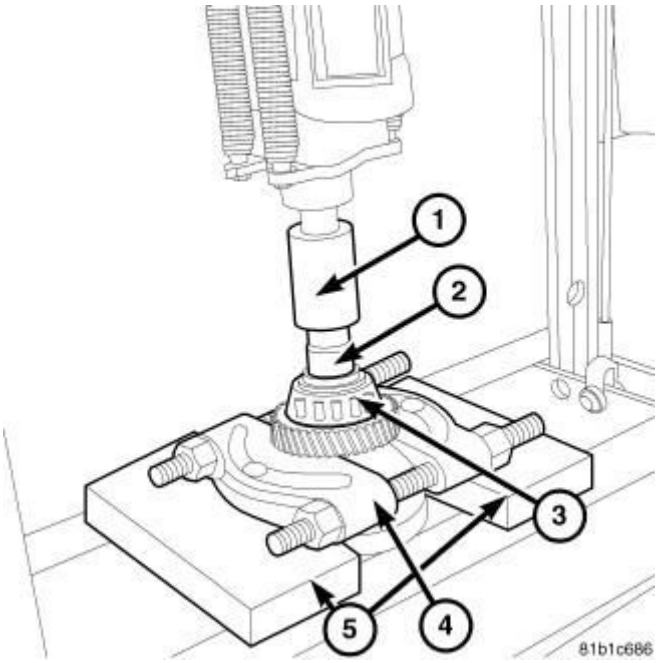

Fig. 276: Bearing From Cluster Shaft
Courtesy of CHRYSLER GROUP, LLC

2. Using a press, blocks, Bearing Splitter (special tool #P-334, Splitter, Bearing) and an appropriate spacer (2) press sixth gear and case side bearing (3) from shaft.

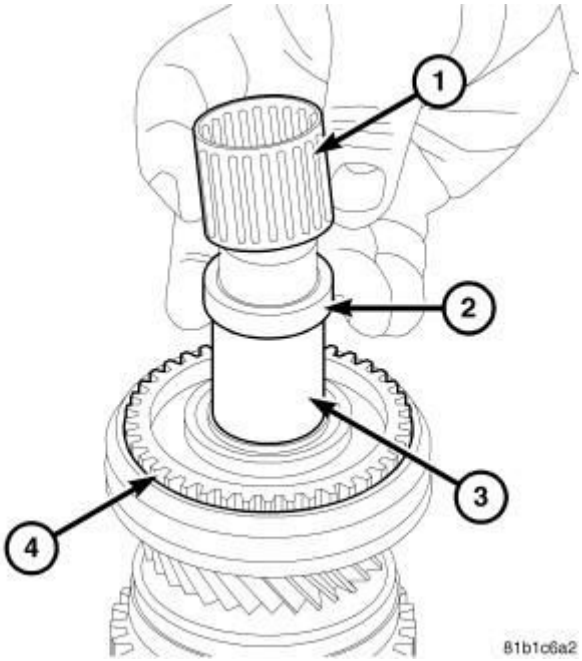

Fig. 277: Bearing Cage & Spacer Cluster
Courtesy of CHRYSLER GROUP, LLC

3. Remove sixth needle bearing cage (1) and spacer (2) from output shaft # 2

(3).

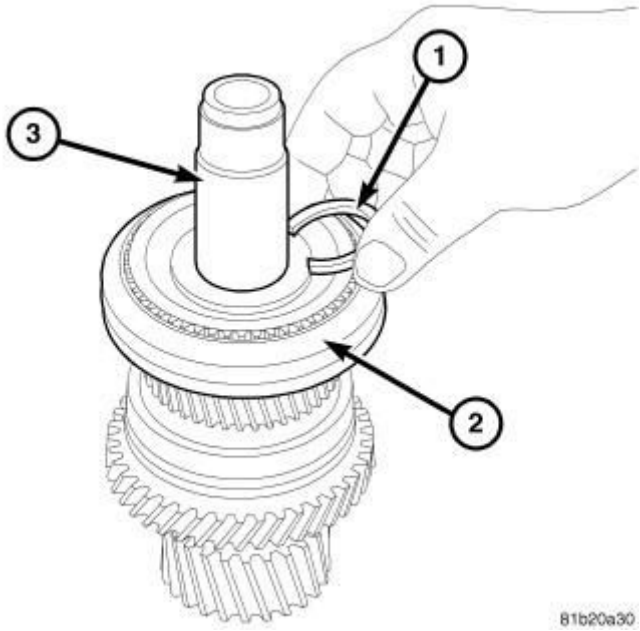

Fig. 278: C Clip At Cluster Shaft
Courtesy of CHRYSLER GROUP, LLC

4. Remove the snap ring (1) from the output shaft # 2 (3).

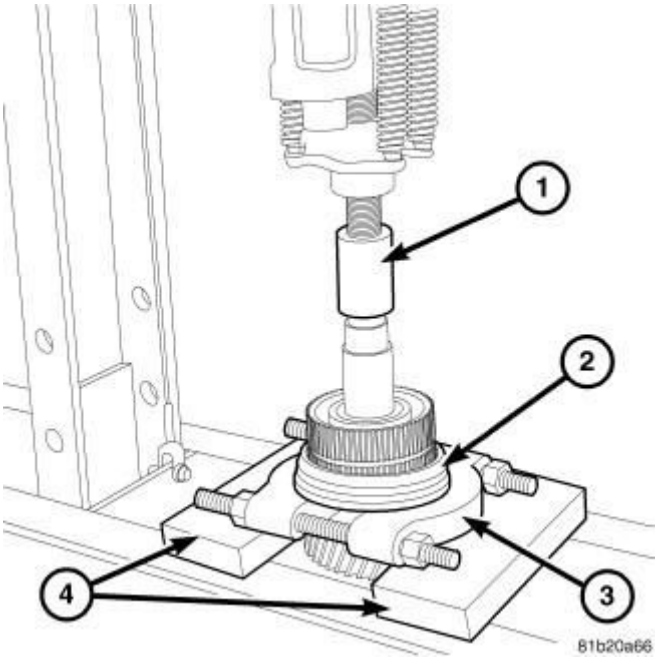

Fig. 279: Fifth Gear & Five/Six Synchronizer
Courtesy of CHRYSLER GROUP, LLC

5. Use Bearing Splitter (special tool #P-334, Splitter, Bearing) (3), Blocks (4)

and a press remove fifth gear and five/six synchronizer (2).

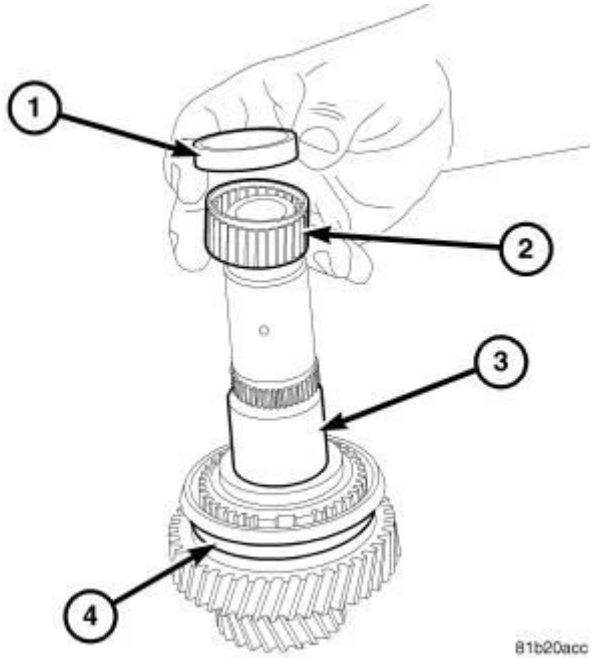

Fig. 280: Fifth Needle Bearing Cage, Spacer & Output Shaft
Courtesy of CHRYSLER GROUP, LLC

6. Remove fifth needle bearing cage (2) and spacer (1) from output shaft (3).

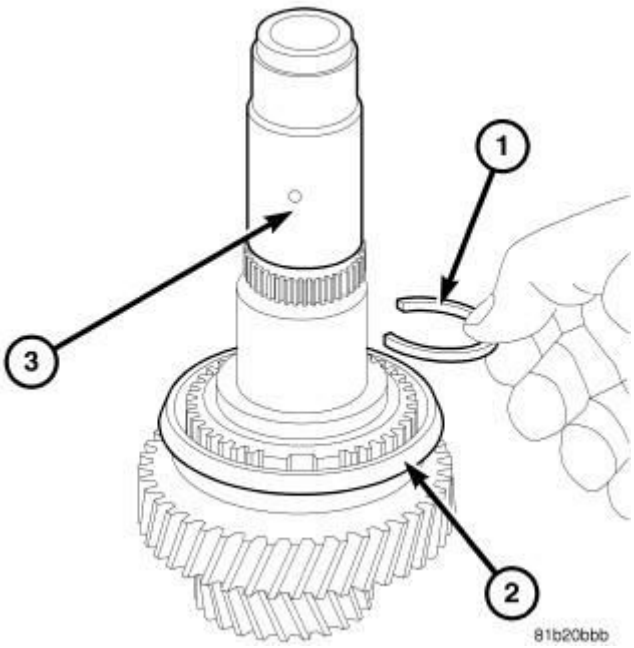

Fig. 281: Output Shaft & C-Clip
Courtesy of CHRYSLER GROUP, LLC

7. Remove the C-clip (1) from the output shaft (3).

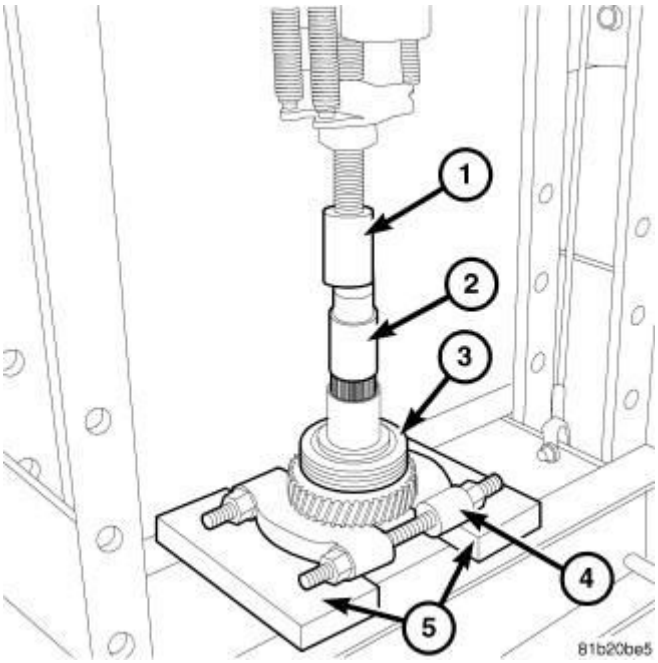

Fig. 282: Output Shaft #2 & Reverse Synchronizer
Courtesy of CHRYSLER GROUP, LLC

8. Use Bearing Splitter (special tool #P-334, Splitter, Bearing) (4), Blocks (5) and a press to remove reverse gear and reverse synchronizer (3) from the output shaft # 2.

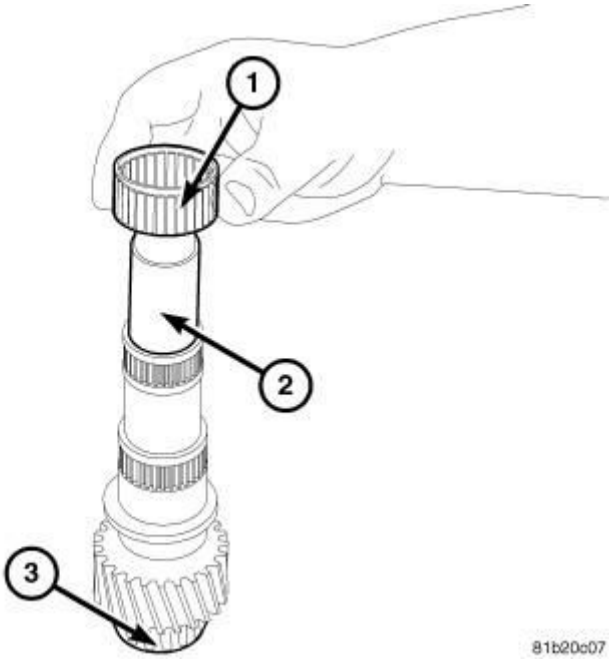

Fig. 283: Output Shaft #2 & Needle Bearing
Courtesy of CHRYSLER GROUP, LLC

9. Remove the reverse needle bearing (1) from the output shaft # 2 (2).

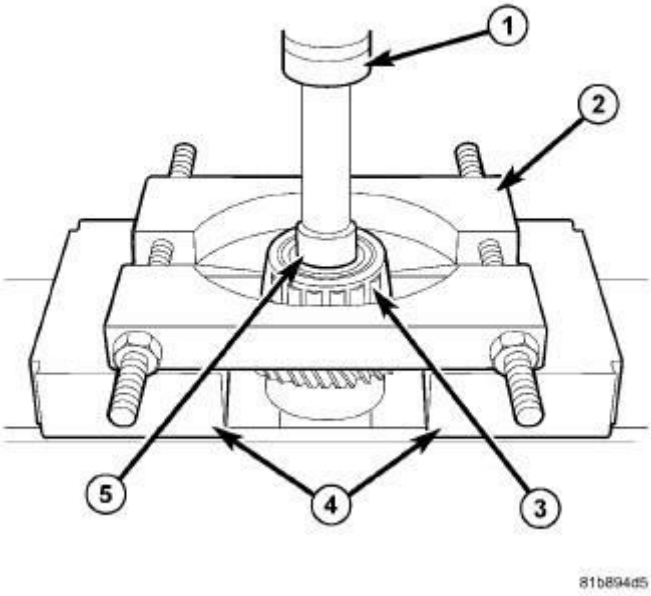

Fig. 284: Output Shaft & Bellhousing Side Bearing
Courtesy of CHRYSLER GROUP, LLC

10. Using a Press (1) and Splitter (special tool #1130, Splitter, Bearing/Gear) (2) to remove the bellhousing side bearing (3) from the output shaft # 2(5).

ASSEMBLY

ASSEMBLY

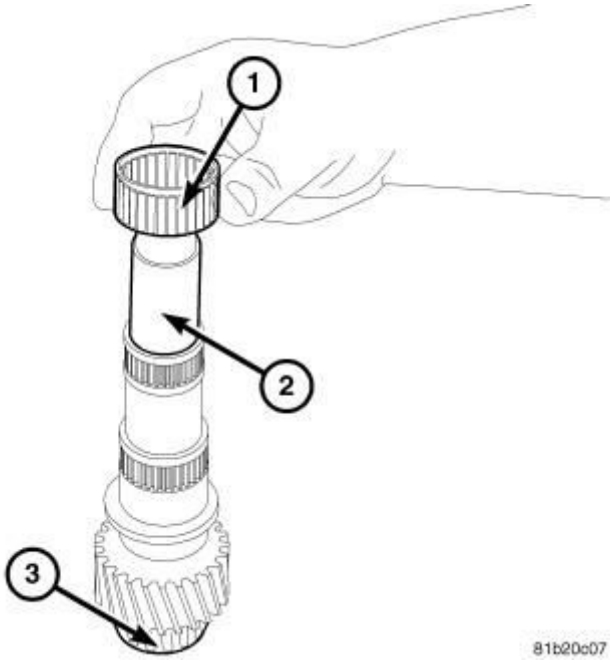

Fig. 285: Output Shaft #2 & Needle Bearing

Courtesy of CHRYSLER GROUP, LLC

1. Install the reverse needle bearing (1) onto the output shaft # 2 (2).

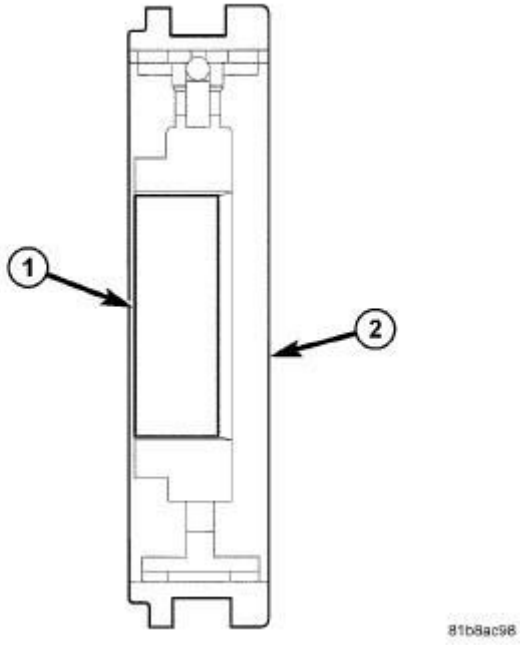

Fig. 286: Synchronizer
Courtesy of CHRYSLER GROUP, LLC

NOTE: Pay attention to the direction when inserting the reverse hub sleeve.

2. Install the reverse gear synchronizer onto the output shaft with (2) towards reverse gear.

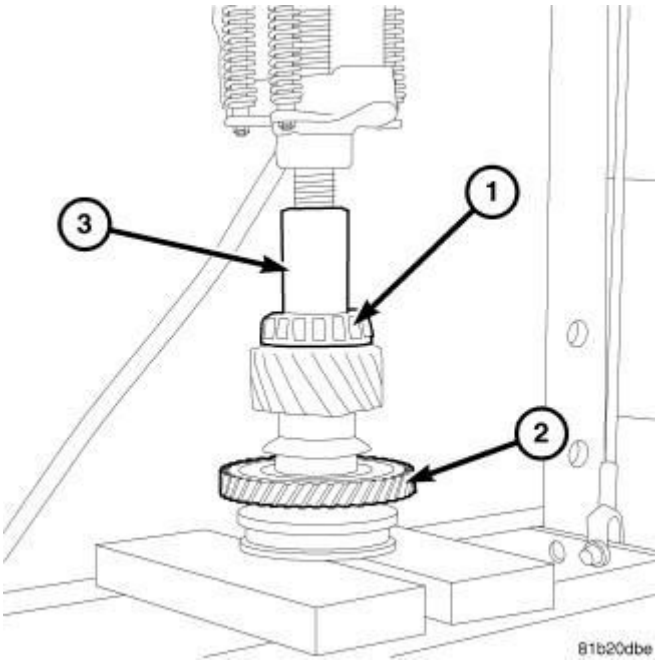

Fig. 287: Install/Remove Reverse Gear Onto Output Shaft #2
Courtesy of CHRYSLER GROUP, LLC

3. Install reverse gear (2) onto output shaft # 2.
4. Install reverse gear synchronizer onto output shaft using a Press (3).

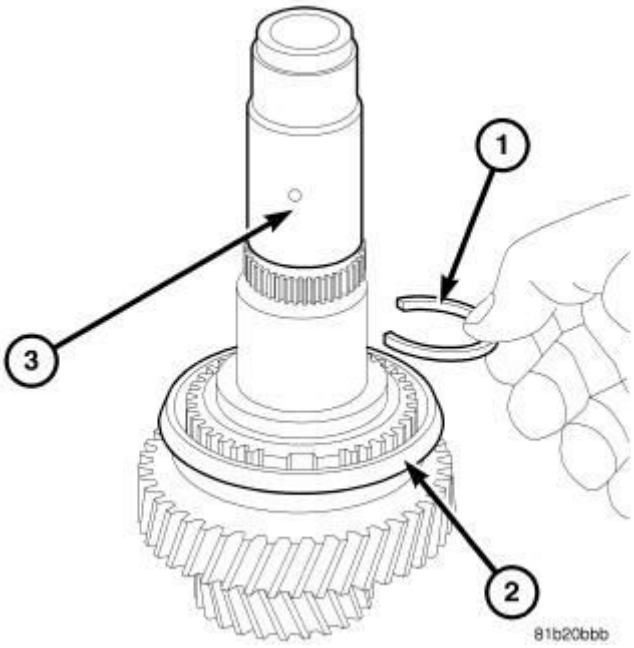

Fig. 288: Output Shaft & C-Clip
Courtesy of CHRYSLER GROUP, LLC

NOTE: Always use the largest snap that will fit into the grove.

5. Install the **new** snap ring (2) from the output shaft # 2.

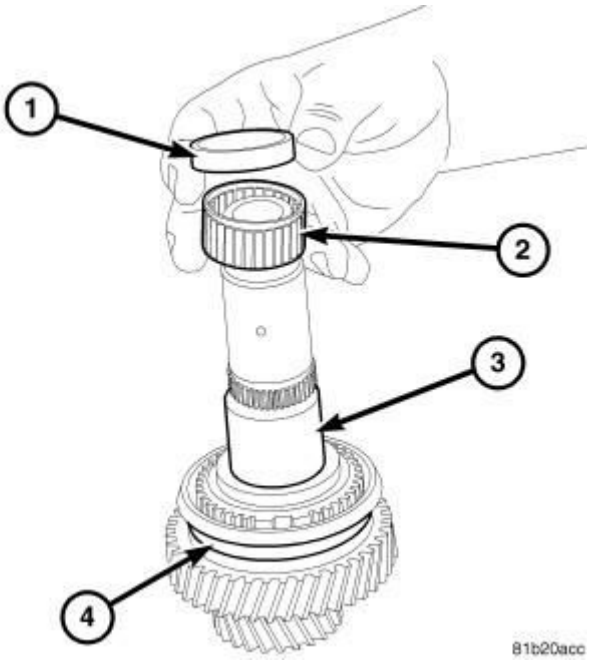

Fig. 289: Fifth Needle Bearing Cage, Spacer & Output Shaft
Courtesy of CHRYSLER GROUP, LLC

6. Install fifth needle bearing (2) and spacer (1) onto output shaft # 2 (3).

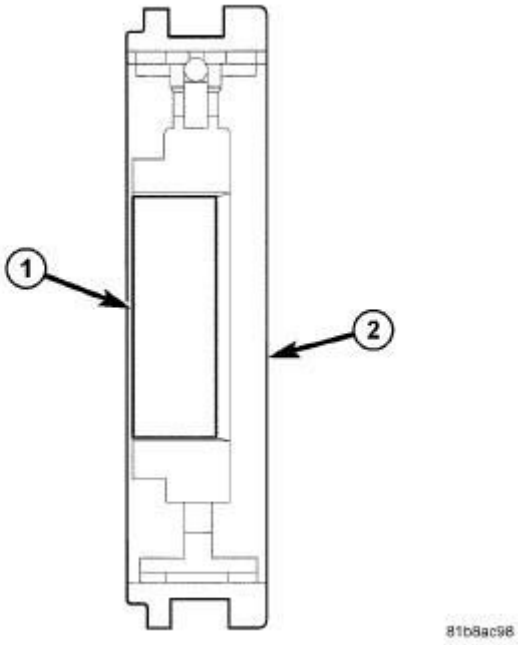

Fig. 290: Synchronizer
Courtesy of CHRYSLER GROUP, LLC

NOTE: Pay attention to the direction when inserting the 5th-6th hub sleeve.

7. Install the fifth gear and fifth/sixth gear synchronizer onto the output shaft with (2) towards fifth gear.

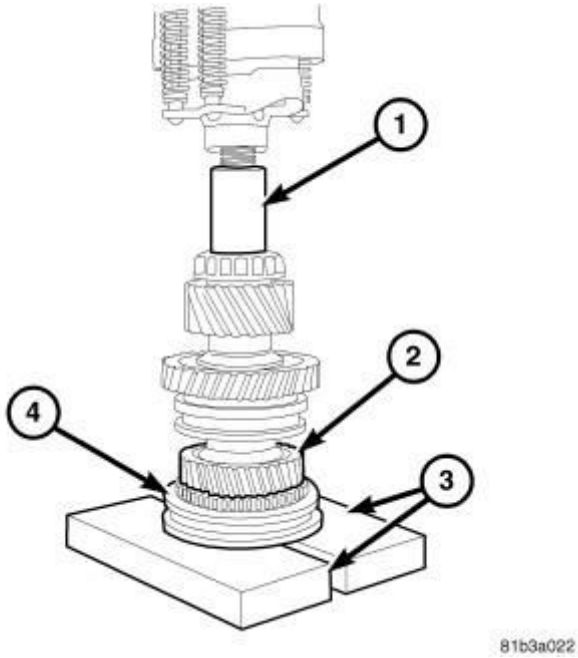

Fig. 291: 5th Gear & Synchronizer
Courtesy of CHRYSLER GROUP, LLC

8. Use a press to install fifth gear and fifth/sixth gear synchronizer (2).

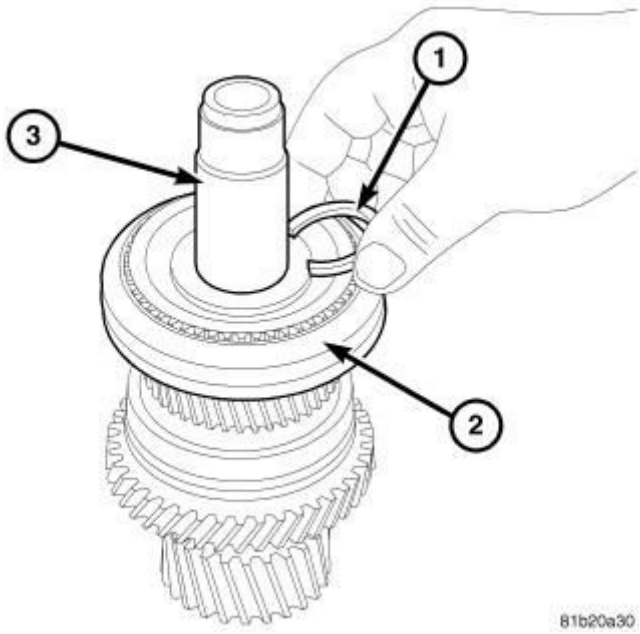

Fig. 292: C Clip At Cluster Shaft
Courtesy of CHRYSLER GROUP, LLC

NOTE: Always use the largest snap that will fit into the grove.

9. Install the **new** snap ring (1) from the output shaft.

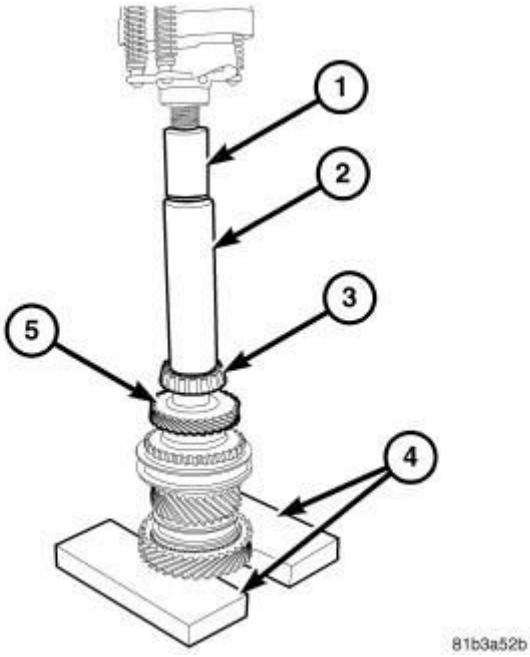

Fig. 293: Sixth Gear & Bearing
Courtesy of CHRYSLER GROUP, LLC

10. Install spacer sixth needle bearing and sixth gear onto shaft
11. Use Sleeve (special tool #C-3717, Sleeve) to press sixth gear and bearing (3) onto shaft.

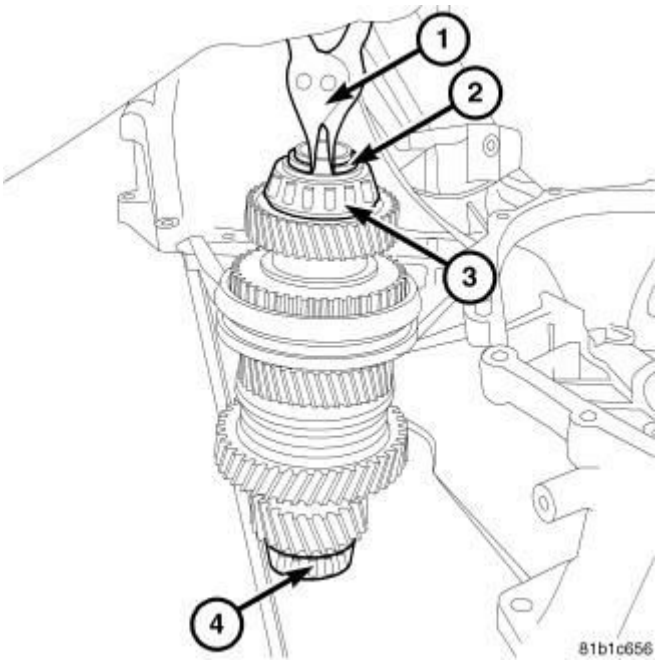

Fig. 294: Snap Ring At Output Shaft
Courtesy of CHRYSLER GROUP, LLC

NOTE: Always use the largest snap that will fit into the grove.

12. Install the **new** snap ring (2) from the output shaft.

SWITCH, BACKUP LAMP

REMOVAL

REMOVAL

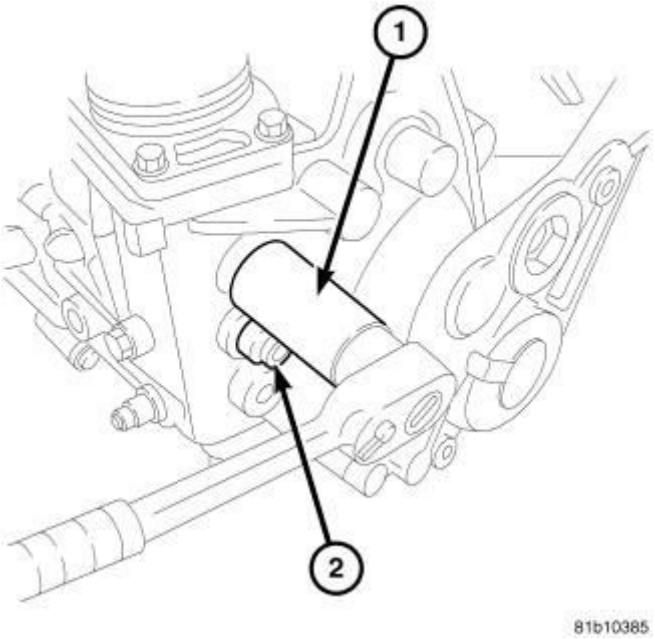

Fig. 295: Back- Up Lamp Switch
Courtesy of CHRYSLER GROUP, LLC

1. Disconnect battery negative cable.
2. Raise vehicle on hoist.
3. Disconnect backup lamp switch connector.
4. Remove backup lamp switch (1).

INSTALLATION

INSTALLATION

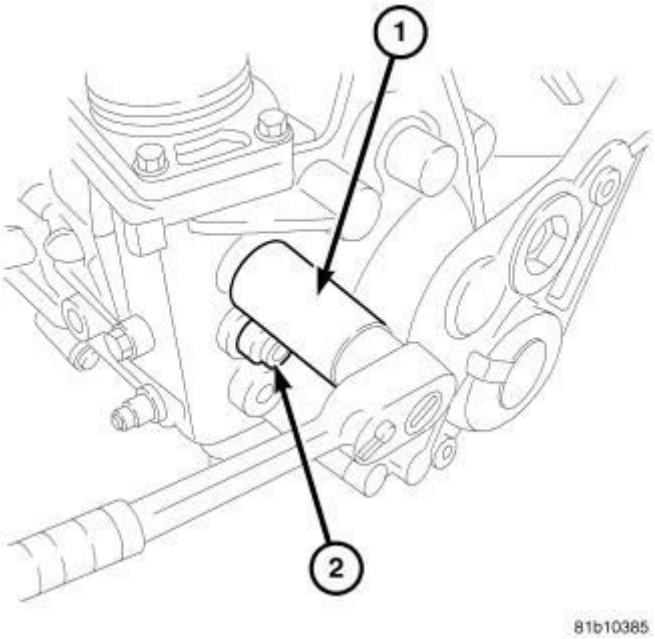

Fig. 296: Back- Up Lamp Switch
Courtesy of CHRYSLER GROUP, LLC

1. Install the backup lamp switch (1) with a **new** washer and tighten to 40 N.m (29 ft. lbs.).
2. Connect backup lamp switch connector.
3. Lower vehicle.
4. Connect battery negative cable.

SYNCHRONIZER

DISASSEMBLY

DISASSEMBLY

Place synchronizer in a clean shop towel and wrap. Press on inner hub. Carefully open up shop towel and remove springs, balls, keys, hub, and sleeve.

CLEANING

CLEANING

Do not attempt to clean the blocking rings in solvent. The friction material will become contaminated. Place synchronizer components in a suitable holder and clean and air dry.

INSPECTION

INSPECTION

Proper inspection of components involve:

- Teeth, for wear, scuffed, nicked, burred, or broken teeth
- Keys, for wear or distortion
- Balls and springs, for distortion, cracks, or wear

If any of these conditions exist in these components, replace as necessary.

ASSEMBLY

ASSEMBLY

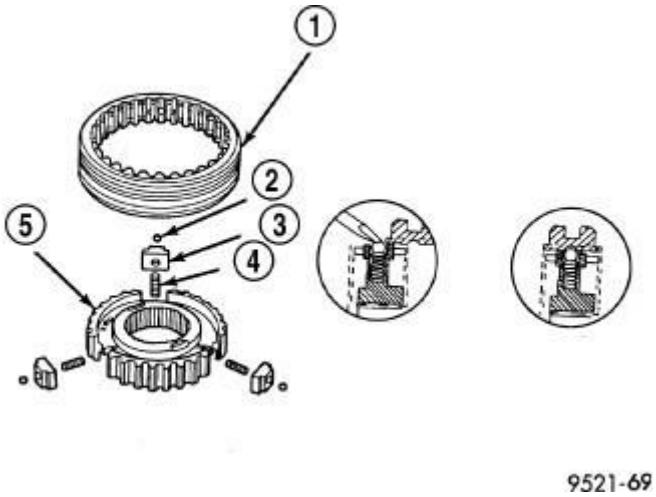

Fig. 297: Synchronizer Assembly
Courtesy of CHRYSLER GROUP, LLC

1 - SLEEVE
2 - BALL
3 - KEY
4 - SPRING
5 - HUB

1. Position synchronizer hub (5) onto a suitable holding fixture (input shaft). The synchronizer hubs (5) are directional. The hubs must be installed with the **U** facing upward.
2. Install springs (4) into hub slot.

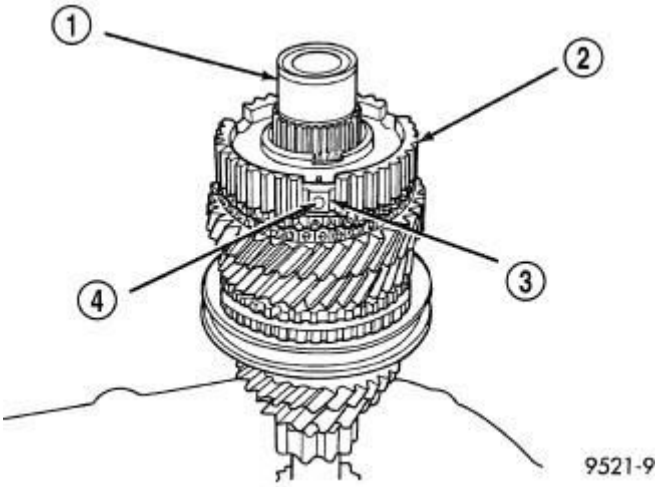

Fig. 298: Synchronizer Balls
Courtesy of CHRYSLER GROUP, LLC

1 - INPUT SHAFT
2 - HUB
3 - KEY
4 - BALL

3. Insert key (3) into hub (2) and spring.
4. Apply petroleum jelly to the hole in the key. Insert balls (4) into each key.

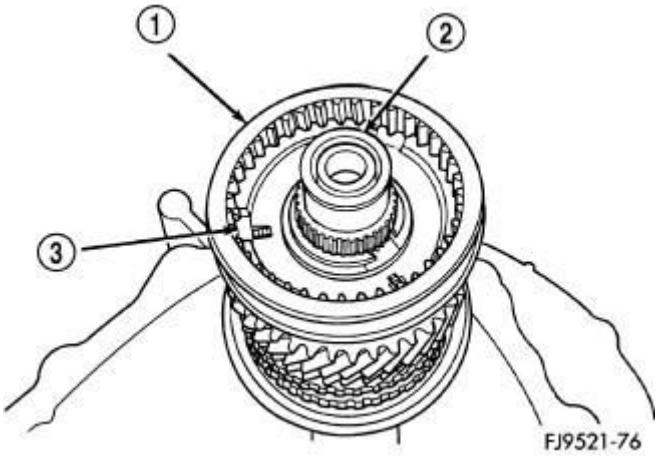

Fig. 299: Synchronizer Sleeve
Courtesy of CHRYSLER GROUP, LLC

1 - SLEEVE
2 - INPUT SHAFT
3 - KEY

5. Slide sleeve (1) over the hub and depress balls as you carefully slip the sleeve into position.

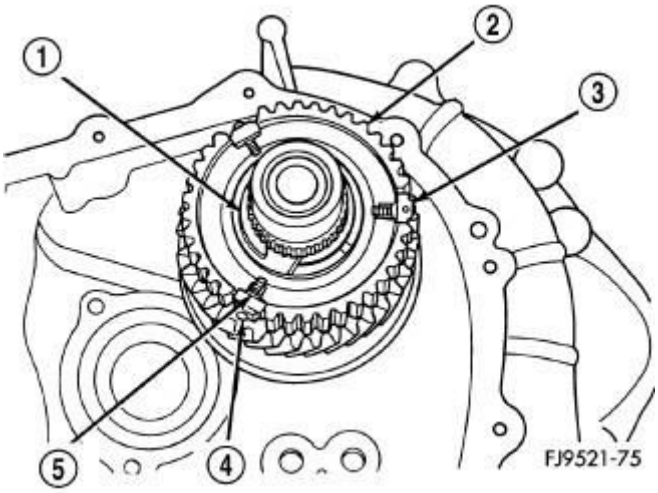

Fig. 300: Keys In Hub
Courtesy of CHRYSLER GROUP, LLC

1 - SNAP RING
2 - CLUTCH
3 - KEY
4 - BALL
5 - SPRING

6. Line up stop ring tang over the keys in the hub, install stop rings, center the keys (3) and balls (4) by pushing on both stop rings.

2014 MANUAL TRANSMISSION

T355 - Service Information - Compass & Patriot

DESCRIPTION

DESCRIPTION

This five speed is a constant-mesh manual transaxle. All gear ranges, except reverse, are synchronized. The reverse gear utilizes a reverse brake for shifting ease. The reverse idler gear is supported on a sliding spindle idler shaft. The transaxle case is aluminum with a steel end-plate bearing cover. It is housed in a die-cast aluminum case featuring a two-piece, middle split design.

The T355 transaxle internal components can be serviced only by separating the gear case from the bellhousing case.

CAUTION: The transaxle output shaft is serviced as a unit. No disassembly and reassembly is possible. Damage to the transaxle may result.

TRANSAXLE IDENTIFICATION

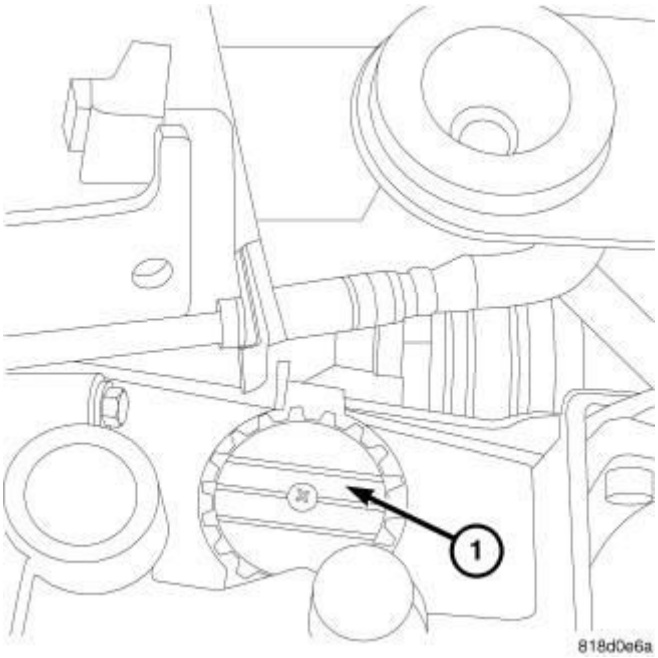

Fig. 1: Metal I.D. Tag
Courtesy of CHRYSLER GROUP, LLC

The transaxle model, assembly number, and build date are on a metal I.D. tag (1)

that is attached to the top of the transaxle.

GEAR RATIOS

GEAR	
1st	3.77
2nd	2.16
3rd	1.41
4th	1.026
5th	0.81
REVERSE	3.4
FINAL DRIVE RATIO	4.12
REVERSE BRAKE	YES
CLUTCH RELEASE SYSTEM	HYDRAULIC

CAUTION: All gears and shafts must not be interchanged with other transaxles; they will not function correctly.

The differential is a conventional arrangement of gears that is supported by tapered roller bearings. The final output gear turns the ring gear and differential assembly, thereby turning the drive axle shafts.

GEARSHIFT PATTERN

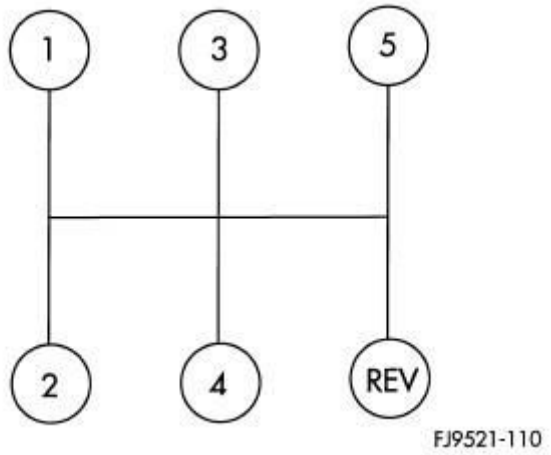

Fig. 2: T355 Transaxle Shift Pattern
Courtesy of CHRYSLER GROUP, LLC

The T355 transaxle shift pattern is a modified H-pattern. Overdrive fifth and

reverse gears are in-line and outboard of the first through fourth gear positions.

DIAGNOSIS AND TESTING

DIAGNOSIS AND TESTING - COMMON PROBLEM CAUSES

The majority of transaxle malfunctions are a result of:

- Insufficient lubrication
- Incorrect lubricant
- Mis-assembled or damaged internal components
- Improper operation

HARD SHIFTING

Hard shifting may be caused by a mis-adjusted crossover cable. If hard shifting is accompanied by gear clash, synchronizer clutch and stop rings or gear teeth may be worn or damaged.

Mis-assembled synchronizer components also cause shifting problems. Incorrectly installed synchronizer sleeves, struts, or springs can cause shift problems.

Worn, damaged, mis-assembled or leaking hydraulic clutch release system/components can also cause difficult shifting or gear clash.

NOISY OPERATION

Transaxle noise is most often a result of worn or damaged components. Chipped, broken gear or synchronizer teeth, and brinnelled, spalled bearings all cause noise.

Abnormal wear and damage to the internal components is frequently the end result of insufficient lubricant.

SLIPS OUT OF GEAR

Transaxle disengagement may be caused by misaligned or damaged shift components, or worn teeth on the drive gears or synchronizer components. Incorrect assembly also causes gear disengagement.

LOW LUBRICANT LEVEL

Insufficient transaxle lubricant is usually the result of leaks, or inaccurate fluid level check or refill method. **Vehicle must be level to accurately check fluid level.** Leakage is evident by the presence of oil around the leak point. If leakage is not evident, the condition is probably the result of an underfill.

If air-powered lubrication equipment is used to fill a transaxle, be sure the equipment is properly calibrated. Equipment out of calibration can lead to an under fill condition.

CLUTCH PROBLEMS

Worn, damaged, or misaligned clutch components can cause difficult shifting, gear clash, and noise.

A worn or damaged clutch disc, pressure plate, or a faulty slave cylinder can cause hard shifting and gear clash.

SPECIFICATIONS

TORQUE SPECIFICATIONS

TORQUE SPECIFICATIONS TABLE

DESCRIPTION	N.m	Ft. Lbs.	In. Lbs.
Back-up Lamp Switch	23	17	-
Crossover Cable Adjustment Screw	8	-	70
Drain Plug	14	-	120
Bolts, Differential Ring Gear	95	70	-
Bolts, End Plate Cover	25	-	225
Bolts, Output Bearing Race Retaining Strap	12	-	105
Bolts, Reverse Fork Bracket	11	-	96
Bolt, Reverse Idler Shaft	26	19	-
Bolts, Shift Cable Bracket to Transaxle	21	-	185
Transaxle Case Bolts	25	-	225
Bolt, Transaxle to Engine	48	35	-

Bolt, Vehicle Speed Sensor	7	-	60
Bolts, Modular Clutch-to-Driveplate	88	65	-
Bolt, Reverse Idler Shaft	29	21	-
Bolts, Shift Blocker Assembly	25	-	225
Bolts, Upper Mount - to Transaxle	68	50	-
Bolts, Shifter Assembly	7	-	61
Bolts, Crossmember - to - Frame	68	50	-
Through Bolt, Rear transmission mount	68	50	-

Bolts that have thread sealer or torque lock patches should not be reused. Always install new bolts in these applications.

REMOVAL

REMOVAL

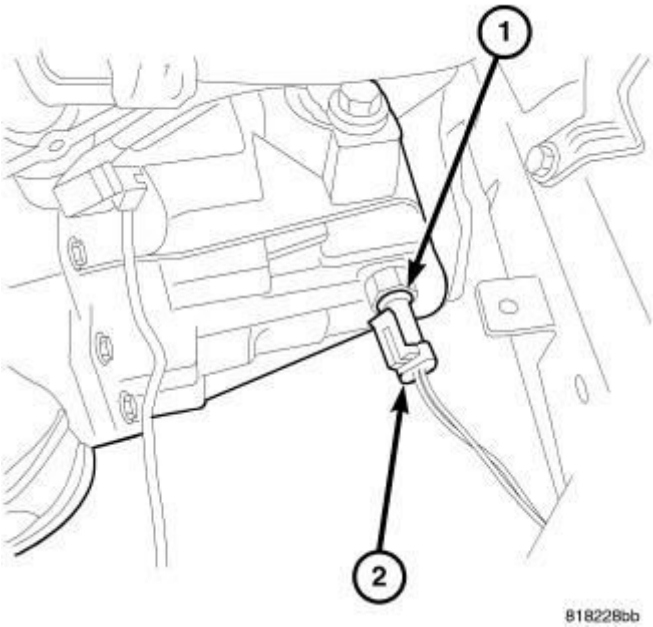

Fig. 3: Backup Switch Connector
Courtesy of CHRYSLER GROUP, LLC

1. Raise hood.
2. Remove the resonator.
3. Remove engine cover.
4. Remove air cleaner assembly.
5. Disconnect negative battery cable.
6. Unplug the speed sensor connector (if equipped).
7. Disconnect back-up lamp switch connector (2).

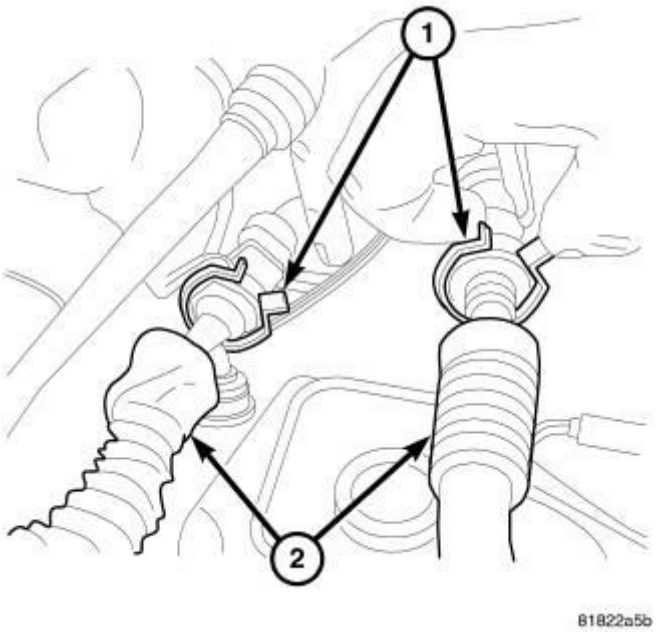

Fig. 4: Shift Cable-To-Bracket Clips
Courtesy of CHRYSLER GROUP, LLC

8. Remove shift cable-to-bracket clips (1).

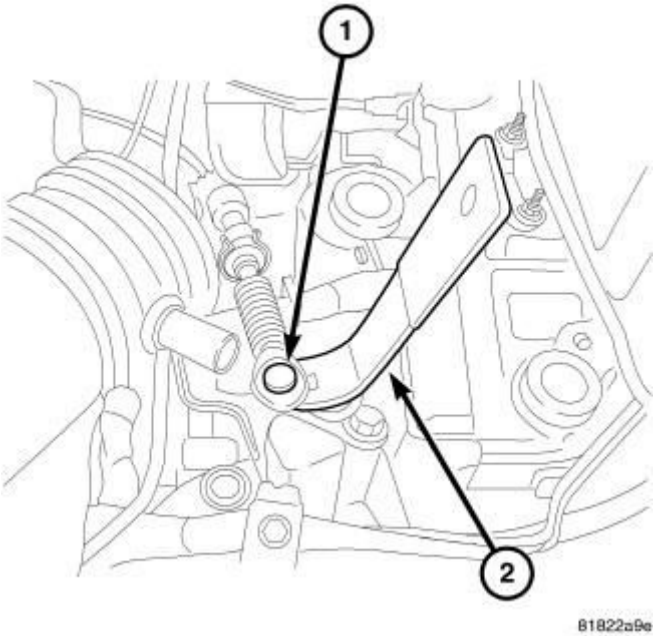

Fig. 5: Shift Selector & Crossover Cable
Courtesy of CHRYSLER GROUP, LLC

9. Disconnect shift selector and crossover cable (1) from levers. Remove cables and secure out of the way.
10. Remove the slave cylinder hose at bracket.

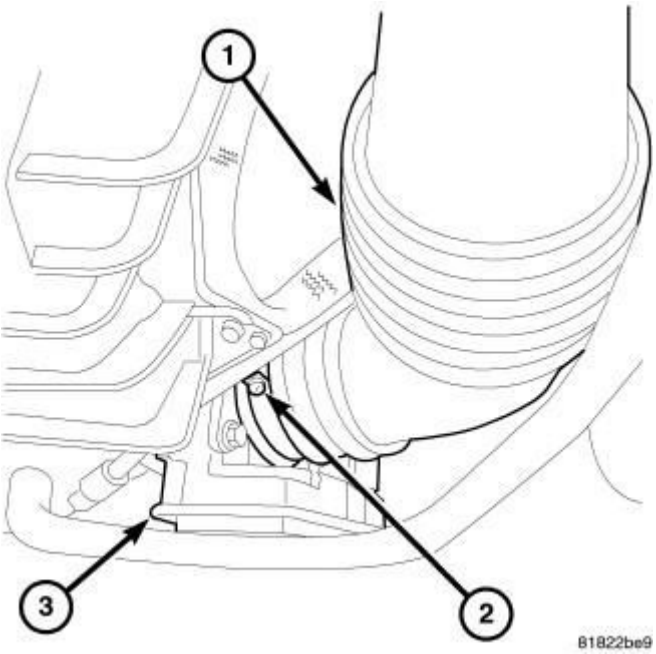

Fig. 6: Air Inlet Tube
Courtesy of CHRYSLER GROUP, LLC

11. Remove the air inlet tube (1) by loosing the screw (2) at the throttle body

(3).

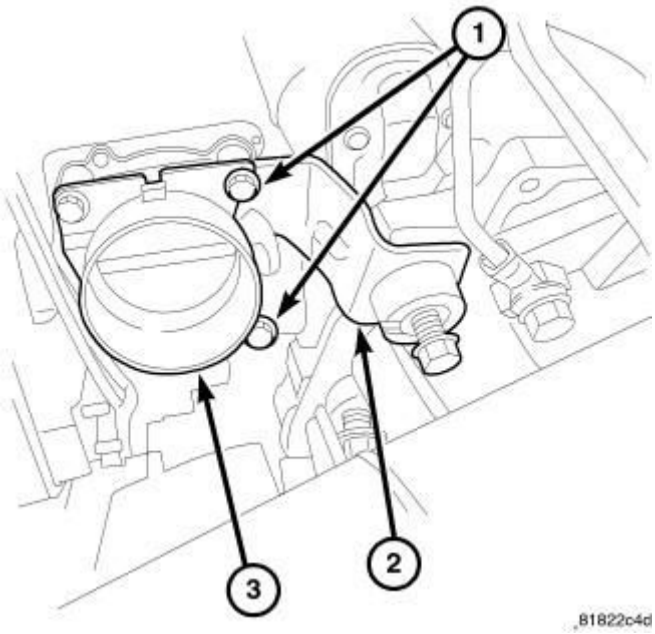

Fig. 7: Throttle Body Support Bracket
Courtesy of CHRYSLER GROUP, LLC

12. Remove the throttle body support bracket bolts (1).
13. Remove the throttle body support bracket (2).
14. Remove upper bell housing bolts.
15. Remove the starter bolts and slide the starter back. Refer to **STARTER, REMOVAL** .

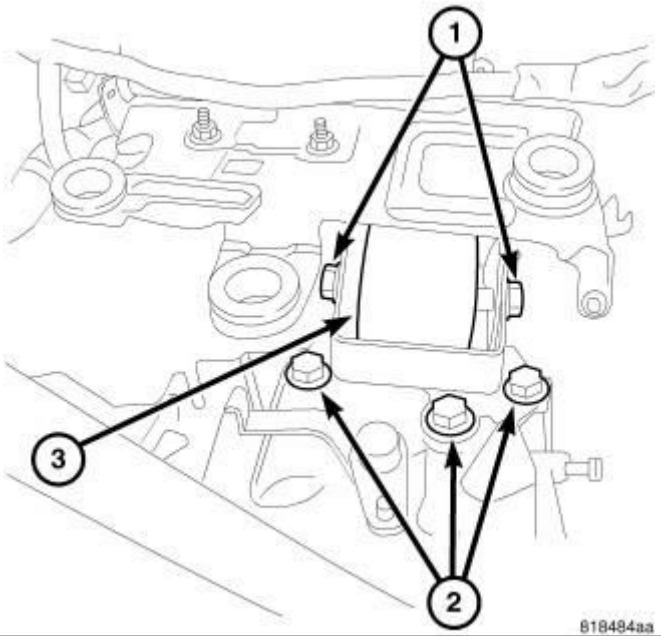

Fig. 8: Transmission Mount Bolts
Courtesy of CHRYSLER GROUP, LLC

16. Support transmission and loosen the left/upper transmission mount through bolt (1).
17. Remove the transmission mount bolts (2).
18. Raise vehicle on hoist.

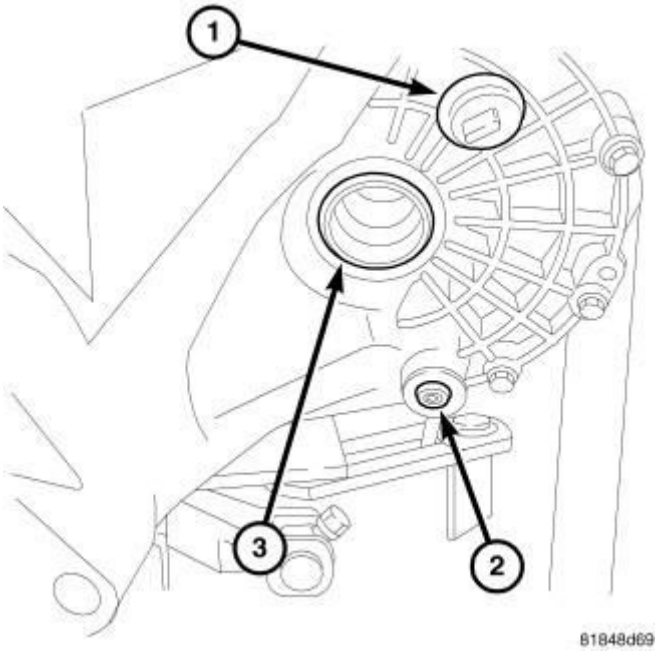

Fig. 9: Drain And Fill Plugs
Courtesy of CHRYSLER GROUP, LLC

19. Remove the splash shields. Refer to **SHIELD, SPLASH, FRONT WHEELHOUSE, REMOVAL** .
20. Remove transaxle oil drain plug (2) and drain oil into a suitable container. Reinstall drain plug and tighten to 14 N.m (120 in. lbs.).
21. Remove both axle halfshafts. Refer to **REMOVAL** .
22. If equipped, remove PTU.

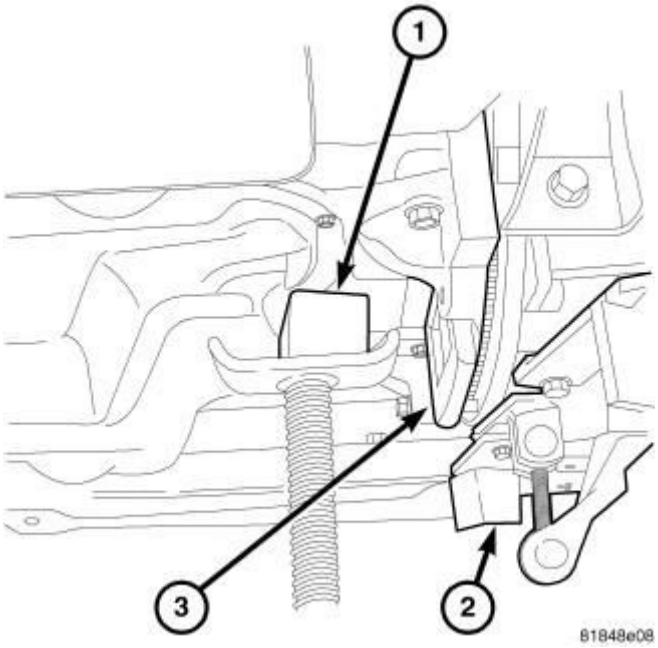

Fig. 10: Support Engine And Transaxle
Courtesy of CHRYSLER GROUP, LLC

23. Support the engine with a screw jack (1) and the transmission with a transmission jack.
24. Remove bell housing dust cover (3).

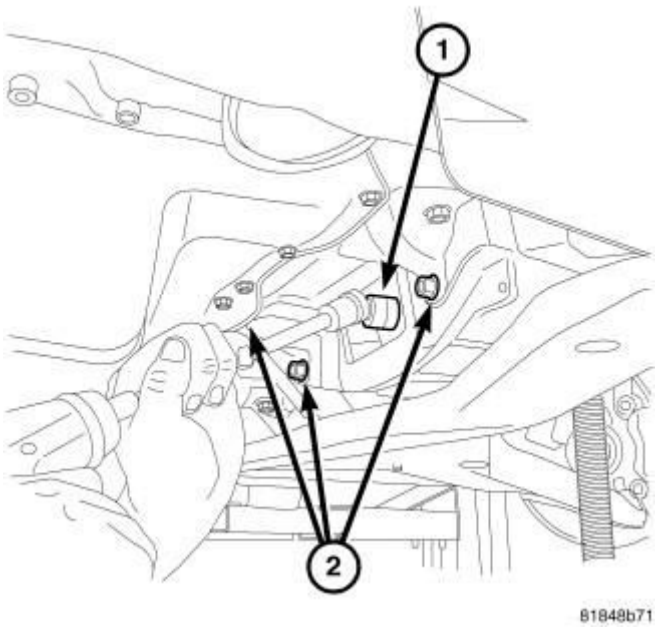

Fig. 11: Modular Clutch-To-Drive Plate Bolts
Courtesy of CHRYSLER GROUP, LLC

25. Remove four modular clutch-to-drive plate bolts (1). While removing bolts,

one tight-tolerance (slotted) drive plate hole will be encountered. When this bolt is removed, mark drive plate and modular clutch assembly at this location. Be sure to align marks upon reassembly.

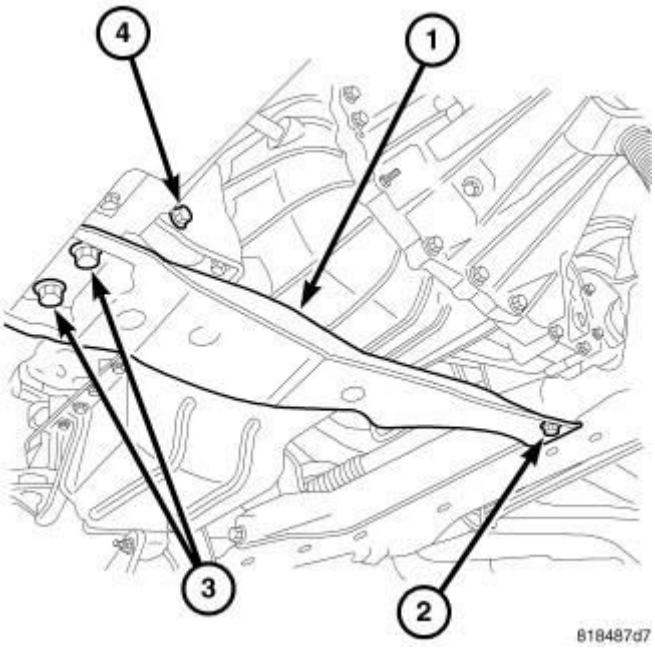

Fig. 12: Transmission Crossmember
Courtesy of CHRYSLER GROUP, LLC

26. Remove the front transmission mount through bolt (4).
27. Remove the transmission crossmember mounting bolts (2, 3).
28. Remove the transmission crossmember (1).

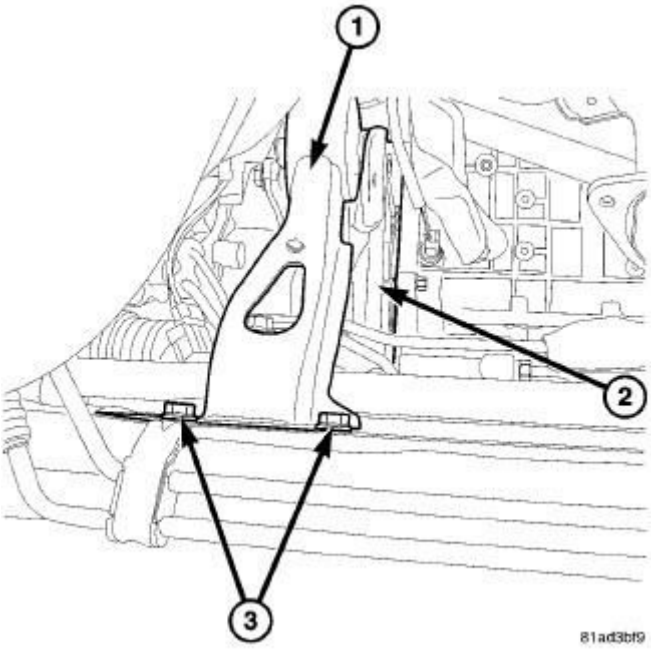

Fig. 13: Rear Trans To Frame Mount
Courtesy of CHRYSLER GROUP, LLC

29. Remove the rear transmission through bolt (4).
30. Remove the rear transmission mount bolts (3) and mount (1) from the frame.
31. Remove the rear transmission mount bracket bolts and bracket from transmission.

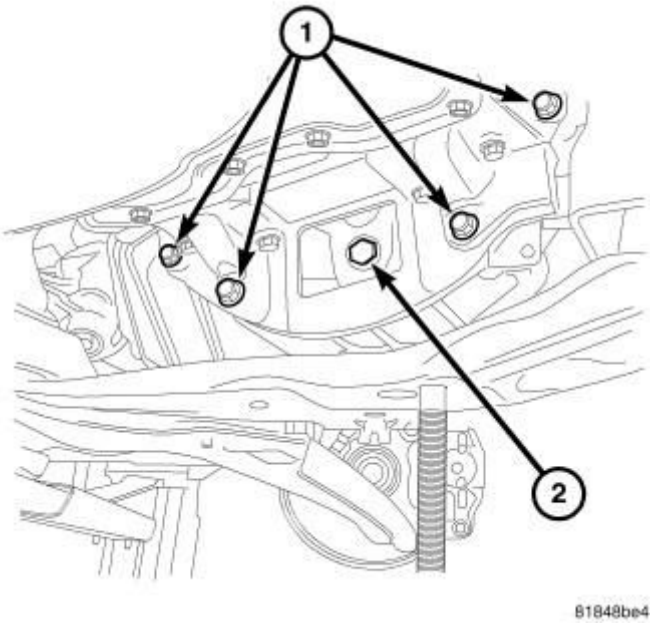

Fig. 14: Lower Bell Housing Bolts
Courtesy of CHRYSLER GROUP, LLC

32. Remove the remaining transmission bell housing bolts (1).
33. Carefully lower engine and transaxle on screw jack and transmission jack until proper removal clearance is obtained.
34. Obtain a helper to assist in holding transaxle while removing transaxle-to-engine mounting bolts.
35. Remove transaxle from vehicle.

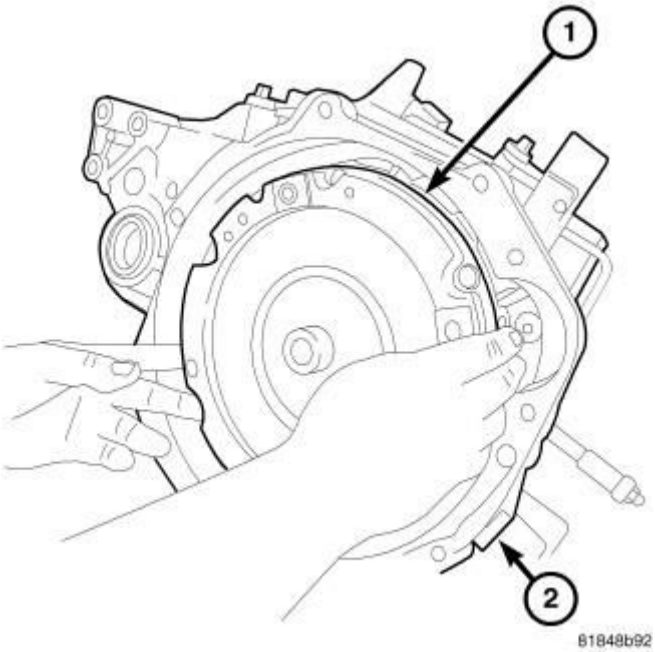

Fig. 15: Modular Clutch Assembly
Courtesy of CHRYSLER GROUP, LLC

36. Remove clutch module from transaxle input shaft (1).

DISASSEMBLY

DISASSEMBLY

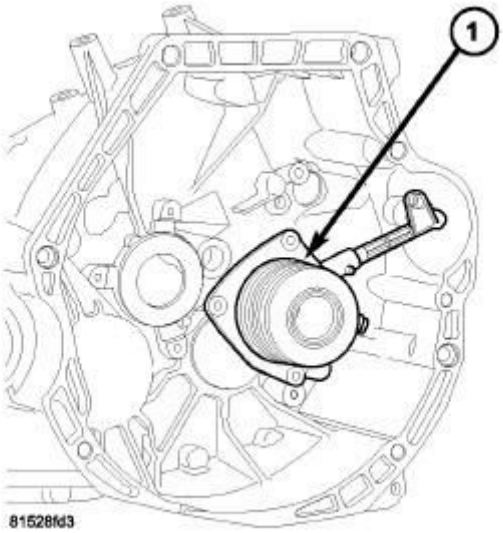

Fig. 16: Slave Cylinder
Courtesy of CHRYSLER GROUP, LLC

1. Remove bolts from slave cylinder-to-clutch bellhousing and remove slave cylinder (1) from transaxle.

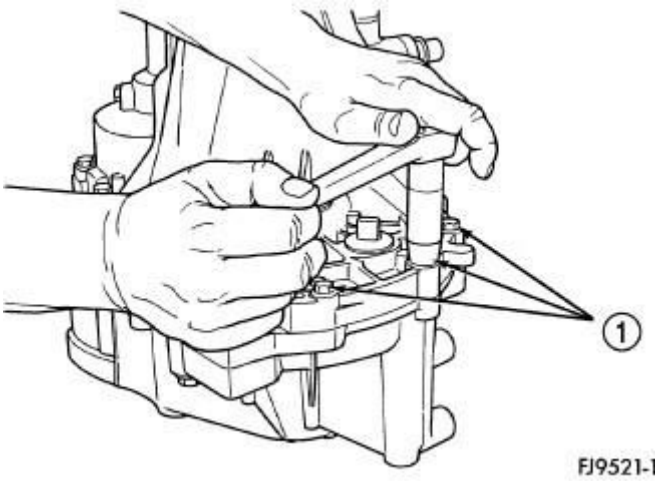

Fig. 17: Case Bolts
Courtesy of CHRYSLER GROUP, LLC

1 - CASE BOLTS

The T355 transaxle internal components can be serviced only by separating the gear case from the bellhousing case.

CAUTION: The transaxle output shaft is serviced as a unit. No disassembly and reassembly is

possible. Damage to the transaxle may result.

2. Place transaxle on bench.
3. Remove transaxle case half bolts (1).

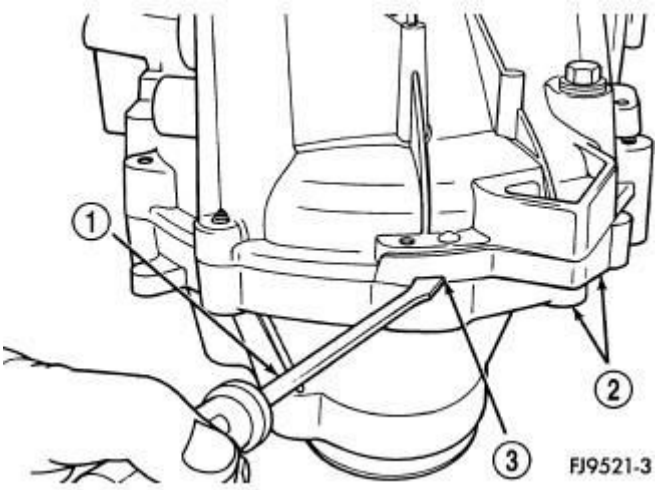

Fig. 18: Separating Case Halves Using Screwdrivers
Courtesy of CHRYSLER GROUP, LLC

1 - PRY TOOL
2 - CASE HALVES
3 - PRY SLOT

4. Place two screwdrivers (1) into the slots (3) provided in the case halves (2) near the dowels. Separate the case halves.

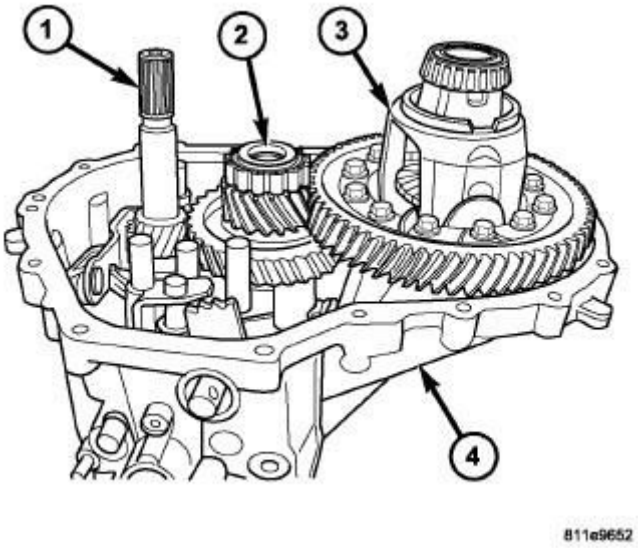

Fig. 19: Bellhousing Case Half Removed
Courtesy of CHRYSLER GROUP, LLC

1 - INPUT SHAFT
2 - OUTPUT SHAFT
3 - DIFFERENTIAL ASSEMBLY
4 - GEARTRAIN HOUSING

5. Remove bellhousing half from gear case half (4).

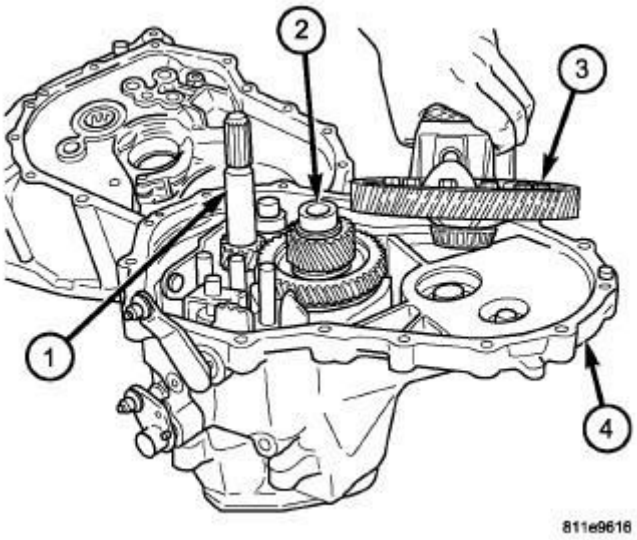

Fig. 20: Removing/Installing Differential
Courtesy of CHRYSLER GROUP, LLC

1 - INPUT SHAFT
2 - OUTPUT SHAFT
3 - DIFFERENTIAL ASSEMBLY
4 - GEARTRAIN HOUSING

6. Remove differential assembly (3) from housing (4).

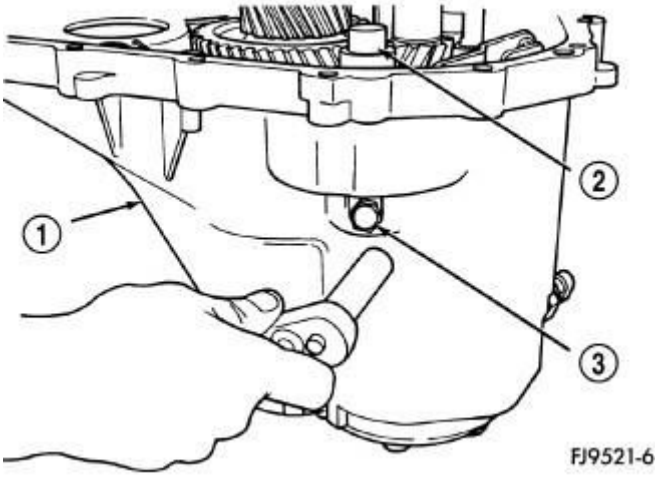

Fig. 21: Reverse Idler Shaft Bolt
Courtesy of CHRYSLER GROUP, LLC

1 - CASE 2 - REVERSE IDLER SHAFT 3 - REVERSE IDLER SHAFT BOLT

7. Remove reverse idler shaft bolt (3).

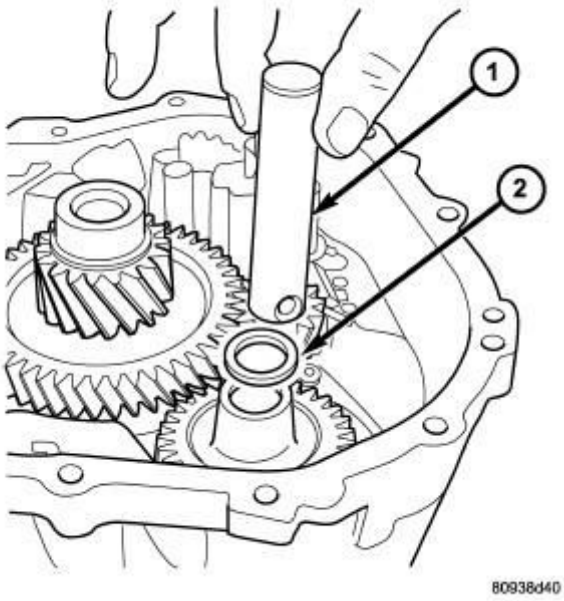

Fig. 22: Removing/Installing Reverse Idler Shaft
Courtesy of CHRYSLER GROUP, LLC

1 - REVERSE IDLER SHAFT

2 - SPACER

8. Remove reverse idler shaft (1).

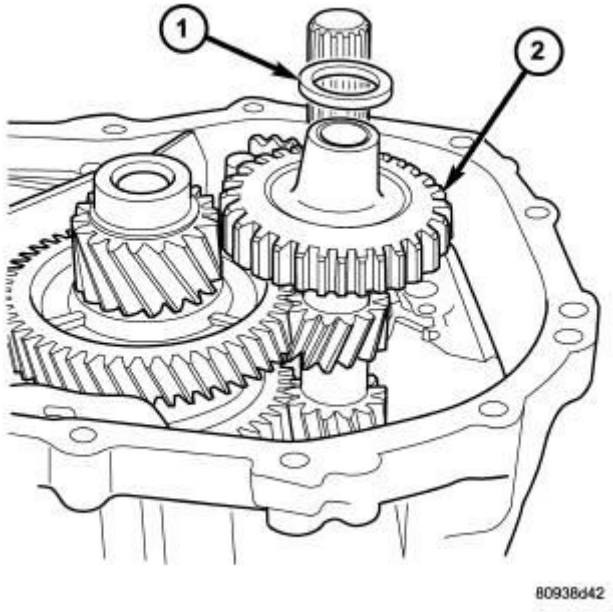

Fig. 23: Reverse Idler Gear & Spacer
Courtesy of CHRYSLER GROUP, LLC

1 - SPACER
2 - REVERSE IDLER GEAR

9. Remove reverse idler gear (2) and spacer (1).

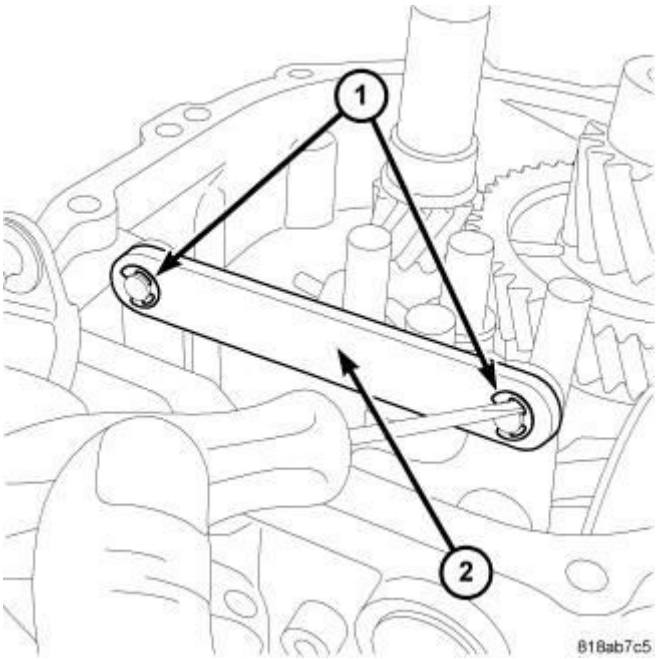

Fig. 24: Linkage Tie Bar Clips
Courtesy of CHRYSLER GROUP, LLC

10. Remove the clips (1) at the linkage tie bar (2).

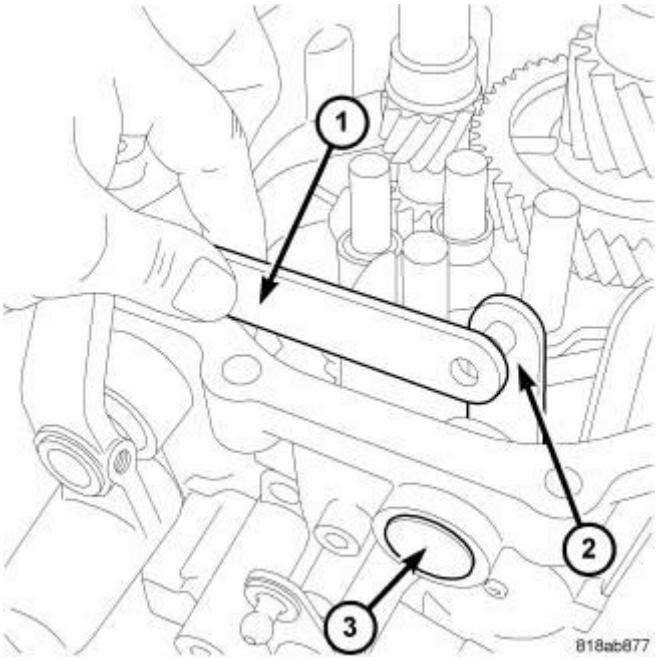

Fig. 25: Linkage Tie Bar
Courtesy of CHRYSLER GROUP, LLC

11. Remove the linkage tie bar (1).
12. Remove the plug (3) at the selector shaft (2).

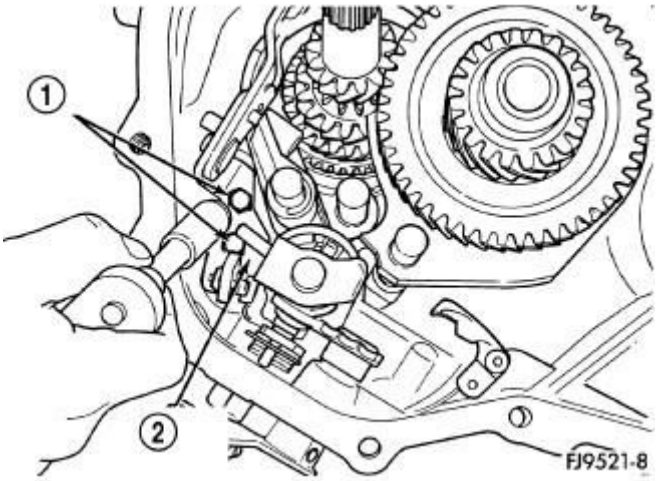

Fig. 26: Screws Retaining Reverse Fork Bracket
Courtesy of CHRYSLER GROUP, LLC

1 - SCREWS (2)
2 - REVERSE FORK BRACKET

13. Remove two screws (1) retaining reverse fork bracket (2).

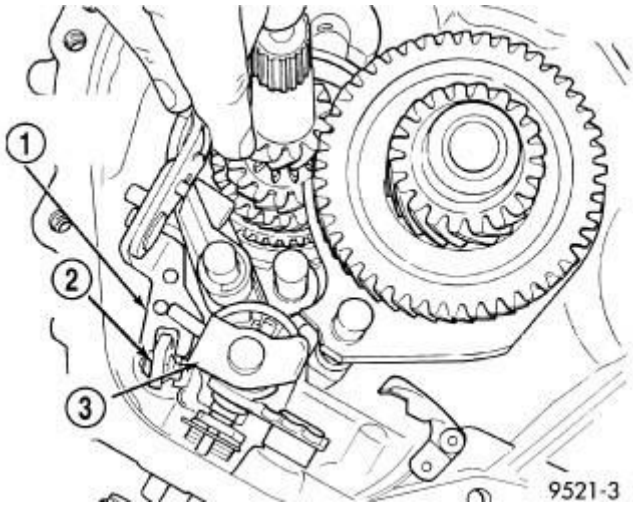

Fig. 27: Removing/Installing Reverse Fork Bracket & Reverse Cam Block-Out Assembly
Courtesy of CHRYSLER GROUP, LLC

1 - REVERSE FORK BRACKET
2 - REVERSE CAM BLOCKOUT
3 - SHIFT BLOCKER ASSEMBLY

14. Remove reverse fork bracket (1) and reverse cam block-out assembly (2).

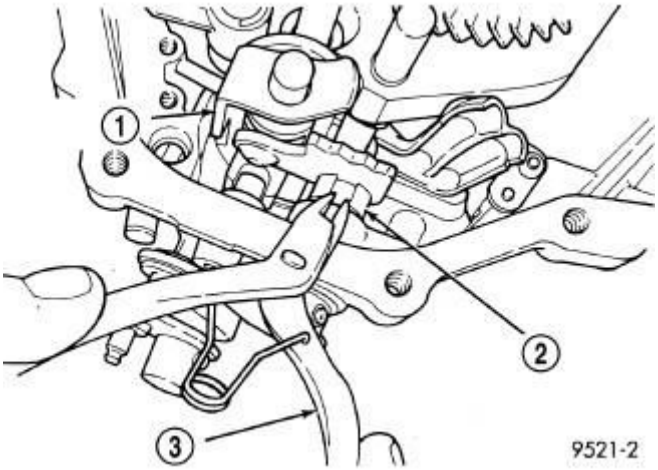

Fig. 28: Removing/Installing Link Shaft Spacer Using Snap-Ring Pliers
Courtesy of CHRYSLER GROUP, LLC

1 - SHIFT BLOCKER ASSEMBLY 2 - SELECTOR SHAFT SPACER (PLASTIC) 3 - SNAP RING PLIERS

15. Using snap-ring pliers (3), remove link shaft spacer (2).

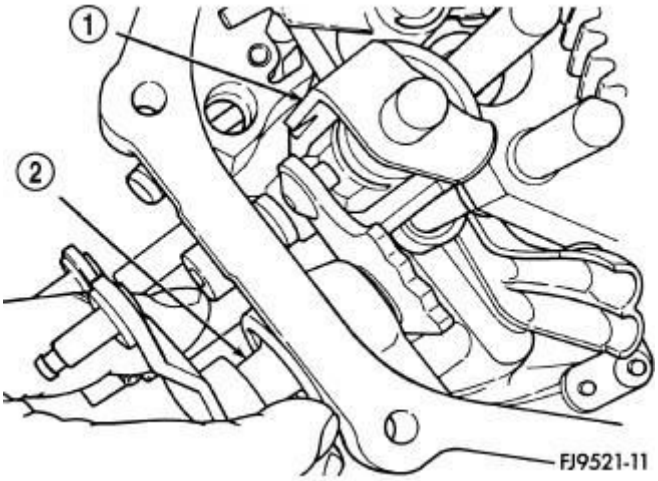

Fig. 29: Selector Shaft
Courtesy of CHRYSLER GROUP, LLC

1 - SHIFT ASSEMBLY 2 - SELECTOR SHAFT

16. Pull the link shaft shift pin out of the slot in the blocker assembly. Turn selector shaft (2) up and out of the way.

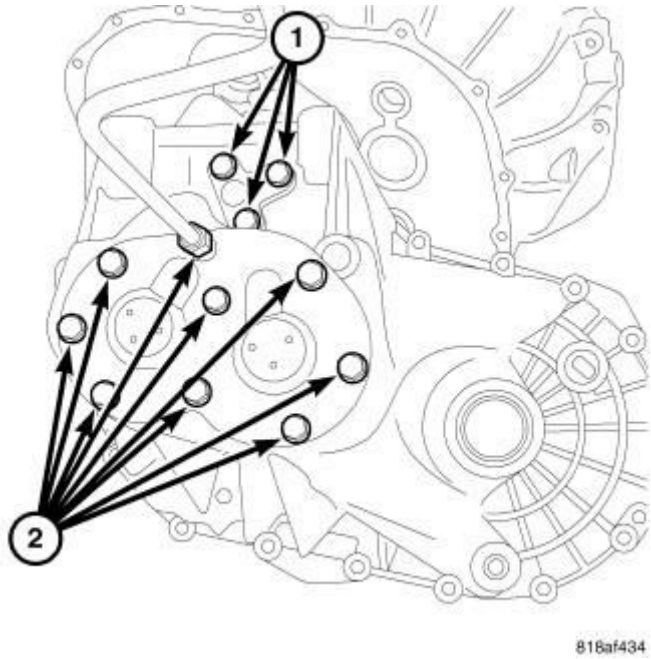

Fig. 30: Transaxle End Cover & Rear Detent Assembly Bolts
Courtesy of CHRYSLER GROUP, LLC

17. Remove transaxle end cover (2) and rear detent assembly bolts (1).

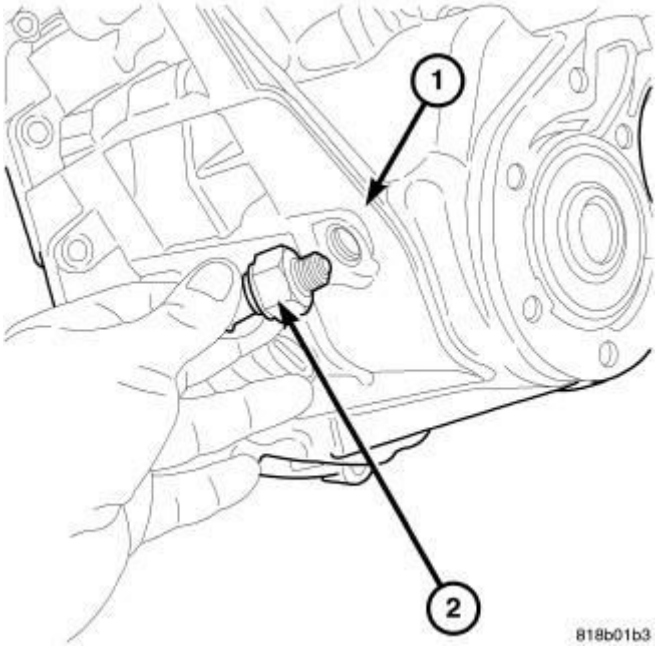

Fig. 31: Backup Lamp Switch
Courtesy of CHRYSLER GROUP, LLC

18. Remove the backup lamp switch (2).

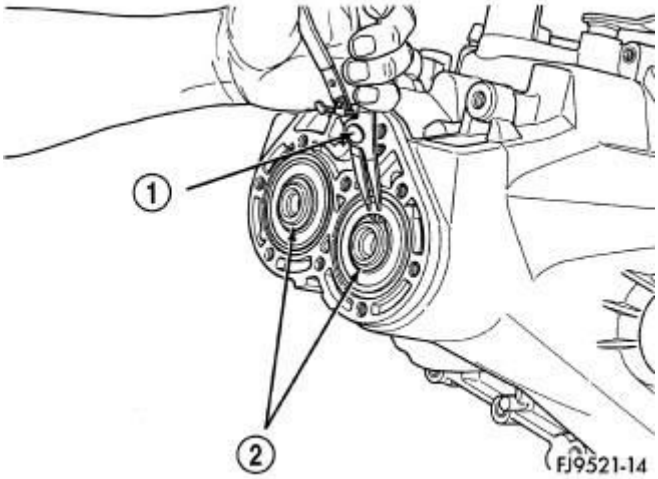

Fig. 32: Snap Rings Retaining Bearings
Courtesy of CHRYSLER GROUP, LLC

1 - SNAP RING PLIERS 2 - SNAP RINGS

19. Remove two snap rings (2) retaining the output shaft and the input shaft to the bearings.

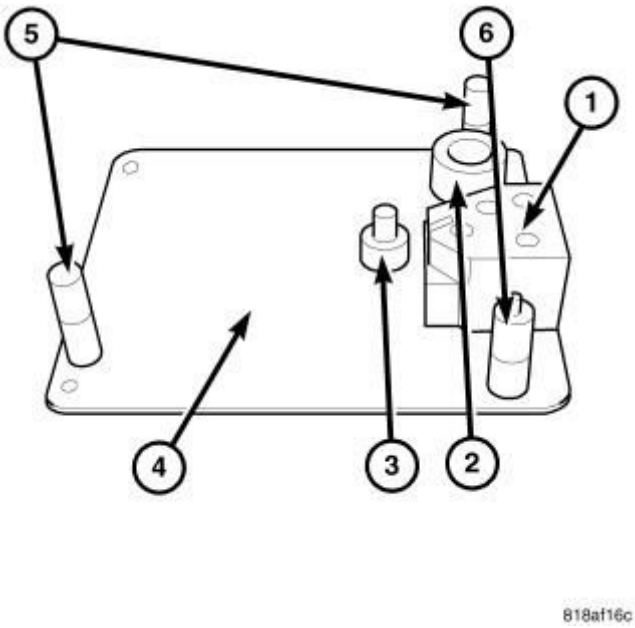

Fig. 33: Bench Fixture T355
Courtesy of CHRYSLER GROUP, LLC

20. The Bench Fixture (special tool #6785, Assembly, Pallet) (4) and adaptors (special tool #9761-1, Pad, Shift Rail Support) (1), (special tool #9761-2,

Spacer) (3), (special tool #9761-3, Spacer) (2), (special tool #9761-6, Stand Off) (5) and (special tool #9761-7, Stand Off) (6) will be used to remove input and output shafts from the case.

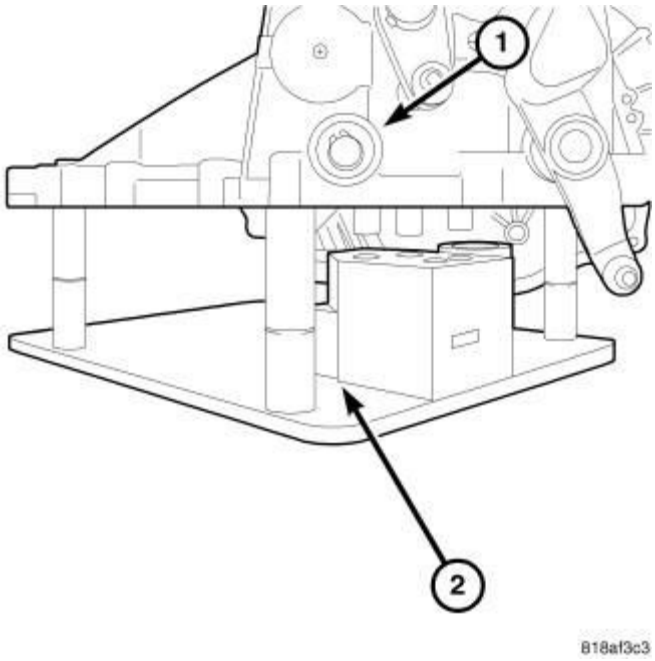

Fig. 34: Trans On Fixture T355
Courtesy of CHRYSLER GROUP, LLC

21. Turn transaxle over. Install transaxle (1) onto Bench Fixture (special tool #6785, Assembly, Pallet) (2). Verify shim spacers and adaptors are in position on Bench Fixture (special tool #6785, Assembly, Pallet). Install transaxle into shop press.

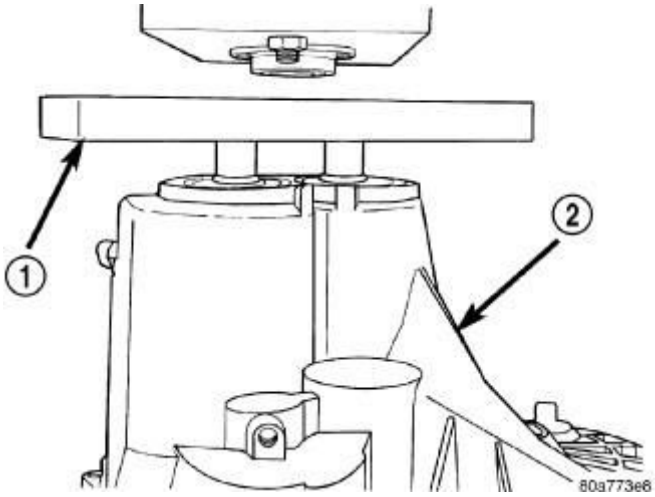

Fig. 35: Bearing Fixture
Courtesy of CHRYSLER GROUP, LLC

1 - BEARING FIXTURE
2 - TRANSAXLE CASE

22. Install Bearing Remover (special tool #6768, Remover, Bearings) (1) onto transaxle end bearings. Verify tool is properly aligned to input and output shafts.

CAUTION: The oil dams in the input and output shafts can be damaged while pressing on the shafts if the bearing fixture is not used properly.

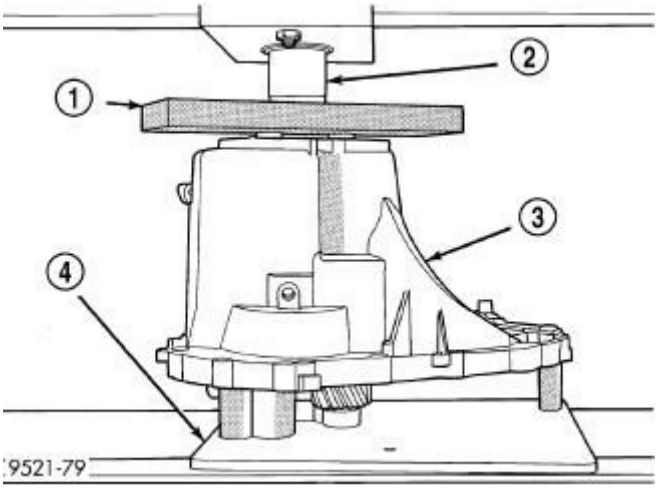

Fig. 36: Pressing Gears Out Of Case
Courtesy of CHRYSLER GROUP, LLC

1 - BEARING FIXTURE
2 - PRESS RAM
3 - TRANSAXLE CASE
4 - BENCH FIXTURE

23. Install transaxle gear case (3) into shop press. Press (2) output and input shaft assemblies out of case.
24. Remove transaxle from press.

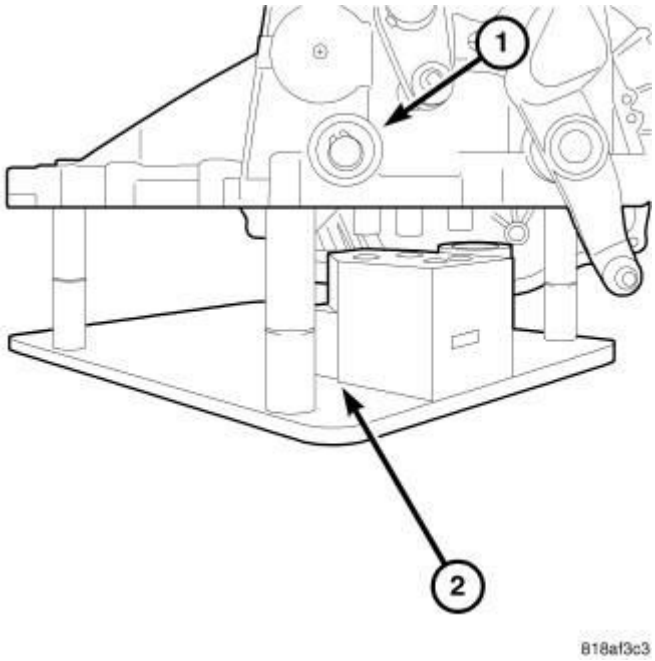

Fig. 37: Trans On Fixture T355
Courtesy of CHRYSLER GROUP, LLC

25. Carefully remove transaxle case (1) from the shaft assemblies and Bench Fixture (special tool #6785, Assembly, Pallet) (2).

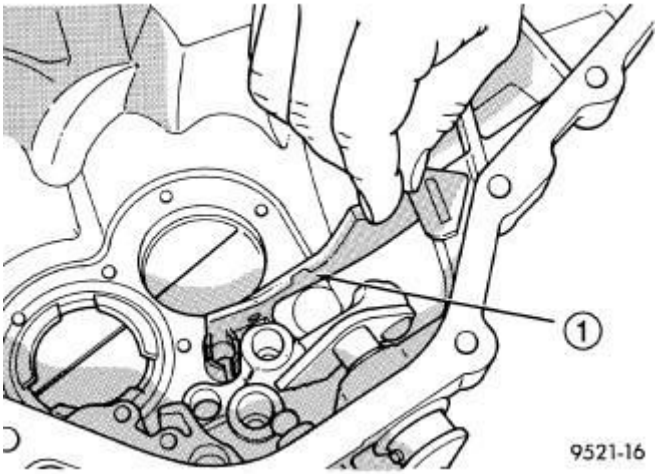

Fig. 38: Oil Feed Trough
Courtesy of CHRYSLER GROUP, LLC

1 - OIL FEED TROUGH

26. Be sure the oil-feed trough (1) to the end bearings is not damaged.

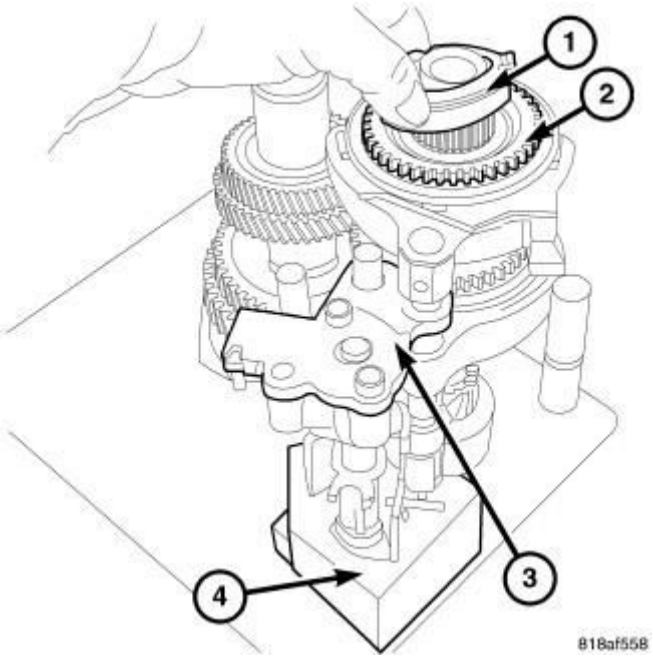

Fig. 39: Reverse Brake Friction Cone & Blocking Ring At Input Shaft Assembly
Courtesy of CHRYSLER GROUP, LLC

27. Remove the reverse brake friction cone (1) from the input shaft assembly.
28. Remove the blocking ring (2) from the input shaft assembly.

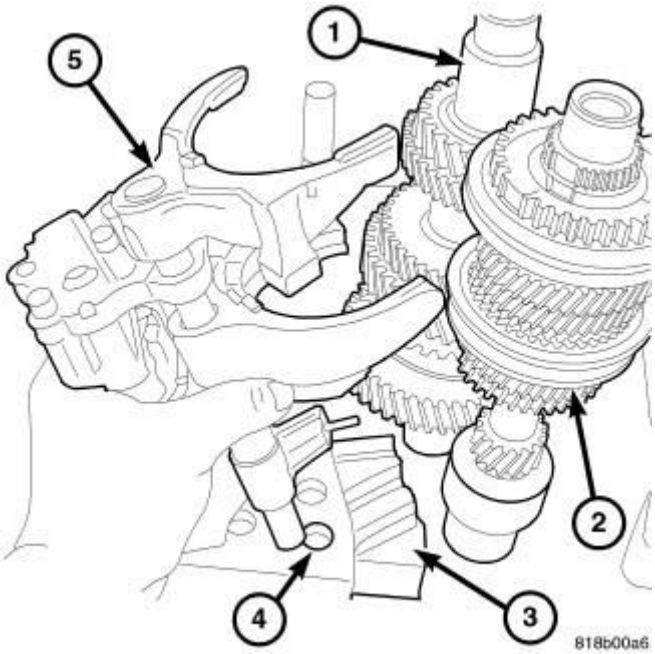

Fig. 40: Input/Output Shaft Assemblies, Shift Blocker Assembly, Reverse Shift Fork, & Detent Assembly
Courtesy of CHRYSLER GROUP, LLC

29. Remove the shift blocker assembly, the reverse shift fork (5) and the detent assembly from the bench fixture (4).
30. Remove input (2) and output shaft (1) assemblies from Bench Fixture (special tool #6785, Assembly, Pallet).

CAUTION: The output shaft assembly is serviced as an assembly. Do not try to repair any component on the output shaft. If the 1-2 synchronizer or gear fails, it is necessary to replace the complete output shaft assembly.

CLEANING

CLEANING

Clean the gears, bearings, shafts, synchronizers, thrust washers, oil feeder, shift mechanism, gear case, and bellhousing with solvent. Dry all parts except the bearings with compressed air. Allow the bearings to either air dry or wipe them dry with clean shop towels.

INSPECTION

INSPECTION

Inspect the gears, bearings and shafts. Replace the bearings and cups if the rollers are worn, chipped, cracked, flat spotted, brinnelled, or if the bearing cage is damaged or distorted. Replace the gears if the teeth are chipped, cracked or worn thin. Inspect the synchronizers. Replace the sleeve if worn or damaged in any way. Replace the stop rings if the friction material is burned, flaking off, or worn. Check the condition of the synchro keys and springs. Replace these parts if worn, cracked, or distorted.

ASSEMBLY

ASSEMBLY

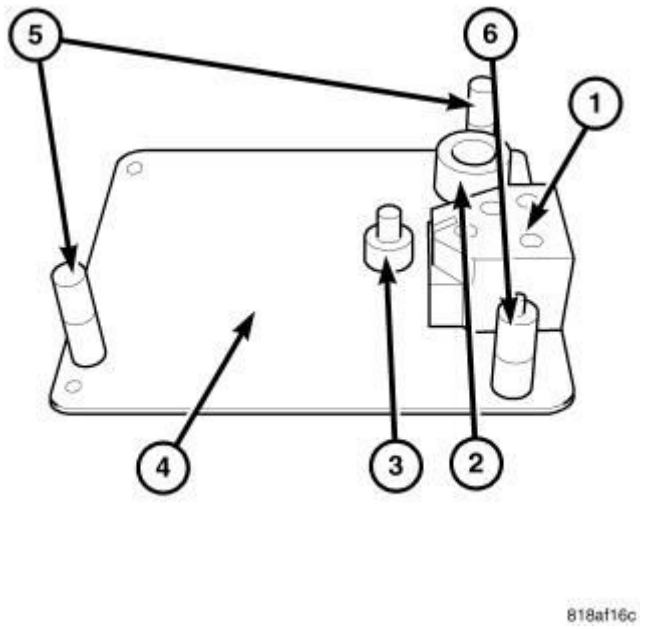

Fig. 41: Bench Fixture T355
Courtesy of CHRYSLER GROUP, LLC

The T355 transaxle internal components can be serviced only by separating the gear case from the bellhousing case.

CAUTION: The transaxle output shaft is serviced as a unit. No disassembly and reassembly is possible. Damage to the transaxle may result.

The sealant used to seal the transaxle case halves is MOPAR® Gasket Maker, Loctite® 518, or equivalent. The sealant used for the bearing end plate cover is MOPAR® RTV.

1. Load Bench Fixture (special tool #6785, Assembly, Pallet) (4) with adaptors (special tool #9761-1, Pad, Shift Rail Support) (1), (special tool #9761-2, Spacer) (3), (special tool #9761-3, Spacer) (2), (special tool #9761-4, Stand Off) (5) and (special tool #9761-5, Stand Off) (6).

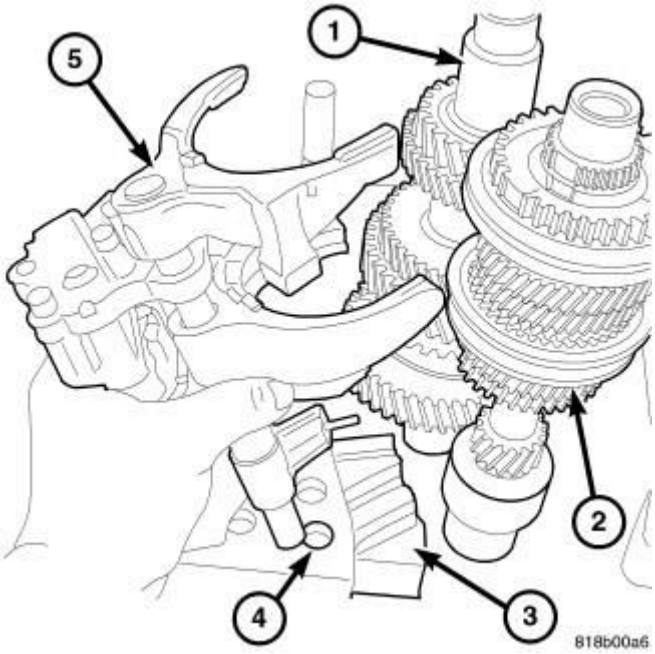

Fig. 42: Input/Output Shaft Assemblies, Shift Blocker Assembly, Reverse Shift Fork, & Detent Assembly
Courtesy of CHRYSLER GROUP, LLC

2. Install the output (1) and input (2) shafts onto Bench Fixture (special tool #6785, Assembly, Pallet).
3. Install shift blocker assembly and the 1-2 shift fork (5) onto the Bench Fixture (special tool #6785, Assembly, Pallet) (4).

NOTE: Adaptor (special tool #9761-1, Pad, Shift Rail Support) will slide shift blocker assembly and the 1-2 shift fork into the input and output shafts.

4. Align all shift forks and slide into place.

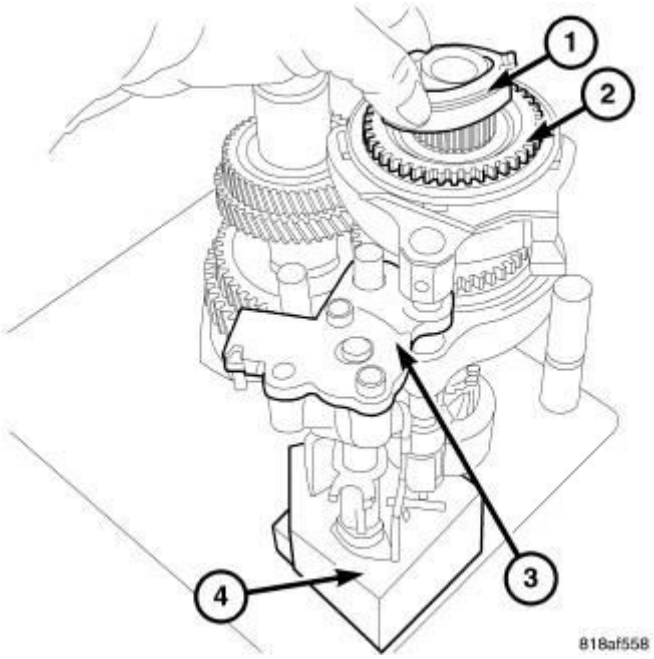

Fig. 43: Reverse Brake Friction Cone & Blocking Ring At Input Shaft Assembly
Courtesy of CHRYSLER GROUP, LLC

5. Install reverse brake blocking ring (2).
6. Install reverse brake friction cone (1).

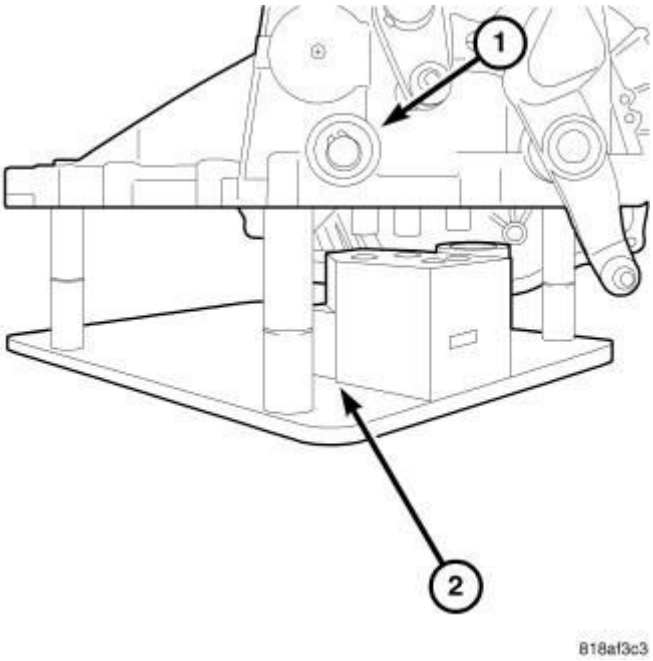

Fig. 44: Trans On Fixture T355
Courtesy of CHRYSLER GROUP, LLC

NOTE: One shift fork bolt may need to be installed to align

assembly.

7. Install gear-case half (1) over Bench Fixture (special tool #6785, Assembly, Pallet) (2). Line up shift finger over 3-4 lug.
8. Line up reverse brake friction cone lugs to the slots in the gear case. Verify reverse brake shim is in position.

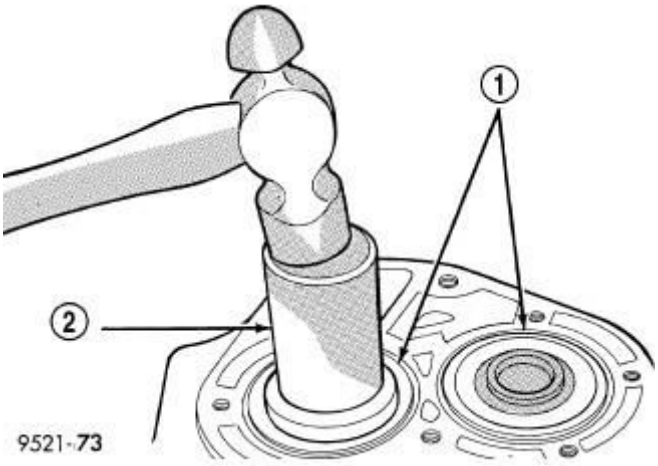

Fig. 45: Installing Input And Output Bearings
Courtesy of CHRYSLER GROUP, LLC

1 - INPUT AND OUTPUT BEARINGS
2 - SEAL INSTALLER 4992-1

9. Position input and output bearings (1) on the shafts. Using Seal Installer (special tool #C-4992-1, Installer) (2), install input and output shaft bearings (1) until they bottom into the case and against the shafts.

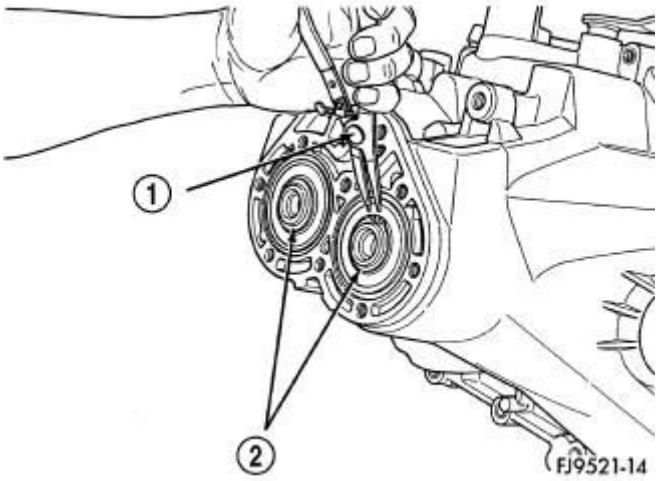

Fig. 46: Snap Rings Retaining Bearings

Courtesy of CHRYSLER GROUP, LLC

1 - SNAP RING PLIERS 2 - SNAP RINGS

10. Install **new** snap rings (2) at input and output bearings.

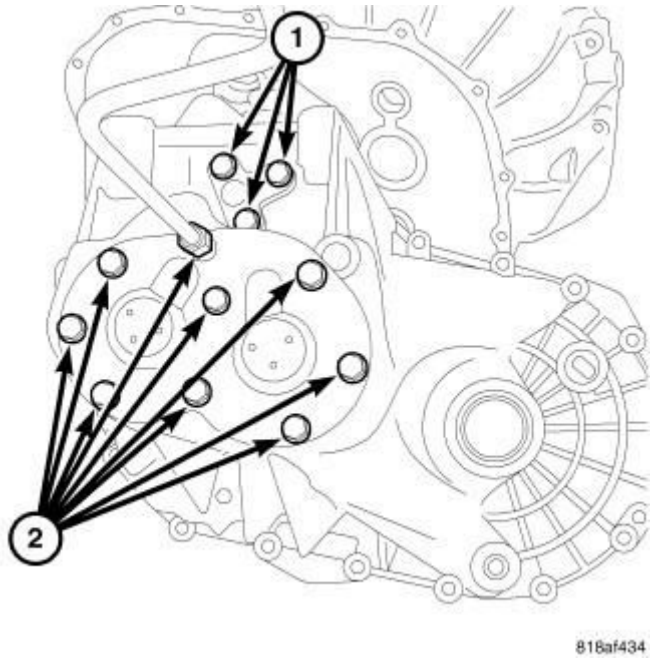

Fig. 47: Transaxle End Cover & Rear Detent Assembly Bolts
Courtesy of CHRYSLER GROUP, LLC

11. Apply MOPAR® RTV sealant to end-cover outer edge and around bolt holes. Install end-cover onto gear case. Tighten end cover bolts to 25 N.m (225 in. lbs.).

NOTE: Install new O-rings on shift blocker assembly bolts.

12. Install the three shift blocker assembly bolts (1) and tighten to 25 N.m (225 in. lbs.).

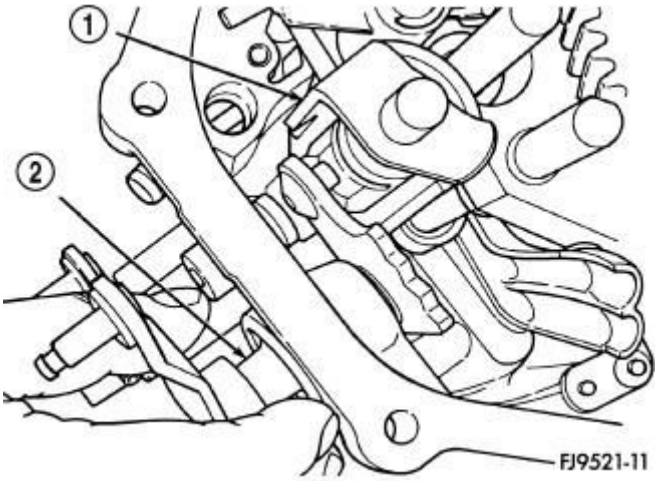

Fig. 48: Selector Shaft
Courtesy of CHRYSLER GROUP, LLC

1 - SHIFT ASSEMBLY 2 - SELECTOR SHAFT

13. Remove gear case from Bench Fixture (special tool #6785, Assembly, Pallet).
14. Install gear case in a holding fixture with end cover facing down.
15. Turn selector link (2) into slot on blocker assembly.

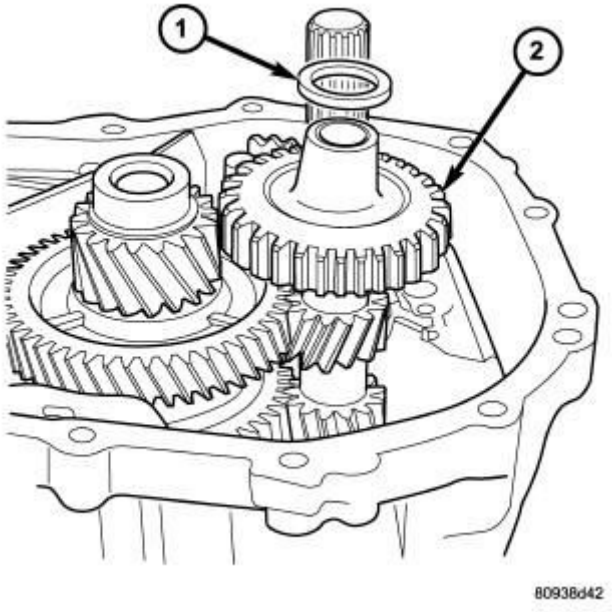

Fig. 49: Reverse Idler Gear & Spacer
Courtesy of CHRYSLER GROUP, LLC

1 - SPACER 2 - REVERSE IDLER GEAR

16. Push selector link spacer clip onto selector shaft. Install shift levers.
17. Install reverse idler gear (2) and spacer (1).

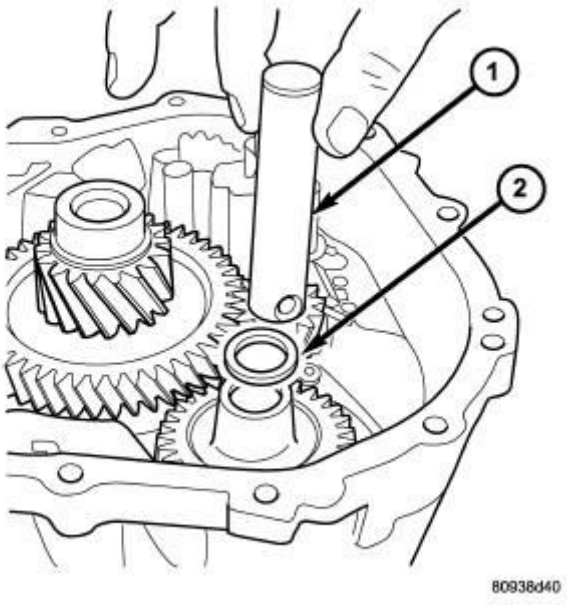

Fig. 50: Removing/Installing Reverse Idler Shaft
Courtesy of CHRYSLER GROUP, LLC

1 - REVERSE IDLER SHAFT 2 - SPACER

18. Install reverse idler shaft (1).

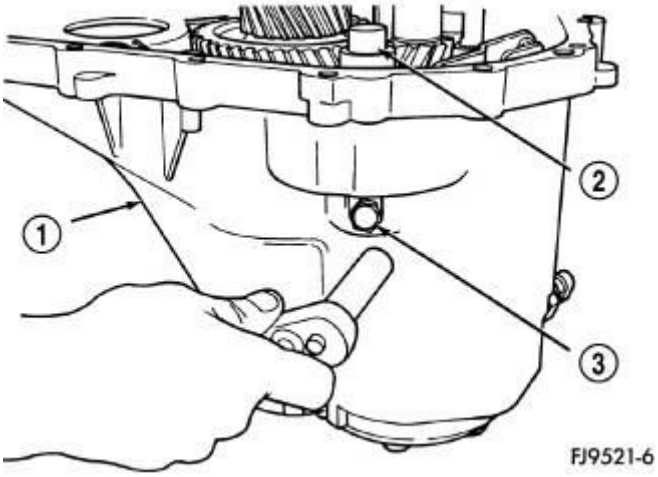

Fig. 51: Reverse Idler Shaft Bolt
Courtesy of CHRYSLER GROUP, LLC

1 - CASE
2 - REVERSE IDLER SHAFT
3 - REVERSE IDLER SHAFT BOLT

NOTE: Install a new O-ring on reverse idler shaft bolt.

19. Install bolt into reverse idler shaft (2) and tighten to 26 N.m (19 ft. lbs.).

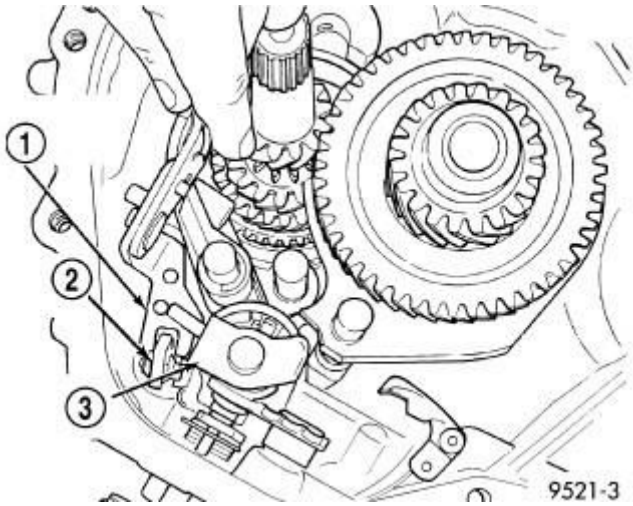

Fig. 52: Removing/Installing Reverse Fork Bracket & Reverse Cam Block-Out Assembly
Courtesy of CHRYSLER GROUP, LLC

1 - REVERSE FORK BRACKET
2 - REVERSE CAM BLOCKOUT

3 - SHIFT BLOCKER ASSEMBLY

20. Install reverse fork bracket (1).

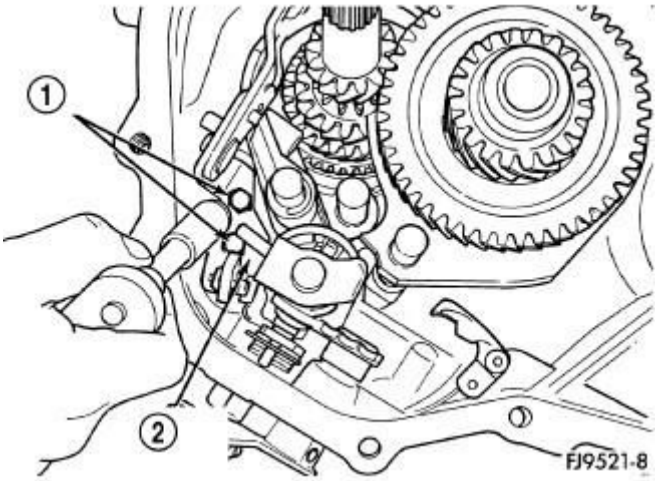

Fig. 53: Screws Retaining Reverse Fork Bracket
Courtesy of CHRYSLER GROUP, LLC

1 - SCREWS (2) 2 - REVERSE FORK BRACKET

21. Tighten reverse fork bracket (1) bolts to 11 N.m (96 in. lbs.).

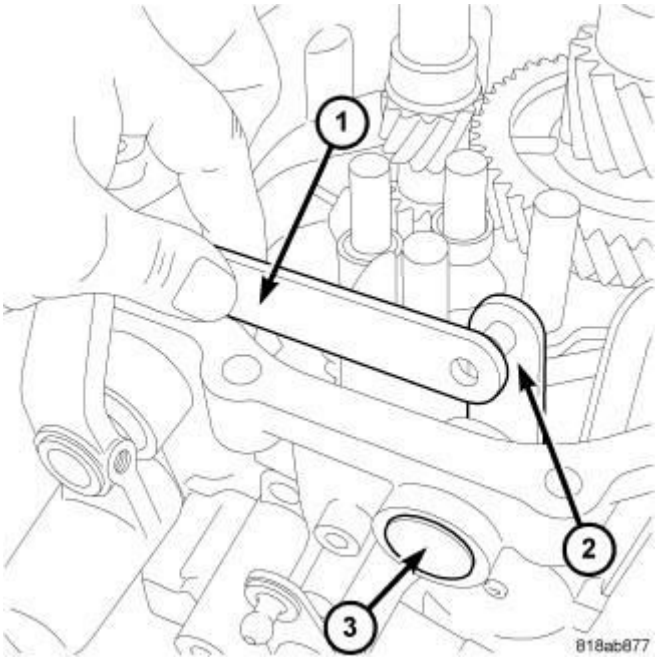

Fig. 54: Linkage Tie Bar
Courtesy of CHRYSLER GROUP, LLC

22. Install the linkage tie bar (1).

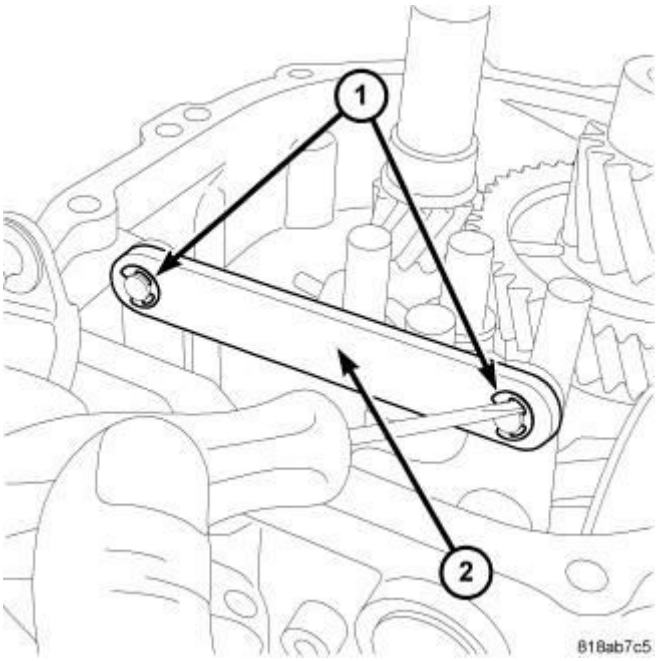

Fig. 55: Linkage Tie Bar Clips
Courtesy of CHRYSLER GROUP, LLC

23. Install the linkage tie bar clips (1).

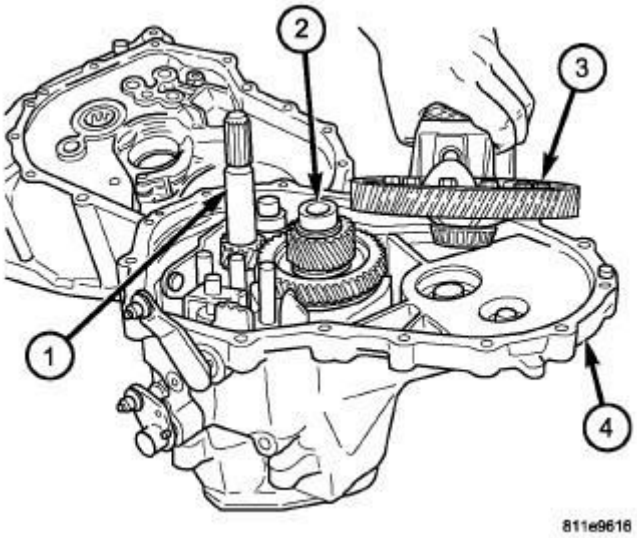

Fig. 56: Removing/Installing Differential
Courtesy of CHRYSLER GROUP, LLC

1 - INPUT SHAFT 2 - OUTPUT SHAFT

3 - DIFFERENTIAL ASSEMBLY
4 - GEARTRAIN HOUSING

24. Install differential (3) into gear case (4).

BEARING ADJUSTMENT PROCEDURE

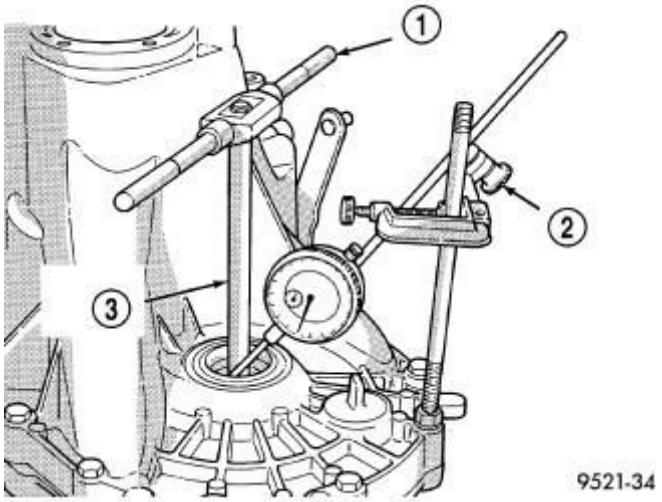

Fig. 57: Checking Differential Bearing End Play To Determine Shim Thickness
Courtesy of CHRYSLER GROUP, LLC

1 - T-HANDLE
2 - DIAL INDICATOR SET
3 - TORQUE TOOL C-4995A

1. Use extreme care when removing and installing bearing cups and cones. Use only an arbor press for installation, as a hammer may not properly align the bearing cup or cone. Burrs or nicks on the bearing seat gives a false end-play reading while gauging for proper shims. Improperly seated bearing cups and cones are subject to low-mileage failure.
2. Bearing cups and cones should be replaced if they show signs of pitting or heat distress. If distress is seen on either the cup or bearing rollers, both cup and cone must be replaced.
3. Bearing preload and drag torque specifications must be maintained to avoid premature bearing failures. Used (original) bearings may lose up to 50% of the original drag torque after break-in. All bearing adjustments must be made with no other component interference or gear intermesh.

4. Replace bearings as a pair: If one differential bearing is defective, replace both differential bearings, if one input shaft bearing is defective, replace both input shaft bearings.
5. Bearing cones must not be reused if removed.
6. Turning-torque readings should be obtained while smoothly rotating in either direction.

DIFFERENTIAL BEARING PRELOAD ADJUSTMENT

NOTE: True bearing turning-torque readings can be obtained only with the geartrain removed from the case.

1. Remove bearing cup and existing shim from clutch bellhousing case.
2. Press in new bearing cup into bellhousing case (or use a cup that has been ground down on the outer edge for ease of measurement).
3. Press in new bearing cup into gear case side.
4. Oil differential bearings with transmission fluid. Install differential assembly in transaxle gear case. Install clutch bellhousing over gear case. Install and tighten case bolts to 25 N.m (225 in. lbs.).
5. Position transaxle with bellhousing facing down on workbench with C-clamps. Position dial indicator.

NOTE: Position of dial indicator is for illustrative purposes only. The dial indicator should be parallel to T-Handle to obtain the most accurate reading.

6. Apply a medium load to differential with Torque Tool (special tool #C-4995A, Tool, Differential Bearing Torque) (3) and a T-handle (1), in the downward direction. Roll differential assembly back and forth a number of times. This will settle the bearings. Zero the dial indicator (2). To obtain end play readings, apply a medium load in an upward direction while rolling differential assembly back and forth. Record end play.

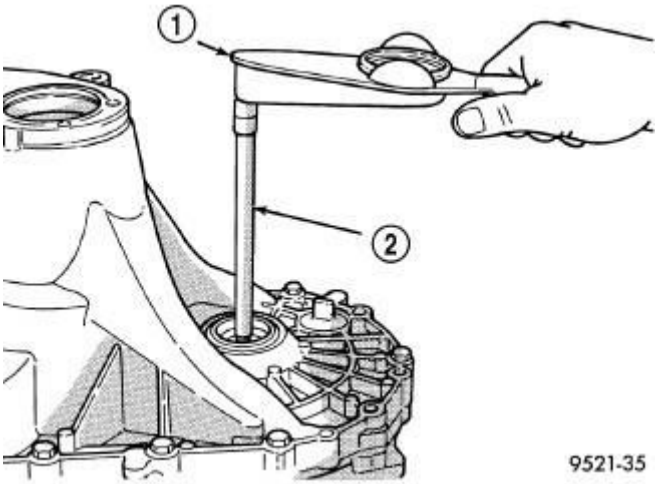

Fig. 58: Checking Differential Bearing Turning Torque
Courtesy of CHRYSLER GROUP, LLC

1 - INCH-POUND TORQUE WRENCH 2 - TORQUE TOOL C-4995A

7. The shim required for proper bearing preload is the **total of end play, plus (constant) preload of 0.18 mm (0.007 in.).** Never combine shims to obtain the required preload.
8. Remove case bolts. Remove clutch bellhousing differential bearing cup. Install shim(s) selected in. Then press the bearing cup into clutch bellhousing.
9. Install clutch bellhousing. Install and tighten case bolts to 25 N.m (225 in. lbs.).

   Using Torque Tool (special tool #C-4995A, Tool, Differential Bearing Torque) (2) and an inch-pound torque wrench (1), check turning torque of the differential assembly. **The turning torque should be 6 to 12 in. lbs. If the turning torque is too high, install a 0.05 mm (0.002 inch) thinner shim. If the turning torque is too low, install a 0.05 mm (0.002 inch) thicker shim.**

10. Recheck turning torque (1). Repeat until the proper turning torque is obtained.

    Once proper turning torque has been established, place gear case on the end plate. Draw a bead of MOPAR® Gasket Maker, Loctite® 518, or equivalent, on the flat surface of the case mating flange. Install clutch

bellhousing onto gear case. Install and tighten case bolts to 25 N.m (225 in. lbs.).

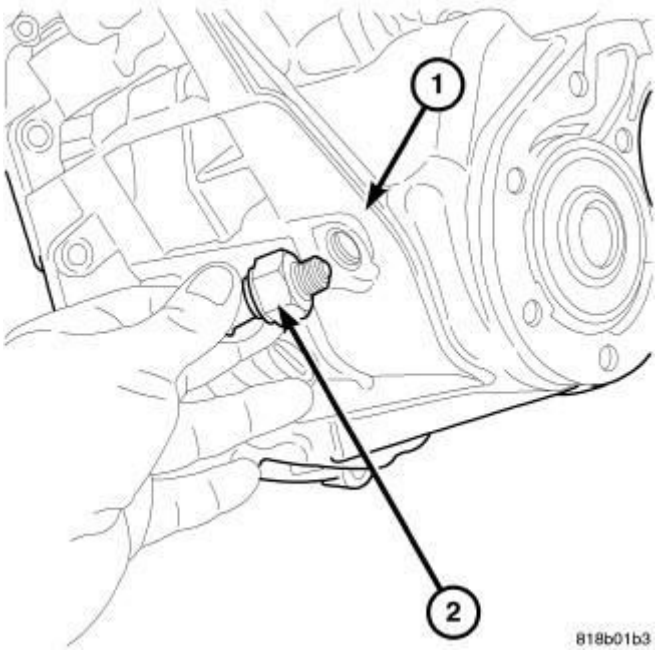

Fig. 59: Backup Lamp Switch
Courtesy of CHRYSLER GROUP, LLC

11. Install the backup lamp switch (2), tighten switch to 23 N.m (17 ft. lbs.).

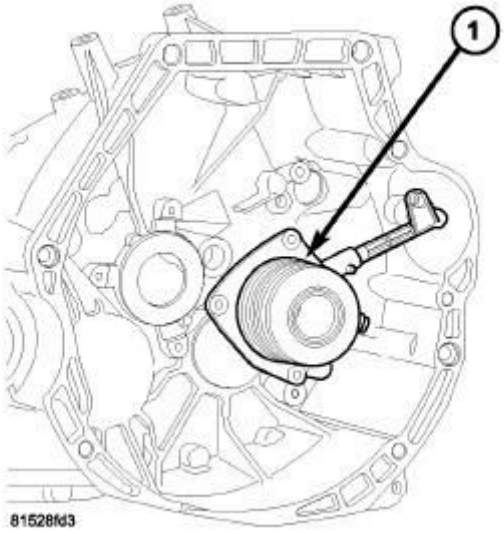

Fig. 60: Slave Cylinder
Courtesy of CHRYSLER GROUP, LLC

12. Install slave cylinder (1) to transaxle using new bolts. Refer to **CYLINDER,**

CLUTCH SLAVE, INSTALLATION .

INSTALLATION

INSTALLATION

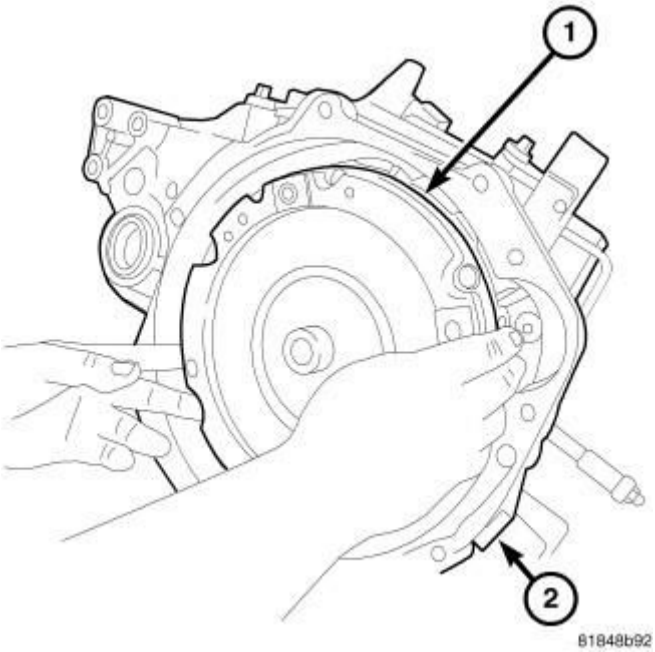

Fig. 61: Modular Clutch Assembly
Courtesy of CHRYSLER GROUP, LLC

1. Install clutch module (1) (if equipped) onto input shaft.

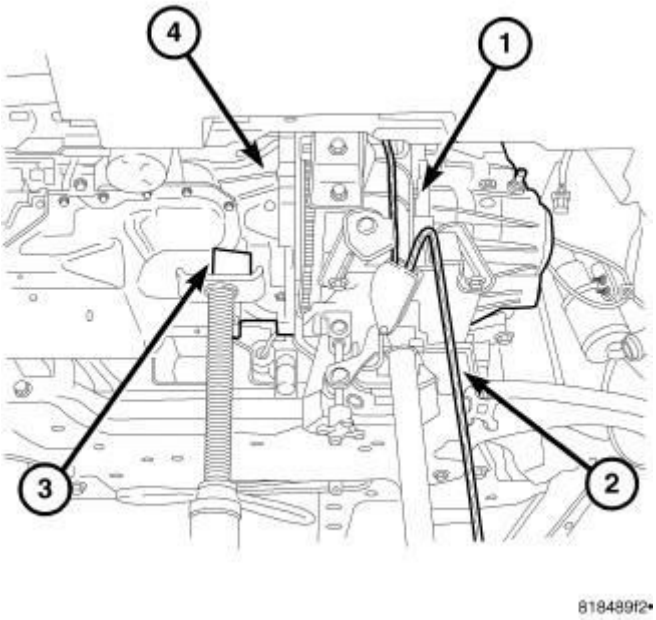

Fig. 62: Support Trans And Engine

Courtesy of CHRYSLER GROUP, LLC

2. Install transaxle (1) into position.

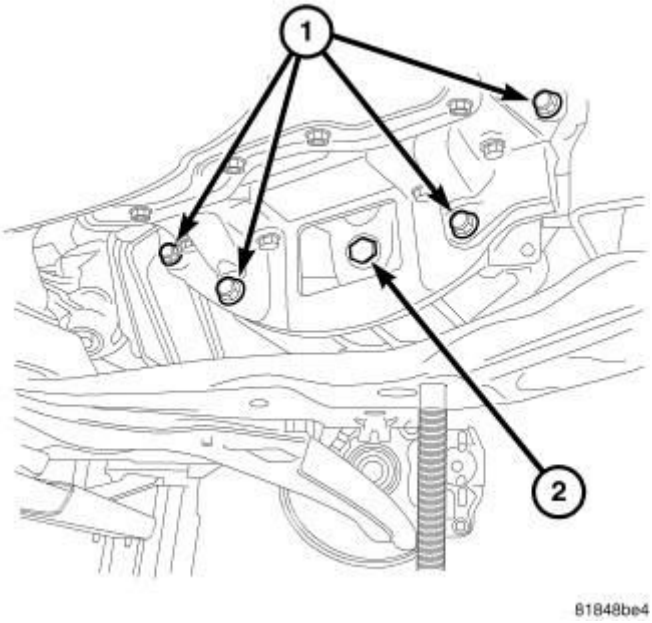

Fig. 63: Lower Bell Housing Bolts
Courtesy of CHRYSLER GROUP, LLC

3. Install transaxle-to-engine lower (1) mounting bolts and tighten to 48 N.m (35 ft. lbs.).
4. If equipped, install the PTU.

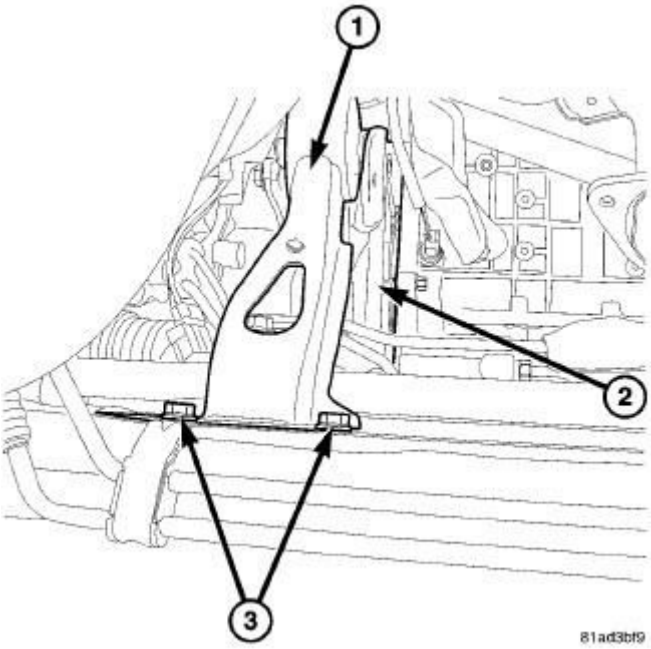

Fig. 64: Rear Trans To Frame Mount
Courtesy of CHRYSLER GROUP, LLC

5. Install the rear transmission mount bracket (2) and bolts, tighten to 68 N.m (50 ft. lbs.).
6. Install the rear transmission mount (1) and bolts, tighten to 68 N.m (50 ft. lbs.).
7. Install the rear transmission mount through bolt (4) at this time and tighten to 68 N.m (50 ft. lbs.).

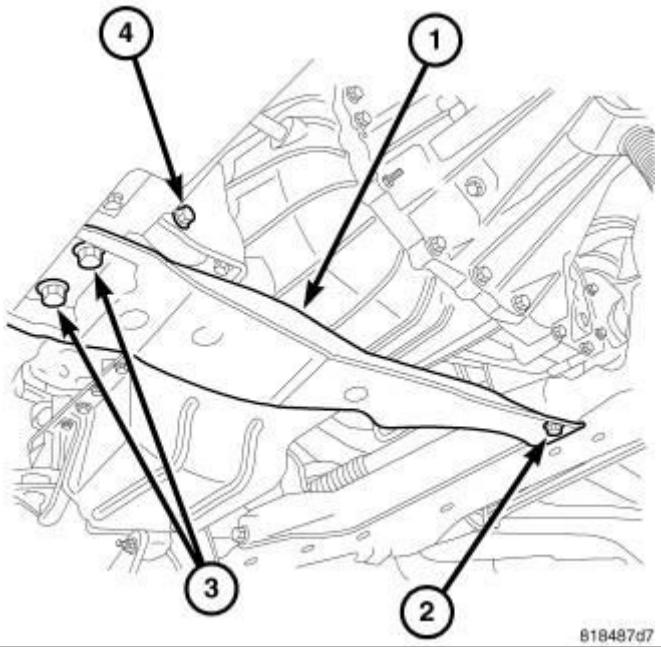

Fig. 65: Transmission Crossmember
Courtesy of CHRYSLER GROUP, LLC

8. Install front mount bracket to transmission and tighten to 68 N.m (50 ft. lbs.).
9. Install the transmission crossmember and tighten to 68 N.m (50 ft. lbs.).

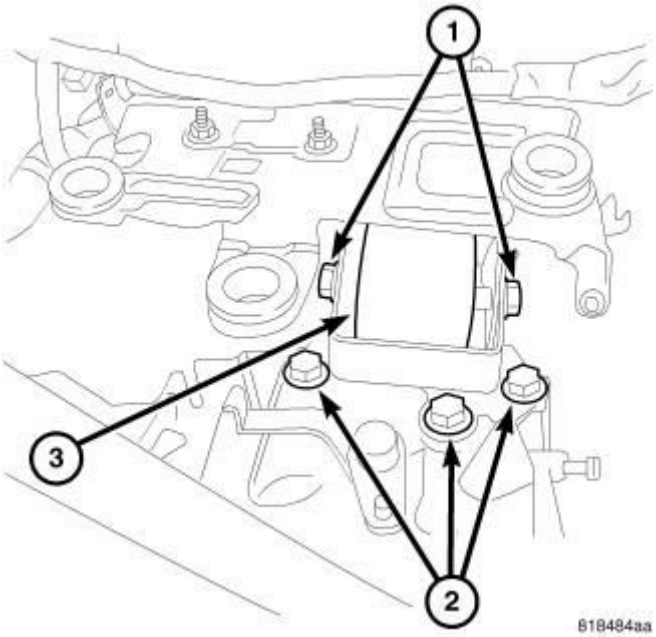

Fig. 66: Transmission Mount Bolts
Courtesy of CHRYSLER GROUP, LLC

10. Lower the vehicle on hoist.
11. Raise engine and transaxle until upper mount bracket aligns with upper mount. Install mount bolts (2) and tighten to 68 N.m (50 ft. lbs.).
12. Tighten through bolt to 68 N.m (50 ft. lbs.).
13. Remove jack.

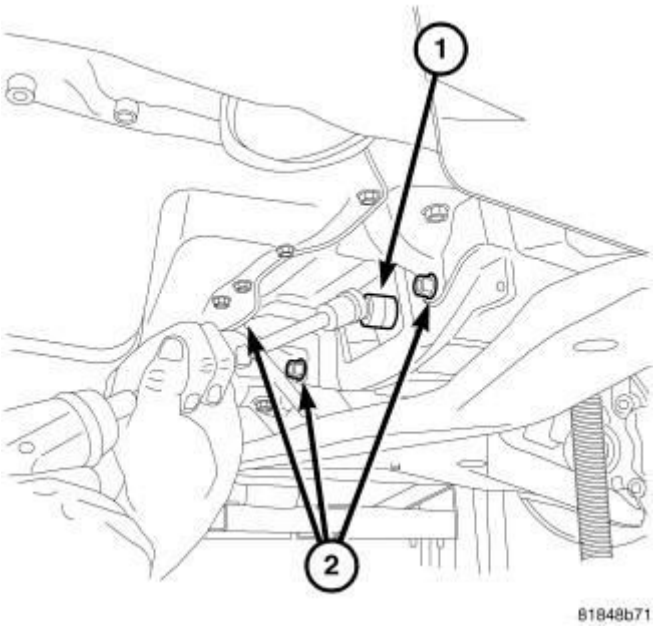

Fig. 67: Modular Clutch-To-Drive Plate Bolts
Courtesy of CHRYSLER GROUP, LLC

14. Raise the vehicle on the hoist.
15. Install four (4) modular clutch-to-driveplate bolts (4). Align drive plate and modular clutch alignment marks placed upon disassembly. Start with tight-tolerance (slotted) hole, install and torque bolts to 88 N.m (65 ft. lbs.).
16. Install starter motor, make sure to fasten ground cable to upper starter bolt. Refer to **STARTER, INSTALLATION** .
17. Install bell housing dust cover.
18. Install both front axle driveshafts. Refer to **INSTALLATION** .

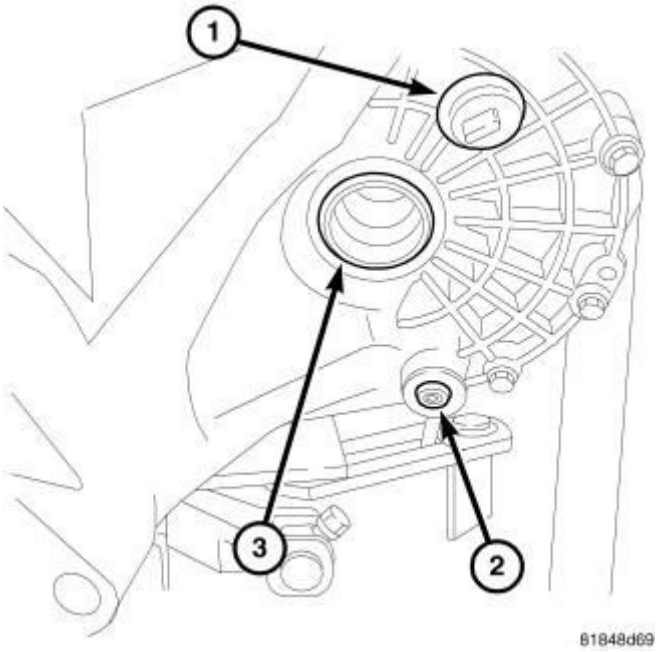

Fig. 68: Drain And Fill Plugs
Courtesy of CHRYSLER GROUP, LLC

19. Fill transaxle with suitable amount of fluid (2.7 liters). Refer to **STANDARD PROCEDURE** .
20. Install the splash shields. Refer to **SHIELD, SPLASH, FRONT WHEELHOUSE, INSTALLATION** .
21. Lower the vehicle.
22. Install the remaining top bell housing bolts and tighten to 48 N.m (35 ft. lbs.).
23. Connect the hydraulic clutch slave cylinder (1). An audible click should be heard. Verify connection by pushing and pulling quick connect.

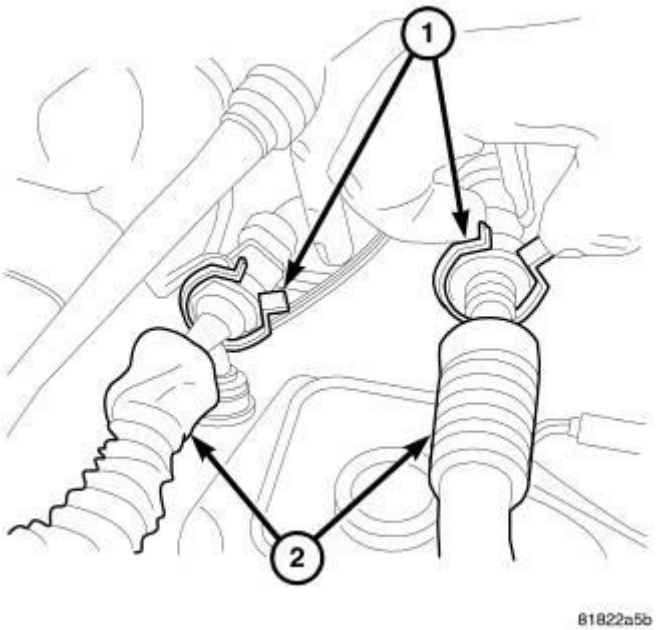

Fig. 69: Shift Cable-To-Bracket Clips
Courtesy of CHRYSLER GROUP, LLC

24. Connect shift and selector cables (2) to shift lever. Install cables to bracket (1).

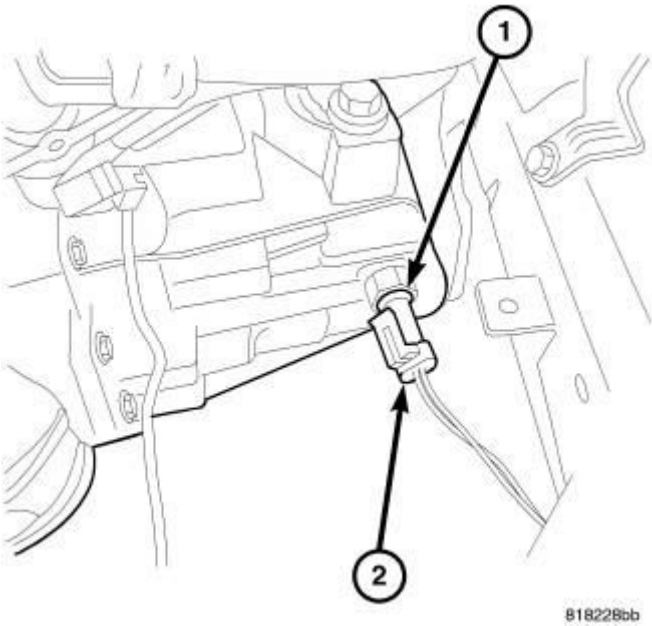

Fig. 70: Backup Switch Connector
Courtesy of CHRYSLER GROUP, LLC

25. Connect back-up lamp switch connector (1).
26. Connect the vehicle speed sensor connector if equipped.

27. Install battery and battery tray.
28. Install the air cleaner assembly.
29. Connect the battery cables.
30. Road test vehicle and inspect for leaks.

SPECIAL TOOLS

SPECIAL TOOLS

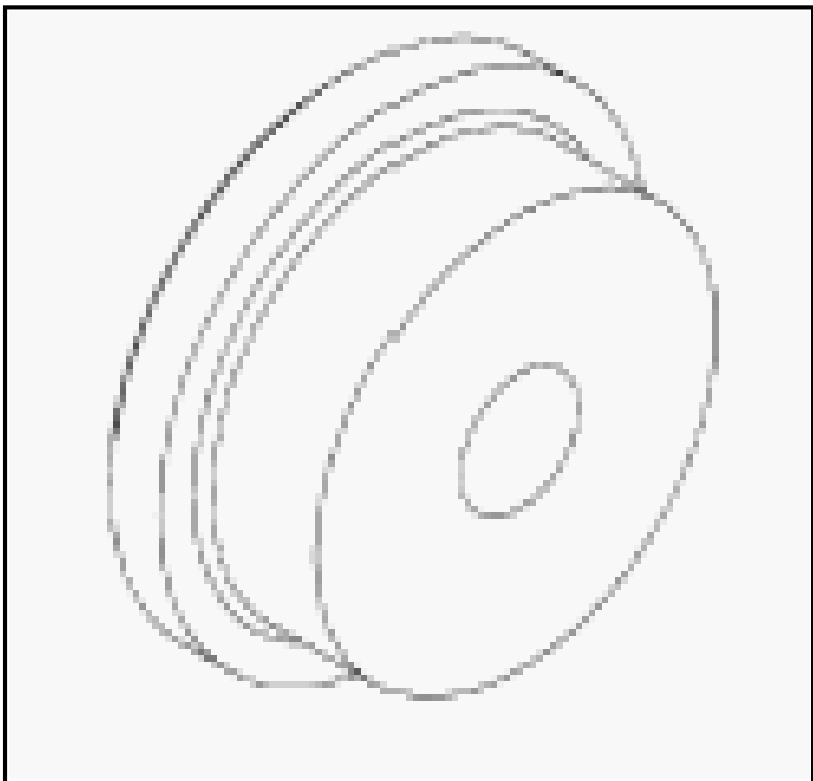	1130 - Splitter, Bearing/Gear (Originally Shipped In Kit Number(s) 6745, 6947, 6949, 9202, 9202A-CAN, 9202CC, 9299.)
	5064 - Installer, Bearing (Originally Shipped In Kit Number(s) 9975.)

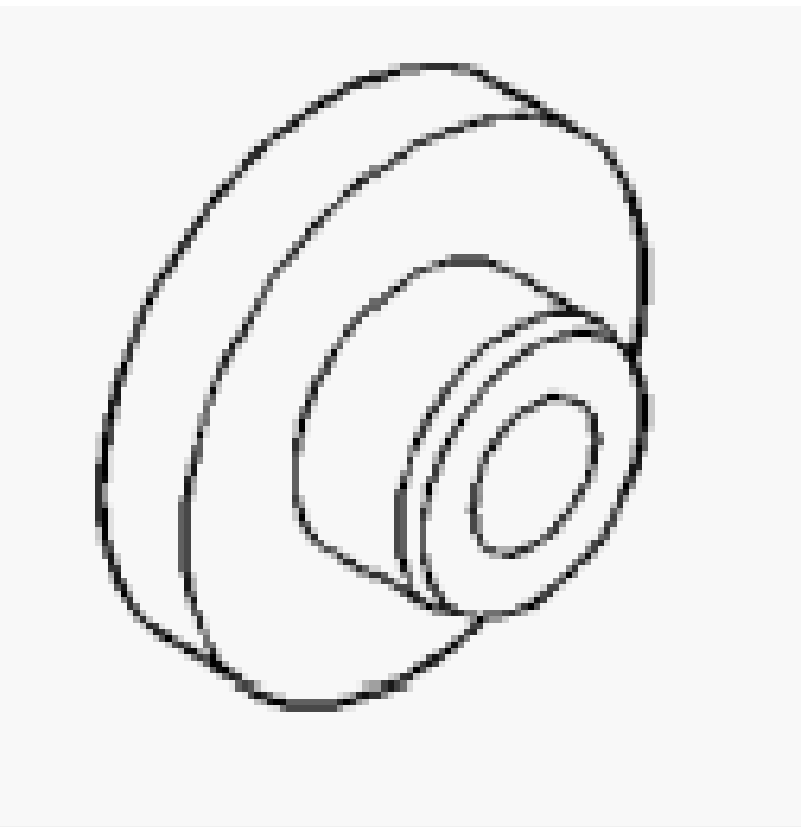	
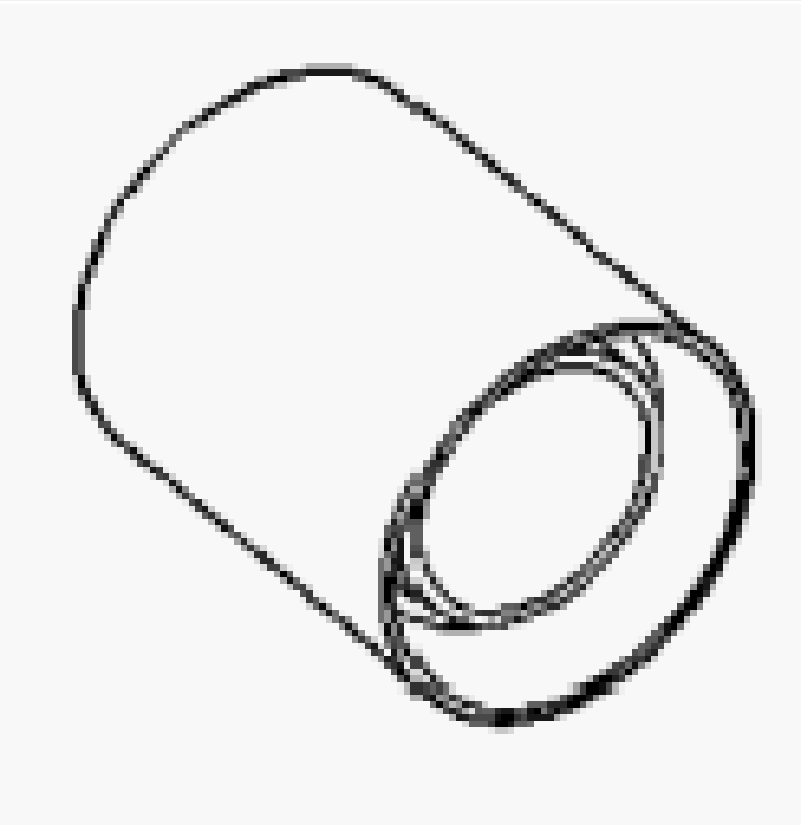	6053 - Installer, Bearing (Originally Shipped In Kit Number(s) 6303, 6822.)

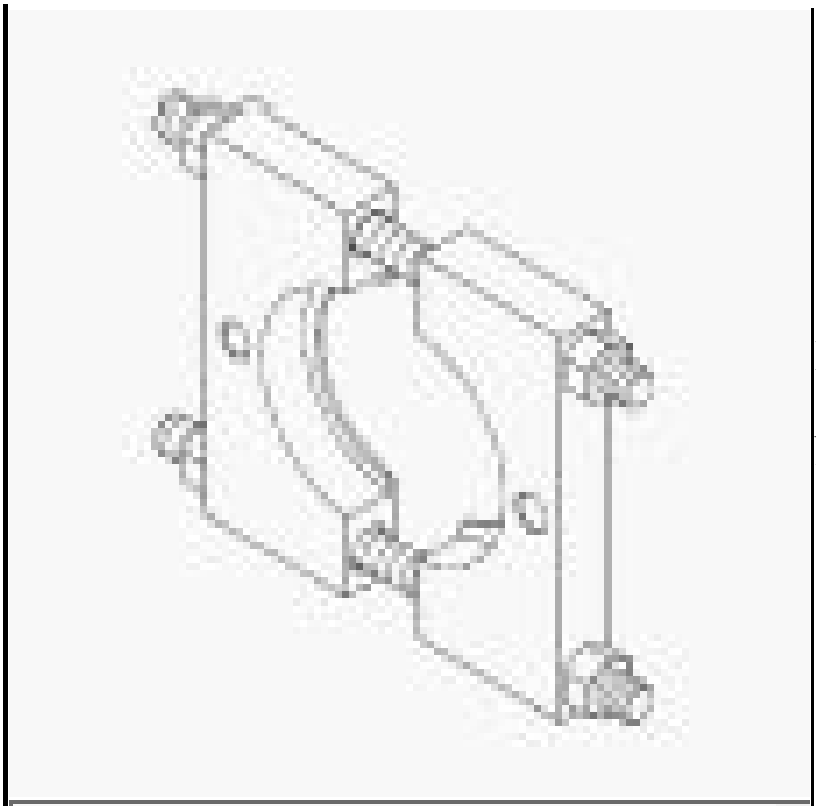

6448A - Installer, Bearing/Gear
(Originally Shipped In Kit Number(s) 6947, 8667, 8837, 8867.)

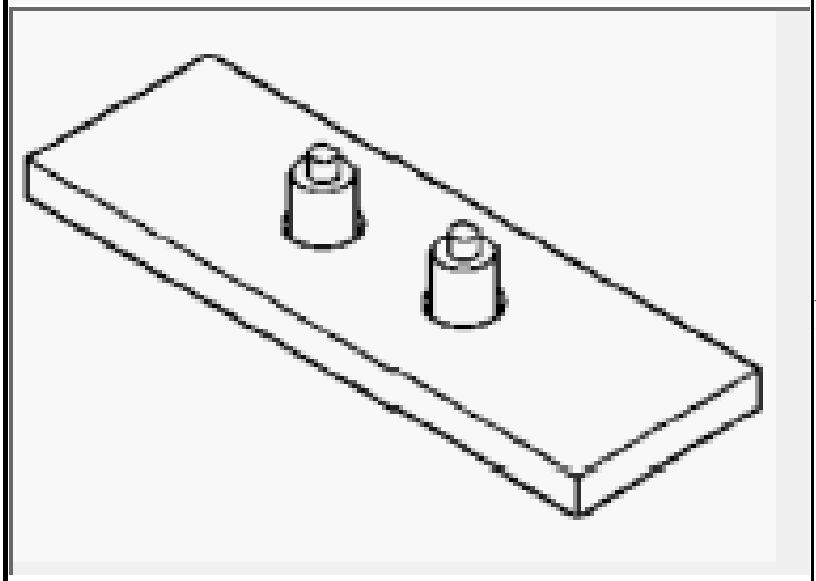

6768 - Remover, Bearings
(Originally Shipped In Kit Number(s) 6784, 6809, 6822.)

6785 - Assembly, Pallet
(Originally Shipped In Kit Number(s) 6784, 6809, 6822.)

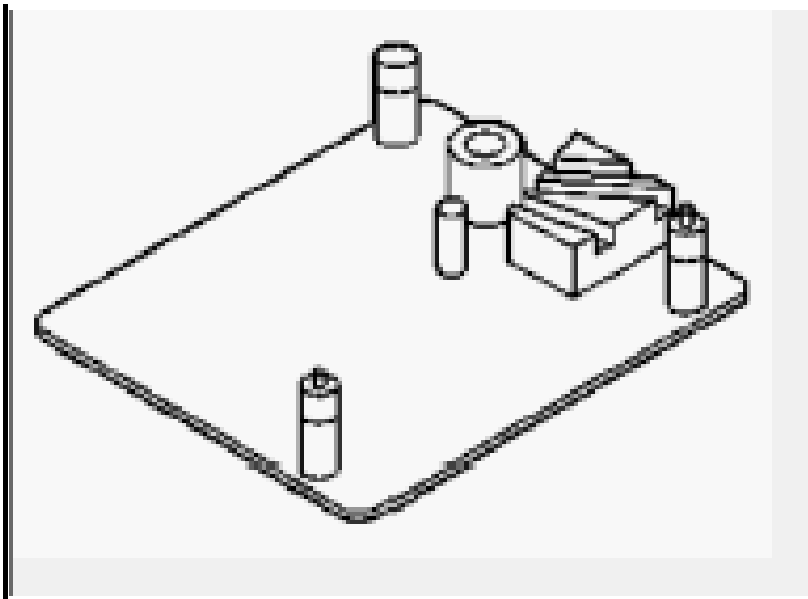

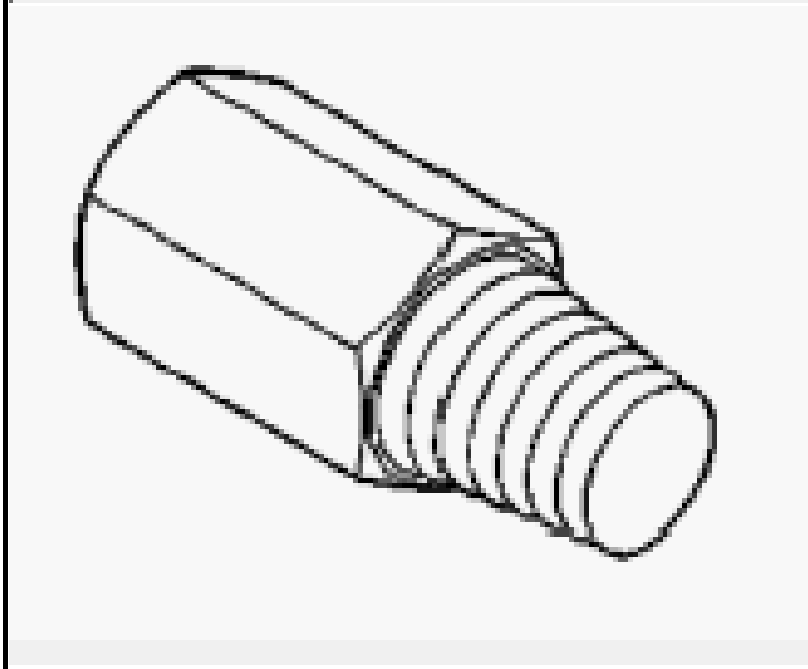

6786 - Remover, Bushing (Originally Shipped In Kit Number(s) 6784, 6809, 6822.)

8692 - Installer, Bearing Cup (Originally Shipped In Kit Number(s) 8685CC, 8696, 8710, 8837.)

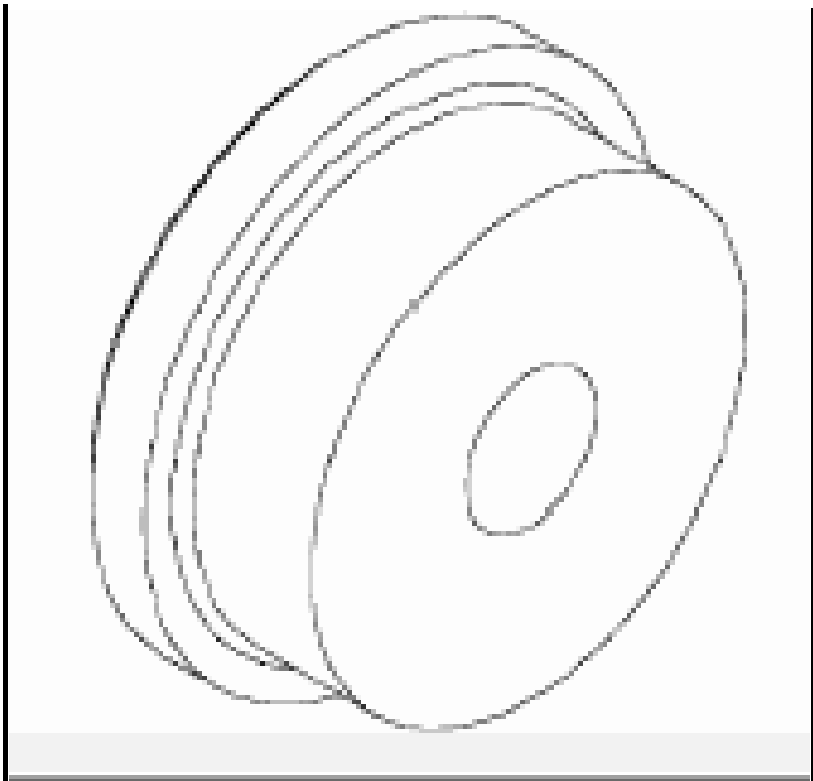

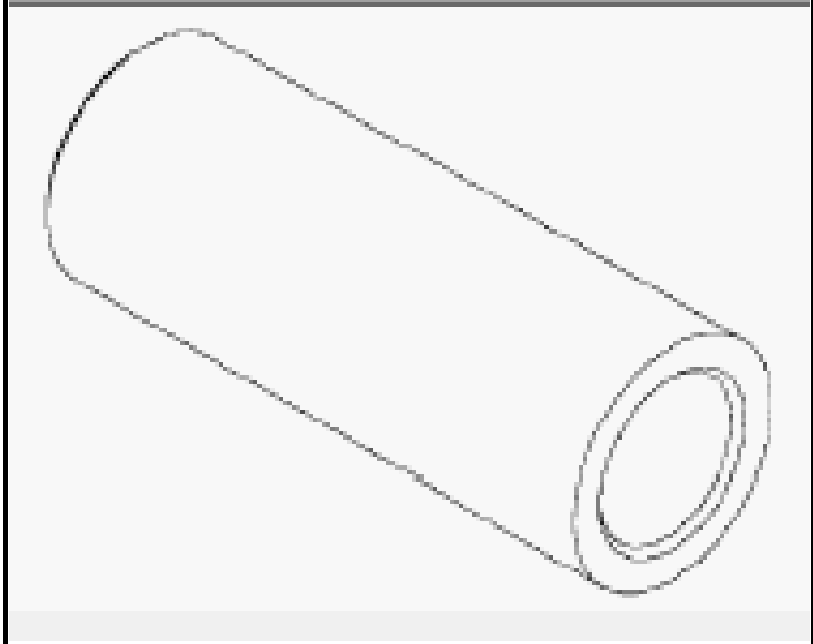

8864 - Installer, Seal (Originally Shipped In Kit Number(s) 8998, 8998CC.)

9585 - Remover, Bearing Cup

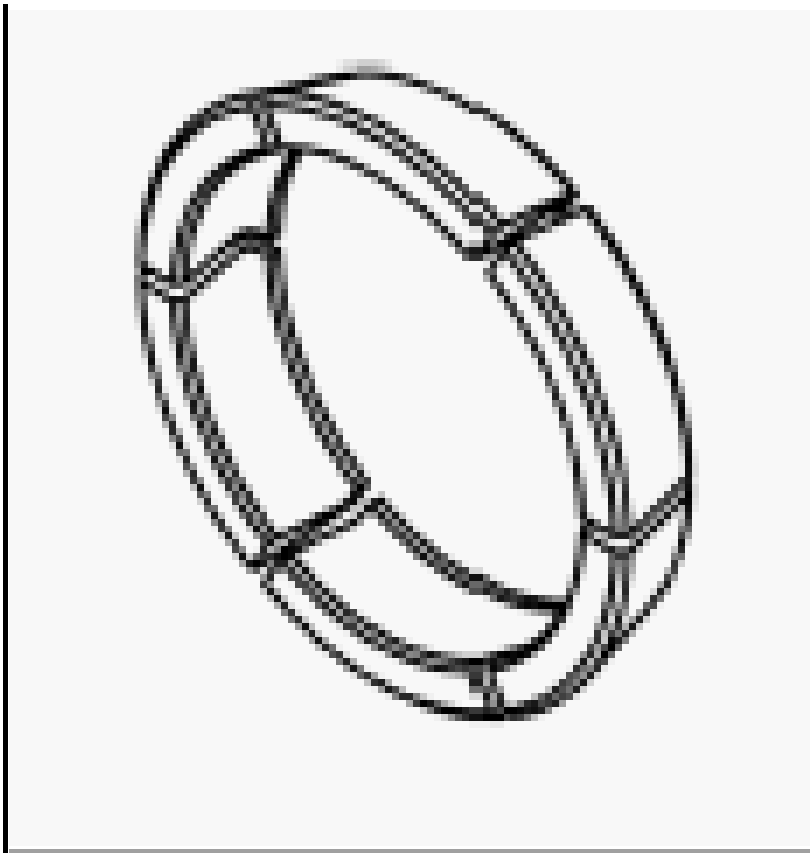	(Originally Shipped In Kit Number(s) 9691.)
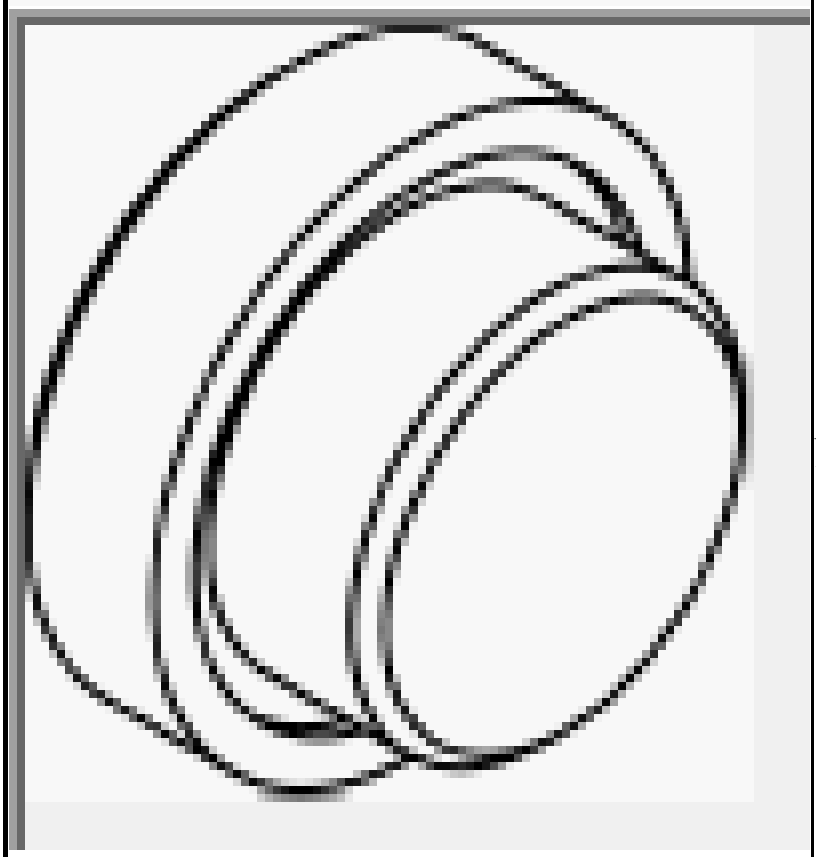	9678 - Press Plug (Originally Shipped In Kit Number(s) 9675, 9685, 9695.)

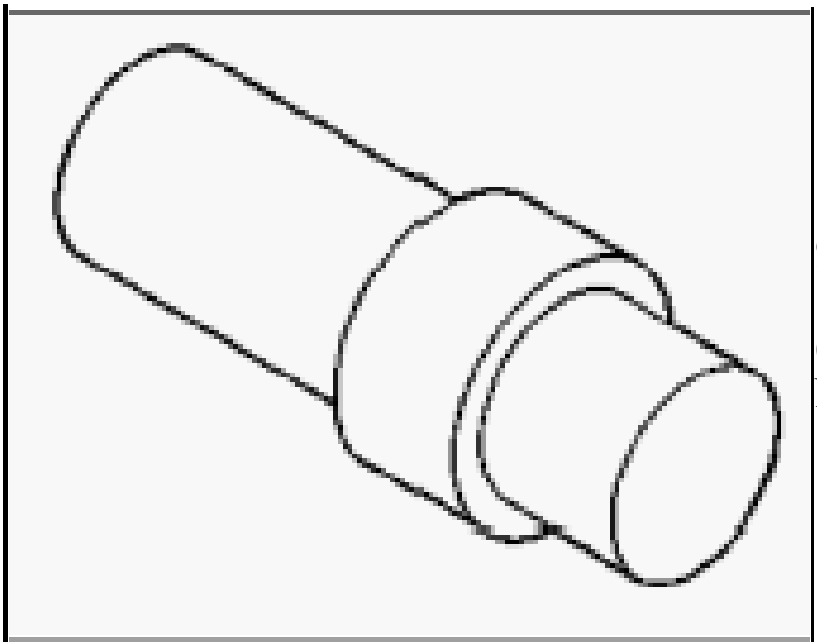

9761-1 - Pad, Shift Rail Support
(Originally Shipped In Kit Number(s) 9898.)

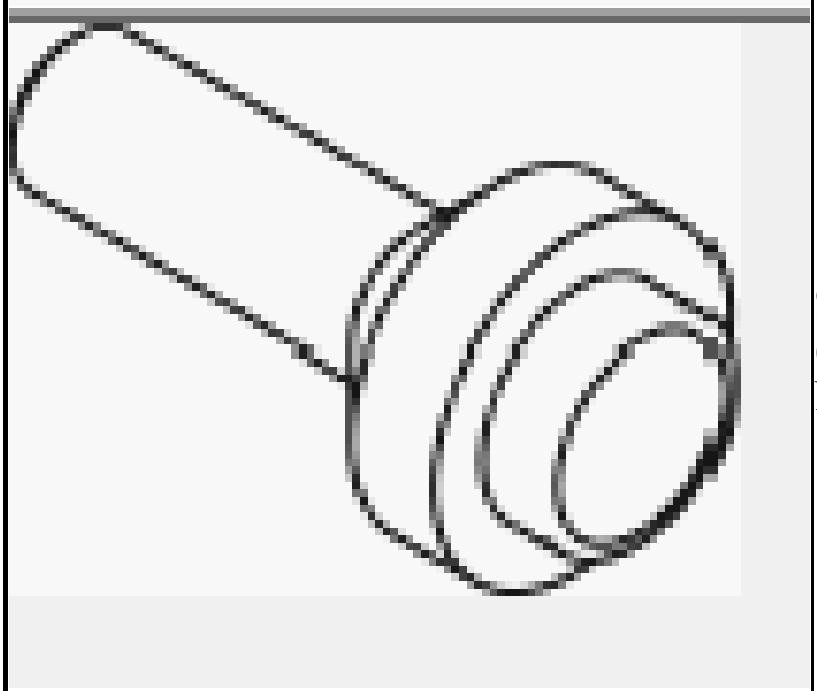

9761-2 - Spacer
(Originally Shipped In Kit Number(s) 9898.)

9761-3 - Spacer
(Originally Shipped In Kit Number(s) 9898.)

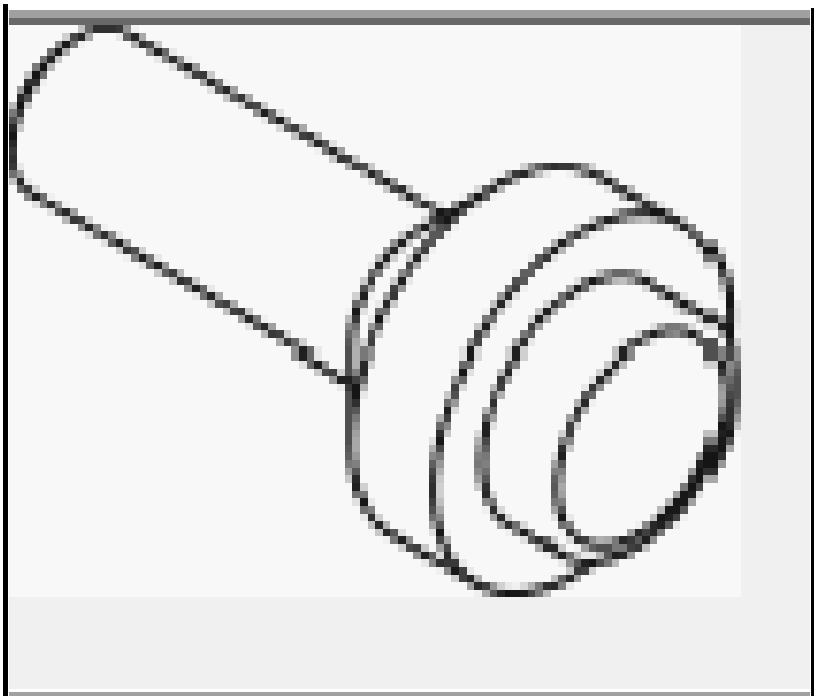

9761-4 - Stand Off
(Originally Shipped In Kit Number(s) 9898.)

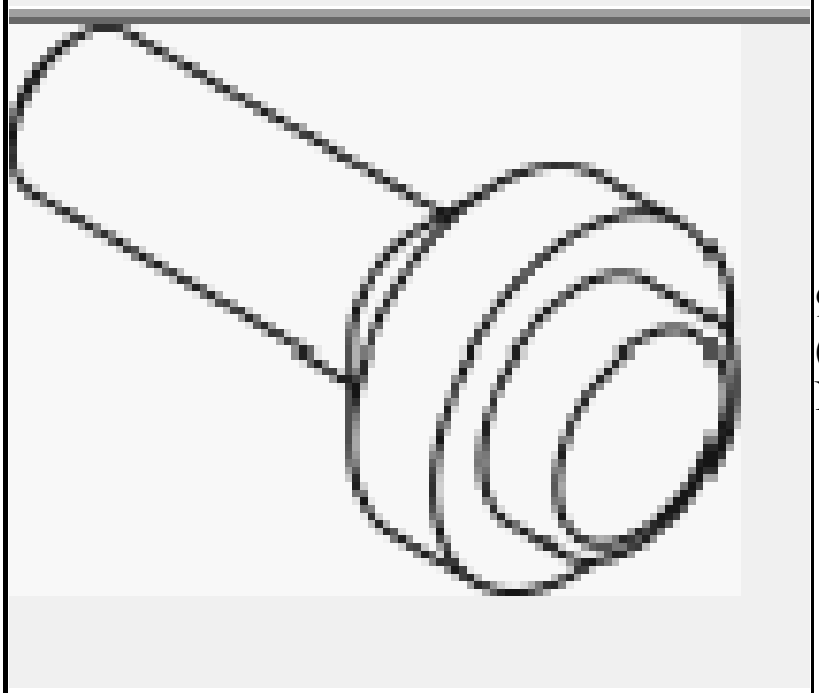

9761-5 - Stand Off
(Originally Shipped In Kit Number(s) 9898.)

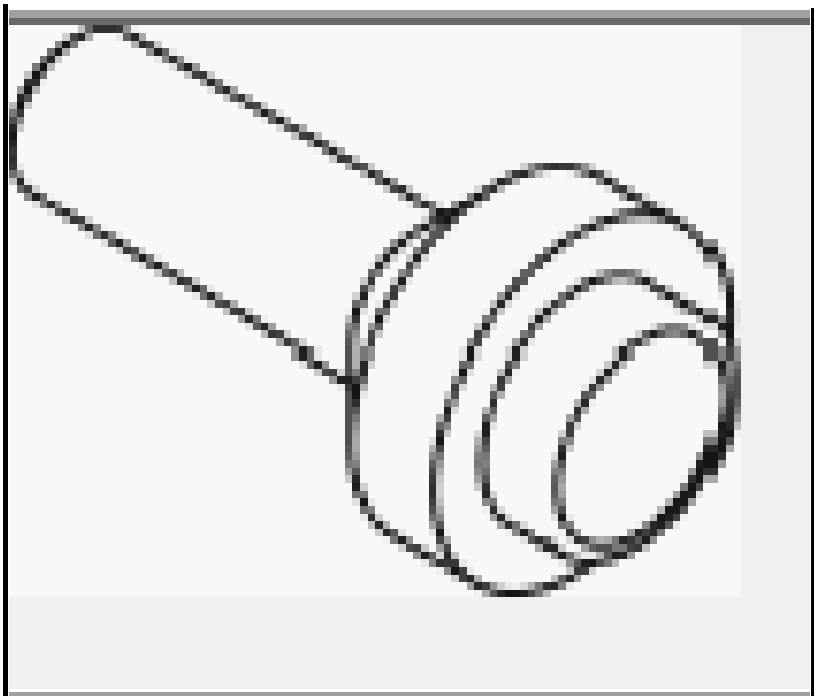

9761-6 - Stand Off
(Originally Shipped In Kit Number(s) 9898.)

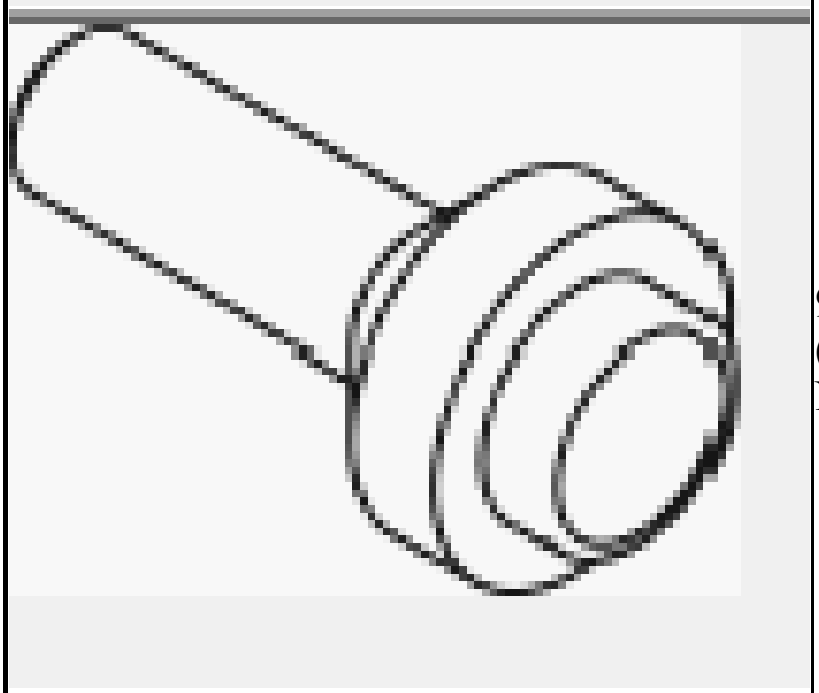

9761-7 - Stand Off
(Originally Shipped In Kit Number(s) 9898.)

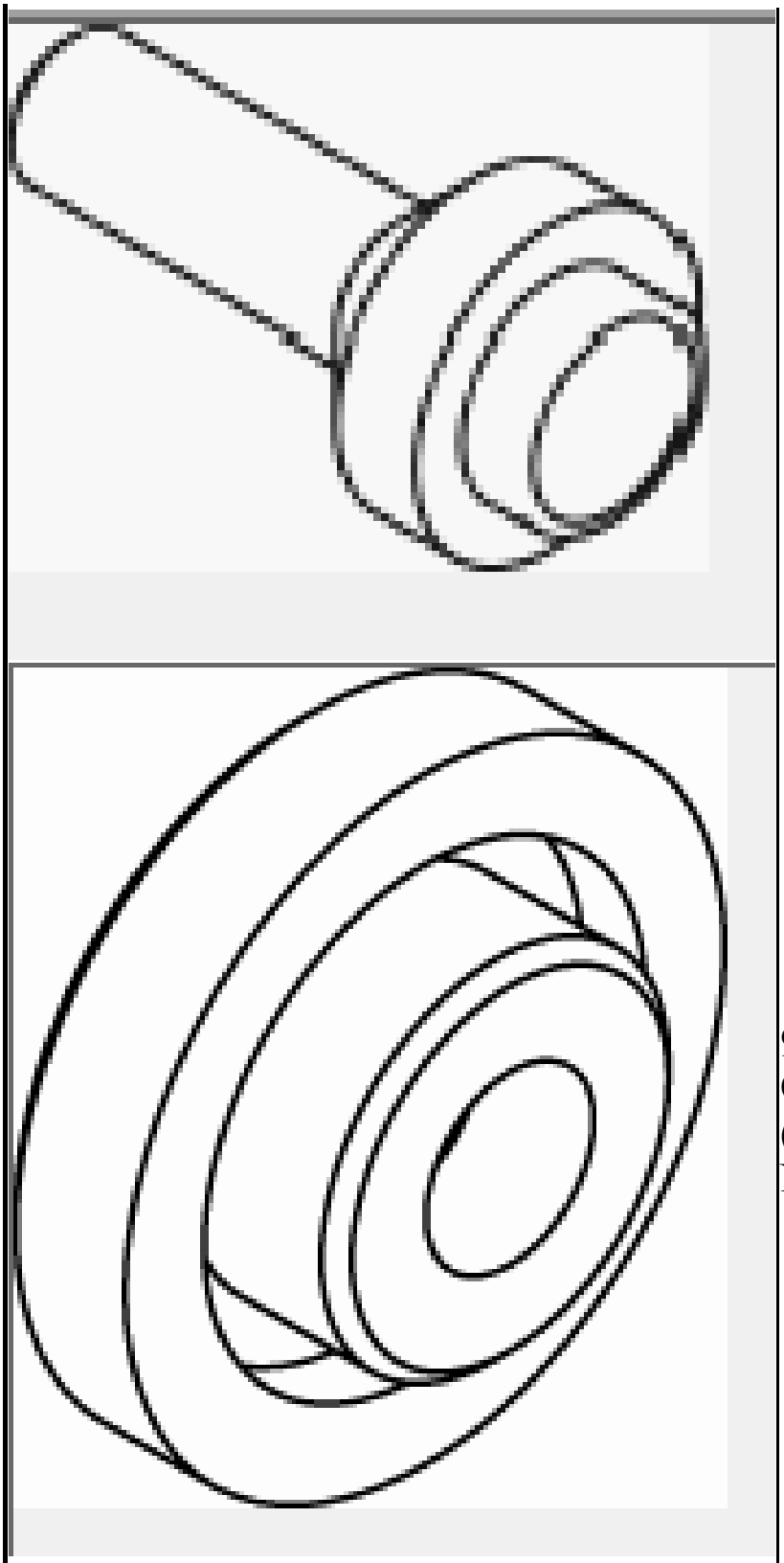

9928 - Installer, Differential Oil Seal
(Originally Shipped In Kit Number(s) 9898.)

	C-293-37 - Block Set, Puller (Originally Shipped In Kit Number(s) 8418, 8562, C-293-M, DD-914-CLT-L.)
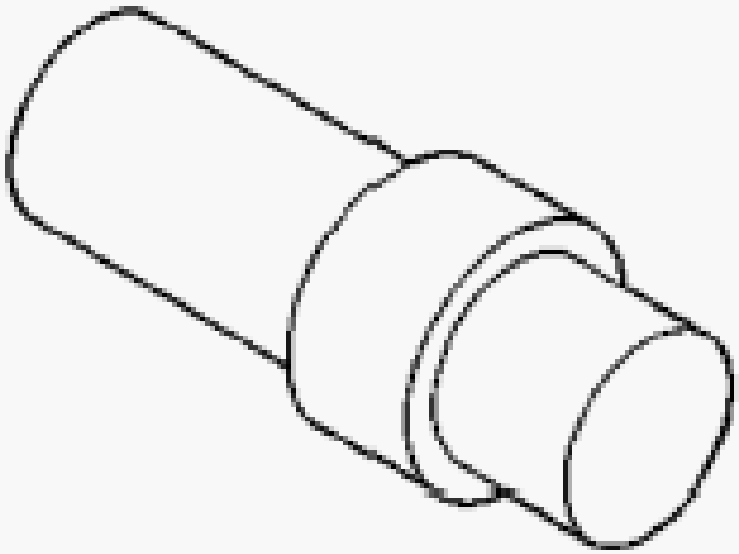	C-293-45 - Block Set, Puller (Originally Shipped In Kit Number(s) C-293-M.)

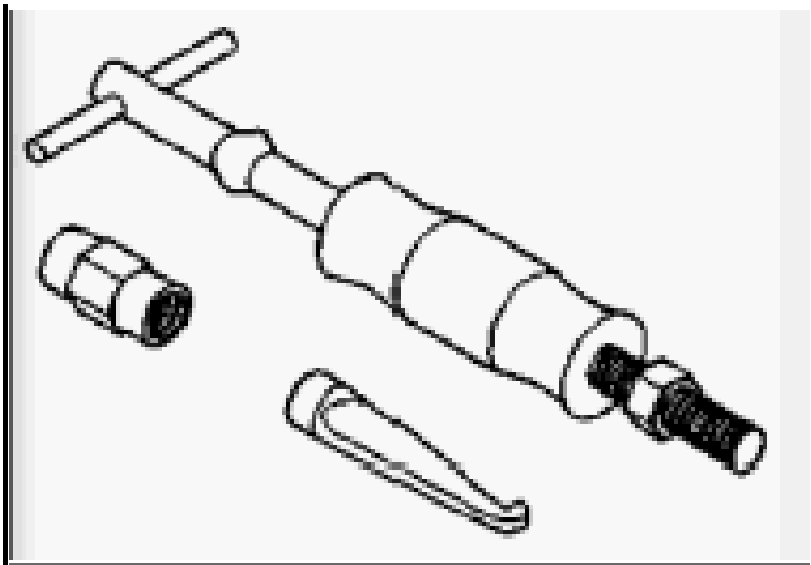	C-293-PA - Puller, Press (Originally Shipped In Kit Number(s) 8418, 8837, C-293-M.)
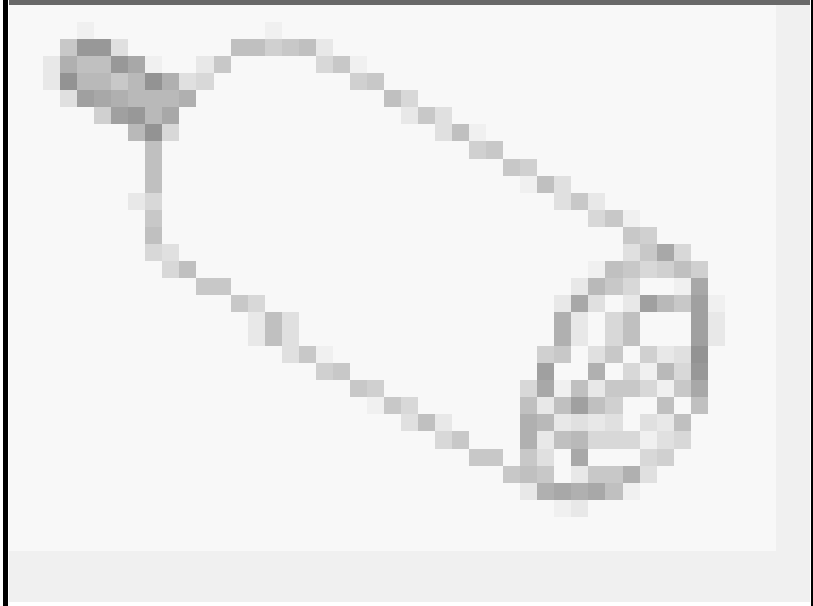	C-3752 - Slide Hammers (Originally Shipped In Kit Number(s) 9202, 9202A-CAN, 9202-CAN, 9202CC.)
	C-4171 - Driver Handle, Universal (Originally Shipped In Kit Number(s) 9202, 9202A-CAN, 9202CC, 9299, 9299CC, 9299CC, 9300A-CAN.)

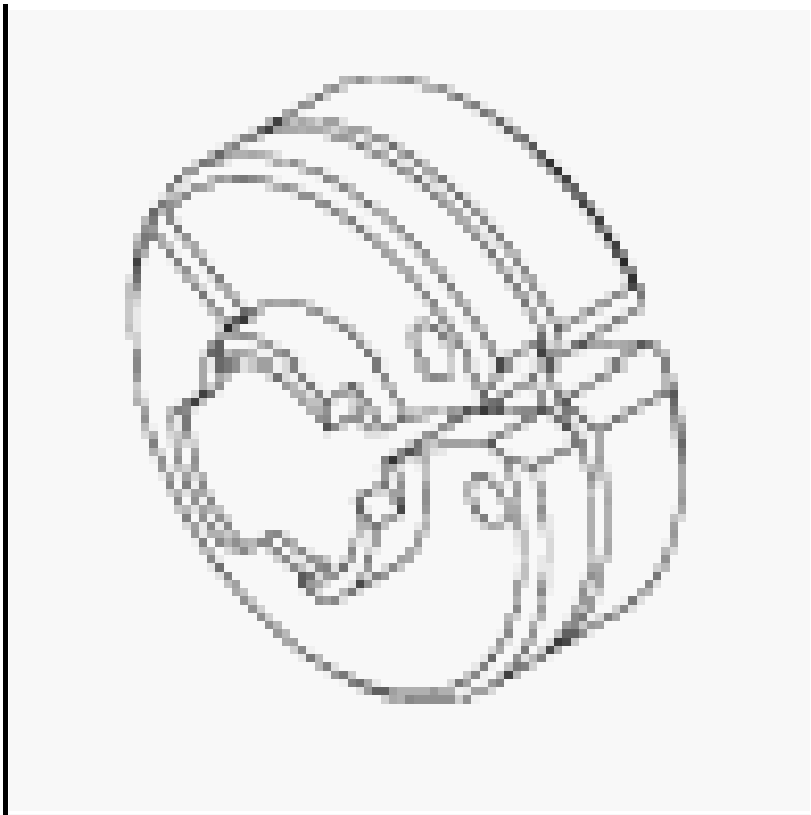

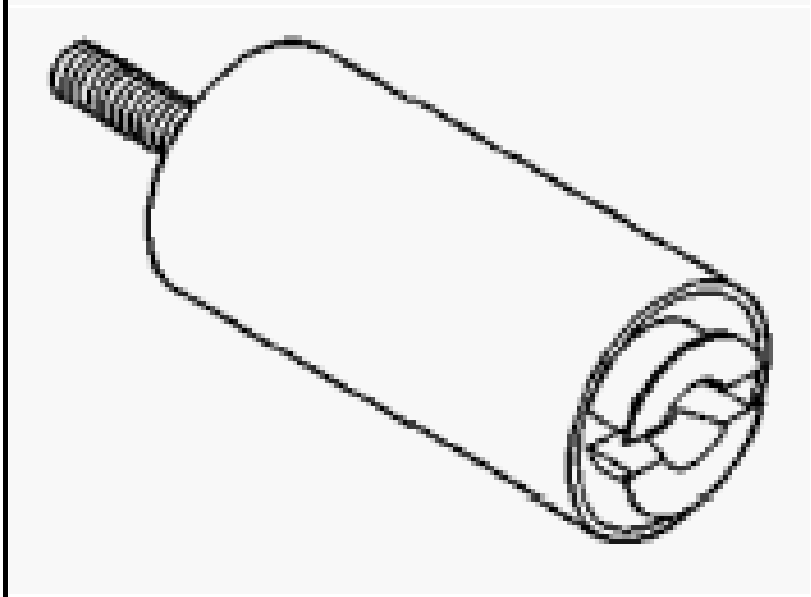

C-4992-1 - Installer (Originally Shipped In Kit Number(s) 6672, 6822.)

C-4995A - Tool, Differential Bearing Torque

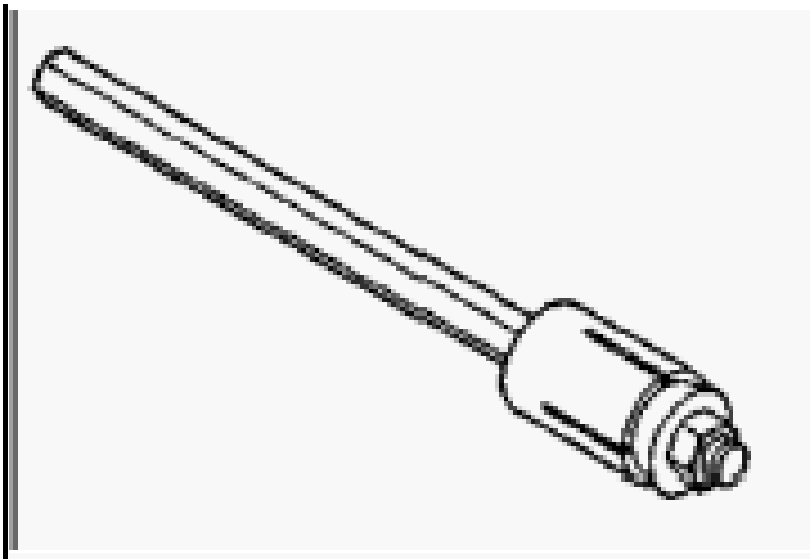

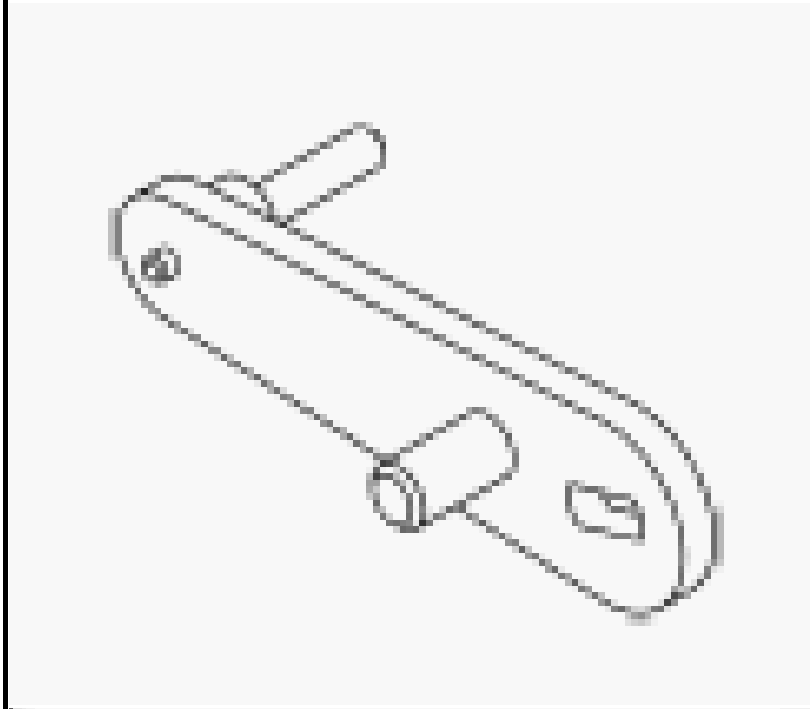

C-4996 - Adapter, Plug
(Originally Shipped In Kit Number(s) 6672.)

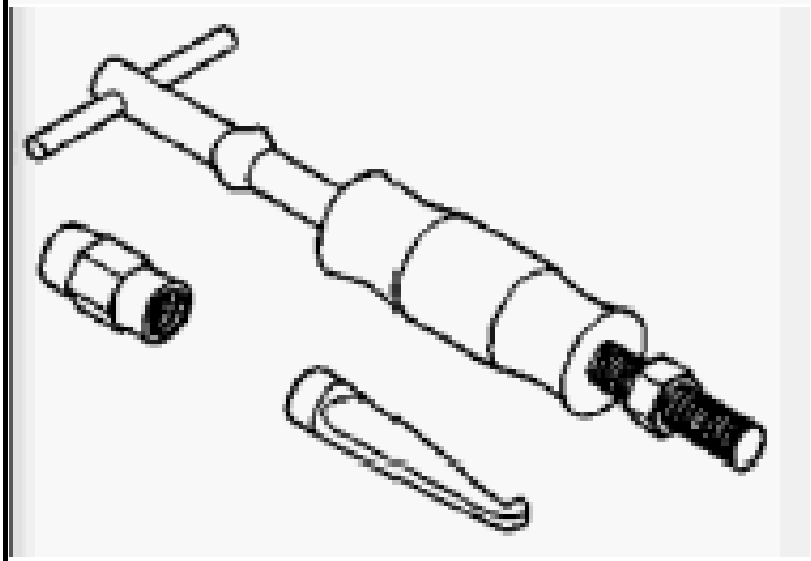

C-637 - Slide Hammer, Universal
(Originally Shipped In Kit Number(s) 9202.)

	L-4410 - Installer, Bearing (Originally Shipped In Kit Number(s) 6822.)
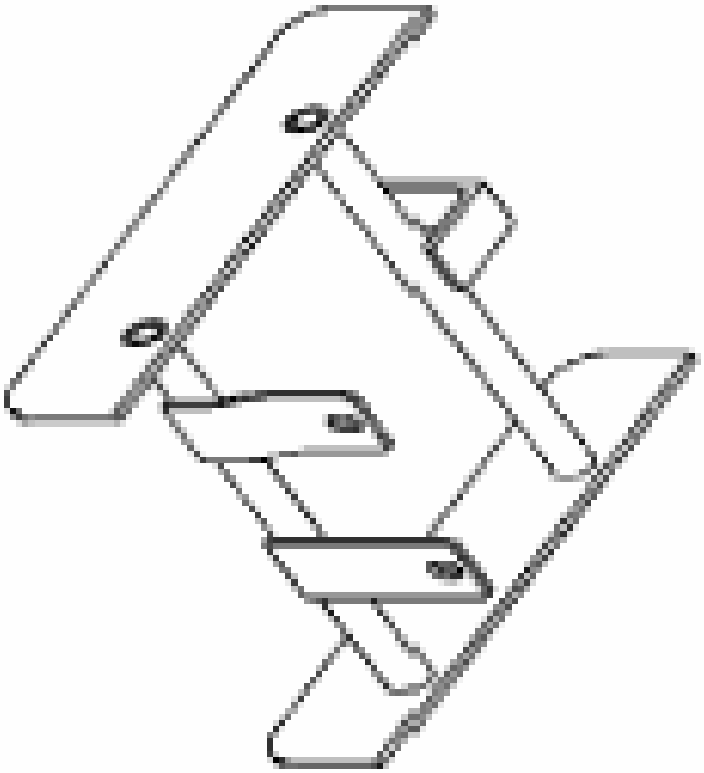	L-4518 - Remover, Bearing Cup (Originally Shipped In Kit Number(s) 6822.)

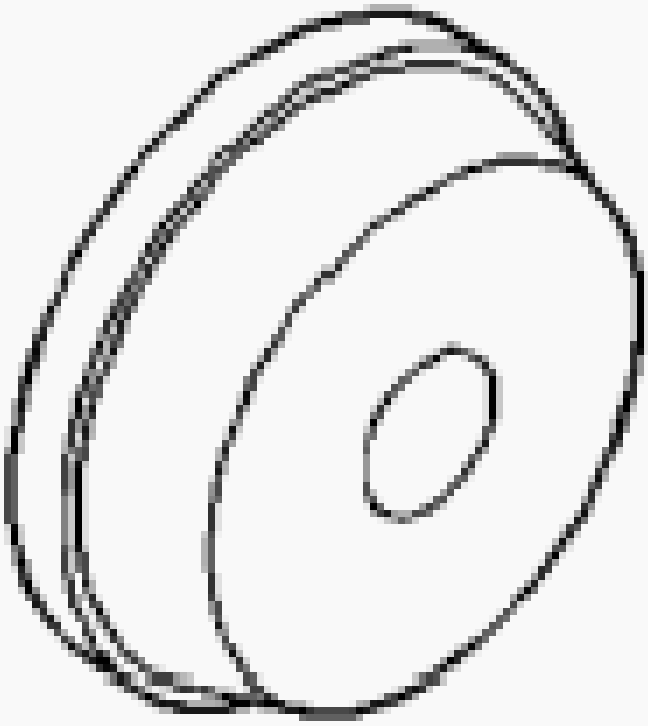	L-4520 - Installer, Seal/Cup (Originally Shipped In Kit Number(s) 6822.)
	MD998343 - Adapter, Wrench

BEARING AND RACE, INPUT

REMOVAL

REMOVAL

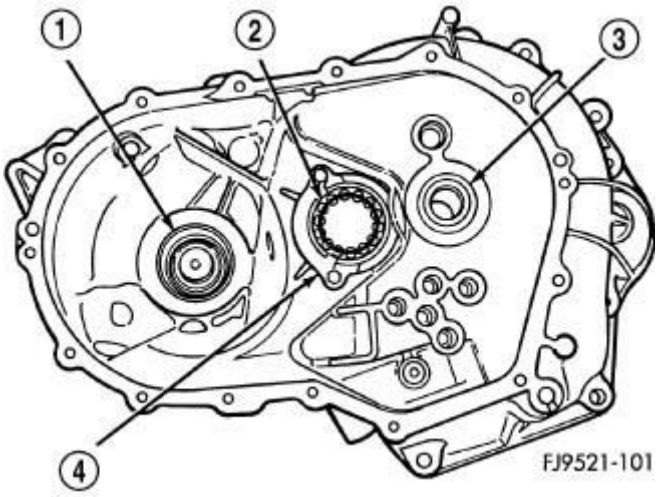

Fig. 71: Input Bearing And Sleeve
Courtesy of CHRYSLER GROUP, LLC

1 - DIFFERENTIAL BEARING
2 - OUTPUT BEARING
3 - INPUT BEARING
4 - BEARING RETAINER

The input bearing (3) is a one-piece bearing and sleeve unit. The sleeve is the slide point for the clutch-release bearing and lever.

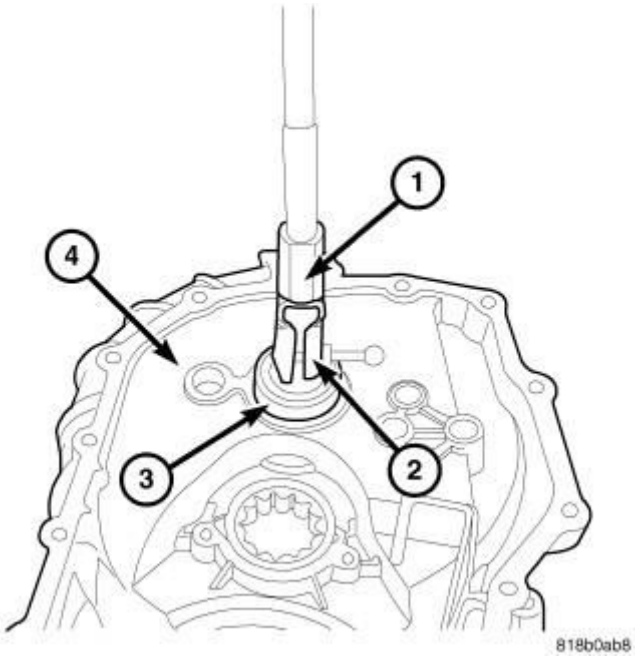

Fig. 72: Puller, Slide Hammer & Input Bearing
Courtesy of CHRYSLER GROUP, LLC

1. Install Puller (special tool #9585, Remover, Bearing Cup) (2) and Slide Hammer (special tool #C-637, Slide Hammer, Universal) (1) over into bearing on the gear case side of the transaxle clutch housing (4).
2. Pull the input bearing (3) out of the housing.

INSTALLATION

INSTALLATION

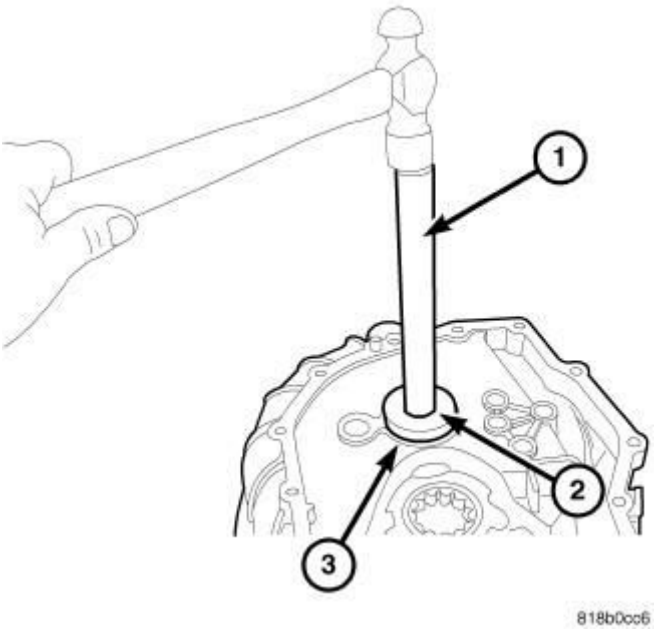

Fig. 73: Installing Input Bearing Bellhousing
Courtesy of CHRYSLER GROUP, LLC

1. Apply coating of Loctite® sealant on bearing outer diameter. Position sleeve and bearing assembly at input bearing bore.
2. Using Installer (special tool #5064, Installer, Bearing) (2) and Handle (special tool #C-4171, Driver Handle, Universal) (1) install input bearing (3) into bore until it is fully seated.

BEARING AND RACE, OUTPUT

REMOVAL

REMOVAL

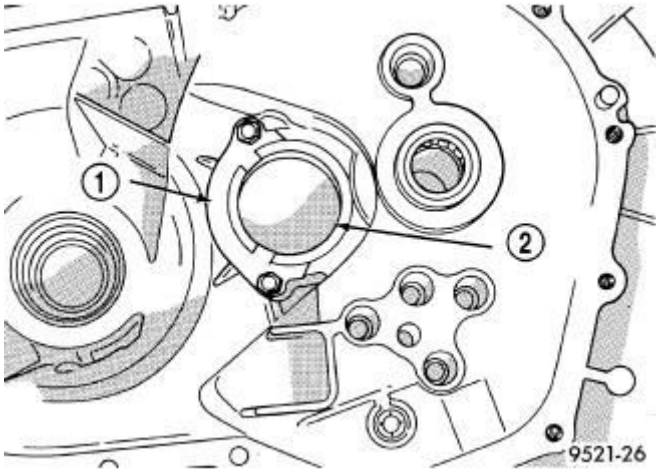

Fig. 74: Output Bearing Strap
Courtesy of CHRYSLER GROUP, LLC

1 - BEARING RETAINER
2 - OUTPUT BEARING RACE

1. Remove screws at output bearing retainer strap (1).

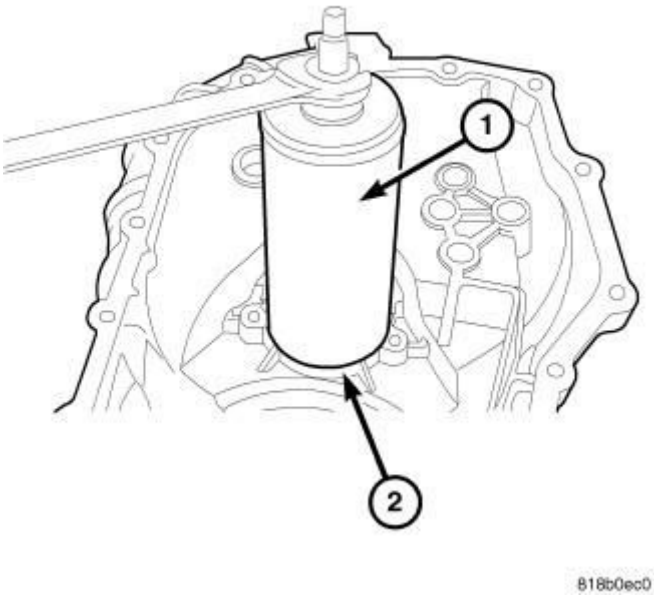

Fig. 75: Output Shaft Bearing
Courtesy of CHRYSLER GROUP, LLC

2. Install Puller (special tool #L-4518, Remover, Bearing Cup) (1) and remove output bearing (2).

INSTALLATION

INSTALLATION

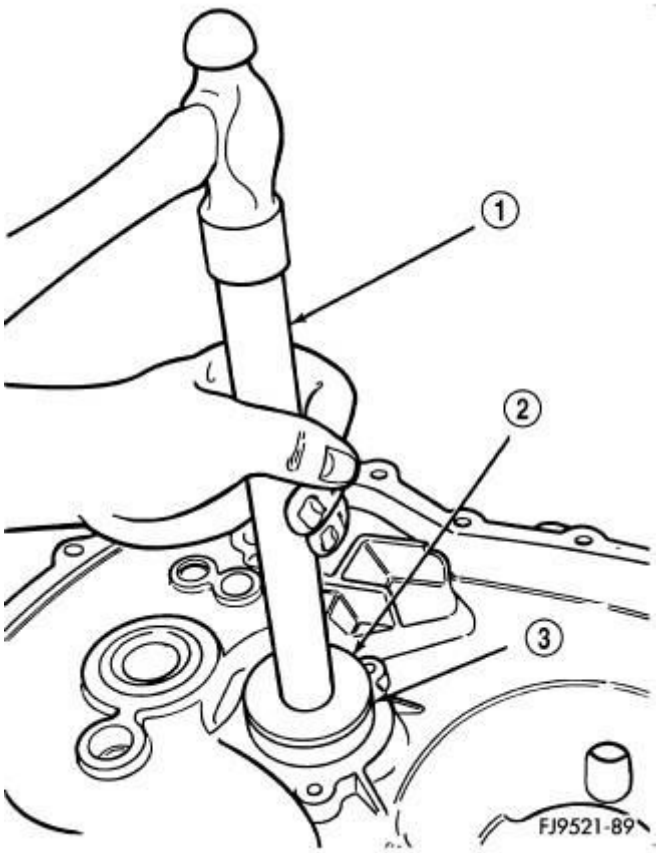

Fig. 76: Output Bearing Race Installation
Courtesy of CHRYSLER GROUP, LLC

1 - HANDLE C-4171
2 - INSTALLER C-4628
3 - OUTPUT BEARING RACE

NOTE: Properly install race with tabs on lock feature.

1. Line up output bearing (3) to bore.
2. Insert tool Installer (special tool #8692, Installer, Bearing Cup) (2) with Handle (special tool #C-4171, Driver Handle, Universal) (1) onto output bearing. Tap bearing into bore. Verify that the larger diameter of the cage is facing outward. Position bearing retaining strap. Tighten bolts to 12 N.m (105 in. lbs.).

BOOT, GEARSHIFT

REMOVAL

REMOVAL

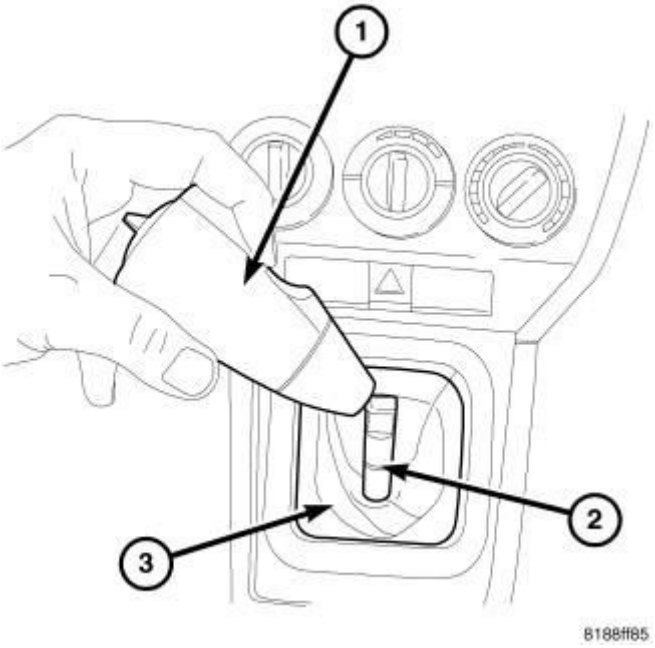

Fig. 77: Gearshift Knob
Courtesy of CHRYSLER GROUP, LLC

1. Firmly pull up on gearshift knob (1) with moderate force to remove from gearshift (2) mechanism.
2. Remove shifter boot/bezel (3) assembly from console by lifting up at mounting ring area.

INSTALLATION

INSTALLATION

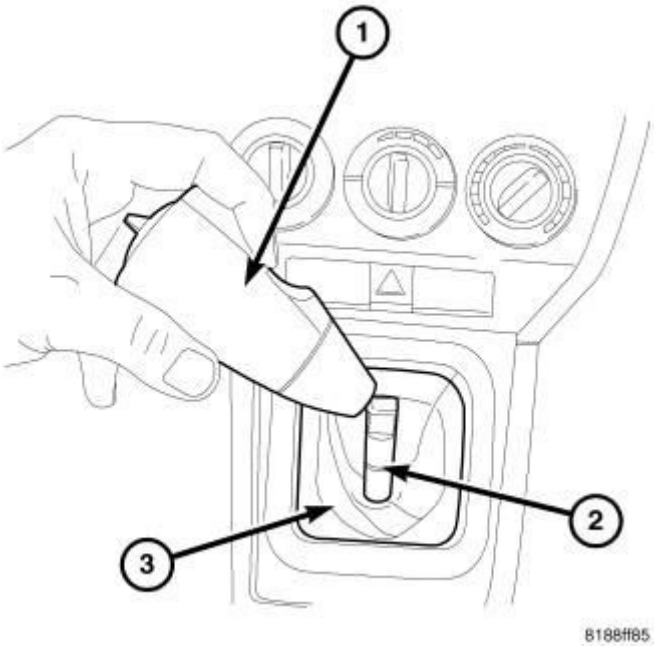

Fig. 78: Gearshift Knob
Courtesy of CHRYSLER GROUP, LLC

1. Position gearshift boot/bezel (3) over the gearshift mechanism (2) and apply hand pressure to engage and snap the boot into place.
2. Position gearshift knob (1) over the gearshift mechanism.
3. Apply firm pressure until the knob snaps into place.

BUSHING(S), SHIFT RAIL

REMOVAL

REMOVAL

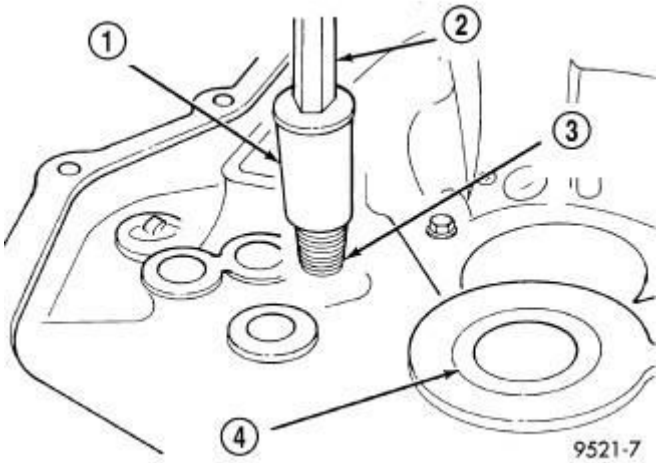

Fig. 79: Shift Rail Bushing Removal

Courtesy of CHRYSLER GROUP, LLC

1 - REMOVER 6786
2 - SLIDE HAMMER C-3752
3 - SHIFTER RAIL BUSHING
4 - INPUT BEARING

1. Thread Remover (special tool #6786, Remover, Bushing) (1) into shift rail bushing.
2. Install slide hammer (special tool #C-3752, Slide Hammers) (2) onto tool.
3. Remove bushing (3) using slide hammer and tool assembly.

INSTALLATION

INSTALLATION

1. Line up replacement bushing in bore.
2. Using Installer (special tool #MD998343, Adapter, Wrench), tap bushing into bore until flush with the chamfer in the case.

BUSHING(S), SHIFT SELECT SHAFT

REMOVAL

REMOVAL

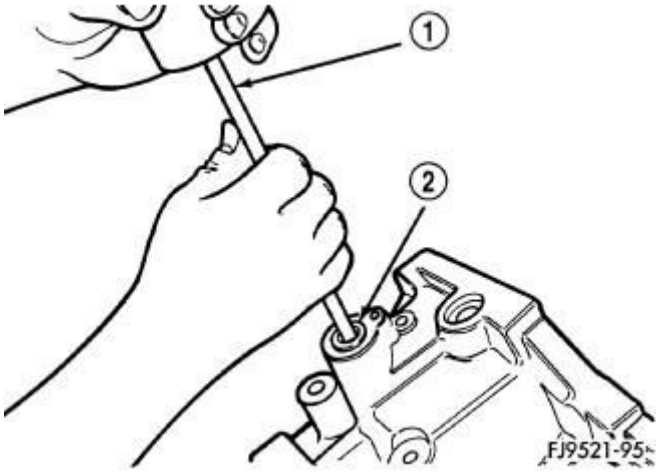

Fig. 80: Crossover Shaft Bushing Removal
Courtesy of CHRYSLER GROUP, LLC

1 - SLIDE HAMMER C-3752

2 - SHIFTER SHAFT BUSHING

1. Install Slide Hammer (special tool #C-3752, Slide Hammers) (1) through the select bushing.
2. Thread nut and washer onto slide hammer.
3. Using the slide hammer, remove the select shaft bushing (2).

INSTALLATION

INSTALLATION

1. Position the replacement select shaft bushing over the crossover shaft bushing bore.
2. Using an appropriate size deep-well socket, install the select shaft bushing into the bushing bore.

BUSHING(S), SHIFT SHAFT

REMOVAL

REMOVAL

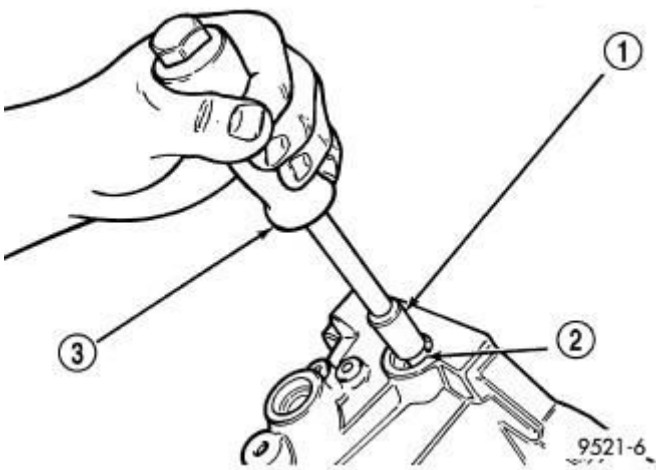

Fig. 81: Selector Shaft Bushing Removal
Courtesy of CHRYSLER GROUP, LLC

1 - REMOVER 6786
2 - SHIFT SHAFT BUSHING
3 - SLIDE HAMMER C-3752

1. Remove shift shaft using procedure in this service information.

2. Thread Remover (special tool #6786, Remover, Bushing) (1) into bushing.
3. Install slide hammer (special tool #C-3752, Slide Hammers) (3) onto tool and remove bushing (2) using slide hammer.

INSTALLATION

INSTALLATION

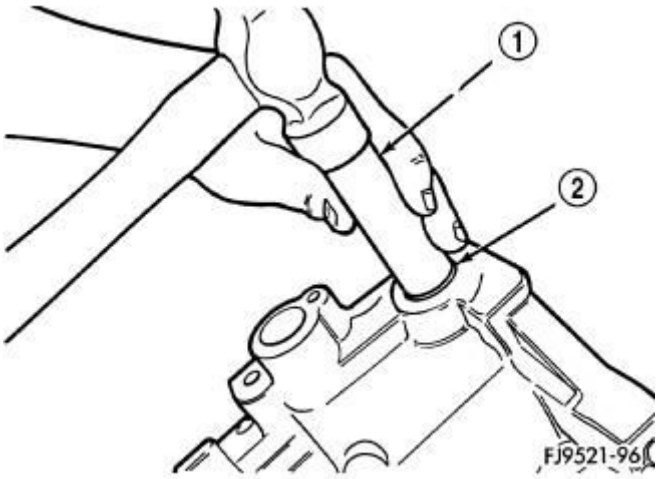

Fig. 82: Selector Shaft Bushing Installation
Courtesy of CHRYSLER GROUP, LLC

1 - DEEP WELL SOCKET
2 - SHIFTER SHAFT BUSHING

1. Position replacement bushing over shift shaft bore.
2. Using an appropriate size deep-well socket (1), install bushing (2) in selector shaft bore.

CABLE, GEARSHIFT CONTROL

REMOVAL

REMOVAL

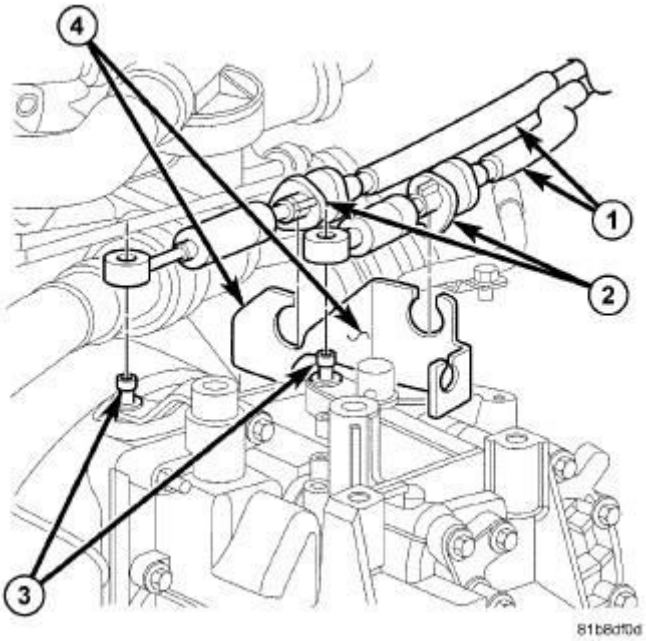

Fig. 83: Shifter Cables, Bracket & Clips
Courtesy of CHRYSLER GROUP, LLC

1. Remove the shifter. Refer to **MECHANISM, GEARSHIFT, REMOVAL**.
2. Raise hood.
3. Remove the resonator.
4. Remove engine cover.
5. Remove air cleaner assembly.
6. Disconnect both battery cables. Refer to **REMOVAL** .
7. Remove battery hold down clamp and bolt, and remove battery.
8. Remove battery tray. Refer to **TRAY, BATTERY, REMOVAL** .
9. Disconnect cables (1) from the shift levers at the transaxle (3).

CAUTION: Pry up with equal force on both sides of shifter cable isolator bushings to avoid damaging cable isolator bushings.

10. Squeeze cable retaining clips (2) and remove cables from bracket (4).

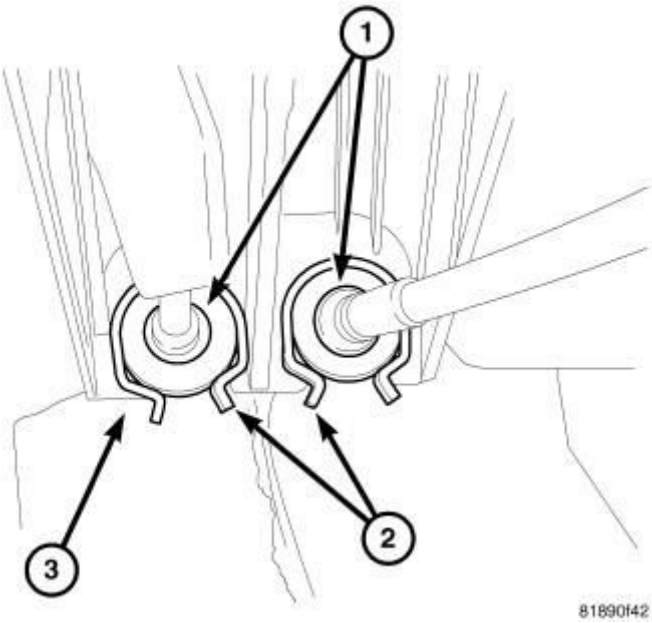

Fig. 84: Cable Retaining Clips & Cables
Courtesy of CHRYSLER GROUP, LLC

11. Remove the Occupant Restraint Controller (ORC). Refer to **MODULE, OCCUPANT RESTRAINT CONTROLLER, REMOVAL** .
12. Remove shifter. Refer to **MECHANISM, GEARSHIFT, REMOVAL**.
13. Squeeze cable retaining clips (2) and remove cables from bracket.
14. Remove cable assembly (1) from vehicle.

INSTALLATION

INSTALLATION

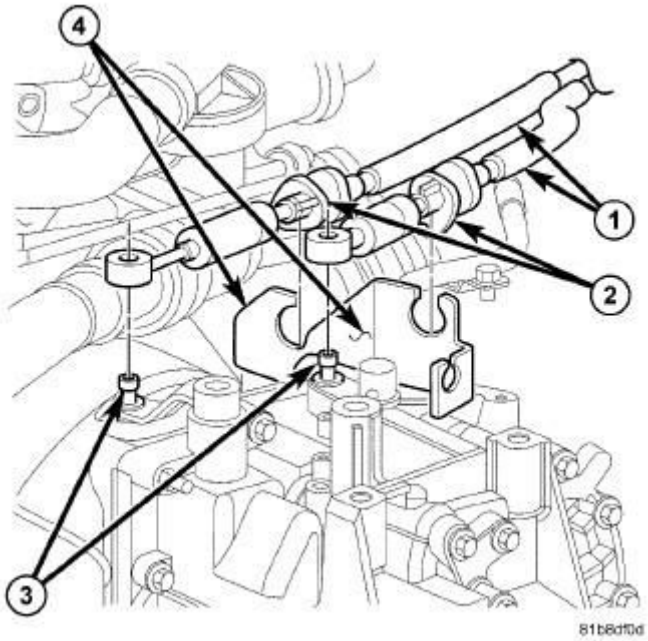

Fig. 85: Shifter Cables, Bracket & Clips
Courtesy of CHRYSLER GROUP, LLC

CAUTION: Gearshift cable bushings must not be lubricated or the bushings will swell and split.

1. Install cable assembly through floor pan opening and secure to floor pan with grommet plate.
2. Route transaxle end of cable assembly into engine compartment and over transaxle assembly.
3. Connect cables (1) to the shift levers (3) at the transaxle.
4. Install cables (1) to bracket (4).

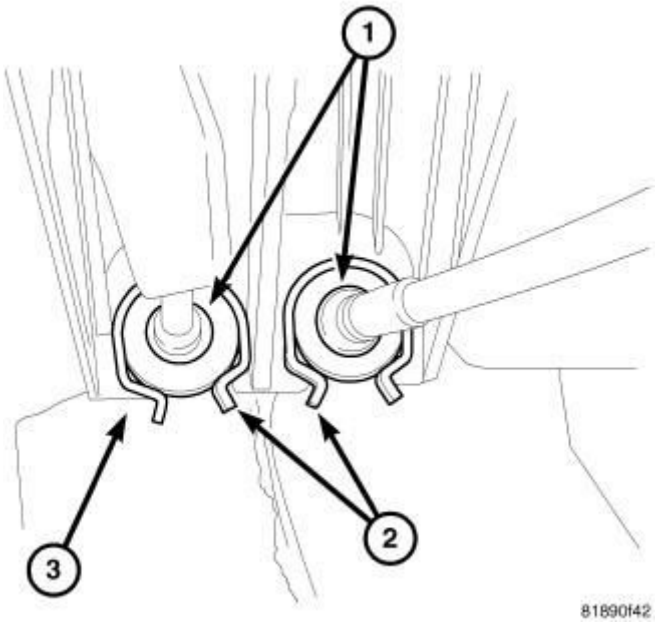

Fig. 86: Cable Retaining Clips & Cables
Courtesy of CHRYSLER GROUP, LLC

5. Install gearshift cables (1).
6. Install ORC. Refer to **MODULE, OCCUPANT RESTRAINT CONTROLLER, INSTALLATION** .
7. Install shifter. Refer to **MECHANISM, GEARSHIFT, INSTALLATION**.
8. Install battery tray.
9. Install battery and hold-down clamp.
10. Install the air cleaner assembly.
11. Connect battery cables.

CUPS, DIFFERENTIAL BEARING

REMOVAL

REMOVAL

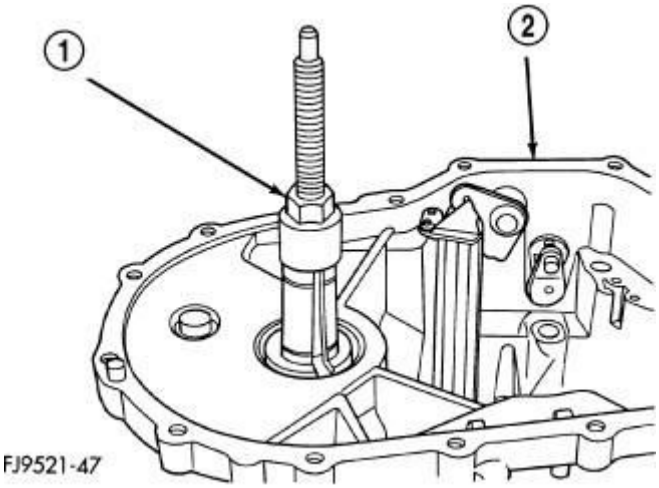

Fig. 87: Identifying Remover L-4518 & Gear Case
Courtesy of CHRYSLER GROUP, LLC

1 - SPECIAL TOOL L-4518
2 - GEAR CASE

1. Remove differential assembly from gear case (2) using the procedure outlined in this service information.
2. Install Remover (special tool #L-4518, Remover, Bearing Cup) (1) into the differential bearing cup.

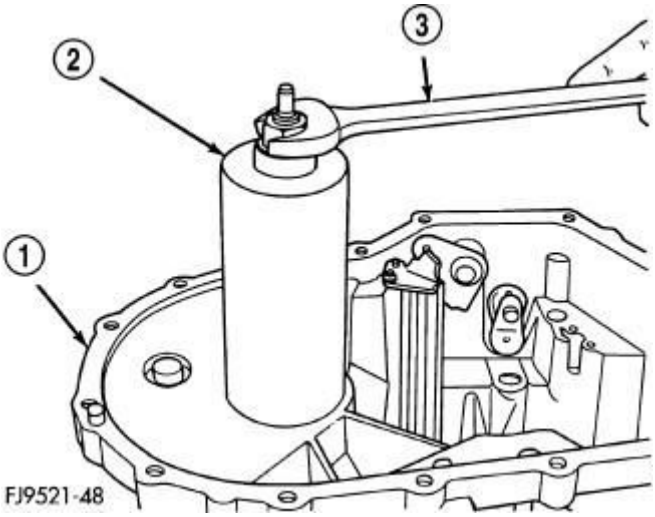

Fig. 88: Removing Differential Bearing Race
Courtesy of CHRYSLER GROUP, LLC

1 - GEAR CASE
2 - SPECIAL TOOL L-4518
3 - WRENCH

3. Install the tool cup (2) over the tool.
4. Tighten the tool until the race is removed from the case.

INSTALLATION

INSTALLATION

1. Position the bearing cup into the case.
2. Install the bearing cup onto Installer (special tool #L-4520, Installer, Seal/Cup).
3. Using Installer (special tool #L-4520, Installer, Seal/Cup) and Universal Handle (special tool #C-4171, Driver Handle, Universal), install differential bearing cup into the transaxle case.

DIFFERENTIAL, TRANSAXLE

ADJUSTMENTS

ADJUSTMENTS

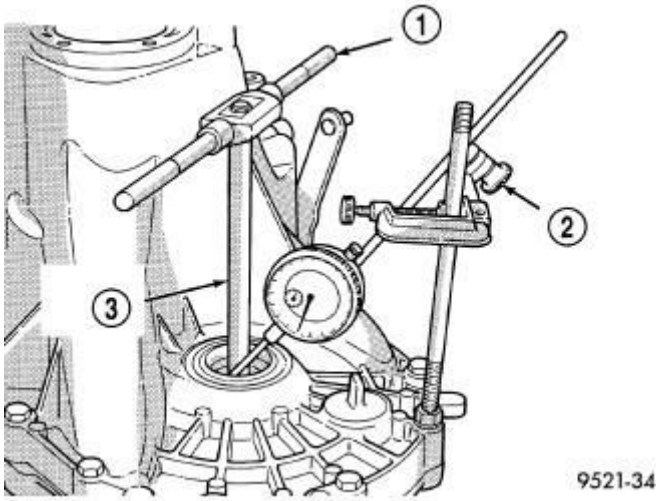

Fig. 89: Checking Differential Bearing End Play To Determine Shim Thickness
Courtesy of CHRYSLER GROUP, LLC

1 - T-HANDLE
2 - DIAL INDICATOR SET
3 - TORQUE TOOL C-4995A

Measure and adjust differential side bearing preload during any transaxle service,

especially when the following components are replaced:

- Transaxle gear case
- Clutch bellhousing case
- Differential case
- Differential bearings

NOTE: True bearing turning torque readings can be obtained only with the geartrain removed from the case.

1. Remove bearing cup and existing shim from clutch bellhousing case.
2. Press in new bearing cup into bellhousing case (or use a cup that has been ground down on the outer edge for ease of measurement).
3. Press in new bearing cup into gear case side.
4. Oil differential bearings with transmission fluid. Install differential assembly in transaxle gear case. Install clutch bellhousing over gear case. Install and torque case bolts to 25 N.m (225 in. lbs.).
5. Position transaxle with bellhousing facing down on workbench with C-clamps. Position dial indicator (2).

   NOTE: Indicator is set up as shown for illustrative purposes only. Indicator must be parallel to T-Handle to obtain the most accurate reading.

6. Apply a medium load to differential with Torque Tool (special tool #C-4995A, Tool, Differential Bearing Torque) (3) and a T-handle (1), in the downward direction. Roll differential assembly back and forth a number of times. This will settle the bearings. Zero the dial indicator (2). To obtain end play readings, apply a medium load in an upward direction while rolling differential assembly back and forth. Record end play.

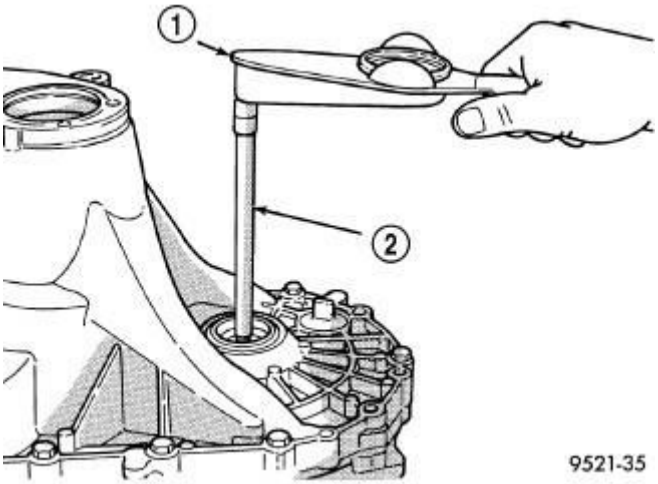

Fig. 90: Checking Differential Bearing Turning Torque
Courtesy of CHRYSLER GROUP, LLC

1 - INCH-POUND TORQUE WRENCH 2 - TORQUE TOOL C-4995A

7. The shim required for proper bearing preload is the **total of end play, plus (constant) preload of 0.18 mm (0.007 in.).** Never combine shims to obtain the required preload.
8. Remove case bolts. Remove clutch bellhousing differential bearing cup. Install shim(s) selected in. Refer to 7. Then press the bearing cup into clutch bellhousing.
9. Install clutch bellhousing. Install and tighten case bolts to 25 N.m (225 in. lbs.).
10. Using Torque Tool (special tool #C-4995A, Tool, Differential Bearing Torque) (2) and an inch-pound torque wrenched (1) check turning torque of the differential assembly. **The turning torque should be 6 to 12 in. lbs. If the turning torque is too high, install a 0.05 mm (0.002 inch) thinner shim. If the turning torque is too low, install a 0.05 mm (0.002 inch) thicker shim.**
11. Recheck turning torque. Repeat until the proper turning torque is obtained. Refer to 10.

DISASSEMBLY

DISASSEMBLY

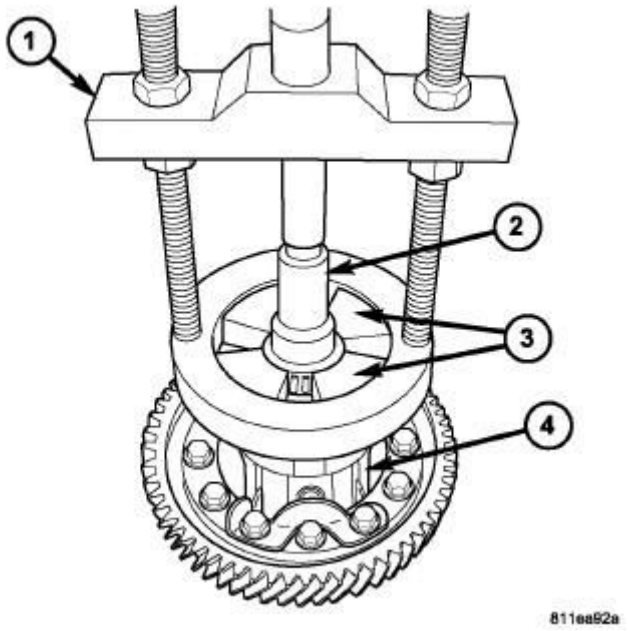

Fig. 91: Removing Differential Bearing Cone From Diff. Case Side
Courtesy of CHRYSLER GROUP, LLC

1 - PULLER PRESS C-293-PA
2 - ADAPTOR C-4996
3 - ADAPTOR BLOCKS C-293-45
4 - DIFFERENTIAL CASE

1. Remove differential bearing cones (ring gear and differential case side) using Puller (special tool #C-293-PA, Puller, Press) (1), Adapter Blocks (special tool #C-293-45, Block Set, Puller) (3), and Adaptor (special tool #C-4996, Adapter, Plug) (2). If all wheel drive use Puller (special tool #C-293-PA, Puller, Press), four (special tool #C-293-37, Block Set, Puller) Inserts and Press Insert (special tool #9678, Press Plug) to remove the large carrier bearing.

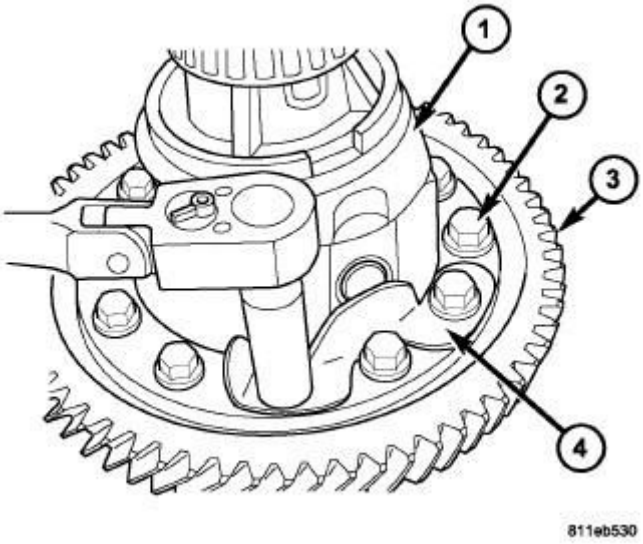

Fig. 92: Differential Ring Gear-To-Case Bolts
Courtesy of CHRYSLER GROUP, LLC

1 - DIFFERENTIAL CASE
2 - BOLT (12)
3 - RING GEAR
4 - PINION SHAFT RETAINER (2)

2. Remove the bolts holding the pinion shaft retainer (4) and the ring gear (3) to the differential case (1).

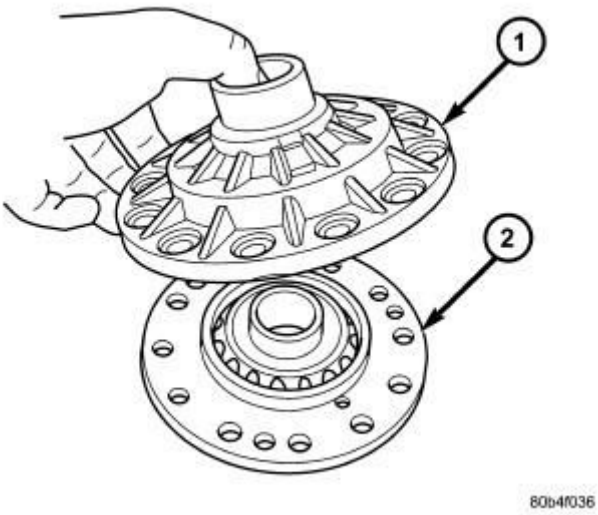

Fig. 93: Differential Support Plate
Courtesy of CHRYSLER GROUP, LLC

1 - DIFFERENTIAL SUPPORT PLATE 2 - DIFFERENTIAL CASE

3. Separate differential support (1) from case (2).

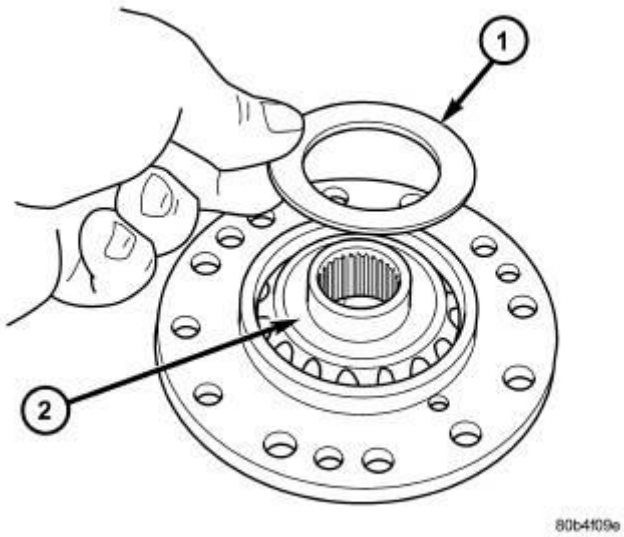

Fig. 94: Side Gear Thrust Washer
Courtesy of CHRYSLER GROUP, LLC

1 - SIDE GEAR THRUST WASHER 2 - DIFFERENTIAL SIDE GEAR

4. Remove the side gear thrust washer (1).
5. Remove side gear (2).

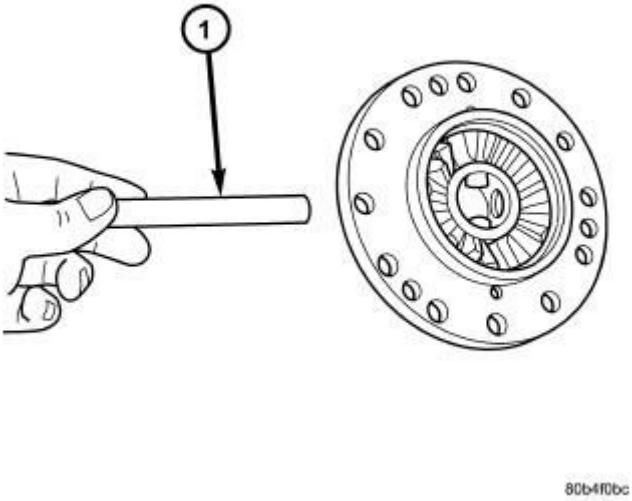

Fig. 95: Long Pinion Shaft
Courtesy of CHRYSLER GROUP, LLC

1 - PINION SHAFT (LONG)

6. Remove pinion shaft (1).

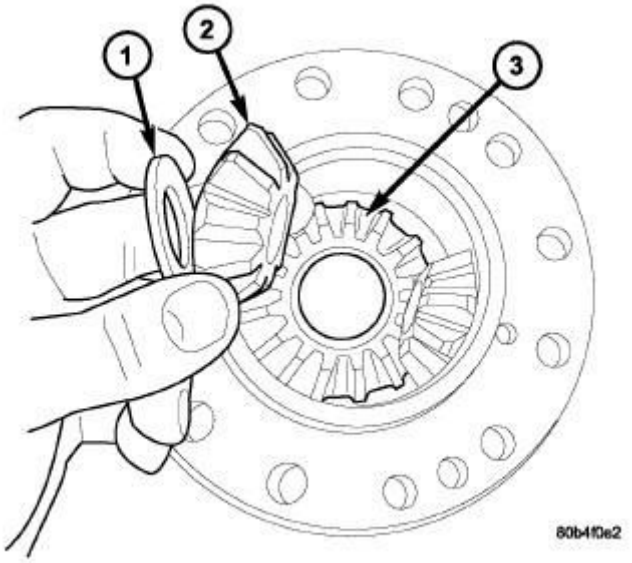

Fig. 96: Pinion Gear And Thrust Washer
Courtesy of CHRYSLER GROUP, LLC

1 - THRUST WASHER (4)

2 - PINION GEAR (4)

7. Remove pinion gear (2) and thrust washers (1).

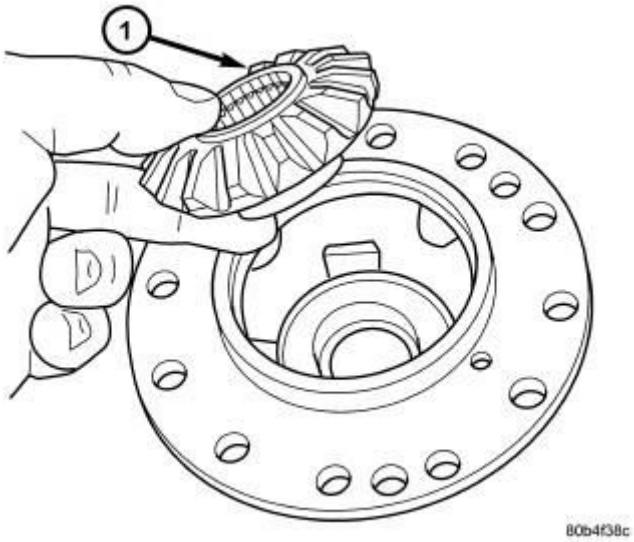

Fig. 97: Differential Side Gear
Courtesy of CHRYSLER GROUP, LLC

1 - DIFFERENTIAL SIDE GEAR

8. Remove side gear (1).

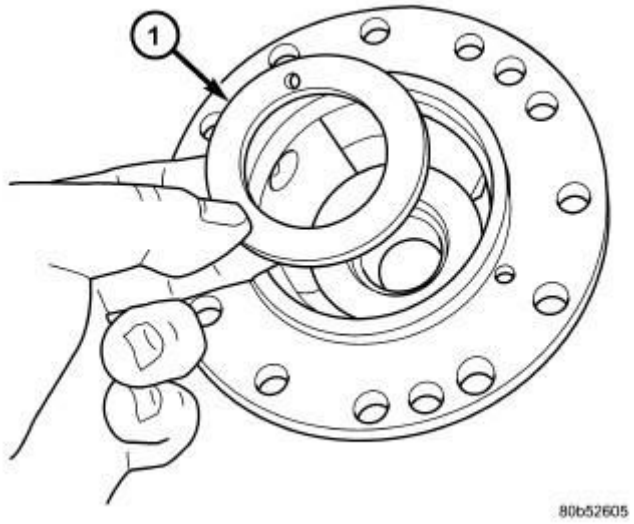

Fig. 98: Side Gear Thrust Washer
Courtesy of CHRYSLER GROUP, LLC

1 - SIDE GEAR THRUST WASHER

9. Remove the side gears thrust washer (1).

ASSEMBLY

ASSEMBLY

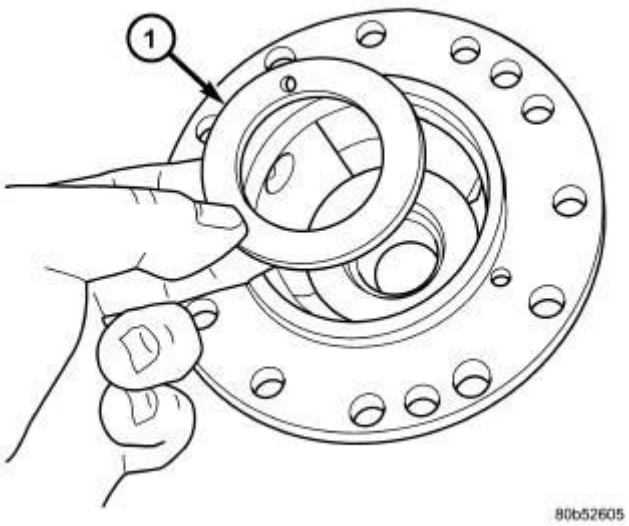

Fig. 99: Side Gear Thrust Washer
Courtesy of CHRYSLER GROUP, LLC

1 - SIDE GEAR THRUST WASHER

1. Install side gear thrust washer (1) into case.

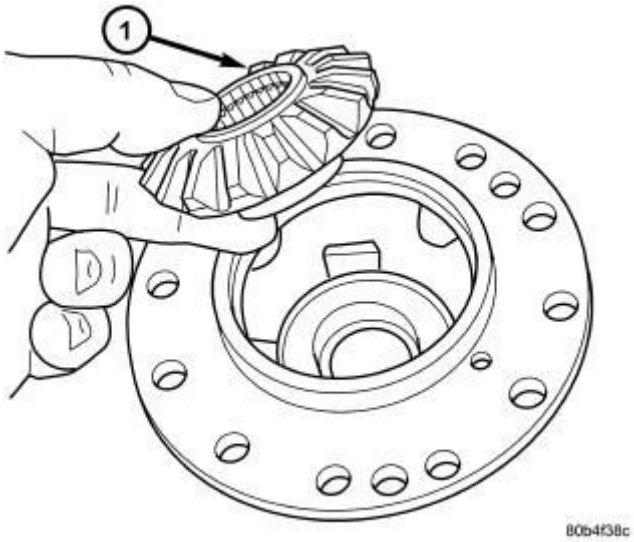

Fig. 100: Differential Side Gear
Courtesy of CHRYSLER GROUP, LLC

1 - DIFFERENTIAL SIDE GEAR

2. Install side gear (1).

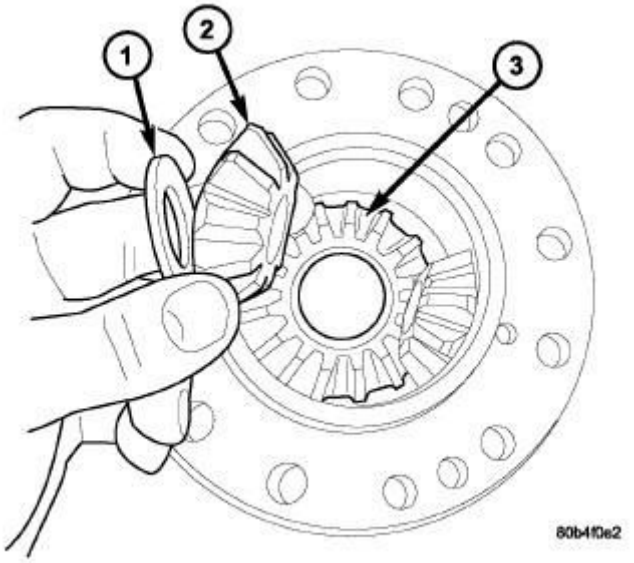

Fig. 101: Pinion Gear And Thrust Washer
Courtesy of CHRYSLER GROUP, LLC

1 - THRUST WASHER (4)

2 - PINION GEAR (4)

3. Install pinion gear (2) and thrust washer (1) into case.

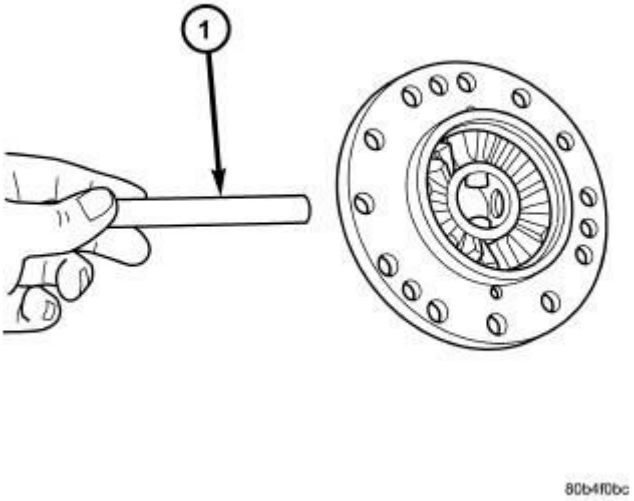

Fig. 102: Long Pinion Shaft
Courtesy of CHRYSLER GROUP, LLC

1 - PINION SHAFT (LONG)

4. Install pinion shaft (1).

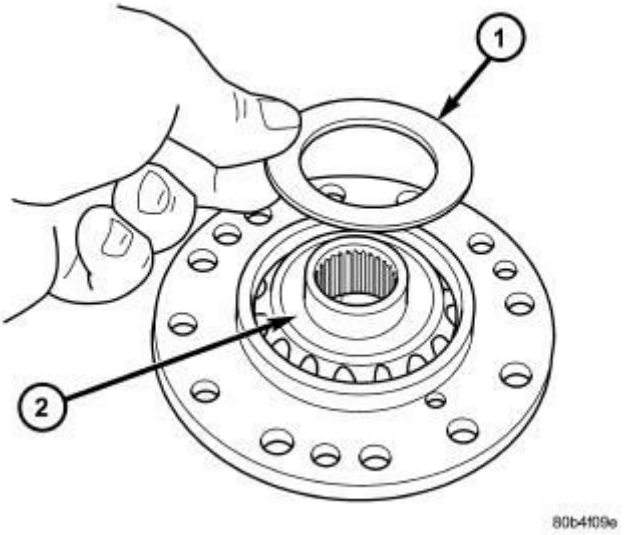

Fig. 103: Side Gear Thrust Washer
Courtesy of CHRYSLER GROUP, LLC

1 - SIDE GEAR THRUST WASHER 2 - DIFFERENTIAL SIDE GEAR

5. Install the side gear (2) and the thrust washer (1).

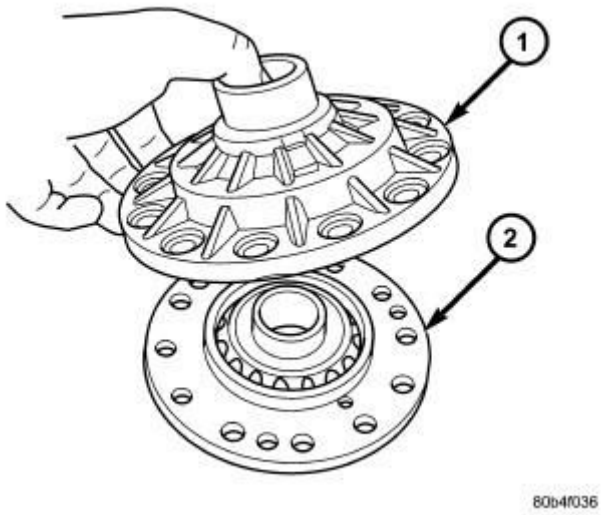

Fig. 104: Differential Support Plate
Courtesy of CHRYSLER GROUP, LLC

1 - DIFFERENTIAL SUPPORT PLATE 2 - DIFFERENTIAL CASE

6. Install differential support (1) onto case (2).

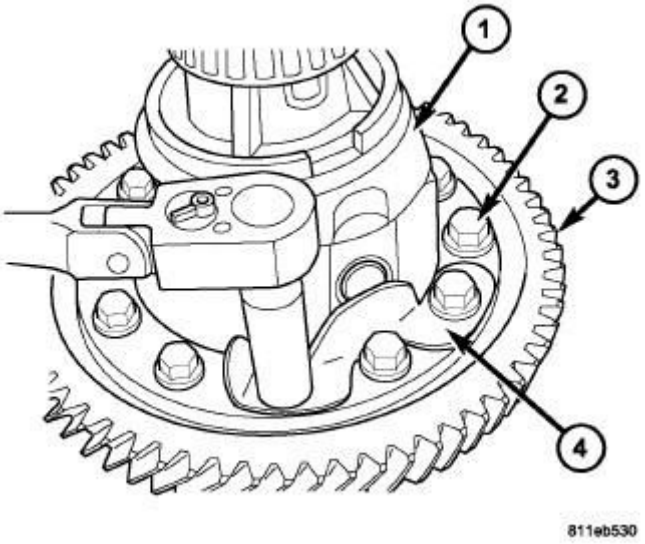

Fig. 105: Differential Ring Gear-To-Case Bolts
Courtesy of CHRYSLER GROUP, LLC

1 - DIFFERENTIAL CASE
2 - BOLT (12)
3 - RING GEAR
4 - PINION SHAFT RETAINER (2)

7. Install pinion shaft retainer along with **NEW** ring gear-to-case bolts (2) tighten bolts to 95 N.m (70 ft. lbs.).

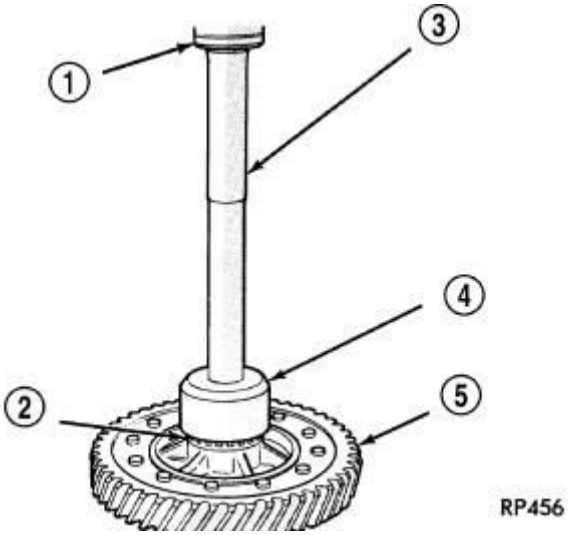

Fig. 106: Install Differential Bearing Cone To Ring Gear Side
Courtesy of CHRYSLER GROUP, LLC

1 - ARBOR PRESS RAM
2 - BEARING CONE
3 - HANDLE C-4171
4 - INSTALLER L-4410
5 - DIFFERENTIAL ASSEMBLY

8. Using an arbor press (1), Handle (special tool #C-4171, Driver Handle, Universal) (3), and Installer (special tool #L-4410, Installer, Bearing) (4), install differential side bearing to ring gear side.

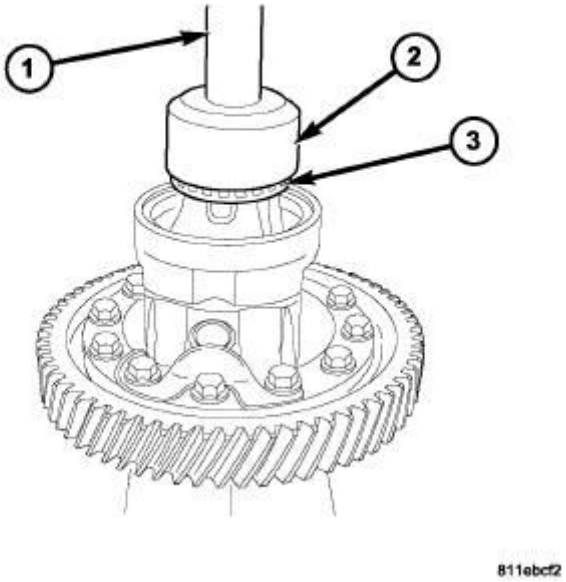

Fig. 107: Installing Bearing Cone To Differential Case Side
Courtesy of CHRYSLER GROUP, LLC

1 - HANDLE C-4171 2 - INSTALLER L-4410 3 - BEARING CONE

9. Using an arbor press, Handle (special tool #C-4171, Driver Handle, Universal) (1), and Installer (special tool #L-4410, Installer, Bearing) (2), install differential side bearings (3) to case side. If all wheel drive use Bearing Installer (special tool #6053, Installer, Bearing) to install the large bearing.

MEASURE AND ADJUST SIDE GEAR END-PLAY

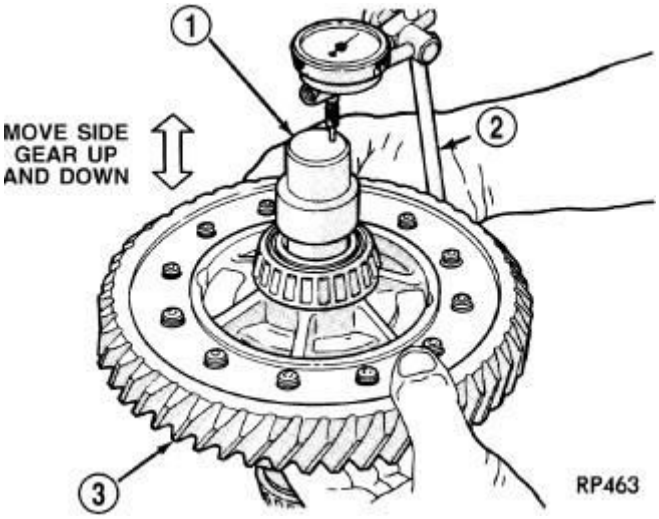

Fig. 108: Checking Side Gear End Play
Courtesy of CHRYSLER GROUP, LLC

1 - ADAPTOR C-4996 (NOTE POSITION)
2 - DIAL INDICATOR SET
3 - DIFFERENTIAL ASSEMBLY

1. Rotate the assembly two full revolutions both clockwise and counterclockwise. Set up dial indicator and record end play.
2. Rotate side gear 90 degrees and take another measurement (2). Again, rotate side gear 90 degrees and record a final measurement.
3. Using the smallest end play recorded, shim that side gear to within 0.001 to 0.013 inch. The other side gear should be checked using the same procedure.

CAUTION: Side gear end play must be within 0.001 to 0.013 inch.

FLUID

STANDARD PROCEDURE

STANDARD PROCEDURE - FLUID DRAIN AND FILL

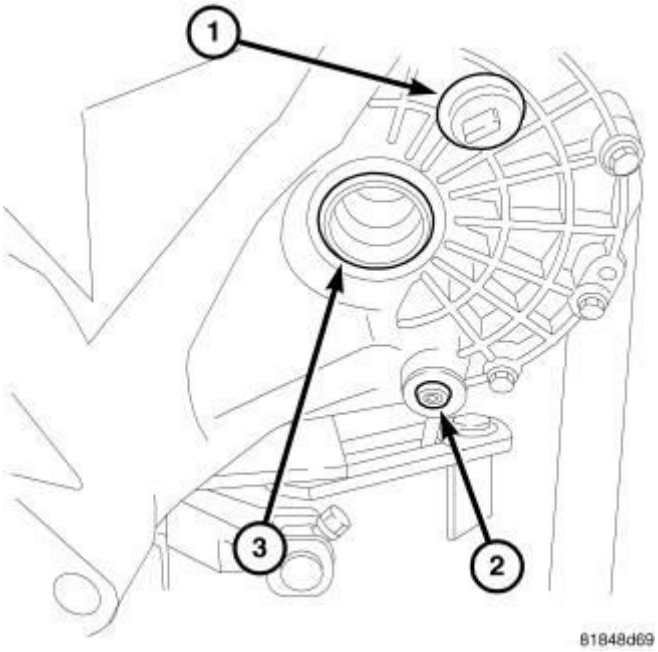

Fig. 109: Drain And Fill Plugs
Courtesy of CHRYSLER GROUP, LLC

NOTE: All T355 Manual Transaxles require the use of ATF+4 (Automatic Transmission Fluid).

The transaxle fill plug (1) is located on the left side of the transaxle differential area. The fluid level should be within 3/16 inch from the bottom of the transaxle fill hole (vehicle must be level when checking).

The transaxle drain plug (2) is located on the lower right side of the transaxle differential housing. Tighten drain plug to 14 N.m (120 in. lbs.).

INPUT SHAFT, TRANSMISSION

DISASSEMBLY

DISASSEMBLY

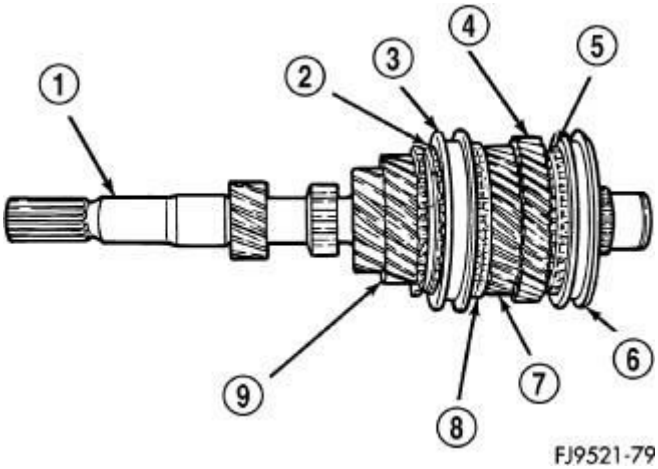

Fig. 110: Input Shaft
Courtesy of CHRYSLER GROUP, LLC

1 - INPUT SHAFT
2 - STOP RING
3 - SLEEVE
4 - 5TH SPEED GEAR
5 - STOP RING
6 - SLEEVE
7 - 4TH SPEED GEAR
8 - STOP RING
9 - 3RD SPEED GEAR

NOTE: Ring gaps must be measured with synchronizer ring biased towards gear clutching teeth on gear cone as much as possible while measuring gaps.

Before disassembly of the input shaft (1), it is necessary to check the synchronizer stop ring gap. Use a feeler gauge to measure the gaps between the stop rings (2, 5, and 8) and the speed gears. The correct gaps are listed below:

- 3rd - 0.73-1.53 mm (0.029-0.060 in)
- 4th - 0.77-1.57 mm (0.030-0.062 in).
- 5th - 0.73-1.53 mm (0.029-0.060 in)
- Reverse Brake - 0.505-1.74 mm (0.020-0.068 in.)

The reverse brake measurement is taken between the stop ring and case.

If a stop ring gap does not fall within the specifications, it must be inspected for wear and replaced. If the 1st or 2nd synchronizer stop ring is worn beyond specifications, the complete output shaft assembly must be replaced.

The input shaft incorporates the 3rd, 4th, and 5th speed gears and synchronizers on the assembly.

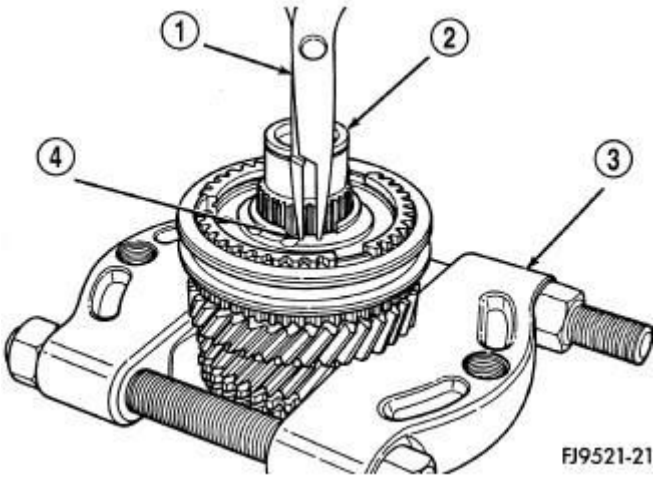

Fig. 111: 5th Synchro And Hub Snap Ring Removal
Courtesy of CHRYSLER GROUP, LLC

1 - SNAP RING PLIERS
2 - INPUT SHAFT
3 - BEARING SPLITTER
4 - SNAP RING

1. Install Bearing Splitter (special tool #1130, Splitter, Bearing/Gear) (3) behind 5th speed gear. Remove snap ring (4) at 5th synchronizer hub on input shaft (2).

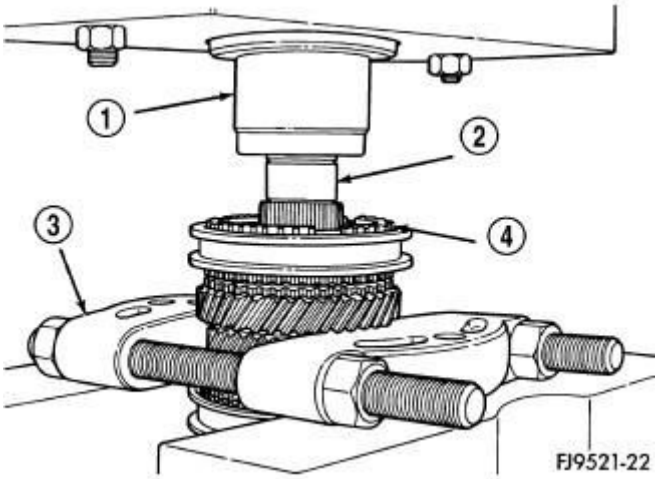

Fig. 112: Removing Synchronizer Using Shop Press
Courtesy of CHRYSLER GROUP, LLC

1 - PRESS RAM 2 - INPUT SHAFT 3 - BEARING SPLITTER 4 - SYNCHRONIZER ASSEMBLY

2. Remove synchronizer (4) and gear using shop press (1).

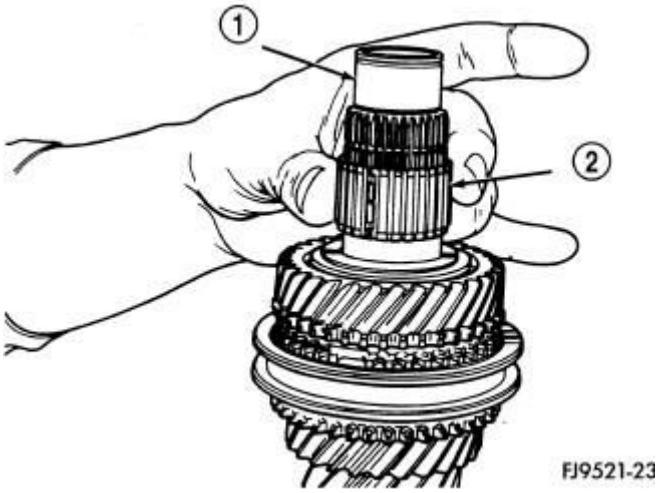

Fig. 113: Caged Needle Bearing
Courtesy of CHRYSLER GROUP, LLC

1 - INPUT SHAFT 2 - CAGED NEEDLE BEARING

3. Remove caged needle bearing (2).

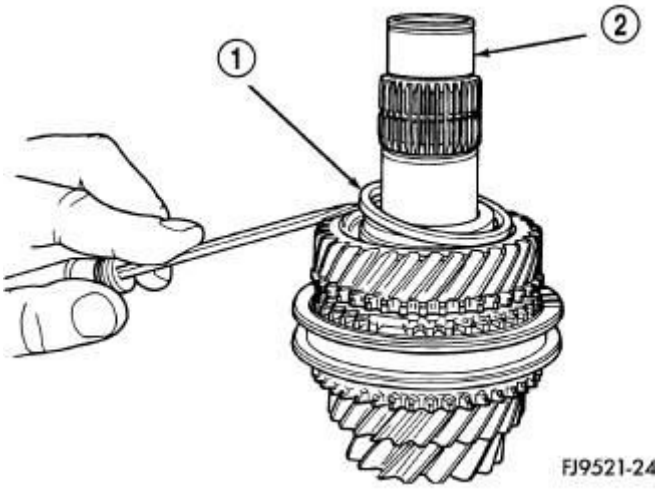

Fig. 114: Split Thrust Washer Ring
Courtesy of CHRYSLER GROUP, LLC

1 - SPLIT THRUST WASHER RING 2 - INPUT SHAFT

4. Remove 4-5 gears split thrust washer ring (1).

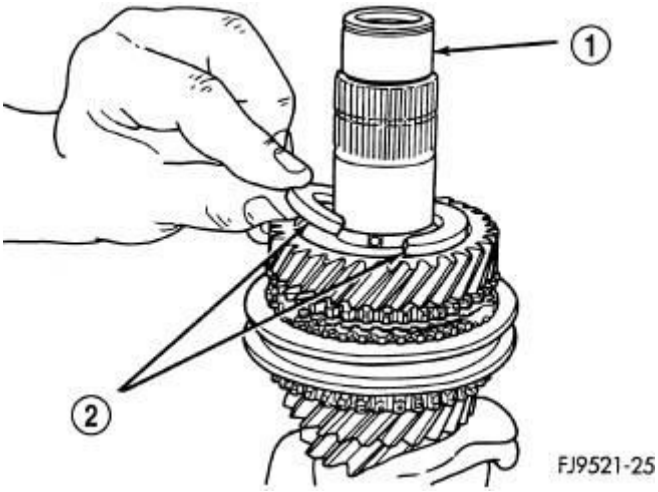

Fig. 115: Split Thrust Washer Removal
Courtesy of CHRYSLER GROUP, LLC

1 - INPUT SHAFT 2 - SPLIT THRUST WASHER

5. Remove split thrust washer (2).

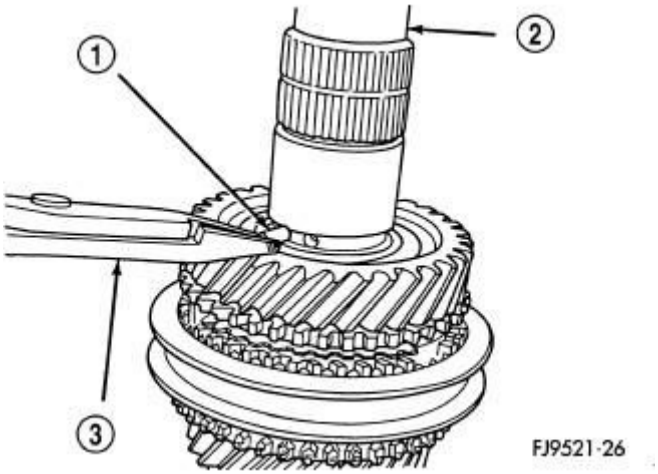

Fig. 116: Split Thrust Washer Separation Pin
Courtesy of CHRYSLER GROUP, LLC

1 - SEPARATION PIN 2 - INPUT SHAFT 3 - PLIERS

6. Remove split thrust washer separation pin (1).

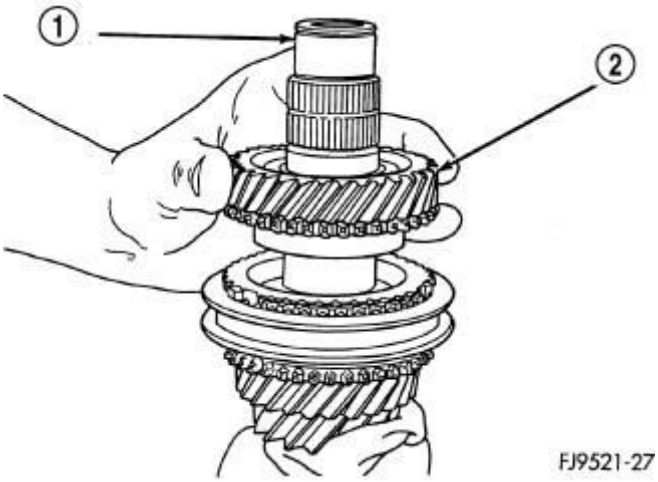

Fig. 117: 4th Gear Removal
Courtesy of CHRYSLER GROUP, LLC

1 - INPUT SHAFT 2 - 4TH GEAR

7. Remove 4th gear (2).

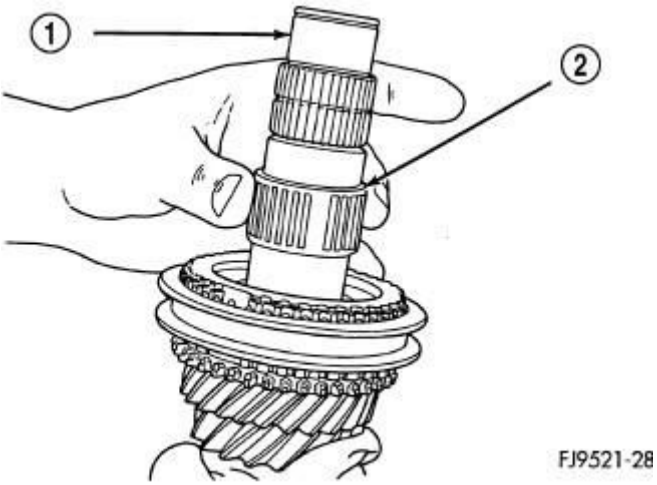

Fig. 118: Caged Needle Bearing Removal
Courtesy of CHRYSLER GROUP, LLC

1 - INPUT SHAFT 2 - CAGED NEEDLE BEARING

8. Remove 4th gear caged needle bearing (2). Check the caged needle bearing (2) for a broken retention spring.

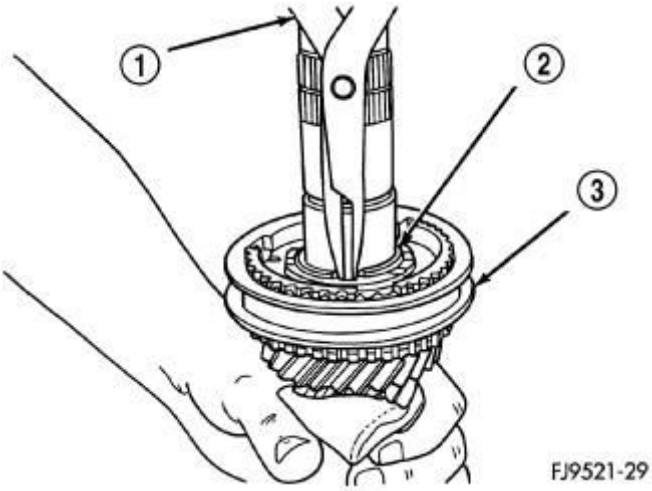

Fig. 119: 3-4 Synchronizer Hub Snap Ring
Courtesy of CHRYSLER GROUP, LLC

1 - SNAP RING PLIERS 2 - SYNCHRO SNAP RING 3 - SYNCHRONIZER ASSEMBLY

9. Remove blocking ring. Remove 3-4 synchronizer hub retaining snap ring (3).

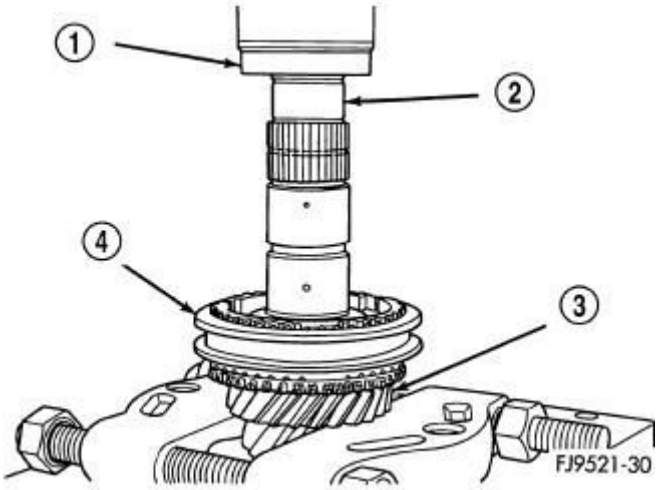

Fig. 120: 3rd Gear Removal
Courtesy of CHRYSLER GROUP, LLC

1 - PRESS RAM 2 - INPUT SHAFT 3 - 3RD GEAR 4 - SYNCHRONIZER ASSEMBLY

10. Install input shaft in shop press (1). Using Bearing Splitter (special tool #1130, Splitter, Bearing/Gear), remove 3-4 synchronizer and 3rd gear (3).

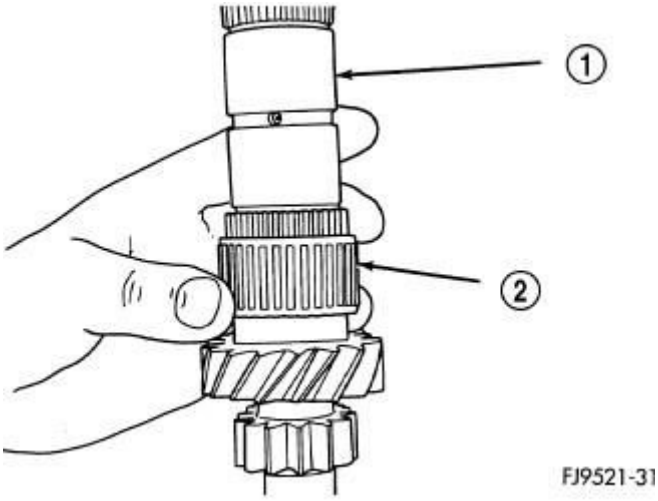

Fig. 121: 3rd Gear Caged Needle Bearing
Courtesy of CHRYSLER GROUP, LLC

1 - INPUT SHAFT 2 - 3RD GEAR CAGED NEEDLE BEARING

11. Remove 3rd gear caged needle bearing (2). Inspect needle bearing for a broken retention spring.
12. Inspect the input shaft for worn or damaged bearing races or chipped gear teeth. Replace as necessary.

ASSEMBLY

ASSEMBLY

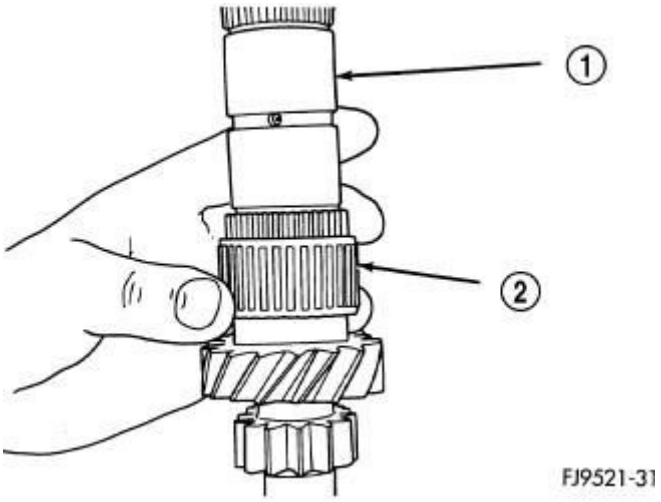

Fig. 122: 3rd Gear Caged Needle Bearing
Courtesy of CHRYSLER GROUP, LLC

1 - INPUT SHAFT
2 - 3RD GEAR CAGED NEEDLE BEARING

1. Place input shaft into shop press.
2. Install 3rd gear caged needle bearing (2).

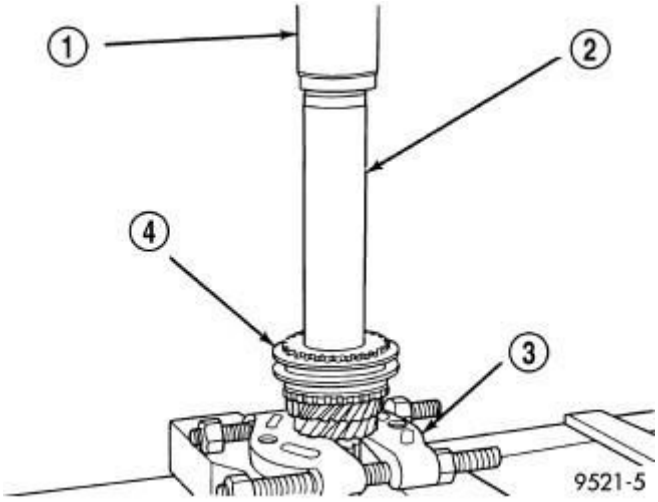

Fig. 123: Pressing 3rd Gear Synchronizer Hub
Courtesy of CHRYSLER GROUP, LLC

1 - PRESS RAM
2 - SLEEVE C-3717
3 - BEARING SPLITTER
4 - 3RD GEAR SYNCHRONIZER ASSEMBLY

3. Install 3rd gear and 3-4 synchronizer (4) onto input shaft. Position Installer (special tool #6448A, Installer, Bearing/Gear) (2) over input shaft and press on synchronizer hub and 3rd gear. The synchronizer hub has the letter **U** stamped on the top face of the hub. This designates that the hub must be installed with the **U** facing upward.

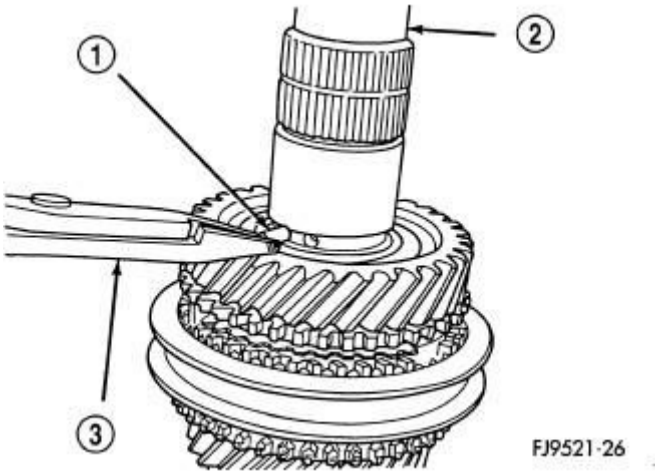

Fig. 124: Split Thrust Washer Separation Pin
Courtesy of CHRYSLER GROUP, LLC

1 - SEPARATION PIN
2 - INPUT SHAFT
3 - PLIERS

4. Install a **new** 3-4 synchronizer snap ring into slot on input shaft.
5. Install blocking ring into 3-4 synchronizer. Install 4th gear caged needle bearing.
6. Install 4th gear onto input shaft.
7. Install 4-5 split thrust washer separation pin (1).

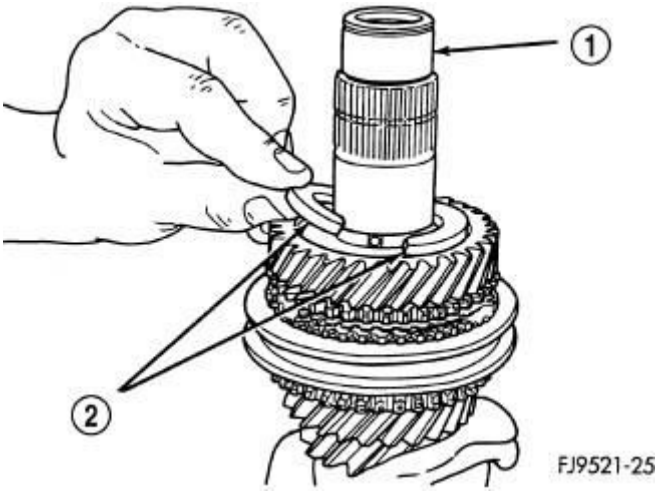

Fig. 125: Split Thrust Washer Removal
Courtesy of CHRYSLER GROUP, LLC

1 - INPUT SHAFT 2 - SPLIT THRUST WASHER

8. Install split thrust washer (2) onto input shaft (1).

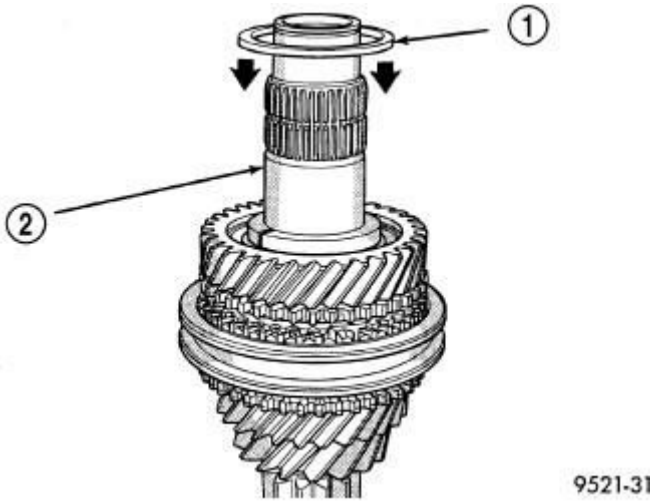

Fig. 126: Retaining Ring Installation
Courtesy of CHRYSLER GROUP, LLC

1 - SPLIT THRUST WASHER RING 2 - INPUT SHAFT

9. Install split thrust washer retaining ring (1).

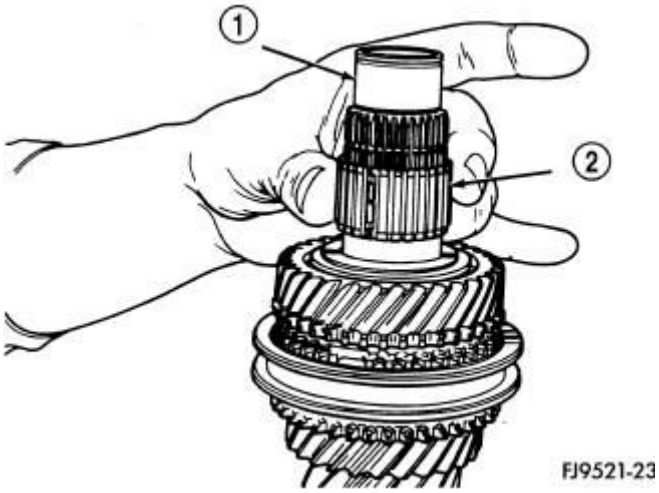

Fig. 127: Caged Needle Bearing
Courtesy of CHRYSLER GROUP, LLC

1 - INPUT SHAFT
2 - CAGED NEEDLE BEARING

10. Install 5th gear caged needle bearing (2).

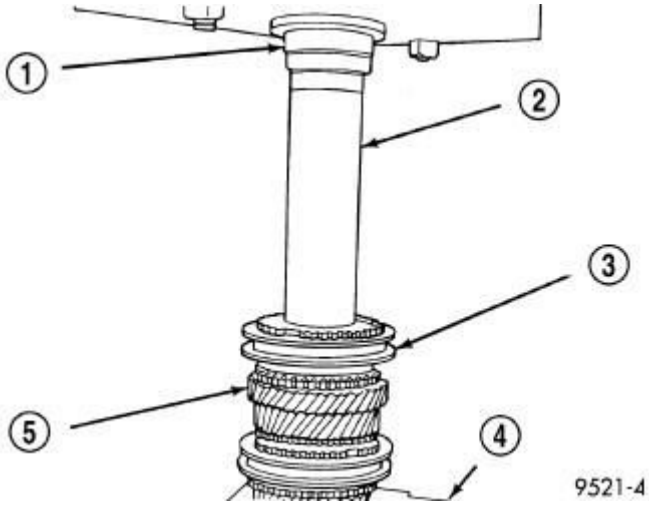

Fig. 128: 5th Speed Gear Installation
Courtesy of CHRYSLER GROUP, LLC

1 - PRESS RAM
2 - SLEEVE C-3717
3 - SYNCHRONIZER ASSEMBLY
4 - BEARING SPLITTER
5 - 5TH SPEED GEAR

11. Using Installer (special tool #6448A, Installer, Bearing/Gear) (2), install 5th speed gear (5) and synchronizer (3). The 5th gear synchronizer hub has the letter **S** stamped on the top face of the hub. This designates that the hub must be installed with the **S** facing upward.

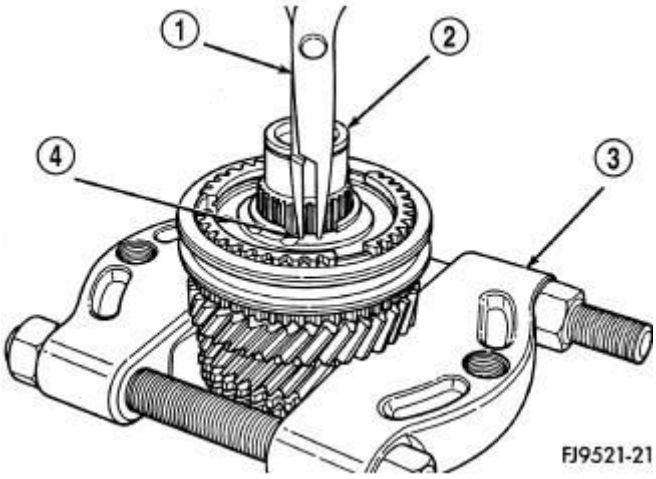

Fig. 129: 5th Synchro And Hub Snap Ring Removal
Courtesy of CHRYSLER GROUP, LLC

1 - SNAP RING PLIERS
2 - INPUT SHAFT
3 - BEARING SPLITTER
4 - SNAP RING

12. Install a **new** 5th gear synchronizer snap ring (4).

KNOB, GEARSHIFT

REMOVAL

REMOVAL

The gearshift knob or boot with a manual transmission is not removable. If the gear shift knob or boot are damaged the gearshift mechanism will need to be replaced.

INSTALLATION

INSTALLATION

The gearshift knob or boot with a manual transmission is not removable. If the

gear shift knob or boot are damaged the gearshift mechanism will need to be replaced.

LEVER, SHIFT

REMOVAL

REMOVAL

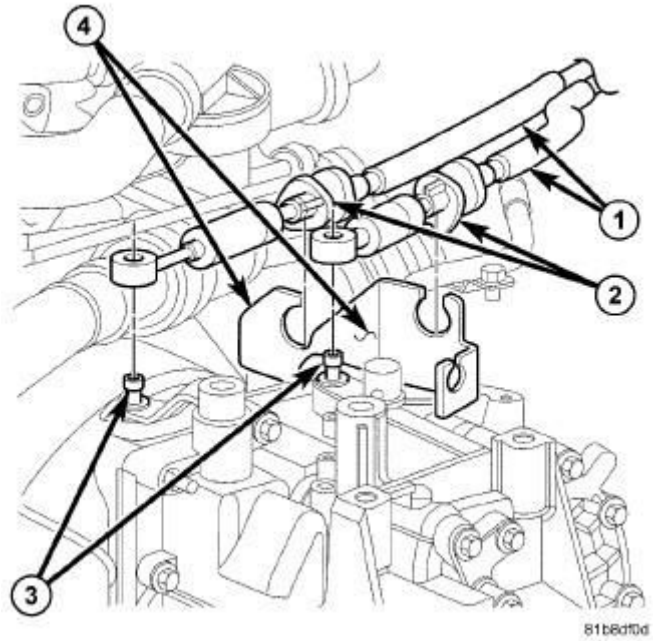

Fig. 130: Shifter Cables, Bracket & Clips
Courtesy of CHRYSLER GROUP, LLC

1. Disconnect select cable (2) from select lever (3) and cable bracket.
2. Using a pin punch, remove the select roll pin from lever.
3. Pull up and remove the select lever from the transaxle select shaft.

INSTALLATION

INSTALLATION

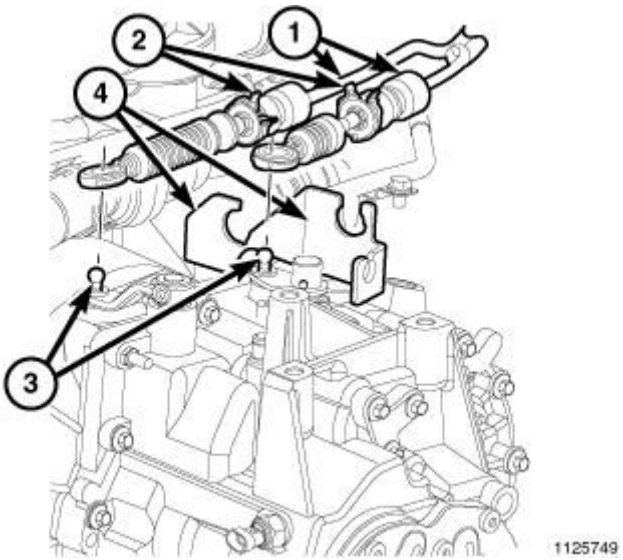

Fig. 131: Select Cables & Select Lever
Courtesy of CHRYSLER GROUP, LLC

1. Install select lever to shaft and fasten with NEW roll pin.
2. Install select cable to bracket. Fasten with clip.
3. Install select cables (2) to select lever (3).

MECHANISM, GEARSHIFT

REMOVAL

REMOVAL

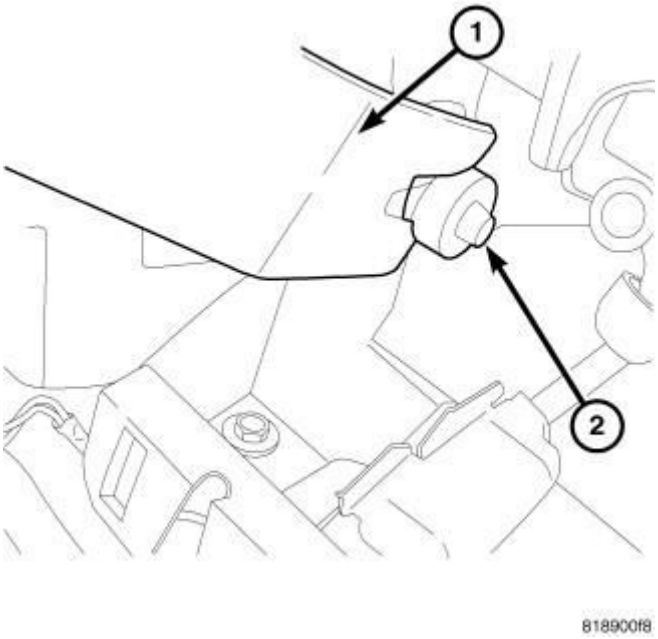

Fig. 132: Removing/Installing Select Cable At Shift Lever

Courtesy of CHRYSLER GROUP, LLC

1. Remove gear shift boot.
2. Remove the center console assembly (Refer to **REMOVAL**). Remove rear power window switch (if equipped) and disconnect harness from console.

NOTE: Cable is pushed into a rubber grommet.

3. Remove select cable (2) from shift lever (1).

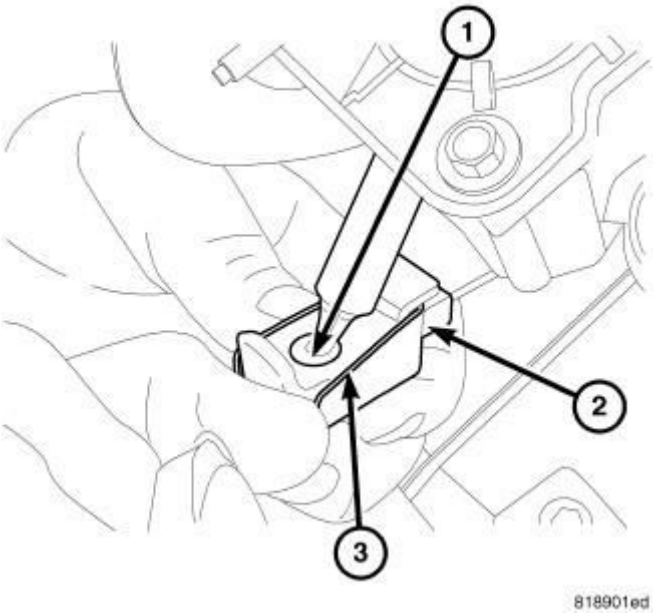

Fig. 133: Identifying Shift Cable Retaining Clip, Cable, & Shift Lever
Courtesy of CHRYSLER GROUP, LLC

4. Remove shift cable retaining clip (3) and disconnect cable (2) from the shift lever (1).

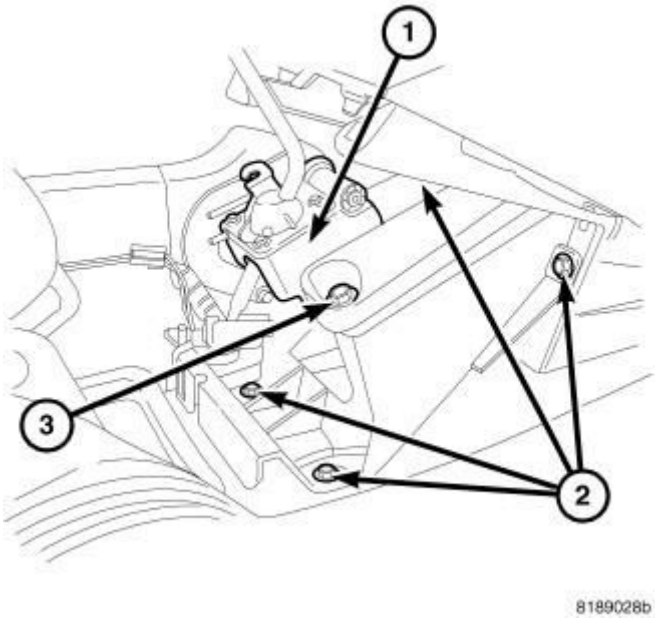

Fig. 134: Shifter Bolts
Courtesy of CHRYSLER GROUP, LLC

5. Remove the shifter assembly to riser bolts (3) and remove shifter from vehicle.

INSTALLATION

INSTALLATION

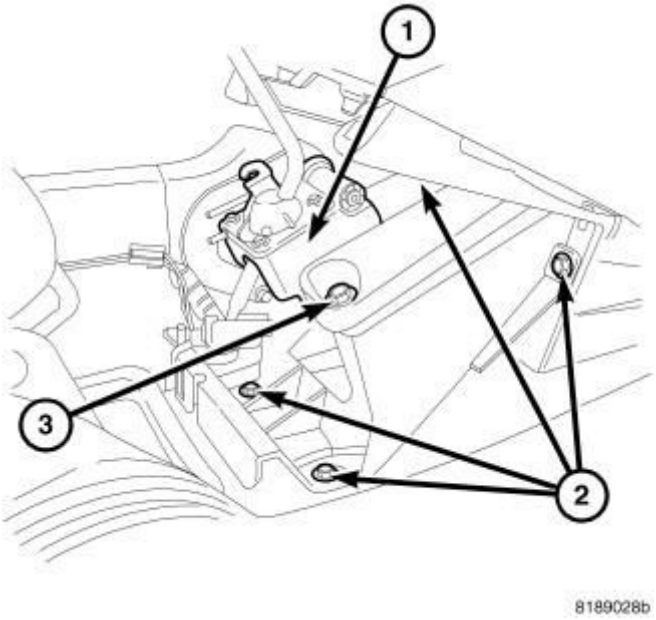

Fig. 135: Shifter Bolts
Courtesy of CHRYSLER GROUP, LLC

1. Install shifter assembly. (1) to riser. Install and tighten bolts (3) to 7 N.m (61 in. lbs.).

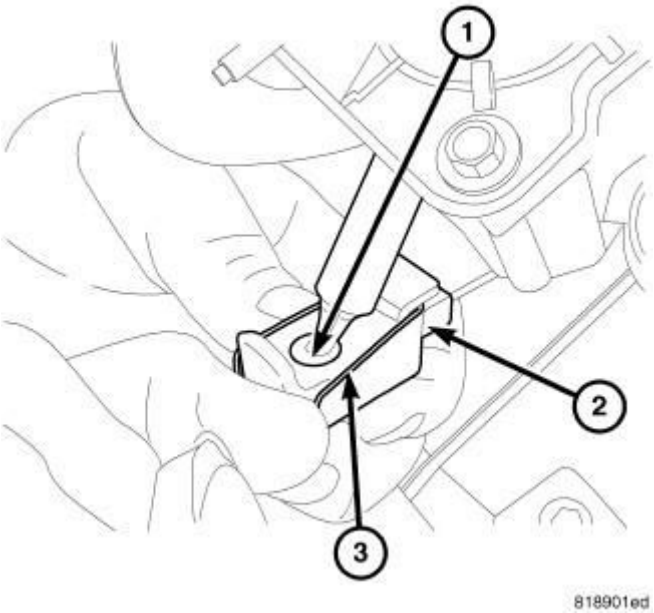

Fig. 136: Identifying Shift Cable Retaining Clip, Cable, & Shift Lever
Courtesy of CHRYSLER GROUP, LLC

2. Install shift cable (2) to shifter lever (1) and secure cable to shifter bracket with clip (3).

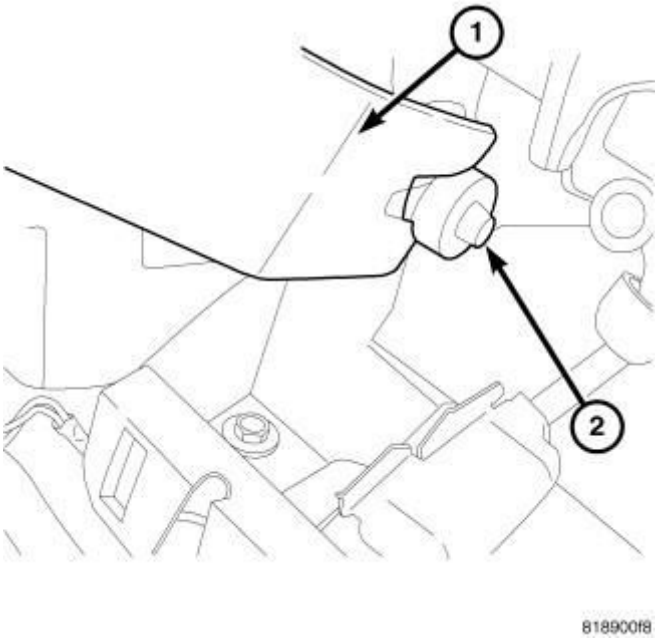

Fig. 137: Removing/Installing Select Cable At Shift Lever
Courtesy of CHRYSLER GROUP, LLC

3. Install select cable to shifter lever and secure cable to shifter bracket.
4. Install center console assembly. Install rear power window switch (if equipped) and fasten harness to console (Refer to **INSTALLATION**).
5. Install gearshift boot.
6. Verify that shift pattern is aligned properly.

SEAL, AXLE DRIVE SHAFT

REMOVAL

REMOVAL

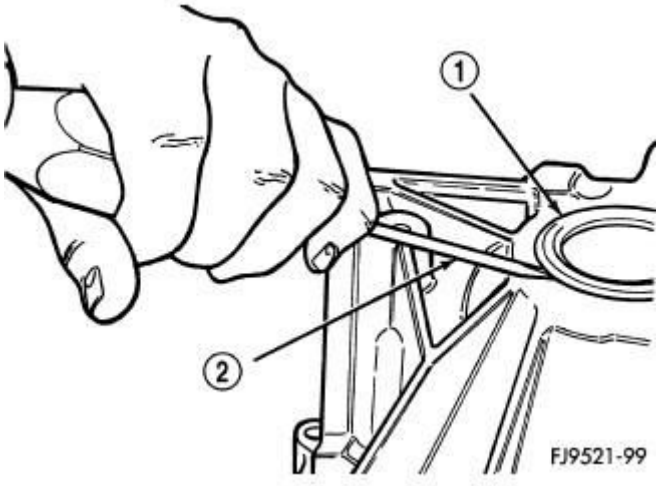

Fig. 138: Axle Shaft Seal Removal
Courtesy of CHRYSLER GROUP, LLC

1. Remove axle shaft. Refer to **REMOVAL** .
2. Insert a flat-blade pry tool (2) at outer edge of axle shaft seal (1).
3. Tap on the pry tool (2) with a small hammer and remove axle shaft seal (1).

INSTALLATION

INSTALLATION

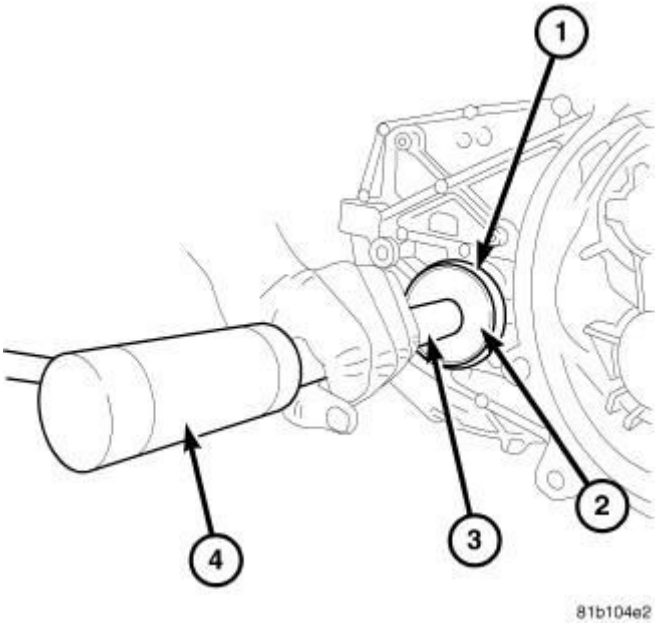

Fig. 139: Installing Axle Shaft Seal (Bellhousing Side)
Courtesy of CHRYSLER GROUP, LLC

1. Clean axle shaft seal bore of any excess sealant.
2. Align (bellhousing side) axle shaft seal with axle shaft seal bore.
3. Install axle seal on Seal Installer (special tool #9928, Installer, Differential Oil Seal) and Handle (special tool #C-4171, Driver Handle, Universal) and insert into axle shaft seal bore.
4. Tap seal into position until seated against transaxle case.

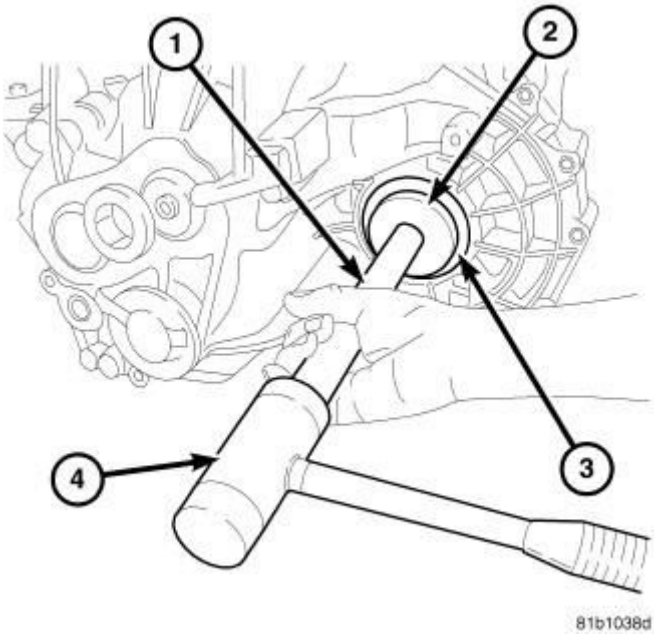

Fig. 140: Installing Axle Shaft Seal (Case Side)
Courtesy of CHRYSLER GROUP, LLC

5. Align axle shaft seal with axle shaft seal bore.
6. Install (case side) axle seal on Seal Installer 9934 and Handle (special tool #C-4171, Driver Handle, Universal) and insert into axle shaft seal bore.
7. Tap seal into position until seated against transaxle case.
8. Install axle shaft. Refer to **INSTALLATION** .
9. Check transaxle fluid level and adjust as necessary.

SEAL, INPUT SHAFT

REMOVAL

REMOVAL

1. Remove the transaxle. Refer to **REMOVAL**.
2. Remove seal.

INSTALLATION

INSTALLATION

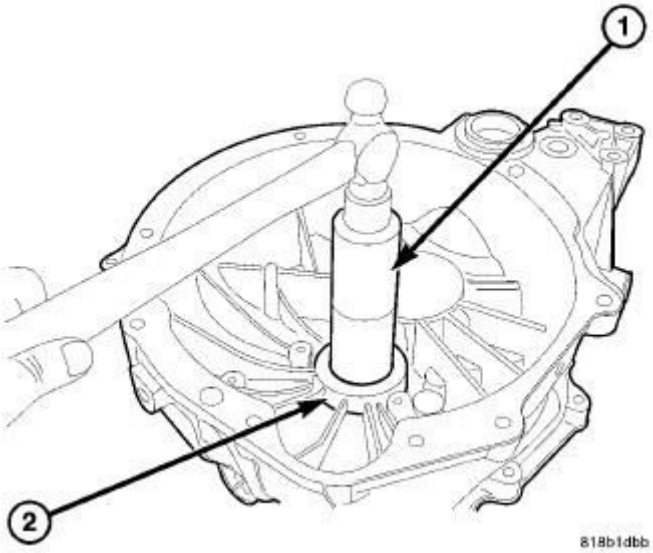

Fig. 141: Installing Input Shaft Seal
Courtesy of CHRYSLER GROUP, LLC

1. Install input shaft seal (2) using installer (special tool #8864, Installer, Seal) (1).

2. Install the transaxle. Refer to **INSTALLATION**.

SEALS, SHIFT SHAFT

REMOVAL

REMOVAL

It is not necessary to remove the shift shafts from the transaxle to service the shift shaft seals.

1. Using a pick tool, pry up on the shift shaft seal, and remove seal from bore.

INSTALLATION

INSTALLATION

1. Position new shift shaft seal into bore.
2. Install shift shaft seal into bore using an appropriate size deep-well socket.

SENSOR, VEHICLE SPEED

DESCRIPTION

DESCRIPTION

The Vehicle Speed Sensor (VSS) is a hall effect sensor mounted above the transaxle differential. The sensor is triggered by the ring gear teeth passing below it. The VSS pulse signal to the speedometer/odometer is monitored by the PCM speed control circuitry to determine vehicle speed and to maintain speed control set speed.

REMOVAL

REMOVAL

1. Open hood.
2. Remove the air cleaner housing. Refer to **BODY, AIR CLEANER, REMOVAL 2.0L** or **BODY, AIR CLEANER, REMOVAL 2.2L** or **BODY, AIR CLEANER, REMOVAL 2.4L** .
3. Disconnect the speed sensor connector.

CAUTION: Clean area around speed sensor before

removing to prevent dirt from entering the transaxle during speed sensor removal.

4. Remove speed sensor retaining bolt.
5. Remove speed sensor from transaxle.

INSTALLATION

INSTALLATION

1. Using a NEW O-ring, install the speed sensor to the transaxle.
2. Install the bolt and tighten to 7 N.m (60 in. lbs.).
3. Connect speed sensor connector.
4. Install the air cleaner housing. Refer to **BODY, AIR CLEANER, INSTALLATION 2.0L** or **BODY, AIR CLEANER, INSTALLATION 2.2L** or **BODY, AIR CLEANER, INSTALLATION 2.4L** .

SHAFT, OUTPUT

DISASSEMBLY

DISASSEMBLY

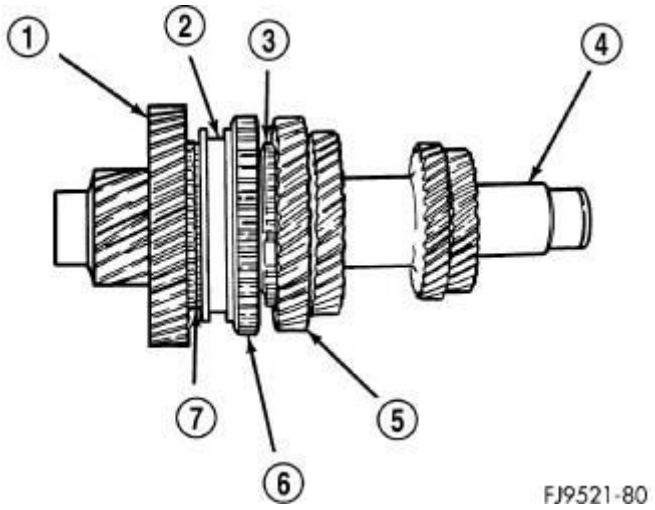

Fig. 142: Output Shaft
Courtesy of CHRYSLER GROUP, LLC

1 - 1ST GEAR 2 - SLEEVE 3 - STOP RING

4 - OUTPUT SHAFT
5 - 2ND SPEED GEAR
6 - REVERSE GEAR
7 - STOP RING

CAUTION: The output shaft is serviced as an assembly. Do not try to repair any component on the output shaft. If the 1-2 synchronizer or gear fails, it is necessary to replace the output shaft assembly.

NOTE: Ring gaps must be measured with synchronizer ring biased towards gear clutching teeth on gear cone as much as possible while measuring gaps.

It is necessary to check the synchronizer stop ring gap. Use a feeler gauge to measure the gaps between the stop rings and the speed gears . The correct gaps are listed below:

- 1st - 0.522-2.208 mm (0.021-0.087 in)
- 2nd - 0.522-2.208 mm (0.021-0.087 in)

If a stop ring gap does not fall within the specifications it must be inspected for wear and replaced. If the 1st or 2nd synchronizer stop ring is worn beyond specifications, the complete output shaft assembly must be replaced.

The output shaft incorporates the 1st and 2nd gears and synchronizers on the assembly.

INSPECTION

INSPECTION

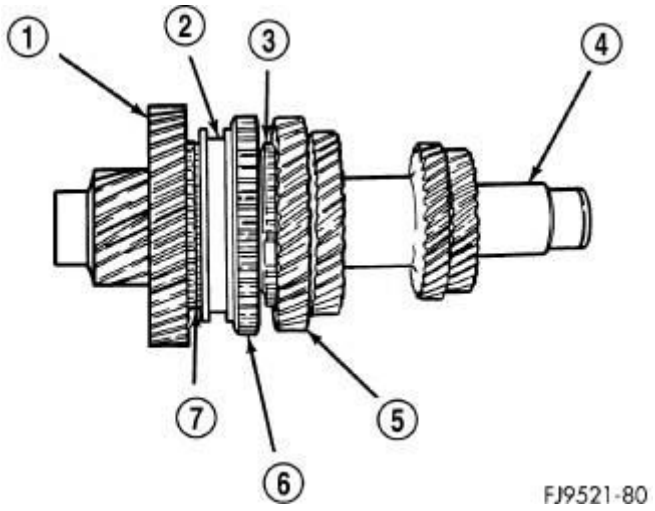

Fig. 143: Output Shaft
Courtesy of CHRYSLER GROUP, LLC

1 - 1ST GEAR
2 - SLEEVE
3 - STOP RING
4 - OUTPUT SHAFT
5 - 2ND SPEED GEAR
6 - REVERSE GEAR
7 - STOP RING

CAUTION: The output shaft is serviced as an assembly. Do not try to repair any component on the output shaft. If the 1-2 synchronizer or gear fails, it is necessary to replace the output shaft assembly.

It is necessary to check the synchronizer stop ring gap. Use a feeler gauge to measure the gaps between the stop rings and the speed gears (3, 7) . The correct gaps are listed below:

- 1st - 0.522-2.208 mm (0.021-0.087 in)
- 2nd - 0.522-2.208 mm (0.021-0.087 in)

If a stop ring gap does not fall within the specifications it must be inspected for wear and replaced. If the 1st or 2nd synchronizer stop ring is worn beyond specifications, the complete output shaft assembly must be replaced.

The output shaft incorporates the 1st and 2nd gears and synchronizers on the

assembly.

SHAFT, SELECT

REMOVAL

REMOVAL

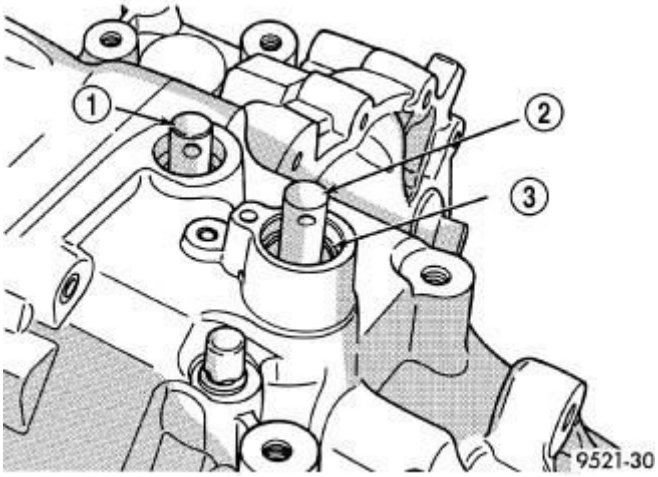

Fig. 144: Crossover Shaft Snap Ring
Courtesy of CHRYSLER GROUP, LLC

1 - SELECTOR SHAFT
2 - CROSSOVER SHAFT
3 - SNAP RING

1. Disassemble transaxle.
2. With the transaxle disassembled, remove the select shaft seal.
3. Using snap-ring pliers, remove the snap ring (3) at the select shaft bore.
4. Push the select shaft (2) in the case and remove the select assembly.

INSTALLATION

INSTALLATION

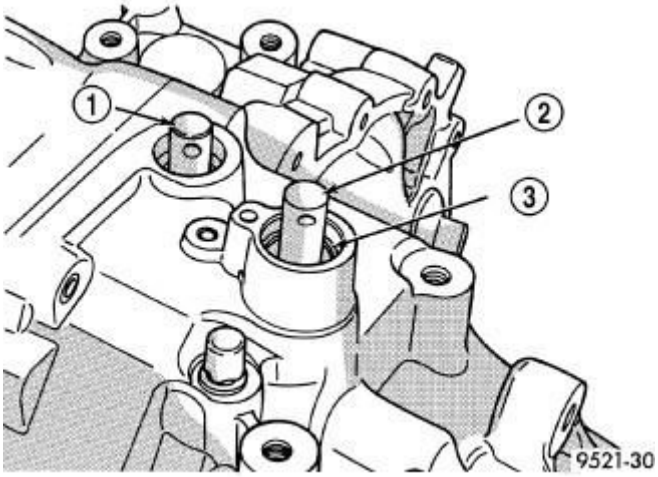

Fig. 145: Crossover Shaft Snap Ring
Courtesy of CHRYSLER GROUP, LLC

1 - SELECTOR SHAFT 2 - CROSSOVER SHAFT 3 - SNAP RING

1. Install select shaft to case and install snap ring (3).
2. Install the select shaft seal.
3. Assemble transaxle.

SHAFT, SHIFT

REMOVAL

REMOVAL

1. Disassemble transaxle.
2. With the transaxle disassembled, remove the shift shaft by pushing on the shaft from the outside. Pull shaft out from the inside.

INSTALLATION

INSTALLATION

1. Pull shift shaft into position from the outside.
2. Assemble transaxle.

SWITCH, BACKUP LAMP

REMOVAL

REMOVAL

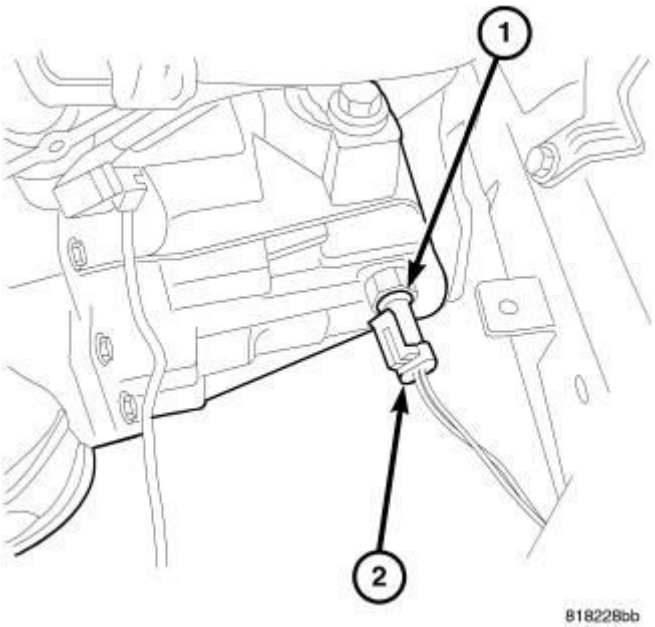

Fig. 146: Backup Switch Connector
Courtesy of CHRYSLER GROUP, LLC

1. Lift vehicle on hoist.
2. From bottom side of vehicle, disconnect back-up lamp switch connector (2).

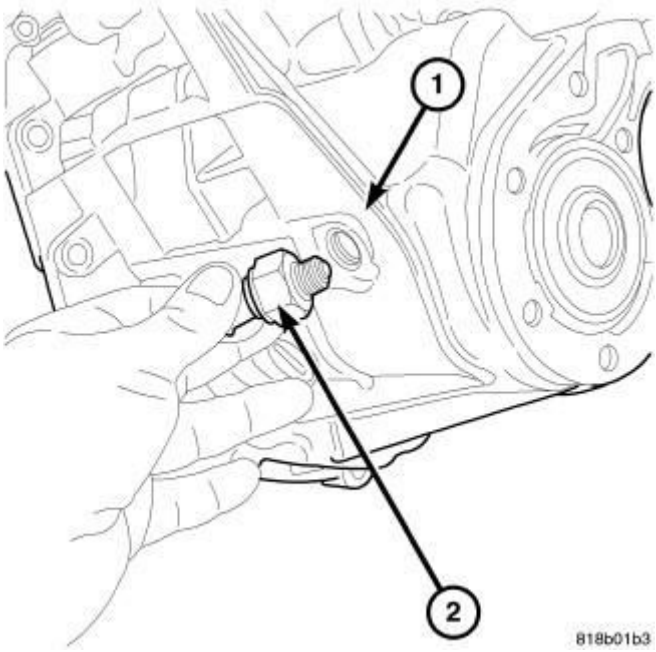

Fig. 147: Backup Lamp Switch
Courtesy of CHRYSLER GROUP, LLC

3. Unscrew switch (2) from transaxle.

INSTALLATION

INSTALLATION

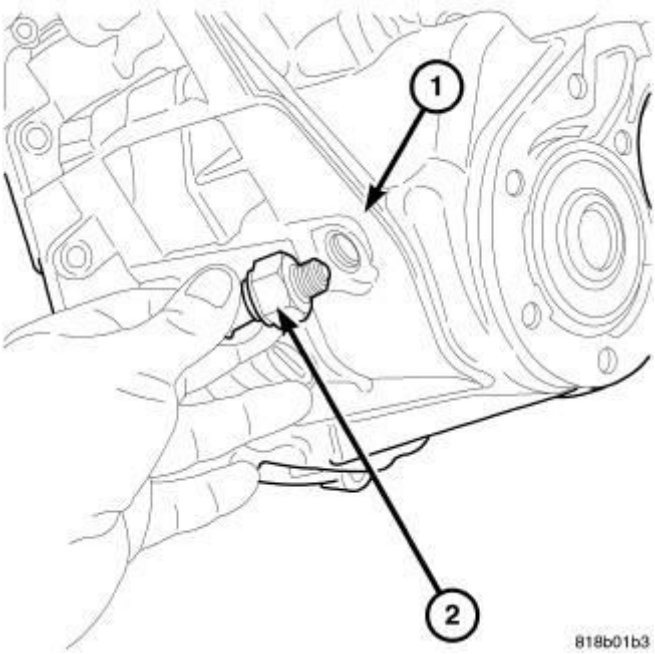

Fig. 148: Backup Lamp Switch
Courtesy of CHRYSLER GROUP, LLC

1. Install back-up lamp switch (2). Teflon tape or equivalent must be used on switch threads. Tighten switch to 24 N.m (18 ft. lbs.).

CAUTION: Do not overtighten switch.

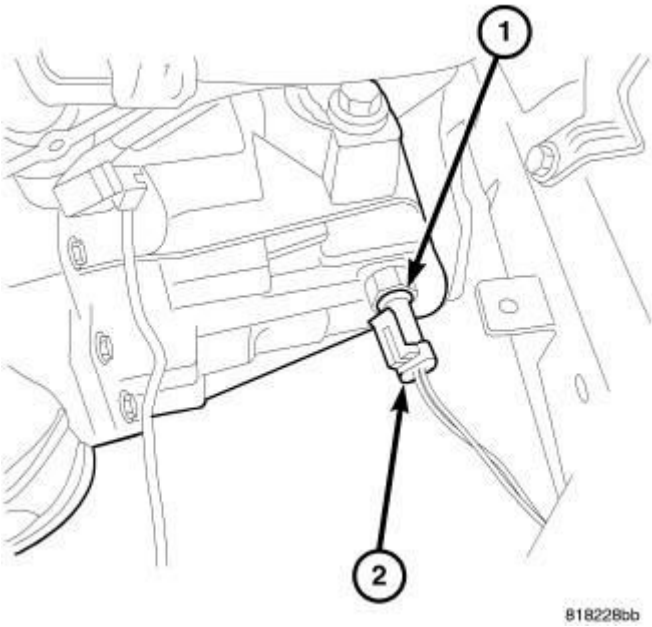

Fig. 149: Backup Switch Connector
Courtesy of CHRYSLER GROUP, LLC

2. Connect back-up lamp switch connector (2).
3. Lower vehicle.
4. Verify back-up lamp operation.

SYNCHRONIZER

DISASSEMBLY

DISASSEMBLY

Place synchronizer in a clean shop towel and wrap. Press on inner hub. Carefully open up shop towel and remove springs, balls, keys, hub, and sleeve.

CLEANING

CLEANING

Do not attempt to clean the blocking rings in solvent. The friction material will become contaminated. Place synchronizer components in a suitable holder and clean and air dry.

INSPECTION

INSPECTION

Proper inspection of components involve:

- Teeth, for wear, scuffed, nicked, burred, or broken teeth
- Keys, for wear or distortion
- Balls and springs, for distortion, cracks, or wear

If any of these conditions exist in these components, replace as necessary.

ASSEMBLY

ASSEMBLY

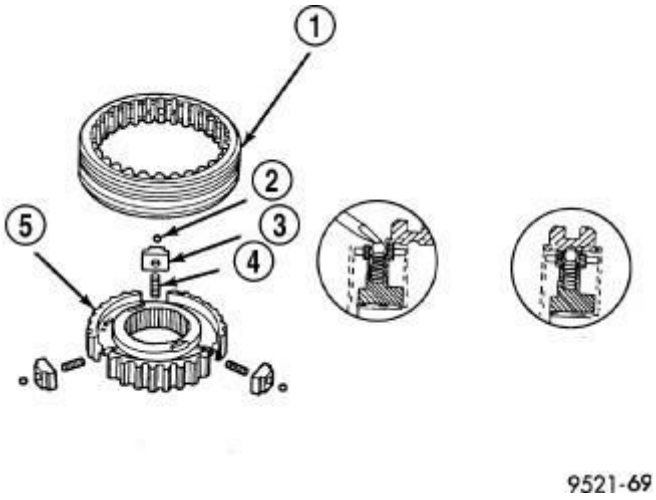

Fig. 150: Synchronizer Assembly
Courtesy of CHRYSLER GROUP, LLC

1 - SLEEVE
2 - BALL
3 - KEY
4 - SPRING
5 - HUB

1. Position synchronizer hub (5) onto a suitable holding fixture (input shaft). The synchronizer hubs (5) are directional. The hubs must be installed with the **U** facing upward.
2. Install springs (4) into hub slot.

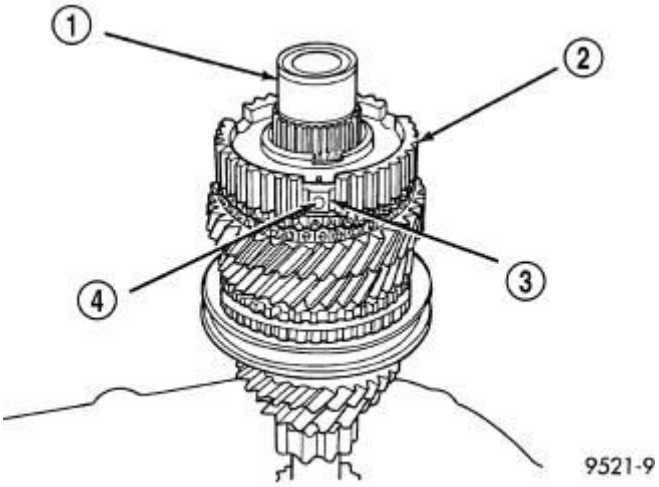

Fig. 151: Synchronizer Balls
Courtesy of CHRYSLER GROUP, LLC

1 - INPUT SHAFT
2 - HUB
3 - KEY
4 - BALL

3. Insert key (3) into hub (2) and spring.
4. Apply petroleum jelly to the hole in the key. Insert balls (4) into each key.

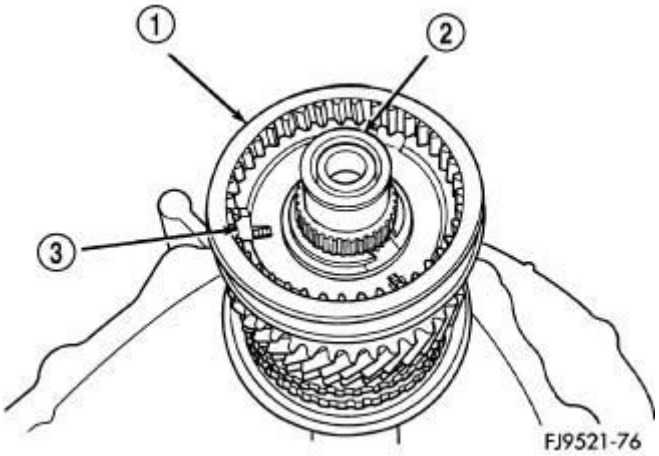

Fig. 152: Synchronizer Sleeve
Courtesy of CHRYSLER GROUP, LLC

1 - SLEEVE
2 - INPUT SHAFT
3 - KEY

5. Slide sleeve (1) over the hub and depress balls as you carefully slip the sleeve into position.

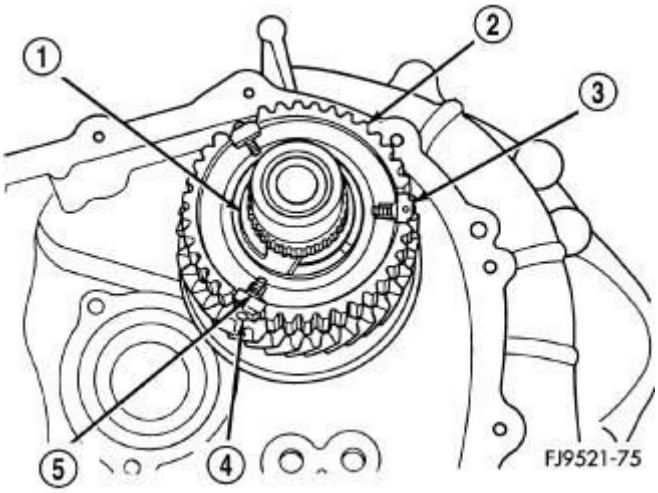

Fig. 153: Keys In Hub
Courtesy of CHRYSLER GROUP, LLC

1 - SNAP RING
2 - CLUTCH
3 - KEY
4 - BALL
5 - SPRING

6. Line up stop ring tang over the keys in the hub, install stop rings, center the keys (3) and balls (4) by pushing on both stop rings.

TROUGH, BEARING OIL FEED, REAR

REMOVAL

REMOVAL

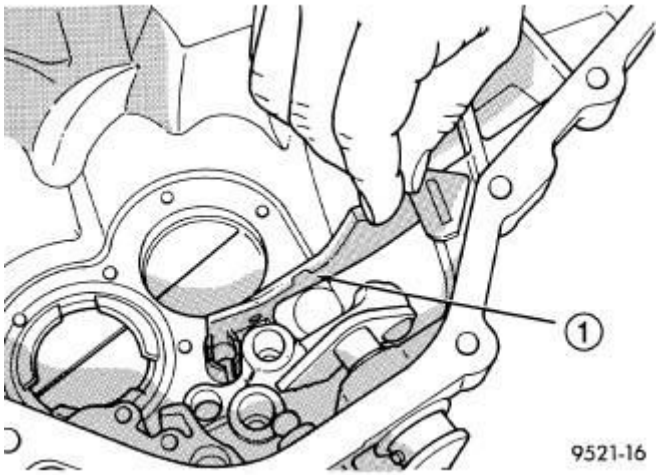

Fig. 154: Oil Feed Trough
Courtesy of CHRYSLER GROUP, LLC

1 - OIL FEED TROUGH

The bearing oil feed trough (1) is retained in the case by a pin that is molded into the case and clips that are part of the trough.

1. Using light plier pressure, squeeze the clips together at the rear of the trough.
2. Slide the trough over the retaining pin that locates the trough in the case.

INSTALLATION

INSTALLATION

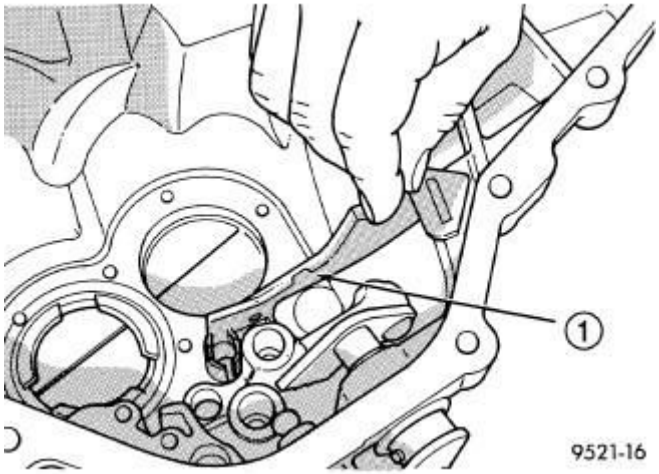

Fig. 155: Oil Feed Trough
Courtesy of CHRYSLER GROUP, LLC

1 - OIL FEED TROUGH

1. Slide the trough (1) over the retaining pin that locates the trough in the case.

2014 RESTRAINTS

Occupant Restraint Controller (ORC) - Electrical Diagnostics - Compass & Patriot

STANDARD PROCEDURE

AIRBAG SYSTEM INTERMITTENT TEST

For a complete wiring diagram, **refer to appropriate SYSTEM WIRING DIAGRAMS article** .

DIAGNOSTIC TEST

1. **CHECK FOR TECHNICAL SERVICE BULLETINS (TSB)**
   1. If any ACTIVE codes are present they must be resolved before diagnosing any stored codes.
   2. Review the Technical Service Bulletins (TSBs) related to the reported symptoms.

      Are there any related TSBs?

      Yes

      - Perform the appropriate TSB procedure.
      - Perform the AIRBAG SYSTEM VERIFICATION TEST. Refer to **STANDARD PROCEDURE**.

      No

      - Go To 2
2. **RECORD AND ERASE ALL RESTRAINT SYSTEM DTCS**
   1. With the scan tool, record and erase all DTCs from the Occupant Restraint Controller (ORC). Monitor for any active codes as you work through the following steps.
   2. Review the code monitored and set conditions for any DTCs that are stored and attempt to reproduce the conditions listed.
      - Wiggle the wiring harness and connectors of the related airbag circuit, sensor, or component.
      - If codes are related to the Driver Airbag circuits, rotate the steering wheel from stop to stop.

3. Turn the ignition off, wait five seconds, turn the ignition on.
4. Wait one minute, and read active codes, if there are none present, read the stored codes.

   Was the source of the customer complaint found or did any DTCs appear and stay active?

   Yes

   - Refer to **DIAGNOSIS AND TESTING** and perform the appropriate diagnostic procedure.

   No

   - Go To 3

3. **ATTEMPT TO REPRODUCE THE CONDITION**
   1. In the event the customer complaint cannot be duplicated due to an intermittent condition in the restraints system, the following may aid in attempting to reproduce the condition.

      WARNING: **Turn the ignition off, disconnect the 12-volt battery and wait two minutes before proceeding. Failure to follow these instructions may result in possible serious or fatal injury.**

   2. Using the wiring diagram/schematic as a guide, inspect the wiring and connectors related to the stored code or component in question.
   3. Look for chafed, pierced, pinched, or partially broken wires and broken, bent, pushed out, spread, corroded, or contaminated terminals.
   4. Reconnect any disconnected components and harness connector, except the battery.

      WARNING: **Turn the ignition on, then reconnect the 12-volt battery and wait two minutes before proceeding. Failure to follow these instructions may result in possible serious or fatal injury.**

5. Wait one minute, and read active codes, if there are none present, read the stored codes.
6. If numerous trouble codes were set, use a schematic and inspect any common ground or supply circuits.

   Was the source of the intermittent condition located?

   Yes

   - Refer to **DIAGNOSIS AND TESTING** and perform the appropriate diagnostic procedure.

   No

   - Test complete, the condition or conditions that originally set this DTC are not present at this time.
   - Perform the AIRBAG SYSTEM VERIFICATION TEST. Refer to **STANDARD PROCEDURE**.

AIRBAG SYSTEM PRE-DIAGNOSTIC PROCEDURE

DIAGNOSTIC PRE-TEST

1. Before attempting to repair any restraint system, technicians should be familiar with and fully understand the system operation. Refer to Restraints System **DESCRIPTION** and **OPERATION** for complete details. The following should be used as a checklist to be completed in its entirety prior to referencing specific Restraints Diagnostic Procedures.
2. **FOLLOW THE BASIC OUTLINE SET FORTH IN THE SIX-STEP TROUBLESHOOTING PROCEDURE**
   1. Verification of complaint.
   2. Verification of any related symptoms.
   3. Symptom analysis.
   4. Problem isolation.
   5. Repair of isolated problem.
   6. Verification of proper operation.
3. **TAKE INTO ACCOUNT CURRENT VEHICLE CONDITION, REPAIR HISTORY, AND TECHNICAL SERVICE BULLETINS**

(TSBs)

- Verify that there are no outward signs of vehicle damage or effects from a collision that could impact the proper operation of the Restraints system.
- Check for aftermarket vehicle accessories that may have been installed improperly or could interfere with the system.
- Check the vehicle repair history for repairs that may relate to the current condition.
- Check for current Technical Service Bulletins (TSBs) for the Restraints system related to the customer concern. If a TSB applies, follow the procedure outlined in the TSB.

4. **DIAGNOSE ONLY THOSE FAILURES THAT ARE ACTIVE AND CAN BE REPRODUCED**
   - Check the control module central to the subsystem that is exhibiting the condition for active DTCs.
   - For an intermittent failure that is not active at the time of vehicle inspection, perform the AIRBAG SYSTEM INTERMITTENT TEST diagnostic procedure and document the event on the repair order. Refer to **STANDARD PROCEDURE**.
5. **ADDRESS ACTIVE DIAGNOSTIC TROUBLE CODES (DTCs) IN THE CORRECT ORDER**
   1. Low/High Voltage and Serial Data Loss of Communication Codes.
   2. Module Internal Failure and Configuration Mismatch Codes.
   3. Circuit specific DTC failures.
6. Should the malfunction still be present after conducting this Pre-diagnostic Procedure, technicians should continue to the appropriate DTC procedure. Refer to **DIAGNOSIS AND TESTING** .

   Was the Pre-Test reviewed and is the DTC still present?

   Yes

   - Perform the appropriate diagnostic procedure. Refer to **DIAGNOSIS AND TESTING** .

   No

- Test Complete.

STANDARD PROCEDURE - AIRBAG SYSTEM VERIFICATION TEST

DIAGNOSTIC TEST

AIRBAG SYSTEM VERIFICATION TEST

1. Remove all special tools and jumper wires and reconnect all previously disconnected components - except the Battery.

   WARNING: **Turn the ignition on, then reconnect the 12-volt battery and wait two minutes before proceeding. Failure to follow these instructions may result in possible serious or fatal injury.**

2. Connect the scan tool to the Data Link Connector - use the most current software available.
3. With the scan tool, erase stored DTCs in all Airbag System Modules.
4. Turn the ignition off, and wait 30 seconds, then turn the ignition on.
5. Wait one minute, and read active DTCs in all Airbag System Modules.
6. Read the stored DTCs in all Airbag System Modules.

   Are any DTCs present or if the original condition still present?

   Yes

   - Repair is not complete. Perform the appropriate DTC. Refer to **DIAGNOSIS AND TESTING** .

   No

   - Repair is complete.

2014 RESTRAINTS

Occupant Restraint Controller (ORC) - Electrical Diagnostics - Compass & Patriot

DIAGNOSIS AND TESTING

B1204-PASSENGER AIRBAG INDICATOR CIRCUIT LOW

For a complete wiring diagram, **refer to appropriate SYSTEM WIRING DIAGRAMS article** .

THEORY OF OPERATION

The repair of this fault does not involve any external circuitry and centers on the validity of the modules internal circuitry. The airbag indicator is serviced as a unit with the instrument cluster.

WHEN MONITORED

With the ignition on and when requested to turn on by the Occupant Restraint Controller (ORC). The airbag warning lamp sets in the Cluster. The airbag indicator lamp circuit is monitored by the ORC at a rate of every 500ms.

SET CONDITION

The Cluster software detects the resistance across the Airbag Lamp is less than 5K Ohm for five seconds. The fault will go from active to stored after the circuit voltage has returned to normal voltage range for five seconds. The supply voltage range is 9 - 16 volts.

POSSIBLE CAUSES

Possible Causes
CLUSTER

DIAGNOSTIC TEST

CHECK FOR ACTIVE DTC

NOTE: The Cluster performs internal tests on the Airbag Lamp during each ignition cycle.

1. With the scan tool, erase DTCs.

2. Turn the ignition off, wait 10 seconds, then turn the ignition on.
3. Wait for the Cluster to perform the bulb check.
4. With the scan tool, read DTCs.

   Is the DTC active?

   Yes

   - Replace the Cluster in accordance with the Service Information. Refer to **REMOVAL** .
   - Perform the BODY VERIFICATION TEST. Refer to **STANDARD PROCEDURE** .

   No

   - Test complete.

B1205-PASSENGER AIRBAG INDICATOR CIRCUIT HIGH

For a complete wiring diagram, **refer to appropriate SYSTEM WIRING DIAGRAMS article** .

THEORY OF OPERATION

The repair of this fault does not involve any external circuitry and centers on the validity of the modules internal circuitry. The airbag indicator is serviced as a unit with the instrument cluster.

WHEN MONITORED

With the ignition on and when requested to turn on by the Occupant Restraint Controller (ORC). The airbag warning lamp sets in the Cluster. The airbag indicator lamp circuit is continuously monitored by the ORC at a rate of every 500ms.

SET CONDITION

The Cluster software detects the resistance across the Airbag Lamp is less than 5K Ohm for five seconds. The fault will go from active to stored after the circuit voltage has returned to normal voltage range for five seconds. The supply voltage range is 9 - 16 volts.

POSSIBLE CAUSES

Possible Causes
CLUSTER

DIAGNOSTIC TEST

CHECK FOR AN ACTIVE DTC

NOTE: The Cluster performs internal tests on the Airbag Lamp during each ignition cycle.

1. With the scan tool, erase DTCs.
2. Turn the ignition off, wait 10 seconds, then turn the ignition on.
3. Wait for the Cluster to perform the bulb check.
4. With the scan tool, read DTCs.

Is the DTC active?

Yes

- Replace the Cluster in accordance with the Service Information. Refer to **REMOVAL** .
- Perform the BODY VERIFICATION TEST. Refer to **STANDARD PROCEDURE** .

No

- Test complete.

B1B00-DRIVER AIRBAG SQUIB 1 CIRCUIT LOW

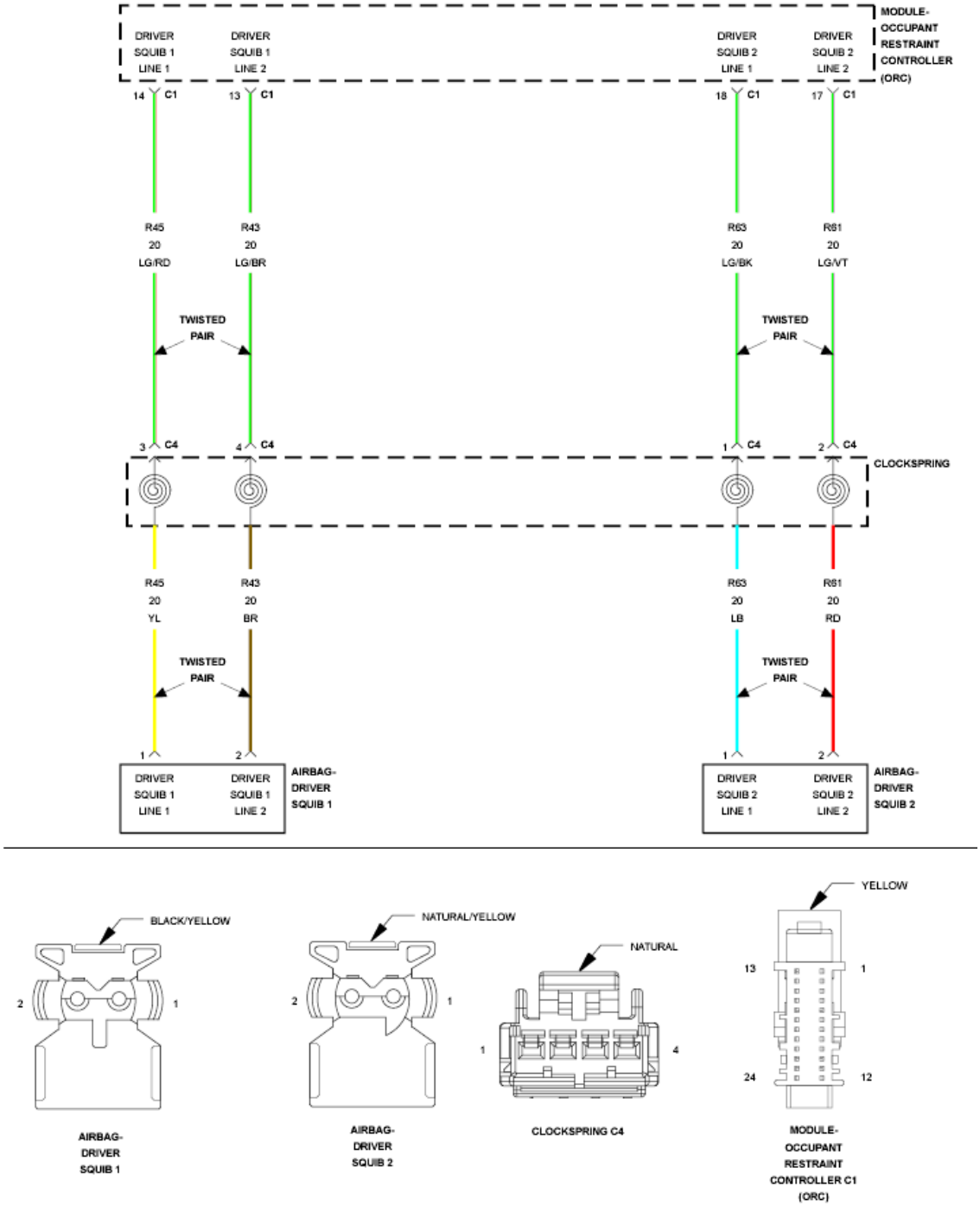

Fig. 1: Driver Airbag Squib Line Circuit Schematic
Courtesy of CHRYSLER GROUP, LLC

For a complete wiring diagram, **refer to appropriate SYSTEM WIRING DIAGRAMS article** .

WHEN MONITORED

With the ignition on.

SET CONDITION

The Occupant Restraint Controller (ORC) monitors the resistance of the Driver Squib 1 circuits. The ORC will set this DTC if it detects low resistance on the Driver Squib 1 circuits.

POSSIBLE CAUSES

Possible Causes
(R43) DRIVER SQUIB 1 LINE 2 CIRCUIT SHORTED TO GROUND
(R45) DRIVER SQUIB 1 LINE 1 CIRCUIT SHORTED TO GROUND
CLOCKSPRING
DRIVER AIRBAG
OCCUPANT RESTRAINT CONTROLLER (ORC)

DIAGNOSTIC TEST

1. **DETERMINE ACTIVE OR STORED DTC**

   NOTE: Make sure that the battery is fully charged.

   NOTE: The scan tool, SRS Load Tool Kit (special tool #8443A, SRS Load Tool), and DVOM are required to perform the following test:

   1. Turn the ignition on.
   2. With the scan tool, read the active ORC DTCs.

      Select ACTIVE or STORED DTC:

      ACTIVE DTC

      - Go To 2

      STORED DTC

      - Go To 5
2. **CHECK FOR SHORTED SQUIB CIRCUITS IN DRIVER AIRBAG**

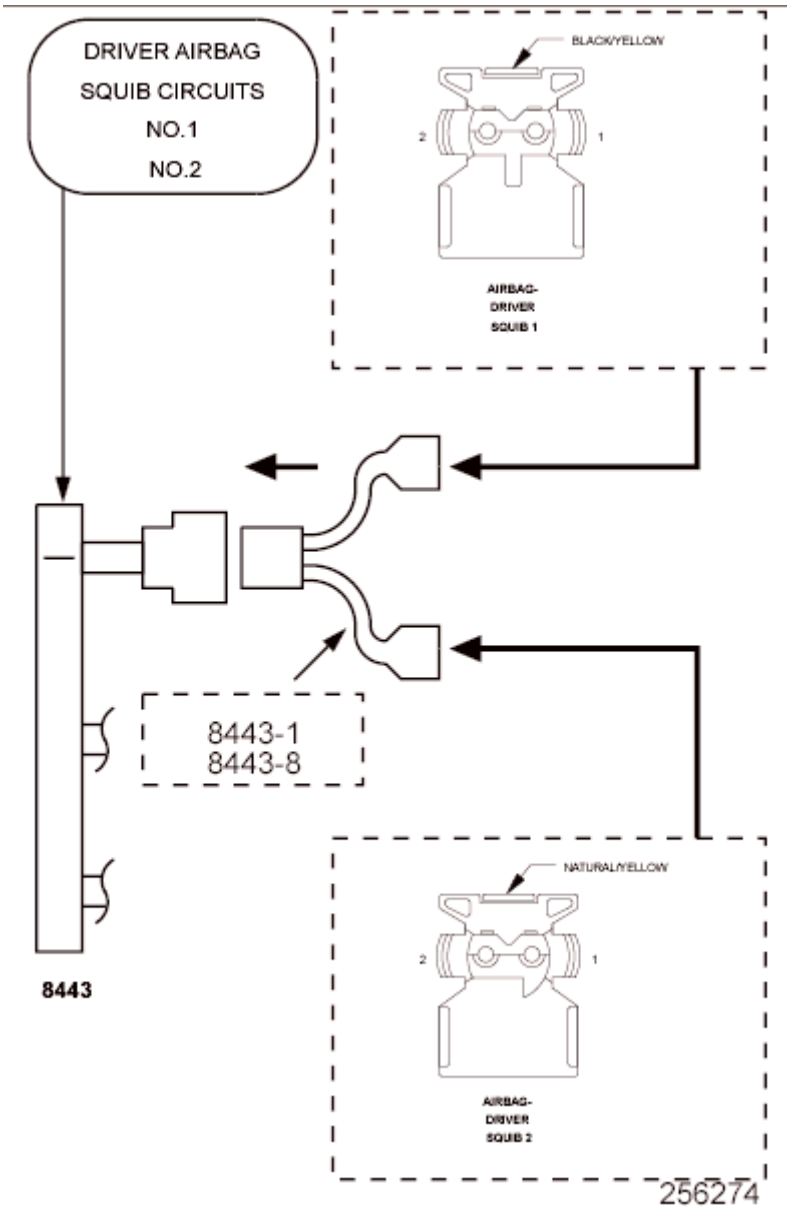

Fig. 2: Checking Squib Circuits In Driver Airbag For Short
Courtesy of CHRYSLER GROUP, LLC

WARNING: **Turn the ignition off disconnect the 12-volt battery and wait two minutes before proceeding. Failure to follow these instructions may result in possible serious or fatal injury.**

1. Disconnect the Driver Airbag Squib connectors.

WARNING: **Do not place an intact non-deployed airbag face down on a hard surface, the**

airbag propels into the air if accidentally deployed. Failure to follow these instructions may result in possible serious or fatal injury.

NOTE: Check connectors - Clean and repair as necessary.

2. Connect the SRS Load Tool Kit (special tool #8443A, SRS Load Tool) and SRS Load Tool Jumper (special tool #8443-1, Jumpers, 2 Pin) or (special tool #8443-8, Jumper, SRS Load) to the Driver Airbag Squib connectors.

WARNING: Turn the ignition on, then reconnect the 12-volt battery and wait two minutes before proceeding. Failure to follow these instructions may result in possible serious or fatal injury.

3. With the scan tool, read the active ORC DTCs.

   Does the scan tool display: B1B00-DRIVER AIRBAG SQUIB 1 CIRCUIT LOW?

   Yes

   - Go To 3

   No

   - Replace the Driver Airbag in accordance with the Service Information.
   - Perform the AIRBAG SYSTEM VERIFICATION TEST. Refer to **STANDARD PROCEDURE** .

3. **CHECK CLOCKSPRING SQUIB CIRCUITS FOR A SHORT TO GROUND**

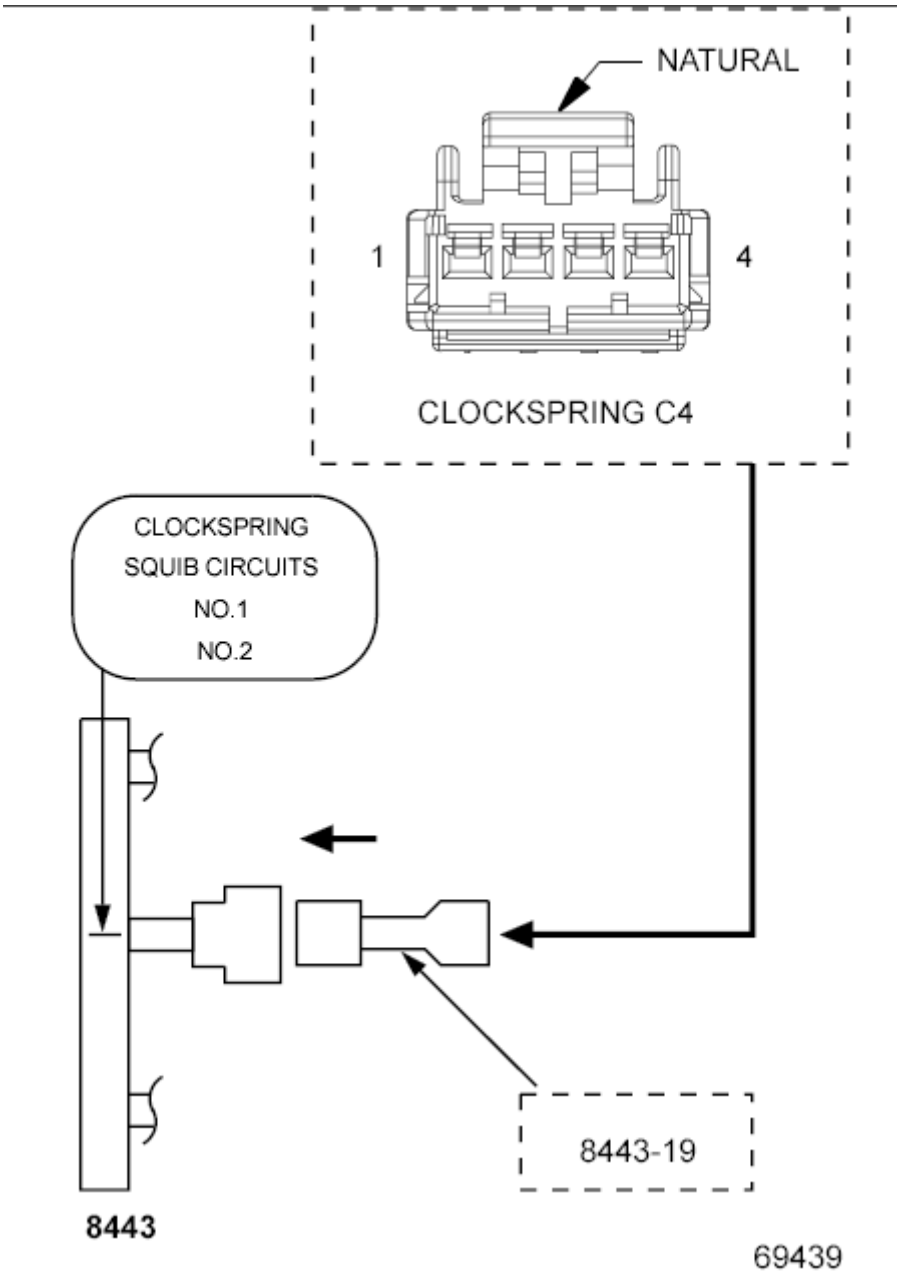

Fig. 3: Checking Clockspring Squib Circuits For A Short To Ground
Courtesy of CHRYSLER GROUP, LLC

WARNING: Turn the ignition off, disconnect the 12-volt battery and wait two minutes before proceeding. Failure to follow these instructions may result in possible serious or fatal injury.

1. Disconnect the SRS Load Tool Kit (special tool #8443A, SRS Load Tool) and SRS Load Tool Jumper (special tool #8443-1, Jumpers, 2

Pin) or (special tool #8443-8, Jumper, SRS Load) from the Driver Airbag Squib connectors.

2. Disconnect the Clockspring C4 connector.

NOTE: Check connectors - Clean and repair as necessary.

3. Connect the SRS Load Tool Kit (special tool #8443A, SRS Load Tool) and SRS Load Tool Jumper (special tool #8443-19, 4 Pin Jumper) to the Clockspring C4 connector.

WARNING: Turn the ignition on, then reconnect the 12-volt battery and wait two minutes before proceeding. Failure to follow these instructions may result in possible serious or fatal injury.

4. With the scan tool, read the active ORC DTCs.

   Does the scan tool display: B1B00-DRIVER AIRBAG SQUIB 1 CIRCUIT LOW?

   Yes

   - Go To 4

   No

   - Replace the Clockspring in accordance with the Service Information.
   - Perform the AIRBAG SYSTEM VERIFICATION TEST. Refer to **STANDARD PROCEDURE** .

4. **CHECK (R43) DRIVER SQUIB 1 LINE 2 CIRCUIT AND (R45) DRIVER SQUIB 1 LINE 1 CIRCUIT FOR A SHORT TO GROUND**

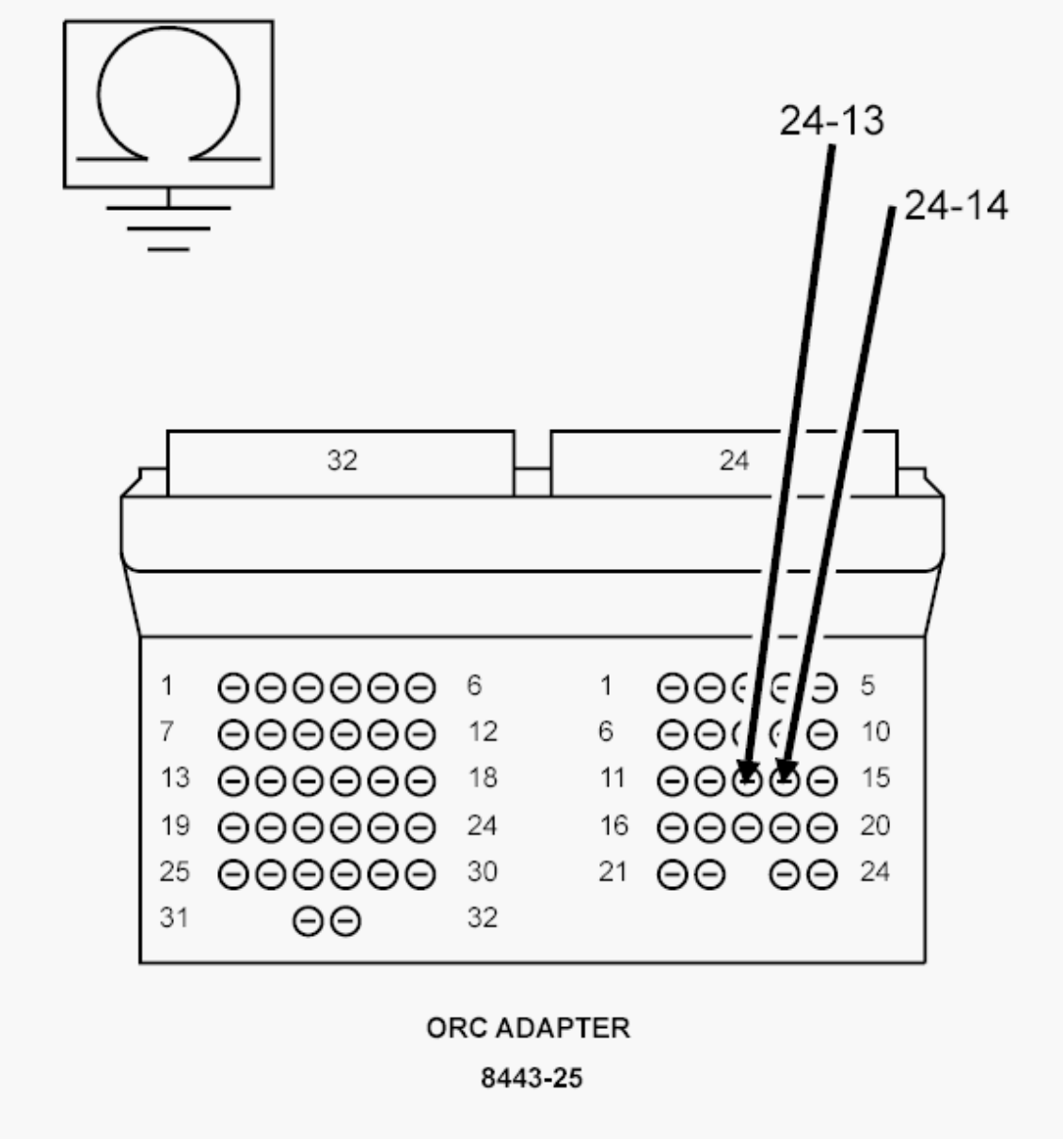

Fig. 4: Checking Driver Squib 1 Line Circuits For Short To Ground
Courtesy of CHRYSLER GROUP, LLC

WARNING: Turn the ignition off, disconnect the 12-volt battery and wait two minutes before proceeding. Failure to follow these instructions may result in possible serious or fatal injury.

1. Disconnect the SRS Load Tool Kit (special tool #8443A, SRS Load Tool) and SRS Load Tool Jumper (special tool #8443-19, 4 Pin Jumper) from the Clockspring C4 connector.
2. Disconnect the ORC connectors.

NOTE: Check connectors - Clean and repair as necessary.

3. Connect the SRS Load Tool Adaptor (special tool #8443-25, 56 Way ACM Adapter) to the ORC connectors.
4. Measure the resistance of the (R43) Driver Squib 1 Line 2 circuit between the SRS Load Tool Adaptor (special tool #8443-25, 56 Way ACM Adapter) cavity 24-13 and ground.
5. Measure the resistance of the (R45) Driver Squib 1 Line 1 circuit between SRS Load Tool Adaptor (special tool #8443-25, 56 Way ACM Adapter) cavity 24-14 and ground.

Is the resistance below 10k Ohms for either measurement?

Yes

- Repair the Driver Squib 1 circuits with resistance below 10k Ohms for a short to ground.
- Perform the AIRBAG SYSTEM VERIFICATION TEST. Refer to **STANDARD PROCEDURE** .

No

WARNING: **If the Occupant Restraint Controller (ORC) is dropped at any time, it must be replaced. Failure to take the proper precautions can result in accidental airbag deployment. Failure to follow these instructions may result in possible serious or fatal injury.**

- Replace the ORC in accordance with Service Information.
- Perform the AIRBAG SYSTEM VERIFICATION TEST. Refer to **STANDARD PROCEDURE** .

5. **CHECKING STORED OR INTERMITTENT CODES**

NOTE: Diagnose and repair all active codes before diagnosing stored codes. Refer to OCCUPANT

RESTRAINT CONTROLLER (ORC) - DIAGNOSTIC CODE INDEX for a complete list of airbag system diagnostic procedures.

1. With the scan tool, record and erase all Airbag System Module DTCs.

   WARNING: **Turn the ignition off, disconnect the 12-volt battery and wait two minutes before proceeding. Failure to follow these instructions may result in possible serious or fatal injury.**

2. Using the wiring diagram/schematic as a guide, inspect the related wiring and connectors for chafed, pierced, pinched, and partially broken wires, and for broken, bent, pushed out, corroded, and contaminated terminals. Repair as necessary.
3. Reconnect all disconnected components and harness connectors.

   WARNING: **Turn the ignition on, then reconnect the 12-volt battery and wait two minutes before proceeding. Failure to follow these instructions may result in possible serious or fatal injury.**

4. With the scan tool, monitor for active codes while performing the following:
   - Wiggle the wiring harness and connectors of the related airbag circuit.
   - Continue the test until either a code becomes active or the problem area is isolated.
5. In the previous steps you have attempted to recreate the conditions responsible for setting the DTC in question / causing the intermittent condition.

   Are any ACTIVE DTCs present?

   Yes

- Perform the appropriate DTC. Refer to **DIAGNOSIS AND TESTING**.

No

- No problem found at this time. Erase all codes before returning the vehicle to the customer.

B1B01-DRIVER AIRBAG SQUIB 1 CIRCUIT HIGH

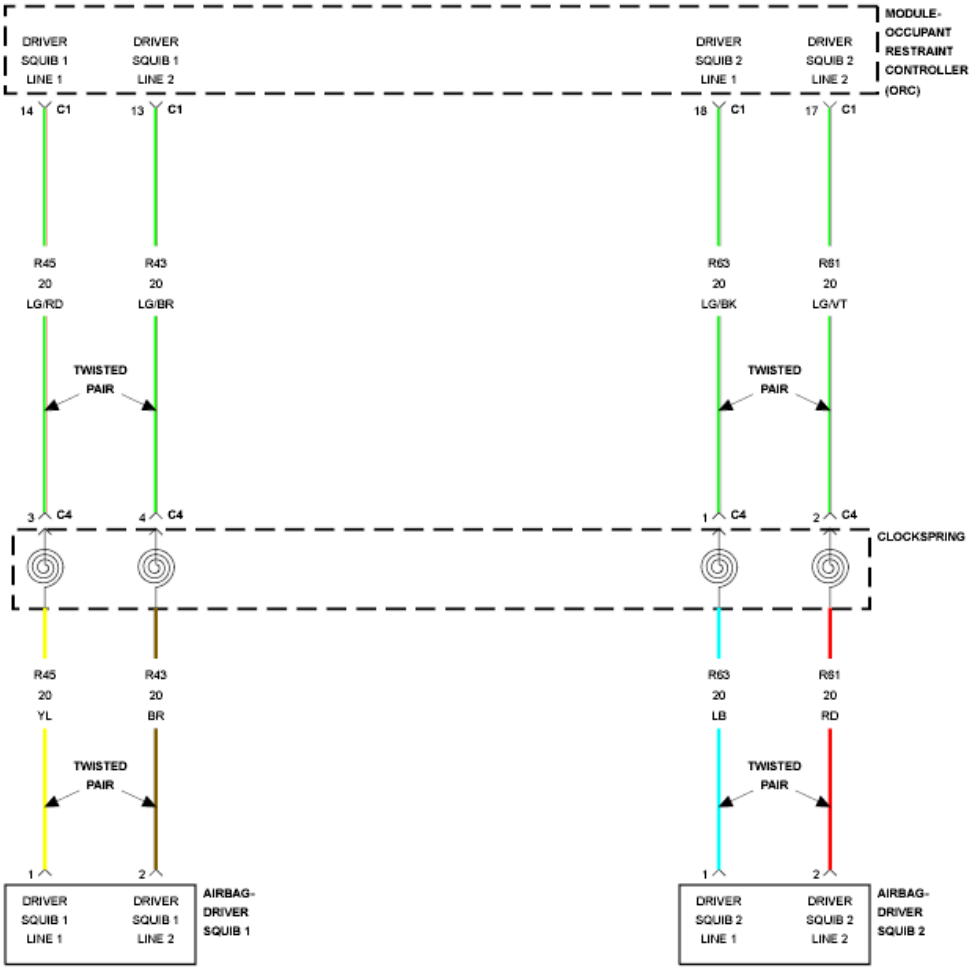

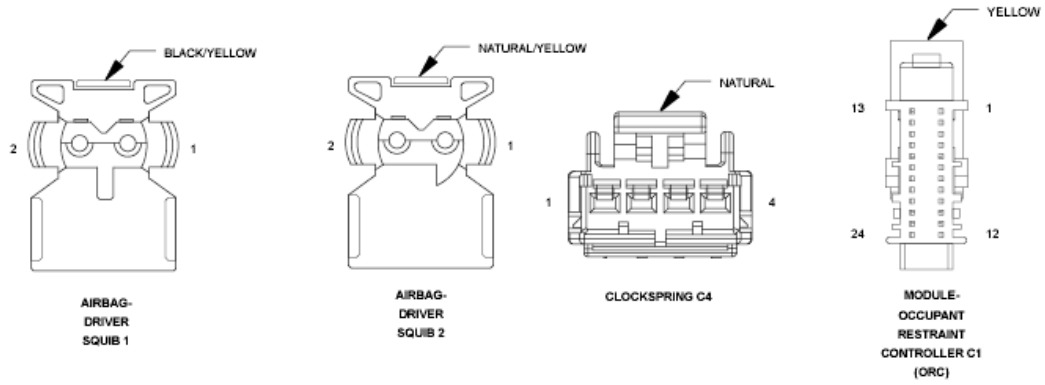

Fig. 5: Driver Airbag Squib Line Circuit Schematic
Courtesy of CHRYSLER GROUP, LLC

For a complete wiring diagram, **refer to appropriate SYSTEM WIRING DIAGRAMS article** .

WHEN MONITORED

With the ignition on.

SET CONDITION

The Occupant Restraint Controller (ORC) monitors the voltage on the Driver Squib 1 circuits. The ORC will set this DTC if it detects voltage on the Driver Squib 1 circuits.

POSSIBLE CAUSES

Possible Causes
(R43) DRIVER SQUIB 1 LINE 2 CIRCUIT SHORTED TO BATTERY
(R45) DRIVER SQUIB 1 LINE 1 CIRCUIT SHORTED TO BATTERY
CLOCKSPRING
DRIVER AIRBAG
OCCUPANT RESTRAINT CONTROLLER (ORC)

DIAGNOSTIC TEST

1. **DETERMINE ACTIVE OR STORED DTC**

NOTE: Make sure that the battery is fully charged.

NOTE: The scan tool, SRS Load Tool Kit (special tool #8443A, SRS Load Tool), and DVOM are required to perform the following test:

1. Turn the ignition on.
2. With the scan tool, read the active ORC DTCs.

   Select ACTIVE or STORED DTC:

   ACTIVE DTC

- Go To 2

STORED DTC

- Go To 5

2. **CHECK FOR SHORTED SQUIB CIRCUITS IN DRIVER AIRBAG**

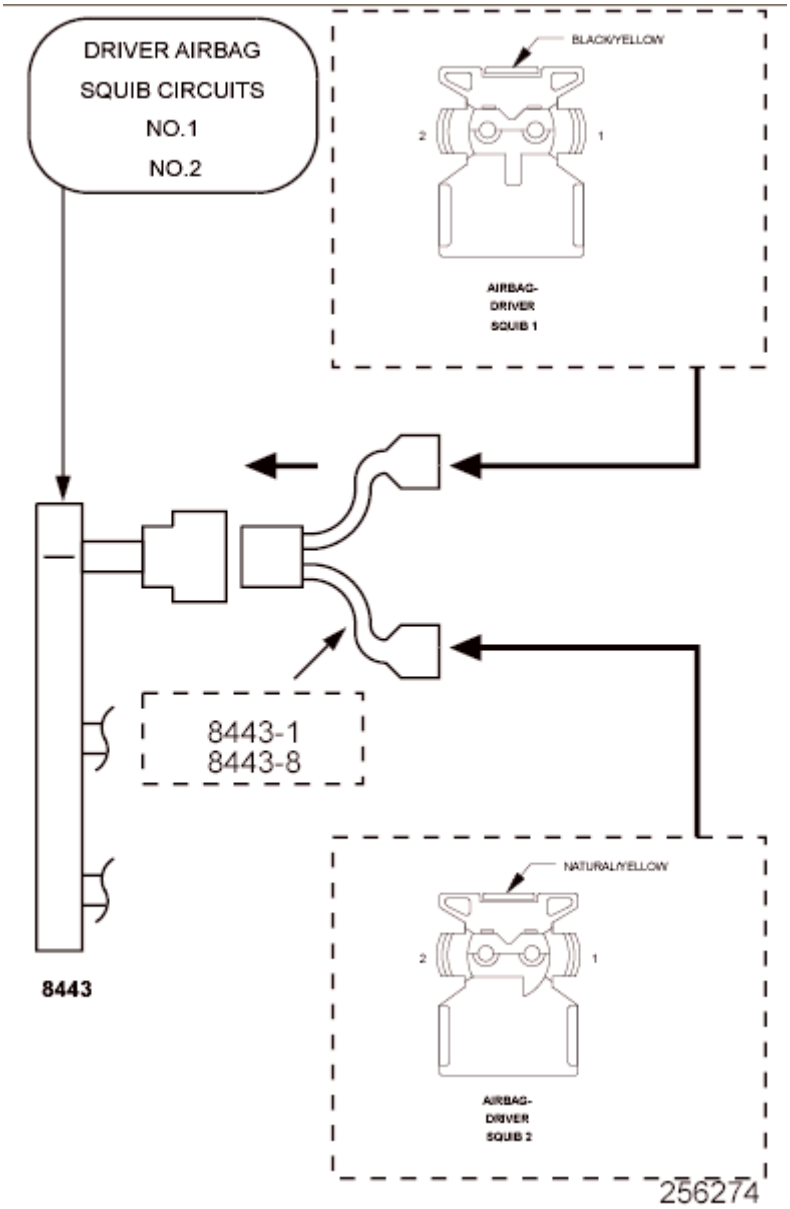

Fig. 6: Checking Squib Circuits In Driver Airbag For Short
Courtesy of CHRYSLER GROUP, LLC

WARNING: Turn the ignition off disconnect the 12-volt battery and wait two minutes before proceeding. Failure to follow these

instructions may result in possible serious or fatal injury.

1. Disconnect the Driver Airbag Squib connectors.

   WARNING: **Do not place an intact non-deployed airbag face down on a hard surface, the airbag propels into the air if accidentally deployed. Failure to follow these instructions may result in possible serious or fatal injury.**

   NOTE: **Check connectors - Clean and repair as necessary.**

2. Connect the SRS Load Tool Kit (special tool #8443A, SRS Load Tool) and SRS Load Tool Jumper (special tool #8443-1, Jumpers, 2 Pin) or (special tool #8443-8, Jumper, SRS Load) to the Driver Airbag Squib connectors.

   WARNING: **Turn the ignition on, then reconnect the 12-volt battery and wait two minutes before proceeding. Failure to follow these instructions may result in possible serious or fatal injury.**

3. With the scan tool, read the active ORC DTCs.

   Does the scan tool display: B1B01-DRIVER AIRBAG SQUIB 1 CIRCUIT HIGH?

   Yes

   - Go To 3

   No

   - Replace the Driver Airbag in accordance with the Service Information.

- Perform the AIRBAG SYSTEM VERIFICATION TEST. Refer to **STANDARD PROCEDURE** .

3. **CHECK CLOCKSPRING SQUIB CIRCUITS FOR A SHORT TO BATTERY**

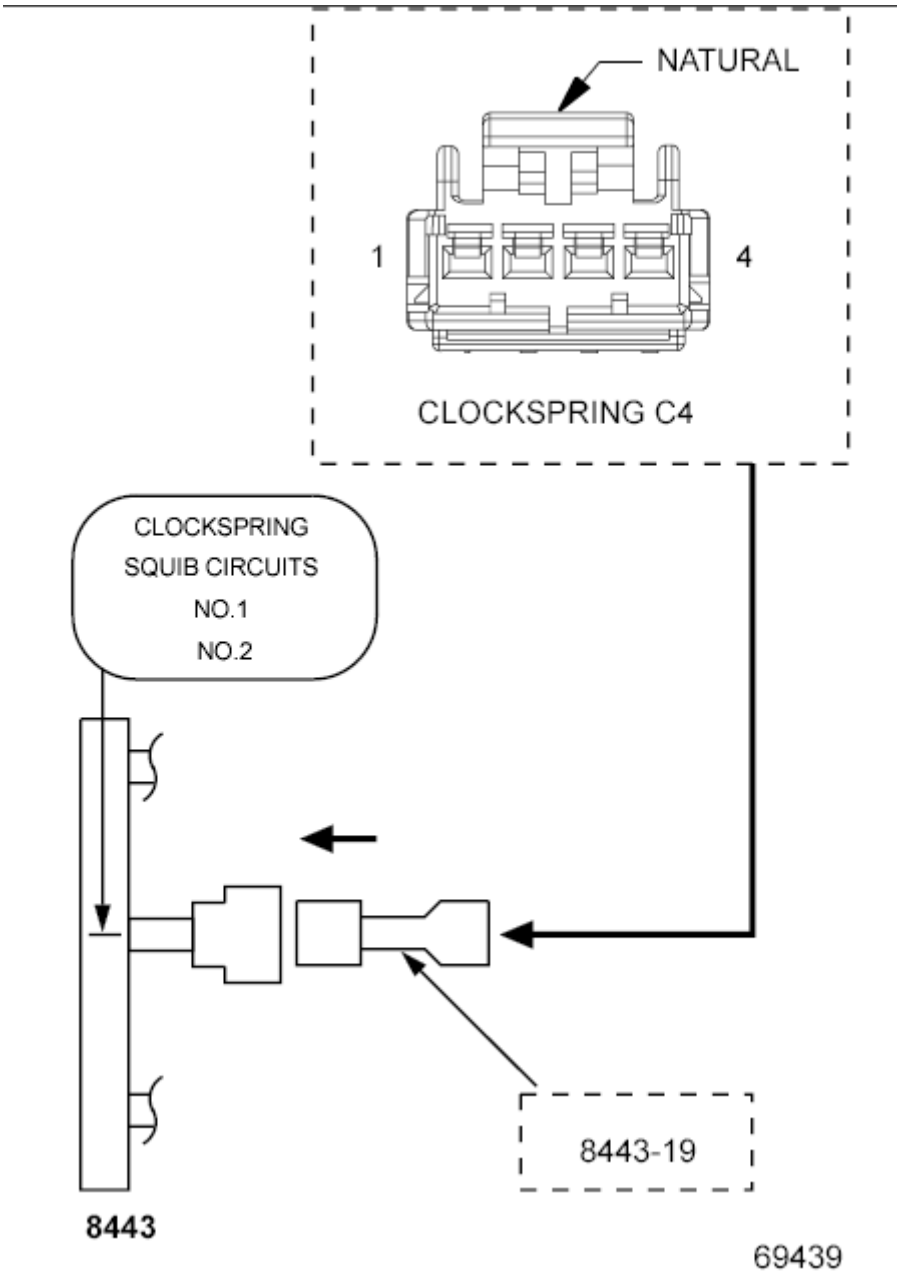

Fig. 7: Checking Clockspring Squib Circuits For A Short To Ground
Courtesy of CHRYSLER GROUP, LLC

WARNING: **Turn the ignition off, disconnect the 12-volt battery and wait two minutes before proceeding. Failure to follow these**

instructions may result in possible serious or fatal injury.

1. Disconnect the SRS Load Tool Kit (special tool #8443A, SRS Load Tool) and SRS Load Tool Jumper (special tool #8443-1, Jumpers, 2 Pin) or (special tool #8443-8, Jumper, SRS Load) from the Driver Airbag Squib connectors.
2. Disconnect the Clockspring C4 connector.

NOTE: Check connectors - Clean and repair as necessary.

3. Connect the SRS Load Tool Kit (special tool #8443A, SRS Load Tool) and SRS Load Tool Jumper (special tool #8443-19, 4 Pin Jumper) to the Clockspring C4 connector.

WARNING: Turn the ignition on, then reconnect the 12-volt battery and wait two minutes before proceeding. Failure to follow these instructions may result in possible serious or fatal injury.

4. With the scan tool, read the active ORC DTCs.

   Does the scan tool display: B1B01-DRIVER AIRBAG SQUIB 1 CIRCUIT HIGH?

   Yes

   - Go To 4

   No

   - Replace the Clockspring in accordance with the Service Information.
   - Perform the AIRBAG SYSTEM VERIFICATION TEST. Refer to **STANDARD PROCEDURE** .

4. **CHECK (R43) DRIVER SQUIB 1 LINE 2 CIRCUIT AND (R45) DRIVER SQUIB 1 LINE 1 CIRCUIT FOR A SHORT TO BATTERY**

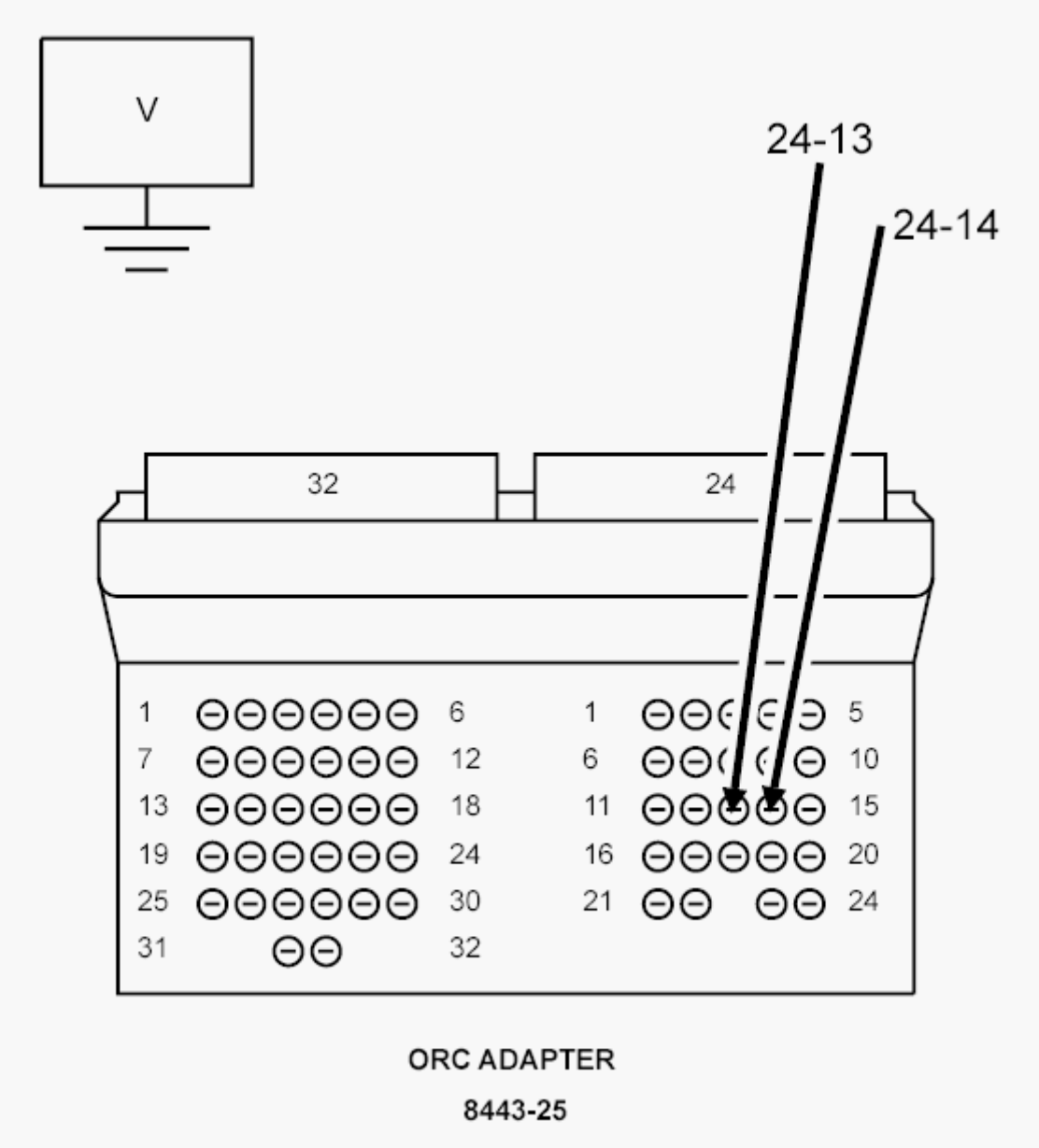

Fig. 8: Checking Driver Squib 1 Line Circuits For Short To Battery
Courtesy of CHRYSLER GROUP, LLC

WARNING: Turn the ignition off, disconnect the 12-volt battery and wait two minutes before proceeding. Failure to follow these instructions may result in possible serious or fatal injury.

1. Disconnect the SRS Load Tool Kit (special tool #8443A, SRS Load Tool) and SRS Load Tool Jumper (special tool #8443-19, 4 Pin Jumper) from the Clockspring C4 connector.

2. Disconnect the ORC connectors.

NOTE: Check connectors - Clean and repair as necessary.

3. Connect the SRS Load Tool Adaptor (special tool #8443-25, 56 Way ACM Adapter) to the ORC connectors.

WARNING: Turn the ignition on, then reconnect the 12-volt battery and wait two minutes before proceeding. Failure to follow these instructions may result in possible serious or fatal injury.

4. Measure the voltage of the (R43) Driver Squib 1 Line 2 circuit between the SRS Load Tool Adaptor (special tool #8443-25, 56 Way ACM Adapter) cavity 24-13 and ground.
5. Measure the voltage of the (R45) Driver Squib 1 Line 1 circuit between the SRS Load Tool Adaptor (special tool #8443-25, 56 Way ACM Adapter) connector cavity 24-14 and ground.

Is there any voltage present for either measurement?

Yes

- Repair the Driver Squib 1 circuits with voltage present for a short to battery.
- Perform the AIRBAG SYSTEM VERIFICATION TEST. Refer to **STANDARD PROCEDURE** .

No

WARNING: If the Occupant Restraint Controller (ORC) is dropped at any time, it must be replaced. Failure to take the proper precautions can result in accidental airbag deployment. Failure to follow these instructions may result in possible serious or fatal injury.

WARNING: Turn the ignition off, disconnect the 12-volt battery and wait two minutes before proceeding. Failure to follow these instructions may result in possible serious or fatal injury.

- Replace the ORC in accordance with Service Information.
- Perform the AIRBAG SYSTEM VERIFICATION TEST. Refer to **STANDARD PROCEDURE** .

5. **CHECKING STORED OR INTERMITTENT CODES**

NOTE: Diagnose and repair all active codes before diagnosing stored codes. Refer to OCCUPANT RESTRAINT CONTROLLER (ORC) - DIAGNOSTIC CODE INDEX for a complete list of airbag system diagnostic procedures.

1. With the scan tool, record and erase all Airbag System Module DTCs.

WARNING: Turn the ignition off, disconnect the 12-volt battery and wait two minutes before proceeding. Failure to follow these instructions may result in possible serious or fatal injury.

2. Using the wiring diagram/schematic as a guide, inspect the related wiring and connectors for chafed, pierced, pinched, and partially broken wires, and for broken, bent, pushed out, corroded, and contaminated terminals. Repair as necessary.
3. Reconnect all disconnected components and harness connectors.

WARNING: Turn the ignition on, then reconnect the 12-volt battery and wait two minutes before proceeding. Failure to follow these instructions may result in possible serious or fatal injury.

4. With the scan tool, monitor for active codes while performing the

following:

- Wiggle the wiring harness and connectors of the related airbag circuit.
- Continue the test until either a code becomes active or the problem area is isolated.

5. In the previous steps you have attempted to recreate the conditions responsible for setting the DTC in question / causing the intermittent condition.

   Are any ACTIVE DTCs present?

   Yes

   - Perform the appropriate DTC. Refer to **DIAGNOSIS AND TESTING**.

   No

   - No problem found at this time. Erase all codes before returning the vehicle to the customer.

B1B02-DRIVER AIRBAG SQUIB 1 CIRCUIT OPEN

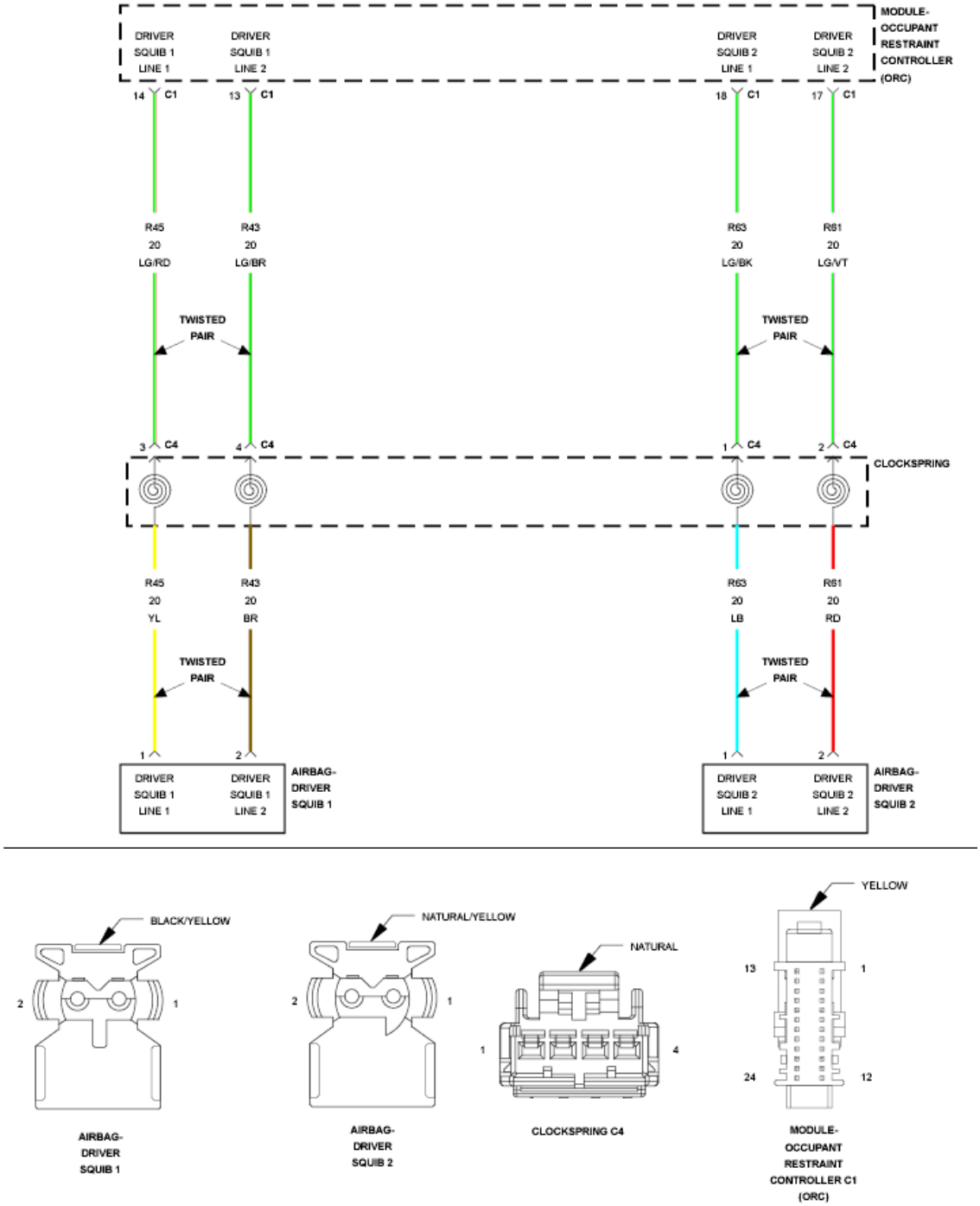

Fig. 9: Driver Airbag Squib Line Circuit Schematic
Courtesy of CHRYSLER GROUP, LLC

For a complete wiring diagram, **refer to appropriate SYSTEM WIRING DIAGRAMS article** .

THEORY OF OPERATION

When powered, the Occupant Restraint Controller (ORC) sends a test current to the squibs to verify the integrity of the squib and the wiring. These circuits are

maintained in a "floating" configuration at the module, (connected to neither power nor ground), as protection against inadvertent deployment. Use of the Supplemental Restraints System (SRS) Load Tool Kit 8443A in the tests below substitutes a suspect squib with a known good component. The use of the SRS Load Tool Adapter tool provides a test point, as well as a method for opening the shorting bar connections within the harness connector.

WHEN MONITORED

With the ignition on.

SET CONDITION

The Occupant Restraint Controller (ORC) monitors the resistance of the Driver Squib 1 circuits. The ORC will set this DTC if it detects an open or high resistance on the Driver Squib 1 circuits.

POSSIBLE CAUSES

Possible Causes
(R43) DRIVER SQUIB 1 LINE 2 CIRCUIT OPEN
(R45) DRIVER SQUIB 1 LINE 1 CIRCUIT OPEN
CLOCKSPRING
DRIVER AIRBAG
OCCUPANT RESTRAINT CONTROLLER (ORC)

DIAGNOSTIC TEST

1. **DETERMINE ACTIVE OR STORED DTC**

   NOTE: Make sure that the battery is fully charged.

   NOTE: The scan tool, SRS Load Tool Kit (special tool #8443A, SRS Load Tool), and DVOM are required to perform the following test:

   1. Turn the ignition on.

      Select ACTIVE or STORED DTC:

      ACTIVE DTC

- Go To 2

STORED DTC

- Go To 6

2. **CHECK FOR OPEN SQUIB CIRCUITS IN DRIVER AIRBAG**

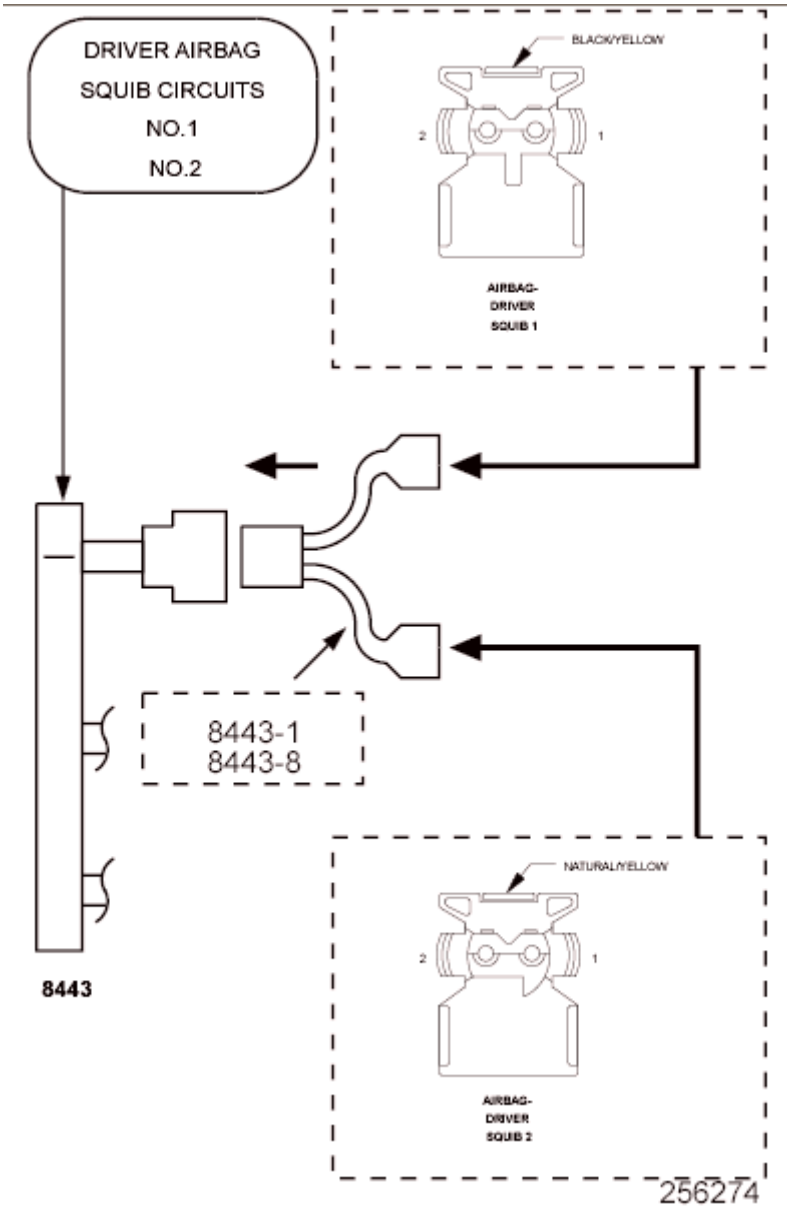

Fig. 10: Checking Squib Circuits In Driver Airbag For Short
Courtesy of CHRYSLER GROUP, LLC

WARNING: Turn the ignition off disconnect the 12-volt battery and wait two minutes before proceeding. Failure to follow these

instructions may result in possible serious or fatal injury.

1. Disconnect the Driver Airbag Squib connectors.

   WARNING: **Do not place an intact non-deployed airbag face down on a hard surface, the airbag propels into the air if accidentally deployed. Failure to follow these instructions may result in possible serious or fatal injury.**

   NOTE: Check connectors - Clean and repair as necessary.

2. Connect the SRS Load Tool Kit (special tool #8443A, SRS Load Tool) and SRS Load Tool Jumper (special tool #8443-1, Jumpers, 2 Pin) to the Driver Airbag Squib connectors.

   WARNING: **Turn the ignition on, then reconnect the 12-volt battery and wait two minutes before proceeding. Failure to follow these instructions may result in possible serious or fatal injury.**

3. With the scan tool, read the active ORC DTCs.

   Does the scan tool display: B1B02-DRIVER AIRBAG SQUIB 1 CIRCUIT OPEN?

   Yes

   - Go To 3

   No

   - Replace the Driver Airbag in accordance with the Service Information.
   - Perform the AIRBAG SYSTEM VERIFICATION TEST. Refer to

STANDARD PROCEDURE .

3. **CHECK THE CLOCKSPRING SQUIB CIRCUITS FOR AN OPEN**

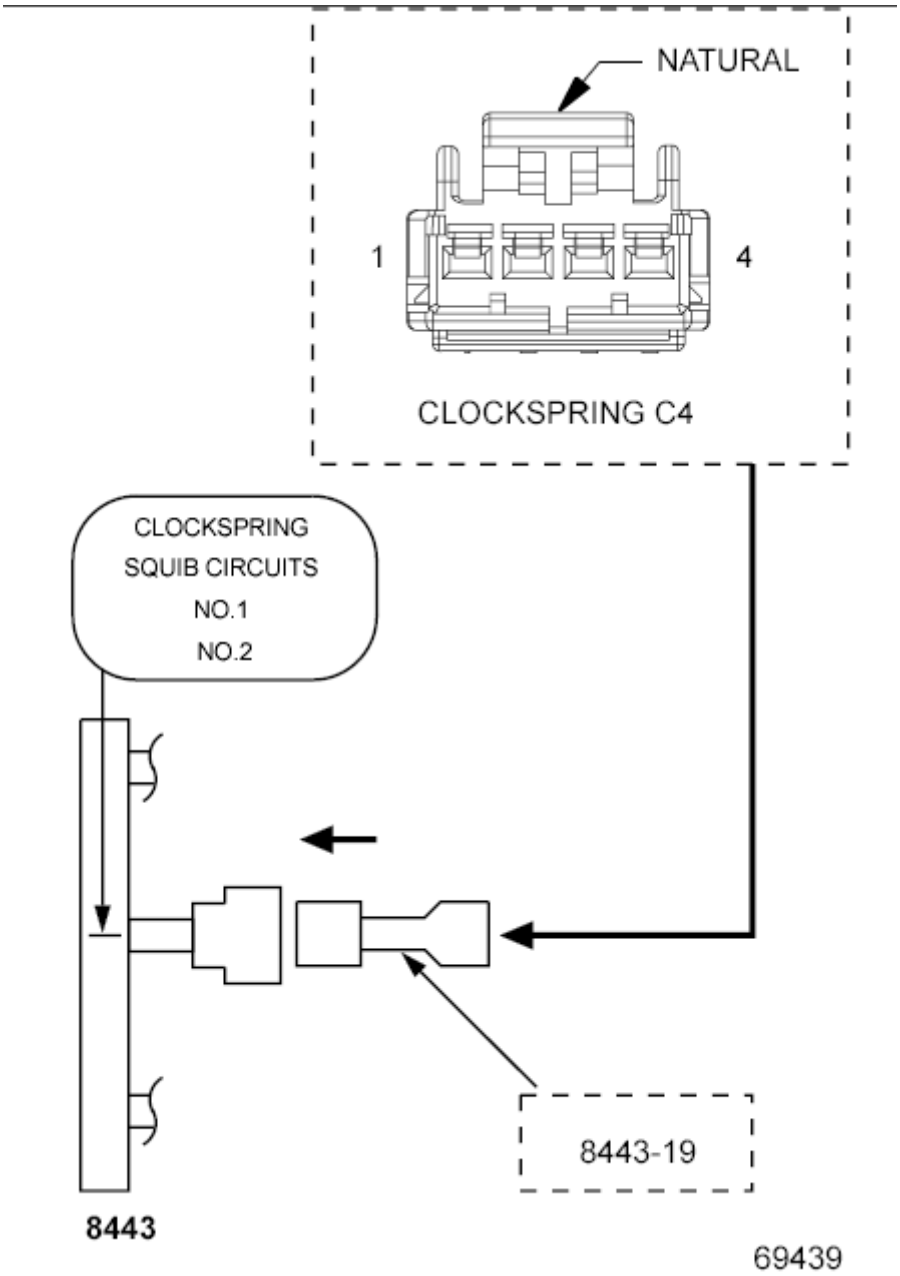

Fig. 11: Checking Clockspring Squib Circuits For A Short To Ground
Courtesy of CHRYSLER GROUP, LLC

WARNING: Turn the ignition off, disconnect the 12-volt battery and wait two minutes before proceeding. Failure to follow these instructions may result in possible serious or fatal injury.

1. Disconnect the SRS Load Tool Kit (special tool #8443A, SRS Load Tool) and SRS Load Tool Jumper (special tool #8443-1, Jumpers, 2 Pin) from the Driver Airbag Squib connectors.
2. Disconnect the Clockspring C4 connector.

NOTE: Check connectors - Clean and repair as necessary.

3. Connect the SRS Load Tool Kit (special tool #8443A, SRS Load Tool) and SRS Load Tool Jumper (special tool #8443-19, 4 Pin Jumper) to the Clockspring C4 connector.

WARNING: Turn the ignition on, then reconnect the 12-volt battery and wait two minutes before proceeding. Failure to follow these instructions may result in possible serious or fatal injury.

4. With the scan tool, read the active ORC DTCs.

   Does the scan tool display: B1B02-DRIVER AIRBAG SQUIB 1 CIRCUIT OPEN?

   Yes

   - Go To 4

   No

   - Replace the Clockspring in accordance with the Service Information.
   - Perform the AIRBAG SYSTEM VERIFICATION TEST. Refer to **STANDARD PROCEDURE** .

4. **CHECK THE (R43) DRIVER SQUIB 1 LINE 2 CIRCUIT FOR AN OPEN**

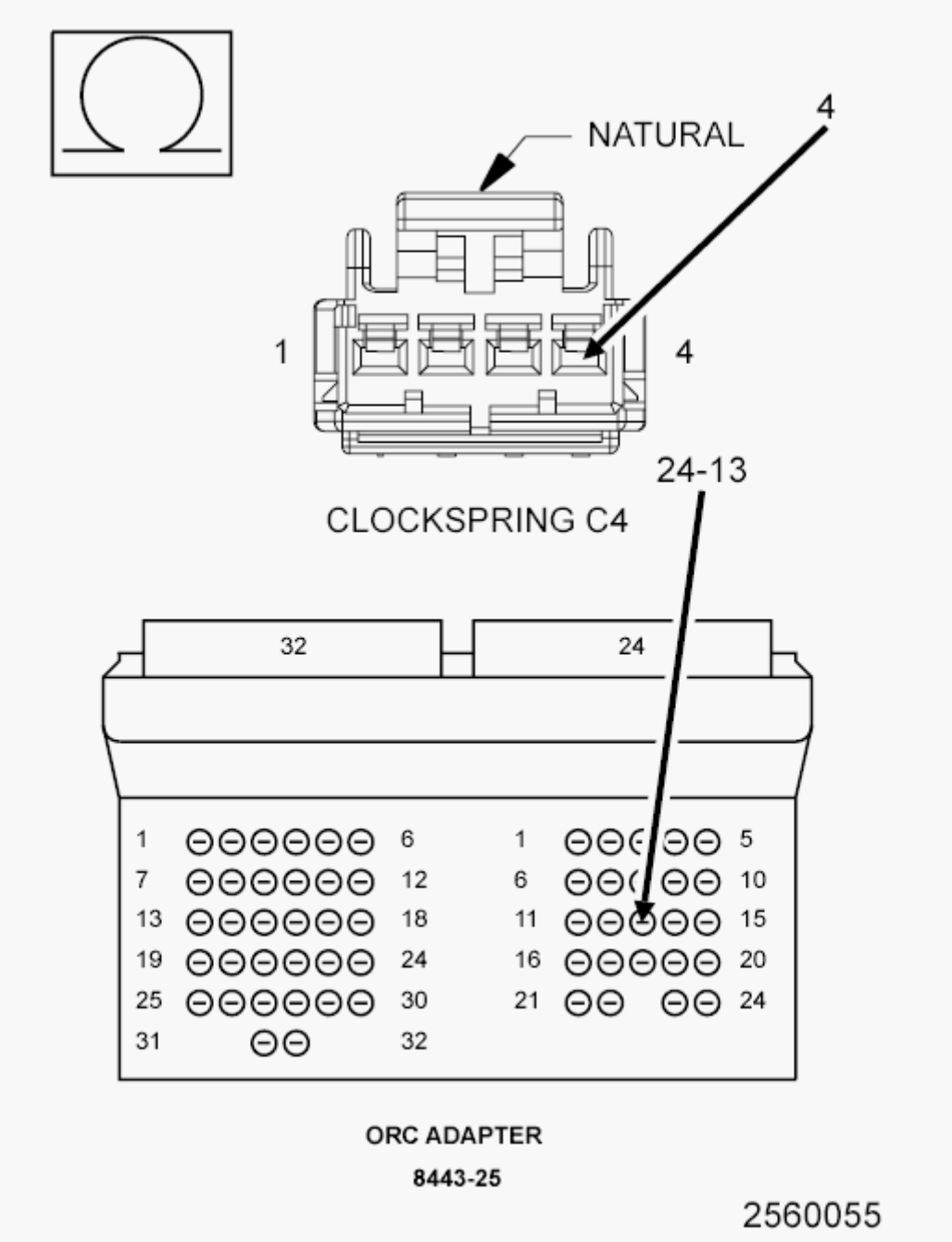

Fig. 12: Checking Driver Squib 1 Line 2 Circuit For Open
Courtesy of CHRYSLER GROUP, LLC

WARNING: Turn the ignition off, disconnect the 12-volt battery and wait two minutes before proceeding. Failure to follow these instructions may result in possible serious or fatal injury.

1. Disconnect the SRS Load Tool Kit (special tool #8443A, SRS Load

Tool) and SRS Load Tool Jumper (special tool #8443-19, 4 Pin Jumper) from the Clockspring C4 connector.

2. Disconnect the ORC connectors.

NOTE: Check connectors - Clean and repair as necessary.

3. Connect the SRS Load Tool Adaptor (special tool #8443-25, 56 Way ACM Adapter) to the ORC connectors.
4. Measure the resistance of the (R43) Driver Squib 1 Line 2 circuit between the Clockspring C4 connector cavity 4 and the SRS Load Tool Adaptor (special tool #8443-25, 56 Way ACM Adapter) cavity 24-13.

   Is the resistance below 1.0 Ohm?

   Yes

   - Go To 5

   No

   - Repair the R43 Driver Squib 1 Line 2 circuit for an open.
   - Perform the AIRBAG SYSTEM VERIFICATION TEST. Refer to **STANDARD PROCEDURE** .

5. **CHECK THE (R45) DRIVER SQUIB 1 LINE 1 CIRCUIT FOR AN OPEN**

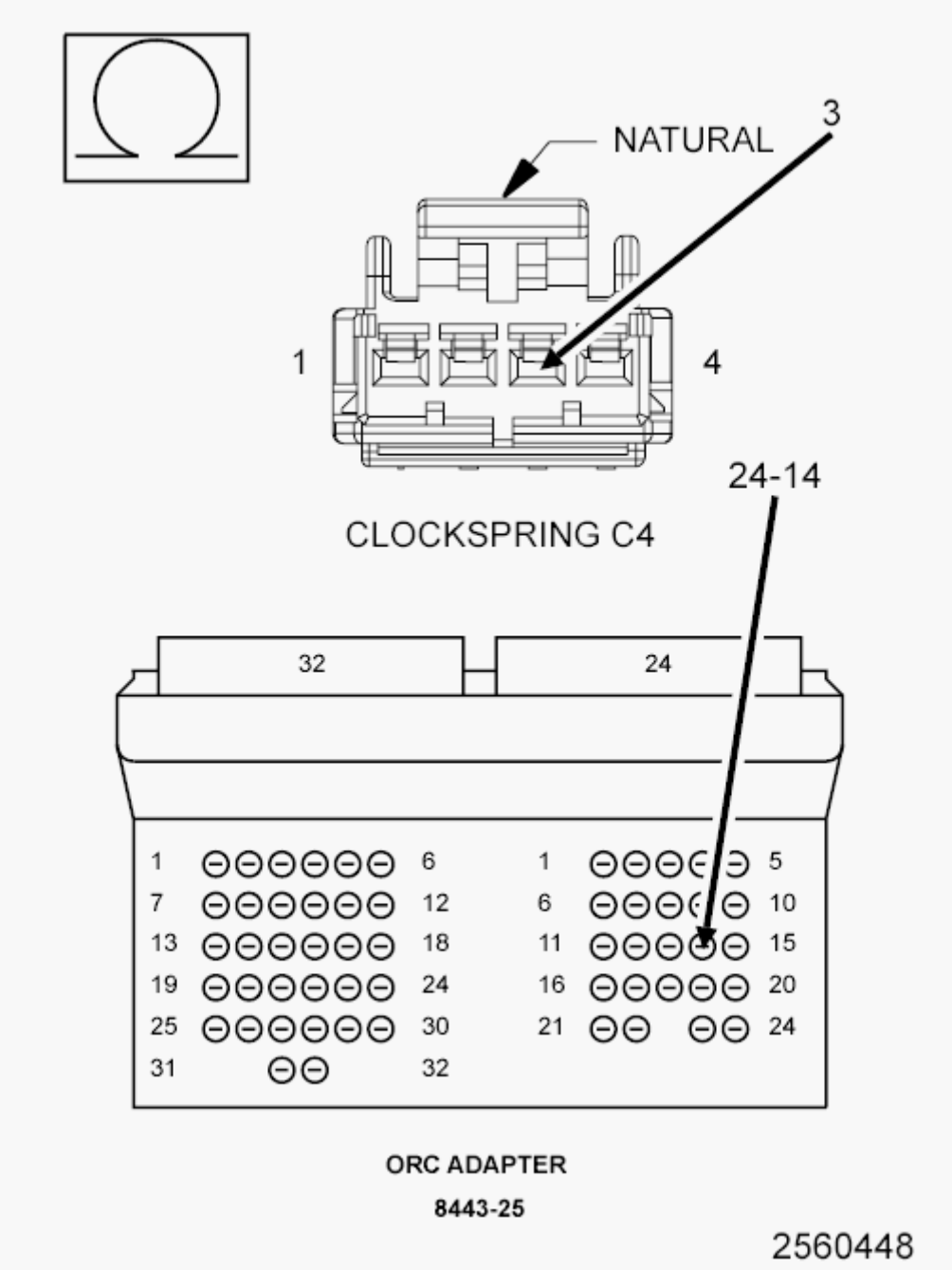

Fig. 13: Checking Driver Squib 1 Line 1 Circuit For Open
Courtesy of CHRYSLER GROUP, LLC

1. Measure the resistance of the (R45) Driver Squib 1 Line 1 circuit between the Clockspring C4 connector cavity 3 and the SRS Load Tool Adaptor (special tool #8443-25, 56 Way ACM Adapter) cavity 24-14.

   Is the resistance below 1.0 Ohm?

   Yes

WARNING: Turn the ignition off, disconnect the 12-volt battery and wait two minutes before proceeding. Failure to follow these instructions may result in possible serious or fatal injury.

- Replace the ORC in accordance with Service Information.
- Perform the AIRBAG SYSTEM VERIFICATION TEST. Refer to **STANDARD PROCEDURE** .

No

- Repair the (R45) Driver Squib 1 Line 1 circuit for an open.
- Perform the AIRBAG SYSTEM VERIFICATION TEST. Refer to **STANDARD PROCEDURE** .

6. **CHECKING STORED OR INTERMITTENT CODES**

NOTE: Diagnose and repair all active codes before diagnosing stored codes. for a complete list of airbag system diagnostic procedures. Refer to DIAGNOSIS AND TESTING.

1. With the scan tool, record and erase all Airbag System Module DTCs.

WARNING: Turn the ignition off, disconnect the 12-volt battery and wait two minutes before proceeding. Failure to follow these instructions may result in possible serious or fatal injury.

2. Using the wiring diagram / schematic as a guide, inspect the related wiring and connectors for chafed, pierced, pinched, and partially broken wires, and for broken, bent, pushed out, corroded, and contaminated terminals. Repair as necessary.
3. Reconnect all disconnected components and harness connectors.

WARNING: Turn the ignition on, then reconnect the 12-volt battery and wait two minutes

before proceeding. Failure to follow these instructions may result in possible serious or fatal injury.

4. With the scan tool, monitor for active codes while performing the following:
   - Wiggle the wiring harness and connectors of the related airbag circuit.
   - Continue the test until either a code becomes active or the problem area is isolated.
5. In the previous steps you have attempted to recreate the conditions responsible for setting the DTC in question / causing the intermittent condition.

   Are any ACTIVE DTCs present?

   Yes

   - Refer to **DIAGNOSIS AND TESTING** and perform the appropriate diagnostic procedure.

   No

   - No problem found at this time. Erase all codes before returning the vehicle to the customer.

B1B03-DRIVER AIRBAG SQUIB 1 CIRCUIT SHORTED TOGETHER

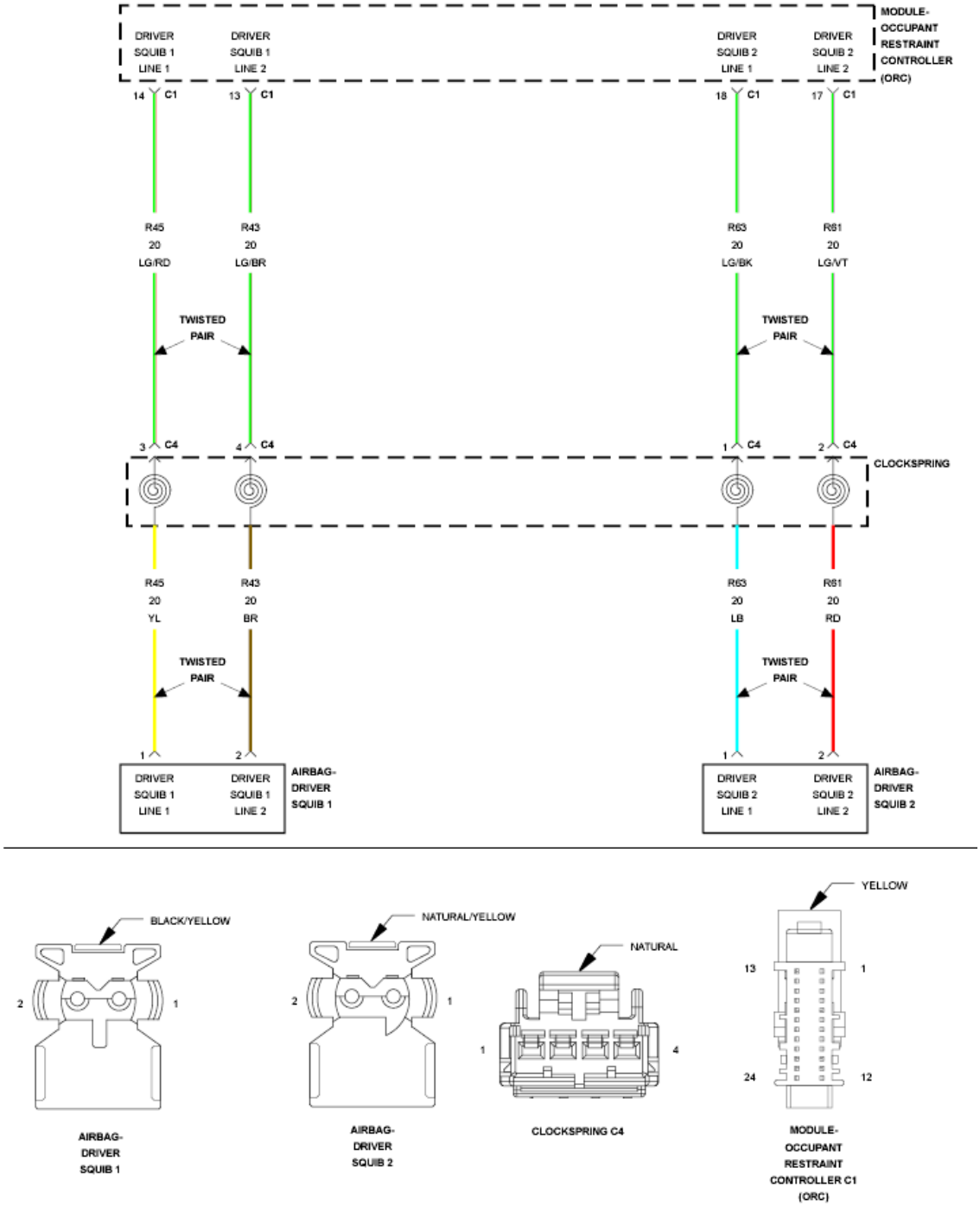

Fig. 14: Driver Airbag Squib Line Circuit Schematic
Courtesy of CHRYSLER GROUP, LLC

For a complete wiring diagram, **refer to appropriate SYSTEM WIRING DIAGRAMS article** .

THEORY OF OPERATION

When powered, the Occupant Restraint Controller (ORC) sends a test current to the squibs to verify the integrity of the squib and the wiring. These circuits are

maintained in a "floating" configuration at the module, (connected to neither power nor ground), as protection against inadvertent deployment. Use of the Supplemental Restraints System (SRS) Load Tool Kit 8443A in the tests below substitutes a suspect squib with a known good component. The use of the SRS Load Tool Adapter tool provides a test point, as well as a method for opening the shorting bar connections within the harness connector.

WHEN MONITORED

With the ignition on.

SET CONDITION

The Occupant Restraint Controller (ORC) monitors the resistance of the Driver Squib 1 circuits. The ORC will set this DTC if it detects low resistance between the Driver Squib 1 circuits.

POSSIBLE CAUSES

Possible Causes
(R43) DRIVER SQUIB 1 LINE 2 CIRCUIT SHORTED TO THE (R45) DRIVER SQUIB 1 LINE 1 CIRCUIT
CLOCKSPRING
DRIVER AIRBAG
OCCUPANT RESTRAINT CONTROLLER (ORC)

DIAGNOSTIC TEST

1. **DETERMINE ACTIVE OR STORED DTC**

   NOTE: Make sure that the battery is fully charged.

   NOTE: The scan tool, SRS Load Tool Kit (special tool #8443A, SRS Load Tool), and DVOM are required to perform the following test:

   1. Turn the ignition on.

      Select ACTIVE or STORED DTC:

      ACTIVE DTC

- Go To 2

STORED DTC

- Go To 5

2. **CHECK FOR SHORTED SQUIB CIRCUITS IN DRIVER AIRBAG**

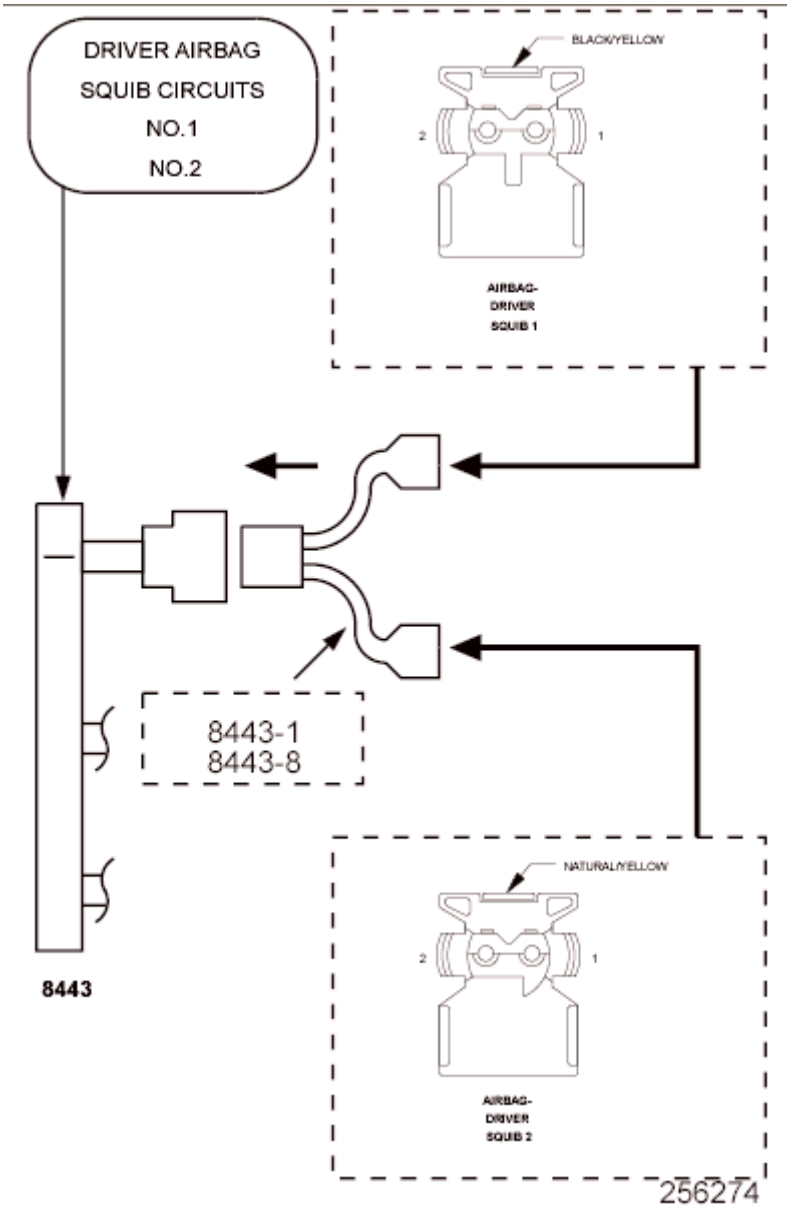

Fig. 15: Checking Squib Circuits In Driver Airbag For Short
Courtesy of CHRYSLER GROUP, LLC

WARNING: Turn the ignition off disconnect the 12-volt battery and wait two minutes before proceeding. Failure to follow these

instructions may result in possible serious or fatal injury.

WARNING: **Do not place an intact non-deployed airbag face down on a hard surface, the airbag propels into the air if accidentally deployed. Failure to follow these instructions may result in possible serious or fatal injury.**

1. Disconnect the Driver Airbag Squib connectors.

   NOTE: **Check connectors - Clean and repair as necessary.**

2. Connect the SRS Load Tool Kit (special tool #8443A, SRS Load Tool) and SRS Load Tool Jumper (special tool #8443-1, Jumpers, 2 Pin) or (special tool #8443-8, Jumper, SRS Load) to the Driver Airbag Squib connectors.

   WARNING: **Turn the ignition on, then reconnect the 12-volt battery and wait two minutes before proceeding. Failure to follow these instructions may result in possible serious or fatal injury.**

3. With the scan tool, read the active ORC DTCs.

   Does the scan tool display: B1B03-DRIVER AIRBAG SQUIB 1 CIRCUIT SHORTED TOGETHER?

   Yes

   - Go To 3

   No

   - Replace the Driver Airbag in accordance with the Service Information.
   - Perform the AIRBAG SYSTEM VERIFICATION TEST. Refer to

STANDARD PROCEDURE .

3. **CHECK CLOCKSPRING SQUIB CIRCUITS FOR A SHORT TOGETHER**

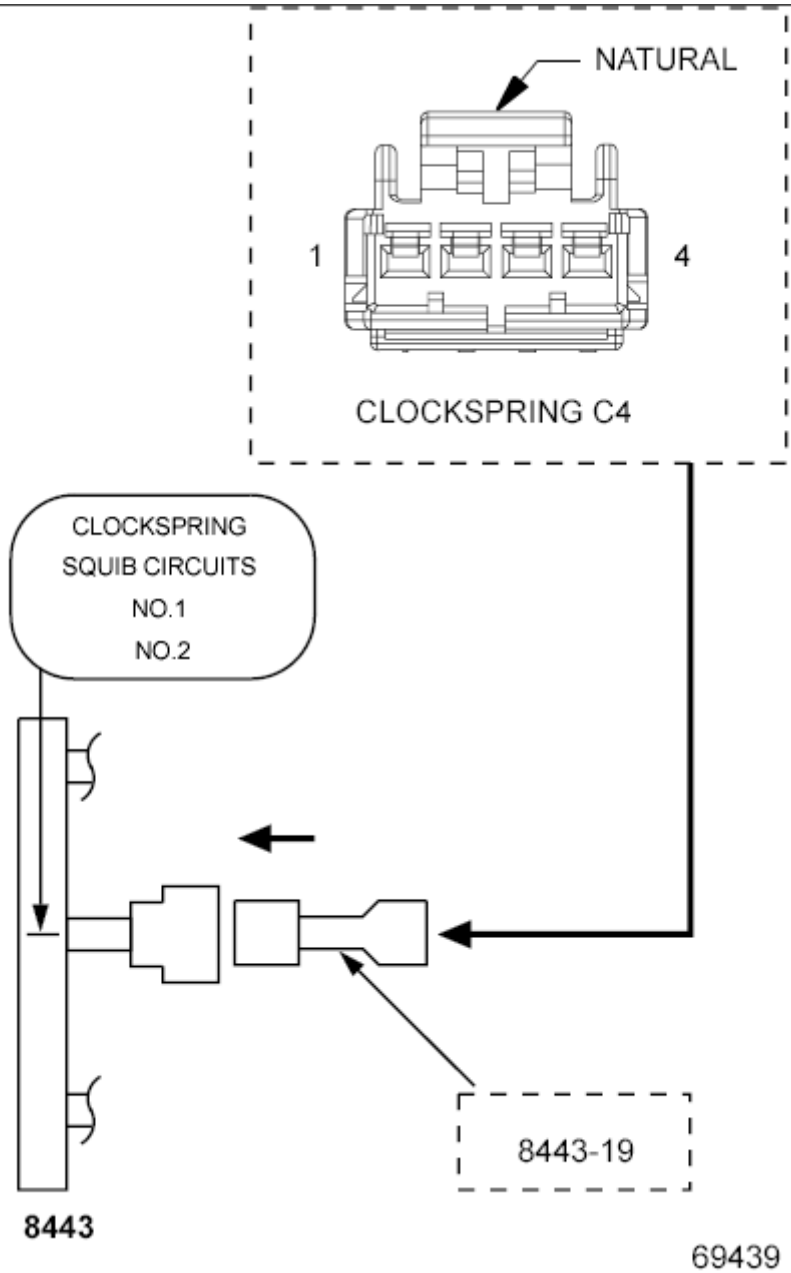

Fig. 16: Checking Clockspring Squib Circuits For A Short To Ground
Courtesy of CHRYSLER GROUP, LLC

WARNING: Turn the ignition off disconnect the 12-volt battery and wait two minutes before proceeding. Failure to follow these instructions may result in possible serious or

fatal injury.

1. Disconnect the SRS Load Tool Kit (special tool #8443A, SRS Load Tool) and SRS Load Tool Jumper (special tool #8443-1, Jumpers, 2 Pin) or (special tool #8443-8, Jumper, SRS Load) from the Driver Airbag Squib connectors.
2. Disconnect the Clockspring C4 connector.

NOTE: Check connectors - Clean and repair as necessary.

3. Connect the SRS Load Tool Kit (special tool #8443A, SRS Load Tool) and SRS Load Tool Jumper (special tool #8443-19, 4 Pin Jumper) to the Clockspring C4 connector.

WARNING: Turn the ignition on, then reconnect the 12-volt battery and wait two minutes before proceeding. Failure to follow these instructions may result in possible serious or fatal injury.

4. With the scan tool, read the active ORC DTCs.

   Does the scan tool display: B1B03-DRIVER AIRBAG SQUIB 1 CIRCUIT SHORTED TOGETHER?

   Yes

   - Go To 4

   No

   - Replace the Clockspring in accordance with the Service Information.
   - Perform AIRBAG SYSTEM VERIFICATION TEST. Refer to **STANDARD PROCEDURE** .

4. **CHECK THE (R43) DRIVER SQUIB 1 LINE 2 CIRCUIT FOR A SHORT TO THE (R45) DRIVER SQUIB 1 LINE 1 CIRCUIT**

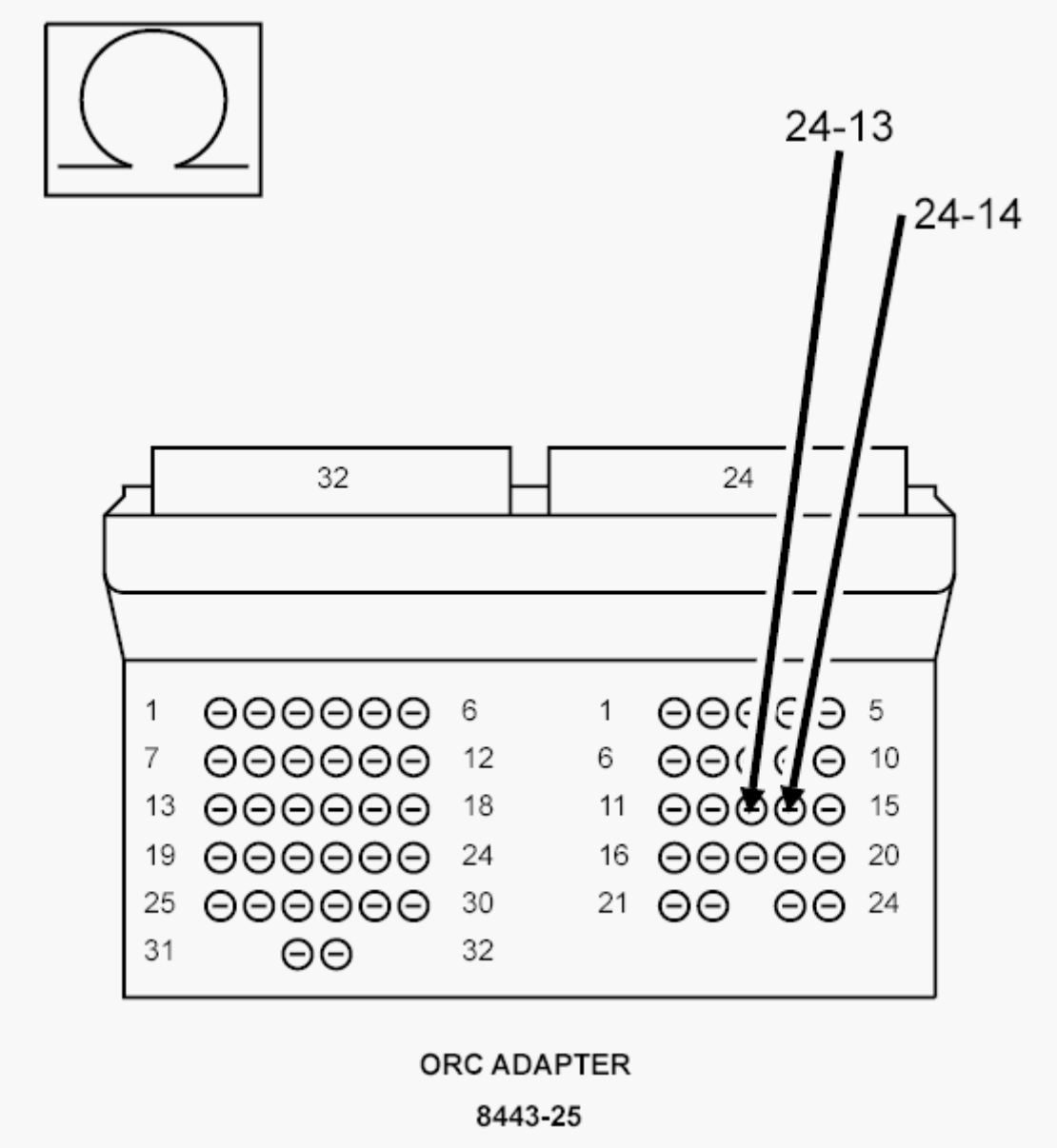

Fig. 17: Checking Driver Squib 1 Line 2 Circuit For Short To Driver Squib 1 Line 1 Circuit
Courtesy of CHRYSLER GROUP, LLC

WARNING: Turn the ignition off disconnect the 12-volt battery and wait two minutes before proceeding. Failure to follow these instructions may result in possible serious or fatal injury.

1. Disconnect the SRS Load Tool Kit (special tool #8443A, SRS Load Tool) and SRS Load Tool Jumper (special tool #8443-1, Jumpers, 2 Pin) or (special tool #8443-8, Jumper, SRS Load) from the Clockspring

C4 connector.

2. Disconnect the ORC connectors.

NOTE: Check connectors - Clean and repair as necessary.

3. Connect the SRS Load Tool Adaptor (special tool #8443-25, 56 Way ACM Adapter) to the ORC connectors.
4. Measure the resistance between the (R43) Driver Squib 1 Line 2 circuit cavity 24-13 and the (R45) Driver Squib 1 Line 1 circuit cavity 24-14 at the SRS Load Tool Adaptor (special tool #8443-25, 56 Way ACM Adapter).

   Is the resistance below 10k Ohms?

   Yes

   - Repair the (R43) Driver Squib 1 Line 2 circuit for a short to the (R45) Driver Squib 1 Line 1 circuit.
   - Perform AIRBAG SYSTEM VERIFICATION TEST. Refer to **STANDARD PROCEDURE** .

   No

   WARNING: If the Occupant Restraint Controller (ORC) is dropped at any time, it must be replaced. Failure to take the proper precautions can result in accidental airbag deployment. Failure to follow these instructions may result in possible serious or fatal injury.

   - Replace the ORC in accordance with Service Information.
   - Perform AIRBAG SYSTEM VERIFICATION TEST. Refer to **STANDARD PROCEDURE** .

5. **CHECKING STORED OR INTERMITTENT CODES**

NOTE: Diagnose and repair all active codes before

diagnosing stored codes. Refer to OCCUPANT RESTRAINT CONTROLLER (ORC) - DIAGNOSTIC CODE INDEX for a complete list of airbag system diagnostic procedures.

1. With the scan tool, record and erase all Airbag System Module DTCs.

   WARNING: **Turn the ignition off disconnect the 12-volt battery and wait two minutes before proceeding. Failure to follow these instructions may result in possible serious or fatal injury.**

2. Using the wiring diagram/schematic as a guide, inspect the related wiring and connectors for chafed, pierced, pinched, and partially broken wires, and for broken, bent, pushed out, corroded, and contaminated terminals. Repair as necessary.
3. Reconnect all disconnected components and harness connectors.

   WARNING: **Turn the ignition on, then reconnect the 12-volt battery and wait two minutes before proceeding. Failure to follow these instructions may result in possible serious or fatal injury.**

4. With the scan tool, monitor for active codes while performing the following:
   - Wiggle the wiring harness and connectors of the related airbag circuit.
   - Continue the test until either a code becomes active or the problem area is isolated.
5. In the previous steps you have attempted to recreate the conditions responsible for setting the DTC in question / causing the intermittent condition.

   Are any ACTIVE DTCs present?

   Yes

- Refer to the appropriate diagnostic procedure in the **OCCUPANT RESTRAINT CONTROLLER (ORC) - DIAGNOSTIC CODE INDEX** .

No

- No problem found at this time. Erase all codes before returning the vehicle to the customer.

B1B04-DRIVER AIRBAG SQUIB 2 CIRCUIT LOW

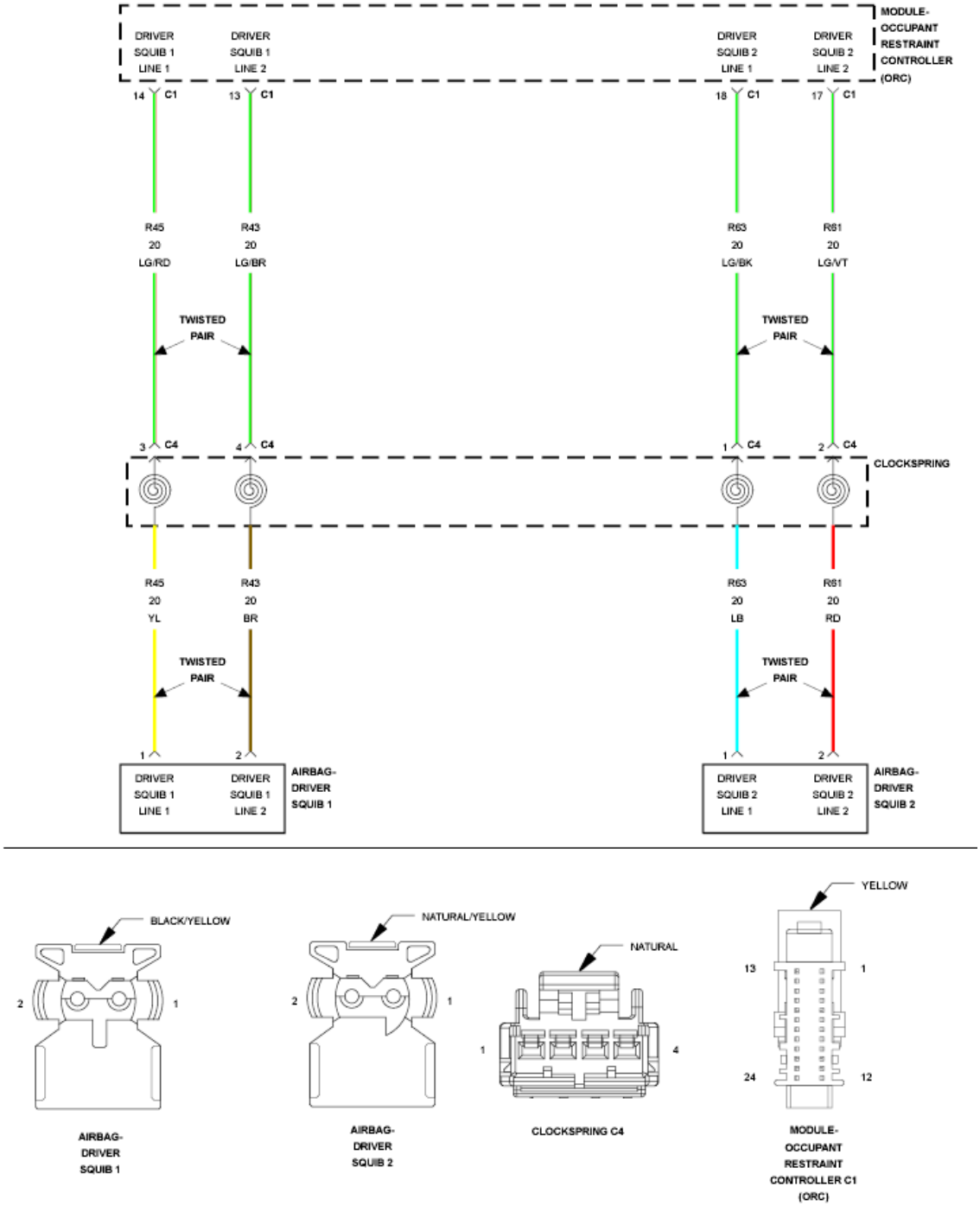

Fig. 18: Driver Airbag Squib Line Circuit Schematic
Courtesy of CHRYSLER GROUP, LLC

For a complete wiring diagram, **refer to appropriate SYSTEM WIRING DIAGRAMS article** .

THEORY OF OPERATION

When powered, the Occupant Restraint Controller (ORC) sends a test current to the squibs to verify the integrity of the squib and the wiring. These circuits are

maintained in a "floating" configuration at the module, (connected to neither power nor ground), as protection against inadvertent deployment. Use of the Supplemental Restraints System (SRS) Load Tool Kit 8443A in the tests below substitutes a suspect squib with a known good component. The use of the SRS Load Tool Adapter tool provides a test point, as well as a method for opening the shorting bar connections within the harness connector.

WHEN MONITORED

With the ignition on.

SET CONDITION

The Occupant Restraint Controller (ORC) monitors the resistance of the Driver Squib 2 circuits. The ORC will set this DTC if it detects low resistance on the Driver Squib 2 circuits.

POSSIBLE CAUSES

Possible Causes
(R63) DRIVER SQUIB 2 LINE 1 CIRCUIT SHORTED TO GROUND
(R61) DRIVER SQUIB 2 LINE 2 CIRCUIT SHORTED TO GROUND
CLOCKSPRING
DRIVER AIRBAG
OCCUPANT RESTRAINT CONTROLLER (ORC)

DIAGNOSTIC TEST

1. **DETERMINE ACTIVE OR STORED DTC**

   NOTE: Make sure that the battery is fully charged.

   NOTE: The scan tool, SRS Load Tool Kit (special tool #8443A, SRS Load Tool), and DVOM are required to perform the following test:

   1. Turn the ignition on.

      Select ACTIVE or STORED DTC:

      ACTIVE DTC

- Go To 2

STORED DTC

- Go To 5

2. **CHECK FOR SHORTED SQUIB CIRCUITS IN DRIVER AIRBAG**

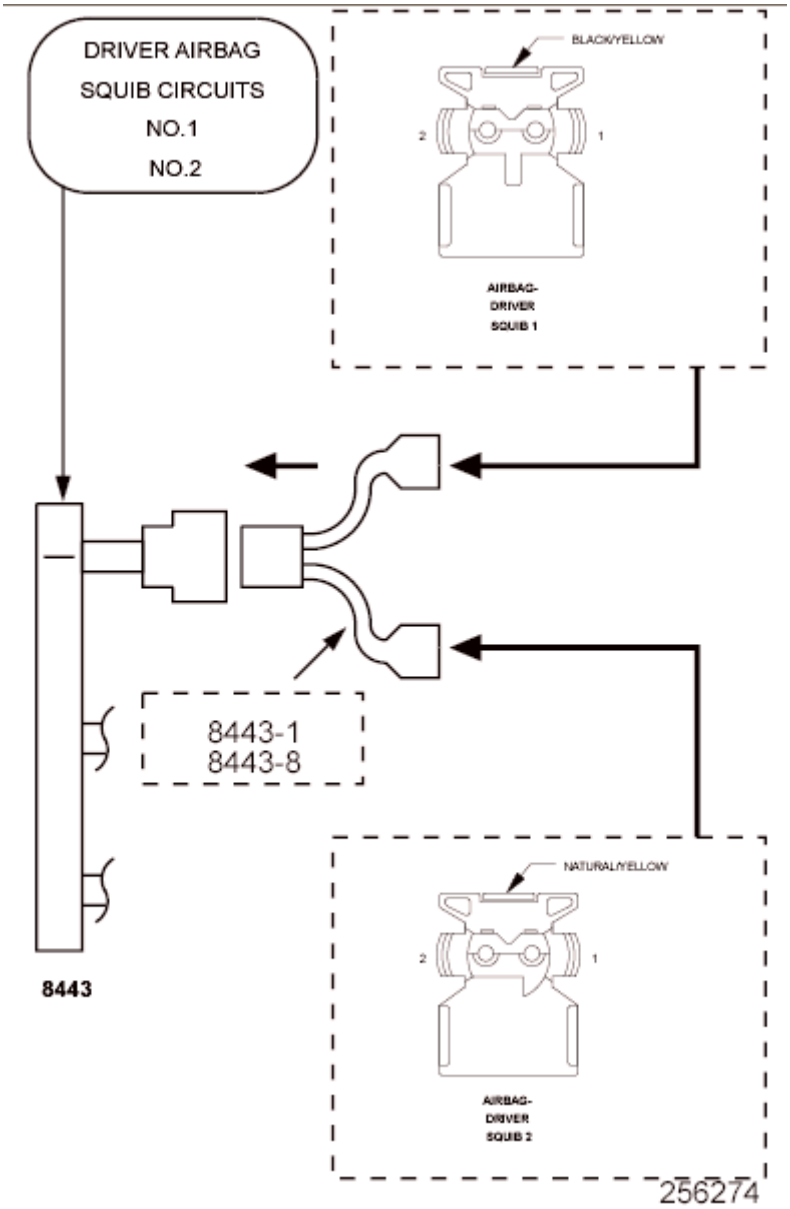

Fig. 19: Checking Squib Circuits In Driver Airbag For Short
Courtesy of CHRYSLER GROUP, LLC

WARNING: Turn the ignition off disconnect the 12-volt battery and wait two minutes before proceeding. Failure to follow these

instructions may result in possible serious or fatal injury.

1. Disconnect the Driver Airbag Squib connectors.

   WARNING: **Do not place an intact non-deployed airbag face down on a hard surface, the airbag propels into the air if accidentally deployed. Failure to follow these instructions may result in possible serious or fatal injury.**

   NOTE: **Check connectors - Clean and repair as necessary.**

2. Connect the SRS Load Tool Kit (special tool #8443A, SRS Load Tool) and SRS Load Tool Jumper (special tool #8443-1, Jumpers, 2 Pin) or (special tool #8443-8, Jumper, SRS Load) to the Driver Airbag Squib connectors.

   WARNING: **Turn the ignition on, then reconnect the 12-volt battery and wait two minutes before proceeding. Failure to follow these instructions may result in possible serious or fatal injury.**

3. With the scan tool, read the active ORC DTCs.

   Does the scan tool display: B1B04-DRIVER AIRBAG SQUIB 2 CIRCUIT LOW?

   Yes

   - Go To 3

   No

   - Replace the Driver Airbag in accordance with the Service Information.

- Perform the AIRBAG SYSTEM VERIFICATION TEST. Refer to **STANDARD PROCEDURE** .

3. **CHECK THE CLOCKSPRING SQUIB CIRCUITS FOR A SHORT TO GROUND**

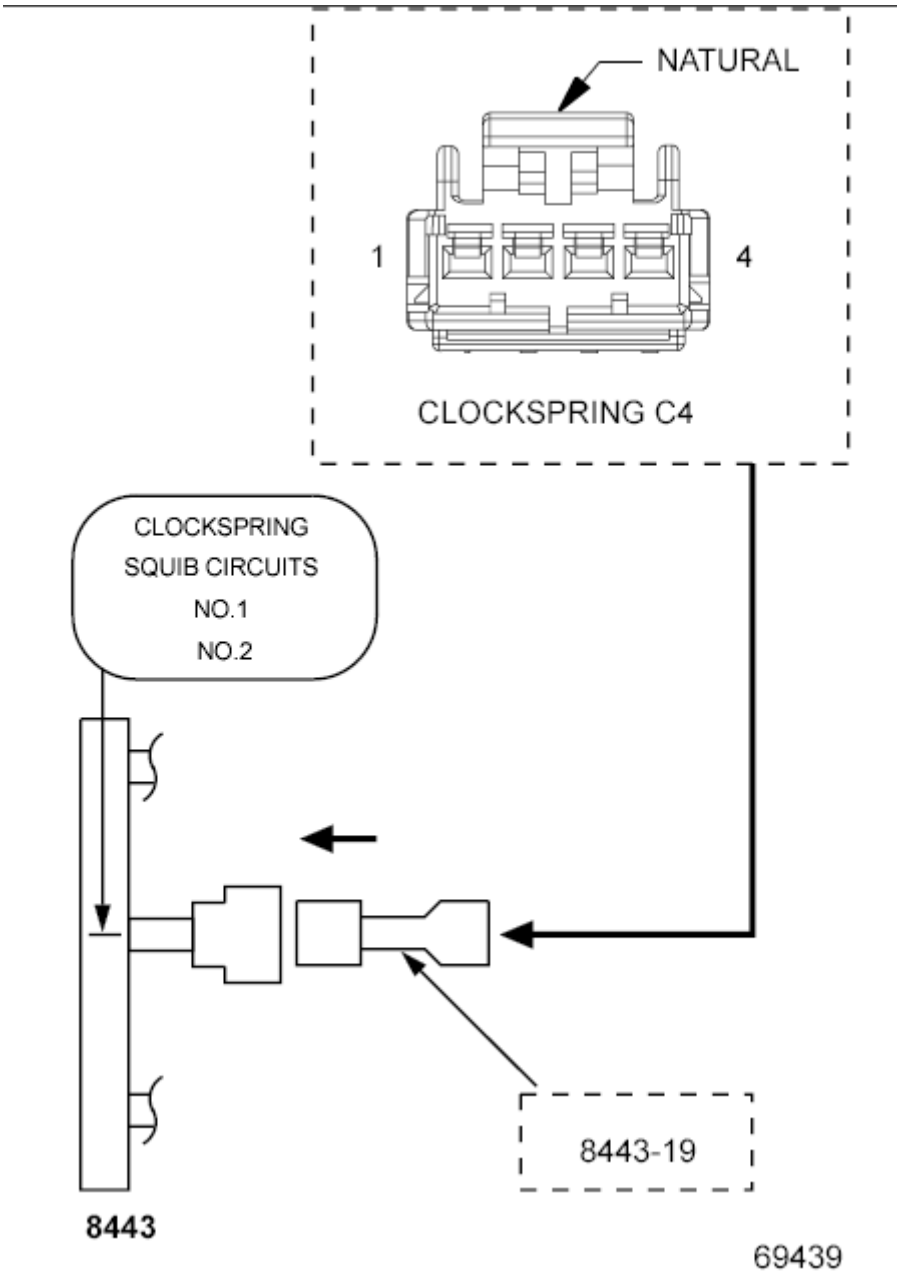

Fig. 20: Checking Clockspring Squib Circuits For A Short To Ground
Courtesy of CHRYSLER GROUP, LLC

WARNING: Turn the ignition off disconnect the 12-volt battery and wait two minutes before proceeding. Failure to follow these

instructions may result in possible serious or fatal injury.

1. Disconnect the SRS Load Tool Kit (special tool #8443A, SRS Load Tool) and SRS Load Tool Jumper (special tool #8443-1, Jumpers, 2 Pin) or (special tool #8443-8, Jumper, SRS Load) from the Driver Airbag Squib connectors.
2. Disconnect the Clockspring C4 connector.

NOTE: Check connectors - Clean and repair as necessary.

3. Connect the SRS Load Tool Kit (special tool #8443A, SRS Load Tool) and SRS Load Tool Jumper (special tool #8443-19, 4 Pin Jumper) to the Clockspring C4 connector.

WARNING: Turn the ignition on, then reconnect the 12-volt battery and wait two minutes before proceeding. Failure to follow these instructions may result in possible serious or fatal injury.

4. With the scan tool, read the active ORC DTCs.

   Does the scan tool display: B1B04-DRIVER AIRBAG SQUIB 2 CIRCUIT LOW?

   Yes

   - Go To 4

   No

   - Replace the Clockspring in accordance with the Service Information.
   - Perform the AIRBAG SYSTEM VERIFICATION TEST. Refer to **STANDARD PROCEDURE** .

4. **CHECK THE (R63) DRIVER SQUIB 2 LINE 1 CIRCUIT AND THE (R61) DRIVER SQUIB 2 LINE 2 CIRCUIT FOR A SHORT TO**

GROUND

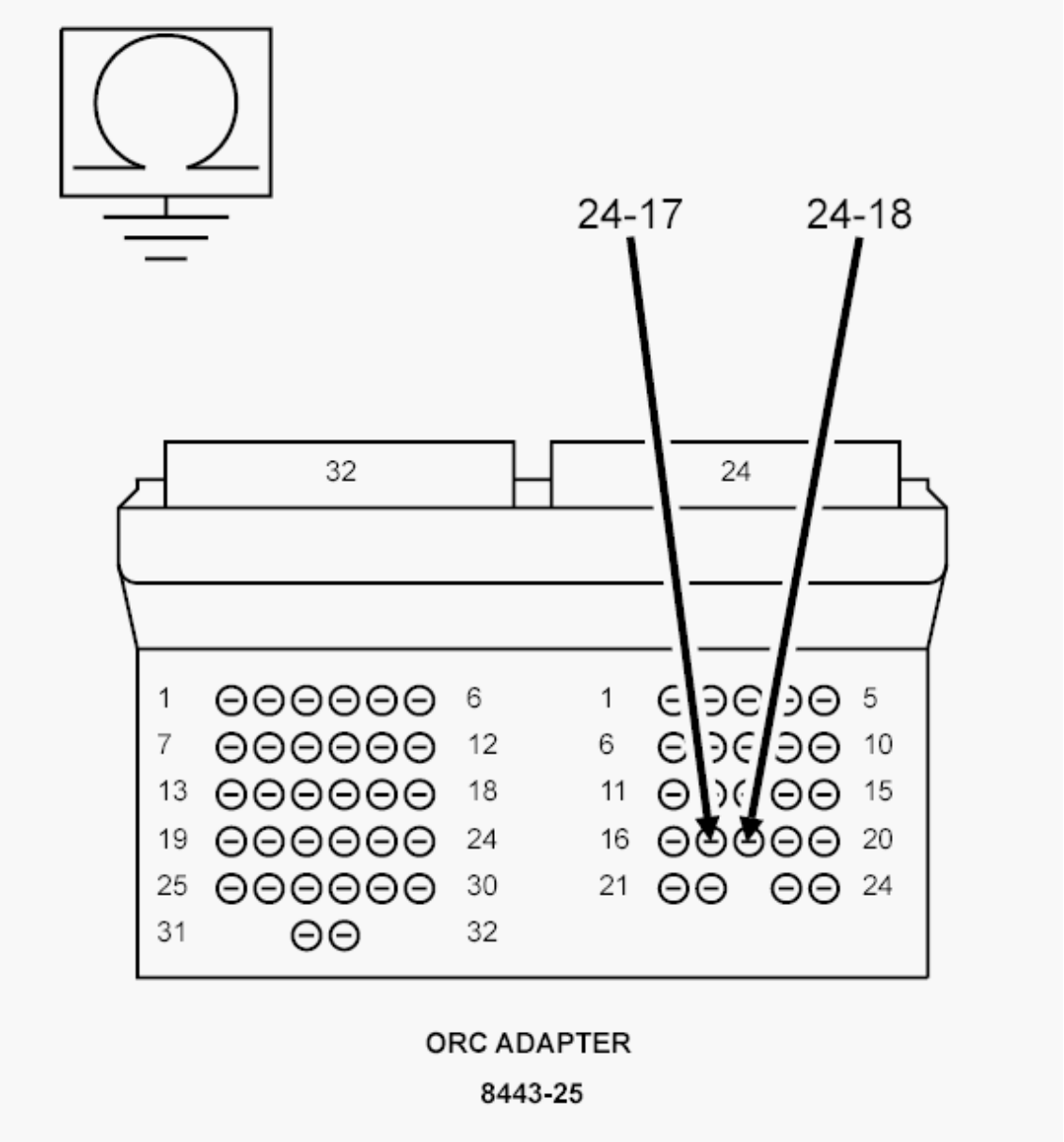

Fig. 21: Checking Driver Squib 2 Line Circuits For A Short To Ground
Courtesy of CHRYSLER GROUP, LLC

WARNING: Turn the ignition off disconnect the 12-volt battery and wait two minutes before proceeding. Failure to follow these instructions may result in possible serious or fatal injury.

1. Disconnect the SRS Load Tool Kit (special tool #8443A, SRS Load Tool) and SRS Load Tool Jumper (special tool #8443-19, 4 Pin

Jumper) from the Clockspring C4 connector.

2. Disconnect the ORC connectors.

NOTE: Check connectors - Clean and repair as necessary.

3. Connect the SRS Load Tool Adaptor (special tool #8443-25, 56 Way ACM Adapter) to the ORC connectors.
4. Measure the resistance of the (R63) Driver Squib 2 Line 1 circuit between ground and the SRS Load Tool Adaptor (special tool #8443-25, 56 Way ACM Adapter) cavity 24-18.
5. Measure the resistance of the (R61) Driver Squib 2 Line 2 circuit between ground and the SRS Load Tool Adaptor (special tool #8443-25, 56 Way ACM Adapter) cavity 24-17.

Is the resistance below 10k Ohms for either measurement?

Yes

- Repair the Driver Squib 2 circuits with resistance below 10k Ohms for a short to ground.
- Perform the AIRBAG SYSTEM VERIFICATION TEST. Refer to **STANDARD PROCEDURE** .

No

WARNING: **If the Occupant Restraint Controller (ORC) is dropped at any time, it must be replaced. Failure to take the proper precautions can result in accidental airbag deployment. Failure to follow these instructions may result in possible serious or fatal injury.**

- Replace the ORC in accordance with Service Information.
- Perform the AIRBAG SYSTEM VERIFICATION TEST. Refer to **STANDARD PROCEDURE** .

5. **CHECKING STORED OR INTERMITTENT CODES**

NOTE: Diagnose and repair all active codes before diagnosing stored codes. Refer to OCCUPANT RESTRAINT CONTROLLER (ORC) - DIAGNOSTIC CODE INDEX for a complete list of airbag system diagnostic procedures.

1. With the scan tool, record and erase all Airbag System Module DTCs.

   WARNING: Turn the ignition off disconnect the 12-volt battery and wait two minutes before proceeding. Failure to follow these instructions may result in possible serious or fatal injury.

2. Using the wiring diagram/schematic as a guide, inspect the related wiring and connectors for chafed, pierced, pinched, and partially broken wires, and for broken, bent, pushed out, corroded, and contaminated terminals. Repair as necessary.
3. Reconnect all disconnected components and harness connectors.

   WARNING: Turn the ignition on, then reconnect the 12-volt battery and wait two minutes before proceeding. Failure to follow these instructions may result in possible serious or fatal injury.

4. With the scan tool, monitor for active codes while performing the following:
   - Wiggle the wiring harness and connectors of the related airbag circuit.
   - Continue the test until either a code becomes active or the problem area is isolated.
5. In the previous steps you have attempted to recreate the conditions responsible for setting the DTC in question / causing the intermittent condition.

   Are any ACTIVE DTCs present?

Yes

- Select the appropriate diagnostic procedure from **OCCUPANT RESTRAINT CONTROLLER (ORC) - DIAGNOSTIC CODE INDEX** . Refer to **DIAGNOSIS AND TESTING**.

No

- No problem found at this time. Erase all codes before returning the vehicle to the customer.

B1B05-DRIVER AIRBAG SQUIB 2 CIRCUIT HIGH

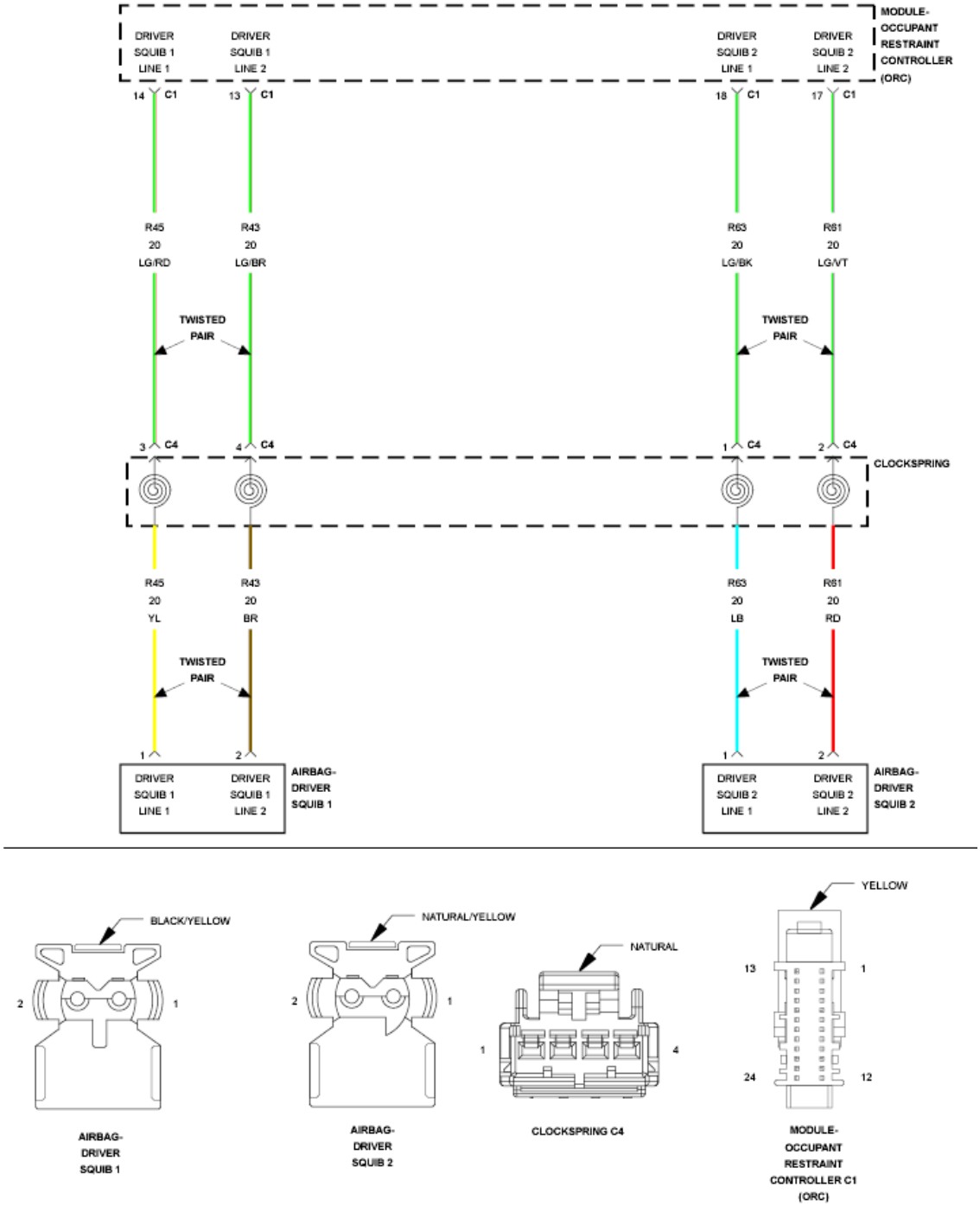

Fig. 22: Driver Airbag Squib Line Circuit Schematic
Courtesy of CHRYSLER GROUP, LLC

For a complete wiring diagram, **refer to appropriate SYSTEM WIRING DIAGRAMS article** .

THEORY OF OPERATION

When powered, the Occupant Restraint Controller (ORC) sends a test current to the squibs to verify the integrity of the squib and the wiring. These circuits are

maintained in a "floating" configuration at the module, (connected to neither power nor ground), as protection against inadvertent deployment. Use of the Supplemental Restraints System (SRS) Load Tool Kit 8443A in the tests below substitutes a suspect squib with a known good component. The use of the SRS Load Tool Adapter tool provides a test point, as well as a method for opening the shorting bar connections within the harness connector.

WHEN MONITORED

With the ignition on.

SET CONDITION

The Occupant Restraint Controller (ORC) monitors the voltage on the Driver Squib 2 circuits. The ORC will set this DTC if it detects voltage on the Driver Squib 2 circuits.

POSSIBLE CAUSES

Possible Causes
(R63) DRIVER SQUIB 2 LINE 1 CIRCUIT SHORTED TO BATTERY
(R61) DRIVER SQUIB 2 LINE 2 CIRCUIT SHORTED TO BATTERY
CLOCKSPRING
DRIVER AIRBAG
OCCUPANT RESTRAINT CONTROLLER (ORC)

DIAGNOSTIC TEST

1. **DETERMINE ACTIVE OR STORED DTC**

NOTE: Make sure that the battery is fully charged.

NOTE: The scan tool, SRS Load Tool Kit (special tool #8443A, SRS Load Tool) and DVOM are required to perform the following test:

1. Turn the ignition on.
2. With the scan tool, read the active ORC DTCs.

   Select ACTIVE or STORED DTC:

ACTIVE DTC

- Go To 2

STORED DTC

- Go To 5

2. **CHECK FOR SHORTED SQUIB CIRCUITS IN DRIVER AIRBAG**

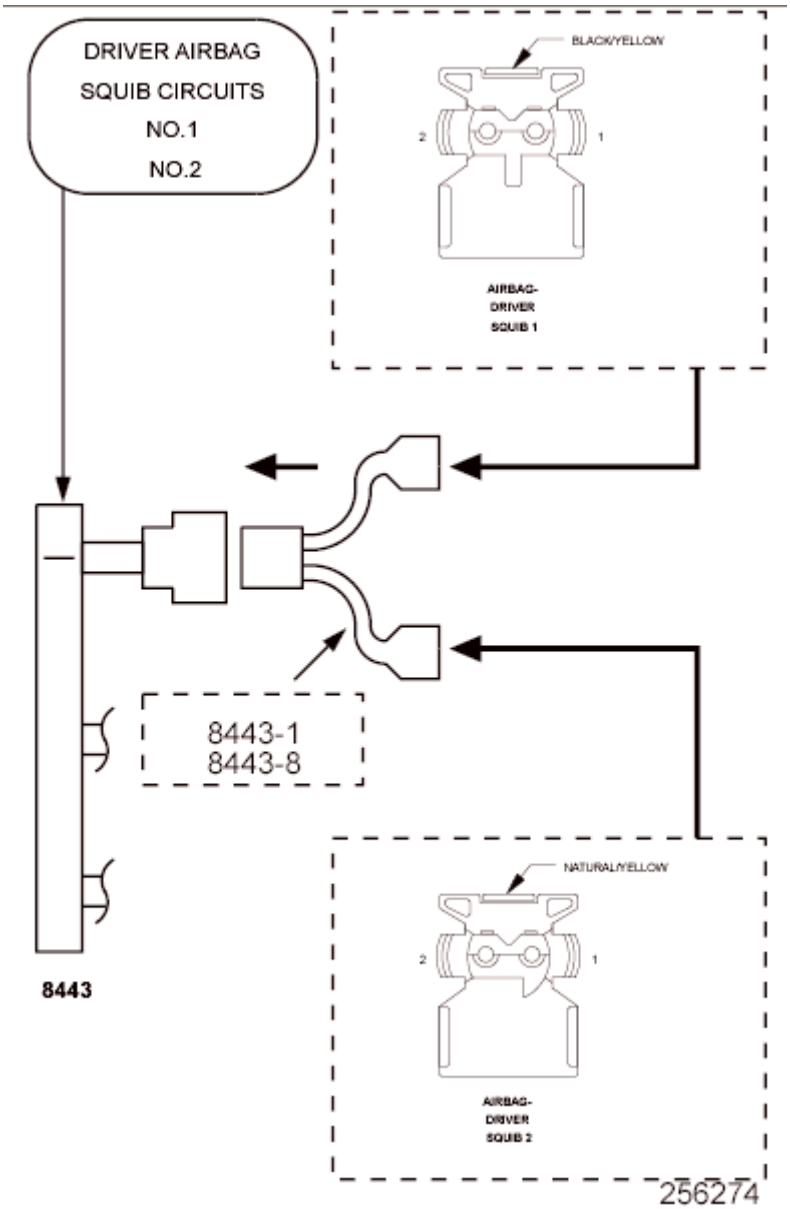

Fig. 23: Checking Squib Circuits In Driver Airbag For Short
Courtesy of CHRYSLER GROUP, LLC

WARNING: Turn the ignition off disconnect the 12-volt

battery and wait two minutes before proceeding. Failure to follow these instructions may result in possible serious or fatal injury.

1. Disconnect the Driver Airbag Squib connectors.

   WARNING: **Do not place an intact non-deployed airbag face down on a hard surface, the airbag propels into the air if accidentally deployed. Failure to follow these instructions may result in possible serious or fatal injury.**

   NOTE: **Check connectors - Clean and repair as necessary.**

2. Connect the SRS Load Tool Kit (special tool #8443A, SRS Load Tool) and SRS Load Tool Jumper (special tool #8443-1, Jumpers, 2 Pin) or (special tool #8443-8, Jumper, SRS Load) to the Driver Airbag Squib connectors.

   WARNING: **Turn the ignition on, then reconnect the 12-volt battery and wait two minutes before proceeding. Failure to follow these instructions may result in possible serious or fatal injury.**

3. With the scan tool, read the active ORC DTCs.

   Does the scan tool display: B1B05-DRIVER AIRBAG SQUIB 2 CIRCUIT HIGH?

   Yes

   - Go To 3

   No

- Replace the Driver Airbag in accordance with the Service Information.
- Perform the AIRBAG SYSTEM VERIFICATION TEST. Refer to **STANDARD PROCEDURE** .

3. **CHECK THE CLOCKSPRING SQUIB CIRCUITS FOR A SHORT TO BATTERY**

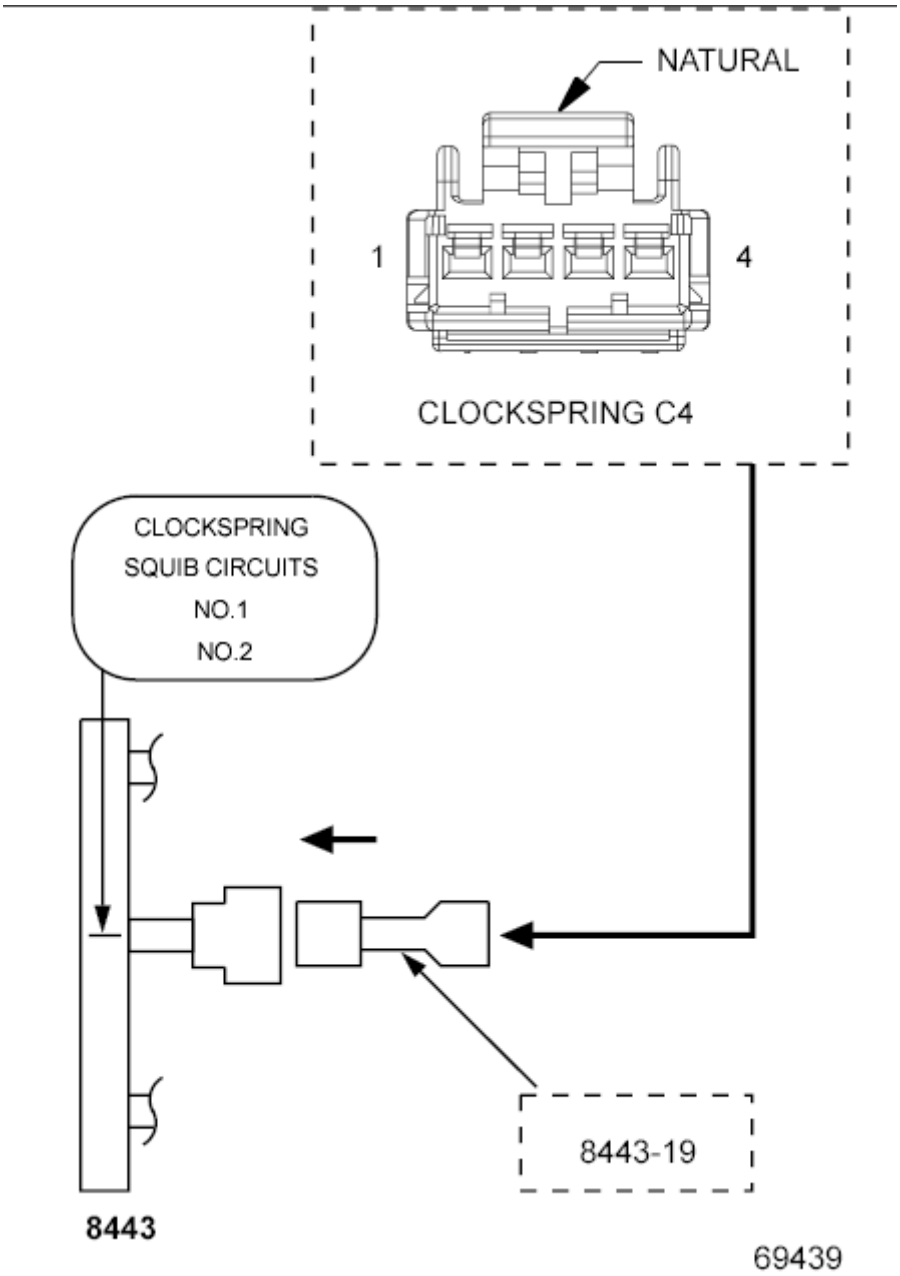

Fig. 24: Checking Clockspring Squib Circuits For A Short To Ground
Courtesy of CHRYSLER GROUP, LLC

WARNING: Turn the ignition off, disconnect the 12-volt

battery and wait two minutes before proceeding. Failure to follow these instructions may result in possible serious or fatal injury.

1. Disconnect the SRS Load Tool Kit (special tool #8443A, SRS Load Tool) and SRS Load Tool Jumper (special tool #8443-19, 4 Pin Jumper) from the Driver Airbag Squib connectors.
2. Disconnect the Clockspring C4 connector.

NOTE: Check connectors - Clean and repair as necessary.

3. Connect the SRS Load Tool Kit (special tool #8443A, SRS Load Tool) and SRS Load Tool Jumper (special tool #8443-19, 4 Pin Jumper) to the Clockspring C4 connector.

WARNING: Turn the ignition on, then reconnect the 12-volt battery and wait two minutes before proceeding. Failure to follow these instructions may result in possible serious or fatal injury.

4. With the scan tool, read the active ORC DTCs.

   Does the scan tool display: B1B05-DRIVER AIRBAG SQUIB 2 CIRCUIT HIGH?

   Yes

   - Go To 4

   No

   - Replace the Clockspring in accordance with the Service Information.
   - Perform the AIRBAG SYSTEM VERIFICATION TEST. Refer to **STANDARD PROCEDURE** .

4. **CHECK THE (R63) DRIVER SQUIB 2 LINE 1 CIRCUIT AND THE**

(R61) DRIVER SQUIB 2 LINE 2 CIRCUIT FOR A SHORT TO BATTERY

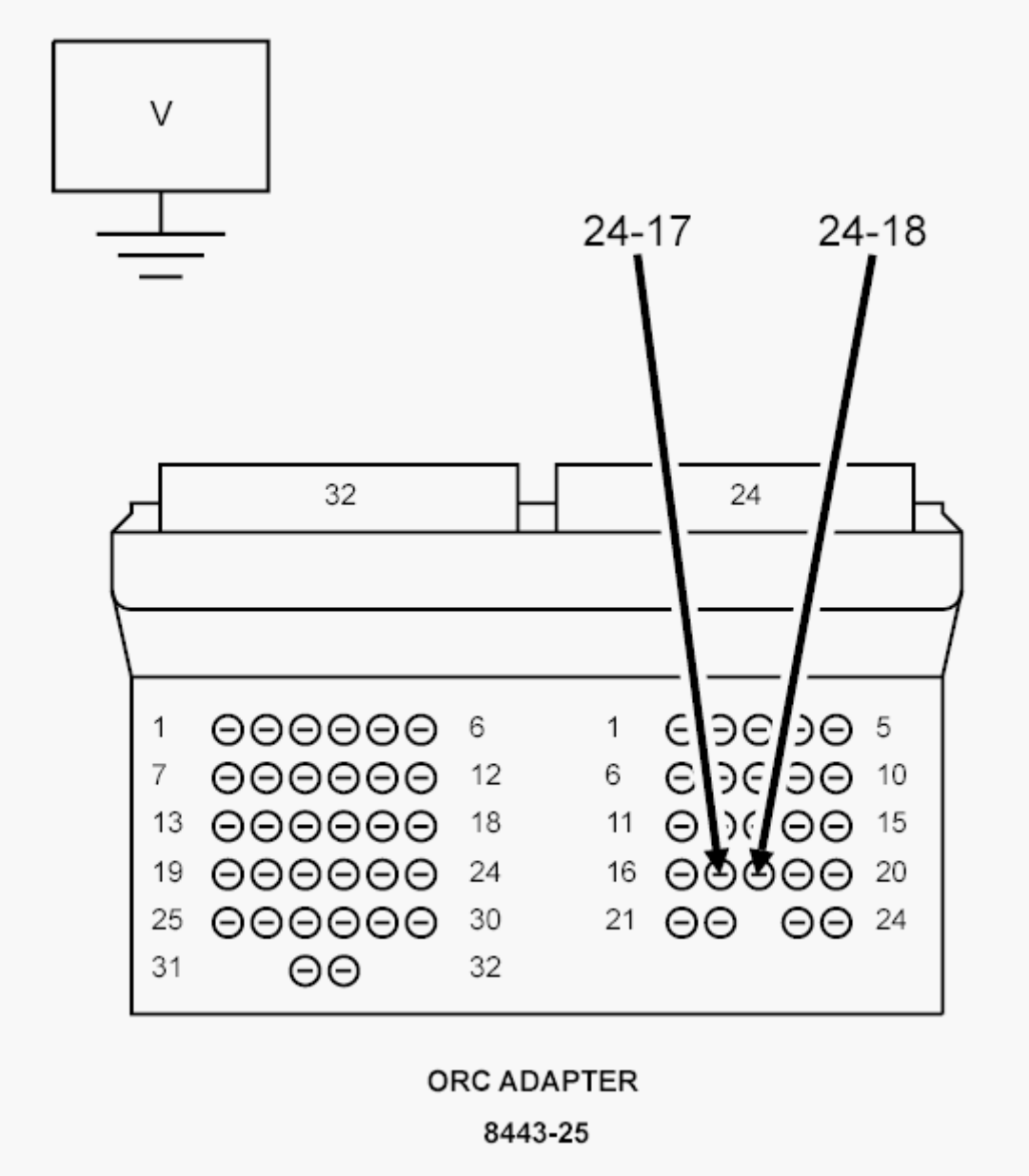

Fig. 25: Checking Driver Squib 2 Line Circuits For Short To Battery
Courtesy of CHRYSLER GROUP, LLC

WARNING: Turn the ignition off, disconnect the 12-volt battery and wait two minutes before proceeding. Failure to follow these instructions may result in possible serious or fatal injury.

1. Disconnect the SRS Load Tool Kit (special tool #8443A, SRS Load Tool) and SRS Load Tool Jumper (special tool #8443-19, 4 Pin Jumper) from the Clockspring C4 connector.
2. Disconnect the ORC connectors.

NOTE: Check connectors - Clean and repair as necessary.

3. Connect the SRS Load Tool Adaptor (special tool #8443-25, 56 Way ACM Adapter) to the ORC connectors.

WARNING: Turn the ignition on, then reconnect the 12-volt battery and wait two minutes before proceeding. Failure to follow these instructions may result in possible serious or fatal injury.

4. Measure the voltage of the (R63) Driver Squib 2 Line 1 circuit between the SRS Load Tool Adaptor (special tool #8443-25, 56 Way ACM Adapter) cavity 24-17 and ground.
5. Measure the voltage of the (R61) Driver Squib 2 Line 2 circuit between the SRS Load Tool Adaptor (special tool #8443-25, 56 Way ACM Adapter) cavity 24-18 and ground.

Is there any voltage present for either measurement?

Yes

- Repair the Driver Squib 2 circuits with voltage present for a short to battery.
- Perform the AIRBAG SYSTEM VERIFICATION TEST. Refer to **STANDARD PROCEDURE** .

No

WARNING: If the Occupant Restraint Controller (ORC) is dropped at any time, it must be replaced. Failure to take the proper precautions can result in accidental airbag

deployment. Failure to follow these instructions may result in possible serious or fatal injury.

WARNING: **Turn the ignition off, disconnect the 12-volt battery and wait two minutes before proceeding. Failure to follow these instructions may result in possible serious or fatal injury.**

- Replace the ORC in accordance with Service Information.
- Perform the AIRBAG SYSTEM VERIFICATION TEST. Refer to **STANDARD PROCEDURE** .

5. **CHECKING STORED OR INTERMITTENT CODES**

NOTE: **Diagnose and repair all active codes before diagnosing stored codes. Refer to OCCUPANT RESTRAINT CONTROLLER (ORC) - DIAGNOSTIC CODE INDEX for a complete list of airbag system diagnostic procedures.**

1. With the scan tool, record and erase all Airbag System Module DTCs.

WARNING: **Turn the ignition off, disconnect the 12-volt battery and wait two minutes before proceeding. Failure to follow these instructions may result in possible serious or fatal injury.**

2. Using the wiring diagram/schematic as a guide, inspect the related wiring and connectors for chafed, pierced, pinched, and partially broken wires, and for broken, bent, pushed out, corroded, and contaminated terminals. Repair as necessary.
3. Reconnect all disconnected components and harness connectors.

WARNING: **Turn the ignition on, then reconnect the 12-volt battery and wait two minutes before proceeding. Failure to follow these**

instructions may result in possible serious or fatal injury.

4. With the scan tool, monitor for active codes while performing the following:
   - Wiggle the wiring harness and connectors of the related airbag circuit.
   - Continue the test until either a code becomes active or the problem area is isolated.
5. In the previous steps you have attempted to recreate the conditions responsible for setting the DTC in question causing the intermittent condition.

   Are any ACTIVE DTCs present?

   Yes

   - Perform the appropriate diagnostic procedure. Refer to **DIAGNOSIS AND TESTING**.

   No

   - No problem found at this time. Erase all codes before returning the vehicle to the customer.

B1B06-DRIVER AIRBAG SQUIB 2 CIRCUIT OPEN

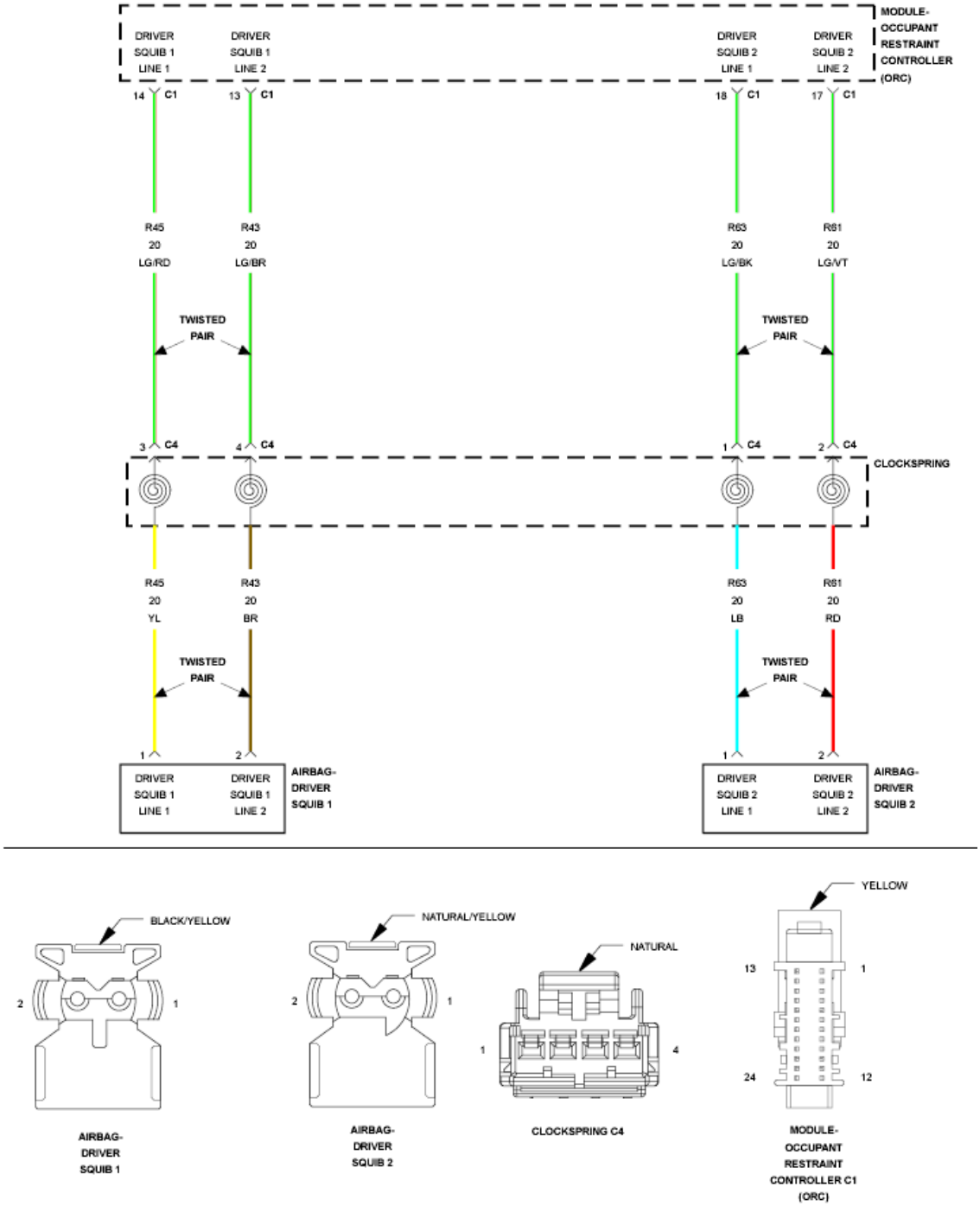

Fig. 26: Driver Airbag Squib Line Circuit Schematic
Courtesy of CHRYSLER GROUP, LLC

For a complete wiring diagram, **refer to appropriate SYSTEM WIRING DIAGRAMS article** .

THEORY OF OPERATION

When powered, the Occupant Restraint Controller (ORC) sends a test current to the squibs to verify the integrity of the squib and the wiring. These circuits are

maintained in a "floating" configuration at the module, (connected to neither power nor ground), as protection against inadvertent deployment. Use of the Supplemental Restraints System (SRS) Load Tool Kit 8443A in the tests below substitutes a suspect squib with a known good component. The use of the SRS Load Tool Adapter tool provides a test point, as well as a method for opening the shorting bar connections within the harness connector.

WHEN MONITORED

With the ignition on.

SET CONDITION

The Occupant Restraint Controller (ORC) monitors the resistance of the Driver Squib 2 circuits. The ORC will set this DTC if it detects an open or high resistance on the Driver Squib 2 circuits.

POSSIBLE CAUSES

Possible Causes
(R63) DRIVER SQUIB 2 LINE 1 CIRCUIT OPEN
(R61) DRIVER SQUIB 2 LINE 2 CIRCUIT OPEN
CLOCKSPRING
DRIVER AIRBAG
OCCUPANT RESTRAINT CONTROLLER (ORC)

DIAGNOSTIC TEST

1. **DETERMINE ACTIVE OR STORED DTC**

   NOTE: Make sure that the battery is fully charged.

   NOTE: The scan tool, SRS Load Tool Kit (special tool #8443A, SRS Load Tool), and DVOM are required to perform the following test:

   1. Turn the ignition on.

      Select ACTIVE or STORED DTC:

      ACTIVE DTC

- Go To 2

STORED DTC

- Go To 6

2. **CHECK FOR OPEN SQUIB CIRCUITS IN DRIVER AIRBAG**

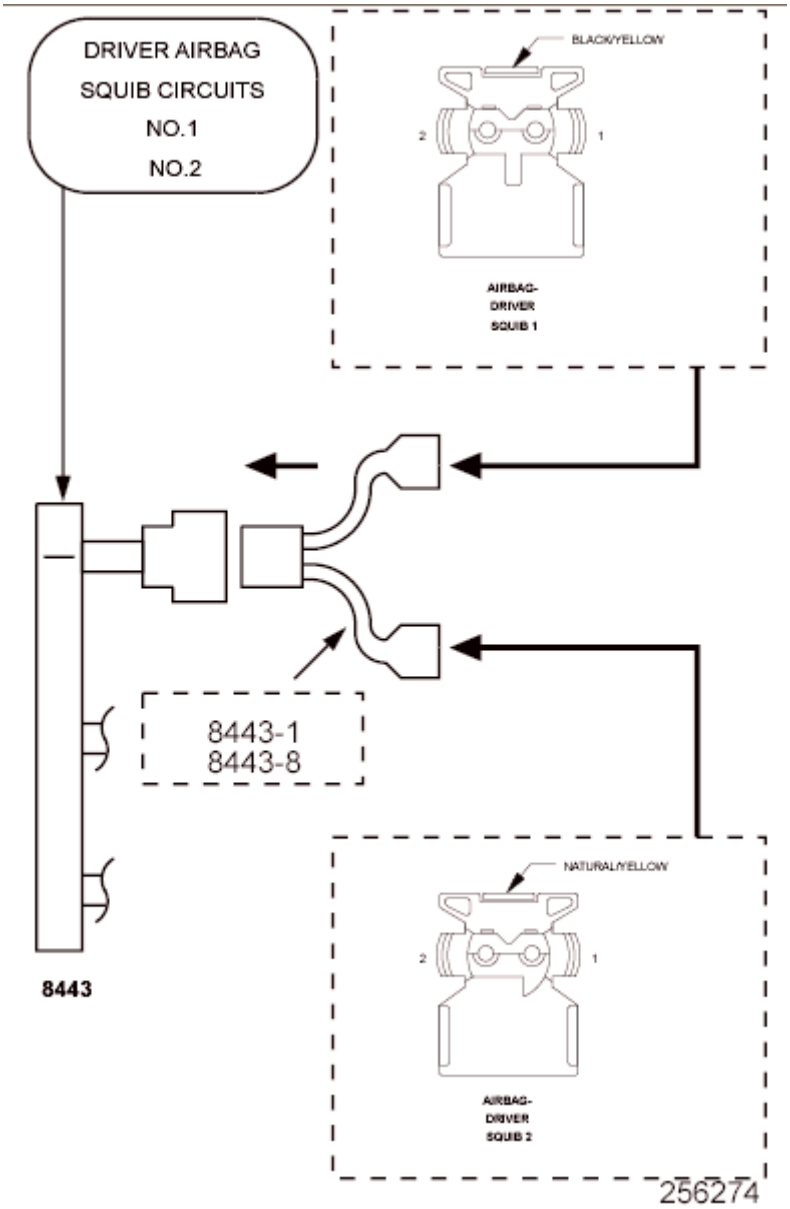

Fig. 27: Checking Squib Circuits In Driver Airbag For Short
Courtesy of CHRYSLER GROUP, LLC

WARNING: Turn the ignition off, disconnect the 12-volt battery and wait two minutes before proceeding. Failure to follow these

instructions may result in possible serious or fatal injury.

1. Disconnect the Driver Airbag Squib connectors.

   WARNING: **Do not place an intact non-deployed airbag face down on a hard surface, the airbag propels into the air if accidentally deployed. Failure to follow these instructions may result in possible serious or fatal injury.**

   NOTE: **Check connectors - Clean and repair as necessary.**

2. Connect the SRS Load Tool Kit (special tool #8443A, SRS Load Tool) and SRS Load Tool Jumper (special tool #8443-1, Jumpers, 2 Pin) or (special tool #8443-8, Jumper, SRS Load) to the Driver Airbag Squib connectors.

   WARNING: **Turn the ignition on, then reconnect the 12-volt battery and wait two minutes before proceeding. Failure to follow these instructions may result in possible serious or fatal injury.**

3. With the scan tool, read the active ORC DTCs.

   Does the scan tool display: B1B06-DRIVER AIRBAG SQUIB 2 CIRCUIT OPEN?

   Yes

   - Go To 3

   No

   - Replace the Driver Airbag in accordance with the Service Information.

- Perform the AIRBAG SYSTEM VERIFICATION TEST. Refer to **STANDARD PROCEDURE** .

3. **CHECK THE CLOCKSPRING SQUIB CIRCUITS FOR AN OPEN**

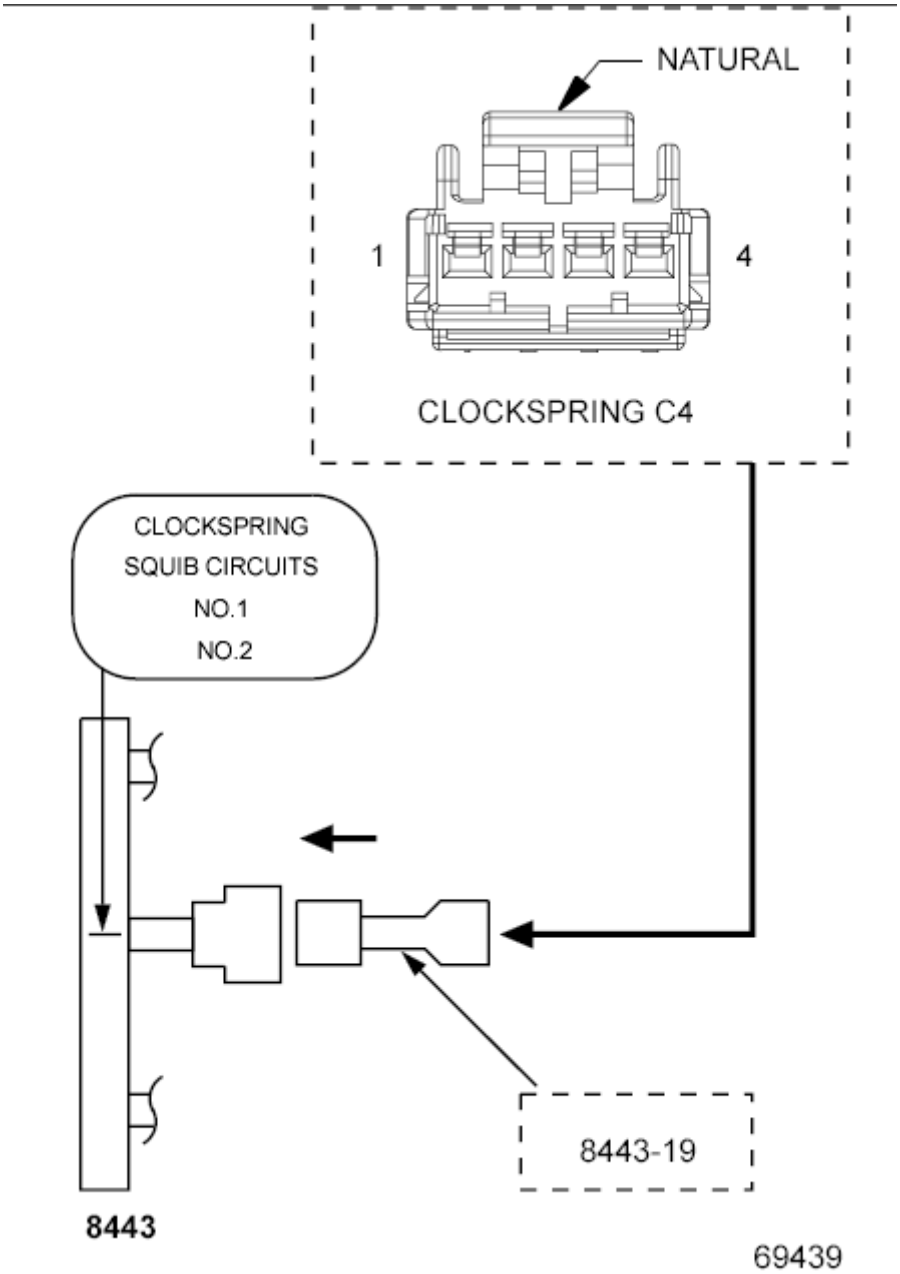

Fig. 28: Checking Clockspring Squib Circuits For A Short To Ground
Courtesy of CHRYSLER GROUP, LLC

WARNING: Turn the ignition off, disconnect the 12-volt battery and wait two minutes before proceeding. Failure to follow these instructions may result in possible serious or

fatal injury.

1. Disconnect the SRS Load Tool Kit (special tool #8443A, SRS Load Tool) and SRS Load Tool Jumper (special tool #8443-1, Jumpers, 2 Pin) or (special tool #8443-8, Jumper, SRS Load) from the Driver Airbag Squib connectors.
2. Disconnect the Clockspring C4 connector.

NOTE: Check connectors - Clean and repair as necessary.

3. Connect the SRS Load Tool Kit (special tool #8443A, SRS Load Tool) and SRS Load Tool Jumper (special tool #8443-19, 4 Pin Jumper) to the Clockspring C4 connector.

WARNING: Turn the ignition on, then reconnect the 12-volt battery and wait two minutes before proceeding. Failure to follow these instructions may result in possible serious or fatal injury.

4. With the scan tool, read the active ORC DTCs.

   Does the scan tool display: B1B06-DRIVER AIRBAG SQUIB 2 CIRCUIT OPEN?

   Yes

   - Go To 4

   No

   - Replace the Clockspring in accordance with the Service Information.
   - Perform the AIRBAG SYSTEM VERIFICATION TEST. Refer to **STANDARD PROCEDURE** .

4. **CHECK THE (R63) DRIVER SQUIB 2 LINE 1 CIRCUIT FOR AN OPEN**

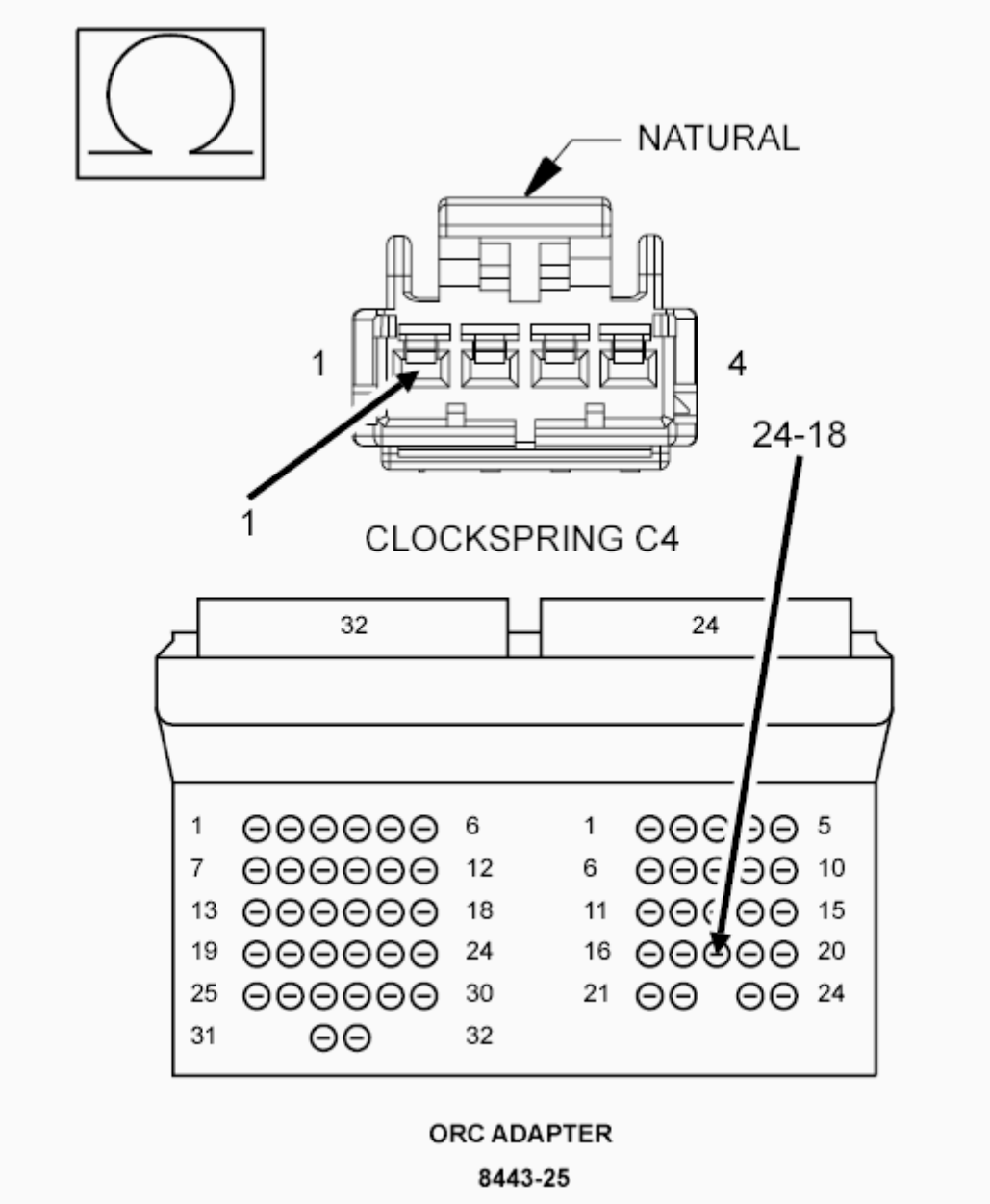

Fig. 29: Checking Driver Squib 2 Line 1 Circuit For Open
Courtesy of CHRYSLER GROUP, LLC

WARNING: Turn the ignition off, disconnect the 12-volt battery and wait two minutes before proceeding. Failure to follow these instructions may result in possible serious or fatal injury.

1. Disconnect the SRS Load Tool Kit (special tool #8443A, SRS Load Tool) and SRS Load Tool Jumper (special tool #8443-19, 4 Pin Jumper) from the Clockspring connector.

2. Disconnect the ORC connectors.

NOTE: Check connectors - Clean and repair as necessary.

3. Connect the SRS Load Tool Adaptor (special tool #8443-25, 56 Way ACM Adapter) to the ORC connectors.
4. Measure the resistance of the (R63) Driver Squib 2 Line 1 circuit between the Clockspring C4 connector cavity 1 and the SRS Load Tool Adaptor (special tool #8443-25, 56 Way ACM Adapter) cavity 24-18.

   Is the resistance below 1.0 Ohm?

   Yes

   - Go To 5

   No

   - Repair the (R63) Driver Squib 2 Line 1 circuit for an open.
   - Perform the AIRBAG SYSTEM VERIFICATION TEST. Refer to **STANDARD PROCEDURE** .

5. **CHECK THE (R61) DRIVER SQUIB 2 LINE 2 CIRCUIT FOR AN OPEN**

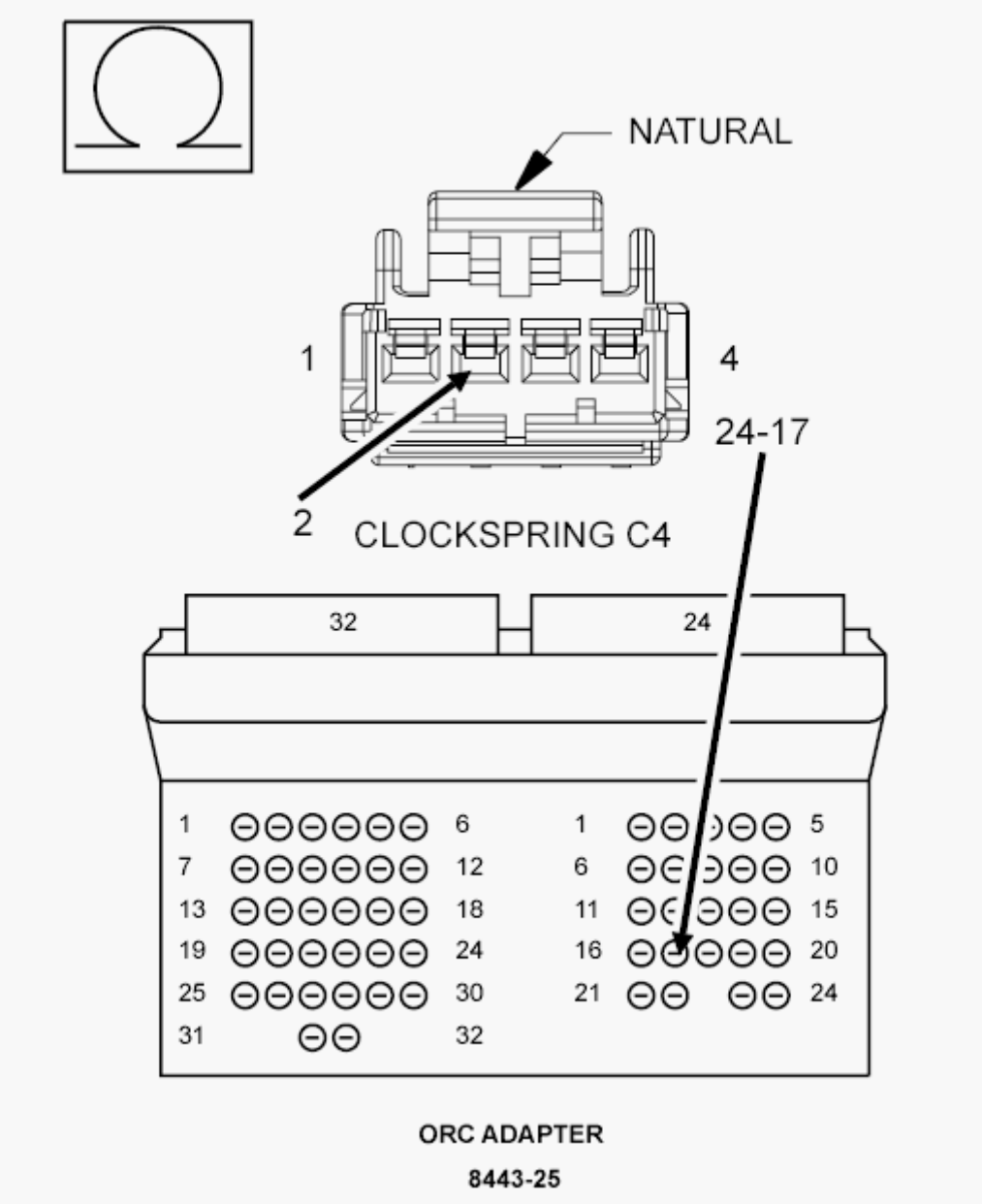

Fig. 30: Checking Driver Squib 2 Line 2 Circuit For Open
Courtesy of CHRYSLER GROUP, LLC

1. Measure the resistance of the (R61) Driver Squib 2 Line 2 circuit between the Clockspring C4 connector cavity 2 and the SRS Load Tool Adaptor (special tool #8443-25, 56 Way ACM Adapter) cavity 24-17.

   Is the resistance below 1.0 Ohm?

   Yes

WARNING: If the Occupant Restraint Controller (ORC) is dropped at any time, it must be

replaced. Failure to take the proper precautions can result in accidental airbag deployment. Failure to follow these instructions may result in possible serious or fatal injury.

- Replace the ORC in accordance with Service Information.
- Perform the AIRBAG SYSTEM VERIFICATION TEST. Refer to **STANDARD PROCEDURE** .

No

- Repair the (R61) Driver Squib 2 Line 2 circuit for an open.
- Perform the AIRBAG SYSTEM VERIFICATION TEST. Refer to **STANDARD PROCEDURE** .

6. **CHECKING STORED OR INTERMITTENT CODES**

NOTE: Diagnose and repair all active codes before diagnosing stored codes. Refer to OCCUPANT RESTRAINT CONTROLLER (ORC) - DIAGNOSTIC CODE INDEX for a complete list of airbag system diagnostic procedures.

1. With the scan tool, record and erase all Airbag System Module DTCs.

WARNING: Turn the ignition off, disconnect the 12-volt battery and wait two minutes before proceeding. Failure to follow these instructions may result in possible serious or fatal injury.

2. Using the wiring diagram/schematic as a guide, inspect the related wiring and connectors for chafed, pierced, pinched, and partially broken wires, and for broken, bent, pushed out, corroded, and contaminated terminals. Repair as necessary.
3. Reconnect all disconnected components and harness connectors.

WARNING: Turn the ignition on, then reconnect the

12-volt battery and wait two minutes before proceeding. Failure to follow these instructions may result in possible serious or fatal injury.

4. With the scan tool, monitor for active codes while performing the following:
   - Wiggle the wiring harness and connectors of the related airbag circuit.
   - Continue the test until either a code becomes active or the problem area is isolated.
5. In the previous steps you have attempted to recreate the conditions responsible for setting the DTC in question / causing the intermittent condition.

   Are any ACTIVE DTCs present?

   Yes

   - Perform the appropriate DTC. Refer to **DIAGNOSIS AND TESTING**.

   No

   - No problem found at this time. Erase all codes before returning the vehicle to the customer.

B1B07-DRIVER AIRBAG SQUIB 2 CIRCUIT SHORTED TOGETHER

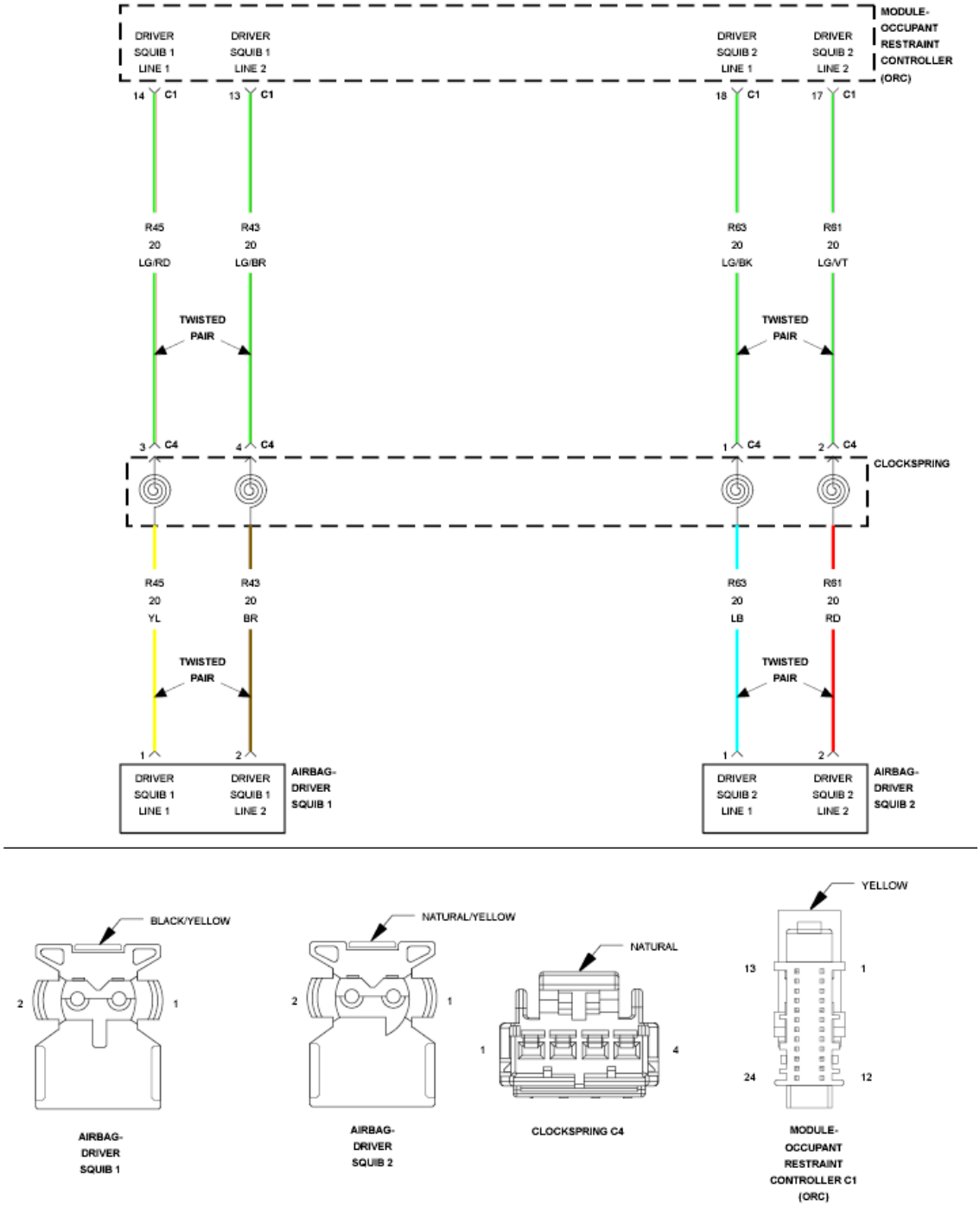

Fig. 31: Driver Airbag Squib Line Circuit Schematic
Courtesy of CHRYSLER GROUP, LLC

For a complete wiring diagram, **refer to appropriate SYSTEM WIRING DIAGRAMS article** .

THEORY OF OPERATION

When powered, the Occupant Restraint Controller (ORC) sends a test current to the squibs to verify the integrity of the squib and the wiring. These circuits are

maintained in a "floating" configuration at the module, (connected to neither power nor ground), as protection against inadvertent deployment. Use of the Supplemental Restraints System (SRS) Load Tool Kit 8443A in the tests below substitutes a suspect squib with a known good component. The use of the SRS Load Tool Adapter tool provides a test point, as well as a method for opening the shorting bar connections within the harness connector.

WHEN MONITORED

With the ignition on.

SET CONDITION

The Occupant Restraint Controller (ORC) monitors the resistance of the Driver Squib 2 circuits. The ORC will set this DTC if it detects low resistance between the Driver Squib 2 circuits.

POSSIBLE CAUSES

Possible Causes
(R63) DRIVER SQUIB 2 LINE 1 CIRCUIT SHORTED TO (R61) DRIVER SQUIB 2 LINE 2 CIRCUIT
CLOCKSPRING
DRIVER AIRBAG
OCCUPANT RESTRAINT CONTROLLER (ORC)

DIAGNOSTIC TEST

1. **DETERMINE ACTIVE OR STORED DTC**

   NOTE: Make sure that the battery is fully charged.

   NOTE: The scan tool, SRS Load Tool Kit (special tool #8443A, SRS Load Tool) and DVOM are required to perform the following test:

   1. Turn the ignition on.

      Select ACTIVE or STORED DTC:

      ACTIVE DTC

- Go To 2

STORED DTC

- Go To 5

2. **CHECK FOR SHORTED SQUIB CIRCUITS IN DRIVER AIRBAG**

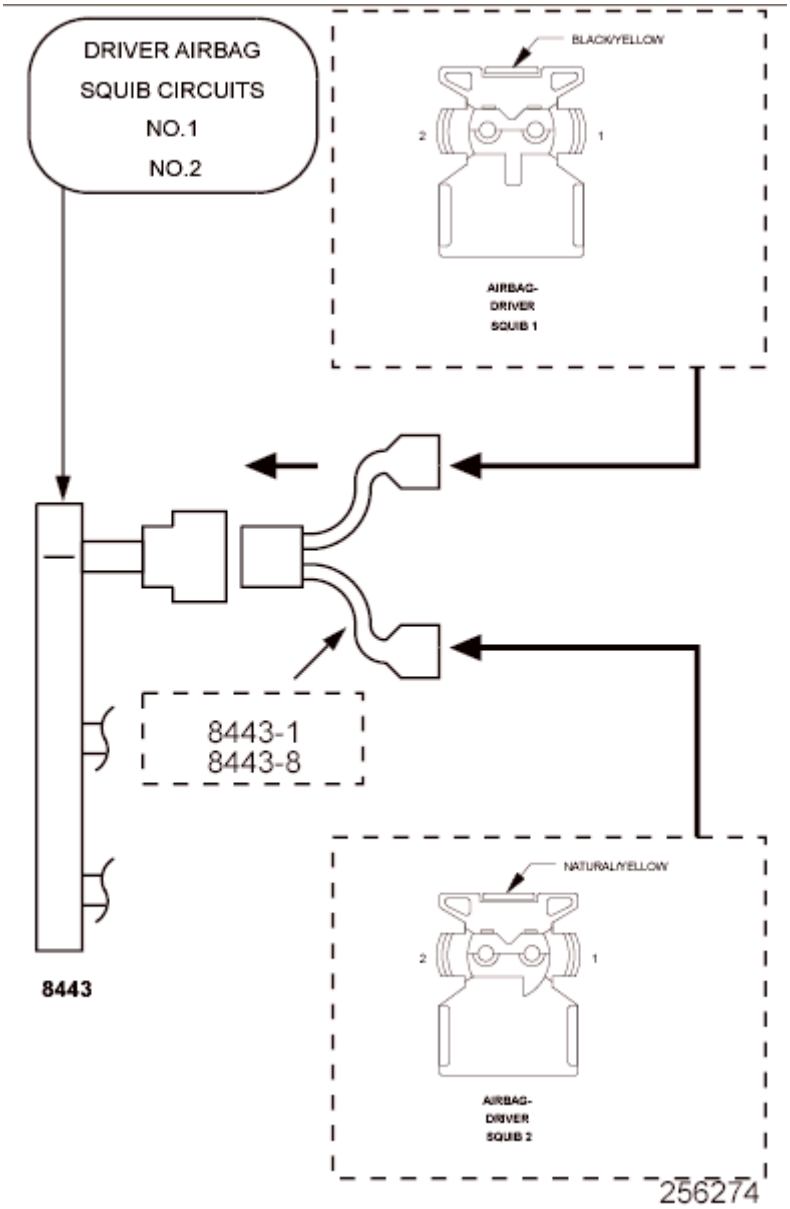

Fig. 32: Checking Squib Circuits In Driver Airbag For Short
Courtesy of CHRYSLER GROUP, LLC

WARNING: Turn the ignition off disconnect the 12-volt battery and wait two minutes before proceeding. Failure to follow these

instructions may result in possible serious or fatal injury.

WARNING: **Do not place an intact non-deployed airbag face down on a hard surface, the airbag propels into the air if accidentally deployed. Failure to follow these instructions may result in possible serious or fatal injury.**

1. Disconnect the Driver Airbag Squib connectors.

   NOTE: **Check connectors - Clean and repair as necessary.**

2. Connect the SRS Load Tool Kit (special tool #8443A, SRS Load Tool) and SRS Load Tool Jumper (special tool #8443-1, Jumpers, 2 Pin) or (special tool #8443-8, Jumper, SRS Load) to the Driver Airbag Squib connectors.

   WARNING: **Turn the ignition on, then reconnect the 12-volt battery and wait two minutes before proceeding. Failure to follow these instructions may result in possible serious or fatal injury.**

3. With the scan tool, read the active ORC DTCs.

   Does the scan tool display: B1B07-DRIVER AIRBAG SQUIB 2 CIRCUIT SHORTED TOGETHER?

   Yes

   - Go To 3

   No

   - Replace the Driver Airbag in accordance with the Service Information.
   - Perform the AIRBAG SYSTEM VERIFICATION TEST. Refer to

STANDARD PROCEDURE .

3. **CHECK THE CLOCKSPRING SQUIB CIRCUITS FOR A SHORT TOGETHER**

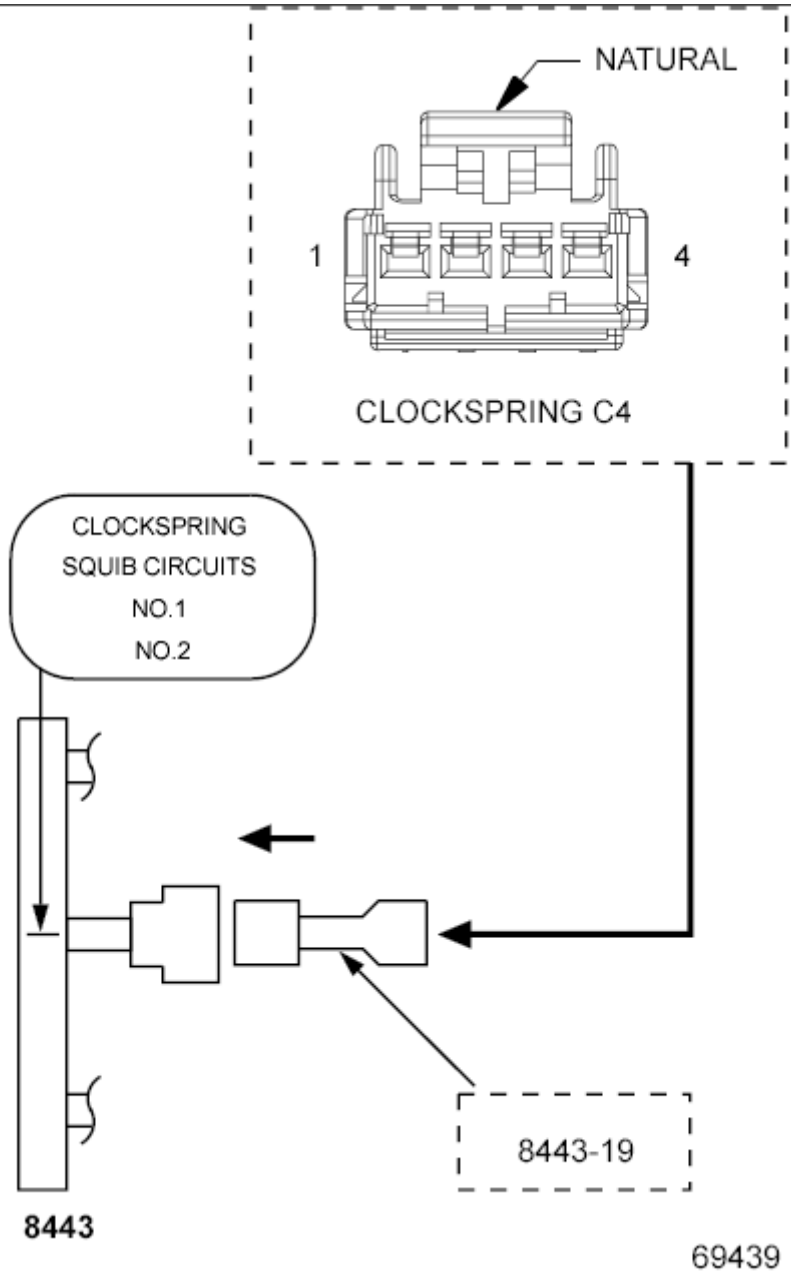

Fig. 33: Checking Clockspring Squib Circuits For A Short To Ground
Courtesy of CHRYSLER GROUP, LLC

WARNING: Turn the ignition off, disconnect the 12-volt battery and wait two minutes before proceeding. Failure to follow these instructions may result in possible serious or

fatal injury.

1. Disconnect the SRS Load Tool Kit (special tool #8443A, SRS Load Tool) and SRS Load Tool Jumper (special tool #8443-19, 4 Pin Jumper) from the Driver Airbag Squib connectors.
2. Disconnect the Clockspring C4 connector.

NOTE: Check connectors - Clean and repair as necessary.

3. Connect the SRS Load Tool Kit (special tool #8443A, SRS Load Tool) and SRS Load Tool Jumper (special tool #8443-19, 4 Pin Jumper) to the Clockspring C4 connector.

WARNING: Turn the ignition on, then reconnect the 12-volt battery and wait two minutes before proceeding. Failure to follow these instructions may result in possible serious or fatal injury.

4. With the scan tool, read the active ORC DTCs.

   Does the scan tool display: B1B07-DRIVER AIRBAG SQUIB 2 CIRCUIT SHORTED TOGETHER?

   Yes

   - Go To 4

   No

   - Replace the Clockspring in accordance with the Service Information.
   - Perform the AIRBAG SYSTEM VERIFICATION TEST. Refer to **STANDARD PROCEDURE** .

4. **CHECK THE (R63) DRIVER SQUIB 2 LINE 1 CIRCUIT FOR A SHORT TO THE (R61) DRIVER SQUIB 2 LINE 2 CIRCUIT**

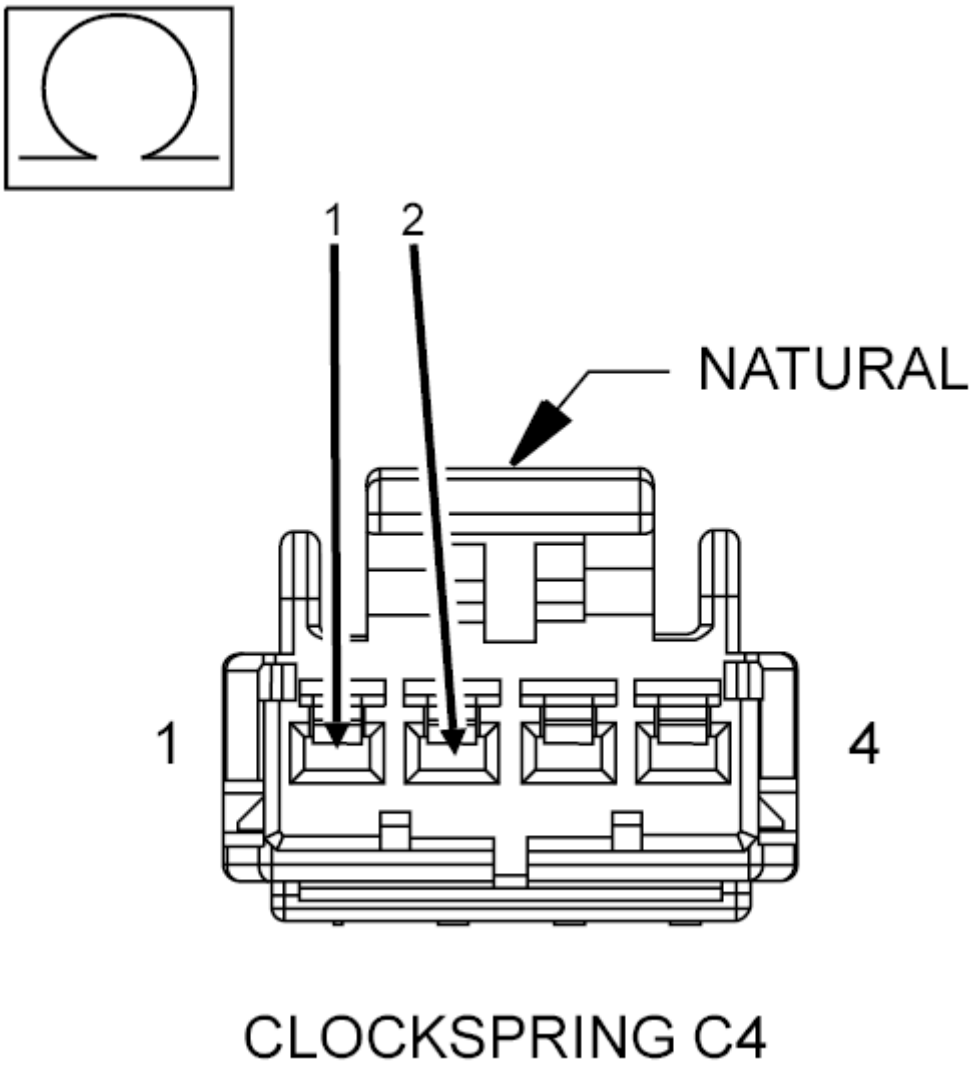

Fig. 34: Checking Driver Squib 2 Line 1 Circuit For Short To Driver Squib 2 Line 2 Circuit
Courtesy of CHRYSLER GROUP, LLC

WARNING: **Turn the ignition off disconnect the 12-volt battery and wait two minutes before proceeding. Failure to follow these instructions may result in possible serious or fatal injury.**

1. Disconnect the SRS Load Tool Kit (special tool #8443A, SRS Load Tool) and SRS Load Tool Jumper (special tool #8443-19, 4 Pin Jumper) from the Clockspring connector.
2. Disconnect the ORC connectors.

NOTE: Check connectors - Clean and repair as necessary.

3. Connect the SRS Load Tool Adaptor (special tool #8443-25, 56 Way ACM Adapter) to the ORC connectors.
4. Measure the resistance between the (R63) Driver Squib 2 Line 1 circuit and the (R61) Driver Squib 2 Line 2 circuit at the SRS Load Tool Adaptor (special tool #8443-25, 56 Way ACM Adapter) cavities 24-18 and 24-17.

   Is the resistance below 10k Ohms?

   Yes

   - Repair the (R63) Driver Squib 2 Line 1 circuit for a short to the (R61) Driver Squib 2 Line 2 circuit.
   - Perform AIRBAG SYSTEM VERIFICATION TEST. Refer to **STANDARD PROCEDURE** .

   No

   WARNING: **If the Occupant Restraint Controller (ORC) is dropped at any time, it must be replaced. Failure to take the proper precautions can result in accidental airbag deployment. Failure to follow these instructions may result in possible serious or fatal injury.**

   - Replace the ORC in accordance with Service Information.
   - Perform the AIRBAG SYSTEM VERIFICATION TEST. Refer to **STANDARD PROCEDURE** .

5. **CHECKING STORED OR INTERMITTENT CODES**

NOTE: Diagnose and repair all active codes before diagnosing stored codes. Refer to OCCUPANT RESTRAINT CONTROLLER (ORC) - DIAGNOSTIC CODE INDEX for a complete list of airbag system

diagnostic procedures.

1. With the scan tool, record and erase all Airbag System Module DTCs.

   WARNING: **Turn the ignition off disconnect the 12-volt battery and wait two minutes before proceeding. Failure to follow these instructions may result in possible serious or fatal injury.**

2. Using the wiring diagram/schematic as a guide, inspect the related wiring and connectors for chafed, pierced, pinched, and partially broken wires, and for broken, bent, pushed out, corroded, and contaminated terminals. Repair as necessary.
3. Reconnect all disconnected components and harness connectors.

   WARNING: **Turn the ignition on, then reconnect the 12-volt battery and wait two minutes before proceeding. Failure to follow these instructions may result in possible serious or fatal injury.**

4. With the scan tool, monitor for active codes while performing the following:
   - Wiggle the wiring harness and connectors of the related airbag circuit.
   - Continue the test until either a code becomes active or the problem area is isolated.
5. In the previous steps you have attempted to recreate the conditions responsible for setting the DTC in question causing the intermittent condition.

   Are any ACTIVE DTCs present?

   Yes

   - Refer to the appropriate diagnostic procedure. Refer to **DIAGNOSIS AND TESTING**.

No

- No problem found at this time. Erase all codes before returning the vehicle to the customer.

B1B08-PASSENGER AIRBAG SQUIB 1 CIRCUIT LOW

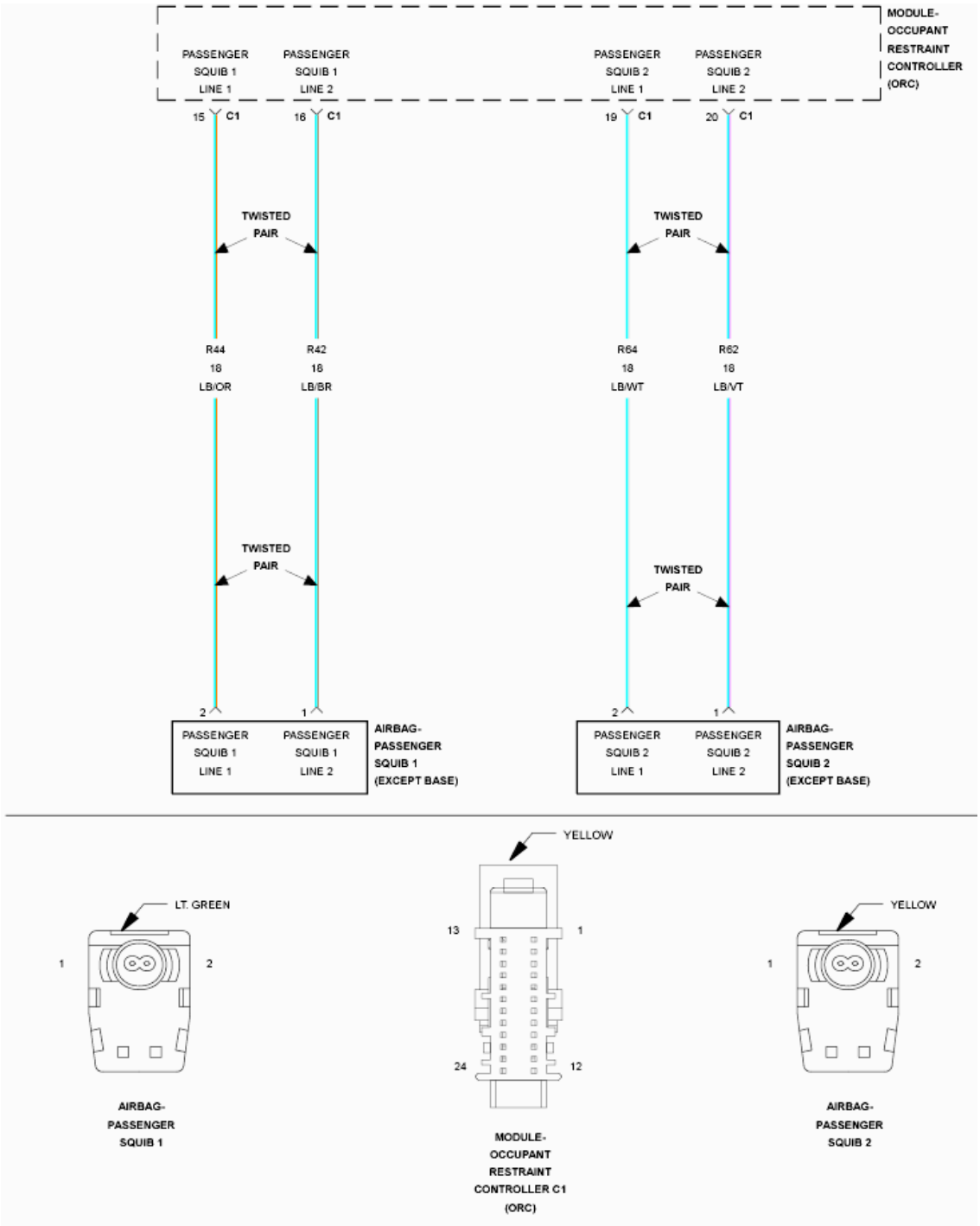

Fig. 35: Passenger Airbag Squib Line Circuit Schematic
Courtesy of CHRYSLER GROUP, LLC

For a complete wiring diagram, **refer to appropriate SYSTEM WIRING DIAGRAMS article** .

THEORY OF OPERATION

When powered, the Occupant Restraint Controller (ORC) sends a test current to the squibs to verify the integrity of the squib and the wiring. These circuits are maintained in a "floating" configuration at the module, (connected to neither power nor ground), as protection against inadvertent deployment. Use of the Supplemental Restraints System (SRS) Load Tool Kit 8443A in the tests below substitutes a suspect squib with a known good component. The use of the SRS Load Tool Adapter tool provides a test point, as well as a method for opening the shorting bar connections within the harness connector.

WHEN MONITORED

With the ignition on.

SET CONDITION

The Occupant Restraint Controller (ORC) monitors the resistance of the Passenger Squib 1 circuits. The ORC will set this DTC if it detects low resistance on the Passenger Squib 1 circuits.

POSSIBLE CAUSES

Possible Causes
(R42) PASSENGER SQUIB 1 LINE 2 CIRCUIT SHORTED TO GROUND
(R44) PASSENGER SQUIB 1 LINE 1 CIRCUIT SHORTED TO GROUND
PASSENGER AIRBAG
OCCUPANT RESTRAINT CONTROLLER (ORC)

DIAGNOSTIC TEST

1. **DETERMINE ACTIVE OR STORED DTC**

NOTE: Make sure that the battery is fully charged.

NOTE: The scan tool, SRS Load Tool Kit (special tool

#8443A, SRS Load Tool), and DVOM are required to perform the following test:

1. Turn the ignition on.

   Select ACTIVE or STORED DTC:

   ACTIVE DTC

   - Go To 2

   STORED DTC

   - Go To 4

2. **CHECK FOR SHORTED SQUIB CIRCUITS IN PASSENGER AIRBAG**

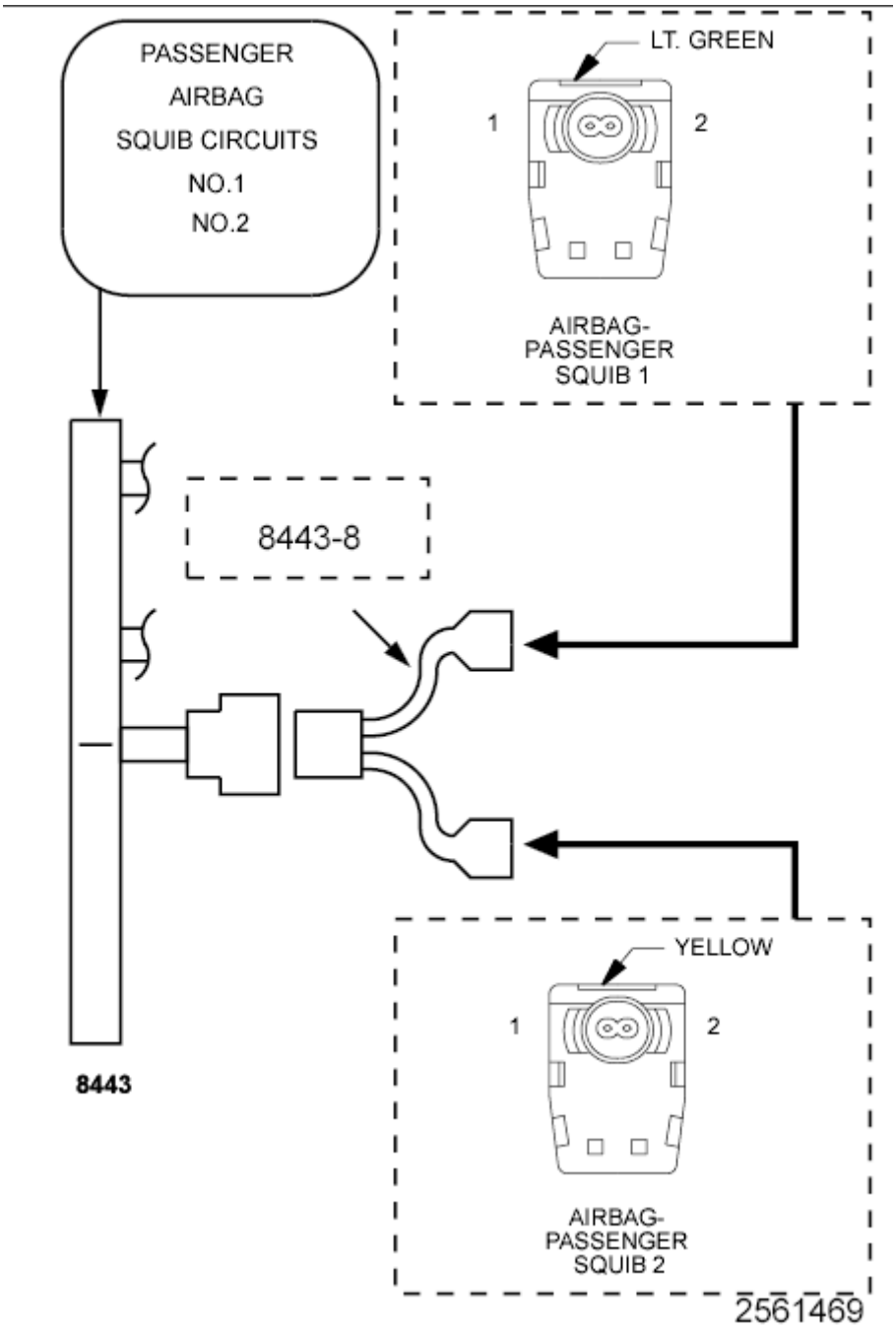

Fig. 36: Checking For Shorted Squib Circuits In Passenger Airbag
Courtesy of CHRYSLER GROUP, LLC

WARNING: Turn the ignition off disconnect the 12-volt battery and wait two minutes before proceeding. Failure to follow these instructions may result in possible serious or fatal injury.

1. Disconnect the Passenger Airbag Squib connectors.

WARNING: Do not place an intact non-deployed airbag face down on a hard surface, the airbag propels into the air if accidentally deployed. Failure to follow these instructions may result in possible serious or fatal injury.

NOTE: Check connectors - Clean and repair as necessary.

2. Connect the SRS Load Tool Kit (special tool #8443A, SRS Load Tool) and SRS Load Tool Jumper (special tool #8443-8, Jumper, SRS Load) to the Passenger Airbag Squib connectors.

WARNING: Turn the ignition on, then reconnect the 12-volt battery and wait two minutes before proceeding. Failure to follow these instructions may result in possible serious or fatal injury.

3. With the scan tool, read the active ORC DTCs.

   Does the scan tool display: B1B08-PASSENGER AIRBAG SQUIB 1 CIRCUIT LOW?

   Yes

   - Go To 3

   No

   - Replace the Passenger Airbag in accordance with the Service Information.
   - Perform the AIRBAG SYSTEM VERIFICATION TEST. Refer to **STANDARD PROCEDURE** .

3. **CHECK THE (R42) PASSENGER SQUIB 1 LINE 2 CIRCUIT AND THE (R44) PASSENGER SQUIB 1 LINE 1 CIRCUIT FOR A SHORT TO GROUND**

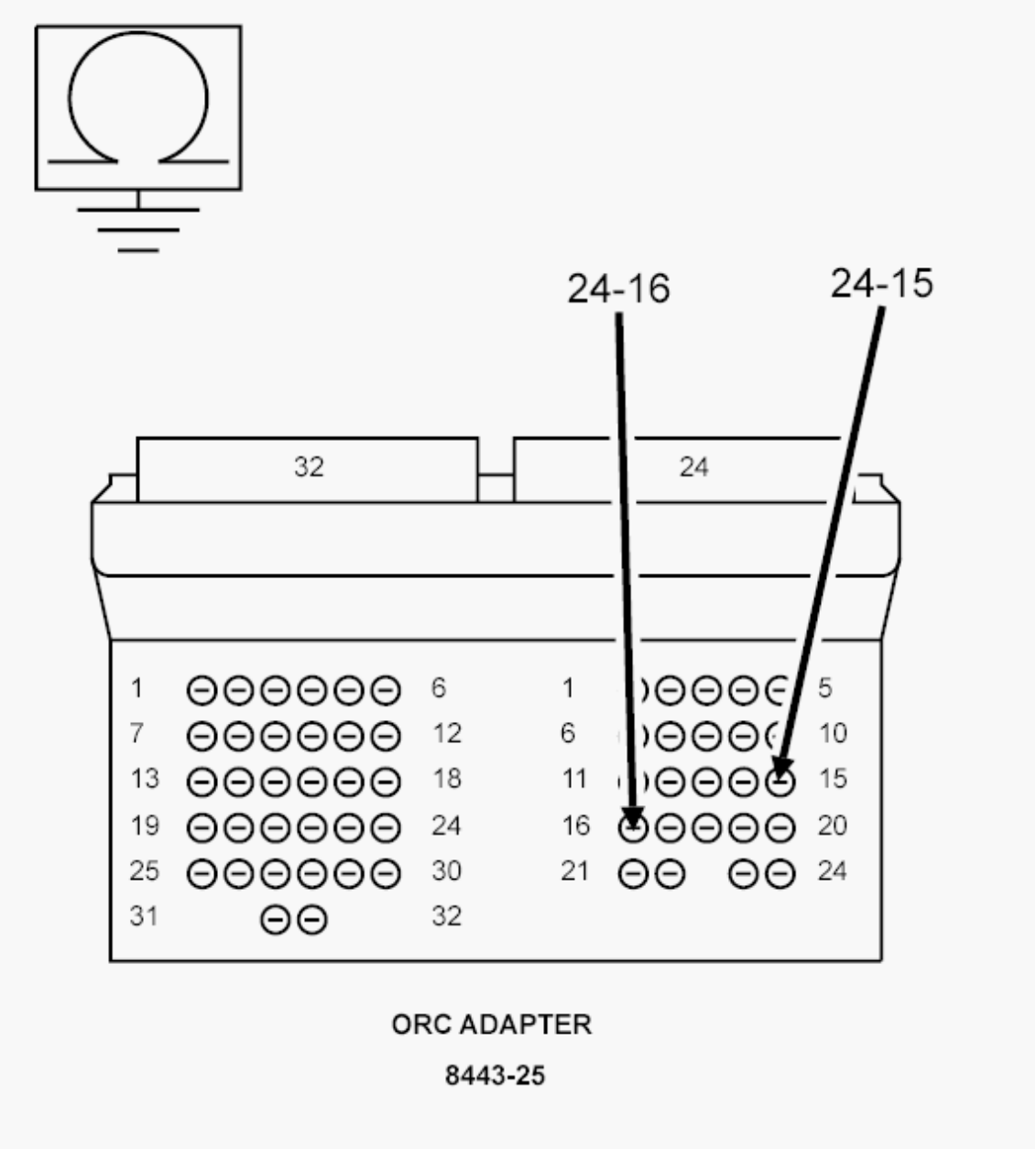

Fig. 37: Checking Passenger Squib 1 Line Circuits For Short To Ground
Courtesy of CHRYSLER GROUP, LLC

WARNING: Turn the ignition off disconnect the 12-volt battery and wait two minutes before proceeding. Failure to follow these instructions may result in possible serious or fatal injury.

1. Disconnect the SRS Load Tool Kit (special tool #8443A, SRS Load Tool) from the Passenger Airbag Squib connector.

2. Disconnect the ORC connectors.

NOTE: Check connectors - Clean and repair as necessary.

3. Connect the SRS Load Tool Adaptor (special tool #8443-25, 56 Way ACM Adapter) to the ORC connectors.
4. Measure the resistance of the (R42) Passenger Squib 1 Line 2 circuit between the SRS Load Tool Adaptor (special tool #8443-25, 56 Way ACM Adapter) cavity 24-16 and ground.
5. Measure the resistance of the (R44) Passenger Squib 1 Line 1 circuit between the SRS Load Tool Adaptor (special tool #8443-25, 56 Way ACM Adapter) cavity 24-15 and ground.

Is the resistance below 10k Ohms on either circuit?

Yes

- Repair the Passenger Squib 1 circuits with resistance below 10k Ohms for a short to ground.
- Perform the AIRBAG SYSTEM VERIFICATION TEST. Refer to **STANDARD PROCEDURE** .

No

WARNING: **If the Occupant Restraint Controller (ORC) is dropped at any time, it must be replaced. Failure to take the proper precautions can result in accidental airbag deployment. Failure to follow these instructions may result in possible serious or fatal injury.**

- Replace the ORC in accordance with Service Information.
- Perform the AIRBAG SYSTEM VERIFICATION TEST. Refer to **STANDARD PROCEDURE** .

4. **CHECKING STORED OR INTERMITTENT CODES**

NOTE: Diagnose and repair all active codes before diagnosing stored codes. Refer to OCCUPANT RESTRAINT CONTROLLER (ORC) - DIAGNOSTIC CODE INDEX for a complete list of ORC Control Module diagnostic procedures.

1. With the scan tool, record and erase all ORC Control Module DTCs.

   WARNING: Turn the ignition off disconnect the 12-volt battery and wait two minutes before proceeding. Failure to follow these instructions may result in possible serious or fatal injury.

2. Using the wiring diagram/schematic as a guide, inspect the related wiring and connectors for chafed, pierced, pinched, and partially broken wires, and for broken, bent, pushed out, corroded, and contaminated terminals. Repair as necessary.
3. Reconnect all disconnected components and harness connectors.

   WARNING: Turn the ignition on, then reconnect the 12-volt battery and wait two minutes before proceeding. Failure to follow these instructions may result in possible serious or fatal injury.

4. With the scan tool, monitor for active codes while performing the following:
   - Wiggle the wiring harness and connectors of the related airbag circuit.
   - Continue the test until either a code becomes active or the problem area is isolated.
5. In the previous steps you have attempted to recreate the conditions responsible for setting the DTC in question / causing the intermittent condition.

   Are any ACTIVE DTCs present?

Yes

- Select the appropriate diagnostic procedure from **OCCUPANT RESTRAINT CONTROLLER (ORC) - DIAGNOSTIC CODE INDEX** .

No

- No problem found at this time. Erase all codes before returning the vehicle to the customer.

B1B09-PASSENGER AIRBAG SQUIB 1 CIRCUIT HIGH

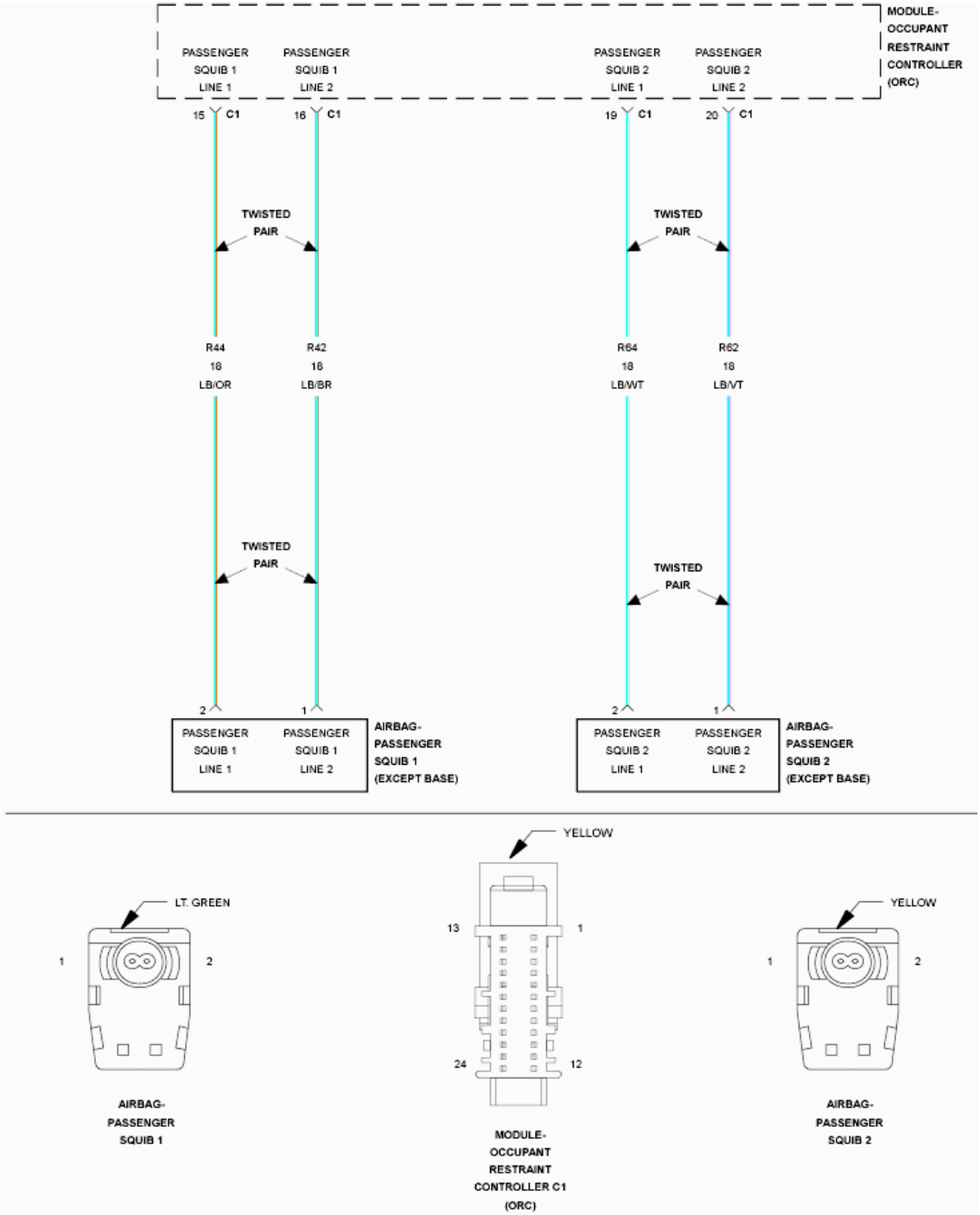

Fig. 38: Passenger Airbag Squib Line Circuit Schematic
Courtesy of CHRYSLER GROUP, LLC

For a complete wiring diagram, **refer to appropriate SYSTEM WIRING DIAGRAMS article** .

THEORY OF OPERATION

When powered, the Occupant Restraint Controller (ORC) sends a test current to

the squibs to verify the integrity of the squib and the wiring. These circuits are maintained in a "floating" configuration at the module, (connected to neither power nor ground), as protection against inadvertent deployment. Use of the Supplemental Restraints System (SRS) Load Tool Kit 8443A in the tests below substitutes a suspect squib with a known good component. The use of the SRS Load Tool Adapter tool provides a test point, as well as a method for opening the shorting bar connections within the harness connector. When Monitored:

WHEN MONITORED

With the ignition on

SET CONDITION

The Occupant Restraint Controller (ORC) monitors the voltage on the Passenger Squib 1 circuits. The ORC will set this DTC if it detects voltage on the Passenger Squib 1 circuits.

POSSIBLE CAUSES

Possible Causes
(R42) PASSENGER SQUIB 1 LINE 2 CIRCUIT SHORTED TO BATTERY
(R44) PASSENGER SQUIB 1 LINE 1 CIRCUIT SHORTED TO BATTERY
PASSENGER AIRBAG
OCCUPANT RESTRAINT CONTROLLER (ORC)

DIAGNOSTIC TEST

1. **DETERMINE ACTIVE OR STORED DTC**

   NOTE: Make sure that the battery is fully charged.

   NOTE: The scan tool, SRS Load Tool Kit (special tool #8443A, SRS Load Tool), and DVOM are required to perform the following test:

   1. Turn the ignition on.

      Select ACTIVE or STORED DTC:

ACTIVE DTC

- Go To 2

STORED DTC

- Go To 4

2. **CHECK FOR SHORTED SQUIB CIRCUITS IN PASSENGER AIRBAG**

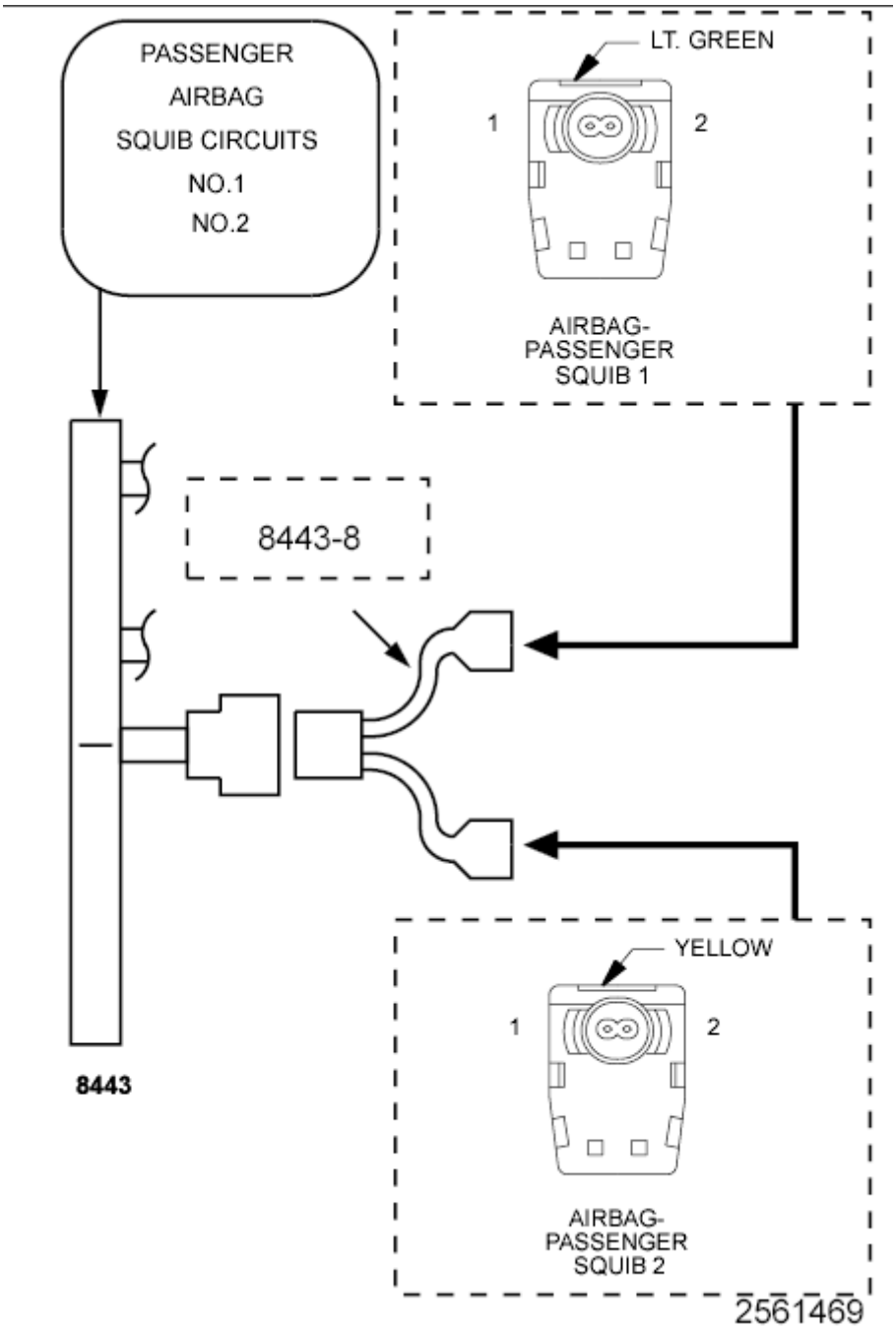

Fig. 39: Checking For Shorted Squib Circuits In Passenger Airbag
Courtesy of CHRYSLER GROUP, LLC

WARNING: Turn the ignition off disconnect the 12-volt battery and wait two minutes before proceeding. Failure to follow these instructions may result in possible serious or fatal injury.

1. Disconnect the Passenger Airbag Squib connectors.

WARNING: Do not place an intact non-deployed airbag face down on a hard surface, the airbag propels into the air if accidentally deployed. Failure to follow these instructions may result in possible serious or fatal injury.

NOTE: Check connectors - Clean and repair as necessary.

2. Connect the SRS Load Tool Kit (special tool #8443A, SRS Load Tool) and SRS Load Tool Jumper (special tool #8443-8, Jumper, SRS Load) to the Passenger Airbag Squib connectors.

WARNING: Turn the ignition on, then reconnect the 12-volt battery and wait two minutes before proceeding. Failure to follow these instructions may result in possible serious or fatal injury.

3. With the scan tool, read the active ORC DTCs.

   Does the scan tool display: B1B09-PASSENGER AIRBAG SQUIB 1 CIRCUIT HIGH?

   Yes

   - Go To3

No

WARNING: Turn the ignition off disconnect the 12-volt battery and wait two minutes before proceeding. Failure to follow these instructions may result in possible serious or fatal injury.

- Replace the Passenger Airbag in accordance with the Service Information.
- Perform the AIRBAG SYSTEM VERIFICATION TEST. Refer to **STANDARD PROCEDURE** .

3. **CHECK THE (R42) PASSENGER SQUIB 1 LINE 2 CIRCUIT AND THE (R44) PASSENGER SQUIB 1 LINE 1 CIRCUIT FOR A SHORT TO BATTERY**

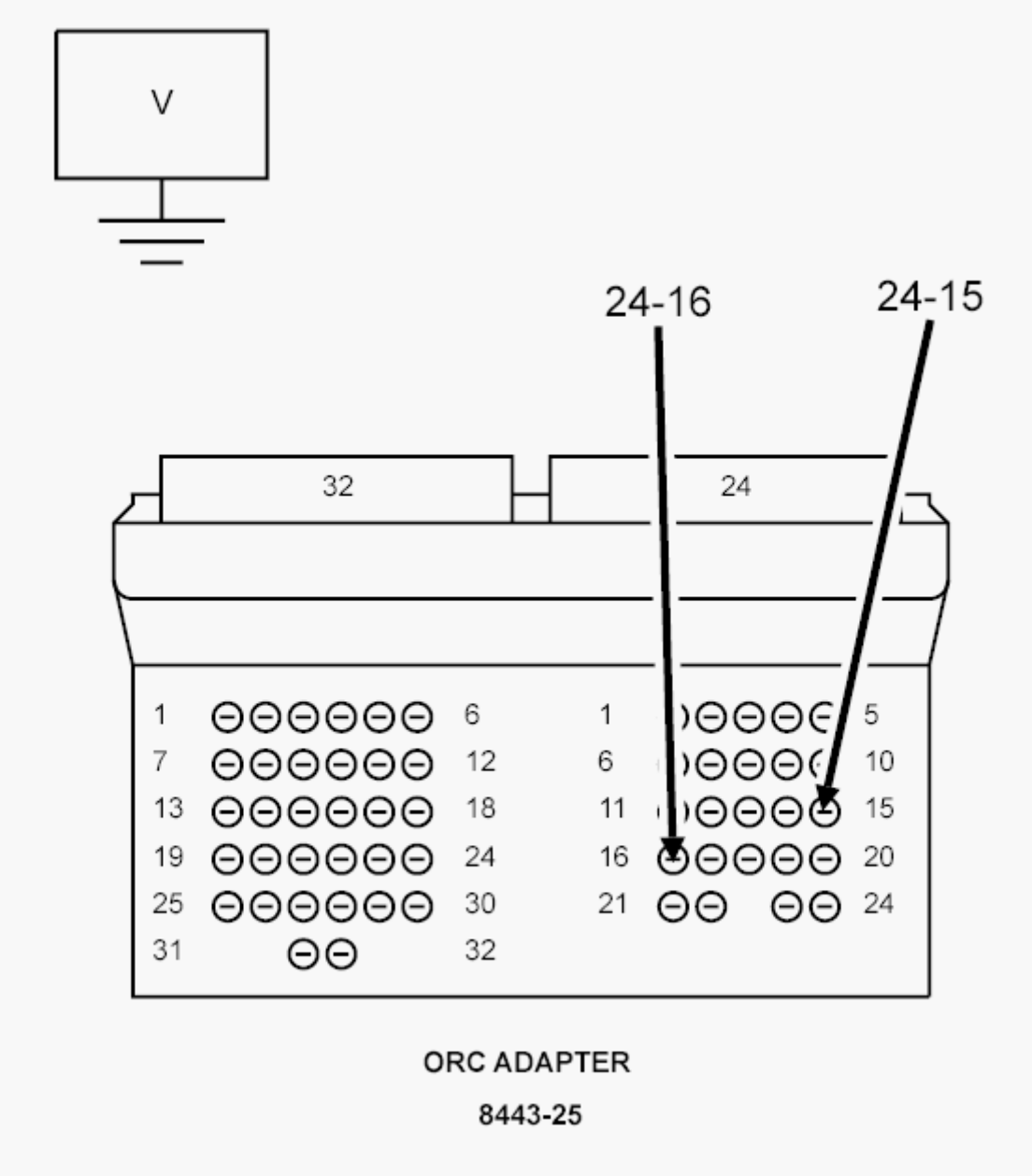

Fig. 40: Checking Passenger Squib 1 Line Circuits For Short To Battery
Courtesy of CHRYSLER GROUP, LLC

WARNING: Turn the ignition off disconnect the 12-volt battery and wait two minutes before proceeding. Failure to follow these instructions may result in possible serious or fatal injury.

1. Disconnect the SRS Load Tool Kit (special tool #8443A, SRS Load Tool) and SRS Load Tool Jumper (special tool #8443-8, Jumper, SRS Load) from the Passenger Airbag Squib connectors.

2. Disconnect the ORC connectors.

NOTE: Check connectors - Clean and repair as necessary.

3. Connect the SRS Load Tool Adaptor (special tool #8443-25, 56 Way ACM Adapter) to the ORC connectors.
4. Measure the voltage of the (R42) Passenger Squib 1 Line 2 circuit between the SRS Load Tool Adaptor (special tool #8443-25, 56 Way ACM Adapter) cavity 24-16 and ground.
5. Measure the voltage of the (R44) Passenger Squib 1 Line 1 circuit between the SRS Load Tool Adaptor (special tool #8443-25, 56 Way ACM Adapter) cavity 24-15 and ground.

WARNING: **Turn the ignition on, then reconnect the 12-volt battery and wait two minutes before proceeding. Failure to follow these instructions may result in possible serious or fatal injury.**

Is there any voltage present on either circuit?

Yes

- Repair the Passenger Squib 1 circuits with voltage present for short to battery.
- Perform the AIRBAG SYSTEM VERIFICATION TEST. Refer to **STANDARD PROCEDURE** .

No

WARNING: **If the Occupant Restraint Controller (ORC) is dropped at any time, it must be replaced. Failure to take the proper precautions can result in accidental airbag deployment. Failure to follow these instructions may result in possible serious or fatal injury.**

WARNING: Turn the ignition off disconnect the 12-volt battery and wait two minutes before proceeding. Failure to follow these instructions may result in possible serious or fatal injury.

- Replace the ORC in accordance with Service Information.
- Perform the AIRBAG SYSTEM VERIFICATION TEST. Refer to **STANDARD PROCEDURE** .

4. **CHECKING STORED OR INTERMITTENT CODES**

NOTE: Diagnose and repair all active codes before diagnosing stored codes. Refer to OCCUPANT RESTRAINT CONTROLLER (ORC) - DIAGNOSTIC CODE INDEX for a complete list of airbag system diagnostic procedures.

1. With the scan tool, record and erase all Airbag System Module DTCs.

WARNING: Turn the ignition off disconnect the 12-volt battery and wait two minutes before proceeding. Failure to follow these instructions may result in possible serious or fatal injury.

2. Using the wiring diagram/schematic as a guide, inspect the related wiring and connectors for chafed, pierced, pinched, and partially broken wires, and for broken, bent, pushed out, corroded, and contaminated terminals. Repair as necessary.
3. Reconnect all disconnected components and harness connectors.

WARNING: Turn the ignition on, then reconnect the 12-volt battery and wait two minutes before proceeding. Failure to follow these instructions may result in possible serious or fatal injury.

4. With the scan tool, monitor for active codes while performing the

following:

- Wiggle the wiring harness and connectors of the related airbag circuit.
- Continue the test until either a code becomes active or the problem area is isolated.

5. In the previous steps you have attempted to recreate the conditions responsible for setting the DTC in question / causing the intermittent condition.

   Are any ACTIVE DTCs present?

   Yes

   - Select the appropriate diagnostic procedure from **OCCUPANT RESTRAINT CONTROLLER (ORC) - DIAGNOSTIC CODE INDEX** .

   No

   - No problem found at this time. Erase all codes before returning the vehicle to the customer.

B1B0A-PASSENGER AIRBAG SQUIB 1 CIRCUIT OPEN

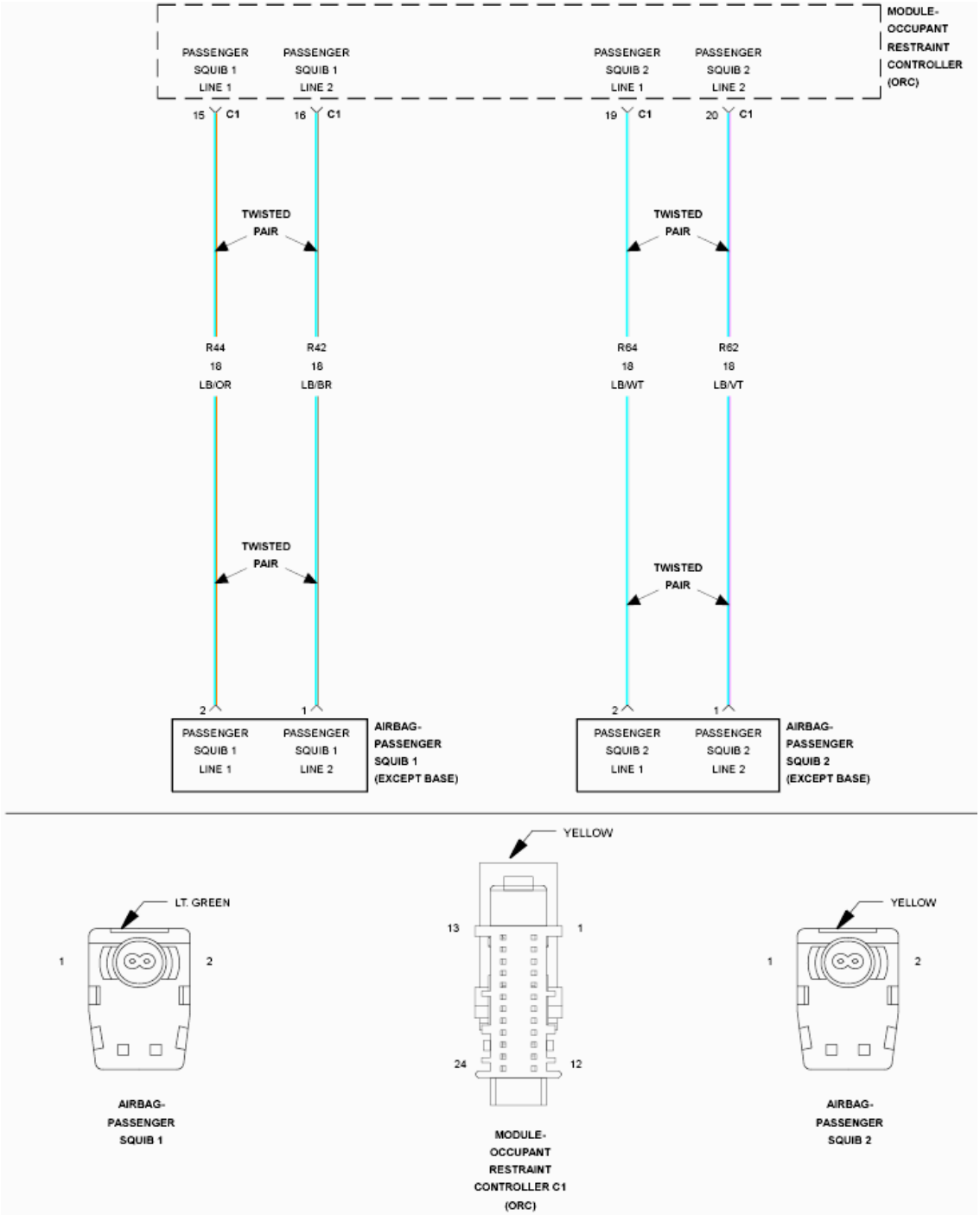

Fig. 41: Passenger Airbag Squib Line Circuit Schematic
Courtesy of CHRYSLER GROUP, LLC

For a complete wiring diagram, **refer to appropriate SYSTEM WIRING DIAGRAMS article** .

THEORY OF OPERATION

When powered, the Occupant Restraint Controller (ORC) sends a test current to

the squibs to verify the integrity of the squib and the wiring. These circuits are maintained in a "floating" configuration at the module, (connected to neither power nor ground), as protection against inadvertent deployment. Use of the Supplemental Restraints System (SRS) Load Tool Kit 8443A in the tests below substitutes a suspect squib with a known good component. The use of the SRS Load Tool Adapter tool provides a test point, as well as a method for opening the shorting bar connections within the harness connector.

WHEN MONITORED

With the ignition on.

SET CONDITION

The Occupant Restraint Controller (ORC) monitors the resistance of the Passenger Squib 1 circuits. The ORC will set this DTC if it detects an open or high resistance on the Passenger Squib 1 circuits.

POSSIBLE CAUSES

Possible Causes
(R42) PASSENGER SQUIB 1 LINE 2 CIRCUIT OPEN
(R44) PASSENGER SQUIB 1 LINE 1 CIRCUIT OPEN
PASSENGER AIRBAG
OCCUPANT RESTRAINT CONTROLLER (ORC)

DIAGNOSTIC TEST

1. **DETERMINE ACTIVE OR STORED DTC**

   NOTE: Make sure that the battery is fully charged.

   NOTE: The scan tool, SRS Load Tool Kit (special tool #8443A, SRS Load Tool), and DVOM are required to perform the following test:

   1. Turn the ignition on.

      Select ACTIVE or STORED DTC:

      ACTIVE DTC

- Go To 2

STORED DTC

- Go To 5

2. **CHECK FOR OPEN SQUIB CIRCUITS IN PASSENGER AIRBAG**

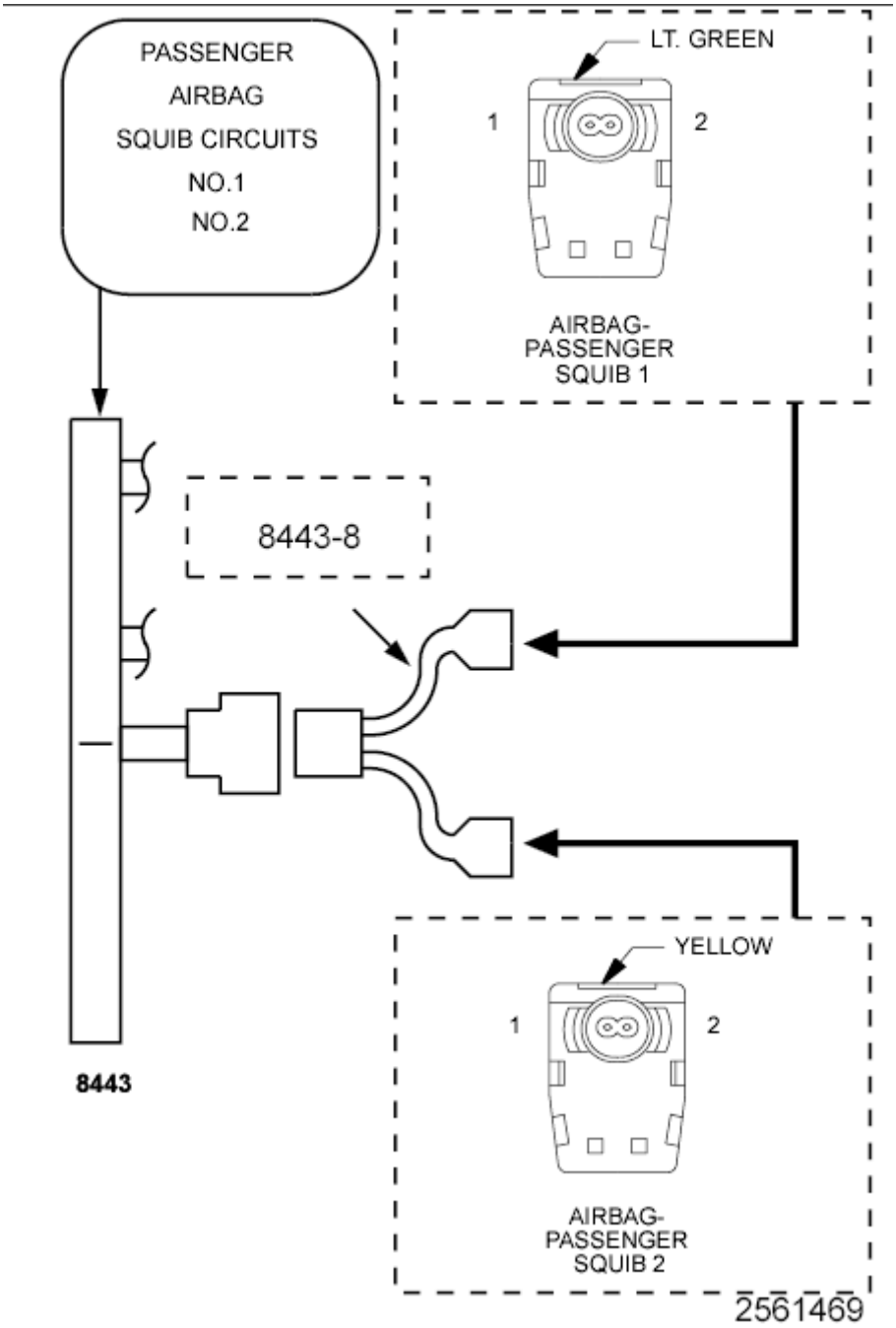

Fig. 42: Checking For Shorted Squib Circuits In Passenger Airbag
Courtesy of CHRYSLER GROUP, LLC

WARNING: Turn the ignition off disconnect the 12-volt battery and wait two minutes before proceeding. Failure to follow these instructions may result in possible serious or fatal injury.

1. Disconnect the Passenger Airbag Squib connectors.

   NOTE: Check connectors - Clean and repair as necessary.

2. Connect the SRS Load Tool Kit (special tool #8443A, SRS Load Tool) and SRS Load Tool Jumper (special tool #8443-8, Jumper, SRS Load) to the Passenger Airbag Squib connectors.

   WARNING: Turn the ignition on, then reconnect the 12-volt battery and wait two minutes before proceeding. Failure to follow these instructions may result in possible serious or fatal injury.

3. With the scan tool, read the active ORC DTC.

   Does the scan tool display: B1B0A-PASSENGER AIRBAG SQUIB 1 CIRCUIT OPEN?

   Yes

   - Go To 3

   No

   - Replace the Passenger Airbag in accordance with the Service Information.
   - Perform the AIRBAG SYSTEM VERIFICATION TEST. Refer to **STANDARD PROCEDURE** .

3. **CHECK THE (R42) PASSENGER SQUIB 1 LINE 2 CIRCUIT FOR AN OPEN**

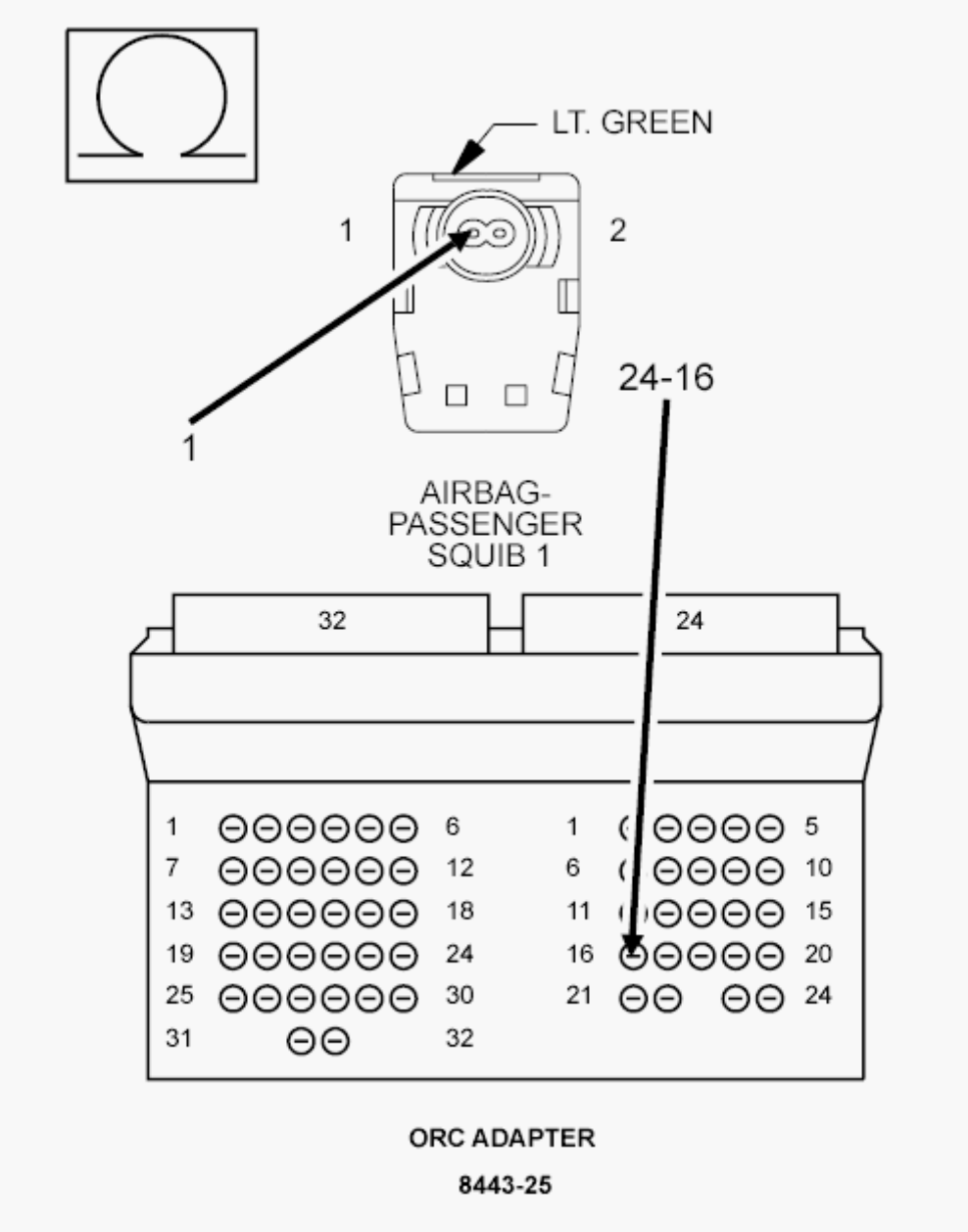

Fig. 43: Checking Passenger Squib 1 Line 2 Circuit For Open
Courtesy of CHRYSLER GROUP, LLC

WARNING: Turn the ignition off, disconnect the 12-volt battery and wait two minutes before proceeding. Failure to follow these instructions may result in possible serious or fatal injury.

1. Disconnect the SRS Load Tool Kit (special tool #8443A, SRS Load Tool) and SRS Load Tool Jumper (special tool #8443-8, Jumper, SRS Load) from the Passenger Airbag Squib connectors.

2. Disconnect the ORC connectors.

NOTE: Check connectors - Clean and repair as necessary.

3. Connect the SRS Load Tool Adaptor (special tool #8443-25, 56 Way ACM Adapter) to the ORC connectors.
4. Measure the resistance of the (R42) Passenger Squib 1 Line 2 between the Passenger Airbag Squib connector circuit cavity 1 and the SRS Load Tool Adaptor (special tool #8443-25, 56 Way ACM Adapter) cavity 24-16.

   Is the resistance below 1.0 Ohm?

   Yes

   - Go To 4

   No

   - Repair the (R42) Passenger Squib 1 Line 2 circuit for an open.
   - Perform the AIRBAG SYSTEM VERIFICATION TEST. Refer to **STANDARD PROCEDURE** .

4. **CHECK THE (R44) PASSENGER SQUIB 1 LINE 1 CIRCUIT FOR AN OPEN**

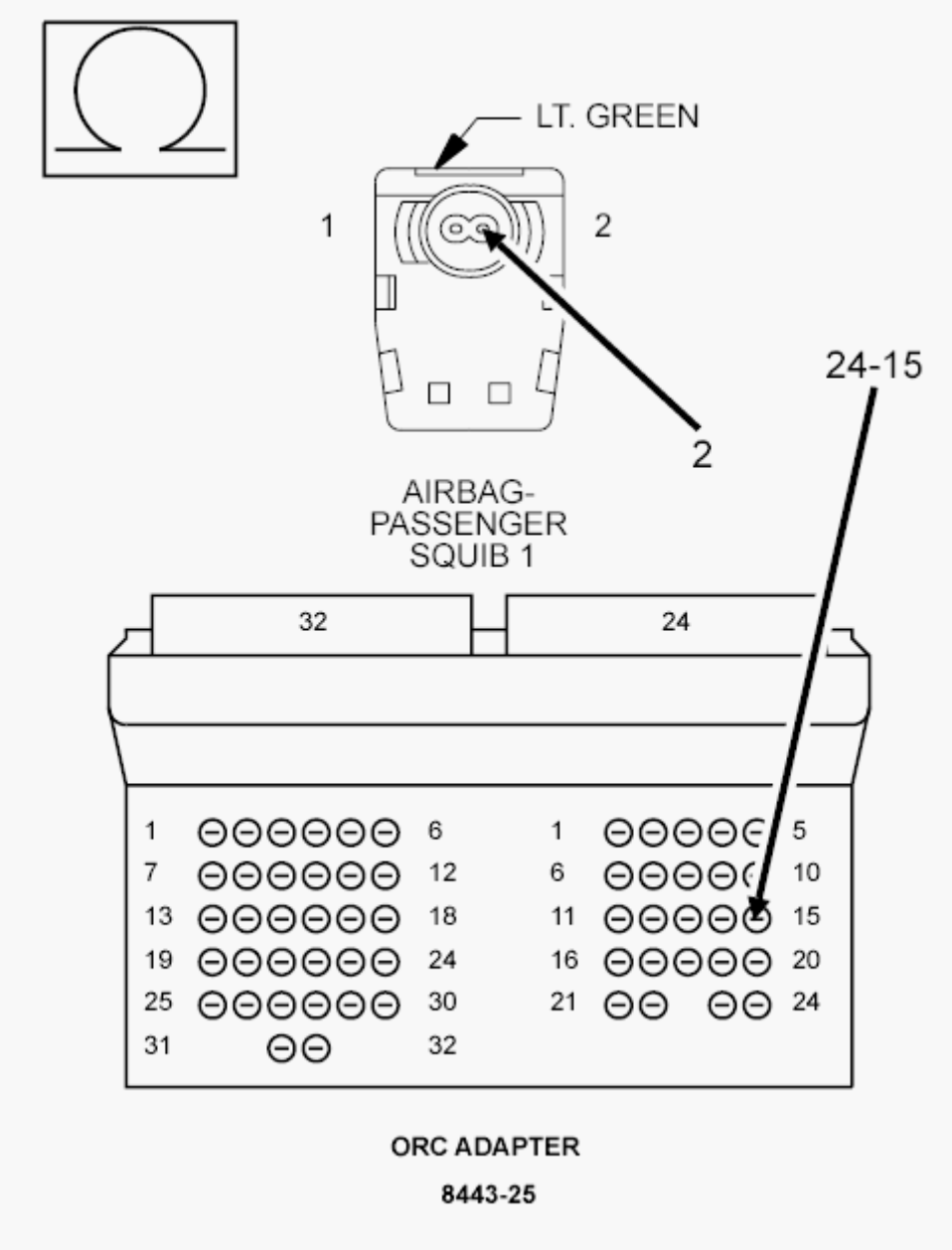

Fig. 44: Checking Passenger Squib 1 Line 1 Circuit For Open
Courtesy of CHRYSLER GROUP, LLC

1. Measure the resistance of the (R44) Passenger Squib 1 Line 1 circuit between the Passenger Airbag Squib connector circuit cavity 2 and the SRS Load Tool Adaptor (special tool #8443-25, 56 Way ACM Adapter) cavity 24-15.

   Is the resistance below 1.0 Ohm?

   Yes

WARNING: If the Occupant Restraint Controller (ORC) is dropped at any time, it must be replaced. Failure to follow these instructions may result in possible serious or fatal injury.

- Replace the ORC in accordance with Service Information.
- Perform the AIRBAG SYSTEM VERIFICATION TEST. Refer to **STANDARD PROCEDURE** .

No

- Repair the (R44) Passenger Squib 1 Line 1 circuit for an open.
- Perform the AIRBAG SYSTEM VERIFICATION TEST. Refer to **STANDARD PROCEDURE** .

5. **CHECKING STORED OR INTERMITTENT CODES**

NOTE: Diagnose and repair all active codes before diagnosing stored codes. Refer to OCCUPANT RESTRAINT CONTROLLER (ORC) - DIAGNOSTIC CODE INDEX for a complete list of airbag system diagnostic procedures.

1. With the scan tool, record and erase all Airbag System Module DTC.

WARNING: Turn the ignition off, disconnect the 12-volt battery and wait two minutes before proceeding. Failure to follow these instructions may result in possible serious or fatal injury.

2. Using the wiring diagram/schematic as a guide, inspect the related wiring and connectors for chafed, pierced, pinched, and partially broken wires, and for broken, bent, pushed out, corroded, and contaminated terminals. Repair as necessary.
3. Reconnect all disconnected components and harness connectors.

WARNING: Turn the ignition on, then reconnect the

12-volt battery and wait two minutes before proceeding. Failure to follow these instructions may result in possible serious or fatal injury.

4. With the scan tool, monitor for active codes while performing the following:
   - Wiggle the wiring harness and connectors of the related airbag circuit.
   - Continue the test until either a code becomes active or the problem area is isolated.
5. In the previous steps you have attempted to recreate the conditions responsible for setting the DTC in question / causing the intermittent condition.

   Are any ACTIVE DTC present?

   Yes

   - Perform the appropriate diagnostic procedure. Refer to **DIAGNOSIS AND TESTING**.

   No

   - No problem found at this time. Erase all codes before returning the vehicle to the customer.

B1B0B-PASSENGER AIRBAG SQUIB 1 CIRCUIT SHORTED TOGETHER

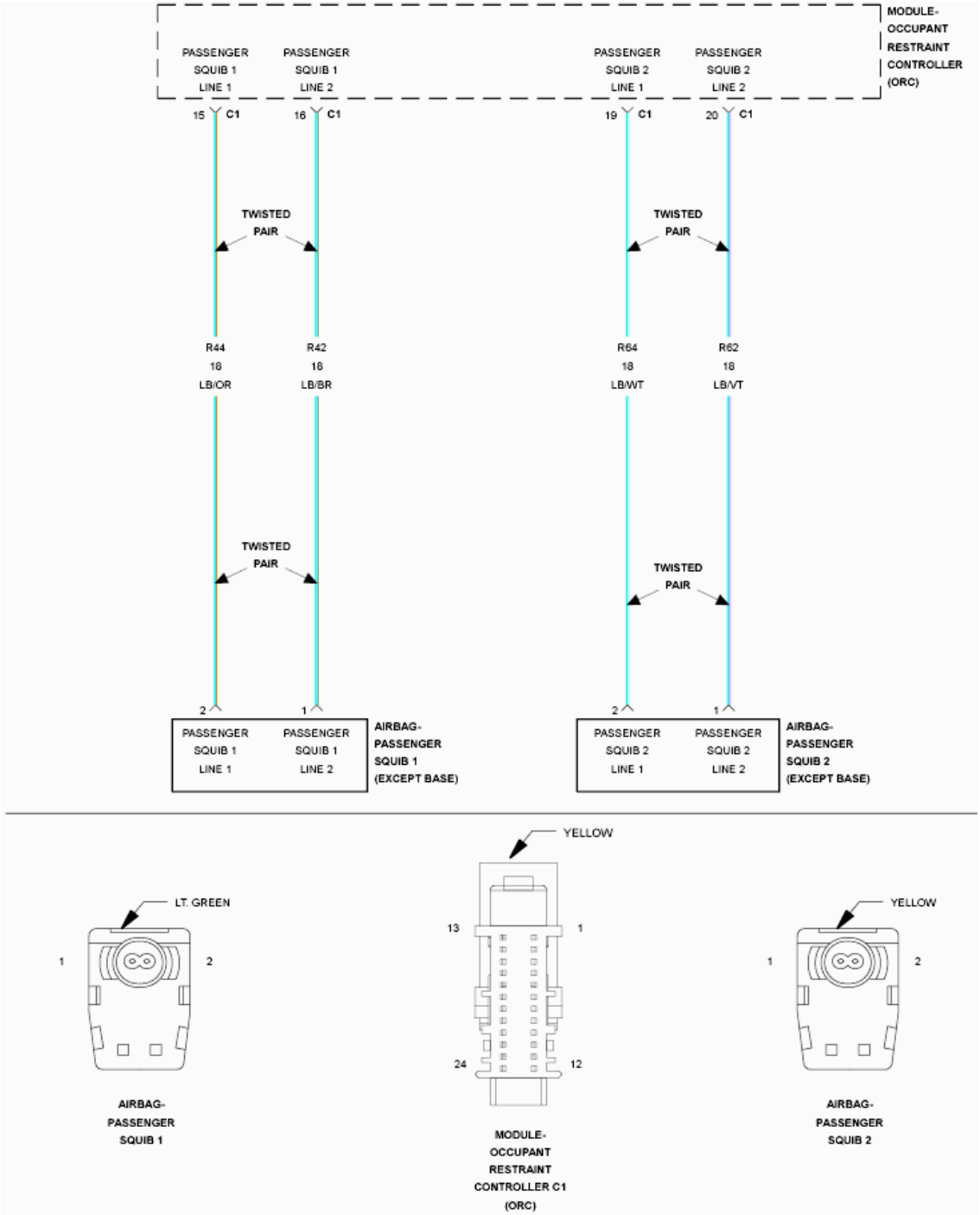

Fig. 45: Passenger Airbag Squib Line Circuit Schematic
Courtesy of CHRYSLER GROUP, LLC

For a complete wiring diagram, **refer to appropriate SYSTEM WIRING DIAGRAMS article** .

THEORY OF OPERATION

When powered, the Occupant Restraint Controller (ORC) sends a test current to

the squibs to verify the integrity of the squib and the wiring. These circuits are maintained in a "floating" configuration at the module, (connected to neither power nor ground), as protection against inadvertent deployment. Use of the Supplemental Restraints System (SRS) Load Tool Kit 8443A in the tests below substitutes a suspect squib with a known good component. The use of the SRS Load Tool Adapter tool provides a test point, as well as a method for opening the shorting bar connections within the harness connector.

WHEN MONITORED

With the ignition on.

SET CONDITION

The Occupant Restraint Controller (ORC) monitors the resistance of the Passenger Squib 1 circuits. The ORC will set this DTC if it detects low resistance between the Passenger Squib 1 circuits.

POSSIBLE CAUSES

Possible Causes
(R42) PASSENGER SQUIB 1 LINE 2 CIRCUIT SHORTED TO (R44) PASSENGER SQUIB 1 LINE 1 CIRCUIT
PASSENGER AIRBAG
OCCUPANT RESTRAINT CONTROLLER (ORC)

DIAGNOSTIC TEST

1. **DETERMINE ACTIVE OR STORED DTC**

   NOTE: Make sure that the battery is fully charged.

   NOTE: The scan tool, SRS Load Tool Kit (special tool #8443A, SRS Load Tool), and DVOM are required to perform the following test:

   1. Turn the ignition on.

      Select ACTIVE or STORED DTC:

      ACTIVE DTC

- Go To 2

STORED DTC

- Go To 4

2. **CHECK FOR SHORTED SQUIB CIRCUITS IN PASSENGER AIRBAG**

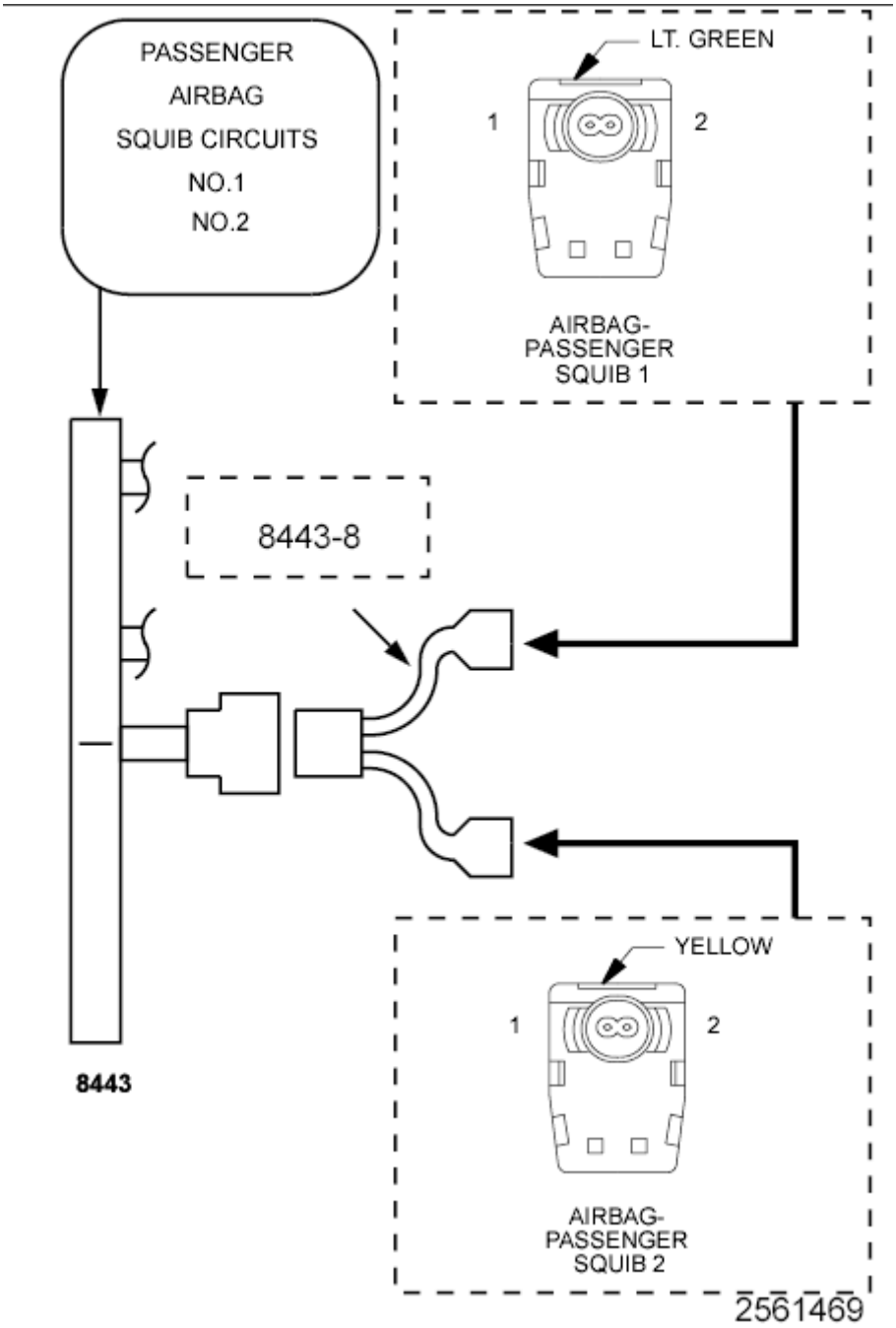

Fig. 46: Checking For Shorted Squib Circuits In Passenger Airbag
Courtesy of CHRYSLER GROUP, LLC

WARNING: Turn the ignition off disconnect the 12-volt battery and wait two minutes before proceeding. Failure to follow these instructions may result in possible serious or fatal injury.

1. Disconnect the Passenger Airbag Squib connectors.

   NOTE: Check connectors - Clean and repair as necessary.

2. Connect the SRS Load Tool Kit (special tool #8443A, SRS Load Tool) and SRS Load Tool Jumper (special tool #8443-8, Jumper, SRS Load) to the Passenger Airbag Squib connectors.

   WARNING: Turn the ignition on, then reconnect the 12-volt battery and wait two minutes before proceeding. Failure to follow these instructions may result in possible serious or fatal injury.

3. With the scan tool, read the active ORC DTC.

   Does the scan tool display: B1B0B-PASSENGER AIRBAG SQUIB 1 CIRCUIT SHORTED TOGETHER?

   Yes

   - Go To 3

   No

   - Replace the Passenger Airbag in accordance with the Service Information.
   - Perform the AIRBAG SYSTEM VERIFICATION TEST. Refer to **STANDARD PROCEDURE** .

3. **CHECK THE (R42) PASSENGER SQUIB 1 LINE 2 CIRCUIT FOR A SHORT TO THE (R44) PASSENGER SQUIB 1 LINE 1 CIRCUIT**

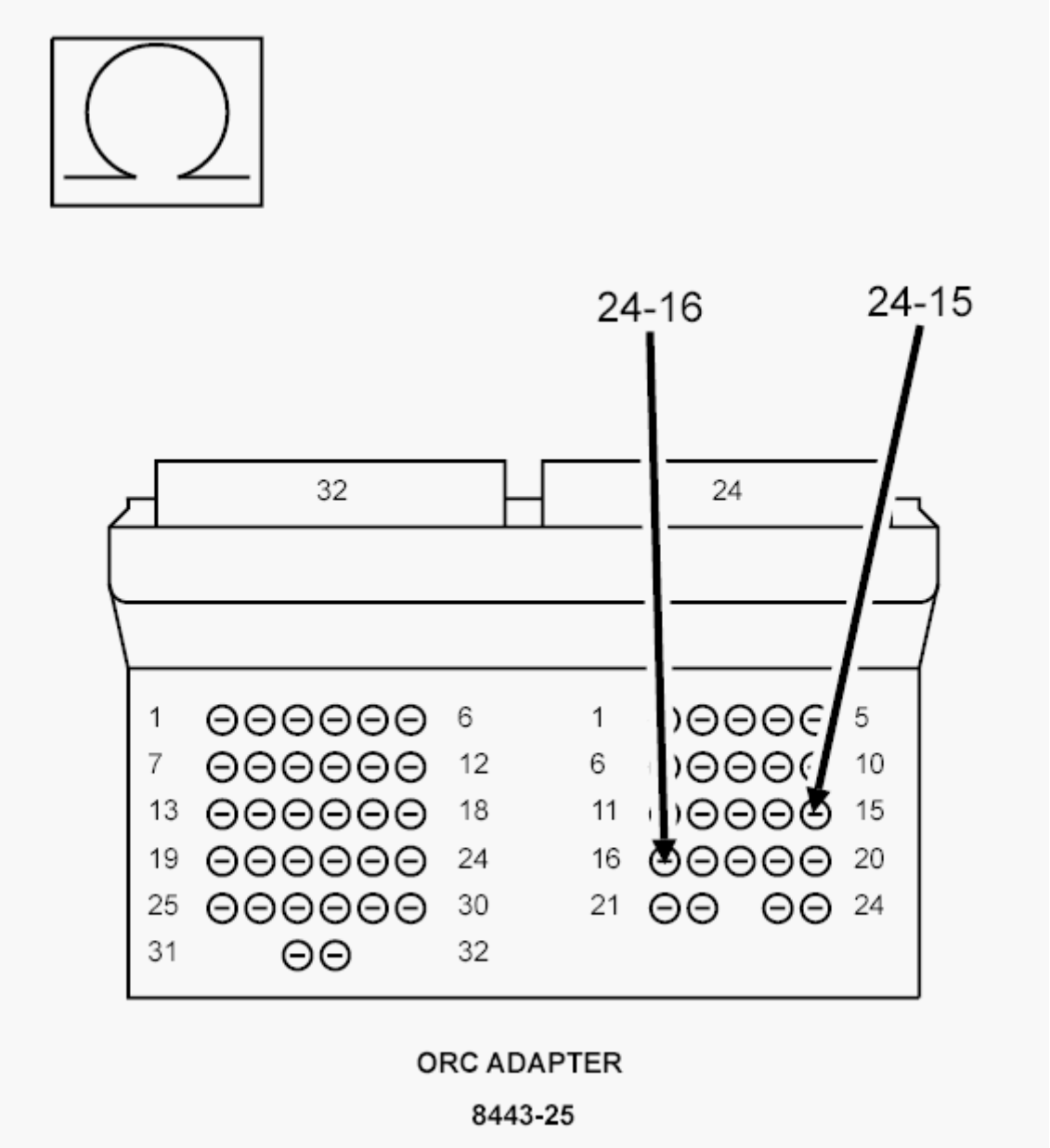

Fig. 47: Checking Passenger Squib 1 Line 2 Circuit For Short To Passenger Squib 1 Line 1 Circuit
Courtesy of CHRYSLER GROUP, LLC

WARNING: Turn the ignition off disconnect the 12-volt battery and wait two minutes before proceeding. Failure to follow these instructions may result in possible serious or fatal injury.

1. Disconnect the SRS Load Tool Kit (special tool #8443A, SRS Load Tool) and SRS Load Tool Jumper (special tool #8443-8, Jumper, SRS

Load) from the Passenger Airbag Squib connectors.

2. Disconnect the ORC connectors.

NOTE: Check connectors - Clean and repair as necessary.

3. Connect the SRS Load Tool Adaptor (special tool #8443-25, 56 Way ACM Adapter) to the ORC connectors.
4. Measure the resistance between the (R42) Passenger Squib 1 Line 2 circuit cavity 24-16 and the (R44) Passenger Squib 1 Line 1 circuit cavity 24-15 at the SRS Load Tool Adaptor (special tool #8443-25, 56 Way ACM Adapter).

   Is the resistance below 10k Ohms?

   Yes

   - Repair the (R42) Passenger Squib 1 Line 2 circuit for a short to the (R44) Passenger Squib 1 Line 1 circuit.
   - Perform the AIRBAG SYSTEM VERIFICATION TEST. Refer to **STANDARD PROCEDURE** .

   No

   WARNING: If the Occupant Restraint Controller (ORC) is dropped at any time, it must be replaced. Failure to take the proper precautions can result in accidental airbag deployment. Failure to follow these instructions may result in possible serious or fatal injury.

   - Replace the ORC in accordance with Service Information.
   - Perform the AIRBAG SYSTEM VERIFICATION TEST. Refer to **STANDARD PROCEDURE** .

4. **CHECKING STORED OR INTERMITTENT CODES**

NOTE: Diagnose and repair all active codes before

diagnosing stored codes. Refer to OCCUPANT RESTRAINT CONTROLLER (ORC) - DIAGNOSTIC CODE INDEX for a complete list of airbag system diagnostic procedures.

1. With the scan tool, record and erase all Airbag System Module DTC.

   WARNING: **Turn the ignition off disconnect the 12-volt battery and wait two minutes before proceeding. Failure to follow these instructions may result in possible serious or fatal injury.**

2. Using the wiring diagram/schematic as a guide, inspect the related wiring and connectors for chafed, pierced, pinched, and partially broken wires, and for broken, bent, pushed out, corroded, and contaminated terminals. Repair as necessary.
3. Reconnect all disconnected components and harness connectors.

   WARNING: **Turn the ignition on, then reconnect the 12-volt battery and wait two minutes before proceeding. Failure to follow these instructions may result in possible serious or fatal injury.**

4. With the scan tool, monitor for active codes while performing the following:
   - Wiggle the wiring harness and connectors of the related airbag circuit.
   - Continue the test until either a code becomes active or the problem area is isolated.
5. In the previous steps you have attempted to recreate the conditions responsible for setting the DTC in question / causing the intermittent condition.

   Are any ACTIVE DTC present?

   Yes

- Select the appropriate diagnostic procedure from the **OCCUPANT RESTRAINT CONTROLLER (ORC) - DIAGNOSTIC CODE INDEX** .

No

- No problem found at this time. Erase all codes before returning the vehicle to the customer.

B1B0C-PASSENGER AIRBAG SQUIB 2 CIRCUIT LOW

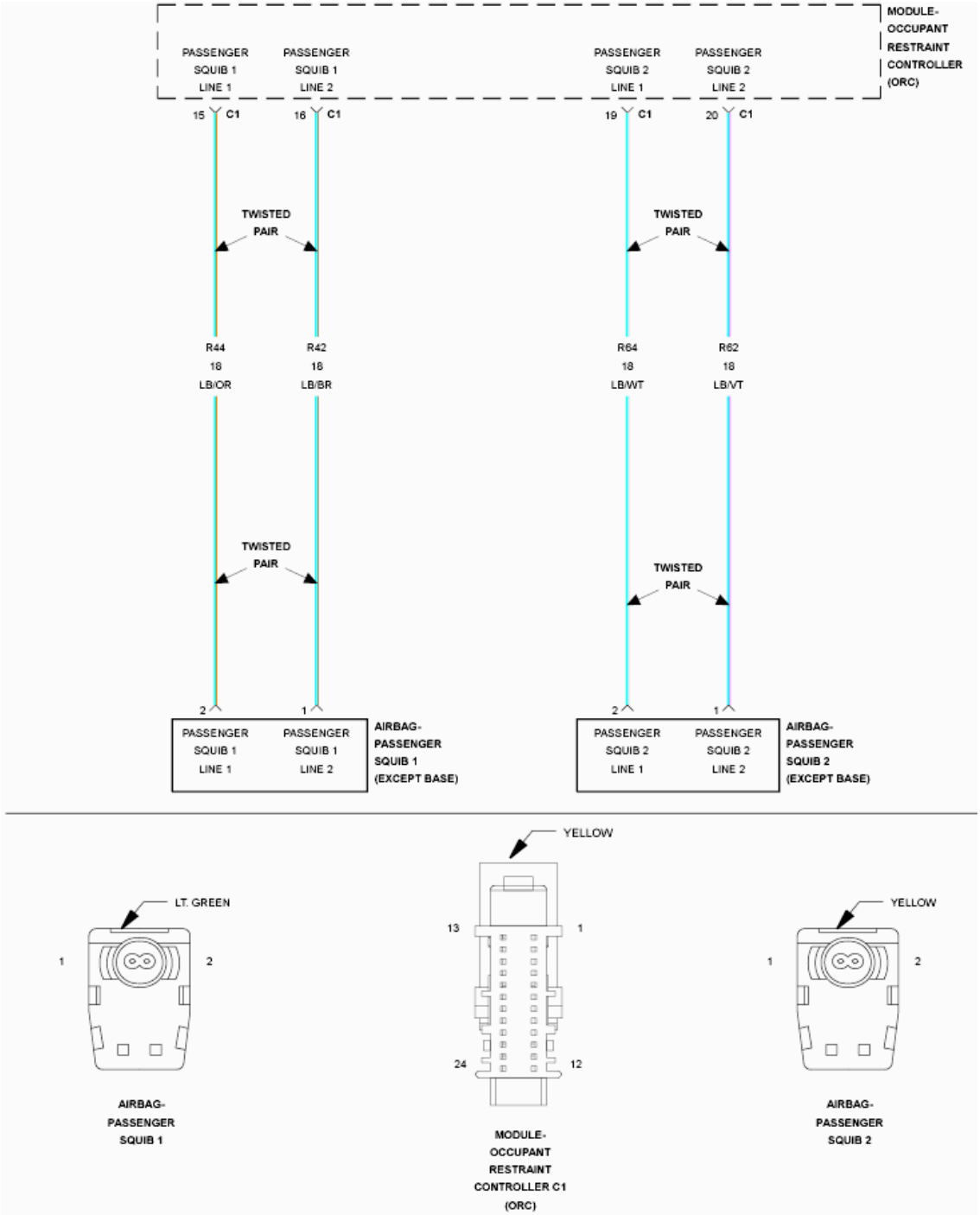

Fig. 48: Passenger Airbag Squib Line Circuit Schematic
Courtesy of CHRYSLER GROUP, LLC

For a complete wiring diagram, **refer to appropriate SYSTEM WIRING DIAGRAMS article** .

THEORY OF OPERATION

When powered, the Occupant Restraint Controller (ORC) sends a test current to

the squibs to verify the integrity of the squib and the wiring. These circuits are maintained in a "floating" configuration at the module, (connected to neither power nor ground), as protection against inadvertent deployment. Use of the Supplemental Restraints System (SRS) Load Tool Kit 8443A in the tests below substitutes a suspect squib with a known good component. The use of the SRS Load Tool Adapter tool provides a test point, as well as a method for opening the shorting bar connections within the harness connector.

WHEN MONITORED

With the ignition on.

SET CONDITION

The Occupant Restraint Controller (ORC) monitors the resistance of the Passenger Squib 2 circuits. The ORC will set this DTC if it detects low resistance on the Passenger Squib 2 circuits.

POSSIBLE CAUSES

Possible Causes
(R64) PASSENGER SQUIB 2 LINE 1 CIRCUIT SHORTED TO GROUND
(R62) PASSENGER SQUIB 2 LINE 2 CIRCUIT SHORTED TO GROUND
PASSENGER AIRBAG
OCCUPANT RESTRAINT CONTROLLER (ORC)

DIAGNOSTIC TEST

1. **DETERMINE ACTIVE OR STORED DTC**

   NOTE: Make sure that the battery is fully charged.

   NOTE: The scan tool, SRS Load Tool Kit (special tool #8443A, SRS Load Tool), and DVOM are required to perform the following test:

   1. Turn the ignition on.

      Select ACTIVE or STORED DTC:

ACTIVE DTC

- Go To 2

STORED DTC

- Go To 4

2. **CHECK FOR SHORTED SQUIB CIRCUITS IN PASSENGER AIRBAG**

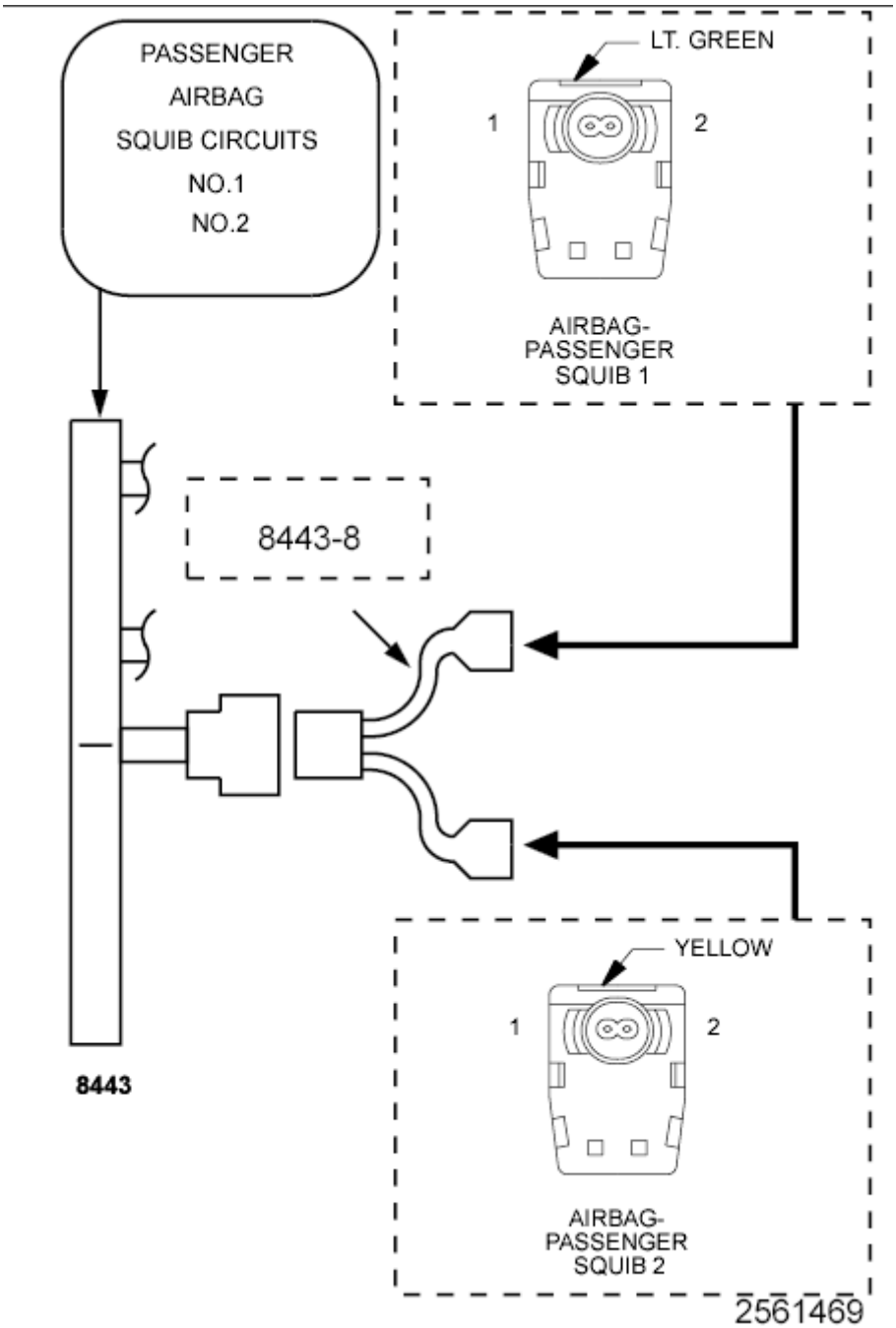

Fig. 49: Checking For Shorted Squib Circuits In Passenger Airbag
Courtesy of CHRYSLER GROUP, LLC

WARNING: Turn the ignition off disconnect the 12-volt battery and wait two minutes before proceeding. Failure to follow these instructions may result in possible serious or fatal injury.

1. Disconnect the Passenger Airbag Squib connectors.

   WARNING: Do not place an intact non-deployed airbag face down on a hard surface, the airbag propels into the air if accidentally deployed. Failure to follow these instructions may result in possible serious or fatal injury.

   NOTE: Check connectors - Clean and repair as necessary.

2. Connect the SRS Load Tool Kit (special tool #8443A, SRS Load Tool) and SRS Load Tool Jumper (special tool #8443-8, Jumper, SRS Load) to the Passenger Airbag Squib connectors.

   WARNING: Turn the ignition on, then reconnect the 12-volt battery and wait two minutes before proceeding. Failure to follow these instructions may result in possible serious or fatal injury.

3. With the scan tool, read the active ORC DTCs.

   Does the scan tool display: B1B0C-PASSENGER AIRBAG SQUIB 2 CIRCUIT LOW?

   Yes

   - Go To 3

No

- Replace the Passenger Airbag in accordance with the Service Information.
- Perform the AIRBAG SYSTEM VERIFICATION TEST. Refer to **STANDARD PROCEDURE** .

3. **CHECK THE (R64) PASSENGER SQUIB 2 LINE 1 CIRCUIT AND THE (R62) PASSENGER SQUIB 2 LINE 2 CIRCUIT FOR A SHORT TO GROUND**

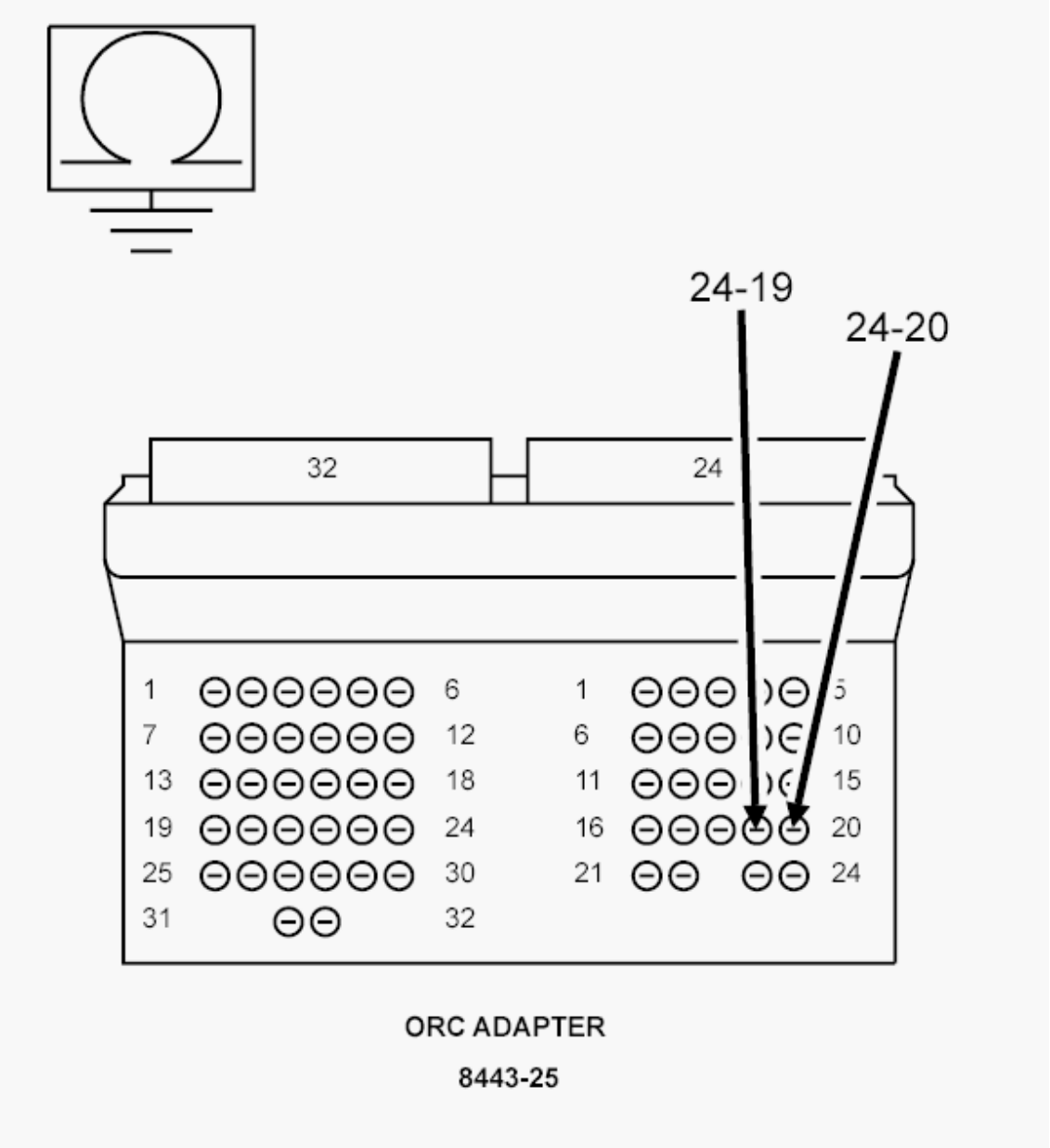

Fig. 50: Checking Passenger Squib 2 Line Circuits For Short To Ground

Courtesy of CHRYSLER GROUP, LLC

WARNING: Turn the ignition off disconnect the 12-volt battery and wait two minutes before proceeding. Failure to follow these instructions may result in possible serious or fatal injury.

1. Disconnect the SRS Load Tool Kit (special tool #8443A, SRS Load Tool) and SRS Load Tool Jumper (special tool #8443-8, Jumper, SRS Load) from the Passenger Airbag Squib connectors.
2. Disconnect the ORC connectors.

NOTE: Check connectors - Clean and repair as necessary.

3. Connect the SRS Load Tool Adaptor (special tool #8443-25, 56 Way ACM Adapter) to the ORC connectors.
4. Measure the resistance of the (R64) Passenger Squib 2 Line 1 circuit between SRS Load Tool Adaptor (special tool #8443-25, 56 Way ACM Adapter) cavity 24-19 and ground.
5. Measure the resistance of the (R62) Passenger Squib 2 Line 2 circuit between SRS Load Tool Adaptor (special tool #8443-25, 56 Way ACM Adapter) cavity 24-20 and ground.

Is the resistance below 10k Ohms on either circuit?

Yes

- Repair the Passenger Squib 2 circuits with resistance below 10k Ohms for a short to ground.
- Perform the AIRBAG SYSTEM VERIFICATION TEST. Refer to **STANDARD PROCEDURE** .

No

WARNING: If the Occupant Restraint Controller (ORC) is dropped at any time, it must be replaced. Failure to take the proper

precautions can result in accidental airbag deployment. Failure to follow these instructions may result in possible serious or fatal injury.

- Replace the ORC in accordance with Service Information.
- Perform the AIRBAG SYSTEM VERIFICATION TEST. Refer to **STANDARD PROCEDURE** .

4. **CHECKING STORED OR INTERMITTENT CODES**

NOTE: Diagnose and repair all active codes before diagnosing stored codes. Refer to OCCUPANT RESTRAINT CONTROLLER (ORC) - DIAGNOSTIC CODE INDEX for a complete list of airbag system diagnostic procedures.

1. With the scan tool, record and erase all Airbag System Module DTCs.

WARNING: Turn the ignition off disconnect the 12-volt battery and wait two minutes before proceeding. Failure to follow these instructions may result in possible serious or fatal injury.

2. Using the wiring diagram/schematic as a guide, inspect the related wiring and connectors for chafed, pierced, pinched, and partially broken wires, and for broken, bent, pushed out, corroded, and contaminated terminals. Repair as necessary.
3. Reconnect all disconnected components and harness connectors.

WARNING: Turn the ignition on, then reconnect the 12-volt battery and wait two minutes before proceeding. Failure to follow these instructions may result in possible serious or fatal injury.

4. With the scan tool, monitor for active codes while performing the following:

- Wiggle the wiring harness and connectors of the related airbag circuit.
- Continue the test until either a code becomes active or the problem area is isolated.

5. In the previous steps you have attempted to recreate the conditions responsible for setting the DTC in question / causing the intermittent condition.

   Are any ACTIVE DTCs present?

   Yes

   - Select the appropriate diagnostic procedure from the **OCCUPANT RESTRAINT CONTROLLER (ORC) - DIAGNOSTIC CODE INDEX** .

   No

   - No problem found at this time. Erase all codes before returning the vehicle to the customer.

B1B0D-PASSENGER AIRBAG SQUIB 2 CIRCUIT HIGH

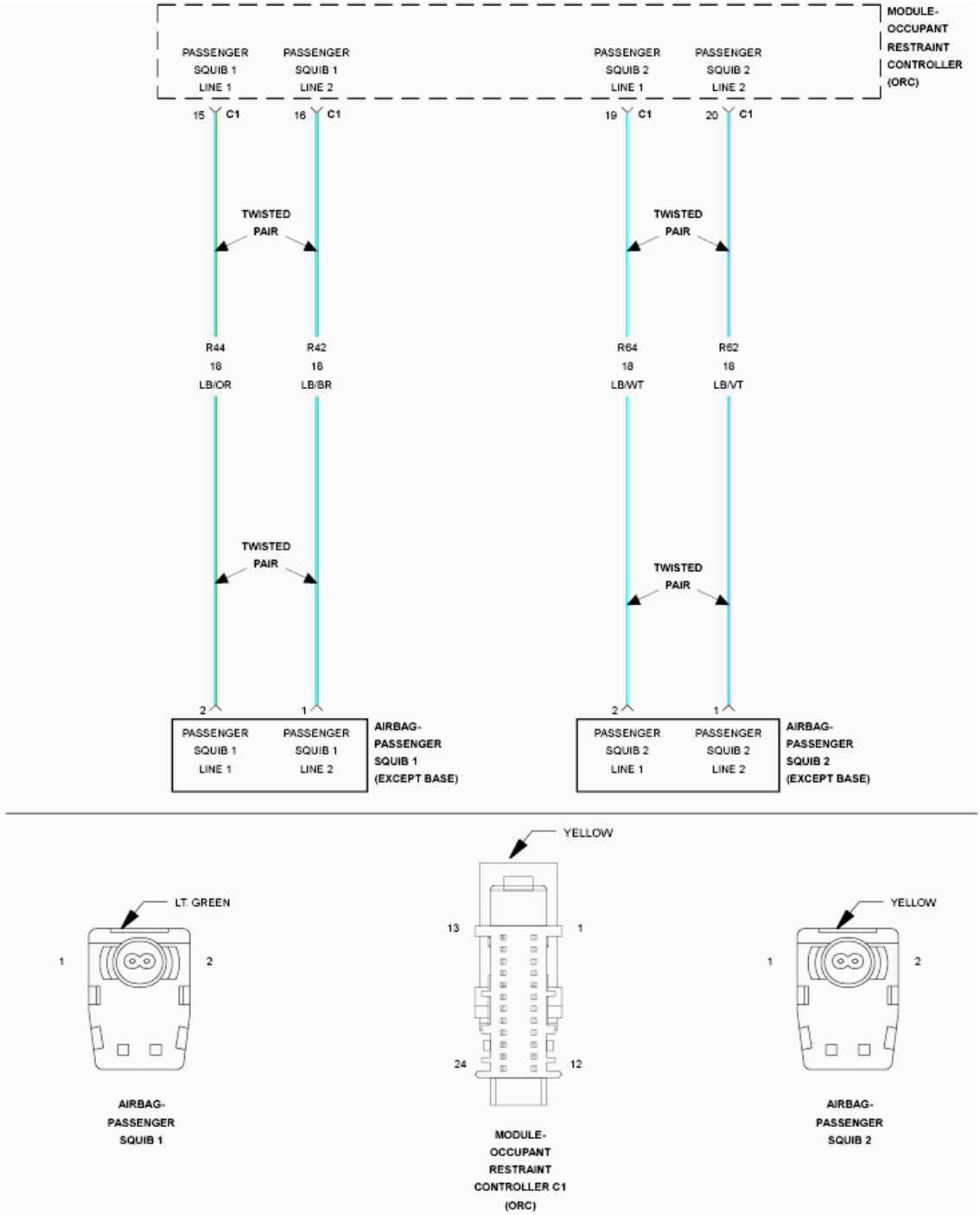

Fig. 51: Passenger Airbag Squib Line Circuit Schematic
Courtesy of CHRYSLER GROUP, LLC

For a complete wiring diagram, **refer to appropriate SYSTEM WIRING DIAGRAMS article** .

THEORY OF OPERATION

When powered, the Occupant Restraint Controller (ORC) sends a test current to

the squibs to verify the integrity of the squib and wiring. These circuits are maintained in a "floating" configuration at the ORC (connected to neither power nor ground) as protection against inadvertent deployment. Use of the Supplemental Restraints System (SRS) Load Tool Kit 8443A in the tests below substitutes a suspect squib with a known good component. The SRS Load Tool Adapter provides a test point as well as a method for opening the shorting bar connections within the ORC harness connector.

WHEN MONITORED

With the ignition on.

SET CONDITION

The Occupant Restraint Controller (ORC) monitors the voltage of the Passenger Squib 2 circuits. The ORC will set this DTC if it detects voltage on the Passenger Squib 2 circuits.

POSSIBLE CAUSES

Possible Causes
(R64) PASSENGER SQUIB 2 LINE 1 CIRCUIT SHORTED TO BATTERY
(R62) PASSENGER SQUIB 2 LINE 2 CIRCUIT SHORTED TO BATTERY
PASSENGER AIRBAG
OCCUPANT RESTRAINT CONTROLLER (ORC)

DIAGNOSTIC TEST

1. **DETERMINE ACTIVE OR STORED DTC**

   NOTE: Make sure that the battery is fully charged.

   NOTE: The scan tool, SRS Load Tool Kit (special tool #8443A, SRS Load Tool), and DVOM are required to perform the following test:

   1. Turn the ignition on.

      Select ACTIVE or STORED DTC:

ACTIVE DTC

- Go To 2

STORED DTC

- Go To 4

2. **CHECK FOR SHORTED SQUIB CIRCUITS IN PASSENGER AIRBAG**

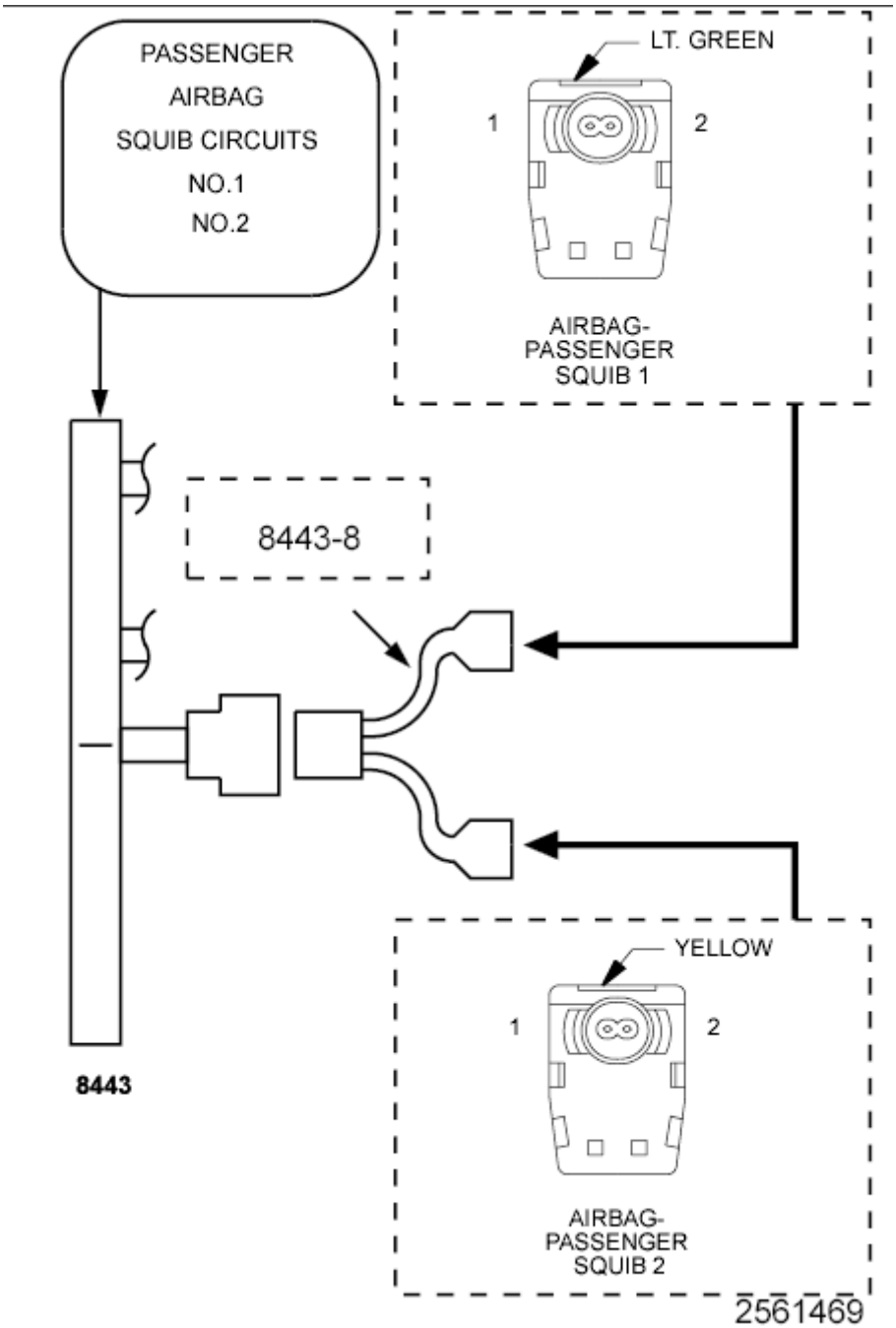

Fig. 52: Checking For Shorted Squib Circuits In Passenger Airbag
Courtesy of CHRYSLER GROUP, LLC

WARNING: Turn the ignition off disconnect the 12-volt battery and wait two minutes before proceeding. Failure to follow these instructions may result in possible serious or fatal injury.

1. Disconnect the Passenger Airbag Squib connectors.

   WARNING: Do not place an intact non-deployed airbag face down on a hard surface, the airbag propels into the air if accidentally deployed. Failure to follow these instructions may result in possible serious or fatal injury.

   NOTE: Check connectors - Clean and repair as necessary.

2. Connect the SRS Load Tool Kit (special tool #8443A, SRS Load Tool) and SRS Load Tool Jumper (special tool #8443-8, Jumper, SRS Load) to the Passenger Airbag Squib connectors.

   WARNING: Turn the ignition on, then reconnect the 12-volt battery and wait two minutes before proceeding. Failure to follow these instructions may result in possible serious or fatal injury.

3. With the scan tool, read the active ORC DTCs.

   Does the scan tool display: B1B0D-PASSENGER AIRBAG SQUIB 2 CIRCUIT HIGH?

   Yes

   - Go To 3

No

- Replace the Passenger Airbag in accordance with the Service Information.
- Perform the AIRBAG SYSTEM VERIFICATION TEST. Refer to **STANDARD PROCEDURE** .

3. **CHECK THE (R64) PASSENGER SQUIB 2 LINE 1 CIRCUIT AND THE (R62) PASSENGER SQUIB 2 LINE 2 CIRCUIT FOR A SHORT TO BATTERY**

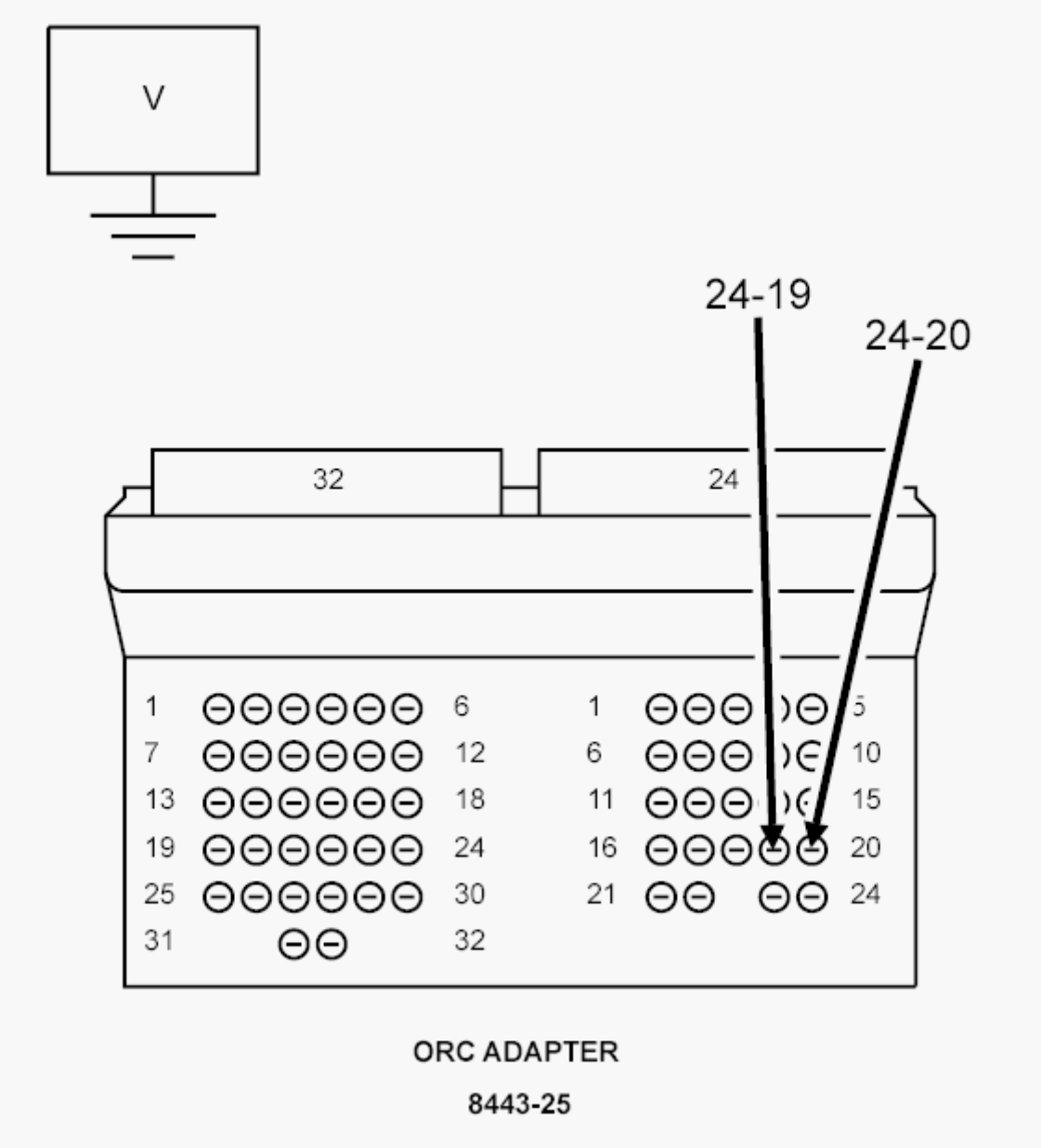

Fig. 53: Checking Passenger Squib 2 Line Circuits For Short To Battery
Courtesy of CHRYSLER GROUP, LLC

WARNING: Turn the ignition off disconnect the 12-volt battery and wait two minutes before proceeding. Failure to follow these instructions may result in possible serious or fatal injury.

1. Disconnect the SRS Load Tool Kit (special tool #8443A, SRS Load Tool) and SRS Load Tool Jumper (special tool #8443-8, Jumper, SRS Load) from the Passenger Airbag Squib connectors.
2. Disconnect the ORC connectors.

NOTE: Check connectors - Clean and repair as necessary.

3. Connect the SRS Load Tool Adaptor (special tool #8443-25, 56 Way ACM Adapter) to the ORC connectors.
4. Measure the voltage of the (R64) Passenger Squib 2 Line 1 circuit between the SRS Load Tool Adaptor (special tool #8443-25, 56 Way ACM Adapter) cavity 24-19 and ground.
5. Measure the voltage of the (R62) Passenger Squib 2 Line 2 circuit between the SRS Load Tool Adaptor (special tool #8443-25, 56 Way ACM Adapter) cavity 24-20 and ground.

Is there any voltage present on either circuit?

Yes

- Repair the Passenger Squib 2 circuits with voltage present for a short to battery.
- Perform the AIRBAG SYSTEM VERIFICATION TEST. Refer to **STANDARD PROCEDURE** .

No

WARNING: If the Occupant Restraint Controller (ORC) is dropped at any time, it must be replaced. Failure to take the proper precautions can result in accidental airbag

deployment. Failure to follow these instructions may result in possible serious or fatal injury.

WARNING: **Turn the ignition off disconnect the 12-volt battery and wait two minutes before proceeding. Failure to follow these instructions may result in possible serious or fatal injury.**

- Replace the ORC in accordance with Service Information.
- Perform the AIRBAG SYSTEM VERIFICATION TEST. Refer to **STANDARD PROCEDURE** .

4. **CHECKING STORED OR INTERMITTENT CODES**

NOTE: **Diagnose and repair all active codes before diagnosing stored codes. Refer to OCCUPANT RESTRAINT CONTROLLER (ORC) - DIAGNOSTIC CODE INDEX for a complete list of airbag system diagnostic procedures.**

1. With the scan tool, record and erase all Airbag System Module DTCs.

WARNING: **Turn the ignition off disconnect the 12-volt battery and wait two minutes before proceeding. Failure to follow these instructions may result in possible serious or fatal injury.**

2. Using the wiring diagram/schematic as a guide, inspect the related wiring and connectors for chafed, pierced, pinched, and partially broken wires, and for broken, bent, pushed out, corroded, and contaminated terminals. Repair as necessary.
3. Reconnect all disconnected components and harness connectors.

WARNING: **Turn the ignition on, then reconnect the 12-volt battery and wait two minutes before proceeding. Failure to follow these**

instructions may result in possible serious or fatal injury.

4. With the scan tool, monitor for active codes while performing the following:
   - Wiggle the wiring harness and connectors of the related airbag circuit.
   - Continue the test until either a code becomes active or the problem area is isolated.
5. In the previous steps you have attempted to recreate the conditions responsible for setting the DTC in question / causing the intermittent condition.

   Are any ACTIVE DTCs present?

   Yes

   - Select the appropriate diagnostic procedure from the **OCCUPANT RESTRAINT CONTROLLER (ORC) - DIAGNOSTIC CODE INDEX** .

   No

   - No problem found at this time. Erase all codes before returning the vehicle to the customer.

B1B0E-PASSENGER AIRBAG SQUIB 2 CIRCUIT OPEN

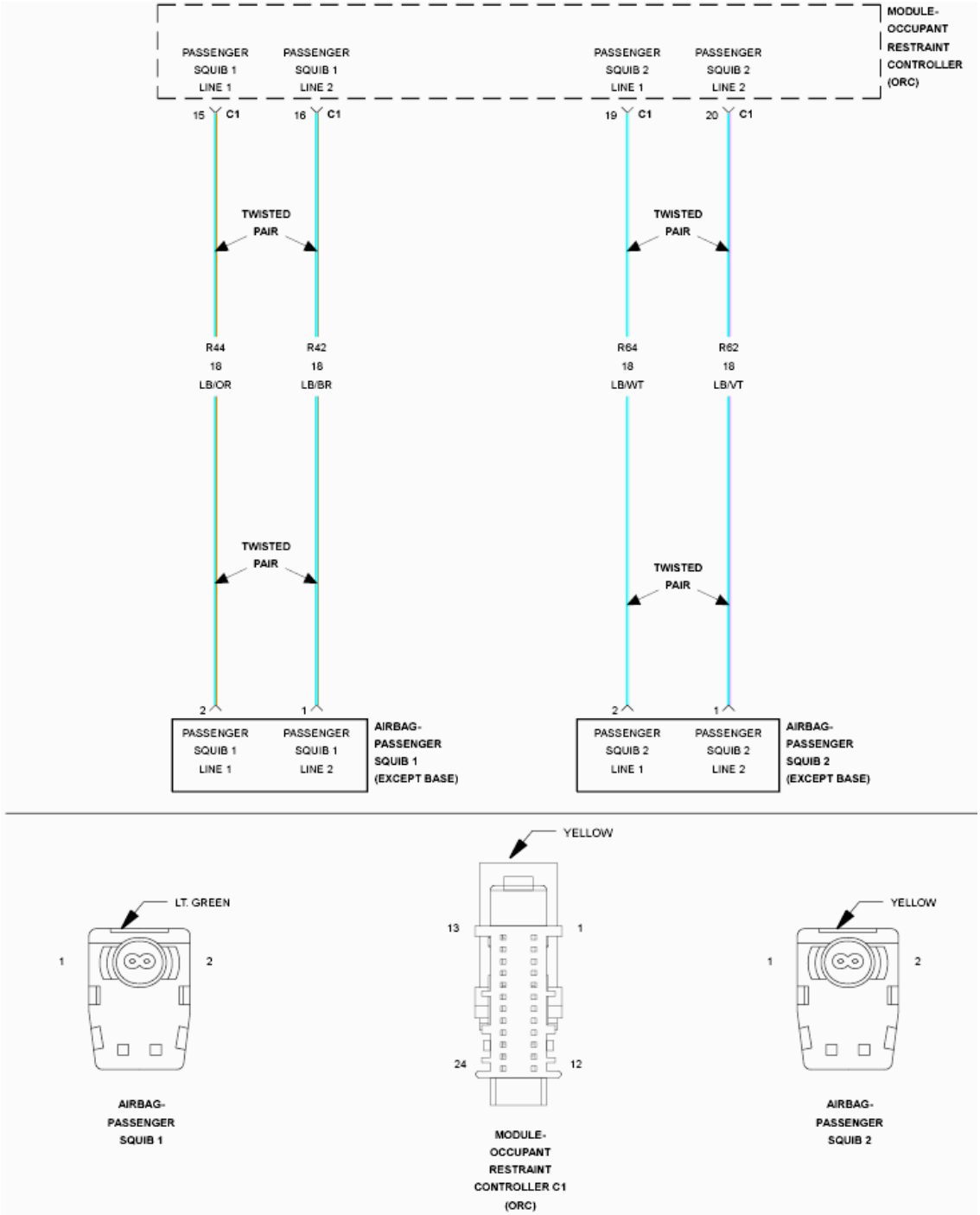

Fig. 54: Passenger Airbag Squib Line Circuit Schematic
Courtesy of CHRYSLER GROUP, LLC

For a complete wiring diagram, **refer to appropriate SYSTEM WIRING DIAGRAMS article** .

THEORY OF OPERATION

When powered, the Occupant Restraint Controller (ORC) sends a test current to

the squibs to verify the integrity of the squib and wiring. These circuits are maintained in a "floating" configuration at the ORC (connected to neither power nor ground) as protection against inadvertent deployment. Use of the Supplemental Restraints System (SRS) Load Tool Kit 8443A in the tests below substitutes a suspect squib with a known good component. The SRS Load Tool Adapter provides a test point as well as a method for opening the shorting bar connections within the ORC harness connector.

WHEN MONITORED

With the ignition on.

SET CONDITION

The Occupant Restraint Controller (ORC) monitors the resistance of the Passenger Squib 2 circuits. The ORC will set this DTC if it detects an open or high resistance on the Passenger Squib 2 circuits.

POSSIBLE CAUSES

Possible Causes
(R64) PASSENGER SQUIB 2 LINE 1 CIRCUIT OPEN
(R62) PASSENGER SQUIB 2 LINE 2 CIRCUIT OPEN
PASSENGER AIRBAG
OCCUPANT RESTRAINT CONTROLLER (ORC)

DIAGNOSTIC TEST

1. **DETERMINE ACTIVE OR STORED DTC**

   NOTE: Make sure that the battery is fully charged.

   NOTE: The scan tool, SRS Load Tool Kit (special tool #8443A, SRS Load Tool), and DVOM are required to perform the following test:

   1. Turn the ignition on.

      Select ACTIVE or STORED DTC:

      ACTIVE DTC

- Go To 2

STORED DTC

- Go To 5

2. **CHECK FOR OPEN SQUIB CIRCUITS IN PASSENGER AIRBAG**

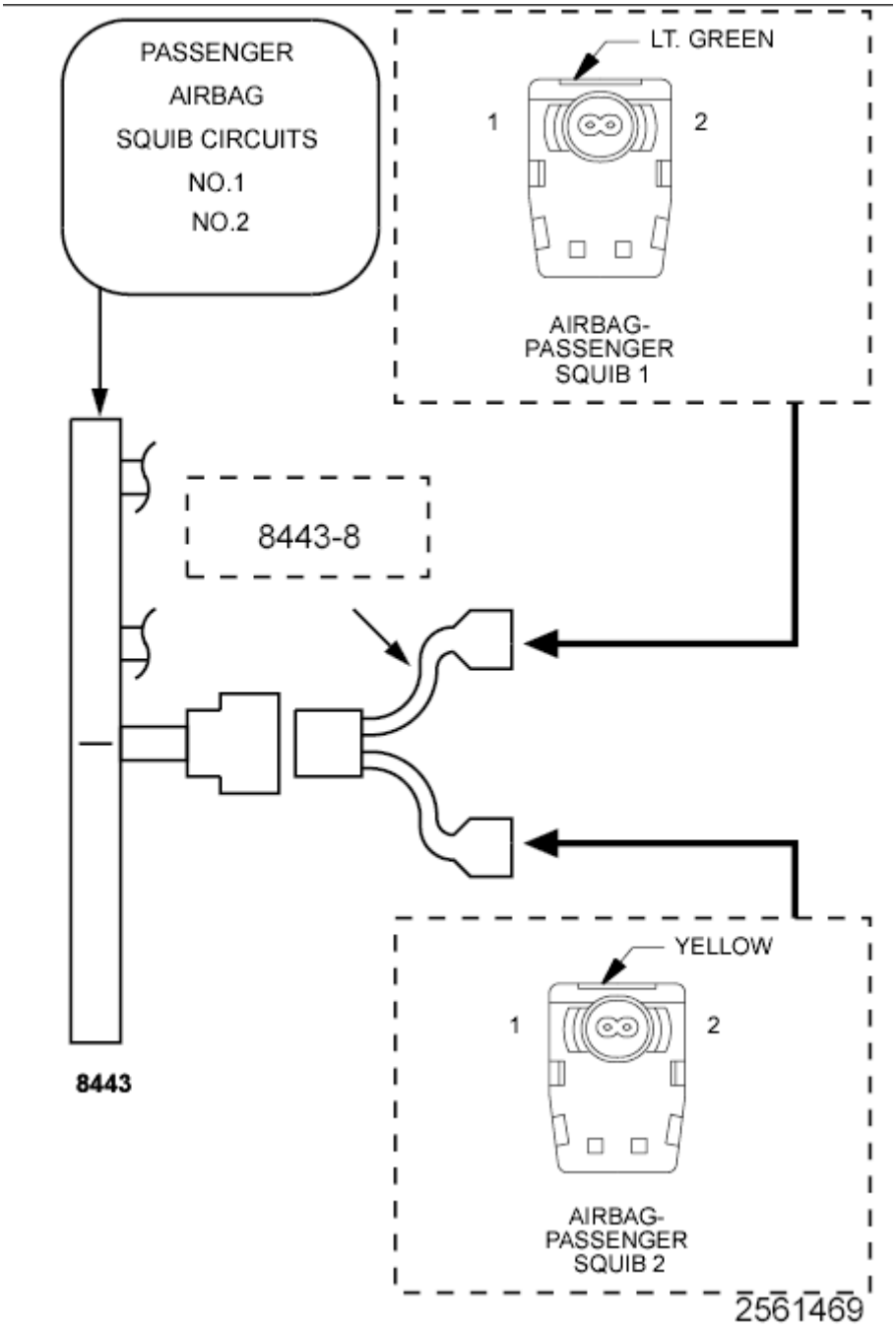

Fig. 55: Checking For Shorted Squib Circuits In Passenger Airbag
Courtesy of CHRYSLER GROUP, LLC

WARNING: Turn the ignition off disconnect the 12-volt battery and wait two minutes before proceeding. Failure to follow these instructions may result in possible serious or fatal injury.

1. Disconnect the Passenger Airbag Squib connectors.

   WARNING: Do not place an intact non-deployed airbag face down on a hard surface, the airbag propels into the air if accidentally deployed. Failure to follow these instructions may result in possible serious or fatal injury.

   NOTE: Check connectors - Clean and repair as necessary.

2. Connect the SRS Load Tool Kit (special tool #8443A, SRS Load Tool) and SRS Load Tool Jumper (special tool #8443-8, Jumper, SRS Load) to the Passenger Airbag Squib connectors.

   WARNING: Turn the ignition on, then reconnect the 12-volt battery and wait two minutes before proceeding. Failure to follow these instructions may result in possible serious or fatal injury.

3. With the scan tool, read the active ORC DTCs.

   Does the scan tool display: B1B0E-PASSENGER AIRBAG SQUIB 2 CIRCUIT OPEN?

   Yes

   - Go To 3

   No

- Replace the Passenger Airbag in accordance with the Service Information.
- Perform the AIRBAG SYSTEM VERIFICATION. Refer to **STANDARD PROCEDURE** .

3. **CHECK THE (R64) PASSENGER SQUIB 2 LINE 1 CIRCUIT FOR AN OPEN**

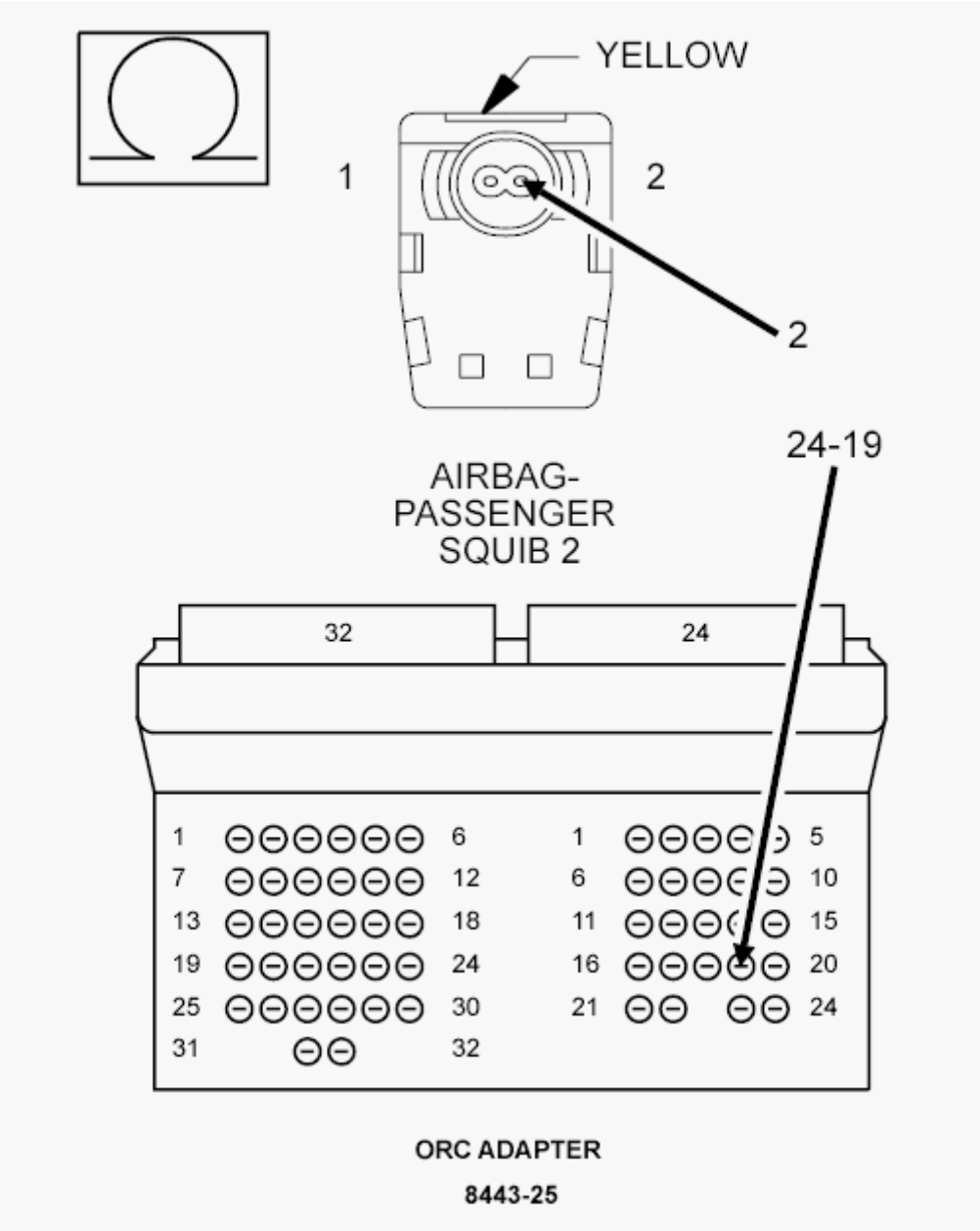

Fig. 56: Checking Passenger Squib 2 Line 1 Circuit For Open
Courtesy of CHRYSLER GROUP, LLC

1. Disconnect the SRS Load Tool Kit (special tool #8443A, SRS Load

Tool) and SRS Load Tool Jumper (special tool #8443-8, Jumper, SRS Load) from the Passenger Airbag Squib connectors.

2. Disconnect the ORC connectors.

NOTE: Check connectors - Clean and repair as necessary.

3. Connect the SRS Load Tool Adaptor (special tool #8443-25, 56 Way ACM Adapter) to the ORC connectors.
4. Measure the resistance of the (R64) Passenger Squib 2 Line 1 circuit between the Passenger Airbag Squib connector cavity 2 and the SRS Load Tool Adaptor (special tool #8443-25, 56 Way ACM Adapter) cavity 24-19.

   Is the resistance below 1.0 Ohm?

   Yes

   - Go To 4

   No

   - Repair the (R64) Passenger Squib 2 Line 1 circuit for an open.
   - Perform the AIRBAG SYSTEM VERIFICATION TEST. Refer to **STANDARD PROCEDURE** .

4. **CHECK THE (R62) PASSENGER SQUIB 2 LINE 2 CIRCUIT FOR AN OPEN**

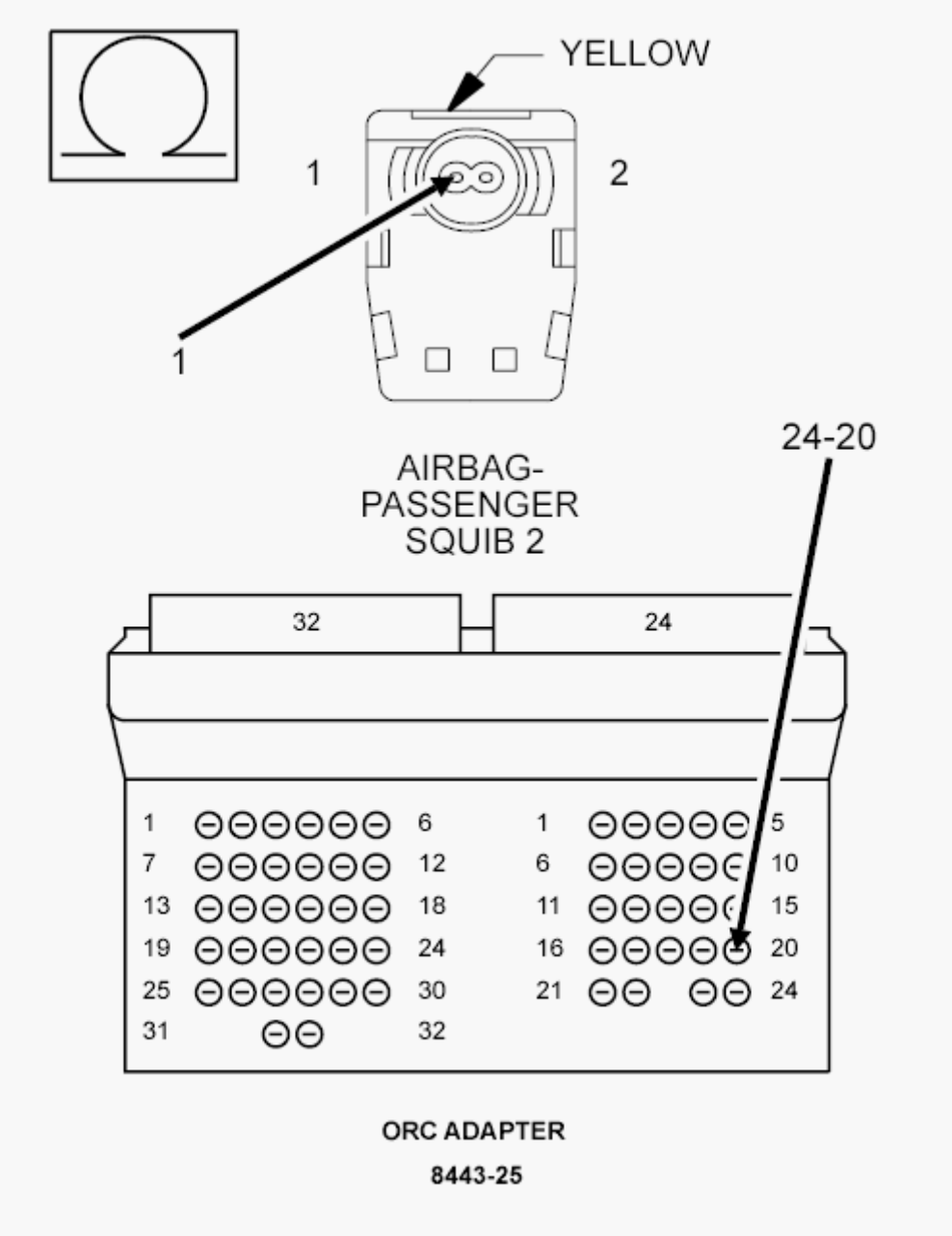

Fig. 57: Checking Passenger Squib 2 Line 2 Circuit For Open
Courtesy of CHRYSLER GROUP, LLC

1. Measure the resistance of the (R62) Passenger Squib 2 Line 2 circuit between the Passenger Airbag Squib connector cavity 1 and the SRS Load Tool Adaptor (special tool #8443-25, 56 Way ACM Adapter) cavity 24-20.

   Is the resistance below 1.0 Ohm?

   Yes

WARNING: Turn the ignition off, disconnect the 12-volt battery and wait two minutes before proceeding. Failure to follow these instructions may result in possible serious or fatal injury.

- Replace the ORC in accordance with Service Information.
- Perform the AIRBAG SYSTEM VERIFICATION TEST. Refer to **STANDARD PROCEDURE** .

No

- Repair the (R62) Passenger Squib 2 Line 2 circuit for an open.
- Perform the AIRBAG SYSTEM VERIFICATION TEST. Refer to **STANDARD PROCEDURE** .

5. **CHECKING STORED OR INTERMITTENT CODES**

NOTE: Diagnose and repair all active codes before diagnosing stored codes. Refer to OCCUPANT RESTRAINT CONTROLLER (ORC) - DIAGNOSTIC CODE INDEX for a complete list of airbag system diagnostic procedures.

1. With the scan tool, record and erase all ORC Control Module DTCs.

WARNING: Turn the ignition off, disconnect the 12-volt battery and wait two minutes before proceeding. Failure to follow these instructions may result in possible serious or fatal injury.

2. Using the wiring diagram/schematic as a guide, inspect the related wiring and connectors for chafed, pierced, pinched, and partially broken wires, and for broken, bent, pushed out, corroded, and contaminated terminals. Repair as necessary.
3. Reconnect all disconnected components and harness connectors.

WARNING: Turn the ignition on, then reconnect the

12-volt battery and wait two minutes before proceeding. Failure to follow these instructions may result in possible serious or fatal injury.

4. With the scan tool, monitor for active codes while performing the following:
   - Wiggle the wiring harness and connectors of the related airbag circuit.
   - Continue the test until either a code becomes active or the problem area is isolated.
5. In the previous steps you have attempted to recreate the conditions responsible for setting the DTC in question / causing the intermittent condition.

   Are any ACTIVE DTCs present?

   Yes

   - Perform the appropriate diagnostic procedure. Refer to **DIAGNOSIS AND TESTING**.

   No

   - No problem found at this time. Erase all codes before returning the vehicle to the customer.

B1B0F-PASSENGER AIRBAG SQUIB 2 CIRCUIT SHORTED TOGETHER

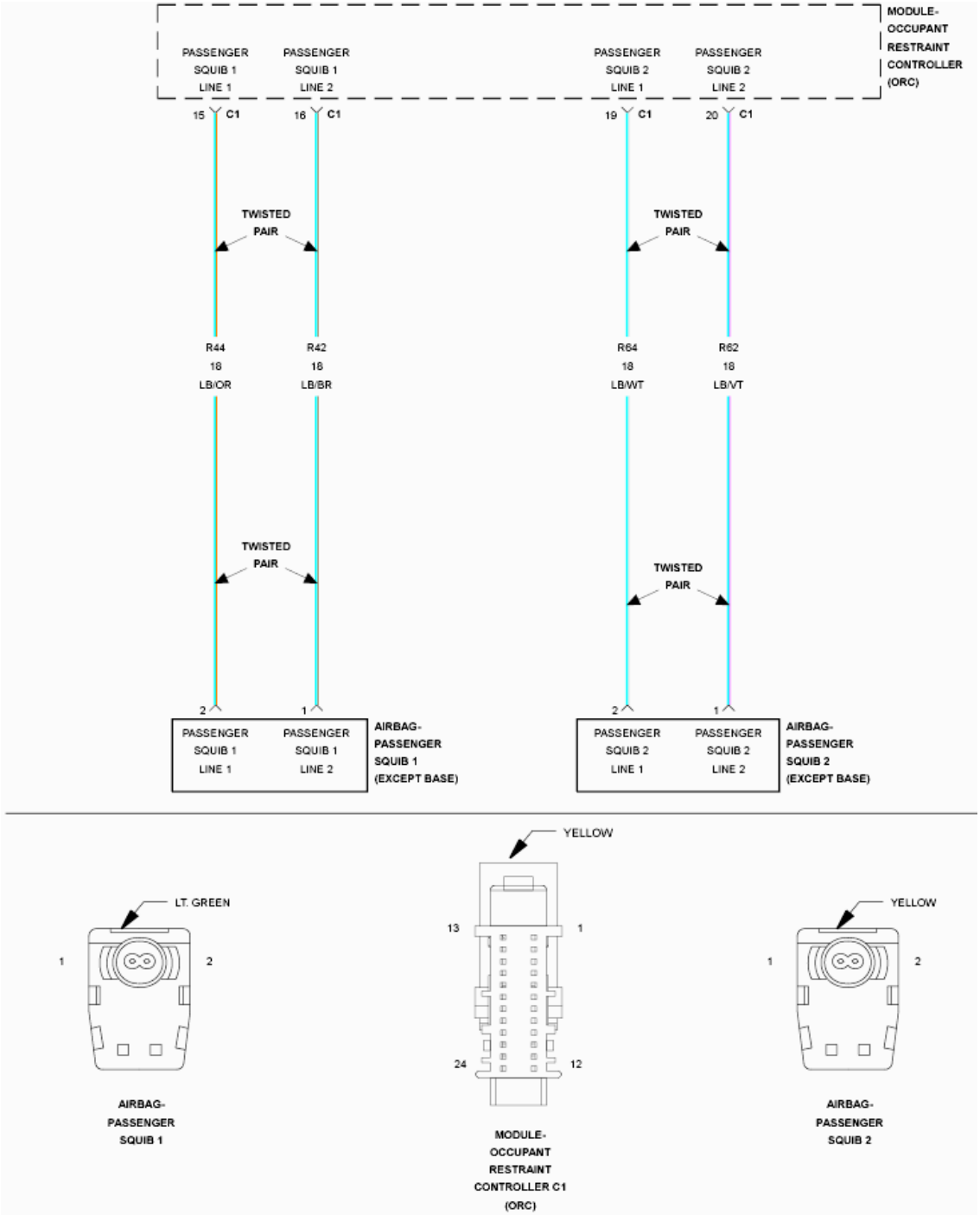

Fig. 58: Passenger Airbag Squib Line Circuit Schematic
Courtesy of CHRYSLER GROUP, LLC

For a complete wiring diagram, **refer to appropriate SYSTEM WIRING DIAGRAMS article** .

THEORY OF OPERATION

When powered, the Occupant Restraint Controller (ORC) sends a test current to

the squibs to verify the integrity of the squib and wiring. These circuits are maintained in a "floating" configuration at the ORC (connected to neither power nor ground) as protection against inadvertent deployment. Use of the Supplemental Restraints System (SRS) Load Tool Kit 8443A in the tests below substitutes a suspect squib with a known good component. The SRS Load Tool Adapter provides a test point as well as a method for opening the shorting bar connections within the ORC harness connector.

WHEN MONITORED

With the ignition on.

SET CONDITION

The Occupant Restraint Controller (ORC) monitors the resistance of the Passenger Squib 2 circuits. The ORC will set this DTC if it detects low resistance between the Passenger Squib 2 circuits.

POSSIBLE CAUSES

Possible Causes
(R64) PASSENGER SQUIB 2 LINE 1 CIRCUIT SHORTED TO (R62) PASSENGER SQUIB 2 LINE 2 CIRCUIT
PASSENGER AIRBAG
OCCUPANT RESTRAINT CONTROLLER (ORC)

DIAGNOSTIC TEST

1. **DETERMINE ACTIVE OR STORED DTC**

   NOTE: Make sure that the battery is fully charged.

   NOTE: The scan tool, SRS Load Tool Kit (special tool #8443A, SRS Load Tool), and DVOM are required to perform the following test:

   1. Turn the ignition on.

      Select ACTIVE or STORED DTC:

      ACTIVE DTC

- Go To 2

STORED DTC

- Go To 4

2. **CHECK FOR SHORTED SQUIB CIRCUITS IN PASSENGER AIRBAG**

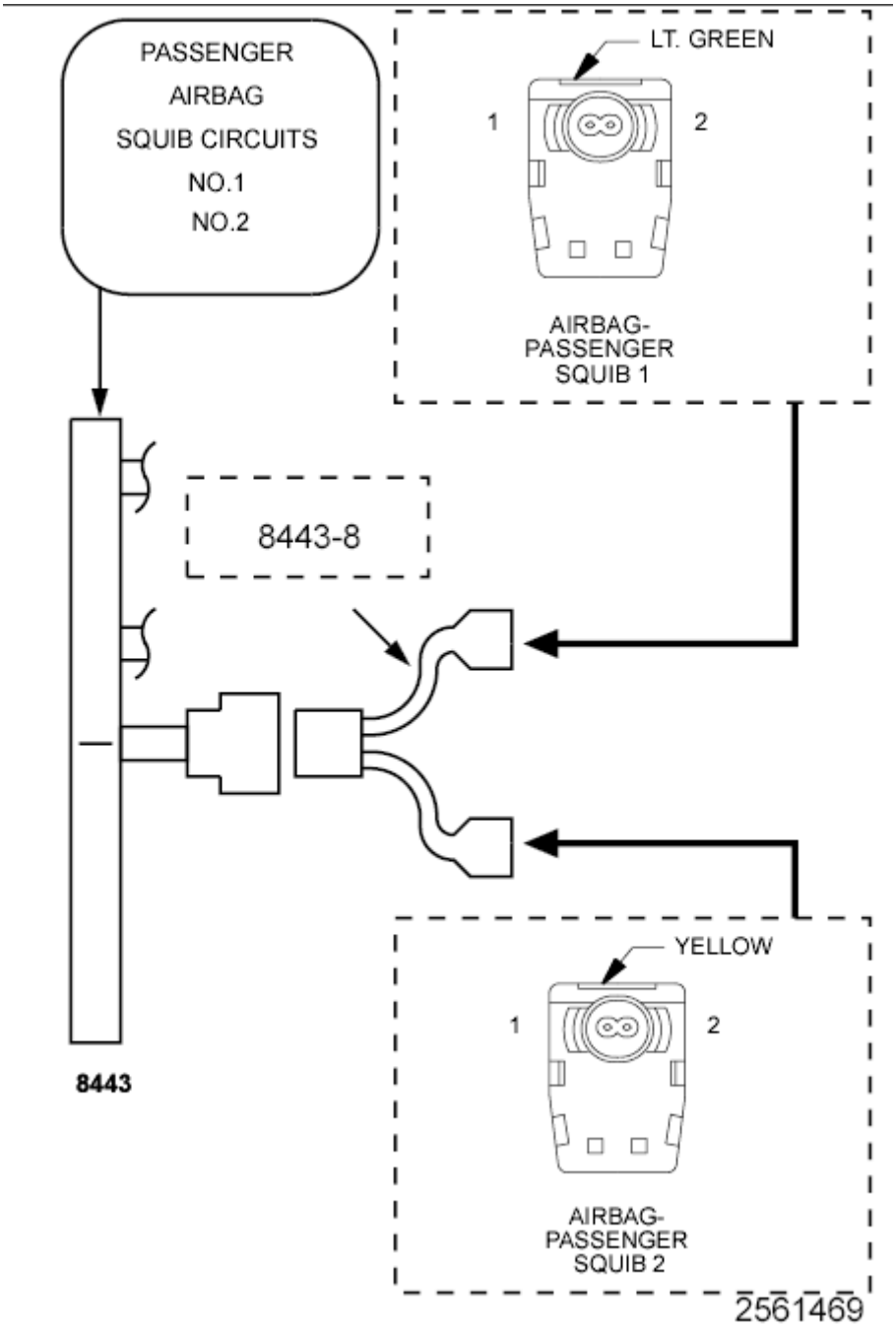

Fig. 59: Checking For Shorted Squib Circuits In Passenger Airbag
Courtesy of CHRYSLER GROUP, LLC

WARNING: Turn the ignition off disconnect the 12-volt battery and wait two minutes before proceeding. Failure to follow these instructions may result in possible serious or fatal injury.

1. Disconnect the Passenger Airbag Squib connectors.

   WARNING: Do not place an intact non-deployed airbag face down on a hard surface, the airbag propels into the air if accidentally deployed. Failure to follow these instructions may result in possible serious or fatal injury.

   NOTE: Check connectors - Clean and repair as necessary.

2. Connect the SRS Load Tool Kit (special tool #8443A, SRS Load Tool) and SRS Load Tool Jumper (special tool #8443-8, Jumper, SRS Load) to the Passenger Airbag Squib connectors.

   WARNING: Turn the ignition on, then reconnect the 12-volt battery and wait two minutes before proceeding. Failure to follow these instructions may result in possible serious or fatal injury.

3. With the scan tool, read the active ORC DTCs.

   Does the scan tool display: B1B0F-PASSENGER AIRBAG SQUIB 2 CIRCUIT SHORTED TOGETHER?

   Yes

   - Go To 3

   No

- Replace the Passenger Airbag in accordance with the Service Information.
- Perform the AIRBAG SYSTEM VERIFICATION TEST. Refer to **STANDARD PROCEDURE** .

3. **CHECK THE (R64) PASSENGER SQUIB 2 LINE 1 CIRCUIT FOR A SHORT TO (R62) PASSENGER SQUIB 2 LINE 2 CIRCUIT**

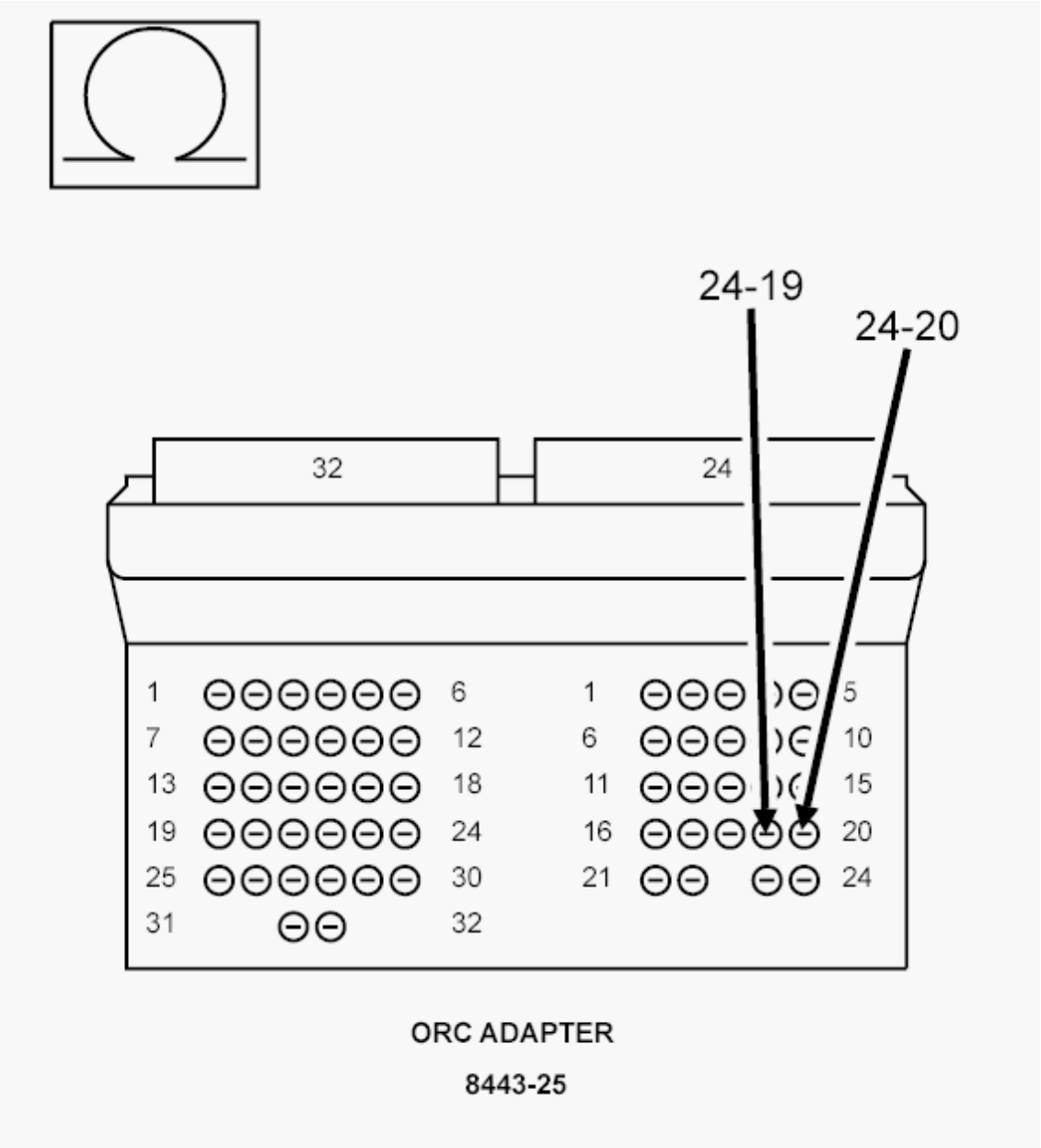

Fig. 60: Checking Passenger Squib 2 Line 1 Circuit For Short To Passenger Squib 2 Line 2 Circuit
Courtesy of CHRYSLER GROUP, LLC

WARNING: Turn the ignition off disconnect the 12-volt battery and wait two minutes before proceeding. Failure to follow these instructions may result in possible serious or fatal injury.

1. Disconnect the SRS Load Tool Kit (special tool #8443A, SRS Load Tool) and SRS Load Tool Jumper (special tool #8443-8, Jumper, SRS Load) from the Passenger Airbag Squib connectors.
2. Disconnect the ORC connectors.

NOTE: Check connectors - Clean and repair as necessary.

3. Connect the SRS Load Tool Adaptor (special tool #8443-25, 56 Way ACM Adapter) to the ORC connectors.
4. Measure the resistance between the (R64) Passenger Squib 2 Line 1 circuit cavity 24-19 and the (R62) Passenger Squib 2 Line 2 circuit cavity 24-20 at the SRS Load Tool Adaptor (special tool #8443-25, 56 Way ACM Adapter).

   Is the resistance below 10k Ohms?

   Yes

   - Repair the (R64) Passenger Squib 2 Line 1 circuit for a short to the (R62) Passenger Squib 2 Line 2 circuit.
   - Perform the AIRBAG SYSTEM VERIFICATION TEST. Refer to **STANDARD PROCEDURE** .

   No

WARNING: If the Occupant Restraint Controller (ORC) is dropped at any time, it must be replaced. Failure to take the proper precautions can result in accidental airbag deployment. Failure to follow these instructions may result in possible serious or fatal injury.

- Replace the ORC in accordance with Service Information.
- Perform the AIRBAG SYSTEM VERIFICATION TEST. Refer to **STANDARD PROCEDURE** .

4. **CHECKING STORED OR INTERMITTENT CODES**

NOTE: Diagnose and repair all active codes before diagnosing stored codes. Refer to the OCCUPANT RESTRAINT CONTROLLER (ORC) - DIAGNOSTIC CODE INDEX for a complete list of airbag system diagnostic procedures.

1. With the scan tool, record and erase all Airbag System Module DTCs.

WARNING: Turn the ignition off disconnect the 12-volt battery and wait two minutes before proceeding. Failure to follow these instructions may result in possible serious or fatal injury.

2. Using the wiring diagram/schematic as a guide, inspect the related wiring and connectors for chafed, pierced, pinched, and partially broken wires, and for broken, bent, pushed out, corroded, and contaminated terminals. Repair as necessary.
3. Reconnect all disconnected components and harness connectors.

WARNING: Turn the ignition on, then reconnect the 12-volt battery and wait two minutes before proceeding. Failure to follow these instructions may result in possible serious or fatal injury.

4. With the scan tool, monitor for active codes while performing the following:
   - Wiggle the wiring harness and connectors of the related airbag circuit.
   - Continue the test until either a code becomes active or the problem area is isolated.

5. In the previous steps you have attempted to recreate the conditions responsible for setting the DTC in question / causing the intermittent condition.

   Are any ACTIVE DTCs present?

   Yes

   - Select the appropriate diagnostic procedure from the **OCCUPANT RESTRAINT CONTROLLER (ORC) - DIAGNOSTIC CODE INDEX** .

   No

   - No problem found at this time. Erase all codes before returning the vehicle to the customer.

B1B18-LEFT SIDE CURTAIN SQUIB 1 CIRCUIT LOW

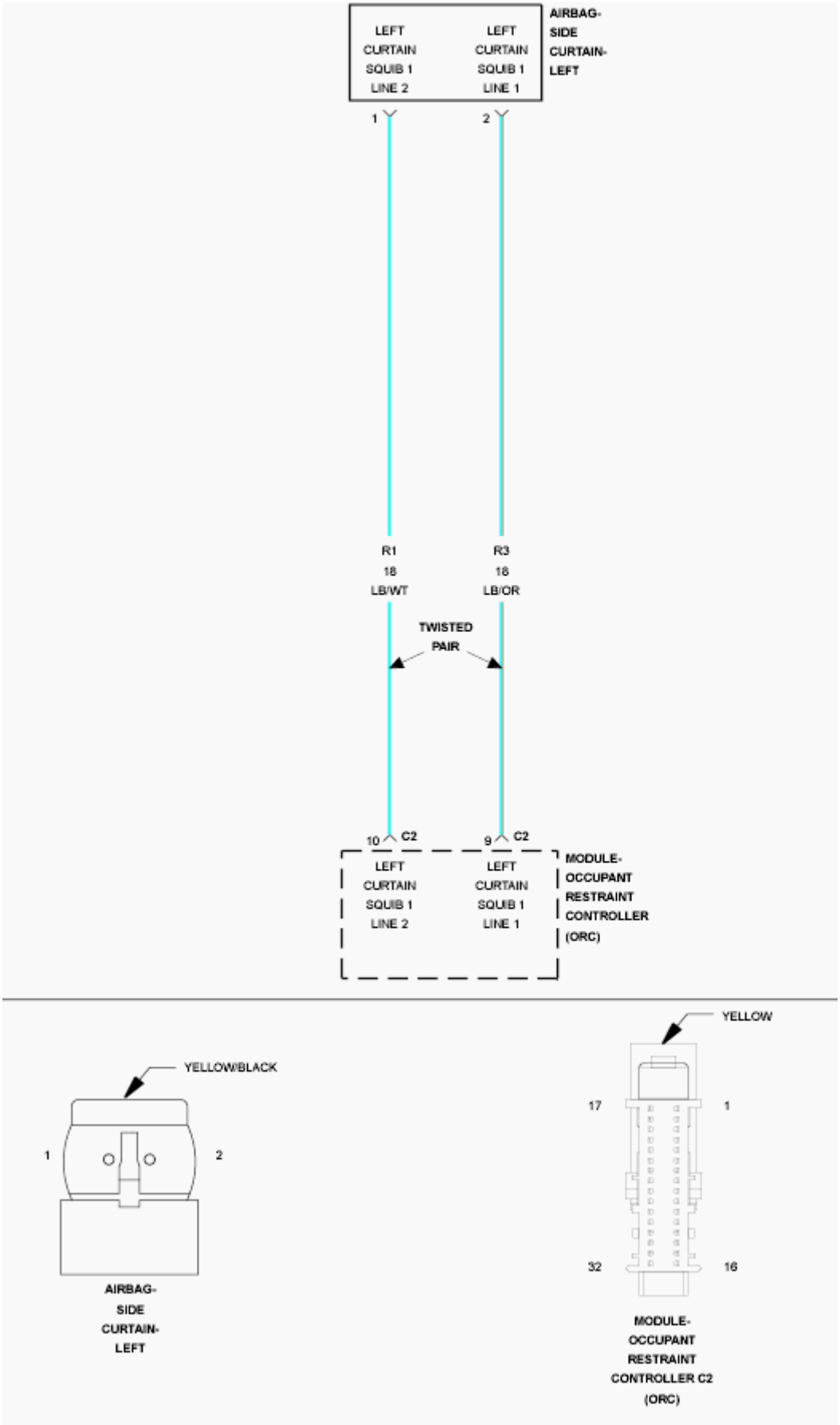
LEFT CURTAIN SQUIB 1 LINE 2
LEFT CURTAIN SQUIB 1 LINE 1
AIRBAG-SIDE CURTAIN-LEFT
1
2
R1
18
LB/WT
R3
18
LB/OR
TWISTED PAIR
10
C2
9
C2
LEFT CURTAIN SQUIB 1 LINE 2
LEFT CURTAIN SQUIB 1 LINE 1
MODULE-OCCUPANT RESTRAINT CONTROLLER (ORC)
YELLOW/BLACK
1
2
AIRBAG-SIDE CURTAIN-LEFT
YELLOW
17
1
32
16
MODULE-OCCUPANT RESTRAINT CONTROLLER C2 (ORC)

Fig. 61: Left Side Curtain Squib 1 Circuit Schematic
Courtesy of CHRYSLER GROUP, LLC

For a complete wiring diagram, **refer to appropriate SYSTEM WIRING DIAGRAMS article** .

THEORY OF OPERATION

When powered, the Occupant Restraint Controller (ORC) sends a test current to the squibs to verify the integrity of the squib and wiring. These circuits are maintained in a "floating" configuration at the ORC (connected to neither power nor ground) as protection against inadvertent deployment. Use of the Supplemental Restraints System (SRS) Load Tool Kit 8443A in the tests below substitutes a suspect squib with a known good component. The SRS Load Tool Adapter provides a test point as well as a method for opening the shorting bar connections within the ORC harness connector.

WHEN MONITORED

With the ignition on.

SET CONDITION

The Occupant Restraint Controller (ORC) monitors the resistance of the Left Curtain Squib 1 circuits. The ORC will set this DTC if it detects low resistance of the Left Curtain Squib 1 circuits.

POSSIBLE CAUSES

Possible Causes
(R3) LEFT CURTAIN SQUIB 1 LINE 1 CIRCUIT SHORTED TO GROUND
(R1) LEFT CURTAIN SQUIB 1 LINE 2 CIRCUIT SHORTED TO GROUND
LEFT SIDE CURTAIN AIRBAG
OCCUPANT RESTRAINT CONTROLLER (ORC)

DIAGNOSTIC TEST

1. **DETERMINE ACTIVE OR STORED DTC**

NOTE: Make sure that the battery is fully charged.

NOTE: The scan tool, SRS Load Tool Kit (special tool #8443A, SRS Load Tool), and DVOM are required to perform the following test:

1. Turn the ignition on.

   Select ACTIVE or STORED DTC:

   ACTIVE DTC

   - Go To 2

   STORED DTC

   - Go To 4

2. **CHECK FOR SHORTED SQUIB CIRCUITS IN LEFT SIDE CURTAIN AIRBAG**

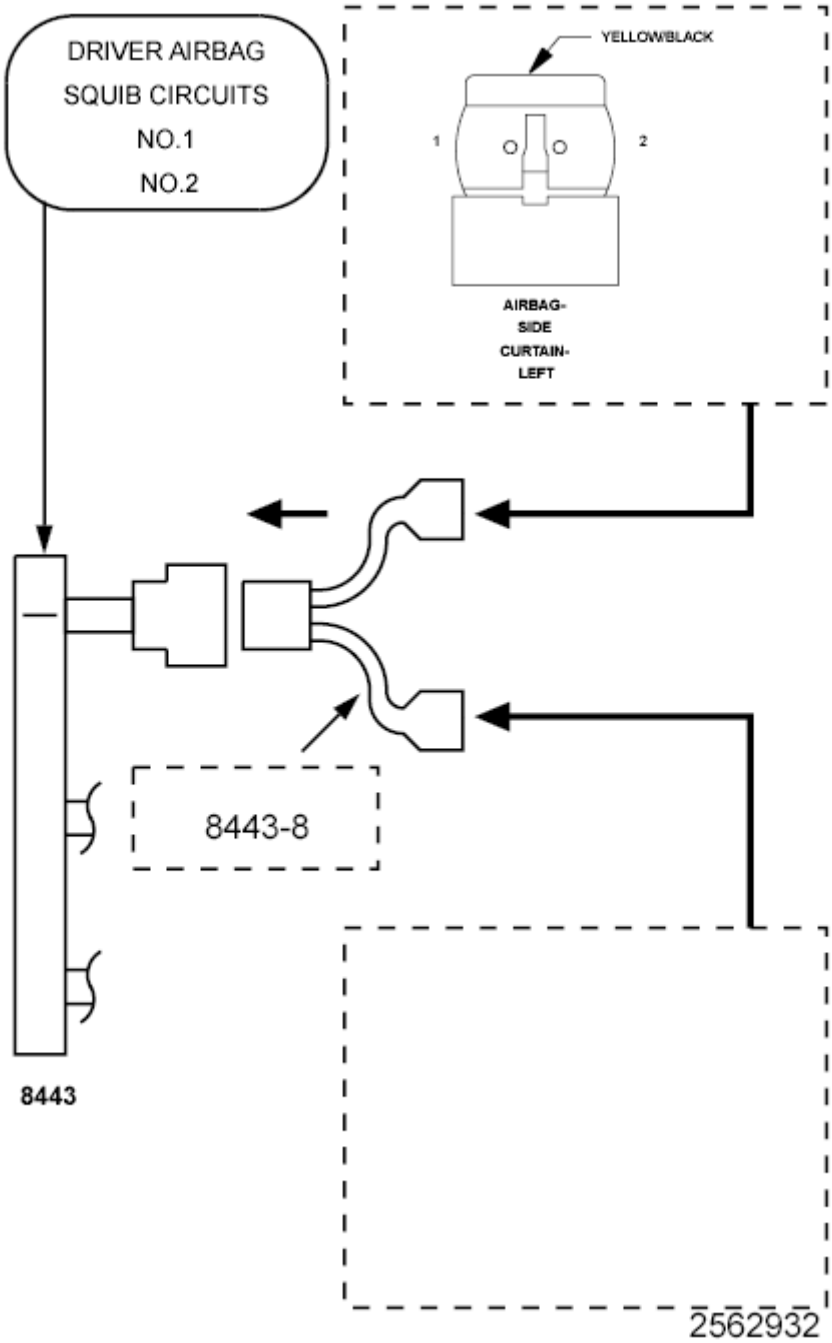

Fig. 62: Checking For Shorted Squib Circuits In Left Side Curtain Airbag
Courtesy of CHRYSLER GROUP, LLC

WARNING: Turn the ignition off disconnect the 12-volt battery and wait two minutes before proceeding. Failure to follow these instructions may result in possible serious or fatal injury.

1. Disconnect the Left Side Curtain Airbag connector.

   WARNING: Do not place an intact non-deployed curtain airbag face down on a hard surface, the airbag will propel into the air if accidentally deployed. Failure to follow these instructions may result in possible serious or fatal injury.

   NOTE: Check connectors - Clean and repair as necessary.

2. Connect the SRS Load Tool Kit (special tool #8443A, SRS Load Tool) and SRS Load Tool Jumper (special tool #8443-8, Jumper, SRS Load) to the Left Side Curtain Airbag connector.

   WARNING: Turn the ignition on, then reconnect the 12-volt battery and wait two minutes before proceeding. Failure to follow these instructions may result in possible serious or fatal injury.

3. With the scan tool, read the active ORC DTCs.

   Does the scan tool display: B1B18-LEFT SIDE CURTAIN SQUIB 1 CIRCUIT LOW?

   Yes

   - Go To 3

   No

   - Replace the Left Side Curtain Airbag in accordance with the Service Information.
   - Perform the AIRBAG SYSTEM VERIFICATION TEST. Refer to **STANDARD PROCEDURE** .

3. **CHECK THE (R3) LEFT CURTAIN SQUIB 1 LINE 1 CIRCUIT AND THE (R1) LEFT CURTAIN SQUIB 1 LINE 2 CIRCUIT FOR A**

SHORT TO GROUND

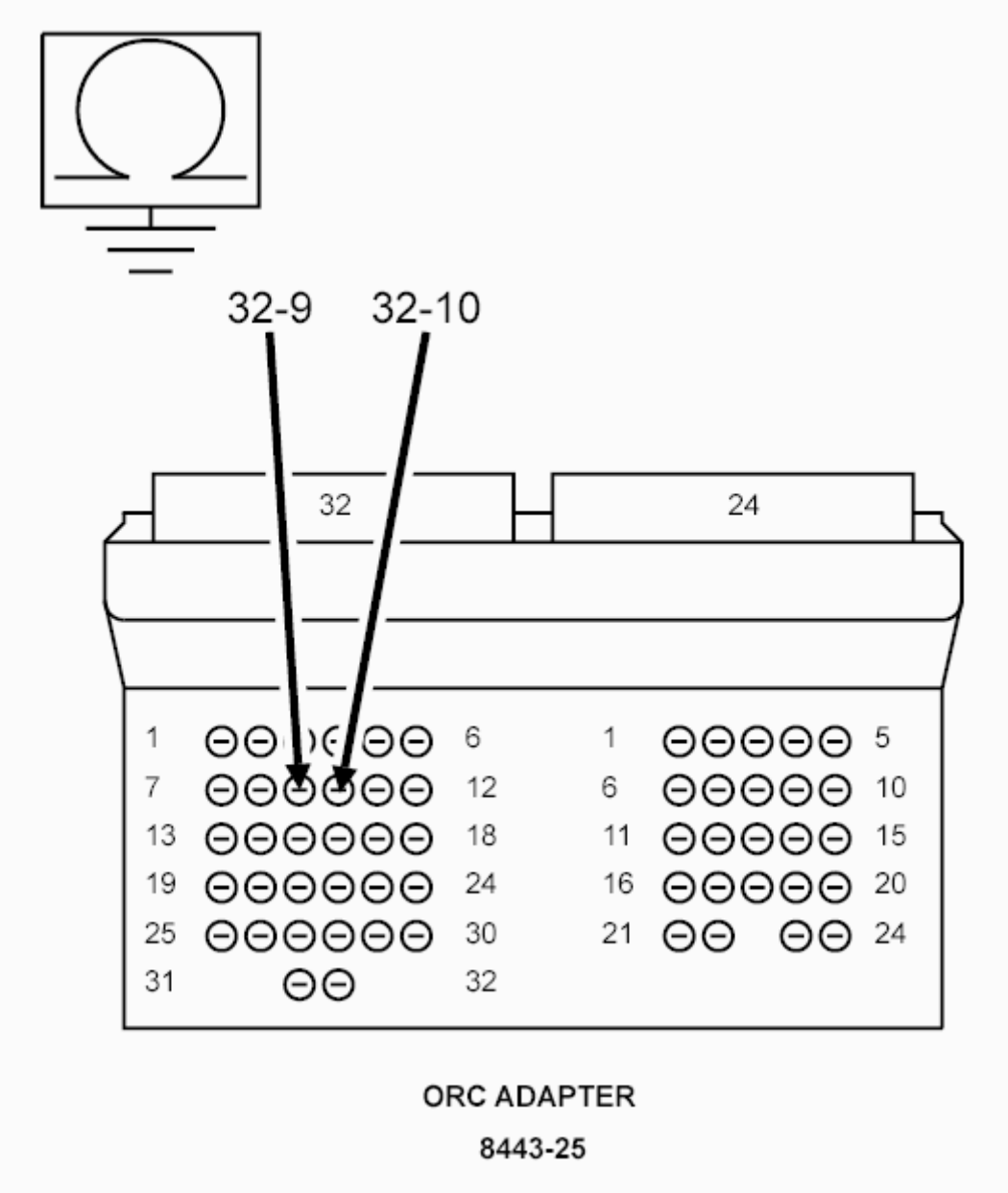

Fig. 63: Checking Left Curtain Squib 1 Line Circuits For Short To Ground
Courtesy of CHRYSLER GROUP, LLC

WARNING: Turn the ignition off disconnect the 12-volt battery and wait two minutes before proceeding. Failure to follow these instructions may result in possible serious or fatal injury.

1. Disconnect the SRS Load Tool Kit (special tool #8443A, SRS Load Tool) and SRS Load Tool Jumper (special tool #8443-8, Jumper, SRS Load) from the Left Side Curtain Airbag connector.
2. Disconnect the ORC connectors.

NOTE: Check connectors - Clean and repair as necessary.

3. Connect the SRS Load Tool Adaptor (special tool #8443-25, 56 Way ACM Adapter) to the ORC connectors.
4. Measure the resistance of the (R3) Left Curtain Squib 1 Line 1 circuit between the SRS Load Tool Adaptor (special tool #8443-25, 56 Way ACM Adapter) cavity 32-9 and ground.
5. Measure the resistance of the (R1) Left Curtain Squib 1 Line 2 circuit between the SRS Load Tool Adaptor (special tool #8443-25, 56 Way ACM Adapter) cavity 32-10 and ground.

Is the resistance below 10k Ohms on either circuit?

Yes

- Repair the Left Curtain Squib 1 circuits with resistance below 10k Ohms for a short to ground.
- Perform the AIRBAG SYSTEM VERIFICATION TEST. Refer to **STANDARD PROCEDURE** .

No

WARNING: **If the Occupant Restraint Controller (ORC) is dropped at any time, it must be replaced. Failure to take the proper precautions can result in accidental airbag deployment. Failure to follow these instructions may result in possible serious or fatal injury.**

- Replace the ORC in accordance with Service Information.
- Perform the AIRBAG SYSTEM VERIFICATION TEST. Refer to

STANDARD PROCEDURE .

4. CHECKING STORED OR INTERMITTENT CODES

NOTE: Diagnose and repair all active codes before diagnosing stored codes. Refer to the OCCUPANT RESTRAINT CONTROLLER (ORC) - DIAGNOSTIC CODE INDEX for a complete list of airbag system diagnostic procedures.

1. With the scan tool, record and erase all Airbag System Module DTCs.

WARNING: Turn the ignition off disconnect the 12-volt battery and wait two minutes before proceeding. Failure to follow these instructions may result in possible serious or fatal injury.

2. Using the wiring diagram/schematic as a guide, inspect the related wiring and connectors for chafed, pierced, pinched, and partially broken wires, and for broken, bent, pushed out, corroded, and contaminated terminals. Repair as necessary.
3. Reconnect all disconnected components and harness connectors.

WARNING: Turn the ignition on, then reconnect the 12-volt battery and wait two minutes before proceeding. Failure to follow these instructions may result in possible serious or fatal injury.

4. With the scan tool, monitor for active codes while performing the following:
   - Wiggle the wiring harness and connectors of the related airbag circuit.
   - Continue the test until either a code becomes active or the problem area is isolated.
5. In the previous steps you have attempted to recreate the conditions responsible for setting the DTC in question / causing the intermittent condition.

Are any ACTIVE DTCs present?

Yes

- Select the appropriate diagnostic procedure from the **OCCUPANT RESTRAINT CONTROLLER (ORC) - DIAGNOSTIC CODE INDEX** .

No

- No problem found at this time. Erase all codes before returning the vehicle to the customer.

B1B19-LEFT SIDE CURTAIN SQUIB 1 CIRCUIT HIGH

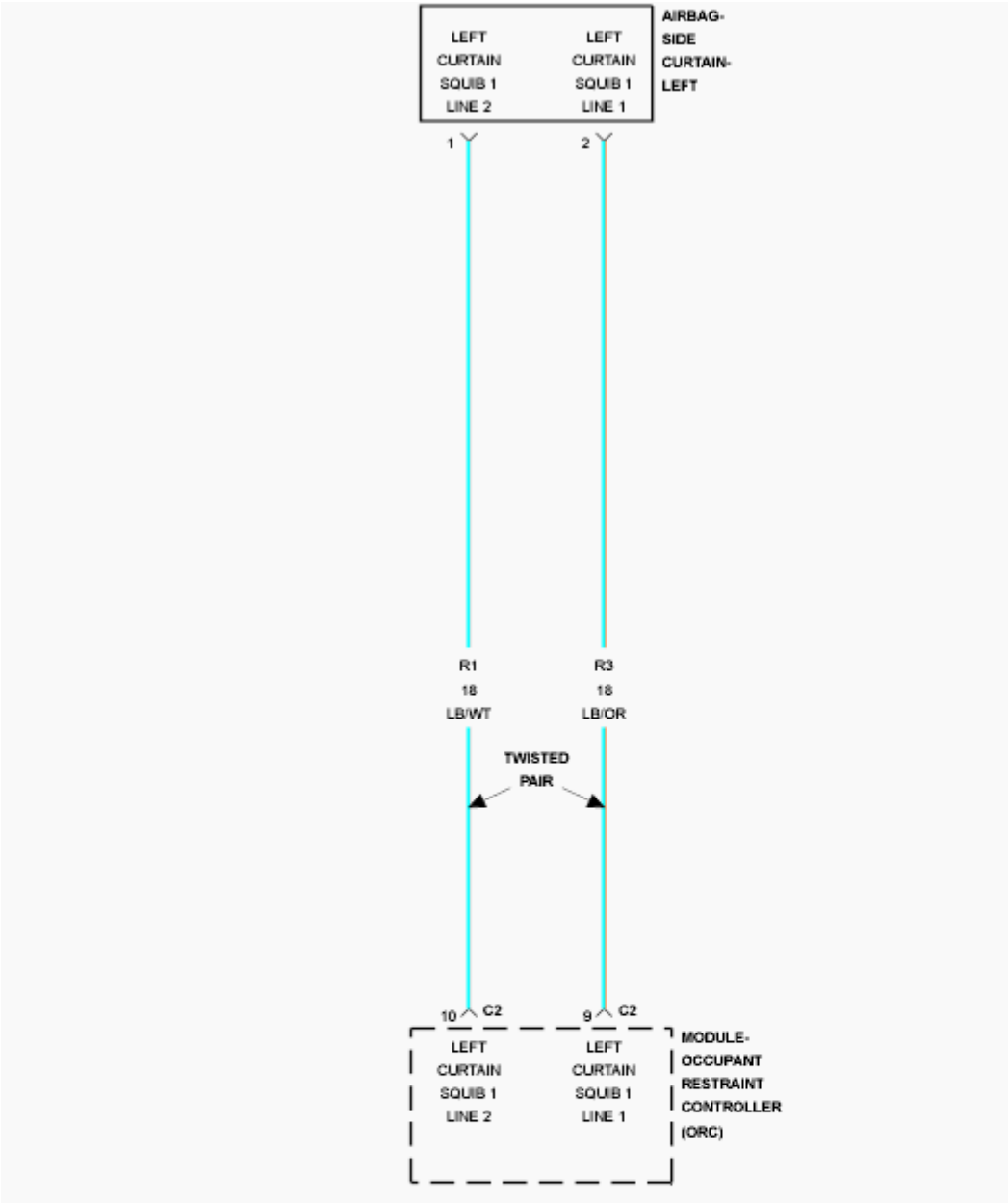
LEFT CURTAIN SQUIB 1 LINE 2
LEFT CURTAIN SQUIB 1 LINE 1
AIRBAG-SIDE CURTAIN-LEFT
1
2
R1
18
LB/WT
R3
18
LB/OR
TWISTED PAIR
10
C2
9
C2
LEFT CURTAIN SQUIB 1 LINE 2
LEFT CURTAIN SQUIB 1 LINE 1
MODULE-OCCUPANT RESTRAINT CONTROLLER (ORC)

YELLOW/BLACK
1
2
AIRBAG-SIDE CURTAIN-LEFT
YELLOW
17
1
32
16
MODULE-OCCUPANT RESTRAINT CONTROLLER C2 (ORC)

Fig. 64: Left Side Curtain Squib 1 Circuit Schematic
Courtesy of CHRYSLER GROUP, LLC

For a complete wiring diagram, **refer to appropriate SYSTEM WIRING DIAGRAMS article** .

THEORY OF OPERATION

When powered, the Occupant Restraint Controller (ORC) sends a test current to the squibs to verify the integrity of the squib and wiring. These circuits are maintained in a "floating" configuration at the ORC (connected to neither power nor ground) as protection against inadvertent deployment. Use of the Supplemental Restraints System (SRS) Load Tool Kit 8443A in the tests below substitutes a suspect squib with a known good component. The SRS Load Tool Adapter provides a test point as well as a method for opening the shorting bar connections within the ORC harness connector.

WHEN MONITORED

With the ignition on.

SET CONDITION

The Occupant Restraint Controller (ORC) monitors the voltage on the Left Curtain Squib 1 circuits. The ORC will set this DTC if it detects voltage on the Left Curtain Squib 1 circuits.

POSSIBLE CAUSES

Possible Causes
(R3) LEFT CURTAIN SQUIB 1 LINE 1 CIRCUIT SHORTED TO BATTERY
(R1) LEFT CURTAIN SQUIB 1 LINE 2 CIRCUIT SHORTED TO BATTERY
LEFT SIDE CURTAIN AIRBAG
OCCUPANT RESTRAINT CONTROLLER (ORC)

DIAGNOSTIC TEST

1. **DETERMINE ACTIVE OR STORED DTC**

NOTE: Make sure that the battery is fully charged.

NOTE: The scan tool, SRS Load Tool Kit (special tool #8443A, SRS Load Tool), and DVOM are required to perform the following test:

1. Turn the ignition on.

   Select ACTIVE or STORED DTC:

   ACTIVE DTC

   - Go To 2

   STORED DTC

   - Go To 4

2. **CHECK FOR SHORTED SQUIB CIRCUITS IN LEFT SIDE CURTAIN AIRBAG**

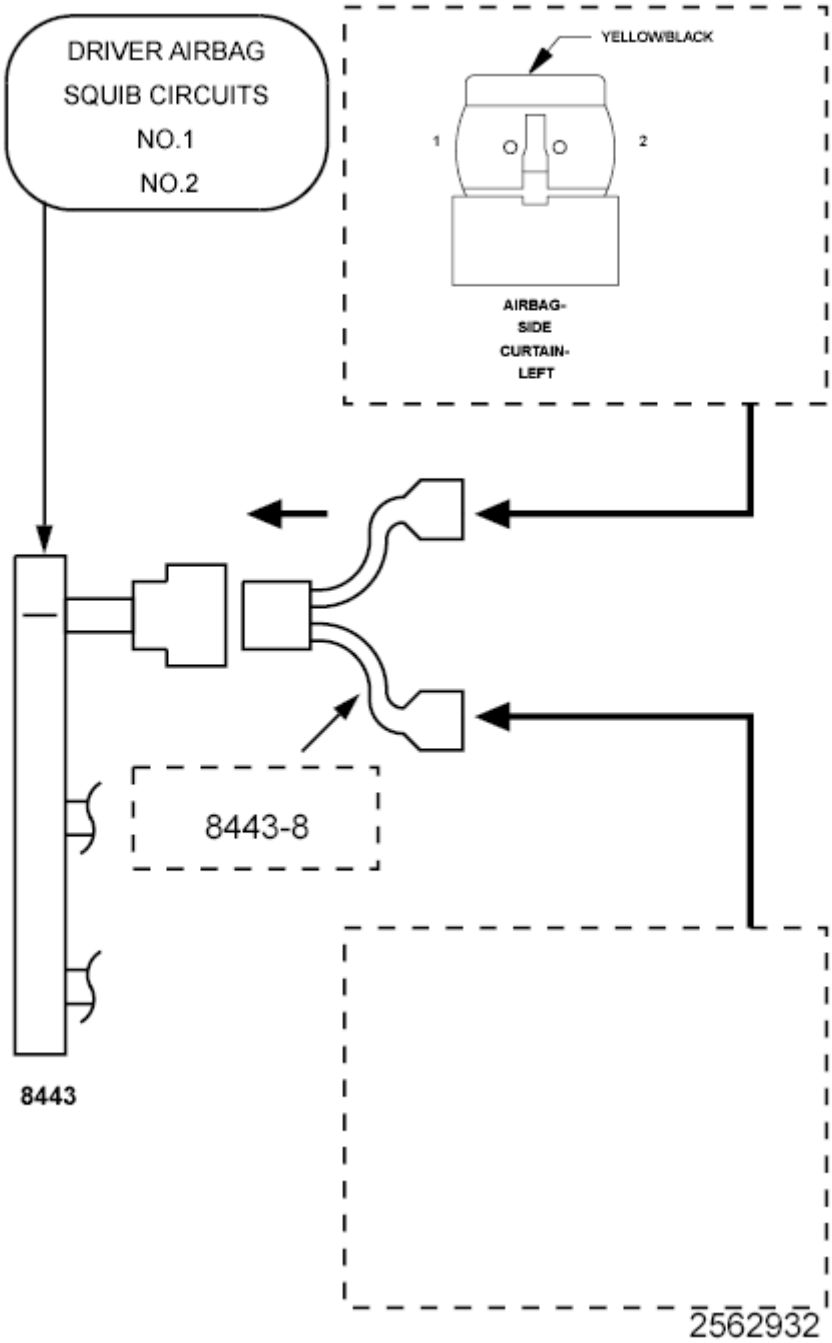

Fig. 65: Checking For Shorted Squib Circuits In Left Side Curtain Airbag
Courtesy of CHRYSLER GROUP, LLC

WARNING: Turn the ignition off disconnect the 12-volt battery and wait two minutes before proceeding. Failure to follow these instructions may result in possible serious or fatal injury.

1. Disconnect the Left Side Curtain Airbag connector.

   WARNING: Do not place an intact non-deployed curtain airbag face down on a hard surface, the airbag will propel into the air if accidentally deployed. Failure to follow these instructions may result in possible serious or fatal injury.

   NOTE: Check connectors - Clean and repair as necessary.

2. Connect the SRS Load Tool Kit (special tool #8443A, SRS Load Tool) and SRS Load Tool Jumper (special tool #8443-8, Jumper, SRS Load) to the Left Side Curtain Airbag connectors.

   WARNING: Turn the ignition on, then reconnect the 12-volt battery and wait two minutes before proceeding. Failure to follow these instructions may result in possible serious or fatal injury.

3. With the scan tool, read the active ORC DTCs.

   Does the scan tool display: B1B19-LEFT SIDE CURTAIN SQUIB 1 CIRCUIT HIGH?

   Yes

   - Go To 3

   No

   - Replace the Left Side Curtain Airbag in accordance with the Service Information.
   - Perform the AIRBAG SYSTEM VERIFICATION TEST. Refer to **STANDARD PROCEDURE** .

3. **CHECK THE (R3) LEFT CURTAIN SQUIB 1 LINE 1 CIRCUIT AND THE (R1) LEFT CURTAIN SQUIB 1 LINE 2 CIRCUIT FOR A**

SHORT TO BATTERY

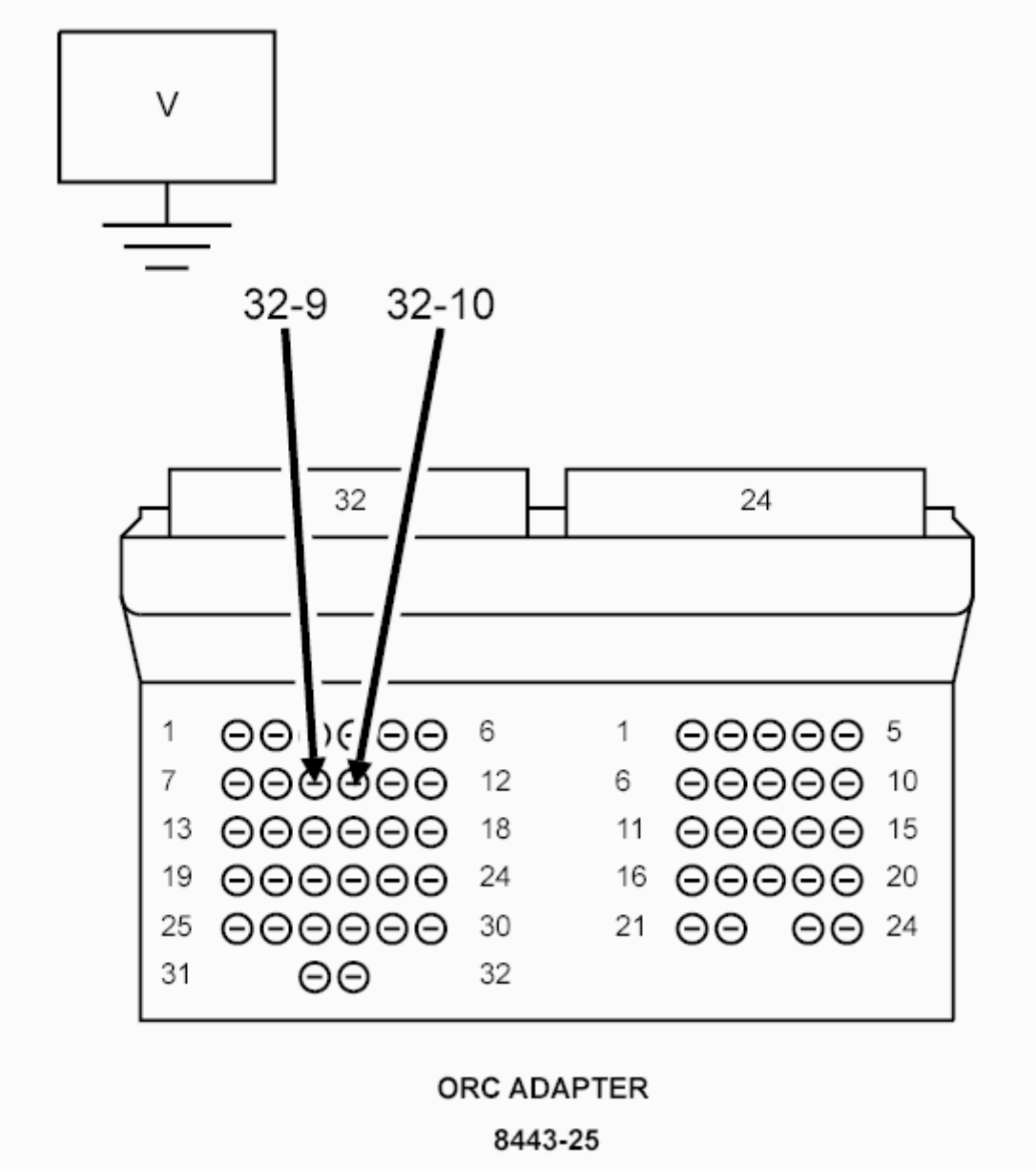

Fig. 66: Checking Left Curtain Squib 1 Line Circuits For Short To Battery
Courtesy of CHRYSLER GROUP, LLC

WARNING: Turn the ignition off disconnect the 12-volt battery and wait two minutes before proceeding. Failure to follow these instructions may result in possible serious or fatal injury.

1. Disconnect the SRS Load Tool Kit (special tool #8443A, SRS Load

Tool) and SRS Load Tool Jumper (special tool #8443-8, Jumper, SRS Load) from the Left Side Curtain Airbag connector.

2. Disconnect the ORC connectors.

NOTE: Check connectors - Clean and repair as necessary.

3. Connect the SRS Load Tool Adaptor (special tool #8443-25, 56 Way ACM Adapter) to the ORC connectors.

WARNING: Turn the ignition on, then reconnect the 12-volt battery and wait two minutes before proceeding. Failure to follow these instructions may result in possible serious or fatal injury.

4. Measure the voltage of the (R3) Left Curtain Squib 1 Line 1 circuit between the ORC (special tool #8443-25, 56 Way ACM Adapter) adaptor cavity 32-9 and ground.
5. Measure the voltage of the (R1) Left Curtain Squib 1 Line 2 circuit between the ORC (special tool #8443-25, 56 Way ACM Adapter) adaptor cavity 32-10 and ground.

Is there any voltage present on either circuit?

Yes

- Repair the Left Curtain Squib 1 circuits with voltage present for a short to battery.
- Perform AIRBAG SYSTEM VERIFICATION TEST. Refer to **STANDARD PROCEDURE** .

No

WARNING: If the Occupant Restraint Controller (ORC) is dropped at any time, it must be replaced. Failure to take the proper precautions can result in accidental airbag deployment. Failure to follow these

instructions may result in possible serious or fatal injury.

WARNING: Turn the ignition off disconnect the 12-volt battery and wait two minutes before proceeding. Failure to follow these instructions may result in possible serious or fatal injury.

- Replace the ORC in accordance with Service Information.
- Perform the AIRBAG SYSTEM VERIFICATION TEST. Refer to **STANDARD PROCEDURE** .

4. **CHECKING STORED OR INTERMITTENT CODES**

NOTE: Diagnose and repair all active codes before diagnosing stored codes. Refer to OCCUPANT RESTRAINT CONTROLLER (ORC) - DIAGNOSTIC CODE INDEX for a complete list of airbag system diagnostic procedures.

1. With the scan tool, record and erase all Airbag System Module DTCs.

WARNING: Turn the ignition off disconnect the 12-volt battery and wait two minutes before proceeding. Failure to follow these instructions may result in possible serious or fatal injury.

2. Using the wiring diagram/schematic as a guide, inspect the related wiring and connectors for chafed, pierced, pinched, and partially broken wires, and for broken, bent, pushed out, corroded, and contaminated terminals. Repair as necessary.
3. Reconnect all disconnected components and harness connectors.

WARNING: Turn the ignition on, then reconnect the 12-volt battery and wait two minutes before proceeding. Failure to follow these instructions may result in possible

serious or fatal injury.

4. With the scan tool, monitor for active codes while performing the following:
   - Wiggle the wiring harness and connectors of the related airbag circuit.
   - Continue the test until either a code becomes active or the problem area is isolated.
5. In the previous steps you have attempted to recreate the conditions responsible for setting the DTC in question / causing the intermittent condition.

   Are any ACTIVE DTCs present?

   Yes

   - Select the appropriate diagnostic procedure from the **OCCUPANT RESTRAINT CONTROLLER (ORC) - DIAGNOSTIC CODE INDEX** .

   No

   - No problem found at this time. Erase all codes before returning the vehicle to the customer.

B1B1A-LEFT SIDE CURTAIN SQUIB 1 CIRCUIT OPEN

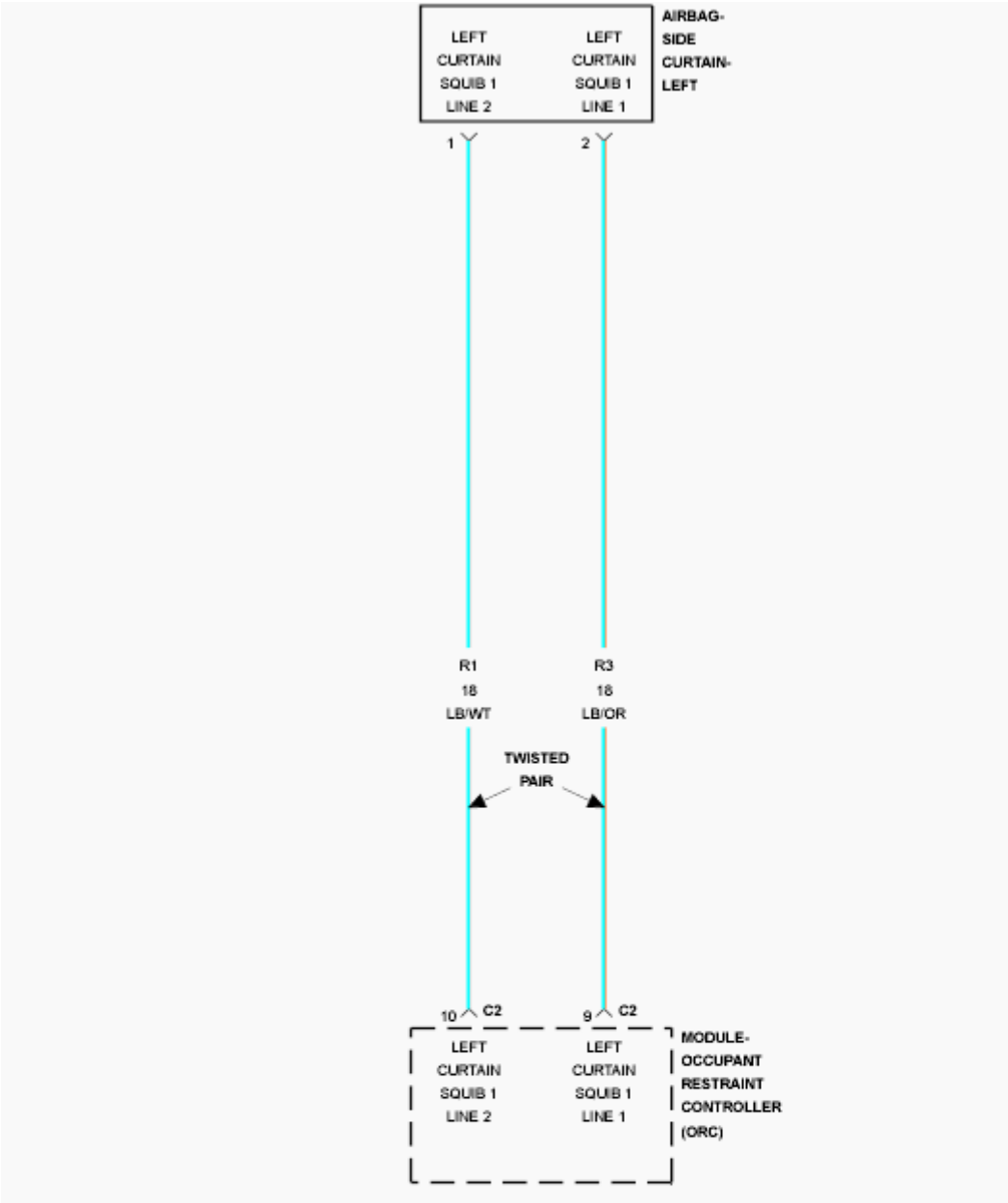
LEFT CURTAIN SQUIB 1 LINE 2
LEFT CURTAIN SQUIB 1 LINE 1
AIRBAG-SIDE CURTAIN-LEFT
1
2
R1
18
LB/WT
R3
18
LB/OR
TWISTED PAIR
10
C2
9
C2
LEFT CURTAIN SQUIB 1 LINE 2
LEFT CURTAIN SQUIB 1 LINE 1
MODULE-OCCUPANT RESTRAINT CONTROLLER (ORC)

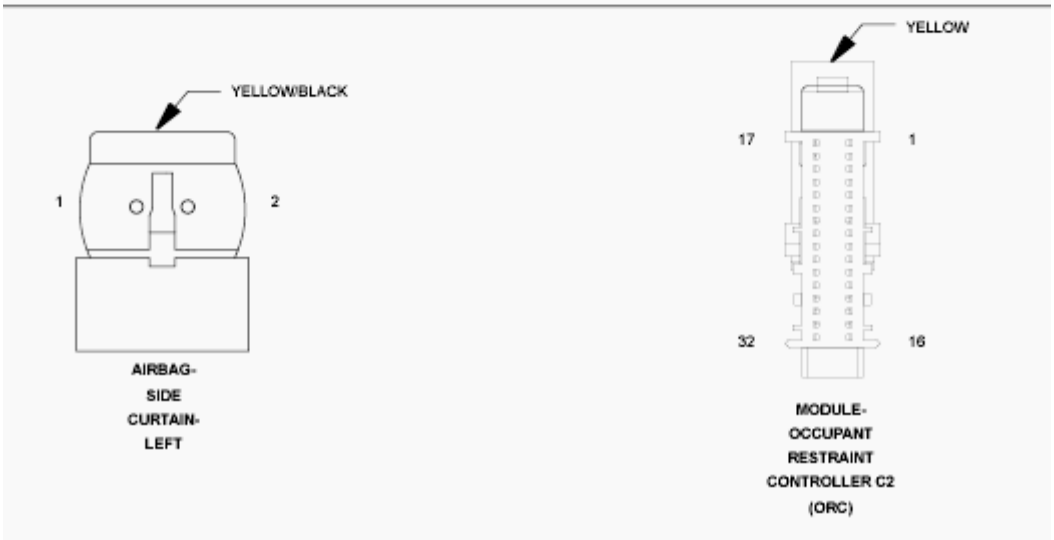
YELLOW/BLACK
1
2
AIRBAG-SIDE CURTAIN-LEFT
YELLOW
17
1
32
16
MODULE-OCCUPANT RESTRAINT CONTROLLER C2 (ORC)

Fig. 67: Left Side Curtain Squib 1 Circuit Schematic
Courtesy of CHRYSLER GROUP, LLC

For a complete wiring diagram, **refer to appropriate SYSTEM WIRING DIAGRAMS article** .

THEORY OF OPERATION

When powered, the Occupant Restraint Controller (ORC) sends a test current to the squibs to verify the integrity of the squib and wiring. These circuits are maintained in a "floating" configuration at the ORC (connected to neither power nor ground) as protection against inadvertent deployment. Use of the Supplemental Restraints System (SRS) Load Tool Kit 8443A in the tests below substitutes a suspect squib with a known good component. The SRS Load Tool Adapter provides a test point as well as a method for opening the shorting bar connections within the ORC harness connector.

WHEN MONITORED

With the ignition on.

SET CONDITION

The Occupant Restraint Controller (ORC) monitors the resistance of the Left Curtain Squib 1 circuits. The ORC will set this DTC if it detects an open or high resistance on the Left Curtain Squib 1 circuits.

POSSIBLE CAUSES

Possible Causes
(R3) LEFT CURTAIN SQUIB 1 LINE 1 CIRCUIT OPEN
(R1) LEFT CURTAIN SQUIB 1 LINE 2 CIRCUIT OPEN
LEFT SIDE CURTAIN AIRBAG
OCCUPANT RESTRAINT CONTROLLER (ORC)

DIAGNOSTIC TEST

1. **DETERMINE ACTIVE OR STORED DTC**

NOTE: Make sure that the battery is fully charged.

NOTE: The scan tool, SRS Load Tool Kit (special tool #8443A, SRS Load Tool), and DVOM are required to perform the following test:

1. Turn the ignition on.

   Select ACTIVE or STORED DTC:

   ACTIVE DTC

   - Go To 2

   STORED DTC

   - Go To 5

2. **CHECK FOR OPEN SQUIB CIRCUITS IN LEFT SIDE CURTAIN AIRBAG**

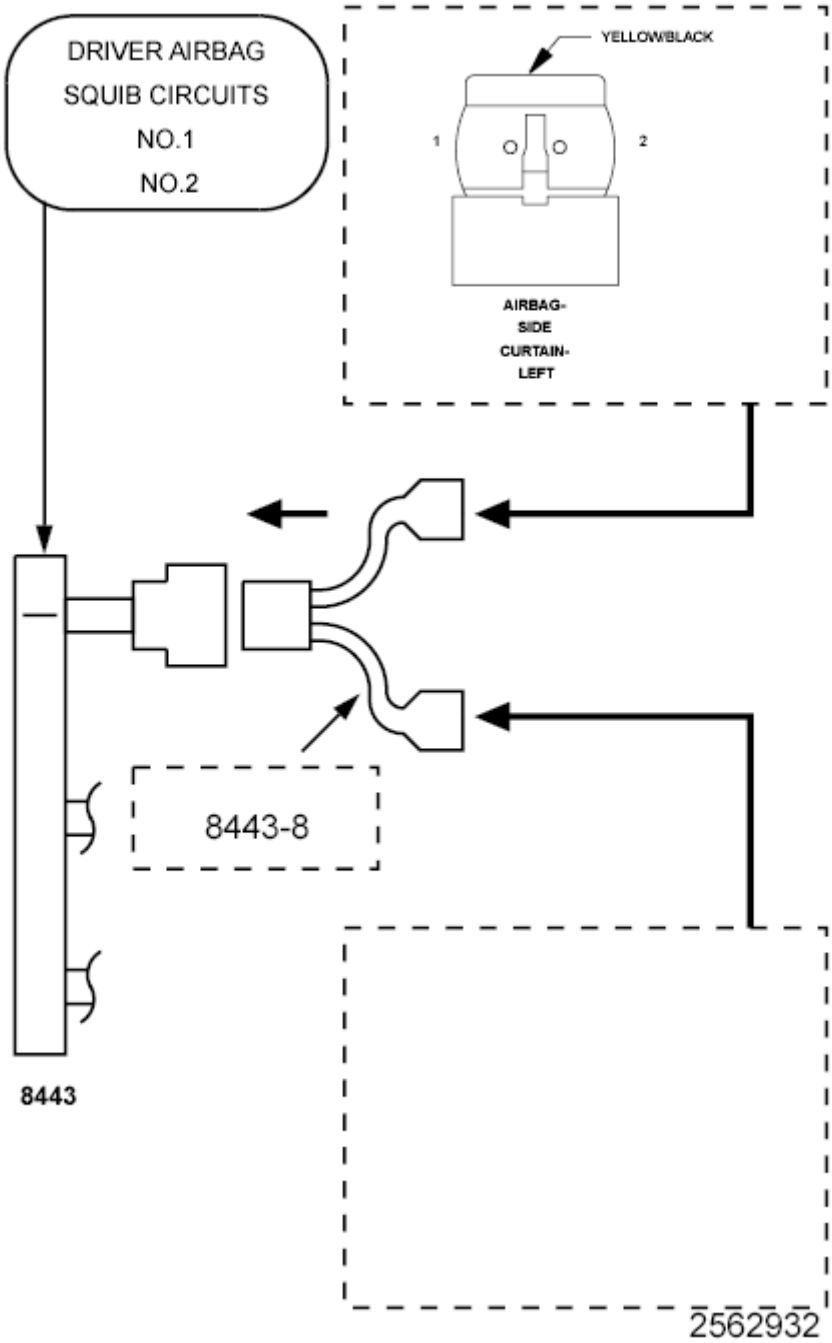

Fig. 68: Checking For Shorted Squib Circuits In Left Side Curtain Airbag
Courtesy of CHRYSLER GROUP, LLC

WARNING: Turn the ignition off disconnect the 12-volt battery and wait two minutes before proceeding. Failure to follow these instructions may result in possible serious or fatal injury.

1. Disconnect the Left Side Curtain Airbag connector.

   WARNING: Do not place an intact non-deployed curtain airbag face down on a hard surface, the airbag will propel into the air if accidentally deployed. Failure to follow these instructions may result in possible serious or fatal injury.

   NOTE: Check connectors - Clean and repair as necessary.

2. Connect the SRS Load Tool Kit (special tool #8443A, SRS Load Tool) and SRS Load Tool Jumper (special tool #8443-8, Jumper, SRS Load) to the Left Side Curtain Airbag connector.

   WARNING: Turn the ignition on, then reconnect the 12-volt battery and wait two minutes before proceeding. Failure to follow these instructions may result in possible serious or fatal injury.

3. With the scan tool, read the active ORC DTCs.

   Does the scan tool display: B1B1A-LEFT SIDE CURTAIN SQUIB 1 CIRCUIT OPEN?

   Yes

   - Go To 3

   No

   - Replace the Left Side Curtain Airbag in accordance with the Service Information.
   - Perform the AIRBAG SYSTEM VERIFICATION TEST. Refer to **STANDARD PROCEDURE** .

3. **CHECK THE (R3) LEFT CURTAIN SQUIB 1 LINE 1 CIRCUIT FOR AN OPEN**

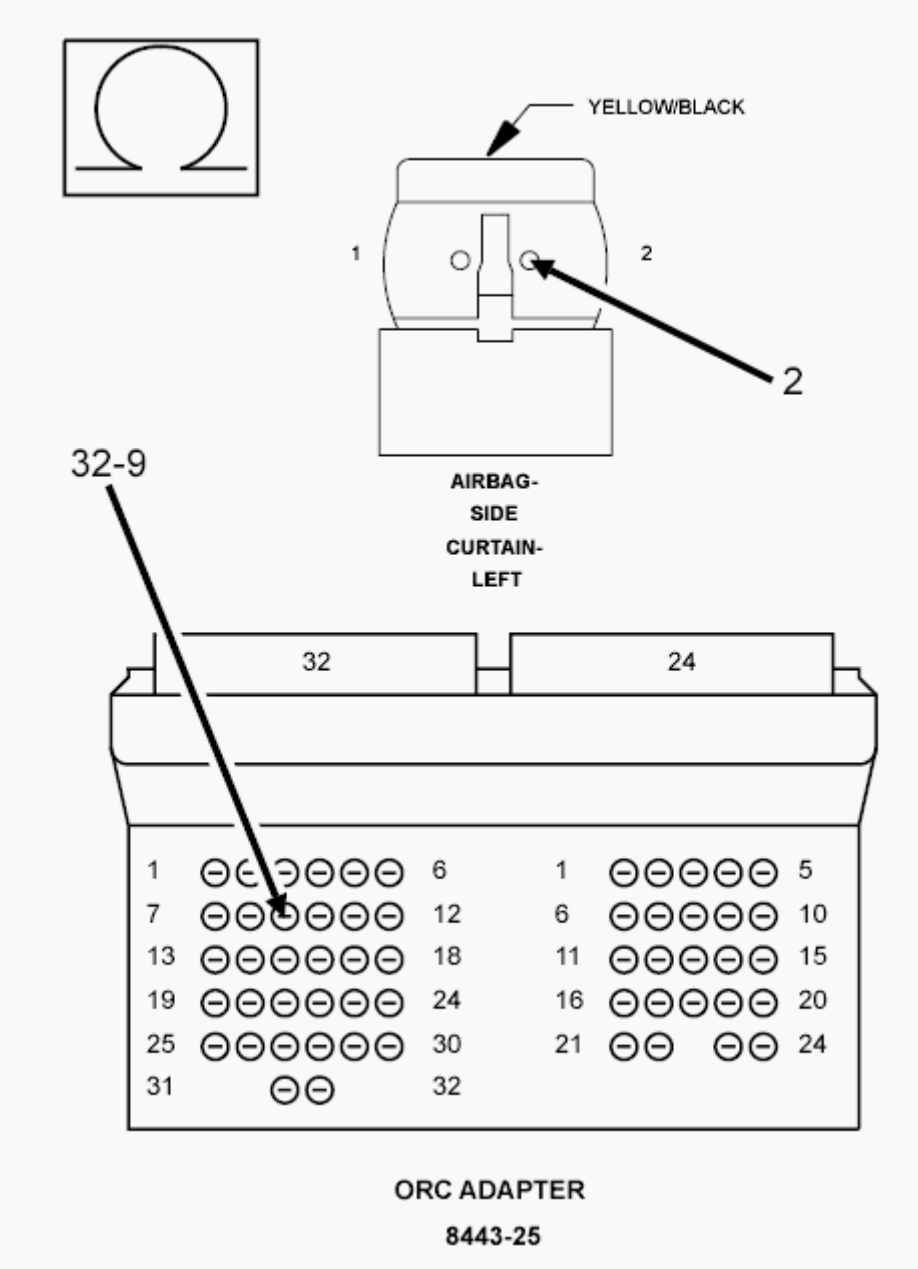

Fig. 69: Checking Left Curtain Squib 1 Line 1 Circuit For Open
Courtesy of CHRYSLER GROUP, LLC

WARNING: **Turn the ignition off disconnect the 12-volt battery and wait two minutes before proceeding. Failure to follow these instructions may result in possible serious or fatal injury.**

1. Disconnect the SRS Load Tool Kit (special tool #8443A, SRS Load Tool) and SRS Load Tool Jumper (special tool #8443-8, Jumper, SRS Load) from the Left Side Curtain Airbag connector.

2. Disconnect the ORC connectors.

NOTE: Check connectors - Clean and repair as necessary.

3. Connect the SRS Load Tool Adaptor (special tool #8443-25, 56 Way ACM Adapter) to the ORC connectors.
4. Measure the resistance of the (R3) Left Curtain Squib 1 Line 1 circuit between the Left Side Curtain Airbag connector cavity 2 and the SRS Load Tool Adaptor (special tool #8443-25, 56 Way ACM Adapter) cavity 32-9.

   Is the resistance below 1.0 Ohm?

   Yes

   - Go To 4

   No

   - Repair the (R3) Left Curtain Squib 1 Line 1 circuit for an open.
   - Perform AIRBAG SYSTEM VERIFICATION TEST. Refer to **STANDARD PROCEDURE** .

4. **CHECK THE (R1) LEFT CURTAIN SQUIB 1 LINE 2 CIRCUIT FOR AN OPEN**

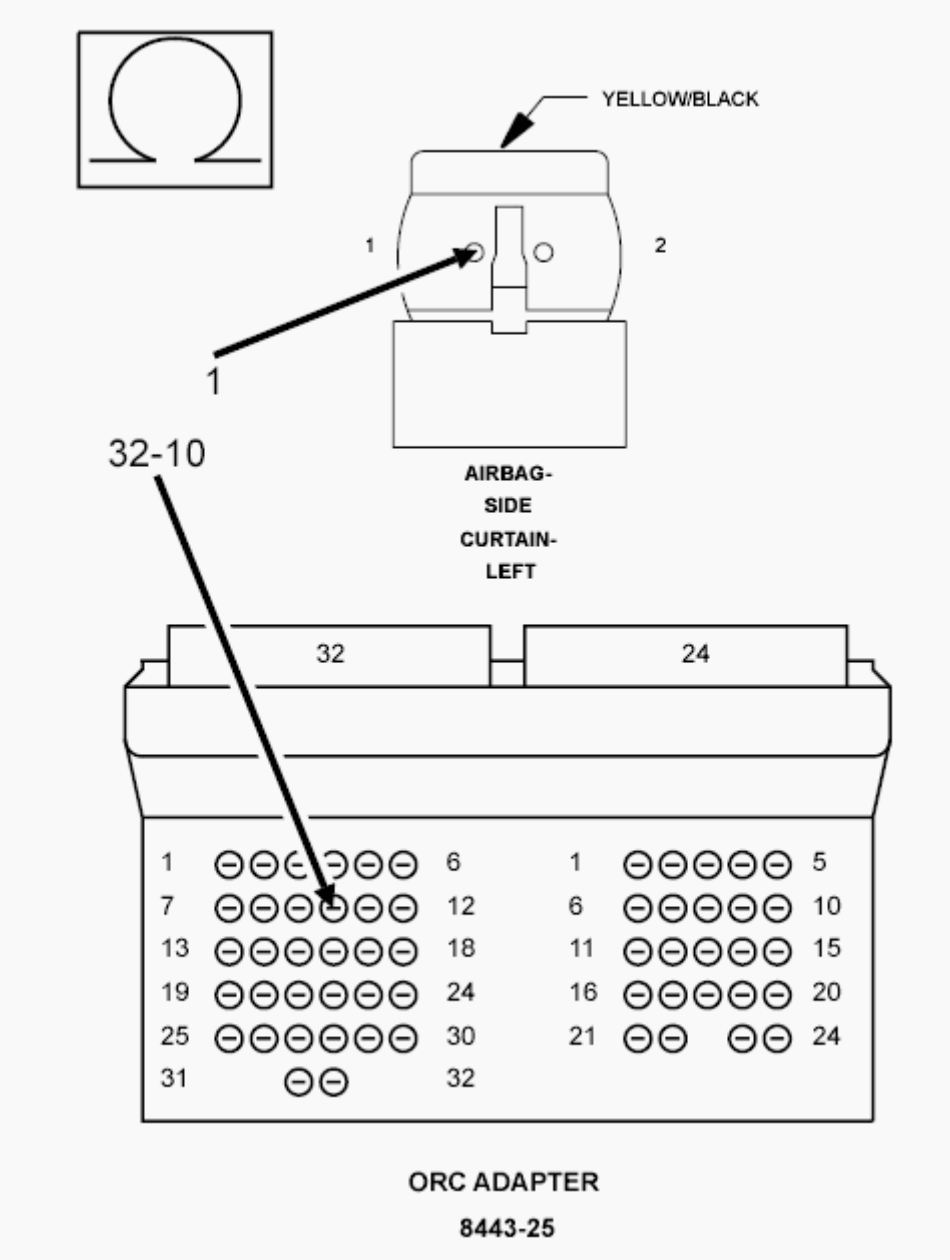

Fig. 70: Checking Left Curtain Squib 1 Line 2 Circuit For Open
Courtesy of CHRYSLER GROUP, LLC

1. Measure the resistance of the (R1) Left Curtain Squib 1 Line 2 circuit between the Left Side Curtain Airbag connector cavity 1 and the SRS Load Tool Adaptor (special tool #8443-25, 56 Way ACM Adapter) cavity 32-10.

   Is the resistance below 1.0 Ohm?

   Yes

WARNING: If the Occupant Restraint Controller (ORC) is dropped at any time, it must be replaced. Failure to take the proper precautions can result in accidental airbag deployment. Failure to follow these instructions may result in possible serious or fatal injury.

- Replace the ORC in accordance with Service Information.
- Perform the AIRBAG SYSTEM VERIFICATION TEST. Refer to **STANDARD PROCEDURE** .

No

- Repair the (R1) Left Curtain Squib 1 Line 2 circuit for an open.
- Perform the AIRBAG SYSTEM VERIFICATION TEST. Refer to **STANDARD PROCEDURE** .

5. **CHECKING STORED OR INTERMITTENT CODES**

NOTE: Diagnose and repair all active codes before diagnosing stored codes. Refer to OCCUPANT RESTRAINT CONTROLLER (ORC) - DIAGNOSTIC CODE INDEX for a complete list of airbag system diagnostic procedures.

1. With the scan tool, record and erase all Airbag System Module DTCs.

WARNING: Turn the ignition off disconnect the 12-volt battery and wait two minutes before proceeding. Failure to follow these instructions may result in possible serious or fatal injury.

2. Using the wiring diagram/schematic as a guide, inspect the related wiring and connectors for chafed, pierced, pinched, and partially broken wires, and for broken, bent, pushed out, corroded, and contaminated terminals. Repair as necessary.
3. Reconnect all disconnected components and harness connectors.

WARNING: Turn the ignition on, then reconnect the 12-volt battery and wait two minutes before proceeding. Failure to follow these instructions may result in possible serious or fatal injury.

4. With the scan tool, monitor for active codes while performing the following:
5. In the previous steps you have attempted to recreate the conditions responsible for setting the DTC in question / causing the intermittent condition.

   Are any ACTIVE DTCs present?

   Yes

   - Select the appropriate diagnostic procedure from the **OCCUPANT RESTRAINT CONTROLLER (ORC) - DIAGNOSTIC CODE INDEX** .

   No

   - No problem found at this time. Erase all codes before returning the vehicle to the customer.

B1B1B-LEFT SIDE CURTAIN SQUIB 1 CIRCUIT SHORTED TOGETHER

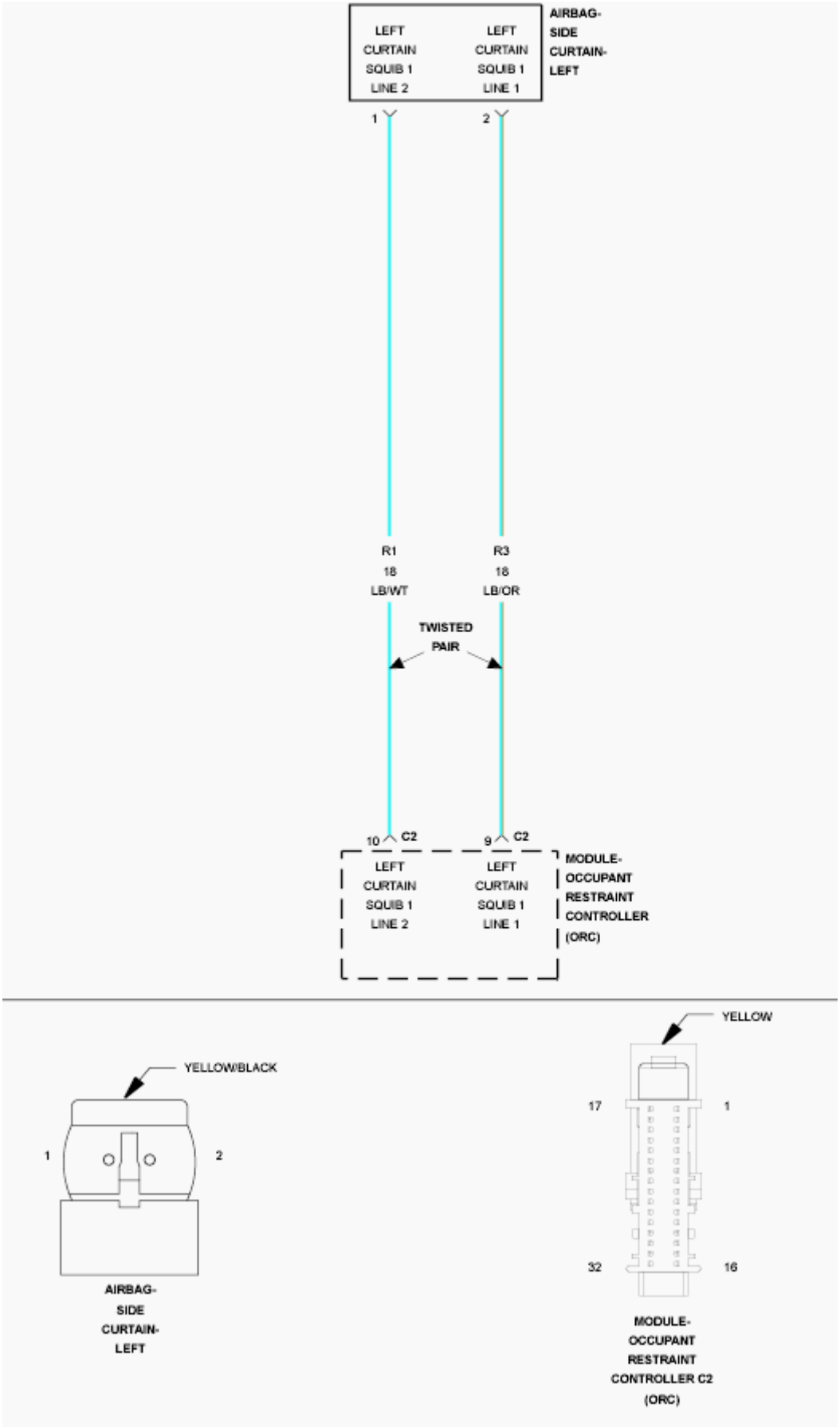
LEFT CURTAIN SQUIB 1 LINE 2
LEFT CURTAIN SQUIB 1 LINE 1
AIRBAG-SIDE CURTAIN-LEFT
1
2
R1
18
LB/WT
R3
18
LB/OR
TWISTED PAIR
10
C2
9
C2
LEFT CURTAIN SQUIB 1 LINE 2
LEFT CURTAIN SQUIB 1 LINE 1
MODULE-OCCUPANT RESTRAINT CONTROLLER (ORC)
YELLOW/BLACK
1
2
AIRBAG-SIDE CURTAIN-LEFT
YELLOW
17
1
32
16
MODULE-OCCUPANT RESTRAINT CONTROLLER C2 (ORC)

Fig. 71: Left Side Curtain Squib 1 Circuit Schematic
Courtesy of CHRYSLER GROUP, LLC

For a complete wiring diagram, **refer to appropriate SYSTEM WIRING DIAGRAMS article** .

THEORY OF OPERATION

When powered, the Occupant Restraint Controller (ORC) sends a test current to the squibs to verify the integrity of the squib and wiring. These circuits are maintained in a "floating" configuration at the ORC (connected to neither power nor ground) as protection against inadvertent deployment. Use of the Supplemental Restraints System (SRS) Load Tool Kit 8443A in the tests below substitutes a suspect squib with a known good component. The SRS Load Tool Adapter provides a test point as well as a method for opening the shorting bar connections within the ORC harness connector.

WHEN MONITORED

With the ignition on.

SET CONDITION

The Occupant Restraint Controller (ORC) monitors the resistance of the Left Curtain Squib 1 circuits. The ORC will set this DTC if it detects low resistance between the Left Curtain Squib 1 circuits.

POSSIBLE CAUSES

Possible Causes
(R3) LEFT CURTAIN SQUIB 1 LINE 1 CIRCUIT SHORTED TO THE (R1) LEFT CURTAIN SQUIB 1 LINE 2 CIRCUIT
LEFT SIDE CURTAIN AIRBAG
OCCUPANT RESTRAINT CONTROLLER (ORC)

DIAGNOSTIC TEST

1. **DETERMINE ACTIVE OR STORED DTC**

NOTE: Make sure that the battery is fully charged.

NOTE: The scan tool, SRS Load Tool Kit (special tool

#8443A, SRS Load Tool), and DVOM are required to perform the following test:

1. Turn the ignition on.

   Select ACTIVE or STORED DTC:

   ACTIVE DTC

   - Go To 2

   STORED DTC

   - Go To 4

2. **CHECK FOR SHORTED SQUIB CIRCUITS IN LEFT SIDE CURTAIN AIRBAG**

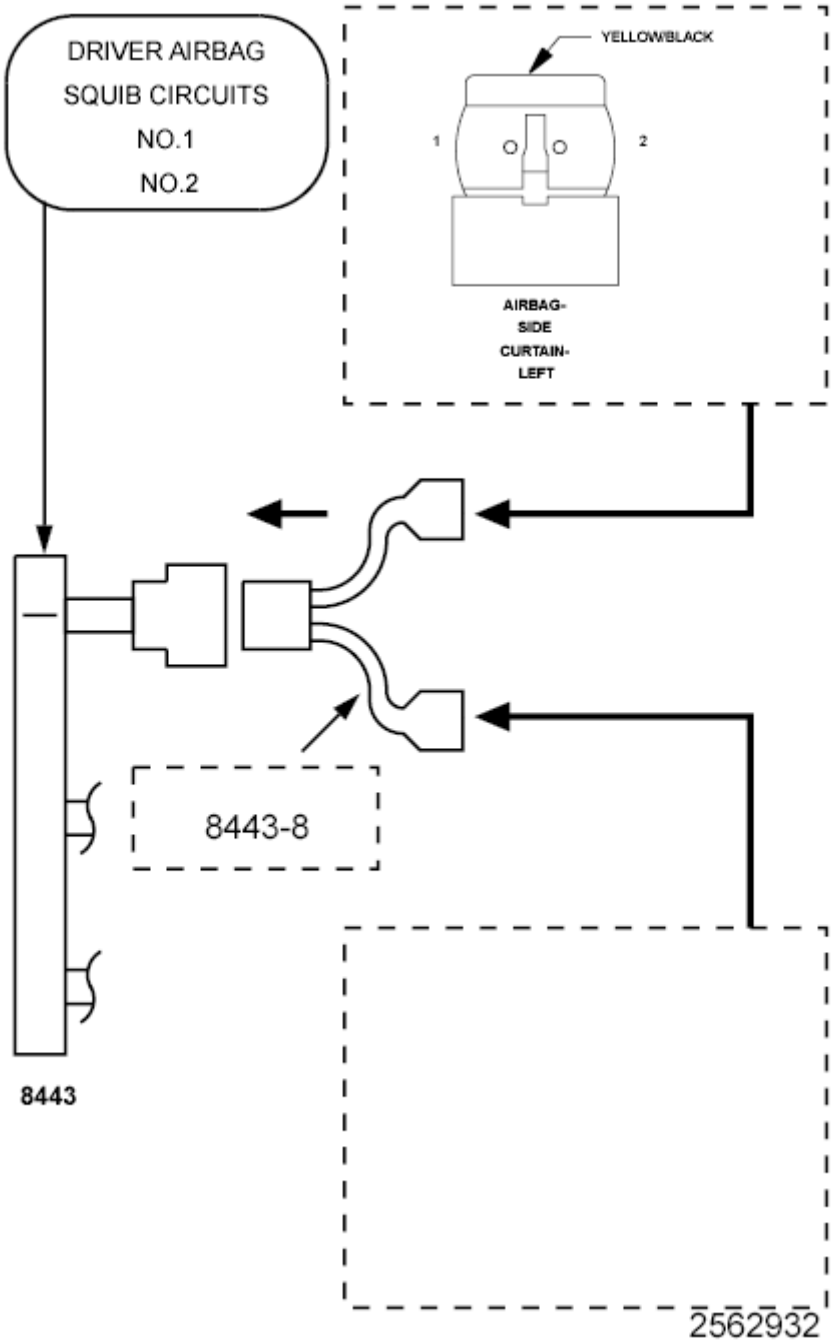

Fig. 72: Checking For Shorted Squib Circuits In Left Side Curtain Airbag
Courtesy of CHRYSLER GROUP, LLC

WARNING: Turn the ignition off disconnect the 12-volt battery and wait two minutes before proceeding. Failure to follow these instructions may result in possible serious or fatal injury.

1. Disconnect the Left Side Curtain Airbag connector.

WARNING: Do not place an intact non-deployed curtain airbag face down on a hard surface, the airbag will propel into the air if accidentally deployed. Failure to follow these instructions may result in possible serious or fatal injury.

NOTE: Check connectors - Clean and repair as necessary.

2. Connect the SRS Load Tool Kit (special tool #8443A, SRS Load Tool) and SRS Load Tool Jumper (special tool #8443-8, Jumper, SRS Load) to the Left Side Curtain Airbag connector.

WARNING: Turn the ignition on, then reconnect the 12-volt battery and wait two minutes before proceeding. Failure to follow these instructions may result in possible serious or fatal injury.

3. With the scan tool, read the active ORC DTCs.

   Does the scan tool display: B1B1B-LEFT SIDE CURTAIN SQUIB 1 CIRCUIT SHORTED TOGETHER?

   Yes

   - Go To 3

   No

   - Replace the Left Side Curtain Airbag in accordance with the Service Information.
   - Perform the AIRBAG SYSTEM VERIFICATION TEST. Refer to **STANDARD PROCEDURE** .

3. **CHECK THE (R3) LEFT CURTAIN SQUIB 1 LINE 1 CIRCUIT FOR A SHORT TO THE (R1) LEFT CURTAIN SQUIB 1 LINE 2 CIRCUIT**

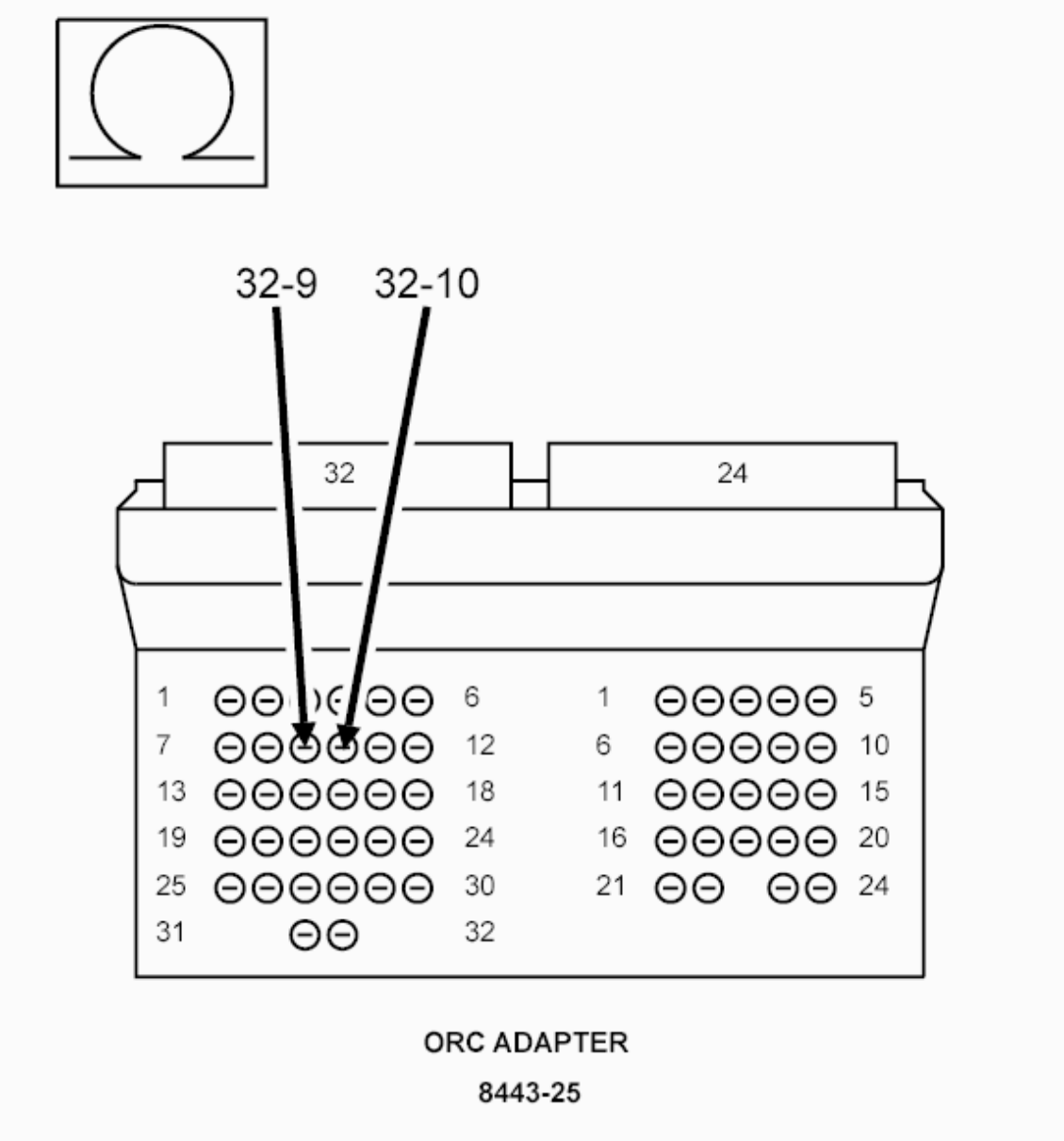

Fig. 73: Checking Left Curtain Squib 1 Line 1 Circuit For Short To Left Curtain Squib 1 Line 2 Circuit
Courtesy of CHRYSLER GROUP, LLC

WARNING: Turn the ignition off disconnect the 12-volt battery and wait two minutes before proceeding. Failure to follow these instructions may result in possible serious or fatal injury.

1. Disconnect the SRS Load Tool Kit (special tool #8443A, SRS Load Tool) and SRS Load Tool Jumper (special tool #8443-8, Jumper, SRS Load) from the Left Side Curtain Airbag connector.

2. Disconnect the ORC connectors.

NOTE: Check connectors - Clean and repair as necessary.

3. Connect the SRS Load Tool Adaptor (special tool #8443-25, 56 Way ACM Adapter) Adaptor to the ORC connectors.
4. Measure the resistance between the (R3) Left Curtain Squib 1 Line 1 circuit cavity 32-9 and the (R1) Left Curtain Squib 1 Line 2 circuit cavity 32-10 at the SRS Load Tool Adaptor (special tool #8443-25, 56 Way ACM Adapter).

   Is the resistance below 10k Ohms?

   Yes

   - Repair the (R3) Left Curtain Squib 1 Line 1 circuit for a short to the (R1) Left Curtain Squib 1 Line 2 circuit.
   - Perform the AIRBAG SYSTEM VERIFICATION TEST. Refer to **STANDARD PROCEDURE** .

   No

   WARNING: **If the Occupant Restraint Controller (ORC) is dropped at any time, it must be replaced. Failure to take the proper precautions can result in accidental airbag deployment. Failure to follow these instructions may result in possible serious or fatal injury.**

   - Replace the ORC in accordance with Service Information.
   - Perform the AIRBAG SYSTEM VERIFICATION TEST. Refer to **STANDARD PROCEDURE** .

4. **CHECKING STORED OR INTERMITTENT CODES**

NOTE: Diagnose and repair all active codes before diagnosing stored codes. Refer to OCCUPANT

RESTRAINT CONTROLLER (ORC) - DIAGNOSTIC CODE INDEX for a complete list of airbag system diagnostic procedures.

1. With the scan tool, record and erase all Airbag System Module DTCs.

   WARNING: **Turn the ignition off disconnect the 12-volt battery and wait two minutes before proceeding. Failure to follow these instructions may result in possible serious or fatal injury.**

2. Using the wiring diagram/schematic as a guide, inspect the related wiring and connectors for chafed, pierced, pinched, and partially broken wires, and for broken, bent, pushed out, corroded, and contaminated terminals. Repair as necessary.
3. Reconnect all disconnected components and harness connectors.

   WARNING: **Turn the ignition on, then reconnect the 12-volt battery and wait two minutes before proceeding. Failure to follow these instructions may result in possible serious or fatal injury.**

4. With the scan tool, monitor for active codes while performing the following:
   - Wiggle the wiring harness and connectors of the related airbag circuit.
   - Continue the test until either a code becomes active or the problem area is isolated.
5. In the previous steps you have attempted to recreate the conditions responsible for setting the DTC in question / causing the intermittent condition.

   Are any ACTIVE DTCs present?

   Yes

- Select the appropriate diagnostic procedure from the **OCCUPANT RESTRAINT CONTROLLER (ORC) - DIAGNOSTIC CODE INDEX** .

No

- No problem found at this time. Erase all codes before returning the vehicle to the customer.

B1B20-RIGHT SIDE CURTAIN SQUIB 1 CIRCUIT LOW

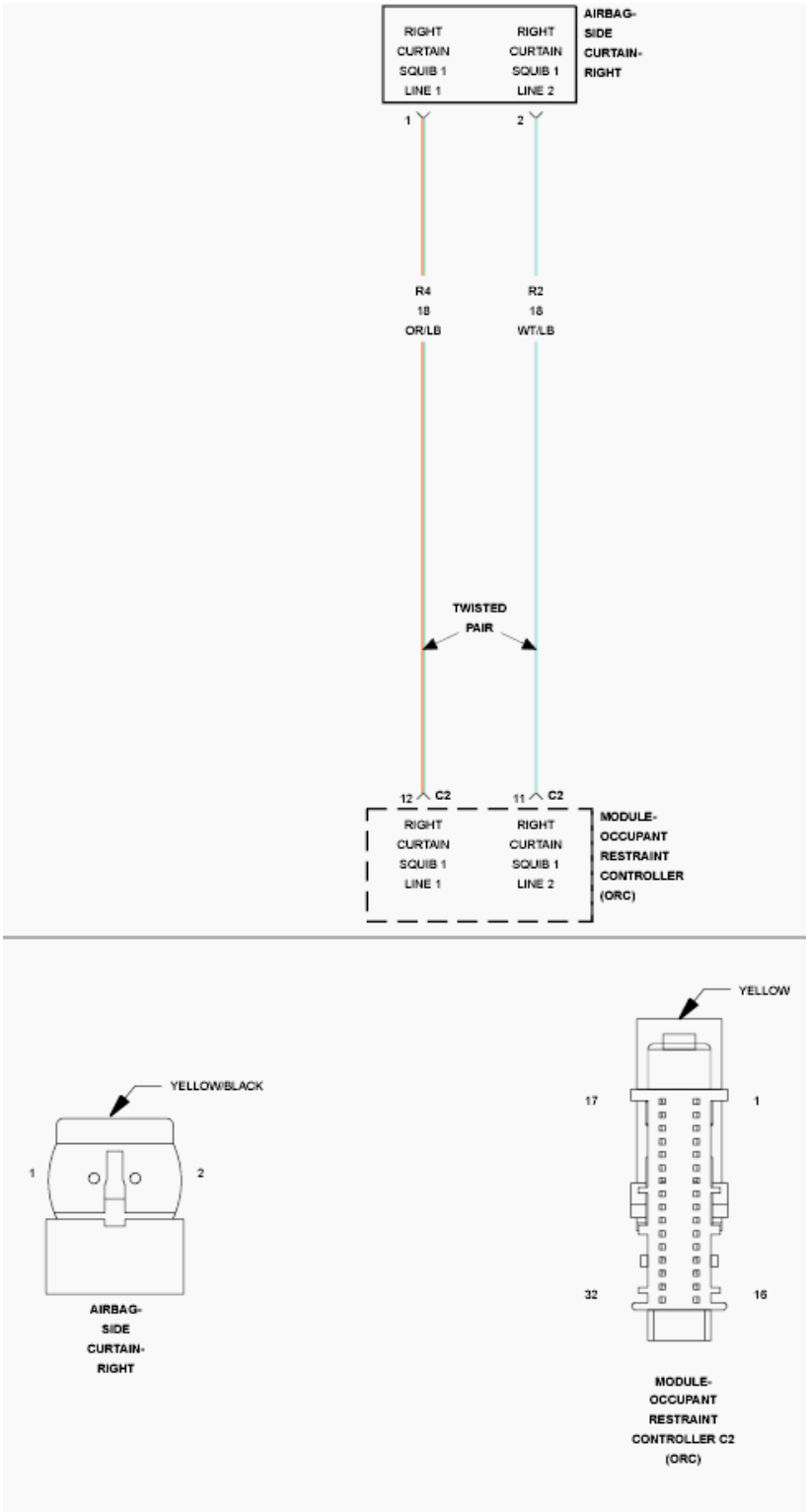

Fig. 74: Right Side Curtain Squib 1 Circuit Schematic
Courtesy of CHRYSLER GROUP, LLC

For a complete wiring diagram, **refer to appropriate SYSTEM WIRING DIAGRAMS article** .

THEORY OF OPERATION

When powered, the Occupant Restraint Controller (ORC) sends a test current to the squibs to verify the integrity of the squib and wiring. These circuits are maintained in a "floating" configuration at the ORC (connected to neither power nor ground) as protection against inadvertent deployment. Use of the Supplemental Restraints System (SRS) Load Tool Kit 8443A in the tests below substitutes a suspect squib with a known good component. The SRS Load Tool Adapter provides a test point as well as a method for opening the shorting bar connections within the ORC harness connector.

WHEN MONITORED

With the ignition on.

SET CONDITION

The Occupant Restraint Controller (ORC) monitors the resistance of the Right Curtain Squib 1 circuits. The ORC will set this DTC if it detects low resistance on the Right Curtain Squib 1 circuits.

POSSIBLE CAUSES

Possible Causes
(R4) RIGHT CURTAIN SQUIB 1 LINE 1 CIRCUIT SHORTED TO GROUND
(R2) RIGHT CURTAIN SQUIB 1 LINE 2 CIRCUIT SHORTED TO GROUND
RIGHT SIDE CURTAIN AIRBAG
OCCUPANT RESTRAINT CONTROLLER (ORC)

DIAGNOSTIC TEST

1. **DETERMINE ACTIVE OR STORED DTC**

   NOTE: Make sure that the battery is fully charged.

   NOTE: The scan tool, SRS Load Tool Kit (special tool #8443A, SRS Load Tool), and DVOM are required to perform the following test:

   1. Turn the ignition on.

Select ACTIVE or STORED DTC:

ACTIVE DTC

- Go To 2

STORED DTC

- Go To 4

2. **CHECK FOR SHORTED SQUIB CIRCUITS IN RIGHT SIDE CURTAIN AIRBAG**

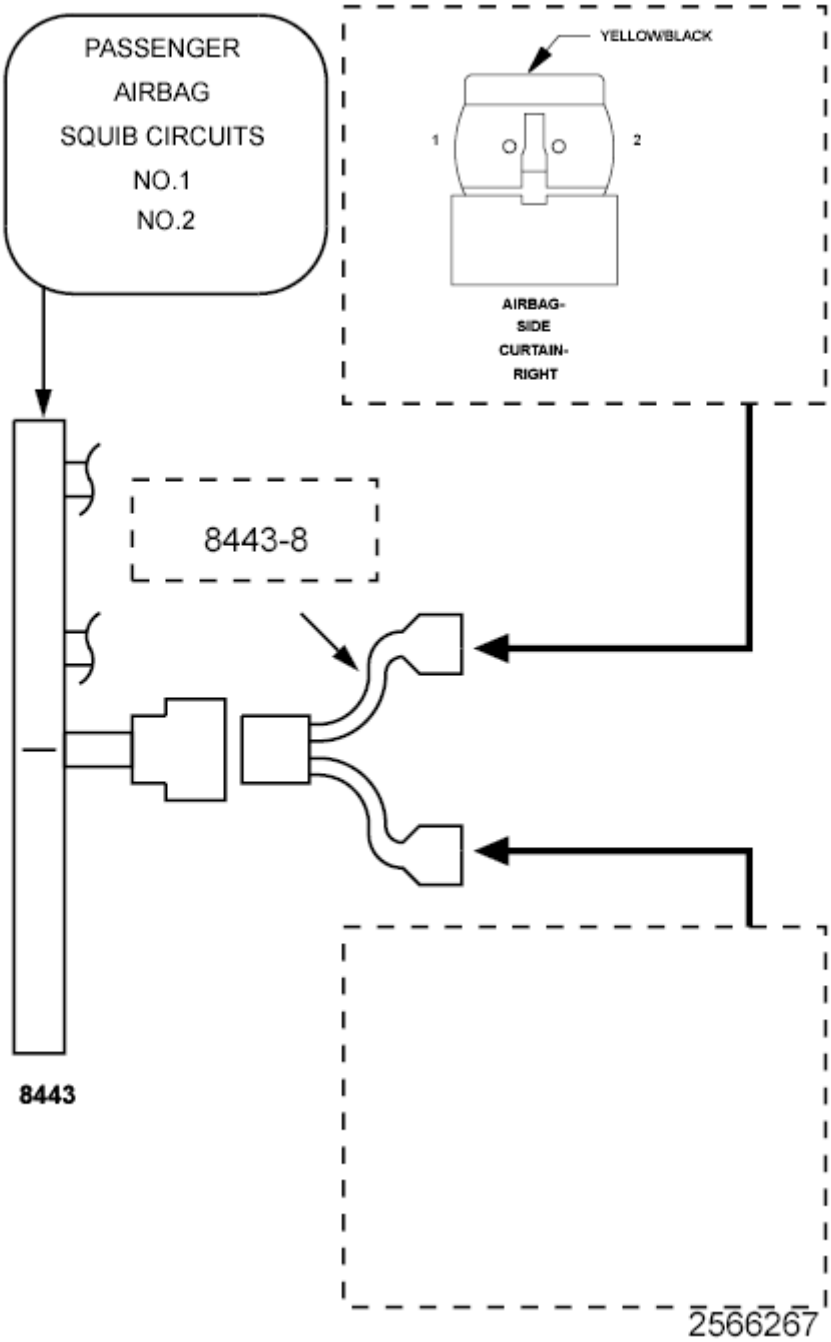

Fig. 75: Checking For Shorted Squib Circuits In Right Side Curtain Airbag
Courtesy of CHRYSLER GROUP, LLC

WARNING: Turn the ignition off disconnect the 12-volt battery and wait two minutes before proceeding. Failure to follow these instructions may result in possible serious or fatal injury.

1. Disconnect the Right Side Curtain Airbag connector.

   WARNING: Do not place an intact non-deployed curtain airbag face down on a hard surface, the airbag will propel into the air if accidentally deployed. Failure to follow these instructions may result in possible serious or fatal injury.

   NOTE: Check connectors - Clean and repair as necessary.

2. Connect the SRS Load Tool Kit (special tool #8443A, SRS Load Tool) and SRS Load Tool Jumper (special tool #8443-8, Jumper, SRS Load) to the Right Side Curtain Airbag connector.

   WARNING: Turn the ignition on, then reconnect the 12-volt battery and wait two minutes before proceeding. Failure to follow these instructions may result in possible serious or fatal injury.

3. With the scan tool, read the active ORC DTCs.

   Does the scan tool display: B1B20-RIGHT SIDE CURTAIN SQUIB 1 CIRCUIT LOW?

   Yes

   - Go To 3

   No

   - Replace the Right Side Curtain Airbag in accordance with the Service Information.
   - Perform the AIRBAG SYSTEM VERIFICATION TEST. Refer to **STANDARD PROCEDURE** .

3. **CHECK THE (R4) RIGHT CURTAIN SQUIB 1 LINE 1 CIRCUIT AND THE (R2) RIGHT CURTAIN SQUIB 1 LINE 2 CIRCUIT FOR A**

SHORT TO GROUND

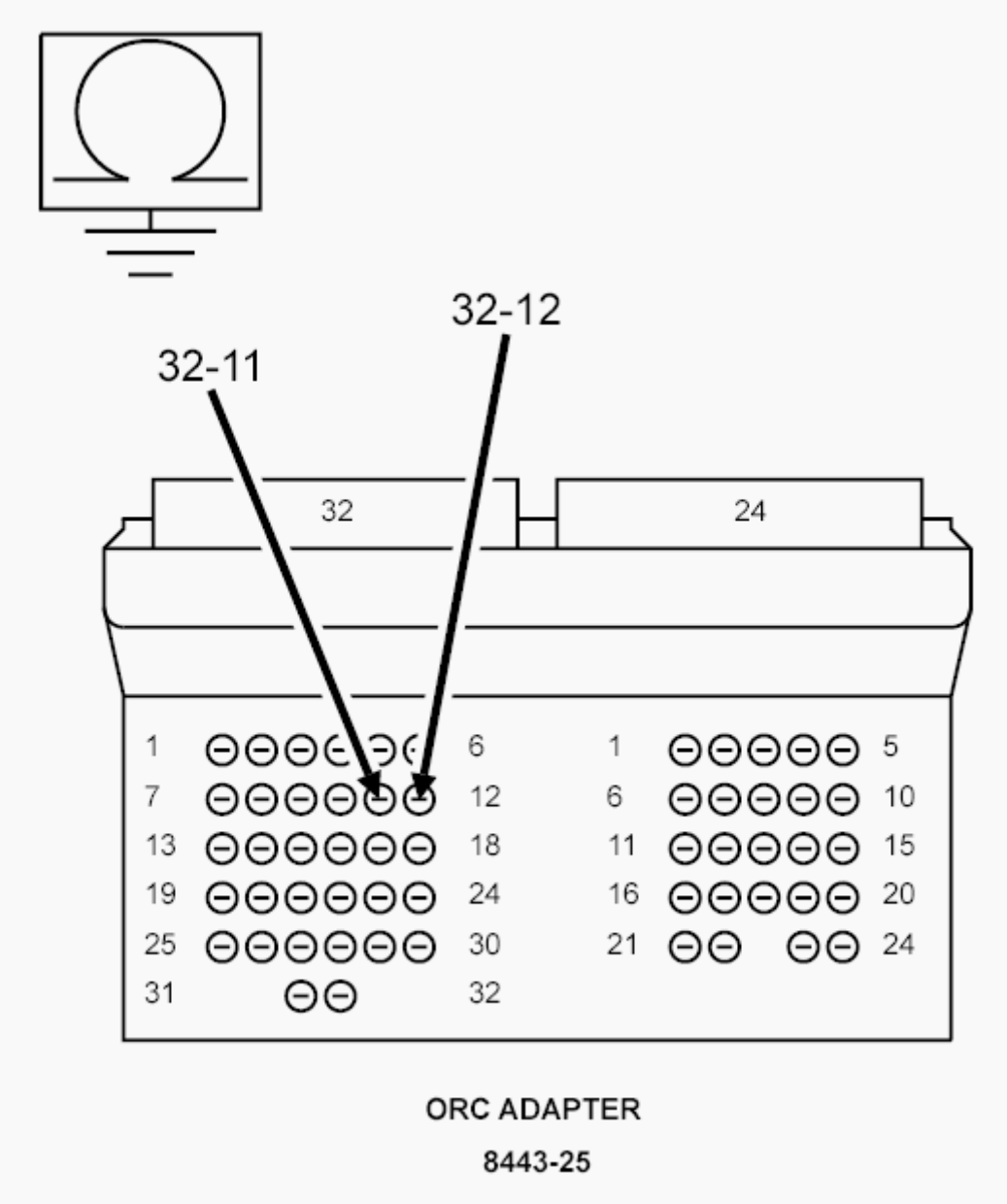

Fig. 76: Checking Right Curtain Squib 1 Line Circuits For Short To Ground
Courtesy of CHRYSLER GROUP, LLC

WARNING: Turn the ignition off disconnect the 12-volt battery and wait two minutes before proceeding. Failure to follow these instructions may result in possible serious or fatal injury.

1. Disconnect the SRS Load Tool Kit (special tool #8443A, SRS Load Tool) and SRS Load Tool Jumper (special tool #8443-8, Jumper, SRS Load) from the Right Side Curtain Airbag connector.
2. Disconnect the ORC connectors.

NOTE: Check connectors - Clean and repair as necessary.

3. Connect the SRS Load Tool Adaptor (special tool #8443-25, 56 Way ACM Adapter) to the ORC connectors.
4. Measure the resistance of the (R4) Right Curtain Squib 1 Line 1 circuit between SRS Load Tool Adaptor (special tool #8443-25, 56 Way ACM Adapter) cavity 32-12 and ground.
5. Measure the resistance of the (R2) Right Curtain Squib 1 Line 2 circuit between SRS Load Tool Adaptor (special tool #8443-25, 56 Way ACM Adapter) cavity 32-11 and ground.

Is the resistance below 10k Ohms on either circuit?

Yes

- Repair the Right Curtain Squib 1 circuits with resistance below 10k Ohms for a short to ground.
- Perform the AIRBAG SYSTEM VERIFICATION TEST. Refer to **STANDARD PROCEDURE** .

No

WARNING: **If the Occupant Restraint Controller (ORC) is dropped at any time, it must be replaced. Failure to take the proper precautions can result in accidental airbag deployment. Failure to follow these instructions may result in possible serious or fatal injury.**

- Replace the ORC in accordance with Service Information.
- Perform the AIRBAG SYSTEM VERIFICATION TEST. Refer to

STANDARD PROCEDURE .

4. CHECKING STORED OR INTERMITTENT CODES

NOTE: Diagnose and repair all active codes before diagnosing stored codes. Refer to OCCUPANT RESTRAINT CONTROLLER (ORC) - DIAGNOSTIC CODE INDEX for a complete list of airbag system diagnostic procedures.

1. With the scan tool, record and erase all Airbag System Module DTCs.

WARNING: Turn the ignition off disconnect the 12-volt battery and wait two minutes before proceeding. Failure to follow these instructions may result in possible serious or fatal injury.

2. Using the wiring diagram/schematic as a guide, inspect the related wiring and connectors for chafed, pierced, pinched, and partially broken wires, and for broken, bent, pushed out, corroded, and contaminated terminals. Repair as necessary.
3. Reconnect all disconnected components and harness connectors.

WARNING: Turn the ignition on, then reconnect the 12-volt battery and wait two minutes before proceeding. Failure to follow these instructions may result in possible serious or fatal injury.

4. With the scan tool, monitor for active codes while performing the following:
   - Wiggle the wiring harness and connectors of the related airbag circuit.
   - Continue the test until either a code becomes active or the problem area is isolated.
5. In the previous steps you have attempted to recreate the conditions responsible for setting the DTC in question / causing the intermittent condition.

Are any ACTIVE DTCs present?

Yes

- Select the appropriate diagnostic procedure from the **OCCUPANT RESTRAINT CONTROLLER (ORC) - DIAGNOSTIC CODE INDEX** .

No

- No problem found at this time. Erase all codes before returning the vehicle to the customer.

B1B21-RIGHT SIDE CURTAIN SQUIB 1 CIRCUIT HIGH

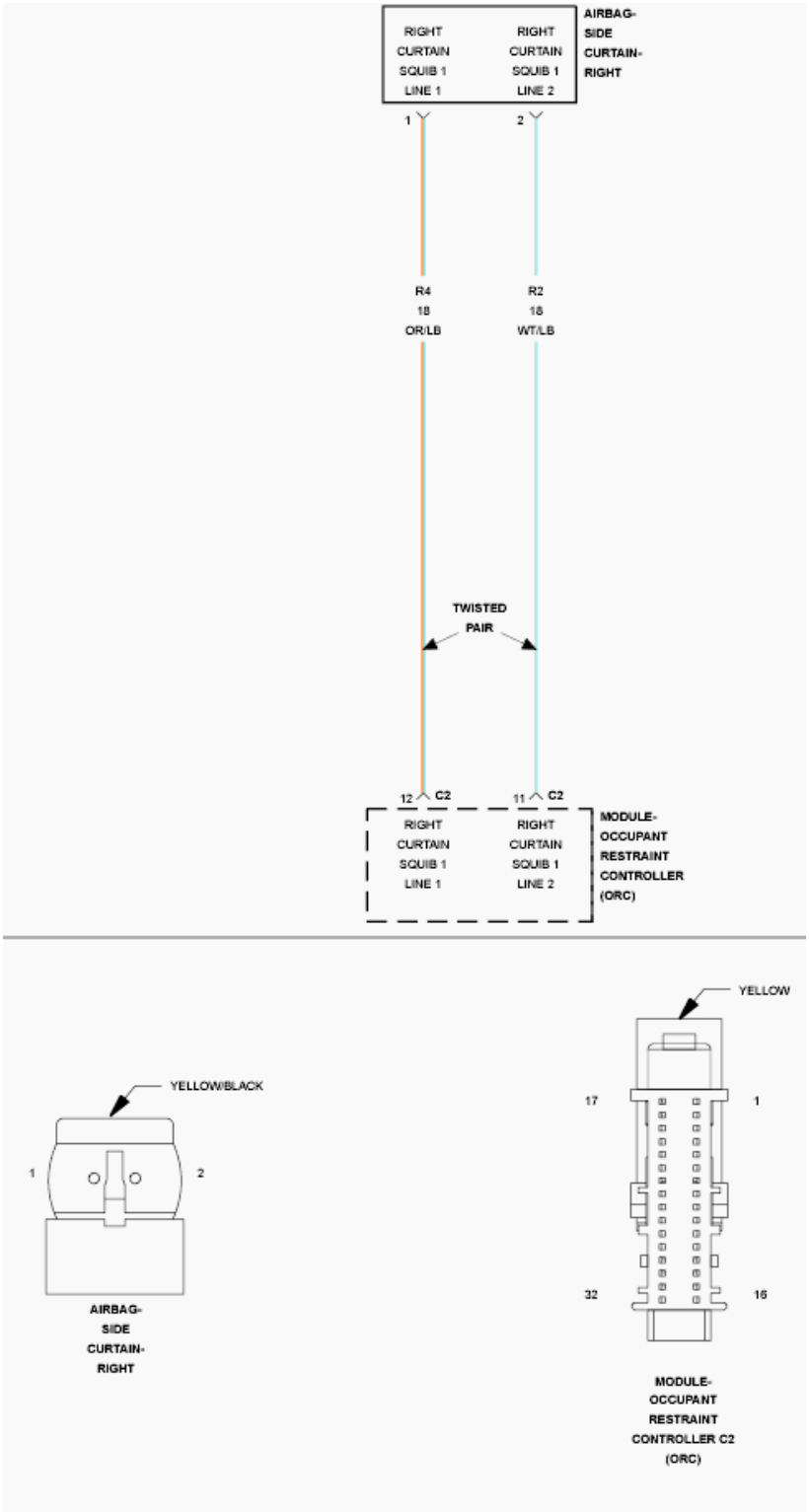

Fig. 77: Right Side Curtain Squib 1 Circuit Schematic
Courtesy of CHRYSLER GROUP, LLC

For a complete wiring diagram, **refer to appropriate SYSTEM WIRING DIAGRAMS article** .

WHEN MONITORED

With the ignition on.

SET CONDITION

The Occupant Restraint Controller (ORC) monitors the voltage on the Right Curtain Squib 1 circuits. The ORC will set this DTC if it detects voltage on the Right Curtain Squib 1 circuits.

POSSIBLE CAUSES

Possible Causes
(R4) RIGHT CURTAIN SQUIB 1 LINE 1 CIRCUIT OR (R2) RIGHT CURTAIN SQUIB 1 LINE 2 CIRCUIT SHORTED TO BATTERY
RIGHT SIDE CURTAIN AIRBAG
OCCUPANT RESTRAINT CONTROLLER (ORC)

DIAGNOSTIC TEST

1. **DETERMINE ACTIVE OR STORED DTC**

   NOTE: Make sure that the battery is fully charged.

   NOTE: The scan tool, SRS Load Tool Kit (special tool #8443A, SRS Load Tool), and DVOM are required to perform the following test:

   1. Turn the ignition on.

      Select ACTIVE or STORED DTC:

      ACTIVE DTC

      - Go To 2

      STORED DTC

      - Go To 4

2. **CHECK FOR SHORTED SQUIB CIRCUITS IN RIGHT SIDE CURTAIN AIRBAG**

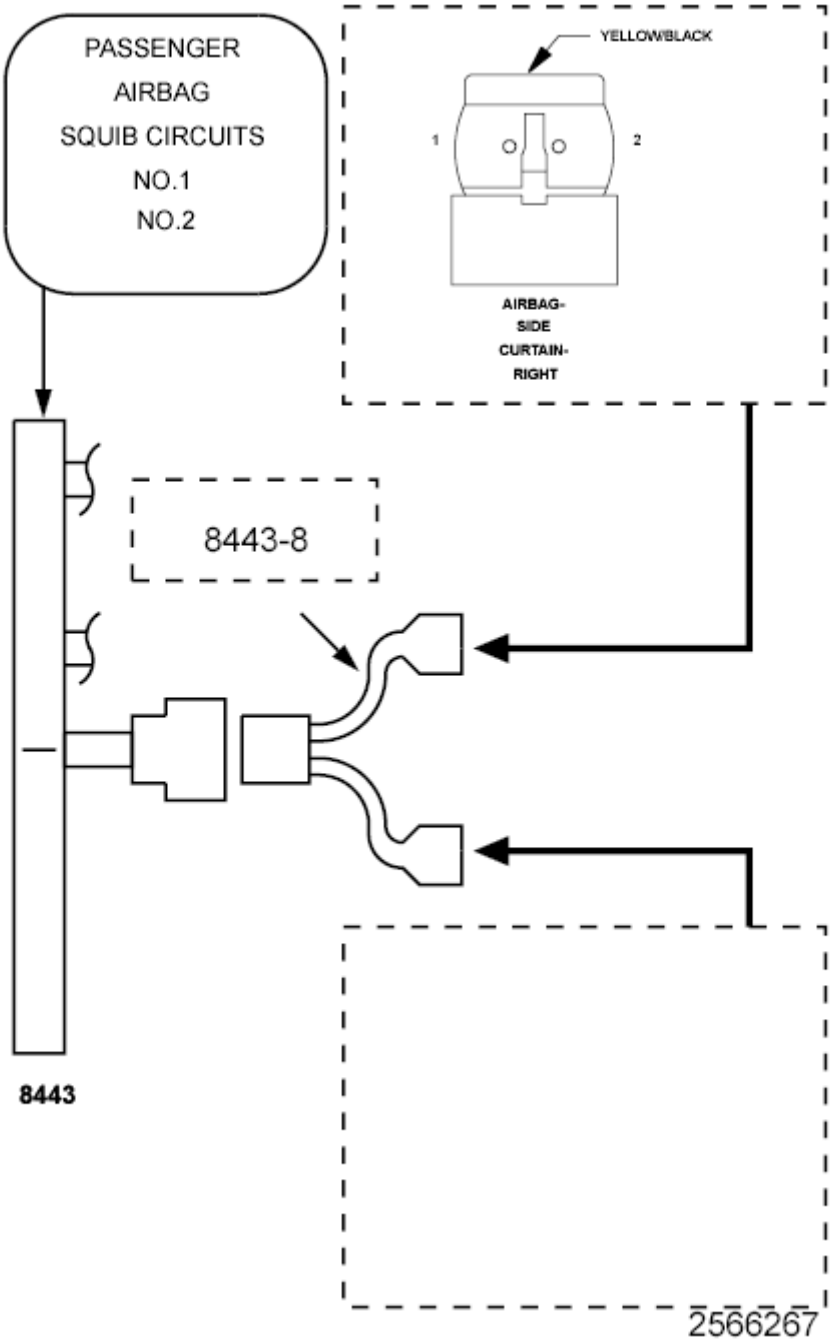

Fig. 78: Checking For Shorted Squib Circuits In Right Side Curtain Airbag
Courtesy of CHRYSLER GROUP, LLC

WARNING: Turn the ignition off disconnect the 12-volt battery and wait two minutes before proceeding. Failure to follow these instructions may result in possible serious or fatal injury.

1. Disconnect the Right Side Curtain Airbag connector.

   WARNING: Do not place an intact uncoupled curtain airbag face down on a hard surface, the airbag will propel into the air if accidentally deployed. Failure to follow these instructions may result in possible serious or fatal injury.

   NOTE: Check connectors - Clean and repair as necessary.

2. Connect the SRS Load Tool Kit (special tool #8443A, SRS Load Tool) and SRS Load Tool Jumper (special tool #8443-8, Jumper, SRS Load) to the Right Side Curtain Airbag connector.

   WARNING: Turn the ignition on, then reconnect the 12-volt battery and wait two minutes before proceeding. Failure to follow these instructions may result in possible serious or fatal injury.

3. With the scan tool, read the active ORC DTCs.

   Does the scan tool display: B1B21-RIGHT SIDE CURTAIN SQUIB 1 CIRCUIT HIGH?

   Yes

   - Go To 3

   No

   - Replace the Right Side Curtain Airbag in accordance with the Service Information.
   - Perform the AIRBAG SYSTEM VERIFICATION TEST. Refer to **STANDARD PROCEDURE** .

3. **CHECK THE (R4) RIGHT CURTAIN SQUIB 1 LINE 1 CIRCUIT AND THE (R2) RIGHT CURTAIN SQUIB 1 LINE 2 CIRCUIT FOR A**

SHORT TO BATTERY

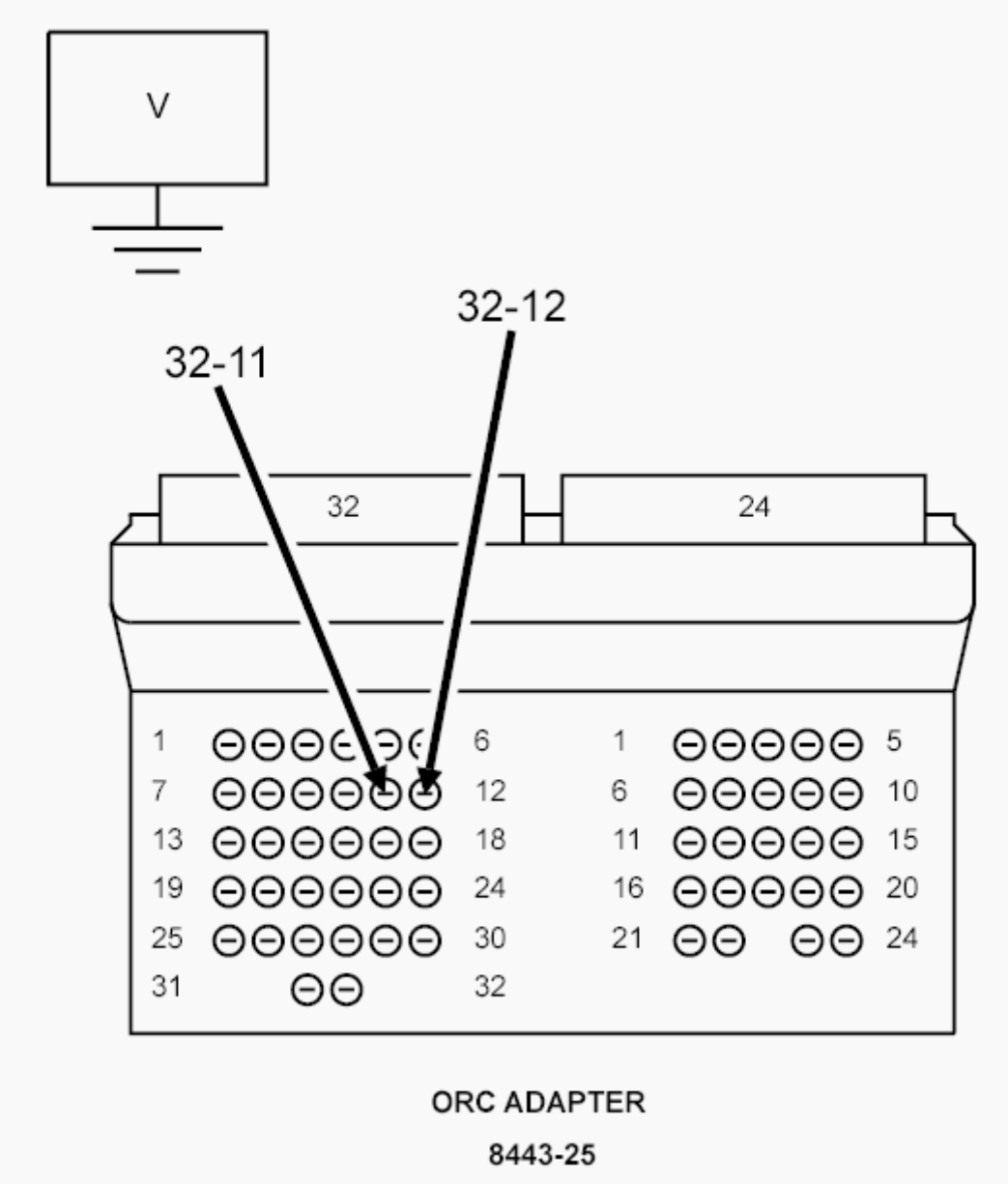

Fig. 79: Checking Right Curtain Squib 1 Line Circuits For Short To Battery
Courtesy of CHRYSLER GROUP, LLC

WARNING: Turn the ignition off disconnect the 12-volt battery and wait two minutes before proceeding. Failure to follow these instructions may result in possible serious or fatal injury.

1. Disconnect the SRS Load Tool Kit (special tool #8443A, SRS Load

Tool) and SRS Load Tool Jumper (special tool #8443-8, Jumper, SRS Load) from the Right Side Curtain Airbag connector.

2. Disconnect the ORC connectors.

NOTE: Check connectors - Clean and repair as necessary.

3. Connect the SRS Load Tool Adaptor (special tool #8443-25, 56 Way ACM Adapter) to the ORC connectors.
4. Measure the voltage of the (R4) Right Curtain Squib 1 Line 1 circuit between the SRS Load Tool Adaptor (special tool #8443-25, 56 Way ACM Adapter) cavity 32-12 and ground.
5. Measure the voltage of the (R2) Right Curtain Squib 1 Line 2 circuit between the SRS Load Tool Adaptor (special tool #8443-25, 56 Way ACM Adapter) cavity 32-11 and ground.

Is there any voltage present on either circuit?

Yes

- Repair the Right Curtain Squib 1 circuits with voltage present for a short to battery.
- Perform the AIRBAG SYSTEM VERIFICATION TEST. Refer to **STANDARD PROCEDURE** .

No

WARNING: **If the Occupant Restraint Controller (ORC) is dropped at any time, it must be replaced. Failure to take the proper precautions can result in accidental airbag deployment. Failure to follow these instructions may result in possible serious or fatal injury.**

- Replace the ORC in accordance with Service Information.
- Perform the AIRBAG SYSTEM VERIFICATION TEST. Refer to **STANDARD PROCEDURE** .

4. CHECKING STORED OR INTERMITTENT CODES

NOTE: Diagnose and repair all active codes before diagnosing stored codes. Refer to OCCUPANT RESTRAINT CONTROLLER (ORC) - DIAGNOSTIC CODE INDEX for a complete list of airbag system diagnostic procedures.

1. With the scan tool, record and erase all Airbag System Module DTCs.

WARNING: Turn the ignition off disconnect the 12-volt battery and wait two minutes before proceeding. Failure to follow these instructions may result in possible serious or fatal injury.

2. Using the wiring diagram/schematic as a guide, inspect the related wiring and connectors for chafed, pierced, pinched, and partially broken wires, and for broken, bent, pushed out, corroded, and contaminated terminals. Repair as necessary.
3. Reconnect all disconnected components and harness connectors.

WARNING: Turn the ignition on, then reconnect the 12-volt battery and wait two minutes before proceeding. Failure to follow these instructions may result in possible serious or fatal injury.

4. With the scan tool, monitor for active codes while performing the following:
   - Wiggle the wiring harness and connectors of the related airbag circuit.
   - Continue the test until either a code becomes active or the problem area is isolated.
5. In the previous steps you have attempted to recreate the conditions responsible for setting the DTC in question / causing the intermittent condition.

Are any ACTIVE DTCs present?

Yes

- Select the appropriate diagnostic procedure from the **OCCUPANT RESTRAINT CONTROLLER (ORC) - DIAGNOSTIC CODE INDEX** .

No

- No problem found at this time. Erase all codes before returning the vehicle to the customer.

B1B22-RIGHT SIDE CURTAIN SQUIB 1 CIRCUIT OPEN

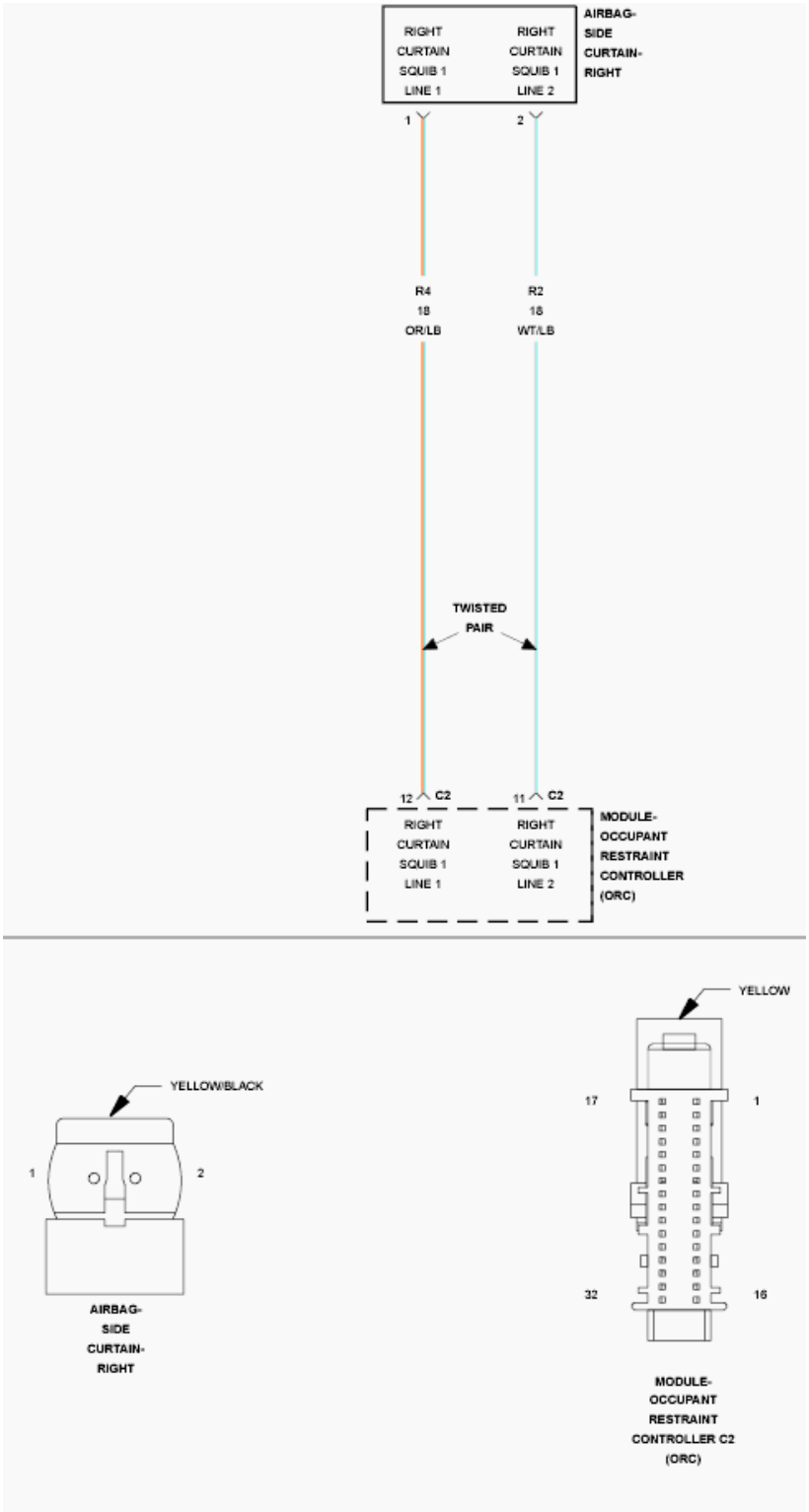

Fig. 80: Right Side Curtain Squib 1 Circuit Schematic
Courtesy of CHRYSLER GROUP, LLC

For a complete wiring diagram, **refer to appropriate SYSTEM WIRING DIAGRAMS article** .

THEORY OF OPERATION

When powered, the Occupant Restraint Controller (ORC) sends a test current to the squibs to verify the integrity of the squib and wiring. These circuits are maintained in a "floating" configuration at the ORC (connected to neither power nor ground) as protection against inadvertent deployment. Use of the Supplemental Restraints System (SRS) Load Tool Kit 8443A in the tests below substitutes a suspect squib with a known good component. The SRS Load Tool Adapter provides a test point as well as a method for opening the shorting bar connections within the ORC harness connector.

WHEN MONITORED

With the ignition on.

SET CONDITION

The Occupant Restraint Controller (ORC) monitors the resistance of the Right Curtain Squib 1 circuits. The ORC will set this DTC if it detects an open or high resistance on the Right Curtain Squib 1 circuits.

POSSIBLE CAUSES

Possible Causes
(R4) RIGHT CURTAIN SQUIB 1 LINE 1 CIRCUIT OPEN
(R2) RIGHT CURTAIN SQUIB 1 LINE 2 CIRCUIT OPEN
RIGHT SIDE CURTAIN AIRBAG
OCCUPANT RESTRAINT CONTROLLER (ORC)

DIAGNOSTIC TEST

1. **DETERMINE ACTIVE OR STORED DTC**

NOTE: Make sure that the battery is fully charged.

NOTE: The scan tool, SRS Load Tool Kit (special tool #8443A, SRS Load Tool), and DVOM are required to perform the following test:

1. Turn the ignition on.

   Select ACTIVE or STORED DTC:

ACTIVE DTC

- Go To 2

STORED DTC

- Go To 5

2. **CHECK FOR OPEN SQUIB CIRCUITS IN RIGHT SIDE CURTAIN AIRBAG**

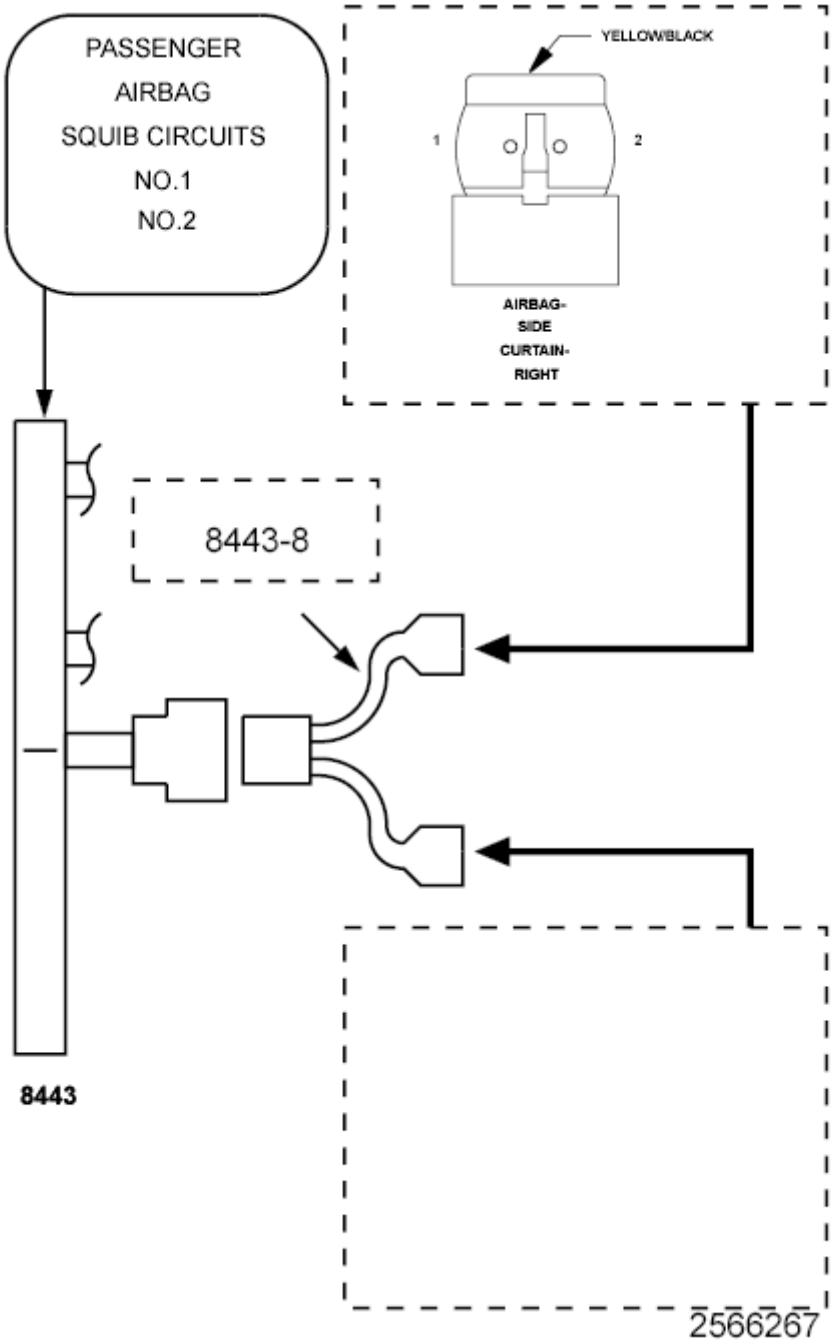

Fig. 81: Checking For Shorted Squib Circuits In Right Side Curtain Airbag
Courtesy of CHRYSLER GROUP, LLC

WARNING: Turn the ignition off disconnect the 12-volt battery and wait two minutes before proceeding. Failure to follow these instructions may result in possible serious or fatal injury.

1. Disconnect the Right Side Curtain Airbag connector.

WARNING: Do not place an intact uncoupled curtain airbag face down on a hard surface, the airbag will propel into the air if accidentally deployed. Failure to follow these instructions may result in possible serious or fatal injury.

NOTE: Check connectors - Clean and repair as necessary.

2. Connect the SRS Load Tool Kit (special tool #8443A, SRS Load Tool) and SRS Load Tool Jumper (special tool #8443-8, Jumper, SRS Load) to the Right Side Curtain Airbag connector.

WARNING: Turn the ignition on, then reconnect the 12-volt battery and wait two minutes before proceeding. Failure to follow these instructions may result in possible serious or fatal injury.

3. With the scan tool, read the active ORC DTCs.

   Does the scan tool display: B1B22 RIGHT SIDE CURTAIN SQUIB 1 CIRCUIT OPEN?

   Yes

- Go To 3

No

- Replace the Right Side Curtain Airbag in accordance with the Service Information.
- Perform the AIRBAG SYSTEM VERIFICATION TEST. Refer to **STANDARD PROCEDURE** .

3. **CHECK THE (R4) RIGHT CURTAIN SQUIB 1 LINE 1 CIRCUIT FOR AN OPEN**

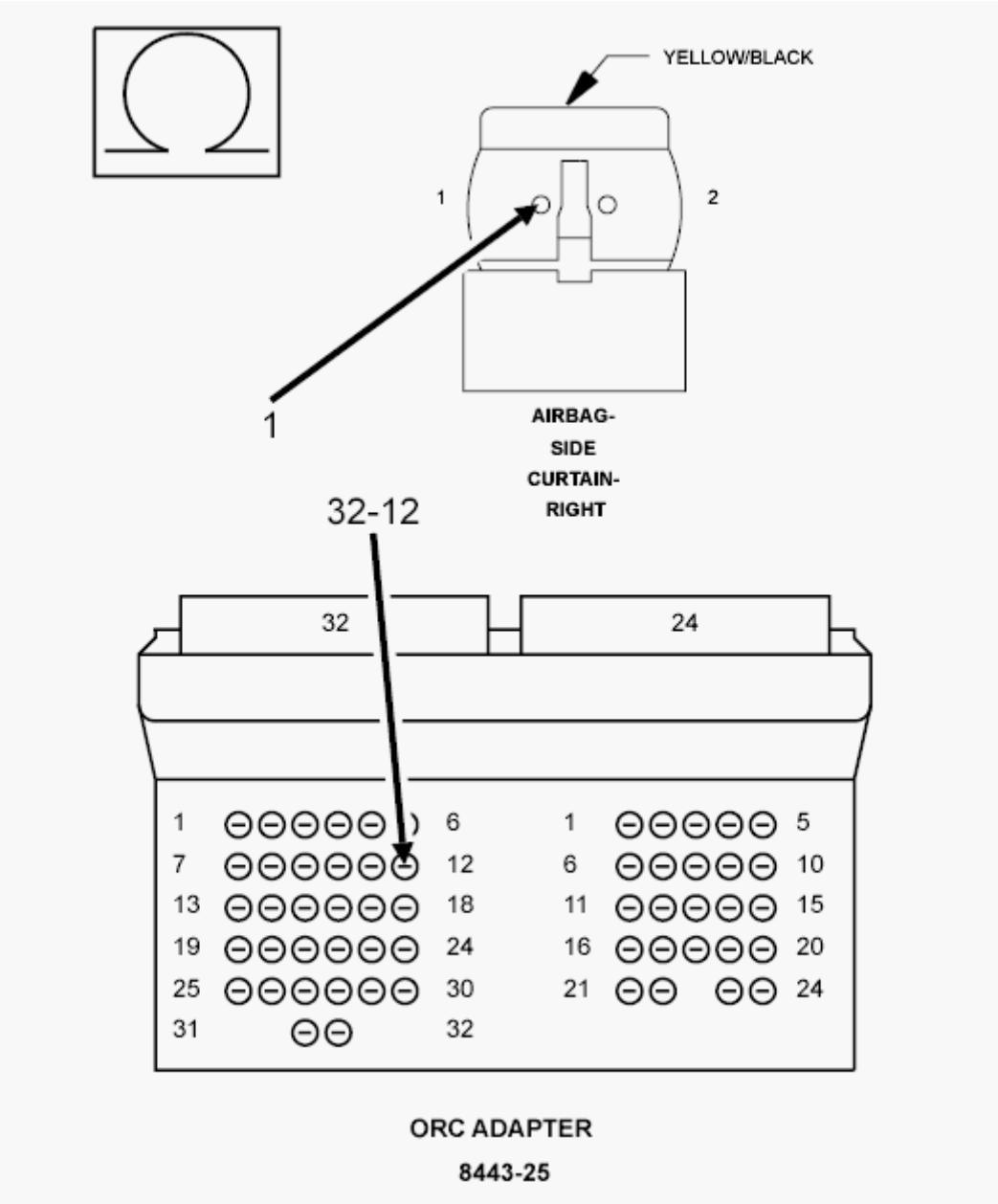

Fig. 82: Checking Right Curtain Squib 1 Line 1 Circuit For Open

Courtesy of CHRYSLER GROUP, LLC

WARNING: Turn the ignition off, disconnect the 12-volt battery and wait two minutes before proceeding. Failure to follow these instructions may result in possible serious or fatal injury.

1. Disconnect the SRS Load Tool Kit (special tool #8443A, SRS Load Tool) and SRS Load Tool Jumper (special tool #8443-8, Jumper, SRS Load) from the Right Side Curtain Airbag connector.
2. Disconnect the ORC connectors.

NOTE: Check connectors - Clean and repair as necessary.

3. Connect the SRS Load Tool Adaptor (special tool #8443-25, 56 Way ACM Adapter) to the ORC C1 connector.
4. Measure the resistance of the (R4) Right Curtain Squib 1 Line 1 circuit between the Right Side Curtain Airbag connector cavity 1 and the SRS Load Tool Adaptor (special tool #8443-25, 56 Way ACM Adapter) cavity 32-12.

   Is the resistance below 1.0 Ohm?

   Yes

   - Go To 4

   No

   - Repair the (R4) Right Curtain Squib 1 Line 1 circuit for an open.
   - Perform the AIRBAG SYSTEM VERIFICATION TEST. Refer to **STANDARD PROCEDURE** .

4. **CHECK (R2) RIGHT CURTAIN SQUIB 1 LINE 2 CIRCUIT FOR AN OPEN**

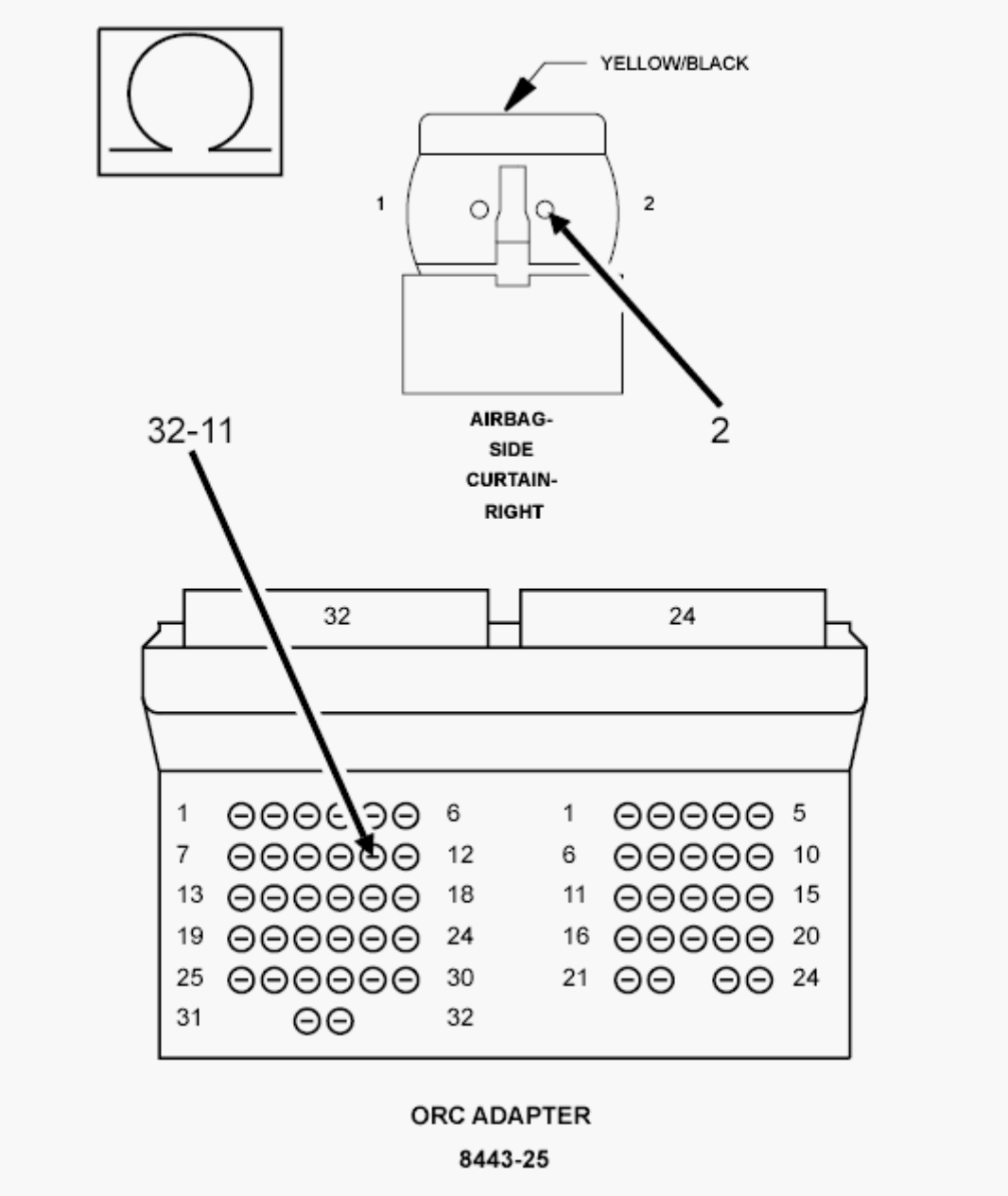

Fig. 83: Checking Right Curtain Squib 1 Line 2 Circuit For Open
Courtesy of CHRYSLER GROUP, LLC

1. Measure the resistance of the (R2) Right Curtain Squib 1 Line 2 circuit between the Right Side Curtain Airbag connector cavity 2 and the SRS Load Tool Adaptor (special tool #8443-25, 56 Way ACM Adapter) cavity 32-11.

   Is the resistance below 1.0 Ohm?

   Yes

WARNING: If the Occupant Restraint Controller (ORC) is dropped at any time, it must be replaced. Failure to follow these instructions may result in possible serious or fatal injury.

- Replace the ORC in accordance with Service Information.
- Perform the AIRBAG SYSTEM VERIFICATION TEST. Refer to **STANDARD PROCEDURE** .

No

- Repair the (R2) Right Curtain Squib 1 Line 2 circuit for an open.
- Perform the AIRBAG SYSTEM VERIFICATION TEST. Refer to **STANDARD PROCEDURE** .

5. **CHECKING STORED OR INTERMITTENT CODES**

NOTE: Diagnose and repair all active codes before diagnosing stored codes. Refer to OCCUPANT RESTRAINT CONTROLLER (ORC) - DIAGNOSTIC CODE INDEX for a complete list of airbag system diagnostic procedures.

1. With the scan tool, record and erase all Airbag System Module DTCs.

WARNING: Turn the ignition off, disconnect the 12-volt battery and wait two minutes before proceeding. Failure to follow these instructions may result in possible serious or fatal injury.

2. Using the wiring diagram/schematic as a guide, inspect the related wiring and connectors for chafed, pierced, pinched, and partially broken wires, and for broken, bent, pushed out, corroded, and contaminated terminals. Repair as necessary.
3. Reconnect all disconnected components and harness connectors.

WARNING: Turn the ignition on, then reconnect the

12-volt battery and wait two minutes before proceeding. Failure to follow these instructions may result in possible serious or fatal injury.

4. With the scan tool, monitor for active codes while performing the following:
   - Wiggle the wiring harness and connectors of the related airbag circuit.
   - Continue the test until either a code becomes active or the problem area is isolated.
5. In the previous steps you have attempted to recreate the conditions responsible for setting the DTC in question / causing the intermittent condition.

   Are any ACTIVE DTCs present?

   Yes

   - Perform the appropriate diagnostic procedure. Refer to **DIAGNOSIS AND TESTING**.

   No

   - No problem found at this time. Erase all codes before returning the vehicle to the customer.

B1B23-RIGHT SIDE CURTAIN SQUIB 1 CIRCUIT SHORTED TOGETHER

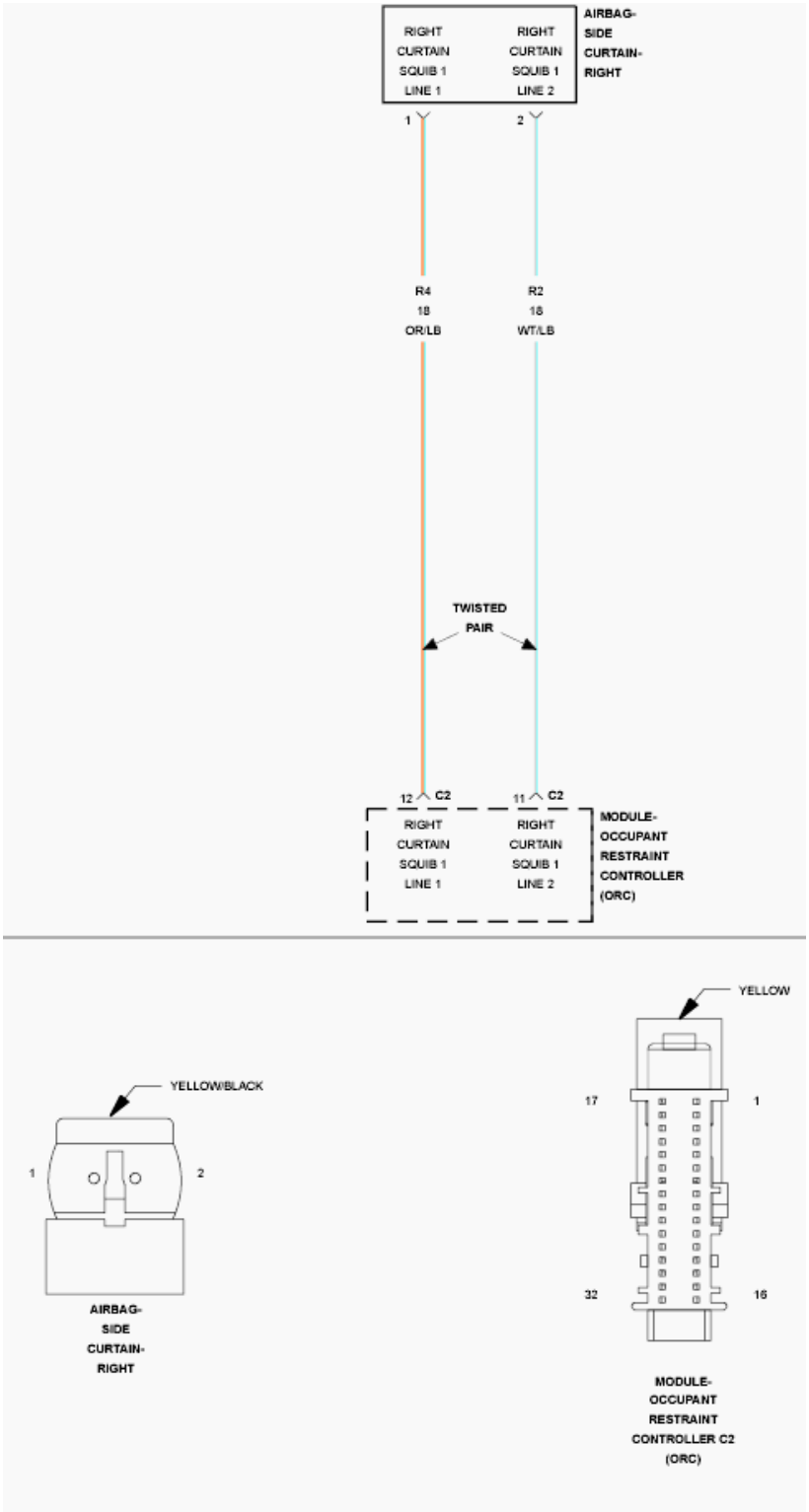

Fig. 84: Right Side Curtain Squib 1 Circuit Schematic
Courtesy of CHRYSLER GROUP, LLC

For a complete wiring diagram, **refer to appropriate SYSTEM WIRING DIAGRAMS article** .

THEORY OF OPERATION

When powered, the Occupant Restraint Controller (ORC) sends a test current to the squibs to verify the integrity of the squib and wiring. These circuits are maintained in a "floating" configuration at the ORC (connected to neither power nor ground) as protection against inadvertent deployment. Use of the Supplemental Restraints System (SRS) Load Tool Kit 8443A in the tests below substitutes a suspect squib with a known good component. The SRS Load Tool Adapter provides a test point as well as a method for opening the shorting bar connections within the ORC harness connector.

WHEN MONITORED

With the ignition on.

SET CONDITION

The Occupant Restraint Controller (ORC) monitors the resistance of the Right Curtain Squib 1 circuits. The ORC will set this DTC if it detects low resistance between the Right Curtain Squib 1 circuits.

POSSIBLE CAUSES

Possible Causes
(R4) RIGHT CURTAIN SQUIB 1 LINE 1 CIRCUIT SHORTED TO (R2) RIGHT CURTAIN SQUIB 1 LINE 2 CIRCUIT
RIGHT SIDE CURTAIN AIRBAG
OCCUPANT RESTRAINT CONTROLLER (ORC)

DIAGNOSTIC TEST

1. **DETERMINE ACTIVE OR STORED DTC**

   NOTE: Make sure that the battery is fully charged.

   NOTE: The scan tool, SRS Load Tool Kit (special tool #8443A, SRS Load Tool), and DVOM are required to perform the following test:

   1. Turn the ignition on.

      Select ACTIVE or STORED DTC:

ACTIVE DTC

- Go To 2

STORED DTC

- Go To 4

2. **CHECK FOR SHORTED SQUIB CIRCUITS IN RIGHT SIDE CURTAIN AIRBAG**

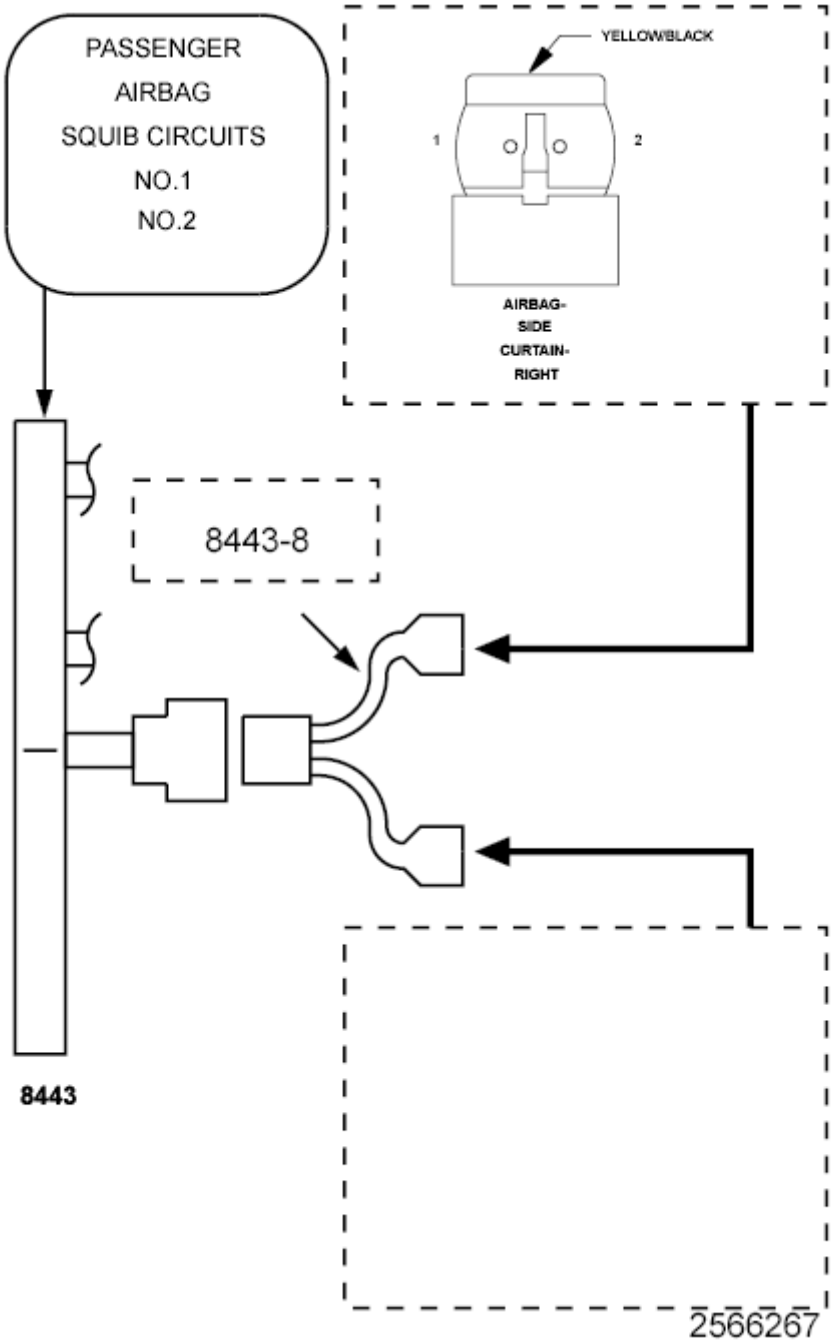

Fig. 85: Checking For Shorted Squib Circuits In Right Side Curtain Airbag
Courtesy of CHRYSLER GROUP, LLC

WARNING: Turn the ignition off disconnect the 12-volt battery and wait two minutes before proceeding. Failure to follow these instructions may result in possible serious or fatal injury.

1. Disconnect the Right Side Curtain Airbag connector.

WARNING: Do not place an intact uncoupled curtain airbag face down on a hard surface, the airbag will propel into the air if accidentally deployed. Failure to follow these instructions may result in possible serious or fatal injury.

NOTE: Check connectors - Clean and repair as necessary.

2. Connect the SRS Load Tool Kit (special tool #8443A, SRS Load Tool) and SRS Load Tool Jumper (special tool #8443-8, Jumper, SRS Load) to the Right Side Curtain Airbag connector.

WARNING: Turn the ignition on, then reconnect the 12-volt battery and wait two minutes before proceeding. Failure to follow these instructions may result in possible serious or fatal injury.

3. With the scan tool, read the active ORC DTCs.

   Does the scan tool display: B1B23-RIGHT SIDE CURTAIN SQUIB 1 CIRCUIT SHORTED TOGETHER?

   Yes

- Go To 3

No

- Replace the Right Side Curtain Airbag in accordance with the Service Information.
- Perform the AIRBAG SYSTEM VERIFICATION TEST. Refer to **STANDARD PROCEDURE** .

3. **CHECK THE (R4) RIGHT CURTAIN SQUIB 1 LINE 1 CIRCUIT FOR A SHORT TO THE (R2) RIGHT CURTAIN SQUIB 1 LINE 2 CIRCUIT**

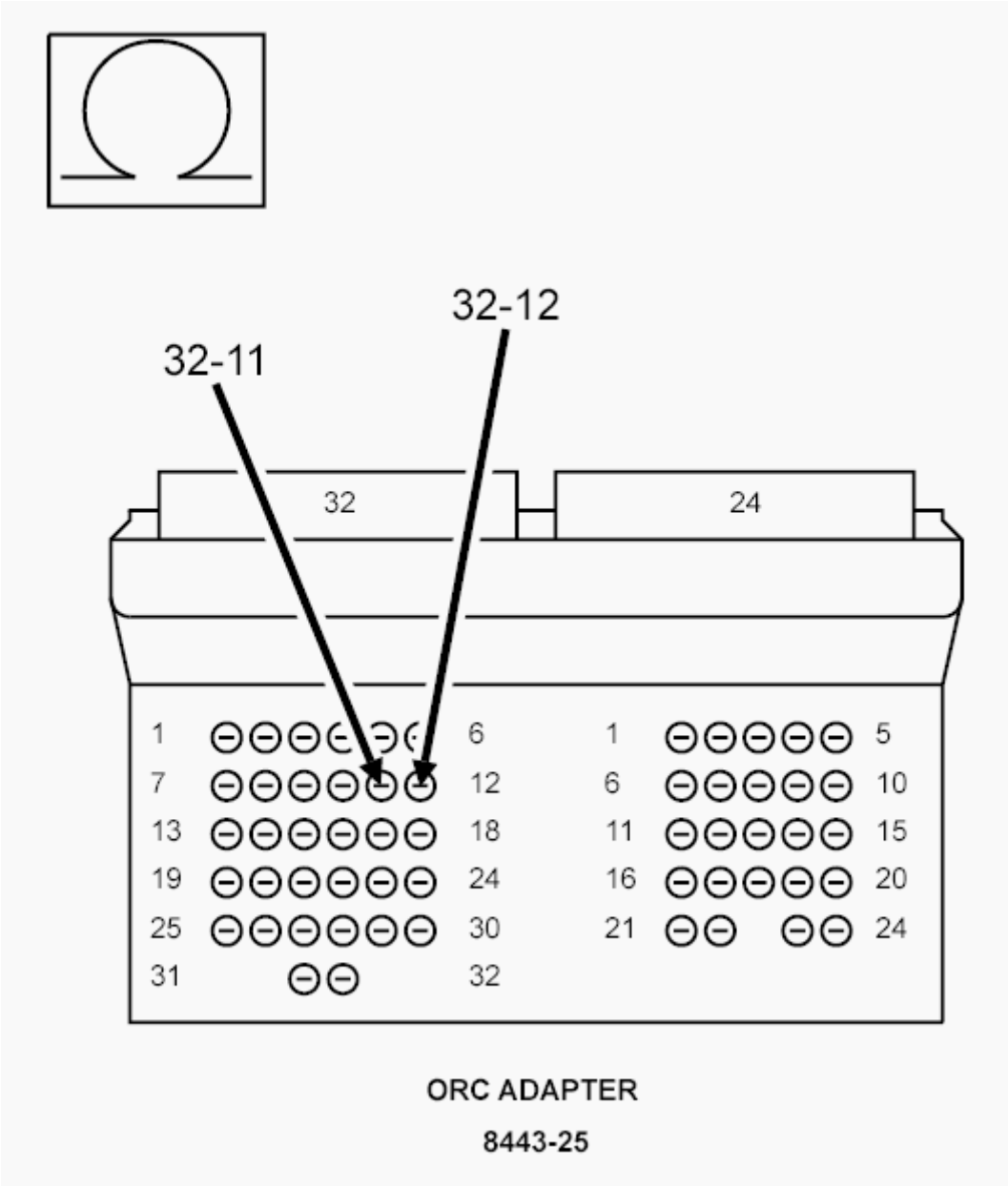

Fig. 86: Checking Right Curtain Squib 1 Line 1 Circuit For Short To Right Curtain Squib 1 Line 2 Circuit
Courtesy of CHRYSLER GROUP, LLC

WARNING: Turn the ignition off disconnect the 12-volt battery and wait two minutes before proceeding. Failure to follow these instructions may result in possible serious or fatal injury.

1. Disconnect the SRS Load Tool Kit (special tool #8443A, SRS Load Tool) and SRS Load Tool Jumper (special tool #8443-8, Jumper, SRS Load) from the Right Side Curtain Airbag connector.
2. Disconnect the ORC connectors.

NOTE: Check connectors - Clean and repair as necessary.

3. Connect the SRS Load Tool Adaptor (special tool #8443-25, 56 Way ACM Adapter) to the ORC connectors.
4. Measure the resistance between the (R4) Right Curtain Squib 1 Line 1 circuit cavity 32-12 and the (R2) Right Curtain Squib 1 Line 2 circuit cavity 32-11 at the SRS Load Tool Adaptor (special tool #8443-25, 56 Way ACM Adapter).

   Is the resistance below 10k Ohms?

   Yes

   - Repair the (R4) Right Curtain Squib 1 Line 1 circuit for a short to the (R2) Right Curtain Squib 1 Line 2 circuit.
   - Perform the AIRBAG SYSTEM VERIFICATION TEST. Refer to **STANDARD PROCEDURE** .

   No

WARNING: If the Occupant Restraint Controller (ORC) is dropped at any time, it must be replaced. Failure to take the proper

precautions can result in accidental airbag deployment. Failure to follow these instructions may result in possible serious or fatal injury.

- Replace the ORC in accordance with Service Information.
- Perform the AIRBAG SYSTEM VERIFICATION TEST. Refer to **STANDARD PROCEDURE** .

4. **CHECKING STORED OR INTERMITTENT CODES**

NOTE: Diagnose and repair all active codes before diagnosing stored codes. Refer to OCCUPANT RESTRAINT CONTROLLER (ORC) - DIAGNOSTIC CODE INDEX for a complete list of airbag system diagnostic procedures.

1. With the scan tool, record and erase all Airbag System Module DTCs.

WARNING: Turn the ignition off disconnect the 12-volt battery and wait two minutes before proceeding. Failure to follow these instructions may result in possible serious or fatal injury.

2. Using the wiring diagram/schematic as a guide, inspect the related wiring and connectors for chafed, pierced, pinched, and partially broken wires, and for broken, bent, pushed out, corroded, and contaminated terminals. Repair as necessary.
3. Reconnect all disconnected components and harness connectors.

WARNING: Turn the ignition on, then reconnect the 12-volt battery and wait two minutes before proceeding. Failure to follow these instructions may result in possible serious or fatal injury.

4. With the scan tool, monitor for active codes while performing the following:

- Wiggle the wiring harness and connectors of the related airbag circuit.
- Continue the test until either a code becomes active or the problem area is isolated.

5. In the previous steps you have attempted to recreate the conditions responsible for setting the DTC in question / causing the intermittent condition.

   Are any ACTIVE DTCs present?

   Yes

   - Select the appropriate diagnostic procedure from the **OCCUPANT RESTRAINT CONTROLLER (ORC) - DIAGNOSTIC CODE INDEX** .

   No

   - No problem found at this time. Erase all codes before returning the vehicle to the customer.

B1B28-1ST ROW DRIVER SEAT BELT PRETENSIONER CIRCUIT LOW

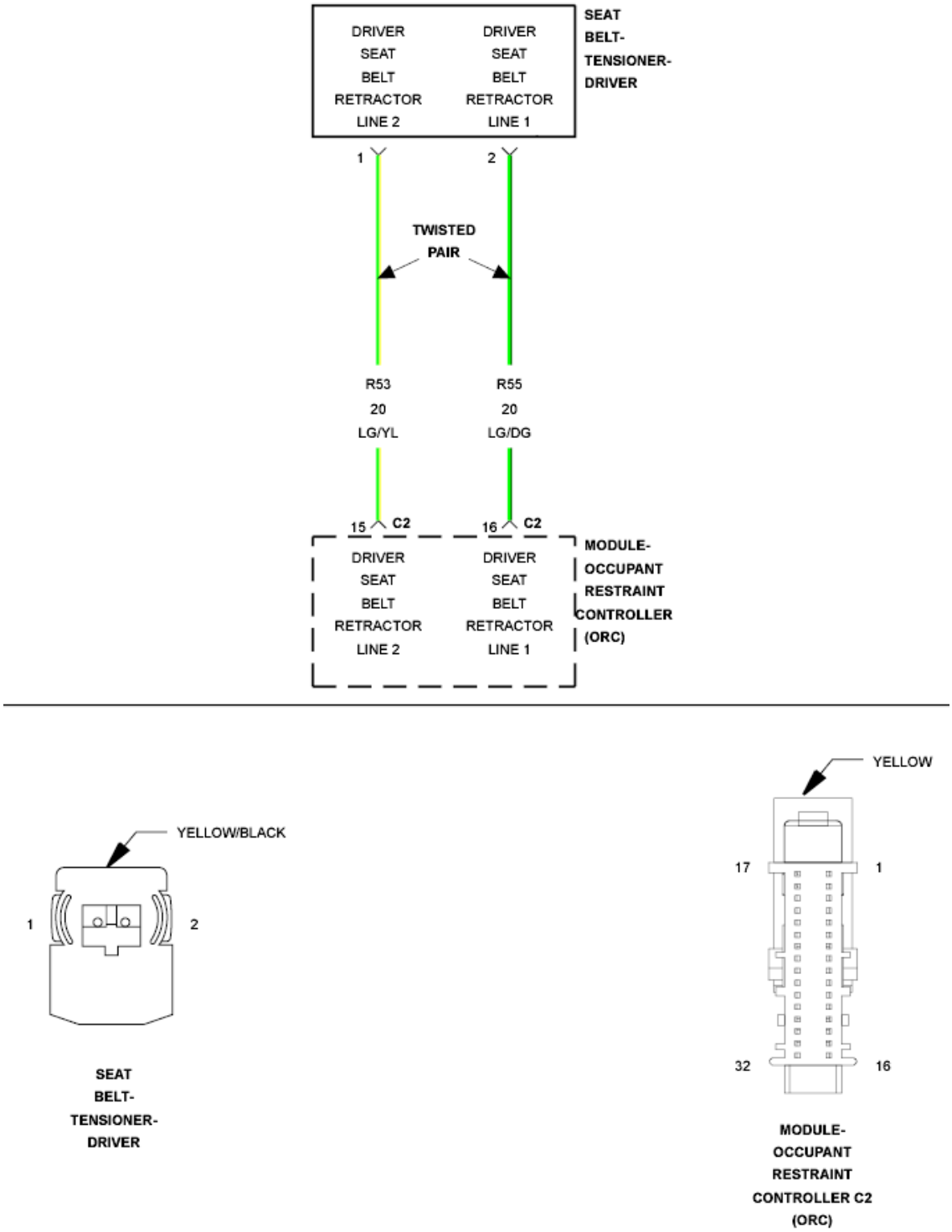

Fig. 87: Driver Seat Belt Pretensioner Circuit Schematic
Courtesy of CHRYSLER GROUP, LLC

For a complete wiring diagram, **refer to appropriate SYSTEM WIRING DIAGRAMS article** .

TO-ORC SQUIB

When powered, the Occupant Restraint Controller (ORC) sends a test current to the squibs to verify the integrity of the squib and wiring. These circuits are maintained in a "floating" configuration at the ORC (connected to neither power nor ground) as protection against inadvertent deployment. Use of the Supplemental Restraints System (SRS) Load Tool Kit (special tool #8443A, SRS Load Tool) in the tests below substitutes a suspect squib with a known good component. The SRS Load Tool Adapter provides a test point as well as a method for opening the shorting bar connections within the ORC harness connector.

WHEN MONITORED

With the ignition on.

SET CONDITION

The Occupant Restraint Controller (ORC) monitors the resistance of the Driver Seat Belt Tensioner circuits. The ORC will set this DTC if it detects low resistance on the Driver Seat Belt Tensioner circuits.

POSSIBLE CAUSES

Possible Causes
(R55) DRIVER SEAT BELT RETRACTOR LINE 1 CIRCUIT OR (R53) DRIVER SEAT BELT RETRACTOR LINE 2 CIRCUIT SHORTED TO GROUND
DRIVER SEAT BELT TENSIONER
OCCUPANT RESTRAINT CONTROLLER (ORC)

DIAGNOSTIC TEST

1. **DETERMINE ACTIVE OR STORED DTC**

   NOTE: Make sure that the battery is fully charged.

   NOTE: The scan tool, SRS Load Tool Kit (special tool #8443A, SRS Load Tool), and DVOM are required to perform the following test:

   1. Turn the ignition on.

Select ACTIVE or STORED DTC:

ACTIVE DTC

- Go To 2

STORED DTC

- Go To 4

2. **CHECK FOR SHORTED DRIVER SEAT BELT TENSIONER**

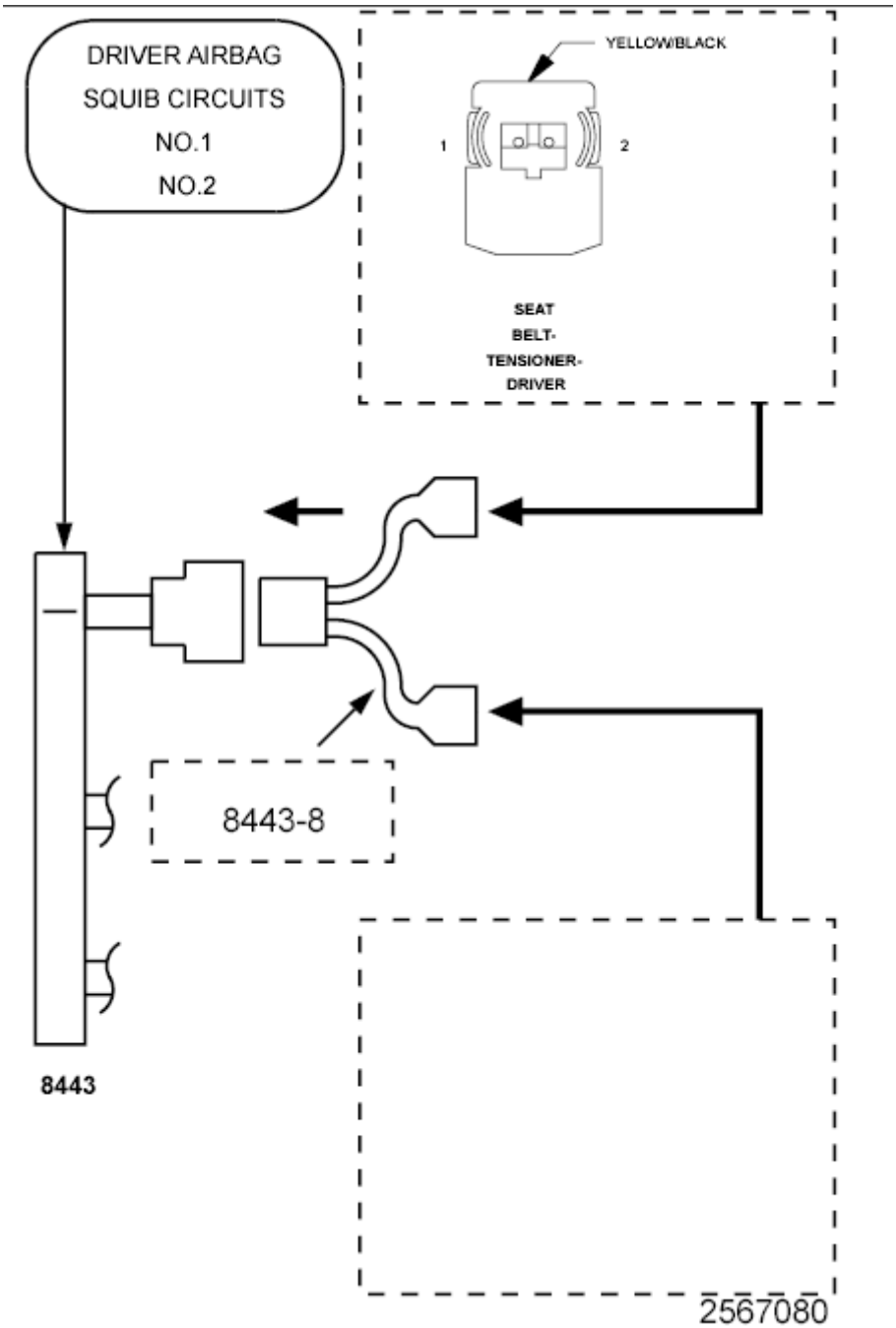

Fig. 88: Checking For Shorted Driver Seat Belt Tensioner
Courtesy of CHRYSLER GROUP, LLC

WARNING: Turn the ignition off, disconnect the 12-volt battery and wait two minutes before proceeding. Failure to follow these instructions may result in possible serious or fatal injury.

1. Disconnect the Driver Seat Belt Pretensioner connector.

NOTE: Check connectors - Clean and repair as necessary.

2. Connect the SRS Load Tool Kit (special tool #8443A, SRS Load Tool) and SRS Load Tool Jumper (special tool #8443-8, Jumper, SRS Load) to the Driver Seat Belt Tensioner connector.

WARNING: Turn the ignition on, then reconnect the 12-volt battery and wait two minutes before proceeding. Failure to follow these instructions may result in possible serious or fatal injury.

3. With the scan tool, read the active ORC DTCs.

   Does the scan tool display: B1B28-1st ROW DRIVER SEAT BELT PRETENSIONER CIRCUIT LOW?

   Yes

   - Go To 3

   No

   - Replace the Driver Seat Belt Pretensioner in accordance with the Service Information.
   - Perform the AIRBAG SYSTEM VERIFICATION TEST. Refer to **STANDARD PROCEDURE** .

3. **CHECK THE (R55) DRIVER SEAT BELT RETRACTOR LINE 1 CIRCUIT AND THE (R53) DRIVER SEAT BELT RETRACTOR LINE 2 CIRCUIT FOR A SHORT TO GROUND**

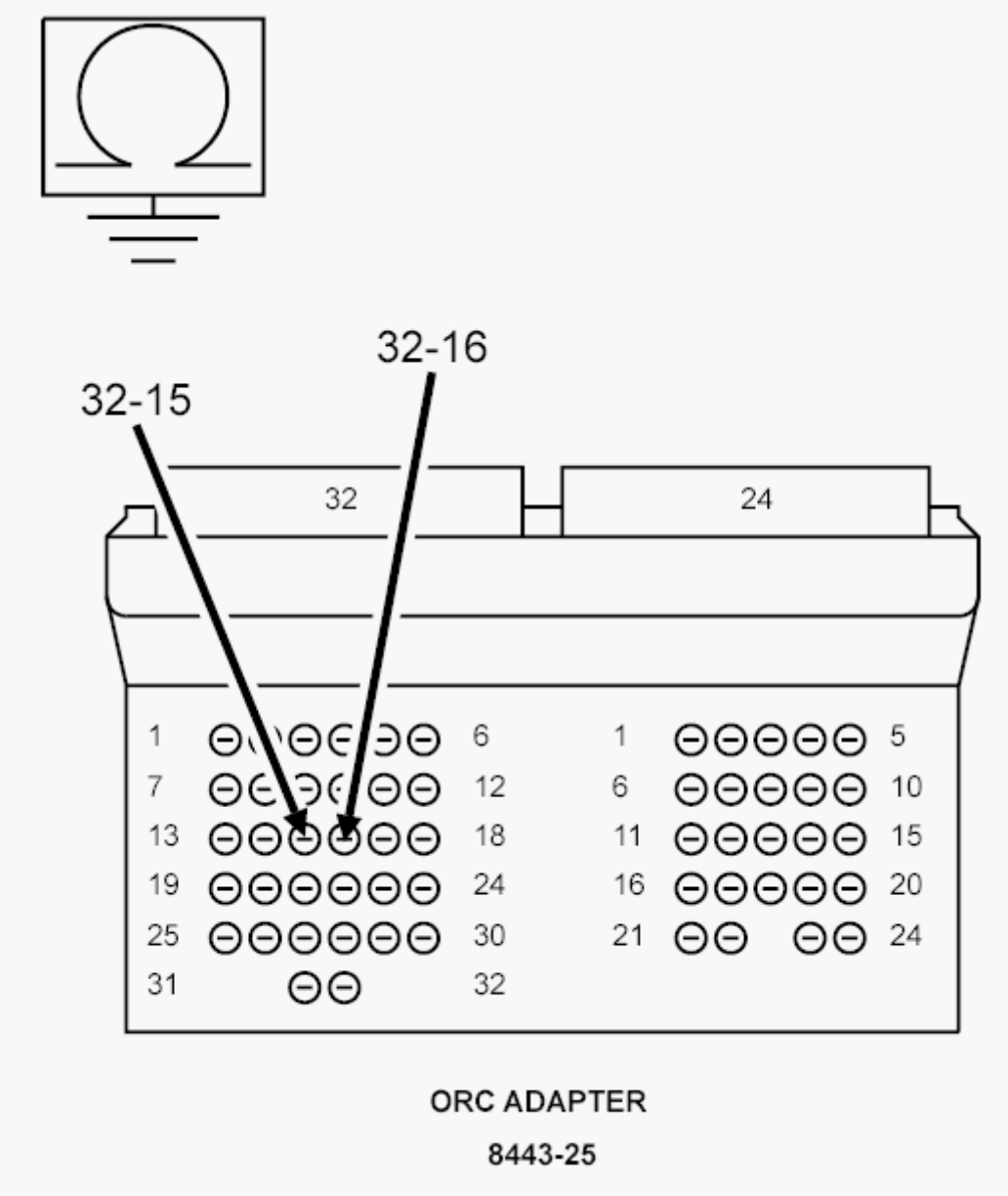

Fig. 89: Checking Driver Seat Belt Retractor Line Circuits For Short To Ground
Courtesy of CHRYSLER GROUP, LLC

WARNING: Turn the ignition off, disconnect the 12-volt battery and wait two minutes before proceeding. Failure to follow these instructions may result in possible serious or

fatal injury.

1. Disconnect the SRS Load Tool Kit (special tool #8443A, SRS Load Tool) and SRS Load Tool Jumper (special tool #8443-8, Jumper, SRS Load) from the Driver Seat Belt Pretensioner connector.
2. Disconnect the ORC connectors.

NOTE: Check connectors - Clean and repair as necessary.

3. Connect the SRS Load Tool Adaptor (special tool #8443-25, 56 Way ACM Adapter) to the ORC C1 connector.
4. Measure the resistance of the (R55) Driver Seat Belt Retractor Line 1 circuit between ground and the SRS Load Tool Adaptor (special tool #8443-25, 56 Way ACM Adapter) cavity 32-16.
5. Measure the resistance of the (R53) Driver Seat Belt Retractor Line 2 circuit between ground and the SRS Load Tool Adaptor (special tool #8443-25, 56 Way ACM Adapter) cavity 32-15.

Is the resistance below 10k Ohms on either circuit?

Yes

- Repair the Driver Seat Belt Tensioner circuits with resistance below 10k Ohms for a short to ground.
- Perform the AIRBAG SYSTEM VERIFICATION TEST. Refer to **STANDARD PROCEDURE** .

No

WARNING: **If the Occupant Restraint Controller (ORC) is dropped at any time, it must be replaced. Failure to take the proper precautions can result in accidental airbag deployment. Failure to follow these instructions may result in possible serious or fatal injury.**

- Replace the ORC in accordance with Service Information.

- Perform the AIRBAG SYSTEM VERIFICATION TEST. Refer to **STANDARD PROCEDURE** .

4. **CHECKING STORED OR INTERMITTENT CODES**

NOTE: Diagnose and repair all active codes before diagnosing stored codes. Refer to OCCUPANT RESTRAINT CONTROLLER (ORC) - DIAGNOSTIC CODE INDEX for a complete list of airbag system diagnostic procedures.

1. With the scan tool, record and erase all Airbag System Module DTCs.

WARNING: Turn the ignition off, disconnect the 12-volt battery and wait two minutes before proceeding. Failure to follow these instructions may result in possible serious or fatal injury.

2. Using the wiring diagram/schematic as a guide, inspect the related wiring and connectors for chaffed, pierced, pinched, and partially broken wires, and for broken, bent, pushed out, corroded, and contaminated terminals. Repair as necessary.
3. Reconnect all disconnected components and harness connectors.

WARNING: Turn the ignition on, then reconnect the 12-volt battery and wait two minutes before proceeding. Failure to follow these instructions may result in possible serious or fatal injury.

4. With the scan tool, monitor for active codes while performing the following:
   - Wiggle the wiring harness and connectors of the related airbag circuit.
   - Continue the test until either a code becomes active or the problem area is isolated.
5. In the previous steps you have attempted to recreate the conditions

responsible for setting the DTC in question/causing the intermittent condition.

Are any ACTIVE DTCs present?

Yes

- Perform the appropriate diagnostic procedure. Refer to **DIAGNOSIS AND TESTING**.

No

- No problem found at this time. Erase all codes before returning the vehicle to the customer.

B1B29-1ST ROW DRIVER SEAT BELT PRETENSIONER CIRCUIT HIGH

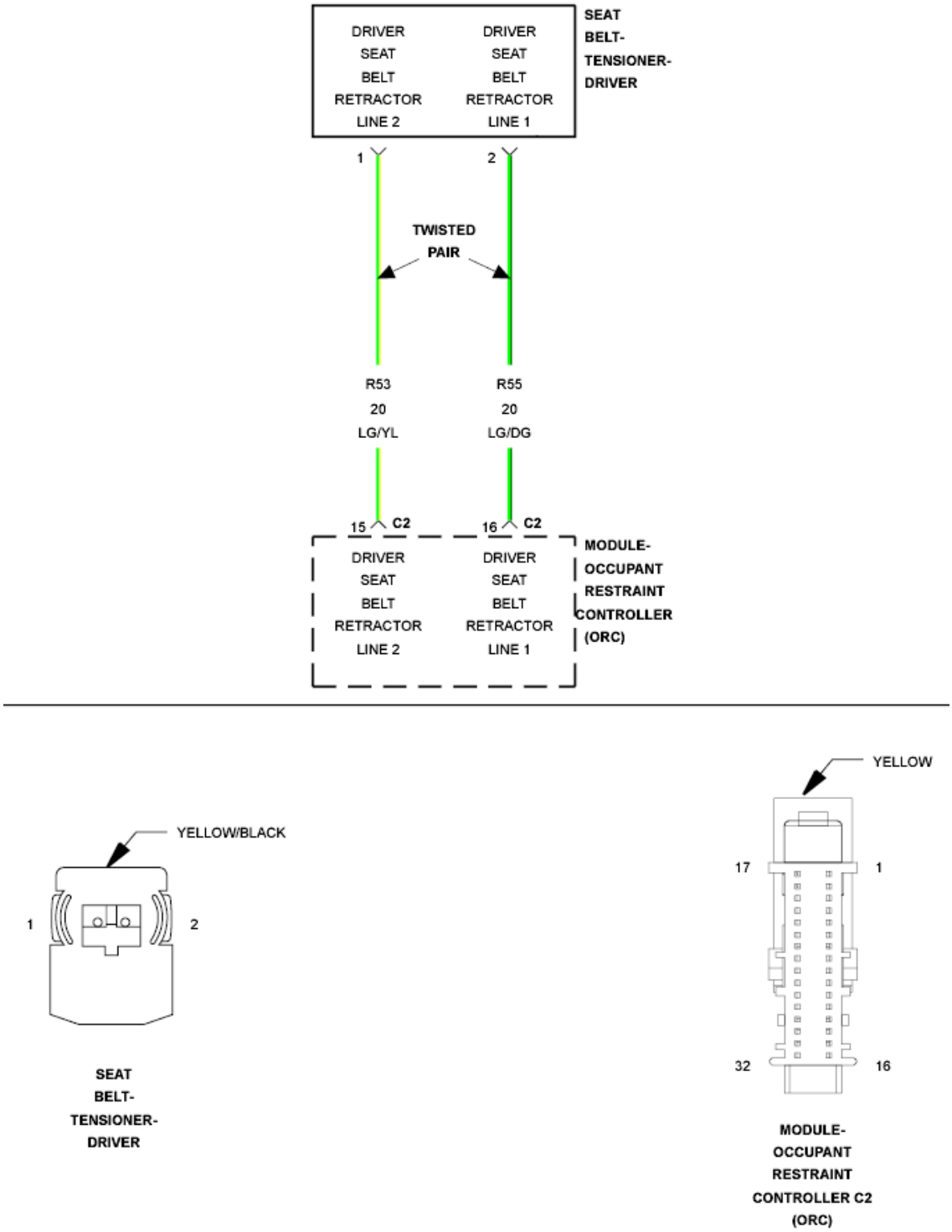

Fig. 90: Driver Seat Belt Pretensioner Circuit Schematic
Courtesy of CHRYSLER GROUP, LLC

For a complete wiring diagram, **refer to appropriate SYSTEM WIRING DIAGRAMS article** .

THEORY OF OPERATION

When powered, the Occupant Restraint Controller (ORC) sends a test current to the squibs to verify the integrity of the squib and wiring. These circuits are maintained in a "floating" configuration at the ORC (connected to neither power nor ground) as protection against inadvertent deployment. Use of the Supplemental Restraints System (SRS) Load Tool Kit 8443A in the tests below substitutes a suspect squib with a known good component. The SRS Load Tool Adapter provides a test point as well as a method for opening the shorting bar connections within the ORC harness connector.

WHEN MONITORED

With the ignition on.

SET CONDITION

The Occupant Restraint Controller (ORC) monitors the voltage on the Driver Seat Belt Tensioner circuits. The ORC will set this DTC if it detects voltage on the Driver Seat Belt Tensioner circuits.

POSSIBLE CAUSES

Possible Causes
(R55) DRIVER SEAT BELT RETRACTOR LINE 1 CIRCUIT SHORTED TO BATTERY
(R53) DRIVER SEAT BELT RETRACTOR LINE 2 CIRCUIT SHORTED TO BATTERY
DRIVER SEAT BELT TENSIONER
OCCUPANT RESTRAINT CONTROLLER (ORC)

DIAGNOSTIC TEST

1. **DETERMINE ACTIVE OR STORED DTC**

   NOTE: Make sure that the battery is fully charged.

   NOTE: The scan tool, SRS Load Tool Kit (special tool #8443A, SRS Load Tool), and DVOM are required to perform the following test:

   1. Turn the ignition on.

Select ACTIVE or STORED DTC:

ACTIVE DTC

- Go To 2

STORED DTC

- Go To 4

2. **CHECK FOR SHORTED DRIVER SEAT BELT TENSIONER**

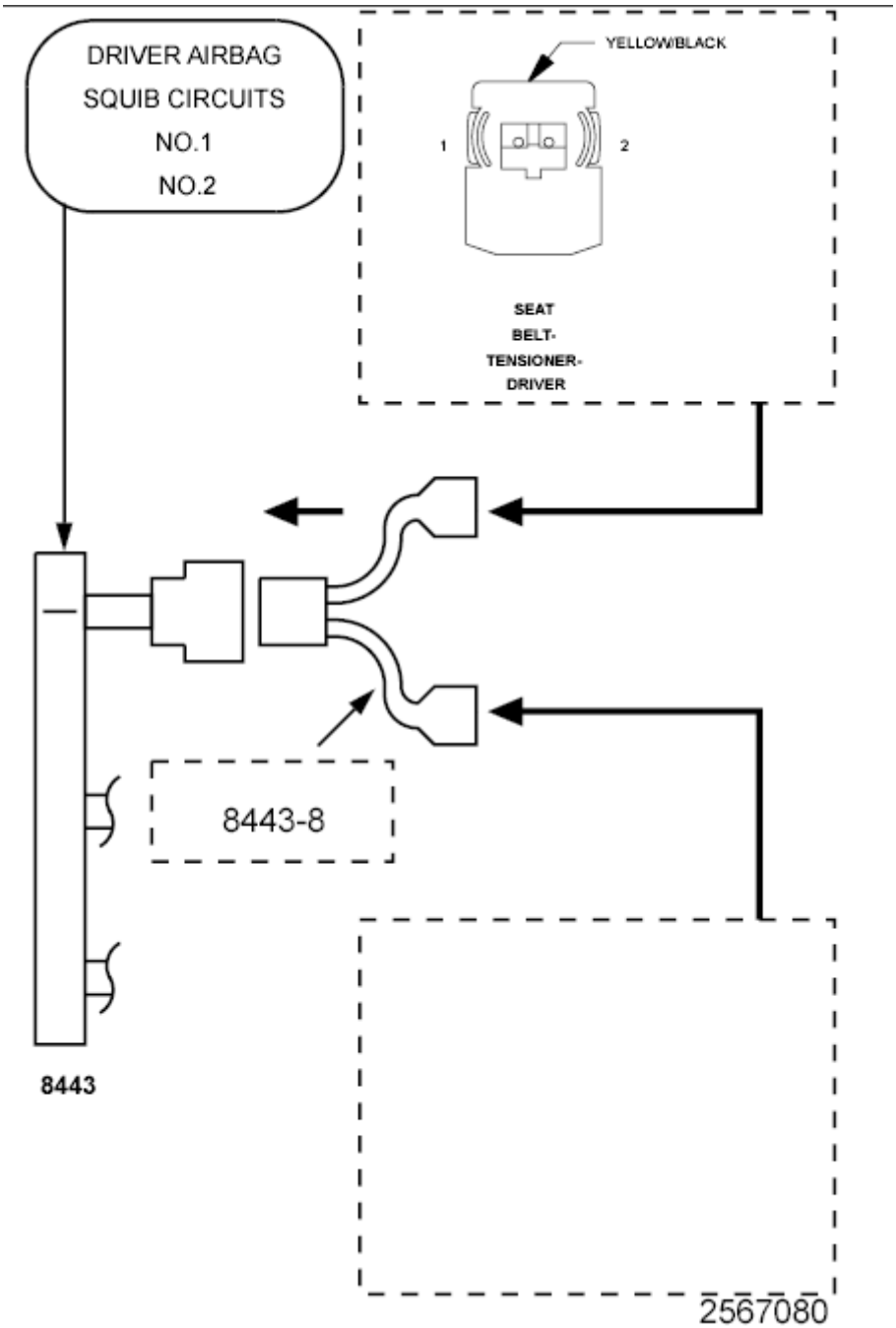

Fig. 91: Checking For Shorted Driver Seat Belt Tensioner
Courtesy of CHRYSLER GROUP, LLC

WARNING: Turn the ignition off disconnect the 12-volt battery and wait two minutes before proceeding. Failure to follow these instructions may result in possible serious or fatal injury.

1. Disconnect the Driver Seat Belt Tensioner connector.

NOTE: Check connectors - Clean and repair as necessary.

2. Connect the SRS Load Tool Kit (special tool #8443A, SRS Load Tool) and SRS Load Tool Jumper (special tool #8443-8, Jumper, SRS Load) to the Driver Seat Belt Tensioner connector.

WARNING: Turn the ignition on, then reconnect the 12-volt battery and wait two minutes before proceeding. Failure to follow these instructions may result in possible serious or fatal injury.

3. With the scan tool, read the active ORC DTCs.

   Does the scan tool display: B1B29-1st ROW DRIVER SEAT BELT PRETENSIONER CIRCUIT HIGH?

   Yes

   - Go To 3

   No

   - Replace the Driver Seat Belt Tensioner in accordance with the Service Information.
   - Perform the AIRBAG SYSTEM VERIFICATION TEST. Refer to **STANDARD PROCEDURE** .

3. **CHECK THE (R55) DRIVER SEAT BELT RETRACTOR LINE 1 CIRCUIT AND THE (R53) DRIVER SEAT BELT RETRACTOR LINE 2 CIRCUIT FOR A SHORT TO BATTERY**

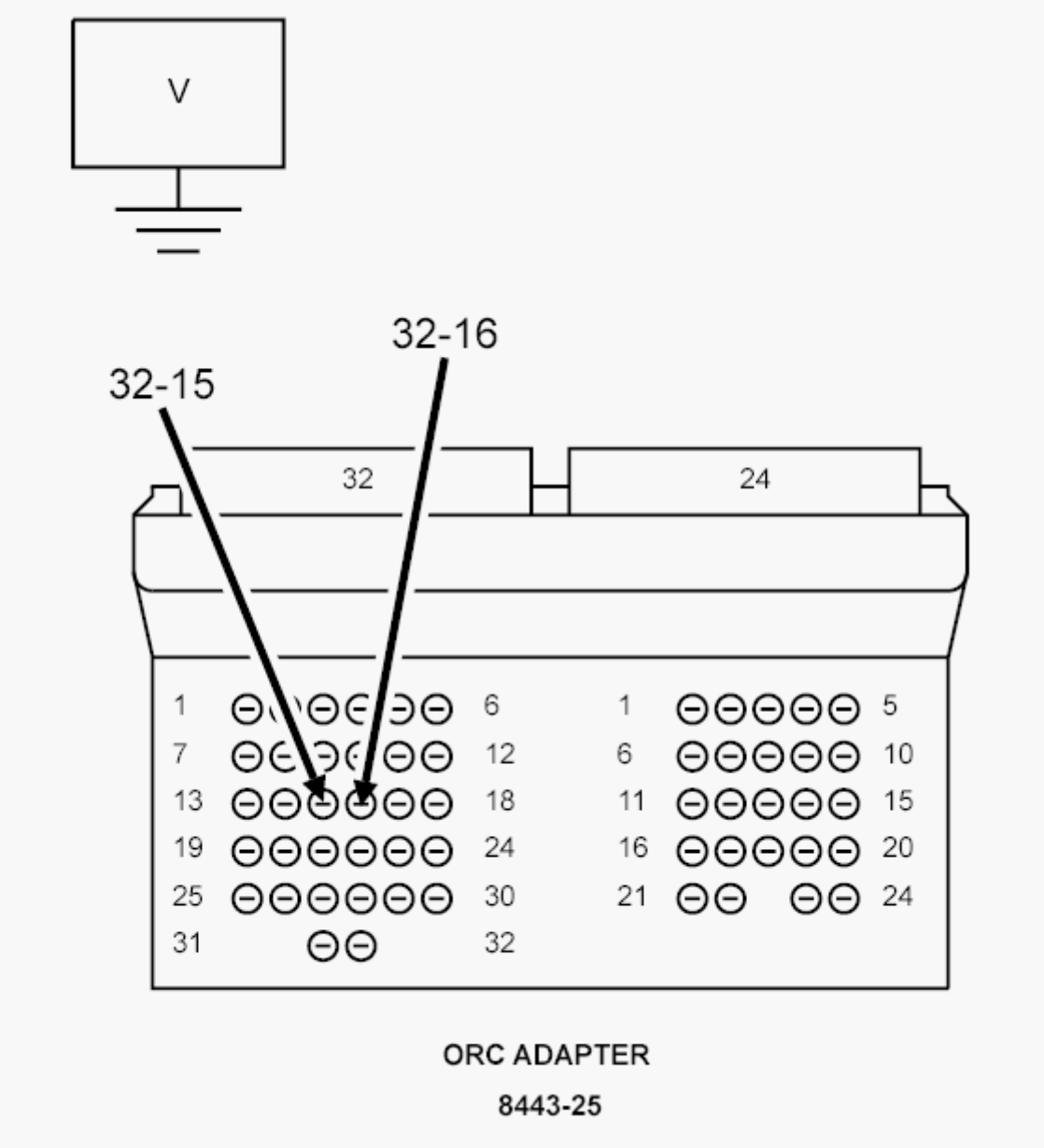

Fig. 92: Checking Driver Seat Belt Retractor Line Circuits For Short To Battery
Courtesy of CHRYSLER GROUP, LLC

WARNING: Turn the ignition off disconnect the 12-volt battery and wait two minutes before proceeding. Failure to follow these instructions may result in possible serious or

fatal injury.

1. Disconnect the SRS Load Tool Kit (special tool #8443A, SRS Load Tool) and SRS Load Tool Jumper (special tool #8443-8, Jumper, SRS Load) from the Driver Seat Belt Tensioner connector.
2. Disconnect the ORC connectors.

NOTE: Check connectors - Clean and repair as necessary.

3. Connect the SRS Load Tool Adaptor (special tool #8443-25, 56 Way ACM Adapter) to the ORC connectors.

WARNING: Turn the ignition on, then reconnect the 12-volt battery and wait two minutes before proceeding. Failure to follow these instructions may result in possible serious or fatal injury.

4. Measure the voltage of the (R55) Driver Seat Belt Retractor Line 1 circuit between the SRS Load Tool Adaptor (special tool #8443-25, 56 Way ACM Adapter) cavity 32-16 and ground.
5. Measure the voltage of the (R53) Driver Seat Belt Retractor Line 2 circuit between the SRS Load Tool Adaptor (special tool #8443-25, 56 Way ACM Adapter) cavity 32-15 and ground.

Is there any voltage present on either circuit?

Yes

- Repair the Driver Seat Belt Tensioner circuits with voltage present for a short to battery.
- Perform the AIRBAG SYSTEM VERIFICATION TEST. Refer to **STANDARD PROCEDURE** .

No

WARNING: If the Occupant Restraint Controller (ORC) is dropped at any time, it must be

replaced. Failure to take the proper precautions can result in accidental airbag deployment. Failure to follow these instructions may result in possible serious or fatal injury.

WARNING: **Turn the ignition off disconnect the 12-volt battery and wait two minutes before proceeding. Failure to follow these instructions may result in possible serious or fatal injury.**

- Replace the ORC in accordance with Service Information.
- Perform the AIRBAG SYSTEM VERIFICATION TEST. Refer to **STANDARD PROCEDURE** .

4. **CHECKING STORED OR INTERMITTENT CODES**

NOTE: **Diagnose and repair all active codes before diagnosing stored codes. Refer to OCCUPANT RESTRAINT CONTROLLER (ORC) - DIAGNOSTIC CODE INDEX for a complete list of airbag system diagnostic procedures.**

1. With the scan tool, record and erase all Airbag System Module DTCs.

WARNING: **Turn the ignition off disconnect the 12-volt battery and wait two minutes before proceeding. Failure to follow these instructions may result in possible serious or fatal injury.**

2. Using the wiring diagram/schematic as a guide, inspect the related wiring and connectors for chafed, pierced, pinched, and partially broken wires, and for broken, bent, pushed out, corroded, and contaminated terminals. Repair as necessary.
3. Reconnect all disconnected components and harness connectors.

WARNING: **Turn the ignition on, then reconnect the**

12-volt battery and wait two minutes before proceeding. Failure to follow these instructions may result in possible serious or fatal injury.

4. With the scan tool, monitor for active codes while performing the following:
   - Wiggle the wiring harness and connectors of the related airbag circuit.
   - Continue the test until either a code becomes active or the problem area is isolated.
5. In the previous steps you have attempted to recreate the conditions responsible for setting the DTC in question/causing the intermittent condition.

   Are any ACTIVE DTCs present?

   Yes

   - Select the appropriate diagnostic procedure from the **OCCUPANT RESTRAINT CONTROLLER (ORC) - DIAGNOSTIC CODE INDEX** .

   No

   - No problem found at this time. Erase all codes before returning the vehicle to the customer.

B1B54-1ST ROW PASSENGER SEAT BELT SENSOR CIRCUIT LOW

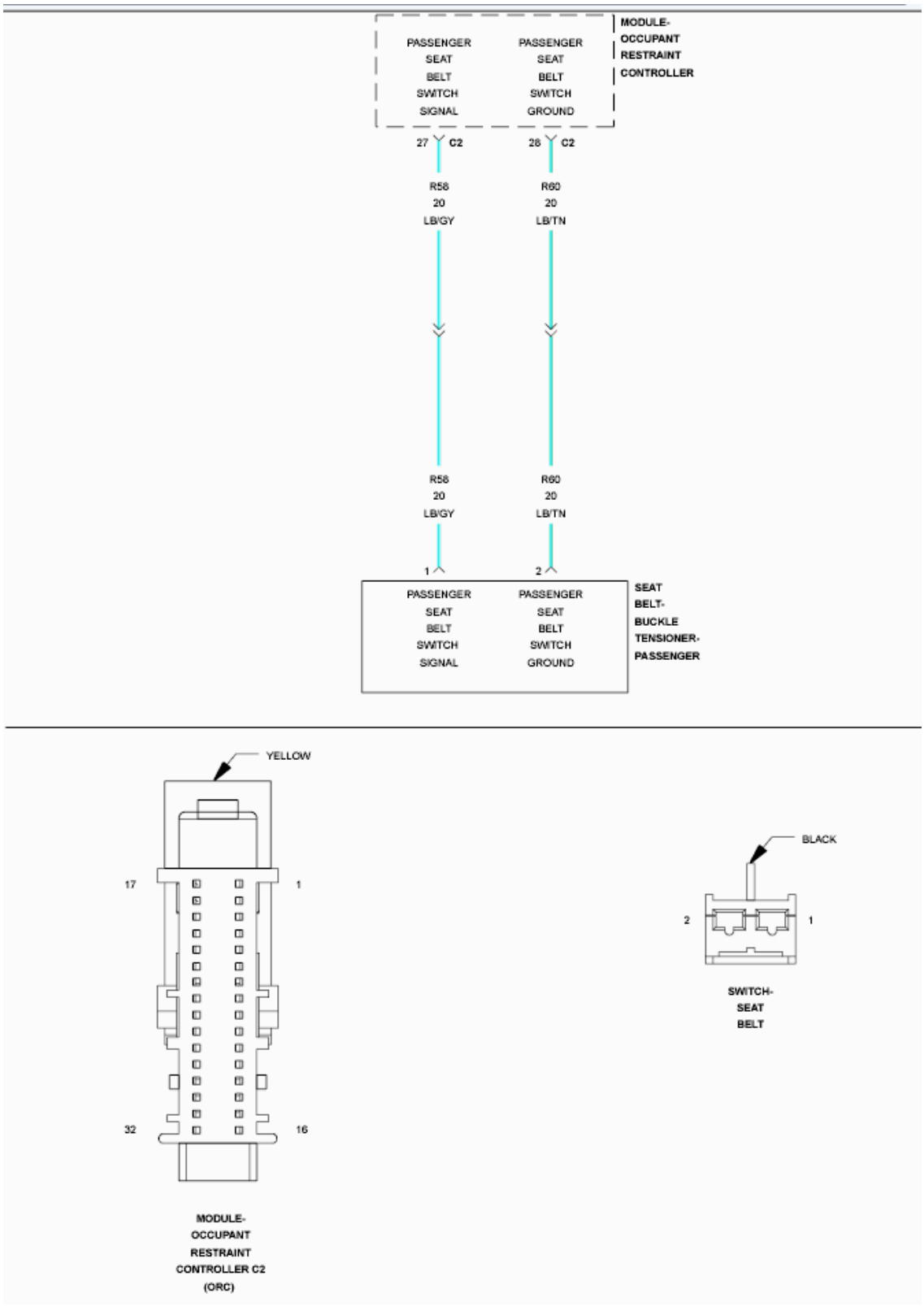

Fig. 93: Passenger Seat Belt Sensor Wiring Schematic
Courtesy of CHRYSLER GROUP, LLC

For a complete wiring diagram, **refer to appropriate SYSTEM WIRING DIAGRAMS article** .

THEORY OF OPERATION

When powered, the Occupant Restraint Controller (ORC) sends a test current across the Passenger Seat Belt Buckle Switch circuits every 100 ms to verify the integrity of the switch and wiring. The front seat belt switches cannot be adjusted or repaired and, if ineffective or damaged, the entire front seat belt buckle-half unit must be replaced. The airbag warning lamp will display in the instrument cluster for this fault.

WHEN MONITORED

When powered, the Occupant Restraint Controller (ORC) sends a test current to the belt switches to verify the integrity of the switch and wiring. The use of the SRS Load Tool Adapter tool in the tests below provides a test point in place of the module.

SET CONDITION

The ORC monitors the status of the seat belt switch circuits at power up and every 60 ms thereafter while the ignition is in on.

This DTC sets when the ORC detects the seat belt switch circuits have become shorted to ground for more than 2.5 seconds. This DTC transitions from active to stored when the module sees a recovery from the shorted to ground condition for greater than five seconds.

POSSIBLE CAUSES

Possible Causes
(R58) PASSENGER SEAT BELT SWITCH SIGNAL CIRCUIT SHORTED TO GROUND
OCCUPANT RESTRAINT CONTROLLER (ORC)

DIAGNOSTIC TEST

1. **VERIFY ACTIVE DTC**

   NOTE: Make sure the battery is fully charged.

   1. Turn the ignition on.
   2. With the scan tool, read the ORC DTCs.

Does the scan tool display active B1B54-1ST ROW PASSENGER SEAT BELT SENSOR CIRCUIT LOW DTC?

Yes

- Go To 2

No

- Perform the AIRBAG SYSTEM INTERMITTENT TEST. Refer to **STANDARD PROCEDURE** .

2. **PASSENGER SEAT BELT SWITCH SIGNAL CIRCUIT SHORTED TO GROUND**

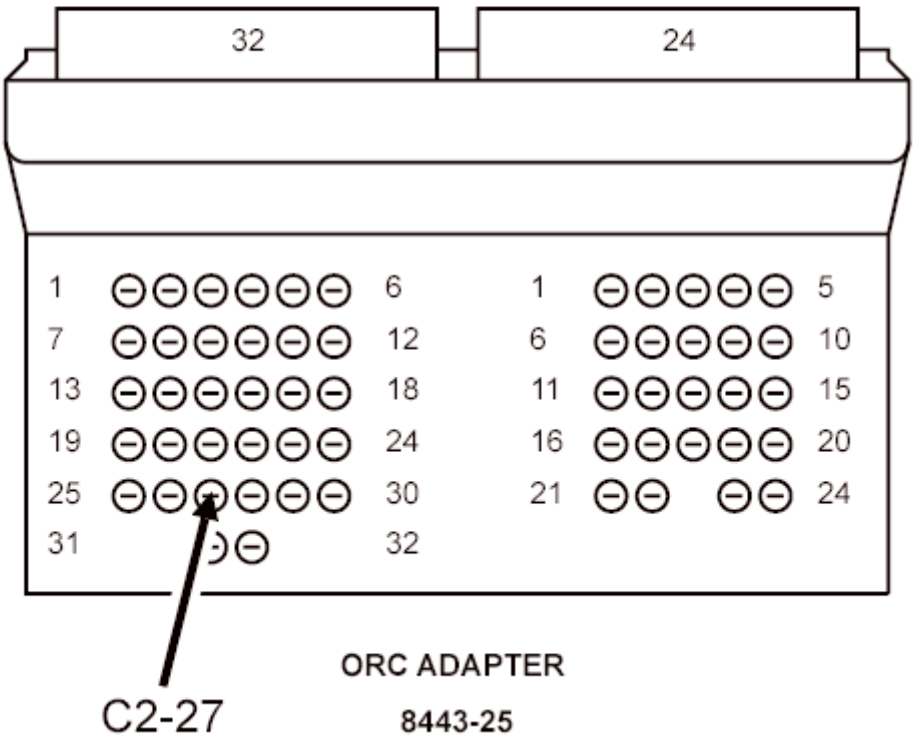

Fig. 94: Checking Passenger Seat Belt Switch Signal Circuit Shorted To Ground
Courtesy of CHRYSLER GROUP, LLC

WARNING: Turn the ignition off, disconnect the 12-volt battery and wait two minutes before proceeding. Failure to follow these instructions may result in possible serious or fatal injury.

1. Disconnect the Passenger Seat Belt Switch harness connector.
2. Disconnect the ORC harness connectors.

NOTE: Check harness connectors - Clean and repair as necessary.

3. Connect the SRS Load Tool Adapter (special tool #8443-25, 56 Way ACM Adapter) to the ORC harness connectors.
4. Measure the resistance of the (R58) Passenger Seat Belt Switch Signal circuit between the appropriate terminal of the SRS Load Tool Adapter (special tool #8443-25, 56 Way ACM Adapter) and ground.

   Is the resistance below 10.0 Ohms?

   Yes

   - Repair or replace the (R58) Passenger Seat Belt Switch Signal circuit for a short to ground.
   - Perform the AIRBAG SYSTEM VERIFICATION TEST. Refer to **STANDARD PROCEDURE** .

   No

   - Go To 3

3. **PASSENGER SEAT BELT SWITCH SIGNAL CIRCUIT SHORTED TO GROUND**
   1. Replace the Passenger Seat Belt Switch.
   2. Disconnect the SRS Load Tool Adapter (special tool #8443-25, 56 Way

ACM Adapter).

3. Reconnect the ORC harness connectors.

WARNING: Turn the ignition on, then reconnect the 12-volt battery and wait two minutes before proceeding. Failure to follow these instructions may result in possible serious or fatal injury.

4. With the scan tool, read all active ORC DTCs.

Does the scan tool display active B1B54-1ST ROW PASSENGER SEAT BELT SENSOR CIRCUIT LOW DTC?

Yes

WARNING: Turn the ignition off, disconnect the 12-volt battery and wait two minutes before proceeding. Failure to follow these instructions may result in possible serious or fatal injury.

WARNING: If the Occupant Restraint Controller (ORC) is dropped at any time, it must be replaced. Failure to follow these instructions may result in possible serious or fatal injury.

- Replace the ORC in accordance with the Service Information.
- Perform the AIRBAG SYSTEM VERIFICATION TEST. Refer to **STANDARD PROCEDURE** .

No

- The repair is complete.
- Perform the AIRBAG SYSTEM VERIFICATION TEST. Refer to **STANDARD PROCEDURE** .

B1B55-1ST ROW PASSENGER SEAT BELT SENSOR CIRCUIT HIGH

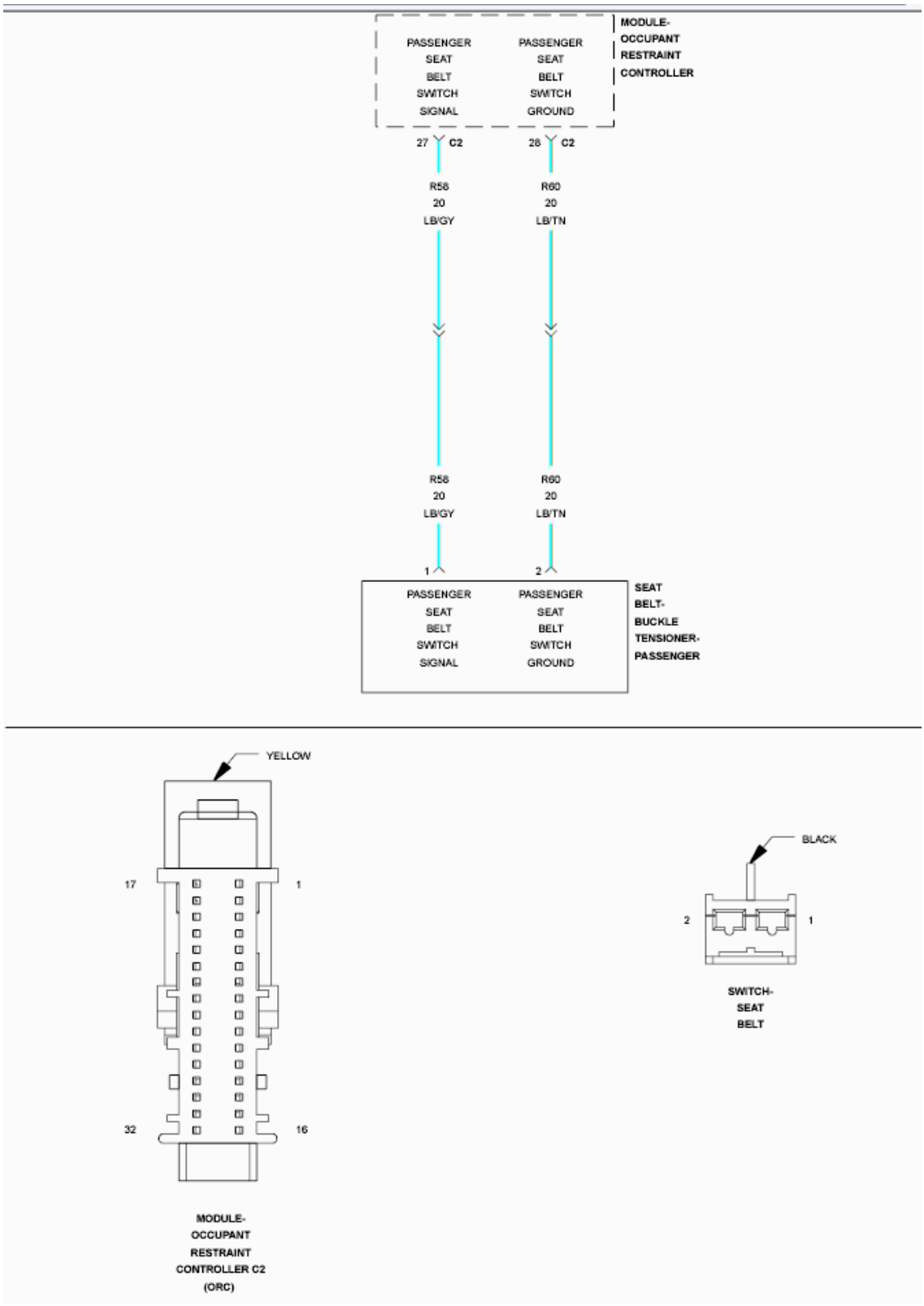

Fig. 95: Passenger Seat Belt Sensor Wiring Schematic
Courtesy of CHRYSLER GROUP, LLC

For a complete wiring diagram, **refer to appropriate SYSTEM WIRING DIAGRAMS article** .

THEORY OF OPERATION

When powered, the Occupant Restraint Controller (ORC) sends a test current across the Passenger Seat Belt Buckle Switch circuits every 100 ms to verify the integrity of the switch and wiring. The front seat belt switches cannot be adjusted or repaired and, if ineffective or damaged, the entire front seat belt buckle-half unit must be replaced. The airbag warning lamp will display in the instrument cluster for this fault.

WHEN MONITORED

The ORC monitors the status of the seat belt switch circuits at power up and every 60 ms thereafter while the ignition is in on.

SET CONDITION

This DTC sets when the ORC detects the seat belt switch circuits have become shorted to voltage for more than 2.5 seconds. This DTC transitions from active to stored when the module sees a recovery from the shorted to voltage condition for greater than five seconds.

POSSIBLE CAUSES

Possible Causes
(R58) PASSENGER SEAT BELT SWITCH SIGNAL CIRCUIT SHORTED TO VOLTAGE
(R60) PASSENGER SEAT BELT SWITCH GROUND CIRCUIT SHORTED TO VOLTAGE
(R58) PASSENGER SEAT BELT SWITCH SIGNAL CIRCUIT OPEN
(R60) PASSENGER SEAT BELT SWITCH GROUND CIRCUIT OPEN
PASSENGER SEAT BELT SWITCH
OCCUPANT RESTRAINT CONTROLLER (ORC)

DIAGNOSTIC TEST

1. **VERIFY ACTIVE DTC**

   NOTE: Make sure the battery is fully charged.

   1. Turn the ignition on.
   2. With the scan tool, read all ORC DTCs.

Does the scan tool display active B1B55-1ST ROW PASSENGER SEAT BELT SENSOR CIRCUIT HIGH?

Yes

- Go To 2

No

- Perform the AIRBAG SYSTEM INTERMITTENT TEST. Refer to **STANDARD PROCEDURE** .

2. **(R58) PASSENGER SEAT BELT SWITCH SIGNAL CIRCUIT SHORTED TO VOLTAGE**

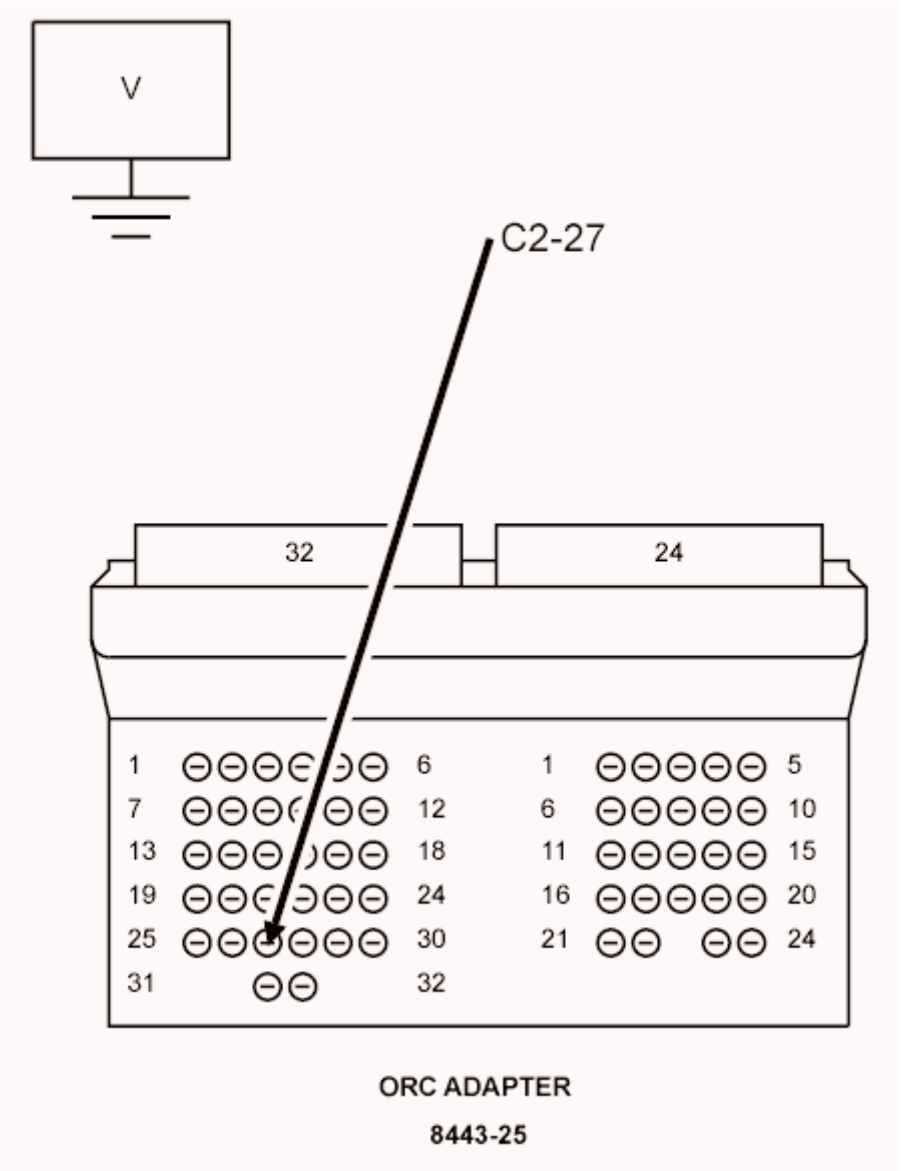

Fig. 96: Checking Passenger Seat Belt Switch Signal Circuit Shorted To Voltage
Courtesy of CHRYSLER GROUP, LLC

WARNING: Turn the ignition off, disconnect the 12-volt battery and wait two minutes before proceeding. Failure to follow these instructions may result in possible serious or fatal injury.

1. Disconnect the Passenger Seat Belt Buckle Tensioner connector containing the Seat Belt Switch circuits.
2. Disconnect the ORC harness harness connector.

NOTE: Check connectors - Clean and repair as necessary.

3. Connect the SRS Load Tool Adapter (special tool #8443-25, 56 Way ACM Adapter) to the ORC harness connectors.

WARNING: Turn the ignition on, then reconnect the 12-volt battery and wait two minutes before proceeding. Failure to follow these instructions may result in possible serious or fatal injury.

4. Measure the voltage of the (R58) Passenger Seat Belt Switch Signal circuit between the appropriate terminal of the SRS Load Tool Adapter (special tool #8443-25, 56 Way ACM Adapter) and ground.

   Is there any voltage present on the circuit?

   Yes

WARNING: Turn the ignition off, disconnect the 12-volt battery and wait two minutes before proceeding. Failure to follow these instructions may result in possible serious or fatal injury.

- Repair the (R58) Passenger Seat Belt Switch Signal circuit for a short to voltage.
- Perform the AIRBAG SYSTEM VERIFICATION TEST. Refer to **STANDARD PROCEDURE** .

No

- Go To 3

3. **(R60) PASSENGER SEAT BELT SWITCH GROUND CIRCUIT SHORTED TO VOLTAGE**

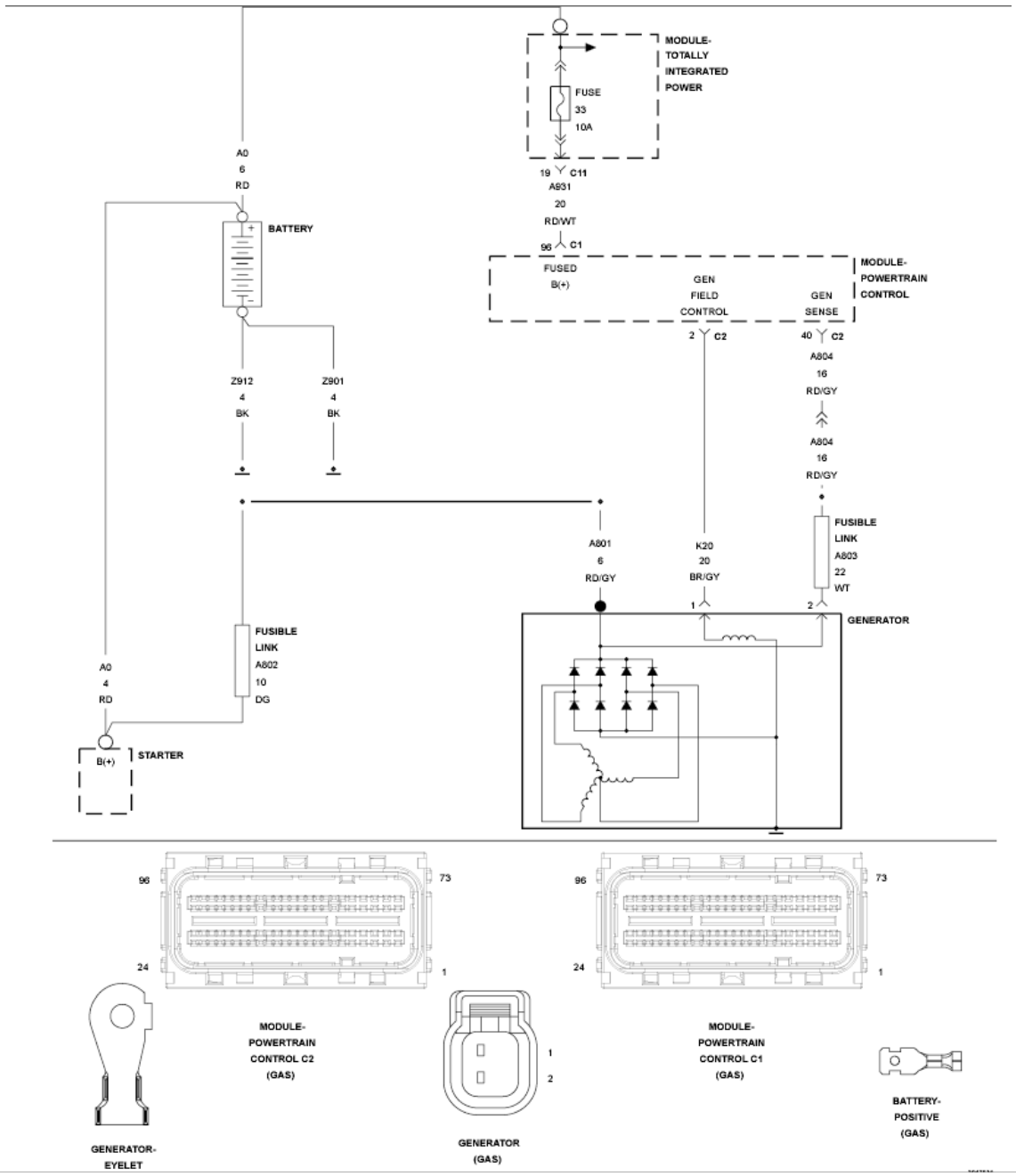

Fig. 97: Checking Passenger Seat Belt Switch Ground Circuit Shorted To Voltage
Courtesy of CHRYSLER GROUP, LLC

1. Measure the voltage of the (R60) Passenger Seat Belt Switch Ground circuit between the appropriate terminal of the SRS Load Tool Adapter (special tool #8443-25, 56 Way ACM Adapter) and ground.

   Is there any voltage present on the circuit?

   Yes

   WARNING: **Turn the ignition off, disconnect the 12-volt battery and wait two minutes before proceeding. Failure to follow these instructions may result in possible serious or fatal injury.**

   - Repair or replace the (R60) Passenger Seat Belt Switch Ground circuit for a short to voltage.
   - Perform the AIRBAG SYSTEM VERIFICATION TEST. Refer to **STANDARD PROCEDURE** .

   No

   - Go To 4

4. **(R58) PASSENGER SEAT BELT SWITCH SIGNAL CIRCUIT FOR AN OPEN**

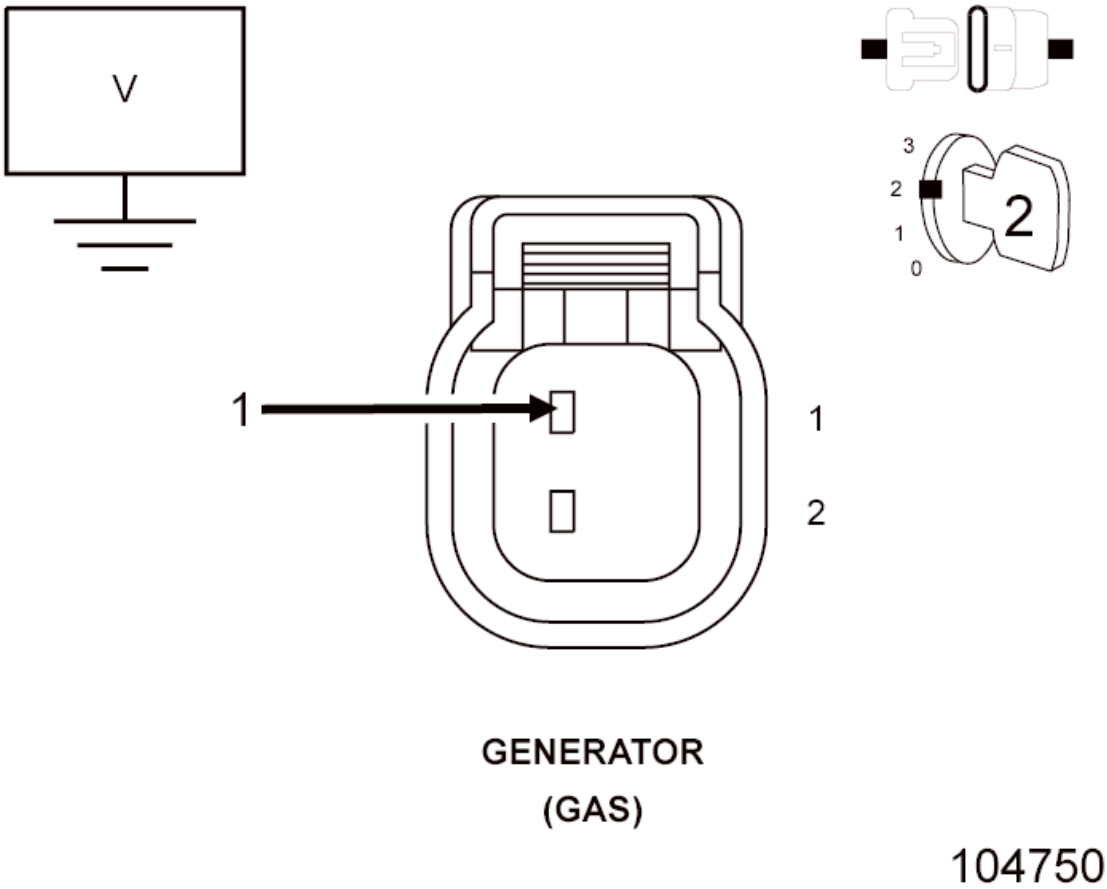

Fig. 98: Checking Passenger Seat Belt Switch Signal Circuit For An Open
Courtesy of CHRYSLER GROUP, LLC

WARNING: Turn the ignition off, disconnect the 12-volt battery and wait two minutes before proceeding. Failure to follow these instructions may result in possible serious or fatal injury.

1. Measure the resistance of the (R58) Passenger Seat Belt Switch Signal circuit between the Passenger Seat Belt Buckle Tensioner harness connector and the appropriate terminal of the SRS Load Tool Adapter (special tool #8443-25, 56 Way ACM Adapter).

   Is the resistance below 1.0 Ohm?

   Yes

   - Go To 5

No

- Repair or replace the (R58) Passenger Seat Belt Switch Signal circuit for an open or high resistance.
- Perform the AIRBAG SYSTEM VERIFICATION TEST. Refer to **STANDARD PROCEDURE** .

5. **(R60) PASSENGER SEAT BELT SWITCH GROUND CIRCUIT FOR AN OPEN**

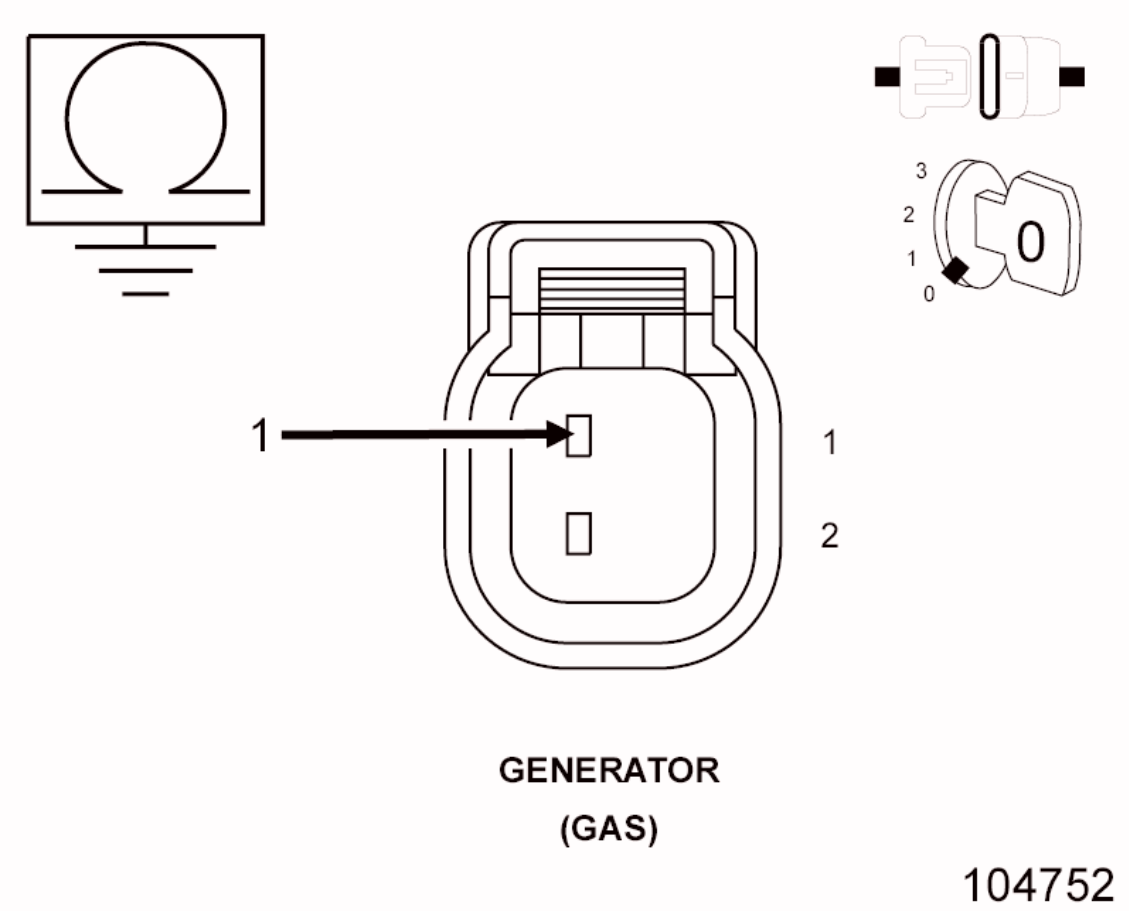

Fig. 99: Checking Passenger Seat Belt Switch Ground Circuit For An Open
Courtesy of CHRYSLER GROUP, LLC

1. Measure the resistance of the (R60) Passenger Seat Belt Switch Ground circuit between the Passenger Seat Belt Buckle Tensioner harness connector and the appropriate terminal of the SRS Load Tool Adapter (special tool #8443-25, 56 Way ACM Adapter).

   Is the resistance below 1.0 Ohm?

Yes

- Go To 6

No

- Repair or replace the (R60) Passenger Seat Belt Switch Ground circuit for an open or high resistance.
- Perform the AIRBAG SYSTEM VERIFICATION TEST. Refer to **STANDARD PROCEDURE** .

6. **CHECK OPERATION OF THE 1st ROW PASSENGER SEAT BELT SWITCH**

WARNING: **Turn the ignition off, disconnect the 12-volt battery and wait two minutes before proceeding. Failure to follow these instructions may result in possible serious or fatal injury.**

1. Replace the Passenger Seat Belt Switch.
2. Reconnect the vehicle body harness to the switch.

WARNING: **Turn the ignition on, then reconnect the 12-volt battery and wait two minutes before proceeding. Failure to follow these instructions may result in possible serious or fatal injury.**

3. Connect the scan tool to the Data Link Connector - use the most current software available.
4. Use the scan tool and erase all codes in the ORC.
5. Turn the ignition off, and wait 15 seconds before turning the Ignition On.
6. Wait one minute, and read active codes.

Did the active B1B56-1st ROW PASSENGER SEAT BELT SENSOR CIRCUIT OPEN DTC return?

Yes

WARNING: If the Occupant Restraint Controller (ORC) is dropped at any time, it must be replaced. Failure to take the proper precautions can result in accidental airbag deployment. Failure to follow these instructions may result in possible serious or fatal injury.

WARNING: Turn the ignition off, disconnect the 12-volt battery and wait two minutes before proceeding. Failure to follow these instructions may result in possible serious or fatal injury.

- Replace the ORC in accordance with the Service Information.
- Perform the AIRBAG SYSTEM VERIFICATION TEST. Refer to **STANDARD PROCEDURE** .

No

- Repair is complete.
- Perform the AIRBAG SYSTEM VERIFICATION TEST. Refer to **STANDARD PROCEDURE** .

B1B56-1ST ROW PASSENGER SEATBELT SENSOR CIRCUIT OPEN

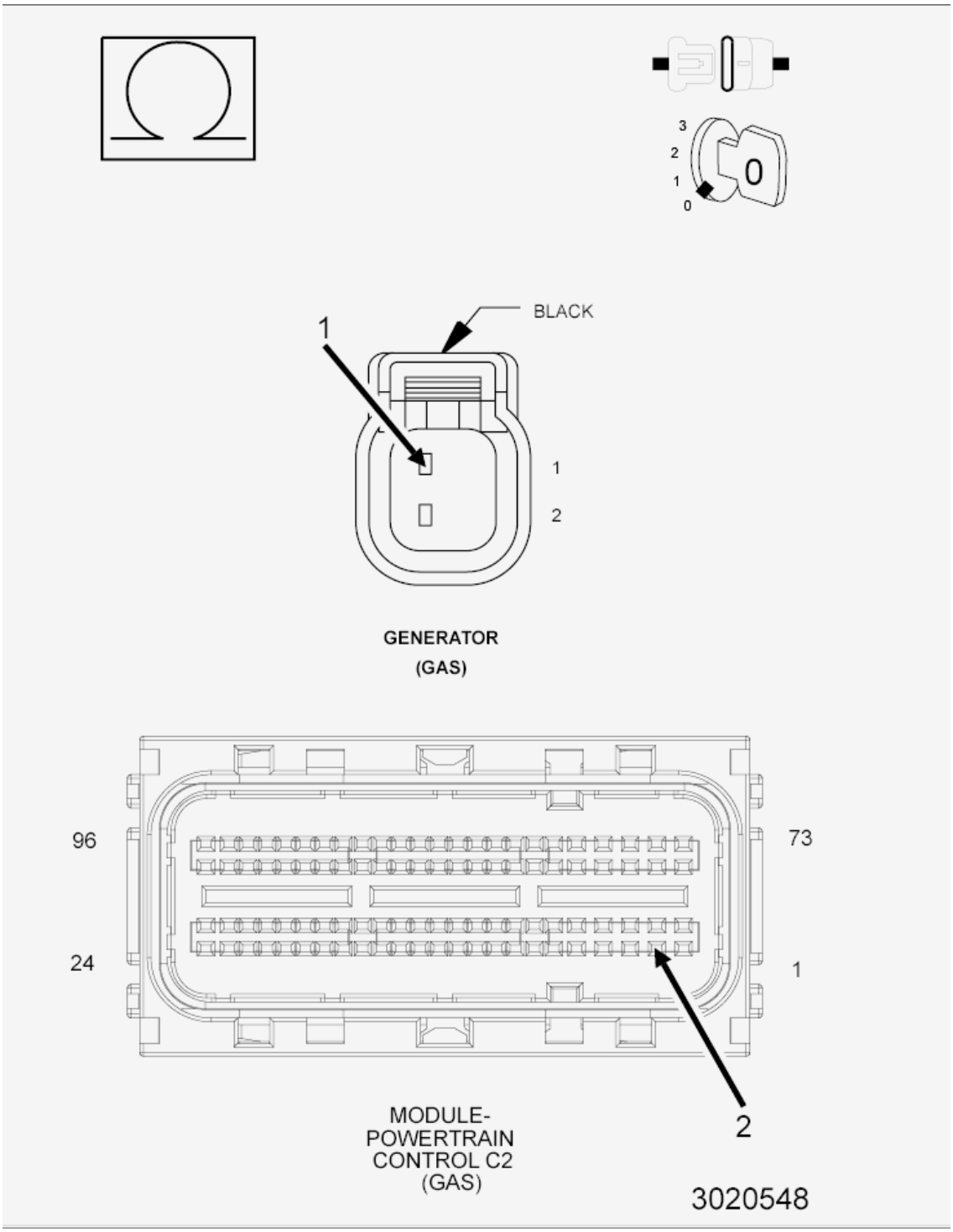

Fig. 100: Passenger Seat Belt Sensor Wiring Schematic
Courtesy of CHRYSLER GROUP, LLC

For a complete wiring diagram, **refer to appropriate SYSTEM WIRING DIAGRAMS article** .

THEORY OF OPERATION

When powered, the Occupant Restraint Controller (ORC) sends a test current across the Passenger Seat Belt Buckle Switch circuits every 100 ms to verify the integrity of the switch and wiring. The front seat belt switches cannot be adjusted or repaired and, if ineffective or damaged, the entire front seat belt buckle-half unit must be replaced. The airbag warning lamp will display in the instrument cluster for this fault.

WHEN MONITORED

With the ignition on and the Occupant Restraint Controller (ORC) configured for a Passenger Seat Belt Buckle Switch. The ORC monitors the switch input current ranges at power up and continuously every 100ms with the ignition in on.

SET CONDITION

If the ORC detects the passenger seat belt buckle switch circuits have been open for 2.5 seconds. The active code will change to stored after the ORC verifies the passenger seat belt buckle switch sense circuit voltage has returned to normal voltage range for five seconds.

POSSIBLE CAUSES

Possible Causes
(R58) PASSENGER SEAT BELT BUCKLE SWITCH SENSE CIRCUIT OPEN
(R60) PASSENGER SEAT BELT BUCKLE SWITCH GROUND CIRCUIT OPEN
PASSENGER SEAT BELT BUCKLE SWITCH
OCCUPANT RESTRAINT CONTROLLER (ORC)

Always perform the Pre-Diagnostic Troubleshooting procedure before proceeding. Refer to STANDARD PROCEDURE .

DIAGNOSTIC TEST

1. **VERIFY ACTIVE DTC**

   NOTE: Make sure the battery is fully charged.

   1. Turn the ignition on.
   2. With the scan tool, read ORC DTC.

Does the scan tool display active B1B56-1st ROW PASSENGER SEATBELT SENSOR CIRCUIT OPEN DTC?

Yes

- Go To 2

No

- Perform the AIRBAG SYSTEM INTERMITTENT TEST. Refer to **STANDARD PROCEDURE** .

2. **CHECK (R58) PASSENGER SEAT BELT BUCKLE SWITCH SENSE CIRCUIT AND (R60) PASSENGER SEAT BELT BUCKLE SWITCH GROUND CIRCUIT FOR AN OPEN**

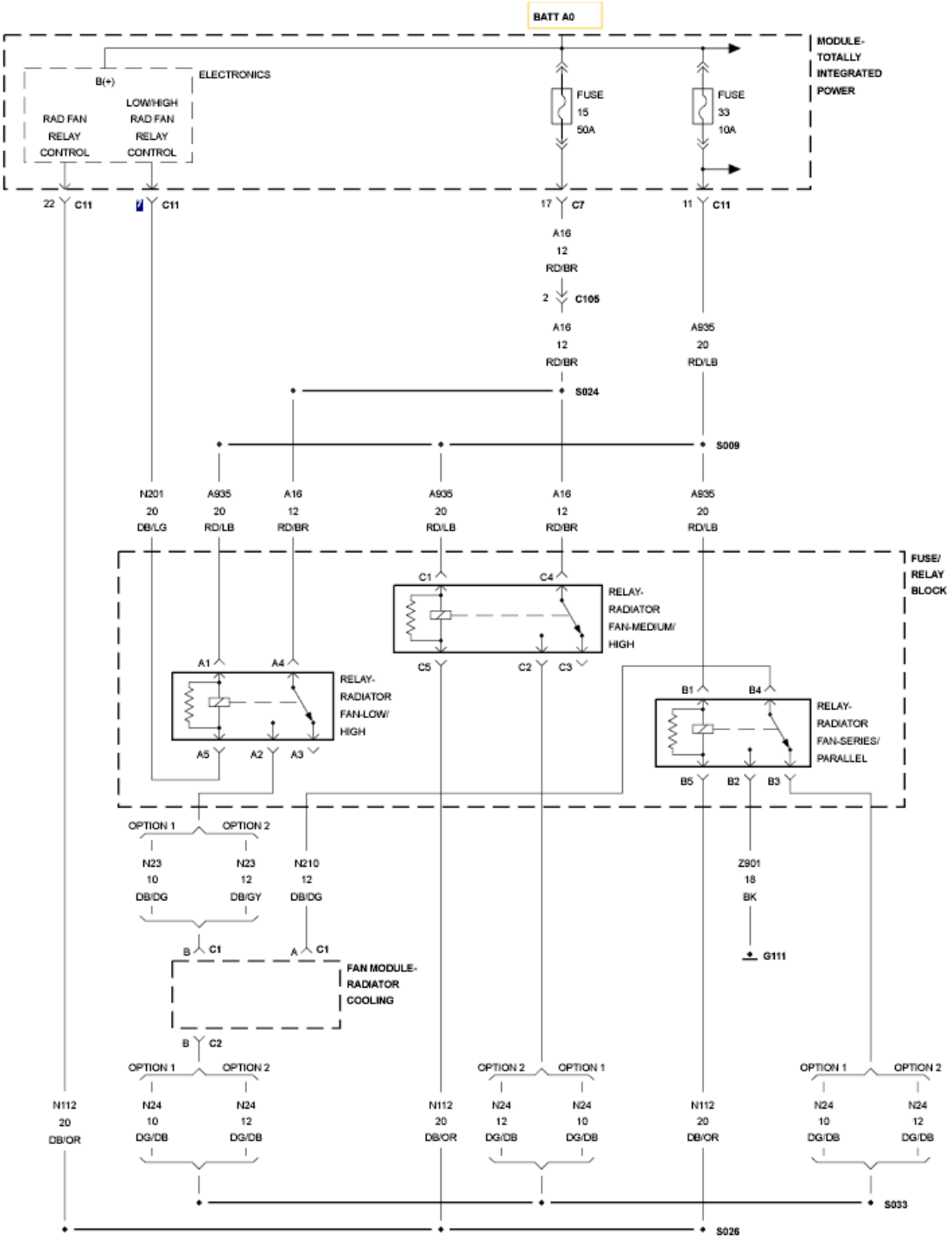

Fig. 101: Checking Passenger Seat Belt Buckle Switch Sense Circuit And Passenger Seat Belt Buckle Switch Ground Circuit For An Open
Courtesy of CHRYSLER GROUP, LLC

WARNING: Turn the ignition off, disconnect the 12-volt battery and wait two minutes before proceeding. Failure to follow these instructions may result in possible serious or

fatal injury.

1. Disconnect the Passenger Seat Belt Buckle Switch harness connector.
2. Disconnect the ORC harness connectors.

NOTE: Check connectors - Clean and repair as necessary.

3. Connect the SRS Load Tool Adapter (special tool #8443-25, 56 Way ACM Adapter) to the ORC C2 harness connector.
4. Measure the resistance of the (R58) Passenger Seat Belt Buckle Switch Sense circuit between the Passenger Seat Belt Buckle Switch harness connector and the SRS Load Tool Adapter (special tool #8443-25, 56 Way ACM Adapter) cavity 27.
5. Measure the resistance of the (R60) Passenger Seat Belt Buckle Switch Ground circuit between the Passenger Seat Belt Buckle Switch harness connector and the SRS Load Tool Adapter (special tool #8443-25, 56 Way ACM Adapter) cavity 28.

   Is the resistance greater than 1.0 Ohms on any of these circuits?

   Yes

   - Repair the (R58), (R60) Passenger Seat Belt Buckle Switch circuits for an open.
   - Perform the AIRBAG SYSTEM VERIFICATION TEST. Refer to **STANDARD PROCEDURE** .

   No

   - Go To 3

3. **VERIFY OPEN SWITCH**
   1. Replace the Passenger Seat Belt Buckle Switch. Refer to **BUCKLE, SEAT BELT, REMOVAL** .
   2. Reconnect the vehicle body harness connector to the Passenger Seat Belt Buckle Switch.
   3. Remove any special tools or jumper wires and reconnect all previously disconnected components - except the Battery.

WARNING: Turn the ignition on, then reconnect the 12-volt battery and wait two minutes before proceeding. Failure to follow these instructions may result in possible serious or fatal injury.

4. Connect the scan tool to the Data Link Connector - use the most current software available.
5. Use the scan tool and erase the stored DTCs.
6. Turn the Ignition OFF, and wait 15 seconds before turning the Ignition ON.
7. Wait one minute, and read active DTCs and if there are none present read the stored DTCs.

Does the scan tool display active B1B56-1st ROW PASSENGER SEATBELT SENSOR CIRCUIT OPEN DTC?

Yes

WARNING: Turn the ignition off, disconnect the 12-volt battery and wait two minutes before proceeding. Failure to follow these instructions may result in possible serious or fatal injury.

WARNING: If the Occupant Restraint Controller (ORC) is dropped at any time, it must be replaced. Failure to follow these instructions may result in possible serious or fatal injury.

- Replace the ORC in accordance with the Service Information. Refer to **MODULE, OCCUPANT RESTRAINT CONTROLLER, REMOVAL** .
- Perform the AIRBAG SYSTEM VERIFICATION TEST. Refer to **STANDARD PROCEDURE** .

No

- Repair is complete.
- Perform the AIRBAG SYSTEM VERIFICATION TEST. Refer to **STANDARD PROCEDURE** .

B1B2A-1ST ROW DRIVER SEAT BELT PRETENSIONER CIRCUIT OPEN

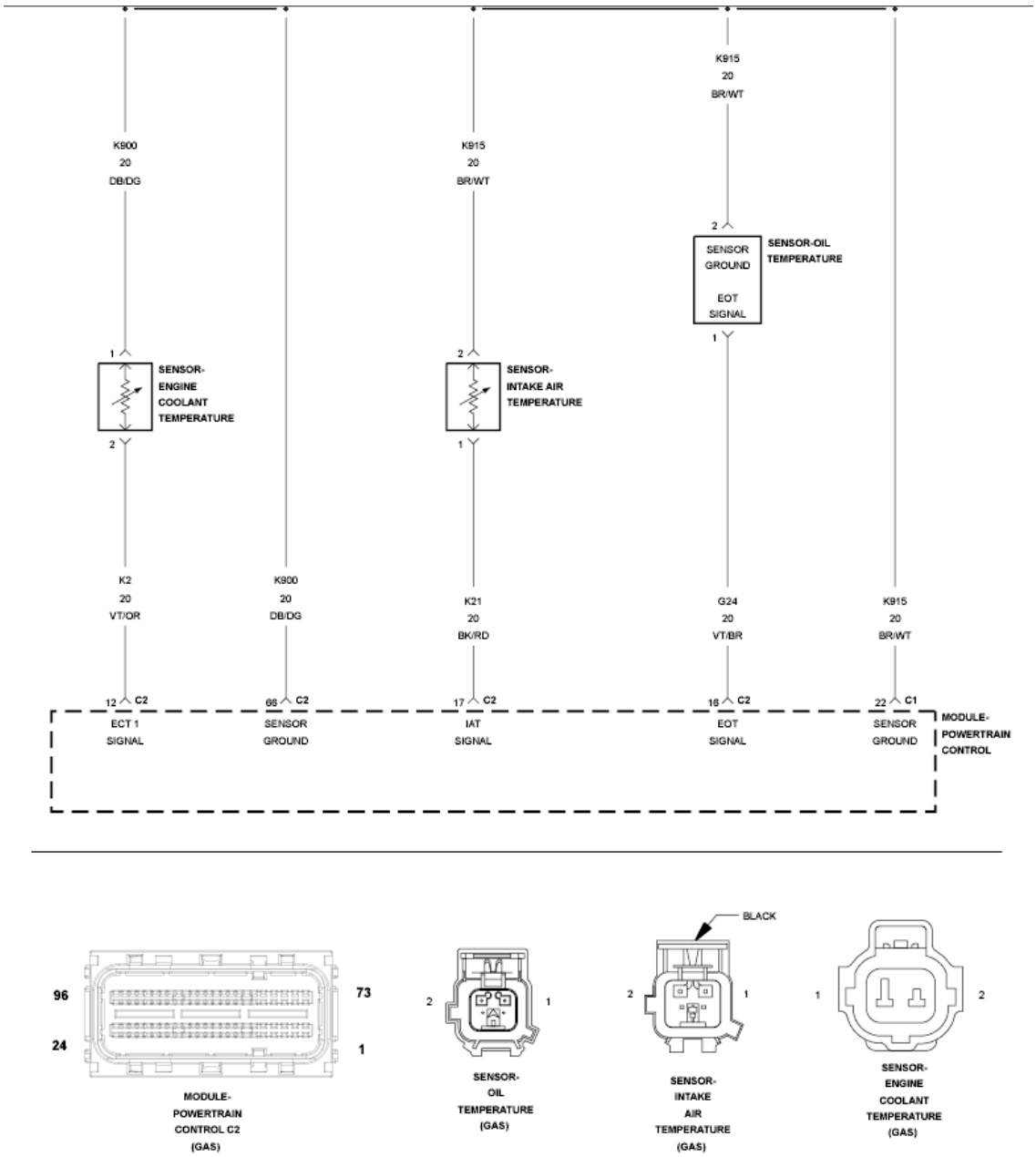

Fig. 102: Driver Seat Belt Pretensioner Circuit Schematic
Courtesy of CHRYSLER GROUP, LLC

For a complete wiring diagram, **refer to appropriate SYSTEM WIRING DIAGRAMS article** .

THEORY OF OPERATION

When powered, the Occupant Restraint Controller (ORC) sends a test current to the squibs to verify the integrity of the squib and wiring. These circuits are maintained in a "floating" configuration at the ORC (connected to neither power nor ground) as protection against inadvertent deployment. Use of the Supplemental Restraints System (SRS) Load Tool Kit (special tool #8443A, SRS Load Tool) in the tests below substitutes a suspect squib with a known good component. The SRS Load Tool Adapter provides a test point as well as a method for opening the shorting bar connections within the ORC harness connector.

WHEN MONITORED

With the ignition on.

SET CONDITION

The Occupant Restraint Controller (ORC) monitors the resistance of the Driver Seat Belt Tensioner circuits. The ORC will set this DTC if it detects an open or high resistance on the Driver Seat Belt Tensioner circuits.

POSSIBLE CAUSES

Possible Causes
(R55) DRIVER SEAT BELT RETRACTOR LINE 1 CIRCUIT OPEN
(R53) DRIVER SEAT BELT RETRACTOR LINE 2 CIRCUIT OPEN
DRIVER SEAT BELT TENSIONER
OCCUPANT RESTRAINT CONTROLLER (ORC)

DIAGNOSTIC TEST

1. **DETERMINE ACTIVE OR STORED DTC**

NOTE: Make sure that the battery is fully charged.

NOTE: The scan tool, SRS Load Tool Kit (special tool #8443A, SRS Load Tool), and DVOM are required to perform the following test:

1. Turn the ignition on.

SELECT ACTIVE or STORED DTC:

ACTIVE DTC

- Go To 2

STORED DTC

- Go To 5

2. **CHECK FOR OPEN DRIVER SEAT BELT TENSIONER**

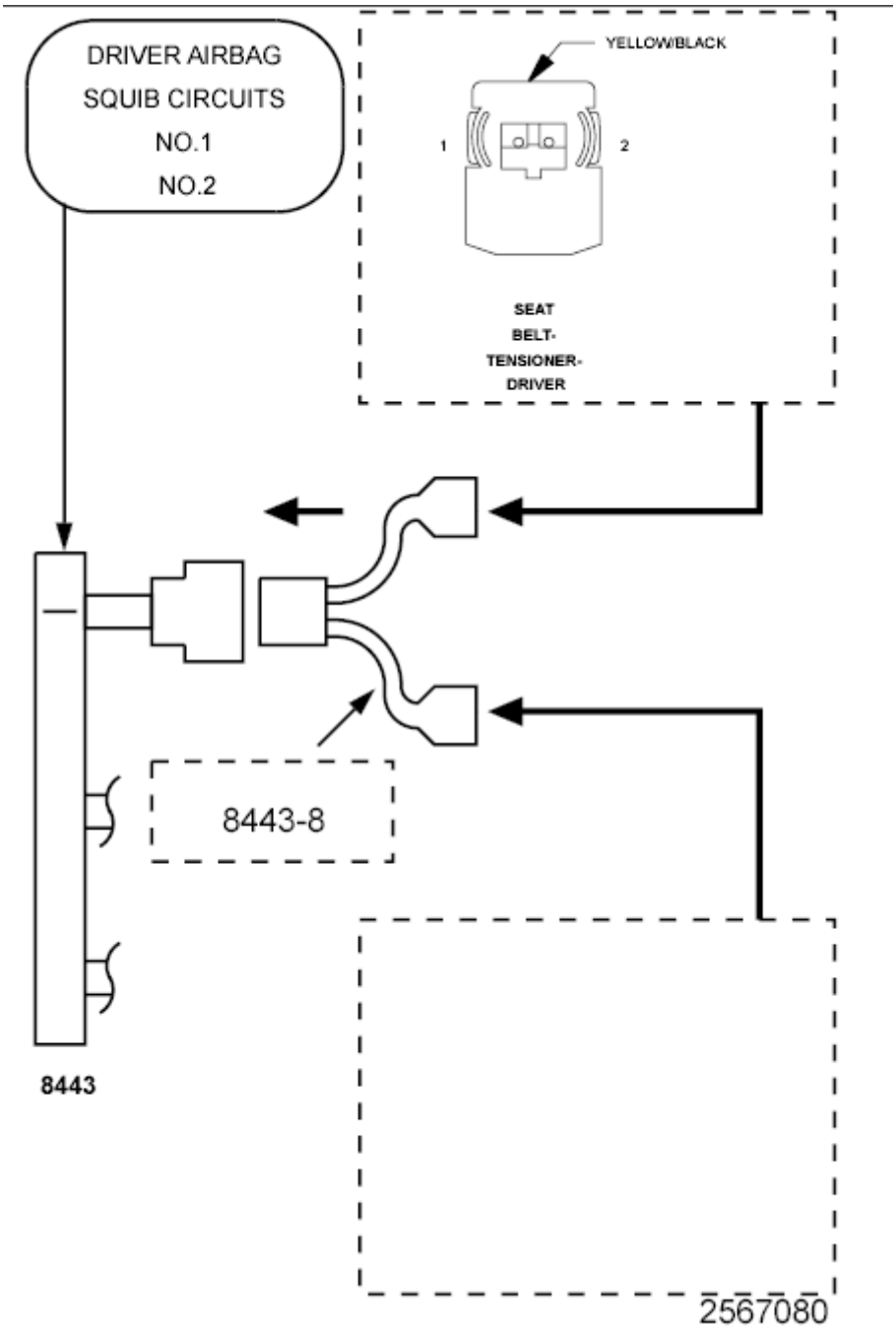

Fig. 103: Checking For Shorted Driver Seat Belt Tensioner
Courtesy of CHRYSLER GROUP, LLC

WARNING: Turn the ignition off, disconnect the 12-volt battery and wait two minutes before proceeding. Failure to follow these instructions may result in possible serious or fatal injury.

1. Disconnect the Driver Seat Belt Tensioner connector.

   NOTE: Check connectors - Clean and repair as necessary.

2. Connect the SRS Load Tool Kit (special tool #8443A, SRS Load Tool) and SRS Load Tool Jumper (special tool #8443-8, Jumper, SRS Load) to the Driver Seat Belt Tensioner connector.

   WARNING: Turn the ignition on, then reconnect the 12-volt battery and wait two minutes before proceeding. Failure to follow these instructions may result in possible serious or fatal injury.

3. With the scan tool, read the active ORC DTCs.

   Does the scan tool display: B1B2A-1st ROW DRIVER SEAT BELT PRETENSIONER CIRCUIT OPEN?

   Yes

   - Go To 3

   No

   - Replace the Driver Seat Belt Tensioner in accordance with the Service Information.
   - Perform the AIRBAG SYSTEM VERIFICATION TEST. Refer to **STANDARD PROCEDURE** .

3. **CHECK THE (R55) DRIVER SEAT BELT RETRACTOR LINE 1 CIRCUIT FOR AN OPEN**

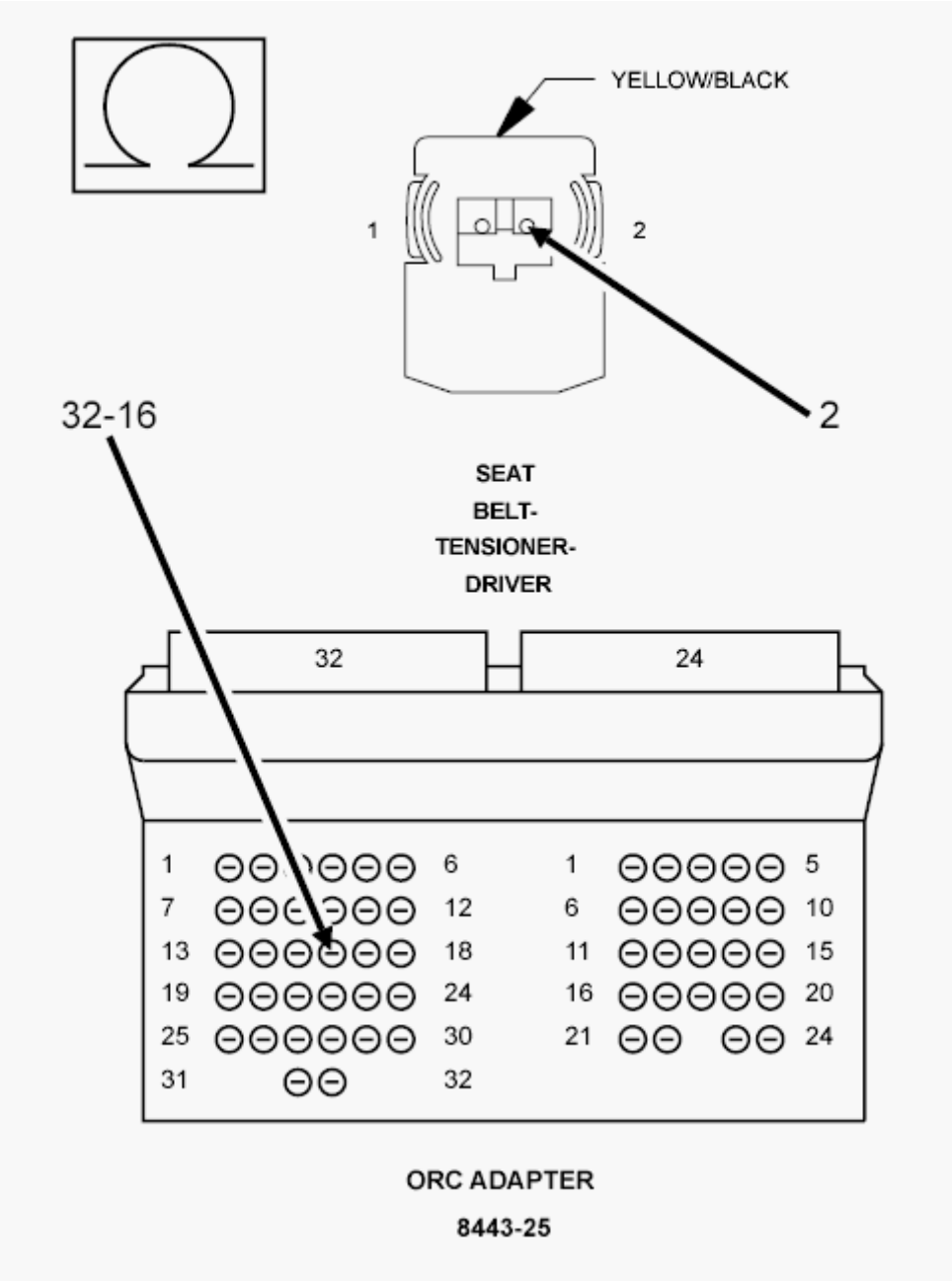

Fig. 104: Checking Driver Seat Belt Retractor Line 1 Circuit For Open
Courtesy of CHRYSLER GROUP, LLC

WARNING: Turn the ignition off, disconnect the 12-volt battery and wait two minutes before proceeding. Failure to follow these instructions may result in possible serious or fatal injury.

1. Disconnect the SRS Load Tool Kit (special tool #8443A, SRS Load Tool) and SRS Load Tool Jumper (special tool #8443-8, Jumper, SRS Load) from the Driver Seat Belt Tensioner connector.
2. Disconnect the ORC connectors.

NOTE: Check connectors - Clean and repair as necessary.

3. Connect the SRS Load Tool Adaptor (special tool #8443-25, 56 Way ACM Adapter) to the ORC C1 connector.
4. Measure the resistance of the (R55) Driver Seat Belt Retractor Line 1 circuit between the Driver Seat Belt Tensioner connector cavity 2 and the SRS Load Tool Adaptor (special tool #8443-25, 56 Way ACM Adapter) cavity 32-16.

   Is the resistance below 1.0 Ohm?

   Yes

   - Go To 4

   No

   - Repair the open (R55) Driver Seat Belt Tensioner Line 1 circuit.
   - Perform the AIRBAG SYSTEM VERIFICATION TEST. Refer to **STANDARD PROCEDURE** .

4. **CHECK THE (R53) DRIVER SEAT BELT RETRACTOR LINE 2 CIRCUIT FOR AN OPEN**

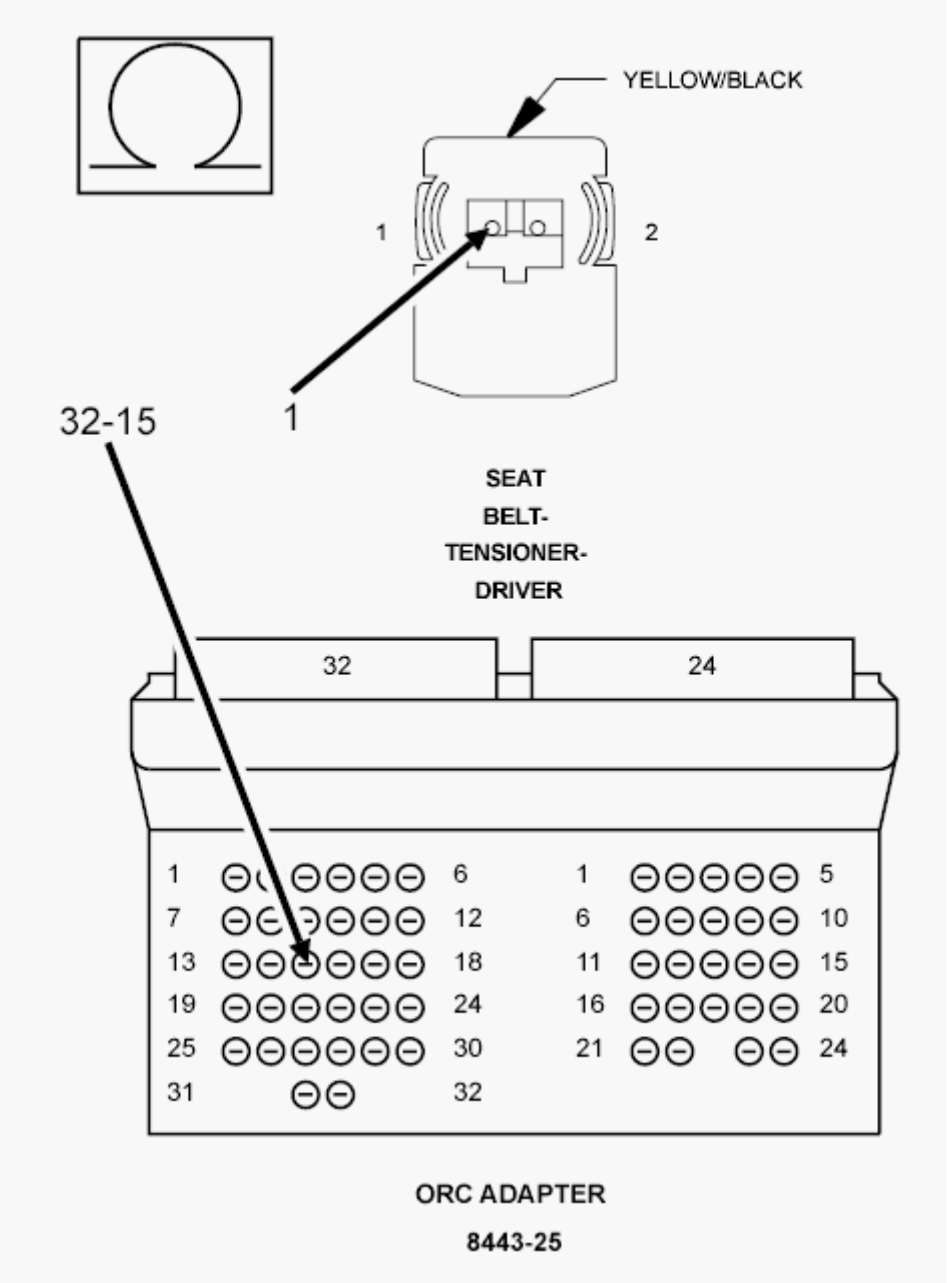

Fig. 105: Checking Driver Seat Belt Retractor Line 2 Circuit For Open
Courtesy of CHRYSLER GROUP, LLC

1. Measure the resistance of the (R53) Driver Seat Belt Retractor Line 2 circuit between the Driver Seat Belt Tensioner connector cavity 1 and the SRS Load Tool Adaptor (special tool #8443-25, 56 Way ACM Adapter) cavity 32-15.

   Is the resistance below 1.0 Ohm?

   Yes

WARNING: If the Occupant Restraint Controller (ORC) is dropped at any time, it must be replaced. Failure to follow these instructions may result in possible serious or fatal injury.

- Replace the ORC in accordance with Service Information.
- Perform the AIRBAG SYSTEM VERIFICATION TEST. Refer to **STANDARD PROCEDURE** .

No

- Repair the open (R53) Driver Seat Belt Tensioner Line 2 circuit.
- Perform the AIRBAG SYSTEM VERIFICATION TEST. Refer to **STANDARD PROCEDURE** .

5. **CHECKING STORED OR INTERMITTENT CODES**

NOTE: Diagnose and repair all active codes before diagnosing stored codes. Refer to OCCUPANT RESTRAINT CONTROLLER (ORC) - DIAGNOSTIC CODE INDEX for a complete list of airbag system diagnostic procedures.

1. With the scan tool, record and erase all Airbag System Module DTCs.

WARNING: Turn the ignition off, disconnect the 12-volt battery and wait two minutes before proceeding. Failure to follow these instructions may result in possible serious or fatal injury.

2. Using the wiring diagram/schematic as a guide, inspect the related wiring and connectors for chaffed, pierced, pinched, and partially broken wires, and for broken, bent, pushed out, corroded, and contaminated terminals. Repair as necessary.
3. Reconnect all disconnected components and harness connectors.

WARNING: Turn the ignition on, then reconnect the

12-volt battery and wait two minutes before proceeding. Failure to follow these instructions may result in possible serious or fatal injury.

4. With the scan tool, monitor for active codes while performing the following:
   - Wiggle the wiring harness and connectors of the related airbag circuit.
   - Continue the test until either a code becomes active or the problem area is isolated.
5. In the previous steps you have attempted to recreate the conditions responsible for setting the DTC in question/causing the intermittent condition.

   Are any ACTIVE DTCs present?

   Yes

   - Perform the appropriate DTC. Refer to **DIAGNOSIS AND TESTING**.

   No

   - No problem found at this time. Erase all codes before returning the vehicle to the customer.

B1B2B-1ST ROW DRIVER SEAT BELT PRETENSIONER CIRCUIT SHORTED TOGETHER

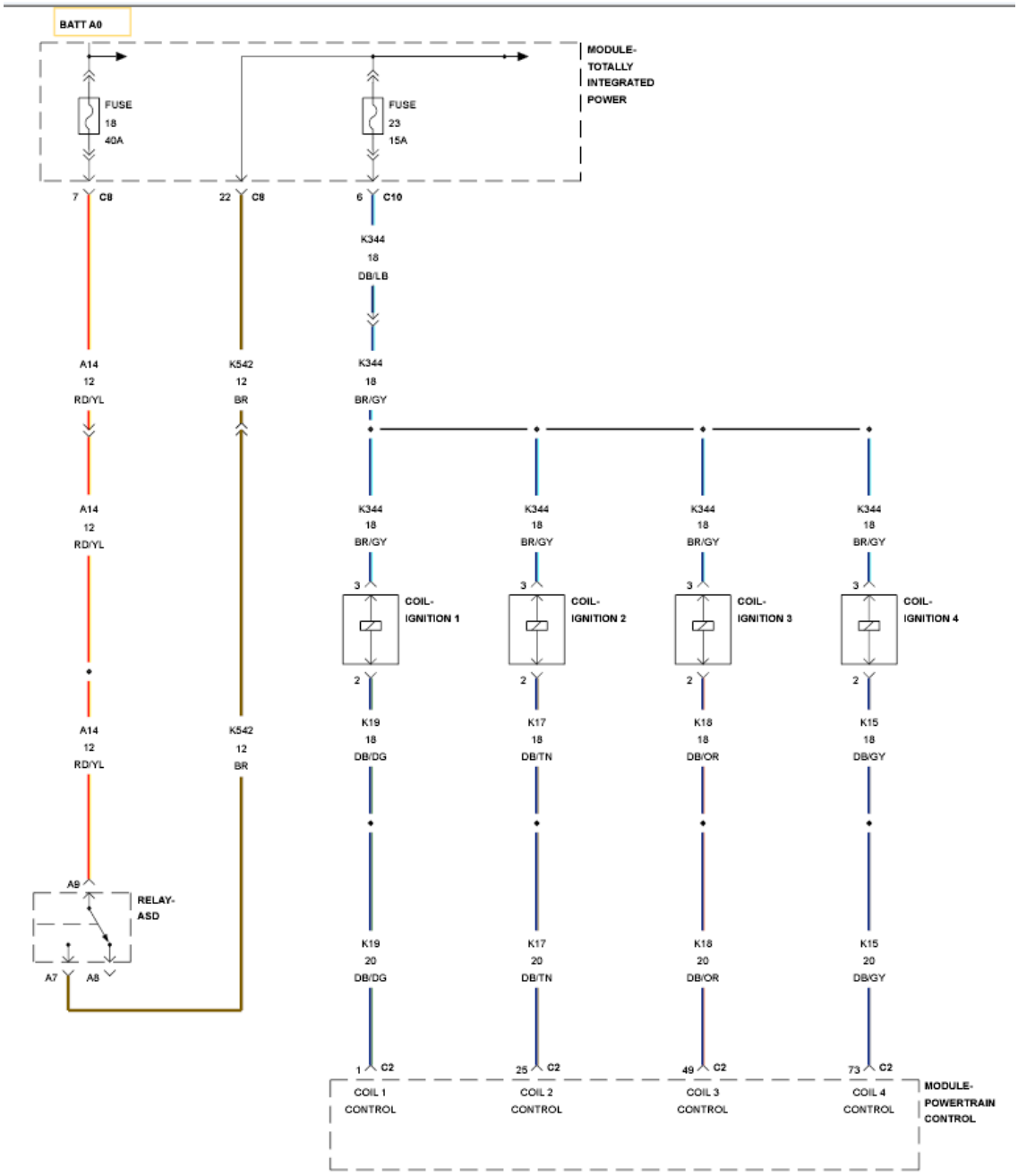

Fig. 106: Driver Seat Belt Pretensioner Circuit Schematic
Courtesy of CHRYSLER GROUP, LLC

For a complete wiring diagram, **refer to appropriate SYSTEM WIRING DIAGRAMS article** .

WHEN MONITORED

With the ignition on.

SET CONDITION

The Occupant Restraint Controller (ORC) monitors the resistance of the Driver Seat Belt Tensioner circuits. The ORC will set this DTC if it detects low resistance between the Driver Seat Belt Tensioner circuits.

POSSIBLE CAUSES

Possible Causes
(R55) DRIVER SEAT BELT RETRACTOR LINE 1 CIRCUIT SHORTED TO (R53) DRIVER SEAT BELT RETRACTOR LINE 2 CIRCUIT
DRIVER SEAT BELT TENSIONER
OCCUPANT RESTRAINT CONTROLLER (ORC)

DIAGNOSTIC TEST

1. **SELECT ACTIVE OR STORED DTC**

   NOTE: Make sure that the battery is fully charged.

   NOTE: The scan tool, SRS Load Tool Kit (special tool #8443A, SRS Load Tool), and DVOM are required to perform the following test:

   1. Turn the ignition on.

      Select ACTIVE or STORED DTC:

      ACTIVE DTC

      - Go To 2

      STORED DTC

      - Go To 4

2. **CHECK FOR SHORTED DRIVER SEAT BELT TENSIONER**

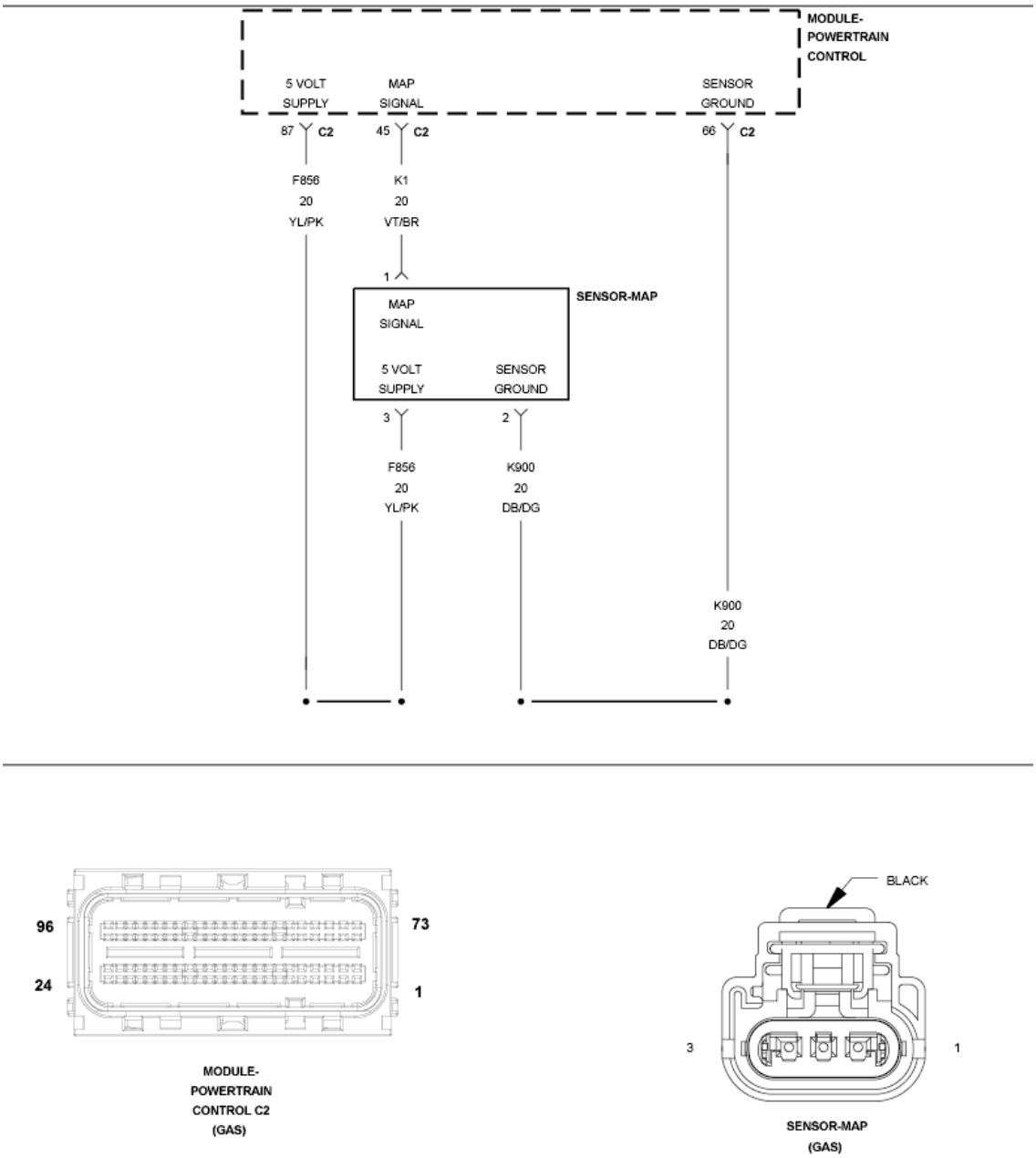

Fig. 107: Checking For Shorted Driver Seat Belt Tensioner
Courtesy of CHRYSLER GROUP, LLC

WARNING: Turn the ignition off, disconnect the 12-volt battery and wait two minutes before proceeding. Failure to follow these instructions may result in possible serious or fatal injury.

1. Disconnect the Driver Seat Belt Tensioner connector.

NOTE: Check connectors - Clean and repair as necessary.

2. Connect the SRS Load Tool Kit (special tool #8443A, SRS Load Tool) and SRS Load Tool Jumper (special tool #8443-8, Jumper, SRS Load) to the Driver Seat Belt Tensioner connector.

WARNING: Turn the ignition on, then reconnect the 12-volt battery and wait two minutes before proceeding. Failure to follow these instructions may result in possible serious or fatal injury.

3. With the scan tool, read the active ORC DTCs.

   Does the scan tool display: B1B2B-1st ROW DRIVER SEAT BELT PRETENSIONER CIRCUIT SHORTED TOGETHER?

   Yes

   - Go To 3

   No

   - Replace the Driver Seat Belt Tensioner in accordance with the Service Information.
   - Perform the AIRBAG SYSTEM VERIFICATION TEST. Refer to **STANDARD PROCEDURE** .

3. **CHECK THE (R55) DRIVER SEAT BELT RETRACTOR LINE 1 CIRCUIT FOR A SHORT TO THE (R53) DRIVER SEAT BELT RETRACTOR LINE 2 CIRCUIT**

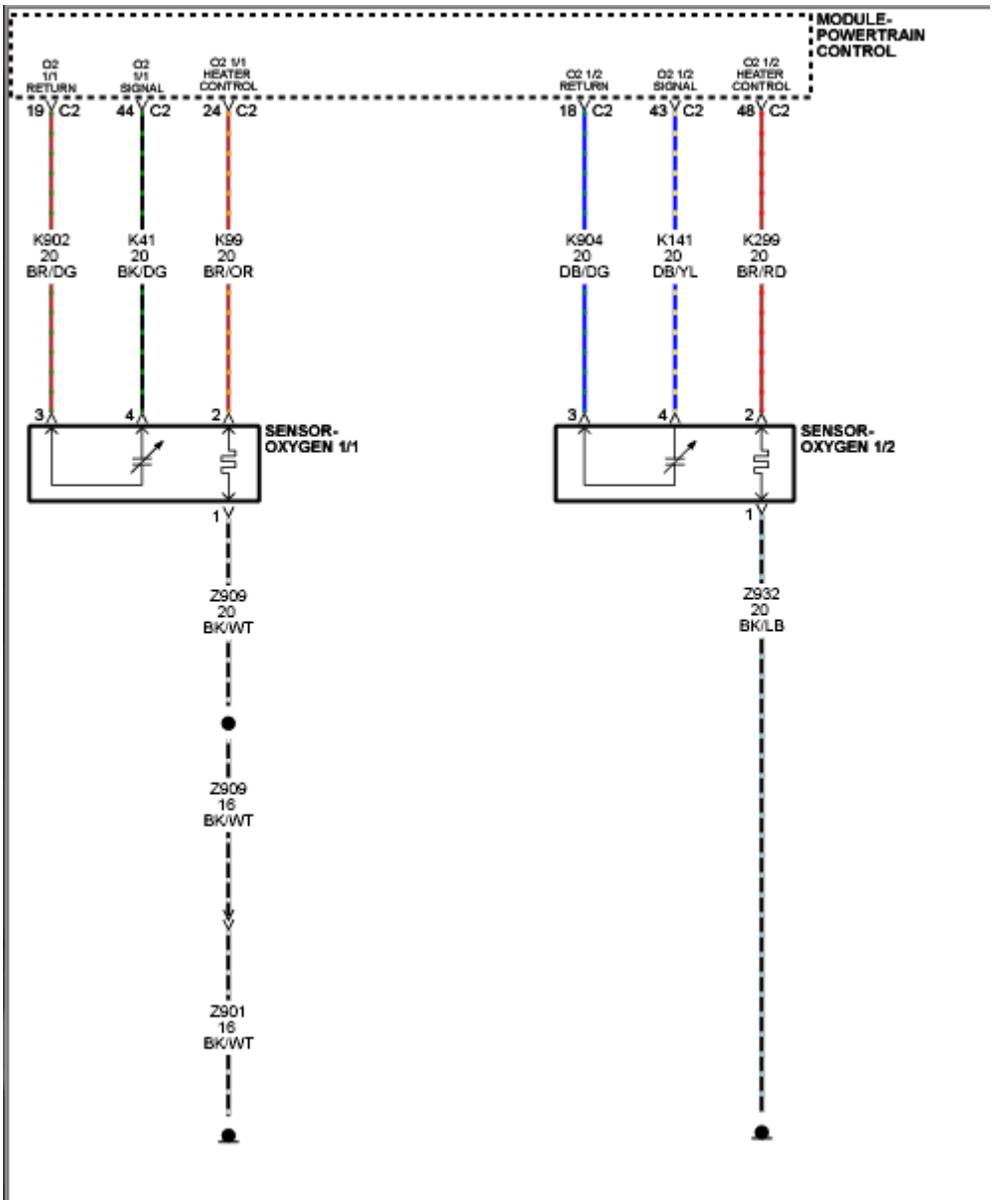

Fig. 108: Checking Driver Seat Belt Retractor Line 1 Circuit For Short To Driver Seat Belt Retractor Line 2 Circuit
Courtesy of CHRYSLER GROUP, LLC

WARNING: Turn the ignition off, disconnect the 12-volt battery and wait two minutes before proceeding. Failure to follow these instructions may result in possible serious or fatal injury.

1. Disconnect the SRS Load Tool Kit (special tool #8443A, SRS Load Tool) and SRS Load Tool Jumper (special tool #8443-8, Jumper, SRS Load) from the Driver Seat Belt Tensioner connector.

2. Disconnect the ORC connectors.

NOTE: Check connectors - Clean and repair as necessary.

3. Connect the SRS Load Tool Adaptor (special tool #8443-25, 56 Way ACM Adapter) to the ORC C1 connector.
4. Measure the resistance between the (R55) Driver Seat Belt Retractor Line 1 circuit cavity 32-16 and the (R53) Driver Seat Belt Retractor Line 2 circuit cavity 32-15 at the SRS Load Tool Adaptor (special tool #8443-25, 56 Way ACM Adapter).

   Is the resistance below 10k Ohms?

   Yes

   - Repair the (R55) Driver Seat Belt Tensioner Line 1 circuit for a short to the (R53) Driver Seat Belt Tensioner Line 2 circuit.
   - Perform the AIRBAG SYSTEM VERIFICATION TEST. Refer to **STANDARD PROCEDURE** .

   No

   WARNING: If the Occupant Restraint Controller (ORC) is dropped at any time, it must be replaced. Failure to follow these instructions may result in possible serious or fatal injury.

   - Replace the ORC in accordance with Service Information.
   - Perform the AIRBAG SYSTEM VERIFICATION TEST. Refer to **STANDARD PROCEDURE** .

4. **CHECKING STORED OR INTERMITTENT CODES**

NOTE: Diagnose and repair all active codes before diagnosing stored codes. Refer to OCCUPANT RESTRAINT CONTROLLER (ORC) - DIAGNOSTIC CODE INDEX for a complete list of airbag system

diagnostic procedures.

1. With the scan tool, record and erase all Airbag System Module DTCs.

   WARNING: **Turn the ignition off, disconnect the 12-volt battery and wait two minutes before proceeding. Failure to follow these instructions may result in possible serious or fatal injury.**

2. Using the wiring diagram/schematic as a guide, inspect the related wiring and connectors for chaffed, pierced, pinched, and partially broken wires, and for broken, bent, pushed out, corroded, and contaminated terminals. Repair as necessary.
3. Reconnect all disconnected components and harness connectors.

   WARNING: **Turn the ignition on, then reconnect the 12-volt battery and wait two minutes before proceeding. Failure to follow these instructions may result in possible serious or fatal injury.**

4. With the scan tool, monitor for active codes while performing the following:
   - Wiggle the wiring harness and connectors of the related airbag circuit.
   - Continue the test until either a code becomes active or the problem area is isolated.
5. In the previous steps you have attempted to recreate the conditions responsible for setting the DTC in question/causing the intermittent condition.

   Are any ACTIVE DTCs present?

   Yes

   - Perform the appropriate diagnostic procedure. Refer to **DIAGNOSIS AND TESTING**.

No

- No problem found at this time. Erase all codes before returning the vehicle to the customer.

B1B2C-1ST ROW PASSENGER SEAT BELT PRETENSIONER CIRCUIT LOW

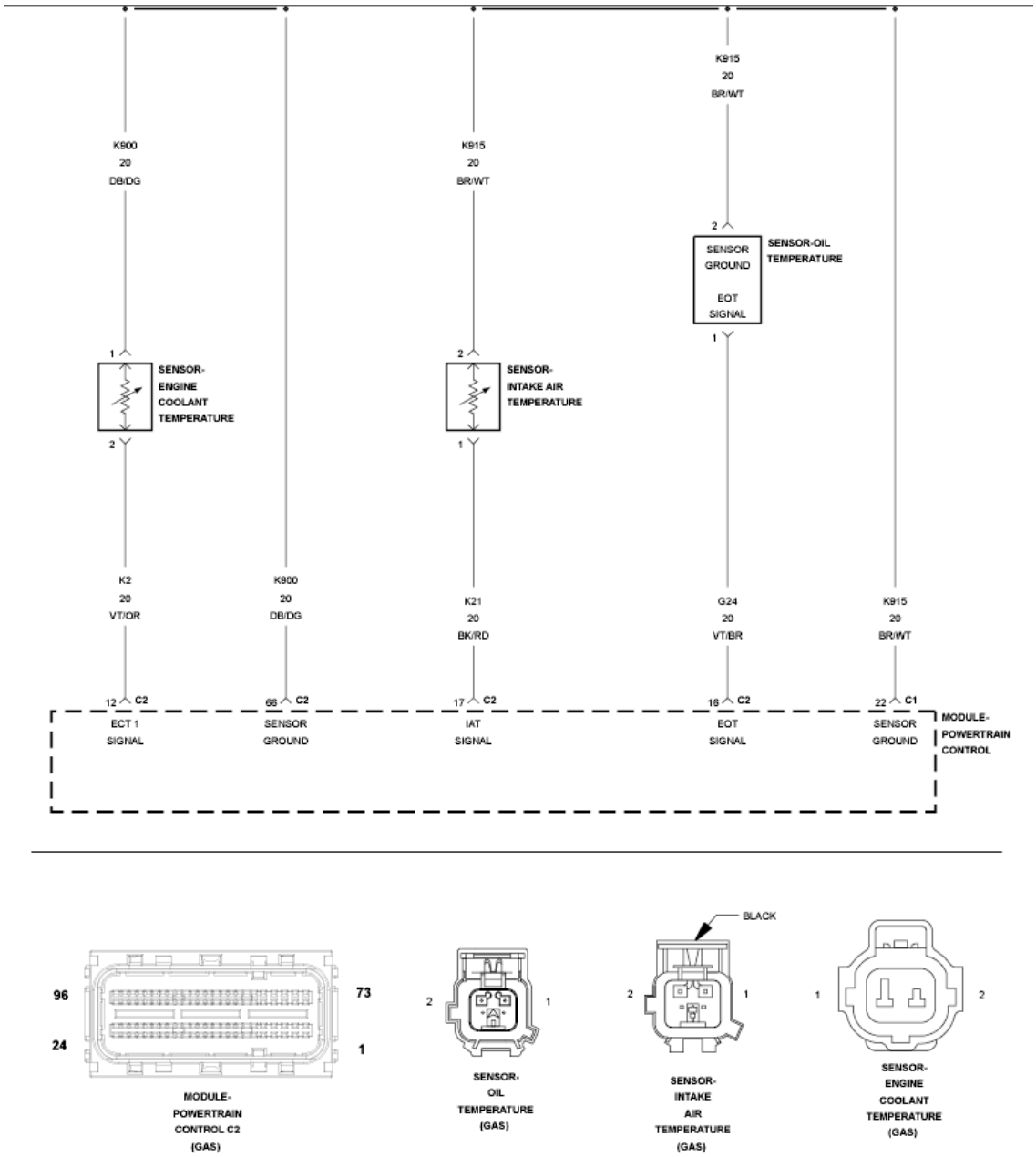

Fig. 109: Passenger Seat Belt Pretensioner Circuit Schematic
Courtesy of CHRYSLER GROUP, LLC

For a complete wiring diagram, **refer to appropriate SYSTEM WIRING DIAGRAMS article** .

THEORY OF OPERATION

When powered, the Occupant Restraint Controller (ORC) sends a test current to the squibs to verify the integrity of the squib and wiring. These circuits are maintained in a "floating" configuration at the ORC (connected to neither power nor ground) as protection against inadvertent deployment. Use of the Supplemental Restraints System (SRS) Load Tool Kit 8443A in the tests below substitutes a suspect squib with a known good component. The SRS Load Tool Adapter provides a test point as well as a method for opening the shorting bar connections within the ORC harness connector.

WHEN MONITORED

With the ignition on.

SET CONDITION

The Occupant Restraint Controller (ORC) monitors the resistance of the Passenger Seat Belt Tensioner circuits. The ORC will set this DTC if it detects low resistance on the Passenger Seat Belt Tensioner circuits.

POSSIBLE CAUSES

Possible Causes
(R56) PASSENGER SEAT BELT RETRACTOR LINE 1 CIRCUIT SHORTED TO GROUND
(R54) PASSENGER SEAT BELT RETRACTOR LINE 2 CIRCUIT SHORTED TO GROUND
PASSENGER SEAT BELT TENSIONER
OCCUPANT RESTRAINT CONTROLLER (ORC)

DIAGNOSTIC TEST

1. **DETERMINE ACTIVE OR STORED DTC**

NOTE: Make sure that the battery is fully charged.

NOTE: The scan tool, SRS Load Tool Kit (special tool #8443A, SRS Load Tool), and DVOM are required to perform the following test:

1. Turn the ignition on.

   Select ACTIVE or STORED DTC:

   ACTIVE DTC

   - Go To 2

   STORED DTC

   - Go To 4

2. **CHECK FOR SHORTED PASSENGER SEAT BELT TENSIONER**

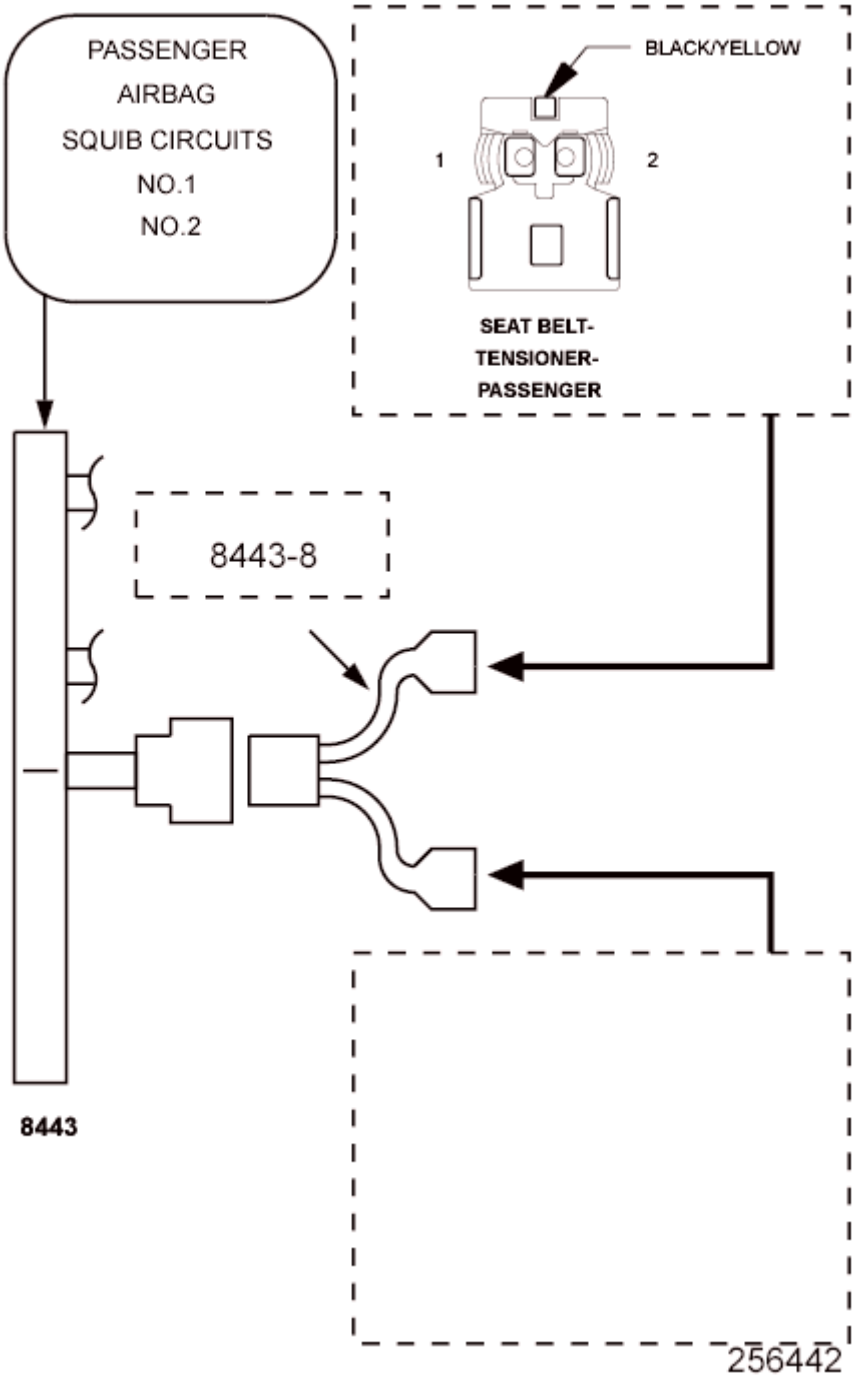

Fig. 110: Checking For Shorted Passenger Seat Belt Pretensioner
Courtesy of CHRYSLER GROUP, LLC

WARNING: Turn the ignition off disconnect the 12-volt battery and wait two minutes before proceeding. Failure to follow these instructions may result in possible serious or fatal injury.

1. Disconnect the Passenger Seat Belt Tensioner connector.

   NOTE: Check connectors - Clean and repair as necessary.

2. Connect the SRS Load Tool Kit (special tool #8443A, SRS Load Tool) and SRS Load Tool Jumper (special tool #8443-8, Jumper, SRS Load) to the Passenger Seat Belt Tensioner connector.

   WARNING: Turn the ignition on, then reconnect the 12-volt battery and wait two minutes before proceeding. Failure to follow these instructions may result in possible serious or fatal injury.

3. With the scan tool, read the active ORC DTCs.

   Does the scan tool display: B1B2C-1st ROW PASSENGER SEAT BELT PRETENSIONER CIRCUIT LOW?

   Yes

   - Go To 3

   No

   - Replace the Passenger Seat Belt Tensioner in accordance with the Service Information.
   - Perform the AIRBAG SYSTEM VERIFICATION TEST. Refer to **STANDARD PROCEDURE** .

3. **CHECK THE (R56) PASSENGER SEAT BELT TENSIONER LINE 1 CIRCUIT AND THE (R54) PASSENGER SEAT BELT TENSIONER LINE 2 CIRCUIT FOR A SHORT TO GROUND**

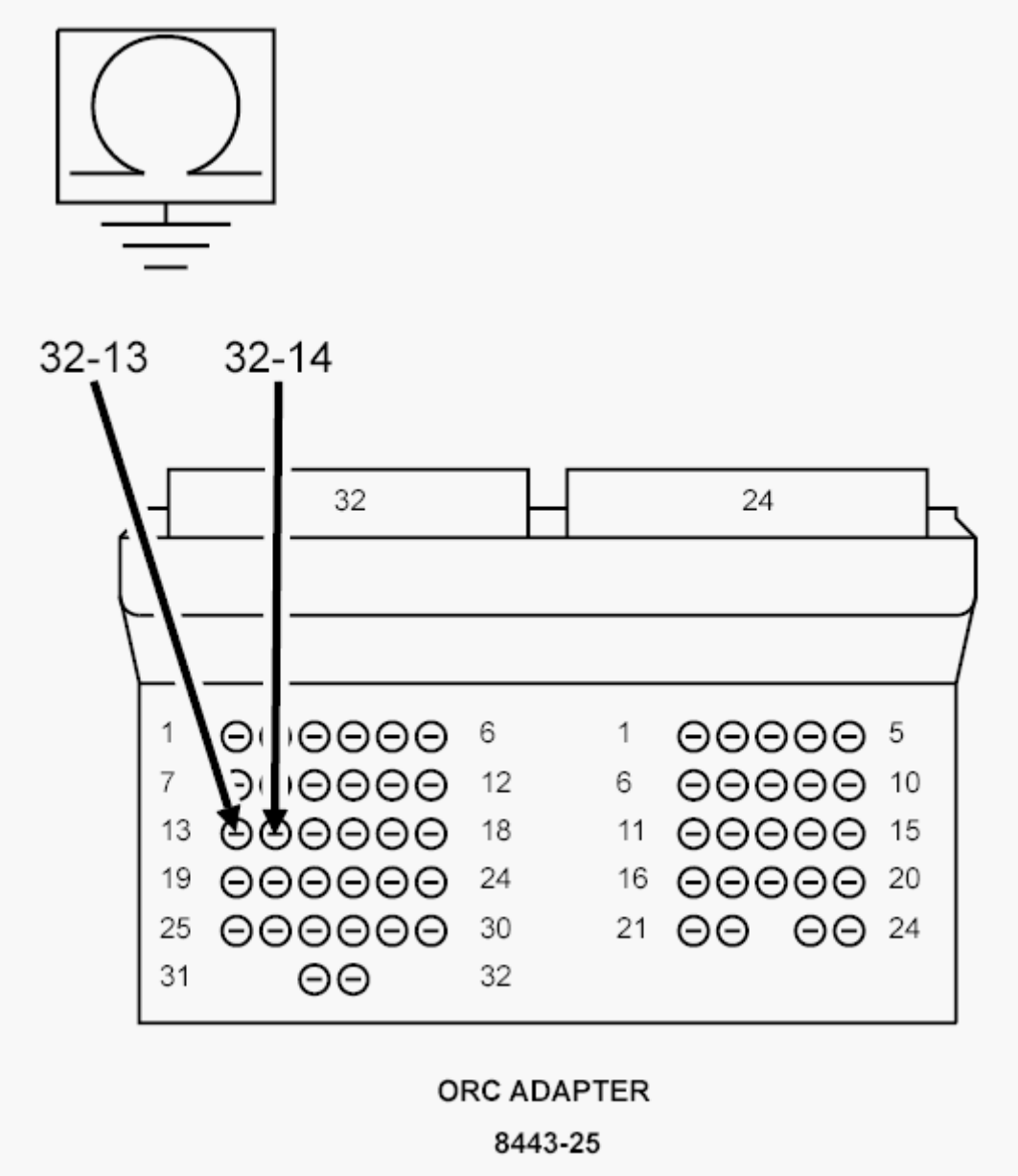

Fig. 111: Checking Passenger Seat Belt Tensioner Line Circuits For Short To Ground
Courtesy of CHRYSLER GROUP, LLC

WARNING: Turn the ignition off disconnect the 12-volt battery and wait two minutes before proceeding. Failure to follow these instructions may result in possible serious or fatal injury.

1. Disconnect the SRS Load Tool Kit (special tool #8443A, SRS Load Tool) and SRS Load Tool Jumper (special tool #8443-8, Jumper, SRS

Load) from the Passenger Seat Belt Tensioner connector.

2. Disconnect the ORC connectors.

NOTE: Check connectors - Clean and repair as necessary.

3. Connect the SRS Load Tool Adaptor (special tool #8443-25, 56 Way ACM Adapter) to the ORC C1 connector.
4. Measure the resistance of the (R56) Passenger Seat Belt Retractor Line 1 circuit between ground and the SRS Load Tool Adaptor (special tool #8443-25, 56 Way ACM Adapter) cavity 32-13.
5. Measure the resistance of the (R54) Passenger Seat Belt Retractor Line 2 circuit between ground and the SRS Load Tool Adaptor (special tool #8443-25, 56 Way ACM Adapter) cavity 32-14.

Is the resistance below 10k Ohms on either circuit?

Yes

- Repair the Passenger Seat Belt Tensioner circuits with resistance below 10k Ohms for a short to ground.
- Perform the AIRBAG SYSTEM VERIFICATION TEST. Refer to **STANDARD PROCEDURE** .

No

WARNING: Turn the ignition off disconnect the 12-volt battery and wait two minutes before proceeding. Failure to follow these instructions may result in possible serious or fatal injury.

- Replace the ORC in accordance with Service Information.
- Perform the AIRBAG SYSTEM VERIFICATION TEST. Refer to **STANDARD PROCEDURE** .

4. **CHECKING STORED OR INTERMITTENT CODES**

NOTE: Diagnose and repair all active codes before

diagnosing stored codes. Refer to OCCUPANT RESTRAINT CONTROLLER (ORC) - DIAGNOSTIC CODE INDEX for a complete list of airbag system diagnostic procedures.

1. With the scan tool, record and erase all Airbag System Module DTCs.

   WARNING: **Turn the ignition off disconnect the 12-volt battery and wait two minutes before proceeding. Failure to follow these instructions may result in possible serious or fatal injury.**

2. Using the wiring diagram/schematic as a guide, inspect the related wiring and connectors for chaffed, pierced, pinched, and partially broken wires, and for broken, bent, pushed out, corroded, and contaminated terminals. Repair as necessary.
3. Reconnect all disconnected components and harness connectors.

   WARNING: **Turn the ignition on, then reconnect the 12-volt battery and wait two minutes before proceeding. Failure to follow these instructions may result in possible serious or fatal injury.**

4. With the scan tool, monitor for active codes while performing the following:
   - Wiggle the wiring harness and connectors of the related airbag circuit.
   - Continue the test until either a code becomes active or the problem area is isolated.
5. In the previous steps you have attempted to recreate the conditions responsible for setting the DTC in question/causing the intermittent condition.

   Are any ACTIVE DTCs present?

   Yes

- Select the appropriate diagnostic procedure from the **OCCUPANT RESTRAINT CONTROLLER (ORC) - DIAGNOSTIC CODE INDEX** .

No

- No problem found at this time. Erase all codes before returning the vehicle to the customer.

B1B2D-1ST ROW PASSENGER SEAT BELT PRETENSIONER CIRCUIT HIGH

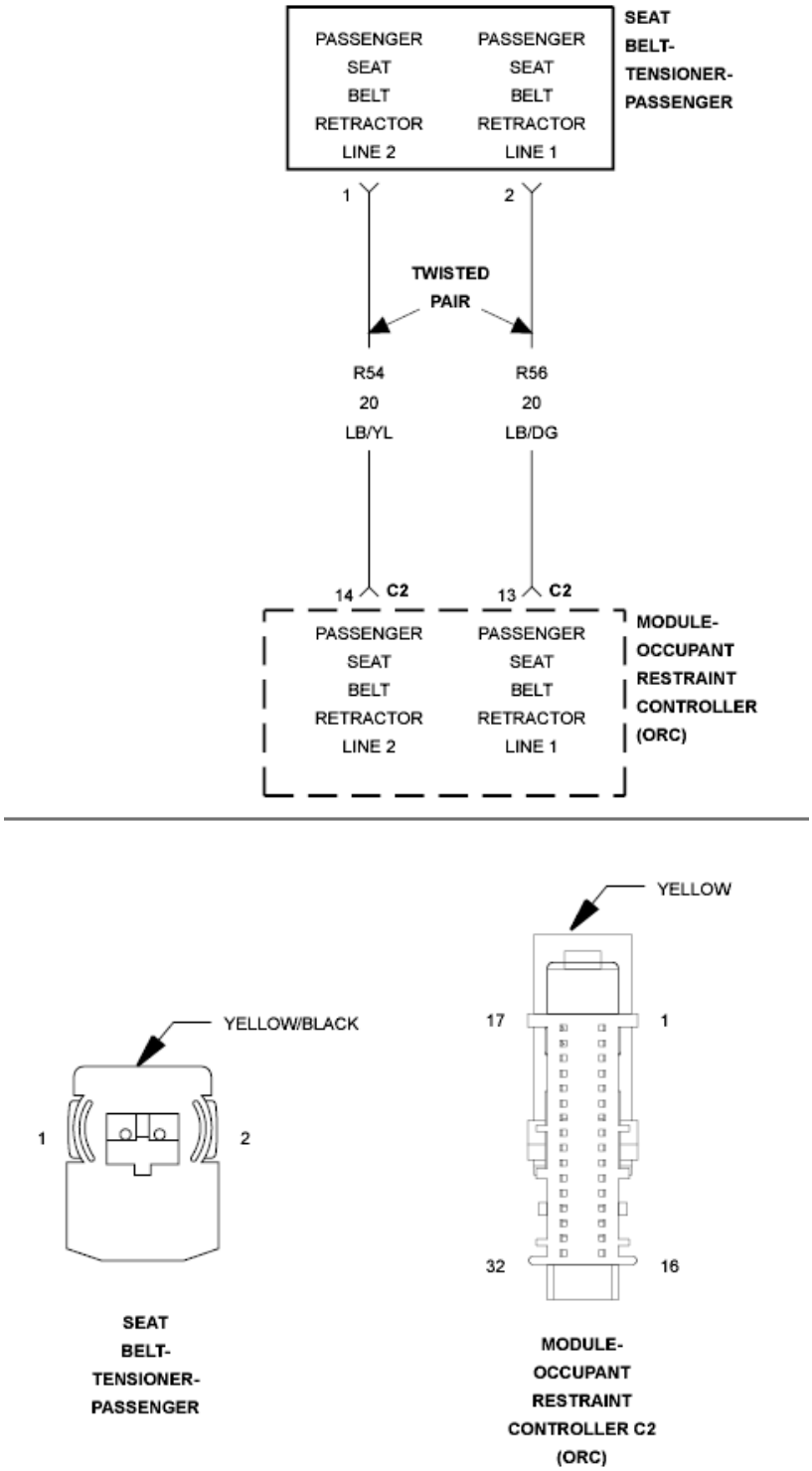

Fig. 112: Passenger Seat Belt Pretensioner Circuit Schematic
Courtesy of CHRYSLER GROUP, LLC

For a complete wiring diagram, **refer to appropriate SYSTEM WIRING DIAGRAMS article** .

THEORY OF OPERATION

When powered, the Occupant Restraint Controller (ORC) sends a test current to the squibs to verify the integrity of the squib and wiring. These circuits are maintained in a "floating" configuration at the ORC (connected to neither power nor ground) as protection against inadvertent deployment. Use of the Supplemental Restraints System (SRS) Load Tool Kit 8443A in the tests below substitutes a suspect squib with a known good component. The use of the SRS Load Tool Adapter provides a test point as well as a method for opening the shorting bar connections within the ORC harness connector.

WHEN MONITORED

With the ignition on.

SET CONDITION

The Occupant Restraint Controller (ORC) monitors the voltage on the Passenger Seat Belt Tensioner circuits. The ORC will set this DTC if it detects voltage on the Passenger Seat Belt Tensioner circuits.

POSSIBLE CAUSES

Possible Causes
(R56) PASSENGER SEAT BELT RETRACTOR LINE 1 CIRCUIT SHORTED TO BATTERY
(R54) PASSENGER SEAT BELT RETRACTOR LINE 2 CIRCUIT SHORTED TO BATTERY
PASSENGER SEAT BELT TENSIONER
OCCUPANT RESTRAINT CONTROLLER (ORC)

DIAGNOSTIC TEST

1. **DETERMINE ACTIVE OR STORED DTC**

   NOTE: Make sure that the battery is fully charged.

   NOTE: The scan tool, SRS Load Tool Kit (special tool #8443A, SRS Load Tool), and DVOM are required to perform the following test:

   1. Turn the ignition on.

Select ACTIVE or STORED DTC:

ACTIVE DTC

- Go To 2

STORED DTC

- Go To 4

2. **CHECK FOR SHORTED PASSENGER SEAT BELT TENSIONER**

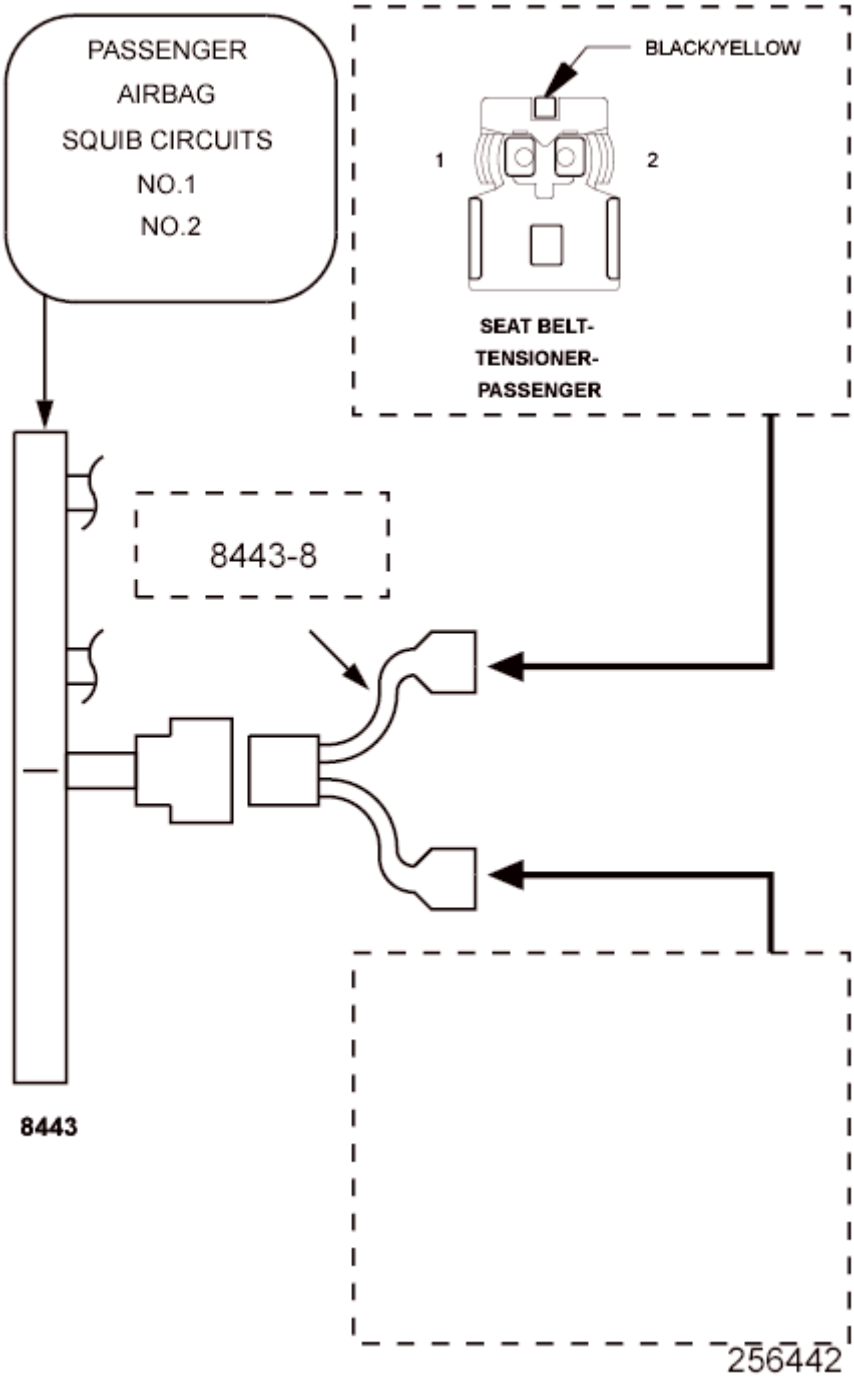

Fig. 113: Checking For Shorted Passenger Seat Belt Pretensioner
Courtesy of CHRYSLER GROUP, LLC

WARNING: Turn the ignition off disconnect the 12-volt battery and wait two minutes before proceeding. Failure to follow these instructions may result in possible serious or fatal injury.

1. Disconnect the Passenger Seat Belt Tensioner connector.

   NOTE: Check connectors - Clean and repair as necessary.

2. Connect the SRS Load Tool Kit (special tool #8443A, SRS Load Tool) and SRS Load Tool Jumper (special tool #8443-8, Jumper, SRS Load) to the Passenger Seat Belt Tensioner connector.

   WARNING: Turn the ignition on, then reconnect the 12-volt battery and wait two minutes before proceeding. Failure to follow these instructions may result in possible serious or fatal injury.

3. With the scan tool, read the active ORC DTCs.

   Does the scan tool display: B1B2D-1st ROW PASSENGER SEAT BELT PRETENSIONER CIRCUIT HIGH?

   Yes

   - Go To 3

   No

   - Replace the Passenger Seat Belt Tensioner in accordance with the Service Information.
   - Perform the AIRBAG SYSTEM VERIFICATION TEST. Refer to **STANDARD PROCEDURE** .

3. **CHECK THE (R56) PASSENGER SEAT BELT RETRACTOR LINE 1 CIRCUIT AND THE (R54) PASSENGER SEAT BELT RETRACTOR LINE 2 CIRCUIT FOR A SHORT TO BATTERY**

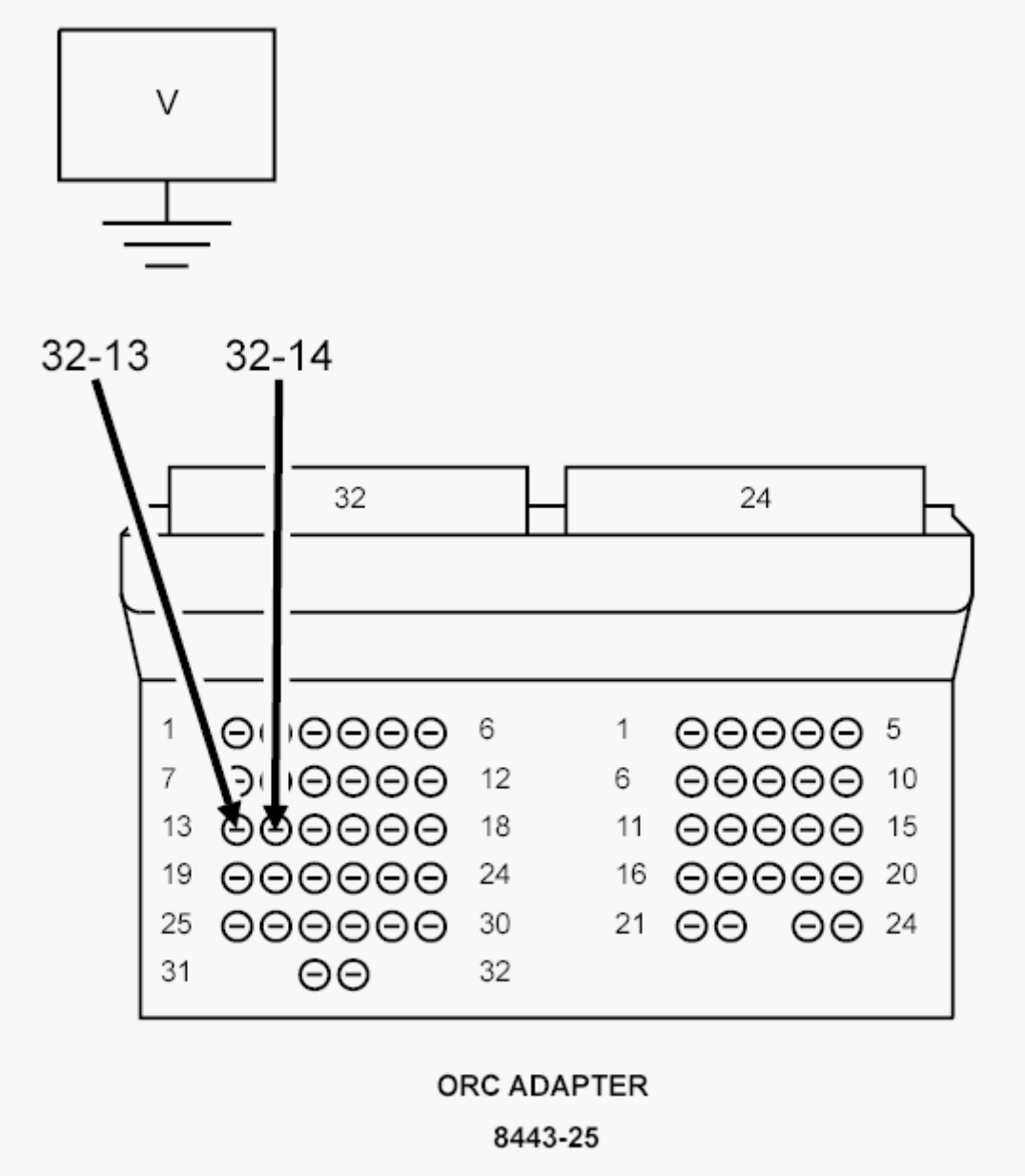

Fig. 114: Checking Passenger Seat Belt Retractor Line Circuits For Short To Battery
Courtesy of CHRYSLER GROUP, LLC

WARNING: Turn the ignition off, disconnect the 12-volt battery and wait two minutes before proceeding. Failure to follow these instructions may result in possible serious or fatal injury.

1. Disconnect the SRS Load Tool Kit (special tool #8443A, SRS Load Tool) and SRS Load Tool Jumper (special tool #8443-8, Jumper, SRS

Load) from the Passenger Seat Belt Tensioner connector.

2. Disconnect the ORC connectors.

NOTE: Check connectors - Clean and repair as necessary.

3. Connect the SRS Load Tool Adaptor (special tool #8443-25, 56 Way ACM Adapter) to the ORC C1 connector.

WARNING: Turn the ignition on, then reconnect the 12-volt battery and wait two minutes before proceeding. Failure to follow these instructions may result in possible serious or fatal injury.

4. Measure the voltage of the (R56) Passenger Seat Belt Retractor Line 1 circuit between the SRS Load Tool Adaptor (special tool #8443-25, 56 Way ACM Adapter) cavity 13 and ground.
5. Measure the voltage of the (R54) Passenger Seat Belt Retractor Line 2 circuit between the SRS Load Tool Adaptor (special tool #8443-25, 56 Way ACM Adapter) cavity 14 and ground.

Is there any voltage present on either circuit?

Yes

- Repair the Passenger Seat Belt Tensioner circuits with voltage present for a short to battery.
- Perform the AIRBAG SYSTEM VERIFICATION TEST. Refer to **STANDARD PROCEDURE** .

No

WARNING: Turn the ignition off, disconnect the 12-volt battery and wait two minutes before proceeding. Failure to follow these instructions may result in possible serious or fatal injury.

WARNING: If the Occupant Restraint Controller (ORC) is dropped at any time, it must be replaced. Failure to take the proper precautions can result in accidental airbag deployment. Failure to follow these instructions may result in possible serious or fatal injury.

- Replace the ORC in accordance with Service Information.
- Perform the AIRBAG SYSTEM VERIFICATION TEST. Refer to **STANDARD PROCEDURE** .

4. **CHECKING STORED OR INTERMITTENT CODES**

NOTE: Diagnose and repair all active codes before diagnosing stored codes. Refer to OCCUPANT RESTRAINT CONTROLLER (ORC) - DIAGNOSTIC CODE INDEX for a complete list of airbag system diagnostic procedures.

1. With the scan tool, record and erase all Airbag System Module DTCs.

WARNING: Turn the ignition off, disconnect the 12-volt battery and wait two minutes before proceeding. Failure to follow these instructions may result in possible serious or fatal injury.

2. Using the wiring diagram/schematic as a guide, inspect the related wiring and connectors for chaffed, pierced, pinched, and partially broken wires, and for broken, bent, pushed out, corroded, and contaminated terminals. Repair as necessary.
3. Reconnect all disconnected components and harness connectors.

WARNING: Turn the ignition on, then reconnect the 12-volt battery and wait two minutes before proceeding. Failure to follow these instructions may result in possible serious or fatal injury.

4. With the scan tool, monitor for active codes while performing the following:
   - Wiggle the wiring harness and connectors of the related airbag circuit.
   - Continue the test until either a code becomes active or the problem area is isolated.
5. In the previous steps you have attempted to recreate the conditions responsible for setting the DTC in question/causing the intermittent condition.

   Are any ACTIVE DTCs present?

   Yes

   - Perform the appropriate diagnostic procedure. Refer to **DIAGNOSIS AND TESTING**.

   No

   - No problem found at this time. Erase all codes before returning the vehicle to the customer.

B1B2E-1ST ROW PASSENGER SEAT BELT PRETENSIONER CIRCUIT OPEN

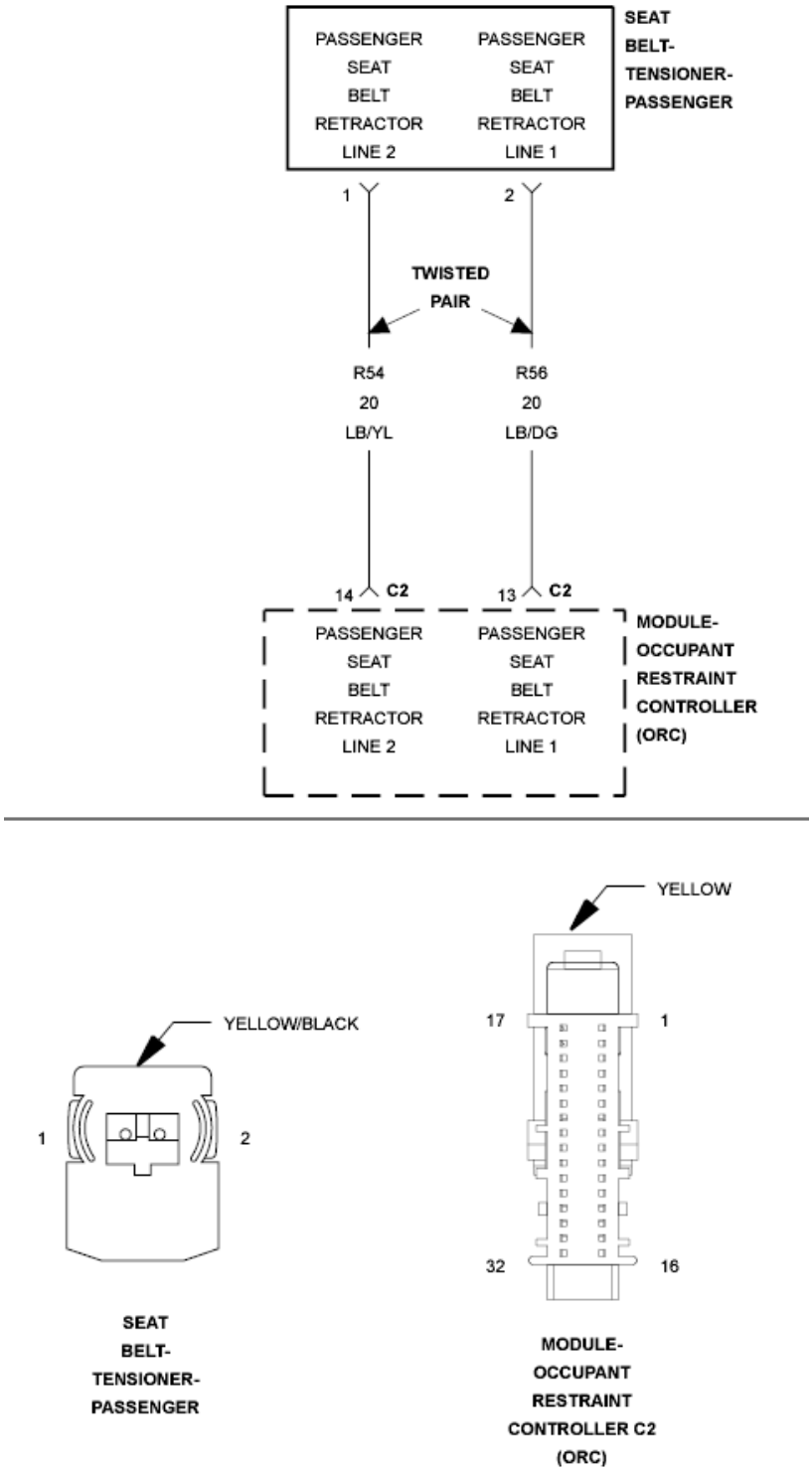

Fig. 115: Passenger Seat Belt Pretensioner Circuit Schematic
Courtesy of CHRYSLER GROUP, LLC

For a complete wiring diagram, **refer to appropriate SYSTEM WIRING DIAGRAMS article** .

THEORY OF OPERATION

When powered, the Occupant Restraint Controller (ORC) sends a test current to the squibs to verify the integrity of the squib and wiring. These circuits are maintained in a "floating" configuration at the ORC (connected to neither power nor ground) as protection against inadvertent deployment. Use of the Supplemental Restraints System (SRS) Load Tool Kit 8443A in the tests below substitutes a suspect squib with a known good component. The use of the SRS Load Tool Adapter provides a test point as well as a method for opening the shorting bar connections within the ORC harness connector.

WHEN MONITORED

With the ignition on.

SET CONDITION

The Occupant Restraint Controller (ORC) monitors the resistance of the Passenger Seat Belt Tensioner circuits. The ORC will set this DTC if it detects an open or high resistance on the Passenger Seat Belt Tensioner circuits.

POSSIBLE CAUSES

Possible Causes
(R56) PASSENGER SEAT BELT RETRACTOR LINE 1 CIRCUIT OPEN
(R54) PASSENGER SEAT BELT RETRACTOR LINE 2 CIRCUIT OPEN
PASSENGER SEAT BELT PRETENSIONER
OCCUPANT RESTRAINT CONTROLLER (ORC)

DIAGNOSTIC TEST

1. **DETERMINE ACTIVE OR STORED DTC**

NOTE: Make sure that the battery is fully charged.

NOTE: The scan tool, SRS Load Tool Kit (special tool #8443A, SRS Load Tool), and DVOM are required to perform the following test:

1. Turn the ignition on.

   Select ACTIVE or STORED DTC:

ACTIVE DTC

- Go To 2

STORED DTC

- Go To 5

2. **CHECK FOR AN OPEN PASSENGER SEAT BELT PRETENSIONER**

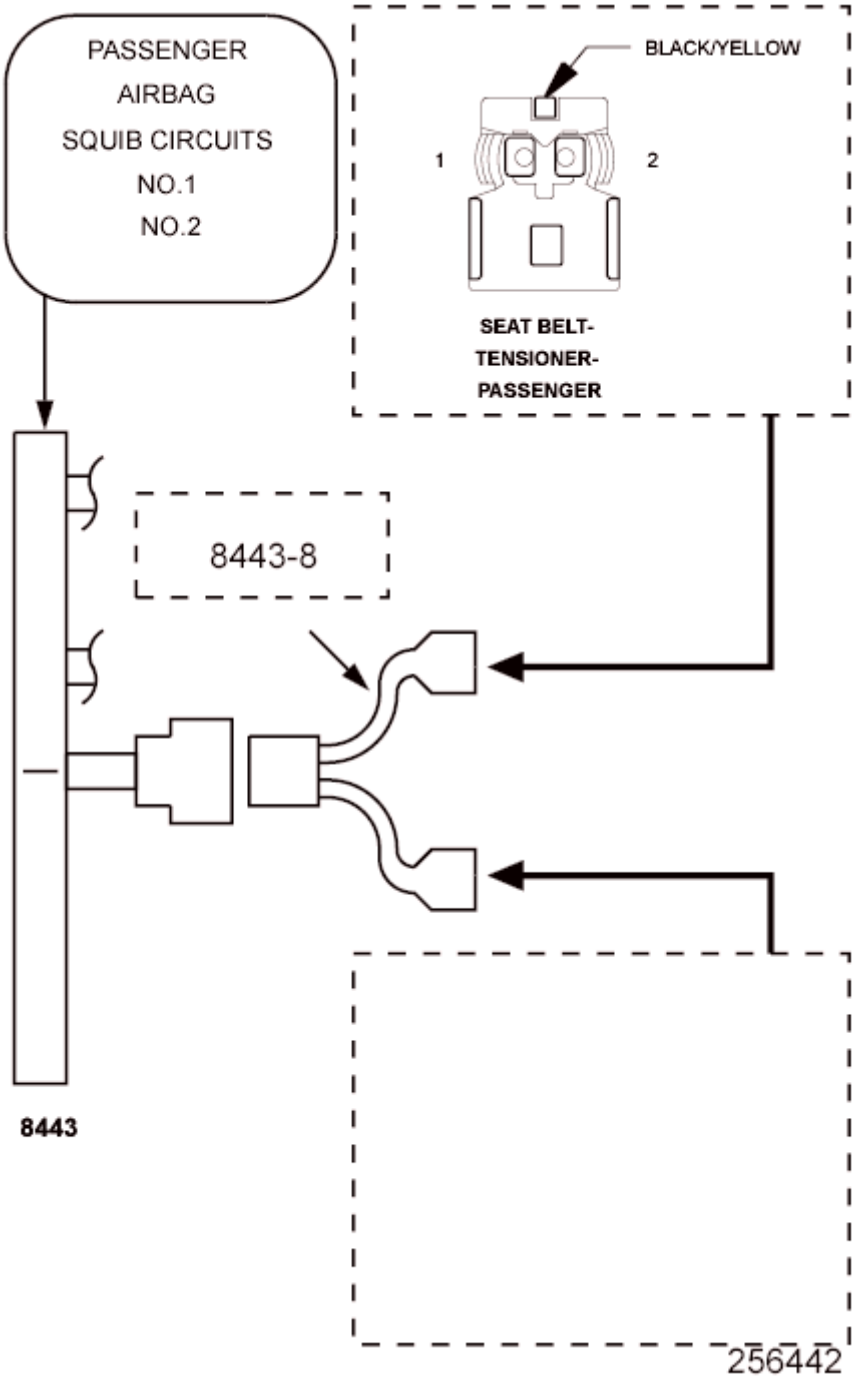

Fig. 116: Checking For Shorted Passenger Seat Belt Pretensioner
Courtesy of CHRYSLER GROUP, LLC

WARNING: Turn the ignition off disconnect the 12-volt battery and wait two minutes before proceeding. Failure to follow these instructions may result in possible serious or fatal injury.

1. Disconnect the Passenger Seat Belt Pretensioner connector.

NOTE: Check connectors - Clean and repair as necessary.

2. Connect the SRS Load Tool Kit (special tool #8443A, SRS Load Tool) and SRS Load Tool Jumper (special tool #8443-8, Jumper, SRS Load) to the Passenger Seat Belt Pretensioner connector.

WARNING: Turn the ignition on, then reconnect the 12-volt battery and wait two minutes before proceeding. Failure to follow these instructions may result in possible serious or fatal injury.

3. With the scan tool, read the active ORC DTCs.

   Does the scan tool display: B1B2E-1st ROW PASSENGER SEAT BELT PRETENSIONER CIRCUIT OPEN?

   Yes

   - Go To 3

   No

   - Replace the Passenger Seat Belt Pretensioner in accordance with the Service Information.
   - Perform the AIRBAG SYSTEM VERIFICATION TEST. Refer to **STANDARD PROCEDURE** .

3. **CHECK THE (R56) PASSENGER SEAT BELT TENSIONER LINE 1 CIRCUIT FOR AN OPEN**

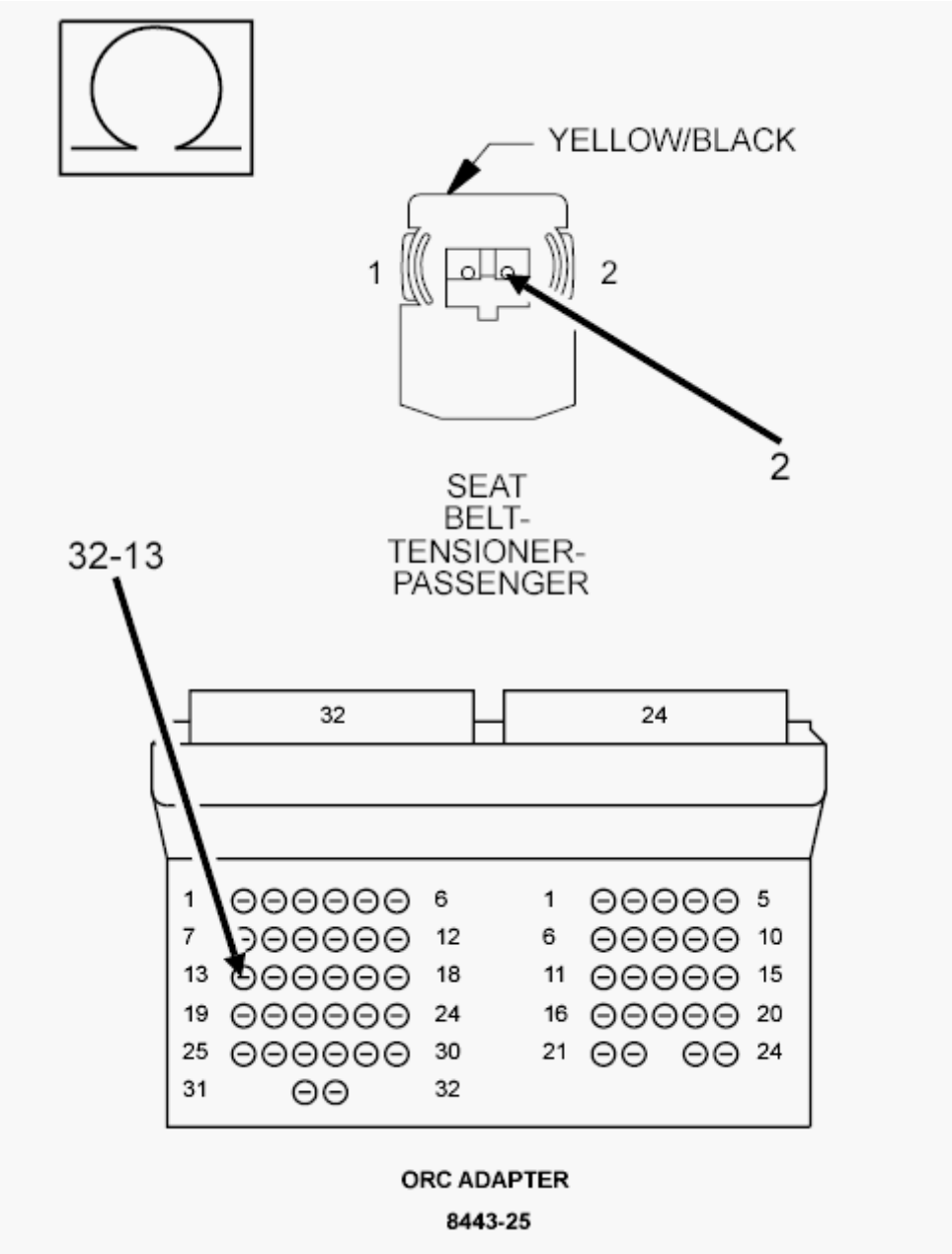

Fig. 117: Checking Passenger Seat Belt Tensioner Line 1 Circuit For Open
Courtesy of CHRYSLER GROUP, LLC

WARNING: Turn the ignition off, disconnect the 12-volt battery and wait two minutes before proceeding. Failure to follow these instructions may result in possible serious or

fatal injury.

1. Disconnect the (special tool #8443A, SRS Load Tool) Load Tool and Jumper from the Passenger Seat Belt Pretensioner connector.
2. Disconnect the ORC connectors.

   NOTE: Check connectors - Clean and repair as necessary.

3. Connect the SRS Load Tool Adaptor (special tool #8443-25, 56 Way ACM Adapter) to the ORC C1 connector.
4. Measure the resistance of the (R56) Passenger Seat Belt Tensioner Line 1 circuit between the Passenger Seat Belt Pretensioner connector cavity 2 and the SRS Load Tool Adaptor (special tool #8443-25, 56 Way ACM Adapter) cavity 32-13.

   Is the resistance below 1.0 Ohm?

   Yes

   - Go To 4

   No

   - Repair the (R56) Passenger Seat Belt Tensioner Line 1 circuit for an open.
   - Perform the AIRBAG SYSTEM VERIFICATION TEST. Refer to **STANDARD PROCEDURE** .

4. **CHECK THE (R54) PASSENGER SEAT BELT TENSIONER LINE 2 CIRCUIT FOR AN OPEN**

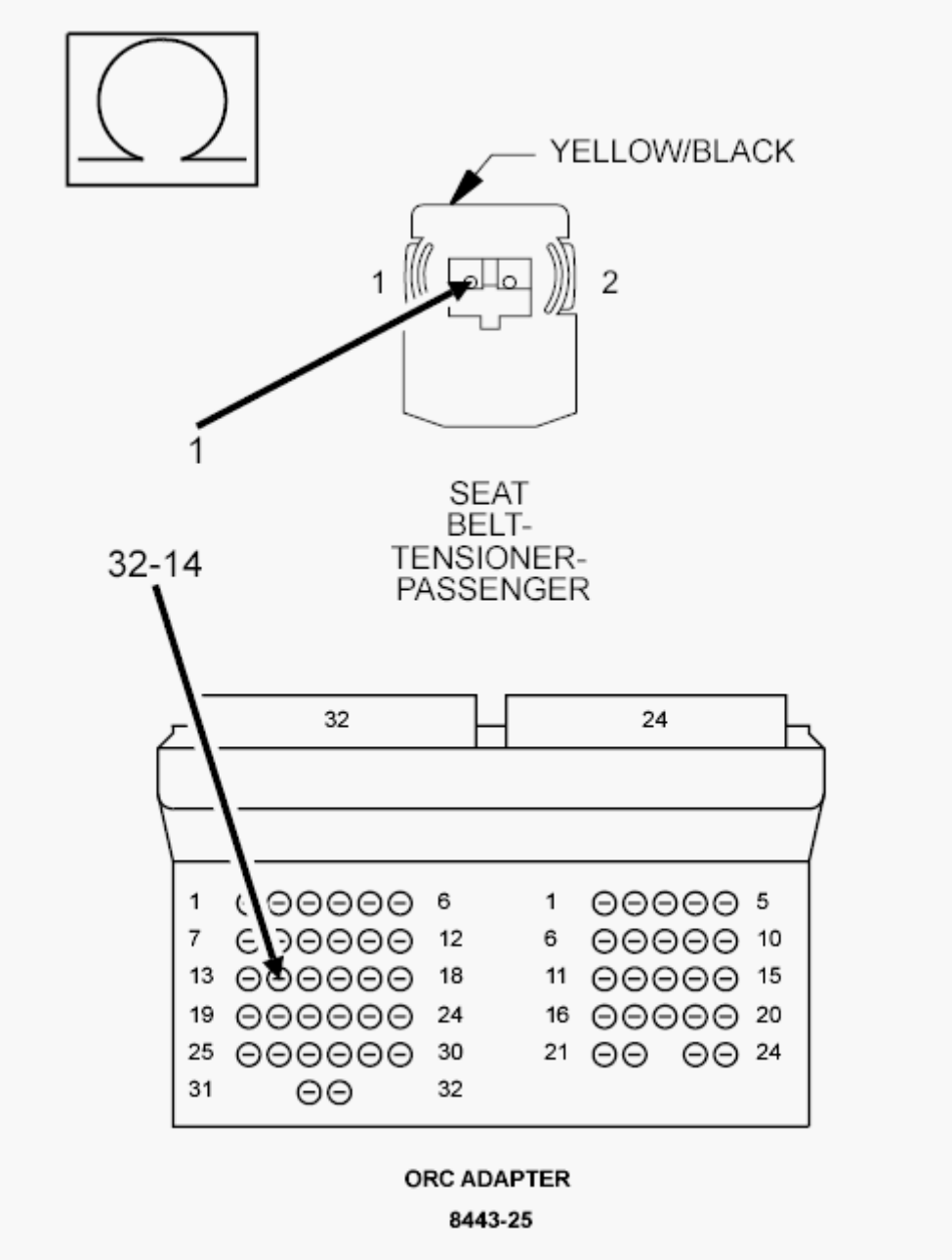

Fig. 118: Checking Passenger Seat Belt Tensioner Line 2 Circuit For Open
Courtesy of CHRYSLER GROUP, LLC

1. Measure the resistance of the (R54) Passenger Seat Belt Tensioner Line 2 circuit between the Passenger Seat Belt Pretensioner connector cavity 1 and the SRS Load Tool Adaptor (special tool #8443-25, 56 Way ACM Adapter) cavity 32-14.

   Is the resistance below 1.0 Ohm?

   Yes

WARNING: If the Occupant Restraint Controller (ORC) is dropped at any time, it must be replaced. Failure to follow these instructions may result in possible serious or fatal injury.

- Replace the ORC in accordance with Service Information.
- Perform the AIRBAG SYSTEM VERIFICATION TEST. Refer to **STANDARD PROCEDURE** .

No

- Repair the (R54) Passenger Seat Belt Tensioner Line 2 circuit for an open.
- Perform the AIRBAG SYSTEM VERIFICATION TEST. Refer to **STANDARD PROCEDURE** .

5. **CHECKING STORED OR INTERMITTENT CODES**

NOTE: Diagnose and repair all active codes before diagnosing stored codes. Refer to OCCUPANT RESTRAINT CONTROLLER (ORC) - DIAGNOSTIC CODE INDEX for a complete list of airbag system diagnostic procedures.

1. With the scan tool, record and erase all Airbag System Module DTCs.

WARNING: Turn the ignition off, disconnect the 12-volt battery and wait two minutes before proceeding. Failure to follow these instructions may result in possible serious or fatal injury.

2. Using the wiring diagram/schematic as a guide, inspect the related wiring and connectors for chaffed, pierced, pinched, and partially broken wires, and for broken, bent, pushed out, corroded, and contaminated terminals. Repair as necessary.
3. Reconnect all disconnected components and harness connectors.

WARNING: Turn the ignition on, then reconnect the 12-volt battery and wait two minutes before proceeding. Failure to follow these instructions may result in possible serious or fatal injury.

4. With the scan tool, monitor for active codes while performing the following:
   - Wiggle the wiring harness and connectors of the related airbag circuit.
   - Continue the test until either a code becomes active or the problem area is isolated.
5. In the previous steps you have attempted to recreate the conditions responsible for setting the DTC in question / causing the intermittent condition.

   Are any ACTIVE DTCs present?

   Yes

   - Perform the appropriate diagnostic procedure. Refer to **DIAGNOSIS AND TESTING**.

   No

   - No problem found at this time. Erase all codes before returning the vehicle to the customer.

B1B2F-1ST ROW PASSENGER SEAT BELT PRETENSIONER CIRCUIT SHORTED TOGETHER

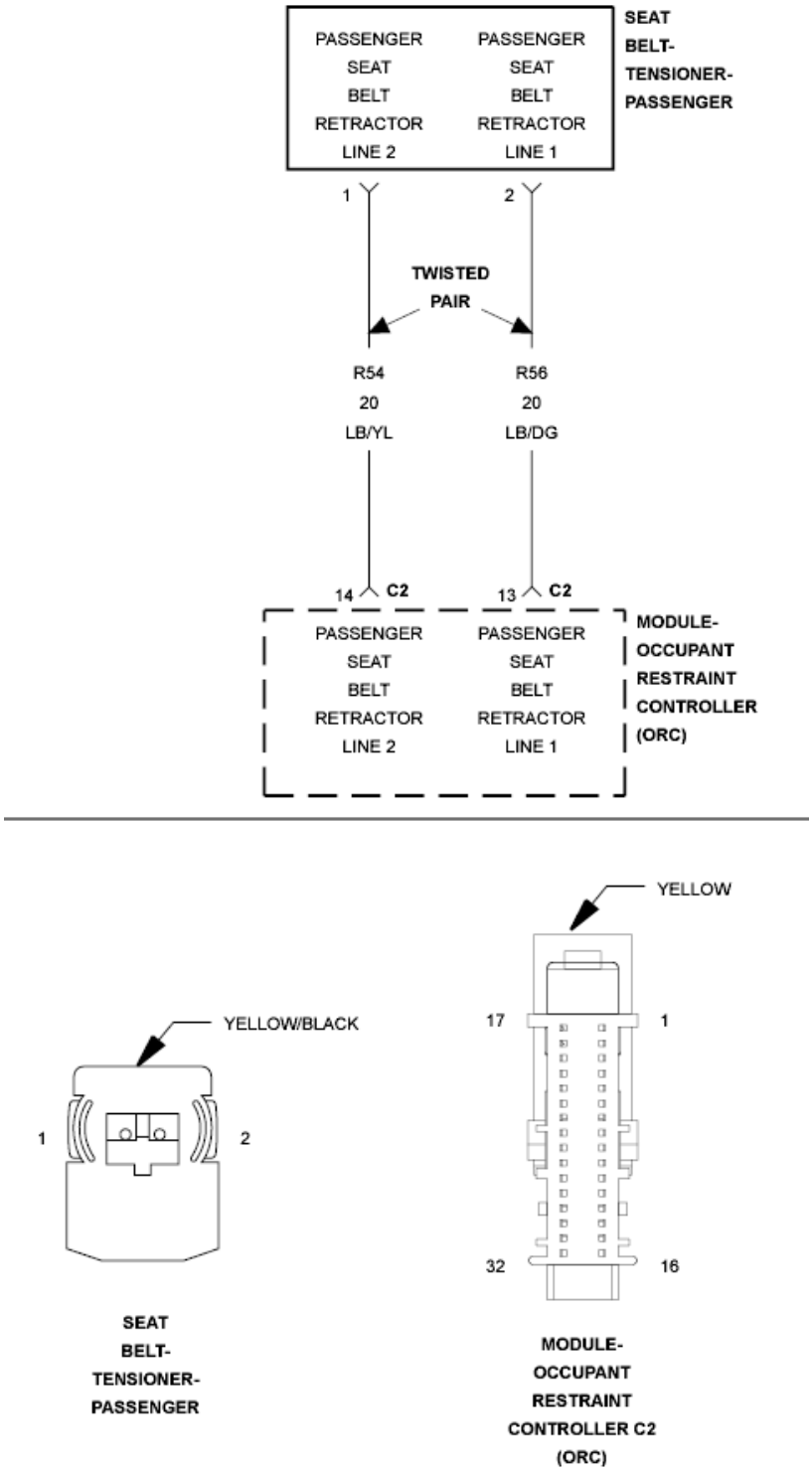

Fig. 119: Passenger Seat Belt Pretensioner Circuit Schematic
Courtesy of CHRYSLER GROUP, LLC

For a complete wiring diagram, **refer to appropriate SYSTEM WIRING DIAGRAMS article** .

THEORY OF OPERATION

When powered, the Occupant Restraint Controller (ORC) sends a test current to the squibs to verify the integrity of the squib and wiring. These circuits are maintained in a "floating" configuration at the ORC (connected to neither power nor ground) as protection against inadvertent deployment. Use of the Supplemental Restraints System (SRS) Load Tool Kit 8443A in the tests below substitutes a suspect squib with a known good component. The use of the SRS Load Tool Adapter provides a test point as well as a method for opening the shorting bar connections within the ORC harness connector.

WHEN MONITORED

With the ignition on.

SET CONDITION

The Occupant Restraint Controller (ORC) monitors the resistance of the Passenger Seat Belt Tensioner circuits. The ORC will set this DTC if it detects low resistance between the Passenger Seat Belt Tensioner circuits.

POSSIBLE CAUSES

Possible Causes
(R56) PASSENGER SEAT BELT RETRACTOR LINE 1 CIRCUIT SHORTED TO THE (R54) PASSENGER SEAT BELT RETRACTOR LINE 2 CIRCUIT
PASSENGER SEAT BELT PRETENSIONER
OCCUPANT RESTRAINT CONTROLLER (ORC)

DIAGNOSTIC TEST

1. **DETERMINE ACTIVE OR STORED DTC**

   NOTE: Make sure that the battery is fully charged.

   NOTE: The scan tool, SRS Load Tool Kit (special tool #8443A, SRS Load Tool), and DVOM are required to perform the following test:

   1. Turn the ignition on.

      Select ACTIVE or STORED DTC:

ACTIVE DTC

- Go To 2

STORED DTC

- Go To 4

2. **CHECK FOR SHORTED PASSENGER SEAT BELT PRETENSIONER**

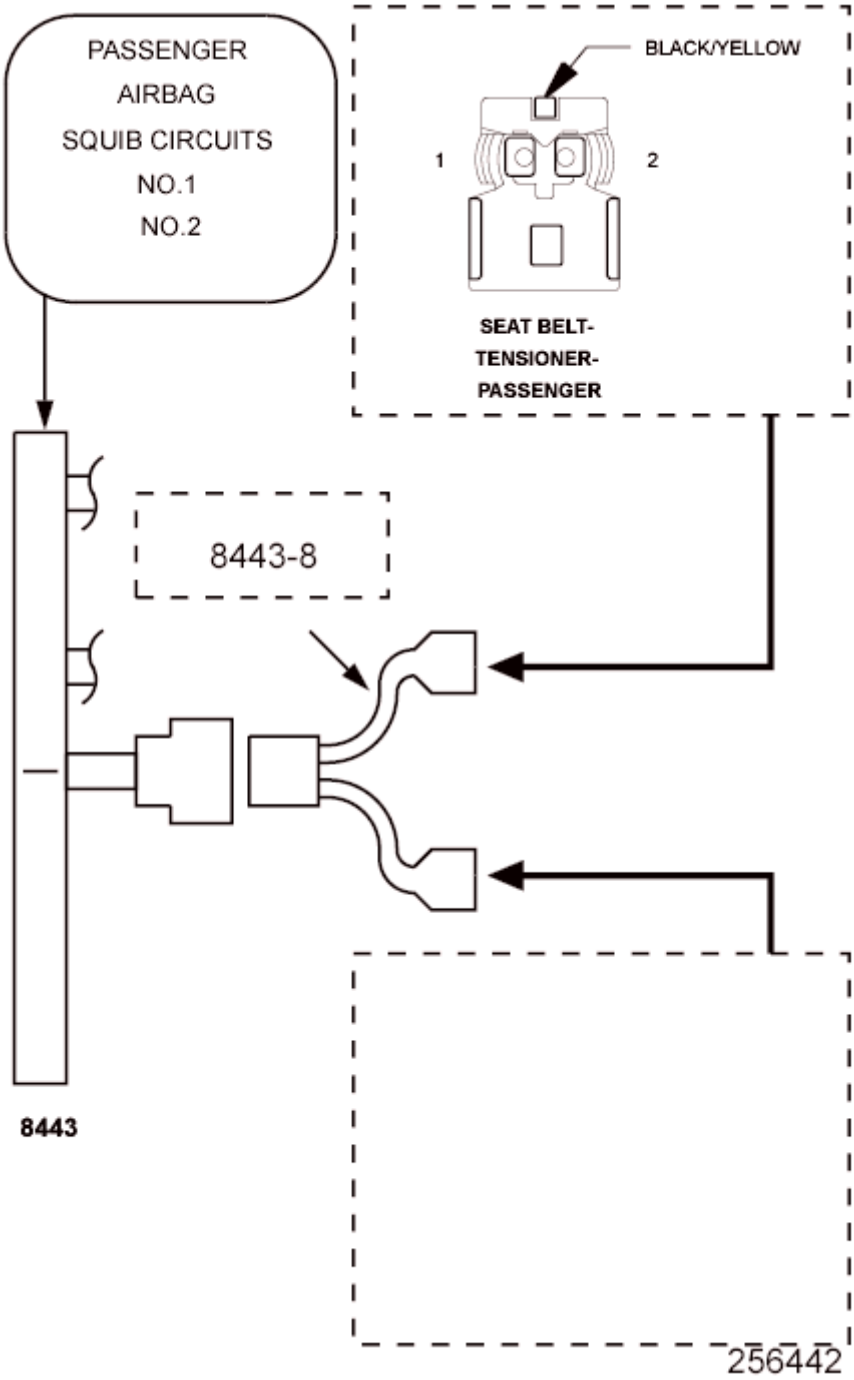

Fig. 120: Checking For Shorted Passenger Seat Belt Pretensioner
Courtesy of CHRYSLER GROUP, LLC

WARNING: Turn the ignition off disconnect the 12-volt battery and wait two minutes before proceeding. Failure to follow these instructions may result in possible serious or fatal injury.

1. Disconnect the Passenger Seat Belt Pretensioner connector.

   NOTE: Check connectors - Clean and repair as necessary.

2. Connect the SRS Load Tool Kit (special tool #8443A, SRS Load Tool) and SRS Load Tool Jumper (special tool #8443-8, Jumper, SRS Load) to the Passenger Seat Belt Pretensioner connector.

   WARNING: Turn the ignition on, then reconnect the 12-volt battery and wait two minutes before proceeding. Failure to follow these instructions may result in possible serious or fatal injury.

3. With the scan tool, read the active ORC DTCs.

   Does the scan tool display: B1B2F-1st ROW PASSENGER SEAT BELT PRETENSIONER CIRCUIT SHORTED TOGETHER?

   Yes

   - Go To 3

   No

   - Replace the Passenger Seat Belt Pretensioner in accordance with the Service Information.
   - Perform the AIRBAG SYSTEM VERIFICATION TEST. Refer to **STANDARD PROCEDURE** .

3. **CHECK THE (R56) PASSENGER SEAT BELT TENSIONER LINE 1 CIRCUIT FOR A SHORT TO THE (R54) PASSENGER SEAT BELT TENSIONER LINE 2 CIRCUIT**

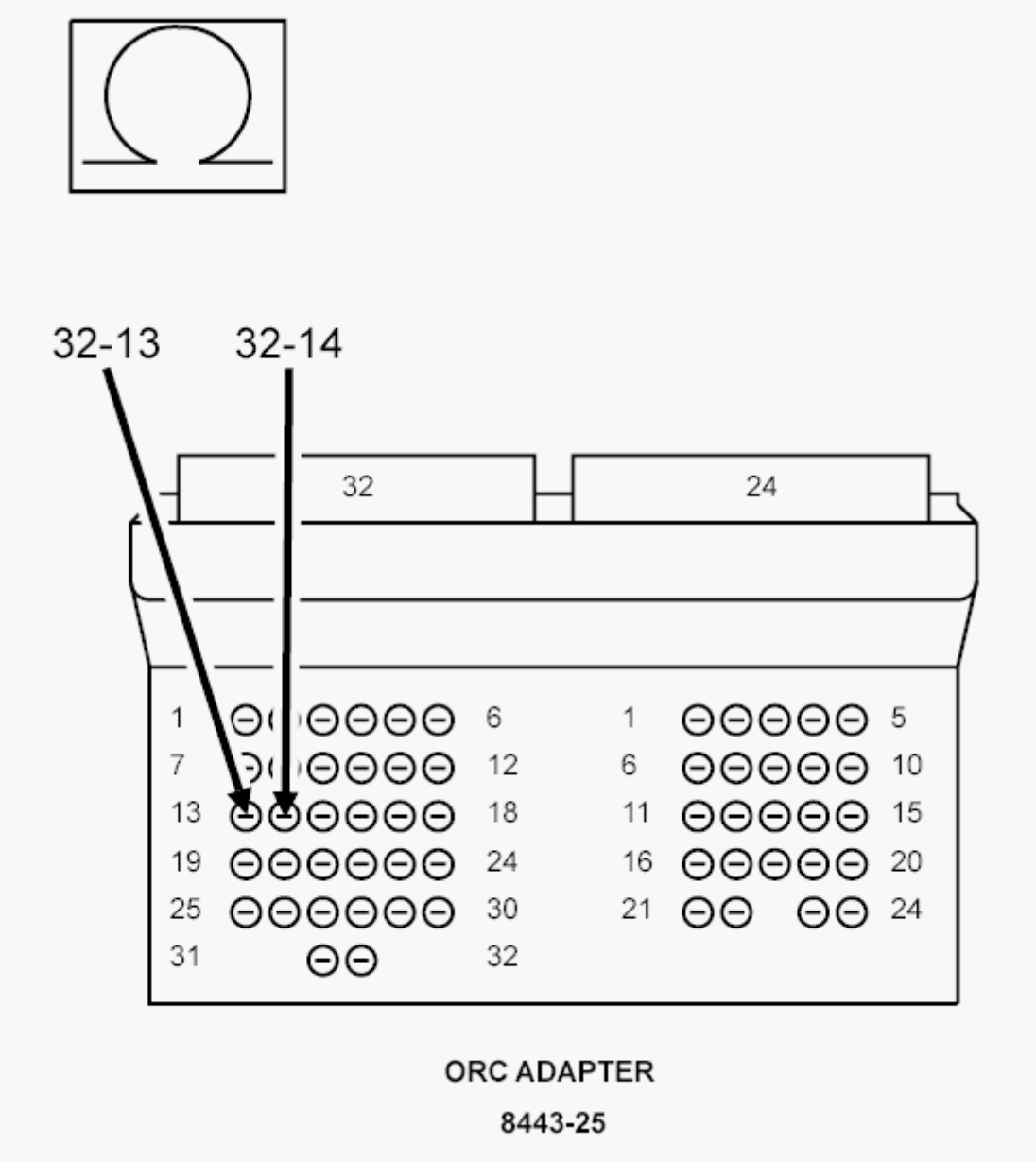

Fig. 121: Checking Passenger Seat Belt Tensioner Line 1 Circuit For Short To Passenger Seat Belt Tensioner Line 2 Circuit
Courtesy of CHRYSLER GROUP, LLC

WARNING: Turn the ignition off disconnect the 12-volt battery and wait two minutes before proceeding. Failure to follow these instructions may result in possible serious or

fatal injury.

1. Disconnect the SRS Load Tool Kit (special tool #8443A, SRS Load Tool) and SRS Load Tool Jumper (special tool #8443-8, Jumper, SRS Load) from the Passenger Seat Belt Pretensioner connector.
2. Disconnect the ORC connectors.

NOTE: Check connectors - Clean and repair as necessary.

3. Connect the SRS Load Tool Adaptor (special tool #8443-25, 56 Way ACM Adapter) to the ORC C1 connector.
4. Measure the resistance between the (R56) Passenger Seat Belt Retractor Line 1 circuit cavity 32-13 and the (R54) Passenger Seat Belt Retractor Line 2 circuit cavity 32-14 at the SRS Load Tool Adaptor (special tool #8443-25, 56 Way ACM Adapter).

   Is the resistance below 10k Ohms?

   Yes

   - Repair the (R56) Passenger Seat Belt Tensioner Line 1 circuit for a short to the (R54) Passenger Seat Belt Tensioner Line 2 circuit.
   - Perform the AIRBAG SYSTEM VERIFICATION TEST. Refer to **STANDARD PROCEDURE** .

   No

   WARNING: **If the Occupant Restraint Controller (ORC) is dropped at any time, it must be replaced. Failure to take the proper precautions can result in accidental airbag deployment. Failure to follow these instructions may result in possible serious or fatal injury.**

   - Replace the ORC in accordance with Service Information.
   - Perform the AIRBAG SYSTEM VERIFICATION TEST. Refer to **STANDARD PROCEDURE** .

4. CHECKING STORED OR INTERMITTENT CODES

NOTE: Diagnose and repair all active codes before diagnosing stored codes. Refer to the OCCUPANT RESTRAINT CONTROLLER (ORC) - DIAGNOSTIC CODE INDEX for a complete list of airbag system diagnostic procedures.

1. With the scan tool, record and erase all Airbag System Module DTCs.

WARNING: Turn the ignition off disconnect the 12-volt battery and wait two minutes before proceeding. Failure to follow these instructions may result in possible serious or fatal injury.

2. Using the wiring diagram/schematic as a guide, inspect the related wiring and connectors for chaffed, pierced, pinched, and partially broken wires, and for broken, bent, pushed out, corroded, and contaminated terminals. Repair as necessary.
3. Reconnect all disconnected components and harness connectors.

WARNING: Turn the ignition on, then reconnect the 12-volt battery and wait two minutes before proceeding. Failure to follow these instructions may result in possible serious or fatal injury.

4. With the scan tool, monitor for active codes while performing the following:
   - Wiggle the wiring harness and connectors of the related airbag circuit.
   - Continue the test until either a code becomes active or the problem area is isolated.
5. In the previous steps you have attempted to recreate the conditions responsible for setting the DTC in question / causing the intermittent condition.

Are any ACTIVE DTCs present?

Yes

- Select the appropriate diagnostic procedure from the **OCCUPANT RESTRAINT CONTROLLER (ORC) - DIAGNOSTIC CODE INDEX** .

No

- No problem found at this time. Erase all codes before returning the vehicle to the customer.

B1B70-UP-FRONT LEFT SATELLITE ACCELERATION SENSOR INTERNAL

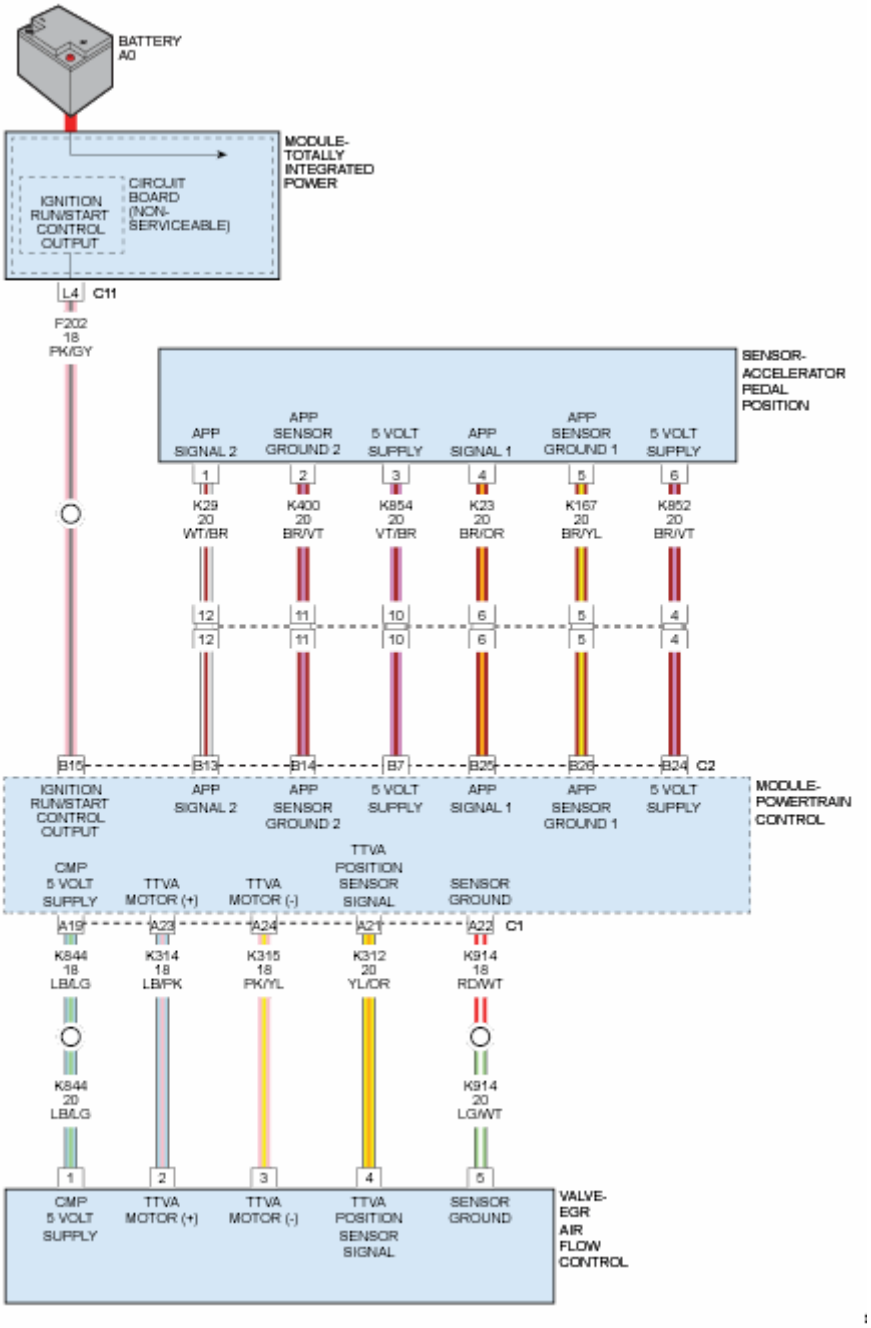

Fig. 122: Front Impact Sensors Circuit Schematic
Courtesy of CHRYSLER GROUP, LLC

For a complete wiring diagram, **refer to appropriate SYSTEM WIRING DIAGRAMS article** .

THEORY OF OPERATION

Each front sensor is secured with a screw to the backs of the right and left vertical members of the radiator support within the engine compartment. Impact sensors perform their own self test using power supplied by the Occupant

Restraint Controller (ORC) then communicate this status back to the module. The repair of this fault centers on verifying the integrity of the sensor's internal circuitry and software validity. If the scan tool shows this DTC has a Stored history of setting then the front left impact sensor is to be replaced.

WHEN MONITORED

With the ignition on, the Front Left Impact Sensor is equipped with on board diagnostics to monitor to sensor's internal circuits. If a problem is identified, the sensor sends the Front Left Impact Sensor Internal message to the Occupant Restraint Controller (ORC).

SET CONDITION

This DTC will set if the ORC receives an internal DTC from the Front Left Impact Sensor.

POSSIBLE CAUSES

Possible Causes
FRONT LEFT IMPACT SENSOR OCCUPANT RESTRAINT CONTROLLER (ORC)

DIAGNOSTIC TEST

NOTE: If the scan tool shows this DTC has a Stored history of setting then the front left impact sensor is to be replaced.

NOTE: Make sure the battery is fully charged.

1. **DETERMINE ACTIVE OR STORED FAULT CODE**
   1. Turn the ignition on.
   2. With the scan tool, read the active ORC DTCs.

      Is DTC B1B70 -Up-Front Left Satellite Acceleration Sensor Internal Active or shows a setting history in Stored ?

      Yes

      WARNING: Turn the ignition off disconnect the 12-volt

battery and wait two minutes before proceeding. Failure to follow these instructions may result in possible serious or fatal injury.

NOTE: Inspect the related wiring harness for chafed, pierced, pinched, and partially broken wires. Also, inspect the related connectors for broken, bent, pushed out, spread, corroded, or contaminated terminals. Repair as necessary.

- Go To 2

No (Did not set a active or stored DTC B1B70-UP-FRONT LEFT SATELLITE ACCELERATION SENSOR INTERNAL).

- Perform the AIRBAG SYSTEM INTERMITTENT TEST. Refer to **STANDARD PROCEDURE** .

2. **VERIFY OPERATION OF THE FRONT LEFT IMPACT SENSOR**

WARNING: **Turn the ignition off disconnect the 12-volt battery and wait two minutes before proceeding. Failure to follow these instructions may result in possible serious or fatal injury.**

1. Replace the Front Left Impact Sensor in accordance with the Service Information.
2. Reconnect the vehicle body harness to the impact sensor.
3. Remove any special tools or jumper wires and reconnect all previously disconnected components - except the Battery.

WARNING: **Turn the ignition on, then reconnect the 12-volt battery and wait two minutes before proceeding. Failure to follow these instructions may result in possible serious or fatal injury.**

4. Use the scan tool and erase the stored codes in all airbag system modules.
5. Turn the Ignition Off, and wait 15 seconds before turning the Ignition On.
6. Wait one minute, and read active codes.

   Did the active DTC: B1B70-UP-FRONT LEFT SATELLITE ACCELERATION SENSOR INTERNAL return?

   Yes

   - Go To 3

   No

   - Repair is complete.
   - Perform the AIRBAG SYSTEM VERIFICATION TEST. Refer to **STANDARD PROCEDURE** .

3. **REPLACE THE OCCUPANT RESTRAINT CONTROLLER**

   WARNING: **Turn the ignition off, disconnect the 12-volt battery and wait two minutes before proceeding. Failure to follow these instructions may result in possible serious or fatal injury.**

   WARNING: **If the airbag control module is dropped at any time, it must be replaced. Failure to take the proper precautions could result in accidental airbag deployment and serious or fatal injury.**

   If there are no possible causes remaining, view repair.

   Repair

   - Replace the ORC in accordance with Service Information.
   - Perform the AIRBAG SYSTEM VERIFICATION TEST. Refer to **STANDARD PROCEDURE** .

B1B71-UP-FRONT RIGHT SATELLITE ACCELERATION SENSOR INTERNAL

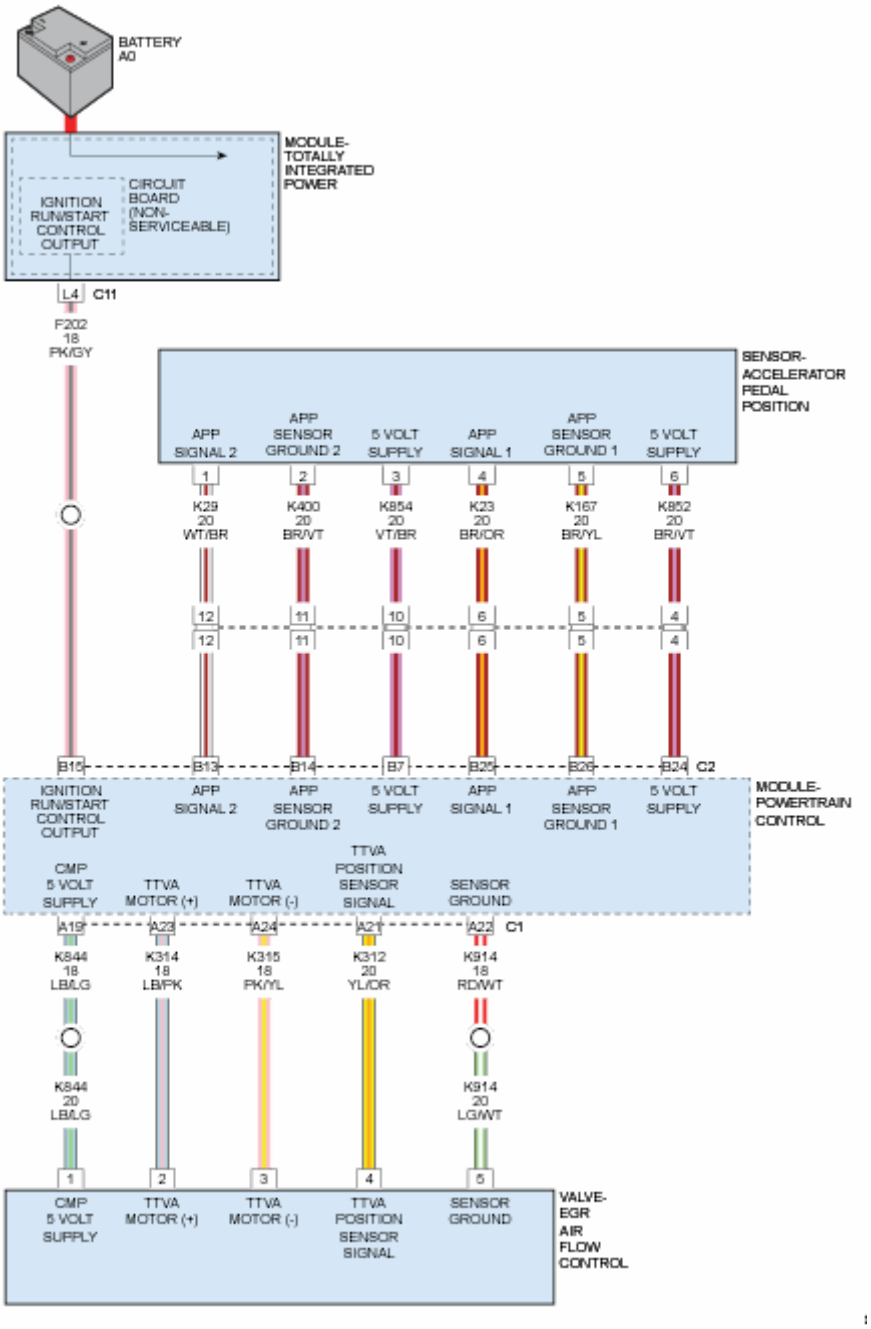

Fig. 123: Front Impact Sensors Circuit Schematic
Courtesy of CHRYSLER GROUP, LLC

For a complete wiring diagram, **refer to appropriate SYSTEM WIRING DIAGRAMS article** .

THEORY OF OPERATION

Each front sensor is secured with a screw to the backs of the right and left

vertical members of the radiator support within the engine compartment. Impact sensors perform their own self test using power supplied by the Occupant Restraint Controller (ORC) then communicate this status back to the module. The repair of this fault centers on verifying the integrity of the sensor's internal circuitry and software validity. If the scan tool shows this DTC has a Stored history of setting then the front right impact sensor is to be replaced.

WHEN MONITORED

With the ignition on, the Front Right Impact Sensor is equipped with on board diagnostics to monitor to sensor's internal circuits. If a problem is identified, the sensor sends the Front Right Impact Sensor Internal message to the Occupant Restraint Controller (ORC).

SET CONDITION

This DTC will set if the ORC receives an internal DTC from the Front Right Impact Sensor.

POSSIBLE CAUSES

Possible Causes
FRONT RIGHT IMPACT SENSOR OCCUPANT RESTRAINT CONTROLLER (ORC)

DIAGNOSTIC TEST

NOTE: If the scan tool shows this DTC has a Stored history of setting then the front right impact sensor is to be replaced.

NOTE: Make sure the battery is fully charged.

1. **DETERMINE ACTIVE OR STORED FAULT CODE**
   1. With the scan tool, read the active ORC DTCs.

      Is the DTC: B1B71-UP-FRONT RIGHT SATELLITE ACCELERATION SENSOR INTERNAL active or shows a setting history in Stored?

      Yes

WARNING: Turn the ignition off disconnect the 12-volt battery and wait two minutes before proceeding. Failure to follow these instructions may result in possible serious or fatal injury.

NOTE: Inspect the related wiring harness for chafed, pierced, pinched, and partially broken wires. Also, inspect the related connectors for broken, bent, pushed out, spread, corroded, or contaminated terminals. Repair as necessary.

- Go To 2

No (Did not set a active or stored DTC B1B71-UP-FRONT RIGHT SATELLITE ACCELERATION SENSOR INTERNAL).

- Test for an intermittent condition. Perform the Airbag System Intermittent Test. Refer to **STANDARD PROCEDURE** .

2. **VERIFY OPERATION OF THE FRONT RIGHT IMPACT SENSOR**

WARNING: Turn the ignition off disconnect the 12-volt battery and wait two minutes before proceeding. Failure to follow these instructions may result in possible serious or fatal injury.

1. Replace the Front Right Impact Sensor in accordance with the Service Information.
2. Reconnect the vehicle wire harness to the sensor.
3. Remove any special tools or jumper wires and reconnect all previously disconnected components - except the Battery.

WARNING: Turn the ignition on, then reconnect the 12-volt battery and wait two minutes before proceeding. Failure to follow these instructions may result in possible serious or fatal injury.

4. Use the scan tool and erase the stored codes in all airbag system modules.
5. Turn the Ignition Off, and wait 15 seconds before turning the Ignition On.
6. Wait one minute, and read active codes.

   Did the active DTC: B1B71-UP-FRONT RIGHT SATELLITE ACCELERATION SENSOR INTERNAL return?

   Yes

   - Go To 3

   No

   - Repair is complete.
   - Perform the AIRBAG SYSTEM VERIFICATION TEST. Refer to **STANDARD PROCEDURE** .

3. **REPLACE THE OCCUPANT RESTRAINT CONTROLLER**

   WARNING: **Turn the ignition off, disconnect the 12-volt battery and wait two minutes before proceeding. Failure to follow these instructions may result in possible serious or fatal injury.**

   WARNING: **If the airbag control module is dropped at any time, it must be replaced. Failure to take the proper precautions could result in accidental airbag deployment and serious or fatal injury.**

   If there are no possible causes remaining, view repair.

   Repair

   - Replace the ORC in accordance with Service Information.
   - Perform the AIRBAG SYSTEM VERIFICATION TEST. Refer to **STANDARD PROCEDURE** .

B1B72-LEFT SIDE SATELLITE ACCELERATION SENSOR 1 INTERNAL

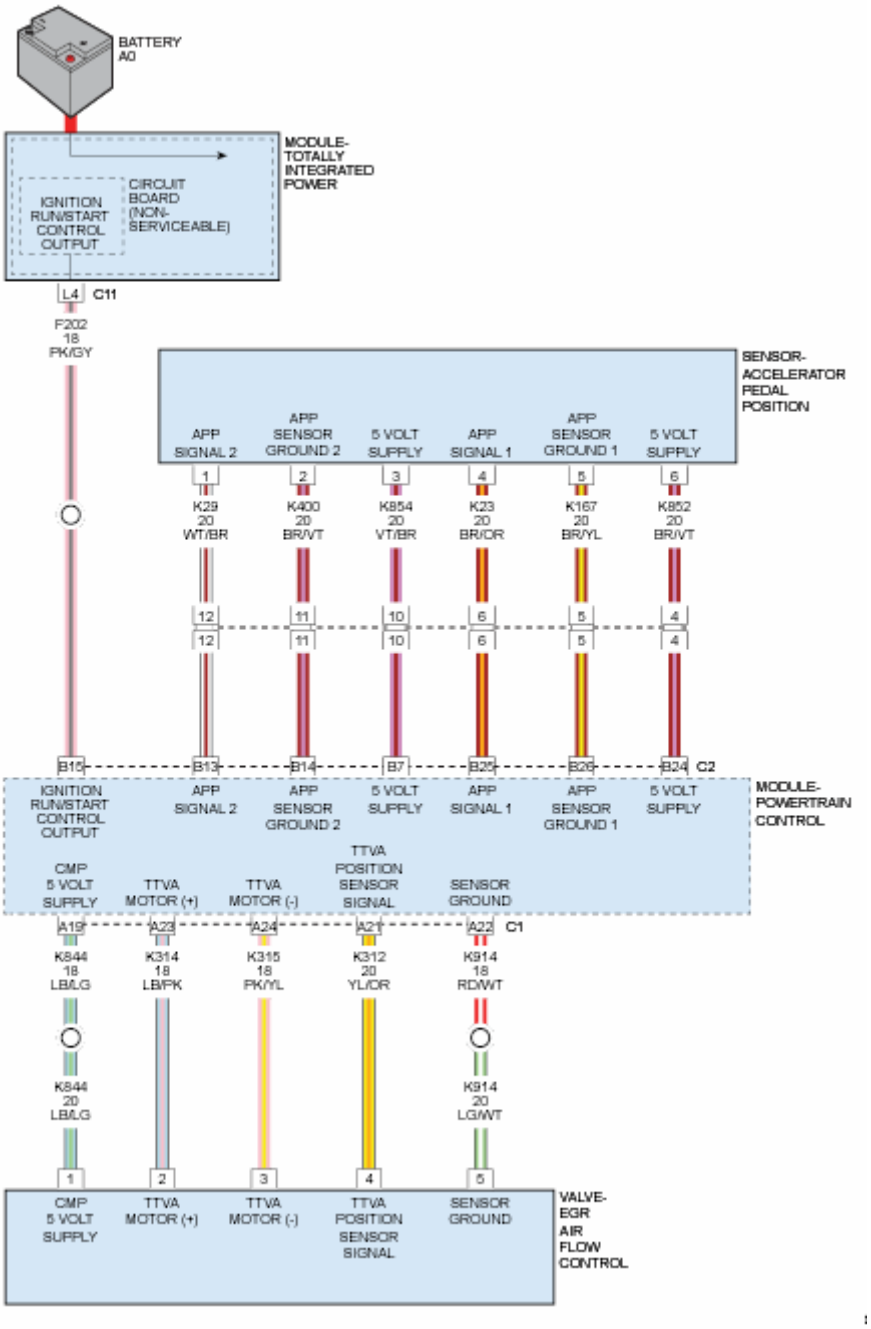

Fig. 124: Left Side Impact Sensors Circuit Schematic
Courtesy of CHRYSLER GROUP, LLC

For a complete wiring diagram, **refer to appropriate SYSTEM WIRING DIAGRAMS article** .

THEORY OF OPERATION

The location of the left side impact sensor 1 is in the B-pillar just past the first

row seating. Impact sensors perform their own self test using power supplied by the Occupant Restraint Controller (ORC) then communicate this status back to the module. The repair of this fault centers on verifying the integrity of the sensor's internal circuitry and software validity. If the scan tool shows this DTC has a Stored history of setting then the left side impact sensor is to be replaced.

WHEN MONITORED

With the ignition on, the Left Side Impact Sensor 1 is equipped with on board diagnostics to monitor to sensor's internal circuits. If a problem is identified, the sensor sends the Left Side Impact Sensor 1 Internal message to the Occupant Restraint Controller (ORC).

SET CONDITION

This DTC will set if the ORC receives an internal DTC from the Left Side Impact Sensor 1.

POSSIBLE CAUSES

Possible Causes
LEFT SIDE IMPACT SENSOR 1 OCCUPANT RESTRAINT CONTROLLER (ORC)

DIAGNOSTIC TEST

NOTE: If the scan tool shows this DTC has a Stored history of setting then the left side impact sensor is to be replaced.

1. **DETERMINE ACTIVE OR STORED FAULT CODE**
   1. Turn the ignition on.
   2. With the scan tool, read the active ORC DTCs.

      NOTE: Make sure the battery is fully charged.

      IS the DTC: B1B72-LEFT SIDE SATELLITE ACCELERATION SENSOR 1 INTERNAL active or shows a setting history in stored?

      Yes

WARNING: Turn the ignition off disconnect the 12-volt battery and wait two minutes before proceeding. Failure to follow these instructions may result in possible serious or fatal injury.

NOTE: Inspect the related wiring harness for chafed, pierced, pinched, and partially broken wires. Also, inspect the related connectors for broken, bent, pushed out, spread, corroded, or contaminated terminals. Repair as necessary.

- Go To 2

No (Did not set a active or stored DTC B1B72-LEFT SIDE SATELLITE ACCELERATION SENSOR 1 INTERNAL).

- Perform the AIRBAG SYSTEM INTERMITTENT TEST. Refer to **STANDARD PROCEDURE** .

2. **VERIFY OPERATION OF THE LEFT SIDE IMPACT SENSOR 1**

WARNING: Turn the ignition off, disconnect the 12-volt battery and wait two minutes before proceeding. Failure to follow these instructions may result in possible serious or fatal injury.

1. Replace the Left Side Impact Sensor 1 in accordance with the Service Information.
2. Reconnect the vehicle wire harness to the sensor.
3. Remove any special tools or jumper wires and reconnect all previously disconnected components - except the Battery.

WARNING: Turn the ignition on, then reconnect the 12-volt battery and wait two minutes before proceeding. Failure to follow these instructions may result in possible serious or fatal injury.

4. Use the scan tool and erase the stored codes in all airbag system modules.
5. Turn the Ignition Off, and wait 15 seconds before turning the Ignition On.
6. With the scan tool, read the active ORC DTCs.

   Did the active DTC: B1B72-LEFT SIDE SATELLITE ACCELERATION SENSOR 1 INTERNAL return?

   Yes

   - Go To 3

   No

   - Repair is complete.
   - Perform the AIRBAG SYSTEM VERIFICATION TEST. Refer to **STANDARD PROCEDURE** .

3. **REPLACE THE OCCUPANT RESTRAINT CONTROLLER**

   WARNING: **Turn the ignition off, disconnect the 12-volt battery and wait two minutes before proceeding. Failure to follow these instructions may result in possible serious or fatal injury.**

   WARNING: **If the Occupant Restraint Controller (ORC) is dropped at any time, it must be replaced. Failure to take the proper precautions can result in accidental airbag deployment. Failure to follow these instructions may result in possible serious or fatal injury.**

   If there are no possible causes remaining, view repair

   Repair

   - Replace the ORC in accordance with the Service Information.
   - Perform the AIRBAG SYSTEM VERIFICATION TEST. Refer to

STANDARD PROCEDURE .

B1B73-LEFT SIDE SATELLITE ACCELERATION SENSOR 2 INTERNAL

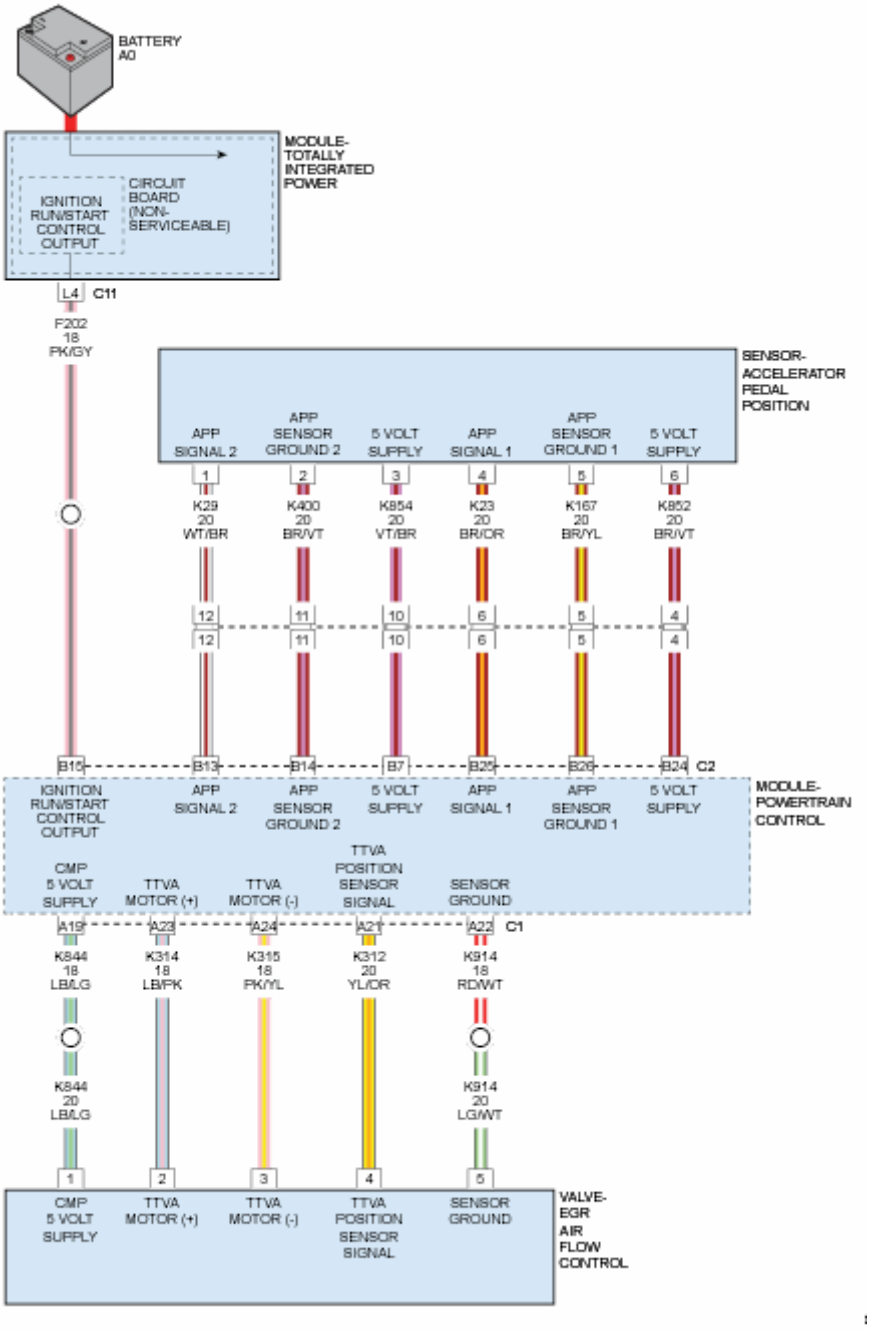

Fig. 125: Left Side Impact Sensors Circuit Schematic
Courtesy of CHRYSLER GROUP, LLC

For a complete wiring diagram, **refer to appropriate SYSTEM WIRING DIAGRAMS article** .

WHEN MONITORED

The location of the left side impact sensor 2 is in the C-pillar just past the second row seating. With the ignition on, the Left Side Impact Sensor 2 is equipped with on board diagnostics to monitor to sensor's internal circuits. If a problem is identified, the sensor sends the Left Side Impact Sensor 2 Internal message to the Occupant Restraint Controller (ORC). If the scan tool shows this DTC has a Stored history of setting then the left side impact sensor is to be replaced.

SET CONDITION

This DTC will set if the ORC receives an internal DTC from the Left Side Impact Sensor 2.

POSSIBLE CAUSES

Possible Causes
LEFT SIDE IMPACT SENSOR 2 OCCUPANT RESTRAINT CONTROLLER (ORC)

DIAGNOSTIC TEST

NOTE: If the scan tool shows this DTC has a Stored history of setting then the left side impact sensor is to be replaced.

NOTE: Make sure the battery is fully charged.

1. **DETERMINE ACTIVE OR STORED FAULT CODE**
   1. Turn the ignition on.

      Is the DTC: B1B72-LEFT SIDE SATELLITE ACCELERATION SENSOR 1 INTERNAL active or shows a setting history in stored?

      Yes

      WARNING: Turn the ignition off disconnect the 12-volt battery and wait two minutes before proceeding. Failure to follow these instructions may result in possible serious or fatal injury.

NOTE: Inspect the related wiring harness for chafed, pierced, pinched, and partially broken wires. Also, inspect the related connectors for broken, bent, pushed out, spread, corroded, or contaminated terminals. Repair as necessary.

- Go To 2

No (Did not set a active or stored DTC B1B73-LEFT SIDE SATELLITE ACCELERATION SENSOR 2 INTERNAL).

- Perform the AIRBAG SYSTEM INTERMITTENT TEST. Refer to **STANDARD PROCEDURE** .

2. **VERIFY OPERATION OF THE LEFT SIDE IMPACT SENSOR 2**

WARNING: **Turn the ignition off disconnect the 12-volt battery and wait two minutes before proceeding. Failure to follow these instructions may result in possible serious or fatal injury.**

1. Replace the Left Side Impact Sensor 2 in accordance with the Service Information.
2. Reconnect the vehicle wire harness to the sensor.
3. Remove any special tools or jumper wires and reconnect all previously disconnected components - except the Battery.

WARNING: **Turn the ignition on, then reconnect the 12-volt battery and wait two minutes before proceeding. Failure to follow these instructions may result in possible serious or fatal injury.**

4. Use the scan tool and erase the stored codes in all airbag system modules.
5. Turn the Ignition Off, and wait 15 seconds before turning the Ignition On.
6. Wait one minute, and read active codes.

Did the active DTC: B1B73-LEFT SIDE SATELLITE ACCELERATION SENSOR 2 INTERNAL return?

Yes

- Go To 3

No

- Repair is complete.
- Perform the AIRBAG SYSTEM VERIFICATION TEST. Refer to **STANDARD PROCEDURE** .

3. **REPLACE THE OCCUPANT RESTRAINT CONTROLLER**

WARNING: **Turn the ignition off, disconnect the 12-volt battery and wait two minutes before proceeding. Failure to follow these instructions may result in possible serious or fatal injury.**

WARNING: **If the Occupant Restraint Controller (ORC) is dropped at any time, it must be replaced. Failure to take the proper precautions can result in accidental airbag deployment. Failure to follow these instructions may result in possible serious or fatal injury.**

If there are no possible causes remaining, view repair.

Repair

- Replace the ORC in accordance with the Service Information.
- Perform the AIRBAG SYSTEM VERIFICATION TEST. Refer to **STANDARD PROCEDURE** .

B1B75-RIGHT SIDE SATELLITE ACCELERATION SENSOR 1 INTERNAL

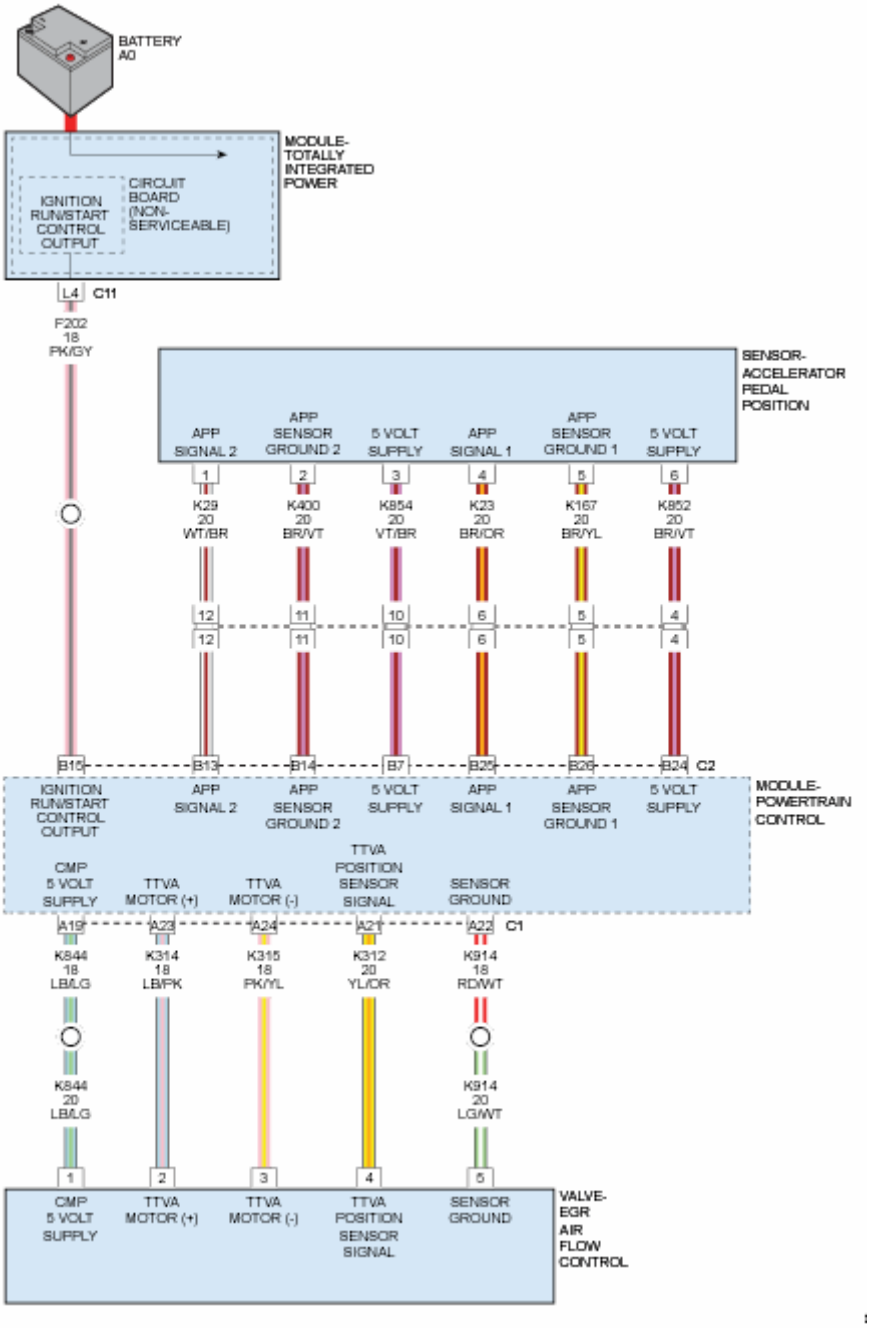

Fig. 126: Right Side Impact Sensors Circuit Schematic
Courtesy of CHRYSLER GROUP, LLC

For a complete wiring diagram, **refer to appropriate SYSTEM WIRING DIAGRAMS article** .

THEORY OF OPERATION

The location of the right side impact sensor 1 is in the B-pillar just past the first row seating. Impact sensors perform their own self test using power supplied by the Occupant Restraint Controller (ORC) then communicate this status back to

the module. The repair of this fault centers on verifying the integrity of the sensor's internal circuitry and software validity. If the scan tool shows this DTC has a Stored history of setting then the right side impact sensor is to be replaced.

WHEN MONITORED

With the ignition on, the Right Side Impact Sensor 1 is equipped with on board diagnostics to monitor to sensor's internal circuits. If a problem is identified, the sensor sends the Right Side Impact Sensor 1 Internal message to the Occupant Restraint Controller (ORC).

SET CONDITION

This DTC will set if the ORC receives an internal DTC from the Right Side Impact Sensor 1.

POSSIBLE CAUSES

Possible Causes
RIGHT SIDE IMPACT SENSOR 1 OCCUPANT RESTRAINT CONTROLLER (ORC)

DIAGNOSTIC TEST

NOTE: If the scan tool shows this DTC has a Stored history of setting then the right side impact sensor is to be replaced.

NOTE: Make sure the battery is fully charged.

1. **DETERMINE ACTIVE OR STORED FAULT CODE**
   1. Turn the ignition on.
   2. With the scan tool, read the active ORC DTCs.

      Is the DTC: B1B75-RIGHT SIDE SATELLITE ACCELERATION SENSOR 1 INTERNAL active or shows a setting history in stored?

      Yes

      WARNING: Turn the ignition off disconnect the 12-volt battery and wait two minutes before

proceeding. Failure to follow these instructions may result in possible serious or fatal injury.

NOTE: Inspect the related wiring harness for chafed, pierced, pinched, and partially broken wires. Also, inspect the related connectors for broken, bent, pushed out, spread, corroded, or contaminated terminals. Repair as necessary.

- Go To 2

No (Did not set a active or stored DTC B1B75-RIGHT SIDE SATELLITE ACCELERATION SENSOR 1 INTERNAL).

- Perform the AIRBAG SYSTEM INTERMITTENT TEST. Refer to **STANDARD PROCEDURE** .

2. **VERIFY OPERATION OF THE RIGHT SIDE IMPACT SENSOR 1**

WARNING: **Turn the ignition off, disconnect the 12-volt battery and wait two minutes before proceeding. Failure to follow these instructions may result in possible serious or fatal injury.**

1. Replace the Right Side Impact Sensor 1 in accordance with the Service Information.
2. Reconnect the vehicle wire harness to the sensor.
3. Remove any special tools or jumper wires and reconnect all previously disconnected components - except the Battery.

WARNING: **Turn the ignition on, then reconnect the 12-volt battery and wait two minutes before proceeding. Failure to follow these instructions may result in possible serious or fatal injury.**

4. Use the scan tool and erase the stored codes in all airbag system

modules.

5. Turn the Ignition Off, and wait 15 seconds before turning the Ignition On.
6. Wait one minute, and read active codes.

   Did the active DTC: B1B75-RIGHT SIDE SATELLITE ACCELERATION SENSOR 1 INTERNAL return?

   Yes

   - Go To 3

   No

   - Repair is complete.
   - Perform the AIRBAG SYSTEM VERIFICATION TEST. Refer to **STANDARD PROCEDURE** .

3. **REPLACE THE OCCUPANT RESTRAINT CONTROLLER**

   WARNING: **Turn the ignition off, disconnect the 12-volt battery and wait two minutes before proceeding. Failure to follow these instructions may result in possible serious or fatal injury.**

   If all possible causes have been done, view repair.

   Repair

   WARNING: **If the Occupant Restraint Controller (ORC) is dropped at any time, it must be replaced. Failure to follow these instructions may result in possible serious or fatal injury.**

   - Replace the ORC in accordance with Service Instructions.
   - Perform the AIRBAG SYSTEM VERIFICATION TEST. Refer to **STANDARD PROCEDURE** .

B1B76-RIGHT SIDE SATELLITE ACCELERATION SENSOR 2 INTERNAL

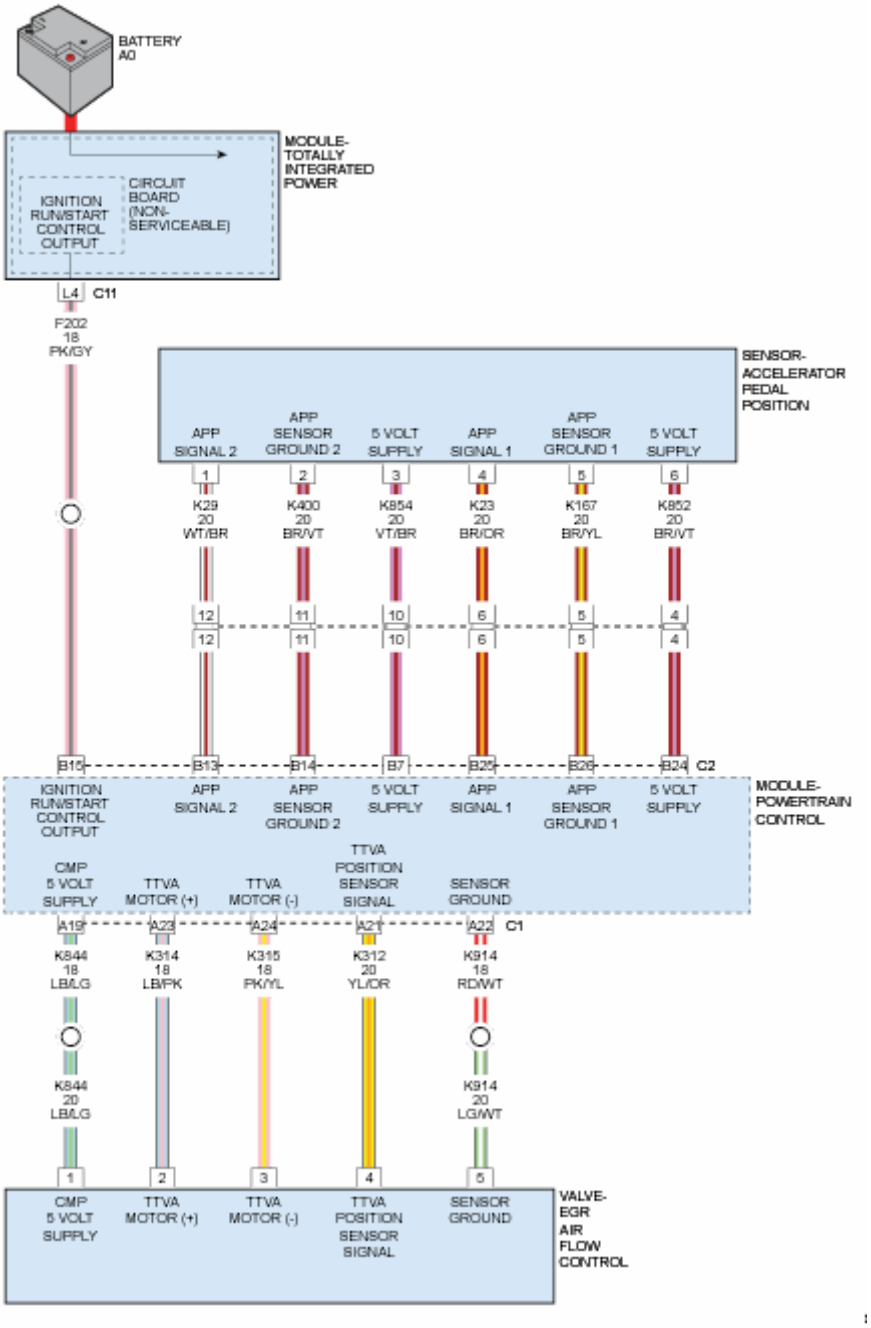

Fig. 127: Right Side Impact Sensors Circuit Schematic
Courtesy of CHRYSLER GROUP, LLC

For a complete wiring diagram, **refer to appropriate SYSTEM WIRING DIAGRAMS article** .

THEORY OF OPERATION

The location of the right side impact sensor 2 is in the C-pillar just past the second row seating. Impact sensors perform their own self test using power supplied by the Occupant Restraint Controller (ORC) then communicate this

status back to the module. The repair of this fault centers on verifying the integrity of the sensor's internal circuitry and software validity. If the scan tool shows this DTC has a Stored history of setting then the right side impact sensor is to be replaced.

WHEN MONITORED

With the ignition on, the Right Side Impact Sensor 2 is equipped with on board diagnostics to monitor to sensor's internal circuits. If a problem is identified, the sensor sends the Right Side Impact Sensor 2 Internal message to the Occupant Restraint Controller (ORC).

SET CONDITION

This DTC will set if the ORC receives an internal DTC from the Right Side Impact Sensor 2.

POSSIBLE CAUSES

Possible Causes
RIGHT SIDE IMPACT SENSOR 2 OCCUPANT RESTRAINT CONTROLLER (ORC)

DIAGNOSTIC TEST

NOTE: If the scan tool shows this DTC has a Stored history of setting then the right side impact sensor is to be replaced.

NOTE: Make sure the battery is fully charged.

1. **DETERMINE ACTIVE OR STORED FAULT CODE**
   1. Turn the ignition on.
   2. With the scan tool, read the active ORC DTCs.

      Is the DTC: B1B76-RIGHT SIDE SATELLITE ACCELERATION SENSOR 2 INTERNAL active or shows a setting history in stored?

      Yes

      WARNING: Turn the ignition off disconnect the 12-volt

battery and wait two minutes before proceeding. Failure to follow these instructions may result in possible serious or fatal injury.

NOTE: Inspect the related wiring harness for chafed, pierced, pinched, and partially broken wires. Also, inspect the related connectors for broken, bent, pushed out, spread, corroded, or contaminated terminals. Repair as necessary.

- Go To 2

No (Did not set a active or stored DTC B1B76-RIGHT SIDE SATELLITE ACCELERATION SENSOR 2 INTERNAL).

- Perform the AIRBAG SYSTEM INTERMITTENT TEST. Refer to **STANDARD PROCEDURE** .

2. **VERIFY OPERATION OF THE RIGHT SIDE IMPACT SENSOR 2**

WARNING: **Turn the ignition off disconnect the 12-volt battery and wait two minutes before proceeding. Failure to follow these instructions may result in possible serious or fatal injury.**

1. Replace the Right Side Impact Sensor 2 in accordance with the Service Information.
2. Reconnect the vehicle wire harness to the sensor.
3. Remove any special tools or jumper wires and reconnect all previously disconnected components - except the Battery.

WARNING: **Turn the ignition on, then reconnect the 12-volt battery and wait two minutes before proceeding. Failure to follow these instructions may result in possible serious or fatal injury.**

4. Use the scan tool and erase the stored codes in all airbag system modules.
5. Turn the Ignition Off, and wait 15 seconds before turning the Ignition On.
6. Wait one minute, and read active codes.

   Did the active DTC: B1B76-RIGHT SIDE SATELLITE ACCELERATION SENSOR 2 INTERNAL return?

   Yes

   - Go To 3

   No

   - Repair is complete.
   - Perform the AIRBAG SYSTEM VERIFICATION TEST. Refer to **STANDARD PROCEDURE** .

3. **REPLACE THE OCCUPANT RESTRAINT CONTROLLER**

   WARNING: **Turn the ignition off, disconnect the 12-volt battery and wait two minutes before proceeding. Failure to follow these instructions may result in possible serious or fatal injury.**

   WARNING: **If the Occupant Restraint Controller (ORC) is dropped at any time, it must be replaced. Failure to take the proper precautions can result in accidental airbag deployment. Failure to follow these instructions may result in possible serious or fatal injury.**

   If all possible causes have been done, view repair.

   Repair

   - Replace the ORC in accordance with Service Information.
   - Perform the AIRBAG SYSTEM VERIFICATION TEST. Refer to

STANDARD PROCEDURE .

B1B8C-DRIVER SEAT TRACK POSITION SENSOR CIRCUIT PERFORMANCE

For a complete wiring diagram, **refer to appropriate SYSTEM WIRING DIAGRAMS article** .

WHEN MONITORED

While the CAN bus ignition status is in IGN_RUN, the module checks the sensor input ranges.

SET CONDITION

If the module detects that the sensor input is between 8 and 12 mA.

POSSIBLE CAUSES

Possible Causes
DRIVER SEAT TRACK POSITION SENSOR OCCUPANT RESTRAINT CONTROLLER (ORC)

DIAGNOSTIC TEST

1. **CHECK FOR ACTIVE INTERNAL FAULTS, IGNITION FAULTS, BATTERY FAULTS, OR SEAT TRACK POSITION SENSOR CIRCUIT HIGH OR LOW FAULTS IN THE OCCUPANT RESTRAINT CONTROLLER (ORC)**

   NOTE: Make sure the battery is fully charged

   1. With the scan tool, read Occupant Restraint Controller (ORC) DTCs.

      Does the scan tool display any active DTCs relating to internal faults, ignition faults, battery faults, or Seat Track Position Sensor Circuit High or Low faults?

      Yes

      - Diagnose and repair the DTCs. Perform the appropriate diagnostic procedure. Refer to **DIAGNOSIS AND TESTING**.

      No

- Go To 2

2. **VERIFY THAT B1B8C-DRIVER SEAT TRACK POSITION SENSOR CIRCUIT PERFORMANCE IS ACTIVE**
   1. With the scan tool, read ORC DTCs.

      Does the scan tool display active: B1B8C-DRIVER SEAT TRACK POSITION SENSOR CIRCUIT PERFORMANCE?

      Yes

      - Go To 3

      No

      - Perform the AIRBAG SYSTEM INTERMITTENT TEST. Refer to **STANDARD PROCEDURE** .

3. **PERFORM SEAT TRACK POSITION SENSOR PERFORMANCE TEST**
   1. With the scan tool, erase ORC DTCs.
   2. Turn the ignition off, wait 10 seconds and then turn the ignition on.
   3. Cycle the driver seat to the full forward position and then to the full rearward position.
   4. Return the driver seat to its approximate original position.
   5. Wait two minutes, and then with the scan tool, read ORC DTCs.

      Does the scan tool display active: B1B8C-DRIVER SEAT TRACK POSITION SENSOR CIRCUIT PERFORMANCE?

      Yes

      WARNING: **Turn the ignition off disconnect the 12-volt battery and wait two minutes before proceeding. Failure to follow these instructions may result in possible serious or fatal injury.**

      WARNING: **If the Occupant Restraint Controller (ORC) is dropped at any time, it must be**

replaced. Failure to take the proper precautions can result in accidental airbag deployment. Failure to follow these instructions may result in possible serious or fatal injury.

- Replace the Driver Seat Track Position Sensor in accordance with the Service Information.
- Perform the AIRBAG VERIFICATION TEST. Refer to **STANDARD PROCEDURE** .
- If DTC B1B8C-DRIVER SEAT TRACK POSITION SENSOR CIRCUIT PERFORMANCE returns active, replace the ORC in accordance with the Service Information.

No

- Perform the AIRBAG VERIFICATION TEST. Refer to **STANDARD PROCEDURE** .

B1B8D-DRIVER SEAT TRACK POSITION SENSOR CIRCUIT LOW

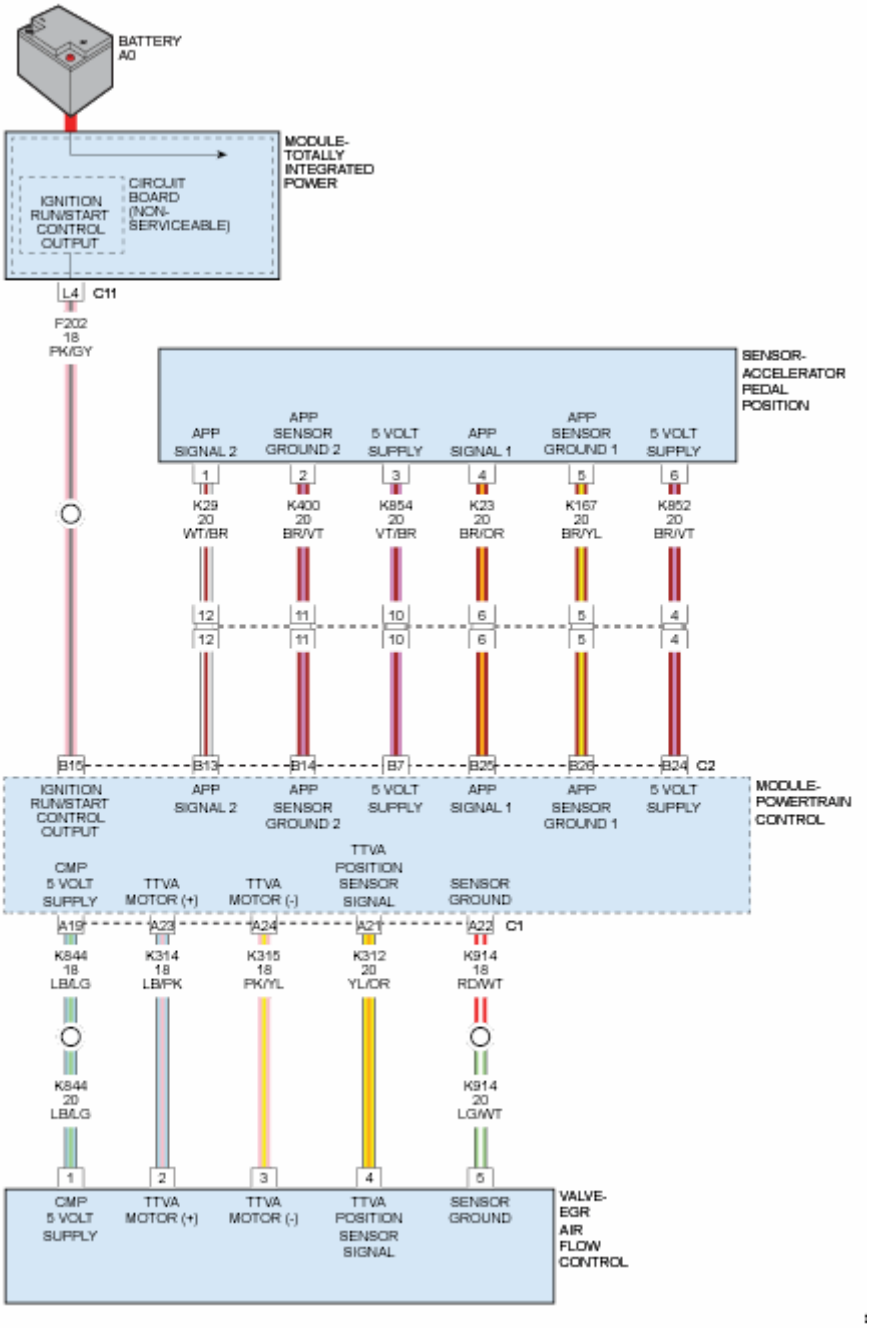

Fig. 128: Seat Track Position Sensors Circuit Schematic
Courtesy of CHRYSLER GROUP, LLC

For a complete wiring diagram, **refer to appropriate SYSTEM WIRING DIAGRAMS article** .

WHEN MONITORED

While the CAN bus ignition status is in IGN_RUN and the module is configured for a Driver Seat Track Position Sensor, the module checks the sensor input current ranges.

SET CONDITION

If the module detects that the sensor input is less than or equal to 0.3 ma. This DTC may set when the current is between 0.3 mA and 2.0 mA.

POSSIBLE CAUSES

Possible Causes
DRIVER SEAT HARNESS IMPROPERLY ROUTED
DRIVER SEAT HARNESS WIRES CHAFED, PIERCED, PINCHED, PARTIALLY BROKEN
DRIVER SEAT HARNESS CONNECTOR TERMINALS BROKEN, BENT, PUSHED OUT, SPREAD, CORRODED, CONTAMINATED
(R261) DRIVER SEAT POSITION SENSOR DATA CIRCUIT SHORTED TO GROUND
(R263) DRIVER SEAT POSITION SENSOR VOLTAGE CIRCUIT SHORTED TO GROUND
(R261) DRIVER SEAT POSITION SENSOR DATA CIRCUIT OPEN
(R263) DRIVER SEAT POSITION SENSOR VOLTAGE CIRCUIT OPEN
DRIVER SEAT TRACK POSITION SENSOR
OCCUPANT RESTRAINT CONTROLLER (ORC)

DIAGNOSTIC TEST

1. **IDENTIFYING VEHICLE EQUIPMENT**

   NOTE: Make sure the battery is fully charged.

   1. Turn the ignition on.
   2. With the scan tool, read ORC active DTCs.

      Does the scan tool display active DTC: B1B8D-DRIVER SEAT TRACK POSITION SENSOR CIRCUIT LOW?

      Yes

      - Go To 2

      No

- Perform the AIRBAG SYSTEM INTERMITTENT TEST. Refer to **STANDARD PROCEDURE** .

2. **CHECK FOR ACTIVE INTERNAL FAULTS, IGNITION FAULTS, AND BATTERY FAULTS IN THE OCCUPANT RESTRAINT CONTROLLER (ORC)**
   1. With the scan tool, read Occupant restraint Controller (ORC) DTCs.

      Does the scan tool display any active DTCs relating to internal faults, ignition faults, or battery faults?

      Yes

      - Perform the appropriate diagnostic procedure. Refer to **DIAGNOSIS AND TESTING**.

      No

      - Go To 3

3. **INSPECT DRIVER SEAT HARNESS WIRES AND CONNECTORS**

   WARNING: **Turn the ignition off, disconnect the 12-volt battery and wait two minutes before proceeding. Failure to follow these instructions may result in possible serious or fatal injury.**

   1. Using the wiring diagram/schematic as a guide, inspect the driver seat harness wiring and connectors. Look for chafed, pierced, pinched, or partially broken wires and broken, bent, pushed out, spread, corroded, or contaminated terminals.

      Are any of these conditions present?

      Yes

      NOTE: **Do not attempt to repair the Seat Harness. Replace the Seat Harness if the condition inspecting or testing for is present in the Seat Harness.**

- Replace the driver seat harness in accordance with the Service Information.
- Perform the AIRBAG SYSTEM VERIFICATION TEST. Refer to **STANDARD PROCEDURE** .

No

- Go To 4

4. **VERIFY THAT DRIVER SEAT HARNESS IS ROUTED CORRECTLY**
   1. Verify that the driver seat harness is routed correctly.

   Is the Driver Seat Harness routed correctly?

   Yes

   - Go To 5

   No

   - Reroute the driver seat harness as necessary.
   - Perform the AIRBAG SYSTEM VERIFICATION TEST. Refer to **STANDARD PROCEDURE** .
5. **CHECK (R261) DRIVER SEAT POSITION SENSOR DATA CIRCUIT AND (R263) DRIVER SEAT POSITION SENSOR VOLTAGE CIRCUIT FOR A SHORT TO GROUND**

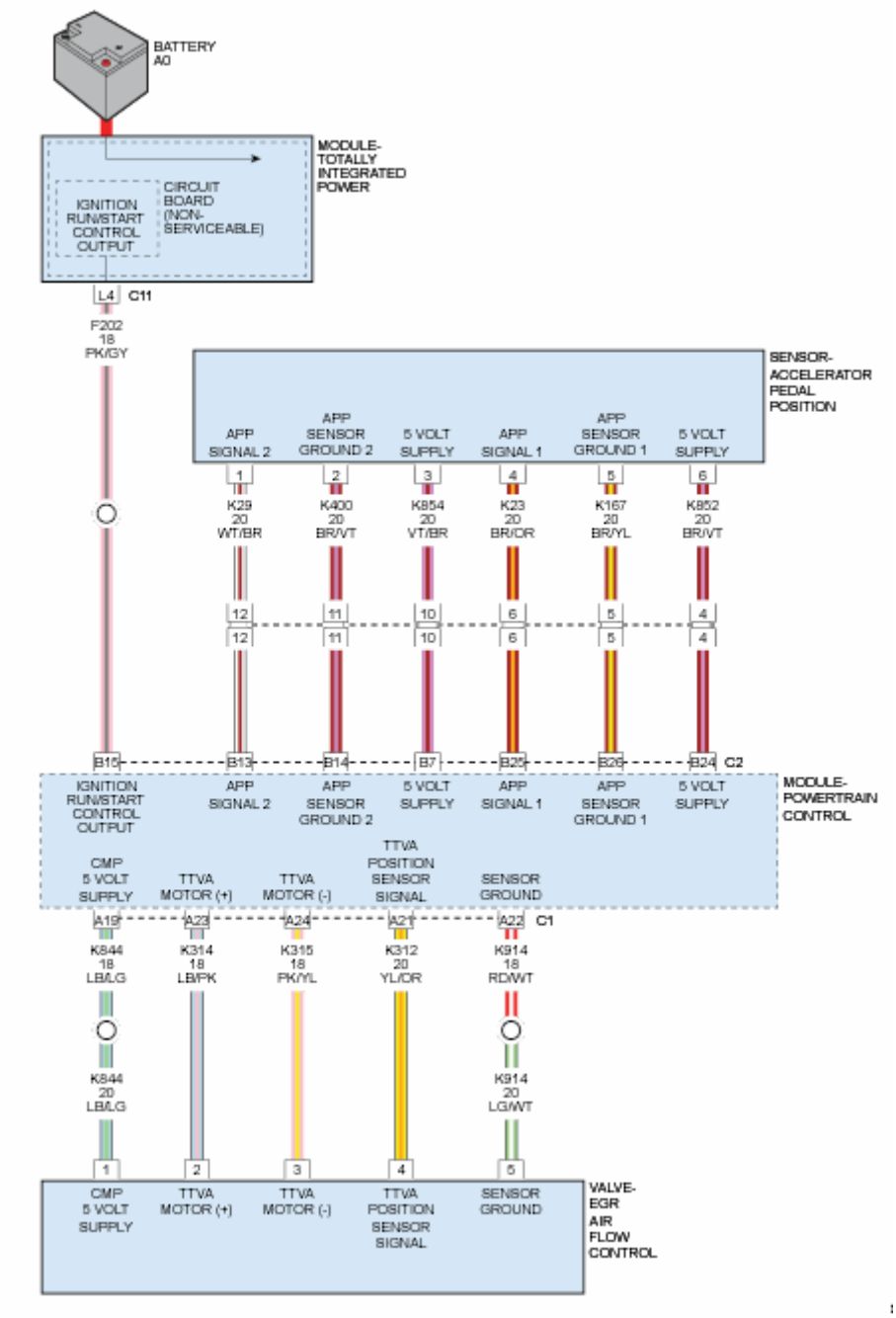

Fig. 129: Checking Seat Position Sensor Data-Driver Circuit & Seat Position Sensor Voltage-Driver Circuit For A Short To Ground
Courtesy of CHRYSLER GROUP, LLC

1. Measure the resistance between ground and the (R261) Driver Seat Position Sensor Data circuit cavity 1.
2. Measure the resistance between ground and the (R263) Driver Seat Position Sensor Voltage circuit cavity 2.

   Is the resistance below 10k Ohms on either circuit?

Yes

NOTE: Do not attempt to repair the Seat Harness. Replace the Seat Harness if the condition inspecting or testing for is present in the Seat Harness.

- Replace the Driver Seat Harness in accordance with the service information.
- Perform the AIRBAG SYSTEM VERIFICATION TEST. Refer to **STANDARD PROCEDURE** .

No

- Go To 6

6. **CHECK (R261) DRIVER SEAT POSITION SENSOR DATA CIRCUIT AND (R263) DRIVER SEAT POSITION SENSOR VOLTAGE CIRCUIT FOR AN OPEN**

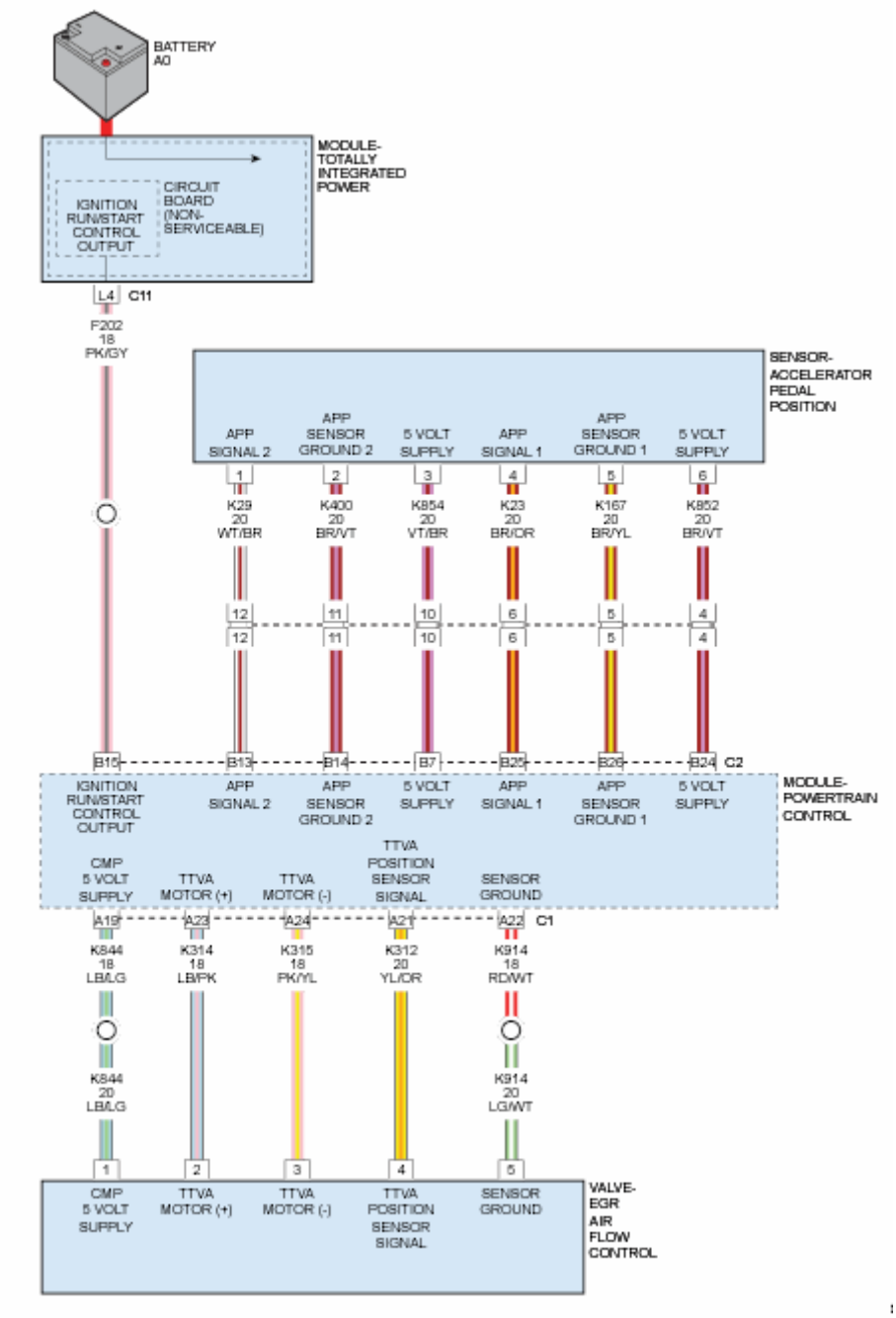

Fig. 130: Checking Driver Seat Position Sensor Data Circuit For Open
Courtesy of CHRYSLER GROUP, LLC

1. Disconnect the ORC connectors.
2. Connect the SRS Load Tool Adaptor (special tool #8443-25, 56 Way ACM Adapter) to the ORC C1 connector.
3. Measure the resistance of the (R261) Driver Seat Position Sensor Data circuit between the SRS Load Tool Adaptor (special tool #8443-25, 56 Way ACM Adapter) cavity 24-7 and the Driver Seat Track Position Sensor connector cavity 1.

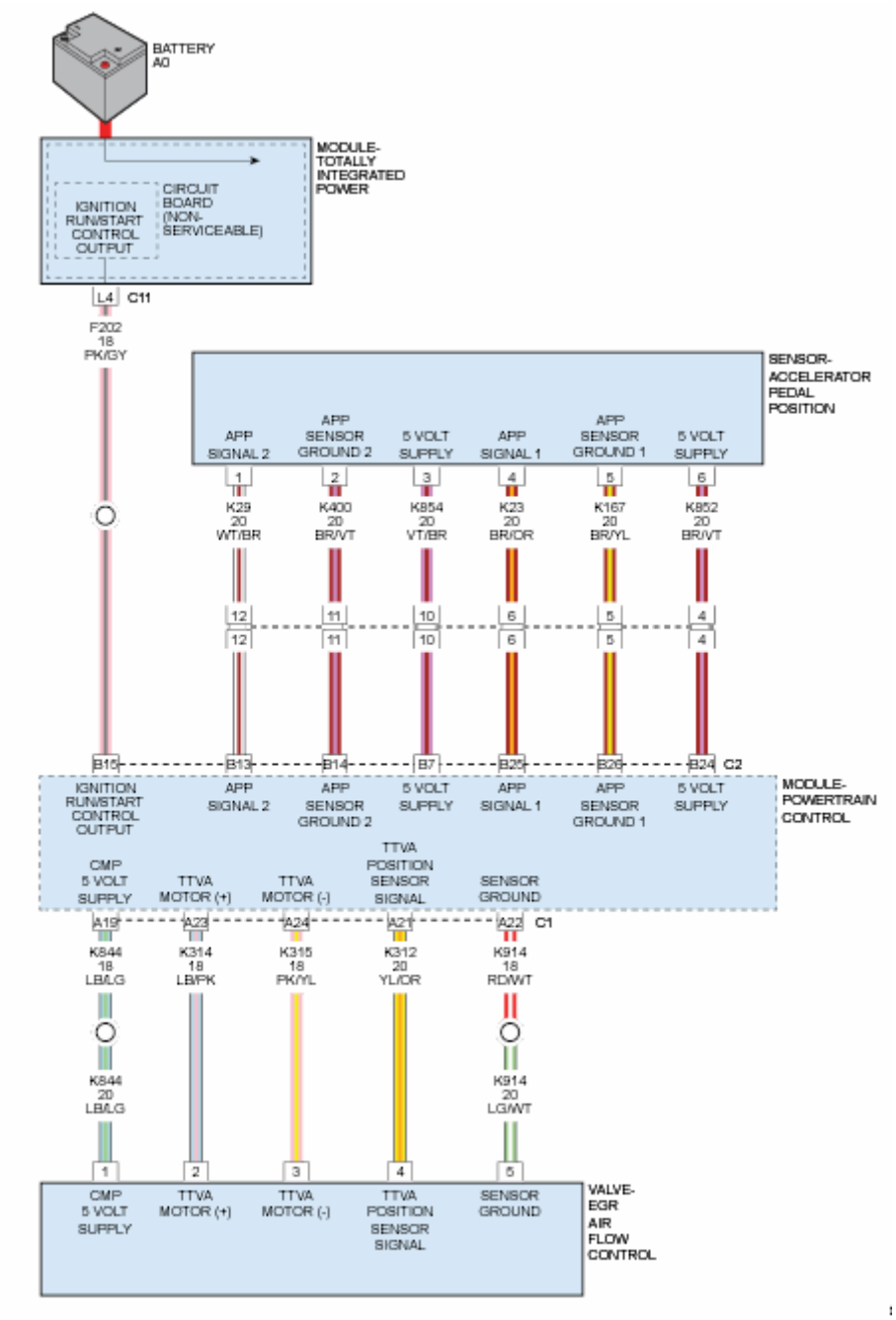

Fig. 131: Checking Driver Seat Position Sensor Voltage Circuit For Open
Courtesy of CHRYSLER GROUP, LLC

4. Measure the resistance of the (R263) Driver Seat Position Sensor Voltage circuit between the SRS Load Tool Adaptor (special tool #8443-25, 56 Way ACM Adapter) cavity 24-8 and the Driver Seat Track Position Sensor connector cavity 2.

   Is the resistance of either circuit above 5.0 Ohms?

Yes

NOTE: Do not attempt to repair the Seat Harness. Replace the Seat Harness if the condition inspecting or testing for is present in the Seat Harness.

- Replace the Driver Seat Harness in accordance with the Service Information.
- Perform the AIRBAG SYSTEM VERIFICATION TEST. Refer to **STANDARD PROCEDURE** .

No

WARNING: Turn the ignition off disconnect the 12-volt battery and wait two minutes before proceeding. Failure to follow these instructions may result in possible serious or fatal injury.

WARNING: If the Occupant Restraint Controller (ORC) is dropped at any time, it must be replaced. Failure to take the proper precautions can result in accidental airbag deployment. Failure to follow these instructions may result in possible serious or fatal injury.

- Replace the Occupant Restraint Controller (ORC) in accordance with the service information.
- Perform the AIRBAG SYSTEM VERIFICATION TEST. Refer to **STANDARD PROCEDURE** .

B1B8E-DRIVER SEAT TRACK POSITION SENSOR CIRCUIT HIGH

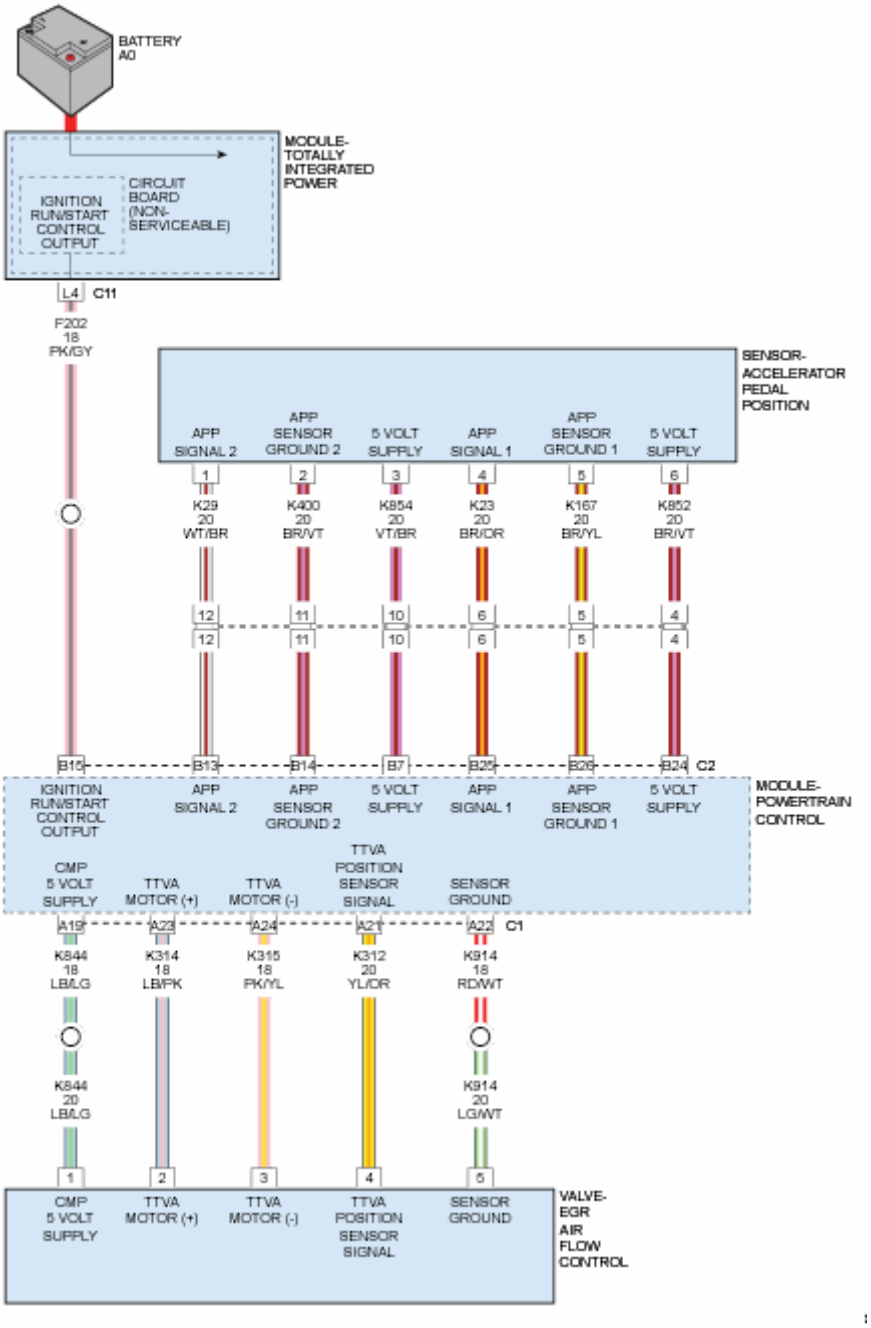

Fig. 132: Seat Track Position Sensors Circuit Schematic
Courtesy of CHRYSLER GROUP, LLC

For a complete wiring diagram, **refer to appropriate SYSTEM WIRING DIAGRAMS article** .

WHEN MONITORED

While the CAN bus ignition status is in IGN_RUN and the module is configured for a Driver Seat Track Position Sensor, the module checks the sensor input current ranges.

SET CONDITION

If the module detects that the sensor input is greater than or equal to 20.5 mA. This DTC may set when the current is between 17 mA and 20.5 mA.

POSSIBLE CAUSES

Possible Causes
DRIVER SEAT HARNESS IMPROPERLY ROUTED
DRIVER SEAT HARNESS WIRES CHAFED, PIERCED, PINCHED, PARTIALLY BROKEN
DRIVER SEAT HARNESS CONNECTOR TERMINALS BROKEN, BENT, PUSHED OUT, SPREAD, CORRODED, CONTAMINATED
(R261) DRIVER SEAT POSITION SENSOR DATA CIRCUIT SHORTED TO VOLTAGE
(R263) DRIVER SEAT POSITION SENSOR VOLTAGE CIRCUIT SHORTED TO VOLTAGE
(R261) DRIVER SEAT POSITION SENSOR DATA CIRCUIT SHORTED TO (R263) DRIVER SEAT POSITION SENSOR VOLTAGE CIRCUIT
DRIVER SEAT TRACK POSITION SENSOR
OCCUPANT RESTRAINT CONTROLLER (ORC)

DIAGNOSTIC TEST

1. **IDENTIFYING VEHICLE EQUIPMENT**

   NOTE: Make sure the battery is fully charged.

   1. Turn the ignition on.
   2. With the scan tool, read ORC active DTCs.

      Does the scan tool display active DTC: B1B8E-DRIVER SEAT TRACK POSITION SENSOR CIRCUIT HIGH?

      Yes

      - Go To 2

      No

- Perform the AIRBAG SYSTEM INTERMITTENT TEST. Refer to **STANDARD PROCEDURE** .

2. **CHECK FOR ACTIVE INTERNAL FAULTS, IGNITION FAULTS, AND BATTERY FAULTS IN THE OCCUPANT RESTRAINT CONTROLLER (ORC)**
   1. With the scan tool, read Occupant Restraint Controller (ORC) DTCs.

      Does the scan tool display any active DTCs relating to internal faults, ignition faults, or battery faults?

      Yes

      - Perform the appropriate diagnostic procedure. Refer to **DIAGNOSIS AND TESTING**.

      No

      - Go To 3

3. **INSPECT DRIVER SEAT HARNESS WIRES AND CONNECTORS**

   WARNING: **Turn the ignition off, disconnect the 12-volt battery and wait two minutes before proceeding. Failure to follow these instructions may result in possible serious or fatal injury.**

   1. Using the wiring diagram/schematic as a guide, inspect the driver seat harness wiring and connectors. Look for chafed, pierced, pinched, or partially broken wires and broken, bent, pushed out, spread, corroded, or contaminated terminals.

      Are any of these conditions present?

      Yes

      NOTE: **Do not attempt to repair the Seat Harness. Replace the Seat Harness if the condition inspecting or testing for is present in the Seat Harness.**

- Replace the driver seat harness in accordance with the Service Information.
- Perform the AIRBAG SYSTEM VERIFICATION TEST. Refer to **STANDARD PROCEDURE** .

No

- Go To 4

4. **VERIFY THAT DRIVER SEAT HARNESS IS ROUTED CORRECTLY**
   1. Verify that the driver seat harness is routed correctly.

      Is the Driver Seat Harness routed correctly?

      Yes

      - Go To 5

      No

      - Reroute the driver seat harness as necessary.
      - Perform the AIRBAG SYSTEM VERIFICATION TEST. Refer to **STANDARD PROCEDURE** .
5. **CHECK FOR DTC B1B8E-DRIVER SEAT TRACK POSITION SENSOR CIRCUIT HIGH WITH DRIVER SEAT TRACK POSITION SENSOR DISCONNECTED**

   WARNING: **Turn the ignition off disconnect the 12-volt battery and wait two minutes before proceeding. Failure to follow these instructions may result in possible serious or fatal injury.**

   1. Disconnect the Driver Seat Track Position Sensor connector.

      WARNING: **Turn the ignition on, then reconnect the 12-volt battery and wait two minutes before proceeding. Failure to follow these instructions may result in possible**

serious or fatal injury.

2. Wait two minutes, and then with the scan tool, read ORC DTCs.

   Does the scan tool display: B1B8E-DRIVER SEAT TRACK POSITION SENSOR CIRCUIT HIGH?

   Yes

   - Go To 6

   No

   WARNING: **Turn the ignition off, disconnect the 12-volt battery and wait two minutes before proceeding. Failure to follow these instructions may result in possible serious or fatal injury.**

   - Replace the Driver Seat Track Position Sensor in accordance with the service information.
   - Perform the AIRBAG SYSTEM VERIFICATION TEST. Refer to **STANDARD PROCEDURE** .

6. **CHECK (R261) DRIVE SEAT POSITION SENSOR DATA CIRCUIT AND (R263) DRIVE SEAT POSITION SENSOR VOLTAGE CIRCUIT FOR A SHORT TO VOLTAGE**

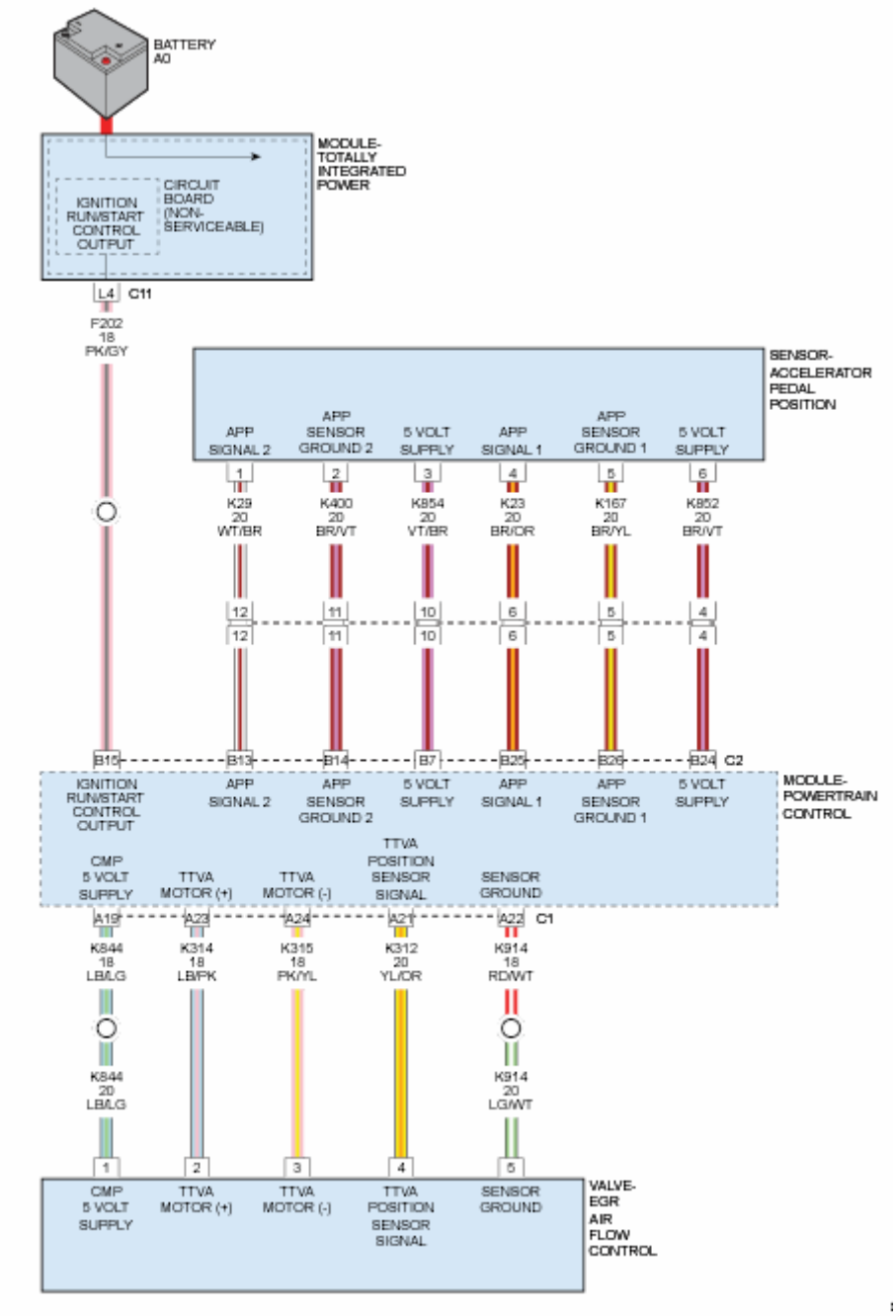

Fig. 133: Checking Driver Seat Position Sensor Data Circuit & Driver Seat Position Sensor Voltage Circuit For A Short To Voltage
Courtesy of CHRYSLER GROUP, LLC

WARNING: Turn the ignition off, disconnect the 12-volt battery and wait two minutes before proceeding. Failure to follow these instructions may result in possible serious or fatal injury.

1. Disconnect the ORC connectors.

WARNING: Turn the ignition on, then reconnect the 12-volt battery and wait two minutes before proceeding. Failure to follow these instructions may result in possible serious or fatal injury.

2. Measure the voltage of the (R261) Driver Seat Position Sensor Data circuit at the Driver Seat Track Position Sensor connector cavity 1.
3. Measure the voltage of the (R263) Driver Seat Position Sensor Voltage circuit at the Driver Seat Track Position Sensor connector cavity 2.

Is the voltage above 0.2 of a volt on either circuit?

Yes

NOTE: Do not attempt to repair the Seat Harness. Replace the Seat Harness if the condition inspecting or testing for is present in the Seat Harness.

WARNING: Turn the ignition off, disconnect the 12-volt battery and wait two minutes before proceeding. Failure to follow these instructions may result in possible serious or fatal injury.

- Replace the Driver Seat Harness in accordance with the Service Information.
- Perform the AIRBAG SYSTEM VERIFICATION TEST. Refer to **STANDARD PROCEDURE** .

No

- Go To 7

7. **CHECK (R261) DRIVER SEAT POSITION SENSOR DATA CIRCUIT FOR A SHORT TO (R263) DRIVER SEAT POSITION SENSOR VOLTAGE CIRCUIT**

WARNING: Turn the ignition off, disconnect the 12-volt battery and wait two minutes before proceeding. Failure to follow these instructions may result in possible serious or fatal injury.

1. Measure the resistance between the (R261) Driver Seat Position Sensor Data circuit cavity 1 and the (R263) Driver Seat Position Sensor Voltage circuit cavity 2 in the Driver Seat Track Position Sensor connector.

   Is the resistance below 10k Ohms?

   Yes

   NOTE: Do not attempt to repair the Seat Harness. Replace the Seat Harness if the condition inspecting or testing for is present in the Seat Harness.

   - Replace the Driver Seat Harness in accordance with the service information.
   - Perform the AIRBAG SYSTEM VERIFICATION TEST. Refer to **STANDARD PROCEDURE** .

   No

   - Replace the ORC in accordance with the Service information.
   - Perform the AIRBAG SYSTEM VERIFICATION TEST. Refer to **STANDARD PROCEDURE** .

B1B8F-DRIVER SEAT TRACK POSITION SENSOR CIRCUIT OPEN

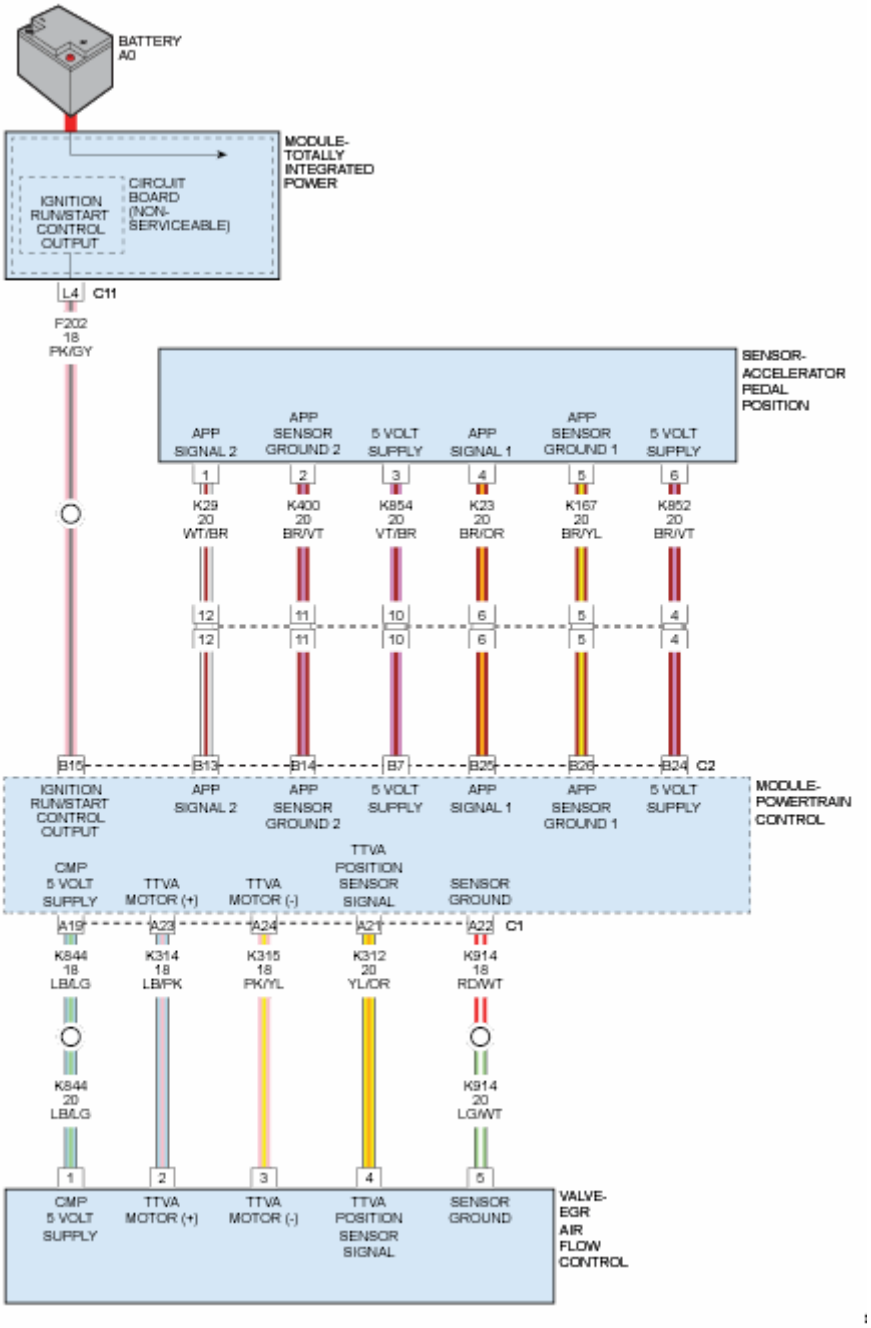

Fig. 134: Seat Track Position Sensors Circuit Schematic
Courtesy of CHRYSLER GROUP, LLC

For a complete wiring diagram, **refer to appropriate SYSTEM WIRING DIAGRAMS article** .

WHEN MONITORED

While the CAN bus ignition status is in IGN_RUN and the module is configured for a Seat Track Position Sensor, the module checks the sensor input current ranges.

SET CONDITION

This DTC may set when the module detects that the sensor input current is below 1 mA.

POSSIBLE CAUSES

Possible Causes
DRIVER SEAT HARNESS IMPROPERLY ROUTED
DRIVER SEAT HARNESS WIRES CHAFED, PIERCED, PINCHED, PARTIALLY BROKEN
DRIVER SEAT HARNESS CONNECTOR TERMINALS BROKEN, BENT, PUSHED OUT, SPREAD, CORRODED, CONTAMINATED
(R261) DRIVER SEAT POSITION SENSOR DATA CIRCUIT SHORTED TO VOLTAGE
(R263) DRIVER SEAT POSITION SENSOR VOLTAGE CIRCUIT SHORTED TO VOLTAGE
(R261) DRIVER SEAT POSITION SENSOR DATA CIRCUIT SHORTED TO (R263) DRIVER SEAT POSITION SENSOR VOLTAGE CIRCUIT
DRIVER SEAT TRACK POSITION SENSOR
OCCUPANT RESTRAINT CONTROLLER (ORC)

DIAGNOSTIC TEST

1. **CHECK FOR ACTIVE INTERNAL FAULTS, IGNITION FAULTS, AND BATTERY FAULTS IN THE OCCUPANT RESTRAINT CONTROLLER (ORC)**
    1. With the scan tool, read Occupant Restraint Controller (ORC) DTCs.

       Does the scan tool display any active DTCs relating to internal faults, ignition faults, or battery faults?

       Yes

       - Perform the appropriate diagnostic procedure. Refer to **DIAGNOSIS AND TESTING**.

       No

       - Go To 2

2. **VERIFY THAT DTC B1B8F-DRIVER SEAT TRACK POSITION SENSOR CIRCUIT OPEN IS ACTIVE**

   Does the scan tool display active: B1B8F-DRIVER SEAT TRACK POSITION SENSOR CIRCUIT OPEN?

   Yes

   - Go To 3

   No

   - Go To 8

3. **INSPECT DRIVER SEAT HARNESS WIRES AND CONNECTORS**

   WARNING: Turn the ignition off, disconnect the 12-volt battery and wait two minutes before proceeding. Failure to follow these instructions may result in possible serious or fatal injury.

   1. Using the wiring diagram/schematic as a guide, inspect the Driver Seat Harness wiring and connectors. Look for chafed, pierced, pinched, or partially broken wires and broken, bent, pushed out, spread, corroded, or contaminated terminals.

      Are any of these conditions present?

      Yes

      NOTE: Do not attempt to repair the Seat Harness. Replace the Seat Harness if any of these conditions exist

      - Replace the Driver Seat Harness in accordance with the Service Information.
      - Perform the AIRBAG SYSTEM VERIFICATION TEST. Refer to **STANDARD PROCEDURE** .

      No

- Go To 4

4. **VERIFY THAT DRIVER SEAT HARNESS IS ROUTED CORRECTLY**
   1. Verify that the Driver Seat Harness is routed correctly.

      Is the Driver Seat Harness routed correctly?

      Yes

      - Go To 5

      No

      - Reroute the Driver Seat Harness as necessary.
      - Perform the AIRBAG SYSTEM VERIFICATION TEST. Refer to **STANDARD PROCEDURE** .

5. **CHECK FOR DTC B1B8F-DRIVER SEAT TRACK POSITION SENSOR CIRCUIT OPEN WITH DRIVER SEAT TRACK POSITION SENSOR DISCONNECTED**

   WARNING: **Turn the ignition off disconnect the 12-volt battery and wait two minutes before proceeding. Failure to follow these instructions may result in possible serious or fatal injury.**

   1. Disconnect the Driver Seat Track Position Sensor connector.

      WARNING: **Turn the ignition on, then reconnect the 12-volt battery and wait two minutes before proceeding. Failure to follow these instructions may result in possible serious or fatal injury.**

   2. Wait two minutes, and then with the scan tool, read ORC DTCs.

      Does the scan tool display: B1B8F-DRIVER SEAT TRACK POSITION SENSOR CIRCUIT OPEN?

Yes

- Go To 6

No

WARNING: Turn the ignition off, disconnect the 12-volt battery and wait two minutes before proceeding. Failure to follow these instructions may result in possible serious or fatal injury.

- Replace the Driver Seat Track Position Sensor in accordance with the service information.
- Perform the AIRBAG SYSTEM VERIFICATION TEST. Refer to **STANDARD PROCEDURE** .

6. **CHECK (R261) DRIVER SEAT POSITION SENSOR DATA CIRCUIT AND (R263) DRIVER SEAT POSITION SENSOR VOLTAGE CIRCUIT FOR A SHORT TO VOLTAGE**

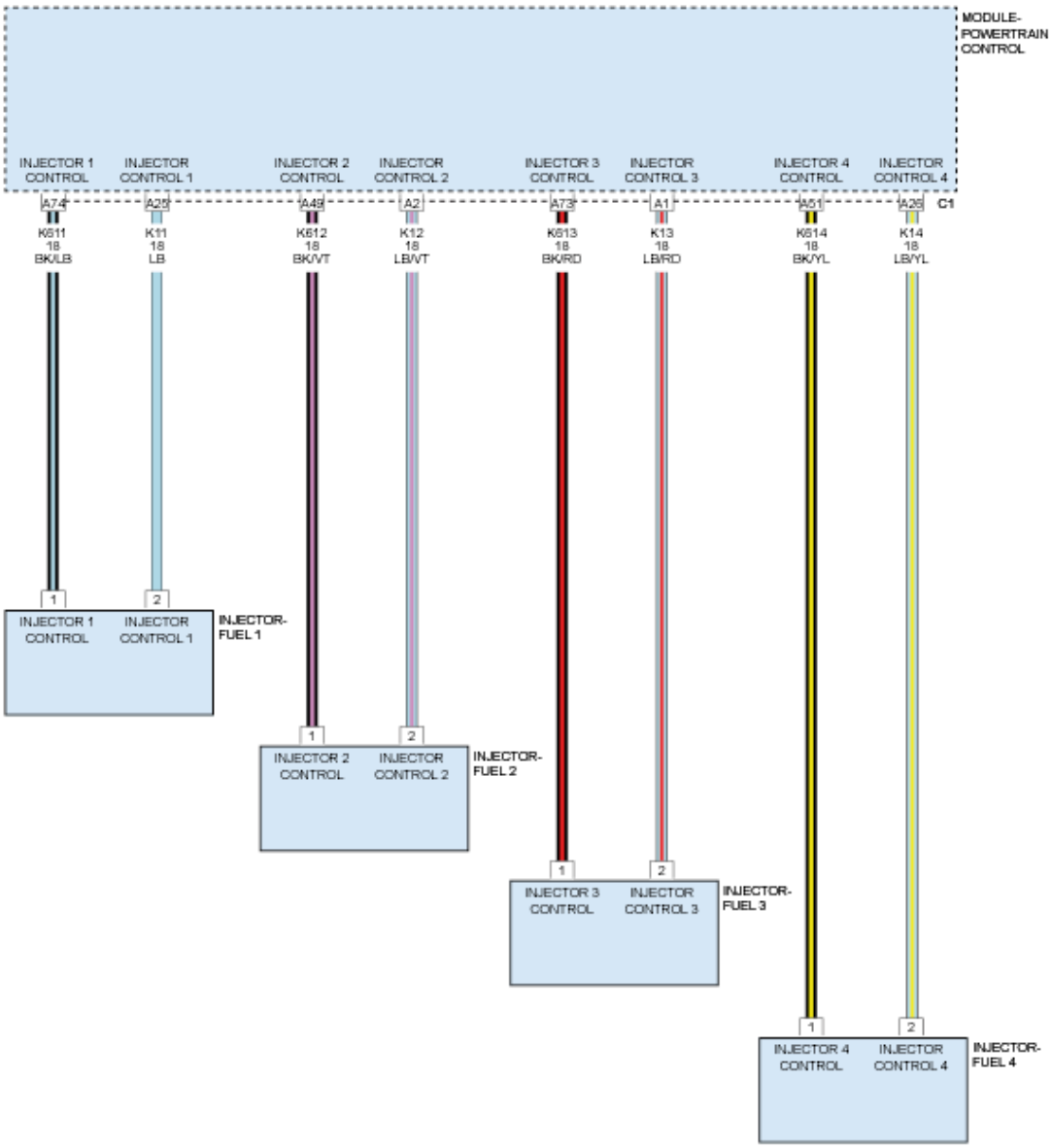

Fig. 135: Checking Driver Seat Position Sensor Data Circuit & Driver Seat Position Sensor Voltage Circuit For A Short To Voltage
Courtesy of CHRYSLER GROUP, LLC

WARNING: Turn the ignition off, disconnect the 12-volt battery and wait two minutes before proceeding. Failure to follow these instructions may result in possible serious or fatal injury.

1. Disconnect the ORC C1 connector.

WARNING: Turn the ignition on, then reconnect the 12-volt battery and wait two minutes before proceeding. Failure to follow these instructions may result in possible serious or fatal injury.

2. Measure the voltage of the (R261) Driver Seat Position Sensor Data circuit between the Driver Seat Track Position Sensor connector and ground.
3. Measure the voltage of the (R263) Driver Seat Position Sensor Voltage circuit between the Driver Seat Track Position Sensor connector and ground.

Is the voltage above 0.2 of a volt on either circuit?

Yes

NOTE: Do not attempt to repair the Seat Harness. Replace the Seat Harness if any of these conditions exist

WARNING: Turn the ignition off, disconnect the 12-volt battery and wait two minutes before proceeding. Failure to follow these instructions may result in possible serious or fatal injury.

- Replace the Driver Seat Harness in accordance with the Service Information.
- Perform the AIRBAG SYSTEM VERIFICATION TEST. Refer to **STANDARD PROCEDURE** .

No

- Go To 7

7. **CHECK (R261) DRIVER SEAT POSITION SENSOR DATA CIRCUIT FOR A SHORT TO (R263) DRIVER SEAT POSITION SENSOR VOLTAGE CIRCUIT**

WARNING: Turn the ignition off, disconnect the 12-volt battery and wait two minutes before proceeding. Failure to follow these instructions may result in possible serious or fatal injury.

1. Measure the resistance between the (R261) Driver Seat Position Sensor Data circuit and the (R263) Driver Seat Position Sensor Voltage circuit in the Driver Seat Track Position Sensor connector.

   Is the resistance below 10k Ohms?

   Yes

   NOTE: Do not attempt to repair the Seat Harness. Replace the Seat Harness if any of these conditions exist

   - Replace the Driver Seat Harness in accordance with the service information.
   - Perform the AIRBAG SYSTEM VERIFICATION TEST. Refer to **STANDARD PROCEDURE** .

   No

   - Replace the ORC in accordance with the Service information.
   - Perform the AIRBAG SYSTEM VERIFICATION TEST. Refer to **STANDARD PROCEDURE** .

8. **TEST FOR AN INTERMITTENT CONDITION**
   1. With the scan tool, record and erase all DTCs from the ORC.
   2. If any ACTIVE codes are present they must be resolved before diagnosing any stored codes.

WARNING: Turn the ignition off disconnect the 12-volt battery and wait two minutes before proceeding. Failure to follow these instructions may result in possible serious or fatal injury.

3. Using the wiring diagram/schematic as a guide, inspect the wiring and connectors.
4. Look for chafed, pierced, pinched, or partially broken wires and broken, bent, pushed out, spread, corroded, or contaminated terminals.
5. The following additional checks may assist you in identifying a possible intermittent problem.
6. Reconnect any disconnected components and harness connector.

WARNING: **Turn the ignition on, then reconnect the 12-volt battery and wait two minutes before proceeding. Failure to follow these instructions may result in possible serious or fatal injury.**

7. With the scan tool monitor active codes as you work through the following steps.

WARNING: **Maintain a safe distance from all airbags while performing the following steps. Failure to follow these instructions may result in possible serious or fatal injury.**

8. Wiggle the wiring harness and connectors of the related airbag circuit or component.
9. If only stored codes return continue the test until the problem area has been isolated.
10. In the previous steps you have attempted to recreate the conditions responsible for setting active DTC in question.

Are any ACTIVE DTCs present?

Yes

- Perform the appropriate diagnostic procedure. Refer to **DIAGNOSIS AND TESTING**.

No

- No problem found at this time. Erase all codes before returning vehicle to customer.

B1B90-DRIVER SEAT TRACK POSITION SENSOR CIRCUIT SHORTED TOGETHER

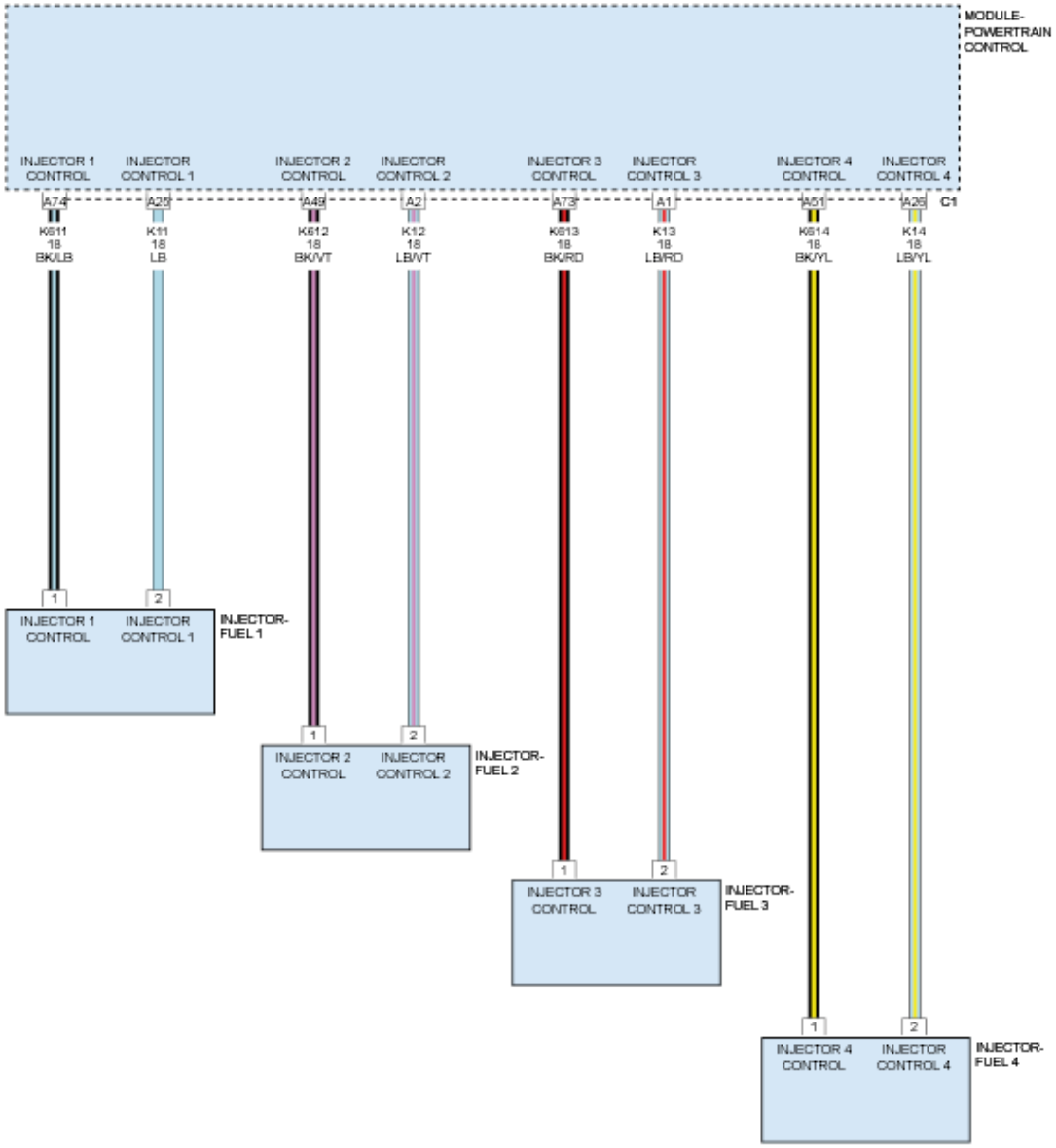

Fig. 136: Seat Track Position Sensors Circuit Schematic
Courtesy of CHRYSLER GROUP, LLC

For a complete wiring diagram, **refer to appropriate SYSTEM WIRING DIAGRAMS article** .

WHEN MONITORED

While the CAN bus ignition status is in IGN RUN and the module is configured

for a Seat Track Position Sensor, the module checks the sensor input current ranges.

SET CONDITION

If the module detects that the sensor input is greater than or equal to 17.1 mA.

POSSIBLE CAUSES

Possible Causes
DRIVER SEAT HARNESS IMPROPERLY ROUTED
DRIVER SEAT HARNESS WIRES CHAFED, PIERCED, PINCHED, PARTIALLY BROKEN
DRIVER SEAT HARNESS CONNECTOR TERMINALS BROKEN, BENT, PUSHED OUT, SPREAD, CORRODED, CONTAMINATED
(R261) DRIVER SEAT POSITION SENSOR DATA CIRCUIT
(R263) DRIVER SEAT POSITION SENSOR VOLTAGE CIRCUIT SHORTED
(R261) DRIVER SEAT POSITION SENSOR DATA CIRCUIT SHORTED TO (R263) DRIVER SEAT POSITION SENSOR VOLTAGE CIRCUIT
DRIVER SEAT TRACK POSITION SENSOR
OCCUPANT RESTRAINT CONTROLLER (ORC)

DIAGNOSTIC TEST

1. **CHECK FOR ACTIVE INTERNAL FAULTS, IGNITION FAULTS, AND BATTERY FAULTS IN THE OCCUPANT RESTRAINT CONTROLLER (ORC)**
   1. With the scan tool, read Occupant Restraint Controller (ORC) DTCs.

      Does the scan tool display any active DTCs relating to internal faults, ignition faults, or battery faults?

      Yes

      - Perform the appropriate diagnostic procedure. Refer to **DIAGNOSIS AND TESTING**.

      No

- Go To 2

2. **VERIFY THAT DTC B1B90-DRIVER SEAT TRACK POSITION SENSOR CIRCUIT SHORTED TOGETHER IS ACTIVE**

   Does the scan tool display active: B1B90-DRIVER SEAT TRACK POSITION SENSOR CIRCUIT SHORTED TOGETHER?

   Yes

   - Go To 3

   No

   - Go To 8

3. **INSPECT DRIVER SEAT HARNESS WIRES AND CONNECTORS**

   WARNING: Turn the ignition off, disconnect the 12-volt battery and wait two minutes before proceeding. Failure to follow these instructions may result in possible serious or fatal injury.

   1. Using the wiring diagram/schematic as a guide, inspect the Driver Seat Harness wiring and connectors. Look for chafed, pierced, pinched, or partially broken wires and broken, bent, pushed out, spread, corroded, or contaminated terminals.

      Are any of these conditions present?

      Yes

      NOTE: Do not attempt to repair the Seat Harness. Replace the Seat Harness if any of these conditions exist

      - Replace the Driver Seat Harness in accordance with the Service Information.
      - Perform the AIRBAG SYSTEM VERIFICATION TEST. Refer to **STANDARD PROCEDURE** .

No

- Go To 4

4. **VERIFY THAT DRIVER SEAT HARNESS IS ROUTED CORRECTLY**
   1. Verify that the Driver Seat Harness is routed correctly.

      Is the Driver Seat Harness routed correctly?

      Yes

      - Go To 5

      No

      - Reroute the Driver Seat Harness as necessary.
      - Perform the AIRBAG SYSTEM VERIFICATION TEST. Refer to **STANDARD PROCEDURE** .

5. **CHECK FOR DTC B1B90-DRIVER SEAT TRACK POSITION SENSOR CIRCUIT SHORTED TOGETHER WITH DRIVER SEAT TRACK POSITION SENSOR DISCONNECTED**

   WARNING: **Turn the ignition off disconnect the 12-volt battery and wait two minutes before proceeding. Failure to follow these instructions may result in possible serious or fatal injury.**

   1. Disconnect the Driver Seat Track Position Sensor connector.

      WARNING: **Turn the ignition on, then reconnect the 12-volt battery and wait two minutes before proceeding. Failure to follow these instructions may result in possible serious or fatal injury.**

   2. Wait two minutes, and then with the scan tool, read ORC DTCs.

      Does the scan tool display: B1B90-DRIVER SEAT TRACK

POSITION SENSOR CIRCUIT SHORTED TOGETHER?

Yes

- Go To 6

No

WARNING: Turn the ignition off, disconnect the 12-volt battery and wait two minutes before proceeding. Failure to follow these instructions may result in possible serious or fatal injury.

- Replace the Driver Seat Track Position Sensor in accordance with the service information.
- Perform the AIRBAG SYSTEM VERIFICATION TEST. Refer to **STANDARD PROCEDURE** .

6. **CHECK (R261) SEAT POSITION SENSOR DATA-DRIVER CIRCUIT AND (R263) SEAT POSITION SENSOR VOLTAGE-DRIVER CIRCUIT FOR A SHORT TO VOLTAGE**

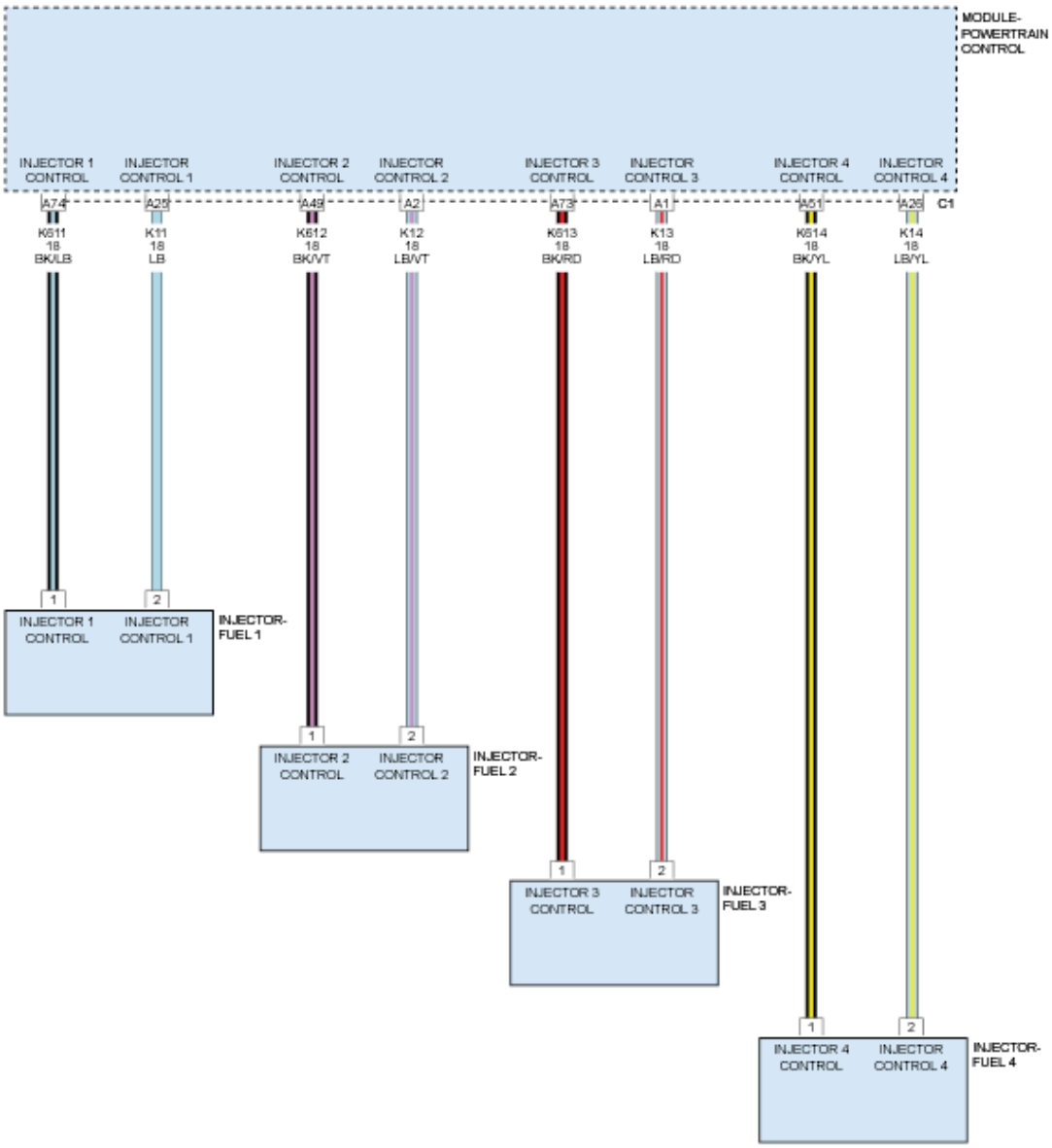

Fig. 137: Checking Driver Seat Position Sensor Data Circuit & Driver Seat Position Sensor Voltage Circuit For A Short To Voltage
Courtesy of CHRYSLER GROUP, LLC

WARNING: Turn the ignition off, disconnect the 12-volt battery and wait two minutes before proceeding. Failure to follow these instructions may result in possible serious or fatal injury.

1. Disconnect the ORC C1 connector.

WARNING: Turn the ignition on, then reconnect the 12-volt battery and wait two minutes before proceeding. Failure to follow these instructions may result in possible serious or fatal injury.

2. Measure the voltage of the (R261) Driver Seat Position Sensor Data circuit between the Driver Seat Track Position Sensor connector and ground.
3. Measure the voltage of the (R263) Driver Seat Position Sensor Voltage circuit between the Driver Seat Track Position Sensor connector and ground.

Is the voltage above 0.2 of a volt on either circuit?

Yes

NOTE: Do not attempt to repair the Seat Harness. Replace the Seat Harness if any of these conditions exist

WARNING: Turn the ignition off, disconnect the 12-volt battery and wait two minutes before proceeding. Failure to follow these instructions may result in possible serious or fatal injury.

- Replace the Driver Seat Harness in accordance with the Service Information.
- Perform the AIRBAG SYSTEM VERIFICATION TEST. Refer to **STANDARD PROCEDURE** .

No

- Go To 7

7. **CHECK (R261) DRIVER SEAT POSITION SENSOR DATA CIRCUIT FOR A SHORT TO (R263) DRIVER SEAT POSITION SENSOR VOLTAGE CIRCUIT**

WARNING: Turn the ignition off, disconnect the 12-volt battery and wait two minutes before proceeding. Failure to follow these instructions may result in possible serious or fatal injury.

1. Measure the resistance between the (R261) Driver Seat Position Sensor Data circuit and the (R263) Driver Seat Position Sensor Voltage circuit in the Driver Seat Track Position Sensor connector.

   Is the resistance below 10k Ohms?

   Yes

   NOTE: Do not attempt to repair the Seat Harness. Replace the Seat Harness if any of these conditions exist

   - Replace the Driver Seat Harness in accordance with the service information.
   - Perform the AIRBAG SYSTEM VERIFICATION TEST. Refer to **STANDARD PROCEDURE** .

   No

   - Replace the ORC in accordance with the Service information.
   - Perform the AIRBAG SYSTEM VERIFICATION TEST. Refer to **STANDARD PROCEDURE** .

8. **TEST FOR AN INTERMITTENT CONDITION**
   1. With the scan tool, record and erase all DTCs from the ORC.
   2. If any ACTIVE codes are present they must be resolved before diagnosing any stored codes.

WARNING: Turn the ignition off disconnect the 12-volt battery and wait two minutes before proceeding. Failure to follow these instructions may result in possible serious or fatal injury.

3. Using the wiring diagram/schematic as a guide, inspect the wiring and connectors.
4. Look for chafed, pierced, pinched, or partially broken wires and broken, bent, pushed out, spread, corroded, or contaminated terminals.
5. The following additional checks may assist you in identifying a possible intermittent problem.
6. Reconnect any disconnected components and harness connector.

WARNING: Turn the ignition on, then reconnect the 12-volt battery and wait two minutes before proceeding. Failure to follow these instructions may result in possible serious or fatal injury.

7. With the scan tool monitor active codes as you work through the following steps.

WARNING: Maintain a safe distance from all airbags while performing the following steps. Failure to follow these instructions may result in possible serious or fatal injury.

8. Wiggle the wiring harness and connectors of the related airbag circuit or component.
9. If only stored codes return continue the test until the problem area has been isolated.
10. In the previous steps you have attempted to recreate the conditions responsible for setting active DTC in question.

Are any ACTIVE DTCs present?

Yes

- Perform the appropriate diagnostic procedure. Refer to **DIAGNOSIS AND TESTING**.

No

- No problem found at this time. Erase all codes before returning vehicle to customer.

B1B91-DRIVER SEAT TRACK POSITION SENSOR CONFIGURATION MISMATCH

For a complete wiring diagram, **refer to appropriate SYSTEM WIRING DIAGRAMS article** .

WHEN MONITORED

With the ignition on the ORC monitors the Driver Seat Track Position Sensors (STPS).

SET CONDITION

If the ORC detects current on the Driver Seat Track Position Sensors circuits and the module is not configured for STPS.

POSSIBLE CAUSES

Possible Causes
SENSORS
WIRING
OCCUPANT RESTRAINT CONTROLLER (ORC)

DIAGNOSTIC TEST

1. **CHECK FOR ACTIVE INTERNAL FAULTS, IGNITION FAULTS, AND BATTERY FAULTS IN THE OCCUPANT RESTRAINT CONTROLLER (ORC)**

   NOTE: Make sure the battery is fully charged.

   1. With the scan tool, read Occupant Restraint Controller (ORC) DTCs.

      Does the scan tool display any active DTCs relating to internal faults, ignition faults, or battery faults?

      Yes

      - Perform the appropriate diagnostic procedure. Refer to **DIAGNOSIS AND TESTING**.

No

- Go To 2

2. **VERIFY THAT B1B91-DRIVER SEAT TRACK POSITION SENSOR CONFIGURATION MISMATCH IS ACTIVE**
   1. With the scan tool, erase ORC DTCs.
   2. Turn the ignition off, wait 10 seconds and then turn the ignition on.
   3. Wait two minutes, and then with the scan tool, read ORC DTCs.

   Does the scan tool display active: B1B91-DRIVER SEAT TRACK POSITION SENSOR CONFIGURATION MISMATCH?

   Yes

   - Go To3

   No

   - Perform the AIRBAG SYSTEM VERIFICATION TEST. Refer to **STANDARD PROCEDURE** .

3. **VERIFY WIRING**
   1. Turn the ignition off.
   2. Inspect the driver seat wiring for Seat Position Sensors.

   Are Seat Position Sensor(s) present?

   Yes

   WARNING: **Turn the ignition off, disconnect the 12-volt battery and wait two minutes before proceeding. Failure to follow these instructions may result in possible serious or fatal injury.**

   WARNING: **If the Occupant Restraint Controller (ORC) is dropped at any time, it must be replaced. Failure to take the proper precautions can result in accidental airbag**

deployment. Failure to follow these instructions may result in possible serious or fatal injury.

- Replace the ORC in accordance with the Service Information.
- Perform the AIRBAG SYSTEM VERIFICATION TEST. Refer to **STANDARD PROCEDURE** .

No

- Perform the AIRBAG SYSTEM VERIFICATION TEST. Refer to **STANDARD PROCEDURE** .

B1B92-PASSENGER SEAT TRACK POSITION SENSOR CIRCUIT PERFORMANCE

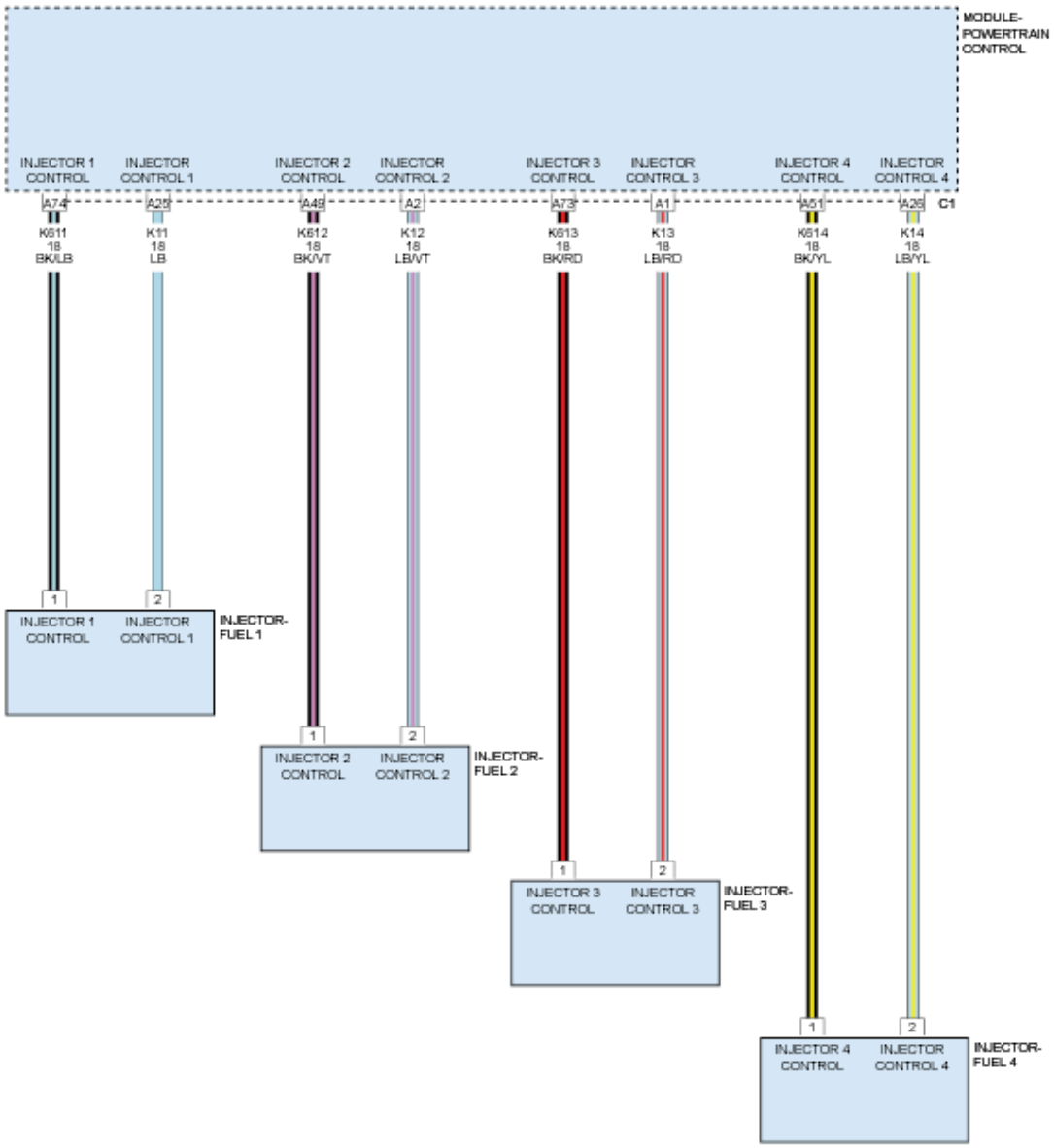

Fig. 138: Seat Track Position Sensors Circuit Schematic
Courtesy of CHRYSLER GROUP, LLC

For a complete wiring diagram, **refer to appropriate SYSTEM WIRING DIAGRAMS article** .

WHEN MONITORED

While the CAN bus ignition status is in IGN_RUN, the module checks the sensor input ranges.

SET CONDITION

If the module detects that the sensor input is between 8 and 12 mA.

POSSIBLE CAUSES

Possible Causes
PASSENGER SEAT TRACK POSITION SENSOR OCCUPANT RESTRAINT CONTROLLER

DIAGNOSTIC TEST

1. **IDENTIFYING VEHICLE EQUIPMENT**

   NOTE: Make sure the battery is fully charged.

   1. With the scan tool, read ORC active DTCs.

      Does the scan tool display active DTC: B1B92-PASSENGER SEAT TRACK POSITION SENSOR CIRCUIT PERFORMANCE?

      Yes

      - Go To 2

      No

      - Go To 4

2. **CHECK FOR ACTIVE INTERNAL FAULTS, IGNITION FAULTS, BATTERY FAULTS, OR SEAT TRACK POSITION SENSOR CIRCUIT HIGH OR LOW FAULTS IN THE OCCUPANT RESTRAINT CONTROLLER (ORC)**

   1. With the scan tool, read Occupant Restraint Controller (ORC) DTCs.

      Does the scan tool display any active DTCs relating to internal faults, ignition faults, battery faults, or Seat Track Position Sensor Circuit High or Low faults?

      Yes

      - Perform the appropriate diagnostic procedure. Refer to **DIAGNOSIS AND TESTING**.

      No

- Go To 3

3. **PERFORM THE SEAT TRACK POSITION SENSOR PERFORMANCE TEST**
   1. With the scan tool, erase ORC DTCs.
   2. Turn the ignition off, wait 10 seconds and then turn the ignition on.
   3. Cycle the passenger seat to the full forward position and then to the full rearward position.
   4. Return the passenger seat to its approximate original position.
   5. Wait two minutes, and then with the scan tool, read ORC DTCs.

   Does the scan tool display active: B1B92-PASSENGER SEAT TRACK POSITION SENSOR CIRCUIT PERFORMANCE?

   Yes

   WARNING: **Turn the ignition off, disconnect the 12-volt battery and wait two minutes before proceeding. Failure to follow these instructions may result in possible serious or fatal injury.**

   WARNING: **If the Occupant Restraint Controller (ORC) is dropped at any time, it must be replaced. Failure to follow these instructions may result in possible serious or fatal injury.**

   - Replace the Passenger Seat Track Position Sensor in accordance with the Service Information.
   - Perform the AIRBAG SYSTEM VERIFICATION TEST. Refer to **STANDARD PROCEDURE** .
   - If DTC B1B92-PASSENGER SEAT TRACK POSITION SENSOR CIRCUIT PERFORMANCE returns active, replace the ORC in accordance with the Service Information.

   No

- Perform the AIRBAG SYSTEM VERIFICATION TEST. Refer to **STANDARD PROCEDURE** .

4. **TEST FOR AN INTERMITTENT CONDITION**
   1. With the scan tool, record and erase all DTC's from the ORC.
   2. If any ACTIVE codes are present they must be resolved before diagnosing any stored codes.

      WARNING: **Turn the ignition off, disconnect the 12-volt battery and wait two minutes before proceeding. Failure to follow these instructions may result in possible serious or fatal injury.**

   3. Using the wiring diagram/schematic as a guide, inspect the wiring and connectors.
   4. Look for chafed, pierced, pinched, or partially broken wires and broken, bent, pushed out, spread, corroded, or contaminated terminals.
   5. The following additional checks may assist you in identifying a possible intermittent problem.
   6. Reconnect any disconnected components and harness connector.

      WARNING: **Turn the ignition on, then reconnect the 12-volt battery and wait two minutes before proceeding. Failure to follow these instructions may result in possible serious or fatal injury.**

   7. With the scan tool monitor active codes as you work through the following steps.

      WARNING: **Maintain a safe distance from all airbags while performing the following steps. Failure to follow these instructions may result in possible serious or fatal injury.**

   8. Wiggle the wiring harness and connectors of the related airbag circuit or component.

9. If only stored codes return continue the test until the problem area has been isolated.
10. In the previous steps you have attempted to recreate the conditions responsible for setting active DTC in question.

    Are any ACTIVE DTCs present?

    Yes

    - Perform the appropriate diagnostic procedure. Refer to **DIAGNOSIS AND TESTING**.

    No

    - No problem found at this time. Erase all codes before returning vehicle to customer.

B1B93-PASSENGER SEAT TRACK POSITION SENSOR CIRCUIT LOW

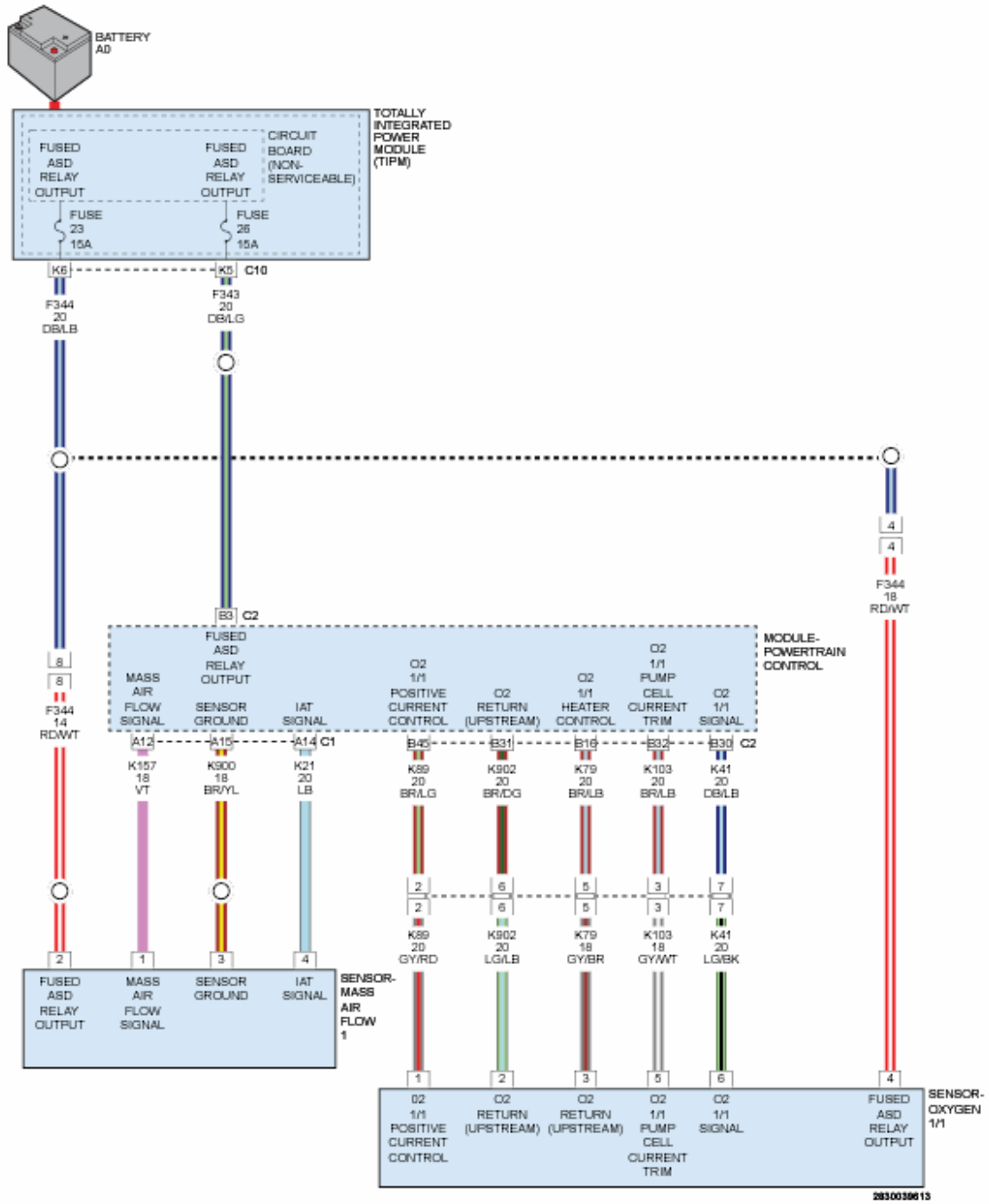

Fig. 139: Seat Track Position Sensors Circuit Schematic
Courtesy of CHRYSLER GROUP, LLC

For a complete wiring diagram, **refer to appropriate SYSTEM WIRING DIAGRAMS article** .

WHEN MONITORED

While the CAN bus ignition status is in IGN_RUN and the module is configured for a Passenger Seat Track Position Sensor, the module checks the sensor input

current ranges.

SET CONDITION

If the module detects that the sensor input is less than or equal to 0.3 ma. This DTC may set when the current is between 0.3 mA and 2.0 mA.

POSSIBLE CAUSES

Possible Causes
PASSENGER SEAT HARNESS IMPROPERLY ROUTED
PASSENGER SEAT HARNESS WIRES CHAFED, PIERCED, PINCHED, PARTIALLY BROKEN
PASSENGER SEAT HARNESS CONNECTOR TERMINALS BROKEN, BENT, PUSHED OUT, SPREAD, CORRODED, CONTAMINATED
(R262) PASSENGER SEAT POSITION SENSOR DATA CIRCUIT SHORTED TO GROUND
(R264) PASSENGER SEAT POSITION SENSOR VOLTAGE CIRCUIT SHORTED TO GROUND
(R262) PASSENGER SEAT POSITION SENSOR DATA CIRCUIT OPEN
(R264) PASSENGER SEAT POSITION SENSOR VOLTAGE CIRCUIT OPEN
PASSENGER SEAT TRACK POSITION SENSOR
OCCUPANT RESTRAINT CONTROLLER (ORC)

DIAGNOSTIC TEST

1. **IDENTIFYING VEHICLE EQUIPMENT**

   NOTE: Make sure the battery is fully charged.

   1. Turn the ignition on.
   2. With the scan tool, read ORC active DTCs.

      Does the scan tool display active DTC: B1B93-PASSENGER SEAT TRACK POSITION SENSOR CIRCUIT LOW?

      Yes

      - Go To 2

No

- Go To 7

2. **CHECK FOR ACTIVE INTERNAL FAULTS, IGNITION FAULTS, AND BATTERY FAULTS IN THE OCCUPANT RESTRAINT CONTROLLER (ORC)**
   1. With the scan tool, read Occupant restraint Controller (ORC) DTCs.

      Does the scan tool display any active DTCs relating to internal faults, ignition faults, or battery faults?

      Yes

      - Perform the appropriate diagnostic procedure. Refer to **DIAGNOSIS AND TESTING**.

      No

      - Go To 3

3. **INSPECT PASSENGER SEAT HARNESS WIRES AND CONNECTORS**

   WARNING: **Turn the ignition off, disconnect the 12-volt battery and wait two minutes before proceeding. Failure to follow these instructions may result in possible serious or fatal injury.**

   1. Using the wiring diagram/schematic as a guide, inspect the passenger seat harness wiring and connectors. Look for chafed, pierced, pinched, or partially broken wires and broken, bent, pushed out, spread, corroded, or contaminated terminals.

      Are any of these conditions present?

      Yes

      NOTE: **Do not attempt to repair the Seat Harness. Replace the Seat Harness if the condition**

inspecting or testing for is present in the Seat Harness.

- Replace the passenger seat harness in accordance with the Service Information.
- Perform the AIRBAG SYSTEM VERIFICATION TEST. Refer to **STANDARD PROCEDURE** .

No

- Go To 4

4. **VERIFY THAT PASSENGER SEAT HARNESS IS ROUTED CORRECTLY**
   1. Verify that the passenger seat harness is routed correctly.

   Is the Passenger Seat Harness routed correctly?

   Yes

   - Go To 5

   No

   - Reroute the passenger seat harness as necessary.
   - Perform the AIRBAG SYSTEM VERIFICATION TEST. Refer to **STANDARD PROCEDURE** .

5. **CHECK (R262) PASSENGER SEAT POSITION SENSOR DATA CIRCUIT AND (R264) PASSENGER SEAT POSITION SENSOR VOLTAGE CIRCUIT FOR A SHORT TO GROUND**

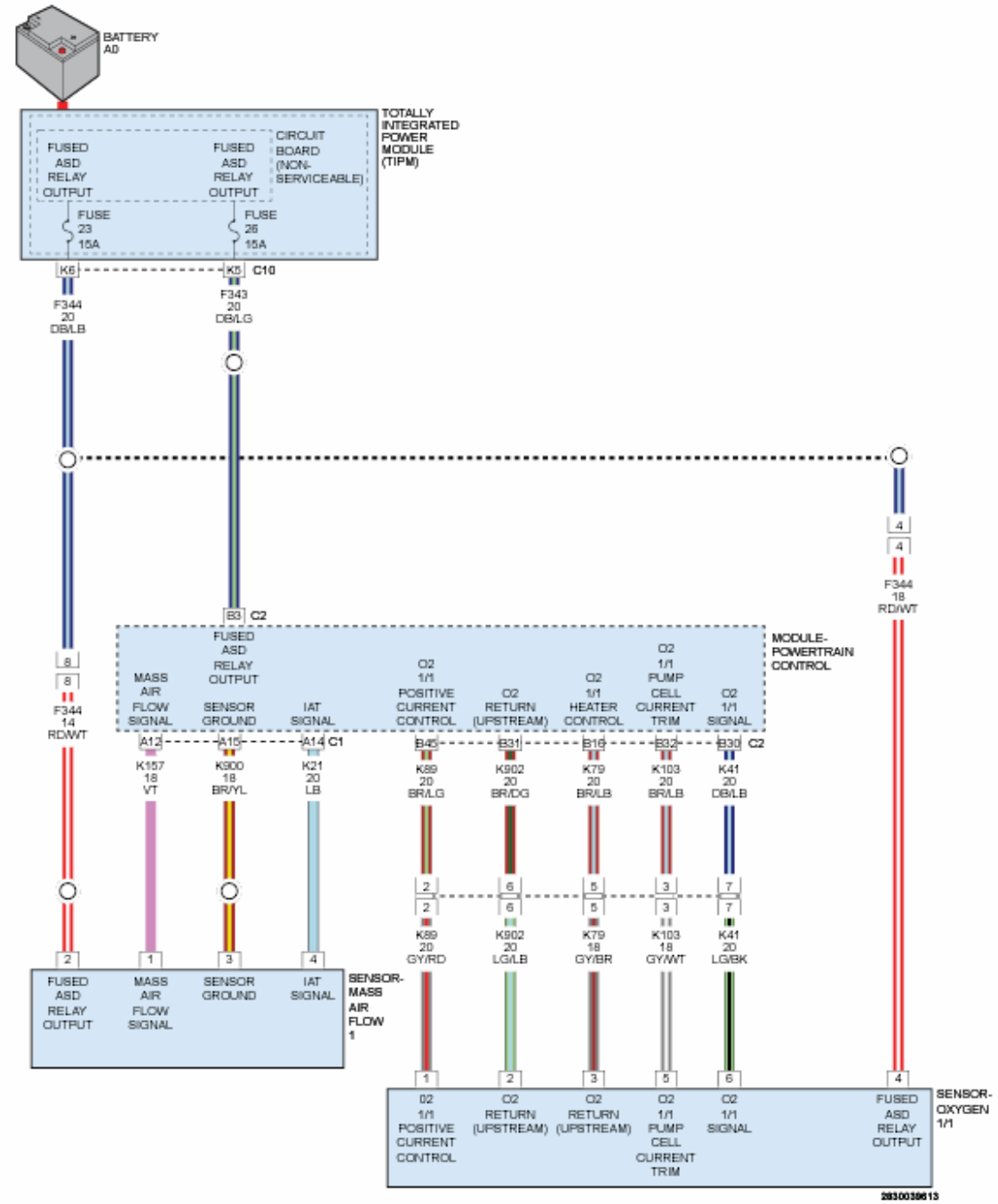

Fig. 140: Checking Passenger Seat Track Position Sensor Signal Circuit & Sensor Supply Circuit For A Short To Ground
Courtesy of CHRYSLER GROUP, LLC

1. Measure the resistance between ground and the (R262) Passenger Seat Position Sensor Data circuit cavity 1.
2. Measure the resistance between ground and the (R264) Passenger Seat Position Sensor Voltage circuit cavity 2.

Is the resistance below 10k Ohms on either circuit?

Yes

NOTE: Do not attempt to repair the Seat Harness. Replace the Seat Harness if the condition inspecting or testing for is present in the Seat Harness.

- Replace the passenger seat harness in accordance with the service information.
- Perform the AIRBAG SYSTEM VERIFICATION TEST. Refer to **STANDARD PROCEDURE** .

No

- Go To 6

6. **CHECK FOR AN OPEN R262 DATA CIRCUIT OR R264 VOLTAGE CIRCUIT**
   1. Disconnect the ORC connectors.
   2. Install the SRS Load Tool Adaptor (special tool #8443-24, 32-Way Adapter) to the ORC-C2
   3. Measure the resistance of the (R262) Passenger Seat Position Sensor Data circuit between the SRS Load Tool Adaptor (special tool #8443-24, 32-Way Adapter) cavity C2-32 and the Passenger Seat Track Position Sensor connector cavity 1.
   4. Measure the resistance of the (R264) Passenger Seat Position Sensor Voltage circuit between the SRS Load Tool Adaptor (special tool #8443-24, 32-Way Adapter) cavity C2-31 and the Passenger Seat Track Position Sensor connector cavity 2.

   Is the resistance of either circuit above 5.0 Ohms?

   Yes

   NOTE: Do not attempt to repair the Seat Harness. Replace the Seat Harness if the condition inspecting or testing for is present in the Seat

Harness.

- Replace the passenger seat harness in accordance with the Service Information.
- Perform the AIRBAG SYSTEM VERIFICATION TEST. Refer to **STANDARD PROCEDURE** .

No

WARNING: **If the Occupant Restraint Controller (ORC) is dropped at any time, it must be replaced. Failure to follow these instructions may result in possible serious or fatal injury.**

- Replace the Occupant Restraint Controller (ORC) in accordance with the service information.
- Perform the AIRBAG SYSTEM VERIFICATION TEST. Refer to **STANDARD PROCEDURE** .

7. **TEST FOR AN INTERMITTENT CONDITION**
   1. With the scan tool, record and erase all DTCs from the ORC.
   2. If any ACTIVE codes are present they must be resolved before diagnosing any stored codes.

WARNING: **Turn the ignition off, disconnect the 12-volt battery and wait two minutes before proceeding. Failure to follow these instructions may result in possible serious or fatal injury.**

   3. Using the wiring diagram/schematic as a guide, inspect the wiring and connectors.
   4. Look for chafed, pierced, pinched, or partially broken wires and broken, bent, pushed out, spread, corroded, or contaminated terminals.
   5. The following additional checks may assist you in identifying a possible intermittent problem.
   6. Reconnect any disconnected components and harness connector.

WARNING: Turn the ignition on, then reconnect the 12-volt battery and wait two minutes before proceeding. Failure to follow these instructions may result in possible serious or fatal injury.

7. With the scan tool monitor active codes as you work through the following steps.

WARNING: Maintain a safe distance from all airbags while performing the following steps. Failure to follow these instructions may result in possible serious or fatal injury.

8. Wiggle the wiring harness and connectors of the related airbag circuit or component.
9. If only stored codes return continue the test until the problem area has been isolated.
10. In the previous steps you have attempted to recreate the conditions responsible for setting active DTC in question.

    Are any ACTIVE DTCs present?

    Yes

    - Perform the appropriate diagnostic. Refer to **DIAGNOSIS AND TESTING**.

    No

    - No problem found at this time. Erase all codes before returning vehicle to customer.

B1B94-PASSENGER SEAT TRACK POSITION SENSOR CIRCUIT HIGH

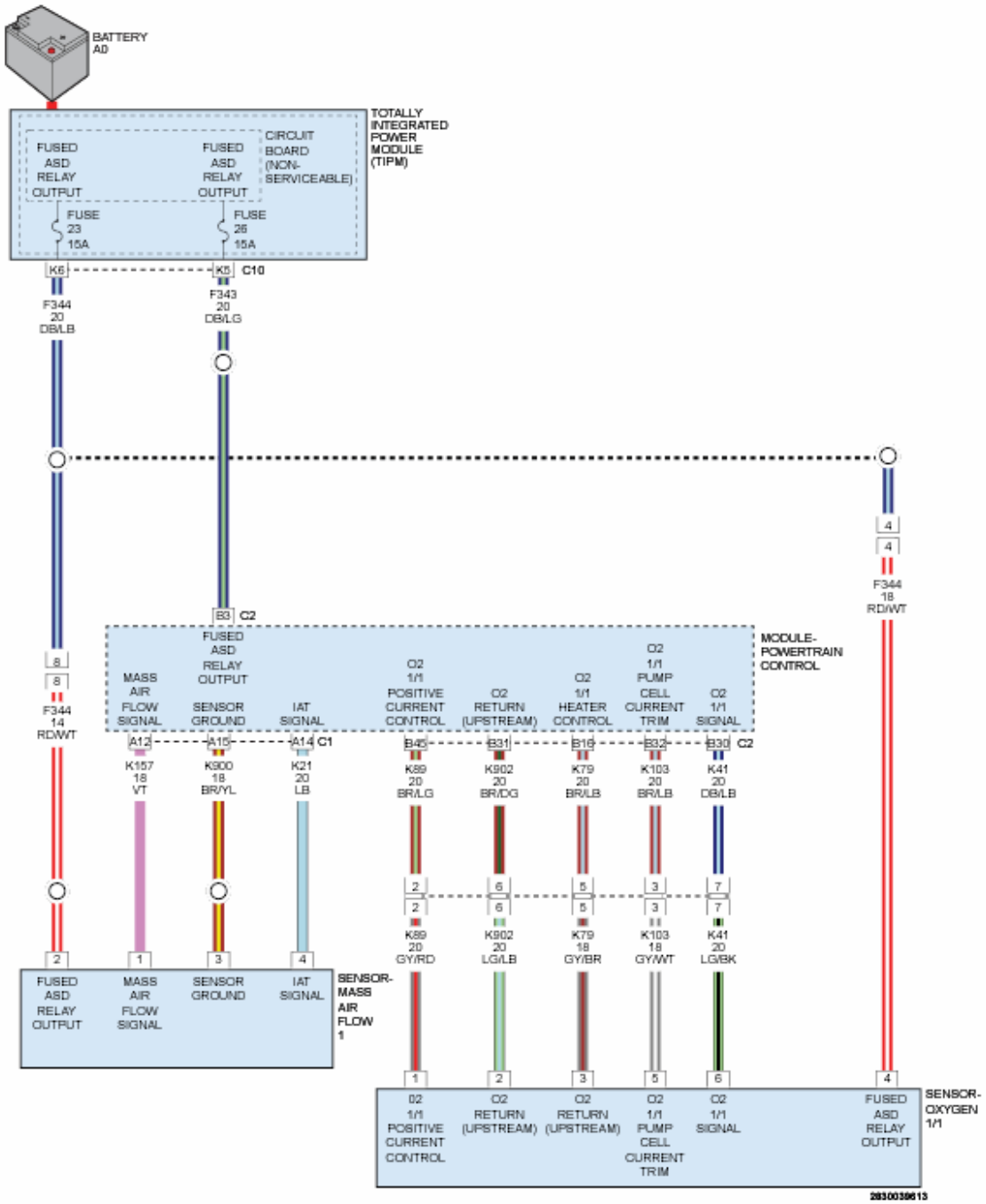

Fig. 141: Seat Track Position Sensors Circuit Schematic
Courtesy of CHRYSLER GROUP, LLC

For a complete wiring diagram, **refer to appropriate SYSTEM WIRING DIAGRAMS article** .

WHEN MONITORED

While the CAN bus ignition status is in IGN_RUN and the module is configured for a Passenger Seat Track Position Sensor, the module checks the sensor input

current ranges.

SET CONDITION

If the module detects that the sensor input is greater than or equal to 20.5 mA. This DTC may set when the current is between 17 mA and 20.5 mA.

POSSIBLE CAUSES

Possible Causes
PASSENGER SEAT HARNESS IMPROPERLY ROUTED
PASSENGER SEAT HARNESS WIRES CHAFED, PIERCED, PINCHED, PARTIALLY BROKEN
PASSENGER SEAT HARNESS CONNECTOR TERMINALS BROKEN, BENT, PUSHED OUT, SPREAD, CORRODED, CONTAMINATED
(R262) PASSENGER SEAT POSITION SENSOR DATA CIRCUIT SHORTED TO VOLTAGE
(R264) PASSENGER SEAT POSITION SENSOR VOLTAGE CIRCUIT SHORTED TO VOLTAGE
(R262) SEAT POSITION SENSOR DATA-PASSENGER CIRCUIT SHORTED TO (R264) SEAT POSITION SENSOR VOLTAGE-PASSENGER CIRCUIT
PASSENGER SEAT TRACK POSITION SENSOR
OCCUPANT RESTRAINT CONTROLLER (ORC)

DIAGNOSTIC TEST

1. **IDENTIFYING VEHICLE EQUIPMENT**

   NOTE: Make sure the battery is fully charged.

   1. Turn the ignition on.
   2. With the scan tool, read ORC active DTCs.

      Does the scan tool display active DTC: B1B94-PASSENGER SEAT TRACK POSITION SENSOR CIRCUIT HIGH?

      Yes

      - Go To 2

No

- Go To 8

2. **CHECK FOR ACTIVE INTERNAL FAULTS, IGNITION FAULTS, AND BATTERY FAULTS IN THE OCCUPANT RESTRAINT CONTROLLER (ORC)**
   1. With the scan tool, read Occupant Restraint Controller (ORC) DTCs.

      Does the scan tool display any active DTCs relating to internal faults, ignition faults, or battery faults?

      Yes

      - Perform the appropriate diagnostic procedure. Refer to **DIAGNOSIS AND TESTING**.

      No

      - Go To 3

3. **INSPECT PASSENGER SEAT HARNESS WIRES AND CONNECTORS**

   WARNING: **Turn the ignition off, disconnect the 12-volt battery and wait two minutes before proceeding. Failure to follow these instructions may result in possible serious or fatal injury.**

   1. Using the wiring diagram/schematic as a guide, inspect the passenger seat harness wiring and connectors. Look for chafed, pierced, pinched, or partially broken wires and broken, bent, pushed out, spread, corroded, or contaminated terminals.

      Are any of these conditions present?

      Yes

      NOTE: **Do not attempt to repair the Seat Harness. Replace the Seat Harness if the condition**

inspecting or testing for is present in the Seat Harness.

- Replace the passenger seat harness in accordance with the Service Information.
- Perform the AIRBAG SYSTEM VERIFICATION TEST. Refer to **STANDARD PROCEDURE** .

No

- Go To 4

4. **VERIFY THAT PASSENGER SEAT HARNESS IS ROUTED CORRECTLY**
   1. Verify that the Passenger Seat Harness is routed correctly.

      Is the Passenger Seat Harness routed correctly?

      Yes

      - Go To 5

      No

      - Reroute the Passenger Seat Harness as necessary.
      - Perform the AIRBAG SYSTEM VERIFICATION TEST. Refer to **STANDARD PROCEDURE** .

5. **CHECK FOR DTC B1B94-PASSENGER SEAT TRACK POSITION SENSOR CIRCUIT HIGH WITH PASSENGER SEAT TRACK POSITION SENSOR DISCONNECTED**

   WARNING: **Turn the ignition off, disconnect the 12-volt battery and wait two minutes before proceeding. Failure to follow these instructions may result in possible serious or fatal injury.**

   1. Disconnect the Passenger Seat Track Position Sensor connector.

      WARNING: **Turn the ignition on, then reconnect the**

12-volt battery and wait two minutes before proceeding. Failure to follow these instructions may result in possible serious or fatal injury.

2. Wait two minutes, and then with the scan tool, read ORC DTCs.

   Does the scan tool display: B1B94-PASSENGER SEAT TRACK POSITION SENSOR CIRCUIT HIGH?

   Yes

   - Go To 6

   No

   WARNING: **Turn the ignition off, disconnect the 12-volt battery and wait two minutes before proceeding. Failure to follow these instructions may result in possible serious or fatal injury.**

   - Replace the Passenger Seat Track Position Sensor in accordance with the service information.
   - Perform the AIRBAG SYSTEM VERIFICATION TEST. Refer to **STANDARD PROCEDURE** .

6. **CHECK (R262) PASSENGER SEAT POSITION SENSOR DATA CIRCUIT AND (R264) PASSENGER SEAT POSITION SENSOR VOLTAGE CIRCUIT FOR A SHORT TO VOLTAGE**

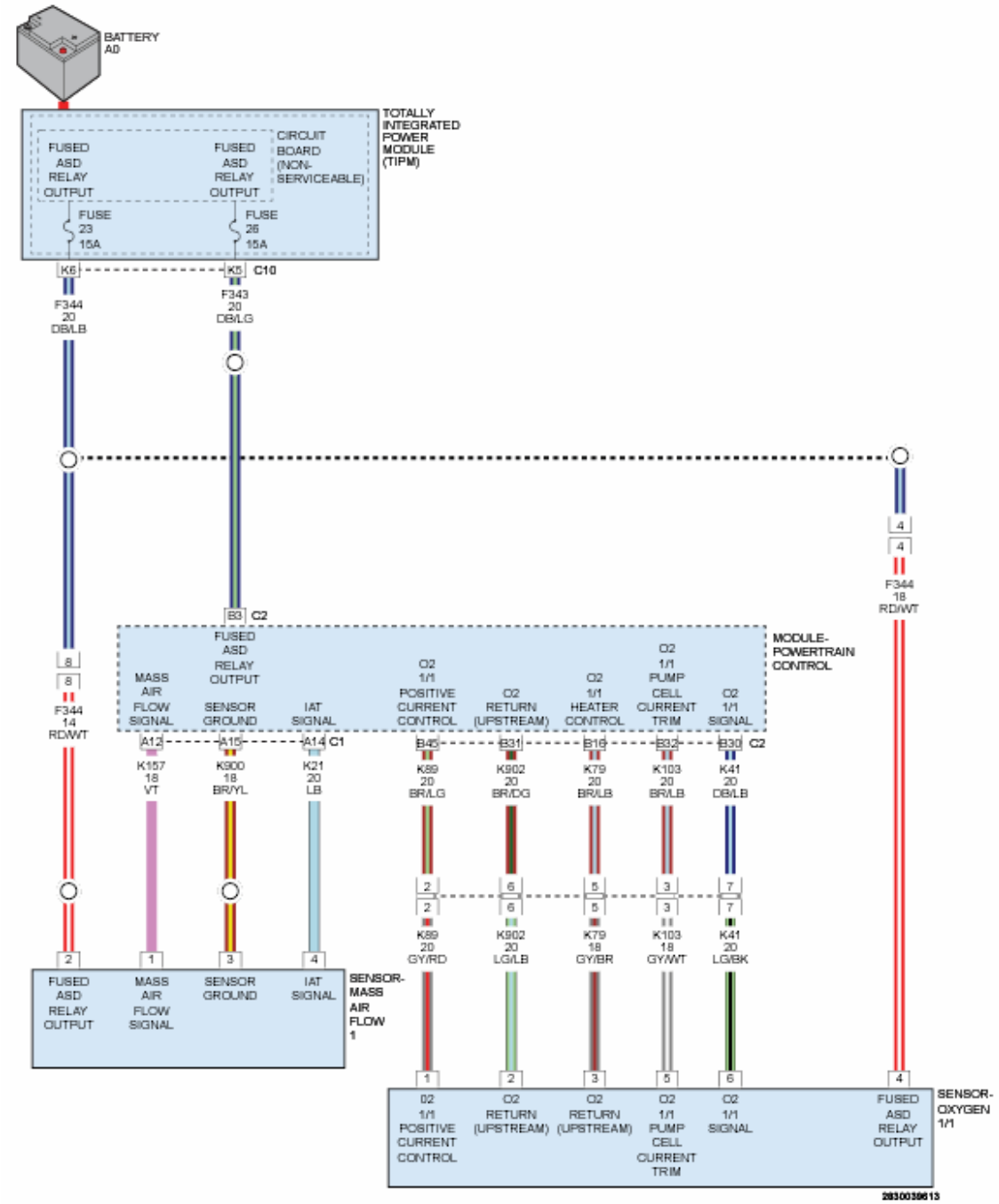

Fig. 142: Checking Passenger Seat Position Sensor Data Circuit & Passenger Seat Position Sensor Voltage Circuit For A Short To Voltage
Courtesy of CHRYSLER GROUP, LLC

WARNING: Turn the ignition off, disconnect the 12-volt battery and wait two minutes before proceeding. Failure to follow these instructions may result in possible serious or fatal injury.

1. Disconnect the both ORC connectors.

WARNING: Turn the ignition on, then reconnect the 12-volt battery and wait two minutes before proceeding. Failure to follow these instructions may result in possible serious or fatal injury.

2. Measure the voltage of the (R262) Passenger Seat Position Sensor Data circuit at the Passenger Seat Track Position Sensor connector.
3. Measure the voltage of the (R263) Passenger Seat Position Sensor Voltage circuit at the Passenger Seat Track Position Sensor connector.

Is the voltage above 0.2 of a volt on either circuit?

Yes

NOTE: Do not attempt to repair the Seat Harness. Replace the Seat Harness if the condition inspecting or testing for is present in the Seat Harness.

WARNING: Turn the ignition off, disconnect the 12-volt battery and wait two minutes before proceeding. Failure to follow these instructions may result in possible serious or fatal injury.

- Replace the Passenger Seat Harness in accordance with the Service Information.
- Perform the AIRBAG SYSTEM VERIFICATION TEST. Refer to **STANDARD PROCEDURE** .

No

- Go To 7

7. **CHECK (R262) PASSENGER SEAT POSITION SENSOR DATA CIRCUIT FOR A SHORT TO (R264) PASSENGER SEAT POSITION SENSOR VOLTAGE CIRCUIT**

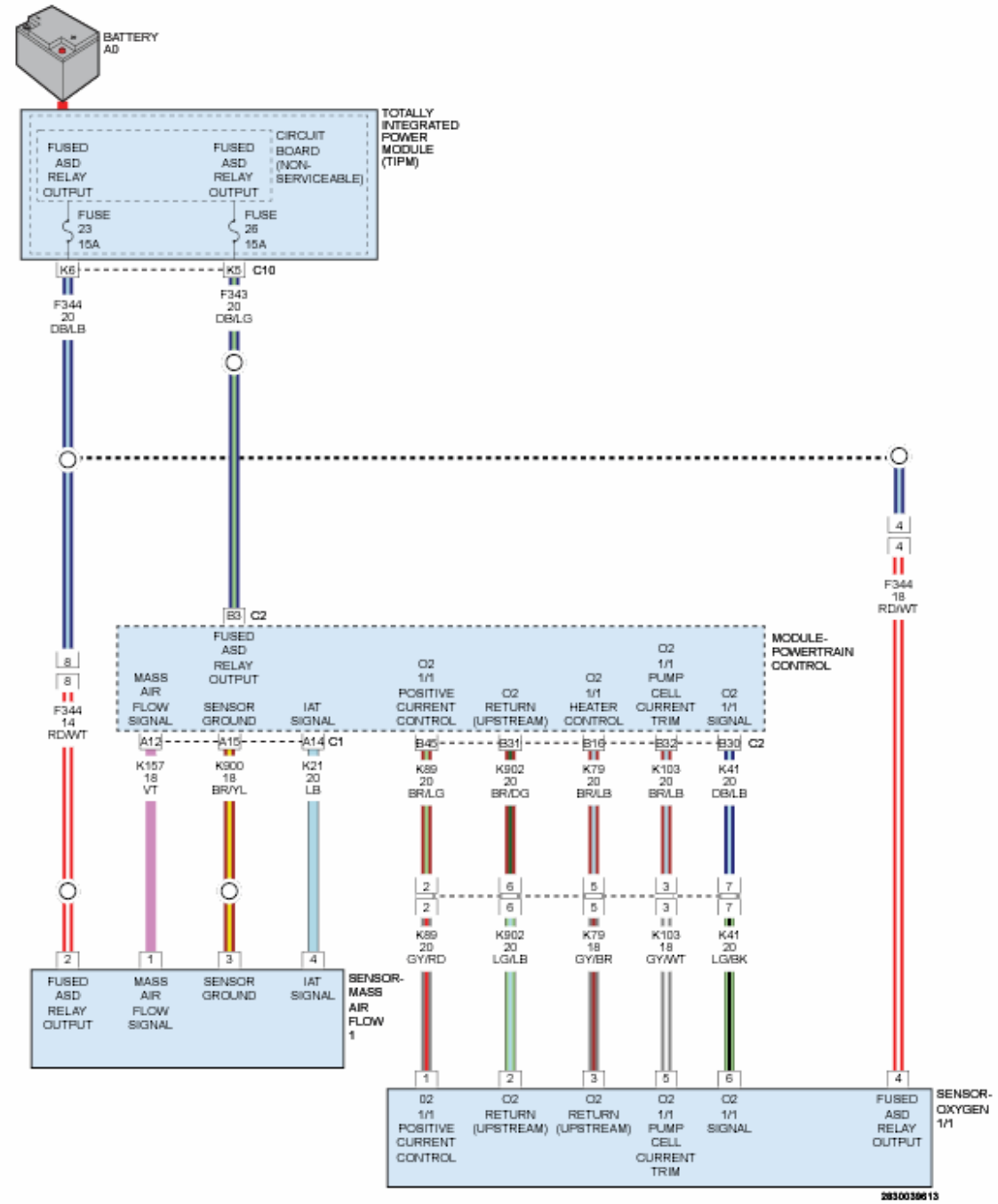

Fig. 143: Checking Passenger Seat Position Sensor Data Circuit For A Short To Passenger Seat Position Sensor Voltage Circuit
Courtesy of CHRYSLER GROUP, LLC

WARNING: Turn the ignition off, disconnect the 12-volt battery and wait two minutes before proceeding. Failure to follow these instructions may result in possible serious or fatal injury.

1. Measure the resistance between the (R262) Passenger Seat Position Sensor Data circuit and the (R264) Passenger Seat Position Sensor Voltage circuit in the Passenger Seat Track Position Sensor connector.

   Is the resistance below 10k Ohms?

   Yes

   NOTE: Do not attempt to repair the Seat Harness. Replace the Seat Harness if the condition inspecting or testing for is present in the Seat Harness.

   - Replace the passenger seat harness in accordance with the service information.
   - Perform the AIRBAG SYSTEM VERIFICATION TEST. Refer to **STANDARD PROCEDURE** .

   No

   - Replace the ORC in accordance with the Service information.
   - Perform the AIRBAG SYSTEM VERIFICATION TEST. Refer to **STANDARD PROCEDURE** .

8. **TEST FOR AN INTERMITTENT CONDITION**
   1. With the scan tool, record and erase all DTCs from the ORC.
   2. If any ACTIVE codes are present they must be resolved before diagnosing any stored codes.

      WARNING: **Turn the ignition off, disconnect the 12-volt battery and wait two minutes before proceeding. Failure to follow these instructions may result in possible serious or fatal injury.**

   3. Using the wiring diagram/schematic as a guide, inspect the wiring and connectors.
   4. Look for chafed, pierced, pinched, or partially broken wires and broken, bent, pushed out, spread, corroded, or contaminated terminals.

5. The following additional checks may assist you in identifying a possible intermittent problem.
6. Reconnect any disconnected components and harness connector.

WARNING: Turn the ignition on, then reconnect the 12-volt battery and wait two minutes before proceeding. Failure to follow these instructions may result in possible serious or fatal injury.

7. With the scan tool monitor active codes as you work through the following steps.

WARNING: Turn the ignition off, disconnect the 12-volt battery and wait two minutes before proceeding. Failure to follow these instructions may result in possible serious or fatal injury.

8. Wiggle the wiring harness and connectors of the related airbag circuit or component.
9. If only stored codes return continue the test until the problem area has been isolated.
10. In the previous steps you have attempted to recreate the conditions responsible for setting active DTC in question.

    Are any ACTIVE DTCs present?

    Yes

    - Perform the appropriate diagnostic procedure. Refer to **DIAGNOSIS AND TESTING**.

    No

    - No problem found at this time. Erase all codes before returning vehicle to customer.

B1B95-PASSENGER SEAT TRACK POSITION SENSOR CIRCUIT OPEN

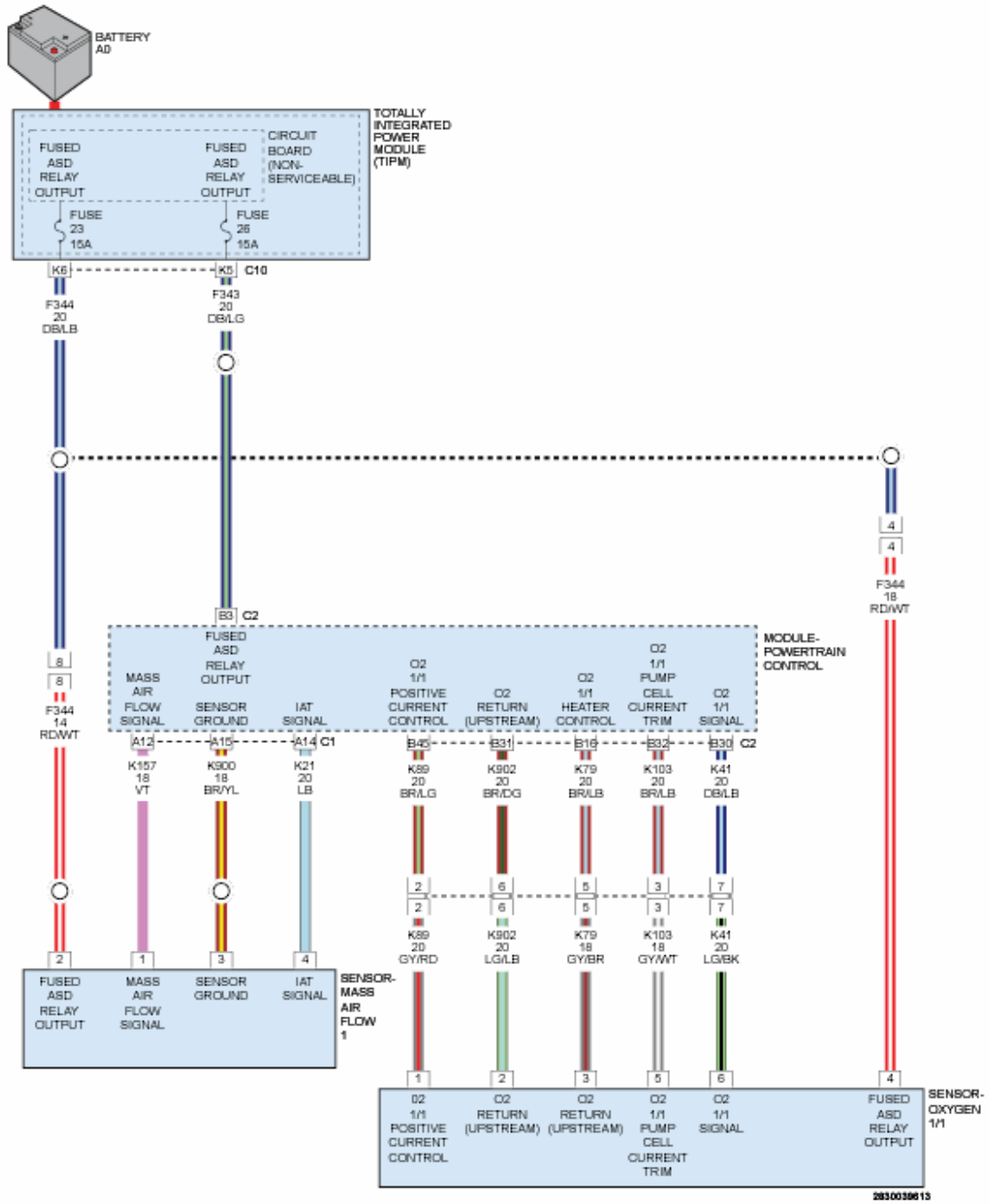

Fig. 144: Seat Track Position Sensors Circuit Schematic
Courtesy of CHRYSLER GROUP, LLC

For a complete wiring diagram, **refer to appropriate SYSTEM WIRING DIAGRAMS article** .

WHEN MONITORED

While the CAN bus ignition status is in IGN_RUN and the module is configured for a Seat Track Position Sensor, the module checks the sensor input current

ranges.

SET CONDITION

This DTC may set when the module detects that the sensor input current is below 1 mA.

POSSIBLE CAUSES

Possible Causes
PASSENGER SEAT HARNESS IMPROPERLY ROUTED
PASSENGER SEAT HARNESS WIRES CHAFED, PIERCED, PINCHED, PARTIALLY BROKEN
PASSENGER SEAT HARNESS CONNECTOR TERMINALS BROKEN, BENT, PUSHED OUT, SPREAD, CORRODED, CONTAMINATED
(R262) PASSENGER SEAT POSITION SENSOR DATA CIRCUIT SHORTED TO VOLTAGE
(R264) PASSENGER SEAT POSITION SENSOR VOLTAGE CIRCUIT SHORTED TO VOLTAGE
(R262) PASSENGER SEAT POSITION SENSOR DATA CIRCUIT SHORTED TO (R264) SEAT POSITION SENSOR VOLTAGE-PASSENGER CIRCUIT
PASSENGER SEAT TRACK POSITION SENSOR
OCCUPANT RESTRAINT CONTROLLER (ORC)

DIAGNOSTIC TEST

1. **CHECK FOR ACTIVE INTERNAL FAULTS, IGNITION FAULTS, AND BATTERY FAULTS IN THE OCCUPANT RESTRAINT CONTROLLER (ORC)**
   1. With the scan tool, read Occupant Restraint Controller (ORC) DTCs.

      Does the scan tool display any active DTCs relating to internal faults, ignition faults, or battery faults?

      Yes

      - Perform the appropriate diagnostic procedure. Refer to **DIAGNOSIS AND TESTING**.

No

- Go To 2

2. **VERIFY THAT DTC B1B95-PASSENGER SEAT TRACK POSITION SENSOR CIRCUIT OPEN IS ACTIVE**

   Does the scan tool display active: B1B95-PASSENGER SEAT TRACK POSITION SENSOR CIRCUIT OPEN?

   Yes

   - Go To 3

   No

   - Go To 8

3. **INSPECT PASSENGER SEAT HARNESS WIRES AND CONNECTORS**

   WARNING: Turn the ignition off, disconnect the 12-volt battery and wait two minutes before proceeding. Failure to follow these instructions may result in possible serious or fatal injury.

   1. Using the wiring diagram/schematic as a guide, inspect the Passenger Seat Harness wiring and connectors. Look for chafed, pierced, pinched, or partially broken wires and broken, bent, pushed out, spread, corroded, or contaminated terminals.

      Are any of these conditions present?

      Yes

      NOTE: Do not attempt to repair the Seat Harness. Replace the Seat Harness if any of these conditions exist

      - Replace the Passenger Seat Harness in accordance with the Service Information.

- Perform the AIRBAG SYSTEM VERIFICATION TEST. Refer to **STANDARD PROCEDURE** .

No

- Go To 4

4. **VERIFY THAT PASSENGER SEAT HARNESS IS ROUTED CORRECTLY**
   1. Verify that the Passenger Seat Harness is routed correctly.

      Is the Passenger Seat Harness routed correctly?

      Yes

      - Go To 5

      No

      - Reroute the Passenger Seat Harness as necessary.
      - Perform the AIRBAG SYSTEM VERIFICATION TEST. Refer to **STANDARD PROCEDURE** .

5. **CHECK FOR DTC B1B95-PASSENGER SEAT TRACK POSITION SENSOR CIRCUIT OPEN WITH PASSENGER SEAT TRACK POSITION SENSOR DISCONNECTED**

   WARNING: **Turn the ignition off, disconnect the 12-volt battery and wait two minutes before proceeding. Failure to follow these instructions may result in possible serious or fatal injury.**

   1. Disconnect the Passenger Seat Track Position Sensor connector.

      WARNING: **Turn the ignition on, then reconnect the 12-volt battery and wait two minutes before proceeding. Failure to follow these instructions may result in possible serious or fatal injury.**

2. Wait two minutes, and then with the scan tool, read ORC DTCs.

   Does the scan tool display: B1B95-PASSENGER SEAT TRACK POSITION SENSOR CIRCUIT OPEN?

   Yes

   - Go To 6

   No

   WARNING: Turn the ignition off, disconnect the 12-volt battery and wait two minutes before proceeding. Failure to follow these instructions may result in possible serious or fatal injury.

   - Replace the Passenger Seat Track Position Sensor in accordance with the service information.
   - Perform the AIRBAG SYSTEM VERIFICATION TEST. Refer to **STANDARD PROCEDURE** .

6. **CHECK (R262) PASSENGER SEAT POSITION SENSOR DATA CIRCUIT AND (R264) PASSENGER SEAT POSITION SENSOR VOLTAGE CIRCUIT FOR A SHORT TO VOLTAGE**

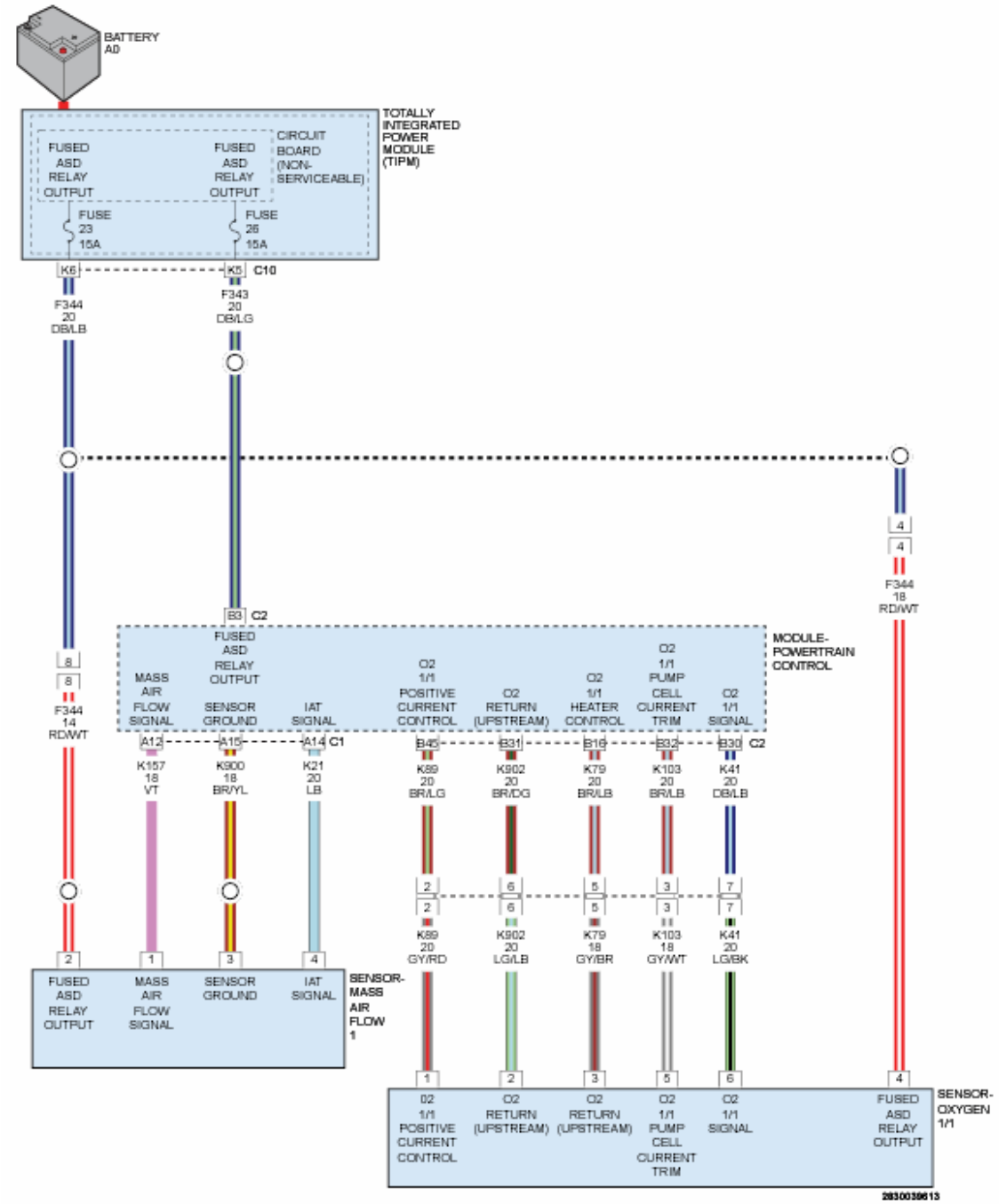

Fig. 145: Checking Passenger Seat Position Sensor Data Circuit & Passenger Seat Position Sensor Voltage Circuit For A Short To Voltage
Courtesy of CHRYSLER GROUP, LLC

WARNING: Turn the ignition off, disconnect the 12-volt battery and wait two minutes before proceeding. Failure to follow these instructions may result in possible serious or fatal injury.

1. Disconnect the ORC connectors.

WARNING: Turn the ignition on, then reconnect the 12-volt battery and wait two minutes before proceeding. Failure to follow these instructions may result in possible serious or fatal injury.

2. Measure the voltage of the (R262) Passenger Seat Position Sensor Data circuit between the Passenger Seat Track Position Sensor connector and ground.
3. Measure the voltage of the (R264) Passenger Seat Position Sensor Voltage circuit between the Passenger Seat Track Position Sensor connector and ground.

Is the voltage above 0.2 of a volt on either circuit?

Yes

NOTE: Do not attempt to repair the Seat Harness. Replace the Seat Harness if any of these conditions exist

WARNING: Turn the ignition off, disconnect the 12-volt battery and wait two minutes before proceeding. Failure to follow these instructions may result in possible serious or fatal injury.

- Replace the Passenger Seat Harness in accordance with the Service Information.
- Perform the AIRBAG SYSTEM VERIFICATION TEST. Refer to **STANDARD PROCEDURE** .

No

- Go To 7

7. **CHECK (R262) SEAT POSITION SENSOR DATA-PASSENGER CIRCUIT FOR A SHORT TO (R264) SEAT POSITION SENSOR**

VOLTAGE-PASSENGER CIRCUIT

WARNING: Turn the ignition off, disconnect the 12-volt battery and wait two minutes before proceeding. Failure to follow these instructions may result in possible serious or fatal injury.

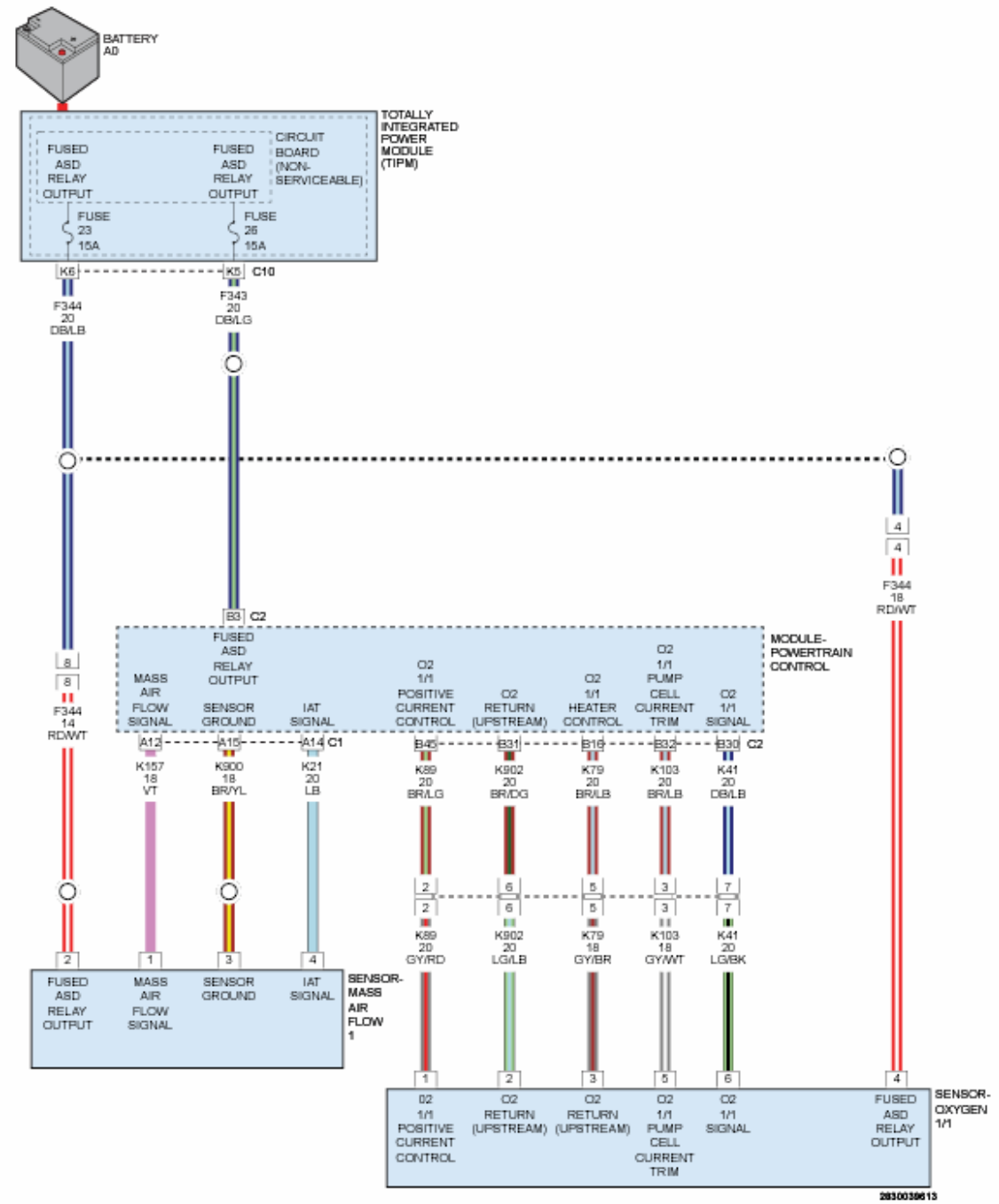

Fig. 146: Checking Passenger Seat Position Sensor Data Circuit For A

Short To Passenger Seat Position Sensor Voltage Circuit
Courtesy of CHRYSLER GROUP, LLC

1. Measure the resistance between the (R262) Passenger Seat Position Sensor Data circuit and the (R264) Passenger Seat Position Sensor Voltage circuit in the Passenger Seat Track Position Sensor connector.

   Is the resistance below 10k Ohms?

   Yes

   NOTE: Do not attempt to repair the Seat Harness. Replace the Seat Harness if any of these conditions exist

   - Replace the Passenger Seat Harness in accordance with the service information.
   - Perform the AIRBAG SYSTEM VERIFICATION TEST. Refer to **STANDARD PROCEDURE** .

   No

   - Replace the ORC in accordance with the Service information.
   - Perform the AIRBAG SYSTEM VERIFICATION TEST. Refer to **STANDARD PROCEDURE** .

8. **TEST FOR AN INTERMITTENT CONDITION**
   1. With the scan tool, record and erase all DTCs from the ORC.
   2. If any ACTIVE codes are present they must be resolved before diagnosing any stored codes.

      WARNING: **Turn the ignition off, disconnect the 12-volt battery and wait two minutes before proceeding. Failure to follow these instructions may result in possible serious or fatal injury.**

   3. Using the wiring diagram/schematic as a guide, inspect the wiring and connectors.

4. Look for chafed, pierced, pinched, or partially broken wires and broken, bent, pushed out, spread, corroded, or contaminated terminals.
5. The following additional checks may assist you in identifying a possible intermittent problem.
6. Reconnect any disconnected components and harness connector.

WARNING: Turn the ignition on, then reconnect the 12-volt battery and wait two minutes before proceeding. Failure to follow these instructions may result in possible serious or fatal injury.

7. With the scan tool monitor active codes as you work through the following steps.

WARNING: Maintain a safe distance from all airbags while performing the following steps. Failure to follow these instructions may result in possible serious or fatal injury.

8. Wiggle the wiring harness and connectors of the related airbag circuit or component.
9. If only stored codes return continue the test until the problem area has been isolated.
10. In the previous steps you have attempted to recreate the conditions responsible for setting active DTC in question.

Are any ACTIVE DTCs present?

Yes

- Perform the appropriate diagnostic procedure. Refer to **DIAGNOSIS AND TESTING**.

No

- No problem found at this time. Erase all codes before returning vehicle to customer.

B1B97-PASSENGER SEAT TRACK POSITION SENSOR CONFIGURATION MISMATCH

For a complete wiring diagram **refer to appropriate SYSTEM WIRING DIAGRAMS article** .

WHEN MONITORED

With the ignition on the ORC monitors the Seat Track Position Sensors circuits.

SET CONDITION

If the ORC detects current on the Seat Track Position Sensor circuits and the module is not configured for STPS.

POSSIBLE CAUSES

Possible Causes
SENSORS
WIRING
OCCUPANT RESTRAINT CONTROLLER (ORC)

DIAGNOSTIC TEST

1. **IDENTIFYING VEHICLE EQUIPMENT**

   NOTE: Ensure the battery is fully charged.

   1. Turn the ignition on.
   2. With the scan tool, read ORC active DTCs.

      Does the scan tool display active: B1B97-PASSENGER SEAT TRACK POSITION SENSOR CONFIGURATION MISMATCH?

      Yes

      - Go To 2

      No

      - Repair complete.

2. **CHECK FOR ACTIVE INTERNAL FAULTS, IGNITION FAULTS, AND BATTERY FAULTS IN THE OCCUPANT RESTRAINT**

CONTROLLER (ORC)

1. With the scan tool, read Occupant Restraint Controller (ORC) DTCs.

   Does the scan tool display any active DTCs relating to internal faults, ignition faults, or battery faults?

   Yes

   - Perform the appropriate DTC. Refer to **DIAGNOSIS AND TESTING**.

   No

   - Go To 3

3. **VERIFY THAT B1B97-PASSENGER SEAT TRACK POSITION SENSOR CONFIGURATION MISMATCH IS ACTIVE**
   1. With the scan tool, erase ORC DTCs.
   2. Turn the ignition off, wait 10 seconds and then turn the ignition on.
   3. Wait 2 minutes, and then with the scan tool, read ORC DTCs.

      Does the scan tool display active: B1B97-PASSENGER SEAT TRACK POSITION SENSOR CONFIGURATION MISMATCH?

      Yes

      - Go To4

      No

      - Perform the AIRBAG SYSTEM VERIFICATION TEST. Refer to **STANDARD PROCEDURE** .

4. **VERIFY WIRING**
   1. Turn the ignition off.
   2. Inspect the passenger seat wiring for Seat Position Sensors.

      Are Seat Position Sensor(s) present?

      Yes

WARNING: Turn the ignition off, disconnect the 12-volt battery and wait two minutes before proceeding. Failure to follow these instructions may result in possible serious or fatal injury.

WARNING: If the Occupant Restraint Controller (ORC) is dropped at any time, it must be replaced. Failure to follow these instructions may result in possible serious or fatal injury.

- Replace the ORC in accordance with the Service Information.
- Perform the AIRBAG SYSTEM VERIFICATION TEST. Refer to **STANDARD PROCEDURE** .

No

- Perform the AIRBAG SYSTEM VERIFICATION TEST. Refer to **STANDARD PROCEDURE** .

2014 RESTRAINTS

Occupant Restraint Controller (ORC) - Electrical Diagnostics - Compass & Patriot

DIAGNOSIS AND TESTING

B1BA5-AIRBAG SQUIB CONFIGURATION MISMATCH

For a complete wiring diagram, **refer to appropriate SYSTEM WIRING DIAGRAMS article** .

WHEN MONITORED

With the ignition on, the Occupant Restraint Controller (ORC) checks for Driver Knee Blocker, Curtain Side Airbag, or Thorax (Seat) Airbag components and compares the results against the ORC component configuration.

SET CONDITION

The DTC will be set active, if any Driver Knee Blocker, Curtain Side Airbag, or Thorax (Seat) Airbag components are present and the ORC is not configured for that component.

POSSIBLE CAUSES

Possible Causes
POWERTRAIN CONTROL MODULE (PCM)
TOTALLY INTEGRATED POWER MODULE (TIPM)
OCCUPANT RESTRAINT CONTROLLER (ORC)

DIAGNOSTIC TEST

1. **VERIFY THAT DTC B1BA5 AIRBAG SQUIB CONFIGURATION MISMATCH IS ACTIVE**

   NOTE: Ensure the battery is fully charged.

   1. Turn the ignition on.
   2. With the scan tool, read ORC DTCs.

      Does the scan tool display active: B1BA5-AIRBAG SQUIB CONFIGURATION MISMATCH?

Yes

- Go To 2

No

- Go To 4

2. **CHECK ORC PART NUMBER**
   1. With the scan tool, read the ORC part number.

      Is the part number correct for the vehicle?

      Yes

      - Go To3

      No

      - Replace the ORC in accordance with Service Information.
      - Perform the AIRBAG SYSTEM VERIFICATION TEST. Refer to **STANDARD PROCEDURE** .

3. **CHECK VIN WITH SCAN TOOL**

   NOTE: The PCM provides the VIN and the TIPM send the configuration message over the BUS.

   1. With the scan tool, read the VIN.

      Is the correct VIN displayed?

      Yes

      - Replace the Totally integrated Power Module (TIPM) in accordance with Service Information.
      - Perform the TOTALLY INTEGRATED POWER MODULE VERIFICATION TEST. Refer to **STANDARD PROCEDURE** .
      - Perform the AIRBAG SYSTEM VERIFICATION TEST. Refer to **STANDARD PROCEDURE** .

      No

- Replace the Powertrain Control Module (PCM) in accordance with Service Information.
- Perform the PCM VERIFICATION TEST. Refer to **POWERTRAIN VERIFICATION TEST** .
- Perform the AIRBAG SYSTEM VERIFICATION TEST. Refer to **STANDARD PROCEDURE** .

4. **TEST FOR INTERMITTENT CONDITION**
   1. With the scan tool, record and erase all DTCs from all Airbag modules.
   2. If any ACTIVE codes are present they must be resolved before diagnosing any stored codes.

      WARNING: **Turn the ignition off, disconnect the 12-volt battery and wait two minutes before proceeding. Failure to follow these instructions may result in possible serious or fatal injury.**

   3. Using the wiring diagram/schematic as a guide, inspect the wiring and connectors.
   4. Look for chafed, pierced, pinched, or partially broken wires and broken, bent, pushed out, spread, corroded, or contaminated terminals.
   5. The following additional checks may assist you in identifying a possible intermittent problem.
   6. Reconnect any disconnected components and harness connector.

      WARNING: **Turn the ignition on, then reconnect the 12-volt battery and wait two minutes before proceeding. Failure to follow these instructions may result in possible serious or fatal injury.**

   7. With the scan tool, monitor active codes as you work through the following steps.

      WARNING: **Maintain a safe distance from all airbags while performing the following steps. Failure to follow these instructions may**

result in possible serious or fatal injury.

8. Wiggle the wiring harness and connectors of the related airbag circuit or component.
9. If only stored codes return, continue the test until the problem area has been isolated.
10. In the previous steps you have attempted to recreate the conditions responsible for setting the active DTC in question.

    Does the scan tool display any ACTIVE DTCs?

    Yes

    - Perform the appropriate diagnostic procedure. Refer to **DTC INDEX** .

    No

    - No problem found at this time. Erase all codes before returning vehicle to customer.

B1BB8-SRS WARNING INDICATOR STATUS MISMATCH

For a complete wiring diagram **refer to appropriate SYSTEM WIRING DIAGRAMS article** .

WHEN MONITORED

After the Instrument Cluster bulb check is completed, the ORC compares the lamp request by the ORC (On or Off) and the Lamp On request by the Instrument Cluster (On or Off) Can bus messages. Each message is transmitted one time per second or when a change in the lap state occurs.

SET CONDITION

If the lamp request by the ORC (On or Off), and the Lamp On by the Instrument Cluster (On or Off), messages do not match, this code will set.

POSSIBLE CAUSES

Possible Causes

OCCUPANT RESTRAINT CONTROLLER, INSTRUMENT CLUSTER MESSAGE MISMATCH
INSTRUMENT CLUSTER
OCCUPANT RESTRAINT CONTROLLER (ORC)

DIAGNOSTIC TEST

1. **CHECK FOR AN ACTIVE DTC B1BB8-SRS WARNING INDICATOR STATUS MISMATCH**

   NOTE: Ensure the battery is fully charged.

   1. Turn the ignition on, then off, and then on again.
   2. With the scan tool, read Occupant Restraint Controller (ORC) DTCs.

      Does the scan tool display active: B1BB8-SRS WARNING INDICATOR STATUS MISMATCH?

      Yes

      - Go To 2

      No

      - Go To 5
2. **CHECK FOR ACTIVE INSTRUMENT CLUSTER DTCs**
   1. With the scan tool, read Instrument Cluster DTCs.

      Does the scan tool display and active Instrument Cluster DTCs?

      Yes

      - Refer to **DTC INDEX** for problems related to the Instrument Cluster.
      - Perform the AIRBAG SYSTEM VERIFICATION TEST. Refer to **STANDARD PROCEDURE** .

      No

      - Go To 3

3. **CHECK THE ORC AND INSTRUMENT CLUSTER FOR LAMP STATUS**
   1. With the scan tool view the Instrument Cluster Data Display.
   2. Cycle the ignition key and observe the SRS Indicator Lamp Request status (Set/Not Set) during the Instrument Cluster bulb check.
   3. With the scan tool view the ORC Data Display.
   4. Select SRS Indicator Lamp Status from Bussed Inputs and sect SRS Indicator Lamp request from the Bussed Outputs.
   5. Cycle the ignition key and observe the Status of each during the Instrument Cluster bulb check.

   Did the Data Display information match each other?

   Yes

   - Go To 4

   No

   - Replace the Instrument Cluster in accordance with the service information.
   - Perform the AIRBAG SYSTEM VERIFICATION TEST. Refer to **STANDARD PROCEDURE** .
4. **REPLACE THE OCCUPANT RESTRAINT CONTROLLER**

   WARNING: **Turn the ignition off, disconnect the 12-volt battery and wait two minutes before proceeding. Failure to follow these instructions may result in possible serious or fatal injury.**

   WARNING: **If the Occupant Restraint Controller (ORC) is dropped at any time, it must be replaced. Failure to follow these instructions may result in possible serious or fatal injury.**

If there are no possible causes remaining, view repair.

Repair

- Replace the Occupant Restraint Controller in accordance with the service information.
- Perform the AIRBAG SYSTEM VERIFICATION TEST. Refer to **STANDARD PROCEDURE** .

5. **TEST FOR INTERMITTENT CONDITION**
   1. With the scan tool, record and erase all DTCs from all Airbag modules.
   2. If any ACTIVE codes are present they must be resolved before diagnosing any stored codes.

      WARNING: **Turn the ignition off, disconnect the 12-volt battery and wait two minutes before proceeding. Failure to follow these instructions may result in possible serious or fatal injury.**

   3. Using the wiring diagram/schematic as a guide, inspect the wiring and connectors.
   4. Look for chafed, pierced, pinched, or partially broken wires and broken, bent, pushed out, spread, corroded, or contaminated terminals.
   5. The following additional checks may assist you in identifying a possible intermittent problem.
   6. Reconnect any disconnected components and harness connector.

      WARNING: **Turn the ignition on, then reconnect the 12-volt battery and wait two minutes before proceeding. Failure to follow these instructions may result in possible serious or fatal injury.**

   7. With the scan tool, monitor active codes as you work through the following steps.

      WARNING: **Maintain a safe distance from all airbags while performing the following steps. Failure to follow these instructions may**

result in possible serious or fatal injury.

8. Wiggle the wiring harness and connectors of the related airbag circuit or component.
9. If only stored codes return, continue the test until the problem area has been isolated.
10. In the previous steps you have attempted to recreate the conditions responsible for setting the active DTC in question.

    Does the scan tool display any ACTIVE DTCs?

    Yes

    - Perform the appropriate DTC. Refer to **DTC INDEX** .

    No

    - No problem found at this time. Erase all codes before returning vehicle to customer.

B1BD0-ROLL OVER INTERNAL

WHEN MONITORED

With the ignition on. The module's on board diagnostics continuously performs internal circuit tests.

SET CONDITION

This DTC will set if the module identifies an out of range ORC Roll Over Internal circuit.

POSSIBLE CAUSES

Possible Causes
OCCUPANT RESTRAINT CONTROLLER (ORC)

DIAGNOSTIC TEST

REPLACE OCCUPANT RESTRAINT CONTROLLER

1. Turn the ignition on.

WARNING: Turn the ignition off disconnect the 12-volt battery and wait two minutes before proceeding. Failure to follow these instructions may result in possible serious or fatal injury.

WARNING: If the Occupant Restraint Controller is dropped at any time, it must be replaced. Failure to take proper precautions could result in accidental airbag deployment and serious or fatal injury.

When this code is set, view repair.

Repair

- Replace the Occupant Restraint Controller in accordance with the Service Information.
- Perform the AIRBAG SYSTEM VERIFICATION TEST. Refer to **STANDARD PROCEDURE** .

B1C12-DRIVER ACTIVE HEADREST CONTROL CIRCUIT LOW

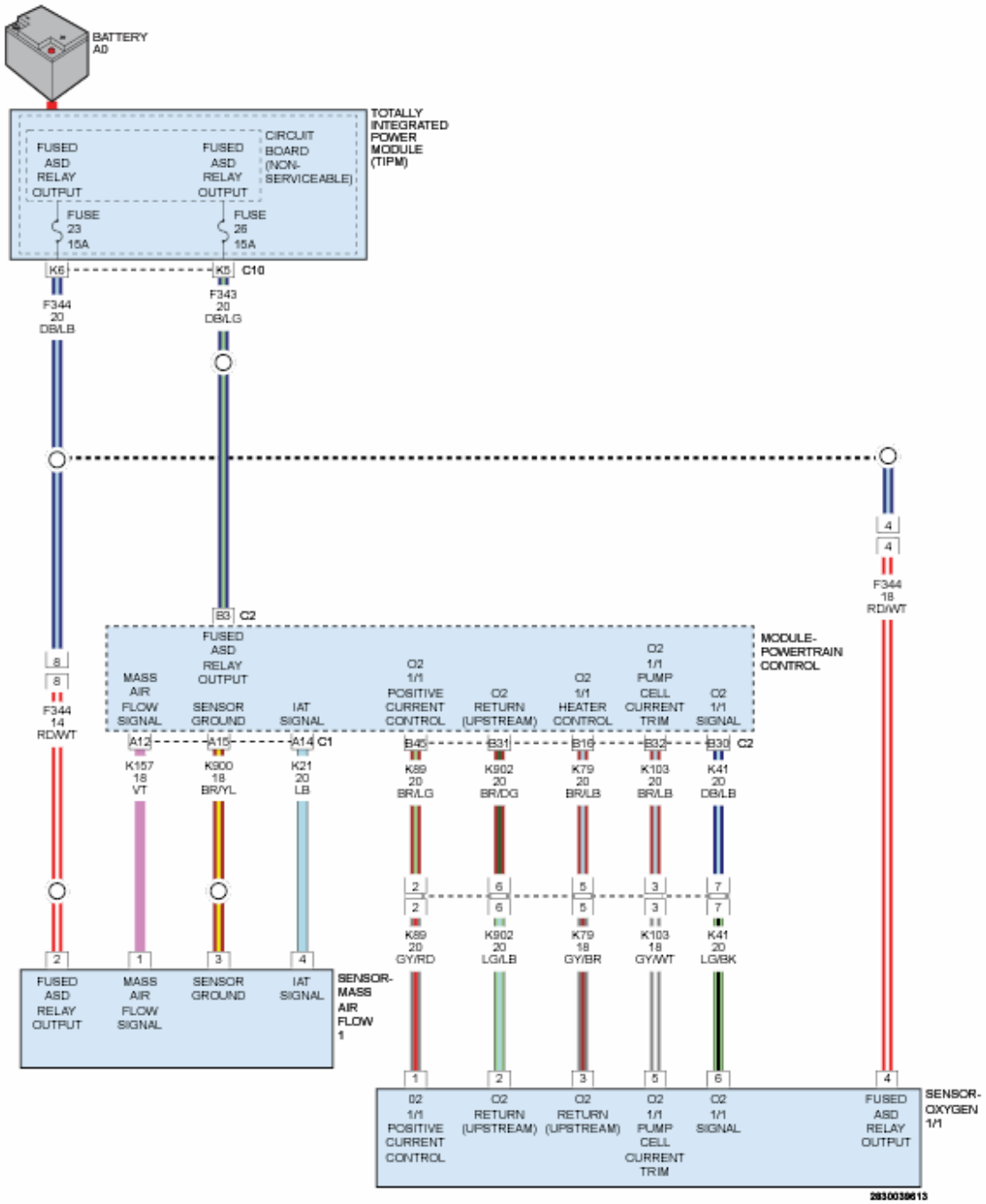

Fig. 1: Active Headrests Circuit Schematic
Courtesy of CHRYSLER GROUP, LLC

For a complete wiring diagram, **refer to appropriate SYSTEM WIRING DIAGRAMS article** .

NOTE: If this code is setting on a right hand Drive Vehicle (RHD) follow the diagnostic procedure for (whatever the BXXXX-Passenger Active Headrest Control Circuit Low).

THEORY OF OPERATION

The Driver Active Headrest signal circuit is driven by a solenoid that also uses a diode in parallel. The single electrical component of the AHR (Active Headrest) unit is the latch-release solenoid. The solenoid is connected by a 2 way pigtail wire and harness connector. The pigtail wire and 2 way connector are routed through the center of one of the headrest support posts and down through the guide sleeve to the interior of the seat back, where it connects to the seat wire harness. The solenoid is grounded at an independent dedicated ground. The AHR components itself cannot be repaired. If damaged or ineffective, the AHR (Active Headrest) must be replaced as a new assembly. If upon inspection the AHR has deployed it can be reset following the proper reset method. if the already deployed Driver or Passenger AHR are latched in the locked position please see the scan tool miscellaneous functions to set the latch in the unlock or deployed position. Refer to **RESTRAINT, ACTIVE HEAD, STANDARD PROCEDURE** . Please be very observant and careful, the scan tool should never be used to actually deploy a known good non-deployed Driver or Passenger AHR.

WHEN MONITORED

The Occupant Restraint Controller (ORC) continuously communicates with the Active Driver Head Restraint over the (R676) Active Head Restraint 1st Row Driver Signal circuit. The Driver Active Head Restraint communication and on board diagnostics are powered by the ORC signal.

SET CONDITION

This code will set, if the ORC detects low voltage on the (R676) Driver Active Head Restraint Solenoid Signal circuit.

POSSIBLE CAUSES

Possible Causes
(R676) DRIVER ACTIVE HEAD RESTRAINT SIGNAL SHORTED TO GROUND DRIVER ACTIVE HEAD RESTRAINT OCCUPANT RESTRAINT CONTROLLER (ORC)

DIAGNOSTIC TEST

1. **VERIFY ACTIVE DTC**

   NOTE: Make sure the battery is fully charged.

   1. Turn the ignition on.
   2. With the scan tool, read the ORC DTCs

      Does the scan tool display active B1C12-DRIVER ACTIVE HEADREST CONTROL CIRCUIT LOW DTC?

      Yes

      - Go To 2

      No

      - Perform the AIRBAG SYSTEM INTERMITTENT TEST. Refer to **STANDARD PROCEDURE** .

2. **CHECK FOR A SHORTED ACTIVE HEAD REST CIRCUIT IN DRIVER ACTIVE HEAD REST**

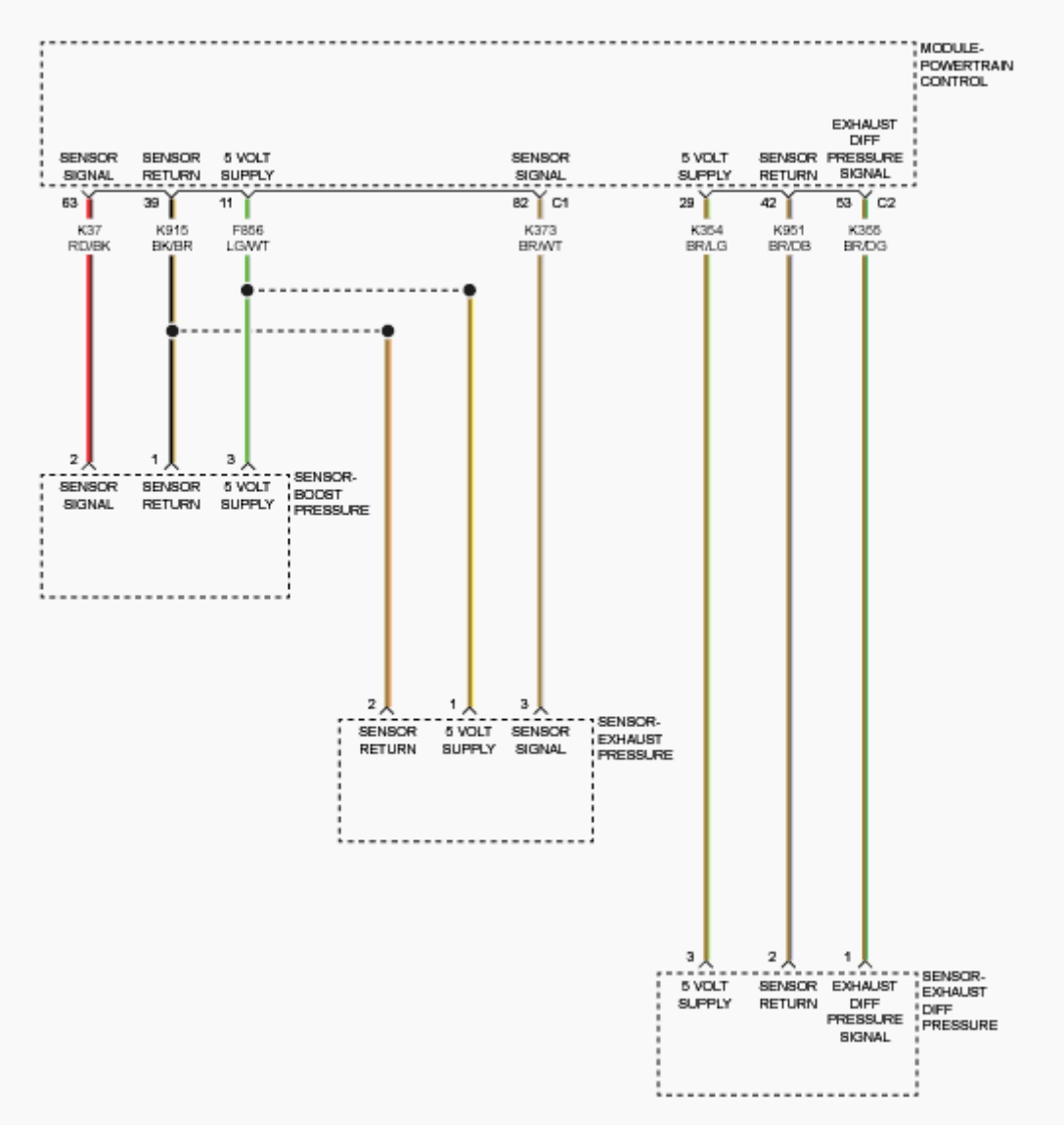

Fig. 2: Checking For Shorted Active Head Rest Circuit
Courtesy of CHRYSLER GROUP, LLC

WARNING: Turn the ignition off disconnect the 12-volt battery and wait two minutes before proceeding. Failure to follow these instructions may result in possible serious or fatal injury.

1. Access the Driver Active Head Rest harness connector located in the driver seatback jumper harness.
2. Disconnect the Driver Active Headrest harness connectors.

NOTE: Check the connectors - Clean and repair as

necessary.

NOTE: Please use the Active Head Rest Load Tool (special tool #10253, Tester, AHR Load) in testing the present status of the AHR signal circuit.

3. Connect the AHR Load Tool (special tool #10253, Tester, AHR Load) to the driver AHR seatback jumper harness connector going into the seatback and under the seat. Not into the driver AHR component harness.

WARNING: Turn the ignition on, then reconnect the 12-volt battery and wait two minutes before proceeding. Failure to follow these instructions may result in possible serious or fatal injury.

4. With the scan tool, read the active ORC DTCs.

   Does the scan tool display: B1C12-DRIVER ACTIVE HEADREST CONTROL CIRCUIT LOW?

   Yes

   - Go To 3

   No

WARNING: Turn the ignition off disconnect the 12-volt battery and wait two minutes before proceeding. Failure to follow these instructions may result in possible serious or fatal injury.

- Replace the Driver Active Head Rest in accordance with the Service Information. Refer to **HEADREST, REMOVAL** .

3. **CHECK THE (R676) ACTIVE HEAD RESTRAINT 1ST ROW DRIVER SIGNAL CIRCUIT HARNESS FOR A SHORT TO GROUND**

NOTE: The AHR connectors carry a shorting bar that should set a high code upon disconnecting the AHR harness connectors.

WARNING: Turn the ignition off disconnect the 12-volt battery and wait two minutes before proceeding. Failure to follow these instructions may result in possible serious or fatal injury.

1. Access the Driver Active Headrest connector located in the driver seat back.
2. Disconnect the Driver Active Headrest harness connector.

WARNING: Turn the ignition on, then reconnect the 12-volt battery and wait two minutes before proceeding. Failure to follow these instructions may result in possible serious or fatal injury.

Does the scan tool display active B1C13-DRIVER ACTIVE HEADREST CONTROL CIRCUIT HIGH?

Yes

- Turn the Ignition off.

WARNING: Turn the ignition off disconnect the 12-volt battery and wait two minutes before proceeding. Failure to follow these instructions may result in possible serious or fatal injury.

-
- Connect the Driver Active Headrest harness connector.

WARNING: Turn the ignition on, then reconnect the 12-volt battery and wait two

minutes before proceeding. Failure to follow these instructions may result in possible serious or fatal injury.

-
- Wait 15 seconds before turning the Ignition On.
- Use the scan tool and erase the ORC stored codes.

NOTE: This forces the ORC module into a reset diagnostic mode to check for Active ORC DTCs.

-
- Turn the ignition Off. Wait 15 seconds before turning the ignition On.
- Wait one minute and read active codes.
- If the B1C12-Driver Active Headrest Control Circuit Low DTC becomes active, replace the Driver Active Headrest in accordance with the Service Information. Refer to **HEADREST, REMOVAL** .

No

- Go To 4

4. **CHECK THE (R676) ACTIVE HEAD RESTRAINT 1ST ROW DRIVER SIGNAL CIRCUIT HARNESS FOR SHORT TO GROUND IN THE BODY HARNESS**

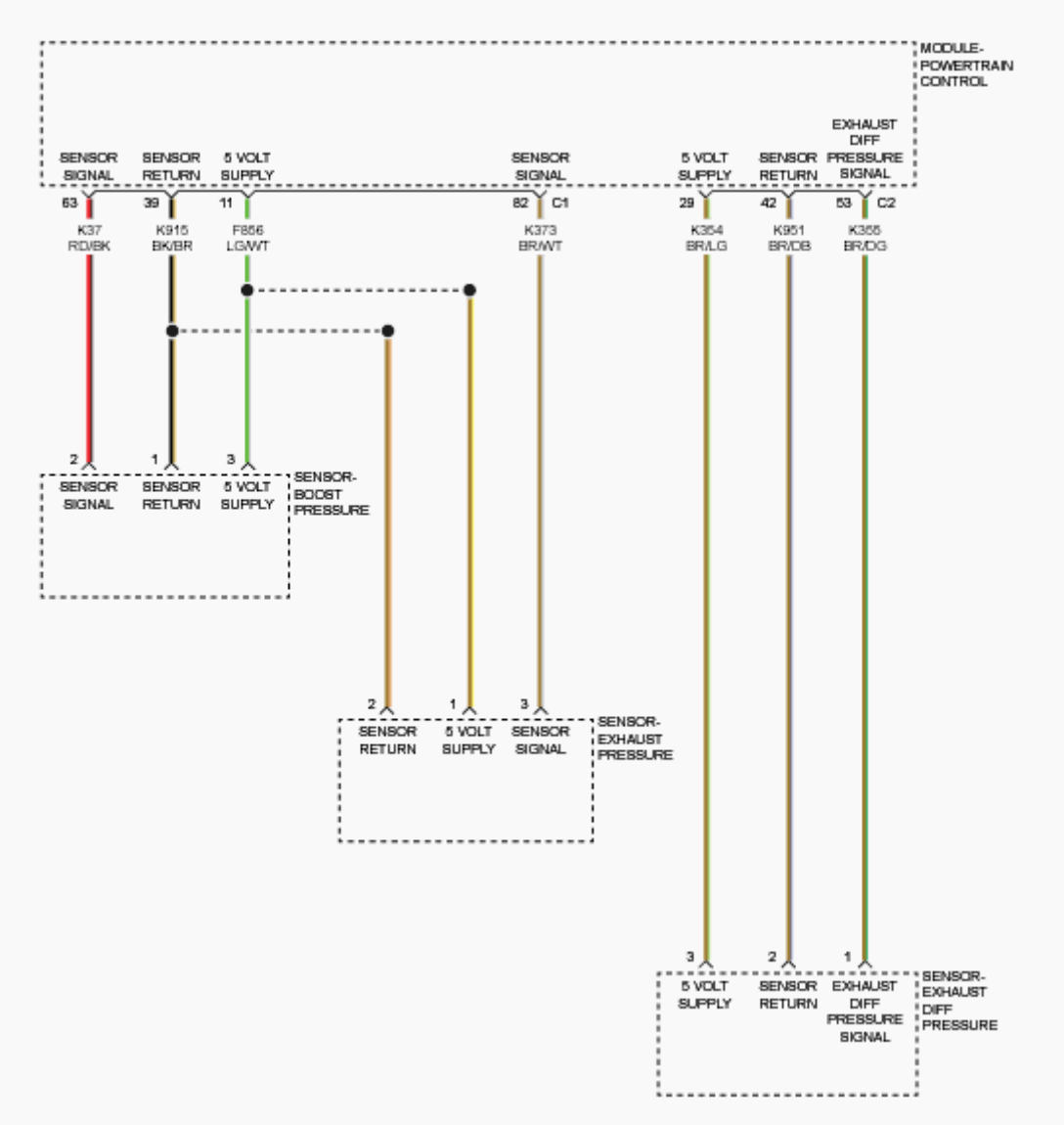

<u>Fig. 3: Checking Active Head Restraint 1st Row Driver Signal Circuit Harness For Short To Ground</u>
Courtesy of CHRYSLER GROUP, LLC

WARNING: Turn the ignition off disconnect the 12-volt battery and wait two minutes before proceeding. Failure to follow these instructions may result in possible serious or fatal injury.

1. Reconnect the Drivers Active Headrest connector located in the driver seatback.
2. Disconnect the ORC Module harness connector.
3. Connect the SRS Load Tool Adapter (special tool #8443-25, 56 Way

ACM Adapter).

4. Disconnect the in-line underseat jumper harness connector located under the driver seat to the rear of the seat cushion.
5. Measure the resistance between ground and the (R676) Active Head Restraint 1st Row Driver Signal circuit of the appropriate terminal of the SRS Load Tool Adapter (special tool #8443-25, 56 Way ACM Adapter).

   Is the resistance below 5.0 Ohms?

   Yes

   - Repair the short to ground in the (R676) Active Head Restraint 1st Row Driver Signal circuit located between the inline underseat jumper harness connector and the ORC.
   - Perform the AIRBAG SYSTEM VERIFICATION TEST. Refer to **STANDARD PROCEDURE** .

   No

   - Go To 5

5. **CHECK THE (R676) ACTIVE HEAD RESTRAINT 1ST ROW DRIVER SIGNAL CIRCUIT FOR A SHORT TO GROUND IN THE DRIVER ACTIVE HEAD REST SEAT BACK JUMPER HARNESS**

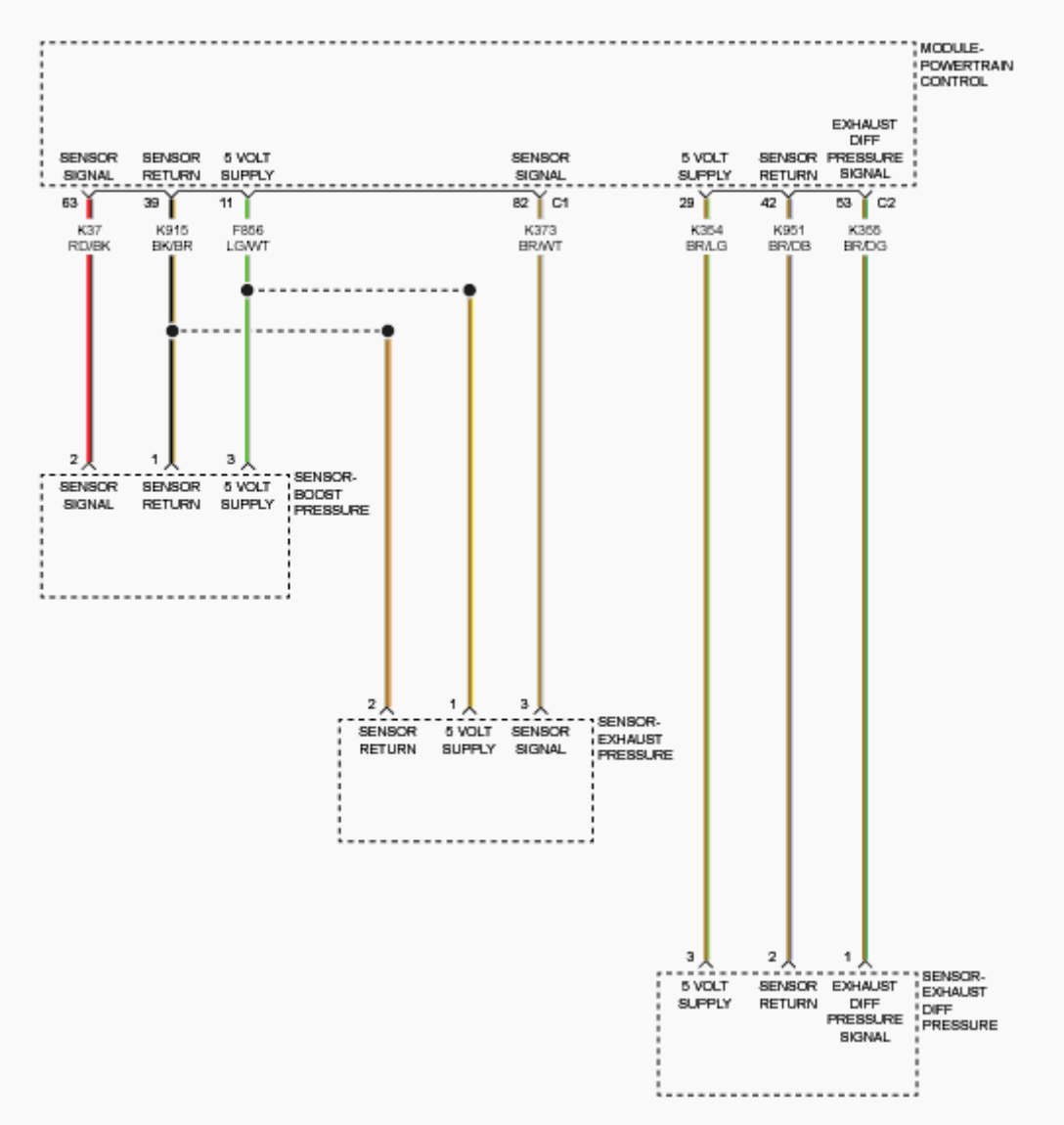

Fig. 4: Checking Active Head Restraint 1st Row Driver Signal Circuit Harness For Short To Ground
Courtesy of CHRYSLER GROUP, LLC

WARNING: Turn the ignition off disconnect the 12-volt battery and wait two minutes before proceeding. Failure to follow these instructions may result in possible serious or fatal injury.

NOTE: Inspect for damaged or bent terminals at the inline underseat jumper harness connectors located under the driver seat to the driver active head rest.

1. Reconnect the inline underseat jumper harness connector located under the driver seat to the rear of the seat cushion.
2. Measure the resistance of the (R676) Active Head Restraint 1st Row Driver Signal circuit between the appropriate terminal of the SRS Load Tool Adapter (special tool #8443-25, 56 Way ACM Adapter) and ground.

   Is the resistance below 5.0 Ohms?

   Yes

   - Repair the short to ground in the (R676) Active Head Restraint 1st Row Driver Signal circuit located between the Driver Active Head Rest jumper harness connector and the inline connector under the driver seat.
   - Perform the AIRBAG SYSTEM VERIFICATION TEST. Refer to **STANDARD PROCEDURE** .

   No

   - Go To 6

6. **CHECK THE OPERATION OF THE DRIVER ACTIVE HEAD REST**
   1. Replace the Driver Active Head Rest.
   2. Reconnect the vehicle body harness to the Active Driver Head Restraint harness connector.
   3. Remove any special tools or jumper wires and reconnect all previously disconnected components - except the Battery.

      WARNING: **Turn the ignition on, then reconnect the 12-volt battery and wait two minutes before proceeding. Failure to follow these instructions may result in possible serious or fatal injury.**

   4. Connect the scan tool to the Data Link Connector - use the most current software available.
   5. Use the scan tool and erase the ORC stored codes.
   6. Turn the Ignition Off and wait 15 seconds before turning the Ignition

On.

7. Wait one minute and read active codes and if there are none present read the stored codes.

   Does the scan tool display active B1C12-DRIVER ACTIVE HEADREST CONTROL CIRCUIT LOW DTC?

   Yes

   WARNING: Turn the ignition off, disconnect the 12-volt battery and wait two minutes before proceeding. Failure to follow these instructions may result in possible serious or fatal injury.

   WARNING: If the Occupant Restraint Controller (ORC) is dropped at any time, it must be replaced. Failure to follow these instructions may result in possible serious or fatal injury.

   - Replace the ORC in accordance with Service Information.
   - Perform the AIRBAG SYSTEM VERIFICATION TEST. Refer to **STANDARD PROCEDURE** .

   No

   - Repair is complete.
   - Perform the AIRBAG SYSTEM VERIFICATION TEST. Refer to **STANDARD PROCEDURE** .

B1C13-DRIVER ACTIVE HEADREST CONTROL CIRCUIT HIGH

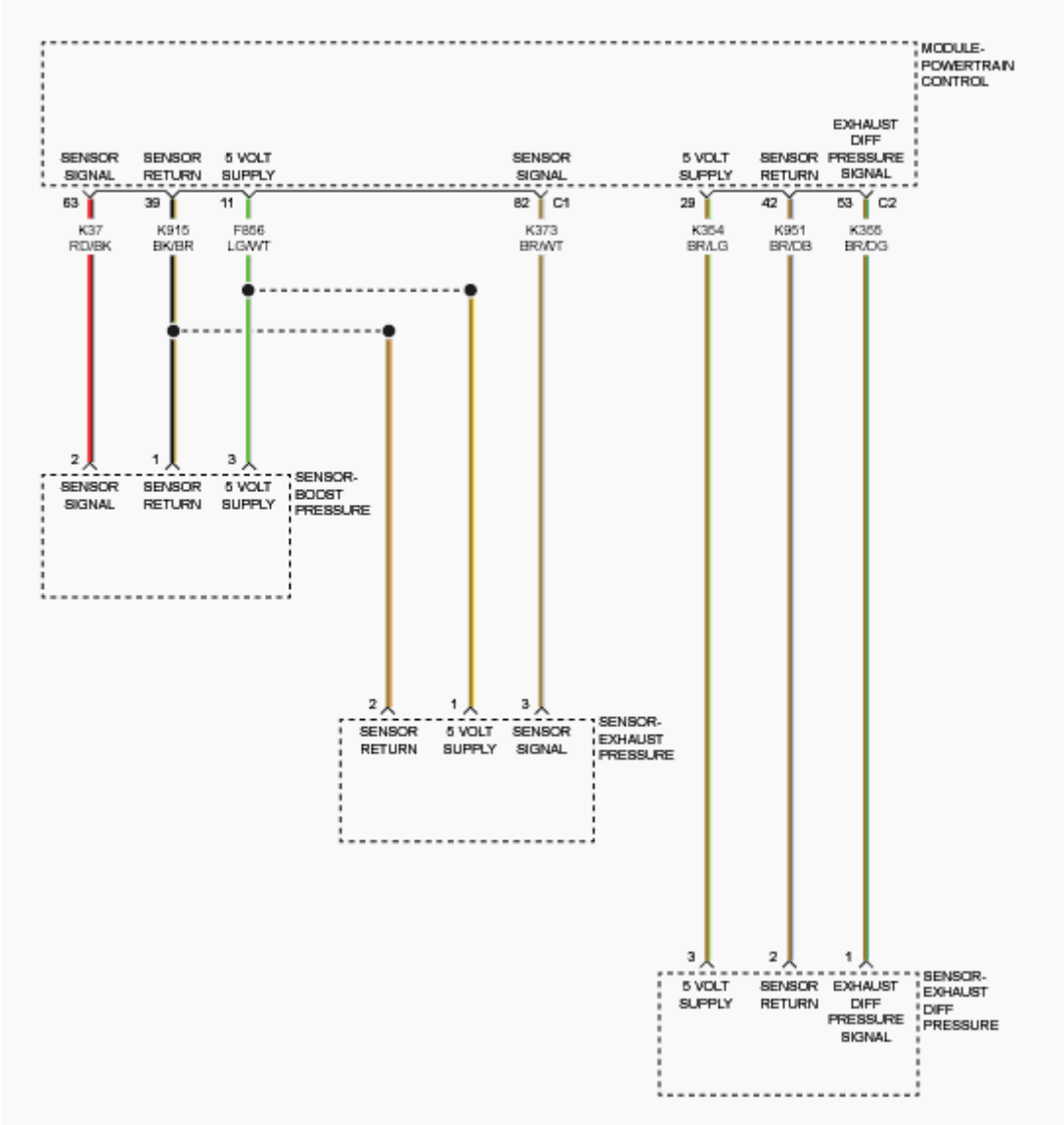

Fig. 5: Active Headrests Circuit Schematic
Courtesy of CHRYSLER GROUP, LLC

For a complete wiring diagram, **refer to appropriate SYSTEM WIRING DIAGRAMS article** .

NOTE: If this code is setting on a right hand Drive Vehicle (RHD) follow the diagnostic procedure for (whatever the BXXXX-Passenger Active Headrest Control Circuit High).

THEORY OF OPERATION

The Driver Active Headrest signal circuit is driven by a solenoid that also uses a diode in parallel. The single electrical component of the AHR (Active Headrest) unit is the latch-release solenoid. The solenoid is connected by a 2 way pigtail

wire and harness connector. The pigtail wire and 2 way connector are routed through the center of one of the headrest support posts and down through the guide sleeve to the interior of the seat back, where it connects to the seat wire harness. The solenoid is grounded at an independent dedicated ground. The AHR components itself cannot be repaired. If damaged or ineffective, the AHR (Active Headrest) must be replaced as a new assembly. If upon inspection the AHR has deployed it can be reset following the proper reset method. Refer to **RESTRAINT, ACTIVE HEAD, STANDARD PROCEDURE** . Also if the already deployed Driver or Passenger AHR are latched in the locked position please see the scan tool miscellaneous functions to set the latch in the unlock or deployed position. Please be very observant and careful, the scan tool should never be used to actually deploy a known good non-deployed Driver or Passenger AHR.

WHEN MONITORED

The Occupant Restraint Controller (ORC) continuously communicates with the Driver Active Head Restraint over the (R676) Active Head Restraint 1st Row Driver Signal circuit. The Driver Active Head Restraint communication and on board diagnostics are powered by the ORC signal.

SET CONDITION

This code will set, if the ORC detects High voltage on the (R676) Active Head Restraint 1st Row Driver Signal circuit.

POSSIBLE CAUSES

Possible Causes
(R676) ACTIVE HEAD RESTRAINT 1ST ROW DRIVER SIGNAL CIRCUIT SHORTED TO VOLTAGE DRIVER ACTIVE HEAD RESTRAINT OCCUPANT RESTRAINT CONTROLLER (ORC)

DIAGNOSTIC TEST

1. **VERIFY ACTIVE DTC**

   NOTE: Make sure the battery is fully charged.

   1. Turn the ignition on.

2. With the scan tool, read the ORC DTCs.

   Does the scan tool display active B1C13-DRIVER ACTIVE HEADREST CONTROL CIRCUIT HIGH DTC?

   Yes

   - Go To 2

   No

   - Perform the AIRBAG SYSTEM INTERMITTENT TEST. Refer to **STANDARD PROCEDURE** .

2. **CHECK FOR A SHORTED ACTIVE HEAD REST CIRCUIT IN DRIVER ACTIVE HEAD REST**

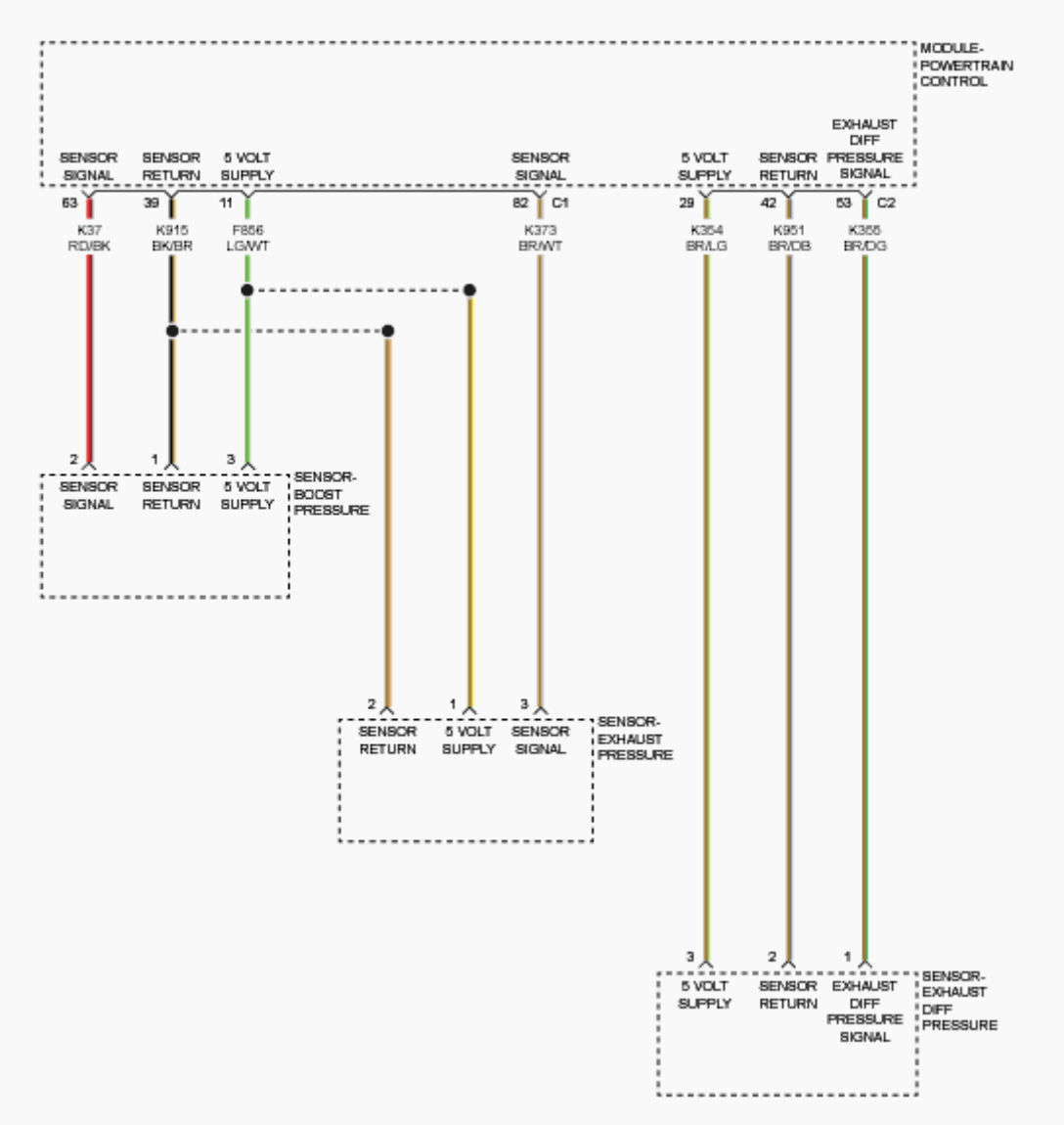

Fig. 6: Checking For Shorted Active Head Rest Circuit
Courtesy of CHRYSLER GROUP, LLC

WARNING: Turn the ignition off disconnect the 12-volt battery and wait two minutes before proceeding. Failure to follow these instructions may result in possible serious or fatal injury.

1. Access the Driver Active Head Rest harness connector located in the driver seatback jumper harness.
2. Disconnect the Driver Active Headrest harness connectors.

NOTE: Check the connectors - Clean and repair as

necessary.

NOTE: Please use the Active Head Rest Load Tool (special tool #10253, Tester, AHR Load) in testing the present status of the AHR signal circuit.

3. Connect the AHR Load Tool (special tool #10253, Tester, AHR Load) to the driver AHR seatback jumper harness connector going into the seatback and under the seat.

WARNING: Turn the ignition on, then reconnect the 12-volt battery and wait two minutes before proceeding. Failure to follow these instructions may result in possible serious or fatal injury.

4. With the scan tool, read the active ORC DTCs.

   Does the scan tool display: B1C13-DRIVER ACTIVE HEADREST CONTROL CIRCUIT HIGH?

   Yes

   - Go To 3

   No

WARNING: Turn the ignition off disconnect the 12-volt battery and wait two minutes before proceeding. Failure to follow these instructions may result in possible serious or fatal injury.

- Replace the Driver Active Head Rest in accordance with the Service Information. Refer to **HEADREST, REMOVAL** .

3. **CHECK THE (R676) ACTIVE HEAD RESTRAINT 1ST ROW DRIVER SIGNAL CIRCUIT HARNESS FOR A SHORT TO VOLTAGE**

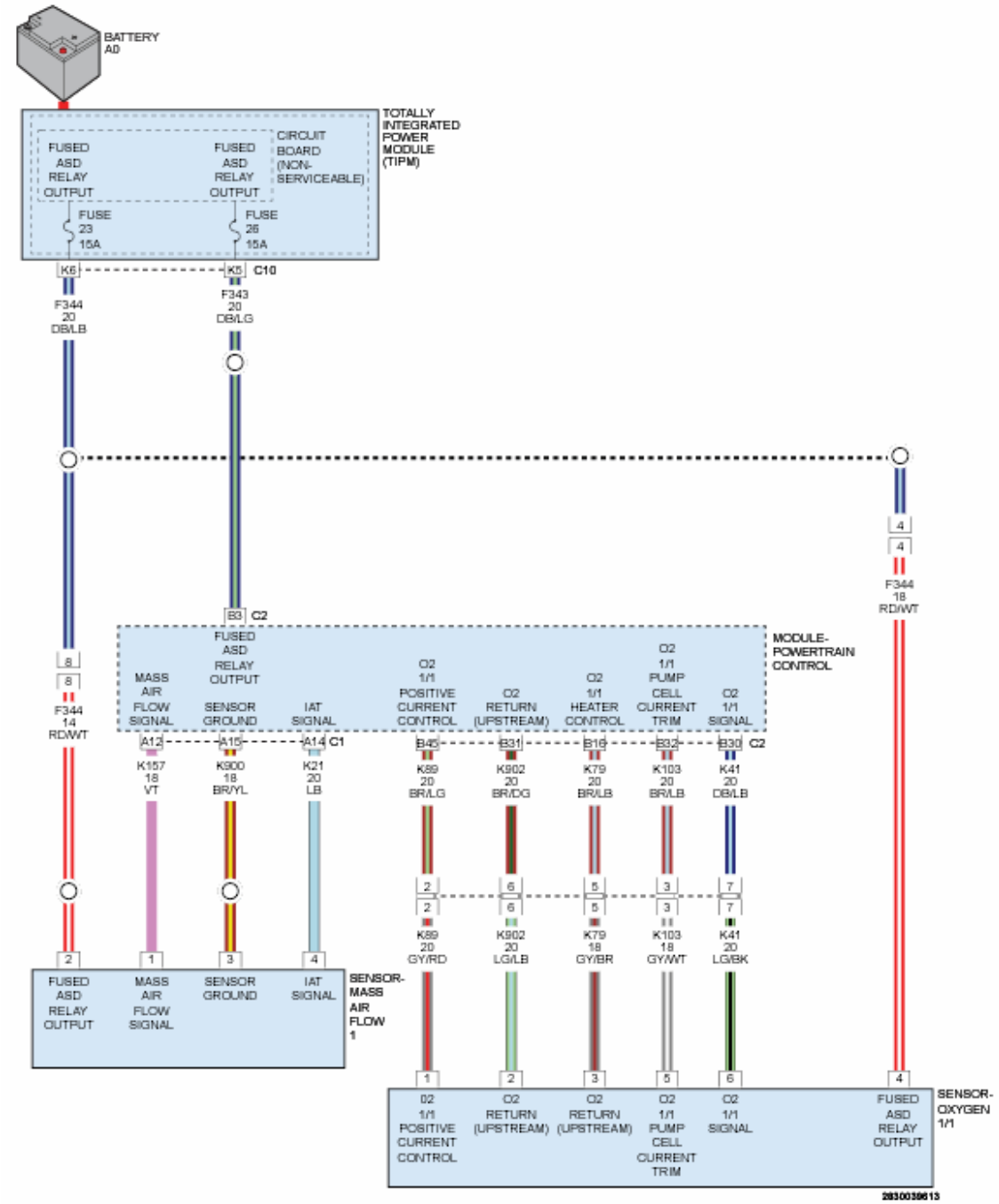

Fig. 7: Checking Active Head Restraint 1st Row Driver Signal Circuit Harness For A Short To Voltage
Courtesy of CHRYSLER GROUP, LLC

WARNING: Turn the ignition off, disconnect the 12-volt battery and wait two minutes before proceeding. Failure to follow these instructions may result in possible serious or fatal injury.

1. Disconnect the ORC harness connectors.
2. Connect the SRS Load Tool Adapter (special tool #8443-25, 56 Way ACM Adapter) to the ORC harness connectors.
3. Keep the in-line underseat connector and the Driver Active Headrest connector in the driver seat back connected.

WARNING: Turn the ignition on, then reconnect the 12-volt battery and wait two minutes before proceeding. Failure to follow these instructions may result in possible serious or fatal injury.

4. Measure the voltage of the (R676) Active Head Restraint 1st Row Driver Signal circuit at the appropriate terminal of the SRS Load Tool Adaptor (special tool #8443-25, 56 Way ACM Adapter) and ground.

   Is there voltage present?

   Yes

   - Go To 4

   No

   - Go To 5

4. **CHECK THE (R676) ACTIVE HEAD RESTRAINT 1ST ROW DRIVER SIGNAL CIRCUIT FOR A SHORT TO VOLTAGE BETWEEN THE ORC AND THE IN-LINE UNDERSEAT CONNECTOR (BODY HARNESS)**

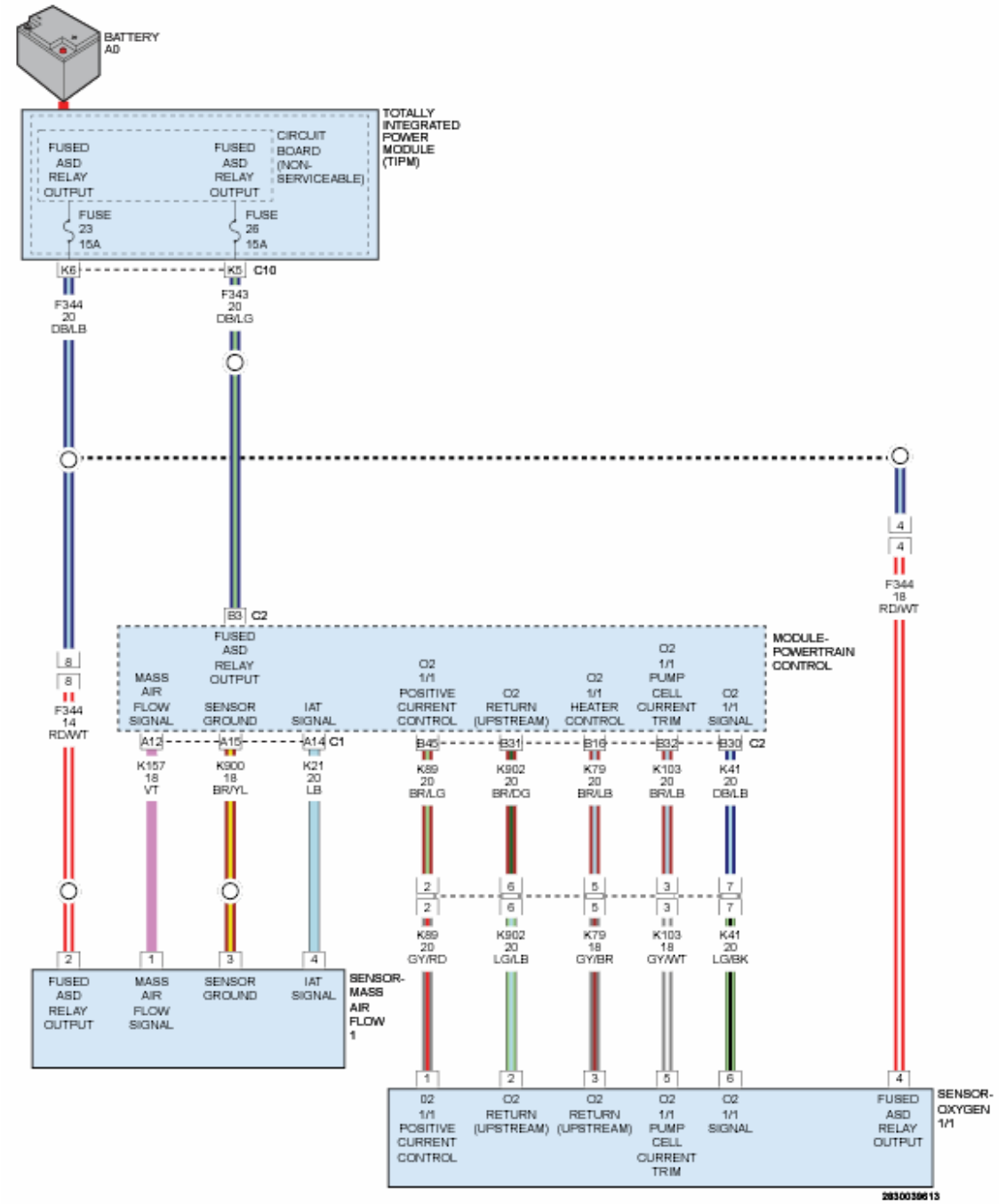

Fig. 8: Checking Active Head Restraint 1st Row Driver Signal Circuit Harness For A Short To Voltage
Courtesy of CHRYSLER GROUP, LLC

WARNING: Turn the ignition off disconnect the 12-volt battery and wait two minutes before proceeding. Failure to follow these instructions may result in possible serious or fatal injury.

NOTE: Inspect for damaged terminals at the in-line underseat jumper harness connector.

1. Disconnect the in-line underseat harness connector.

   WARNING: Turn the ignition on, then reconnect the 12-volt battery and wait two minutes before proceeding. Failure to follow these instructions may result in possible serious or fatal injury.

2. Measure for voltage between ground and the (R676) Active Head Restraint 1st Row Driver Signal circuit at the appropriate terminal of the SRS Load Tool Adaptor (special tool #8443-25, 56 Way ACM Adapter).

   Is there voltage present?

   Yes

   - Repair the short to voltage in the (R676) Active Head Restraint 1st Row Driver Signal circuit located between the ORC and the body side of harness in-line underseat jumper harness connector.
   - Perform the AIRBAG SYSTEM VERIFICATION TEST. Refer to **STANDARD PROCEDURE** .

   No

   - Go To 5

5. **CHECK THE (R676) ACTIVE HEAD RESTRAINT 1ST ROW DRIVER SIGNAL CIRCUIT FOR SHORT TO VOLTAGE IN THE SEATBACK HARNESS**

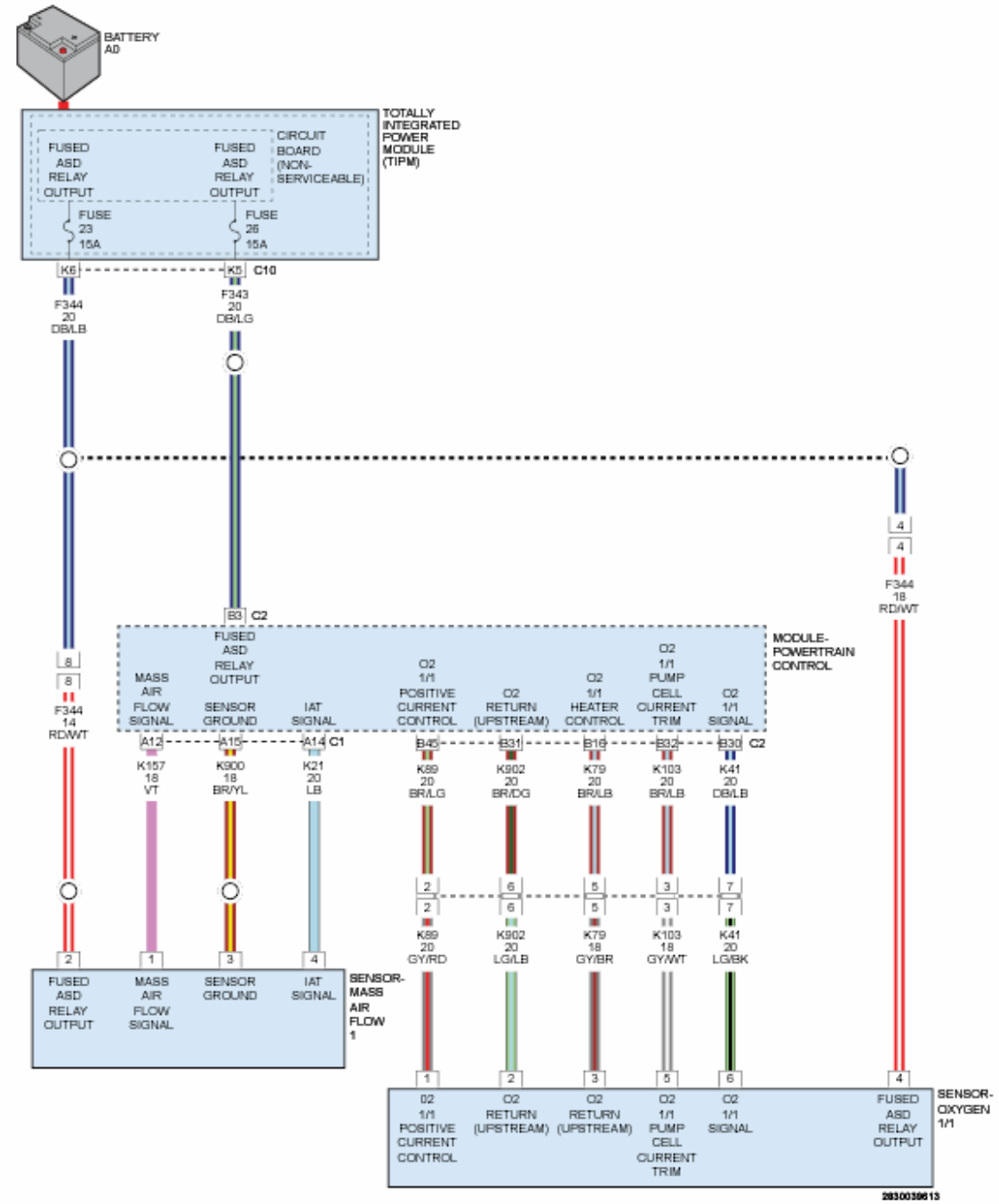

Fig. 9: Checking Active Head Restraint 1st Row Driver Signal Circuit Harness For A Short To Voltage
Courtesy of CHRYSLER GROUP, LLC

WARNING: Turn the ignition off disconnect the 12-volt battery and wait two minutes before proceeding. Failure to follow these instructions may result in possible serious or fatal injury.

NOTE: Inspect for damaged terminals at the in-line underseat jumper harness connector. Reconnect the in-line harness connector.

1. Connect the in-line under seat harness connector.
2. Access the Driver Active Headrest connector located in the driver seat back jumper harness.
3. Disconnect the Driver Active Headrest harness connector.

WARNING: Turn the ignition on, then reconnect the 12-volt battery and wait two minutes before proceeding. Failure to follow these instructions may result in possible serious or fatal injury.

4. Measure the voltage between ground and the (R676) Active Head Restraint 1st Row Driver Signal circuit at the appropriate terminal of the SRS Load Tool Adaptor (special tool #8443-25, 56 Way ACM Adapter).

   Is there voltage present?

   Yes

   - Repair the short to voltage in the (R676) Active Head Restraint 1st Row Driver Signal circuit located between the in-line underseat jumper harness connector and the Driver Active Headrest connector.
   - Perform the AIRBAG SYSTEM VERIFICATION TEST. Refer to **STANDARD PROCEDURE** .

   No

   - Go To 6

6. **CHECK THE OPERATION OF THE DRIVER ACTIVE HEAD RESTRAINT**
   1. Replace the Driver Active Head Restraint.
   2. Reconnect the vehicle body harness to the Driver Active Head Restraint

harness connector.

3. Remove any special tools or jumper wires and reconnect all previously disconnected components - except the Battery.

WARNING: Turn the ignition on, then reconnect the 12-volt battery and wait two minutes before proceeding. Failure to follow these instructions may result in possible serious or fatal injury.

4. Connect the scan tool to the Data Link Connector - use the most current software available.
5. Use the scan tool and erase the ORC stored codes.
6. Turn the Ignition Off and wait 15 seconds before turning the Ignition On.
7. Wait one minute and read active codes and if there are none present read the stored codes.

Does the scan tool display active B1C13-DRIVER ACTIVE HEADREST CONTROL CIRCUIT HIGH DTC?

Yes

WARNING: Turn the ignition off, disconnect the 12-volt battery and wait two minutes before proceeding. Failure to follow these instructions may result in possible serious or fatal injury.

WARNING: If the Occupant Restraint Controller (ORC) is dropped at any time, it must be replaced. Failure to follow these instructions may result in possible serious or fatal injury.

- Replace the ORC in accordance with Service Information.
- Perform the AIRBAG SYSTEM VERIFICATION TEST. Refer to **STANDARD PROCEDURE** .

No

- Repair is complete.
- Perform the AIRBAG SYSTEM VERIFICATION TEST. Refer to **STANDARD PROCEDURE** .

B1C14-DRIVER ACTIVE HEADREST CONTROL CIRCUIT OPEN

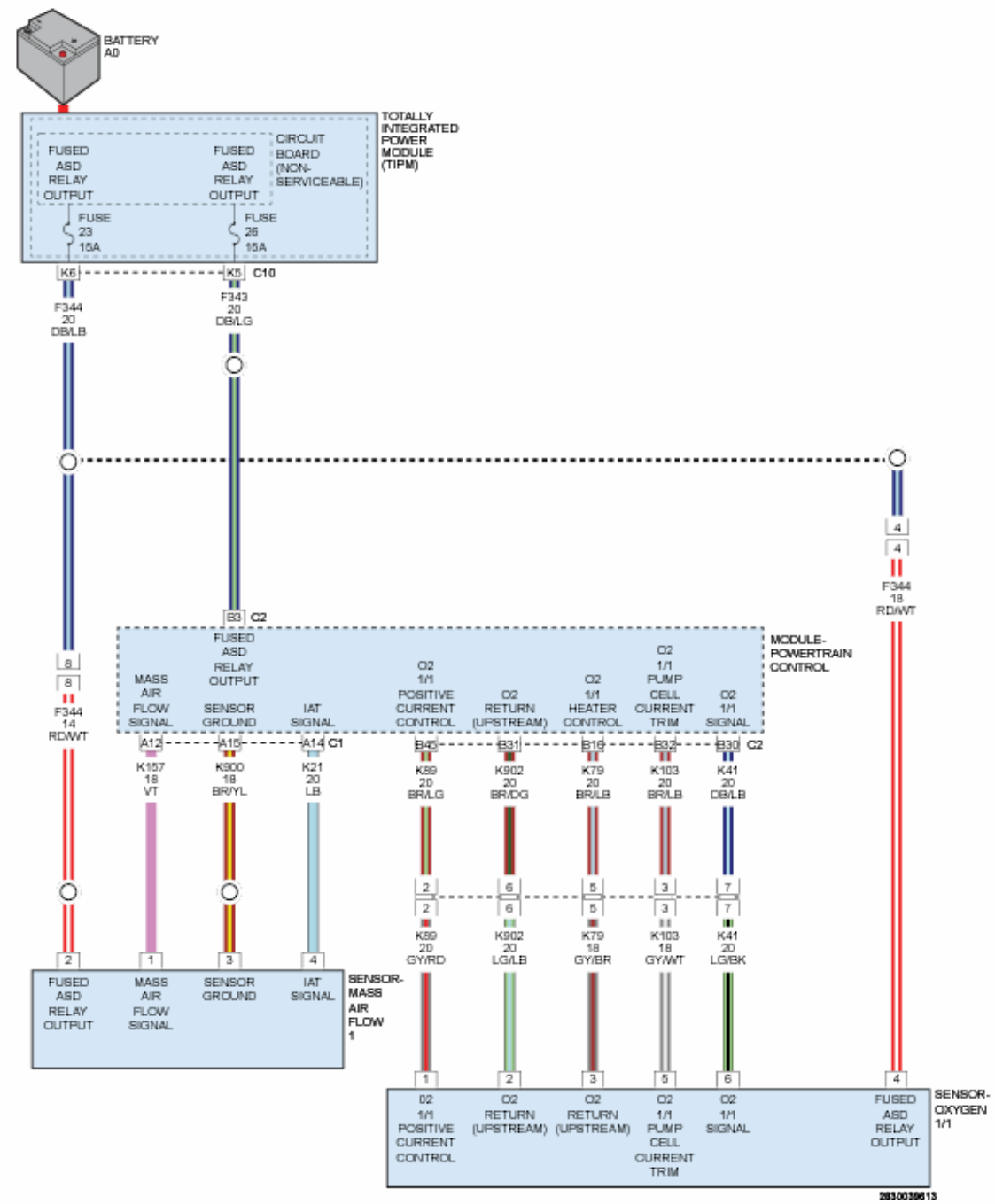

Fig. 10: Active Headrests Circuit Schematic
Courtesy of CHRYSLER GROUP, LLC

For a complete wiring diagram, **refer to appropriate SYSTEM WIRING DIAGRAMS article** .

NOTE: If this code is setting on a Right Hand Drive Vehicle (RHD) follow the diagnostic procedure for (whatever the BXXXX-Passenger Active Headrest Control Circuit Open)

THEORY OF OPERATION

The Driver Active Headrest signal circuit is driven by a solenoid that also uses a diode in parallel. The single electrical component of the AHR (Active Headrest) unit is the latch-release solenoid. The solenoid is connected by a 2 way pigtail wire and harness connector. The pigtail wire and 2 way connector are routed through the center of one of the headrest support posts and down through the guide sleeve to the interior of the seat back, where it connects to the seat wire harness. The solenoid is grounded at an independent dedicated ground. The AHR components itself cannot be repaired. If damaged or ineffective, the AHR (Active Headrest) must be replaced as a new assembly. If upon inspection the AHR has deployed it can be reset following the proper reset method. Refer to **RESTRAINT, ACTIVE HEAD, STANDARD PROCEDURE** . Also if the already deployed Driver or Passenger AHR are latched in the locked position please see the scan tool miscellaneous functions to set the latch in the unlock or deployed position. Please be very observant and careful, the scan tool should never be used to actually deploy a known good non-deployed Driver or Passenger AHR.

WHEN MONITORED

The Occupant Restraint Controller (ORC) continuously communicates with the Driver Active Head Restraint over the Driver Active Head Restraint Solenoid Signal circuit. The Driver Active Head Restraint communication and on board diagnostics are powered by the ORC signal. The ORC checks for a open condition every 10ms. The ORC checks the circuit both pre and post fault setting condition. This allows the ORC to de-mature a code in the same ignition cycle.

SET CONDITION

This code will set, if the ORC detects an Open on the (R676) Active Head Restraint 1st Row Driver Signal circuit.

POSSIBLE CAUSES

Possible Causes
(R676) ACTIVE HEAD RESTRAINT 1ST ROW DRIVER SIGNAL CIRCUIT OPEN OR HIGH RESISTANCE DRIVER ACTIVE HEAD RESTRAINT OCCUPANT RESTRAINT CONTROLLER (ORC)

DIAGNOSTIC TEST

1. **VERIFY ACTIVE DTC**

   NOTE: Make sure the battery is fully charged.

   1. Turn the ignition on.
   2. With the scan tool, read the ORC DTCs

      Does the scan tool display active B1C14-DRIVER ACTIVE HEADREST CONTROL CIRCUIT OPEN DTC?

      Yes

      - Go To 2

      No

      - Perform the AIRBAG SYSTEM INTERMITTENT TEST. Refer to **STANDARD PROCEDURE** .

2. **CHECK FOR A SHORTED ACTIVE HEAD REST CIRCUIT IN DRIVER ACTIVE HEAD REST**

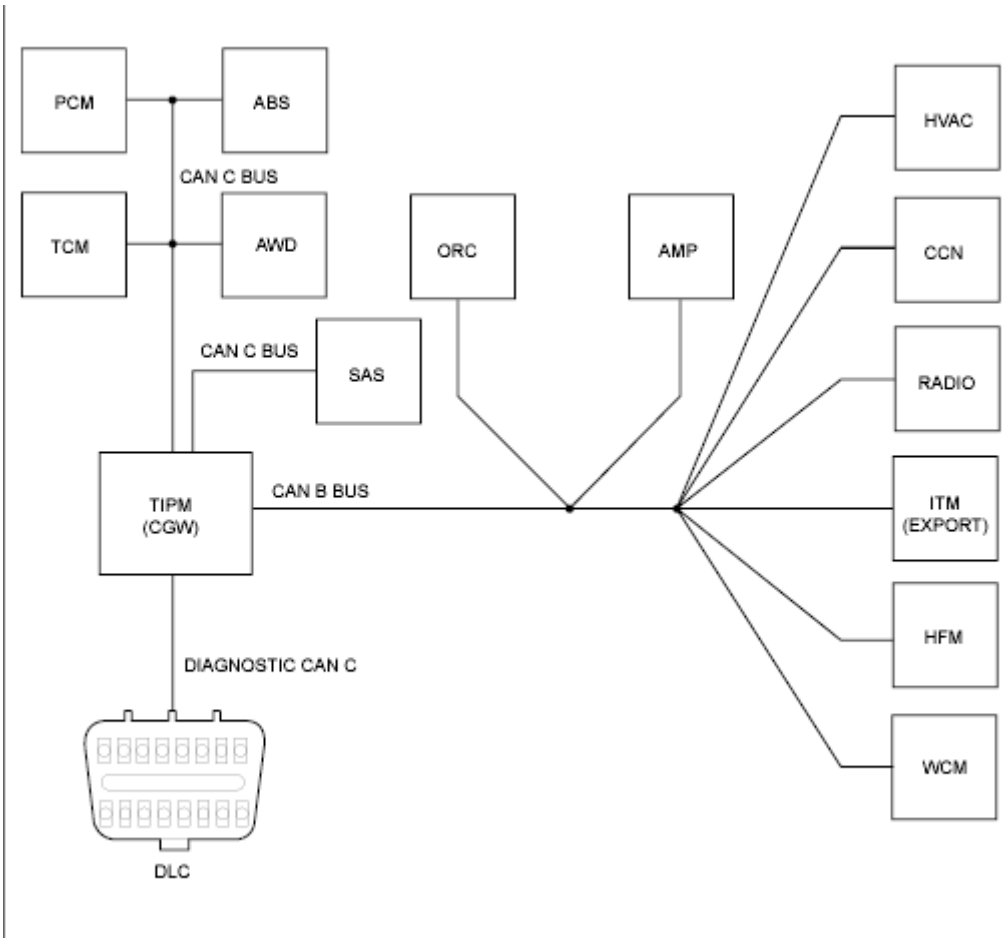

Fig. 11: Checking For Shorted Active Head Rest Circuit
Courtesy of CHRYSLER GROUP, LLC

WARNING: Turn the ignition off disconnect the 12-volt battery and wait two minutes before proceeding. Failure to follow these instructions may result in possible serious or fatal injury.

1. Access the Driver Active Head Rest harness connector located in the driver seatback jumper harness.
2. Disconnect the Driver Active Headrest harness connectors.

NOTE: Check the connectors - Clean and repair as necessary.

NOTE: Please use the Active Head Rest Load Tool (special tool #10253, Tester, AHR Load) in testing

the present status of the AHR signal circuit.

3. Connect the AHR Load Tool (special tool #10253, Tester, AHR Load) to the Driver AHR seatback jumper harness connector going into the seatback and under the seat.

   WARNING: **Turn the ignition on, then reconnect the 12-volt battery and wait two minutes before proceeding. Failure to follow these instructions may result in possible serious or fatal injury.**

4. With the scan tool, read the active ORC DTCs.

   Does the scan tool display: B1C14-DRIVER ACTIVE HEADREST CONTROL CIRCUIT OPEN?

   Yes

   - Go To 3

   No

   WARNING: **Turn the ignition off disconnect the 12-volt battery and wait two minutes before proceeding. Failure to follow these instructions may result in possible serious or fatal injury.**

   - Replace the Driver Active Head Rest in accordance with the Service Information. Refer to **HEADREST, REMOVAL** .

3. **CHECK THE DRIVER ACTIVE HEAD REST (Z903) GROUND CIRCUIT FOR AN OPEN**

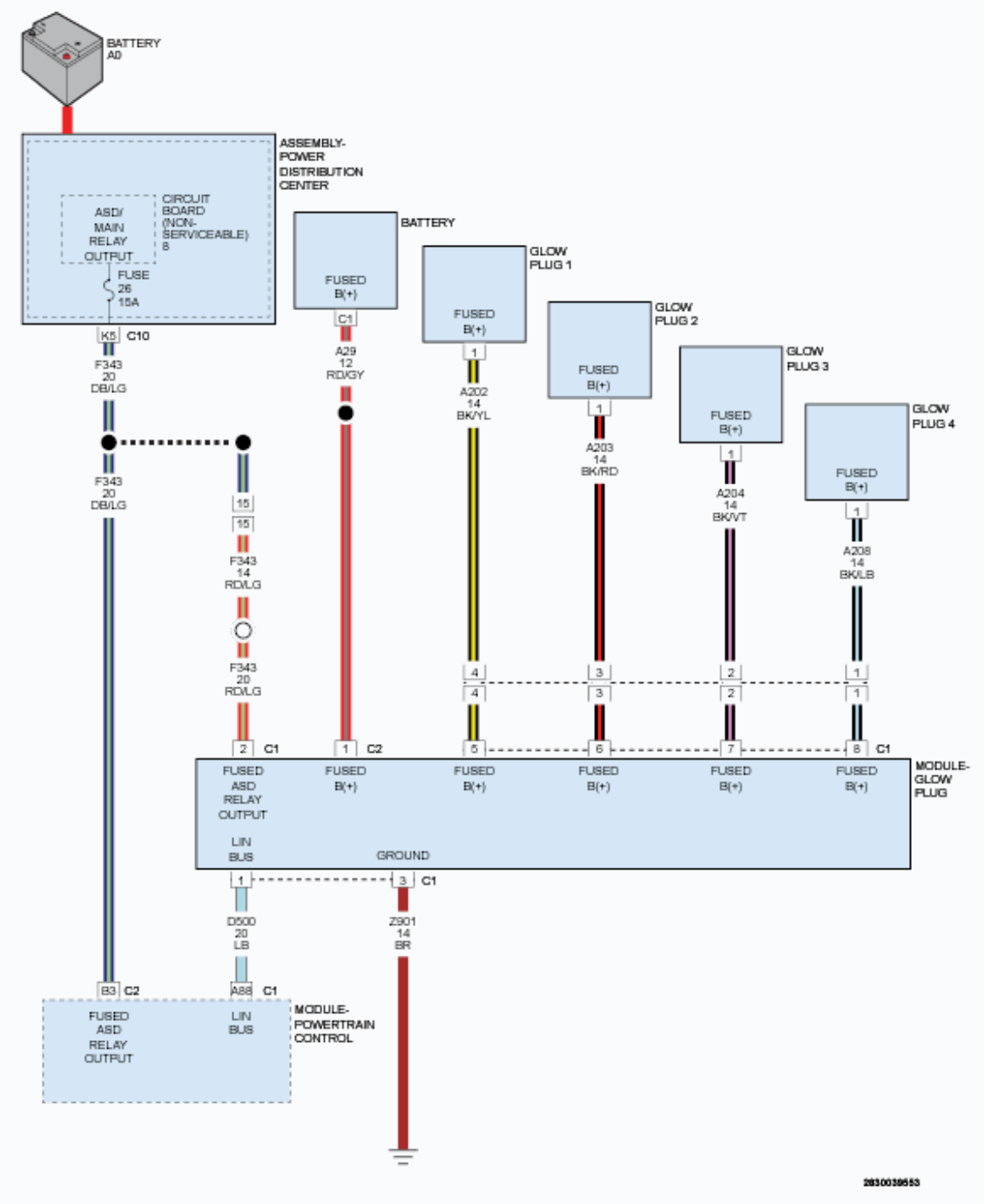

Fig. 12: Checking Driver Active Head Rest Ground Circuit For An Open

Courtesy of CHRYSLER GROUP, LLC

WARNING: Turn the ignition off disconnect the 12-volt battery and wait two minutes before proceeding. Failure to follow these instructions may result in possible serious or fatal injury.

1. Measure the resistance of the (Z903) Ground circuit between the Driver Active Head Rest and ground.

   Is the resistance below 5.0 Ohms?

   Yes

   - Go To 4

   No

   - Repair the Ground circuit for a open or high resistance.
   - Perform the AIRBAG SYSTEM VERIFICATION TEST. Refer to **STANDARD PROCEDURE** .

4. **CHECK THE (R676) ACTIVE HEAD RESTRAINT 1ST ROW DRIVER SIGNAL CIRCUIT FOR AN OPEN OR HIGH RESISTANCE (ACTIVE HEAD REST SEAT BACK JUMPER SIDE TO ORC MODULE)**

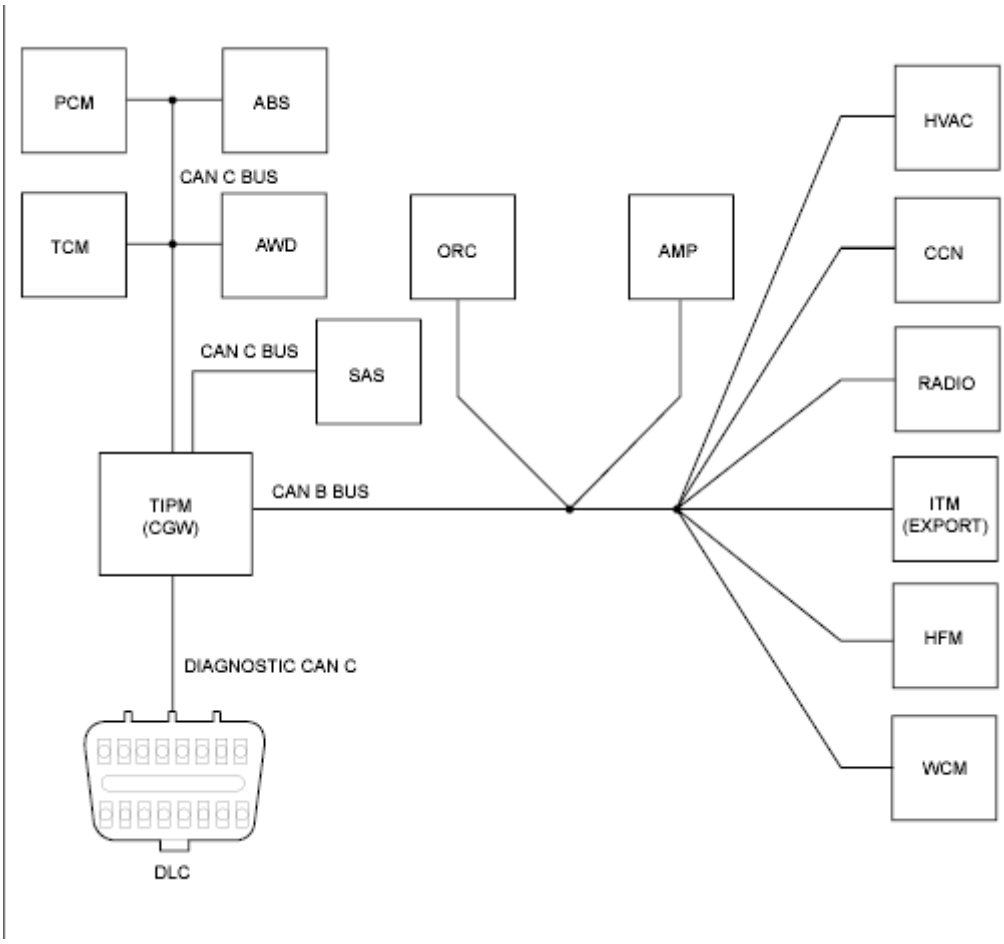

Fig. 13: Checking Driver Head Restraint Solenoid Signal Circuit For An Open Or High Resistance
Courtesy of CHRYSLER GROUP, LLC

1. Measure the resistance of the (R676) Active Head Restraint 1st Row Driver Signal Circuit between the Driver Active Head Restraint connector cavity 2 and the appropriate terminal of the SRS Load Tool Adapter (special tool #8443-25, 56 Way ACM Adapter).

   Is the resistance below 1 Ohm?

   Yes

   - Go To 5

   No

   - Repair the (R676) Active Head Restraint 1st Row Driver Signal Circuit in the seat back and body harness for an open or high resistance.
   - Perform the AIRBAG SYSTEM VERIFICATION TEST. Refer to **STANDARD PROCEDURE** .

5. **CHECK THE OPERATION OF THE DRIVER ACTIVE HEAD RESTRAINT**
   1. Replace the Driver Active Head Restraint in accordance with the Service Information.
   2. Reconnect the vehicle body harness to the Driver Active Head Restraint harness connector.
   3. Remove any special tools or jumper wires and reconnect all previously disconnected components - except the Battery.

      WARNING: **Turn the ignition on, then reconnect the 12-volt battery and wait two minutes before proceeding. Failure to follow these instructions may result in possible serious or fatal injury.**

   4. Connect the scan tool to the Data Link Connector - use the most current software available.

5. Use the scan tool and erase the ORC stored codes.
6. Turn the Ignition Off and wait 15 seconds before turning the Ignition On.
7. Wait one minute and read active codes and if there are none present read the stored codes.

   Does the scan tool display active B1C14-DRIVER ACTIVE HEADREST CONTROL CIRCUIT OPEN DTC?

   Yes

   WARNING: Turn the ignition off, disconnect the 12-volt battery and wait two minutes before proceeding. Failure to follow these instructions may result in possible serious or fatal injury.

   WARNING: If the Occupant Restraint Controller (ORC) is dropped at any time, it must be replaced. Failure to follow these instructions may result in possible serious or fatal injury.

   - Replace the ORC in accordance with Service Information.
   - Perform the AIRBAG SYSTEM VERIFICATION TEST. Refer to **STANDARD PROCEDURE** .

   No

   - Repair is complete.
   - Perform the AIRBAG SYSTEM VERIFICATION TEST. Refer to **STANDARD PROCEDURE** .

B1C18-PASSENGER ACTIVE HEADREST CONTROL CIRCUIT LOW

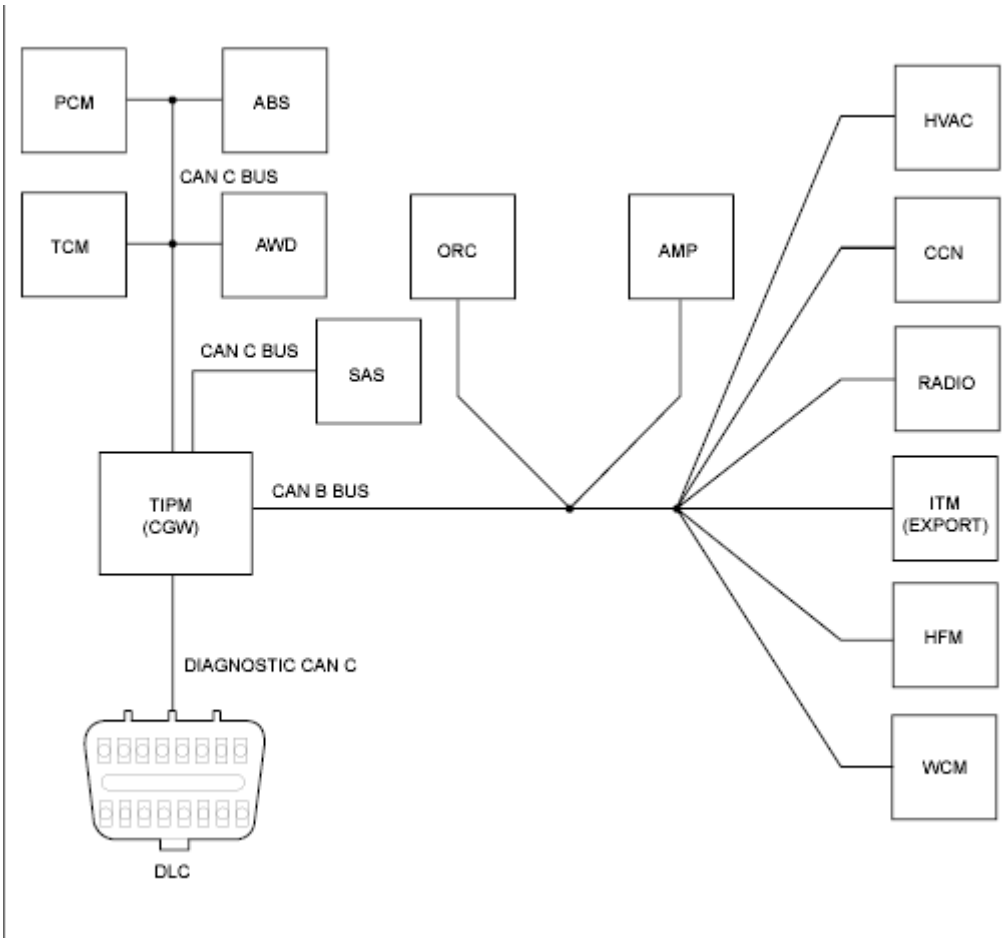

Fig. 14: Active Headrests Circuit Schematic
Courtesy of CHRYSLER GROUP, LLC

For a complete wiring diagram, **refer to appropriate SYSTEM WIRING DIAGRAMS article** .

NOTE: If this code is setting on a Right Hand Drive Vehicle (RHD) follow the diagnostic procedure for (whatever the BXXXX-Driver Active Headrest Control Circuit Low).

THEORY OF OPERATION

The Passenger Active Headrest signal circuit is driven by a solenoid that also uses a diode in parallel. The single electrical component of the AHR (Active Headrest) unit is the latch-release solenoid. The solenoid is connected by a 2 way pigtail wire and harness connector. The pigtail wire and 2 way connector are routed through the center of one of the headrest support posts and down through the guide sleeve to the interior of the seat back, where it connects to the seat wire harness. The solenoid is grounded at an independent dedicated ground. The AHR

components itself cannot be repaired. If damaged or ineffective, the AHR (Active Headrest) must be replaced as a new assembly. If upon inspection the AHR has deployed it can be reset following the proper reset method. Refer to **RESTRAINT, ACTIVE HEAD, STANDARD PROCEDURE** . Also if the already deployed Driver or Passenger AHR are latched in the locked position please see the scan tool miscellaneous functions to set the latch in the unlock or deployed position. Please be very observant and careful, the scan tool should never be used to actually deploy a known good non-deployed Driver or Passenger AHR.

WHEN MONITORED

The Occupant Restraint Controller (ORC) continuously communicates with the Passenger Active Head Restraint over the (R677) Active Head Restraint 1st Row Passenger Signal circuit. The Passenger Active Head Restraint communication and on board diagnostics are powered by the ORC signal.

SET CONDITION

This code will set, if the ORC detects low voltage on the (R677) Active Head Restraint 1st Row Passenger Signal Circuit.

POSSIBLE CAUSES

Possible Causes
(R677) ACTIVE HEAD RESTRAINT 1ST ROW PASSENGER SIGNAL CIRCUIT SHORTED TO GROUND PASSENGER ACTIVE HEAD RESTRAINT OCCUPANT RESTRAINT CONTROLLER (ORC)

DIAGNOSTIC TEST

1. **VERIFY ACTIVE DTC**

   NOTE: Make sure the battery is fully charged.

   1. Turn the ignition on.
   2. With the scan tool, read the ORC DTCs.

      Does the scan tool display active B1C18-PASSENGER ACTIVE HEADREST CONTROL CIRCUIT LOW DTC?

Yes

- Go To 2

No

- Perform the AIRBAG SYSTEM INTERMITTENT TEST. Refer to **STANDARD PROCEDURE** .

2. **CHECK FOR A SHORTED ACTIVE HEAD REST SIGNAL CIRCUIT IN PASSENGER ACTIVE HEAD REST**

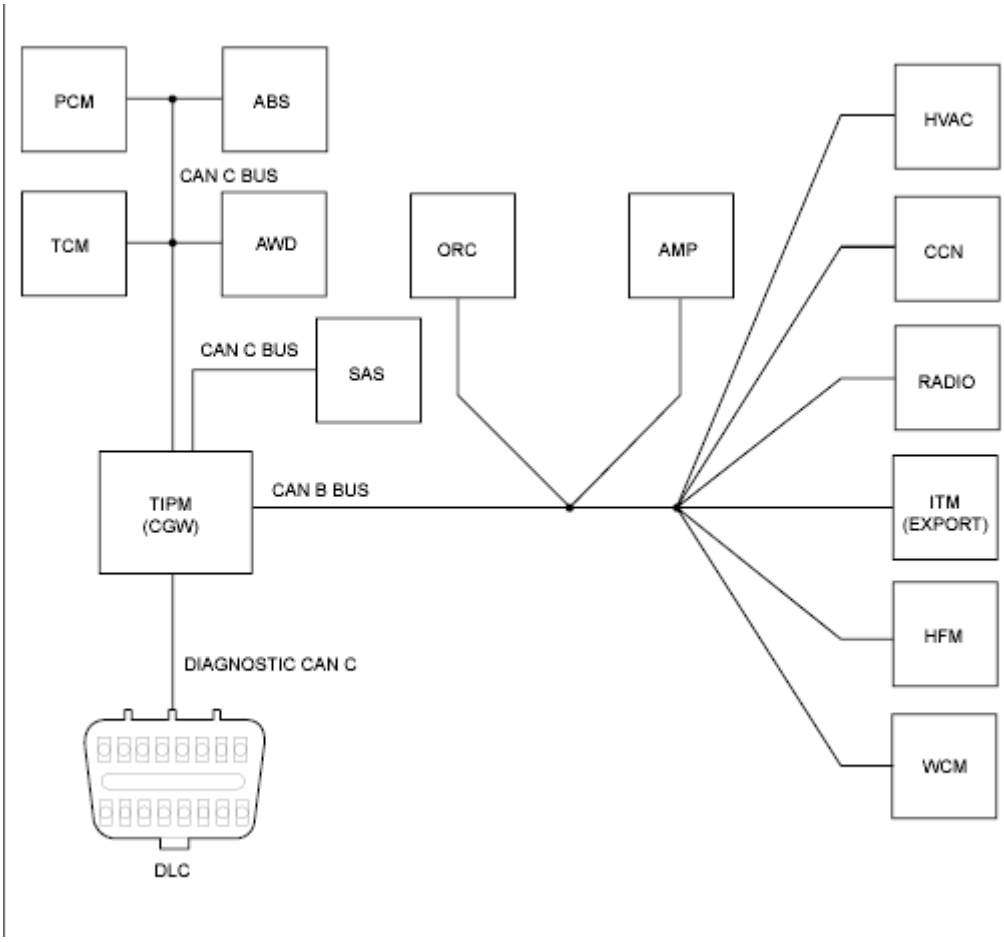

Fig. 15: Checking For Shorted Active Head Rest Circuit
Courtesy of CHRYSLER GROUP, LLC

WARNING: Turn the ignition off disconnect the 12-volt battery and wait two minutes before proceeding. Failure to follow these instructions may result in possible serious or fatal injury.

1. Access the Passenger Active Head Rest harness connector located in the passenger seatback jumper harness.
2. Disconnect the Passenger Active Headrest harness connectors.

NOTE: Check the connectors - Clean and repair as necessary.

NOTE: Please use the Active Head Rest Load Tool (special tool #10253, Tester, AHR Load) in testing the present status of the AHR signal circuit.

3. Connect the AHR Load Tool (special tool #10253, Tester, AHR Load) to the passenger AHR seatback jumper harness connector going into the seatback and under the seat. Not into the passenger AHR component harness.

WARNING: Turn the ignition on, then reconnect the 12-volt battery and wait two minutes before proceeding. Failure to follow these instructions may result in possible serious or fatal injury.

4. With the scan tool, read the active ORC DTCs.

Does the scan tool display: B1C18-PASSENGER ACTIVE HEADREST CONTROL CIRCUIT LOW?

Yes

- Go To 3

No

WARNING: Turn the ignition off disconnect the 12-volt battery and wait two minutes before proceeding. Failure to follow these instructions may result in possible serious or fatal injury.

- Replace the Passenger Active Head Rest in accordance with the Service Information. Refer to **HEADREST, REMOVAL** .

3. **CHECK THE (R677) ACTIVE HEAD RESTRAINT 1ST ROW PASSENGER SIGNAL CIRCUIT HARNESS FOR A SHORT TO GROUND**

NOTE: The AHR connectors carry a shorting bar that should set a high code upon disconnecting the AHR harness connectors.

WARNING: Turn the ignition off disconnect the 12-volt battery and wait two minutes before proceeding. Failure to follow these instructions may result in possible serious or fatal injury.

1. Access the Passenger Active Headrest harness connector located in the passenger seat back.
2. Disconnect the Passenger Active Headrest harness connector.

WARNING: Turn the ignition on, then reconnect the 12-volt battery and wait two minutes before proceeding. Failure to follow these instructions may result in possible serious or fatal injury.

Does the scan tool display active B1C19-PASSENGER ACTIVE HEADREST CONTROL CIRCUIT HIGH?

Yes

- Turn the Ignition off.

WARNING: Turn the ignition off disconnect the 12-volt battery and wait two minutes before proceeding. Failure to follow these instructions may result in possible serious or fatal injury.

-
- Connect the Passenger Active Headrest harness connector.

WARNING: Turn the ignition on, then reconnect the 12-volt battery and wait two minutes before proceeding. Failure to follow these instructions may result in possible serious or fatal injury.

-
- Wait 15 seconds before turning the Ignition On.
- Use the scan tool and erase the ORC stored codes.

NOTE: This forces the ORC module into a reset diagnostic mode to check for Active ORC DTCs.

-
- Turn the ignition Off. Wait 15 seconds before turning the ignition On.
- Wait one minute and read active codes.
- If the B1C18-Passenger Active Headrest Control Circuit Low DTC becomes active, replace the Passenger Active Headrest in accordance with the Service Information. Refer to **HEADREST, REMOVAL** .

No

- Go To 4

4. **CHECK THE (Z908) ACTIVE HEAD RESTRAINT 1ST ROW PASSENGER GROUND CIRCUIT FOR OPEN**

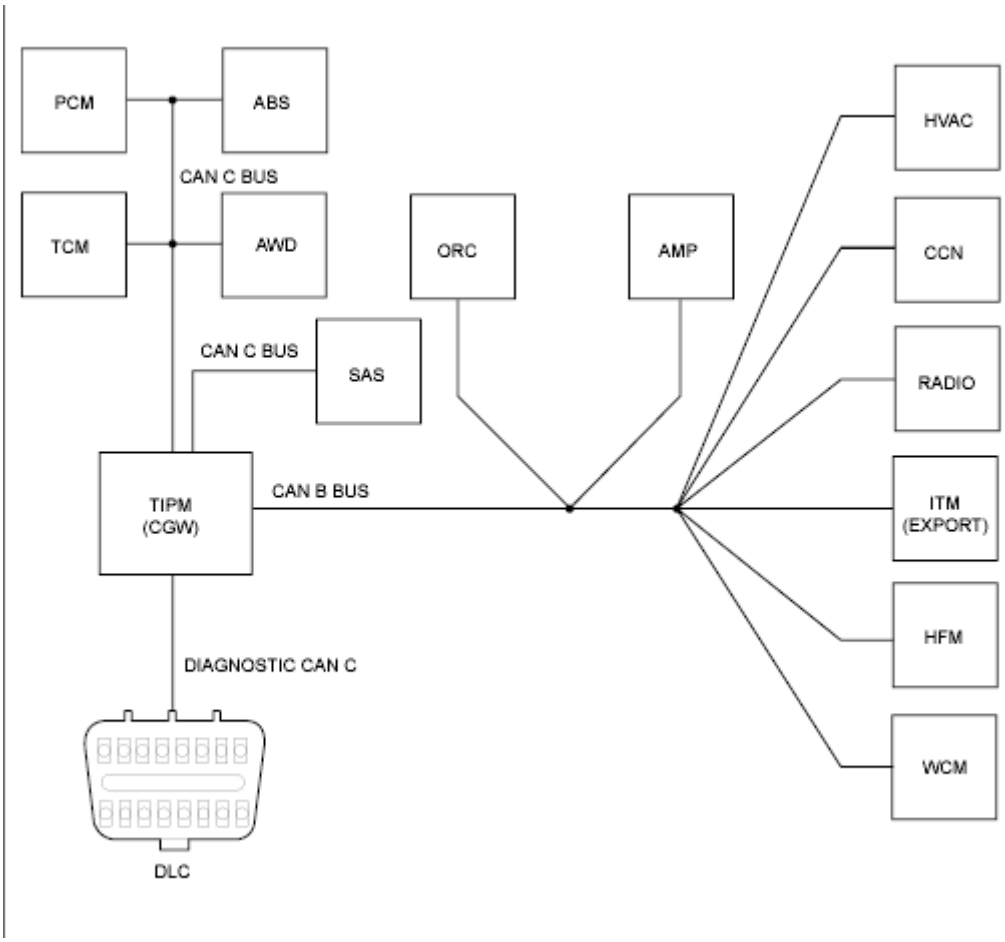

Fig. 16: Checking Active Head Restraint 1st Row Passenger Ground Circuit For Open
Courtesy of CHRYSLER GROUP, LLC

1. Measure the resistance of the Ground circuit between the Passenger Head Restraint connector and ground.

   Is the resistance below 5.0 Ohms?

   Yes

   - Go To 5

   No

   - Repair the Ground circuit for a open or high resistance.
   - Perform the AIRBAG SYSTEM VERIFICATION TEST. Refer to **STANDARD PROCEDURE** .

5. **CHECK THE (R677) ACTIVE HEAD RESTRAINT 1ST ROW**

PASSENGER SIGNAL CIRCUIT HARNESS FOR SHORT TO GROUND IN THE BODY HARNESS

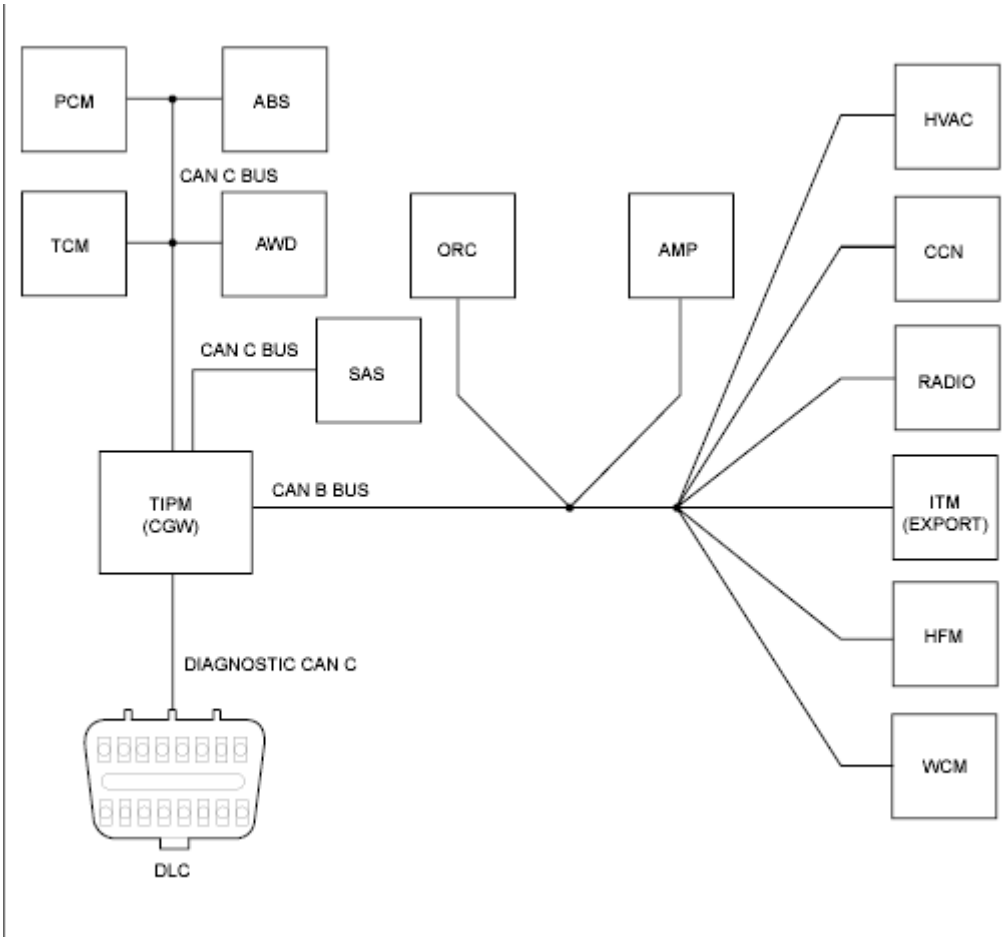

Fig. 17: Checking Active Head Restraint 1st Row Signal Circuit For Short To Ground
Courtesy of CHRYSLER GROUP, LLC

WARNING: Turn the ignition off disconnect the 12-volt battery and wait two minutes before proceeding. Failure to follow these instructions may result in possible serious or fatal injury.

1. Reconnect the Passenger Active Headrest harness connector located in the passenger seatback.
2. Disconnect the ORC Module harness connector.
3. Connect the SRS Load Tool Adapter (special tool #8443-25, 56 Way ACM Adapter).

4. Disconnect the in-line underseat jumper harness connector located under the passenger seat to the rear of the seat cushion.
5. Measure the resistance between ground and the (R677) Active Head Restraint 1st Row Passenger Signal circuit of the appropriate terminal of the SRS Load Tool Adapter (special tool #8443-25, 56 Way ACM Adapter).

   Is the resistance below 5.0 Ohms?

   Yes

   - Repair the short to ground in the (R677) Active Head Restraint 1st Row Passenger Signal circuit located between the inline underseat jumper harness connector and the ORC.
   - Perform the AIRBAG SYSTEM VERIFICATION TEST. Refer to **STANDARD PROCEDURE** .

   No

   - Go To 6

6. **CHECK THE (R677) ACTIVE HEAD RESTRAINT 1ST ROW PASSENGER SIGNAL CIRCUIT FOR A SHORT TO GROUND IN THE PASSENGER ACTIVE HEAD REST SEAT BACK JUMPER HARNESS**

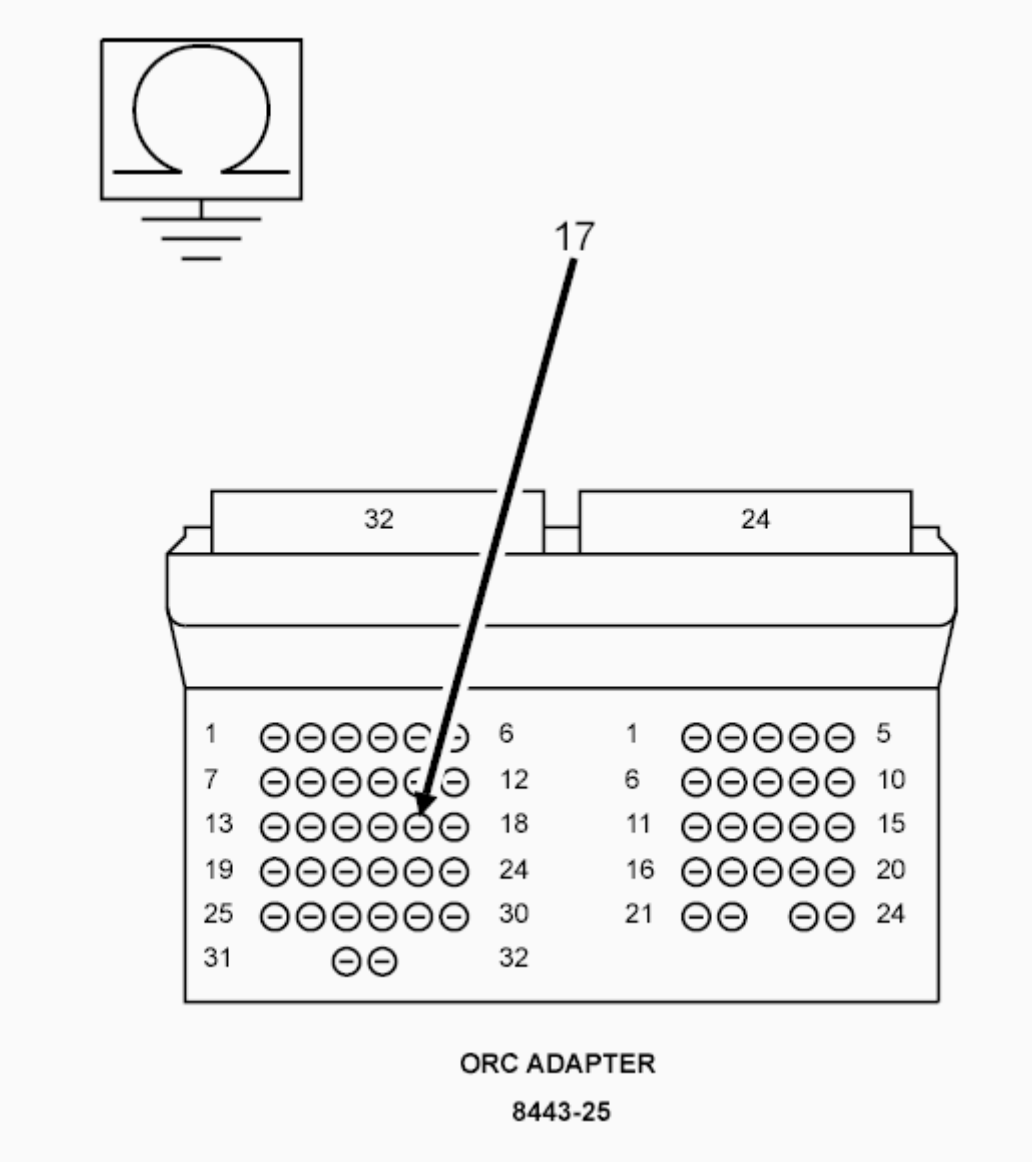

Fig. 18: Checking Active Head Restraint 1st Row Signal Circuit For Short To Ground
Courtesy of CHRYSLER GROUP, LLC

WARNING: Turn the ignition off disconnect the 12-volt battery and wait two minutes before proceeding. Failure to follow these instructions may result in possible serious or fatal injury.

NOTE: Inspect for damaged or bent terminals at the inline underseat jumper harness connectors located under the passenger seat to the passenger active head rest.

1. Reconnect the inline underseat jumper harness connector located under the passenger seat to the rear of the seat cushion.
2. Measure the resistance of the (R677) Active Head Restraint 1st Row Passenger Signal circuit between the appropriate terminal of the SRS Load Tool Adapter (special tool #8443-25, 56 Way ACM Adapter) and ground.

   Is the resistance below 5.0 Ohms?

   Yes

   - Repair the short to ground in the (R677) Active Head Restraint 1st Row Passenger Signal circuit located between the Passenger Active Head Rest jumper harness connector and the inline connector under the passenger seat.
   - Perform the AIRBAG SYSTEM VERIFICATION TEST. Refer to **STANDARD PROCEDURE** .

   No

   - Go To 7

7. **CHECK THE OPERATION OF THE PASSENGER ACTIVE HEAD REST**
   1. Replace the Passenger Active Head Restraint in accordance with the Service Information.
   2. Reconnect the vehicle body harness to the Passenger Active Head Restraint harness connector.
   3. Remove any special tools or jumper wires and reconnect all previously disconnected components - except the Battery.

      WARNING: **Turn the ignition on, then reconnect the 12-volt battery and wait two minutes before proceeding. Failure to follow these instructions may result in possible serious or fatal injury.**

   4. Connect the scan tool to the Data Link Connector - use the most current software available.

5. Use the scan tool and erase the ORC stored codes.
6. Turn the Ignition Off and wait 15 seconds before turning the Ignition On.
7. Wait one minute and read active codes and if there are none present read the stored codes.

   Does the scan tool display active B1C18-PASSENGER ACTIVE HEADREST CONTROL CIRCUIT LOW DTC?

   Yes

   WARNING: **Turn the ignition off, disconnect the 12-volt battery and wait two minutes before proceeding. Failure to follow these instructions may result in possible serious or fatal injury.**

   WARNING: **If the Occupant Restraint Controller (ORC) is dropped at any time, it must be replaced. Failure to follow these instructions may result in possible serious or fatal injury.**

   - Replace the ORC in accordance with Service Information.
   - Perform the AIRBAG SYSTEM VERIFICATION TEST. Refer to **STANDARD PROCEDURE** .

   No

   - Repair is complete.
   - Perform the AIRBAG SYSTEM VERIFICATION TEST. Refer to **STANDARD PROCEDURE** .

B1C19-PASSENGER ACTIVE HEADREST CONTROL CIRCUIT HIGH

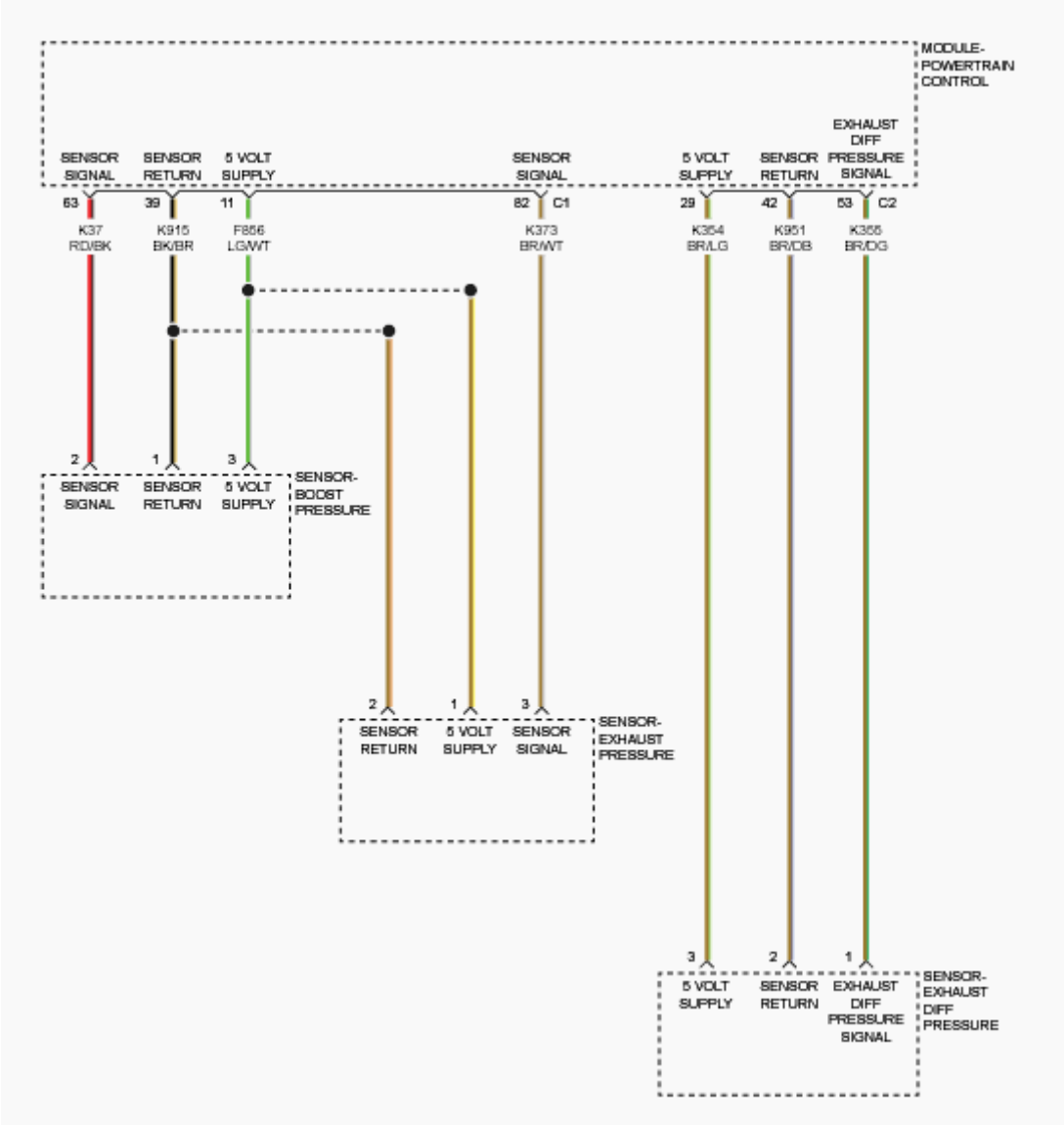

Fig. 19: Active Headrests Circuit Schematic
Courtesy of CHRYSLER GROUP, LLC

For a complete wiring diagram, **refer to appropriate SYSTEM WIRING DIAGRAMS article** .

NOTE: If this code is setting on a Right Hand Drive Vehicle (RHD) follow the diagnostic procedure for (whatever the BXXXX-Driver Active Headrest Control Circuit High).

THEORY OF OPERATION

The Passenger Active Headrest signal circuit is driven by a solenoid that also uses a diode in parallel. The single electrical component of the AHR (Active Headrest) unit is the latch-release solenoid. The solenoid is connected by a 2 way

pigtail wire and harness connector. The pigtail wire and 2 way connector are routed through the center of one of the headrest support posts and down through the guide sleeve to the interior of the seat back, where it connects to the seat wire harness. The solenoid is grounded at an independent dedicated ground. The AHR components itself cannot be repaired. If damaged or ineffective, the AHR (Active Headrest) must be replaced as a new assembly. If upon inspection the AHR has deployed it can be reset following the proper reset method. Refer to **RESTRAINT, ACTIVE HEAD, STANDARD PROCEDURE** . Also if the already deployed Driver or Passenger AHR are latched in the locked position please see the scan tool miscellaneous functions to set the latch in the unlock or deployed position. Please be very observant and careful, the scan tool should never be used to actually deploy a known good non-deployed Driver or Passenger AHR.

WHEN MONITORED

The Occupant Restraint Controller (ORC) continuously communicates with the Passenger Active Head Restraint over the Passenger Active Head Restraint Solenoid Signal circuit. The Passenger Active Head Restraint communication and on board diagnostics are powered by the ORC signal.

SET CONDITION

This code will set, if the ORC detects High voltage on the (R677) Passenger Active Head Restraint Solenoid Signal circuit.

POSSIBLE CAUSES

Possible Causes
(R677) PASSENGER ACTIVE HEAD RESTRAINT SOLENOID SIGNAL CIRCUIT SHORTED TO BATTERY PASSENGER ACTIVE HEAD RESTRAINT OCCUPANT RESTRAINT CONTROLLER (ORC)

DIAGNOSTIC TEST

1. **VERIFY ACTIVE DTC**

   NOTE: Make sure the battery is fully charged.

   1. Turn the ignition on.

2. With the scan tool, read the ORC DTCs.

   Does the scan tool display active B1C19-PASSENGER ACTIVE HEADREST CONTROL CIRCUIT HIGH DTC?

   Yes

   - Go To 2

   No

   - Perform the AIRBAG SYSTEM INTERMITTENT TEST. Refer to **STANDARD PROCEDURE** .

2. **CHECK FOR A SHORTED ACTIVE HEAD REST CIRCUIT IN PASSENGER ACTIVE HEAD REST**

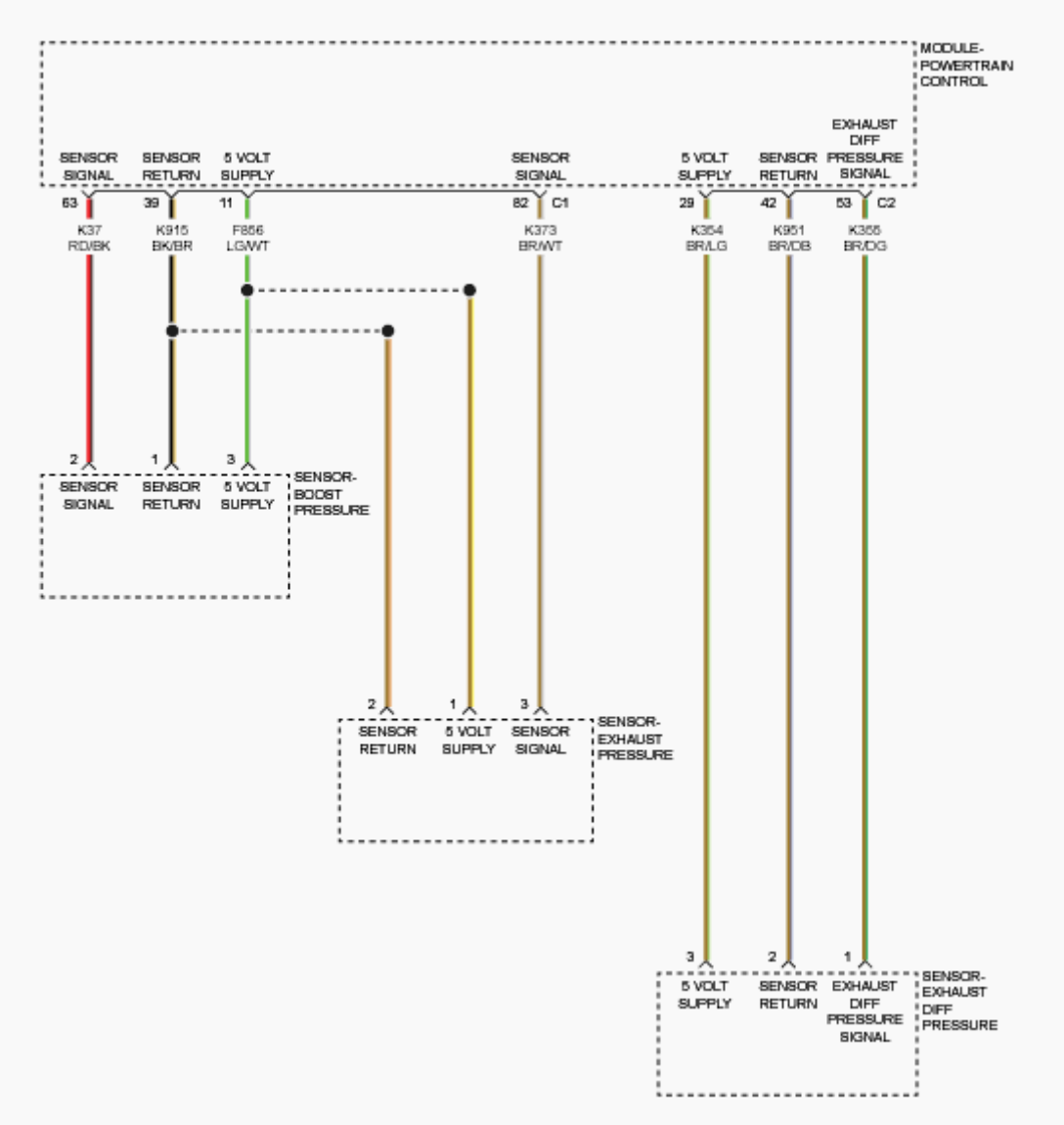

Fig. 20: Checking For Shorted Active Head Rest Circuit
Courtesy of CHRYSLER GROUP, LLC

WARNING: Turn the ignition off disconnect the 12-volt battery and wait two minutes before proceeding. Failure to follow these instructions may result in possible serious or fatal injury.

1. Access the Passenger Active Head Rest harness connector located in the passenger seatback jumper harness.
2. Disconnect the Passenger Active Headrest harness connectors.

NOTE: Check the connectors - Clean and repair as

necessary.

NOTE: Please use the Active Head Rest Load Tool (special tool #10253, Tester, AHR Load) in testing the present status of the AHR signal circuit.

3. Connect the AHR Load Tool (special tool #10253, Tester, AHR Load) to the driver AHR seatback jumper harness connector going into the seatback and under the seat.

WARNING: Turn the ignition on, then reconnect the 12-volt battery and wait two minutes before proceeding. Failure to follow these instructions may result in possible serious or fatal injury.

4. With the scan tool, read the active ORC DTCs.

   Does the scan tool display: B1C19-PASSENGER ACTIVE HEADREST CONTROL CIRCUIT HIGH?

   Yes

   - Go To 3

   No

WARNING: Turn the ignition off disconnect the 12-volt battery and wait two minutes before proceeding. Failure to follow these instructions may result in possible serious or fatal injury.

- Replace the Passenger Active Head Rest in accordance with the Service Information. Refer to **HEADREST, REMOVAL** .

3. **CHECK THE (R677) ACTIVE HEAD RESTRAINT 1ST ROW PASSENGER SIGNAL CIRCUIT HARNESS FOR A SHORT TO VOLTAGE**

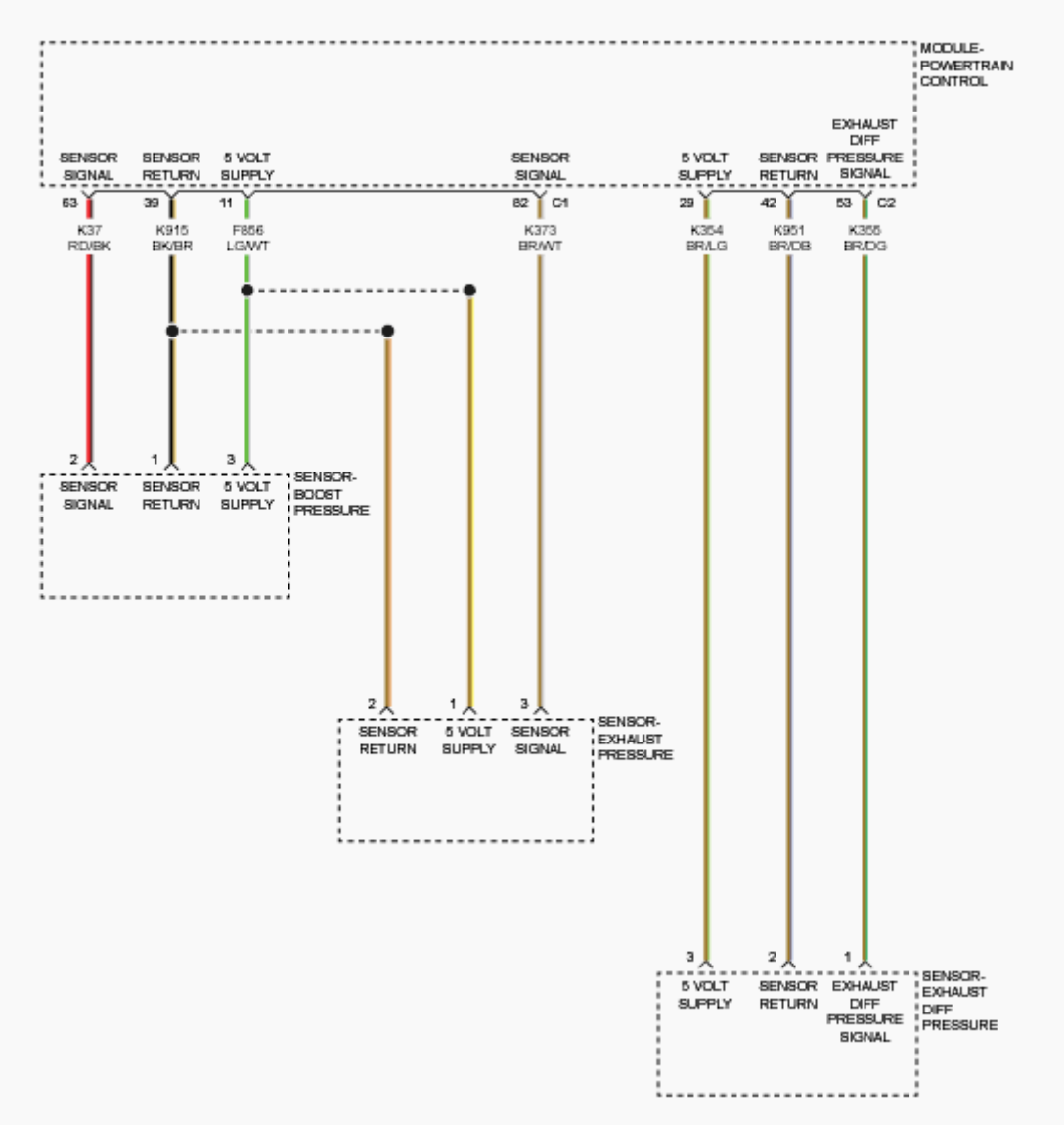

Fig. 21: Checking Active Head Restraint 1st Row Passenger Signal Circuit Harness For A Short To Voltage
Courtesy of CHRYSLER GROUP, LLC

WARNING: Turn the ignition off, disconnect the 12-volt battery and wait two minutes before proceeding. Failure to follow these instructions may result in possible serious or fatal injury.

1. Disconnect the ORC harness connectors.
2. Connect the SRS Load Tool Adapter (special tool #8443-25, 56 Way ACM Adapter) to the ORC harness connectors.
3. Keep the in-line underseat connector and the Passenger Active Headrest

connector in the passenger seat back connected.

WARNING: Turn the ignition on, then reconnect the 12-volt battery and wait two minutes before proceeding. Failure to follow these instructions may result in possible serious or fatal injury.

4. Measure the voltage of the (R677) Active Head Restraint 1st Row Passenger Signal circuit at the appropriate terminal of the SRS Load Tool Adaptor (special tool #8443-25, 56 Way ACM Adapter) and ground.

   Is there voltage present?

   Yes

   - Go To 4

   No

   - Go To 5

4. **CHECK THE (R677) ACTIVE HEAD RESTRAINT 1ST ROW PASSENGER SIGNAL CIRCUIT FOR A SHORT TO VOLTAGE BETWEEN THE ORC AND THE IN-LINE UNDERSEAT CONNECTOR (BODY HARNESS)**

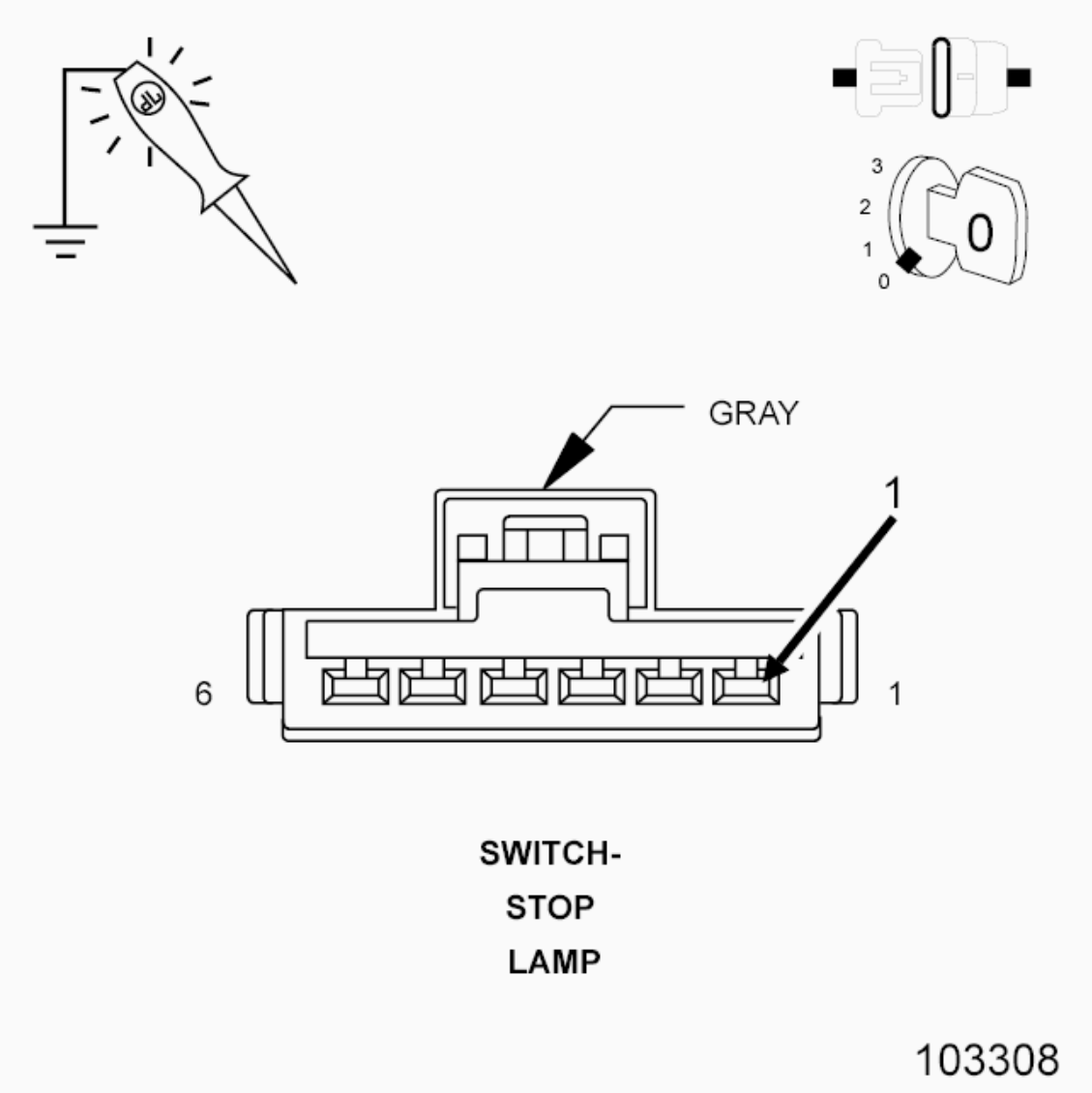

Fig. 22: Checking Active Head Restraint 1st Row Passenger Signal Circuit Harness For A Short To Voltage
Courtesy of CHRYSLER GROUP, LLC

WARNING: Turn the ignition off disconnect the 12-volt battery and wait two minutes before proceeding. Failure to follow these instructions may result in possible serious or fatal injury.

NOTE: Inspect for damaged terminals at the in-line underseat jumper harness connector.

1. Disconnect the in-line underseat harness connector.

WARNING: Turn the ignition on, then reconnect the 12-volt battery and wait two minutes before proceeding. Failure to follow these instructions may result in possible serious or fatal injury.

2. Measure for voltage between ground and the (R677) Active Head Restraint 1st Row Passenger Signal circuit at the appropriate terminal of the SRS Load Tool Adaptor (special tool #8443-25, 56 Way ACM Adapter).

   Is there voltage present?

   Yes

   - Repair the short to voltage in the (R677) Active Head Restraint 1st Row Passenger Signal circuit located between the ORC and the body side of harness in-line underseat jumper connector.
   - Perform the AIRBAG SYSTEM VERIFICATION TEST. Refer to **STANDARD PROCEDURE** .

   No

   - Go To 5

5. **CHECK THE (R677) ACTIVE HEAD RESTRAINT 1ST ROW PASSENGER SIGNAL CIRCUIT FOR SHORT TO VOLTAGE IN THE SEATBACK HARNESS**

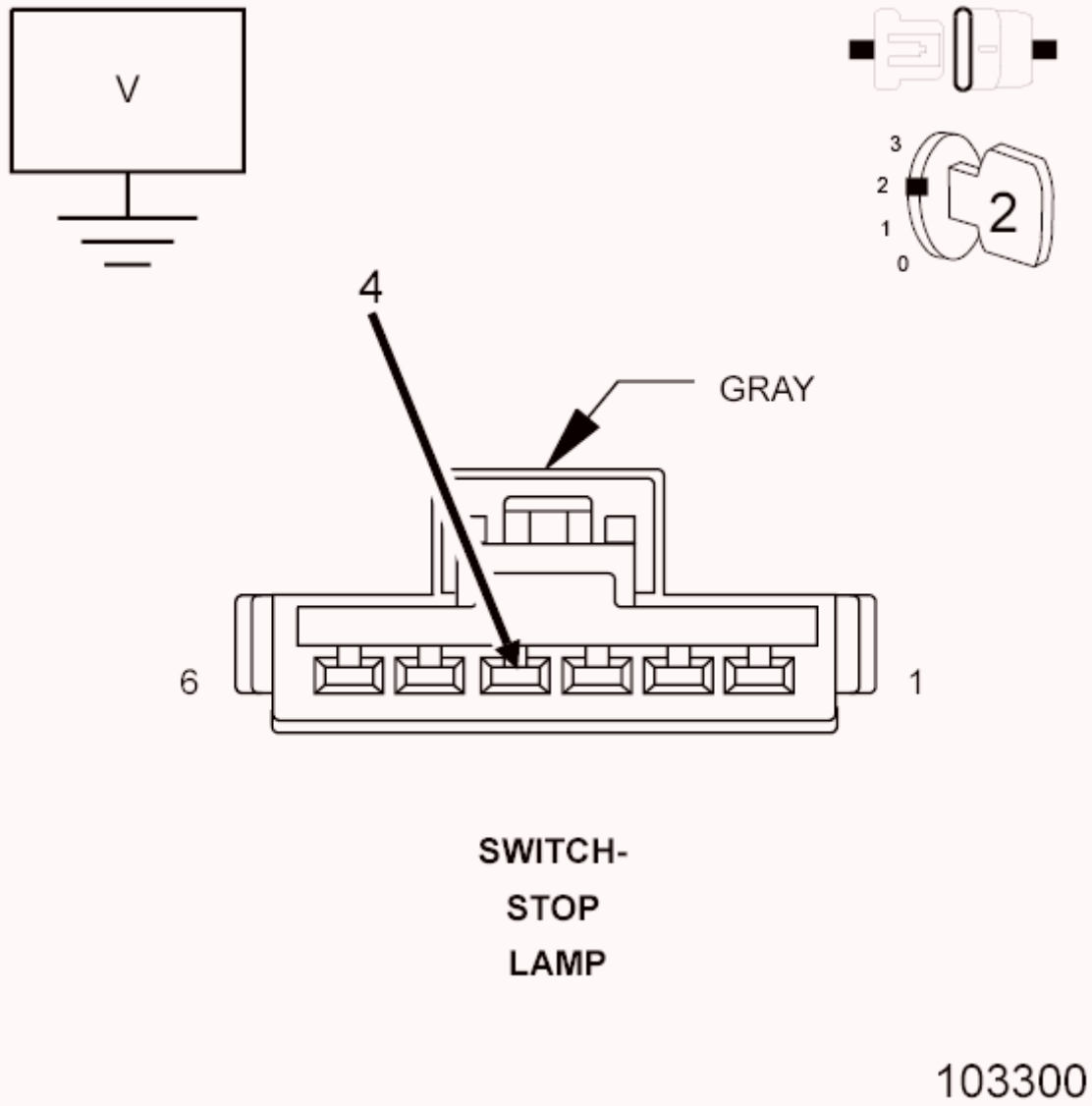

Fig. 23: Checking Active Head Restraint 1st Row Passenger Signal Circuit Harness For A Short To Voltage
Courtesy of CHRYSLER GROUP, LLC

WARNING: Turn the ignition off disconnect the 12-volt battery and wait two minutes before proceeding. Failure to follow these instructions may result in possible serious or fatal injury.

NOTE: Inspect for damaged terminals at the in-line underseat jumper harness connector. Reconnect the in-line harness connector.

1. Connect the in-line under seat harness connector.
2. Access the Passenger Active Headrest connector located in the passenger seat back jumper harness.
3. Disconnect the Passenger Active Headrest harness connector.

WARNING: Turn the ignition on, then reconnect the 12-volt battery and wait two minutes before proceeding. Failure to follow these instructions may result in possible serious or fatal injury.

4. Measure the voltage between ground and the (R677) Active Head Restraint 1st Row Passenger Signal circuit at the appropriate terminal of the SRS Load Tool Adaptor (special tool #8443-25, 56 Way ACM Adapter).

   Is there voltage present?

   Yes

   - Repair the short to voltage in the (R677) Active Head Restraint 1st Row Passenger Signal circuit located between the in-line underseat jumper harness connector and the Passenger Active Headrest connector.
   - Perform the AIRBAG SYSTEM VERIFICATION TEST. Refer to **STANDARD PROCEDURE** .

   No

   - Go To 6

6. **CHECK THE OPERATION OF THE PASSENGER ACTIVE HEAD RESTRAINT**
   1. Replace the Passenger Active Head Restraint.
   2. Reconnect the vehicle body harness to the Passenger Active Head Restraint harness connector.
   3. Remove any special tools or jumper wires and reconnect all previously disconnected components - except the Battery.

WARNING: Turn the ignition on, then reconnect the 12-volt battery and wait two minutes before proceeding. Failure to follow these instructions may result in possible serious or fatal injury.

4. Connect the scan tool to the Data Link Connector - use the most current software available.
5. Use the scan tool and erase the ORC stored codes.
6. Turn the Ignition Off and wait 15 seconds before turning the Ignition On.
7. Wait one minute and read active codes and if there are none present read the stored codes.

Does the scan tool display active B1C19-PASSENGER ACTIVE HEADREST CONTROL CIRCUIT HIGH DTC?

Yes

WARNING: Turn the ignition off, disconnect the 12-volt battery and wait two minutes before proceeding. Failure to follow these instructions may result in possible serious or fatal injury.

WARNING: If the Occupant Restraint Controller (ORC) is dropped at any time, it must be replaced. Failure to follow these instructions may result in possible serious or fatal injury.

- Replace the ORC in accordance with Service Information.
- Perform the AIRBAG SYSTEM VERIFICATION TEST. Refer to **STANDARD PROCEDURE** .

No

- Repair is complete.

- Perform the AIRBAG SYSTEM VERIFICATION TEST. Refer to **STANDARD PROCEDURE** .

B1C1A-PASSENGER ACTIVE HEADREST CONTROL CIRCUIT OPEN

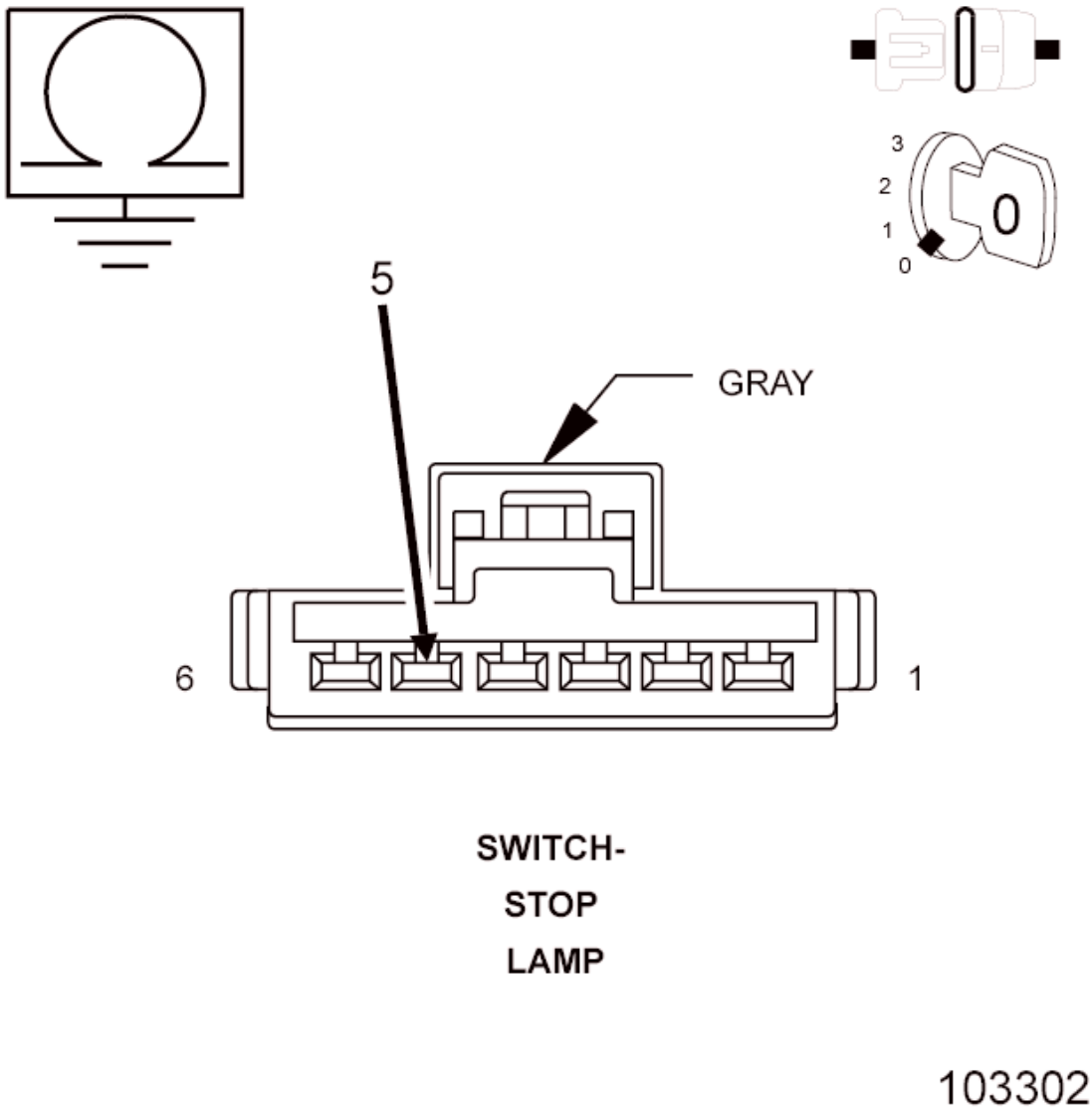

Fig. 24: Active Headrests Circuit Schematic
Courtesy of CHRYSLER GROUP, LLC

For a complete wiring diagram, **refer to appropriate SYSTEM WIRING DIAGRAMS article** .

NOTE: If this code is setting on a Right Hand Drive Vehicle (RHD) follow the diagnostic procedure for (whatever the BXXXX-Driver Active Headrest Control Circuit Open).

THEORY OF OPERATION

The Passenger Active Headrest signal circuit is driven by a solenoid that also uses a diode in parallel. The single electrical component of the AHR (Active Headrest) unit is the latch-release solenoid. The solenoid is connected by a 2 way pigtail wire and harness connector. The pigtail wire and 2 way connector are routed through the center of one of the headrest support posts and down through the guide sleeve to the interior of the seat back, where it connects to the seat wire harness. The solenoid is grounded at an independent dedicated ground. The AHR components itself cannot be repaired. If damaged or ineffective, the AHR (Active Headrest) must be replaced as a new assembly. If upon inspection the AHR has deployed it can be reset following the proper reset method. Refer to **RESTRAINT, ACTIVE HEAD, STANDARD PROCEDURE** . Also if the already deployed Driver or Passenger AHR are latched in the locked position please see the scan tool miscellaneous functions to set the latch in the unlock or deployed position. Please be very observant and careful, the scan tool should never be used to actually deploy a known good non-deployed Driver or Passenger AHR.

WHEN MONITORED

The Occupant Restraint Controller (ORC) continuously communicates with the Passenger Active Head Restraint over the Passenger Active Head Restraint Solenoid Signal circuit. The Passenger Active Head Restraint communication and on board diagnostics are powered by the ORC signal. The ORC checks for a open condition every 10ms. The ORC checks the circuit both pre and post fault setting condition. This allows the ORC to de-mature a code in the same ignition cycle.

SET CONDITION

This code will set, if the ORC detects High voltage or an Open on the (R677) Passenger Active Head Restraint Solenoid Signal circuit.

POSSIBLE CAUSES

Possible Causes
(R677) PASSENGER ACTIVE HEAD RESTRAINT SOLENOID SIGNAL CIRCUIT OPEN (Z908) PASSENGER ACTIVE HEAD REST GROUND CIRCUIT OPEN PASSENGER ACTIVE HEAD RESTRAINT

OCCUPANT RESTRAINT CONTROLLER (ORC)

DIAGNOSTIC TEST

1. **VERIFY ACTIVE DTC**

   NOTE: Make sure the battery is fully charged.

   1. Turn the ignition on.
   2. With the scan tool, read the ORC DTCs.

      Does the scan tool display active B1C1A-PASSENGER ACTIVE HEAD RESTRAINT CONTROL CIRCUIT OPEN DTC?

      Yes

      - Go To 2

      No

      - Perform the AIRBAG SYSTEM INTERMITTENT TEST. Refer to **STANDARD PROCEDURE** .

2. **CHECK FOR A SHORTED ACTIVE HEAD REST CIRCUIT IN PASSENGER ACTIVE HEAD REST**

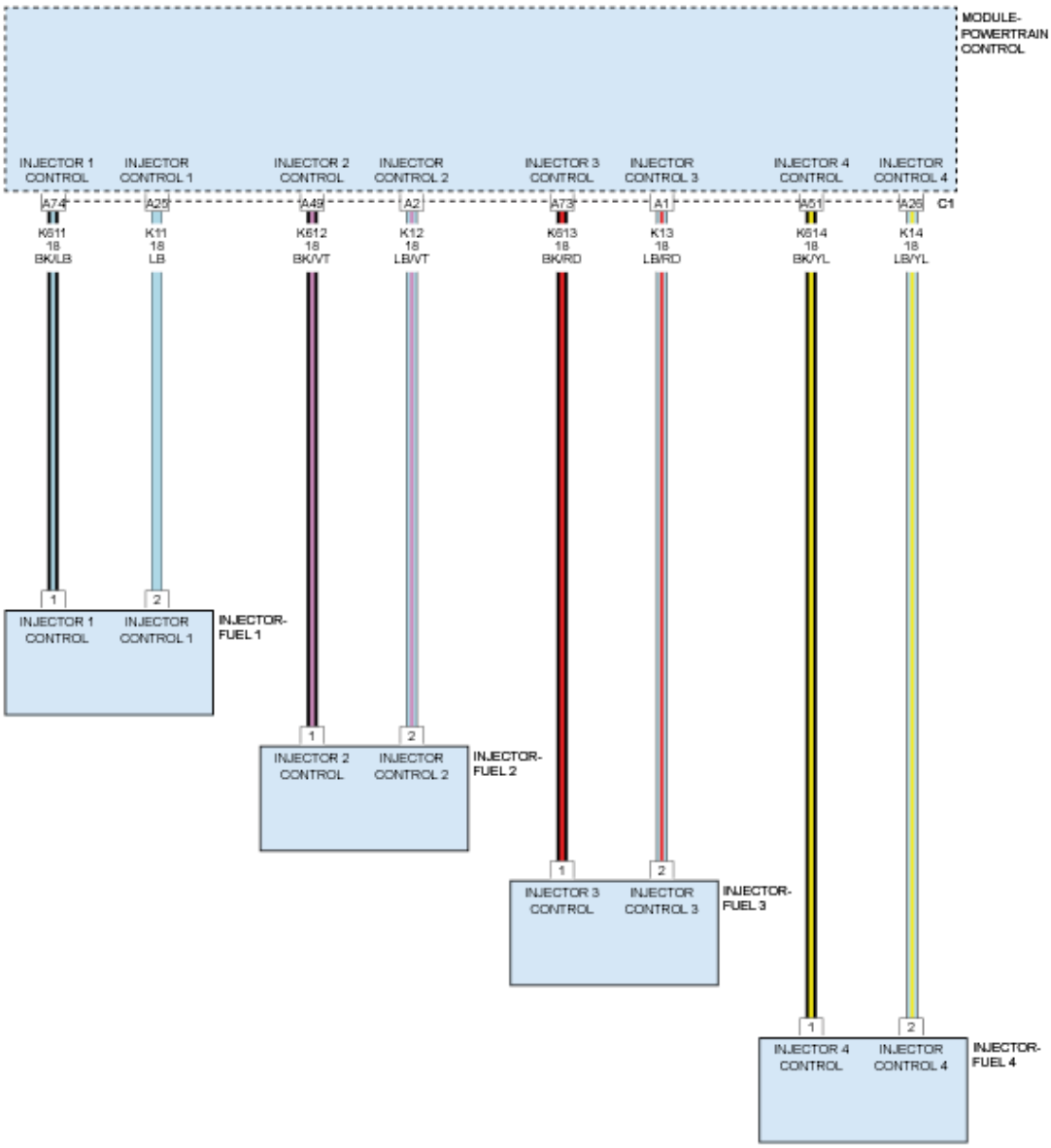

Fig. 25: Checking For Shorted Active Head Rest Circuit
Courtesy of CHRYSLER GROUP, LLC

WARNING: Turn the ignition off disconnect the 12-volt battery and wait two minutes before proceeding. Failure to follow these instructions may result in possible serious or fatal injury.

1. Access the Passenger Active Head Rest harness connector located in the passenger seatback jumper harness.
2. Disconnect the Passenger Active Headrest harness connectors.

NOTE: Check the connectors - Clean and repair as necessary.

NOTE: Please use the Active Head Rest Load Tool (special tool #10253, Tester, AHR Load) in testing the present status of the AHR signal circuit.

3. Connect the AHR Load Tool (special tool #10253, Tester, AHR Load) to the passenger AHR seatback jumper harness connector going into the seatback and under the seat.

WARNING: Turn the ignition on, then reconnect the 12-volt battery and wait two minutes before proceeding. Failure to follow these instructions may result in possible serious or fatal injury.

4. With the scan tool, read the active ORC DTCs.

   Does the scan tool display: B1C1A-PASSENGER ACTIVE HEADREST CONTROL CIRCUIT OPEN?

   Yes

   - Go To 3

   No

WARNING: Turn the ignition off disconnect the 12-volt battery and wait two minutes before proceeding. Failure to follow these instructions may result in possible serious or fatal injury.

- Replace the Passenger Active Head Rest in accordance with the Service Information. Refer to **HEADREST, REMOVAL** .

3. **CHECK THE PASSENGER ACTIVE HEAD REST (Z908) GROUND CIRCUIT FOR AN OPEN**

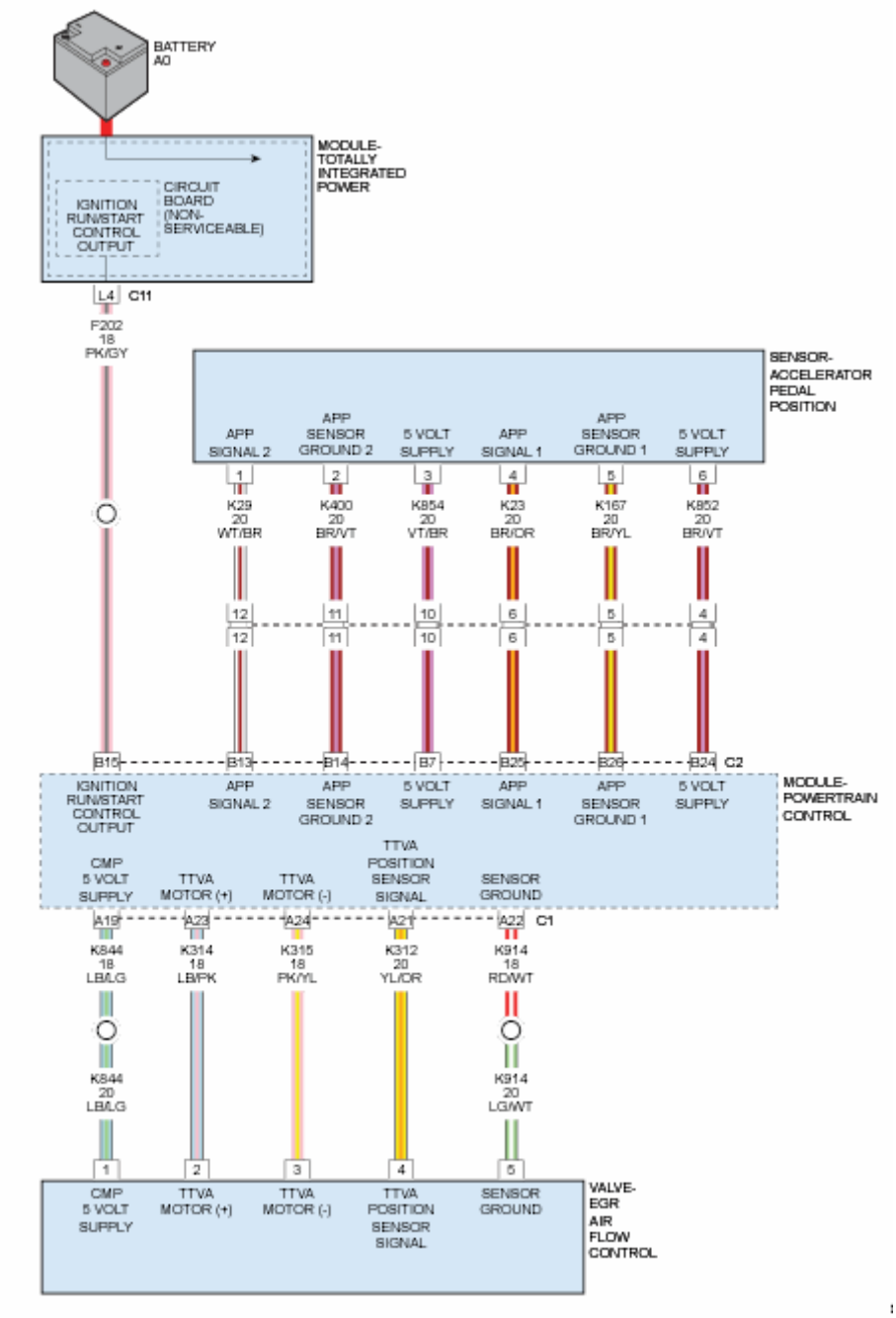

Fig. 26: Checking Passenger Active Head Rest Ground Circuit For An Open
Courtesy of CHRYSLER GROUP, LLC

WARNING: Turn the ignition off disconnect the 12-volt battery and wait two minutes before proceeding. Failure to follow these instructions may result in possible serious or fatal injury.

1. Measure the resistance of the (Z908) Ground circuit between the Driver Active Head Rest and ground.

   Is the resistance below 5.0 Ohms?

   Yes

   - Go To 4

   No

   - Repair the Ground circuit for a open or high resistance.
   - Perform the AIRBAG SYSTEM VERIFICATION TEST. Refer to **STANDARD PROCEDURE** .

4. **CHECK THE (R677) PASSENGER HEAD RESTRAINT SOLENOID SIGNAL CIRCUIT FOR AN OPEN OR HIGH RESISTANCE (ACTIVE HEAD REST SEAT BACK JUMPER SIDE TO ORC MODULE)**

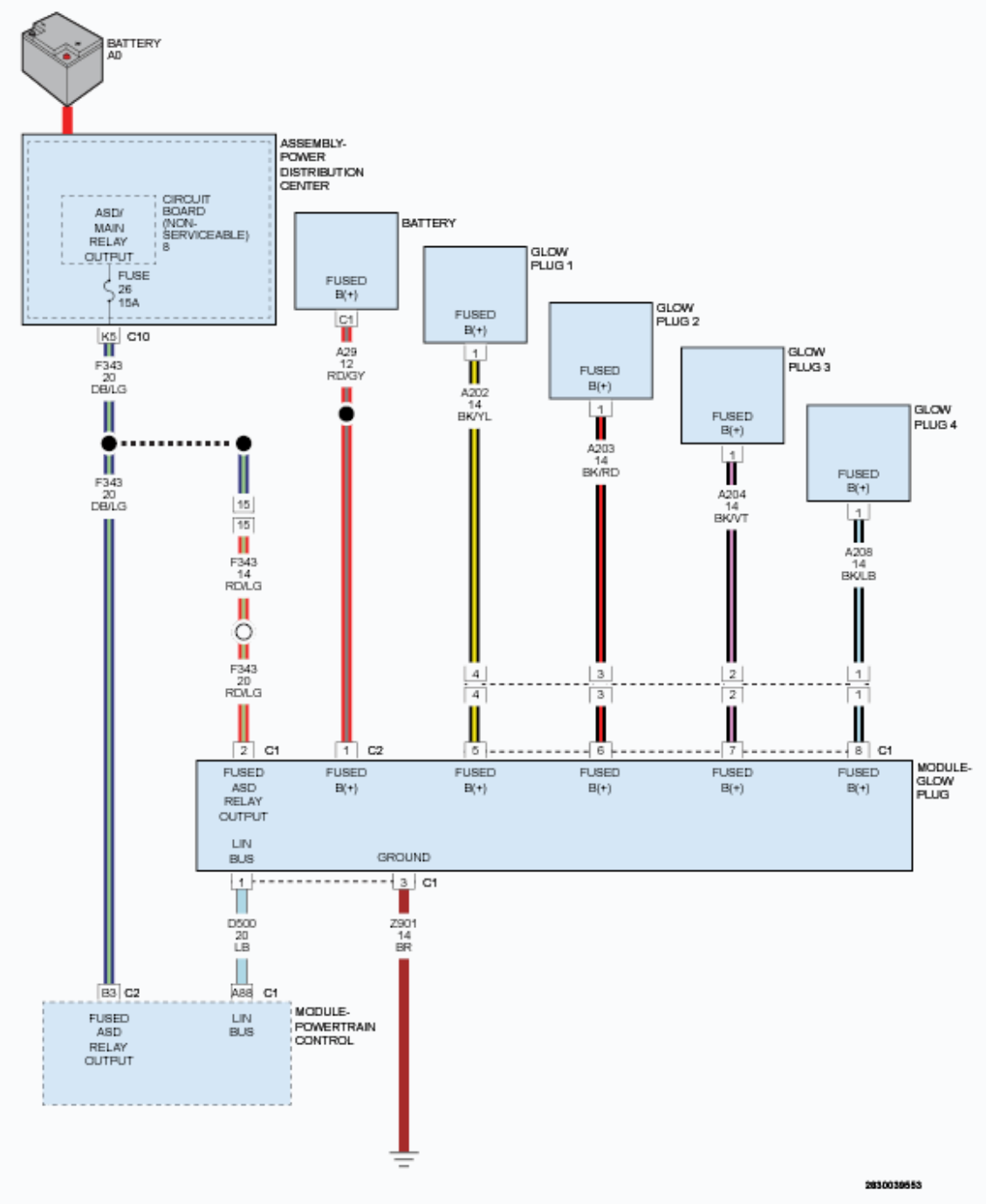

Fig. 27: Checking Passenger Head Restraint Solenoid Signal Circuit For An Open Or High Resistance
Courtesy of CHRYSLER GROUP, LLC

1. Measure the resistance of the (R677) Passenger Active Head Restraint Solenoid Signal circuit between the Passenger Head Restraint harness connector and the appropriate terminal of the SRS Load Tool Adapter (special tool #8443-25, 56 Way ACM Adapter).

Is the resistance below 1 Ohm?

Yes

- Go To 5

No

- Repair the (R677) Passenger Active Head Restraint Solenoid Signal circuit in the seat back and body harness for an open or high resistance.
- Perform the AIRBAG SYSTEM VERIFICATION TEST. Refer to **STANDARD PROCEDURE** .

5. **CHECK THE OPERATION OF THE PASSENGER ACTIVE HEAD RESTRAINT**
   1. Replace the Passenger Active Head Restraint in accordance with the Service Information.
   2. Reconnect the vehicle body harness to the Passenger Active Head Restraint harness connector.
   3. Remove any special tools or jumper wires and reconnect all previously disconnected components - except the Battery.

      WARNING: **Turn the ignition on, then reconnect the 12-volt battery and wait two minutes before proceeding. Failure to follow these instructions may result in possible serious or fatal injury.**

   4. Connect the scan tool to the Data Link Connector - use the most current software available.
   5. Use the scan tool and erase the ORC stored codes.
   6. Turn the Ignition Off and wait 15 seconds before turning the Ignition On.
   7. Wait one minute and read active codes and if there are none present read the stored codes.

      Does the scan tool display active B1C1A-PASSENGER ACTIVE HEADREST CONTROL CIRCUIT OPEN DTC?

Yes

WARNING: Turn the ignition off, disconnect the 12-volt battery and wait two minutes before proceeding. Failure to follow these instructions may result in possible serious or fatal injury.

WARNING: If the Occupant Restraint Controller (ORC) is dropped at any time, it must be replaced. Failure to follow these instructions may result in possible serious or fatal injury.

- Replace the ORC in accordance with Service Information.
- Perform the AIRBAG SYSTEM VERIFICATION TEST. Refer to **STANDARD PROCEDURE** .

No

- Repair is complete.
- Perform the AIRBAG SYSTEM VERIFICATION TEST. Refer to **STANDARD PROCEDURE** .

B1CDB-PASSENGER OCCUPANT DETECTOR CIRCUIT LOW

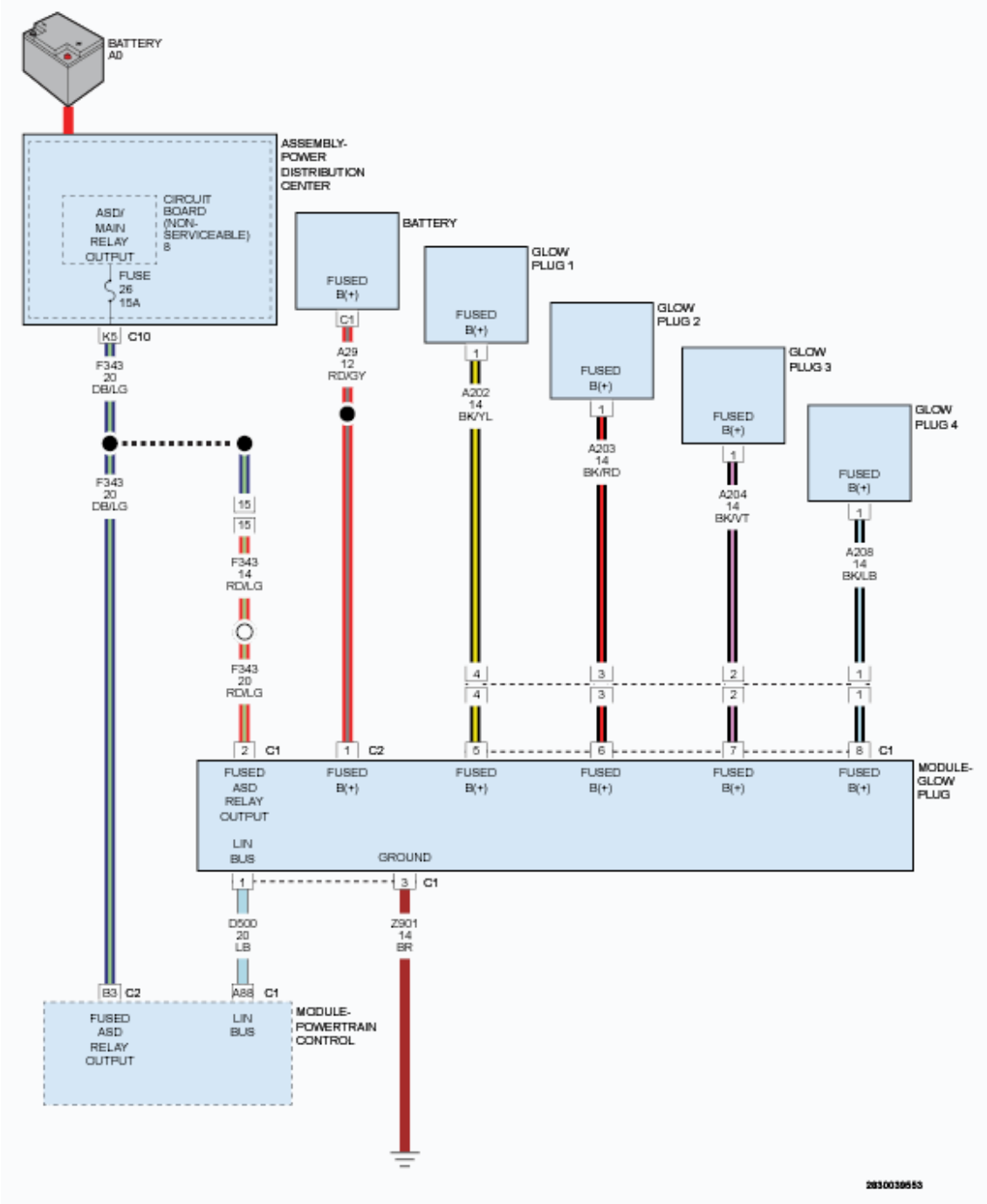

Fig. 28: Passenger Occupant Detector Circuit Schematic
Courtesy of CHRYSLER GROUP, LLC

For a complete wiring diagram, **refer to appropriate SYSTEM WIRING DIAGRAMS article** .

THEORY OF OPERATION

The Occupant Detection Sensor (ODS) is a resistive sensor that is located in the front passenger seat. This sensor is only used for passenger seat belt reminder.

The seat sensor assumes a passenger is present when a minimum of 53.5 pounds (20kg) of weight is placed in the seat. The resistance of the sensor decreases, signaling to the ORC module that a passenger is present. The ORC then transmits this information to the Instrument cluster over the CAN bus. The passenger is only reminded to buckle up if the vehicle speed is over 5mph (8kph) for 45 seconds. The ODS receives battery voltage and clean ground through dedicated sensor plus and minus circuits from the ORC. The ORC receives, processes, and continuously monitors (monitor rate of 500 ms) the analog signal from the ODS. The ODS component is not repairable, if determined inoperable, and would require to be replaced with a new component.

WHEN MONITORED

The ORC receives, processes, and continuously monitors (monitor rate of 500 ms) the analog signal from the ODS.

SET CONDITION

This code will set, if the ORC detects short to ground on the (R283) Passenger Occupant Detector Sensor Signal circuit for 2.5 - 5 seconds. The DTC will not latch for the entire ignition cycle. The code goes from Active to Stored 2.5 - 5 seconds after the code setting criteria is gone

POSSIBLE CAUSES

Possible Causes
(R283) PASSENGER OCCUPANT DETECTOR SIGNAL CIRCUIT OPEN
(R283) PASSENGER SEAT OCCUPANT DETECTOR SIGNAL CIRCUIT SHORTED TO GROUND
(R284) PASSENGER OCCUPANT DETECTOR RETURN CIRCUIT OPEN
(R283) PASSENGER SEAT OCCUPANT DETECTOR SIGNAL CIRCUIT SHORTED TO THE (R284) PASSENGER SEAT OCCUPANT DETECTOR RETURN CIRCUIT
PASSENGER SEAT OCCUPANT DETECTION SENSOR
OCCUPANT RESTRAINT CONTROLLER (ORC)

NOTE: Always Perform the Pre-Diagnostic Troubleshooting procedure before proceeding. Refer to STANDARD

PROCEDURE .

DIAGNOSTIC TEST

NOTE: The seat belt warning lamp in the instrument cluster does not set to indicate a passenger seat belt reminder feature.

NOTE: Make sure the battery is fully charged.

1. **VERIFY ACTIVE DTC**
   1. Turn the ignition on.
   2. With the scan tool, read the ORC DTCs

   Does the scan tool display active B1CDB-PASSENGER OCCUPANT DETECTOR CIRCUIT LOW DTC?

   Yes

   - Go To 2

   No

   - Perform the AIRBAG SYSTEM INTERMITTENT TEST. Refer to **STANDARD PROCEDURE** .
2. **CHECK THE (R283) PASSENGER OCCUPANT DETECTOR SIGNAL CIRCUIT FOR A SHORT TO VOLTAGE**

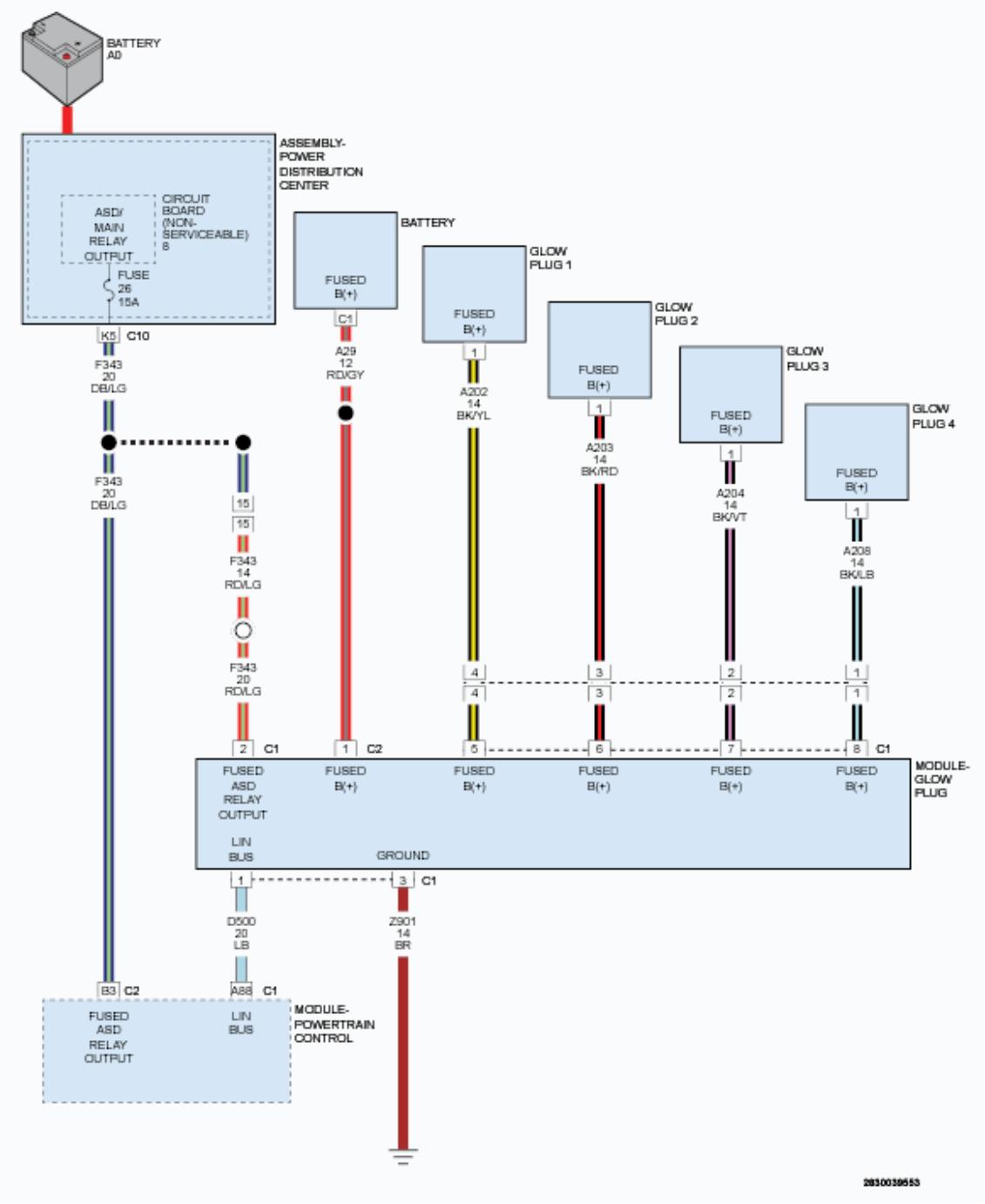

Fig. 29: Checking Passenger Occupant Detector Signal Circuit For A Short To Voltage
Courtesy of CHRYSLER GROUP, LLC

WARNING: Turn the ignition off, disconnect the 12-volt battery and wait two minutes before proceeding. Failure to follow these instructions may result in possible serious or fatal injury.

1. Disconnect the Passenger Occupant Detector Sensor harness connector.
2. Disconnect the ORC harness connectors.
3. Connect the SRS Load Tool Adapter (special tool #8443-25, 56 Way ACM Adapter) to the ORC harness connectors.

WARNING: Turn the ignition on, then reconnect the 12-volt battery and wait two minutes before proceeding. Failure to follow these instructions may result in possible serious or fatal injury.

4. Measure the (R283) Passenger Occupant Detector Signal circuit voltage between the appropriate terminal of the SRS Load Tool Adapter (special tool #8443-25, 56 Way ACM Adapter) and ground.

   Is there any voltage present?

   Yes

   - Repair the (R283) Passenger Occupant Detector Signal circuit for a short to voltage.
   - Perform the AIRBAG SYSTEM VERIFICATION TEST. Refer to **STANDARD PROCEDURE** .

   No

   - Go To 3

3. **CHECK THE (R283) PASSENGER OCCUPANT DETECTOR SIGNAL CIRCUIT FOR A SHORT TO GROUND**

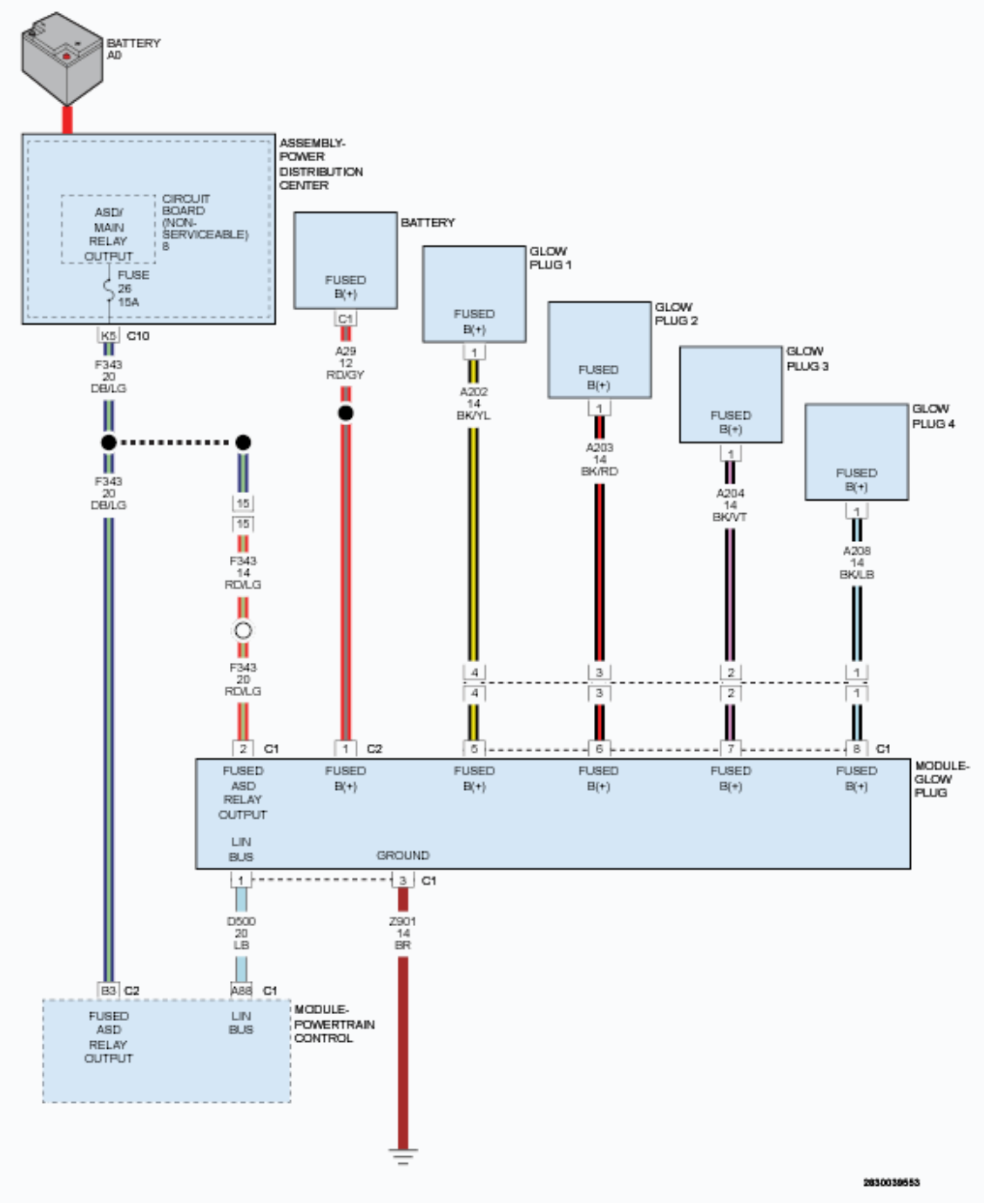

Fig. 30: Checking Passenger Occupant Detector Signal Circuit For A Short To Ground
Courtesy of CHRYSLER GROUP, LLC

WARNING: Turn the ignition off, disconnect the 12-volt battery and wait two minutes before proceeding. Failure to follow these instructions may result in possible serious or fatal injury.

1. Measure the resistance of the (R283) Passenger Occupant Detector Signal circuit between the appropriate terminal of the SRS Load Tool Adapter (special tool #8443-25, 56 Way ACM Adapter) and ground.

   Is the resistance below 2.5 - 5.0 Ohms?

   Yes

   - Repair the (R283) Passenger Seat Occupant Detector circuit for a short to ground.
   - Perform the AIRBAG SYSTEM VERIFICATION TEST. Refer to **STANDARD PROCEDURE** .

   No

   - Go To 4

4. **CHECK THE (R284) PASSENGER OCCUPANT DETECTOR SENSOR RETURN CIRCUIT FOR A SHORT TO GROUND**

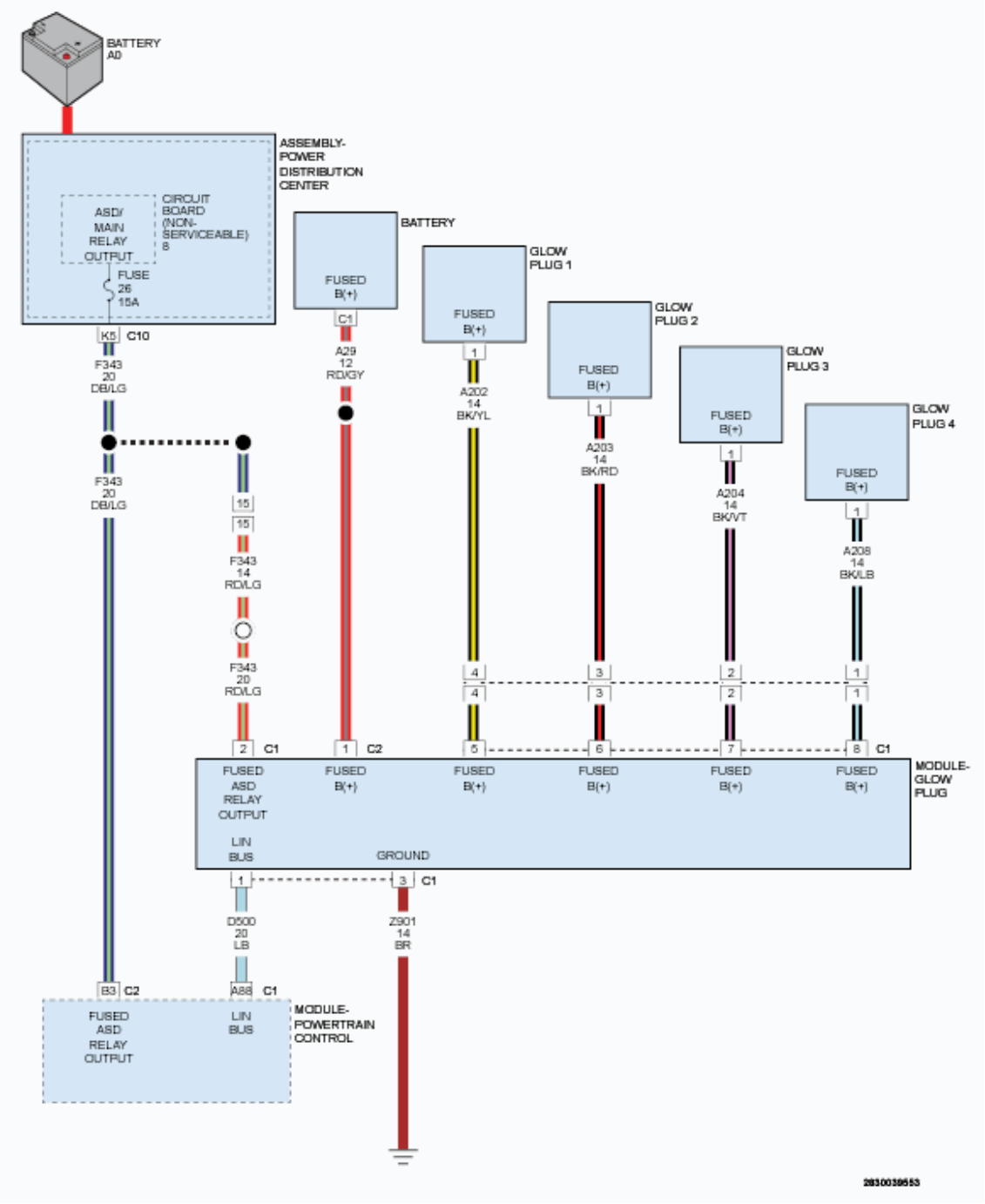

Fig. 31: Checking Passenger Occupant Detector Sensor Return Circuit For A Short To Ground
Courtesy of CHRYSLER GROUP, LLC

1. Measure the resistance of the (R284) Passenger Occupant Sensor Return circuit between the appropriate terminal of the SRS Load Tool Adapter (special tool #8443-25, 56 Way ACM Adapter) and ground.

   Is the resistance below 2.5 - 5.0 Ohms?

Yes

- Go To 5

No

- Repair the (R284) Passenger Occupant Sensor Return circuit for a short to ground.
- Perform the AIRBAG SYSTEM VERIFICATION TEST. Refer to **STANDARD PROCEDURE** .

5. **CHECK THE (R283) PASSENGER OCCUPANT DETECTOR SENSOR SIGNAL CIRCUIT FOR AN OPEN OR HIGH RESISTANCE**

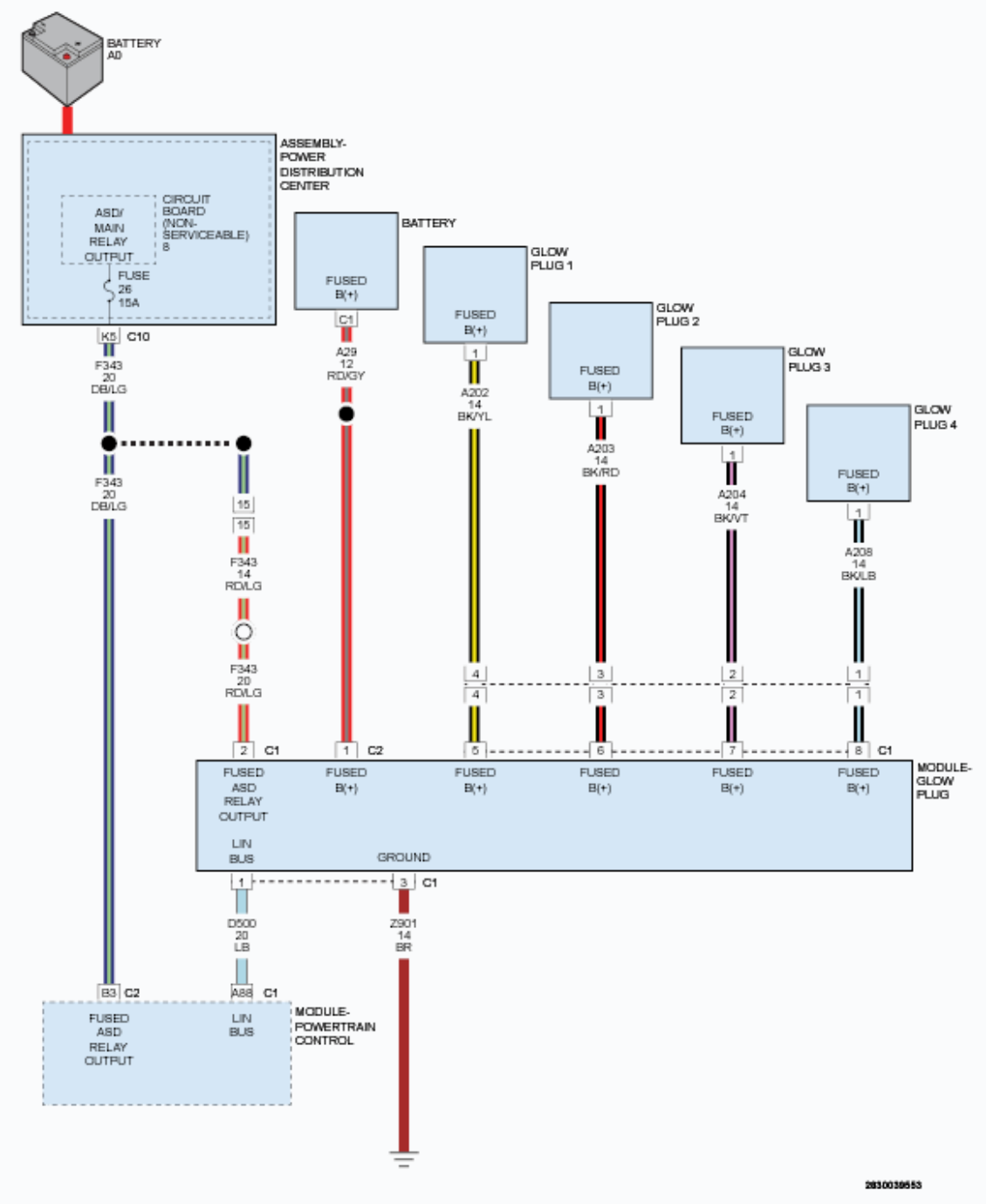

Fig. 32: Checking Passenger Occupant Detector Sensor Signal Circuit For An Open Or High Resistance
Courtesy of CHRYSLER GROUP, LLC

1. Measure the resistance of the (R283) Passenger Occupant Detector Signal circuit between the Passenger Occupant Detector Sensor underseat harness connector and the appropriate terminal of the SRS Load Tool Adapter (special tool #8443-25, 56 Way ACM Adapter).

Is the resistance below 2.5 - 5.0 Ohms?

Yes

- Go To 6

No

- Repair the (R283) Passenger Occupant Detector Signal circuit for an open or high resistance.
- Perform the AIRBAG SYSTEM VERIFICATION TEST. Refer to **STANDARD PROCEDURE** .

6. **CHECK OPERATION OF THE PASSENGER OCCUPANT DETECTOR SENSOR**
   1. Replace the Passenger Occupant Detector Sensor in accordance with the Service Information. Refer to **SENSOR, OCCUPANT DETECTION, REMOVAL** .
   2. Reconnect the vehicle body harness to the Passenger Occupant Detector Sensor.
   3. Remove any special tools or jumper wires and reconnect all previously disconnected components - except the Battery.

      WARNING: **Turn the ignition on, then reconnect the 12-volt battery and wait two minutes before proceeding. Failure to follow these instructions may result in possible serious or fatal injury.**

   4. Connect the scan tool to the Data Link Connector - use the most current software available.
   5. Use the scan tool and erase the ORC stored codes.
   6. Turn the Ignition Off and wait 15 seconds before turning the Ignition On.
   7. Wait one minute and read active codes and if there are none present read the stored codes.

      Does the scan tool display active B1CDB-PASSENGER SEAT OCCUPANT DETECTOR CIRCUIT LOW DTC?

Yes

WARNING: Turn the ignition off, disconnect the 12-volt battery and wait two minutes before proceeding. Failure to follow these instructions may result in possible serious or fatal injury.

WARNING: If the Occupant Restraint Controller (ORC) is dropped at any time, it must be replaced. Failure to follow these instructions may result in possible serious or fatal injury.

- Replace the ORC in accordance with Service Information. Refer to **MODULE, OCCUPANT RESTRAINT CONTROLLER, REMOVAL** .
- Perform the AIRBAG SYSTEM VERIFICATION TEST. Refer to **STANDARD PROCEDURE** .

No

- Repair is complete.
- Perform the AIRBAG SYSTEM VERIFICATION TEST. Refer to **STANDARD PROCEDURE** .

B1CDC-PASSENGER OCCUPANT DETECTOR CIRCUIT HIGH

NOTE: The ORC module cannot recognize between the different faults so it will set a High code. The diagnosis is to check the ODS signal and return circuits for all faults (short to voltage, open, short to ground, and shorted together).

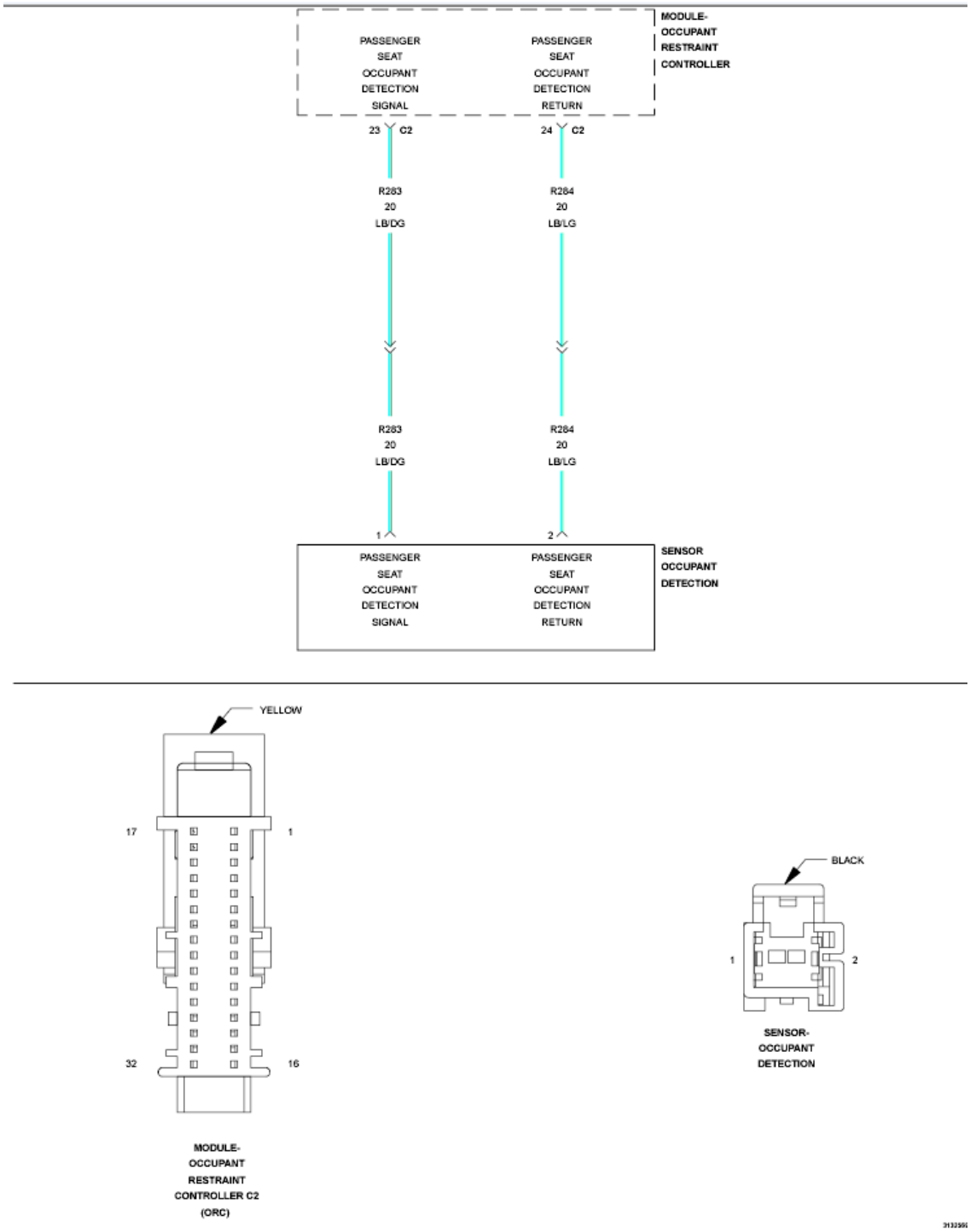

Fig. 33: Passenger Occupant Detector Circuit Schematic
Courtesy of CHRYSLER GROUP, LLC

For a complete wiring diagram, **refer to appropriate SYSTEM WIRING DIAGRAMS article** .

THEORY OF OPERATION

The Occupant Detection Sensor (ODS) is a resistive sensor that is located in the

front passenger seat. This sensor is only used for passenger seatbelt reminder. The seat sensor assumes a passenger is present when a minimum of 53.5 pounds (20kg) of weight is placed in the seat. The resistance of the sensor decreases, signaling to the ORC module that a passenger is present. The ORC then transmits this information to the Instrument cluster over the CAN bus. The passenger is only reminded to buckle up if the passenger seat occupant minimum weight threshold determined by the ODS is surpassed and the seat belt buckle is still not latched. The ODS receives battery voltage and clean ground through dedicated sensor plus and minus circuits from the ORC. The ORC receives, processes, and continuously monitors (monitor rate of 500 ms) the analog signal from the ODS. The ODS component is not repairable, if determined inoperable, it would require to be replaced with a new component. The seatbelt warning lamp will not set for this fault.

WHEN MONITORED

The ORC receives, processes, and continuously monitors (monitor rate of 500 ms) the analog signal from the ODS.

SET CONDITION

The ORC detects High voltage on the (R283) Passenger Occupant Detector Sensor Signal circuit for 2.5 - 5 seconds. The DTC will not latch for the entire ignition cycle. The code goes from Active to Stored 2.5 - 5 seconds after the code setting criteria is gone. This code also covers the Open fault.

POSSIBLE CAUSES

Possible Causes
(R283) PASSENGER OCCUPANT DETECTOR SIGNAL CIRCUIT OPEN
(R283) PASSENGER OCCUPANT DETECTOR SIGNAL CIRCUIT SHORTED TO VOLTAGE
(R283) PASSENGER SEAT OCCUPANT DETECTOR SIGNAL CIRCUIT SHORTED TO GROUND
(R284) PASSENGER OCCUPANT DETECTOR RETURN CIRCUIT OPEN
(R283) PASSENGER SEAT OCCUPANT DETECTOR SIGNAL CIRCUIT SHORTED TO THE (R284) PASSENGER SEAT OCCUPANT DETECTOR RETURN CIRCUIT

PASSENGER SEAT OCCUPANT DETECTION SENSOR OCCUPANT RESTRAINT CONTROLLER (ORC)

NOTE: Always Perform the Pre-Diagnostic Troubleshooting procedure before proceeding. Refer to STANDARD PROCEDURE .

DIAGNOSTIC TEST

NOTE: The seat belt warning lamp in the instrument cluster does not set to indicate a passenger seat belt reminder feature.

NOTE: The use of a approved special tool or Digital Multimeter such as a Fluke Meter that will not apply more than 20 milliamperes to a circuit are the only measurement tools to be used.

NOTE: Make sure the battery is fully charged.

1. **VERIFY ACTIVE DTC**
   1. Turn the ignition on.
   2. With the scan tool, read the ORC DTCs

NOTE: Diagnosing for the high code but also will be checking for an Open fault in both the (R283) signal and (R284) return circuits.

Does the scan tool display active B1CDC-PASSENGER OCCUPANT DETECTOR CIRCUIT HIGH DTC?

Yes

- Go To 2

No

- Perform the AIRBAG SYSTEM INTERMITTENT TEST. Refer to **STANDARD PROCEDURE** .

2. CHECK THE (R283) PASSENGER OCCUPANT DETECTOR SIGNAL CIRCUIT FOR A SHORT TO VOLTAGE

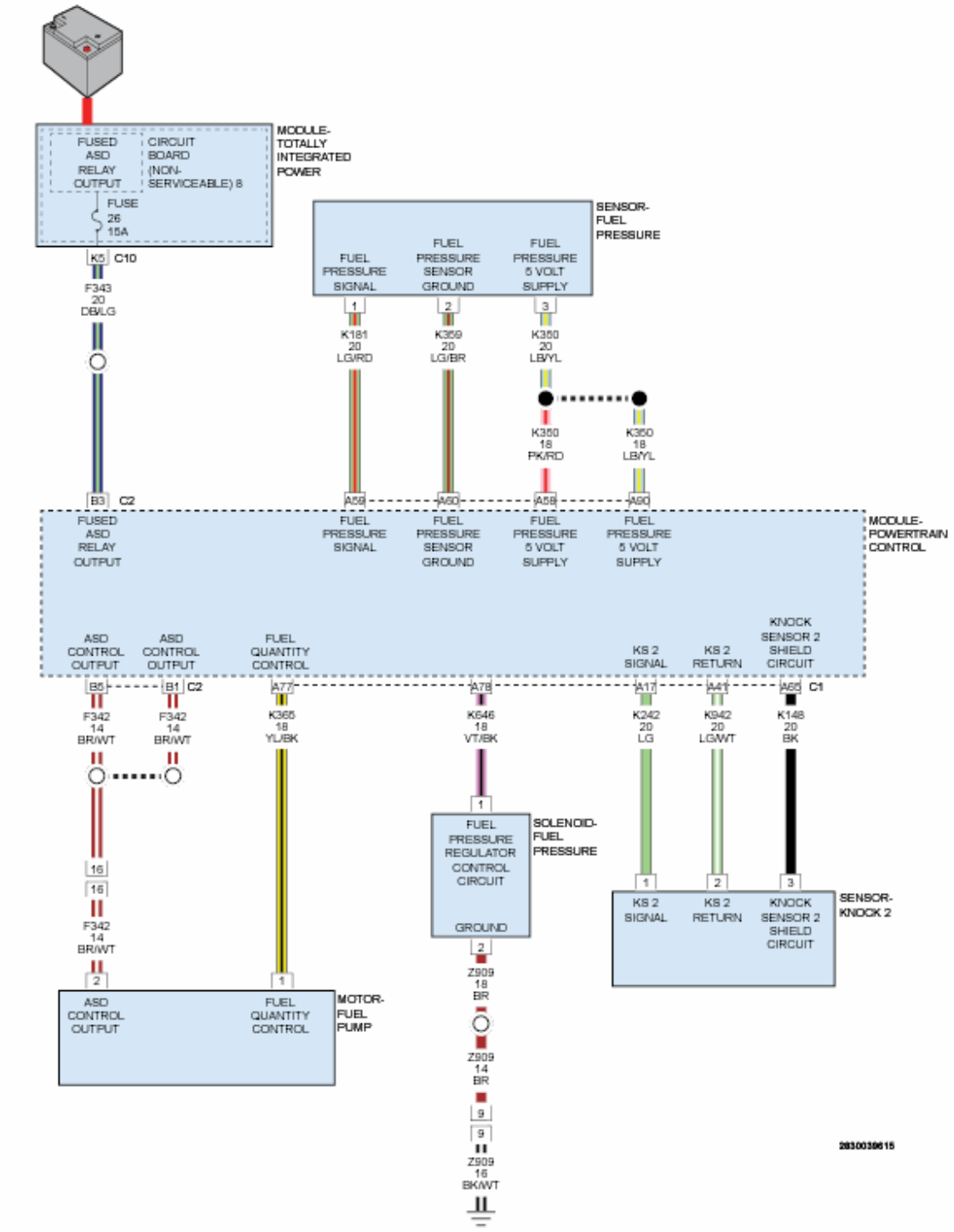

Fig. 34: Checking Passenger Occupant Detector Signal Circuit For A Short To Voltage
Courtesy of CHRYSLER GROUP, LLC

NOTE: Repair of the wiring is only to be done on the seat body harness side of the connector. If the wiring fault is in the component side of the wiring harness routed into the seat cushion a ODS sensor replacement is to be performed. Refer to SENSOR, OCCUPANT DETECTION, REMOVAL .

WARNING: Turn the ignition off, disconnect the 12-volt battery and wait two minutes before proceeding. Failure to follow these instructions may result in possible serious or fatal injury.

1. Keep the Passenger Occupant Detector Sensor harness connector in the seat cushion connected.
2. Keep the passenger inline harness underseat connector connected.
3. Keep the Occupant Detection Sensor (ODS) in the passenger seat cushion connected.
4. Disconnect the ORC harness connectors.
5. Connect the SRS Load Tool Adapter (special tool #8443-25, 56 Way ACM Adapter) to the ORC harness connectors.

WARNING: Turn the ignition on, then reconnect the 12-volt battery and wait two minutes before proceeding. Failure to follow these instructions may result in possible serious or fatal injury.

6. Measure the voltage of the (R283) Passenger Occupant Detector Signal circuit at the appropriate terminal of the SRS Load Tool Adapter (special tool #8443-25, 56 Way ACM Adapter).

   Is there any voltage present?

   Yes

NOTE: The ODS sensor is to be replaced whenever a short to voltage fault has been found in the ODS

harness even after the harness repair has been performed.

WARNING: **Turn the ignition off disconnect the 12-volt battery and wait two minutes before proceeding. Failure to follow these instructions may result in possible serious or fatal injury.**

- Repair the (R283) Passenger Occupant Detector Signal circuit for a short to voltage.
- Replace the ODS sensor in accordance with the Service Information. Refer to **SENSOR, OCCUPANT DETECTION, REMOVAL** .
- Perform the AIRBAG SYSTEM VERIFICATION TEST. Refer to **STANDARD PROCEDURE** .

No

- Go To 3

3. **CHECK THE (R283) PASSENGER OCCUPANT DETECTOR SIGNAL CIRCUIT FOR A SHORT TO VOLTAGE BETWEEN THE ORC AND THE PASSENGER INLINE UNDERSEAT CONNECTOR**

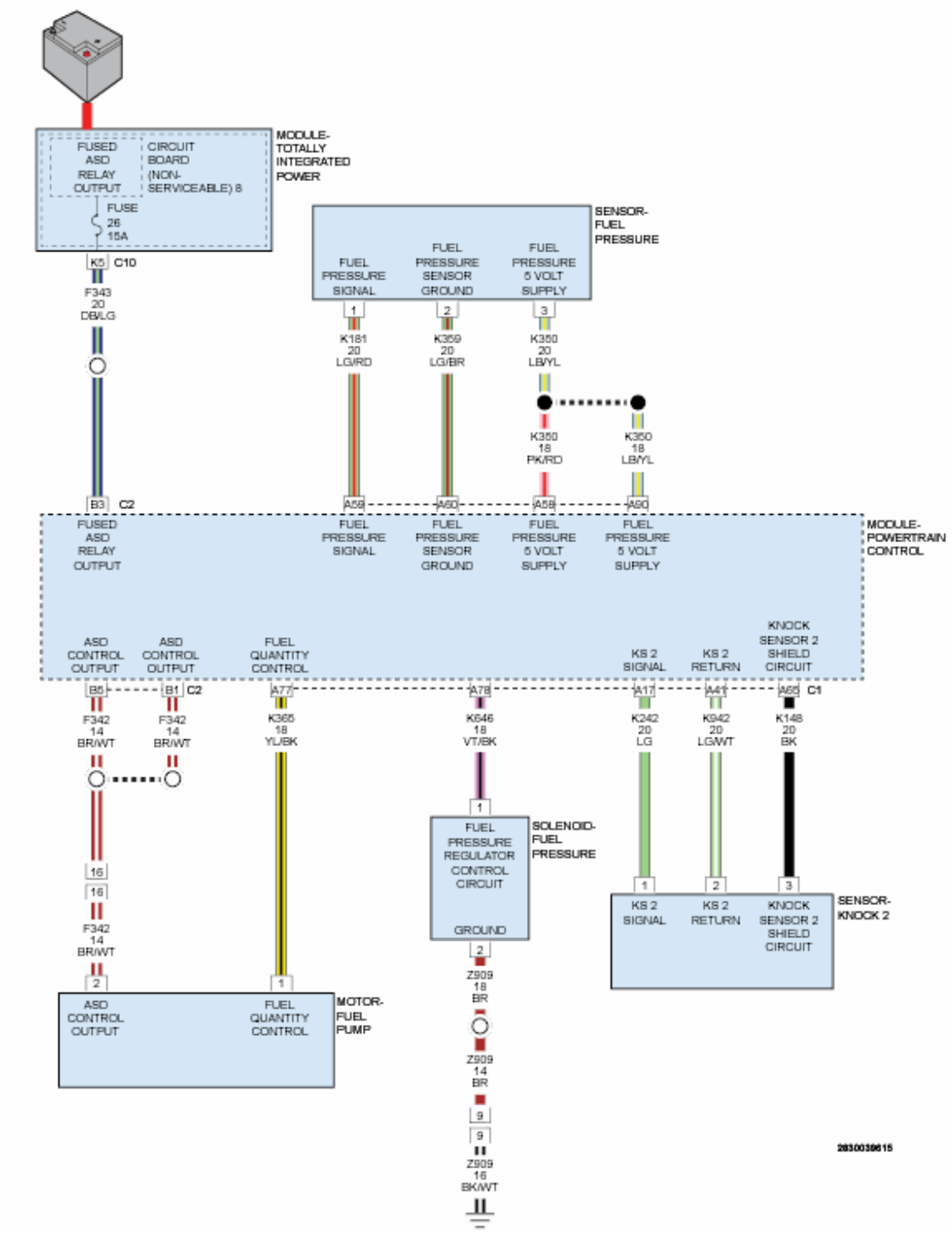

Fig. 35: Checking Passenger Occupant Detector Signal Circuit For A Short To Voltage
Courtesy of CHRYSLER GROUP, LLC

WARNING: Turn the ignition off disconnect the 12-volt battery and wait two minutes before proceeding. Failure to follow these

instructions may result in possible serious or fatal injury.

NOTE: Check connectors - Clean/Repair as necessary.

1. Disconnect the passenger underseat harness connector.

   WARNING: Turn the ignition on, then reconnect the 12-volt battery and wait two minutes before proceeding. Failure to follow these instructions may result in possible serious or fatal injury.

2. Measure the voltage between ground and the (R283) Passenger Occupant Detector Signal circuit at the appropriate terminal of the SRS Load Tool Adapter (special tool #8443-25, 56 Way ACM Adapter).

   Is there voltage present?

   Yes

   NOTE: The ODS sensor is to be replaced whenever a short to voltage fault has been found in the ODS harness even after the harness repair has been performed.

   WARNING: Turn the ignition off disconnect the 12-volt battery and wait two minutes before proceeding. Failure to follow these instructions may result in possible serious or fatal injury.

   - Repair the short to voltage in the (R283) Passenger Occupant Detector Signal circuit located between the ORC and the passenger underseat jumper harness connector.
   - Replace the ODS Sensor in accordance with the Service Information. Refer to **SENSOR, OCCUPANT DETECTION, REMOVAL** .

- Perform the AIRBAG SYSTEM VERIFICATION TEST. Refer to **STANDARD PROCEDURE** .

No

- Go To 4

4. **CHECK THE (R283) PASSENGER OCCUPANT DETECTOR SENSOR SIGNAL CIRCUIT FOR A SHORT TO VOLTAGE IN THE UNDERSEAT JUMPER HARNESS**

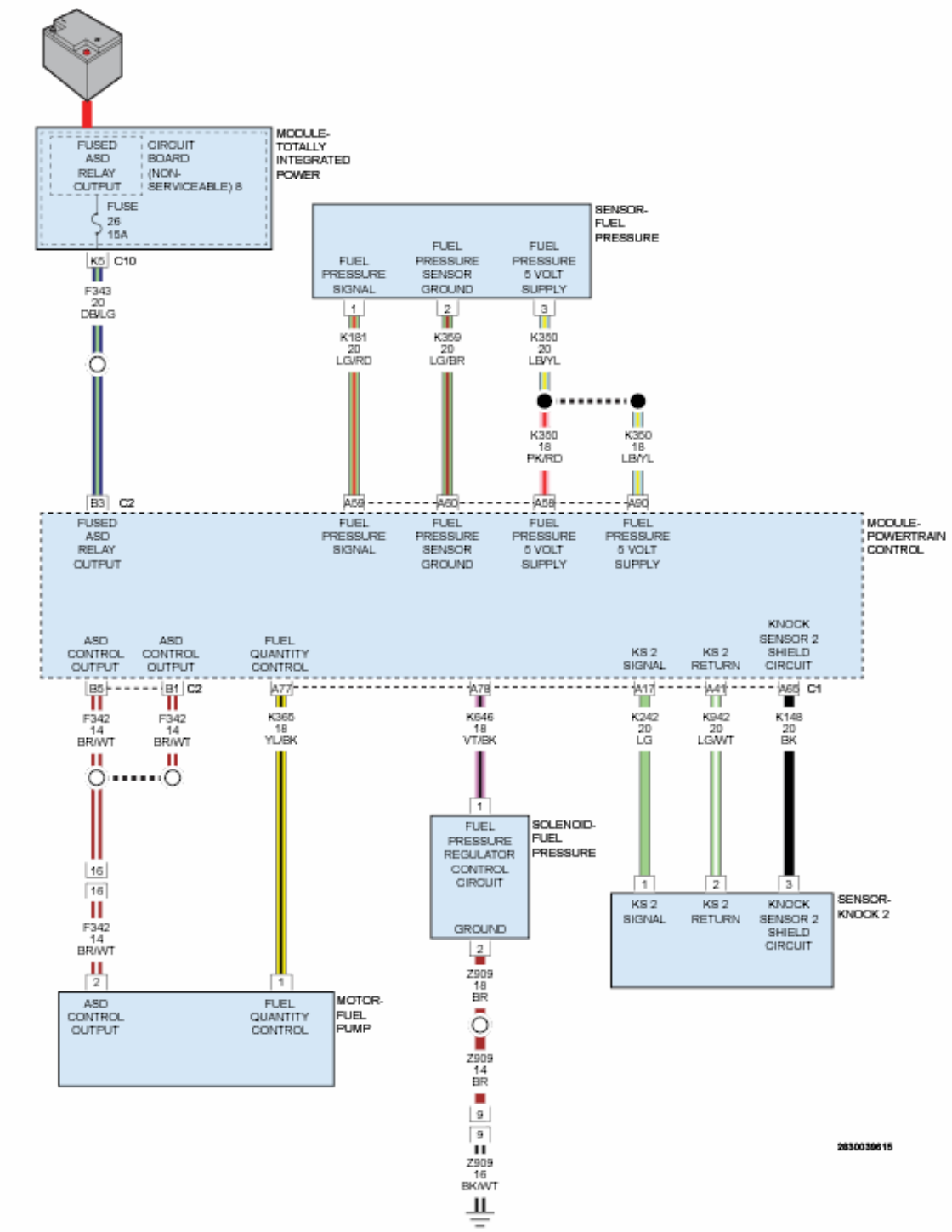

Fig. 36: Checking Passenger Occupant Detector Signal Circuit For A Short To Voltage
Courtesy of CHRYSLER GROUP, LLC

WARNING: Turn the ignition off disconnect the 12-volt battery and wait two minutes before proceeding. Failure to follow these

instructions may result in possible serious or fatal injury.

1. Connect the passenger seat underseat connector.

NOTE: Confirm the connector is seated firmly and the lock tab is fully seated.

2. Access the Passenger Occupant Detector Sensor (ODS) harness connector located at the passenger seat cushion.
3. Disconnect the Passenger Occupant Detector Sensor (ODS) harness connector.

WARNING: Turn the ignition on, then reconnect the 12-volt battery and wait two minutes before proceeding. Failure to follow these instructions may result in possible serious or fatal injury.

4. Measure the voltage between ground and the (R283) Passenger Occupant Detector Signal circuit at the appropriate terminal of the SRS Load Tool Adapter (special tool #8443-25, 56 Way ACM Adapter).

Is there any voltage present?

Yes

NOTE: The ODS sensor is to be replaced whenever a short to voltage fault has been found in the ODS harness even after the harness repair has been performed.

WARNING: Turn the ignition off disconnect the 12-volt battery and wait two minutes before proceeding. Failure to follow these instructions may result in possible serious or fatal injury.

- Repair the short to voltage in the (R283) Passenger Occupant

Detector Signal Circuit located between the passenger underseat connector and the Passenger Occupant Detector Sensor connector.

- Replace the ODS Sensor in accordance with the Service Information. Refer to **SENSOR, OCCUPANT DETECTION, REMOVAL** .
- Perform the AIRBAG SYSTEM VERIFICATION TEST. Refer to **STANDARD PROCEDURE** .

No

- Go To 5

5. **CHECK THE (R283) PASSENGER OCCUPANT DETECTOR SENSOR SIGNAL CIRCUIT AND (R284) PASSENGER OCCUPANT DETECTOR SENSOR RETURN CIRCUIT FOR AN OPEN OR HIGH RESISTANCE BETWEEN THE ORC AND THE PASSENGER UNDERSEAT HARNESS CONNECTOR**

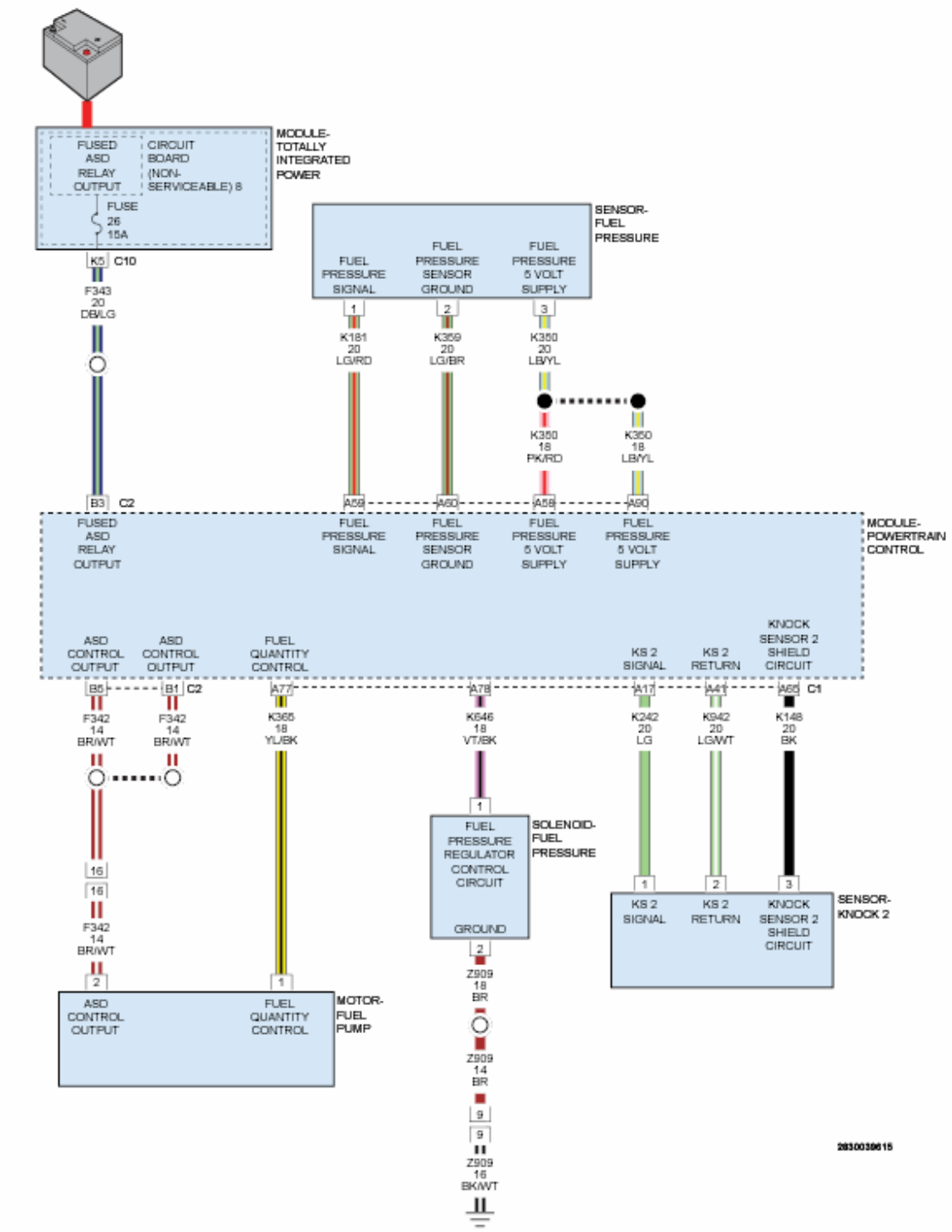

Fig. 37: Checking Passenger Occupant Detector Sensor Signal Circuit And Passenger Occupant Detector Sensor Return Circuit For An Open Or High Resistance Between The ORC And The Passenger Underseat Harness Connector
Courtesy of CHRYSLER GROUP, LLC

WARNING: Turn the ignition off disconnect the 12-volt

battery and wait two minutes before proceeding. Failure to follow these instructions may result in possible serious or fatal injury.

1. Disconnect the passenger underseat harness connector.
2. Measure the resistance of the (R283) Occupant Detector Sensor Signal circuit from cavity 11 of the C304 underseat harness connector to the 32 way side of the SRS Load Tool Adapter (special tool #8443-25, 56 Way ACM Adapter) cavity 23.
3. Measure the resistance of the (R284) Occupant Detector Sensor Return circuit from cavity 12 of the C304 underseat harness connector to the 32 way side of the SRS Load Tool Adapter (special tool #8443-25, 56 Way ACM Adapter) cavity 24.

   Is the resistance for either circuit below 1.0 Ohm?

   Yes

   - Go To 6

   No

   - Repair the (R283) Occupant Detector Sensor Signal circuit or (R284) Occupant Detector Sensor Return circuit for an open or high resistance.
   - Perform the AIRBAG SYSTEM VERIFICATION TEST. Refer to **STANDARD PROCEDURE** .

6. **CHECK THE (R283) PASSENGER OCCUPANT DETECTOR SENSOR SIGNAL CIRCUIT AND (R284) PASSENGER OCCUPANT DETECTOR RETURN CIRCUIT FOR AN OPEN OR HIGH RESISTANCE IN THE SEATBACK JUMPER HARNESS**

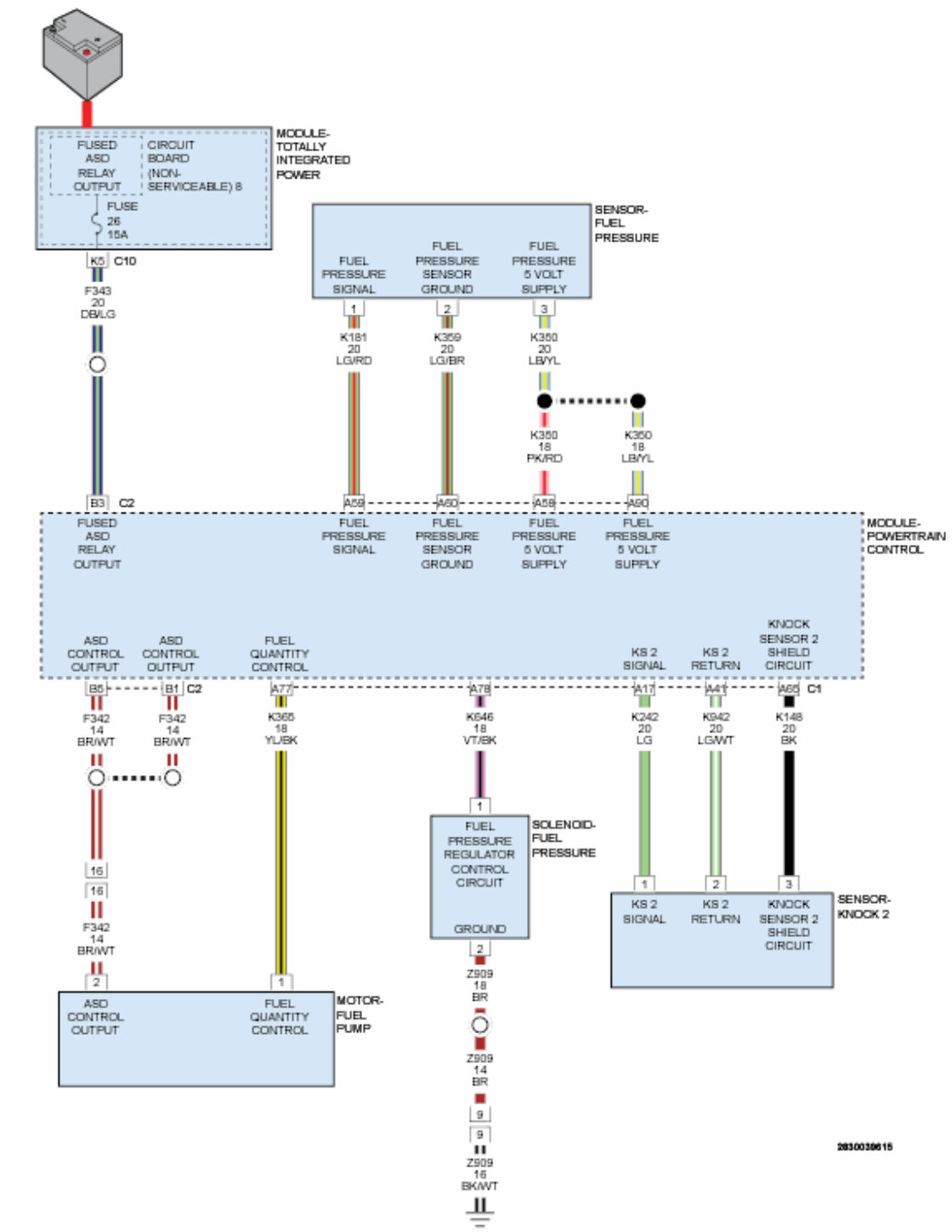

Fig. 38: Checking Passenger Occupant Detector Sensor Signal Circuit For An Open Or High Resistance
Courtesy of CHRYSLER GROUP, LLC

WARNING: Turn the ignition off disconnect the 12-volt battery and wait two minutes before proceeding. Failure to follow these

instructions may result in possible serious or fatal injury.

1. Reconnect the C304 underseat harness connector.

NOTE: Inspect terminal pins and verify the C304 connector is fully seated correctly and that the connector locking tab is correctly in place.

2. Access the Passenger Occupant Detector Sensor located in the passenger seat cushion.
3. Disconnect the Passenger Occupant Detector Sensor harness connector.
4. Measure the resistance of the (R283) Occupant Detector Sensor Signal circuit from cavity 1 of the ODS connector to the 32 way side of the SRS Load Tool Adapter (special tool #8443-25, 56 Way ACM Adapter) cavity 23.
5. Measure the resistance of the (R284) Occupant Detector Sensor Return circuit from cavity 2 of the ODS connector to the 32 way side of the SRS Load Tool Adapter (special tool #8443-25, 56 Way ACM Adapter) cavity 24.

Is the resistance for either circuit below 1.0 Ohm?

Yes

- Go To 7

No

NOTE: Repair of the wiring is only to be done on the seat body harness side of the connector. If the wiring fault is in the component side of the wiring harness routed into the seat cushion a ODS sensor replacement is to be performed. Refer to SENSOR, OCCUPANT DETECTION, REMOVAL .

- Repair the (R283) Passenger Occupant Detector Signal circuit or (R284) Occupant Detector Sensor Return circuit in the body harness for an open or high resistance.

- Perform the AIRBAG SYSTEM VERIFICATION TEST. Refer to **STANDARD PROCEDURE** .

7. **CHECK THE (R283) PASSENGER OCCUPANT DETECTOR SENSOR SIGNAL CIRCUIT AND (R284) PASSENGER OCCUPANT DETECTOR SENSOR RETURN CIRCUIT FOR AN OPEN OR HIGH RESISTANCE WITH THE ODS HARNESS FULLY CONNECTED**

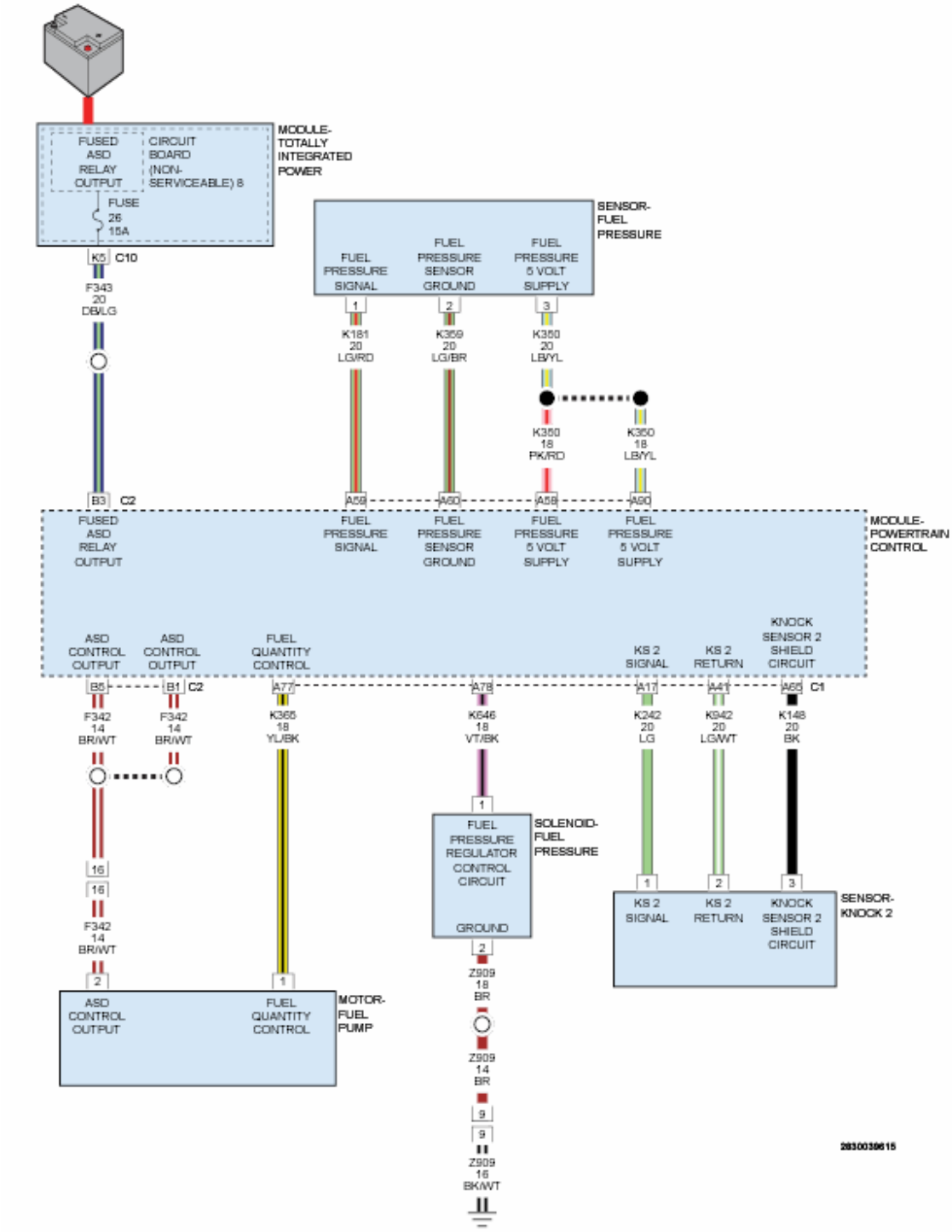

Fig. 39: Checking Passenger Occupant Detector Sensor Signal Circuit For An Open Or High Resistance
Courtesy of CHRYSLER GROUP, LLC

NOTE: Confirm the connector is seated firmly and the lock tab is fully seated.

1. Connect the Occupant Detector Sensor (ODS), verify all in-line connections are secure.
2. Measure the resistance of the (R283) Passenger Occupant Detector Signal circuit to the (R284) Passenger Occupant Detector Sensor Return circuit at the appropriate terminals of the SRS Load Tool Adapter (special tool #8443-25, 56 Way ACM Adapter).

   Is the resistance below 700 Ohms?

   Yes

   WARNING: Turn the ignition on, then reconnect the 12-volt battery and wait two minutes before proceeding. Failure to follow these instructions may result in possible serious or fatal injury.

   - Turn the ignition Off and wait 15 seconds before turning the ignition On.
   - Wait one minute and read active codes.
   - If the B1CDC-Passenger Occupant Detector circuit High DTC or B1CDD-PASSENGER OCCUPANT DETECTOR CIRCUIT OPEN DTC becomes active, replace the ORC in accordance with the Service Information. Refer to **MODULE, OCCUPANT RESTRAINT CONTROLLER, REMOVAL** .

   No

   - Go To 8

8. **CHECK OPERATION OF THE PASSENGER OCCUPANT DETECTOR SENSOR**

WARNING: Turn the ignition off disconnect the 12-volt battery and wait two minutes before proceeding. Failure to follow these instructions may result in possible serious or fatal injury.

1. Replace the Passenger Occupant Detector Sensor in accordance with the Service Information. Refer to **SENSOR, OCCUPANT DETECTION, REMOVAL** .
2. Remove any special tools or jumper wires and reconnect all previously disconnected components - except the Battery.

WARNING: Turn the ignition on, then reconnect the 12-volt battery and wait two minutes before proceeding. Failure to follow these instructions may result in possible serious or fatal injury.

3. Connect the scan tool to the Data Link Connector - use the most current software available.
4. Use the scan tool and erase the ORC stored codes.
5. Turn the Ignition Off and wait 15 seconds before turning the Ignition On.
6. Wait one minute and read active codes and if there are none present read the stored codes.

   Does the scan tool display active B1CDC-PASSENGER OCCUPANT DETECTOR CIRCUIT HIGH or B1CDD-PASSENGER OCCUPANT DETECTOR CIRCUIT OPEN DTC?

   Yes

WARNING: Turn the ignition off, disconnect the 12-volt battery and wait two minutes before proceeding. Failure to follow these instructions may result in possible serious or fatal injury.

WARNING: If the Occupant Restraint Controller (ORC) is dropped at any time, it must be replaced. Failure to follow these instructions may result in possible serious or fatal injury.

- Replace the ORC in accordance with the Service Information. Refer to **MODULE, OCCUPANT RESTRAINT CONTROLLER, REMOVAL** .
- Perform the AIRBAG SYSTEM VERIFICATION TEST. Refer to **STANDARD PROCEDURE** .

No

- Repair is complete.
- Perform the AIRBAG SYSTEM VERIFICATION TEST. Refer to **STANDARD PROCEDURE** .

B1BC7-DEPLOYMENT DATA RECORD FULL

For a complete wiring diagram **refer to appropriate SYSTEM WIRING DIAGRAMS article** .

WHEN MONITORED

With the ignition on. The Occupant Restraint Controller (ORC) on board diagnostics continuously monitors the deployment register.

The register counts the number of airbag deployment for this vehicle.

SET CONDITION

This DTC will set if the ORC deployment register increments to 3.

POSSIBLE CAUSES

Possible Causes
OCCUPANT RESTRAINT CONTROLLER (ORC)

DIAGNOSTIC TEST

REPLACE THE OCCUPANT RESTRAINT CONTROLLER

WARNING: Turn the ignition off, disconnect the 12-volt battery and wait two minutes before proceeding. Failure to follow these instructions may result in possible serious or fatal injury.

WARNING: If the Occupant Restraint Controller (ORC) is dropped at any time, it must be replaced. Failure to follow these instructions may result in possible serious or fatal injury.

View repair.

Repair

- Replace the Occupant Restraint Controller in accordance with the service information.
- Perform the AIRBAG SYSTEM VERIFICATION TEST. Refer to **STANDARD PROCEDURE** .

B1BCF-ROLL OVER SENSOR

THEORY OF OPERATION

When powered, the Occupant Restraint Controller (ORC) performs an internal self test. The repair of this fault condition does not involve any external circuitry and centers on verifying the integrity of the module's internal memory.

WHEN MONITORED

The ORC checks the status and validity of the internal operating hardware and software at power up during the initialization process, and continuously through the ignition cycle.

SET CONDITION

This DTC will set if the module identifies an out of range Roll Over Sensor circuit.

POSSIBLE CAUSES

Possible Causes

OCCUPANT RESTRAINT CONTROLLER (ORC)

Always perform the Pre-Diagnostic Troubleshooting procedure before proceeding. Refer to STANDARD PROCEDURE .

DIAGNOSTIC TEST

REPLACE OCCUPANT RESTRAINT CONTROLLER

NOTE: When this DTC is set, the module self test has discovered an internal fault that cannot be repaired and the module must be replaced regardless of DTC status.

WARNING: Turn the ignition off, disconnect the 12-volt battery and wait two minutes before proceeding. Failure to follow these instructions may result in possible serious or fatal injury.

WARNING: If the Occupant Restraint Controller (ORC) is dropped at any time, it must be replaced. Failure to follow these instructions may result in possible serious or fatal injury.

When this code is set, view repair.

Repair

- Replace the Occupant Restraint Controller in accordance with the Service Information.
- Perform the RESTRAINTS SYSTEM VERIFICATION TEST. Refer to **STANDARD PROCEDURE** .

B1C27-LEFT SIDE SEAT THORAX SQUIB 1 LOW

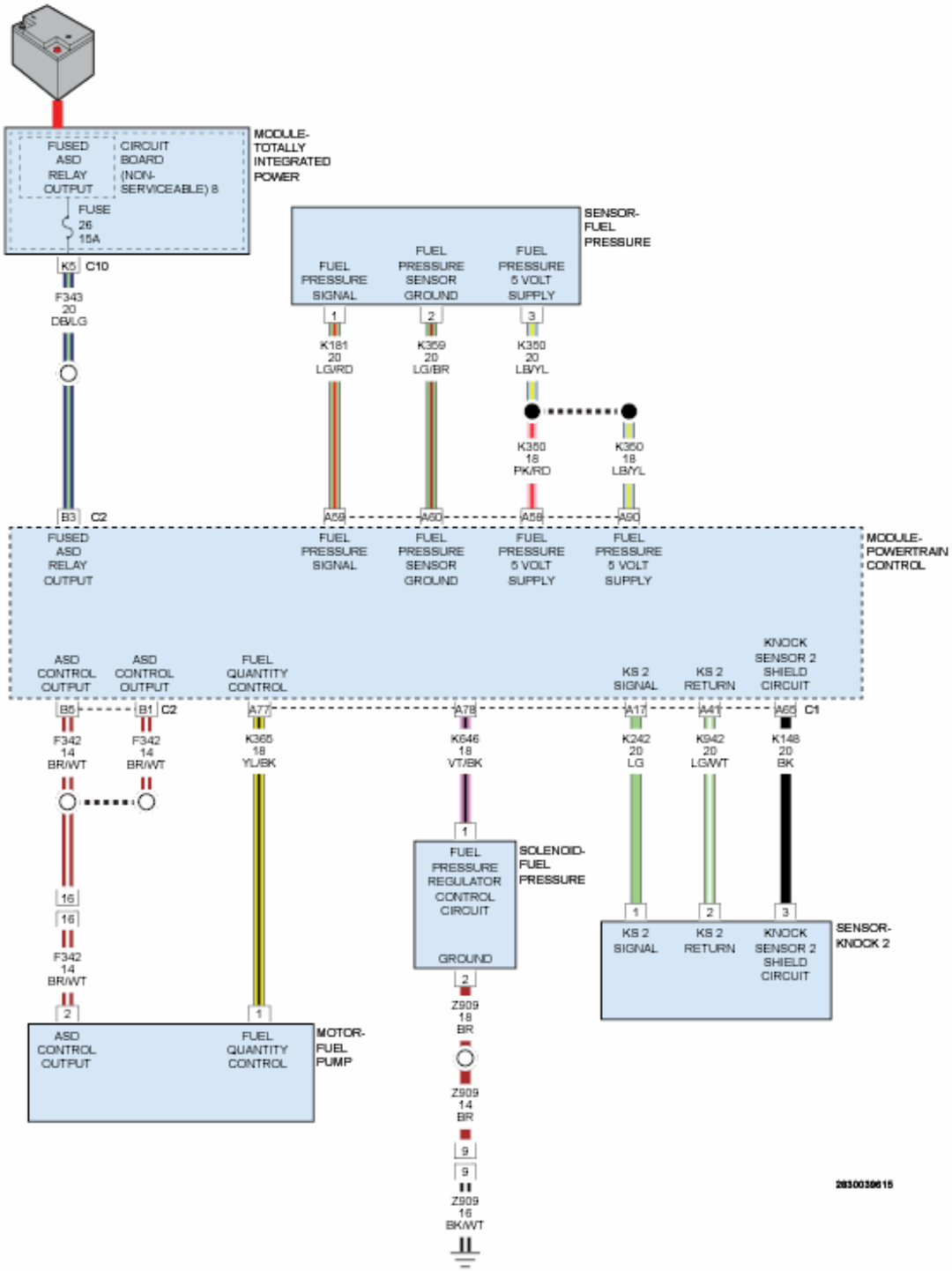

Fig. 40: Left Seat Airbag & ORC Module Circuit Schematic
Courtesy of CHRYSLER GROUP, LLC

For a complete wiring diagram, **refer to appropriate SYSTEM WIRING DIAGRAMS article** .

WHEN MONITORED

With the ignition on.

SET CONDITION

The Occupant Restraint Controller (ORC) monitors the resistance of the Left Seat Airbag circuits. If low resistance is detected in the Left Seat Airbag circuits the ORC will set this DTC.

POSSIBLE CAUSES

Possible Causes
(R5) LEFT SEAT SQUIB 1 LINE 2 CIRCUIT SHORTED TO GROUND
(R7) LEFT SEAT SQUIB 1 LINE 1 CIRCUIT SHORTED TO GROUND
LEFT SEAT AIRBAG
OCCUPANT RESTRAINT CONTROLLER (ORC)

DIAGNOSTIC TEST

1. **DETERMINE ACTIVE OR STORED DTC**

   NOTE: Make sure that the battery is fully charged.

   NOTE: The scan tool, SRS Load Tool Kit (special tool #8443A, SRS Load Tool), and DVOM are required to perform the following test:

   1. Turn the ignition on.
   2. With the scan tool, read the active ORC DTC.

      Select ACTIVE or STORED DTC:

      ACTIVE DTC

      - Go To 2

      STORED DTC

      - Go To 5

2. **CHECK FOR SHORTED SQUIB CIRCUITS AT THE LEFT SEAT SQUIB AIRBAG**

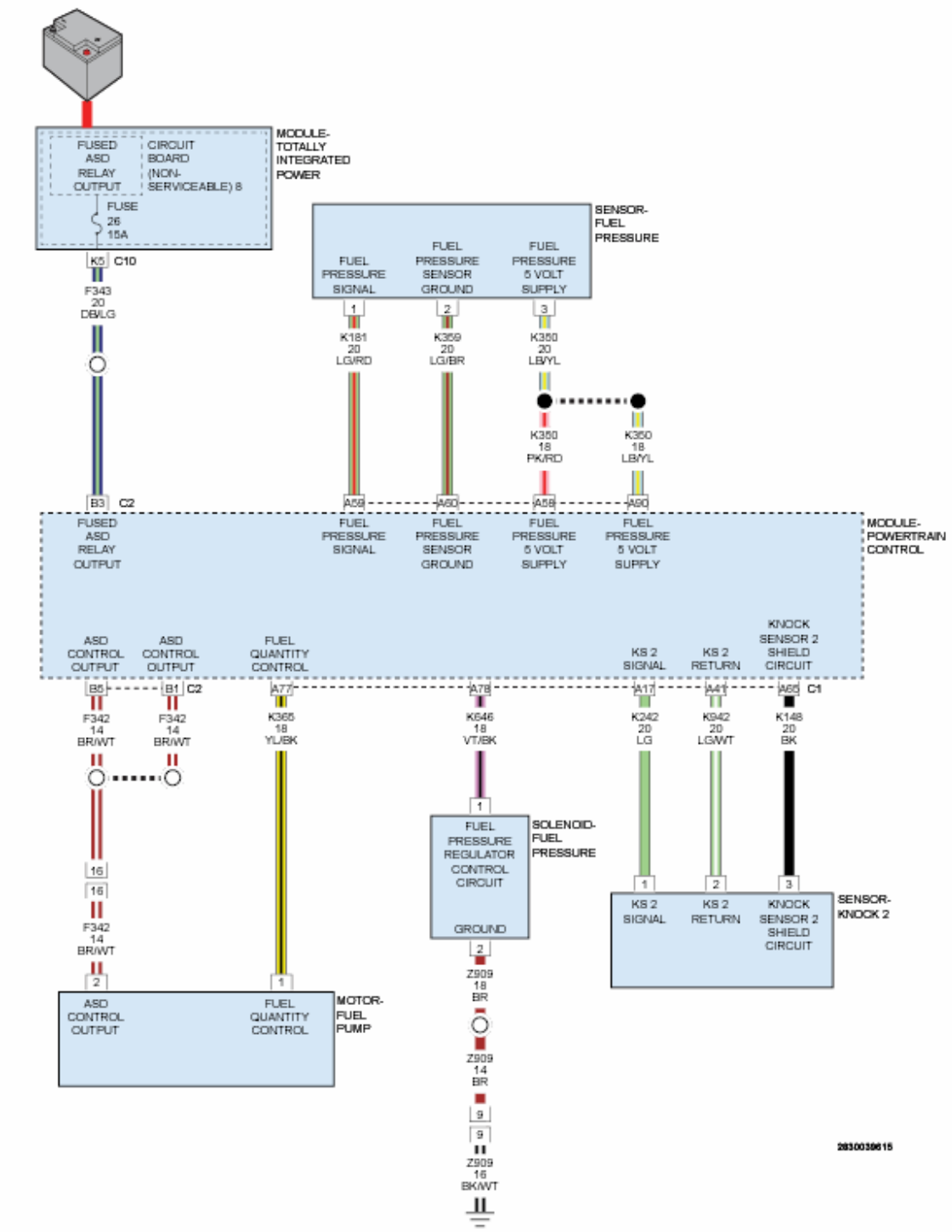

Fig. 41: Checking Squib Circuits At Left Seat Squib Airbag For Shorts
Courtesy of CHRYSLER GROUP, LLC

WARNING: Turn the ignition off disconnect the 12-volt battery and wait two minutes before proceeding. Failure to follow these instructions may result in possible serious or

fatal injury.

1. Disconnect the Left Seat Airbag connector.

   WARNING: **To avoid serious or fatal injury, do not place an intact non-deployed Left Seat Squib Airbag face down on a hard surface, the airbag will propel into the air if accidentally deployed.**

   NOTE: **Check connectors - Clean and repair as necessary.**

2. Connect the SRS Load Tool Kit (special tool #8443A, SRS Load Tool) and SRS Load Tool Jumper (special tool #8443-1, Jumpers, 2 Pin) to the Left Seat Airbag connector.

   WARNING: **Turn the ignition on, then reconnect the 12-volt battery and wait two minutes before proceeding. Failure to follow these instructions may result in possible serious or fatal injury.**

3. With the scan tool, read the active ORC DTC.

   Does the scan tool display: B1C27-LEFT SIDE SEAT THORAX SQUIB 1 LOW?

   Yes

   - Go To 3

   No

   WARNING: **Turn the ignition off, disconnect the 12-volt battery and wait two minutes before proceeding. Failure to follow these instructions may result in possible serious or fatal injury.**

- Replace the Left Seat Airbag in accordance with the Service Information.
- Perform the AIRBAG SYSTEM VERIFICATION TEST. Refer to **STANDARD PROCEDURE** .

3. **CHECK FOR SHORTED LEFT SEAT AIRBAG SQUIB CIRCUITS IN THE SEAT BACK**

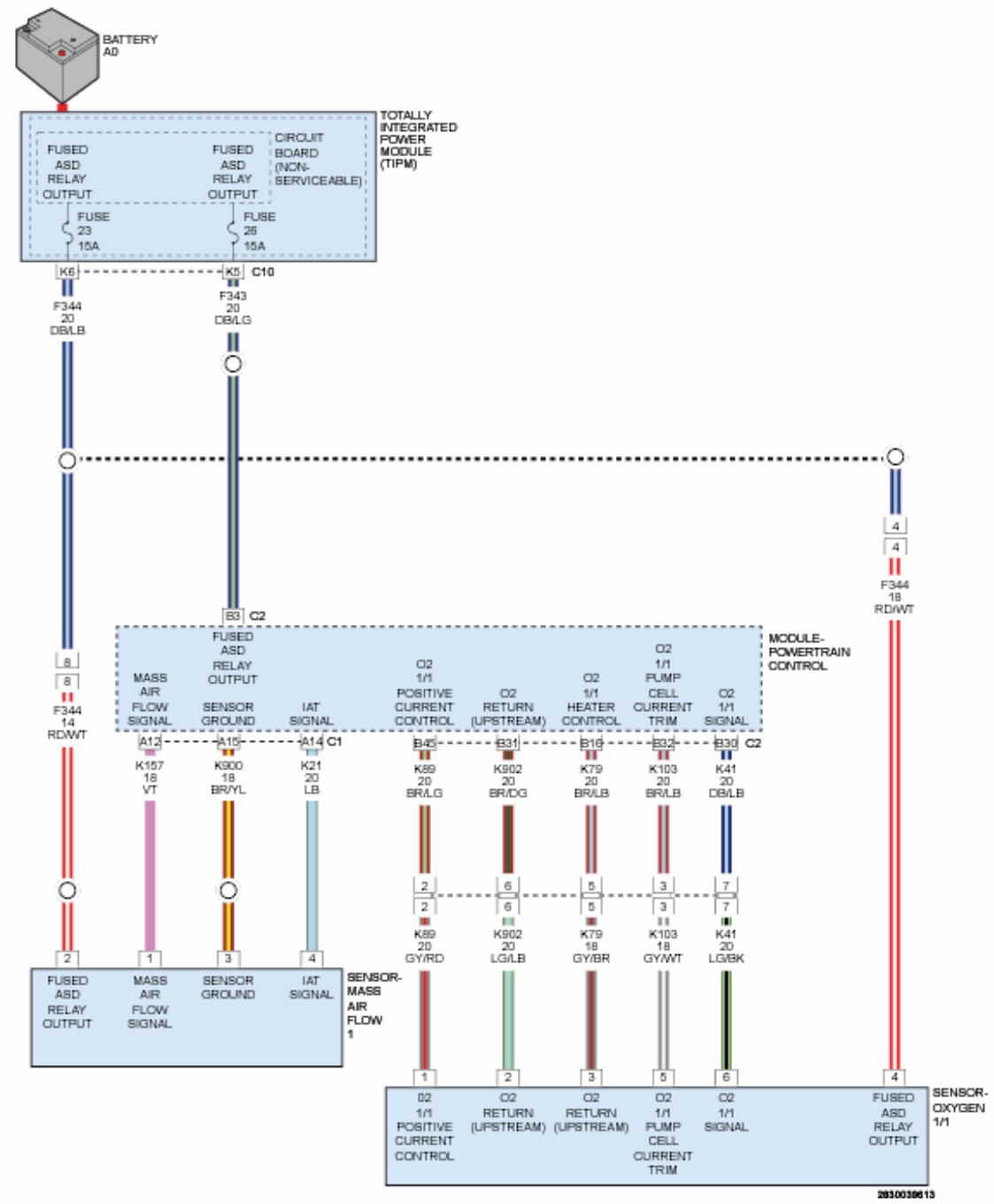

Fig. 42: Checking Left Seat Airbag Squib Circuits In Seat Back
Courtesy of CHRYSLER GROUP, LLC

WARNING: Turn the ignition off, disconnect the 12-volt battery and wait two minutes before proceeding. Failure to follow these instructions may result in possible serious or fatal injury.

1. Disconnect the Left Seat Airbag C353 in-line connector (under Left Seat).

   NOTE: Check connectors - Clean and repair as necessary.

2. Connect the SRS Load Tool Kit (special tool #8443A, SRS Load Tool) and SRS Load Tool Jumper (special tool #8443-20, Jumper, SRS Load Tool) to the C353 in-line connector (Body Side).

   WARNING: Turn the ignition on, then reconnect the 12-volt battery and wait two minutes before proceeding. Failure to follow these instructions may result in possible serious or fatal injury.

3. With the scan tool, read the active ORC DTC.

   Does the scan tool display: B1C27-LEFT SIDE SEAT THORAX SQUIB 1 LOW?

   Yes

   - Go To 4

   No

   WARNING: Turn the ignition off, disconnect the 12-volt battery and wait two minutes before proceeding. Failure to follow these instructions may result in possible serious or fatal injury.

- In accordance with Service Information repair or replace the Left Seat Airbag Squib 1 circuits. Left Seat Airbag circuits Squib 1 circuits shorted to ground between the C353 in-line connector (Side Airbag Jumper) and the Left Seat Airbag connector.
- Perform the AIRBAG SYSTEM VERIFICATION TEST. Refer to **STANDARD PROCEDURE** .

4. **CHECK LEFT SEAT SQUIB CIRCUITS FOR A SHORT TO GROUND IN THE BODY HARNESS TO THE SEAT**

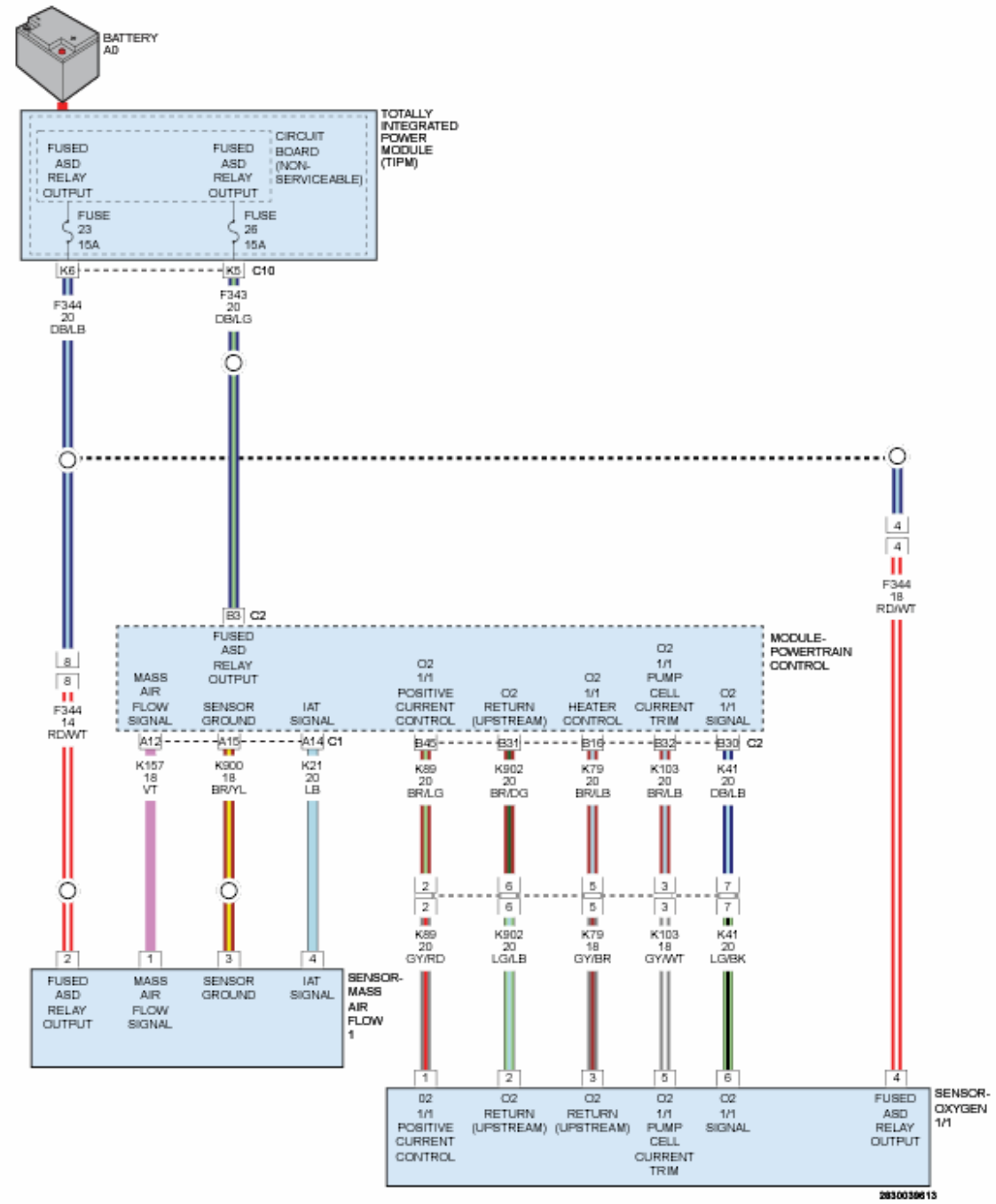

Fig. 43: Checking Left Seat Squib Circuits For Short To Ground
Courtesy of CHRYSLER GROUP, LLC

WARNING: Turn the ignition off, disconnect the 12-volt battery and wait two minutes before proceeding. Failure to follow these instructions may result in possible serious or fatal injury.

1. Disconnect the SRS Load Tool Kit (special tool #8443A, SRS Load Tool) and SRS Load Tool Jumper (special tool #8443-20, Jumper, SRS Load Tool) from the C353 in-line connector.
2. Disconnect the ORC connectors.

NOTE: Check connectors - Clean and repair as necessary.

3. Connect the SRS Load Tool Adaptor (special tool #8443-25, 56 Way ACM Adapter) to the ORC connectors.
4. Measure the resistance of the (R5) Left Seat Squib 1 Line 2 circuit between the SRS Load Tool Adaptor (special tool #8443-25, 56 Way ACM Adapter) cavity 32-7 and ground.
5. Measure the resistance of the (R7) Left Seat Squib 1 Line 2 circuit between the SRS Load Tool Adaptor (special tool #8443-25, 56 Way ACM Adapter) cavity 32-8 and ground.

Is the resistance below 10k Ohms on either circuit?

Yes

- In accordance with Service Information repair or replace the Left Seat Airbag Squib 1 circuits. Left Seat Airbag Squib 1 circuits shorted to ground between the C353 in-line connector (body side) and the ORC C2 (32 way) connector.
- Perform the AIRBAG SYSTEM VERIFICATION TEST. Refer to **STANDARD PROCEDURE** .

No

WARNING: If the Occupant Restraint Controller (ORC) is dropped at any time, it must be replaced. Failure to follow these instructions may result in possible serious or fatal injury.

- Replace the ORC in accordance with Service Information.
- Perform the AIRBAG SYSTEM VERIFICATION TEST. Refer to **STANDARD PROCEDURE** .

5. **CHECKING STORED OR INTERMITTENT CODES**

NOTE: Diagnose and repair all active codes before diagnosing stored codes. Refer to OCCUPANT RESTRAINT CONTROLLER (ORC) - DIAGNOSTIC CODE INDEX for a complete list of airbag system diagnostic procedures.

1. With the scan tool, record and erase all Airbag System Module DTCs.

WARNING: Turn the ignition off, disconnect the 12-volt battery and wait two minutes before proceeding. Failure to follow these instructions may result in possible serious or fatal injury.

2. Using the wiring diagram/schematic as a guide, inspect the related wiring and connectors for chafed, pierced, pinched, and partially broken wires, and for broken, bent, pushed out, corroded, and contaminated terminals. Repair as necessary.
3. Reconnect all disconnected components and harness connectors.

WARNING: Turn the ignition on, then reconnect the 12-volt battery and wait two minutes before proceeding. Failure to follow these instructions may result in possible serious or fatal injury.

4. With the scan tool, monitor for active codes while performing the

following:

- Wiggle the wiring harness and connectors of the related airbag circuit.
- Continue the test until either a code becomes active or the problem area is isolated.

5. In the previous steps you have attempted to recreate the conditions responsible for setting the DTC in question/causing the intermittent condition.

   Are any ACTIVE DTCs present?

   Yes

   - Perform the appropriate diagnostic procedure. Refer to **DTC INDEX** .

   No

   - No problem found at this time. Erase all codes before returning the vehicle to the customer.

B1C28-LEFT SIDE SEAT THORAX SQUIB 1 HIGH

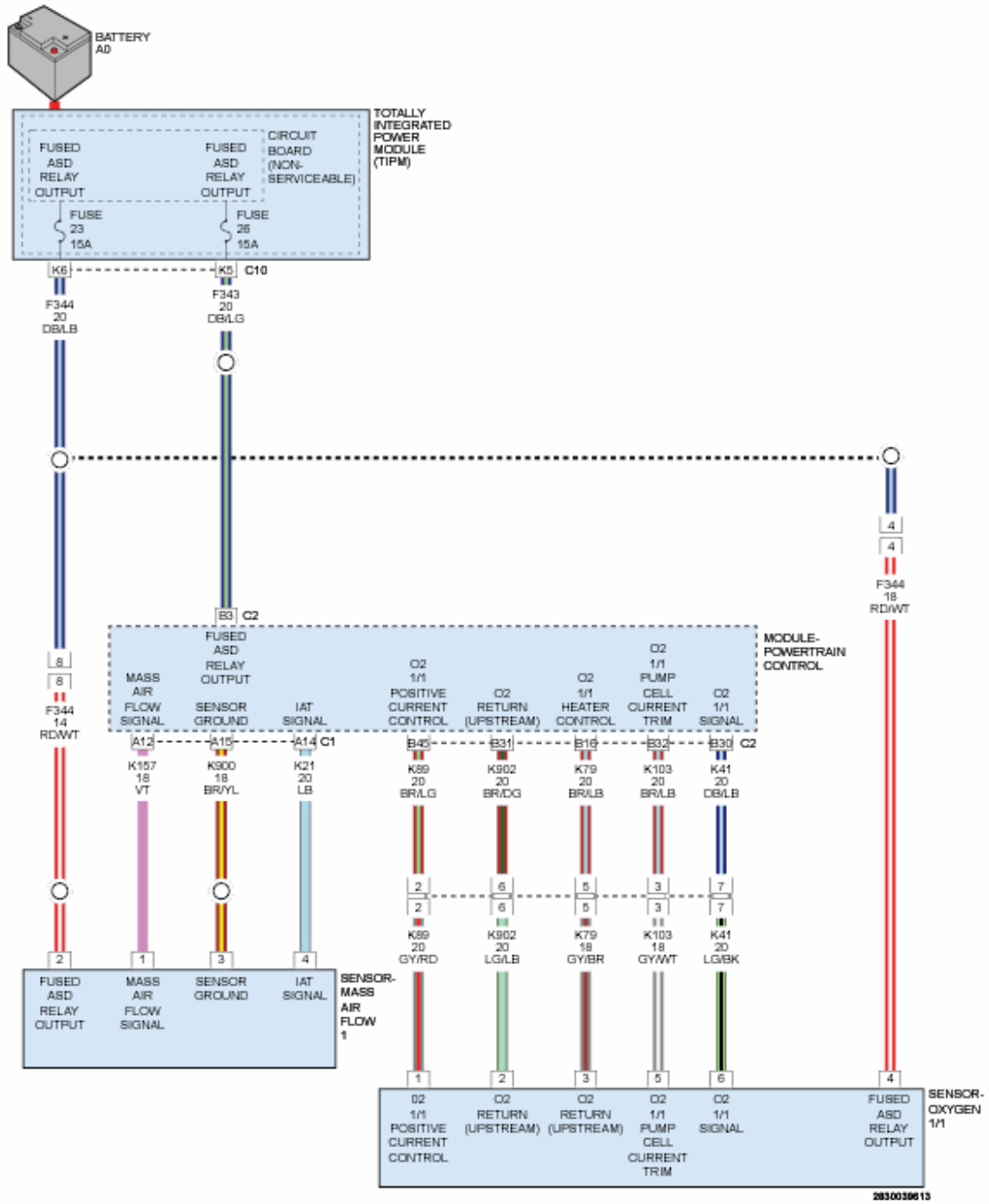

Fig. 44: Left Seat Airbag & ORC Module Circuit Schematic
Courtesy of CHRYSLER GROUP, LLC

For a complete wiring diagram, **refer to appropriate SYSTEM WIRING DIAGRAMS article** .

WHEN MONITORED

With the ignition on.

SET CONDITION

The Occupant Restraint Controller (ORC) monitors the voltage on the Left Seat Airbag circuits. If voltage is detected on the Left Seat Airbag circuits the ORC will set this DTC.

POSSIBLE CAUSES

Possible Causes
(R31) LEFT SEAT SQUIB 1 LINE 1 CIRCUIT SHORTED TO BATTERY
(R33) LEFT SEAT SQUIB 1 LINE 2 CIRCUIT SHORTED TO BATTERY
LEFT SEAT AIRBAG
OCCUPANT RESTRAINT CONTROLLER (ORC)

DIAGNOSTIC TEST

1. **DETERMINE ACTIVE OR STORED DTC**

   NOTE: Make sure that the battery is fully charged.

   NOTE: The scan tool, SRS Load Tool Kit (special tool #8443A, SRS Load Tool), and DVOM are required to perform the following test:

   1. Turn the ignition on.

      Select ACTIVE or STORED DTC:

      ACTIVE DTC

      - Go To 2

      STORED DTC

      - Go To 5

2. **CHECK FOR SHORTED LEFT SEAT AIRBAG SQUIB**

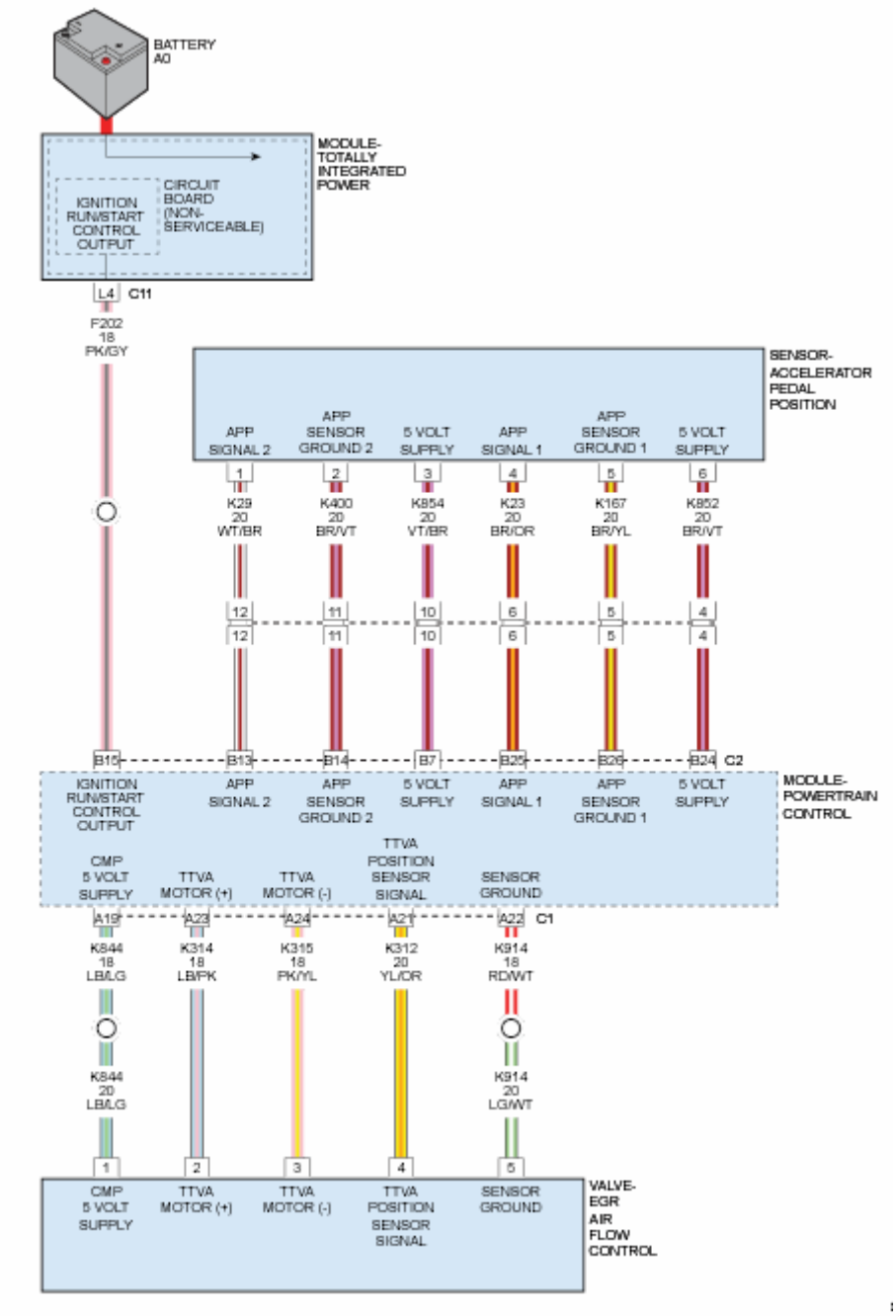

Fig. 45: Checking Squib Circuits At Left Seat Squib Airbag For Shorts
Courtesy of CHRYSLER GROUP, LLC

WARNING: Turn the ignition off, disconnect the 12-volt battery and wait two minutes before proceeding. Failure to follow these instructions may result in possible serious or fatal injury.

1. Disconnect the Left Seat Airbag connector.

WARNING: To avoid serious or fatal injury, do not place an intact non-deployed Left Seat Squib Airbag face down on a hard surface, the airbag will propel into the air if accidentally deployed.

NOTE: Check connectors - Clean and repair as necessary.

2. Connect the SRS Load Tool Kit (special tool #8443A, SRS Load Tool) and SRS Load Tool Jumper (special tool #8443-1, Jumpers, 2 Pin) to the Left Seat Airbag connector.

WARNING: Turn the ignition on, then reconnect the 12-volt battery and wait two minutes before proceeding. Failure to follow these instructions may result in possible serious or fatal injury.

3. With the scan tool, read the active ORC DTC.

   Does the scan tool display : B1C28-LEFT SIDE SEAT THORAX SQUIB 1 HIGH

   Yes

   - Go To 3

   No

WARNING: Turn the ignition off, disconnect the 12-volt battery and wait two minutes before proceeding. Failure to follow these instructions may result in possible serious or fatal injury.

- Replace the Left Seat Airbag in accordance with the Service Information.
- Perform the AIRBAG SYSTEM VERIFICATION TEST. Refer to

STANDARD PROCEDURE .

3. CHECK FOR SHORTED LEFT SEAT AIRBAG SQUIB CIRCUITS IN THE SEAT BACK

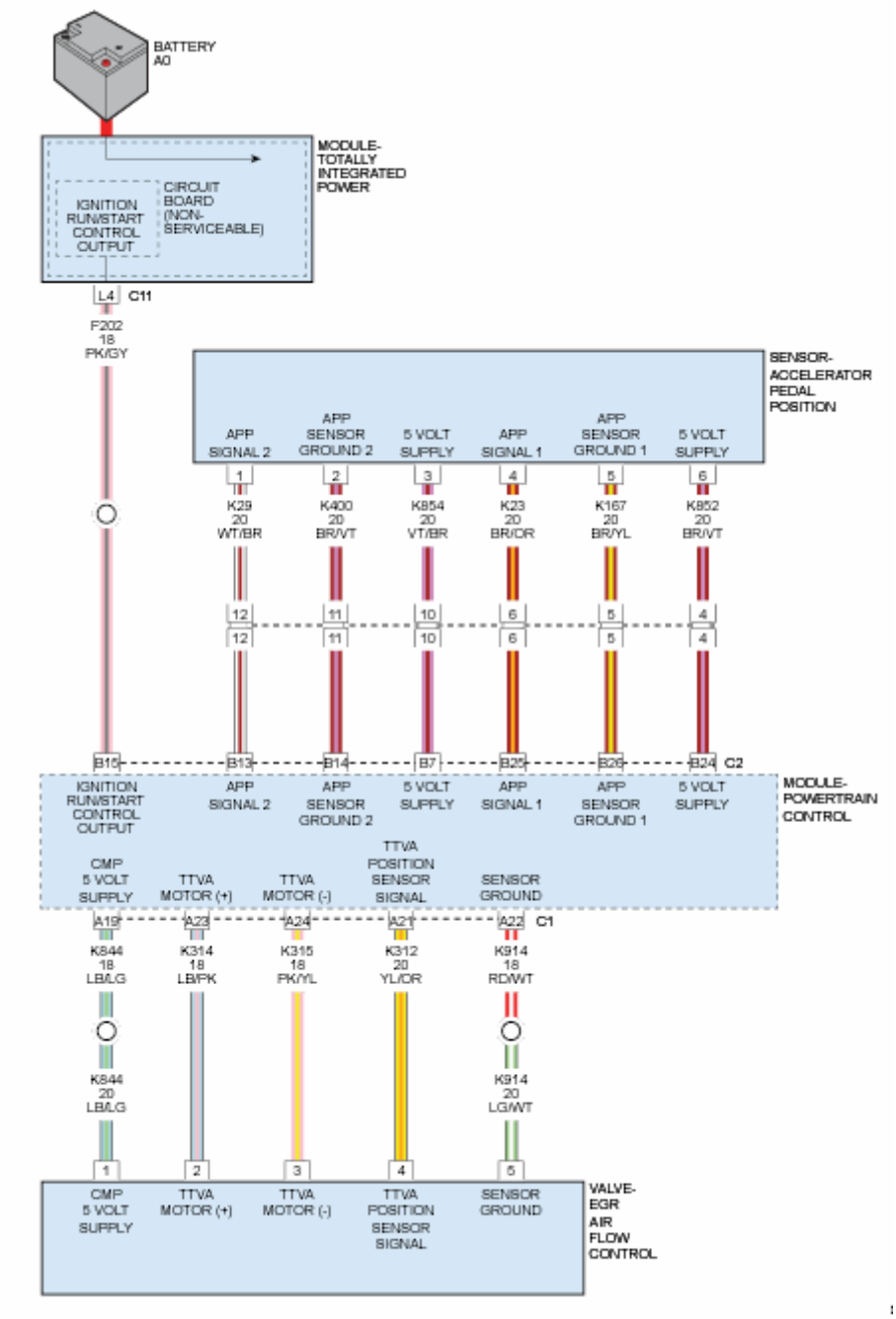

Fig. 46: Checking Left Seat Airbag Squib Circuits In Seat Back
Courtesy of CHRYSLER GROUP, LLC

WARNING: Turn the ignition off, disconnect the 12-volt battery and wait two minutes before proceeding. Failure to follow these

instructions may result in possible serious or fatal injury.

1. Disconnect the Left Seat Airbag C353 in-line connector (under Left Seat).

   NOTE: Check connectors - Clean and repair as necessary.

2. Connect the (special tool #8443A, SRS Load Tool) Load Tool and (special tool #8443-20, Jumper, SRS Load Tool) Jumper to the Left Seat Airbag C353 in-line connector (Body Side).

   WARNING: Turn the ignition on, then reconnect the 12-volt battery and wait two minutes before proceeding. Failure to follow these instructions may result in possible serious or fatal injury.

3. With the scan tool, read the active ORC DTC.

   Does the scan tool display : B1C28-LEFT SIDE SEAT THORAX SQUIB 1 HIGH

   Yes

   - Go To 4

   No

   WARNING: Turn the ignition off, disconnect the 12-volt battery and wait two minutes before proceeding. Failure to follow these instructions may result in possible serious or fatal injury.

   - In accordance with the Service Information repair or replace the Left Seat Airbag wiring harness (Side Airbag Jumper). Left Seat Airbag circuits shorted high between the C353 in-line connector

(Side Airbag Jumper) and the Left Seat Airbag connector.

- Perform the AIRBAG SYSTEM VERIFICATION TEST. Refer to **STANDARD PROCEDURE** .

4. **CHECK FOR SHORTED LEFT SEAT AIRBAG SQUIB CIRCUITS IN THE BODY HARNESS TO THE SEAT**

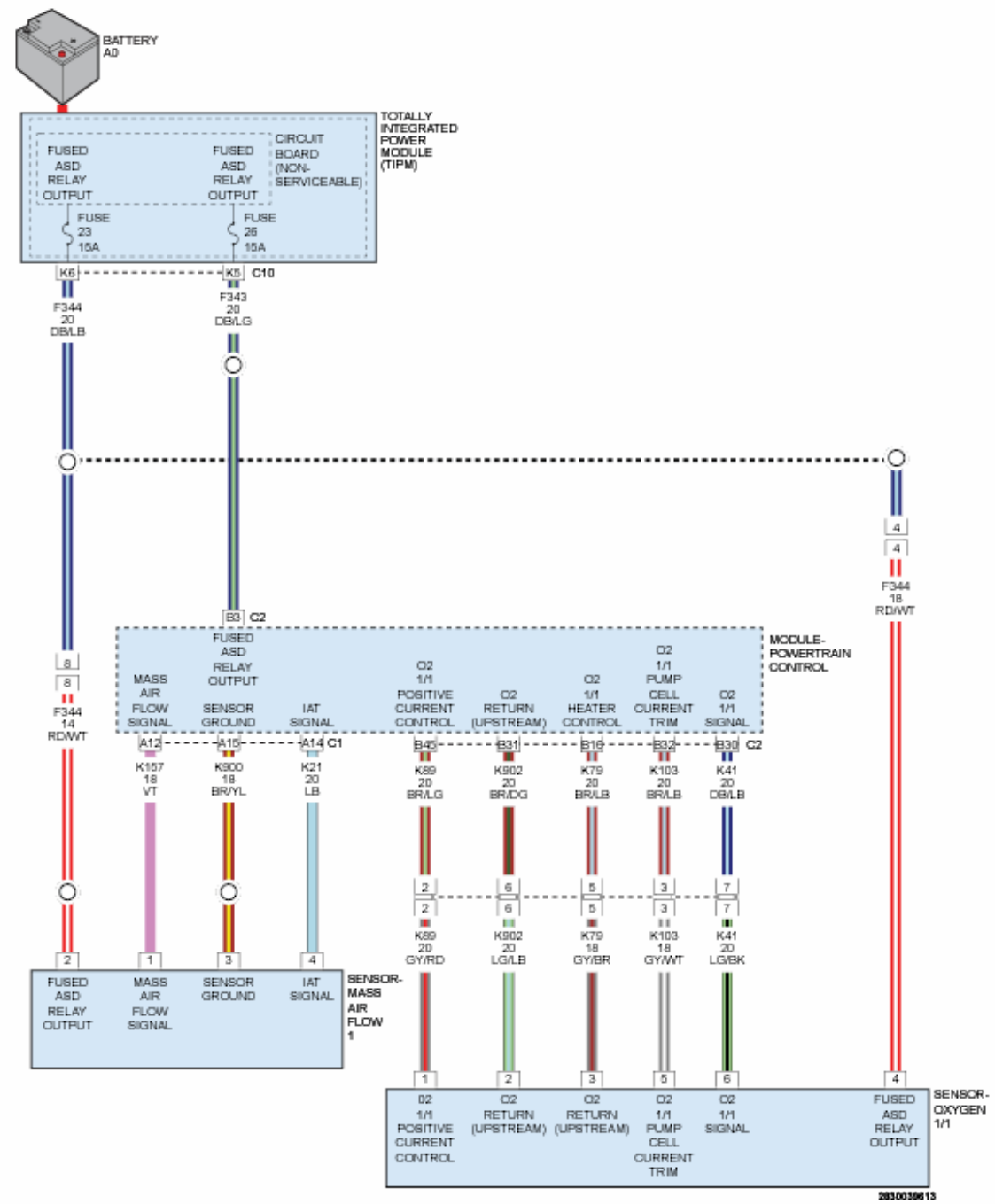

Fig. 47: Checking For Shorted Left Seat Airbag Squib Circuits In Body Harness To Seat
Courtesy of CHRYSLER GROUP, LLC

WARNING: Turn the ignition off, disconnect the 12-volt battery and wait two minutes before proceeding. Failure to follow these instructions may result in possible serious or fatal injury.

1. Disconnect the SRS Load Tool Kit (special tool #8443A, SRS Load Tool) and SRS Load Tool Jumper (special tool #8443-20, Jumper, SRS Load Tool) from the C353 in-line connector.
2. Disconnect the ORC connectors.

NOTE: Check connectors - Clean and repair as necessary.

3. Connect the SRS Load Tool Adaptor (special tool #8443-25, 56 Way ACM Adapter) to the ORC connectors.

WARNING: Turn the ignition on, then reconnect the 12-volt battery and wait two minutes before proceeding. Failure to follow these instructions may result in possible serious or fatal injury.

4. Measure the voltage of the (R5) Left Seat Squib 1 Line 2 circuit between the SRS Load Tool Adaptor (special tool #8443-25, 56 Way ACM Adapter) cavity 32-7 and ground.
5. Measure the voltage of the (R7) Left Seat Squib 1 Line 1 circuit between the SRS Load Tool Adaptor (special tool #8443-25, 56 Way ACM Adapter) cavity 32-8 and ground.

Is there any voltage present on either circuit?

Yes

- In accordance with Service Information repair or replace the Left Seat circuits. Left Seat circuits short to high between the C353 in-line connector (body side) and the ORC C2 (32 way) connector.
- Perform the AIRBAG SYSTEM VERIFICATION TEST. Refer to **STANDARD PROCEDURE** .

No

WARNING: Turn the ignition off, disconnect the 12-volt battery and wait two minutes before proceeding. Failure to follow these instructions may result in possible serious or fatal injury.

WARNING: If the Occupant Restraint Controller (ORC) is dropped at any time, it must be replaced. Failure to take the proper precautions can result in accidental airbag deployment. Failure to follow these instructions may result in possible serious or fatal injury.

- Replace the ORC in accordance with Service Information.
- Perform the AIRBAG SYSTEM VERIFICATION TEST. Refer to **STANDARD PROCEDURE** .

5. **CHECKING STORED OR INTERMITTENT CODES**

NOTE: Diagnose and repair all active codes before diagnosing stored codes. Refer to the OCCUPANT RESTRAINT CONTROLLER (ORC) - DIAGNOSTIC CODE INDEX for a complete list of airbag system diagnostic procedures.

1. With the scan tool, record and erase all Airbag System Module DTCs.

WARNING: Turn the ignition off, disconnect the 12-volt battery and wait two minutes before proceeding. Failure to follow these instructions may result in possible serious or fatal injury.

2. Using the wiring diagram/schematic as a guide, inspect the related wiring and connectors for chafed, pierced, pinched, and partially broken wires, and for broken, bent, pushed out, corroded, and contaminated

terminals. Repair as necessary.

3. Reconnect all disconnected components and harness connectors.

WARNING: Turn the ignition on, then reconnect the 12-volt battery and wait two minutes before proceeding. Failure to follow these instructions may result in possible serious or fatal injury.

4. With the scan tool, monitor for active codes while performing the following:
   - Wiggle the wiring harness and connectors of the related airbag circuit.
   - Continue the test until either a code becomes active or the problem area is isolated.
5. In the previous steps you have attempted to recreate the conditions responsible for setting the DTC in question/causing the intermittent condition.

   Are any ACTIVE DTCs present?

   Yes

   - Perform the appropriate diagnostic procedure. Refer to **DTC INDEX** .

   No

   - No problem found at this time. Erase all codes before returning the vehicle to the customer.

B1C29-LEFT SIDE SEAT THORAX SQUIB 1 OPEN

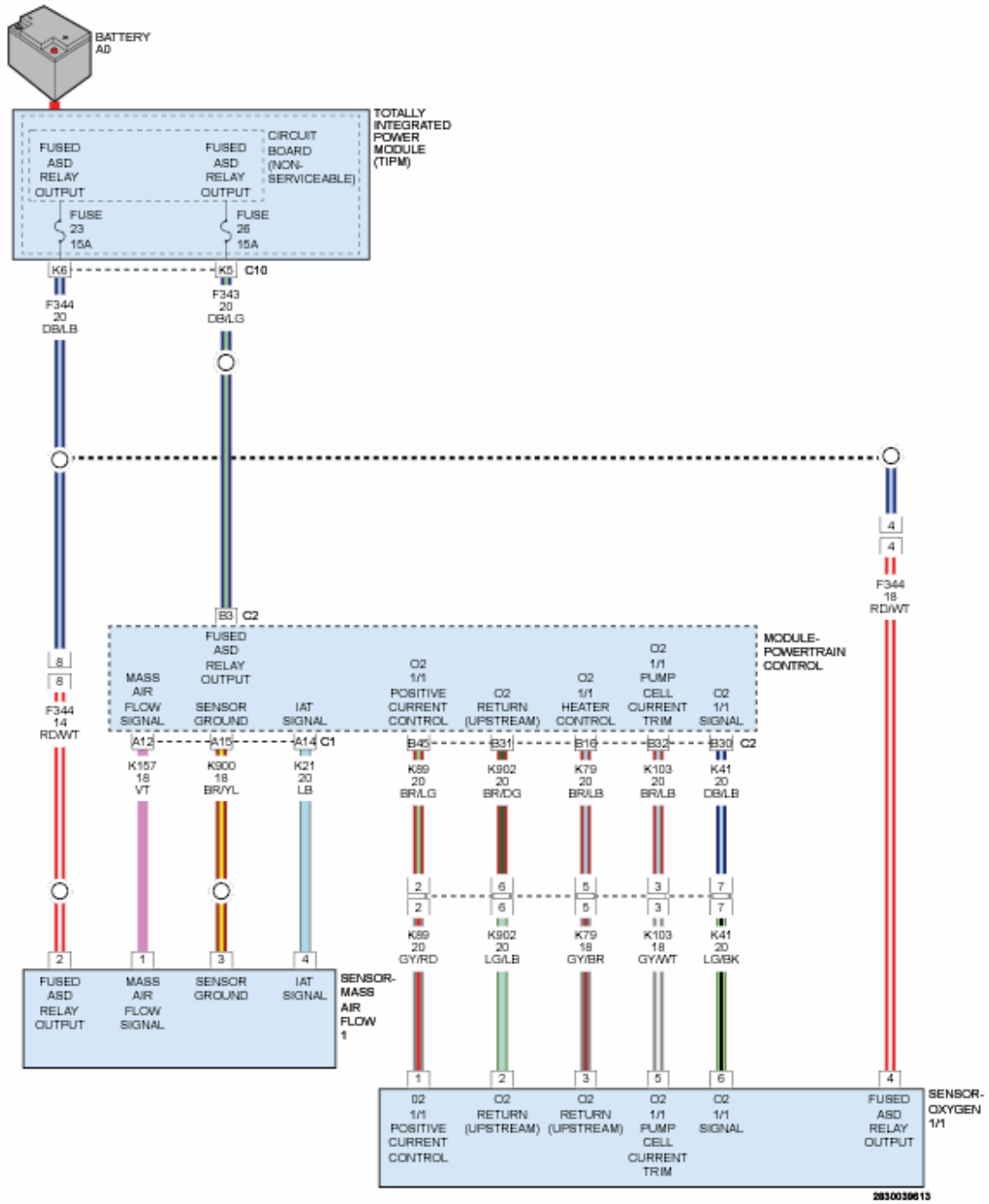

Fig. 48: Left Seat Airbag & ORC Module Circuit Schematic
Courtesy of CHRYSLER GROUP, LLC

For a complete wiring diagram, **refer to appropriate SYSTEM WIRING DIAGRAMS article** .

WHEN MONITORED

With the ignition on.

SET CONDITION

The Occupant Restraint Controller (ORC) monitors the resistance of the Left Seat Airbag circuits. If an open or high resistance condition is detected on the Left Seat Airbag circuits the ORC will set this DTC.

POSSIBLE CAUSES

Possible Causes
(R5) LEFT SEAT SQUIB 1 LINE 2 CIRCUIT OPEN
(R7) LEFT SEAT SQUIB 1 LINE 1 CIRCUIT OPEN
LEFT SEAT AIRBAG
OCCUPANT RESTRAINT CONTROLLER (ORC)

DIAGNOSTIC TEST

1. **DETERMINE ACTIVE OR STORED DTC**

   NOTE: Make sure that the battery is fully charged.

   NOTE: The scan tool, SRS Load Tool Kit (special tool #8443A, SRS Load Tool), and DVOM are required to perform the following test:

   1. Turn the ignition on.

      Select ACTIVE or STORED DTC:

      ACTIVE DTC

      - Go To 2

      STORED DTC

      - Go To 6

2. **CHECK FOR OPEN LEFT SEAT AIRBAG SQUIB**

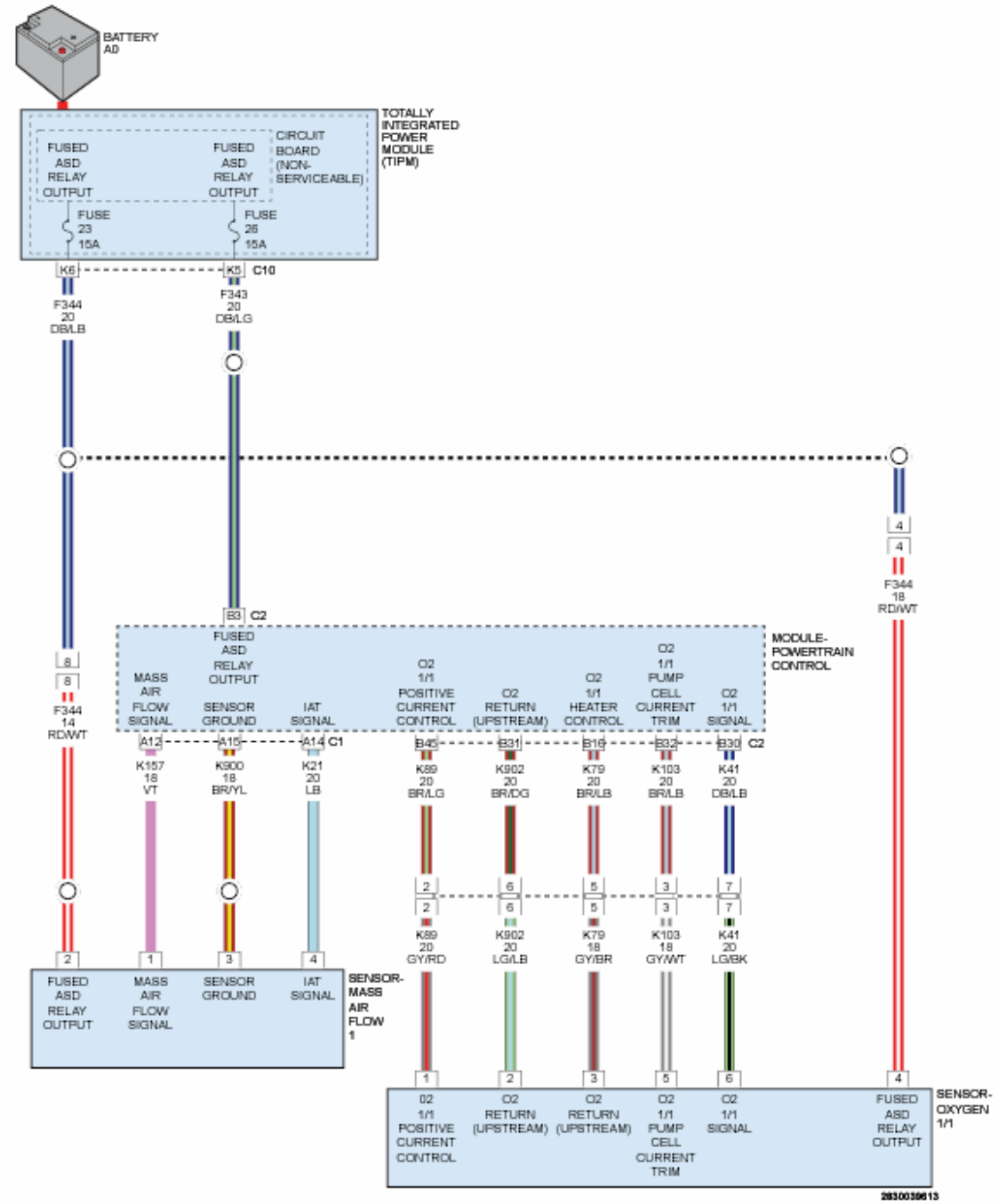

Fig. 49: Checking Squib Circuits At Left Seat Squib Airbag For Shorts
Courtesy of CHRYSLER GROUP, LLC

WARNING: Turn the ignition off disconnect the 12-volt battery and wait two minutes before proceeding. Failure to follow these instructions may result in possible serious or fatal injury.

1. Disconnect the Left Seat Airbag connector.

   WARNING: Do not place an intact non-deployed Seat Squib Airbag face down on a hard surface, the airbag will propel into the air if accidentally deployed. Failure to follow these instructions may result in possible serious or fatal injury.

   NOTE: Check connectors - Clean and repair as necessary.

2. Connect the SRS Load Tool Kit (special tool #8443A, SRS Load Tool) and SRS Load Tool Jumper (special tool #8443-1, Jumpers, 2 Pin) to the Left Seat Airbag connector.

   WARNING: Turn the ignition on, then reconnect the 12-volt battery and wait two minutes before proceeding. Failure to follow these instructions may result in possible serious or fatal injury.

3. With the scan tool, read the active ORC DTCs.

   Does the scan tool display: B1C29-LEFT SIDE SEAT THORAX SQUIB 1 OPEN?

   Yes

   - Go To 3

   No

   WARNING: Turn the ignition off, disconnect the 12-volt battery and wait two minutes before proceeding. Failure to follow these instructions may result in possible serious or fatal injury.

- Replace the Left Seat Airbag in accordance with the Service Information.
- Perform the AIRBAG SYSTEM VERIFICATION TEST. Refer to **STANDARD PROCEDURE** .

3. **CHECK FOR A OPEN LEFT SEAT AIRBAG SQUIB CIRCUIT IN THE SEAT BACK**

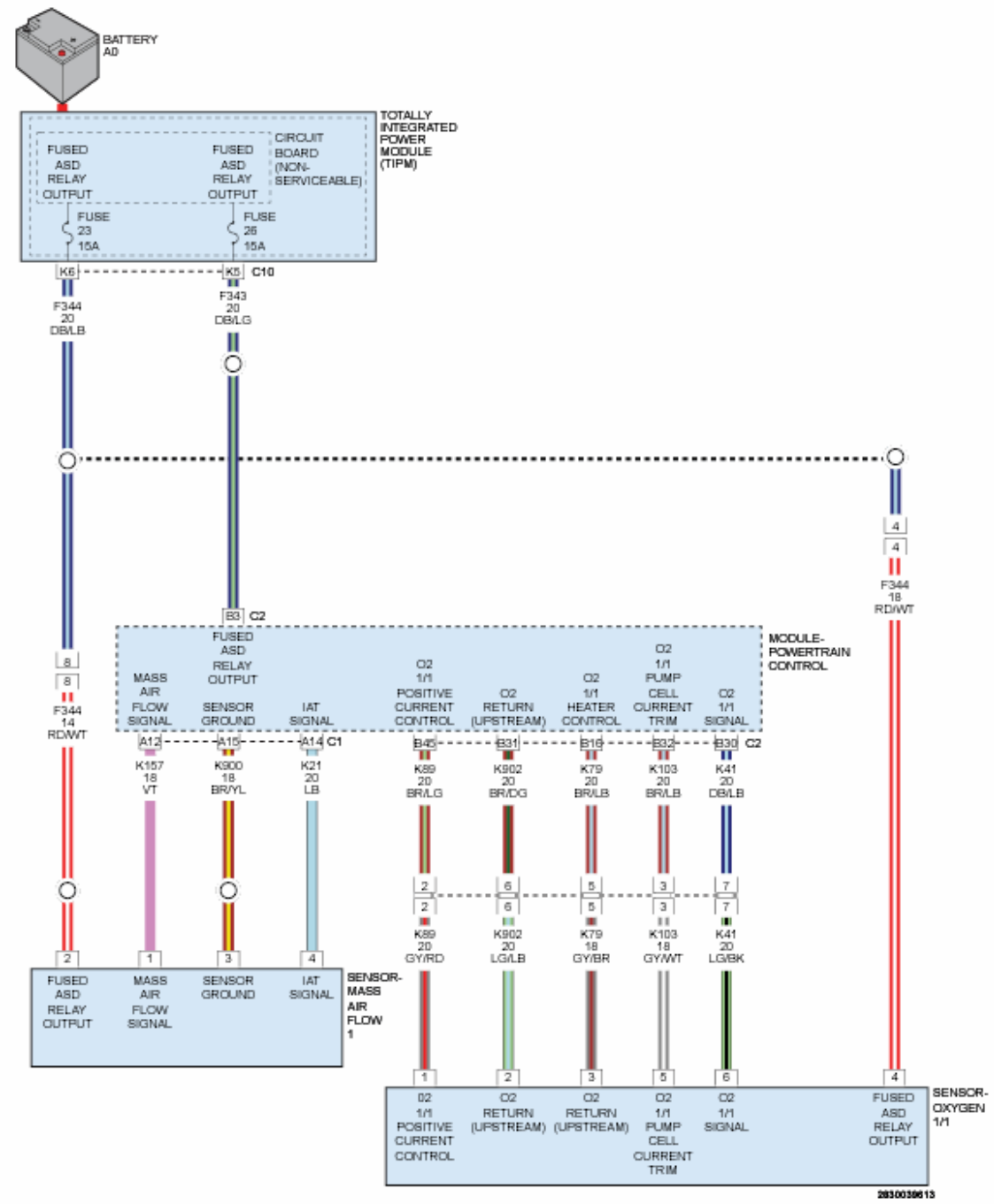

Fig. 50: Checking Left Seat Airbag Squib Circuits In Seat Back
Courtesy of CHRYSLER GROUP, LLC

WARNING: Turn the ignition off, disconnect the 12-volt battery and wait two minutes before proceeding. Failure to follow these instructions may result in possible serious or fatal injury.

1. Disconnect the Left Seat Airbag C353 in-line connector (under Left Seat).

   NOTE: Check connectors - Clean and repair as necessary.

2. Connect the SRS Load Tool Kit (special tool #8443A, SRS Load Tool) and SRS Load Tool Jumper (special tool #8443-20, Jumper, SRS Load Tool) to the Left Seat Airbag C353 in-line connector (Body Side).

   WARNING: Turn the ignition on, then reconnect the 12-volt battery and wait two minutes before proceeding. Failure to follow these instructions may result in possible serious or fatal injury.

3. With the scan tool, read the active ORC DTCs.

   Does the scan tool display: B1C29-LEFT SIDE SEAT THORAX SQUIB 1 OPEN?

   Yes

   - Go To 4

   No

   WARNING: Turn the ignition off, disconnect the 12-volt battery and wait two minutes before proceeding. Failure to follow these instructions may result in possible serious or fatal injury.

- In accordance with the Service Information repair or replace the Left Seat Airbag wiring harness (Side Airbag Jumper). Open Left Seat Airbag circuits between the C353 in-line connector and the Left Seat Airbag connector.
- Perform the AIRBAG SYSTEM VERIFICATION TEST. Refer to **STANDARD PROCEDURE** .

4. **CHECK FOR OPEN (R5) LEFT SEAT SQUIB 1 LINE 2 CIRCUIT IN THE BODY HARNESS TO THE SEAT**

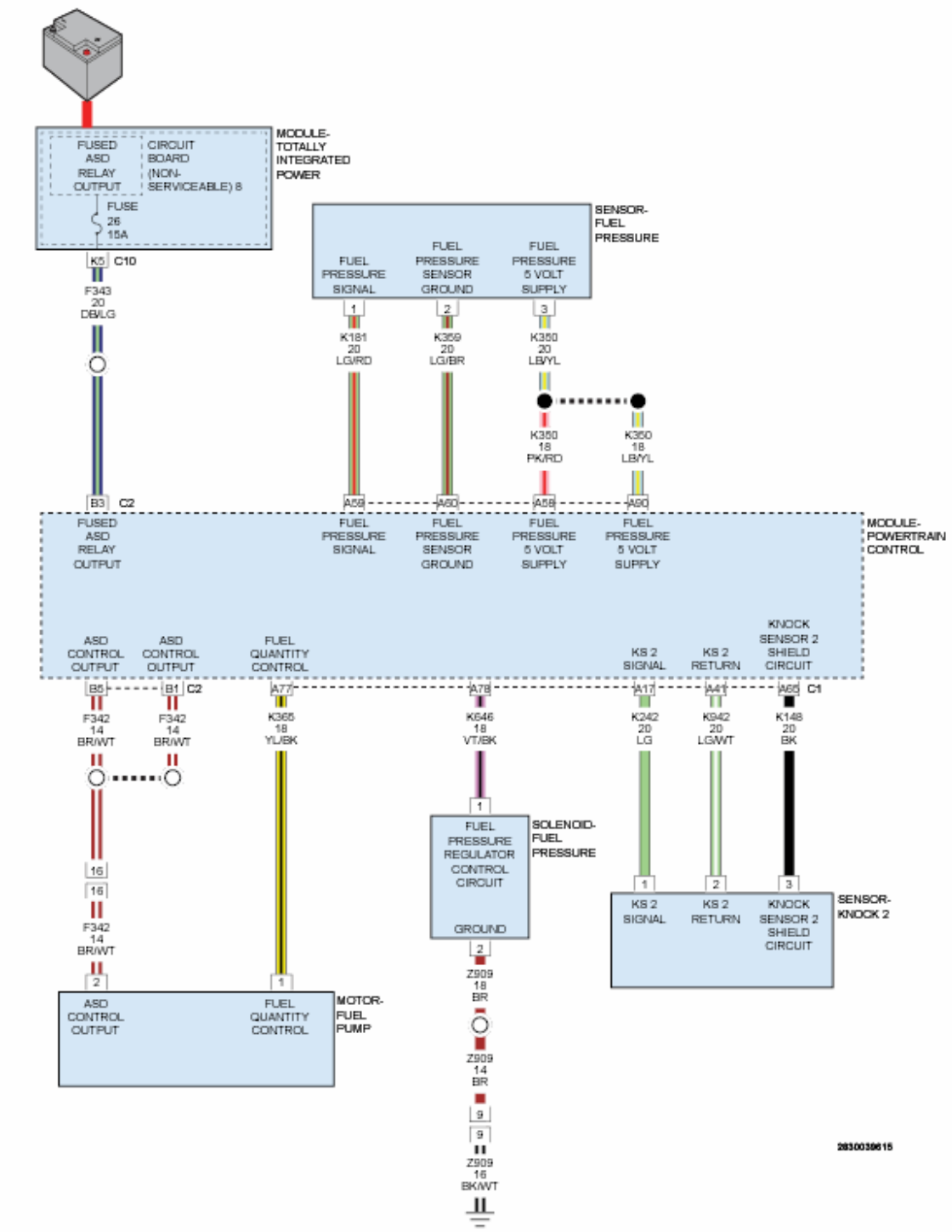

Fig. 51: Checking For Open Left Seat Squib 1 Line 2 Circuit In Body Harness To Seat
Courtesy of CHRYSLER GROUP, LLC

WARNING: Turn the ignition off, disconnect the 12-volt battery and wait two minutes before proceeding. Failure to follow these

instructions may result in possible serious or fatal injury.

1. Disconnect the SRS Load Tool Kit (special tool #8443A, SRS Load Tool) (special tool #8443-20, Jumper, SRS Load Tool) from the C353 in-line connector (body side). and SRS Load Tool Jumper
2. Disconnect the ORC connectors.

NOTE: Check connectors - Clean and repair as necessary.

3. Connect the SRS Load Tool Adaptor (special tool #8443-25, 56 Way ACM Adapter) to the ORC connectors.
4. Measure the resistance of the (R5) Left Seat Squib 1 Line 2 circuit between the SRS Load Tool Adaptor (special tool #8443-25, 56 Way ACM Adapter) cavity 32-7 and the C353 in-line connector (body side) cavity 1.

   Is the resistance below 1.0 Ohm?

   Yes

   - Go To 5

   No

   - Repair or Replace the (R5) Left Seat Squib 1 Line 2 circuit for an open or high resistance in accordance with Service Information.
   - Perform the AIRBAG SYSTEM VERIFICATION TEST. Refer to **STANDARD PROCEDURE** .

5. **CHECK FOR AN OPEN (R7) LEFT SEAT SQUIB 1 LINE 1 CIRCUIT IN THE BODY HARNESS**

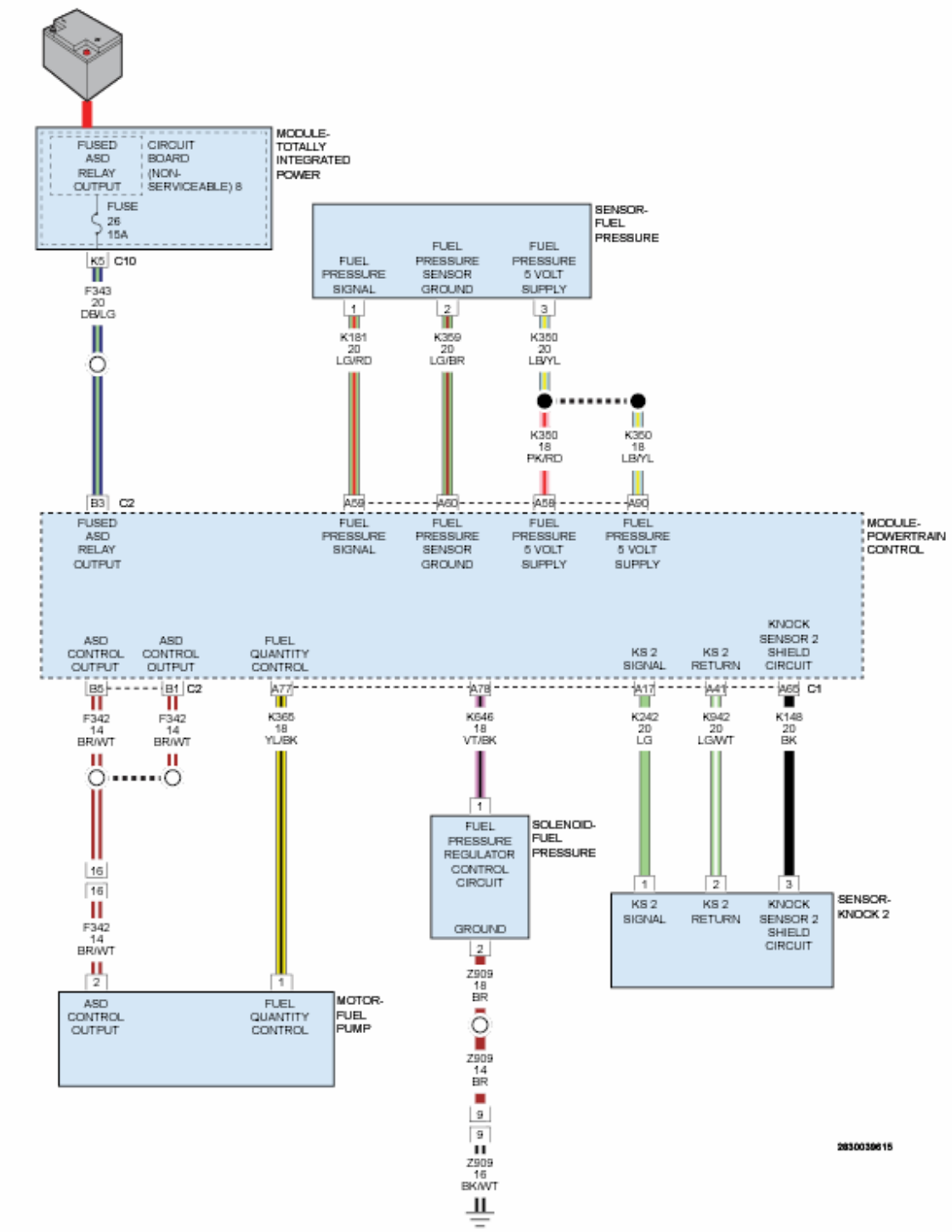

Fig. 52: Checking For Open Left Seat Squib 1 Line 1 Circuit In Body Harness
Courtesy of CHRYSLER GROUP, LLC

1. Measure the resistance of the (R7) Left Seat Squib 1 Line 1 circuit between the SRS Load Tool Adaptor (special tool #8443-25, 56 Way ACM Adapter) cavity 32-8 and the C353 in-line connector (body side)

cavity 2.

Is the resistance below 1.0 Ohm?

Yes

WARNING: If the Occupant Restraint Controller (ORC) is dropped at any time, it must be replaced. Failure to take the proper precautions can result in accidental airbag deployment. Failure to follow these instructions may result in possible serious or fatal injury.

- Replace the ORC in accordance with Service Information.
- Perform the AIRBAG SYSTEM VERIFICATION TEST. Refer to **STANDARD PROCEDURE** .

No

- Repair or Replace the (R7) Left Seat Squib 1 Line 1 circuit for an open or high resistance in accordance with Service Information.
- Perform the AIRBAG SYSTEM VERIFICATION TEST. Refer to **STANDARD PROCEDURE** .

6. **CHECKING STORED OR INTERMITTENT CODES**

NOTE: Diagnose and repair all active codes before diagnosing stored codes. Refer to OCCUPANT RESTRAINT CONTROLLER (ORC) - DIAGNOSTIC CODE INDEX for a complete list of airbag system diagnostic procedures.

1. With the scan tool, record and erase all Airbag System Module DTCs.

WARNING: Turn the ignition off, disconnect the 12-volt battery and wait two minutes before proceeding. Failure to follow these instructions may result in possible serious or fatal injury.

2. Using the wiring diagram/schematic as a guide, inspect the related wiring and connectors for chafed, pierced, pinched, and partially broken wires, and for broken, bent, pushed out, corroded, and contaminated terminals. Repair as necessary.
3. Reconnect all disconnected components and harness connectors.

WARNING: Turn the ignition on, then reconnect the 12-volt battery and wait two minutes before proceeding. Failure to follow these instructions may result in possible serious or fatal injury.

4. With the scan tool, monitor for active codes while performing the following:
   - Wiggle the wiring harness and connectors of the related airbag circuit.
   - Continue the test until either a code becomes active or the problem area is isolated.
5. In the previous steps you have attempted to recreate the conditions responsible for setting the DTC in question/causing the intermittent condition.

   Are any ACTIVE DTCs present?

   Yes

   - Perform the appropriate diagnostic procedure. Refer to **DTC INDEX** .

   No

   - No problem found at this time. Erase all codes before returning the vehicle to the customer.

B1C2A-LEFT SIDE SEAT THORAX SQUIB 1 SHORTED TOGETHER

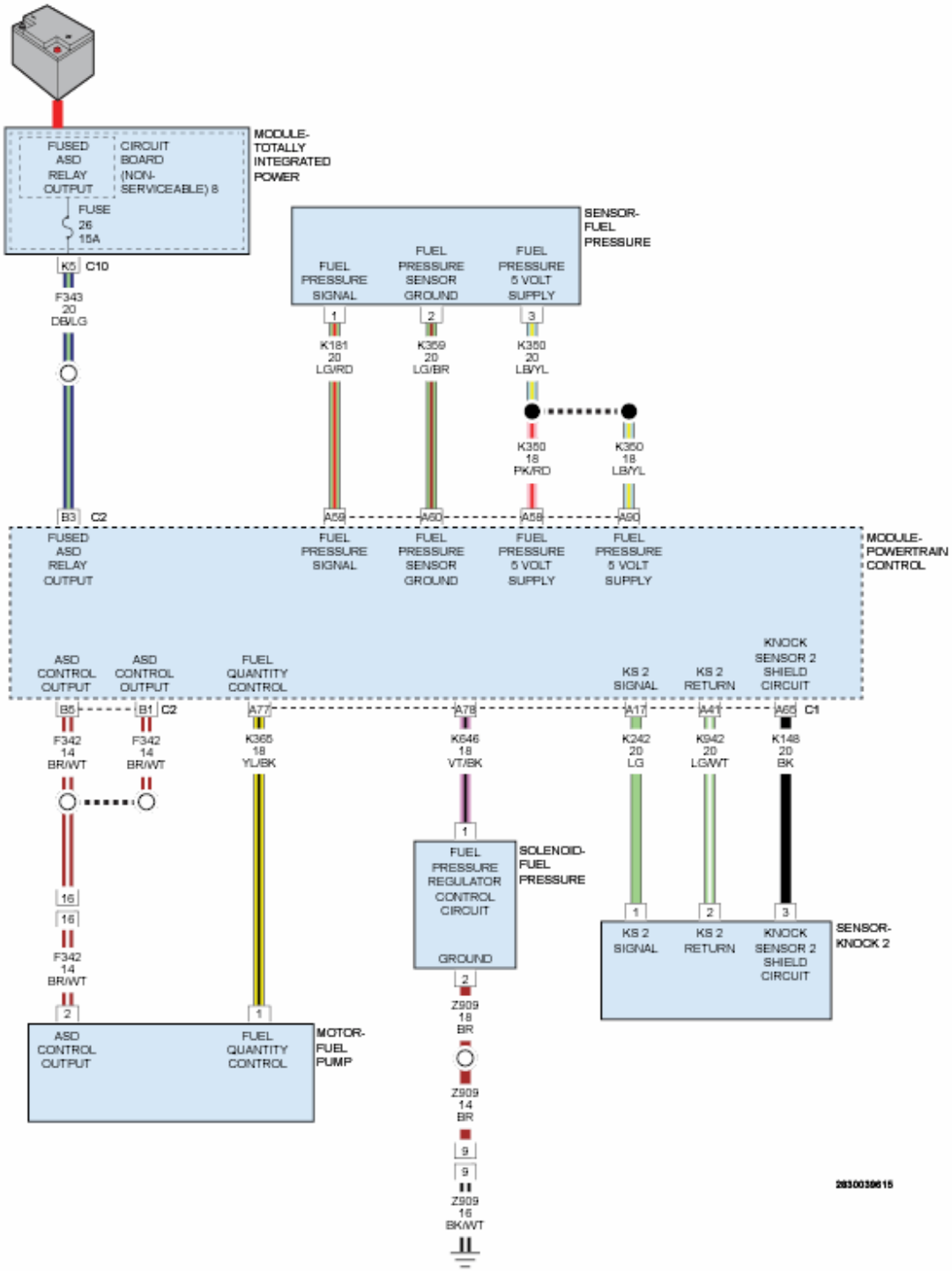

Fig. 53: Left Seat Airbag & ORC Module Circuit Schematic
Courtesy of CHRYSLER GROUP, LLC

For a complete wiring diagram, **refer to appropriate SYSTEM WIRING DIAGRAMS article** .

WHEN MONITORED

With the ignition on.

SET CONDITION

The Occupant Restraint Controller (ORC) monitors the resistance of the Left Seat Airbag circuits. If low resistance is detected between the Left Seat Airbag circuits the ORC will set this DTC.

POSSIBLE CAUSES

Possible Causes
(R5) LEFT SEAT SQUIB 1 LINE 2 CIRCUIT SHORTED TO THE (R7) LEFT SEAT SQUIB 1 LINE 1 CIRCUIT
LEFT SEAT AIRBAG
OCCUPANT RESTRAINT CONTROLLER (ORC)

DIAGNOSTIC TEST

1. **DETERMINE ACTIVE OR STORED DTC**

   NOTE: Make sure that the battery is fully charged.

   NOTE: The scan tool, SRS Load Tool Kit (special tool #8443A, SRS Load Tool), and DVOM are required to perform the following test:

   1. Turn the ignition on.

      Select ACTIVE or STORED DTC:

      ACTIVE DTC

      - Go To 2

      STORED DTC

      - Go To 5

2. **CHECK FOR SHORTED SQUIB CIRCUITS IN THE LEFT SEAT AIRBAG**

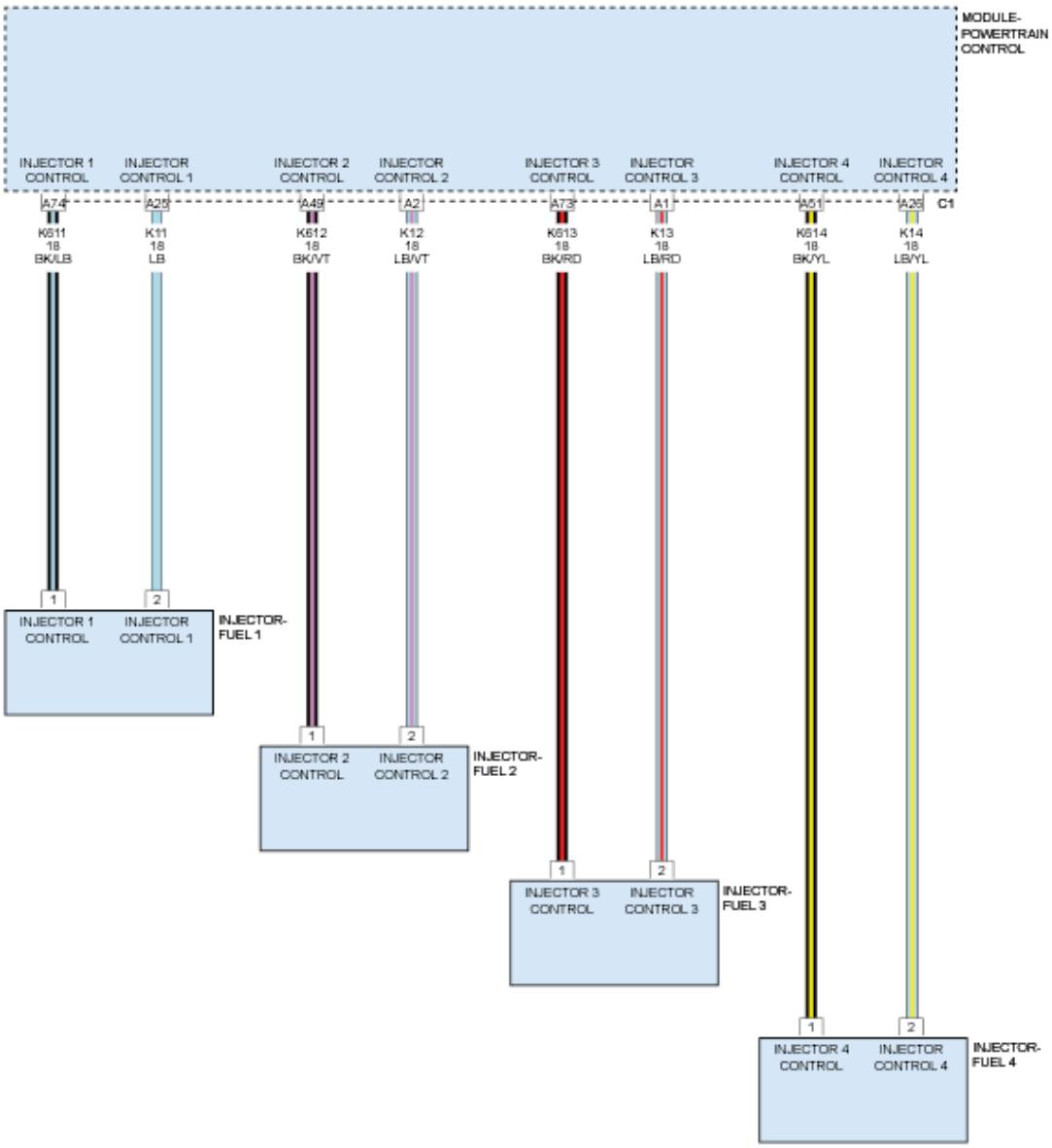

Fig. 54: Checking Squib Circuits At Left Seat Squib Airbag For Shorts
Courtesy of CHRYSLER GROUP, LLC

WARNING: Turn the ignition off disconnect the 12-volt battery and wait two minutes before proceeding. Failure to follow these instructions may result in possible serious or fatal injury.

1. Disconnect the Left Seat Airbag connector.

WARNING: Do not place an intact non-deployed Seat

Squib Airbag face down on a hard surface, the airbag will propel into the air if accidentally deployed. Failure to follow these instructions may result in possible serious or fatal injury.

NOTE: Check connectors - Clean and repair as necessary.

2. Connect the SRS Load Tool Kit (special tool #8443A, SRS Load Tool) and SRS Load Tool Jumper (special tool #8443-1, Jumpers, 2 Pin) to the Left Seat Airbag connector.

   WARNING: Turn the ignition on, then reconnect the 12-volt battery and wait two minutes before proceeding. Failure to follow these instructions may result in possible serious or fatal injury.

3. With the scan tool, read the active ORC DTC.

   Does the scan tool display: B1C2A-LEFT SIDE SEAT THORAX SQUIB 1 SHORTED TOGETHER?

   Yes

   - Go To 3

   No

   WARNING: Turn the ignition off, disconnect the 12-volt battery and wait two minutes before proceeding. Failure to follow these instructions may result in possible serious or fatal injury.

   - Replace the Left Seat Airbag in accordance with the Service Information.
   - Perform the AIRBAG SYSTEM VERIFICATION TEST. Refer to

STANDARD PROCEDURE .

3. **CHECK FOR LEFT SEAT AIRBAG SQUIB CIRCUITS SHORTED TOGETHER IN THE SEAT BACK**

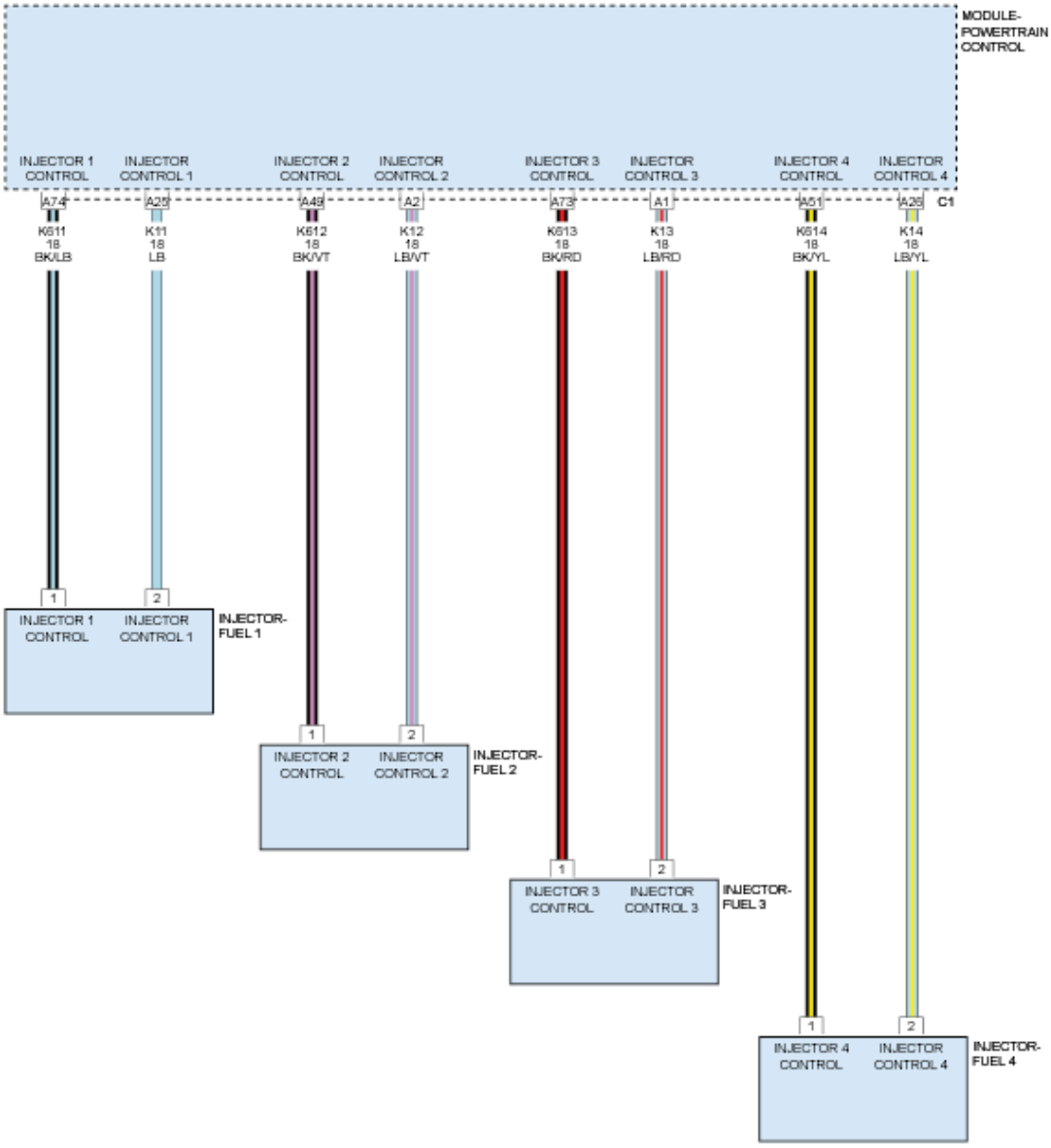

Fig. 55: Checking Left Seat Airbag Squib Circuits In Seat Back
Courtesy of CHRYSLER GROUP, LLC

WARNING: Turn the ignition off, disconnect the 12-volt battery and wait two minutes before proceeding. Failure to follow these instructions may result in possible serious or fatal injury.

1. Disconnect the Left Seat Airbag C353 in-line connector (under Left Seat).

   NOTE: Check connectors - Clean and repair as necessary.

2. Connect the SRS Load Tool Kit (special tool #8443A, SRS Load Tool) and SRS Load Tool Jumper (special tool #8443-20, Jumper, SRS Load Tool) to the Left Seat Airbag C353 in-line connector (Body Side).

   WARNING: Turn the ignition on, then reconnect the 12-volt battery and wait two minutes before proceeding. Failure to follow these instructions may result in possible serious or fatal injury.

3. With the scan tool, read the active ORC DTC.

   Does the scan tool display: B1C2A-LEFT SIDE SEAT THORAX SQUIB 1 SHORTED TOGETHER?

   Yes

   - Go To 4

   No

   WARNING: Turn the ignition off, disconnect the 12-volt battery and wait two minutes before proceeding. Failure to follow these instructions may result in possible serious or fatal injury.

   - In accordance with the Service Information repair or replace the Left Seat Airbag wiring harness (Side Airbag Jumper). Circuits (R5) and (R7) shorted together between the C353 in-line connector and the Left Seat Airbag connector.
   - Perform the AIRBAG SYSTEM VERIFICATION TEST. Refer to **STANDARD PROCEDURE** .

4. **CHECK (R5) LEFT SEAT SQUIB 1 LINE 2 CIRCUIT FOR A SHORT TO (R7) LEFT SEAT SQUIB 1 LINE 1 CIRCUIT**

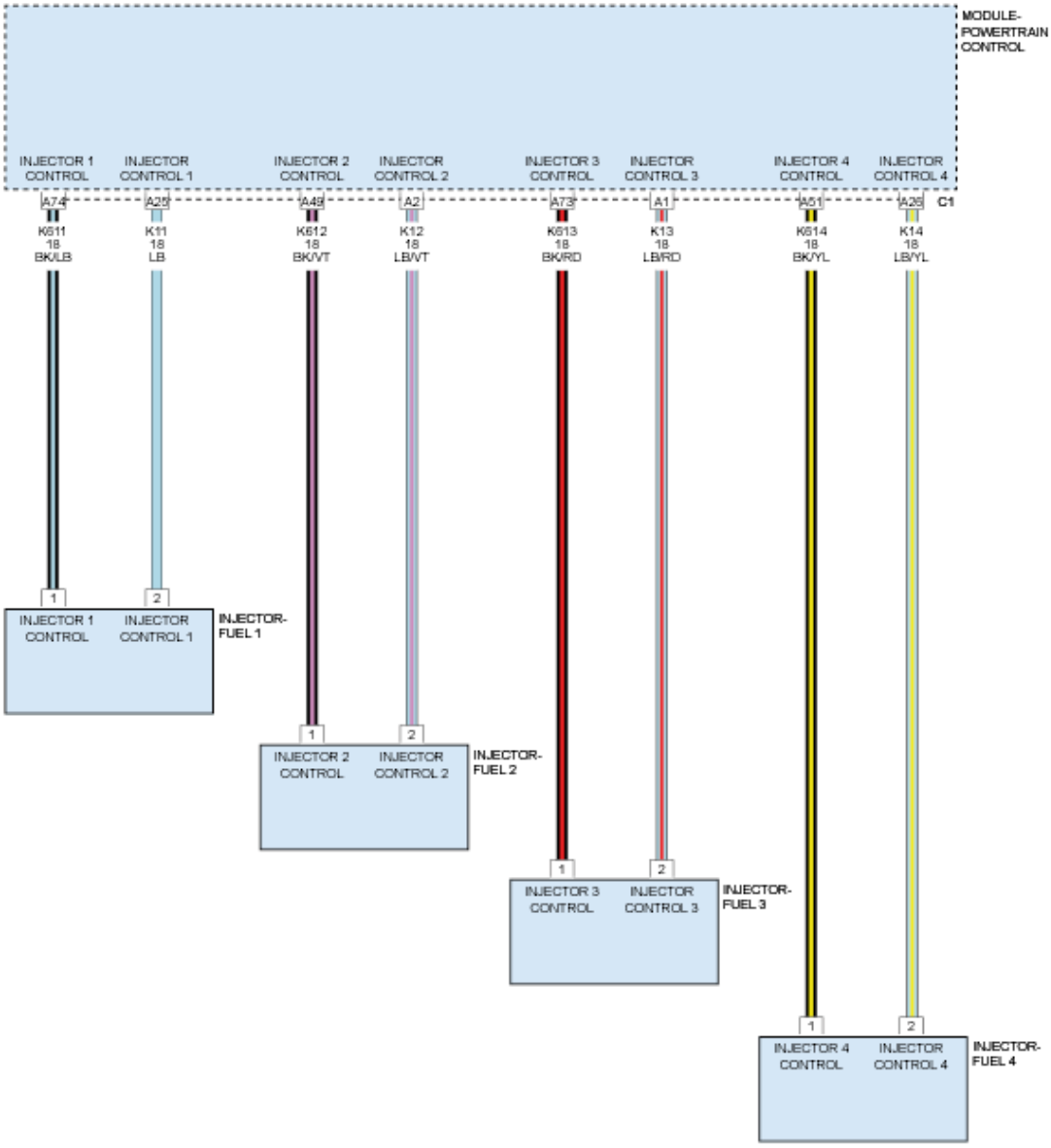

Fig. 56: Checking Left Seat Squib 1 Line 2 Circuit For A Short To Left Seat Squib 1 Line 1 Circuit
Courtesy of CHRYSLER GROUP, LLC

WARNING: Turn the ignition off, disconnect the 12-volt battery and wait two minutes before proceeding. Failure to follow these instructions may result in possible serious or fatal injury.

1. Disconnect the SRS Load Tool Kit (special tool #8443A, SRS Load Tool) and SRS Load Tool Jumper (special tool #8443-20, Jumper, SRS Load Tool) from the Left Seat Airbag connector.
2. Disconnect the ORC connectors.

NOTE: Check connectors - Clean and repair as necessary.

3. Connect the SRS Load Tool Adaptor (special tool #8443-25, 56 Way ACM Adapter) to the ORC connectors.
4. Measure the resistance between the (R5) Left Seat Squib 1 Line 2 circuit cavity 1 and the (R7) Left Seat Squib 1 Line 1 circuit cavity 2 at the C353 in-line connector (Body side).

Is the resistance below 10k Ohms?

Yes

- In accordance with the Service Information repair or replace the Left Seat Airbag wiring harness. Circuits (R5) and (R7) shorted together between the C353 in-line connector and the ORC C2 (32 way) connector.
- Perform the AIRBAG SYSTEM VERIFICATION TEST. Refer to **STANDARD PROCEDURE** .

No

WARNING: **If the Occupant Restraint Controller (ORC) is dropped at any time, it must be replaced. Failure to take the proper precautions can result in accidental airbag deployment. Failure to follow these instructions may result in possible serious or fatal injury.**

- Replace the ORC in accordance with Service Information.
- Perform the AIRBAG SYSTEM VERIFICATION TEST. Refer to **STANDARD PROCEDURE** .

5. CHECKING STORED OR INTERMITTENT CODES

NOTE: Diagnose and repair all active codes before diagnosing stored codes. Refer to OCCUPANT RESTRAINT CONTROLLER (ORC) - DIAGNOSTIC CODE INDEX for a complete list of airbag system diagnostic procedures.

1. With the scan tool, record and erase all Airbag System Module DTCs.

WARNING: Turn the ignition off, disconnect the 12-volt battery and wait two minutes before proceeding. Failure to follow these instructions may result in possible serious or fatal injury.

2. Using the wiring diagram/schematic as a guide, inspect the related wiring and connectors for chafed, pierced, pinched, and partially broken wires, and for broken, bent, pushed out, corroded, and contaminated terminals. Repair as necessary.
3. Reconnect all disconnected components and harness connectors.

WARNING: Turn the ignition on, then reconnect the 12-volt battery and wait two minutes before proceeding. Failure to follow these instructions may result in possible serious or fatal injury.

4. With the scan tool, monitor for active codes while performing the following:
   - Wiggle the wiring harness and connectors of the related airbag circuit.
   - Continue the test until either a code becomes active or the problem area is isolated.
5. In the previous steps you have attempted to recreate the conditions responsible for setting the DTC in question/causing the intermittent condition.

Are any ACTIVE DTCs present?

Yes

- Perform the appropriate diagnostic procedure. Refer to **DTC INDEX** .

No

- No problem found at this time. Erase all codes before returning the vehicle to the customer.

B1C2B-RIGHT SIDE SEAT THORAX SQUIB 1 LOW

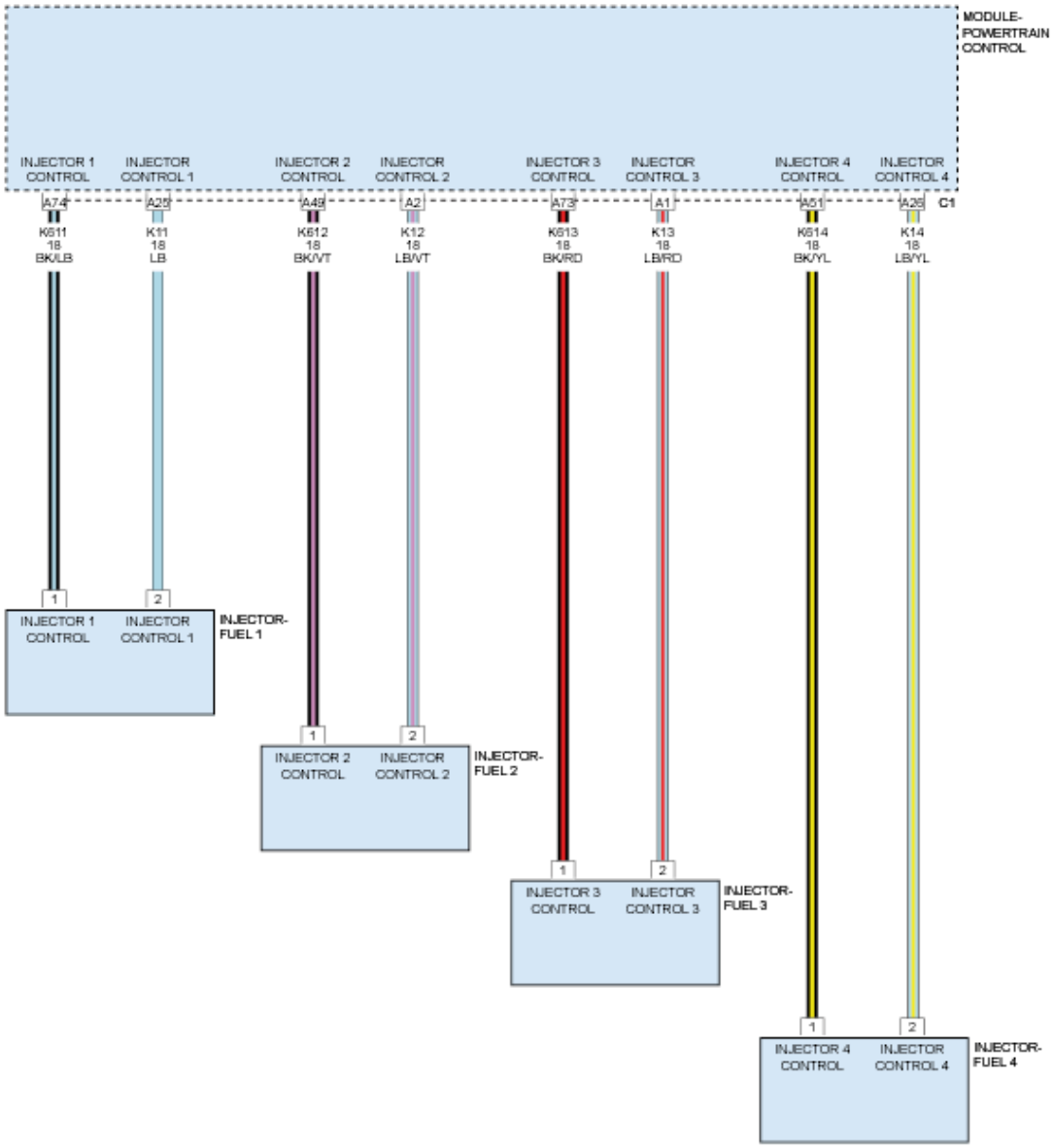

Fig. 57: Right Seat Airbag & ORC Module Circuit Schematic
Courtesy of CHRYSLER GROUP, LLC

For a complete wiring diagram, **refer to appropriate SYSTEM WIRING DIAGRAMS article** .

WHEN MONITORED

With the ignition on.

SET CONDITION

The Occupant Restraint Controller (ORC) monitors the resistance of the Right Seat Airbag circuits. If low resistance is detected on the Right Seat Airbag circuits the ORC will set this DTC.

POSSIBLE CAUSES

Possible Causes
(R6) RIGHT SEAT SQUIB 1 LINE 2 CIRCUIT SHORTED TO GROUND
(R8) RIGHT SEAT SQUIB 1 LINE 1 CIRCUIT SHORTED TO GROUND
RIGHT SEAT AIRBAG
OCCUPANT RESTRAINT CONTROLLER (ORC)

DIAGNOSTIC TEST

1. **DETERMINE ACTIVE OR STORED DTC**

   NOTE: Make sure that the battery is fully charged.

   NOTE: The scan tool, SRS Load Tool Kit (special tool #8443A, SRS Load Tool), and DVOM are required to perform the following test:

   1. Turn the ignition on.

      Select ACTIVE or STORED DTC:

      ACTIVE DTC

      - Go To 2

STORED DTC

- Go To 5

2. **CHECK FOR SHORTED SQUIB CIRCUITS IN RIGHT SEAT AIRBAG**

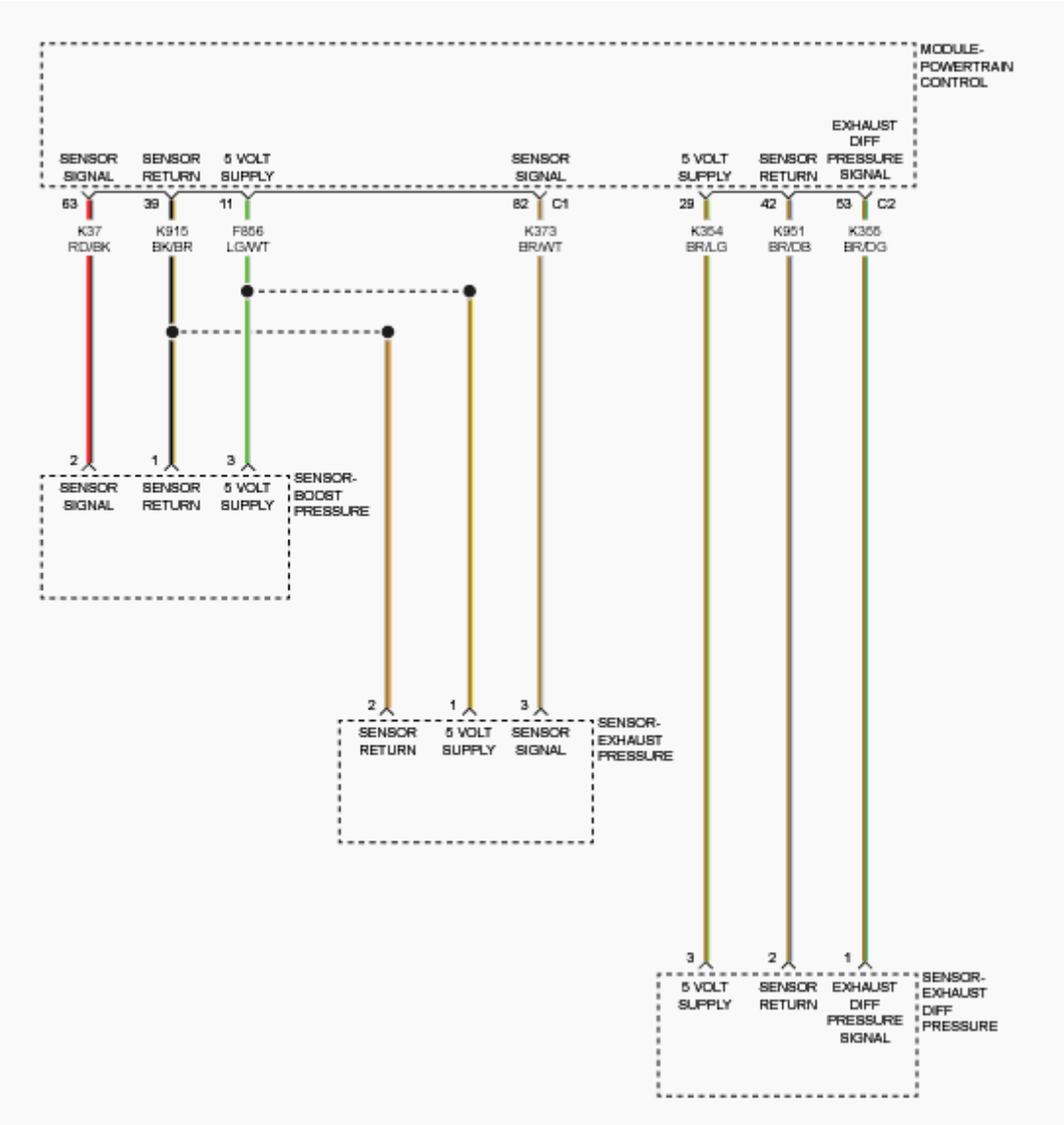

Fig. 58: Checking For Shorted Squib Circuits In Right Seat Airbag
Courtesy of CHRYSLER GROUP, LLC

WARNING: Turn the ignition off disconnect the 12-volt battery and wait two minutes before proceeding. Failure to follow these instructions may result in possible serious or fatal injury.

1. Disconnect the Right Seat Airbag connector.

   WARNING: Do not place an intact non-deployed Seat Squib Airbag face down on a hard surface, the airbag will propel into the air if accidentally deployed. Failure to follow these instructions may result in possible serious or fatal injury.

   NOTE: Check connectors - Clean and repair as necessary.

2. Connect the SRS Load Tool Kit (special tool #8443A, SRS Load Tool) and SRS Load Tool Jumper (special tool #8443-1, Jumpers, 2 Pin) to the Right Seat Airbag connector.

   WARNING: Turn the ignition on, then reconnect the 12-volt battery and wait two minutes before proceeding. Failure to follow these instructions may result in possible serious or fatal injury.

3. With the scan tool, read the active ORC DTC.

   Does the scan tool display: B1C2B-RIGHT SIDE SEAT THORAX SQUIB 1 LOW?

   Yes

   - Go To 3

   No

   WARNING: Turn the ignition off, disconnect the 12-volt battery and wait two minutes before proceeding. Failure to follow these instructions may result in possible serious or fatal injury.

- Replace the Right Seat Airbag in accordance with the Service Information.
- Perform the AIRBAG SYSTEM VERIFICATION TEST. Refer to **STANDARD PROCEDURE** .

3. **CHECK FOR SHORTED RIGHT SEAT AIRBAG SQUIB CIRCUITS IN THE SEAT BACK**

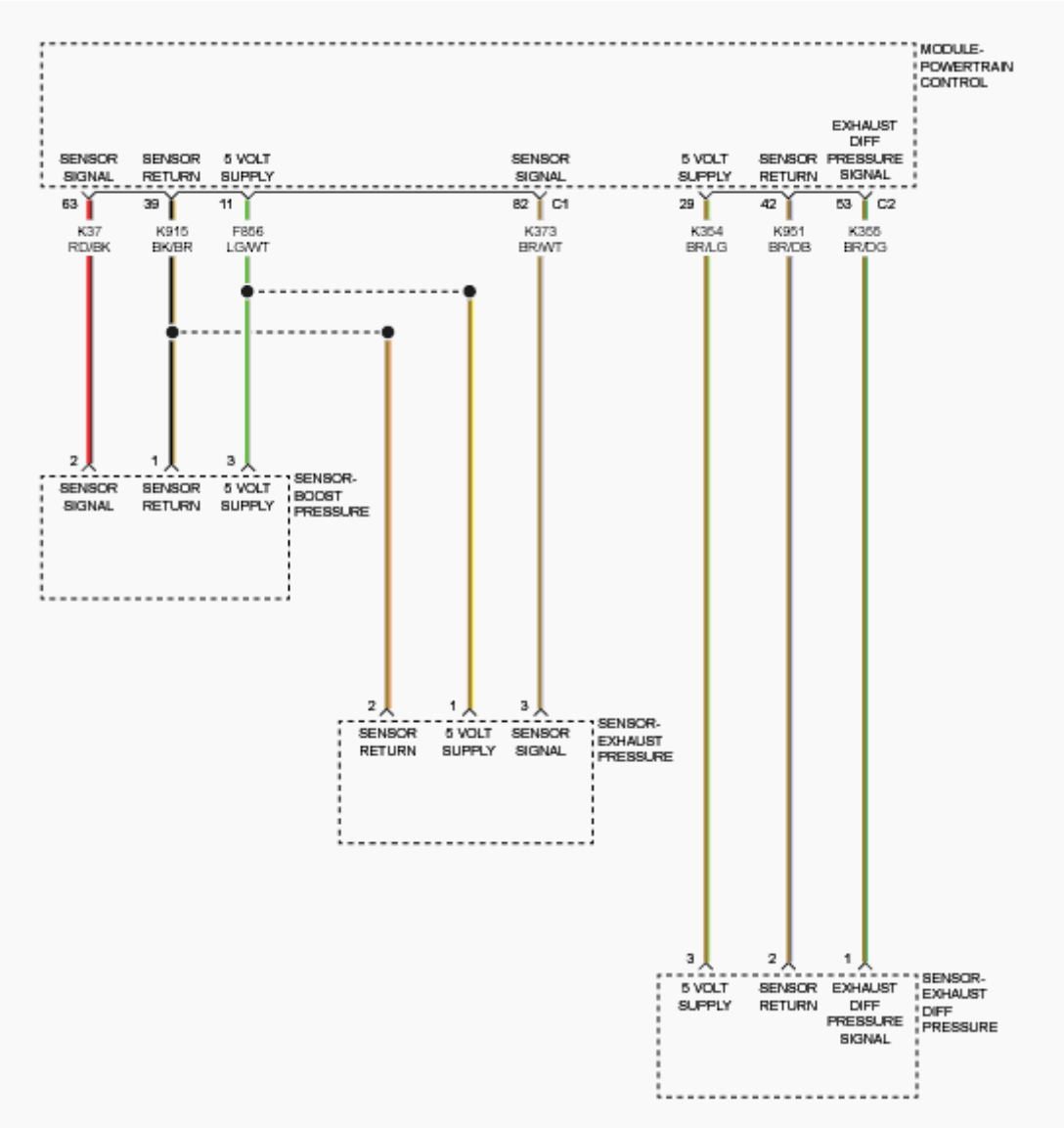

Fig. 59: Checking For Shorted Right Seat Airbag Squib Circuits In Seat Back
Courtesy of CHRYSLER GROUP, LLC

WARNING: Turn the ignition off, disconnect the 12-volt battery and wait two minutes before

proceeding. Failure to follow these instructions may result in possible serious or fatal injury.

1. Disconnect the Right Seat Airbag C352 in-line connector (under Right Seat).

   NOTE: Check connectors - Clean and repair as necessary.

2. Connect the SRS Load Tool Kit (special tool #8443A, SRS Load Tool) and SRS Load Tool Jumper (special tool #8443-20, Jumper, SRS Load Tool) to the C352 in-line connector (Body Side).

   WARNING: **Turn the ignition on, then reconnect the 12-volt battery and wait two minutes before proceeding. Failure to follow these instructions may result in possible serious or fatal injury.**

3. With the scan tool, read the active ORC DTC.

   Does the scan tool display: B1C2B-RIGHT SIDE SEAT THORAX SQUIB 1 LOW?

   Yes

   - Go To 4

   No

   WARNING: **Turn the ignition off, disconnect the 12-volt battery and wait two minutes before proceeding. Failure to follow these instructions may result in possible serious or fatal injury.**

   - In accordance with Service Information repair or replace the Right Seat Airbag wiring harness (Side Airbag Jumper). Right Seat

Airbag circuits shorted to ground between the C352 in-line connector (Side Airbag Jumper) and the Right Seat Airbag connector.

- Perform the AIRBAG SYSTEM VERIFICATION TEST. Refer to **STANDARD PROCEDURE** .

4. **CHECK RIGHT SEAT SQUIB CIRCUITS FOR A SHORT TO GROUND IN THE BODY HARNESS TO THE SEAT**

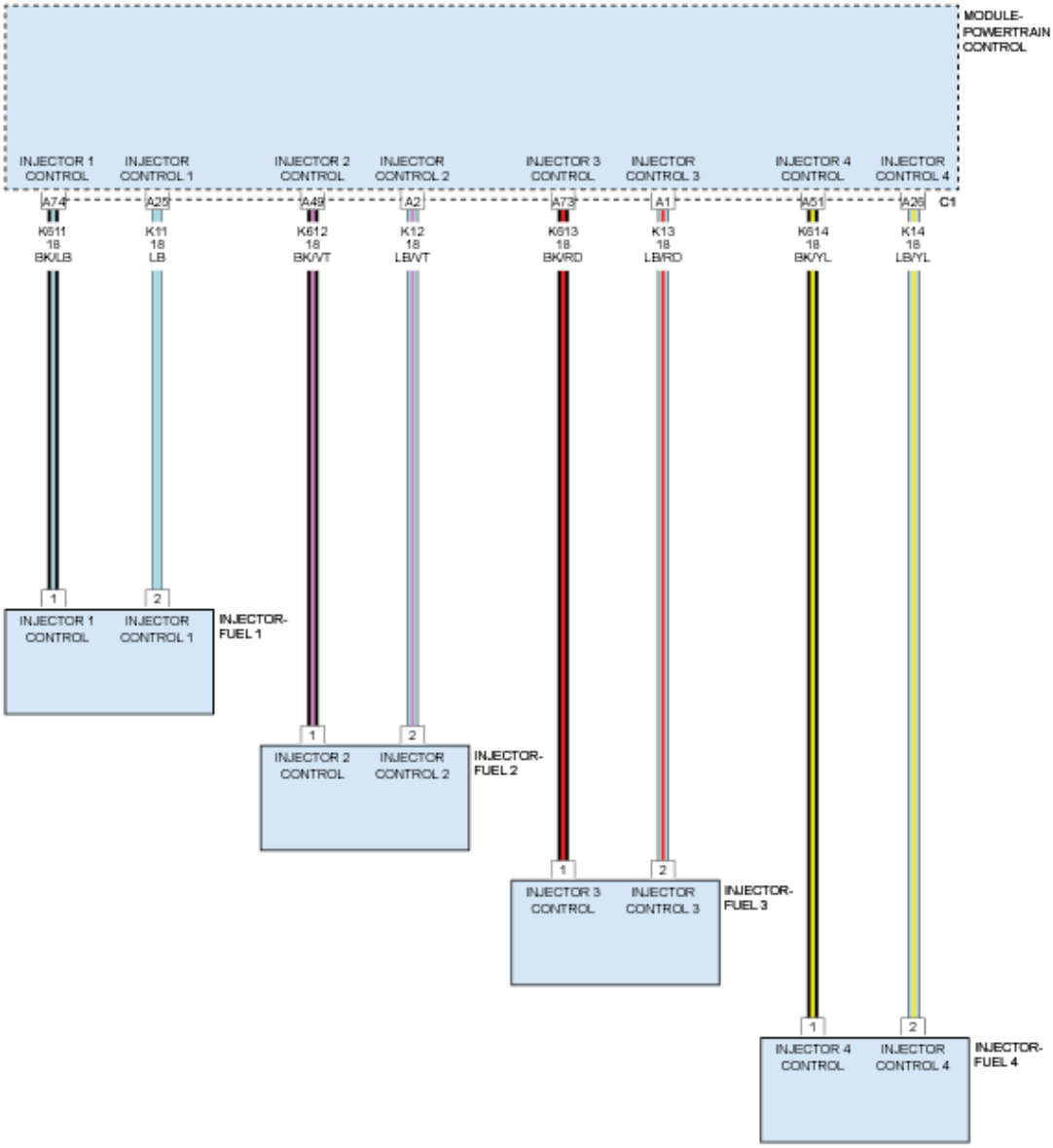

Fig. 60: Checking Right Seat Squib Circuits For Short To Ground In Body Harness To Seat
Courtesy of CHRYSLER GROUP, LLC

WARNING: Turn the ignition off, disconnect the 12-volt battery and wait two minutes before proceeding. Failure to follow these instructions may result in possible serious or fatal injury.

1. Disconnect the SRS Load Tool Kit (special tool #8443A, SRS Load Tool) and SRS Load Tool Jumper (special tool #8443-20, Jumper, SRS Load Tool) from the Right Seat Airbag connector.
2. Disconnect the ORC connectors.

NOTE: Check connectors - Clean and repair as necessary.

3. Connect the SRS Load Tool Adaptor (special tool #8443-25, 56 Way ACM Adapter) to the ORC connectors.
4. Measure the resistance of the (R6) Right Seat Squib 1 Line 2 circuit between the SRS Load Tool Adaptor (special tool #8443-25, 56 Way ACM Adapter) cavity 32-6 and ground.
5. Measure the resistance of the (R8) Right Seat Squib 1 Line 1 circuit between the SRS Load Tool Adaptor (special tool #8443-25, 56 Way ACM Adapter) cavity 32-5 and ground.

Is the resistance below 10k Ohms on either circuit?

Yes

- In accordance with the Service Information repair or replace the Right Seat Airbag wiring harness. Right Seat Airbag circuits shorted to ground between the C352 in-line connector (body side) and the ORC C2 (32 way) connector.
- Perform the AIRBAG SYSTEM VERIFICATION TEST. Refer to **STANDARD PROCEDURE** .

No

WARNING: If the Occupant Restraint Controller (ORC) is dropped at any time, it must be

replaced. Failure to follow these instructions may result in possible serious or fatal injury.

- Replace the ORC in accordance with Service Information.
- Perform the AIRBAG SYSTEM VERIFICATION TEST. Refer to **STANDARD PROCEDURE** .

5. **CHECKING STORED OR INTERMITTENT CODES**

NOTE: Diagnose and repair all active codes before diagnosing stored codes. Refer to OCCUPANT RESTRAINT CONTROLLER (ORC) - DIAGNOSTIC CODE INDEX for a complete list of airbag system diagnostic procedures.

1. With the scan tool, record and erase all Airbag System Module DTCs.

WARNING: Turn the ignition off, disconnect the 12-volt battery and wait two minutes before proceeding. Failure to follow these instructions may result in possible serious or fatal injury.

2. Using the wiring diagram/schematic as a guide, inspect the related wiring and connectors for chafed, pierced, pinched, and partially broken wires, and for broken, bent, pushed out, corroded, and contaminated terminals. Repair as necessary.
3. Reconnect all disconnected components and harness connectors.

WARNING: Turn the ignition on, then reconnect the 12-volt battery and wait two minutes before proceeding. Failure to follow these instructions may result in possible serious or fatal injury.

4. With the scan tool, monitor for active codes while performing the following:
   - Wiggle the wiring harness and connectors of the related airbag

circuit.

- Continue the test until either a code becomes active or the problem area is isolated.

5. In the previous steps you have attempted to recreate the conditions responsible for setting the DTC in question/causing the intermittent condition.

   Are any ACTIVE DTCs present?

   Yes

   - Perform the appropriate DTC. Refer to **DTC INDEX** .

   No

   - No problem found at this time. Erase all codes before returning the vehicle to the customer.

B1C2C-RIGHT SIDE SEAT THORAX SQUIB 1 HIGH

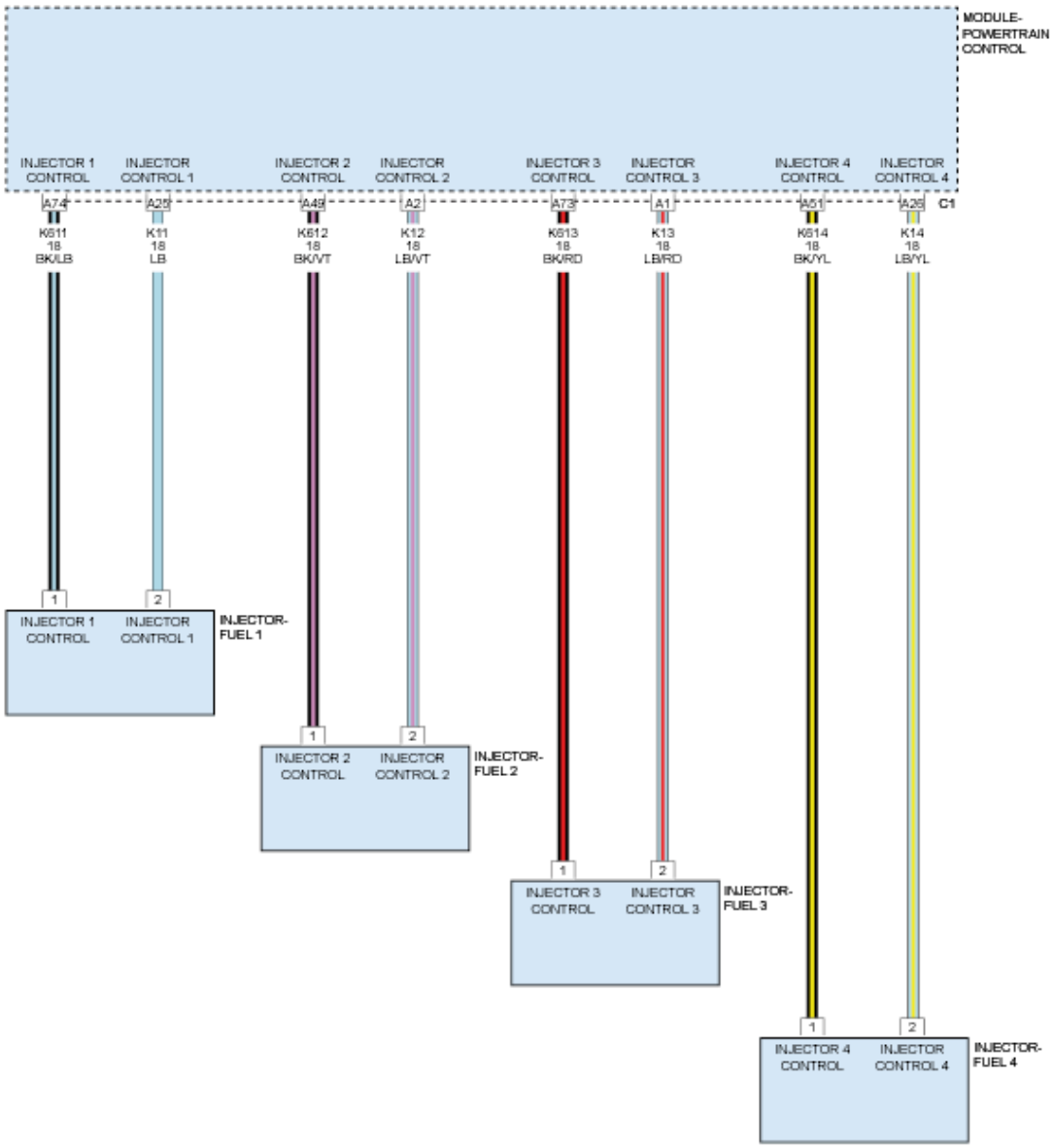

Fig. 61: Right Seat Airbag & ORC Module Circuit Schematic
Courtesy of CHRYSLER GROUP, LLC

For a complete wiring diagram, **refer to appropriate SYSTEM WIRING DIAGRAMS article** .

WHEN MONITORED

With the ignition on.

SET CONDITION

The Occupant Restraint Controller (ORC) monitors the voltage on the Right Seat Airbag Squib circuits. If voltage is detected on the Right Seat Squib circuits the

ORC will set this DTC.

POSSIBLE CAUSES

Possible Causes
(R6) RIGHT SEAT SQUIB 1 LINE 2 CIRCUIT SHORTED TO GROUND
(R8) RIGHT SEAT SQUIB 1 LINE 1 CIRCUIT SHORTED TO GROUND
RIGHT SEAT AIRBAG
OCCUPANT RESTRAINT CONTROLLER (ORC)

DIAGNOSTIC TEST

1. **DETERMINE ACTIVE OR STORED DTC**

   NOTE: Make sure that the battery is fully charged.

   NOTE: The scan tool, SRS Load Tool Kit (special tool #8443A, SRS Load Tool), and DVOM are required to perform the following test:

   1. Turn the ignition on.

      Select ACTIVE or STORED DTC:

      ACTIVE DTC

      - Go To 2

      STORED DTC

      - Go To 5

2. **CHECK FOR SHORTED SQUIB CIRCUITS IN RIGHT SEAT SQUIB AIRBAG**

   WARNING: Turn the ignition off disconnect the 12-volt battery and wait two minutes before proceeding. Failure to follow these instructions may result in possible serious or fatal injury.

1. Disconnect the Right Seat Airbag connector.

   WARNING: To avoid serious or fatal injury, do not place an intact uncoupled Seat Squib Airbag face down on a hard surface, the airbag will propel into the air if accidentally deployed.

   NOTE: Check connectors - Clean and repair as necessary.

2. Connect the SRS Load Tool Kit (special tool #8443A, SRS Load Tool) and SRS Load Tool Jumper (special tool #8443-1, Jumpers, 2 Pin) to the Right Seat Airbag connector.

   WARNING: Turn the ignition on, then reconnect the 12-volt battery and wait two minutes before proceeding. Failure to follow these instructions may result in possible serious or fatal injury.

3. With the scan tool, read the active ORC DTC.

   Does the scan tool display: B1C2C-RIGHT SIDE SEAT THORAX SQUIB 1 HIGH?

   Yes

   - Go To 3

   No

   WARNING: Turn the ignition off, disconnect the 12-volt battery and wait two minutes before proceeding. Failure to follow these instructions may result in possible serious or fatal injury.

   - Replace the Right Seat Airbag in accordance with the Service

Information.

- Perform the AIRBAG SYSTEM VERIFICATION TEST. Refer to **STANDARD PROCEDURE** .

3. **CHECK FOR SHORTED RIGHT SEAT AIRBAG SQUIB CIRCUITS IN THE SEAT BACK**

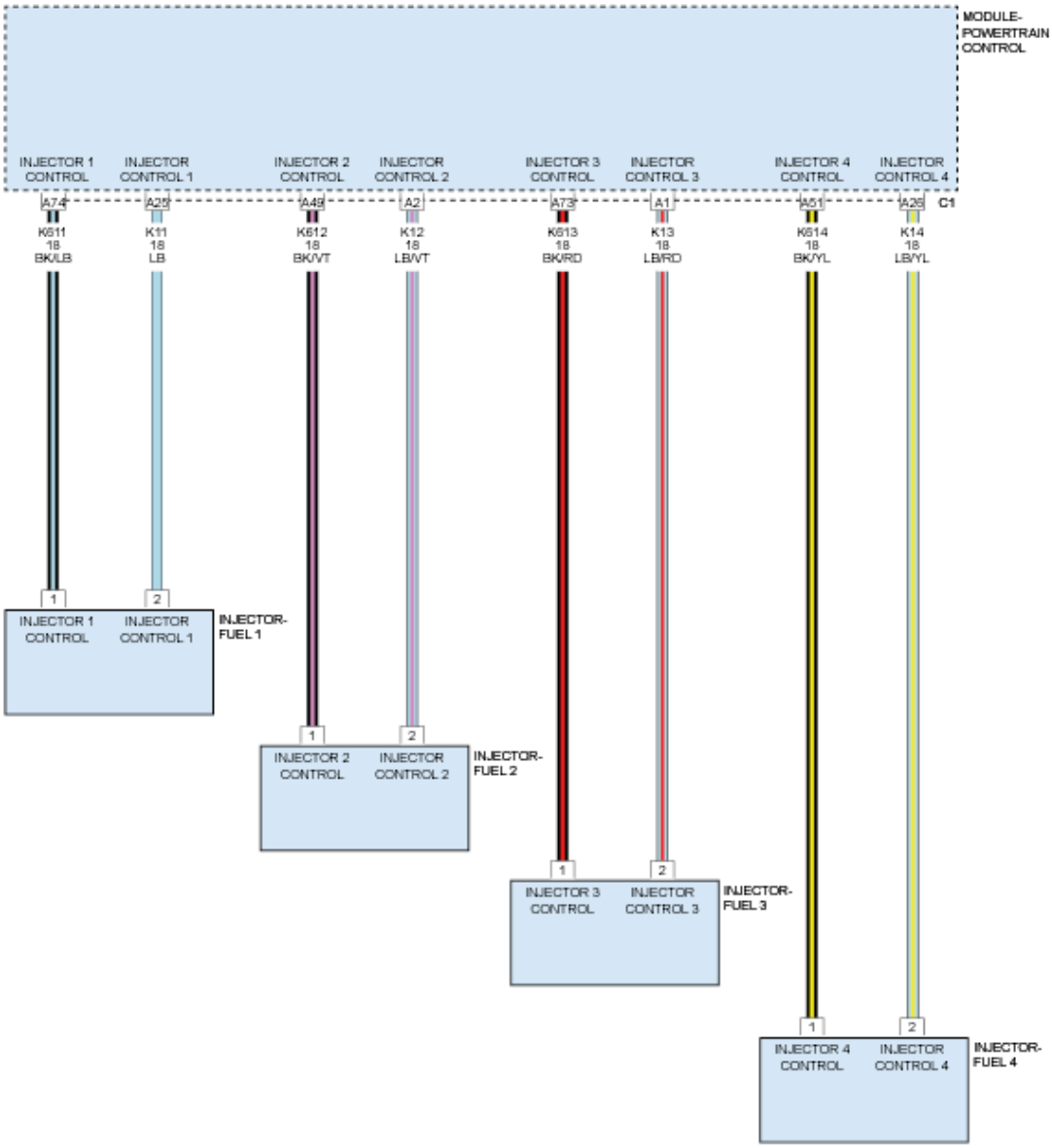

Fig. 62: Checking For Shorted Right Seat Airbag Squib Circuits In Seat Back
Courtesy of CHRYSLER GROUP, LLC

WARNING: Turn the ignition off, disconnect the 12-volt battery and wait two minutes before

proceeding. Failure to follow these instructions may result in possible serious or fatal injury.

1. Disconnect the Right Seat Airbag C352 in-line connector (under Right Seat).

   NOTE: Check connectors - Clean and repair as necessary.

2. Connect the SRS Load Tool Kit (special tool #8443A, SRS Load Tool) and SRS Load Tool Jumper (special tool #8443-20, Jumper, SRS Load Tool) to the Right Seat Airbag C352 in-line connector (Body Side).

   WARNING: **Turn the ignition on, then reconnect the 12-volt battery and wait two minutes before proceeding. Failure to follow these instructions may result in possible serious or fatal injury.**

3. With the scan tool, read the active ORC DTC.

   Does the scan tool display : B1C2C-RIGHT SIDE SEAT THORAX SQUIB 1 HIGH

   Yes

   - Go To 4

   No

   WARNING: **Turn the ignition off, disconnect the 12-volt battery and wait two minutes before proceeding. Failure to follow these instructions may result in possible serious or fatal injury.**

   - In accordance with the Service Information repair or replace the Right Seat Airbag wiring harness (Side Airbag Jumper). Right Seat

Airbag circuits shorted to high between the C353 in-line connector (Side Airbag Jumper) and the Right Seat Airbag connector.

- Perform the AIRBAG SYSTEM VERIFICATION TEST. Refer to **STANDARD PROCEDURE** .

4. **CHECK (R6) RIGHT SEAT SQUIB 1 LINE 2 CIRCUIT AND (R8) RIGHT SEAT SQUIB 1 LINE 1 CIRCUIT FOR A SHORT TO BATTERY**

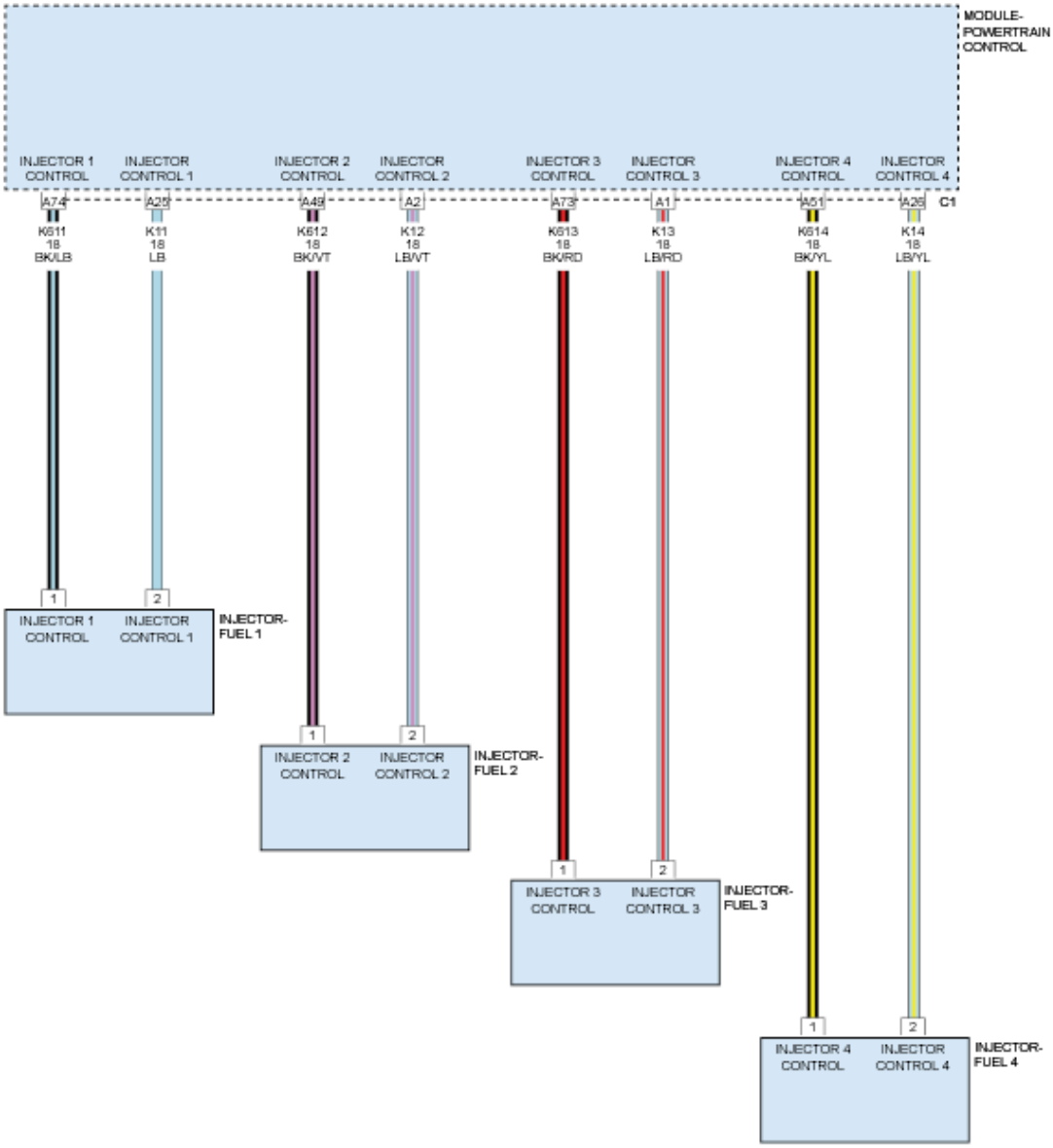

Fig. 63: Checking Right Seat Squib 1 Line Circuits For Short To Battery
Courtesy of CHRYSLER GROUP, LLC

WARNING: Turn the ignition off, disconnect the 12-volt battery and wait two minutes before proceeding. Failure to follow these instructions may result in possible serious or fatal injury.

1. Disconnect the SRS Load Tool Kit (special tool #8443A, SRS Load Tool) and SRS Load Tool Jumper (special tool #8443-20, Jumper, SRS Load Tool) from the Right Seat Airbag connector.
2. Disconnect the ORC connectors.

NOTE: Check connectors - Clean and repair as necessary.

3. Connect the SRS Load Tool Adaptor (special tool #8443-25, 56 Way ACM Adapter) Adaptor to the ORC connectors.

WARNING: Turn the ignition on, then reconnect the 12-volt battery and wait two minutes before proceeding. Failure to follow these instructions may result in possible serious or fatal injury.

4. Measure the voltage of the (R6) Right Seat Squib 1 Line 2 circuit between the SRS Load Tool Adaptor (special tool #8443-25, 56 Way ACM Adapter) cavity 32-6 and ground.
5. Measure the voltage of the (R8) Right Seat Squib 1 Line 1 circuit between the SRS Load Tool Adaptor (special tool #8443-25, 56 Way ACM Adapter) cavity 32-5 and ground.

Is there any voltage present on either circuit?

Yes

- In accordance with Service Information repair or replace the Right Seat circuits. Right Seat circuits shorted high between the C352 in-line connector (body side) and the SRS Load Tool Adapter (special tool #8443-25, 56 Way ACM Adapter) (32 way) connector.
- Perform the AIRBAG SYSTEM VERIFICATION TEST. Refer to

STANDARD PROCEDURE .

No

WARNING: If the Occupant Restraint Controller (ORC) is dropped at any time, it must be replaced. Failure to take the proper precautions can result in accidental airbag deployment. Failure to follow these instructions may result in possible serious or fatal injury.

WARNING: Turn the ignition off, disconnect the 12-volt battery and wait two minutes before proceeding. Failure to follow these instructions may result in possible serious or fatal injury.

- Replace the ORC in accordance with Service Information.
- Perform the AIRBAG SYSTEM VERIFICATION TEST. Refer to **STANDARD PROCEDURE** .

5. **CHECKING STORED OR INTERMITTENT CODES**

NOTE: Diagnose and repair all active codes before diagnosing stored codes. Refer to OCCUPANT RESTRAINT CONTROLLER (ORC) - DIAGNOSTIC CODE INDEX for a complete list of airbag system diagnostic procedures.

1. With the scan tool, record and erase all Airbag System Module DTCs.

WARNING: Turn the ignition off, disconnect the 12-volt battery and wait two minutes before proceeding. Failure to follow these instructions may result in possible serious or fatal injury.

2. Using the wiring diagram/schematic as a guide, inspect the related

wiring and connectors for chafed, pierced, pinched, and partially broken wires, and for broken, bent, pushed out, corroded, and contaminated terminals. Repair as necessary.

3. Reconnect all disconnected components and harness connectors.

WARNING: Turn the ignition on, then reconnect the 12-volt battery and wait two minutes before proceeding. Failure to follow these instructions may result in possible serious or fatal injury.

4. With the scan tool, monitor for active codes while performing the following:
   - Wiggle the wiring harness and connectors of the related airbag circuit.
   - Continue the test until either a code becomes active or the problem area is isolated.
5. In the previous steps you have attempted to recreate the conditions responsible for setting the DTC in question/causing the intermittent condition.

   Are any ACTIVE DTCs present?

   Yes

   - Perform the appropriate DTC. Refer to **DTC INDEX** .

   No

   - No problem found at this time. Erase all codes before returning the vehicle to the customer.

B1C2D-RIGHT SIDE SEAT THORAX SQUIB 1 OPEN

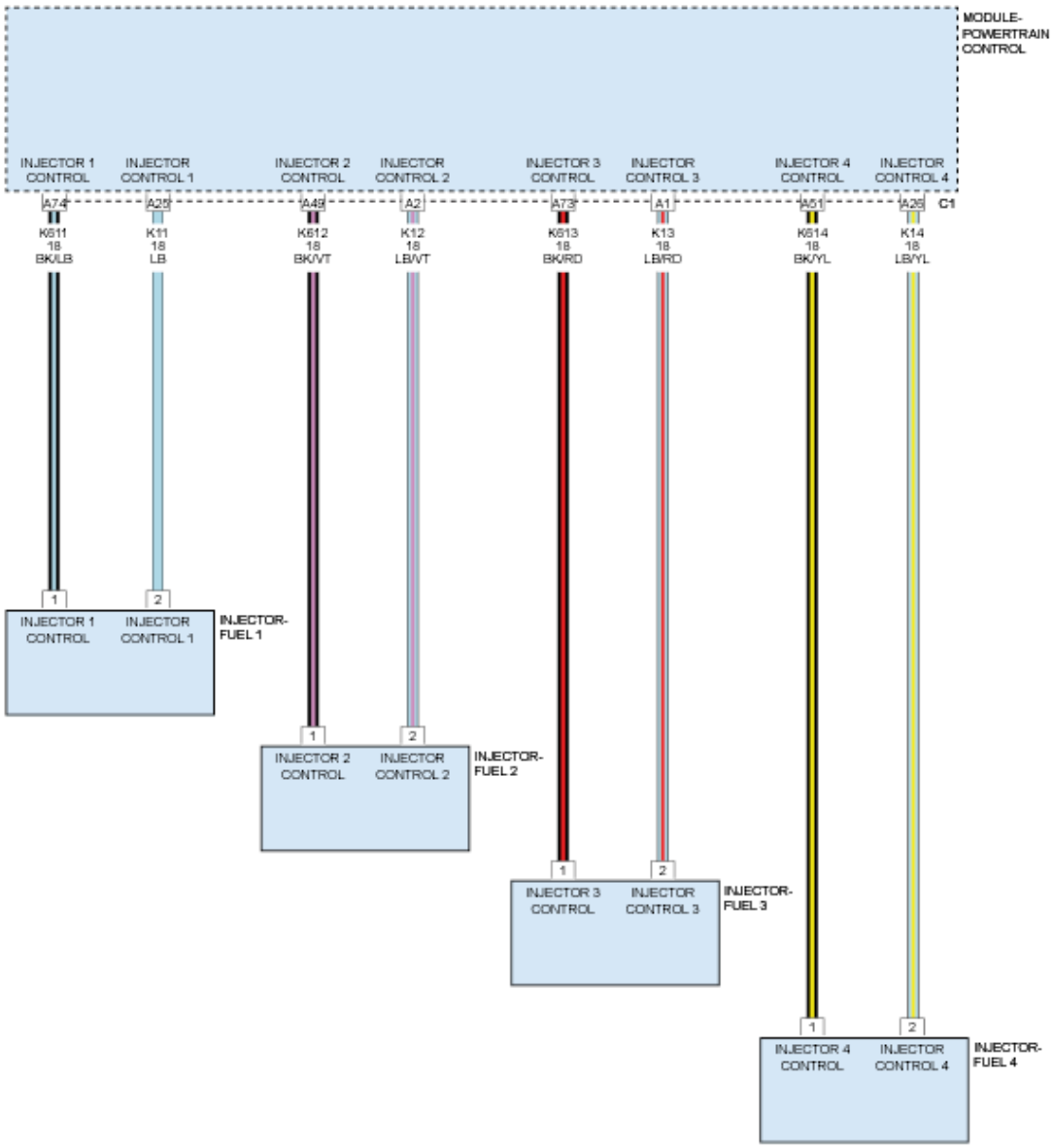

Fig. 64: Right Seat Airbag & ORC Module Circuit Schematic
Courtesy of CHRYSLER GROUP, LLC

For a complete wiring diagram, **refer to appropriate SYSTEM WIRING DIAGRAMS article** .

WHEN MONITORED

With the ignition on.

SET CONDITION

The Occupant Restraint Controller (ORC) monitors the resistance of the Right Seat Airbag Squib circuits. If an open or high resistance is detected on the Right

Seat Squib circuits the ORC will set this DTC.

POSSIBLE CAUSES

Possible Causes
(R6) RIGHT SEAT SQUIB 1 LINE 2 CIRCUIT OPEN
(R8) RIGHT SEAT SQUIB 1 LINE 1 CIRCUIT OPEN
RIGHT SEAT AIRBAG
OCCUPANT RESTRAINT CONTROLLER (ORC)

DIAGNOSTIC TEST

1. **DETERMINE ACTIVE OR STORED DTC**

   NOTE: Make sure that the battery is fully charged.

   NOTE: The scan tool, SRS Load Tool Kit (special tool #8443A, SRS Load Tool), and DVOM are required to perform the following test:

   1. Turn the ignition on.

      Select ACTIVE or STORED DTC:

      ACTIVE DTC

      - Go To 2

      STORED DTC

      - Go To 6

2. **CHECK FOR OPEN SQUIB CIRCUITS IN RIGHT SEAT AIRBAG**

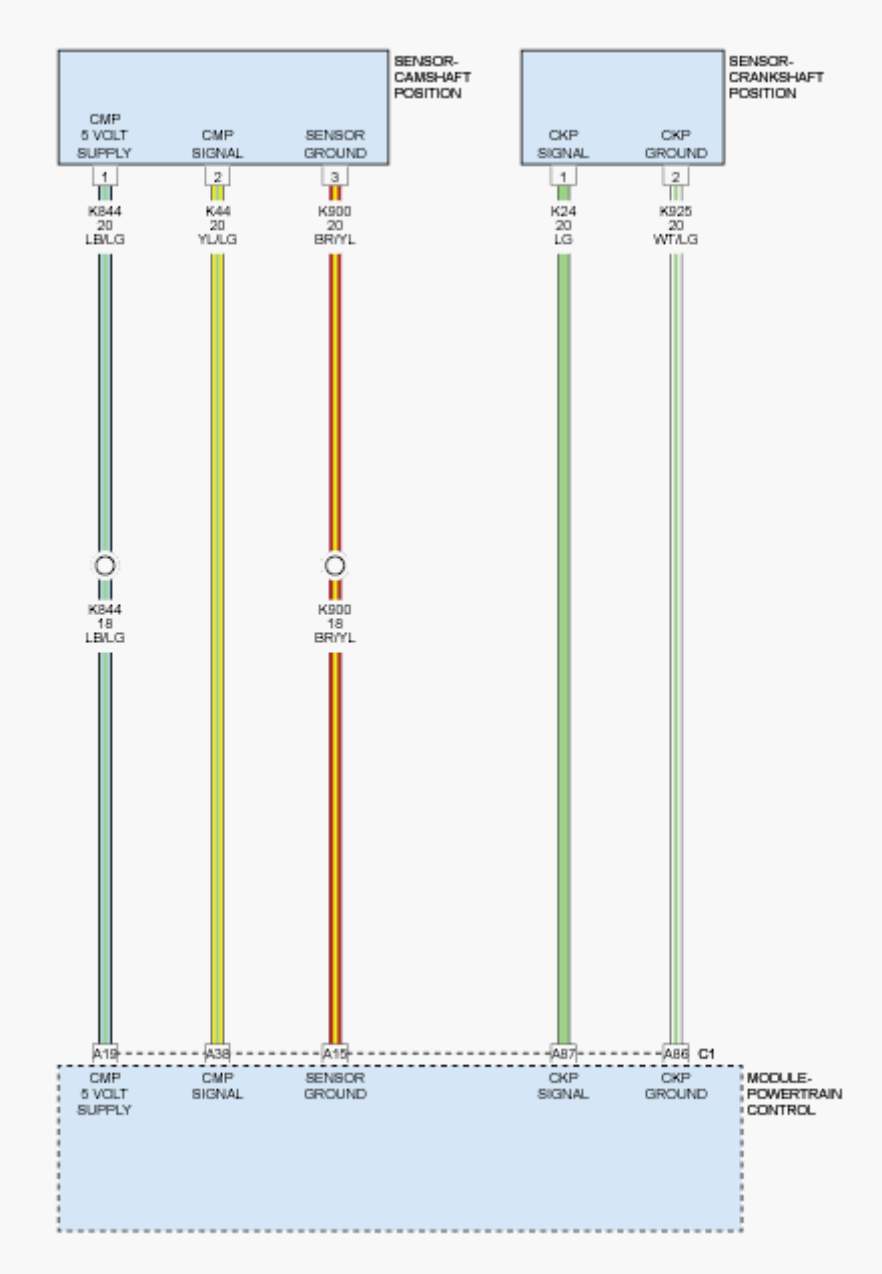

Fig. 65: Checking For Shorted Squib Circuits In Right Seat Airbag
Courtesy of CHRYSLER GROUP, LLC

WARNING: Turn the ignition off disconnect the 12-volt battery and wait two minutes before proceeding. Failure to follow these instructions may result in possible serious or fatal injury.

1. Disconnect the Right Seat Airbag connector.

WARNING: To avoid serious or fatal injury, do not place an intact uncoupled Seat Squib Airbag face down on a hard surface, the airbag will propel into the air if accidentally deployed.

NOTE: Check connectors - Clean and repair as necessary.

2. Connect the SRS Load Tool Kit (special tool #8443A, SRS Load Tool) and SRS Load Tool Jumper (special tool #8443-1, Jumpers, 2 Pin) to the Right Seat Airbag connector.

WARNING: Turn the ignition on, then reconnect the 12-volt battery and wait two minutes before proceeding. Failure to follow these instructions may result in possible serious or fatal injury.

3. With the scan tool, read the active ORC DTC.

Does the scan tool display: B1C2D-RIGHT SIDE SEAT THORAX SQUIB 1 OPEN?

Yes

- Go To 3

No

WARNING: Turn the ignition off, disconnect the 12-volt battery and wait two minutes before proceeding. Failure to follow these instructions may result in possible serious or fatal injury.

- Replace the Right Seat Airbag in accordance with the Service Information.
- Perform the AIRBAG SYSTEM VERIFICATION TEST. Refer to

STANDARD PROCEDURE .

3. **CHECK FOR OPEN LEFT SEAT AIRBAG SQUIB CIRCUIT IN THE SEAT BACK**

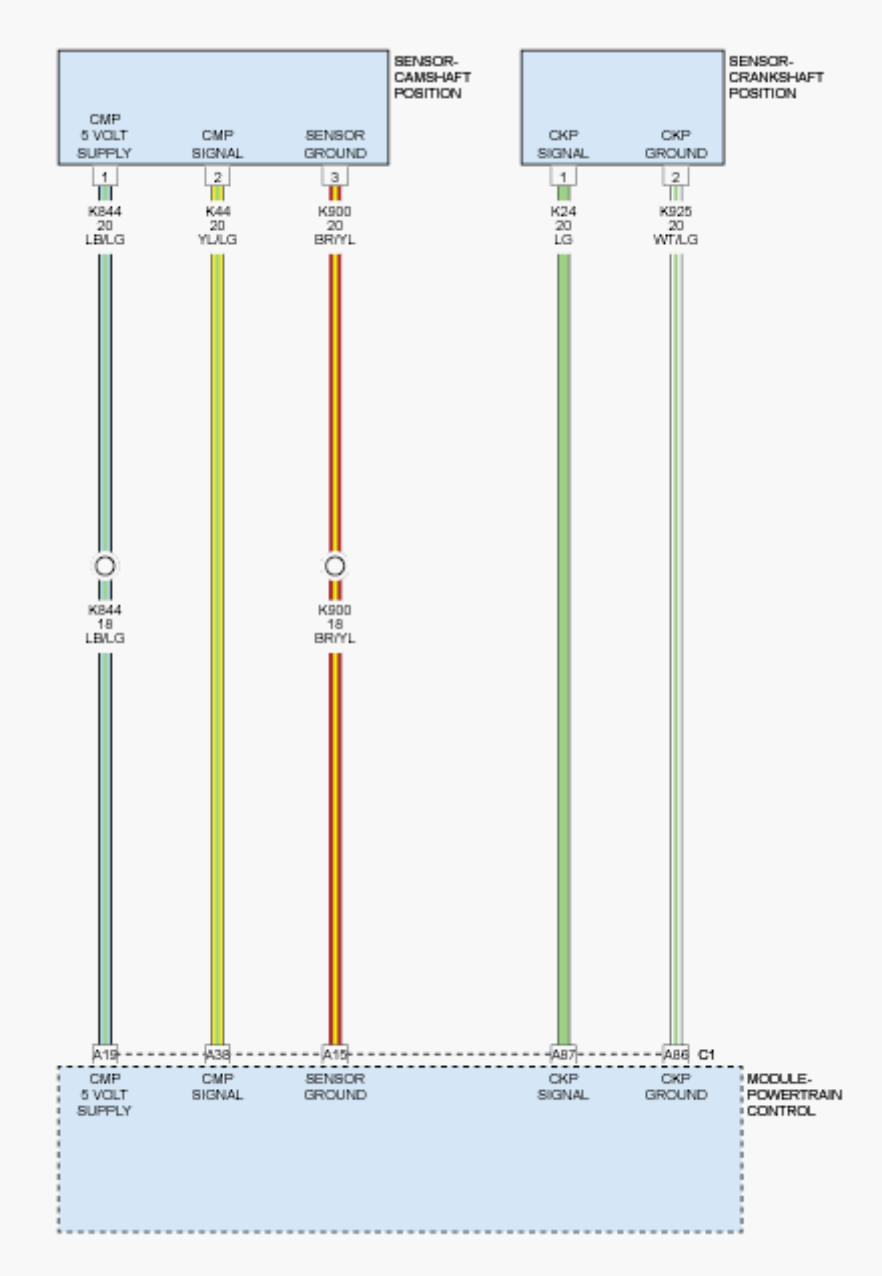

Fig. 66: Checking For Shorted Right Seat Airbag Squib Circuits In Seat Back
Courtesy of CHRYSLER GROUP, LLC

WARNING: Turn the ignition off, disconnect the 12-volt battery and wait two minutes before proceeding. Failure to follow these

instructions may result in possible serious or fatal injury.

1. Disconnect the Left Seat Airbag C352 in-line connector (under Right Seat).

   NOTE: Check connectors - Clean and repair as necessary.

2. Connect the SRS Load Tool Kit (special tool #8443A, SRS Load Tool) and SRS Load Tool Jumper (special tool #8443-20, Jumper, SRS Load Tool) to the Right Seat Airbag C352 in-line connector (Body Side).

   WARNING: Turn the ignition on, then reconnect the 12-volt battery and wait two minutes before proceeding. Failure to follow these instructions may result in possible serious or fatal injury.

3. With the scan tool, read the active ORC DTC.

   Does the scan tool display: B1C2D-RIGHT SIDE SEAT THORAX SQUIB 1 OPEN?

   Yes

   - Go To 4

   No

   WARNING: Turn the ignition off, disconnect the 12-volt battery and wait two minutes before proceeding. Failure to follow these instructions may result in possible serious or fatal injury.

   - In accordance with the Service Information repair or replace the Right Seat Airbag wiring harness (Side Airbag Jumper). Open Right Seat Airbag circuits between the C353 in-line connector and

the Left Seat Airbag connector.

- Perform the AIRBAG SYSTEM VERIFICATION TEST. Refer to **STANDARD PROCEDURE** .

4. **CHECK (R8) RIGHT SEAT SQUIB 1 LINE 1 CIRCUIT FOR AN OPEN**

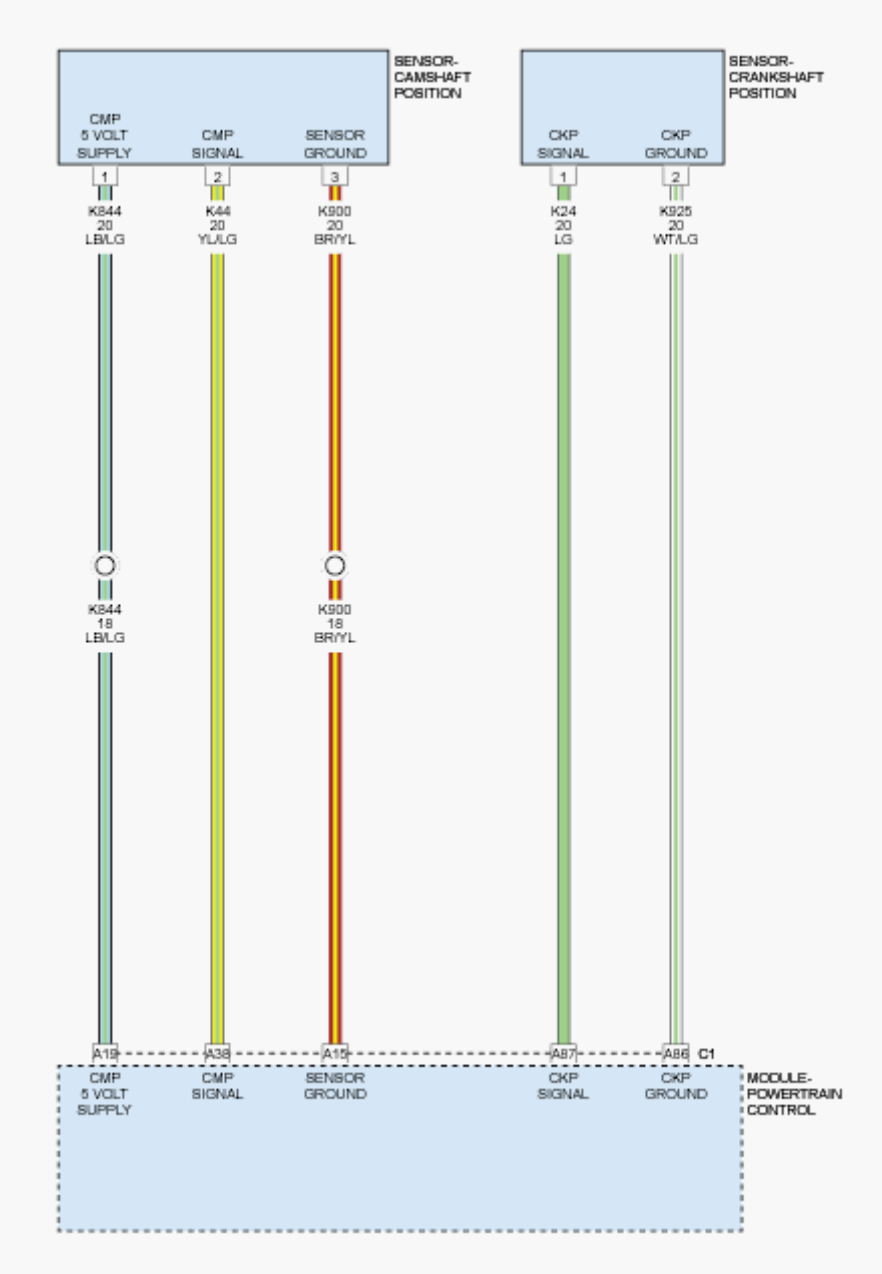

Fig. 67: Checking Right Seat Squib 1 Line 1 Circuit For Open
Courtesy of CHRYSLER GROUP, LLC

WARNING: Turn the ignition off, disconnect the 12-volt battery and wait two minutes before

proceeding. Failure to follow these instructions may result in possible serious or fatal injury.

1. Disconnect the SRS Load Tool Kit (special tool #8443A, SRS Load Tool) and SRS Load Tool Jumper (special tool #8443-20, Jumper, SRS Load Tool) from the Right Seat Airbag connector.
2. Disconnect the ORC connectors.

NOTE: Check connectors - Clean and repair as necessary.

3. Connect the SRS Load Tool Adaptor (special tool #8443-25, 56 Way ACM Adapter) to the ORC connectors.
4. Measure the resistance of the (R8) Right Seat Squib 1 Line 1 circuit between the Right Seat Airbag connector cavity 2 and the SRS Load Tool Adaptor (special tool #8443-25, 56 Way ACM Adapter) cavity 32-5.

   Is the resistance below 1.0 Ohm?

   Yes

   - Go To 5

   No

   - In accordance with the Service Information repair or replace the Right Seat Airbag body wiring harness. Open (R8) Right Seat Airbag Squib 1 Line 1 circuit between the C352 in-line (body side) connector and the ORC C2 (32 way) connector.
   - Perform the AIRBAG SYSTEM VERIFICATION TEST. Refer to **STANDARD PROCEDURE** .

5. **CHECK (R6) RIGHT SEAT SQUIB 1 LINE 2 CIRCUIT FOR AN OPEN**

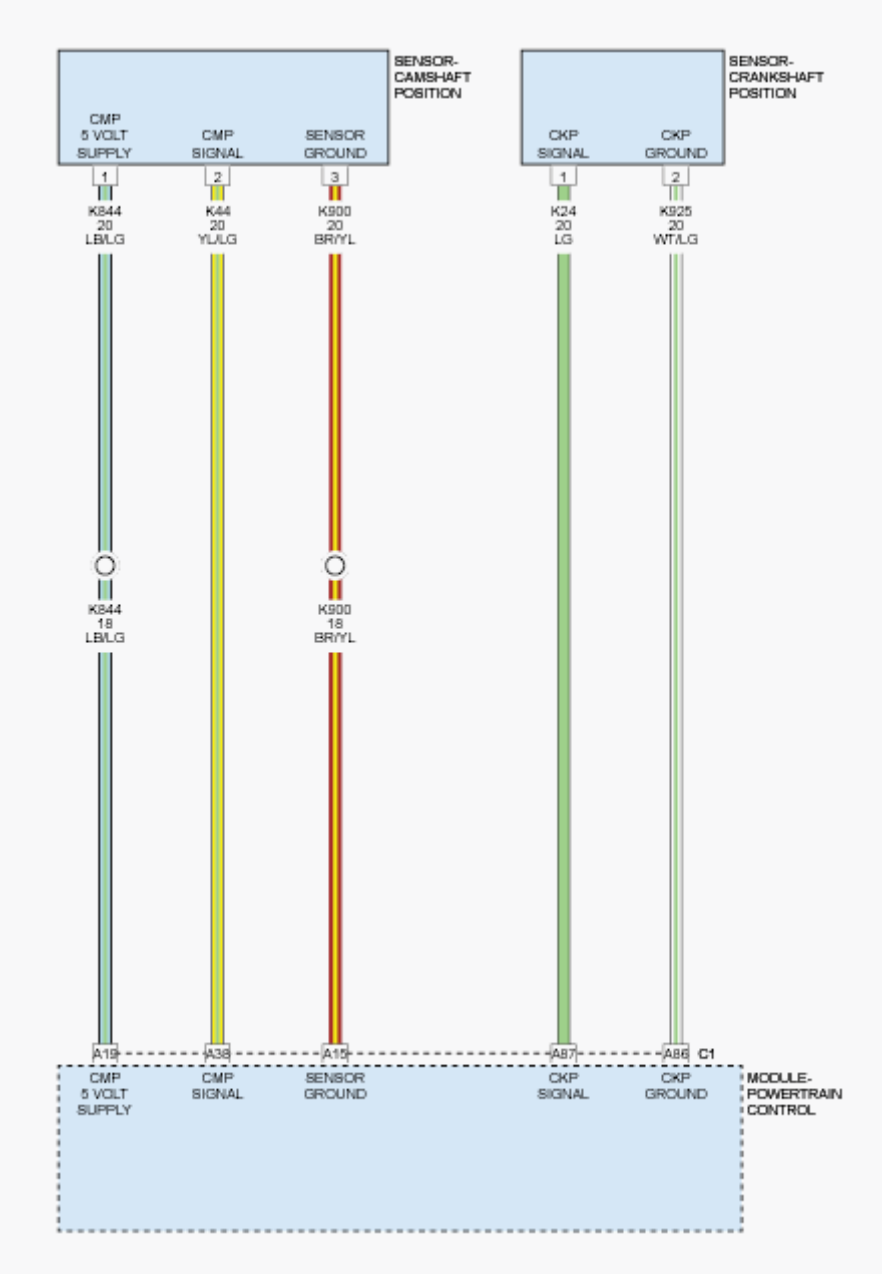

Fig. 68: Checking Right Seat Squib 1 Line 2 Circuit For Open
Courtesy of CHRYSLER GROUP, LLC

1. Measure the resistance of the (R6) Right Seat Squib 1 Line 2 circuit between the Right Seat Squib 1 Airbag connector cavity 1 and the SRS Load Tool Adaptor (special tool #8443-25, 56 Way ACM Adapter) cavity 32-6.

   Is the resistance below 1.0 Ohm?

   Yes

WARNING: If the Occupant Restraint Controller (ORC) is dropped at any time, it must be replaced. Failure to take the proper precautions can result in accidental airbag deployment. Failure to follow these instructions may result in possible serious or fatal injury.

- Replace the ORC in accordance with Service Information.
- Perform the AIRBAG SYSTEM VERIFICATION TEST. Refer to **STANDARD PROCEDURE** .

No

- In accordance with the Service Information repair or replace the Right Seat Airbag body wiring harness. Open (R6) Right Seat Airbag Squib 1 Line 2 circuit between the C352 in-line (body side) connector and the ORC C2 (32 way) connector.
- Perform the AIRBAG SYSTEM VERIFICATION TEST. Refer to **STANDARD PROCEDURE** .

6. **CHECKING STORED OR INTERMITTENT CODES**

NOTE: Diagnose and repair all active codes before diagnosing stored codes. Refer to OCCUPANT RESTRAINT CONTROLLER (ORC) - DIAGNOSTIC CODE INDEX for a complete list of airbag system diagnostic procedures.

1. With the scan tool, record and erase all Airbag System Module DTCs.

WARNING: Turn the ignition off, disconnect the 12-volt battery and wait two minutes before proceeding. Failure to follow these instructions may result in possible serious or fatal injury.

2. Using the wiring diagram/schematic as a guide, inspect the related wiring and connectors for chafed, pierced, pinched, and partially broken

wires, and for broken, bent, pushed out, corroded, and contaminated terminals. Repair as necessary.

3. Reconnect all disconnected components and harness connectors.

WARNING: Turn the ignition on, then reconnect the 12-volt battery and wait two minutes before proceeding. Failure to follow these instructions may result in possible serious or fatal injury.

4. With the scan tool, monitor for active codes while performing the following:
   - Wiggle the wiring harness and connectors of the related airbag circuit.
   - Continue the test until either a code becomes active or the problem area is isolated.
5. In the previous steps you have attempted to recreate the conditions responsible for setting the DTC in question/causing the intermittent condition.

   Are any ACTIVE DTCs present?

   Yes

   - Perform the appropriate DTC. Refer to **DTC INDEX** .

   No

   - No problem found at this time. Erase all codes before returning the vehicle to the customer.

B1C2E-RIGHT SIDE SEAT THORAX SQUIB 1 SHORTED TOGETHER

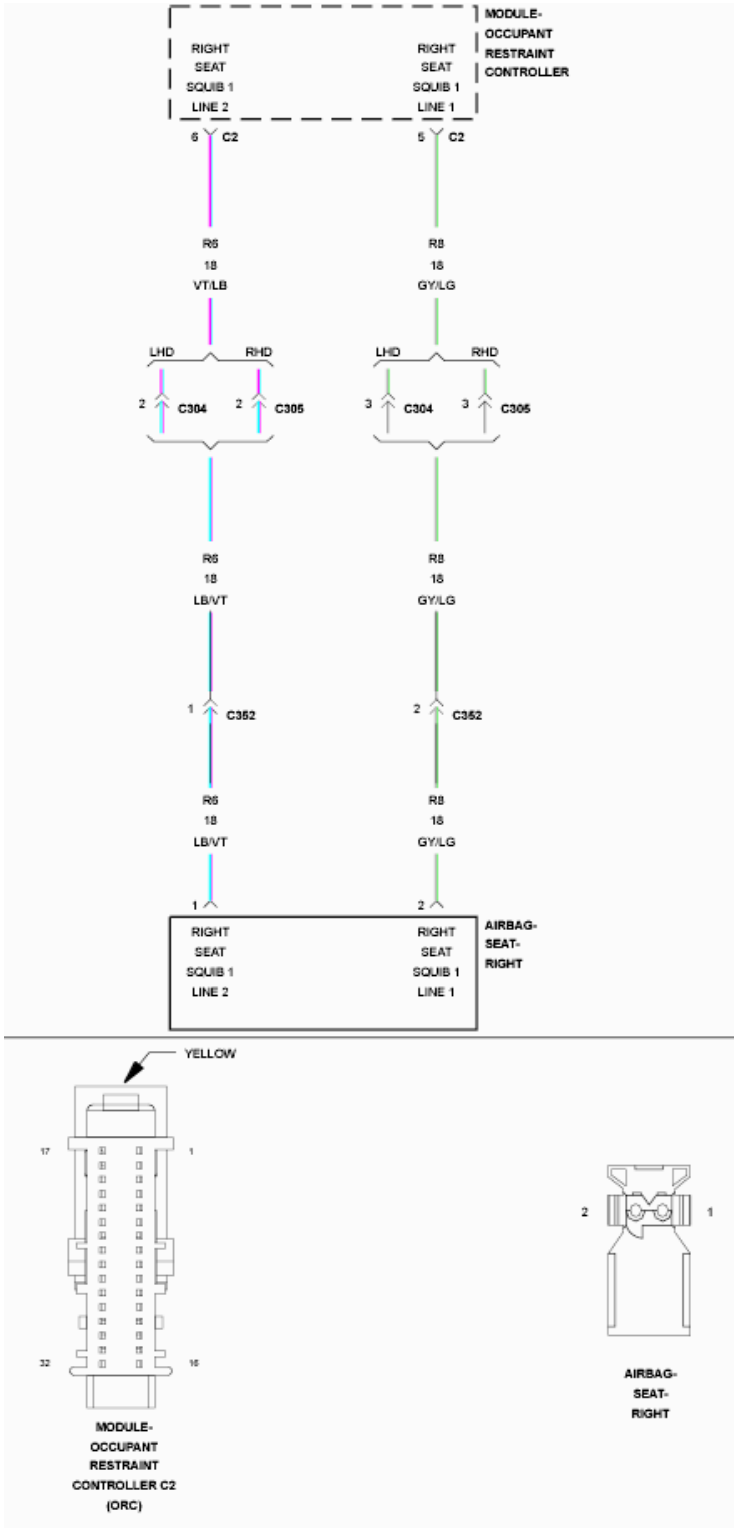

Fig. 69: Right Seat Airbag & ORC Module Circuit Schematic
Courtesy of CHRYSLER GROUP, LLC

For a complete wiring diagram, **refer to appropriate SYSTEM WIRING DIAGRAMS article** .

WHEN MONITORED

With the ignition on.

SET CONDITION

The Occupant Restraint Controller (ORC) monitors the resistance of the Right Seat Airbag Squib 1 circuits. If low resistance is detected between the Right Seat Squib circuits the ORC will set this DTC.

POSSIBLE CAUSES

Possible Causes
(R6) RIGHT SEAT SQUIB 1 LINE 2 CIRCUIT SHORTED TO (R8) RIGHT SEAT SQUIB 1 LINE 1 CIRCUIT
RIGHT SEAT AIRBAG
OCCUPANT RESTRAINT CONTROLLER (ORC)

DIAGNOSTIC TEST

1. **DETERMINE ACTIVE OR STORED DTC**

   NOTE: Make sure that the battery is fully charged.

   NOTE: The scan tool, SRS Load Tool Kit (special tool #8443A, SRS Load Tool), and DVOM are required to perform the following test:

   1. Turn the ignition on.

      Select ACTIVE or STORED DTC:

      ACTIVE DTC

      - Go To 2

      STORED DTC

      - Go To 5

2. **CHECK FOR SHORTED SQUIB CIRCUITS IN RIGHT SEAT AIRBAG**

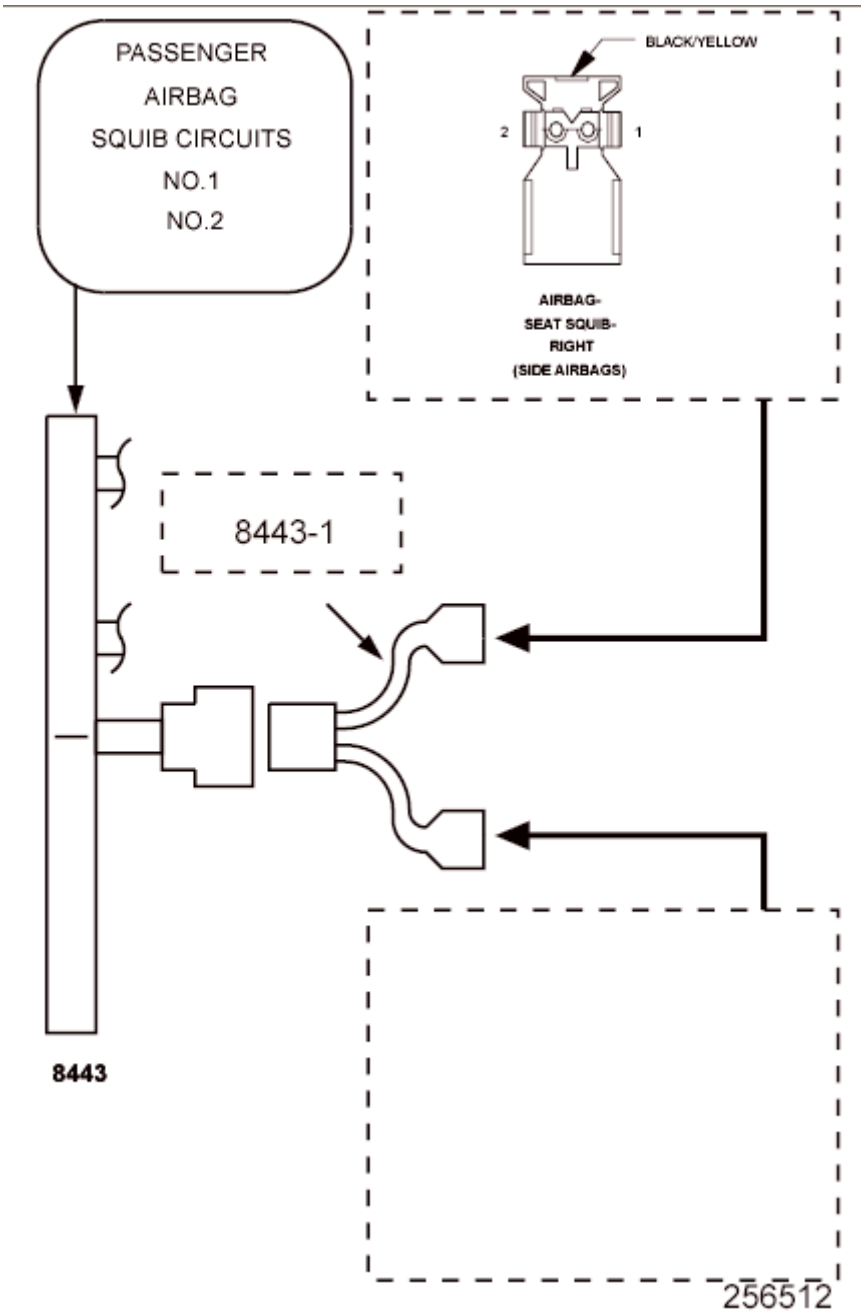

Fig. 70: Checking For Shorted Squib Circuits In Right Seat Airbag
Courtesy of CHRYSLER GROUP, LLC

WARNING: Turn the ignition off disconnect the 12-volt battery and wait two minutes before proceeding. Failure to follow these instructions may result in possible serious or fatal injury.

1. Disconnect the Right Seat Airbag connector.

WARNING: To avoid serious or fatal injury, do not place an intact uncoupled Right Seat Squib Airbag face down on a hard surface, the airbag will propel into the air if accidentally deployed.

NOTE: Check connectors - Clean and repair as necessary.

2. Connect the SRS Load Tool Kit (special tool #8443A, SRS Load Tool) and SRS Load Tool Jumper (special tool #8443-1, Jumpers, 2 Pin) to the Right Seat Airbag connector.

WARNING: Turn the ignition on, then reconnect the 12-volt battery and wait two minutes before proceeding. Failure to follow these instructions may result in possible serious or fatal injury.

3. With the scan tool, read the active ORC DTC.

Does the scan tool display: B1C2E-RIGHT SIDE SEAT THORAX SQUIB 1 SHORTED TOGETHER?

Yes

- Go To 3

No

WARNING: Turn the ignition off, disconnect the 12-volt battery and wait two minutes before proceeding. Failure to follow these instructions may result in possible serious or fatal injury.

- Replace the Right Seat Airbag in accordance with the Service Information.
- Perform the AIRBAG SYSTEM VERIFICATION TEST. Refer to

STANDARD PROCEDURE .

3. **CHECK FOR RIGHT SEAT AIRBAG SQUIB CIRCUITS SHORTED TOGETHER IN THE SEAT BACK**

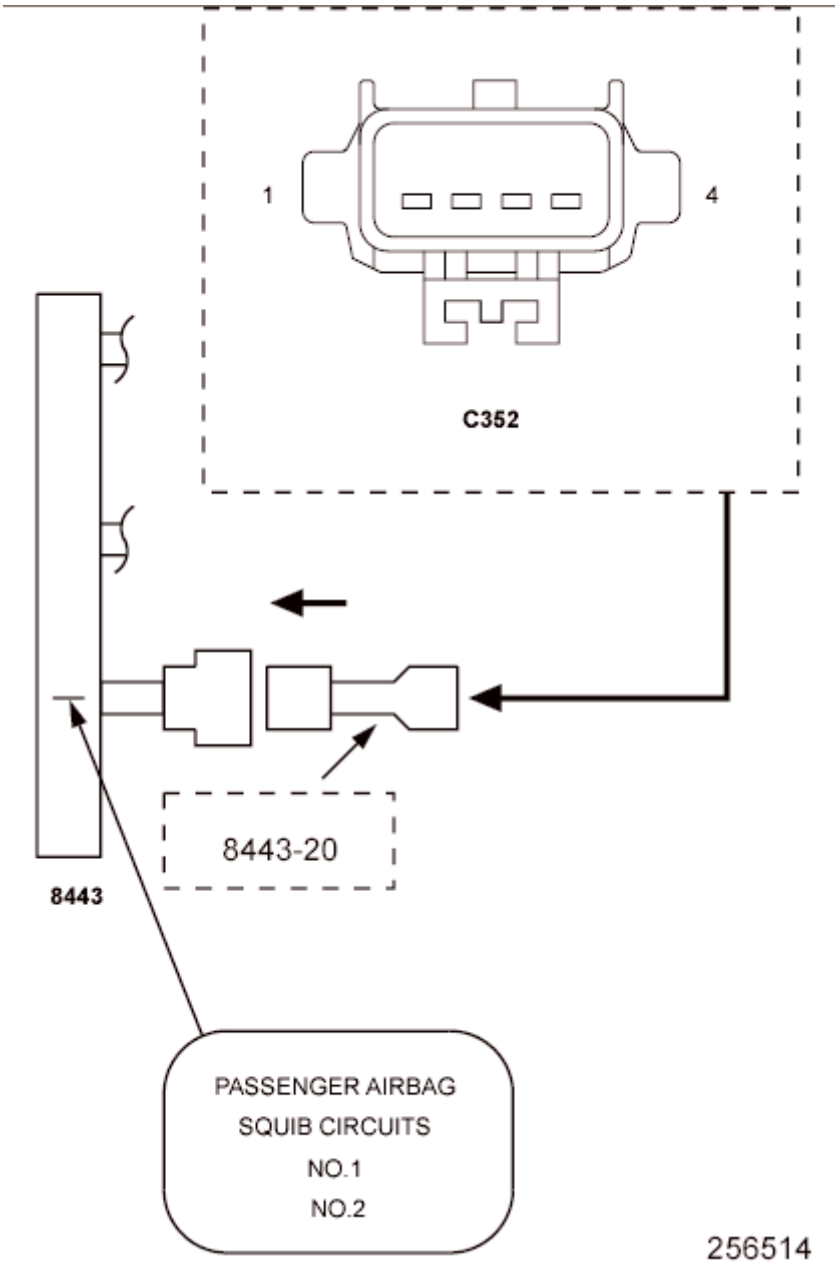

Fig. 71: Checking For Shorted Right Seat Airbag Squib Circuits In Seat Back
Courtesy of CHRYSLER GROUP, LLC

WARNING: Turn the ignition off, disconnect the 12-volt battery and wait two minutes before proceeding. Failure to follow these

instructions may result in possible serious or fatal injury.

1. Disconnect the Right Seat Airbag C352 in-line connector (under Right Seat).

   NOTE: Check connectors - Clean and repair as necessary.

2. Connect the SRS Load Tool Kit (special tool #8443A, SRS Load Tool) and SRS Load Tool Jumper (special tool #8443-20, Jumper, SRS Load Tool) to the Right Seat Airbag C352 in-line connector (Body Side).

   WARNING: Turn the ignition on, then reconnect the 12-volt battery and wait two minutes before proceeding. Failure to follow these instructions may result in possible serious or fatal injury.

3. With the scan tool, read the active ORC DTC.

   Does the scan tool display: B1C2E-RIGHT SIDE SEAT THORAX SQUIB 1 SHORTED TOGETHER?

   Yes

   - Go To 4

   No

   WARNING: Turn the ignition off, disconnect the 12-volt battery and wait two minutes before proceeding. Failure to follow these instructions may result in possible serious or fatal injury.

   - In accordance with the Service Information repair or replace the Right Seat Airbag wiring harness (Side Airbag Jumper). Circuits (R6) and (R8) shorted together between the C352 in-line connector

and the Right Seat Airbag connector.

- Perform the AIRBAG SYSTEM VERIFICATION TEST. Refer to **STANDARD PROCEDURE** .

4. **CHECK (R6) RIGHT SEAT SQUIB 1 LINE 2 CIRCUIT FOR A SHORT TO (R8) RIGHT SEAT SQUIB 1 LINE 1 CIRCUIT**

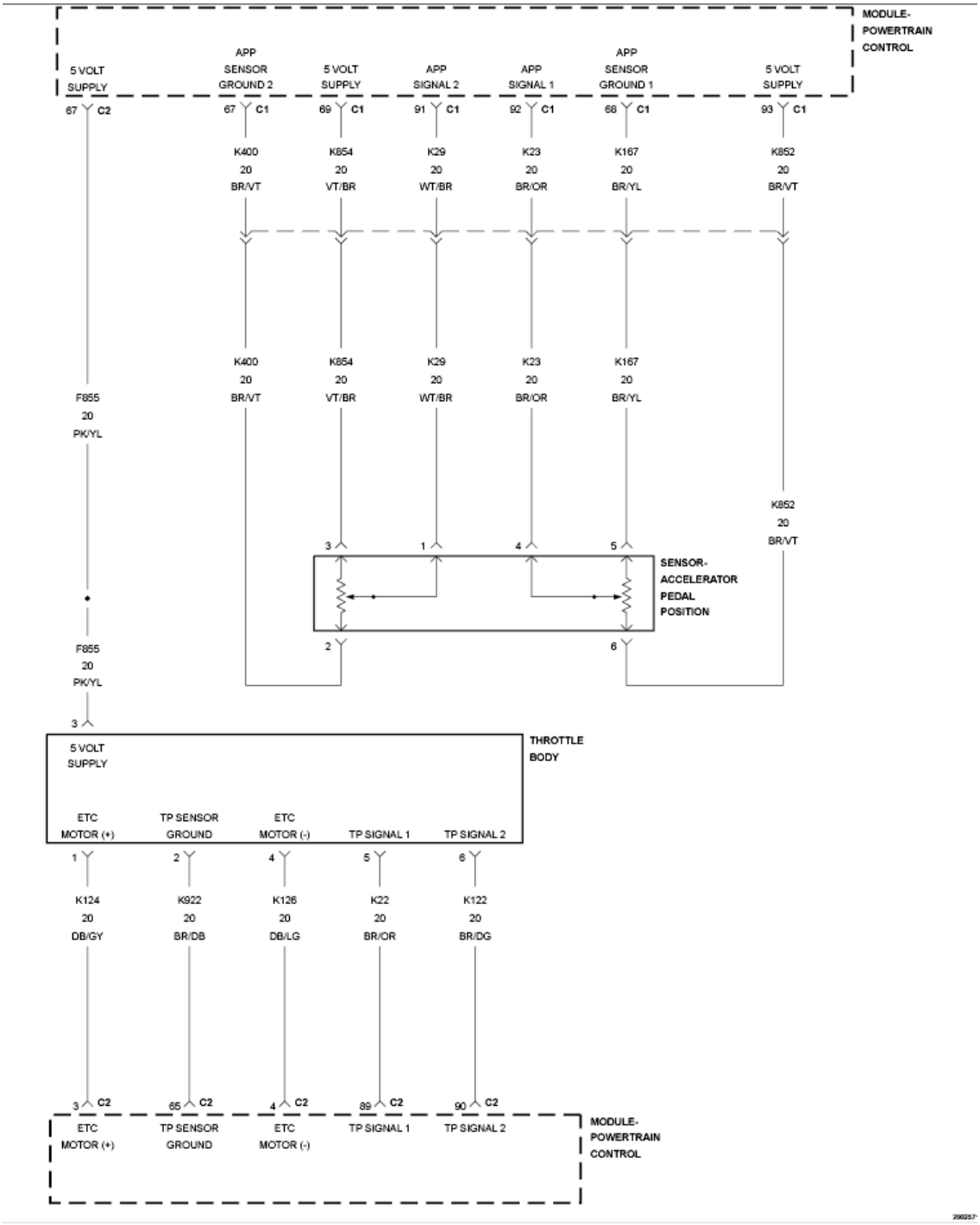

Fig. 72: Checking Right Seat Squib 1 Line 2 Circuit For Short To Right Seat Squib 1 Line 1 Circuit

Courtesy of CHRYSLER GROUP, LLC

WARNING: Turn the ignition off, disconnect the 12-volt battery and wait two minutes before proceeding. Failure to follow these instructions may result in possible serious or fatal injury.

1. Disconnect the SRS Load Tool Kit (special tool #8443A, SRS Load Tool) and SRS Load Tool Jumper (special tool #8443-20, Jumper, SRS Load Tool) from the Right Seat Airbag connector.
2. Disconnect the ORC connectors.

NOTE: Check connectors - Clean and repair as necessary.

3. Connect the SRS Load Tool Adaptor (special tool #8443-25, 56 Way ACM Adapter) to the ORC connectors.
4. Measure the resistance between the (R6) Right Seat Squib 1 Line 2 circuit cavity 1 and the (R8) Right Seat Squib 1 Line 1 circuit cavity 2 at the Right Seat Squib Airbag connector.

   Is the resistance below 10k Ohms?

   Yes

   - In accordance with the Service Information repair or replace the Right Seat Airbag wiring harness. Circuits (R6) and (R8) shorted together between the C352 in-line connector (body side) and the ORC C2 (32 way) connector.
   - Perform the AIRBAG SYSTEM VERIFICATION TEST. Refer to **STANDARD PROCEDURE** .

   No

WARNING: If the Occupant Restraint Controller (ORC) is dropped at any time, it must be replaced. Failure to follow these instructions may result in possible

serious or fatal injury.

- Replace the ORC in accordance with Service Information.
- Perform the AIRBAG SYSTEM VERIFICATION TEST. Refer to **STANDARD PROCEDURE** .

5. **CHECKING STORED OR INTERMITTENT CODES**

NOTE: Diagnose and repair all active codes before diagnosing stored codes. Refer to OCCUPANT RESTRAINT CONTROLLER (ORC) - DIAGNOSTIC CODE INDEX for a complete list of airbag system diagnostic procedures.

1. With the scan tool, record and erase all Airbag System Module DTCs.

WARNING: Turn the ignition off, disconnect the 12-volt battery and wait two minutes before proceeding. Failure to follow these instructions may result in possible serious or fatal injury.

2. Using the wiring diagram/schematic as a guide, inspect the related wiring and connectors for chafed, pierced, pinched, and partially broken wires, and for broken, bent, pushed out, corroded, and contaminated terminals. Repair as necessary.
3. Reconnect all disconnected components and harness connectors.

WARNING: Turn the ignition on, then reconnect the 12-volt battery and wait two minutes before proceeding. Failure to follow these instructions may result in possible serious or fatal injury.

4. With the scan tool, monitor for active codes while performing the following:
   - Wiggle the wiring harness and connectors of the related airbag circuit.
   - Continue the test until either a code becomes active or the problem

area is isolated.

5. In the previous steps you have attempted to recreate the conditions responsible for setting the DTC in question/causing the intermittent condition.

   Are any ACTIVE DTCs present?

   Yes

   - Perform the appropriate DTC. Refer to **DTC INDEX** .

   No

   - No problem found at this time. Erase all codes before returning the vehicle to the customer.

B1C2F-PASSENGER AIRBAG INDICATOR STATUS MISMATCH

For a complete wiring diagram **refer to appropriate SYSTEM WIRING DIAGRAMS article** .

WHEN MONITORED

After the Switch Bank bulb check is completed, the ORC compares the lamp request by the ORC (Set/Not Set) and the (Set/Not Set) request by the Instrument Cluster Can bus messages. Each message is transmitted one time per second or when a change in the lamp state occurs.

SET CONDITION

If the lamp request by the Occupant Restraint Controller (ORC) (On or Off), and the Lamp On by the Instrument Cluster (On or Off), messages do not match, this code will set.

POSSIBLE CAUSES

Possible Causes
OCCUPANT RESTRAINT CONTROLLER, INSTRUMENT CLUSTER MESSAGE MISMATCH
INSTRUMENT CLUSTER (CCN)
OCCUPANT RESTRAINT CONTROLLER (ORC)

DIAGNOSTIC TEST

1. **CHECK FOR AN ACTIVE DTC B1C2F-PASSENGER AIRBAG INDICATOR STATUS MISMATCH**

   NOTE: Ensure the battery is fully charged.

   1. Turn the ignition on, then off, and then on again.
   2. With the scan tool, read Occupant Restraint Controller (ORC) DTCs.

      Does the scan tool display active: B1C2F-PASSENGER AIRBAG INDICATOR STATUS MISMATCH?

      Yes

      - Go To 2

      No

      - Go To 4
2. **CHECK FOR ACTIVE INSTRUMENT CLUSTER DTCs**
   1. With the scan tool, read Instrument Cluster DTCs.

      Does the scan tool display and active Instrument Cluster DTCs?

      Yes

      - Refer to **DTC INDEX** for problems related to the Instrument Cluster.
      - Perform the AIRBAG SYSTEM VERIFICATION TEST. Refer to **STANDARD PROCEDURE** .

      No

      - Go To 3
3. **CHECK THE ORC AND INSTRUMENT CLUSTER FOR LAMP STATUS**
   1. With the scan tool view the Instrument Cluster (CCN) Display.
   2. Cycle the ignition key and observe the Passenger Airbag Indicator Lamp (PADL) Request status (Set/Not Set) during the Instrument

Cluster bulb check.

3. With the scan tool view the ORC Data Display.
4. Select Indicator Lamp Status from Bussed Inputs and select SRS Indicator Lamp request from the Bussed Outputs.
5. Cycle the ignition key and observe the Passenger Airbag Indicator Lamp (PADL) Status (Set/Not Set) during bulb check.

Did the Data Display information match each other?

Yes

WARNING: **Turn the ignition off, disconnect the 12-volt battery and wait two minutes before proceeding. Failure to follow these instructions may result in possible serious or fatal injury.**

WARNING: **If the Occupant Restraint Controller (ORC) is dropped at any time, it must be replaced. Failure to follow these instructions may result in possible serious or fatal injury.**

- Replace the ORC in accordance with the service information.
- Perform the AIRBAG SYSTEM VERIFICATION TEST. Refer to **STANDARD PROCEDURE** .

No

- Replace the Instrument Cluster in accordance with the service information.
- Perform the AIRBAG SYSTEM VERIFICATION TEST. Refer to **STANDARD PROCEDURE** .

4. **TEST FOR INTERMITTENT CONDITION**
   1. With the scan tool, record and erase all DTCs from all Airbag modules.
   2. If any ACTIVE codes are present they must be resolved before diagnosing any stored codes.

WARNING: Turn the ignition off, disconnect the 12-volt battery and wait two minutes before proceeding. Failure to follow these instructions may result in possible serious or fatal injury.

3. Using the wiring diagram/schematic as a guide, inspect the wiring and connectors.
4. Look for chafed, pierced, pinched, or partially broken wires and broken, bent, pushed out, spread, corroded, or contaminated terminals.
5. The following additional checks may assist you in identifying a possible intermittent problem.
6. Reconnect any disconnected components and harness connector.

WARNING: Turn the ignition on, then reconnect the 12-volt battery and wait two minutes before proceeding. Failure to follow these instructions may result in possible serious or fatal injury.

7. With the scan tool, monitor active codes as you work through the following steps.

WARNING: Maintain a safe distance from all airbags while performing the following steps. Failure to follow these instructions may result in possible serious or fatal injury.

8. Wiggle the wiring harness and connectors of the related Switch Bank circuit or component.
9. If only stored codes return, continue the test until the problem area has been isolated.
10. In the previous steps you have attempted to recreate the conditions responsible for setting the active DTC in question.

    Does the scan tool display any ACTIVE DTCs?

    Yes

- Perform the appropriate DTC. Refer to **DTC INDEX** .

No

- No problem found at this time. Erase all codes before returning vehicle to customer.

B1C3A-1ST ROW DRIVER RETRACTOR PRETENSIONER CIRCUIT OPEN

For a complete wiring diagram, **refer to appropriate SYSTEM WIRING DIAGRAMS article** .

WHEN MONITORED

With the ignition on, the Occupant Restraint Controller (ORC) monitors the resistance of the Driver Seat Belt Retractor Tensioner circuits.

SET CONDITION

The ORC has detected an open or high resistance on the Driver Seat Belt Retractor Tensioner circuits.

POSSIBLE CAUSES

Possible Causes
(R55) DRIVER SEAT BELT RETRACTOR TENSIONER LINE 1 CIRCUIT OPEN
(R53) DRIVER SEAT BELT RETRACTOR TENSIONER LINE 2 CIRCUIT OPEN
DRIVER SEAT BELT RETRACTOR TENSIONER
OCCUPANT RESTRAINT CONTROLLER (ORC)

DIAGNOSTIC TEST

1. **VERIFY ACTIVE DTC**

NOTE: Make sure the battery is fully charged.

NOTE: The scan tool, SRS Load Tool Kit (special tool #8443A, SRS Load Tool) and DVOM are required to perform the following test:

1. Select Active or Stored DTC.

   Is the DTC active?

   Yes

   - Go To 2

   No

   - Perform the AIRBAG SYSTEM INTERMITTENT TEST. Refer to **STANDARD PROCEDURE** .

2. **CHECK FOR DRIVER SEAT BELT RETRACTOR TENSIONER CIRCUIT OPEN**

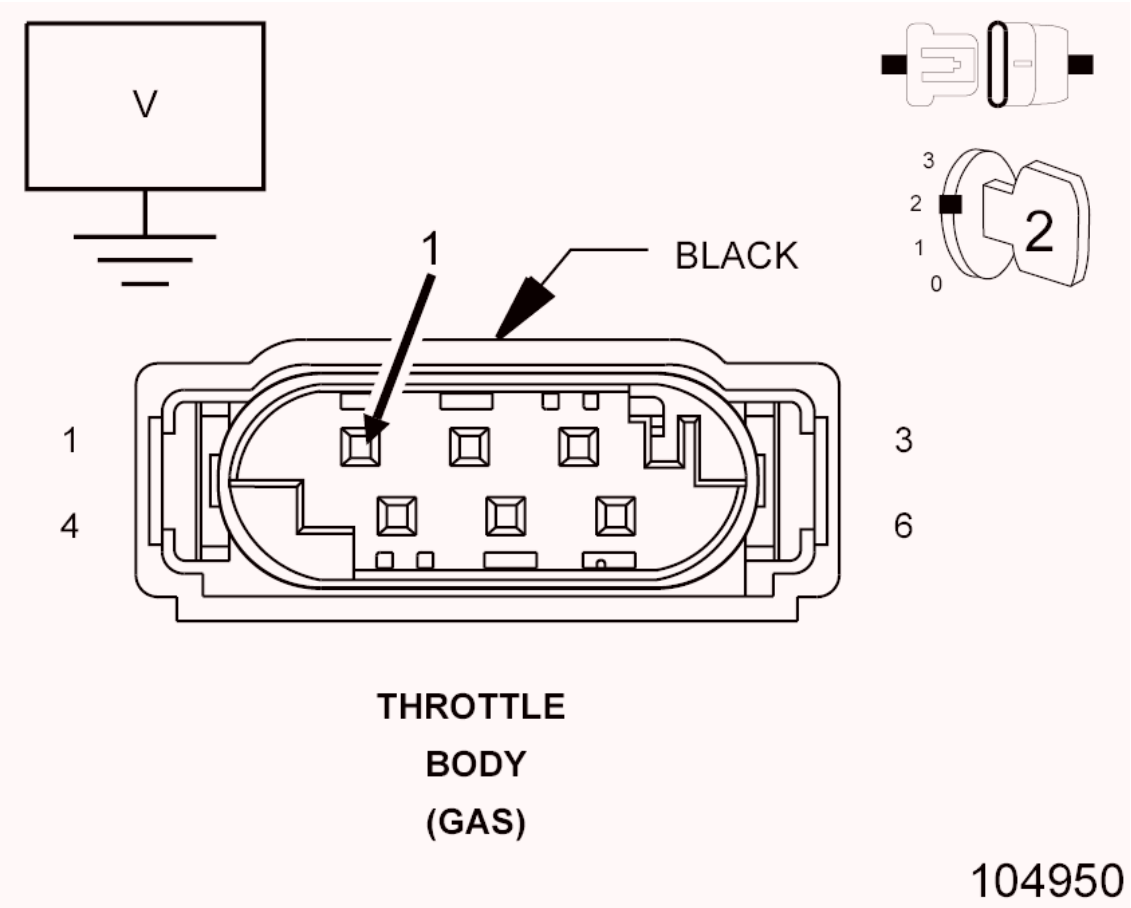

Fig. 73: Checking For Shorted Driver Seat Belt Retractor Tensioner Circuit Open
Courtesy of CHRYSLER GROUP, LLC

WARNING: Turn the ignition off disconnect the 12-volt

battery and wait two minutes before proceeding. Failure to follow these instructions may result in possible serious or fatal injury.

1. Disconnect the Driver Seat Belt Retractor Tensioner connector.

   NOTE: Check connectors - Clean and repair as necessary.

2. Connect the SRS Load Tool Kit (special tool #8443A, SRS Load Tool) and the SRS Load Tool Jumper (special tool #8443-4, Jumpers, 2 Pin) to the Driver Seat Belt Retractor Tensioner connector.

   WARNING: Turn the ignition on, then reconnect the 12-volt battery and wait two minutes before proceeding. Failure to follow these instructions may result in possible serious or fatal injury.

3. With the scan tool, read the active ORC DTCs.

   Does the scan tool display: B1C3A-1ST ROW DRIVER RETRACTOR PRETENSIONER CIRCUIT OPEN?

   Yes

   - Go To 3

   No

   - Replace the Driver Seat Belt Retractor Tensioner in accordance with the Service Information.
   - Perform the AIRBAG SYSTEM VERIFICATION TEST. Refer to **STANDARD PROCEDURE** .

3. **CHECK (R55) DRIVER SEAT BELT RETRACTOR TENSIONER LINE 1 CIRCUIT FOR AN OPEN**

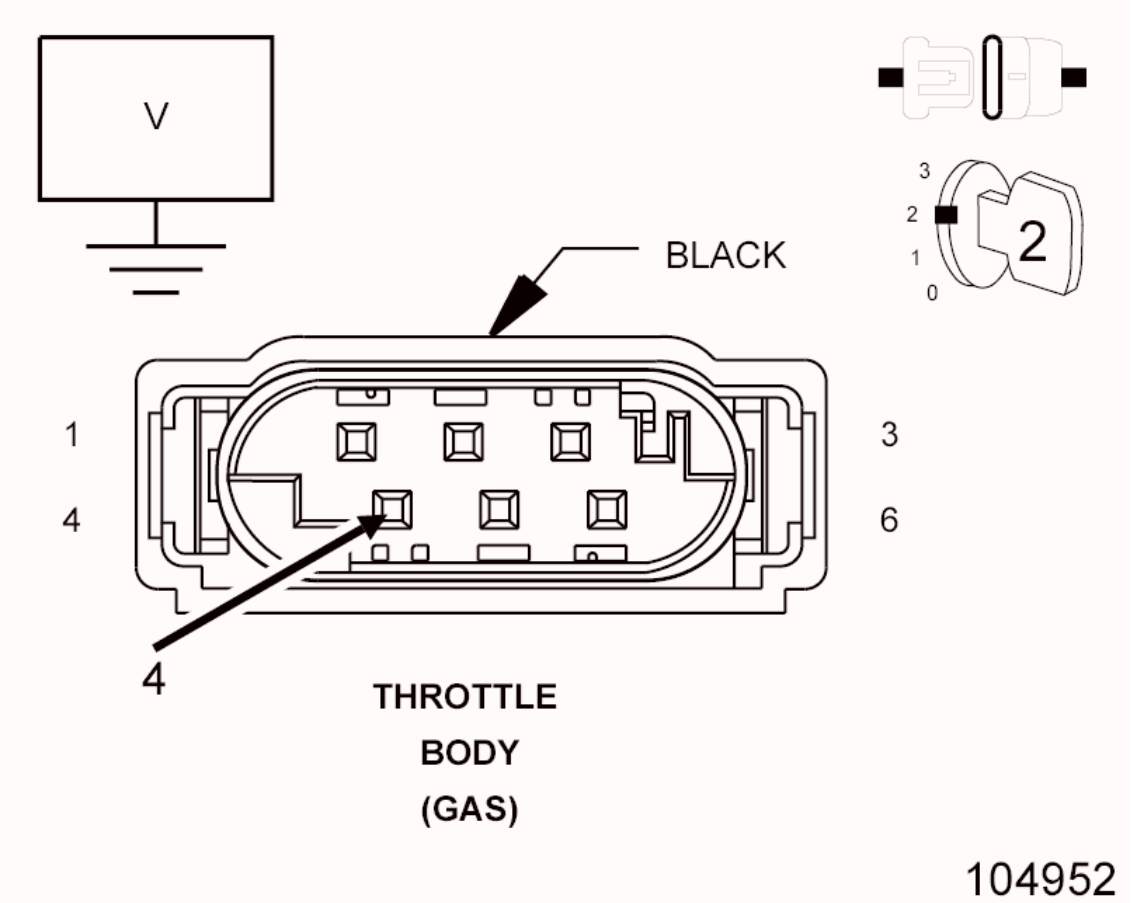

Fig. 74: Checking Driver Seat Belt Retractor Tensioner Line 1 Circuit For An Open
Courtesy of CHRYSLER GROUP, LLC

WARNING: Turn the ignition off disconnect the 12-volt battery and wait two minutes before proceeding. Failure to follow these instructions may result in possible serious or fatal injury.

1. Disconnect the SRS Load Tool Kit (special tool #8443A, SRS Load Tool) and Jumper from the Driver Seat Belt Retractor Tensioner connector.
2. Disconnect the ORC connectors.

NOTE: Check the connectors - Clean and repair as necessary.

3. Connect the SRS Load Tool Adaptor (special tool #8443-25, 56 Way

ACM Adapter) to the ORC connectors.

4. Measure the resistance of the (R55) Driver Seat Belt Retractor Tensioner Line 1 circuit between the Driver Seat Belt Retractor Tensioner connector cavity A and the SRS Load Tool Adaptor (special tool #8443-25, 56 Way ACM Adapter) cavity C2-16.

   Is the resistance below 1.0 Ohm?

   Yes

   - Go To 4

   No

   - Repair the (R55) Driver Seat Belt Retractor Tensioner Line 1 circuit for and open.
   - Perform the AIRBAG SYSTEM VERIFICATION TEST. Refer to **STANDARD PROCEDURE** .

4. **CHECK (R53) DRIVER SEAT BELT RETRACTOR TENSIONER LINE 2 CIRCUIT FOR AN OPEN**

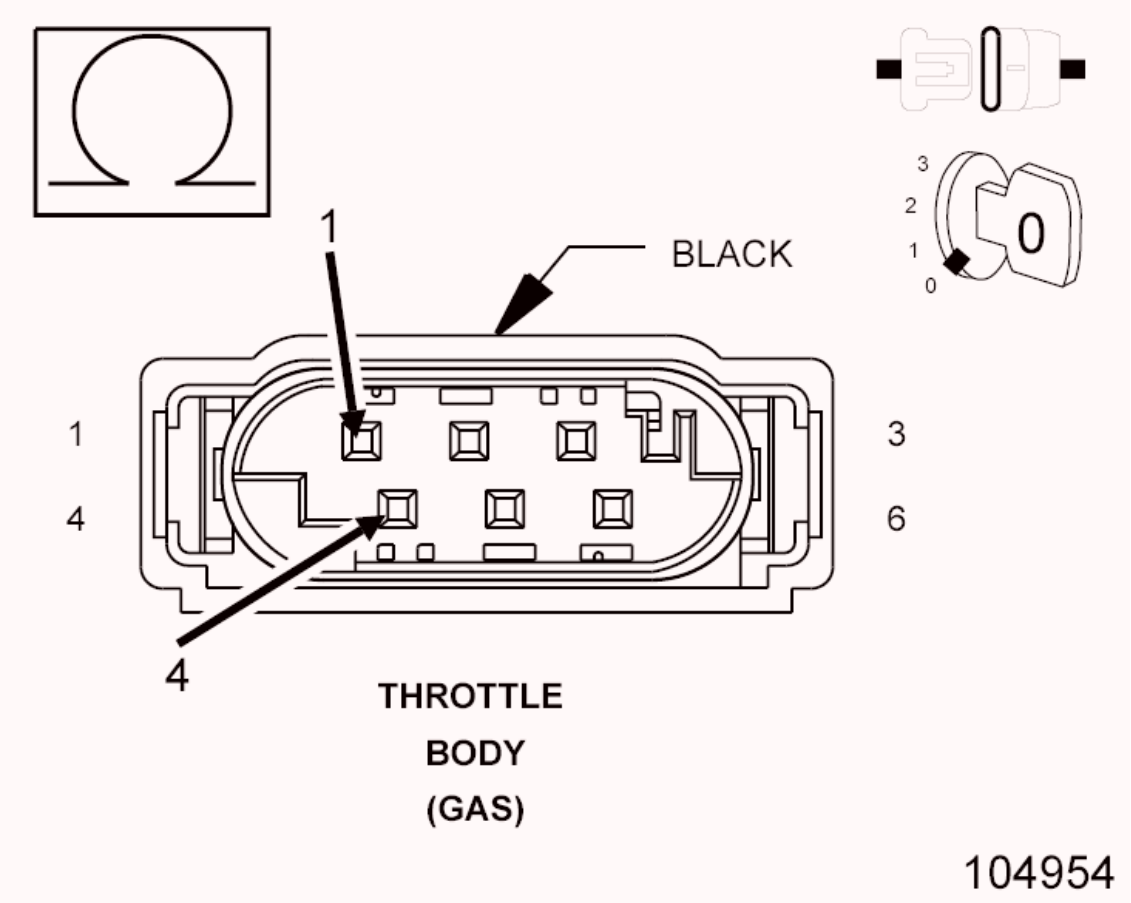

Fig. 75: Checking Driver Seat Belt Retractor Tensioner Line 2 Circuit For An Open
Courtesy of CHRYSLER GROUP, LLC

1. Measure the resistance of the (R53) Driver Seat Belt Retractor Tensioner Line 1 circuit between the Driver Seat Belt Retractor Tensioner connector cavity B and the SRS Load Tool Adaptor (special tool #8443-25, 56 Way ACM Adapter) cavity C2-15.

   Is the resistance below 1.0 Ohm?

   Yes

   WARNING: **If the Occupant Restraint Controller (ORC) is dropped at any time, it must be replaced. Failure to follow these instructions may result in possible serious or fatal injury.**

   - Replace the ORC in accordance with Service Information.

- Perform the AIRBAG SYSTEM VERIFICATION TEST. Refer to **STANDARD PROCEDURE** .

No

- Repair the (R53) Driver Seat Belt Retractor Tensioner Line 1 circuit for and open.
- Perform the AIRBAG SYSTEM VERIFICATION TEST. Refer to **STANDARD PROCEDURE** .

B212C-IGNITION RUN/START INPUT CIRCUIT OPEN

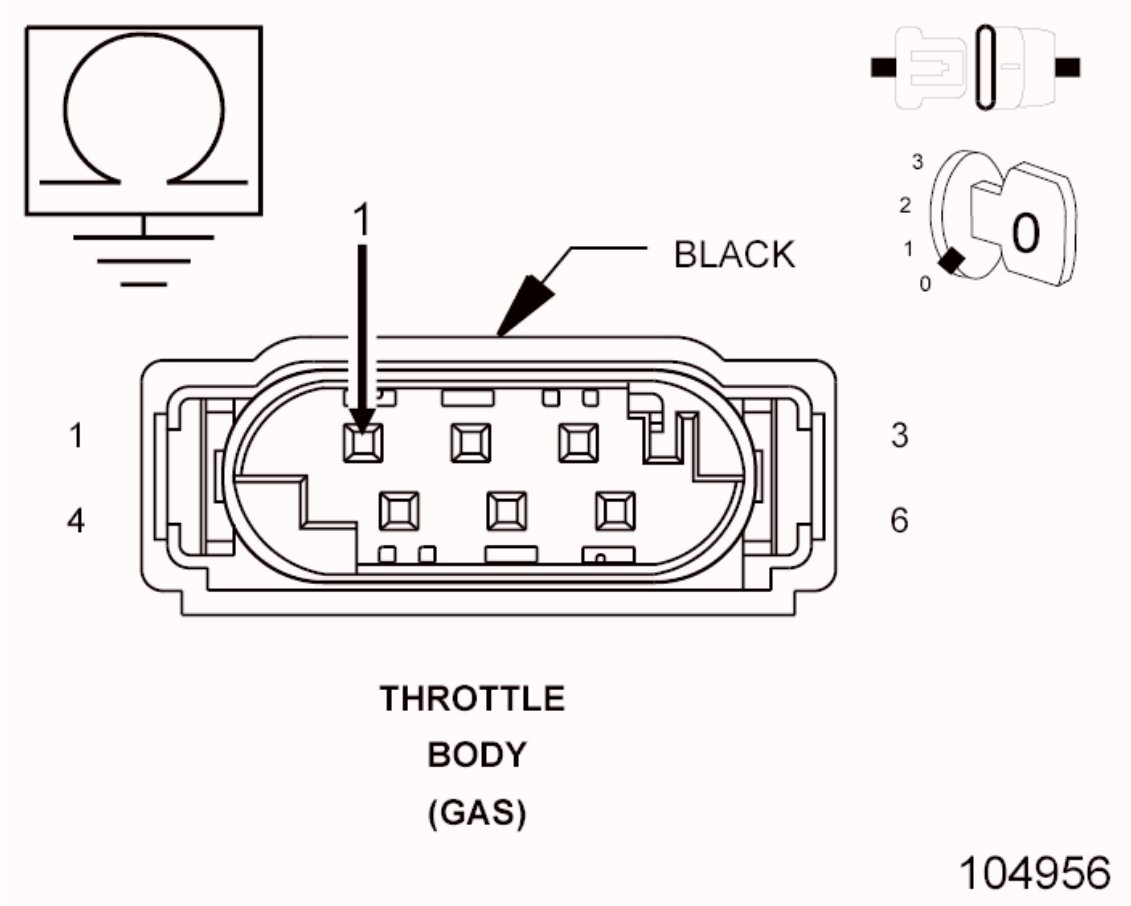

Fig. 76: Occupant Restraint Controller Module & Totally Integrated Power Module Circuit Schematic
Courtesy of CHRYSLER GROUP, LLC

For a complete wiring diagram, **refer to appropriate SYSTEM WIRING DIAGRAMS article** .

THEORY OF OPERATION

The Occupant Restraint Controller (ORC) receives power from both a battery and ignition fed input circuit from the Totally Integrated Power Module (TIPM). These circuits power the ORC and the capacitors used to initiate the squib deployment circuits in the event of collision detection. When Monitored:

WHEN MONITORED

With the ignition in the Run-Start position.

SET CONDITION

If voltage on the (F200) Fused Ignition Switch Output (Run-Start) circuit drops below 6.0 volts.

POSSIBLE CAUSES

Possible Causes
(F200) FUSED IGNITION SWITCH OUTPUT (RUN-START) CIRCUIT OPEN
(F200) FUSED IGNITION SWITCH OUTPUT (RUN-START) CIRCUIT SHORTED TO GROUND
OPEN TIPM FUSE 28
TOTALLY INTEGRATED POWER MODULE (TIPM)
OCCUPANT RESTRAINT CONTROLLER (ORC)

DIAGNOSTIC TEST

1. **VERIFY THAT DTC B212C-IGNITION RUN/START INPUT CIRCUIT OPEN IS ACTIVE IN THE ORC.**

   NOTE: Make sure the battery is fully charged.

   1. Turn the ignition on.
   2. Wait 10 seconds.
   3. With the scan tool, read Occupant Restraint Controller (ORC) DTCs.

      Does the scan tool display active: B212C-IGNITION RUN/START INPUT CIRCUIT OPEN?

      Yes

- Go To 2

No

- Go To 8

2. **INSPECT FUSE 28 IN TIPM**

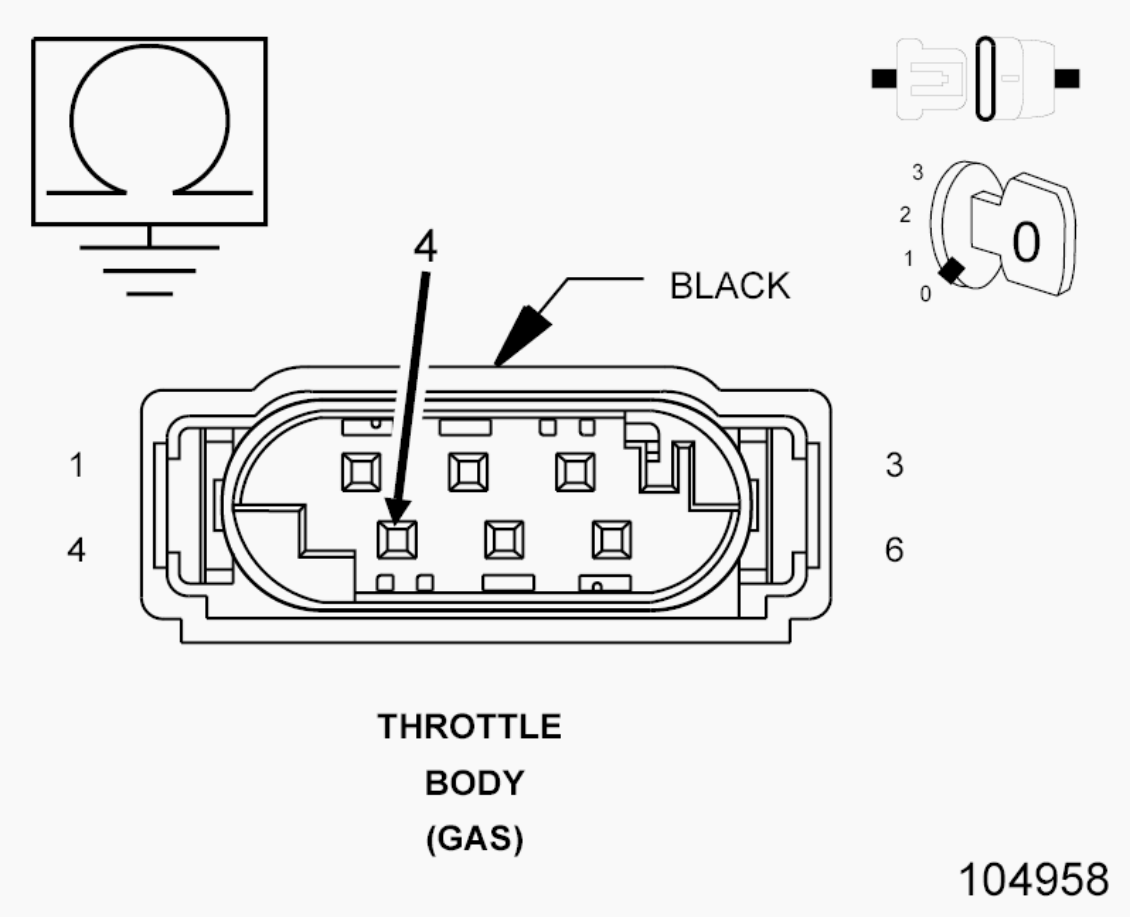

Fig. 77: Inspecting Fuse 28 In TIPM
Courtesy of CHRYSLER GROUP, LLC

1. Turn the ignition off.
2. Remove TIPM Fuse 28 and inspect the fuse.

NOTE: Check connectors - Clean and repair as necessary.

Is the Run/Start fuse open?

Yes

- Go To 3

No

- Go To 5

3. **CHECK THE (F200) FUSED IGNITION SWITCH OUTPUT (RUN-START) CIRCUIT RESISTANCE**
   1. Measure the resistance of the (F200) Fused Ignition Switch Output (Run-Start) circuit between ground and the Airbag Run-Start Fuse 28 (output side) terminal.

      Is the resistance below 100.0 Ohms?

      Yes

      - Go To 4

      No

      - Using the wiring diagram/schematic as a guide, inspect the related wiring and connectors. Look for chafed, pierced, pinched, or partially broken wires and broken, bent, pushed out, spread, corroded, or contaminated terminals.
      - Replace Airbag Run-Start Fuse 28 in TIPM.
      - Perform the AIRBAG SYSTEM VERIFICATION TEST. Refer to **STANDARD PROCEDURE** .
4. **CHECK THE (F200) FUSED IGNITION SWITCH OUTPUT (RUN-START) CIRCUIT RESISTANCE WITH ORC DISCONNECTED**

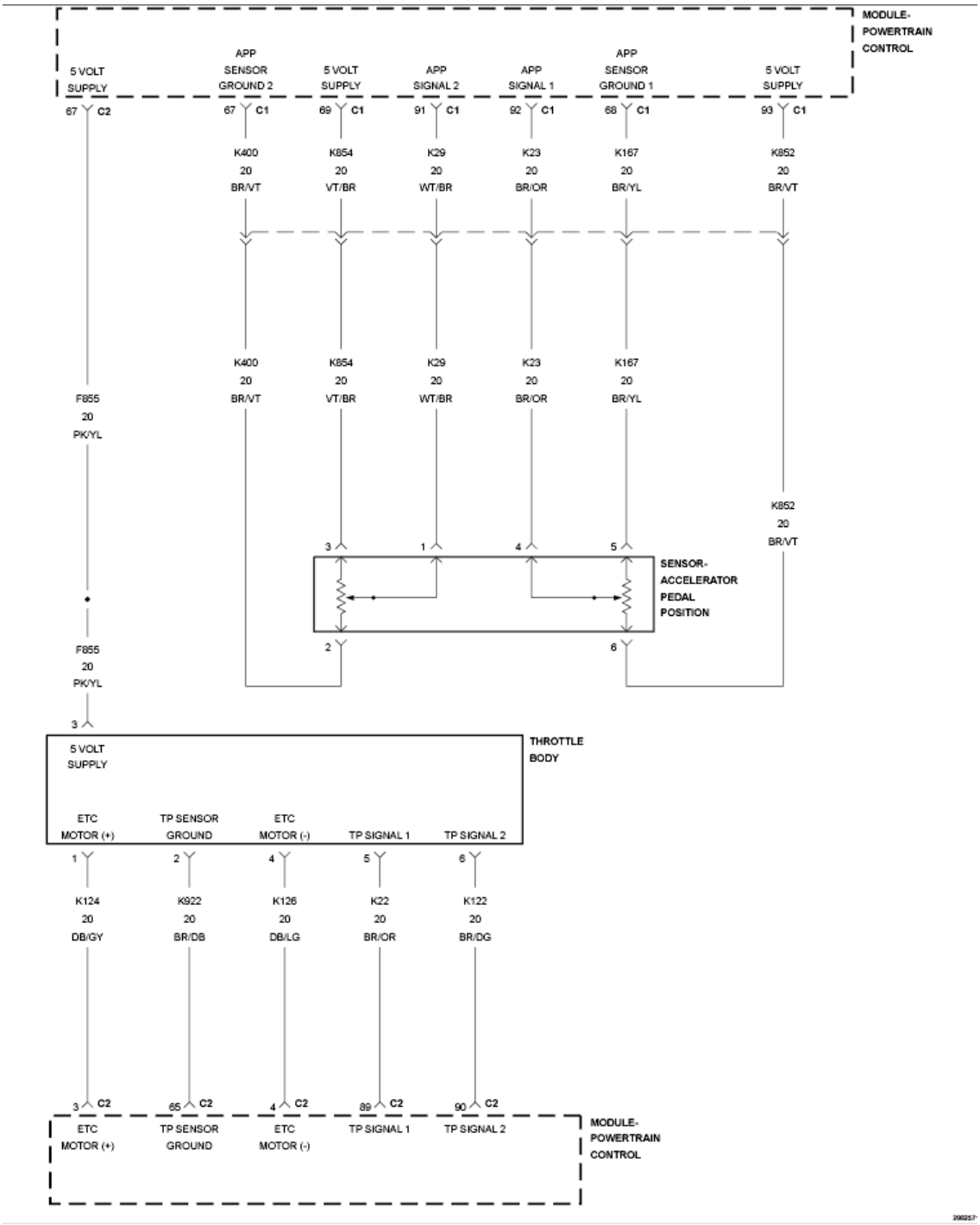

Fig. 78: Checking Fused Ignition Switch Output (Run-Start) Circuit Resistance
Courtesy of CHRYSLER GROUP, LLC

WARNING: Turn the ignition off, disconnect the 12-volt battery and wait two minutes before proceeding. Failure to follow these instructions may result in possible serious or

fatal injury.

1. Disconnect both ORC connectors.

NOTE: Check connectors - Clean and repair as necessary.

2. Connect the SRS Load Tool Adaptor (special tool #8443-25, 56 Way ACM Adapter) to the ORC connectors.
3. Measure the resistance of the (F200) Fused Ignition Switch Output (Run-Start) circuit between cavity 32-21 of the SRS Load Tool Adaptor (special tool #8443-25, 56 Way ACM Adapter) and ground.

   Is the resistance below 100.0 Ohms?

   Yes

   - Repair the (F200) Fused Ignition Switch Output (Run-Start) circuit for a short to ground.
   - Replace the Airbag Run-Start Fuse 28 in TIPM.
   - Perform the AIRBAG SYSTEM VERIFICATION TEST. Refer to **STANDARD PROCEDURE** .

   No

   WARNING: If the Occupant Restraint Controller (ORC) is dropped at any time, it must be replaced. Failure to follow these instructions may result in possible serious or fatal injury.

   - Replace the ORC in accordance with the Service Information.
   - Replace the Airbag Run-Start Fuse 28 in TIPM.
   - Perform the AIRBAG SYSTEM VERIFICATION TEST. Refer to **STANDARD PROCEDURE** .

5. **CHECK THE AIRBAG RUN/START FUSE 28 SUPPLY VOLTAGE IN TIPM**

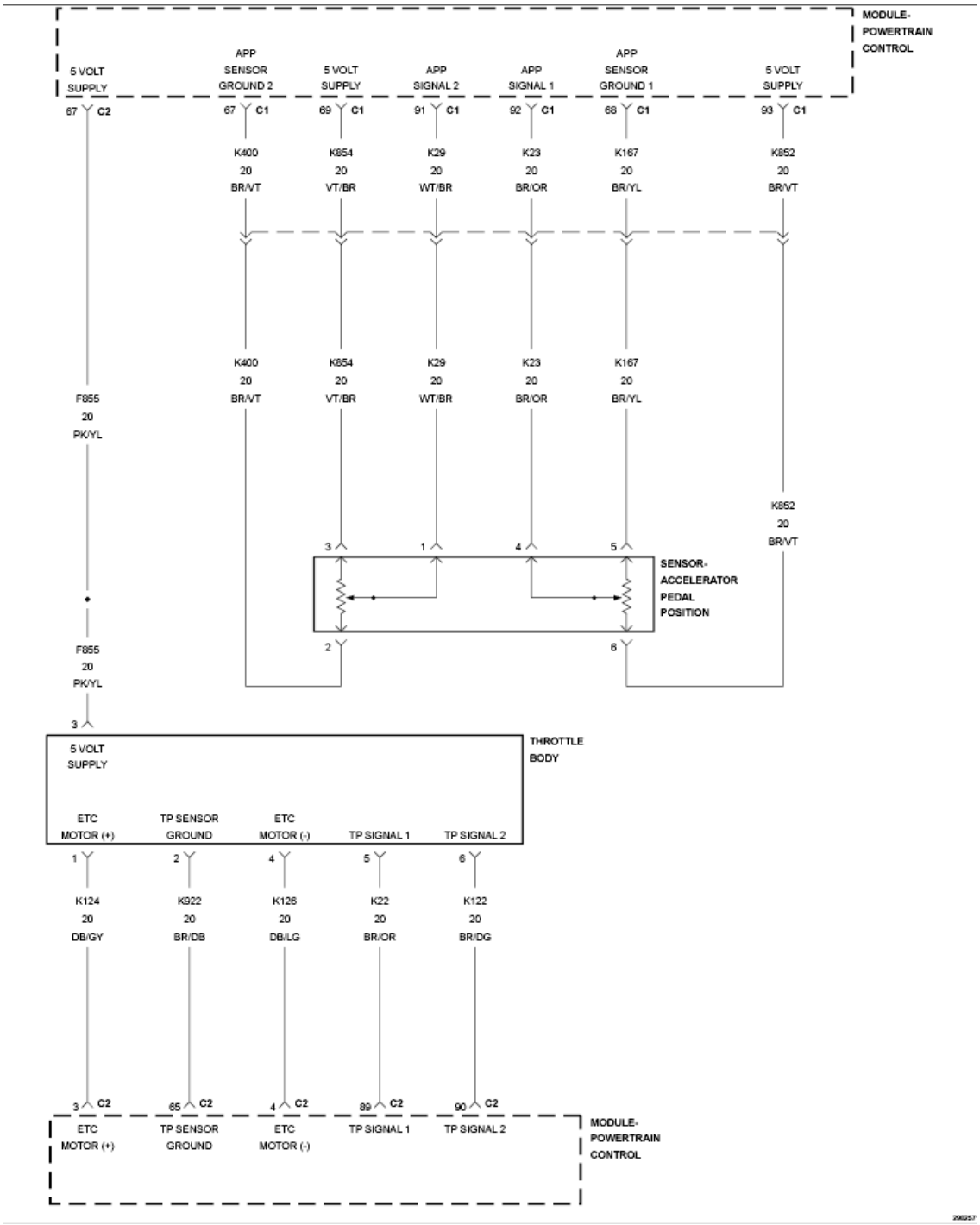

Fig. 79: Inspecting Fuse 28 In TIPM
Courtesy of CHRYSLER GROUP, LLC

1. Turn the ignition on.
2. Measure the voltage between Ground and the Airbag Run-Start Fuse 28 (supply side) terminal.

   Is the voltage above 6.0 volts?

Yes

- Go To 6

No

- Replace the TIPM in accordance with the Service Information.
- Perform the BODY SYSTEM VERIFICATION TEST. Refer to **STANDARD PROCEDURE** .

6. **CHECK THE (F200) FUSED IGNITION SWITCH OUTPUT (RUN-START) CIRCUIT FOR AN OPEN**

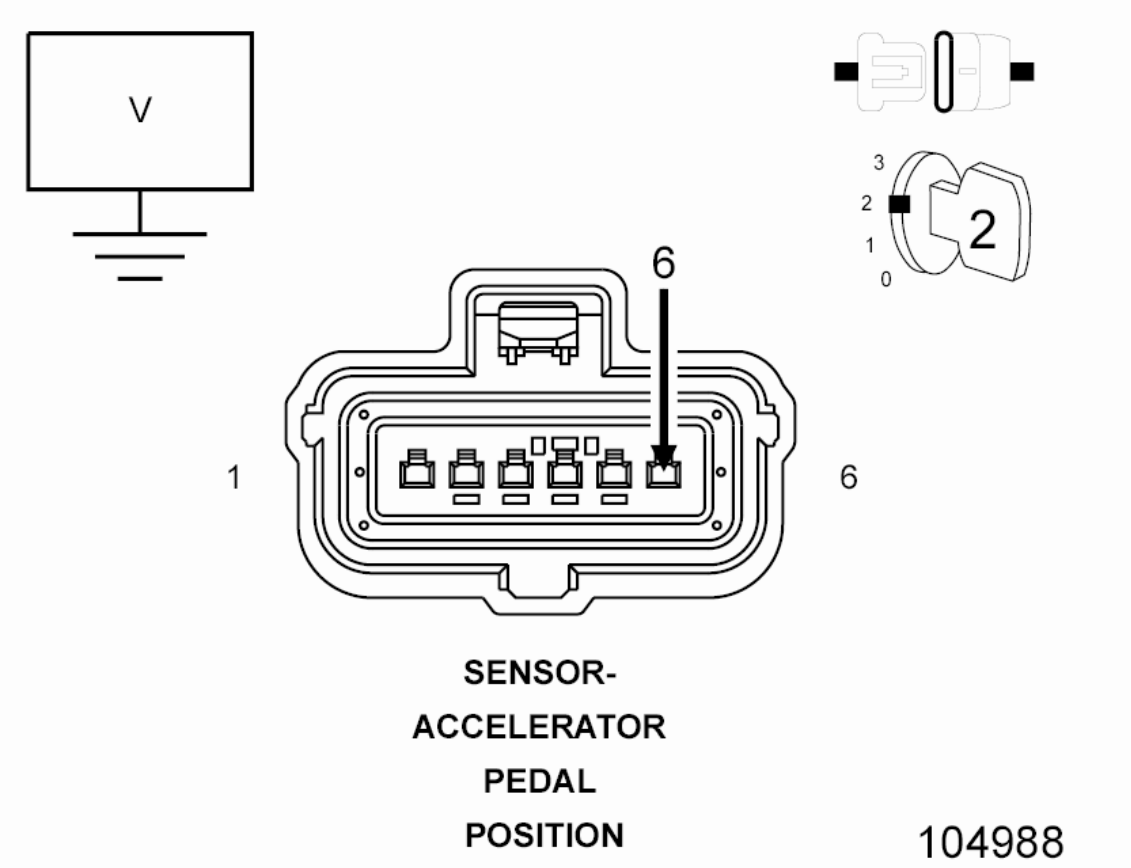

Fig. 80: Checking Fused Ignition Switch Output (Run-Start) Circuit For Open
Courtesy of CHRYSLER GROUP, LLC

WARNING: **Turn the ignition off, disconnect the 12-volt battery and wait two minutes before proceeding. Failure to follow these instructions may result in possible serious or**

fatal injury.

1. Reinstall the Airbag Run-Start Fuse.
2. Disconnect the ORC connectors.

NOTE: Check connectors - Clean and repair as necessary.

3. Install the SRS Load Tool Adaptor (special tool #8443-25, 56 Way ACM Adapter) to the ORC connectors.

WARNING: Turn the ignition on, then reconnect the 12-volt battery and wait two minutes before proceeding. Failure to follow these instructions may result in possible serious or fatal injury.

4. Measure the voltage of the (F200) Fused Ignition Switch Output (Run-Start) Circuit between the SRS Load Tool Adaptor (special tool #8443-25, 56 Way ACM Adapter) connector cavity 32-21 and ground.

   Is the voltage above 6.0 volts?

   Yes

WARNING: Turn the ignition off, disconnect the 12-volt battery and wait two minutes before proceeding. Failure to follow these instructions may result in possible serious or fatal injury.

WARNING: If the Occupant Restraint Controller (ORC) is dropped at any time, it must be replaced. Failure to follow these instructions may result in possible serious or fatal injury.

- Replace the ORC in accordance with the Service Information.
- Perform the AIRBAG SYSTEM VERIFICATION TEST. Refer to

STANDARD PROCEDURE .

No

- Go To 7

7. **CHECK THE (F200) FUSED IGNITION SWITCH OUTPUT (RUN-START) CIRCUIT FOR AN OPEN**

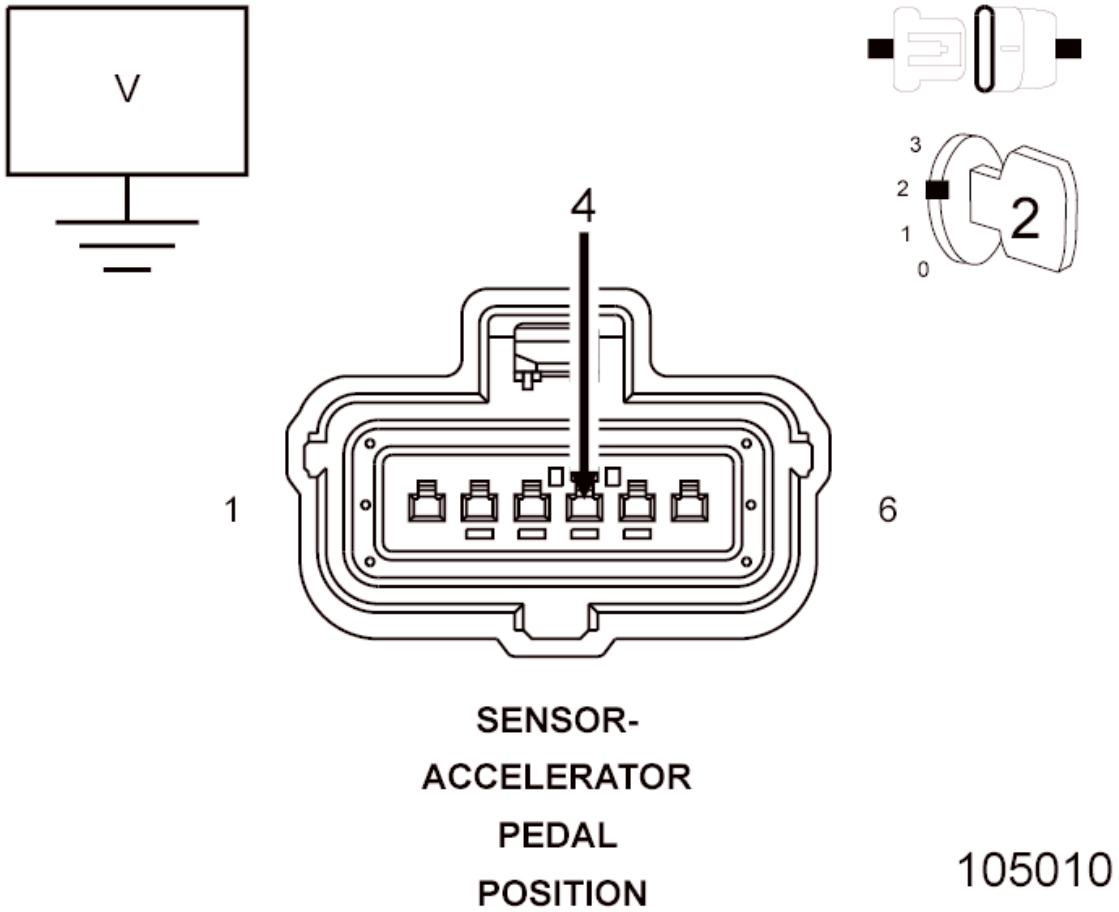

Fig. 81: Checking Fused Ignition Switch Output (Run-Start) Circuit For Open
Courtesy of CHRYSLER GROUP, LLC

WARNING: Turn the ignition off, disconnect the 12-volt battery and wait two minutes before proceeding. Failure to follow these instructions may result in possible serious or fatal injury.

1. Disconnect the TIPM C7 connector.

NOTE: Check connectors - Clean and repair as necessary.

2. Measure the resistance of the (F200) Fused Ignition Switch Output (Run-Start) Circuit between the SRS Load Tool Adaptor (special tool #8443-25, 56 Way ACM Adapter) connector cavity 32-21 and cavity 5 of the TIPM C7 connector.

   Is the resistance below 5.0 Ohms?

   Yes

   - Replace the TIPM in accordance with the Service Information.
   - Perform the BODY SYSTEM VERIFICATION TEST. Refer to **STANDARD PROCEDURE** .

   No

   - Repair the open (F200) Fused Ignition Switch Output (Run-Start) circuit.
   - Perform the AIRBAG SYSTEM VERIFICATION TEST. Refer to **STANDARD PROCEDURE** .

8. **TEST FOR INTERMITTENT CONDITION**
   1. With the scan tool, record and erase all DTCs from all Airbag modules.
   2. If any ACTIVE codes are present they must be resolved before diagnosing any stored codes.

      WARNING: **Turn the ignition off, disconnect the 12-volt battery and wait two minutes before proceeding. Failure to follow these instructions may result in possible serious or fatal injury.**

   3. Using the wiring diagram/schematic as a guide, inspect the wiring and connectors.
   4. Look for chafed, pierced, pinched, or partially broken wires and broken, bent, pushed out, spread, corroded, or contaminated terminals.
   5. The following additional checks may assist you in identifying a

possible intermittent problem.

6. Reconnect any disconnected components and harness connector.

WARNING: Turn the ignition on, then reconnect the 12-volt battery and wait two minutes before proceeding. Failure to follow these instructions may result in possible serious or fatal injury.

7. With the scan tool, monitor active codes as you work through the following steps.

WARNING: Maintain a safe distance from all airbags while performing the following steps. Failure to follow these instructions may result in possible serious or fatal injury.

8. Wiggle the wiring harness and connectors of the related airbag circuit or component.
9. If only stored codes return, continue the test until the problem area has been isolated.
10. In the previous steps you have attempted to recreate the conditions responsible for setting the active DTC in question.

    Does the scan tool display any ACTIVE DTCs?

    Yes

    - Perform the appropriate diagnostic procedure. Refer to **DTC INDEX** .

    No

    - No problem found. Erase all codes before returning the vehicle to the customer.

B212D-IGNITION RUN ONLY INPUT CIRCUIT OPEN

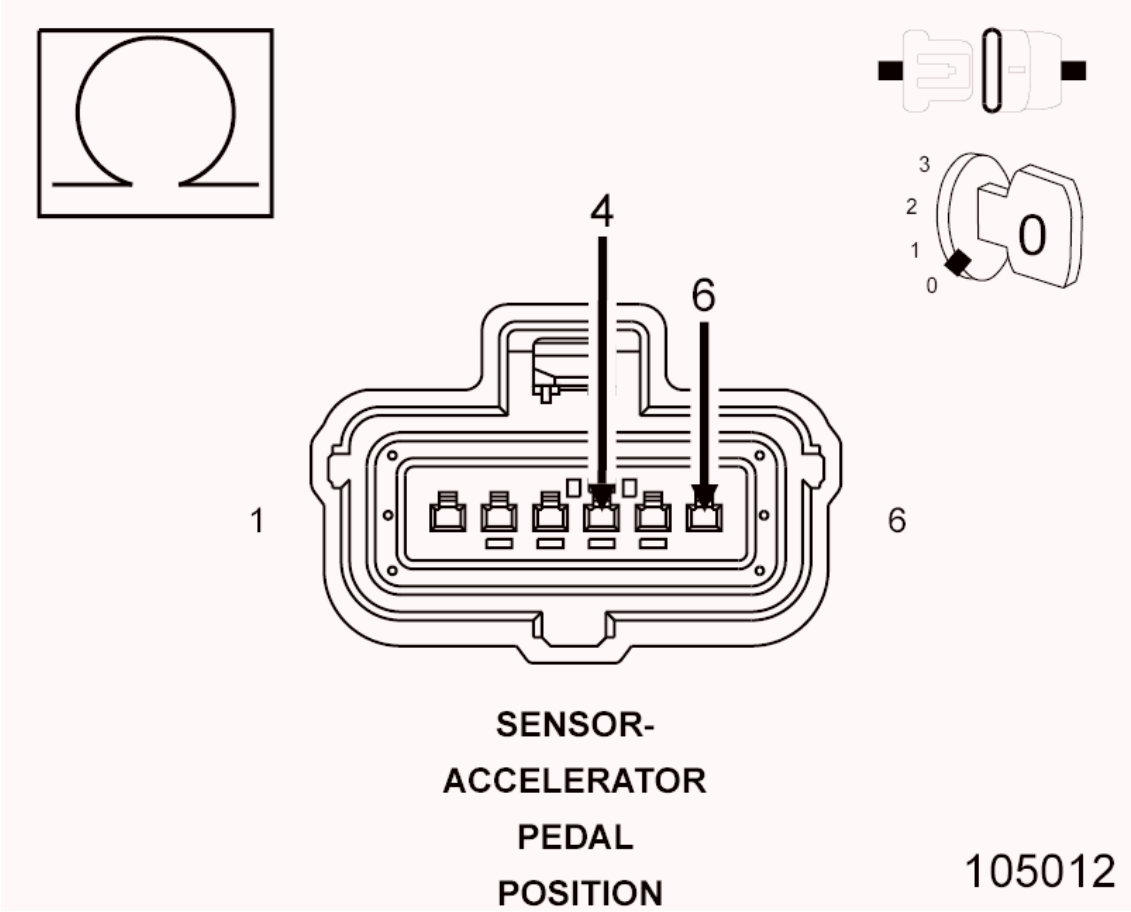

Fig. 82: Occupant Restraint Controller Module & Totally Integrated Power Module Circuit Schematic
Courtesy of CHRYSLER GROUP, LLC

For a complete wiring diagram, **refer to appropriate SYSTEM WIRING DIAGRAMS article** .

THEORY OF OPERATION

The Occupant Restraint Controller (ORC) receives power from both a battery and ignition fed input circuit from the Totally Integrated Power Module (TIPM). These circuits power the ORC and the capacitors used to initiate the squib deployment circuits in the event of collision detection.

WHEN MONITORED

With the ignition in the Run position.

SET CONDITION

If voltage on the (F100) Fused Ignition Switch Output (RUN) circuit drops below

6.0 volts.

POSSIBLE CAUSES

Possible Causes
TIPM FUSE 27 OPEN
TIPM FUSE 27 SUPPLY VOLTAGE LOW
(F100) FUSED IGNITION SWITCH OUTPUT (RUN) CIRCUIT OPEN
(F100) FUSED RUN RELAY OUTPUT CIRCUIT SHORT TO GROUND
OCCUPANT RESTRAINT CONTROLLER (ORC)

DIAGNOSTIC TEST

1. **VERIFY THAT DTC B212D-IGNITION RUN ONLY INPUT CIRCUIT OPEN IS ACTIVE**

   NOTE: Make sure the battery is fully charged.

   1. Turn the ignition on.
   2. Wait 10 seconds.
   3. With the scan tool, read Occupant Restraint Controller (ORC) DTCs.

      Does the scan tool display active: B212D-IGNITION RUN ONLY INPUT CIRCUIT OPEN?

      Yes

      - Go To 2

      No

      - Go To 8
2. **INSPECT FUSE 27 IN TIPM**

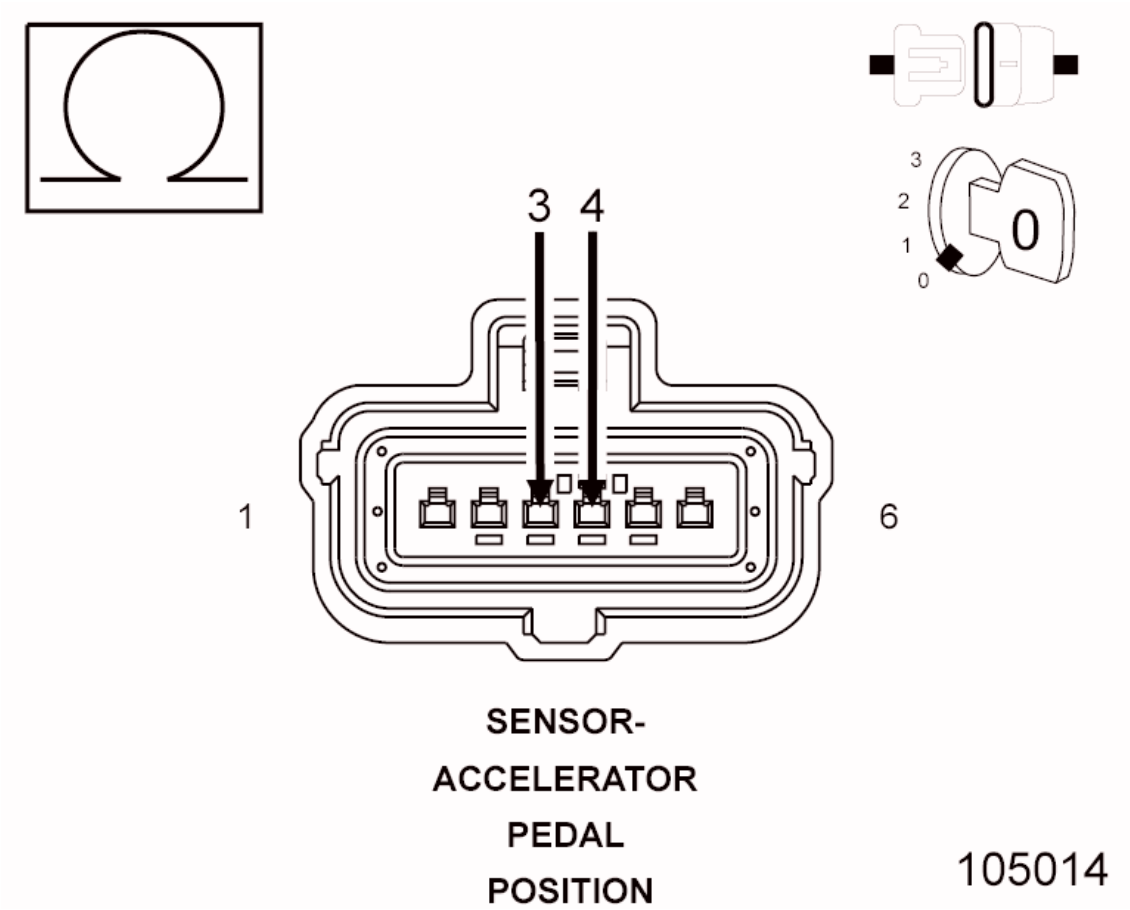

Fig. 83: Inspecting Fuse 27 In TIPM
Courtesy of CHRYSLER GROUP, LLC

1. Turn the ignition off.
2. Remove the TIPM Fuse 27 and inspect the fuse.

NOTE: Check connectors - Clean and repair as necessary.

Is the fuse open?

Yes

- Go To 3

No

- Go To 5

3. **CHECK THE (F100) FUSED IGNITION SWITCH OUTPUT (RUN) CIRCUIT SHORT TO GROUND**

1. Measure the resistance of the (F100) Fused Ignition Switch Output (Run) circuit between the TIPM Fuse 27 (output side) terminal and ground.

   Is the resistance below 100.0 Ohms?

   Yes

   - Go To 4

   No

   - Using the wiring diagram/schematic as a guide, inspect the related wiring and connectors. Look for chafed, pierced, pinched, or partially broken wires and broken, bent, pushed out, spread, corroded, or contaminated terminals.
   - Replace TIPM Fuse 27.
   - Perform the AIRBAG SYSTEM VERIFICATION TEST. Refer to **STANDARD PROCEDURE** .

4. **CHECK THE (F100) FUSED IGNITION SWITCH OUTPUT (RUN) CIRCUIT RESISTANCE WITH ORC DISCONNECTED**

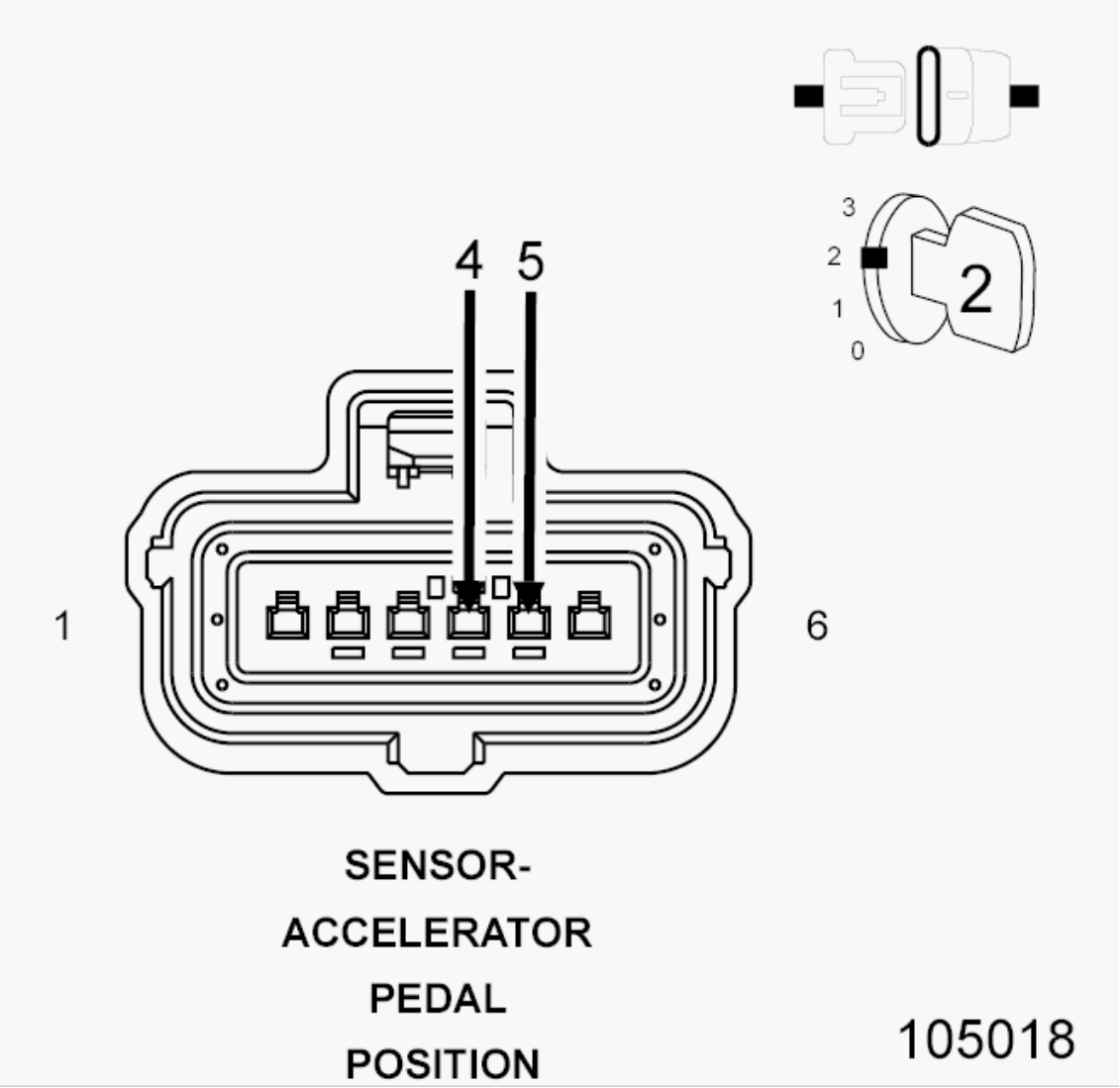

Fig. 84: Checking Fused Ignition Switch Output (Run) Circuit Resistance
Courtesy of CHRYSLER GROUP, LLC

WARNING: Turn the ignition off, disconnect the 12-volt battery and wait two minutes before proceeding. Failure to follow these instructions may result in possible serious or fatal injury.

1. Disconnect the ORC connectors.

NOTE: Check connectors - Clean and repair as necessary.

2. Connect the SRS Load Tool Adaptor (special tool #8443-25, 56 Way ACM Adapter) to the ORC connectors.
3. Measure the resistance of the (F100) Fused Ignition Switch Output (Run) circuit between SRS Load Tool Adaptor (special tool #8443-25, 56 Way ACM Adapter) cavity 32-22 and ground.

   Is the resistance below 100.0 Ohms?

   Yes

   - Repair the (F100) Fused Ignition Switch Output (Run) circuit for a short to ground.
   - Replace the TIPM Fuse 27.
   - Perform the AIRBAG SYSTEM VERIFICATION TEST. Refer to **STANDARD PROCEDURE** .

   No

   WARNING: **If the Occupant Restraint Controller (ORC) is dropped at any time, it must be replaced. Failure to follow these instructions may result in possible serious or fatal injury.**

   - Replace the ORC in accordance with the Service Information.
   - Replace the TIPM Fuse 27.
   - Perform the AIRBAG SYSTEM VERIFICATION TEST. Refer to **STANDARD PROCEDURE** .

5. **CHECK THE TIPM FUSE 27 SUPPLY SIDE CIRCUIT VOLTAGE**

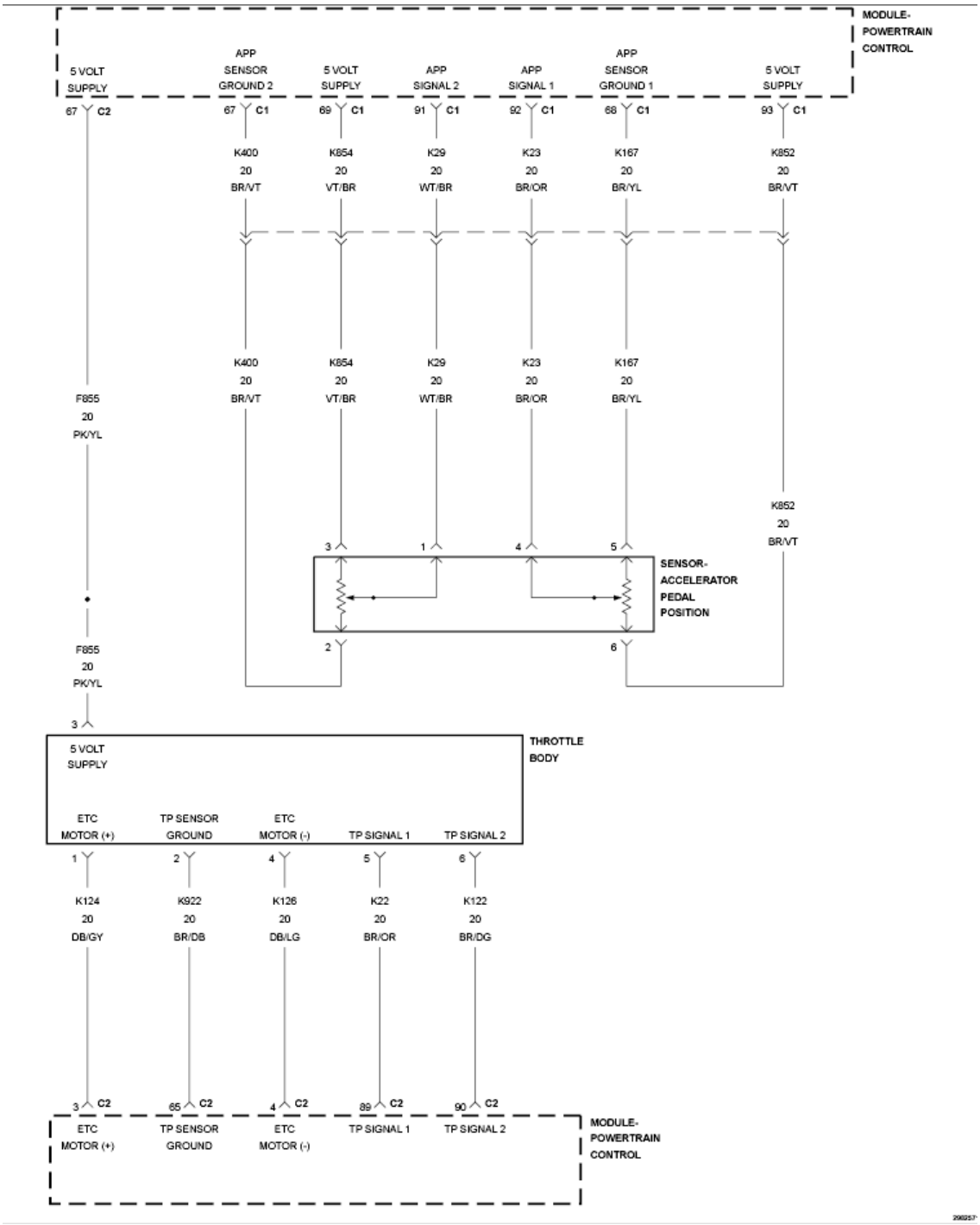

Fig. 85: Inspecting Fuse 27 In TIPM
Courtesy of CHRYSLER GROUP, LLC

1. Turn the ignition on.
2. Measure the voltage of the TIPM Fuse 27 (supply side) of the fuse to ground.

   Is the voltage above 6.0 volts?

Yes

- Go To 6

No

- Replace the TIPM in accordance with the Service Information.
- Perform the BODY VERIFICATION TEST. Refer to **STANDARD PROCEDURE** .

6. **CHECK THE (F100) FUSED IGNITION SWITCH OUTPUT (RUN) OUTPUT CIRCUIT FOR AN OPEN**

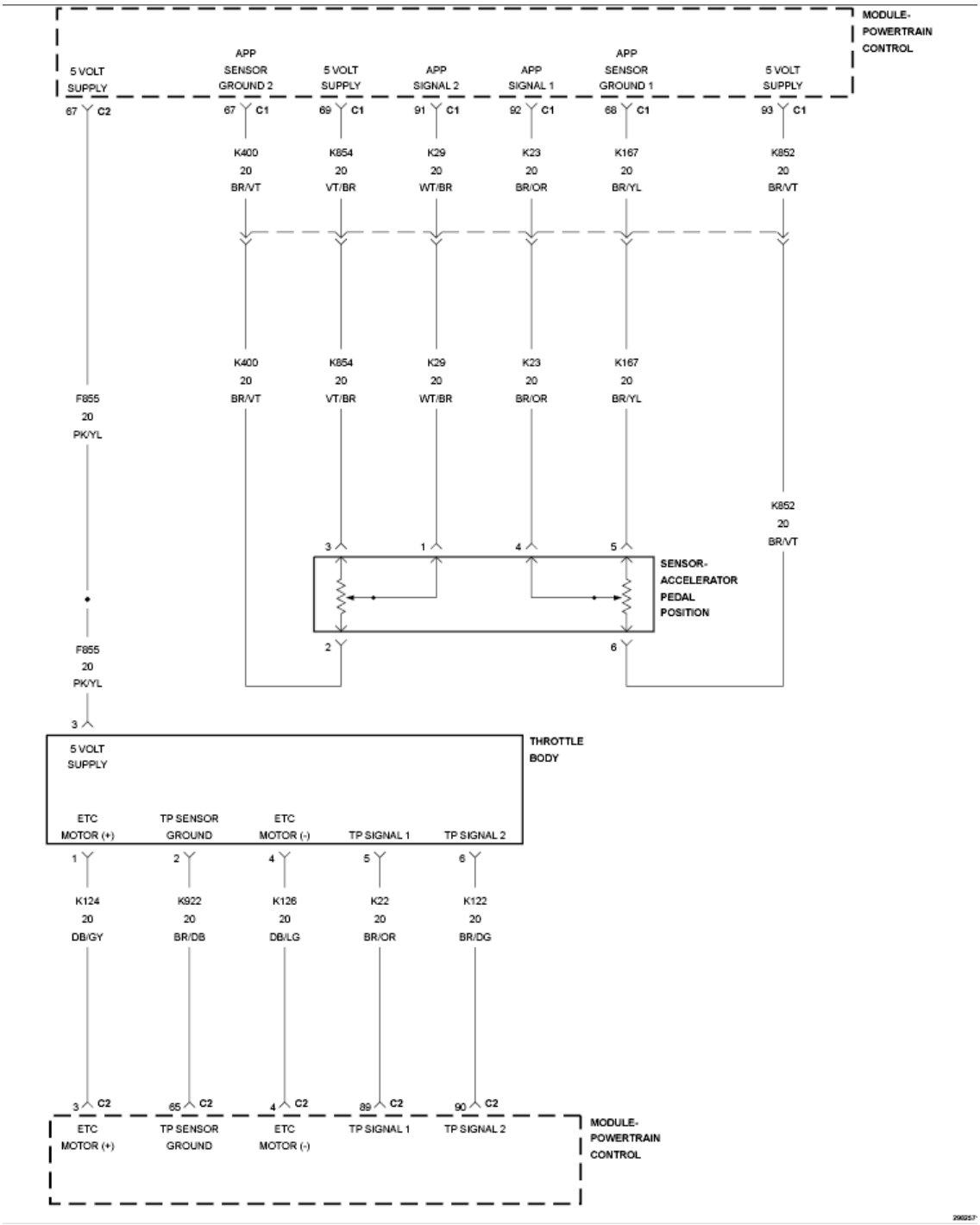

Fig. 86: Checking Fused Ignition Switch Output (Run) Output Circuit For Open
Courtesy of CHRYSLER GROUP, LLC

WARNING: Turn the ignition off, disconnect the 12-volt battery and wait two minutes before proceeding. Failure to follow these instructions may result in possible serious or

fatal injury.

1. Reinstall the TIPM Fuse 27.
2. Disconnect the ORC connectors.

NOTE: Check connectors - Clean and repair as necessary.

3. Connect the SRS Load Tool Adaptor (special tool #8443-25, 56 Way ACM Adapter) to the ORC harness connectors.

WARNING: Turn the ignition on, then reconnect the 12-volt battery and wait two minutes before proceeding. Failure to follow these instructions may result in possible serious or fatal injury.

4. Measure the voltage of the (F100) Fused Ignition Switch Output (Run) circuit between the SRS Load Tool Adaptor (special tool #8443-25, 56 Way ACM Adapter) cavity 32-22 and ground.

   Is the voltage above 6.0 volts?

   Yes

WARNING: Turn the ignition off, disconnect the 12-volt battery and wait two minutes before proceeding. Failure to follow these instructions may result in possible serious or fatal injury.

WARNING: If the Occupant Restraint Controller (ORC) is dropped at any time, it must be replaced. Failure to follow these instructions may result in possible serious or fatal injury.

- Replace the ORC in accordance with the Service Information.
- Perform the AIRBAG SYSTEM VERIFICATION TEST. Refer to

STANDARD PROCEDURE .

No

- Go To 7

7. **CHECK FUSE 27 OUTPUT CIRCUIT TO THE ORC**

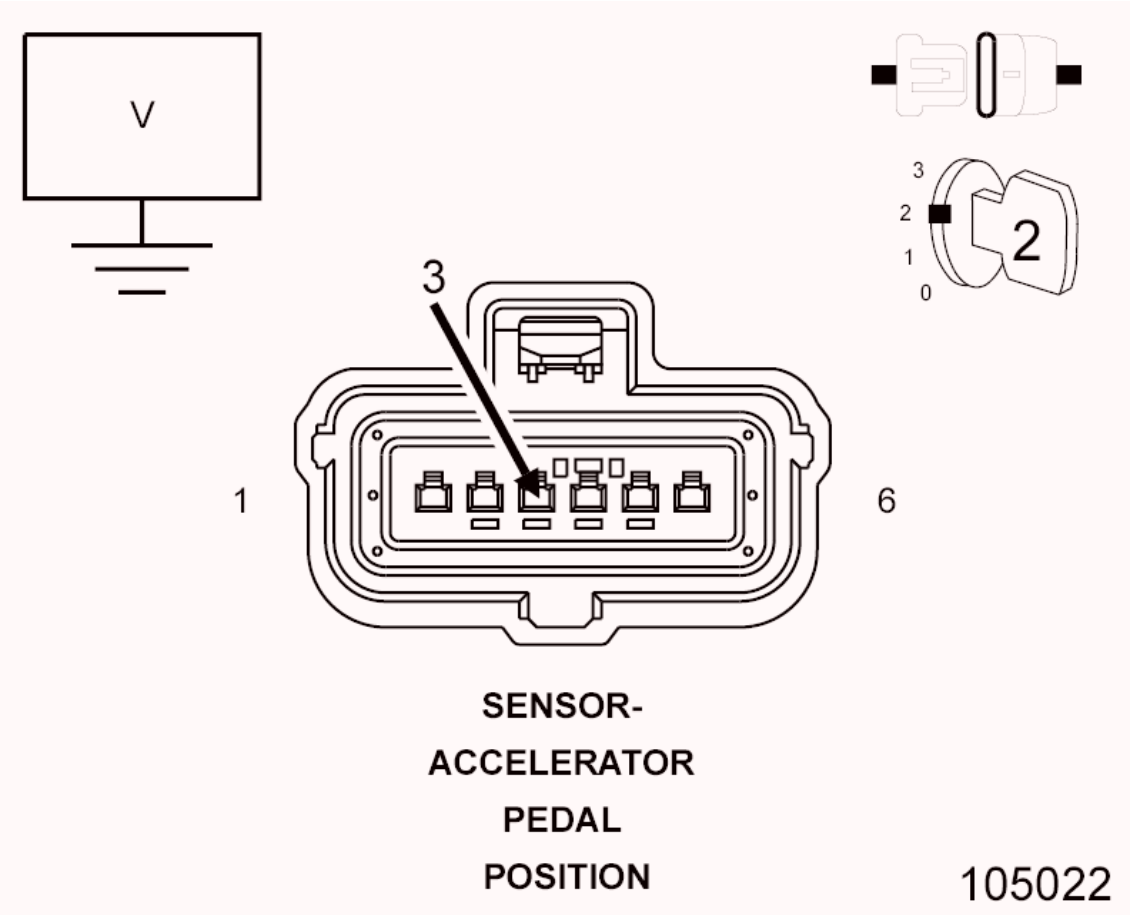

Fig. 87: Checking Fuse 27 Output To Cavity 7 Of TIPM C7 Connector
Courtesy of CHRYSLER GROUP, LLC

WARNING: Turn the ignition off, disconnect the 12-volt battery and wait two minutes before proceeding. Failure to follow these instructions may result in possible serious or fatal injury.

1. Disconnect the TIPM C7 connector.

NOTE: Check connectors - Clean and repair as

necessary.

2. Measure the resistance of the (F100) Fused Ignition Switch Output (Run) circuit between cavity 32-22 of the SRS Load Tool Adaptor (special tool #8443-25, 56 Way ACM Adapter) and TIPM C7 cavity 7 connector.

   Is the resistance below 5.0 Ohms?

   Yes

   WARNING: **If the Occupant Restraint Controller (ORC) is dropped at any time, it must be replaced. Failure to follow these instructions may result in possible serious or fatal injury.**

   - Replace the ORC in accordance with the Service Information.
   - Perform the AIRBAG SYSTEM VERIFICATION TEST. Refer to **STANDARD PROCEDURE** .

   No

   - Repair open in F100 circuit in accordance with the Service Information and retest for code.
   - Perform the BODY VERIFICATION TEST. Refer to **STANDARD PROCEDURE** .

8. **TEST FOR INTERMITTENT CONDITION**
   1. With the scan tool, record and erase all DTCs from all airbag modules.
   2. If any ACTIVE codes are present they must be resolved before diagnosing any stored codes.

   WARNING: **Turn the ignition off, disconnect the 12-volt battery and wait two minutes before proceeding. Failure to follow these instructions may result in possible serious or fatal injury.**

3. Using the wiring diagram/schematic as a guide, inspect the wiring and connectors.
4. Look for chafed, pierced, pinched, or partially broken wires and broken, bent, pushed out, spread, corroded, or contaminated terminals.
5. The following additional checks may assist you in identifying a possible intermittent problem.
6. Reconnect any disconnected components and harness connector.

WARNING: **Turn the ignition on, then reconnect the 12-volt battery and wait two minutes before proceeding. Failure to follow these instructions may result in possible serious or fatal injury.**

7. With the scan tool, monitor active codes as you work through the following steps.

WARNING: **Maintain a safe distance from all airbags while performing the following steps. Failure to follow these instructions may result in possible serious or fatal injury.**

8. Wiggle the wiring harness and connectors of the related airbag circuit or component.
9. If only stored codes return, continue the test until the problem area has been isolated.
10. In the previous steps you have attempted to recreate the conditions responsible for setting the active DTC in question.

    Does the scan tool display any ACTIVE DTCs?

    Yes

    - Perform the appropriate diagnostic procedure. Refer to **DTC INDEX** .

    No

- No problem found. Erase all codes before returning vehicle to customer.

B2201-CALIBRATION MISMATCH

WHEN MONITORED

With the Ignition on.

SET CONDITION

This DTC will be set when the VIN stored in the PCM does not match the VIN stored in the Occupant Restraint Controller (ORC). The ORC does not support a stored B2201 DTC.

POSSIBLE CAUSES

Possible Causes
INCORRECT PCM OCCUPANT RESTRAINT CONTROLLER (ORC)

DIAGNOSTIC TEST

1. **VERIFY THAT DTC B2201-CALIBRATION MISMATCH IS ACTIVE**
   1. Turn the ignition on.
   2. With the scan tool, read ORC DTC.

      NOTE: Make sure the battery is fully charged.

      Does the scan tool display active: B2201-CALIBRATION MISMATCH?

      Yes

      - Go To 2

      No

      - Test Complete.
2. **CHECK VIN IN PCM**

1. With the scan tool compare the VIN that is programmed into the PCM to the VIN stored in the ORC.

   Does the VIN programmed into the PCM match the VIN stored in the ORC?

   Yes

   WARNING: Turn the ignition off, disconnect the 12-volt battery and wait two minutes before proceeding. Failure to follow these instructions may result in possible serious or fatal injury.

   WARNING: If the Occupant Restraint Controller (ORC) is dropped at any time, it must be replaced. Failure to follow these instructions may result in possible serious or fatal injury.

   - Replace the ORC in accordance with the service information.
   - Perform the AIRBAG SYSTEM VERIFICATION TEST. Refer to **STANDARD PROCEDURE** .

   No

   - Replace and program the Powertrain Control Module in accordance with the service information. Ensure the PCM is replaced with the correct vehicle line PCM.

B2205-ORIGINAL VIN MISSING/MISMATCH

For a complete wiring diagram **refer to appropriate SYSTEM WIRING DIAGRAMS article** .

WHEN MONITORED

With the ignition on.

SET CONDITION

The Occupant Restraint Controller (ORC) will receive and monitor the VIN message from the PCM and record the VIN if different from the last VIN.

POSSIBLE CAUSES

Possible Causes
INCORRECT VIN PROGRAMMED IN PCM OCCUPANT RESTRAINT CONTROLLER (ORC)

DIAGNOSTIC TEST

1. **VERIFY THAT DTC B2205-ORIGINAL VIN MISSING/MISMATCH**

   NOTE: Ensure the battery is fully charged.

   1. Turn the ignition on.
   2. With the scan tool, read ORC DTC.

      Does the scan tool display active DTC B2205-ORIGINAL VIN MISSING/MISMATCH?

      Yes

      - Go To 2

      No

      - If the DTC is stored, check for an intermittent condition. Visually inspect the related wiring harness connectors. Look for broken, bent, pushed out, or corroded terminals.
2. **CHECK VIN IN PCM**
   1. With the scan tool compare the VIN that is programmed into the PCM to the VIN on the vehicle.

      Does the VIN programmed into the PCM match the vehicles VIN?

      Yes

      WARNING: Turn the ignition off, disconnect the 12-volt battery and wait two minutes before

proceeding. Failure to follow these instructions may result in possible serious or fatal injury.

WARNING: If the Occupant Restraint Controller (ORC) is dropped at any time, it must be replaced. Failure to follow these instructions may result in possible serious or fatal injury.

- Replace the ORC in accordance with the service information.
- Perform the the AIRBAG SYSTEM VERIFICATION TEST. Refer to **STANDARD PROCEDURE** .

No

- Replace the Powertrain Control Module in accordance with Service Information.
- Perform the PCM VERIFICATION TEST. Refer to **POWERTRAIN VERIFICATION TEST** .

B2207-OCCUPANT RESTRAINT CONTROLLER INTERNAL 1

For a complete wiring diagram, **refer to appropriate SYSTEM WIRING DIAGRAMS article** .

WHEN MONITORED

With the ignition on. The modules on board diagnostics continuously performs internal circuit tests.

SET CONDITION

This DTC will set if the module identifies an out of range internal circuit.

POSSIBLE CAUSES

Possible Causes
INTERMITTENT SQUIB SHORTED TO GROUND
INTERMITTENT SQUIB SHORTED TO VOLTAGE
INTERMITTENT SQUIB OPEN

OCCUPANT RESTRAINT CONTROLLER (ORC)

DIAGNOSTIC TEST

CHECK FOR SQUIB RELATED DTCS

1. Turn the ignition on.
2. With the scan tool, read the Occupant Restraint Controller (ORC) DTCs.

   Is there any squib related DTCs present?

   Yes

   - Diagnose specified squib DTCs according to procedure in article before diagnosing this DTC.
   - Refer to **DIAGNOSIS AND TESTING** and perform the appropriate diagnostic procedure.

   No

   WARNING: **Turn the ignition off, disconnect the 12-volt battery and wait two minutes before proceeding. Failure to follow these instructions may result in possible serious or fatal injury.**

   WARNING: **If the Occupant Restraint Controller (ORC) is dropped at any time, it must be replaced. Failure to follow these instructions may result in possible serious or fatal injury.**

   - Replace the ORC in accordance with the Service Information.
   - Perform the OCCUPANT CLASSIFICATION MODULE SYSTEM VERIFICATION TEST. Refer to **STANDARD PROCEDURE** .

B2208-OCCUPANT RESTRAINT CONTROLLER INTERNAL 2

WHEN MONITORED

With the ignition on. The modules on board diagnostics continuously performs

internal circuit tests.

SET CONDITION

This DTC will set if the module identifies an out of range internal circuit.

POSSIBLE CAUSES

Possible Causes
OCCUPANT RESTRAINT CONTROLLER (ORC)

DIAGNOSTIC TEST

REPLACE OCCUPANT RESTRAINT CONTROLLER

WARNING: Turn the ignition off, disconnect the 12-volt battery and wait two minutes before proceeding. Failure to follow these instructions may result in possible serious or fatal injury.

WARNING: If the Occupant Restraint Controller (ORC) is dropped at any time, it must be replaced. Failure to follow these instructions may result in possible serious or fatal injury.

Repair

- Replace the ORC in accordance with the Service Information.
- Perform the OCCUPANT CLASSIFICATION MODULE SYSTEM VERIFICATION TEST. Refer to **STANDARD PROCEDURE** .

B2209-OCCUPANT RESTRAINT CONTROLLER INTERNAL 3

WHEN MONITORED

With the ignition on. The modules on board diagnostics continuously performs internal circuit tests.

SET CONDITION

This DTC will set if the module identifies an out of range internal circuit.

POSSIBLE CAUSES

Possible Causes
OCCUPANT RESTRAINT CONTROLLER (ORC)

DIAGNOSTIC TEST

REPLACE OCCUPANT RESTRAINT CONTROLLER

WARNING: Turn the ignition off, disconnect the 12-volt battery and wait two minutes before proceeding. Failure to follow these instructions may result in possible serious or fatal injury.

WARNING: If the Occupant Restraint Controller (ORC) is dropped at any time, it must be replaced. Failure to follow these instructions may result in possible serious or fatal injury.

Repair

- Replace the ORC in accordance with the Service Information.
- Perform the OCCUPANT CLASSIFICATION MODULE SYSTEM VERIFICATION TEST. Refer to **STANDARD PROCEDURE** .

B220A-OCCUPANT RESTRAINT CONTROLLER INTERNAL 4

WHEN MONITORED

With the ignition on. The modules on board diagnostics continuously performs internal circuit tests.

SET CONDITION

This DTC will set if the module identifies an out of range internal circuit.

POSSIBLE CAUSES

Possible Causes
OCCUPANT RESTRAINT CONTROLLER (ORC)

DIAGNOSTIC TEST

REPLACE OCCUPANT RESTRAINT CONTROLLER

WARNING: Turn the ignition off, disconnect the 12-volt battery and wait two minutes before proceeding. Failure to follow these instructions may result in possible serious or fatal injury.

WARNING: If the Occupant Restraint Controller (ORC) is dropped at any time, it must be replaced. Failure to follow these instructions may result in possible serious or fatal injury.

Repair

- Replace the ORC in accordance with the Service Information.
- Perform the OCCUPANT CLASSIFICATION MODULE SYSTEM VERIFICATION TEST. Refer to **STANDARD PROCEDURE** .

B220B-OCCUPANT RESTRAINT CONTROLLER FIRING STORED ENERGY

WHEN MONITORED

With the ignition on. The modules on board diagnostics continuously performs internal circuit tests.

SET CONDITION

This DTC will set if the module identifies an out of range internal circuit.

POSSIBLE CAUSES

Possible Causes
OCCUPANT RESTRAINT CONTROLLER (ORC)

DIAGNOSTIC TEST

REPLACE OCCUPANT RESTRAINT CONTROLLER

WARNING: Turn the ignition off, disconnect the 12-volt battery and wait two minutes before proceeding. Failure to follow these instructions may result in possible serious or fatal injury.

WARNING: If the Occupant Restraint Controller (ORC) is dropped at any time, it must be replaced. Failure to follow these instructions may result in possible serious or fatal injury.

Repair

- Replace the ORC in accordance with the Service Information.
- Perform the OCCUPANT CLASSIFICATION MODULE SYSTEM VERIFICATION TEST. Refer to **STANDARD PROCEDURE** .

B220C-OCCUPANT RESTRAINT CONTROLLER ACCELEROMETER 1 INTERNAL

WHEN MONITORED

With the ignition on. The modules on board diagnostics continuously performs internal circuit tests.

SET CONDITION

This DTC will set if the module identifies an out of range internal circuit.

POSSIBLE CAUSES

Possible Causes
OCCUPANT RESTRAINT CONTROLLER (ORC)

DIAGNOSTIC TEST

REPLACE OCCUPANT RESTRAINT CONTROLLER

WARNING: Turn the ignition off, disconnect the 12-volt battery and wait two minutes before proceeding. Failure to follow these instructions may result in possible serious or fatal injury.

WARNING: If the Occupant Restraint Controller (ORC) is dropped at any time, it must be replaced. Failure to follow these instructions may result in possible serious or fatal injury.

Repair

- Replace the ORC in accordance with the Service Information.
- Perform the OCCUPANT CLASSIFICATION MODULE SYSTEM VERIFICATION TEST. Refer to **STANDARD PROCEDURE** .

B220D-OCCUPANT RESTRAINT CONTROLLER ACCELEROMETER 2 INTERNAL

WHEN MONITORED

With the ignition on. The module's on board diagnostics continuously performs internal circuit tests.

SET CONDITION

This DTC will set if the module identifies an out of range internal circuit.

POSSIBLE CAUSES

Possible Causes
OCCUPANT RESTRAINT CONTROLLER (ORC)

DIAGNOSTIC TEST

REPLACE OCCUPANT RESTRAINT CONTROLLER

WARNING: Turn the ignition off, disconnect the 12-volt battery and wait two minutes before proceeding. Failure to follow these instructions may result in possible serious or fatal injury.

WARNING: If the Occupant Restraint Controller (ORC) is dropped at any time, it must be replaced. Failure to follow these instructions may result in possible serious or fatal injury.

Repair

- Replace the ORC in accordance with the Service Information.
- Perform the AIRBAG SYSTEM VERIFICATION TEST. Refer to **STANDARD PROCEDURE** .

B2255-OCCUPANT RESTRAINT CONTROLLER ROLL OVER FEATURE DISABLE

WHEN MONITORED

With the ignition on. The module's on board diagnostics continuously performs internal circuit tests.

SET CONDITION

This DTC will set if the ORC Roll Over Feature has been disabled via the scan tool.

POSSIBLE CAUSES

Possible Causes
OCCUPANT RESTRAINT CONTROLLER

DIAGNOSTIC TEST

OCCUPANT RESTRAINT CONTROLLER ROLL OVER FEATURE DISABLED

1. Turn the ignition on.
2. With the scan tool read the ORC Roll Over Feature status Enabled or Disabled.

   Does the scan tool show Roll Over Feature Disabled?

   Repair

   - With the scan tool select Enable to clear the active B2255 DTC.
   - Perform the AIRBAG SYSTEM VERIFICATION TEST . Refer to **STANDARD PROCEDURE** .

U0001-CAN C BUS

For a complete wiring diagram **refer to appropriate SYSTEM WIRING DIAGRAMS article** .

DIAGNOSTIC TEST

Refer to DIAGNOSIS AND TESTING for the diagnostic test procedure.

U0019-CAN B BUS

For a complete wiring diagram, **refer to appropriate SYSTEM WIRING DIAGRAMS article** .

WHEN MONITORED

Continuously

SET CONDITION

Whenever the CAN B Bus (+) or CAN B Bus (-) circuit is open, shorted to voltage, or shorted to ground.

POSSIBLE CAUSES

Possible Causes
ACTIVE U0019 CAN B BUS DTC IN TOTALLY INTEGRATED POWER MODULE (TIPM)
(D55) CAN B BUS (+) CIRCUIT OPEN
(D54) CAN B BUS (-) CIRCUIT OPEN
OCCUPANT RESTRAINT CONTROLLER (ORC)

DIAGNOSTIC TEST

1. **VERIFY DTC U0019-CAN B BUS IS ACTIVE**
    1. Turn the ignition on.
    2. With the scan tool, read ORC DTCs.

    Does the scan tool display active: U0019-CAN B BUS?

    Yes

    - Go To 2

    No

    - If the DTC is stored, check for an intermittent condition by inspecting the related wiring harness for chafed, pierced, pinched, and partially broken wires. Also, inspect the related connectors for broken, bent, pushed out, spread, corroded, or contaminated terminals.

- Perform the AIRBAG SYSTEM VERIFICATION TEST. Refer to **STANDARD PROCEDURE** .

2. **CHECK FOR ACTIVE CAN B BUS RELATED DTCS IN THE FRONT CONTROL MODULE (FCM)**
   1. With the scan tool, read TIPM DTCs

      Does the scan tool display any active CAN B BUS related DTCs?

      Yes

      - Diagnose and repair the DTC(s). Refer to **DTC INDEX** .

      No

      - Go To 3

3. **CHECK (D55) CAN B BUS (+) CIRCUIT FOR AN OPEN**

   WARNING: Turn the ignition off, disconnect the 12-volt battery and wait two minutes before proceeding. Failure to follow these instructions may result in possible serious or fatal injury.

   1. Disconnect the ORC connectors.

      NOTE: Check connectors - Clean and repair as necessary.

   2. Connect the Load Tool ORC (special tool #8443-25, 56 Way ACM Adapter) Adaptor to the ORC C2 connectors.
   3. Disconnect the TIPM C7 connector.
   4. Measure the resistance of the (D55) CAN B Bus (+) circuit between the TIPM C7 connector and the ORC C2 connector.

      Is the resistance below 2.0 ohms?

      Yes

      - Go To 4

No

- Repair the (D55) CAN B Bus (+) circuit for an open.
- Perform the AIRBAG SYSTEM VERIFICATION TEST. Refer to **STANDARD PROCEDURE** .

4. **CHECK (D54) CAN B BUS (-) CIRCUIT FOR AN OPEN**
   1. Measure the resistance of the (D54) CAN B Bus (-) circuit between the TIPM C7 connector and the ORC C2 connector.

      Is the resistance below 2.0 ohms?

      Yes

      WARNING: **If the Occupant Restraint Controller (ORC) is dropped at any time, it must be replaced. Failure to follow these instructions may result in possible serious or fatal injury.**

      - Replace the ORC in accordance with the Service Information.

      No

      - Repair the (D54) CAN B Bus (-) circuit for an open.
      - Perform the AIRBAG SYSTEM VERIFICATION TEST. Refer to **STANDARD PROCEDURE** .

U0141-LOST COMMUNICATION WITH IPM (FCM/TIPM)

For a complete wiring diagram, **refer to appropriate SYSTEM WIRING DIAGRAMS article** .

WHEN MONITORED

Continuously when the ignition is on.

The battery voltage between 10.0 and 16.0 Volts.

Ignition Off Draw (IOD) fuse installed.

Totally Integrated Power Module (TIPM) is configured correctly.

SET CONDITION

Bus messages not received from the Totally Integrated Power Module (TIPM) for approximately two to five seconds.

POSSIBLE CAUSES

Possible Causes
CAN BUS CIRCUITS OPEN OR SHORTED
DTCS RELATED TO BATTERY VOLTAGE, IGNITION, OR VIN MESSAGES
TOTALLY INTEGRATED POWER MODULE POWER AND GROUND
TIPM NOT CONFIGURED CORRECTLY
TOTALLY INTEGRATED POWER MODULE (TIPM)
MODULE THAT SET THIS DTC

DIAGNOSTIC TEST

VERIFY DTC IS ACTIVE

NOTE: Make sure the IOD fuse is installed and the battery is fully charged before proceeding.

1. Turn the ignition on.
2. With the scan tool, read active DTCs.

   Is this DTC active?

   Yes

   - **Refer to DIAGNOSIS AND TESTING** and perform the U0141-Lost Communication with IPM (FCM/TIPM) diagnostic procedure.

   No

   - **Refer to DIAGNOSIS AND TESTING** and perform the Stored Lost Communication DTCs diagnostic procedure.

U0155-LOST COMMUNICATION WITH CLUSTER/CCN

For a complete wiring diagram, **refer to appropriate SYSTEM WIRING**

DIAGRAMS article .

WHEN MONITORED

Continuously when the ignition is on.

The battery voltage is between 10 and 16 volts.

Ignition Off Draw (IOD) fuse installed.

Totally Integrated Power Module (TIPM) is configured correctly.

SET CONDITION

Bus messages not received from the Instrument Cluster (CCN) for approximately two to five seconds.

POSSIBLE CAUSES

Possible Causes
CAN BUS CIRCUITS OPEN OR SHORTED
DTCS RELATED TO BATTERY VOLTAGE, IGNITION, OR VIN MESSAGES
INSTRUMENT CLUSTER POWER AND GROUND
TIPM NOT CONFIGURED CORRECTLY
INSTRUMENT CLUSTER (CCN)
MODULE THAT SET THIS DTC

DIAGNOSTIC TEST

VERIFY THE DIAGNOSTIC TROUBLE CODE (DTC) IS ACTIVE

NOTE: Make sure the IOD fuse is installed and the battery is fully charged before proceeding.

1. Turn the ignition on.
2. With the scan tool, read active DTCs.

   Is this DTC active?

   Yes

- **Refer to DIAGNOSIS AND TESTING** and perform the U0155-Lost Communication with Cluster/CCN diagnostic procedure.

No

- **Refer to DIAGNOSIS AND TESTING** and perform the Stored Lost Communication DTCs diagnostic procedure.

U0167-LOST COMMUNICATION WITH INTRUSION TRANSCEIVER CONTROL MODULE

For a complete wiring diagram, **refer to appropriate SYSTEM WIRING DIAGRAMS article** .

WHEN MONITORED

Continuously when the ignition is on.

Battery voltage between 10 and 16 volts.

Ignition Off Draw (IOD) fused installed.

Totally Integrated Power Module (TIPM) is configured correctly.

SET CONDITION

Bus messages not received from the Intrusion Transceiver Control Module for approximately two to five seconds.

POSSIBLE CAUSES

Possible Causes
CAN BUS CIRCUITS OPEN OR SHORTED
DTCS RELATED TO BATTERY VOLTAGE, IGNITION, OR VIN MESSAGES
INTRUSION TRANSCEIVER CONTROL MODULE POWER AND GROUND
TIPM NOT CONFIGURED CORRECTLY
INTRUSION TRANSCEIVER CONTROL MODULE
MODULE THAT SET THIS DTC

DIAGNOSTIC TEST

VERIFY DTC IS ACTIVE

NOTE: Make sure the IOD fuse is installed and the battery is fully charged before proceeding.

1. Turn the ignition on.
2. With the scan tool, read active DTCs.

   Is this DTC active?

   Yes

   - **Refer to DIAGNOSIS AND TESTING** and perform the U0167-Lost Communication with Intrusion Transceiver Control Module diagnostic procedure.

   No

   - **Refer to DIAGNOSIS AND TESTING** and perform the Stored Lost Communication DTCs diagnostic procedure.

U0168-LOST COMMUNICATION WITH VEHICLE SECURITY CONTROL MODULE (WIN)

For a complete wiring diagram, **refer to appropriate SYSTEM WIRING DIAGRAMS article** .

WHEN MONITORED

With the ignition on.

Battery voltage between 10 and 16 volts.

Ignition Off Draw (IOD) fuse installed.

Totally Integrated Power Module (TIPM) is configured correctly.

SET CONDITION

Bus messages not received from the Wireless Ignition Node (WIN) for approximately two to five seconds.

POSSIBLE CAUSES

Possible Causes
CAN BUS CIRCUITS OPEN OR SHORTED
DTCS RELATED TO BATTERY VOLTAGE, IGNITION, OR VIN MESSAGES
WIRELESS IGNITION NODE POWER AND GROUND
TIPM NOT CONFIGURED CORRECTLY
WIRELESS IGNITION NODE (WIN)
MODULE THAT SET THIS DTC

DIAGNOSTIC TEST

VERIFY DTC IS ACTIVE

NOTE: Make sure the IOD fuse is installed and the battery is fully charged before proceeding.

1. Turn the ignition on.
2. With the scan tool, read active DTCs.

   Is this DTC active?

   Yes

   - **Refer to DIAGNOSIS AND TESTING** and perform the U0168-Lost Communication with Vehicle Security Control Module (WIN) diagnostic procedure.

   No

   - **Refer to DIAGNOSIS AND TESTING** and perform the Stored Lost Communication DTCs diagnostic procedure.

U0170-LOST COMMUNICATION W/UP-FRONT LEFT SATELLITE ACCELERATION SENSOR

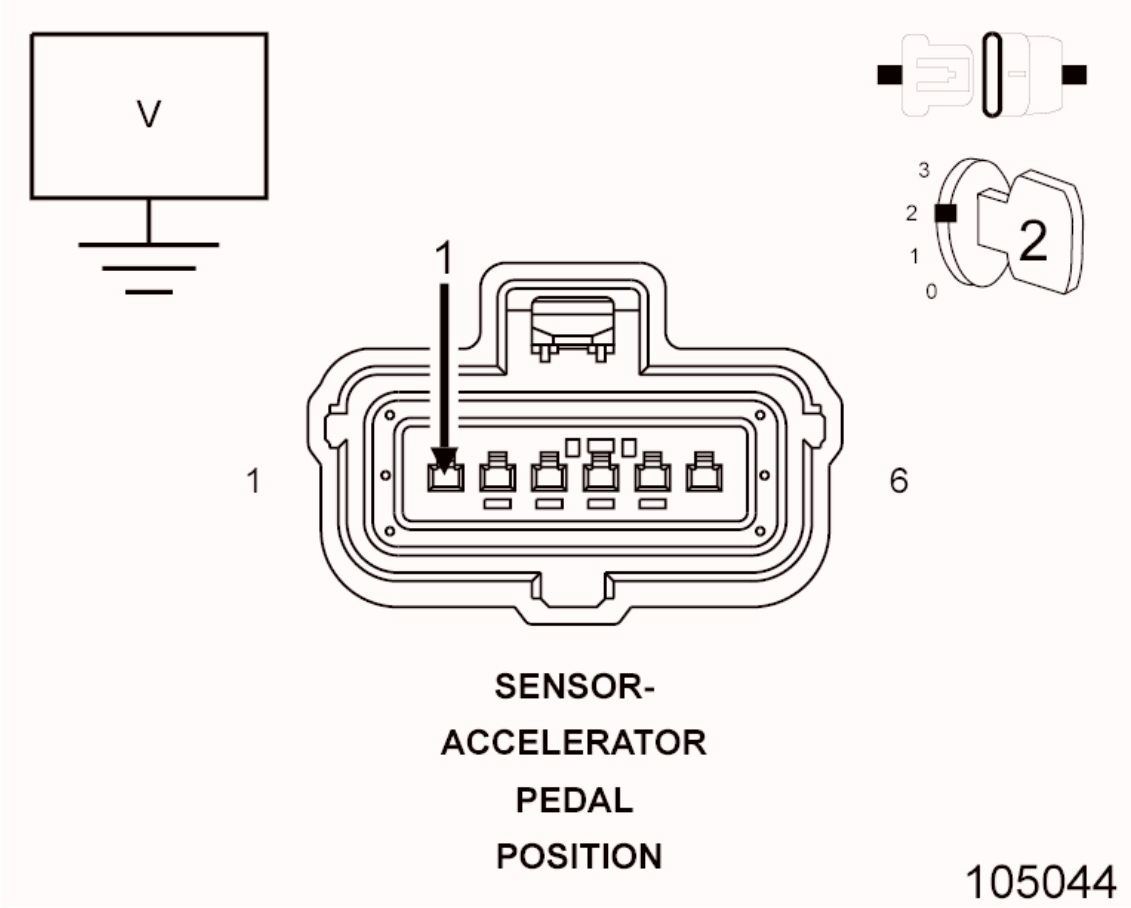

Fig. 88: Front Impact Sensors & ORC Module Circuit Schematic
Courtesy of CHRYSLER GROUP, LLC

For a complete wiring diagram, **refer to appropriate SYSTEM WIRING DIAGRAMS article** .

WHEN MONITORED

The Occupant Restraint Controller (ORC) continuously communicates with the Front Left Impact Sensor over the sensor signal circuit. The sensor communication and on board diagnostics are powered by the ORC signal.

SET CONDITION

This code will set, if the ORC and the Front Left Impact Sensor do not establish and maintain valid data communications.

POSSIBLE CAUSES

Possible Causes
(R79) SIGNAL CIRCUIT SHORTED TO BATTERY

(R79) SIGNAL CIRCUIT SHORTED TO GROUND
(R79, R81) FRONT LEFT IMPACT SENSOR CIRCUITS SHORTED TOGETHER
(R81) FRONT LEFT IMPACT SENSOR GROUND CIRCUIT OPEN
(R79) FRONT LEFT IMPACT SENSOR SIGNAL CIRCUIT OPEN
OCCUPANT RESTRAINT CONTROLLER (ORC)

DIAGNOSTIC TEST

1. **VERIFY THAT DTC U0170-LOST COMMUNICATION W/UP-FRONT LEFT SATELLITE ACCELERATION SENSOR IS ACTIVE**

WARNING: Turn the ignition off disconnect the 12-volt battery and wait two minutes before proceeding. Failure to follow these instructions may result in possible serious or fatal injury.

NOTE: Using the wiring diagram/schematic as a guide check all related splices and connectors for signs of water intrusion, corrosion, pushed out or bent terminals, and correct pin tension.

NOTE: If after the harness inspection it appears the impact sensor connector is only seated halfway. Reseat the harness connector into the impact sensor and lock the tab.

WARNING: Turn the ignition on, then reconnect the 12-volt battery and wait two minutes before proceeding. Failure to follow these instructions may result in possible serious or fatal injury.

NOTE: Make sure the battery is fully charged.

1. Turn the ignition on.
2. With the scan tool, read ORC DTCs.

Does the scan tool display active: U0170-LOST COMMUNICATION W/UP-FRONT LEFT SATELLITE ACCELERATION SENSOR?

Yes

- Go To 2

No

- Go To 9

2. **CHECK THE (R79) AND (R81) FRONT LEFT IMPACT SENSOR SIGNAL AND GROUND CIRCUITS FOR A SHORT TO BATTERY**

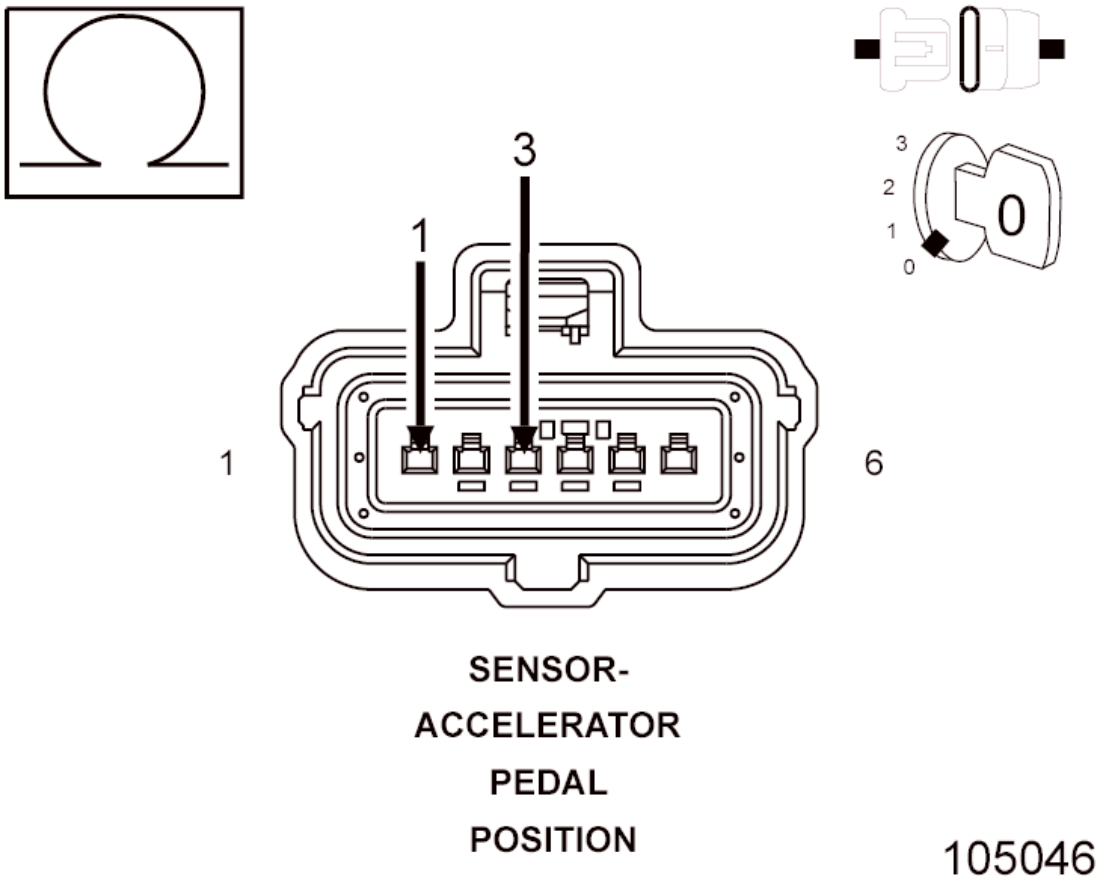

Fig. 89: Checking Front Left Impact Sensor Signal & Ground Circuits For A Short To Battery
Courtesy of CHRYSLER GROUP, LLC

WARNING: Turn the ignition off disconnect the 12-volt battery and wait two minutes before proceeding. Failure to follow these

instructions may result in possible serious or fatal injury.

1. Disconnect the Front Left Impact Sensor harness connector.
2. Disconnect the ORC harness connectors.
3. Connect the SRS Load Tool Adaptor (special tool #8443-25, 56 Way ACM Adapter) to the ORC harness connectors.

WARNING: **Turn the ignition on, then reconnect the 12-volt battery and wait two minutes before proceeding. Failure to follow these instructions may result in possible serious or fatal injury.**

4. Measure the voltage of the (R79) Front Left Impact Sensor Signal circuit and the (R81) Front Left Impact Sensor Ground circuit at the Front Left Impact Sensor connector.

   Is there any voltage present?

   Yes

   - Repair the (R79) and (R81) Front Left Impact Sensor circuits for a short to battery.
   - Perform the AIRBAG SYSTEM VERIFICATION TEST. Refer to **STANDARD PROCEDURE** .

   No

   - Go To 3

3. **CHECK THE (R79) AND (R81) FRONT LEFT IMPACT SENSOR CIRCUITS FOR A SHORT TO GROUND**

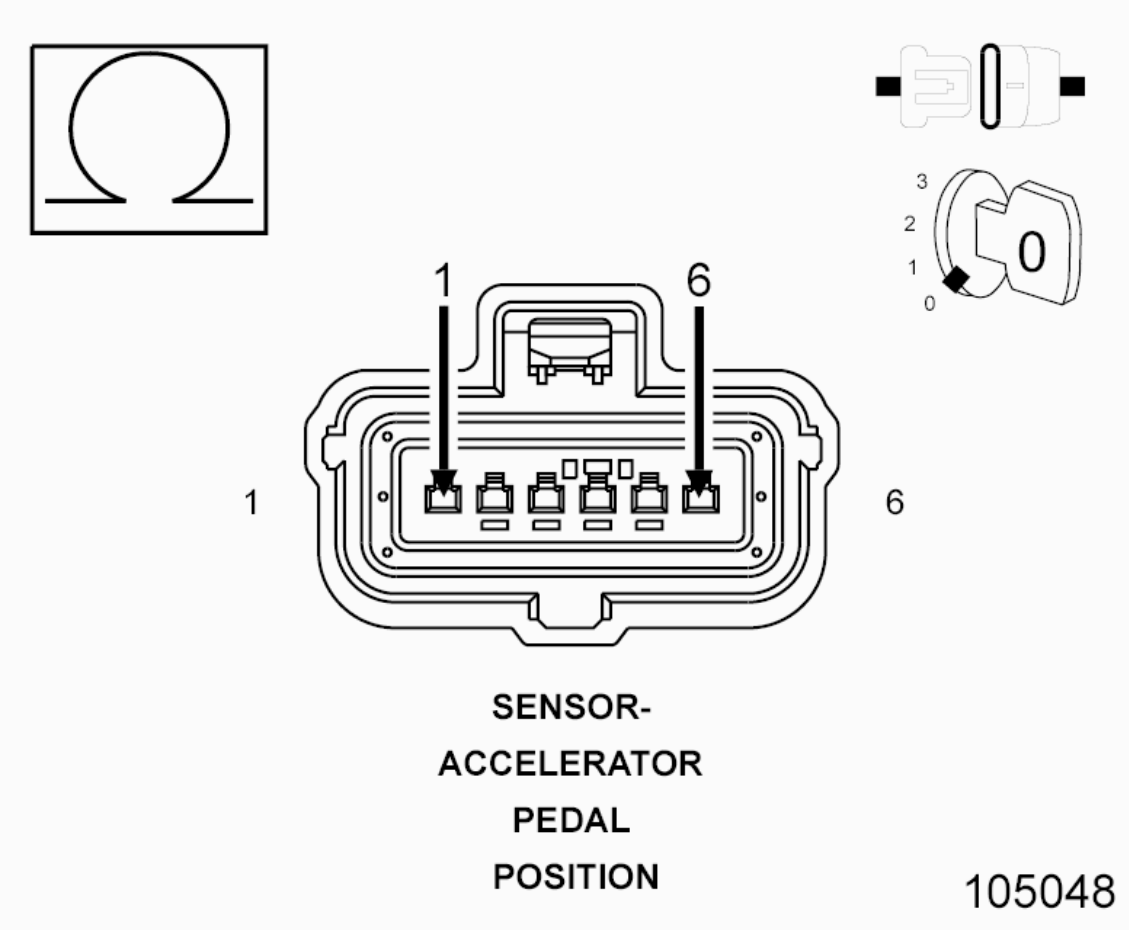

Fig. 90: Checking Front Left Impact Sensor Circuits For A Short To Ground
Courtesy of CHRYSLER GROUP, LLC

WARNING: **Turn the ignition off disconnect the 12-volt battery and wait two minutes before proceeding. Failure to follow these instructions may result in possible serious or fatal injury.**

1. Measure the resistance between ground and the (R79) Front Left Impact Sensor Signal circuit and the (R81) Front Left Impact Sensor Ground circuit at the Front Left Impact Sensor connector.

   Is the resistance below 100K Ohms?

   Yes

   - Repair the (R79) and (R81) Front Left Impact Sensor circuits for a

short to ground.

- Perform the AIRBAG SYSTEM VERIFICATION TEST. Refer to **STANDARD PROCEDURE** .

No

- Go To 4

4. **CHECK THE (R79) AND (R81) FRONT LEFT IMPACT SENSOR CIRCUITS FOR A SHORT TOGETHER**

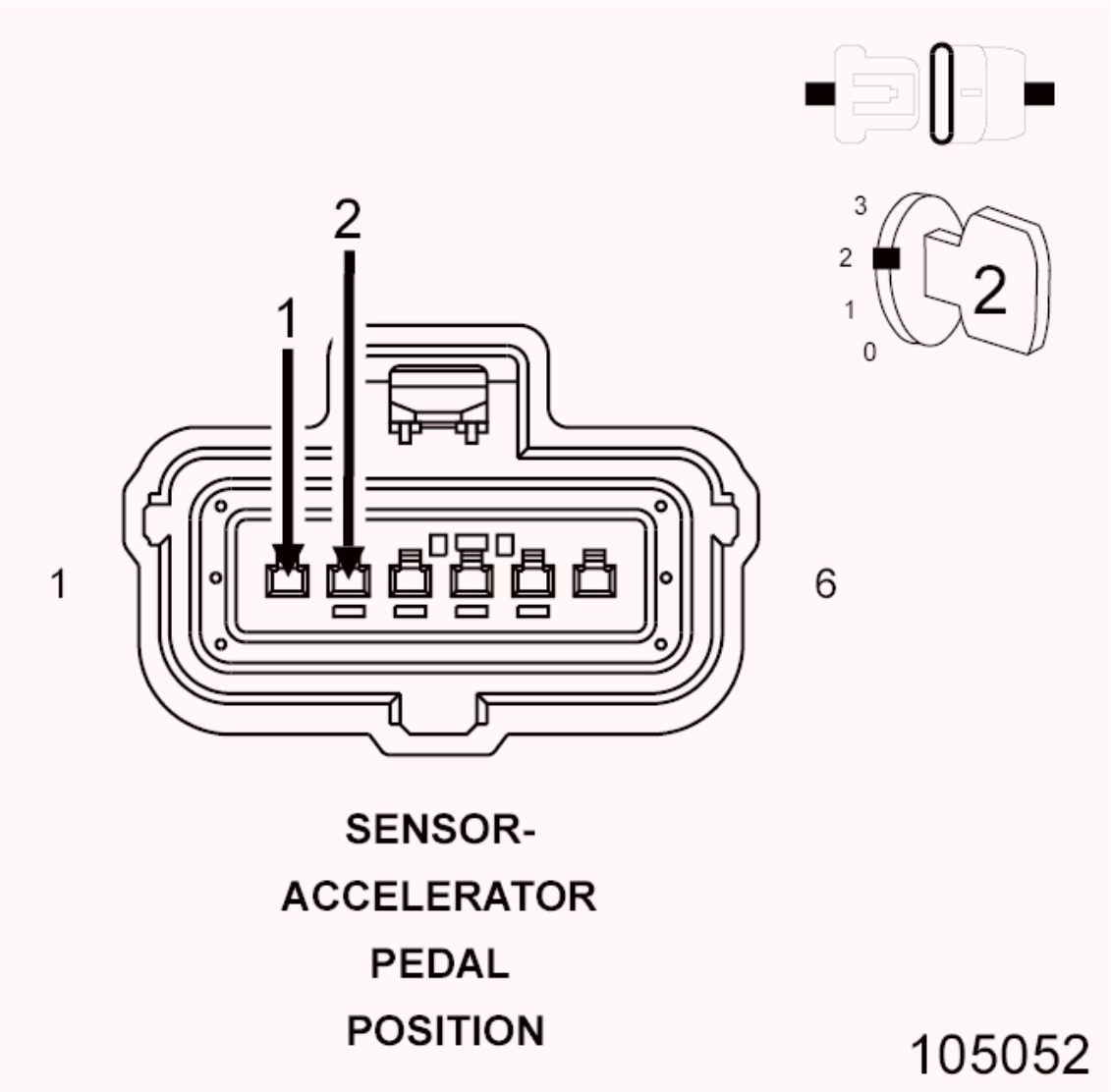

Fig. 91: Checking Front Left Impact Sensor Circuits For A Short Together
Courtesy of CHRYSLER GROUP, LLC

1. Measure the resistance between the (R79) Front Left Impact Sensor

Signal and the (R81) Front Left Impact Sensor Ground circuits at the Front Left Impact Sensor harness connector.

Is the resistance below 100K Ohms?

Yes

- Repair the (R79) and (R81) Front Left Impact Sensor circuits shorted together.
- Perform the AIRBAG SYSTEM VERIFICATION TEST. Refer to **STANDARD PROCEDURE** .

No

- Go To 5

5. **CHECK THE (R81) FRONT LEFT IMPACT SENSOR GROUND CIRCUIT FOR AN OPEN OR HIGH RESISTANCE**

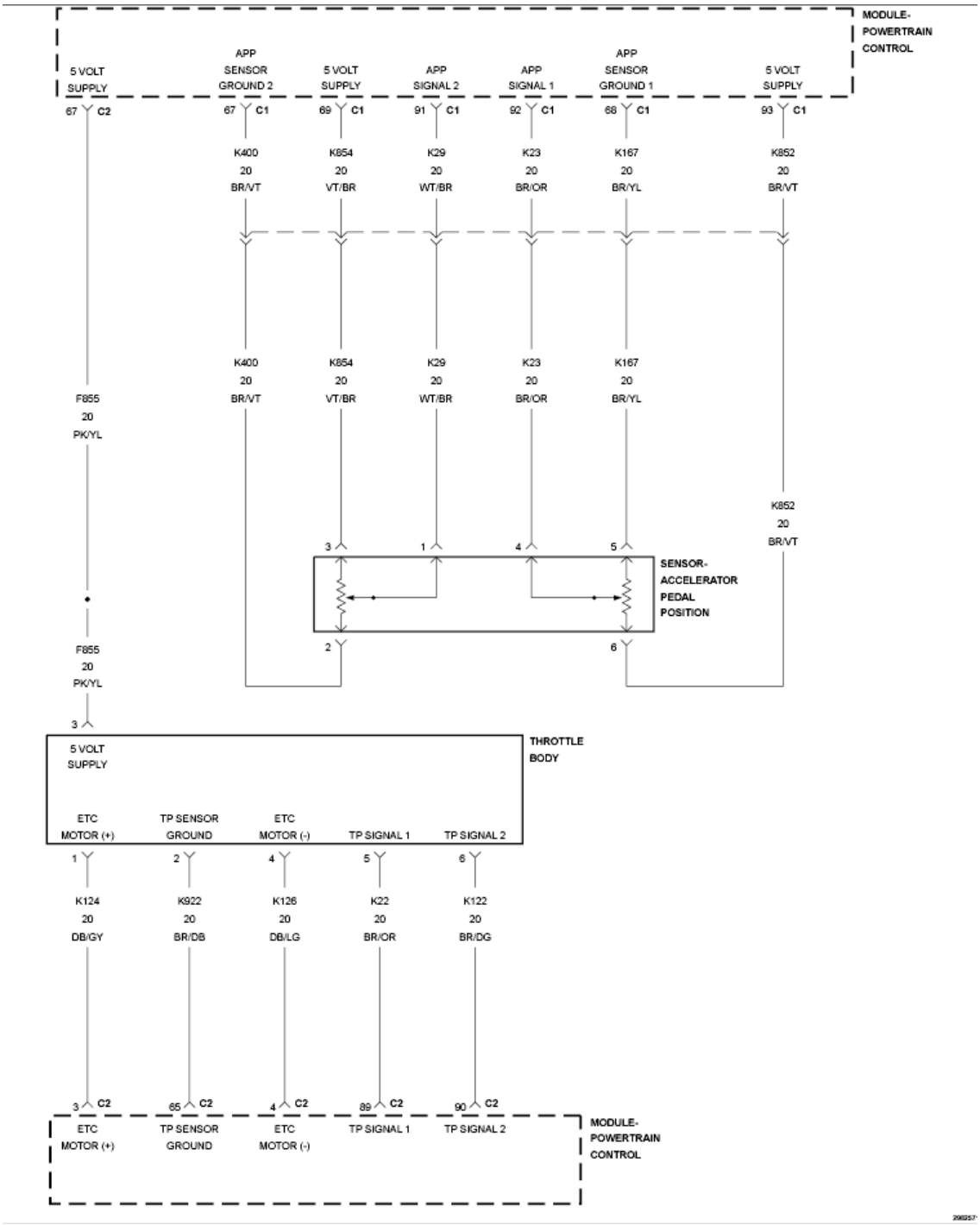

Fig. 92: Checking Front Left Impact Sensor Ground Circuit For Open Or High Resistance
Courtesy of CHRYSLER GROUP, LLC

1. Measure the resistance of the (R81) Front Left Impact Sensor Ground circuit between the Front Left Impact Sensor harness connector and the SRS Load Tool Adaptor (special tool #8443-25, 56 Way ACM Adapter).

Is the resistance below 1 Ohm?

Yes

- Go To 6

No

- Repair the (R81) Front Left Impact Sensor Ground circuit for an open or high resistance.
- Perform the AIRBAG SYSTEM VERIFICATION TEST. Refer to **STANDARD PROCEDURE** .

6. **CHECK THE (R79) FRONT LEFT IMPACT SENSOR CIRCUIT FOR AN OPEN OR HIGH RESISTANCE**

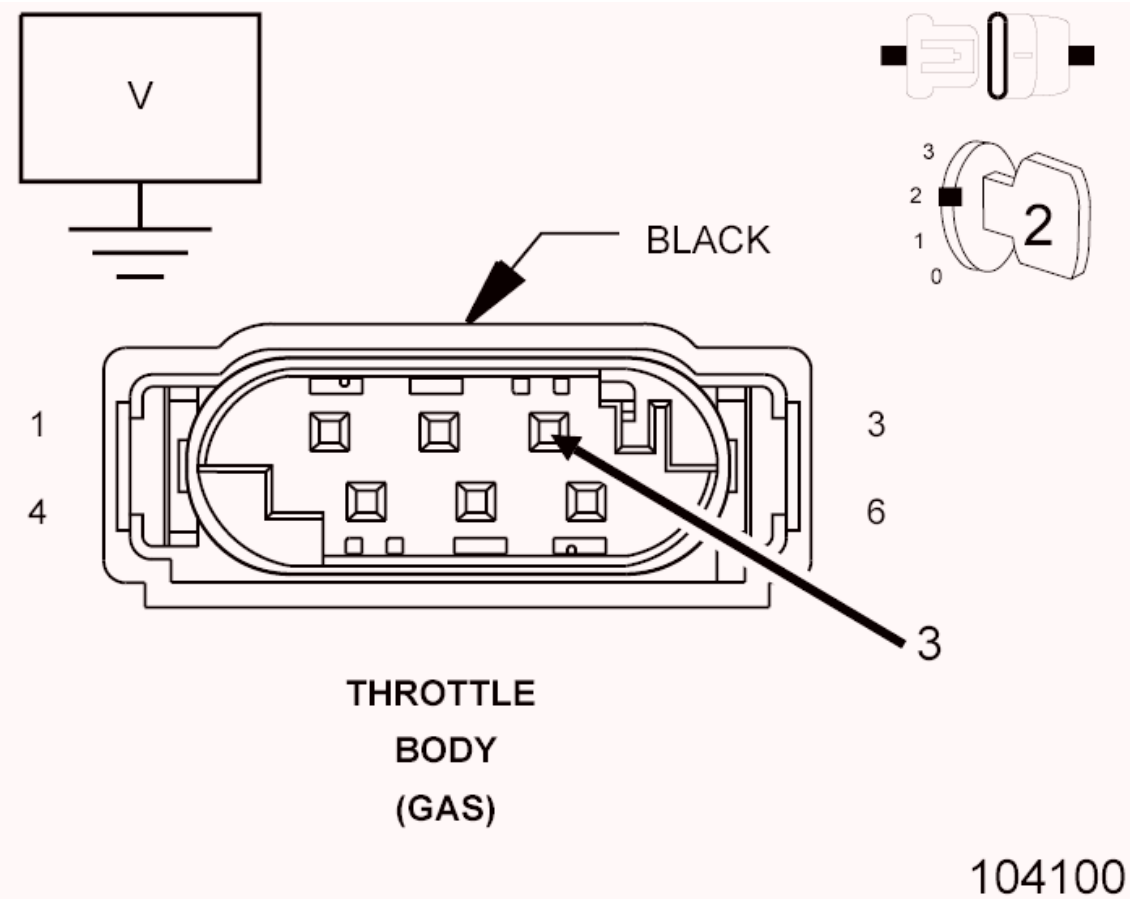

Fig. 93: Checking Front Left Impact Sensor Circuit For Open Or High Resistance
Courtesy of CHRYSLER GROUP, LLC

1. Measure the resistance of the (R79) Front Left Impact Sensor Signal

circuit between the Front Left Impact Sensor harness connector and the SRS Load Tool Adaptor (special tool #8443-25, 56 Way ACM Adapter).

Is the resistance below 1 Ohm?

Yes

- Go To 7

No

- Repair the (R79) Front Left Impact Sensor Signal circuit for an open or high resistance.
- Perform the AIRBAG SYSTEM VERIFICATION TEST. Refer to **STANDARD PROCEDURE** .

7. **CHECK OPERATION OF THE FRONT LEFT IMPACT SENSOR**
   1. Replace the Front Left Impact Sensor.
   2. Reconnect the vehicle body harness to the impact sensor.
   3. Remove any special tools or jumper wires and reconnect all previously disconnected components - except the Battery.

      WARNING: **Turn the ignition on, then reconnect the 12-volt battery and wait two minutes before proceeding. Failure to follow these instructions may result in possible serious or fatal injury.**

   4. Connect the scan tool to the Data Link Connector - use the most current software available.
   5. Use the scan tool and erase the stored codes in all airbag system modules.
   6. Turn the Ignition Off, and wait 15 seconds before turning the Ignition On.
   7. Wait one minute, and read active codes and if there are none present read the stored codes.

      Did the active Front Left Impact Sensor DTC return?

Yes

- Go To 8

No

- Repair is complete.
- Perform the AIRBAG SYSTEM VERIFICATION TEST. Refer to **STANDARD PROCEDURE** .

8. **REPLACE THE OCCUPANT RESTRAINT CONTROLLER**

WARNING: **Turn the ignition off disconnect the 12-volt battery and wait two minutes before proceeding. Failure to follow these instructions may result in possible serious or fatal injury.**

WARNING: **If the airbag control module is dropped at any time, it must be replaced. Failure to take the proper precautions could result in accidental airbag deployment and serious or fatal injury.**

1. Disconnect the SRS Load Tool Adaptor (special tool #8443-25, 56 Way ACM Adapter).

   If there are no possible causes remaining, view repair.

   Repair

   - Replace the Occupant Restraint Controller in accordance with Service Information.
   - Perform the AIRBAG SYSTEM VERIFICATION TEST. Refer to **STANDARD PROCEDURE** .

9. **TEST FOR AN INTERMITTENT CONDITION**
   1. With the scan tool, record and erase all DTCs from all Airbag modules.
   2. If any ACTIVE codes are present they must be resolved before diagnosing any stored codes.

WARNING: Turn the ignition off, disconnect the 12-volt battery and wait two minutes before proceeding. Failure to follow these instructions may result in possible serious or fatal injury.

3. Using the wiring diagram / schematic as a guide, inspect the wiring and connectors.
4. Look for chafed, pierced, pinched, or partially broken wires and broken, bent, pushed out, spread, corroded, or contaminated terminals.
5. The following additional checks may assist you in identifying a possible intermittent problem.
6. Reconnect any disconnected components and harness connector.

WARNING: Turn the ignition on, then reconnect the 12-volt battery and wait two minutes before proceeding. Failure to follow these instructions may result in possible serious or fatal injury.

7. With the scan tool monitor active codes as you work through the following steps.

WARNING: Maintain a safe distance from all airbags while performing the following steps. Failure to follow these instructions may result in possible serious or fatal injury.

8. Wiggle the wiring harness and connectors of the related airbag circuit or component.
9. If codes are related to the Driver Airbag circuits, rotate the steering wheel from stop to stop.
10. If only stored codes return continue the test until the problem area has been isolated.
11. In the previous steps you have attempted to recreate the conditions responsible for setting active DTC in question.

Are any ACTIVE DTCs present?

Yes

- Perform the appropriate diagnostic procedure. Refer to **DTC INDEX** .

No

- No problem found at this time. Erase all codes before returning vehicle to customer.

U0171-LOST COMMUNICATION W/UP-FRONT RIGHT SATELLITE ACCELERATION SENSOR

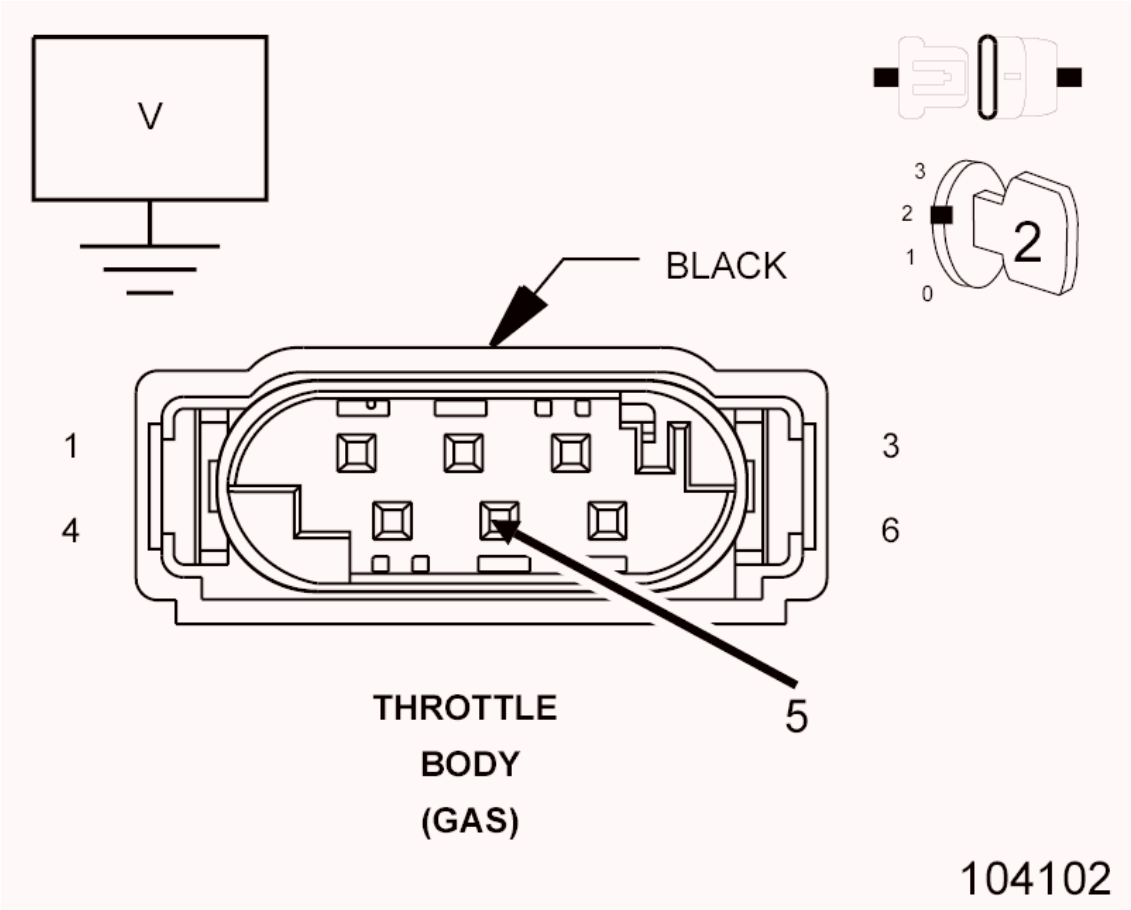

Fig. 94: Front Impact Sensors & ORC Module Circuit Schematic
Courtesy of CHRYSLER GROUP, LLC

For a complete wiring diagram, **refer to appropriate SYSTEM WIRING DIAGRAMS article** .

WHEN MONITORED

The Occupant Restraint Controller (ORC) continuously communicates with the Front Right Impact Sensor over the sensor signal circuit. The sensor communication and on board diagnostics are powered by the ORC signal.

SET CONDITION

This code will set, if the ORC and the Front Right Impact Sensor do not establish and maintain valid data communications.

POSSIBLE CAUSES

Possible Causes
(R80) SIGNAL CIRCUIT SHORTED TO BATTERY
(R80) SIGNAL CIRCUIT SHORTED TO GROUND
(R80, R82) FRONT RIGHT IMPACT SENSOR CIRCUITS SHORTED TOGETHER
(R82) FRONT RIGHT IMPACT SENSOR GROUND CIRCUIT OPEN
(R80) FRONT RIGHT IMPACT SENSOR SIGNAL CIRCUIT OPEN
OCCUPANT RESTRAINT CONTROLLER (ORC)

DIAGNOSTIC TEST

1. **VERIFY THAT DTC U0171-LOST COMMUNICATION W/UP-FRONT RIGHT SATELLITE ACCELERATION SENSOR IS ACTIVE**

WARNING: **Turn the ignition off disconnect the 12-volt battery and wait two minutes before proceeding. Failure to follow these instructions may result in possible serious or fatal injury.**

NOTE: **Using the wiring diagram/schematic as a guide check all related splices and connectors for signs of water intrusion, corrosion, pushed out or bent terminals, and correct pin tension.**

NOTE: **If after the harness inspection it appears the impact**

sensor connector is only seated halfway. Reseat the harness connector into the impact sensor and lock the tab.

WARNING: **Turn the ignition on, then reconnect the 12-volt battery and wait two minutes before proceeding. Failure to follow these instructions may result in possible serious or fatal injury.**

NOTE: Make sure the battery is fully charged.

1. Turn the ignition on.
2. With the scan tool, read ORC DTCs.

   Does the scan tool display active: U0171-LOST COMMUNICATION W/UP-FRONT RIGHT SATELLITE ACCELERATION SENSOR?

   Yes

   - Go To 2

   No

   - Go To 9

2. **CHECK THE (R80) AND (R82) FRONT RIGHT IMPACT SENSOR CIRCUITS FOR A SHORT TO BATTERY**

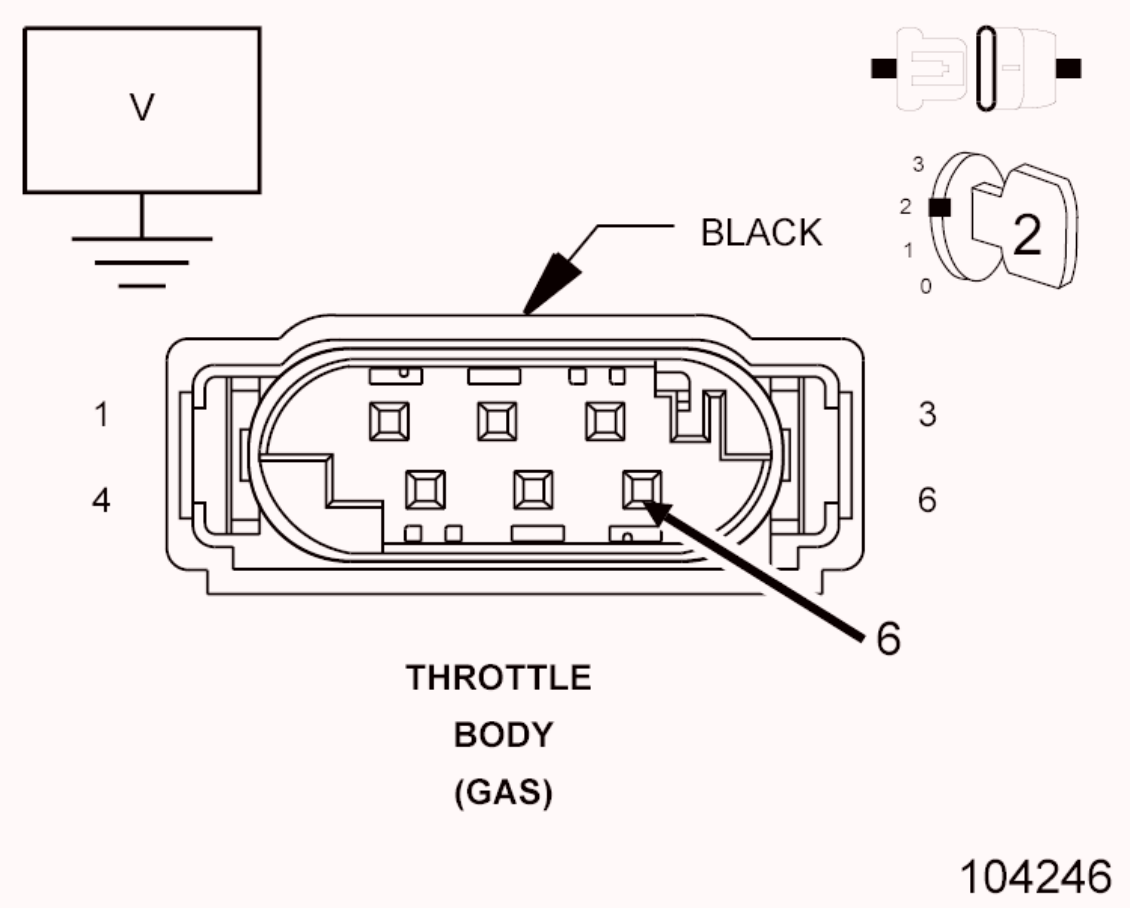

Fig. 95: Checking Front Right Impact Sensor Circuits For Short To Battery
Courtesy of CHRYSLER GROUP, LLC

WARNING: Turn the ignition off, disconnect the 12-volt battery and wait two minutes before proceeding. Failure to follow these instructions may result in possible serious or fatal injury.

1. Disconnect the Front Right Impact Sensor harness connector.
2. Disconnect the ORC harness connectors.
3. Connect the SRS Load Tool Adaptor (special tool #8443-25, 56 Way ACM Adapter) to the ORC harness connector.

WARNING: Turn the ignition on, then reconnect the 12-volt battery and wait two minutes before proceeding. Failure to follow these instructions may result in possible

serious or fatal injury.

4. Measure the voltage of the (R80) Front Right Impact Sensor Signal circuit and the (R82) Sensor Ground circuit at the Front Right Impact Sensor harness connector.

   Is there any voltage present?

   Yes

   - Repair the (R80) and (R82) Front Right Impact Sensor circuits for a short to battery.
   - Perform the AIRBAG SYSTEM VERIFICATION TEST. Refer to **STANDARD PROCEDURE** .

   No

   - Go To 3

3. **CHECK THE (R80) AND (R82) FRONT RIGHT IMPACT SENSOR CIRCUITS FOR A SHORT TO GROUND**

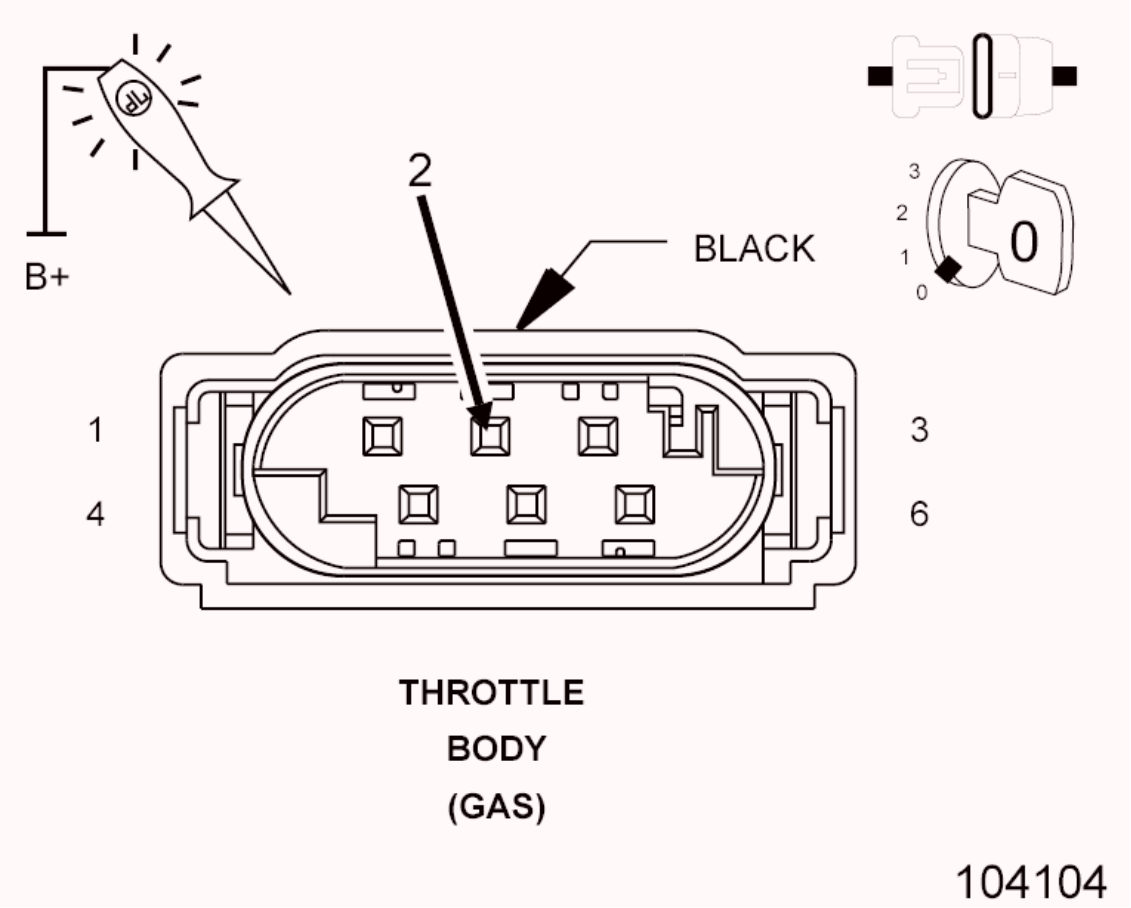

Fig. 96: Checking Front Right Impact Sensor Circuits For Short To Ground
Courtesy of CHRYSLER GROUP, LLC

WARNING: Turn the ignition on, then reconnect the battery and wait two minutes before proceeding. Failure to follow these instructions may result in possible serious or fatal injury.

1. Measure the resistance between ground and the (R80) and (R82) Front Right Impact Sensor circuits at the Front Right Impact Sensor harness connector.

   Is the resistance below 100K Ohms?

   Yes

   - Repair the (R80) and (R82) Front Right Impact Sensor circuits for a short to ground.

- Perform the AIRBAG SYSTEM VERIFICATION TEST. Refer to **STANDARD PROCEDURE** .

No

- Go To 4

4. **CHECK THE (R80) AND (R82) FRONT RIGHT IMPACT SENSOR CIRCUITS FOR A SHORT TOGETHER**

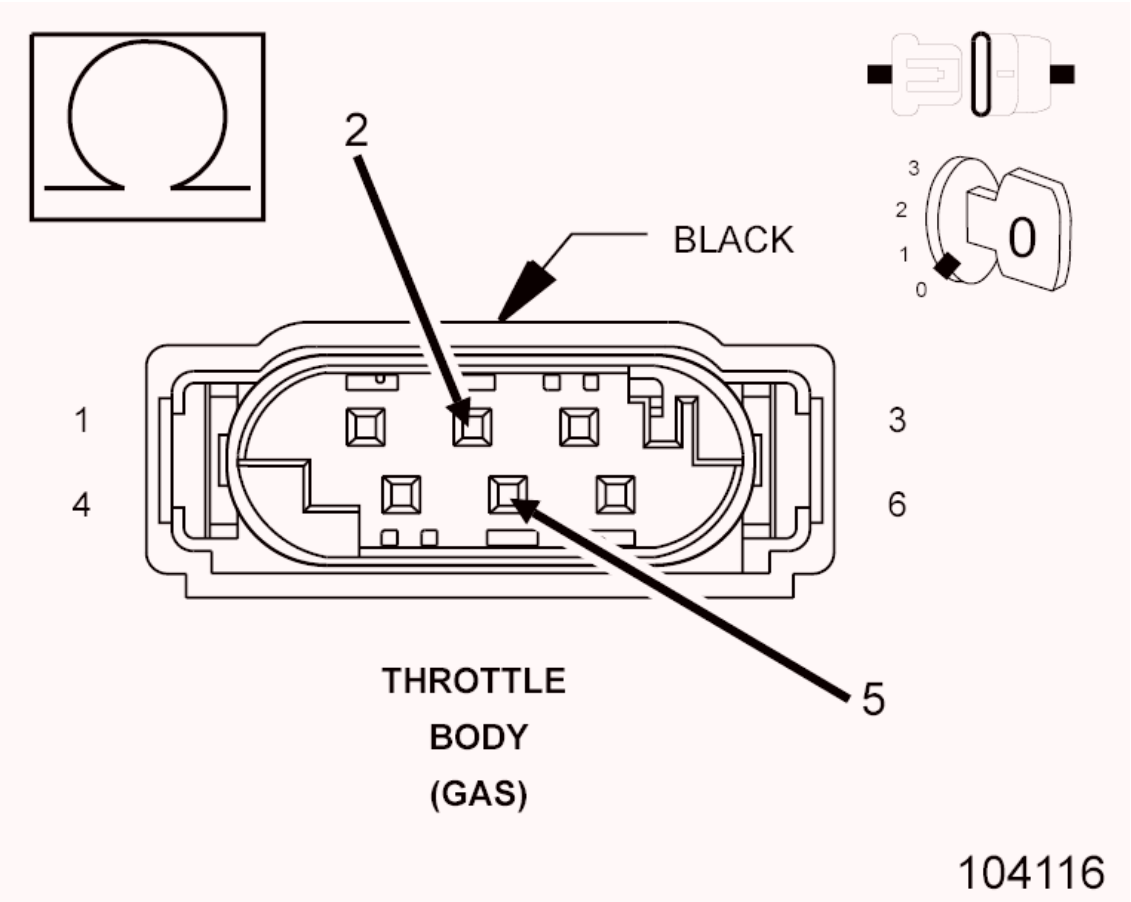

Fig. 97: Checking Front Right Impact Sensor Circuits For Short Together
Courtesy of CHRYSLER GROUP, LLC

1. Measure the resistance between the (R80) Front Right Impact Sensor Signal circuit and the (R82) Sensor Ground circuit at the Front Right Impact Sensor harness connector.

   Is the resistance below 100K ohms?

   Yes

- Repair the (R80) and (R82) Front Right Impact Sensor circuits shorted together.
- Perform the AIRBAG SYSTEM VERIFICATION TEST. Refer to **STANDARD PROCEDURE** .

No

- Go To 5

5. **CHECK THE (R82) FRONT RIGHT IMPACT SENSOR GROUND CIRCUIT FOR AN OPEN OR HIGH RESISTANCE**

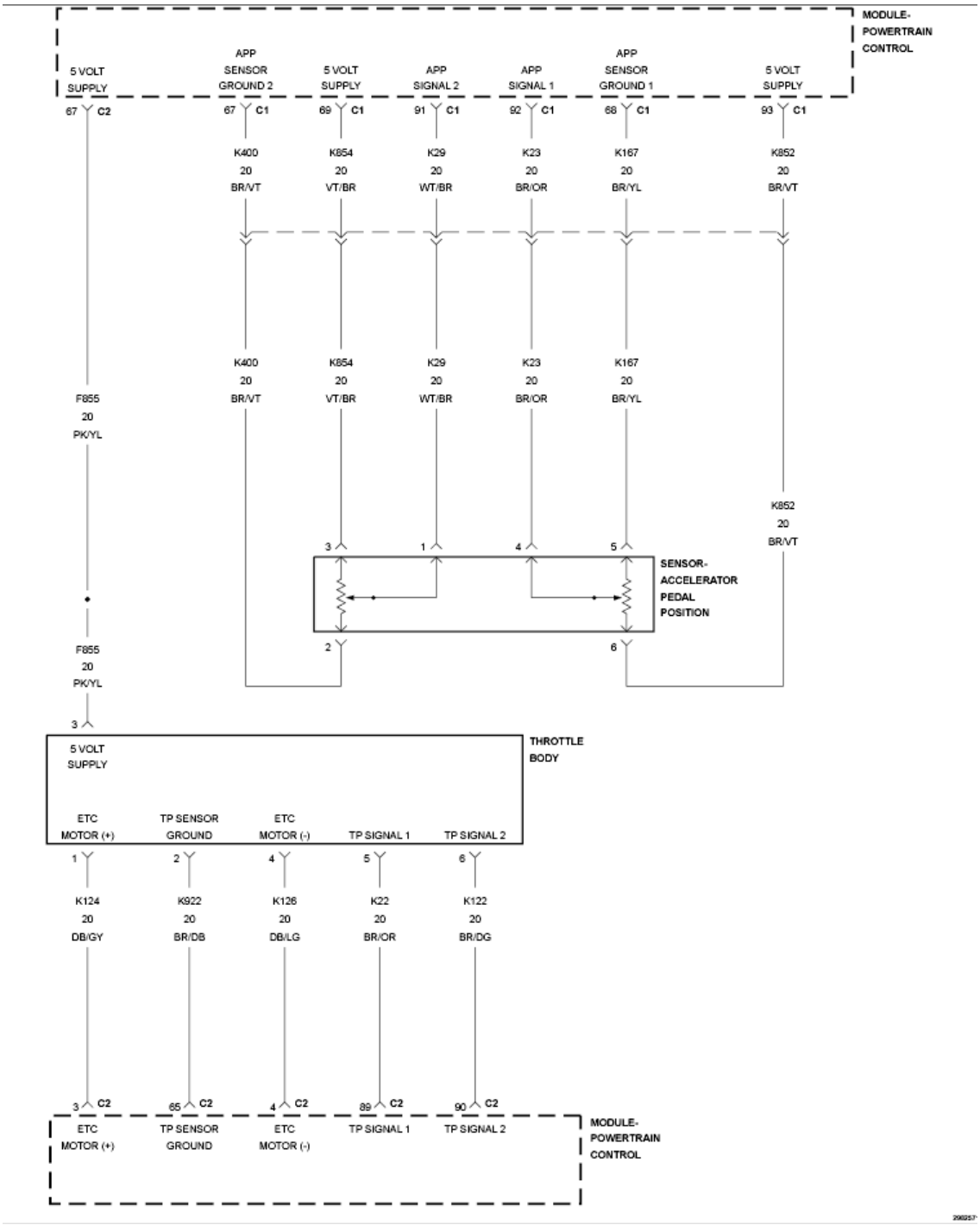

Fig. 98: Checking Front Right Impact Sensor Ground Circuit For Open Or High Resistance
Courtesy of CHRYSLER GROUP, LLC

1. Measure the resistance of the (R82) Front Right Impact Sensor Ground circuit between the Front Right Impact Sensor harness connector and the SRS Load Tool Adaptor (special tool #8443-25, 56 Way ACM Adapter).

Is the resistance below 1 Ohm?

Yes

- Go To 6

No

- Repair the (R82) Front Right Impact Sensor Ground circuit for an open or high resistance.
- Perform the AIRBAG SYSTEM VERIFICATION TEST. Refer to **STANDARD PROCEDURE** .

6. **CHECK THE (R80) FRONT RIGHT IMPACT SENSOR SIGNAL CIRCUIT FOR AN OPEN OR HIGH RESISTANCE**

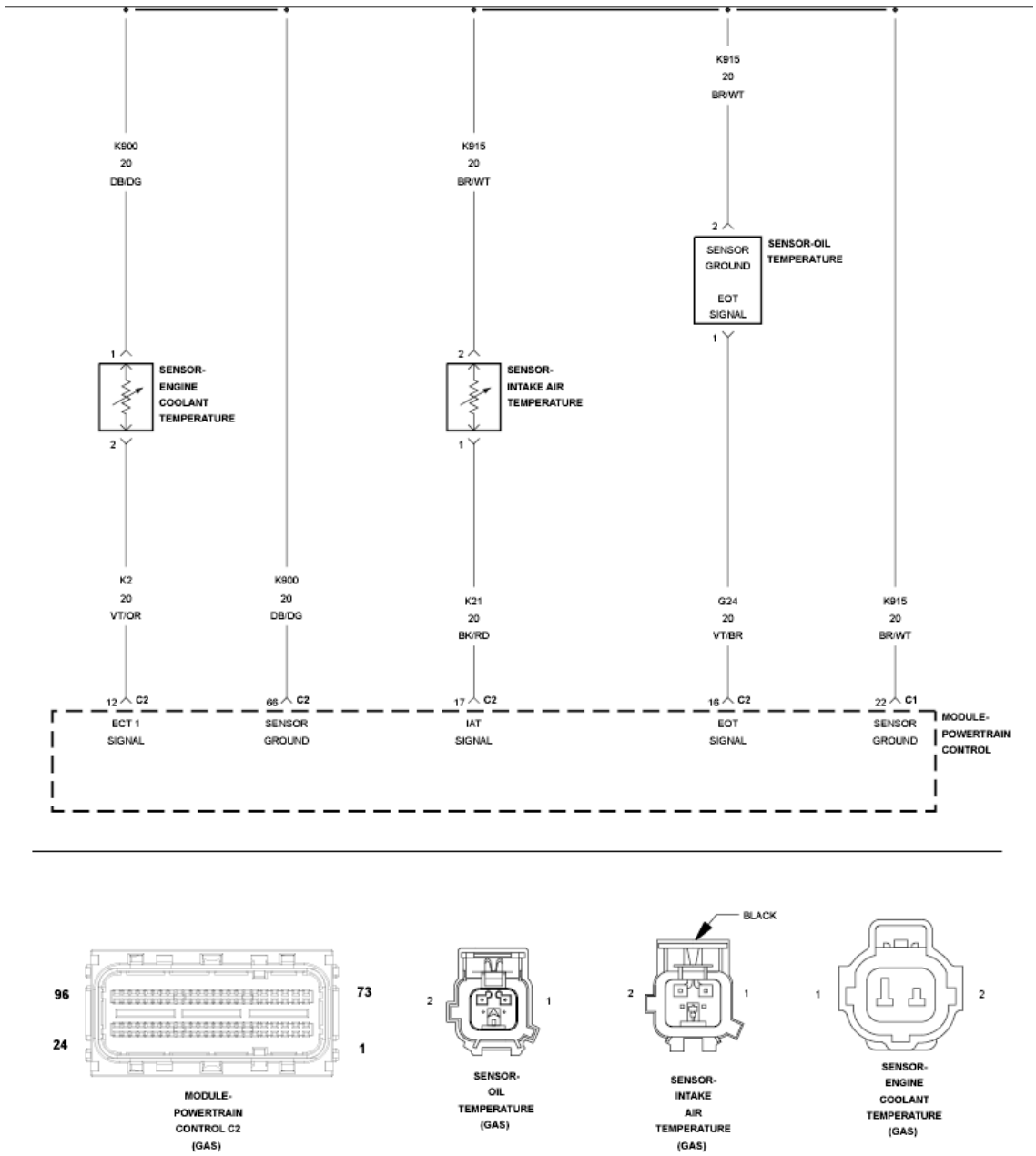

Fig. 99: Checking Front Right Impact Sensor Signal Circuit For Open Or High Resistance
Courtesy of CHRYSLER GROUP, LLC

1. Measure the resistance of the (R80) Front Right Impact Sensor Signal circuit between the Front Right Impact Sensor harness connector and the SRS Load Tool Adaptor (special tool #8443-25, 56 Way ACM Adapter).

   Is the resistance below 1 Ohm?

Yes

- Go To 7

No

- Repair the (R80) Front Right Impact Sensor Signal circuit for an open or high resistance.
- Perform the AIRBAG SYSTEM VERIFICATION TEST. Refer to **STANDARD PROCEDURE** .

7. **CHECK OPERATION OF THE FRONT RIGHT IMPACT SENSOR**
   1. Replace the Front Right Impact Sensor.
   2. Reconnect the vehicle body harness to the impact sensor.
   3. Remove any special tools or jumper wires and reconnect all previously disconnected components - except the Battery.

      WARNING: **Turn the ignition on, then reconnect the 12-volt battery and wait two minutes before proceeding. Failure to follow these instructions may result in possible serious or fatal injury.**

   4. Connect the scan tool to the Data Link Connector - use the most current software available.
   5. Use the scan tool and erase the stored codes in all airbag system modules.
   6. Turn the Ignition Off, and wait 15 seconds before turning the Ignition On.
   7. Wait one minute, and read active codes and if there are none present read the stored codes.

      Did the active Front Right Impact Sensor DTC return?

      Yes

      - Go To 8

      No

- Repair is complete.
- Perform the AIRBAG SYSTEM VERIFICATION TEST. Refer to **STANDARD PROCEDURE** .

8. **REPLACE THE OCCUPANT RESTRAINT CONTROLLER**

WARNING: **Turn the ignition off disconnect the 12-volt battery and wait two minutes before proceeding. Failure to follow these instructions may result in possible serious or fatal injury.**

WARNING: **If the airbag control module is dropped at any time, it must be replaced. Failure to take the proper precautions could result in accidental airbag deployment and serious or fatal injury.**

If there are no possible causes remaining, view repair.

Repair

- Replace the Occupant Restraint Controller in accordance with Service Instructions.
- Perform the AIRBAG SYSTEM VERIFICATION TEST. Refer to **STANDARD PROCEDURE** .

9. **TEST FOR AN INTERMITTENT CONDITION**
   1. With the scan tool, record and erase all DTC's from all Airbag modules.
   2. If any ACTIVE codes are present they must be resolved before diagnosing any stored codes.

WARNING: **Turn the ignition off disconnect the 12-volt battery and wait two minutes before proceeding. Failure to follow these instructions may result in possible serious or fatal injury.**

   3. Using the wiring diagram/schematic as a guide, inspect the wiring and connectors.

4. Look for chafed, pierced, pinched, or partially broken wires and broken, bent, pushed out, spread, corroded, or contaminated terminals.
5. The following additional checks may assist you in identifying a possible intermittent problem.
6. Reconnect any disconnected components and harness connector.

WARNING: Turn the ignition on, then reconnect the 12-volt battery and wait two minutes before proceeding. Failure to follow these instructions may result in possible serious or fatal injury.

7. With the scan tool monitor active codes as you work through the following steps.

WARNING: Maintain a safe distance from all airbags while performing the following steps. Failure to follow these instructions may result in possible serious or fatal injury.

8. Wiggle the wiring harness and connectors of the related airbag circuit or component.
9. If codes are related to the Driver Airbag circuits, rotate the steering wheel from stop to stop.
10. If only stored codes return continue the test until the problem area has been isolated.
11. In the previous steps you have attempted to recreate the conditions responsible for setting active DTC in question.

    Are any ACTIVE DTCs present?

    Yes

    - Perform the appropriate diagnostic procedure. Refer to **DTC INDEX** .

    No

- No problem found at this time. Erase all codes before returning vehicle to customer.

U0172-LOST COMMUNICATION W/LEFT SIDE SATELLITE ACCELERATION SENSOR 1

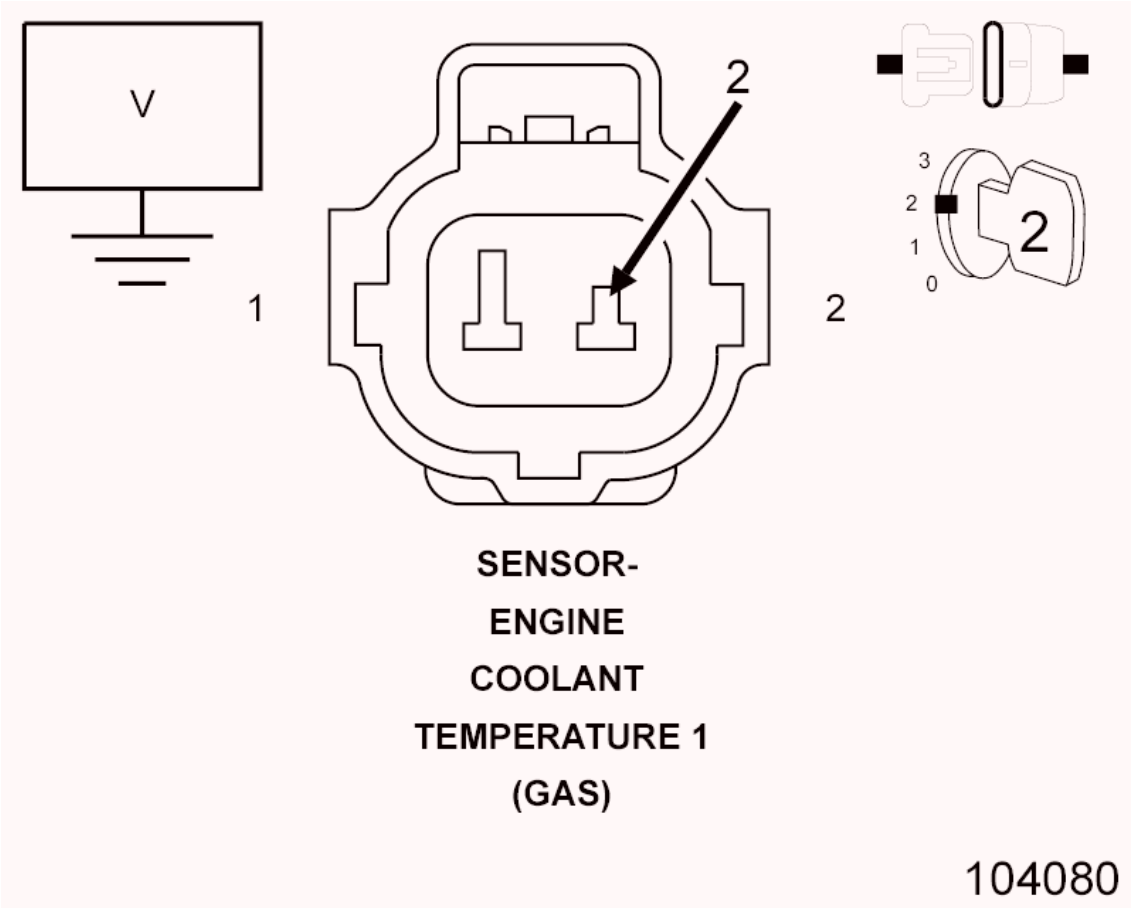

Fig. 100: Left Side Impact Sensors & ORC Module Circuit Schematic
Courtesy of CHRYSLER GROUP, LLC

For a complete wiring diagram, **refer to appropriate SYSTEM WIRING DIAGRAMS article** .

THEORY OF OPERATION

The location of this left side impact sensor 1 is in the B-pillar just past the first row seating. Refer to **DESCRIPTION** . The impact sensors perform their own self test using power supplied by the Occupant Restraint Controller (ORC) then communicate this status back to the ORC with periodic updates. The repair of this fault condition involves verifying the integrity of the wiring between the ORC and the sensor. If the scan tool shows this DTC has a Stored history of setting then the left side impact sensor is to be replaced. A short to voltage fault

on the left side impact sensor 1 sensor wiring can cause a loss of comm impact sensor code to set and the possible replacement of a good left side impact sensor. The short to battery fault in a loss of comm or internal circuit failure of the side impact sensor 1 can cause the impact sensor on the same side to set a loss of comm code.

WHEN MONITORED

The Occupant Restraint Controller (ORC) continuously communicates with the Left Side Impact Sensor 1 over the sensor signal circuit. The sensor communication and on board diagnostics are powered by the ORC signal.

SET CONDITION

This code will set, if the ORC and the Left Side Impact Sensor 1 do not establish and maintain valid data communications.

POSSIBLE CAUSES

Possible Causes
(R13) SIGNAL CIRCUIT SHORTED TO BATTERY
(R13) SIGNAL CIRCUIT SHORTED TO GROUND
(R13, R15) LEFT SIDE IMPACT SENSOR 1 CIRCUITS SHORTED TOGETHER
(R15) LEFT SIDE IMPACT SENSOR 1 GROUND CIRCUIT OPEN
(R13) LEFT SIDE IMPACT SENSOR 1 SIGNAL CIRCUIT OPEN
ORC, LEFT SIDE IMPACT SENSOR 1

DIAGNOSTIC TEST

1. **VERIFY THAT DTC U0172-LOST COMMUNICATION W/LEFT SIDE SATELLITE ACCELERATION SENSOR 1 IS ACTIVE**

WARNING: Turn the ignition off disconnect the 12-volt battery and wait two minutes before proceeding. Failure to follow these instructions may result in possible serious or fatal injury.

NOTE: Using the wiring diagram/schematic as a guide check

all related splices and connectors for signs of water intrusion, corrosion, pushed out or bent terminals, and correct pin tension.

NOTE: If after the harness inspection it appears the impact sensor connector is only seated halfway. Reseat the harness connector into the impact sensor and lock the tab.

WARNING: Turn the ignition on, then reconnect the 12-volt battery and wait two minutes before proceeding. Failure to follow these instructions may result in possible serious or fatal injury.

NOTE: Make sure the battery is fully charged.

1. Turn the ignition on.
2. With the scan tool, read ORC DTCs.

   Does the scan tool display active B1B72-LEFT SIDE SATELLITE ACCELERATION SENSOR 1 INTERNAL, U0172-LOST COMMUNICATION W/LEFT SIDE IMPACT SENSOR 1 - DTC?

   Yes

   - First check and fix DTC B1B72-LEFT SIDE SATELLITE ACCELERATION SENSOR 1 INTERNAL, and DTC U0172-LOST COMMUNICATION W/LEFT SIDE SATELLITE ACCELERATION SENSOR 1. Refer to **DIAGNOSIS AND TESTING** . Go To 2

   No

   - Perform the AIRBAG SYSTEM INTERMITTENT TEST. Refer to **STANDARD PROCEDURE** .

2. **CHECK THE (R13) AND (R15) LEFT SIDE IMPACT SENSOR 1 CIRCUITS FOR A SHORT TO BATTERY**

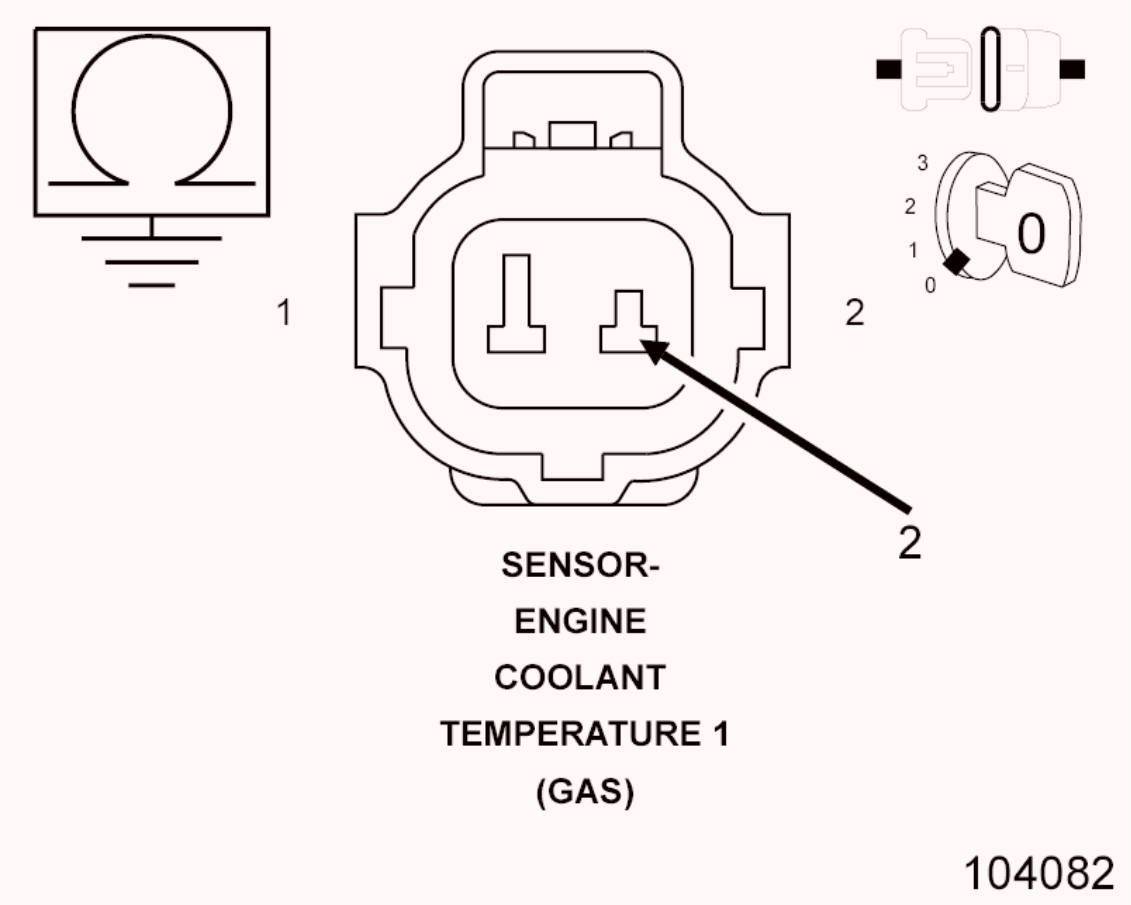

Fig. 101: Checking Left Side Impact Sensor 1 Circuits For Short To Battery
Courtesy of CHRYSLER GROUP, LLC

WARNING: Turn the ignition off disconnect the 12-volt battery and wait two minutes before proceeding. Failure to follow these instructions may result in possible serious or fatal injury.

1. Disconnect the Left Side Impact Sensor 1 harness connector.
2. Disconnect the ORC harness connectors.
3. Connect the SRS Load Tool Adaptor (special tool #8443-25, 56 Way ACM Adapter) to the ORC C2 harness connector.

WARNING: Turn the ignition on, then reconnect the 12-volt battery and wait two minutes before proceeding. Failure to follow these instructions may result in possible

serious or fatal injury.

4. Measure the voltage of the (R13) Left Side Impact Sensor 1 Signal circuit and the (R15) Sensor 1 Ground circuit at the Left Side Impact Sensor 1 connector.

   Is there any voltage present?

   Yes

   - Repair the (R13) and (R15) Left Side Impact Sensor 1 circuits for a short to battery.
   - Perform the AIRBAG SYSTEM VERIFICATION TEST. Refer to **STANDARD PROCEDURE** .

   No

   - Go To 3

3. **CHECK THE (R13) AND (R15) LEFT SIDE IMPACT SENSOR 1 CIRCUITS FOR A SHORT TO GROUND**

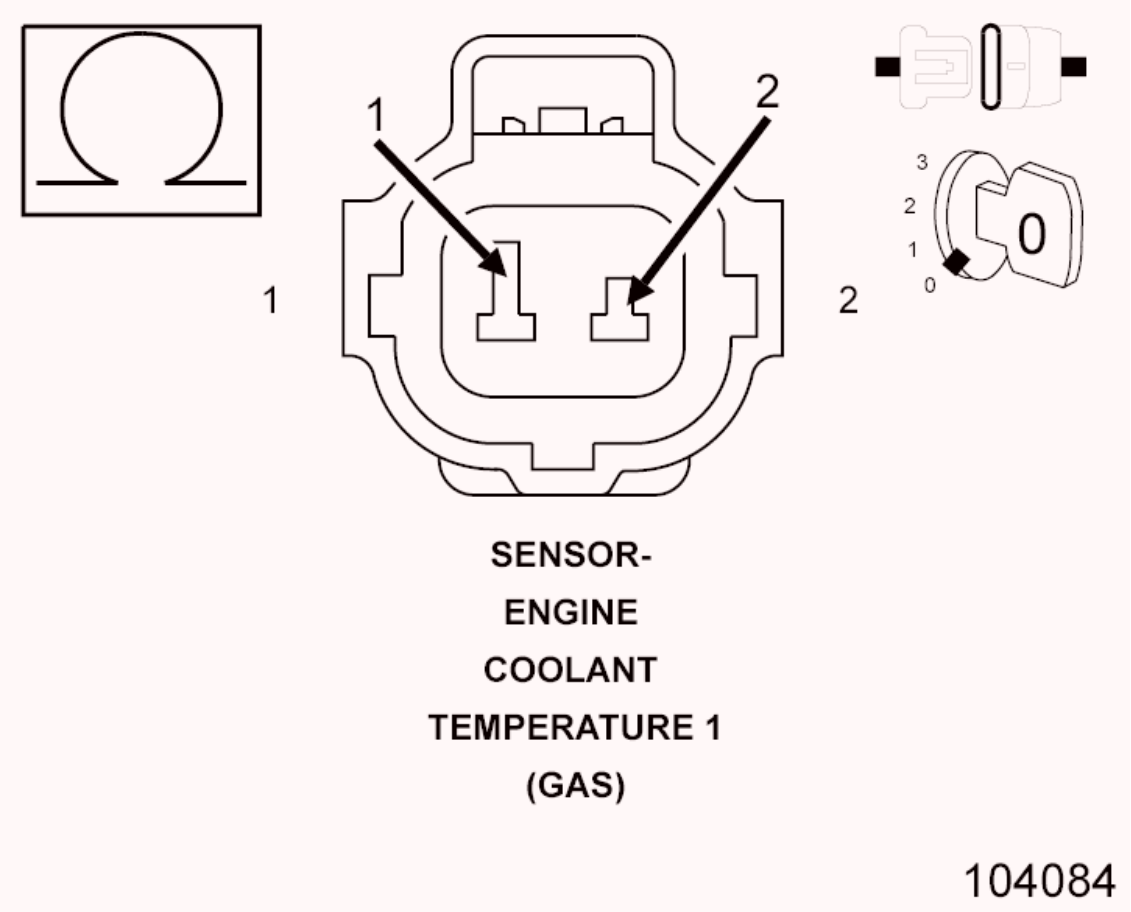

Fig. 102: Checking Left Side Impact Sensor 1 Circuits For Short To Ground
Courtesy of CHRYSLER GROUP, LLC

WARNING: Turn the ignition on, then reconnect the battery and wait two minutes before proceeding. Failure to follow these instructions may result in possible serious or fatal injury.

1. Measure the resistance between ground and the (R13) Left Side Impact Sensor 1 Signal circuit at the Left Side Impact Sensor 1 harness connector.
2. Measure the resistance between ground and the (R15) Left Side Impact Sensor 1 Ground circuit at the Left Side Impact Sensor 1 harness connector.

   Is the resistance below 100K Ohms on either circuit?

Yes

- Repair the (R13) and (R15) Left Side Impact Sensor 1 Signal and Ground circuit for a short to ground.
- Perform the AIRBAG SYSTEM VERIFICATION TEST. Refer to **STANDARD PROCEDURE** .

No

- Go To 4

4. **CHECK THE (R13) AND (R15) LEFT SIDE IMPACT SENSOR 1 CIRCUITS FOR A SHORT TOGETHER**

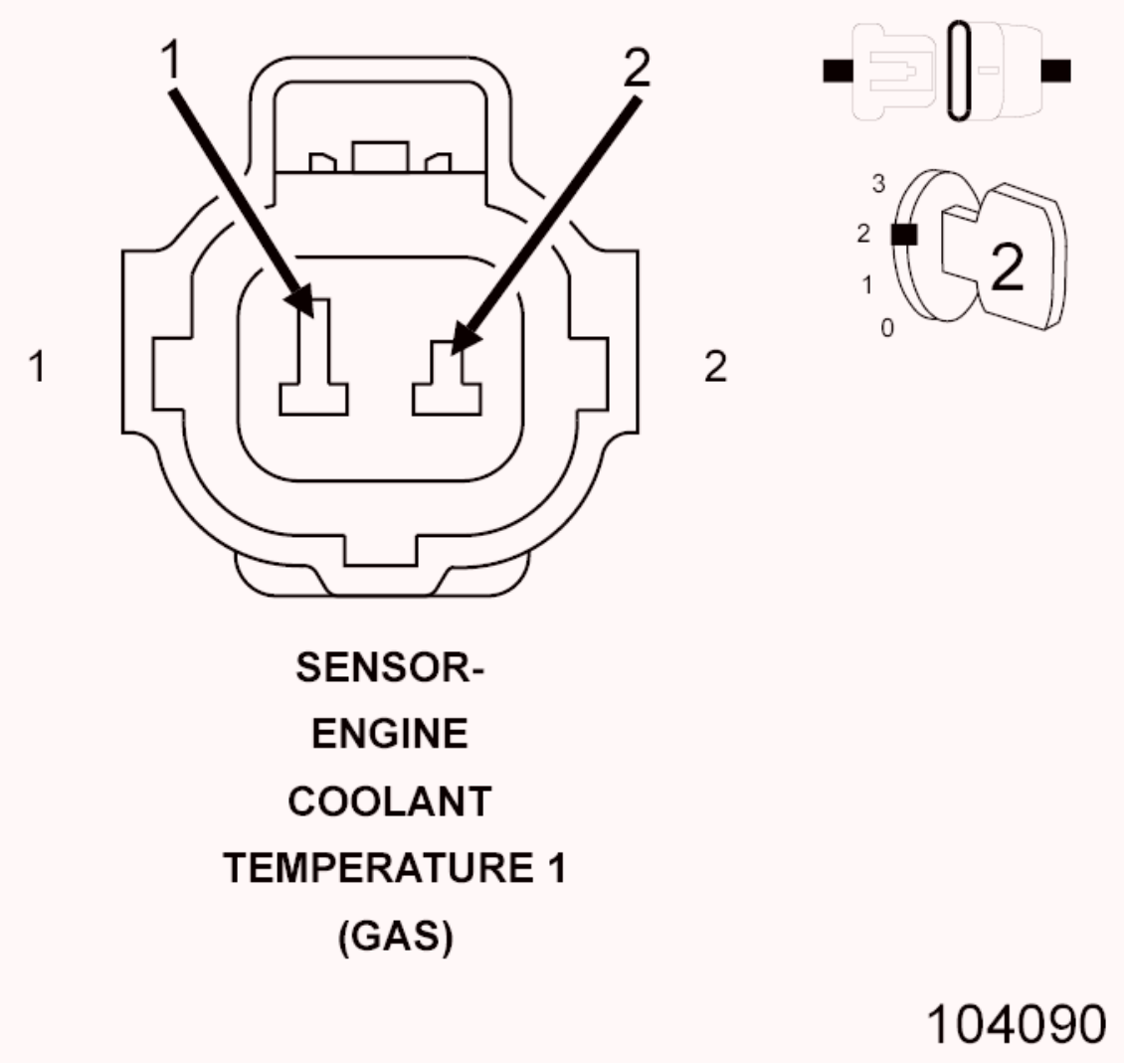

Fig. 103: Checking Left Side Impact Sensor 1 Circuits For Short Together
Courtesy of CHRYSLER GROUP, LLC

1. Measure the resistance between the (R13) Left Side Impact Sensor 1 Signal circuit and the (R15) Sensor 1 Ground circuit at the Left Side Impact Sensor 1 harness connector.

   Is the resistance below 100K Ohms?

   Yes

   - Repair the (R13) and (R15) Left Side Impact Sensor 1 circuits shorted together.
   - Perform the AIRBAG SYSTEM VERIFICATION TEST. Refer to **STANDARD PROCEDURE** .

   No

   - Go To 5

5. **CHECK THE (R15) LEFT SIDE IMPACT SENSOR 1 GROUND CIRCUIT FOR AN OPEN OR HIGH RESISTANCE**

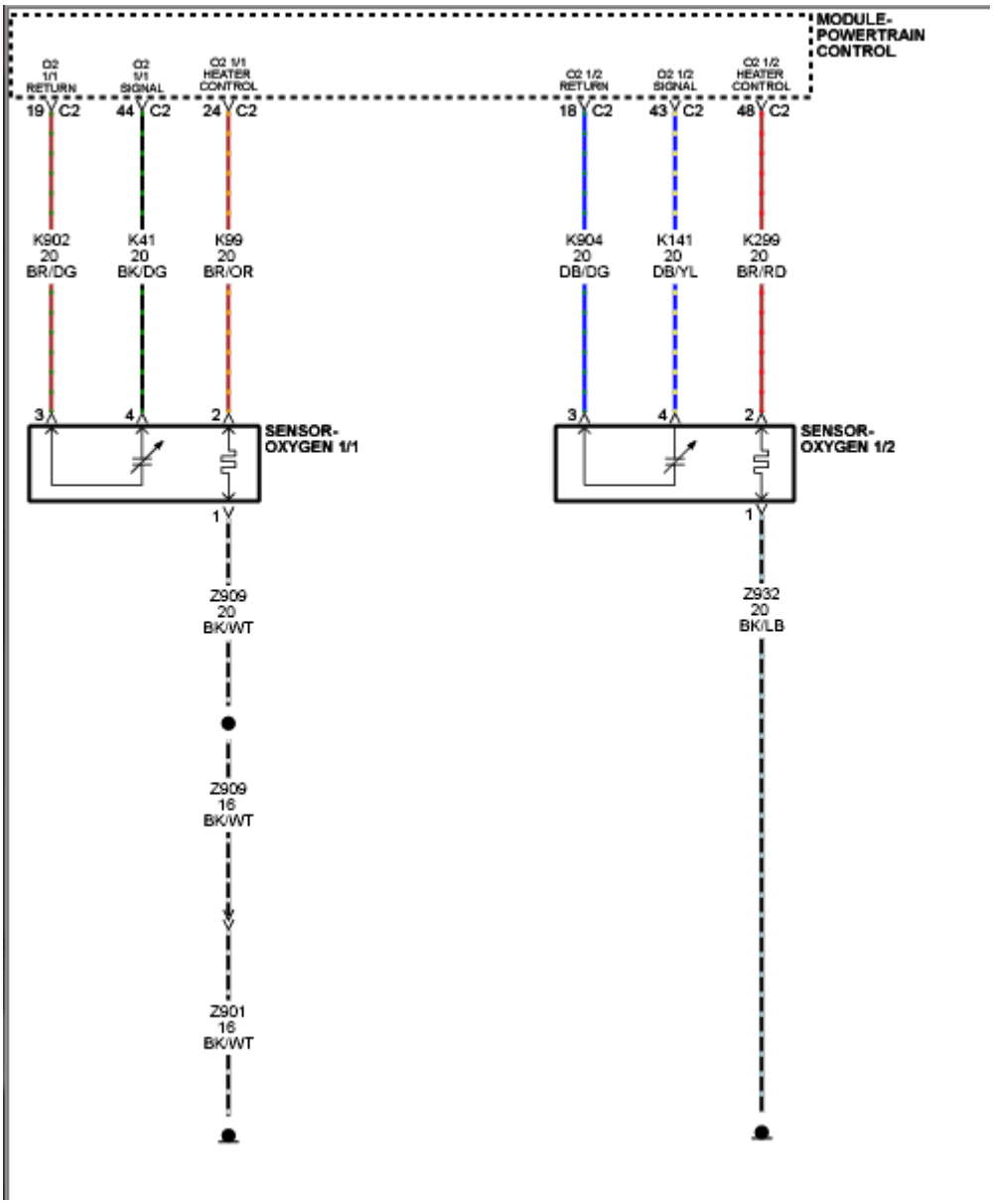

Fig. 104: Checking Left Side Impact Sensor 1 Ground Circuit For Open Or High Resistance
Courtesy of CHRYSLER GROUP, LLC

1. Measure the resistance of the (R15) Left Side Impact Sensor 1 Ground circuit between the Left Side Impact Sensor 1 harness connector and the SRS Load Tool Adaptor (special tool #8443-25, 56 Way ACM Adapter).

   Is the resistance below 1 Ohm?

   Yes

   - Go To 6

No

- Repair the (R15) Left Side Impact Sensor 1 Ground circuit for an open or high resistance.
- Perform the AIRBAG SYSTEM VERIFICATION TEST. Refer to **STANDARD PROCEDURE** .

6. **CHECK THE (R13) LEFT SIDE IMPACT SENSOR 1 CIRCUIT FOR AN OPEN OR HIGH RESISTANCE**

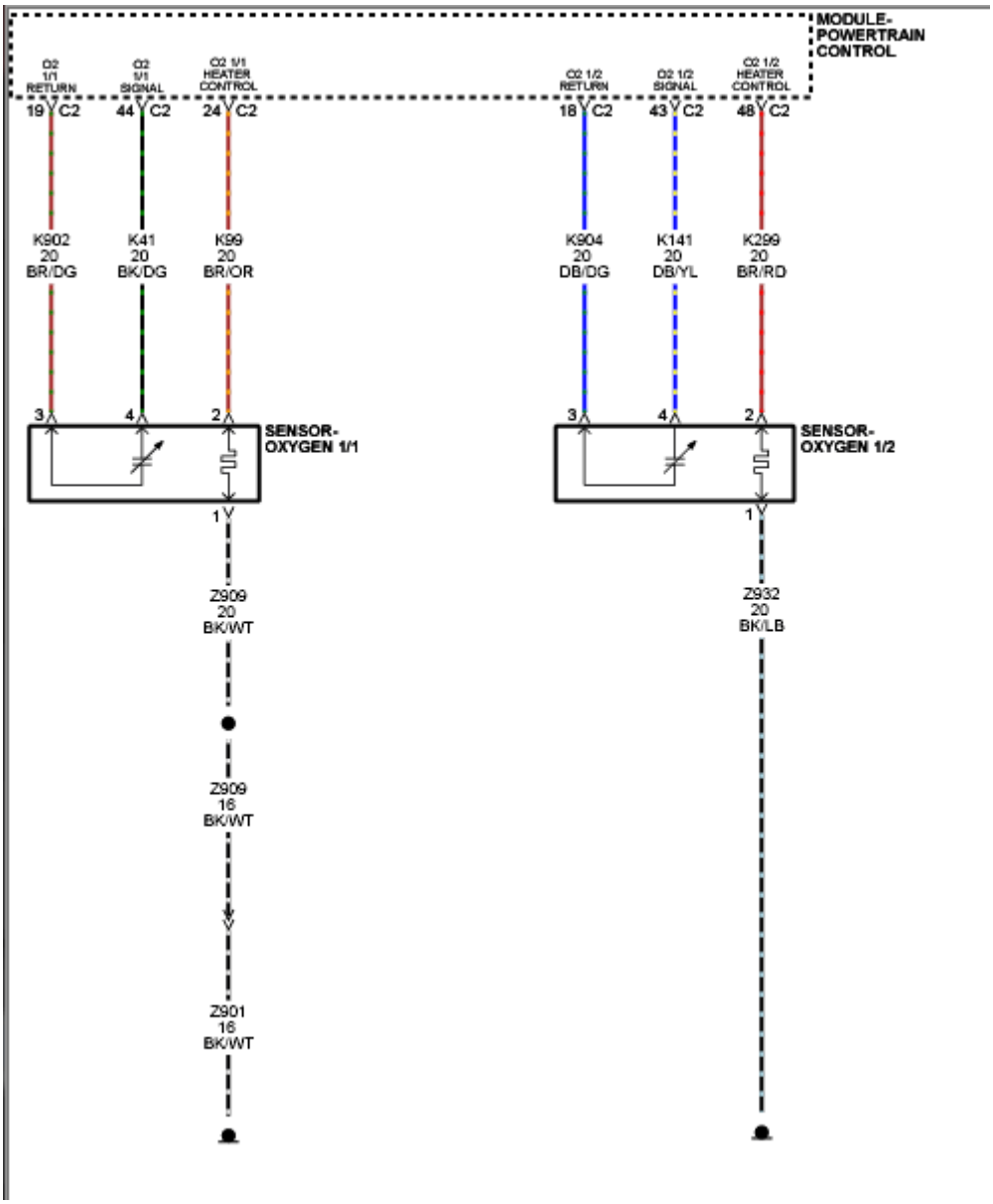

Fig. 105: Checking Left Side Impact Sensor 1 Circuit For Open Or High Resistance
Courtesy of CHRYSLER GROUP, LLC

1. Measure the resistance of the (R13) Left Side Impact Sensor 1 Signal circuit between the Left Side Impact Sensor 1 harness connector and the SRS Load Tool Adaptor (special tool #8443-25, 56 Way ACM Adapter).

   Is the resistance below 1 Ohm?

   Yes

   - Go To 7

   No

   - Repair the (R13) Left Side Impact Sensor 1 Signal circuit for an open or high resistance.
   - Perform the AIRBAG SYSTEM VERIFICATION TEST. Refer to **STANDARD PROCEDURE** .

7. **CHECK OPERATION OF THE LEFT SIDE IMPACT SENSOR 1**
   1. Replace the Left Side Impact Sensor 1.
   2. Reconnect the vehicle body harness to the impact sensor.
   3. Remove any special tools or jumper wires and reconnect all previously disconnected components - except the Battery.

      WARNING: **Turn the ignition on, then reconnect the 12-volt battery and wait two minutes before proceeding. Failure to follow these instructions may result in possible serious or fatal injury.**

   4. Connect the scan tool to the Data Link Connector - use the most current software available.
   5. Use the scan tool and erase the stored codes in all airbag system modules.
   6. Turn the Ignition Off, and wait 15 seconds before turning the Ignition On.
   7. Wait one minute, and read active codes and if there are none present read the stored codes.

Did the active Left Side Impact Sensor 1 DTC return?

Yes

- Go To 8

No

- Repair is complete.
- Perform the AIRBAG SYSTEM VERIFICATION TEST. Refer to **STANDARD PROCEDURE** .

8. **REPLACE THE OCCUPANT RESTRAINT CONTROLLER**

WARNING: **Turn the ignition off, disconnect the 12-volt battery and wait two minutes before proceeding. Failure to follow these instructions may result in possible serious or fatal injury.**

WARNING: **If the airbag control module is dropped at any time, it must be replaced. Failure to take the proper precautions could result in accidental airbag deployment and serious or fatal injury.**

If there are no possible causes remaining, view repair.

Repair

- Replace the Occupant Restraint Controller in accordance with Service Instructions.
- Perform the AIRBAG SYSTEM VERIFICATION TEST. Refer to **STANDARD PROCEDURE** .

U0173-LOST COMMUNICATION W/LEFT SIDE SATELLITE ACCELERATION SENSOR 2

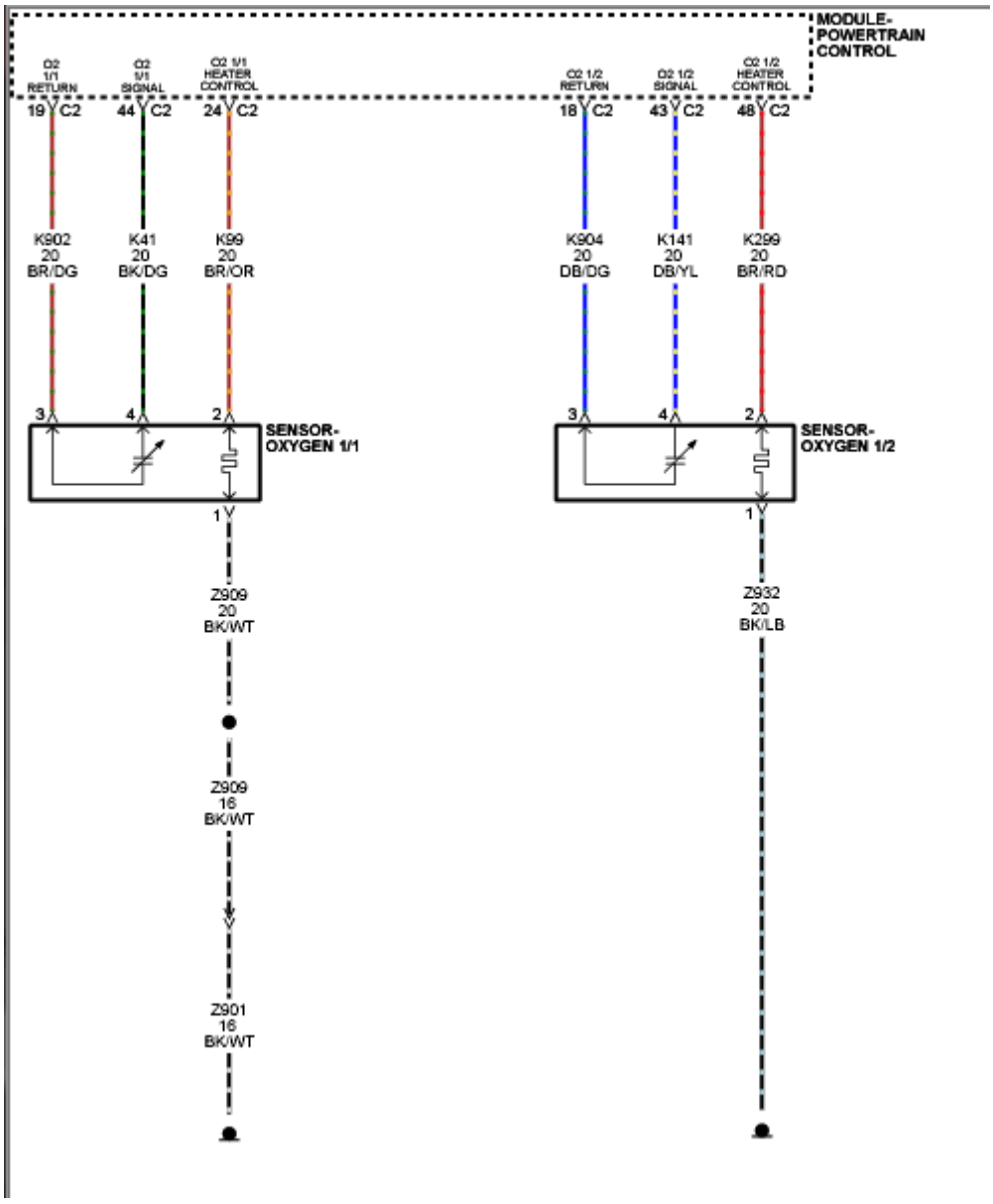

Fig. 106: Left Side Impact Sensors & ORC Module Circuit Schematic
Courtesy of CHRYSLER GROUP, LLC

For a complete wiring diagram, **refer to appropriate SYSTEM WIRING DIAGRAMS article** .

THEORY OF OPERATION

The location of this left side impact sensor 2 is in the C-pillar just past the second row seating. Refer to **DESCRIPTION** . The impact sensors perform their own self test using power supplied by the Occupant Restraint Controller (ORC) then communicate this status back to the ORC with periodic updates. The repair of this fault condition involves verifying the integrity of the wiring between the ORC and the sensor. If the scan tool shows this DTC has a Stored history of

setting then the left side impact sensor is to be replaced. A short to voltage fault on the left side impact sensor 1 sensor wiring can cause a loss of comm impact sensor 2 code to set and the possible replacement of a good left side impact sensor 2. The left side impact 1, and 2 sensors are wired in a daisy chain pattern. The short to battery fault in a loss of comm or internal circuit failure of the side impact sensor 1 can cause the impact sensor 2 on the same side to set a loss of comm code.

WHEN MONITORED

The Occupant Restraint Controller (ORC) continuously communicates with the Left Side Impact Sensor 2 over the sensor signal circuit. The sensor communication and on board diagnostics are powered by the ORC signal.

SET CONDITION

This code will set, if the ORC and the Left Side Impact Sensor 2 do not establish and maintain valid data communications.

POSSIBLE CAUSES

Possible Causes
(R17) SIGNAL CIRCUIT SHORTED TO BATTERY
(R17) SIGNAL CIRCUIT SHORTED TO GROUND
(R17, R19) LEFT SIDE IMPACT SENSOR 2 CIRCUITS SHORTED TOGETHER
(R19) LEFT SIDE IMPACT SENSOR 2 GROUND CIRCUIT OPEN
(R17) LEFT SIDE IMPACT SENSOR 2 SIGNAL CIRCUIT OPEN
ORC, LEFT SIDE IMPACT SENSOR 2

DIAGNOSTIC TEST

1. **VERIFY THAT DTC U0173-LOST COMMUNICATION W/LEFT SIDE SATELLITE ACCELERATION SENSOR 2 IS ACTIVE**

   WARNING: **Turn the ignition off disconnect the 12-volt battery and wait two minutes before proceeding. Failure to follow these instructions may result in possible serious or fatal injury.**

NOTE: Using the wiring diagram/schematic as a guide check all related splices and connectors for signs of water intrusion, corrosion, pushed out or bent terminals, and correct pin tension.

NOTE: If after the harness inspection it appears the impact sensor connector is only seated halfway. Reseat the harness connector into the impact sensor and lock the tab.

WARNING: Turn the ignition on, then reconnect the 12-volt battery and wait two minutes before proceeding. Failure to follow these instructions may result in possible serious or fatal injury.

NOTE: Make sure the battery is fully charged.

1. Turn the ignition on.
2. With the scan tool, read ORC DTCs.

   Does the scan tool display active: B1B72-LEFT SIDE SATELLITE ACCELERATION SENSOR 1 INTERNAL, B1B73-LEFT SIDE SATELLITE ACCELERATION SENSOR 2 INTERNAL, U0172-LOST COMMUNICATION W/LEFT SIDE SATELLITE ACCELERATION SENSOR 1, U0173-LOST COMMUNICATION W/LEFT SIDE SATELLITE ACCELERATION SENSOR 2?

   Yes

   - Check for all other internal and lost communication codes indicated in the left side impact sensor daisy chain wiring before diagnosing DTC U0173-LOST COMMUNICATION W/LEFT SIDE SATELLITE ACCELERATION SENSOR 2. Go To The DTC Displayed. Refer to **DTC INDEX** . If internal fault 1 and lost comm fault 1 have been checked follow DTC U0173-LOST COMMUNICATION W/LEFT SIDE SATELLITE ACCELERATION SENSOR 2. Go To 2

No

- Perform the AIRBAG SYSTEM INTERMITTENT TEST. Refer to **STANDARD PROCEDURE** .

2. **CHECK THE (R17) AND (R19) LEFT SIDE IMPACT SENSOR 2 CIRCUITS FOR A SHORT TO BATTERY**

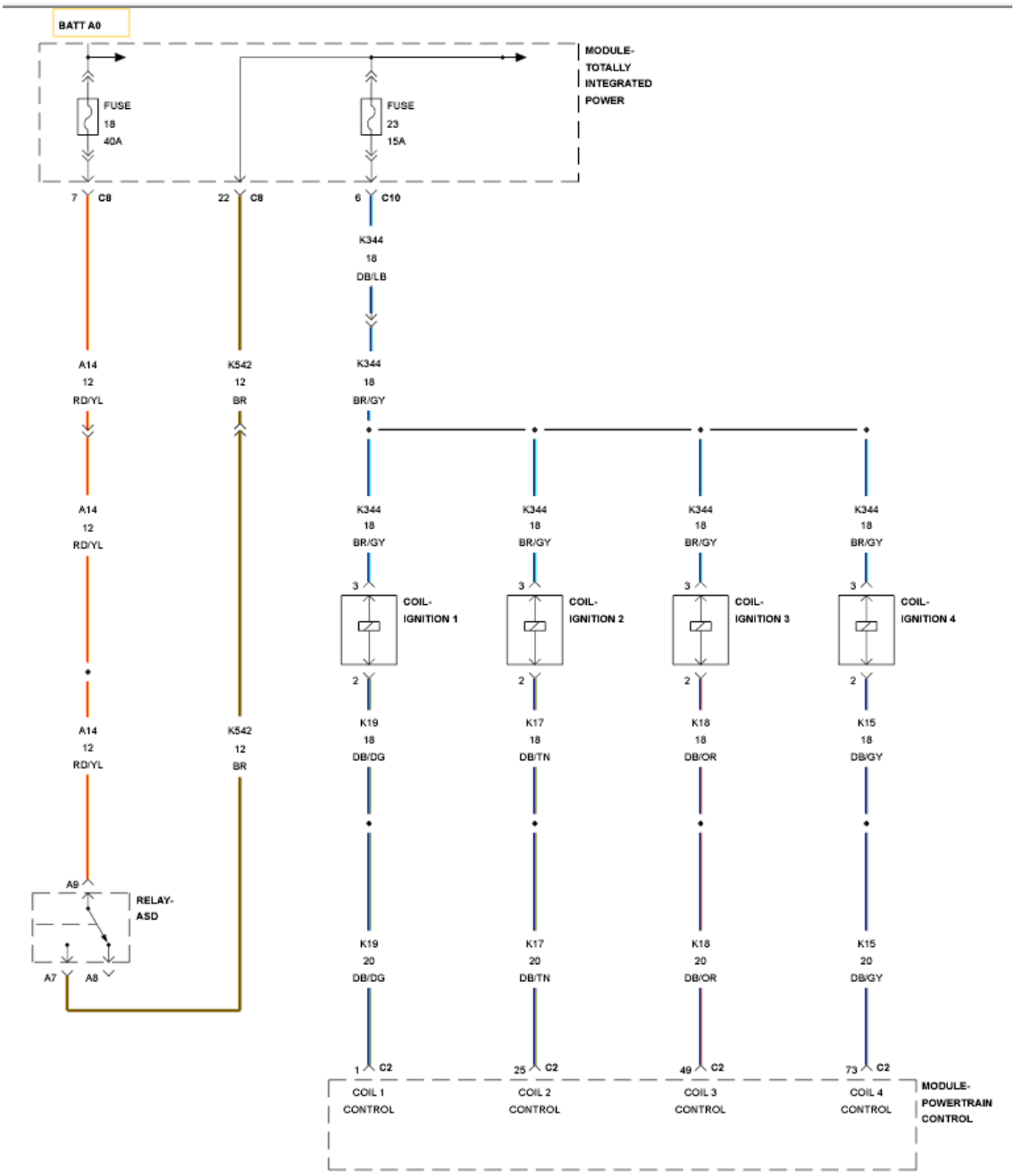

Fig. 107: Checking Left Side Impact Sensor 2 Circuits For A Short To Battery
Courtesy of CHRYSLER GROUP, LLC

WARNING: Turn the ignition off, disconnect the 12-volt battery and wait two minutes before proceeding. Failure to follow these instructions may result in possible serious or fatal injury.

1. Disconnect the Left Side Impact Sensor 2 harness connector.
2. Disconnect the ORC harness connectors.
3. Connect the SRS Load Tool Adaptor (special tool #8443-25, 56 Way ACM Adapter) to the ORC harness connector.

WARNING: Turn the ignition on, then reconnect the 12-volt battery and wait two minutes before proceeding. Failure to follow these instructions may result in possible serious or fatal injury.

4. Measure the voltage of the (R17) Left Side Impact Sensor 2 Signal circuit and the (R19) Sensor 2 Ground circuit at the Left Side Impact Sensor 2 connector.

   Is there any voltage present?

   Yes

   - Repair the (R17) and (R19) Left Side Impact Sensor 2 circuits for a short to battery.
   - Perform the AIRBAG SYSTEM VERIFICATION TEST. Refer to **STANDARD PROCEDURE** .

   No

   - Go To 3

3. **CHECK THE (R17) AND (R19) LEFT SIDE IMPACT SENSOR 2 CIRCUITS FOR A SHORT TO GROUND**

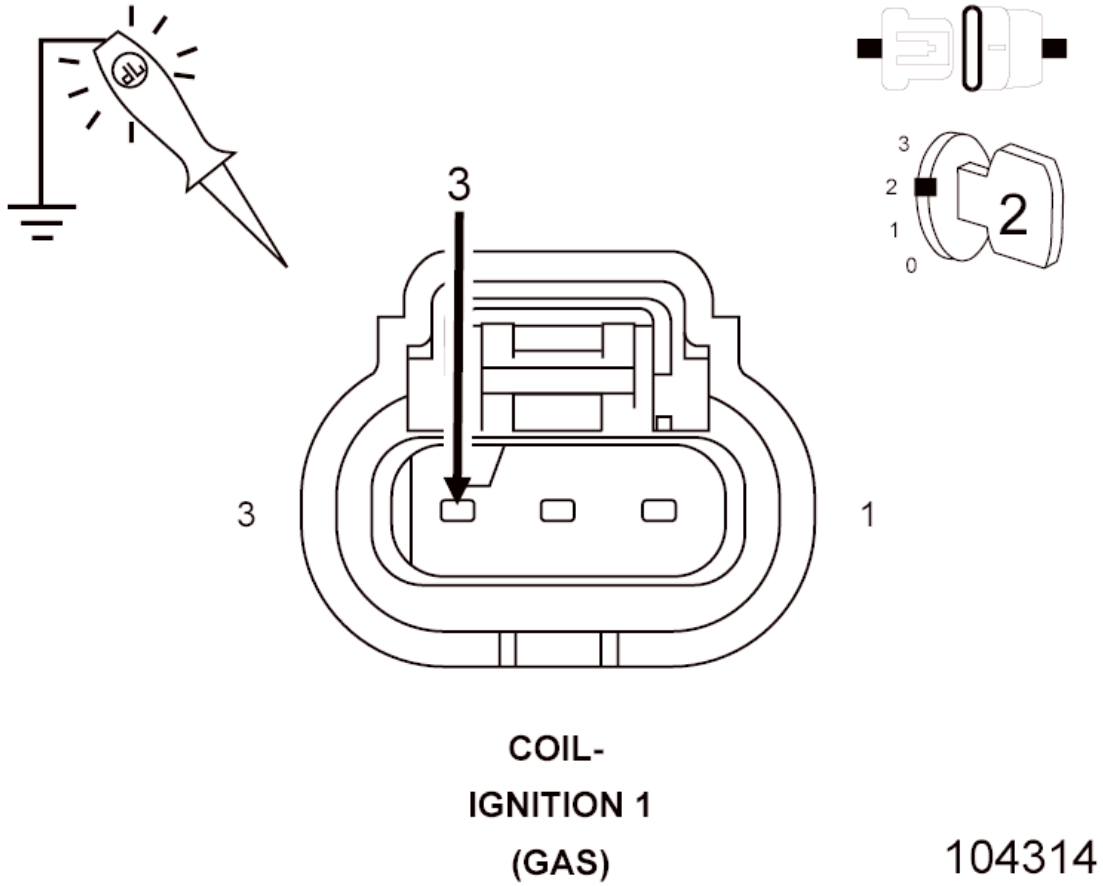

Fig. 108: Checking Left Side Impact Sensor 2 Circuits For A Short To Ground
Courtesy of CHRYSLER GROUP, LLC

WARNING: **Turn the ignition on, then reconnect the 12-volt battery and wait two minutes before proceeding. Failure to follow these instructions may result in possible serious or fatal injury.**

1. Measure the resistance between ground and the (R17) Left Side Impact Sensor 2 Signal circuit at the Left Side Impact Sensor 2 harness connector.

   Is the resistance below 100K ohms?

   Yes

   - Repair the (R17) and (R19) Left Side Impact Sensor 2 circuits for a short to ground.

- Perform the AIRBAG SYSTEM VERIFICATION TEST. Refer to **STANDARD PROCEDURE** .

No

- Go To 4

4. **CHECK THE (R17) AND (R19) LEFT SIDE IMPACT SENSOR 2 CIRCUITS FOR A SHORT TOGETHER**

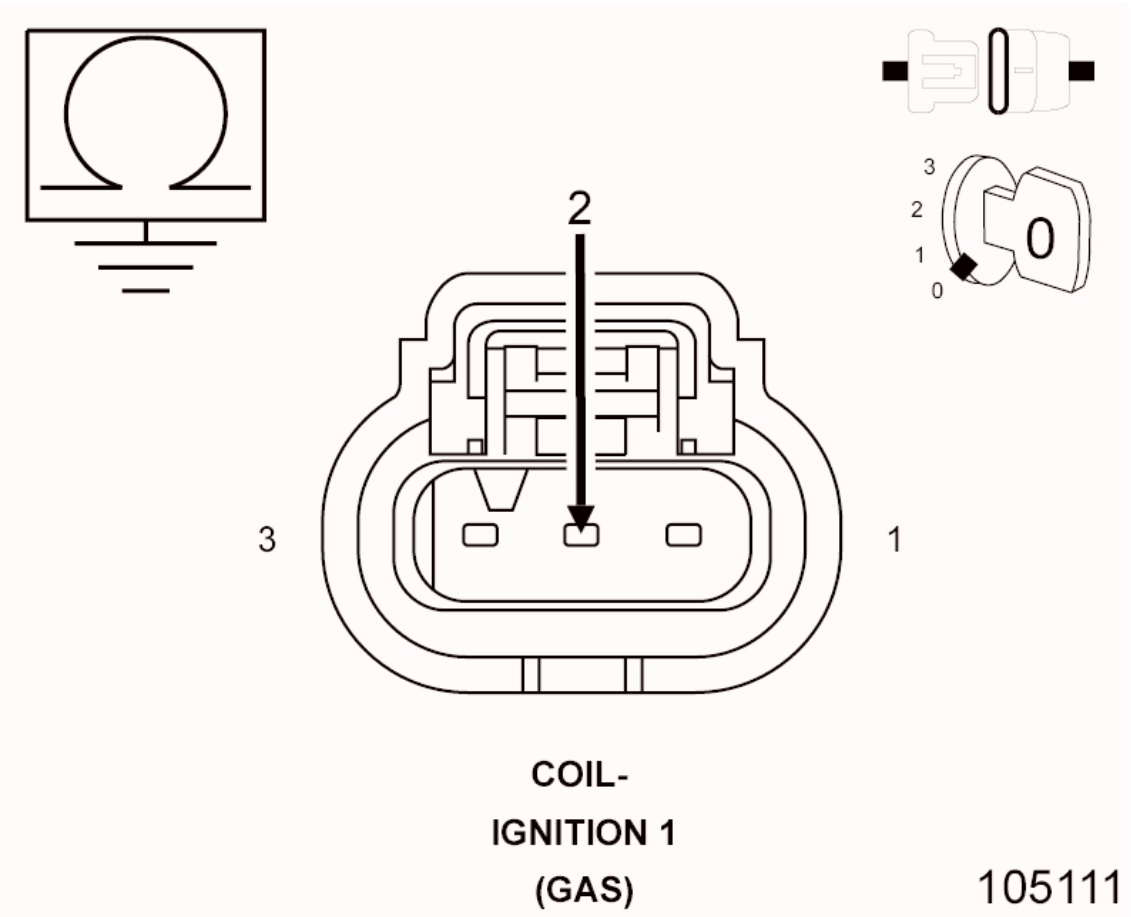

Fig. 109: Checking Left Side Impact Sensor 2 Circuits For A Short Together
Courtesy of CHRYSLER GROUP, LLC

1. Measure the resistance between the (R17) Left Side Impact Sensor 2 Signal circuit and the (R19) Sensor 2 Ground circuit at the Left Side Impact Sensor 2 harness connector.

   Is the resistance below 100K Ohms?

   Yes

- Repair the (R17) and (R19) Left Side Impact Sensor 2 circuits shorted together.
- Perform the AIRBAG SYSTEM VERIFICATION TEST. Refer to **STANDARD PROCEDURE** .

No

- Go To 5

5. **CHECK THE (R19) LEFT SIDE IMPACT SENSOR 2 GROUND CIRCUIT FOR AN OPEN OR HIGH RESISTANCE**

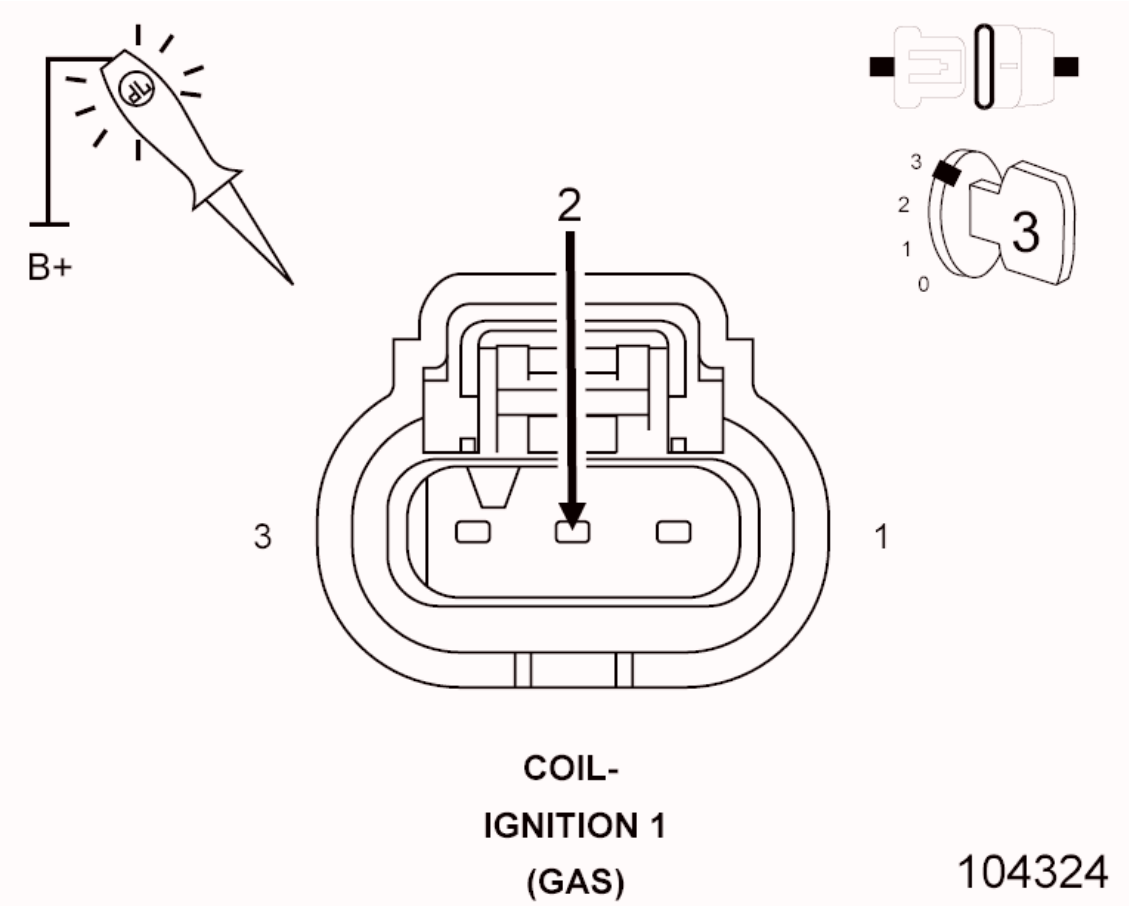

Fig. 110: Checking Left Side Impact Sensor 2 Ground Circuit For Open Or High Resistance
Courtesy of CHRYSLER GROUP, LLC

1. Measure the resistance of the (R19) Left Side Impact Sensor 2 Ground circuit between the Left Side Impact Sensor 2 harness connector and the Left Side Impact Sensor 1 harness connector.

Is the resistance below 1 Ohm?

Yes

- Go To 6

No

- Repair the (R19) Left Side Impact Sensor 2 Ground circuit for an open or high resistance.
- Perform the AIRBAG SYSTEM VERIFICATION TEST. Refer to **STANDARD PROCEDURE** .

6. **CHECK THE (R17) LEFT SIDE IMPACT SENSOR 2 CIRCUIT FOR AN OPEN OR HIGH RESISTANCE**

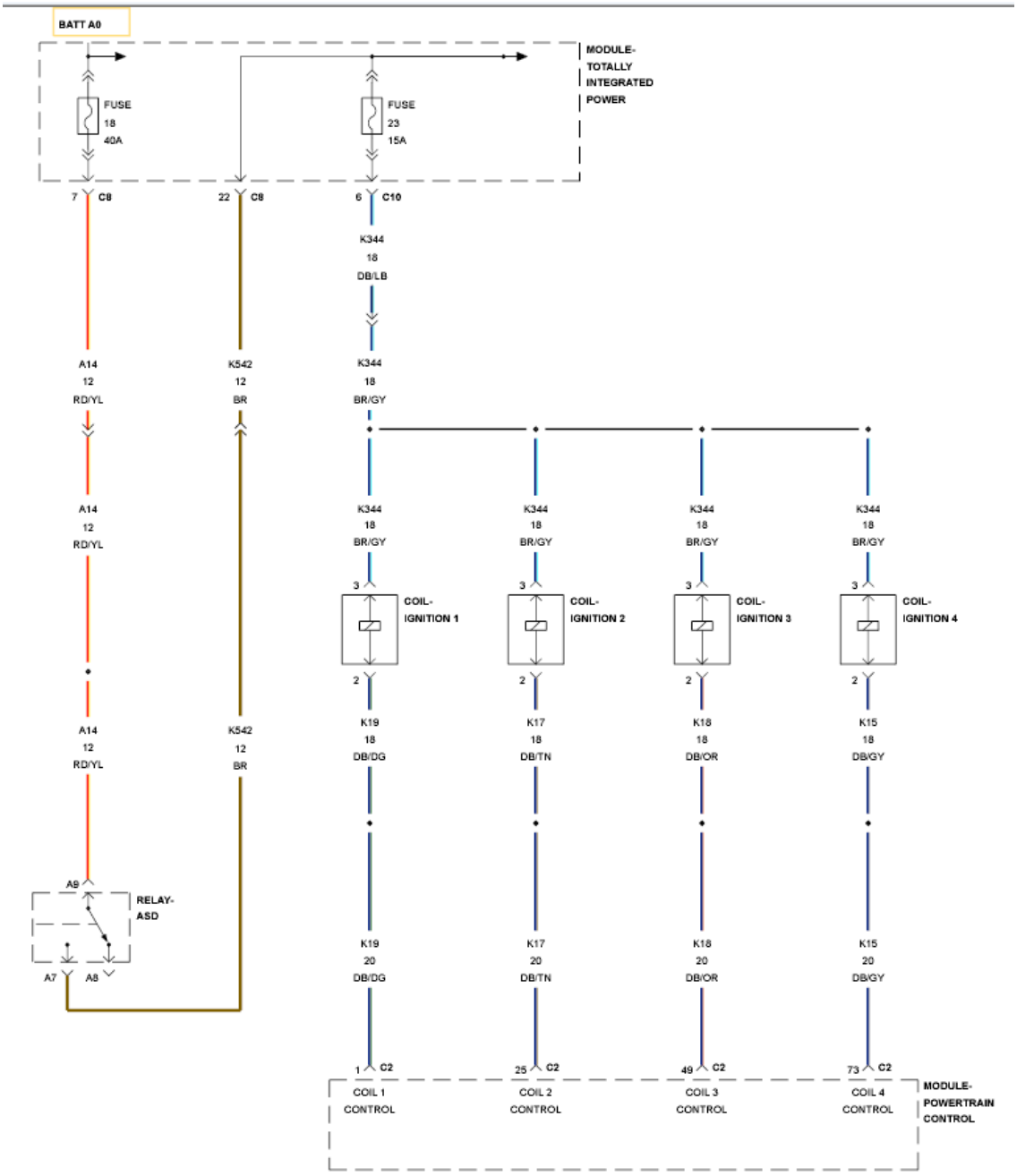

Fig. 111: Checking Left Side Impact Sensor 2 Circuit For Open Or High Resistance
Courtesy of CHRYSLER GROUP, LLC

1. Measure the resistance of the (R17) Left Side Impact Sensor 2 Signal circuit between the Left Side Impact Sensor 2 harness connector and the Left Side Impact Sensor 1 harness connector.

   Is the resistance below 1 Ohm?

   Yes

- Go To 7

No

- Repair the (R17) Left Side Impact Sensor 2 Signal circuit for an open or high resistance.
- Perform the AIRBAG SYSTEM VERIFICATION TEST. Refer to **STANDARD PROCEDURE** .

7. **CHECK OPERATION OF THE LEFT SIDE IMPACT SENSOR 2**
   1. Replace the Left Side Impact Sensor 2.
   2. Reconnect the vehicle body harness to the impact sensor.
   3. Remove any special tools or jumper wires and reconnect all previously disconnected components - except the Battery.

      WARNING: **Turn the ignition on, then reconnect the 12-volt battery and wait two minutes before proceeding. Failure to follow these instructions may result in possible serious or fatal injury.**

   4. Connect the scan tool to the Data Link Connector - use the most current software available.
   5. Use the scan tool and erase the stored codes in all airbag system modules.
   6. Turn the Ignition Off, and wait 15 seconds before turning the Ignition On.
   7. Wait one minute, and read active codes and if there are none present read the stored codes.

      Did the active Left Side Impact Sensor 2 DTC return?

      Yes

      - Go To 8

      No

      - Repair is complete.

- Perform the AIRBAG SYSTEM VERIFICATION TEST. Refer to **STANDARD PROCEDURE** .

8. **REPLACE THE OCCUPANT RESTRAINT CONTROLLER**

WARNING: Turn the ignition off, disconnect the 12-volt battery and wait two minutes before proceeding. Failure to follow these instructions may result in possible serious or fatal injury.

If there are no possible causes remaining, view repair.

Repair

WARNING: If the Occupant Restraint Controller (ORC) is dropped at any time, it must be replaced. Failure to follow these instructions may result in possible serious or fatal injury.

- Replace the Occupant Restraint Controller in accordance with Service Instructions.
- Perform the AIRBAG SYSTEM VERIFICATION TEST. Refer to **STANDARD PROCEDURE** .

U0175-LOST COMMUNICATION W/RIGHT SIDE SATELLITE ACCELERATION SENSOR 1

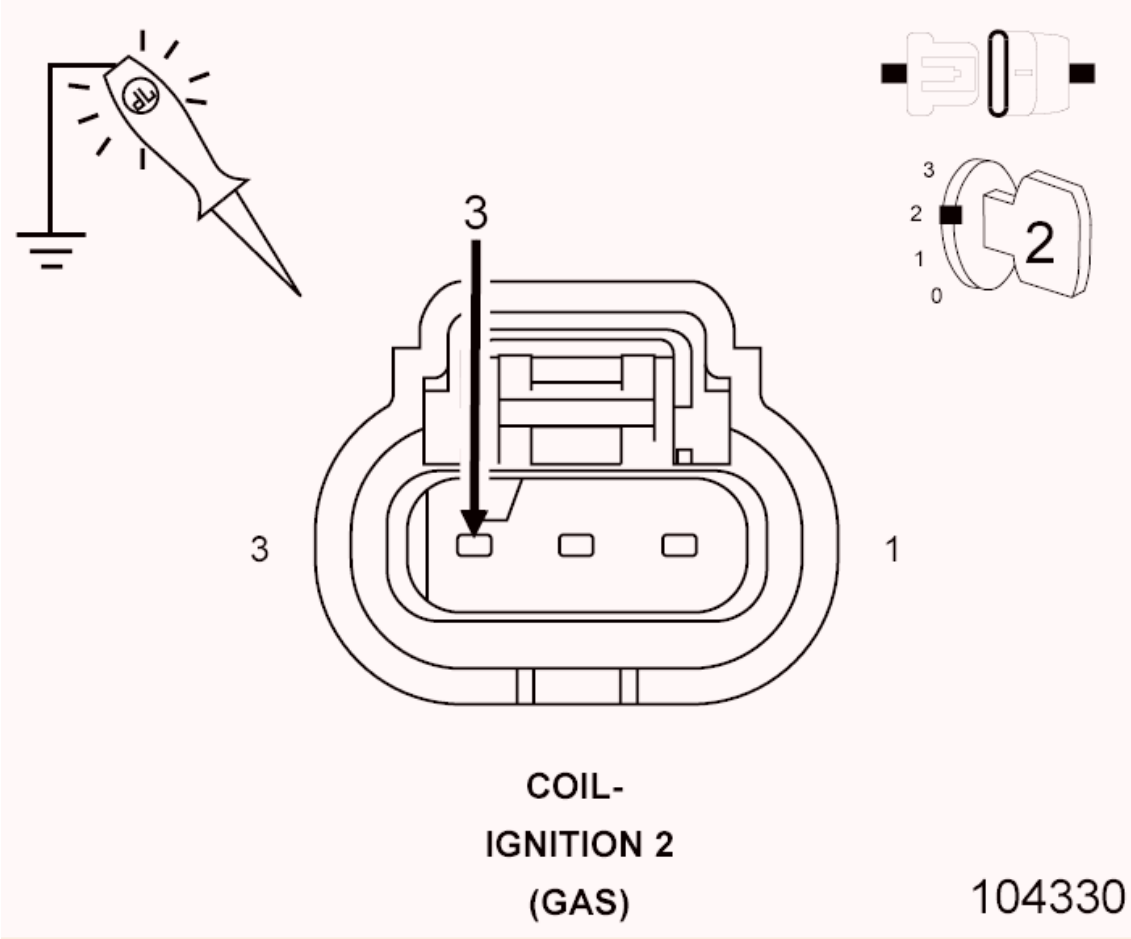

Fig. 112: Right Side Impact Sensors & ORC Module Circuit Schematic
Courtesy of CHRYSLER GROUP, LLC

For a complete wiring diagram, **refer to appropriate SYSTEM WIRING DIAGRAMS article** .

WHEN MONITORED

The Occupant Restraint Controller (ORC) continuously communicates with the Right Side Impact Sensor 1 over the sensor signal circuit. The sensor communication and on board diagnostics are powered by the ORC signal.

SET CONDITION

This code will set, if the ORC and the Right Side Impact Sensor 1 do not establish and maintain valid data communications.

POSSIBLE CAUSES

Possible Causes

(R14) SIGNAL CIRCUIT SHORTED TO BATTERY
(R14) SIGNAL CIRCUIT SHORTED TO GROUND
(R14, R16) RIGHT SIDE IMPACT SENSOR 1 CIRCUITS SHORTED TOGETHER
(R16) RIGHT SIDE IMPACT SENSOR 1 GROUND CIRCUIT OPEN
(R14) RIGHT SIDE IMPACT SENSOR 1 SIGNAL CIRCUIT OPEN
ORC, RIGHT SIDE IMPACT SENSOR 1

DIAGNOSTIC TEST

1. **VERIFY THAT DTC U0175-LOST COMMUNICATION W/RIGHT SIDE SATELLITE ACCELERATION SENSOR 1 IS ACTIVE**

WARNING: Turn the ignition off disconnect the 12-volt battery and wait two minutes before proceeding. Failure to follow these instructions may result in possible serious or fatal injury.

NOTE: Using the wiring diagram/schematic as a guide check all related splices and connectors for signs of water intrusion, corrosion, pushed out or bent terminals, and correct pin tension.

NOTE: If after the harness inspection it appears the impact sensor connector is only seated halfway. Reseat the harness connector into the impact sensor and lock the tab.

WARNING: Turn the ignition on, then reconnect the 12-volt battery and wait two minutes before proceeding. Failure to follow these instructions may result in possible serious or fatal injury.

NOTE: Make sure the battery is fully charged.

1. Turn the ignition on.

2. With the scan tool, read ORC DTCs.

   Does the scan tool display active: B1B75-RIGHT SIDE SATELLITE ACCELERATION SENSOR 1 INTERNAL, U0175-LOST COMMUNICATION W/RIGHT SIDE SATELLITE ACCELERATION SENSOR 1, U0176-LOST COMMUNICATION W/RIGHT SIDE SATELLITE ACCELERATION SENSOR 2?

   Yes

   - Check for all other internal and lost communication codes indicated in the right side impact sensor daisy chain wiring, starting with DTC B1B75-RIGHT SIDE SATELLITE ACCELERATION SENSOR 1 INTERNAL, then DTC U0175-LOST COMMUNICATION W/RIGHT SIDE SATELLITE ACCELERATION SENSOR 1. Refer to **DTC INDEX** . Then Go To 2.

   No

   - Perform the AIRBAG SYSTEM INTERMITTENT TEST. Refer to **STANDARD PROCEDURE** .

2. **CHECK THE (R14) AND (R16) RIGHT SIDE IMPACT SENSOR 1 CIRCUITS FOR A SHORT TO BATTERY**

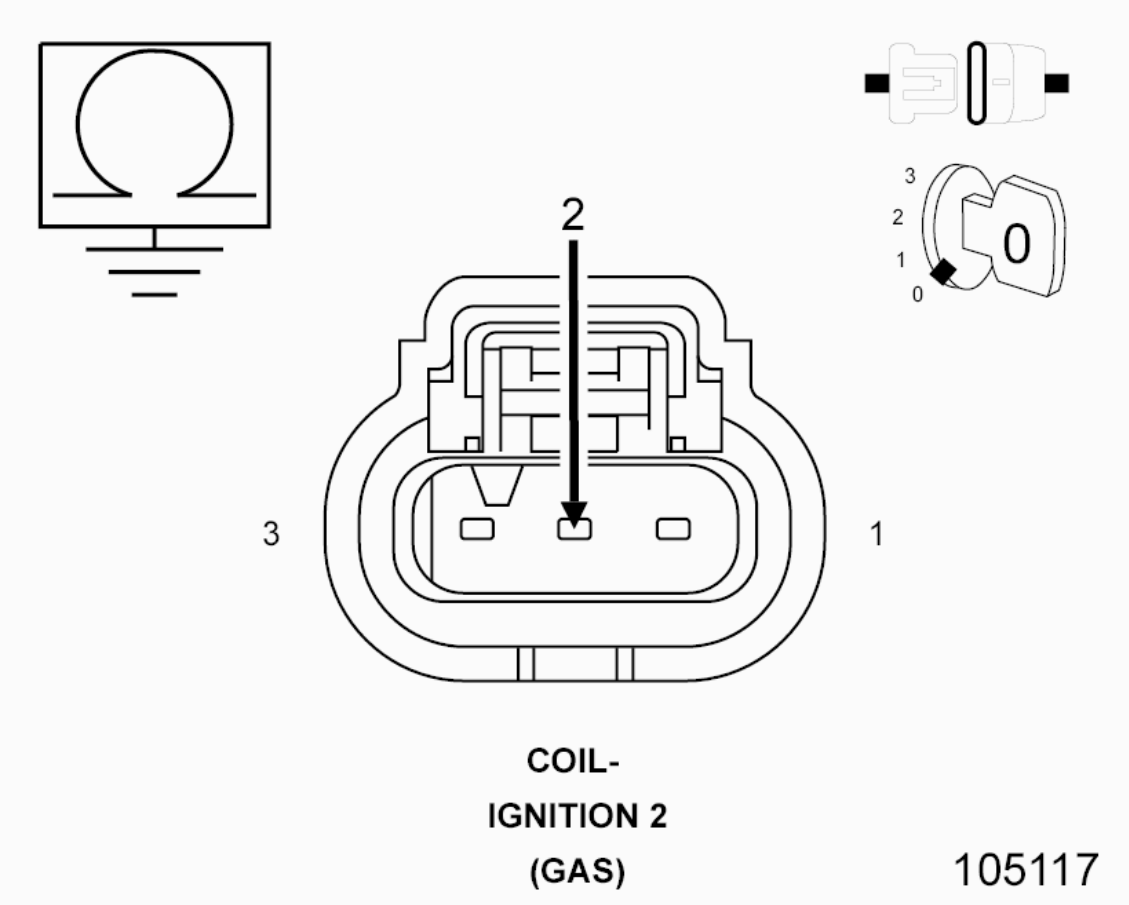

Fig. 113: Checking Right Side Impact Sensor 1 Circuits For Short To Battery
Courtesy of CHRYSLER GROUP, LLC

WARNING: Turn the ignition off, disconnect the 12-volt battery and wait two minutes before proceeding. Failure to follow these instructions may result in possible serious or fatal injury.

1. Disconnect the Right Side Impact Sensor 1 harness connector.
2. Disconnect the ORC harness connectors.
3. Connect the SRS Load Tool Adaptor (special tool #8443-25, 56 Way ACM Adapter) to the ORC harness connector.

WARNING: Turn the ignition on, then reconnect the 12-volt battery and wait two minutes before proceeding. Failure to follow these instructions may result in possible

serious or fatal injury.

4. Measure the voltage of the (R14) Right Side Impact Sensor 1 Signal circuit and the (R16) Sensor 1 Ground circuit at the Right Side Impact Sensor 1 harness connector.

   Is there any voltage present?

   Yes

   - Repair the (R14) and (R16) Right Side Impact Sensor 1 circuits for a short to battery.
   - Perform the AIRBAG SYSTEM VERIFICATION TEST. Refer to **STANDARD PROCEDURE** .

   No

   - Go To 3

3. **CHECK THE (R14) and (R16) RIGHT SIDE IMPACT SENSOR 1 CIRCUITS FOR A SHORT TO GROUND**

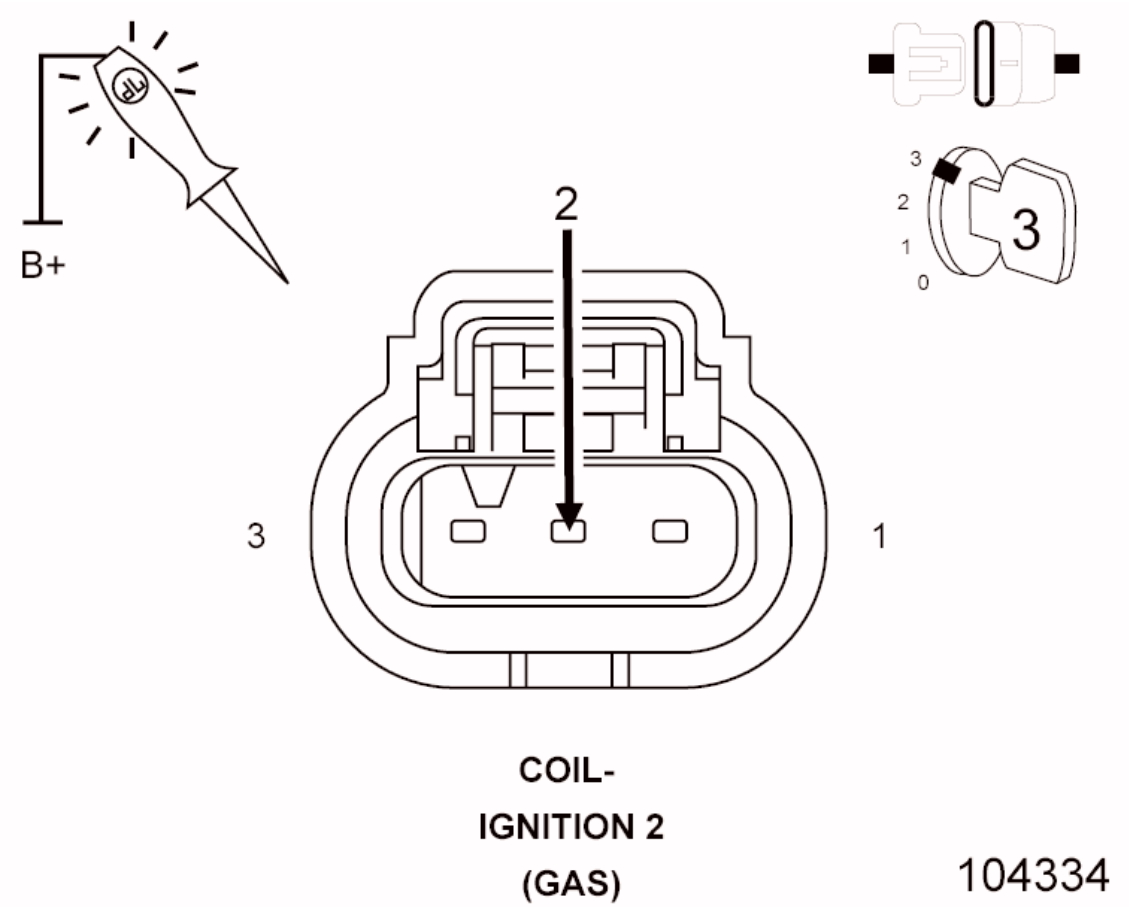

Fig. 114: Checking Right Side Impact Sensor 1 Circuits For Short To Ground
Courtesy of CHRYSLER GROUP, LLC

WARNING: Turn the ignition on, then reconnect the battery and wait two minutes before proceeding. Failure to follow these instructions may result in possible serious or fatal injury.

1. Measure the resistance between ground and the (R14) Right Side Impact Sensor 1 Signal circuit at the Right Side Impact Sensor 1 harness connector.
2. Measure the resistance between ground and the (R16) Right Side Impact Sensor 1 Ground circuit at the Right Side Impact Sensor 1 harness connector.

   Is the resistance below 100K Ohms on either circuit?

Yes

- Repair the (R14) Right Side Impact Sensor 1 Signal or (R16) Right Side Impact Sensor 1 Ground circuit for a short to ground.
- Perform the AIRBAG SYSTEM VERIFICATION TEST. Refer to **STANDARD PROCEDURE** .

No

- Go To 4

4. **CHECK THE (R14) AND (R16) RIGHT SIDE IMPACT SENSOR 1 CIRCUITS FOR A SHORT TOGETHER**

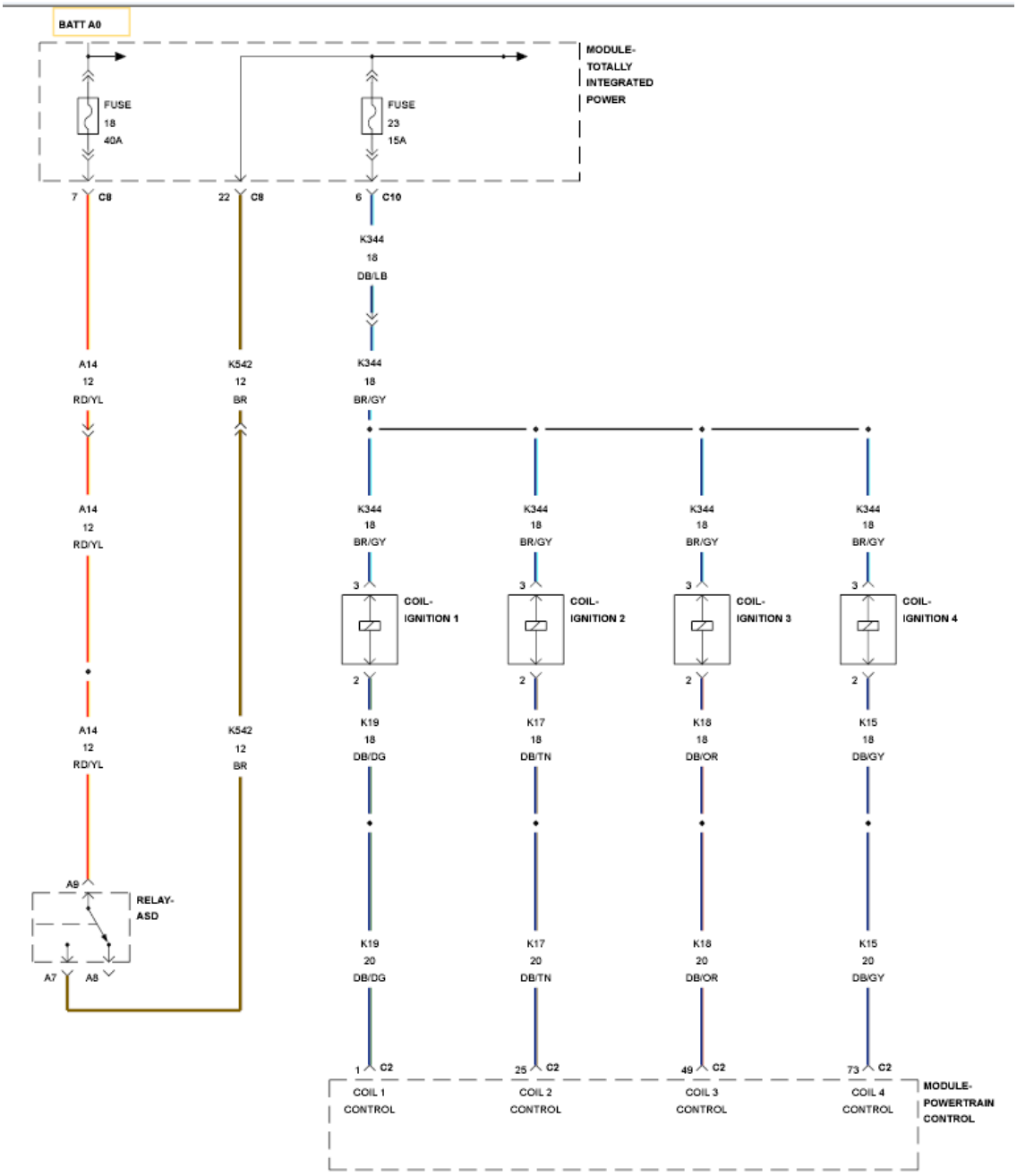

Fig. 115: Checking Right Side Impact Sensor 1 Circuits For Short Together
Courtesy of CHRYSLER GROUP, LLC

1. Measure the resistance between the (R14) Right Side Impact Sensor 1 Signal circuit and the (R16) Sensor 1 Ground circuit at the Right Side Impact Sensor 1 harness connector.

   Is the resistance below 100K Ohms?

   Yes

- Repair the (R14) and (R16) Right Side Impact Sensor 1 circuits shorted together.
- Perform the AIRBAG SYSTEM VERIFICATION TEST. Refer to **STANDARD PROCEDURE** .

No

- Go To 5

5. **CHECK THE (R16) RIGHT SIDE IMPACT SENSOR 1 GROUND CIRCUIT FOR AN OPEN OR HIGH RESISTANCE**

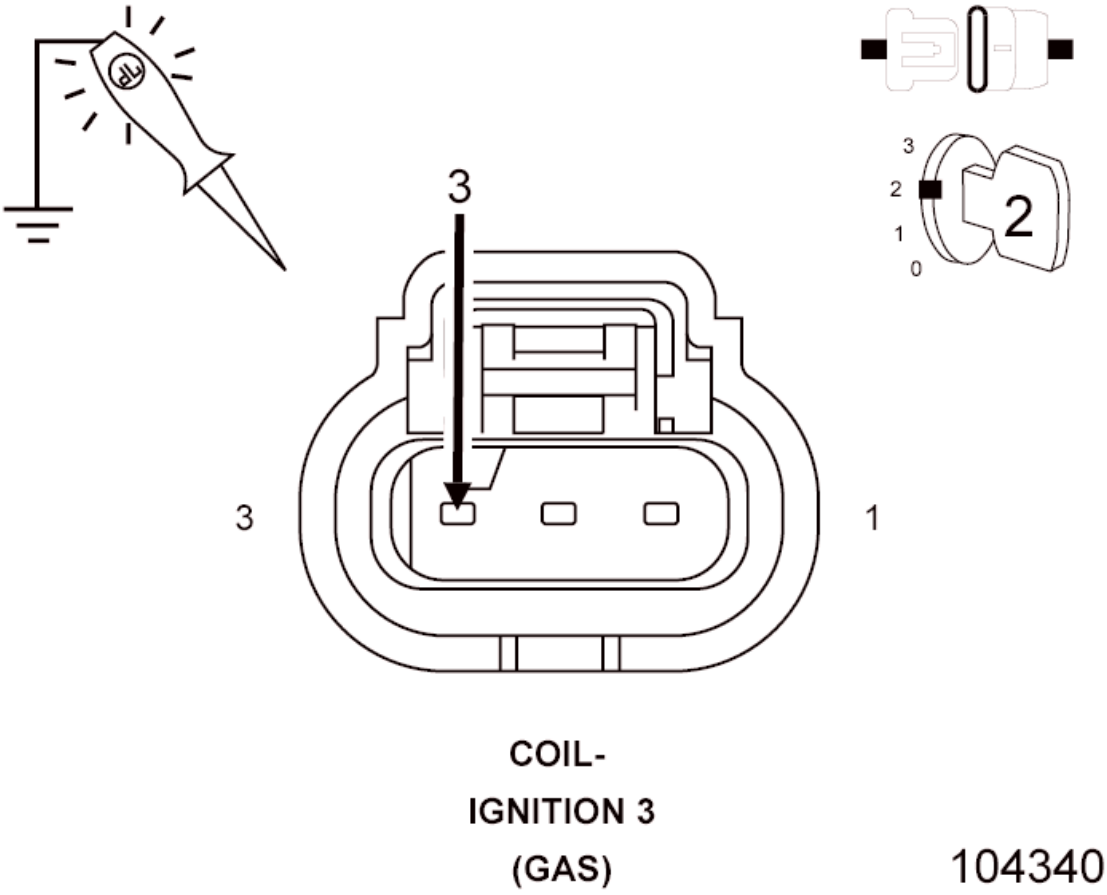

Fig. 116: Checking Right Side Impact Sensor 1 Ground Circuit For Open Or High Resistance
Courtesy of CHRYSLER GROUP, LLC

1. Measure the resistance of the (R16) Right Side Impact Sensor 1 Ground circuit between the Right Side Impact Sensor 1 harness connector and the SRS Load Tool Adaptor (special tool #8443-25, 56 Way ACM Adapter).

Is the resistance below 1 Ohm?

Yes

- Go To 6

No

- Repair the (R16) Right Side Impact Sensor 1 Ground circuit for an open or high resistance.
- Perform the AIRBAG SYSTEM VERIFICATION TEST. Refer to **STANDARD PROCEDURE** .

6. **CHECK THE (R14) RIGHT SIDE IMPACT SENSOR 1 CIRCUIT FOR AN OPEN OR HIGH RESISTANCE**

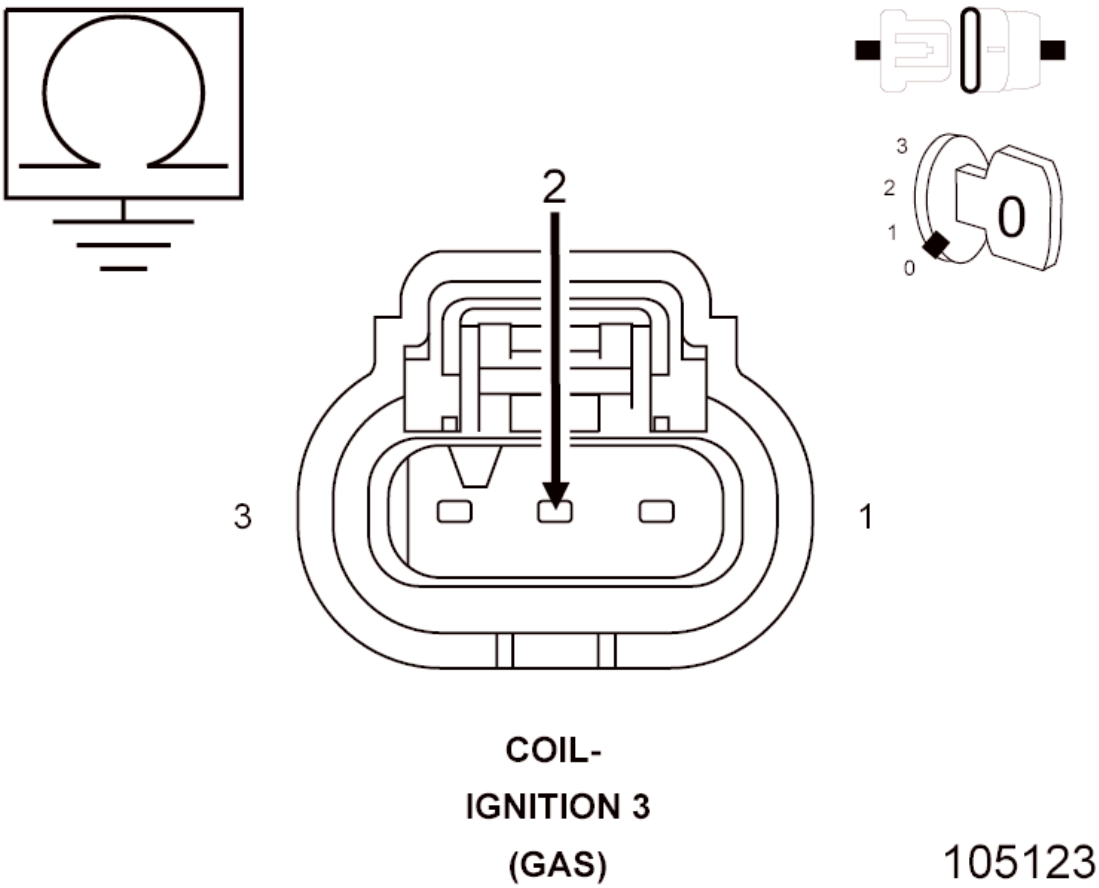

Fig. 117: Checking Right Side Impact Sensor 1 Circuit For Open Or High Resistance
Courtesy of CHRYSLER GROUP, LLC

1. Measure the resistance of the (R14) Right Side Impact Sensor 1 Signal

circuit between the Right Side Impact Sensor 1 harness connector and the SRS Load Tool Adaptor (special tool #8443-25, 56 Way ACM Adapter).

Is the resistance below 1 Ohm?

Yes

- Go To 7

No

- Repair the (R14) Right Side Impact Sensor 1 Signal circuit for an open or high resistance.
- Perform the AIRBAG SYSTEM VERIFICATION TEST. Refer to **STANDARD PROCEDURE** .

7. **CHECK OPERATION OF THE RIGHT SIDE IMPACT SENSOR 1**
   1. Replace the Right Side Impact Sensor 1.
   2. Reconnect the vehicle body harness to the impact sensor.
   3. Remove any special tools or jumper wires and reconnect all previously disconnected components - except the Battery.

      WARNING: **Turn the ignition on, then reconnect the 12-volt battery and wait two minutes before proceeding. Failure to follow these instructions may result in possible serious or fatal injury.**

   4. Connect the scan tool to the Data Link Connector - use the most current software available.
   5. Use the scan tool and erase the stored codes in all airbag system modules.
   6. Turn the Ignition Off, and wait 15 seconds before turning the Ignition On.
   7. Wait one minute, and read active codes and if there are none present read the stored codes.

      Did the active Right Side Impact Sensor 1 DTC return?

Yes

- Go To 8

No

- Repair is complete.
- Perform the AIRBAG SYSTEM VERIFICATION TEST. Refer to **STANDARD PROCEDURE** .

8. **REPLACE THE OCCUPANT RESTRAINT CONTROLLER**

WARNING: **Turn the ignition off disconnect the 12-volt battery and wait two minutes before proceeding. Failure to follow these instructions may result in possible serious or fatal injury.**

WARNING: **If the Occupant Restraint Controller (ORC) is dropped at any time, it must be replaced. Failure to take the proper precautions can result in accidental airbag deployment. Failure to follow these instructions may result in possible serious or fatal injury.**

If there are no possible causes remaining, view repair.

Repair

- Replace the Occupant Restraint Controller in accordance with Service Instructions.
- Perform the AIRBAG SYSTEM VERIFICATION TEST. Refer to **STANDARD PROCEDURE** .

U0176-LOST COMMUNICATION W/RIGHT SIDE SATELLITE ACCELERATION SENSOR 2

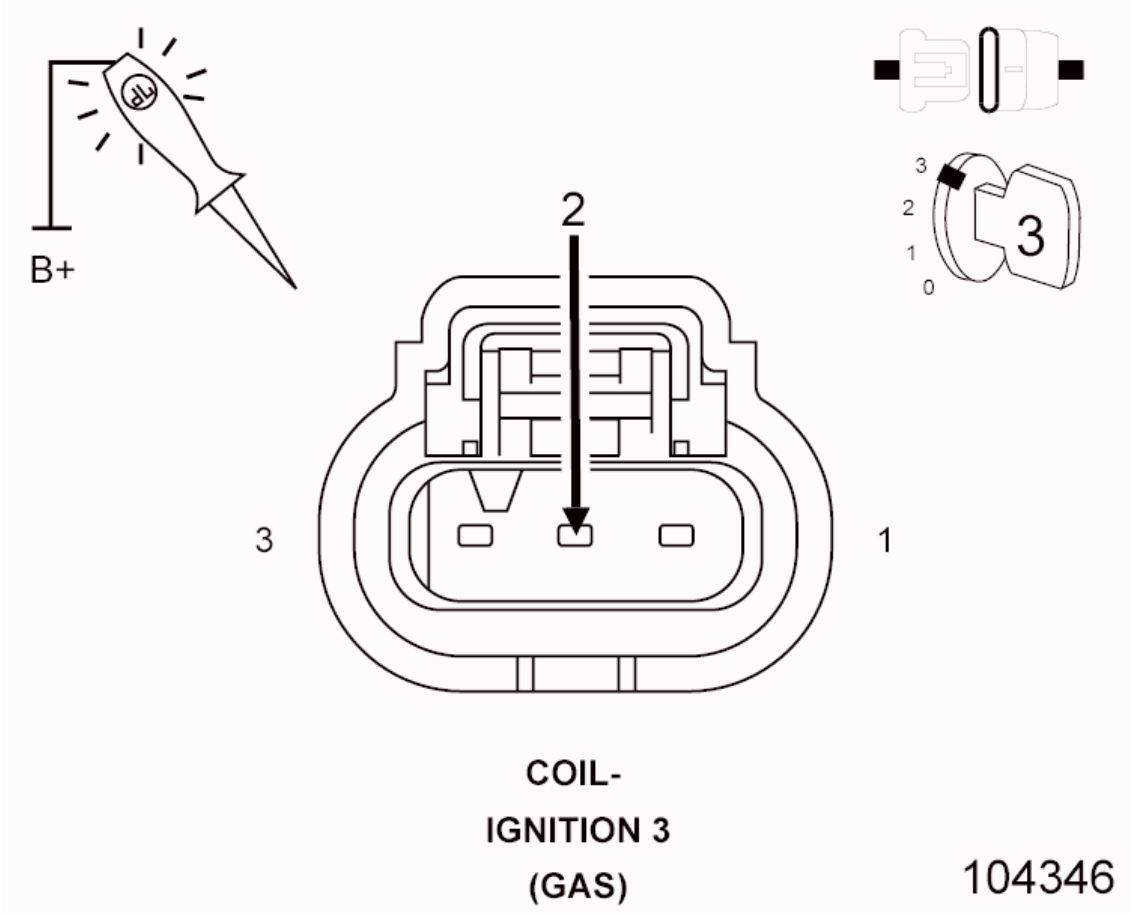

Fig. 118: Right Side Impact Sensors & ORC Module Circuit Schematic
Courtesy of CHRYSLER GROUP, LLC

For a complete wiring diagram, **refer to appropriate SYSTEM WIRING DIAGRAMS article** .

THEORY OF OPERATION

The location of this right side impact sensor 2 is in the C-pillar just past the second row seating. Refer to **DESCRIPTION** . The impact sensors perform their own self test using power supplied by the Occupant Restraint Controller (ORC) then communicate this status back to the ORC with periodic updates. The repair of this fault condition involves verifying the integrity of the wiring between the ORC and the sensor. If the scan tool shows this DTC has a Stored history of setting then the right side impact sensor is to be replaced. A short to voltage fault on the right side impact sensor 1 sensor wiring can cause a loss of comm impact sensor 2 code to set and the possible replacement of a good right side impact sensor 2. The right side impact 1, and 2 sensors are wired in a daisy chain pattern. The short to battery fault in a loss of comm or internal circuit failure of the side impact sensor 1 can cause the impact sensor 2 on the same side to set a

loss of comm code.

WHEN MONITORED

The Occupant Restraint Controller (ORC) continuously communicates with the Right Side Impact Sensor 2 over the sensor signal circuit. The sensor communication and on board diagnostics are powered by the ORC signal.

SET CONDITION

This code will set, if the ORC and the Right Side Impact Sensor 2 do not establish and maintain valid data communications.

POSSIBLE CAUSES

Possible Causes
(R18) SIGNAL CIRCUIT SHORTED TO BATTERY
(R18) SIGNAL CIRCUIT SHORTED TO GROUND
(R18, R20) RIGHT SIDE IMPACT SENSOR 2 CIRCUITS SHORTED TOGETHER
(R20) RIGHT SIDE IMPACT SENSOR 2 GROUND CIRCUIT OPEN
(R18) RIGHT SIDE IMPACT SENSOR 2 SIGNAL CIRCUIT OPEN
ORC, RIGHT SIDE IMPACT SENSOR 2

DIAGNOSTIC TEST

1. **VERIFY THAT DTC U0176-LOST COMMUNICATION W/RIGHT SIDE SATELLITE ACCELERATION SENSOR 2**

WARNING: Turn the ignition off disconnect the 12-volt battery and wait two minutes before proceeding. Failure to follow these instructions may result in possible serious or fatal injury.

NOTE: Using the wiring diagram/schematic as a guide check all related splices and connectors for signs of water intrusion, corrosion, pushed out or bent terminals, and correct pin tension.

NOTE: If after the harness inspection it appears the impact sensor connector is only seated halfway. Reseat the harness connector into the impact sensor and lock the tab.

WARNING: Turn the ignition on, then reconnect the 12-volt battery and wait two minutes before proceeding. Failure to follow these instructions may result in possible serious or fatal injury.

1. Turn the ignition on.
2. With the scan tool, read ORC DTCs.

NOTE: Make sure the battery is fully charged.

Does the scan tool display active: B1B75-RIGHT SIDE SATELLITE ACCELERATION SENSOR 1 INTERNAL, U0175-LOST COMMUNICATION W/RIGHT SIDE SATELLITE ACCELERATION SENSOR 1, U0176-LOST COMMUNICATION W/RIGHT SIDE SATELLITE ACCELERATION SENSOR 2?

Yes

- Check for all other internal and lost communication codes indicated in the right side impact sensor daisy chain wiring before diagnosing DTC U0176-LOST COMMUNICATION W/RIGHT SIDE SATELLITE ACCELERATION SENSOR 2. Go To The DTC Displayed. Refer to **DTC INDEX** . If internal fault 1 and lost comm fault 1 have been checked follow DTC U0176-LOST COMMUNICATION W/RIGHT SIDE SATELLITE ACCELERATION SENSOR 2. Go To 2

No

- Perform the AIRBAG SYSTEM INTERMITTENT TEST. Refer to **STANDARD PROCEDURE** .

2. **CHECK THE (R18) AND (R20) RIGHT SIDE IMPACT SENSOR 2 SIGNAL AND GROUND CIRCUITS FOR A SHORT TO BATTERY**

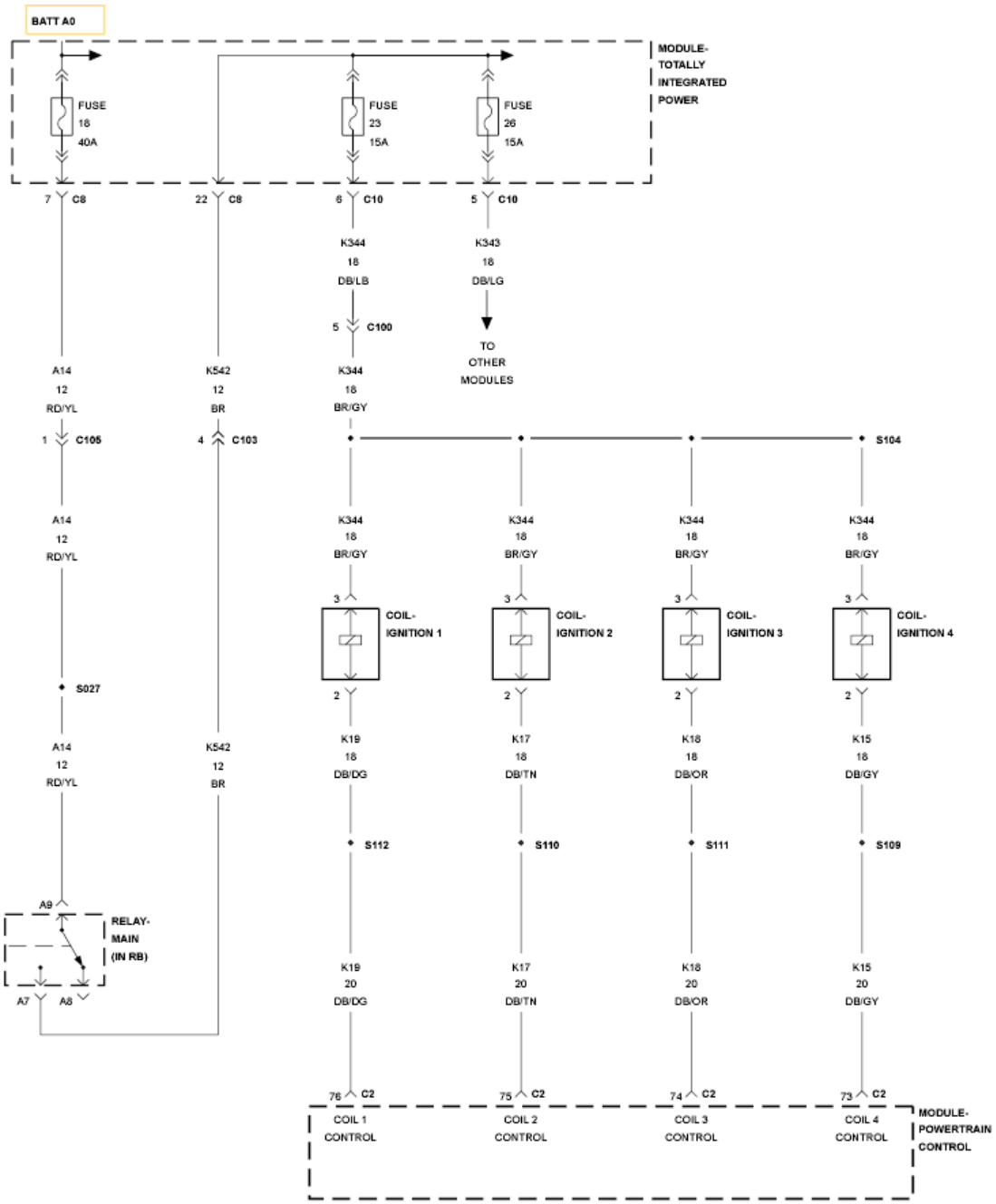

Fig. 119: Checking Right Side Impact Sensor 2 Signal And Ground Circuits For A Short To Battery
Courtesy of CHRYSLER GROUP, LLC

WARNING: Turn the ignition off, disconnect the 12-volt battery and wait two minutes before proceeding. Failure to follow these instructions may result in possible serious or fatal injury.

1. Disconnect the Right Side Impact Sensor 2 harness connector.
2. Disconnect the ORC harness connectors.
3. Connect the SRS Load Tool Adapter (special tool #8443-25, 56 Way ACM Adapter) to the ORC harness connector.

WARNING: Turn the ignition on, then reconnect the battery and wait two minutes before proceeding. Failure to follow these instructions may result in possible serious or fatal injury.

4. Measure the voltage of the (R18) Right Side Impact Sensor 2 Signal circuit and the (R20) Sensor 2 Ground circuit at the Right Side Impact Sensor 2 harness connector.

   Is there any voltage present?

   Yes

   - Repair the (R18) and (R20) Right Side Impact Sensor 2 circuits for a short to battery.
   - Perform the AIRBAG SYSTEM VERIFICATION TEST. Refer to **STANDARD PROCEDURE** .

   No

   - Go To 3

3. **CHECK THE (R18) RIGHT SIDE IMPACT SENSOR 2 SIGNAL CIRCUIT FOR A SHORT TO GROUND**

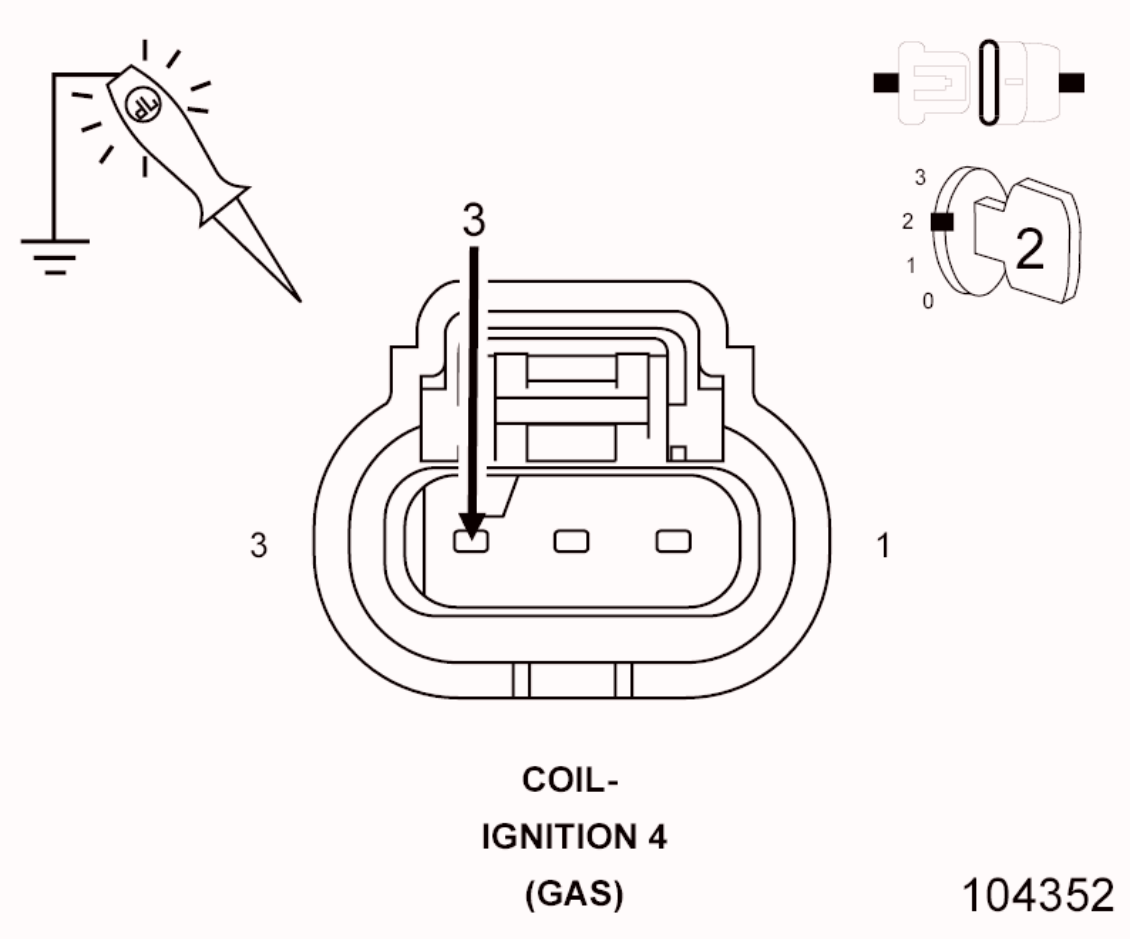

Fig. 120: Checking Right Side Impact Sensor 2 Signal Circuit For A Short To Ground
Courtesy of CHRYSLER GROUP, LLC

WARNING: Turn the ignition on, then reconnect the battery and wait two minutes before proceeding. Failure to follow these instructions may result in possible serious or fatal injury.

1. Measure the resistance between ground and the (R18) Right Side Impact Sensor 2 Signal circuit at the Right Side Impact Sensor 2 harness connector.

   Is the resistance below 100K Ohms?

   Yes

   - Repair the (R18) Right Side Impact Sensor 2 Signal circuit for a

short to ground.

- Perform the AIRBAG SYSTEM VERIFICATION TEST. Refer to **STANDARD PROCEDURE** .

No

- Go To 4

4. **CHECK THE (R18) AND (R20) RIGHT SIDE IMPACT SENSOR 2 CIRCUITS FOR A SHORT TOGETHER**

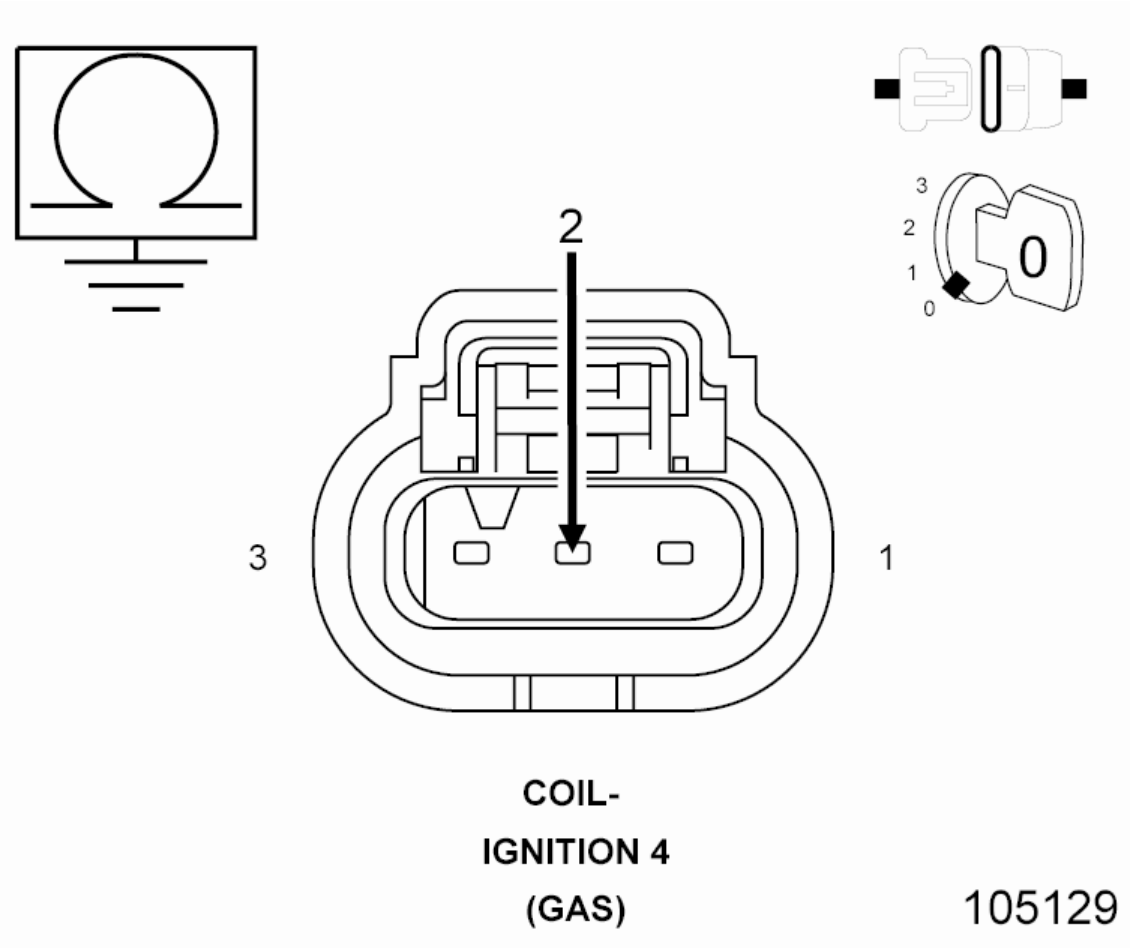

Fig. 121: Checking Right Side Impact Sensor Circuits For A Short Together
Courtesy of CHRYSLER GROUP, LLC

1. Measure the resistance between the (R18) Right Side Impact Sensor 2 Signal circuit and the (R20) Sensor 2 Ground circuit at the Right Side Impact Sensor 2 harness connector.

   Is the resistance below 100K Ohms?

Yes

- Repair the (R18) and (R20) Right Side Impact Sensor 2 circuits shorted together.
- Perform the AIRBAG SYSTEM VERIFICATION TEST. Refer to **STANDARD PROCEDURE** .

No

- Go To 5

5. **CHECK THE (R20) RIGHT SIDE IMPACT SENSOR 2 GROUND CIRCUIT FOR AN OPEN OR HIGH RESISTANCE**

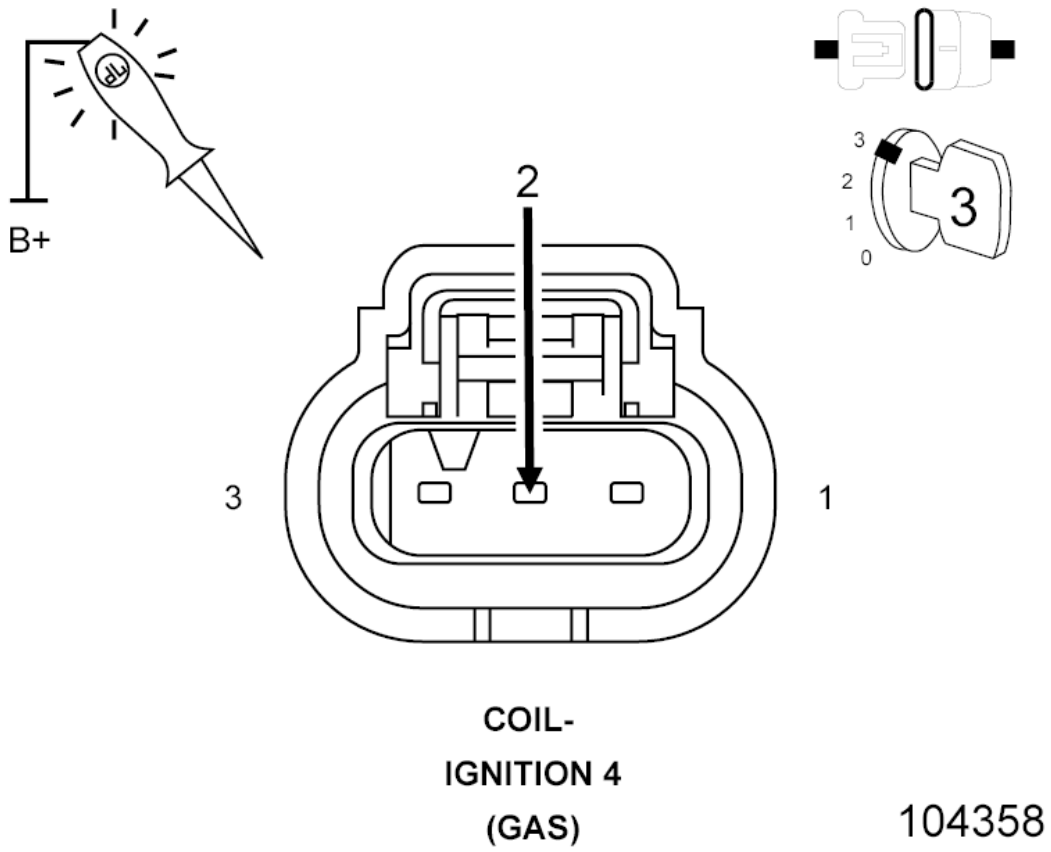

Fig. 122: Checking Right Side Impact Sensor 2 Ground Circuit For Open Or High Resistance
Courtesy of CHRYSLER GROUP, LLC

1. Measure the resistance of the (R20) Right Side Impact Sensor 2 Ground circuit between the Right Side Impact Sensor 2 harness connector and the Right Side Impact Sensor 1.

Is the resistance below 1 Ohm?

Yes

- Go To 6

No

- Repair the (R20) Right Side Impact Sensor 2 Ground circuit for an open or high resistance.
- Perform the AIRBAG SYSTEM VERIFICATION TEST. Refer to **STANDARD PROCEDURE** .

6. **CHECK THE (R18) RIGHT SIDE IMPACT SENSOR 2 CIRCUIT FOR AN OPEN OR HIGH RESISTANCE**

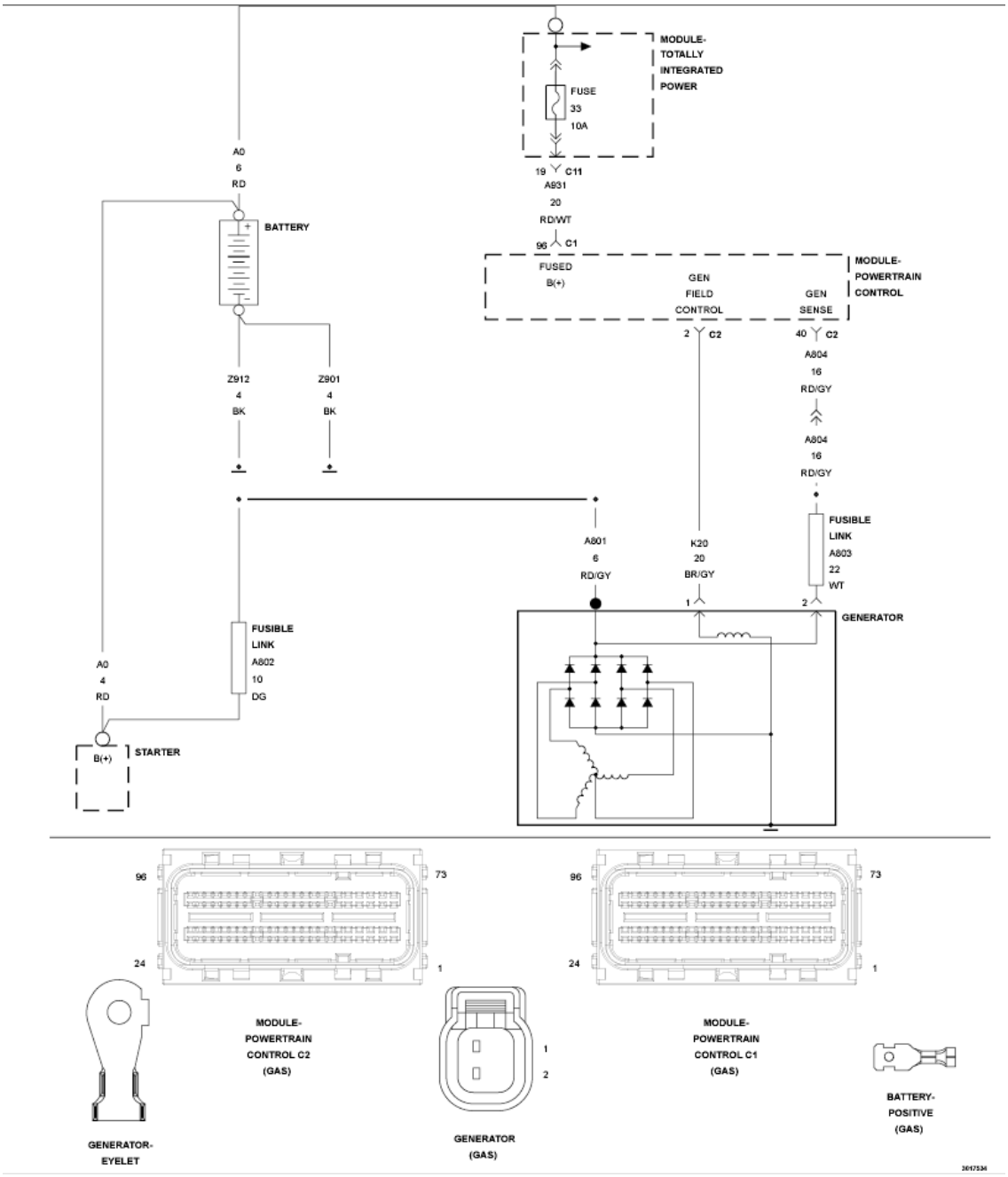

Fig. 123: Checking Right Side Impact Sensor 2 Circuit For Open Or High Resistance
Courtesy of CHRYSLER GROUP, LLC

1. Measure the resistance of the (R18) Right Side Impact Sensor 2 Signal circuit between the Right Side Impact Sensor 2 harness connector and the Right Side Impact Sensor 1.

   Is the resistance below 1 Ohm?

   Yes

- Go To 7

No

- Repair the (R18) Right Side Impact Sensor 2 Signal circuit for an open or high resistance.
- Perform the AIRBAG SYSTEM VERIFICATION TEST. Refer to **STANDARD PROCEDURE** .

7. **CHECK OPERATION OF THE RIGHT SIDE IMPACT SENSOR 2**
   1. Replace the Right Side Impact Sensor 2.
   2. Reconnect the vehicle body harness to the impact sensor.
   3. Remove any special tools or jumper wires and reconnect all previously disconnected components - except the Battery.

      WARNING: **Turn the ignition on, then reconnect the 12-volt battery and wait two minutes before proceeding. Failure to follow these instructions may result in possible serious or fatal injury.**

   4. Connect the scan tool to the Data Link Connector - use the most current software available.
   5. Use the scan tool and erase the stored codes in all airbag system modules.
   6. Turn the Ignition Off, and wait 15 seconds before turning the Ignition On.
   7. Wait one minute, and read active codes and if there are none present read the stored codes.

      Did the active Right Side Impact Sensor 2 DTC return?

      Yes

      - Go To 8

      No

      - Repair is complete.

- Perform the AIRBAG SYSTEM VERIFICATION TEST. Refer to **STANDARD PROCEDURE** .

8. **REPLACE THE OCCUPANT RESTRAINT CONTROLLER**

WARNING: **Turn the ignition off, disconnect the 12-volt battery and wait two minutes before proceeding. Failure to follow these instructions may result in possible serious or fatal injury.**

WARNING: **If the Occupant Restraint Controller (ORC) is dropped at any time, it must be replaced. Failure to take the proper precautions can result in accidental airbag deployment. Failure to follow these instructions may result in possible serious or fatal injury.**

If there are no possible causes remaining, view repair.

Repair

- Replace the Occupant Restraint Controller in accordance with Service Instructions.
- Perform the AIRBAG SYSTEM VERIFICATION TEST. Refer to **STANDARD PROCEDURE** .

U0184-LOST COMMUNICATION WITH RADIO

For a complete wiring diagram, **refer to appropriate SYSTEM WIRING DIAGRAMS article** .

WHEN MONITORED

Continuously when the ignition is on.

Battery voltage between 10 and 16 volts.

Ignition Off Draw (IOD) fused installed.

Totally Integrated Power Module (TIPM) is configured correctly.

SET CONDITION

Bus messages not received from the Radio for approximately two to five seconds.

POSSIBLE CAUSES

Possible Causes
CAN BUS CIRCUITS OPEN OR SHORTED
DTCS RELATED TO BATTERY VOLTAGE, IGNITION, OR VIN MESSAGES
RADIO POWER AND GROUND
TIPM NOT CONFIGURED CORRECTLY
RADIO
MODULE THAT SET THIS DTC

DIAGNOSTIC TEST

VERIFY THE DIAGNOSTIC TROUBLE CODE (DTC) IS ACTIVE

NOTE: Make sure the IOD fuse is installed and the battery is fully charged before proceeding.

1. Turn the ignition on.
2. With the scan tool, read the active DTCs.

   Is this DTC active?

   Yes

   - Refer to **DIAGNOSIS AND TESTING** and perform the U0184-87-Lost Communication with Radio - Missing Message diagnostic procedure.

   No

   - Refer to **DIAGNOSIS AND TESTING** and perform the Stored Lost Communication DTCs diagnostic procedure.

U0186-LOST COMMUNICATION WITH AUDIO AMPLIFIER

For a complete wiring diagram, **refer to appropriate SYSTEM WIRING DIAGRAMS article** .

WHEN MONITORED

Continuously when the ignition is on.

The battery voltage is between 10 and 16 volts.

Ignition Off Draw (IOD) fused installed.

Totally Integrated Power Module (TIPM) is configured correctly.

SET CONDITION

Bus messages not received from the Audio Amplifier for approximately two to five seconds.

POSSIBLE CAUSES

Possible Causes
CAN BUS CIRCUITS OPEN OR SHORTED
DTCS RELATED TO BATTERY VOLTAGE, IGNITION, OR VIN MESSAGES
AMPLIFIER POWER AND GROUND
TIPM NOT CONFIGURED CORRECTLY
AMPLIFIER
MODULE THAT SET THIS DTC

DIAGNOSTIC TEST

VERIFY THE DIAGNOSTIC TROUBLE CODE (DTC) IS ACTIVE

NOTE: Make sure the IOD fuse is installed and the battery is fully charged before proceeding.

1. Turn the ignition on.
2. With the scan tool, read the active DTCs.

   Is this DTC active?

Yes

- **Refer to DIAGNOSIS AND TESTING** and perform the U0186-Lost Communication with Audio Amplifier diagnostic procedure.

No

- **Refer to DIAGNOSIS AND TESTING** and perform the Stored Lost Communication DTCs diagnostic procedure.

U0195-LOST COMMUNICATION WITH SDARS

For a complete wiring diagram, **refer to appropriate SYSTEM WIRING DIAGRAMS article** .

WHEN MONITORED

Continuously when the ignition is on.

The battery voltage is between 10 and 16 volts.

Ignition Off Draw (IOD) fused installed.

Totally Integrated Power Module (TIPM) is configured correctly.

SET CONDITION

Bus messages not received from the Satellite Receiver (SDAR) for approximately two to five seconds.

POSSIBLE CAUSES

Possible Causes
CAN B BUS CIRCUITS OPEN OR SHORTED
DTCS RELATED TO BATTERY VOLTAGE, IGNITION, OR VIN MESSAGES
SATELLITE RECEIVER POWER AND GROUND
TIPM NOT CONFIGURED CORRECTLY
SATELLITE RECEIVER
MODULE THAT SET THIS DTC

DIAGNOSTIC TEST

VERIFY THE DIAGNOSTIC TROUBLE CODE (DTC) IS ACTIVE

NOTE: Make sure the IOD fuse is installed and the battery is fully charged before proceeding.

1. Turn the ignition on.
2. With the scan tool, read the active DTCs.

   Is this DTC active?

   Yes

   - **Refer to DIAGNOSIS AND TESTING** and perform the U0195-Lost Communication with SDAR diagnostic procedure.

   No

   - **Refer to DIAGNOSIS AND TESTING** and perform the Stored Lost Communication DTCs diagnostic procedure.

U0197-LOST COMMUNICATION WITH HANDS FREE PHONE MODULE

For a complete wiring diagram, **refer to appropriate SYSTEM WIRING DIAGRAMS article** .

WHEN MONITORED

Continuously when the ignition is on.

The battery voltage is between 10 and 16 volts.

Ignition Off Draw (IOD) fused installed.

Totally Integrated Power Module (TIPM) is configured correctly.

SET CONDITION

Bus messages not received from the Hands Free Module (HFM) for approximately two to five seconds.

POSSIBLE CAUSES

Possible Causes

CAN BUS CIRCUITS OPEN OR SHORTED
DTCS RELATED TO BATTERY VOLTAGE, IGNITION, OR VIN MESSAGES
HANDS FREE MODULE POWER AND GROUND
TIPM NOT CONFIGURED CORRECTLY
HANDS FREE MODULE
MODULE THAT SET THIS DTC

DIAGNOSTIC TEST

VERIFY THE DIAGNOSTIC TROUBLE CODE (DTC) IS ACTIVE

NOTE: Make sure the IOD fuse is installed and the battery is fully charged before proceeding.

1. Turn the ignition on.
2. With the scan tool, read the active DTCs.

   Is this DTC active?

   Yes

   - **Refer to DIAGNOSIS AND TESTING** and perform the U0197-Lost Communication with Hands Free Phone Module diagnostic procedure.

   No

   - **Refer to DIAGNOSIS AND TESTING** and perform the Stored Lost Communication DTCs diagnostic procedure.

U1414-IMPLAUSIBLE/MISSING ECU CONFIGURATION DATA

For a complete wiring diagram **refer to appropriate SYSTEM WIRING DIAGRAMS article** .

WHEN MONITORED

With the ignition on. The Occupant Restraint Controller (ORC) on board diagnostics continuously monitors the CAN Bus message from the TIPM containing the ORC configuration data.

SET CONDITION

This DTC will set if the data is invalid or missing.

POSSIBLE CAUSES

Possible Causes
OCCUPANT RESTRAINT CONTROLLER (ORC)
TOTALLY INTEGRATED POWER MODULE (TIPM)

DIAGNOSTIC TEST

1. **VERIFY TOTALLY INTEGRATED POWER MODULE (TIPM) OPERATION**
   1. Turn the ignition on.
   2. With the scan tool, read TIPM DTC.

      Does the scan tool display any TIPM DTC?

      Yes

      - Select appropriate symptom from **DTC INDEX** . Repair all TIPM active DTC or reprogram the TIPM before diagnosing the ORC DTC. Refer to **DIAGNOSIS AND TESTING** .

      No

      - Go To 2
2. **CHECK OPERATION OF THE OCCUPANT RESTRAINT CONTROLLER**

   WARNING: **Turn the ignition off, disconnect the 12-volt battery and wait two minutes before proceeding. Failure to follow these instructions may result in possible serious or fatal injury.**

   WARNING: **If the airbag control module is dropped at any time, it must be replaced. Failure to take the proper precautions could result in accidental**

airbag deployment and serious or fatal injury.

1. Replace the Occupant Restraint Controller in accordance with the service information.

   WARNING: **Turn the ignition on, then reconnect the 12-volt battery and wait two minutes before proceeding. Failure to follow these instructions may result in possible serious or fatal injury.**

2. Connect the scan tool to the Data Link Connector - use the most current software available.
3. Wait one minute, and read active codes and if there are none present read the stored codes.

   Did the active U1414-IMPLAUSIBLE/MISSING ECU CONFIGURATION DATA DTC return?

   Yes

   - Replace the Totally Integrated Power Module (TIPM) in accordance with Service Information.
   - Perform the BODY VERIFICATION TEST. Refer to **STANDARD PROCEDURE** .

   No

   - Repair is complete.
   - Perform the AIRBAG SYSTEM VERIFICATION TEST. Refer to **STANDARD PROCEDURE** .

U1415-IMPLAUSIBLE/MISSING VEHICLE CONFIGURATION DATA

For a complete wiring diagram **refer to appropriate SYSTEM WIRING DIAGRAMS article** .

WHEN MONITORED

With the ignition on. The Occupant Restraint Controller (ORC) on board

diagnostics continuously monitors the CAN Bus message from the TIPM containing the ORC configuration data.

SET CONDITION

This DTC will set if the data is invalid or missing.

POSSIBLE CAUSES

Possible Causes
OCCUPANT RESTRAINT CONTROLLER (ORC)
TOTALLY INTEGRATED POWER MODULE (TIPM)

DIAGNOSTIC TEST

1. **VERIFY TOTALLY INTEGRATED POWER MODULE (TIPM) OPERATION**
   1. Turn the ignition on.
   2. With the scan tool, read TIPM DTCs.

      Does the scan tool display any TIPM DTCs?

      Yes

      - Select appropriate symptom from **DTC INDEX** Repair all TIPM active DTCs or reprogram the TIPM before diagnosing the ORC DTCs.

      No

      - Go To 2
2. **CHECK OPERATION OF THE OCCUPANT RESTRAINT CONTROLLER**

   WARNING: **Turn the ignition off, disconnect the 12-volt battery and wait two minutes before proceeding. Failure to follow these instructions may result in possible serious or fatal injury.**

WARNING: If the airbag control module is dropped at any time, it must be replaced. Failure to take the proper precautions could result in accidental airbag deployment and serious or fatal injury.

1. Replace the Occupant Restraint Controller in accordance with the service information.

   WARNING: Turn the ignition on, then reconnect the 12-volt battery and wait two minutes before proceeding. Failure to follow these instructions may result in possible serious or fatal injury.

2. Use the most current software available. Connect the scan tool to the Data Link connector.
3. Wait one minute, and read active codes and if there are none present read the stored codes.

   Did the active U1415-IMPLAUSIBLE/MISSING VEHICLE CONFIGURATION DATA DTC return?

   Yes

   - Replace the Totally Integrated Power Module (TIPM) in accordance with Service Information.
   - Perform the BODY VERIFICATION TEST. Refer to **STANDARD PROCEDURE** .

   No

   - Repair is complete.
   - Perform the AIRBAG SYSTEM VERIFICATION TEST. Refer to **STANDARD PROCEDURE** .

2014 RESTRAINTS

Occupant Restraint Controller (ORC) - Electrical Diagnostics - Compass & Patriot

DIAGNOSTIC CODE INDEX

DIAGNOSTIC CODE INDEX

DTC	Description
B1204	PASSENGER AIRBAG INDICATOR CIRCUIT LOW
B1205	PASSENGER AIRBAG INDICATOR CIRCUIT HIGH
B1B00	DRIVER AIRBAG SQUIB 1 CIRCUIT LOW
B1B01	DRIVER AIRBAG SQUIB 1 CIRCUIT HIGH
B1B02	DRIVER AIRBAG SQUIB 1 CIRCUIT OPEN
B1B03	DRIVER AIRBAG SQUIB 1 CIRCUIT SHORTED TOGETHER
B1B04	DRIVER AIRBAG SQUIB 2 CIRCUIT LOW
B1B05	DRIVER AIRBAG SQUIB 2 CIRCUIT HIGH
B1B06	DRIVER AIRBAG SQUIB 2 CIRCUIT OPEN
B1B07	DRIVER AIRBAG SQUIB 2 CIRCUIT SHORTED TOGETHER
B1B08	PASSENGER AIRBAG SQUIB 1 CIRCUIT LOW
B1B09	PASSENGER AIRBAG SQUIB 1 CIRCUIT HIGH
B1B0A	PASSENGER AIRBAG SQUIB 1 CIRCUIT OPEN
B1B0B	PASSENGER AIRBAG SQUIB 1 CIRCUIT SHORTED TOGETHER
B1B0C	PASSENGER AIRBAG SQUIB 2 CIRCUIT LOW
B1B0D	PASSENGER AIRBAG SQUIB 2 CIRCUIT HIGH
B1B0E	PASSENGER AIRBAG SQUIB 2 CIRCUIT OPEN
B1B0F	PASSENGER AIRBAG SQUIB 2 CIRCUIT SHORTED TOGETHER
B1B18	LEFT SIDE CURTAIN SQUIB 1 CIRCUIT LOW
B1B19	LEFT SIDE CURTAIN SQUIB 1 CIRCUIT HIGH
B1B1A	LEFT SIDE CURTAIN SQUIB 1 CIRCUIT OPEN
B1B1B	LEFT SIDE CURTAIN SQUIB 1 CIRCUIT SHORTED TOGETHER
B1B20	RIGHT SIDE CURTAIN SQUIB 1 CIRCUIT LOW

B1B21	RIGHT SIDE CURTAIN SQUIB 1 CIRCUIT HIGH
B1B22	RIGHT SIDE CURTAIN SQUIB 1 CIRCUIT OPEN
B1B23	RIGHT SIDE CURTAIN SQUIB 1 CIRCUIT SHORTED TOGETHER
B1B28	1ST ROW DRIVER SEAT BELT PRETENSIONER CIRCUIT LOW
B1B29	1ST ROW DRIVER SEAT BELT PRETENSIONER CIRCUIT HIGH
B1B54	1ST ROW PASSENGER SEAT BELT SENSOR CIRCUIT LOW
B1B55	1ST ROW PASSENGER SEAT BELT SENSOR CIRCUIT HIGH
B1B56	1st ROW PASSENGER SEATBELT SENSOR CIRCUIT OPEN
B1B2A	1st ROW DRIVER SEAT BELT PRETENSIONER CIRCUIT OPEN
B1B2B	1st ROW DRIVER SEAT BELT PRETENSIONER CIRCUIT SHORTED TOGETHER
B1B2C	1st ROW PASSENGER SEAT BELT PRETENSIONER CIRCUIT LOW
B1B2D	1st ROW PASSENGER SEAT BELT PRETENSIONER CIRCUIT HIGH
B1B2E	1st ROW PASSENGER SEAT BELT PRETENSIONER CIRCUIT OPEN
B1B2F	1st ROW PASSENGER SEAT BELT PRETENSIONER CIRCUIT SHORTED TOGETHER
B1B70	UP-FRONT LEFT SATELLITE ACCELERATION SENSOR INTERNAL
B1B71	UP-FRONT RIGHT SATELLITE ACCELERATION SENSOR INTERNAL
B1B72	LEFT SIDE SATELLITE ACCELERATION SENSOR 1 INTERNAL
B1B73	LEFT SIDE SATELLITE ACCELERATION SENSOR 2 INTERNAL
B1B75	RIGHT SIDE SATELLITE ACCELERATION SENSOR 1 INTERNAL

B1B76	RIGHT SIDE SATELLITE ACCELERATION SENSOR 2 INTERNAL
B1B8C	DRIVER SEAT TRACK POSITION SENSOR CIRCUIT PERFORMANCE
B1B8D	DRIVER SEAT TRACK POSITION SENSOR CIRCUIT LOW
B1B8E	DRIVER SEAT TRACK POSITION SENSOR CIRCUIT HIGH
B1B8F	DRIVER SEAT TRACK POSITION SENSOR CIRCUIT OPEN
B1B90	DRIVER SEAT TRACK POSITION SENSOR CIRCUIT SHORTED TOGETHER
B1B91	DRIVER SEAT TRACK POSITION SENSOR CONFIGURATION MISMATCH
B1B92	PASSENGER SEAT TRACK POSITION SENSOR CIRCUIT PERFORMANCE
B1B93	PASSENGER SEAT TRACK POSITION SENSOR CIRCUIT LOW
B1B94	PASSENGER SEAT TRACK POSITION SENSOR CIRCUIT HIGH
B1B95	PASSENGER SEAT TRACK POSITION SENSOR CIRCUIT OPEN
B1B97	PASSENGER SEAT TRACK POSITION SENSOR CONFIGURATION MISMATCH
B1BA5	AIRBAG SQUIB CONFIGURATION MISMATCH
B1BB8	SRS WARNING INDICATOR STATUS MISMATCH
B1BD0	ROLL OVER INTERNAL
B1C12	DRIVER ACTIVE HEADREST CONTROL CIRCUIT LOW
B1C13	DRIVER ACTIVE HEADREST CONTROL CIRCUIT HIGH
B1C14	DRIVER ACTIVE HEADREST CONTROL CIRCUIT OPEN
B1C18	PASSENGER ACTIVE HEADREST CONTROL CIRCUIT LOW
B1C19	PASSENGER ACTIVE HEADREST CONTROL CIRCUIT

	HIGH
B1C1A	PASSENGER ACTIVE HEADREST CONTROL CIRCUIT OPEN
B1CDB	PASSENGER OCCUPANT DETECTOR CIRCUIT LOW
B1CDC	PASSENGER OCCUPANT DETECTOR CIRCUIT HIGH
B1BC7	DEPLOYMENT DATA RECORD FULL
B1BCF	ROLL OVER SENSOR
B1C27	LEFT SIDE SEAT THORAX SQUIB 1 LOW
B1C28	LEFT SIDE SEAT THORAX SQUIB 1 HIGH
B1C29	LEFT SIDE SEAT THORAX SQUIB 1 OPEN
B1C2A	LEFT SIDE SEAT THORAX SQUIB 1 SHORTED TOGETHER
B1C2B	RIGHT SIDE SEAT THORAX SQUIB 1 LOW
B1C2C	RIGHT SIDE SEAT THORAX SQUIB 1 HIGH
B1C2D	RIGHT SIDE SEAT THORAX SQUIB 1 OPEN
B1C2E	RIGHT SIDE SEAT THORAX SQUIB 1 SHORTED TOGETHER
B1C2F	PASSENGER AIRBAG INDICATOR STATUS MISMATCH
B1C3A	1ST ROW DRIVER RETRACTOR PRETENSIONER CIRCUIT OPEN
B212C	IGNITION RUN/START INPUT CIRCUIT OPEN
B212D	IGNITION RUN ONLY INPUT CIRCUIT OPEN
B2201	CALIBRATION MISMATCH
B2205	ORIGINAL VIN MISSING/MISMATCH
B2207	OCCUPANT RESTRAINT CONTROLLER INTERNAL 1
B2208	OCCUPANT RESTRAINT CONTROLLER INTERNAL 2
B2209	OCCUPANT RESTRAINT CONTROLLER INTERNAL 3
B220A	OCCUPANT RESTRAINT CONTROLLER INTERNAL 4
B220B	OCCUPANT RESTRAINT CONTROLLER FIRING STORED ENERGY
B220C	OCCUPANT RESTRAINT CONTROLLER ACCELEROMETER 1 INTERNAL
B220D	OCCUPANT RESTRAINT CONTROLLER ACCELEROMETER 2 INTERNAL

B2255	OCCUPANT RESTRAINT CONTROLLER ROLL OVER FEATURE DISABLE
U0001	CAN C BUS
U0019	CAN B BUS
U0141	LOST COMMUNICATION WITH IPM (FCM/TIPM)
U0155	LOST COMMUNICATION WITH CLUSTER/CCN
U0167	LOST COMMUNICATION WITH INTRUSION TRANSCEIVER CONTROL MODULE
U0168	LOST COMMUNICATION WITH VEHICLE SECURITY CONTROL MODULE (WIN)
U0170	LOST COMMUNICATION W/UP-FRONT LEFT SATELLITE ACCELERATION SENSOR
U0171	LOST COMMUNICATION W/UP-FRONT RIGHT SATELLITE ACCELERATION SENSOR
U0172	LOST COMMUNICATION W/LEFT SIDE SATELLITE ACCELERATION SENSOR 1
U0173	LOST COMMUNICATION W/LEFT SIDE SATELLITE ACCELERATION SENSOR 2
U0175	LOST COMMUNICATION W/RIGHT SIDE SATELLITE ACCELERATION SENSOR 1
U0176	LOST COMMUNICATION W/RIGHT SIDE SATELLITE ACCELERATION SENSOR 2
U0184	LOST COMMUNICATION WITH RADIO
U0186	LOST COMMUNICATION WITH AUDIO AMPLIFIER
U0195	LOST COMMUNICATION WITH SDARS
U0197	LOST COMMUNICATION WITH HANDS FREE PHONE MODULE
U1414	IMPLAUSIBLE/MISSING ECU CONFIGURATION DATA
U1415	IMPLAUSIBLE/MISSING VEHICLE CONFIGURATION DATA

2014 RESTRAINTS

Service Information - Compass & Patriot

WARNING

WARNING

WARNING: To avoid serious or fatal injury on vehicles equipped with the Supplemental Restraint System (SRS), never attempt to repair the electrically conductive circuits or wiring components related to the SRS for which there is no MOPAR® wiring repair kit. It is important to use ONLY the recommended splicing kit and procedure. For applicable and available MOPAR® wiring repair kits, please visit the MOPAR® Connector Web Site at the following address on the Internet: (http://dto.vftis.com/mopar/disclaimer.asp). Inappropriate repairs can compromise the conductivity and current carrying capacity of those critical electrical circuits, which may cause SRS components not to deploy when required, or to deploy when not required. Only minor cuts or abrasions of wire and terminal insulation where the conductive material has not been damaged, or connector insulators where the integrity of the latching and locking mechanisms have not been compromised may be repaired using appropriate methods.

WARNING: To avoid serious or fatal injury during and following any seat belt or child restraint anchor service, carefully inspect all seat belts, buckles, mounting hardware, retractors, tether straps, and anchors for proper installation, operation, or damage. Replace any belt that is cut, frayed, or torn. Straighten any belt that is twisted. Tighten any loose fasteners. Replace any belt that has a

damaged or ineffective buckle or retractor. Replace any belt that has a bent or damaged latch plate or anchor plate. Replace any child restraint anchor or the unit to which the anchor is integral that has been bent or damaged. Never attempt to repair a seat belt or child restraint component. Always replace damaged or ineffective seat belt and child restraint components with the correct, new and unused replacement parts listed in the Chrysler Mopar® Parts Catalog.

WARNING: **To avoid serious or fatal injury on vehicles equipped with side curtain airbags, disable the Supplemental Restraint System (SRS) before attempting any Occupant Restraint Controller (ORC) diagnosis or service. The ORC may contain a rollover sensor, which enables the system to deploy the side curtains and seat airbags in the event of a vehicle rollover event. If an ORC containing a rollover sensor is accidentally rolled during service while still connected to battery power, the side curtain and seat airbags will deploy. Disconnect and isolate the battery negative (ground) cable, then wait two minutes for the system capacitor to discharge before performing further diagnosis or service. This is the only sure way to disable the SRS. Failure to take the proper precautions could result in accidental airbag deployment.**

WARNING: **To avoid serious or fatal injury on vehicles equipped with airbags, disable the Supplemental Restraint System (SRS) before attempting any steering wheel, steering column, airbag, seat belt tensioner, impact sensor or instrument panel component diagnosis or service. Disconnect and isolate the battery negative (ground) cable, then wait two minutes for the system capacitor to**

discharge before performing further diagnosis or service. This is the only sure way to disable the SRS. Failure to take the proper precautions could result in accidental airbag deployment.

WARNING: To avoid potential physical injury or damage to sensitive electronic circuits and systems, always disconnect and isolate the battery negative (ground) cable and the positive cable, then ground the positive cable to discharge the Occupant Restraint Controller (ORC) capacitor before performing any welding operations on the vehicle. Failure to take the proper precautions could result in accidental airbag deployment, possible damage to the Supplemental Restraint System (SRS) circuits and components, and possible damage to other electronic circuits and components. Whenever a welding process is being performed within 12 inches (30 centimeters) of an electronic module or wiring harness, then that module or harness should be relocated out of the way, or disconnected. Always protect against component or vehicle damage from weld spatter by using weld blankets and screens.

WARNING: To avoid serious or fatal injury, do not attempt to dismantle an airbag unit or tamper with its inflator. Do not puncture, incinerate or bring into contact with electricity. Do not store at temperatures exceeding 93° C (200° F). An airbag inflator unit may contain sodium azide and potassium nitrate. These materials are poisonous and extremely flammable. Contact with acid, water, or heavy metals may produce harmful and irritating gases (sodium hydroxide is formed in the presence of moisture) or combustible compounds. An airbag inflator unit may also contain a gas canister pressurized to over 17.24 kPa (2500 psi). Failure to

follow these instructions may result in possible serious or fatal injury.

WARNING: To avoid serious or fatal injury when handling a seat belt tensioner retractor. Exercise proper care to keep fingers out from under the retractor cover and away from the seat belt webbing where it exits from the retractor cover. Failure to follow these instructions may result in possible serious or fatal injury.

WARNING: To avoid serious or fatal injury, replace all Supplemental Restraint System (SRS) components only with parts specified in the Chrysler Mopar® Parts Catalog. Substitute parts may appear interchangeable, but internal differences may result in inferior occupant protection.

WARNING: To avoid serious or fatal injury, the fasteners, screws, and bolts originally used for the Supplemental Restraint System (SRS) components must never be replaced with any substitutes. These fasteners have special coatings and are specifically designed for the SRS. Any time a new fastener is needed, replace it with the correct fasteners provided in the service package or specified in the Chrysler Mopar® Parts Catalog.

WARNING: To avoid serious or fatal injury when a steering column has an airbag unit attached, never place the column on the floor or any other surface with the steering wheel or airbag unit face down. Failure to follow these instructions may result in possible serious or fatal injury.

DESCRIPTION

SUPPLEMENTAL RESTRAINT SYSTEM

A Supplemental Restraint System (SRS) is standard factory-installed safety equipment on this vehicle. Available supplemental occupant restraints for this vehicle include both active and passive types. Active restraints are those which require the vehicle occupants to take some action to employ, such as fastening and adjusting a seat belt; while passive restraints require no action by the vehicle occupants to be employed. Additional details of each of these subsystems of the SRS can be found elsewhere within this service information.

ACTIVE RESTRAINTS

The active restraints for this vehicle include:

- **Child Restraint Anchors** - All vehicles are equipped with three, fixed-position, child seat upper tether anchors for the second row seating. A single upper tether anchor is integral to the back of the left seat back panel, and two more are integral to the right seat back panel. Two lower anchors are also provided for each outboard seating position. Three lower anchors are integral to the seat back hinge brackets, while the fourth is integral to a dedicated child anchor bracket. All lower anchors are accessed from the front of the second row seat where the seat back meets the seat cushion.
- **Front Seat Belts** - Both front seating positions are equipped with three-point seat belt systems employing a lower B-pillar mounted inertia latch-type emergency locking retractors, height-adjustable upper B-pillar mounted turning loops, a traveling lower seat belt anchor secured to the outboard side of the seat frame, and a traveling end-release seat belt buckle secured to the inboard side of the seat frame. The driver side front seat belt retractor includes an integral plunger-actuated mechanical seat belt switch that detects whether the driver side front seat belt has been fastened. In domestic market vehicles, a second seat belt switch on the passenger side retractor detects whether the passenger side front seat belt has been fastened.
- **Second Row Seat Belts** - All three second row seating positions are equipped with three-point seat belt systems. The outboard seating position belts employ lower C-pillar mounted inertia latch-type emergency locking retractors, fixed position upper C-pillar mounted turning loops and fixed lower seat belt anchors secured to the rear floor panel. The second row seat center seating position has an inertia latch-type emergency locking retractor that is secured within the right D-pillar and has a dedicated, keyed anchor

buckle that allows the belt anchor to be quickly detached when the right second row seat back is folded down for additional cargo space. All of the second row seat belt retractors for this vehicle are also switchable from an emergency locking retractor to an automatic locking retractor for compatibility with child seats. The center seating position belt lower anchor buckle is secured along with the right outboard seat belt buckle to the rear floor panel through the child lower anchor bracket. All three second row seat belts have fixed end-release seat belt buckles.

PASSIVE RESTRAINTS

8098029e

Fig. 1: SRS Logo
Courtesy of CHRYSLER GROUP, LLC

The passive restraints available for this vehicle include the following:

- **Active Head Restraints** - Active Head Restraints (AHR) are standard equipment for both front seating positions in this vehicle. An AHR can be readily distinguished from a non-active head restraint by the two-piece construction used for an AHR. The forward-facing surface is padded and covered in a material coordinated with the other soft trim on the seat, while the rearward-facing surface is equipped with a molded plastic trim cover that matches the other hard trim on the seat.
- **Dual Front Airbags** - A multistage Driver AirBag (DAB) and front Passenger AirBag (PAB) are used in this vehicle. This airbag system consists of passive, inflatable, Supplemental Restraint System (SRS) components and vehicles with this equipment can be readily identified by the **SRS - AIRBAG** logo molded into the DAB trim cover in the center of the steering wheel and also into the PAB door on the instrument panel above

the glove box. Vehicles with the airbag system can also be identified by the airbag indicator, which will illuminate in the ElectroMechanical Instrument Cluster (EMIC) (also known as the Cab Compartment Node/CCN) for about seven seconds as a bulb test each time the ignition switch is turned to the On position. A pyrotechnic-type seat belt tensioner is also integral to the driver and passenger front seat belt retractors to work in conjunction with the dual front airbags.

- **Seat Airbags** - Seat mounted Seat AirBags (SAB) (also known as pelvic and thoracic airbags) are optional equipment in this vehicle. This airbag system consists of passive, inflatable, SRS components and vehicles with this equipment can be readily identified by a sewn tag with the **SRS - AIRBAG** logo located on the outboard side of the front seat back trim cover.
- **Side Curtain Airbags** - Side curtain airbags (also known as Side AirBag Inflatable Curtains/SABIC) are standard equipment in this vehicle when it is also equipped with dual front airbags. This airbag system consists of passive, inflatable, SRS components and vehicles with this equipment can be readily identified by a molded identification trim button with the **SRS - AIRBAG** logo located on the top of each B-pillar upper trim panel near the headliner.

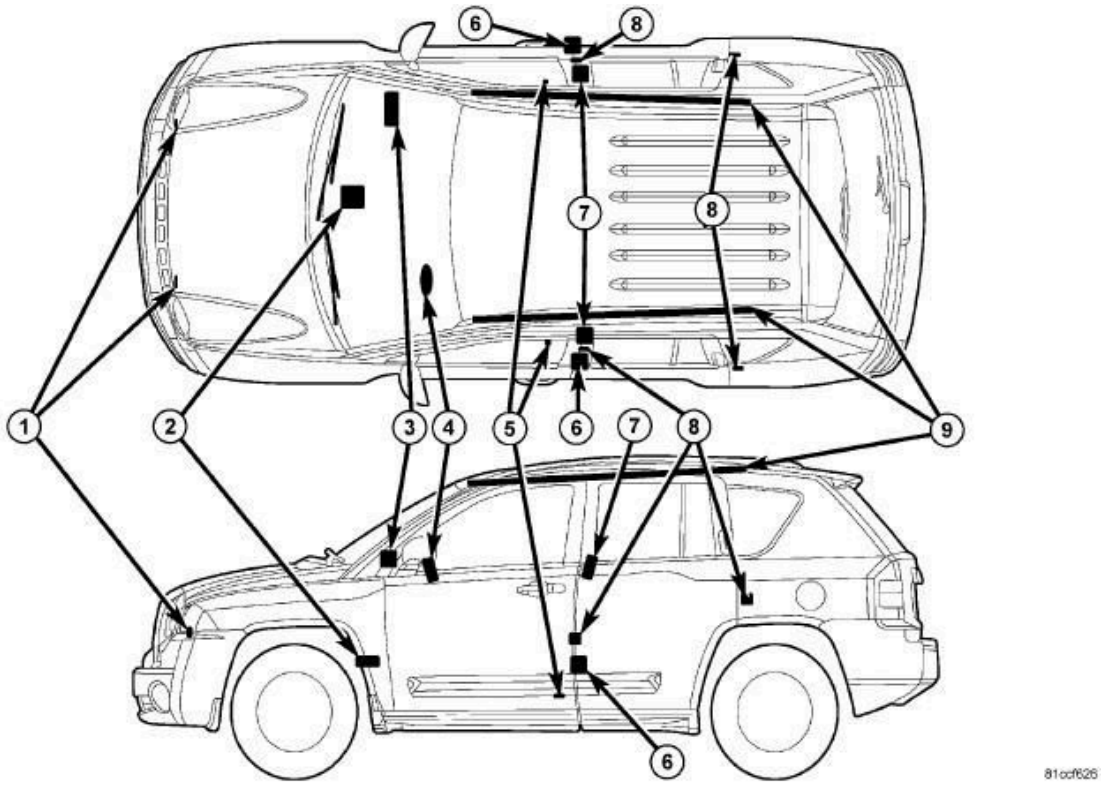

Fig. 2: Supplemental Restraint System Components

Courtesy of CHRYSLER GROUP, LLC

The SRS includes the following major components, which are described in further detail elsewhere in this service information:

- **Active Head Restraints** - On vehicles with this equipment, one Active Head Restraint (AHR) is located atop each front seat back unit.
- **Airbag Indicator** - The airbag indicator is integral to the ElectroMechanical Instrument Cluster (EMIC) (also known as the Cab Compartment Node/CCN), which is located on the instrument panel in front of the driver.
- **Clockspring** - The clockspring is located near the top of the steering column, directly beneath the steering wheel.
- **Driver Airbag (4)** - The Driver AirBag (DAB) is located in the center of the steering wheel, beneath the DAB trim cover.
- **Driver Knee Blocker** - The driver knee blocker is a static structural unit secured to the back side of and integral to the instrument panel steering column opening cover.
- **Front Impact Sensor (1)** - Two front impact sensors are used on vehicles equipped with dual front airbags, one left side and one right side. One sensor is located on the back side of each vertical member of the radiator support.
- **Occupant Detection Sensor** - An Occupant Detection Sensor (ODS) is located on the top of the seat cushion of the passenger side front seat in domestic market vehicles.
- **Occupant Restraint Controller (2)** - The Occupant Restraint Controller (ORC) is located on a mount on the floor panel transmission tunnel forward of the transmission gear selector, and is concealed behind the instrument panel center support.
- **Passenger Airbag (3)** - The Passenger AirBag (PAB) is located in the instrument panel, beneath the PAB door on the instrument panel top cover and above the glove box on the passenger side of the vehicle.
- **Passenger Knee Blocker** - The passenger knee blocker is a static structural reinforcement that is integral to and concealed within the glove box door.
- **Seat Airbag (7)** - An optional Seat AirBag (SAB) (also known as a pelvic and thoracic airbag) is secured to each outboard front seat back frame, where it is concealed beneath the seat back trim cover and foam.
- **Seat Belt Tensioner (6)** - A seat belt tensioner is integral to both front seat belt retractor units on vehicles equipped with dual front airbags. The seat

belt retractor tensioner units are secured to the right and left lower inner B-pillar and are concealed behind the lower B-pillar trim.

- **Seat Track Position Sensor (5)** - Certain vehicles may include a Seat Track Position Sensor (STPS) that is located on the inboard side of one of the seat adjuster tracks on both the driver and the passenger front seats.
- **Side Curtain Airbag (9)** - A side curtain airbag (also known as a Side AirBag Inflatable Curtain/SABIC) is secured to each inside roof side rail above the headliner, and extends from the A-pillar to just behind the C-pillar.
- **Side Impact Sensor (8)** - Four side impact sensors are used, two on each side of the vehicle. One sensor is located behind the B-pillar trim near the belt line of each B-pillar and one sensor is located behind the quarter panel trim near the belt line of each C-pillar.

The ORC and the EMIC each contain a microcontroller and programming that allow them to communicate with each other using the Controller Area Network (CAN) data bus. This method of communication is used by the ORC for control of the airbag indicator in the EMIC. Refer to **COMMUNICATION, DESCRIPTION** .

Hard wired circuitry connects the SRS components to each other through the electrical system of the vehicle. These hard wired circuits are integral to several wire harnesses, which are routed throughout the vehicle and retained by many different methods. These circuits may be connected to each other, to the vehicle electrical system, and to the SRS components through the use of a combination of soldered splices, splice block connectors, and many different types of wire harness terminal connectors and insulators. Refer to the appropriate wiring information. The wiring information includes wiring diagrams, proper wire and connector repair procedures, further details on wire harness routing and retention, as well as pin out and location views for the various wire harness connectors, splices and grounds.

PEDESTRIAN PROTECTION SYSTEM

A Pedestrian Protection system (also known as the PedPro System) is factory-installed safety equipment, which is available only in vehicles manufactured for certain export markets. Unlike the PedPro system used in some other models, the PedPro system used in this vehicle consists entirely of passive, static components. There are no electronic or active features used or required in the

PedPro system for this vehicle. The PedPro system for this vehicle includes the following major components, which are described in further detail elsewhere in this service information:

- **Front Energy Absorber Foam Material** - The front energy absorber foam material is sandwiched between the front bumper area of the front fascia and the front bumper support beam. Refer to **FRAME AND BUMPERS** for front fascia removal and installation procedures.
- **Pedestrian Bar** - A static, tubular metal pedestrian bar (also known as a leg catcher) is concealed just behind the lower end of the front fascia. The pedestrian bar is suspended at each side from the lower end of a stamped metal bracket that is secured at the top near the same brackets that support each end of the front bumper support beam. Refer to **FRAME AND BUMPERS** for the pedestrian bar removal and installation procedures.

OPERATION

SUPPLEMENTAL RESTRAINT SYSTEM

The Supplemental Restraint System (SRS) is comprised of two primary subsystems: Active Restraints and Passive Restraints. Additional operational details on each of these subsystems of the SRS can be found elsewhere within this service information.

ACTIVE RESTRAINTS

The primary passenger restraints in this or any other vehicle are the standard equipment factory-installed seat belts and child restraint anchors. Seat belts and child restraint anchors are referred to as an active restraint because the vehicle occupants are required to physically fasten and properly adjust these restraints in order to benefit from them.

PASSIVE RESTRAINTS

The passive restraints are referred to as a Supplemental Restraint System (SRS) components because they were designed and are intended to enhance the protection for the occupants of the vehicle **only** when used in conjunction with the seat belts. They are referred to as passive restraints because the vehicle occupants are not required to do anything to make them operate; however, the vehicle occupants must be wearing their seat belts in order to obtain the maximum safety benefit from the factory-installed SRS components. In addition,

each front seat occupant must have their Active Head Restraint (AHR) unit properly adjusted in order to obtain its maximum safety benefit.

The SRS electrical circuits are continuously monitored and controlled by a microcontroller and software contained within the Occupant Restraint Controller (ORC). An airbag indicator in the ElectroMechanical Instrument Cluster (EMIC) (also known as the Cab Compartment Node/CCN) illuminates for about seven seconds as a bulb test each time the ignition switch is turned to the On or Start positions. Following the bulb test, the airbag indicator is turned On or Off by the ORC to indicate the status of the SRS. If the airbag indicator comes On at any time other than during the bulb test, it indicates that there is a problem in the SRS electrical circuits. Such a problem may cause airbags not to deploy when required, or to deploy when not required.

Deployment of the SRS components depends upon the angle and severity of an impact. Deployment is not based upon vehicle speed; rather, deployment is based upon the rate of deceleration as measured by the forces of gravity (G force) upon the acceleration-type impact sensors. When an impact is severe enough, the microcontroller within the ORC signals the inflator of the appropriate airbag units to deploy their airbag cushions. The front seat belt retractor tensioners are provided with a deployment signal by the ORC in conjunction with the front airbags. The optional Seat AirBags (SAB) (also known as pelvic and thoracic airbags) are provided with a deployment signal by the ORC in conjunction with the side curtain airbag based upon a side impact sensor input for the same side of the vehicle.

The two AHR units are provided with a simultaneous deployment signal by the ORC independent from any of the other passive restraints only as a result of an impact pulse originating at the rear of the vehicle, but will not deploy with the transmission gear selector in the Reverse **(R)** position.

During a frontal vehicle impact, the static knee blockers work in concert with properly fastened and adjusted seat belts to restrain both the driver and the front seat passenger in the proper position for an airbag deployment. The knee blockers also absorb and distribute the crash energy from the driver and the front seat passenger to the structure of the instrument panel. The seat belt tensioners remove the slack from the front seat belts to provide further assurance that the driver and front seat passenger are properly positioned and restrained for an airbag deployment.

Typically, the vehicle occupants recall more about the events preceding and following a collision than they do of an airbag deployment itself. This is because the airbag deployment and deflation occur very rapidly. In a typical 48 kilometer-per-hour (30 mile-per-hour) barrier impact, from the moment of impact until the airbags are fully inflated takes about 40 milliseconds. Within one to two seconds from the moment of impact, the airbags are almost entirely deflated. The times cited for these events are approximations, which apply only to a barrier impact at the given speed. Actual times will vary somewhat, depending upon the vehicle speed, impact angle, severity of the impact, and the type of collision.

When the ORC monitors a problem in any of the SRS circuits or components, including the seat belt tensioners and AHR units, it stores a fault code or Diagnostic Trouble Code (DTC) in its memory circuit and sends an electronic message to the EMIC to turn On the airbag indicator. The hard wired circuits between components related to the SRS may be diagnosed using conventional diagnostic tools and procedures. Refer to the appropriate wiring information. The wiring information includes wiring diagrams, proper wire and connector repair procedures, details of wire harness routing and retention, connector pin out information and location views for the various wire harness connectors, splices and grounds.

However, conventional diagnostic methods will not prove conclusive in the diagnosis of the SRS or the electronic controls and communication between other modules and devices that provide features of the SRS. The most reliable, efficient and accurate means to diagnose the SRS or the electronic controls and communication related to SRS operation, as well as the retrieval or erasure of a DTC requires the use of a diagnostic scan tool and may also require the use of the SRS Load Tool special tool along with the appropriate Load Tool Jumpers and Adapters. Refer to the appropriate diagnostic information.

PEDESTRIAN PROTECTION SYSTEM

In the event of a frontal vehicle impact, the Pedestrian Protection system (also known as the PedPro System) components are designed and intended to enhance the protection for pedestrians. During a frontal pedestrian impact, the purpose of the front energy absorber foam material and the pedestrian bar (also known as the leg catcher) that supports the lower front fascia is to reduce the severity of leg injuries and to position the pedestrian onto the hood of the vehicle rather than onto the pavement. These goals are intended to reduce both the severity and the

debilitating nature of potential pedestrian injuries.

It should be noted that the pedestrian bar and the front energy absorber foam material **must** be inspected and replaced if visually damaged following **any** frontal vehicle impact, regardless of whether a pedestrian is involved.

DIAGNOSIS AND TESTING

DIAGNOSIS AND TESTING - SUPPLEMENTAL RESTRAINT SYSTEM

The hard wired circuits between modules and components related to the Supplemental Restraint System (SRS) may be diagnosed using conventional diagnostic tools and procedures. Refer to the appropriate wiring information. The wiring information includes wiring diagrams, proper wire and connector repair procedures, details of wire harness routing and retention, connector pin out information and location views for the various wire harness connectors, splices and grounds.

However, conventional diagnostic methods will not prove conclusive in the diagnosis of the SRS or the electronic controls and communication between other modules and devices that provide features of the SRS. The most reliable, efficient and accurate means to diagnose the SRS or the electronic controls and communication related to SRS operation, as well as the retrieval or erasure of a DTC requires the use of a diagnostic scan tool. Refer to the appropriate diagnostic information.

In addition to a diagnostic scan tool that contains the latest version of the proper diagnostic software, certain diagnostic procedures for the SRS may require the use of the SRS Load Tool special tool along with the appropriate Load Tool Jumpers and Adapters. Refer to the appropriate diagnostic information.

WARNING: **To avoid serious or fatal injury on vehicles equipped with airbags, disable the Supplemental Restraint System (SRS) before attempting any steering wheel, steering column, airbag, seat belt tensioner, impact sensor or instrument panel component diagnosis or service. Disconnect and isolate the battery negative (ground) cable, then wait two minutes for the system capacitor to discharge before performing further diagnosis or**

service. This is the only sure way to disable the SRS. Failure to take the proper precautions could result in accidental airbag deployment.

STANDARD PROCEDURE

HANDLING NON-DEPLOYED SUPPLEMENTAL RESTRAINTS

At no time should any source of electricity be permitted near the inflator on the back of a non-deployed airbag or seat belt tensioner. When carrying a non-deployed airbag, the trim cover or airbag cushion side of the unit should be pointed away from the body to minimize injury in the event of an accidental deployment. If the airbag unit is placed on a bench or any other surface, the trim cover or airbag cushion side of the unit should be face up to minimize movement in the event of an accidental deployment.

When handling a non-deployed seat belt tensioner, take proper care to keep fingers away from the retractor cover and away from the seat belt webbing where it exits from the retractor cover. In addition, the Supplemental Restraint System (SRS) should be disarmed whenever any steering wheel, steering column, seat belt tensioner, airbag, impact sensor or instrument panel components require diagnosis or service. Failure to observe this warning could result in accidental airbag deployment and possible personal injury.

All damaged, ineffective or non-deployed airbags and seat belt tensioners which are replaced on vehicles are to be handled and disposed of properly. If an airbag or seat belt tensioner unit is ineffective or damaged and non-deployed, refer to the appropriate Hazardous Substance Control System for information regarding the potentially hazardous properties of the subject component and the proper safe handling procedures. Then dispose of all non-deployed and deployed airbags and seat belt tensioners in a manner consistent with state, provincial, local and federal regulations.

SERVICE AFTER A FRONTAL IMPACT WITH PEDESTRIAN PROTECTION SYSTEM

NON-PEDESTRIAN IMPACT

The following Pedestrian Protection (also known as PedPro) system components **must** be closely inspected, then replaced if any damage is visually evident following any non-pedestrian frontal vehicle impact:

- Front bumper energy absorber foam material (inspect for compression, cracks and any other signs of deformation or deterioration)
- Front bumper support beam (reinforcement)
- Front fascia
- Front fascia brackets
- Pedestrian bar

PEDESTRIAN IMPACT

The following Pedestrian Protection (also known as PedPro) system components **must** be closely inspected, then replaced if any damage is visually evident following a pedestrian impact:

- Front bumper energy absorber foam material (inspect for compression, cracks and any other signs of deformation or deterioration)
- Front bumper support beam (reinforcement)
- Front fascia
- Front fascia brackets
- Pedestrian bar

SERVICE AFTER A SUPPLEMENTAL RESTRAINT SYSTEM DEPLOYMENT

Any vehicle which is to be returned to use following a Supplemental Restraint System (SRS) component deployment must have the deployed restraints replaced. In addition, the following guidelines MUST be observed.

- **Following ANY major vehicle impact damage in the vicinity of an impact sensor or the ORC** - It is critical that the mounting surfaces and mounting brackets for the Occupant Restraint Controller (ORC), front impact sensors and side impact sensors located within the proximity of the impact damage be closely inspected and restored to their original conditions. Because the ORC and each impact sensor are used by the SRS to monitor or confirm the direction and severity of a vehicle impact, improper orientation or insecure fastening of these components may cause airbags not to deploy when required, or to deploy when not required.
- **If an active head restraint is deployed** - Deployed Active Head Restraint (AHR) units that are undamaged are designed with the intention of reuse. However, the deployed AHR units must be properly reset following

deployment. Refer to **RESTRAINT, ACTIVE HEAD, STANDARD PROCEDURE**.

- **If the driver airbag is deployed** - If the Driver AirBag (DAB) has been deployed, the clockspring and the steering column must be replaced.
- **If the passenger airbag is deployed** - If the Passenger AirBag (PAB) is deployed, the PAB door must be replaced.
- **If a seat airbag is deployed** - If a Seat AirBag (SAB) (also known as pelvic and thoracic airbags) has been deployed, the seat back frame, the seat back foam and the seat back trim cover on the same side of the vehicle as the deployed airbag must also be replaced.
- **If a seat belt tensioner is deployed** - The seat belt tensioners are deployed in conjunction with the front airbags, but can also be deployed with Seat AirBags (SAB) (also known as pelvic and thoracic airbags) or side curtain airbags (also known as Side AirBag Inflatable Curtains/SABIC). The seat belt tensioners must be replaced if either front airbag has been deployed, and must be inspected if either SAB or side curtain airbag has been deployed.
- **If a side curtain airbag is deployed** - If a side curtain airbag (also known as Side AirBag Inflatable Curtains/SABIC) has been deployed, the headliner as well as the upper A, B, C and D-pillar trim on the same side of the vehicle as the deployed airbag must also be replaced. On vehicles with an optional sunroof, the sunroof drain tubes and hoses must be closely inspected following a side curtain airbag deployment.

The components identified with the deployed SRS components in the preceding list are not intended for reuse and will be damaged or weakened as a result of an airbag deployment, which may or may not be obvious during a visual inspection. All other vehicle components should be closely inspected following any SRS component deployment, but are to be replaced only as required by the extent of the visible damage incurred.

SQUIB CIRCUIT DAMAGE

In addition to the preceding guidelines, be aware that the heat created by the initiator during an airbag or tensioner deployment will cause collateral damage to the connected wiring (squib circuits) and connector insulators. There are two methods by which an airbag or seat belt tensioner may be connected to the vehicle electrical system. The first method involves a short pigtail harness and connector insulator that are integral to the airbag or tensioner unit and are

replaced as a unit with the service replacement airbag or seat belt tensioner. This connection method typically requires no additional wiring repair following a deployment.

However, the second connection method involves a wire harness takeout and connector insulator that are connected directly to the airbag or tensioner initiator or squib. These direct-connect type take outs and connector insulators **MUST** be repaired following an airbag or seat belt tensioner deployment using the approved Supplemental Restraint System Wiring Repairs procedure. Refer to **STANDARD PROCEDURE**.

AIRBAG SQUIB STATUS

Multistage airbags with multiple initiators (squibs) must be checked to determine that all squibs were used during the deployment event. The Driver AirBag (DAB) and Passenger AirBag (PAB) in this vehicle are deployed by electrical signals generated by the Occupant Restraint Controller (ORC) through the driver or passenger squib 1 and squib 2 circuits to the two initiators in the airbag inflators. Typically, both initiators are used and all potentially hazardous chemicals are burned during an airbag deployment event. However, it is possible for only one initiator to be used; therefore, it is always necessary to confirm that both initiators have been used in order to avoid the improper handling or disposal of potentially live pyrotechnic or hazardous materials. The following procedure should be performed using a diagnostic scan tool to verify the status of both airbag squibs before either deployed airbag is removed from the vehicle for disposal.

CAUTION: Deployed front airbags having two initiators (squibs) in the airbag inflator may or may not have live pyrotechnic material within the inflator. Do not dispose of these airbags unless you are certain of complete deployment. Refer to the appropriate Hazardous Substance Control System for information regarding the potentially hazardous properties of the subject component and the proper safe handling procedures. Then dispose of all non-deployed and deployed airbags and seat belt tensioners in a manner consistent with state, provincial, local and federal regulations.

1. Be certain that the diagnostic scan tool contains the latest version of the proper diagnostic software. Connect the scan tool to the 16-way Data Link Connector (DLC). The DLC is located on the driver side lower edge of the instrument panel, outboard of the steering column.
2. Turn the ignition switch to the On position.
3. Using the scan tool, read and record the active (current) Diagnostic Trouble Code (DTC) data.

Using the active DTC information, refer to the **AIRBAG SQUIB STATUS** table to determine the status of both DAB squibs and both PAB squibs.

AIRBAG SQUIB STATUS

IF THE ACTIVE DTC IS:	CONDITIONS	SQUIB STATUS
Driver or Passenger Squib 1 open	**AND** the stored DTC minutes for both Driver or Passenger squibs are within 15 minutes of each other	Both Squib 1 and 2 were used.
Driver or Passenger Squib 2 open		
Driver or Passenger Squib 1 open	**AND** the stored DTC minutes for Driver or Passenger Squib 2 open is GREATER than the stored DTC minutes for Driver or Passenger Squib 1 by 15 minutes or more	Squib 1 was used; Squib 2 is live.
Driver or Passenger Squib 2 open		
Driver or Passenger Squib 1 open	**AND** the stored DTC minutes for Driver or Passenger Squib 1 open is GREATER than the stored DTC minutes for Driver or Passenger Squib 2 by 15 minutes or more	Squib 1 is live; Squib 2 was used.
Driver or Passenger Squib 2 open		
Driver or Passenger Squib 1 open	**AND** Driver or Passenger Squib 2 open is NOT an active code	Squib 1 was used; Squib 2 is live.
Driver or Passenger Squib 2 open	**AND** Driver or Passenger Squib 1 open is NOT an active code	Squib 1 is live; Squib 2 was used.

NOTE: If none of the Driver or Passenger Squib 1 or 2 open are active codes, the status of the airbag squibs is unknown.

In this case the airbag should be handled and disposed of as if the squibs were both live.

CLEANUP PROCEDURE

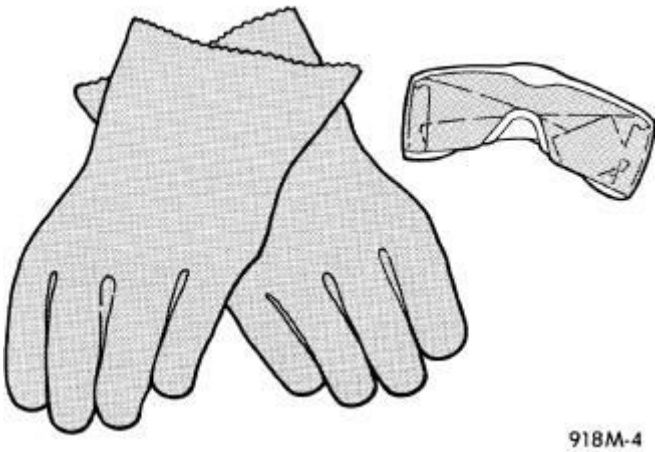

Fig. 3: Rubber Gloves & Safety Glasses
Courtesy of CHRYSLER GROUP, LLC

Following a Supplemental Restraint System (SRS) component deployment, the vehicle interior will contain a powdery residue. This residue consists primarily of harmless particulate by-products of the small pyrotechnic charge that initiates the propellant used to deploy a SRS component. However, this residue may also contain traces of sodium hydroxide powder, a chemical by-product of the propellant material that is used to generate the inert gas that inflates the airbag. Since sodium hydroxide powder can irritate the skin, eyes, nose, or throat, be certain to wear safety glasses, rubber gloves, and a long-sleeved shirt during cleanup.

WARNING: **To avoid serious or fatal injury, if you experience skin irritation during cleanup, run cool water over the affected area. Also, if you experience irritation of the nose or throat, exit the vehicle for fresh air until the irritation ceases. If irritation continues, see a physician.**

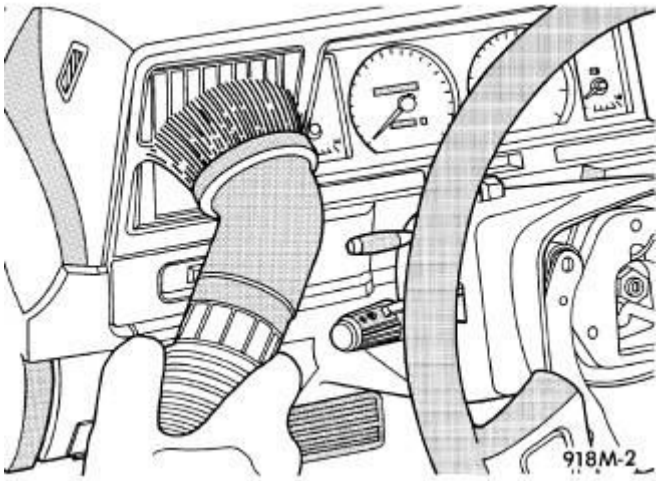

Fig. 4: Cleaning Vehicle Interior Using Vacuum Cleaner
Courtesy of CHRYSLER GROUP, LLC

1. Begin the cleanup by using a vacuum cleaner to remove any residual powder from the vehicle interior. Clean from outside the vehicle and work your way inside, so that you avoid kneeling or sitting on a non-cleaned area.
2. Be certain to vacuum the heater and air conditioning outlets as well. Run the heater and air conditioner blower on the lowest speed setting and vacuum any powder expelled from the outlets.

CAUTION: Deployed front airbags having two initiators (squibs) in the airbag inflator may or may not have live pyrotechnic material within the inflator. Do not dispose of these airbags unless you are certain of complete deployment. Refer to AIRBAG SQUIB STATUS . All damaged, ineffective, or non-deployed Supplemental Restraint System (SRS) components which are replaced on vehicles are to be handled and disposed of properly. If an airbag or seat belt tensioner unit is ineffective or damaged and non-deployed, refer to the appropriate Hazardous Substance Control System for information regarding the potentially hazardous properties of the subject component and the proper safe handling procedures. Then dispose of all non-deployed

and deployed airbags and seat belt tensioners in a manner consistent with state, provincial, local and federal regulations.

3. Next, remove the deployed SRS components from the vehicle. Refer to the appropriate service removal procedures.
4. You may need to vacuum the interior of the vehicle a second time to recover all of the powder.

SUPPLEMENTAL RESTRAINT STORAGE

Airbags and seat belt tensioners must be stored in their original, special container until they are used for service. Also, they must be stored in a clean, dry environment away from sources of extreme heat, sparks and high electrical energy. Always place or store any airbag on a surface with its trim cover or airbag cushion side facing up, to minimize movement in case of an accidental deployment.

SUPPLEMENTAL RESTRAINT SYSTEM VERIFICATION TEST

WARNING: **To avoid serious or fatal injury on vehicles equipped with airbags, disable the Supplemental Restraint System (SRS) before attempting any steering wheel, steering column, airbag, seat belt tensioner, impact sensor or instrument panel component diagnosis or service. Disconnect and isolate the battery negative (ground) cable, then wait two minutes for the system capacitor to discharge before performing further diagnosis or service. This is the only sure way to disable the SRS. Failure to take the proper precautions could result in accidental airbag deployment.**

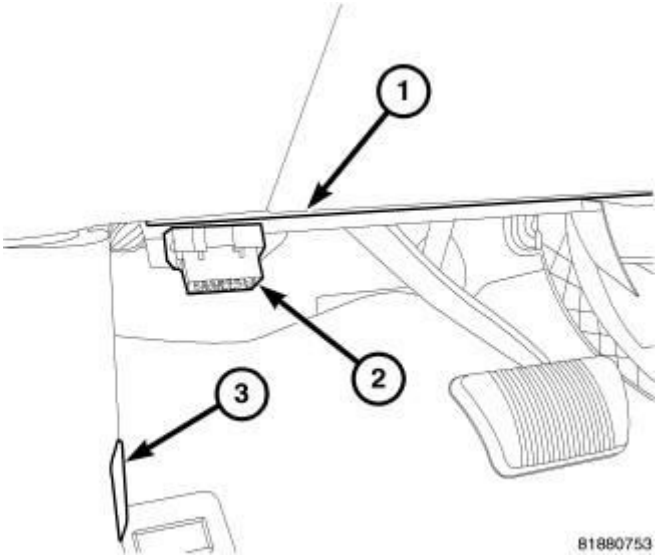

Fig. 5: Locating Data Link Connector
Courtesy of CHRYSLER GROUP, LLC

NOTE: The following procedure should be performed using a diagnostic scan tool to verify proper Supplemental Restraint System (SRS) operation following the service or replacement of any SRS component. Refer to the appropriate diagnostic procedures.

1. During the following test, the negative cable remains disconnected and isolated from the battery, as it was during the Supplemental Restraint System (SRS) component removal and installation procedures.
2. Be certain that the diagnostic scan tool contains the latest version of the proper diagnostic software. Connect the scan tool to the 16-way Data Link Connector (DLC) (2). The DLC is located on the driver side lower edge of the instrument panel (1), near the cowl side inner panel (3).
3. Transition the status of the ignition switch to On and exit the vehicle with the scan tool.
4. Check to be certain that nobody is in the vehicle, then reconnect the negative cable to the battery.
5. Using the scan tool, read and record the active (current) Diagnostic Trouble Code (DTC) data.
6. Next, use the scan tool to read and record any stored (historical) DTC data.
7. If any DTC is found in Step 5 or Step 6, refer to the appropriate diagnostic information.

8. Use the scan tool to erase the stored DTC data. If any problems remain, the stored DTC data will not erase. Refer to the appropriate diagnostic information to diagnose any stored DTC that will not erase. If the stored DTC information is successfully erased, go to Step 9.
9. Transition the status of the ignition switch to Off for about 15 seconds, and then back to On. Observe the airbag indicator in the instrument cluster. It should light for six to eight seconds, and then go out. This indicates that the SRS is functioning normally and that the repairs are complete. If the airbag indicator fails to light, or lights and stays On, there is still an active SRS fault or malfunction. Refer to the appropriate diagnostic information to diagnose the problem.

SUPPLEMENTAL RESTRAINT SYSTEM WIRING REPAIRS

It is important when repairing any Supplemental Restraint System (SRS) electrical circuits to use the recommended splicing kit and procedure. For applicable and available MOPAR® wiring repair kits, please visit the MOPAR® Connector Web Site at the following address on the Internet: (http://dto.vftis.com/mopar/disclaimer.asp).

This recommended procedure involves crimping the wires together with a splice band, soldering the crimped connection and, finally, sealing and protecting the repair. The crimp and solder ensure a strong mechanical bond that will always pass a pull test while also maintaining the conductivity and current carrying capacity of the circuit. The adhesive sealant and heat shrink tubing ensures the splice repair will perform as well or better than the original wire and be safe from potential corrosion or short circuits.

There is no limit to the number of splice repairs that can be made in one harness using this procedure. However, as has been past practice, multiple adjacent splices should be offset from each other. This wiring splice repair procedure is approved for harness side repairs only. Repairs and splices to pigtail wires on SRS components such as airbag units, seat belt tensioner units or clocksprings are not approved or recommended.

REPAIR PROCEDURE

CAUTION: If additional wire is needed when making a splice repair to any wire, it is important that the same or next larger size wire gauge be used. Refer to the

appropriate wiring diagram for the original wire gauge size.

1. Remove 13 millimeters (0.50 inch) of insulation from each wire that needs to be spliced.

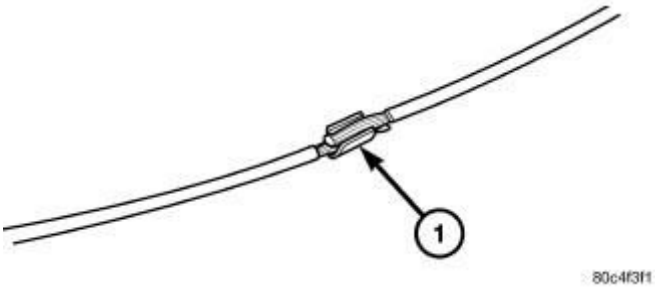

Fig. 6: Splice Band
Courtesy of CHRYSLER GROUP, LLC

2. Place a piece of adhesive sealant-lined heat shrink tubing (Part Number 04778570 or equivalent) over the wire on one side of the splice. Be certain the length of tubing will be sufficient to cover and seal the entire repair area.
3. Place the strands of the wires being spliced so that they are overlapping each other within the splice band (1).

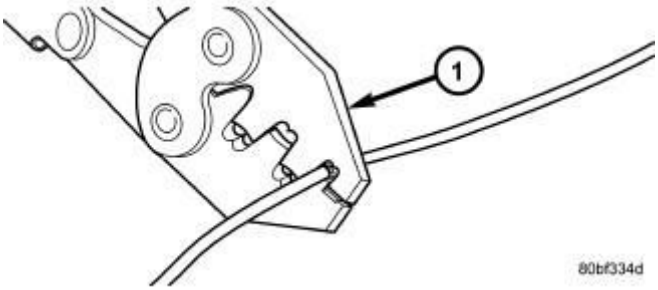

Fig. 7: Crimping Tool
Courtesy of CHRYSLER GROUP, LLC

4. Using a crimping tool (1) (MOPAR® Part Number 05019912AA, Miller Special Tool Number (special tool #10042, Crimper, Wire/Terminal) or equivalent) crimp the splice band and wires together securely.

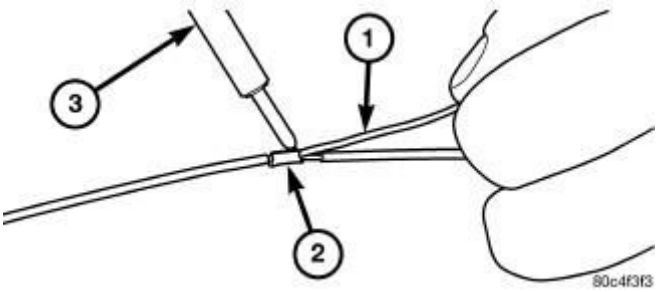

Fig. 8: Solder Splice
Courtesy of CHRYSLER GROUP, LLC

CAUTION: Never use acid core solder for electrical wiring repairs.

5. Using rosin core type solder (1) only and a suitable soldering iron (3), solder the wire and splice band connection (2) together.

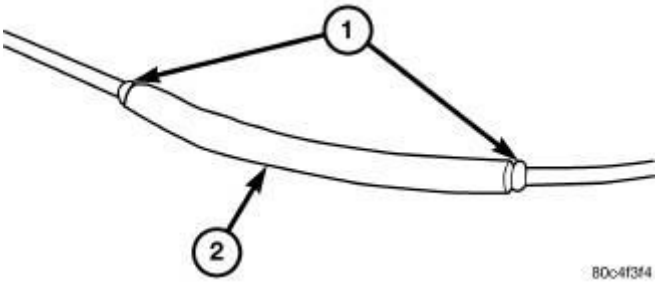

Fig. 9: Heat Shrink Tube
Courtesy of CHRYSLER GROUP, LLC

6. Center the heat shrink tubing (2) over the splice joint repair and heat using a suitable heat gun. Heat the joint until the tubing is tightly sealed and sealant (1) begins to ooze out of both ends of the tubing.

SPECIFICATIONS

SPECIFICATIONS

TORQUE SPECIFICATIONS			
DESCRIPTION	**N.m**	**Ft. Lbs.**	**In. Lbs.**
Child Anchor Bracket Mounting Nut	80	59	-
Clockspring Mounting Screw	3	-	27
Curtain Airbag Mounting Screw	5.5	-	50

Driver Airbag (Horn Switch) Mounting Screws	13	10	-
Front Impact Sensor Mounting Nut	8	-	70
Side Impact Sensor Mounting Screw	8	-	70
Occupant Restraint Controller Mounting Nut	9	-	80
Passenger Airbag Mounting Nut	6	-	55
Seat Airbag Mounting Nut	10	-	89
Front Seat Belt Buckle Lower Anchor Mounting Screw	45	33	-
Second Row Seat Belt Buckle Anchor Plate Mounting Screw	58	43	-
Front Seat Belt Retractor Mounting Screw	40	30	-
Front Seat Belt Turning Loop Mounting Screw	40	30	-
Front Seat Belt Lower Anchor Mounting Screw	40	30	-
Second Row Seat Belt Retractor Mounting Screw	40	30	-
Second Row Outboard Seat Belt Turning Loop Mounting Screw	40	30	-
Second Row Outboard Seat Belt Lower Anchor Mounting Screw	58	43	-
Turning Loop Height Adjuster Mounting Screw	40	30	-

SPECIAL TOOLS

SPECIAL TOOLS

	10042 - Crimper,

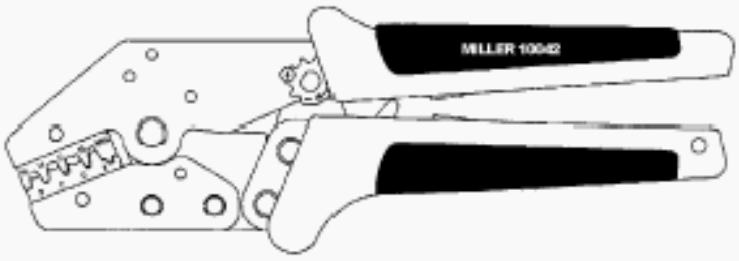	Wire/Terminal (Originally Shipped In Kit Number(s) 10042.)

ADJUSTER, SEAT BELT TURNING LOOP

REMOVAL

REMOVAL

WARNING: To avoid serious or fatal injury during and following any seat belt or child restraint anchor service, carefully inspect all seat belts, buckles, mounting hardware, retractors, tether straps, and anchors for proper installation, operation, or damage. Replace any belt that is cut, frayed, or torn. Straighten any belt that is twisted. Tighten any loose fasteners. Replace any belt that has a damaged or ineffective buckle or retractor. Replace any belt that has a bent or damaged latch plate or anchor plate. Replace any child restraint anchor or the unit to which the anchor is integral that has been bent or damaged. Never attempt to repair a seat belt or child restraint component. Always replace damaged or ineffective seat belt and child restraint components with the correct, new and unused replacement parts listed in the Chrysler Mopar® Parts Catalog.

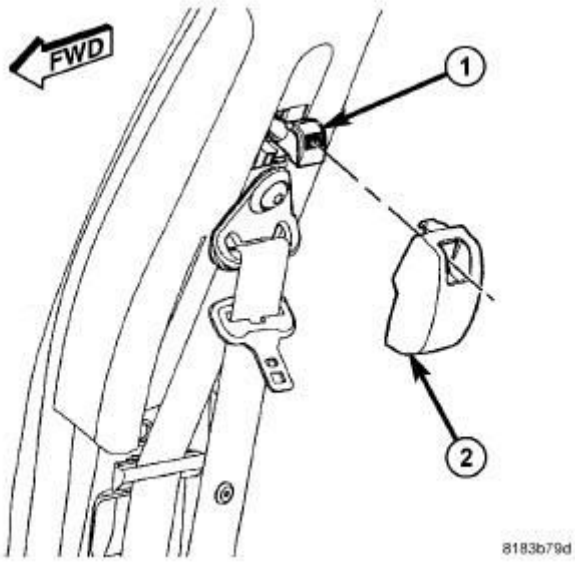

Fig. 10: Height Adjuster Knob & Turning Loop Trim Cover
Courtesy of CHRYSLER GROUP, LLC

1. Firmly grasp the lower end of the turning loop trim cover (2) on the upper B-pillar and pull it straight out to unsnap it from over the height adjuster knob (1), then roll the bottom of the cover upward and pull outward to disengage the upper tab from the slot in the adjuster cover above the knob.

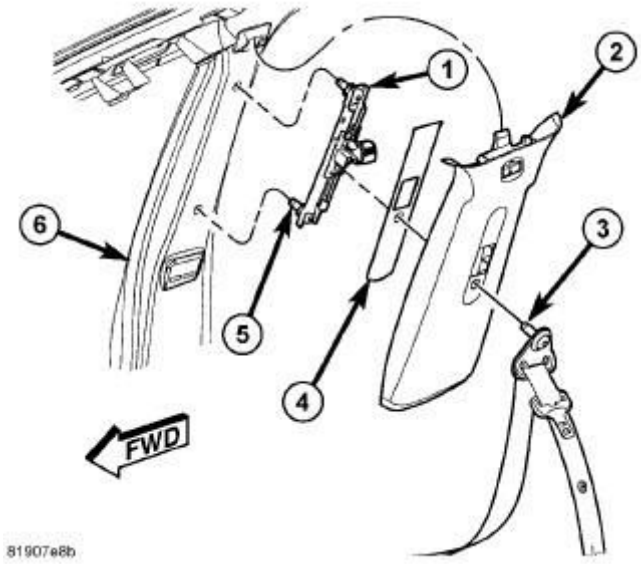

Fig. 11: Seat Belt Turning Loop & Height Adjuster
Courtesy of CHRYSLER GROUP, LLC

2. Remove the screw (3) that secures the seat belt turning loop to the height adjuster (1).

3. Remove the seat belt turning loop from the height adjuster.
4. Remove the upper trim (2) from the inside of the B-pillar (6). Refer to **PANEL, B-PILLAR TRIM, UPPER, REMOVAL** .
5. Remove the cover (4) from over the height adjuster.
6. Remove the two screws (5) that secure the height adjuster to the inside of the B-pillar.
7. Remove the adjuster from the B-pillar.

INSTALLATION

INSTALLATION

WARNING: **To avoid serious or fatal injury during and following any seat belt or child restraint anchor service, carefully inspect all seat belts, buckles, mounting hardware, retractors, tether straps, and anchors for proper installation, operation, or damage. Replace any belt that is cut, frayed, or torn. Straighten any belt that is twisted. Tighten any loose fasteners. Replace any belt that has a damaged or ineffective buckle or retractor. Replace any belt that has a bent or damaged latch plate or anchor plate. Replace any child restraint anchor or the unit to which the anchor is integral that has been bent or damaged. Never attempt to repair a seat belt or child restraint component. Always replace damaged or ineffective seat belt and child restraint components with the correct, new and unused replacement parts listed in the Chrysler Mopar® Parts Catalog.**

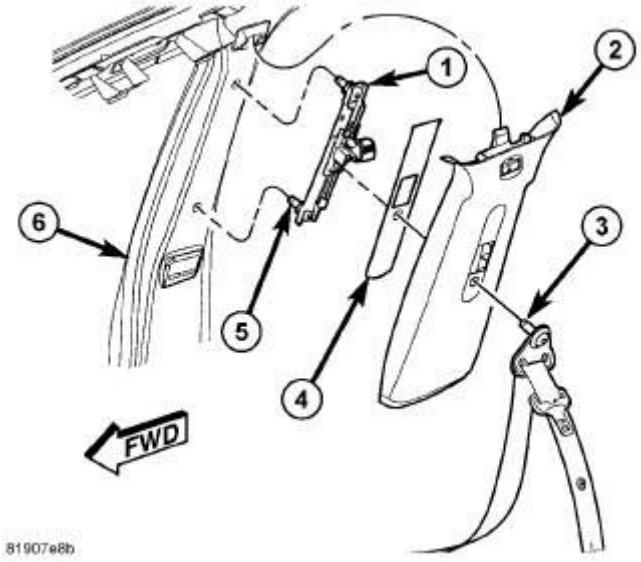

Fig. 12: Seat Belt Turning Loop & Height Adjuster
Courtesy of CHRYSLER GROUP, LLC

1. Position the seat belt turning loop adjuster (1) to the inside of the B-pillar (6).
2. Install and tighten the two screws (5) that secure the adjuster to the B-pillar. Tighten the screws to 40 N.m (30 ft. lbs.).
3. Position the cover (4) over the height adjuster knob.
4. Reinstall the upper trim (2) onto the inside of the B-pillar. Refer to **PANEL, B-PILLAR TRIM, UPPER, INSTALLATION** .
5. Position the seat belt turning loop onto the height adjuster on the upper B-pillar. Be certain that the seat belt webbing between the retractor and the turning loop is not twisted.
6. Install and tighten the screw (3) that secures the turning loop to the height adjuster. Tighten the screw to 40 N.m (30 ft. lbs.).

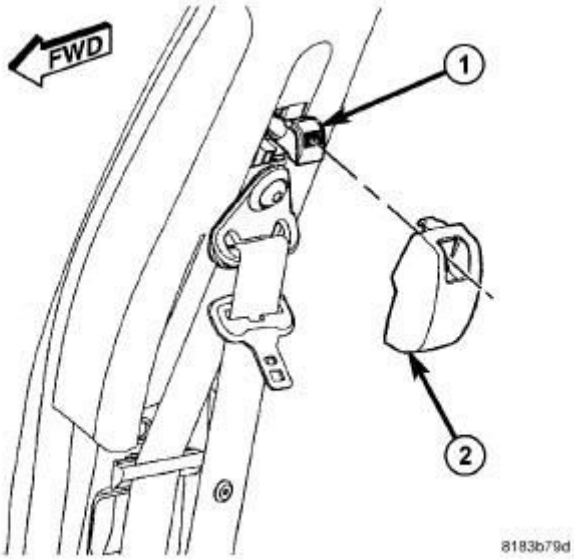

Fig. 13: Height Adjuster Knob & Turning Loop Trim Cover
Courtesy of CHRYSLER GROUP, LLC

7. Insert the upper tab of the turning loop trim cover (2) into the slot in the height adjuster cover above the knob on the upper B-pillar, then roll the bottom of the cover down over the turning loop and use hand pressure to press firmly and evenly on the cover until it snaps into place.

AIR BAG, DRIVER

DESCRIPTION

DESCRIPTION

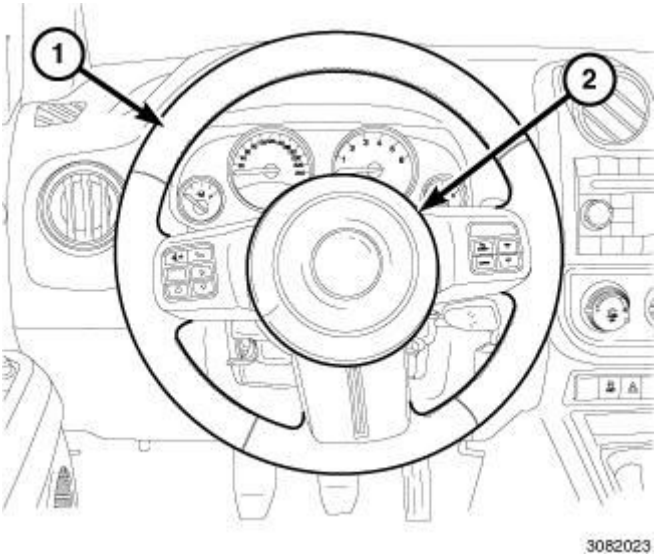

Fig. 14: Steering Wheel & Trim Cover

Courtesy of CHRYSLER GROUP, LLC

The injection molded, thermoplastic Driver AirBag (DAB) protective trim cover (2) is the most visible part of the DAB. The DAB is located in the center of the steering wheel (1), where it is secured with screws to the floating horn switch within the hub cavity of the three-spoke steering wheel. An injection molded, bright emblem with the Jeep® logo is applied to the center of the trim cover.

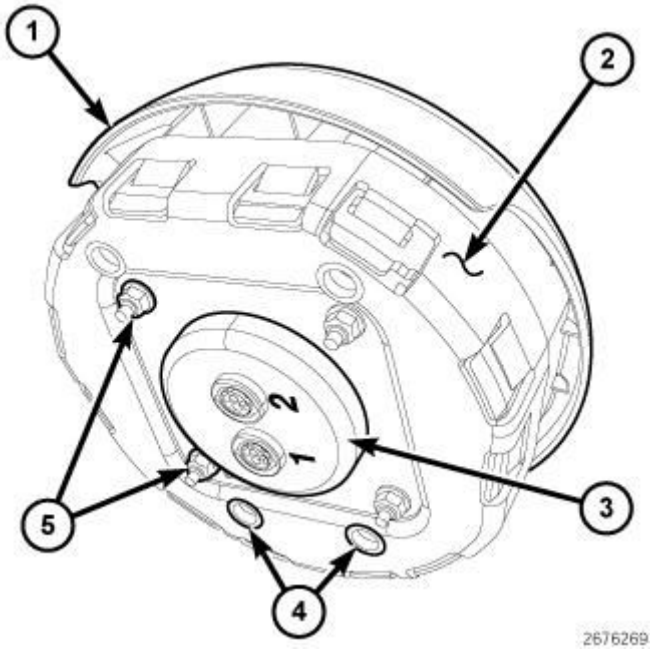

Fig. 15: DAB Trim Cover, Airbag Housing, Airbag Inflator, Retainers & Nuts
Courtesy of CHRYSLER GROUP, LLC

Concealed beneath the DAB trim cover (1) are the folded airbag cushion, the airbag housing (2), the airbag inflator (3) and the retainers (5) that secure the inflator to the housing. The airbag cushion, housing and inflator are secured within an integral receptacle molded into the back of the trim cover. The vertical walls of this receptacle have numerous integral window features that are engaged by numerous tab features that are bent inward around the perimeter of the DAB housing. Once the trim cover is fully seated in the housing, it can only be removed by cutting it off, and will have to be replaced with a new trim cover. The DAB housing also has four well nuts (4) which are used to secure the floating horn switch to the back of the housing.

The DAB used in this vehicle is a multistage-type that complies with revised federal airbag standards to deploy with less force than those used in some prior

vehicles. A radial deploying 67.3 centimeter (26.5 inch) diameter fabric airbag cushion with internal tethers is used. The airbag inflator is a dual-initiator, non-azide, pyrotechnic-type unit and is secured to the stamped metal airbag housing using four flanged hex nuts. Two keyed and color-coded connector receptacles on the DAB inflator connect the two inflator initiators to the vehicle electrical system through two jacketed, two-wire pigtail harnesses from the clockspring.

The DAB cannot be repaired, and must be replaced if deployed, ineffective or in any way damaged. The DAB trim cover and the floating horn switch are available for individual service replacement.

OPERATION

OPERATION

The multistage Driver AirBag (DAB) is deployed by electrical signals generated by the Occupant Restraint Controller (ORC) through the DAB squib 1 and squib 2 circuits to the two initiators in the airbag inflator. By using two initiators, the airbag can be deployed at multiple levels of force. The force level is controlled by the ORC to suit the monitored impact conditions by providing one of several delay intervals between the electrical signals provided to the two initiators. The longer the delay between these signals, the less forcefully the airbag will deploy.

When the ORC sends the proper electrical signals to each initiator, the electrical energy generates enough heat to initiate a small pyrotechnic charge which, in turn ignites chemical pellets within the inflator. Once ignited, these chemical pellets burn rapidly and produce a large quantity of inert gas. The inflator is sealed to the back of the DAB housing and a diffuser in the inflator directs all of the inert gas into the airbag cushion, causing the cushion to inflate. As the cushion inflates, the DAB trim cover will split at predetermined breakout lines, then fold back out of the way. Following a deployment, the airbag cushion quickly deflates by venting the inert gas towards the instrument panel through vent holes within the fabric used to construct the back (steering wheel side) panel of the cushion.

Some of the chemicals used to create the inert gas may be considered hazardous while in their solid state before they are burned, but they are securely sealed within the airbag inflator. Typically, both initiators are used and all potentially hazardous chemicals are burned during an airbag deployment event. However, it is possible for only one initiator to be used during a deployment due to a

Supplemental Restraint System (SRS) fault; therefore, it is necessary to always confirm that both initiators have been used in order to avoid the improper disposal of potentially live pyrotechnic or hazardous materials. Refer to **STANDARD PROCEDURE**.

The inert gas that is produced when the chemicals are burned during a deployment is harmless. However, a small amount of residue from the burned chemicals may cause some temporary discomfort if it contacts the skin, eyes, or breathing passages. If skin or eye irritation is noted, rinse the affected area with plenty of cool, clean water. If breathing passages are irritated, move to another area where there is plenty of clean, fresh air to breath. If the irritation is not alleviated by these actions, contact a physician.

The ORC monitors the condition of the DAB through circuit resistance, and will illuminate the airbag indicator in the instrument cluster and store a Diagnostic Trouble Code (DTC) for any fault that is detected. Proper diagnosis of the DAB inflator and squib circuits requires the use of a diagnostic scan tool and may also require the use of the SRS Load Tool special tool along with the appropriate Load Tool Jumpers and Adapters. Refer to the appropriate diagnostic information.

REMOVAL

REMOVAL

WARNING: **To avoid serious or fatal injury on vehicles equipped with airbags, disable the Supplemental Restraint System (SRS) before attempting any steering wheel, steering column, airbag, seat belt tensioner, impact sensor or instrument panel component diagnosis or service. Disconnect and isolate the battery negative (ground) cable, then wait two minutes for the system capacitor to discharge before performing further diagnosis or service. This is the only sure way to disable the SRS. Failure to take the proper precautions could result in accidental airbag deployment.**

WARNING: **To avoid serious or fatal injury when removing a deployed airbag, rubber gloves, eye protection,**

and a long-sleeved shirt should be worn. There may be deposits on the airbag cushion and other interior surfaces. In large doses, these deposits may cause irritation to the skin and eyes.

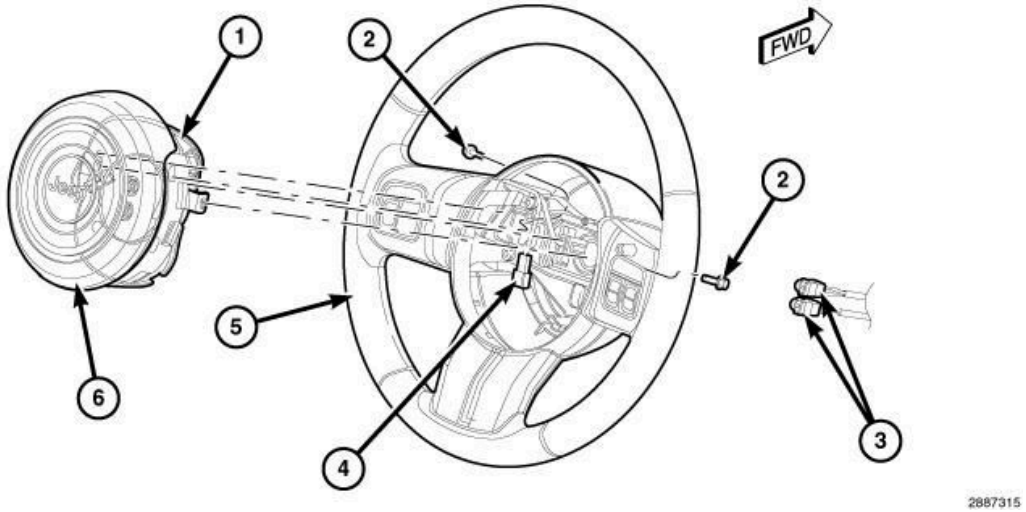

Fig. 16: Steering Wheel, Two Screws & Horn Switch
Courtesy of CHRYSLER GROUP, LLC

NOTE: The following procedure is for replacement of an ineffective or damaged Driver AirBag (DAB). If the airbag is ineffective or damaged, but not deployed, review the recommended procedures for Handling Non-Deployed Supplemental Restraints. Refer to STANDARD PROCEDURE. If the DAB has been deployed, review the recommended procedures for Service After A Supplemental Restraint Deployment before removing the airbag from the vehicle. Refer to STANDARD PROCEDURE.

1. Disconnect and isolate the negative cable from the battery. Wait two minutes for the system capacitor to discharge before further service.
2. Working through the access holes in each side of the steering wheel (5) rear trim cover, remove the two screws (2) that secure the floating horn switch (1) and Driver AirBag (DAB) (6) unit to the steering wheel armature.
3. Pull the DAB and floating horn switch unit away from the steering wheel far enough to access the electrical connections (3 and 4) at the back of the airbag housing and switch unit.

4. Disconnect the steering wheel wire harness connector from the floating horn switch connector on the back of the switch.

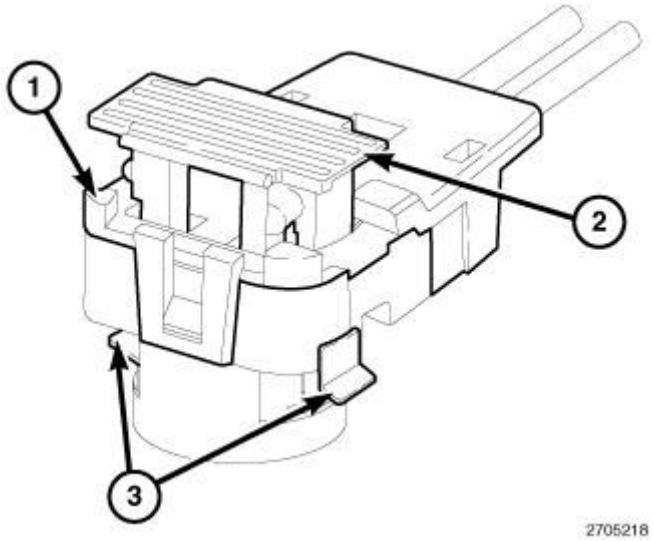

Fig. 17: Clockspring DAB Pigtail Wire Connector Insulators, Latches & Connector Position Assurance (CPA) Lock
Courtesy of CHRYSLER GROUP, LLC

CAUTION: Do not pull on the clockspring pigtail wires or pry on the connector insulators to disengage them from the Driver AirBag (DAB) inflator initiator connector receptacles. Improper removal of these pigtail wires and their connector insulators can result in damage to the airbag circuits or the connector insulators.

5. The clockspring DAB pigtail wire connector insulators (1) are secured by integral latches (3) and a Connector Position Assurance (CPA) lock (2) to the airbag inflator connector receptacles, which are located on the back of the DAB housing. Pull the lock straight out from the connector insulator, then pull the insulators straight out from the airbag inflator to disengage the latches and disconnect them from the connector receptacles.
6. Remove the DAB from the steering wheel.
7. If the DAB has been deployed, the clockspring and the steering column must be replaced.

DISASSEMBLY

DISASSEMBLY

WARNING: To avoid serious or fatal injury on vehicles equipped with airbags, disable the Supplemental Restraint System (SRS) before attempting any steering wheel, steering column, airbag, seat belt tensioner, impact sensor or instrument panel component diagnosis or service. Disconnect and isolate the battery negative (ground) cable, then wait two minutes for the system capacitor to discharge before performing further diagnosis or service. This is the only sure way to disable the SRS. Failure to take the proper precautions could result in accidental airbag deployment.

WARNING: To avoid serious or fatal injury, service of this unit should be performed only by Chrysler-trained and authorized dealer service technicians. Failure to take the proper precautions or to follow the proper procedures could result in accidental, incomplete, or improper airbag deployment and possible occupant injuries.

WARNING: To avoid serious or fatal injury, use extreme care to prevent any foreign material from entering the Driver AirBag (DAB), or becoming entrapped between the DAB cushion and the DAB trim cover. Failure to observe this warning could result in occupant injuries upon airbag deployment.

WARNING: To avoid serious or fatal injury, the Driver AirBag (DAB) trim cover must never be painted. Replacement trim covers are serviced in the original colors. Paint may change the way in which the material of the trim cover responds to an airbag deployment. Failure to observe this warning could result in occupant injuries upon airbag deployment.

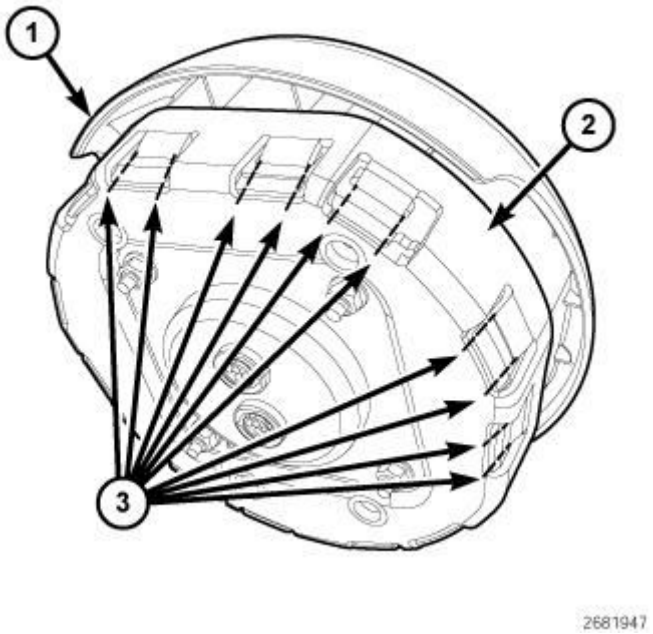

Fig. 18: Trim Cover Windows & Airbag Housing
Courtesy of CHRYSLER GROUP, LLC

NOTE: The following procedures can be used to replace the Driver AirBag (DAB) trim cover for service of cosmetic damage issues. If the DAB is ineffective or deployed, the entire DAB and trim cover must be replaced as a unit. The trim cover will be irreparably damaged if it is removed from the DAB housing and MUST be replaced with a new trim cover.

1. Disconnect and isolate the negative cable from the battery. Wait two minutes for the system capacitor to discharge before further service.
2. Remove the Driver AirBag (DAB) from the steering wheel. Refer to **AIR BAG, DRIVER, REMOVAL**.
3. Place the DAB on a suitable clean and dry work surface.
4. Using a sharp utility knife, carefully cut through the lower edge of each of the twelve trim cover (1) windows at the cut lines (3) on each side of the twelve inward pointing hooks of the airbag housing (2). Use extreme care to prevent any scraps from entering and becoming lost within the airbag housing or cushion.
5. With all of the windows cut open, separate the remainder of the trim cover from the DAB housing by pulling it away from the top of the housing around the perimeter. Discard the removed trim cover.

ASSEMBLY

ASSEMBLY

WARNING: To avoid serious or fatal injury on vehicles equipped with airbags, disable the Supplemental Restraint System (SRS) before attempting any steering wheel, steering column, airbag, seat belt tensioner, impact sensor or instrument panel component diagnosis or service. Disconnect and isolate the battery negative (ground) cable, then wait two minutes for the system capacitor to discharge before performing further diagnosis or service. This is the only sure way to disable the SRS. Failure to take the proper precautions could result in accidental airbag deployment.

WARNING: To avoid serious or fatal injury, service of this unit should be performed only by Chrysler-trained and authorized dealer service technicians. Failure to take the proper precautions or to follow the proper procedures could result in accidental, incomplete, or improper airbag deployment and possible occupant injuries.

WARNING: To avoid serious or fatal injury, use extreme care to prevent any foreign material from entering the Driver AirBag (DAB), or becoming entrapped between the DAB cushion and the DAB trim cover. Failure to observe this warning could result in occupant injuries upon airbag deployment.

WARNING: To avoid serious or fatal injury, the Driver AirBag (DAB) trim cover must never be painted. Replacement trim covers are serviced in the original colors. Paint may change the way in which the material of the trim cover responds to an airbag deployment. Failure to observe this warning could result in occupant injuries upon

airbag deployment.

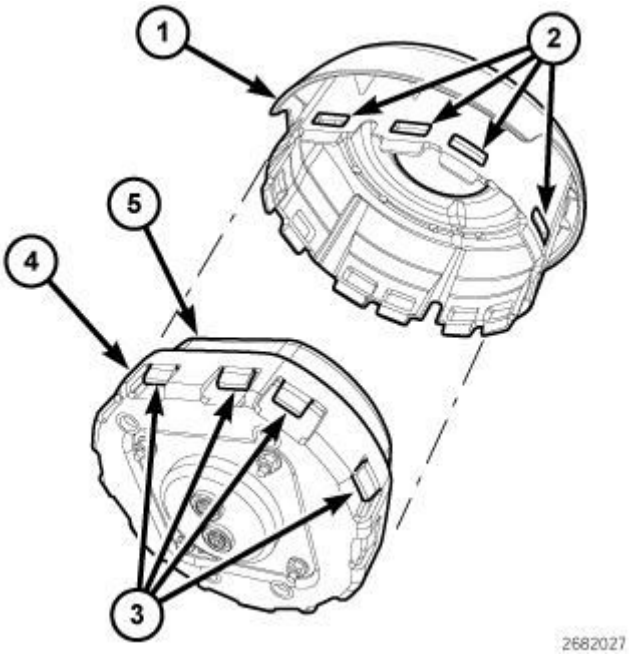

Fig. 19: Driver AirBag Housing, Cushion, DAB Trim Cover, Pointing Hooks & Windows
Courtesy of CHRYSLER GROUP, LLC

NOTE: The following procedures can be used to replace the Driver AirBag (DAB) trim cover for service of cosmetic damage issues. If the DAB is ineffective or deployed, the entire DAB and trim cover must be replaced as a unit. The trim cover will be irreparably damaged if it is removed from the DAB housing and MUST be replaced with a new trim cover.

1. Place the Driver AirBag (DAB) housing (4) on a suitable clean and dry work surface with the cushion (5) facing up.
2. Position the DAB trim cover (1) over the housing. Be certain that the twelve windows (2) of the trim cover are aligned with the twelve inward pointing hooks (3) of the airbag housing. All of the trim cover windows will align with all of the housing hooks correctly only in one position.
3. Insert the edges of the trim cover between the airbag cushion and the airbag housing. Be certain that the trim cover and housing are still properly aligned.
4. Using hand pressure, push the trim cover firmly and evenly down into the housing far enough that each of the inward pointing hooks of the housing is

engage through a window in the trim cover.

5. Inspect around the entire perimeter of the unit being certain each of the twelve hooks on the DAB housing is engaged through the appropriate window in the trim cover.
6. After the DAB has been assembled, try pulling the perimeters of the trim cover and the airbag housing away from each other. This action will fully seat the housing hooks into the trim cover windows.
7. Reinstall the DAB onto the steering wheel. Refer to **AIR BAG, DRIVER, INSTALLATION**.

INSTALLATION

INSTALLATION

WARNING: To avoid serious or fatal injury on vehicles equipped with airbags, disable the Supplemental Restraint System (SRS) before attempting any steering wheel, steering column, airbag, seat belt tensioner, impact sensor or instrument panel component diagnosis or service. Disconnect and isolate the battery negative (ground) cable, then wait two minutes for the system capacitor to discharge before performing further diagnosis or service. This is the only sure way to disable the SRS. Failure to take the proper precautions could result in accidental airbag deployment.

WARNING: To avoid serious or fatal injury, use extreme care to prevent any foreign material from entering the Driver AirBag (DAB), or becoming entrapped between the DAB cushion and the DAB trim cover. Failure to observe this warning could result in occupant injuries upon airbag deployment.

WARNING: To avoid serious or fatal injury, the driver airbag trim cover must never be painted. Replacement airbags are serviced with trim covers in the original colors. Paint may change the way in

which the material of the trim cover responds to an airbag deployment. Failure to observe this warning could result in occupant injuries upon airbag deployment.

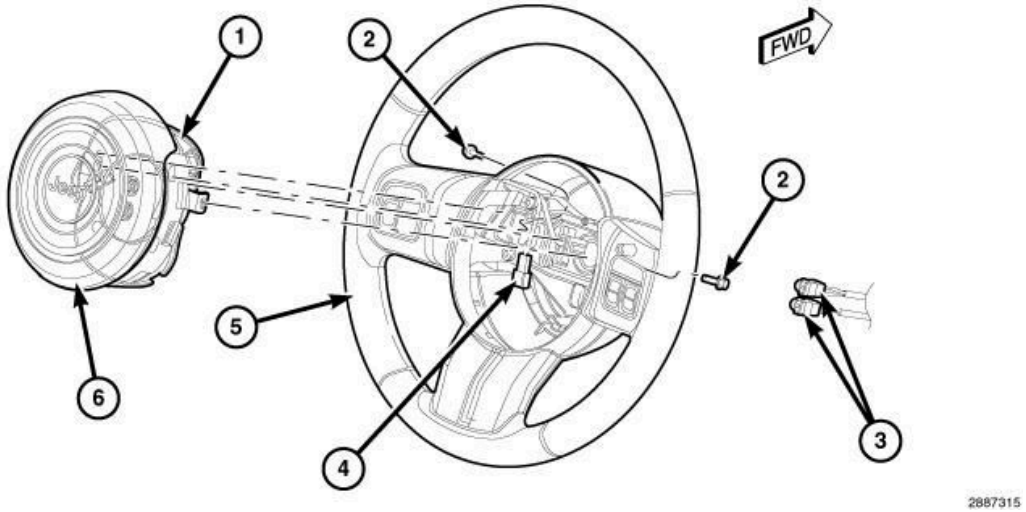

Fig. 20: Steering Wheel, Two Screws & Horn Switch
Courtesy of CHRYSLER GROUP, LLC

NOTE: The following procedure is for replacement of an ineffective or damaged Driver AirBag (DAB). If the airbag is ineffective or damaged, but not deployed, review the recommended procedures for Handling Non-Deployed Supplemental Restraints. Refer to STANDARD PROCEDURE. If the DAB has been deployed, review the recommended procedures for Service After A Supplemental Restraint Deployment before removing the airbag from the vehicle. Refer to STANDARD PROCEDURE.

1. Position the Driver AirBag (DAB) (6) and floating horn switch (1) unit close enough to the steering wheel (5) to reconnect the electrical connections (3 and 4) to the back of the airbag housing.
2. Reconnect the steering wheel wire harness connector to the floating horn switch connector on the back of the switch.
3. Reconnect the wire connectors to the airbag inflator connector receptacles by pressing straight in on the connector insulator. Be certain to engage each keyed and color-coded connector to the matching connector receptacle. You

can be certain that each connector is fully engaged in its receptacle by listening carefully for a distinct, audible click as the connector latches snap into place.

4. Push each of the Connector Position Assurance (CPA) locks firmly into the DAB connector insulator until it is flush with the upper surface of the insulator.
5. Carefully position the DAB and floating horn switch unit into the steering wheel hub while tugging lightly upward on the clockspring pigtail wires for the airbag and tucking the wires into the upper hub cavity of the steering wheel. Be certain that none of the steering wheel wiring is pinched between the airbag housing or the horn switch and the steering wheel armature or the steering wheel damper.
6. Working through the access holes in each side of the steering wheel rear trim cover, install and tighten the two screws (2) that secure the floating horn switch and DAB unit to the steering wheel armature. Tighten the screws to 13 N.m (10 ft. lbs.).
7. Do not reconnect the negative cable to the battery at this time. The Supplemental Restraint System (SRS) Verification Test procedure should be performed following service of any SRS component. Refer to **STANDARD PROCEDURE**.

AIR BAG, PASSENGER

DESCRIPTION

DESCRIPTION

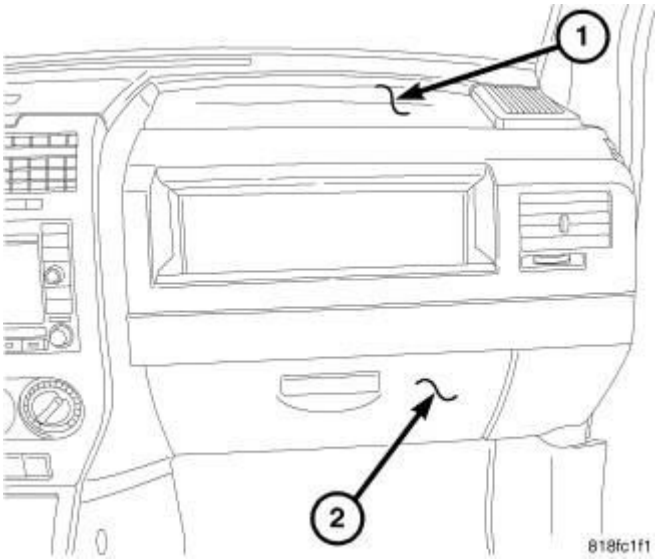

Fig. 21: Locating Passenger Airbag
Courtesy of CHRYSLER GROUP, LLC

The horizontal surface of the injection molded, thermoplastic Passenger AirBag (PAB) door (1) is the most visible part of the PAB. The PAB door is located above the glove box (2) opening on the top of the instrument panel in front of the front seat passenger seating position.

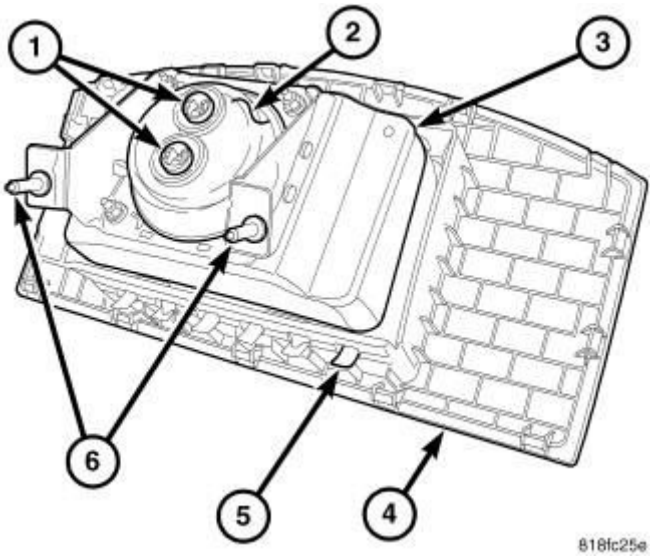

Fig. 22: Identifying Passenger Airbag
Courtesy of CHRYSLER GROUP, LLC

The edges of the PAB door (4) are secured with integral snap features to the instrument panel base trim. Located below the PAB door within the instrument panel is the PAB unit. The PAB unit is secured through two studs (6) on a stamped mounting bracket to the die cast instrument panel structural support armature.

The PAB housing (3) fits into a molded receptacle on the back of the PAB door, where several stamped hook formations (5) on the forward and rearward edges of the airbag housing are engaged in mating small window openings on the forward and rearward flanges of the receptacle to secure the airbag door to the airbag housing. These airbag door fasteners and mounting provisions are all concealed beneath the instrument panel base trim.

The PAB unit used in this vehicle is a multistage, Next Generation-type that complies with revised federal airbag standards to deploy with less force than those used in some prior vehicles. The PAB unit consists of a stamped and welded metal housing, the airbag cushion, and the airbag inflator (2). The airbag

housing contains the airbag inflator and the folded airbag cushion. An approximately 80 centimeter (31.5 inch) wide by 90 centimeter (35.5 inch) high rectangular fabric cushion is used.

The PAB inflator is a non-azide, pyrotechnic-type unit that is secured to and sealed within the airbag housing. Two inflator initiators (1) are connected to the vehicle electrical system through dedicated take outs and connectors of the instrument panel wire harness.

A service replacement PAB does not include the PAB door. The PAB door may be disassembled from the PAB and is available for individual service replacement. The PAB unit cannot be repaired and must be replaced if deployed, ineffective, or in any way damaged.

OPERATION

OPERATION

The multistage Passenger AirBag (PAB) is deployed by electrical signals generated by the Occupant Restraint Controller (ORC) through the PAB squib 1 and squib 2 circuits to the two initiators in the airbag inflator. By using two initiators, the PAB can be deployed at multiple levels of force. The force level is controlled by the ORC to suit the monitored impact conditions by providing one of several delay intervals between the electrical signals provided to the two initiators. The longer the delay between these signals, the less forcefully the airbag will deploy.

When the ORC sends the proper electrical signals to each initiator, the electrical energy generates enough heat to initiate a small pyrotechnic charge which, in turn ignites chemical pellets within the inflator. Once ignited, these chemical pellets burn rapidly and produce a large quantity of inert gas. The inflator is sealed to the airbag cushion and a diffuser in the inflator directs all of the inert gas into the airbag cushion, causing the cushion to inflate. As the cushion inflates, the PAB door will split at predetermined tear seam lines concealed on the inside surface of the door, then the door will pivot up over the top of the instrument panel and out of the way. Following an airbag deployment, the airbag cushion quickly deflates by venting the inert gas through a vent hole in each fabric side panel of the airbag cushion.

Typically, both initiators are used during a PAB deployment event. However, it

is possible for only one initiator to be used during a deployment due to an airbag system fault; therefore, it is necessary to always confirm that both initiators have been used in order to avoid the improper disposal of potentially live pyrotechnic materials. Refer to **STANDARD PROCEDURE**.

The ORC monitors the condition of the PAB through circuit resistance, and will illuminate the airbag indicator in the instrument cluster and store a Diagnostic Trouble Code (DTC) for any fault that is detected. Proper diagnosis of the PAB inflator and squib circuits requires the use of a diagnostic scan tool and may also require the use of the SRS Load Tool special tool along with the appropriate Load Tool Jumpers and Adapters. Refer to the appropriate diagnostic information.

REMOVAL

REMOVAL

WARNING: **To avoid serious or fatal injury on vehicles equipped with airbags, disable the Supplemental Restraint System (SRS) before attempting any steering wheel, steering column, airbag, seat belt tensioner, impact sensor or instrument panel component diagnosis or service. Disconnect and isolate the battery negative (ground) cable, then wait two minutes for the system capacitor to discharge before performing further diagnosis or service. This is the only sure way to disable the SRS. Failure to take the proper precautions could result in accidental airbag deployment.**

WARNING: **To avoid serious or fatal injury when removing a deployed airbag, rubber gloves, eye protection, and a long-sleeved shirt should be worn. There may be deposits on the airbag unit and other interior surfaces. In large doses, these deposits may cause irritation to the skin and eyes.**

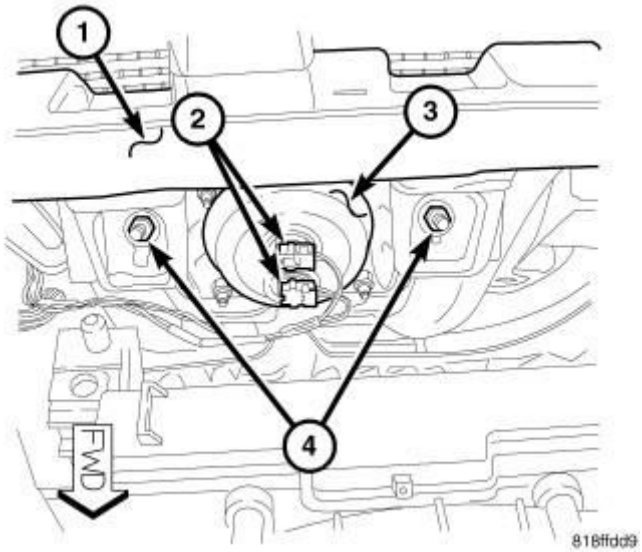

Fig. 23: Replacing Passenger Airbag
Courtesy of CHRYSLER GROUP, LLC

NOTE: The following procedure is for replacement of an ineffective or damaged Passenger AirBag (PAB). If the airbag is ineffective or damaged, but not deployed, review the recommended procedures for Handling Non-Deployed Supplemental Restraints. Refer to STANDARD PROCEDURE. If the PAB has been deployed, review the recommended procedures for Service After A Supplemental Restraint Deployment before removing the airbag from the vehicle. Refer to STANDARD PROCEDURE.

1. Disconnect and isolate the negative cable from the battery. Wait two minutes for the system capacitor to discharge before further service.
2. Remove the top cover from the top of the instrument panel. Refer to **COVER, INSTRUMENT PANEL, REMOVAL** .
3. Remove the glove box from the instrument panel. Refer to **GLOVE BOX, INSTRUMENT PANEL, REMOVAL** .

CAUTION: Do not pull on the instrument panel wire harness take outs or pry on the connector insulator to disengage the connector from the passenger airbag inflator or tether cutter connector receptacles. Improper removal of

these take outs and their connector insulators can result in damage to the airbag circuits or the connector insulators.

4. Reach up into the instrument panel between the upper glove box opening reinforcement and the instrument panel armature (1) to access and disconnect the instrument panel wire harness connectors (2) from the Passenger AirBag (PAB) inflator (3). Firmly grasp and pull the lock straight out from the connector insulator, then pull the insulators straight out from the inflator to disconnect them from the connector receptacles.
5. Remove the two nuts (4) that secure the PAB lower bracket studs to the instrument panel armature.
6. Using a trim stick or another suitable wide flat-bladed tool, gently pry the edges of the PAB door away from the instrument panel far enough to disengage the snap features on the door from the receptacles in the instrument panel base trim.
7. Remove the PAB and PAB door from the top of the instrument panel as a unit.

DISASSEMBLY

DISASSEMBLY

WARNING: **To avoid serious or fatal injury on vehicles equipped with airbags, disable the Supplemental Restraint System (SRS) before attempting any steering wheel, steering column, airbag, seat belt tensioner, impact sensor or instrument panel component diagnosis or service. Disconnect and isolate the battery negative (ground) cable, then wait two minutes for the system capacitor to discharge before performing further diagnosis or service. This is the only sure way to disable the SRS. Failure to take the proper precautions could result in accidental airbag deployment.**

WARNING: **To avoid serious or fatal injury, service of this unit should be performed only by Chrysler-trained and**

authorized dealer service technicians. Failure to take the proper precautions or to follow the proper procedures could result in accidental, incomplete, or improper airbag deployment and possible occupant injuries.

WARNING: To avoid serious or fatal injury, use extreme care to prevent any foreign material from entering the passenger airbag, or from becoming entrapped between the airbag cushion and the deployment door. Failure to observe this warning could result in occupant injuries upon airbag deployment.

WARNING: To avoid serious or fatal injury, the passenger airbag door must never be painted. Replacement airbag doors are serviced in the original colors. Paint may change the way in which the material of the airbag door responds to an airbag deployment. Failure to observe this warning could result in occupant injuries upon airbag deployment.

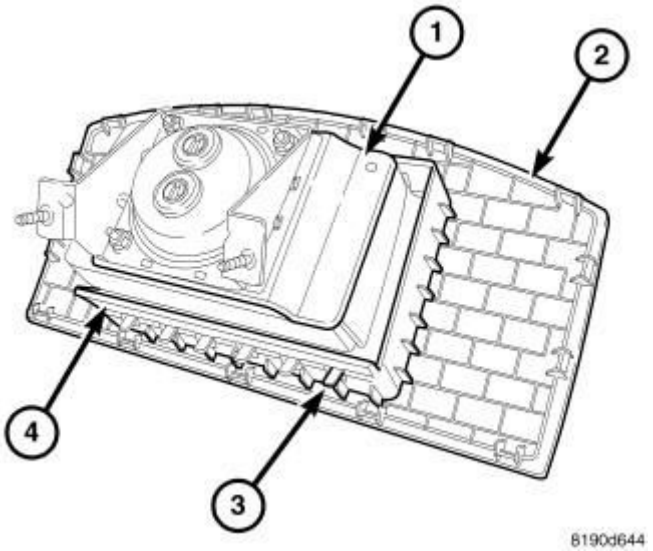

Fig. 24: Identifying Passenger Air Bag
Courtesy of CHRYSLER GROUP, LLC

NOTE: The following procedures can be used to replace the

Passenger AirBag (PAB) door. If the PAB is deployed, the PAB and the PAB door must both be replaced.

1. Disconnect and isolate the negative cable from the battery. Wait two minutes for the system capacitor to discharge before further service.
2. Remove the Passenger AirBag (PAB) from the instrument panel. Refer to **AIR BAG, PASSENGER, REMOVAL**.
3. Place the PAB on a suitable work surface with the PAB door (2) facing down. If the PAB door will be reused, be certain to take the proper precautions to prevent the door from receiving cosmetic damage during the following procedures.
4. Disengage each of the 12 hooks (3) of the PAB housing (1) from the 12 windows in the vertical walls (4) of the receptacle on the underside of the PAB door, one wall at a time. To disengage the hooks, use hand pressure to push the adjacent edge of the PAB housing firmly and evenly downward into the PAB door receptacle, while at the same time pulling outward on the upper edge of the receptacle wall.
5. With all of the hooks disengaged, lift the PAB housing, inflator and cushion from the receptacle on the back of the PAB door.

ASSEMBLY

ASSEMBLY

WARNING: **To avoid serious or fatal injury on vehicles equipped with airbags, disable the Supplemental Restraint System (SRS) before attempting any steering wheel, steering column, airbag, seat belt tensioner, impact sensor or instrument panel component diagnosis or service. Disconnect and isolate the battery negative (ground) cable, then wait two minutes for the system capacitor to discharge before performing further diagnosis or service. This is the only sure way to disable the SRS. Failure to take the proper precautions could result in accidental airbag deployment.**

WARNING: **To avoid serious or fatal injury, service of this unit**

should be performed only by Chrysler-trained and authorized dealer service technicians. Failure to take the proper precautions or to follow the proper procedures could result in accidental, incomplete, or improper airbag deployment and possible occupant injuries.

WARNING: To avoid serious or fatal injury, use extreme care to prevent any foreign material from entering the passenger airbag, or from becoming entrapped between the airbag cushion and the deployment door. Failure to observe this warning could result in occupant injuries upon airbag deployment.

WARNING: To avoid serious or fatal injury, the passenger airbag door must never be painted. Replacement airbag doors are serviced in the original colors. Paint may change the way in which the material of the airbag door responds to an airbag deployment. Failure to observe this warning could result in occupant injuries upon airbag deployment.

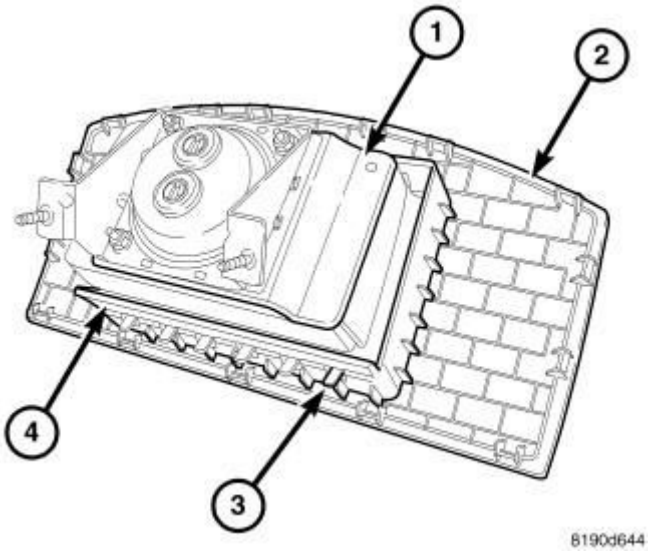

Fig. 25: Identifying Passenger Air Bag
Courtesy of CHRYSLER GROUP, LLC

NOTE: The following procedures can be used to replace the Passenger AirBag (PAB) door. If the PAB is deployed, the PAB and the PAB door must both be replaced.

1. Place the Passenger AirBag (PAB) door (2) on a suitable work surface with the PAB receptacle facing up. Be certain to take the proper precautions to prevent the PAB door from receiving cosmetic damage during the following procedures.
2. Carefully position the PAB housing (1) into the PAB door receptacle.
3. Work around the perimeter of the PAB engaging each of the 12 hooks (3) on the PAB housing through the 12 windows in the walls of the PAB door receptacle.
4. After the PAB has been assembled, try pulling the PAB door and the PAB housing away from each other. This action will fully seat the edges of the PAB door windows into the cradles of the PAB housing hooks.
5. Reinstall the PAB into the instrument panel. Refer to **AIR BAG, PASSENGER, INSTALLATION**.

INSTALLATION

INSTALLATION

WARNING: To avoid serious or fatal injury on vehicles equipped with airbags, disable the Supplemental Restraint System (SRS) before attempting any steering wheel, steering column, airbag, seat belt tensioner, impact sensor or instrument panel component diagnosis or service. Disconnect and isolate the battery negative (ground) cable, then wait two minutes for the system capacitor to discharge before performing further diagnosis or service. This is the only sure way to disable the SRS. Failure to take the proper precautions could result in accidental airbag deployment.

WARNING: To avoid serious or fatal injury, use extreme care to prevent any foreign material from entering the passenger airbag, or from becoming entrapped

between the airbag cushion and the deployment door. Failure to observe this warning could result in occupant injuries upon airbag deployment.

WARNING: To avoid serious or fatal injury, the instrument panel cover must never be painted. Replacement covers are serviced in the original colors. Paint may change the way in which the material of the cover responds to an airbag deployment. Failure to observe this warning could result in occupant injuries upon airbag deployment.

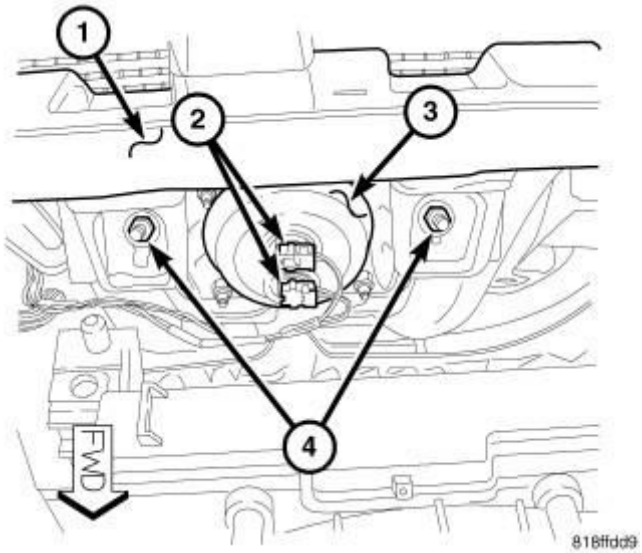

Fig. 26: Replacing Passenger Airbag
Courtesy of CHRYSLER GROUP, LLC

NOTE: The following procedure is for replacement of an ineffective or damaged Passenger AirBag (PAB). If the airbag is ineffective or damaged, but not deployed, review the recommended procedures for Handling Non-Deployed Supplemental Restraints. Refer to STANDARD PROCEDURE. If the PAB has been deployed, review the recommended procedures for Service After A Supplemental Restraint Deployment before removing the airbag from the vehicle. Refer to STANDARD PROCEDURE.

1. Carefully position the Passenger AirBag (PAB) and PAB door through the opening in the top of the instrument panel base trim as a unit. Be certain that the two studs of the PAB lower bracket are engaged in the holes of the instrument panel armature (1).
2. Install and tighten the two nuts (4) that secure the PAB lower bracket to the instrument panel armature. Tighten the nuts to 6 N.m (55 in. lbs.).
3. Reconnect the two connector insulators (2) of the instrument panel wire harness PAB take outs to the PAB inflator connector receptacles by pressing straight in on the connectors, then pushing the locks straight into the connectors. Be certain to engage each keyed and color-coded connector to the matching connector receptacle.
4. Using hand pressure, push down on the PAB door over each snap feature on the edges of the door until it snaps into its receptacle in the instrument panel base trim.
5. Reinstall the glove box into the instrument panel. Refer to **GLOVE BOX, INSTRUMENT PANEL, INSTALLATION** .
6. Reinstall the top cover onto the top of the instrument panel. Refer to **COVER, INSTRUMENT PANEL, INSTALLATION** .
7. Do not reconnect the negative cable to the battery at this time. The Supplemental Restraint System (SRS) Verification Test procedure should be performed following service of any SRS component. Refer to **STANDARD PROCEDURE**.

AIR BAG, SEAT

DESCRIPTION

DESCRIPTION

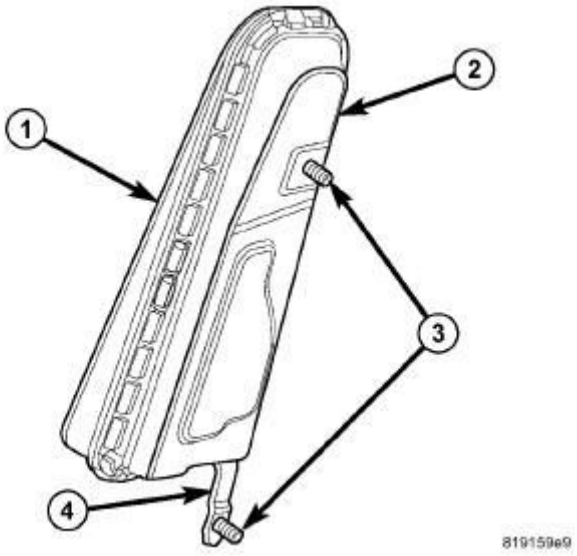

Fig. 27: View Of Seat Airbag
Courtesy of CHRYSLER GROUP, LLC

The Seat AirBags (SAB) (also known as pelvic and thoracic airbags) are completely concealed beneath the seat back trim cover on the upper outboard sides of both front seat backs. Vehicles with this equipment can be readily identified by a sewn tag with the **SRS - AIRBAG** logo located on the outboard side of the front seat back trim cover. Each SAB is inserted into a sewn pouch called an intensifier on the inside of the trim cover, then secured to the seat back frame by nuts on two studs (3). One stud is located on the stamped metal SAB housing (2), while the second stud is located on the stamped metal SAB lower bracket (4).

The folded SAB cushions are contained within a retainer wrap (1) constructed of the same material as the airbag cushion. The retainer wrap completely encloses the cushion and is engaged over the stud on the housing for retention. The SAB cushion is constructed of a coated nylon fabric.

The SAB housing contains the airbag inflator and a heat shield. The SAB inflator is a single-initiator, pyrotechnic-type unit that is secured to and sealed within the SAB housing. The SAB is connected to the vehicle electrical system through a dedicated take out of the seat wire harness with a connector insulator that connects directly to the inflator initiator. The connector insulators are uniquely keyed and color-coded to ensure they can only be connected to the initiator.

The SAB cannot be repaired, and must be replaced if deployed, ineffective, or in

any way damaged. If the SAB is deployed, the seat back frame, the seat back foam cushion, the seat back trim cover and the seat wire harness must also be replaced.

OPERATION

OPERATION

Each Seat AirBag (SAB) (also known as a pelvic and thoracic airbag) is deployed individually by an electrical signal generated by the Occupant Restraint Controller (ORC) to which it is connected through left or right SAB line 1 and line 2 (or squib) circuits. The hybrid-type inflator assembly for each SAB contains a small canister of highly compressed inert gas. When the ORC sends the proper electrical signal to the SAB inflator, the electrical energy creates enough heat to ignite chemical pellets within the inflator.

Once ignited, these chemicals burn rapidly and produce the pressure necessary to rupture a containment disk in the inert gas canister. The inflator and inert gas canister are sealed and connected so that all of the released gas is directed into the folded SAB cushion, causing the cushion to inflate. As the cushion inflates it will split the retainer wrap, the sewn pouch (intensifier) and the outboard side of the seat back trim cover and expand into the area between the outboard side of the front seat and the front door to form a cushion to protect the front seat occupant during a side impact collision or a vehicle rollover incident.

Following the SAB deployment, the SAB cushion slowly deflates by venting the inert gas through the loose weave of the cushion fabric, and the deflated cushion hangs down loosely from the outboard side of the front seat back.

The ORC monitors the condition of the SAB through circuit resistance, and will illuminate the airbag indicator in the instrument cluster and store a Diagnostic Trouble Code (DTC) for any fault that is detected. Proper diagnosis of the SAB inflator and squib circuits requires the use of a diagnostic scan tool and may also require the use of the SRS Load Tool special tool along with the appropriate Load Tool Jumpers and Adapters. Refer to the appropriate diagnostic information.

REMOVAL

REMOVAL

WARNING: To avoid serious or fatal injury on vehicles equipped with airbags, disable the Supplemental Restraint System (SRS) before attempting any steering wheel, steering column, airbag, seat belt tensioner, impact sensor or instrument panel component diagnosis or service. Disconnect and isolate the battery negative (ground) cable, then wait two minutes for the system capacitor to discharge before performing further diagnosis or service. This is the only sure way to disable the SRS. Failure to take the proper precautions could result in accidental airbag deployment.

WARNING: To avoid serious or fatal injury when removing a deployed airbag, rubber gloves, eye protection, and a long-sleeved shirt should be worn. There may be deposits on the airbag unit and other interior surfaces. In large doses, these deposits may cause irritation to the skin and eyes.

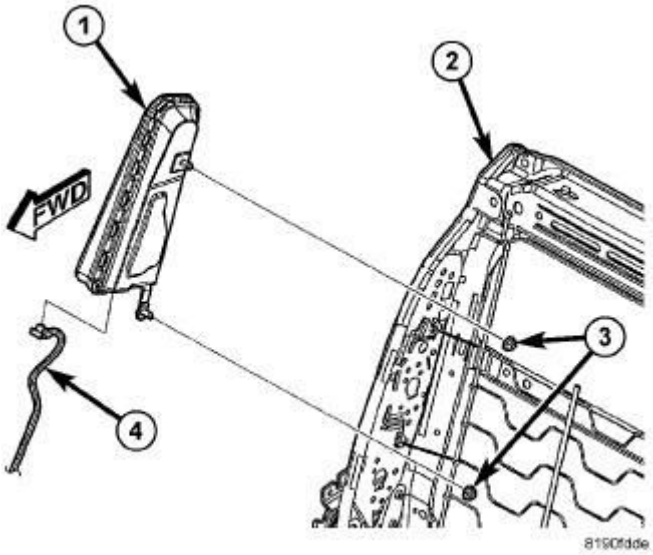

Fig. 28: Removing/Installing Seat Airbag
Courtesy of CHRYSLER GROUP, LLC

NOTE: The following procedure is for replacement of an ineffective or damaged Seat AirBag (SAB). If the airbag is

ineffective or damaged, but not deployed, review the recommended procedures for Handling Non-Deployed Supplemental Restraints. Refer to STANDARD PROCEDURE. If the SAB has been deployed, review the recommended procedures for Service After A Supplemental Restraint Deployment before removing the airbag from the vehicle. Refer to STANDARD PROCEDURE.

1. Position the front seat to its most forward position for easiest access to the front seat mounting hardware.
2. Disconnect and isolate the negative cable from the battery. Wait two minutes for the system capacitor to discharge before further service.
3. Remove the front seat from the vehicle. Refer to **SEAT, FRONT, REMOVAL** .

CAUTION: During removal of the seat back trim cover, be certain not to tear or damage the integral nylon pouch that contains the seat airbag. If the nylon pouch or the trim cover are torn or damaged, the entire front seat back trim cover must be replaced with a new unit.

4. Remove the trim from the front and back of the front seat back frame (2), but do not remove from the outboard side of the seat back until after the Seat AirBag (SAB) has been detached from the seat. Refer to **DISASSEMBLY** .

CAUTION: Do not pull on the seat wire harness (4) take out or pry on the connector insulator to disengage the connector from the seat airbag (1) inflator connector receptacle. Improper removal of this take out and its connector insulator can result in damage to the airbag circuits or the connector insulator.

5. Disconnect the seat wire harness connector from the SAB inflator. Slide the yellow locking tab down, then squeeze the two latch tabs on the connector insulator. Pull the insulator straight out from the inflator to disconnect it

from the connector receptacle.

6. Remove the two nuts (3) that secure the SAB to the side of the seat back frame.
7. Grasp the outboard side of the seat back trim cover and pull the trim cover and cushion over the top of the seat back frame. This will allow room to remove the SAB without damaging the trim cover or the cushion.
8. Working between the seat back trim cover and the seat back frame, carefully disengage the two SAB studs from the nylon pouch (intensifier) and slide the SAB out of the pouch. Be careful not to tear or damage the nylon pouch or the trim cover.

INSTALLATION

INSTALLATION

WARNING: **To avoid serious or fatal injury on vehicles equipped with airbags, disable the Supplemental Restraint System (SRS) before attempting any steering wheel, steering column, airbag, seat belt tensioner, impact sensor or instrument panel component diagnosis or service. Disconnect and isolate the battery negative (ground) cable, then wait two minutes for the system capacitor to discharge before performing further diagnosis or service. This is the only sure way to disable the SRS. Failure to take the proper precautions could result in accidental airbag deployment.**

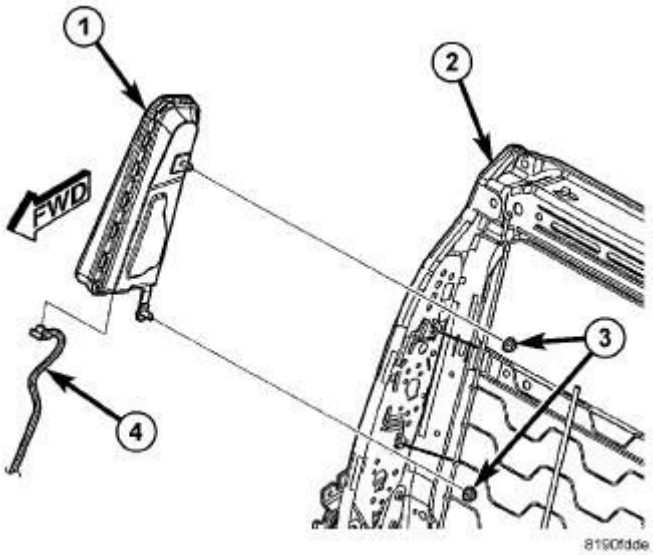

Fig. 29: Removing/Installing Seat Airbag
Courtesy of CHRYSLER GROUP, LLC

NOTE: The following procedure is for replacement of an ineffective or damaged Seat AirBag (SAB). If the airbag is ineffective or damaged, but not deployed, review the recommended procedures for Handling Non-Deployed Supplemental Restraints. Refer to STANDARD PROCEDURE. If the SAB has been deployed, review the recommended procedures for Service After A Supplemental Restraint Deployment before removing the airbag from the vehicle. Refer to STANDARD PROCEDURE.

CAUTION: The seat airbag (1) must be installed into the nylon mesh pouch integral to the front seat back trim cover before the airbag or the trim cover are installed on the front seat back frame (2). Failure to do so will adversely affect the function of the seat airbag system.

1. Carefully slide the Seat AirBag (SAB) into the nylon pouch (intensifier) integral to the outboard side of the front seat back trim cover and engage the two SAB studs through the holes provided in the pouch. Be careful not to tear or damage the nylon pouch or the trim cover.

2. Position the SAB and trim cover as a unit to the outboard side of the seat back frame and insert the studs through the mounting holes in the frame.
3. Install and tighten the two nuts (3) that secure the SAB to the side of the seat back frame. Tighten the nuts to 10 N.m (89 in. lbs.).
4. Reconnect the seat wire harness (4) connector to the SAB inflator. Be certain that the connector latches and lock are fully engaged.

CAUTION: Be certain that all of the trim is properly reinstalled on the front seat back frame. Failure to do so will adversely affect the function of the seat airbag system.

5. Reinstall the trim onto the front and back of the front seat back (2). Refer to **ASSEMBLY** .
6. Reinstall the front seat into the vehicle. Refer to **SEAT, FRONT, INSTALLATION** .
7. Do not reconnect the negative cable to the battery at this time. The Supplemental Restraint System (SRS) Verification Test procedure should be performed following service of any SRS component. Refer to **STANDARD PROCEDURE**.

AIR BAG, SIDE CURTAIN

DESCRIPTION

DESCRIPTION

8098029e

Fig. 30: SRS Logo

Courtesy of CHRYSLER GROUP, LLC

Side curtain airbags (also known as Side AirBag Inflatable Curtains/SABIC) are available equipment in this vehicle when it is also equipped with dual front airbags. These airbags are passive, inflatable, Supplemental Restraint System (SRS) components, and vehicles with this equipment can be readily identified by a molded identification trim button with the **SRS - AIRBAG** logo located on the headliner above each B-pillar. This system is designed to reduce injuries to the vehicle occupants in the event of a side impact collision or a vehicle rollover incident.

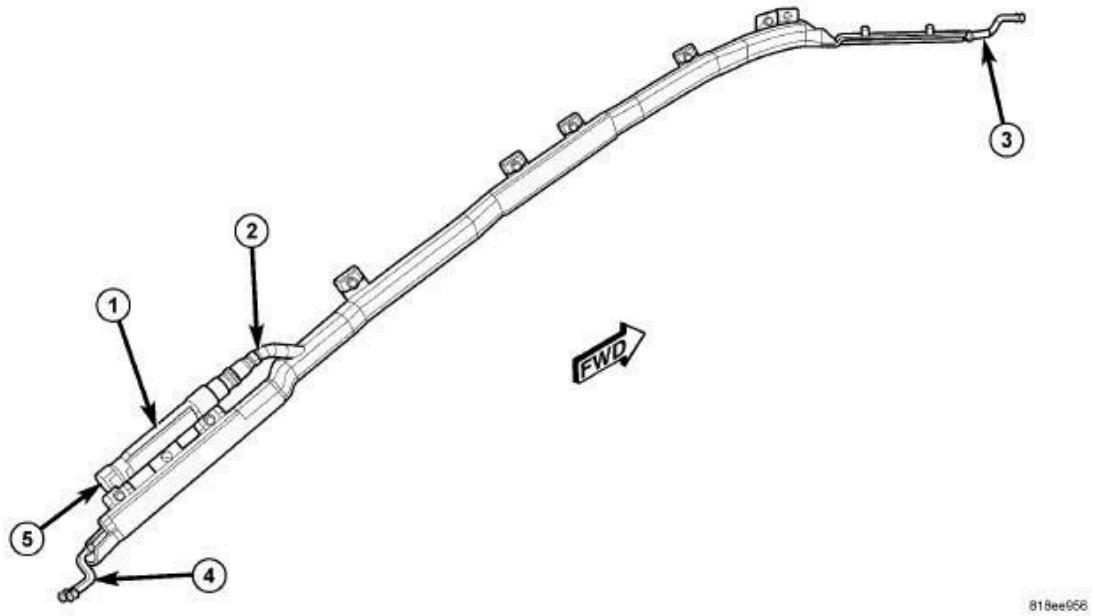

Fig. 31: Side Curtain Airbag
Courtesy of CHRYSLER GROUP, LLC

Vehicles equipped with side curtain airbags have two individually controlled curtain airbag units. These airbag units are concealed and mounted above the headliner where they are each secured to one of the roof side rails. Each folded airbag cushion is contained within a fabric wrap and extruded plastic channels that extend along the roof rail from the A-pillar at the front of the vehicle to just forward of the D-pillar at the rear of the vehicle.

A long tether (3) extends down the A-pillar from the front of the airbag cushion. The end of the tether is secured to a slot in the sheet metal with a metal clip, while two additional plastic fasteners secure the tether to the inside of the A-pillar. A short tether (4) extends down the D-pillar from the rear of the airbag cushion and is also secured with a metal clip.

The hybrid-type inflator (1) for each airbag is secured to the roof rail near the rear of the airbag unit between the C-pillar and the D-pillar, and is connected to the airbag cushion by a long tubular manifold (2). The inflator bracket and the extruded airbag cushion channel are secured with both plastic push-in fasteners and screws to U-nuts installed in the roof rail.

The initiator (5) of the airbag inflator is connected to the vehicle electrical system through a dedicated take out and connector of the body wire harness near the top of the D-pillar. The body wire harness connects the airbag unit to the Occupant Restraint Controller (ORC).

The side curtain airbag unit cannot be adjusted or repaired and must be replaced if deployed, ineffective, or in any way damaged. Once a side curtain airbag has been deployed, the complete airbag unit, the headliner, the upper A, B, C and D-pillar trim, and all other visibly damaged components must be replaced.

OPERATION

OPERATION

Each side curtain airbag (also know as Side AirBag Inflatable Curtain/SABIC) is deployed individually by an electrical signal generated by the Occupant Restraint Controller (ORC) to which it is connected through left or right curtain airbag line 1 and line 2 (or squib) circuits. The hybrid-type inflator assembly for each airbag contains a small canister of highly compressed inert gas. When the ORC sends the proper electrical signal to the airbag inflator, the electrical energy creates enough heat to ignite chemical pellets within the inflator.

Once ignited, these chemicals burn rapidly and produce the pressure necessary to rupture a containment disk in the inert gas canister. The inflator and inert gas canister are sealed and connected to a tubular manifold so that all of the released gas is directed into the folded curtain airbag cushion, causing the cushion to inflate. As the airbag cushion inflates it will drop down from the roof rail between the edge of the headliner and the side glass/body pillars to form a curtain-like cushion to protect the vehicle occupants during a side impact collision or a vehicle rollover incident.

The front and rear tethers keep the side curtain bag taut to the side of the vehicle, thus ensuring that the bag will deploy in the proper position. Following the airbag deployment, the airbag cushion slowly deflates by venting the inert gas

through the loose weave of the cushion fabric, and the deflated cushion hangs down loosely from the roof rail.

The ORC monitors the condition of the side curtain airbags through circuit resistance, and will illuminate the airbag indicator in the instrument cluster and store a Diagnostic Trouble Code (DTC) for any fault that is detected. Proper diagnosis of the side curtain airbag inflator and squib circuits requires the use of a diagnostic scan tool and may also require the use of the SRS Load Tool special tool along with the appropriate Load Tool Jumpers and Adapters. Refer to the appropriate diagnostic information.

REMOVAL

REMOVAL

WARNING: **To avoid serious or fatal injury on vehicles equipped with airbags, disable the Supplemental Restraint System (SRS) before attempting any steering wheel, steering column, airbag, seat belt tensioner, impact sensor or instrument panel component diagnosis or service. Disconnect and isolate the battery negative (ground) cable, then wait two minutes for the system capacitor to discharge before performing further diagnosis or service. This is the only sure way to disable the SRS. Failure to take the proper precautions could result in accidental airbag deployment.**

WARNING: **To avoid serious or fatal injury when removing a deployed airbag, rubber gloves, eye protection, and a long-sleeved shirt should be worn. There may be deposits on the airbag unit and other interior surfaces. In large doses, these deposits may cause irritation to the skin and eyes.**

WARNING: **To avoid serious or fatal injury, use extreme care to prevent any foreign material from entering the side curtain airbag, or becoming entrapped between the side curtain airbag cushion and the**

headliner. Failure to observe this warning could result in occupant injuries upon airbag deployment.

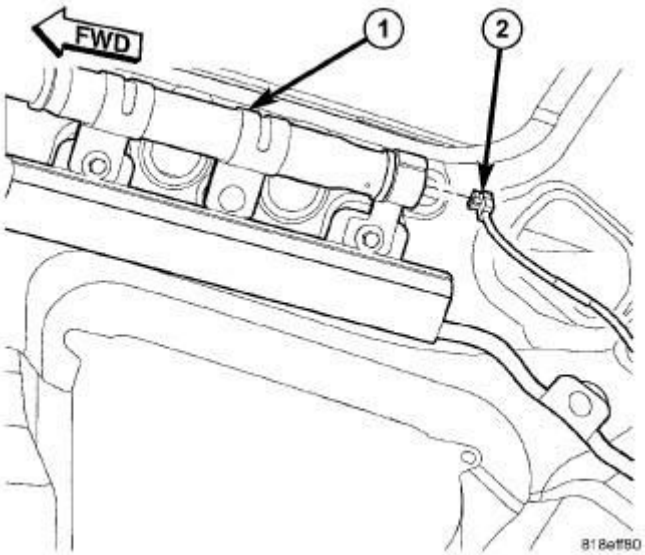

Fig. 32: Body Wire Harness Connector
Courtesy of CHRYSLER GROUP, LLC

NOTE: The following procedure is for replacement of an ineffective or damaged side curtain airbag (also known as Side AirBag Inflatable Curtain/SABIC). If the airbag is ineffective or damaged, but not deployed, review the recommended procedures for Handling Non-Deployed Supplemental Restraints. Refer to STANDARD PROCEDURE. If the side curtain airbag has been deployed, review the recommended procedures for Service After A Supplemental Restraint Deployment before removing the airbag from the vehicle. Refer to STANDARD PROCEDURE.

1. Disconnect and isolate the negative cable from the battery. Wait two minutes for the system capacitor to discharge before further service.
2. Remove the headliner from the vehicle. Refer to **HEADLINER, REMOVAL** .
3. Disconnect the body wire harness connector (2) for the side curtain airbag from the connector receptacle at the back of the inflator (1) on the inner roof

side rail between the C and D-pillars.

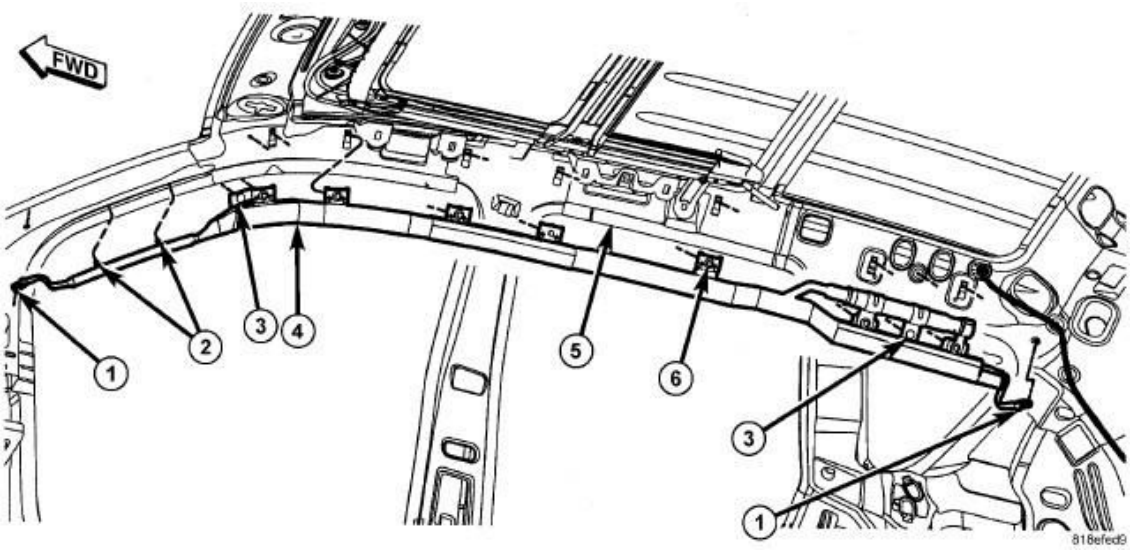

Fig. 33: Replacing Side Curtain Airbag
Courtesy of CHRYSLER GROUP, LLC

4. Disengage the metal clip (1) that secures the side curtain airbag rear tether to the inner roof side rail (5) above the D-pillar.
5. Disengage the metal clip (1) that secures the front tether to the inner A-pillar.
6. Disengage the two plastic fasteners (2) that secure the front tether to the inner A-pillar.
7. Remove the seven screws (6) that secure the side curtain airbag (4) to the U-nuts in the inner roof side rail.
8. Disengage the two plastic push-in fasteners (3) that secure the airbag and the inflator bracket to the inner roof side rail.
9. Remove the side curtain airbag from the vehicle as a unit.

INSTALLATION

INSTALLATION

WARNING: **To avoid serious or fatal injury on vehicles equipped with airbags, disable the Supplemental Restraint System (SRS) before attempting any steering wheel, steering column, airbag, seat belt tensioner, impact sensor or instrument panel component diagnosis or service. Disconnect and**

isolate the battery negative (ground) cable, then wait two minutes for the system capacitor to discharge before performing further diagnosis or service. This is the only sure way to disable the SRS. Failure to take the proper precautions could result in accidental airbag deployment.

WARNING: To avoid serious or fatal injury when removing a deployed airbag, rubber gloves, eye protection, and a long-sleeved shirt should be worn. There may be deposits on the airbag unit and other interior surfaces. In large doses, these deposits may cause irritation to the skin and eyes.

WARNING: To avoid serious or fatal injury, use extreme care to prevent any foreign material from entering the side curtain airbag, or becoming entrapped between the side curtain airbag cushion and the headliner. Failure to observe this warning could result in occupant injuries upon airbag deployment.

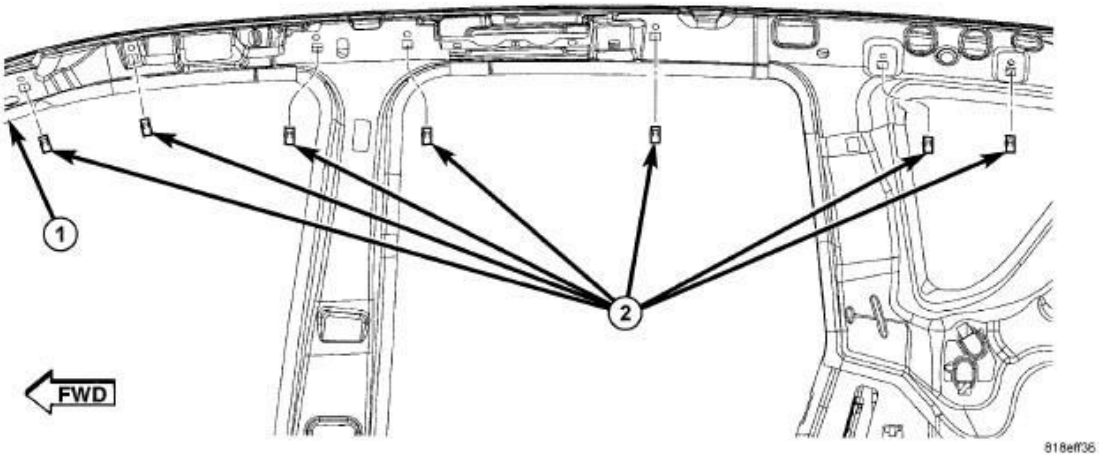

Fig. 34: U-Nuts
Courtesy of CHRYSLER GROUP, LLC

NOTE: The following procedure is for replacement of an ineffective or damaged side curtain airbag (also known as Side AirBag Inflatable Curtain/SABIC). If the airbag is

ineffective or damaged, but not deployed, review the recommended procedures for Handling Non-Deployed Supplemental Restraints. Refer to STANDARD PROCEDURE. If the side curtain airbag has been deployed, review the recommended procedures for Service After A Supplemental Restraint Deployment before removing the airbag from the vehicle. Refer to STANDARD PROCEDURE.

1. Check to be certain that the seven U-nuts (2) for the side curtain airbag are properly installed in the inner roof side rail (1) and that they are in good condition.

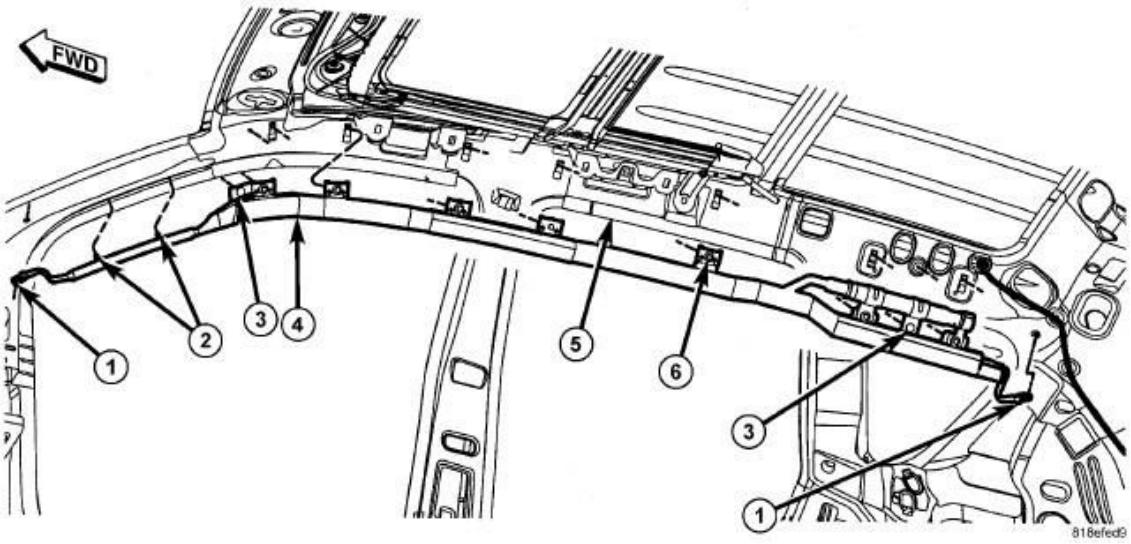

Fig. 35: Replacing Side Curtain Airbag
Courtesy of CHRYSLER GROUP, LLC

2. Position the side curtain airbag (4) into the vehicle as a unit.

NOTE: Be certain that the airbag cushion is not twisted during installation. If a colored stripe (red for right side bag, blue for left side bag) is visible on the cushion, the bag is twisted and must be untwisted before it is secured to the roof side rail.

3. Engage the two plastic push-in fasteners (3) that secure the airbag and the inflator bracket to the inner roof side rail (5).
4. Install and tighten the seven screws (6) that secure the side curtain airbag to

the U-nuts in the inner roof side rail. Tighten the screws to 5.5 N.m (50 in. lbs.).

5. Engage the two plastic fasteners (2) that secure the side curtain airbag front tether to the inner A-pillar.
6. Engage the metal clip (1) that secures the front tether to the inner A-pillar.
7. Engage the metal clip (1) that secures the rear tether to the inner roof side rail above the D-pillar.

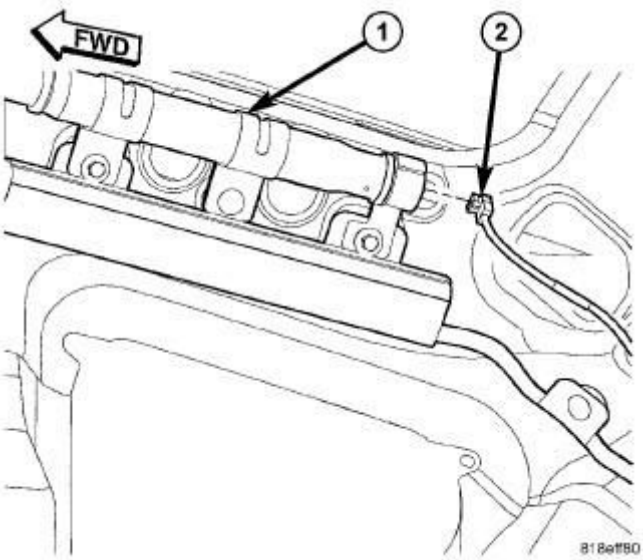

Fig. 36: Body Wire Harness Connector
Courtesy of CHRYSLER GROUP, LLC

8. Reconnect the body wire harness connector (2) for the side curtain airbag to the connector receptacle at the back of the inflator (1) on the inner roof side rail between the C and D-pillars.
9. Reinstall the headliner into the vehicle. Refer to **HEADLINER, INSTALLATION** .
10. Do not reconnect the negative cable to the battery at this time. The Supplemental Restraint System (SRS) Verification Test procedure should be performed following service of any SRS component. Refer to **STANDARD PROCEDURE**.

ANCHOR, CHILD SEAT

DESCRIPTION

DESCRIPTION

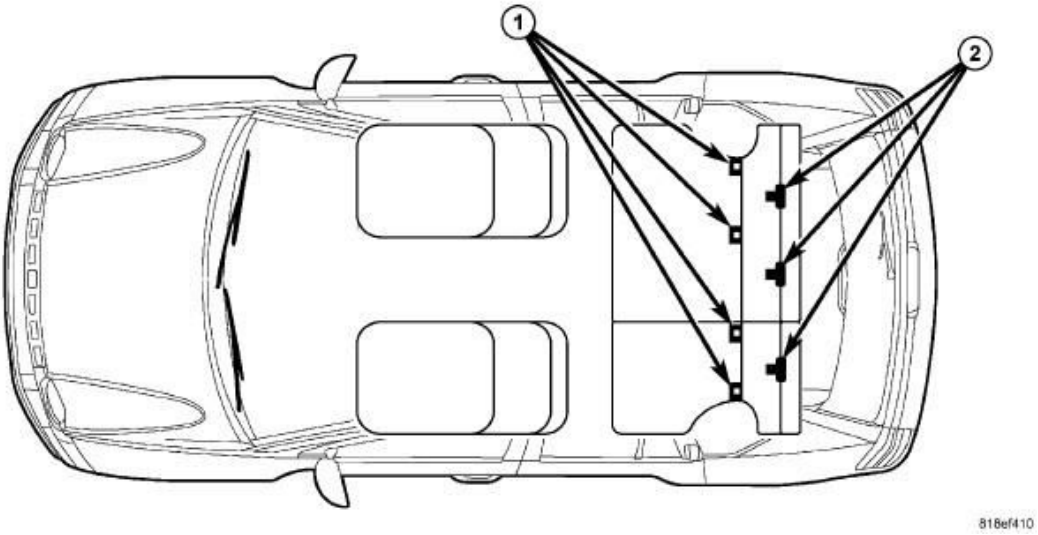

Fig. 37: Locating Upper Tether Anchors And Lower Anchors
Courtesy of CHRYSLER GROUP, LLC

This vehicle is equipped with a Lower Anchors and Tether for CHildren (LATCH) child restraint anchorage system. The second row seats in these vehicles are equipped with a fixed-position child restraint upper tether anchor (2) for both the center and the two outboard seating positions, and child restraint lower anchors (1) for the two outboard seating positions.

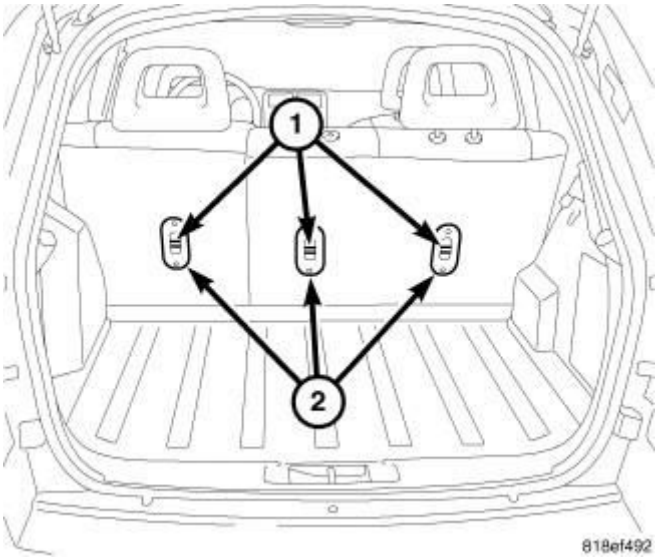

Fig. 38: Locating Molded Plastic Trim Bezel
Courtesy of CHRYSLER GROUP, LLC

The upper tether anchors (1) are each integral to the second row seat back panels. These anchors are each constructed from short lengths of heavy-gauge steel wire that is securely welded into stamped steel cups that are integral to the seat back

panels. There is a separate molded plastic trim bezel (2) located around each of these anchors. The child restraint upper tether anchors cannot be adjusted or repaired and, if ineffective or damaged, they must be replaced as a unit with their respective second row seat back panels.

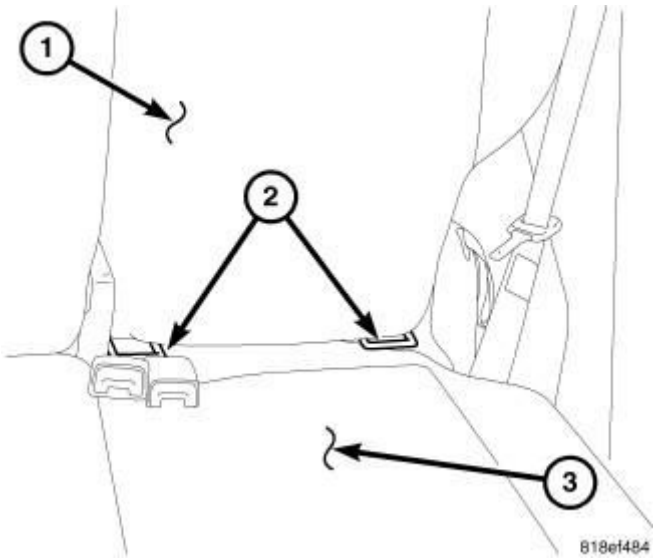

Fig. 39: Locating Lower Anchors
Courtesy of CHRYSLER GROUP, LLC

The right outboard and both left lower anchors (2) are integral to the second row seat back hinges, which are secured to the rear floor panel at the rear with studs and nuts, and at the front with screws. The right inboard lower anchor is integral to a separate child anchor bracket that is secured to the rear floor panel at the rear with a stud and a nut, and at the front along with the right and center anchor seat belt buckles with a screw. These anchors are each constructed from a heavy-gauge steel wire loop that is securely welded to the hinge or child anchor brackets. The anchor loops are located where the second row seat back (1) meets the seat cushion (3). The child restraint lower tether anchors cannot be adjusted or repaired and, if ineffective or damaged, they must be replaced as a unit with their respective second row seat hinge or child anchor brackets.

WARNING: **To avoid serious or fatal injury during and following any seat belt or child restraint anchor service, carefully inspect all seat belts, buckles, mounting hardware, retractors, tether straps, and anchors for proper installation, operation, or damage. Replace any belt that is cut, frayed, or torn. Straighten any belt that is twisted. Tighten**

any loose fasteners. Replace any belt that has a damaged or ineffective buckle or retractor. Replace any belt that has a bent or damaged latch plate or anchor plate. Replace any child restraint anchor or the unit to which the anchor is integral that has been bent or damaged. Never attempt to repair a seat belt or child restraint component. Always replace damaged or ineffective seat belt and child restraint components with the correct, new and unused replacement parts listed in the Chrysler Mopar® Parts Catalog.

OPERATION

OPERATION

All vehicles manufactured for sale in the United States and Canada are required to be equipped with a Lower Anchors and Tether for CHildren, or LATCH child restraint anchorage system. The second row seats in this vehicle have two pairs of anchor provisions for installing a LATCH-compatible child seat. A single seat may be mounted in the center seating position, or one in each outboard seating position.

With LATCH, child seats are secured by direct attachment to the vehicle seat structure, rather than by the seat belts. With LATCH-compatible child seats, lower anchors attach to the seat structure through heavy-gauge wire loops located at the intersection between the seat cushion and the seat back surfaces.

Three upper tether anchors are integral to the second row seat back frames to secure the top tether strap of child seats equipped with this feature. These upper tether anchors work with both LATCH-compatible and other child seats equipped with a top tether strap.

The owner's information packet in the vehicle glove box contains details and suggestions on the proper use of all of the factory-installed child restraint anchors.

REMOVAL

REMOVAL

WARNING: To avoid serious or fatal injury during and following any seat belt or child restraint anchor service, carefully inspect all seat belts, buckles, mounting hardware, retractors, tether straps, and anchors for proper installation, operation, or damage. Replace any belt that is cut, frayed, or torn. Straighten any belt that is twisted. Tighten any loose fasteners. Replace any belt that has a damaged or ineffective buckle or retractor. Replace any belt that has a bent or damaged latch plate or anchor plate. Replace any child restraint anchor or the unit to which the anchor is integral that has been bent or damaged. Never attempt to repair a seat belt or child restraint component. Always replace damaged or ineffective seat belt and child restraint components with the correct, new and unused replacement parts listed in the Chrysler Mopar® Parts Catalog.

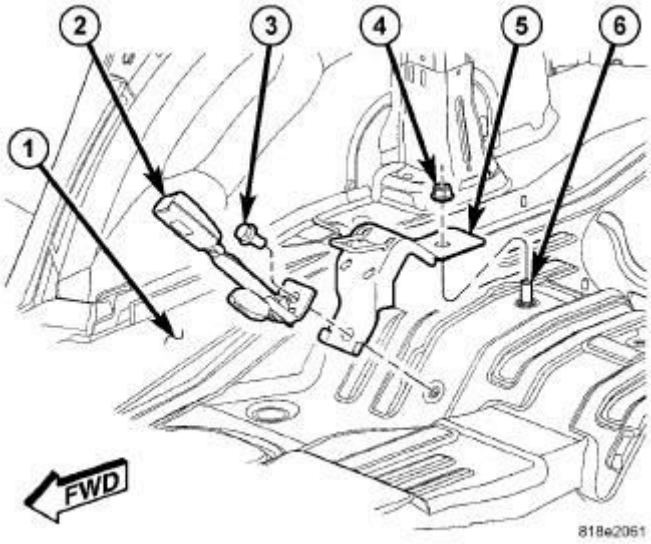

Fig. 40: Replacing Anchor
Courtesy of CHRYSLER GROUP, LLC

NOTE: The following procedure is for servicing the second row right inboard child restraint lower anchor and bracket. The second row right outboard and both left lower

anchors are integral to their respective seat back hinge brackets. Refer to DISASSEMBLY .

1. Remove the second row right and center anchor buckle unit (2) from the rear floor panel (1). Refer to **BUCKLE, SEAT BELT, REMOVAL**.
2. Remove the nut (4) from the stud (6) that secures the rear of the child anchor bracket (5) to the rear floor panel.
3. Disengage the child anchor bracket from the stud and remove the bracket from under the second row seat back.

INSTALLATION

INSTALLATION

WARNING: **To avoid serious or fatal injury during and following any seat belt or child restraint anchor service, carefully inspect all seat belts, buckles, mounting hardware, retractors, tether straps, and anchors for proper installation, operation, or damage. Replace any belt that is cut, frayed, or torn. Straighten any belt that is twisted. Tighten any loose fasteners. Replace any belt that has a damaged or ineffective buckle or retractor. Replace any belt that has a bent or damaged latch plate or anchor plate. Replace any child restraint anchor or the unit to which the anchor is integral that has been bent or damaged. Never attempt to repair a seat belt or child restraint component. Always replace damaged or ineffective seat belt and child restraint components with the correct, new and unused replacement parts listed in the Chrysler Mopar® Parts Catalog.**

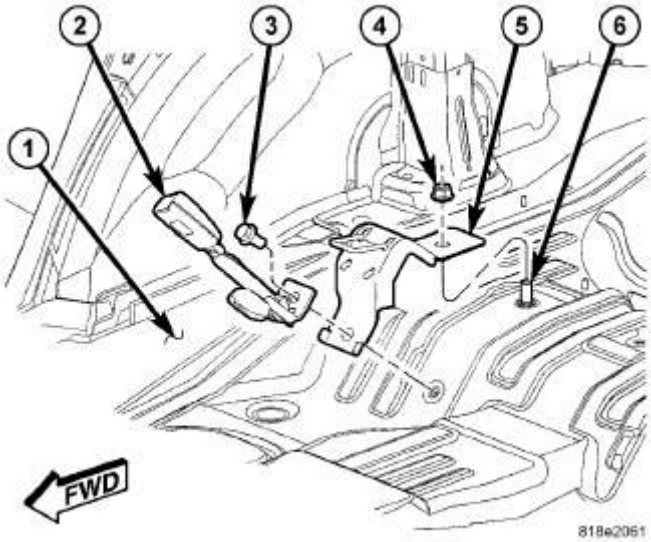

Fig. 41: Replacing Anchor
Courtesy of CHRYSLER GROUP, LLC

NOTE: The following procedure is for servicing the second row right inboard child restraint lower anchor and bracket. The second row right outboard and both left lower anchors are integral to their respective seat back hinge brackets. Refer to ASSEMBLY .

1. Position the child anchor bracket (5) under the second row seat back and engage it over the stud (6) on the rear floor panel (1).
2. Install and tighten the nut that secures the bracket to the stud. Tighten the nut to 80 N.m (59 ft. lbs.).
3. Reinstall the second row right and center anchor buckle unit (2) onto the rear floor panel. Refer to **BUCKLE, SEAT BELT, INSTALLATION**.

BUCKLE, SEAT BELT

REMOVAL

FRONT

WARNING: To avoid serious or fatal injury during and following any seat belt or child restraint anchor service, carefully inspect all seat belts, buckles, mounting hardware, retractors, tether straps, and

anchors for proper installation, operation, or damage. Replace any belt that is cut, frayed, or torn. Straighten any belt that is twisted. Tighten any loose fasteners. Replace any belt that has a damaged or ineffective buckle or retractor. Replace any belt that has a bent or damaged latch plate or anchor plate. Replace any child restraint anchor or the unit to which the anchor is integral that has been bent or damaged. Never attempt to repair a seat belt or child restraint component. Always replace damaged or ineffective seat belt and child restraint components with the correct, new and unused replacement parts listed in the Chrysler Mopar® Parts Catalog.

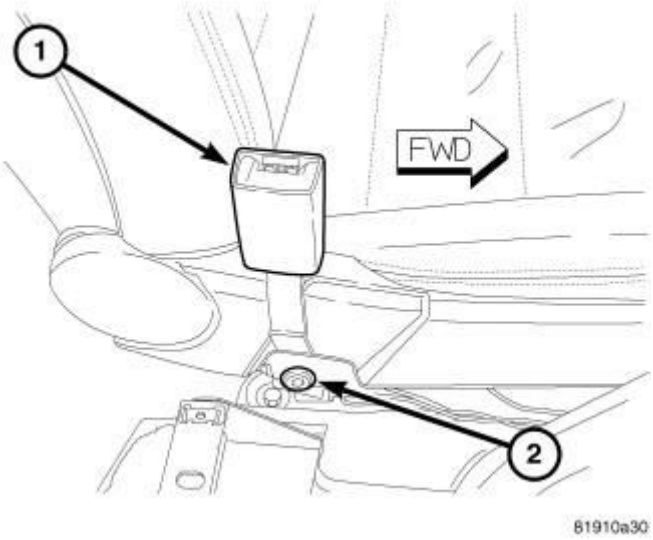

Fig. 42: Replacing Seat Belt Buckle
Courtesy of CHRYSLER GROUP, LLC

1. Move the front seat to its most rearward position for easiest access to the front seat belt buckle (1) lower anchor.
2. Disconnect and isolate the negative cable from the battery. Wait two minutes for the system capacitor to discharge before further service.
3. Remove the console from the floor panel transmission tunnel. Refer to **CONSOLE, FLOOR, REMOVAL** .
4. Remove the screw (2) that secures the front seat belt buckle lower anchor to the inboard side of the front seat cushion frame.

5. Remove the seat belt buckle from the front seat cushion frame.

SECOND ROW - CENTER AND LEFT

WARNING: To avoid serious or fatal injury during and following any seat belt or child restraint anchor service, carefully inspect all seat belts, buckles, mounting hardware, retractors, tether straps, and anchors for proper installation, operation, or damage. Replace any belt that is cut, frayed, or torn. Straighten any belt that is twisted. Tighten any loose fasteners. Replace any belt that has a damaged or ineffective buckle or retractor. Replace any belt that has a bent or damaged latch plate or anchor plate. Replace any child restraint anchor or the unit to which the anchor is integral that has been bent or damaged. Never attempt to repair a seat belt or child restraint component. Always replace damaged or ineffective seat belt and child restraint components with the correct, new and unused replacement parts listed in the Chrysler Mopar® Parts Catalog.

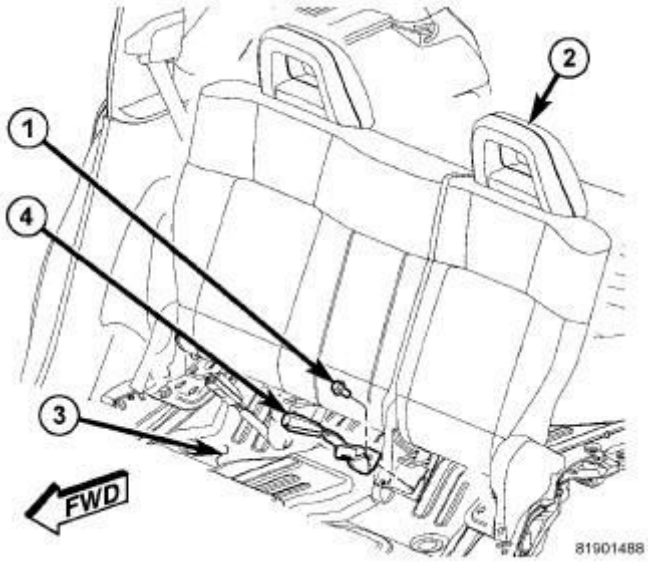

Fig. 43: Replacing Seat Belt Buckle
Courtesy of CHRYSLER GROUP, LLC

1. Remove the second row seat cushion from the rear floor panel (3). Refer to **COVER, SEAT CUSHION, REAR, REMOVAL** .
2. Remove the screw (1) that secures the center and left seat belt buckle unit (4) anchor plate and the left center seat back (2) hinge bracket to the rear floor panel.
3. Remove the buckle unit from the rear floor panel.

SECOND ROW - RIGHT AND CENTER ANCHOR

WARNING: To avoid serious or fatal injury during and following any seat belt or child restraint anchor service, carefully inspect all seat belts, buckles, mounting hardware, retractors, tether straps, and anchors for proper installation, operation, or damage. Replace any belt that is cut, frayed, or torn. Straighten any belt that is twisted. Tighten any loose fasteners. Replace any belt that has a damaged or ineffective buckle or retractor. Replace any belt that has a bent or damaged latch plate or anchor plate. Replace any child restraint anchor or the unit to which the anchor is integral that has been bent or damaged. Never attempt to repair a seat belt or child restraint component. Always replace damaged or ineffective seat belt and child restraint components with the correct, new and unused replacement parts listed in the Chrysler Mopar® Parts Catalog.

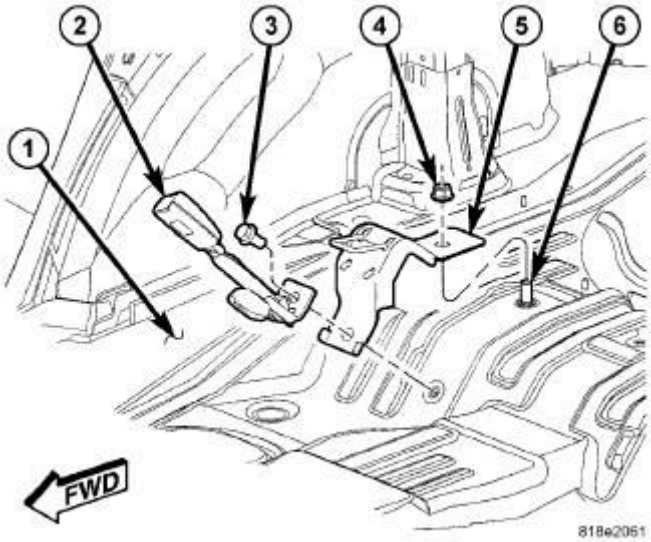

Fig. 44: Replacing Anchor
Courtesy of CHRYSLER GROUP, LLC

1. Remove the second row seat cushion from the rear floor panel (1). Refer to **COVER, SEAT CUSHION, REAR, REMOVAL** .
2. Remove the screw (3) that secures the right and center anchor seat belt buckle unit (2) anchor plate and the child anchor bracket (5) to the rear floor panel.
3. Remove the buckle unit from the rear floor panel.

INSTALLATION

FRONT

WARNING: To avoid serious or fatal injury during and following any seat belt or child restraint anchor service, carefully inspect all seat belts, buckles, mounting hardware, retractors, tether straps, and anchors for proper installation, operation, or damage. Replace any belt that is cut, frayed, or torn. Straighten any belt that is twisted. Tighten any loose fasteners. Replace any belt that has a damaged or ineffective buckle or retractor. Replace any belt that has a bent or damaged latch plate or anchor plate. Replace any child restraint anchor or the unit to which the anchor is integral

that has been bent or damaged. Never attempt to repair a seat belt or child restraint component. Always replace damaged or ineffective seat belt and child restraint components with the correct, new and unused replacement parts listed in the Chrysler Mopar® Parts Catalog.

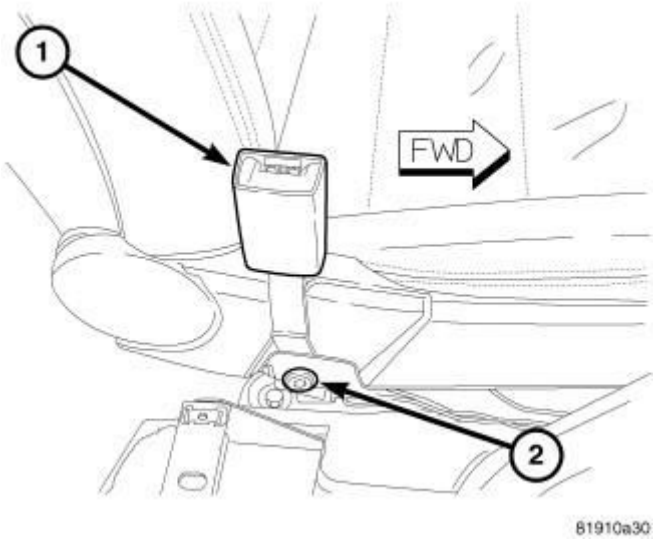

Fig. 45: Replacing Seat Belt Buckle
Courtesy of CHRYSLER GROUP, LLC

1. Position the front seat belt buckle (1) lower anchor onto the inboard side of the seat cushion frame.
2. Install and tighten the screw (2) that secures the front seat belt buckle lower anchor to the seat cushion frame. Tighten the screw to 45 N.m (33 ft. lbs.).
3. Reinstall the console onto the floor panel transmission tunnel. Refer to **CONSOLE, FLOOR, INSTALLATION** .
4. Reconnect the negative cable to the battery.

SECOND ROW - CENTER AND LEFT

WARNING: **To avoid serious or fatal injury during and following any seat belt or child restraint anchor service, carefully inspect all seat belts, buckles, mounting hardware, retractors, tether straps, and anchors for proper installation, operation, or damage. Replace any belt that is cut, frayed, or**

torn. Straighten any belt that is twisted. Tighten any loose fasteners. Replace any belt that has a damaged or ineffective buckle or retractor. Replace any belt that has a bent or damaged latch plate or anchor plate. Replace any child restraint anchor or the unit to which the anchor is integral that has been bent or damaged. Never attempt to repair a seat belt or child restraint component. Always replace damaged or ineffective seat belt and child restraint components with the correct, new and unused replacement parts listed in the Chrysler Mopar® Parts Catalog.

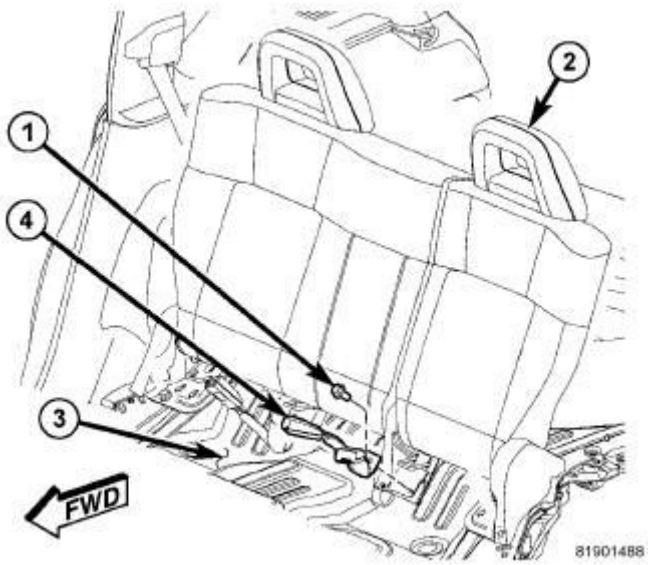

Fig. 46: Replacing Seat Belt Buckle
Courtesy of CHRYSLER GROUP, LLC

1. Position the center and left seat belt buckle unit (4) anchor plate onto the left seat back (2) hinge bracket on the rear floor panel (3).
2. Install and tighten the screw (1) that secures the anchor plate and buckles and the left center seat back hinge bracket to the rear floor panel. Tighten the screw to 58 N.m (43 ft. lbs.).
3. Reinstall the second row seat cushion onto the rear floor panel. Refer to **COVER, SEAT CUSHION, REAR, INSTALLATION** .

SECOND ROW - RIGHT AND CENTER ANCHOR

WARNING: To avoid serious or fatal injury during and following any seat belt or child restraint anchor service, carefully inspect all seat belts, buckles, mounting hardware, retractors, tether straps, and anchors for proper installation, operation, or damage. Replace any belt that is cut, frayed, or torn. Straighten any belt that is twisted. Tighten any loose fasteners. Replace any belt that has a damaged or ineffective buckle or retractor. Replace any belt that has a bent or damaged latch plate or anchor plate. Replace any child restraint anchor or the unit to which the anchor is integral that has been bent or damaged. Never attempt to repair a seat belt or child restraint component. Always replace damaged or ineffective seat belt and child restraint components with the correct, new and unused replacement parts listed in the Chrysler Mopar® Parts Catalog.

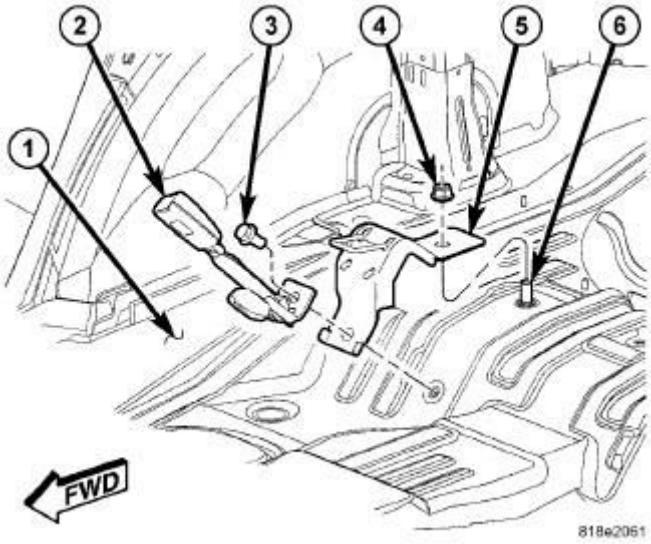

Fig. 47: Replacing Anchor
Courtesy of CHRYSLER GROUP, LLC

1. Position the right and center anchor seat belt buckle unit (2) anchor plate onto the child anchor bracket (5) on the rear floor panel (1).
2. Install and tighten the screw (3) that secures the buckle unit to the rear floor

panel. Tighten the screw to 58 N.m (43 ft. lbs.).

3. Reinstall the second row seat cushion onto the rear floor panel. Refer to **COVER, SEAT CUSHION, REAR, INSTALLATION** .

CLOCKSPRING

DESCRIPTION

DESCRIPTION

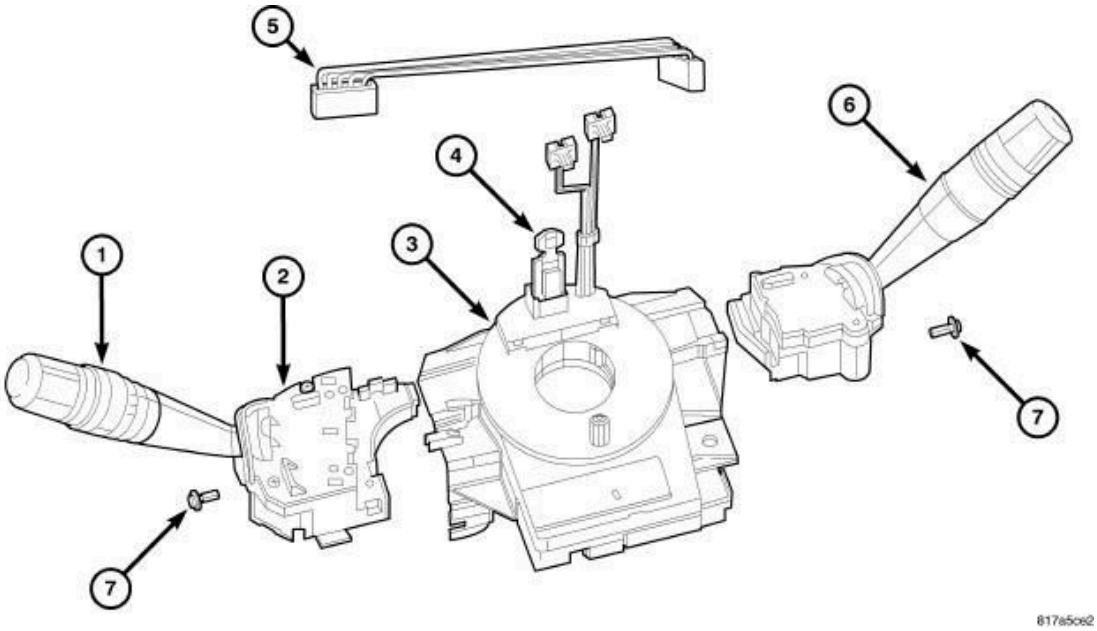

Fig. 48: Steering Control Module
Courtesy of CHRYSLER GROUP, LLC

The clockspring (3) for this vehicle is secured near the top of the steering column below the steering wheel. The clockspring also includes an integral, internal turn signal cancel cam and a Steering Angle Sensor (SAS) that are both serviced as a unit with the clockspring. The clockspring also supports the left (lighting) multifunction switch (1), the Steering Control Module (SCM) internal to the left multifunction switch housing (2), and the right (wiper) multifunction switch (6). Each of these switches and the jumper wire harness (5) between the two multifunction switches can be separated from and are serviced individually from the clockspring.

The clockspring case includes integral tabs for mounting the unit with three screws to the steering column lock housing as well as integral provisions for mounting and supporting both multifunction switches. The multifunction switches are each secured to the clockspring with a single screw (7). The SAS

within the clockspring includes an electronic circuit board and a microprocessor, which allows it to communicate with other electronic modules in the vehicle over the Controller Area Network (CAN) data bus. The SAS circuitry, the clockspring, and the turn signal cancel cam are all contained within a flat, molded plastic case.

The clockspring case includes three connector receptacles that face toward the instrument panel. Within the plastic case is a spool-like molded plastic rotor with a large exposed hub. The upper surface of the rotor hub has a large center hole, two short pigtail wires with connectors, and a connector receptacle that faces toward the steering wheel. The lower surface of the rotor has an integral dowel or drive pin that also faces toward the steering wheel. Wound around the rotor spool within the case is a long ribbon-like tape that consists of several thin copper wire leads sandwiched between two thin plastic membranes. The outer end of the tape terminates at two of the connector receptacles that face the instrument panel, while the inner end of the tape terminates at the pigtail wires and connector receptacle on the hub of the clockspring rotor that face the steering wheel. The outer surface of the rotor hub rim within the clockspring case also has the integral lobes of the turn signal cancel cam.

The service replacement clockspring is shipped pre-centered and with a molded plastic locking pin (4) installed. The locking pin secures the centered clockspring rotor to the clockspring case during shipment and handling, but must be removed after the clockspring is installed on the steering column and the steering wheel is installed. Refer to **CLOCKSPRING, STANDARD PROCEDURE**.

The clockspring cannot be repaired. If the clockspring is ineffective, damaged, or if the Driver AirBag (DAB) has been deployed, the clockspring/turn signal cancel cam/SAS unit must be replaced.

OPERATION

OPERATION

The clockspring is a mechanical electrical circuit component that is used to provide continuous electrical continuity between the fixed instrument panel wire harness and certain electrical components mounted on or in the rotating steering wheel. On this vehicle the rotating electrical components include the Driver AirBag (DAB), the horn switch, the speed control switch, and the remote radio switches, if the vehicle is so equipped. The clockspring is positioned and secured

near the top of the steering column. The fixed connector receptacles on the back of the fixed clockspring case connect the clockspring to the vehicle electrical system through three take outs with connectors from the instrument panel wire harness.

The turn signal cancel cam is integral to the rim of the clockspring rotor hub within the clockspring case so it also moves with the rotation of the steering wheel. Two short, black-sleeved pigtail wires on the upper surface of the clockspring rotor connect the clockspring to the DAB, while a steering wheel wire harness connected to the connector receptacle on the upper surface of the clockspring rotor complete circuits to the horn switch, the speed control switch and, if the vehicle is so equipped, to the optional remote radio switches on the steering wheel. The third connector receptacle is dedicated to the inputs and outputs of the Steering Angle Sensor (SAS) internal to the clockspring case.

Like the clockspring in a timepiece, the clockspring tape has travel limits and can be damaged by being wound too tightly during full stop-to-stop steering wheel rotation. To prevent this from occurring, the clockspring is centered when it is installed on the steering column. Centering the clockspring indexes the clockspring tape to the movable steering components so that the tape can operate within its designed travel limits. However, if the steering wheel is removed from the steering column, if the clockspring is removed from the steering column, or if the steering shaft is disconnected from the steering gear, the clockspring spool can change position relative to the other steering components. The clockspring must be re-centered following completion of this service or the tape may be damaged.

Service replacement clocksprings are shipped pre-centered and with a plastic locking pin installed. This locking pin should not be removed until the steering wheel has been installed on the steering column. If the locking pin is removed before the steering wheel is installed on a steering column, the clockspring centering procedure must be performed. Refer to **CLOCKSPRING, STANDARD PROCEDURE**. Proper clockspring installation may be confirmed by viewing the SAS data using a diagnostic scan tool.

The hard wired clockspring circuits as well as the hard wired inputs and outputs of the SAS may be diagnosed using conventional diagnostic tools and procedures. Refer to the appropriate wiring information. However, conventional diagnostic methods will not prove conclusive in the diagnosis of the SAS or the

electronic controls and communication between other modules and devices that provide features of the Electronic Stability Program (ESP) or Supplemental Restraint System (SRS). The most reliable, efficient and accurate means to diagnose the SAS or the electronic controls and communication related to ESP or SRS operation requires the use of a diagnostic scan tool and may also require the use of the SRS Load Tool special tool along with the appropriate Load Tool Jumpers and Adapters. Refer to the appropriate diagnostic information.

STANDARD PROCEDURE

STANDARD PROCEDURE - CLOCKSPRING CENTERING

WARNING: To avoid serious or fatal injury on vehicles equipped with airbags, disable the Supplemental Restraint System (SRS) before attempting any steering wheel, steering column, airbag, seat belt tensioner, impact sensor or instrument panel component diagnosis or service. Disconnect and isolate the battery negative (ground) cable, then wait two minutes for the system capacitor to discharge before performing further diagnosis or service. This is the only sure way to disable the SRS. Failure to take the proper precautions could result in accidental airbag deployment.

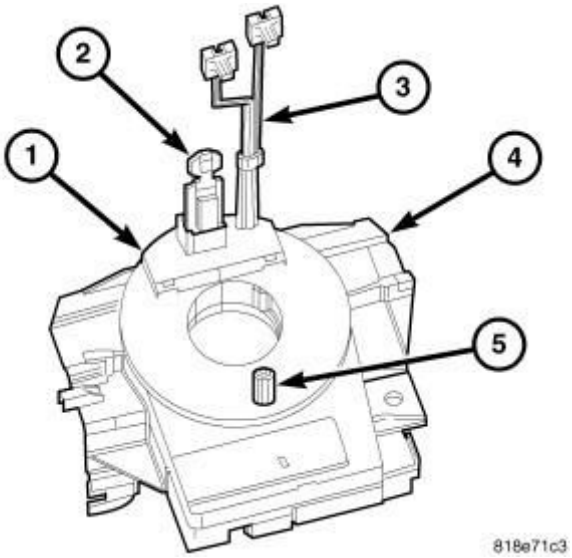

Fig. 49: Identifying Clockspring Components
Courtesy of CHRYSLER GROUP, LLC

NOTE: A service replacement clockspring is shipped with the clockspring pre-centered and with a molded plastic locking pin installed. This locking pin should not be removed until the steering wheel has been installed on the steering column. If the locking pin is removed before the steering wheel is installed, the clockspring centering procedure must be performed.

NOTE: When a clockspring is installed into a vehicle without properly centering and locking the entire steering system, the Steering Angle Sensor (SAS) data does not agree with the true position of the steering system and causes the Electronic Stability Program (ESP) system to shut down. This may also damage the clockspring without any immediate malfunction. Unlike some other Chrysler vehicles, this SAS never requires calibration. However, upon each new ignition ON cycle, the steering wheel must be rotated slightly to initialize the SAS.

NOTE: Determining if the clockspring/SAS is centered is also possible electrically using the diagnostic scan tool. Steering wheel position is displayed as ANGLE with a range of up to 900 degrees. Refer to the appropriate menu item on the diagnostic scan tool.

NOTE: Before starting this procedure, be certain to turn the steering wheel until the front wheels are in the straight-ahead position and that the entire steering system is locked or inhibited from rotation.

NOTE: The clockspring may be centered and the rotor may be rotated freely once the steering wheel has been removed.

1. Place the front wheels in the straight-ahead position and inhibit the steering column shaft from rotation.
2. Remove the steering wheel from the steering shaft. Refer to **WHEEL, STEERING, REMOVAL** .
3. Rotate the clockspring rotor (1) clockwise to the end of its travel. **Do not**

apply excessive torque.

4. From the end of the clockwise travel, rotate the rotor about two and one-half turns counterclockwise. Turn the rotor slightly clockwise or counterclockwise as necessary so that the clockspring airbag pigtail wires (3) and connector receptacle are at the top and the dowel or drive pin (5) is at the bottom.
5. The clockspring is now centered. Secure the clockspring rotor to the clockspring case using a locking pin (2) or some similar device to maintain clockspring centering until the steering wheel is reinstalled on the steering column.

REMOVAL

REMOVAL

WARNING: **To avoid serious or fatal injury on vehicles equipped with airbags, disable the Supplemental Restraint System (SRS) before attempting any steering wheel, steering column, airbag, seat belt tensioner, impact sensor or instrument panel component diagnosis or service. Disconnect and isolate the battery negative (ground) cable, then wait two minutes for the system capacitor to discharge before performing further diagnosis or service. This is the only sure way to disable the SRS. Failure to take the proper precautions could result in accidental airbag deployment.**

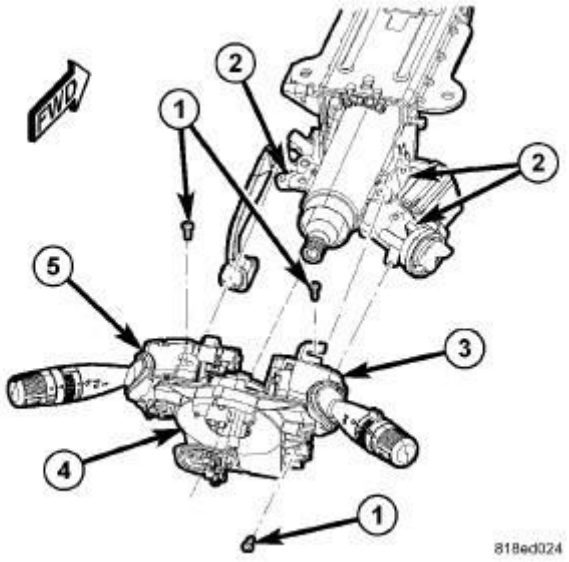

Fig. 50: Replacing Clockspring
Courtesy of CHRYSLER GROUP, LLC

NOTE: **A service replacement clockspring is shipped with the clockspring pre-centered and with a molded plastic locking pin installed. This locking pin should not be removed until the steering wheel has been installed on the steering column. If the locking pin is removed before the steering wheel is installed, the clockspring centering procedure must be performed.**

NOTE: **When a clockspring is installed into a vehicle without properly centering and locking the entire steering system, the Steering Angle Sensor (SAS) data does not agree with the true position of the steering system and causes the Electronic Stability Program (ESP) system to shut down. This may also damage the clockspring without any immediate malfunction. Unlike some other Chrysler vehicles, this SAS never requires calibration. Refer to CLOCKSPRING, STANDARD PROCEDURE.**

NOTE: **Determining if the clockspring/SAS is centered is also possible electrically using the diagnostic scan tool. Steering wheel position is displayed as ANGLE with a range of up to 900 degrees. Refer to the appropriate**

menu item on the diagnostic scan tool.

NOTE: Before starting this procedure, be certain to turn the steering wheel until the front wheels are in the straight-ahead position and that the entire steering system is locked or inhibited from rotation.

1. Place the front wheels in the straight ahead position and inhibit the steering column shaft from rotation.
2. Disconnect and isolate the negative cable from the battery.
3. Remove the steering wheel from the steering shaft. Refer to **WHEEL, STEERING, REMOVAL** .
4. If the removed clockspring is to be reused, be certain to secure the clockspring rotor to the clockspring case to maintain clockspring centering until the steering wheel is reinstalled on the steering column. If clockspring centering is not maintained, the clockspring must be centered again before the steering wheel is reinstalled. Refer to **CLOCKSPRING, STANDARD PROCEDURE**.
5. Move the steering column to the fully lowered position and leave the tilt release lever in the released (down) position.
6. Remove the upper and lower shrouds from the steering column. Refer to **COLUMN, REMOVAL** .
7. Remove the right multifunction switch (3) from the clockspring (4). Refer to **SWITCH, MULTIFUNCTION, RIGHT, REMOVAL** .
8. Remove the left multifunction switch (5) from the clockspring. Refer to **SWITCH, MULTIFUNCTION, LEFT, REMOVAL** .
9. Remove the three screws (1) that secure the clockspring to the steering column lock housing (2).

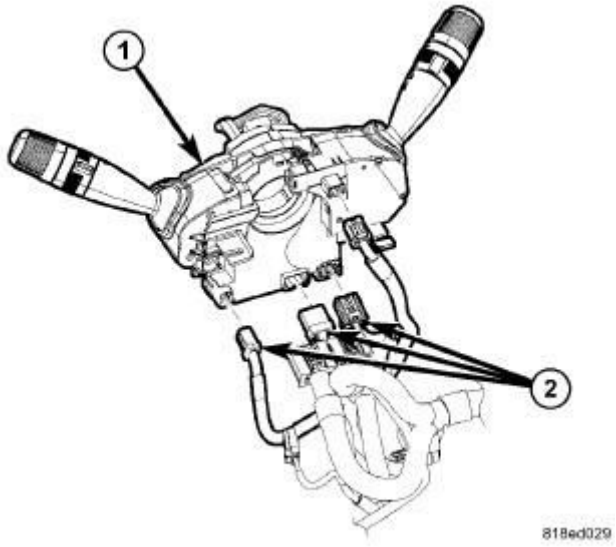

Fig. 51: Instrument Panel Wire Harness Connectors
Courtesy of CHRYSLER GROUP, LLC

10. Pull the clockspring (1) away from the steering column lock housing far enough to access and disconnect the three instrument panel wire harness connectors (2) from the receptacles on the back of the clockspring case.
11. Remove the clockspring from the steering column.

INSTALLATION

INSTALLATION

WARNING: To avoid serious or fatal injury on vehicles equipped with airbags, disable the Supplemental Restraint System (SRS) before attempting any steering wheel, steering column, airbag, seat belt tensioner, impact sensor or instrument panel component diagnosis or service. Disconnect and isolate the battery negative (ground) cable, then wait two minutes for the system capacitor to discharge before performing further diagnosis or service. This is the only sure way to disable the SRS. Failure to take the proper precautions could result in accidental airbag deployment.

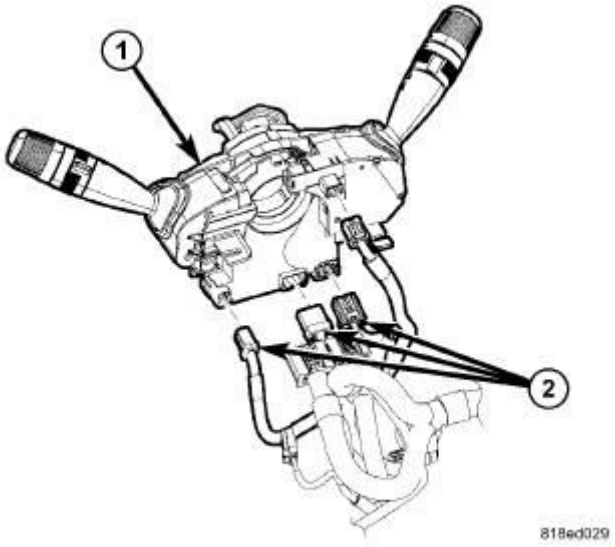

Fig. 52: Instrument Panel Wire Harness Connectors
Courtesy of CHRYSLER GROUP, LLC

NOTE: **A service replacement clockspring is shipped with the clockspring pre-centered and with a molded plastic locking pin installed. This locking pin should not be removed until the steering wheel has been installed on the steering column. If the locking pin is removed before the steering wheel is installed, the clockspring centering procedure must be performed.**

NOTE: **When a clockspring is installed into a vehicle without properly centering and locking the entire steering system, the Steering Angle Sensor (SAS) data does not agree with the true position of the steering system and causes the Electronic Stability Program (ESP) system to shut down. This may also damage the clockspring without any immediate malfunction. Unlike some other Chrysler vehicles, this SAS never requires calibration. Refer to CLOCKSPRING, STANDARD PROCEDURE.**

NOTE: **Determining if the clockspring/SAS is centered is also possible electrically using the diagnostic scan tool. Steering wheel position is displayed as ANGLE with a range of up to 900 degrees. Refer to the appropriate**

menu item on the diagnostic scan tool.

NOTE: Before starting this procedure, be certain to turn the steering wheel until the front wheels are in the straight-ahead position and that the entire steering system is locked or inhibited from rotation.

1. If a new clockspring (1) is being installed, transfer the multifunction switch jumper harness from the old clockspring or position a new jumper harness onto the new clockspring.
2. Carefully slide the clockspring down over the steering column upper shaft far enough to reconnect the three instrument panel wire harness connectors (2) to the receptacles on the back of the clockspring case.

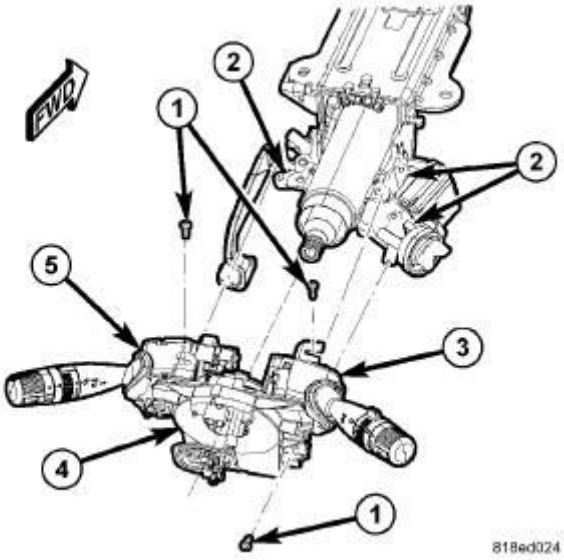

Fig. 53: Replacing Clockspring
Courtesy of CHRYSLER GROUP, LLC

3. Position the clockspring (4) onto the steering column lock housing (2).
4. Install and tighten the three screws (1) that secure the clockspring to the lock housing in the following sequence: lower right, upper left, upper right. Tighten the screws to 3 N.m (27 in. lbs.).

NOTE: Use of an improper sequence when tightening the clockspring mounting screws may result in an audible ticking noise as the steering wheel is rotated.

5. Reinstall the left multifunction switch (5) onto the clockspring. Refer to **SWITCH, MULTIFUNCTION, LEFT, INSTALLATION** .
6. Reinstall the right multifunction switch (3) onto the clockspring. Refer to **SWITCH, MULTIFUNCTION, RIGHT, INSTALLATION** .
7. Reinstall the upper and lower shrouds onto the steering column. Refer to **COLUMN, INSTALLATION** .
8. Move the steering column back to the fully raised position and move the tilt release lever back to the locked (up) position.
9. Reinstall the steering wheel onto the steering column. Refer to **WHEEL, STEERING, INSTALLATION** .
10. Remove the plastic locking pin that secures the clockspring rotor to the clockspring case to maintain clockspring centering.
11. Reconnect the negative cable to the battery.

MODULE, OCCUPANT RESTRAINT CONTROLLER

DESCRIPTION

DESCRIPTION

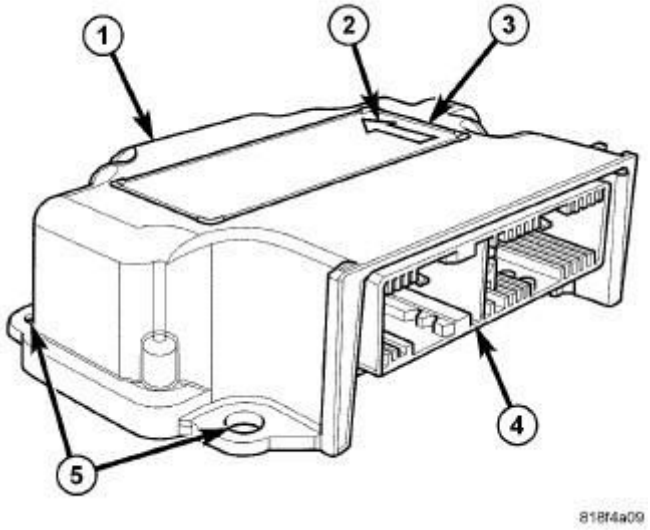

Fig. 54: Occupant Restraint Controller
Courtesy of CHRYSLER GROUP, LLC

The Occupant Restraint Controller (ORC) (1) is secured with three nuts to three studs on a stamped steel mounting bracket welded onto the top of the floor panel transmission tunnel near the dash panel. The ORC is located beneath the console

shifter housing forward of the transmission gearshift mechanism and center floor console in the passenger compartment of the vehicle. Concealed within a hollow in the center of the die cast aluminum ORC housing is the electronic circuitry of the ORC which includes a microcontroller, an electronic impact sensor, an electronic safing sensor, and an energy storage capacitor. A stamped metal cover plate is secured to the bottom of the ORC housing with four screws to enclose and protect the internal electronic circuitry and components.

An arrow (2) printed on the label (3) on the top of the ORC housing provides a visual verification of the proper orientation of the unit, and should always be pointed toward the front of the vehicle. The ORC housing has integral mounting flanges (5) on the left front and rear corners and near the center of the right side. A molded plastic electrical connector receptacle (4) exits the rearward facing side of the ORC housing. This receptacle connects the ORC to the vehicle electrical system through two dedicated take outs and connectors from the instrument panel wire harness.

The impact sensor and safing sensor internal to the ORC are calibrated for the specific vehicle, and are only serviced as a unit with the ORC. In addition, there are unique versions of the ORC for vehicles with or without side supplemental restraints. The ORC cannot be repaired or adjusted and, if damaged or ineffective, it must be replaced.

OPERATION

OPERATION

The microcontroller within the Occupant Restraint Controller (ORC) contains the supplemental restraint system logic circuits and controls all of the Supplemental Restraint System (SRS) components. The ORC uses On-Board Diagnostics (OBD) and can communicate with other electronic modules in the vehicle as well as with the diagnostic scan tool using the Controller Area Network (CAN) data bus. This method of communication is used for control of the airbag indicator in the ElectroMechanical Instrument Cluster (EMIC) (also known as the Cab Compartment Node/CCN) and for SRS diagnosis and testing through the 16-way data link connector located on the driver side lower edge of the instrument panel.

The ORC microcontroller continuously monitors all of the SRS electrical circuits to determine the system readiness. If the ORC detects a monitored system fault, it sets an active and stored Diagnostic Trouble Code (DTC) and sends electronic

messages to the EMIC over the CAN data bus to turn ON the airbag indicator. An active fault only remains for the duration of the fault, or in some cases for the duration of the current ignition switch cycle, while a stored fault causes a DTC to be stored in memory by the ORC. For some DTCs, if a fault does not recur for a number of ignition cycles, the ORC will automatically erase the stored DTC. For other internal faults, the stored DTC is latched forever.

The ORC receives battery current through two circuits; a fused ignition switch output (run) circuit through a fuse in the Totally Integrated Power Module (TIPM), and a fused ignition switch output (run-start) circuit through a second fuse in the TIPM. The ORC receives ground through a ground circuit and take out of the instrument panel wire harness. These connections allow the ORC to be operational whenever the ignition switch is in the START or ON positions. Refer to the appropriate wiring information for additional details.

The ORC also contains an energy-storage capacitor. When the ignition switch is in the START or ON positions, this capacitor is continually being charged with enough electrical energy to deploy the SRS components for up to one second following a battery disconnect or failure. The purpose of the capacitor is to provide backup SRS protection in case there is a loss of battery current supply to the ORC during an impact.

Two sensors are contained within the ORC, an electronic impact sensor and a safing sensor. The ORC also monitors inputs from two remote front impact sensors located on the back of the right and left vertical members of the radiator support near the front of the vehicle. The electronic impact sensors are accelerometers that sense the rate of vehicle deceleration, which provides verification of the direction and severity of an impact. On vehicles equipped with optional side curtain airbags or seat airbags, the ORC also monitors inputs from an internal rollover sensor and four additional remote impact sensors located on the left and right inner B-pillars and C-pillars to control deployment of the side curtain airbag and seat airbag units.

The safing sensor is an electronic accelerometer sensor within the ORC that provides an additional logic input to the ORC microcontroller. The safing sensor is used to verify the need for a SRS component deployment by detecting impact energy of a lesser magnitude than that of the primary electronic impact sensors, and must exceed a safing threshold in order for the airbags to deploy. Vehicles equipped with optional side curtain airbags or seat airbags feature a second

safing sensor within the ORC to provide confirmation to the ORC microcontroller of side impact forces. This second safing sensor is a bi-directional unit that detects impact forces from either side of the vehicle.

Pre-programmed decision algorithms in the ORC microcontroller determine when the deceleration rate as signaled by the impact sensors and the safing sensors indicate an impact that is severe enough to require SRS protection and, based upon the severity of the monitored impact, determines the level of front airbag deployment force required for each front seating position. When the programmed conditions are met, the ORC sends the proper electrical signals to deploy the dual multistage front airbags at the programmed force levels, the front seat belt tensioners and, if the vehicle is so equipped, either side curtain and seat airbag unit.

The hard wired inputs and outputs for the ORC may be diagnosed using conventional diagnostic tools and procedures. Refer to the appropriate wiring information. However, conventional diagnostic methods will not prove conclusive in the diagnosis of the ORC or the electronic controls and communication between other modules and devices that provide some features of the SRS. The most reliable, efficient and accurate means to diagnose the ORC or the electronic controls and communication related to SRS operation requires the use of a diagnostic scan tool and may also require the use of the SRS Load Tool special tool along with the appropriate Load Tool Jumpers and Adapters. Refer to the appropriate diagnostic information.

REMOVAL

REMOVAL

WARNING: **To avoid serious or fatal injury on vehicles equipped with side curtain or seat airbags, disable the Supplemental Restraint System (SRS) before attempting any Occupant Restraint Controller (ORC) diagnosis or service. The ORC contains a rollover sensor, which enables the system to deploy the side curtain and seat airbags in the event of a vehicle rollover event. If an ORC is accidentally rolled during service while still connected to battery power, the side curtain and seat airbags will deploy. Disconnect and isolate**

the battery negative (ground) cable, then wait two minutes for the system capacitor to discharge before performing further diagnosis or service. This is the only sure way to disable the SRS. Failure to take the proper precautions could result in accidental airbag deployment.

WARNING: To avoid serious or fatal injury on vehicles equipped with airbags, disable the Supplemental Restraint System (SRS) before attempting any steering wheel, steering column, airbag, seat belt tensioner, impact sensor or instrument panel component diagnosis or service. Disconnect and isolate the battery negative (ground) cable, then wait two minutes for the system capacitor to discharge before performing further diagnosis or service. This is the only sure way to disable the SRS. Failure to take the proper precautions could result in accidental airbag deployment.

WARNING: To avoid serious or fatal injury, never strike or drop the Occupant Restraint Controller (ORC), as it can damage the impact sensor or affect its calibration. The ORC contains the impact sensor, which enables the system to deploy the SRS components. If an ORC is accidentally dropped during service, the module must be scrapped and replaced with a new unit. Failure to observe this warning could result in accidental, incomplete, or improper SRS component deployment.

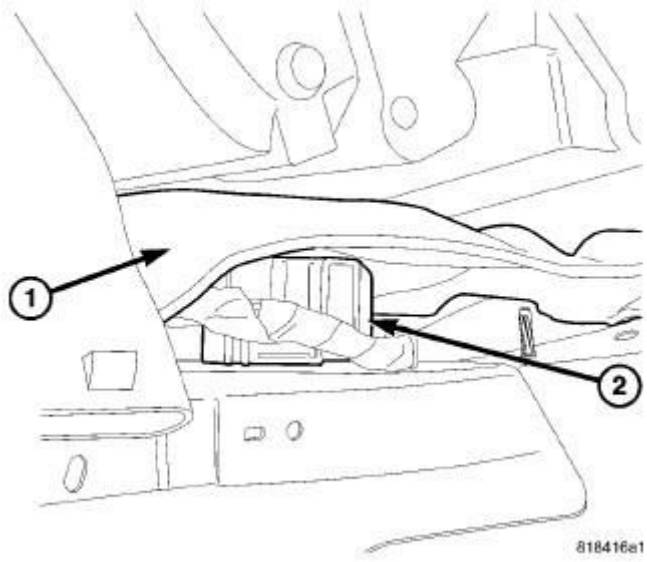

Fig. 55: ORC Mount Covering
Courtesy of CHRYSLER GROUP, LLC

NOTE: Several different Occupant Restraint Controllers (ORC) are available for this vehicle. For vehicles equipped with the optional side curtain or seat airbags the ORC contains a second bi-directional safing sensor.

1. Disconnect and isolate the negative cable from the battery. Wait two minutes for the system capacitor to discharge before further service.
2. Remove the center console shifter bezel and pod from the top of the floor panel transmission tunnel. Refer to **BEZEL, SHIFTER, REMOVAL** .
3. Lift, but do not remove, the jute covered panel (1) over the Occupant Restraint Controller (ORC) (2) between the dash panel and the gearshift mechanism as necessary to access the ORC connections and fasteners.

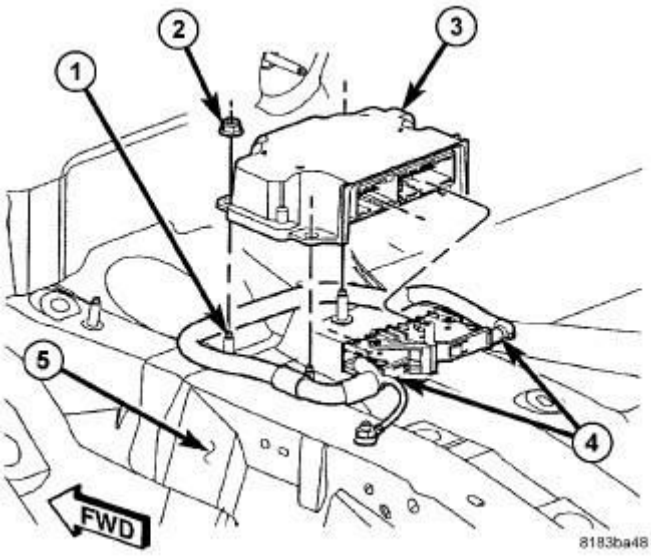

Fig. 56: Replacing ORC
Courtesy of CHRYSLER GROUP, LLC

4. Remove the three nuts (2) that secure the ORC (3) to the three studs (1) on the ORC mount welded onto the top of the floor panel transmission tunnel (5).
5. Unlatch and disconnect the two instrument panel wire harness connectors (4) from the ORC connector receptacles located on the rearward facing side of the module. To disconnect the wire harness connectors from the ORC, depress the release tab and lift the lever arm on each connector.
6. Remove the ORC from the ORC mount.

INSTALLATION

INSTALLATION

WARNING: To avoid serious or fatal injury on vehicles equipped with side curtain or seat airbags, disable the Supplemental Restraint System (SRS) before attempting any Occupant Restraint Controller (ORC) diagnosis or service. The ORC contains a rollover sensor, which enables the system to deploy the side curtain and seat airbags in the event of a vehicle rollover event. If an ORC is accidentally rolled during service while still connected to battery power, the side curtain and

seat airbags will deploy. Disconnect and isolate the battery negative (ground) cable, then wait two minutes for the system capacitor to discharge before performing further diagnosis or service. This is the only sure way to disable the SRS. Failure to take the proper precautions could result in accidental airbag deployment.

WARNING: **To avoid serious or fatal injury on vehicles equipped with airbags, disable the Supplemental Restraint System (SRS) before attempting any steering wheel, steering column, airbag, seat belt tensioner, impact sensor or instrument panel component diagnosis or service. Disconnect and isolate the battery negative (ground) cable, then wait two minutes for the system capacitor to discharge before performing further diagnosis or service. This is the only sure way to disable the SRS. Failure to take the proper precautions could result in accidental airbag deployment.**

WARNING: **To avoid serious or fatal injury, never strike or drop the Occupant Restraint Controller (ORC), as it can damage the impact sensor or affect its calibration. The ORC contains the impact sensor, which enables the system to deploy the SRS components. If an ORC is accidentally dropped during service, the module must be scrapped and replaced with a new unit. Failure to observe this warning could result in accidental, incomplete, or improper SRS component deployment.**

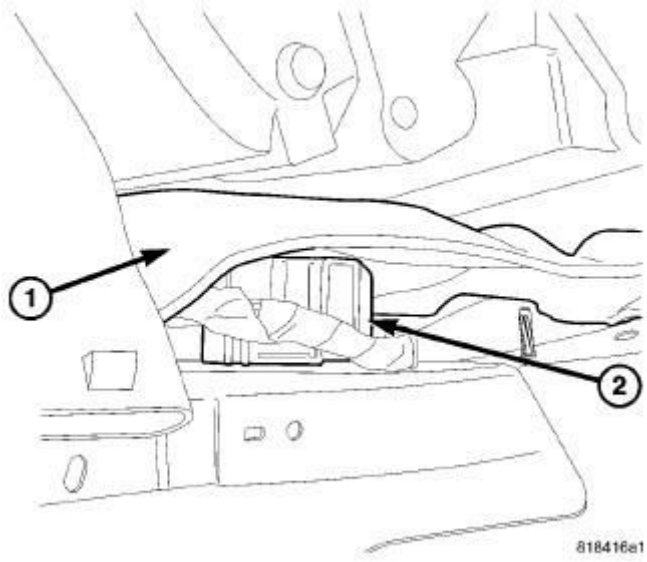

Fig. 57: ORC Mount Covering
Courtesy of CHRYSLER GROUP, LLC

NOTE: Several different Occupant Restraint Controllers (ORC) are available for this vehicle. For vehicles equipped with the optional side curtain or seat airbags the ORC contains a second bi-directional safing sensor.

1. Lift, but do not remove, the jute covered panel (1) over the Occupant Restraint Controller (ORC) (2) mount between the dash panel and the gearshift mechanism as necessary to reinstall the ORC, its connections and fasteners.

CAUTION: Be certain that the jute covered panel over the ORC is restored to its original installed position following ORC service. Failure to do so may result in the setting of a false Diagnostic Trouble Code (DTC) and illumination of the airbag indicator. This cover protects the ORC from the gearshift selector cables vibrating against or striking the top of the ORC housing, which could be falsely interpreted as a vehicle impact pulse by the sensors within the ORC.

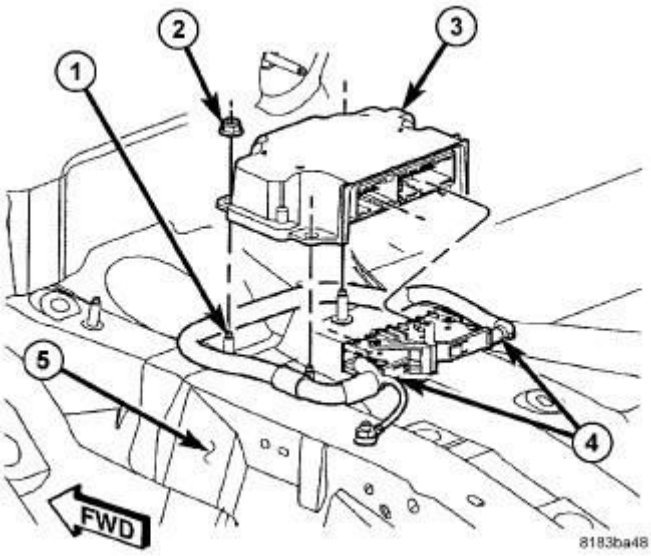

Fig. 58: Replacing ORC
Courtesy of CHRYSLER GROUP, LLC

2. Carefully position the Occupant Restraint Controller (ORC) (3) onto the three studs (1) of the ORC mount on the floor panel transmission tunnel (5). The bottom of the ORC housing is keyed. When the ORC is correctly positioned, the bottom of the housing will fit flush with the mount and the orientation arrow on the label on top of the housing will be pointed forward in the vehicle.
3. Reconnect the two instrument panel wire harness connectors (4) to the ORC connector receptacles located on the rearward facing side of the module. Be certain that the latches on the connectors are each fully engaged.
4. Install and tighten the three nuts (2) that secure the ORC to the studs of the ORC mount. Tighten the nuts to 9 N.m (80 in. lbs.).
5. Restore the jute covered panel to its proper position over the ORC between the dash panel and the gearshift mechanism.
6. Reinstall the center console shifter pod and bezel onto the top of the floor panel transmission tunnel. Refer to **HOUSING, SHIFTER, INSTALLATION** .
7. Do not reconnect the negative cable to the battery at this time. The Supplemental Restraint System (SRS) Verification Test procedure should be performed following service of any SRS component. Refer to **STANDARD PROCEDURE**.

RESTRAINT, ACTIVE HEAD

DESCRIPTION

DESCRIPTION

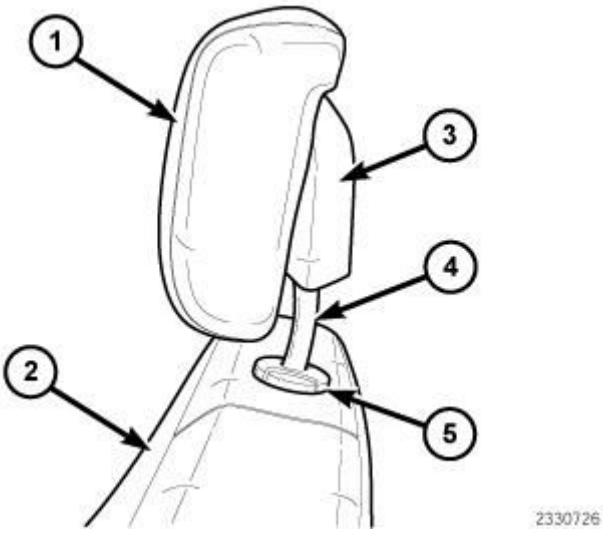

Fig. 59: Identifying Active Head Restraint Unit (AHR)
Courtesy of CHRYSLER GROUP, LLC

Active Head Restraint (AHR) units are standard equipment for both front seating positions in this vehicle. One AHR unit is located atop each front seat back (2). An AHR can be readily distinguished from a non-active head restraint by the two-piece construction used for an AHR. The forward-facing pad (1) consists of a molded reinforced plastic convex form covered with a dense foam pad and is trimmed in a material coordinated with the other soft trim on the seat. The rearward-facing surface is equipped with a hard molded plastic trim cover (3) that matches the other hard trim on the seat.

Located between the pad and the trim cover are the support structure of the AHR and both the mechanical and electrical components of the unit. The support structure includes a molded plastic carrier that is securely clamped to a U-shaped, bright-plated metal tube, the legs of which form the two visible posts (4) that are used to secure the unit in the two plastic guide sleeves (5) located at the top of the seat back frame. These posts feature numerous notches that engage spring-loaded detents integral to the plastic guide sleeves which are used for manually adjusting the vertical height of the AHR unit to properly fit the seat occupant.

The mechanical components of the AHR include the linkage that permits the lower part of the pad to be tilted forward or rearward for comfort as well as the

linkage that articulates the pad during deployment, a pair of heavy wire springs, a caliper-type latch mechanism and the latch striker. The single electrical component of the AHR unit is a latch-release solenoid and the pigtail wire that connects the solenoid to the vehicle electrical system. The pigtail wire and connector are routed through the center of one of the support posts and down through the guide sleeve into the interior of the seat back, where it is connected to a dedicated take out and connector of the seat wire harness.

The AHR cannot be repaired. If damaged or ineffective, it must be replaced with a new unit. However, unlike many other Supplemental Restraint System (SRS) components, following an AHR deployment, if no visible damage to the unit is observed it can usually be successfully reset and reused. Refer to **RESTRAINT, ACTIVE HEAD, STANDARD PROCEDURE**.

OPERATION

OPERATION

The Active Head Restraint (AHR) units are deployed by a signal generated by the Occupant Restraint Controller (ORC) through the first row right and left solenoid and ground signal circuits. The ORC logic monitors inputs from the front impact sensors as well as electronic message inputs received over the Controller Area Network (CAN) data bus to determine when the appropriate conditions exist to send a deployment signal to both AHR units. When the ORC detects an impact pulse of sufficient magnitude originating from the rear of the vehicle, while any transmission gear is selected except Reverse (**R**), the ORC sends the deployment signals.

When the ORC sends the proper electrical deployment signal to the solenoid of the AHR unit, the solenoid releases the AHR latch. When the AHR latch is released, the tension of the spring-loaded linkage within the AHR mechanically drives the AHR pad through a short, slightly forward and upward arc to the final deployed position. Deployment of the AHR reduces the space between the back of the head of the seat occupant and the head restraint pad. Closing this space supports the head of the seat occupant during a low speed rear impact collision event and is important in reducing or eliminating potentially debilitating cervical (also known as whiplash) injuries.

The ORC monitors the condition of the AHR unit circuits, and will illuminate the airbag indicator in the ElectroMechanical Instrument Cluster (EMIC) (also

known as the Cab Compartment Node/CCN) and store a Diagnostic Trouble Code (DTC) for any fault that is detected.

The hard wired circuits between the AHR units and the ORC may be diagnosed using conventional diagnostic tools and procedures. Refer to the appropriate wiring information. However, conventional diagnostic methods will not prove conclusive in the diagnosis of the AHR units or the electronic controls and communication between other modules and devices that provide some features of the Supplemental Restraint System (SRS). The most reliable, efficient and accurate means to diagnose the AHR units or the electronic controls and communication related to AHR unit operation requires the use of a diagnostic scan tool. Refer to the appropriate diagnostic information.

STANDARD PROCEDURE

STANDARD PROCEDURE - ACTIVE HEAD RESTRAINT RESET

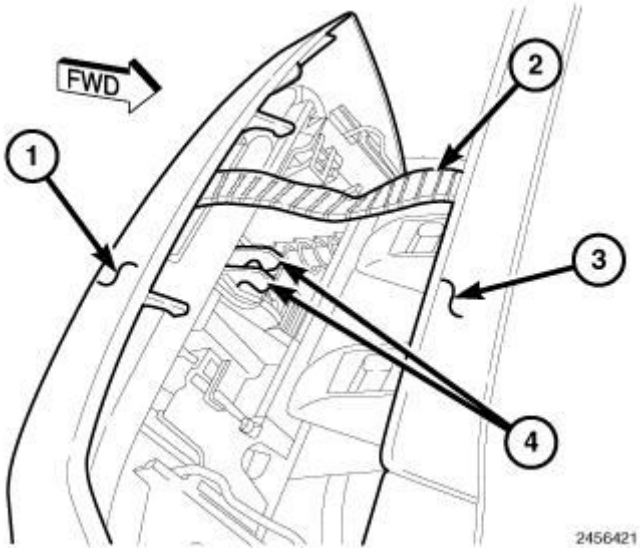

Fig. 60: Identifying Active Head Restraint (AHR) Trim Cover, Latch Catches Cushion & Tether Strap
Courtesy of CHRYSLER GROUP, LLC

If the Active Head Restraint (AHR) units have been deployed, both the driver and passenger side units must be reset. You can recognize that an AHR has been deployed by the forward position of the head restraint cushion and the large spacing between the cushion and the AHR rear trim cover.

NOTE: Before attempting to reset, and after each unsuccessful attempt to reset an AHR, inspect the latch mechanism

within the AHR rear trim cover (1) to be certain the latch is unlatched. This can be confirmed by placing a finger on the latch catches (4) and gently rocking them rearward and forward. The catches should move freely. If the catches do not move freely, they are in the latched position and the latch must be opened using the diagnostic scan tool. Follow the steps outlined for AHR - Activate Driver And Passenger Head Restraint under System Test for the Occupant Restraint Controller/ORC menu item. Each time this routine is performed, both the driver and passenger side AHR unit latches may be opened and both AHR units may have to be reset.

1. Be certain to pull the center of AHR tether strap (2) located between the rear trim cover and the cushion (3) upward as far as possible to prevent it from becoming trapped between the latch striker and the latch catches, which could interfere with successful latching of the striker.

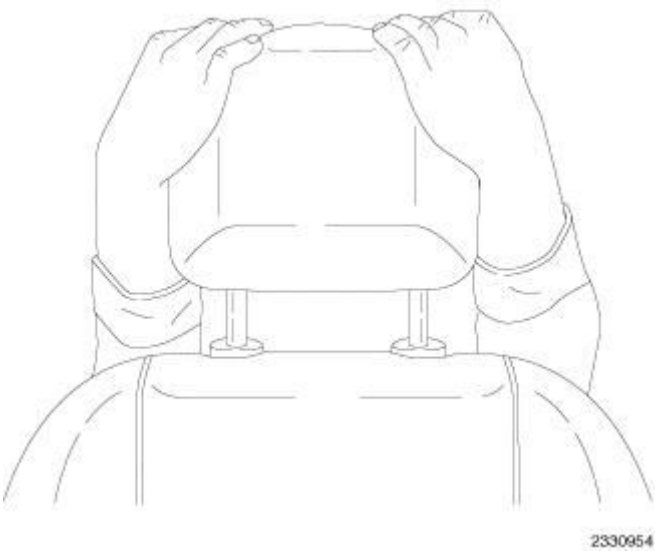

Fig. 61: Positioning Hands At Top Of AHR Cushion
Courtesy of CHRYSLER GROUP, LLC

2. Reaching from behind the seat and below the AHR, position both hands on the top of the AHR cushion as illustrated and brace your forearms or your upper torso against the upper seat back as needed for leverage.

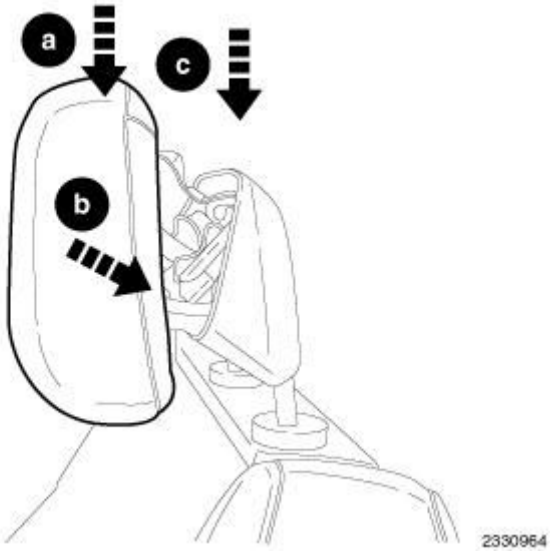

Fig. 62: Identifying Physical Actions To Reset And Latch AHR
Courtesy of CHRYSLER GROUP, LLC

3. Three separate and distinct physical actions must each be completed in their entirety to successfully reset and latch an AHR. It may help to memorize these actions before attempting the reset as: **DOWN** , **BACK** and **DOWN** . A short explanation of each action follows:
   a. **DOWN** : Pull the cushion downward (arrow a) far enough to allow the AHR linkage to drop out of its locked, deployed position to its neutral position. The cushion cannot be compressed against the rear trim cover until after the AHR linkage has been moved to its neutral position.
   b. **BACK** : Pull the cushion rearward (arrow b) firmly and evenly against the pressure of the deployment springs until it is flush against the rear trim cover.
   c. **DOWN** : Finally, while still holding the cushion tightly against the rear trim cover, pull the cushion downward (arrow c) once again far enough to fully engage the latch striker with the AHR latch mechanism. Listen for an audible click as the latch catches engage the striker.
4. If the tether remains hanging out between the top of the cushion and the rear trim cover, simply use a finger to tuck it out of sight between the top of the rear trim cover and the cushion.
5. To confirm a successful reset, there should be no visually obvious space between the cushion and the rear trim cover; although, there may be enough space to physically insert your fingertips between them. Also, operation of the comfort tilt adjustment feature should be restored.

RETRACTOR, SEAT BELT

DESCRIPTION

DESCRIPTION

The seat belt retractors used in all seating positions include an inertia-type, emergency locking mechanism as standard equipment. However, the retractor locking mechanisms for all seating positions except for the driver side front are mechanically switchable from an emergency locking retractor to an automatic locking retractor. The primary function of this feature is to securely accommodate a child seat in any of these seating positions of the vehicle without the need for a self-cinching seat belt tip half latch plate unit or another supplemental device that would be required to prevent the seat belt webbing from unwinding freely from the retractor spool of an inertia-type emergency locking retractor mechanism.

The automatic locking mechanism is integral to the seat belt and retractor unit and is concealed beneath a molded plastic cover located on one side of the retractor spool. The automatic locking mechanism cannot be adjusted or repaired and, if ineffective or damaged, the entire seat belt and retractor unit must be replaced.

OPERATION

OPERATION

The locked mode of the automatic locking retractor is engaged and the retractor is switched from operating as a standard inertia-type emergency locking retractor by first buckling the combination lap and shoulder belt buckle. Then grasp the shoulder belt and pull all of the webbing out of the retractor. Once all of the belt webbing is extracted from the spool, the retractor will automatically become engaged in the pre-locked automatic locking mode and will make a light, audible clicking or ratchet-like sound as the shoulder belt is allowed to retract to confirm that the automatic locking mode is now engaged. Once the automatic locking mode is engaged, the retractor will remain locked and the belt will remain tight around whatever it is restraining.

The retractor is returned to standard emergency locking (inertia) mode by unbuckling the combination lap and shoulder belt buckle and allowing the belt webbing to be almost fully retracted onto the retractor spool. The emergency

locking mode is confirmed by the absence of the light, audible clicking or ratchet-like sound as the belt webbing retracts. This mode will allow the belt to unwind from and wind onto the retractor spool freely unless and until a predetermined inertia load is sensed, or until the retractor is again switched to the automatic locking mode.

REMOVAL

FRONT

WARNING: **To avoid serious or fatal injury on vehicles equipped with airbags, disable the Supplemental Restraint System (SRS) before attempting any steering wheel, steering column, airbag, seat belt tensioner, impact sensor or instrument panel component diagnosis or service. Disconnect and isolate the battery negative (ground) cable, then wait two minutes for the system capacitor to discharge before performing further diagnosis or service. This is the only sure way to disable the SRS. Failure to take the proper precautions could result in accidental airbag deployment.**

WARNING: **To avoid serious or fatal injury during and following any seat belt or child restraint anchor service, carefully inspect all seat belts, buckles, mounting hardware, retractors, tether straps, and anchors for proper installation, operation, or damage. Replace any belt that is cut, frayed, or torn. Straighten any belt that is twisted. Tighten any loose fasteners. Replace any belt that has a damaged or ineffective buckle or retractor. Replace any belt that has a bent or damaged latch plate or anchor plate. Replace any child restraint anchor or the unit to which the anchor is integral that has been bent or damaged. Never attempt to repair a seat belt or child restraint component. Always replace damaged or ineffective seat belt and child restraint components with the correct,**

new and unused replacement parts listed in the Chrysler Mopar® Parts Catalog.

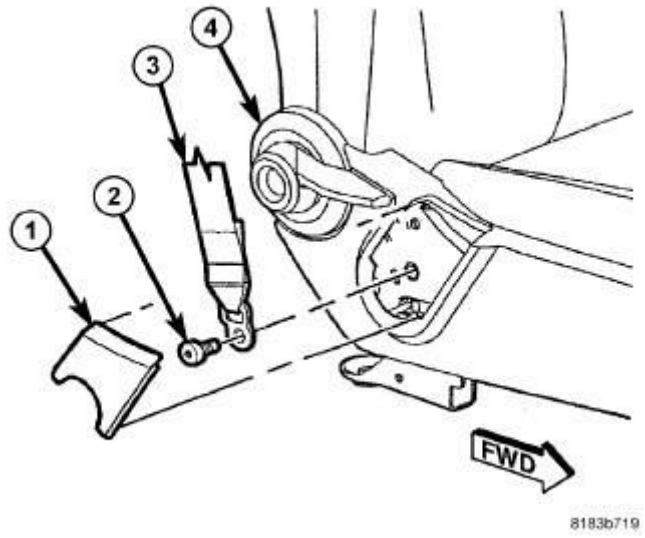

Fig. 63: Replacing Front Seat Belt
Courtesy of CHRYSLER GROUP, LLC

NOTE: **The following procedure is for replacement of an ineffective or damaged seat belt and retractor unit. The front retractor also includes a seat belt tensioner. If the front seat belt or retractor is ineffective or damaged, but the seat belt tensioner is not deployed, review the recommended procedures for Handling Non-Deployed Supplemental Restraints. Refer to STANDARD PROCEDURE. If the seat belt tensioner has been deployed, review the recommended procedures for Service After A Supplemental Restraint Deployment before removing the unit from the vehicle. Refer to STANDARD PROCEDURE.**

NOTE: **All seat belt retractors except the driver side front retractor include a switchable automatic locking mechanism. Refer to RETRACTOR, SEAT BELT, DESCRIPTION.**

1. Adjust the front seat to its most forward position for easiest access to the front seat belt lower anchor cover (1) and the B-pillar trim.

2. Disconnect and isolate the negative cable from the battery. Wait two minutes for the system capacitor to discharge before further service.
3. Grasp the upper edge of the lower anchor cover and pull upward to unsnap it from the front seat cushion outboard side shield (4).
4. Remove the screw (2) that secures the seat belt (3) lower anchor to the outboard side of the front seat cushion frame.

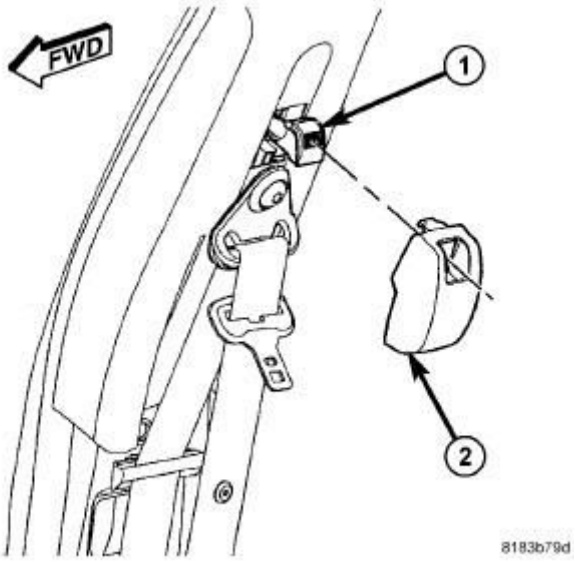

Fig. 64: Height Adjuster Knob & Turning Loop Trim Cover
Courtesy of CHRYSLER GROUP, LLC

5. Firmly grasp the lower end of the turning loop trim cover (2) on the upper B-pillar and pull it straight out to unsnap it from over the height adjuster knob (1), then roll the bottom of the cover upward and pull outward to disengage the upper tab from the slot in the adjuster cover above the knob.

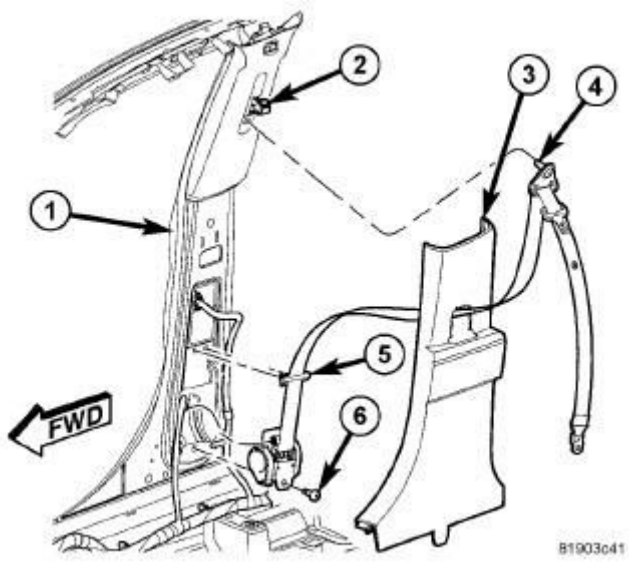

Fig. 65: Height Adjuster On Upper B-Pillar
Courtesy of CHRYSLER GROUP, LLC

6. Remove the screw (4) that secures the seat belt turning loop to the height adjuster (2) on the upper B-pillar (1).
7. Remove the seat belt turning loop from the height adjuster.
8. Remove the trim (3) from the lower B-pillar. Refer to **PANEL, B-PILLAR TRIM, LOWER, REMOVAL** .
9. Pull the front seat belt turning loop and lower anchor through the seat belt opening in the lower B-pillar trim.
10. Disengage the two clips that secure the belt web guide (5) to the B-pillar.
11. Remove the screw (6) that secures the retractor lower bracket to the base of the inner B-pillar.

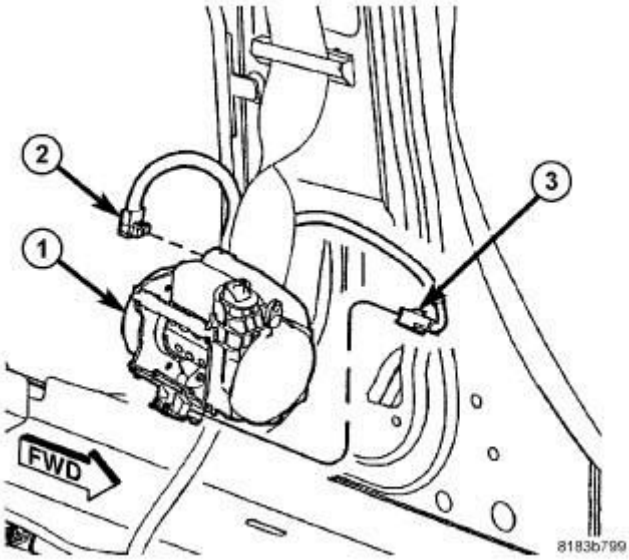

Fig. 66: Replacing Retractor
Courtesy of CHRYSLER GROUP, LLC

12. Pull the retractor (1) away from the B-pillar far enough to access and disconnect the yellow body wire harness connector (2) from the seat belt tensioner initiator on the retractor.
13. If the retractor is so equipped, disconnect the body wire harness connector (3) from the connector receptacle for the seat belt switch located near the bottom of the retractor.
14. Remove the front seat belt and retractor from the vehicle as a unit.

SECOND ROW - CENTER

WARNING: **To avoid serious or fatal injury during and following any seat belt or child restraint anchor service, carefully inspect all seat belts, buckles, mounting hardware, retractors, tether straps, and anchors for proper installation, operation, or damage. Replace any belt that is cut, frayed, or torn. Straighten any belt that is twisted. Tighten any loose fasteners. Replace any belt that has a damaged or ineffective buckle or retractor. Replace any belt that has a bent or damaged latch plate or anchor plate. Replace any child restraint anchor or the unit to which the anchor is integral that has been bent or damaged. Never attempt to**

repair a seat belt or child restraint component. Always replace damaged or ineffective seat belt and child restraint components with the correct, new and unused replacement parts listed in the Chrysler Mopar® Parts Catalog.

Fig. 67: Seat Belt Lower Anchor And Anchor Buckle
Courtesy of CHRYSLER GROUP, LLC

NOTE: All seat belt retractors except the driver side front retractor include a switchable automatic locking mechanism. Refer to RETRACTOR, SEAT BELT, DESCRIPTION.

1. If the second row center seat belt lower anchor (1) is connected, access and unbuckle the lower anchor latch plate from the unique, keyed lower anchor buckle (2). Use an ignition key or a small screwdriver to depress the small latch release button on the anchor buckle.

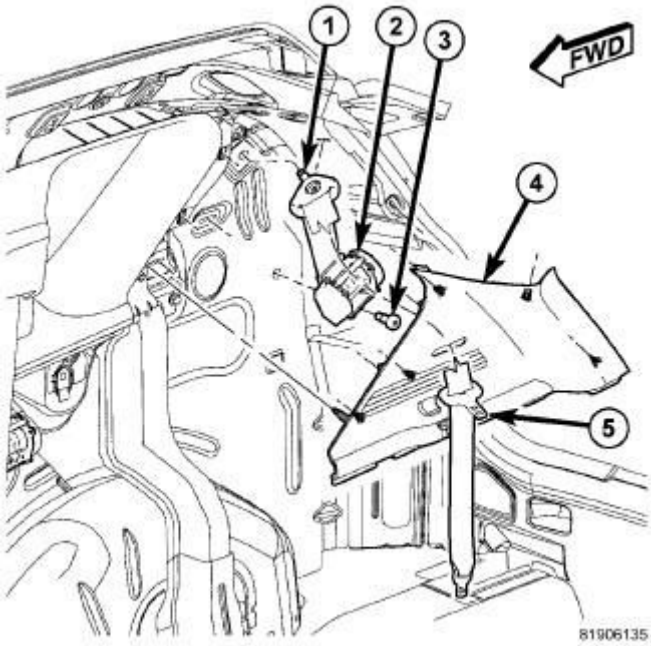

Fig. 68: Upper Trim
Courtesy of CHRYSLER GROUP, LLC

2. Remove the upper trim (4) from the inside of the right D-pillar. Refer to **PANEL, D-PILLAR TRIM, REMOVAL** .
3. Pull the second row center seat belt latch plate and lower anchor (5) through the seat belt opening in the right upper D-pillar trim.
4. Remove the screw (1) that secures the seat belt turning loop to the right upper D-pillar.
5. Remove the screw (3) that secures the retractor (2) lower bracket to the right quarter inner panel.
6. Remove the second row center seat belt and retractor unit from the right quarter inner panel.

SECOND ROW - OUTBOARD

WARNING: To avoid serious or fatal injury during and following any seat belt or child restraint anchor service, carefully inspect all seat belts, buckles, mounting hardware, retractors, tether straps, and anchors for proper installation, operation, or damage. Replace any belt that is cut, frayed, or torn. Straighten any belt that is twisted. Tighten

any loose fasteners. Replace any belt that has a damaged or ineffective buckle or retractor. Replace any belt that has a bent or damaged latch plate or anchor plate. Replace any child restraint anchor or the unit to which the anchor is integral that has been bent or damaged. Never attempt to repair a seat belt or child restraint component. Always replace damaged or ineffective seat belt and child restraint components with the correct, new and unused replacement parts listed in the Chrysler Mopar® Parts Catalog.

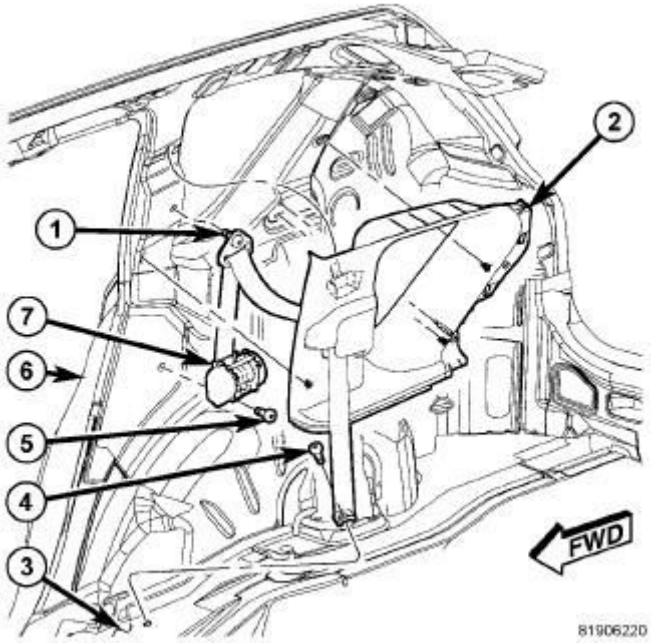

Fig. 69: Upper Trim
Courtesy of CHRYSLER GROUP, LLC

NOTE: All seat belt retractors except the driver side front retractor include a switchable automatic locking mechanism. Refer to RETRACTOR, SEAT BELT, DESCRIPTION.

1. Remove the rear seat cushion from the vehicle. Refer to **COVER, SEAT CUSHION, REAR, REMOVAL** .
2. Remove the screw (4) that secures the second row outboard seat belt lower

anchor to the rear floor panel (3).

3. Remove the upper trim (2) from the inside of the C-pillar (6). Refer to **PANEL, C-PILLAR TRIM, REMOVAL** .
4. Pull the seat belt lower anchor through the seat belt opening in the upper C-pillar trim.
5. Remove the screw (1) that secures the seat belt turning loop to the upper C-pillar.
6. Remove the seat belt turning loop from the upper C-pillar.
7. Move the trim from the front of the quarter inner panel far enough to access the seat belt retractor (7). Refer to **PANEL, QUARTER TRIM, REMOVAL** .
8. Remove the screw (4) that secures the retractor (1) to the lower C-pillar.
9. Remove the second row outboard seat belt and retractor from the lower C-pillar as a unit.

INSTALLATION

FRONT

WARNING: **To avoid serious or fatal injury on vehicles equipped with airbags, disable the Supplemental Restraint System (SRS) before attempting any steering wheel, steering column, airbag, seat belt tensioner, impact sensor or instrument panel component diagnosis or service. Disconnect and isolate the battery negative (ground) cable, then wait two minutes for the system capacitor to discharge before performing further diagnosis or service. This is the only sure way to disable the SRS. Failure to take the proper precautions could result in accidental airbag deployment.**

WARNING: **To avoid serious or fatal injury during and following any seat belt or child restraint anchor service, carefully inspect all seat belts, buckles, mounting hardware, retractors, tether straps, and anchors for proper installation, operation, or damage. Replace any belt that is cut, frayed, or**

torn. Straighten any belt that is twisted. Tighten any loose fasteners. Replace any belt that has a damaged or ineffective buckle or retractor. Replace any belt that has a bent or damaged latch plate or anchor plate. Replace any child restraint anchor or the unit to which the anchor is integral that has been bent or damaged. Never attempt to repair a seat belt or child restraint component. Always replace damaged or ineffective seat belt and child restraint components with the correct, new and unused replacement parts listed in the Chrysler Mopar® Parts Catalog.

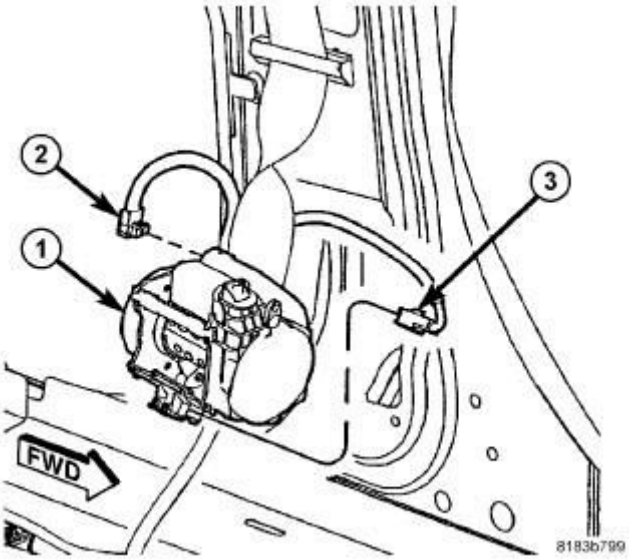

Fig. 70: Replacing Retractor
Courtesy of CHRYSLER GROUP, LLC

NOTE: **The following procedure is for replacement of an ineffective or damaged seat belt and retractor unit. The front retractor also includes a seat belt tensioner. If the front seat belt or retractor is ineffective or damaged, but the seat belt tensioner is not deployed, review the recommended procedures for Handling Non-Deployed Supplemental Restraints. Refer to STANDARD PROCEDURE. If the seat belt tensioner has been deployed, review the recommended procedures for**

Service After A Supplemental Restraint Deployment before removing the unit from the vehicle. Refer to STANDARD PROCEDURE.

NOTE: All seat belt retractors except the driver side front retractor include a switchable automatic locking mechanism. Refer to RETRACTOR, SEAT BELT, DESCRIPTION.

1. Position the seat belt and retractor (1) into the vehicle as a unit.
2. If the retractor is so equipped, reconnect the body wire harness connector (3) to the connector receptacle for the seat belt switch located near the bottom of the retractor.
3. Reconnect the yellow body wire harness connector (2) to the seat belt tensioner initiator on the retractor.

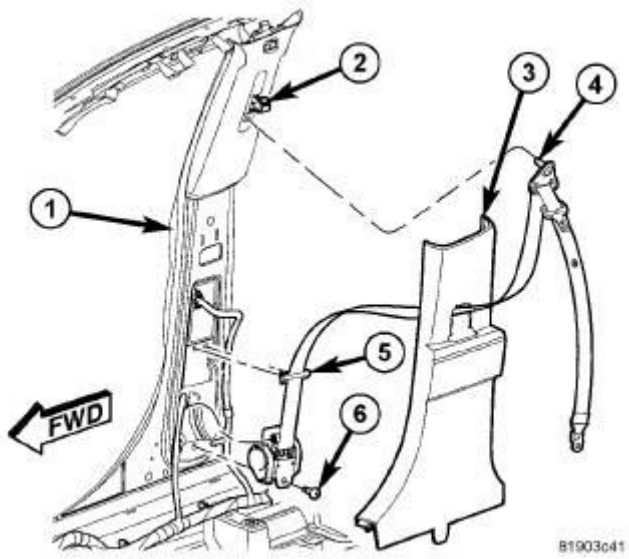

Fig. 71: Height Adjuster On Upper B-Pillar
Courtesy of CHRYSLER GROUP, LLC

4. Angle the top of the retractor into the opening in the lower inner B-pillar (1) then roll the lower end of the retractor into the opening.
5. Install and tighten the screw (6) that secures the retractor lower bracket to the base of the inner B-pillar. Tighten the screw to 40 N.m (30 ft. lbs.).
6. Position the belt web guide (5) to the B-pillar and use hand pressure to press it firmly and evenly until the two clips that secure it snap into place.

7. Route the front seat belt turning loop and lower anchor through the seat belt opening in the lower B-pillar trim (3).
8. Reinstall the lower trim onto the B-pillar. Refer to **PANEL, B-PILLAR TRIM, LOWER, INSTALLATION** .
9. Position the seat belt turning loop onto the height adjuster (2) on the upper B-pillar. Be certain that the seat belt webbing between the retractor and the turning loop is not twisted.
10. Install and tighten the screw (4) that secures the turning loop to the height adjuster. Tighten the screw to 40 N.m (30 ft. lbs.).

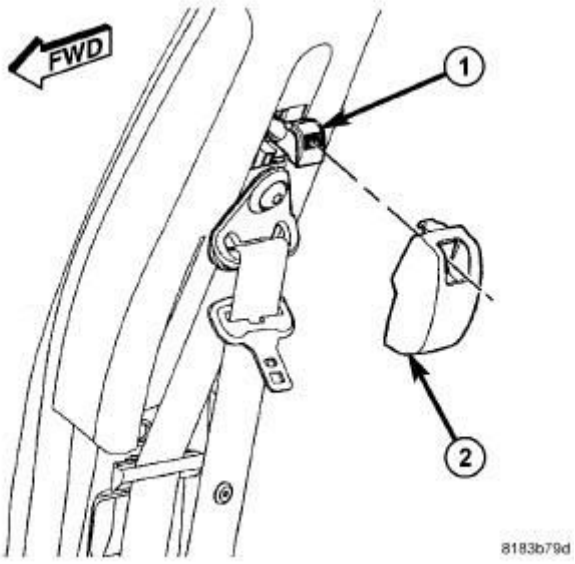

Fig. 72: Height Adjuster Knob & Turning Loop Trim Cover
Courtesy of CHRYSLER GROUP, LLC

11. Insert the upper tab of the turning loop trim cover (2) into the slot in the height adjuster cover above the knob on the upper B-pillar, then roll the bottom of the cover down over the turning loop and use hand pressure to press firmly and evenly on the cover until it snaps into place.

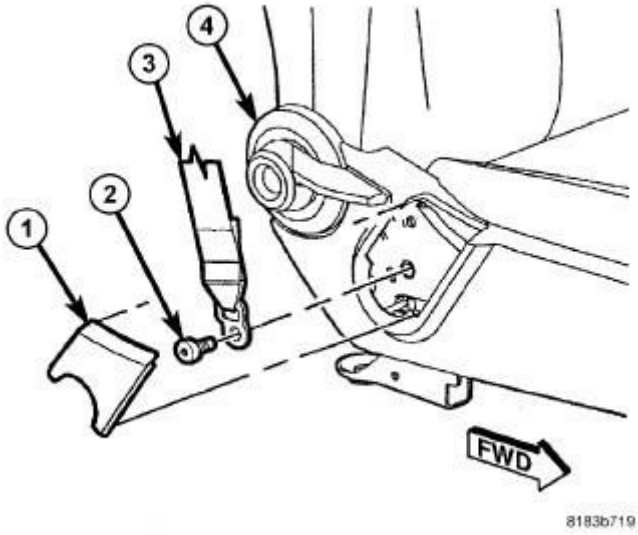

Fig. 73: Replacing Front Seat Belt
Courtesy of CHRYSLER GROUP, LLC

12. Position the seat belt (3) lower anchor to the mounting hole on the outboard side of the front seat cushion frame. Be certain that the seat belt webbing between the turning loop and the lower anchor is not twisted.
13. Install and tighten the screw (2) that secures the lower anchor to the seat. Tighten the screw to 40 N.m (30 ft. lbs.).
14. Reinstall the lower anchor cover (1) onto the front seat cushion outboard side shield (4).
15. Do not reconnect the negative cable to the battery at this time. The Supplemental Restraint System (SRS) Verification Test procedure should be performed following service of any SRS component. Refer to **STANDARD PROCEDURE**.

SECOND ROW - CENTER

WARNING: **To avoid serious or fatal injury during and following any seat belt or child restraint anchor service, carefully inspect all seat belts, buckles, mounting hardware, retractors, tether straps, and anchors for proper installation, operation, or damage. Replace any belt that is cut, frayed, or torn. Straighten any belt that is twisted. Tighten any loose fasteners. Replace any belt that has a damaged or ineffective buckle or retractor.**

Replace any belt that has a bent or damaged latch plate or anchor plate. Replace any child restraint anchor or the unit to which the anchor is integral that has been bent or damaged. Never attempt to repair a seat belt or child restraint component. Always replace damaged or ineffective seat belt and child restraint components with the correct, new and unused replacement parts listed in the Chrysler Mopar® Parts Catalog.

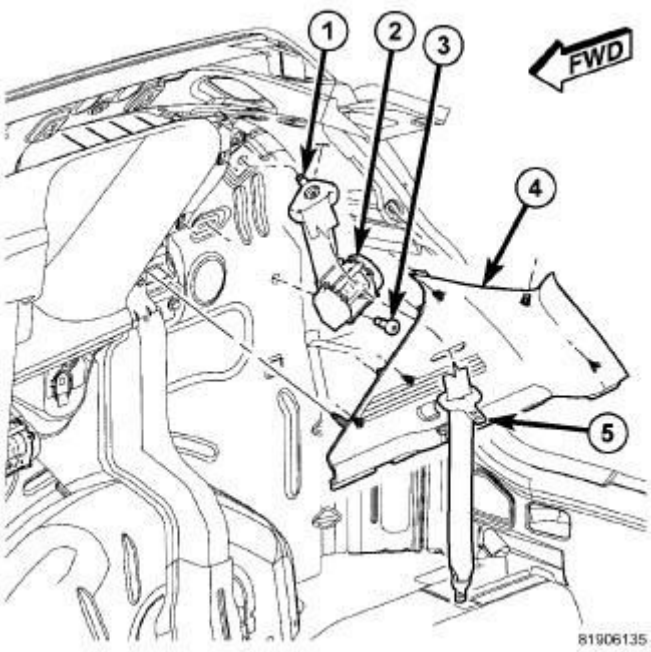

Fig. 74: Upper Trim
Courtesy of CHRYSLER GROUP, LLC

NOTE: All seat belt retractors except the driver side front retractor include a switchable automatic locking mechanism. Refer to RETRACTOR, SEAT BELT, DESCRIPTION.

1. Position the second row center seat belt and retractor unit (2) onto the right quarter inner panel.
2. Install and tighten the screw (3) that secures the retractor lower bracket to the right quarter inner panel. Tighten the screw to 40 N.m (30 ft. lbs.).
3. Position the seat belt turning loop to the upper D-pillar. Be certain the seat

belt webbing between the retractor and the turning loop is not twisted.

4. Install and tighten the screw (1) that secures the seat belt turning loop to the upper D-pillar. Tighten the screw to 40 N.m (30 ft. lbs.).
5. Route the second row center seat belt latch plate and lower anchor (5) through the seat belt opening in the upper D-pillar trim (4).
6. Reinstall the upper trim onto the inside of the right D-pillar. Refer to **PANEL, D-PILLAR TRIM, INSTALLATION** .

Fig. 75: Seat Belt Lower Anchor And Anchor Buckle
Courtesy of CHRYSLER GROUP, LLC

7. Access and buckle the second row center seat belt lower anchor latch plate (1) to the unique, keyed lower anchor buckle (2).

SECOND ROW - OUTBOARD

WARNING: To avoid serious or fatal injury during and following any seat belt or child restraint anchor service, carefully inspect all seat belts, buckles, mounting hardware, retractors, tether straps, and anchors for proper installation, operation, or damage. Replace any belt that is cut, frayed, or torn. Straighten any belt that is twisted. Tighten any loose fasteners. Replace any belt that has a

damaged or ineffective buckle or retractor. Replace any belt that has a bent or damaged latch plate or anchor plate. Replace any child restraint anchor or the unit to which the anchor is integral that has been bent or damaged. Never attempt to repair a seat belt or child restraint component. Always replace damaged or ineffective seat belt and child restraint components with the correct, new and unused replacement parts listed in the Chrysler Mopar® Parts Catalog.

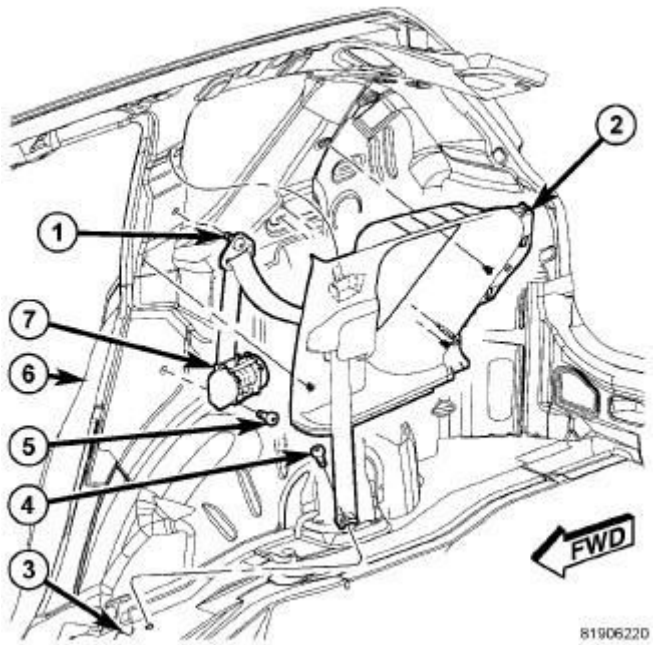

Fig. 76: Upper Trim
Courtesy of CHRYSLER GROUP, LLC

NOTE: All seat belt retractors except the driver side front retractor include a switchable automatic locking mechanism. Refer to RETRACTOR, SEAT BELT, DESCRIPTION.

1. Position the second row seat belt and retractor (7) to the lower inner C-pillar (6).
2. Engage the locator tab on the back of the retractor into the slot in the lower C-pillar.

3. Install and tighten the screw (5) that secures the retractor to the lower C-pillar. Tighten the screw to 40 N.m (30 ft. lbs.).
4. Position the seat belt turning loop to the upper C-pillar. Be certain the seat belt webbing between the retractor and the turning loop is not twisted.
5. Install and tighten the screw (1) that secures the turning loop to the upper C-pillar. Tighten the screw to 40 N.m (30 ft. lbs.).
6. Reinstall the trim onto the front of the quarter inner panel. Refer to **PANEL, QUARTER TRIM, INSTALLATION** .
7. Route the seat belt lower anchor through the seat belt opening in the upper C-pillar trim (2).
8. Reinstall the upper trim onto the inside of the C-pillar. Refer to **PANEL, C-PILLAR TRIM, INSTALLATION** .
9. Position the seat belt lower anchor to the rear floor panel (3). Be certain the seat belt webbing between the turning loop and the lower anchor is not twisted.
10. Install and tighten the screw (4) that secures the lower anchor to the rear floor panel. Tighten the screw to 58 N.m (43 ft. lbs.).
11. Reinstall the rear seat cushion into the vehicle. Refer to **COVER, SEAT CUSHION, REAR, INSTALLATION** .

SENSOR, IMPACT

DESCRIPTION

FRONT

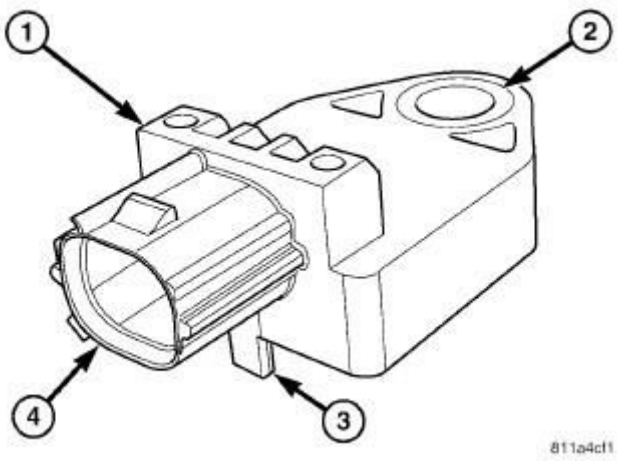

Fig. 77: Impact Sensor Components

Courtesy of CHRYSLER GROUP, LLC

Two front impact sensors (1) are used on this vehicle, one each for the left and right sides of the vehicle. These sensors are mounted remotely from the impact sensor that is internal to the Occupant Restraint Controller (ORC). Each front sensor is secured with a screw to the backs of the right and left vertical headlamp bars on either side of the radiator within the engine compartment. The sensor housing has an integral connector receptacle (4), an integral anti-rotation pin (3), and an integral mounting hole (2) with a metal sleeve to provide crush protection.

The right and left front impact sensors are identical in construction and calibration. A cavity in the center of the molded black plastic impact sensor housing contains the electronic circuitry of the sensor which includes an electronic communication chip and an electronic impact sensor. Potting material fills the cavity to seal and protect the internal electronic circuitry and components. The front impact sensors are each connected to the vehicle electrical system through a dedicated take out and connector of the engine compartment wire harness.

The impact sensors cannot be repaired or adjusted and, if damaged or ineffective, they must be replaced.

SIDE

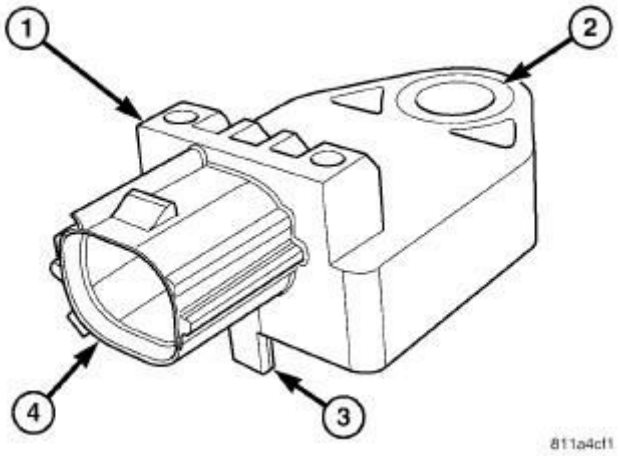

Fig. 78: Impact Sensor Components
Courtesy of CHRYSLER GROUP, LLC

Four side impact sensors (1) are used with the side curtain airbags, two each for the left and right sides of the vehicle. These sensors are mounted remotely from

the impact sensor that is internal to the Occupant Restraint Controller (ORC). Each side sensor is secured with a screw to the inner right or left B-pillar ahead of the front seat belt retractor, and the inner quarter panel near the C-pillar beneath the trim within the passenger compartment. The sensor housing has an integral connector receptacle (4), an integral anti-rotation pin (3), and an integral mounting hole (2) with a metal sleeve to provide crush protection.

The right and left side impact sensors are identical in construction and calibration. A cavity in the center of the molded black plastic impact sensor housing contains the electronic circuitry of the sensor which includes an electronic communication chip and an electronic impact sensor. Potting material fills the cavity to seal and protect the internal electronic circuitry and components. The side impact sensors are each connected to the vehicle electrical system through a dedicated take out and connector of the body wire harness.

The impact sensors cannot be repaired or adjusted and, if damaged or ineffective, they must be replaced.

OPERATION

FRONT

The front impact sensors are electronic accelerometers that sense the rate of vehicle deceleration, which provides verification of the direction and severity of an impact. Each sensor also contains an electronic communication chip that allows the unit to communicate the sensor status as well as sensor fault information to the microcontroller within the Occupant Restraint Controller (ORC).

The ORC microcontroller continuously monitors all of the passive restraint system electrical circuits to determine the system readiness. If the ORC detects a monitored system fault, it sets a Diagnostic Trouble Code (DTC) and controls the airbag indicator operation accordingly. The impact sensors each receive battery current and ground through dedicated left and right sensor plus and minus circuits from the ORC. The impact sensors and the ORC communicate by modulating the voltage in the sensor plus circuit.

The hard wired circuits between the front impact sensors and the ORC may be diagnosed using conventional diagnostic tools and procedures. Refer to the appropriate wiring information. However, conventional diagnostic methods will

not prove conclusive in the diagnosis of the impact sensors or the electronic controls and communication between other modules and devices that provide features of the supplemental restraint system. The most reliable, efficient and accurate means to diagnose the impact sensors or the electronic controls and communication related to front impact sensor operation requires the use of a diagnostic scan tool. Refer to the appropriate diagnostic information.

SIDE

The side impact sensors are electronic accelerometers that sense the rate of vehicle deceleration, which provides verification of the direction and severity of an impact. Each sensor also contains an electronic communication chip that allows the unit to communicate the sensor status as well as sensor fault information to the microcontroller within the Occupant Restraint Controller (ORC).

The ORC microcontroller continuously monitors all of the side passive restraint system electrical circuits to determine the system readiness. If the ORC detects a monitored system fault, it sets a Diagnostic Trouble Code (DTC) and controls the airbag indicator operation accordingly. The impact sensors each receive battery current and ground through the same left or right sensor plus and minus circuits in a series arrangement from the ORC. The impact sensors and the ORC communicate by modulating the voltage in the sensor plus circuit.

The hard wired circuits between the side impact sensors and the ORC may be diagnosed using conventional diagnostic tools and procedures. Refer to the appropriate wiring information. However, conventional diagnostic methods will not prove conclusive in the diagnosis of the impact sensors or the electronic controls and communication between other modules and devices that provide features of the supplemental restraint system. The most reliable, efficient and accurate means to diagnose the impact sensors or the electronic controls and communication related to side impact sensor operation requires the use of a diagnostic scan tool. Refer to the appropriate diagnostic information.

REMOVAL

FRONT

WARNING: **To avoid serious or fatal injury on vehicles equipped with airbags, disable the Supplemental Restraint System (SRS) before attempting any**

steering wheel, steering column, airbag, seat belt tensioner, impact sensor or instrument panel component diagnosis or service. Disconnect and isolate the battery negative (ground) cable, then wait two minutes for the system capacitor to discharge before performing further diagnosis or service. This is the only sure way to disable the SRS. Failure to take the proper precautions could result in accidental airbag deployment.

WARNING: To avoid serious or fatal injury, never strike or drop the front impact sensor, as it can damage the impact sensor or affect its calibration. The front impact sensor enables the system to deploy the front supplemental restraints. If an impact sensor is accidentally dropped during service, the sensor must be scrapped and replaced with a new unit. Failure to observe this warning could result in accidental, incomplete, or improper front supplemental restraint deployment.

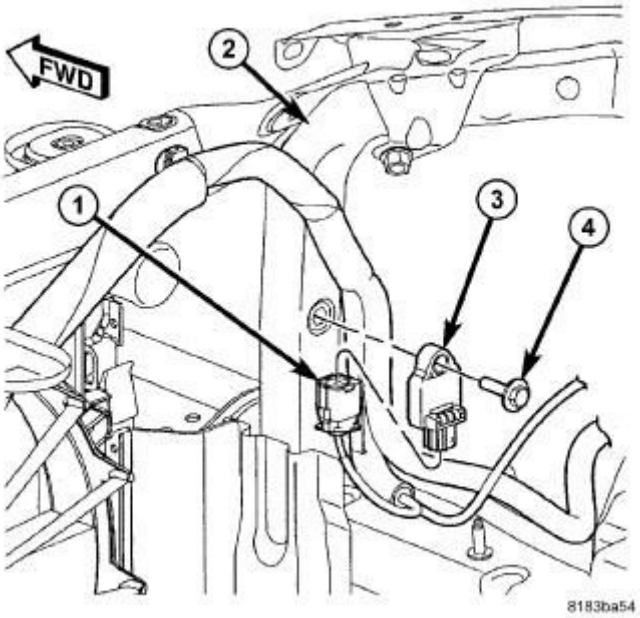

Fig. 79: Removing/Installing Front Impact Sensor
Courtesy of CHRYSLER GROUP, LLC

NOTE: The front and side impact sensors are interchangeable.

1. Disconnect and isolate the negative cable from the battery. Wait two minutes for the system capacitor to discharge before further service.
2. Remove the screw (4) that secures the impact sensor (3) to the of the right or left radiator support vertical member (2).
3. Disconnect the engine compartment wire harness connector (1) from the right or left front impact sensor connector receptacle.
4. Remove the right or left front impact sensor from the engine compartment.

SIDE - B-PILLAR

WARNING: To avoid serious or fatal injury on vehicles equipped with airbags, disable the Supplemental Restraint System (SRS) before attempting any steering wheel, steering column, airbag, seat belt tensioner, impact sensor or instrument panel component diagnosis or service. Disconnect and isolate the battery negative (ground) cable, then wait two minutes for the system capacitor to discharge before performing further diagnosis or service. This is the only sure way to disable the SRS. Failure to take the proper precautions could result in accidental airbag deployment.

WARNING: To avoid serious or fatal injury, never strike or drop the side impact sensor, as it can damage the impact sensor or affect its calibration. The side impact sensor enables the system to deploy the side Supplemental Restraint System (SRS) components. If an impact sensor is accidentally dropped during service, the sensor must be scrapped and replaced with a new unit. Failure to observe this warning could result in accidental, incomplete, or improper side SRS component deployment.

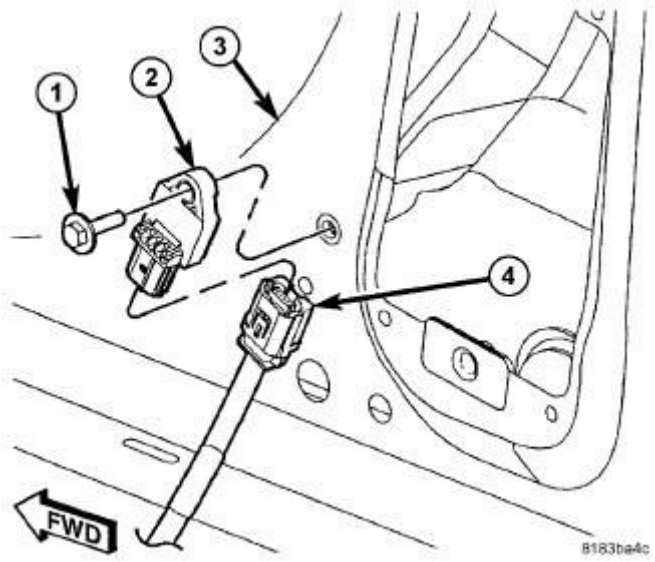

Fig. 80: B-Pillar Side Impact Sensor
Courtesy of CHRYSLER GROUP, LLC

NOTE: The front and side impact sensors are interchangeable.

1. Adjust the driver or passenger side front seat to its most forward position for easiest access to the B-pillar trim.
2. Disconnect and isolate the negative cable from the battery. Wait two minutes for the system capacitor to discharge before further service.
3. Remove the trim from the inside of the lower right or left B-pillar (3). Refer to **PANEL, B-PILLAR TRIM, LOWER, REMOVAL** .
4. Remove the screw (1) that secures the side impact sensor (2) to the lower B-pillar.
5. Disconnect the body wire harness connector (4) from the sensor connector receptacle.
6. Remove the sensor from the B-pillar.

SIDE - C-PILLAR

WARNING: To avoid serious or fatal injury on vehicles equipped with airbags, disable the Supplemental Restraint System (SRS) before attempting any steering wheel, steering column, airbag, seat belt tensioner, impact sensor or instrument panel component diagnosis or service. Disconnect and

isolate the battery negative (ground) cable, then wait two minutes for the system capacitor to discharge before performing further diagnosis or service. This is the only sure way to disable the SRS. Failure to take the proper precautions could result in accidental airbag deployment.

WARNING: To avoid serious or fatal injury, never strike or drop the side impact sensor, as it can damage the impact sensor or affect its calibration. The side impact sensor enables the system to deploy the side Supplemental Restraint System (SRS) components. If an impact sensor is accidentally dropped during service, the sensor must be scrapped and replaced with a new unit. Failure to observe this warning could result in accidental, incomplete, or improper side SRS component deployment.

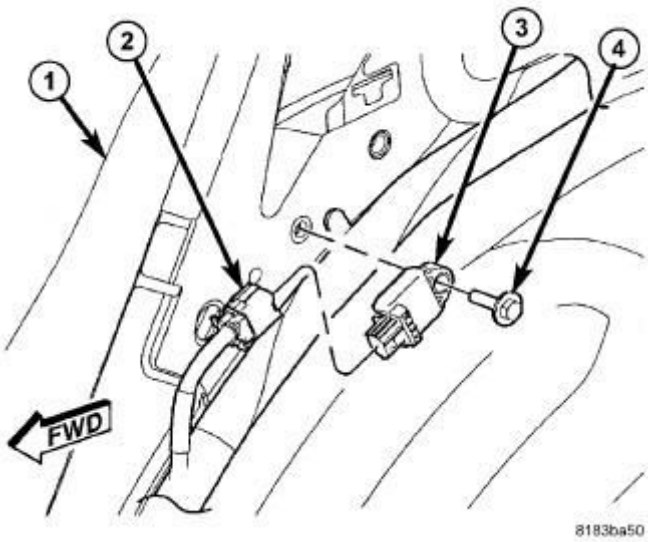

Fig. 81: C-Pillar Side Impact Sensor
Courtesy of CHRYSLER GROUP, LLC

NOTE: The front and side impact sensors are interchangeable.

1. Disconnect and isolate the negative cable from the battery. Wait two minutes for the system capacitor to discharge before further service.

2. Remove the quarter trim panel from the inside of the lower C-pillar (1). Refer to **PANEL, QUARTER TRIM, REMOVAL** .
3. Remove the screw (4) that secures the side impact sensor (3) to the C-pillar.
4. Disconnect the body wire harness connector (2) from the sensor (3) connector receptacle.
5. Remove the sensor from the C-pillar.

INSTALLATION

FRONT

WARNING: **To avoid serious or fatal injury on vehicles equipped with airbags, disable the Supplemental Restraint System (SRS) before attempting any steering wheel, steering column, airbag, seat belt tensioner, impact sensor or instrument panel component diagnosis or service. Disconnect and isolate the battery negative (ground) cable, then wait two minutes for the system capacitor to discharge before performing further diagnosis or service. This is the only sure way to disable the SRS. Failure to take the proper precautions could result in accidental airbag deployment.**

WARNING: **To avoid serious or fatal injury, never strike or drop the front impact sensor, as it can damage the impact sensor or affect its calibration. The front impact sensor enables the system to deploy the front Supplemental Restraint System (SRS) components. If an impact sensor is accidentally dropped during service, the sensor must be scrapped and replaced with a new unit. Failure to observe this warning could result in accidental, incomplete, or improper front SRS component deployment.**

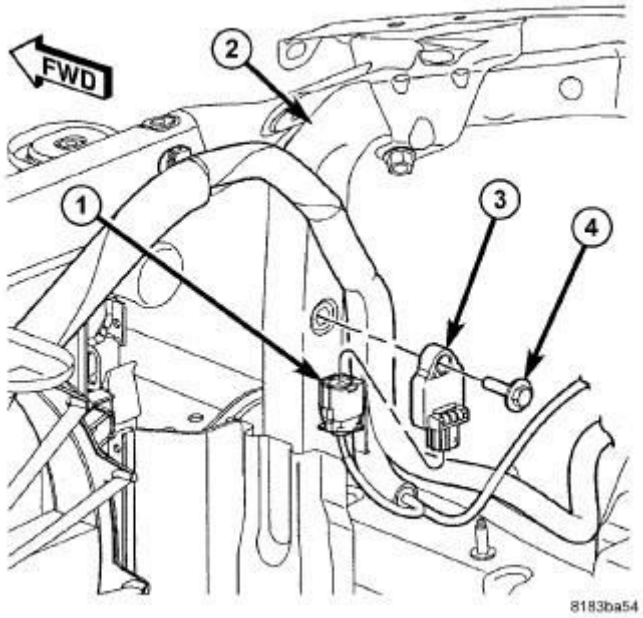

Fig. 82: Removing/Installing Front Impact Sensor
Courtesy of CHRYSLER GROUP, LLC

NOTE: The front and side impact sensors are interchangeable.

1. Position the right or left front impact sensor (3) into the engine compartment.
2. Reconnect the engine compartment wire harness connector (1) to the sensor connector receptacle.
3. Carefully position the sensor onto the back of the right or left radiator support vertical member (2). Be certain that the anti-rotation pin on the back of the sensor is engaged in the clearance hole of the radiator support.
4. Install and tighten the screw (4) that secures the sensor to the back of the support vertical member. Tighten the screw to 8 N.m (70 in. lbs.).
5. Do not reconnect the negative cable to the battery at this time. The Supplemental Restraint System (SRS) Verification Test procedure should be performed following service of any SRS component. Refer to **STANDARD PROCEDURE**.

SIDE - B-PILLAR

WARNING: To avoid serious or fatal injury on vehicles equipped with airbags, disable the Supplemental

Restraint System (SRS) before attempting any steering wheel, steering column, airbag, seat belt tensioner, impact sensor or instrument panel component diagnosis or service. Disconnect and isolate the battery negative (ground) cable, then wait two minutes for the system capacitor to discharge before performing further diagnosis or service. This is the only sure way to disable the SRS. Failure to take the proper precautions could result in accidental airbag deployment.

WARNING: **To avoid serious or fatal injury, never strike or drop the side impact sensor, as it can damage the impact sensor or affect its calibration. The side impact sensor enables the system to deploy the side Supplemental Restraint System (SRS) components. If an impact sensor is accidentally dropped during service, the sensor must be scrapped and replaced with a new unit. Failure to observe this warning could result in accidental, incomplete, or improper side SRS component deployment.**

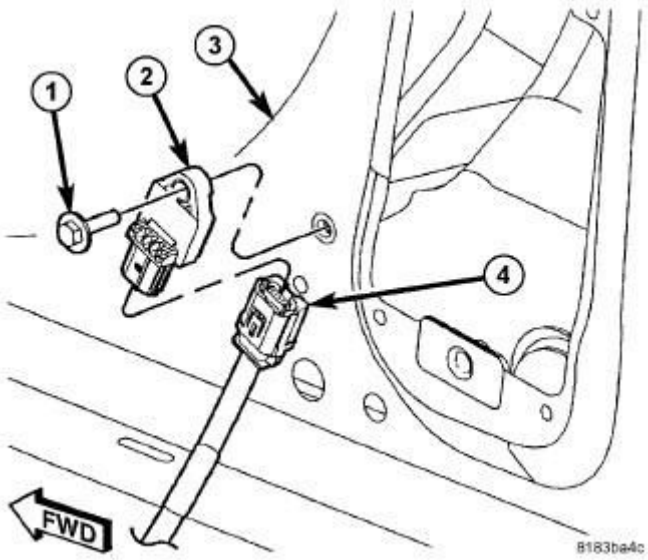

Fig. 83: B-Pillar Side Impact Sensor
Courtesy of CHRYSLER GROUP, LLC

NOTE: The front and side impact sensors are interchangeable.

1. Reconnect the body wire harness connector (4) to the side impact sensor (2) connector receptacle.
2. Position the sensor onto the inner B-pillar (3). Be certain that the anti-rotation pin on the back of the sensor is engaged in the clearance hole of the B-pillar.
3. Install and tighten the screw (1) that secures the sensor to the inner B-pillar. Tighten the screw to 8 N.m (70 in. lbs.).
4. Reinstall the lower trim onto the inside of the B-pillar. Refer to **PANEL, B-PILLAR TRIM, LOWER, INSTALLATION** .
5. Do not reconnect the negative cable to the battery at this time. The Supplemental Restraint System (SRS) Verification Test procedure should be performed following service of any SRS component. Refer to **STANDARD PROCEDURE**.

SIDE - C-PILLAR

WARNING: **To avoid serious or fatal injury on vehicles equipped with airbags, disable the Supplemental Restraint System (SRS) before attempting any steering wheel, steering column, airbag, seat belt tensioner, impact sensor or instrument panel component diagnosis or service. Disconnect and isolate the battery negative (ground) cable, then wait two minutes for the system capacitor to discharge before performing further diagnosis or service. This is the only sure way to disable the SRS. Failure to take the proper precautions could result in accidental airbag deployment.**

WARNING: **To avoid serious or fatal injury, never strike or drop the side impact sensor, as it can damage the impact sensor or affect its calibration. The side impact sensor enables the system to deploy the side Supplemental Restraint System (SRS) components. If an impact sensor is accidentally dropped during service, the sensor must be**

scrapped and replaced with a new unit. Failure to observe this warning could result in accidental, incomplete, or improper side SRS component deployment.

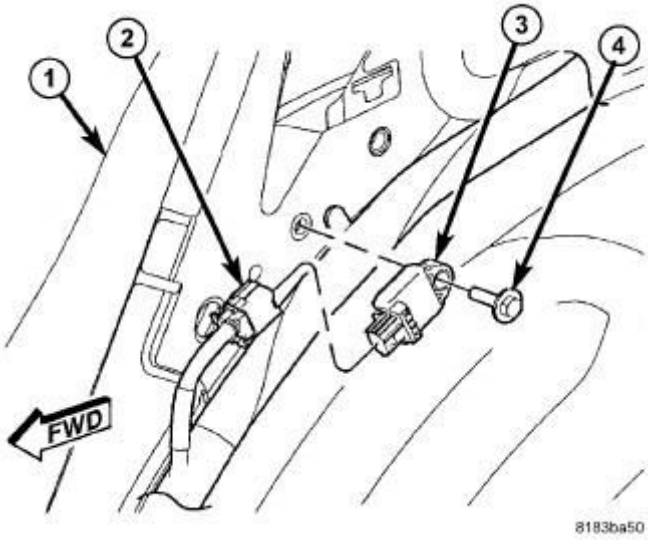

Fig. 84: C-Pillar Side Impact Sensor
Courtesy of CHRYSLER GROUP, LLC

NOTE: The front and side impact sensors are interchangeable.

1. Reconnect the body wire harness connector (2) to the side impact sensor (3) connector receptacle.
2. Position the sensor onto the lower inner C-pillar (1). Be certain that the anti-rotation pin on the back of the sensor is engaged in the clearance hole of the C-pillar.
3. Install and tighten the screw (4) that secures the sensor to the inner C-pillar. Tighten the screw to 8 N.m (70 in. lbs.).
4. Reinstall the quarter trim panel onto the inner lower C-pillar. Refer to **PANEL, QUARTER TRIM, INSTALLATION** .
5. Do not reconnect the negative cable to the battery at this time. The Supplemental Restraint System (SRS) Verification Test procedure should be performed following service of any SRS component. Refer to **STANDARD PROCEDURE**.

SENSOR, OCCUPANT DETECTION

DESCRIPTION

DESCRIPTION

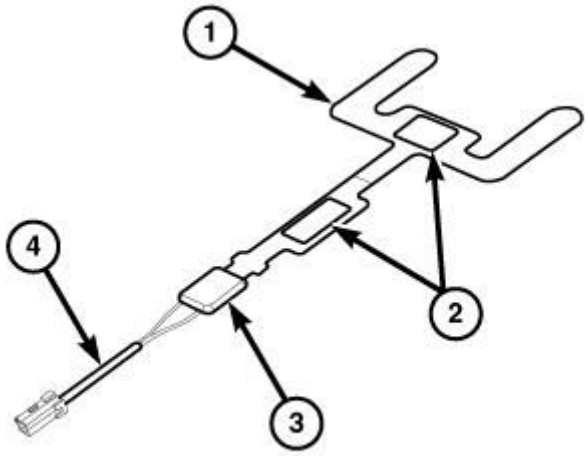

3092591

Fig. 85: Occupant Detection Sensor Components
Courtesy of CHRYSLER GROUP, LLC

An Occupant Detection Sensor (ODS) is located below the passenger side front seat cushion trim cover. This sensor provides information to the Occupant Restraint Controller (ORC) used for control of the passenger belt alert feature.

The ODS consists of a flexible clear plastic mat (1) containing several resistive membrane, force sensing resistor cells that is secured by two double-faced adhesive patches (2) to either the top surface of the seat cushion foam or, if the vehicle is so equipped, to the top surface of the seat cushion heater element mat positioned on the top of the seat cushion foam. The adhesive patch on the ODS is a one time only material and cannot be reactivated or reused if removed.

A short, two-conductor pigtail wire and connector (4) connects the sensor to the vehicle electrical system through a dedicated take out and connector of the seat wire harness. A hot melt adhesive block (3) encapsulates and protects the connections between the electrical conductors in the tail of the sensor mat and the pigtail wires as well as a diagnostic resistor.

The ODS cannot be adjusted or repaired, and must be replaced if damaged or ineffective. Whenever the ODS has been removed from the seat cushion foam, heater element or ventilation and heater element mat unit for any reason, it must be replaced with a new ODS unit.

OPERATION

OPERATION

The Occupant Detection Sensor (ODS) acts as a simple switch to detect loads placed upon the passenger side front seat cushion. The sensor circuits are connected to and monitored by the Occupant Restraint Controller (ORC) whenever the ignition switch is in the ON position. The ORC uses an algorithm logic in monitoring the changing states of the sensor input to determine whether the seat cushion load is static or dynamic.

The ORC microcontroller continuously monitors all of the Supplemental Restraint System (SRS) electrical circuits to determine the system status and readiness. If the ORC detects a monitored system fault, it sets a Diagnostic Trouble Code (DTC). However, because the ODS input is only used for control of the passenger belt alert feature, which has no effect on SRS component features or functions, the airbag indicator is **NOT** illuminated in response to a detected ODS circuit fault.

The ODS receives source current and a clean ground through dedicated sensor plus and minus circuits from the ORC. The ORC then sends the appropriate sensor status information to the ElectroMechanical Instrument Cluster (EMIC) (also known as the Cab Compartment Node/CCN), which uses this information as an additional logic input used for control of the passenger belt alert feature.

The hard wired circuits between the ODS and the ORC may be diagnosed using conventional diagnostic tools and procedures. Refer to the appropriate wiring information. However, conventional diagnostic methods will not prove conclusive in the diagnosis of the ODS or the electronic controls and communication between other modules and devices that provide some features of the passenger belt alert feature. The most reliable, efficient and accurate means to diagnose the ODS or the electronic controls and communication related to the passenger belt alert feature operation requires the use of a diagnostic scan tool. Refer to the appropriate diagnostic information.

REMOVAL

REMOVAL

WARNING: To avoid serious or fatal injury on vehicles equipped with airbags, disable the Supplemental

Restraint System (SRS) before attempting any steering wheel, steering column, airbag, seat belt tensioner, impact sensor or instrument panel component diagnosis or service. Disconnect and isolate the battery negative (ground) cable, then wait two minutes for the system capacitor to discharge before performing further diagnosis or service. This is the only sure way to disable the SRS. Failure to take the proper precautions could result in accidental airbag deployment.

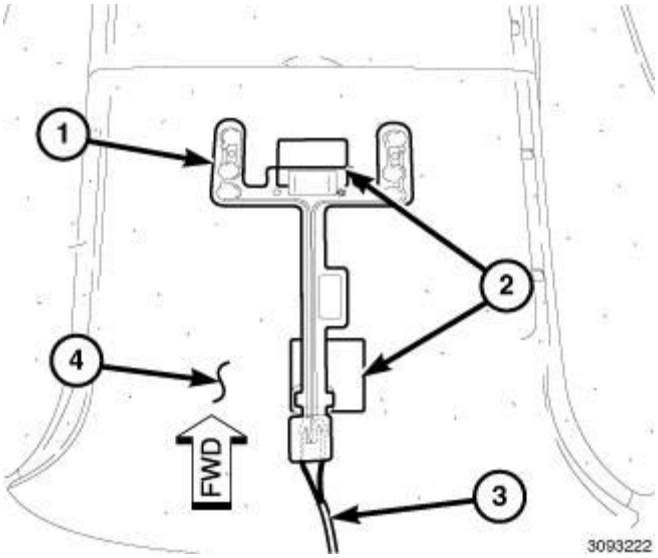

Fig. 86: Two Adhesive Patches, Seat Cushion Foam & Pigtail Wire
Courtesy of CHRYSLER GROUP, LLC

1. Position the front seat to its most forward position for easiest access to the front seat mounting hardware.
2. Disconnect and isolate the negative cable from the battery. Wait two minutes for the system capacitor to discharge before further service.
3. Remove the passenger side front seat from the vehicle. Refer to **SEAT, FRONT, REMOVAL** .
4. Remove the trim from the front seat cushion foam and frame. Refer to **COVER, SEAT CUSHION, FRONT, REMOVAL** .
5. Reach under the back of the front seat cushion frame to access and disconnect the Occupant Detection Sensor (ODS) pigtail wire (3) connector from the seat wire harness.
6. Carefully peel the two adhesive patches (2) of the ODS from the top surface

of the seat cushion foam (4) or, if the vehicle is so equipped, from the top surface of the heater element mat.

7. Remove the ODS (1) from the seat cushion foam or the heater element mat.

INSTALLATION

INSTALLATION

WARNING: To avoid serious or fatal injury on vehicles equipped with airbags, disable the Supplemental Restraint System (SRS) before attempting any steering wheel, steering column, airbag, seat belt tensioner, impact sensor or instrument panel component diagnosis or service. Disconnect and isolate the battery negative (ground) cable, then wait two minutes for the system capacitor to discharge before performing further diagnosis or service. This is the only sure way to disable the SRS. Failure to take the proper precautions could result in accidental airbag deployment.

CAUTION: When handling a new Occupant Detection Sensor (ODS), it should never be bent, creased, torn, cut or abraded. The ODS should not be handled with or come into contact with hard or sharp-edged tools or objects. Do not allow the ODS to drop more than 2 meters (6.5 feet). Prior to installation, do not sit on, stand on or place boxes, tools or any other foreign object on the ODS. If the ODS adhesive patches become inadvertently adhered to any seat materials or foreign objects prior to proper positioning on the seat cushion, the ODS must be scrapped and replaced with a new unit. Do not modify the seat foam or trim materials of a seat that contains an ODS. Failure to observe these cautions may result in an inoperative ODS, or an ODS that provides inaccurate inputs to the Occupant Restraint Controller (ORC).

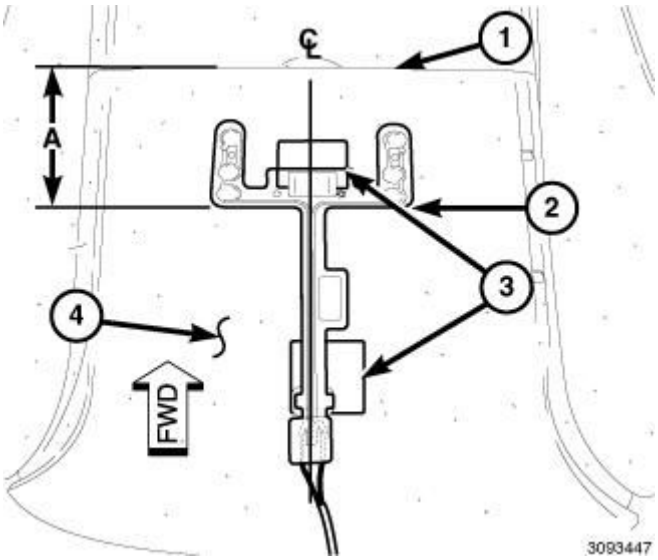

Fig. 87: Seat Cushion Foam, Crimp Channel & Release Paper
Courtesy of CHRYSLER GROUP, LLC

1. Mark the Center Line (CL) of the seat cushion on the top of the seat cushion foam (4) or, if the vehicle is so equipped, on the seat cushion heater element mat of a heated seat or heated and ventilated seat.

CAUTION: The adhesive used to secure the ODS to the seat is heat activated and requires that both the adhesive and the material it is applied to be ideally between 21° and 38° C (between 70° and 100° F). Application of the ODS to surfaces below 10° C (50° F) is not recommended as the adhesive becomes too firm to readily adhere. Do not touch or allow the adhesive patches to contact any foreign materials with the release paper removed. Do not attempt to add adhesive materials to the ODS.

2. Measure and mark a transverse line on the top of the seat cushion foam or, if the vehicle is so equipped, on the seat cushion heater element mat 220 millimeters (8.66 inches) (Distance A) rearward from the back edge of the crimp channel (1) in the seat cushion foam.
3. Peel the release paper (3) off of the two adhesive patches on the underside of the Occupant Detection Sensor (ODS) mat.
4. Carefully position the ODS onto the seat cushion with the label between the

branches containing the circular sensor cells centered ± 5 millimeters (0.196 inches) on the marked seat cushion center line and with the rearward edge (2) of the sensor cell mat aligned with the transverse line behind the crimp channel.

5. Apply hand pressure (0.8 bar or 12 psi) over each of the two adhesive patches of the ODS for at least four seconds to activate and adhere the adhesive to the seat cushion foam or the heater element mat.
6. Route the ODS pigtail wires that exit the back of the hot melt block through the recess at the back of the seat cushion foam.
7. Reach under the back of the front seat cushion frame to access and reconnect the ODS pigtail wire connector to the seat wire harness.
8. Reinstall the trim onto the front seat cushion foam and frame. Refer to **COVER, SEAT CUSHION, FRONT, INSTALLATION** .
9. Reinstall the passenger side front seat into the vehicle. Refer to **SEAT, FRONT, INSTALLATION** .
10. Reconnect the negative cable to the battery.

SENSOR, SEAT TRACK POSITION

DESCRIPTION

DESCRIPTION

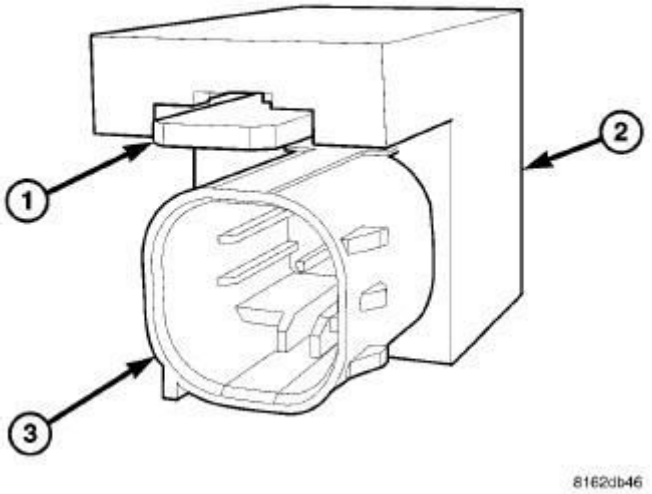

Fig. 88: Identifying Seat Track Position Sensor
Courtesy of CHRYSLER GROUP, LLC

The Seat Track Position Sensor (STPS) (2) is a Hall Effect-type sensor used on some vehicles. This sensor consists of a Hall Effect Integrated Circuit (IC) chip encased in potting material within a cavity of the molded plastic sensor housing.

The STPS housing has a mounting slot containing an integral latch feature (1) and slides and latches onto a stamped metal blade-type bracket located on the inboard side of the upper outboard seat adjuster track near the rear of both the passenger and driver front seats. A molded connector receptacle (3) integral to the STPS housing is connected to the vehicle electrical system through a connector and take out of the seat wire harness beneath the front seat cushion frame.

The STPS cannot be adjusted or repaired and, if ineffective or damaged, the entire STPS unit must be replaced.

OPERATION

OPERATION

The Seat Track Position Sensor (STPS) is designed to provide a seat position data input to the Occupant Restraint Controller (ORC) indicating whether the driver or passenger front seat is in a full forward or a not full forward position. The ORC uses this data as an additional logic input for use in determining the appropriate deployment force to be used when deploying the multistage Driver AirBag (DAB).

The STPS receives a nominal five volt supply from the ORC. The STPS communicates the seat position by modulating the voltage returned to the ORC on a sensor data circuit. The ORC also monitors the condition of the STPS circuits and will store a Diagnostic Trouble Code (DTC) for any fault that is detected. The ORC then sends messages over the CAN data bus to control the illumination of the airbag indicator in the ElectroMechanical Instrument Cluster (EMIC) (also known as the Cab Compartment Node/CCN).

The hard wired circuits between the STPS and the ORC may be diagnosed using conventional diagnostic tools and procedures. Refer to the appropriate wiring information. However, conventional diagnostic methods will not prove conclusive in the diagnosis of the STPS or the electronic controls and communication between other modules and devices that provide features of the Supplemental Restraint System (SRS). The most reliable, efficient and accurate

means to diagnose the STPS or the electronic controls and communication related to STPS operation requires the use of a diagnostic scan tool. Refer to the appropriate diagnostic information.

REMOVAL

REMOVAL

WARNING: To avoid serious or fatal injury on vehicles equipped with airbags, disable the Supplemental Restraint System (SRS) before attempting any steering wheel, steering column, airbag, seat belt tensioner, impact sensor or instrument panel component diagnosis or service. Disconnect and isolate the battery negative (ground) cable, then wait two minutes for the system capacitor to discharge before performing further diagnosis or service. This is the only sure way to disable the SRS. Failure to take the proper precautions could result in accidental airbag deployment.

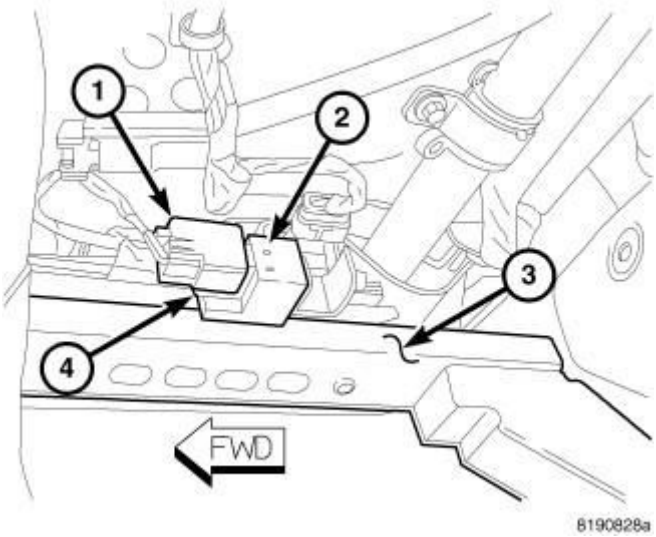

Fig. 89: Replacing Seat Track Position Sensor
Courtesy of CHRYSLER GROUP, LLC

1. Disconnect and isolate the negative cable from the battery. Wait two minutes for the system capacitor to discharge before further service.
2. Reach under the front seat cushion to access the Seat Track Position Sensor (STPS) (2) on a bracket located on the outboard side near the rear of the

upper outboard seat track (3).

3. Using a small screwdriver, hold the latch feature (4) depressed while sliding the connector end of the STPS off of the bracket.
4. Disconnect the seat wire harness connector (1) from the STPS connector receptacle.
5. Remove the STPS from under the front seat.

INSTALLATION

INSTALLATION

WARNING: To avoid serious or fatal injury on vehicles equipped with airbags, disable the Supplemental Restraint System (SRS) before attempting any steering wheel, steering column, airbag, seat belt tensioner, impact sensor or instrument panel component diagnosis or service. Disconnect and isolate the battery negative (ground) cable, then wait two minutes for the system capacitor to discharge before performing further diagnosis or service. This is the only sure way to disable the SRS. Failure to take the proper precautions could result in accidental airbag deployment.

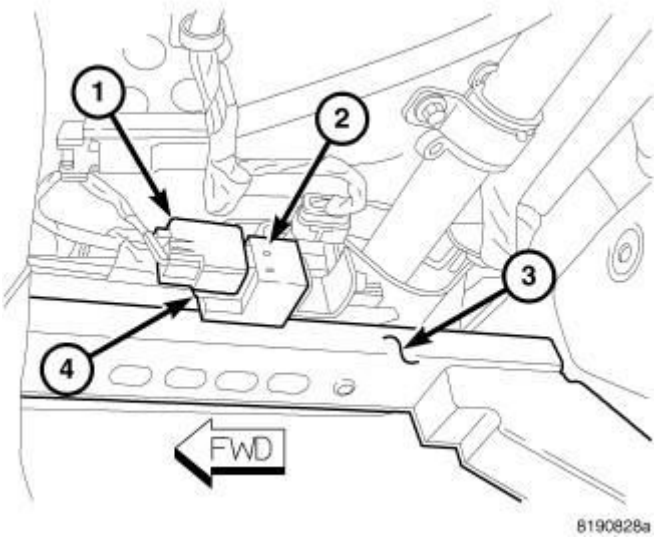

Fig. 90: Replacing Seat Track Position Sensor
Courtesy of CHRYSLER GROUP, LLC

1. Reach under the front seat cushion to reconnect the seat wire harness connector (1) to the Seat Track Position Sensor (STPS) (2) connector receptacle. Be certain that the latch on the connector is fully engaged.
2. Align the open end of the STPS to the slide tab of the STPS bracket located on the outboard side near the rear of the upper outboard seat track (3).
3. Push the STPS firmly onto the bracket until the latch feature (4) snaps into place with an audible click.
4. Do not reconnect the negative cable to the battery at this time. The Supplemental Restraint System (SRS) Verification Test procedure should be performed following service of any SRS component. Refer to **STANDARD PROCEDURE**.

SWITCH, SEAT BELT

DESCRIPTION

DESCRIPTION

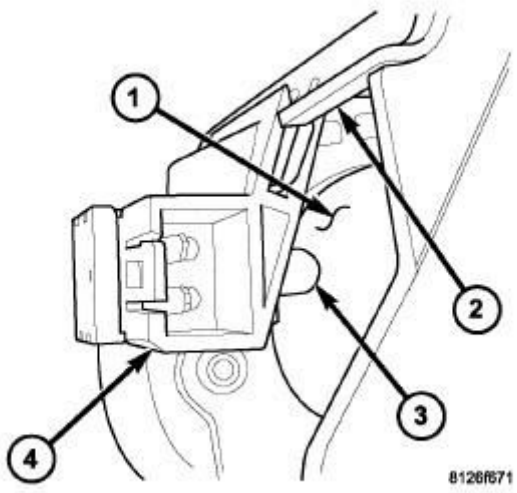

Fig. 91: Seat Belt Switch
Courtesy of CHRYSLER GROUP, LLC

The seat belt switch (4) is a small, normally open, single pole, single throw, plunger (3) actuated, momentary switch. One seat belt switch is installed on the driver side front seat belt retractor frame (2) over the retractor spool (1). On domestic market vehicles, a second seat belt switch is installed on the passenger side front seat belt retractor frame. The seat belt switch includes an integral

connector that is connected to the vehicle electrical system through a take out and connector of the body wire harness.

The seat belt switch cannot be adjusted or repaired and, if ineffective or damaged, the switch unit must be replaced.

OPERATION

OPERATION

The driver side seat belt switch is designed to control a path to ground for the seat belt switch sense input of the ElectroMechanical Instrument Cluster (EMIC) (also known as the Cab Compartment Node/CCN). The passenger side seat belt switch is designed to control a sense input to the Occupant Restraint Controller (ORC). The seat belt switch plunger is actuated by the seat belt webbing wound onto the seat belt retractor spool. When the seat belt tip-half webbing is pulled out of the retractor far enough to engage the seat belt buckle-half, the switch plunger is extended and closes the seat belt switch sense circuit. Conversely, when the seat belt tip-half webbing is wound onto the retractor spool the switch plunger is depressed, opening the sense circuit.

The EMIC monitors the driver side seat belt switch status through the hard wired input, then controls the illumination of the seat belt indicator and the generation of audible electronic chime tones based upon that input. The ORC monitors the passenger side seat belt switch and Occupant Detection Sensor (ODS) input status through hard wired inputs. If the ORC logic determines that the seat belt is not buckled while the seat is occupied, it sends an electronic message to the EMIC over the Controller Area Network (CAN) data bus requesting seat belt indicator illumination.

The driver side seat belt switch receives ground through its connection to the body wire harness from another take out of the body wire harness. An eyelet terminal connector on that ground take out is secured under a ground screw. The driver side seat belt switch is connected in series between ground and the driver side seat belt switch sense input of the EMIC. The passenger side seat belt switch receives a clean ground from the ORC and is connected in series between the clean ground and the passenger side seat belt switch input of the ORC.

The hard wired circuits between the seat belt switches and the EMIC (driver side) or ORC (passenger side) may be diagnosed using conventional diagnostic

tools and procedures. Refer to the appropriate wiring information. However, conventional diagnostic methods will not prove conclusive in the diagnosis of the switches or the electronic controls and communication between other modules and devices that provide features of the Supplemental Restraint System (SRS). The most reliable, efficient and accurate means to diagnose the seat belt switches or the electronic controls and communication related to seat belt switch operation requires the use of a diagnostic scan tool. Refer to the appropriate diagnostic information.

REMOVAL

REMOVAL

WARNING: **To avoid serious or fatal injury on vehicles equipped with airbags, disable the Supplemental Restraint System (SRS) before attempting any steering wheel, steering column, airbag, seat belt tensioner, impact sensor or instrument panel component diagnosis or service. Disconnect and isolate the battery negative (ground) cable, then wait two minutes for the system capacitor to discharge before performing further diagnosis or service. This is the only sure way to disable the SRS. Failure to take the proper precautions could result in accidental airbag deployment.**

WARNING: **To avoid serious or fatal injury during and following any seat belt or child restraint anchor service, carefully inspect all seat belts, buckles, mounting hardware, retractors, tether straps, and anchors for proper installation, operation, or damage. Replace any belt that is cut, frayed, or torn. Straighten any belt that is twisted. Tighten any loose fasteners. Replace any belt that has a damaged or ineffective buckle or retractor. Replace any belt that has a bent or damaged latch plate or anchor plate. Replace any child restraint anchor or the unit to which the anchor is integral that has been bent or damaged. Never attempt to**

repair a seat belt or child restraint component. Always replace damaged or ineffective seat belt and child restraint components with the correct, new and unused replacement parts listed in the Chrysler Mopar® Parts Catalog.

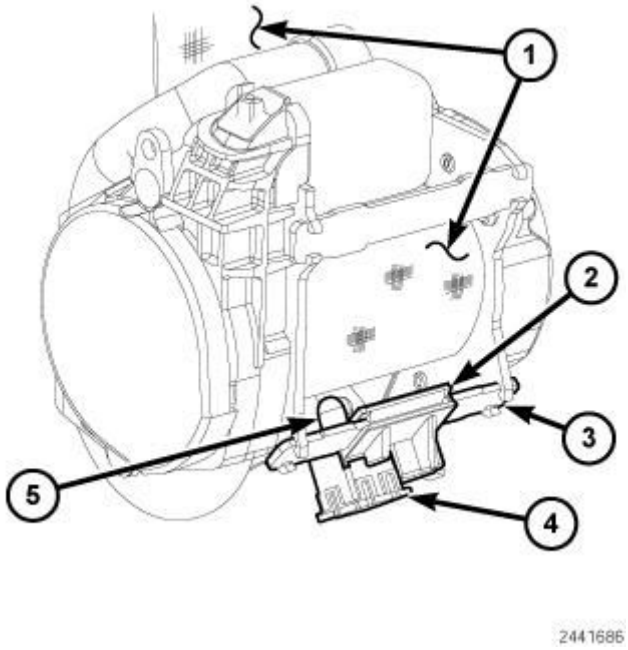

Fig. 92: Removing/Installing Seat Belt Switch At Retractor
Courtesy of CHRYSLER GROUP, LLC

NOTE: The following procedure is for replacement of an ineffective or damaged seat belt switch unit. The front retractor also includes a seat belt tensioner. If the front seat belt switch is ineffective or damaged, but the seat belt tensioner is not deployed, review the recommended procedures for Handling Non-Deployed Supplemental Restraints. Refer to STANDARD PROCEDURE. If the seat belt tensioner has been deployed, review the recommended procedures for Service After A Supplemental Restraint Deployment before removing the unit from the vehicle. Refer to STANDARD PROCEDURE.

1. Adjust the front seat to its most forward position for easiest access to the front seat belt lower anchor cover (1) and the B-pillar trim.
2. Disconnect and isolate the negative cable from the battery. Wait two

minutes for the system capacitor to discharge before further service.

3. Remove the front seat belt retractor from the lower B-pillar. Refer to **RETRACTOR, SEAT BELT, REMOVAL**.
4. Extract the seat belt webbing (1) from the retractor far enough to eliminate any contact between the seat belt switch plunger (5) and the webbing on the retractor spool.
5. Lift the latch tab (2) integral to the seat belt switch (4) far enough to allow the switch to be pushed off of the retractor frame tie bar (3).
6. Remove the seat belt switch from the retractor.

INSTALLATION

INSTALLATION

WARNING: **To avoid serious or fatal injury on vehicles equipped with airbags, disable the Supplemental Restraint System (SRS) before attempting any steering wheel, steering column, airbag, seat belt tensioner, impact sensor or instrument panel component diagnosis or service. Disconnect and isolate the battery negative (ground) cable, then wait two minutes for the system capacitor to discharge before performing further diagnosis or service. This is the only sure way to disable the SRS. Failure to take the proper precautions could result in accidental airbag deployment.**

WARNING: **To avoid serious or fatal injury during and following any seat belt or child restraint anchor service, carefully inspect all seat belts, buckles, mounting hardware, retractors, tether straps, and anchors for proper installation, operation, or damage. Replace any belt that is cut, frayed, or torn. Straighten any belt that is twisted. Tighten any loose fasteners. Replace any belt that has a damaged or ineffective buckle or retractor. Replace any belt that has a bent or damaged latch plate or anchor plate. Replace any child restraint**

anchor or the unit to which the anchor is integral that has been bent or damaged. Never attempt to repair a seat belt or child restraint component. Always replace damaged or ineffective seat belt and child restraint components with the correct, new and unused replacement parts listed in the Chrysler Mopar® Parts Catalog.

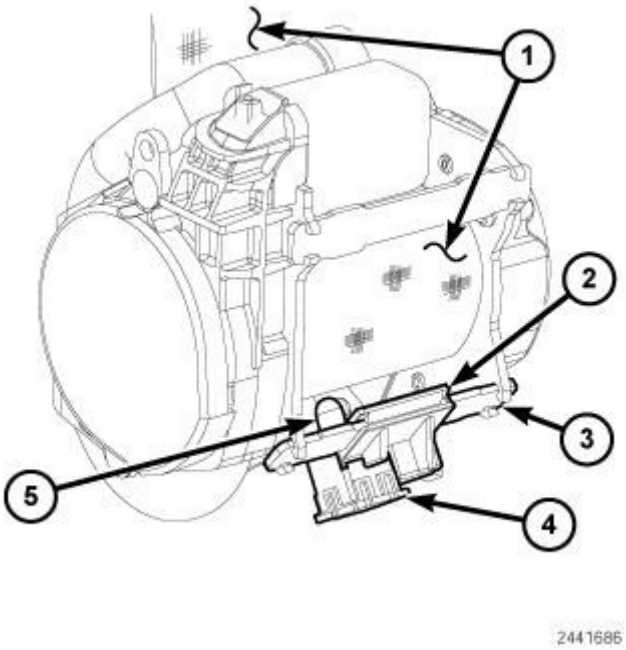

Fig. 93: Removing/Installing Seat Belt Switch At Retractor
Courtesy of CHRYSLER GROUP, LLC

NOTE: The following procedure is for replacement of an ineffective or damaged seat belt switch unit. The front retractor also includes a seat belt tensioner. If the front seat belt switch is ineffective or damaged, but the seat belt tensioner is not deployed, review the recommended procedures for Handling Non-Deployed Supplemental Restraints. Refer to STANDARD PROCEDURE. If the seat belt tensioner has been deployed, review the recommended procedures for Service After A Supplemental Restraint Deployment before removing the unit from the vehicle. Refer to STANDARD PROCEDURE.

1. Extract the seat belt webbing (1) from the retractor far enough to allow

clearance between the seat belt switch plunger (5) and the webbing on the retractor spool during switch installation.

2. Position the seat belt switch (4) to the lower edge of the retractor frame tie bar (3) with the plunger oriented toward the retractor spool.
3. Push the switch onto the tie bar until the integral latch feature (2) is fully engaged over the tie bar.
4. Reinstall the front seat belt retractor onto the lower B-pillar. Refer to **RETRACTOR, SEAT BELT, INSTALLATION**.

TENSIONER, SEAT BELT

DESCRIPTION

DESCRIPTION

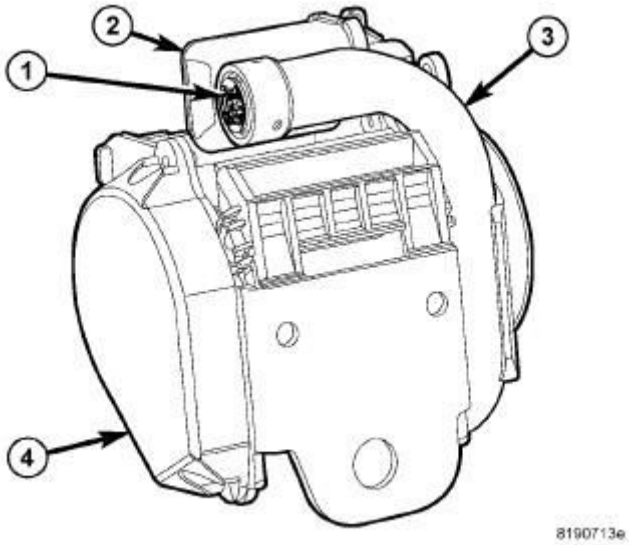

Fig. 94: Seat Belt Tensioner
Courtesy of CHRYSLER GROUP, LLC

Seat belt tensioners supplement the dual front airbags for this vehicle. The seat belt tensioners are integral to the front seat belt retractor units (4), which are secured to the inner B-pillar on the right and left sides of the vehicle. The retractor is concealed beneath the molded plastic inner B-pillar trim.

The seat belt tensioner consists primarily of a sprocket/pinion, a steel tube (3), a cast metal housing, numerous steel balls, a stamped metal ball trap (2), a torsion bar and a small pyrotechnically activated gas generator with a connector receptacle (1). All of these components are located on one side of the retractor

spool on the outside of the retractor housing except for the torsion bar, which serves as the spindle upon which the retractor spool rides. The seat belt tensioners are controlled by the Occupant Restraint Controller (ORC) and are connected to the vehicle electrical system through a dedicated take out of the body wire harness by a keyed and latching yellow molded plastic connector insulator to ensure a secure connection.

The seat belt tensioners cannot be repaired and, if ineffective or damaged, the entire front seat belt and retractor unit must be replaced. If the front airbags have been deployed, the seat belt tensioners have also been deployed. The seat belt tensioners are not intended for reuse and must be replaced following any front airbag deployment. A growling or grinding sound while attempting to operate the seat belt retractor is a sure indication that the seat belt tensioner has been deployed and requires replacement. Refer to **RETRACTOR, SEAT BELT, REMOVAL**.

OPERATION

OPERATION

The seat belt tensioners are deployed in conjunction with the dual front airbags by a signal generated by the Occupant Restraint Controller (ORC) through the driver or passenger seat belt tensioner line 1 and line 2 (or squib) circuits. When the ORC sends the proper electrical signal to the tensioners, the electrical energy generates enough heat to initiate a small pyrotechnic gas generator.

The gas generator is installed in one end of a steel tube that contains numerous steel balls. As the gas expands, it pushes the steel balls through the tube into a cast metal housing, where a ball guide directs the balls into engagement with the teeth of a sprocket that is geared to one end of the retractor spool. As the balls drive past the sprocket, the sprocket turns and drives the seat belt retractor spool causing the slack to be removed from the front seat belts. The ball trap captures the balls as they leave the sprocket and are expelled from the housing.

Removing excess slack from the front seat belts not only keeps the occupants properly positioned for an airbag deployment following a frontal impact of the vehicle, but also helps to reduce injuries that the occupant might experience in these situations as a result of harmful contact with the steering wheel, steering column, instrument panel or windshield. Also, the seat belt tensioner torsion bar that the retractor spool rides upon is designed to deform in order to control the

loading being applied to the occupants by the seat belts during a frontal impact, further reducing the potential for occupant injuries.

The ORC monitors the condition of the seat belt tensioners through circuit resistance, and will illuminate the airbag indicator in the ElectroMechanical Instrument Cluster (EMIC) (also known as the Cab Compartment Node/CCN) and store a Diagnostic Trouble Code (DTC) for any fault that is detected. Proper diagnosis of the seat belt tensioner gas generator and the seat belt tensioner squib circuits requires the use of a diagnostic scan tool and may also require the use of the SRS Load Tool special tool along with the appropriate Load Tool Jumpers and Adapters. Refer to the appropriate diagnostic information. Refer to the appropriate diagnostic information.

2014 STEERING

Steering Control Module (SCM) - Electrical Diagnostics - Compass & Patriot

DIAGNOSTIC CODE INDEX

DIAGNOSTIC CODE INDEX

DTC	Description
C1219	STEERING ANGLE SENSOR ERRATIC PERFORMANCE
C121A	STEERING ANGLE SENSOR NOT INITIALIZED
C123F	STEERING ANGLE SENSOR COMPARATIVE PERFORMANCE
C1240	STEERING ANGLE SENSOR ANGLE OVERTRAVEL PERFORMANCE
C1241	STEERING ANGLE SENSOR VELOCITY PERFORMANCE
C2102	SYSTEM VOLTAGE LOW
C2103	SYSTEM VOLTAGE HIGH
C2205	STEERING ANGLE SENSOR INTERNAL
U0001	CAN C BUS
U0121	LOST COMMUNICATION WITH ABS
U0141	LOST COMMUNICATION WITH IPM (FCM/TIPM)

DIAGNOSIS AND TESTING

C1219-STEERING ANGLE SENSOR ERRATIC PERFORMANCE

For a complete wiring diagram, **refer to appropriate SYSTEM WIRING DIAGRAMS article** .

WHEN MONITORED

With the ignition on.

SET CONDITION

The Steering Angle Sensor (SAS) has set an internal failure status.

POSSIBLE CAUSES

Possible Causes
CLOCKSPRING/SAS

DIAGNOSTIC TEST

CHECK FOR AN ACTIVE DTC

NOTE: Before proceeding with the diagnostic procedure, verify that the connections are properly made, seated and verify proper pin terminal tension. A loose connection at any of the SCCM connectors may cause the DTC to set.

1. Turn the ignition on.
2. With the scan tool, read DTCs.

   Does the scan tool display this DTC as active?

   Yes

   - Replace the Clockspring/SAS in accordance with the Service Information. Refer to **CLOCKSPRING, REMOVAL** .
   - Perform the ABS VERIFICATION TEST. Refer to **STANDARD PROCEDURE** .

   No

   - Test complete, the condition or conditions that originally set this DTC are not present at this time. Using the wiring diagrams as a guide, check all related splices and connectors for signs of water intrusion, corrosion, pushed out or bent terminals, and correct pin tension.
   - Perform the ABS VERIFICATION TEST. Refer to **STANDARD PROCEDURE** .

C121A-STEERING ANGLE SENSOR NOT INITIALIZED

For a complete wiring diagram, **refer to appropriate SYSTEM WIRING DIAGRAMS article** .

WHEN MONITORED

With the ignition on.

SET CONDITION

The Steering Angle Sensor (SAS) has set an internal failure status.

POSSIBLE CAUSES

Possible Causes
CLOCKSPRING/SAS

DIAGNOSTIC TEST

CHECK FOR AN ACTIVE DTC

NOTE: Before proceeding with the diagnostic procedure, verify that the connections are properly made, seated and verify proper pin terminal tension. A loose connection at any of the SCCM connectors may cause the DTC to set.

1. Turn the ignition on.
2. With the scan tool, perform the Steering Angle Sensor Initialization procedure.
3. With the scan tool, read DTCs.

   Does the scan tool display this DTC as active?

   Yes

   - Replace the Clockspring/SAS in accordance with the Service Information. Refer to **CLOCKSPRING, REMOVAL** .
   - Perform the ABS VERIFICATION TEST. Refer to **STANDARD PROCEDURE** .

   No

   - Test complete, the condition or conditions that originally set this DTC are not present at this time. Using the wiring diagrams as a guide, check all related splices and connectors for signs of water intrusion, corrosion, pushed out or bent terminals, and correct pin tension.
   - Perform the ABS VERIFICATION TEST. Refer to **STANDARD PROCEDURE** .

C123F-STEERING ANGLE SENSOR COMPARATIVE PERFORMANCE

For a complete wiring diagram, **refer to appropriate SYSTEM WIRING DIAGRAMS article** .

WHEN MONITORED

With the ignition on.

SET CONDITION

The Steering Angle Sensor (SAS) has set an internal failure status.

POSSIBLE CAUSES

Possible Causes
CLOCKSPRING/SAS

DIAGNOSTIC TEST

CHECK FOR AN ACTIVE DTC

NOTE: Before proceeding with the diagnostic procedure, verify that the connections are properly made, seated and verify proper pin terminal tension. A loose connection at any of the SCCM connectors may cause the DTC to set.

1. Turn the ignition on.
2. With the scan tool, read DTCs.

   Does the scan tool display this DTC as active?

   Yes

   - Replace the Clockspring/SAS in accordance with the Service Information. Refer to **CLOCKSPRING, REMOVAL** .
   - Perform the ABS VERIFICATION TEST. Refer to **STANDARD PROCEDURE** .

   No

   - Test complete, the condition or conditions that originally set this DTC

are not present at this time. Using the wiring diagrams as a guide, check all related splices and connectors for signs of water intrusion, corrosion, pushed out or bent terminals, and correct pin tension.

- Perform the ABS VERIFICATION TEST. Refer to **STANDARD PROCEDURE** .

C1240-STEERING ANGLE SENSOR ANGLE OVERTRAVEL PERFORMANCE

For a complete wiring diagram, **refer to appropriate SYSTEM WIRING DIAGRAMS article** .

WHEN MONITORED

With the ignition on.

SET CONDITION

The Steering Angle Sensor (SAS) has set an internal failure status.

POSSIBLE CAUSES

Possible Causes
CLOCKSPRING/SAS

DIAGNOSTIC TEST

CHECK FOR AN ACTIVE DTC

NOTE: Before proceeding with the diagnostic procedure, verify that the connections are properly made, seated and verify proper pin terminal tension. A loose connection at any of the SCCM connectors may cause the DTC to set.

1. Turn the ignition on.
2. With the scan tool, read DTCs.

   Does the scan tool display this DTC as active?

   Yes

   - Replace the Clockspring/SAS in accordance with the Service Information. Refer to **CLOCKSPRING, REMOVAL** .

- Perform the ABS VERIFICATION TEST. Refer to **STANDARD PROCEDURE** .

No

- Test complete, the condition or conditions that originally set this DTC are not present at this time. Using the wiring diagrams as a guide, check all related splices and connectors for signs of water intrusion, corrosion, pushed out or bent terminals, and correct pin tension.
- Perform the ABS VERIFICATION TEST. Refer to **STANDARD PROCEDURE** .

C1241-STEERING ANGLE SENSOR VELOCITY PERFORMANCE

For a complete wiring diagram, **refer to appropriate SYSTEM WIRING DIAGRAMS article** .

WHEN MONITORED

With the ignition on.

SET CONDITION

The Steering Angle Sensor (SAS) has set an internal failure status.

POSSIBLE CAUSES

Possible Causes
CLOCKSPRING/SAS

DIAGNOSTIC TEST

CHECK FOR AN ACTIVE DTC

NOTE: Before proceeding with the diagnostic procedure, verify that the connections are properly made, seated and verify proper pin terminal tension. A loose connection at any of the SCCM connectors may cause the DTC to set.

1. Turn the ignition on.
2. With the scan tool, read DTCs.

Does the scan tool display this DTC as active?

Yes

- Replace the Clockspring/SAS in accordance with the Service Information. Refer to **CLOCKSPRING, REMOVAL** .
- Perform the ABS VERIFICATION TEST. Refer to **STANDARD PROCEDURE** .

No

- Test complete, the condition or conditions that originally set this DTC are not present at this time. Using the wiring diagrams as a guide, check all related splices and connectors for signs of water intrusion, corrosion, pushed out or bent terminals, and correct pin tension.
- Perform the ABS VERIFICATION TEST. Refer to **STANDARD PROCEDURE** .

C2102-SYSTEM VOLTAGE LOW

For a complete wiring diagram, **refer to appropriate SYSTEM WIRING DIAGRAMS article** .

WHEN MONITORED

At all times.

SET CONDITION

This is a CAN message that the battery voltage was below 10.0 volts for over 15 seconds.

POSSIBLE CAUSES

POSSIBLE CAUSES
LOW SYSTEM VOLTAGE BATTERY OR CHARGING SYSTEM

DIAGNOSTIC TEST

CHECK POWERTRAIN CONTROL MODULE DTCs

1. With the scan tool, read Powertrain DTCs

   Are there any Powertrain Charging or Battery DTCs present?

   Yes

   - Perform the appropriate diagnostic procedure. Refer to **DTC INDEX** .

   No

   - This code is for information only. At some time there was a low battery system voltage. Check the battery and charging system in accordance with the Service Information.
   - Perform the BODY VERIFICATION TEST. Refer to **STANDARD PROCEDURE** .

C2103-SYSTEM VOLTAGE HIGH

For a complete wiring diagram, **refer to appropriate SYSTEM WIRING DIAGRAMS article** .

WHEN MONITORED

At all times.

SET CONDITION

This is a CAN message that the system voltage was above 16.0 volts for over 15 seconds.

POSSIBLE CAUSES

POSSIBLE CAUSES
HIGH BATTERY SYSTEM VOLTAGE CHARGING SYSTEM

DIAGNOSTIC TEST

CHECK ENGINE DTCs

1. With the scan tool, read Powertrain DTCs.

   Are there any Powertrain Charging or Battery DTCs present?

Yes

- Refer to **DTC INDEX** and perform the appropriate diagnostic procedure.

No

- This code is a CAN system message for information only. Check the charging system in accordance with the Service Information.
- Perform the BODY VERIFICATION TEST. Refer to **STANDARD PROCEDURE** .

C2205-STEERING ANGLE SENSOR INTERNAL

For a complete wiring diagram, **refer to appropriate SYSTEM WIRING DIAGRAMS article** .

WHEN MONITORED

With the ignition on.

SET CONDITION

The Steering Angle Sensor (SAS) has set an internal failure status.

POSSIBLE CAUSES

Possible Causes
CLOCKSPRING/SAS

DIAGNOSTIC TEST

CHECK FOR AN ACTIVE DTC

NOTE: Before proceeding with the diagnostic procedure, verify that the connections are properly made, seated and verify proper pin terminal tension. A loose connection at any of the SCCM connectors may cause the DTC to set.

1. Turn the ignition on.
2. With the scan tool, read DTCs.

Does the scan tool display this DTC as active?

Yes

- Replace the Clockspring/SAS in accordance with the Service Information. Refer to **CLOCKSPRING, REMOVAL** .
- Perform the ABS VERIFICATION TEST. Refer to **STANDARD PROCEDURE** .

No

- Test complete, the condition or conditions that originally set this DTC are not present at this time. Using the wiring diagrams as a guide, check all related splices and connectors for signs of water intrusion, corrosion, pushed out or bent terminals, and correct pin tension.
- Perform the ABS VERIFICATION TEST. Refer to **STANDARD PROCEDURE** .

U0001-CAN C BUS

For a complete wiring diagram, **refer to appropriate SYSTEM WIRING DIAGRAMS article** .

WHEN MONITORED

With the ignition on.

SET CONDITION

Whenever the CAN C Bus (+) or CAN C Bus (-) circuit is open, shorted to voltage or shorted to ground.

POSSIBLE CAUSES

Possible Causes
CAN C BUS CIRCUITS OPEN OR SHORTED
DIAGNOSTIC TROUBLE CODES (DTC) RELATED TO BATTERY VOLTAGE, IGNITION, OR VIN MESSAGES PRESENT
TOTALLY INTEGRATED POWER MODULE (TIPM) NOT CONFIGURED CORRECTLY
TOTALLY INTEGRATED POWER MODULE (TIPM) POWER AND

GROUND
TOTALLY INTEGRATED POWER MODULE (TIPM)
ANY CAN C MODULE SHORTED

DIAGNOSTIC TEST

CHECK FOR ACTIVE DTCS

1. With the scan tool, read the active WIN DTCs.
2. Cycle the ignition switch from off to on at least 3 times, leaving the ignition on for a minimum of one minute per cycle.
3. With the scan tool, read the active WIN DTCs.

   Does the scan tool display: U0001-CAN C BUS as active?

   Yes

   - **Refer to DIAGNOSIS AND TESTING** and perform the U0001-CAN C Bus diagnostic procedure.

   No

   - **Refer to DIAGNOSIS AND TESTING** and perform the Stored Lost Communication DTCs diagnostic procedure.

U0121-LOST COMMUNICATION WITH ABS

For a complete wiring diagram, **refer to appropriate SYSTEM WIRING DIAGRAMS article** .

WHEN MONITORED

Ignition run time is greater than one second.

Battery voltage between 9 and 16 volts.

Engine run time greater than three seconds.

SET CONDITION

Bus messages not received from the Totally Integrated Power Module (TIPM) for approximately two to five seconds.

POSSIBLE CAUSES

Possible Causes
CAN BUS CIRCUITS OPEN OR SHORTED ABS MODULE DTCS RELATED TO BATTERY VOLTAGE, IGNITION, OR VIN MESSAGES TOTALLY INTEGRATED POWER MODULE POWER AND GROUND TIPM NOT CONFIGURED CORRECTLY TOTALLY INTEGRATED POWER MODULE (TIPM) MODULE THAT SET THIS DTC

DIAGNOSTIC TEST

ACTIVE DTC

1. Ignition on, engine not running.
2. With the scan tool, select view DTCs.

   Is the DTC Active at this time?

   Yes

   - Refer to **DIAGNOSIS AND TESTING** and perform the U0121-Lost Communication with Anti-Lock Brake Module diagnostic procedure.

   No

   - **Refer to DIAGNOSIS AND TESTING** and perform the Stored Lost Communication DTCs diagnostic procedure.

U0141-LOST COMMUNICATION WITH IPM (FCM/TIPM)

For a complete wiring diagram, **refer to appropriate SYSTEM WIRING DIAGRAMS article** .

WHEN MONITORED

Continuously when the ignition is on.

The battery voltage between 10.0 and 16.0 Volts.

Ignition Off Draw (IOD) fuse installed.

Totally Integrated Power Module (TIPM) is configured correctly.

SET CONDITION

Bus messages not received from the Totally Integrated Power Module (TIPM) for approximately two to five seconds.

POSSIBLE CAUSES

Possible Causes
CAN BUS CIRCUITS OPEN OR SHORTED
DTCS RELATED TO BATTERY VOLTAGE, IGNITION, OR VIN MESSAGES
TOTALLY INTEGRATED POWER MODULE POWER AND GROUND
TIPM NOT CONFIGURED CORRECTLY
TOTALLY INTEGRATED POWER MODULE (TIPM)
MODULE THAT SET THIS DTC

DIAGNOSTIC TEST

VERIFY DTC IS ACTIVE

NOTE: Make sure the IOD fuse is installed and the battery is fully charged before proceeding.

1. Turn the ignition on.
2. With the scan tool, read active DTCs.

   Is this DTC active?

   Yes

   - **Refer to DIAGNOSIS AND TESTING** and perform the U0141-Lost Communication with IPM (FCM/TIPM) diagnostic procedure.

   No

   - **Refer to DIAGNOSIS AND TESTING** and perform the Stored Lost Communication DTCs diagnostic procedure.

2014 STEERING

Steering System - Compass & Patriot

WARNING

WARNING

WARNING: Power steering fluid, engine parts and exhaust system may be extremely hot if engine has been running. Do not start engine with any loose or disconnected hoses. Do not allow hoses to touch hot exhaust manifold or catalyst.

WARNING: Fluid level should be checked with the engine off to prevent personal injury from moving parts.

CAUTION: When the system is open, cap all open ends of the hoses, power steering pump fittings or power steering gear ports to prevent entry of foreign material into the components.

DESCRIPTION

DESCRIPTION

This vehicle comes with power steering as standard equipment and it is the only steering system available. The power steering system consists of these major components:

- Power Steering Pump
- Power Steering Gear
- Power Steering Fluid Reservoir
- Power Steering Fluid Pressure Hose
- Power Steering Fluid Return Hose
- Power Steering Fluid Cooler

For information on the first two components, refer to the appropriate Service Information . Information on the remaining components can be found in Power Steering Pump.

OPERATION

OPERATION - GAS ENGINE

Turning of the steering wheel is converted into linear (side-to-side) travel through the meshing of the helical pinion teeth with the rack teeth within the steering gear. The lateral travel pushes and pulls the tie rods to change the direction of the vehicle's front wheels.

Power assist steering is provided by a belt driven rotary type pump. It directs fluid through power steering fluid hoses to the power steering gear where it is used to assist the driver's turning effort.

Manual steering control of the vehicle can be maintained if power steering assist is lost. However, under this condition, steering effort is significantly increased.

OPERATION - DIESEL ENGINE

Turning of the steering wheel is converted into linear (side-to-side) travel through the meshing of the helical pinion teeth with the rack teeth within the steering gear. The lateral travel pushes and pulls the tie rods to change the direction of the vehicle's front wheels.

Power assist steering is provided by a belt driven combination water and power steering pump. The belt drives the water pump, onto which the power steering pump is mounted. It directs fluid through power steering fluid hoses to the power steering gear where it is used to assist the driver's turning effort.

Manual steering control of the vehicle can be maintained if power steering assist is lost. However, under this condition, steering effort is significantly increased.

DIAGNOSIS AND TESTING

HYDRAULIC FLOW AND PRESSURE TEST

WARNING: To prevent personal injury, safety goggles should be worn at all times while performing any test procedures on the power steering system.

The following procedure is to be used to test the operation of the power steering system on this vehicle. This test will provide the flow rate (Gallons Per Minute

(GPM)) of the power steering pump along with the maximum relief pressure. Perform this test any time a power steering system problem is present. This test will help determine if the power steering pump or power steering gear is not functioning properly. The test is performed using tools in the Power Steering Analyzer Kit (special tool #6815, Kit, Power Steering) with appropriate hoses and adapters.

Refer to **SPECIAL TOOLS**.

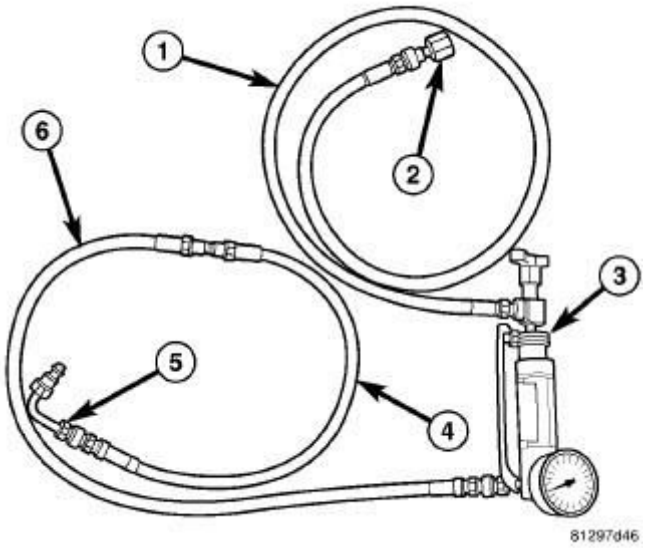

Fig. 1: Analyzer Setup To Test AT Pump
Courtesy of CHRYSLER GROUP, LLC

1. Check the power steering belt to ensure it is in good condition and adjusted properly.
2. Assemble the following hoses and adapters on the Flow Meter And Gauge (special tool #6800, Analyzer, Power Steering) (3):
   a. Gauge end (inlet) - Hose (special tool #6905, Assembly, Hose) (6) (in (special tool #6893A, Kit, Power Steering) kit), Hose (special tool #6713, Hose, Power Steering) (4) (in (special tool #6815, Kit, Power Steering) kit), Adapter Tube (special tool #6844, Adapter, Power Steering (Truck)) (5) (in (special tool #6893A, Kit, Power Steering) kit)
   b. Valve end (outlet) - Hose (special tool #6959, Assembly, Hose) (1), Adapter Fitting (special tool #6826, Adapter, LH P/S Tester) (2)

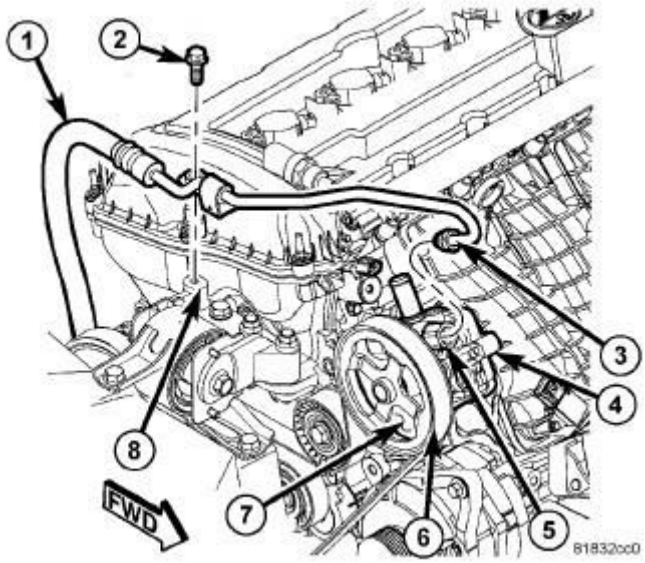

Fig. 2: Pressure Hose
Courtesy of CHRYSLER GROUP, LLC

3. Un-thread the tube nut (3) and disconnect the power steering pressure hose (1) at the power steering pump pressure fitting (5).

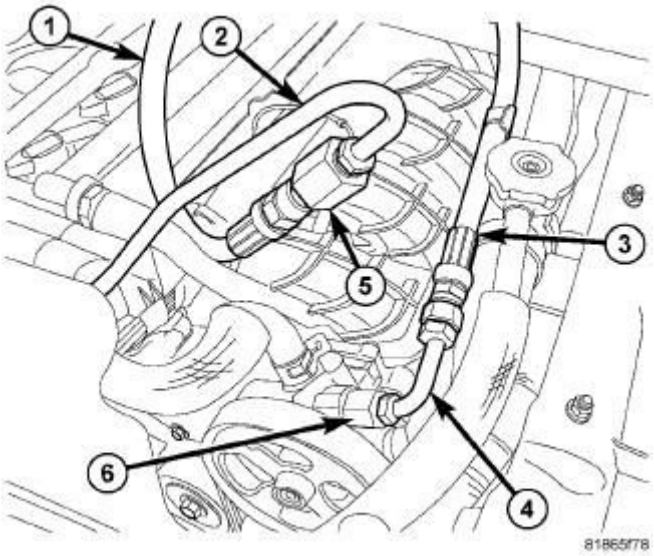

Fig. 3: Analyzer Connected To Pump
Courtesy of CHRYSLER GROUP, LLC

4. Connect the vehicle's power steering pressure hose (2) to Adapter Fitting (special tool #6826, Adapter, LH P/S Tester) (5) (on Hose (special tool #6959, Assembly, Hose) (1) leading to Analyzer outlet). Tighten the tube nut.

Refer to **SPECIFICATIONS**.

5. Connect Adapter Fitting (special tool #6844, Adapter, Power Steering (Truck)) (4) (on Hose (special tool #6713, Hose, Power Steering) (3) leading to Analyzer inlet), to the open power steering pump pressure fitting (6). Tighten the tube nut.

   Refer to **SPECIFICATIONS**.

6. Route the hoses away from the exhaust system as well as possible.

TEST PROCEDURE

1. Completely open the valve on the Power Steering Analyzer flow meter.
2. Start the engine and let idle long enough to circulate power steering fluid through the analyzer and hoses, until the air is out of the fluid. Shut off the engine.
3. Check the power steering fluid level and add fluid as necessary. Start the engine again and let idle.
4. The analyzer gauge should read below 862 kPa (125 psi). If above, inspect the hoses for restrictions and repair as necessary. The initial pressure should be in the range of 345-552 kPa (50-80 psi). The flow meter should read between 1.5 and 1.7 GPM.

CAUTION: The following test procedure step involves testing maximum pump pressure output and flow control valve operation. Do not leave valve closed for more than five seconds as the pump could be damaged.

NOTE: Power steering pump maximum relief pressure is 9, 600 to 10, 100 kPa (1392 to 1465 psi.).

5. Close the flow meter valve fully three times and record highest pressure indicated each time. **All three readings must be above specifications and within 345 kPa (50 psi) of each other.**
   - If the power steering pump pressures are above specifications, but not within 345 kPa (50 psi) of each other, replace the power steering pump.
   - If the pressures are within 345 kPa (50 psi) of each other, but below

specifications, replace the power steering pump.

If the power steering pump requires replacement. Refer to **PUMP, REMOVAL**.

CAUTION: During the next step, do not force the pump to operate against the stops for more than 5 seconds at a time as pump damage may result.

6. Completely open the valve on the Power Steering Analyzer flow meter. Turn the steering wheel to the extreme left until the stop in the steering gear is met, then turn the steering wheel to the right until the right stop is met. Record the highest indicated pressure at each position. Compare the recorded readings to the specifications. If the highest output pressure reading against one stop is not within 345 kPa (50 psi) of the highest reading at the other stop, the steering gear is leaking internally and must be replaced.

If the power steering gear requires replacement. Refer to **GEAR, REMOVAL**.

STEERING DIAGNOSIS CHARTS

NOTE: There are three diagnosis charts following that cover NOISE, VIBRATION AND HARSHNESS (NVH) ISSUES, PERFORMANCE ISSUES, and FLUID ISSUES.

NOISE, VIBRATION AND HARSHNESS (NVH) ISSUES

CONDITION	POSSIBLE CAUSES	EVALUATION/CORRECTION
OBJECTIONABLE HISS OR WHISTLE WHILE TURNING STEERING WHEEL WHEN STATIONARY OR MOVING SLOWLY*	1. Damaged or mispositioned steering column shaft/coupling dash boot seal.	1. Check to ensure boot is properly installed and seals against sheet metal. Reposition or replace steering column shaft/coupling dash boot seal as necessary.
	2. Mis-routed power steering hose.	2. Check routing of power steering hoses. Ensure hoses do not come

		in unwanted contact with other components and objects.
	3. Restriction in pressure or return hose. 4. Noisy valve in power steering gear.	3. Using an electronic listening tool, determine if noise is coming from either pressure or return hose. Replace hose that noise is present within. 4. For evaluation and correction, refer to **GEAR, DIAGNOSIS AND TESTING**.
RATTLE OR EXCESSIVE CLUNK**	1. Power steering gear loose on engine cradle/crossmember.	1. Check fastener torque and tighten to specifications. Replace as necessary. Check steering wheel center following repair.
	2. Loose strut assembly mounting fasteners at tower or knuckle.	2. Check fastener torque and tighten to specifications.
	3. Excessive play in outer tie rod.	3. For evaluation and correction, refer to **TIE ROD, STEERING, DIAGNOSIS AND TESTING**.
	4. Engine cradle/crossmember mounting fasteners loose at frame or bushings worn.	4. Check fastener torque and tighten to specifications. Inspect bushings and repair as necessary.
	5. Wheel mounting (lug) nuts loose.	5. Inspect wheel mounting (Lug) nuts and studs and repair as necessary. Tighten nuts to specifications.
	6. Power steering hose touching the body or frame of vehicle.	6. For evaluation and correction, refer to **PUMP, DIAGNOSIS AND TESTING**.
	7. Stabilizer bar link joints worn (occurs with steering input	7. At park, jounce only one side of vehicle front to exercise stabilizer bar. Replace stabilizer bar link.

	only when moving, not stationary).	
	8. Loose lower control arm mounting bolts at engine cradle, frame or crossmember (occurs with steering input only when moving, not stationary).	8. Check control arm mounting bolts and tighten to specified torque.
	9. Loose intermediate shaft or column.	9. Rotate intermediate (steering) shaft in relationship to gear, checking for free-play. Check column fasteners and tighten to specifications as necessary.
	10. Lower control arm pivot bushing worn (occurs with steering input only when moving, not stationary).	10. Inspect bushings for wear and replace lower control arm as necessary.
	11. Internal power steering gear noise.	11. Drive vehicle on rough road, then steer rapidly back and forth when stopped. Replace power steering gear as necessary.
	12. Loose inner tie rod.	12. For evaluation and correction, refer to **TIE ROD, STEERING, DIAGNOSIS AND TESTING**.
	13. Damaged engine cradle/crossmember.	13. Inspect the cradle/crossmember for cracks or other damage. Replace as necessary.
POPPING NOISE	1. Loose steering gear mounting fasteners.	1. Check fasteners for proper torque and retighten as necessary.
	2. Loose outer tie	2. Check fastener torque. Replace

	rod mounting nut or jam nut.	nuts as necessary and tighten to specifications.
	3. Loose intermediate (steering) shaft coupling at gear input shaft.	3. Make sure coupling is fully seated on gear input shaft. Retighten or re-seat as necessary.
	4. Worn tie rod (outer or inner).	4. For evaluation and correction, refer to **TIE ROD, STEERING, DIAGNOSIS AND TESTING**.
	5. Worn axle half-shaft.	5. For evaluation and correction, refer to **DIAGNOSIS AND TESTING** .
CHIRP OR SQUEAL (POWER STEERING PUMP)	1. Loose power steering pump drive belt.	1. Inspect belt. Replace belt if worn or glazed. Tighten/adjust power steering pump drive belt if equipped with a manual tensioner.
	2. Pulley alignment incorrect. 3. Malfunctioning belt auto-tensioner. 4. Power steering pump noisy (worn bearing/bushing noise). 5. Generator or water pump noisy.	2. Realign accessory drives. 3. Verify belt tension. Replace belt auto-tensioner. 4. Using an electronic listening tool, determine if noise is coming from pump. Replace power steering pump as required. 5. Using an electronic listening tool, determine if noise is coming from generator or water pump. Replace faulty component.
WHINE, GROWL, MOAN OR GROAN (POWER STEERING PUMP)***	1. Low power steering fluid level.	1. Fill power steering fluid reservoir to proper level and check for leaks (make sure all air is bled from the system fluid).
	2. Air in power	2. Inspect for excessive air bubbles in fluid (fluid will appear foamy and lighter in color).

	steering fluid.	Inspect hoses for leaks and replace as necessary. Bleed air from fluid. Refer to **STANDARD PROCEDURE**.
	3. Power steering hose touching body or frame of vehicle.	3. For evaluation and correction, refer to **PUMP, DIAGNOSIS AND TESTING**.
	4. Wear of power steering pump internal components.	4. For evaluation and correction, refer to **PUMP, DIAGNOSIS AND TESTING**.
COLD START WHINE OR MOAN (POWER STEERING PUMP)***	1. Low power steering fluid level.	1. Fill power steering fluid reservoir to proper level and check for leaks (make sure all air is bled from the system fluid).
	2. Extremely low ambient temperature (near 0 F° (-18 C°) or below).	2. Some noise is expected as pump attempts to pull cold, thick fluid. Noise should go away as vehicle warms up. Acceptable levels of excessive noise are one second at 0 F° (-18 C°) and 15 seconds at -20 F° (-29 C°). If noise is excessive, look for poor sealing on the return hose or a possible fluid leak.
SQUEAKING OR RUBBING SOUND	1. Steering column shroud or shaft rubbing.	1. While turning the steering wheel, listen down column to locate. Check interference between moving components. Move or realign shrouds or shaft as necessary. Replace components if this does not correct problem.
	2. Clockspring inside steering column noisy.	2. Remove clockspring and reinstall steering wheel for testing. If noise is gone, replace clockspring.

	3. Boot/dash seal lubrication inadequate.	3. Remove boot seal and recheck for noise. Lubricate seal as necessary.
	4. Steering gear outer tie rod noisy.	4. While a helper turns the steering wheel, use an electronic listening tool to determine if noise is coming from either outer tie rod. Replace outer tie rods as necessary.
	5. Steering gear internally noisy.	5. Remove dash seal boot, then exercise the steering wheel. If noise is still present at gear, replace steering gear.
SCRUBBING OR KNOCKING SOUND	1. Incorrect tire or wheel size.	1. Replace incorrect size tire or wheel with original equipment size.
	2. Worn motor or transmission mount.	2. Drive vehicle, moving accelerator pedal rapidly up and down attempting to locate noise. Try in both forward and reverse. Replace mounts as necessary.
	3. Tires contacting wheel well.	3. Make sure wheel house is properly positioned. If not, reposition as necessary. If steering wheel is properly centered, check steering gear travel left to right by rotating the steering wheel to each stop. Steering wheel should rotate the same amount in both directions from center. If not, replace steering gear.
	4. Interference between moving steering components and other components.	4. Check for bent or misaligned components. Correct or replace as necessary.
	5. Accessory drive	5. Check pulleys for wear. Check

	pulley rubbing against another component.	for worn engine or transmission mount. Reposition components or replace mounts as necessary.

NOTE: *** There is some noise in all power steering systems. One of the most common is a hissing sound evident when turning the steering wheel when at a standstill or when parking and the steering wheel is at the end of its travel. Hiss is a very high frequency noise similar to that experienced while slowly closing a water tap. The noise is present in every valve and results when high velocity fluid passes valve orifice edges. There is no relationship between this noise and the performance of the steering system.**

NOTE: **** A light clunk may be felt or heard during steering wheel reversal while vehicle is stationary. This results from internal steering gear rack movement at the bushings and in no way affects the performance of the steering system. This movement may be felt in the steering components during steering wheel reversal.**

NOTE: ***** Power steering pump growl/moan/groan results from the development of high pressure fluid flow. Normally this noise level should not be high enough to be objectionable.**

PERFORMANCE ISSUES

CONDITION	POSSIBLE CAUSES	EVALUATION/CORRECTI
STEERING WHEEL OR COLUMN HAS FREE-PLAY/LASH/LOOSENESS (CLUNKING OR RATTLING)	1. Loose coupling pinch bolt at gear input shaft.	1. Check pinch bolt torque. Replace pinch bolt if equipped with thread locker patch and tighten to specifications.
	2. Power steering gear loose on	2. Inspect gear mounting bolts. Replace if necessary and tighte

	cradle/crossmember.	to specifications.
	3. Excessive free-play or noise from steering column bearings.	3. Replace steering column.
	4. Excessive intermediate (steering) shaft coupling U-joint free-play.	4. Rotate steering wheel back-a forth while watching coupling. Observe for free-play. Replace steering column as necessary.
	5. Loose or worn outer tie rod.	5. For evaluation and correctior refer to **TIE ROD, STEERING DIAGNOSIS AND TESTING**
	6. Lack of lubrication in lower ball joint or ball joint is damaged.	6. Lubricate ball joint if equipp with a zerk fitting and check fo function. If not equipped with a zerk fitting, test and replace bal joint/lower control arm as necessary.
	7. Excessive lash inside steering gear.	7. Disconnect intermediate shaf and turn steering gear input sha Observe for any movement without a corresponding tire movement. Replace steering ge as necessary.
STEERING WHEEL HAS FORE AND AFT LOOSENESS	1. Steering wheel retaining bolt loose.	1. Check steering wheel retainir bolt torque and tighten to specifications as necessary.
	2. Loose steering column to instrument panel fasteners.	2. Check steering column to instrument panel fastener torqu and tighten to specifications as necessary.
STEERING WHEEL, DASH OR VEHICLE VIBRATES DURING STEERING MANEUVERS (ESPECIALLY AT LOW	1. Air in power steering fluid.	1. Inspect for excessive air bubbles in fluid (fluid will appe foamy and lighter in color). Inspect hoses for leaks and repl as necessary. Bleed air from flu

SPEED OR STANDSTILL)		Refer to **STANDARD PROCEDURE**.
	2. Tire(s) not properly inflated.	2. Check and inflate tires to the specified pressure.
	3. Excessive engine vibration.	3. Ensure that the engine is tune properly.
	4. Loose tie rod end jam nut.	4. Check torque and tighten the inner to outer tie rod jam nut to specifications.
	5. Overcharged air conditioning (A/C) system.	5. Turn A/C off and verify issue goes away. Repair A/C as necessary.
	6. Grounded, damaged or loose engine mount.	6. Visually inspect for damaged misaligned mounts. Check fastener torque. Replace or real as necessary.
	7. Loose or worn outer tie rod.	7. For evaluation and correction refer to **TIE ROD, STEERING DIAGNOSIS AND TESTING**
	8. Steering gear noisy.	8. During a parking event at 0 mph, verify there is vibration or with steering. Steer in both directions and verify that the no follows the steering input. Chec TSB's for any known issues. Replace steering gear as necessary.
STEERING CATCHES, SURGES OR STICKS IN CERTAIN POSITIONS OR IS DIFFICULT TO TURN	1. Low power steering fluid level.	1. Check fluid level and fill to proper level as necessary. Chec for leaks. Make sure all air is bl from system.
	2. Tire(s) not properly inflated.	2. Check and inflate tires to the specified pressure.
	3. Loose or slipping power steering/accessory drive belt.	3. Verify belt tension. Replace belt auto-tensioner and belt as necessary.

	4. Lack of lubrication in lower ball joint or ball joint is damaged.	4. Lubricate ball joint if equipp with a zerk fitting and check fo function. If not equipped with a zerk fitting, test and replace bal joint/lower control arm as necessary.
	5. Lack of lubrication in steering gear outer tie rod end(s).	5. For evaluation and correctior refer to **TIE ROD, STEERING DIAGNOSIS AND TESTING**
	6. Faulty power steering pump.	6. Perform Power Steering Flov and Pressure Test. Refer to **DIAGNOSIS AND TESTING** Look for low or erratic flow or pressure. Replace power steerir pump as necessary.
	7. Excessive friction in intermediate shaft/coupler joint.	7. Disconnect intermediate shaft/coupler at steering gear ar check joint for smooth operatio in all directions. Replace steeri column.
	8. Excessive friction in steering column.	8. Disconnect intermediate shaft/coupler at steering gear. Turn steering wheel two revolutions in either direction from on center and check for smooth operation. DO NOT tur past two revolutions. Damage t the clockspring may occur. Replace steering column as necessary.
	9. Worn or binding seat and bearing in front strut assembly.	9. Disconnect outer tie rod ends from knuckles, then turn tire an wheel assembly checking for smooth operation. Replace fron strut assembly seat and bearing
	10. Faulty steering	10. With vehicle on hoist, tires

	gear.	unsupported and engine off, ste gear throughout travel and chec for smooth operation. Replace steering gear (only after all previous components have beer checked).
STEERING WHEEL DOES NOT RETURN TO CENTER POSITION	1. Tire(s) not properly inflated.	1. Check and inflate tires to the specified pressure.
	2. Improper front wheel alignment.	2. Check and adjust wheel alignment as necessary.
	3. Lack of lubrication in lower ball joint or ball joint is damaged.	3. Lubricate ball joint if equipp with a zerk fitting and check fo function. If not equipped with a zerk fitting, test and replace bal joint/lower control arm as necessary.
	4. Excessive friction in intermediate shaft/coupler joint.	4. Disconnect intermediate shaft/coupler at steering gear ar check joint for smooth operatio in all directions. Replace steeri column.
	5. Excessive friction in steering column.	5. Disconnect intermediate shaft/coupler at steering gear. Turn steering wheel two revolutions in either direction from on center and check for smooth operation. DO NOT tur past two revolutions. Damage t the clockspring may occur. Replace steering column as necessary.
	6. Worn or binding seat and bearing in front strut assembly.	6. Disconnect steering gear out tie rod ends at knuckles, then tu tire and wheel assembly in and checking for smooth operation. Replace seat and bearing as

		necessary.
	7. Excessive friction in power steering gear.	7. With vehicle on hoist, tires unsupported and engine off, ste gear throughout travel and chec for smooth operation. Replace steering gear (only after all previous components have beer checked).
EXCESSIVE STEERING WHEEL KICKBACK FROM ROAD INPUTS	1. Air in power steering fluid.	1. Inspect for excessive air bubbles in fluid (fluid will appe foamy and lighter in color). Inspect hoses for leaks and repl as necessary. Bleed air from flu Refer to **STANDARD PROCEDURE**.
	2. Power steering gear loose on cradle/crossmember.	2. Inspect gear mounting bolts. Replace if necessary and tighte to specifications.
	3. Steering column, coupling or intermediate shaft worn or loose.	3. Rotate steering wheel back-a forth while inspecting intermediate shaft going into steering gear. Look for excessiv free-play. Retighten if loose bo found. Replace steering columr coupling or intermediate shaft i necessary.
	4. Power steering pump flow is too low.	4. Perform Power Steering Flov and Pressure Test. Refer to **DIAGNOSIS AND TESTING** Look for low or erratic flow or pressure. Replace power steerir pump as necessary.

FLUID ISSUES

CONDITION	POSSIBLE CAUSES	EVALUATION/CORRECTION
LOW FLUID	1. Loose power	1. Check torque on all tube nuts (at

LEVEL WITH VISIBLE LEAK	steering hose fittings or connections.	gear and pump). Inspect clamps at all rubber hose connections for correct position, damage and tension. Tighten tube nuts to specifications as required. Reposition or replace clamps at hose connections. Clean joints and reinspect for leaks.
	2. Damaged or missing O-ring at power steering hose tube nuts.	2. Remove tube nut and inspect O-ring. If damaged or missing, replace O-ring. Clean joints and reinspect for leaks.
	3. Power steering line or hose failure.	3. Clean fluid from around suspect areas. Run vehicle and inspect for leaks. Look inside reservoir to see if air is being ingested. Replace hoses as necessary.
	4. Power steering component leaking (reservoir, pump, gear).	4. Clean fluid from around suspect areas. Run vehicle and inspect for leaks. Look inside reservoir to see if air is being ingested. Replace power steering component as necessary.
AERATED FLUID*	1. Low power steering fluid level.	1. Check fluid level and fill to proper level as necessary. Check for leaks. Make sure all air is bled from system.
	2. Air leak at power steering supply hose, reservoir or pump.	2. Inspect components. Place a hand vacuum pump with Adapter 9688 on reservoir and verify that system can sustain vacuum. System should not lose more than 1 psi in 2 minutes (make sure vacuum pump is sealed well to the reservoir). Replace steering component as necessary.
RESERVOIR FLUID OVERFLOW OR FLUID THAT IS MILKY IN	1. Water contamination of power steering fluid.	1. Inspect fluid for milky appearance. Completely drain power steering fluid. Refill and bleed system. Refer to **STANDARD PROCEDURE**.

COLOR		

NOTE: * Extremely cold temperatures may cause power steering fluid aeration. The air should work its way out of the system as the fluid warms.

STANDARD PROCEDURE

STANDARD PROCEDURE - OUTER TIE ROD END LUBRICATION

NOTE: View is typical.

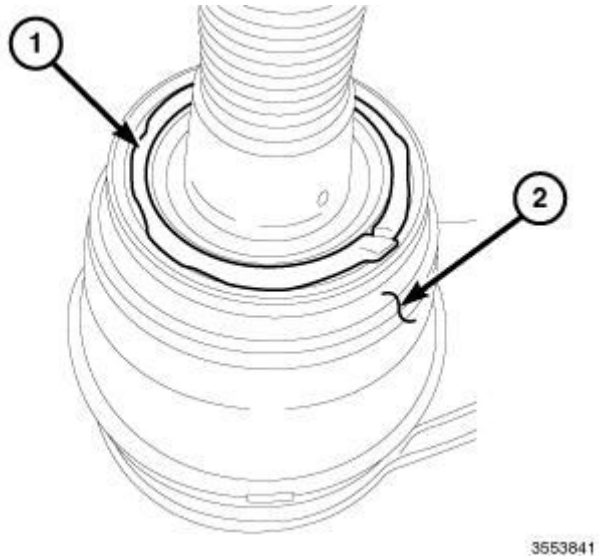

Fig. 4: Locating Grease & Tie Rod End Boot
Courtesy of CHRYSLER GROUP, LLC

NOTE: If a new tie rod end is to be installed, make sure the boot (2) is properly lubricated.

Any time the outer tie rod end is disconnected from the knuckle, before assembly, clean all old grease and debris from the boot with a clean cloth and apply outer tie rod grease P/N 68088623AA (1) to the boot (2) as shown.

STANDARD PROCEDURE - POWER STEERING SYSTEM BLEEDING

WARNING: The fluid level should be checked with engine off to prevent injury from moving components.

CAUTION: Mopar® Power Steering Fluid + 4 or Mopar® ATF+4

Automatic Transmission Fluid is to be used in the power steering system. Both Fluids have the same material standard specifications (MS-9602). No other power steering or automatic transmission fluid is to be used in the system. Damage may result to the power steering pump and system if another fluid is used. Do not overfill the system.

CAUTION: If the air is not purged from the power steering system correctly, pump failure could result.

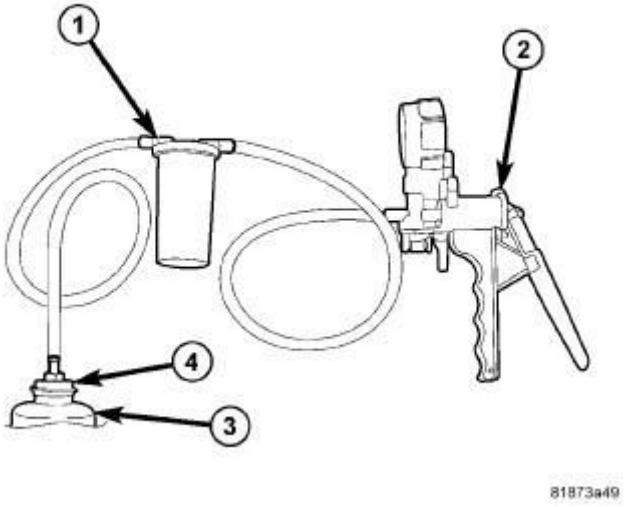

Fig. 5: Hand Vacuum Pump On Reservoir
Courtesy of CHRYSLER GROUP, LLC

NOTE: Be sure the vacuum tool used in the following procedure is clean and free of any fluids.

1. Check the fluid level. As measured on the side of the reservoir, the level should indicate between MAX and MIN when the fluid is at normal ambient temperature. Adjust the fluid level as necessary. Refer to **FLUID, STANDARD PROCEDURE**.
2. Tightly insert Power Steering Cap Adapter (4), Special Tool (special tool #9688A, Cap Adapter, Power Steering Pump), into the mouth of the reservoir (3).

CAUTION: Failure to use a vacuum pump reservoir (1) may allow power steering fluid to be sucked into the hand vacuum pump.

3. Attach Hand Vacuum Pump (2), Special Tool (special tool #C-4207-A, Vacuum Pump, Hand) or equivalent, with reservoir (1) attached, to the Power Steering Cap Adapter (4).

CAUTION: Do not run the vehicle while vacuum is applied to the power steering system. Damage to the power steering pump can occur.

NOTE: When performing the following step make sure the vacuum level is maintained during the entire time period.

4. Using Hand Vacuum Pump (2), apply 68-85 kPa (20-25 in. Hg) of vacuum to the system for a minimum of three minutes.
5. Slowly release the vacuum and remove the special tools.
6. Adjust the fluid level as necessary. Go to 1.
7. Repeat Step #1 through Step #6 until the fluid no longer drops when vacuum is applied.
8. Start the engine and cycle the steering wheel lock-to-lock three times.

NOTE: Do not hold the steering wheel at the stops.

9. Stop the engine and check for leaks at all connections.
10. Check for any signs of air in the reservoir and check the fluid level. If air is present, repeat the procedure as necessary.

SPECIFICATIONS

SPECIFICATIONS

SPECIFICATIONS

DESCRIPTION	N.m	Ft. Lbs.	In. Lbs.
Cooler Mounting Screws	8	6	71
Gear Heat Shield Screws To			

Crossmember - Left-Hand-Drive	4	-	35
Gear Heat Shield Screw To Steering Gear - Left-Hand-Drive	17	12.5	150
Gear Heat Shield Screws To Steering Gear - Right-Hand-Drive	8	6	71
Gear Mounting Bolts	70	52	-
Hose Routing Clamp Screws To Crossmember	8	6	71
Hose Tube Nut At Gear - Pressure	32	24	-
Hose Tube Nut At Gear - Return	20	15	177
Hose Tube Nut At Pump	32	24	-
Intermediate Shaft Coupling Bolt	42	31	-
Pump Pressure Fitting	88	65	-
Pump Mounting Bolts - Gas Engine	26	19	230
Pump Mounting Bolts - Diesel Engine	26	19	230
Pressure Hose Routing Clamp Bolt To Exhaust Manifold	9	6.5	80
Pressure Hose Routing Clamp Nut To Engine Rear - Diesel	24	18	212
Reservoir Mounting Screw	12	9	106
Return Hose Routing Clamp Screw To Frame Rail	19	14	-
Suspension Crossmember Mounting Bolts	150	111	-
Tie Rod End-to-Knuckle Nut	132	97	-
Tie Rod Jam Nut	75	55	-

SPECIAL TOOLS

SPECIAL TOOLS

	10041 - Bit, TORX

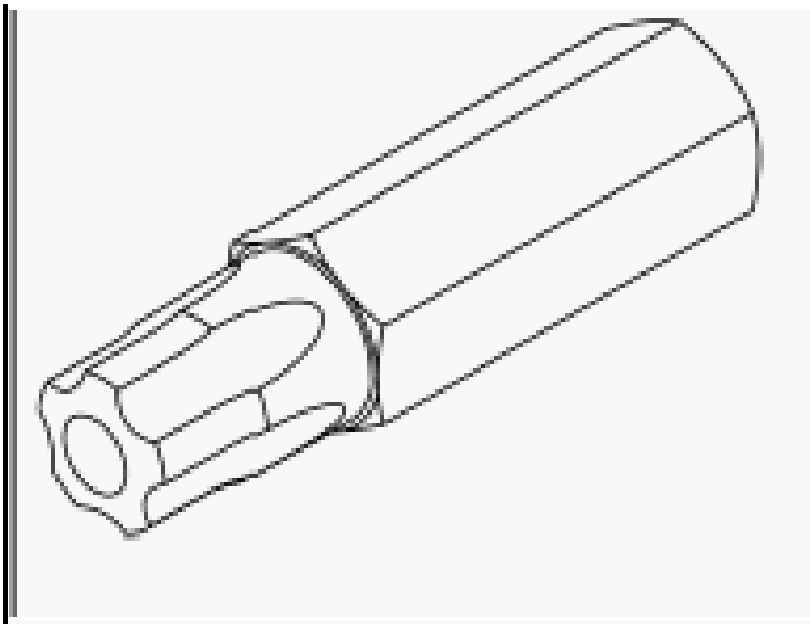	(Originally Shipped In Kit Number(s) 10041.)
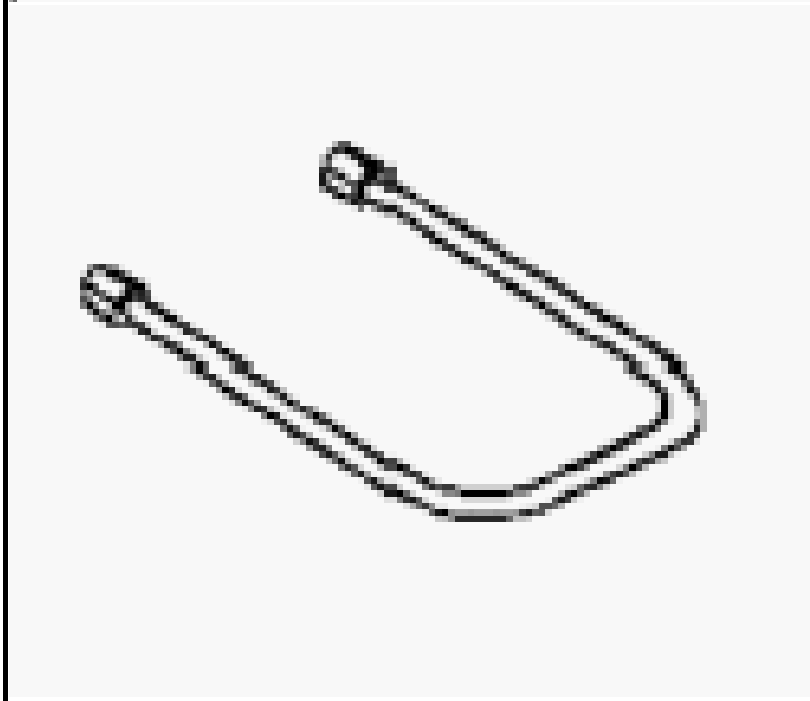	6713 - Hose, Power Steering
	6800 - Analyzer, Power Steering

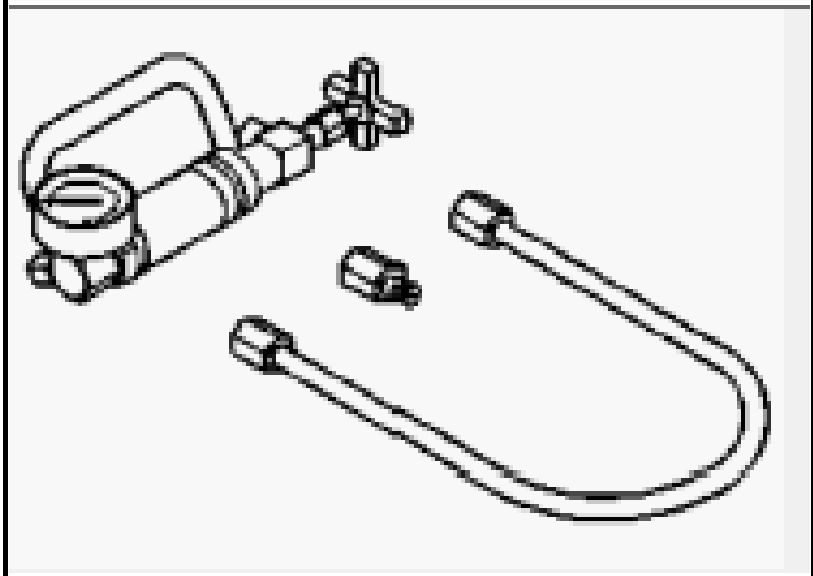

6815 - Kit, Power Steering
(Originally Shipped In Kit Number(s) 6784, 6809, 6898.)

6826 - Adapter, LH P/S Tester
(Originally Shipped In Kit Number(s) 6893A, 6894, 6895, 6897, 6898.)

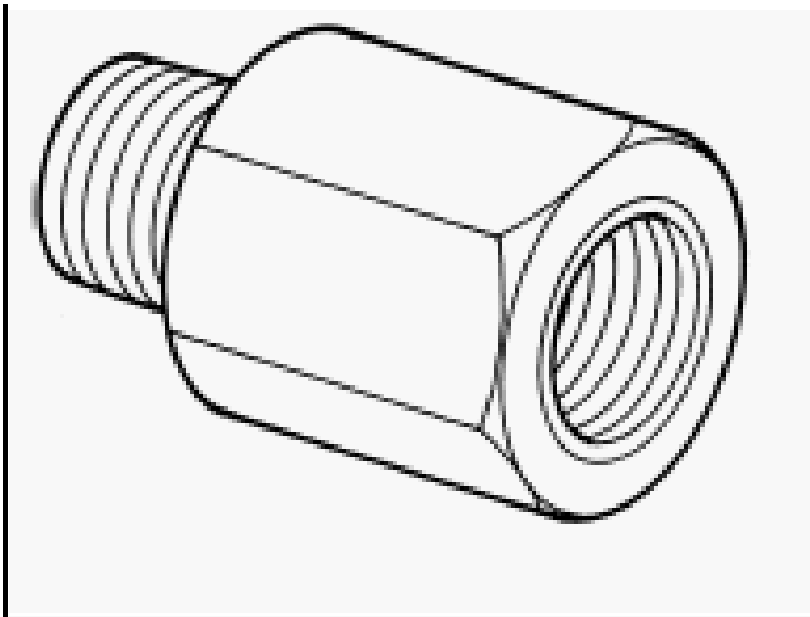

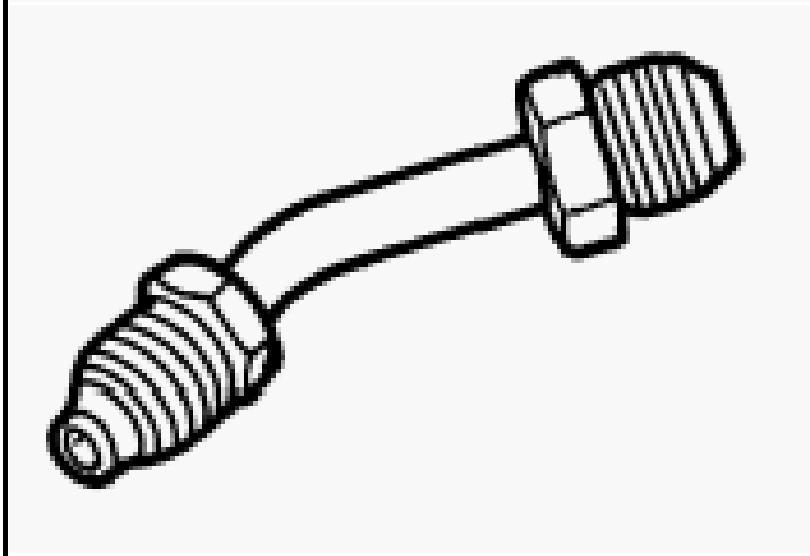

6844 - Adapter, Power Steering (Truck)
(Originally Shipped In Kit Number(s) 6896.)

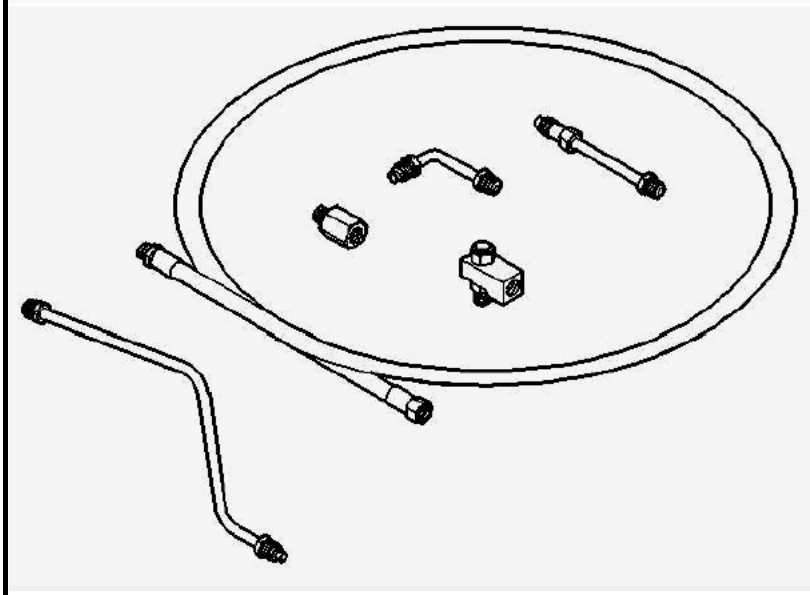

6893A - Kit, Power Steering
(Originally Shipped In Kit Number(s) 6896.)

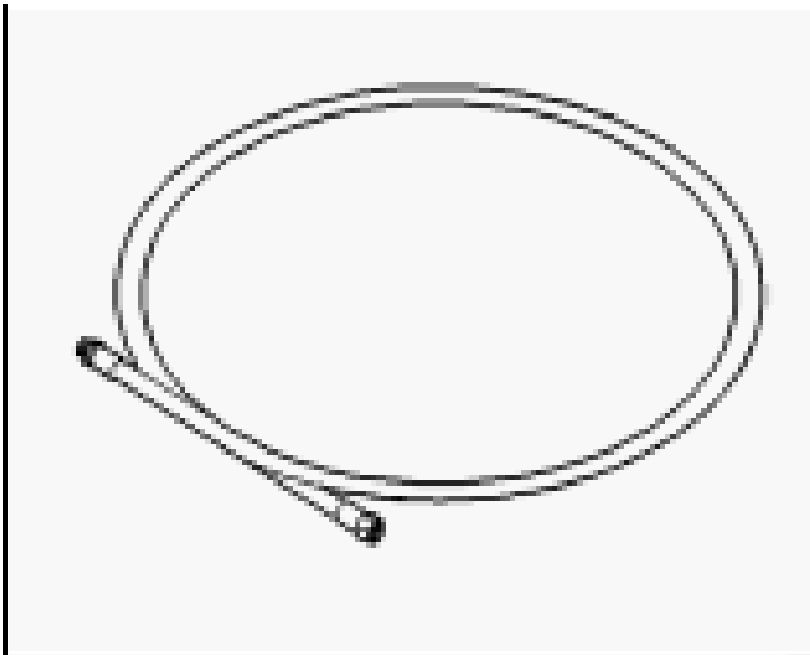	6905 - Assembly, Hose (Originally Shipped In Kit Number(s) 6896.)
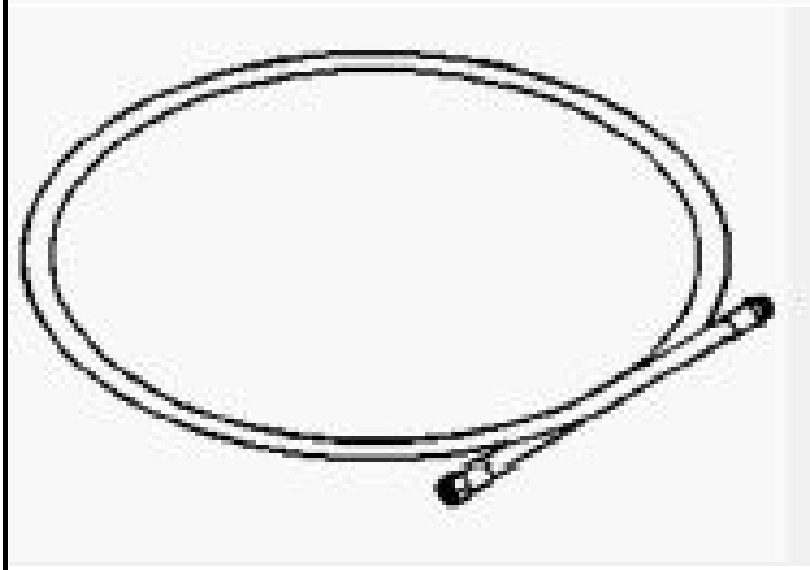	6959 - Assembly, Hose (Originally Shipped In Kit Number(s) 6945, 6946, 6947, 6948, 6949.)
	9360 - Remover, Ball Joint (Originally Shipped In Kit Number(s) 9329, 9515, 9516, 9516-CAN, 9517, 9517-CAN, 9518, 9519, 9540, 9541.)

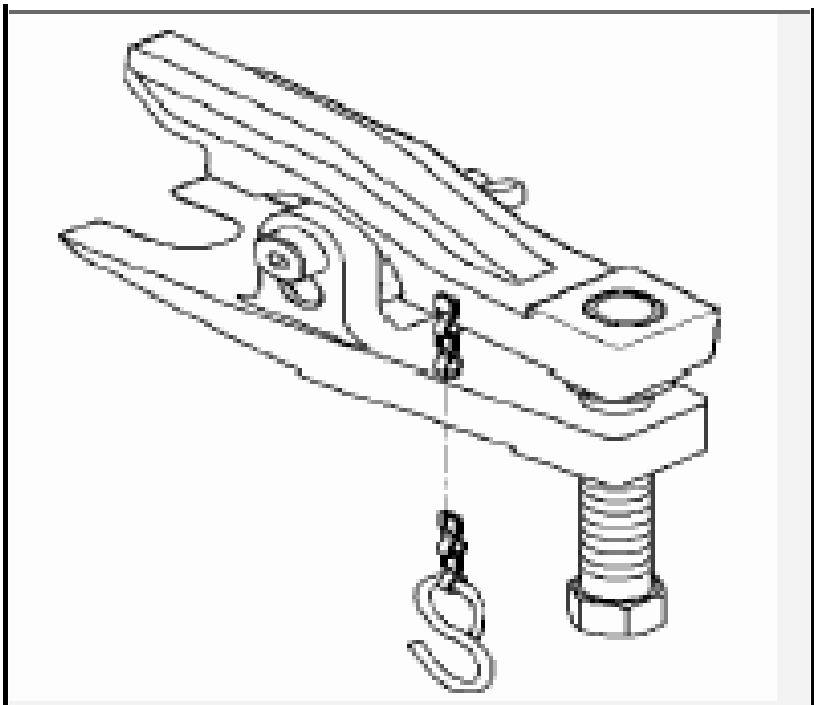

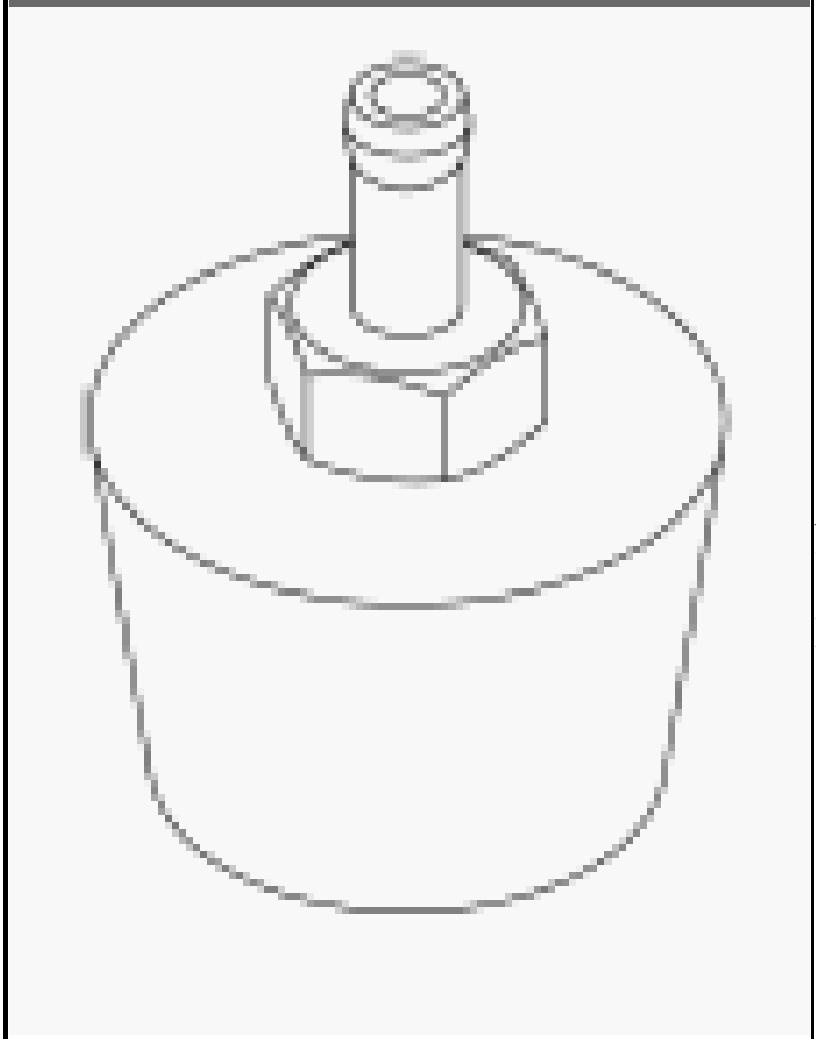

9688A - Cap Adapter, Power Steering Pump
(Originally Shipped In Kit Number(s) 10075A-DOD, 10075-CHRYSLER, 10075-DODGE.)

	C-4207-A - Vacuum Pump, Hand
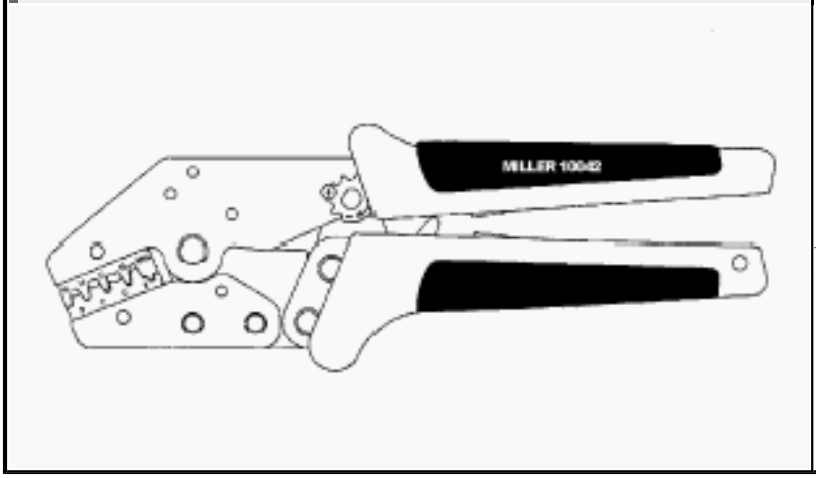	C-4755 - Trim Stick (Originally Shipped In Kit Number(s) 9299, 9299CC, 9299CC, 9300A-CAN.)

COLUMN

WARNING

WARNING

WARNING: Safety goggles should be worn at all times when working on steering columns.

WARNING: Before beginning any service procedure that involves removing the air bag: Remove and isolate the negative (-) battery cable (ground) from the vehicle battery. This is the only sure way to disable the air bag system. Failure to do this could result in accidental air bag deployment and

possible personal injury.

WARNING: The air bag system is a sensitive, complex electro-mechanical unit. Before attempting to diagnose, remove or install the air bag system components you must first disconnect and isolate the battery negative (ground) cable. Failure to do so could result in accidental deployment of the air bag and possible personal injury. The fasteners, screws, and bolts, originally used for the air bag components, have special coatings and are specifically designed for the air bag system. They must never be replaced with any substitutes. Anytime a new fastener is needed, replace with the correct fasteners provided in the service package or fasteners listed in the parts books. Before servicing a steering column equipped with an air bag,

WARNING: When handling an undeployed air bag during servicing of the steering column, the following precautions should be observed:

- At no time should any source of electricity be permitted near the inflator on the back of the air bag.
- When carrying a live air bag, the trim cover should be pointed away from the body to minimize injury if the air bag should accidently deploy.
- If the air bag is placed on a bench or other surface, the plastic cover should be face-up to minimize movement, in case of accidental deployment.

CAUTION: Disconnect negative (ground) cable from the battery before servicing any column component.

DESCRIPTION

DESCRIPTION

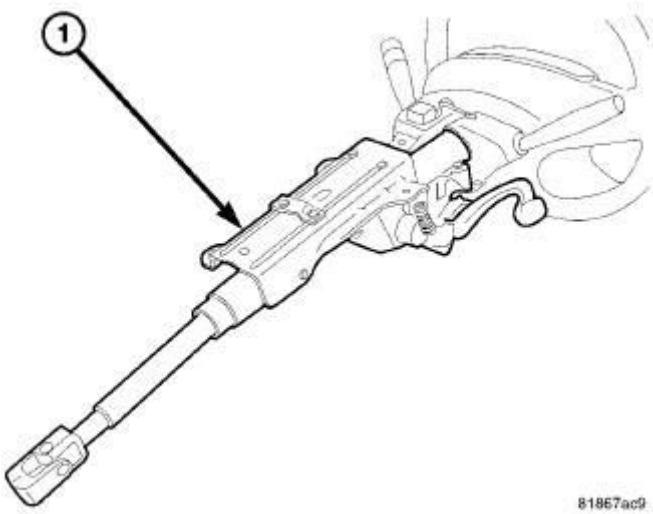

Fig. 6: Steering Column
Courtesy of CHRYSLER GROUP, LLC

This vehicle is equipped with a tilt type steering column (1). The steering column is designed to be serviced only as complete assembly if an internal component is found to be defective. The shaft, bearings and intermediate shaft are all serviced with the column.

The serviceable components on the steering column assembly are:

- Clockspring (Integral part of Steering Column Control Module (SCCM))
- Driver Airbag
- Ignition Switch
- Key Cylinder
- Lock Cylinder Housing
- Multi-Function Switches (left and right)
- Tilt Lever
- Shrouds
- Steering Wheel

These components can be serviced without removal of the steering column from the vehicle. Refer to the appropriate Service Information for servicing these

components separately.

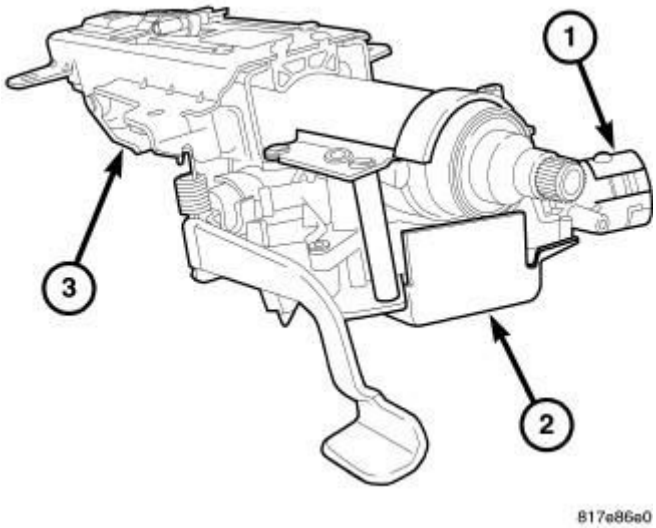

Fig. 7: Thatcham Steering Column
Courtesy of CHRYSLER GROUP, LLC

A special steering column is used in some Export areas meeting Thatcham security requirements. This steering column (3) is much the same as the standard steering column except for the addition of a tamper-proof shield (2) around the lock cylinder housing and an antitheft cup (1) surrounding the key cylinder. The tamper-proof shield disallows service of the lock cylinder housing. The antitheft cup can be removed allowing access to the key cylinder for service purposes.

The Thatcham steering column also features a ratcheting slip collar internal to the column assembly. This collar is not serviceable.

DIAGNOSIS AND TESTING

DIAGNOSIS AND TESTING - STEERING COLUMN

The two steering column bracket halves are riveted together above the steering column with raised locator pads under the rivets (when viewed from the top). These rivets and locator pads can help determine if column has been compromised. If the steering column has collapsed, the rivets will slide down the slotted upper half of the bracket with the steering column. A collapse may occur with the tube housing moving into the rear bracket assembly OR the tube may move inside the tube housing. Typically if a collapse happens, the rivets/locator pads should indicate damage. However, if **any** of the following steps indicate a collapse, the steering column will still need replacement.

NOTE: All illustrations within this procedure are typical; however the steering column functionality is the same in all vehicles.

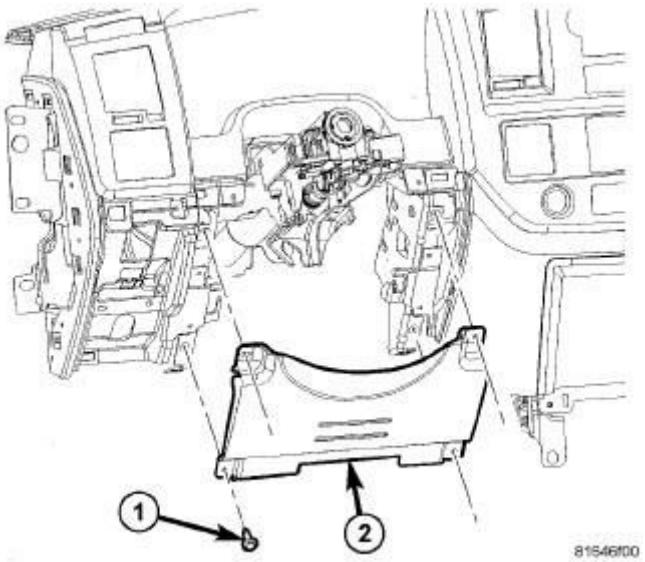

Fig. 8: Retaining Screws And Steering Column Opening Cover Reinforcement
Courtesy of CHRYSLER GROUP, LLC

1. Grasp the steering wheel at the 9 and 3 o'clock positions, and again at the 12 and 6 o'clock positions and attempt to rock the steering wheel back and forth and up and down. If there is excessive movement or an audible clunking or grinding sound, replace the steering column. Refer to **COLUMN, REMOVAL**.
2. Remove the steering column opening cover, and if equipped, remove the retaining screws (1) and the steering column opening cover reinforcement (2).

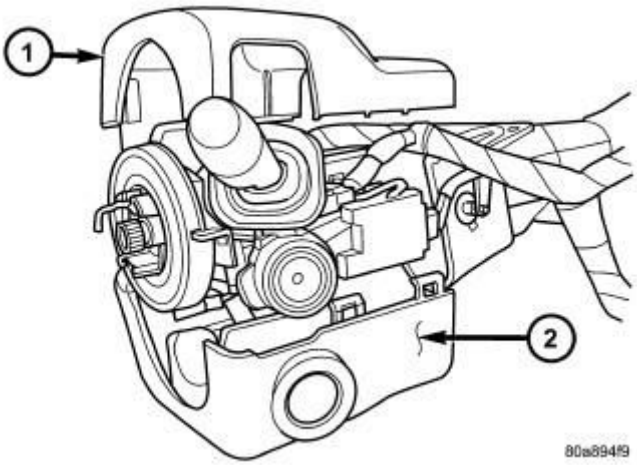

Fig. 9: Shroud Removal/Install
Courtesy of CHRYSLER GROUP, LLC

3. Remove screws from the lower column shroud (2) and remove both the upper and lower shrouds.

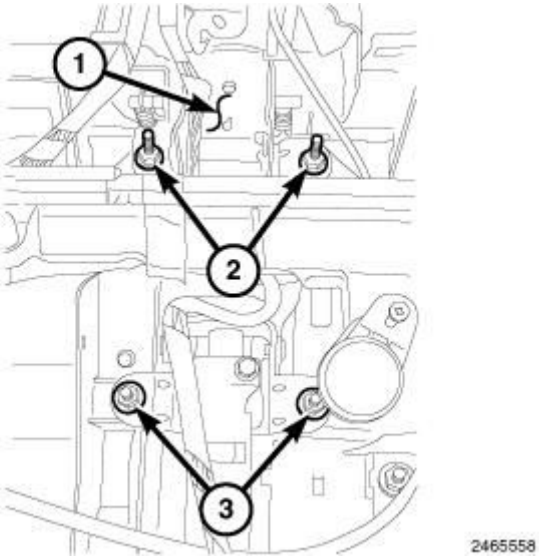

Fig. 10: Vertical Front Steering Column Mounting Bolts
Courtesy of CHRYSLER GROUP, LLC

4. Remove the rear steering column mounting bolts (2).

NOTE: This illustration shows two vertical front steering column mounting bolts (3). Some steering column mounting brackets may have only one vertical mounting bolt in this position and another horizontal bolt. The horizontal bolt does not need to be

loosened for this procedure.

5. Loosen the front steering column retaining bolts/nuts (3) several turns, but do not remove.

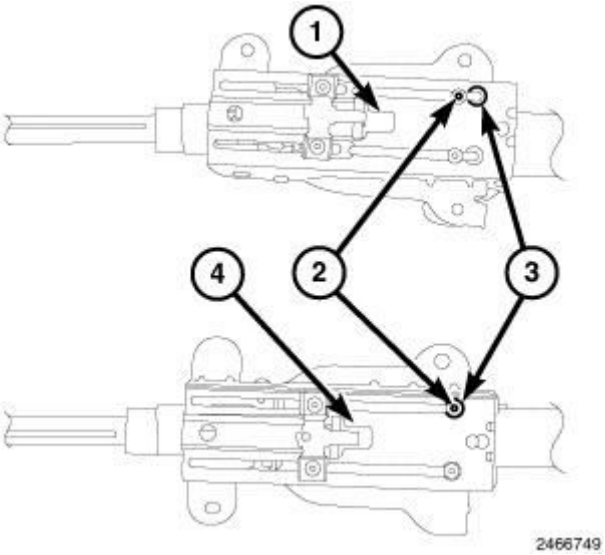

Fig. 11: Rivets And Locator Pads
Courtesy of CHRYSLER GROUP, LLC

NOTE: A steering column which is in good condition (4) will have the rivets (2) centered on the raised locator pads (3). When a steering column is compromised (1), the rivets (2) should be moved off the locator pads (3).

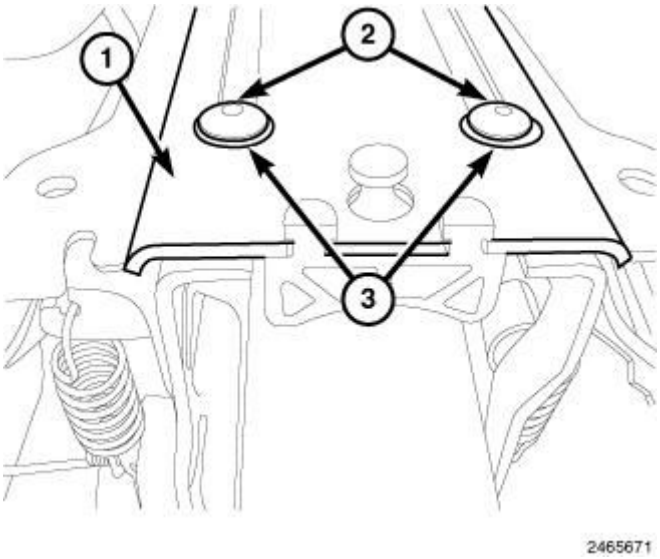

Fig. 12: Steering Column, Rivets, & Locator Pads

Courtesy of CHRYSLER GROUP, LLC

6. Move the steering column assembly (1) down to view the rivets (2) in the top of the bracket (between instrument cluster and steering column). Verify that the rivets (2) have not moved off center of the locator pads (3). If the rivets (2) have moved, replace the steering column. Refer to **COLUMN, REMOVAL**.

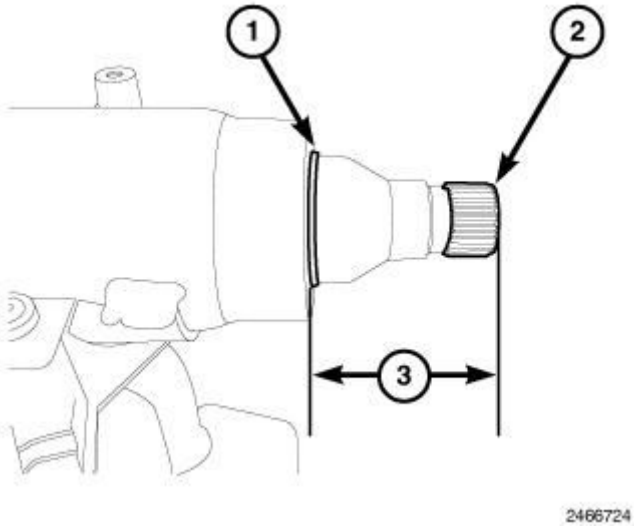

Fig. 13: Steering Column Housing Tube Replacement Components Splined Shaft
Courtesy of CHRYSLER GROUP, LLC

7. Remove the clockspring. Refer to **CLOCKSPRING, REMOVAL** .
8. Measure the distance from the edge of the steering column housing tube (1) to the edge of the splined shaft (2). If the measurement (3) is less than 40 mm (1.574 in.), replace the steering column. Refer to **COLUMN, REMOVAL**.
9. If the steering column passes all tests and measurements above, the steering column is not collapsed and should not need to be replaced.

SPECIFICATIONS

SPECIFICATIONS

SPECIFICATIONS

DESCRIPTION	N.m	Ft. Lbs.	In. Lbs.
Intermediate Shaft Coupling Bolt	42	31	-

Lock Cylinder Housing Mounting Screws	16	12	142
SCCM Mounting Screws	3	-	27
SKREEM/WCM Mounting Screws	3.5	-	31
Steering Column Mounting Bolt	28	21	250
Steering Column Mounting Nuts	28	21	250
Steering Wheel Retaining Bolt	50	37	-

REMOVAL

REMOVAL

WARNING: When an undeployed airbag module is to be removed from the vehicle, first disconnect the battery ground cable and isolate it. Allow the system capacitor to discharge for a minimum of two minutes before starting any removal.

NOTE: Before proceeding, refer to COLUMN, WARNING.

NOTE: LHD model shown in illustrations. RHD model similar.

1. Disconnect the negative (-) cable from the battery and isolate the cable.

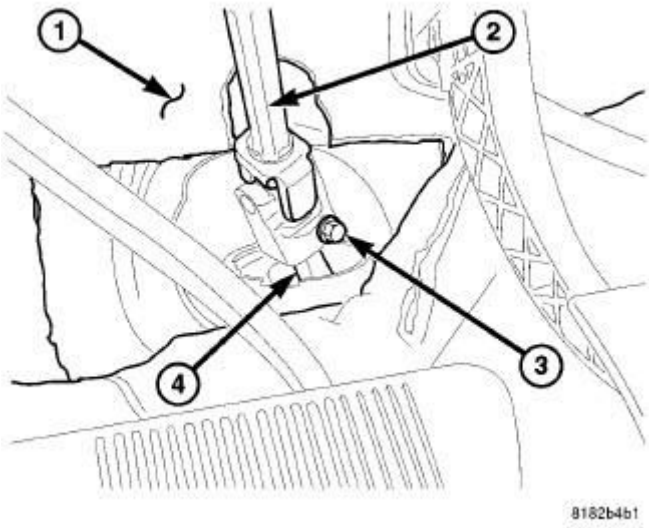

Fig. 14: Lower Coupling Bolt
Courtesy of CHRYSLER GROUP, LLC

2. Reposition the floor carpeting to access the steering column coupling at the base of the column.
3. Position the front wheels of vehicle in the STRAIGHT-AHEAD position, then turn the steering wheel to the right until the intermediate shaft coupling bolt (3) at the base of the column can be accessed.
4. Remove the intermediate shaft coupling bolt (3). **Do not separate the intermediate shaft (2) from the steering gear pinion shaft (4) at this time.**
5. Return the front wheels of vehicle (and steering wheel) to the STRAIGHT-AHEAD position.

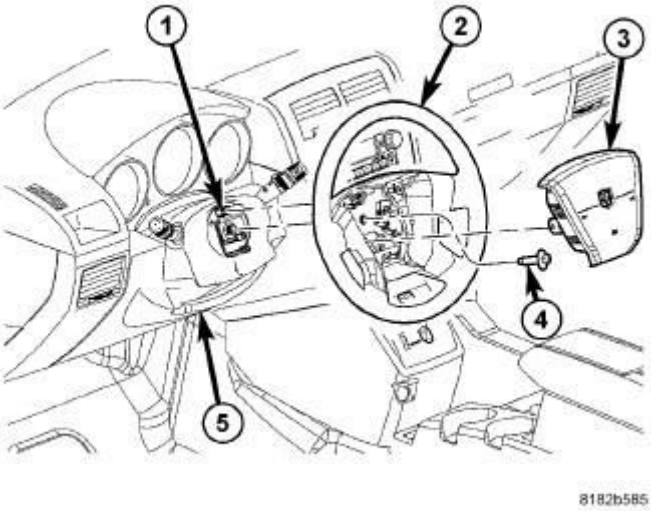

Fig. 15: Air Bag Removal/Installation
Courtesy of CHRYSLER GROUP, LLC

6. Remove the driver airbag (3). Refer to **AIR BAG, DRIVER, REMOVAL** .

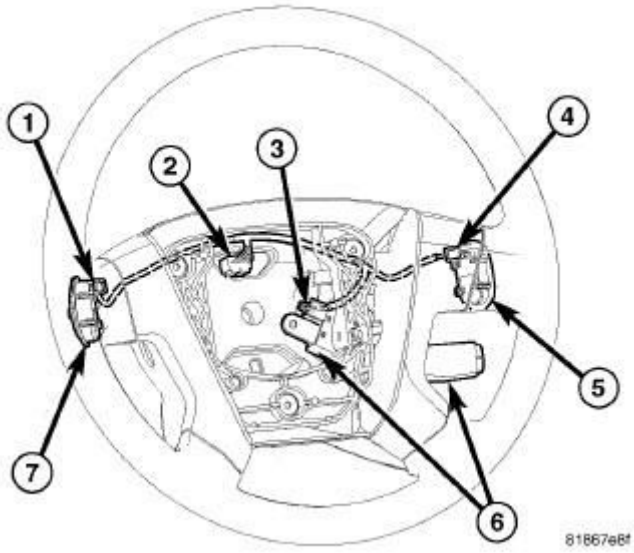

Fig. 16: Steering Wheel Wiring
Courtesy of CHRYSLER GROUP, LLC

7. Disconnect the wiring connector (2) at the clockspring.

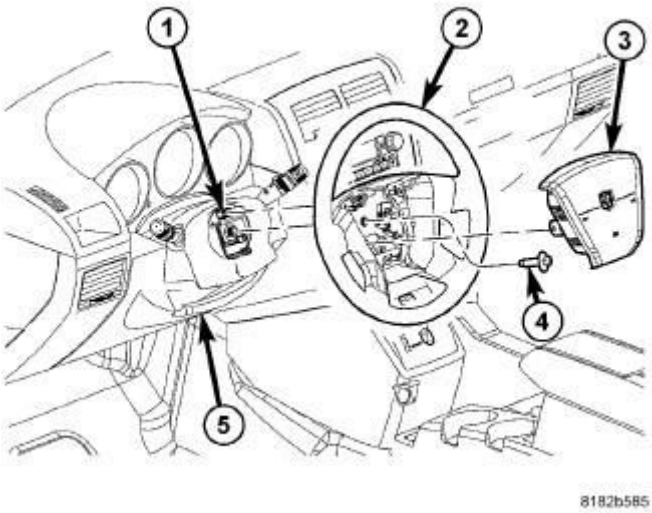

Fig. 17: Air Bag Removal/Installation
Courtesy of CHRYSLER GROUP, LLC

8. While holding the steering wheel firmly in place, remove the steering wheel retaining bolt (4) from the steering column shaft.

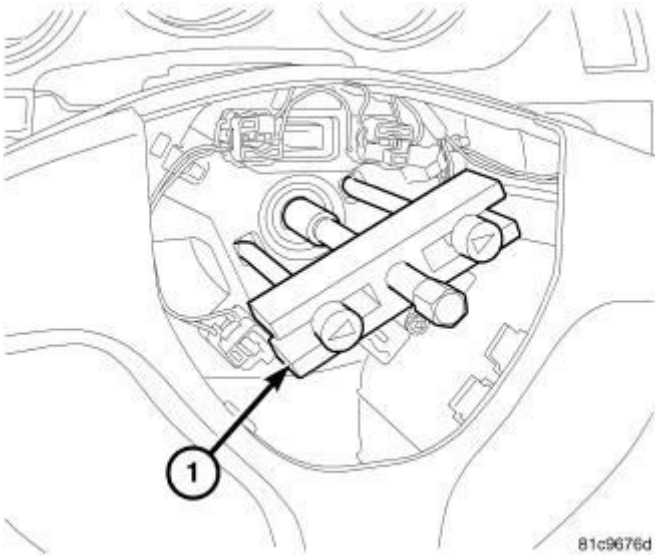

Fig. 18: Identifying Steering Wheel Puller
Courtesy of CHRYSLER GROUP, LLC

CAUTION: Do not bump or hammer on the steering wheel or steering column shaft when removing the steering wheel.

9. Install an appropriate wheel puller with hooked legs (1) on the steering wheel over the steering shaft. Refer to **WHEEL, STEERING, REMOVAL**.

CAUTION: Do not attempt to rotate the clockspring rotor once the steering wheel is removed. The clockspring must remain centered in its travel to avoid overextending the clockspring inner parts, causing the clockspring to become inoperative. If removed and handled properly using the correct procedures, it should remain in the "centered" position. If there is any question as to whether the clockspring is in the "centered" position of travel, perform the clockspring centering procedure before installing the steering wheel.

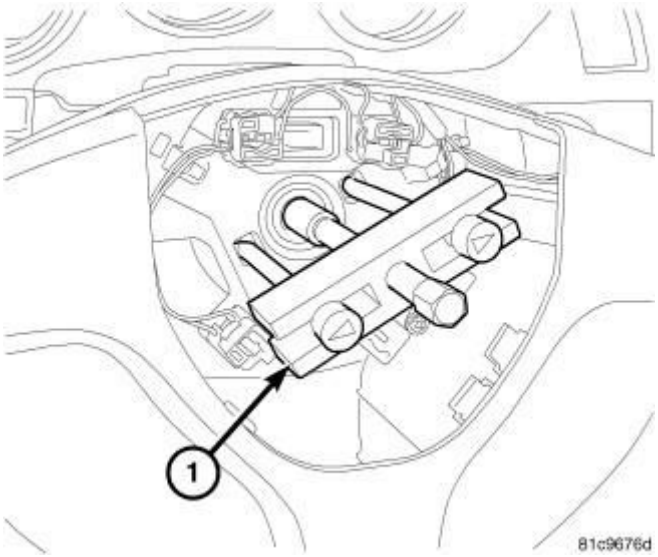

Fig. 19: Identifying Steering Wheel Puller
Courtesy of CHRYSLER GROUP, LLC

10. While holding the steering wheel firmly in the STRAIGHT-AHEAD position, release the steering wheel from the steering column shaft splines using the wheel puller (1). Remove the steering wheel from the column.

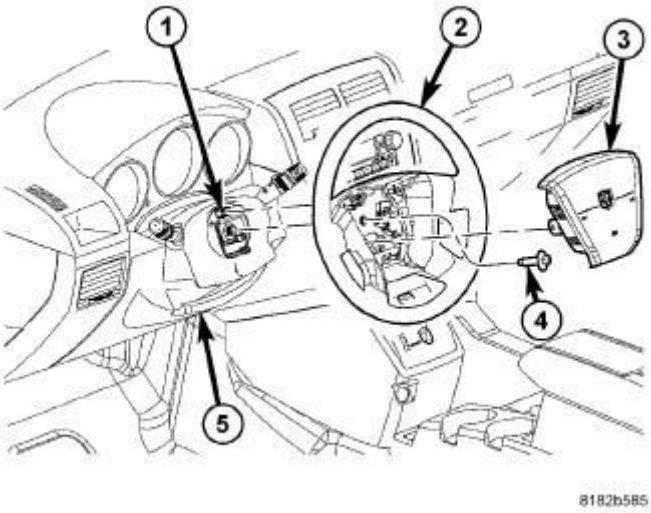

Fig. 20: Air Bag Removal/Installation
Courtesy of CHRYSLER GROUP, LLC

11. Position the column tilt at the full-upward position.
12. Remove the steering column opening cover (5). Refer to **COVER, STEERING COLUMN OPENING, REMOVAL** .

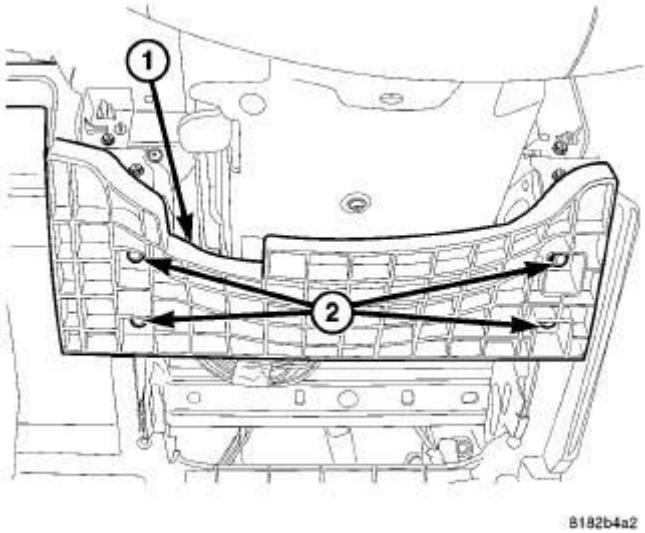

Fig. 21: Reinforcement
Courtesy of CHRYSLER GROUP, LLC

13. Remove the steering column cover reinforcement panel (1) four screws (2).

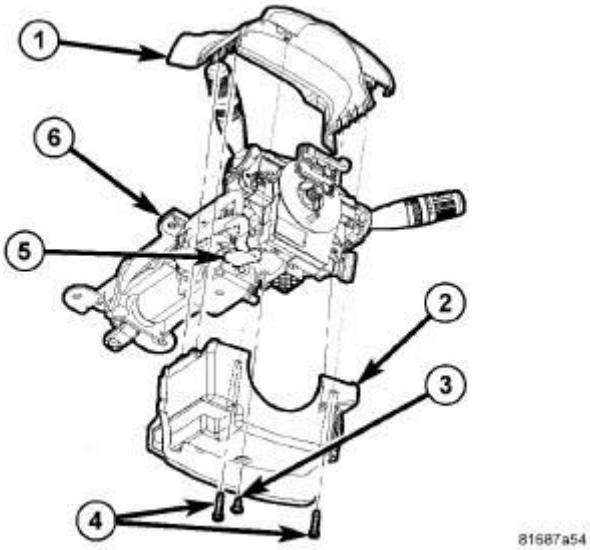

Fig. 22: Steering Column Shrouds
Courtesy of CHRYSLER GROUP, LLC

14. Remove the two screws (4) attaching the upper shroud (1) to the lower shroud (2). After removing the screws, unclip the shrouds from each other by applying hand pressure along the seams where the shrouds connect on the sides, then remove the upper shroud.
15. Push the tilt lever (5) downward.

16. Remove the screw (3) attaching the lower shroud (2) to the steering column (6). Remove the lower shroud.
17. Push the tilt lever (5) upward, locking it in place.

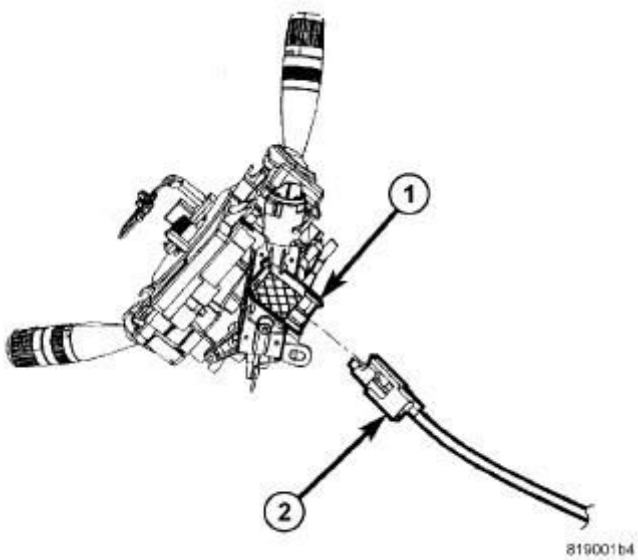

Fig. 23: Shift Interlock Cable AT Column
Courtesy of CHRYSLER GROUP, LLC

18. If equipped with an automatic transaxle, disconnect the ignition shift interlock cable at the steering column. To do so, insert the ignition key into the key cylinder and turn it to the ON position. Depress the tab on top of the interlock cable connector (2) and pull the cable out of the lock cylinder housing (1).

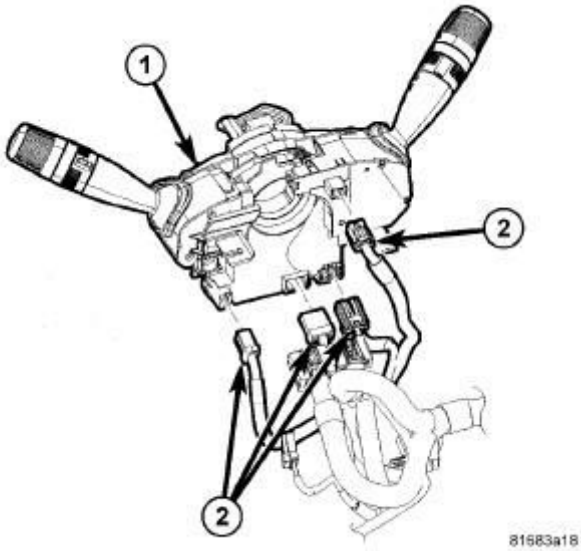

Fig. 24: Measuring For Voltage On The CMP Sensor Ground Circuit
Courtesy of CHRYSLER GROUP, LLC

19. Disconnect the wiring harness connectors (2) at the Steering Column Control Module (SCCM) (1).
20. Disconnect all other wiring harness connectors at column components.

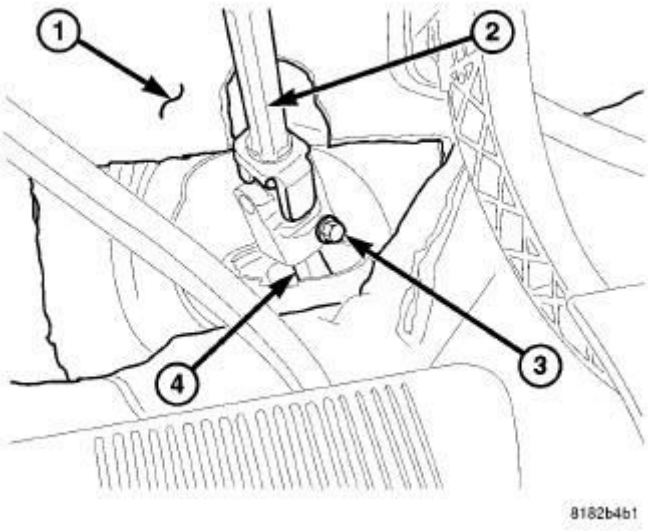

Fig. 25: Lower Coupling Bolt
Courtesy of CHRYSLER GROUP, LLC

21. Separate the intermediate shaft (2) at the base of the column from the steering gear pinion shaft (4).

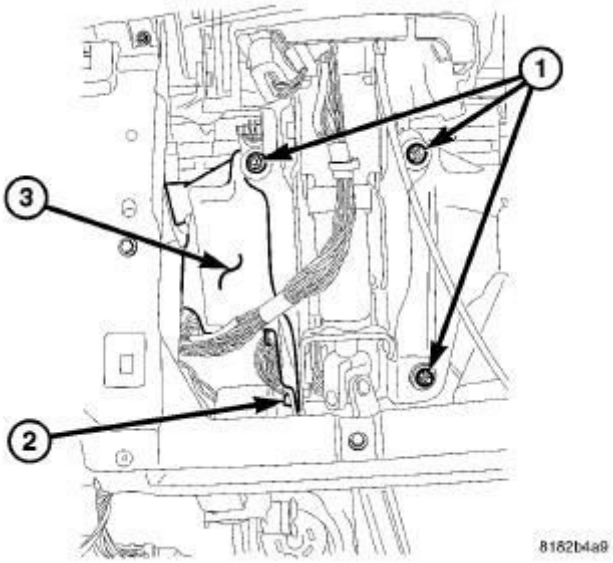

Fig. 26: Column Mounting
Courtesy of CHRYSLER GROUP, LLC

NOTE: If the same steering column is to be reinstalled, clamp the tilt lever to lock the column in place so that it can be easily reinstalled in the same orientation.

22. Remove the one mounting bolt (left lower) (2) attaching the steering column to the instrument panel (3).
23. Remove the three mounting nuts (1) attaching the steering column to the instrument panel (3).
24. Remove the steering column from the vehicle.
25. To remove remaining components from the column. Refer to **COLUMN, DISASSEMBLY**.

DISASSEMBLY

DISASSEMBLY

STEERING COLUMN CONTROL MODULE

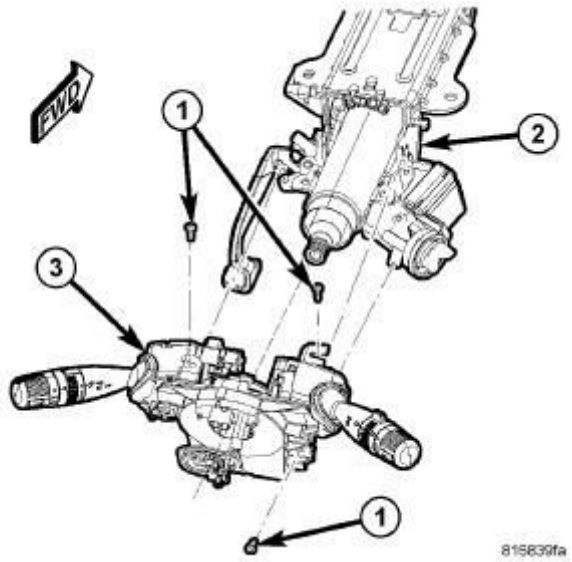

Fig. 27: Multi-Function Switch Mounting
Courtesy of CHRYSLER GROUP, LLC

1. Remove the screws (1) attaching the Steering Column Control Module (SCCM) (with switch stalks) (3) to the steering column (2).
2. Slide the SCCM (with switch stalks) (3) off the steering column (2).

SKREEM/WCM (IF EQUIPPED)

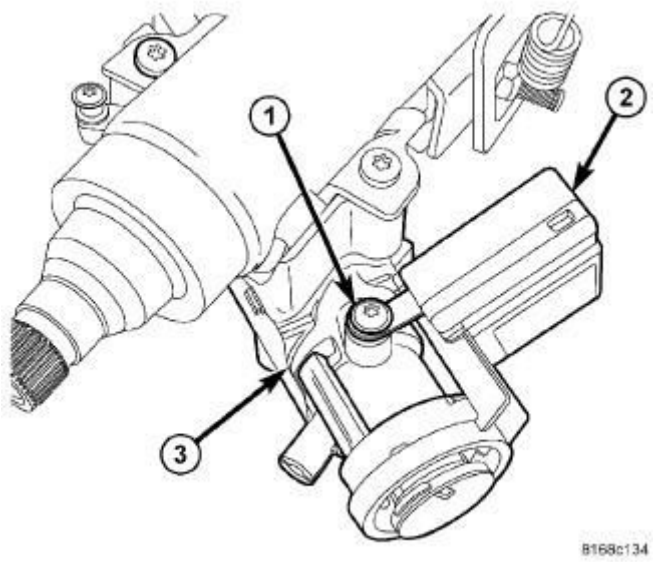

Fig. 28: SKREEM (WCM) Mounting Screw
Courtesy of CHRYSLER GROUP, LLC

NOTE: SCCM previously removed.

1. Remove the screw (1) fastening the SKREEM/WCM (2) to the lock cylinder housing (3).
2. Unhook the SKREEM/WCM (2) retainer fingers from the lock cylinder housing (3) and remove it from the housing.

KEY CYLINDER

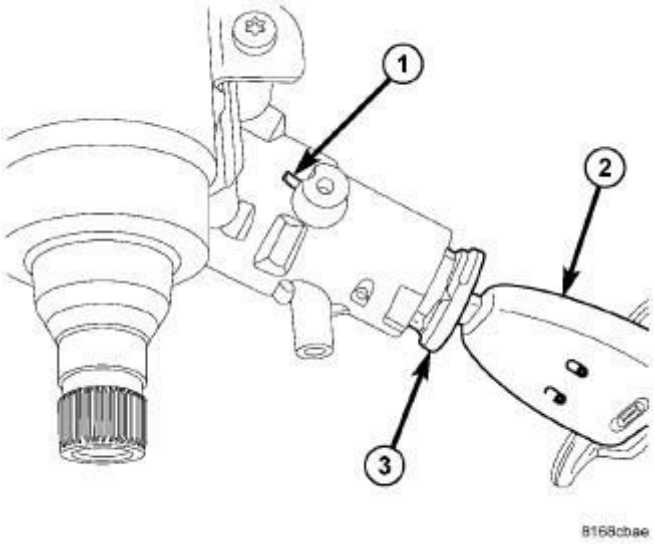

Fig. 29: Access Hole For Lock Cylinder Removal
Courtesy of CHRYSLER GROUP, LLC

NOTE: SCCM and SKREEM/WCM previously removed.

1. Insert the key (2) and turn the key cylinder (3) to the RUN position.
2. Insert an appropriate tool into the slot (1) formed into the lock cylinder housing depressing the key cylinder retaining tab.
3. Pull the key cylinder and key straight out of the lock cylinder housing as one unit.

LOCK CYLINDER HOUSING

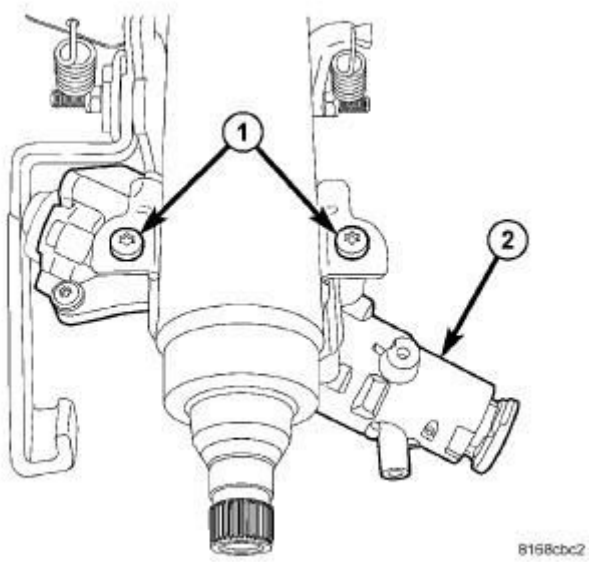

Fig. 30: Lock Cylinder Housing Mounting
Courtesy of CHRYSLER GROUP, LLC

NOTE: SCCM previously removed.

1. Using Torx® Plus Bit (special tool #10041, Bit, TORX), or equivalent Tamper-Proof Torx® Plus (five point) 30 bit, remove the two screws (1) fastening the lock cylinder housing (2) to the column.
2. Remove the lock cylinder housing from the steering column.

IGNITION SWITCH

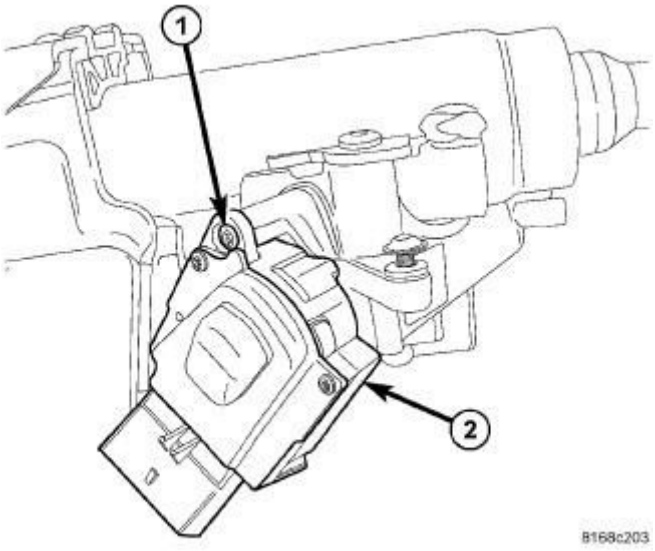

Fig. 31: Ignition Switch Mounting Screw
Courtesy of CHRYSLER GROUP, LLC

NOTE: Lock cylinder housing removed from column.

1. Remove the ignition switch (2) mounting screw (1).

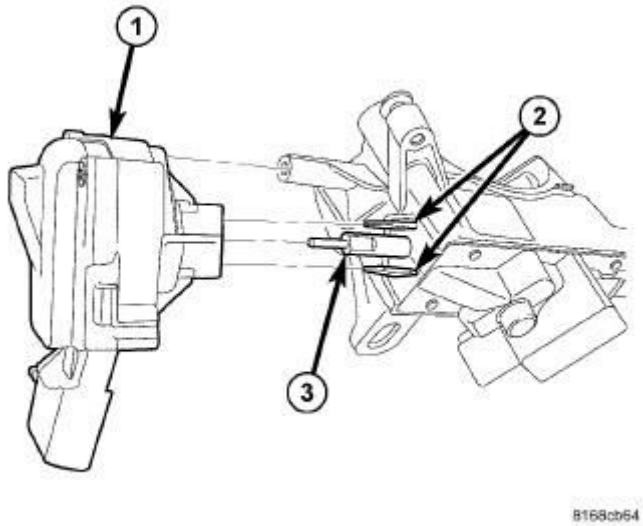

Fig. 32: Ignition Switch Removal/Installation
Courtesy of CHRYSLER GROUP, LLC

2. Pull the switch (1) straight out and off the retaining tabs (2) located on the lock cylinder housing.

INSPECTION

INSPECTION

Inspect the column for damage any time the driver airbag has deployed.

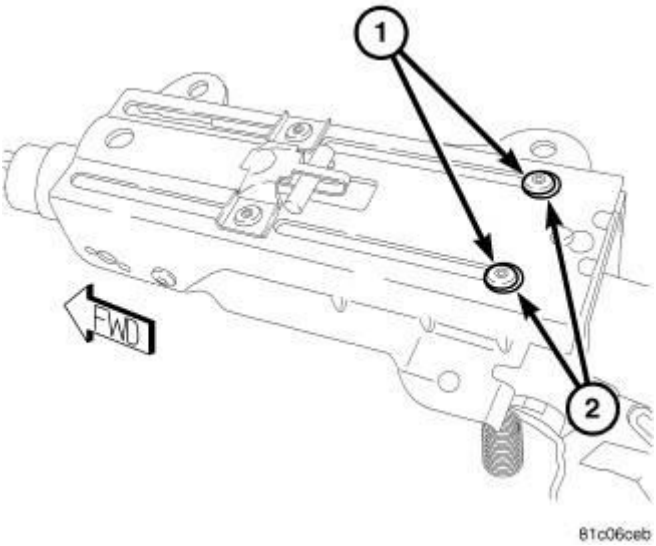

Fig. 33: Identifying Column Rivets
Courtesy of CHRYSLER GROUP, LLC

Lower the steering column from its mount and inspect the column collapse feature. If the rearmost rivets (1) have dislodged from top of their mounting pads (2), into the mounting bracket slots, the column must be replaced. **NO attempt should be made to return the rivets to the top of the pads.**

If any physical damage or stress cracks are present on the column, the column must be replaced.

ASSEMBLY

ASSEMBLY

NOTE: Assemble the column components in the order shown to ensure proper installation of all components.

IGNITION SWITCH

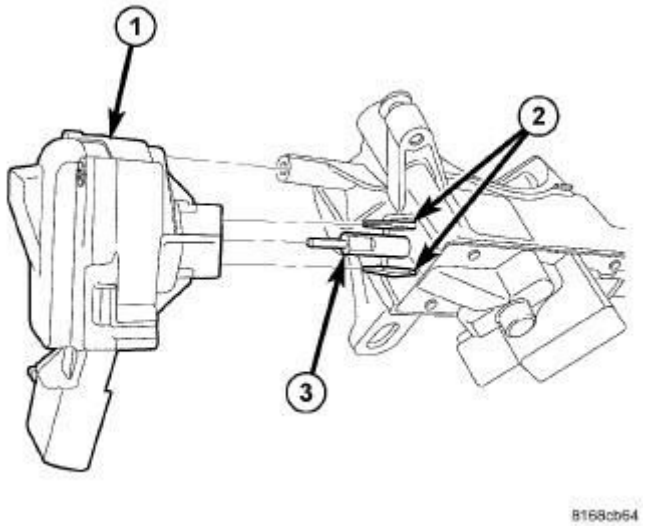

Fig. 34: Ignition Switch Removal/Installation
Courtesy of CHRYSLER GROUP, LLC

1. Ensure the ignition switch is in the RUN position and the actuator shaft in the lock housing is in the RUN position.

CAUTION: Use care when installing the ignition switch on the lock cylinder housing to avoid damaging the key-in plunger (3).

2. Align the ignition switch with the key-in plunger (3), actuator shaft and retaining tabs (2) located on the lock cylinder housing. Carefully install the switch, snapping it into place over the retaining tabs.

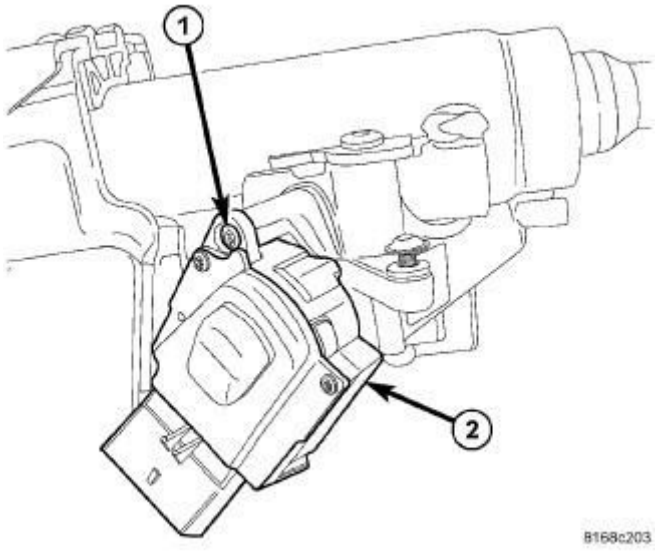

Fig. 35: Ignition Switch Mounting Screw
Courtesy of CHRYSLER GROUP, LLC

3. Install the ignition switch (2) mounting screw (1). Tighten the screw to 2 N.m (18 in. lbs.).

LOCK CYLINDER HOUSING

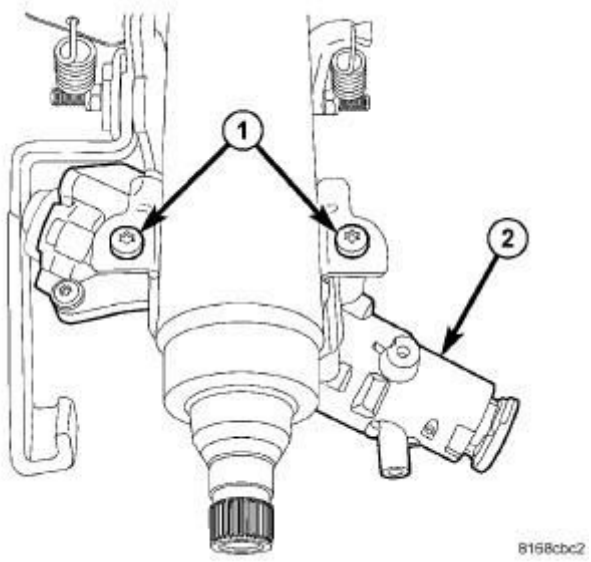

Fig. 36: Lock Cylinder Housing Mounting
Courtesy of CHRYSLER GROUP, LLC

1. Position the lock cylinder housing in the RUN position.
2. Align the lock cylinder housing (2) with the steering column.
3. Using Torx® Plus Bit 1004, or equivalent Tamper-Proof Torx® Plus (five point) 30 bit, install the two screws (1) fastening the lock cylinder housing (2) to the column. Tighten the screws to 16 N.m (142 in. lbs.).

KEY CYLINDER

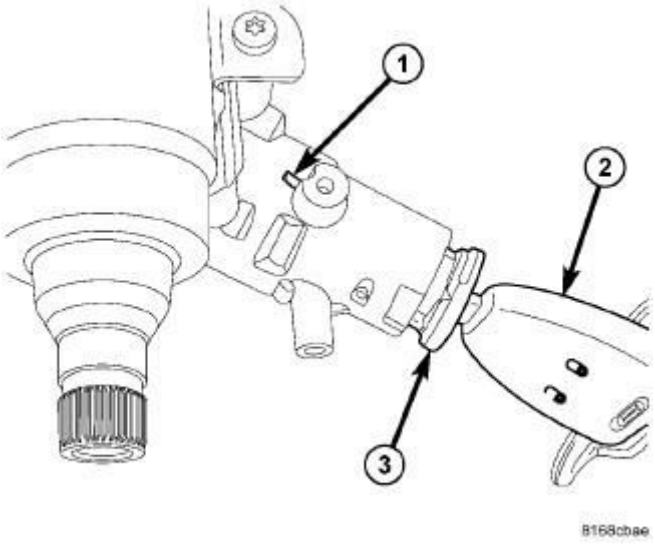

Fig. 37: Access Hole For Lock Cylinder Removal
Courtesy of CHRYSLER GROUP, LLC

1. Place the actuator in the lock cylinder housing to the RUN position (if not already there).
2. Insert the key into the key cylinder and turn the key cylinder to the RUN position.
3. Align the retaining tab on the key cylinder with the slot in the top of the lock cylinder housing.
4. Slide the key cylinder into the lock cylinder housing until the key cylinder retaining tab locks the cylinder into place.
5. Rotate the key back and forth, then remove and reinstall it, making sure the key cylinder and lock cylinder housing operate properly.

SKREEM/WCM (IF EQUIPPED)

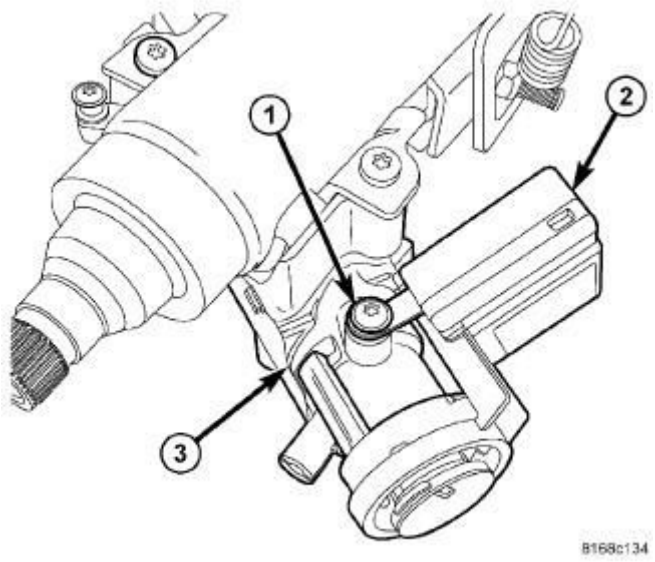

Fig. 38: SKREEM (WCM) Mounting Screw
Courtesy of CHRYSLER GROUP, LLC

1. Slide the ring of the SKREEM/WCM (2) over the lock cylinder housing (3) and engage the retainer fingers in the recesses formed on the lock cylinder housing.
2. Install the screw (1) fastening the SKREEM/WCM (2) to the lock cylinder housing (3). Tighten the screw to 3.5 N.m (31 in. lbs.).

STEERING COLUMN CONTROL MODULE

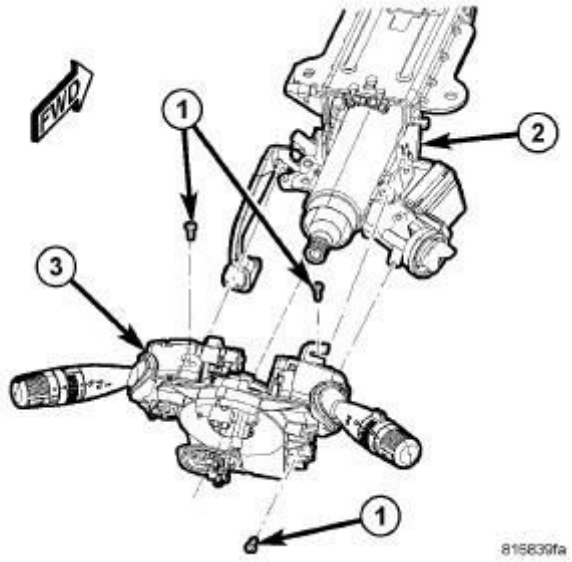

Fig. 39: Multi-Function Switch Mounting
Courtesy of CHRYSLER GROUP, LLC

1. Slide the Steering Column Control Module (SCCM) (with switch stalks) (3) onto the steering column (2).
2. Install the screws (1) attaching the SCCM (with switch stalks) (3) to the steering column (2). Tighten the screws to 3 N.m (27 in. lbs.).

INSTALLATION

INSTALLATION

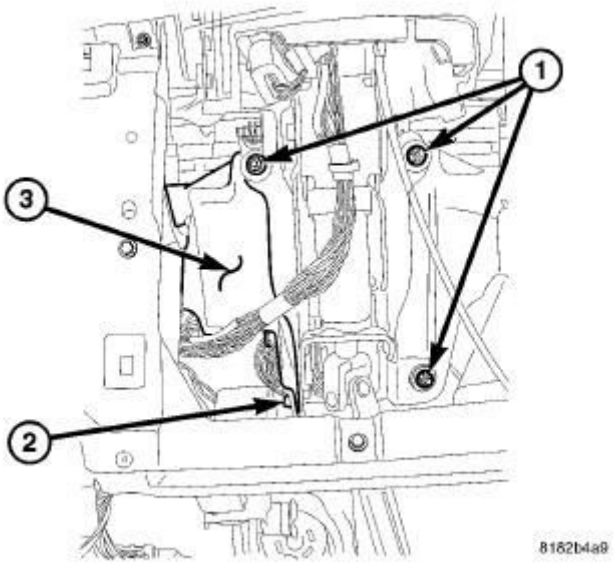

Fig. 40: Column Mounting
Courtesy of CHRYSLER GROUP, LLC

NOTE: LHD model shown in illustrations. RHD model similar.

1. If the steering column is being replaced, assemble components on the steering column as necessary before column installation. Refer to **COLUMN, ASSEMBLY**.

NOTE: When installing a tilt column, do not release the tilt lever from the locked position until after the column is installed on the instrument panel.

2. Install the steering column through the steering column opening.
3. Raise the column onto the mounting studs and install the three mounting nuts (1) on the studs and the 1 bolt (2).

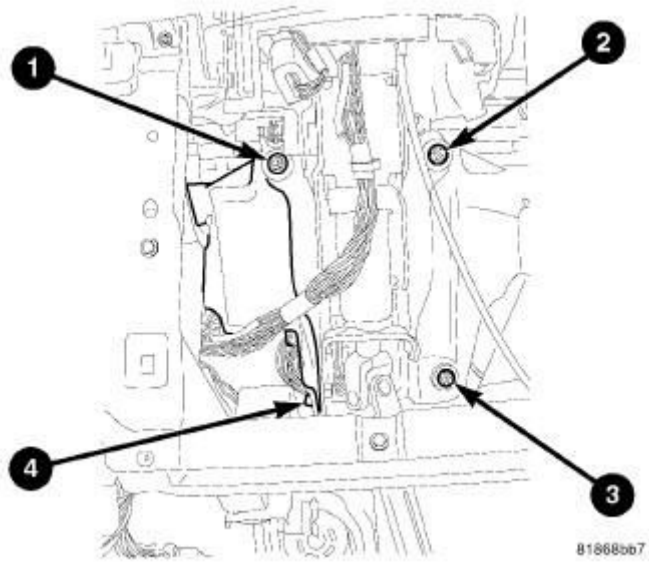

Fig. 41: Column Tightening Sequence
Courtesy of CHRYSLER GROUP, LLC

NOTE: When tightening the fasteners in the following step, make sure there is no gap between the column flange and the instrument panel support at bolt (4).

4. Starting with the left upper nut and proceeding in a clockwise tightening sequence ending at the bolt (left lower), tighten all four mounting fasteners to 28 N.m (21 ft. lbs.).

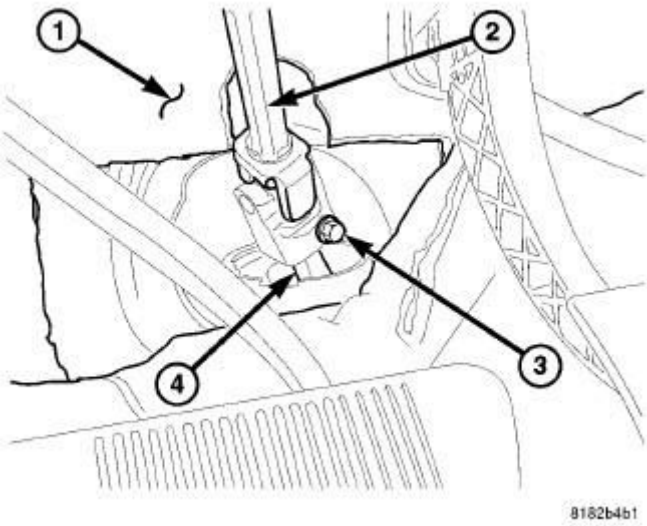

Fig. 42: Lower Coupling Bolt
Courtesy of CHRYSLER GROUP, LLC

5. Verify the front wheels of vehicle are in the STRAIGHT-AHEAD position.
6. Collapse the intermediate shaft (2). Center it over the steering gear pinion shaft (4), lining up the ends, then slide the intermediate shaft onto the steering gear pinion shaft. **Do not install the intermediate shaft coupling bolt (3) at this time. The bolt can be more easily installed in a later step.**

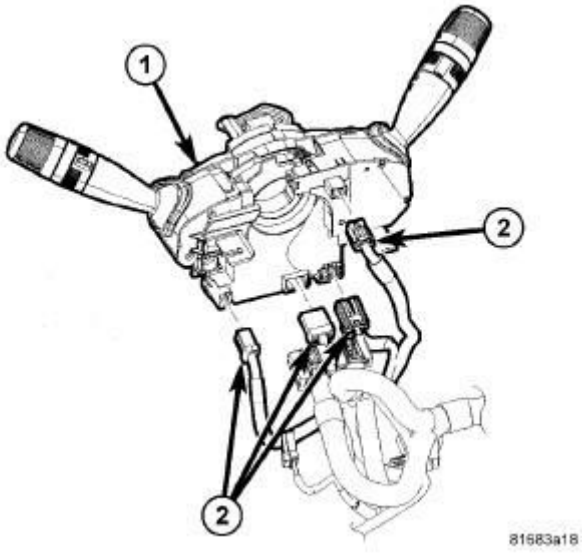

Fig. 43: Measuring For Voltage On The CMP Sensor Ground Circuit
Courtesy of CHRYSLER GROUP, LLC

7. Connect the wiring harness connectors (2) to the Steering Column Control Module (SCCM) (1).
8. Connect any other the wiring harness connectors.

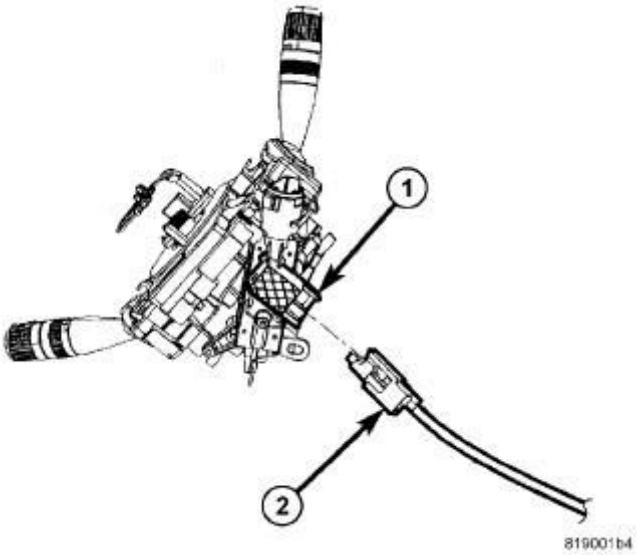

Fig. 44: Shift Interlock Cable AT Column
Courtesy of CHRYSLER GROUP, LLC

9. If equipped with an automatic transaxle, connect the ignition shift interlock cable to the steering column. To do so, insert the ignition key into the key cylinder and turn it to the ON position. Push the interlock cable connector (2) into the lock cylinder housing (1) until it clicks into place. Make sure the ignition-shift interlock feature operates properly.

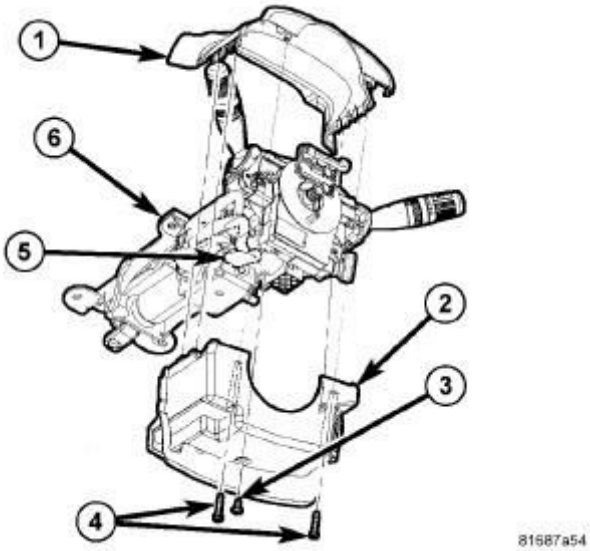

Fig. 45: Steering Column Shrouds
Courtesy of CHRYSLER GROUP, LLC

10. Push the tilt lever (5) downward.
11. Install the lower shroud (2) over the tilt lever and onto the column.
12. Position the column tilt (5) at the full-upward position.
13. Push the tilt lever (5) upward, locking it in place.
14. Install the screw (3) attaching the lower shroud (2) to the steering column (6).
15. Position the column tilt at the full-downward position and lock it in place.
16. Install the upper shroud over the lower shroud, clipping the shrouds to one another.
17. Install the two screws (4) attaching the upper shroud (1) to the lower shroud (2).

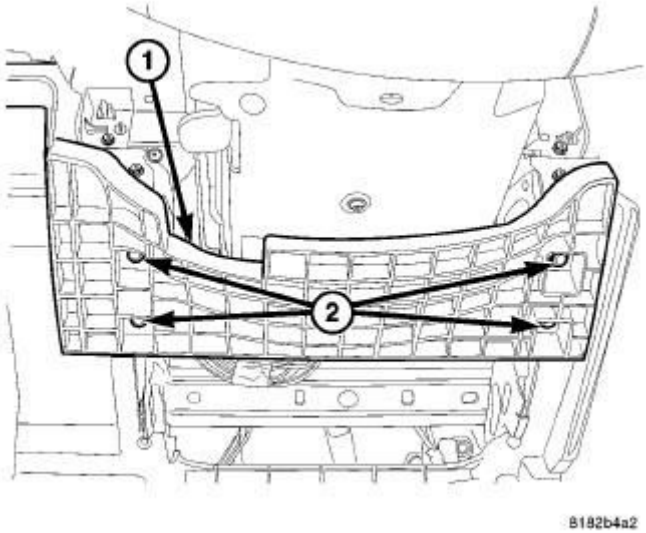

Fig. 46: Reinforcement
Courtesy of CHRYSLER GROUP, LLC

18. Position the column tilt at the full-upward position.
19. Install the steering column reinforcement panel (1) and four screws (2).

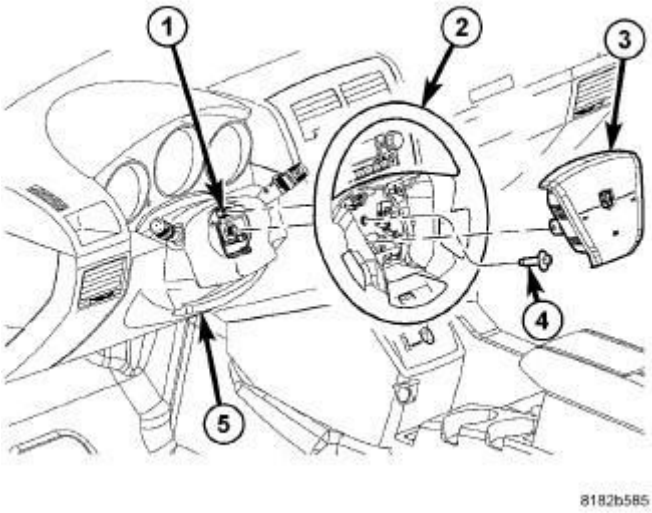

Fig. 47: Air Bag Removal/Installation
Courtesy of CHRYSLER GROUP, LLC

CAUTION: When installing the steering wheel, the clockspring must be centered in its travel to avoid overextending the clockspring inner parts, causing the clockspring to become

inoperative. If removed and handled properly using the correct procedures, it should be in the "centered" position. If there is any question as to whether the clockspring is in the "centered" position of travel, perform the clockspring centering procedure before proceeding.

NOTE: Do not reuse the old steering wheel bolt, a new bolt must be used every time.

20. Install the steering column opening cover (5). Refer to **COVER, STEERING COLUMN OPENING, INSTALLATION** .
21. Install the steering wheel (2) and a **NEW** retaining bolt (4). Tighten the steering wheel retaining bolt to 50 N.m (37 ft. lbs.). Refer to **WHEEL, STEERING, INSTALLATION**.

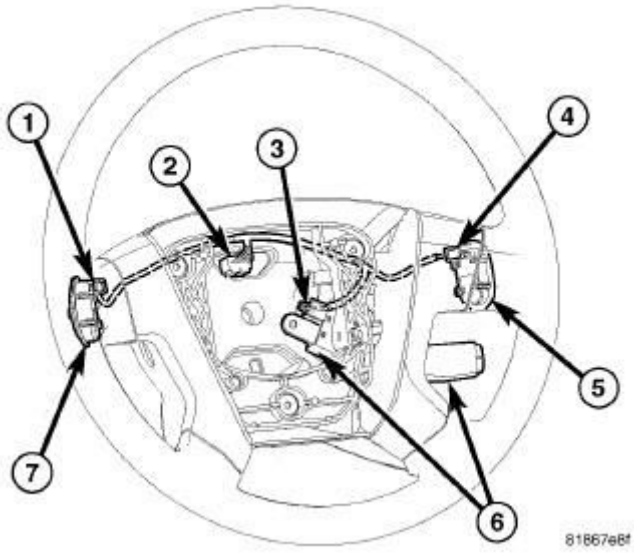

Fig. 48: Steering Wheel Wiring
Courtesy of CHRYSLER GROUP, LLC

22. Connect the wiring connector (2) at the clockspring.

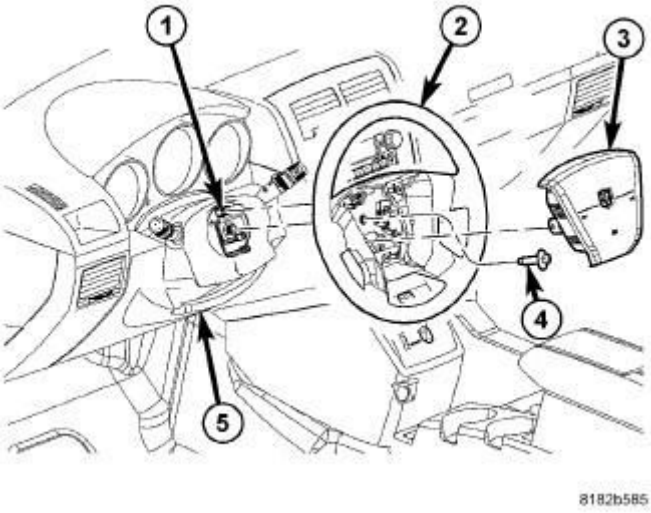

Fig. 49: Air Bag Removal/Installation
Courtesy of CHRYSLER GROUP, LLC

23. Install the driver airbag (3). Refer to **AIR BAG, DRIVER, INSTALLATION** .

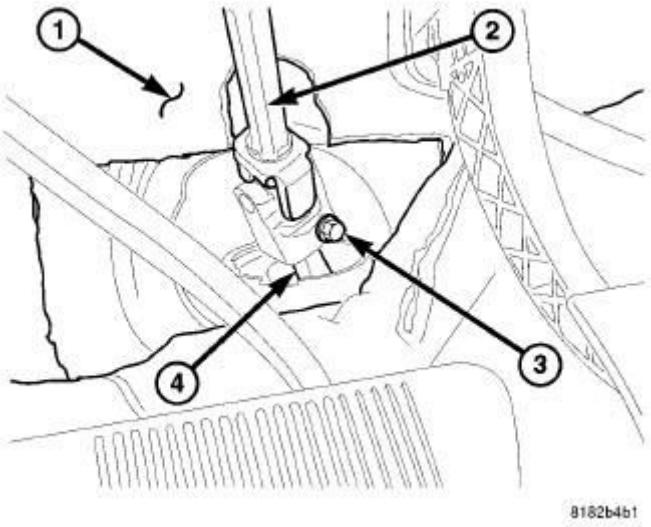

Fig. 50: Lower Coupling Bolt
Courtesy of CHRYSLER GROUP, LLC

24. From center, rotate the steering wheel to the right approximately 90° or until the shaft coupling pinch bolt (3) can be easily installed.
25. Install the intermediate shaft coupling bolt (3). Tighten the bolt to 42 N.m (31 ft. lbs.).

26. Reposition the floor carpet (1) in place.
27. Straighten the steering wheel to STRAIGHT-AHEAD position.

WARNING: Do not connect the battery ground cable without following the proper procedure as indicated in the following step. Personal injury or death may result if the Airbag System Test is not performed first.

28. Reconnect the battery ground terminal following the Airbag System Test found in Restraints. Refer to **DIAGNOSIS AND TESTING** .
29. Test the operation of the all column mounted components. If applicable, reset the radio and the clock as necessary.
30. Road test the vehicle to ensure proper operation of the steering system.

LOCK HOUSING, STEERING COLUMN

REMOVAL

REMOVAL

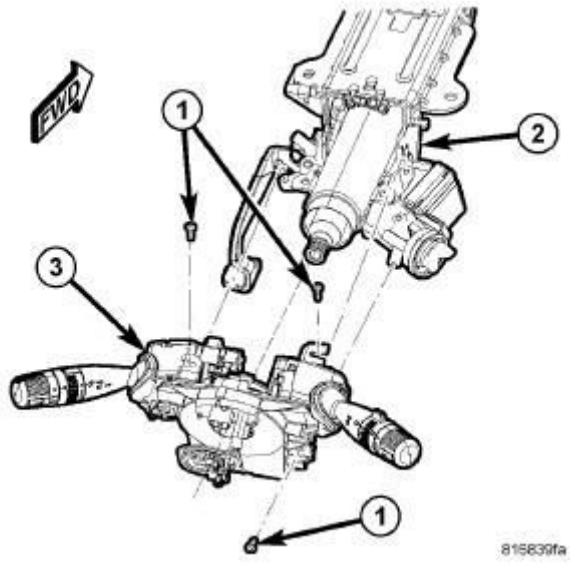

Fig. 51: Multi-Function Switch Mounting
Courtesy of CHRYSLER GROUP, LLC

1. Access and remove the Steering Column Control Module (SCCM) (3) from the steering column (2). Refer to **MODULE, STEERING COLUMN CONTROL, REMOVAL**.

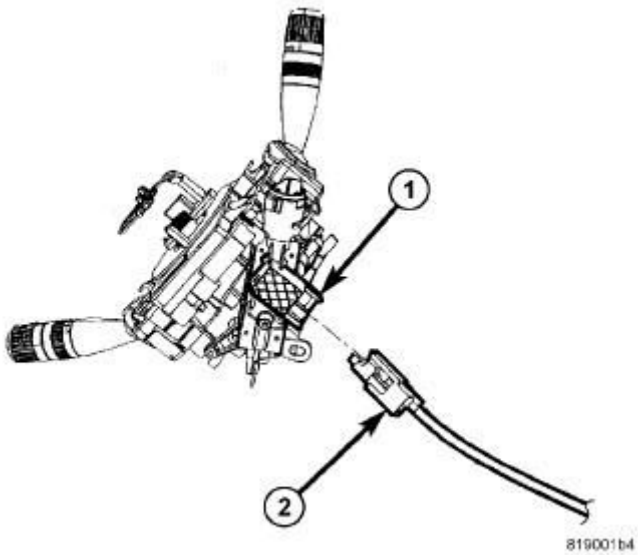

Fig. 52: Shift Interlock Cable AT Column
Courtesy of CHRYSLER GROUP, LLC

2. If equipped with an automatic transaxle, disconnect the ignition shift interlock cable at the steering column. To do so, insert the ignition key into the key cylinder and turn it to the ON position. Depress the tab on top of the interlock cable connector (2) and pull the cable out of the lock cylinder housing (1).

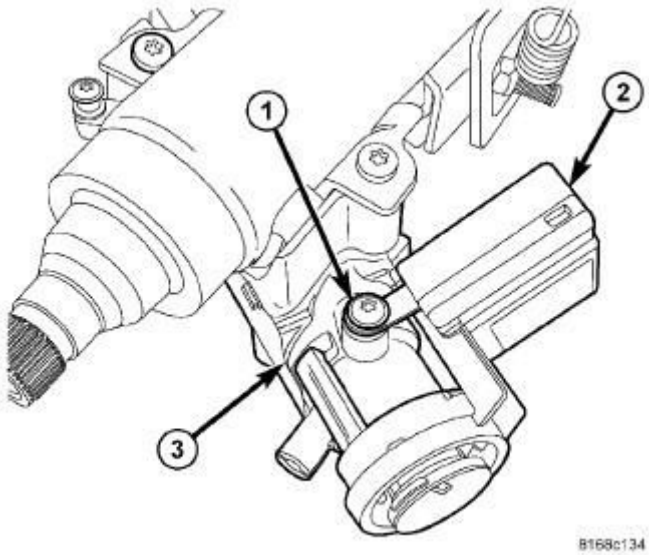

Fig. 53: SKREEM (WCM) Mounting Screw
Courtesy of CHRYSLER GROUP, LLC

3. Remove the screw (1) fastening the SKREEM/WCM (2) to the lock cylinder

housing (3).

4. Unhook the SKREEM/WCM (2) retainer fingers from the lock cylinder housing (3) and remove it.

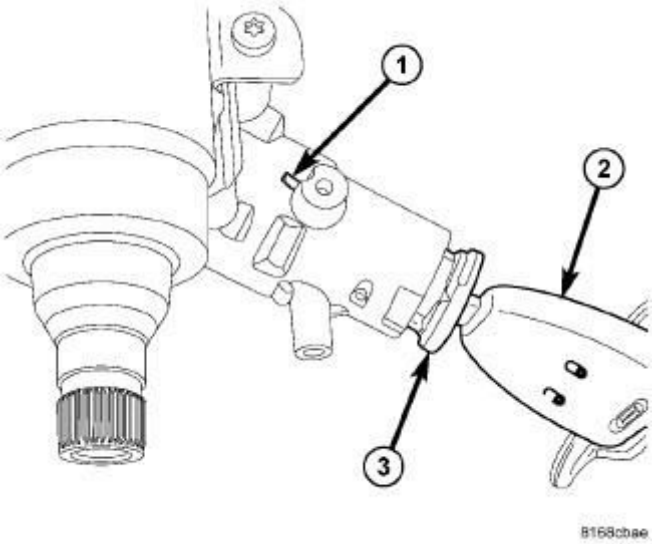

Fig. 54: Access Hole For Lock Cylinder Removal
Courtesy of CHRYSLER GROUP, LLC

5. Insert the key (2) and turn the key cylinder (3) to the RUN position.
6. Insert an appropriate tool into the slot (1) formed into the lock cylinder housing depressing the key cylinder retaining tab.
7. Pull the key cylinder and key straight out of the lock cylinder housing as one unit.

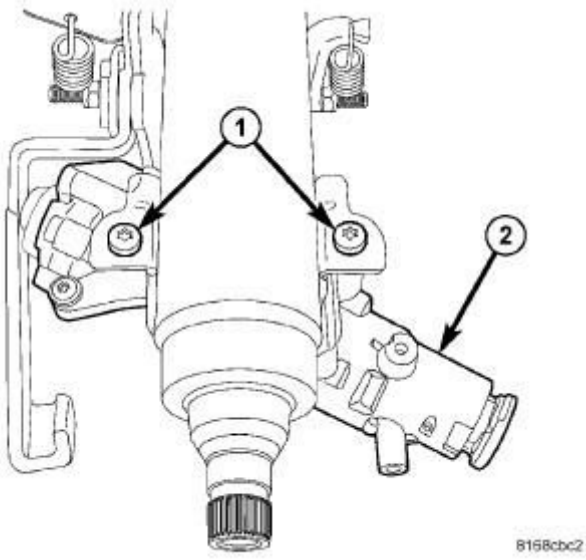

Fig. 55: Lock Cylinder Housing Mounting
Courtesy of CHRYSLER GROUP, LLC

8. Using Torx® Plus Bit (special tool #10041, Bit, TORX), or equivalent Tamper-Proof Torx® Plus (five point) 30 bit, remove the two screws (1) fastening the lock cylinder housing (2) to the column.
9. Remove the lock cylinder housing from the steering column.

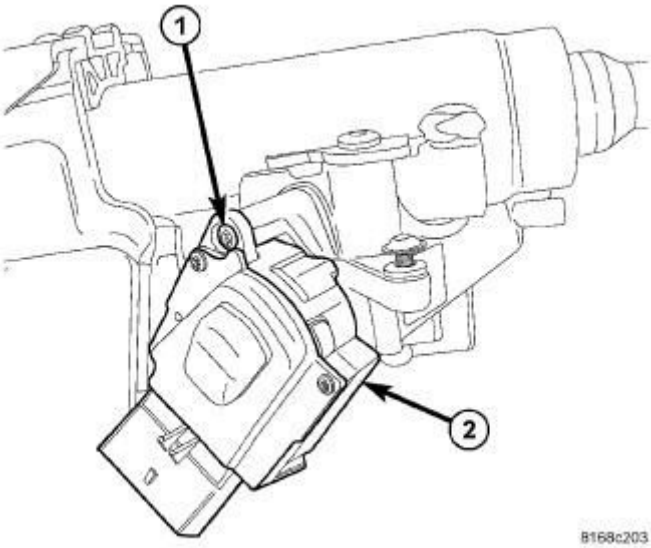

Fig. 56: Ignition Switch Mounting Screw
Courtesy of CHRYSLER GROUP, LLC

10. If ignition switch transfer is required, remove the ignition switch (2) mounting screw (1).

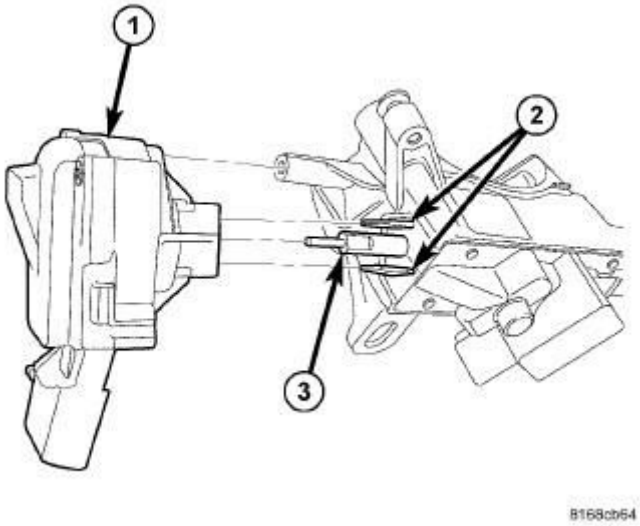

Fig. 57: Ignition Switch Removal/Installation
Courtesy of CHRYSLER GROUP, LLC

11. If ignition switch transfer is required, pull the switch (1) straight out and off the retaining tabs (2) located on the lock cylinder housing.

INSTALLATION

INSTALLATION

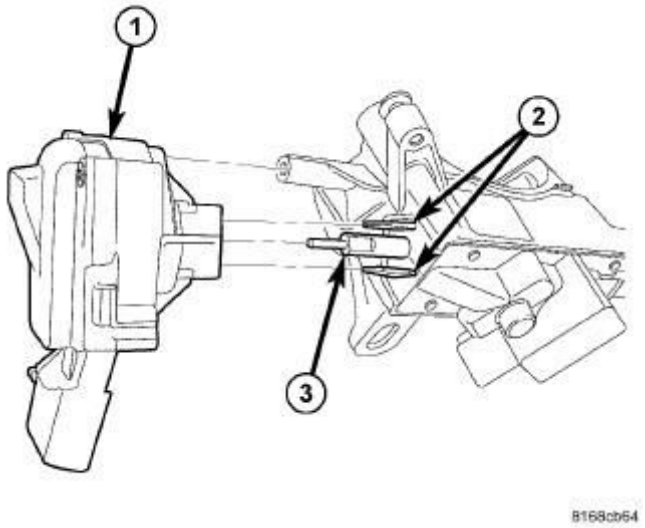

Fig. 58: Ignition Switch Removal/Installation
Courtesy of CHRYSLER GROUP, LLC

NOTE: Install the ignition switch prior to lock housing installation on the column to avoid complications due to interference with the tilt lever.

1. Ensure the ignition switch is in the RUN position and the actuator shaft in the lock housing is in the RUN position.

CAUTION: Use care when installing the ignition switch on the lock cylinder housing to avoid damaging the key-in plunger (3).

2. Align the ignition switch with the key-in plunger (3), actuator shaft and retaining tabs (2) located on the lock cylinder housing. Carefully install the switch, snapping it into place over the retaining tabs.

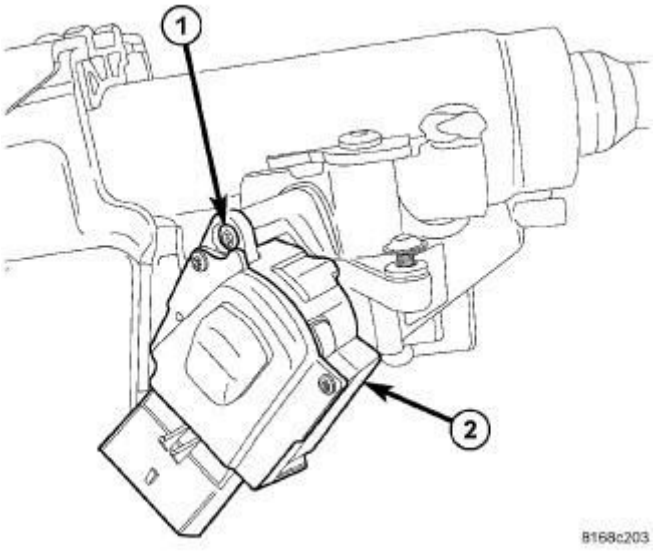

Fig. 59: Ignition Switch Mounting Screw
Courtesy of CHRYSLER GROUP, LLC

3. Install the ignition switch (2) mounting screw (1). Tighten the screw to 2 N.m (18 in. lbs.).

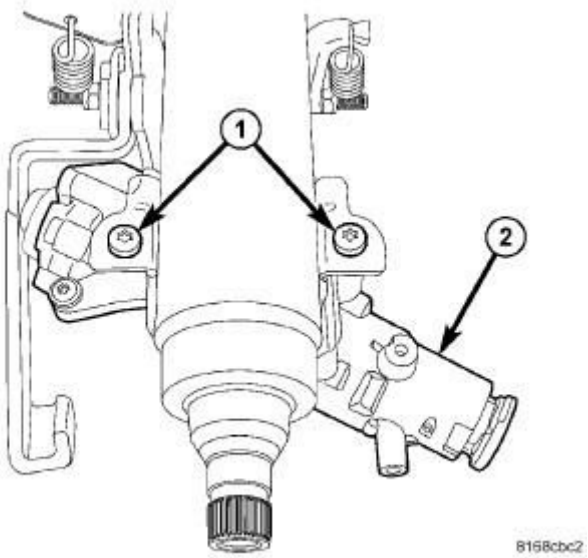

Fig. 60: Lock Cylinder Housing Mounting
Courtesy of CHRYSLER GROUP, LLC

4. Position the lock cylinder housing in the RUN position.
5. Align the lock cylinder housing (2) with the steering column.
6. Using Torx® Plus Bit (special tool #10041, Bit, TORX), or equivalent Tamper-Proof Torx® Plus (five point) 30 bit, install the two screws (1)

fastening the lock cylinder housing (2) to the column. Tighten the screws to 16 N.m (142 in. lbs.).

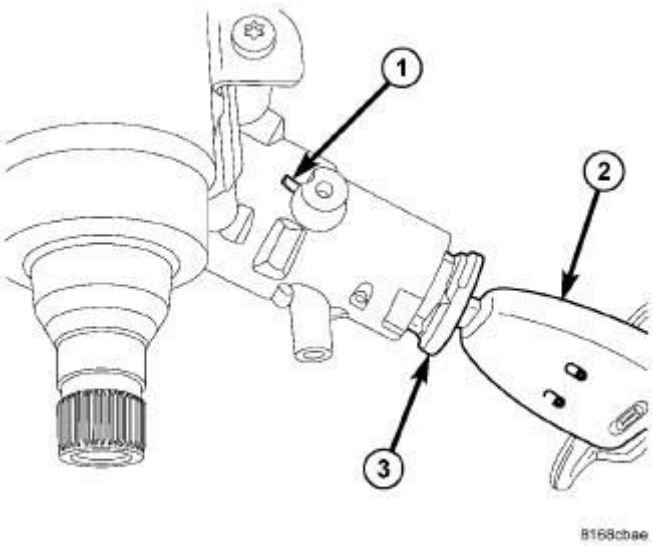

Fig. 61: Access Hole For Lock Cylinder Removal
Courtesy of CHRYSLER GROUP, LLC

7. Place the actuator in the lock cylinder housing to the RUN position (if not already there).
8. Insert the key into the key cylinder and turn the key cylinder to the RUN position.
9. Align the retaining tab on the key cylinder with the slot in the top of the lock cylinder housing.
10. Slide the key cylinder into the lock cylinder housing until the key cylinder retaining tab locks the cylinder into place.
11. Rotate the key back and forth (OFF to START), then remove and reinstall it, making sure the key cylinder and lock cylinder housing operate properly.

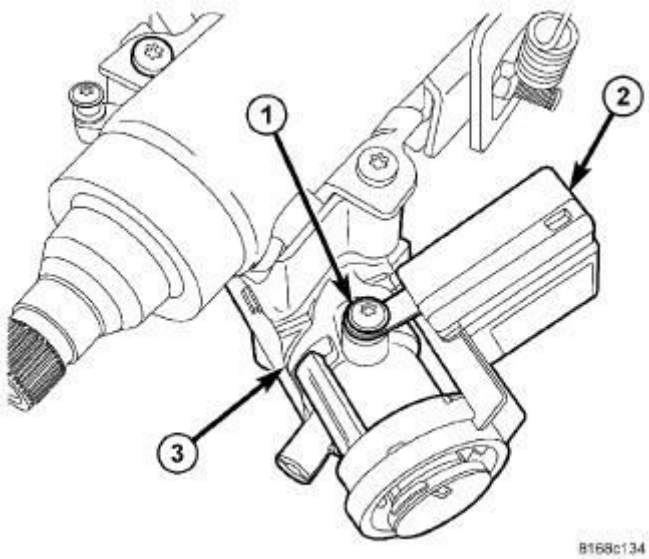

Fig. 62: SKREEM (WCM) Mounting Screw
Courtesy of CHRYSLER GROUP, LLC

12. Slide the ring of the SKREEM/WCM (2) over the lock cylinder housing (3) and engage the retainer fingers in the recesses formed on the lock cylinder housing.
13. Install the screw (1) fastening the SKREEM/WCM (2) to the lock cylinder housing (3). Tighten the screw to 3.5 N.m (31 in. lbs.).

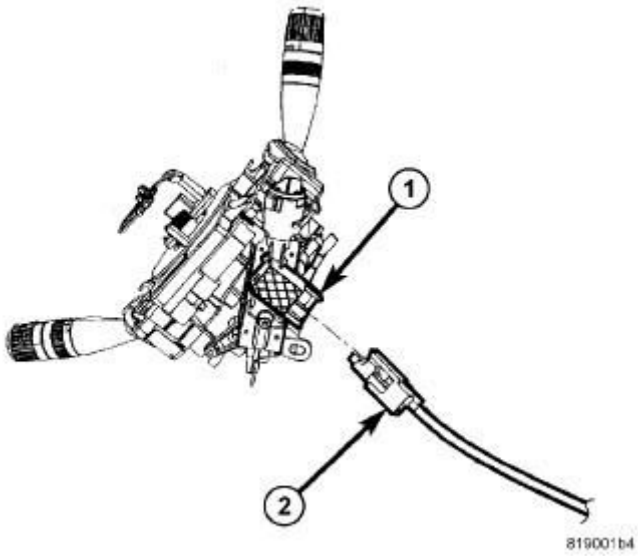

Fig. 63: Shift Interlock Cable AT Column
Courtesy of CHRYSLER GROUP, LLC

14. If equipped with an automatic transaxle, connect the ignition shift interlock

cable to the steering column. To do so, insert the ignition key into the key cylinder and turn it to the ON position. Push the interlock cable connector (2) into the lock cylinder housing (1) until it clicks into place.

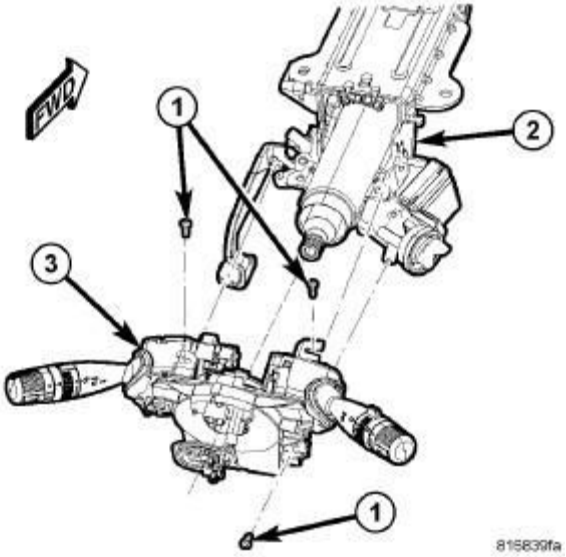

Fig. 64: Multi-Function Switch Mounting
Courtesy of CHRYSLER GROUP, LLC

15. Install the Steering Column Control Module (SCCM) (3) and all components removed to access it. Refer to **MODULE, STEERING COLUMN CONTROL, INSTALLATION**.
16. Check operation of all steering column mounted components. Make sure the ignition-shift interlock feature operates properly.

MODULE, STEERING COLUMN CONTROL

DESCRIPTION

DESCRIPTION

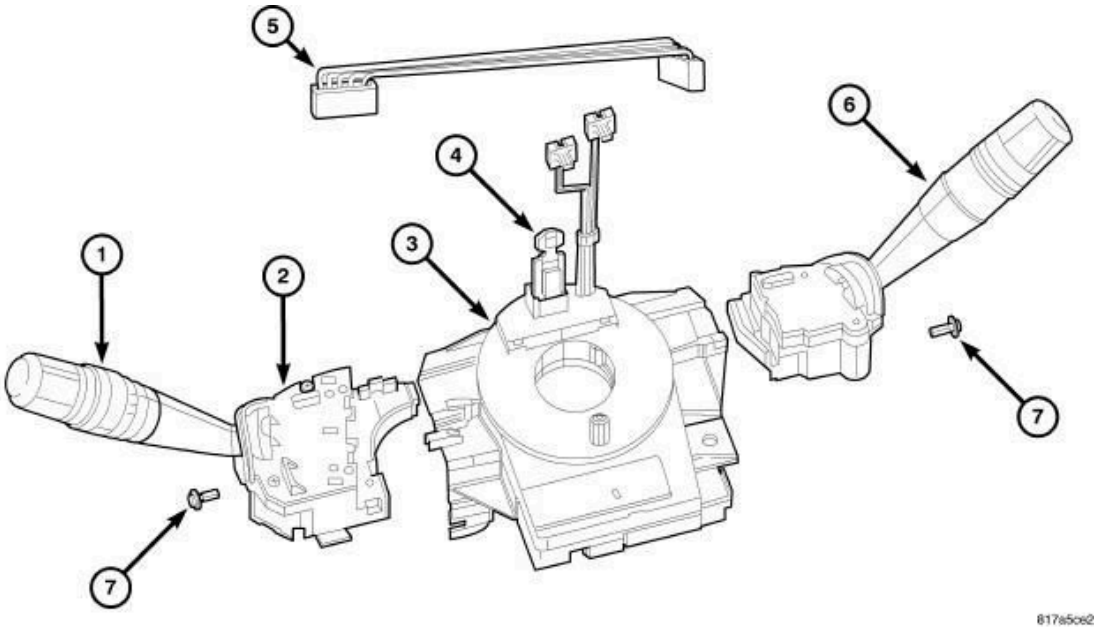

Fig. 65: Steering Control Module
Courtesy of CHRYSLER GROUP, LLC

This vehicle is equipped with a Steering Control Module (SCM) that is internal to the left multi-function switch housing (2). The left (lighting) multi-function switch is located on the left side of the steering column, just below the steering wheel. This switch is the primary control for the interior and exterior lighting systems. The only visible components of the switch are the control stalk (1), control knob and control sleeve that extend through the steering column shrouds on the left side of the column. The remainder of the switch including its mounting provisions and electrical connections are concealed beneath the shrouds.

The switch housing and controls are constructed of molded black plastic. A single screw (7) through a mounting tab integral to the back of the switch housing, and a slide tab integral to the bottom of the switch housing secure the switch to the mounting bracket integral to the clockspring (3). A connector receptacle containing seven terminal pins is integral to the inboard end of the switch housing and connects the SCM through a jumper wire harness (5) directly to the right (wiper) multi-function switch (6). A second connector receptacle containing four terminal pins is integral to the back of the switch housing and connects the SCM to the vehicle electrical system through a dedicated takeout and connector of the instrument panel wire harness.

The SCM cannot be adjusted or repaired. If ineffective or damaged the entire left multi-function switch must be replaced. Refer to **SWITCH,**

MULTIFUNCTION, LEFT, REMOVAL . The clockspring (with the multi-function switch mounting bracket), the left multi-function switch (with the SCM), the right multi-function switch and the jumper wire harness are each available for separate service replacement.

OPERATION

OPERATION

The microprocessor-based Steering Control Module (SCM) utilizes integrated circuitry to monitor hard wired analog and multiplexed inputs from both the right and left multi-function switches. In response to those inputs, the internal circuitry of the SCM allow it to transmit electronic message outputs to the ElectroMechanical Instrument Cluster (EMIC) (also known as the Cab Compartment Node/CCN) over the Local Interface Network (LIN) data bus.

In response to those inputs the internal circuitry and programming of the EMIC, which is also the LIN master module in the vehicle, allow it to control and integrate many electronic functions and features of the vehicle through both hard wired outputs and the transmission of electronic message outputs to other electronic modules in the vehicle over the Controller Area Network (CAN) data bus. Refer to **COMMUNICATION, DESCRIPTION** .

The SCM is connected to both a fused B(+) circuit and a fused ignition switch output (run-start) circuit. It receives a path to ground at all times. These connections allow it to remain functional regardless of the ignition switch position. Any input to the SCM that controls a vehicle system function that does not require that the ignition switch be in the ON position such as turning on the lights, prompts the SCM to wake up and transmit on the LIN data bus.

The hard wired circuits between components related to the SCM may be diagnosed using conventional diagnostic tools and procedures. Refer to the appropriate wiring information. The wiring information includes wiring diagrams, proper wire and connector repair procedures, details of wire harness routing and retention, connector pin-out information and location views for the various wire harness connectors, splices and grounds.

However, conventional diagnostic methods will not prove conclusive in the diagnosis of the SCM or the electronic controls or communication between modules and other devices that provide some features of the SCM. The most reliable, efficient, and accurate means to diagnose the SCM or the electronic

controls and communication related to SCM operation requires the use of a diagnostic scan tool. Refer to the appropriate diagnostic information.

REMOVAL

REMOVAL

SCCM

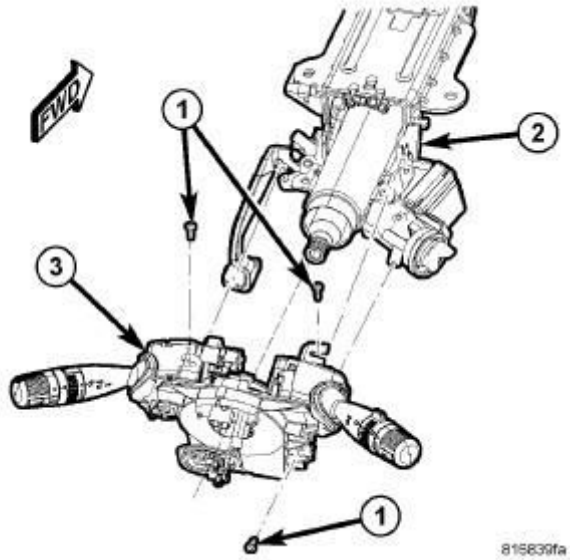

Fig. 66: Multi-Function Switch Mounting
Courtesy of CHRYSLER GROUP, LLC

1. Place the front road wheels in the STRAIGHT-AHEAD position.
2. Open hood.
3. Disconnect and isolate the battery negative cable.

> **WARNING: Wait two minutes for the airbag system reserve capacitor to discharge before beginning any airbag system or component service. Failure to do so may result in accidental airbag deployment, personal injury or death.**

4. Remove steering wheel. Refer to **WHEEL, STEERING, REMOVAL**.
5. Remove upper and lower steering column shrouds to gain access to the Steering Column Control Module (SCCM). Refer to **SHROUD, STEERING COLUMN, LOWER, REMOVAL** and **SHROUD,**

STEERING COLUMN, UPPER, REMOVAL.

6. Lock the clockspring rotor in the center position as follows: Insert a grenade pin through the hole in the rotor at the 10 o'clock position.
7. Remove the three screws (1) to the Steering Column Control Module (SCCM) (3).

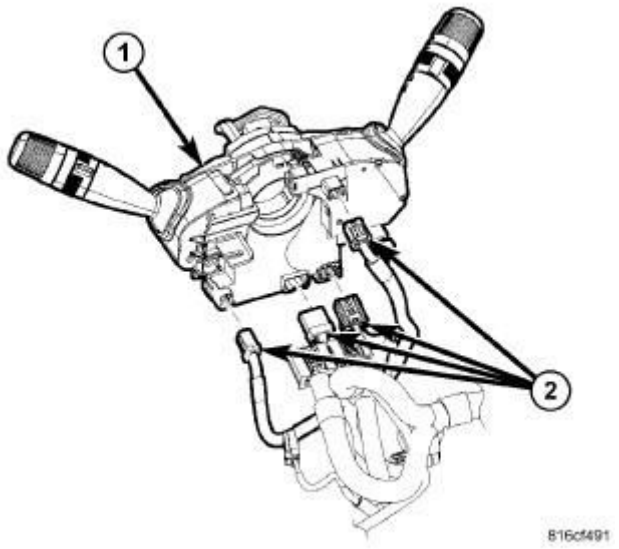

Fig. 67: Locating Sccm Electrical Connectors
Courtesy of CHRYSLER GROUP, LLC

8. Disconnect the electrical connectors (2) between the SCCM (1) and the instrument panel wiring harness at the base of the SCCM and remove from column.

NOTE: If only removing the SCCM from column, there is no need to continue to next step.

DISASSEMBLY

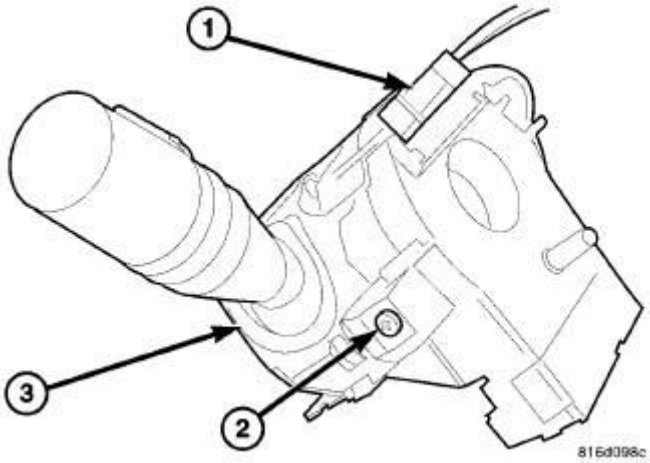

Fig. 68: Identifying Left Stalk Retaining Screw
Courtesy of CHRYSLER GROUP, LLC

1. Remove the left multi-function switch stalk retaining screw (2).
2. Pull the left stalk out of the SCCM.

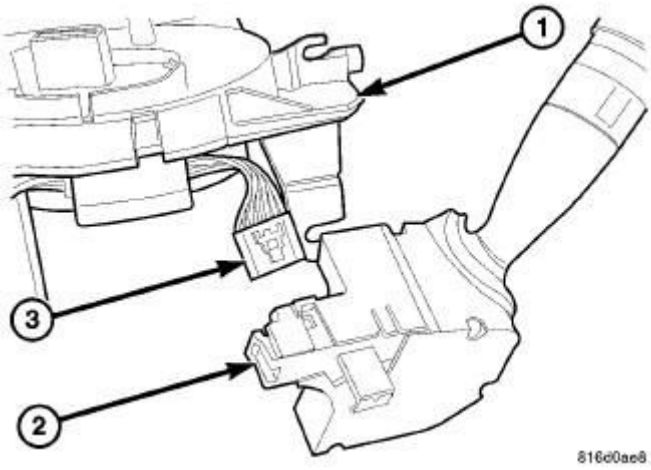

Fig. 69: Left Stalk Elect. Conn.
Courtesy of CHRYSLER GROUP, LLC

3. Disconnect the left stalk electrical connector.
4. Separate the left switch from the SCCM.

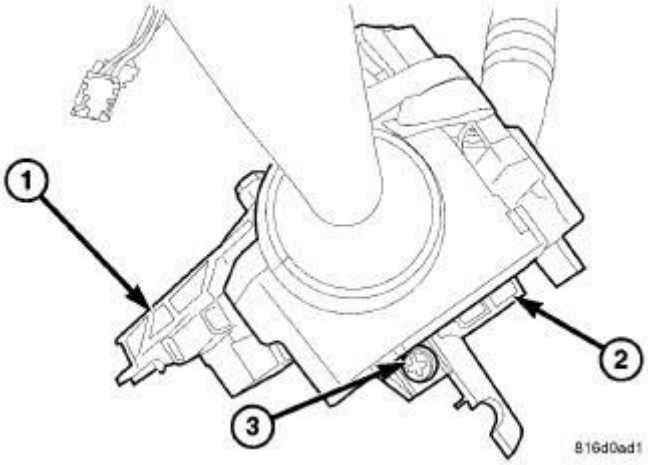

Fig. 70: Identifying Right Multi-Function Switch Retaining Screw
Courtesy of CHRYSLER GROUP, LLC

5. Remove the one right multi-function switch retaining screw.
6. Pull right switch out of SCCM.

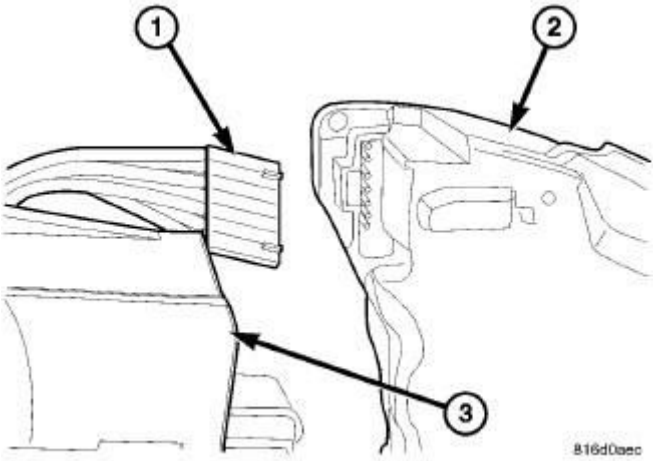

Fig. 71: Identifying Jumper Wire Harness Connector, Right Multi-Function Switch & Clockspring
Courtesy of CHRYSLER GROUP, LLC

7. Disconnect the right switch electrical connector.

INSTALLATION

INSTALLATION

NOTE: If SCCM is already assembled and needs to be installed, bypass ASSEMBLY and proceed with SCCM.

ASSEMBLY

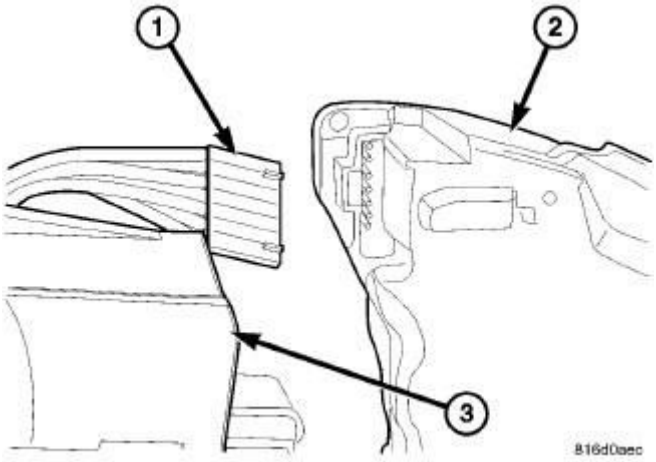

Fig. 72: Identifying Jumper Wire Harness Connector, Right Multi-Function Switch & Clockspring
Courtesy of CHRYSLER GROUP, LLC

1. Connect the right stalk electrical connector.

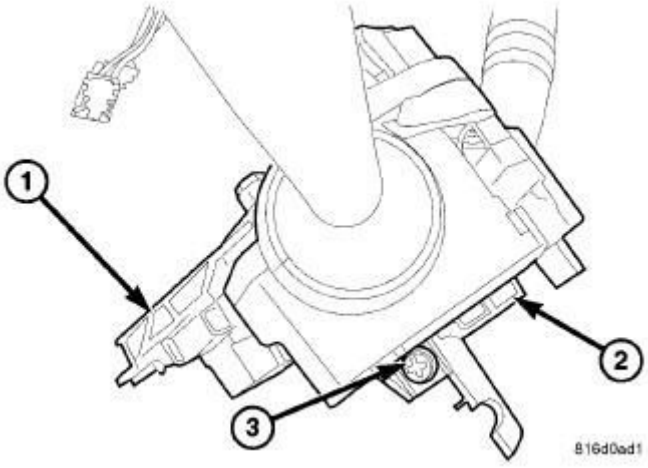

Fig. 73: Identifying Right Multi-Function Switch Retaining Screw
Courtesy of CHRYSLER GROUP, LLC

2. Slide the right stalk into the groove and install the one retaining screw.

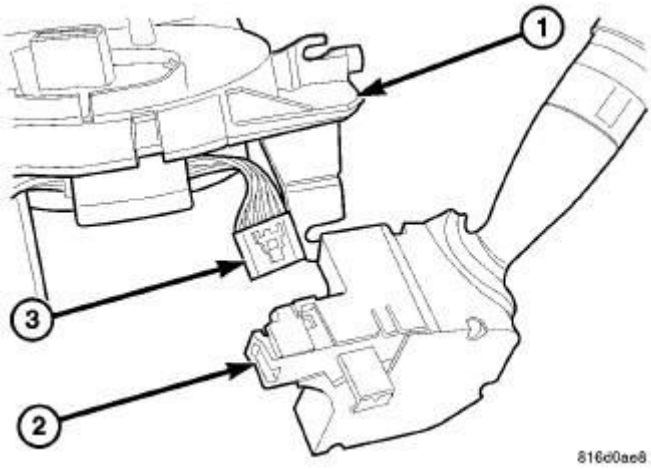

Fig. 74: Left Stalk Elect. Conn.
Courtesy of CHRYSLER GROUP, LLC

3. Connect the left stalk switch electrical connector.

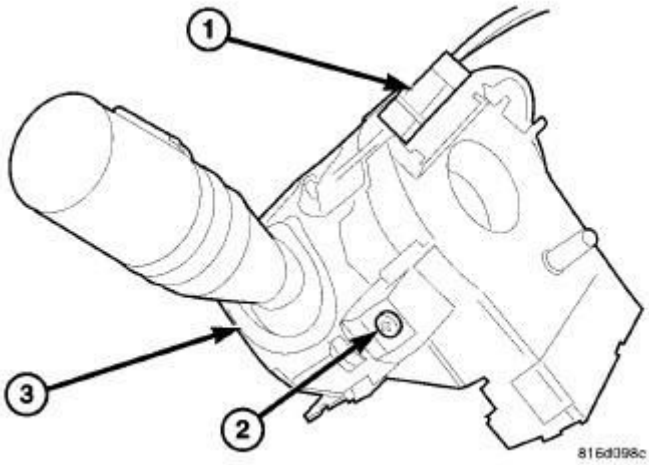

Fig. 75: Identifying Left Stalk Retaining Screw
Courtesy of CHRYSLER GROUP, LLC

4. Install the left stalk switch retaining screw.

SCCM

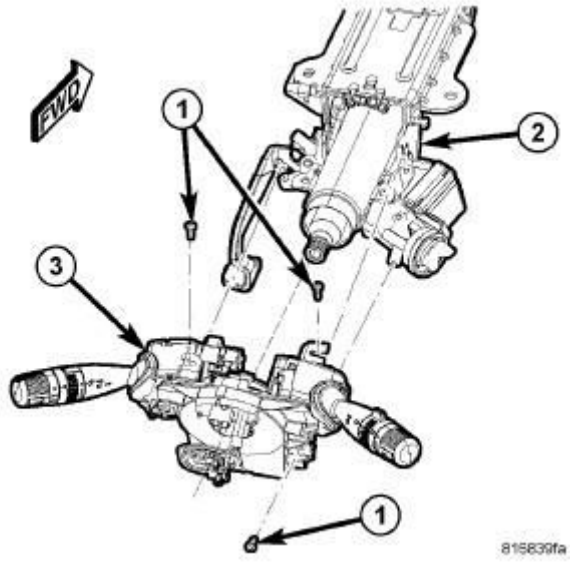

Fig. 76: Multi-Function Switch Mounting
Courtesy of CHRYSLER GROUP, LLC

1. Position the SCCM (3) over the steering column shaft (2).
2. Install the three screws (1).

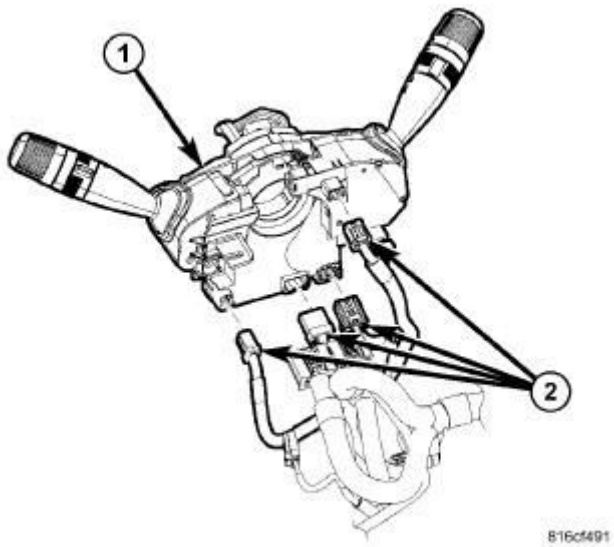

Fig. 77: Locating Sccm Electrical Connectors
Courtesy of CHRYSLER GROUP, LLC

3. Connect the electrical connectors (2) to the instrument panel harness, ensure wiring is properly routed. Then check that the connectors, locking tabs are properly engaged.
4. Install steering column shrouds. Refer to **SHROUD, STEERING**

COLUMN, LOWER, INSTALLATION and **SHROUD, STEERING COLUMN, UPPER, INSTALLATION**. Be sure all wires are inside of shrouds.

5. Install steering wheel ensuring the flats on hub align with the clockspring. Refer to **WHEEL, STEERING, INSTALLATION**. Pull the airbag leads through the larger slot. Ensure leads do not get pinched under the steering wheel.

NOTE: There is a small wire harness in the steering wheel and it contains the horn circuits and speed control circuits.

6. Connect the speed control and horn wire connector into the clockspring.
7. Pull the grenade pin out of the clockspring.
8. Install the driver airbag, refer to **AIR BAG, DRIVER, INSTALLATION** .

WARNING: Do not connect the negative battery cable at this time. Perform the Air Bag System Test prior to connecting the negative battery cable. Failure to follow this warning may result in accidental air bag deployment and possible serious or fatal injury.

SHROUD, STEERING COLUMN, LOWER

REMOVAL

REMOVAL

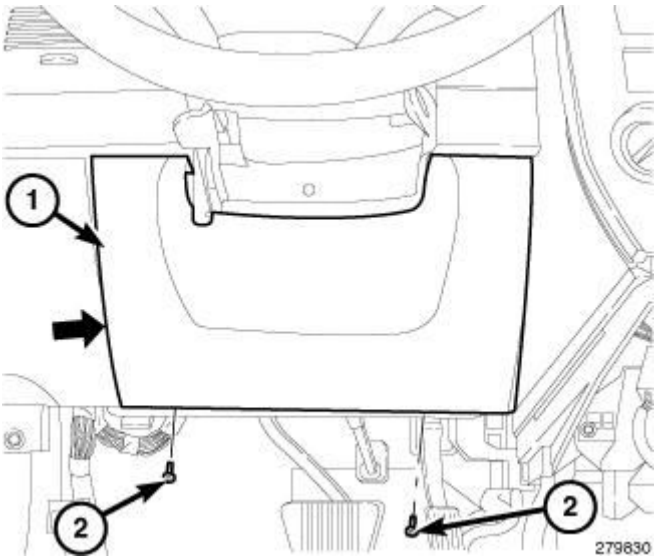

Fig. 78: Steering Column Opening Cover
Courtesy of CHRYSLER GROUP, LLC

1. Remove the screws (2) from the bottom of the steering column opening cover (1).
2. Using (special tool #C-4755, Trim Stick), separate the steering column opening cover (1) and remove.

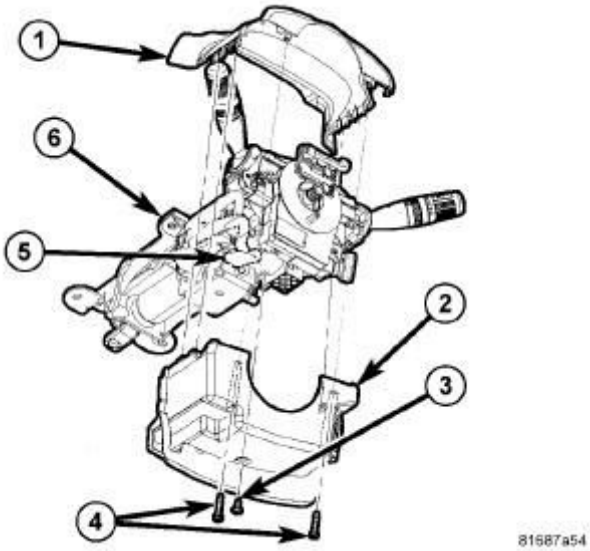

Fig. 79: Steering Column Shrouds
Courtesy of CHRYSLER GROUP, LLC

3. Position the column tilt at the full-downward position.
4. Remove the two screws (4) attaching the upper shroud (1) to the lower shroud (2). After removing the screws, unclip the shrouds from each other

by applying hand pressure along the seams where the shrouds connect on the sides, then remove the upper shroud.

5. Push the tilt lever (5) downward.
6. Remove the screw (3) attaching the lower shroud (2) to the steering column (6). Remove the lower shroud.

INSTALLATION

INSTALLATION

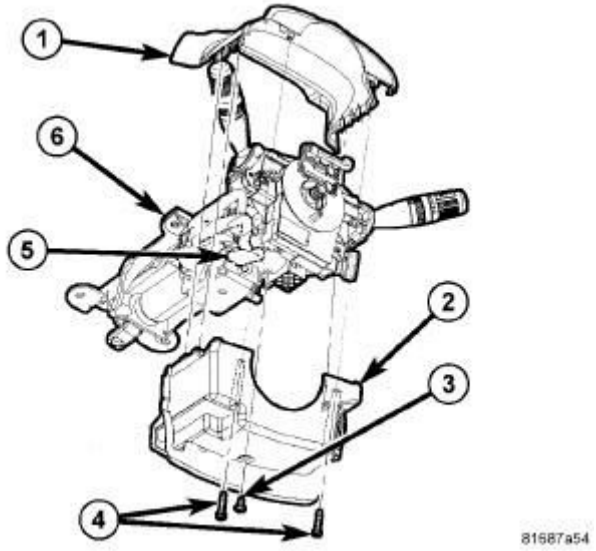

Fig. 80: Steering Column Shrouds
Courtesy of CHRYSLER GROUP, LLC

1. Push the tilt lever (5) downward.
2. Install the lower shroud (2) over the tilt lever and onto the column.
3. Position the column tilt (5) at the full-upward position.
4. Push the tilt lever (5) upward, locking it in place.
5. Install the screw (3) attaching the lower shroud (2) to the steering column (6).
6. Position the column tilt at the full-downward position and lock it in place.
7. Install the upper shroud over the lower shroud, clipping the shrouds to one another.
8. Install the two screws (4) attaching the upper shroud (1) to the lower shroud (2).

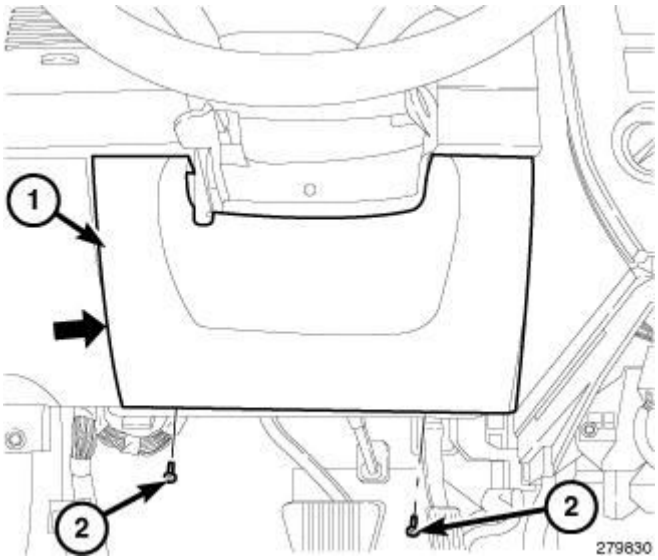

Fig. 81: Steering Column Opening Cover
Courtesy of CHRYSLER GROUP, LLC

9. Place the steering column opening cover (1) in place and seat the clips fully.
10. Install the two screws (2) and tighten until secure.

SHROUD, STEERING COLUMN, UPPER

REMOVAL

REMOVAL

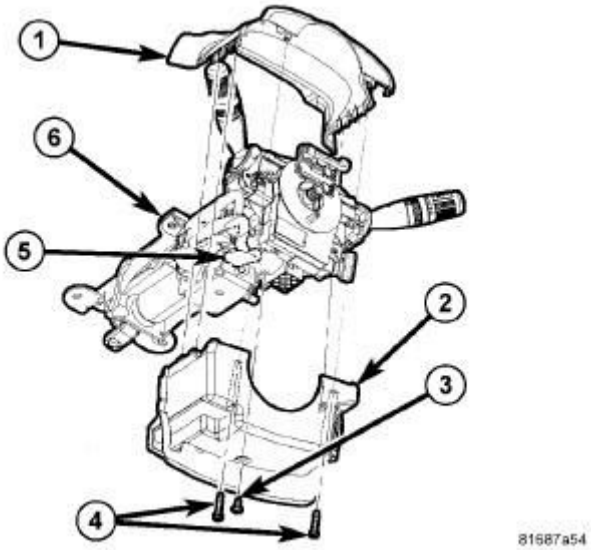

Fig. 82: Steering Column Shrouds
Courtesy of CHRYSLER GROUP, LLC

1. Position the column tilt at the full-downward position.

2. Remove the two screws (4) attaching the upper shroud (1) to the lower shroud (2). After removing the screws, unclip the shrouds from each other by applying hand pressure along the seams where the shrouds connect on the sides, then remove the upper shroud.

INSTALLATION

INSTALLATION

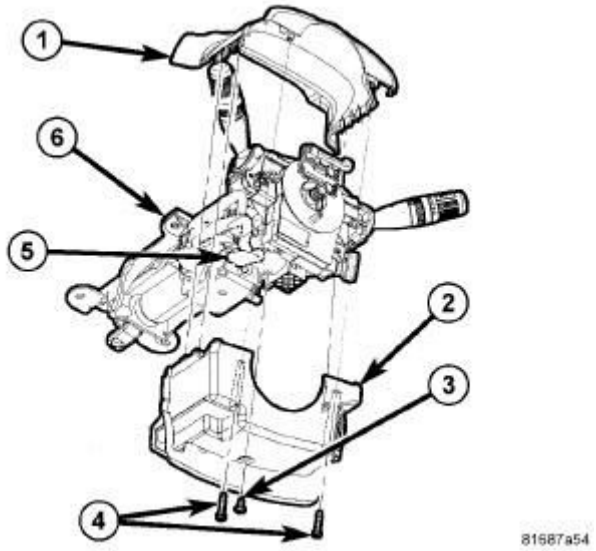

Fig. 83: Steering Column Shrouds
Courtesy of CHRYSLER GROUP, LLC

1. Position the column tilt at the full-downward position and lock it in place.
2. Install the upper shroud over the lower shroud, clipping the shrouds to one another.
3. Install the two screws (4) attaching the upper shroud (1) to the lower shroud (2).

WHEEL, STEERING

REMOVAL

REMOVAL

WARNING:

- **Do not place a non-deployed airbag face down on a hard surface. The airbag will propel into the air if accidentally deployed. Failure to follow this instruction may result in possible**

serious or fatal injury.

- **Disconnect and isolate the battery negative (ground) cable before beginning steering wheel removal or installation. This will disable the airbag system. Failure to follow this instruction may result in accidental airbag deployment and possible serious or fatal injury.**
- **Allow the airbag system capacitor to discharge for two minutes before removing the steering wheel or any airbag system component. Failure to follow this instruction may result in accidental airbag deployment and possible serious or fatal injury.**

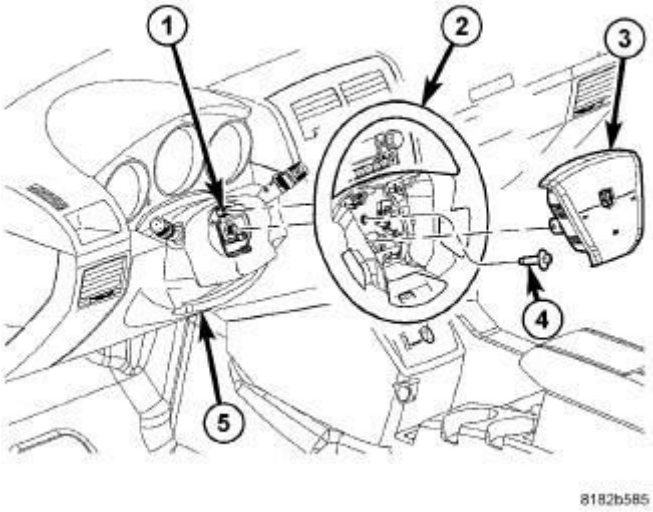

Fig. 84: Air Bag Removal/Installation
Courtesy of CHRYSLER GROUP, LLC

1. Adjust the steering wheel so that the tires are in the STRAIGHT-AHEAD position.
2. Disconnect and isolate the negative battery cable.
3. Remove the driver airbag (3). Refer to **AIR BAG, DRIVER, REMOVAL** .

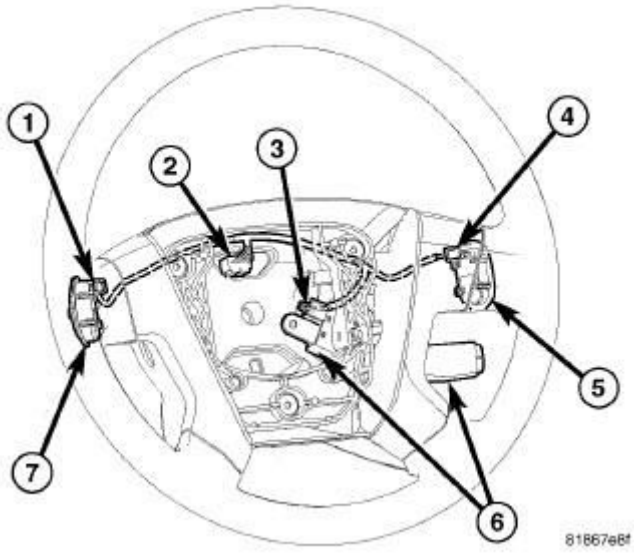

Fig. 85: Steering Wheel Wiring
Courtesy of CHRYSLER GROUP, LLC

4. Disconnect the wiring connector (2) at the clockspring.

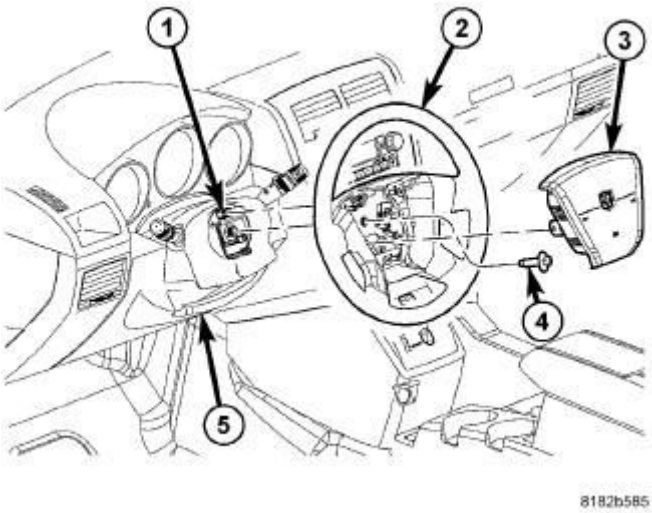

Fig. 86: Air Bag Removal/Installation
Courtesy of CHRYSLER GROUP, LLC

5. Holding the steering wheel (4) firmly in place, remove the steering wheel retaining bolt (4) from the steering column shaft.

CAUTION: Do not bump or hammer on the steering wheel or steering column shaft when removing the

steering wheel.

NOTE: The jaws should point outward from the center of the steering wheel for removal.

6. Install Gear Puller (special tool #L-4407A, Puller, Gear) (1) and OTC® 7929A Steering Wheel Puller Leg Set or equivalent and loosen the steering wheel.

CAUTION: Do not attempt to rotate the clockspring rotor once the steering wheel is removed. The clockspring must remain centered in its travel to avoid overextending the clockspring inner parts, causing the clockspring to become inoperative. If removed and handled properly using the correct procedures, it should remain in the "centered" position. If there is any question as to whether the clockspring is in the "centered" position of travel, perform the clockspring centering procedure before installing the steering wheel.

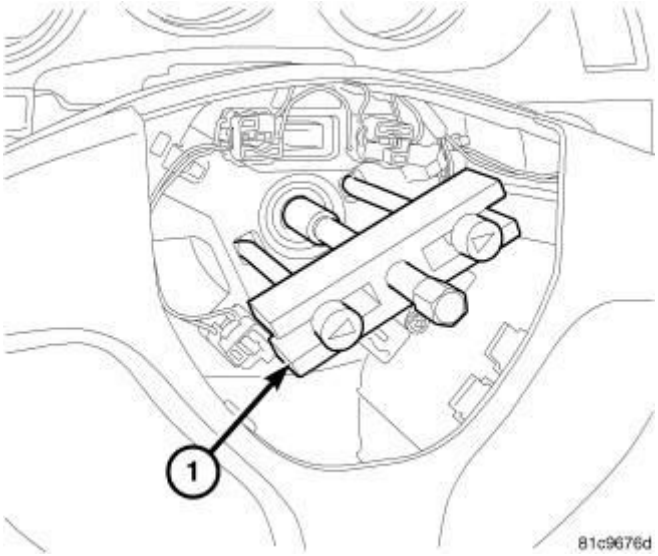

Fig. 87: Identifying Steering Wheel Puller
Courtesy of CHRYSLER GROUP, LLC

7. Holding the steering wheel firmly in the STRAIGHT-AHEAD position, release the steering wheel from the steering column shaft splines using the

wheel puller (1). Remove the steering wheel from the column.

INSTALLATION

INSTALLATION

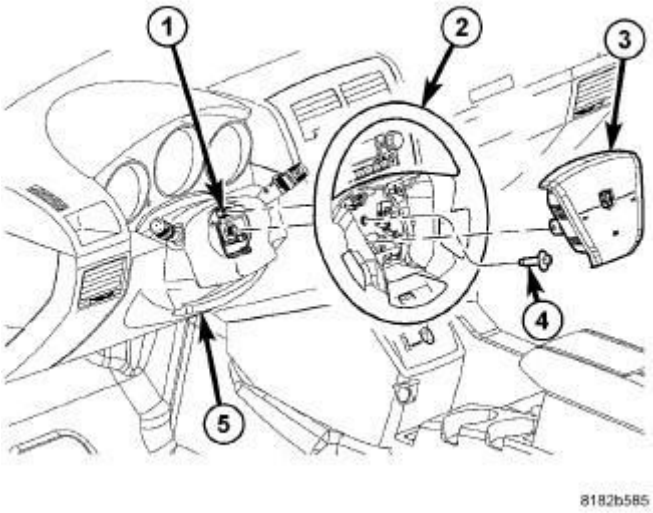

Fig. 88: Air Bag Removal/Installation
Courtesy of CHRYSLER GROUP, LLC

CAUTION: Do not install the steering wheel onto the shaft of the steering column by driving it onto the shaft.

NOTE: Do not reuse the old steering wheel bolt, a new bolt must be used every time.

1. Confirm that:
   a. The front wheels are in the STRAIGHT-AHEAD position.
   b. The turn signal stalk is in the NEUTRAL position.
2. Align the wide mounting spline of the steering wheel (2) with the missing spline area of the steering column shaft (1) and push the wheel onto the shaft. Make sure the clockspring lines up with the back of the wheel and does not bind.
3. Install a **NEW** steering wheel retaining bolt (4) and tighten 50 N.m (37 ft. lbs.).

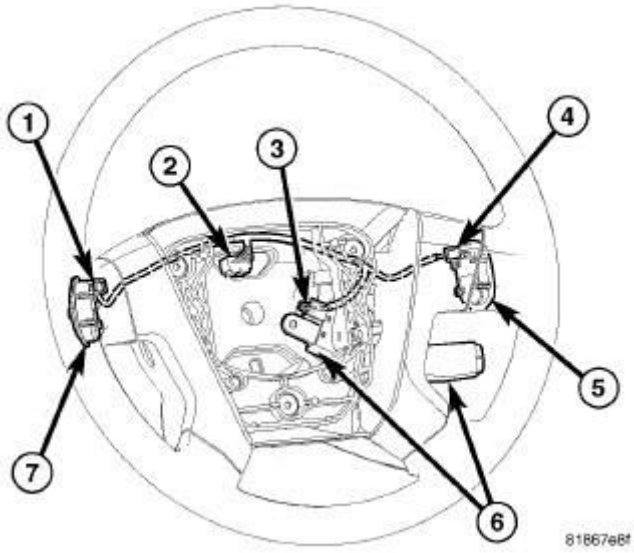

Fig. 89: Steering Wheel Wiring
Courtesy of CHRYSLER GROUP, LLC

4. Connect the wiring connector (2) at the clockspring.

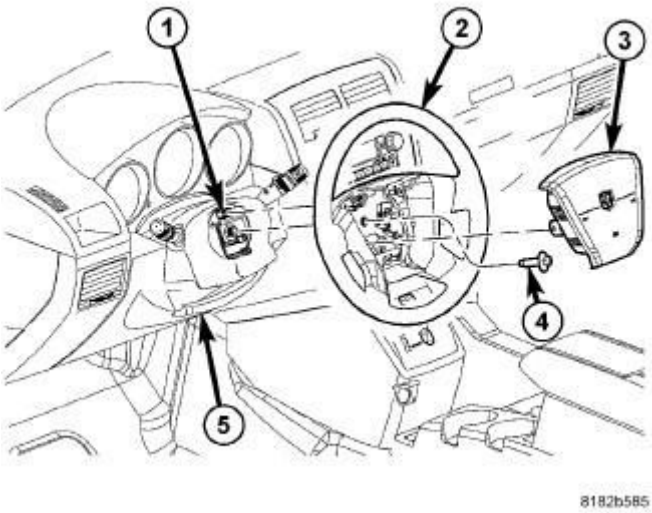

Fig. 90: Air Bag Removal/Installation
Courtesy of CHRYSLER GROUP, LLC

5. Install the driver airbag (3). Refer to **AIR BAG, DRIVER, INSTALLATION** .

WARNING: Do not reconnect the battery without first performing the Airbag System Test procedure.

Failure to perform the Airbag System Test may result in accidental airbag deployment and serious or fatal injury.

6. Reconnect the battery using the Airbag System Test procedure. Refer to **DIAGNOSIS AND TESTING** .
7. Verify vehicle and system operation.

GEAR

DIAGNOSIS AND TESTING

DIAGNOSIS AND TESTING - POWER STEERING GEAR

NOTE: This information is designed to be used in conjunction with the diagnostic charts at the beginning of the Steering Service Information . Refer to DIAGNOSIS AND TESTING.

OBJECTIONABLE HISS OR WHISTLE POSSIBLY CAUSED BY A NOISY STEERING GEAR

1. Check and adjust power steering fluid level in the reservoir as necessary. Refer to **FLUID, STANDARD PROCEDURE**.
2. Start the vehicle and heat system by steering lock-to-lock 5 times with the engine running at 3000 rpm. Do not hold the gear against the stops for more than 5 seconds at a time.
3. Return the engine to idle speed.
4. Listen for the noise when turning the wheel slowly off center during a dry park maneuver.
5. Replace power steering gear if the hiss or whistle is present. Refer to **GEAR, REMOVAL**.

REMOVAL

STEERING GEAR

NOTE: Before proceeding, refer to WARNING.

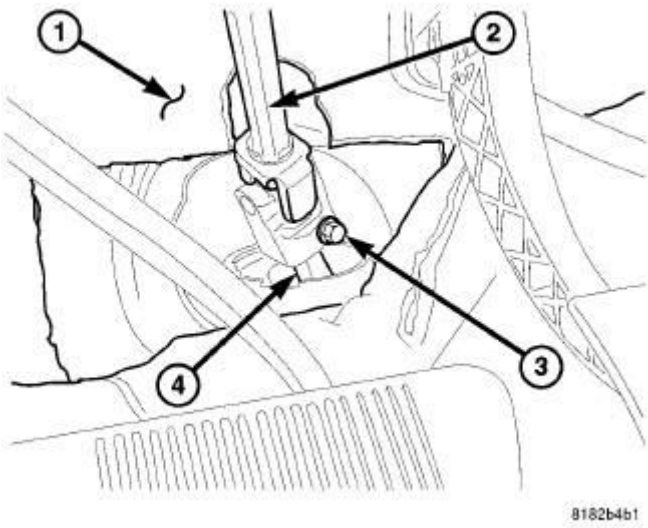

Fig. 91: Lower Coupling Bolt
Courtesy of CHRYSLER GROUP, LLC

1. Siphon out as much power steering fluid as possible from the pump.
2. Reposition the floor carpeting to access the intermediate shaft coupling at the base of the column.
3. Position the front wheels of vehicle in the STRAIGHT-AHEAD position, then turn the steering wheel to the right until the intermediate shaft coupling bolt (3) at the base of the column can be accessed.
4. Remove the intermediate shaft coupling bolt (3). **Do not separate the intermediate shaft (2) from the steering gear pinion shaft (4) at this time.**

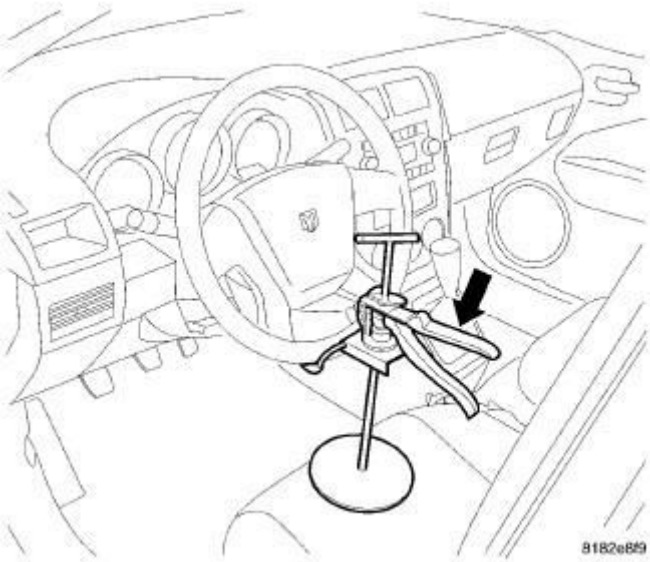

Fig. 92: Steering Wheel Holding Tool
Courtesy of CHRYSLER GROUP, LLC

5. Return the front wheels of vehicle (and steering wheel) to the STRAIGHT-AHEAD position. Using a steering wheel holder, lock the steering wheel in place to keep it from rotating. This keeps the clockspring in the proper orientation.

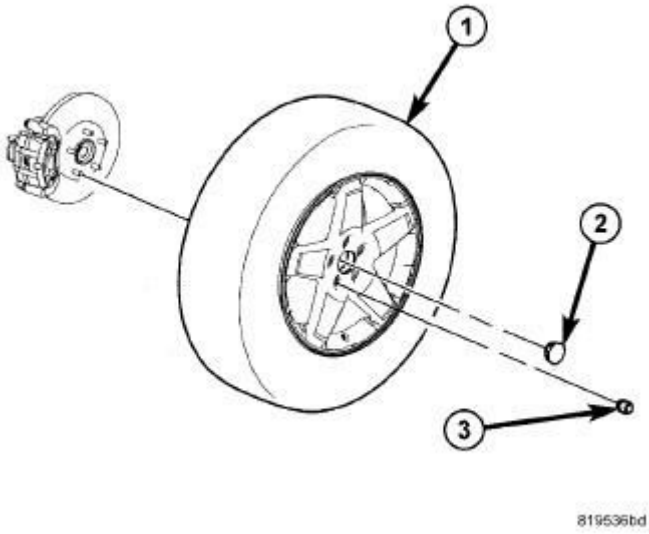

Fig. 93: Tire And Wheel Mounting
Courtesy of CHRYSLER GROUP, LLC

6. Raise and support the vehicle.
7. Remove the wheel mounting nuts (3), then the tire and wheel assembly (1).

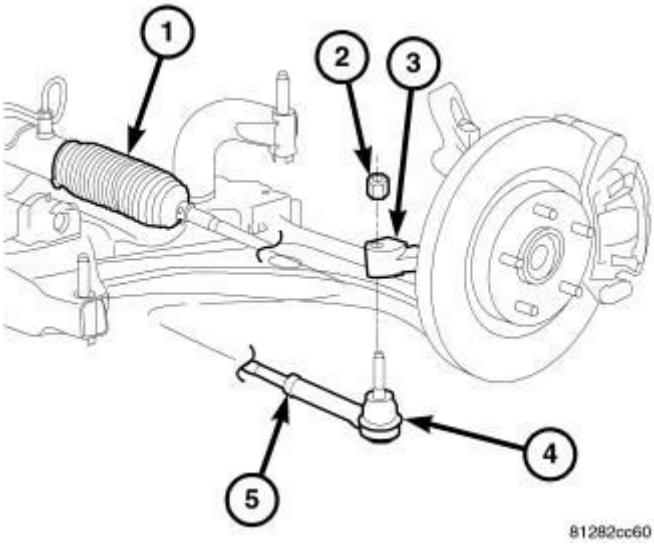

Fig. 94: Tie Rod Nut
Courtesy of CHRYSLER GROUP, LLC

8. On each side of the gear, remove the nut (2) from the out tie rod end (4) at the knuckle (3).

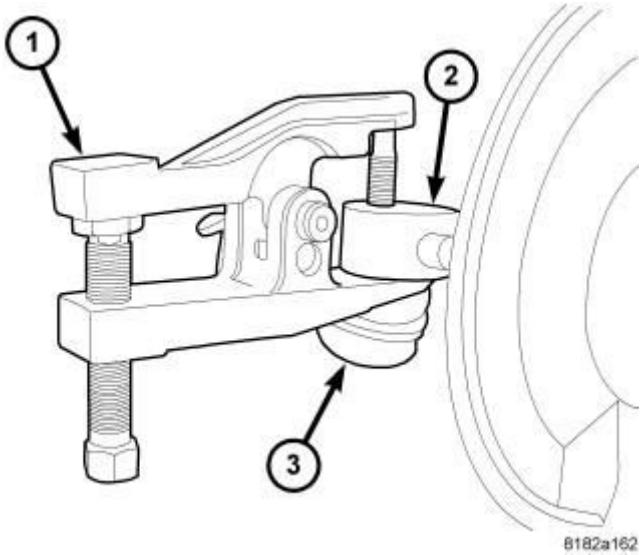

Fig. 95: Using 9360 On Tie Rod End
Courtesy of CHRYSLER GROUP, LLC

9. On each side of the steering gear, separate the tie rod end (3) from the knuckle (2) using Ball Joint Remover (special tool #9360, Remover, Ball Joint) (1) or equivalent.
10. If equipped, remove the engine belly pan.
11. Remove the rear engine mount. Refer to **INSULATOR, ENGINE MOUNT, REAR, REMOVAL** for 2.0L, **INSULATOR, ENGINE MOUNT, REAR MOUNT, REMOVAL** for 2.2L Diesel or **INSULATOR, ENGINE MOUNT, REAR, REMOVAL** for 2.4L .
12. Remove the front engine mount through-bolt.

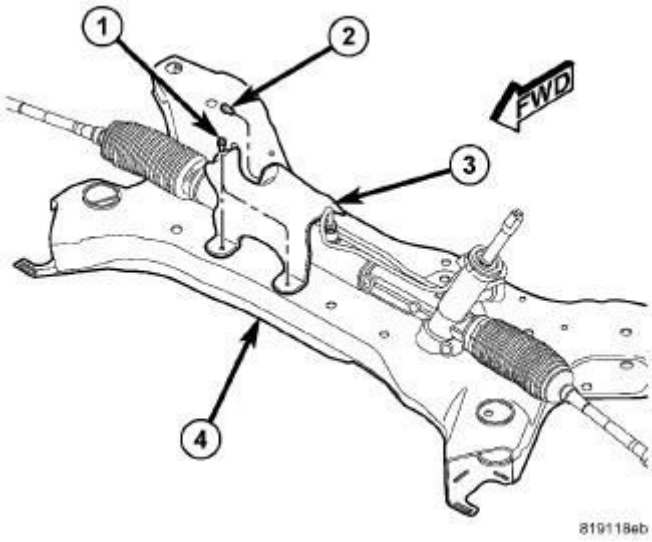

Fig. 96: Steering Gear Heat Shield
Courtesy of CHRYSLER GROUP, LLC

13. Remove the three screws (1, 2) securing the heat shield (3) to the crossmember (4). Remove the shield.

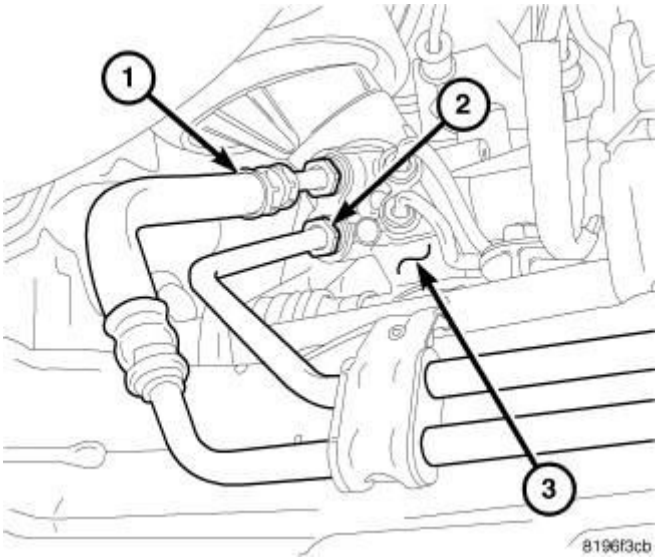

Fig. 97: Hoses AT Left-Hand-Drive Gear
Courtesy of CHRYSLER GROUP, LLC

14. Remove the return hose (1) at the steering gear (3).
15. Remove the pressure hose (2) at the steering gear.

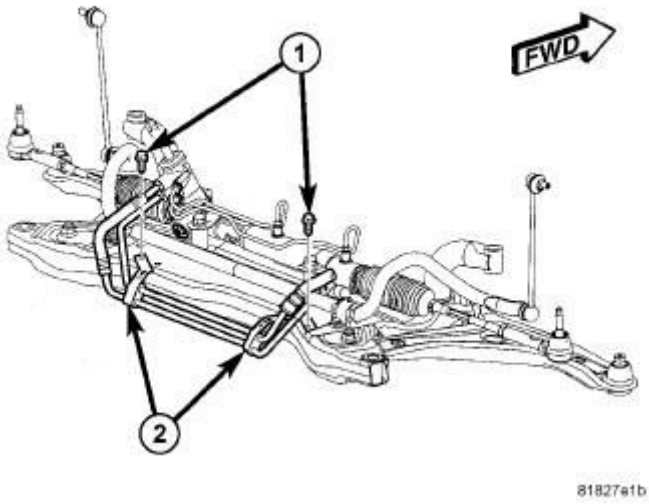

Fig. 98: Hose Routing Bracket Screws AT Crossmember
Courtesy of CHRYSLER GROUP, LLC

16. Remove the fasteners (1) securing the power steering hose routing clamps (2) to the crossmember.

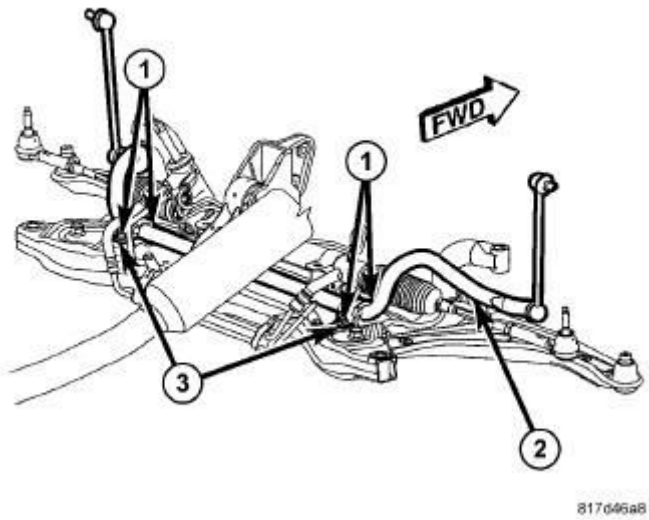

Fig. 99: Stabilizer Bar Mounting To Crossmember
Courtesy of CHRYSLER GROUP, LLC

17. Remove the screws (1) securing the stabilizer bushing retainers (3) to the crossmember.
18. Remove the two stabilizer bushing retainers.

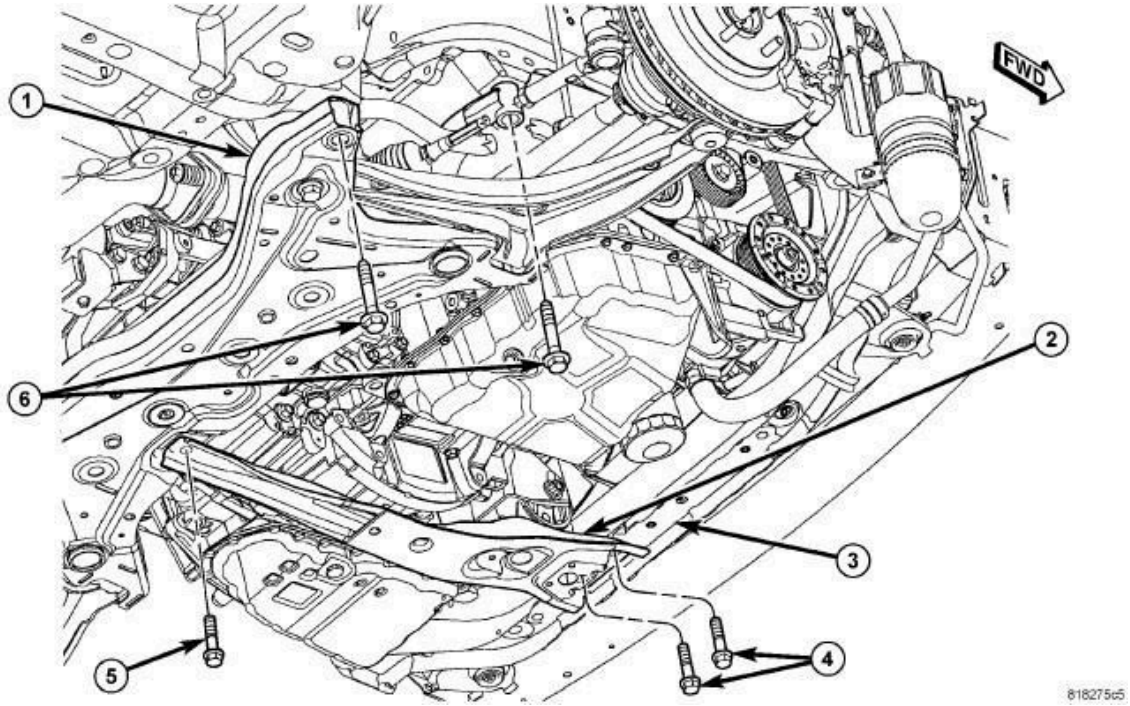

Fig. 100: Front Crossmember Mounting
Courtesy of CHRYSLER GROUP, LLC

NOTE: Before removing the front suspension crossmember from the vehicle, the location of the crossmember must be marked on the body of the vehicle. Do this so the crossmember can be relocated, upon reinstallation, against the body of vehicle in the same location as before removal. If the front suspension crossmember is not reinstalled in exactly the same location as before removal, the preset front wheel alignment settings (caster and camber) may be lost.

19. Mark the location of the front crossmember on the body near each mounting bolt using a marker or crayon. **Do not use a scratch awl or other tool that can penetrate the protective coating on the body.**
20. Support the front crossmember with a transmission jack.
21. Remove the four mounting bolts (two each side) (6) securing the front crossmember (1) to the body.

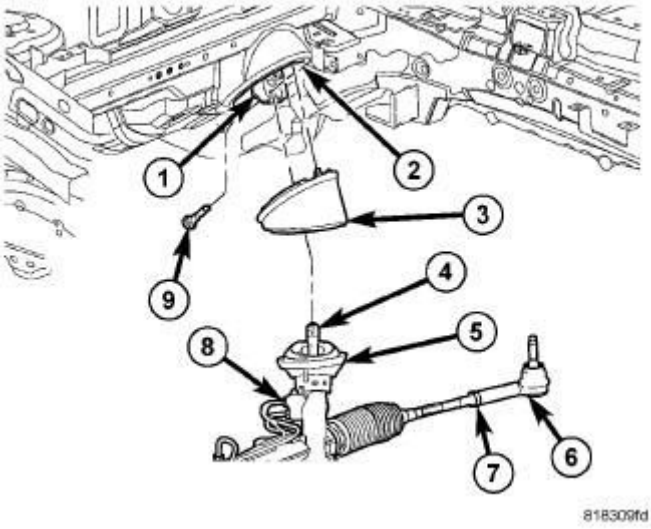

Fig. 101: Rack & Coupling Pinch Bolt
Courtesy of CHRYSLER GROUP, LLC

22. Lower the crossmember enough to access the intermediate shaft coupling (1) at the steering gear pinion shaft (4). Slide the coupling off the pinion shaft.
23. Remove the dash seals (3, 5) as necessary.

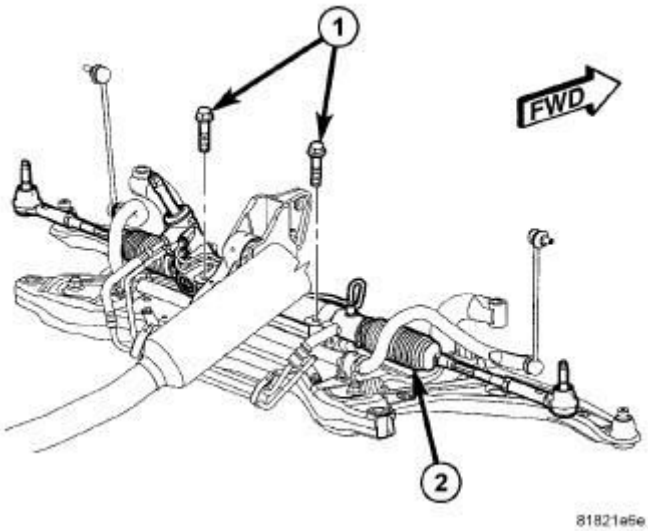

Fig. 102: Gear Mounting Bolts
Courtesy of CHRYSLER GROUP, LLC

24. Remove the two bolts (1) securing the steering gear (2) to the crossmember.
25. Rotate the stabilizer bar up in order to remove the steering gear from the vehicle.

26. Remove the steering gear from the crossmember.

STEERING GEAR - RIGHT-HAND-DRIVE

NOTE: Before proceeding, refer to WARNING.

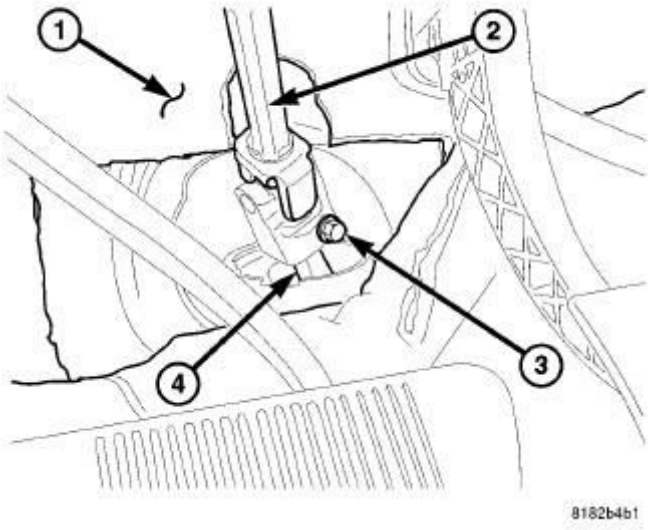

Fig. 103: Lower Coupling Bolt
Courtesy of CHRYSLER GROUP, LLC

1. Siphon out as much power steering fluid as possible from the pump.
2. Reposition the floor carpeting to access the intermediate shaft coupling at the base of the column.
3. Position the front wheels of vehicle in the STRAIGHT-AHEAD position, then, if necessary, turn the steering wheel to the right until the intermediate shaft coupling bolt (3) at the base of the column can be accessed.
4. Remove the intermediate shaft coupling bolt (3). **Do not separate the intermediate shaft (2) from the steering gear pinion shaft (4) at this time.**

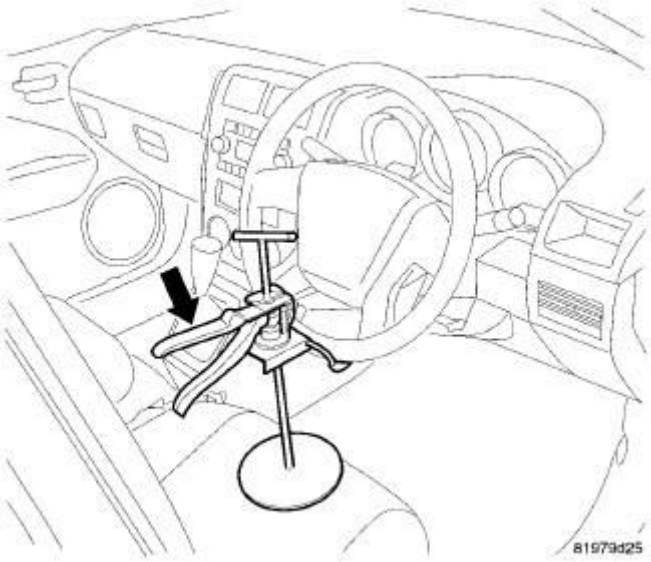

Fig. 104: Steering Wheel Holding Tool - RHD
Courtesy of CHRYSLER GROUP, LLC

5. If necessary, return the front wheels of vehicle (and steering wheel) to the STRAIGHT-AHEAD position. Using a steering wheel holder, lock the steering wheel in place to keep it from rotating. This keeps the clockspring in the proper orientation.

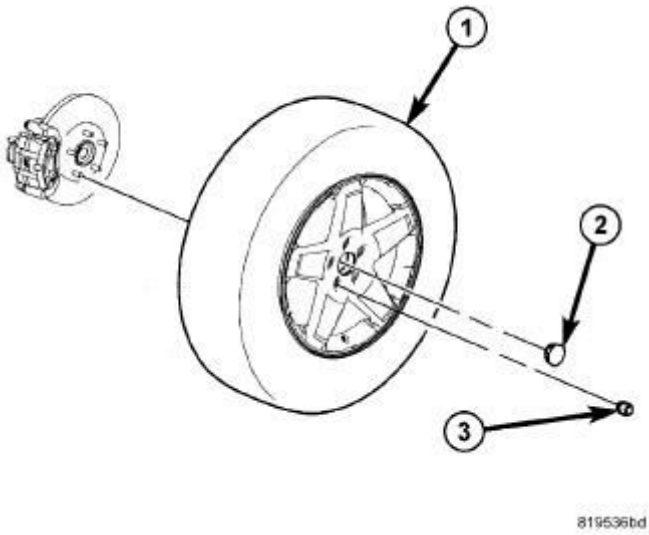

Fig. 105: Tire And Wheel Mounting
Courtesy of CHRYSLER GROUP, LLC

6. Raise and support the vehicle.
7. Remove the wheel mounting nuts (3), then the tire and wheel assembly (1).

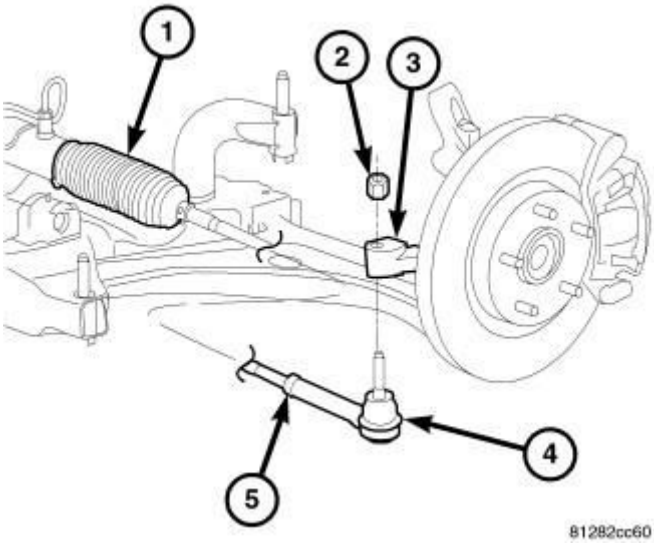

Fig. 106: Tie Rod Nut
Courtesy of CHRYSLER GROUP, LLC

8. On each side of the steering gear, remove the nut (2) from the out tie rod end (4) at the knuckle (3).

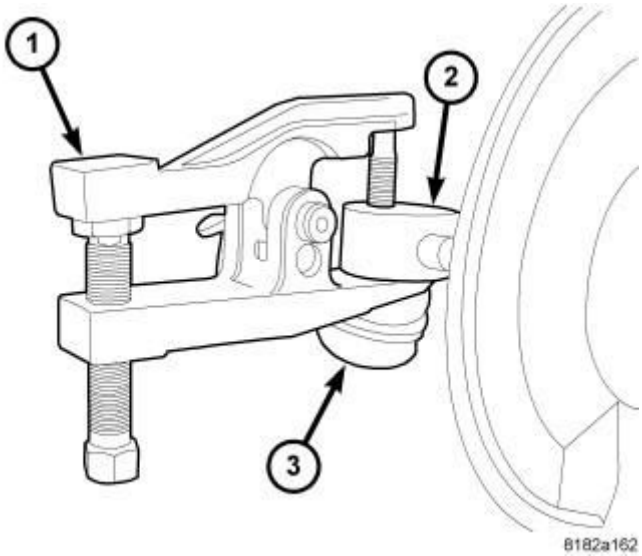

Fig. 107: Using 9360 On Tie Rod End
Courtesy of CHRYSLER GROUP, LLC

9. On each side of the gear, separate the tie rod end (3) from the knuckle (2) using Ball Joint Remover (special tool #9360, Remover, Ball Joint) (1) or equivalent.
10. If equipped, remove the engine belly pan.
11. Remove the rear engine mount. Refer to **INSULATOR, ENGINE MOUNT, REAR, REMOVAL** for 2.0L, **INSULATOR, ENGINE**

MOUNT, REAR MOUNT, REMOVAL for 2.2L Diesel or **INSULATOR, ENGINE MOUNT, REAR, REMOVAL** for 2.4L .

12. Remove the front engine mount through-bolt.

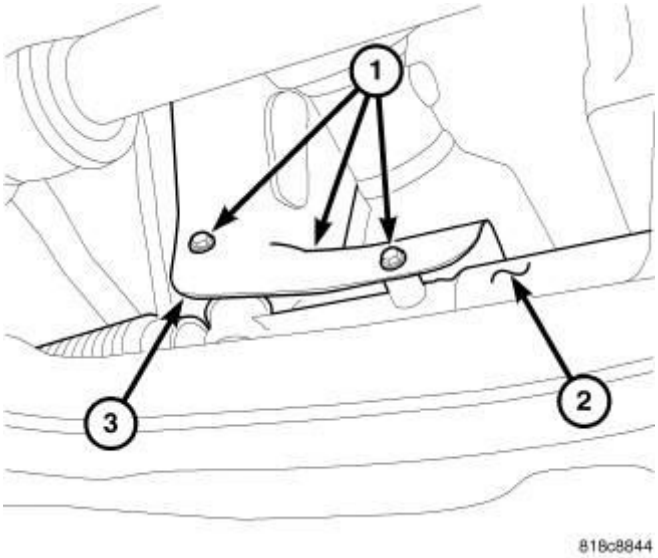

Fig. 108: Gear Shield
Courtesy of CHRYSLER GROUP, LLC

13. Remove the screws (1) securing the heat shield (3) to the steering gear (2). Remove the shield.

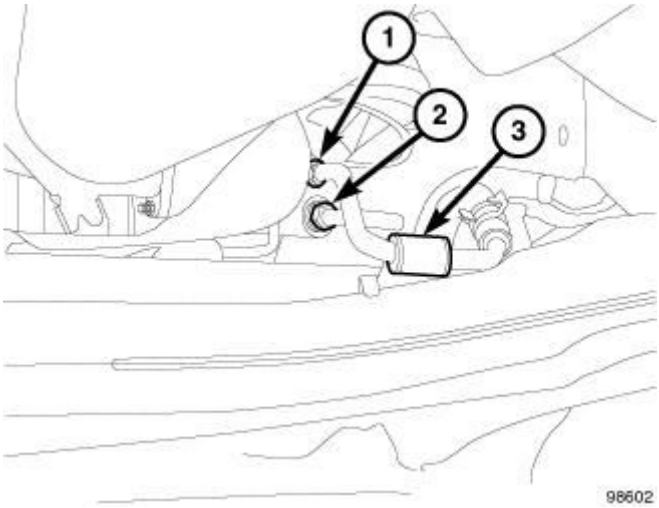

Fig. 109: Hoses AT RHD Gear
Courtesy of CHRYSLER GROUP, LLC

14. Un-thread the tube nut (1) and remove the return hose at the steering gear.
15. Un-thread the tube nut (2) and remove the pressure hose at the steering gear.

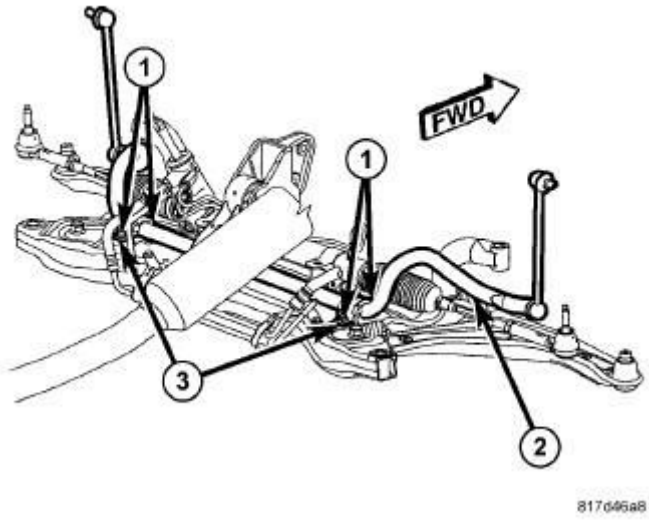

Fig. 110: Stabilizer Bar Mounting To Crossmember
Courtesy of CHRYSLER GROUP, LLC

16. Remove the screws (1) securing the stabilizer bushing retainers (3) to the crossmember.
17. Remove the two stabilizer bushing retainers.

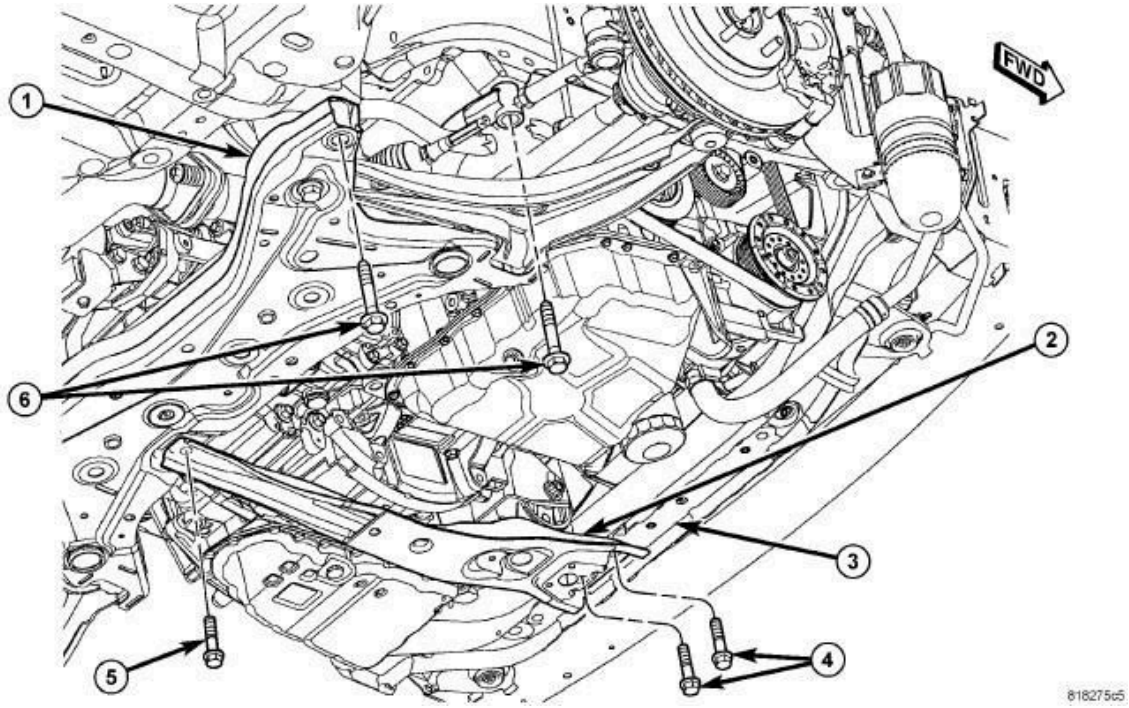

Fig. 111: Front Crossmember Mounting
Courtesy of CHRYSLER GROUP, LLC

NOTE: Before removing the front suspension crossmember

from the vehicle, the location of the crossmember must be marked on the body of the vehicle. Do this so the crossmember can be relocated, upon reinstallation, against the body of vehicle in the same location as before removal. If the front suspension crossmember is not reinstalled in exactly the same location as before removal, the preset front wheel alignment settings (caster and camber) may be lost.

18. Mark the location of the front crossmember on the body near each mounting bolt using a marker or crayon. **Do not use a scratch awl or other tool that can penetrate the protective coating on the body.**
19. Support the front crossmember with a transmission jack.
20. Remove the four mounting bolts (two each side) (6) securing the front crossmember (1) to the body.

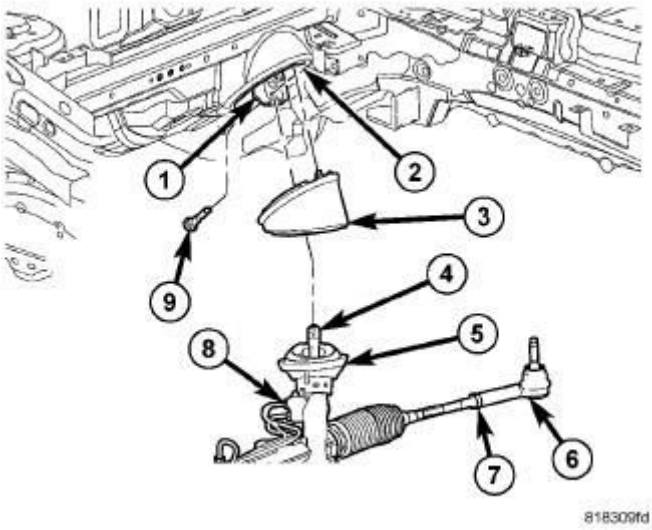

Fig. 112: Rack & Coupling Pinch Bolt
Courtesy of CHRYSLER GROUP, LLC

21. Lower the crossmember enough to access the intermediate shaft coupling (1) at the steering gear pinion shaft (4). Slide the coupling off the pinion shaft.
22. Remove the dash seals (3, 5) as necessary.

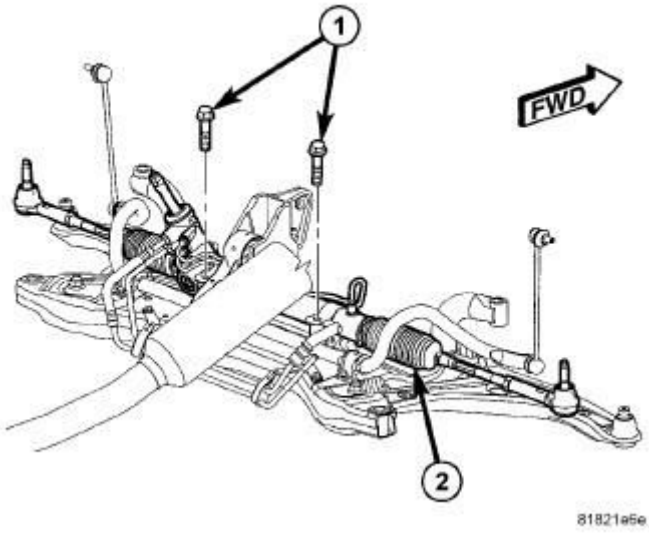

Fig. 113: Gear Mounting Bolts
Courtesy of CHRYSLER GROUP, LLC

23. Remove the two bolts (1) securing the steering gear (2) to the crossmember.
24. Rotate the stabilizer bar up in order to remove the steering gear from the vehicle.
25. Remove the steering gear from the crossmember.

INSTALLATION

STEERING GEAR

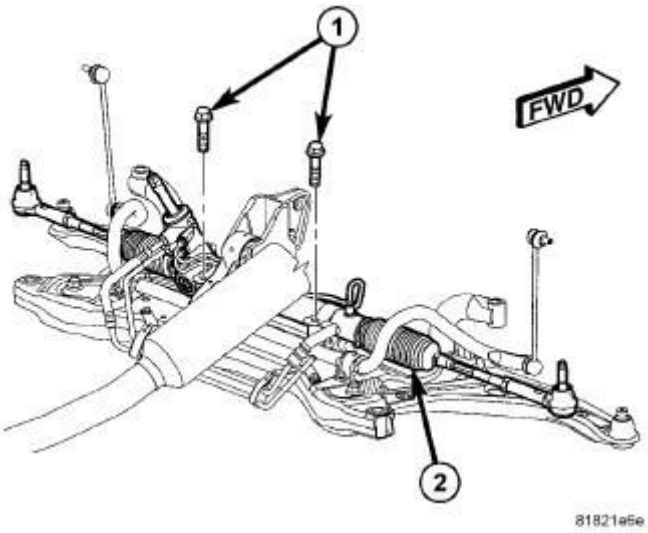

Fig. 114: Gear Mounting Bolts
Courtesy of CHRYSLER GROUP, LLC

1. Rotate the stabilizer bar up and install the steering gear on the crossmember.
2. Install the two bolts (1) securing the steering gear (2) to the crossmember. Tighten the steering gear mounting bolts to 70 N.m (52 ft. lbs.).

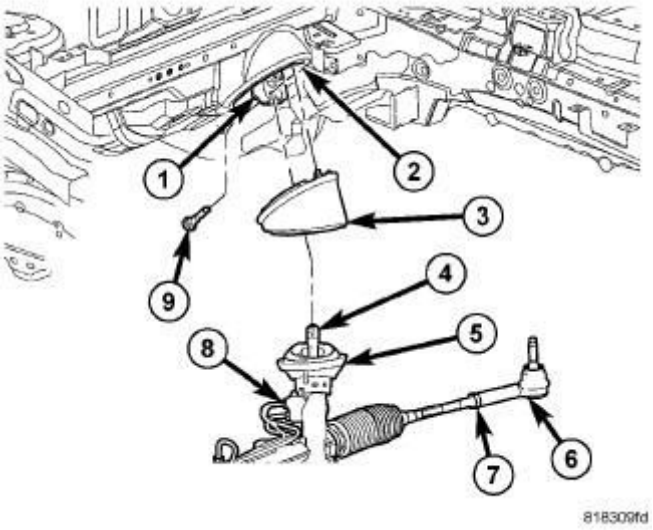

Fig. 115: Rack & Coupling Pinch Bolt
Courtesy of CHRYSLER GROUP, LLC

3. Install the dash seals (3, 5) as necessary.

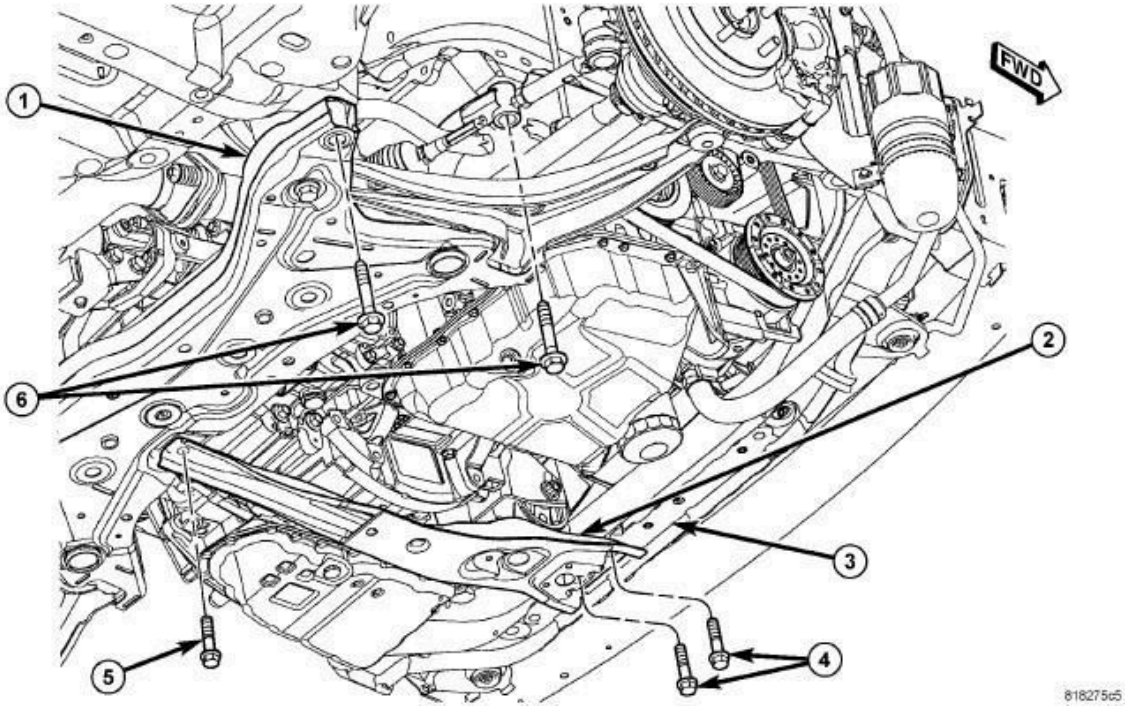

Fig. 116: Front Crossmember Mounting
Courtesy of CHRYSLER GROUP, LLC

4. Center the power steering gear rack in its travel as necessary.

NOTE: When installing the front suspension crossmember (1) back in the vehicle, it is very important that the crossmember be attached to the body in exactly the same spot as when it was removed. Otherwise, the vehicle's wheel alignment settings (caster and camber) will be lost.

5. Slowly raise the crossmember (1) into mounted position using the transmission jack matching the crossmember to the marked locations on the body made during removal.
6. Check the positioning of the seals at the dash panel and adjust as necessary.
7. Install the four mounting bolts (two each side) (6) securing the front crossmember (1) to the body. Tighten the crossmember mounting bolts to 150 N.m (111 ft. lbs.).
8. Remove the transmission jack.

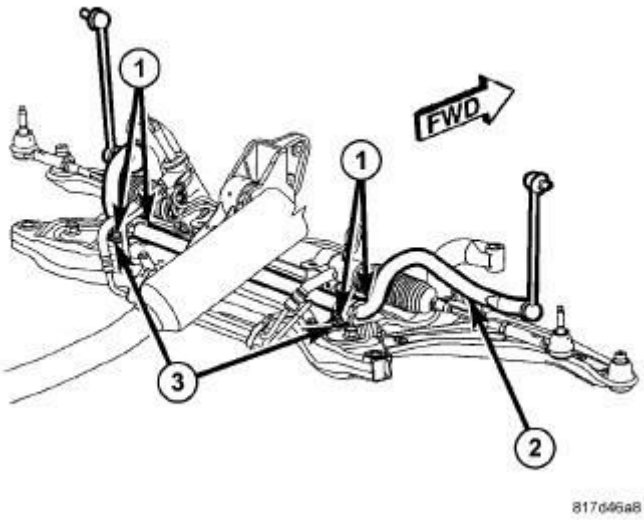

Fig. 117: Stabilizer Bar Mounting To Crossmember
Courtesy of CHRYSLER GROUP, LLC

9. Install the retainers (3) over the stabilizer bar cushions. Install all four stabilizer bar cushion retainer screws (1) and tighten them to 30 N.m (22 ft. lbs.).

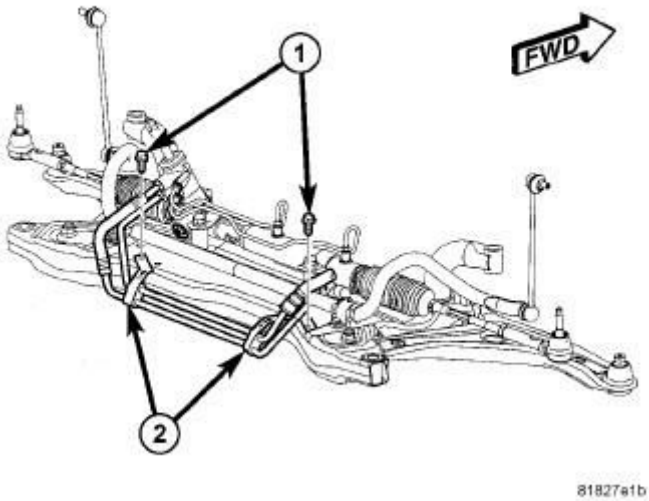

Fig. 118: Hose Routing Bracket Screws AT Crossmember
Courtesy of CHRYSLER GROUP, LLC

10. Install the fasteners (1) securing the power steering hose routing clamps (2) to the crossmember. Use a NEW push clip on the left and tighten the screw on the right to 8 N.m (71 in. lbs.).

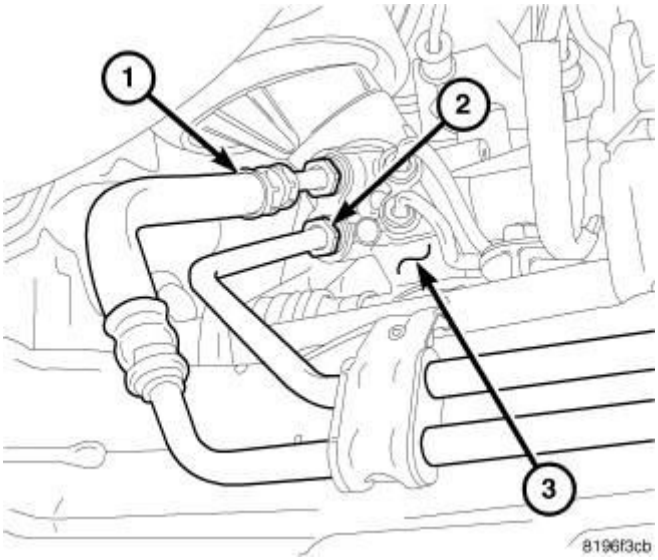

Fig. 119: Hoses AT Left-Hand-Drive Gear
Courtesy of CHRYSLER GROUP, LLC

11. Install the pressure hose (2) at the gear (3). Tighten the tube nut to 32 N.m (24 ft. lbs.).
12. Install the return hose (1) at the gear. Tighten the tube nut to 20 N.m (15 ft. lbs.).

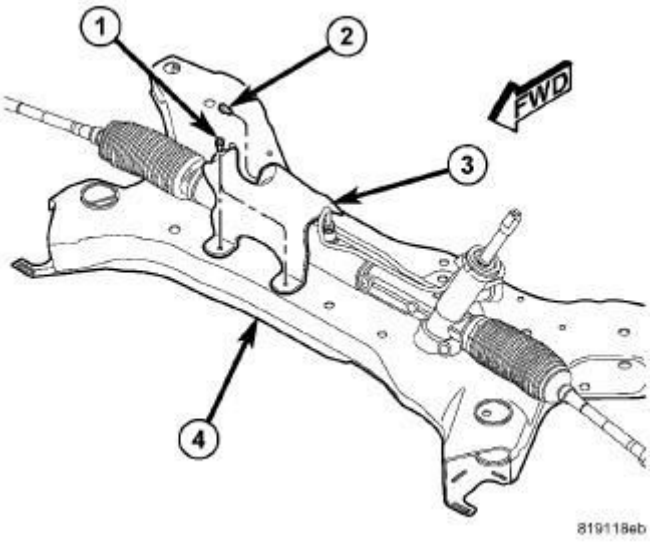

Fig. 120: Steering Gear Heat Shield
Courtesy of CHRYSLER GROUP, LLC

13. Position the heat shield (3) and install the three screws (1, 2) securing the shield to the crossmember (4). Tighten the two front mounting screws (1) to 4 N.m (35 in. lbs.). Tighten the rear mounting screw (2) to 17 N.m (150 in. lbs.).
14. Install the front engine mount through-bolt.
15. Install the rear engine mount. Refer to **INSULATOR, ENGINE MOUNT, REAR, INSTALLATION** for 2.0L, **INSULATOR, ENGINE MOUNT, REAR MOUNT, INSTALLATION** for 2.2L Diesel or **INSULATOR, ENGINE MOUNT, REAR, INSTALLATION** for 2.4L .
16. If equipped, install the engine belly pan.

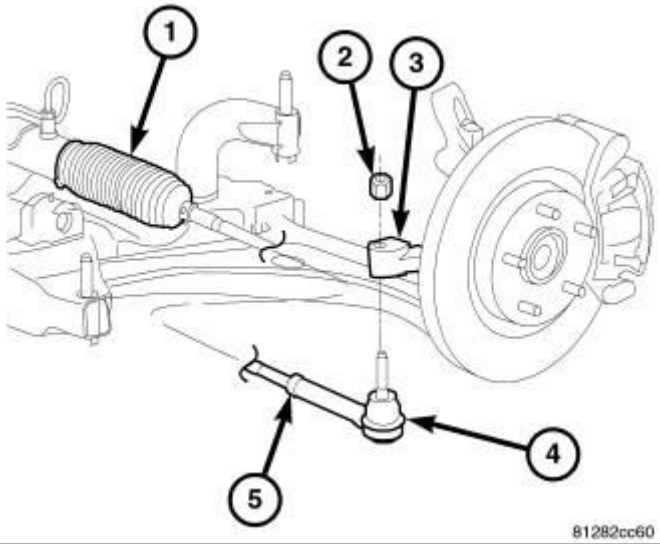

Fig. 121: Tie Rod Nut
Courtesy of CHRYSLER GROUP, LLC

NOTE: Prior to attaching the outer tie rod end to the knuckle, inspect the tie rod seal boot. If the seal boot is damaged, replace the outer tie rod end.

17. On each side of the gear, install the outer tie rod end (4) into the hole in the knuckle arm (3). Start a NEW tie rod mounting nut (2) onto the stud. While holding the tie rod end stud with a wrench, tighten the nut with a wrench or crowfoot wrench. Tighten the nut to 132 N.m (97 ft. lbs.).

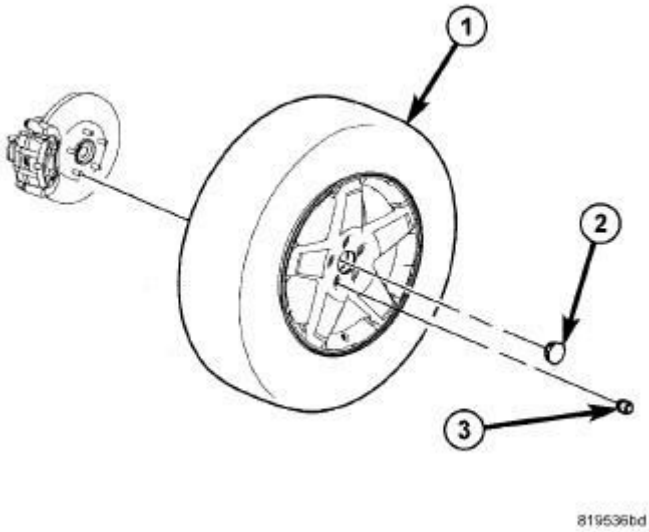

Fig. 122: Tire And Wheel Mounting
Courtesy of CHRYSLER GROUP, LLC

18. On each side of the vehicle, install the tire and wheel assembly (1). Refer to **INSTALLATION** . Install and tighten the wheel mounting nuts (3) to 135 N.m (100 ft. lbs.).
19. Lower the vehicle.

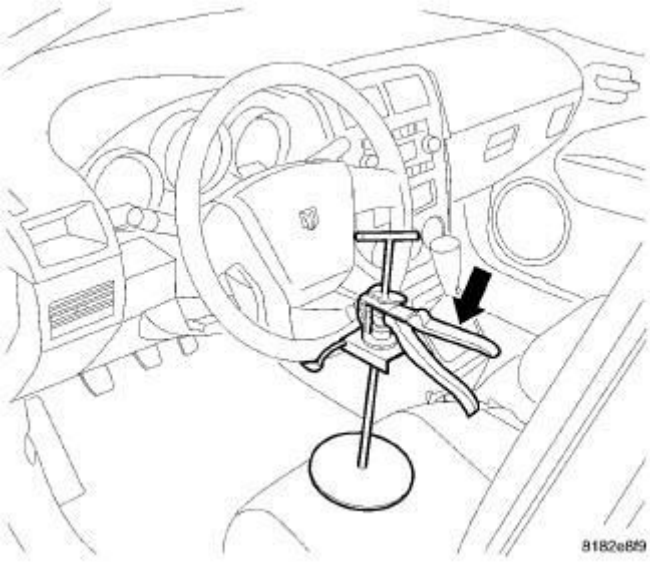

Fig. 123: Steering Wheel Holding Tool
Courtesy of CHRYSLER GROUP, LLC

20. Remove the steering wheel holder.

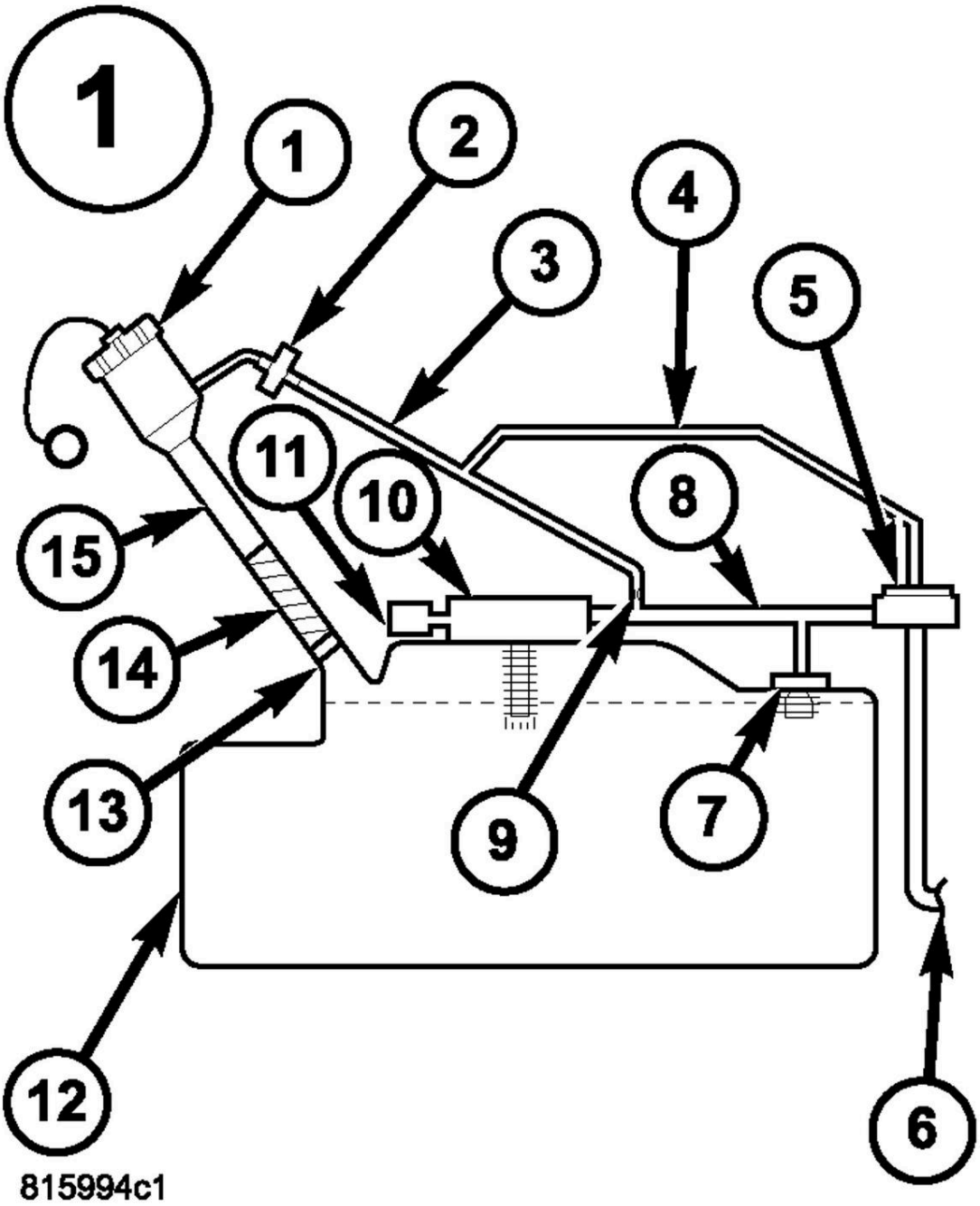

Fig. 124: Lower Coupling Bolt
Courtesy of CHRYSLER GROUP, LLC

21. Verify the front wheels of vehicle are in the STRAIGHT-AHEAD position.
22. Center the intermediate shaft (2) over the steering gear pinion shaft (4), lining up the ends, then slide the intermediate shaft onto the steering gear pinion shaft.
23. From center, rotate the steering wheel to the right approximately 90° or until the intermediate shaft coupling bolt (3) can be easily installed.

24. Install the intermediate shaft coupling bolt (3). Tighten the bolt to 42 N.m (31 ft. lbs.).
25. Reposition the floor carpet (1) in place.
26. Straighten the steering wheel to STRAIGHT-AHEAD position.
27. Fill and bleed the power steering system. Refer to **STANDARD PROCEDURE**.
28. Check for fluid leaks.
29. Adjust front wheel toe as necessary. Refer to **WHEEL ALIGNMENT, STANDARD PROCEDURE** .

STEERING GEAR - RIGHT-HAND-DRIVE

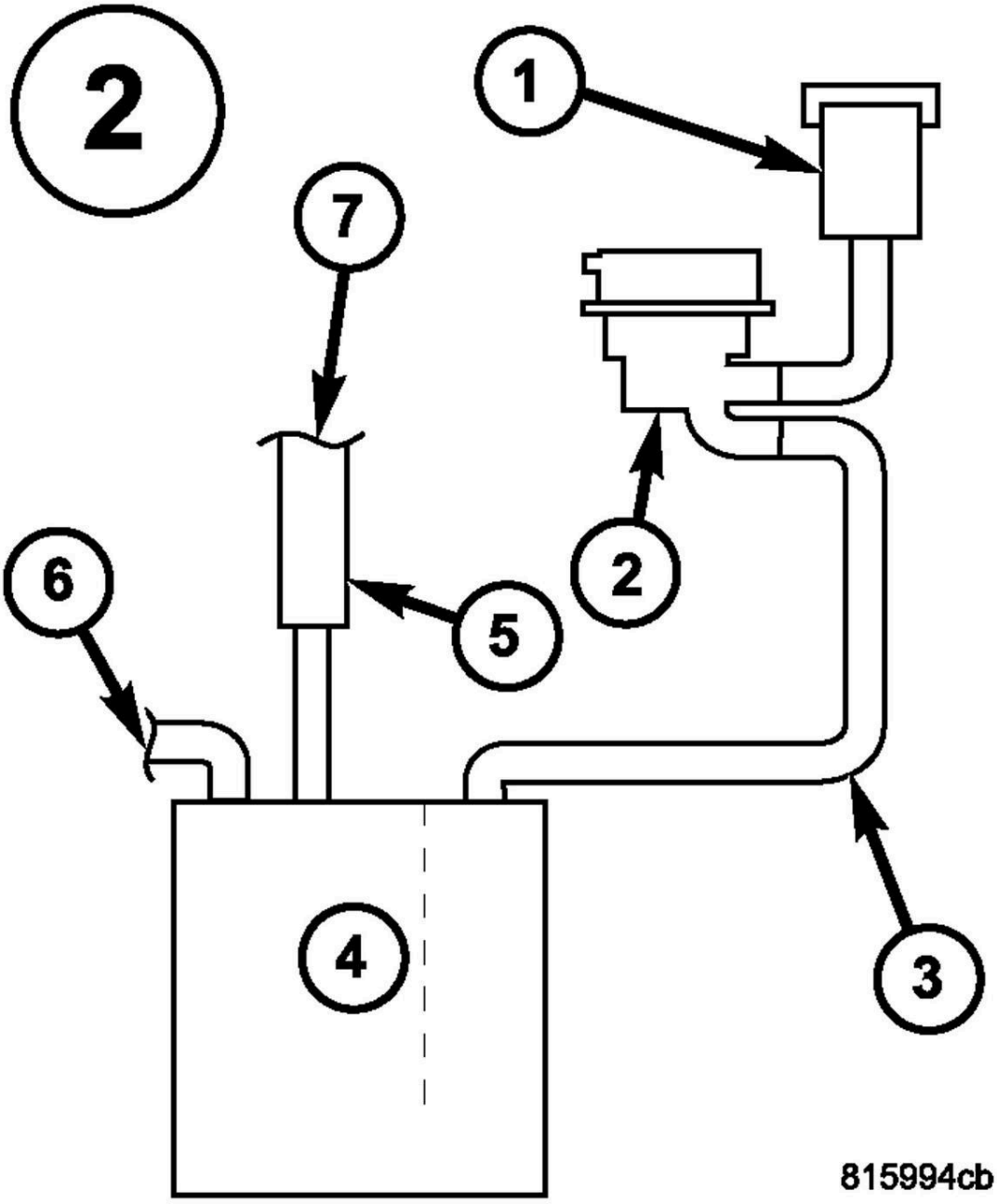

Fig. 125: Gear Mounting Bolts
Courtesy of CHRYSLER GROUP, LLC

1. Rotate the stabilizer bar up and install the steering gear on the crossmember.
2. Install the two bolts (1) securing the steering gear (2) to the crossmember. Tighten the steering gear mounting bolts to 70 N.m (52 ft. lbs.).

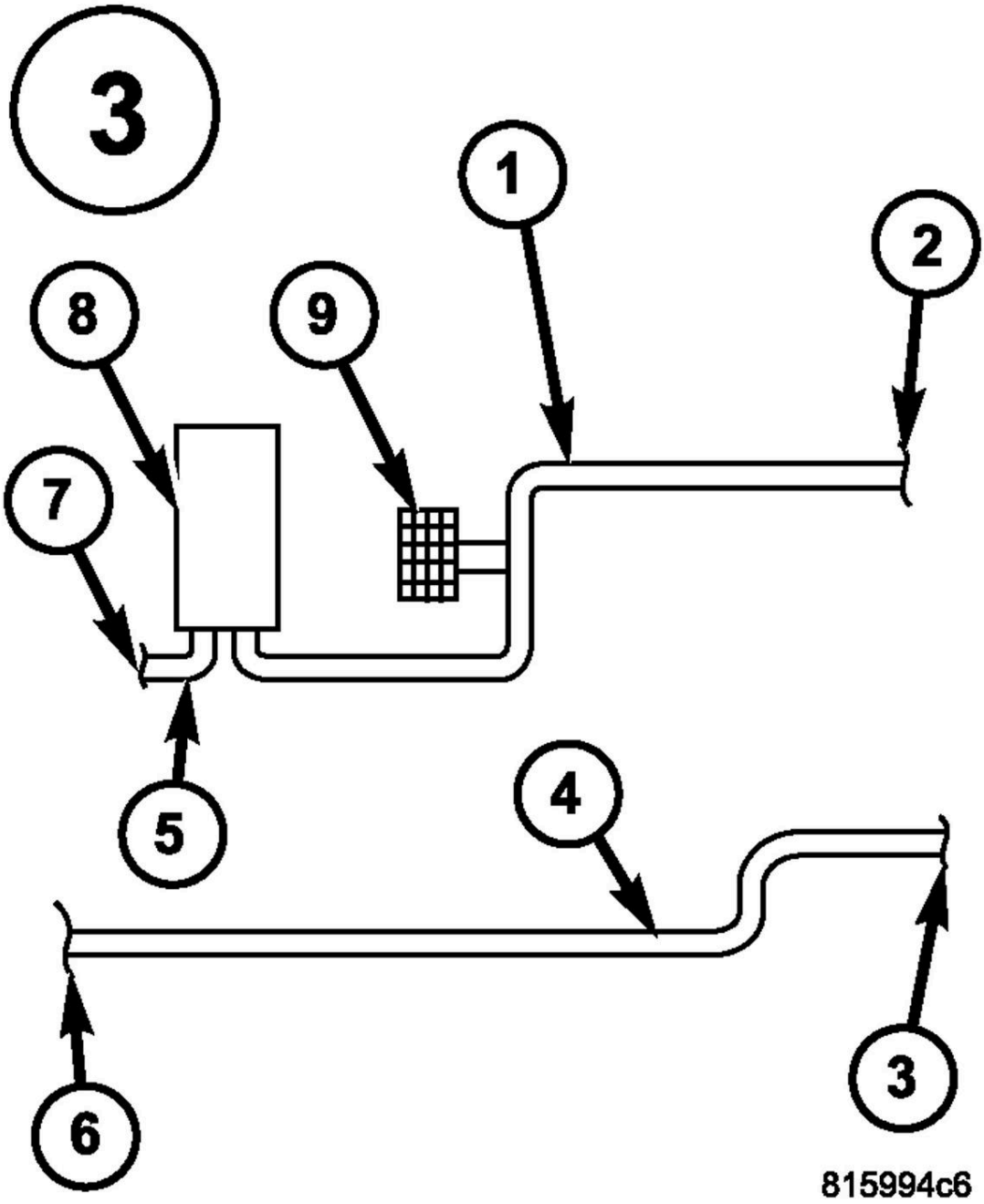

Fig. 126: Rack & Coupling Pinch Bolt
Courtesy of CHRYSLER GROUP, LLC

3. Install the dash seals (3, 5) as necessary.

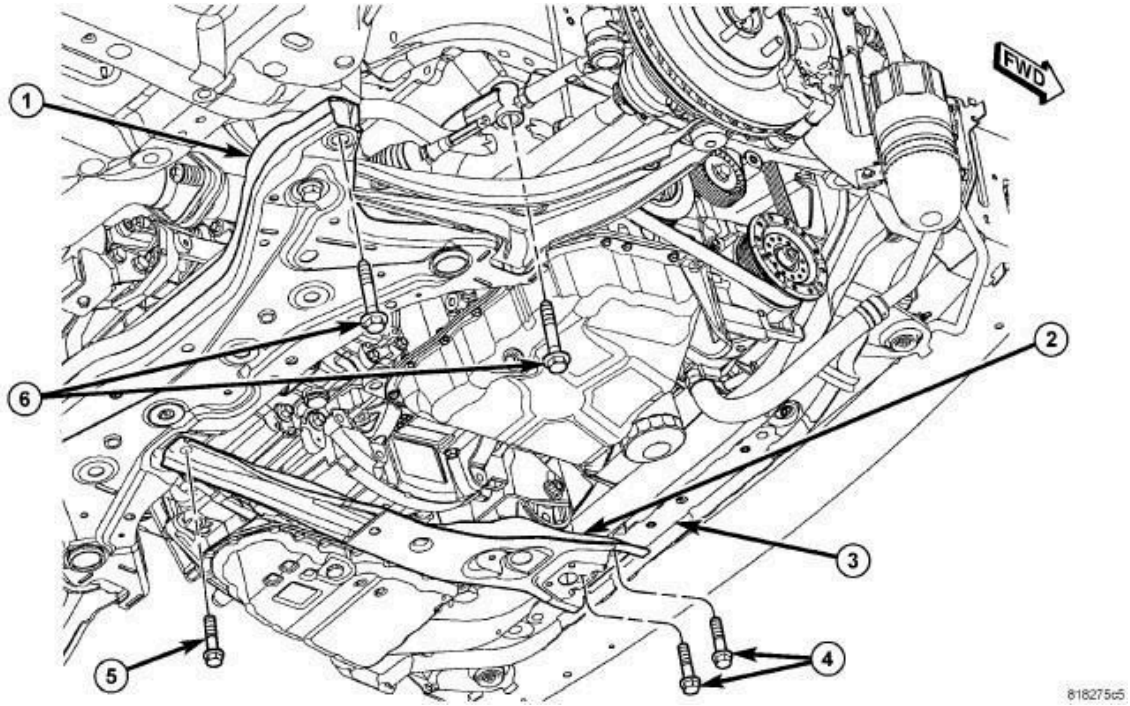

Fig. 127: Front Crossmember Mounting
Courtesy of CHRYSLER GROUP, LLC

4. Center the power steering gear rack in its travel as necessary.

NOTE: When installing the front suspension crossmember (1) back in the vehicle, it is very important that the crossmember be attached to the body in exactly the same spot as when it was removed. Otherwise, the vehicle's wheel alignment settings (caster and camber) will be lost.

5. Slowly raise the crossmember (1) into mounted position using the transmission jack matching the crossmember to the marked locations on the body made during removal.
6. Check the positioning of the seals at the dash panel and adjust as necessary.
7. Install the four mounting bolts (two each side) (6) securing the front crossmember (1) to the body. Tighten the crossmember mounting bolts to 150 N.m (111 ft. lbs.).
8. Remove the transmission jack.

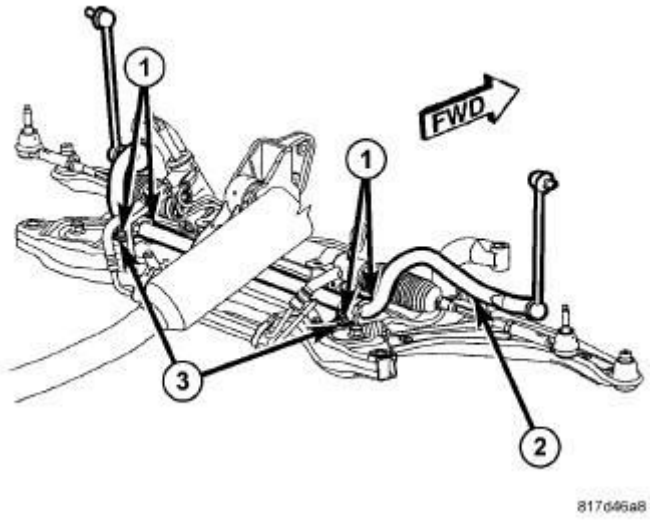

Fig. 128: Stabilizer Bar Mounting To Crossmember
Courtesy of CHRYSLER GROUP, LLC

9. Install the retainers (3) over the stabilizer bar cushions. Install all four stabilizer bar cushion retainer screws (1) and tighten them to 30 N.m (22 ft. lbs.).

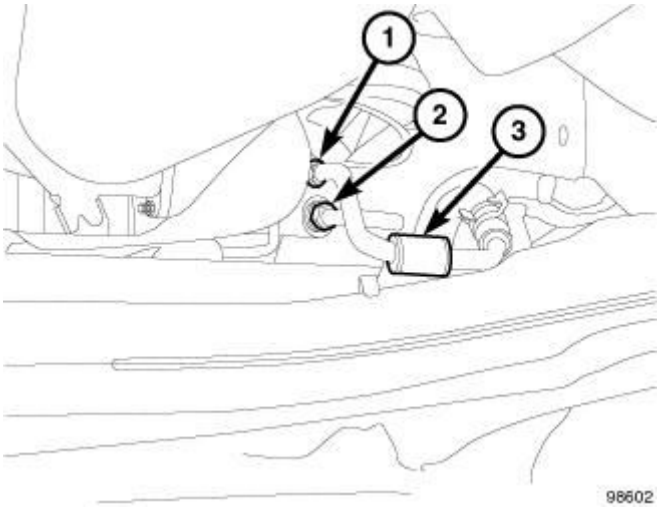

Fig. 129: Hoses AT RHD Gear
Courtesy of CHRYSLER GROUP, LLC

10. Install the pressure hose at the steering gear. Tighten the pressure hose tube nut (2) to 32 N.m (24 ft. lbs.).
11. Install the return hose at the steering gear. Tighten the return hose tube nut (1) to 20 N.m (15 ft. lbs.).

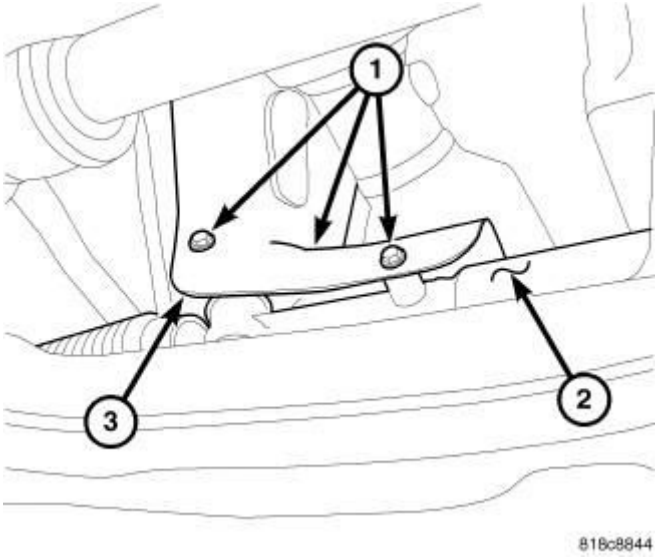

Fig. 130: Gear Shield
Courtesy of CHRYSLER GROUP, LLC

12. Position the heat shield (3) and install the screws (1) securing the shield to the steering gear (2). Tighten the mounting screws (1) to 8 N.m (71 in. lbs.).
13. Install the front engine mount through-bolt.
14. Install the rear engine mount. Refer to **INSULATOR, ENGINE MOUNT, REAR, INSTALLATION** for 2.0L, **INSULATOR, ENGINE MOUNT, REAR MOUNT, INSTALLATION** for 2.2L Diesel or **INSULATOR, ENGINE MOUNT, REAR, INSTALLATION** for 2.4L .
15. If equipped, install the engine belly pan.

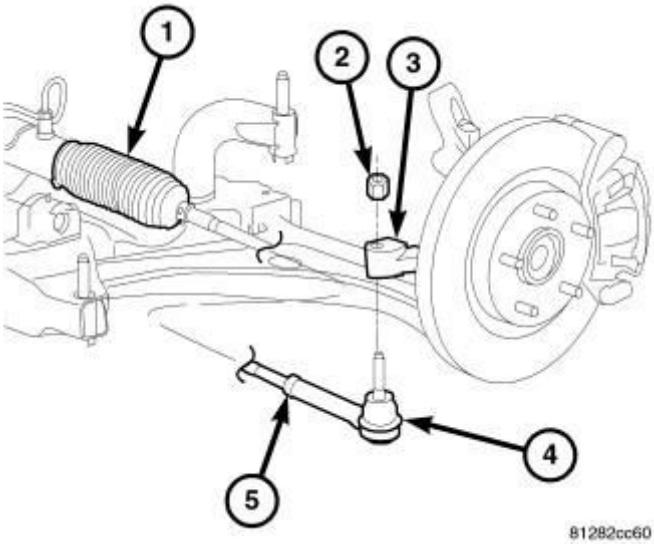

Fig. 131: Tie Rod Nut
Courtesy of CHRYSLER GROUP, LLC

16. On each side of the gear, install the outer tie rod end (4) into the hole in the knuckle arm (3). Start the tie rod mounting nut (2) onto the stud. While holding the tie rod end stud with a wrench, tighten the nut with a wrench or crowfoot wrench. Tighten the nut to 132 N.m (97 ft. lbs.).

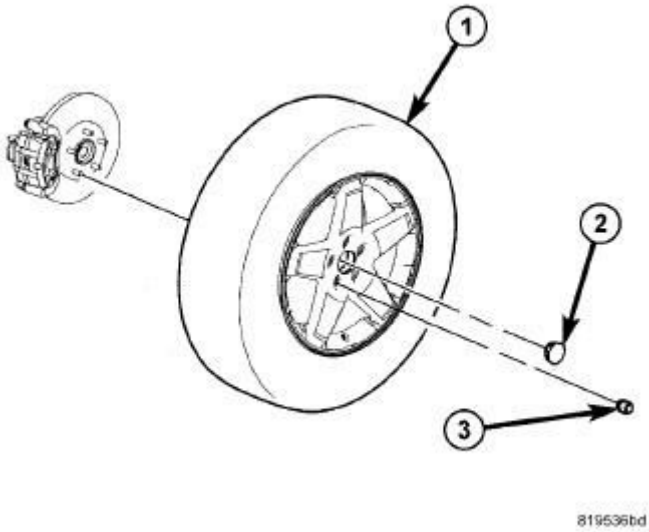

Fig. 132: Tire And Wheel Mounting
Courtesy of CHRYSLER GROUP, LLC

17. On each side of the vehicle, install the tire and wheel assembly and wheel mounting nuts (3). Tighten nuts to 135 N.m (100 ft. lbs.).
18. Lower the vehicle.

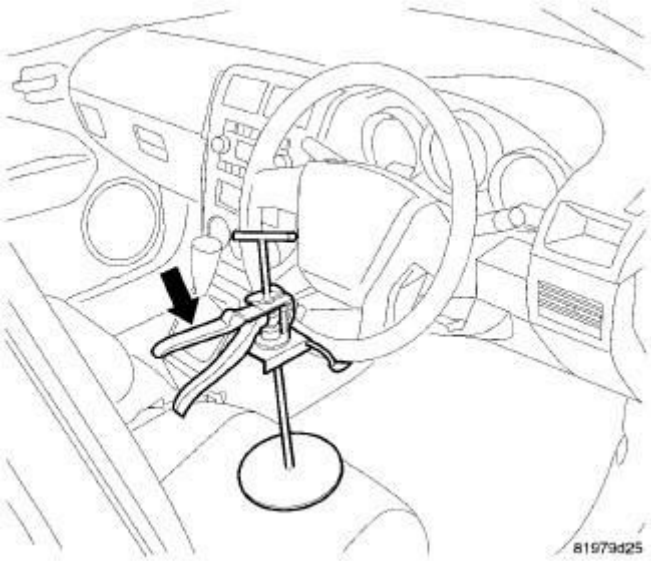

Fig. 133: Steering Wheel Holding Tool - RHD

Courtesy of CHRYSLER GROUP, LLC

19. Remove the steering wheel holder.

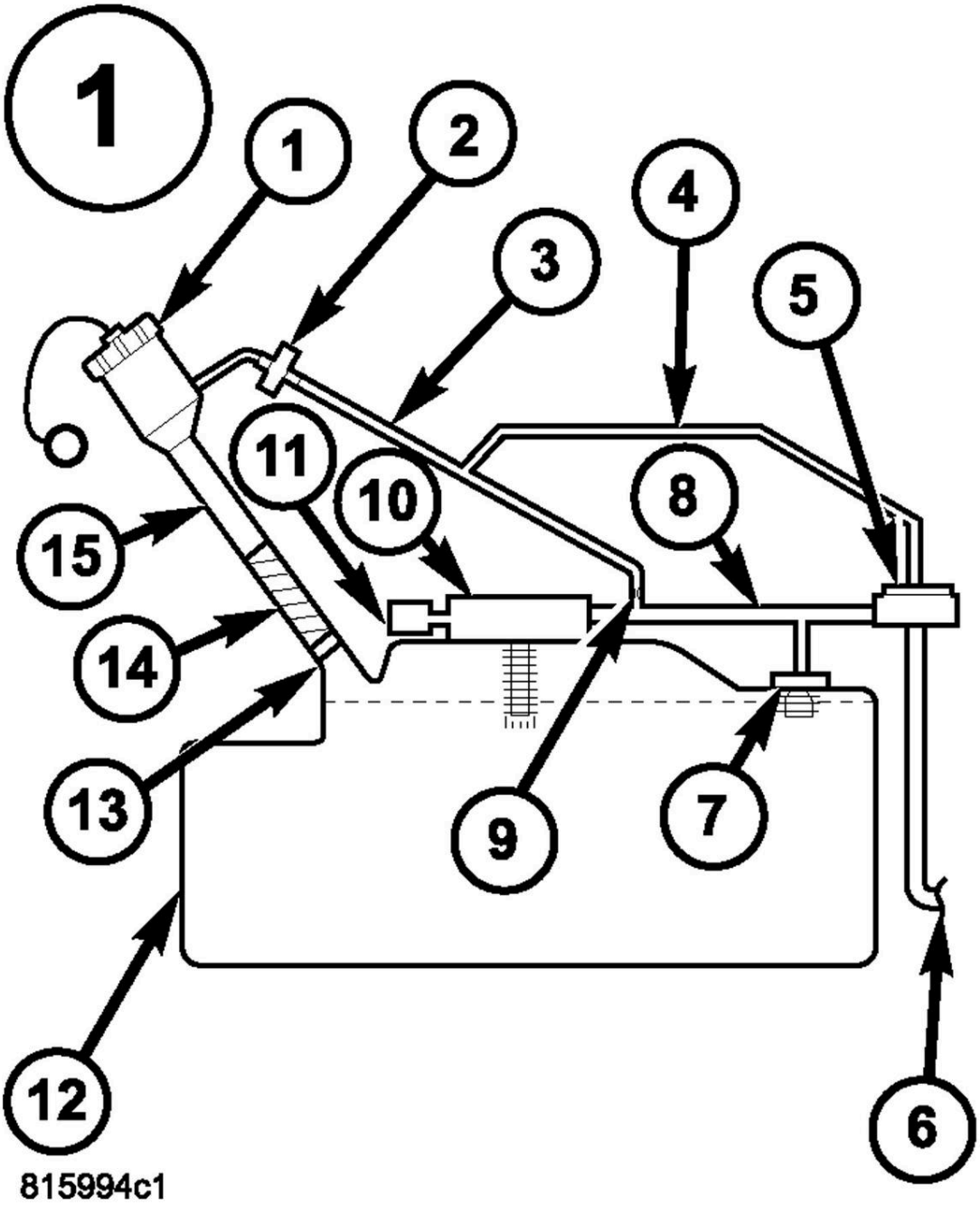

Fig. 134: Lower Coupling Bolt
Courtesy of CHRYSLER GROUP, LLC

20. Verify the front wheels of vehicle are in the STRAIGHT-AHEAD position.
21. Center the intermediate shaft (2) over the steering gear pinion shaft (4), lining up the ends, then slide the intermediate shaft onto the steering gear

pinion shaft.

22. If necessary, rotate the steering wheel to the right until the intermediate shaft coupling bolt (3) can be easily installed.
23. Install the intermediate shaft coupling bolt (3). Tighten the bolt to 42 N.m (31 ft. lbs.).
24. Reposition the floor carpet (1) in place.
25. Fill and bleed the power steering system. Refer to **STANDARD PROCEDURE**.
26. Check for fluid leaks.
27. Adjust front wheel toe as necessary. Refer to **WHEEL ALIGNMENT, STANDARD PROCEDURE** .

TIE ROD, STEERING

DIAGNOSIS AND TESTING

DIAGNOSIS AND TESTING - TIE ROD

Tie rod free-play can be measured using the following hand methods:

OUTER TIE ROD

1. Raise and support the vehicle. Refer to **HOISTING, STANDARD PROCEDURE** .
2. Remove the front wheels. Refer to **REMOVAL** .
3. Install two standard wheel mounting fasteners (flat side to rotor for mounting nuts), diagonally opposite to each on the rotor.

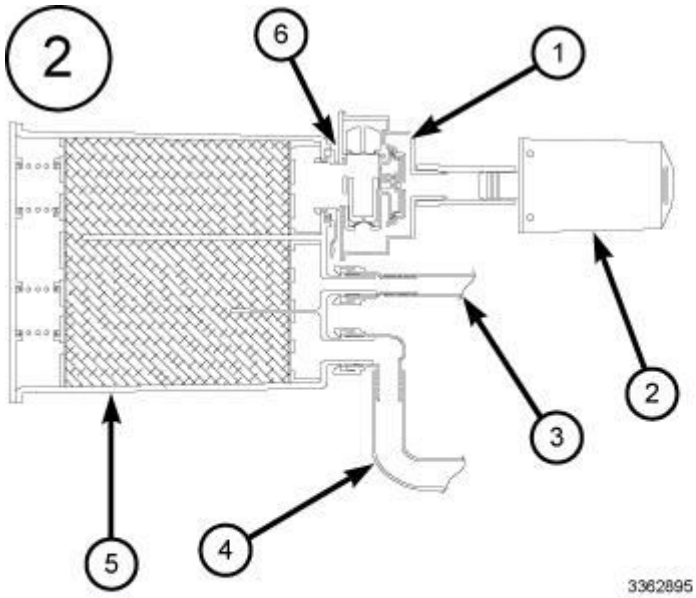

Fig. 135: Magnetic Dial Indicator
Courtesy of CHRYSLER GROUP, LLC

4. Attach a magnetic dial indicator (2) to the inside or outside of the brake rotor, then align the dial indicator's contact pointer (1) with the direction of the stud axis and touch the outer tie rod.
5. Zero the dial indicator. (3)

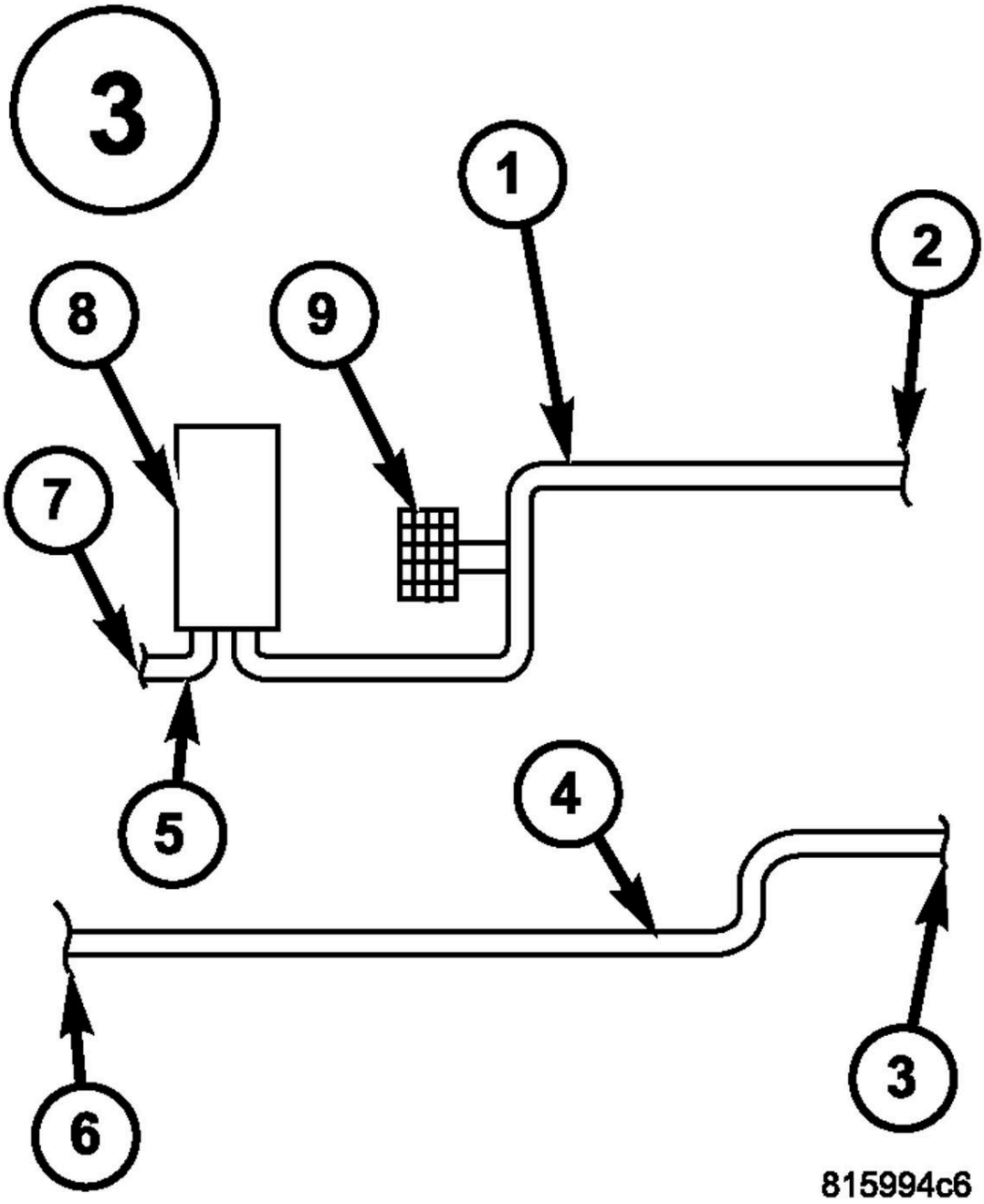

Fig. 136: Checking Outer Tie Rod Free-Play
Courtesy of CHRYSLER GROUP, LLC

NOTE: When checking free-play, DO NOT rotate the tie rod. Just because a tie rod rotates easily does not mean that it is necessarily faulty. Using more than light hand pressure will result in a false reading.

6. Grasp the outer tie rod near the ball stud and attempt to move the tie rod straight up and down using light hand pressure. (Less than 10 lbs. of force.)

7. Measure and record any tie rod free-play movement.
8. Remove the magnetic dial indicator.
9. Remove the standard wheel mounting nuts from the two studs.

If the free-play in the tie rod exceeds 0.05 mm (.002 in.), replace the outer tie rod. Refer to **TIE ROD, STEERING, REMOVAL**. If the free-play is less than 0.05 mm (.002 in.) at the outer tie rod check the inner tie rod for free-play. Refer to the following procedure.

INNER TIE ROD

NOTE: Always check and repair (if necessary) outer tie rod free-play before checking inner tie rod free-play. False results can otherwise be obtained.

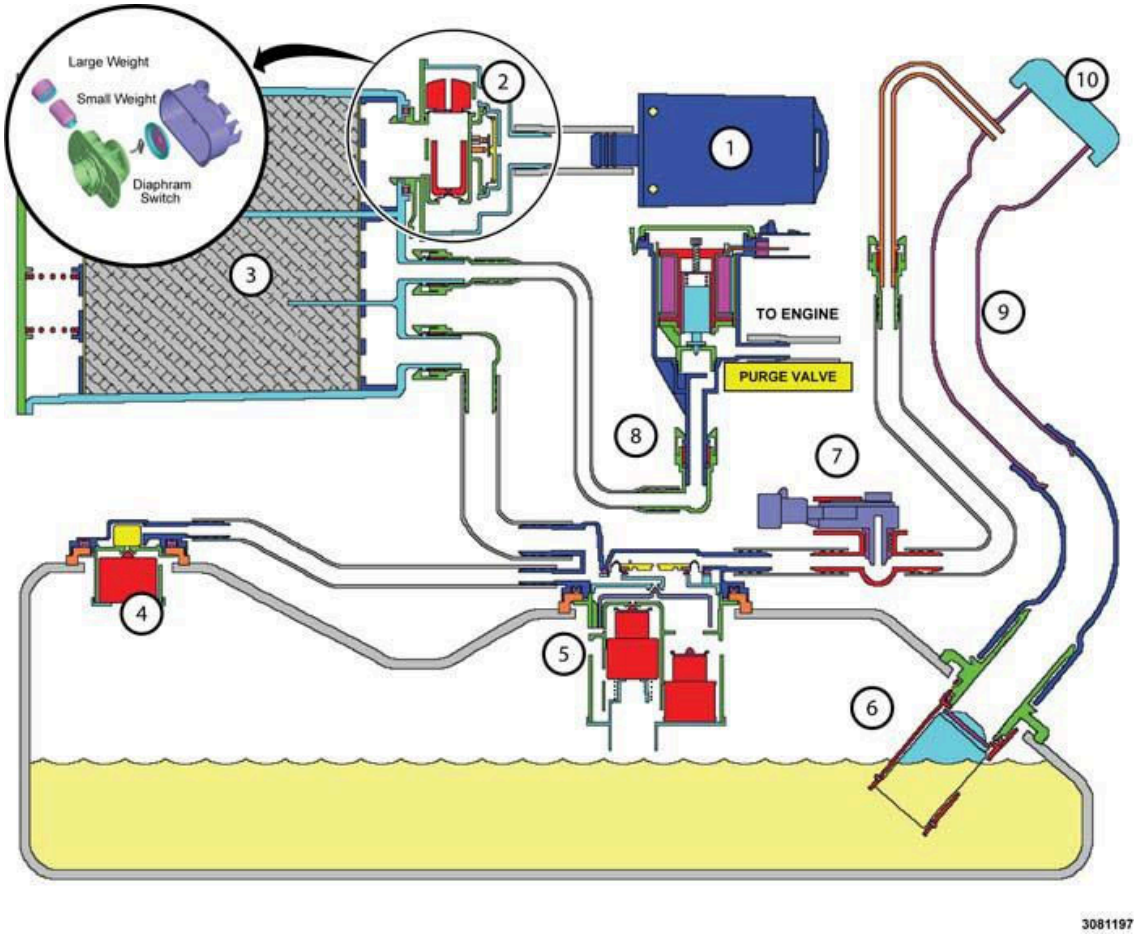

Fig. 137: Checking Inner Tie Rod Free-Play
Courtesy of CHRYSLER GROUP, LLC

1. Grasp the inner tie rod near the steering gear bellows and attempt to move

the tie rod straight up and down. If any free-play is felt, replace the inner tie rod. Refer to **TIE ROD, STEERING, REMOVAL**.

2. If no free-play is felt, install the front wheels. Refer to **INSTALLATION** .
3. Remove support and lower the vehicle.

REMOVAL

INNER TIE ROD

1. Remove the outer tie rod. Refer to **TIE ROD, STEERING, REMOVAL**.
2. Remove the tie rod jam nut from the inner tie rod.

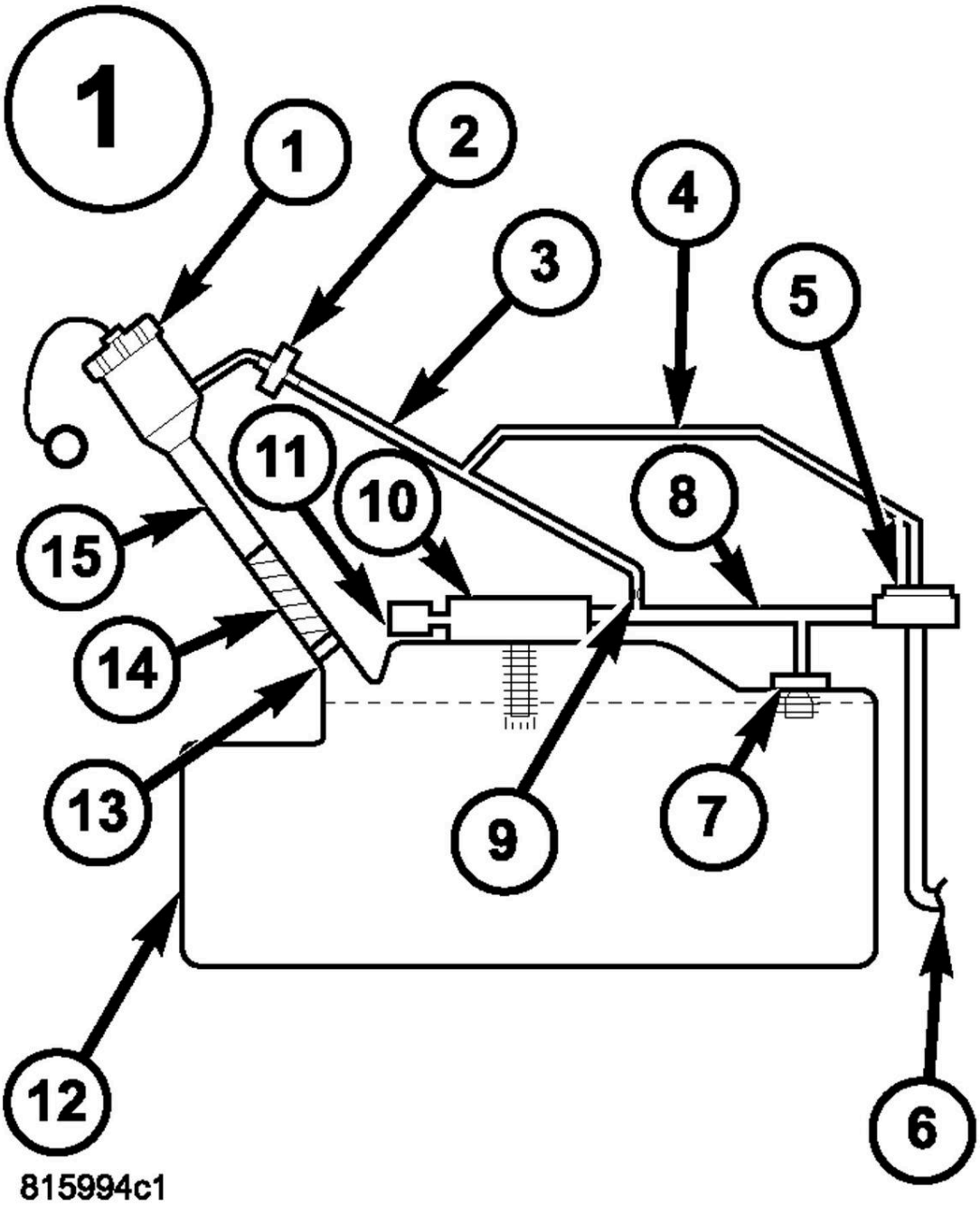

Fig. 138: Bellows Clamps
Courtesy of CHRYSLER GROUP, LLC

3. Remove the clamp (3) securing the bellows (1) to the inner tie rod.
4. Remove the clamp (2) securing the bellows (1) to the steering gear body.
5. Remove the bellows.

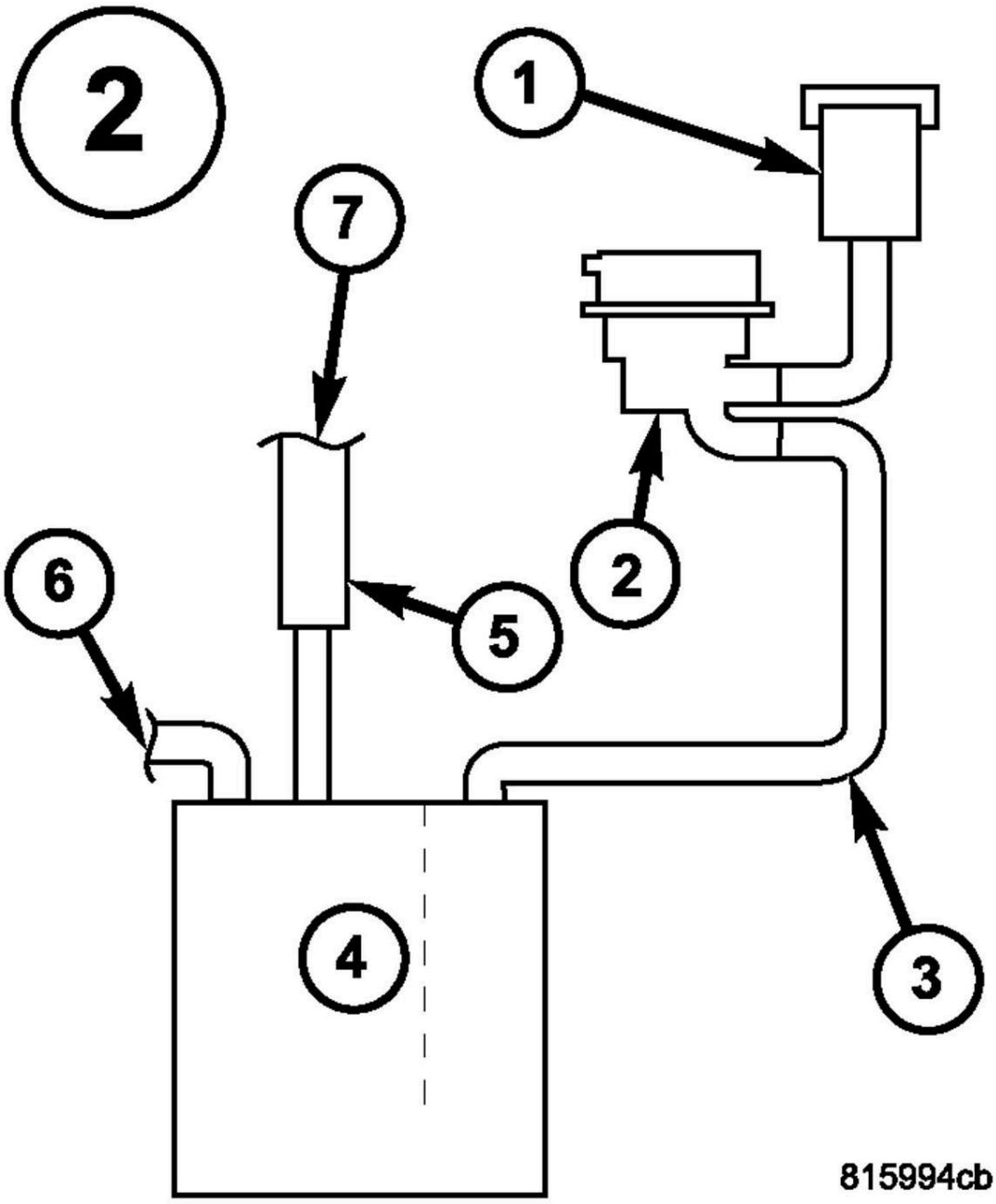

Fig. 139: Inner Tie Rod To Gear
Courtesy of CHRYSLER GROUP, LLC

6. Remove the travel restrictor (3) from the inner tie rod (1).
7. Install an appropriate inner tie rod removal tool on the inner tie rod (1) hex.

CAUTION: If the inner tie rod cannot be removed using the specified tools, do not use a hammer or heat to loosen. Damage to the steering gear will occur. Replace the entire steering gear.

8. Un-thread and remove the inner tie rod (1) from the steering gear (2).

OUTER TIE ROD END

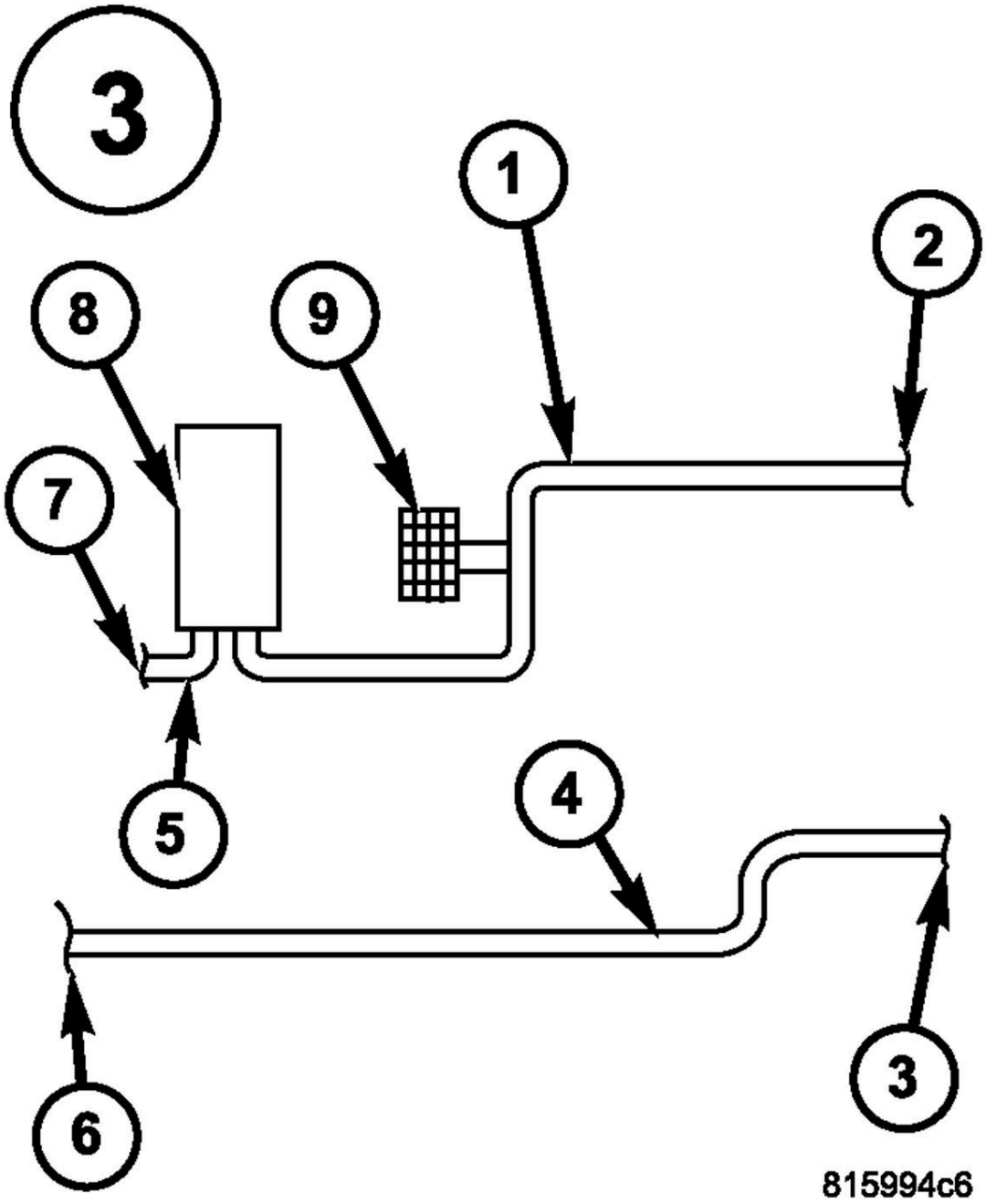

Fig. 140: Tire And Wheel Mounting
Courtesy of CHRYSLER GROUP, LLC

1. Raise and support the vehicle. Refer to **HOISTING, STANDARD PROCEDURE** .
2. Remove the wheel mounting nuts (3), then the tire and wheel assembly (1).

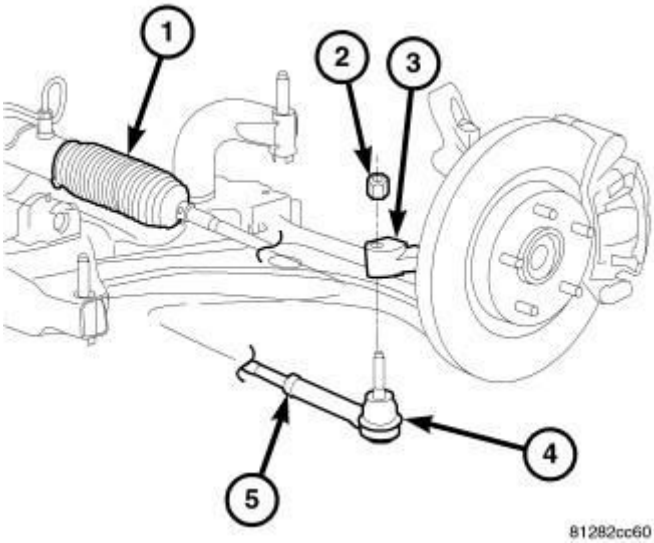

Fig. 141: Tie Rod Nut
Courtesy of CHRYSLER GROUP, LLC

3. Loosen the tie rod jam nut (5).
4. Remove the nut (2) attaching the outer tie rod (4) to the knuckle (3). To do this, hold the tie rod end stud with a wrench while loosening and removing the nut with a standard wrench or crowfoot wrench.

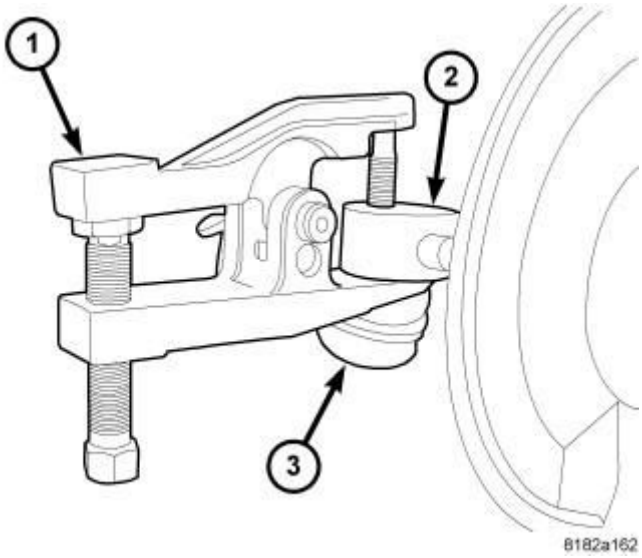

Fig. 142: Using 9360 On Tie Rod End
Courtesy of CHRYSLER GROUP, LLC

5. Release the tie rod end (3) from the knuckle (2) using Remover, Special Tool (special tool #9360, Remover, Ball Joint) (1)
6. Remove the outer tie rod (3) from the knuckle (2).

NOTE: When unscrewing the outer tie rod from inner, count the number of revolutions to take it off. This action will aid in installation, getting the toe close to where it needs to be when setting the wheel alignment.

7. Remove the outer tie rod from the inner tie rod.

INSTALLATION

INNER TIE ROD

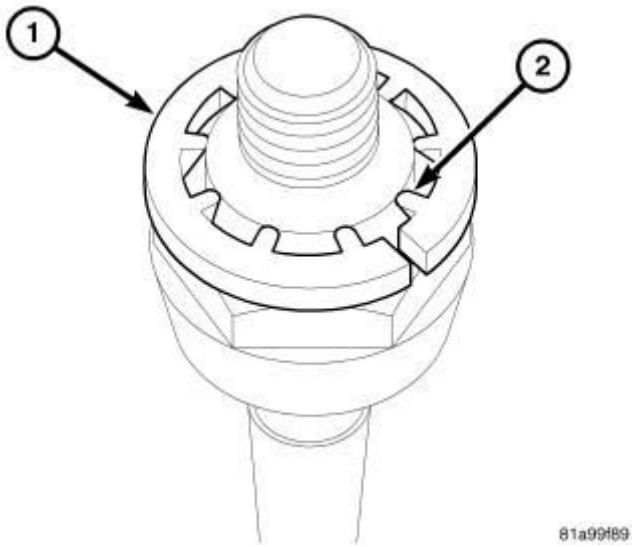

Fig. 143: Travel Restrictor On Inner Tie Rod
Courtesy of CHRYSLER GROUP, LLC

1 - RESTRICTOR
2 - FLAT SIDE OF TEETH

CAUTION: When installing the travel restrictor, be sure to use the same color and thickness travel restrictor as was removed. This action is necessary to properly set gear travel for the steering gear being serviced. Travel restrictor thickness can vary side-to-side on the steering gear.

1. Install the travel restrictor (1), flat side of teeth (2) facing out, on the inboard end of the inner tie rod ball joint.
2. Apply Mopar® Lock AND Seal Adhesive or equivalent medium thread locker adhesive to the inboard end threads of the inner tie rod.

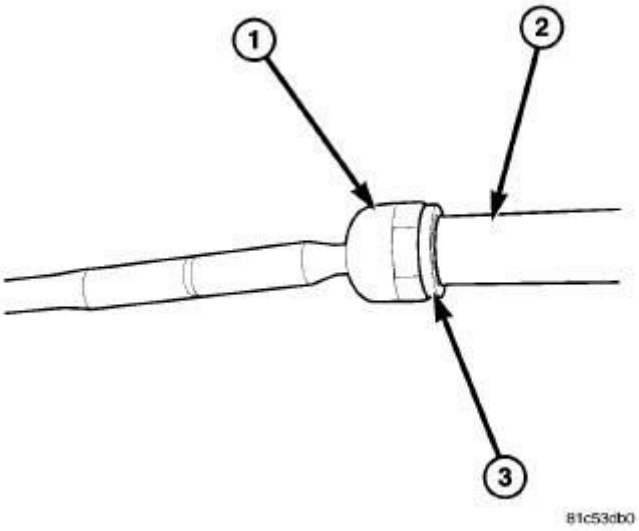

Fig. 144: Inner Tie Rod To Gear
Courtesy of CHRYSLER GROUP, LLC

3. Install the inner tie rod (1) onto the gear (2) using an appropriate inner tie rod installation tool or crows foot wrench on the hex. Tighten the inner tie rod to 78 N.m, (58 ft. lbs.).
4. Loosely place a NEW clamp over the large end of the NEW bellows.
5. Slide the NEW bellows with clamp over the end of the inner tie rod and onto the gear body.

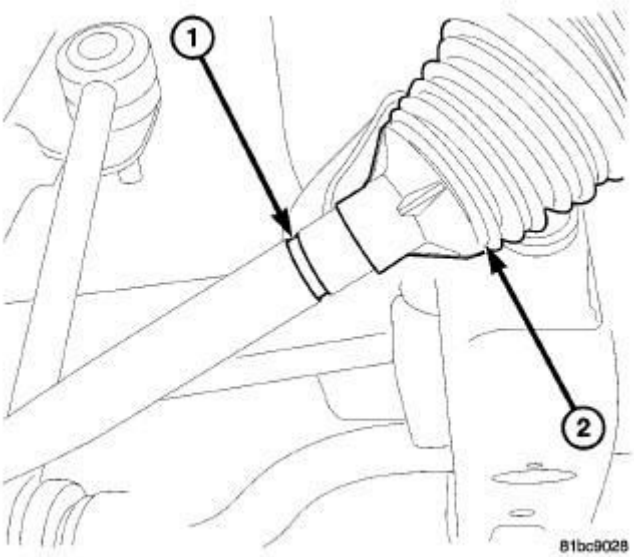

Fig. 145: Groove In Inner Tie Rod
Courtesy of CHRYSLER GROUP, LLC

6. Push the small end of the bellows (2) past the groove (1) machined into the inner tie rod.
7. Apply a small amount of Mopar® Lubriplate or equivalent uniformly to the groove (1) in the inner tie rod shaft. This allows for toe adjustment without twisting the bellows.
8. Pull the small end of the bellows outward until the ridge inside the bellows engages the groove.

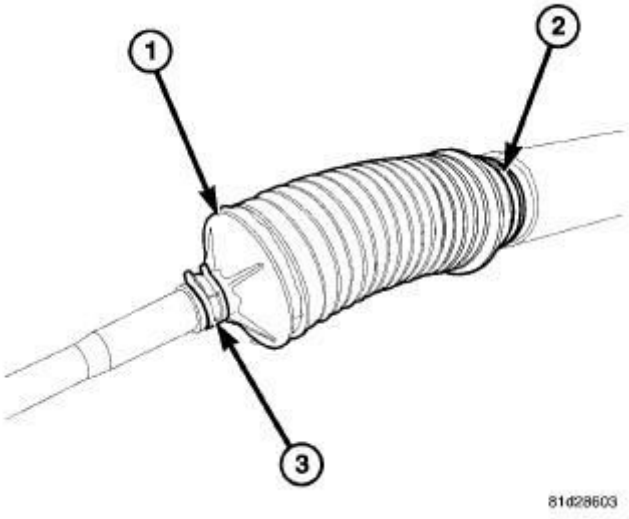

Fig. 146: Bellows Clamps
Courtesy of CHRYSLER GROUP, LLC

9. Install a NEW clamp (3) over the small end of the bellows (1).

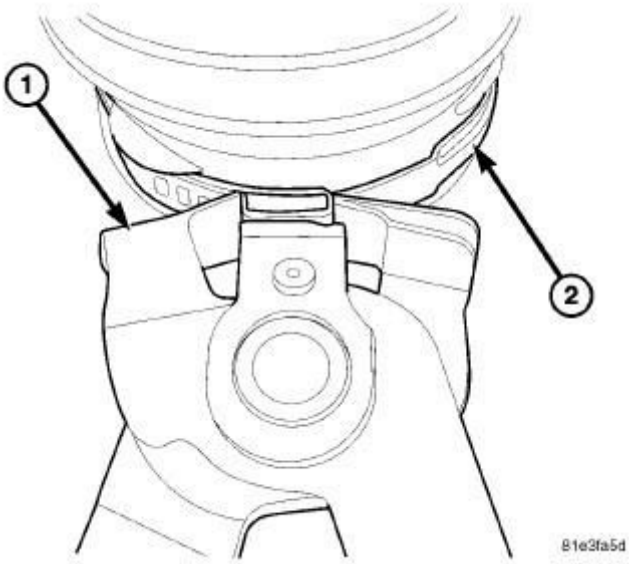

Fig. 147: Crimping Pliers On Bellows Clamp
Courtesy of CHRYSLER GROUP, LLC

10. Using crimping pliers (1), crimp the large clamp (2) securing the bellows to the gear body.
11. Thread the tie rod jam nut onto the inner tie rod far enough to install the outer tie rod.
12. Install the outer tie rod. Refer to **TIE ROD, STEERING, INSTALLATION**.

OUTER TIE ROD END

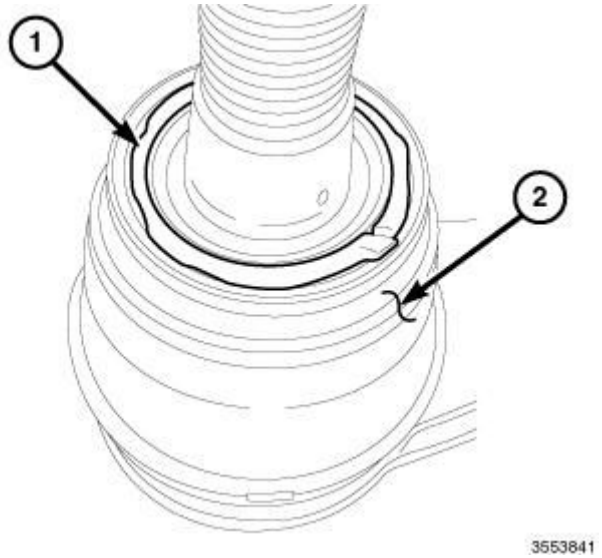

Fig. 148: Locating Grease & Tie Rod End Boot
Courtesy of CHRYSLER GROUP, LLC

NOTE: If a new tie rod end is to be installed, make sure the boot (2) is properly lubricated.

1. Clean all old grease and debris from the boot (2) with a clean cloth.
2. Apply outer tie rod grease P/N 68088623AA (1) to the tie rod end boot (2).

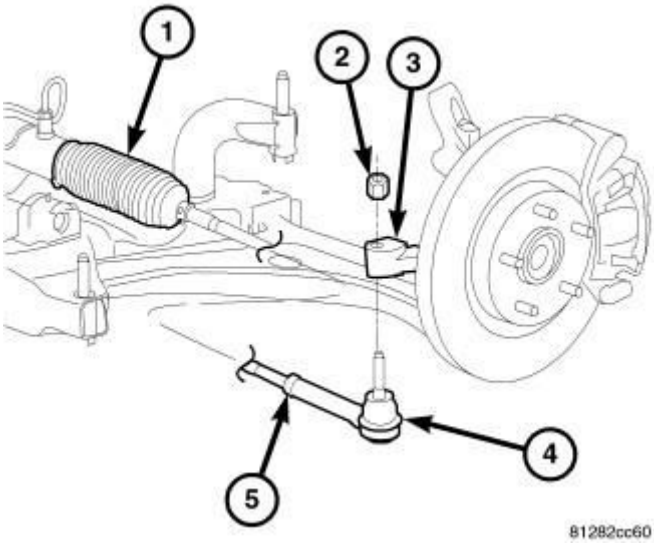

Fig. 149: Tie Rod Nut
Courtesy of CHRYSLER GROUP, LLC

3. If it is not already installed, install the jam nut (5) on the inner tie rod threads.
4. Thread the outer tie rod (4) onto the inner tie rod approximately the same amount of revolutions as the original was installed.
5. Thread the jam nut (5) down the inner tie rod far enough to hold the outer tie rod. Do not tighten the jam nut at this time.
6. Install the outer tie rod ball stud into the hole in the knuckle arm (3). Start a NEW tie rod mounting nut (2) onto the stud. While holding the tie rod end stud with a wrench, tighten the nut with a wrench or crowfoot wrench. Tighten the nut to 132 N.m (97 ft. lbs.).

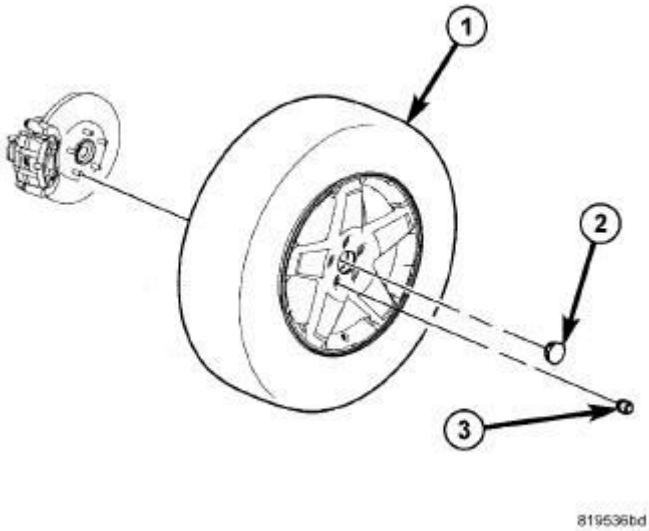

Fig. 150: Tire And Wheel Mounting
Courtesy of CHRYSLER GROUP, LLC

7. Install the tire and wheel assembly (1). Refer to **INSTALLATION** . Install and tighten wheel mounting nuts (3) to 135 N.m (100 ft. lbs.).
8. Lower the vehicle.
9. Adjust the front wheel toe setting. Refer to **WHEEL ALIGNMENT, STANDARD PROCEDURE** .
10. Tighten the tie rod jam nut to 75 N.m (55 ft. lbs.) once wheel toe is set.

PUMP

DESCRIPTION

DESCRIPTION - GAS ENGINE

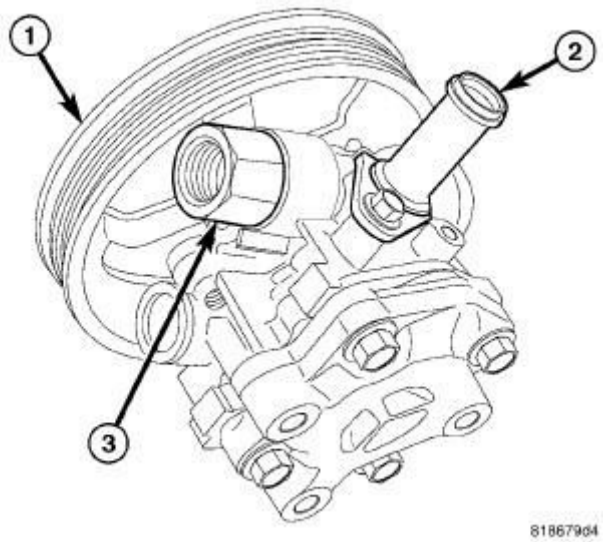

Fig. 151: View Of Power Steering Pump - Gas Engine
Courtesy of CHRYSLER GROUP, LLC

Hydraulic pressure for operation of the power steering gear is provided by a droop-flow type power steering pump.

The power steering pump is belt driven. The pulley (1) cannot be serviced separately. The power steering pump is serviced as a complete assembly.

DESCRIPTION

The power steering pump and water pump are part of one assembly, and are not

serviced separately. To service the assembly, refer to **PUMP, WATER, REMOVAL** .

DIAGNOSIS AND TESTING

DIAGNOSIS AND TESTING - POWER STEERING PUMP AND HOSES

NOTE: This information is designed to be used in conjunction with the diagnostic charts at the beginning of the Steering Service Information . Refer to DIAGNOSIS AND TESTING.

CHECKING FOR WEAR OF POWER STEERING PUMP INTERNAL COMPONENTS

1. Place gear selector in PARK (or NEUTRAL) with wheels chalked.
2. With the engine idling, have a helper turn the steering wheel.
3. Using an electronic listening tool, determine if noise is coming from the pump.
4. Increase the engine speed and have a helper turn the steering wheel. Does the noise change with load?
5. Replace the power steering pump if excessive noise is present. Refer to **PUMP, REMOVAL**.

CHECKING FOR POWER STEERING HOSES TOUCHING BODY OR FRAME OF VEHICLE

Check hoses and hose tubes as following:

- Inspect hoses and hose tubes for witness marks. If witness marks are present, adjust hose(s) to the proper position by loosening, repositioning and tightening attachments to the specified torque. Refer to **SPECIFICATIONS**. **Do not bend tubing to adjust.** Replace the hose assembly if damaged.
- Check fastener torque of hose mounting brackets and tube nuts. Refer to **SPECIFICATIONS**.
- Have a helper bump the steering gear off of the stops to induce pressure fluctuations which may move the hose. If hose contact is made, adjust hose (s) to the proper position by loosening, repositioning and tightening attachments to the specified torque. Refer to **SPECIFICATIONS**. **Do not bend tubing to adjust.** Replace the hose assembly if damaged.

REMOVAL

GAS ENGINE

NOTE: Before proceeding, refer to WARNING.

1. Siphon as much fluid as possible from the power steering fluid reservoir.
2. Remove the engine appearance cover.

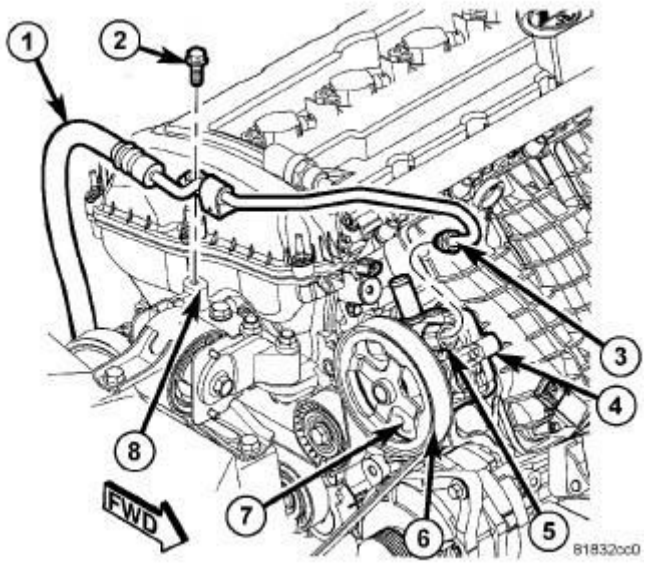

Fig. 152: Pressure Hose
Courtesy of CHRYSLER GROUP, LLC

3. Remove the pressure hose routing bracket bolt (2) at the upper mount (8).
4. Remove the pressure hose (3) at the pump pressure port (5).

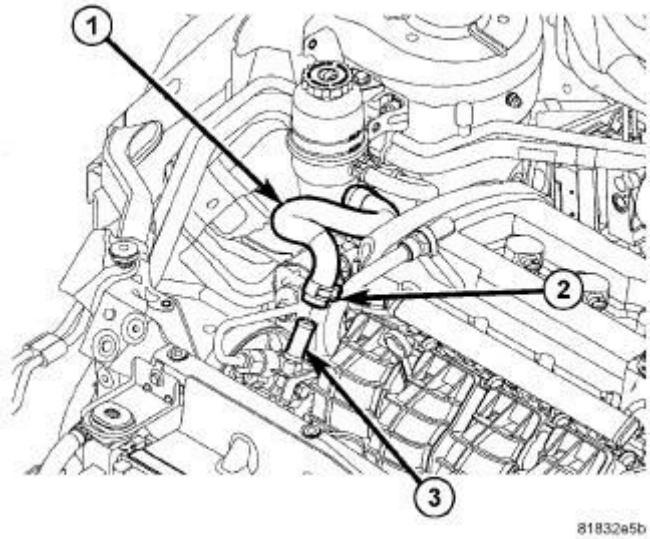

Fig. 153: Supply Hose
Courtesy of CHRYSLER GROUP, LLC

5. Remove the hose clamp (2) securing the supply hose (1) at the pump.
6. Remove the supply hose (1) from the pump (3).

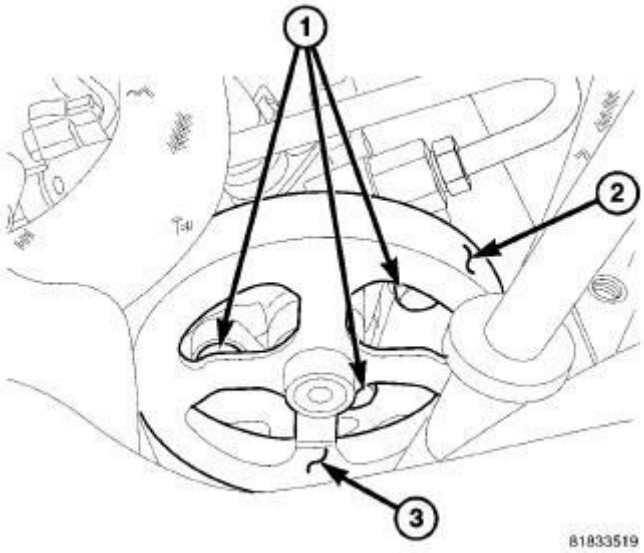

Fig. 154: Power Steering Pump - Gas
Courtesy of CHRYSLER GROUP, LLC

7. Remove the drive belt (2). Refer to **BELT, SERPENTINE, REMOVAL** .
8. Remove the three pump mounting bolts (1) through the pulley (3) openings.
9. Remove the power steering pump.

DIESEL ENGINE

The power steering pump and water pump are serviced as one assembly. To remove the assembly, refer to **PUMP, WATER, REMOVAL** .

INSTALLATION

GAS ENGINE

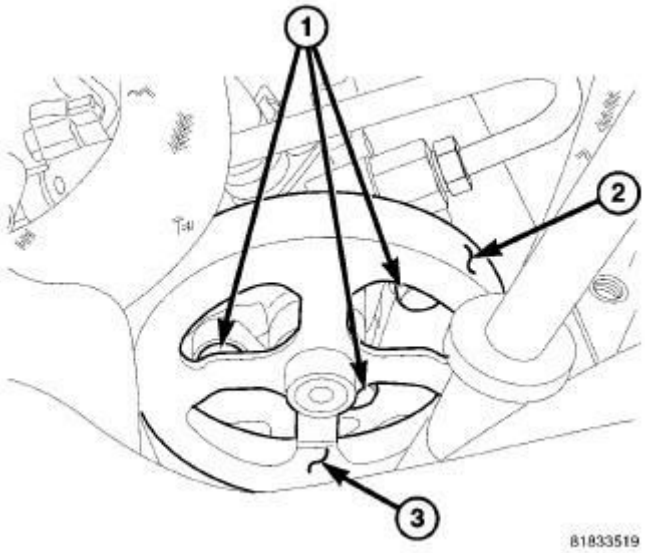

Fig. 155: Power Steering Pump - Gas
Courtesy of CHRYSLER GROUP, LLC

1. Using a lint free towel, wipe clean the open power steering pressure hose end and the power steering pump port. Replace any used O-rings with new. Lubricate the O-ring with clean power steering fluid.
2. Place the pump in mounting position. Install the three bolts (1) through the pulley (3) openings. Tighten the mounting bolts (1) to 26 N.m (19 ft. lbs.).
3. Install the drive belt (2). Refer to **BELT, SERPENTINE, INSTALLATION** .

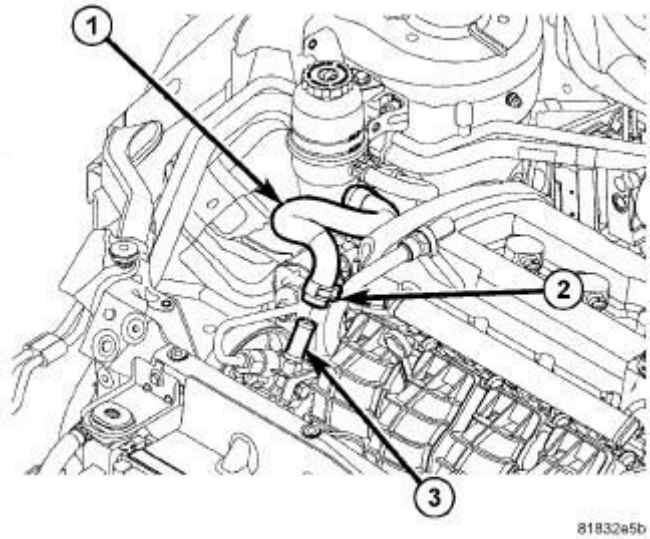

Fig. 156: Supply Hose
Courtesy of CHRYSLER GROUP, LLC

4. Install the supply hose (1) at the pump (3).
5. Clamp the hose clamp (2) securing the supply hose (1) to the pump.

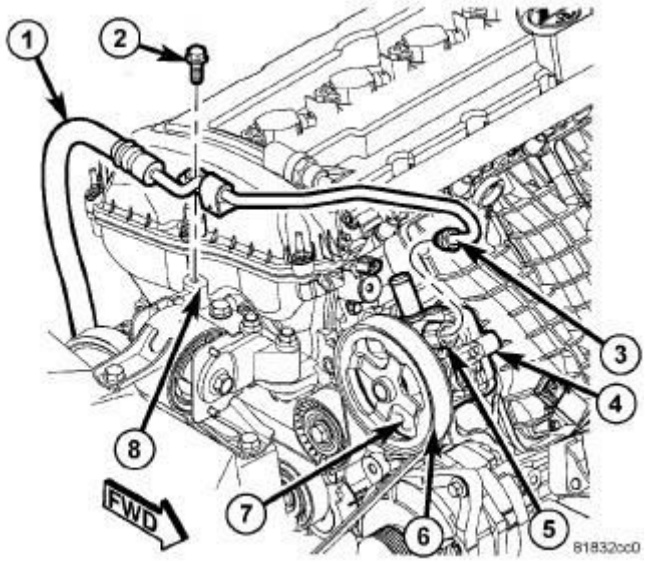

Fig. 157: Pressure Hose
Courtesy of CHRYSLER GROUP, LLC

6. Install the pressure hose (3) at the pump pressure port (5). Tighten the tube nut to 32 N.m (24 ft. lbs.).
7. Install the pressure hose routing bracket bolt (2) to the upper mount (8).
8. Fill and bleed the power steering system. Refer to **STANDARD**

PROCEDURE.

9. Check for leaks.
10. Install the engine appearance cover.

DIESEL ENGINE - INSTALLATION

The power steering pump and water pump are part of one assembly. To install the assembly, refer to **PUMP, WATER, INSTALLATION** .

COOLER, POWER STEERING

DESCRIPTION

DESCRIPTION - GAS ENGINE

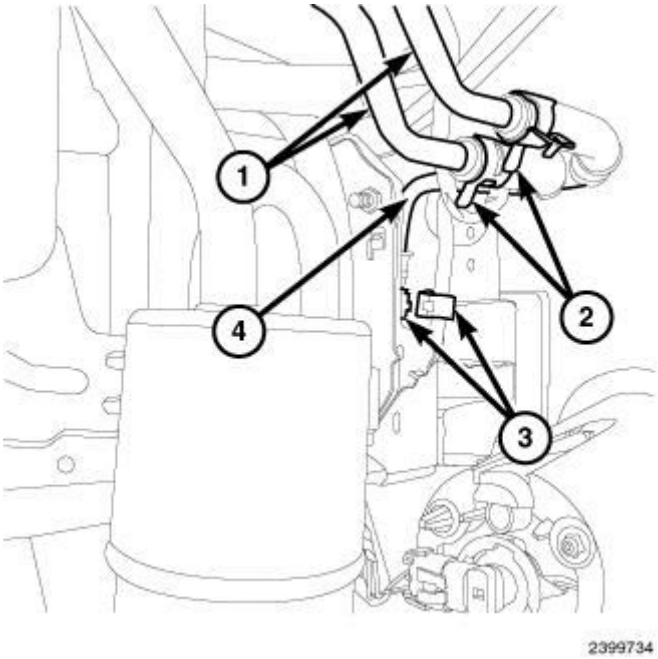

Fig. 158: Removing /Installing Fluid Return Hose And Hose Clamps
Courtesy of CHRYSLER GROUP, LLC

The cooler (4) is placed in series with the power steering fluid return hose (1), between the steering gear fluid outlet port and the fluid return hose leading to the power steering fluid reservoir.

The cooler is not available separately. It is serviced with the power steering fluid return hose.

DESCRIPTION - DIESEL ENGINE

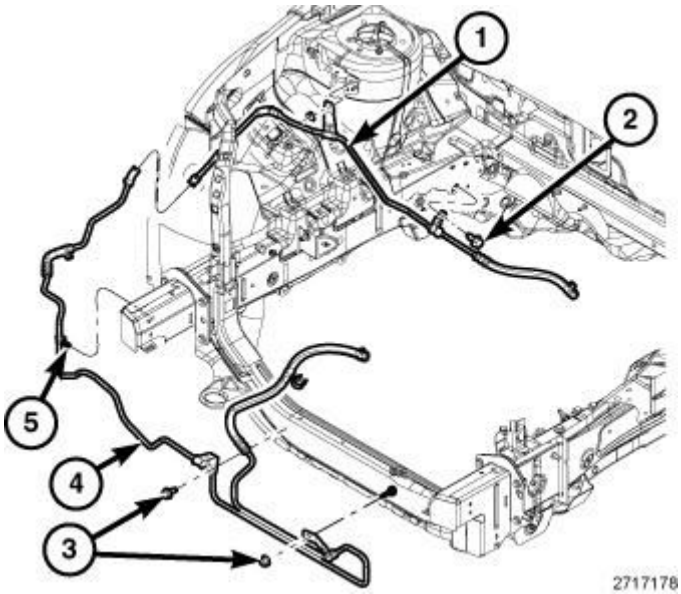

Fig. 159: Identifying Cooler, Return Hose & Bolts
Courtesy of CHRYSLER GROUP, LLC

The cooler (4) is placed in series with the power steering fluid return hose (1), between the steering gear fluid outlet port and the fluid return hose leading to the power steering fluid reservoir.

REMOVAL

REMOVAL - GAS ENGINE

The power steering cooler is not available separately. It is serviced with the power steering return hose. Refer to **HOSE, POWER STEERING, PRESSURE, REMOVAL**, **HOSE, POWER STEERING, RETURN, REMOVAL** and **HOSE, POWER STEERING, SUPPLY, REMOVAL**.

REMOVAL - DIESEL ENGINE

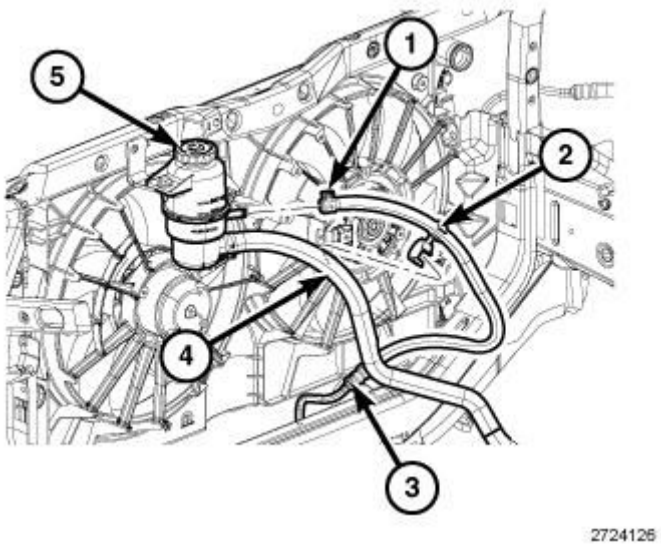

Fig. 160: Power Steering Reservoir, Hose & Clamp
Courtesy of CHRYSLER GROUP, LLC

NOTE: Before proceeding, refer to WARNING.

1. Siphon as much fluid as possible from the power steering fluid reservoir.
2. Remove the hose clamp (3) attaching the power steering cooler to the hose (2) leading to the power steering reservoir (5).

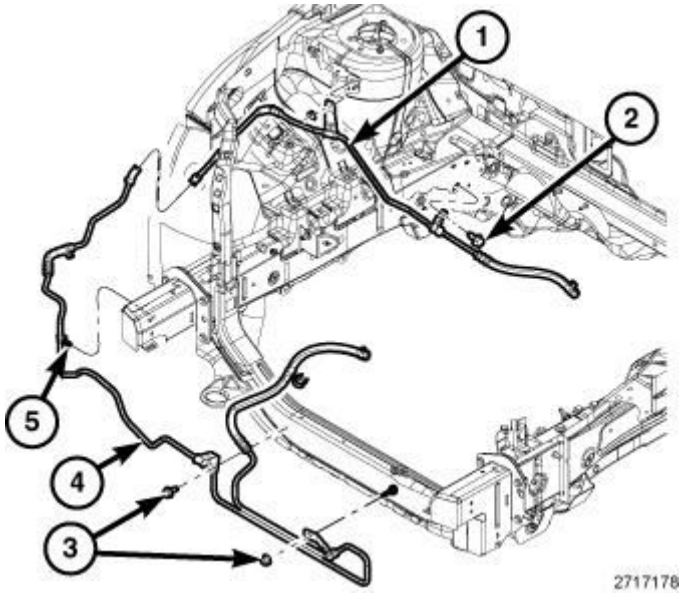

Fig. 161: Identifying Cooler, Return Hose & Bolts
Courtesy of CHRYSLER GROUP, LLC

3. Remove the belly pan. Refer to **BELLY PAN, REMOVAL** .
4. Remove the front fascia. Refer to **FASCIA, FRONT, REMOVAL** .

5. Remove the right headlamp unit.
6. Remove the hose clamp attaching the fluid return hose (1) to the power steering fluid cooler line (4). Separate the return hose from the cooler line (4).
7. Remove the clip (5) that attaches the power steering cooler line to the right frame rail.
8. Remove the fasteners (3) holding the cooler lines to the lower radiator support.
9. Remove the cooler lines (4) from the vehicle.

INSTALLATION

INSTALLATION - GAS ENGINE

The power steering cooler is not available separately. It is serviced with the power steering return hose Refer to **HOSE, POWER STEERING, PRESSURE, INSTALLATION**, **HOSE, POWER STEERING, RETURN, INSTALLATION** and **HOSE, POWER STEERING, SUPPLY, INSTALLATION**.

INSTALLATION - DIESEL ENGINE

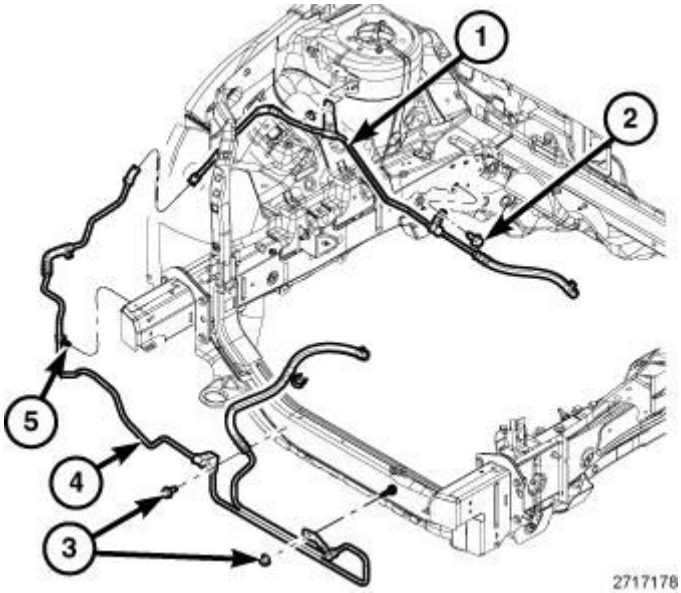

Fig. 162: Identifying Cooler, Return Hose & Bolts
Courtesy of CHRYSLER GROUP, LLC

1. Install the power steering fluid cooler line (4) to the lower front radiator crossmember. Tighten the fasteners (3) to 8 N-m (70.81 in. lbs.)

2. Connect the power steering fluid cooler line (4) to the fluid return line (1).
3. Install the clip (5) that attaches the power steering cooler line to the right frame rail.
4. Install the right headlamp unit.
5. Install the front fascia. Refer to **FASCIA, FRONT, INSTALLATION** .
6. Install the belly pan. Refer to **BELLY PAN, INSTALLATION** .

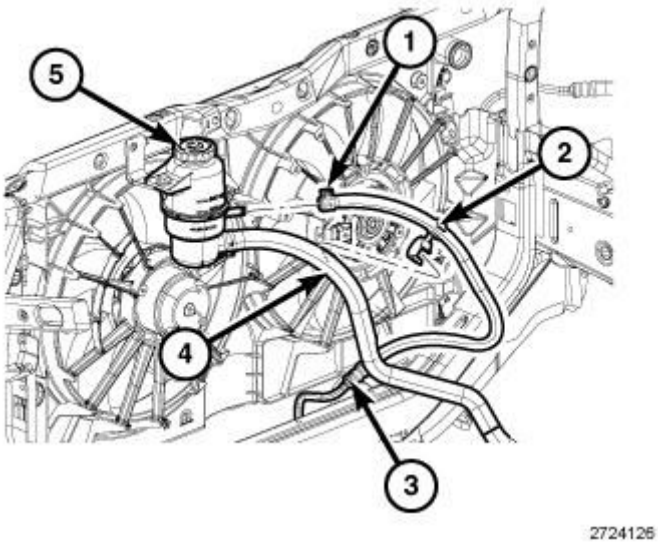

Fig. 163: Power Steering Reservoir, Hose & Clamp
Courtesy of CHRYSLER GROUP, LLC

7. Slide the hose (2) from the power steering reservoir over the power steering cooler line. Expand the hose clamp (3) and slide it over the cooler line to secure it to the hose.
8. Fill and bleed the power steering system. Refer to **STANDARD PROCEDURE**.
9. Check for leaks.

FLUID

DESCRIPTION

DESCRIPTION

The recommended fluid for the power steering system is Mopar® Power Steering fluid + 4 or Mopar® ATF+4 Automatic Transmission Fluid. Both fluids have the same material standard specifications (MS-9602).

Mopar® ATF+4 (and Mopar® Power Steering fluid + 4), when new, is red in color. ATF+4 is dyed red so it can be identified from other fluids used in the vehicle such as engine oil or antifreeze. The red color is not permanent and is not an indicator of fluid condition. As the vehicle is driven, ATF+4 will begin to look darker in color and may eventually become brown. **THIS IS NORMAL.** ATF+4 also has a unique odor that may change with age. Consequently, odor and color cannot be used to indicate the fluid condition or the need for a fluid change.

STANDARD PROCEDURE

STANDARD PROCEDURE - POWER STEERING FLUID LEVEL CHECKING

WARNING: Fluid level should be checked with the engine OFF to prevent personal injury from moving parts and to assure an accurate fluid level reading.

CAUTION: Mopar® Power Steering Fluid + 4 or Mopar® ATF+4 Automatic Transmission Fluid is to be used in the power steering system. Both Fluids have the same material standard specifications (MS-9602). No other power steering or automatic transmission fluid is to be used in the system. Damage may result to the power steering pump and system if another fluid is used. Do not overfill the system.

NOTE: Although not required at specific intervals, the fluid level may be checked periodically. Check the fluid level anytime there is a system noise or fluid leak suspected.

Fig. 164: View Of Power Steering Reservoir
Courtesy of CHRYSLER GROUP, LLC

The power steering fluid level can be viewed through the side of the power steering fluid reservoir. Compare the fluid level to the markings on the side of the reservoir. When the fluid is at normal ambient temperature, approximately 21°C to 27°C (70°F to 80°F), the fluid level should read between the MAX. and MIN. markings. When the fluid is hot, fluid level is allowed to read up to the MAX. line.

HOSE, POWER STEERING, PRESSURE

REMOVAL

GAS ENGINE

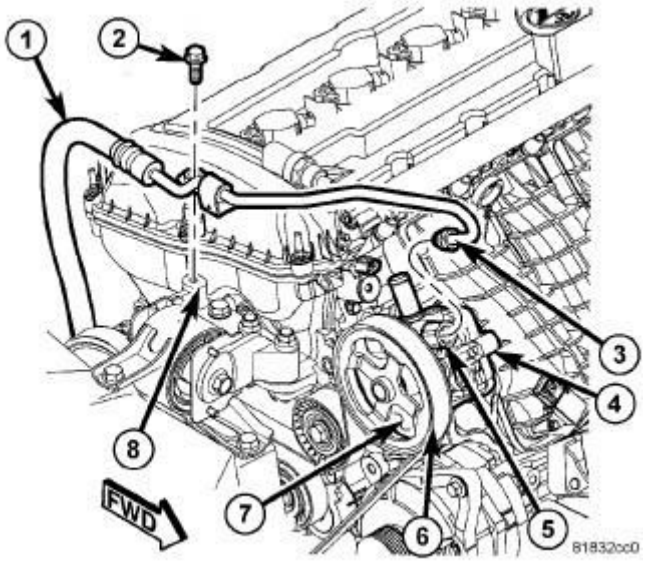

Fig. 165: Pressure Hose
Courtesy of CHRYSLER GROUP, LLC

NOTE: Before proceeding, refer to WARNING.

1. Siphon as much fluid as possible from the power steering fluid reservoir.
2. Remove the engine appearance cover.
3. Remove the pressure Hose (3) at the pump pressure port (5).
4. Remove the pressure hose routing bracket bolt (2) at the upper mount (8).

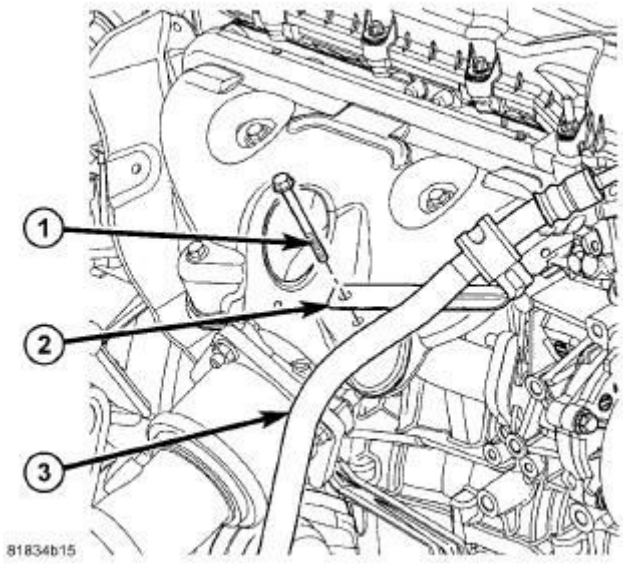

Fig. 166: Pressure Hose Bracket To Heat Shield - 2.0L
Courtesy of CHRYSLER GROUP, LLC

5. All except 2.4L Engine with All-Wheel-Drive - Remove the pressure hose routing clamp bolt (1) at the exhaust manifold.

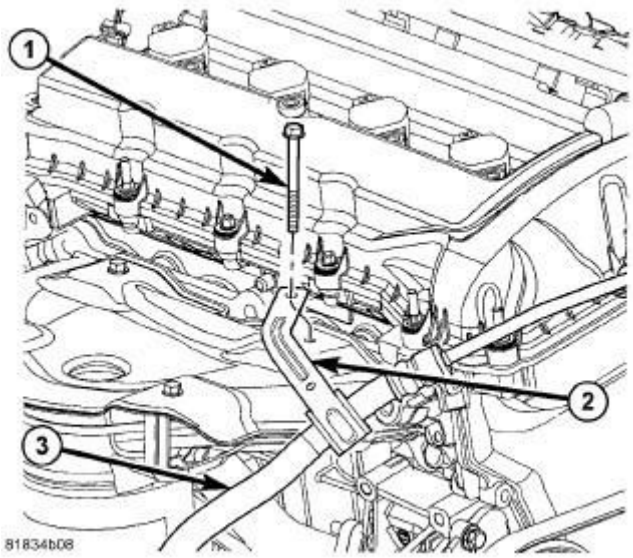

Fig. 167: Pressure Bracket To Heat Shield - 2.4L
Courtesy of CHRYSLER GROUP, LLC

6. 2.4L Engine with All-Wheel-Drive - Remove the pressure hose routing clamp bolt (1) at the exhaust manifold.

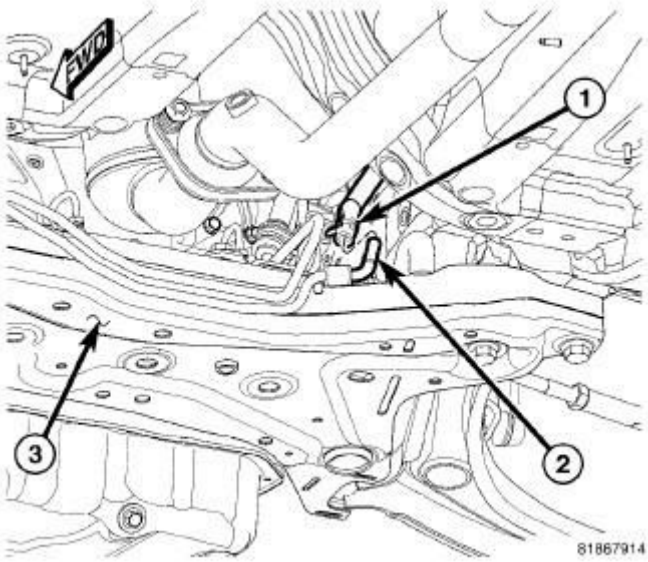

Fig. 168: Return Hose AT Tube To Gear
Courtesy of CHRYSLER GROUP, LLC

7. Raise and support the vehicle. Refer to **HOISTING, STANDARD PROCEDURE** .
8. Remove the return hose (1) at the return tube (2).

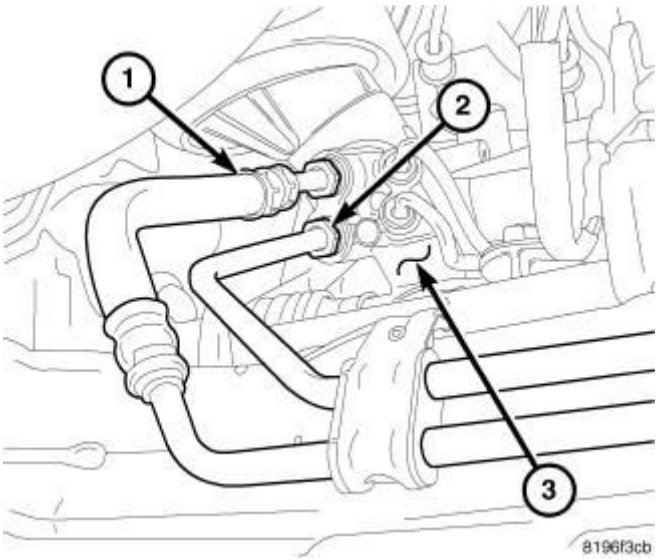

Fig. 169: Hoses AT Left-Hand-Drive Gear
Courtesy of CHRYSLER GROUP, LLC

9. Remove the return tube (1) at the steering gear (3).
10. Remove the pressure hose (2) at the steering gear (3).

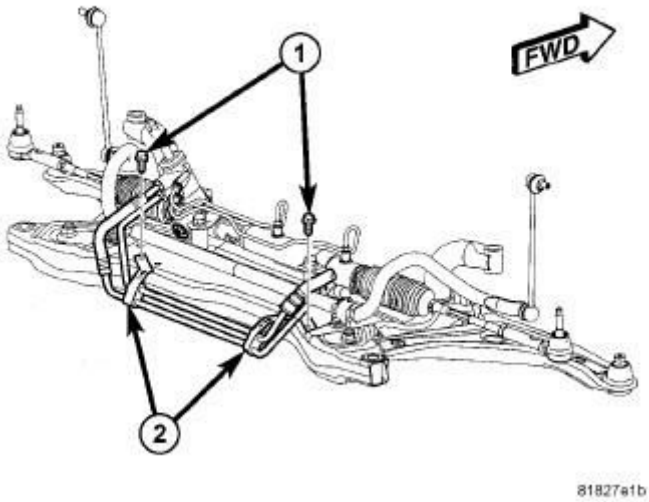

Fig. 170: Hose Routing Bracket Screws AT Crossmember
Courtesy of CHRYSLER GROUP, LLC

11. Remove the fasteners (1) securing the power steering hose routing clamps (2) to the crossmember.
12. Remove the power steering pressure hose from the vehicle.

DIESEL ENGINE

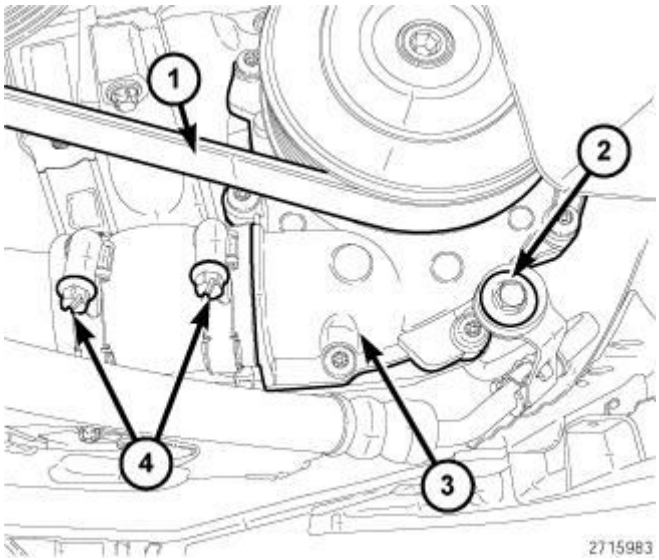

Fig. 171: Power Steering Pressure Line Retaining Bracket Bolt
Courtesy of CHRYSLER GROUP, LLC

NOTE: Before proceeding, refer to WARNING.

1. Siphon as much fluid as possible from power steering fluid reservoir.
2. Raise and support the vehicle. Refer to **HOISTING, STANDARD PROCEDURE** .
3. Remove the power steering line retaining bracket bolt (2).

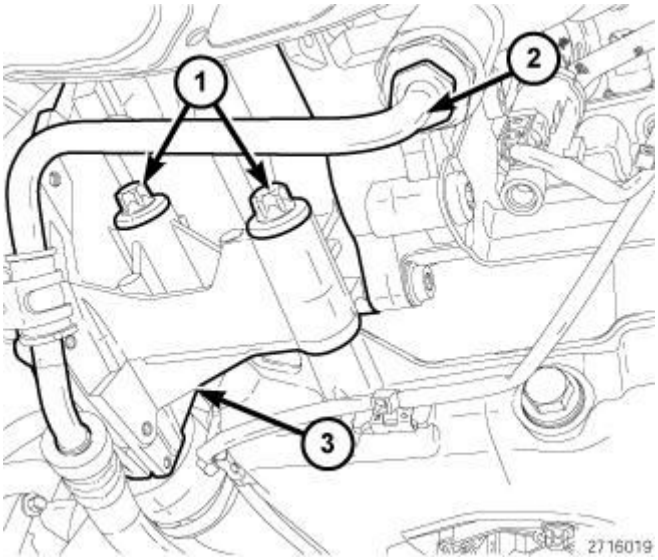

Fig. 172: Pressure Line At Pump
Courtesy of CHRYSLER GROUP, LLC

4. Remove the pressure line (2) at the pump.

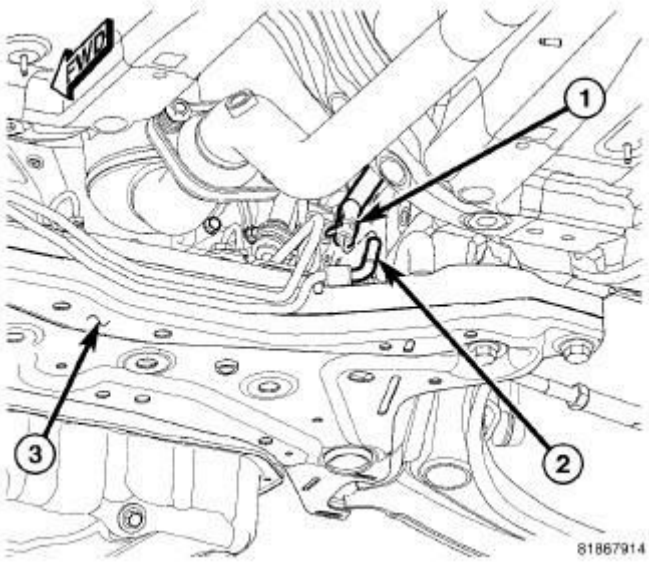

Fig. 173: Return Hose AT Tube To Gear
Courtesy of CHRYSLER GROUP, LLC

5. Remove the return hose (1) at the return tube (2).

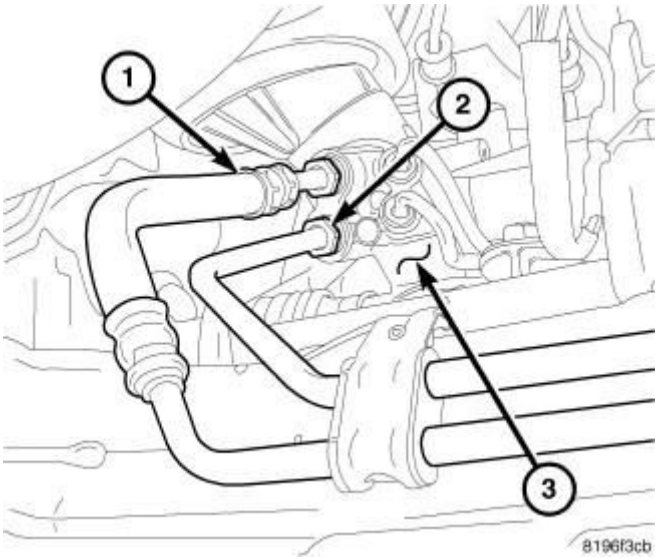

Fig. 174: Hoses AT Left-Hand-Drive Gear
Courtesy of CHRYSLER GROUP, LLC

6. Remove the return tube (1) at the steering gear (3).
7. Remove the pressure hose (2) at the steering gear (3).

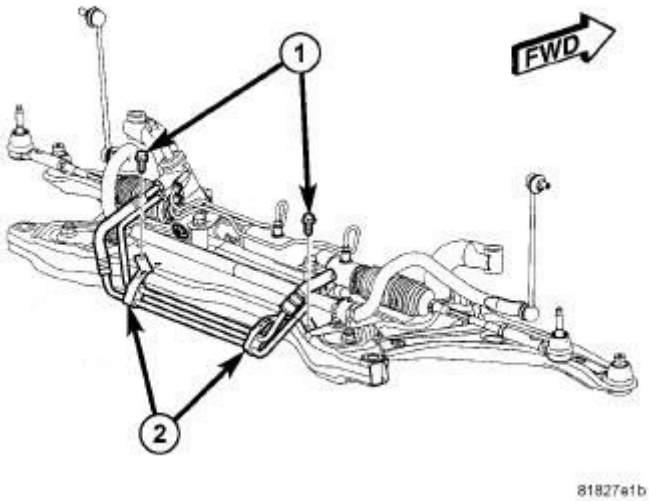

Fig. 175: Hose Routing Bracket Screws AT Crossmember
Courtesy of CHRYSLER GROUP, LLC

8. Remove the fasteners (1) securing the power steering hose routing clamps (2) to the crossmember.
9. Remove the power steering pressure hose from the vehicle.

GAS ENGINE - RIGHT-HAND-DRIVE

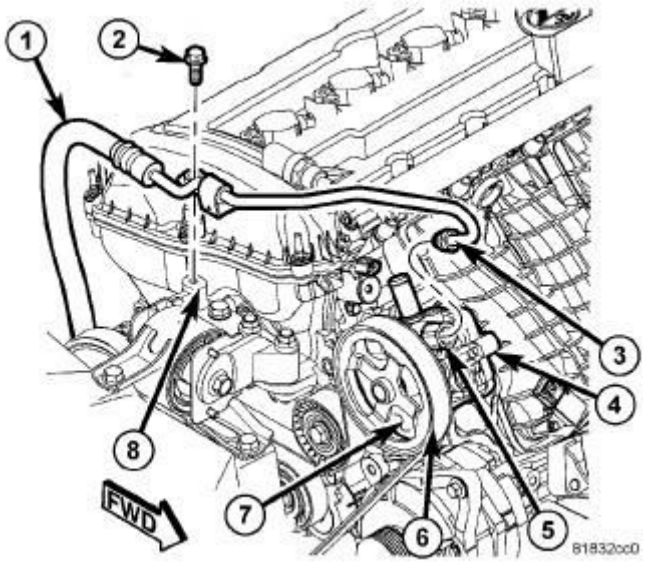

Fig. 176: Pressure Hose
Courtesy of CHRYSLER GROUP, LLC

NOTE: Before proceeding, refer to WARNING.

1. Siphon as much fluid as possible from the power steering fluid reservoir.
2. Remove the engine appearance cover.
3. Remove the pressure Hose (3) at the pump pressure port (5).
4. Remove the pressure hose routing bracket bolt (2) at the upper mount (8).

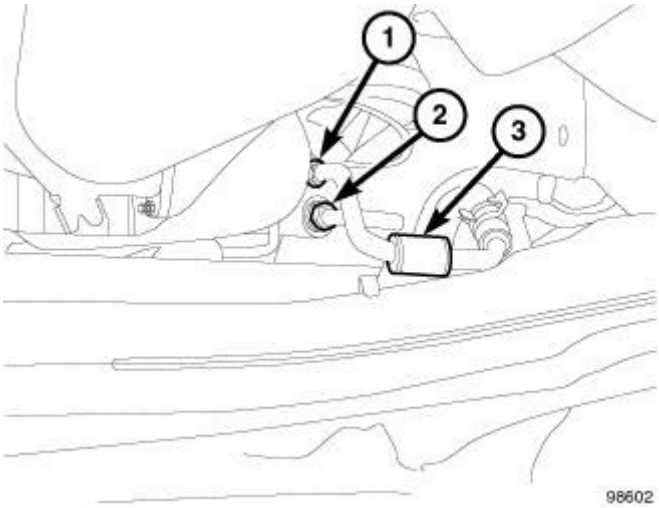

Fig. 177: Hoses AT RHD Gear
Courtesy of CHRYSLER GROUP, LLC

5. Raise and support the vehicle. Refer to **HOISTING, STANDARD PROCEDURE** .
6. Un-thread the tube nut (2) and remove the pressure hose at the steering gear.
7. Remove the power steering pressure hose from the vehicle.

DIESEL ENGINE - RIGHT-HAND-DRIVE

NOTE: Before proceeding, refer to WARNING.

1. Siphon as much fluid as possible from power steering fluid reservoir.
2. Remove the engine appearance cover.

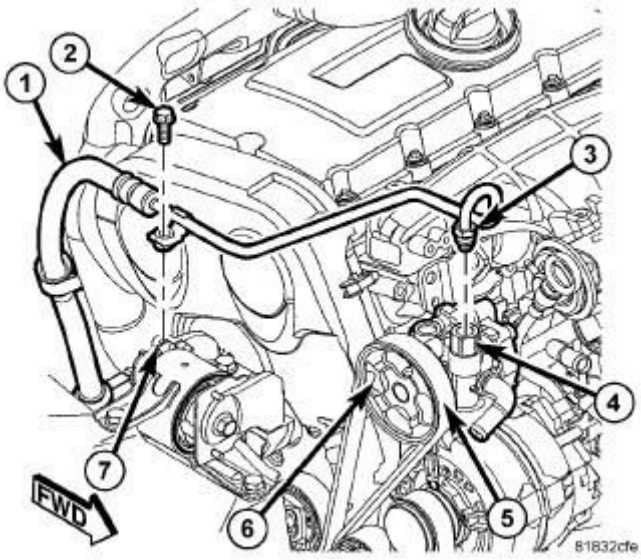

Fig. 178: Pressure Line
Courtesy of CHRYSLER GROUP, LLC

3. Remove the pressure line (3) at the pump (4).
4. Remove the pressure line routing bracket bolt (2) at the upper mount (7).

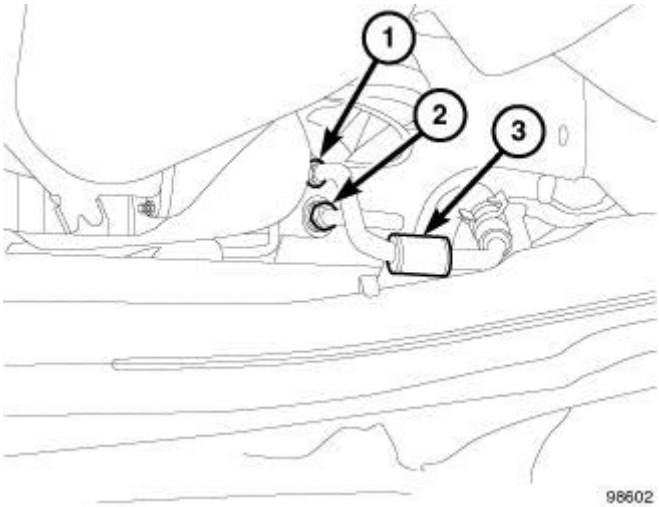

Fig. 179: Hoses AT RHD Gear
Courtesy of CHRYSLER GROUP, LLC

5. Raise and support the vehicle. Refer to **HOISTING, STANDARD PROCEDURE** .
6. Un-thread the tube nut (2) and remove the pressure hose (2) at the steering gear.
7. Remove the power steering pressure hose from the vehicle.

INSTALLATION

GAS ENGINE

CAUTION: Power steering fluid hoses must remain away from the exhaust system, driveshafts, vehicle components and any unfriendly surface that can possibly damage the hoses.

1. Using a lint free towel, wipe clean the open power steering hose end and the power steering pump port. Replace any used O-rings with new. Lubricate the O-ring with power steering fluid.

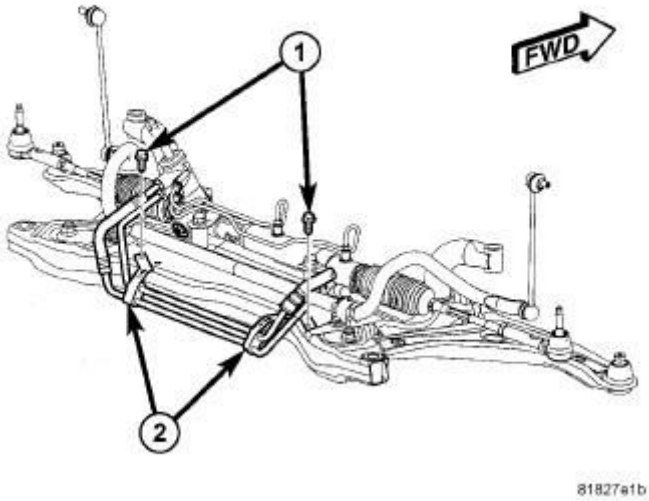

Fig. 180: Hose Routing Bracket Screws AT Crossmember
Courtesy of CHRYSLER GROUP, LLC

2. Install the power steering pressure hose into the engine compartment from below.
3. Install the fasteners (1) securing the power steering hose routing clamps (2) to the crossmember. Use a NEW push clip on the left and tighten the screw on the right to 8 N.m (71 in. lbs.).

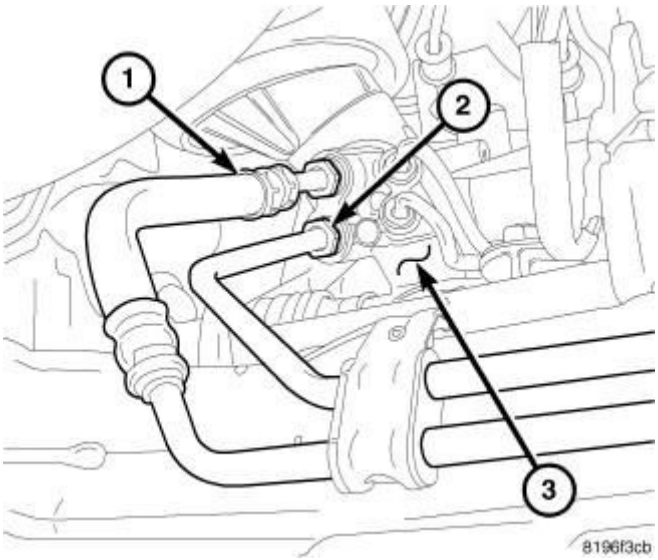

Fig. 181: Hoses AT Left-Hand-Drive Gear
Courtesy of CHRYSLER GROUP, LLC

4. Install the pressure hose (2) at the gear (3). Tighten the tube nut to 32 N.m (24 ft. lbs.).
5. Install the return tube (1) at the gear (3). Tighten the tube nut to 20 N.m (15 ft. lbs.).

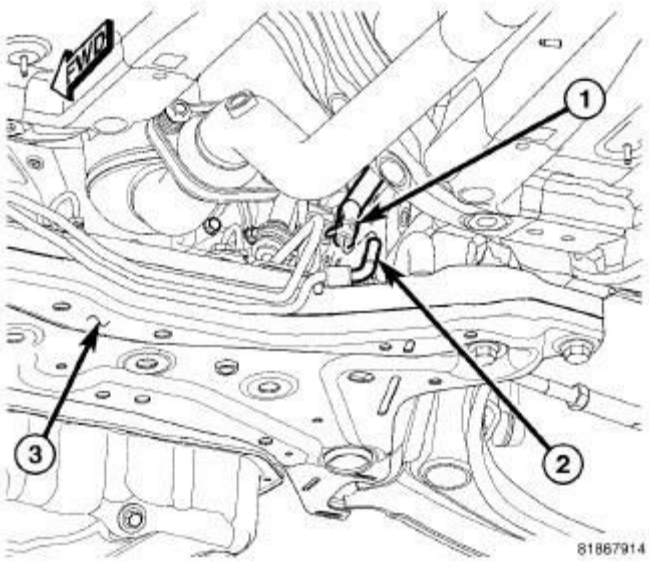

Fig. 182: Return Hose AT Tube To Gear
Courtesy of CHRYSLER GROUP, LLC

6. Install the return hose (1) at the return tube (2).
7. Lower the vehicle.

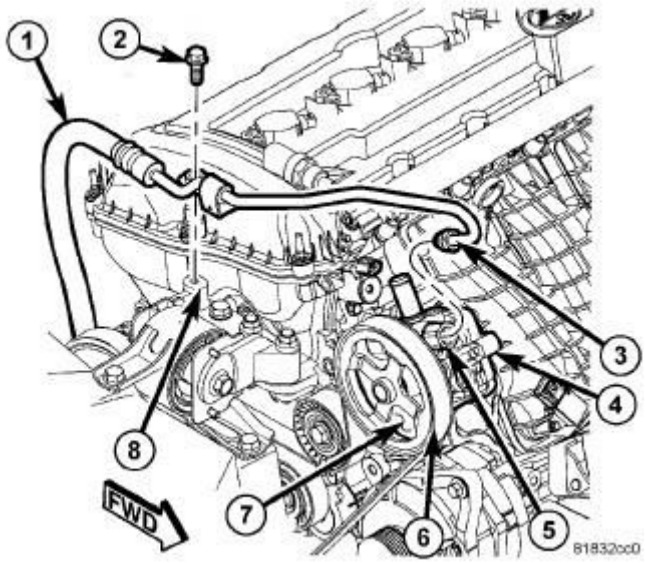

Fig. 183: Pressure Hose
Courtesy of CHRYSLER GROUP, LLC

8. Install the pressure hose (3) at the pump pressure port (5). Tighten the tube nut to 32 N.m (24 ft. lbs.).
9. Install the pressure hose routing bracket bolt (2) to the upper mount (8).

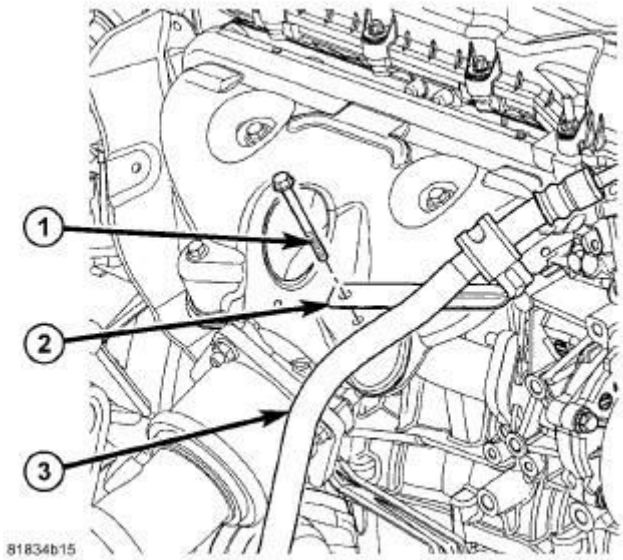

Fig. 184: Pressure Hose Bracket To Heat Shield - 2.0L
Courtesy of CHRYSLER GROUP, LLC

10. All except 2.4L Engine with All-Wheel-Drive - Position the pressure hose routing clamp (2) at the exhaust manifold and install the mounting bolt (1). Tighten the bolt to 9 N.m (80 in. lbs.).

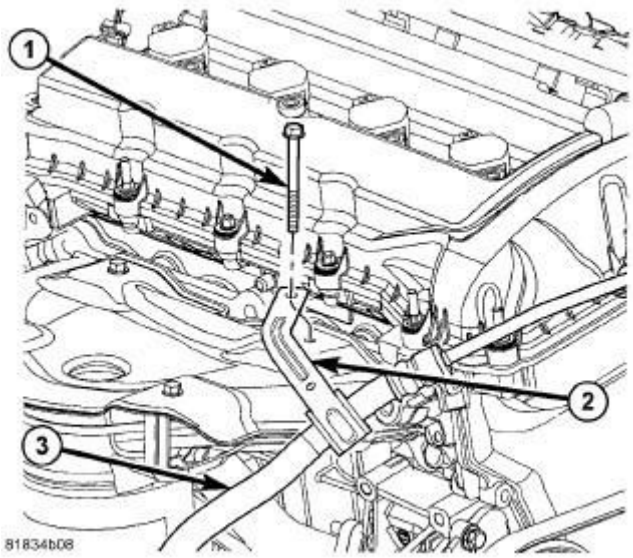

Fig. 185: Pressure Bracket To Heat Shield - 2.4L
Courtesy of CHRYSLER GROUP, LLC

11. 2.4L Engine with All-Wheel-Drive - Position the pressure hose routing clamp (2) at the exhaust manifold and install the mounting bolt (1). Tighten the bolt to 9 N.m (80 in. lbs.).
12. Fill and bleed the power steering system. Refer to **STANDARD PROCEDURE**.
13. Check for leaks.
14. Install the engine appearance cover.

DIESEL ENGINE

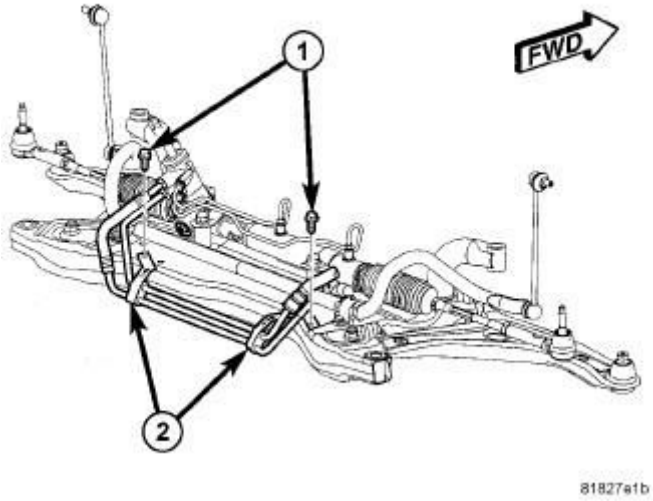

Fig. 186: Hose Routing Bracket Screws AT Crossmember
Courtesy of CHRYSLER GROUP, LLC

CAUTION: Power steering fluid hoses must remain away from the exhaust system, driveshafts, vehicle components and any unfriendly surface that can possibly damage hoses.

1. Using a lint free towel, wipe clean the open power steering hose end and power steering pump port. Replace any used O-rings with new. Lubricate the O-ring with fresh power steering fluid.
2. Raise and support the vehicle. Refer to **HOISTING, STANDARD PROCEDURE** .
3. Install the power steering pressure hose into the engine compartment from below.
4. Install the fasteners (1) securing the power steering hose routing clamps (2) to the crossmember. Use a NEW push clip on the left and tighten the screw on the right to 8 N.m (71 in. lbs.).

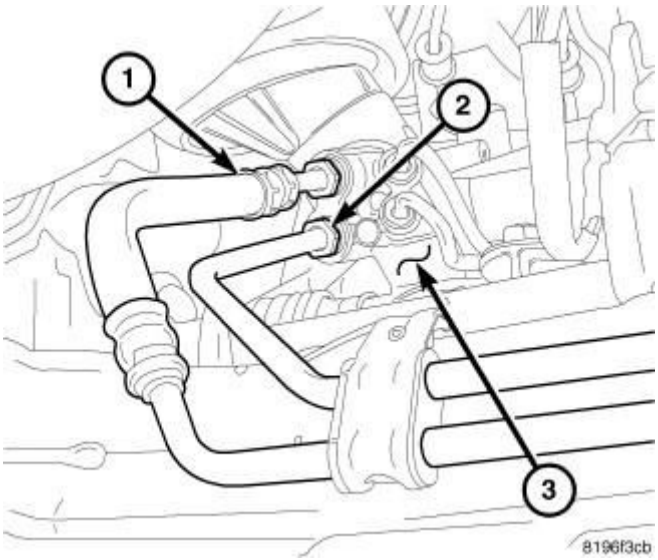

Fig. 187: Hoses AT Left-Hand-Drive Gear
Courtesy of CHRYSLER GROUP, LLC

5. Install the pressure hose (2) at the gear (3). Tighten the tube nut to 32 N.m (24 ft. lbs.).
6. Install the return tube (1) at the gear (3). Tighten the tube nut to 20 N.m (15 ft. lbs.).

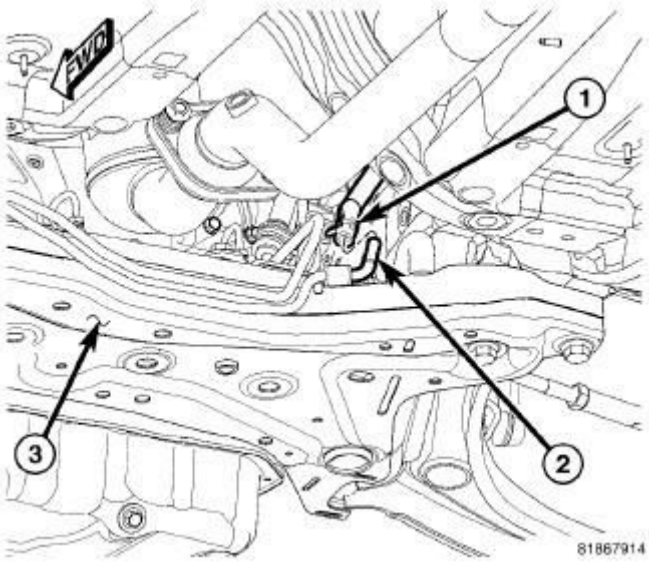

Fig. 188: Return Hose AT Tube To Gear
Courtesy of CHRYSLER GROUP, LLC

7. Install the return hose (1) at the return tube (2).

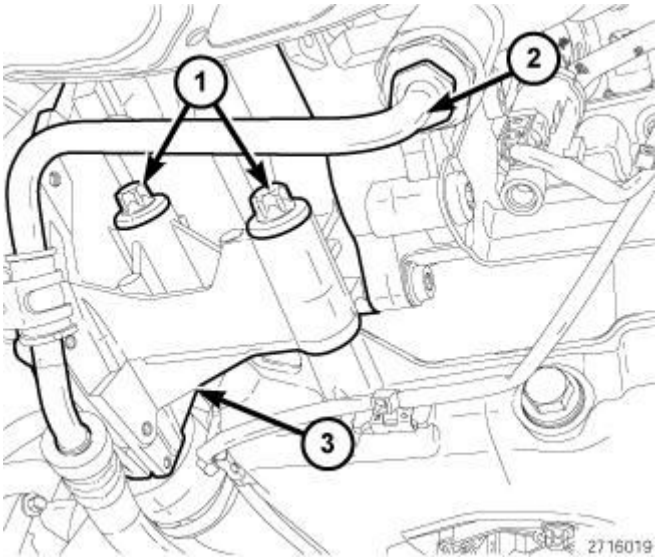

Fig. 189: Pressure Line At Pump
Courtesy of CHRYSLER GROUP, LLC

8. Install the pressure line at the pump pressure port (2). Tighten the tube nut to 32 N.m (24 ft. lbs.).

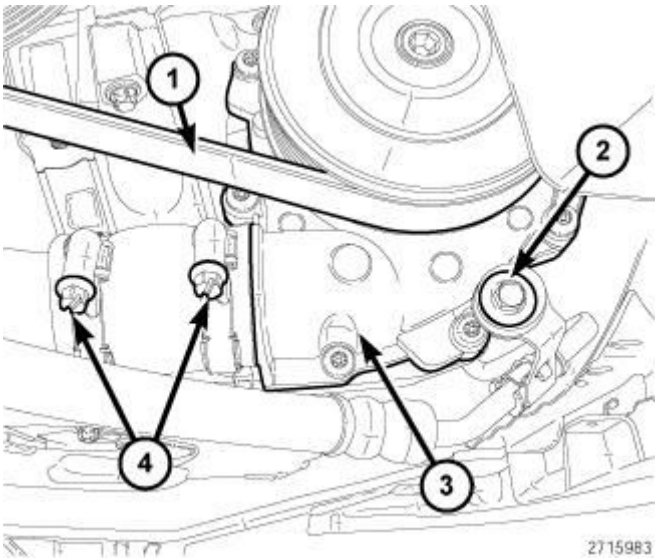

Fig. 190: Power Steering Pressure Line Retaining Bracket Bolt
Courtesy of CHRYSLER GROUP, LLC

9. Install the mounting bolt (2) for the pressure line bracket. Tighten the nut to 24 N.m (18 ft. lbs.).
10. Lower the vehicle.
11. Fill and bleed the power steering system. Refer to **STANDARD PROCEDURE**.
12. Check for leaks.

GAS ENGINE - RIGHT-HAND-DRIVE

CAUTION: Power steering fluid hoses must remain away from the exhaust system, driveshafts, vehicle components and any unfriendly surface that can possibly damage the hoses.

1. Using a lint free towel, wipe clean the open power steering hose end and the power steering pump port. Replace any used O-rings with new. Lubricate the O-ring with power steering fluid.

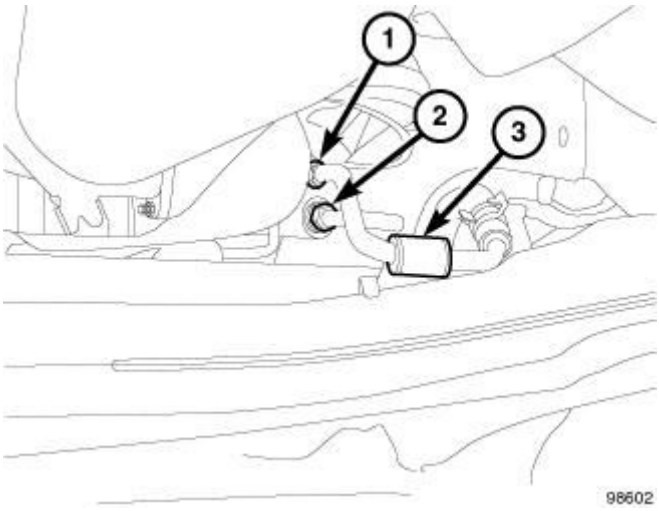

Fig. 191: Hoses AT RHD Gear
Courtesy of CHRYSLER GROUP, LLC

2. Install the power steering pressure hose into the engine compartment from below.
3. Install the pressure hose at the gear. Tighten the tube nut (2) to 32 N.m (24 ft. lbs.).
4. Lower the vehicle.

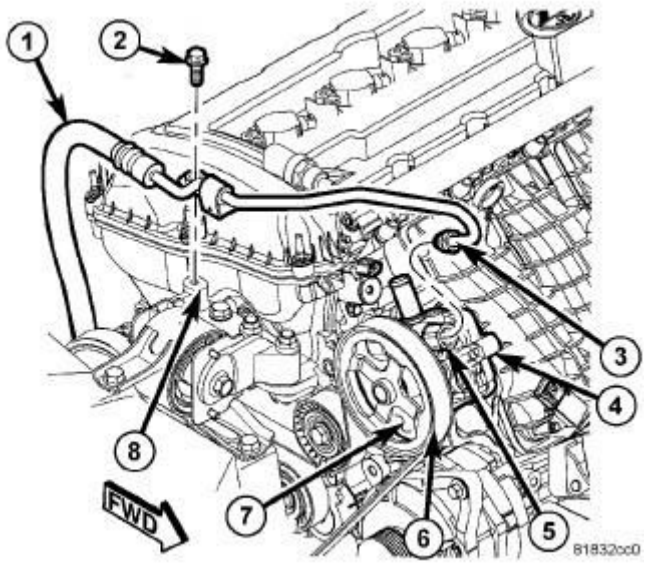

Fig. 192: Pressure Hose
Courtesy of CHRYSLER GROUP, LLC

5. Install the pressure hose (3) at the pump pressure port (5). Tighten the tube nut to 32 N.m (24 ft. lbs.).
6. Install the pressure hose routing bracket bolt (2) to the upper mount (8).

7. Fill and bleed the power steering system. Refer to **STANDARD PROCEDURE**.
8. Check for leaks.
9. Install the engine appearance cover.

DIESEL ENGINE - RIGHT-HAND-DRIVE

CAUTION: Power steering fluid hoses must remain away from the exhaust system, driveshafts, vehicle components and any unfriendly surface that can possibly damage the hoses.

1. Using a lint free towel, wipe clean the open power steering hose end and the power steering pump port. Replace any used O-rings with new. Lubricate the O-ring with power steering fluid.

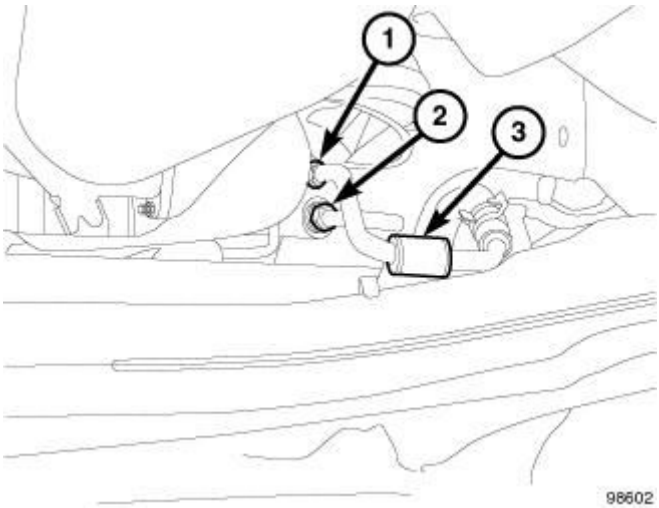

Fig. 193: Hoses AT RHD Gear
Courtesy of CHRYSLER GROUP, LLC

2. Install the power steering pressure hose into the engine compartment from below.
3. Install the pressure hose at the gear. Tighten the tube nut (2) to 32 N.m (24 ft. lbs.).
4. Lower the vehicle.

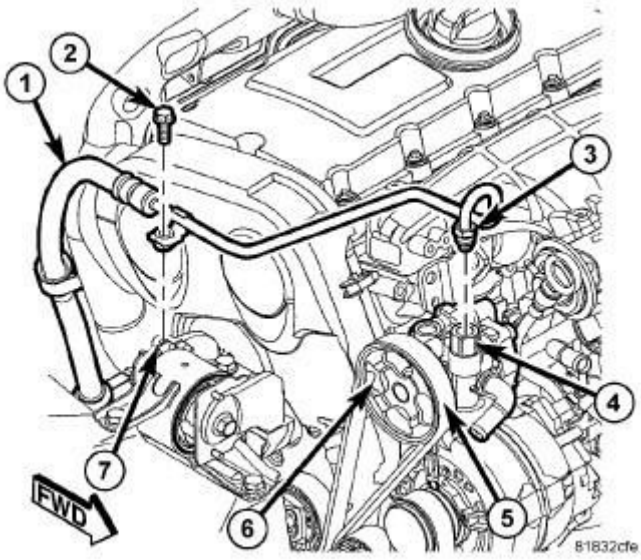

Fig. 194: Pressure Line
Courtesy of CHRYSLER GROUP, LLC

5. Install the pressure line (3) at the pump pressure port (4). Tighten the tube nut to 32 N.m (24 ft. lbs.).
6. Install the pressure line routing bracket bolt (2) to the upper mount (7).
7. Fill and bleed the power steering system. Refer to **STANDARD PROCEDURE**.
8. Check for leaks.
9. Install the engine appearance cover.

HOSE, POWER STEERING, RETURN

REMOVAL

REMOVAL - GAS ENGINE

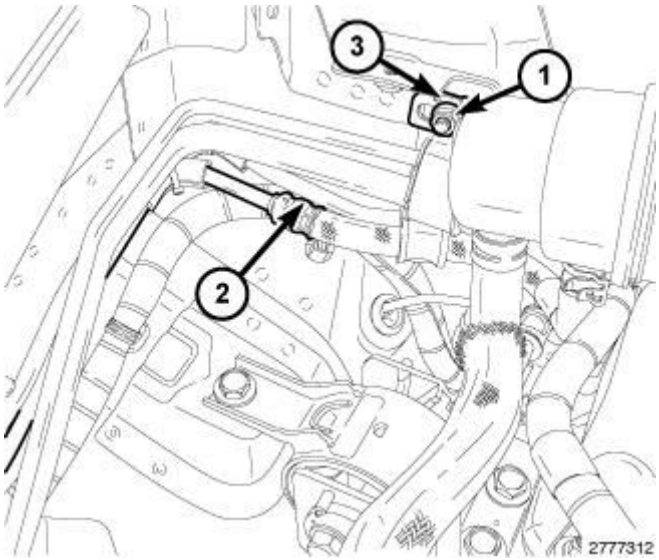

Fig. 195: Power Steering Hose, Nut & Air Conditioning Bracket
Courtesy of CHRYSLER GROUP, LLC

NOTE: Before proceeding, refer to WARNING.

1. Remove the engine appearance cover.
2. Remove the fasteners of the coolant recovery bottle and position aside. Refer to **BOTTLE, COOLANT RECOVERY, REMOVAL** .
3. Siphon as much fluid as possible from the power steering fluid reservoir.
4. Remove the power steering fluid reservoir. Refer to **RESERVOIR, POWER STEERING PUMP, REMOVAL**.
5. Remove the windshield washer reservoir. Refer to **RESERVOIR, WINDSHIELD WASHER, REMOVAL** .
6. Remove the nut (1) on the bracket that holds in the air conditioning and power steering lines.
7. Unhook the power steering lines from the air conditioning bracket (3).

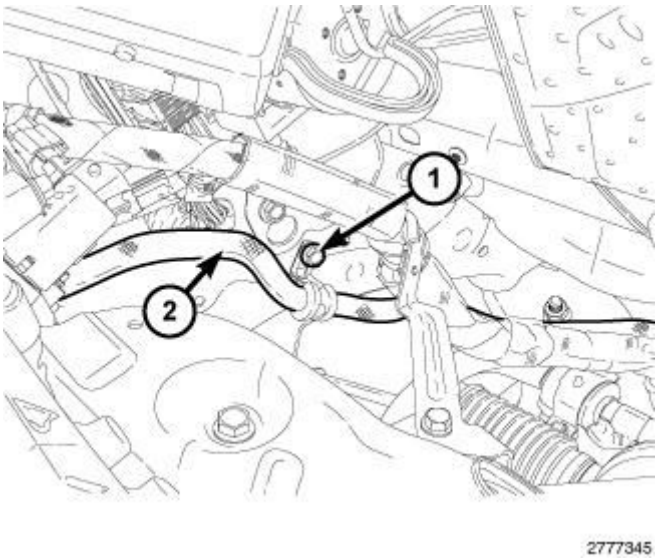

Fig. 196: Return Line & Bolt
Courtesy of CHRYSLER GROUP, LLC

8. Remove the bolt (1) that holds the return line (2) to the body.

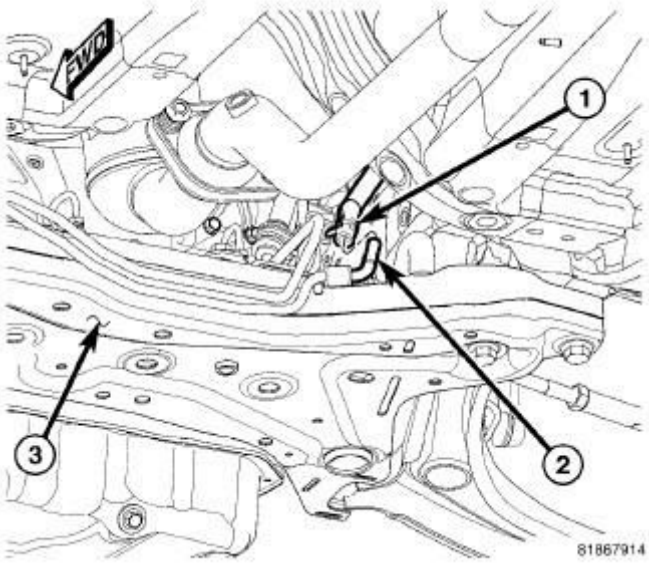

Fig. 197: Return Hose AT Tube To Gear
Courtesy of CHRYSLER GROUP, LLC

9. Raise and support the vehicle. Refer to **HOISTING, STANDARD PROCEDURE** .
10. Remove the return hose (1) at the return tube (2).

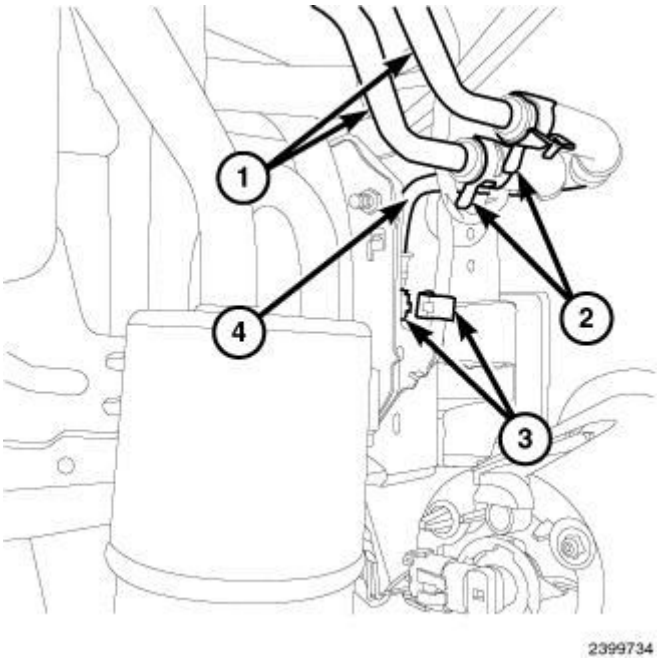

Fig. 198: Removing /Installing Fluid Return Hose And Hose Clamps
Courtesy of CHRYSLER GROUP, LLC

11. Remove the right front wheel. Refer to **REMOVAL** .
12. Remove the right splash shield. Refer to **SHIELD, SPLASH, FRONT WHEELHOUSE, REMOVAL** .
13. Remove clips (3) that hold the power steering cooler lines to the body.
14. Lower the vehicle.
15. Remove the right engine mount Refer to **INSULATOR, ENGINE MOUNT, RIGHT, REMOVAL** for 2.0L, **INSULATOR, ENGINE MOUNT, RIGHT, REMOVAL** for 2.2L Diesel and **INSULATOR, ENGINE MOUNT, RIGHT, REMOVAL** for 2.4L.
16. Remove any electrical harness clips necessary to clear the return hose.
17. Remove the return hose from the vehicle.

REMOVAL - DIESEL ENGINE

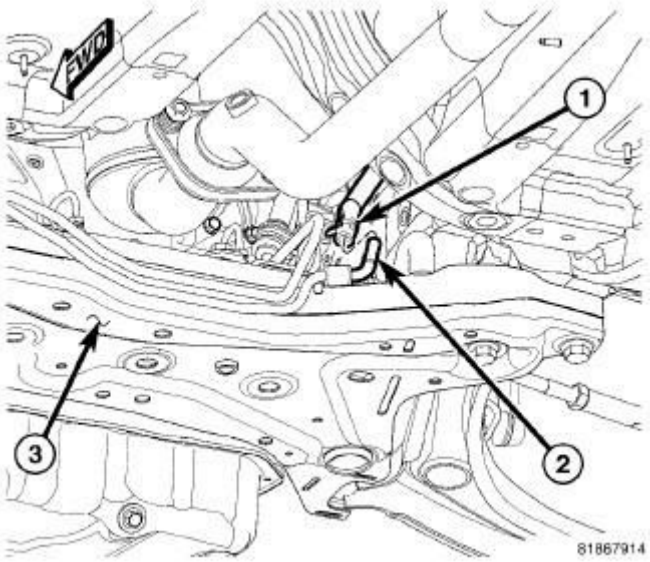

Fig. 199: Return Hose AT Tube To Gear
Courtesy of CHRYSLER GROUP, LLC

NOTE: Before proceeding, refer to WARNING.

1. Siphon as much fluid as possible from the power steering fluid reservoir.
2. Remove the coolant recovery bottle. Refer to **BOTTLE, COOLANT RECOVERY, REMOVAL** .
3. Remove the windshield washer reservoir. Refer to **RESERVOIR, WINDSHIELD WASHER, REMOVAL** .
4. Remove the front fascia. Refer to **FASCIA, FRONT, REMOVAL** .
5. Remove the right headlamp
6. Raise and support the vehicle. Refer to **HOISTING, STANDARD PROCEDURE** .
7. Remove the return hose (1) at the return tube (2).

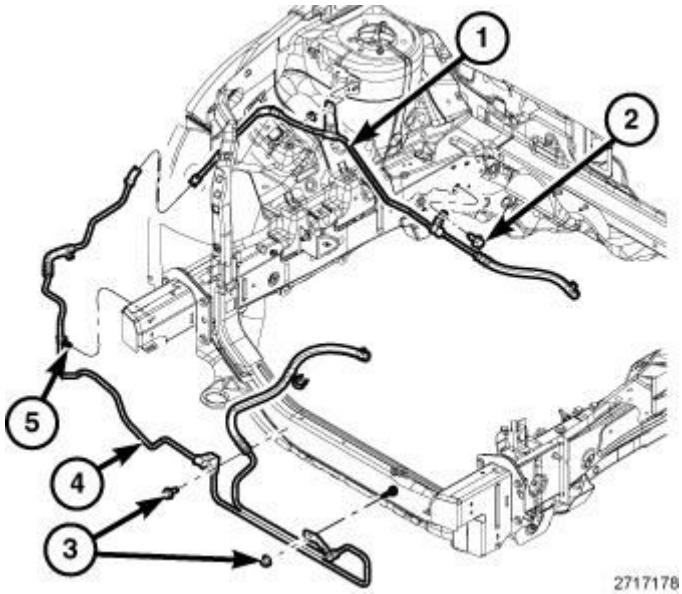

Fig. 200: Identifying Cooler, Return Hose & Bolts
Courtesy of CHRYSLER GROUP, LLC

8. Remove the return hose routing clamp screw (2) securing the return hose (1) to the frame rail.
9. Remove the return hose routing clamp screw securing the return hose (1) to the strut tower.
10. Remove the hose clamps securing the return hose (1) to the power steering cooler (4). Slide the hose off the end of the cooler tube.
11. Remove the return hose from the vehicle.

INSTALLATION

INSTALLATION - GAS ENGINE

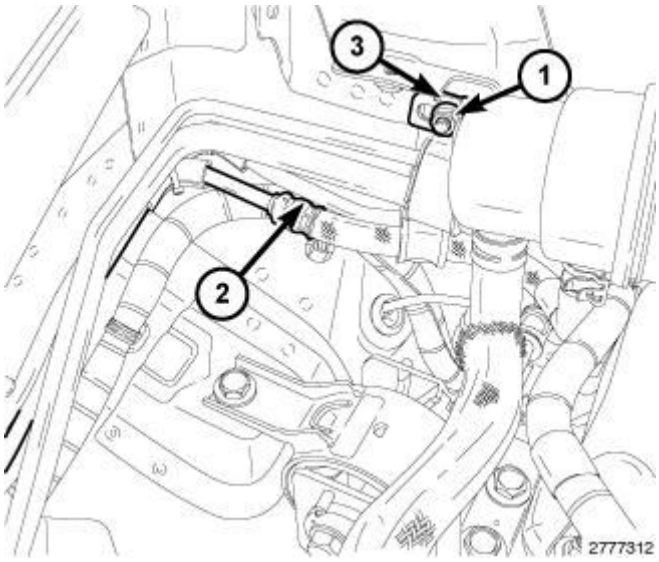

Fig. 201: Power Steering Hose, Nut & Air Conditioning Bracket
Courtesy of CHRYSLER GROUP, LLC

1. Install the power steering return hose into the engine compartment.
2. Hook the power steering lines to the air conditioning bracket (3).
3. Install the bolt (1) that holds the power steering lines (2) to the body. Tighten the bolt to 19 N.m (14 ft. lbs.)
4. Install the right engine mount Refer to **INSULATOR, ENGINE MOUNT, RIGHT, INSTALLATION** for 2.0L, **INSULATOR, ENGINE MOUNT, RIGHT, INSTALLATION** for 2.2L Diesel and **INSULATOR, ENGINE MOUNT, RIGHT, INSTALLATION** for 2.4L.

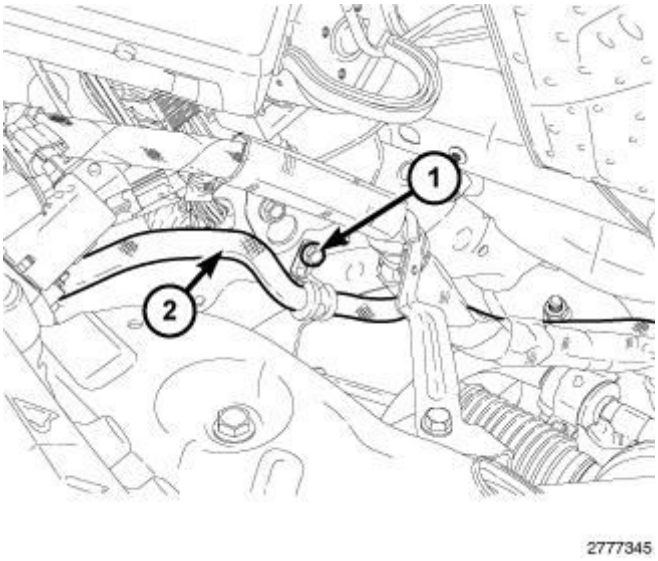

Fig. 202: Return Line & Bolt
Courtesy of CHRYSLER GROUP, LLC

5. Install the return hose routing clamp screw (1) securing the return hose (2) to the body. Tighten the screw to 19 N.m (14 ft. lbs.).

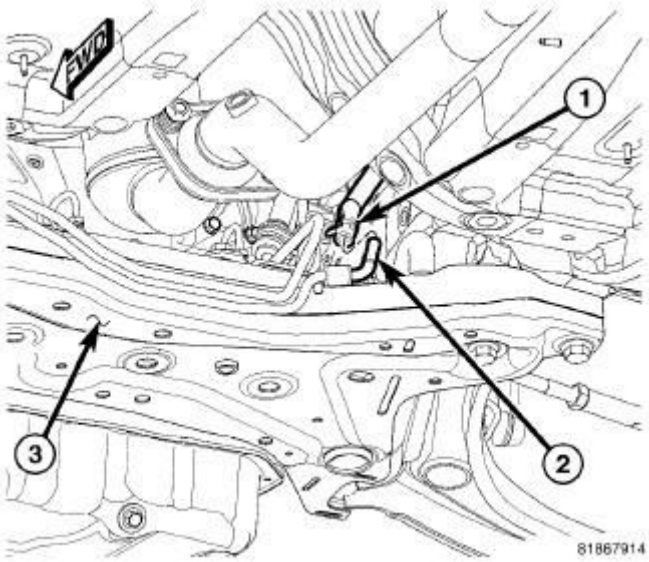

Fig. 203: Return Hose AT Tube To Gear
Courtesy of CHRYSLER GROUP, LLC

6. Raise and support the vehicle. Refer to **HOISTING, STANDARD PROCEDURE** .
7. Install the return hose (1) at the return tube (2) and secure the clamp.

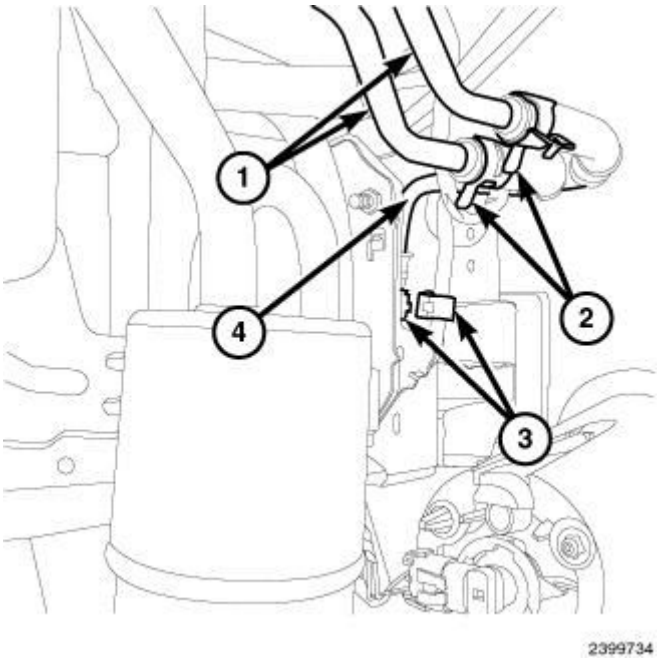

Fig. 204: Removing /Installing Fluid Return Hose And Hose Clamps
Courtesy of CHRYSLER GROUP, LLC

8. Install the clips (3) that hold the power steering cooler lines to the body.
9. Install right splash shield Refer to **SHIELD, SPLASH, FRONT**

WHEELHOUSE, INSTALLATION .

10. Install right front wheel and tire assembly Install and tighten wheel mounting nuts to 135 N.m (100 ft. Refer to **INSTALLATION** . lbs.).
11. Lower the vehicle.
12. Install the windshield washer reservoir. Refer to **RESERVOIR, WINDSHIELD WASHER, INSTALLATION** .
13. Install the power steering fluid reservoir. Refer to **RESERVOIR, POWER STEERING PUMP, INSTALLATION**.
14. Install the coolant recovery bottle. Refer to **BOTTLE, COOLANT RECOVERY, INSTALLATION** .
15. Fill and bleed the power steering system. Refer to **STANDARD PROCEDURE**.
16. Check for leaks.
17. Install the engine appearance cover.

INSTALLATION - DIESEL ENGINE

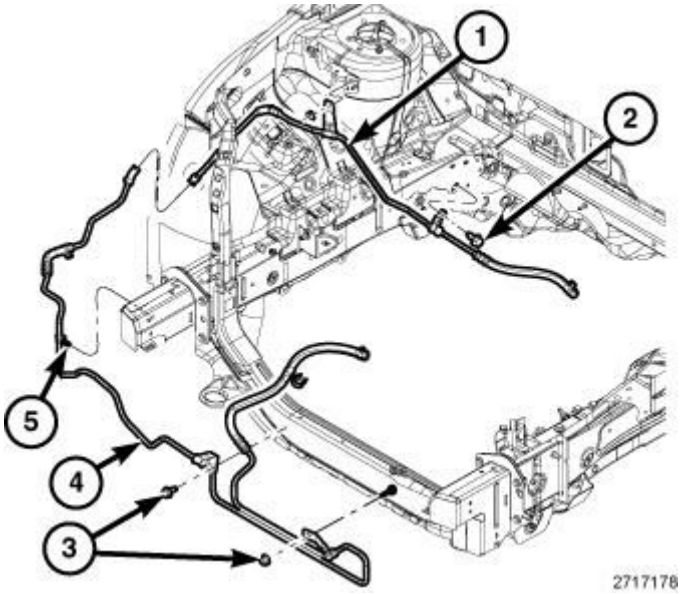

Fig. 205: Identifying Cooler, Return Hose & Bolts
Courtesy of CHRYSLER GROUP, LLC

1. Install the power steering return hose (1) into the engine compartment.
2. Install the return hose routing clamp screw securing the return hose (1) to the strut tower.
3. Install the return hose (1) onto the cooler tube (4) and install the hose clamp.
4. Raise and support the vehicle. Refer to **HOISTING, STANDARD**

PROCEDURE .

5. Install the screw (2) securing the return hose to the frame rail. Tighten the screw to 19 N.m (14 ft. lbs.).

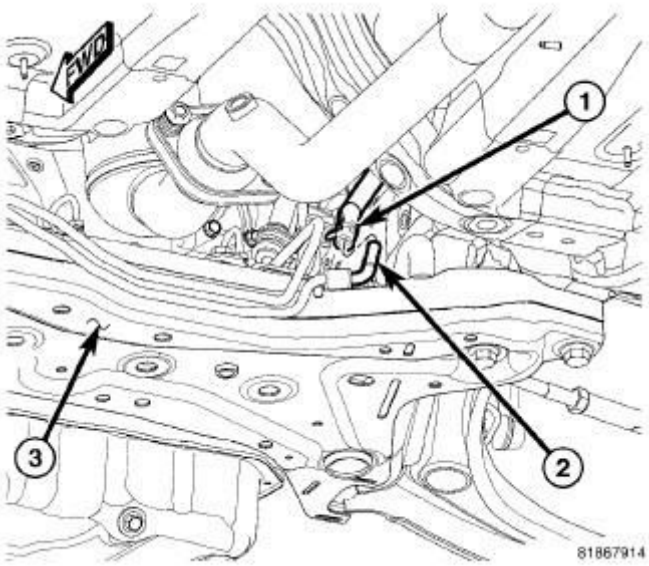

Fig. 206: Return Hose AT Tube To Gear
Courtesy of CHRYSLER GROUP, LLC

6. Install the return hose (1) at the return tube (2).
7. Lower the vehicle.
8. Install the right headlamp.
9. Install the front fascia. Refer to **FASCIA, FRONT, INSTALLATION** .
10. Install the windshield washer reservoir. Refer to **RESERVOIR, WINDSHIELD WASHER, INSTALLATION** .
11. Install the coolant recovery bottle. Refer to **BOTTLE, COOLANT RECOVERY, INSTALLATION** .
12. Fill and bleed the power steering system. Refer to **STANDARD PROCEDURE**.
13. Check for leaks.

HOSE, POWER STEERING, SUPPLY

REMOVAL

GAS ENGINE

NOTE: Before proceeding, refer to WARNING.

1. Siphon as much fluid as possible from the power steering fluid reservoir.

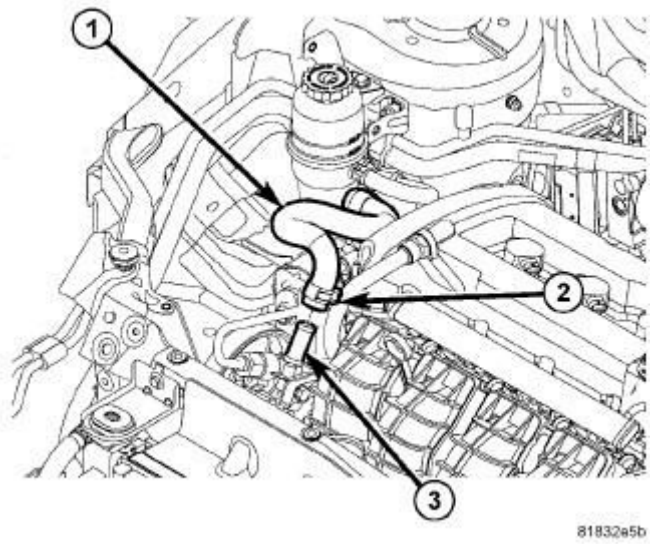

Fig. 207: Supply Hose
Courtesy of CHRYSLER GROUP, LLC

2. Remove the clamp (2) securing the supply hose to the power steering pump (3) supply fitting, then remove the hose from the supply fitting.

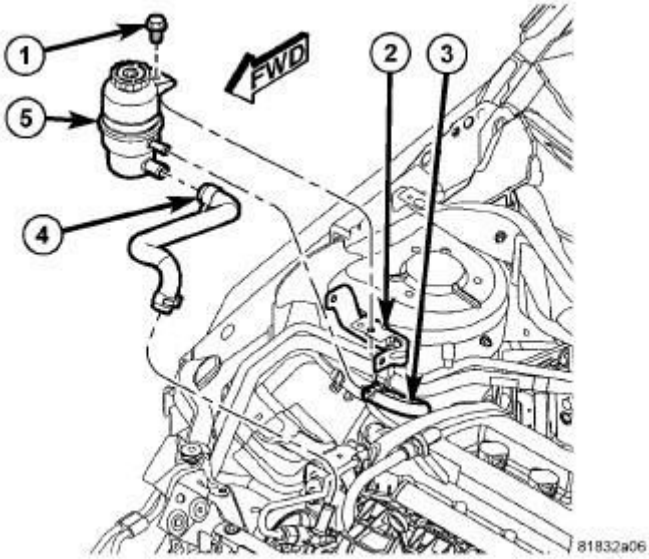

Fig. 208: Fluid Reservoir, Return Hose, Supply Hose & Mounting Screw
Courtesy of CHRYSLER GROUP, LLC

3. Remove the hose clamp securing the supply hose (4) to the power steering

fluid reservoir (5). Slide the hose off the end of the reservoir fitting and remove from vehicle.

DIESEL ENGINE

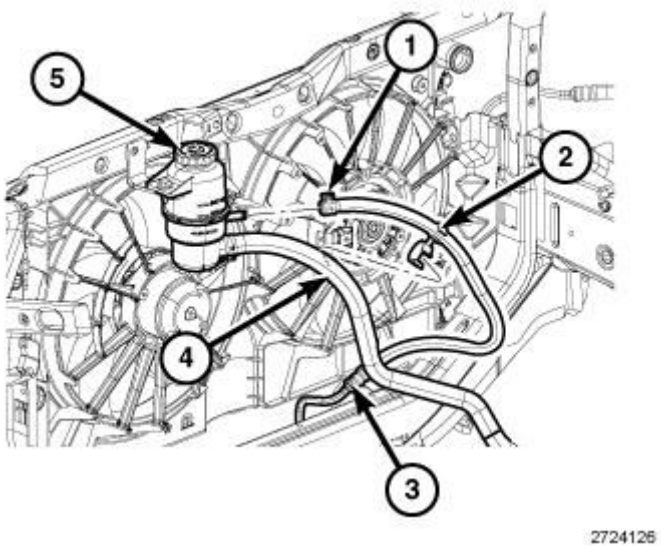

Fig. 209: Power Steering Reservoir, Hose & Clamp
Courtesy of CHRYSLER GROUP, LLC

NOTE: Before proceeding, refer to WARNING.

1. Siphon as much fluid as possible from power steering fluid reservoir.
2. Remove the clamp securing the supply hose (4) to the power steering pump supply fitting, then remove the hose from the fitting.
3. Remove the hose clamp securing the supply hose (4) to the power steering fluid reservoir (5). Slide the hose off the end of the reservoir fitting and remove from vehicle.

INSTALLATION

GAS ENGINE

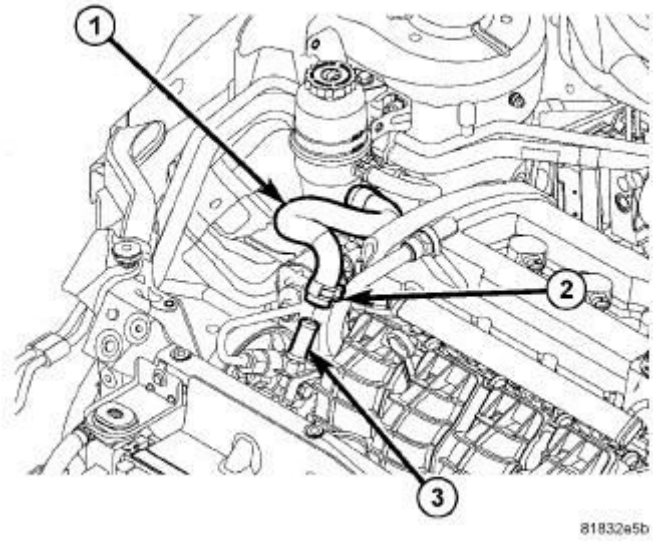

Fig. 210: Supply Hose
Courtesy of CHRYSLER GROUP, LLC

1. Slide hose clamps (2) onto both ends of the power steering fluid supply hose (1) far enough to clear the fittings on the reservoir and pump once the hose is installed.
2. Place the pump end of the supply hose (1) onto the pump (3) supply fitting. Expand the hose clamp (2) and slide it over the hose and pump supply fitting. Secure the clamp once it is past the bead formed into the fluid supply fitting.

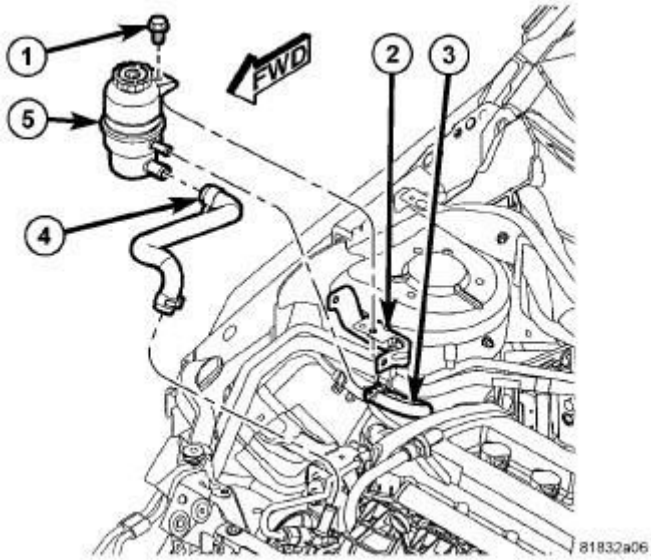

Fig. 211: Fluid Reservoir, Return Hose, Supply Hose & Mounting Screw

Courtesy of CHRYSLER GROUP, LLC

3. Expand the hose clamp (4) at the fluid reservoir (5) and slide it over the hose and fitting. Secure the clamp once it is past the bead formed into the fluid reservoir fitting.
4. Perform the POWER STEERING PUMP BLEED PROCEDURE. Refer to **STANDARD PROCEDURE**.
5. Check for leaks at all hose connections.

DIESEL ENGINE

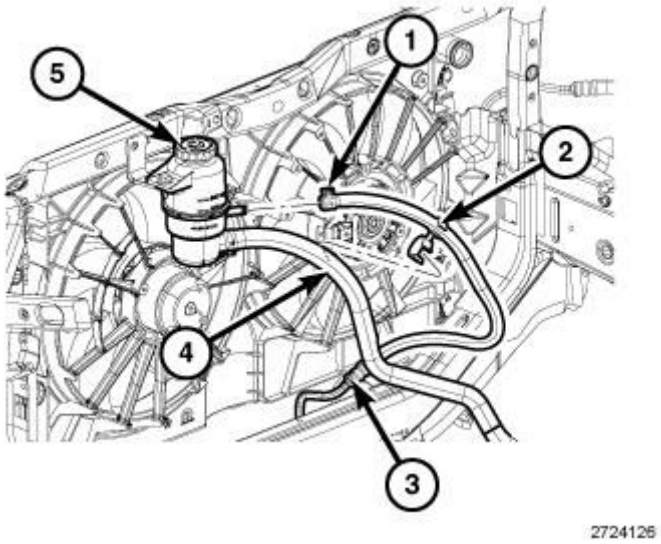

Fig. 212: Power Steering Reservoir, Hose & Clamp
Courtesy of CHRYSLER GROUP, LLC

1. Slide hose clamps onto both ends of the power steering fluid supply hose far enough to clear the fittings on the reservoir and pump once hose is installed.
2. Place the fluid reservoir end of the supply hose (4) onto the reservoir (5) supply fitting. Expand the hose clamp and slide it over the hose and fitting. Secure the clamp once it is past the bead formed into the fluid reservoir fitting.
3. Place the pump end of the supply hose onto the pump supply fitting. Expand the hose clamp and slide it over the hose and pump supply fitting. Secure the clamp once it is past the bead formed into the fluid supply fitting.
4. Fill and bleed the power steering system. Refer to **STANDARD PROCEDURE**.
5. Check for leaks.

RESERVOIR, POWER STEERING PUMP

DESCRIPTION

DESCRIPTION - GAS ENGINE

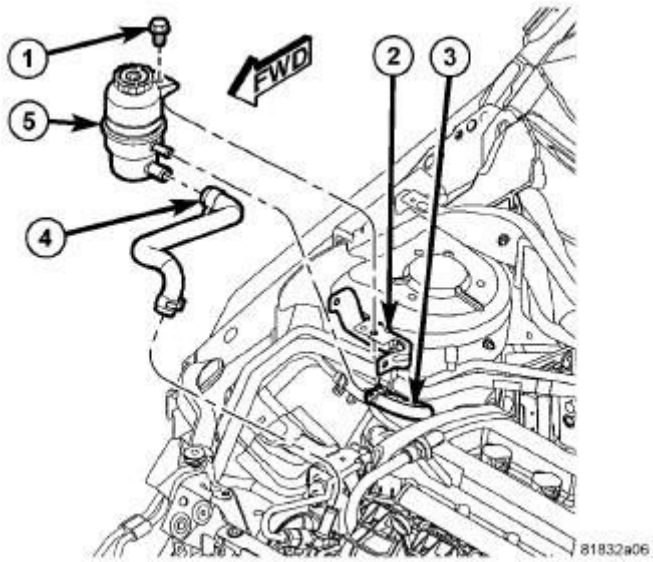

Fig. 213: Fluid Reservoir, Return Hose, Supply Hose & Mounting Screw
Courtesy of CHRYSLER GROUP, LLC

The power steering fluid reservoir (5) is mounted above the right front inner fender well to a bracket (2).

DESCRIPTION - DIESEL ENGINE

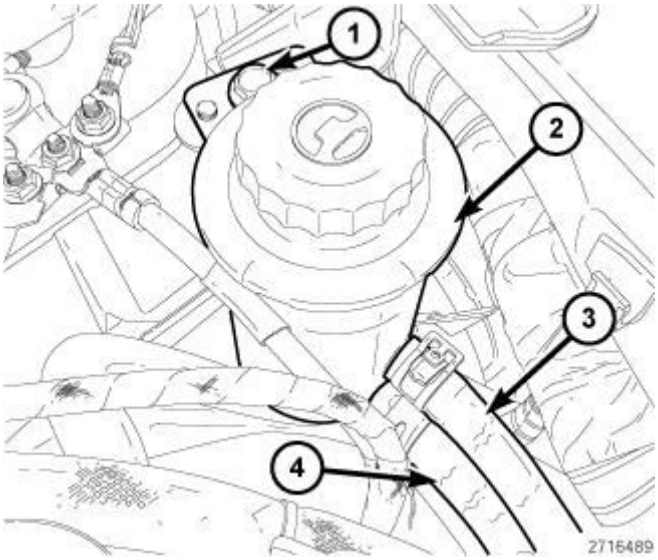

Fig. 214: Power Steering Fluid Reservoir, Cooler Return Hose & Supply Hose

Courtesy of CHRYSLER GROUP, LLC

The power steering fluid reservoir (2) is mounted behind the radiator support on the left side of the engine bay, next to the battery.

REMOVAL

REMOVAL - GAS ENGINE

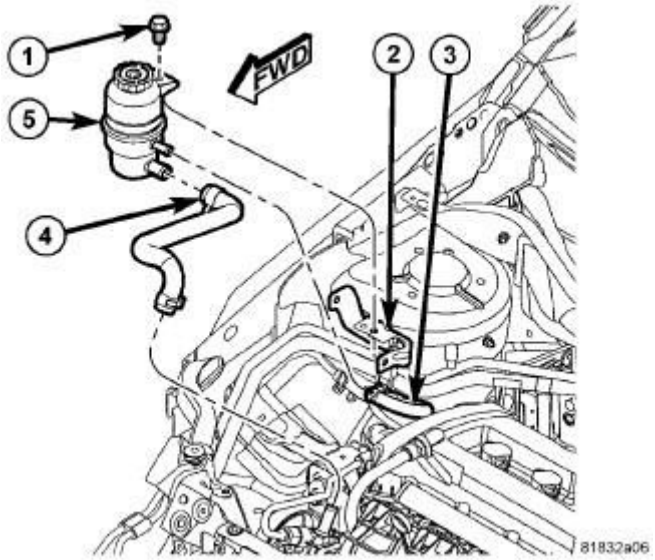

Fig. 215: Fluid Reservoir, Return Hose, Supply Hose & Mounting Screw
Courtesy of CHRYSLER GROUP, LLC

NOTE: Before proceeding, refer to WARNING.

1. Remove engine appearance cover.
2. Remove the fasteners securing the coolant recovery bottle to its mounts and move it away from the power steering fluid reservoir. It is not necessary to disconnect the coolant recovery bottle fluid lines. Refer to **BOTTLE, COOLANT RECOVERY, REMOVAL** .
3. Siphon as much fluid as possible from the power steering fluid reservoir (5).
4. Remove hose clamp securing cooler return hose (3) to fluid reservoir fitting. Slide the hose off the end of the reservoir fitting.
5. Remove hose clamp securing pump supply hose (4) to the fluid reservoir fitting. Slide the hose off the end of the reservoir fitting.
6. Remove the reservoir mounting screw (1) used to secure the reservoir in place.

7. Remove the reservoir (5).
8. Remove the plastic shield from the reservoir.

REMOVAL - DIESEL ENGINE

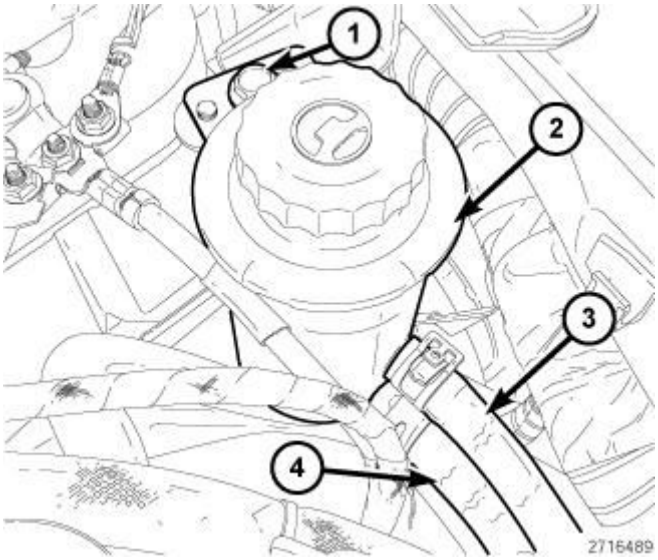

Fig. 216: Power Steering Fluid Reservoir, Cooler Return Hose & Supply Hose
Courtesy of CHRYSLER GROUP, LLC

NOTE: Before proceeding, refer to WARNING.

1. Siphon as much fluid as possible from the power steering fluid reservoir (2).
2. Remove hose clamp securing cooler return hose (3) to fluid reservoir fitting. Slide the hose off the end of the reservoir fitting.
3. Remove hose clamp securing pump supply hose (4) to the fluid reservoir fitting. Slide the hose off the end of the reservoir fitting.
4. Remove the reservoir mounting screw (1) used to secure the reservoir in place.
5. Remove the reservoir (2).

INSTALLATION

INSTALLATION - GAS ENGINE

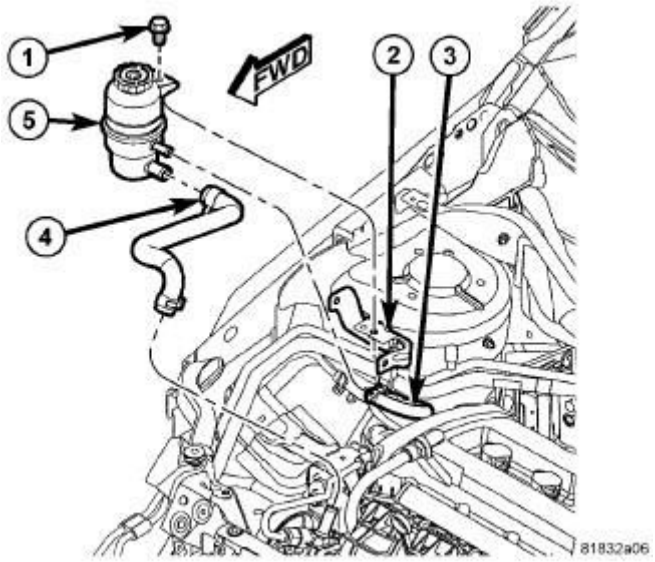

Fig. 217: Fluid Reservoir, Return Hose, Supply Hose & Mounting Screw
Courtesy of CHRYSLER GROUP, LLC

1. Install the plastic shield over the reservoir neck.
2. Attach the reservoir (5) to the strut tower bracket (2) using the mounting screw (1). Tighten mounting screw (1) to 12 N.m (106 in. lbs.).
3. Slide the pump supply hose (4) onto reservoir fitting. Expand hose clamp and slide it over hose on reservoir fitting. Secure clamp once it is past bead formed into fluid reservoir fitting.
4. Slide cooler return hose (3) onto reservoir fitting. Expand hose clamp and slide it over hose on reservoir fitting. Secure clamp once it is past bead formed into fluid reservoir fitting.
5. Install the coolant recovery bottle. Refer to **BOTTLE, COOLANT RECOVERY, INSTALLATION** .
6. Fill and bleed the power steering system. Refer to **STANDARD PROCEDURE**.
7. Check for leaks.
8. Install the engine appearance cover.

INSTALLATION - DIESEL ENGINE

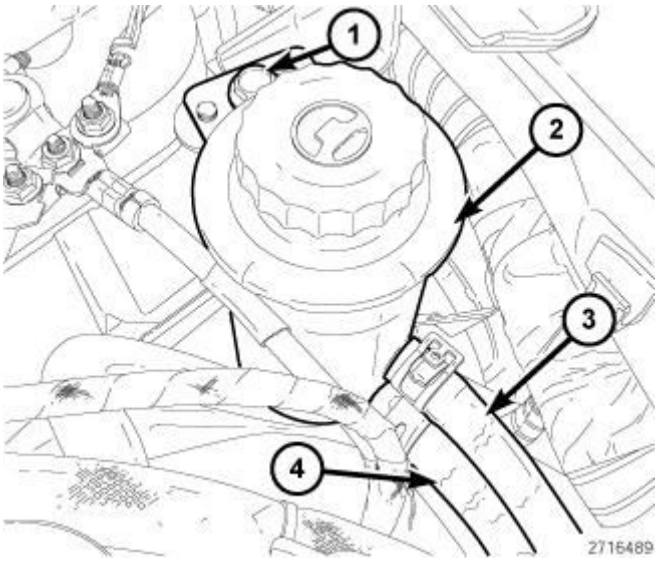

Fig. 218: Power Steering Fluid Reservoir, Cooler Return Hose & Supply Hose
Courtesy of CHRYSLER GROUP, LLC

1. Attach the reservoir to the bracket using the mounting screw (1). Tighten mounting screw (1) to 12 N.m (106 in. lbs.).
2. Slide the pump supply hose (4) onto reservoir fitting. Expand hose clamp and slide it over hose on reservoir fitting. Secure clamp once it is past bead formed into fluid reservoir fitting.
3. Slide cooler return hose (3) onto reservoir fitting. Expand hose clamp and slide it over hose on reservoir fitting. Secure clamp once it is past bead formed into fluid reservoir fitting.
4. Fill and bleed the power steering system. Refer to **STANDARD PROCEDURE**.
5. Check for leaks.

2014 SUSPENSION

Front Suspension & Wheel Alignment - Compass & Patriot

SPECIAL TOOLS

SPECIAL TOOLS

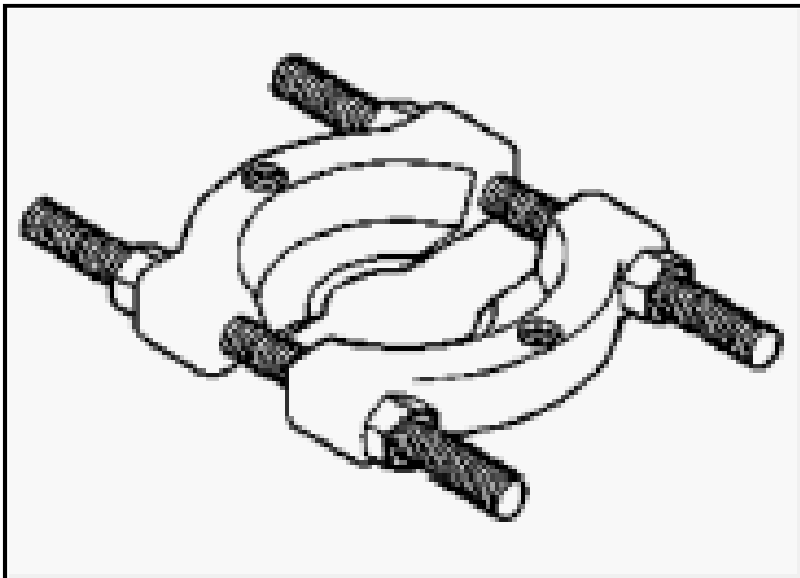	1130 - Splitter, Bearing/Gear (Originally Shipped In Kit Number(s) 6745, 6947, 6949, 9202, 9202A-CAN, 9202CC, 9299.)
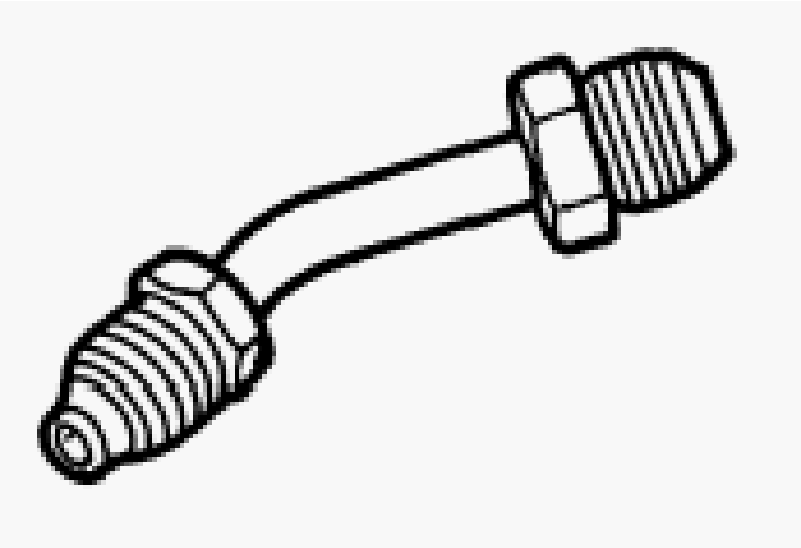	6289-4 - Remover/Installer (Originally Shipped In Kit Number(s) 6289, 9923, 9924.)

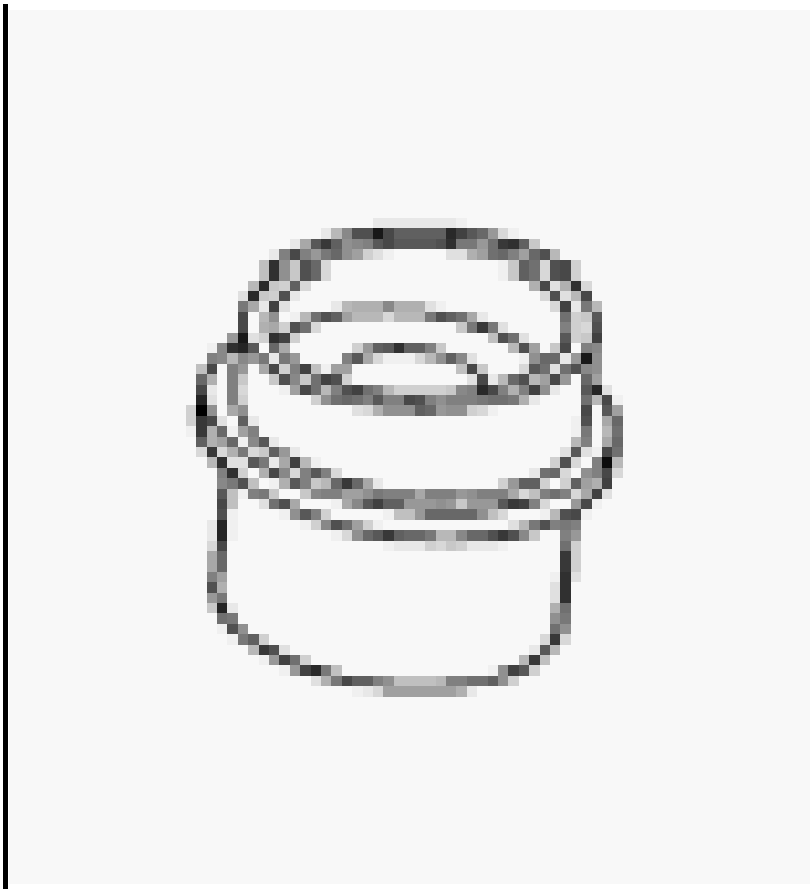	6289-6 - Remover/Installer (Originally Shipped In Kit Number(s) 6289, 6745.)
	6310-1 - Cup (Originally Shipped In Kit Number(s) 8207, 8418, XJ594, XJ595.)

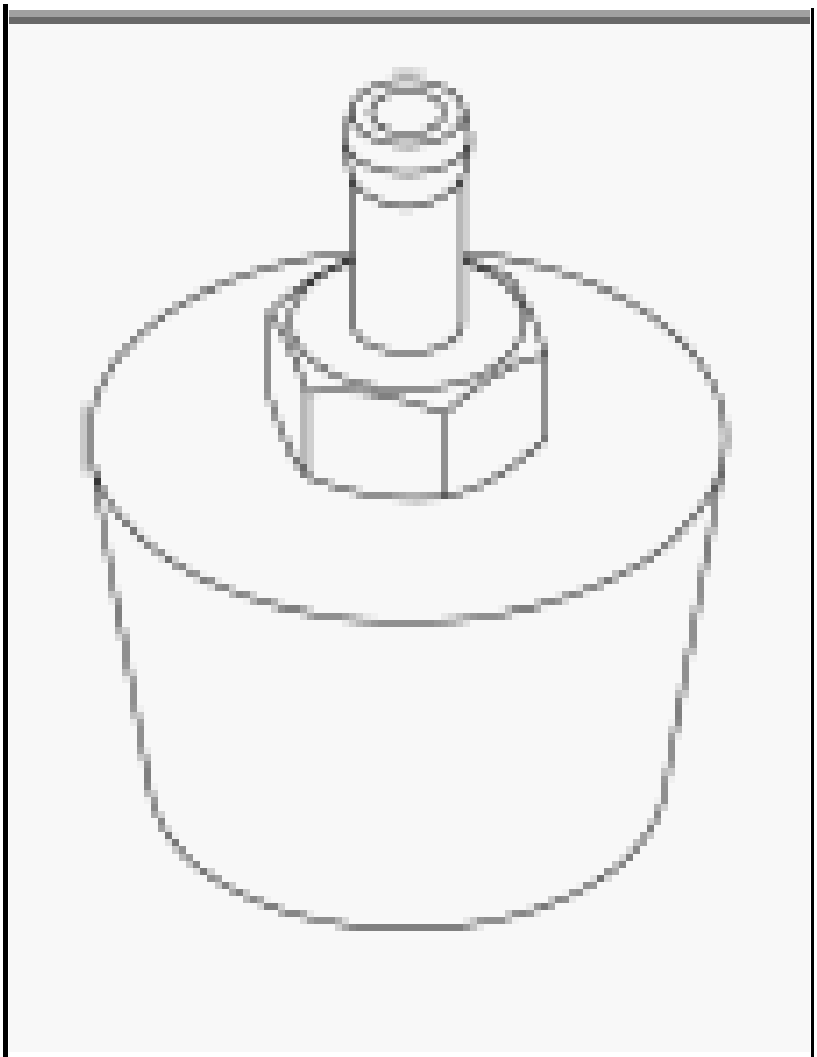

6310-2 - Disc
(Originally Shipped In Kit Number(s) 8207, 8418, XJ594, XJ595.)

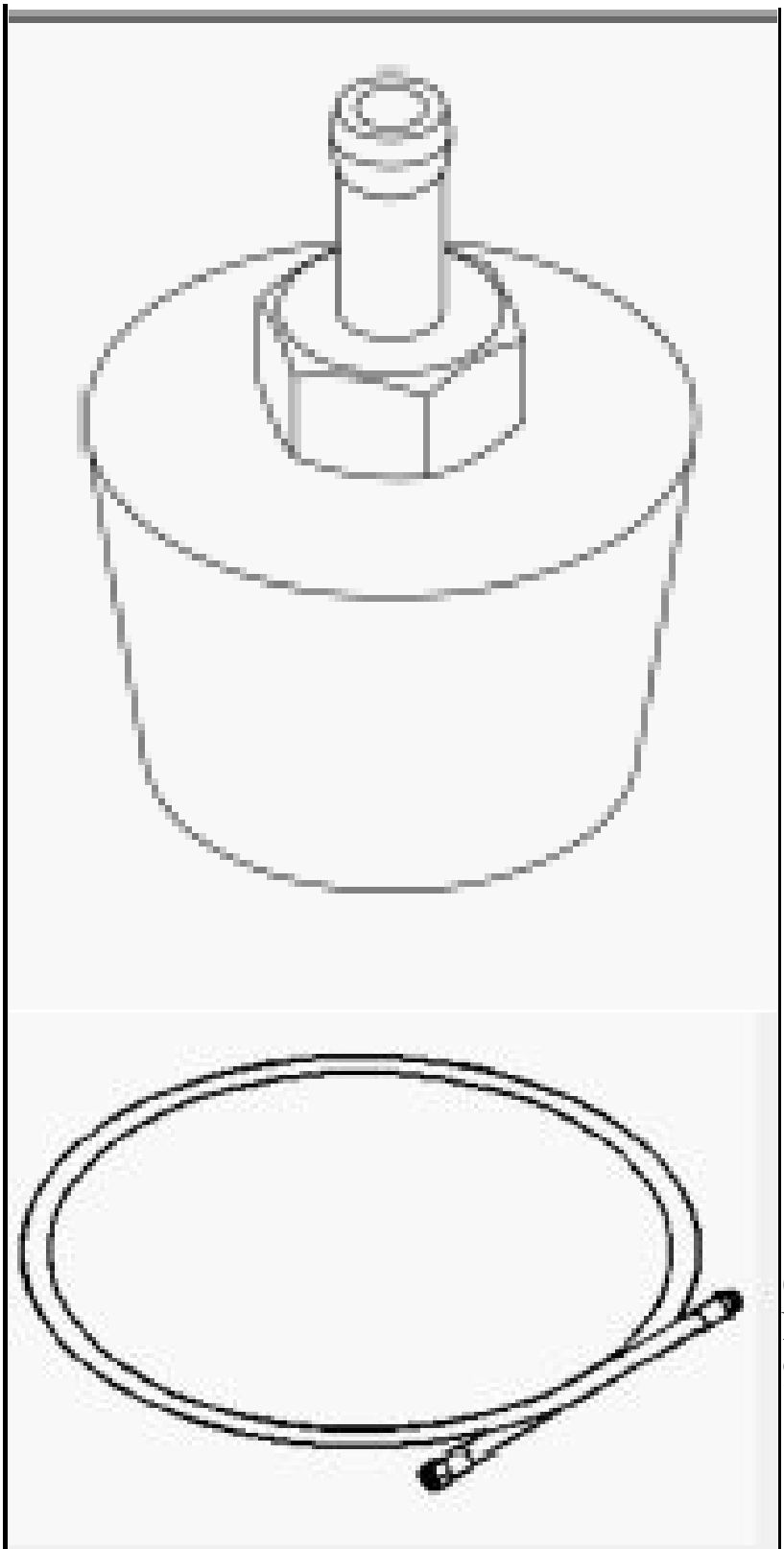

8498 - Receiver, Axle Shaft Seal
(Originally Shipped In Kit Number(s) 8887, 8887CC, 9972.)

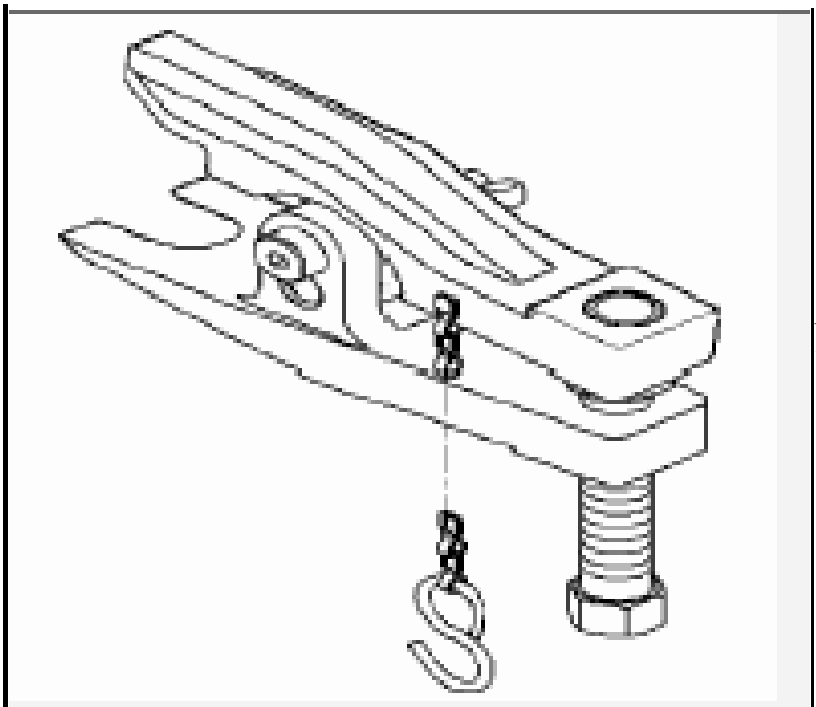

9360 - Remover, Ball Joint (Originally Shipped In Kit Number(s) 9329, 9515, 9516, 9516-CAN, 9517, 9517-CAN, 9518, 9519, 9540, 9541.)

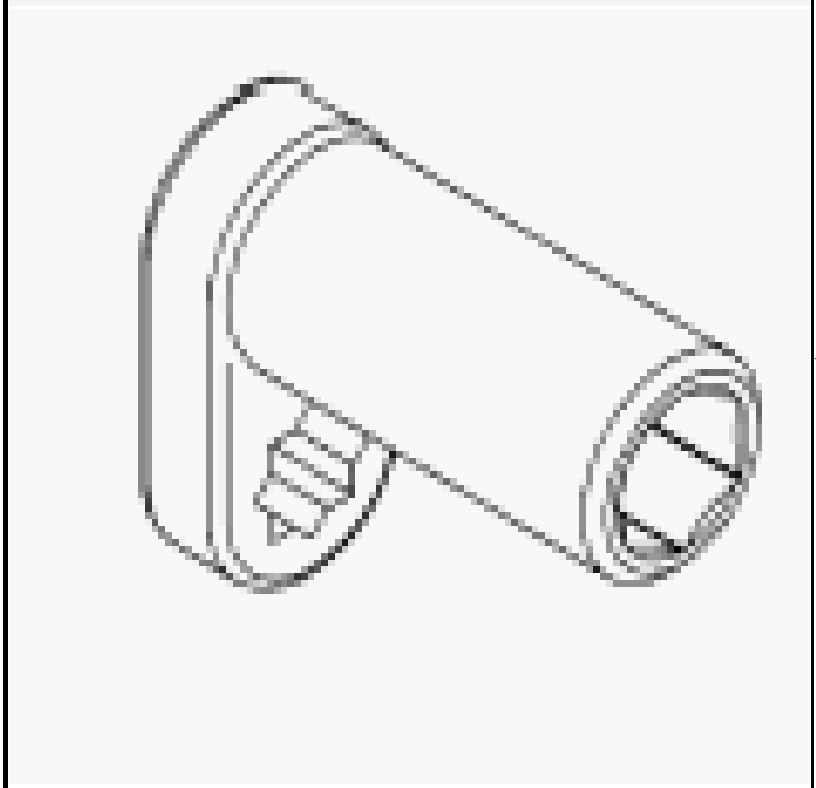

9362 - Wrench, Strut Nut (Originally Shipped In Kit Number(s) 9329, 9515, 9516, 9516-CAN, 9517, 9517-CAN, 9518, 9519, 9540, 9541.)

9712 - Fixture, Knuckle Support

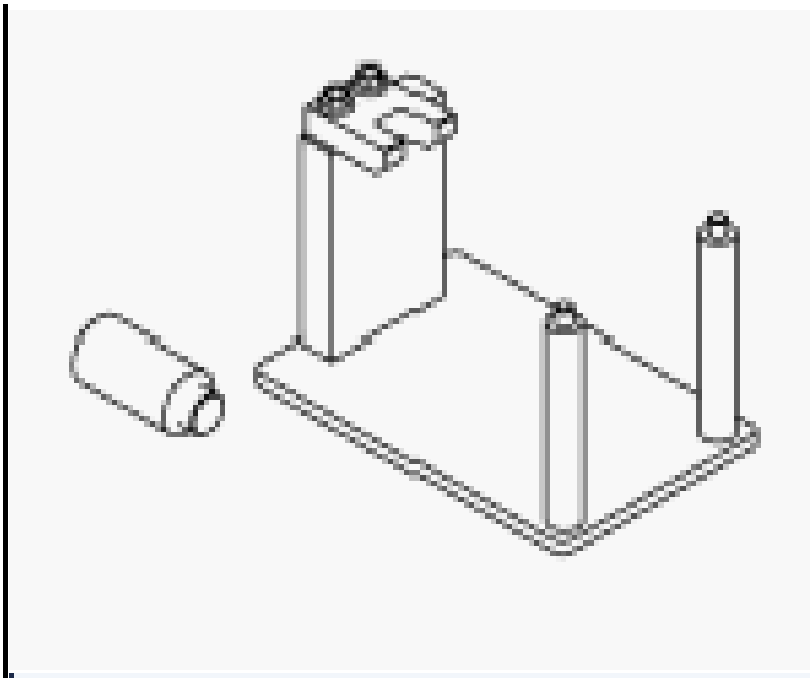	(Originally Shipped In Kit Number(s) 6896, 9896, 9973, 9974.)
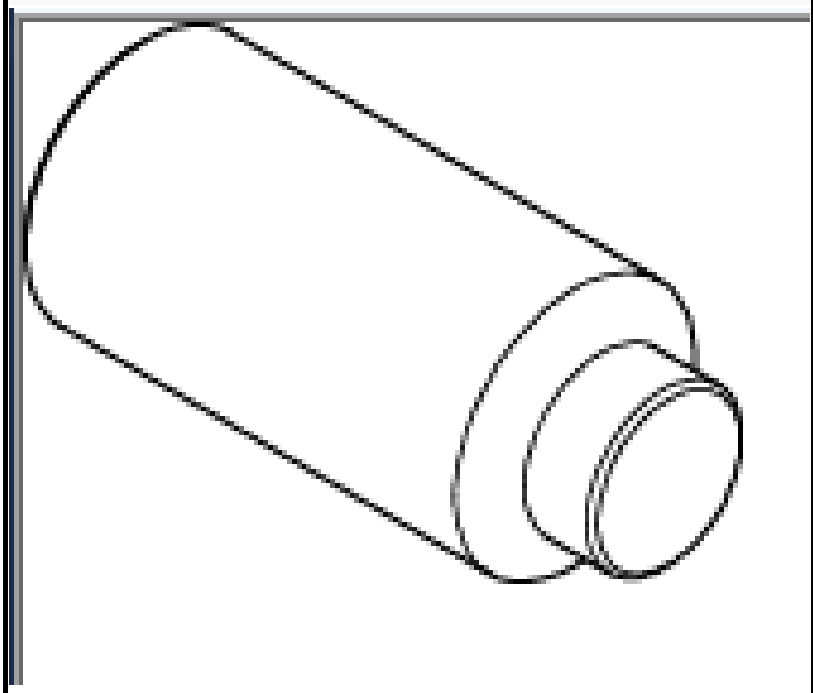	9712-2 - Plug, Press (Originally Shipped In Kit Number(s) 6896, 9896, 9973, 9974.)
	9894 - Socket, Strut Shaft (Originally Shipped In Kit Number(s) 9896, 9973, 9974.)

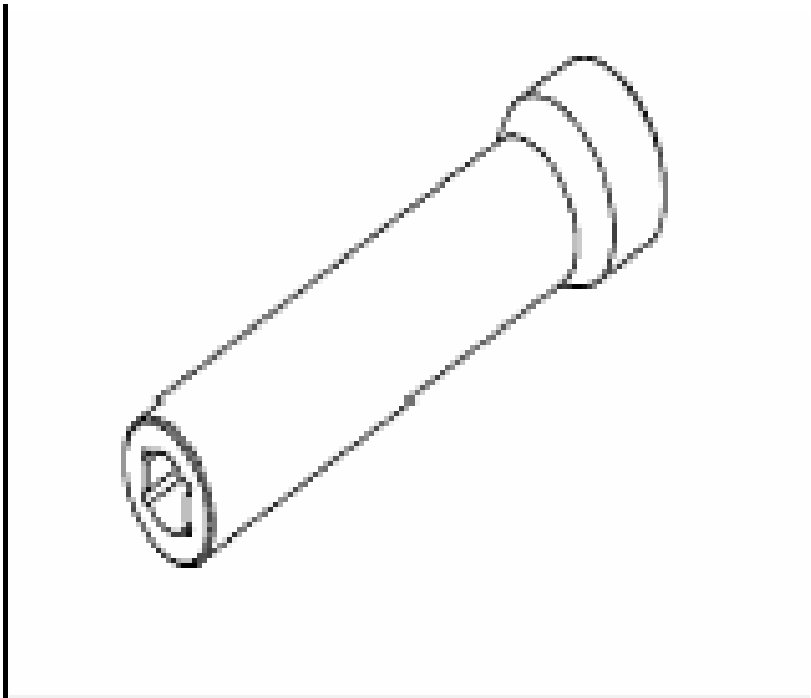

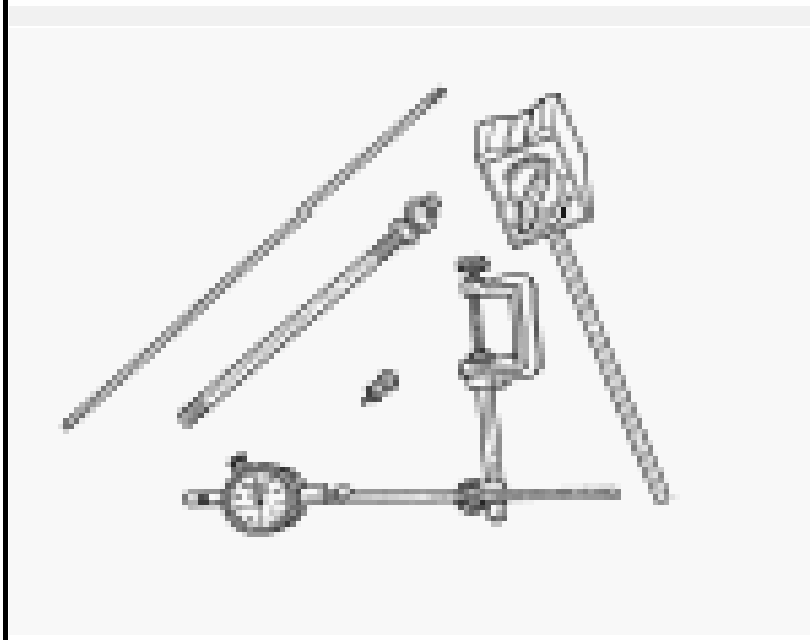

C-3339A - Set, Dial Indicator
(Originally Shipped In Kit Number(s) 9202.)

C-4212F - Press, Ball Joint
(Originally Shipped In Kit Number(s) 6745, 6880, 6881, MLR-C03.)

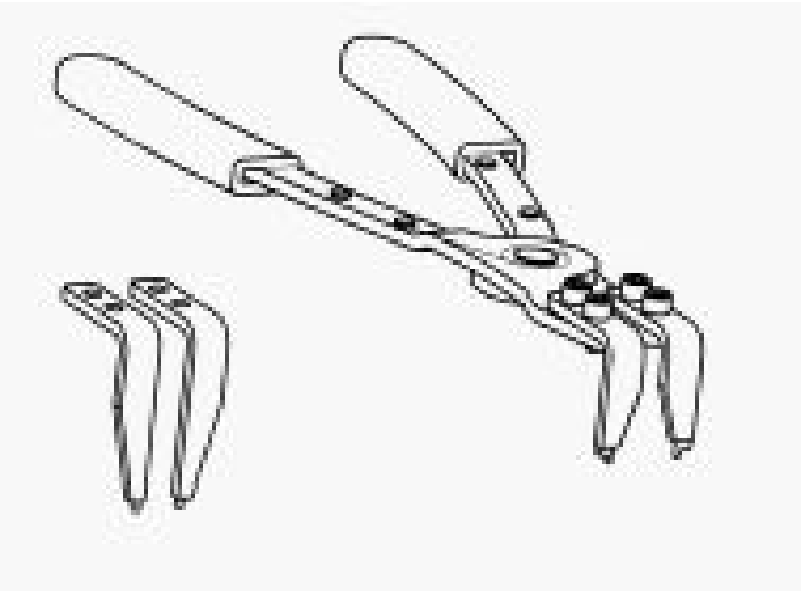

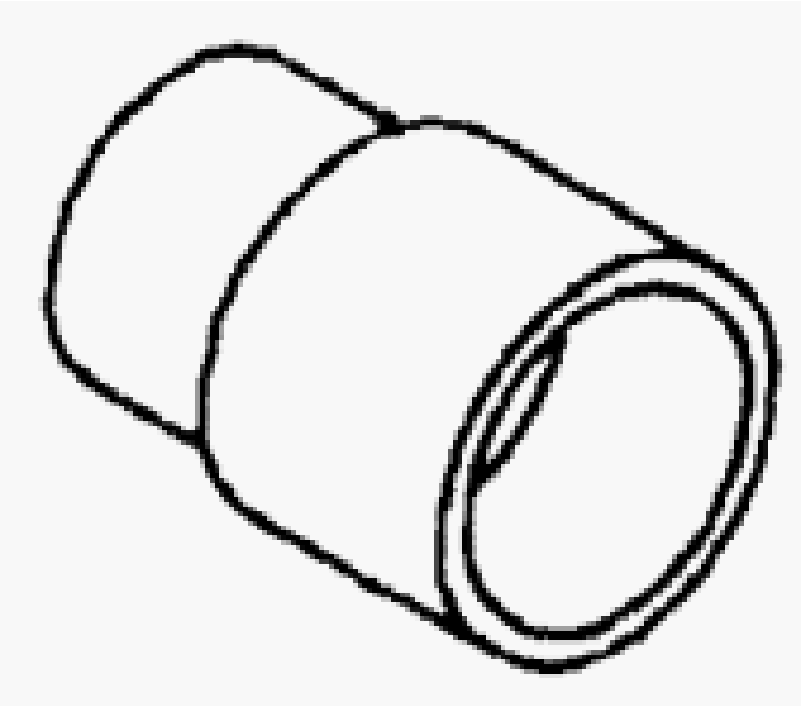

MB-990799 - Remover/Installer

MD-998334 - Installer, Seal (Originally Shipped In Kit Number(s) 9974.)

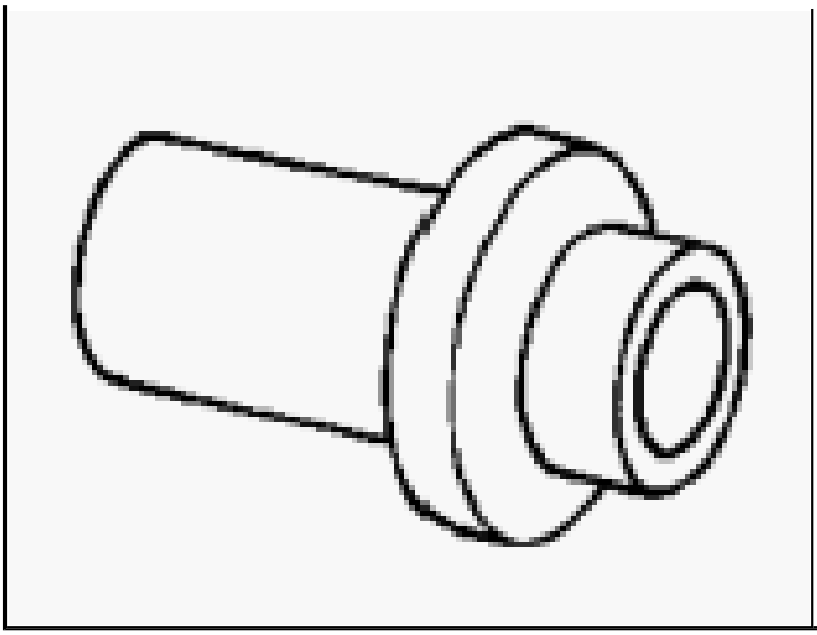

FRONT

WARNING

WARNING

WARNING: Chrysler LLC does not manufacture any vehicles or replacement parts that contain asbestos. Aftermarket products may or may not contain asbestos. Refer to aftermarket product packaging for product information.

Whether the product contains asbestos or not, dust and dirt can accumulate on brake parts during normal use. Follow practices prescribed by appropriate regulations for the handling, processing and disposing of dust and debris.

WARNING: Do not remove the strut shaft nut while strut assembly is installed in vehicle, or before the coil spring is compressed with a compression tool. The spring is held under high pressure.

CAUTION: Only frame contact hoisting equipment can be used on this vehicle. It cannot be hoisted using

equipment designed to lift a vehicle by the rear axle. If this type of hoisting equipment is used, damage to rear suspension components will occur.

CAUTION: At no time when servicing a vehicle can a sheet metal screw, bolt, or other metal fastener be installed in the shock tower to take the place of an original plastic clip. It may come into contact with the strut or coil spring.

CAUTION: Wheel bearing damage will result if after loosening the axle hub nut, the vehicle is rolled on the ground or the weight of the vehicle is allowed to be supported by the tires for any length of time.

STANDARD PROCEDURE

STANDARD PROCEDURE - LUBRICATION

There are no serviceable lubrication points on the front or rear suspension. The ball joints and tie rod ends are sealed for life and require no maintenance.

STANDARD PROCEDURE - OUTER TIE ROD END LUBRICATION

NOTE: View is typical.

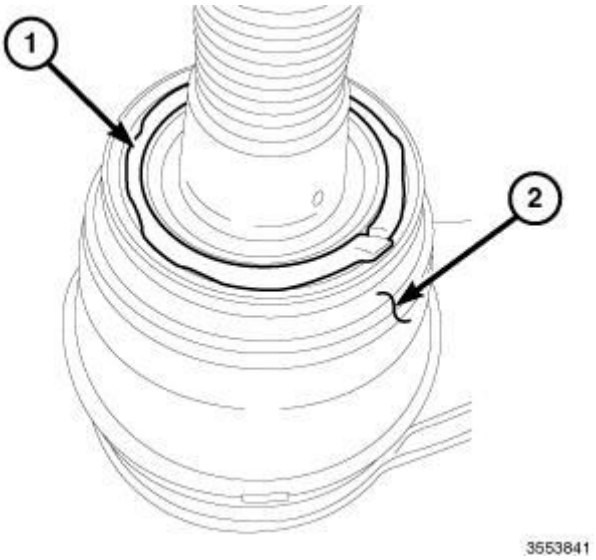

Fig. 1: Locating Grease & Tie Rod End Boot
Courtesy of CHRYSLER GROUP, LLC

NOTE: If a new tie rod end is to be installed, make sure the boot (2) is properly lubricated.

Any time the outer tie rod end is disconnected from the knuckle, before assembly, clean all old grease and debris from the boot with a clean cloth and apply outer tie rod grease P/N 68088623AA (1) to the boot (2) as shown.

SPECIFICATIONS

SPECIFICATIONS

SPECIFICATIONS

DESCRIPTION	N.m	Ft. Lbs.	In. Lbs.
Hub Nut	244	180	-
Lower Ball Joint Stud Pinch Bolt	82	60	-
Lower Control Arm Front Pivot Bolt **(Built up to 8/1/08)**	135	100	-
Lower Control Arm Front Pivot Bolt **(Built After 8/1/08)**	160	118	-
Lower Control Arm Rear Pivot Bolt	183	135	-
Stabilizer Bar Cushion Retainer Screws	30	22	-
Stabilizer Bar Link Nuts	58	43	-
Strut Clevis-to-Knuckle Nuts	110	81	-
Strut Rod Nut	78	58	-
Strut-to-Tower Nuts	48	35	-
Tie Rod Adjuster Jam Nut	75	55	-
Tie Rod End-to-Knuckle Nut	132	97	-
Wheel Mounting (Lug) Nuts	125	92	-

ARM, LOWER CONTROL

DIAGNOSIS AND TESTING

DIAGNOSIS AND TESTING - LOWER CONTROL ARM

Inspect the lower control arm for signs of damage from contact with the ground or road debris. If the lower control arm shows any sign of damage, look for distortion. Do not attempt to repair or straighten a broken or bent lower control arm. If damaged, the lower control arm stamping is serviced only as a complete

component.

Inspect both lower control arm isolator bushings for severe deterioration and replace the lower control arm as required. Inspect the ball joint per the inspection procedure in this Service Information and replace the lower control arm required.

The only serviceable component of the lower control arm is the ball joint seal boot. It should only be replaced if damaged during service of a chassis component. Otherwise, replace the entire control arm.

REMOVAL

REMOVAL

NOTE: Before proceeding, refer to FRONT, WARNING.

1. Raise and support the vehicle. Refer to **HOISTING, STANDARD PROCEDURE** .

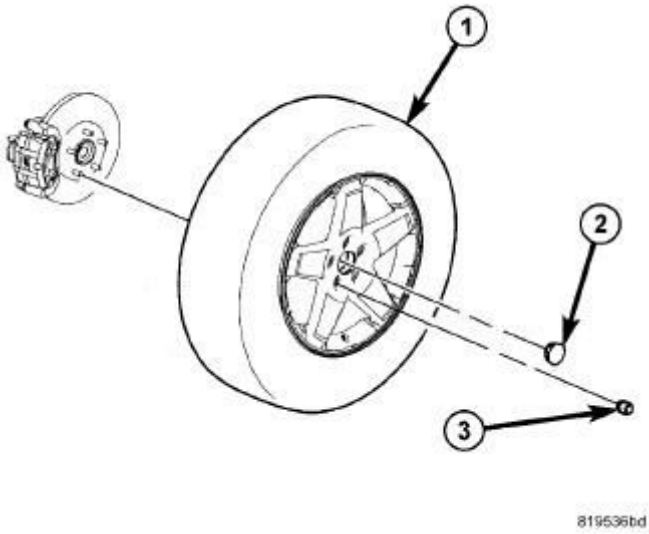

Fig. 2: Tire And Wheel Mounting
Courtesy of CHRYSLER GROUP, LLC

2. Remove the wheel mounting nuts (3), then the tire and wheel assembly (1).

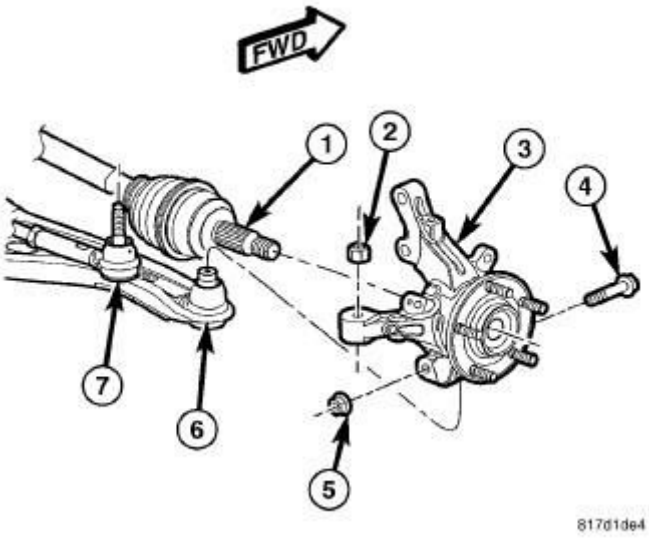

Fig. 3: Front Knuckle Mounting
Courtesy of CHRYSLER GROUP, LLC

3. Remove the nut (5) and pinch bolt (4) clamping the ball joint (6) stud to the knuckle (3).

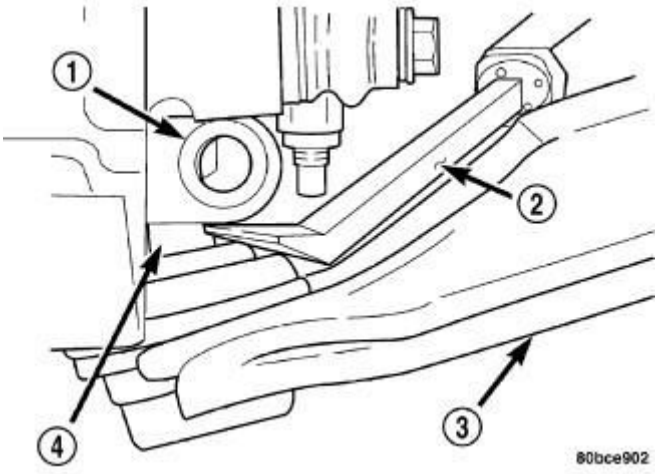

Fig. 4: Separate Ball Joint From Knuckle
Courtesy of CHRYSLER GROUP, LLC

CAUTION: Upon removing the knuckle from the ball joint stud, do not pull outward on the knuckle. Pulling the knuckle outward at this point can separate the inner C/V joint on the halfshaft thus damaging it.

CAUTION: Use care when separating the ball joint stud (4)

from the knuckle (1), so the ball joint seal does not get cut.

4. Using an appropriate prying tool (2), separate the ball joint stud (4) from the knuckle (1) by prying down on lower control arm (3) and up against the ball joint boss on the knuckle.

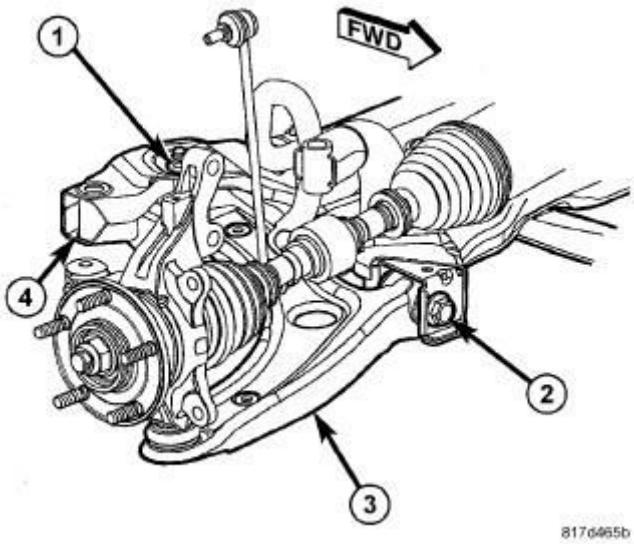

Fig. 5: Lower Control Arm Mounting
Courtesy of CHRYSLER GROUP, LLC

5. Remove the front bolt (2) attaching the lower control arm (3) to the front suspension crossmember (4).
6. Remove the nut (1) on the rear bolt attaching the lower control arm (3) to the front suspension crossmember (4). Remove the bolt.
7. Remove the lower control arm (3) from the crossmember (4).

INSTALLATION

INSTALLATION

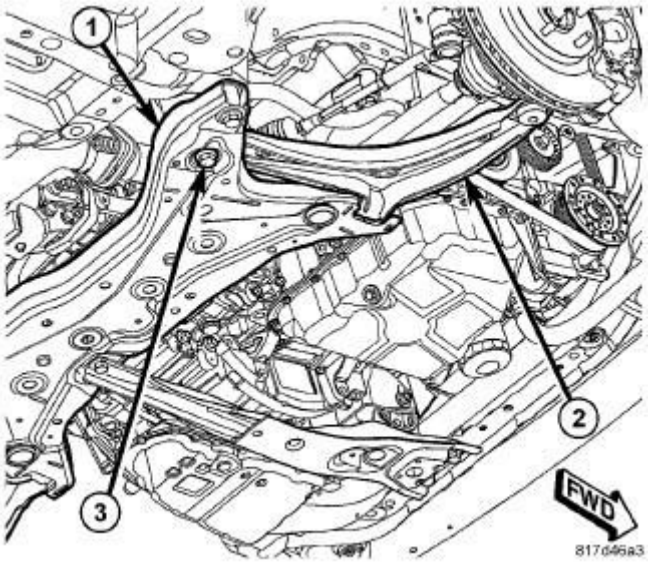

Fig. 6: Lower Control Arm Rear Mounting Bolt
Courtesy of CHRYSLER GROUP, LLC

1. Place the lower control arm (2) into the front suspension crossmember (1).
2. Insert the rear bolt (3) up through the crossmember (1) and lower control arm (2).

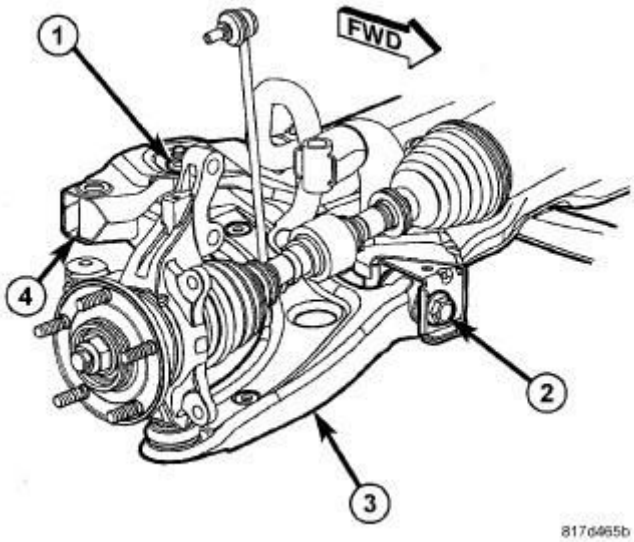

Fig. 7: Lower Control Arm Mounting
Courtesy of CHRYSLER GROUP, LLC

3. Install, but do not fully tighten, the nut (1) on the rear bolt attaching the lower control arm (3) to the crossmember (4).
4. Install, but do not fully tighten, the front bolt (2) attaching the lower control

arm to the crossmember.

5. With no weight or obstruction on the lower control arm, tighten the lower control arm rear mounting bolt nut (1) to 183 N.m (135 ft. lbs.).
6. With no weight or obstruction on the lower control arm, tighten the lower control arm front pivot bolt (2) to the following:
   - 135 N.m (100 ft. lbs.) **(Vehicles built up to 8/1/08)**
   - 160 N.m (118 ft. lbs.) **(Vehicles built after 8/1/08)**

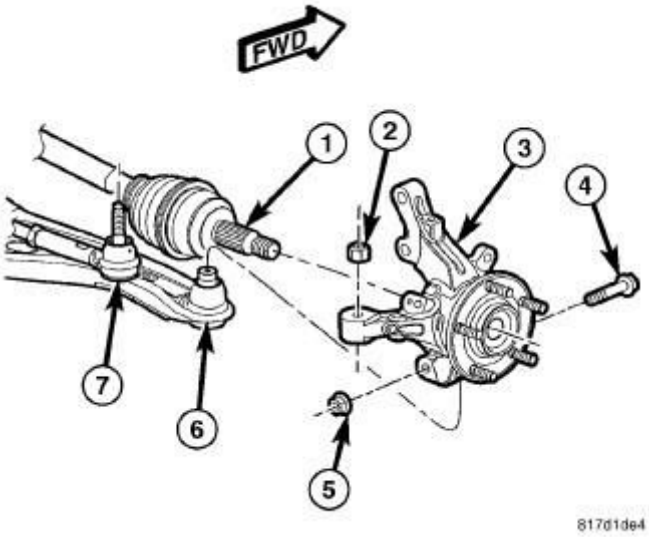

Fig. 8: Front Knuckle Mounting
Courtesy of CHRYSLER GROUP, LLC

7. Install the ball joint (6) stud into the knuckle (3), aligning the bolt hole in the knuckle boss with the groove formed in the side of the ball joint stud.
8. Install a NEW ball joint stud pinch bolt (4) and nut (5). Tighten the nut to 82 N.m (60 ft. lbs.).

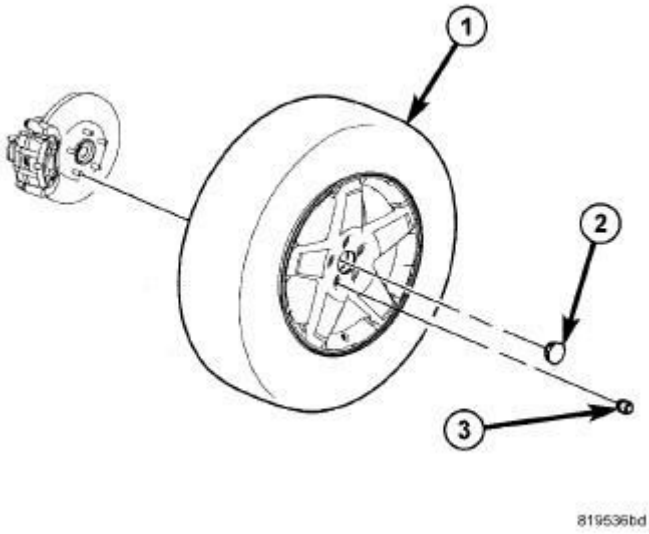

Fig. 9: Tire And Wheel Mounting
Courtesy of CHRYSLER GROUP, LLC

9. Install the tire and wheel assembly (1). Refer to **INSTALLATION** . Install and tighten the wheel mounting nuts (3) to 135 N.m (100 ft. lbs.).
10. Lower the vehicle.
11. Perform wheel alignment as necessary. Refer to **WHEEL ALIGNMENT, STANDARD PROCEDURE**.

BALL JOINT, SUSPENSION

DESCRIPTION

DESCRIPTION

The lower ball joint is not serviced separately from the control arm on this vehicle.

If it is determined from the Diagnosis and Testing procedure that the ball joint is out of specification, the entire lower control arm must be replaced.

DIAGNOSIS AND TESTING

DIAGNOSIS AND TESTING - LOWER BALL JOINT

1. Raise the vehicle allowing the front suspension to hang.
2. Remove the tire and wheel assembly.
3. Using Dial Indicator (special tool #C-3339A, Set, Dial Indicator), or

equivalent, attach the dial indicator mount to the knuckle and align the dial indicator's plunger with the direction of the stud axis, touching the end of the ball joint stud in the lower control arm.

4. Push up on the lower control arm and zero the dial indicator.

NOTE: Use care when applying load to the knuckle as to avoid damaging the ball joint seal boot.

5. From the front of the vehicle, insert a pry bar between the knuckle and lower control arm, resting it on the lower control arm. Use lever principle to push the knuckle up from the lower control arm. Apply the load until the needle of the dial indicator no longer moves.
6. Record the ball joint movement. The end play is acceptable if no more than 0.8 mm (0.031 in.) of end play is achieved back-to-back.
7. Perform this procedure on each side of the vehicle as necessary.

HUB AND BEARING

DESCRIPTION

DESCRIPTION

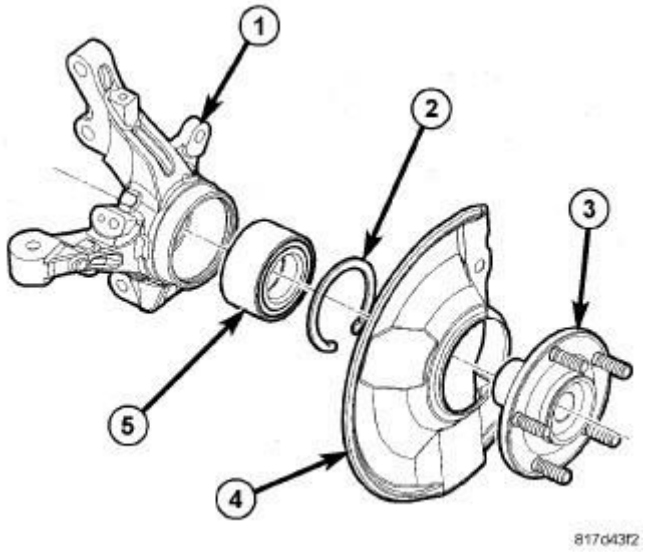

Fig. 10: Front Knuckle - Exploded View
Courtesy of CHRYSLER GROUP, LLC

The wheel bearing (5) and hub (3) are pressed into the knuckle (1). The wheel bearing is secured in place using a snap ring.

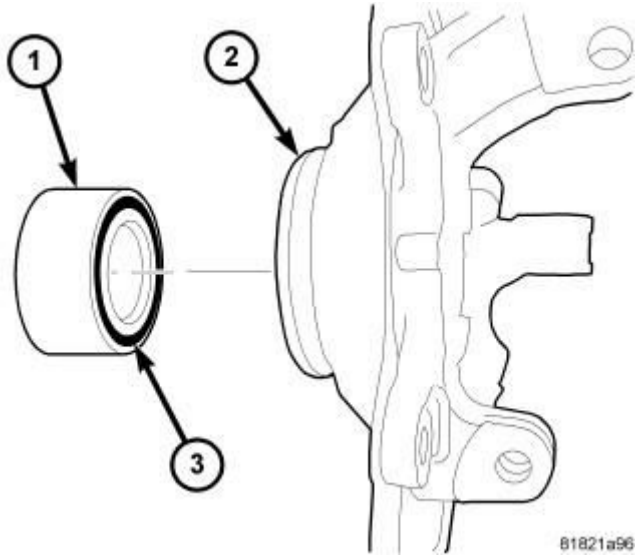

Fig. 11: Magnetic Encoder Ring Positioning
Courtesy of CHRYSLER GROUP, LLC

One side of the wheel bearing has an integrated magnetic encoder ring for wheel speed sensor usage as equipped. It is important that the wheel speed sensor magnetic encoder ring (dark band) (3) be positioned to the inside of the knuckle or the wheel speed sensor will not operate correctly.

The wheel bearing is a Unit 1 type cartridge bearing that requires no maintenance. The wheel bearing can be serviced separately from the hub.

The hub supports the driveline halfshaft outer constant velocity (C/V) joint. Each is splined and meshes in the center of the hub. The outer C/V joint is retained to the hub using a nut. The nut is locked to the outer C/V stub shaft using a cotter pin.

The hub has five studs pressed into its flange.

DIAGNOSIS AND TESTING

DIAGNOSIS AND TESTING - HUB AND BEARING - NOISE

NOTE: The wheel bearing is designed to last for the life of the vehicle and requires no type of periodic maintenance.

Bearings will produce noise if worn or damaged. The noise will generally change when the bearings are loaded. A road test of the vehicle is normally required to determine if there is a bearing noise, or if it may be some other component, and to assist in finding the location. The following procedure, together with the

DIAGNOSTIC CHART , should help determine the proper cause. Note that if a particular vehicle road test maneuver, steering to the right for instance, results in noise only part of the time, it is not likely a faulty bearing. Bearing noises are not typically intermittent.

NOTE: Damaged bearing seals and the resulting excessive grease loss may also require bearing replacement. Moderate grease seepage from the bearing is considered normal and should not require replacement of the wheel bearing. Wheel bearings are designed to last the life of the vehicle and require no type of periodic maintenance. To diagnose the hub, measure hub runout. Refer to ROTOR, BRAKE, DIAGNOSIS AND TESTING .

DIAGNOSTIC PROCEDURE:

1. Perform drive evaluation. Find a smooth level road surface void of traffic or obstructions. Turn off any accessories which may cause background noise. Evaluate for noise at 50 km/h (30 mph) and 100 km/h (60 mph) and with vehicle in neutral to eliminate potential drivetrain noises. With vehicle at a constant speed, steer back and forth to left and right (approximately 45 degree steering input each way). This will load and unload the bearings and may change the noise level. When bearing damage is slight, the noise is sometimes noticeable at lower speeds and at other times is more noticeable at higher speeds.
2. Drive evaluation results: Noise increase when turning right may indicate a problem with the left bearing. Noise increase when turning left may indicate a problem with the right bearing.
3. Put vehicle up on hoist. Grab the tire by pushing in on the top center and pulling out on the bottom center to check for excessive movement in the bearing.
4. Check for potential rubbing on rotating components, such as rotor splash shields, heat shields touching propshaft or halfshaft, wheel well liners contacting tire, wheel cover on wheel, etc. Any cyclic noise (once per wheel revolution for example) is not likely a wheel bearing fault.
5. Remove the wheel and tire assembly, disc brake caliper and brake rotor. Refer to **ROTOR, BRAKE, DIAGNOSIS AND TESTING** .
6. Rotate the wheel hub, checking for resistance or roughness.

7. Any roughness or resistance to rotation may indicate dirt intrusion or a failed hub bearing. If the bearing exhibits any of these conditions, the hub & bearing will require replacement. Do not attempt to disassemble the bearing for repair.
8. Rotate the wheel hub, utilize Chassis Ears (or equivalent) to check for noise.
9. If none of the above checks indicate a bearing failure, refer to the **DIAGNOSTIC CHART - HUB & BEARING** for other possible causes.

DIAGNOSTIC CHART - HUB & BEARING

CONDITION	POSSIBLE CAUSES	POTENTIAL CORRECTIONS
FRONT END WHINE ON TURNS	1. Low Power Steering Fluid Level (if applicable)	1. Fill power steering fluid reservoir to proper level, check for leaks (make sure all air is bled from system fluid)
	2. Worn Tires and/or Incorrect Wheel Alignment	2. Replace Tires, Check And Reset Wheel Alignment
	3. Defective Wheel Bearing	3. Replace Wheel Bearing
	4. Wrong Power Steering Fluid (if applicable)	4. Replace With Correct Power Steering Fluid
FRONT END GROWL OR GRINDING ON TURNS	1. Loose Wheel Lug Nuts	1. Verify Wheel Lug Nut Torque
	2. Engine Mount Grounding Against Frame Or Body Of Vehicle	2. Check For Engine Mount Hitting Frame Rail And Reposition Engine As Required
	3. Worn Tires and/or Incorrect Wheel Alignment	3. Replace Tires, Check and Reset Wheel Alignment

	4. Defective Wheel Bearing 5. Worn or Broken C/V Joint 6. Engine Not Centered, Causing Axle Half Shaft to Bottom Out	4. Replace Wheel Bearing 5. Replace C/V Joint 6. Center the Engine
POPPING/CLICKING/SNAPPING DURING ACCELERATION AFTER DRIVE-TO-REVERSE SHIFT, REVERSE-TO-DRIVE SHIFT OR WHILE TURNING	1. Insufficient Hub Nut Torque 2. Insufficient Grease on Mating Surface of Axle Half Shaft Outer C/V Joint to Wheel Hub/Bearing, or Worn/Damaged Gasket	1. Torque Hub Nut to Spec 2. Separate Half Shaft From Hub and Bearing and Wipe Mating Surfaces Clean. Apply Light Coating of Wheel Bearing Grease to C/V Joint Surface and Reassemble, or Replace Gasket. Torque Hub Nut to Spec
WHINE/HUM/ROAR WITH VEHICLE GOING STRAIGHT AT A CONSTANT SPEED	1. Worn Tires and/or Incorrect Wheel Alignment 2. Defective Wheel Bearing	1. Replace Tires and Reset Wheel Alignment 2. Replace Wheel Bearing
GROWL OR GRINDING WITH VEHICLE GOING STRAIGHT AT A CONSTANT SPEED	1. Engine Mount Grinding Against Frame or Body 2. Defective Wheel Bearing 3. Worn or Broken C/V Joint	1. Check and Reposition Engine as Required 2. Replace Wheel Bearing 3. Replace C/V Joint

REMOVAL

REMOVAL

NOTE: The removal and installation of the wheel bearing and hub from the knuckle is only to be done with the knuckle removed from the vehicle.

1. Remove the steering knuckle from the vehicle. Refer to **KNUCKLE, STEERING, REMOVAL**.

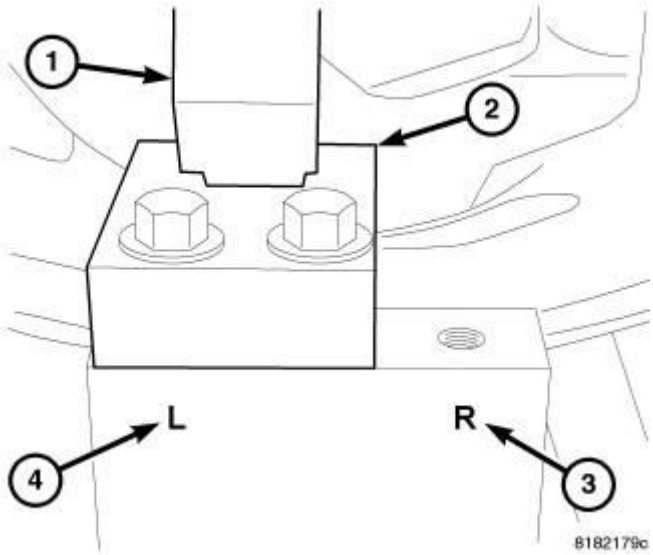

Fig. 12: Fixture Set For Left Or Right Knuckles
Courtesy of CHRYSLER GROUP, LLC

2. Position the knuckle support fixture (special tool #9712, Fixture, Knuckle Support) as follows:
   a. For left side knuckles, place the locator block (2) to the left side (4) on the Fixture. The side of the locator block with the angle cut goes downward, toward the Fixture. Install the mounting screws and tighten them to approximately 54 N.m (40 ft. lbs.).
   b. For right side knuckles, place the locator block (2) to the right side (3) on the Fixture. The side of the locator block with the angle cut goes downward, toward the Fixture. Install the mounting screws and tighten them to approximately 54 N.m (40 ft. lbs.).

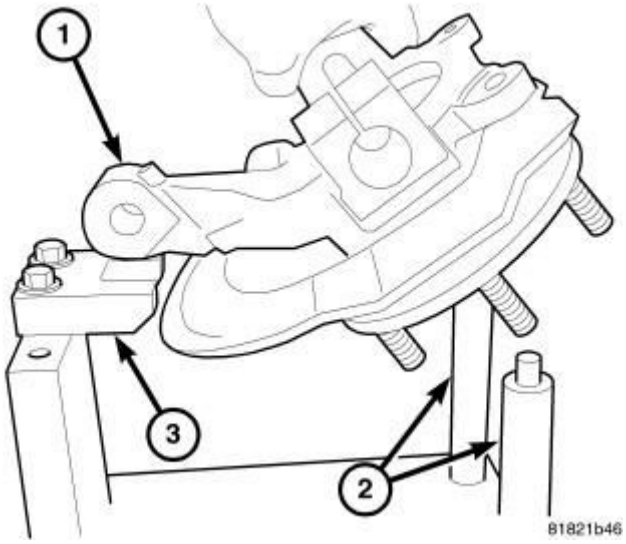

Fig. 13: Place Knuckle In Fixture
Courtesy of CHRYSLER GROUP, LLC

3. Install the knuckle in the Fixture as shown, guiding the steering arm (1) to rest on the locator block (3) and the brake caliper mounting bosses on the two Fixture pins (2).

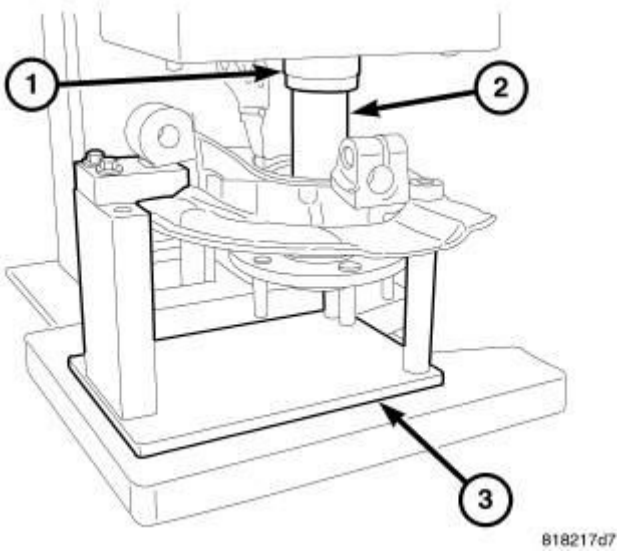

Fig. 14: Hub Removal From Knuckle
Courtesy of CHRYSLER GROUP, LLC

4. Place the Fixture (3) with knuckle in an arbor press.
5. Position Remover/Installer (special tool #9712-2, Plug, Press) (2), in the small end of the hub. Lower the arbor press ram (1) and remove the hub from the wheel bearing and knuckle. The bearing race will normally come out of the wheel bearing with the hub as it is pressed out of the bearing.

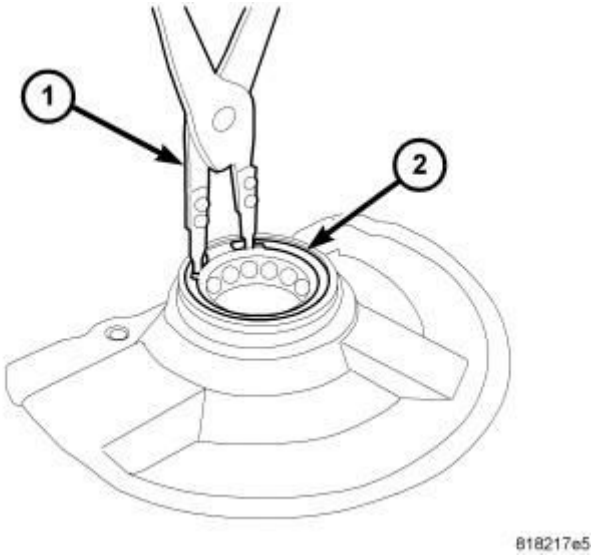

Fig. 15: Snap Ring Removal/Installation
Courtesy of CHRYSLER GROUP, LLC

6. Remove the knuckle from the Fixture and turn it over.
7. Remove the snap ring (2) from the knuckle using an appropriate pair of snap ring pliers (1).

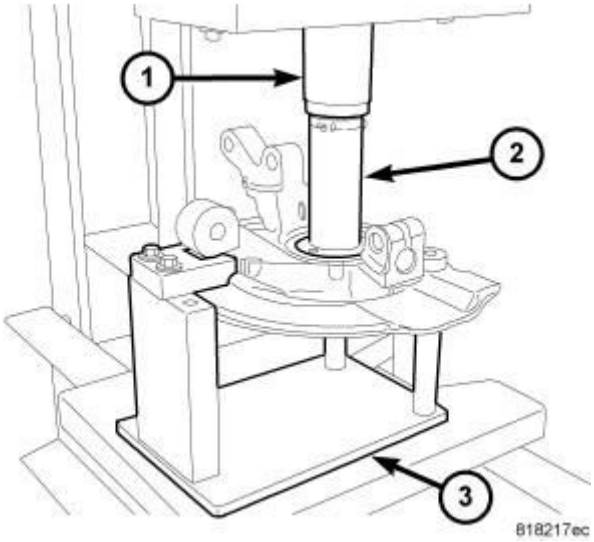

Fig. 16: Bearing Removal From Knuckle
Courtesy of CHRYSLER GROUP, LLC

8. Place the knuckle back in the Fixture (3) in the arbor press ram.
9. Place Installer (2) (special tool #MD-998334, Installer, Seal), on the outer race of the wheel bearing. Lower the arbor press ram (1) and remove the wheel bearing from the knuckle.
10. Remove the knuckle and tools from arbor press.

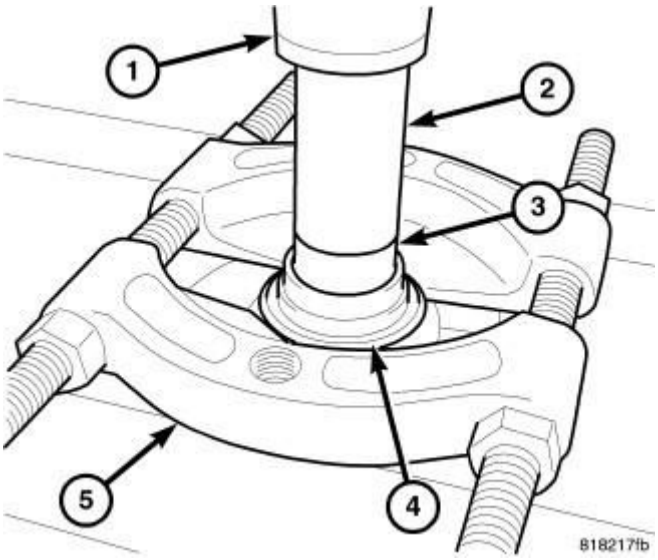

Fig. 17: Inner Race Removal From Hub
Courtesy of CHRYSLER GROUP, LLC

11. If the bearing race is still pressed onto the hub, install the Bearing Splitter (5), Special Tool (special tool #1130, Splitter, Bearing/Gear), between the hub flange and the bearing inner race (4).
12. Place the hub, bearing race and Bearing Splitter in an arbor press. The press support blocks must not obstruct the wheel hub while it is being pressed out of the bearing race.
13. Place Remover/Installer (special tool #9712-2, Plug, Press) (2) in the end of the hub (3). Lower the arbor press ram (1) and remove the hub from the bearing race.

NOTE: For installation, refer to HUB AND BEARING, INSTALLATION.

INSTALLATION

INSTALLATION

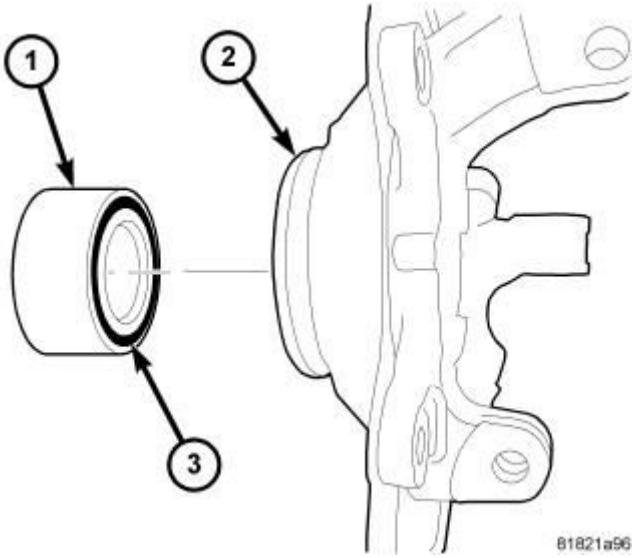

Fig. 18: Magnetic Encoder Ring Positioning
Courtesy of CHRYSLER GROUP, LLC

CAUTION: When installing the wheel bearing (1) in the knuckle (2) it is important to place the side of bearing with the wheel speed sensor magnetic encoder ring (dark band) (3) in the knuckle first. Otherwise, the wheel speed sensor will not operate correctly.

1. Wipe the bearing bore of the knuckle clean of any grease or dirt with a clean, dry shop towel.

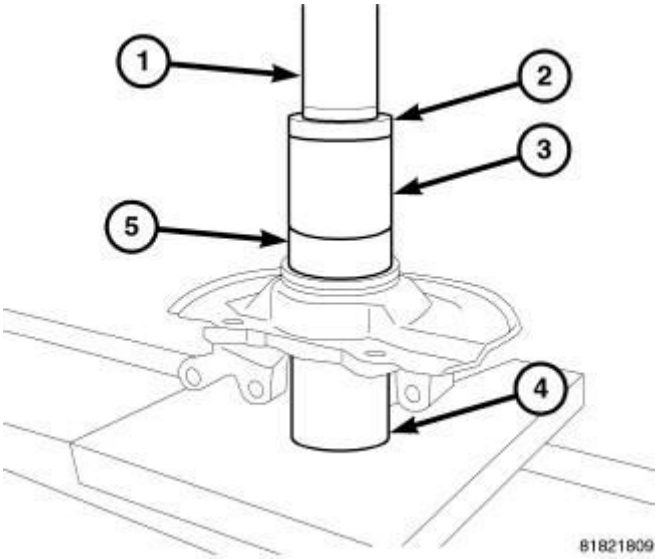

Fig. 19: Bearing Installation In Knuckle
Courtesy of CHRYSLER GROUP, LLC

2. Place the knuckle in an arbor press supporting the knuckle from underneath using Cup (special tool #6310-1, Cup) (4.)
3. Place the NEW wheel bearing (5) magnetic encoder ring side down (see above Caution) into the bore of the knuckle. Be sure the wheel bearing is placed squarely into the bore.
4. Place Receiver (special tool #8498, Receiver, Axle Shaft Seal) (3), larger inside diameter end down over the outer race of the wheel bearing.
5. Place Disc (special tool #6310-2, Disc) (2) into top of Receiver (special tool #8498, Receiver, Axle Shaft Seal). Lower the arbor press ram (1) and press the wheel bearing into the knuckle until it is bottomed in the bore of the knuckle.
6. Remove the knuckle and tools from the arbor press.

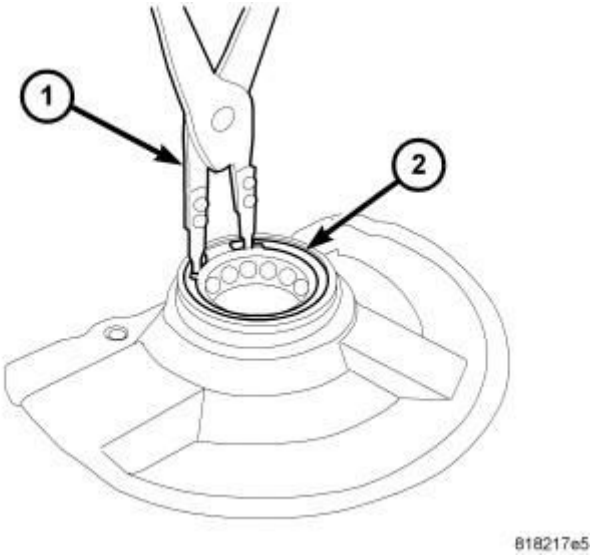

Fig. 20: Snap Ring Removal/Installation
Courtesy of CHRYSLER GROUP, LLC

7. Install a NEW snap ring (2) in the knuckle using an appropriate pair of snap ring pliers (1). Make sure the snap ring is fully seated.

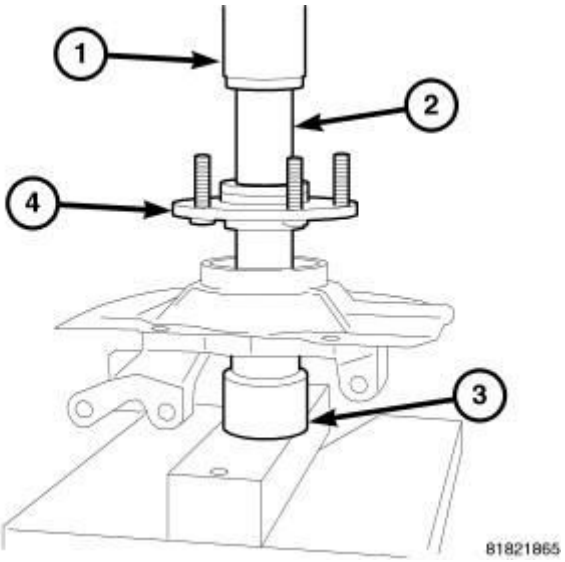

Fig. 21: Hub Installation Into Bearing
Courtesy of CHRYSLER GROUP, LLC

8. Place the knuckle in an arbor press. Support the knuckle from underneath using Remover/Installer (special tool #MB-990799, Remover/Installer) (3), smaller end up against the wheel bearing inner race.
9. Place the hub (4) in the wheel bearing making sure it is square with the bearing inner race.
10. Position Remover/Installer (special tool #9712-2, Plug, Press) (2) in the end of the hub. Lower the arbor press ram (1) and press the hub into the wheel bearing until it bottoms.
11. Remove the knuckle and tools from the press.
12. Verify the hub turns smoothly without rubbing or binding.
13. Install the knuckle on the vehicle. Refer to **KNUCKLE, STEERING, INSTALLATION**.

KNUCKLE, STEERING

DESCRIPTION

DESCRIPTION

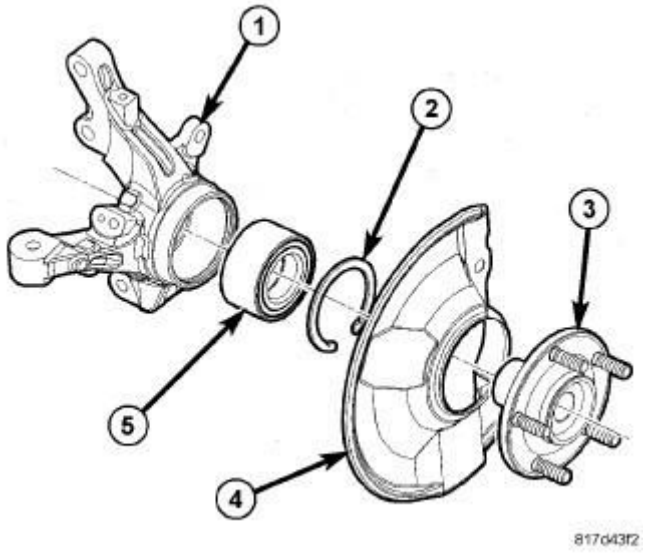

Fig. 22: Front Knuckle - Exploded View
Courtesy of CHRYSLER GROUP, LLC

The knuckle (1) is a single casting with legs machined for attachment to the front strut assembly on the top, lower control arm ball joint on the bottom, and steering linkage on the trailing end. The knuckle also has two machined, drilled and tapped legs on the leading end casting to support and align the front disc brake caliper adapter.

The knuckle supports the wheel bearing (5) and hub (3). The hub is pressed into a sealed-for-life wheel bearing that is pressed into the knuckle. A snap ring also holds the bearing in place. A shield is pressed onto the knuckle behind the hub.

DIAGNOSIS AND TESTING

DIAGNOSIS AND TESTING - KNUCKLE

The front suspension knuckle is not a repairable component of the front suspension. It must be replaced if found to be damaged in any way. If it is determined that the knuckle is bent when servicing the vehicle, no attempt is to be made to straighten the knuckle.

REMOVAL

REMOVAL

NOTE: Before proceeding, review all Warnings and Cautions. Refer to FRONT, WARNING.

1. Raise and support the vehicle. Refer to **HOISTING, STANDARD PROCEDURE** .

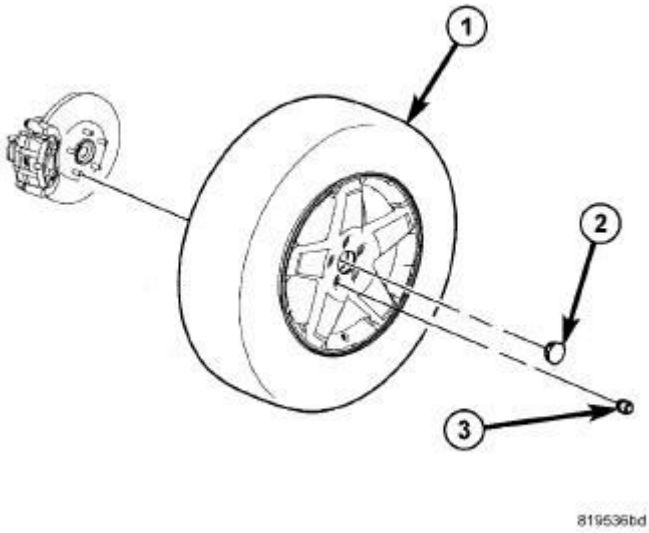

Fig. 23: Tire And Wheel Mounting
Courtesy of CHRYSLER GROUP, LLC

2. Remove the wheel mounting nuts (3), then the tire and wheel assembly (1).

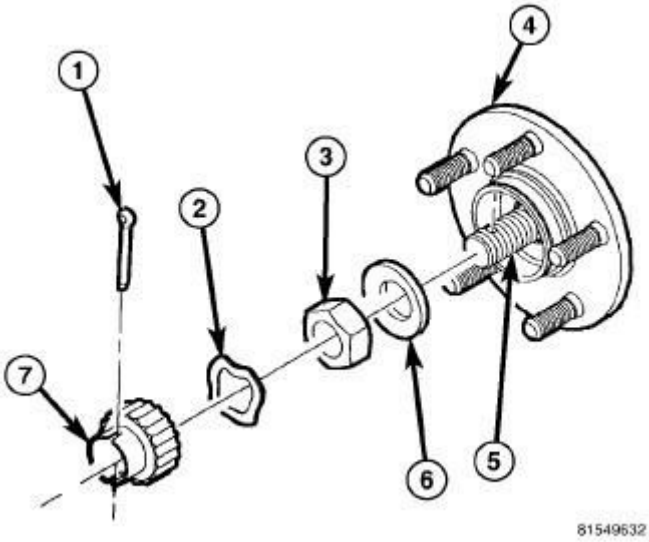

Fig. 24: Removing/Installing Hub Nut
Courtesy of CHRYSLER GROUP, LLC

3. Remove cotter pin (1), lock (7) and spring washer (2) from halfshaft stub shaft (5).

4. While a helper applies the brakes to keep the hub (1) from rotating, remove the hub nut (3) and washer (6).
5. Access and remove the front brake rotor. Refer to **ROTOR, BRAKE, REMOVAL** .

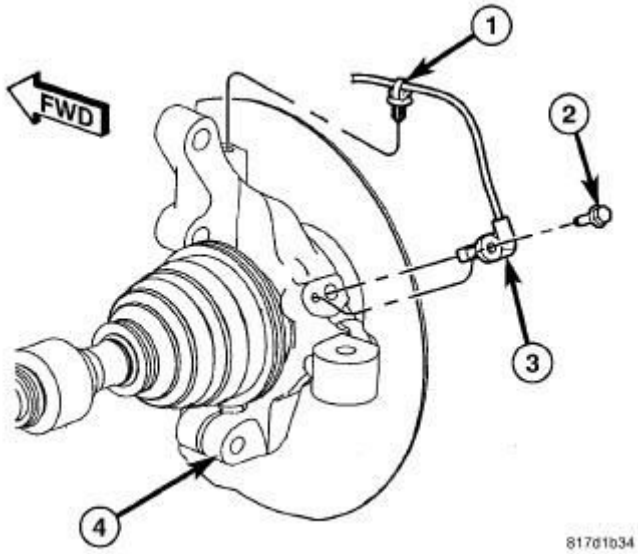

Fig. 25: Front Wheel Speed Sensor Head
Courtesy of CHRYSLER GROUP, LLC

6. Remove the routing clip (1) securing wheel speed sensor cable to the knuckle (4).
7. Remove the screw (2) fastening the wheel speed sensor head (3) to the knuckle (4). Pull the sensor head out of the knuckle.

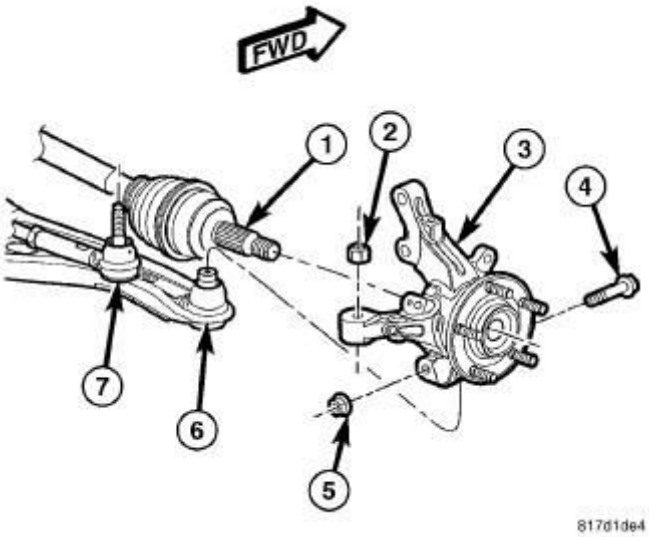

Fig. 26: Front Knuckle Mounting
Courtesy of CHRYSLER GROUP, LLC

8. Remove the nut (2) attaching the outer tie rod (7) to the knuckle (3). To do this, hold the tie rod end stud with a wrench while loosening and removing the nut with a standard wrench or crowfoot wrench.

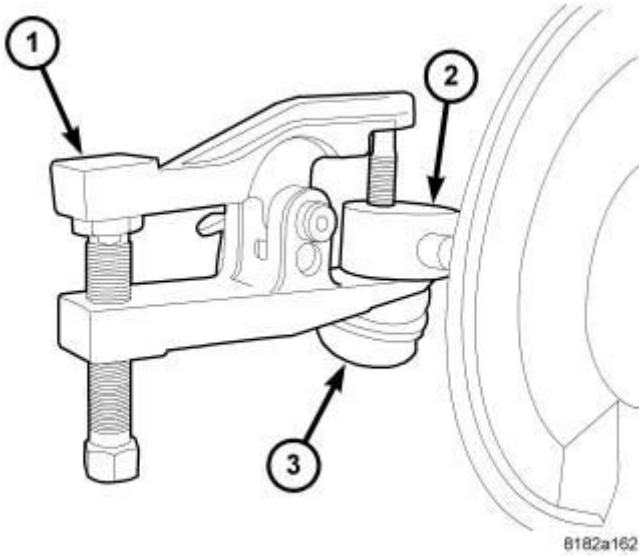

Fig. 27: Using 9360 On Tie Rod End
Courtesy of CHRYSLER GROUP, LLC

9. Release the outer tie rod end (3) from the knuckle (2) using Remover (1), Special Tool (special tool #9360, Remover, Ball Joint).
10. Remove the outer tie rod from the knuckle.

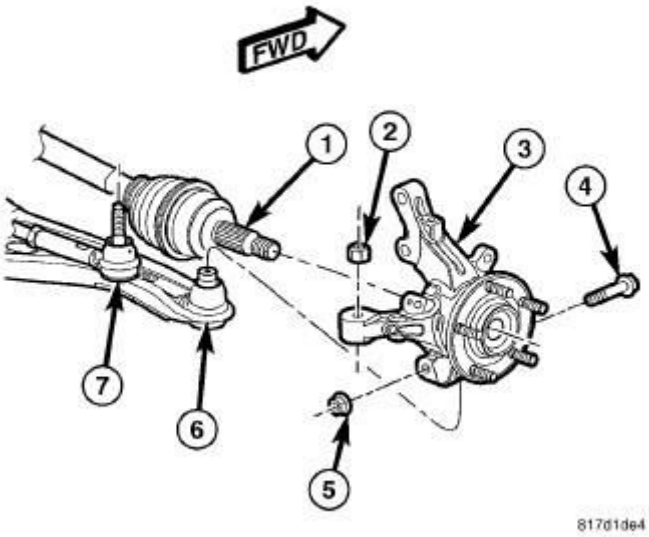

Fig. 28: Front Knuckle Mounting
Courtesy of CHRYSLER GROUP, LLC

11. Remove the nut (5) and pinch bolt (4) clamping the ball joint stud (6) to the knuckle (3).

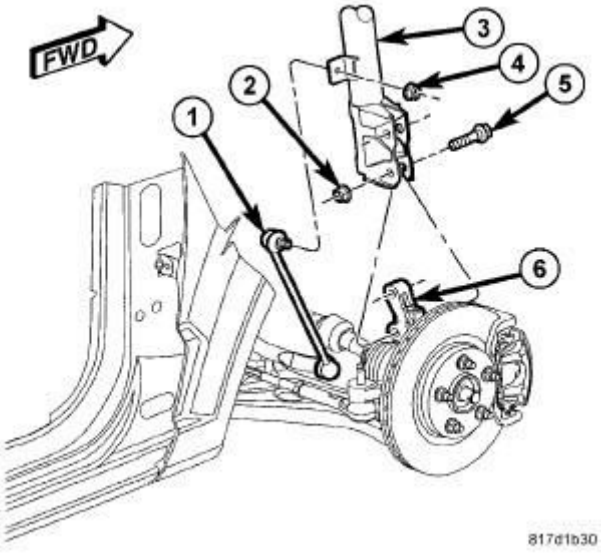

Fig. 29: Strut Mounting To Knuckle
Courtesy of CHRYSLER GROUP, LLC

CAUTION: The strut assembly-to-knuckle attaching bolts (5) are serrated and must not be turned during removal. Proper removal is required. Refer to the following steps for the correct method.

12. While holding the bolt heads stationary, remove the two nuts (2) from the bolts (5) attaching the strut (3) to the knuckle (6).
13. Remove the two bolts (5) attaching the strut (3) to the knuckle (6) using a pin punch.

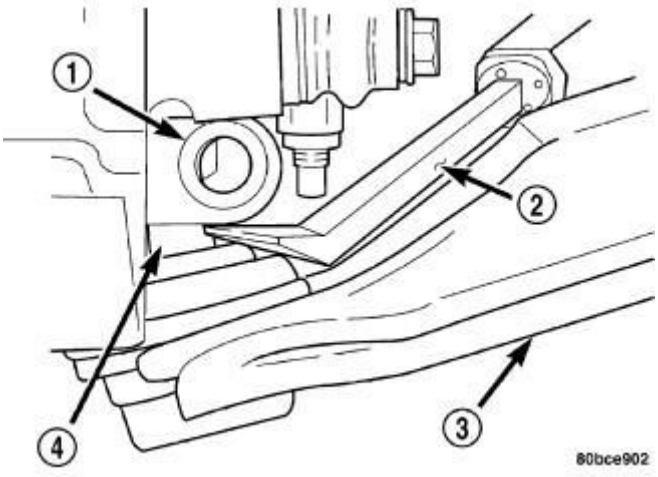

Fig. 30: Separate Ball Joint From Knuckle
Courtesy of CHRYSLER GROUP, LLC

CAUTION: Use care when separating the ball joint stud (4) from the knuckle (1), so the ball joint seal does not get cut.

14. Using an appropriate prying tool (2), separate the ball joint stud (4) from the knuckle (1) by prying down on lower control arm (3) and up against the ball joint boss on the knuckle.

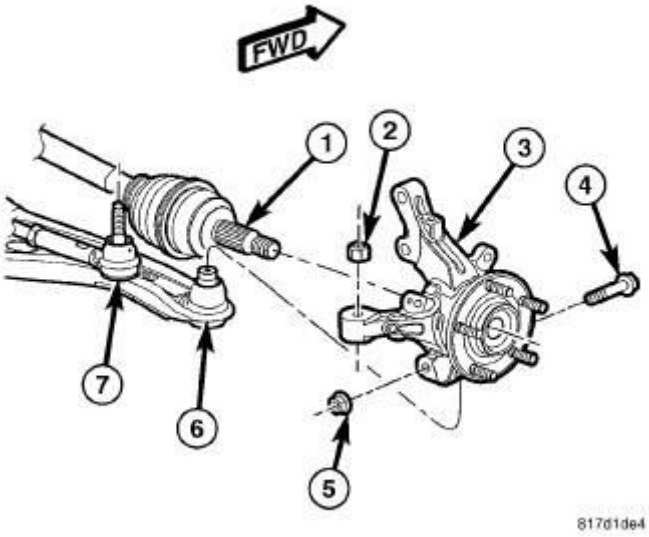

Fig. 31: Front Knuckle Mounting
Courtesy of CHRYSLER GROUP, LLC

NOTE: Do not allow the half shaft (1) to hang by the inner C/V joint; it must be supported to keep the joint from

separating during this operation.

15. Pull the knuckle (3) off the half shaft (1) outer C/V joint splines and remove the knuckle from the vehicle.

INSTALLATION

INSTALLATION

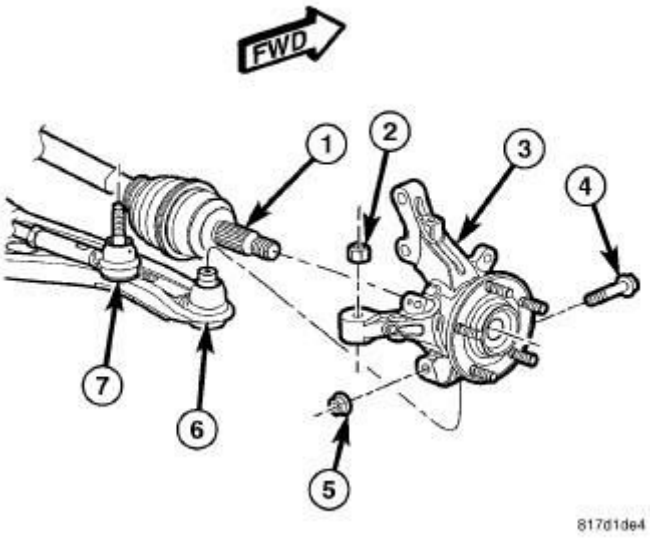

Fig. 32: Front Knuckle Mounting
Courtesy of CHRYSLER GROUP, LLC

1. Slide the hub of the knuckle (3) onto the splines of the halfshaft outer C/V joint (1).
2. Install the knuckle (3) onto the ball joint (6) stud aligning the bolt hole in the knuckle boss with the groove formed into the side of the ball joint stud.
3. Install a NEW ball joint stud pinch bolt (4) and nut (5). Tighten the nut to 82 N.m (60 ft. lbs.).

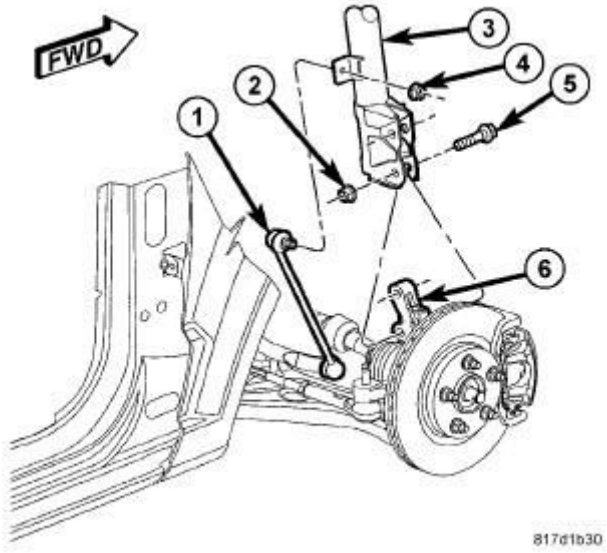

Fig. 33: Strut Mounting To Knuckle
Courtesy of CHRYSLER GROUP, LLC

CAUTION: The strut assembly-to-knuckle attaching bolts (5) are serrated and must not be turned during installation. Install the nuts while holding the bolts stationary in the steering knuckle. Refer to the following step.

4. Position the lower end of the strut assembly (3) in line with the upper end of the knuckle (6), aligning the mounting holes. Install the two mounting bolts (5).
5. Install the nuts (2) on the two bolts (5). While holding the bolts in place, tighten the nuts to 110 N.m (81 ft. lbs.).

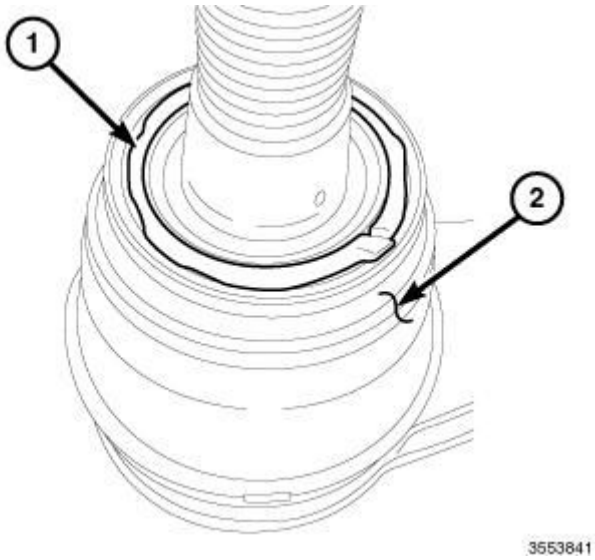

Fig. 34: Locating Grease & Tie Rod End Boot
Courtesy of CHRYSLER GROUP, LLC

NOTE: If a new tie rod end is to be installed, make sure the boot (2) is properly lubricated.

6. Clean all old grease and debris from the boot (2) with a clean cloth.
7. Apply outer tie rod grease P/N 68088623AA (1) to the tie rod end boot (2).

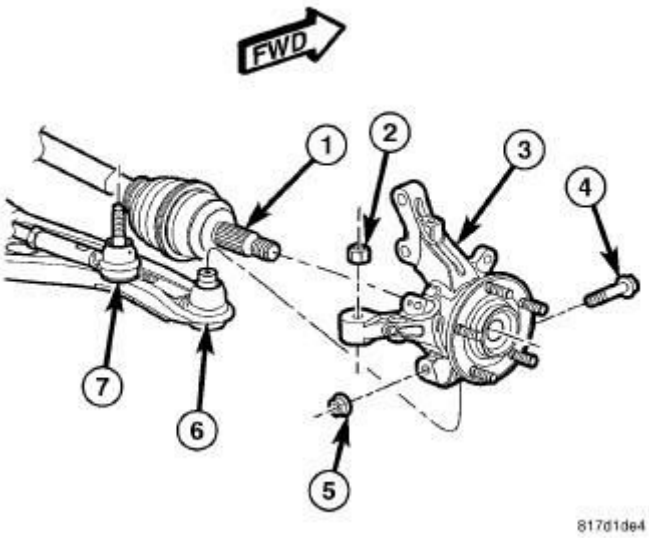

Fig. 35: Front Knuckle Mounting
Courtesy of CHRYSLER GROUP, LLC

8. Install the outer tie rod (7) ball stud into the hole in the knuckle (3) arm. Start the tie rod end-to-knuckle nut (2) onto the stud. While holding the tie

rod end stud with a wrench, tighten the nut with a wrench or crowfoot wrench to 132 N.m (97 ft. lbs.).

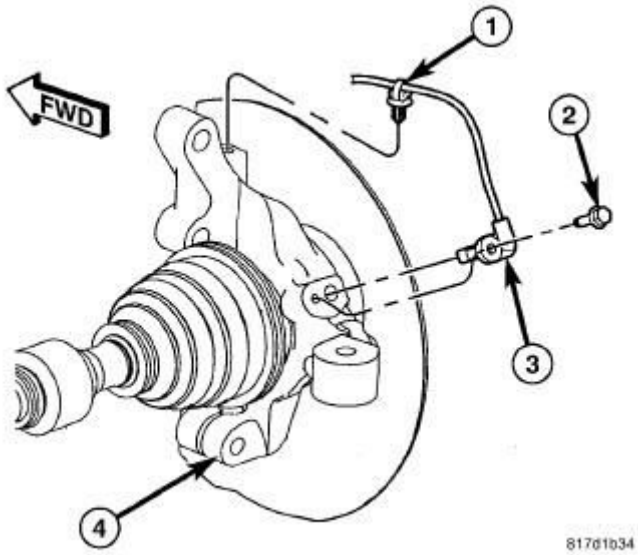

Fig. 36: Front Wheel Speed Sensor Head
Courtesy of CHRYSLER GROUP, LLC

9. Install the wheel speed sensor head (3) into the knuckle (4). Install the mounting screw (2) and tighten it to 12 N.m (106 in. lbs.).
10. Install the routing clip (1) securing the wheel speed sensor cable to the knuckle (4).
11. Install the brake rotor, disc brake caliper and adapter. Refer to **ROTOR, BRAKE, INSTALLATION** .

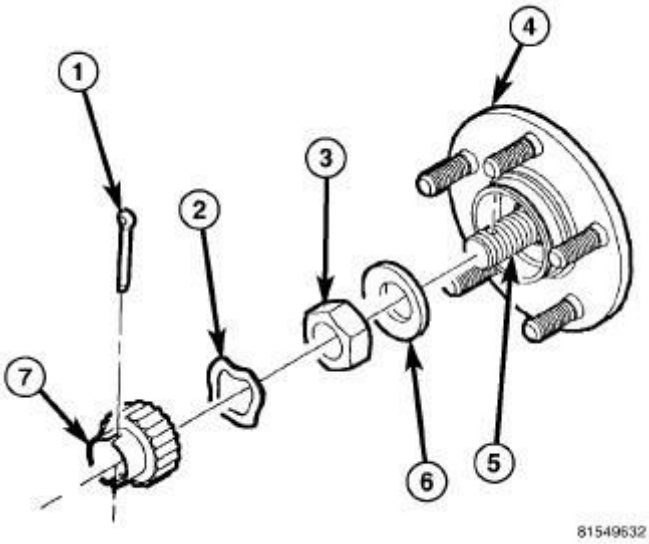

Fig. 37: Removing/Installing Hub Nut
Courtesy of CHRYSLER GROUP, LLC

12. Clean all foreign matter from the threads of the halfshaft stub shaft.
13. Install the washer (6) and hub nut (3) on end of halfshaft stub shaft (5). While a helper applies the brakes to keep the hub (4) from rotating, tighten the hub nut to 244 N.m (180 ft. lbs.).
14. Install the spring washer (2) and hub nut lock (7) over the hub nut and stub shaft. Install a NEW cotter pin (1) securing nut lock in place and wrap the cotter pin prongs tightly around the nut lock.

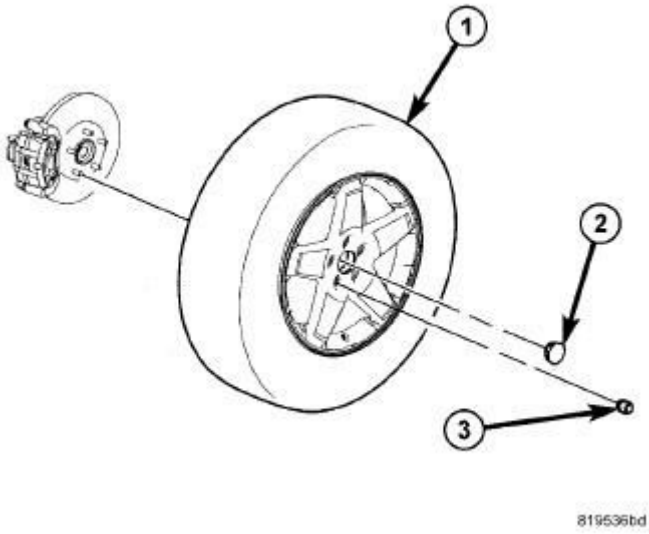

Fig. 38: Tire And Wheel Mounting
Courtesy of CHRYSLER GROUP, LLC

15. Install the tire and wheel assembly (1). Refer to **INSTALLATION** . Install and tighten the wheel mounting nuts (3) to 135 N.m (100 ft. lbs.).
16. Lower the vehicle.

NOTE: If the original knuckle is being reinstalled, wheel alignment may not be necessary due to Net-Build design.

17. Perform wheel alignment as necessary. Refer to **WHEEL ALIGNMENT, STANDARD PROCEDURE**.

SEAL BOOT, BALL JOINT, LOWER

REMOVAL

REMOVAL

CAUTION: This procedure is designed to be used only if a seal boot is damaged during related service procedures. It is not to be used as a repair procedure for a cut seal boot on a vehicle that has been driven and exposed to road and weather conditions.

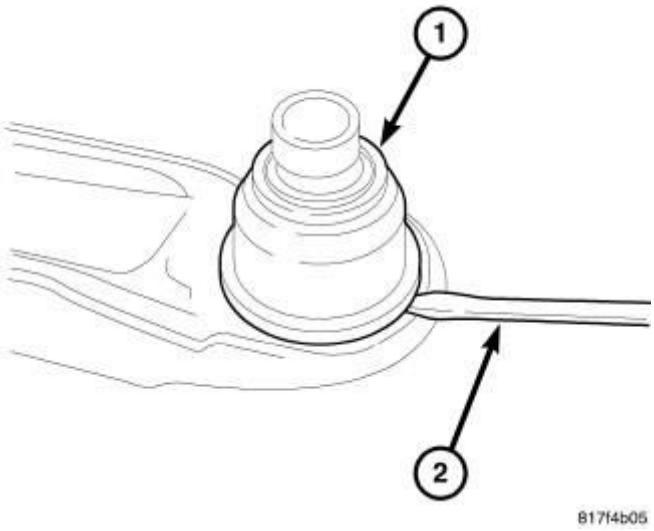

Fig. 39: Ball Joint Seal Boot Removal
Courtesy of CHRYSLER GROUP, LLC

1. Remove the lower control arm from the vehicle. Refer to **ARM, LOWER CONTROL, REMOVAL**.
2. Using a screwdriver or other suitable tool (2), pry the seal boot (1) off of the ball joint.

INSTALLATION

INSTALLATION

CAUTION: This procedure is designed to be used only if a seal boot is damaged during related service procedures. It is not to be used as a repair procedure for a cut seal boot on a vehicle that has been driven and exposed to road and weather conditions.

1. Place a liberal dab of Mopar® Multi-Mileage Lube (No more than 10g) or equivalent around the base of the ball joint stud at the socket.
2. Position the ball joint stud straight up.
3. Place the NEW ball joint seal boot over the ball joint stud.
4. By hand, start the seal boot over the sides of the ball joint.

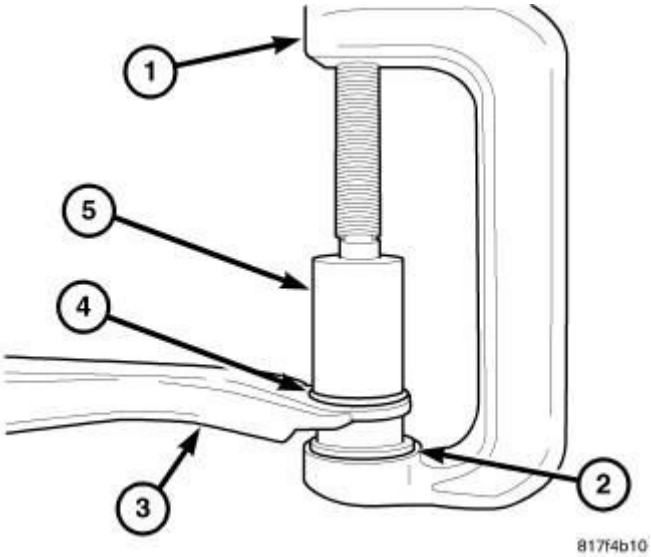

Fig. 40: Ball Joint Seal Boot Installation
Courtesy of CHRYSLER GROUP, LLC

CAUTION: Prior to installing the sealing boot using Remover/Installer, make sure there are no burrs on the inside of the tool. Remove any burrs and lubricate with a small amount of Mopar® Multi-Mileage Lube or equivalent.

5. Place Remover/Installer (special tool #6289-4, Remover/Installer) onto the screw-drive of Ball Joint Press (special tool #C-4212F, Press, Ball Joint).
6. Place Remover/Installer (special tool #6289-6, Remover/Installer), angle-cut end up into the cup of Ball Joint Press (special tool #C-4212F, Press, Ball Joint). Before tightening the set, turn the Remover/Installer so that the tallest point of the angle-cut is away from the body of the control arm when installing the seal boot.
7. Place the control arm ball joint into Remover/Installer (special tool #6289-6, Remover/Installer). Rotate the arm left or right until the tallest point of the angle cut on the Remover/Installer is away from the body of the control arm.

8. Lower Remover/Installer (special tool #6289-4, Remover/Installer) onto outer lip of ball joint seal.
9. By hand, tighten the Ball Joint Press screw-drive installing the seal boot. Tighten the screw-drive until the seal boot is seated squarely down against the top surface of the lower control arm (3). It may be necessary to use a wrench to seat the seal boot, but do not overtighten.
10. Remove the tools and wipe any grease off the ball joint stud using a clean shop towel with Mopar® Brake Parts Cleaner applied to it.
11. Install the lower control arm. Refer to **ARM, LOWER CONTROL, INSTALLATION**.

STABILIZER BAR, FRONT

REMOVAL

REMOVAL

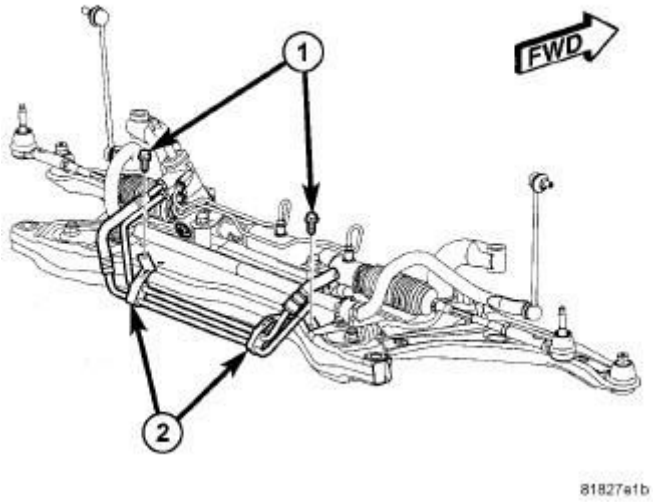

Fig. 41: Hose Routing Bracket Screws AT Crossmember
Courtesy of CHRYSLER GROUP, LLC

NOTE: Before proceeding, refer to FRONT, WARNING.

1. Raise and support the vehicle. Refer to **HOISTING, STANDARD PROCEDURE** .
2. If equipped, remove the engine belly pan.
3. Remove the rear engine mount. Refer to **INSULATOR, ENGINE**

MOUNT, REAR, REMOVAL for 2.0L, **INSULATOR, ENGINE MOUNT, REAR MOUNT, REMOVAL** for 2.2L Diesel or **INSULATOR, ENGINE MOUNT, REAR, REMOVAL** for 2.4L .

4. Remove the front engine mount through-bolt.
5. Remove the fasteners (1) securing the power steering hose routing clamps (2) to the crossmember.

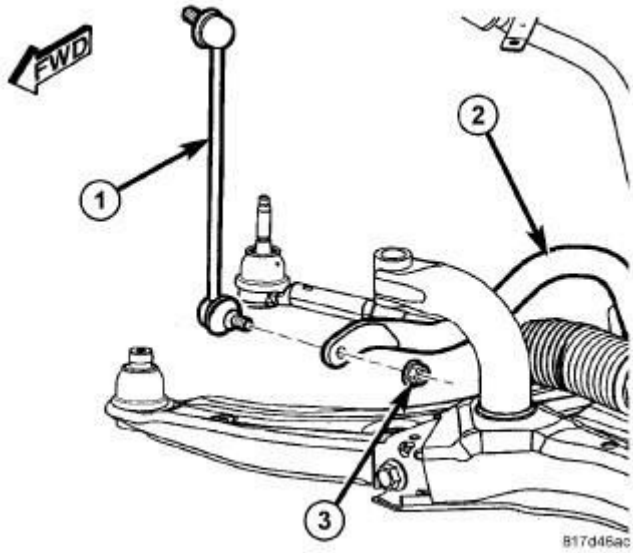

Fig. 42: Stabilizer Link Mounting To Bar
Courtesy of CHRYSLER GROUP, LLC

6. At each end of the stabilizer bar, while holding the stabilizer bar link (1) lower stud stationary, remove the nut (3) securing the link to the stabilizer bar (2).

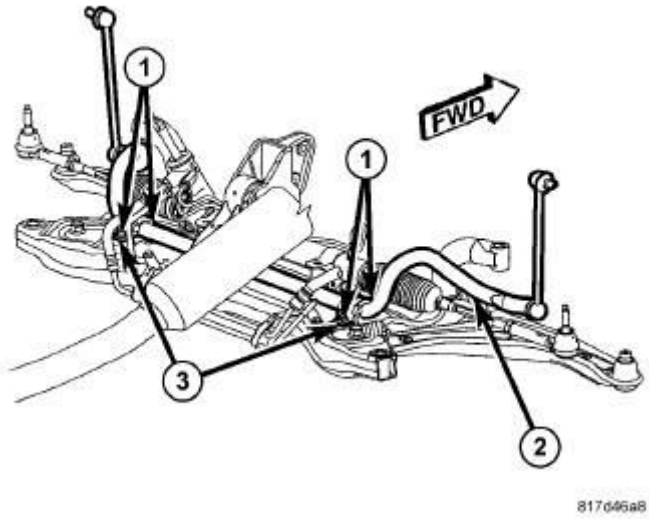

Fig. 43: Stabilizer Bar Mounting To Crossmember
Courtesy of CHRYSLER GROUP, LLC

7. Remove the screws (1) securing the stabilizer bushing retainers (3) to the crossmember.
8. Remove the two stabilizer bushing retainers.
9. Utilizing the slit cut into the cushions (bushings), remove the two cushions from the stabilizer bar.

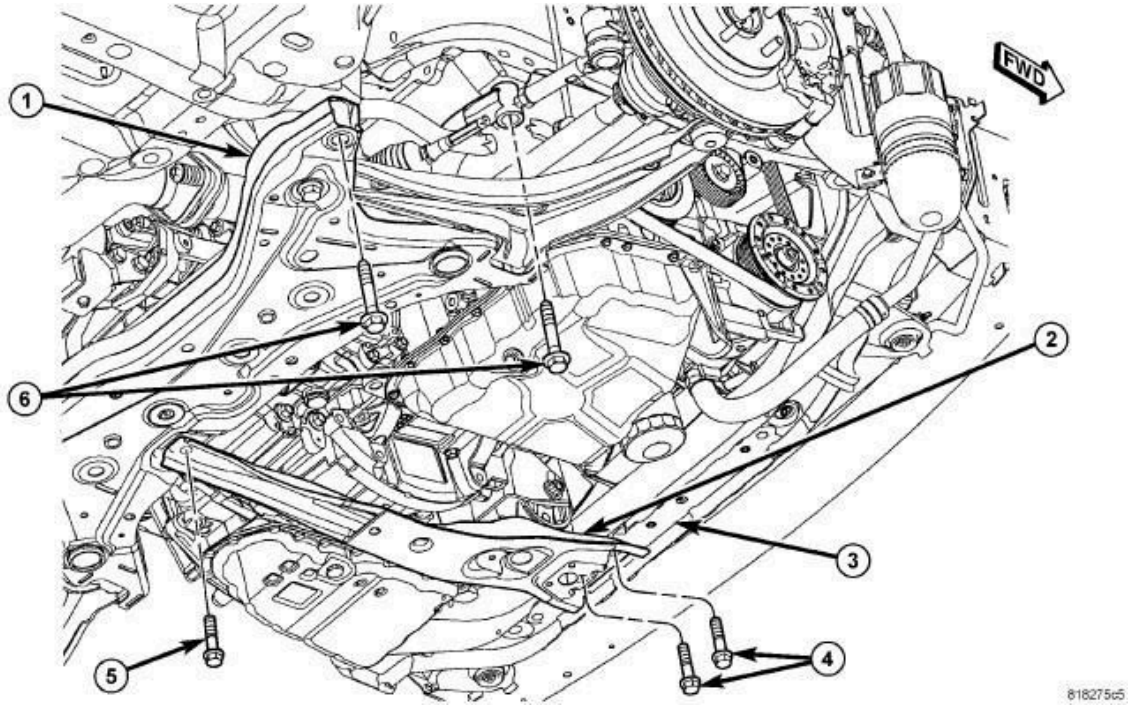

Fig. 44: Front Crossmember Mounting
Courtesy of CHRYSLER GROUP, LLC

NOTE: Before removing the front suspension crossmember from the vehicle, the location of the crossmember must be marked on the body of the vehicle. Do this so the crossmember can be relocated, upon reinstallation, against the body of vehicle in the same location as before removal. If the front suspension crossmember is not reinstalled in exactly the same location as before removal, the preset front wheel alignment settings (caster and camber) may be lost.

10. Mark the location of the front crossmember on the body near each mounting bolt.
11. Support the crossmember with a transmission jack.
12. Remove the four mounting bolts (6) securing the front crossmember (1) to the body.

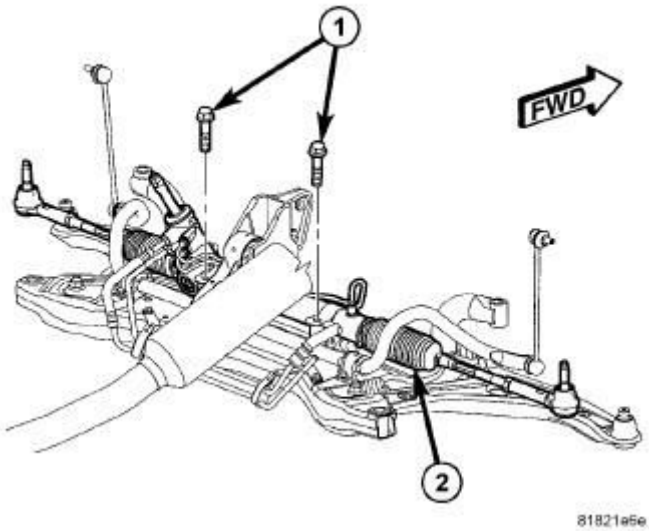

Fig. 45: Gear Mounting Bolts
Courtesy of CHRYSLER GROUP, LLC

13. Remove the two bolts (1) securing the steering gear (2) to the crossmember.
14. Support the steering gear using a bungee cord or other to keep the steering gear from lowering when the crossmember is lowered.
15. Slowly lower the crossmember until there is enough space present to remove the stabilizer bar between the rear of the crossmember and the body. Due to the fact that the fore-and-aft crossmember is still attached, do not lower

crossmember any more than necessary to remove the stabilizer bar.

16. Remove the stabilizer bar out over rear of crossmember.

INSTALLATION

INSTALLATION

NOTE: Before stabilizer bar installation, inspect the cushions and links for excessive wear, cracks, damage and distortion. Replace any pieces failing inspection.

NOTE: Before installing the stabilizer bar, make sure the bar is not upsidedown. The stabilizer bar must be installed so that when in mounted position, the ends of the bar curve over the top of the steering gear before attaching to the links.

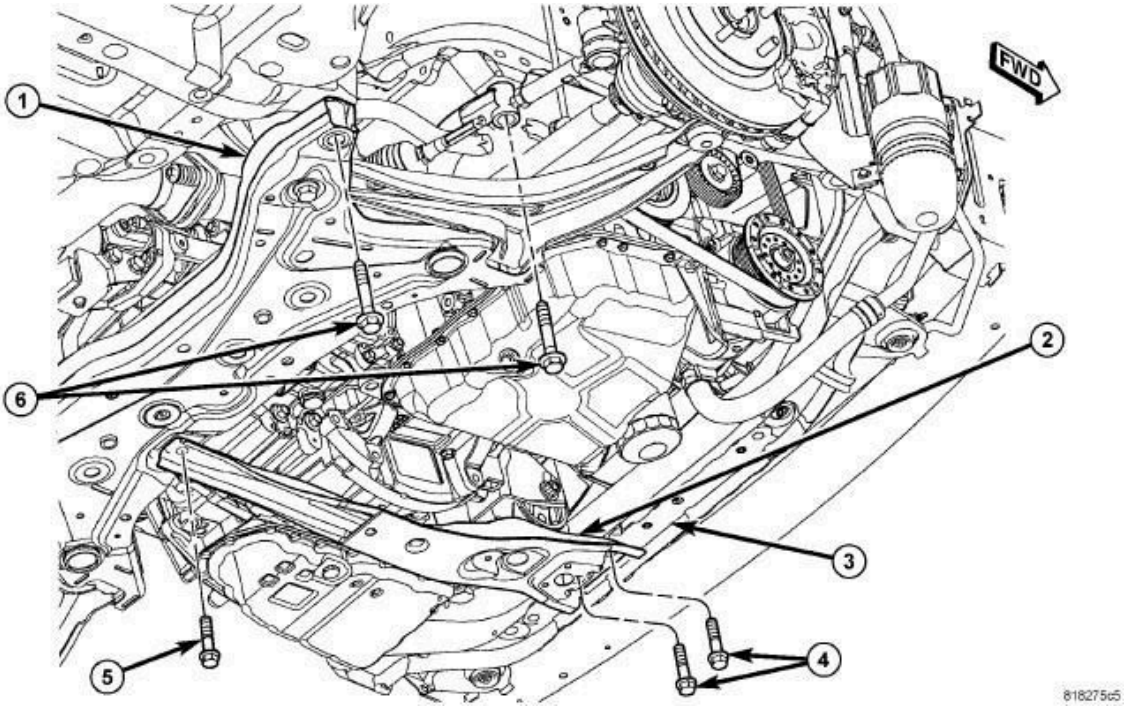

Fig. 46: Front Crossmember Mounting
Courtesy of CHRYSLER GROUP, LLC

1. Install the stabilizer bar, link ends first, from the rear over top of the crossmember. Curve the ends of the bar over the steering gear.
2. Slowly raise the crossmember (1) into mounted position using the transmission jack matching the crossmember to the marked locations on the

body made during removal.

3. Install the four mounting bolts (6) securing the front crossmember (1) to the body. Tighten the crossmember mounting bolts to 190 N.m (140 ft. lbs.).
4. Remove the transmission jack.

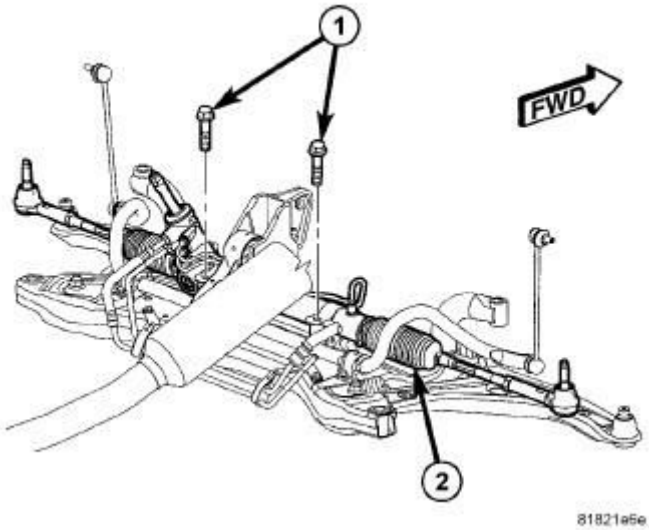

Fig. 47: Gear Mounting Bolts
Courtesy of CHRYSLER GROUP, LLC

5. Remove the bungee cord or other supporting the steering gear (2).
6. Install the two bolts (1) securing the steering gear (2) to the crossmember. Tighten the steering gear mounting bolts to 70 N.m (52 ft. lbs.).

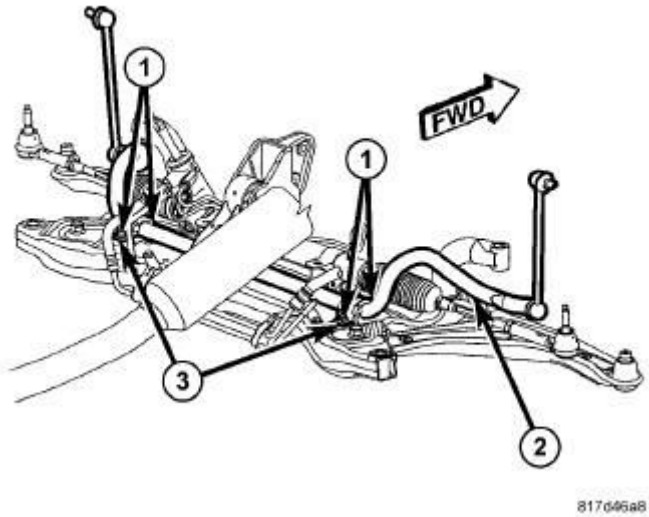

Fig. 48: Stabilizer Bar Mounting To Crossmember

Courtesy of CHRYSLER GROUP, LLC

7. Install the two cushions (bushings) on the stabilizer bar utilizing the slit cut into the cushion sides.
8. Install the two stabilizer bushing retainers (3) over the cushions.
9. Install the screws (1) securing the stabilizer bushing retainers (3) to the crossmember. Tighten all four stabilizer bar cushion retainer screws to 30 N.m (22 ft. lbs.).

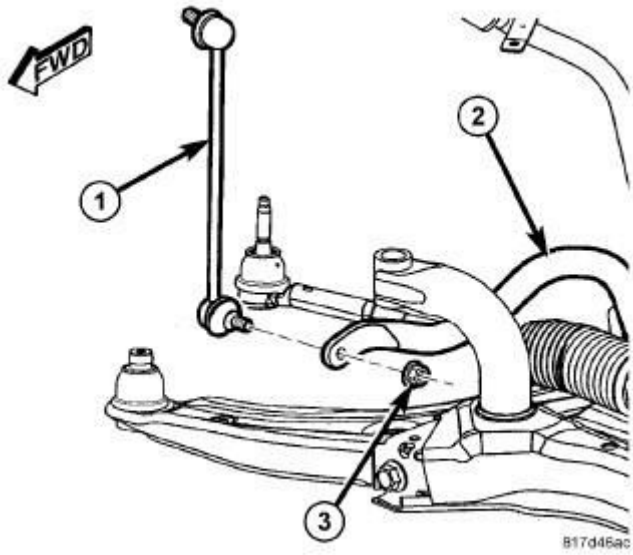

Fig. 49: Stabilizer Link Mounting To Bar
Courtesy of CHRYSLER GROUP, LLC

10. Attach the stabilizer bar link (1) at each end of the stabilizer bar (2). At each link, install and tighten the nut (3) while holding the stabilizer bar link lower stud stationary. Tighten the nuts to 58 N.m (43 ft. lbs.).

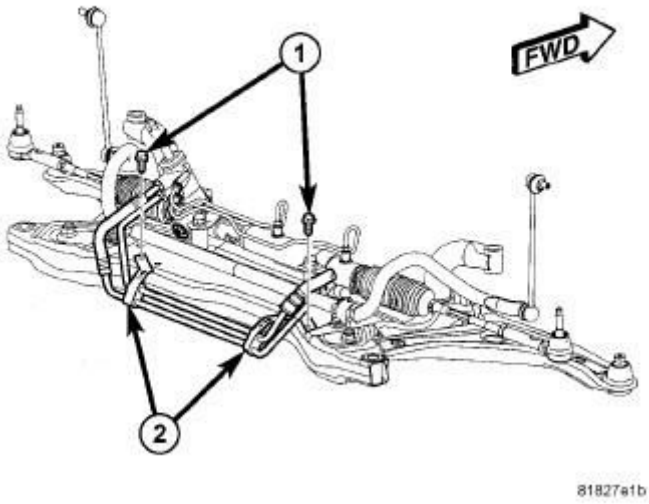

Fig. 50: Hose Routing Bracket Screws AT Crossmember
Courtesy of CHRYSLER GROUP, LLC

11. Position the power steering hose routing clamps (2) on the crossmember. Install the fasteners. Tighten the screw to 8 N.m (71 in. lbs.).
12. Install the rear engine mount. Refer to **INSULATOR, ENGINE MOUNT, REAR, INSTALLATION** for 2.0L, **INSULATOR, ENGINE MOUNT, REAR MOUNT, INSTALLATION** for 2.2L Diesel or **INSULATOR, ENGINE MOUNT, REAR, INSTALLATION** for 2.4L .
13. If equipped, install the engine belly pan.
14. Lower the vehicle.
15. Perform wheel alignment as necessary paying special attention to front camber and caster. The crossmember may need to be shifted on its mounts slightly to gain preferred setting. Refer to **WHEEL ALIGNMENT, STANDARD PROCEDURE**.

STRUT, SUSPENSION, ASSEMBLY

DESCRIPTION

DESCRIPTION

A Macpherson type design strut assembly is used in place of the front suspension upper control arm and upper ball joint. The bottom of the strut mounts directly to the steering knuckle using two attaching bolts and nuts going through the strut clevis bracket and knuckle. The top of the strut mounts directly to the strut tower of the vehicle using the three threaded studs on the strut assembly's upper mount.

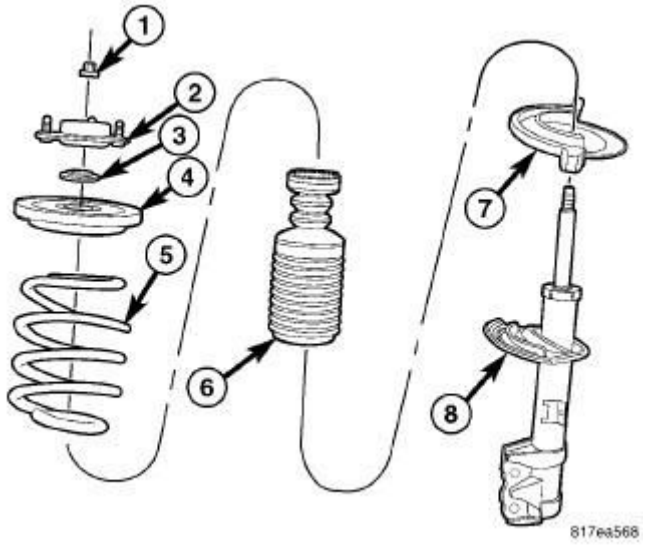

Fig. 51: Strut Assembly (Exploded)
Courtesy of CHRYSLER GROUP, LLC

The strut assembly includes the following components:

- Upper mount (rubber isolated) (2)
- Bearing (3)
- Upper spring seat and isolator (4)
- Coil spring (5)
- Dust shield and jounce bumper (6)
- Lower spring isolator (7)
- Strut (damper) (8)

Each component is serviced by removing the strut assembly from the vehicle and disassembling it.

Coil springs are rated separately for each corner or side of the vehicle depending on optional equipment and type of vehicle service. If a coil spring requires replacement, be sure that it is replaced with a spring meeting the correct load rating for the vehicle and its specific options.

OPERATION

OPERATION

The strut assembly cushions the ride of the vehicle, controlling vibration, jounce

and rebound of the suspension.

The coil spring controls ride quality and maintains proper ride height.

The spring isolators isolate the coil spring at the top and bottom from coming into metal-to-metal contact with the upper mounting seat and the strut.

The jounce bumper limits suspension travel and metal-to-metal contact under full jounce condition.

The strut dampens jounce and rebound motions of the coil spring and suspension.

DIAGNOSIS AND TESTING

DIAGNOSIS AND TESTING - STRUT ASSEMBLY

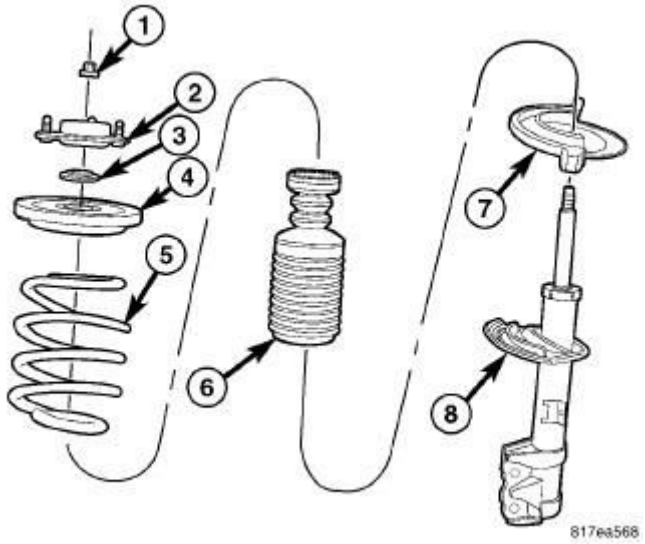

Fig. 52: Strut Assembly (Exploded)
Courtesy of CHRYSLER GROUP, LLC

Inspect the strut assembly for the following conditions:

- Inspect for a damaged or broken coil spring (5).
- Inspect for a torn or damaged dust shield (6).
- Lift the dust shield and inspect the strut assembly for evidence of fluid running from the upper end of the strut fluid reservoir. (Actual leakage will be a stream of fluid running down the side and dripping off lower end of unit). A slight amount of seepage between the strut shaft and strut shaft seal is not unusual and does not affect performance of the strut assembly.

- Inspect the jounce bumper for signs of damage or deterioration.
- Inspect the clearance between the shock tower and the coil spring. Make sure no fasteners are protruding through the shock tower possibly contacting the coil spring and strut. Because of the minimum clearance in this area, installation of metal fasteners could damage the coil spring coating and lead to a corrosion failure of the spring.

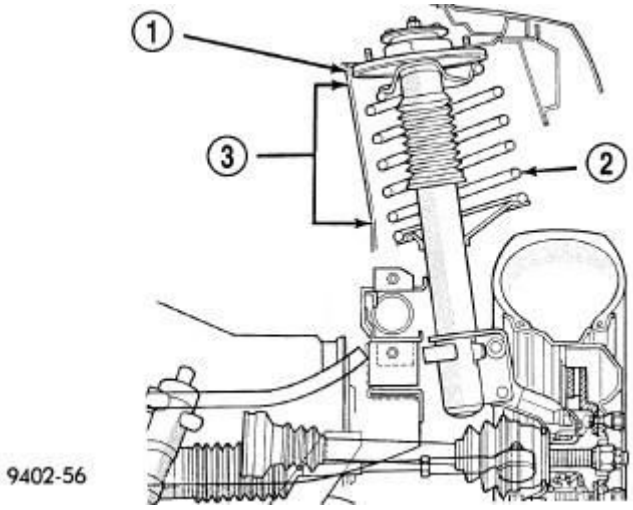

Fig. 53: Shock Tower Area (Typical)
Courtesy of CHRYSLER GROUP, LLC

1 - SHOCK TOWER 2 - COIL SPRING 3 - NO SHEET METAL SCREWS, BOLTS, OR ANY OTHER METAL FASTENERS ARE TO BE INSTALLED INTO SHOCK TOWER IN THIS AREA. ALSO, NO HOLES ARE TO BE DRILLED INTO SHOCK TOWER IN THIS SAME AREA.

CAUTION: At no time when servicing a vehicle can a sheet metal screw, bolt or other metal fastener be installed into the strut tower (1) to take the place of an original plastic clip. Also, do not drill holes into the front strut tower for the installation of any metal fasteners into the shock tower area indicated (3).

REMOVAL

REMOVAL

NOTE: Before proceeding, refer to FRONT, WARNING.

1. Raise and support the vehicle. Refer to **HOISTING, STANDARD PROCEDURE** .

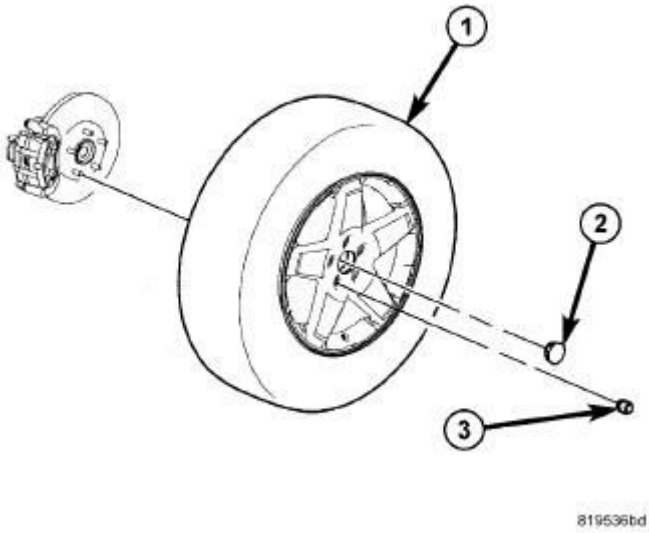

Fig. 54: Tire And Wheel Mounting
Courtesy of CHRYSLER GROUP, LLC

2. Remove the wheel mounting nuts (3), then the tire and wheel assembly (1).

NOTE: If both strut assemblies are to be removed, mark the strut assemblies right or left and keep the parts separated to avoid mix-up. Not all parts of the strut assembly are interchangeable side-to-side.

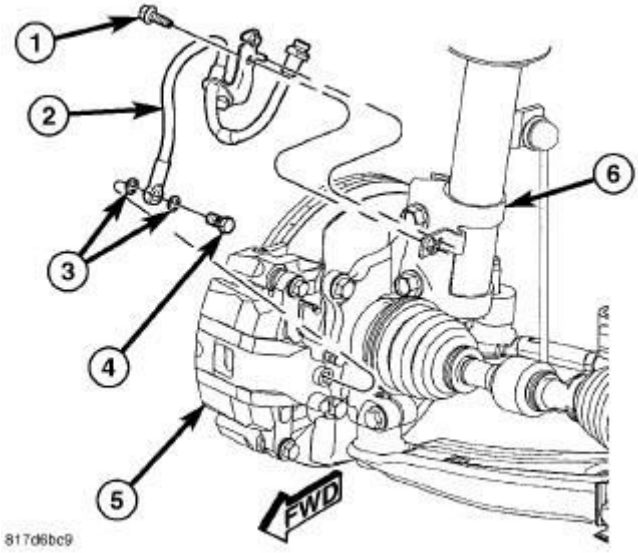

Fig. 55: Brake Hose Mounting To Strut
Courtesy of CHRYSLER GROUP, LLC

3. Remove the screw (1) securing the flex hose (2) routing bracket to the strut (6).

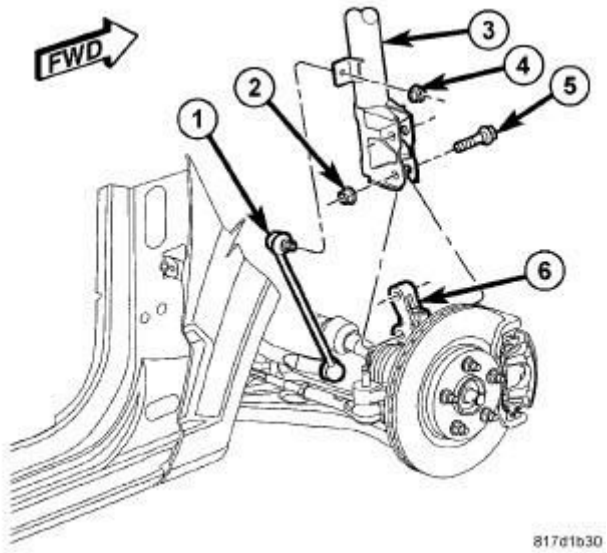

Fig. 56: Strut Mounting To Knuckle
Courtesy of CHRYSLER GROUP, LLC

4. While holding the stabilizer bar link (1) stud stationary, remove the nut (4) securing the link to the strut (3).

CAUTION: The strut assembly-to-knuckle attaching bolts

(5) are serrated and must not be turned during removal. Hold the bolts stationary in the knuckle while removing the nuts, then tap the bolts out using a pin punch.

5. While holding the bolt heads stationary, remove the two nuts (2) from the bolts (5) attaching the strut (3) to the knuckle (6).
6. Remove the two bolts (5) attaching the strut (3) to the knuckle (6) using a pin punch.
7. Lower the vehicle just enough to open the hood without allowing the tires to touch the floor.

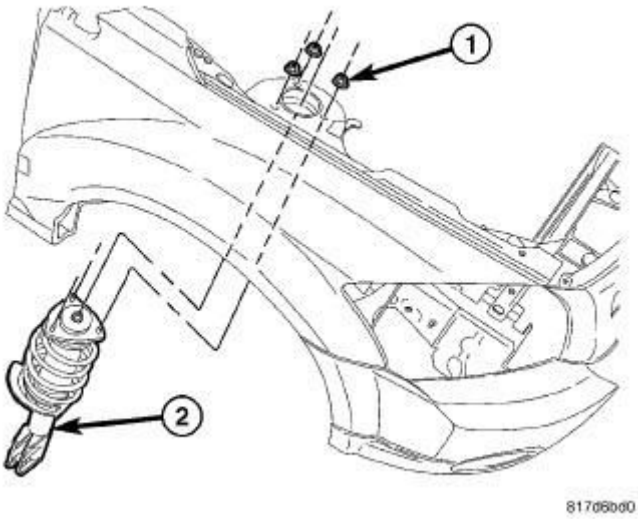

Fig. 57: Strut Upper Mounting Nuts
Courtesy of CHRYSLER GROUP, LLC

8. Remove the three nuts (1) attaching the strut assembly (2) upper mount to the strut tower.
9. Remove the strut assembly (2) from the vehicle.
10. For disassembly, refer to **STRUT, SUSPENSION, ASSEMBLY, DISASSEMBLY**.

DISASSEMBLY

DISASSEMBLY

Fig. 58: Identifying Pliers On Chrome Machined Surface Of Shock/Strut Rod
Courtesy of CHRYSLER GROUP, LLC

CAUTION: Do not use any type of pliers on the chrome machined surface of shock/strut rod to assist in the disassembly/assembly of shocks or struts. Use only tools designed to hold the shock/strut rod stationary when servicing shock or strut components.

NOTE: The strut assembly must be removed from the vehicle for it to be disassembled and assembled. Refer to STRUT, SUSPENSION, ASSEMBLY, REMOVAL.

For the disassembly and assembly of the strut assembly, use strut spring compressor, teamPSE tool 223-7400, or the equivalent, to compress the coil spring. Follow the manufacturer's instructions closely.

WARNING: Do not remove the strut rod nut before the coil spring is properly compressed. The coil spring is held under pressure. The coil spring must be compressed, removing spring tension from the upper mount and bearing, before the strut rod nut is removed.

1. If both struts are being serviced at the same time, mark both the coil spring and strut assembly according to which side of the vehicle the strut is being removed from.

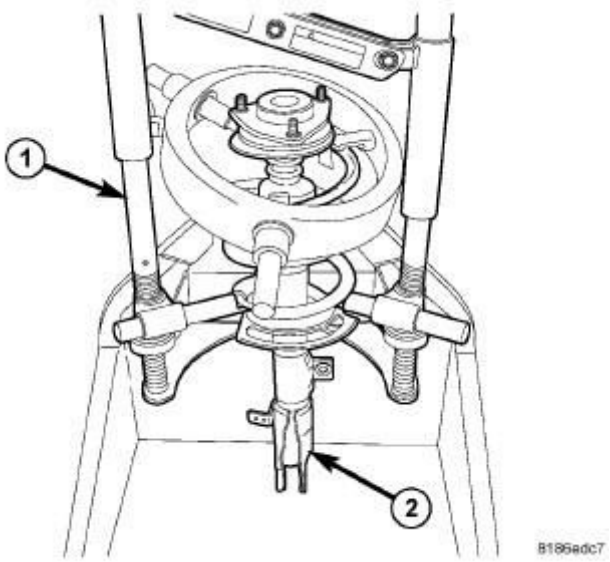

Fig. 59: Strut Assembly In Compressor
Courtesy of CHRYSLER GROUP, LLC

2. Position the strut assembly (2) in the strut coil spring compressor (1) following the manufacturer's instructions and set the lower and upper hooks of the compressor on the coil spring. Position the strut clevis bracket (2) straight outward, away from the compressor.
3. Compress the coil spring until all coil spring tension is removed from the upper mount and bearing.

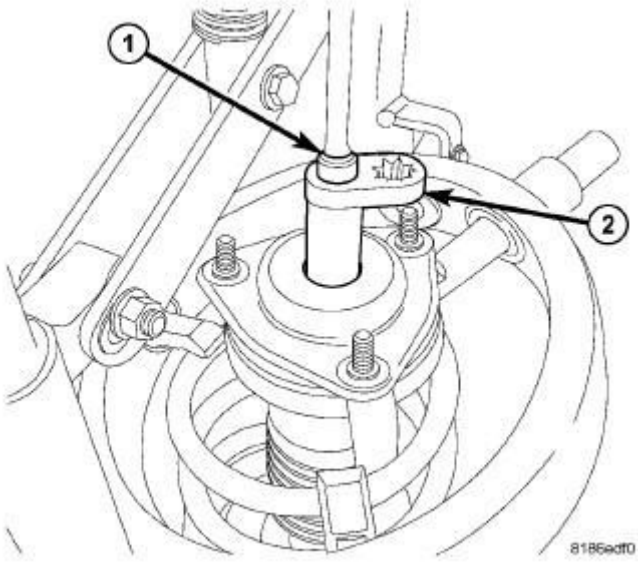

Fig. 60: Special Tools On Strut Rod Nut
Courtesy of CHRYSLER GROUP, LLC

CAUTION: Never use impact or high speed tools to remove the strut rod nut. Damage to the strut internal bearings can occur.

4. Once the spring is sufficiently compressed, install Strut Nut Wrench (special tool #9362, Wrench, Strut Nut) (2) on the strut rod nut. Next, install Strut Shaft Socket (special tool #9894, Socket, Strut Shaft) (1) on the end of the strut rod. While holding the strut rod from turning, remove the nut using the strut nut wrench.

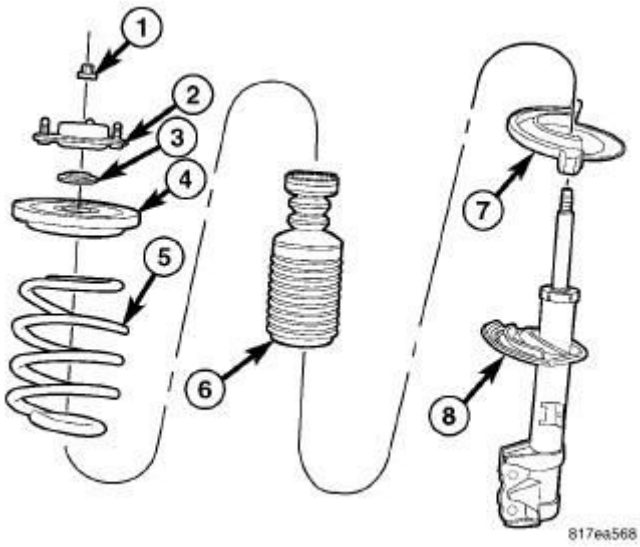

Fig. 61: Strut Assembly (Exploded)
Courtesy of CHRYSLER GROUP, LLC

5. Remove the clamp (if installed) from the bottom of the coil spring and remove the strut (damper) (8) out through the bottom of the coil spring. The dust shield and jounce bumper will come out with the strut.
6. Remove the lower spring isolator (7) from the strut seat.
7. Slide the dust shield and jounce bumper (6) from the strut rod.
8. Remove the upper mount (2) and bearing (3) from the top of the upper spring seat and isolator (4).
9. Remove the upper spring seat and isolator (4) from the top of the coil spring (5).

NOTE: If the coil spring needs to be serviced, proceed with the next step, otherwise, proceed with step 11.

10. Release the tension from the coil spring by backing off the compressor drive completely. Push back the compressor hooks and remove the coil spring.

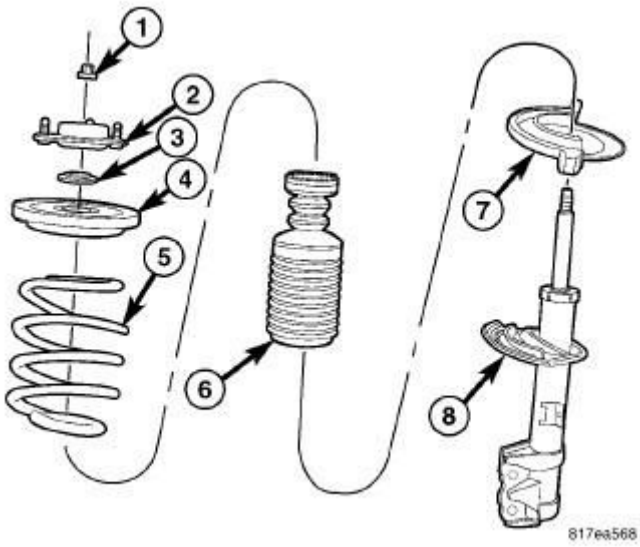

Fig. 62: Strut Assembly (Exploded)
Courtesy of CHRYSLER GROUP, LLC

11. Inspect the strut assembly components for the following and replace as necessary:

- Inspect the strut (damper) (8) for shaft binding over the full stroke of the

shaft.

- Inspect the jounce bumper (with dust shield) (6) for cracks and signs of deterioration.
- Check the upper mount (2) for cracks and distortion and its retaining studs for any sign of damage.
- Check the bearing (3) for any binding.
- Check the upper spring seat and isolator (4) for cracks and distortion.
- Inspect the upper and lower spring isolators (4, 7) for material deterioration and distortion.
- Inspect the coil spring (5) for any sign of damage to the coating.

NOTE: For reassembly, refer to STRUT, SUSPENSION, ASSEMBLY, ASSEMBLY.

ASSEMBLY

ASSEMBLY

Fig. 63: Identifying Pliers On Chrome Machined Surface Of Shock/Strut Rod
Courtesy of CHRYSLER GROUP, LLC

CAUTION: Do not use any type of pliers on the chrome machined surface of shock/strut rod to assist in the disassembly/assembly of shocks or struts. Use

only tools designed to hold the shock/strut rod stationary when servicing shock or strut components.

NOTE: If the coil spring has been removed from the spring compressor, proceed with the next step, otherwise, proceed with step 3.

CAUTION: When installing the coil spring, make sure the end with the ID tag is placed upwards, otherwise spring-to-body contact will occur after strut assembly installation.

1. Place the coil spring in the spring compressor following the manufacturer's instructions. Before compressing the spring, rotate the spring so the end of the bottom coil is at approximately the 9 o'clock position as viewed above (or to where the spring was when removed from the compressor). This action will allow the strut (damper) clevis bracket to be positioned outward, away from the compressor once installed.
2. Slowly compress the coil spring until enough room is available for strut assembly reassembly.

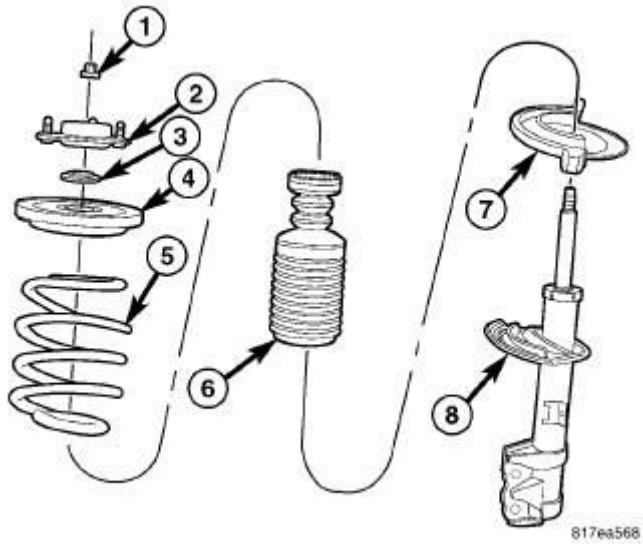

Fig. 64: Strut Assembly (Exploded)
Courtesy of CHRYSLER GROUP, LLC

3. Install the upper spring seat and isolator (4) on top of the coil spring (5).

4. Install the bearing (3) and upper mount (2) on top of the upper spring seat and isolator (4).
5. Install the lower spring isolator (7) on the spring seat on the strut (8).
6. Slide the dust shield and jounce bumper (6) onto the strut rod.

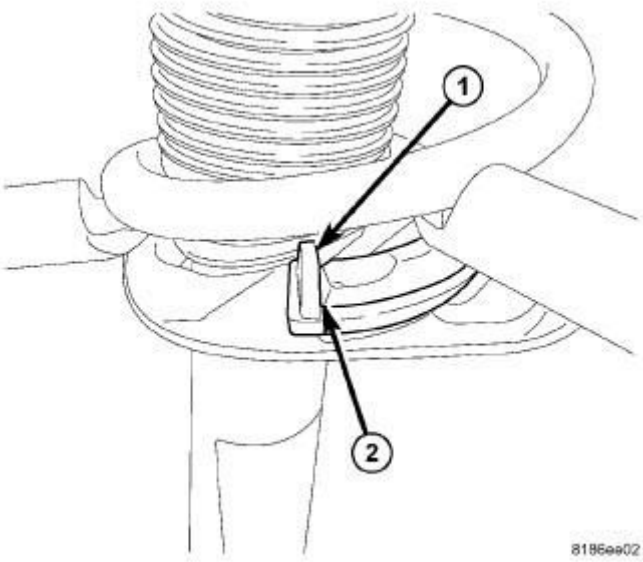

Fig. 65: Coil Spring Against Stop
Courtesy of CHRYSLER GROUP, LLC

7. Install the strut up through the bottom of the coil spring and upper spring seat, mount, and bearing until the lower spring seat contacts the lower end of the coil spring. Rotate the strut as necessary until the end of the bottom coil (2) comes in contact with the stop (1) built into the lower spring isolator.

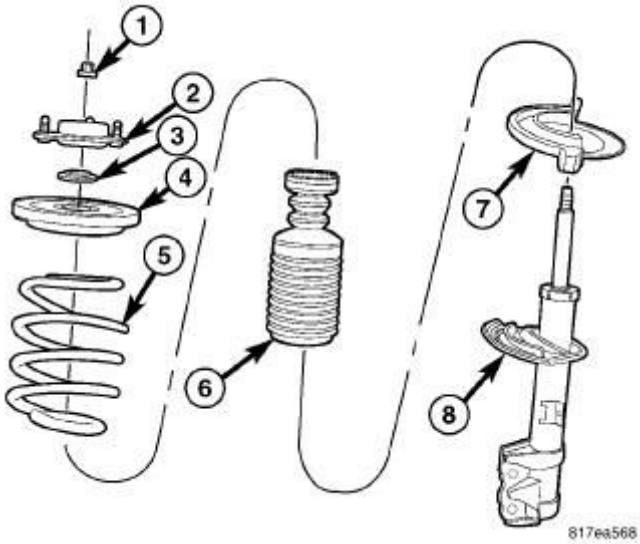

Fig. 66: Strut Assembly (Exploded)
Courtesy of CHRYSLER GROUP, LLC

8. While holding the strut in position, install the nut (1) on the end of the strut rod.

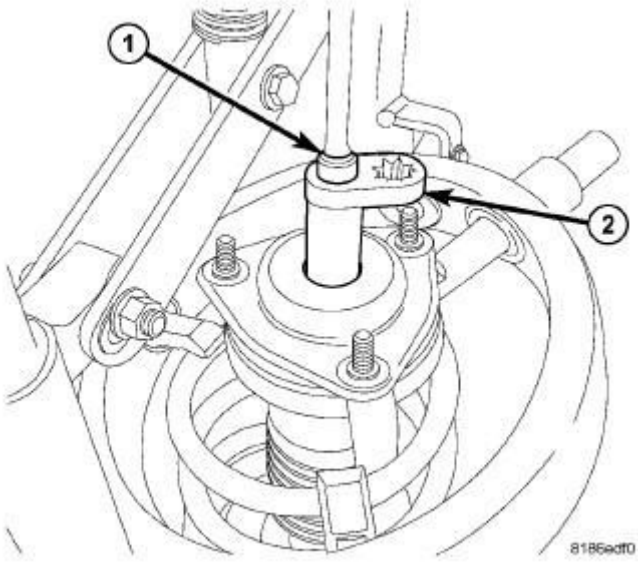

Fig. 67: Special Tools On Strut Rod Nut
Courtesy of CHRYSLER GROUP, LLC

CAUTION: Never use impact or high speed tools to remove the strut rod nut. Damage to the strut internal bearings can occur.

9. Install Strut Nut Wrench (special tool #9362, Wrench, Strut Nut) (2) on the strut rod nut. Next, install Strut Shaft Socket (special tool #9894, Socket, Strut Shaft) (1) on the end of the strut rod. While holding the strut rod from turning, tighten the strut rod nut to 60 N.m (44 ft. lbs.) using a torque wrench on the end of the Strut Nut Wrench (special tool #9362, Wrench, Strut Nut) (2).

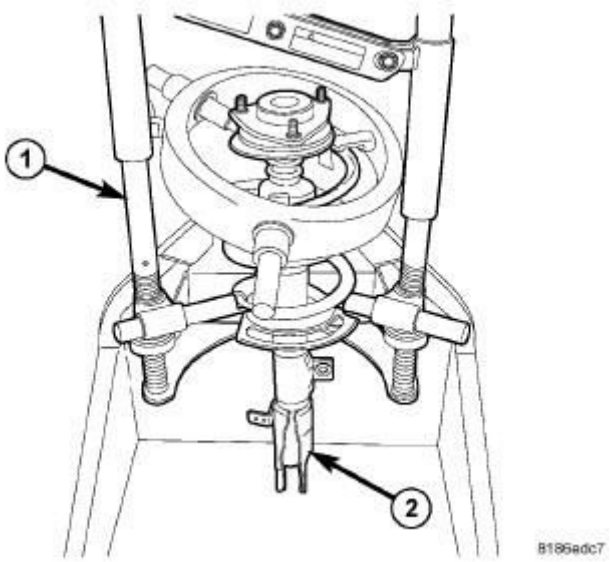

Fig. 68: Strut Assembly In Compressor
Courtesy of CHRYSLER GROUP, LLC

10. Slowly release the tension from the coil spring by backing off the compressor (1) drive completely. As the tension is relieved, make sure the upper mount and bearing align properly. Verify the upper mount does not bind when rotated.
11. Remove the strut assembly from the spring compressor.
12. Install the strut assembly on the vehicle. Refer to **STRUT, SUSPENSION, ASSEMBLY, INSTALLATION**.

INSTALLATION

INSTALLATION

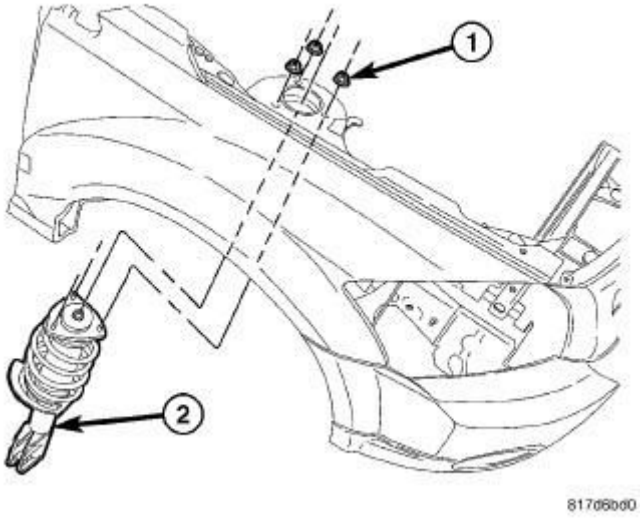

Fig. 69: Strut Upper Mounting Nuts
Courtesy of CHRYSLER GROUP, LLC

1. Raise the strut assembly (2) into the strut tower, aligning the three studs on the strut assembly upper mount with the holes in strut tower. Install the three mounting nuts (1) on the studs. Tighten the three nuts to 78 N.m (58 ft. lbs.).

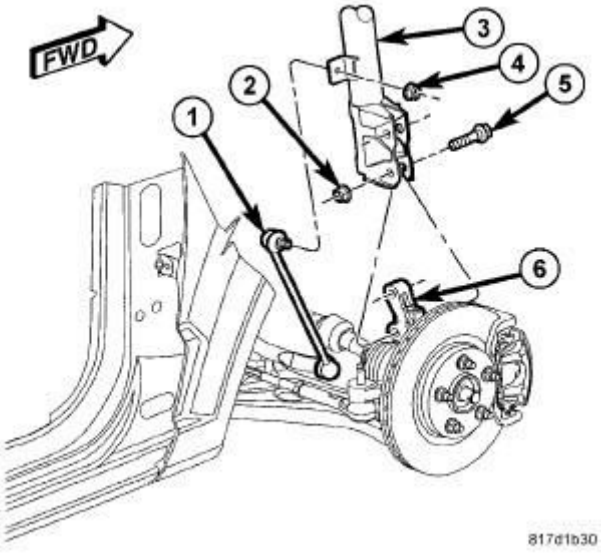

Fig. 70: Strut Mounting To Knuckle
Courtesy of CHRYSLER GROUP, LLC

CAUTION: The strut assembly-to-knuckle attaching bolts (5) are serrated and must not be turned during installation. Install the nuts while holding the

bolts stationary in the knuckle.

2. Position the lower end of the strut assembly (3) in line with the upper end of the knuckle (6), aligning the mounting holes. Install the two attaching bolts (5). Install the nuts (2). While holding the bolts in place, tighten the nuts to 110 N.m (81 ft. lbs.).
3. Attach the stabilizer bar link (1) to the strut (3). Install and tighten the nut (4) while holding the stabilizer bar link stud stationary. Tighten the nut to 58 N.m (43 ft. lbs.).

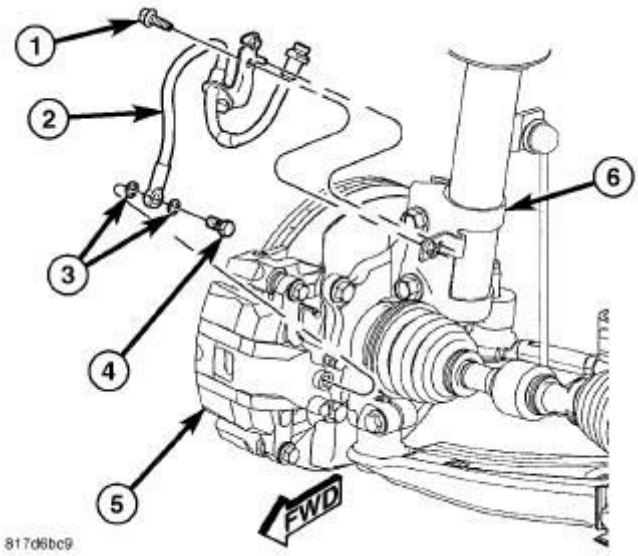

Fig. 71: Brake Hose Mounting To Strut
Courtesy of CHRYSLER GROUP, LLC

4. Secure the flex hose (2) routing bracket to the strut (6) with the mounting screw (1). Tighten the mounting screw to 13 N.m (120 in. lbs.).

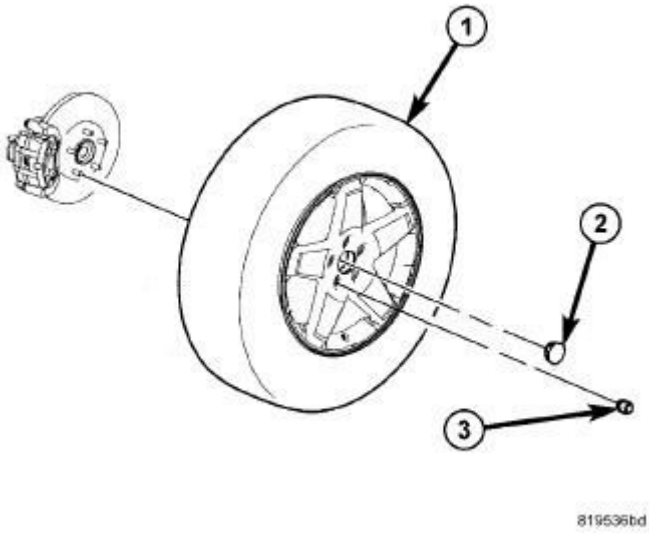

Fig. 72: Tire And Wheel Mounting
Courtesy of CHRYSLER GROUP, LLC

5. Install the tire and wheel assembly (1). Refer to **INSTALLATION** . Install and tighten the wheel mounting nuts (3) to 125 N.m (92 ft. lbs.).
6. Lower the vehicle.
7. Perform wheel alignment as necessary. If original strut is being reinstalled, wheel alignment is not necessary. Refer to **WHEEL ALIGNMENT, STANDARD PROCEDURE**.

WHEEL ALIGNMENT

DESCRIPTION

DESCRIPTION

Vehicle wheel alignment is the positioning of all interrelated front and rear suspension angles. These angles affect the handling and steering of the vehicle when it is in motion. Proper wheel alignment is essential for efficient steering, good directional stability, and proper tire wear.

The method of checking a vehicle's front and rear wheel alignment varies depending on the manufacturer and type of equipment used. The manufacturer's instructions should always be followed to ensure accuracy of the alignment, except when Chrysler Corporation's wheel alignment specifications differ.

On this vehicle, the suspension angles that can be adjusted are as follows:

Front

- Camber (with cradle shift or service adjustment bolt package)
- Caster (limited adjustment with cradle shift)
- Toe

Rear

- Toe

Check the wheel alignment and make all wheel alignment adjustments with the vehicle standing at its proper curb height specification. Curb height is the normal riding height of the vehicle. It is measured from a certain point on the vehicle to the ground or a designated area while the vehicle is sitting on a flat, level surface. Refer to Curb Height Measurement in this Service Information for additional information.

Typical wheel alignment angles and measurements are described in the following paragraphs.

CAMBER

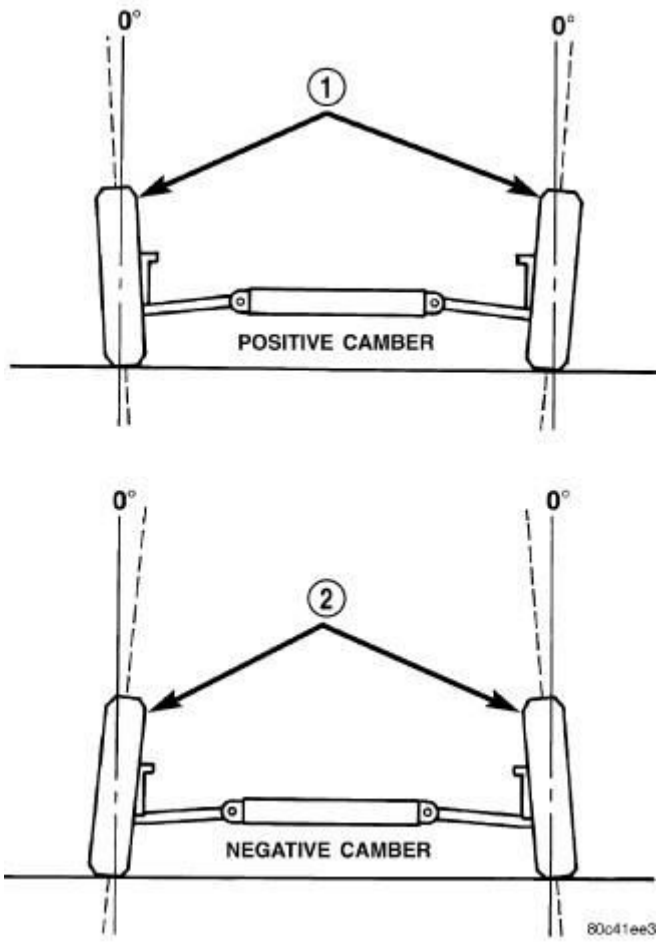

Fig. 73: Camber
Courtesy of CHRYSLER GROUP, LLC

1 - WHEELS TILTED OUT AT TOP 2 - WHEELS TILTED IN AT TOP

Camber is the inward or outward tilt of the top of the tire and wheel assembly. Inward tilt (2) is known as negative camber. Outward tilt (1) is known as positive camber. Camber is measured in degrees of angle relative to a true vertical line. Camber is a tire wearing angle.

- Excessive negative camber will cause tread wear at the inside of the tire.
- Excessive positive camber will cause tread wear on the outside of the tire.

CROSS CAMBER

Cross camber is the difference between left and right camber. To achieve the cross camber reading, subtract the right side camber reading from the left. For

example, if the left camber is -0.7° and the right camber is -0.5°, the cross camber would be -0.2° (-0.7 - (-0.5) = -0.7 + 0.5 = -0.2).

CASTER

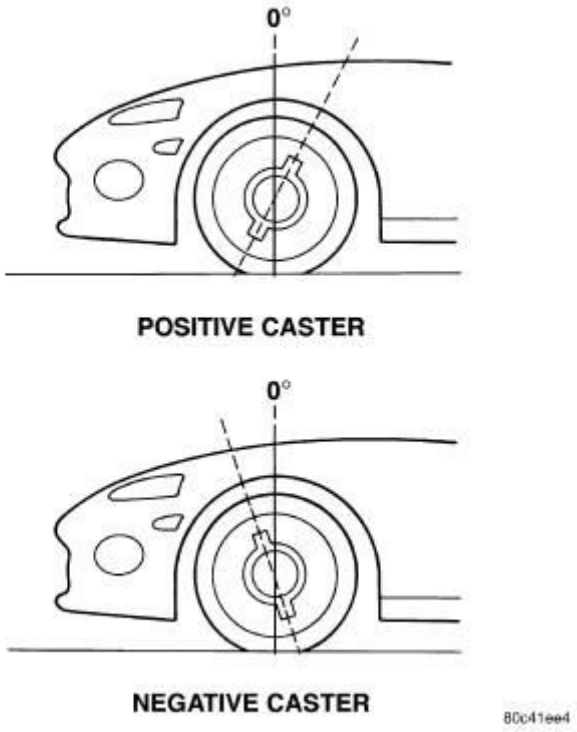

Fig. 74: Caster
Courtesy of CHRYSLER GROUP, LLC

Caster is the forward or rearward tilt of the steering knuckle in reference to the position of the upper and lower ball joints. Caster is measured in degrees of angle relative to a true vertical center line. This line is viewed from the side of the tire and wheel assembly.

- Forward tilt (upper ball joint ahead of lower) results in a negative caster angle.
- Rearward tilt (upper ball joint trailing lower) results in a positive caster angle.

Although caster does not affect tire wear, a caster imbalance between the two front wheels may cause the vehicle to lead to the side with the least positive caster.

CROSS CASTER

Cross caster is the difference between left and right caster. To achieve the cross caster reading, subtract the right side caster reading from the left. For example, if the left caster is 2.5° and the right caster is 2.7°, the cross caster would be -0.2° (2.5 - 2.7 = -0.2).

TOE

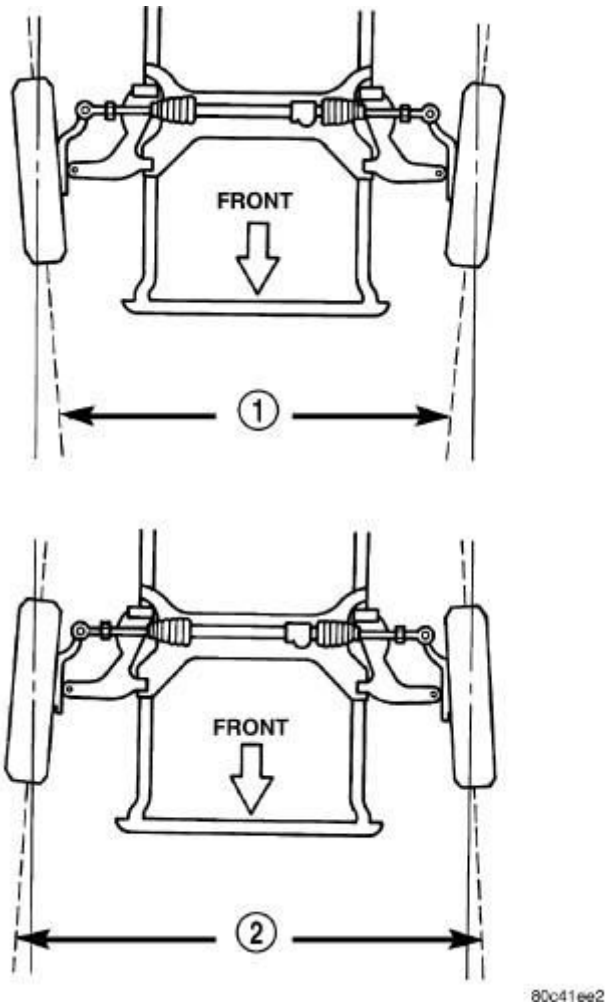

Fig. 75: Toe
Courtesy of CHRYSLER GROUP, LLC

1 - TOE-IN 2 - TOE-OUT

Toe is the inward or outward angle of the wheels as viewed from above the vehicle.

- Toe-in (1) is produced when the front edges of the wheels on the same axle are closer together than the rear edges.

- Toe-out (2) is produced when the front edges of the wheels on the same axle are farther apart than the rear edges.

Toe-in and toe-out can occur at the front wheels and the rear wheels.

Toe is measured in degrees or inches. The measurement identifies the amount that the front of the wheels point inward (toe-in) or outward (toe-out). Toe is measured at the spindle height. Zero toe means the front and rear edges of the wheels on the same axle are equal distant.

TOE-OUT ON TURNS

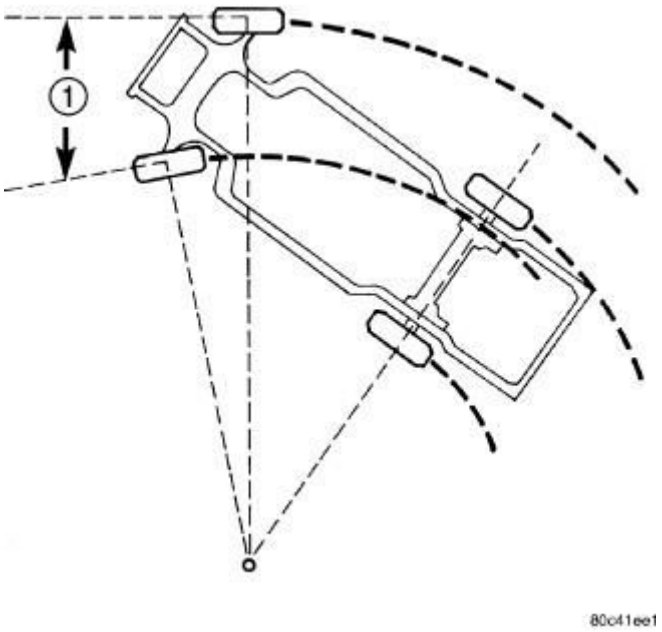

Fig. 76: Toe-Out On Turns
Courtesy of CHRYSLER GROUP, LLC

1 - TOE-OUT ON TURNS

Toe-out on turns (1), sometimes referred to as Ackerman Steering, is the relative positioning of the front wheels while steering through a turn. This compensates for each front wheel's turning radius. As the vehicle encounters a turn, the outboard wheel must travel in a larger radius circle than the inboard wheel. The steering system is designed to make each wheel follow its particular radius circle. To accomplish this, the front wheels must progressively toe outward as the steering is turned from center. This eliminates tire scrubbing and undue tire wear when steering a vehicle through a turn.

DYNAMIC TOE PATTERN

Dynamic toe pattern is the inward and outward toe movement of the front and rear tires through the suspension's jounce and rebound travel. As the vehicle's suspension moves up and down, the toe pattern varies. Toe pattern is critical in controlling the directional stability of the vehicle while in motion. Front and rear dynamic toe pattern is preset by the factory at the time the vehicle is assembled.

It is not necessary to check or adjust front or rear dynamic toe pattern when doing a normal wheel alignment. The only time dynamic toe pattern needs to be checked or adjusted is if the frame of the vehicle has been damaged.

STEERING AXIS INCLINATION (S.A.I.)

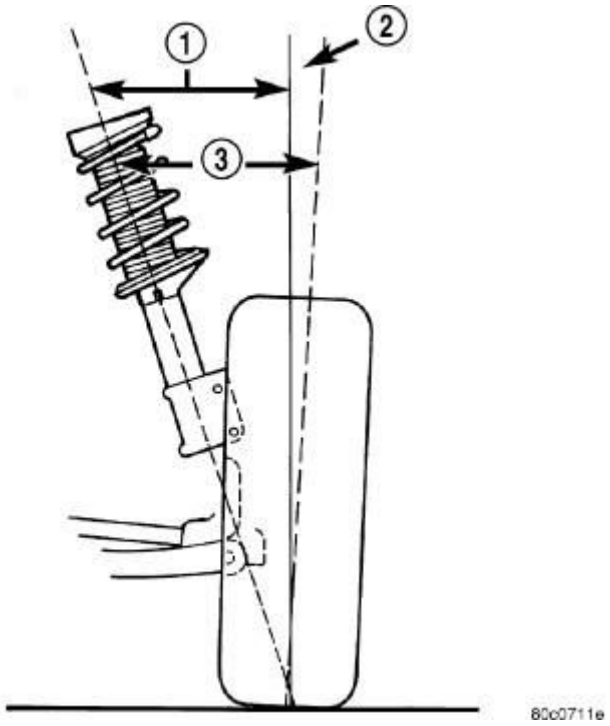

Fig. 77: S.A.I. and I.A.
Courtesy of CHRYSLER GROUP, LLC

1 - S.A.I.
2 - CAMBER
3 - I.A.

Steering axis inclination (1) is the angle between a true vertical line starting at the center of the tire at the road contact point and a line drawn through the center of the upper ball joint (or strut) and the lower ball joint. S.A.I. is built into the vehicle and is not an adjustable angle. If S.A.I. is not within specifications, a bent

or damaged suspension component may be the cause.

INCLUDED ANGLE (I.A.)

Included angle (3) is the sum of the S.A.I. angle (1) plus or minus the camber angle (2), depending on whether or not the wheel has positive or negative camber. If camber is positive, add the camber angle to the S.A.I angle. If camber is negative, subtract the camber angle from the S.A.I. angle. Included angle is not adjustable, but can be used to diagnose a frame misalignment or bent suspension component (spindle, strut).

THRUST ANGLE

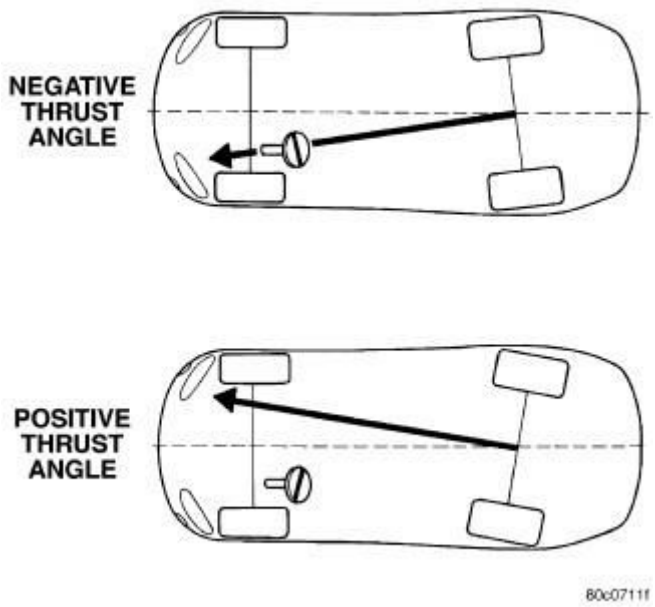

Fig. 78: Thrust Angle
Courtesy of CHRYSLER GROUP, LLC

Thrust angle is the averaged direction the rear wheels are pointing in relation to the vehicle's center line. The presence of negative or positive thrust angle causes the rear tires to track improperly to the left or right of the front tires (dog tracking).

- Negative thrust angle means the rear tires are tracking to the left of the front tires.
- Positive thrust angle means the rear tires are tracking to the right of the front tires.

Improper tracking can cause undue tire wear, a lead or pull and a crooked steering wheel. Excessive thrust angle can usually be corrected by adjusting the rear wheel toe so that each wheel has one-half of the total toe measurement.

DIAGNOSIS AND TESTING

DIAGNOSIS AND TESTING - SUSPENSION AND STEERING

CONDITION	POSSIBLE CAUSES	POTENTIAL CORRECTIONS
Front End Whine On Turns	1. Defective Wheel Bearing	1. Replace Wheel Bearing
	2. Incorrect Wheel Alignment	2. Check And Reset Wheel Alignment
	3. Worn Tires	3. Replace Tires
	4. Low Power Steering Fluid Level	4. Fill power steering fluid reservoir to proper level and check for leaks (make sure all air is bled from the system fluid)
Front End Growl Or Grinding On Turns	1. Defective Wheel Bearing	1. Replace Wheel Bearing
	2. Engine Mount Grounding Against Frame Or Body Of Vehicle.	2. Check For Motor Mount Hitting Frame Rail And Reposition Engine As Required
	3. Worn Or Broken C/V Joint	3. Replace C/V Joint
	4. Loose Wheel Lug Nuts	4. Verify Wheel Lug Nut Torque
	5. Incorrect Wheel Alignment	5. Check And Reset Wheel Alignment
	6. Worn Tires	6. Replace Tires
Front End Clunk Or Snap On Turns	1. Loose Wheel Lug Nuts	1. Verify Wheel Lug Nut Torque
	2. Worn Or Broken C/V Joint	2. Replace C/V Joint
	3. Worn Or Loose	3. Tighten Or Replace

	Tie Rod Or Ball Joint	Tie Rod End Or Ball Joint
	4. Worn Control Arm Bushing	4. Replace Control Arm
	5. Loose Sway Bar Or Upper Strut Attachment	5. Tighten Sway Bar Or Upper Strut Attachment To Specified Torque
Front End Popping/Clicking/Snapping During Acceleration After Drive-To-Reverse Shift, Reverse-To-Drive Shift Or While Turning	1. Insufficient grease on mating surface of axle half shaft outer C/V joint mating surface to wheel hub/bearing.	1. Separate half shaft from hub and bearing and wipe mating surfaces clean. Apply light coating of wheel bearing grease to C/V joint mating surface and reassemble. Tighten hub nut to specified torque.
Front End Whine With Vehicle Going Straight At A Constant Speed	1. Defective Wheel Bearing	1. Replace Wheel Bearing
	2. Incorrect Wheel Alignment	2. Check And Reset Wheel Alignment
	3. Worn Tires	3. Replace Tires
Front End Growl Or Grinding With Vehicle Going Straight At A Constant Speed	1. Engine Mount Grounding	1. Reposition Engine As Required
	2. Worn Or Broken C/V Joint	2. Replace C/V Joint
Front End Whine When Accelerating Or Decelerating	1. Worn Or Defective Transaxle Gears Or Bearings	1. Replace Transaxle Gears Or Bearings
Front End Clunk When Accelerating Or Decelerating	1. Loose Wheel Lug Nuts	1. Verify Wheel Lug Nut Torque
	2. Worn Or Broken Engine Mount	2. Replace Engine Mounts
	3. Worn Or Defective Transaxle Gears Or Bearings	3. Replace Transaxle Gears Or Bearing
	4. Worn Or Broken C/V Joint	4. Replace C/V Joint

	5. Worn Or Loose Ball Joint	5. Tighten Or Replace Ball Joint
	6. Worn Or Loose Control Arm Bushing	6. Tighten To Specified Torque Or Replace Control Arm
	7. Loose Crossmember Bolts	7. Tighten Crossmember Bolts To Specified Torque
Road Wander	1. Incorrect Tire Pressure	1. Inflate Tires To Recommended Pressure
	2. Incorrect Front Or Rear Wheel Toe	2. Check And Reset Front Wheel Toe
	3. Worn Wheel Bearings	3. Replace Wheel Bearing
	4. Worn Control Arm Bushings	4. Replace Control Arm
	5. Excessive Friction In Steering Gear	5. Replace Steering Gear
	6. Excessive Friction In Steering Shaft Coupling	6. Replace Steering Coupler
	7. Excessive Friction In Strut Upper Bearing	7. Replace Strut Bearing
Lateral Pull	1. Unequal Tire Pressure	1. Inflate All Tires To Recommended Pressure
	2. Radial Tire Lead	2. Rotate or Cross-switch tires - Refer to **TIRES & WHEELS - SERVICE INFORMATION**
	3. Incorrect Front Wheel Camber	3. Check And Reset Front Wheel Camber
	4. Power Steering Gear Imbalance	4. Replace Power Steering Gear
		5. Correct Braking

	5. Wheel Braking	Condition Causing Lateral Pull
	6. Excessive Cross-Caster	6. Check wheel alignment and adjust as necessary
Excessive Steering Free Play	1. Incorrect Steering Gear Adjustment	1. Adjust Or Replace Steering Gear
	2. Worn Or Loose Tie Rod Ends	2. Replace Or Tighten Tie Rod Ends
	3. Loose Steering Gear Mounting Bolts	3. Tighten Steering Gear Bolts To The Specified Torque
	4. Loose Or Worn Steering Shaft Coupler	4. Replace Steering Shaft Coupler
Excessive Steering Effort	1. Low Tire Pressure	1. Inflate All Tires To Recommended Pressure
	2. Lack Of Lubricant In Steering Gear	2. Replace Steering Gear
	3. Low Power Steering Fluid Level	3. Fill Power Steering Fluid Reservoir To Correct Level
	4. Loose Power Steering Pump Belt	4. Check and replace automatic belt tensioner as necessary. If drive belt is worn or glazed, replace belt.
	5. Lack Of Lubricant In Steering Ball Joints	5. Lubricate Or Replace Steering Ball Joints
	6. Steering Gear Malfunction	6. Replace Steering Gear
	7. Lack Of Lubricant In Steering Coupler	7. Replace Steering Coupler

STANDARD PROCEDURE

CURB HEIGHT MEASUREMENT

The wheel alignment is to be checked and all alignment adjustments made with the vehicle at its required curb height specification.

Vehicle height is to be checked with the vehicle on a flat, level surface, preferably a vehicle alignment rack. The tires are to be inflated to the recommended pressure. All tires are to be the same size as standard equipment. Vehicle height is checked with the fuel tank full of fuel, and no passenger or luggage compartment load.

Vehicle height is not adjustable. If the measurement is not within specifications, inspect the vehicle for bent or weak suspension components. Compare the parts tag on the suspect coil spring(s) to the parts book and the vehicle sales code, checking for a match. Once removed from the vehicle, compare the coil spring height to a correct new or known good coil spring. The heights should vary if the suspect spring is weak.

NOTE: Prior to reading the curb height measurement, the front and rear of the vehicle must be jounced to settle the suspension. Induce jounce by pushing down on the center of the bumper (fascia), using care not to damage the vehicle, moving the vehicle up and down, gradually increasing the suspension travel with each stroke. Release the bumper at the bottom of each stroke, repeating this action several times. Perform this to both front and rear suspensions an equal amount of times.

Measure curb height as follows:

1. Jounce the vehicle. Refer to note above.

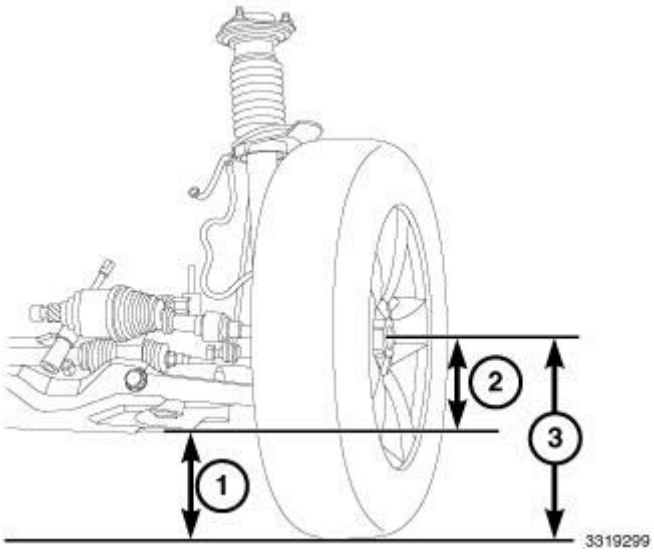

Fig. 79: Subtract The Pivot Bolt Height From The Spindle Height = Obtain The Curb Height Value
Courtesy of CHRYSLER GROUP, LLC

NOTE: On some vehicles it may be necessary to remove an engine belly pan in order to gain access to the lower control arm pivot bolt.

2. FRONT - On each side of the vehicle, measure the distance (1) from the center of the lower control arm rear (vertical) pivot bolt head to the floor or alignment rack/lift runway surface. It may be necessary to measure to the bottom of a straight edge placed from lift runway to runway to get an accurate measurement.
3. FRONT - Measure and record the distance (3) from the center of the spindle to the same surface or straight edge used to measure from the front pivot bolt.
4. Subtract the pivot bolt height (1) from the spindle height (3) to obtain the curb height value (2). Compare the curb height value (2) to specifications listed in the following CURB HEIGHT SPECIFICATIONS chart. **Maximum left-to-right differential is not to exceed 12 mm (0.5 in.).**

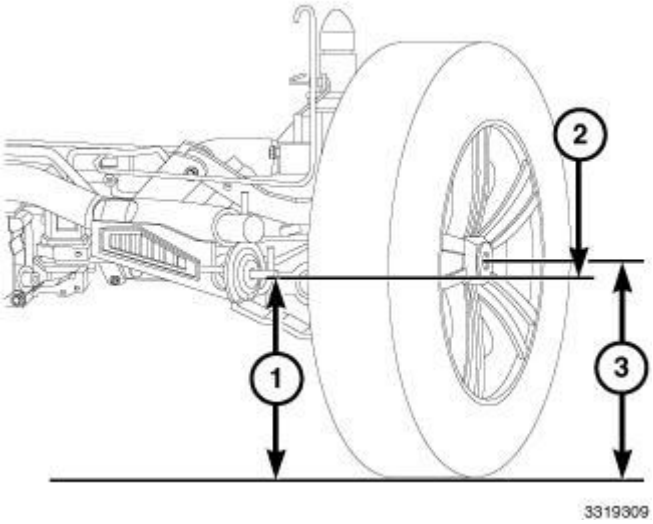

Fig. 80: Subtract The Mounting Bolt Height From The Spindle Height = Curb Height Value
Courtesy of CHRYSLER GROUP, LLC

5. REAR - On each side of the vehicle, measure and record the distance (2) from the center of the outboard trailing arm-to-body mounting bolt (1) to the floor or alignment rack/lift runway surface.
6. REAR - On each side of the vehicle, measure and record the distance (3) from the center of the rear spindle to the same surface that was used to measure to the bolt in the previous step.
7. Subtract the mounting bolt height (1) from the spindle height (3) to obtain the curb height value (2). Compare the curb height value (2) to specifications listed in the following CURB HEIGHT SPECIFICATIONS chart. **Maximum left-to-right differential is not to exceed 12 mm (0.5 in.).**

CURB HEIGHT SPECIFICATIONS

4X2 ALL ENGINES

MODEL	FRONT	REAR
USA and Canada Without Off Road Group (AWL); All Export	105 mm ± 12 mm 4.13 in. ± 0.47 in.	-14 mm ± 12 mm -0.55 in. ± 0.47 in.

4X4 GAS ENGINE

MODEL	FRONT	REAR
USA and Canada With	84 mm ± 12 mm	-34 mm ± 12 mm

Off Road Group (AWL)	3.31 in. ± 0.47 in.	-1.34 in. ± 0.47 in.

4X4 DIESEL ENGINE

MODEL	FRONT	REAR
All Models	92mm ± 12 mm 3.62 in. ± 0.47 in.	-26 mm ± 12 mm -1.02 in. ± 0.47 in.

WHEEL ALIGNMENT

PRE-WHEEL ALIGNMENT INSPECTION

Before any attempt is made to change or correct the wheel alignment, the following inspection and necessary corrections must be made to the vehicle to ensure proper alignment.

1. Verify the fuel tank is full of fuel. If the fuel tank is not full, the reduction in weight will affect the curb height of the vehicle and the alignment specifications.
2. The passenger and luggage compartments of the vehicle should be free of any load that is not factory equipment.
3. Check the tires on the vehicle. The tires are to be inflated to the recommended air pressure. All tires must be the same size and in good condition with approximately the same tread wear.
4. Check the front tire and wheel assemblies for excessive radial runout.
5. Inspect all suspension component fasteners for looseness and proper torque.
6. Inspect the lower front ball joints and all steering linkage for looseness and any sign of wear or damage.
7. Inspect the rubber bushings on all the suspension components for signs of wear or deterioration. If any bushings show signs of wear or deterioration, they should be replaced prior to aligning the vehicle.
8. Check vehicle curb height to verify it is within specifications. Refer to **WHEEL ALIGNMENT, STANDARD PROCEDURE**.

WHEEL ALIGNMENT SETUP

1. Position the vehicle on an alignment rack.
2. Install all required alignment equipment on the vehicle, per the alignment equipment manufacturer's instructions. On this vehicle, a four-wheel alignment is recommended.

NOTE: Prior to reading the vehicle's alignment readouts, the front and rear of vehicle should be jounced. Induce jounce (rear first, then front) by grasping the center of the bumper and jouncing each end of vehicle an equal number of times. The bumper should always be released when vehicle is at the bottom of the jounce cycle.

3. Read the vehicle's current front and rear alignment settings. Compare the vehicle's current alignment settings to the vehicle specifications for camber, caster and toe-in. Refer to **WHEEL ALIGNMENT, SPECIFICATIONS**.

REAR CAMBER

Rear camber settings on this vehicle are determined at the time the vehicle is designed, by the location of the vehicle's suspension components. This is referred to as Net Build. The result is no required adjustment of camber after the vehicle is built or when servicing the suspension components. Thus, when performing a wheel alignment, rear camber is not considered an adjustable angle.

CAUTION: Do not attempt to adjust the vehicle's wheel alignment by heating or bending any of the suspension components.

FRONT CAMBER AND CASTER

Front camber and caster settings on this vehicle are determined at the time the vehicle is designed, by the location of the vehicle's suspension components. This is referred to as Net Build. The result is no required adjustment of camber and caster after the vehicle is built or when servicing the suspension components. Thus, when performing a wheel alignment, caster and camber are not normally considered adjustable angles but some adjustment can be made. Camber and caster should be checked to ensure they meet vehicle specifications. Refer to **WHEEL ALIGNMENT, SPECIFICATIONS**.

If individual front camber or caster is found not to meet alignment specifications, each can be adjusted by shifting the crossmember or by using an available service adjustment bolt package. If an adjustment bolt package installation is necessary, inspect the suspension components for any signs of damage or bending first.

CAUTION: Do not attempt to adjust the vehicle's wheel alignment by heating or bending any of the suspension components.

ADJUSTMENT BY SHIFTING CROSSMEMBER

CAUTION: Always use care when shifting crossmember to avoid damaging other components on the vehicle.

1. Loosen the four bolts fastening the front crossmember to the frame just enough to allow movement of the crossmember. Refer to and **CROSSMEMBER, FRONT SUSPENSION, REMOVAL** .
2. Loosen the bolts fastening the fore/aft crossmember to the frame just enough to allow movement of the crossmember. Refer to **CROSSMEMBER, FRONT FORE AND AFT, REMOVAL** .

CAUTION: When shifting the front crossmember, keep in mind that the front and rear engine mounts are attached to the front crossmember and fore/aft crossmember and should be inspected following the crossmember shift to make sure they are properly aligned.

3. Shift front crossmember as necessary (See following tables) to bring camber or caster into specifications. When shifting crossmember, use care not to move other angles (camber or caster) that are within specifications, out of specifications.

FRONT CAMBER ADJUSTMENT TABLE

FRONT CAMBER ADJUSTMENT BY SHIFTING CROSSMEMBER*	
Left Camber Below Specification	Move crossmember to the right
Left Camber Above Specification	Move crossmember to the left
Right Camber Below Specification	Move crossmember to the left
Right Camber Above Specification	Move crossmember to the right
Cross Camber Below Specification	Move crossmember to the right
Cross Camber Above Specification	Move crossmember to the left
* For every move to adjust one side of the vehicle, a counter-move on the	

opposite side will occur.

FRONT CASTER ADJUSTMENT TABLE

FRONT CASTER ADJUSTMENT BY SHIFTING CROSSMEMBER	
Left Caster Below Specification	Move left side of crossmember forward
Left Caster Above Specification	Move left side of crossmember rearward
Right Caster Below Specification	Move right side of crossmember forward
Right Caster Above Specification	Move right side of crossmember rearward
Cross Caster Below Specification	Move left side of crossmember forward and right side rearward
Cross Caster Above Specification	Move left side of crossmember rearward and right side forward

4. Tighten all previously loosened fasteners (bolts) securing the crossmember to the vehicle to specifications. Refer to **CROSSMEMBER, FRONT FORE AND AFT, INSTALLATION** and **CROSSMEMBER, FRONT SUSPENSION, INSTALLATION** .
5. Jounce the rear, then front of the vehicle an equal amount of times.
6. Measure camber and caster. If camber and caster are within specifications, refer to **TOE** . If camber cannot be brought into specifications, perform the CAMBER ADJUSTMENT BOLT PACKAGE INSTALLATION below.

CAMBER ADJUSTMENT BOLT PACKAGE INSTALLATION

The camber adjustment bolt package contains new bolts and nuts for attaching the strut clevis bracket to the steering knuckle. The bolts contained in the package are slightly undersize allowing for movement between the strut clevis bracket and the steering knuckle. The movement allowed by the undersize bolts provide approximately two degrees of camber adjustment per side of the vehicle. To install and adjust the camber adjustment bolt package, follow the procedure below.

1. Raise the vehicle until its tires are not supporting the weight of the vehicle. Refer to **HOISTING, STANDARD PROCEDURE** .

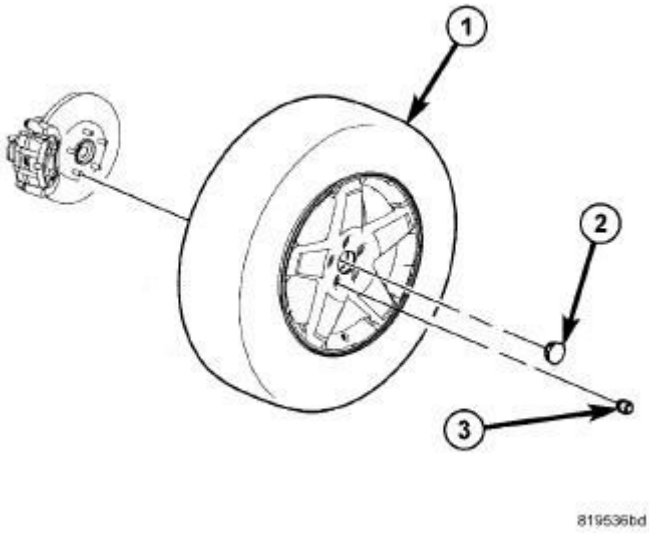

Fig. 81: Tire And Wheel Mounting
Courtesy of CHRYSLER GROUP, LLC

2. Remove the wheel mounting nuts (3), then the front tire and wheel assembly (1).

CAUTION: The strut clevis-to-knuckle attaching bolt shanks are serrated and must not be turned during removal. Remove the nuts while holding the bolts stationary, then tap the bolts out using a punch.

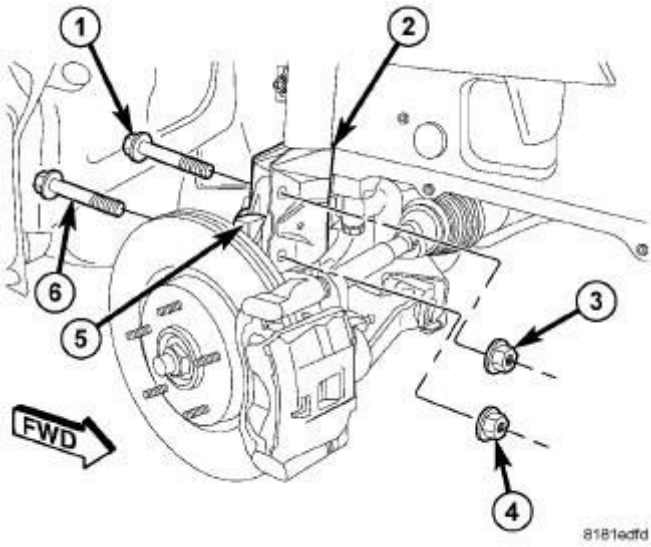

Fig. 82: Clevis Bolts

Courtesy of CHRYSLER GROUP, LLC

3. Remove the original upper bolt (1) and nut (3) attaching the strut clevis bracket (2) to the knuckle (5).
4. Install a bolt from the adjustment package into the hole where the original bolt was removed. Install the bolt as indicated.
5. Install a nut provided in adjustment package on the replacement bolt. Tighten the nut until it's snug, but still allows the knuckle to slide in the clevis bracket.

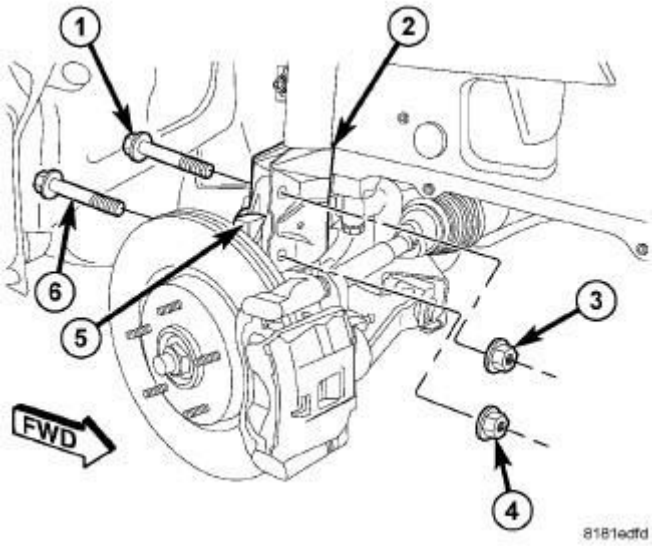

Fig. 83: Clevis Bolts
Courtesy of CHRYSLER GROUP, LLC

6. Remove the original lower bolt (6) and nut (4) attaching the strut clevis bracket (2) to the knuckle (5).
7. Install a bolt from the adjustment package into the bottom hole of the strut clevis bracket. Install the bolt as indicated.
8. Install a nut provided in adjustment package on the replacement bolt. Tighten the nut until it's snug, but still allows the knuckle to slide in the clevis bracket.

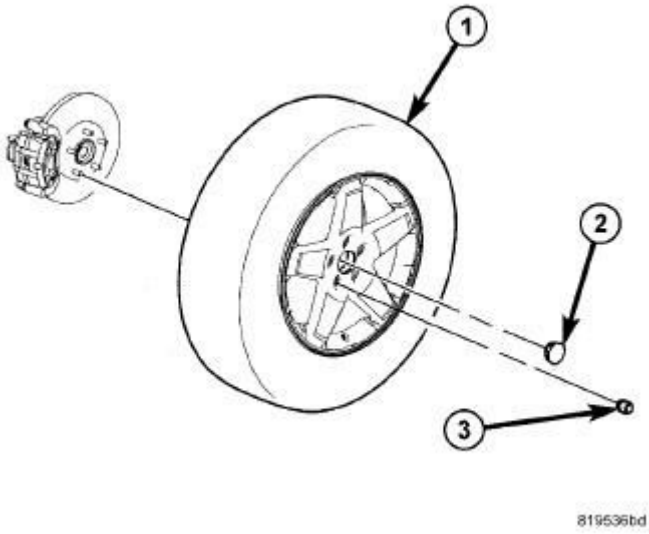

Fig. 84: Tire And Wheel Mounting
Courtesy of CHRYSLER GROUP, LLC

9. Install the tire and wheel assembly (1). Refer to **INSTALLATION** . Install and tighten the wheel mounting nuts (3) to 135 N.m (100 ft. lbs.).
10. Perform the above procedure to opposite strut as required.
11. Lower the vehicle and jounce the front and rear of the vehicle.

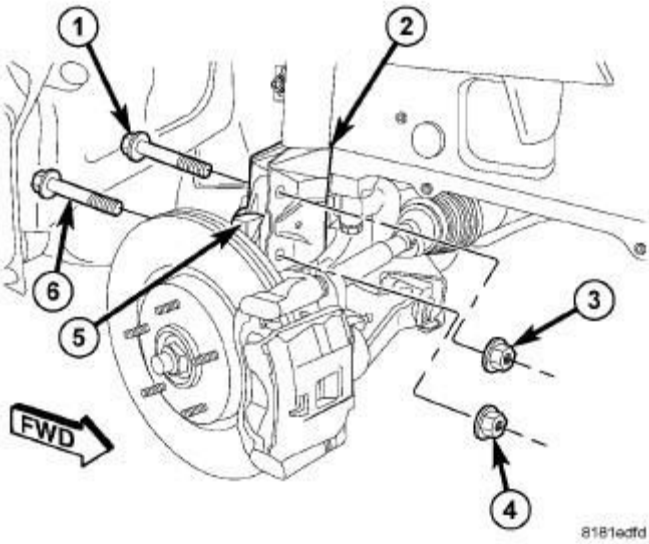

Fig. 85: Clevis Bolts
Courtesy of CHRYSLER GROUP, LLC

12. Adjust the front camber to the preferred setting by pushing or pulling on the top of the tire. When camber is set to specifications, tighten the upper and

lower strut clevis-to-knuckle attaching bolt nuts (3, 4) enough to hold the adjustment. Again jounce the front and rear of the vehicle, then verify the camber settings.

13. Tighten the front strut clevis-to-knuckle attaching bolt nuts (3, 4) to 110 N.m (81 ft. lbs.).
14. Once camber is within specifications, adjust toe to meet the preferred specification setting. Refer to **FRONT TOE** within this wheel alignment service procedure.

TOE

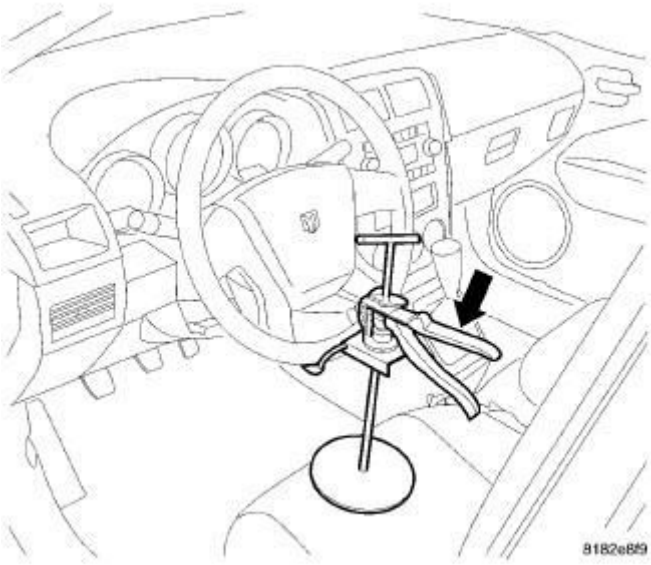

Fig. 86: Steering Wheel Holding Tool
Courtesy of CHRYSLER GROUP, LLC

1. Center the steering wheel and lock it in place using a steering wheel clamp.

NOTE: When setting toe, make sure to set rear toe to the preferred specifications before setting front toe to the preferred specifications

2. Remove the steering wheel clamp.
3. Remove the alignment equipment.
4. Road test the vehicle to verify the steering wheel is straight and the vehicle does not pull or wander.

REAR TOE

NOTE: Perform the following at each rear wheel as necessary.

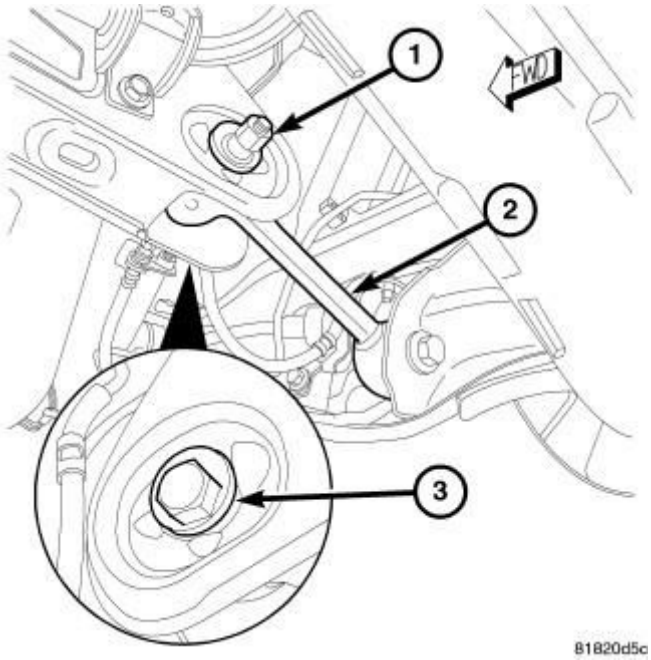

Fig. 87: Rear Toe Adjustment Cam Bolt
Courtesy of CHRYSLER GROUP, LLC

1. While holding the cam bolt head (3) stationary, loosen the toe link mounting cam bolt nut (1).
2. Rotate the cam bolt head (3) left or right until the rear wheel toe for that rear wheel is set to the preferred specification. Refer to **WHEEL ALIGNMENT, SPECIFICATIONS**.
3. While holding the cam bolt head (3) stationary, tighten the toe link mounting cam bolt nut (1) to 35 N.m (26 ft. lbs.).

FRONT TOE

CAUTION: Do not twist the inner tie rod-to-steering gear rubber boots while turning the inner tie rods during the front toe adjustment.

NOTE: Perform the following at each front wheel as necessary.

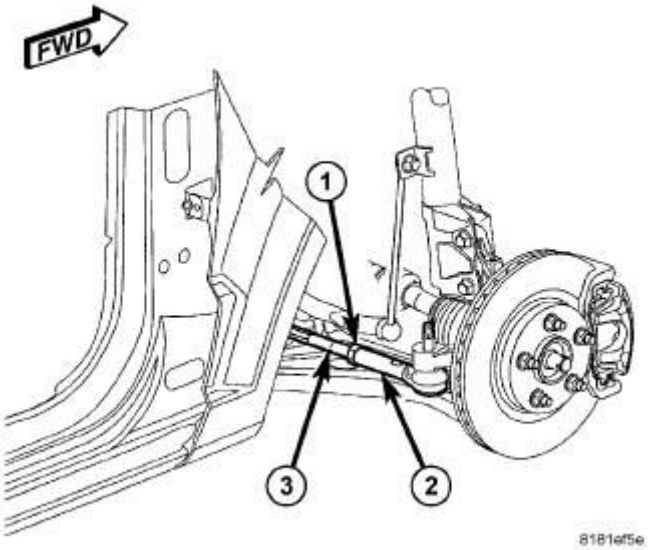

Fig. 88: Tie Rod Jam Nut
Courtesy of CHRYSLER GROUP, LLC

1. Loosen the tie rod adjusting jam nut (1). Grasp the inner tie rod (3) and rotate it one way or the other until the front wheel toe is set to the preferred specification. Refer to **WHEEL ALIGNMENT, SPECIFICATIONS**.
2. Tighten the tie rod adjusting jam nut to of 75 N.m (55 ft. lbs.).
3. Make sure the inner tie rod-to-steering gear rubber boot is not twisted.

SPECIFICATIONS

SPECIFICATIONS

NOTE: All specifications are given in degrees.

NOTE: All wheel alignments are to be set with the vehicle at curb height. Refer to WHEEL ALIGNMENT, STANDARD PROCEDURE.

GAS ENGINE

4X2, 4X4 WITHOUT OFF-ROAD GROUP (AWL), AND EXPORT

FRONT WHEEL ALIGNMENT	PREFERRED SETTING	ACCEPTABLE RANGE
CAMBER	-0.64°	-1.19° to -0.09°
Cross Camber (Maximum Side-To-Side	0.00°	-0.60° to +0.60°

Difference)		
CASTER* - LEFT CASTER* - RIGHT Cross Caster (Maximum Side-To-Side Difference)	+3.00° +2.70° 0.30°	+2.00° to +4.00° +1.70° to +3.70° -0.70° to +1.30°
TOE - TOTAL**	+0.20°	0.00° to +0.40°
Notes:		
* For reference only. These are nonadjustable angles.		
** TOTAL TOE is the sum of both the left and right wheel toe settings. TOTAL TOE should be equally split between each wheel on the same axle to ensure the steering wheel is centered after setting toe.		
Positive toe (+) is toe-in and negative toe (?) is toe-out.		

4X2, 4X4 WITHOUT OFF-ROAD GROUP (AWL), AND EXPORT

REAR WHEEL ALIGNMENT	PREFERRED SETTING	ACCEPTABLE RANGE
CAMBER Cross Camber (Maximum Side-To-Side Difference)	-0.61° 0.00°	-1.26° to -0.04° -0.80° to +0.80°
TOE - TOTAL*	+0.20°	-0.05° to +0.45°
THRUST ANGLE	0.00°	-0.15° to +0.15°
Notes:		
* TOTAL TOE is the sum of both the left and right wheel toe settings. TOTAL TOE should be equally split between each wheel on the same axle to ensure the steering wheel is centered after setting toe.		
Positive toe (+) is toe-in and negative toe (?) is toe-out.		

GAS ENGINE

4X4 WITH OFF-ROAD GROUP (AWL)

FRONT WHEEL ALIGNMENT	PREFERRED SETTING	ACCEPTABLE RANGE
CAMBER Cross Camber (Maximum Side-To-Side Difference)	-0.71° 0.00°	-1.26° to -0.16° -0.60° to +0.60°

CASTER* - LEFT	+3.00°	+2.00° to +4.00°
CASTER* - RIGHT	+2.70°	+1.70° to +3.70°
Cross Caster (Maximum Side-To-Side Difference)	0.30°	-0.70° to +1.30°
TOE - TOTAL**	+0.20°	0.00° to +0.40°
Notes:		
* For reference only. These are nonadjustable angles.		
** TOTAL TOE is the sum of both the left and right wheel toe settings. TOTAL TOE should be equally split between each wheel on the same axle to ensure the steering wheel is centered after setting toe.		
Positive toe (+) is toe-in and negative toe (?) is toe-out.		

4X4 WITH OFF-ROAD GROUP (AWL)

REAR WHEEL ALIGNMENT	PREFERRED SETTING	ACCEPTABLE RANGE
CAMBER	-0.80°	-1.45° to -0.15°
Cross Camber (Maximum Side-To-Side Difference)	0.00°	-0.80° to +0.80°
TOE - TOTAL*	+0.20°	-0.05° to +0.45°
THRUST ANGLE	0.00°	-0.15° to +0.15°
Notes:		
* TOTAL TOE is the sum of both the left and right wheel toe settings. TOTAL TOE should be equally split between each wheel on the same axle to ensure the steering wheel is centered after setting toe.		
Positive toe (+) is toe-in and negative toe (?) is toe-out.		

DIESEL ENGINE

4X4

FRONT WHEEL ALIGNMENT	PREFERRED SETTING	ACCEPTABLE RANGE
CAMBER	-0.87°	-1.42° to -0.32°
Cross Camber (Maximum Side-To-Side Difference)	0.00°	-0.60° to +0.60°
CASTER* - LEFT	+3.00°	+2.00° to +4.00°

CASTER* - RIGHT	+2.70°	+1.70° to +3.70°
Cross Caster (Maximum Side-To-Side Difference)	0.30°	-0.70° to +1.30°
TOE - TOTAL**	+0.20°	0.00° to +0.40°
Notes:		
* For reference only. These are nonadjustable angles.		
** TOTAL TOE is the sum of both the left and right wheel toe settings. TOTAL TOE should be equally split between each wheel on the same axle to ensure the steering wheel is centered after setting toe.		
Positive toe (+) is toe-in and negative toe (?) is toe-out.		

4X4

REAR WHEEL ALIGNMENT	PREFERRED SETTING	ACCEPTABLE RANGE
CAMBER	-0.92°	-1.57° to -0.27°
Cross Camber (Maximum Side-To-Side Difference)	0.00°	-0.80° to +0.80°
TOE - TOTAL*	+0.20°	-0.05° to +0.45°
THRUST ANGLE	0.00°	-0.15° to +0.15°
Notes:		
* TOTAL TOE is the sum of both the left and right wheel toe settings. TOTAL TOE should be equally split between each wheel on the same axle to ensure the steering wheel is centered after setting toe.		
Positive toe (+) is toe-in and negative toe (?) is toe-out.		

DIESEL ENGINE

4X2

FRONT WHEEL ALIGNMENT	PREFERRED SETTING	ACCEPTABLE RANGE
CAMBER	-0.64°	-1.19° to -0.09°
Cross Camber (Maximum Side-To-Side Difference)	0.00°	-0.60° to +0.60°
CASTER* - LEFT	+3.00°	+2.00° to +4.00°
CASTER* - RIGHT	+2.70°	+1.70° to +3.70°

Cross Caster (Maximum Side-To-Side Difference)	0.30°	-0.70° to +1.30°
TOE - TOTAL**	+0.20°	0.00° to +0.40°
Notes:		
* For reference only. These are nonadjustable angles.		
** TOTAL TOE is the sum of both the left and right wheel toe settings. TOTAL TOE should be equally split between each wheel on the same axle to ensure the steering wheel is centered after setting toe.		
Positive toe (+) is toe-in and negative toe (?) is toe-out.		

4X2

REAR WHEEL ALIGNMENT	PREFERRED SETTING	ACCEPTABLE RANGE
CAMBER	-0.61°	-1.26° to +0.04°
Cross Camber (Maximum Side-To-Side Difference)	0.00°	-0.80° to +0.80°
TOE - TOTAL*	+0.20°	-0.05° to +0.45°
THRUST ANGLE	0.00°	-0.15° to +0.15°
Notes:		
Positive toe (+) is toe-in and negative toe (?) is toe-out.		
* TOTAL TOE is the sum of both the left and right wheel toe settings. TOTAL TOE should be equally split between each wheel on the same axle to ensure the steering wheel is centered after setting toe.		

2014 SUSPENSION

JEEP WHEEL ALIGNMENT SPECIFICATIONS

WHEEL ALIGNMENT SPECIFICATIONS

CHEROKEE

CHEROKEE (KL) AWD

Measurement	Minimum	Preferred	Maximum
Left Front Caster (°)	3.43	3.83	4.23
Right Front Caster (°)	3.43	3.83	4.23
Left Front Camber (°)	-0.95	-0.55	-0.15
Right Front Camber (°)	-0.95	-0.55	-0.15
Front Toe (°)	-0.05	0.1	0.25
Left SAI (°)	0	0	0
Right SAI (°)	0	0	0
Left Rear Camber (°)	-1.39	-0.99	-0.59
Right Rear Camber (°)	-1.39	-0.99	-0.59
Rear Toe (°)	-0.15	0	0.15
Thrust Angle	0.1	0	0
Left Toe Out, Inward (°)	0	0	0
Right Toe Out, Inward (°)	0	0	0
Left Toe Out, Outward (°)	0	0	0
Right Toe Out, Outward (°)	0	0	0
Left Max Turn, Inward (°)	0	0	0
Right Max Turn, Inward (°)	0	0	0
Left Max Turn, Outward (°)	0	0	0
Right Max Turn, Outward (°)	0	-	-

CHEROKEE (KL) FWD

Measurement	Minimum	Preferred	Maximum
Left Front Caster (°)	3.11	3.51	3.91

Right Front Caster (°)	3.11	3.51	3.91
Left Front Camber (°)	-0.95	-0.55	-0.15
Right Front Camber (°)	-0.95	-0.55	-0.15
Front Toe (°)	-0.05	0.1	0.25
Left SAI (°)	0	0	0
Right SAI (°)	0	0	0
Left Rear Camber (°)	-1.39	-0.99	-0.59
Right Rear Camber (°)	-1.39	-0.99	-0.59
Rear Toe (°)	-0.15	0	0.15
Thrust Angle	0.1	0	0
Left Toe Out, Inward (°)	0	0	0
Right Toe Out, Inward (°)	0	0	0
Left Toe Out, Outward (°)	0	0	0
Right Toe Out, Outward (°)	0	0	0
Left Max Turn, Inward (°)	0	0	0
Right Max Turn, Inward (°)	0	0	0
Left Max Turn, Outward (°)	0	0	0
Right Max Turn, Outward (°)	0	-	-

CHEROKEE (KL) Lifted

Measurement	Minimum	Preferred	Maximum
Left Front Caster (°)	3.73	4.13	4.53
Right Front Caster (°)	3.73	4.13	4.53
Left Front Camber (°)	-0.85	-0.45	-0.05
Right Front Camber (°)	-0.85	-0.45	-0.05
Front Toe (°)	-0.05	0.1	0.25
Left SAI (°)	0	0	0
Right SAI (°)	0	0	0
Left Rear Camber (°)	-1.55	-1.15	-0.75
Right Rear Camber (°)	-1.55	-1.15	-0.75
Rear Toe (°)	-0.15	0	0.15

Thrust Angle	0.1	0	0
Left Toe Out, Inward (°)	0	0	0
Right Toe Out, Inward (°)	0	0	0
Left Toe Out, Outward (°)	0	0	0
Right Toe Out, Outward (°)	0	0	0
Left Max Turn, Inward (°)	0	0	0
Right Max Turn, Inward (°)	0	0	0
Left Max Turn, Outward (°)	0	0	0
Right Max Turn, Outward (°)	0	-	-

COMPASS

COMPASS Gas Engine 4X2

Measurement	Minimum	Preferred	Maximum
Left Front Caster (°)	2	3	4
Right Front Caster (°)	1.7	2.7	3.7
Left Front Camber (°)	-1.19	-0.64	-0.09
Right Front Camber (°)	-1.19	-0.64	-0.09
Front Toe (°)	0	0.2	0.4
Left SAI (°)	0	0	0
Right SAI (°)	0	0	0
Left Rear Camber (°)	-1.26	-0.61	0.04
Right Rear Camber (°)	-1.26	-0.61	0.04
Rear Toe (°)	-0.05	0.2	0.45
Thrust Angle	0.15	0	0
Left Toe Out, Inward (°)	0	0	0
Right Toe Out, Inward (°)	0	0	0
Left Toe Out, Outward (°)	0	0	0
Right Toe Out, Outward (°)	0	0	0
Left Max Turn, Inward (°)	0	0	0

Right Max Turn, Inward (°)	0	0	0
Left Max Turn, Outward (°)	0	0	0
Right Max Turn, Outward (°)	0	-	-

COMPASS Gas Engine 4X4 With Off-road Group (AWL)

Measurement	Minimum	Preferred	Maximum
Left Front Caster (°)	2	3	4
Right Front Caster (°)	1.7	2.7	3.7
Left Front Camber (°)	-1.26	-0.71	-0.16
Right Front Camber (°)	-1.26	-0.71	-0.16
Front Toe (°)	0	0.2	0.4
Left SAI (°)	0	0	0
Right SAI (°)	0	0	0
Left Rear Camber (°)	-1.45	-0.8	-0.15
Right Rear Camber (°)	-1.45	-0.8	-0.15
Rear Toe (°)	-0.05	0.2	0.45
Thrust Angle	0.15	0	0
Left Toe Out, Inward (°)	0	0	0
Right Toe Out, Inward (°)	0	0	0
Left Toe Out, Outward (°)	0	0	0
Right Toe Out, Outward (°)	0	0	0
Left Max Turn, Inward (°)	0	0	0
Right Max Turn, Inward (°)	0	0	0
Left Max Turn, Outward (°)	0	0	0
Right Max Turn, Outward (°)	0	-	-

COMPASS Gas Engine 4X4 Without Off-road Group (AWL)

Measurement	Minimum	Preferred	Maximum

Left Front Caster (°)	2	3	4
Right Front Caster (°)	1.7	2.7	3.7
Left Front Camber (°)	-1.19	-0.64	-0.09
Right Front Camber (°)	-1.19	-0.64	-0.09
Front Toe (°)	0	0.2	0.4
Left SAI (°)	0	0	0
Right SAI (°)	0	0	0
Left Rear Camber (°)	-1.26	-0.61	0.04
Right Rear Camber (°)	-1.26	-0.61	0.04
Rear Toe (°)	-0.05	0.2	0.45
Thrust Angle	0.15	0	0
Left Toe Out, Inward (°)	0	0	0
Right Toe Out, Inward (°)	0	0	0
Left Toe Out, Outward (°)	0	0	0
Right Toe Out, Outward (°)	0	0	0
Left Max Turn, Inward (°)	0	0	0
Right Max Turn, Inward (°)	0	0	0
Left Max Turn, Outward (°)	0	0	0
Right Max Turn, Outward (°)	0	-	-

COMPASS Gas Engine Export

Measurement	Minimum	Preferred	Maximum
Left Front Caster (°)	2	3	4
Right Front Caster (°)	1.7	2.7	3.7
Left Front Camber (°)	-1.19	-0.64	-0.09
Right Front Camber (°)	-1.19	-0.64	-0.09
Front Toe (°)	0	0.2	0.4
Left SAI (°)	0	0	0
Right SAI (°)	0	0	0
Left Rear Camber (°)	-1.26	-0.61	0.04
Right Rear Camber (°)	-1.26	-0.61	0.04

Rear Toe (°)	-0.05	0.2	0.45
Thrust Angle	0.15	0	0
Left Toe Out, Inward (°)	0	0	0
Right Toe Out, Inward (°)	0	0	0
Left Toe Out, Outward (°)	0	0	0
Right Toe Out, Outward (°)	0	0	0
Left Max Turn, Inward (°)	0	0	0
Right Max Turn, Inward (°)	0	0	0
Left Max Turn, Outward (°)	0	0	0
Right Max Turn, Outward (°)	0	-	-

GRAND CHEROKEE

GRAND CHEROKEE Aero Suspension

Measurement	Minimum	Preferred	Maximum
Left Front Caster (°)	4.4	5	5.6
Right Front Caster (°)	4.4	5	5.6
Left Front Camber (°)	-1.07	-0.47	0.13
Right Front Camber (°)	-1.57	-0.97	-0.37
Front Toe (°)	0.07	0.2	0.33
Left SAI (°)	0	0	0
Right SAI (°)	0	0	0
Left Rear Camber (°)	-1.36	-0.81	-0.26
Right Rear Camber (°)	-1.36	-0.81	-0.26
Rear Toe (°)	-0.1	0.2	0.5
Thrust Angle	0.15	0	0
Left Toe Out, Inward (°)	0	0	0
Right Toe Out, Inward (°)	0	0	0
Left Toe Out, Outward (°)	0	0	0
Right Toe Out, Outward (°)	0	0	0

Left Max Turn, Inward (°)	0	0	0
Right Max Turn, Inward (°)	0	0	0
Left Max Turn, Outward (°)	0	0	0
Right Max Turn, Outward (°)	0	-	-

GRAND CHEROKEE LHD With Air suspension

Measurement	Minimum	Preferred	Maximum
Left Front Caster (°)	4.9	5.5	6.1
Right Front Caster (°)	4.9	5.5	6.1
Left Front Camber (°)	-1.24	-0.64	-0.04
Right Front Camber (°)	-1.74	-1.14	-0.54
Front Toe (°)	0.07	0.2	0.33
Left SAI (°)	0	0	0
Right SAI (°)	0	0	0
Left Rear Camber (°)	-1.69	-1.14	-0.59
Right Rear Camber (°)	-1.69	-1.14	-0.59
Rear Toe (°)	0.1	0.4	0.7
Thrust Angle	0.15	0	0
Left Toe Out, Inward (°)	0	0	0
Right Toe Out, Inward (°)	0	0	0
Left Toe Out, Outward (°)	0	0	0
Right Toe Out, Outward (°)	0	0	0
Left Max Turn, Inward (°)	0	0	0
Right Max Turn, Inward (°)	0	0	0
Left Max Turn, Outward (°)	0	0	0
Right Max Turn, Outward (°)	0	-	-

GRAND CHEROKEE LHD With Standard Suspension

Measurement	Minimum	Preferred	Maximum
Left Front Caster (°)	4.4	5	5.6
Right Front Caster (°)	4.4	5	5.6
Left Front Camber (°)	-0.72	-0.12	0.48
Right Front Camber (°)	-1.22	-0.62	-0.02
Front Toe (°)	0.07	0.2	0.33
Left SAI (°)	0	0	0
Right SAI (°)	0	0	0
Left Rear Camber (°)	-1.09	-0.54	0.01
Right Rear Camber (°)	-1.09	-0.54	0.01
Rear Toe (°)	-0.1	0.2	0.5
Thrust Angle	0.15	0	0
Left Toe Out, Inward (°)	0	0	0
Right Toe Out, Inward (°)	0	0	0
Left Toe Out, Outward (°)	0	0	0
Right Toe Out, Outward (°)	0	0	0
Left Max Turn, Inward (°)	0	0	0
Right Max Turn, Inward (°)	0	0	0
Left Max Turn, Outward (°)	0	0	0
Right Max Turn, Outward (°)	0	-	-

GRAND CHEROKEE RHD With Air suspension

Measurement	Minimum	Preferred	Maximum
Left Front Caster (°)	4.9	5.5	6.1
Right Front Caster (°)	4.9	5.5	6.1
Left Front Camber (°)	-1.49	-0.89	-0.29
Right Front Camber (°)	-1.49	-0.89	-0.29
Front Toe (°)	0.07	0.2	0.33
Left SAI (°)	0	0	0
Right SAI (°)	0	0	0
Left Rear Camber (°)	-1.69	-1.14	-0.59

Right Rear Camber (°)	-1.69	-1.14	-0.59
Rear Toe (°)	0.1	0.4	0.7
Thrust Angle	0.15	0	0
Left Toe Out, Inward (°)	0	0	0
Right Toe Out, Inward (°)	0	0	0
Left Toe Out, Outward (°)	0	0	0
Right Toe Out, Outward (°)	0	0	0
Left Max Turn, Inward (°)	0	0	0
Right Max Turn, Inward (°)	0	0	0
Left Max Turn, Outward (°)	0	0	0
Right Max Turn, Outward (°)	0	-	-

GRAND CHEROKEE RHD With Standard Suspension

Measurement	Minimum	Preferred	Maximum
Left Front Caster (°)	4.4	5	5.6
Right Front Caster (°)	4.4	5	5.6
Left Front Camber (°)	-0.97	-0.37	0.23
Right Front Camber (°)	-0.97	-0.37	0.23
Front Toe (°)	0.07	0.2	0.33
Left SAI (°)	0	0	0
Right SAI (°)	0	0	0
Left Rear Camber (°)	-1.09	-0.54	0.01
Right Rear Camber (°)	-1.09	-0.54	0.01
Rear Toe (°)	-0.1	0.2	0.5
Thrust Angle	0.15	0	0
Left Toe Out, Inward (°)	0	0	0
Right Toe Out, Inward (°)	0	0	0
Left Toe Out, Outward (°)	0	0	0
Right Toe Out, Outward (°)	0	0	0
Left Max Turn, Inward (°)	0	0	0

Right Max Turn, Inward (°)	0	0	0
Left Max Turn, Outward (°)	0	0	0
Right Max Turn, Outward (°)	0	-	-

GRAND CHEROKEE SRT-8

Measurement	Minimum	Preferred	Maximum
Left Front Caster (°)	4.65	5.2	5.75
Right Front Caster (°)	4.65	5.2	5.75
Left Front Camber (°)	-2.15	-1.6	-1.05
Right Front Camber (°)	-2.15	-1.6	-1.05
Front Toe (°)	0.07	0.2	0.33
Left SAI (°)	0	0	0
Right SAI (°)	0	0	0
Left Rear Camber (°)	-1.8	-1.3	-0.8
Right Rear Camber (°)	-1.8	-1.3	-0.8
Rear Toe (°)	0.05	0.25	0.45
Thrust Angle	0.1	0	0
Left Toe Out, Inward (°)	0	0	0
Right Toe Out, Inward (°)	0	0	0
Left Toe Out, Outward (°)	0	0	0
Right Toe Out, Outward (°)	0	0	0
Left Max Turn, Inward (°)	0	0	0
Right Max Turn, Inward (°)	0	0	0
Left Max Turn, Outward (°)	0	0	0
Right Max Turn, Outward (°)	0	-	-

PATRIOT

PATRIOT Diesel Engine 4X2

Measurement	Minimum	Preferred	Maximum
Left Front Caster (°)	2	3	4
Right Front Caster (°)	1.7	2.7	3.7
Left Front Camber (°)	-1.19	-0.64	-0.09
Right Front Camber (°)	-1.19	-0.64	-0.09
Front Toe (°)	0	0.2	0.4
Left SAI (°)	0	0	0
Right SAI (°)	0	0	0
Left Rear Camber (°)	-1.26	-0.61	0.04
Right Rear Camber (°)	-1.26	-0.61	0.04
Rear Toe (°)	-0.05	0.2	0.45
Thrust Angle	0.15	0	0
Left Toe Out, Inward (°)	0	0	0
Right Toe Out, Inward (°)	0	0	0
Left Toe Out, Outward (°)	0	0	0
Right Toe Out, Outward (°)	0	0	0
Left Max Turn, Inward (°)	0	0	0
Right Max Turn, Inward (°)	0	0	0
Left Max Turn, Outward (°)	0	0	0
Right Max Turn, Outward (°)	0	-	-

PATRIOT Diesel Engine 4X4

Measurement	Minimum	Preferred	Maximum
Left Front Caster (°)	2	3	4
Right Front Caster (°)	1.7	2.7	3.7
Left Front Camber (°)	-1.42	-0.87	-0.32
Right Front Camber (°)	-1.42	-0.87	-0.32
Front Toe (°)	0	0.2	0.4
Left SAI (°)	0	0	0
Right SAI (°)	0	0	0
Left Rear Camber (°)	-1.57	-0.92	-0.27

Right Rear Camber (°)	-1.57	-0.92	-0.27
Rear Toe (°)	-0.05	0.2	0.45
Thrust Angle	0.15	0	0
Left Toe Out, Inward (°)	0	0	0
Right Toe Out, Inward (°)	0	0	0
Left Toe Out, Outward (°)	0	0	0
Right Toe Out, Outward (°)	0	0	0
Left Max Turn, Inward (°)	0	0	0
Right Max Turn, Inward (°)	0	0	0
Left Max Turn, Outward (°)	0	0	0
Right Max Turn, Outward (°)	0	-	-

PATRIOT Gas Engine 4X2

Measurement	Minimum	Preferred	Maximum
Left Front Caster (°)	2	3	4
Right Front Caster (°)	1.7	2.7	3.7
Left Front Camber (°)	-1.19	-0.64	-0.09
Right Front Camber (°)	-1.19	-0.64	-0.09
Front Toe (°)	0	0.2	0.4
Left SAI (°)	0	0	0
Right SAI (°)	0	0	0
Left Rear Camber (°)	-1.26	-0.61	0.04
Right Rear Camber (°)	-1.26	-0.61	0.04
Rear Toe (°)	-0.05	0.2	0.45
Thrust Angle	0.15	0	0
Left Toe Out, Inward (°)	0	0	0
Right Toe Out, Inward (°)	0	0	0
Left Toe Out, Outward (°)	0	0	0
Right Toe Out, Outward (°)	0	0	0
Left Max Turn, Inward (°)	0	0	0

Right Max Turn, Inward (°)	0	0	0
Left Max Turn, Outward (°)	0	0	0
Right Max Turn, Outward (°)	0	-	-

PATRIOT Gas Engine 4X4 With Off-road Group (AWL)

Measurement	Minimum	Preferred	Maximum
Left Front Caster (°)	2	3	4
Right Front Caster (°)	1.7	2.7	3.7
Left Front Camber (°)	-1.26	-0.71	-0.16
Right Front Camber (°)	-1.26	-0.71	-0.16
Front Toe (°)	0	0.2	0.4
Left SAI (°)	0	0	0
Right SAI (°)	0	0	0
Left Rear Camber (°)	-1.45	-0.8	-0.15
Right Rear Camber (°)	-1.45	-0.8	-0.15
Rear Toe (°)	-0.05	0.2	0.45
Thrust Angle	0.15	0	0
Left Toe Out, Inward (°)	0	0	0
Right Toe Out, Inward (°)	0	0	0
Left Toe Out, Outward (°)	0	0	0
Right Toe Out, Outward (°)	0	0	0
Left Max Turn, Inward (°)	0	0	0
Right Max Turn, Inward (°)	0	0	0
Left Max Turn, Outward (°)	0	0	0
Right Max Turn, Outward (°)	0	-	-

PATRIOT Gas Engine 4X4 Without Off-road Group (AWL)

Measurement	Minimum	Preferred	Maximum

Left Front Caster (°)	2	3	4
Right Front Caster (°)	1.7	2.7	3.7
Left Front Camber (°)	-1.19	-0.64	-0.09
Right Front Camber (°)	-1.19	-0.64	-0.09
Front Toe (°)	0	0.2	0.4
Left SAI (°)	0	0	0
Right SAI (°)	0	0	0
Left Rear Camber (°)	-1.26	-0.61	0.04
Right Rear Camber (°)	-1.26	-0.61	0.04
Rear Toe (°)	-0.05	0.2	0.45
Thrust Angle	0.15	0	0
Left Toe Out, Inward (°)	0	0	0
Right Toe Out, Inward (°)	0	0	0
Left Toe Out, Outward (°)	0	0	0
Right Toe Out, Outward (°)	0	0	0
Left Max Turn, Inward (°)	0	0	0
Right Max Turn, Inward (°)	0	0	0
Left Max Turn, Outward (°)	0	0	0
Right Max Turn, Outward (°)	0	-	-

PATRIOT Gas Engine Export

Measurement	Minimum	Preferred	Maximum
Left Front Caster (°)	2	3	4
Right Front Caster (°)	1.7	2.7	3.7
Left Front Camber (°)	-1.19	-0.64	-0.09
Right Front Camber (°)	-1.19	-0.64	-0.09
Front Toe (°)	0	0.2	0.4
Left SAI (°)	0	0	0
Right SAI (°)	0	0	0
Left Rear Camber (°)	-1.26	-0.61	0.04
Right Rear Camber (°)	-1.26	-0.61	0.04

Rear Toe (°)	-0.05	0.2	0.45
Thrust Angle	0.15	0	0
Left Toe Out, Inward (°)	0	0	0
Right Toe Out, Inward (°)	0	0	0
Left Toe Out, Outward (°)	0	0	0
Right Toe Out, Outward (°)	0	0	0
Left Max Turn, Inward (°)	0	0	0
Right Max Turn, Inward (°)	0	0	0
Left Max Turn, Outward (°)	0	0	0
Right Max Turn, Outward (°)	0	-	-

WRANGLER

WRANGLER (CKD) 2.8L 4 CYL TURBO DIESEL

Measurement	Minimum	Preferred	Maximum
Left Front Caster (°)	1.6	2.6	3.6
Right Front Caster (°)	1.6	2.6	3.6
Left Front Camber (°)	-0.62	-0.25	0.12
Right Front Camber (°)	-0.62	-0.25	0.12
Front Toe (°)	0.17	0.2	0.23
Left SAI (°)	0	0	0
Right SAI (°)	0	0	0
Left Rear Camber (°)	-0.45	-0.25	0.25
Right Rear Camber (°)	-0.45	-0.25	0.25
Rear Toe (°)	-0.5	0.3	0.5
Thrust Angle	0.25	0	0
Left Toe Out, Inward (°)	0	0	0
Right Toe Out, Inward (°)	0	0	0
Left Toe Out, Outward (°)	0	0	0
Right Toe Out, Outward (°)	0	0	0

Left Max Turn, Inward (°)	0	0	0
Right Max Turn, Inward (°)	0	0	0
Left Max Turn, Outward (°)	0	0	0
Right Max Turn, Outward (°)	0	-	-

WRANGLER (JK) All Models

Measurement	Minimum	Preferred	Maximum
Left Front Caster (°)	3.2	4.2	5.2
Right Front Caster (°)	3.4	4.4	5.4
Left Front Camber (°)	-0.62	-0.25	0.12
Right Front Camber (°)	-0.62	-0.25	0.12
Front Toe (°)	0.17	0.2	0.23
Left SAI (°)	0	0	0
Right SAI (°)	0	0	0
Left Rear Camber (°)	-0.5	-0.25	0
Right Rear Camber (°)	-0.5	-0.25	0
Rear Toe (°)	0	0.25	0.5
Thrust Angle	0.25	0	0
Left Toe Out, Inward (°)	0	0	0
Right Toe Out, Inward (°)	0	0	0
Left Toe Out, Outward (°)	0	0	0
Right Toe Out, Outward (°)	0	0	0
Left Max Turn, Inward (°)	0	0	0
Right Max Turn, Inward (°)	0	0	0
Left Max Turn, Outward (°)	0	0	0
Right Max Turn, Outward (°)	0	-	-

2014 SUSPENSION

Rear Suspension - Compass & Patriot

WARNING

WARNING

WARNING: Chrysler LLC does not manufacture any vehicles or replacement parts that contain asbestos. Aftermarket products may or may not contain asbestos. Refer to aftermarket product packaging for product information.

Whether the product contains asbestos or not, dust and dirt can accumulate on brake parts during normal use. Follow practices prescribed by appropriate regulations for the handling, processing and disposing of dust and debris.

CAUTION: Only frame contact or wheel lift hoisting equipment can be used on this vehicle. It cannot be hoisted using equipment designed to lift a vehicle by the rear axle. If this type of hoisting equipment is used, damage to rear suspension components will occur.

CAUTION: All-Wheel-Drive only - Wheel bearing damage will result if after loosening the hub nut, the vehicle is rolled on the ground or the weight of the vehicle is allowed to be supported by the tires for a length of time.

NOTE: If a rear suspension component becomes bent, damaged or fails, no attempt should be made to straighten or repair it. Always replace it with a new component.

SPECIFICATIONS

SPECIFICATIONS

SPECIFICATIONS

DESCRIPTION	N.m	Ft. Lbs.	In. Lbs.
Brake Flex Hose Trailing Link Mounting Nut	15	11	-
Brake Flex Hose Trailing Link Mounting Screw	23	17	-
Crossmember Stay Brace Mounting screws	25	18	221
Hub And Bearing Mounting Bolts	105	77	-
Hub Nut	245	181	-
Lower Control Arm Trailing Link Bolt Nut	95	70	-
Lower Control Arm Crossmember Mounting Bolt Nut	95	70	-
Shock Assembly Lower Mounting Bolt Nut	99	73	-
Shock Assembly Upper Mounting Nuts	48	35	-
Shock Rod Nut	24	18	-
Stabilizer Bar Cushion Retainer Screws	34	25	-
Stabilizer Link Mounting Nuts	50	37	-
Toe Link Trailing Link Mounting Bolt	95	70	-
Toe Link Mounting Cam Bolt Nut	35	26	-
Trailing Link Body Mounting Bolts	110	81	-
Upper Control Arm Trailing Link Bolt Nut	95	70	-
Upper Control Arm Crossmember Mounting Bolt	95	70	-
Wheel Mounting (Lug) Nuts	125	92	-

ARM, LOWER CONTROL

REMOVAL

REMOVAL

1. Raise and support the vehicle. Refer to **HOISTING, STANDARD PROCEDURE** .

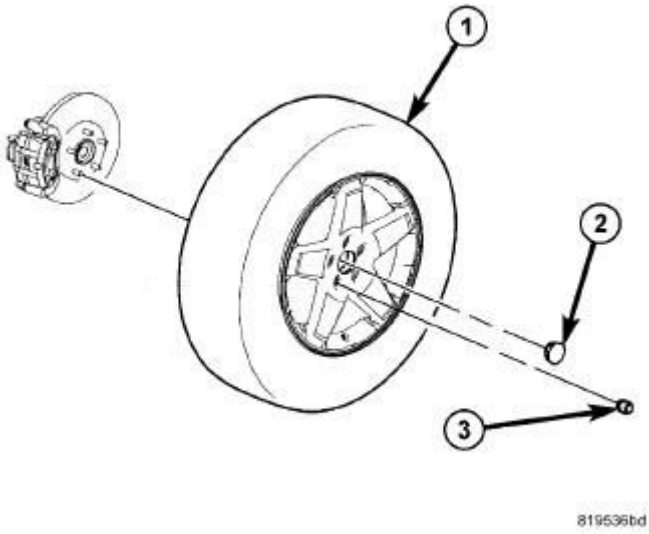

Fig. 1: Tire And Wheel Mounting
Courtesy of CHRYSLER GROUP, LLC

2. Remove the wheel mounting nuts (3), then the tire and wheel assembly (1).

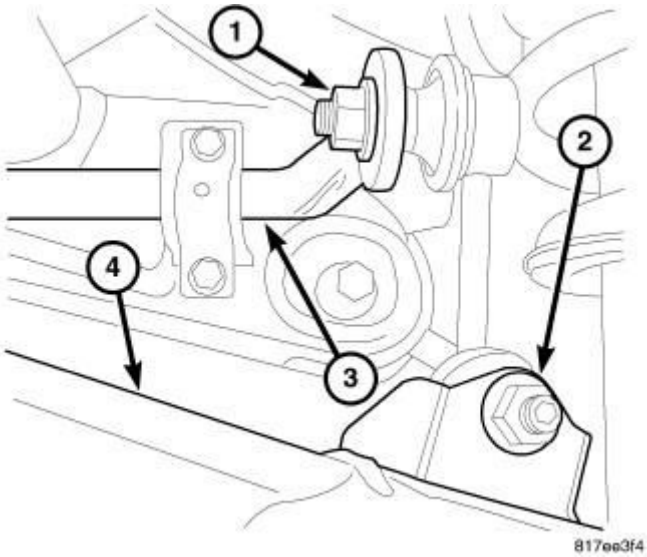

Fig. 2: Rear Stabilizer Bar Link
Courtesy of CHRYSLER GROUP, LLC

3. If equipped, while holding the stabilizer bar link lower stud stationary, remove the nut (2) securing the link to the lower control arm (4).

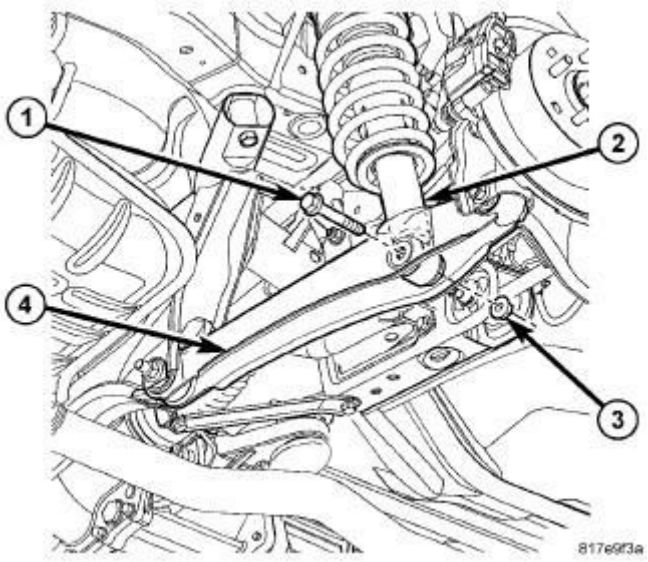

Fig. 3: Lower Strut Mounting
Courtesy of CHRYSLER GROUP, LLC

4. Remove the lower shock mounting nut (3) and bolt (1).

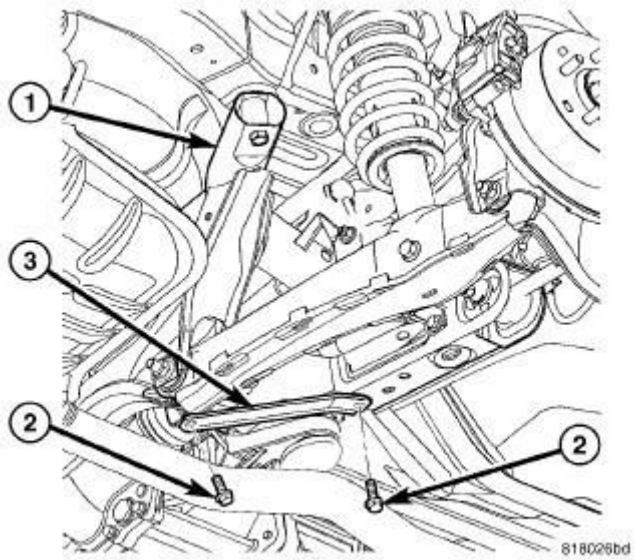

Fig. 4: Stay Brace Mounting
Courtesy of CHRYSLER GROUP, LLC

5. Remove the stay brace (3) mounting screws (2). Remove the stay brace.

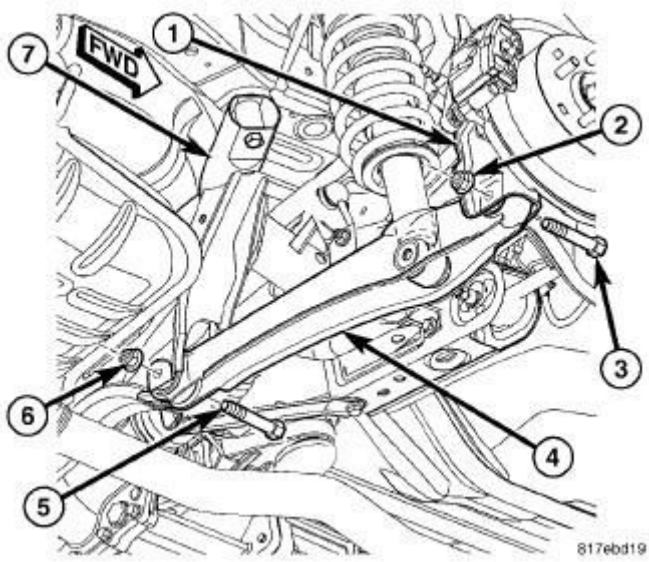

Fig. 5: Rear Lower Control Arm Mounting
Courtesy of CHRYSLER GROUP, LLC

6. Remove the nut (2) and bolt (3) securing the lower control arm (4) to the trailing link (1).
7. Remove the nut (6) and bolt (5) securing the lower control arm (4) to the crossmember (7).
8. Remove the lower control arm (4).

INSTALLATION

INSTALLATION

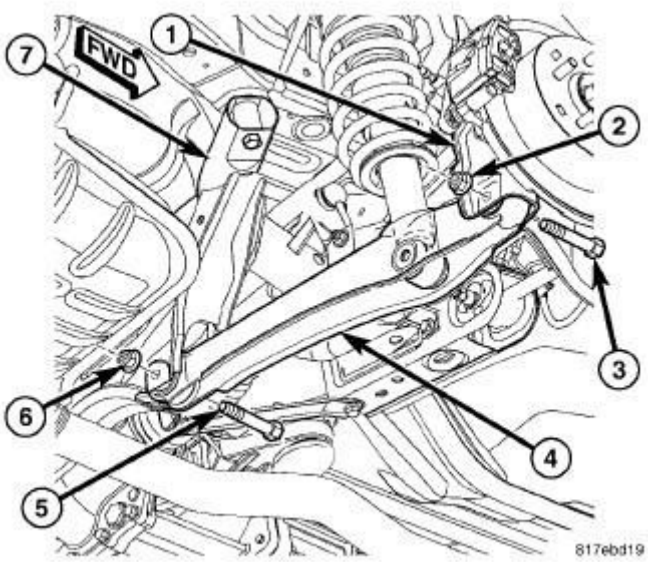

Fig. 6: Rear Lower Control Arm Mounting

Courtesy of CHRYSLER GROUP, LLC

1. Position the lower control arm and install the bolt (5) and nut (6) securing the lower control arm (4) to the crossmember (7). Do not tighten at this time.
2. Install the bolt (3) and nut (2) securing the lower control arm (4) to the trailing link (1). Do not tighten at this time.

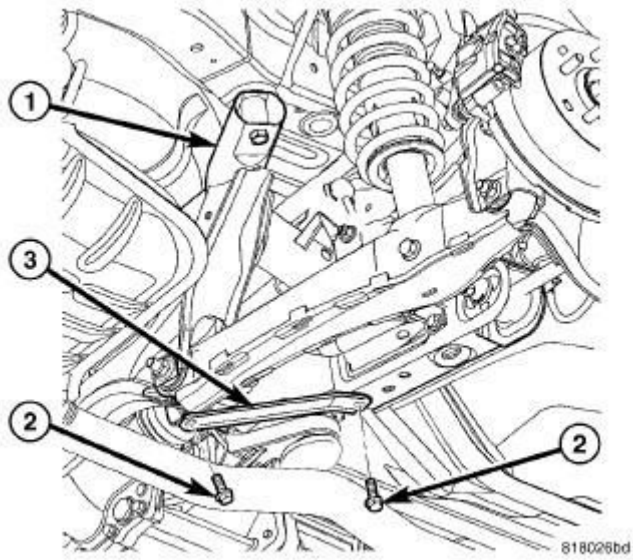

Fig. 7: Stay Brace Mounting
Courtesy of CHRYSLER GROUP, LLC

3. Install the stay brace (3) on the crossmember (1). Install and tighten the mounting screws (2) to 25 N.m (18 ft. lbs.).

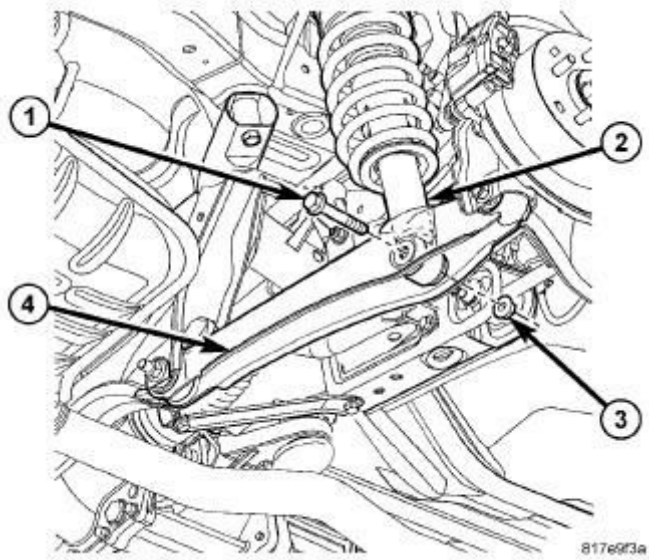

Fig. 8: Lower Strut Mounting
Courtesy of CHRYSLER GROUP, LLC

4. Install the mounting bolt (1) and nut (3) fastening the shock assembly (2) to the lower control arm (4). Do not tighten at this time.

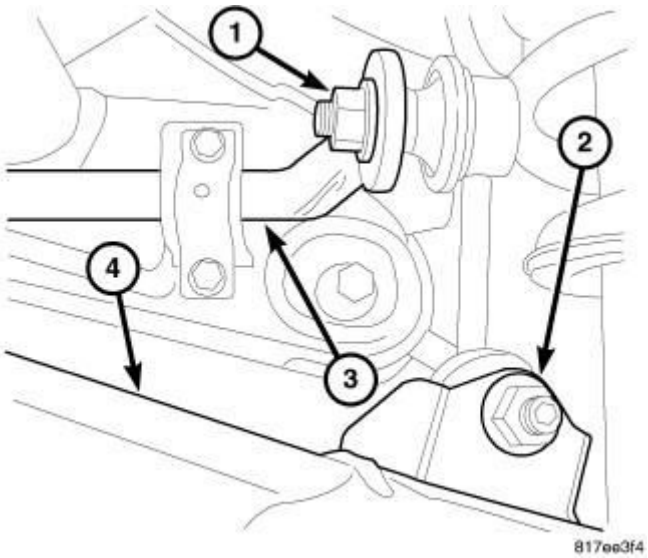

Fig. 9: Rear Stabilizer Bar Link
Courtesy of CHRYSLER GROUP, LLC

NOTE: When attaching a stabilizer bar link to the lower control arm it is important that the lower mounting stud be positioned properly. The lower mounting stud on the right side link needs to point toward the rear of the vehicle when inserted through the lower control arm mounting flange. The left side link lower stud needs to point toward the front of the vehicle. Otherwise the suspension geometry will not function properly.

5. If equipped, attach the stabilizer bar link to the lower control arm (4). Install the nut (2) and while holding the stabilizer bar link lower stud stationary, tighten the nut (2) to 58 N.m (43 ft. lbs.).

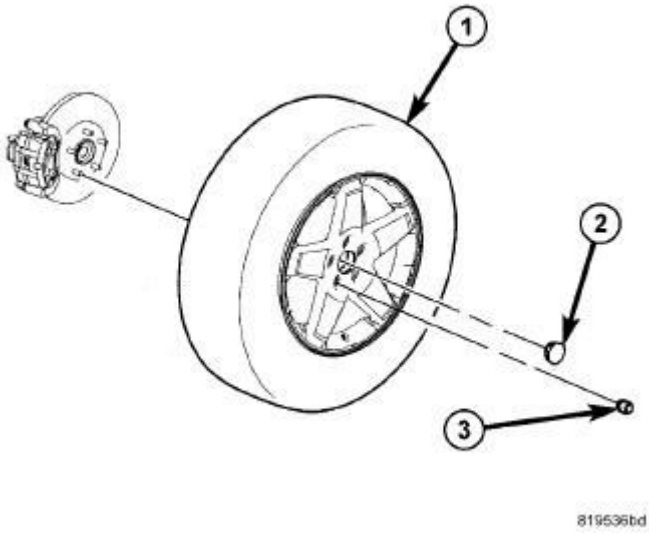

Fig. 10: Tire And Wheel Mounting
Courtesy of CHRYSLER GROUP, LLC

6. Install the tire and wheel assembly (1). Refer to **INSTALLATION** . Install and tighten the wheel mounting nuts (3) to 135 N.m (100 ft. lbs.).
7. Lower the vehicle.
8. Position the vehicle on an alignment rack/drive-on lift. Raise the vehicle as necessary to access mounting bolts and nuts.
9. Tighten the lower control arm mounting bolt nut at the crossmember to 95 N.m (70 ft. lbs.).
10. Tighten the lower control arm mounting bolt nut at the trailing link to 95 N.m (70 ft. lbs.).
11. Tighten the shock assembly lower mounting bolt nut to 99 N.m (73 ft. lbs.).
12. Perform wheel alignment as necessary. Refer to **WHEEL ALIGNMENT, STANDARD PROCEDURE** .

ARM, UPPER CONTROL

REMOVAL

REMOVAL

1. Raise and support the vehicle. Refer to **HOISTING, STANDARD PROCEDURE** .

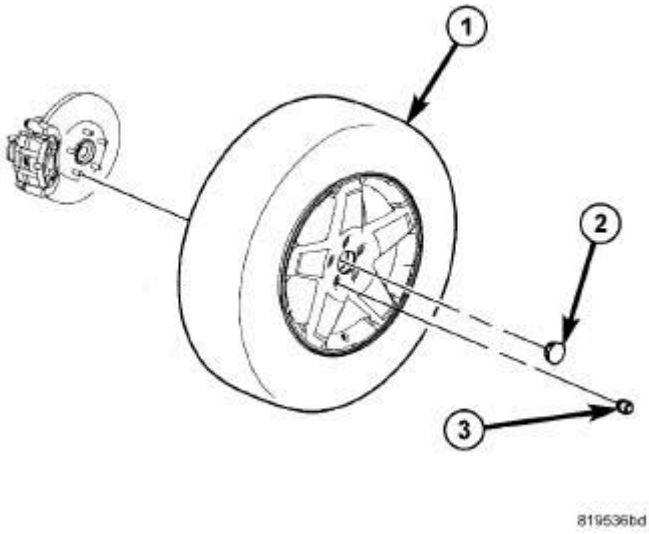

Fig. 11: Tire And Wheel Mounting
Courtesy of CHRYSLER GROUP, LLC

2. Remove the wheel mounting nuts (3), then the tire and wheel assembly (1).

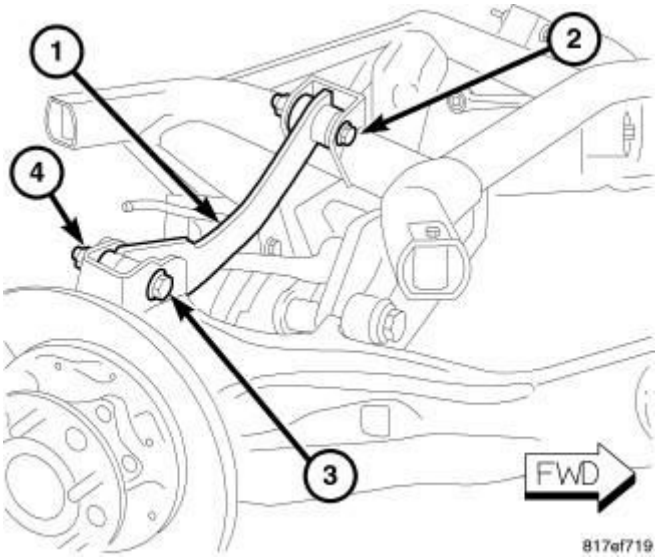

Fig. 12: Rear Upper Control Arm Mounting
Courtesy of CHRYSLER GROUP, LLC

3. Remove the nut (4) and bolt (3) securing the upper control arm (1) to the trailing link.
4. Remove the bolt (2) securing the upper control arm (1) to the crossmember.
5. Remove the upper control arm (1).

INSTALLATION

INSTALLATION

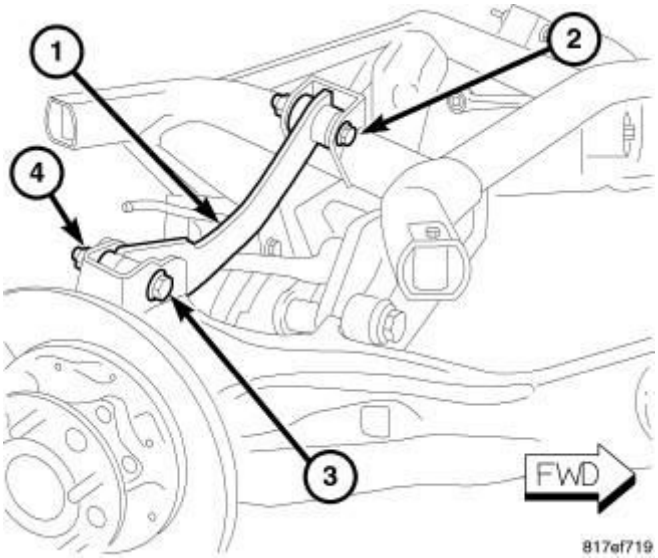

Fig. 13: Rear Upper Control Arm Mounting
Courtesy of CHRYSLER GROUP, LLC

1. Position the upper control arm (1) and install the bolt (2) securing the arm to the crossmember. Do not tighten at this time.
2. Install the bolt (3) and nut (4) securing the upper control arm (1) to the trailing link. Do not tighten at this time.

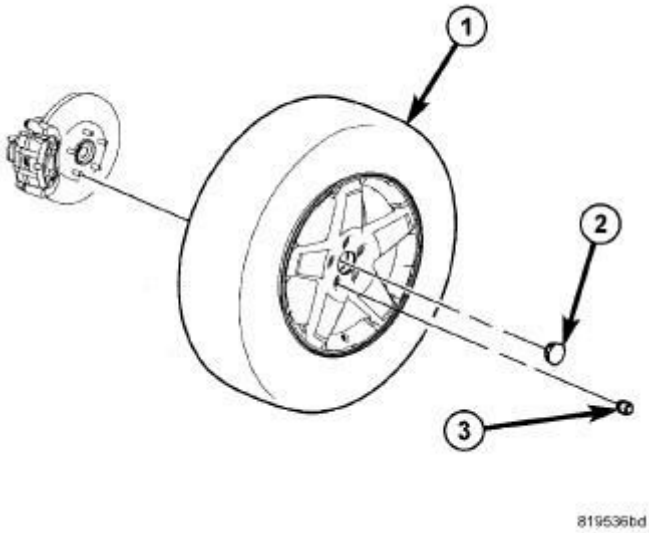

Fig. 14: Tire And Wheel Mounting
Courtesy of CHRYSLER GROUP, LLC

3. Install the tire and wheel assembly (1). Refer to **INSTALLATION** . Install and tighten the wheel mounting nuts (3) to 135 N.m (100 ft. lbs.).

4. Lower the vehicle.
5. Position the vehicle on an alignment rack/drive-on lift. Raise the vehicle as necessary to access mounting bolts and nuts.
6. Tighten the upper control arm mounting bolt at the crossmember to 95 N.m (70 ft. lbs.).
7. Tighten the upper control arm mounting bolt nut at the trailing link to 95 N.m (70 ft. lbs.).
8. Perform wheel alignment as necessary. Refer to **WHEEL ALIGNMENT, STANDARD PROCEDURE** .

HUB AND BEARING

DIAGNOSIS AND TESTING

DIAGNOSIS AND TESTING - HUB AND BEARING - NOISE

NOTE: The wheel bearing is designed to last for the life of the vehicle and requires no type of periodic maintenance.

Bearings will produce noise if worn or damaged. The noise will generally change when the bearings are loaded. A road test of the vehicle is normally required to determine if there is a bearing noise, or if it may be some other component, and to assist in finding the location. The following procedure, together with the **DIAGNOSTIC CHART** , should help determine the proper cause. Note that if a particular vehicle road test maneuver, steering to the right for instance, results in noise only part of the time, it is not likely a faulty bearing. Bearing noises are not typically intermittent.

NOTE: Damaged bearing seals and the resulting excessive grease loss may also require bearing replacement. Moderate grease seepage from the bearing is considered normal and should not require replacement of the wheel bearing. Wheel bearings are designed to last the life of the vehicle and require no type of periodic maintenance. To diagnose the hub, measure hub runout. Refer to ROTOR, BRAKE, DIAGNOSIS AND TESTING .

DIAGNOSTIC PROCEDURE:

1. Perform drive evaluation. Find a smooth level road surface void of traffic or obstructions. Turn off any accessories which may cause background noise. Evaluate for noise at 50 km/h (30 mph) and 100 km/h (60 mph) and with vehicle in neutral to eliminate potential drivetrain noises. With vehicle at a constant speed, steer back and forth to left and right (approximately 45 degree steering input each way). This will load and unload the bearings and may change the noise level. When bearing damage is slight, the noise is sometimes noticeable at lower speeds and at other times is more noticeable at higher speeds.
2. Drive evaluation results: Noise increase when turning right may indicate a problem with the left bearing. Noise increase when turning left may indicate a problem with the right bearing.
3. Put vehicle up on hoist. Grab the tire by pushing in on the top center and pulling out on the bottom center to check for excessive movement in the bearing.
4. Check for potential rubbing on rotating components, such as rotor splash shields, heat shields touching propshaft or halfshaft, wheel well liners contacting tire, wheel cover on wheel, etc. Any cyclic noise (once per wheel revolution for example) is not likely a wheel bearing fault.
5. Remove the wheel and tire assembly, disc brake caliper and brake rotor. Refer to **ROTOR, BRAKE, DIAGNOSIS AND TESTING** .
6. Rotate the wheel hub, checking for resistance or roughness.
7. Any roughness or resistance to rotation may indicate dirt intrusion or a failed hub bearing. If the bearing exhibits any of these conditions, the hub & bearing will require replacement. Do not attempt to disassemble the bearing for repair.
8. Rotate the wheel hub, utilize Chassis Ears (or equivalent) to check for noise.
9. If none of the above checks indicate a bearing failure, refer to the **DIAGNOSTIC CHART - HUB & BEARING** for other possible causes.

DIAGNOSTIC CHART - HUB & BEARING

CONDITION	POSSIBLE CAUSES	POTENTIAL CORRECTIONS
	1. Low Power	1. Fill power steering fluid reservoir to proper

FRONT END WHINE ON TURNS	Steering Fluid Level (if applicable) 2. Worn Tires and/or Incorrect Wheel Alignment 3. Defective Wheel Bearing 4. Wrong Power Steering Fluid (if applicable)	level, check for leaks (make sure all air is bled from system fluid) 2. Replace Tires, Check And Reset Wheel Alignment 3. Replace Wheel Bearing 4. Replace With Correct Power Steering Fluid
FRONT END GROWL OR GRINDING ON TURNS	1. Loose Wheel Lug Nuts 2. Engine Mount Grounding Against Frame Or Body Of Vehicle 3. Worn Tires and/or Incorrect Wheel Alignment 4. Defective Wheel Bearing 5. Worn or Broken C/V Joint 6. Engine Not Centered, Causing Axle Half Shaft to Bottom Out	1. Verify Wheel Lug Nut Torque 2. Check For Engine Mount Hitting Frame Rail And Reposition Engine As Required 3. Replace Tires, Check and Reset Wheel Alignment 4. Replace Wheel Bearing 5. Replace C/V Joint 6. Center the Engine
POPPING/CLICKING/SNAPPING DURING ACCELERATION	1. Insufficient Hub Nut Torque 2. Insufficient Grease on Mating Surface of Axle	1. Torque Hub Nut to Spec 2. Separate Half Shaft From Hub and Bearing and Wipe Mating Surfaces

AFTER DRIVE-TO-REVERSE SHIFT, REVERSE-TO-DRIVE SHIFT OR WHILE TURNING	Half Shaft Outer C/V Joint to Wheel Hub/Bearing, or Worn/Damaged Gasket	Clean. Apply Light Coating of Wheel Bearing Grease to C/V Joint Surface and Reassemble, or Replace Gasket. Torque Hub Nut to Spec
WHINE/HUM/ROAR WITH VEHICLE GOING STRAIGHT AT A CONSTANT SPEED	1. Worn Tires and/or Incorrect Wheel Alignment 2. Defective Wheel Bearing	1. Replace Tires and Reset Wheel Alignment 2. Replace Wheel Bearing
GROWL OR GRINDING WITH VEHICLE GOING STRAIGHT AT A CONSTANT SPEED	1. Engine Mount Grinding Against Frame or Body 2. Defective Wheel Bearing 3. Worn or Broken C/V Joint	1. Check and Reposition Engine as Required 2. Replace Wheel Bearing 3. Replace C/V Joint

REMOVAL

ALL-WHEEL-DRIVE

NOTE: Before proceeding, refer to WARNING.

1. Raise and support the vehicle. Refer to **HOISTING, STANDARD PROCEDURE** .

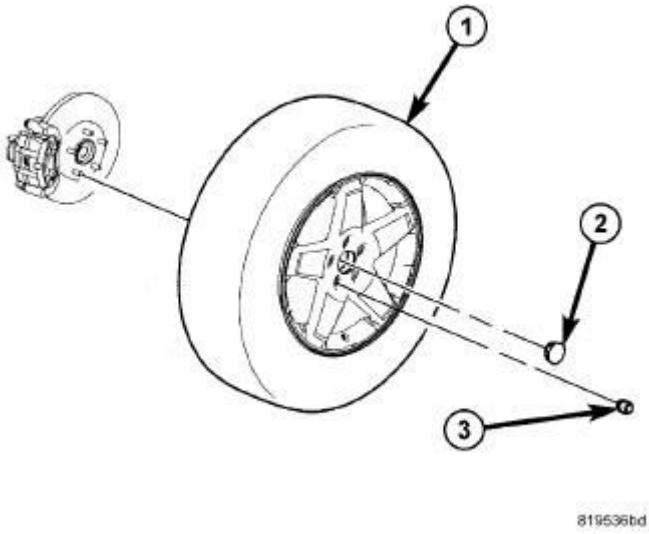

Fig. 15: Tire And Wheel Mounting
Courtesy of CHRYSLER GROUP, LLC

2. Remove the wheel mounting nuts (3), then the tire and wheel assembly (1).

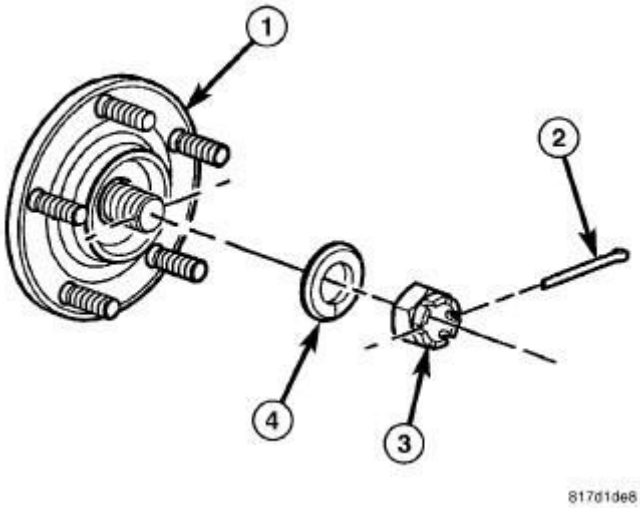

Fig. 16: Hub Nut And Washer
Courtesy of CHRYSLER GROUP, LLC

3. Remove the cotter pin (2) from the hub nut (3) on the end of the axle half shaft.
4. While a helper applies the brakes to keep the hub (1) from rotating, remove the hub nut (3) and washer (4) from the axle half shaft.
5. Tap the end of the half shaft inward, loosening it from the hub and bearing.

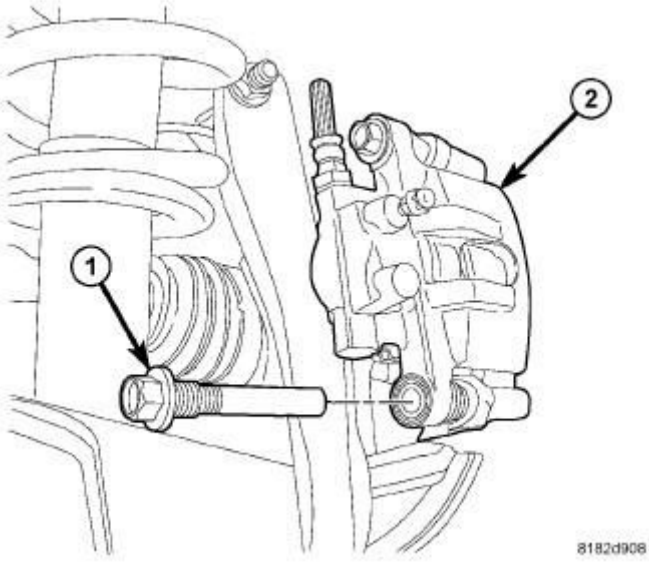

Fig. 17: Lower Caliper Guide Pin Bolt
Courtesy of CHRYSLER GROUP, LLC

6. Remove the disc brake caliper (2) lower guide pin bolt (1).

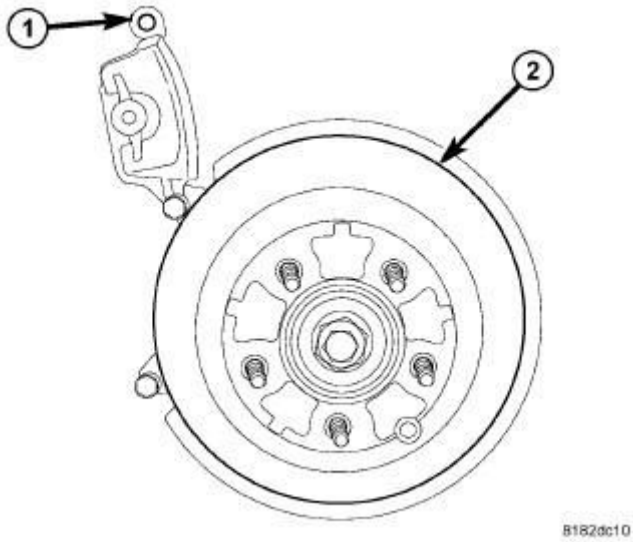

Fig. 18: Rear Caliper Rotated Up
Courtesy of CHRYSLER GROUP, LLC

CAUTION: When moving rear brake caliper upward, use extreme care not to damage or overextend the flex hose. Damage may occur.

7. Rotate the caliper upward hinging off the upper guide pin bolt. Rotate the

caliper upward just enough to allow brake rotor removal. Hang the caliper assembly in this position using wire or a bungee cord.

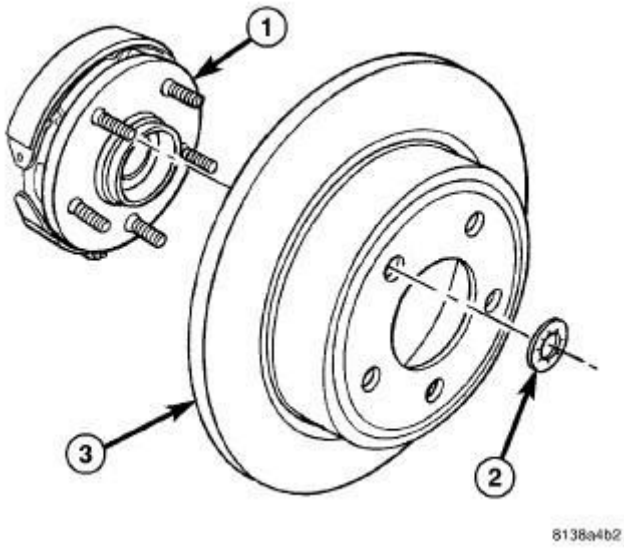

Fig. 19: Solid Brake Rotor Mounting
Courtesy of CHRYSLER GROUP, LLC

8. Remove any clips (2) retaining the brake rotor (3) to the wheel mounting studs.
9. Slide the brake rotor (3) off the hub and bearing (1).

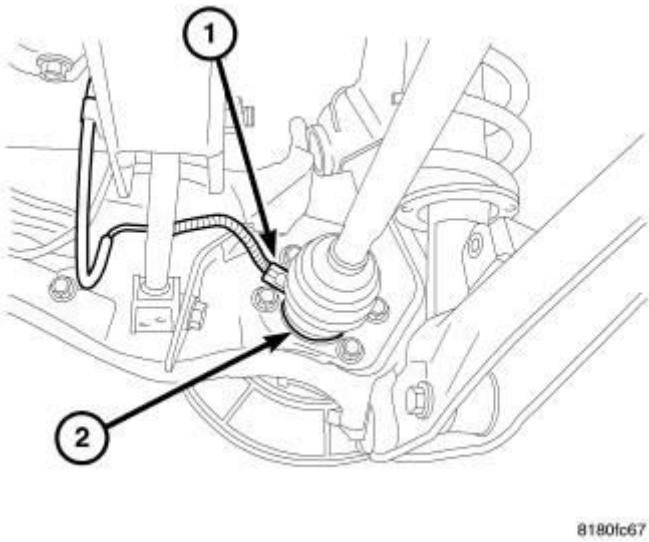

Fig. 20: Awd Rear Wheel Speed Sensor AT Hub And Bearing
Courtesy of CHRYSLER GROUP, LLC

10. Unclip the wheel speed sensor head (1) from the retainer on the rear of the

hub and bearing (2).

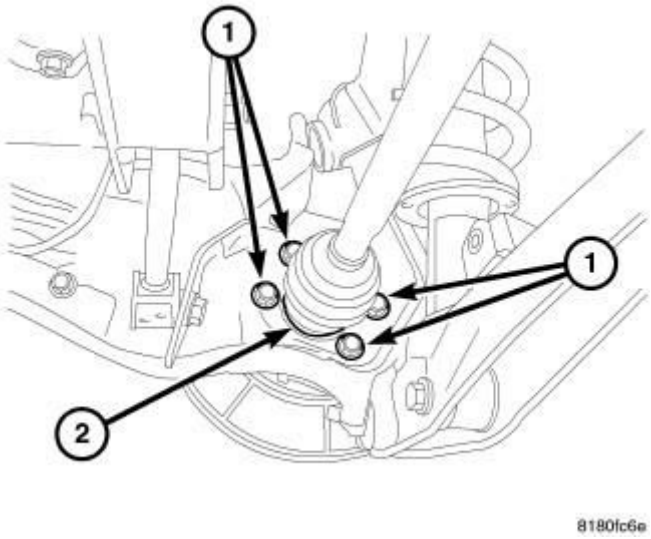

Fig. 21: Awd Rear Hub And Bearing Mounting
Courtesy of CHRYSLER GROUP, LLC

11. Remove the four bolts (1) securing the hub and bearing (2) to the trailing link.
12. Remove the hub and bearing.

FRONT-WHEEL-DRIVE

NOTE: Before proceeding, refer to WARNING.

1. Raise and support the vehicle. Refer to **HOISTING, STANDARD PROCEDURE** .

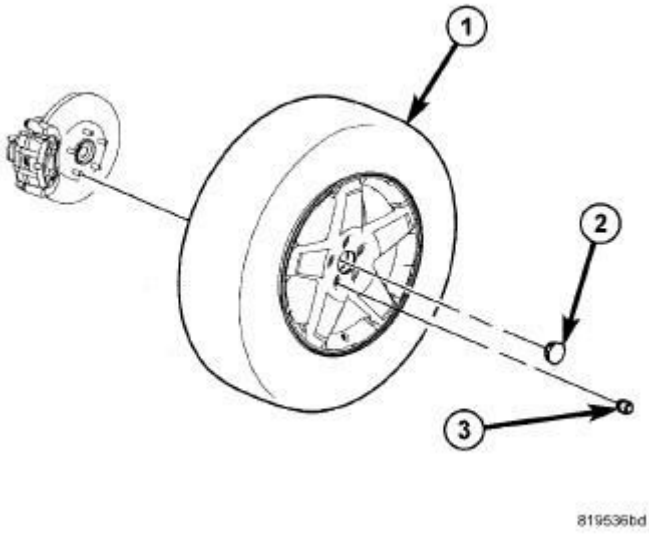

Fig. 22: Tire And Wheel Mounting
Courtesy of CHRYSLER GROUP, LLC

2. Remove the wheel mounting nuts (3), then the rear tire and wheel assembly.

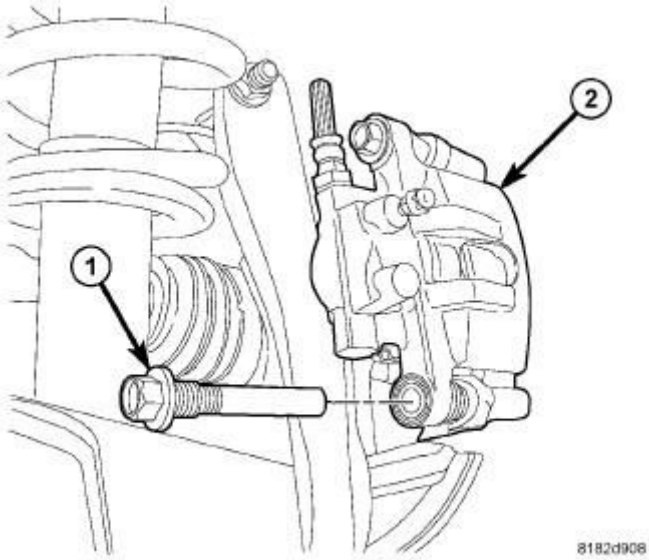

Fig. 23: Lower Caliper Guide Pin Bolt
Courtesy of CHRYSLER GROUP, LLC

3. Remove the disc brake caliper (2) lower guide pin bolt (1).

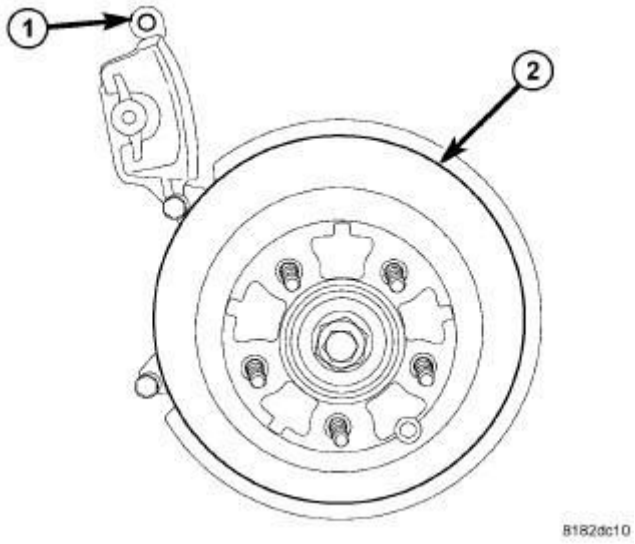

Fig. 24: Rear Caliper Rotated Up
Courtesy of CHRYSLER GROUP, LLC

CAUTION: When moving rear brake caliper upward, use extreme care not to damage or overextend the flex hose. Damage may occur.

4. Rotate the caliper upward hinging off the upper guide pin bolt. Rotate the caliper upward just enough to allow brake rotor removal. Hang the caliper assembly in this position using wire or a bungee cord.

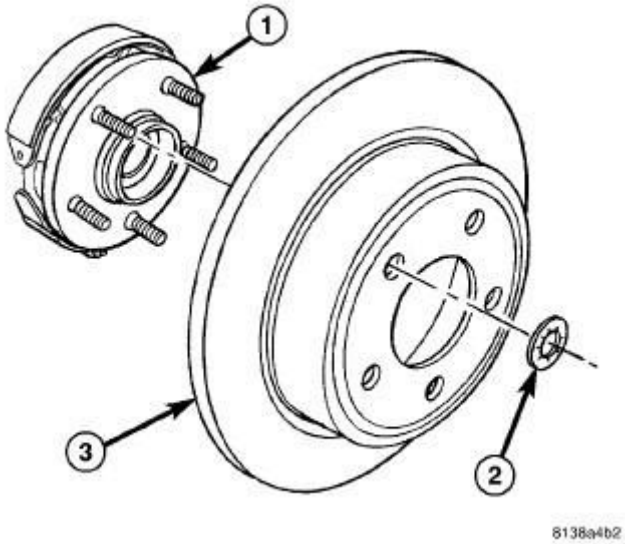

Fig. 25: Solid Brake Rotor Mounting
Courtesy of CHRYSLER GROUP, LLC

5. Remove any clips (2) retaining the brake rotor (3) to the wheel mounting studs.
6. Slide the brake rotor (3) off the hub and bearing (1).

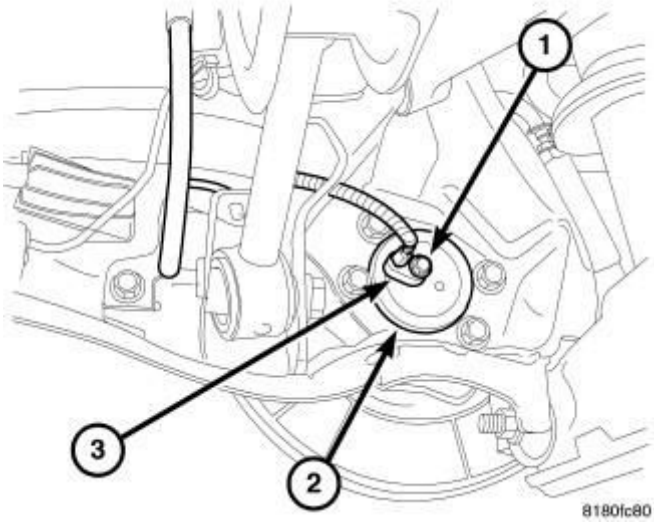

Fig. 26: Fwd Rear Wheel Speed Sensor AT Hub And Bearing
Courtesy of CHRYSLER GROUP, LLC

7. Remove the screw (1) fastening the wheel speed sensor head (3) in the rear of the hub and bearing (2).

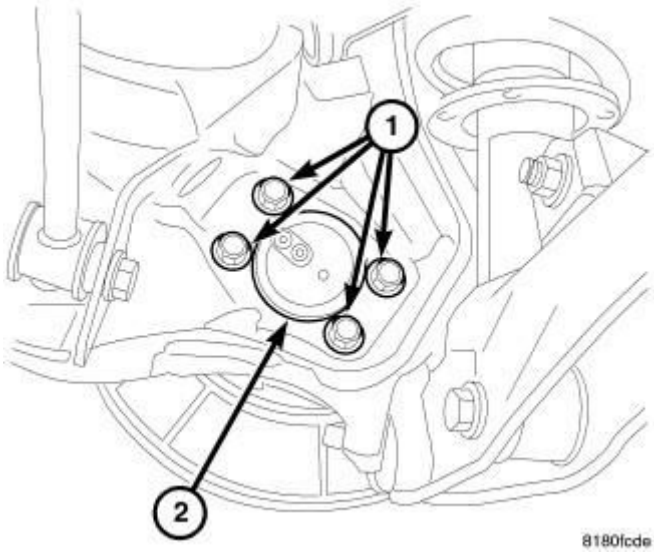

Fig. 27: Fwd Rear Hub And Bearing Mounting
Courtesy of CHRYSLER GROUP, LLC

8. Remove the four bolts (1) securing the hub and bearing (2) to the trailing link.

9. Remove the hub and bearing.

INSTALLATION

ALL-WHEEL-DRIVE

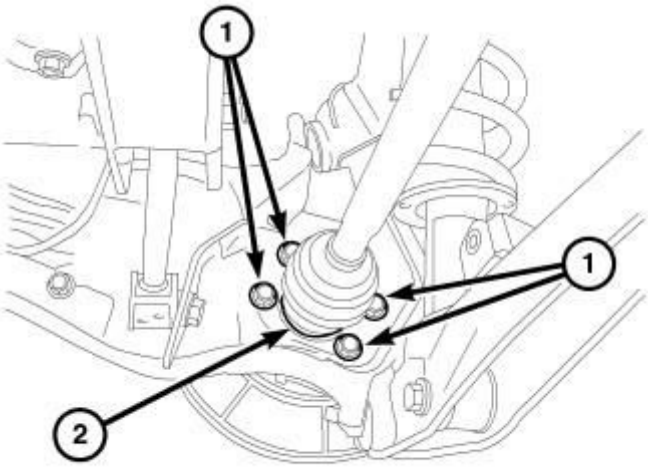

Fig. 28: Awd Rear Hub And Bearing Mounting
Courtesy of CHRYSLER GROUP, LLC

1. Slide the hub and bearing over the axle half shaft and position it on the brake support plate and trailing link.
2. Install the four bolts (1) securing the hub and bearing (2) to the trailing link. Tighten the bolts to 105 N.m (77 ft. lbs.).

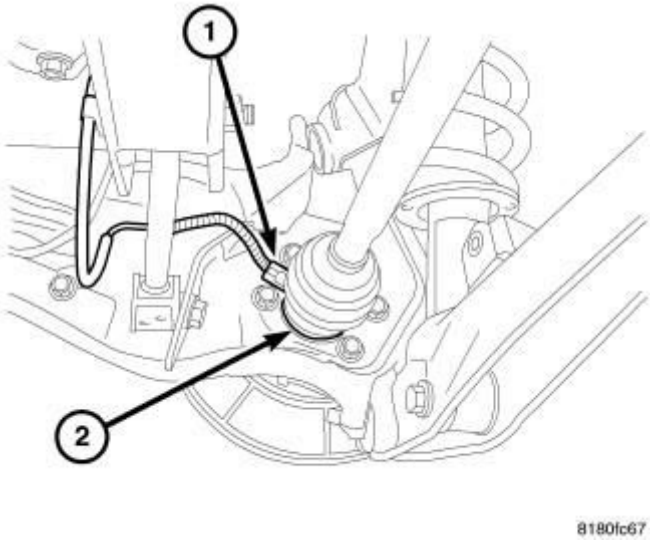

Fig. 29: Awd Rear Wheel Speed Sensor AT Hub And Bearing
Courtesy of CHRYSLER GROUP, LLC

3. Clip the wheel speed sensor head (1) (flat side to bearing rear) into the retainer on the rear of the hub and bearing (2).

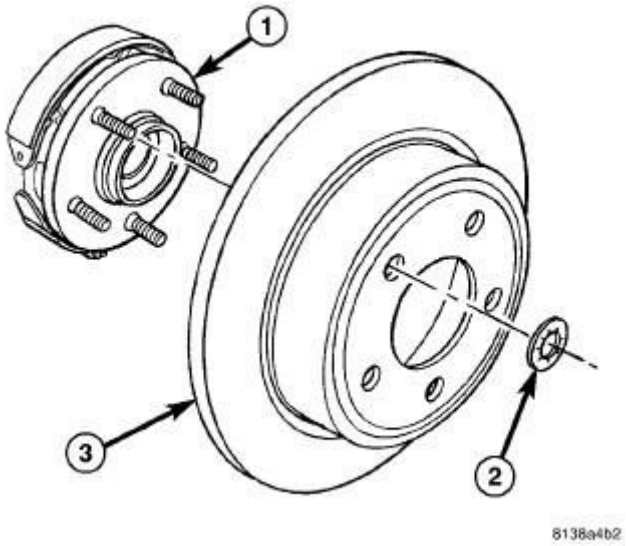

Fig. 30: Solid Brake Rotor Mounting
Courtesy of CHRYSLER GROUP, LLC

4. Slide the brake rotor (3) over the parking brake shoes and onto the hub and bearing (1).

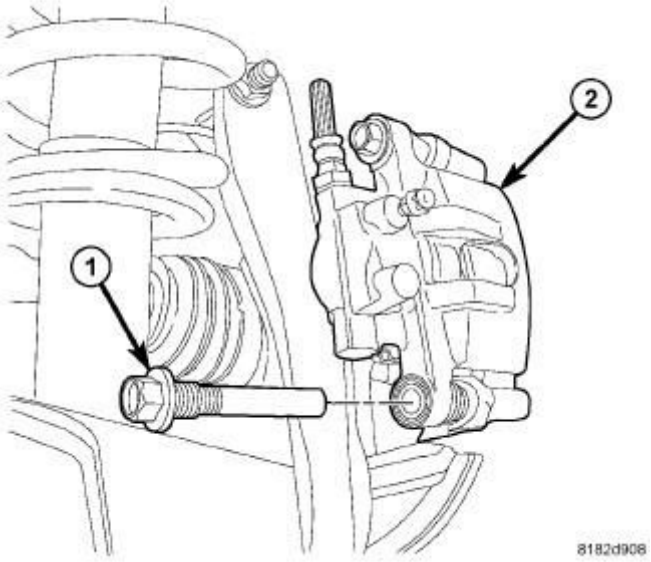

Fig. 31: Lower Caliper Guide Pin Bolt
Courtesy of CHRYSLER GROUP, LLC

5. Rotate the disc brake caliper downward over the brake rotor and lower part

of caliper adapter.

6. Install the disc brake caliper (2) lower guide pin bolt (1). Tighten the guide pin bolt to 60 N.m (44 ft. lbs.).

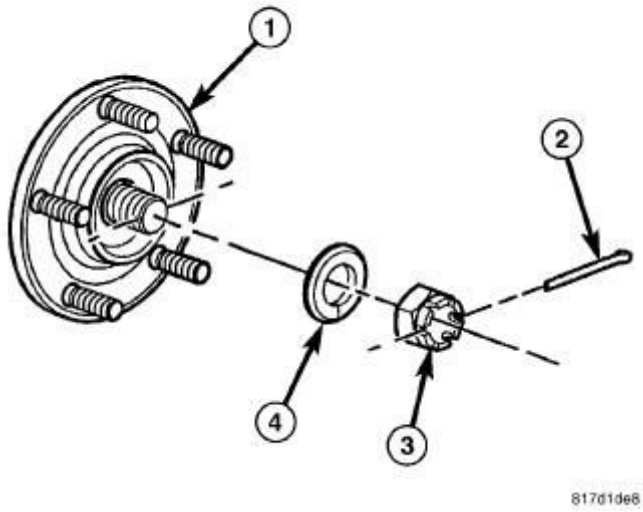

Fig. 32: Hub Nut And Washer
Courtesy of CHRYSLER GROUP, LLC

7. Clean all foreign matter from the threads of the half shaft outer C/V joint.
8. Install the washer (4) and hub nut (3) on the end of the half shaft and snug it.
9. While a helper applies the brakes to keep the hub (1) from rotating, tighten the hub nut (3) to 245 N.m (181 ft. lbs.).
10. Insert the cotter pin (2) through the notches in the nut and the hole in half shaft. If the notches in the nut do not line up with the hole in the half shaft, continue to tighten the nut until they do. **Do not loosen the nut.**
11. Wrap the cotter pin (2) ends tightly around the lock nut.

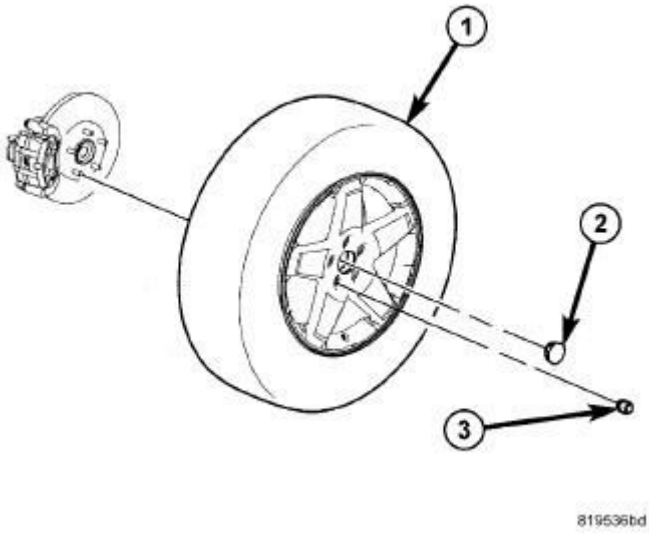

Fig. 33: Tire And Wheel Mounting
Courtesy of CHRYSLER GROUP, LLC

12. Install the tire and wheel assembly (1). Refer to **INSTALLATION** . Install and tighten the wheel mounting nuts (3) to 135 N.m (100 ft. lbs.).
13. Lower the vehicle.
14. Pump the brake pedal several times to ensure the vehicle has a firm brake pedal before moving it.

FRONT-WHEEL-DRIVE

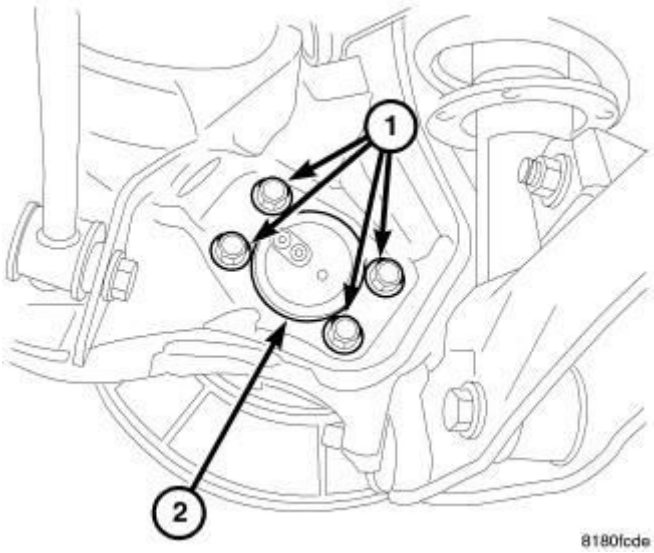

Fig. 34: Fwd Rear Hub And Bearing Mounting
Courtesy of CHRYSLER GROUP, LLC

NOTE: If equipped, make sure the wheel speed sensor mount on the rear of the hub and bearing is directed toward the front of the vehicle.

1. Position the hub and bearing on the brake support plate and trailing link.
2. Install the four bolts (1) securing the hub and bearing (2) to the trailing link. Tighten the bolts to 105 N.m (77 ft. lbs.).

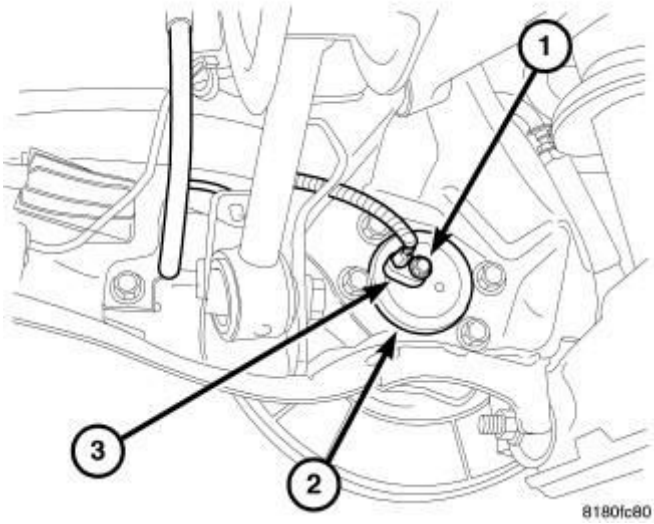

Fig. 35: Fwd Rear Wheel Speed Sensor AT Hub And Bearing
Courtesy of CHRYSLER GROUP, LLC

NOTE: Before installing the wheel speed sensor head (3) into the rear of the hub and bearing (2), inspect the O-ring seal to make sure it is not dislodged, split, cut or damaged in any way. Replace the O-ring as necessary.

3. If equipped with a wheel speed sensor, install the wheel speed sensor head (3) into the rear of the hub and bearing (2).
4. If equipped with a wheel speed sensor, install the wheel speed sensor head mounting screw (1). Tighten the screw to 10 N.m (89 in. lbs.).

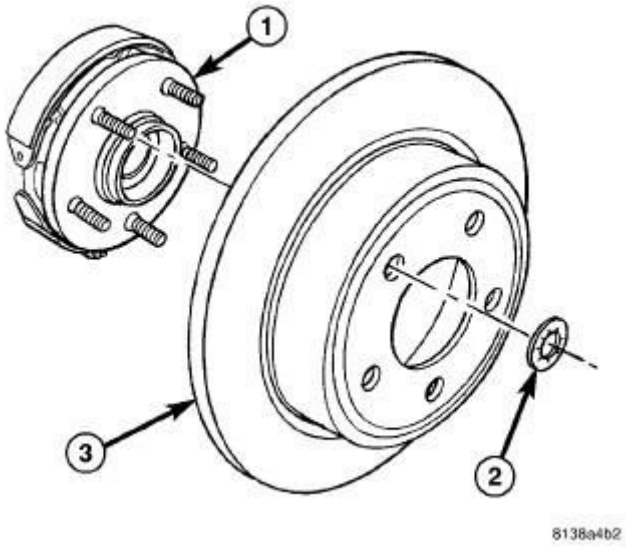

Fig. 36: Solid Brake Rotor Mounting
Courtesy of CHRYSLER GROUP, LLC

5. Slide the brake rotor (3) over the parking brake shoes and onto the hub and bearing (1).

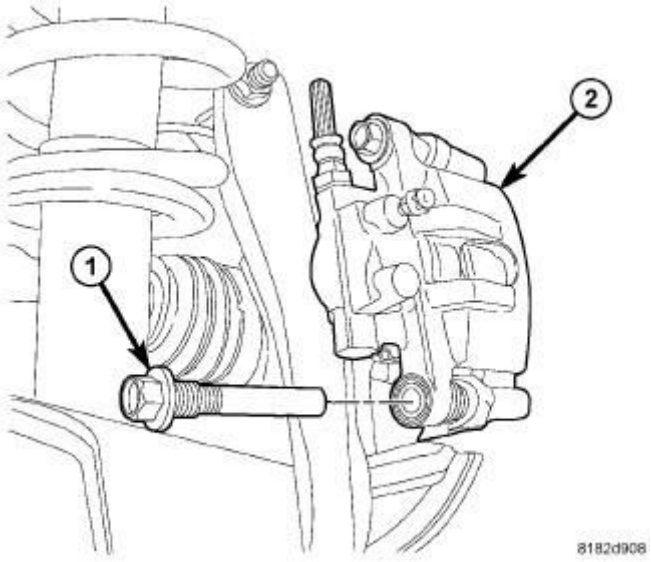

Fig. 37: Lower Caliper Guide Pin Bolt
Courtesy of CHRYSLER GROUP, LLC

6. Rotate the disc brake caliper downward over the brake rotor and lower part of caliper adapter.
7. Install the disc brake caliper (2) lower guide pin bolt (1). Tighten the guide pin bolt to 60 N.m (44 ft. lbs.).

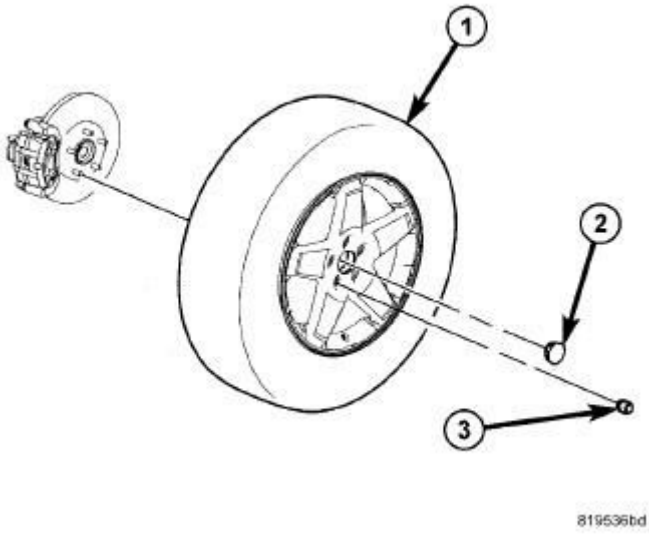

Fig. 38: Tire And Wheel Mounting
Courtesy of CHRYSLER GROUP, LLC

8. Install the tire and wheel assembly (1). Refer to **INSTALLATION** . Install and tighten the wheel mounting nuts (3) to 135 N.m (100 ft. lbs.).
9. Lower the vehicle.
10. Pump the brake pedal several times to ensure the vehicle has a firm brake pedal before moving it.

LINK, TOE

REMOVAL

REMOVAL

1. Raise and support the vehicle. Refer to **HOISTING, STANDARD PROCEDURE** .

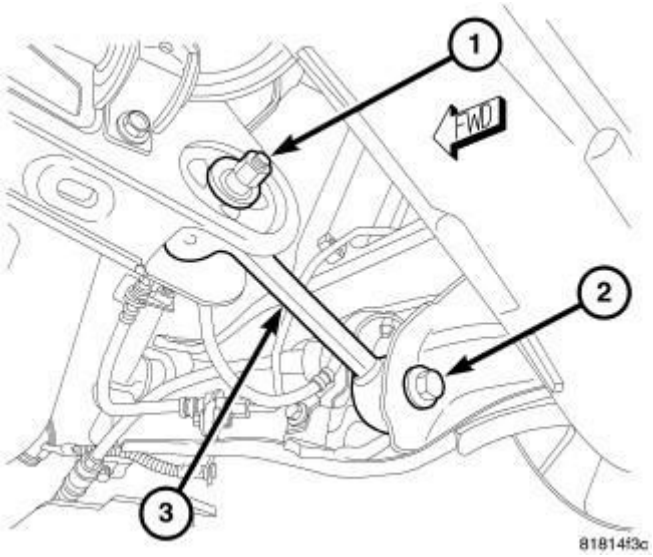

Fig. 39: Toe Link
Courtesy of CHRYSLER GROUP, LLC

2. Remove the bolt (2) securing the toe link (3) to the trailing link.

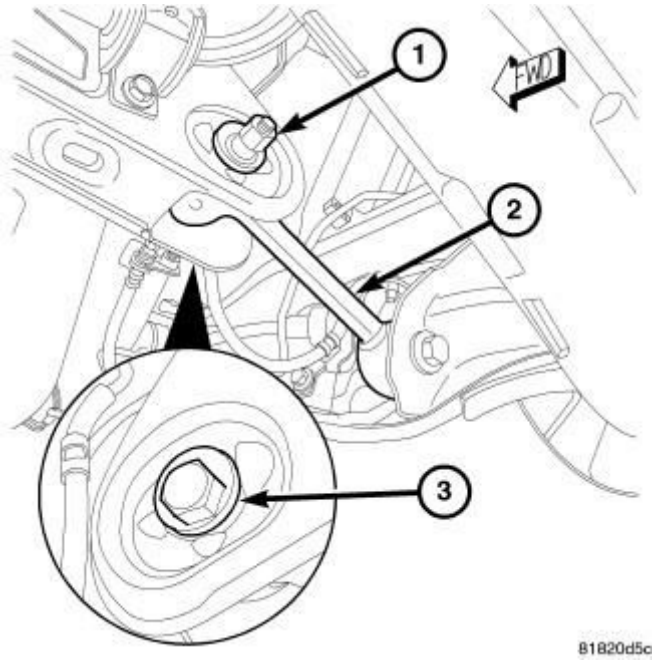

Fig. 40: Rear Toe Adjustment Cam Bolt
Courtesy of CHRYSLER GROUP, LLC

3. Mark the position of the cam bolt cam on the crossmember using a paint marker or crayon. This mark will be used upon installation to help get the alignment close prior to performing rear wheel alignment. Do not use any type marker that will scratch or damage the surface of the crossmember.
4. While holding the cam bolt head (3) stationary, loosen and remove the toe

link mounting cam bolt nut (1) and washer. Remove the cam bolt.

5. Remove the toe link (2).

INSTALLATION

INSTALLATION

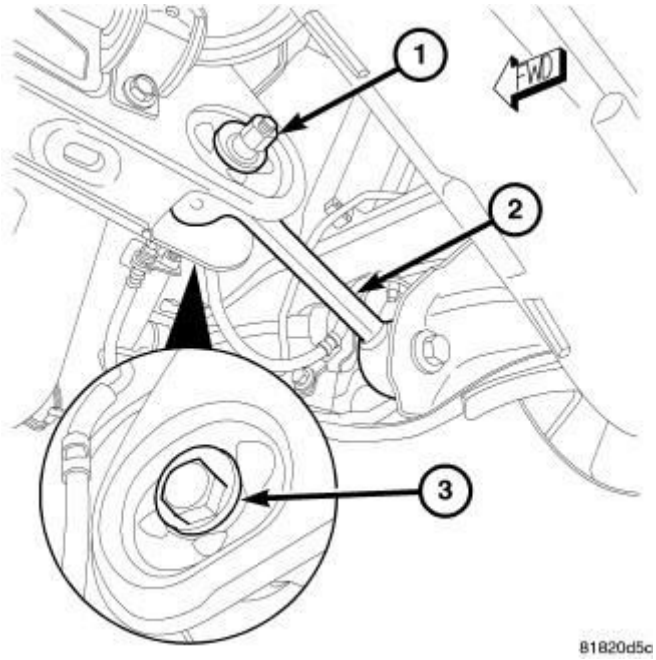

Fig. 41: Rear Toe Adjustment Cam Bolt
Courtesy of CHRYSLER GROUP, LLC

CAUTION: When installing the cam bolt (3) and washer make sure the cams stay inside the abutments built into the crossmember. Failure to do so can damage the abutments and make toe adjustment difficult.

1. Position the toe link (2) and install the cam bolt (3) from the front through the crossmember and link. Match the cam on the bolt to the marks made during removal or position the top of the cam to the 12 O'clock position.
2. Install the cam washer and nut (1) securing the toe link (2) to the crossmember. Do not tighten at this time.

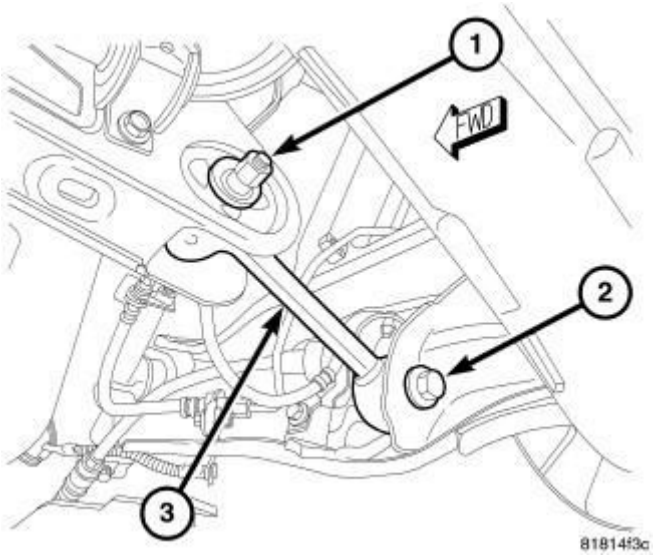

Fig. 42: Toe Link
Courtesy of CHRYSLER GROUP, LLC

3. Install the bolt (2) securing the link to the trailing link. To install the bolt it may be necessary to flex the trailing link body mount bushing inward or outward using an appropriate prying tool. Do not tighten at this time.
4. Lower the vehicle.
5. Position the vehicle on an alignment rack/drive-on lift. Raise the vehicle as necessary to access mounting bolts and nuts.
6. Tighten the toe link mounting bolt at the trailing link to 95 N.m (70 ft. lbs.).
7. Perform wheel alignment as necessary. Refer to **WHEEL ALIGNMENT, STANDARD PROCEDURE** .

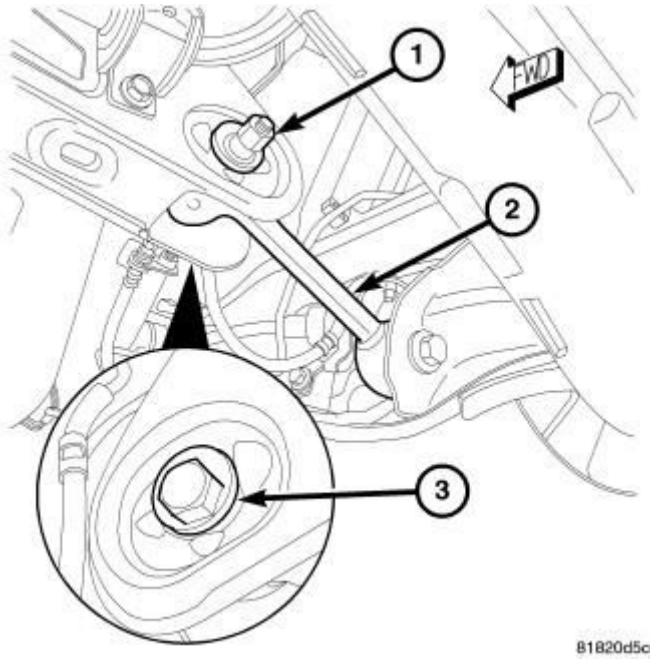

Fig. 43: Rear Toe Adjustment Cam Bolt
Courtesy of CHRYSLER GROUP, LLC

8. Once rear toe is set, while holding the cam bolt head (3) stationary, tighten the toe link mounting cam bolt nut (1) to 35 N.m (26 ft. lbs.).

LINK, TRAILING, REAR

REMOVAL

REMOVAL

1. Raise and support the vehicle. Refer to **HOISTING, STANDARD PROCEDURE** .

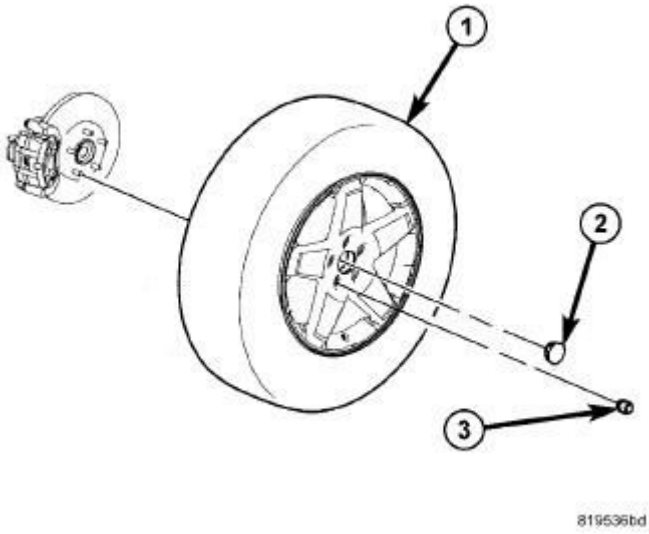

Fig. 44: Tire And Wheel Mounting
Courtesy of CHRYSLER GROUP, LLC

2. Remove the wheel mounting nuts (3), then the tire and wheel assembly (1).

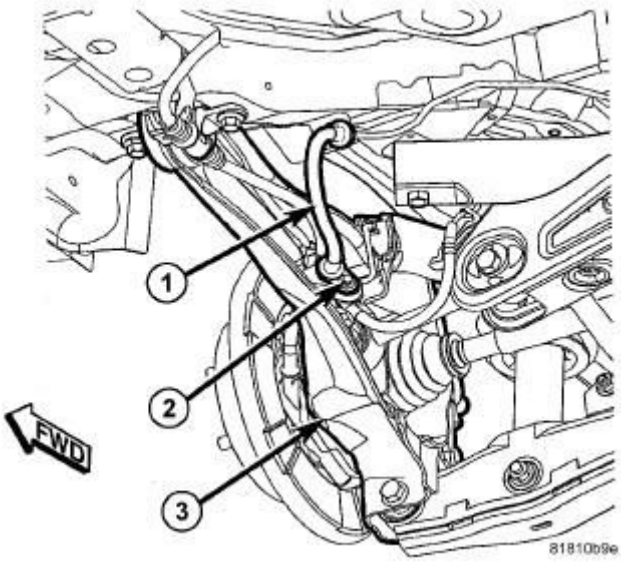

Fig. 45: Brake Hose Mounting To Trailing Arm
Courtesy of CHRYSLER GROUP, LLC

3. Remove the screw (2) securing the brake flex hose (1) to the trailing link (3).

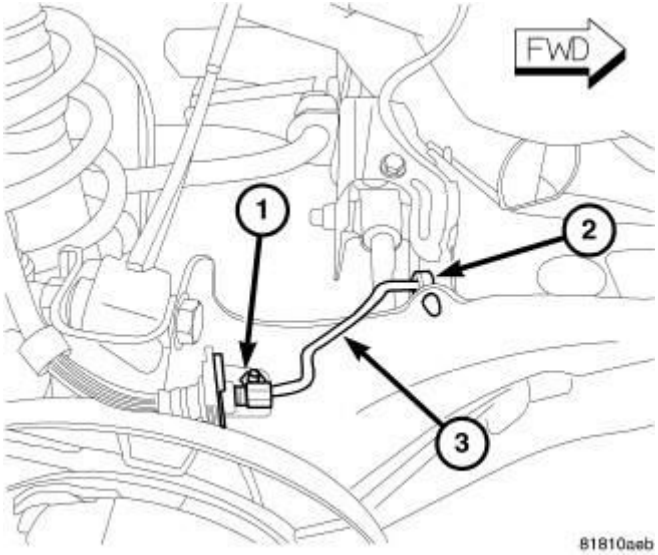

Fig. 46: Brake Line Mounting To Trailing Arm
Courtesy of CHRYSLER GROUP, LLC

4. Remove the nut (1) securing the brake tube routing bracket to the trailing link.
5. Remove the brake tube (3) from the routing clip (2) on the trailing link.

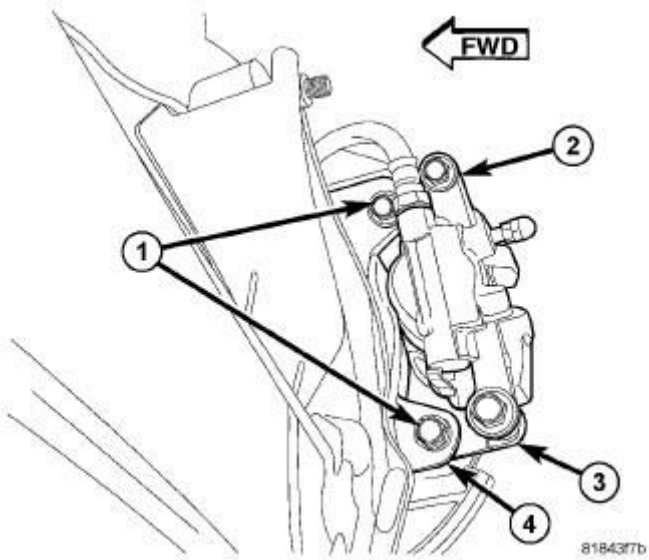

Fig. 47: Rear Caliper/Adapter Mounting
Courtesy of CHRYSLER GROUP, LLC

6. Remove the two bolts (1) securing disc brake caliper adapter (3) to the brake support plate (4).
7. Remove the disc brake caliper (2) and adapter (3) as an assembly. Hang the assembly out of the way using wire or a bungee cord. Use care not to

overextend the brake hose and tubing when doing this.

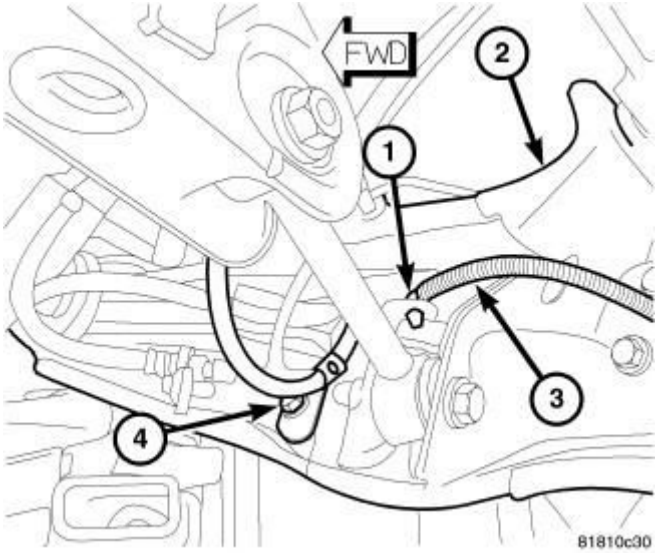

Fig. 48: Rear Wheel Speed Sensor Mounting To Trailing Link
Courtesy of CHRYSLER GROUP, LLC

8. If equipped, remove the screw (4) fastening the wheel speed sensor (3) to the trailing link (2).
9. If equipped, remove the routing clip (1) fastening the wheel speed sensor (3) to the trailing link (2).
10. Remove the brake rotor, then hub and bearing. Refer to **HUB AND BEARING, REMOVAL**.

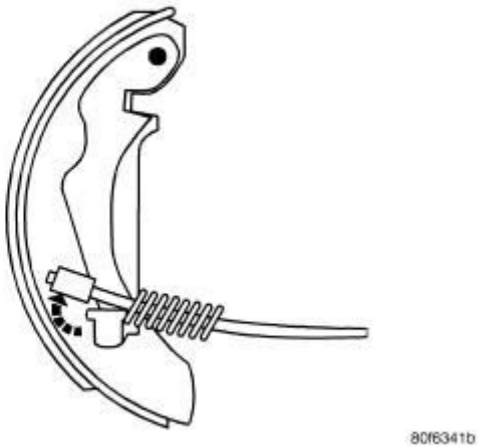

Fig. 49: Removing Cable From Lever
Courtesy of CHRYSLER GROUP, LLC

11. Remove the parking brake cable from the lever on the parking brake shoe.

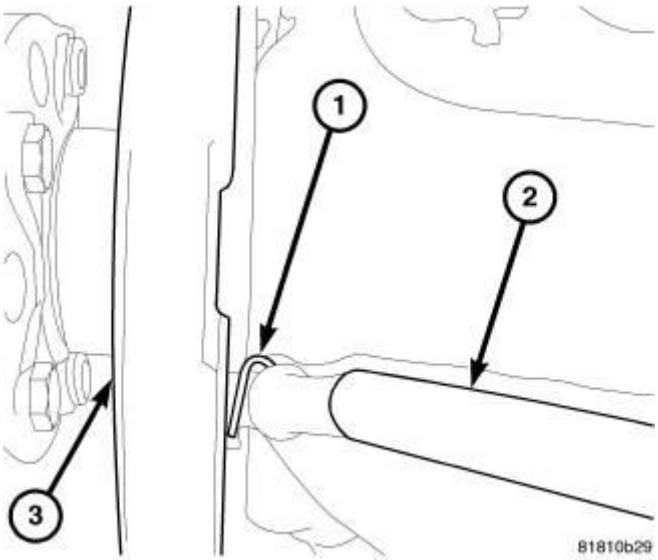

Fig. 50: Parking Brake Cable Hair Pin
Courtesy of CHRYSLER GROUP, LLC

12. Remove the hair pin (1) securing the parking brake cable (2) to the brake support plate (3).
13. Slide the brake support plate (3) with parking brake shoes off the end of the parking brake cable (2) and remove.
14. Pull the parking brake cable from the trailing link.

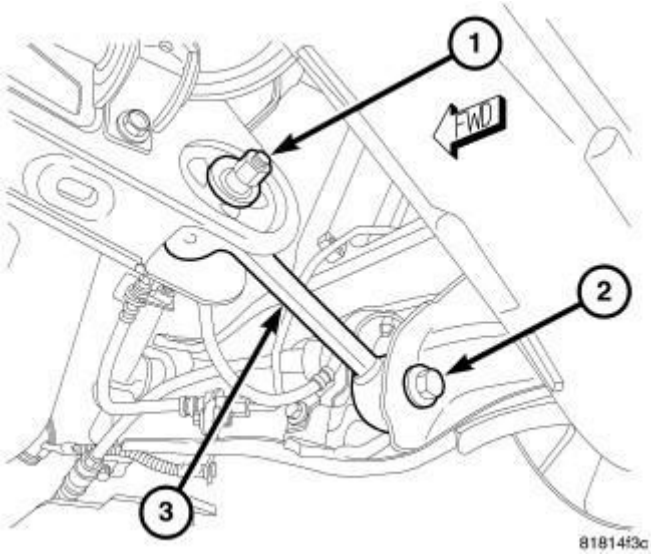

Fig. 51: Toe Link
Courtesy of CHRYSLER GROUP, LLC

15. Remove the bolt (2) securing the toe link (3) to the trailing link.

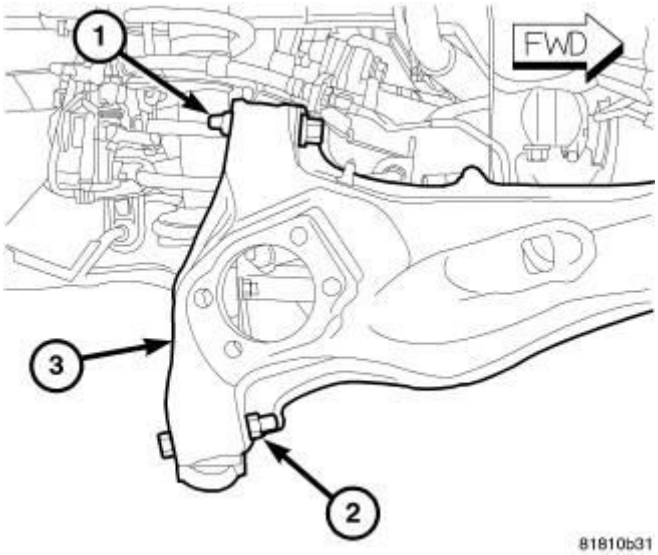

Fig. 52: Upper And Lower Arm Mounting
Courtesy of CHRYSLER GROUP, LLC

16. Remove the nut (2) and bolt securing the lower control arm to the trailing link (3).
17. Remove the nut (1) and bolt securing the upper control arm to the trailing link (3).

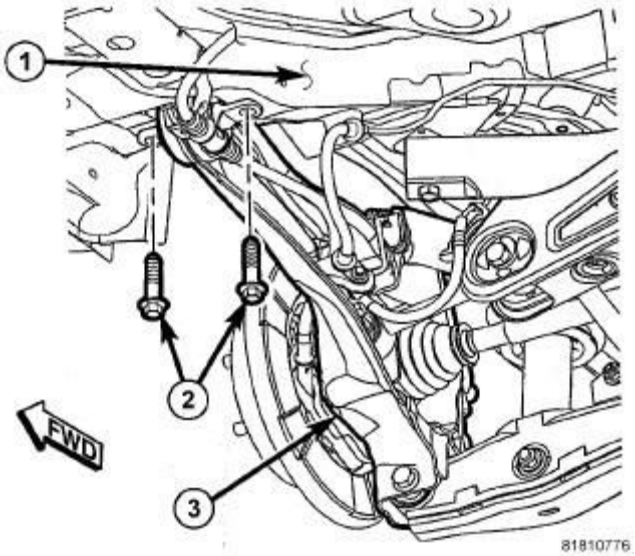

Fig. 53: Trailing Link Mounting To Body
Courtesy of CHRYSLER GROUP, LLC

18. Remove the two bolts (2) fastening the leading end of the trailing link (3) to the body (1).
19. Remove the trailing link.

INSTALLATION

INSTALLATION

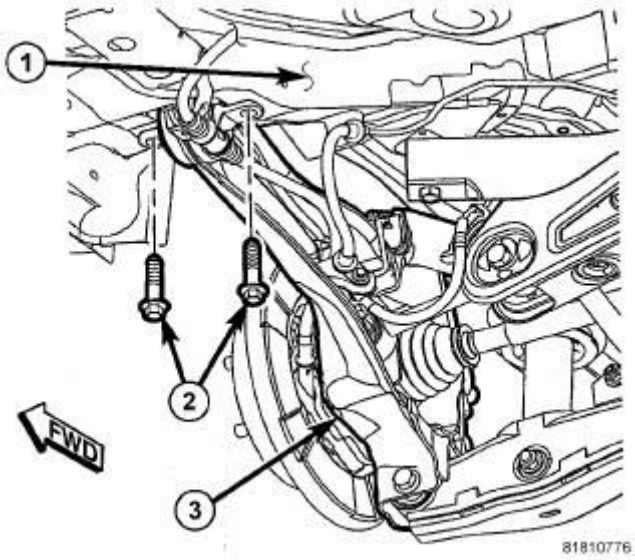

Fig. 54: Trailing Link Mounting To Body
Courtesy of CHRYSLER GROUP, LLC

1. Position the trailing link and install the two bolts (2) fastening the leading end of the trailing link (3) to the body (1). Tighten the two mounting bolts to 110 N.m (81 ft. lbs.).

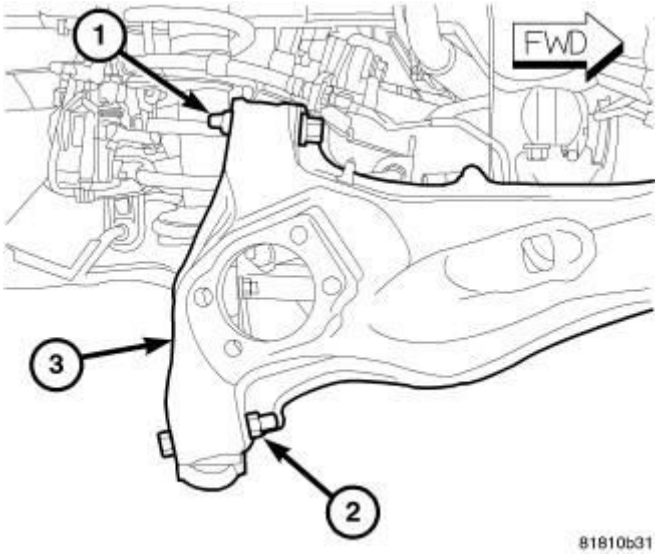

Fig. 55: Upper And Lower Arm Mounting
Courtesy of CHRYSLER GROUP, LLC

2. Position the upper control arm on the trailing link (3) and install the bolt and

nut (1) securing the arm to the link. Tighten the mounting bolt nut to 95 N.m (70 ft. lbs.).

3. Position the lower control arm on the trailing link (3) and install the bolt and nut (2) securing the arm to the link. Tighten the mounting bolt nut to 95 N.m (70 ft. lbs.).

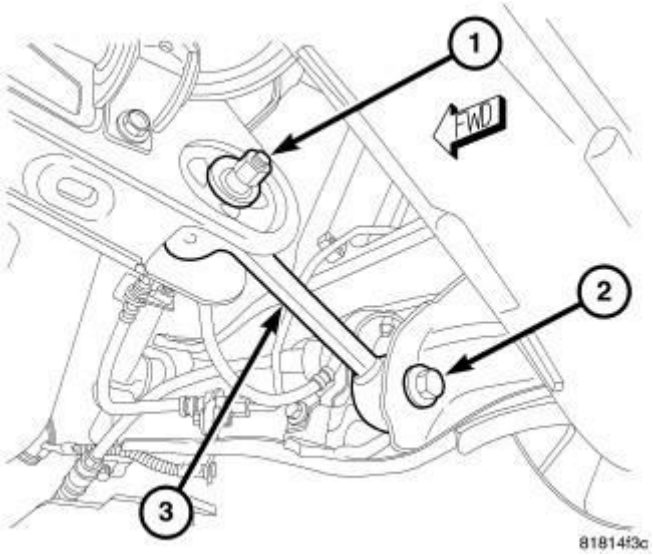

Fig. 56: Toe Link
Courtesy of CHRYSLER GROUP, LLC

4. Install the bolt (2) securing the toe link to the trailing link. To install the bolt it may be necessary to flex the trailing link body mount bushing inward or outward using an appropriate prying tool. Tighten the mounting bolt to 95 N.m (70 ft. lbs.).

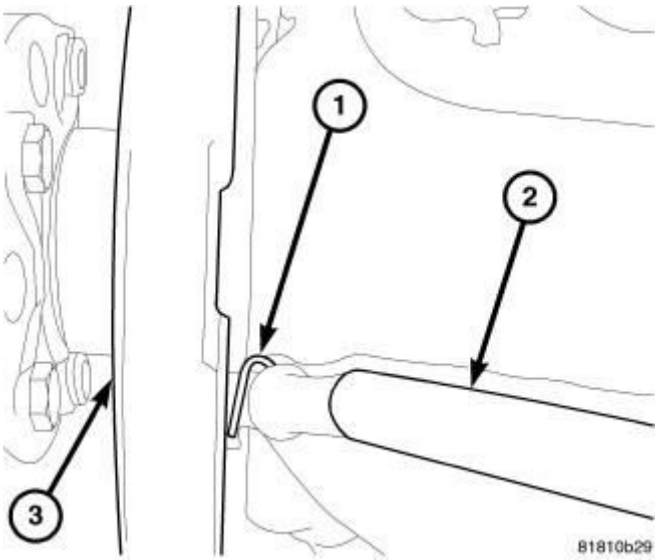

Fig. 57: Parking Brake Cable Hair Pin

Courtesy of CHRYSLER GROUP, LLC

5. Insert the parking brake cable through the trailing link from the inboard side.
6. Slide the parking brake cable (2) into the brake support plate (3) with parking brake shoes.
7. Install the hair pin (1) securing the parking brake cable (2) to the brake support plate (3).

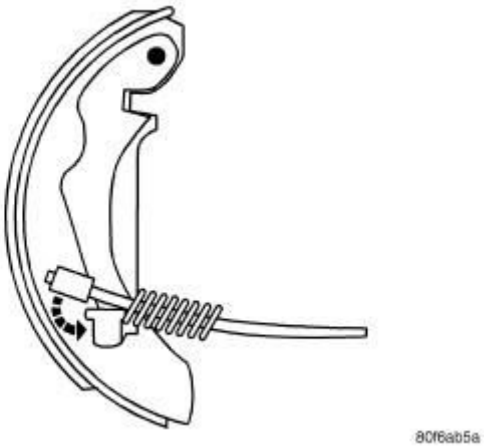

Fig. 58: Installing Cable To Lever
Courtesy of CHRYSLER GROUP, LLC

8. Install the parking brake cable onto the lever on the parking brake shoe.

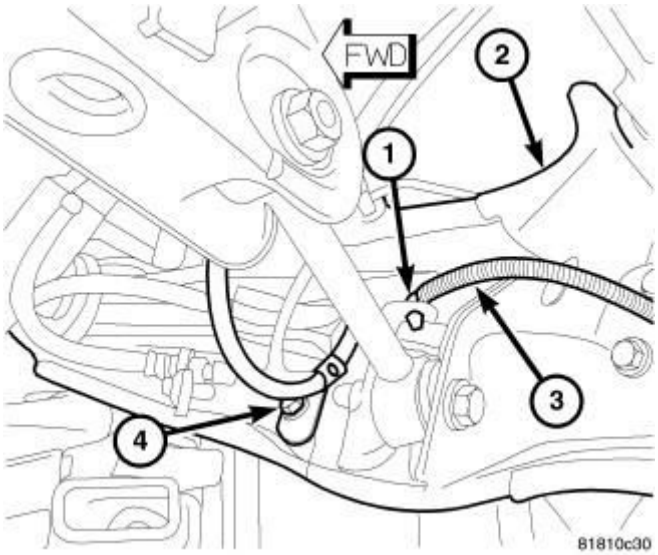

Fig. 59: Rear Wheel Speed Sensor Mounting To Trailing Link
Courtesy of CHRYSLER GROUP, LLC

9. If equipped, position the wheel speed sensor (3) and install the screw (4) fastening the sensor to the trailing link (2). Tighten the mounting screw to 18 N.m (13 ft. lbs.).
10. If equipped, position the wheel speed sensor (3) and install the routing clip (1) fastening the sensor to the trailing link (2).
11. Install the hub and bearing, then install the brake rotor onto the wheel studs. Refer to **HUB AND BEARING, INSTALLATION**.

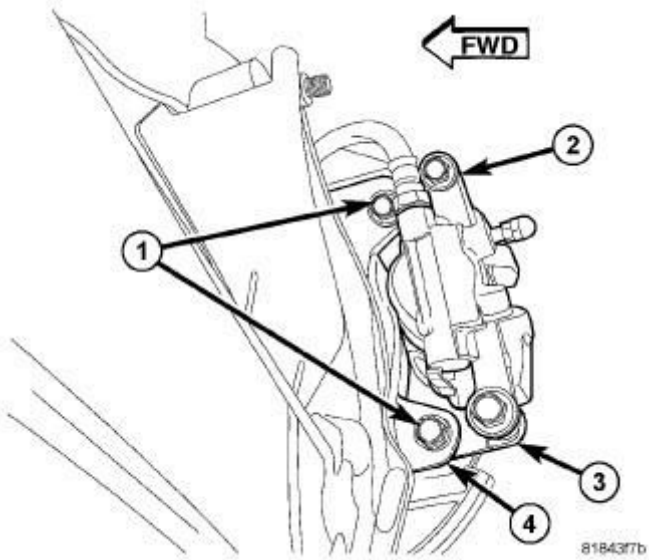

Fig. 60: Rear Caliper/Adapter Mounting
Courtesy of CHRYSLER GROUP, LLC

12. Slide the disc brake caliper (2) and adapter (3) assembly over brake rotor and brake support plate.
13. Install the two bolts (1) securing disc brake caliper adapter (3) to the brake support plate (4). Tighten the mounting bolts to 71 N.m (52 ft. lbs.).

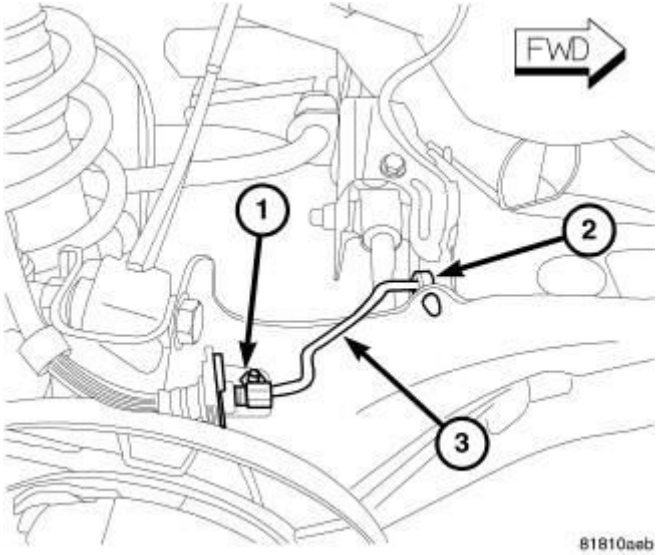

Fig. 61: Brake Line Mounting To Trailing Arm
Courtesy of CHRYSLER GROUP, LLC

14. Position the brake tube on the trailing link inserting the tube into the routing clip (2) and routing bracket over the welded stud.
15. Install the nut (1) on the welded stud. Tighten the nut to 15 N.m (11 ft. lbs.).

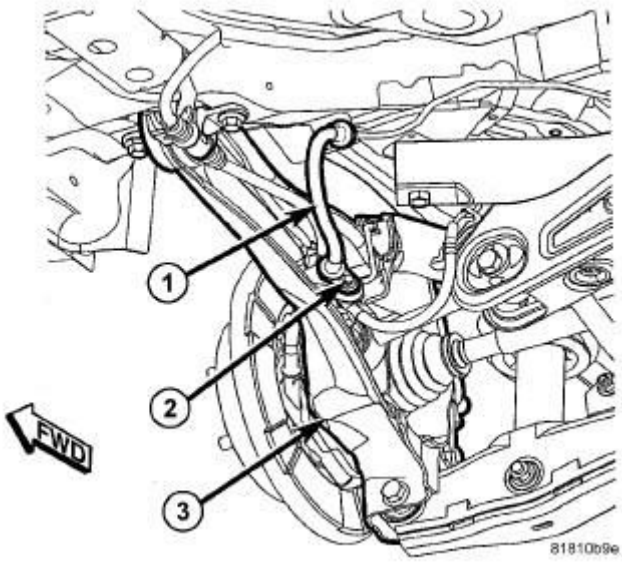

Fig. 62: Brake Hose Mounting To Trailing Arm
Courtesy of CHRYSLER GROUP, LLC

16. Position the brake flex hose (1) at the trailing link (3) bracket and install the mounting screw (2). Tighten the screw to 23 N.m (17 ft. lbs.).

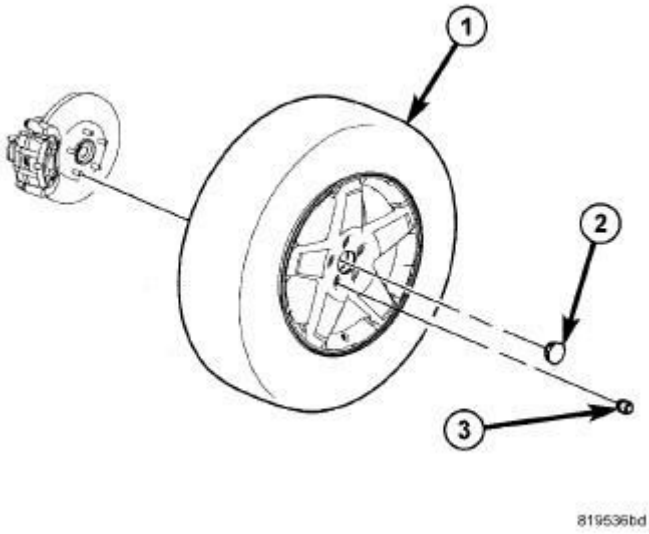

Fig. 63: Tire And Wheel Mounting
Courtesy of CHRYSLER GROUP, LLC

17. Install the tire and wheel assembly (1). Refer to **INSTALLATION** . Install and tighten the wheel mounting nuts (3) to 135 N.m (100 ft. lbs.).
18. Lower the vehicle.
19. Perform wheel alignment as necessary. Refer to **WHEEL ALIGNMENT, STANDARD PROCEDURE** .

SHOCK ABSORBER, SUSPENSION, COIL-OVER

DESCRIPTION

DESCRIPTION

A coil-over shock absorber assembly supports each side of the vehicle. The bottom of the shock assembly mounts to the lower control arm. The top of the shock assembly mounts to the body.

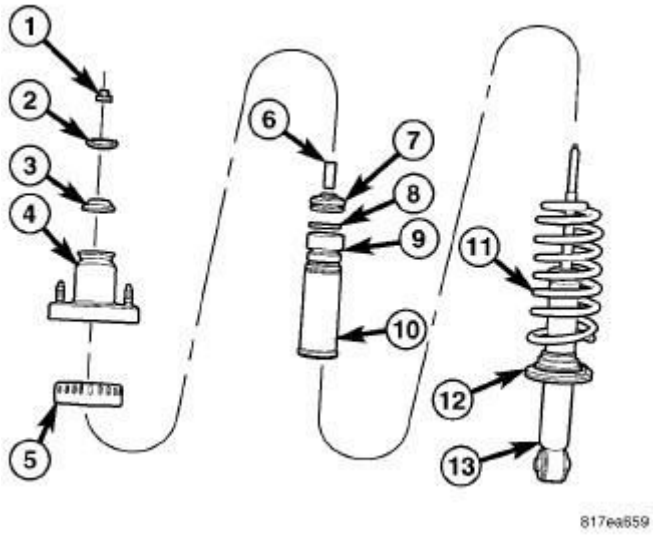

Fig. 64: Shock Assembly (Exploded)
Courtesy of CHRYSLER GROUP, LLC

The shock assembly includes the following major components:

- Upper bushing (3)
- Upper mounting bracket (4)
- Upper spring isolator (5)
- Sleeve (6)
- Lower bushing (7)
- Jounce bumper (9)
- Dust shield (10)
- Coil spring (11)
- Lower spring isolator (12)
- Shock absorber (13)

Later build vehicles also have a noise abatement cap located on top of the assembly.

Each component is serviced by removing the shock assembly from the vehicle and disassembling it.

Coil springs are rated separately for each corner or side of the vehicle depending on optional equipment and type of vehicle service. If a coil spring requires replacement, be sure that it is replaced with a spring meeting the correct load

rating for the vehicle and its specific options.

DIAGNOSIS AND TESTING

DIAGNOSIS AND TESTING - SHOCK ABSORBER

Inspect the shock absorber for damage and evidence of fluid running from the upper end of the fluid reservoir. (Actual leakage will be a stream of fluid running down the side of the reservoir tube and dripping off lower end of unit). A slight amount of seepage between the shaft and shaft seal is not unusual and does not affect performance of the shock absorber.

REMOVAL

REMOVAL

NOTE: Before proceeding, refer to WARNING.

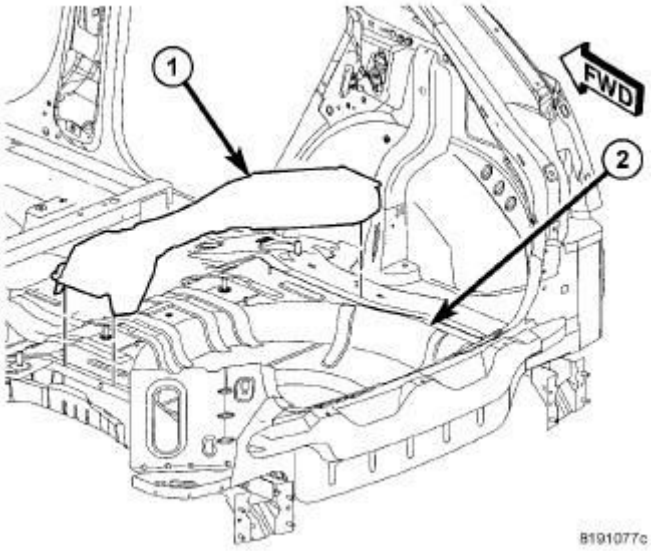

Fig. 65: Rear Floor Pan Silencer
Courtesy of CHRYSLER GROUP, LLC

1. Remove the cargo floor cover.
2. Remove the rear floor pan silencer (1).

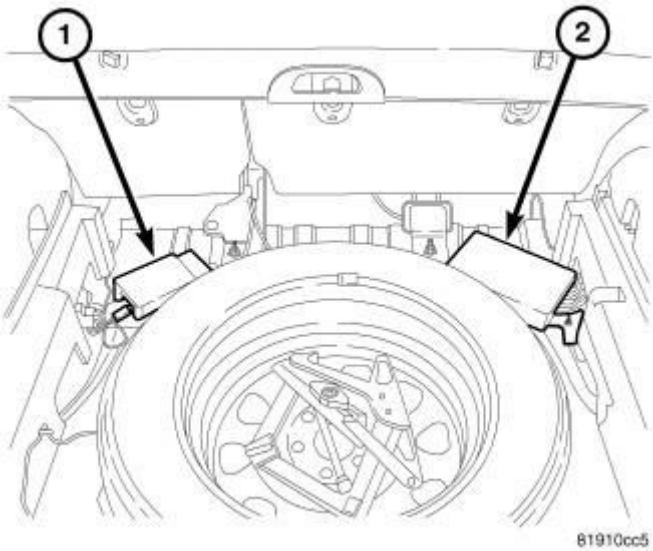

Fig. 66: Radio Receiver And Amplifier
Courtesy of CHRYSLER GROUP, LLC

3. If equipped, remove the nuts mounting the satellite receiver (1) or amplifier (2) to rear floor pan. Move the component aside to allow access to the shock assembly upper mounting nuts through the opening in the bottom of the quarter trim panel.
4. Remove the spare tire.

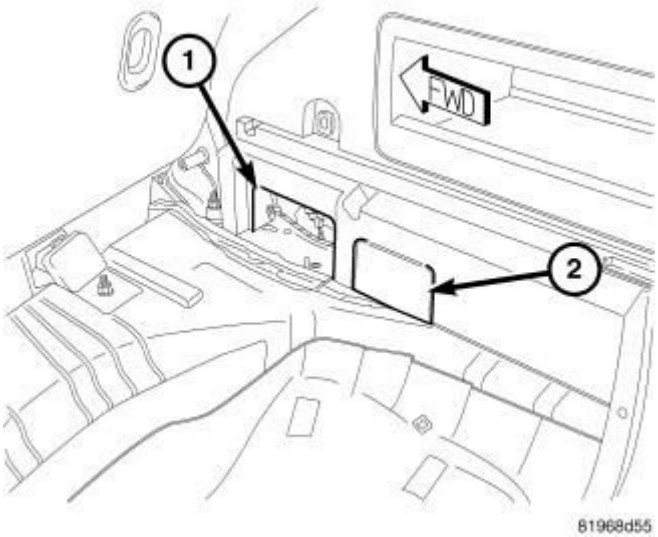

Fig. 67: Rear Shock Mounting Nut Access
Courtesy of CHRYSLER GROUP, LLC

5. Fold the shock assembly upper mounting nut access door (2) upward. Use this opening and the one (1) created when the rear floor pan silencer was removed to access the upper mounting nuts in the following step.

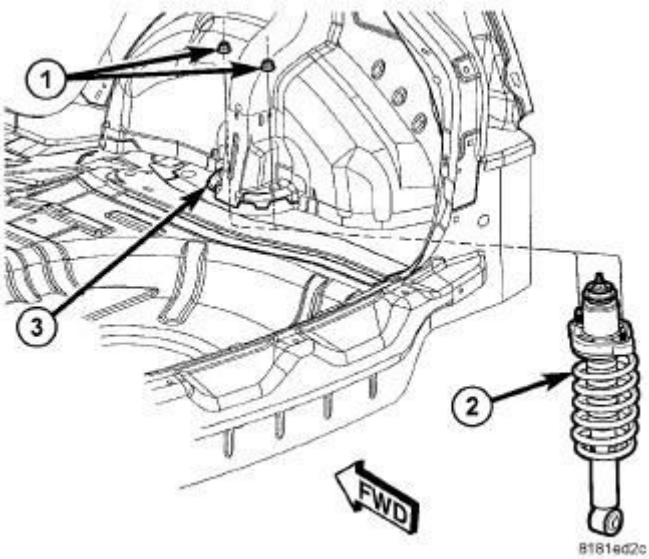

Fig. 68: Rear Shock Mounting Nuts
Courtesy of CHRYSLER GROUP, LLC

6. Remove the two nuts (1) securing the shock assembly (2) to the body bracket (3).
7. Raise and support the vehicle. Refer to **HOISTING, STANDARD PROCEDURE** .

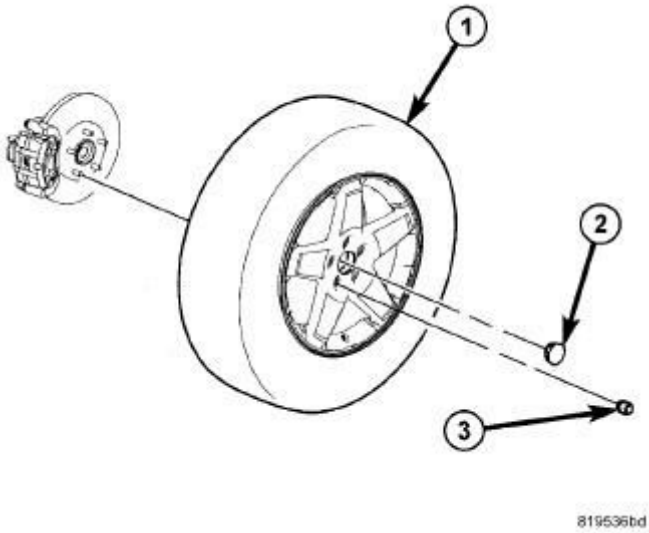

Fig. 69: Tire And Wheel Mounting
Courtesy of CHRYSLER GROUP, LLC

8. Remove the wheel mounting nuts (3), then the rear tire and wheel assembly (1).

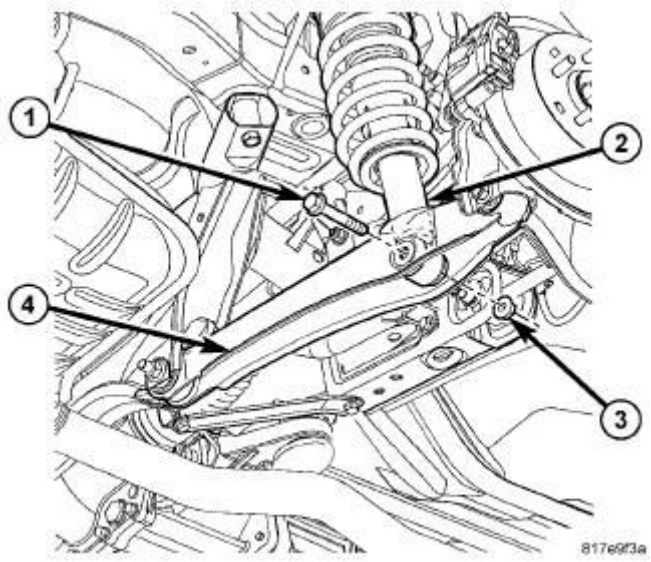

Fig. 70: Lower Strut Mounting
Courtesy of CHRYSLER GROUP, LLC

9. Remove the shock lower mounting nut (3) and bolt (1).

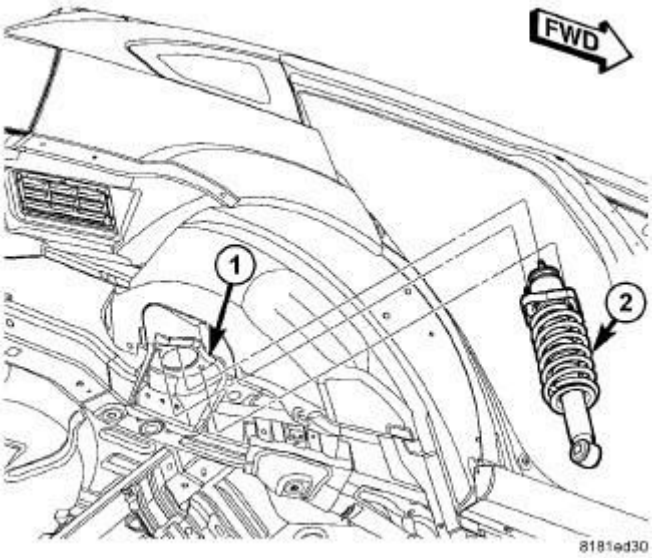

Fig. 71: Rear Shock Into Body
Courtesy of CHRYSLER GROUP, LLC

10. Lower the shock assembly (2) out of the body bracket (1) and lift out over rear suspension.

DISASSEMBLY

DISASSEMBLY

Fig. 72: Identifying Pliers On Chrome Machined Surface Of Shock/Strut Rod
Courtesy of CHRYSLER GROUP, LLC

CAUTION: Do not use any type of pliers on the chrome machined surface of shock/strut rod to assist in the disassembly/assembly of shocks or struts. Use only tools designed to hold the shock/strut rod stationary when servicing shock or strut components.

NOTE: The shock assembly must be removed from the vehicle for it to be disassembled and assembled. Refer to SHOCK ABSORBER, SUSPENSION, COIL-OVER, REMOVAL.

For the disassembly and assembly of the shock assembly, use Strut Spring Compressor, teamPSE tool 223-7400, or the equivalent, to compress the coil spring. Follow the manufacturer's instructions closely.

WARNING: Do not remove the shock rod nut before the coil spring is properly compressed. The coil spring is held under pressure. The coil spring must be compressed, removing spring tension from the upper mounting bracket, before the shock rod nut is removed.

1. If both shocks are being serviced at the same time, mark both the coil spring and shock assembly according to which side of the vehicle the shock is being removed from.
2. If equipped, remove the noise abatement cap from top of the shock assembly.

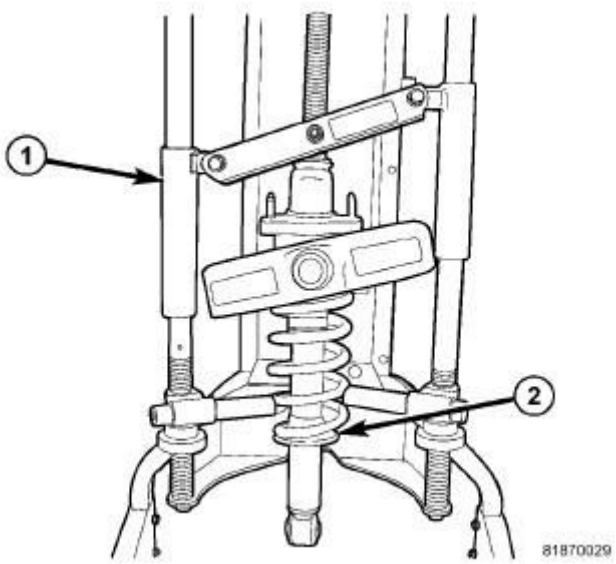

Fig. 73: Shock Assembly In Compressor
Courtesy of CHRYSLER GROUP, LLC

3. Position the shock assembly (2) in the strut spring compressor (1) following the manufacturer's instructions and set the lower and upper hooks of the compressor on the coil spring.
4. Compress the coil spring until all spring tension is removed from the upper mounting bracket and bushings.

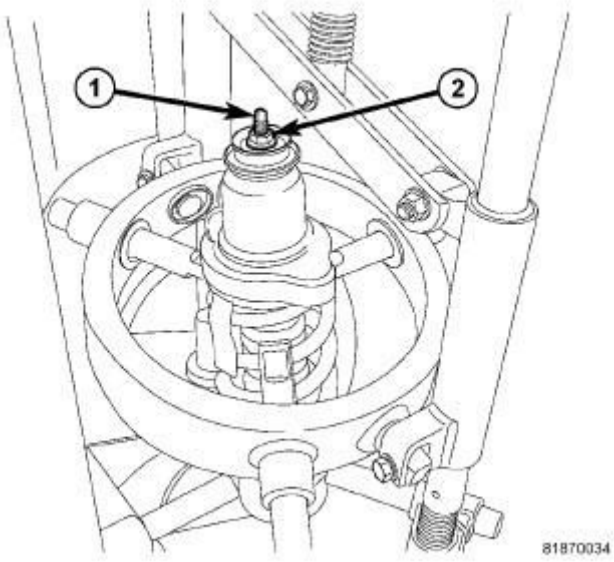

Fig. 74: Shock Rod Retainer Nut
Courtesy of CHRYSLER GROUP, LLC

CAUTION: Never use impact or high speed tools to remove the shock rod nut. Damage to the shock internal bearings can occur.

5. Once the spring is sufficiently compressed, install Snap-On® Shock Absorber Socket A139, or equivalent, on the end of the shock rod (1). While holding the shock rod from turning, remove the nut (2) using a wrench. Remove the washer below the nut.

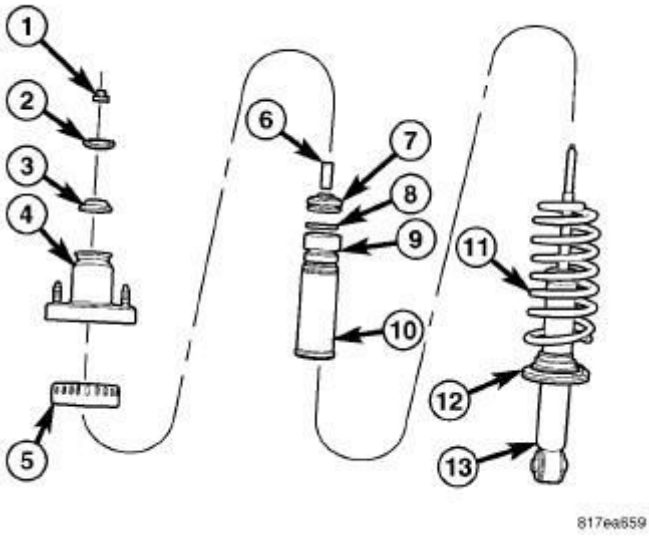

Fig. 75: Shock Assembly (Exploded)

Courtesy of CHRYSLER GROUP, LLC

6. Remove the shock absorber (13) out through the bottom of the coil spring (11). The washer (8), jounce bumper (9), dust shield (10) and lower spring isolator (12) will come out with the shock.
7. Slide the washer (8), jounce bumper (9), dust shield (10) from the shock rod.
8. Remove the lower spring isolator (12) from the shock spring seat.
9. Remove the upper mounting bracket (4), bushings (3, 7), sleeve (6) and upper spring isolator (5) from the top of the spring.
10. Remove the bushings (3, 7), sleeve (6) and upper spring isolator (5) from the upper mounting bracket (4).

NOTE: If the coil spring needs to be serviced, proceed with the next step, otherwise, proceed with step 12.

11. Release the tension from the coil spring by backing off the compressor drive completely. Push back the compressor hooks and remove the coil spring.

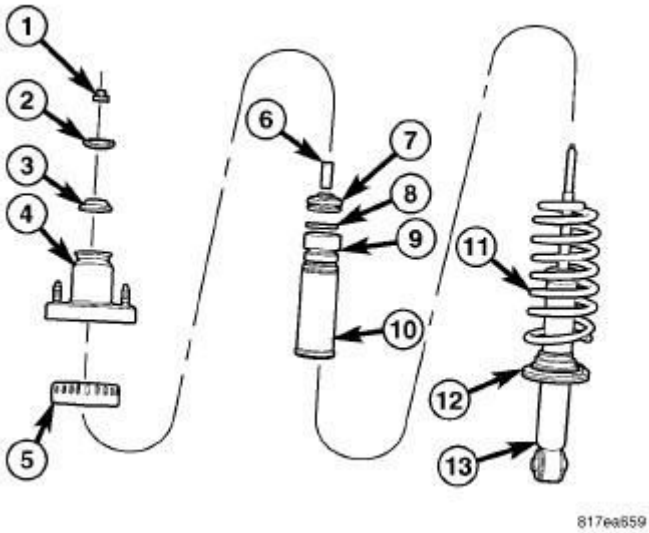

Fig. 76: Shock Assembly (Exploded)
Courtesy of CHRYSLER GROUP, LLC

12. Inspect the shock assembly components for the following and replace as necessary:

- Inspect the shock (13) for shaft binding over the full stroke of the shaft.

- Inspect the jounce bumper (9) for cracks and signs of deterioration.
- Inspect the dust shield (10) for cracks and tears.
- Check the upper mounting bracket (4) for cracks and distortion and its retaining studs for any sign of damage.
- Inspect the upper (3) and lower (7) bushings, for material deterioration and signs of deterioration. Inspect the sleeve (6) for wear and distortion.
- Inspect the upper (5) and lower (12) spring isolators for material deterioration and distortion.
- Inspect the coil spring (11) for any sign of damage to the coating.

NOTE: For reassembly, refer to SHOCK ABSORBER, SUSPENSION, COIL-OVER, ASSEMBLY.

ASSEMBLY

ASSEMBLY

Fig. 77: Identifying Pliers On Chrome Machined Surface Of Shock/Strut Rod
Courtesy of CHRYSLER GROUP, LLC

CAUTION: Do not use any type of pliers on the chrome machined surface of shock/strut rod to assist in the disassembly/assembly of shocks or struts. Use only tools designed to hold the shock/strut rod

stationary when servicing shock or strut components.

NOTE: If the coil spring has been removed from the spring compressor, proceed with the next step, otherwise, proceed with step 3.

CAUTION: When installing the coil spring, make sure the end with the ID tag is placed upward, otherwise spring-to-body contact will occur after shock assembly installation.

1. Place the coil spring in the spring compressor following the manufacturer's instructions.
2. Slowly compress the coil spring until enough room is available for shock assembly reassembly.

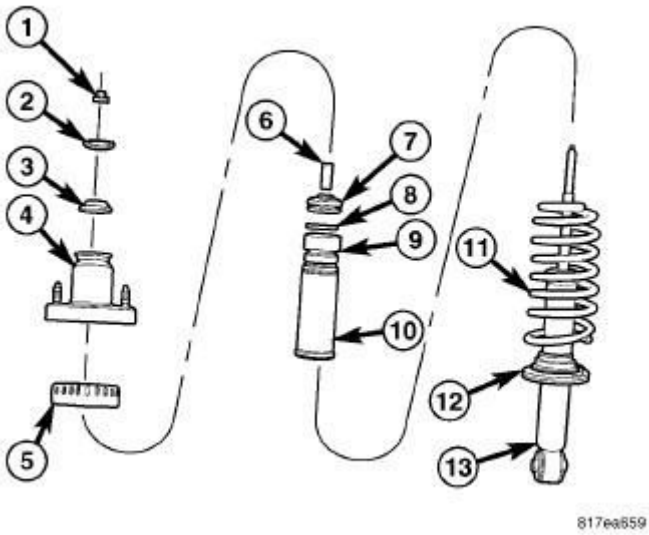

Fig. 78: Shock Assembly (Exploded)
Courtesy of CHRYSLER GROUP, LLC

3. Assemble the bushings (3, 7) and sleeve (6) through the upper mounting bracket (4).
4. Install the upper spring isolator (5) on the upper mounting bracket (4).
5. Install the upper mounting bracket (4) on top of the coil spring.

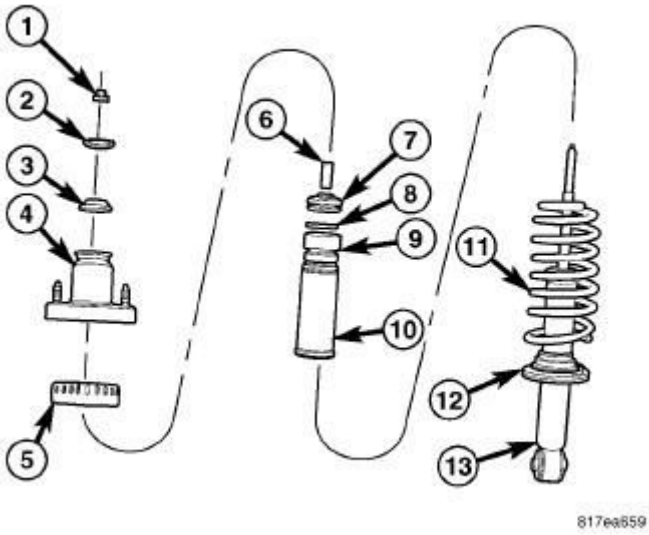

Fig. 79: Shock Assembly (Exploded)
Courtesy of CHRYSLER GROUP, LLC

6. Install the lower spring isolator (12) on the spring seat of the shock absorber (13).
7. Slide the dust shield (10), jounce bumper (9) and washer (8) onto the shock rod.
8. Install the shock absorber (13) up through the bottom of the coil spring and upper mounting bracket until the lower spring seat contacts the lower end of the coil spring.
9. While holding the shock absorber in position, install the washer (2) and nut (1) on the end of the shock rod.

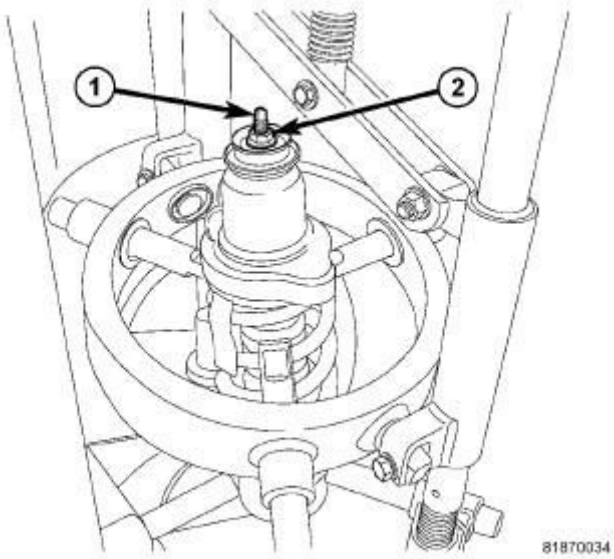

Fig. 80: Shock Rod Retainer Nut
Courtesy of CHRYSLER GROUP, LLC

CAUTION: Never use impact or high speed tools to remove the shock rod nut. Damage to the shock internal bearings can occur.

10. Install Snap-On® Shock Absorber Socket A139, or equivalent, on the end of the shock rod (1). While holding the shock rod from turning, tighten the nut (2) using a crows foot wrench and a torque wrench. Tighten the shock rod nut to 24 N.m (18 ft. lbs.).

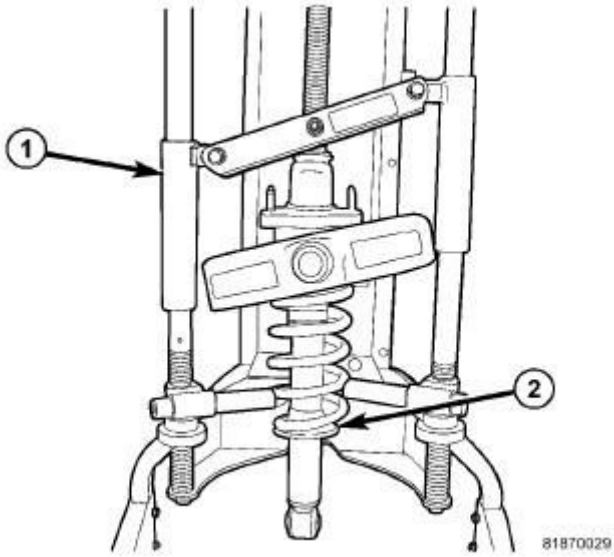

Fig. 81: Shock Assembly In Compressor
Courtesy of CHRYSLER GROUP, LLC

11. Turn the upper mounting bracket or shock absorber as necessary until the mounting studs on the mounting bracket line up with the lower mounting bolt eyelet at the bottom of the shock absorber.
12. Slowly release the tension from the coil spring by backing off the compressor (1) drive completely.
13. Remove the shock assembly from the spring compressor.
14. If equipped, install the noise abatement cap on top of the shock assembly.
15. Install the shock assembly on the vehicle. Refer to **SHOCK ABSORBER, SUSPENSION, COIL-OVER, INSTALLATION**.

INSTALLATION

INSTALLATION

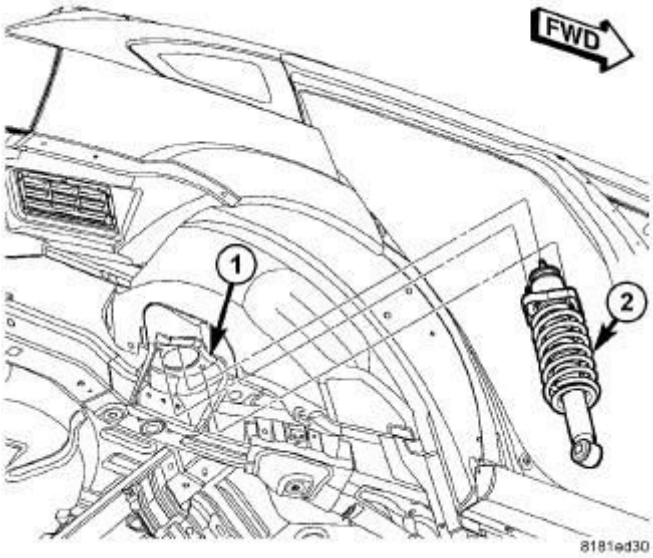

Fig. 82: Rear Shock Into Body
Courtesy of CHRYSLER GROUP, LLC

1. Insert the lower end of the shock assembly (2) down though the lower control arm from above just enough to clear the body, then lift it up into the body bracket (1).

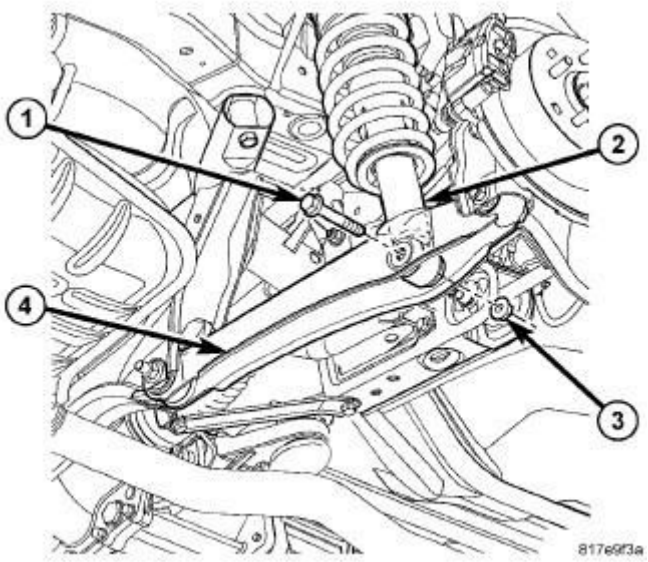

Fig. 83: Lower Strut Mounting
Courtesy of CHRYSLER GROUP, LLC

2. Install the mounting bolt (1) and nut (3) fastening the shock assembly (2) to the lower control arm (4). Do not tighten at this time.

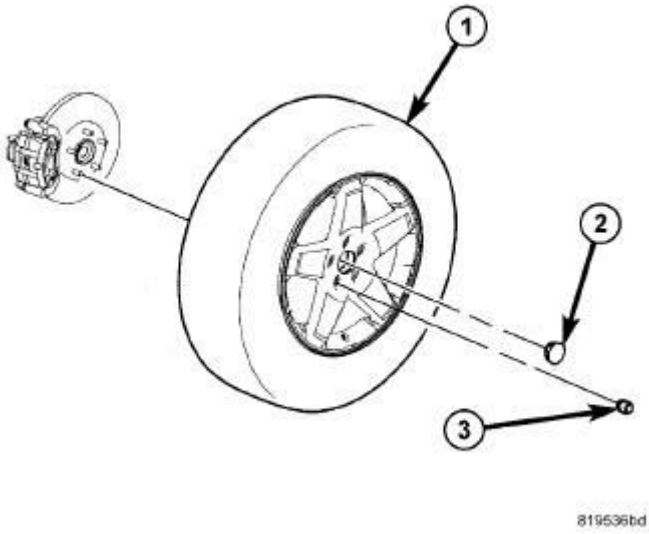

Fig. 84: Tire And Wheel Mounting
Courtesy of CHRYSLER GROUP, LLC

3. Install the tire and wheel assembly (1). Refer to **INSTALLATION** . Install and tighten the wheel mounting nuts (3) to 135 N.m (100 ft. lbs.).
4. Lower the vehicle.

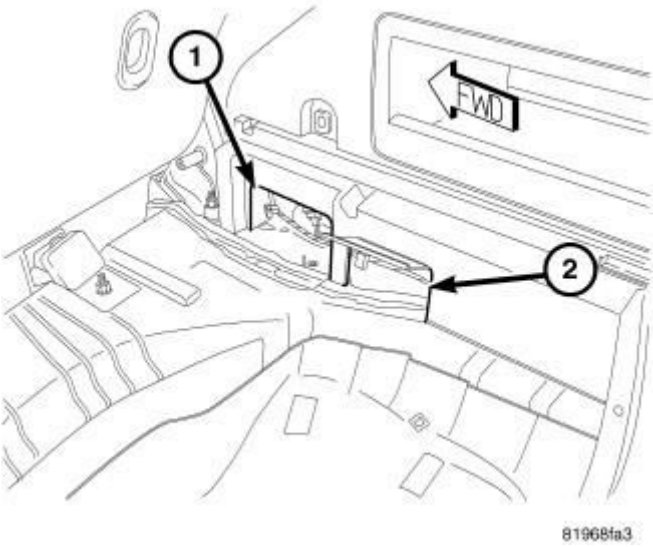

Fig. 85: Upper Mounting Nut Access Openings
Courtesy of CHRYSLER GROUP, LLC

NOTE: Use the openings (1, 2) in the interior rear quarter trim panel when installing the upper mounting nuts in the following step.

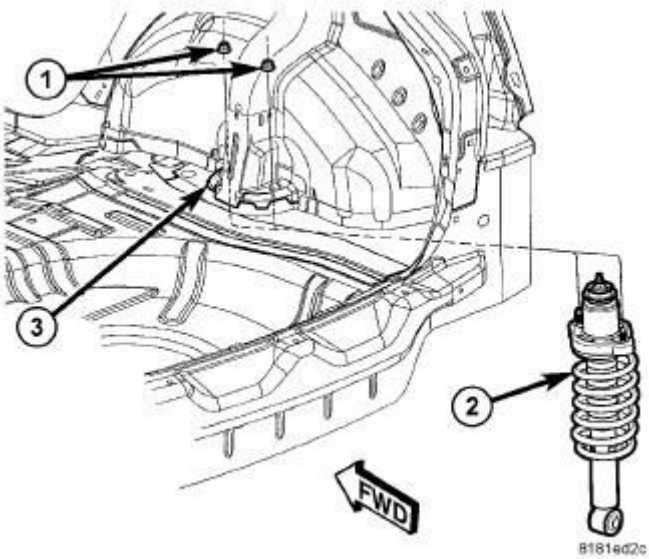

Fig. 86: Rear Shock Mounting Nuts
Courtesy of CHRYSLER GROUP, LLC

5. Install the two nuts (1) securing the shock assembly (2) to the body bracket (3). Tighten the mounting nuts to 48 N.m (35 ft. lbs.).

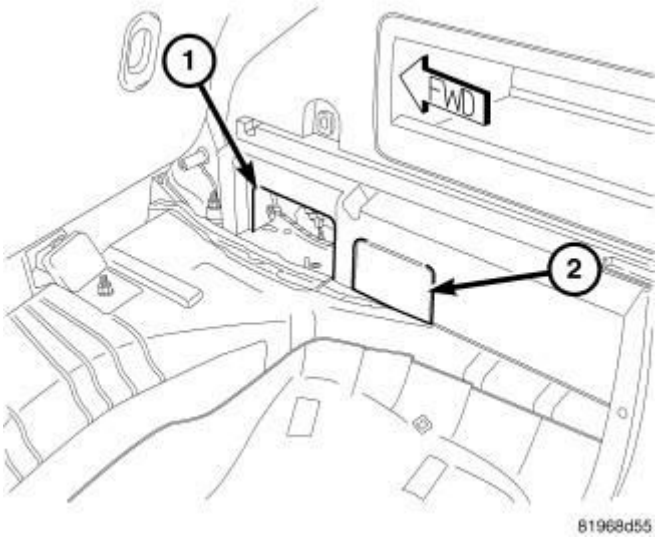

Fig. 87: Rear Shock Mounting Nut Access
Courtesy of CHRYSLER GROUP, LLC

6. Fold the shock assembly upper mounting nut access door (2) down closing off the opening.

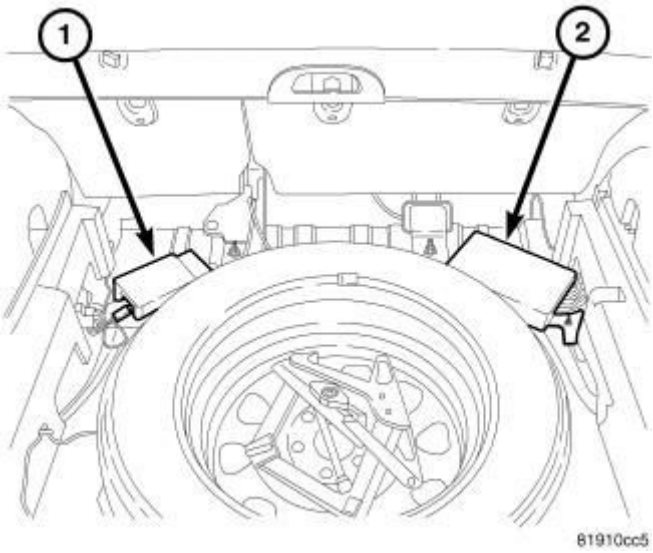

Fig. 88: Radio Receiver And Amplifier
Courtesy of CHRYSLER GROUP, LLC

7. If equipped, install the satellite receiver (1) or amplifier (2) to rear floor pan.

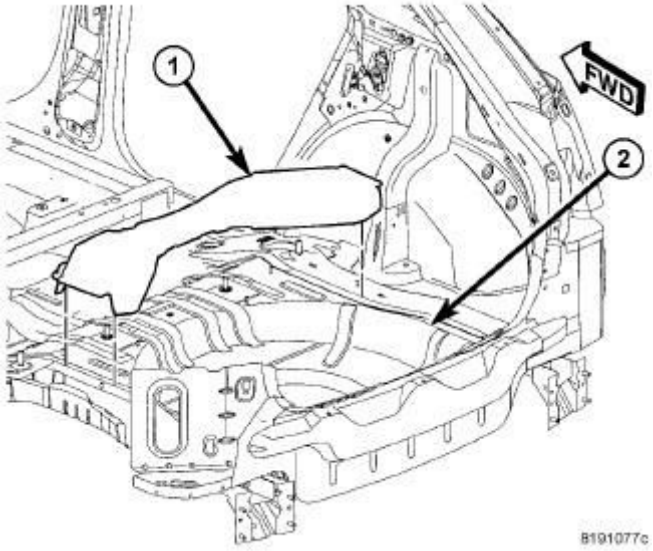

Fig. 89: Rear Floor Pan Silencer
Courtesy of CHRYSLER GROUP, LLC

8. Install the rear floor pan silencer (1).
9. Install the cargo floor cover.

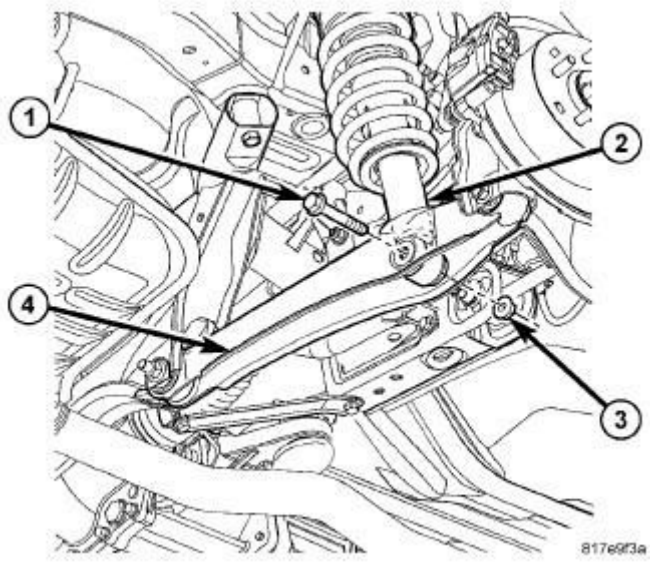

Fig. 90: Lower Strut Mounting
Courtesy of CHRYSLER GROUP, LLC

10. Position the vehicle on an alignment rack/drive-on lift. Raise the lift as necessary to access the shock mounting bolt (1) and nut (3).
11. Tighten the shock assembly lower mounting bolt nut (3) to 99 N.m (73 ft. lbs.).

STABILIZER BAR, REAR SUSPENSION

REMOVAL

REMOVAL

NOTE: Before proceeding, refer to WARNING.

1. Raise and support the vehicle. Refer to **HOISTING, STANDARD PROCEDURE** .

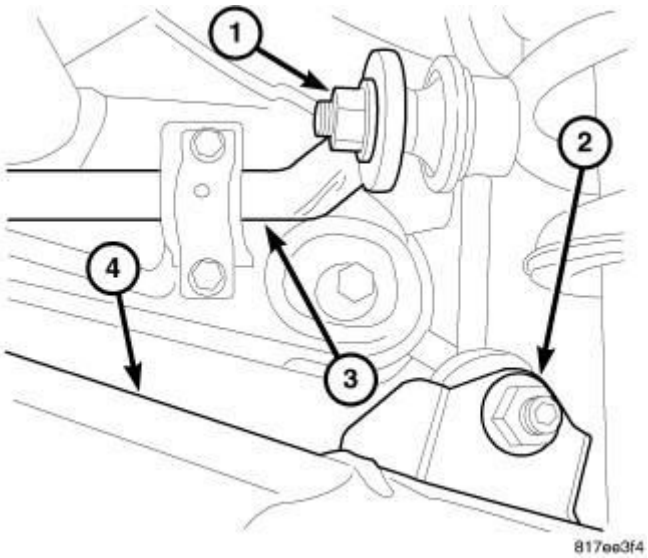

Fig. 91: Rear Stabilizer Bar Link
Courtesy of CHRYSLER GROUP, LLC

2. On both sides of the vehicle, while holding the stabilizer bar link upper stud stationary, remove the nut (1) securing the link to the stabilizer bar (3).
3. If equipped with all-wheel-drive, remove the rear driveline module. Refer to **REMOVAL** .

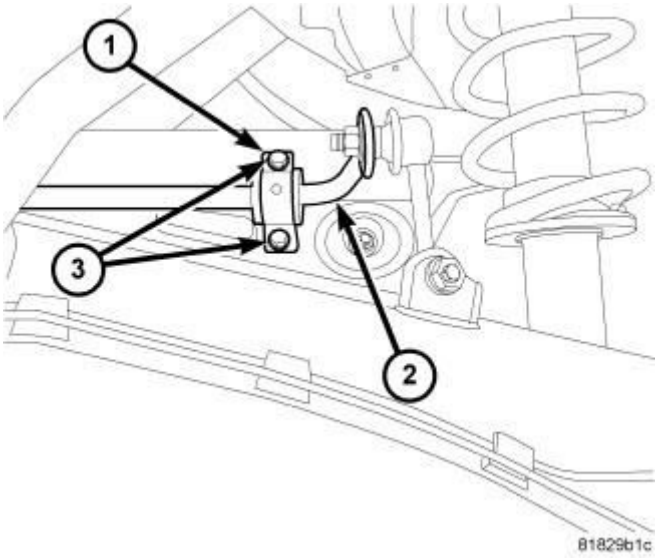

Fig. 92: Rear Stabilizer Retainer
Courtesy of CHRYSLER GROUP, LLC

4. On both sides of the vehicle, remove the screws (3) securing the stabilizer bushing retainers (1) to the crossmember.
5. Remove the two stabilizer bushing retainers.
6. Remove the stabilizer bar (2) from the vehicle.

7. If required, remove the two cushions from the stabilizer bar utilizing the slit cut into the cushions (bushings).

INSTALLATION

INSTALLATION

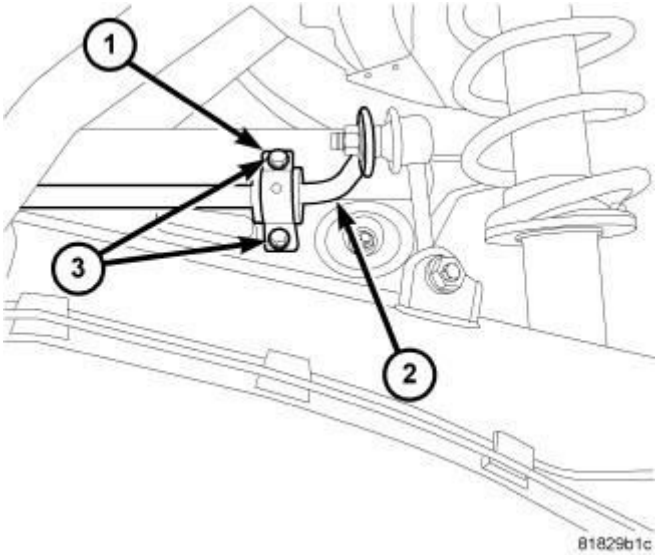

Fig. 93: Rear Stabilizer Retainer
Courtesy of CHRYSLER GROUP, LLC

1. If required, install the two cushions on the stabilizer bar (one on each side) utilizing the slit cut into the cushions (bushings).

NOTE: When installing the stabilizer bar on a vehicle with all-wheel-drive, position the bar so that the bar loops under the axle half shafts once installed, not over the axle half shafts.

2. Position the stabilizer bar (2) on the rear crossmember.
3. Install the two retainers (1) over the cushions at the mounting holes and install the retainer screws (3). Do not tighten the screws at this time.
4. If equipped with all-wheel-drive, install the rear driveline module. Refer to **INSTALLATION** .

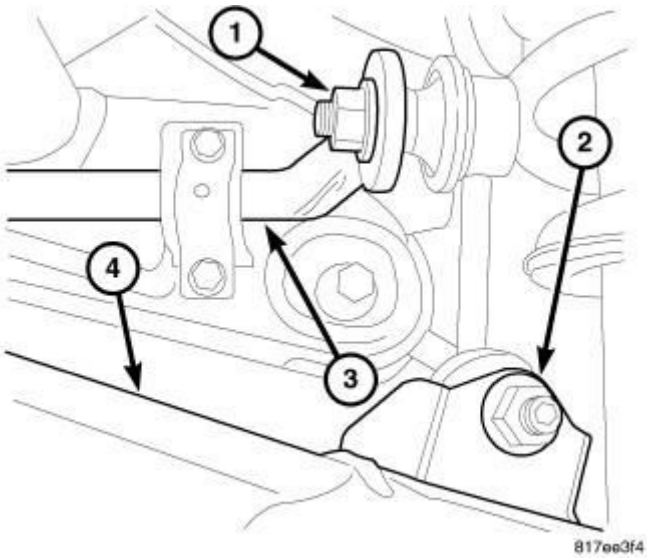

Fig. 94: Rear Stabilizer Bar Link
Courtesy of CHRYSLER GROUP, LLC

5. On each side of the vehicle, install the stabilizer link upper stud in the end of the stabilizer bar (3). Install the nut (1) on each upper stud and while holding the stabilizer link stud stationary, tighten the nut (2) to 50 N.m (37 ft. lbs.).

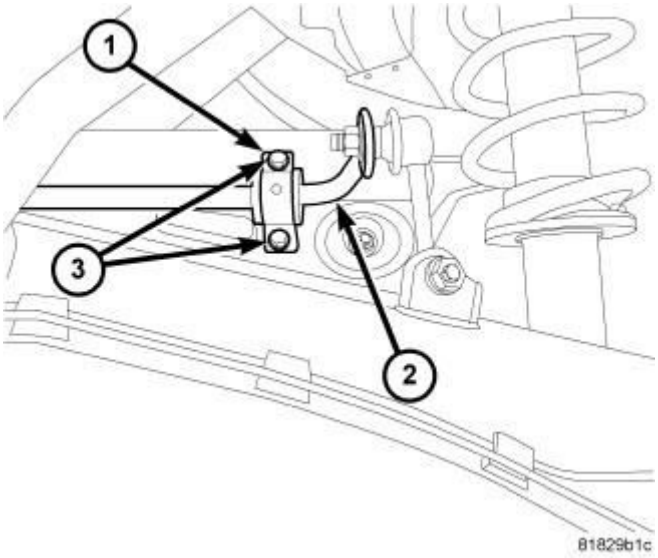

Fig. 95: Rear Stabilizer Retainer
Courtesy of CHRYSLER GROUP, LLC

6. Tighten the cushion retainer screws to 34 N.m (25 ft. lbs.).
7. Lower the vehicle.

2014 SUSPENSION

Tires & Wheels - Service Information - Compass & Patriot

DIAGNOSIS AND TESTING

DIAGNOSIS AND TESTING - TIRE AND WHEEL VIBRATION

Tire and wheel imbalance, runout and tire road force variation can cause vehicles to exhibit steering wheel vibration and/or seat vibration.

VISUAL INSPECTION

Visual inspection of the vehicle is recommended prior to road testing or performing any other procedure. Raise and support the vehicle. Refer to **HOISTING, STANDARD PROCEDURE** .

Inspect for the following:

- Verify correct (OEM) wheel and tire, as well as presence of wheel weights.
- Inspect tires and wheels for damage, mud packing and unusual wear; correct as necessary.
- Check and adjust tire air pressure to the pressure listed on the label attached to the driver's door opening.

ROAD TEST

NOTE: If a Noise & Vibration Analyzer is available, use it to diagnosis the issue during the road test.

NOTE: If the vehicle has been sitting for an extended period of time it is recommended to drive to warm the tires. This process could eliminate flat spots that can cause vibration.

Road test vehicle on a smooth road **at and near the designated speed** where legal speed limits allow. Lightly place hands on steering wheel at the 10:00 and 2:00 positions and observe for:

- Steering wheel oscillation: clockwise/counterclockwise
- Steering wheel high frequency movement: rapid vibration up and down

- Seat high frequency movement: rapid vibration up and down

To rule out vibrations due to brakes or powertrain:

- Lightly apply brakes at the designated speed; if vibration occurs or is enhanced, vibration is likely due to a brake concern.
- Shift transmission into neutral while vibration is occurring; if vibration is eliminated, vibration is likely due to a powertrain concern refer to appropriate Service Information .

TIRE/WHEEL BALANCE AND ROAD FORCE VARIATION

NOTE: If wheel balance equipment is capable of testing tire road force variation and the tire/wheel assemblies are within specification, place the tires with the greater road force variation on the rear of the vehicle.

Balance the tire and wheel assemblies as necessary, and if wheel balance equipment is capable, also test for tire and wheel runout and road force variation following the wheel balancer manufacturer's instructions and using the information listed in Tire And Wheel Balance. Refer to **STANDARD PROCEDURE**. Repeat the road test above to verify the vibration is repaired.

STANDARD PROCEDURE

TIRE AND WHEEL BALANCE

NOTE: Always verify the wheel and tire balance before removing any wheel weights. If assembly is within specification and weights are not corroded or loose, do not remove weights. The process of removing and adding weight could damage wheel protective coating.

NOTE: Balance and road force variation equipment must be calibrated and maintained per equipment manufacturer's specifications.

NOTE: If a tire sealant & inflator kit was used to temporarily repair small punctures then the tire must be removed from wheel and all the sealant must be removed with a

water damped cloth before repairing & balancing the assembly.

NOTE: Some wheels may not have an outer flange. Apply adhesive weights on midplane surface to balance.

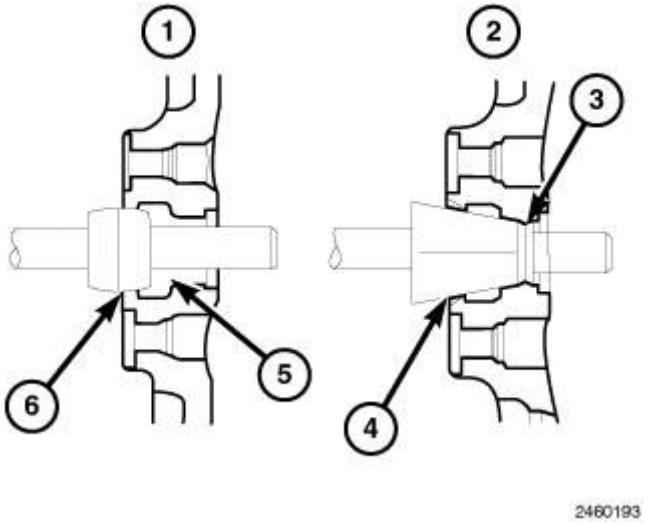

Fig. 1: Balancing Wheels Using Cone/Collet
Courtesy of CHRYSLER GROUP, LLC

NOTE: Use of the proper collet will prevent potential damage to the Chrome Clad wheels.

NOTE: Balance equipment could read an incorrect balance result when measuring Chrome Clad wheels. This is caused by the equipments mounting cone/collet contacting the cladding or the cone/collet is not balanced. A dual-taper collet (1) type wheel centering tool is recommended as opposed to a high-taper cone (2) type wheel centering tool. Always use the manufacturer's recommended balance equipment.

- **Dual-taper collet type (1)**
- **High-taper cone type (2)**
- **Possible obstruction (3)**
- **May not seat properly (4)**
- **No obstruction (5)**

- **Properly seated (6)**

NOTE: **If wheel balance equipment is capable of testing tire road force variation and the tire/wheel assemblies are within specification, place the tires with the greater road force variation on the rear of the vehicle.**

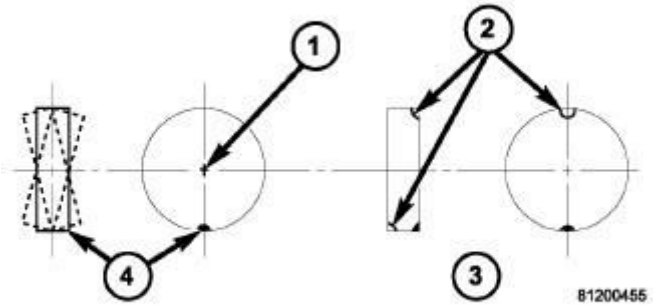

Fig. 2: Dynamic Balancing
Courtesy of CHRYSLER GROUP, LLC

For dynamic balancing (**recommended**), the balance equipment is designed to indicate the location and amount of weight to be applied to both the inner and outer rim flanges (2).

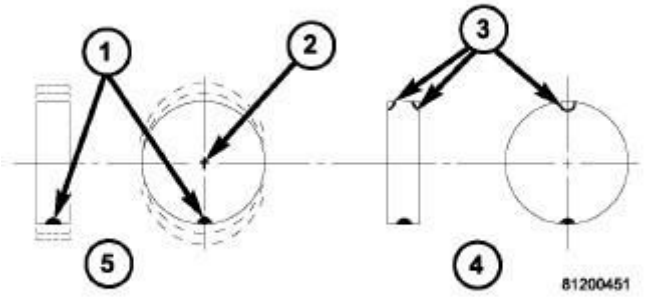

Fig. 3: Static Balancing
Courtesy of CHRYSLER GROUP, LLC

For static balancing (**not recommended**), find the location of the heavy spot causing the imbalance (1). Counter balance the wheel directly opposite the heavy spot. Determine weight required to counterbalance the area of imbalance. Place half of this weight on the **inner** rim flange and the other half on the **outer** rim flange (3) at the predetermined spots.

Aluminum wheels use a different type wheel weight than steel wheels. Be sure to use the correct wheel weight for the wheel type.

Always verify the balance. When using off-vehicle equipment, remount the tire and wheel assembly 180 degrees on the balancer spindle and recheck balance. Balance variation from one spot to the other should not be more than 0.125 (?) ounce. If variation is more than 0.125 ounce, balancing equipment could be malfunctioning, or the wrong collet/cone may have been used.

If difficult to balance, break down the tire and wheel assembly and check for loose debris inside the tire. Prior to disassembly, mark (index) the tire at the valve stem. Use this mark in order to remount the tire in its original orientation with respect to the wheel.

TIRE AND WHEEL ROTATION

NOTE: Refer to the Owner's Manual for rotation schedules.

NON-DIRECTIONAL TREAD PATTERN TIRES

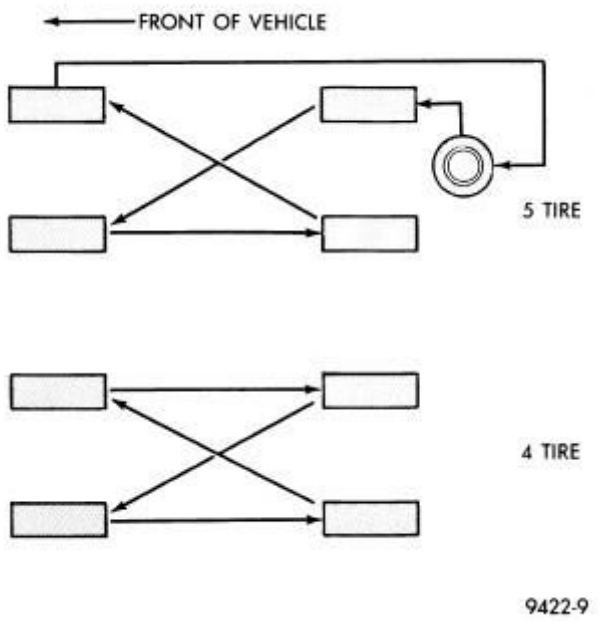

Fig. 4: Forward-Cross Tire Rotation Method
Courtesy of CHRYSLER GROUP, LLC

Tires on the front and rear operate at different loads and perform different steering, driving, and braking functions. For these reasons they wear at unequal rates and tend to develop irregular wear patterns. These effects can be reduced by rotating the tires at regular intervals. The benefits of tire rotation are:

- Increase tread life
- Maintain traction levels
- A smooth, quiet ride

The suggested method of tire rotation is shown in this graphic. Other rotation methods can be used, but they will not provide all the tire longevity benefits.

CAUTION: Only the four-tire rotation may be used on vehicles equipped with tire pressure monitoring (TPM) due to sensors being present in the four road wheels and not in the spare.

NOTE: Only the four-tire rotation method may be used if the vehicle is equipped with a compact or temporary spare tire.

DIRECTIONAL TREAD PATTERN TIRES

Some vehicles may be fitted with special high-performance tires having a directional tread pattern. These tires are designed to improve traction on wet pavement. To obtain the full benefits of this design, the tires must be installed so that they rotate in the correct direction. This is indicated by arrows on the tire sidewalls.

When being installed, extra care is needed to ensure that this direction of rotation is maintained.

REMOVAL

ALUMINUM WHEEL

1. Raise and support the vehicle so that tire and wheel assembly clears ground

level. Refer to **HOISTING, STANDARD PROCEDURE** .

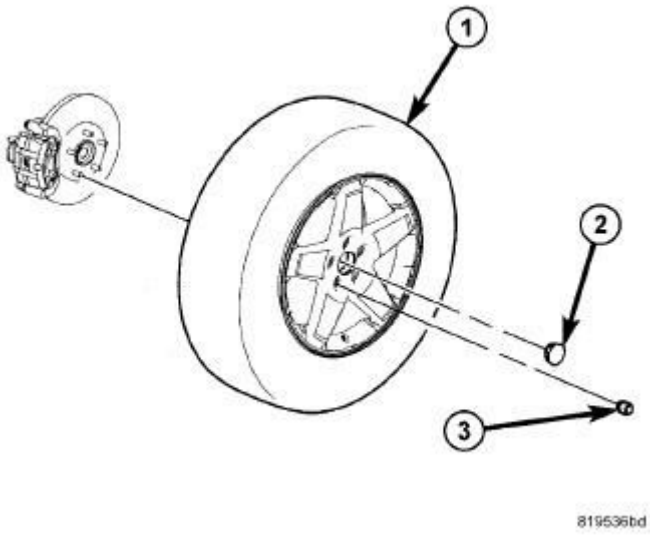

Fig. 5: Tire And Wheel Mounting
Courtesy of CHRYSLER GROUP, LLC

2. Remove the five wheel mounting (lug) nuts (3) from the studs.
3. Remove the tire and wheel assembly (1) from the hub.
4. If the wheel center cap requires removal, tap it out the front of the wheel using a soft head tool applied to the rear of the cap. **Do not attempt to pry it out from the front, damage to the wheel or center cap will occur** .

STEEL WHEEL

1. Raise and support the vehicle so that tire and wheel assembly clears ground level. Refer to **HOISTING, STANDARD PROCEDURE** .

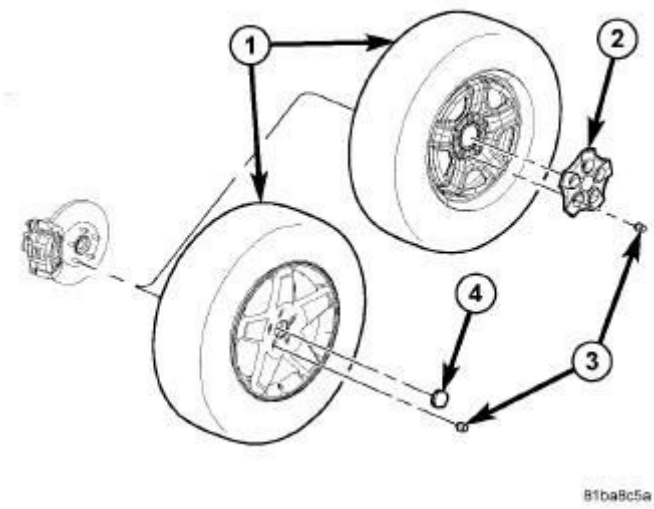

Fig. 6: Tire And Wheel Mounting
Courtesy of CHRYSLER GROUP, LLC

CAUTION: When removing the bolt-on center cap (2), do not attempt to pry the center cap off the wheel. It is held on by the wheel mounting nuts.

2. Remove the five wheel mounting (lug) nuts (3) from the wheel studs. While removing the nuts, hold the center cap (2) in place so it doesn't fall off when the last nut is removed.
3. Remove the center cap (2) using care not to let the tire and wheel assembly (1) fall off the vehicle.
4. Remove the tire and wheel assembly (1) from the hub.

INSTALLATION

ALUMINUM WHEEL

WARNING: Installing wheels without good metal-to-metal contact with the mounting surface could cause loosening of the wheel mounting (lug) nuts. This could adversely affect the safety and handling of the vehicle.

NOTE: Never use oil or grease on studs or wheel mounting (lug) nuts.

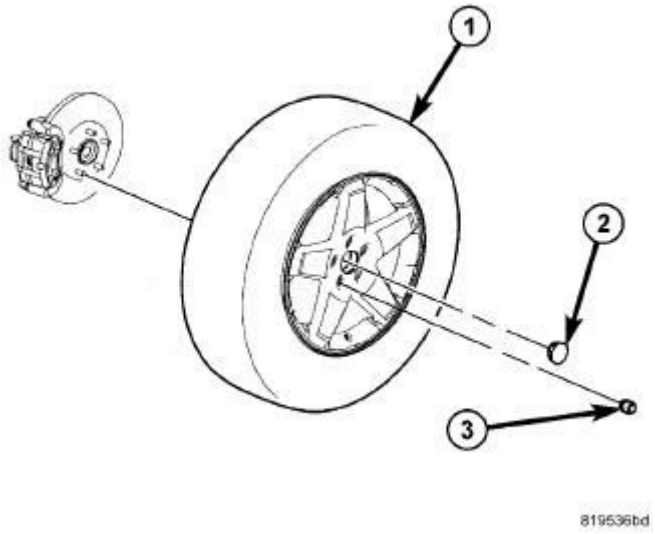

Fig. 7: Tire And Wheel Mounting
Courtesy of CHRYSLER GROUP, LLC

1. Clean the wheel mounting surfaces, removing any build-up of corrosion. It is important to have good metal-to-metal contact between the wheel and vehicle.
2. Position the tire and wheel assembly (1) on the wheel mounting studs using the hub pilot as a guide. Place and hold the wheel flush up against the mounting surface.

NOTE: Always use the original (OEM) style wheel mounting (lug) nuts. Do not use replacement parts of lesser quality or substitute design.

3. Install and lightly snug all five wheel mounting (lug) nuts (3). **Do not tighten at this time** .
4. If applicable, install the wheel center cap.
5. Lower the vehicle.

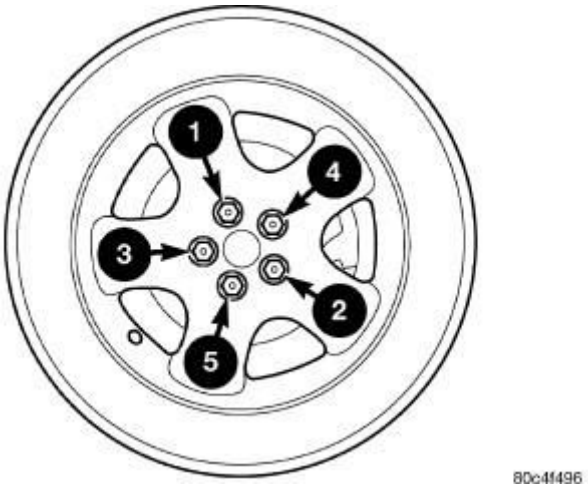

Fig. 8: Wheel Tightening Sequence
Courtesy of CHRYSLER GROUP, LLC

6. Progressively tighten all wheel mounting nuts in the proper sequence shown. Tighten nuts to a final torque of 125 N.m (92 ft. lbs.).

STEEL WHEEL

WARNING: Installing wheels without good metal-to-metal contact with the mounting surface could cause loosening of the wheel mounting (lug) nuts. This could adversely affect the safety and handling of the vehicle.

NOTE: Never use oil or grease on studs or wheel mounting (lug) nuts.

1. Clean the wheel mounting surfaces, removing any build-up of corrosion. It is important to have good metal-to-metal contact between the wheel and vehicle.

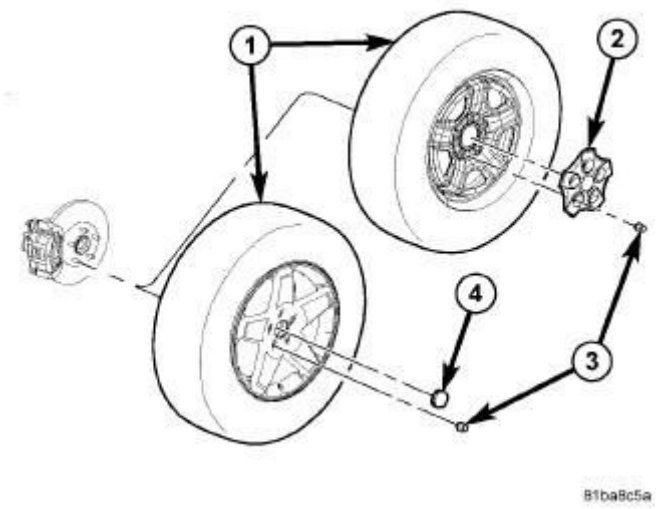

Fig. 9: Tire And Wheel Mounting
Courtesy of CHRYSLER GROUP, LLC

2. Position the tire and wheel assembly (1) on the wheel mounting studs using the hub pilot as a guide. Place and hold the wheel flush up against the mounting surface.
3. Install the center cap (2) over the studs.

NOTE: Always use the original (OEM) style wheel mounting (lug) nuts. Do not use replacement parts of lesser quality or substitute design.

4. Install and lightly snug all five wheel mounting (lug) nuts (3). **Do not tighten at this time** .
5. Lower the vehicle.

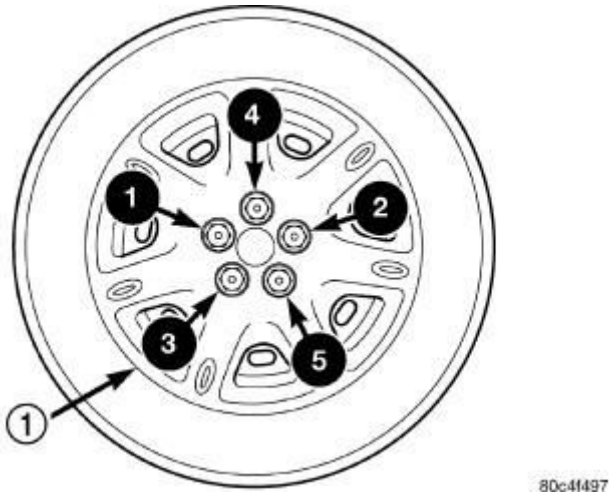

Fig. 10: Nut Tightening Sequence
Courtesy of CHRYSLER GROUP, LLC

1 - BOLT-ON WHEEL COVER

6. Progressively tighten all wheel mounting (lug) nuts in the proper sequence shown. Tighten the nuts to a final torque of 125 N.m (92 ft. lbs.).

SPECIAL TOOLS

SPECIAL TOOLS

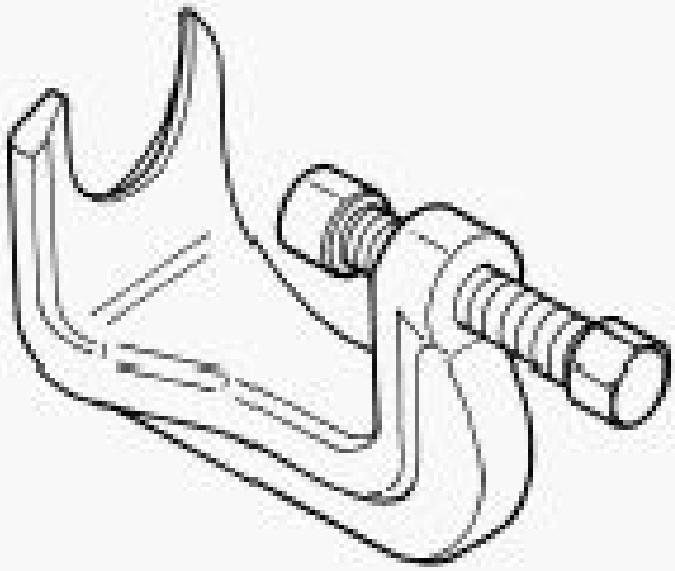	8677 - Remover, Ball Joint (Originally Shipped In Kit Number(s) 8685, 8685CC, 8712, 9973, 9974, 9975.)

TIRE PRESSURE MONITORING

DESCRIPTION

DESCRIPTION

The Tire Pressure Monitoring (TPM) system monitors air pressure in the four road tires (excludes spare). Pressure in the spare tire is not monitored.

There are two tire pressure monitoring systems available, a base system and a premium system. The base system does not specify how many tires are low or where they are located. The premium system does so.

The Base TPM system consists of tire pressure monitoring sensors attached to each road wheel through the valve stem mounting hole, a central receiver module (WCM) and an indicator lamp.

The Premium TPM system consists of tire pressure monitoring sensors attached to each road wheel through the valve stem mounting hole, a wireless control module (WCM) three wheel sensor transponders located in three of the four wheel wells, an electronic display, and an indicator lamp.

The receiver circuit for the TPM system is integrated into the WCM for non-remote start vehicles. For factory installed remote start vehicles, the remote start antenna is external to the WCM. The WCM can also include the Remote Keyless Entry (RKE) receiver, Remote Start (if equipped), and the Sentry Key Immobilizer (SKIM) receiver. All four receivers share a number of common components. The WCM decodes the RF signals transmitted by each of the vehicle's tire pressure sensors. The decoded information is used to determine if "warning" or "fault" conditions exist within the TPM system.

Upon detection of a warning or fault condition, the WCM will send a request to the module that controls the indicator lamp (and the text display if equipped with the Premium system) via the vehicle bus system to illuminate or flash the indicator lamp. Also, upon detection of a warning or fault condition, the electronic display will send a request to sound the "chime".

The WCM will store all warning and fault conditions, placard pressure values and low-pressure threshold values (lamp ON and OFF) in memory that can be accessed through diagnostic communication. If new sensors are introduced to the vehicle, the data stored for the sensor being replaced will be deleted.

The WCM will store all wheel sensor ID's and locations and faults in memory that can be accessed through diagnostic communication. All other data values

transmitted from each active wheel sensor (not the spare tire) shall be stored in the WCM memory.

The WCM automatically learns and stores the sensor IDs while driving "within 10 minutes continuously above 15 mph (24 km/h)" after a sensor has been replaced. The learning sequence will initiate when the vehicle has been stopped for more than 20 minutes.

NOTE: A new sensor ID can also be programmed directly into the WCM by using a RKE-TPM Analyzer in conjunction with a Scan Tool. Once the new sensor ID has been programmed, the RKE-TPM Analyzer can be used to update the TPMS by activating the sensor.

OPERATION

OPERATION

For both the premium and base TPM, the recommended "Placard Pressure", "Low-pressure Threshold" and "Hysteresis Pressure Values" for the tires installed on the vehicle, are stored in the WCM non-volatile memory during the initial Manufacturing Plant Process, or during a service procedure, as required. To determine the pressure thresholds for a vehicle, refer to the Tire Inflation Pressure (Placard) Label, and then apply the placard pressure to the following table. The Low Pressure OFF Threshold is defined as the Low Pressure ON Threshold plus the Hysteresis Pressure Value.

For further information, refer to the Owners Manual or the Appropriate Diagnostic Information.

BASE TIRE PRESSURE MONITORING

The tire pressure monitoring system (TPMS) is designed to operate without loss of function for all OEM tire construction for this vehicle. Sensors, mounted to each road wheel as part of the valve stem, transmit an RF signal indicating their individual pressure to a receiver located in the Wireless Control Module (WCM), commonly referred to as the Sentry Key Remote Entry Module (SKREEM). On a Domestic vehicle, the TPM sensor operates on a 315 MHz radio frequency. Export vehicle sensors operate on a 433 MHz radio frequency. These transmissions occur approximately once every minute at speeds over 15 mph (24 km/h). For more information on sensors, refer to **SENSOR, TIRE PRESSURE**

MONITORING (TPM), OPERATION.

If the TPM system detects that the tire pressure in any road tire is going low, beyond the Low Pressure (lamp) ON threshold (see placard table below), the TPM system will continuously illuminate an indicator lamp. If a system fault is detected, the indicator lamp will flash on/off for 75 seconds, then remain on solid.

If the WCM detects a warning or fault condition at ignition key "on" it will wait ten seconds +/- 10 % before sending the first request to illuminate the indicator lamp. This will assure that the display module has concluded its bulb check period. The display module will request a chime once per ignition cycle for each "warning" or "fault" condition detected. A "warning" or "fault" condition will remain enabled until the problem causing the condition is corrected and removed/reset.

The WCM shall continuously monitor for the receipt of tire pressure RF message transmissions from the wheel sensors during both the ignition key "on" and key "off" cycles. The wheel sensor ID's and the location of each sensor (e.g. Tire 1, Tire 2 etc.) are stored in the WCM non-volatile memory during the initial Manufacturing Plant Process, or during a service procedure, as required.

The TPM System will continue to warn the driver of low tire pressure as long as the condition exists, and will not turn off the indicator lamp until the tire pressure is at or above the Low Pressure (lamp) OFF threshold (see placard table below). The system will automatically update and the TPM indicator lamp will extinguish once the updated tire pressures have been received.

Tire pressure will vary with temperature by about 1 psi (6.9 kPa) for every 12°F (6.5°C). This means that when the outside temperature decreases, the tire pressure will decrease. Tire pressure should always be set based on cold inflation tire pressure (placard pressure). This is defined as the tire pressure after a vehicle has not been driven for more than 3 hours (and in outside ambient temperature). The tire pressure will also increase as the vehicle is driven; this is normal and there should be no adjustment for this increased pressure. For a system fault, the system will return to normal once the WCM receives a valid transmission from that sensor location.

PREMIUM TIRE PRESSURE MONITORING

The operation and lamp/chime strategy of the Base Tire Pressure Monitoring System (TPMS) also applies to the Premium TPMS, but the premium TPMS can display text messages and a tire pressure graphic display on the information cluster. If a low pressure condition is detected, in addition to a chime and indicator lamp turning ON, a graphic display of the pressure value(s) with the low tire(s) flashing will appear in the Electronic Vehicle Information Center (EVIC). Once pressure in the suspect tire(s) raises above the Low Pressure (lamp) OFF Threshold (see placard table below), the lamp will go out once the WCM receives a valid transmission from the sensor. If a system fault is detected, in addition to a chime and a indicator lamp flashing, a "Check TPM System" text message will be displayed in the instrument cluster, and the tire pressure graphic display will have "- -" in place of the pressure value. After the flash sequence, the TPM indicator lamp will remain illuminated. The system will return to normal once the WCM receives a valid transmission from that sensor location.

The Premium TPMS determines the location of the tire pressure sensors by using transponders located in three of the four wheel wells on the vehicle. A fourth transponder is not necessary in the remaining wheel well due to the process of elimination theory. Once the system knows the location of the first three sensors, it assumes the location of the fourth tire pressure sensor, and updates the graphic display when necessary. For more information, refer to **TRANSPONDER, TIRE PRESSURE MONITORING (TPM), OPERATION**.

TPM THRESHOLD PRESSURES

NOTE: To determine the pressure thresholds for a vehicle, refer to the Tire Inflation Pressure (Placard) Label found on the Driver's B-Pillar, then apply the placard pressure to the following table.

TPM THRESHOLD PRESSURES TABLE

Placard Pressure (Cold) (PSI)	Low Pressure ON Threshold (PSI)	Low Pressure OFF Threshold (PSI)
28	22	26
29	23	27
30	24	28
31	25	29
32	25	29

33	26	30
34	27	31
35	28	32
36	29	33
37	29	34
38	30	35
39	31	36
40	32	37
41	33	38
42	34	39
43	35	40
44	36	41
45	36	41
46	37	43
47	38	44
48	38	45
49	39	45
50	40	47
51	41	48
55	44	52
60	48	57
65	52	62
70	56	67
75	60	72
80	64	77

DIAGNOSIS AND TESTING

DIAGNOSIS AND TESTING - TIRE PRESSURE MONITORING

When diagnosing a tire pressure issue, first check the Tire Pressure Monitoring (TPM) indicator lamp in the instrument cluster during ignition key ON. From the OFF position, turn the key to ON and check the TPM indicator lamp to observe one of the following:

- If after 10 seconds the indicator lamp is illuminating continuously (not flashing), proceed to LOW PRESSURE below.

- If after 10 seconds the indicator lamp flashes on/off for 75 seconds, then remains on solid, there is a system fault detected. Refer to **SYSTEM FAULT**.

LOW PRESSURE

NOTE: Tire pressure may increase from 2 to 6 psi (14 to 41 kPa) during normal driving conditions. Do NOT reduce this normal pressure build up.

NOTE: Tire pressure will vary with temperature by about 1 psi (6.9 kPa) for every 12°F (6.5°C). This means that when the outside temperature decreases, the tire pressure will also decrease. Tire pressure should always be set based on cold inflation tire pressure. For details. Refer to TIRES, STANDARD PROCEDURE.

Check air pressure as necessary in all tires using a known accurate air gauge and adjust to the specification listed on the Tire Inflation Pressure Label (Placard) provided with the vehicle (usually applied to the driver side B-pillar). After adjusting air pressure in a tire on the vehicle, allow approximately two minutes for the message or indicator lamp to go out.

If air pressure in any tire is low, inspect **all** the tires for leaks. A water "dunk tank" or other water test may be used to check for a leak around the sensor as long as any water at the valve core is removed once the procedure is completed. The water can be easily expelled from the core area by pushing in on the core for several seconds, allowing escaping air to drive out any moisture. Reinflate the tire as necessary. Always make sure the original (special) valve stem cap is securely installed to keep moisture out of the sensor.

If the indicator lamp is still ON continuously, refer to the appropriate diagnostic information.

SYSTEM FAULT

If a system fault is detected, a chime will sound, and the TPM indicator (telltale) lamp will flash for 75 seconds, then remain on solid. For vehicles with the Premium TPM Systems, a "CHECK TPM SYSTEM" message will appear in the Electronic Vehicle Information Center (EVIC), followed by a graphic display. A

system fault can occur by many scenarios, including the following:

- Signal interference due to electronic devices or driving next to facilities emitting the same Radio Frequencies as the TPM sensors.
- Installing some form of aftermarket window tinting that affects radio wave signals.
- Accumulation of snow or ice around the wheels or wheel housings.
- Using tire chains on the vehicle.
- Using wheels not equipped with TPM sensors.

Refer to the appropriate diagnostic information.

SENSOR, TIRE PRESSURE MONITORING (TPM)

CAUTION

CAUTION

CAUTION: The Tire Pressure Monitoring (TPM) system has been optimized for the original equipment tires and wheels. TPM system pressures have been established for the tire size equipped on the vehicle. Undesirable system operation or sensor damage may result when using replacement equipment that is not of the same size, type, or style. Aftermarket wheels can cause sensor damage. Do not use aftermarket tire sealants or balance beads if your vehicle is equipped with TPM, as damage to the sensors may result.

CAUTION: Do not attempt to install a tire pressure sensor in an aftermarket wheel. Use tire pressure sensors in original style factory wheels only. If aftermarket wheels are installed, and therefore do not contain tire pressure sensors, the system will not function properly and the driver will be continuously notified of a system malfunction.

CAUTION: After inspecting or adjusting the tire pressure

always reinstall the valve stem cap. This will prevent moisture and dirt from entering the valve stem, which could damage the Tire Pressure Sensor.

CAUTION: Tire pressure sensor valve stem caps and cores are specially designed for the sensors. Due to risk of corrosion, do not use a standard valve stem cap or core in a tire pressure sensor in place of the original equipment style sensor cap and core.

CAUTION: Any time a sensor is to be installed in a wheel, it is necessary to install a new sensor-to-wheel seal, metal washer and valve stem nut, to ensure air tight sealing.

CAUTION: When installing the valve core, be sure to tighten the core to specifications. Overtightening by a little as three or four inch pounds can damage the sensor.

DESCRIPTION

DESCRIPTION

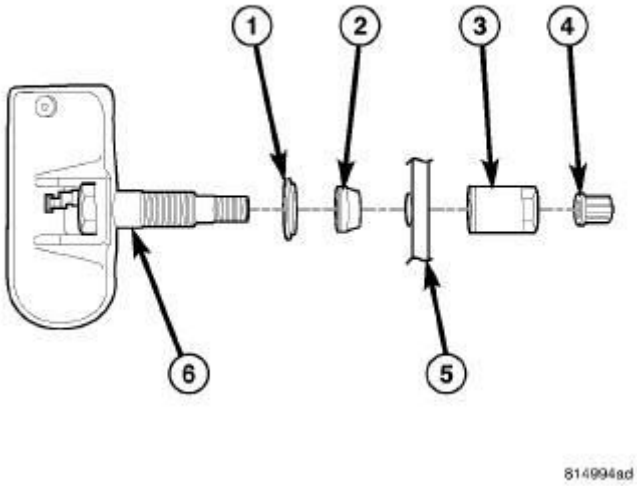

Fig. 11: Sensor Mounting - Exploded View

Courtesy of CHRYSLER GROUP, LLC

1 - METAL WASHER
2 - SEAL
3 - NUT (WITH PRESSED-IN WASHER)
4 - CAP (WITH SEAL)
5 - SECTIONAL CUTAWAY OF WHEEL
6 - TPM SENSOR

On vehicles equipped with Tire Pressure Monitoring (TPM), one tire pressure sensor (6) is mounted to each wheel (5) in place of the traditional tire valve stem. Each sensor has an internal battery that lasts up to 10 years. The battery is not serviceable. At the time of battery failure, the sensor must be replaced.

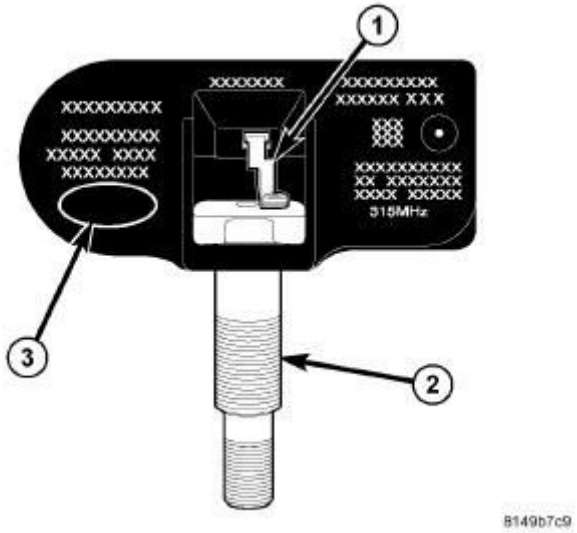

Fig. 12: Tire Pressure Sensor
Courtesy of CHRYSLER GROUP, LLC

1 - ANTENNA STRAP
2 - VALVE STEM
3 - IDENTIFICATION INSIGNIA

The TPM system operates on a 315 MHz radio frequency. The 315 MHz sensors can be easily identified by a white outline oval (black center) insignia (3) on the sensor body.

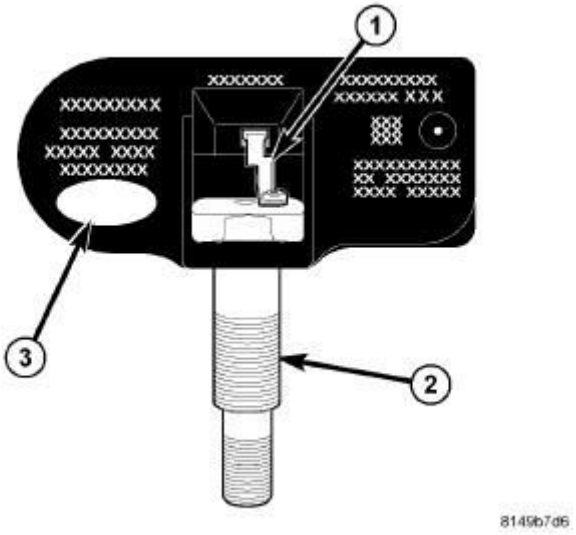

Fig. 13: Tire Pressure Sensor - Export
Courtesy of CHRYSLER GROUP, LLC

1 - ANTENNA STRAP
2 - VALVE STEM
3 - IDENTIFICATION INSIGNIA

The Export TPM system operates on a 433 MHz radio frequency. The 433 MHz sensors can be easily identified by either a solid white oval insignia (3) on the body or.

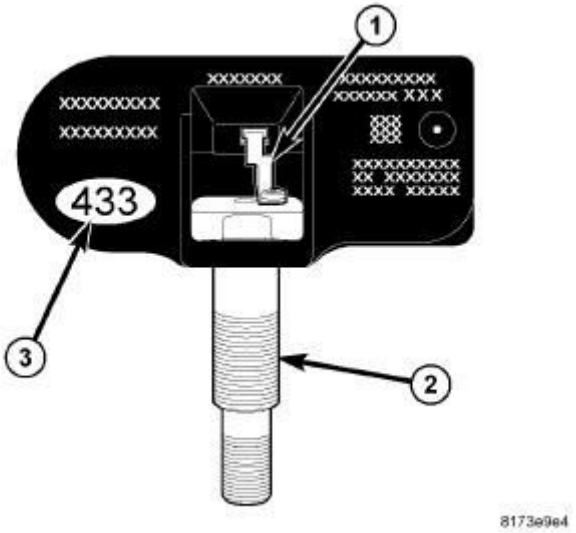

Fig. 14: Tire Pressure Sensor - Export
Courtesy of CHRYSLER GROUP, LLC

1 - ANTENNA STRAP
2 - VALVE STEM
3 - IDENTIFICATION INSIGNIA

a solid white oval insignia (3) with 433 printed in the center. The sensors are identical except for the oval insignia. The 433 MHz sensors can either have a black or grey sensor body.

CAUTION: Although 315 MHz and 433 MHz sensors are identical in size and shape, they are not interchangeable. Always make sure the correct sensor is being used.

NOTE: Sensors may be identified by valve stem cap color. From the factory, 315 MHz sensors have a gray valve stem cap while 433 MHz sensors have a black valve stem cap. Otherwise, once mounted inside a tire and wheel assembly you are not able to visually tell the difference between a 315 MHz and 433 MHz sensor. At that point, the TPM-RKE Analyzer, Special Tool 9936, with the Scan Tool may be used to identify the sensor frequency or the tire can be dismounted allowing visual inspection of the sensor body.

The TPM sensors are designed for original style factory wheels. It is not recommended to install a tire pressure sensor in an aftermarket wheel (This could cause sealing and system performance issues). **Do not attempt to install a tire pressure sensor in an aftermarket wheel. If aftermarket wheels are installed and do not contain tire pressure sensors, the system will not function properly and the driver will be continuously notified of a system malfunction.**

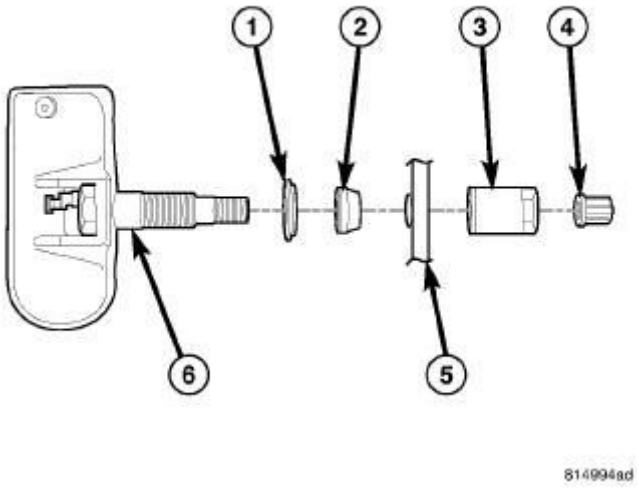

Fig. 15: Sensor Mounting - Exploded View
Courtesy of CHRYSLER GROUP, LLC

1 - METAL WASHER
2 - SEAL
3 - NUT (WITH PRESSED-IN WASHER)
4 - CAP (WITH SEAL)
5 - SECTIONAL CUTAWAY OF WHEEL
6 - TPM SENSOR

The serviceable components of the tire pressure sensor are:

- Sensor-To-Wheel Seal (2) and Metal Washer (1)
- Valve Stem Cap (4)
- Valve Stem Core
- Valve Stem Nut (with pressed-in washer) (3)

NOTE: Any time a sensor is installed on a wheel, a new Sensor-To-Wheel Seal (2), Metal Washer (1) and Valve Stem Nut (3) must be installed to ensure air tight sealing. A service kit is available.

The valve stem caps and cores are specifically designed for the tire pressure monitoring sensors. Although similar to standard valve stem caps and cores, they are different. The valve stem cap has a special seal inside to keep moisture and

corrosion out. The valve stem core has a special nickel coating to protect from corrosion.

OPERATION

OPERATION

The battery operated tire pressure sensor is both a transmitter and a receiver. The TPM sensor can be forced to transmit by using a special tool such as a TPM-RKE Analyzer, or from a transponder. Refer to **TRANSPONDER, TIRE PRESSURE MONITORING (TPM), OPERATION**. The TPM-RKE Analyzer has the ability to change the sensor's operating mode to PARK MODE and to help diagnose a faulty TPM sensor. Using a TPM-RKE Analyzer can take up to a minute to force a transmission from a sensor.

The TPM sensor can be in one of the following operating modes:

- **SLEEP MODE** - A new TPM sensor will be in this mode. If placed on the vehicle as a road tire, the TPM sensor will transmit once every 20 seconds when the vehicle is driven at speeds over 15 mph (24 km/h). If the vehicle is not moving, the sensor will only transmit on a pressure change greater then 1 psi (6.9 kPA). Driving the vehicle continuously at speeds over 15 mph (24 km/h) for more then 4 minutes will change the sensor state into 30 BLOCK MODE. The TPM sensor will not return to SLEEP MODE. Now, if the vehicle has been stopped for 20 minutes, the TPM sensor state will change to PARK MODE.
- **PARK MODE** - This is the correct operating mode when the vehicle is not moving. The sensor will transmit once every 13 hours to update the WCM, or will transmit on a 1 psi (6.9 kPa) delta change. The sensors will internally take a measurement of the tire pressure every minute to determine a change in tire pressure.
- **30 BLOCK MODE** - If the vehicle has been stopped for more then 20 minutes, or if the sensor's operating mode was forced to PARK MODE using a TPM-RKE Analyzer, the sensor's operating mode will transition from PARK MODE to 30 BLOCK MODE once the vehicle is driven over 15 mph (24 km/h). In this mode, the sensor will transmit once every 15 seconds when the vehicle is driven at speeds over 15 mph (24 km/h) for the first 30 transmissions. After about 10 minutes of continuous driving above 15 mph (24 km/h), the sensor's mode will change to DRIVE MODE.
- **DRIVE MODE** - In this mode, the sensor will transmit once every minute

when the vehicle is driven at speeds over 15 mph (24 km/h). Anytime the vehicle speed drops below 15 mph (24 km/h), the sensor mode will still be in Drive Mode, but will not transmit until the vehicle reaches speeds over 15 mph (24 km/h) once again. If the vehicle has been stationary for more then 20 minutes, the sensor state will transition to Park Mode.

Each sensor's (transmitter) broadcast is uniquely coded so that the wireless control module (WCM) can monitor the state of each of the sensors on the four rotating road wheels. The WCM can automatically learn and store the sensor's ID while driving "within 10 minutes continuously above 15 mph (24 km/h)" after a sensor has been replaced. The vehicle must be stationary for more then 20 minutes in order to initiate the learning sequence. The WCM can also learn the sensor's ID using the TPM-RKE Analyzer, Special Tool 9936, with the Scan Tool following the procedure listed in the appropriate diagnostic information.

REMOVAL

REMOVAL

1. Raise and support vehicle.
2. Remove tire and wheel assembly.

CAUTION: The cap used on this valve stem contains an O-ring seal to prevent contamination and moisture from entering the valve stem. Do not substitute a regular valve stem cap in its place.

CAUTION: The valve stem used on this vehicle is made of aluminum and the core is nickel plated brass. The original valve stem core must be reinstalled and not substituted with a valve stem core made of a different material. This is required to prevent corrosion in the valve stem caused by the different metals.

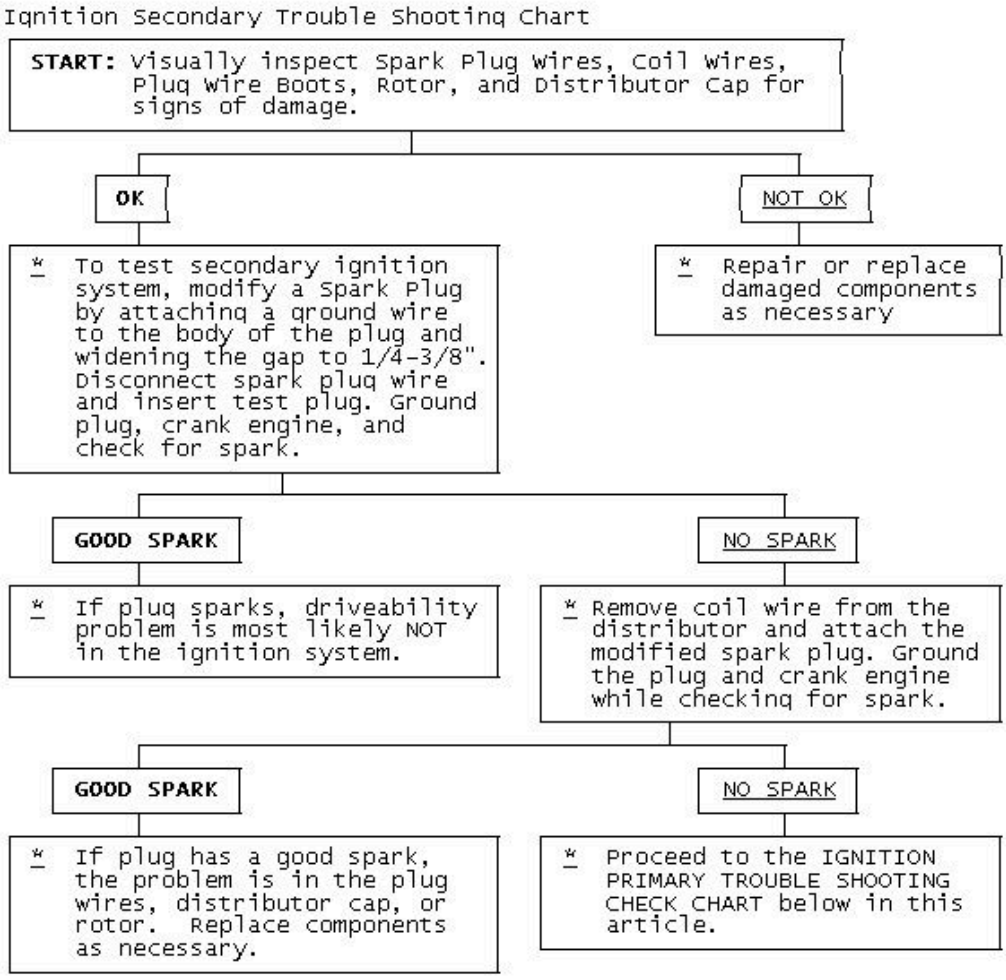

Fig. 16: Start Mount/Dismount Tool Within 10 Degrees Of Valve Stem
Courtesy of CHRYSLER GROUP, LLC

3. Dismount tire from wheel following tire changer manufacturers instructions while paying special attention to the following to avoid damaging the pressure sensor:
   a. When breaking the tire bead loose from the wheel rim, avoid using the Bead Breaker in the area of the sensor (1). That includes both outer and inner beads of the tire.
   b. When preparing to dismount the tire from the wheel, carefully insert the mounting/dismounting tool 280° from the valve stem ± 10°, then proceed to dismount the tire from the wheel. Use this process on both

outer and inner tire beads.

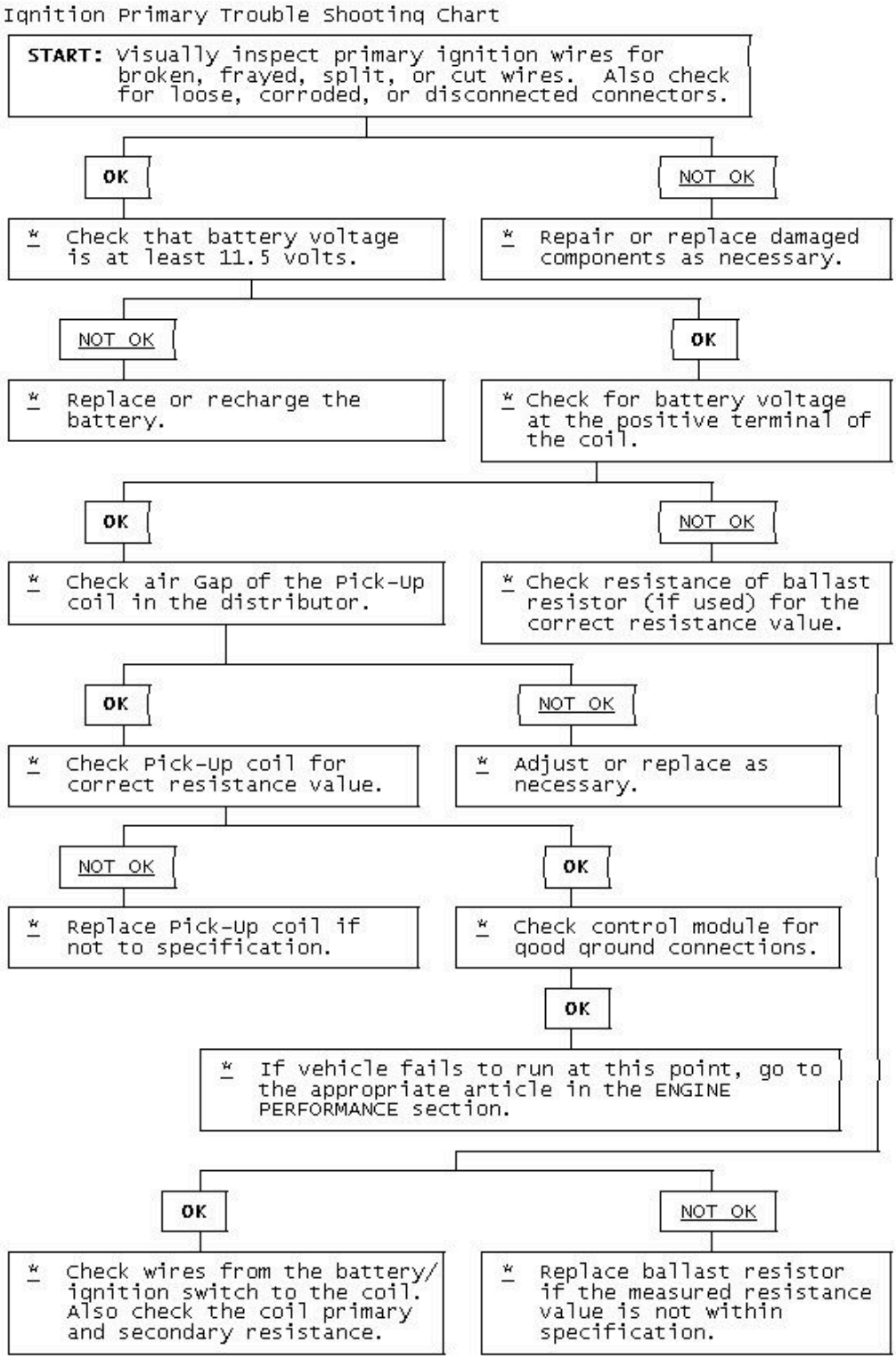

Fig. 17: Sensor Mounting To Wheel

Courtesy of CHRYSLER GROUP, LLC

4. Remove sensor nut (3) retaining sensor to wheel. While removing nut, hold pressure against rear of metal valve stem to keep valve stem from pushing rearward, damaging antenna strap.
5. Remove sensor (1) from wheel (2).

INSTALLATION

INSTALLATION

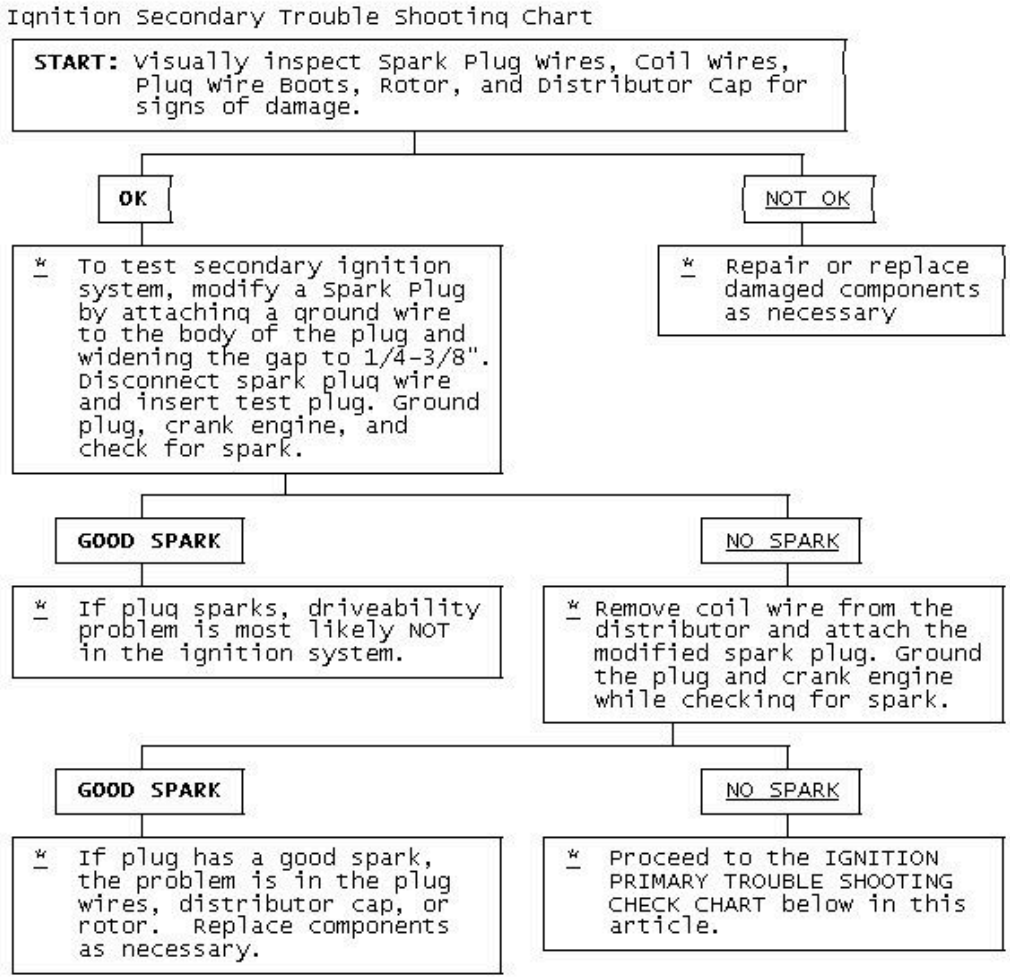

Fig. 18: Sensor Mounting - Exploded View
Courtesy of CHRYSLER GROUP, LLC

1 - METAL WASHER
2 - SEAL
3 - NUT (WITH PRESSED-IN WASHER)
4 - CAP (WITH SEAL)
5 - SECTIONAL CUTAWAY OF WHEEL
6 - TPM SENSOR

NOTE: Before reinstalling an existing tire pressure sensor, replace seal (2) and metal washer (1) at base of sensor valve stem (6) to ensure proper sealing.

1. Wipe area clean around sensor/valve stem mounting hole in wheel (5). Make sure surface of wheel is not damaged.

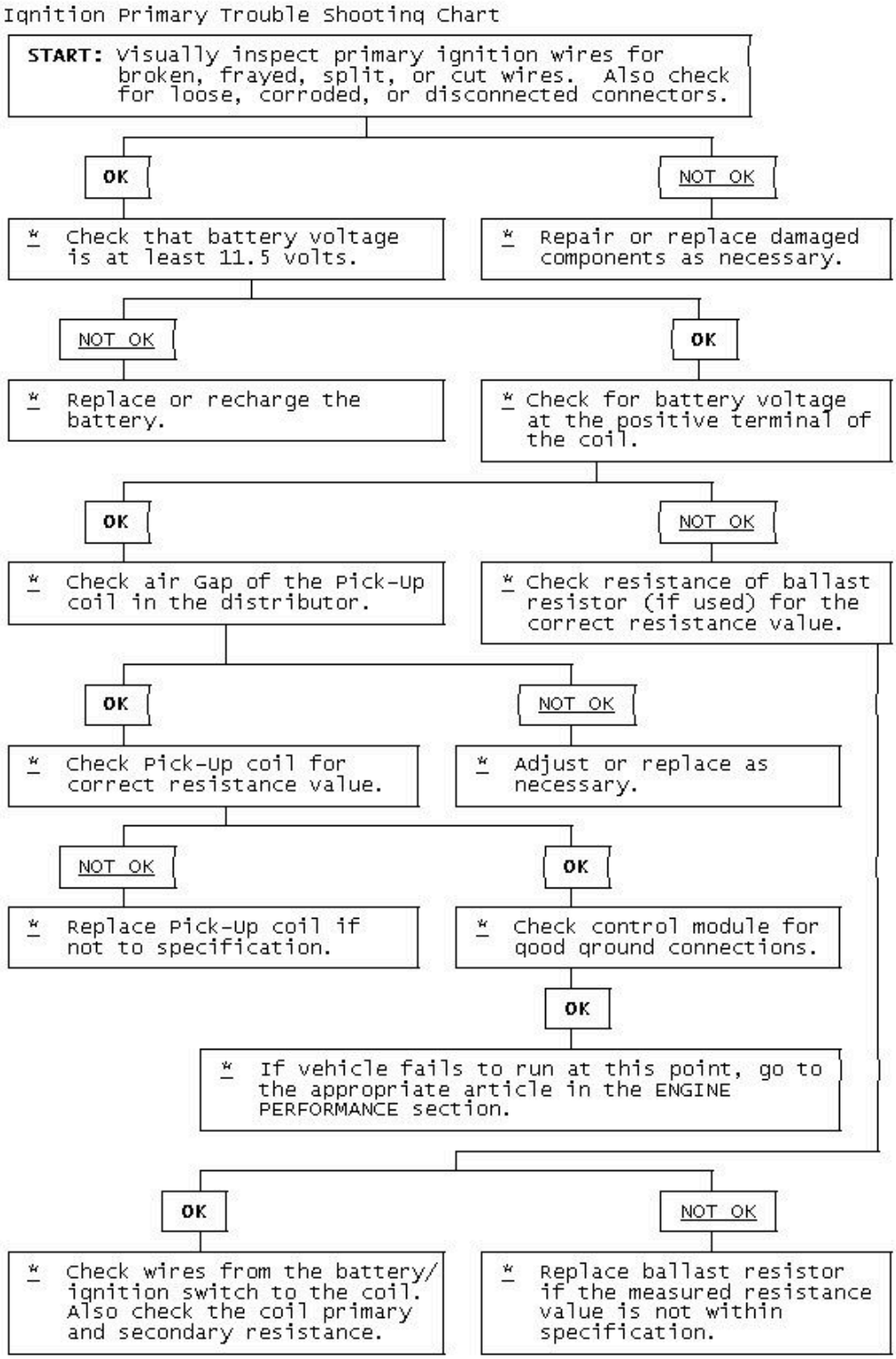

Fig. 19: Tire Pressure Sensor

Courtesy of CHRYSLER GROUP, LLC

1 - ANTENNA STRAP
2 - VALVE STEM
3 - IDENTIFICATION INSIGNIA

CAUTION: To avoid damaging sensor antenna strap (1), if equipped, hold pressure against rear of metal valve stem (2) while sensor is inserted through wheel mounting hole and nut is installed.

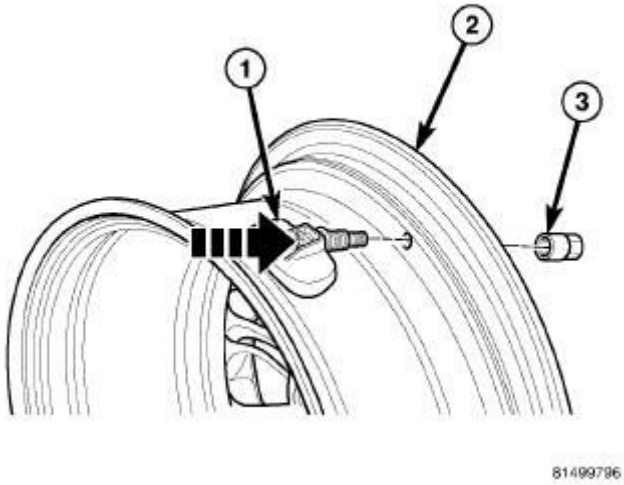

Fig. 20: Installing Sensor To Wheel
Courtesy of CHRYSLER GROUP, LLC

1 - TIRE PRESSURE SENSOR
2 - WHEEL
3 - NUT (WITH WASHER)

2. Insert sensor (1) through wheel (2) as shown keeping pressure against rear of metal valve stem (See Arrow). Potted side of sensor is to be positioned toward wheel. Do not attempt to mount sensor otherwise, damage may occur.
3. Install sensor nut (with pressed-in washer) (3) by hand.

DRIVEABILITY WORKSHEET

(To Be Filled Out By Vehicle Owner)

Name: _____ **Date:** _____ **Make:** _____

Model: _____ **Year:** _____ **Engine:** _____ **Mileage:** _____

FAULT CHARACTERISTICS – SYMPTOMS – DESCRIPTION OF PROBLEM	(Please Check All That Apply In All Categories)
Starting Problems	☐ Will Not Crank ☐ Cranks, But Won't Start ☐ Starts, But Takes A Long Time
Engine Quits/ Running Problems	**Quits:** ☐ Right After Starting ☐ When Put Into Gear ☐ Right After Vehicle Comes To A Stop ☐ During Steady Speed Driving ☐ While Idling ☐ During Acceleration ☐ When Parking
Poor Idling Conditions	**Idle Speed:** ☐ Is Too Slow At All Times ☐ Is Too Slow With A/C On ☐ Is Too Fast ☐ Is Rough Or Uneven ☐ Fluctuates Up and Down
Poor Running Conditions	☐ Runs Rough ☐ Lacks Power ☐ Hesitates Or Stumbles On Acceleration ☐ Bucks and Jerks ☐ Engine Knocks, Pings, Rattles ☐ Backfires ☐ Poor Fuel Economy ☐ Misfires or Cuts Out ☐ Surges and/or Chuggles ☐ Dieseling or Run-On ☐ Engine Light Always On ☐ Engine Light On Sometimes ☐ Fuel, Gas, or Sulfur Smell
Auto. Transmission Problems	☐ Improper Shifting (early/late) ☐ Changes Gear Randomly On Its Own ☐ Vehicle Does Not Move When In Gear
Poor Handling	☐ Pulls To One Side ☐ Hard Steering ☐ Vehicle Shakes and/or Vibrates While Moving
Noise Problems	**Explain:**
Odor Problems	**Explain:**
Problem Frequency	☐ Always ☐ Often ☐ Occasionally
Usually Occurs	☐ Morning ☐ Afternoon ☐ Anytime
Engine Temp.	☐ Cold ☐ Warm ☐ Hot
Vehicle Speed	☐ Low ☐ Cruising ☐ High
Driving Conditions During Occurrence	☐ Short – Less Than 2 Miles ☐ 2-10 Miles ☐ Long – More Than 10 Miles ☐ Stop & Go ☐ While Turning ☐ While Braking ☐ At Gear Engagement ☐ With A/C Operating ☐ With Headlights On ☐ During Acceleration ☐ During Deceleration ☐ Mostly Downhill ☐ Mostly Uphill ☐ Mostly Level ☐ Mostly Curvy ☐ Rough Road
Driving Habits	☐ Drive Hard Before Engine Is Warmed ☐ Allow Engine To Warm ☐ Mostly City Driving ☐ Highway ☐ Park Vehicle Inside ☐ Outside **Drive Per Day:** ☐ Less Than 10 Miles ☐ 10-50 ☐ More Than 50 **Fuel Octane:** ☐ 87 ☐ 89 ☐ 91 ☐ More Than 91 **Brand:** _____ ☐ Gasohol ☐ Propane Conversion
Outside Weather	☐ Cold ☐ Warm ☐ Hot ☐ Wet/Rainy ☐ Fog ☐ Snow/Hail ☐ Dust/Dirt ☐ Dry ☐ Humid

Fig. 21: Seat Sensor Against Wheel Interior
Courtesy of CHRYSLER GROUP, LLC

1 - WHEEL INTERIOR
2 - TIRE PRESSURE SENSOR

CAUTION: Over-torquing the sensor nut by as little as 12

N.m (106 in. lbs.) may result in sensor separation from the valve stem. Under this condition, the sensor may still function. However, the condition should be corrected immediately.

NOTE: Before tightening sensor nut, push downward on sensor housing (2) in an attempt to make it flush with interior contour of wheel (1).

4. While holding sensor in position, tighten sensor nut to 8 N.m (71 in. lbs.).
5. Mount tire on wheel following tire changer manufacturers instructions, paying special attention to the following to avoid damaging tire pressure sensor:

Dear Valued Customer:
Our goal is to fix your problem correctly and get you back on the road as soon as possible in the unlikely event you experience a problem with your vehicle. Help us identify the exact nature of the concern by taking a few moments to complete the appropriate section of this diagnostic worksheet. Thank you.

CUSTOMER NAME: **PHONE NO.:** **REPAIR ORDER NO.:**

DIAGNOSTIC WORKSHEET

DRIVEABILITY - ENGINE - AUTOMATIC TRANSMISSION

SYMPTOM (CHECK ALL THAT APPLY)
ENGINE

- ☐ "Service Engine Soon"/"Malfunction Indicator Light" on
- ☐ Hard start/no start (cranks OK)
- ☐ Won't crank
- ☐ Engine stalls
- ☐ Engine miss
- ☐ Miss while driving
- ☐ Hesitates, stumbles or sags
- ☐ Rough idle
- ☐ Idle is too high ☐ Idle is too low
- ☐ Poor power/performance
- ☐ Surge or chuggle, buck - jerk - skip
- ☐ Poor gas mileage ☐ Highway ☐ City
- ☐ Pings, detonates
- ☐ Suphur, rotten egg odor
- ☐ Backfires (popping noise) - underhood/tailpipe
- ☐ Exhaust smoke ☐ Increased oil consumption
- ☐ Runs on after key is turned off
- ☐ Speed fluctuates without moving accelerator
- ☐ Engine noise (explain): _____

(whine, rattle, groan, clunk, etc.)

- ☐ Other: _____

TRANSMISSION

- ☐ Does not shift properly ☐ Hard shift
- ☐ Will not shift ☐ Up ☐ Down
- ☐ Will not shift into overdrive
- ☐ Engine starts in other than "P" or "N"
- ☐ Noise (describe): _____

(whine, rattle, groan, clunk, buzz, etc.)

- ☐ Shifts into gear too early
- ☐ Overdrive doesn't work with speed control, but is otherwise OK
- ☐ Highway speed - shudder, surge, etc.
- ☐ Other: _____

EXPLAIN: _____

OPERATING CONDITIONS (CHECK ALL THAT APPLY)
HOW OFTEN DOES IT OCCUR? (Engine and/or Transmission)

- ☐ Always ☐ Few seconds ☐ Few minutes
- ☐ Few hours ☐ Few days ☐ Few weeks
- ☐ Few months ☐ Variable ☐ Only during event
- ☐ Every _____ to ___ miles ☐ Unknown
- ☐ Other (explain): _____
- ☐ Just started ☐ Getting better ☐ Getting worse
- ☐ Since new

WHEN DOES IT OCCUR? (Engine and/or Transmission)
When Engine Temperature is:

- ☐ Cold ☐ Warm ☐ Hot
- ☐ All the time ☐ Only during warmup

Weather Conditions:

- ☐ Very cold - below 0 degrees F ☐ Cold - 0 to 32 degrees F
- ☐ Cool - 32 to 60 degrees F ☐ Warm - 60 to 80 degrees F
- ☐ Hot - Above 80 degrees F ☐ Any environment
- ☐ Raining ☐ Dry ☐ Humid
- ☐ Snow/ice ☐ Wet roads ☐ Other (explain below)

Driving Conditions:

- ☐ Light throttle ☐ Medium throttle ☐ Hard throttle
- ☐ Starting ☐ At idle ☐ Decelerating
- ☐ Over bumps ☐ When shifting ☐ While turning
- ☐ Cruising steady at _____ MPH ☐ While braking
- ☐ Anytime ☐ Uphill ☐ Downhill
- ☐ Highway ☐ City/town ☐ Stop and go
- ☐ Between _____ MPH and _____ MPH
- ☐ Only with A/C or Defrost on

What Type of Fuel? **What Brand?** _____

- ☐ Regular UL ☐ Mid range UL ☐ Premium Unleaded
- ☐ Gasohol ☐ Ethanol ☐ Methanol
- ☐ Diesel #1 ☐ Diesel #2 ☐ Various brands

When Gear Selector is in:

- ☐ Park/Neutral ☐ Reverse ☐ Overdrive
- ☐ Drive/3 ☐ Drive/2 ☐ Drive/1

Between Gears:

- ☐ Park to R or D ☐ Rev/Drive ☐ First/Second
- ☐ Second/Third ☐ Third/Overdrive

50G15061

Fig. 22: Mounting Tire Using Rotating Wheel Machine
Courtesy of CHRYSLER GROUP, LLC

a. Rotating Wheel Tire Changers - Once the wheel is mounted to the changer, position the sensor valve stem (2) approximately 280° from the head of the changer (located at 1) in a clockwise direction before

rotating the wheel (also in a clockwise direction) to mount the tire. Use this procedure on both the outer and inner tire beads.

1 - HEAD OF CHANGER LOCATED HERE
2 - VALVE STEM

BRAKES - STEERING - SUSPENSION

SYMPTOM

- ☐ Vehicle pulls right - When _____
- ☐ Vehicle pulls left - When _____
- ☐ Steering wheel vibrates at ____ MPH
- ☐ Excessive play in steering
- ☐ Erratic steering when braking
- ☐ Poor steering wheel return after cornering
- ☐ Suspension bottoms out
- ☐ Leans or sways in corners
- ☐ Brake light on
- ☐ Traction control light on
- ☐ Uneven tire wear
- ☐ Sits uneven
- ☐ "Dog" tracks
- ☐ ABS light on
- ☐ Soft ride

Hard to steer

- ☐ Effort
- ☐ Wanders
- ☐ Steering wheel off center

Shimmy/vibration (check box below for location)

- ☐ Front
- ☐ Rear
- ☐ Don't know
- ☐ Seat
- ☐ Floor
- ☐ Other _____

Brake pedal

- ☐ Noise
- ☐ Pulses
- ☐ Squeaks
- ☐ Hard
- ☐ Mushy
- ☐ Excessive travel

WHEN DOES IT OCCUR?

- ☐ Cold days
- ☐ Hot days
- ☐ Wet/rain
- ☐ All the time
- ☐ Intermittent
- ☐ Parking manuevers
- ☐ At road speed
- ☐ Accelerating
- ☐ Decelerating

EXPLAIN: _____

SQUEAK - RATTLE - NOISE CONDITIONS

AREA OF NOISE

☐ Engine Compartment	☐ Left	☐ Right	☐ Center	☐ Don't know
☐ Front Suspension	☐ Left	☐ Right	☐ Center	☐ Don't know
☐ Rear Suspension	☐ Left	☐ Right	☐ Center	☐ Don't know
☐ Passenger Compartment	☐ Left	☐ Right	☐ Center	☐ Don't know
☐ Instrument Panel	☐ Left	☐ Right	☐ Center	☐ Don't know
☐ Doors	☐ Left	☐ Right	☐ Center	☐ Don't know
☐ Rear seat area	☐ Console	☐ Other _____		

NOISE SOUNDS LIKE

- ☐ Knocks
- ☐ Hard metal
- ☐ Light metal
- ☐ Roars
- ☐ Ticking
- ☐ Whine
- ☐ Squeaks
- ☐ Rattles
- ☐ Scraping
- ☐ Other _____

HOW OFTEN DOES IT OCCUR?

- ☐ Continuous
- ☐ Often
- ☐ Intermittent
- ☐ Just started
- ☐ Since new

WHEN DOES IT OCCUR?

- ☐ All the time
- ☐ Speed
- ☐ RPM
- ☐ Only moving
- ☐ On turns
- ☐ Braking
- ☐ Hard throttle
- ☐ Light throttle
- ☐ Decelerate
- ☐ Steady speed
- ☐ Idle in gear
- ☐ Idle out of gear
- ☐ Hot days
- ☐ Cold days
- ☐ Humid or rainy
- ☐ Temperature _____
- ☐ Heavy bumps
- ☐ Light bumps
- ☐ Smooth pavement

EXPLAIN: _____

CUSTOMER NAME: **PHONE NO.:** **REPAIR ORDER NO:**

SHOP USE ONLY:

VIN#: **MILES:** **TECHNICIAN:** **ADVISOR#:**

50H15062

Fig. 23: Mounting Tire Using Rotating Tool Machine
Courtesy of CHRYSLER GROUP, LLC

b. Rotating Tool Tire Changers - Position the wheel on the changer so that the sensor valve stem (1) is located approximately 210° clockwise from the installation end of the mounting/dismounting tool (2) once the tool is mounted for tire installation. Make sure the sensor is clear of the lower bead breaker area (3) to avoid damaging the sensor when the breaker rises. Rotate the tool (2) in a counterclockwise direction to mount the tire. Use this procedure on both the outer and inner tire beads.

1 - VALVE STEM 2 - INSTALLATION END OF MOUNTING/DISMOUNTING TOOL 3 - BEAD BREAKER (KEEP CLEAR OF SENSOR)

6. Adjust air pressure to that listed on Tire Inflation Pressure Label (Placard) provided with vehicle (usually applied to driver's side B-pillar). Make sure **original style** valve stem cap is securely installed to keep moisture out of sensor.
7. Install tire and wheel assembly on vehicle.
8. Remove the support and lower the vehicle.

NOTE: If a sensor cannot be trained, refer to the appropriate Diagnostic Information.

9. Perform one of the following to make the system learn the new sensor ID:
   a. Use the TPM-RKE Analyzer, 9936, with a scan to program the WCM/SKREEM with the tire pressure sensor ID. This is part of the TPM Diagnostic Verification Test.
   b. Once the vehicle has remained stationary for more than 20 minutes, drive vehicle for a minimum of 10 minutes while maintaining a continuous speed above 15 mph (24 km/h). During this time, the system will learn the new sensor ID. This is part of the TPM Diagnostic Verification Test.

TRANSPONDER, TIRE PRESSURE MONITORING (TPM)

DESCRIPTION

DESCRIPTION

A transponder, sometimes referred to as a trigger module, is located in three of the four wheel wells (behind the wheelhouse splash shields) of a vehicle equipped with Premium TPM. These transponders are used to provide the Wireless Control Module (WCM), commonly referred to as the Sentry Key Remote Entry Module (SKREEM), with the location of the tire pressure sensors on the vehicle. A fourth transponder is not necessary in the remaining wheel well due to the process-of-elimination theory. Once the system knows the location of the first three sensors it assumes the location of the fourth tire pressure sensor. On this vehicle, there is a transponder located in the left front, left rear, and right rear wheelhouse. There is not a transponder located in the right front wheelhouse.

OPERATION

OPERATION

On vehicles equipped with the premium TPM system, the Wireless Control Module (WCM), commonly referred to as the Sentry Key Remote Entry Module (SKREEM), uses transponders (trigger modules) located in three of the four wheel wells on the vehicle to provide it with the location of the tire pressure sensors on the vehicle. Like the base system, the WCM receives RF signals from all four rotating wheel speed sensors. When the WCM needs to know which sensor is located at a particular location on the vehicle, it directs the transponder at that location to send out a low frequency signal to excite the nearby sensor. The WCM then receives that excited signal and knows where that sensor is located. This auto-locating process only happens in the first 10 minutes of any WCM cycle while traveling at speeds above 20 mph (32 km/h) (The auto-locating process will start again only if the vehicle has been shut off for approximately 20 minutes or longer). Once the WCM has performed this to the three locations that have transponders, it uses the process-of-elimination theory to figure out the location of the fourth sensor ID.

REMOVAL

FRONT

1. Remove the wheelhouse splash shield at the transponder requiring service. Refer to **SHIELD, SPLASH, FRONT WHEELHOUSE, REMOVAL** .

AIR CONDITIONING - HEATER - VENTILATION

SYSTEM OR AREA AFFECTED

☐ Air conditioner ☐ Heater ☐ Defroster ☐ Vent ☐ Bi-Level ☐ Fan/blower
☐ Max A/C ☐ Automatic Temperature Control ☐ Mix/blend ☐ Economy ☐ All

SYMPTOM

☐ Does not work ☐ Blows wrong temperature air ☐ No air comes out of vents ☐ Rapid cycling
☐ Noisy (explain) ☐ Broken ☐ Odor ☐ Air comes from wrong outlets ☐ Blows fuse
☐ Leaks ☐ Insufficient heat or cool ☐ Other (explain below)

WHEN DOES IT OCCUR?

☐ All the time ☐ Hot ☐ Cold ☐ Intermittent ☐ Right after startup
☐ When change controls only ☐ Other (explain below) ☐ Fan blower speed High / Med / Low

EXPLAIN: _____

ELECTRICAL - RADIO - TAPE/CD PLAYER

SYMPTOM - MUSIC SYSTEM

☐ Does not work ☐ Noisy ☐ Static ☐ Won't load ☐ Won't eject ☐ Poor reception
☐ Controls do not work ☐ Blows fuse ☐ Other (explain below)

SYSTEM AFFECTED

☐ Radio only ☐ AM ☐ FM ☐ FM stereo ☐ Graphic equalizer
☐ Tape player ☐ CD player ☐ Whole system ☐ Steering wheel buttons ☐ Phone
☐ Speakers ☐ Front ☐ Rear ☐ Left ☐ Right
☐ Antenna ☐ Clock ☐ Radio or player controls ☐ Rear seat controls

ALL OTHER ELECTRICAL ITEMS OR ACCESSORIES
Please list the complaint accessory or item and check any applicable symptom(s) from the list that follows:

_____ ☐ Inoperable ☐ Noisy ☐ No control ☐ Erratic
☐ Check light on or flashing ☐ Works improperly (explain below)
☐ Blows fuse ☐ Intermittent ☐ Related system affected (explain below)

_____ ☐ Inoperable ☐ Noisy ☐ No control ☐ Erratic
☐ Check light on or flashing ☐ Works improperly (explain below)
☐ Blows fuse ☐ Intermittent ☐ Related system affected (explain below)

_____ ☐ Inoperable ☐ Noisy ☐ No control ☐ Erratic
☐ Check light on or flashing ☐ Works improperly (explain below)
☐ Blows fuse ☐ Intermittent ☐ Related system affected (explain below)

WHEN DOES IT OCCUR?

☐ All the time ☐ Hot ☐ Cold ☐ Just after starting - malfunctions for a while
☐ Intermittent ☐ After runs for _____ minutes ☐ Rough roads or bumps only
☐ Other (explain below)

EXPLAIN: _____

CUSTOMER NAME: **PHONE NO.:** **REPAIR ORDER NO:**

SHOP USE ONLY:
VIN#: **MILES:** **TECHNICIAN:** **ADVISOR#:**

50I15063

Fig. 24: Left Front Tpm Transponder
Courtesy of CHRYSLER GROUP, LLC

2. Disconnect the wiring harness connector (2) at the transponder (1).
3. Remove the mounting nuts (3), then remove the transponder (1).

REAR

1. Remove the wheelhouse splash shield at the transponder requiring service. Refer to **SHIELD, SPLASH, REAR WHEELHOUSE, REMOVAL** .

WATER LEAK - WINDNOISE

WATER LEAK
Leak Occurs When?

☐ Setting level ☐ Any time it rains ☐ While driving in the rain ☐ Car wash only
☐ Back lower than front (facing uphill) ☐ Front lower than back (facing downhill)

Location of Leak (where water appears):

☐ LF Door ☐ RF Door ☐ LR Door ☐ RR Door ☐ Windshield ☐ Rear window
☐ LF window ☐ RF window ☐ LR window ☐ RR window ☐ Side door ☐ Sunroof/T-Top
☐ Under instrument panel ☐ Rear door/rear hatch

WINDNOISE:
Location:

☐ LF Door ☐ RF Door ☐ LR Door ☐ RR Door ☐ Windshield ☐ Rear window
☐ LF window ☐ RF window ☐ LR window ☐ RR window ☐ Side door ☐ Sunroof/T-Top
☐ Under instrument panel ☐ Rear door/rear hatch

EXPLAIN: _____

MANUAL TRANSMISSION - CLUTCH

SYMPTOM - MANUAL GEAR SHIFT

☐ Hard to shift ☐ Doesn't shift
☐ Grinds going into_____ gear
☐ Noisy when in _____ gear or neutral _____
☐ Slips/pops out of gear
☐ Noise (describe): _____

☐ Upshift light stays on
☐ Upshift light doesn't light

WHEN DOES IT OCCUR?

☐ All the time ☐ Light load
☐ Heavy load

SYMPTOM - CLUTCH

☐ Hard to push ☐ Fail to release
☐ Noise when pressing pedal down (describe): _____

☐ Slips ☐ Chattering (grabbing)
☐ Odor present ☐ Pedal stays on the floor
☐ Squealing sound

WHEN DOES IT OCCUR?
When Engine Temperature is:

☐ Cold ☐ Hot
☐ Accelerating ☐ Decelerating

EXPLAIN: _____

COMMENTS:

CUSTOMER NAME: **PHONE NO.:** **REPAIR ORDER NO:**

SHOP USE ONLY:
VIN#: **MILES:** **TECHNICIAN:** **ADVISOR#:**

50J15064

Fig. 25: Left Rear Tpm Transponder
Courtesy of CHRYSLER GROUP, LLC

2. Disconnect the wiring harness connector (3) at the transponder (1).
3. Remove the mounting nuts (2), then remove the transponder (1).

INSTALLATION

FRONT

DRIVEABILITY - ENGINE - AUTOMATIC TRANSMISSION

SYMPTOM (CHECK ALL THAT APPLY)
ENGINE

- ☐ "Service Engine Soon"/Malfunction Indicator Light" on
- ☐ Hard start/no start (cranks OK)
- ☐ Won't crank
- ☐ Engine stalls
- ☐ Engine miss
- ☐ Miss while driving
- ☐ Hesitates, stumbles or sags
- ☐ Rough idle
- ☐ Idle is too high ☐ Idle is too low
- ☐ Poor power/performance
- ☐ Surge or chuggle, buck - jerk - skip
- ☐ Poor gas mileage ☐ Highway ☐ City
- ☐ Ping, detonates
- ☐ Sulphur/rotten egg odor
- ☐ Backfires (popping noise) - underhood/tailpipe
- ☐ Exhaust smoke ☐ Increased oil consumption
- ☐ Runs on after key is turned off
- ☐ Speed fluctuates without moving accelerator
- ☐ Engine noise (explain): _____

(whine, rattle, groan, clunk, etc.)

- ☐ Other: _____

TRANSMISSION

- ☐ Does not shift properly ☐ Hard shift
- ☐ Will not shift ☐ Up ☐ Down
- ☐ Will not shift into overdrive
- ☐ Engine starts in other than "P" or "N"
- ☐ Noise (describe): _____

(whine, rattle, groan, clunk, buzz, etc.)

- ☐ Shifts into next gear too early
- ☐ Overdrive doesn't work with speed control, but is otherwise OK
- ☐ Highway speed - shudder, surge, etc.
- ☐ Other: _____

EXPLAIN: _____

OPERATING CONDITIONS (CHECK ALL THAT APPLY)
HOW OFTEN DOES IT OCCUR? (Engine &/or Transmission)

- ☐ Always ☐ Few Seconds ☐ Few minutes
- ☐ Few hours ☐ Few days ☐ Few weeks
- ☐ Few months ☐ Variable ☐ Only during event
- ☐ Every _____ to ____ miles ☐ Unknown
- ☐ Other (explain): _____
- ☐ Just started ☐ Getting better ☐ Getting worse
- ☐ Since new

WHEN DOES IT OCCUR? (Engine and/or Transmission)
When Engine Temperature is:

- ☐ Cold ☐ Warm ☐ Hot
- ☐ All the time ☐ Only during warmup

Weather Conditions:

- ☐ Very cold - below 0°F ☐ Cold - 0 to 32°F
- ☐ Cool - 32 to 60°F ☐ Warm - 60 to 80°F
- ☐ Hot - above 80°F ☐ Any environment
- ☐ Raining ☐ Dry ☐ Humid
- ☐ Snow/Ice ☐ Wet roads
- ☐ Other (explain): _____

Driving Conditions:

- ☐ Light throttle ☐ Medium throttle ☐ Hard throttle
- ☐ Starting ☐ At idle ☐ Decelerating
- ☐ Over bumps ☐ When shifting ☐ While turning
- ☐ Cruising - steady at MPH ☐ While braking
- ☐ Anytime ☐ Uphill ☐ Downhill
- ☐ Highway ☐ City/town ☐ Stop and go
- ☐ Between ____ MPH and _____ MPH
- ☐ Only with A/C or Defrost on

What Type of Fuel? **What Brand?**

- ☐ Regular UL ☐ Midrange UL ☐ Premium UL
- ☐ Gasohol ☐ Ethanol ☐ Methanol
- ☐ Diesel #1 ☐ Diesel #2 ☐ Various brands

When Gear Selector is in:

- ☐ Park/Neutral ☐ Reverse ☐ Overdrive
- ☐ Drive/3 ☐ Drive/2 ☐ Drive/1

Between Gears:

- ☐ Park to R or D ☐ Reverse/Drive ☐ First/Second
- ☐ Second/Third ☐ Third/Overdrive

CUSTOMER NAME: **PHONE NO.:** **REPAIR ORDER NO:**

SHOP USE ONLY:
VIN#: **MILES:** **TECHNICIAN:** **ADVISOR#:**

50H15054

Fig. 26: Left Front Tpm Transponder

Courtesy of CHRYSLER GROUP, LLC

1. Position the transponder (1) and install the mounting nuts (3).
2. Connect the wiring harness connector (2) to the transponder (1).
3. Install the wheelhouse splash shield and all components removed to access it. Refer to **SHIELD, SPLASH, FRONT WHEELHOUSE, INSTALLATION** .
4. Perform the TPM Diagnostic Verification Test. Refer to **STANDARD PROCEDURE** .

REAR

BRAKES - STEERING - SUSPENSION

SYMPTOM

- ☐ Vehicle pulls right - When _____
- ☐ Vehicle pulls left - When _____
- ☐ Steering wheel vibrates at ____ MPH
- ☐ Excessive play in steering
- ☐ Erratic steering when braking
- ☐ Poor steering wheel return after cornering
- ☐ Suspension bottoms out
- ☐ Leans or sways in corners
- ☐ Brake light on
- ☐ Traction control light on
- ☐ Uneven tire wear
- ☐ Sits uneven
- ☐ "Dog" tracks
- ☐ ABS light on
- ☐ Soft ride

Hard to steer

- ☐ Effort
- ☐ Wanders
- ☐ Steering wheel off center

Shimmy/vibration (check box below for location)

- ☐ Front
- ☐ Rear
- ☐ Don't know
- ☐ Seat
- ☐ Floor
- ☐ Other _____

Brake pedal

- ☐ Noise
- ☐ Pulses
- ☐ Squeaks
- ☐ Hard
- ☐ Mushy
- ☐ Excessive travel

WHEN DOES IT OCCUR?

- ☐ Cold days
- ☐ Hot days
- ☐ Wet/rain
- ☐ All the time
- ☐ Intermittent
- ☐ Parking manuevers
- ☐ At road speed
- ☐ Accelerating
- ☐ Decelerating

EXPLAIN: _____

CUSTOMER NAME: **PHONE NO.:** **REPAIR ORDER NO:**

SHOP USE ONLY:
VIN#: **MILES:** **TECHNICIAN:** **ADVISOR#:**

50C15059

Fig. 27: Left Rear Tpm Transponder
Courtesy of CHRYSLER GROUP, LLC

1. Position the transponder (1) and install the mounting nuts (2).
2. Connect the wiring harness connector (3) to the transponder (1).
3. Install the rear wheelhouse splash shield and all components removed to access it. Refer to **SHIELD, SPLASH, REAR WHEELHOUSE,**

INSTALLATION .

4. Perform the TPM Diagnostic Verification Test. Refer to **STANDARD PROCEDURE** .

TIRES

DESCRIPTION

TIRE

Tires are designed and engineered for each specific vehicle. They provide the best overall performance for normal operation. The ride and handling characteristics match the vehicle's requirements. With proper care they will give excellent reliability, traction, skid resistance, and tread life.

Driving habits have more effect on tire life than any other factor. Careful drivers will obtain, in most cases, much greater mileage than severe use or careless drivers. A few of the driving habits which will shorten the life of any tire are:

- Rapid acceleration
- Severe application of brakes
- High-speed driving
- Taking turns at excessive speeds
- Striking curbs and other obstacles
- Operating vehicle with over or under inflated tire pressures

Radial ply tires are more prone to irregular tread wear. It is important to follow the tire rotation interval shown in this Service Information on Tire Rotation. This will help to achieve a greater tread-life potential.

TIRE IDENTIFICATION

Tire type, size, load index and speed rating are encoded in the letters and numbers imprinted on the side wall of the tire. Refer to the Tire Identification chart to decipher the code. For example purposes, the tire size P225/60 R 16 97 T is used in the chart. An All Season type tire will also have either M + S, M AND S, or M - S (indicating mud and snow traction) imprinted on the side wall. An Extra or Light Load marking "XL" or "LL" may also be listed on the sidewall. The absence of an "XL" or "LL" marking infers a standard load tire.

TIRE IDENTIFICATION

Reading Tire Codes		
P	TIRE TYPE (Not present on all tires)	P - Passenger
		T - Temporary
		C - Commercial
		LT - Light Truck
225	SECTIONAL WIDTH	SHOWN IN MILLIMETERS
60	ASPECT RATIO	SHOWN IN PERCENTAGE*
R	CONSTRUCTION TYPE	R - RADIAL
		B - BIAS BELTED
		D - DIAGONAL (BIAS)
16	WHEEL DIAMETER	SHOWN IN INCHES
97	LOAD INDEX	**
T	SPEED RATING	**

AIR CONDITIONING - HEATER - VENTILATION

SYSTEM OR AREA AFFECTED

☐ Air conditioner ☐ Heater ☐ Defroster ☐ Vent ☐ Bi-Level ☐ Fan/blower
☐ Max A/C ☐ Automatic Temperature Control ☐ Mix/blend ☐ Economy ☐ All

SYMPTOM

☐ Does not work ☐ Blows wrong temperature air ☐ No air comes out of vents ☐ Rapid cycling
☐ Noisy (explain) ☐ Broken ☐ Odor ☐ Air comes from wrong outlets ☐ Blows fuse
☐ Leaks ☐ Insufficient heat or cool ☐ Other (explain below)

WHEN DOES IT OCCUR?

☐ All the time ☐ Hot ☐ Cold ☐ Intermittent ☐ Right after startup
☐ When change controls only ☐ Other (explain below) ☐ Fan blower speed High / Med / Low

EXPLAIN: _____

CUSTOMER NAME: **PHONE NO.:** **REPAIR ORDER NO:**

SHOP USE ONLY:
VIN#: **MILES:** **TECHNICIAN:** **ADVISOR#:**

50A15057

Fig. 28: Tire Aspect Ratio

Courtesy of CHRYSLER GROUP, LLC

1 - SECTIONAL WIDTH 2 - SECTIONAL HEIGHT

NOTE: * Height (2) ÷ Width (1) = Aspect Ratio.

NOTE: ** Consult the tire manufacturer regarding any questions on tire specifications or capabilities.

TIRE CHAINS

Refer to the owners manual supplied with the vehicle to determine whether the use of tire chains is permitted on this vehicle.

REPLACEMENT TIRES

WARNING: Failure to equip the vehicle with tires having adequate speed capability can result in sudden tire failure.

WARNING: In order to maintain the speed capability of the vehicle, replacement tires must have speed ratings equal to or higher than those fitted to the vehicle as original equipment. If tires with lower speed ratings are fitted, the vehicle's handling may be affected and the speed capability of the vehicle may be lowered to the maximum speed capability of the replacement tires. To avoid an accident resulting in severe or fatal injury, consult the tire manufacturer in regards to maximum speed ratings.

It is recommended that tires equivalent to the original equipment tires be used when replacement is needed.

Failure to use equivalent replacement tires may adversely affect the safety and handling of the vehicle.

The original equipment tires provide a proper combination of many

characteristics such as:

- Ride
- Noise
- Handling
- Durability
- Tread life
- Traction
- Rolling resistance
- Speed capability

The use of tires smaller than the minimum tire size approved for the vehicle can result in tire overloading and failure.

Use tires that have the approved load rating for the vehicle and never overload them. Failure to equip the vehicle with tires having adequate speed capability can result in sudden tire failure and loss of vehicle control.

The use of oversize tires may cause interference with vehicle components. Under extremes of suspension and steering travel, interference with vehicle components may cause tire damage.

SPARE TIRE

A compact (temporary) spare tire is standard equipment on this vehicle. A full-size spare is available on some models.

The compact spare tire is designed for emergency use only. The original tire should be repaired or replaced at the first opportunity, then reinstalled. Do not exceed speeds of 80 km/h (50 mph) when using the compact spare tire. Refer to the Owner's Manual for complete details.

DIAGNOSIS AND TESTING

TIRE NOISE

Unusual tire noise can be associated with tire and wheel vibration or irregular tire wear. For vibration issues, refer to **DIAGNOSIS AND TESTING**. For irregular tire wear issues, refer to **TIRES, DIAGNOSIS AND TESTING**.

TIRE/VEHICLE LEAD

Refer to **WHEEL ALIGNMENT, DIAGNOSIS AND TESTING** .

TIRE WEAR PATTERNS

ELECTRICAL - RADIO - TAPE/CD PLAYER

SYMPTOM - MUSIC SYSTEM

☐ Does not work ☐ Noisy ☐ Static ☐ Won't load ☐ Won't eject ☐ Poor reception
☐ Controls do not work ☐ Blows fuse ☐ Other (explain below)

SYSTEM AFFECTED

☐ Radio only ☐ AM ☐ FM ☐ FM stereo ☐ Graphic equalizer
☐ Tape player ☐ CD player ☐ Whole system ☐ Steering wheel buttons ☐ Phone
☐ Speakers ☐ Front ☐ Rear ☐ Left ☐ Right
☐ Antenna ☐ Clock ☐ Radio or player controls ☐ Rear seat controls

ALL OTHER ELECTRICAL ITEMS OR ACCESSORIES
Please list the complaint accessory or item and check any applicable symptom(s) from the list that follows:

_____ ☐ Inoperable ☐ Noisy ☐ No control ☐ Erratic
☐ Check light on or flashing ☐ Works improperly (explain below)
☐ Blows fuse ☐ Intermittent ☐ Related system affected (explain below)

_____ ☐ Inoperable ☐ Noisy ☐ No control ☐ Erratic
☐ Check light on or flashing ☐ Works improperly (explain below)
☐ Blows fuse ☐ Intermittent ☐ Related system affected (explain below)

_____ ☐ Inoperable ☐ Noisy ☐ No control ☐ Erratic
☐ Check light on or flashing ☐ Works improperly (explain below)
☐ Blows fuse ☐ Intermittent ☐ Related system affected (explain below)

WHEN DOES IT OCCUR?

☐ All the time ☐ Hot ☐ Cold ☐ Just after starting - malfunctions for a while
☐ Intermittent ☐ After runs for _____ minutes ☐ Rough roads or bumps only
☐ Other (explain below)

EXPLAIN: _____

CUSTOMER NAME: **PHONE NO.:** **REPAIR ORDER NO:**

SHOP USE ONLY:
VIN#: **MILES:** **TECHNICIAN:** **ADVISOR#:**

50B15058

Fig. 29: Identifying Tire Wear Patterns
Courtesy of CHRYSLER GROUP, LLC

Under inflation will cause wear on the shoulders of tire. Over inflation will cause wear at the center of tire.

Excessive camber causes the tire to run at an angle to the road. One side of tread is then worn more than the other.

Excessive toe-in or toe-out causes wear on the tread edges and a feathered effect across the tread.

TREAD WEAR INDICATORS

MANUAL TRANSMISSION - CLUTCH

SYMPTOM - MANUAL GEAR SHIFT

☐ Hard to shift ☐ Doesn't shift
☐ Grinds going into_____ gear
☐ Noisy when in _____ gear or neutral _____
☐ Slips/pops out of gear
☐ Noise (describe): _____
_____
_____
☐ Upshift light stays on
☐ Upshift light doesn't light

WHEN DOES IT OCCUR?

☐ All the time ☐ Light load
☐ Heavy load

SYMPTOM - CLUTCH

☐ Hard to push ☐ Fail to release
☐ Noise when pressing pedal down (describe): _____
_____
_____
☐ Slips ☐ Chattering (grabbing)
☐ Odor present ☐ Pedal stays on the floor
☐ Squealing sound

WHEN DOES IT OCCUR?
When Engine Temperature is:

☐ Cold ☐ Hot
☐ Accelerating ☐ Decelerating

EXPLAIN: _____
_____
_____
_____
_____
_____

CUSTOMER NAME: **PHONE NO.:** **REPAIR ORDER NO:**

SHOP USE ONLY:
VIN#: **MILES:** **TECHNICIAN:** **ADVISOR#:**

50J15056

Fig. 30: Identifying Tread Wear Indicators
Courtesy of CHRYSLER GROUP, LLC

Tread wear indicators are molded into the bottom of the tread grooves. When tread depth is 1.6 mm (1/16 in.), the tread wear indicators will appear as a 13 mm (1/2 in.) band (3).

Tire replacement is necessary when indicators appear in two or more grooves or if localized balding occurs.

STANDARD PROCEDURE

TIRE INFLATION PRESSURES

The specified tire pressures have been chosen to provide safe operation, vehicle stability, and a smooth ride. The proper tire pressure specification can be found

on the Tire And Loading Information Label provided with the vehicle (usually on the driver's door opening (B-pillar) or rear shutface of driver's door).

A quality air pressure gauge is recommended to check tire air pressure. Tire pressure should be checked cold once per month. Check tire pressure more frequently when the weather temperature varies widely. Tire pressure will decrease when the outdoor temperature drops. After checking the air pressure, replace valve cap finger tight.

Inflation pressures specified on the Tire Inflation Pressure Label are always the cold inflation pressure of the tire. Cold inflation pressure is obtained after the vehicle has not been operated for at least 3 hours, or the vehicle is driven less than one mile after being inoperative for 3 hours. Tire inflation pressures may increase from 2 to 6 pounds per square inch (psi) during operation. Do not reduce this normal pressure buildup.

Improper inflation can cause:

- Uneven wear patterns
- Reduced tread life
- Reduced fuel economy
- Unsatisfactory ride
- The vehicle to drift.

WARNING: Over or Under inflated tires can affect vehicle handling. The tire can fail suddenly, resulting in loss of vehicle control.

SQUEAK - RATTLE - NOISE CONDITIONS

AREA OF NOISE

☐ Engine Compartment	☐ Left	☐ Right	☐ Center	☐ Don't know
☐ Front Suspension	☐ Left	☐ Right	☐ Center	☐ Don't know
☐ Rear Suspension	☐ Left	☐ Right	☐ Center	☐ Don't know
☐ Passenger Compartment	☐ Left	☐ Right	☐ Center	☐ Don't know
☐ Instrument Panel	☐ Left	☐ Right	☐ Center	☐ Don't know
☐ Doors	☐ Left	☐ Right	☐ Center	☐ Don't know
☐ Rear seat area	☐ Console	☐ Other _____		

NOISE SOUNDS LIKE

☐ Knocks	☐ Hard metal	☐ Light metal	☐ Roars	☐ Ticking	☐ Whine
☐ Squeaks	☐ Rattles	☐ Scraping	☐ Other _____		

HOW OFTEN DOES IT OCCUR?

☐ Continuous ☐ Often ☐ Intermittent ☐ Just started ☐ Since new

WHEN DOES IT OCCUR?

☐ All the time	☐ Speed	☐ RPM	☐ Only moving	☐ On turns	☐ Braking
☐ Hard throttle	☐ Light throttle	☐ Decelerate	☐ Steady speed	☐ Idle in gear	☐ Idle out of gear
☐ Hot days	☐ Cold days	☐ Humid or rainy	☐ Temperature _____		
☐ Heavy bumps	☐ Light bumps	☐ Smooth pavement			

EXPLAIN: _____

CUSTOMER NAME: **PHONE NO.:** **REPAIR ORDER NO:**

SHOP USE ONLY:

VIN#: **MILES:** **TECHNICIAN:** **ADVISOR#:**

50F15060

Fig. 31: Under Inflation
Courtesy of CHRYSLER GROUP, LLC

Under inflation causes rapid shoulder wear, tire flexing, and can result in tire failure (1).

WATER LEAK - WINDNOISE

WATER LEAK
Leak Occurs When?

☐ Setting level ☐ Any time it rains ☐ While driving in the rain ☐ Car wash only
☐ Back lower than front (facing uphill) ☐ Front lower than back (facing downhill)

Location of Leak (where water appears):

☐ LF Door ☐ RF Door ☐ LR Door ☐ RR Door ☐ Windshield ☐ Rear window
☐ LF window ☐ RF window ☐ LR window ☐ RR window ☐ Side door ☐ Sunroof/T-Top
☐ Under instrument panel ☐ Rear door/rear hatch

WINDNOISE:
Location:

☐ LF Door ☐ RF Door ☐ LR Door ☐ RR Door ☐ Windshield ☐ Rear window
☐ LF window ☐ RF window ☐ LR window ☐ RR window ☐ Side door ☐ Sunroof/T-Top
☐ Under instrument panel ☐ Rear door/rear hatch

EXPLAIN: _____

CUSTOMER NAME: **PHONE NO.:** **REPAIR ORDER NO:**

SHOP USE ONLY:
VIN#: **MILES:** **TECHNICIAN:** **ADVISOR#:**

50I15055

Fig. 32: Identifying Over Inflated Tire
Courtesy of CHRYSLER GROUP, LLC

Over inflation causes rapid center wear and loss of the tire's ability to cushion shocks (1).

TIRE LEAK REPAIRING

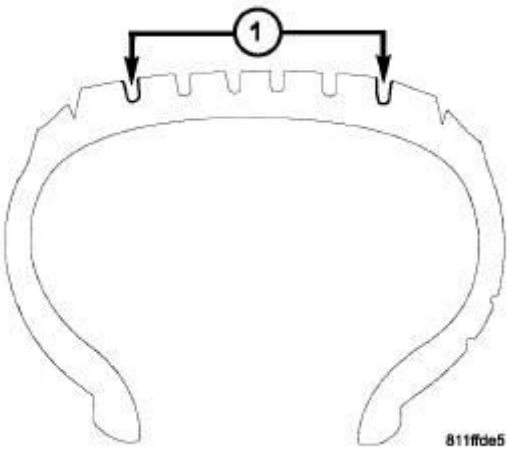

Fig. 33: Identifying Tire Repair Area
Courtesy of CHRYSLER GROUP, LLC

For proper repairing, a radial tire must be removed from the wheel. Repairs should only be made if the defect, or puncture, is in the tread area (1). The tire should be replaced if the puncture is located in the sidewall.

Deflate tire completely before attempting to dismount the tire from the wheel. **Use a lubricant such as a mild soap solution when dismounting or mounting tire.** Use tools free of burrs or sharp edges which could damage the tire or wheel rim.

Before mounting tire on wheel, make sure all rust is removed from the rim bead and repaint if necessary.

Install wheel on vehicle. Refer to **INSTALLATION**.

WHEELS

DESCRIPTION

DESCRIPTION

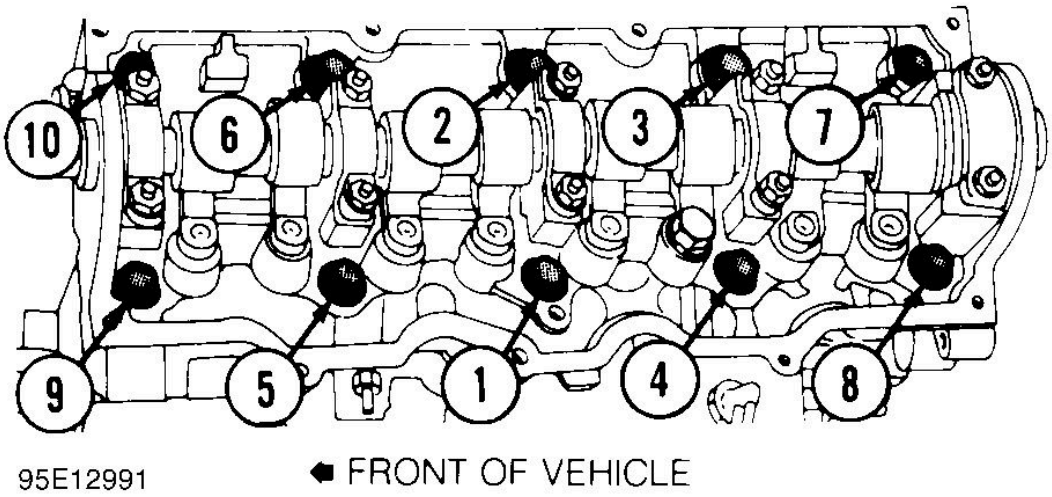

Fig. 34: Identifying Wheel/Rim Design
Courtesy of CHRYSLER GROUP, LLC

All vehicles use either steel or cast aluminum drop center wheels. The original equipment wheels are designed for proper operation at all loads up to the specified maximum vehicle capacity.

Every wheel has raised sections between the rim flanges (1) and drop well (3) called safety humps (2). In case of air loss, these raised sections help hold the tire in position on the wheel until the vehicle can be brought to a safe stop. When being installed on the wheel, initial inflation of the tire forces the tire bead over these raised sections into place.

The wheel studs and nuts are designed for specific wheel applications and must be replaced with equivalent parts. Do not use replacement parts of lesser quality or of a substitute design. All aluminum and steel wheels have wheel stud nuts with an enlarged nose. This enlarged nose is necessary to ensure proper retention of the wheels.

DIAGNOSIS AND TESTING

DIAGNOSIS AND TESTING - WHEEL INSPECTION

Inspect wheels for:

- Excessive runout
- Dents, cracks or irregular bends
- Damaged wheel stud (lug) holes
- Air Leaks

NOTE: Do not attempt to repair a wheel by hammering, heating or welding.

If a wheel is damaged, an original equipment replacement wheel should be used. When obtaining replacement wheels, they should be equivalent in load carrying capacity. The diameter, width, offset, pilot hole and bolt circle of the wheel should be the same as the original wheel.

WARNING: Failure to use equivalent replacement wheels may adversely affect the safety and handling of the vehicle.

WARNING: Replacement with used wheels is not recommended. The service history of the wheel may have included severe treatment or very high mileage. The rim could fail without warning.

WARNING: Chrysler LLC does not recommend that customers use "reconditioned" wheels (wheels that have been damaged and repaired) because they can result in a sudden catastrophic wheel failure which could cause loss of control and result in injury or death. For clarification:

- **Cosmetic refinishing for the purpose of repairing a superficial flaw is an acceptable procedure providing it is limited to paint or clear coat only, the wheel is not modified in any way, and there is no exposure to paint curing heat over 200 degrees Fahrenheit (93 degrees Celsius).**
- **Damaged wheels are those which have been bent, broken, cracked or sustained some other physical damage which may have compromised the wheel structure.**
- **Repaired indicates that the wheel has been modified through bending, welding, heating, straightening, or material removal to rectify damage.**
- **Re-plating of chrome plated wheels is not an acceptable procedure nor is chrome plating of original equipment painted or polished wheels, as this may alter mechanical properties and affect fatigue life.**

SPECIFICATIONS

SPECIFICATIONS

BASE WHEEL

DESCRIPTION	SPECIFICATION
Wheel Mounting (Lug) Nut Hex Size	19 mm
Wheel Mounting Stud Size	M12 x 1.5 mm

TORQUE

DESCRIPTION	N.m	Ft. Lbs.	In. Lbs.
TPM Sensor Nut	8	-	71
TPM Transponder Mounting Nut	3	-	26
Valve Core	0.5	-	4
Wheel Mounting (Lug) Nut	135	100	-

CLEANING

CLEANING

All wheels and wheel trim, especially aluminum and chrome plated, should be cleaned regularly using mild soap and water to maintain their luster and to prevent corrosion. Wash them with the same soap solution recommended for the body of the vehicle.

When cleaning extremely dirty wheels, care must be taken in the selection of tire and wheel cleaning chemicals and equipment to prevent damage to the wheels. Mopar® Wheel Treatment or Mopar® Chrome Cleaner is recommended. Any of the "DO NOT USE" items listed below can damage wheels and wheel trim.

DO NOT USE:

- Any abrasive cleaner
- Any abrasive cleaning pad (such as steel wool) or abrasive brush
- Any cleaner that contains an acid which can react with and discolor the chrome surface. **Many wheel cleaners contain acids that can harm the wheel surface.**
- Oven cleaner
- A car wash that uses carbide-tipped wheel cleaning brushes or acidic solutions.

STUD, WHEEL, FRONT

REMOVAL

REMOVAL

NOTE: Use the following procedure to remove one of five studs on one wheel hub.

1. Access and remove front brake rotor. Refer to **ROTOR, BRAKE, REMOVAL** .

CAUTION: Do not hammer wheel mounting studs out of the hub. Damage to the wheel bearing will occur, leading to premature bearing failure.

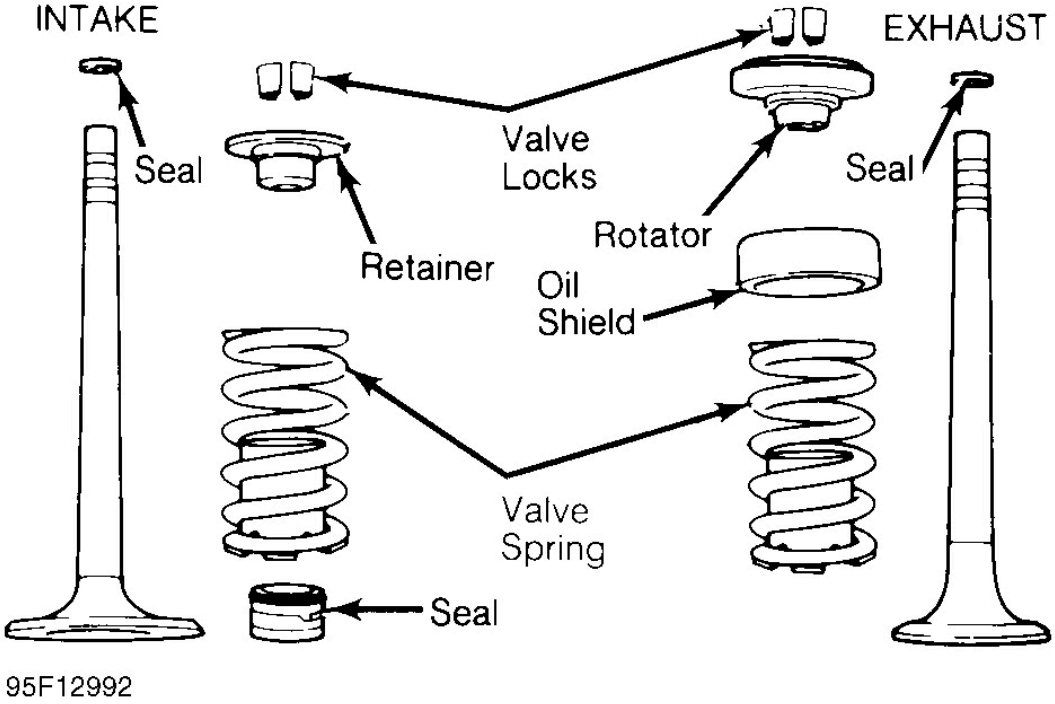

Fig. 35: View Of Wheel Mounting Stud Removal Using 8677
Courtesy of CHRYSLER GROUP, LLC

2. Install Remover (special tool #8677, Remover, Ball Joint) (3) on the hub flange (1) and wheel stud (2).
3. Tighten the Remover, pushing the wheel mounting stud out the rear of the hub flange. When the shoulder of the stud is past the flange, remove the Remover from the hub.
4. Remove the stud from the hub flange.

INSTALLATION

INSTALLATION

NOTE: Use the following procedure to install one of five studs on one wheel hub.

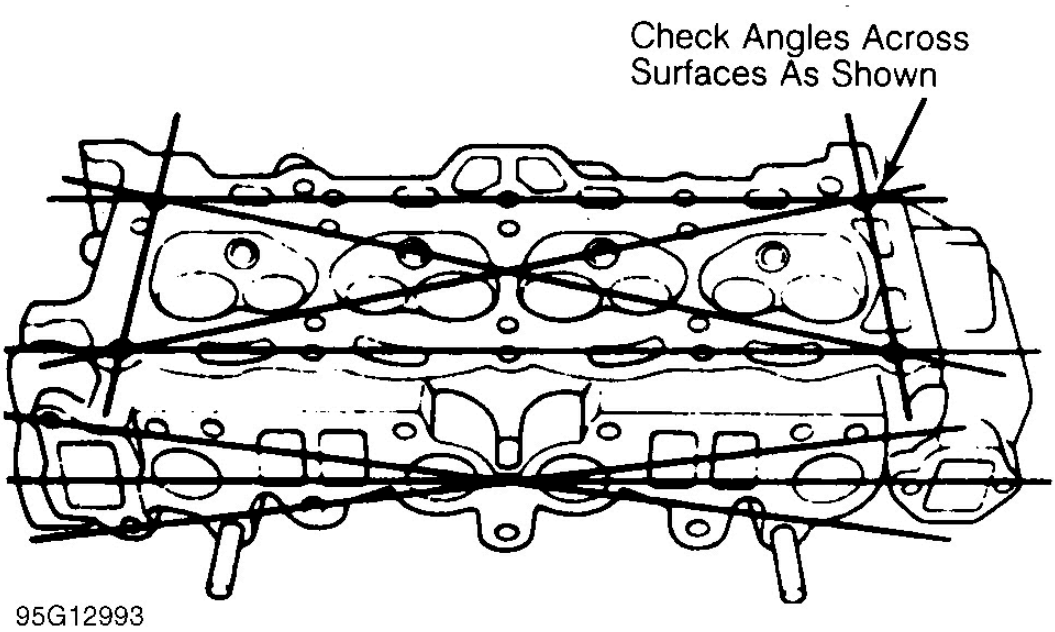

Fig. 36: View Of Wheel Mounting Stud Installation
Courtesy of CHRYSLER GROUP, LLC

1. Install the NEW wheel mounting stud in the flange of the hub (2) from the rear.
2. Install several washers (1) and a standard wheel mounting (lug) nut (3) on the stud (4). Install the mounting nut so that the flat side of the nut is against the washers to eliminate any binding.
3. Tighten the wheel mounting nut. This will pull the wheel mounting stud into the hub flange. When the head of the stud is fully seated against the rear of the hub flange, remove the wheel mounting nut and washers.
4. Install the brake rotor and all components previously removed to access it. Refer to **ROTOR, BRAKE, INSTALLATION** .

STUD, WHEEL, REAR

REMOVAL

REMOVAL

NOTE: Use the following procedure to remove one of five studs on one wheel hub.

1. Access and remove rear brake rotor. Refer to **ROTOR, BRAKE, REMOVAL** .

CAUTION: Do not hammer wheel mounting studs out of the hub. Damage to the wheel bearing will occur, leading to premature bearing failure.

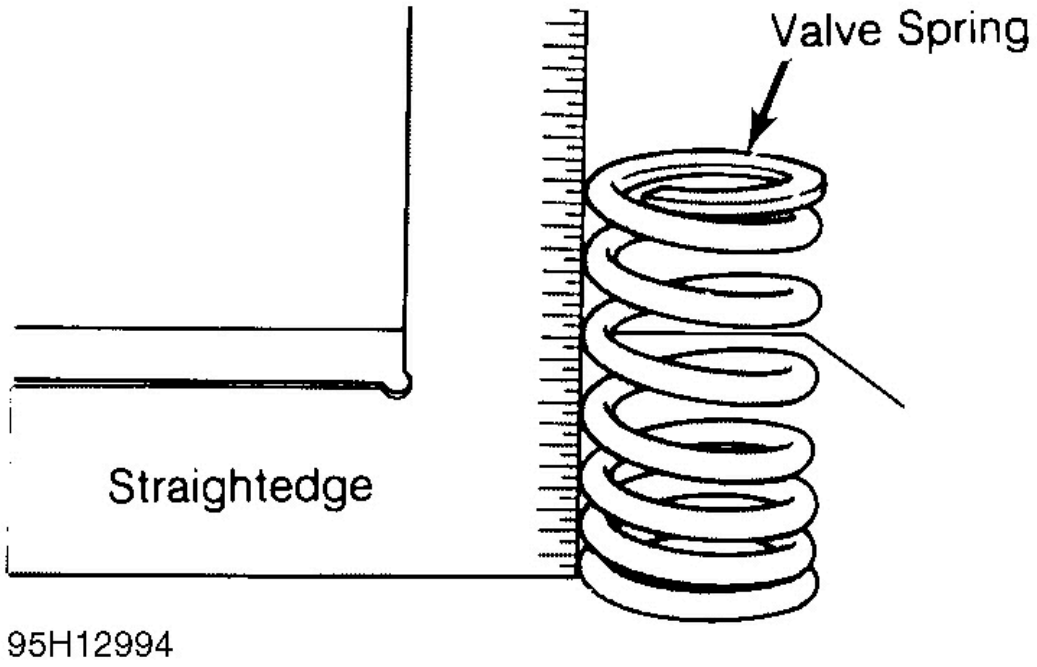

Fig. 37: Right Rear Wheel Stud Removal Using 8677
Courtesy of CHRYSLER GROUP, LLC

2. Install Remover (1), Special Tool (special tool #8677, Remover, Ball Joint), on the hub flange (2) and wheel stud (3).
3. Rotate the hub around until an open spot is found directly behind the wheel stud.
4. Tighten the Remover, pushing the wheel mounting stud out the rear of the hub flange. When the shoulder of the stud is past the flange, remove the Remover from the hub.

5. Remove the stud from the hub flange.

INSTALLATION

INSTALLATION

NOTE: Use the following procedure to install one of five studs on one wheel hub.

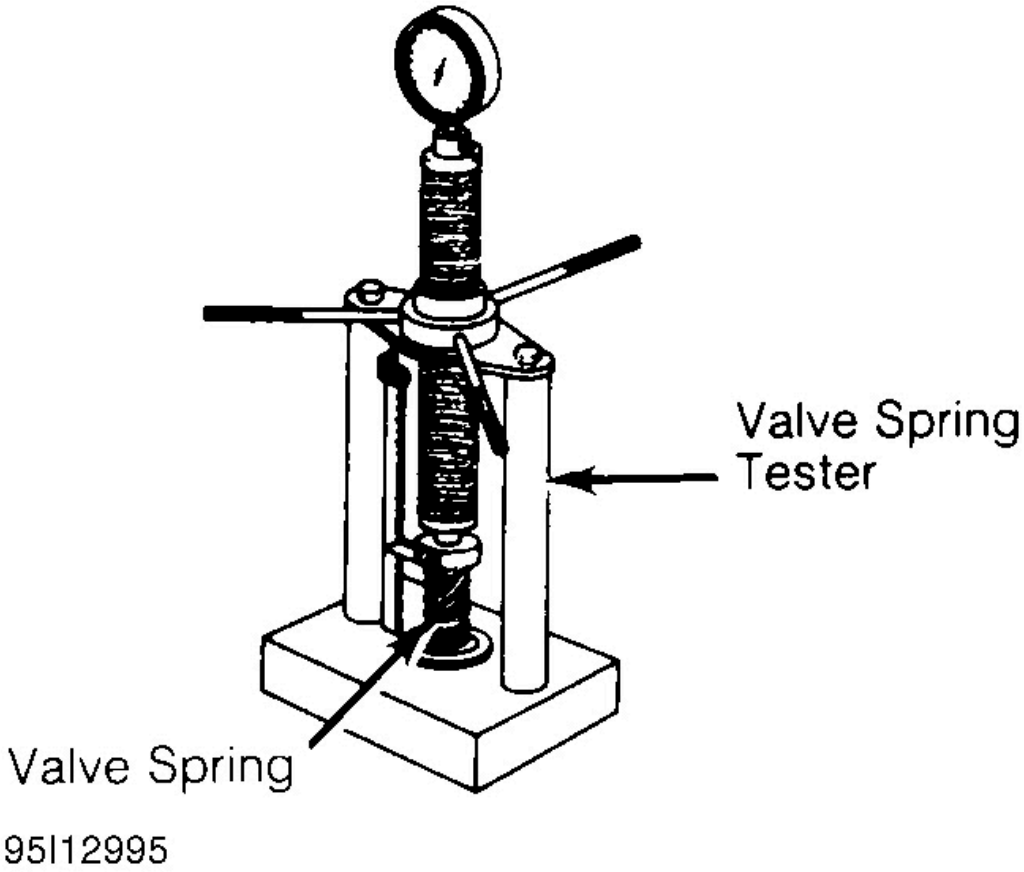

Fig. 38: View Of Wheel Mounting Stud Installation
Courtesy of CHRYSLER GROUP, LLC

1. Install the NEW wheel mounting stud in the flange of the hub (2) from the rear.
2. Install several washers (1) and a standard wheel mounting (lug) nut (3) on the stud (4). Install the mounting nut so that the flat side of the nut is against

the washers to eliminate any binding.

3. Tighten the wheel mounting nut. This will pull the wheel mounting stud into the hub flange. When the head of the stud is fully seated against the rear of the hub flange, remove the wheel mounting nut and washers.
4. Install the rear brake rotor and all components previously removed to access it. Refer to **ROTOR, BRAKE, INSTALLATION** .

AIR CONDITIONING

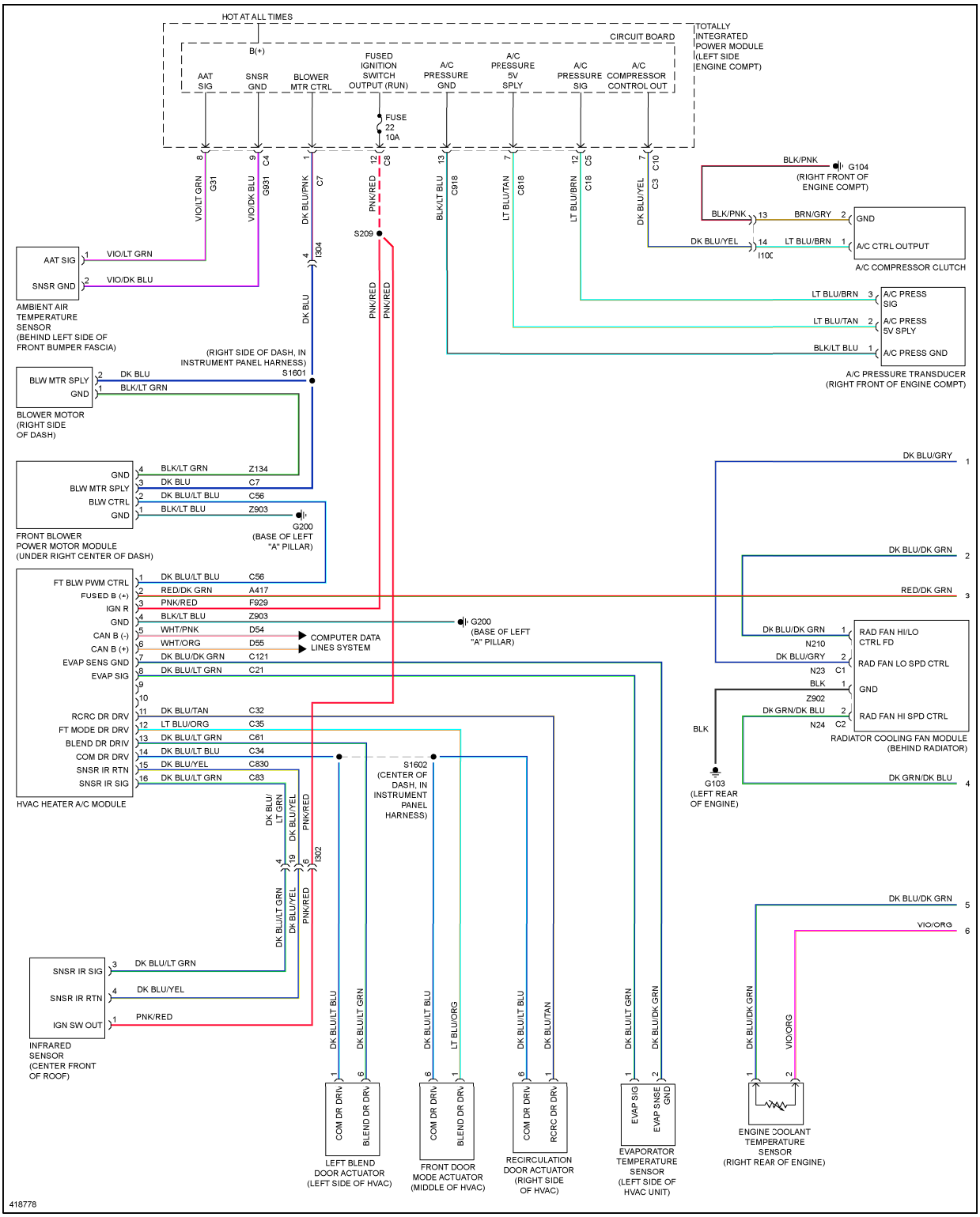

Fig. 1: Automatic A/C Circuit (1 of 2)

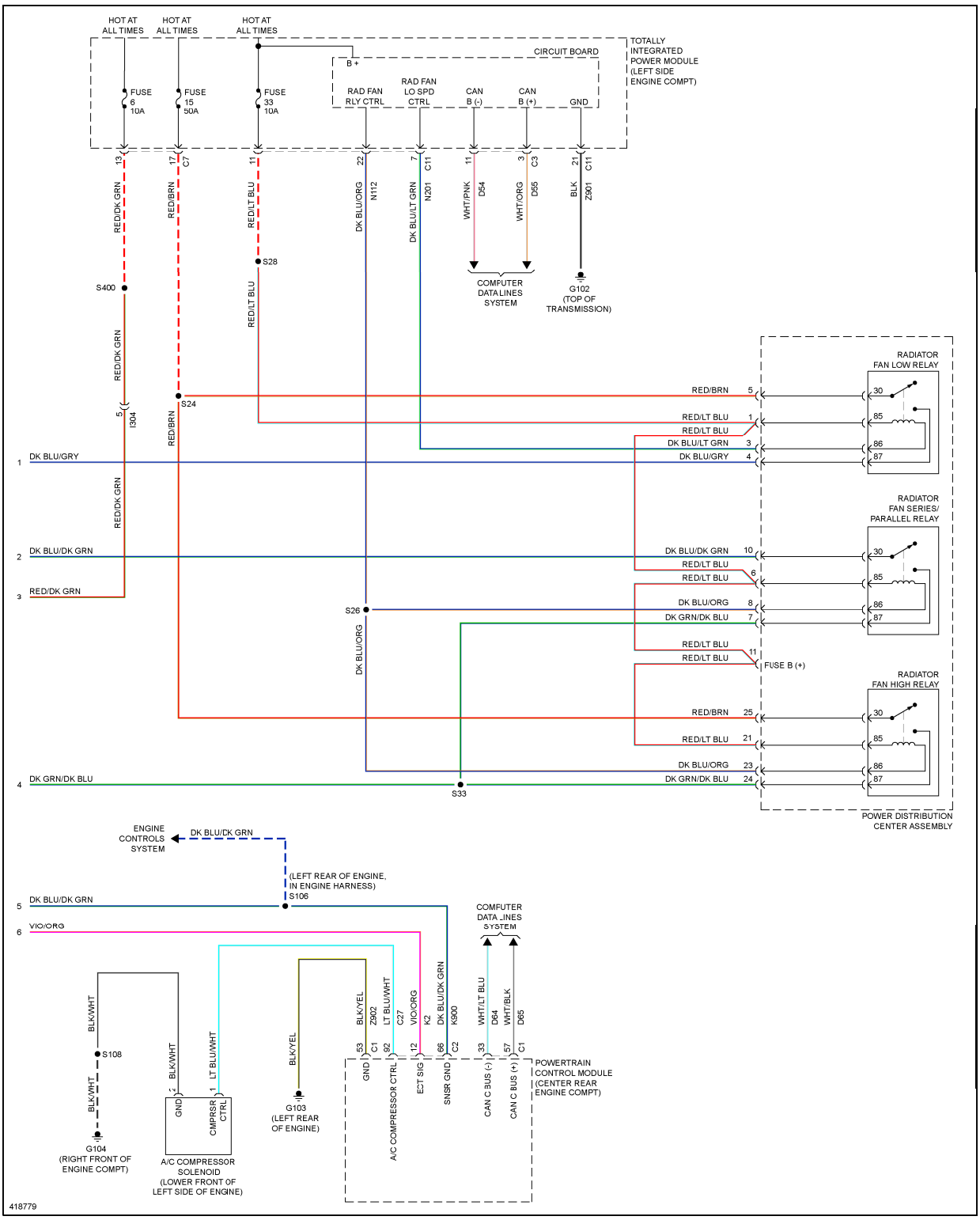

Fig. 2: Automatic A/C Circuit (2 of 2)

ANTI-LOCK BRAKES

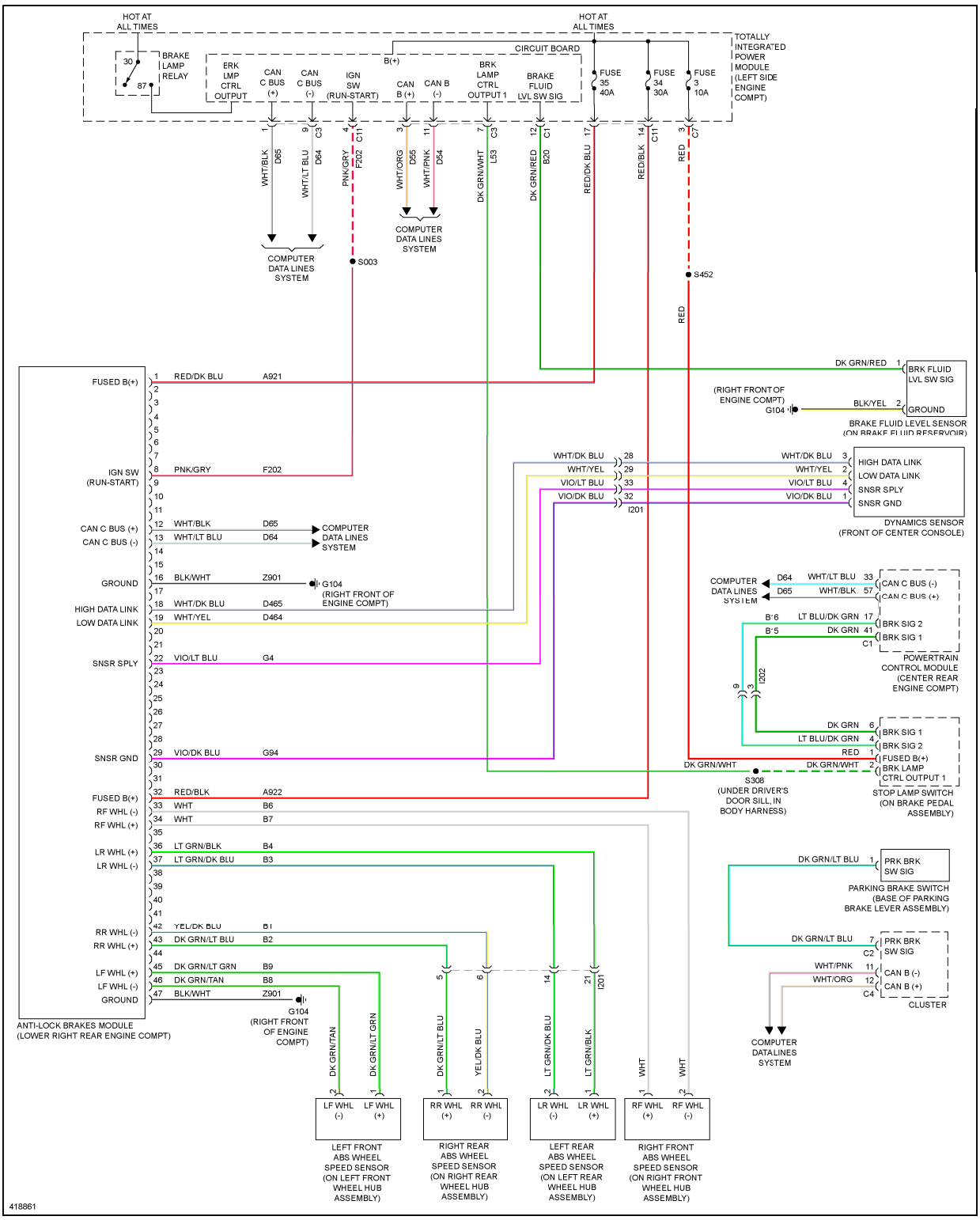

Fig. 3: Anti-lock Brakes Circuit

ANTI-THEFT

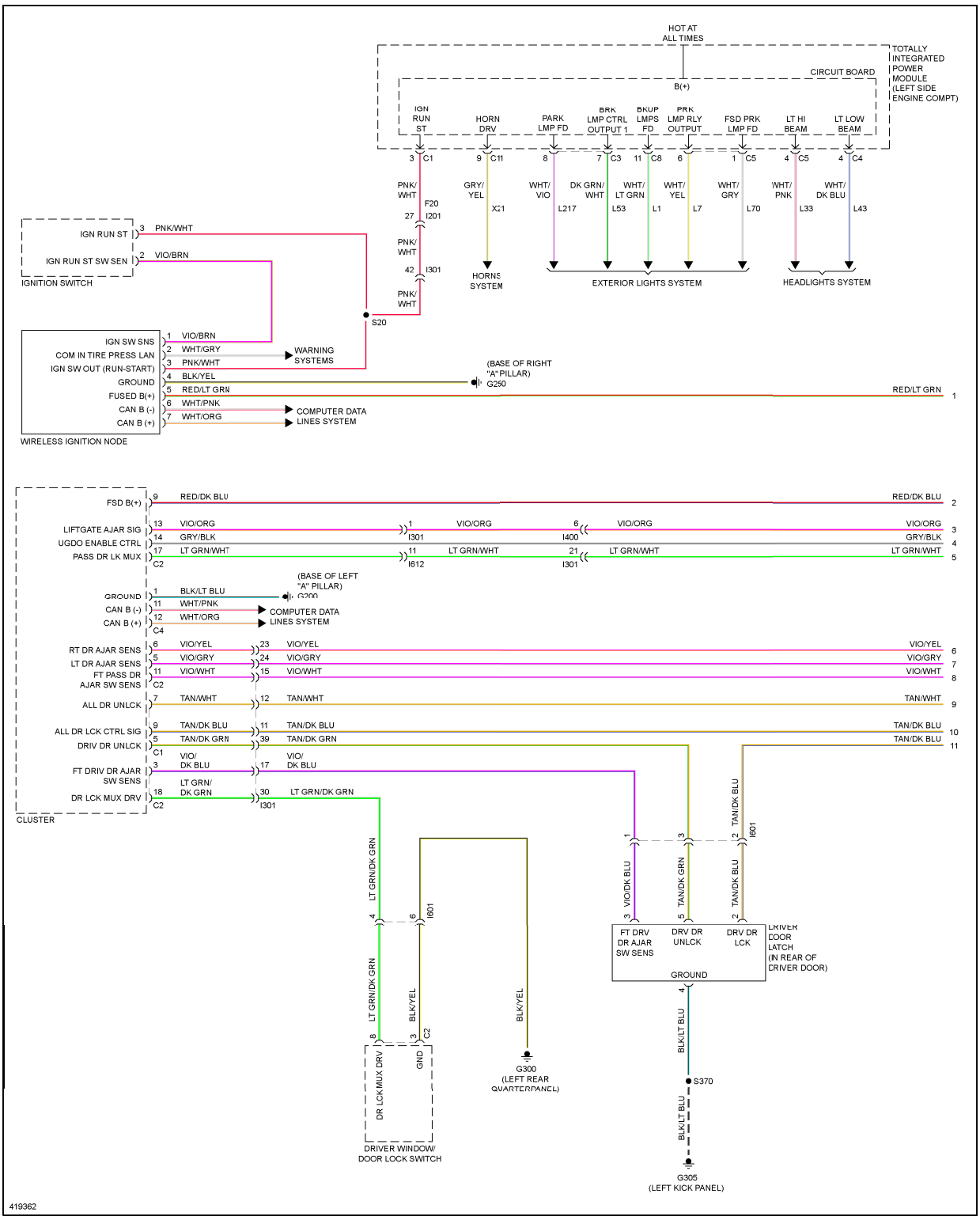

Fig. 4: Anti-theft Circuit (1 of 3)

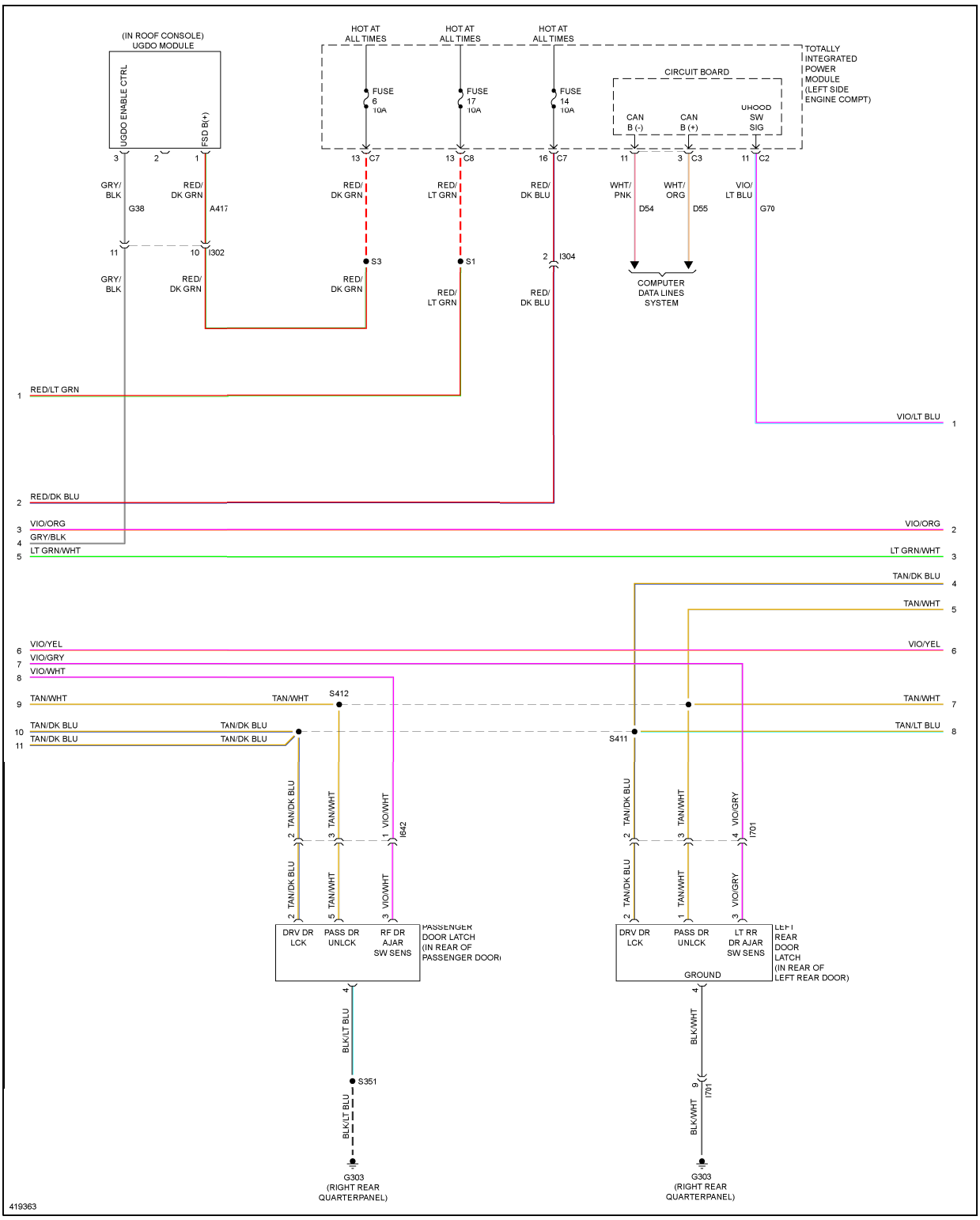

Fig. 5: Anti-theft Circuit (2 of 3)

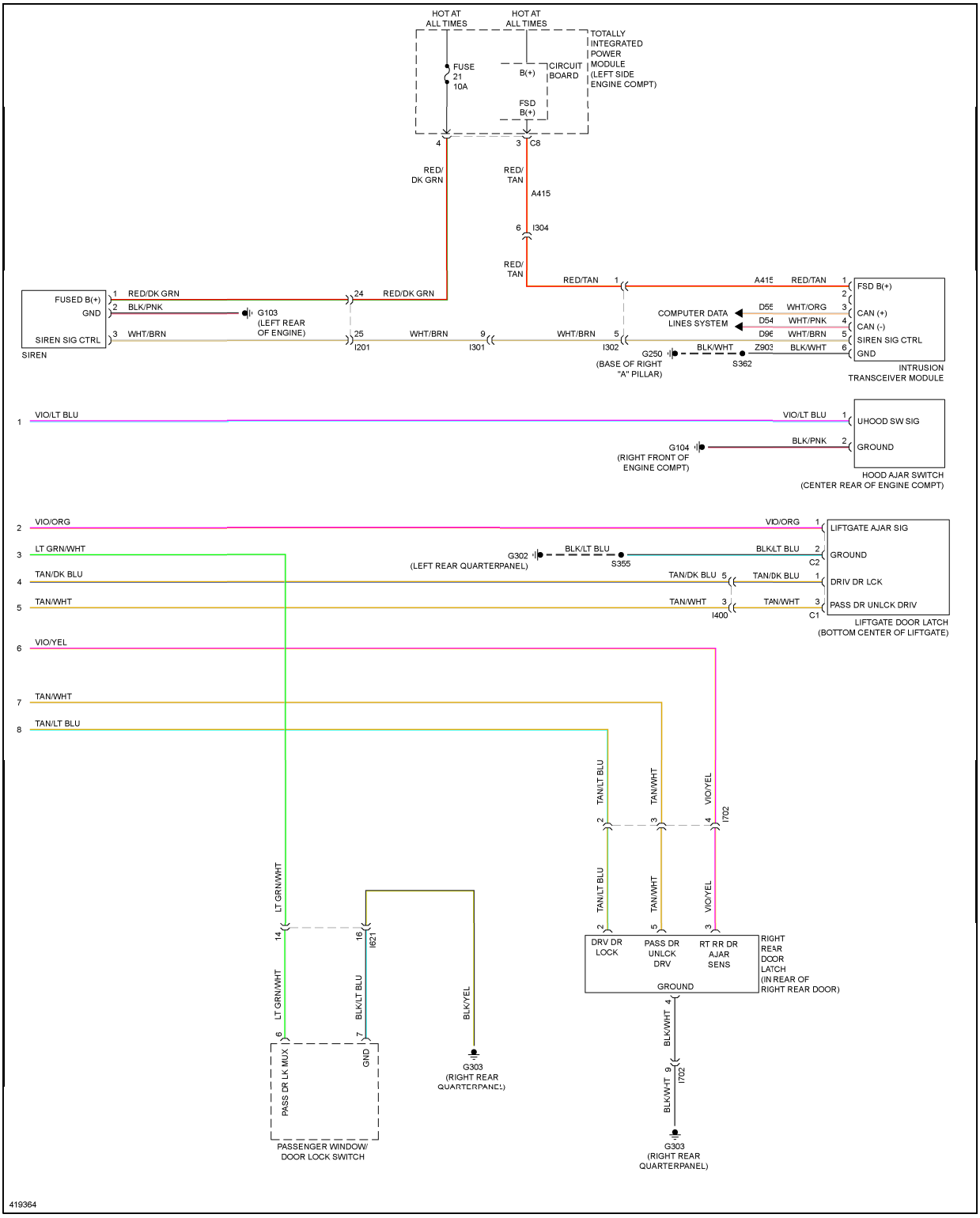

Fig. 6: Anti-theft Circuit (3 of 3)

BODY CONTROL MODULES

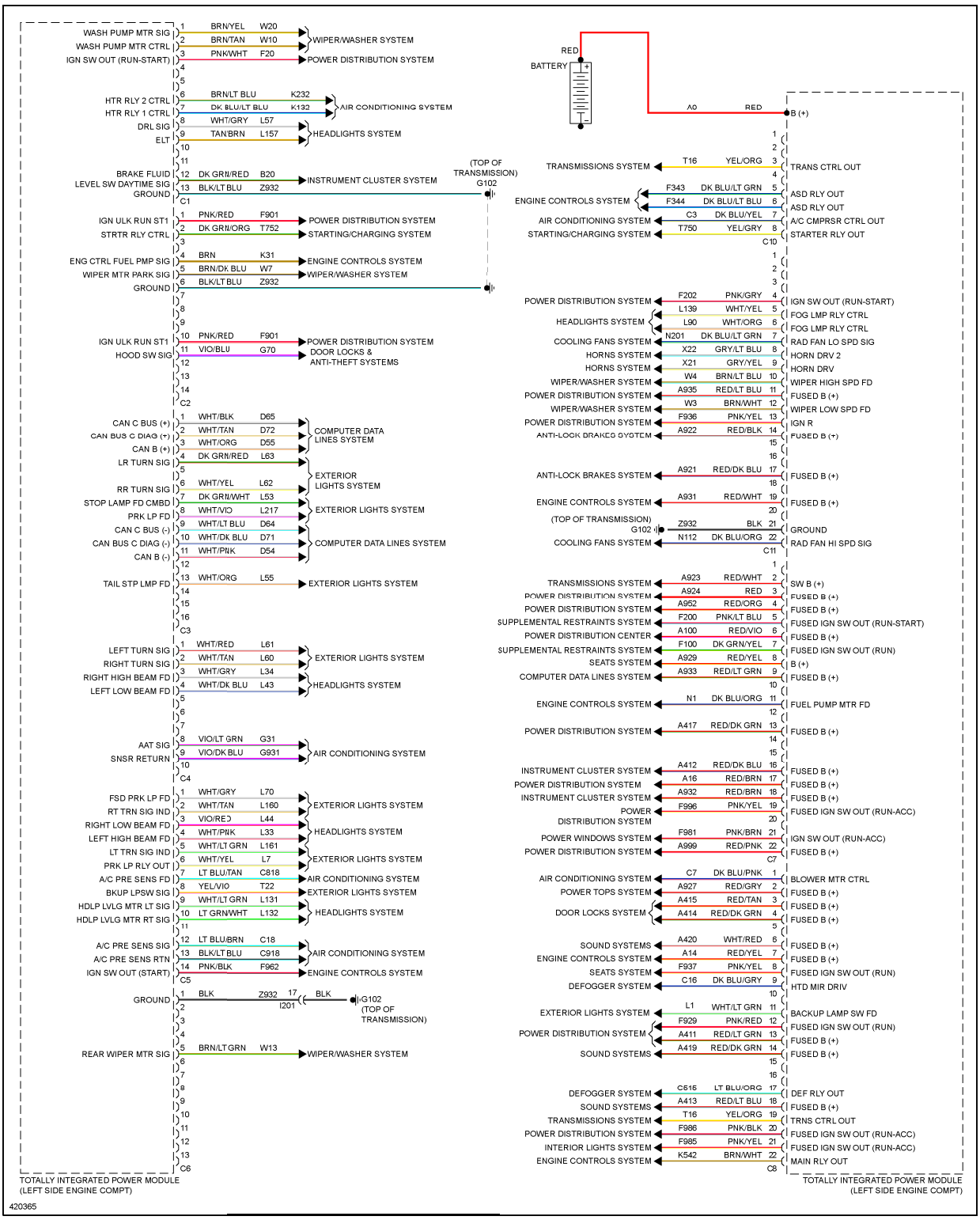

Fig. 7: Body Control Modules Circuit

COMPUTER DATA LINES

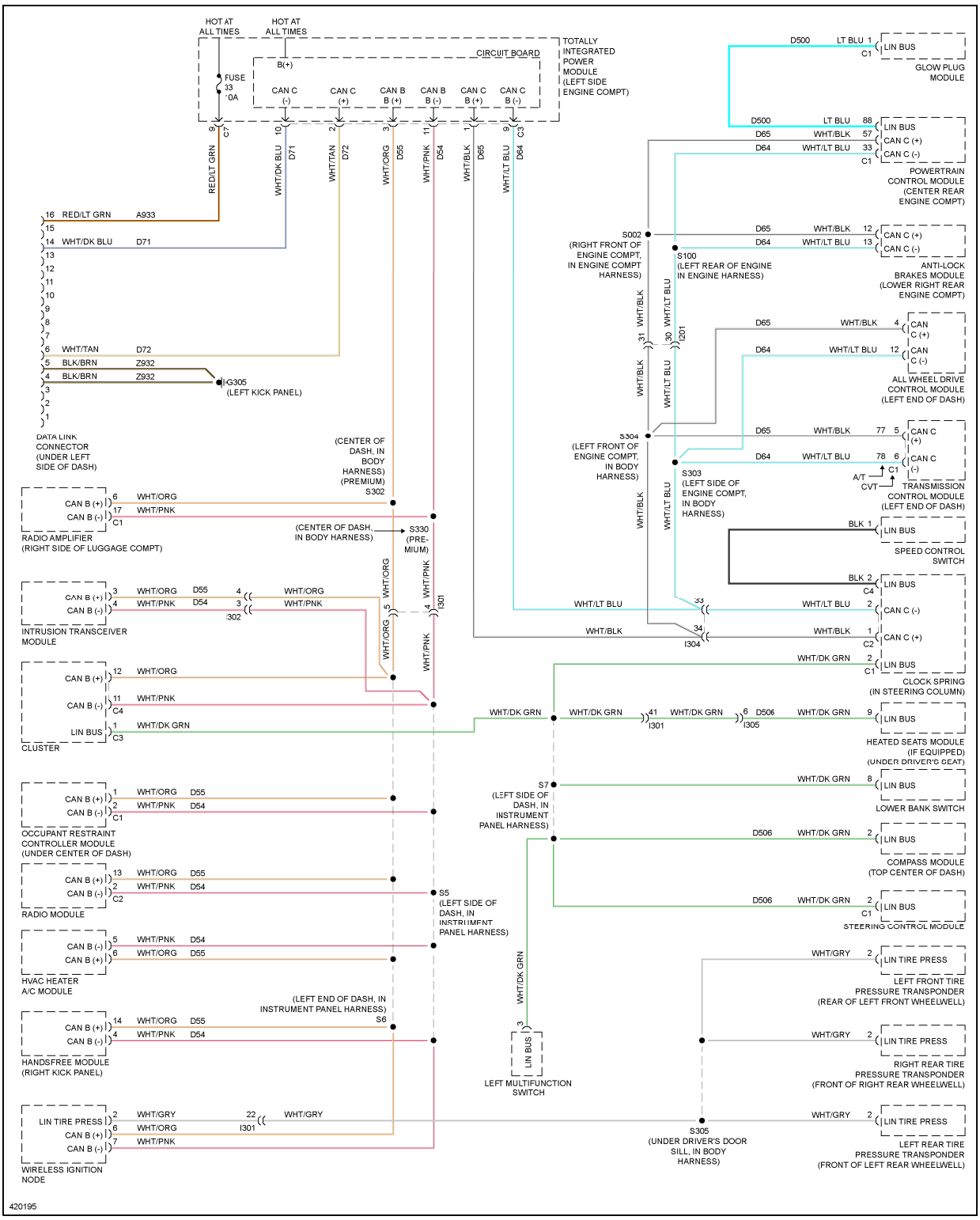

Fig. 8: Computer Data Lines Circuit

COOLING FAN

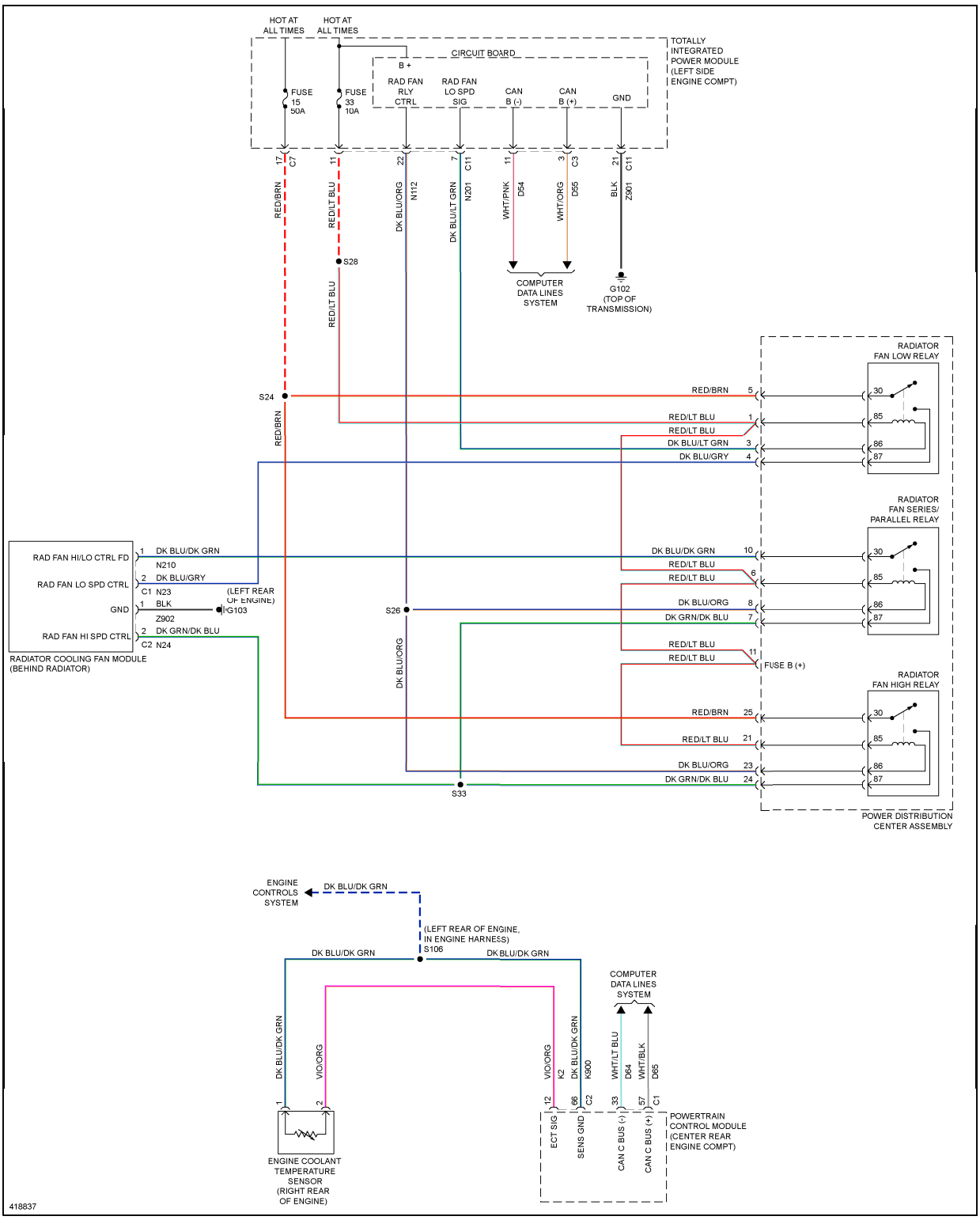

Fig. 9: Cooling Fan Circuit

CRUISE CONTROL

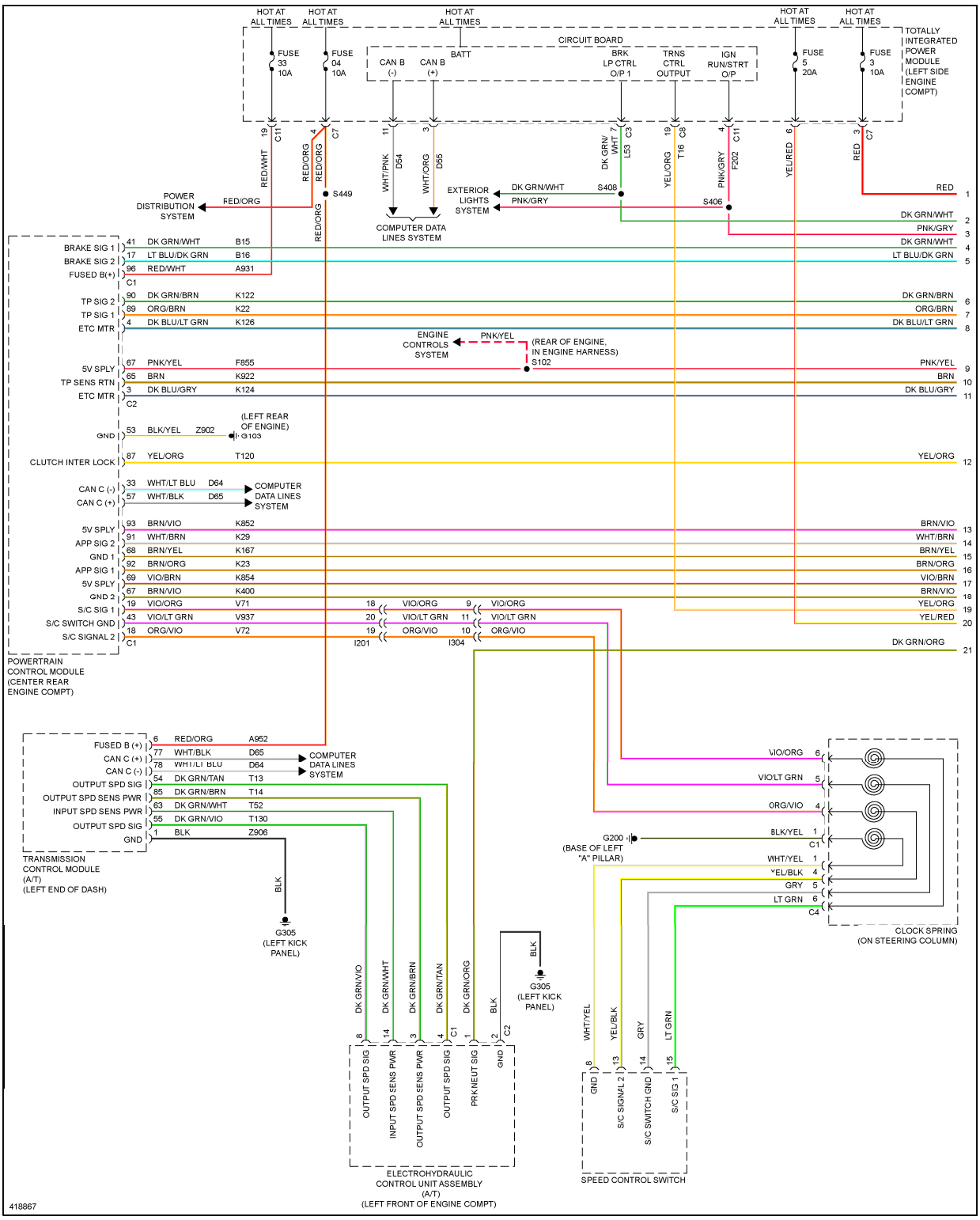

Fig. 10: Cruise Control Circuit (1 of 2)

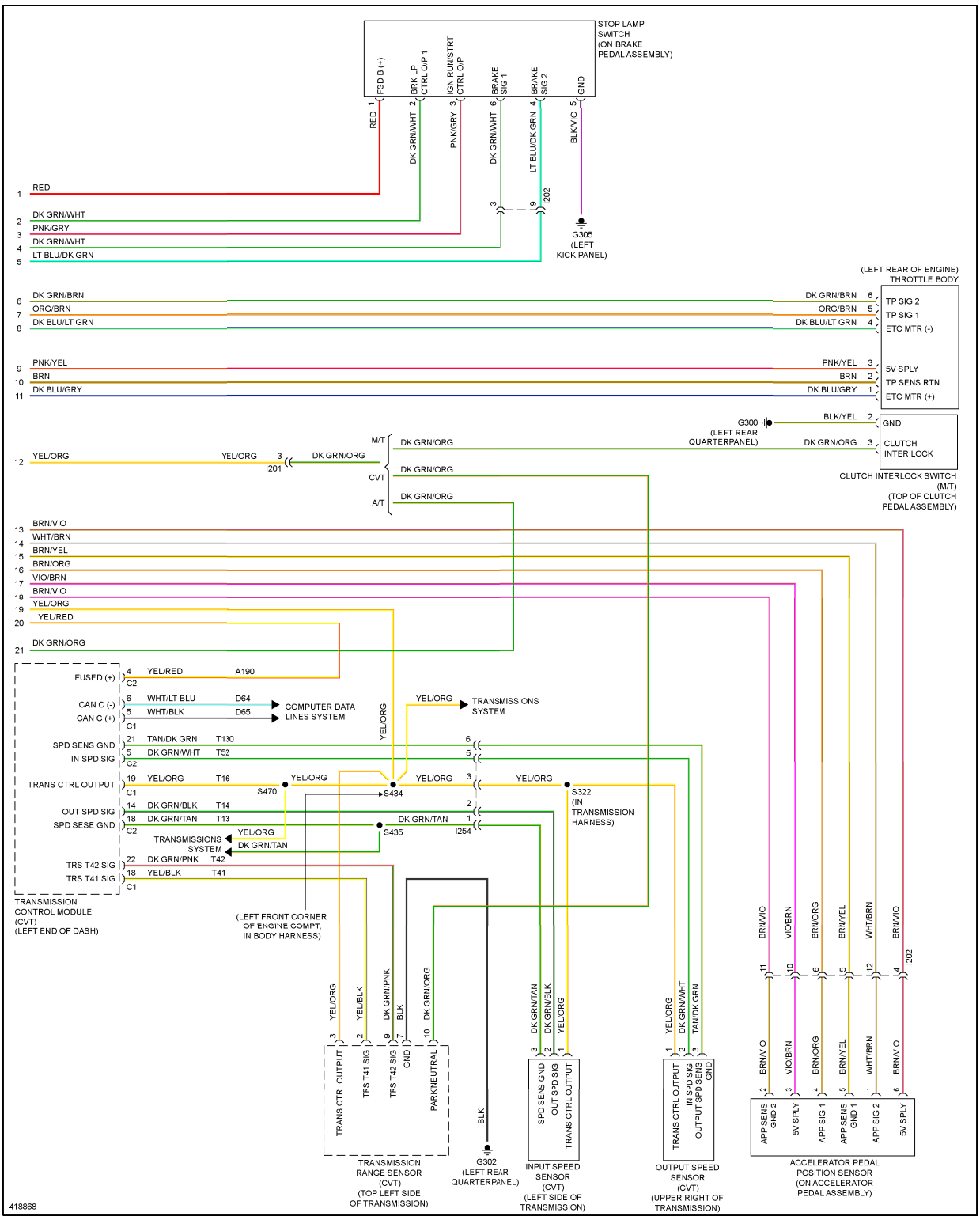

Fig. 11: Cruise Control Circuit (2 of 2)

DEFOGGERS

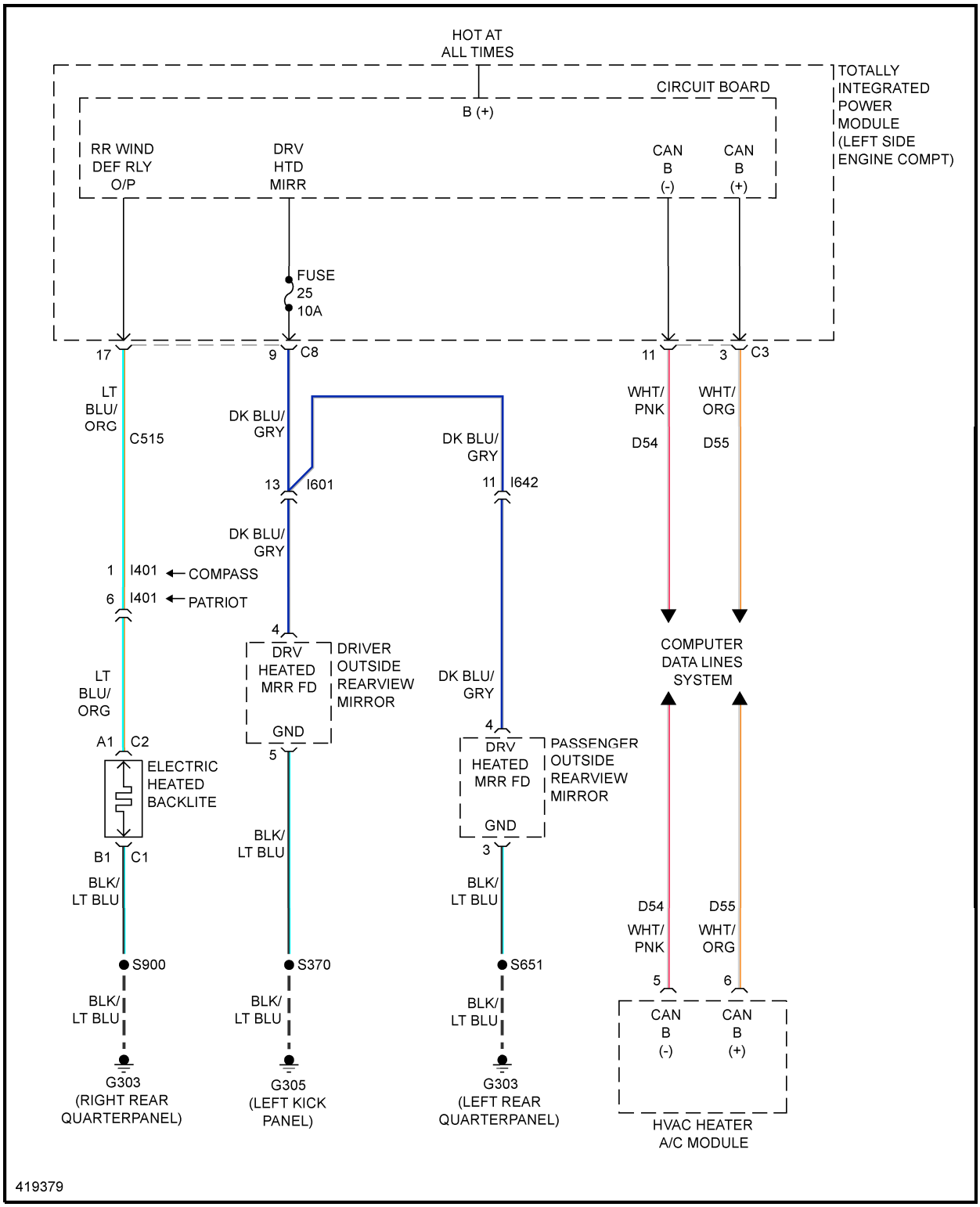

Fig. 12: Defoggers Circuit

ENGINE PERFORMANCE

2.0L

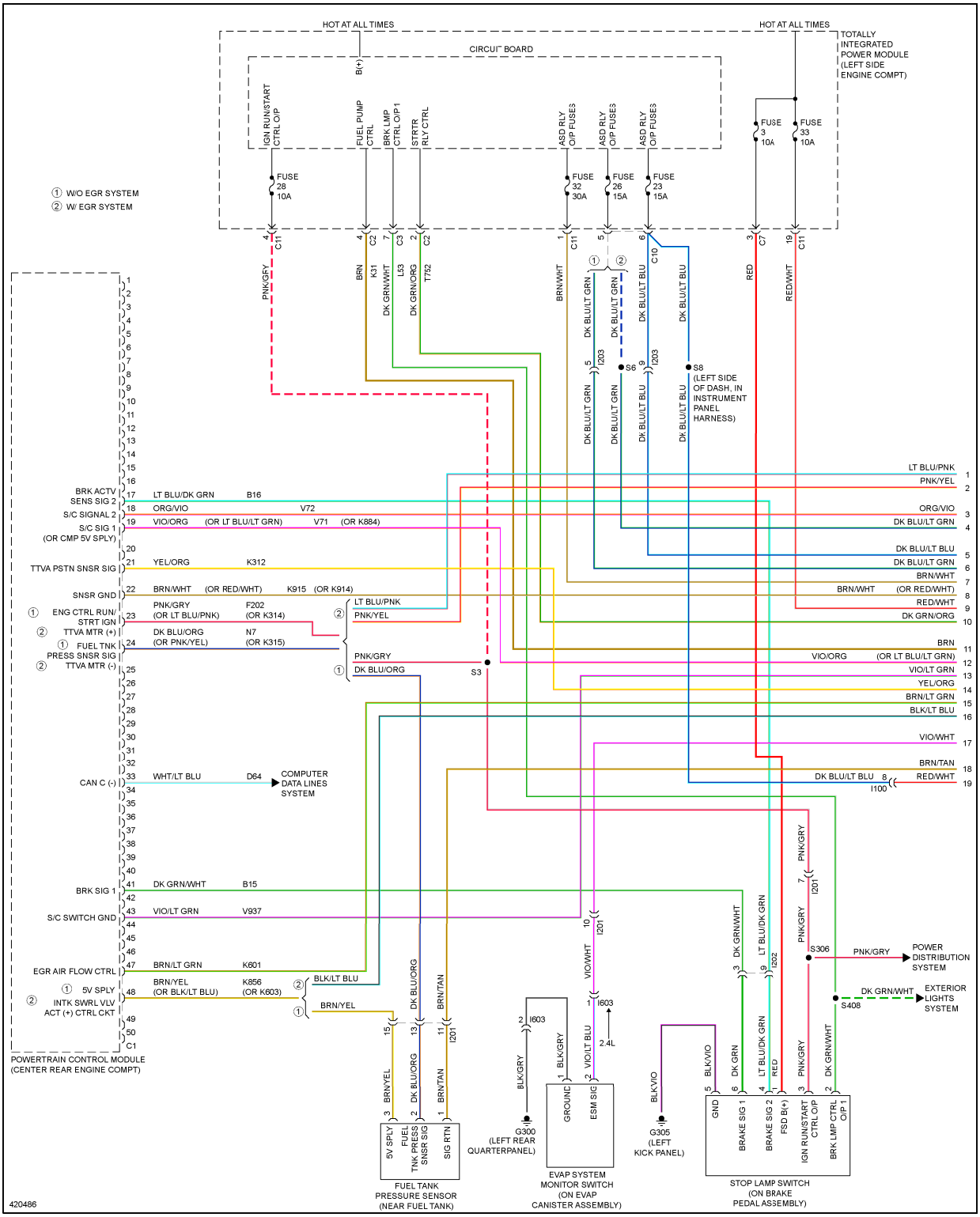

Fig. 13: 2.0L, Engine Performance Circuit (1 of 5)

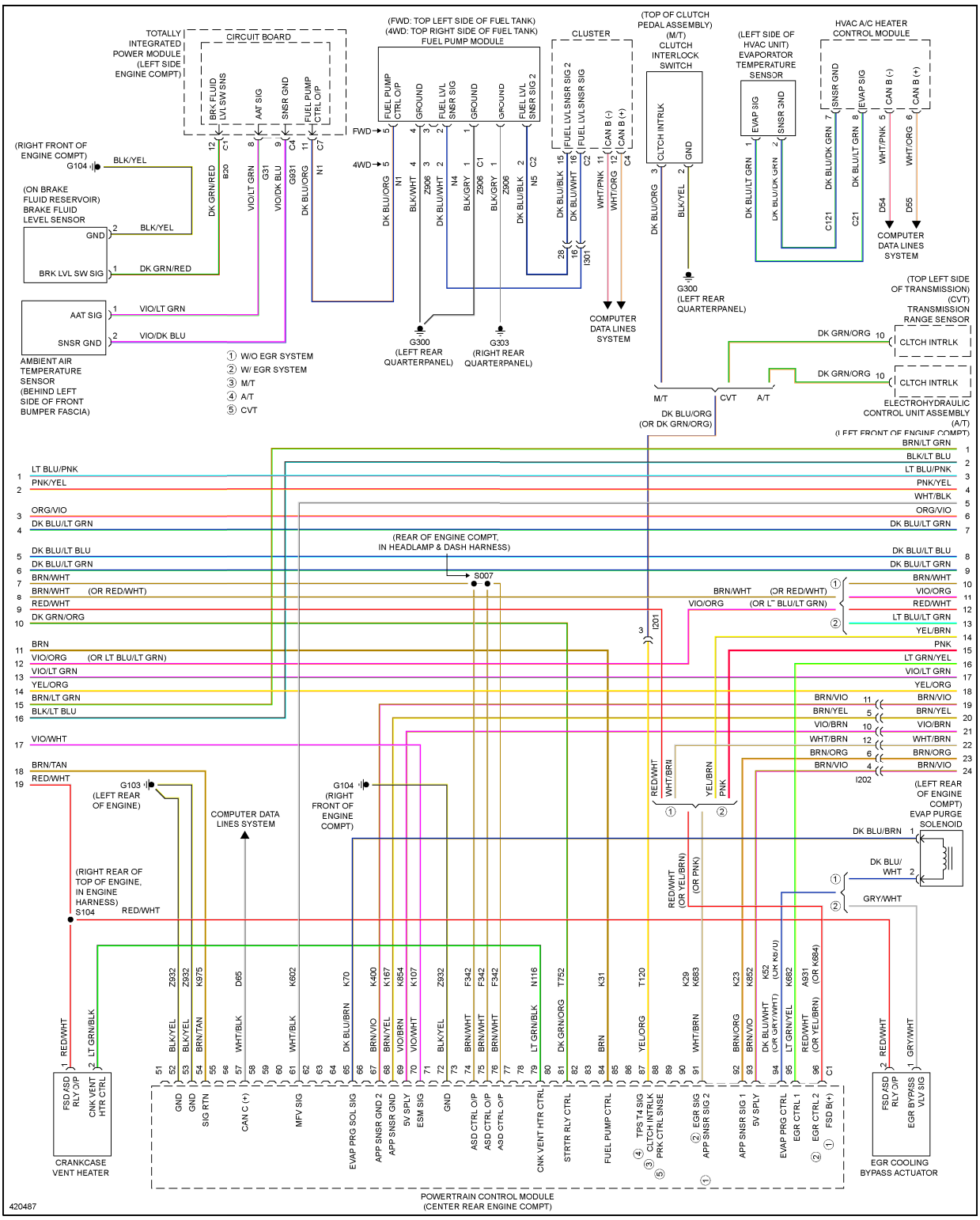

Fig. 14: 2.0L, Engine Performance Circuit (2 of 5)

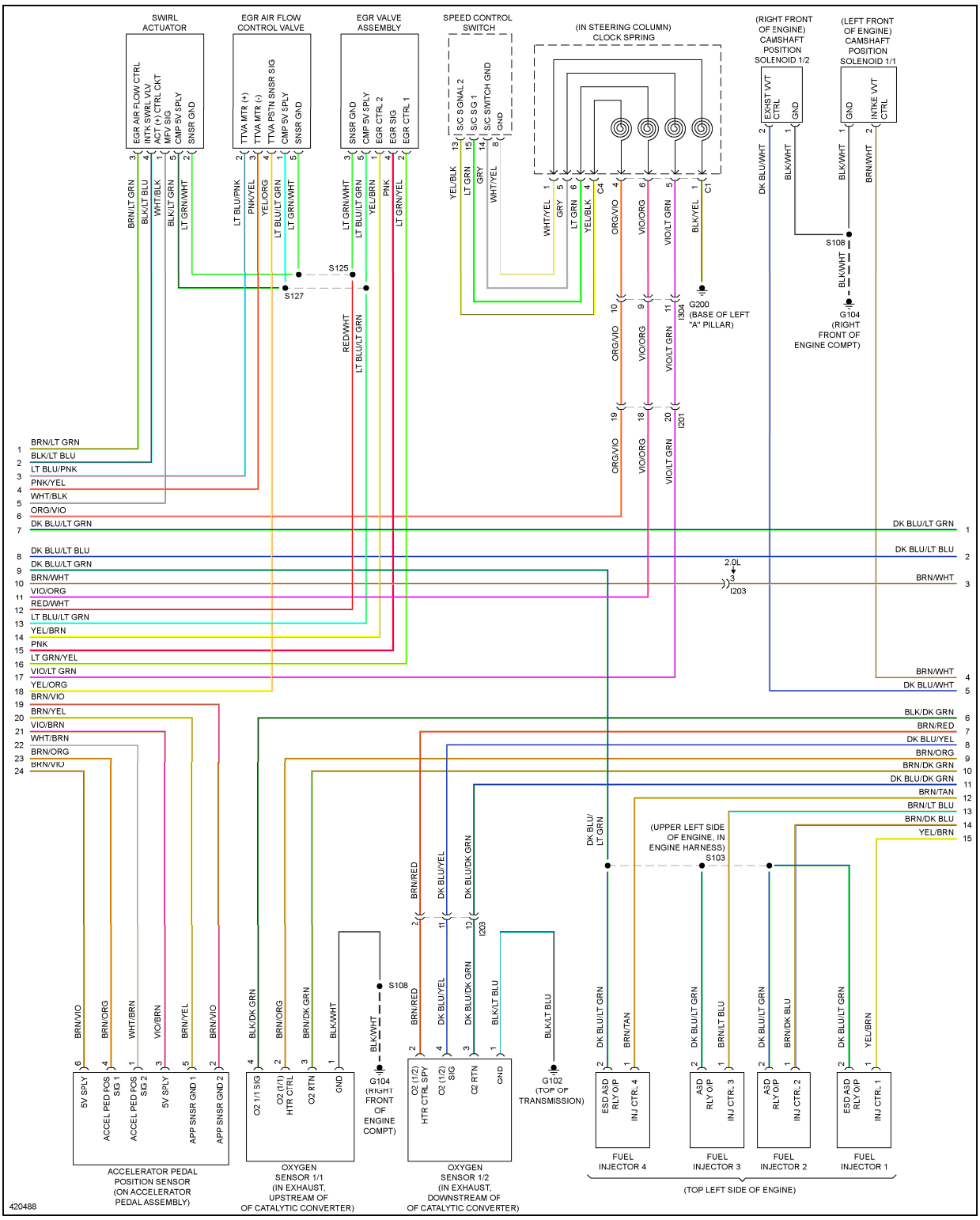

Fig. 15: 2.0L, Engine Performance Circuit (3 of 5)

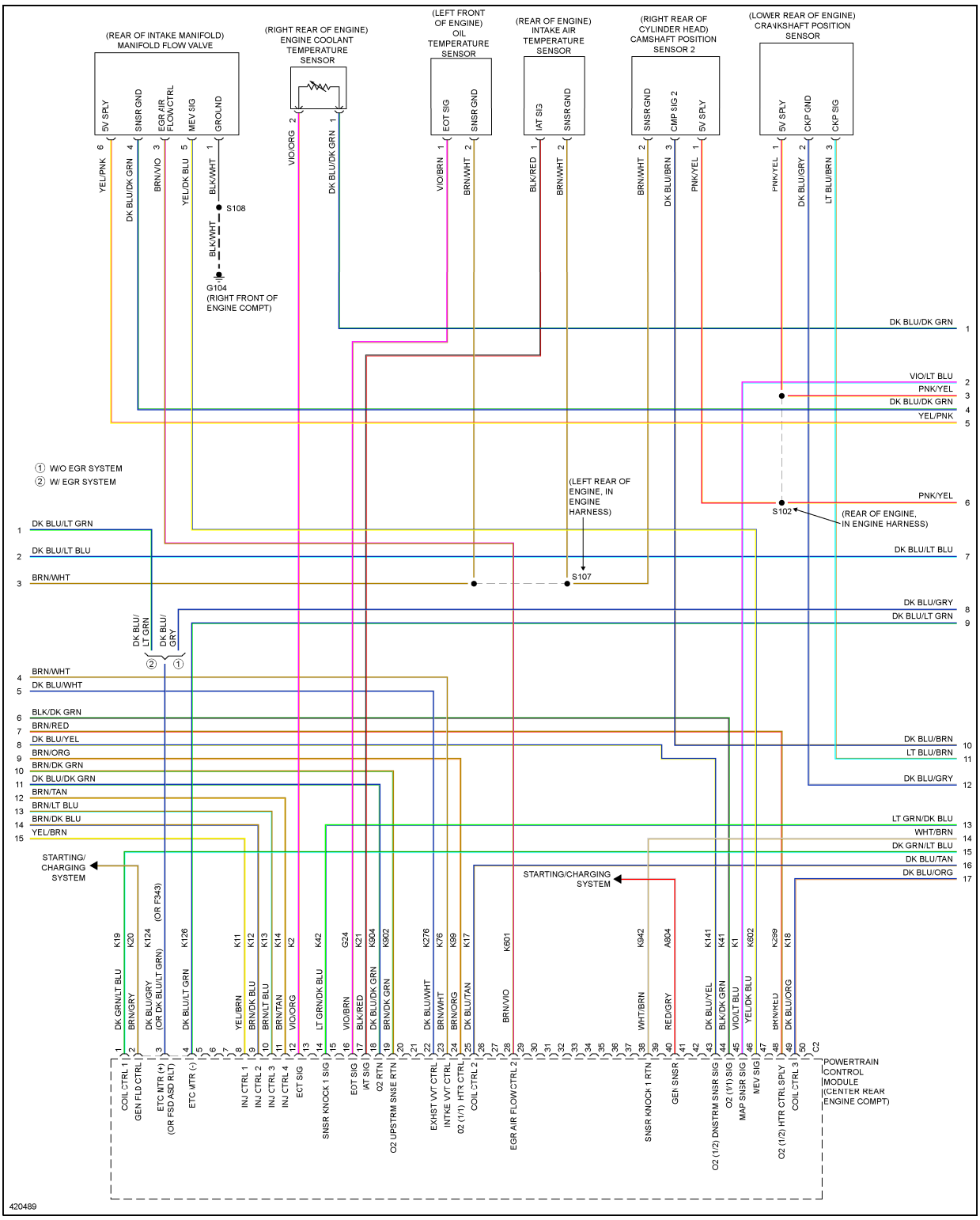

Fig. 16: 2.0L, Engine Performance Circuit (4 of 5)

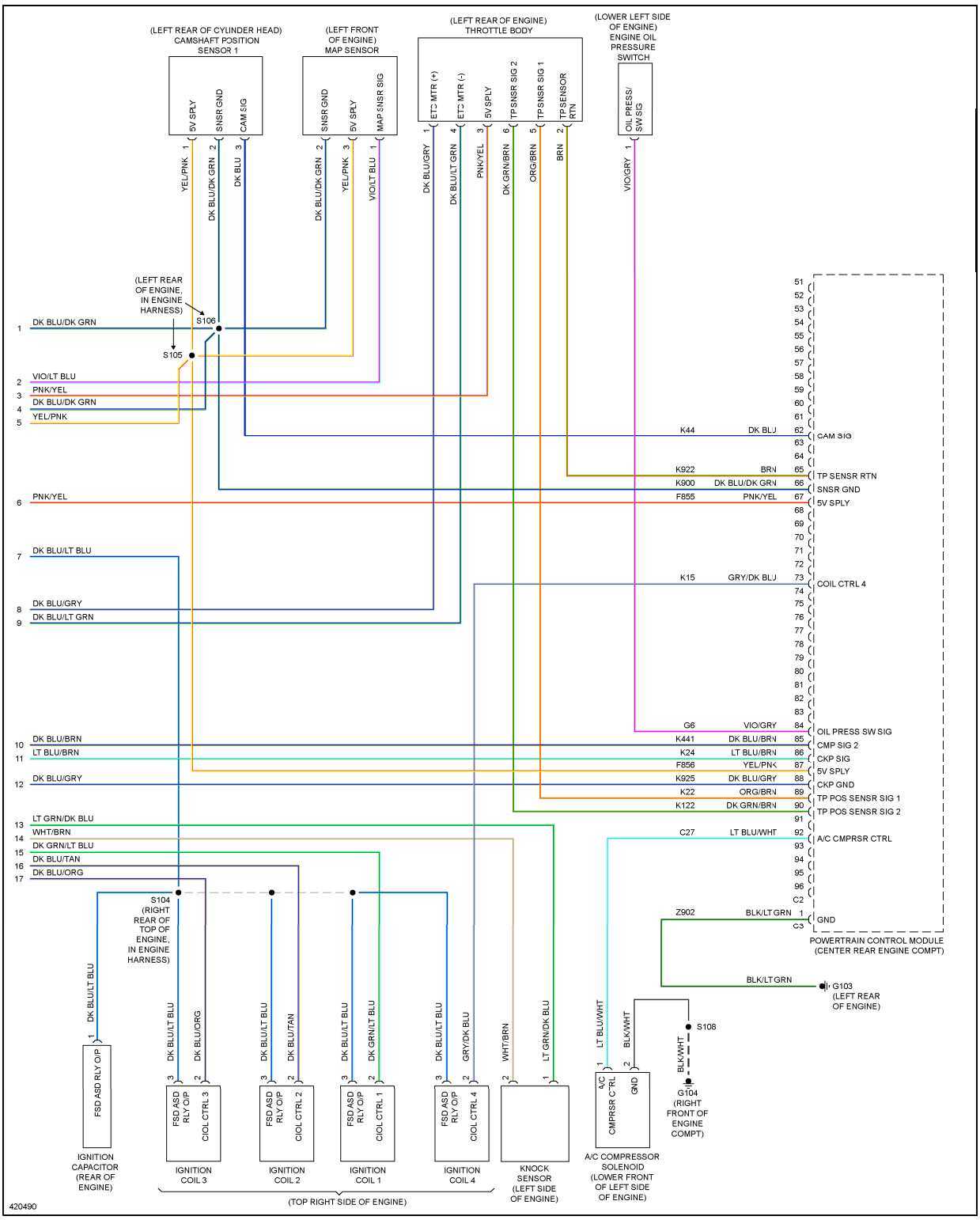

Fig. 17: 2.0L, Engine Performance Circuit (5 of 5)

2.4L

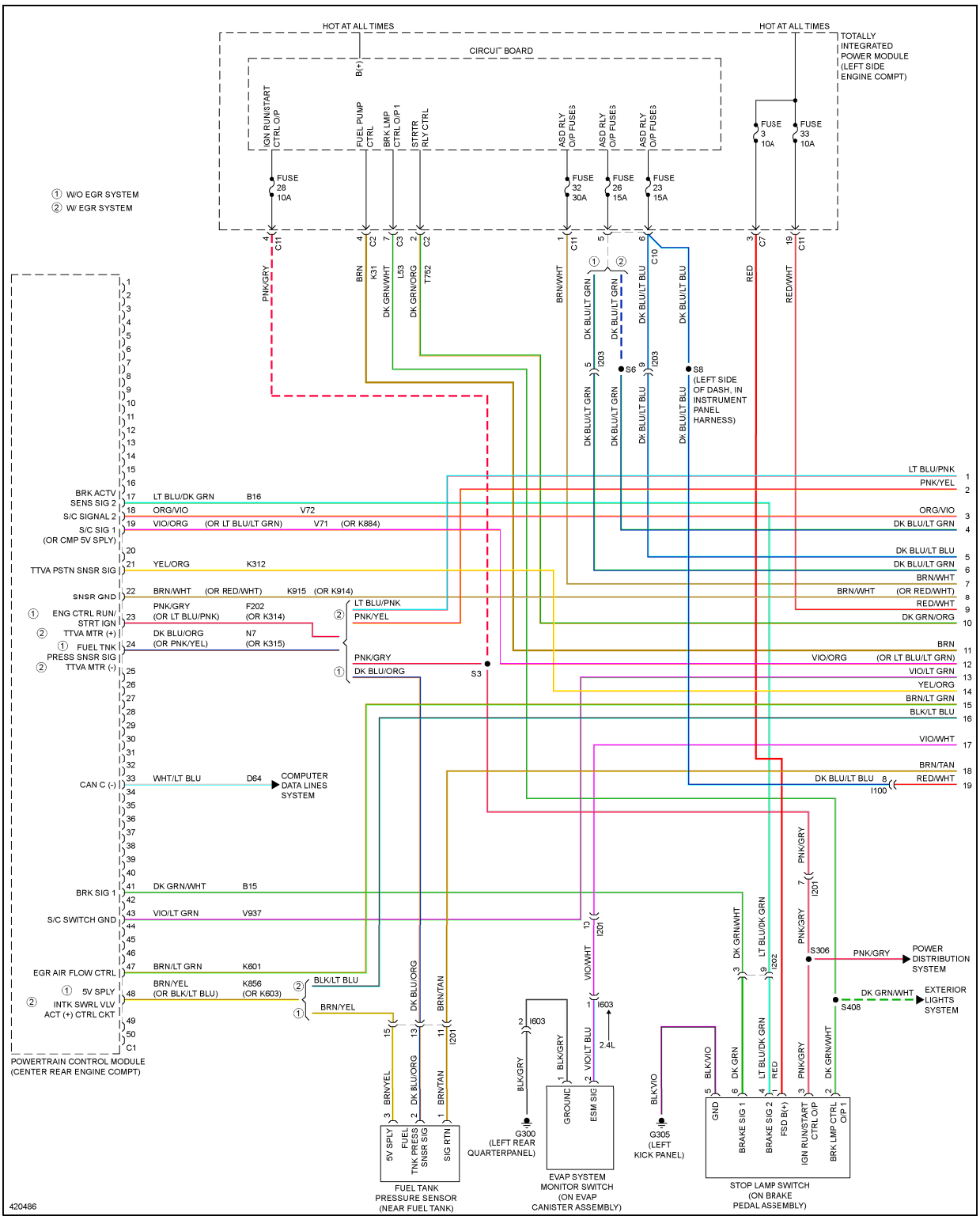

Fig. 18: 2.4L, Engine Performance Circuit (1 of 5)

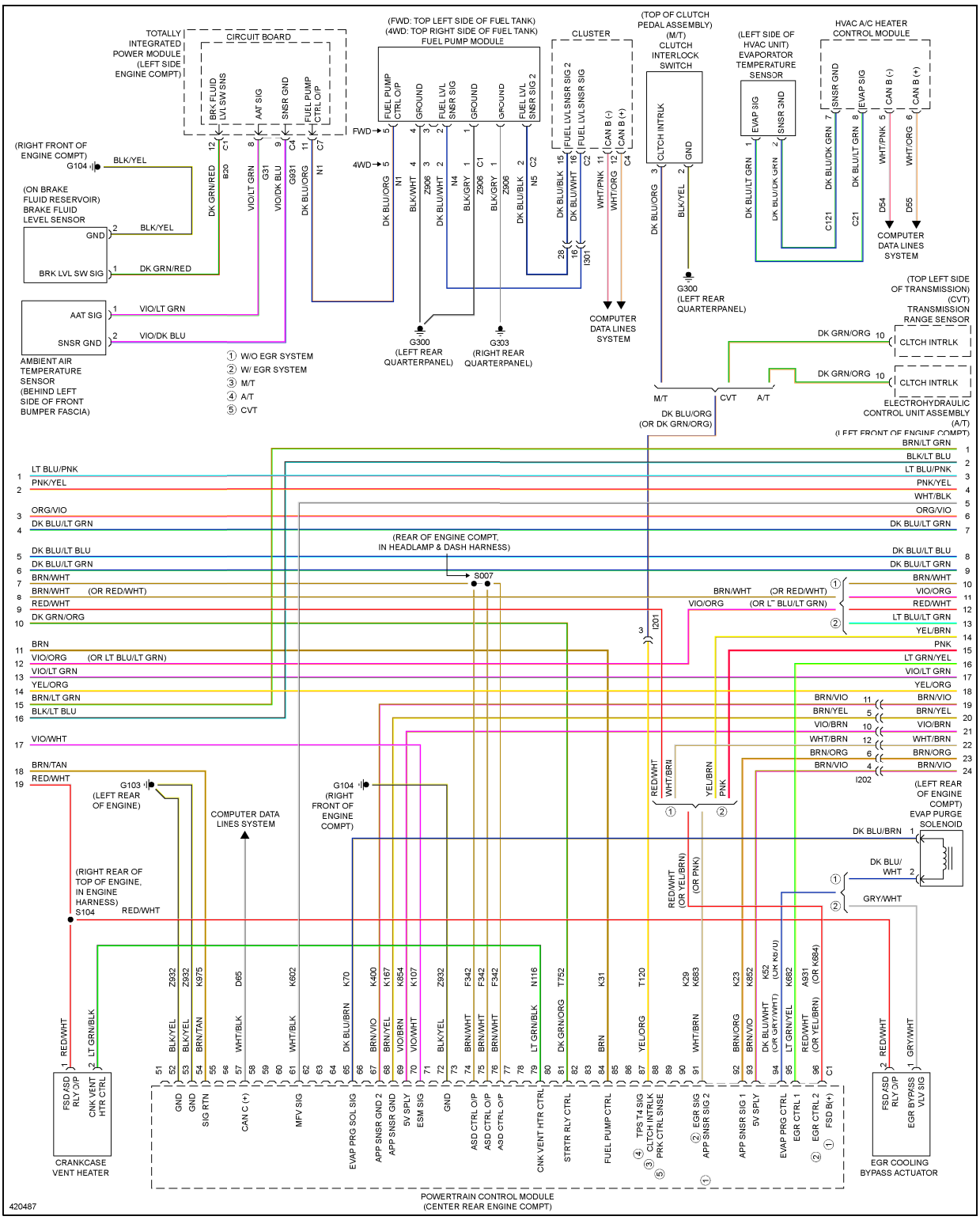

Fig. 19: 2.4L, Engine Performance Circuit (2 of 5)

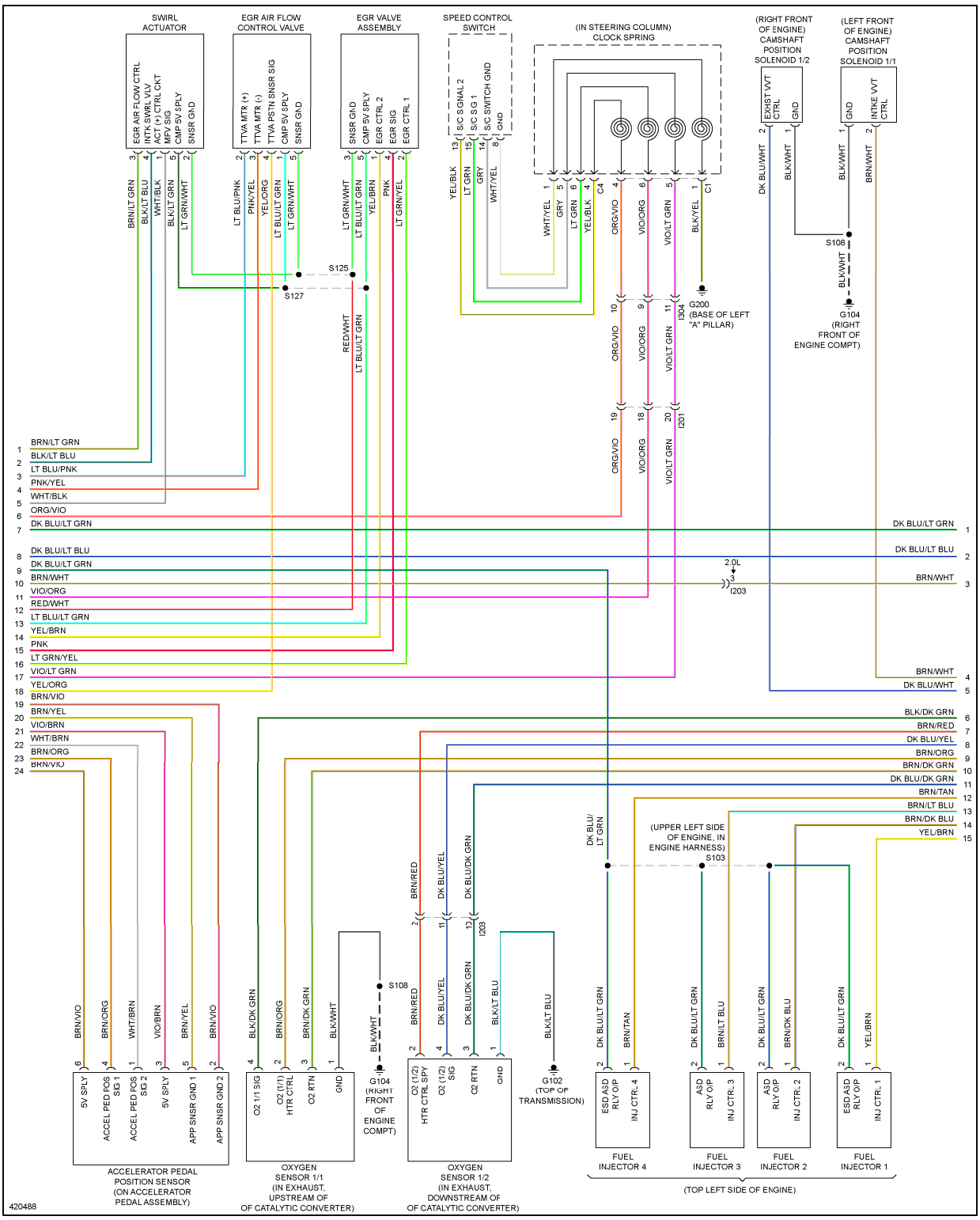

Fig. 20: 2.4L, Engine Performance Circuit (3 of 5)

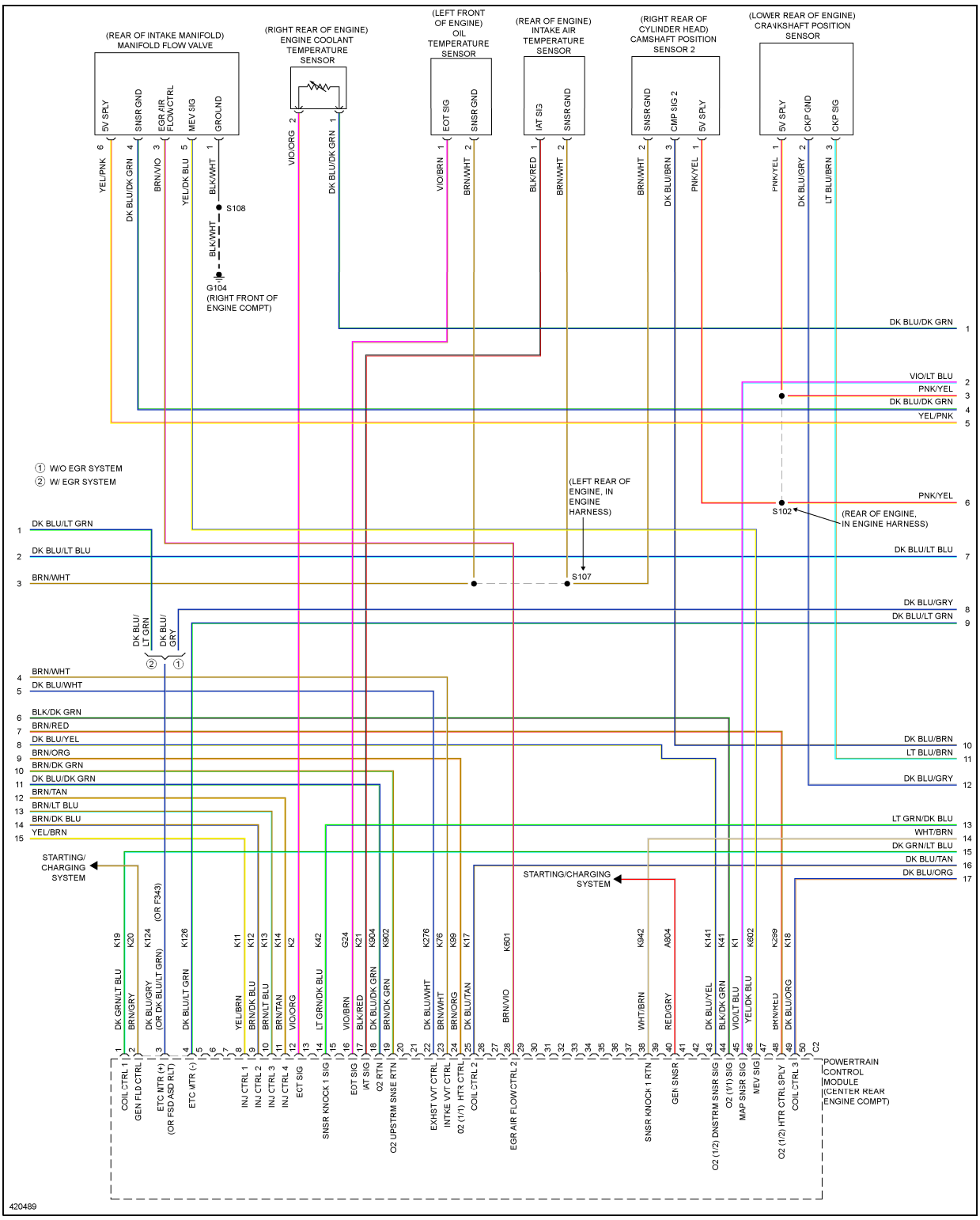

Fig. 21: 2.4L, Engine Performance Circuit (4 of 5)

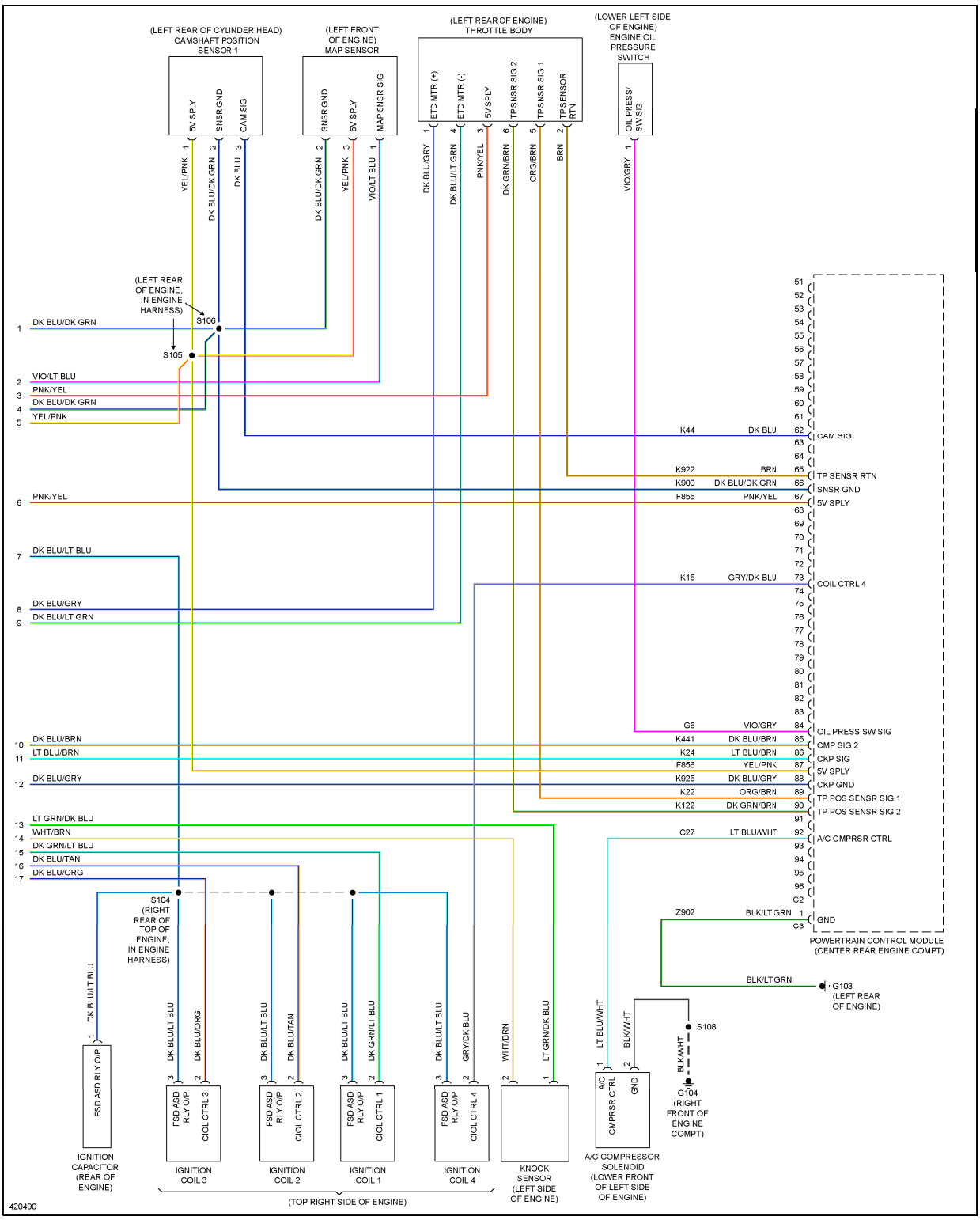

Fig. 22: 2.4L, Engine Performance Circuit (5 of 5)

EXTERIOR LIGHTS

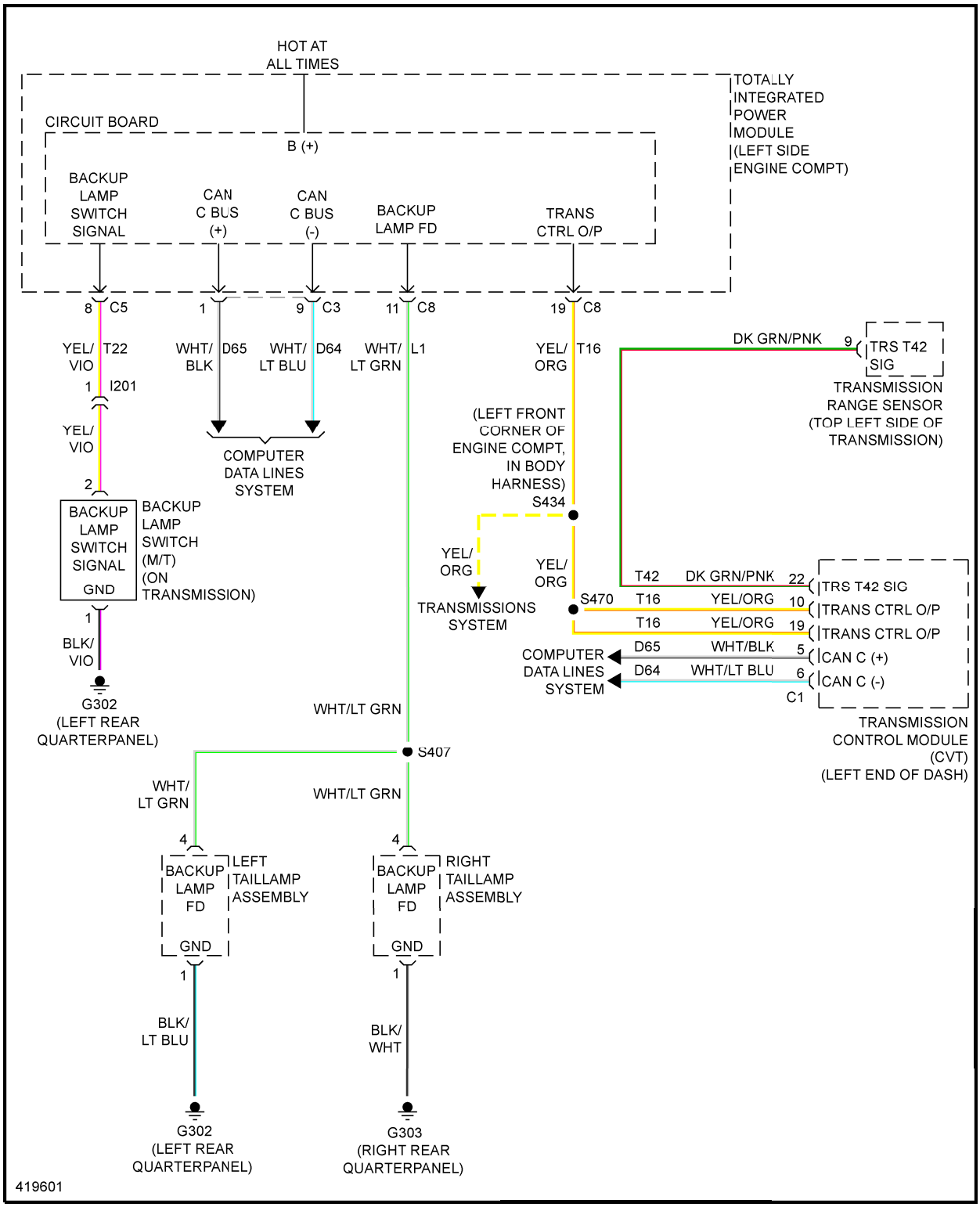

Fig. 23: Backup Lamps Circuit

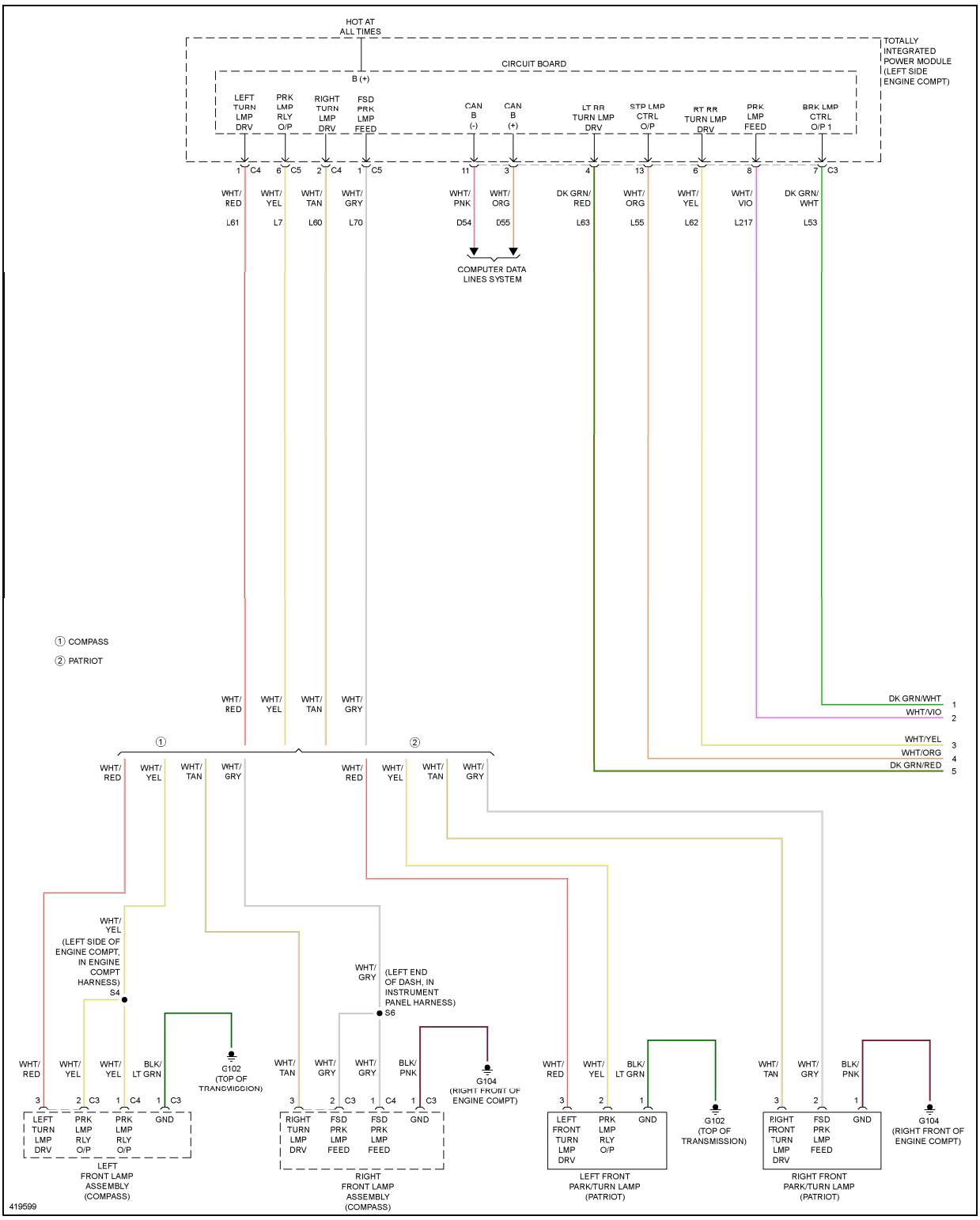

Fig. 24: Exterior Lamps Circuit (1 of 2)

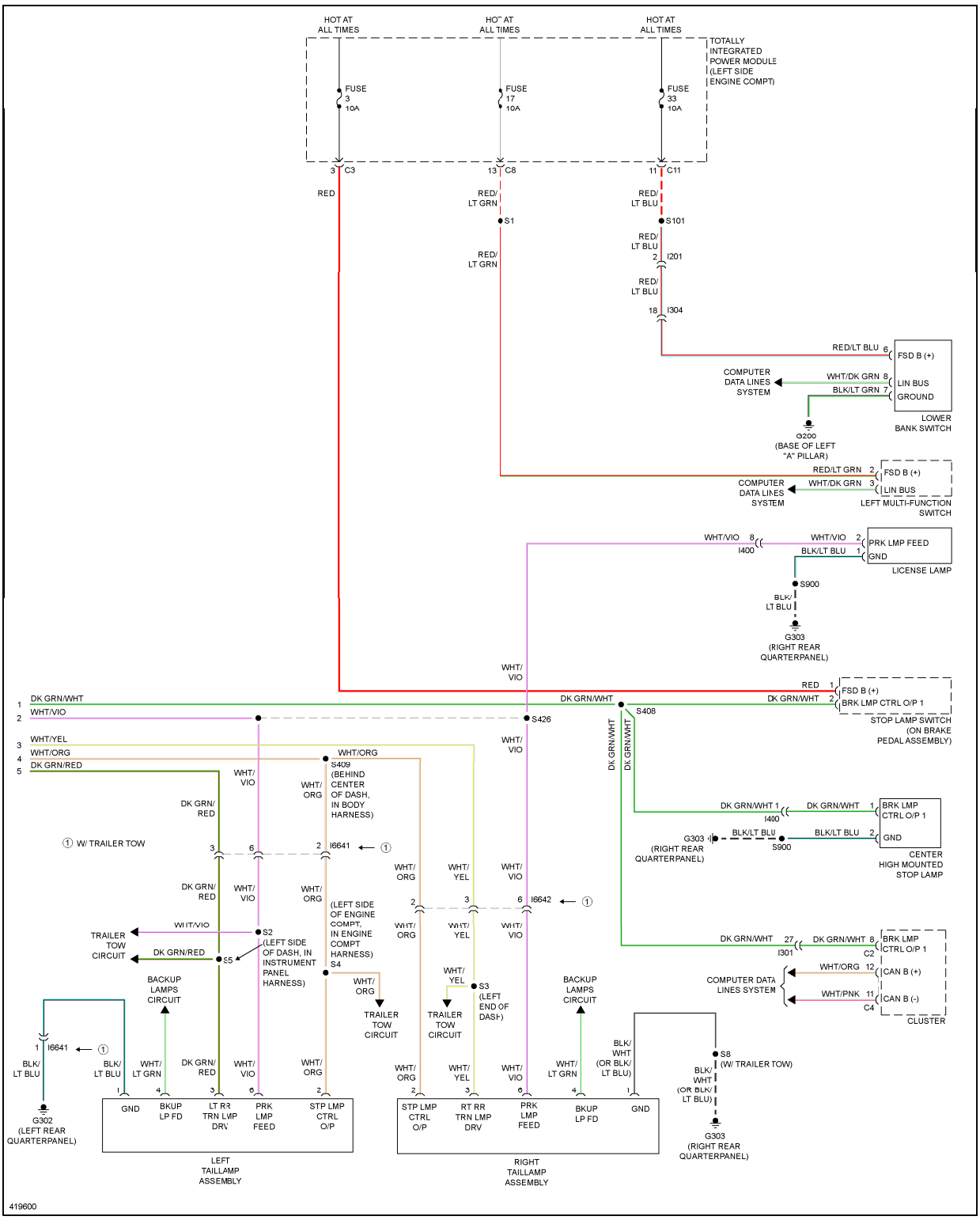

Fig. 25: Exterior Lamps Circuit (2 of 2)

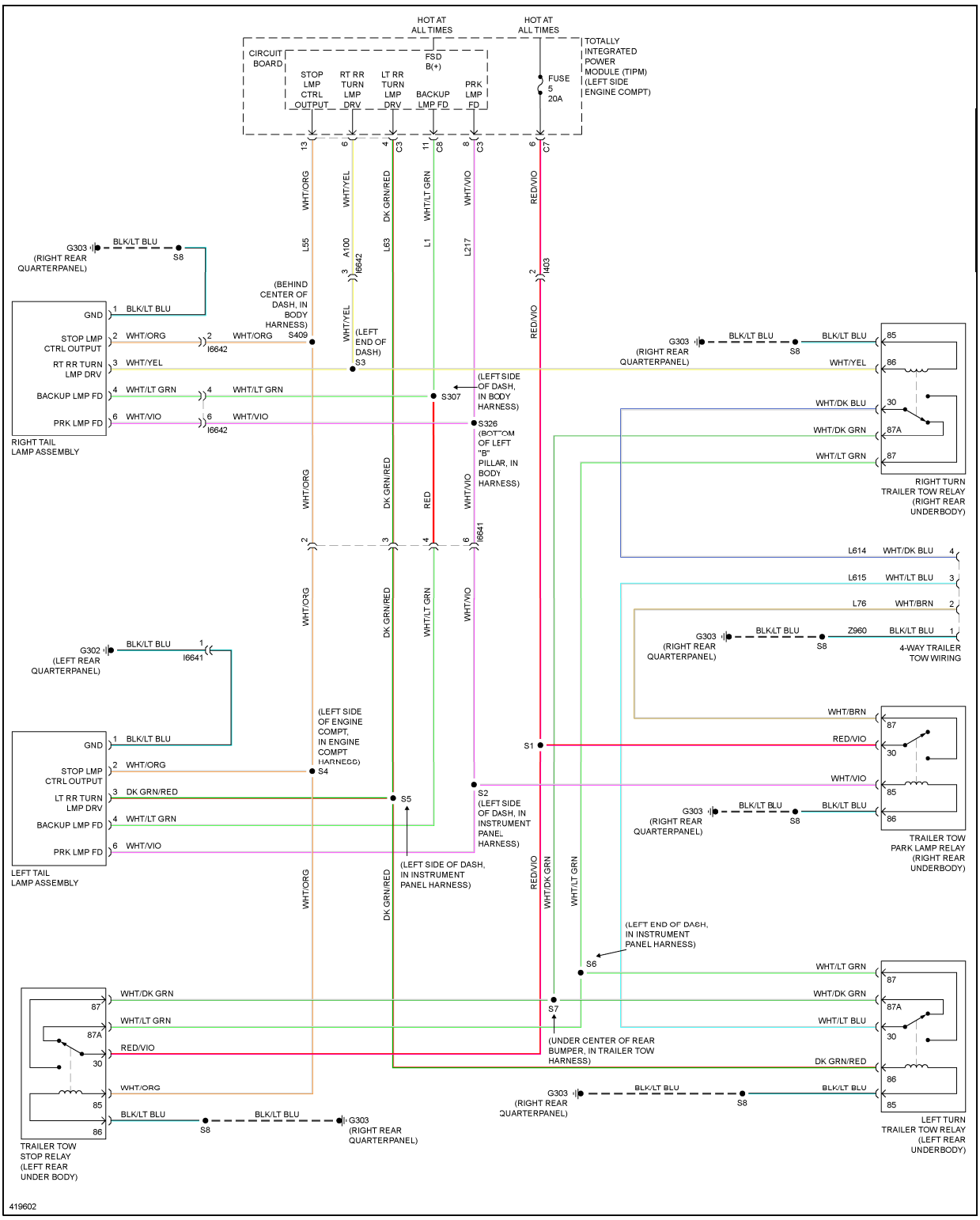

Fig. 26: Trailer Tow Circuit

GROUND DISTRIBUTION

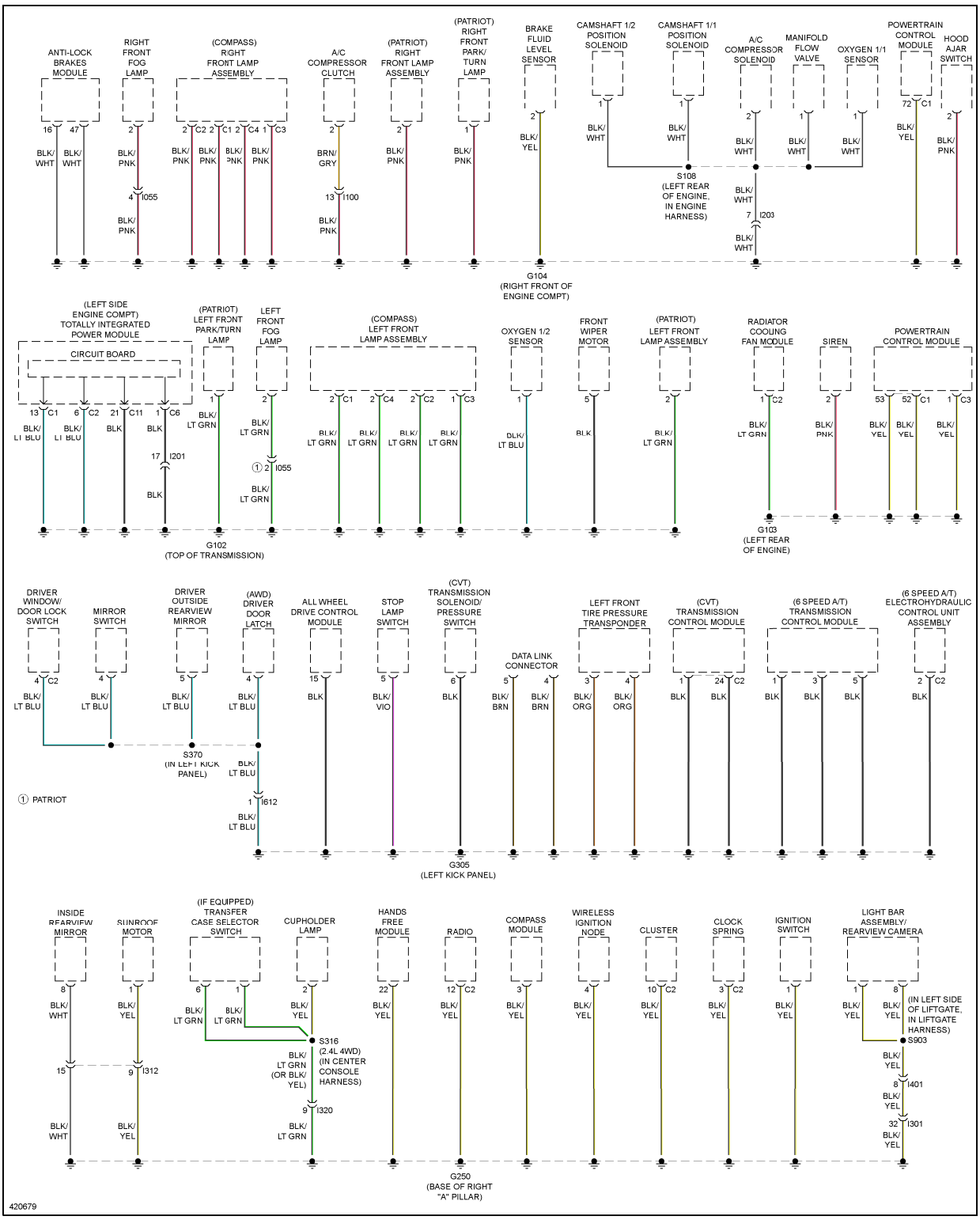

Fig. 27: Ground Distribution Circuit (1 of 2)

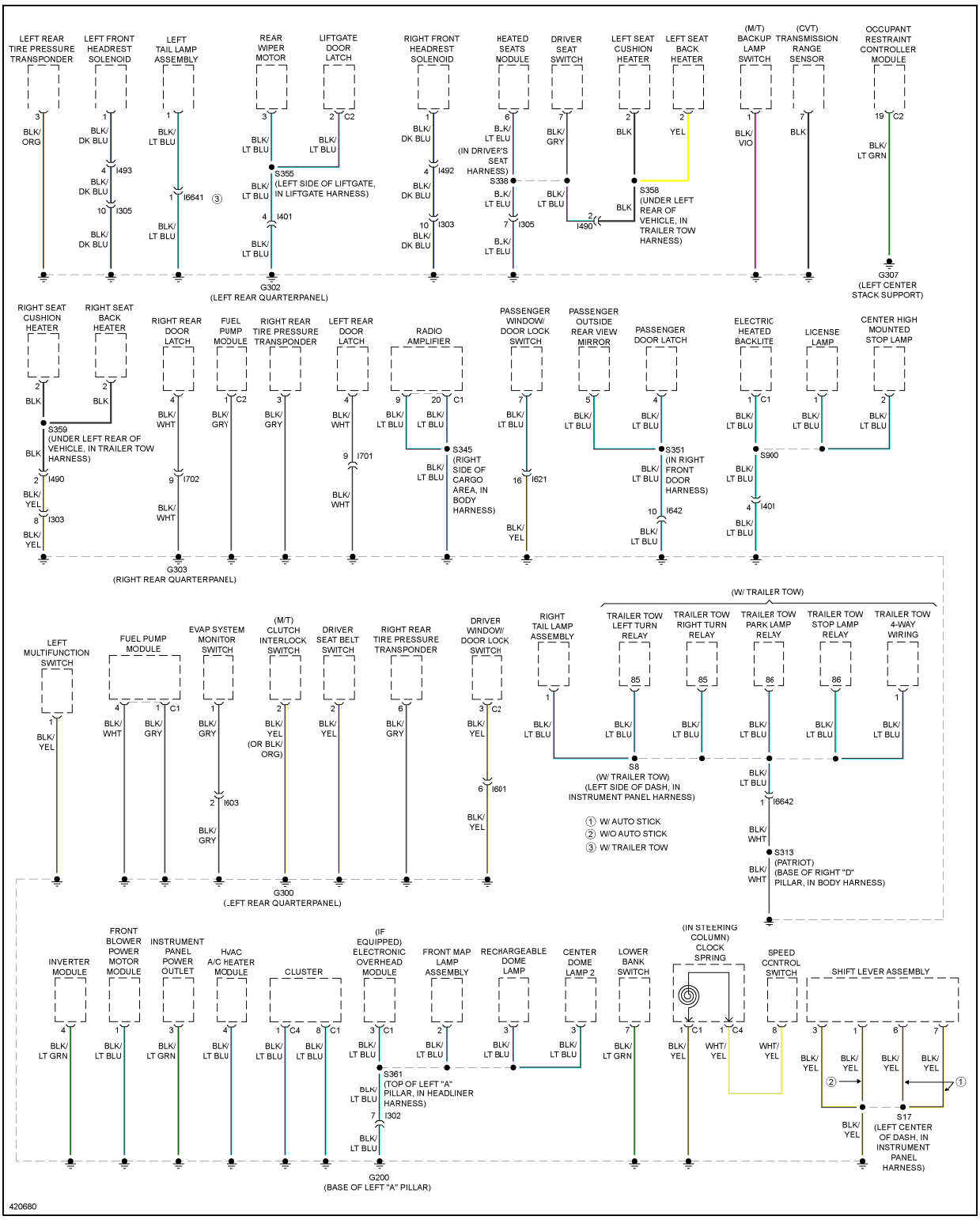

Fig. 28: Ground Distribution Circuit (2 of 2)

HEADLIGHTS

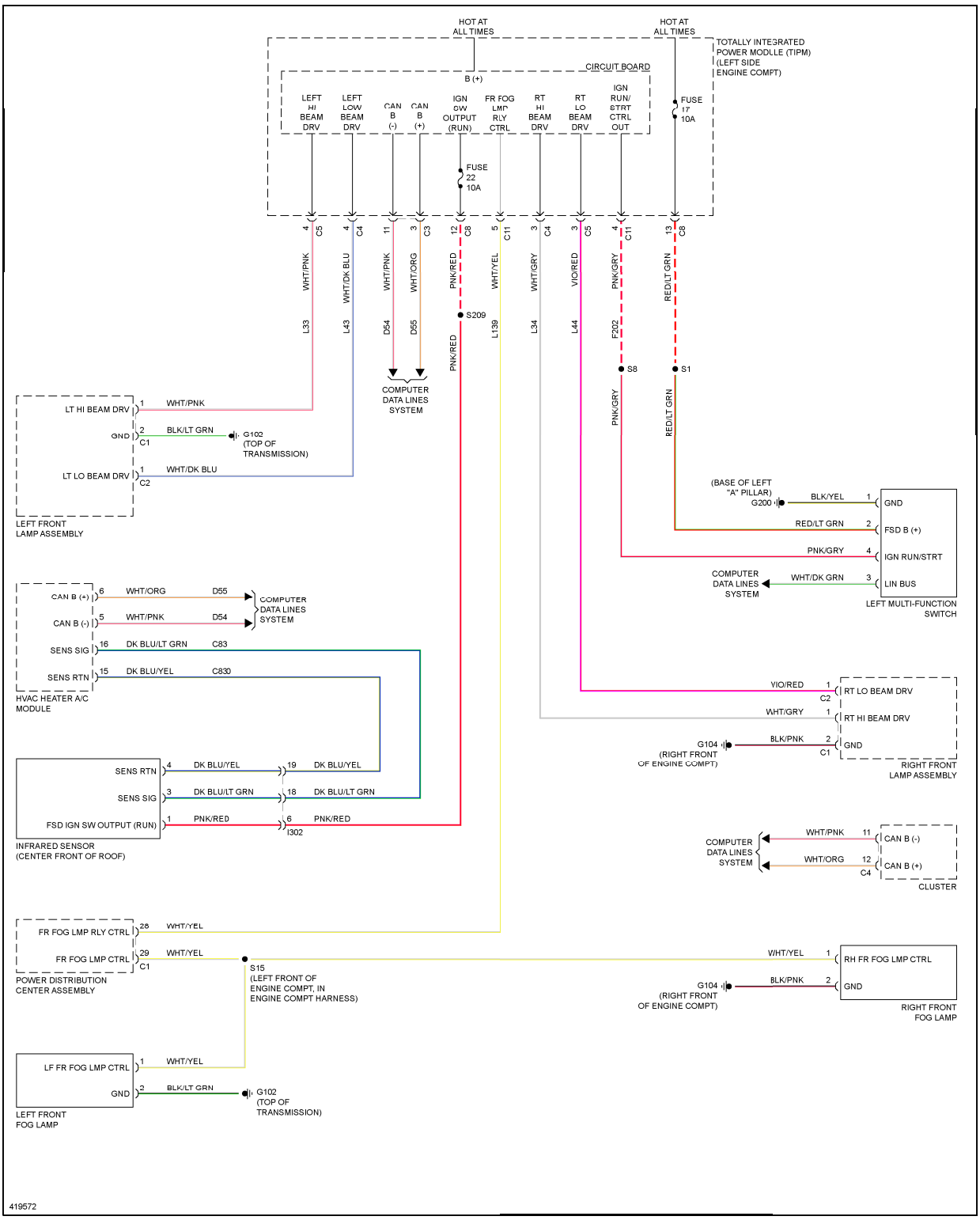

Fig. 29: Headlights Circuit

HORN

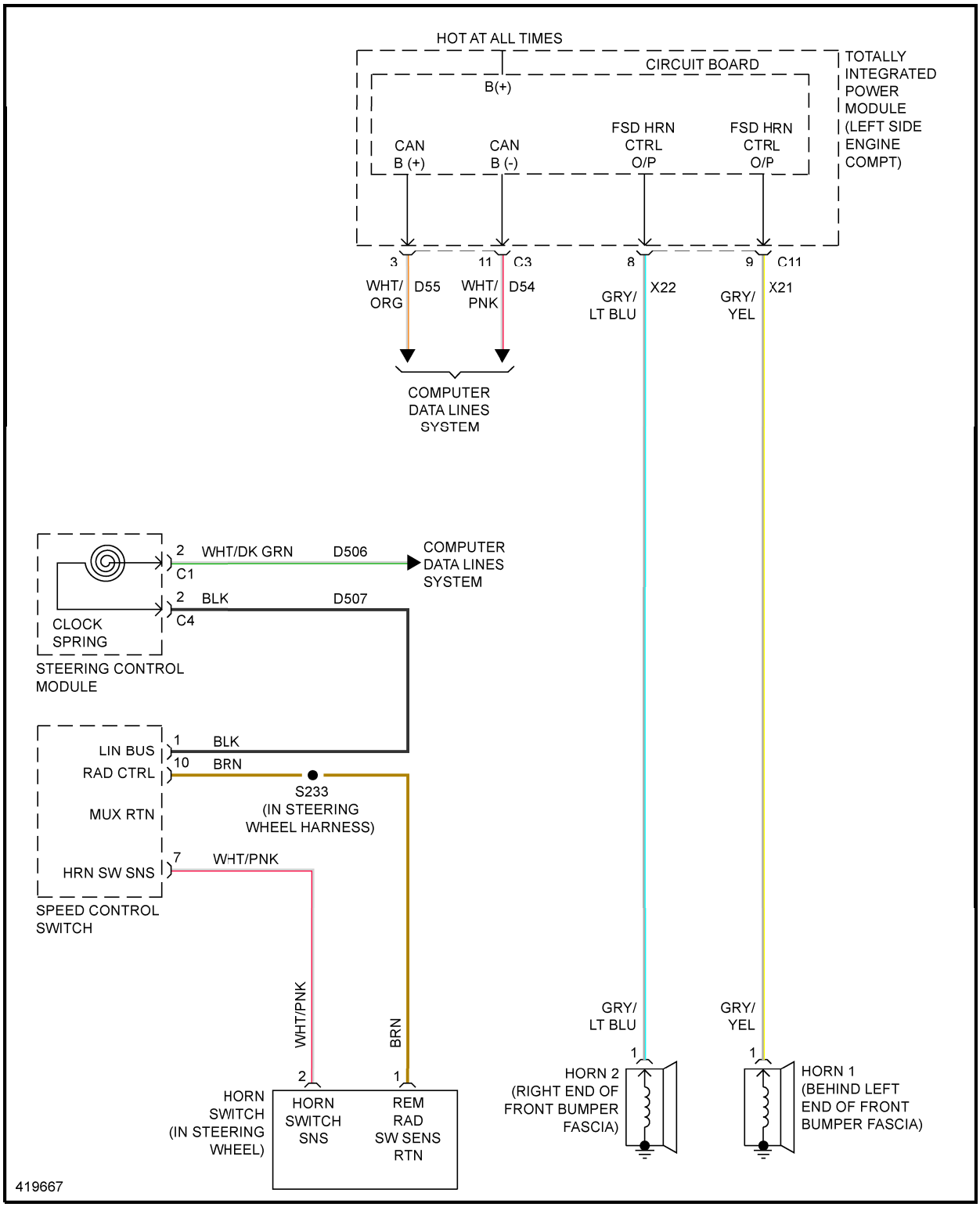

Fig. 30: Horn Circuit

INSTRUMENT CLUSTER

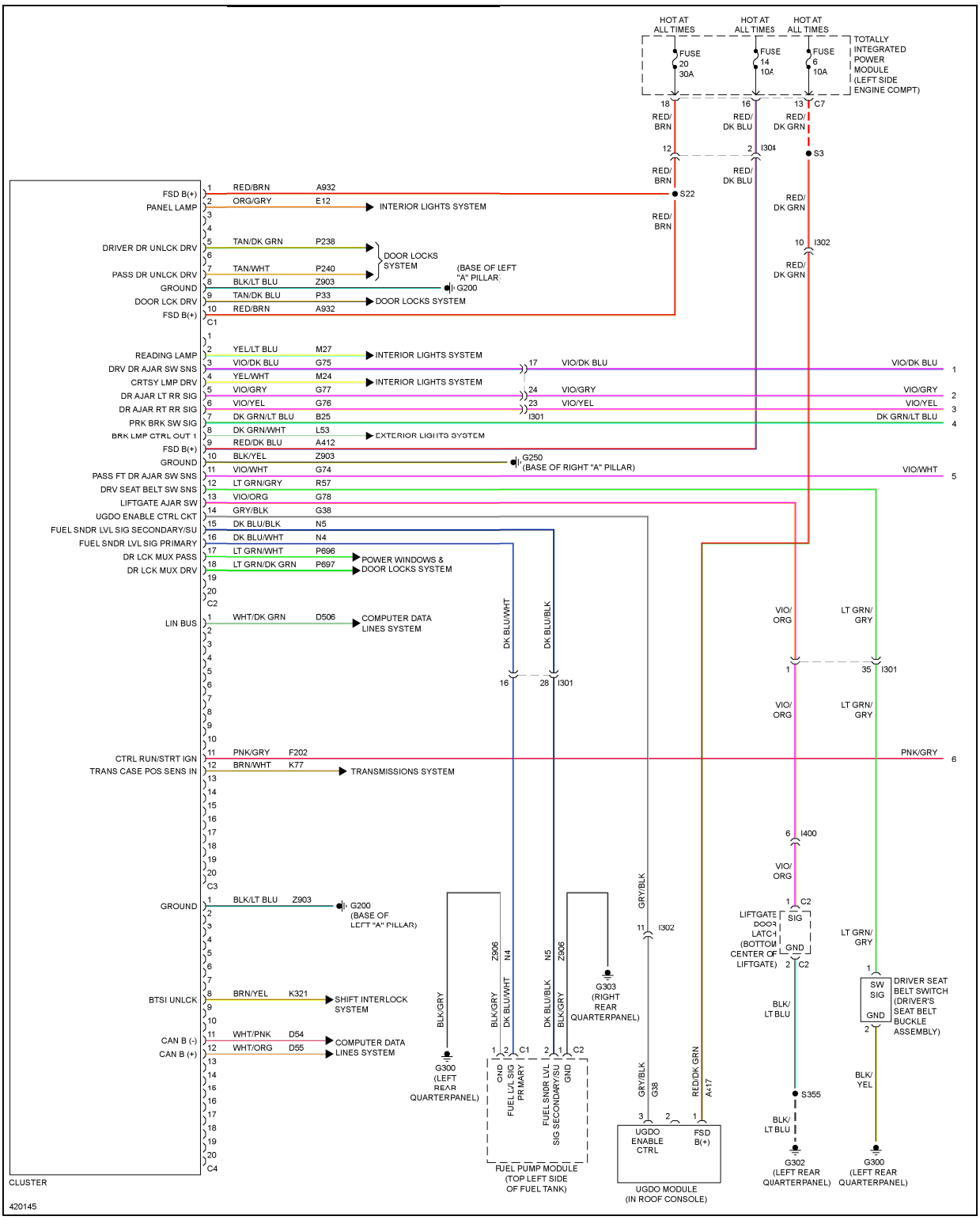

Fig. 31: Instrument Cluster Circuit (1 of 2)

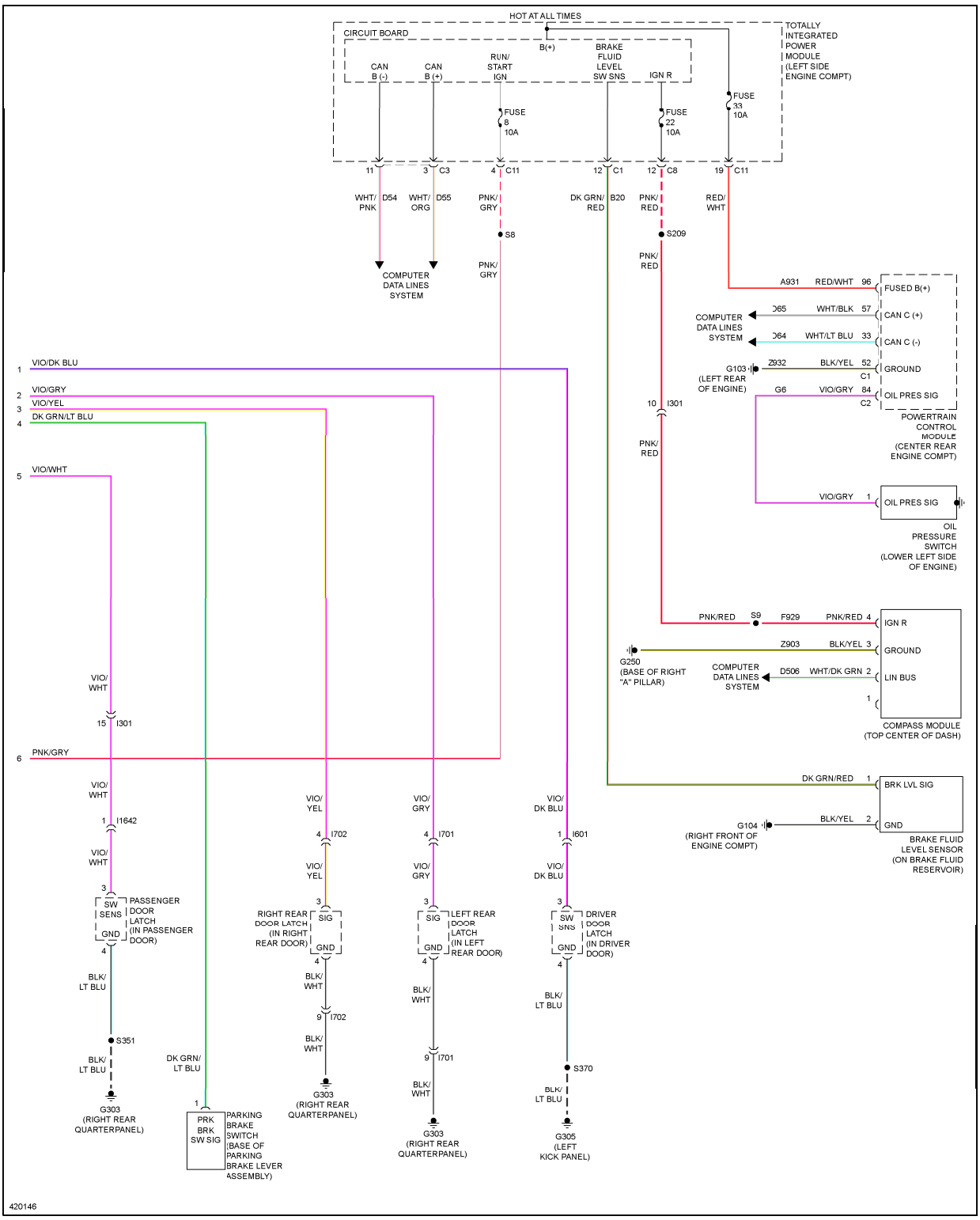

Fig. 32: Instrument Cluster Circuit (2 of 2)

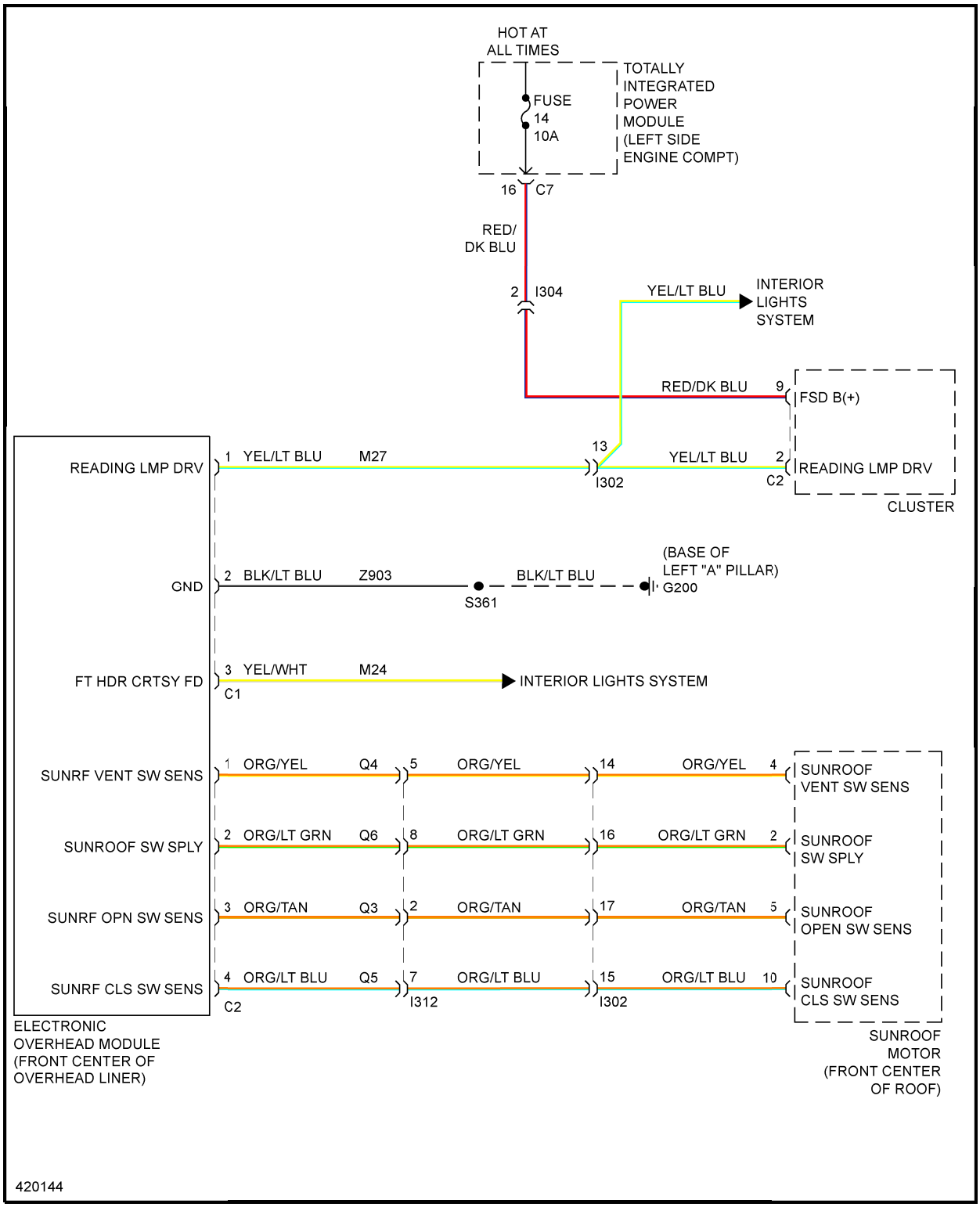

Fig. 33: Overhead Console Circuit

INTERIOR LIGHTS

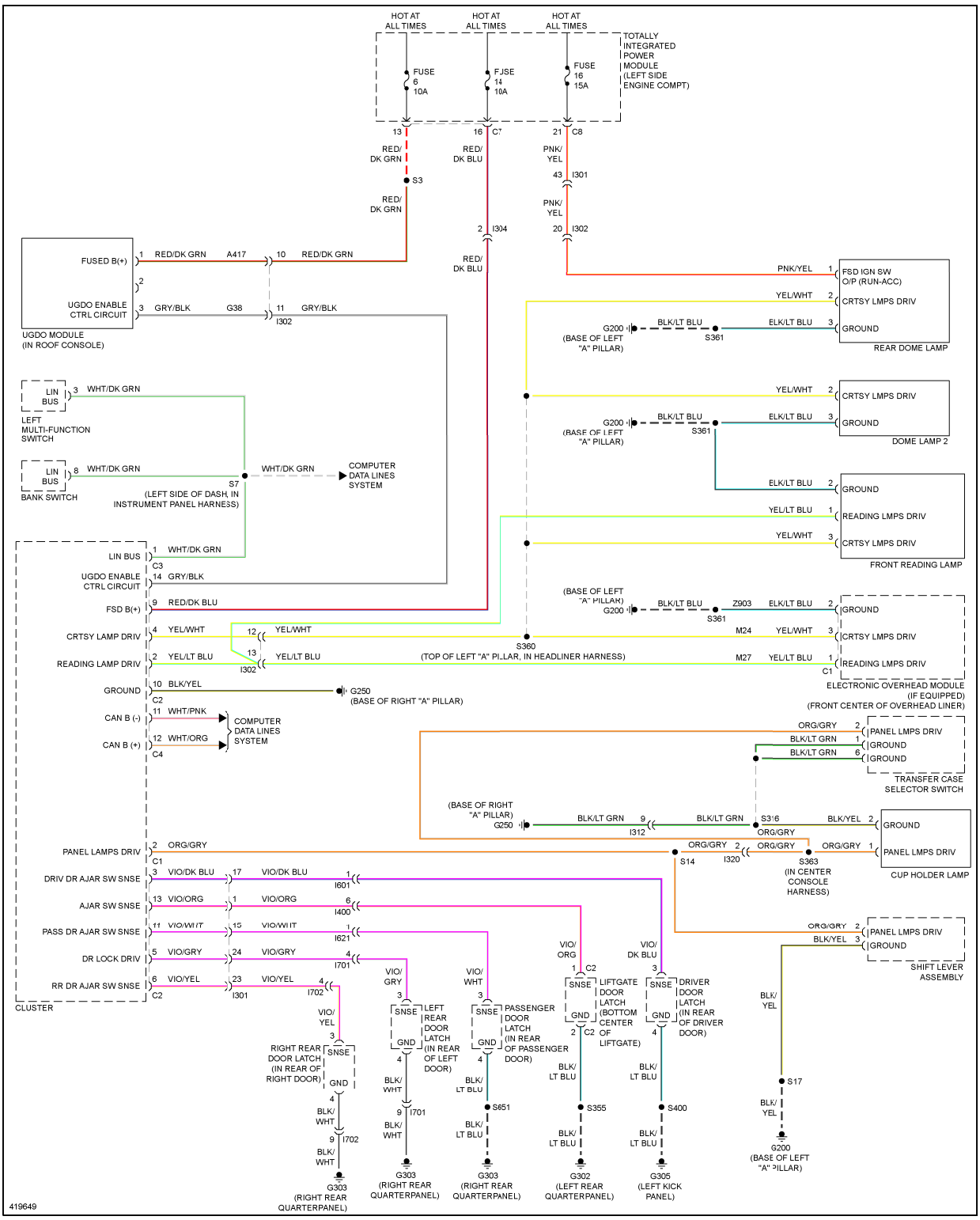

Fig. 34: Interior Lights Circuit

NAVIGATION

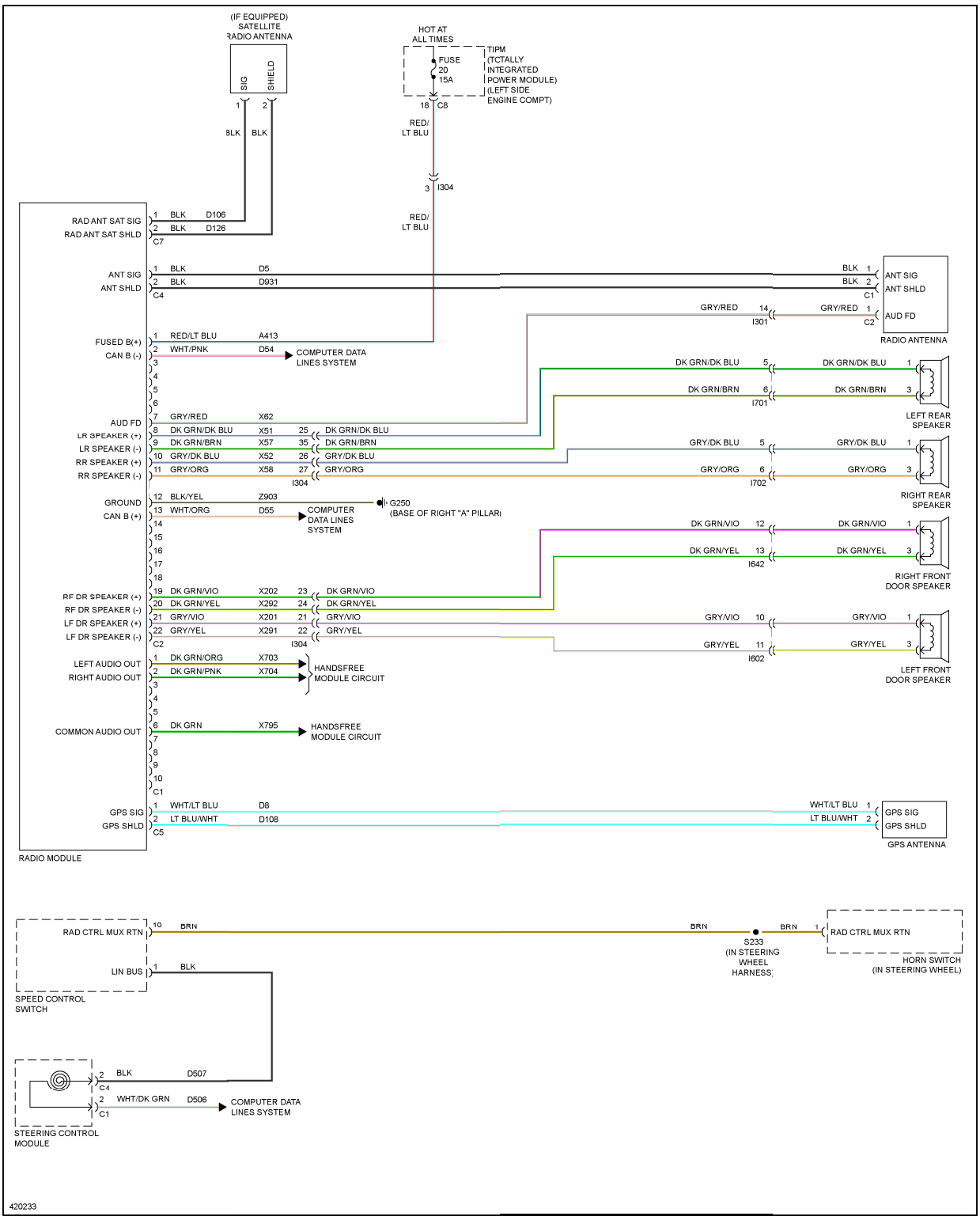

Fig. 35: Navigation Circuit, Base

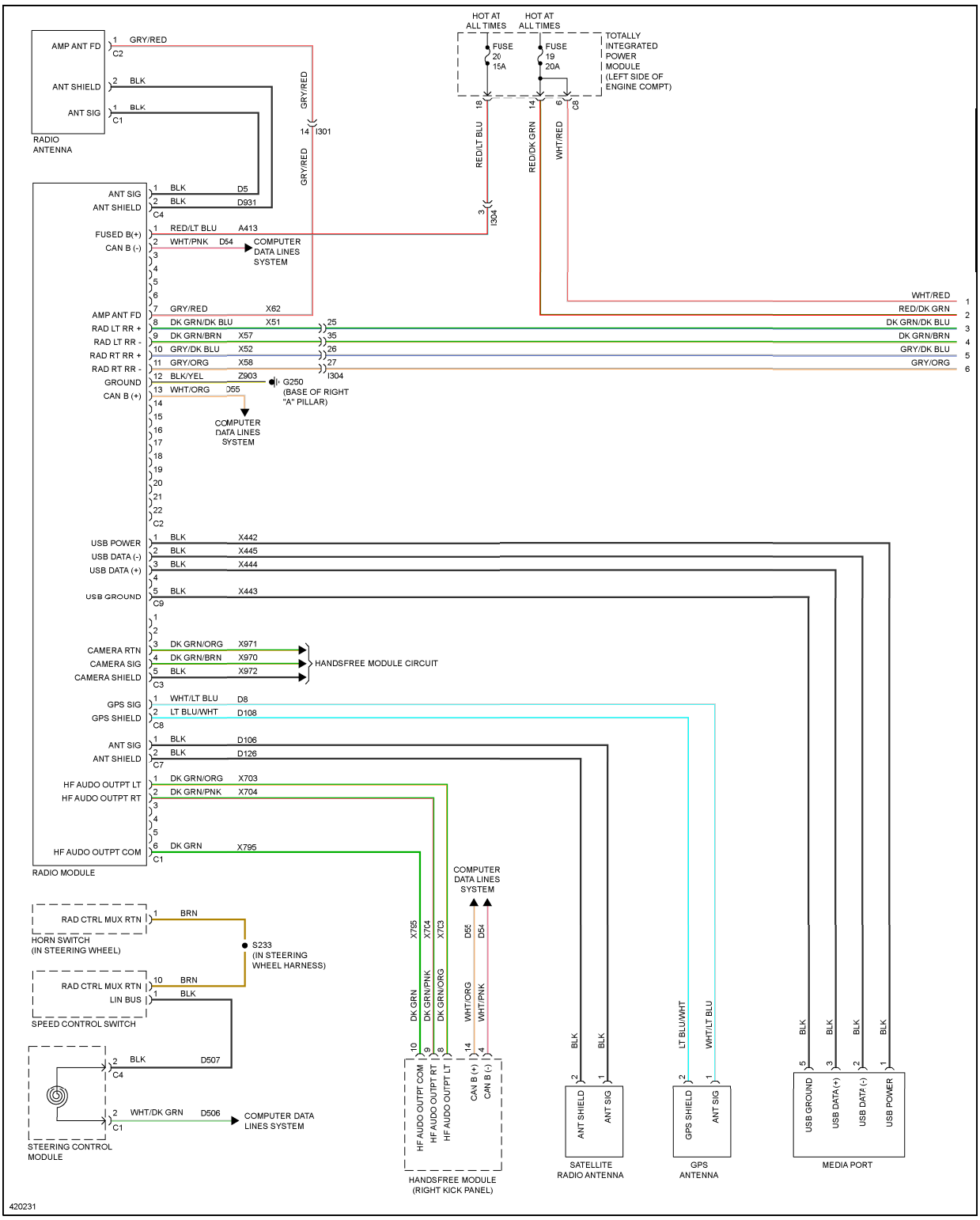

Fig. 36: Navigation Circuit, Premium (1 of 2)

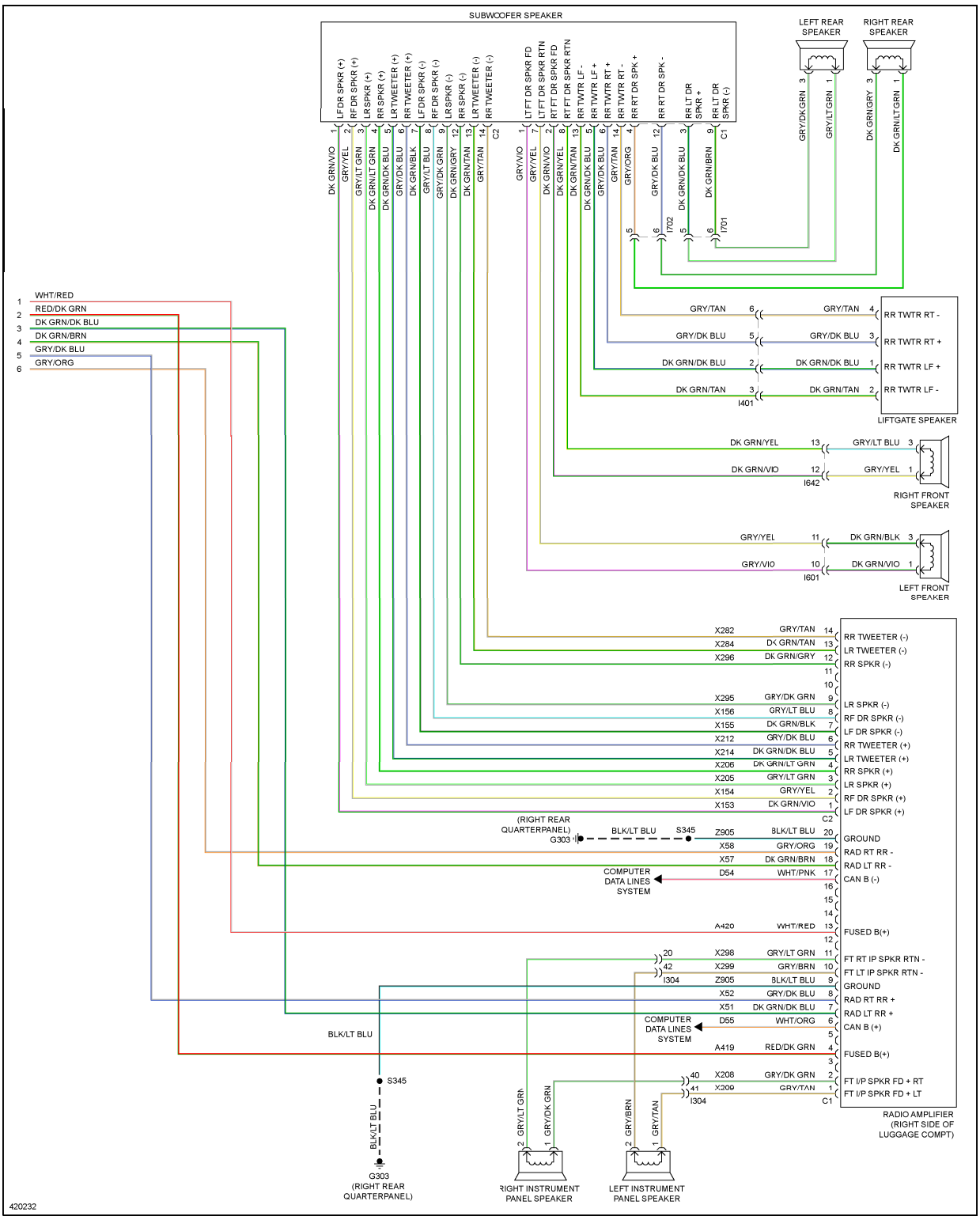

Fig. 37: Navigation Circuit, Premium (2 of 2)

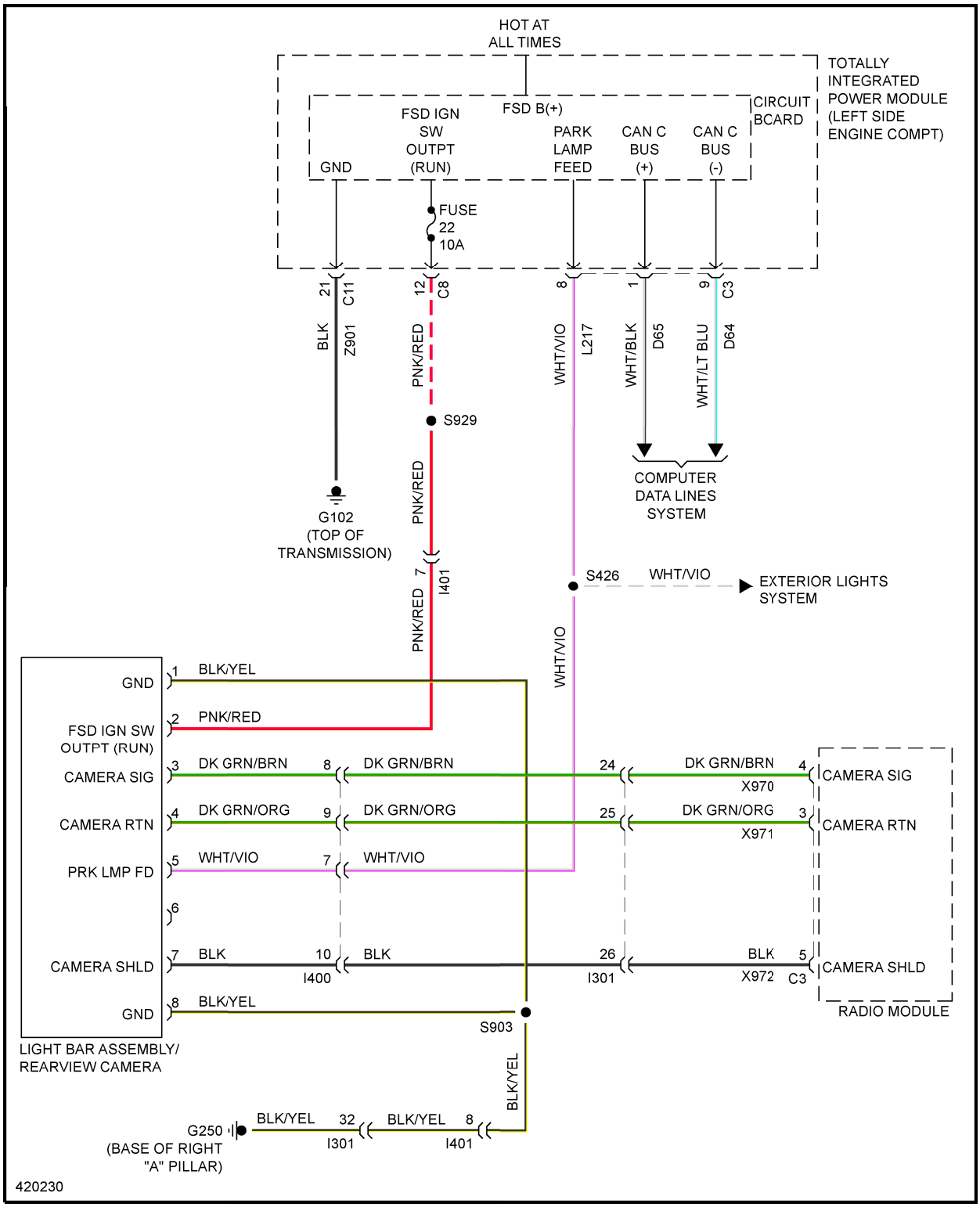

Fig. 38: Rear View Camera Circuit

POWER DISTRIBUTION

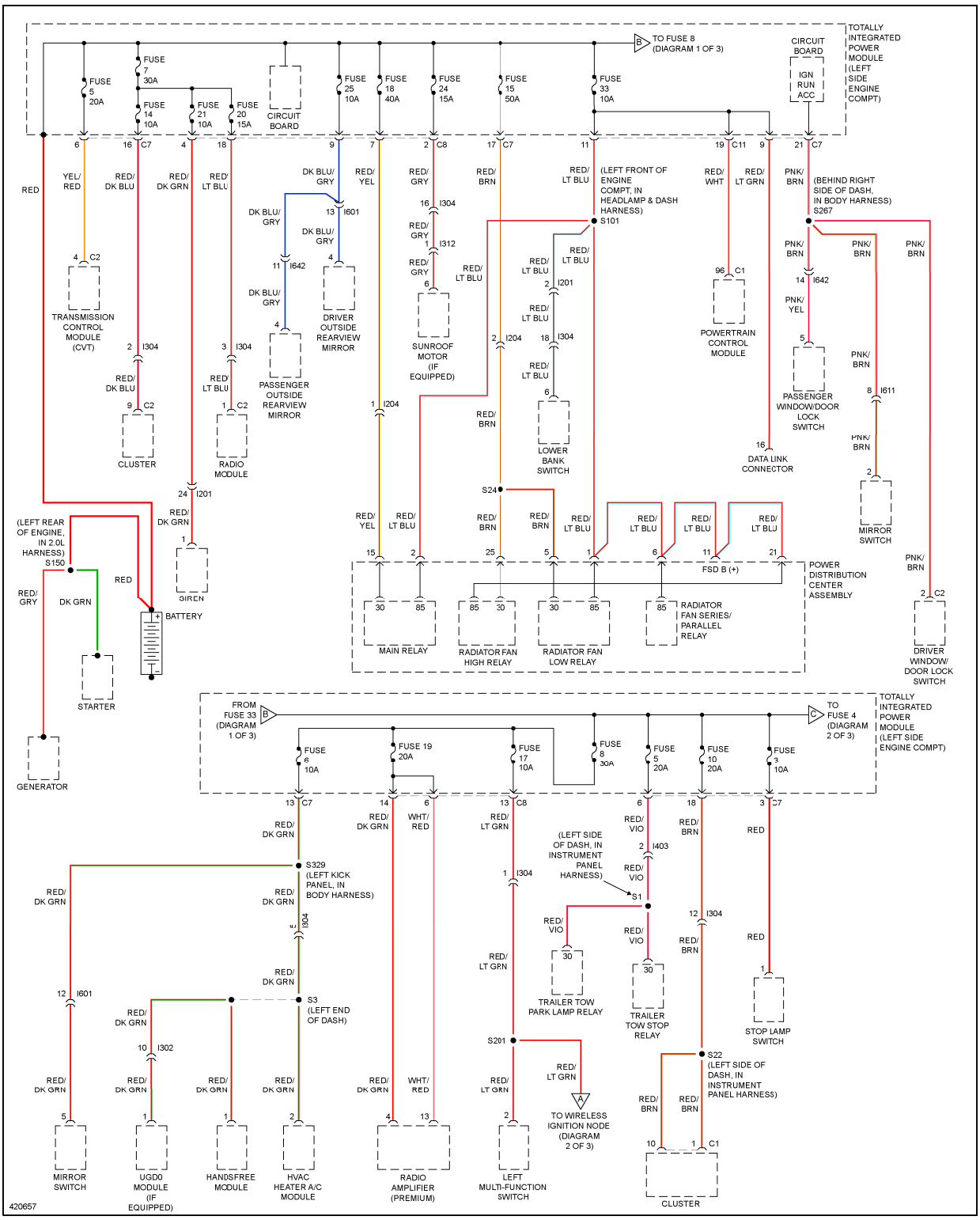

Fig. 39: Power Distribution Circuit (1 of 3)

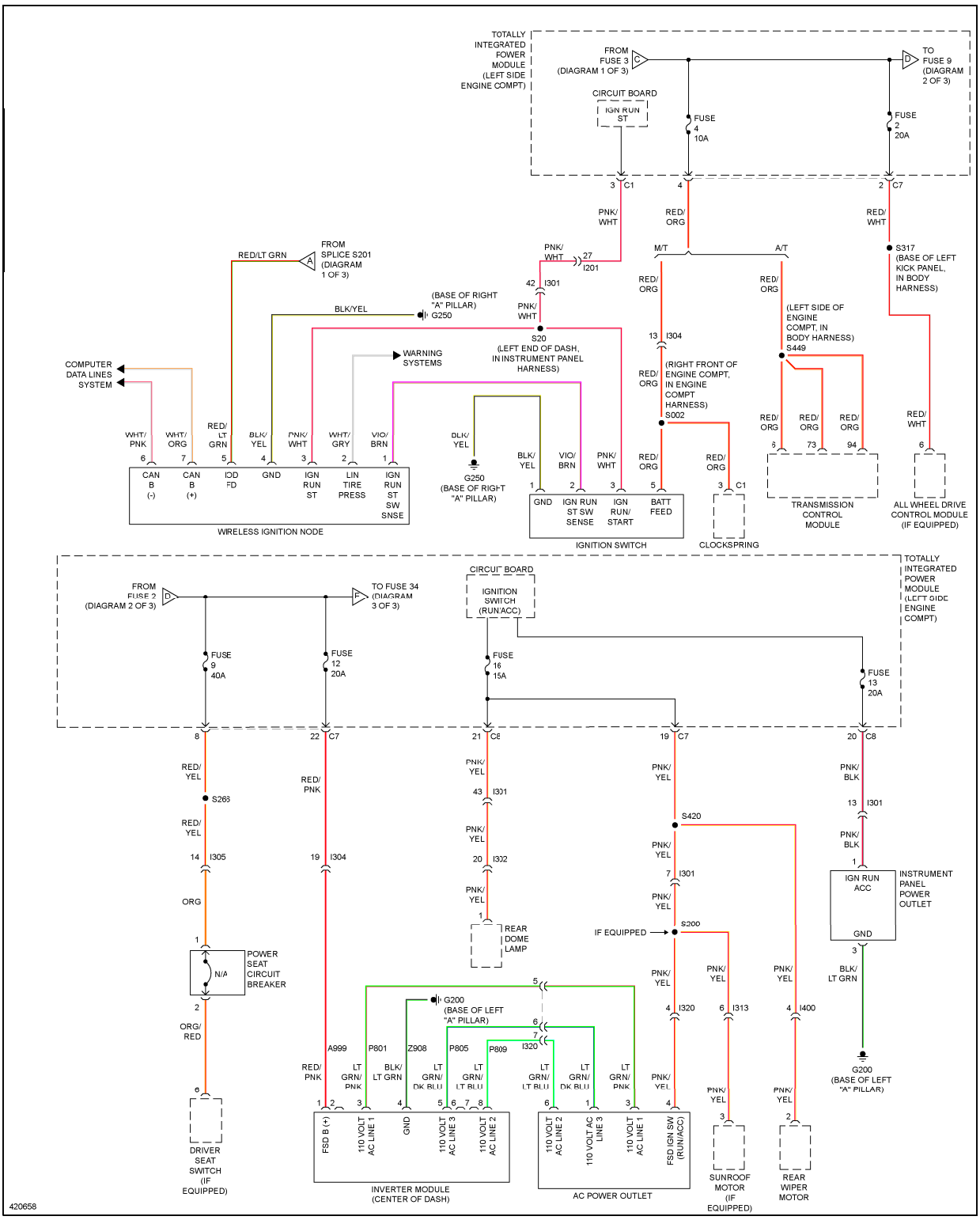

Fig. 40: Power Distribution Circuit (2 of 3)

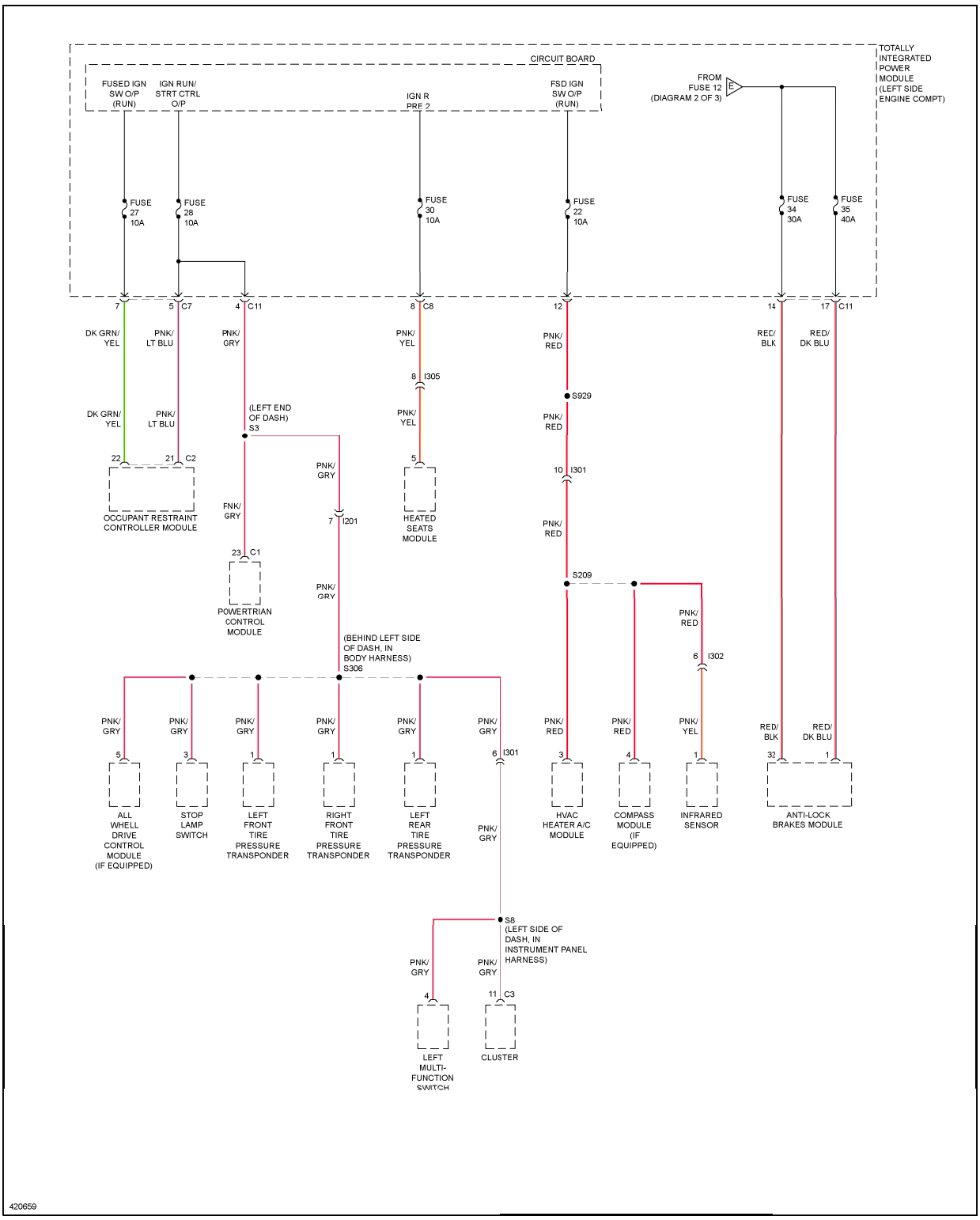

Fig. 41: Power Distribution Circuit (3 of 3)

POWER DOOR LOCKS

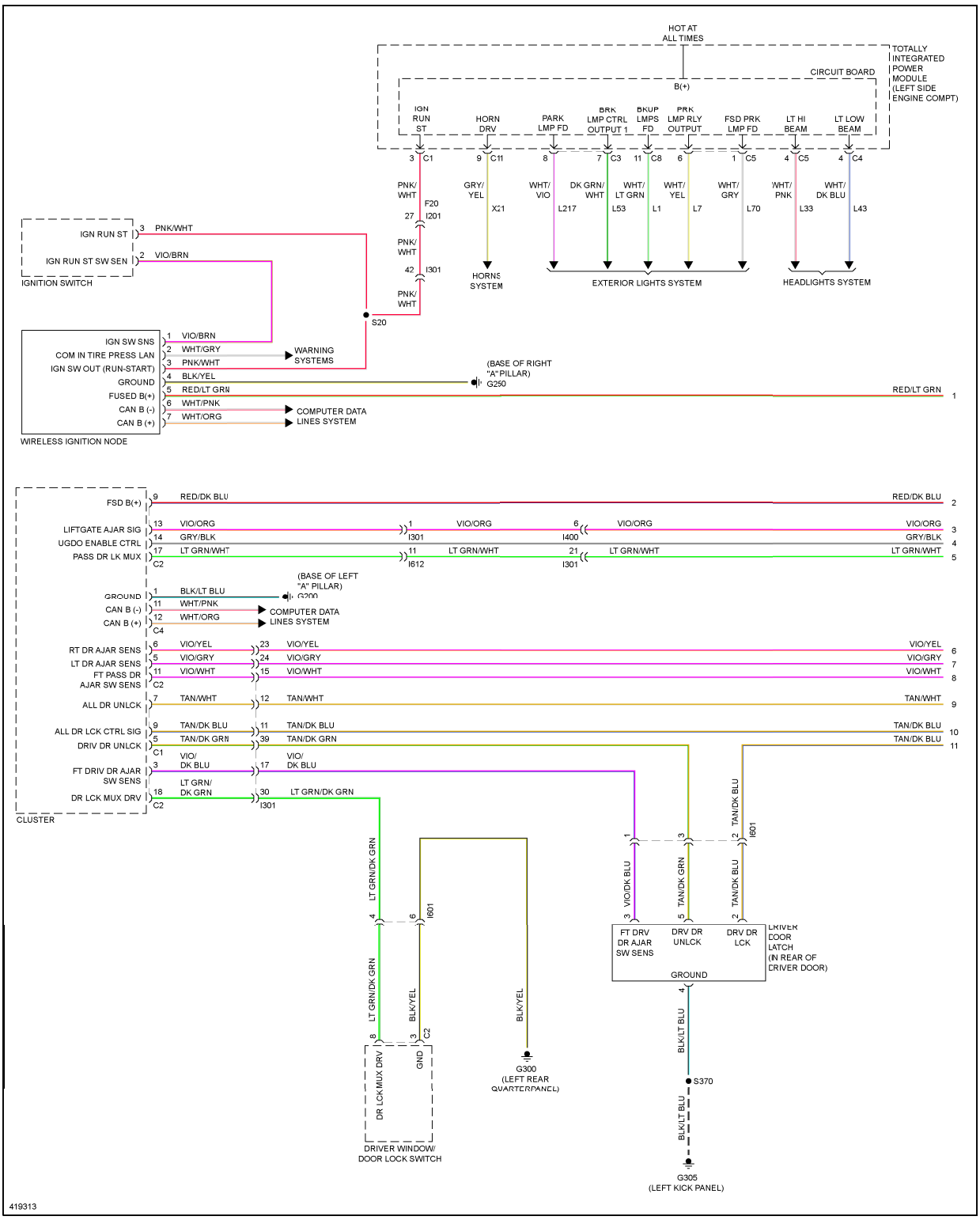

Fig. 42: Power Door Locks Circuit (1 of 3)

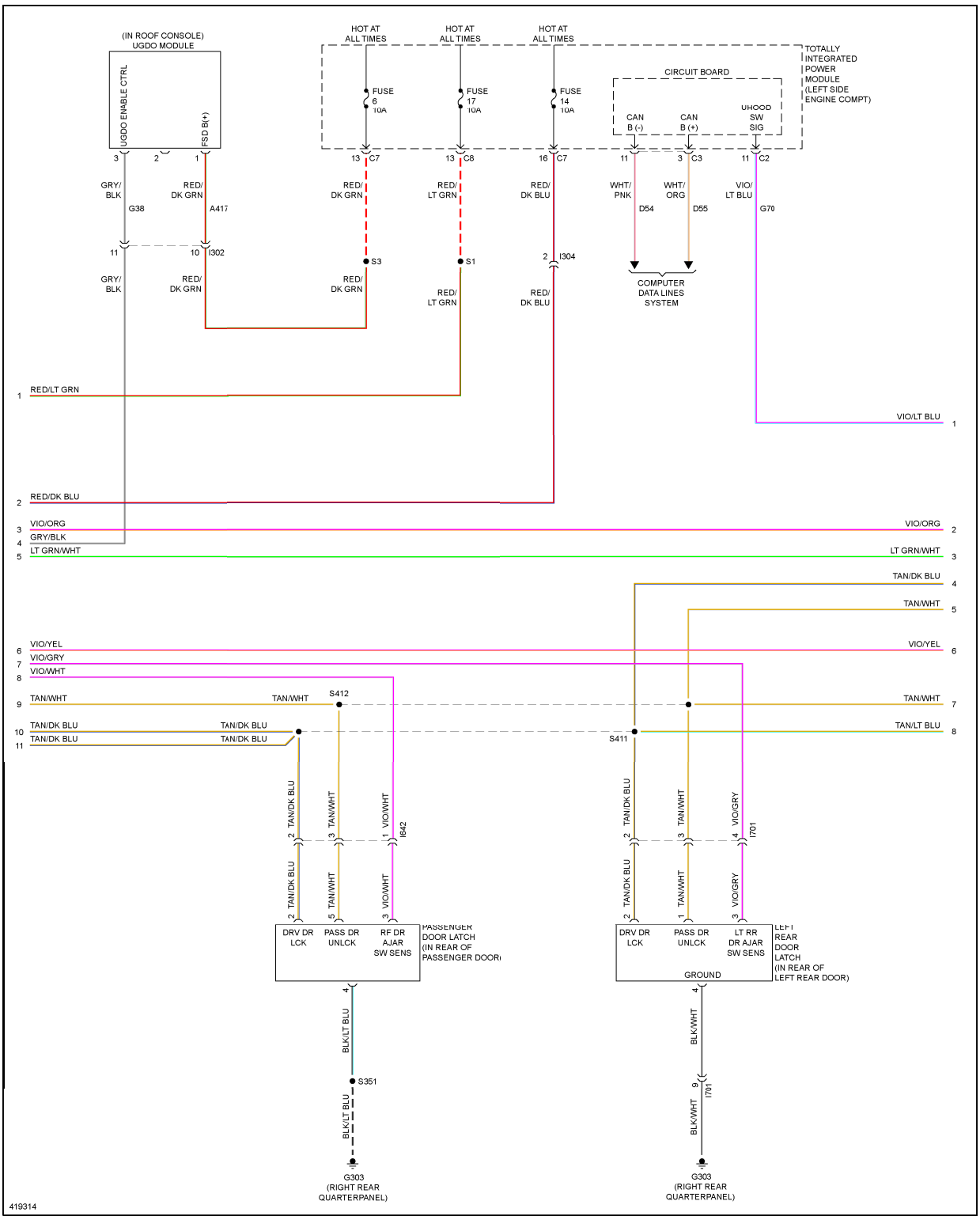

Fig. 43: Power Door Locks Circuit (2 of 3)

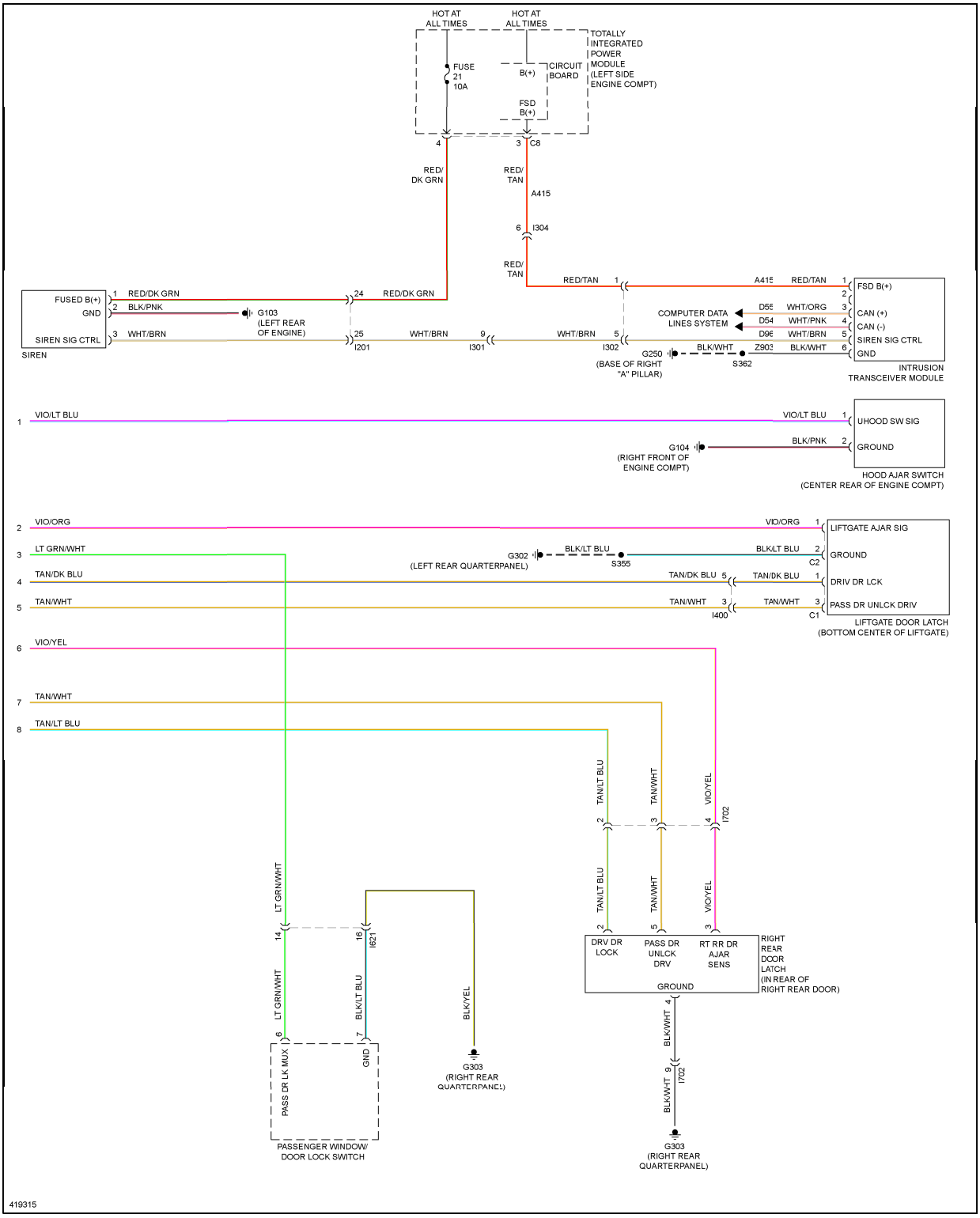

Fig. 44: Power Door Locks Circuit (3 of 3)

POWER MIRRORS

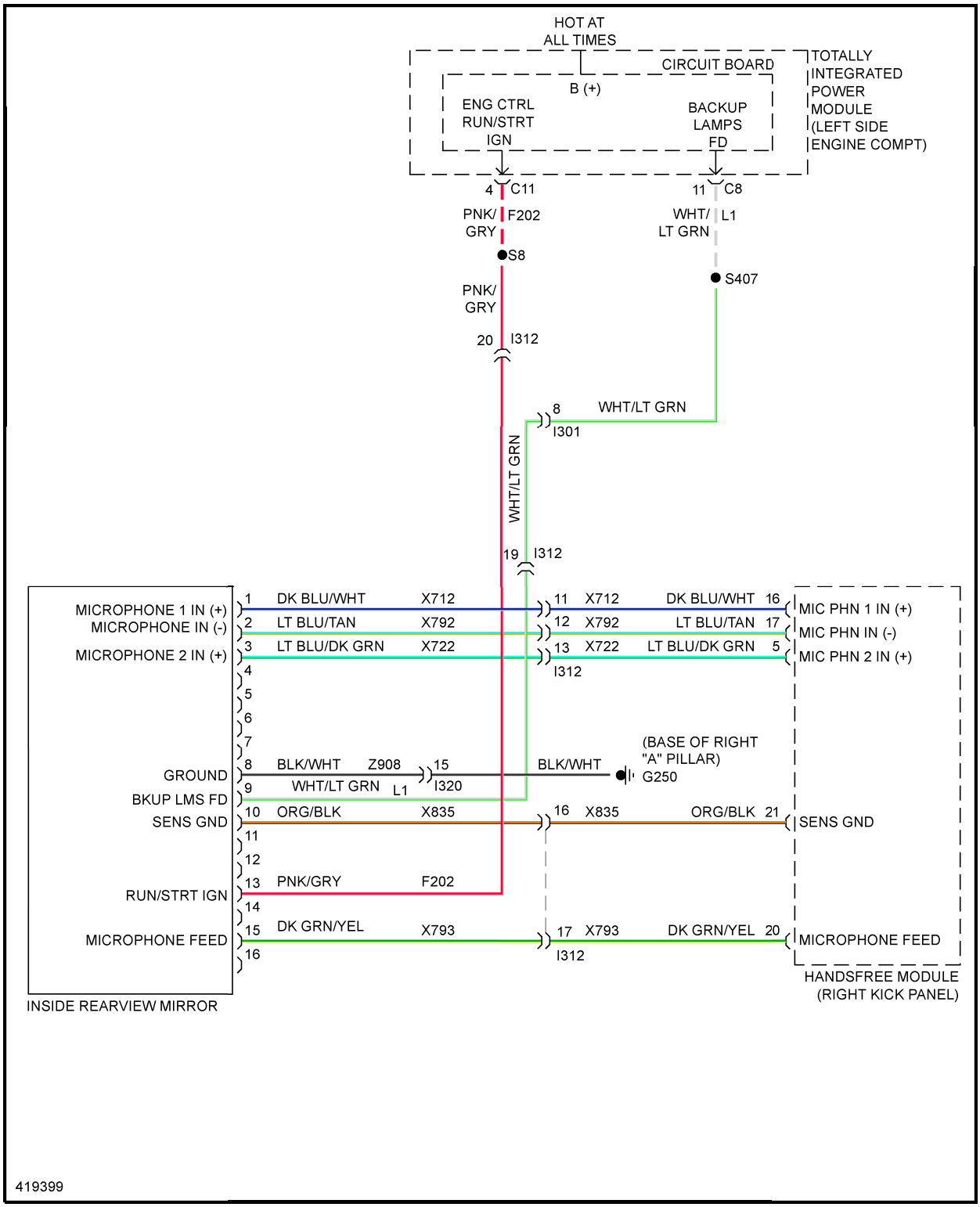

Fig. 45: Automatic Day/Night Mirror Circuit

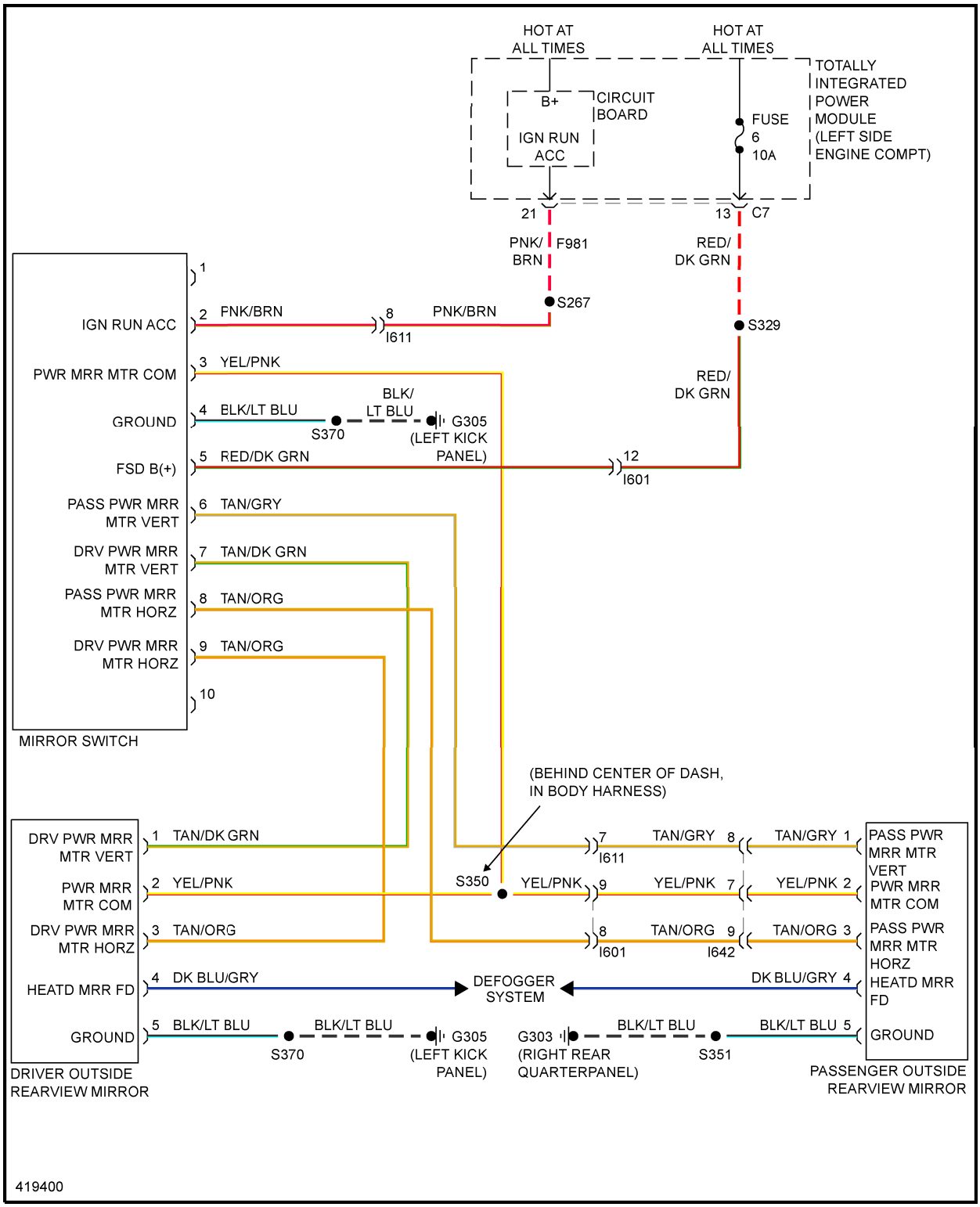

Fig. 46: Power Mirrors Circuit

POWER SEATS

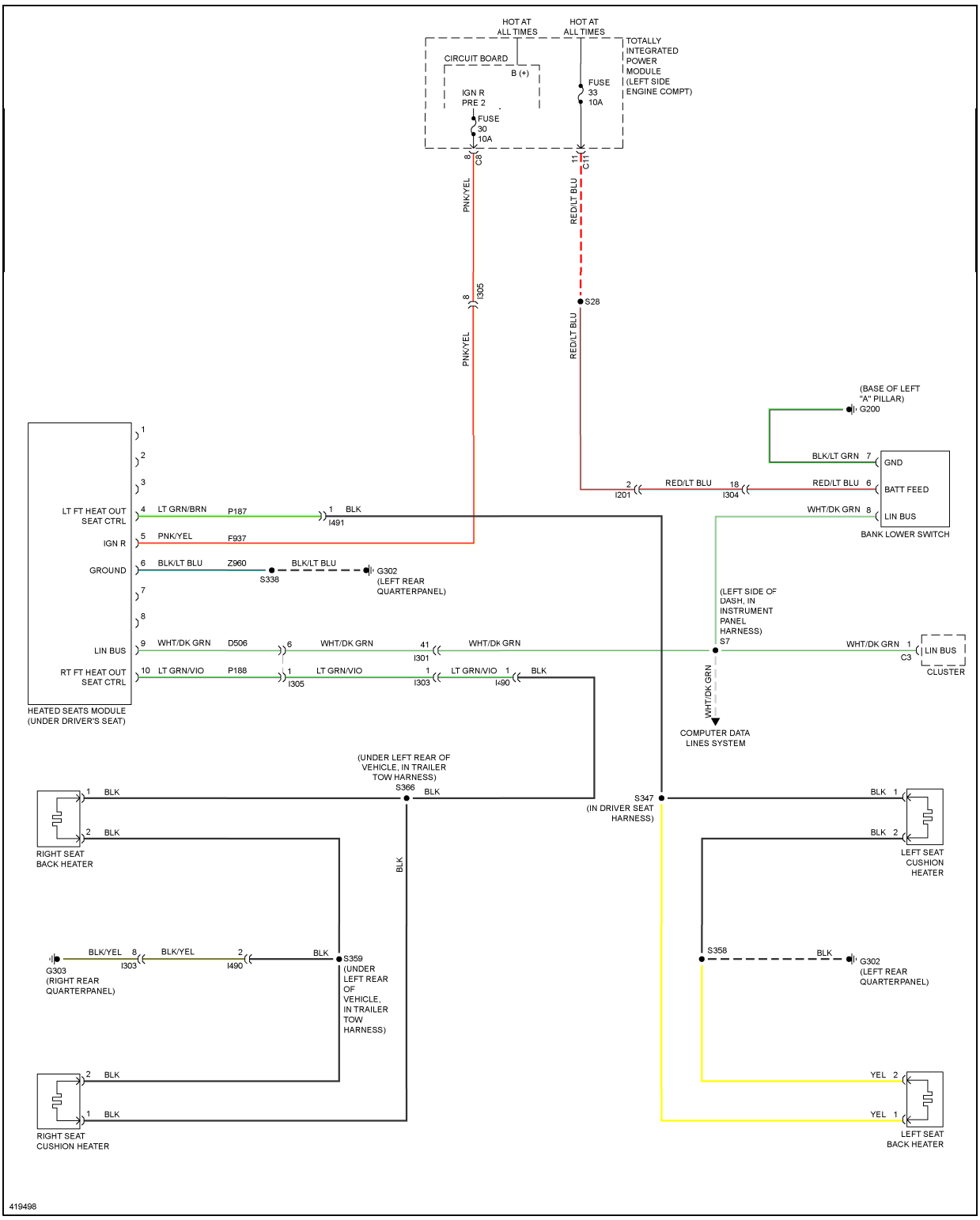

Fig. 47: Heated Seats Circuit

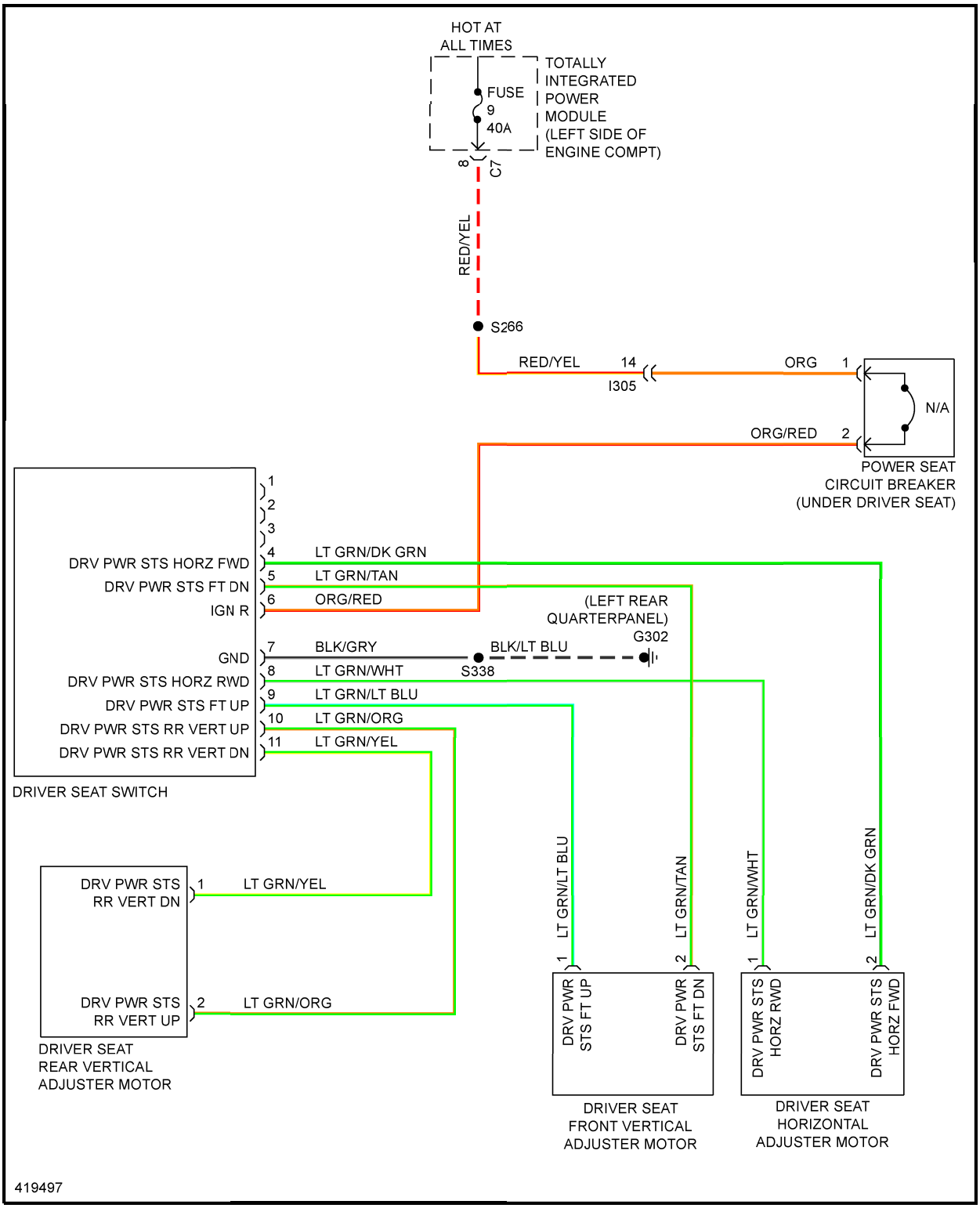

Fig. 48: Power Seats Circuit

POWER TOP/SUNROOF

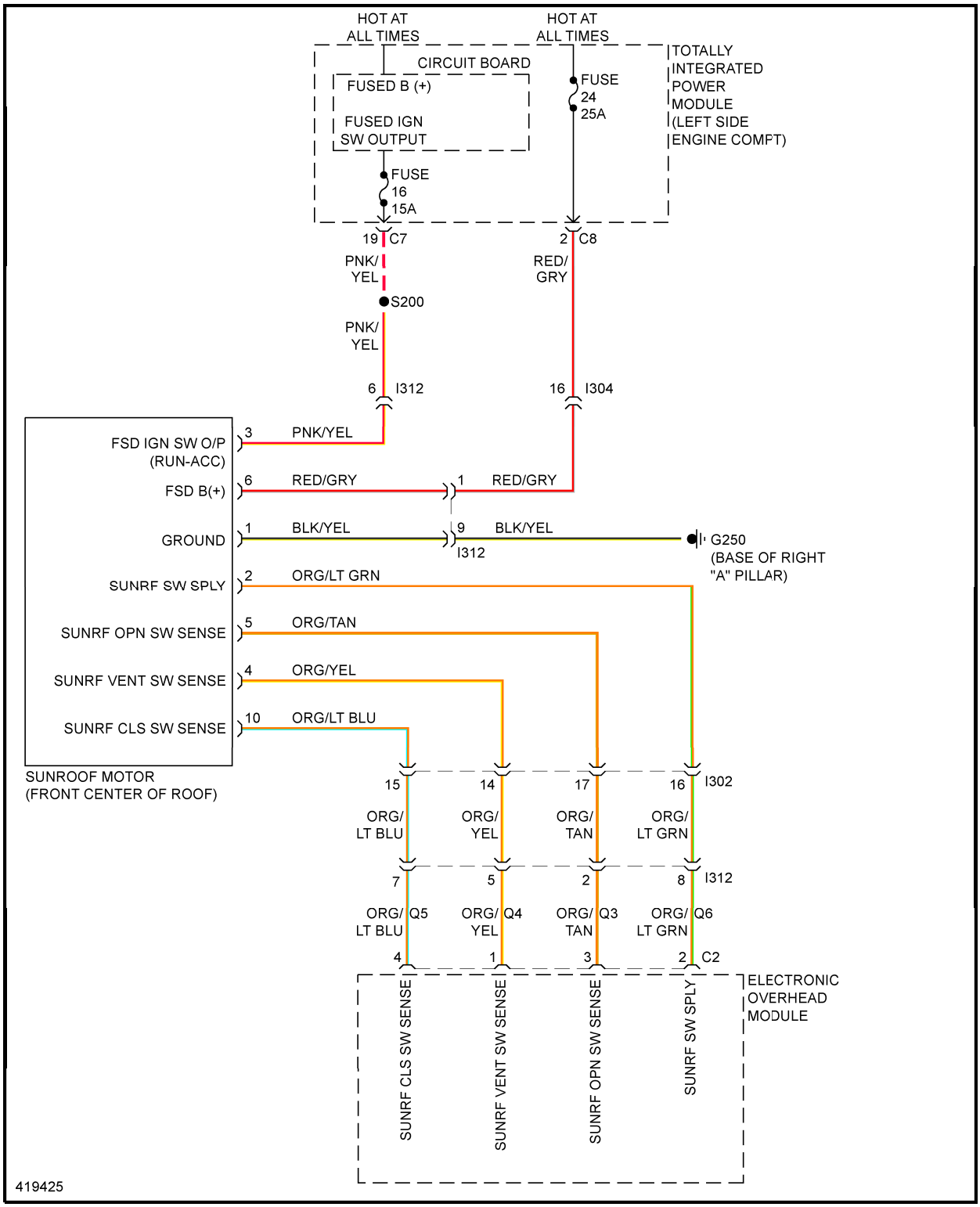

Fig. 49: Power Top/Sunroof Circuit

POWER WINDOWS

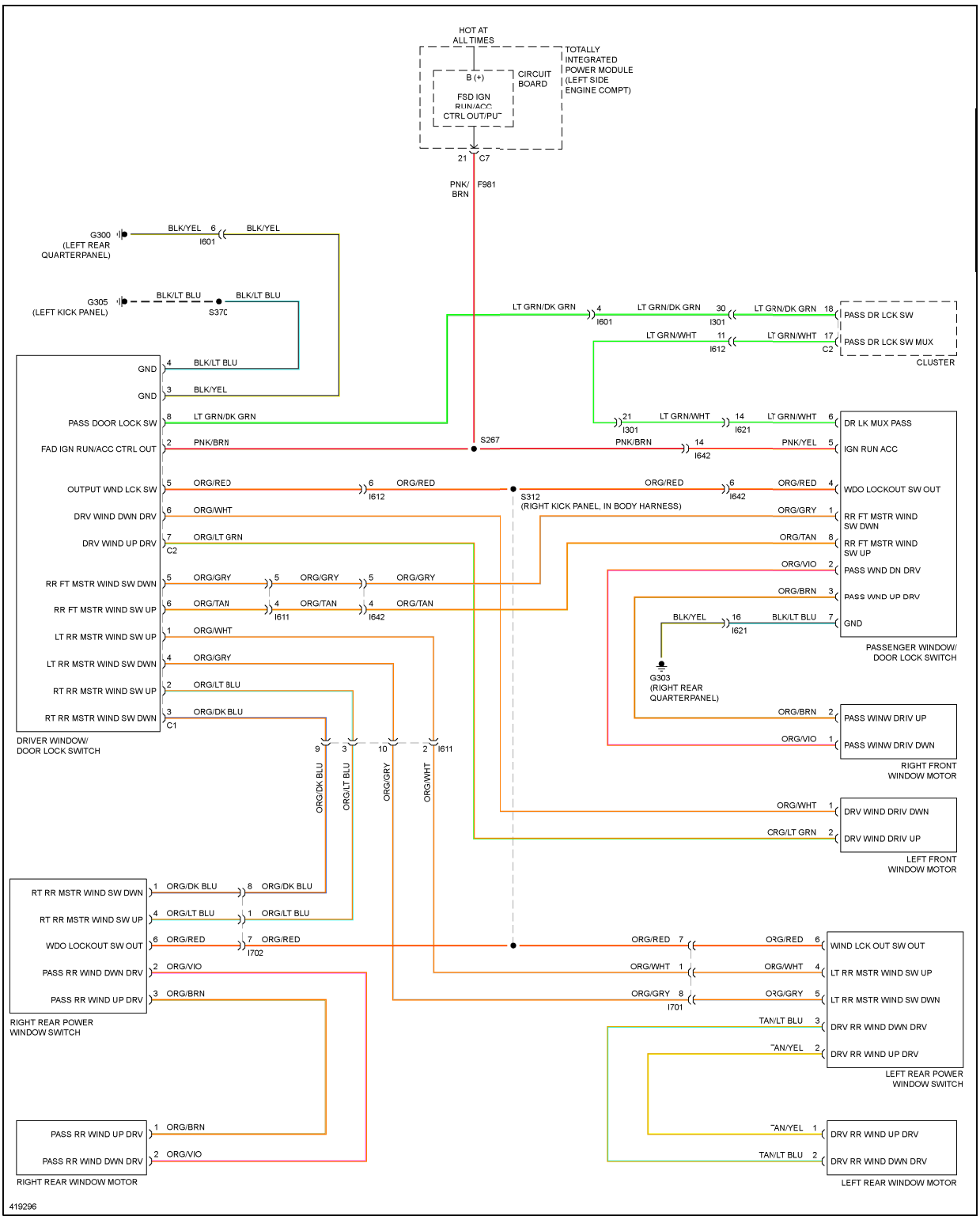

Fig. 50: Power Windows Circuit

RADIO

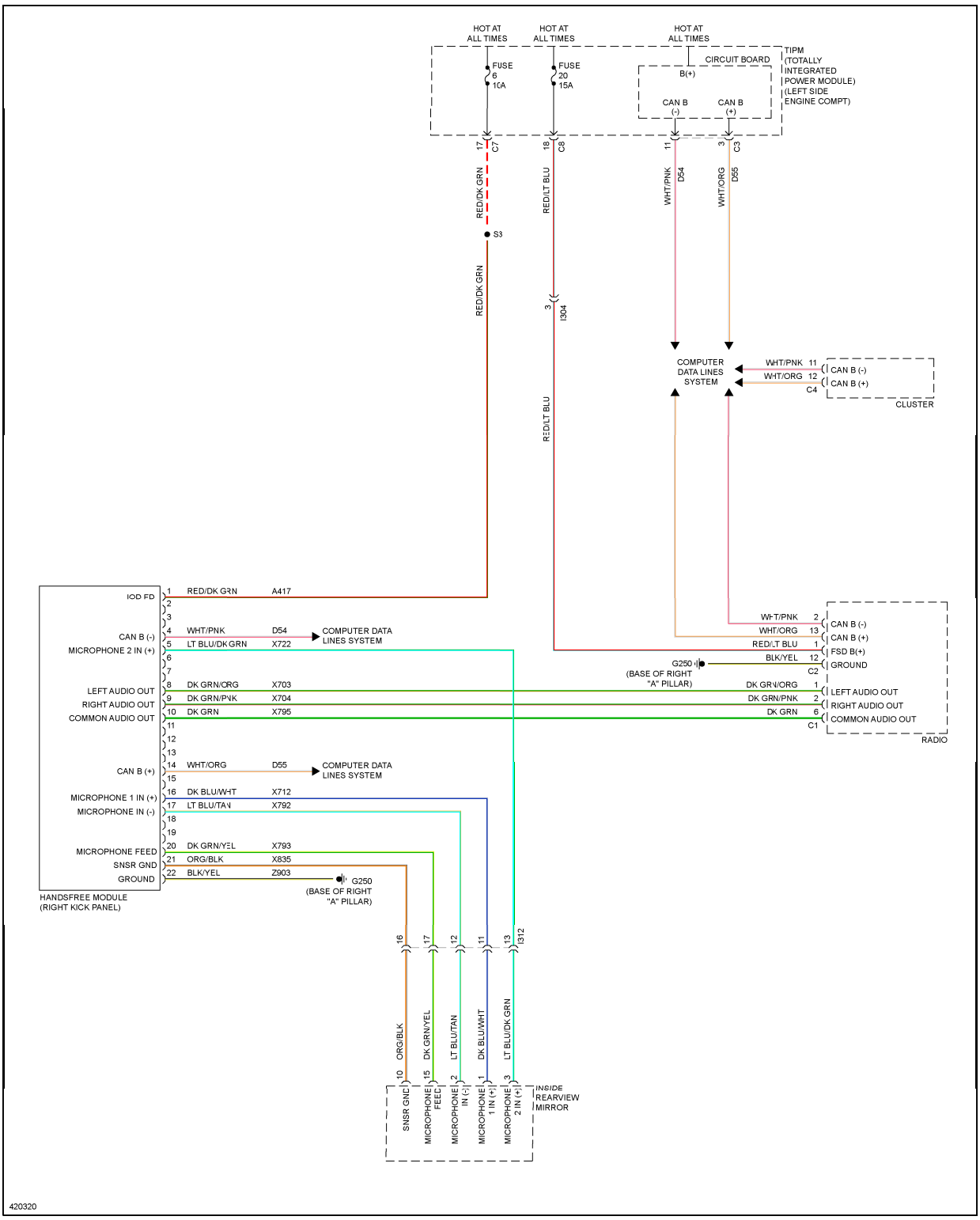

Fig. 51: Hands Free Module Circuit

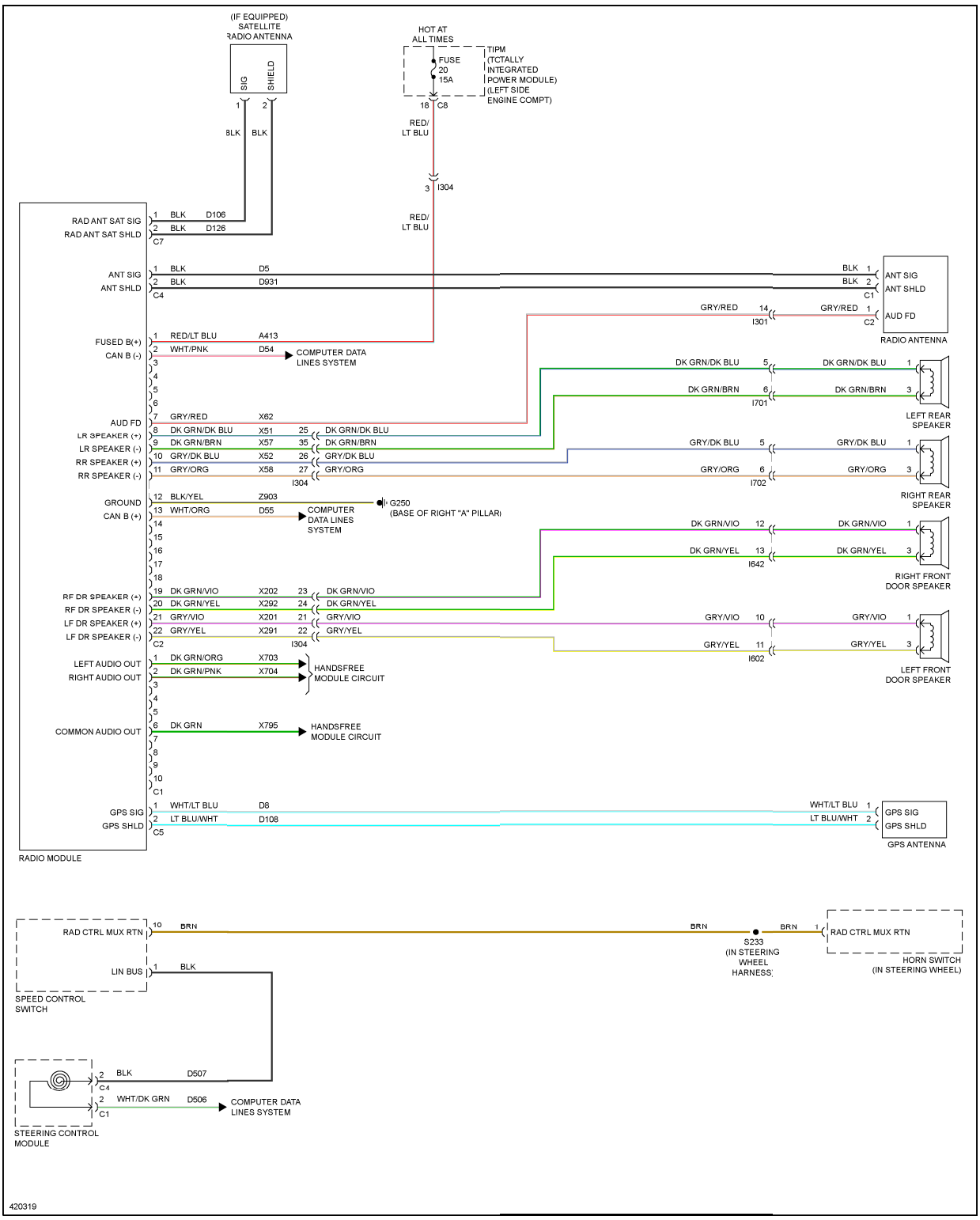

Fig. 52: Radio Circuit, Base

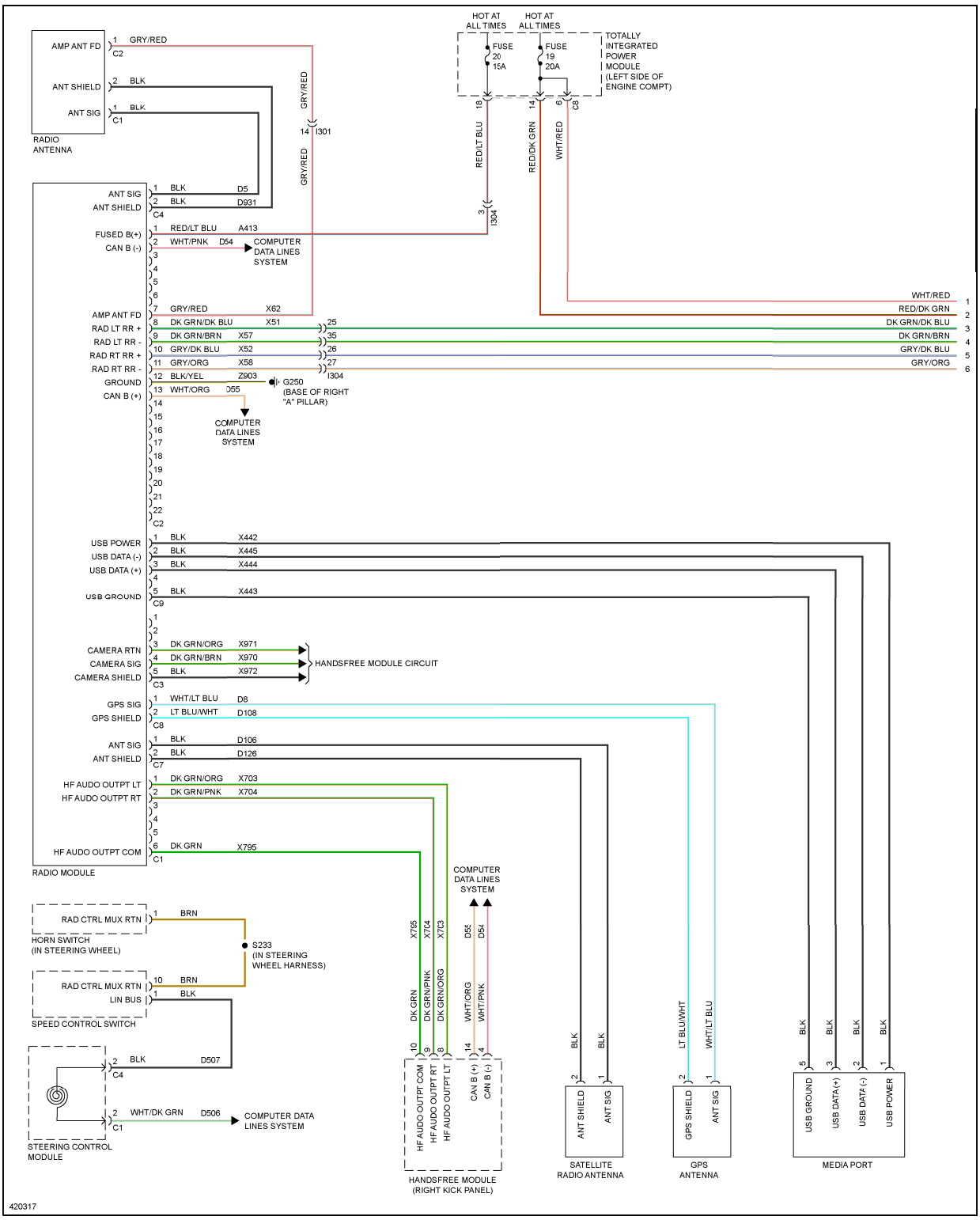

Fig. 53: Radio Circuit, Premium (1 of 2)

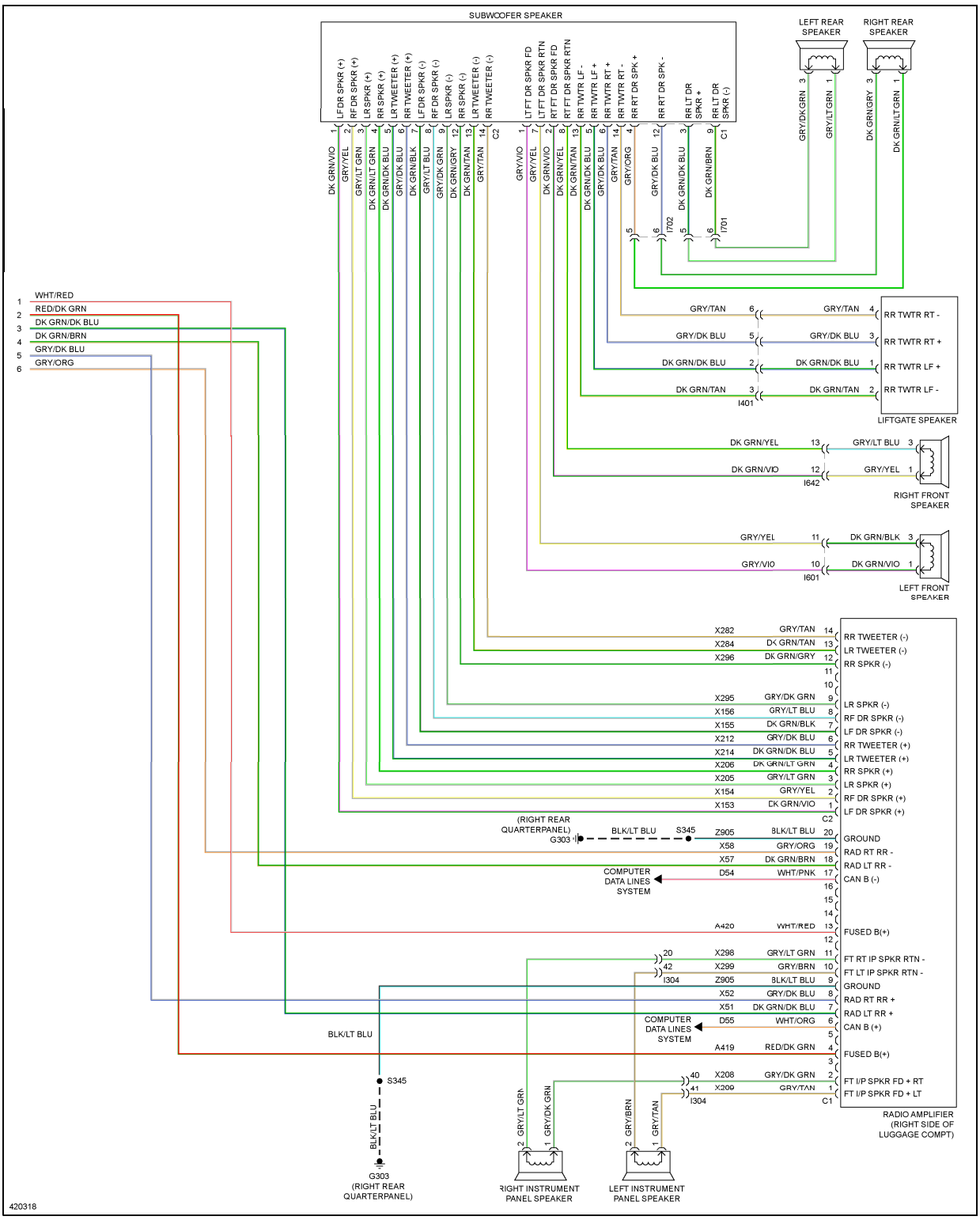

Fig. 54: Radio Circuit, Premium (2 of 2)

SHIFT INTERLOCK

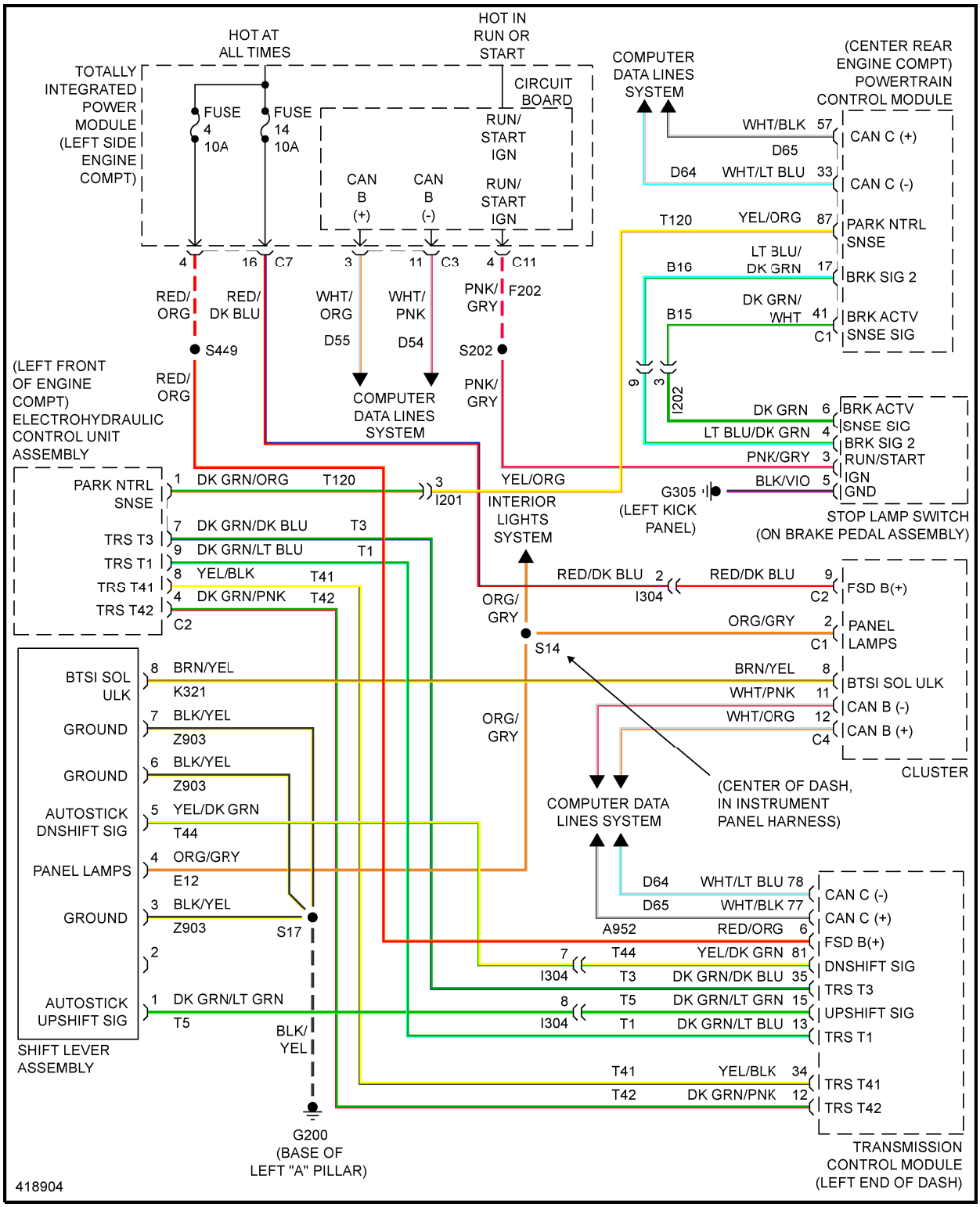

Fig. 55: Shift Interlock Circuit, 6 Speed W/ Autostick

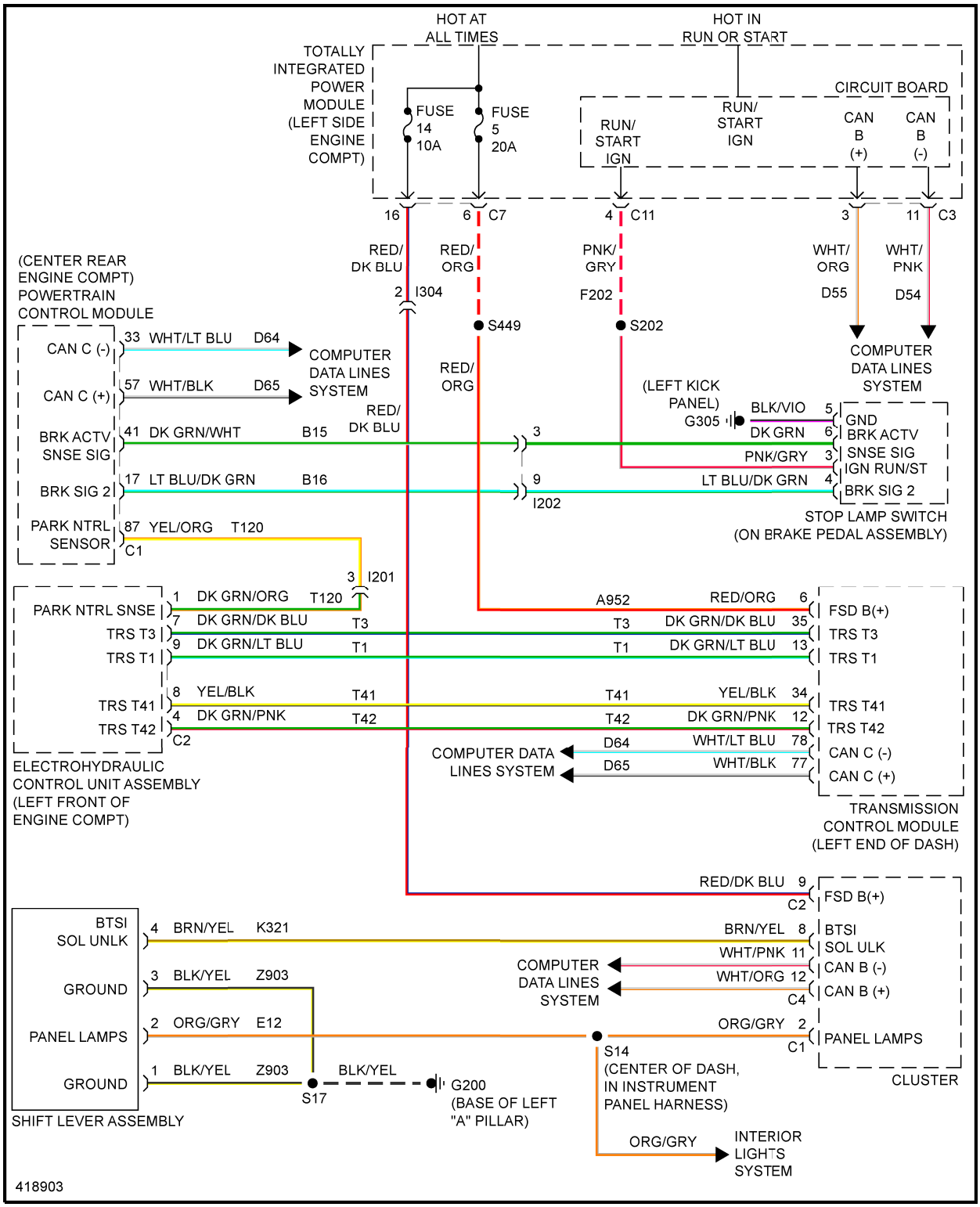

Fig. 56: Shift Interlock Circuit, 6 Speed W/O Autostick

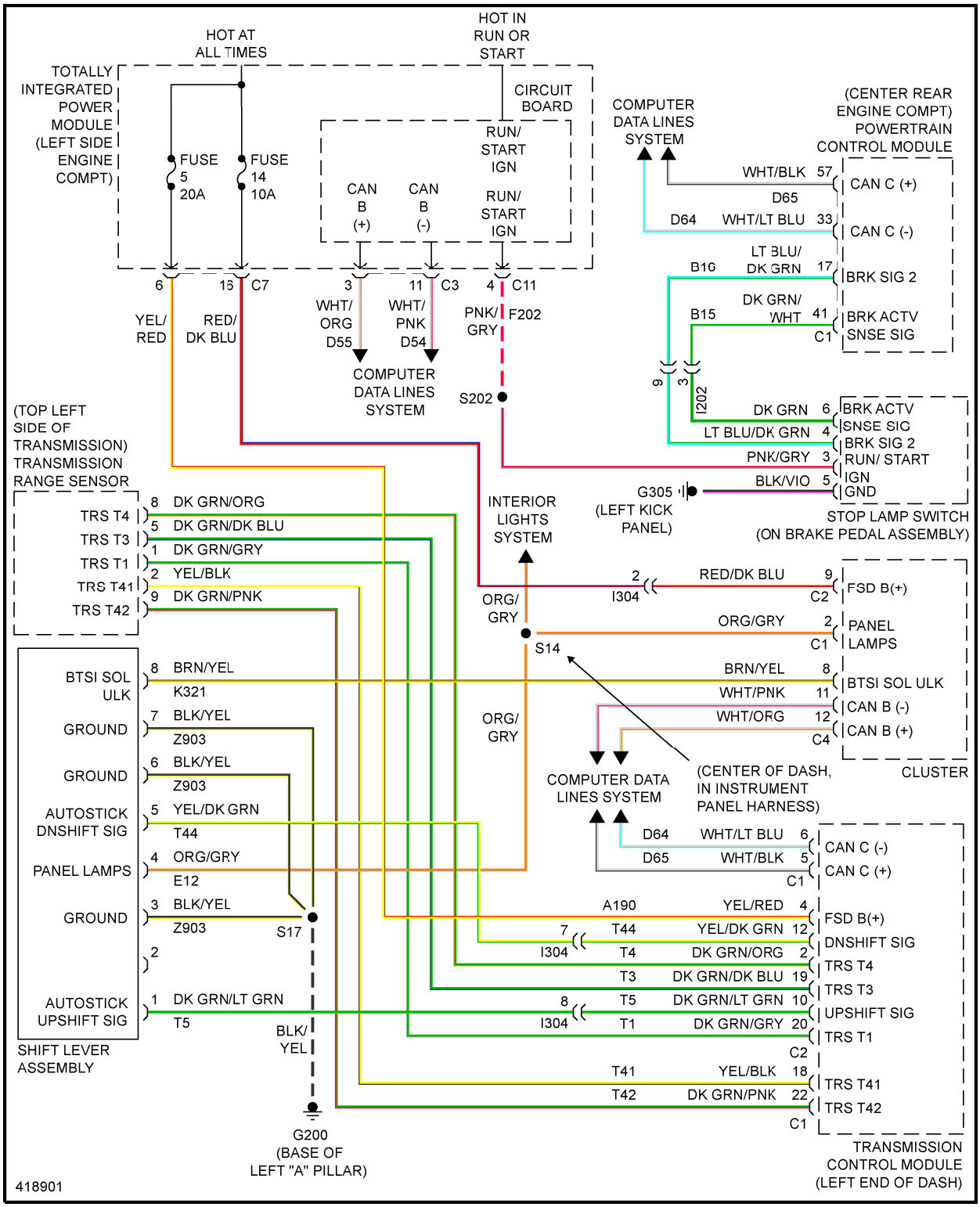

Fig. 57: Shift Interlock Circuit, CVT W/ Autostick

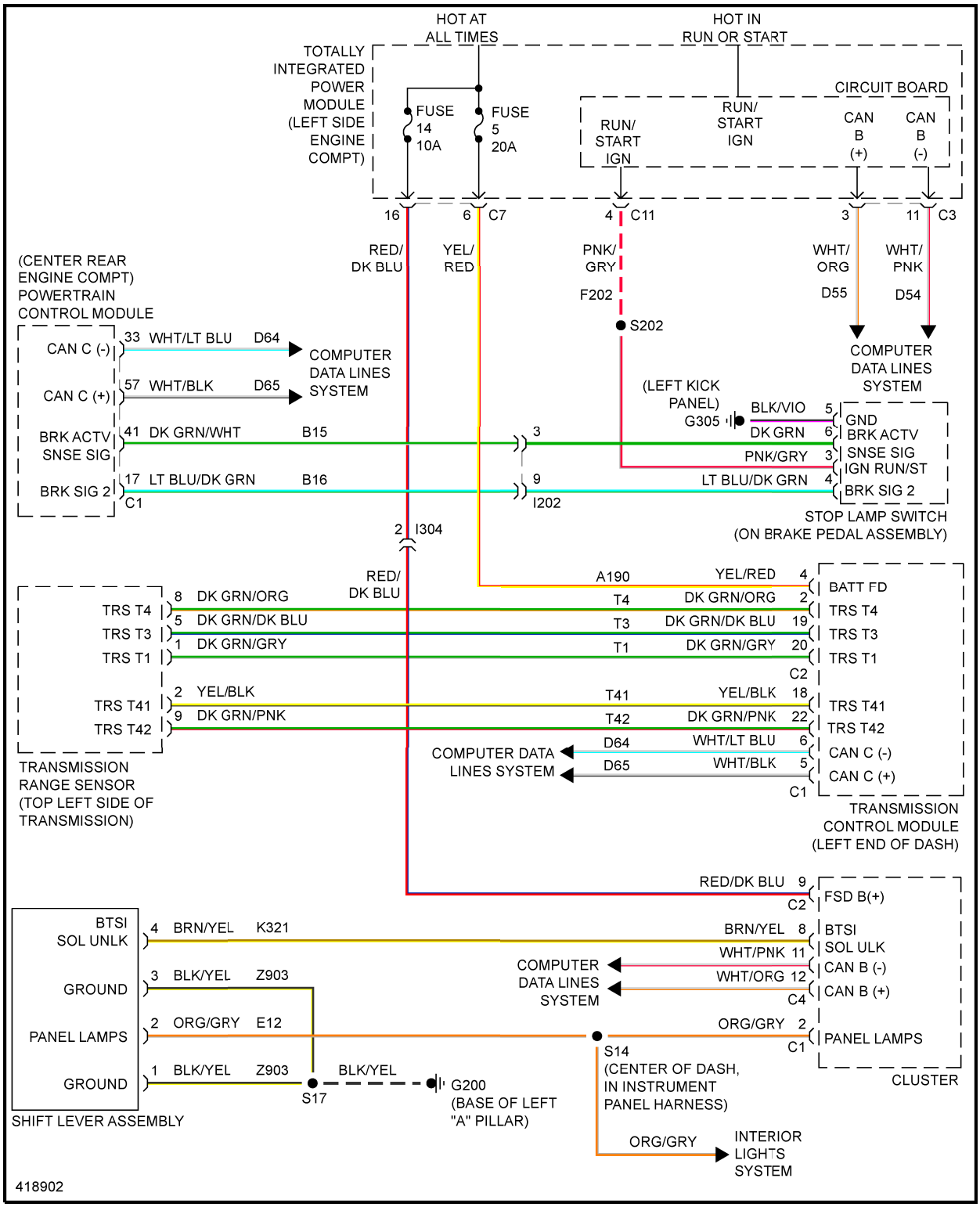

Fig. 58: Shift Interlock Circuit, CVT W/O Autostick

STARTING/CHARGING

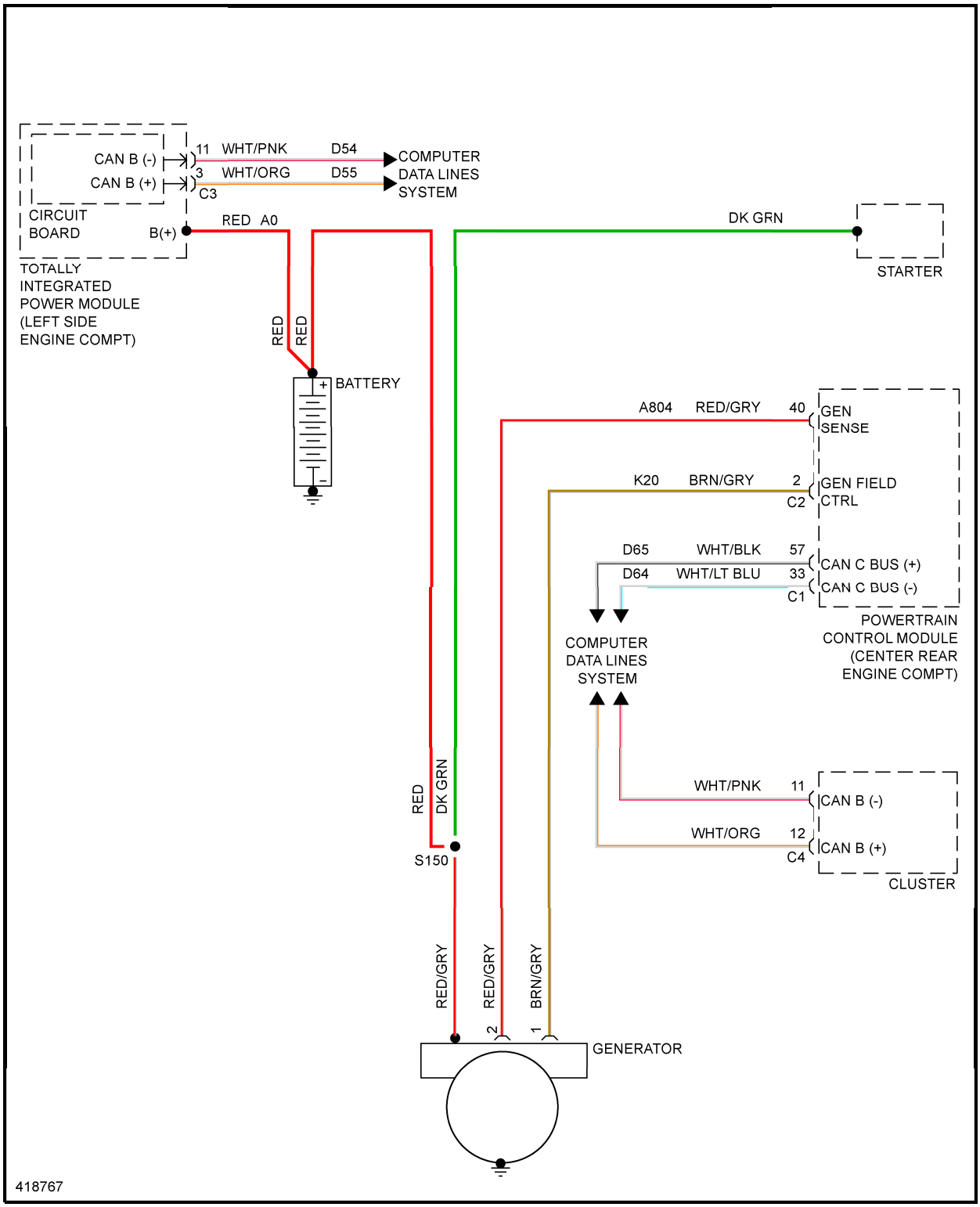

Fig. 59: Charging Circuit

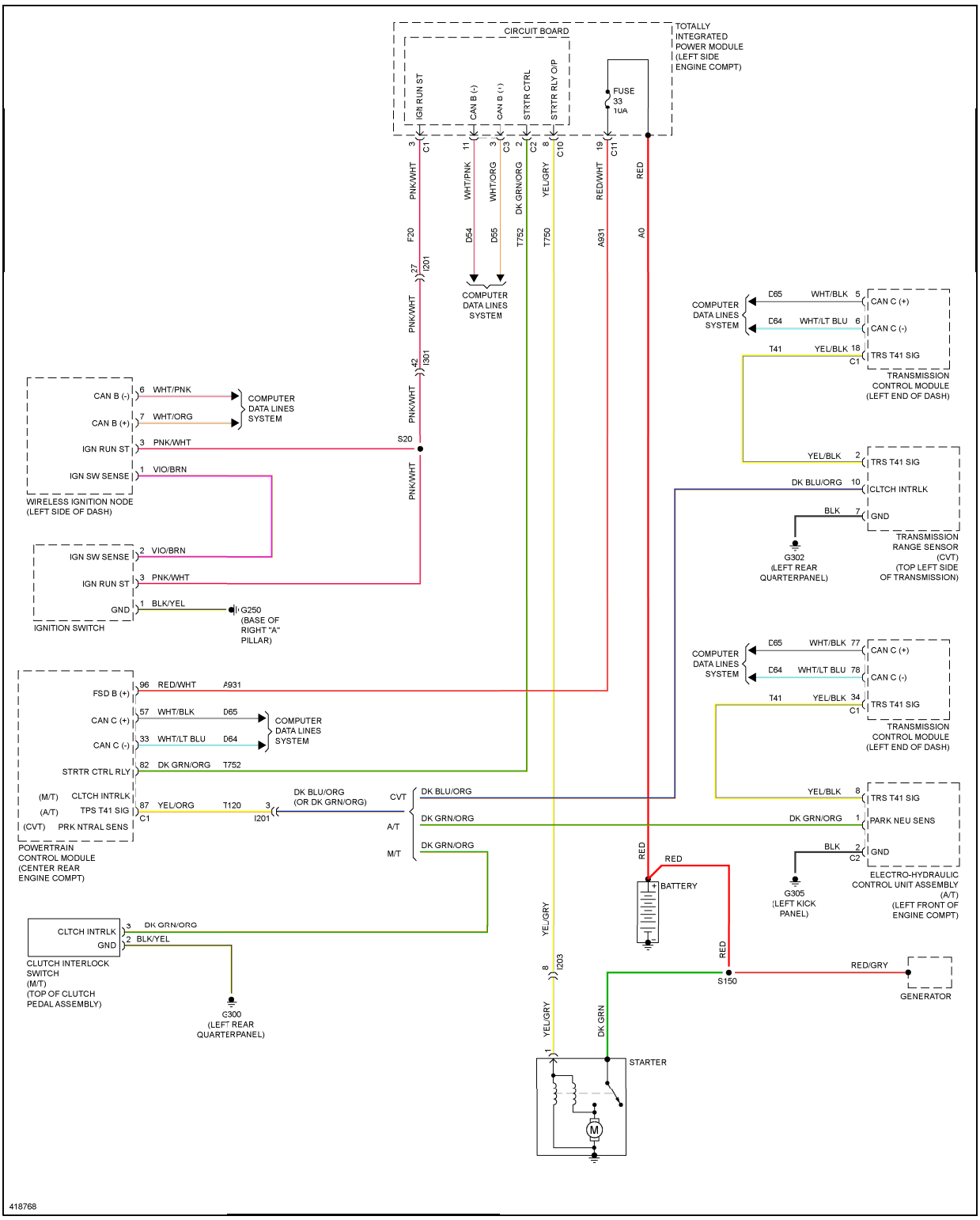

Fig. 60: Starting Circuit

SUPPLEMENTAL RESTRAINTS

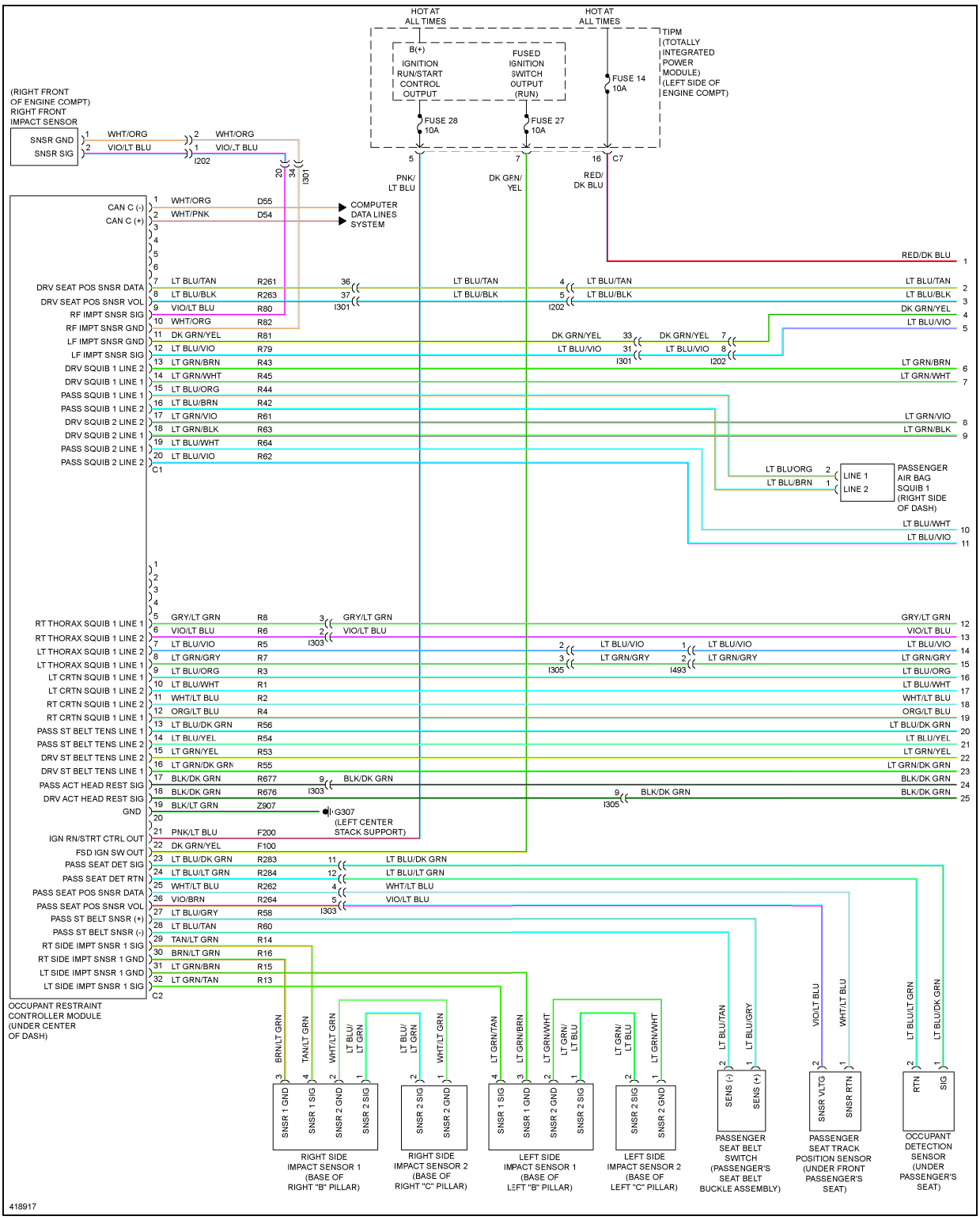

Fig. 61: Supplemental Restraints Circuit (1 of 2)

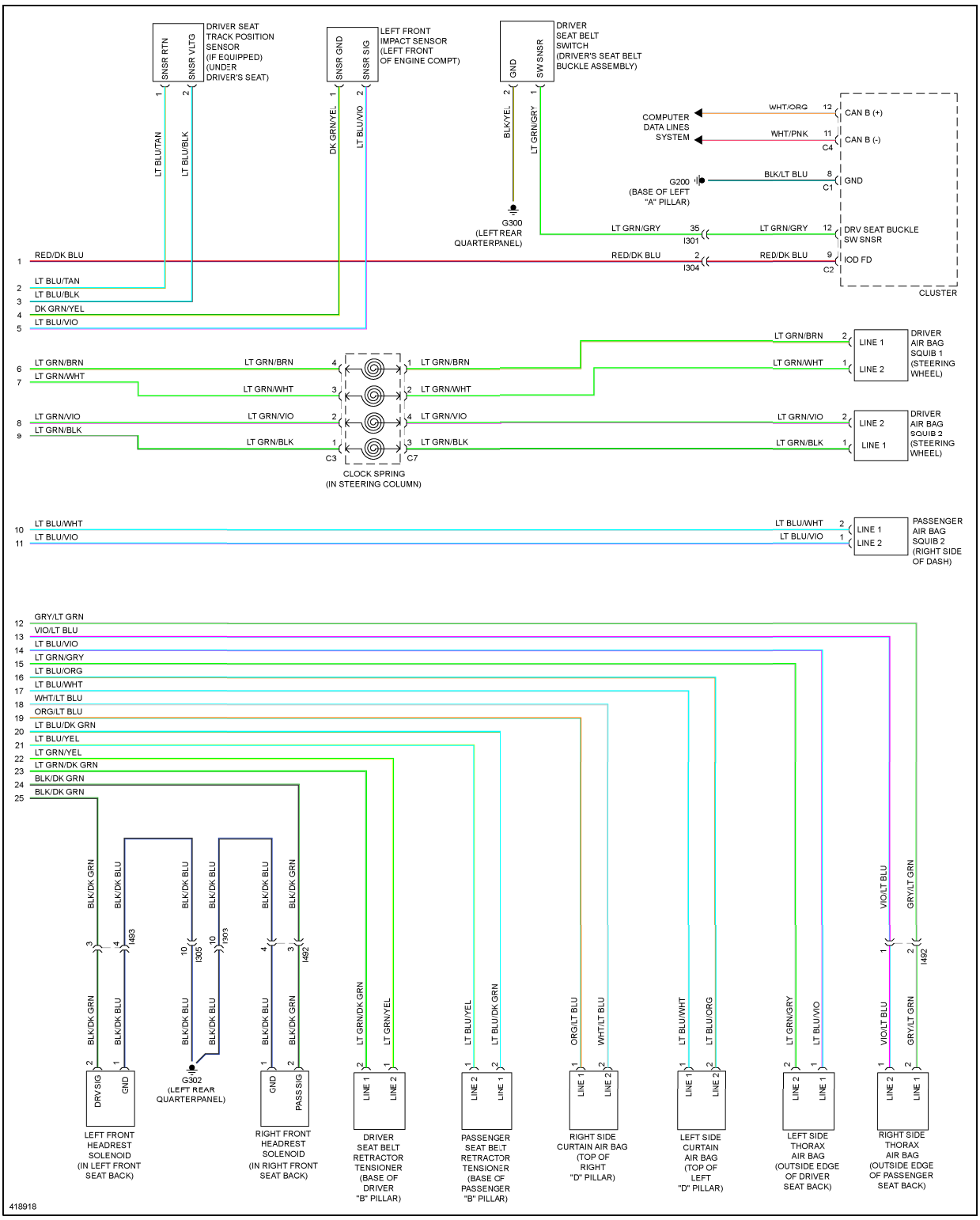

Fig. 62: Supplemental Restraints Circuit (2 of 2)

TRANSMISSION

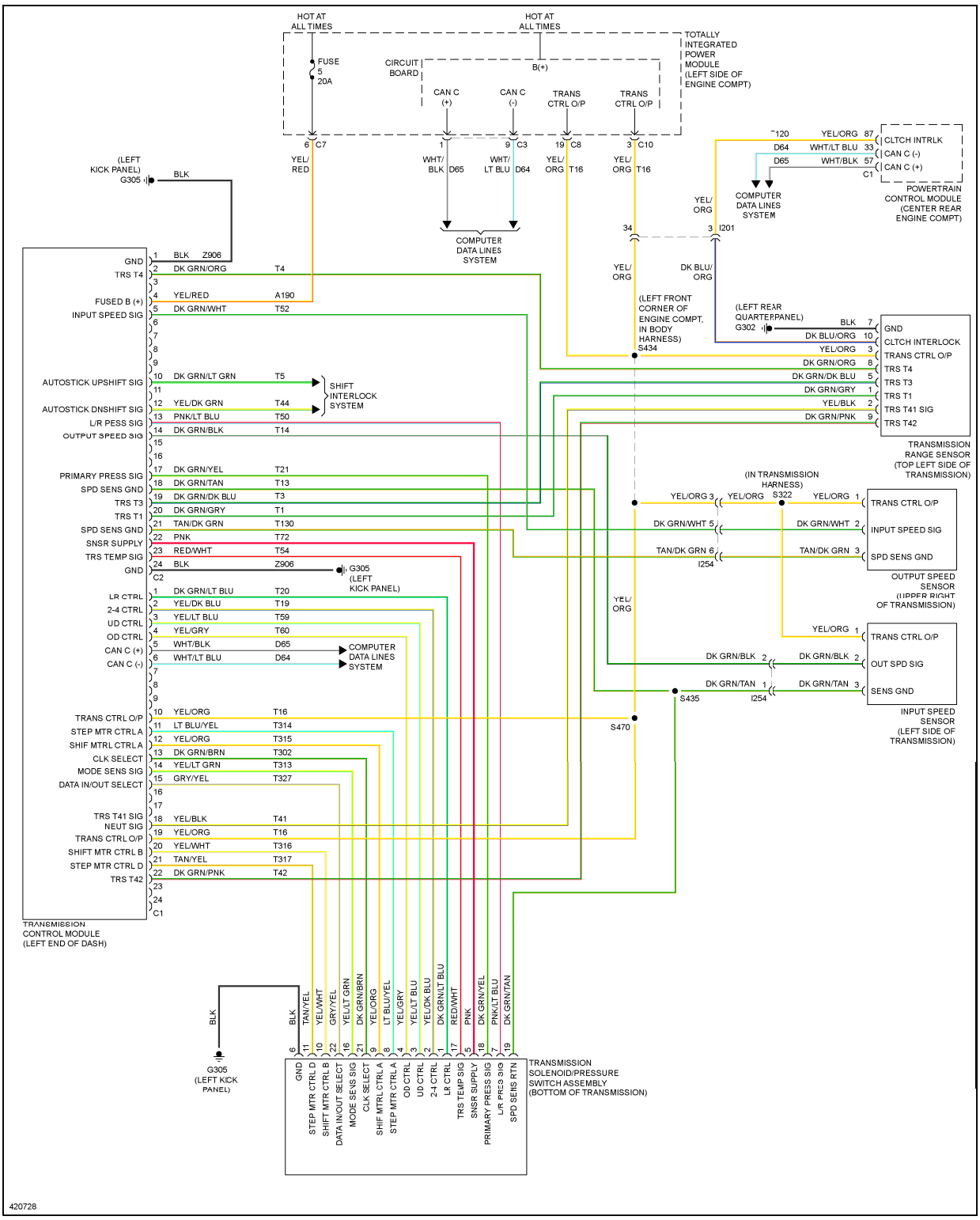

Fig. 63: A/T Circuit, 2 Speed

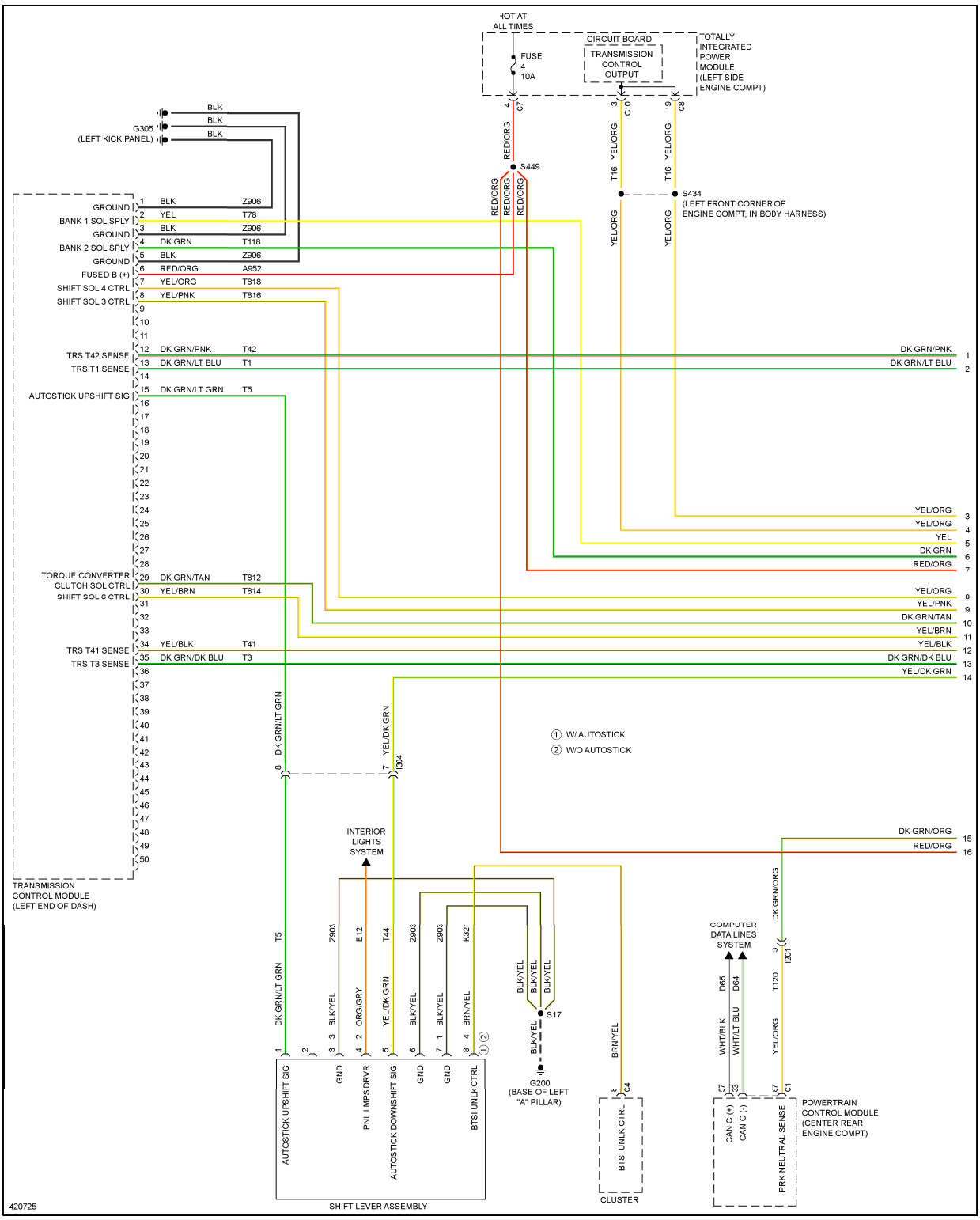

Fig. 64: A/T Circuit, 6 Speed (1 of 2)

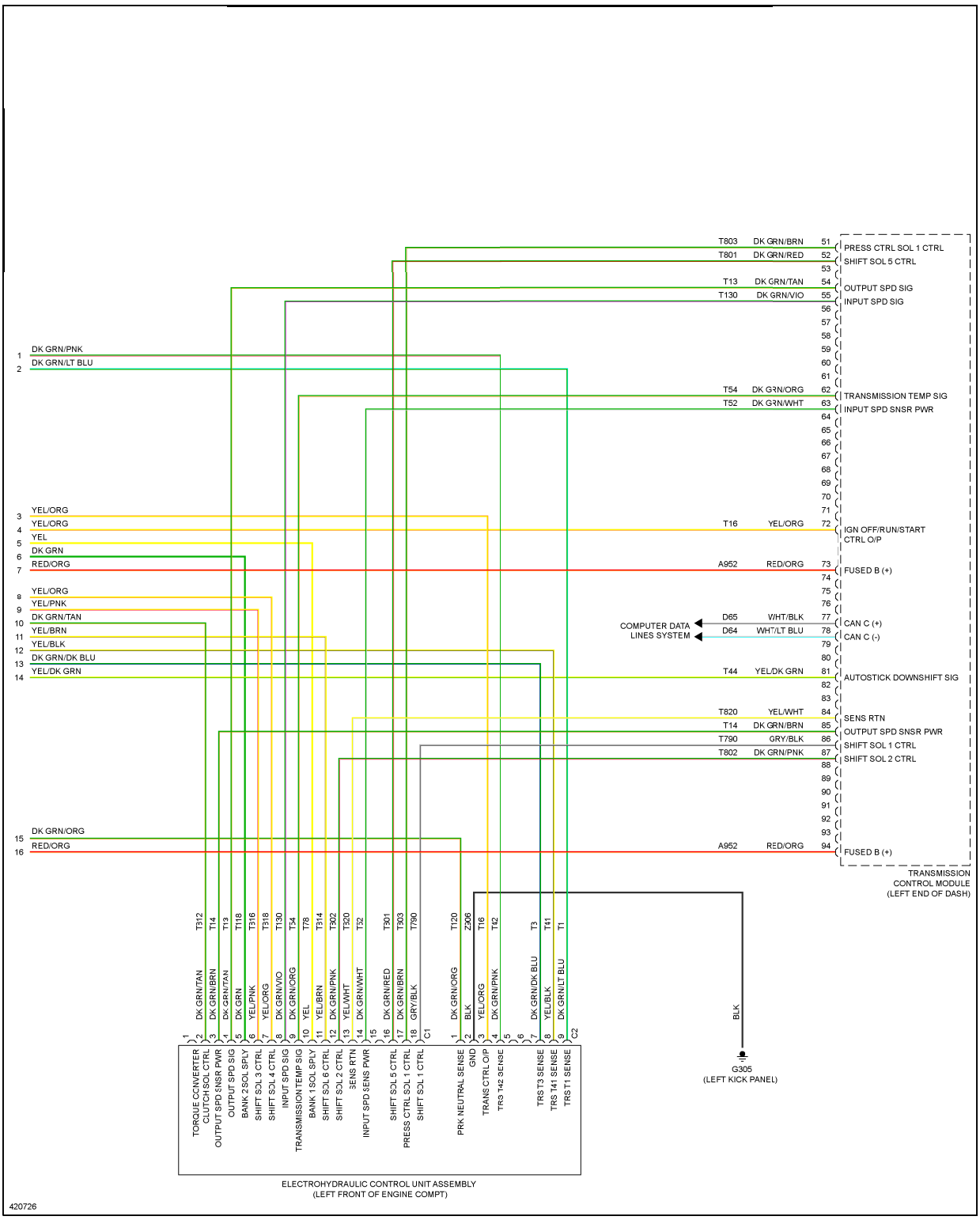

Fig. 65: A/T Circuit, 6 Speed (2 of 2)

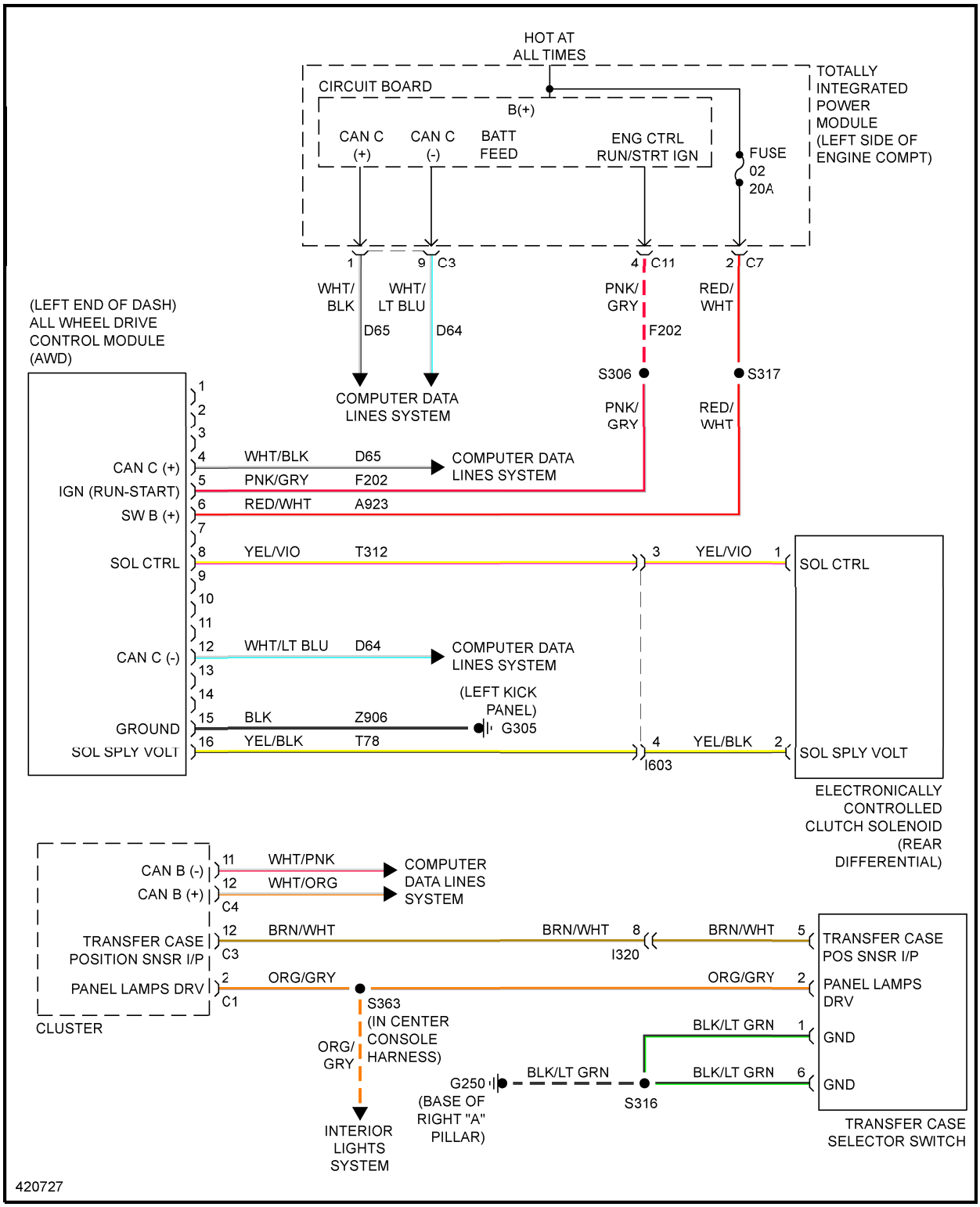

Fig. 66: AWD Circuit

WARNING SYSTEMS

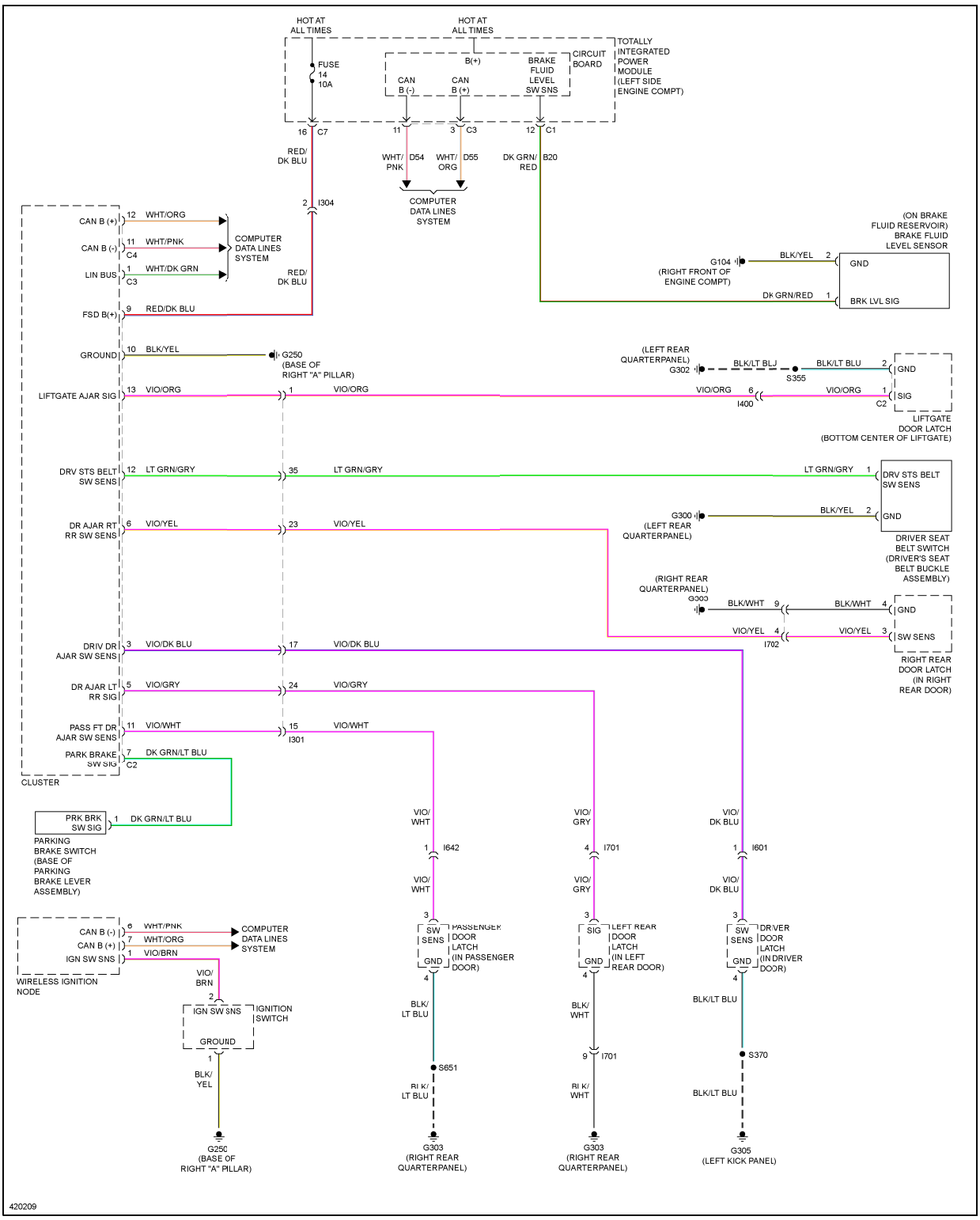

Fig. 67: Chime Circuit

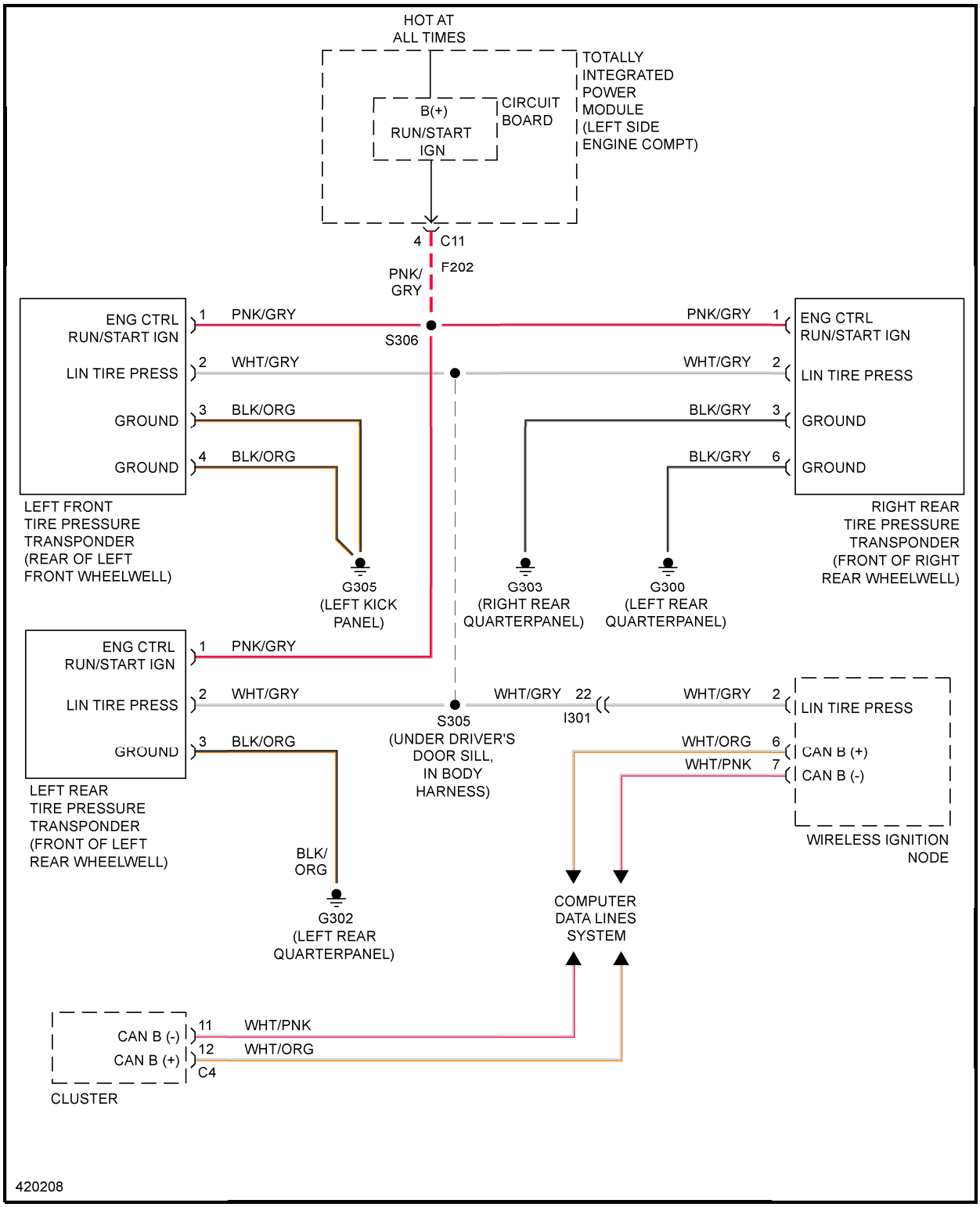

Fig. 68: Tire Pressure Monitoring Circuit

WIPER/WASHER

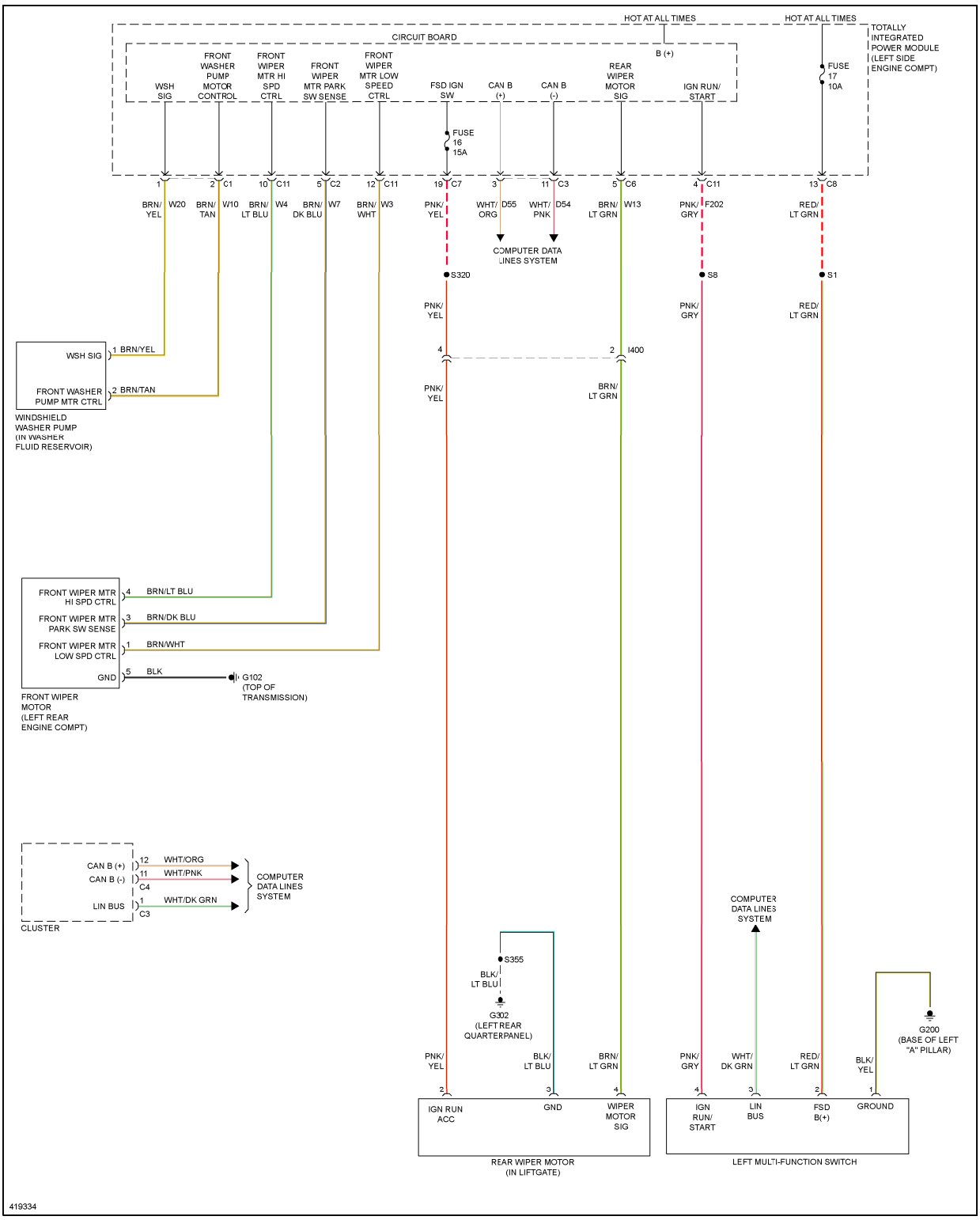

Fig. 69: Wiper/Washer Circuit

2014 TRANSFER CASE

Power Transfer Unit - Service Information - Compass & Patriot

STANDARD PROCEDURE

STANDARD PROCEDURE - DRAIN AND FILL

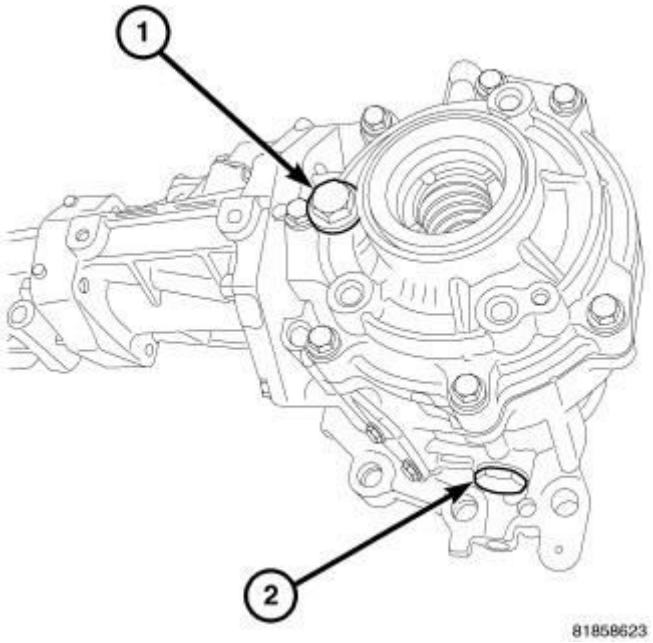

Fig. 1: Drain And Fill Plugs
Courtesy of CHRYSLER GROUP, LLC

1. If fluid level is low or fluid change is required fill with MOPAR® MS (special tool #9020, Insert, Crankshaft) SAE 80W 90 Gear Lube until to bottom of fill plug.
2. Tighten fill plug (1) to 32 N.m (24 ft. lbs.).
3. Tighten drain plug (2) to 32 N.m (24 ft. lbs.).

SPECIFICATIONS

TORQUE SPECIFICATIONS

TORQUE SPECIFICATIONS TABLE

DESCRIPTION	N.m	Ft. Lbs.	In. Lbs.
Plug, Fill	32	24	-
Plug, Drain	32	24	-
Bolts, Inspection cover	23	17	-

Bolts, Vent Shield	23	17	-
Bolts, Vent	23	17	-
Bolts, Output Shaft Housing	38	28	-
Bolts, extension housing	38	28	-
Nut, Output Shaft	150	111	-
Bolts, Carrier Assembly Side Cover	23	17	-
Bolts, Ring Gear	74	55	-
Bolt and Nut, Rear Mount Through	75	55	-
Bolts, Transmission Crossmember	75	55	-
Bolt and Nut, Transmission Crossmember through	75	55	-
Bolts, PTU Mounting	58	43	-

REMOVAL

REMOVAL

1. Disconnect the battery negative cable. Refer to **CABLES, BATTERY, REMOVAL** .
2. Remove the engine cover. Refer to **COVER, ENGINE, REMOVAL** .
3. Remove the air cleaner. Refer to **BODY, AIR CLEANER, REMOVAL 2.0L** , or **BODY, AIR CLEANER, REMOVAL 2.2L** , or **BODY, AIR CLEANER, REMOVAL 2.4L** .
4. Raise the vehicle on a suitable hoist. Refer to **HOISTING, STANDARD PROCEDURE** .
5. Place a suitable drain pan under the PTU.
6. Remove right front halfshaft. Refer to **REMOVAL** .

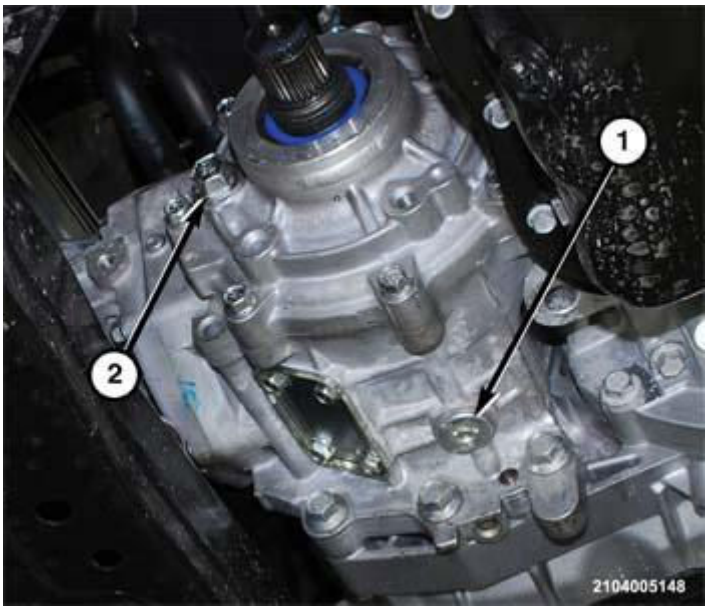

Fig. 2: PTU Drain & Fill Plugs
Courtesy of CHRYSLER GROUP, LLC

7. Remove the drain plug (2) from the PTU and allow the fluid to drain.
8. Install the drain plug. Refer to **SPECIFICATIONS**.
9. Remove the rear prop shaft. Refer to **REMOVAL** .

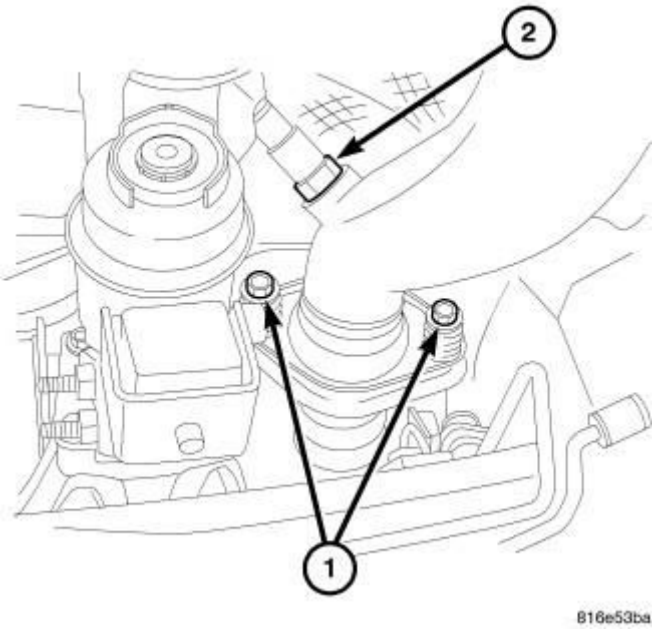

Fig. 3: Exhaust To Maniverter Bolts
Courtesy of CHRYSLER GROUP, LLC

10. Remove the bolts (1) holding the exhaust pipe to the maniverter (exhaust manifold with catalytic converter).

11. Lower the vehicle.
12. Remove the exhaust maniverter. Refer to **MANIFOLD, EXHAUST, REMOVAL 2.0L** , or **MANIFOLD, EXHAUST, REMOVAL 2.2L** , or **MANIFOLD, EXHAUST, REMOVAL 2.4L** .

.

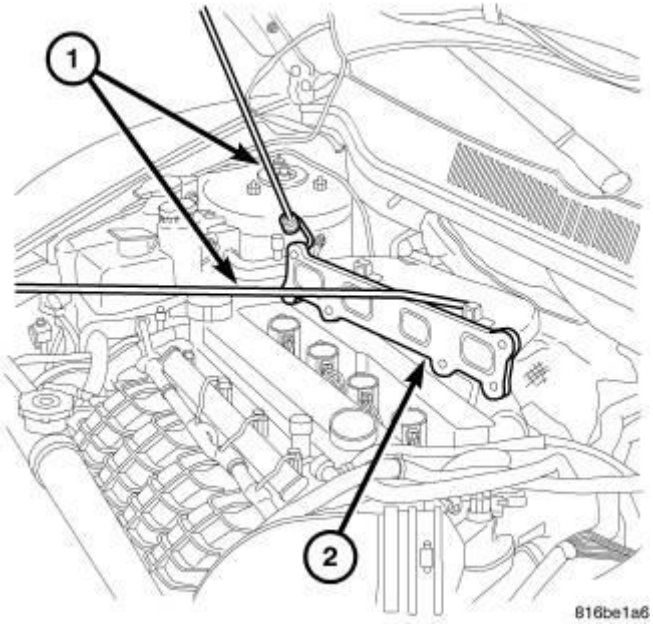

Fig. 4: Maniverter & Bungie Cord
Courtesy of CHRYSLER GROUP, LLC

13. Slide the maniverter up and to the right, support the maniverter (2) with the help of a bungie cord (1).
14. Raise the vehicle on the hoist.

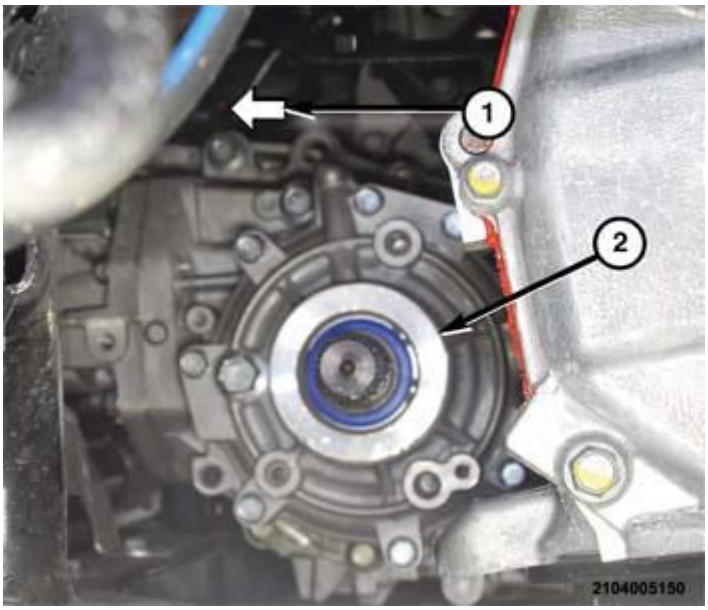

Fig. 5: Hidden Trough Bolt & PTU
Courtesy of CHRYSLER GROUP, LLC

15. Disconnect the battery negative cable. Refer to **CABLES, BATTERY, REMOVAL** .

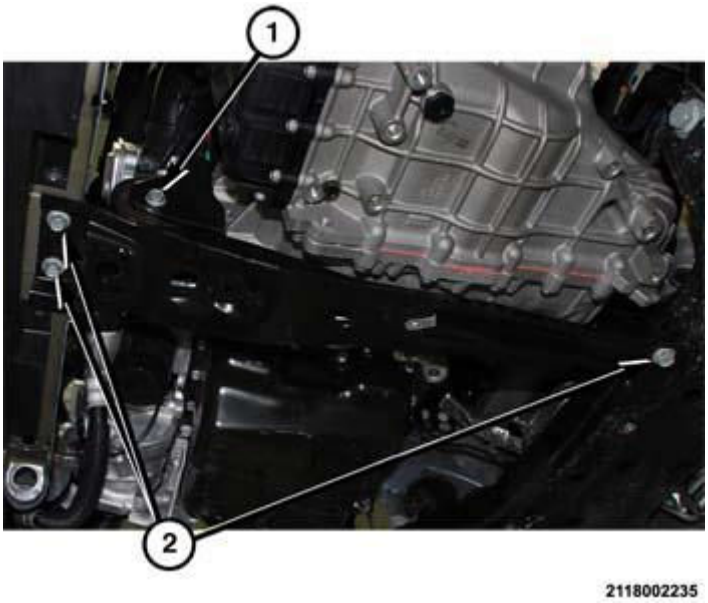

Fig. 6: Front-To-Rear Support Bolts
Courtesy of CHRYSLER GROUP, LLC

16. Remove the trough bolt (1) holding the front-to-rear support rubber isolator to the front crossmember.
17. Remove the bolts (2) holding the front-to-rear support to the front and rear crossmembers.

18. Separate the front-to-rear support from the vehicle.

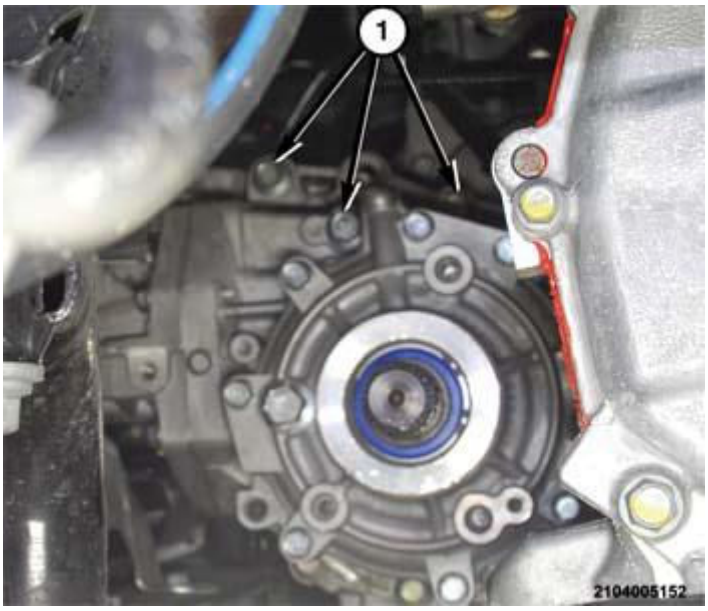

Fig. 7: Upper PTU Mounting Bolts
Courtesy of CHRYSLER GROUP, LLC

19. Remove the bolts (1) holding the upper PTU to the transaxle.

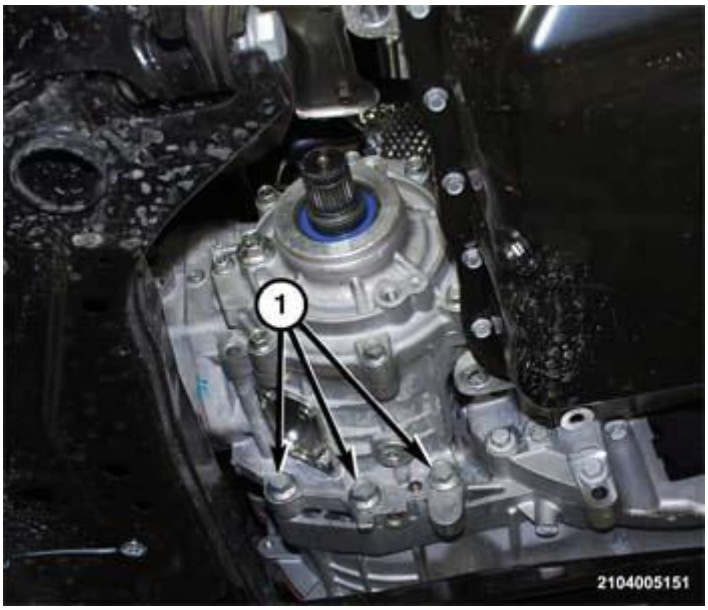

Fig. 8: Lower PTU Mounting Bolts
Courtesy of CHRYSLER GROUP, LLC

20. Remove the bolts (1) holding the lower PTU to the transaxle.

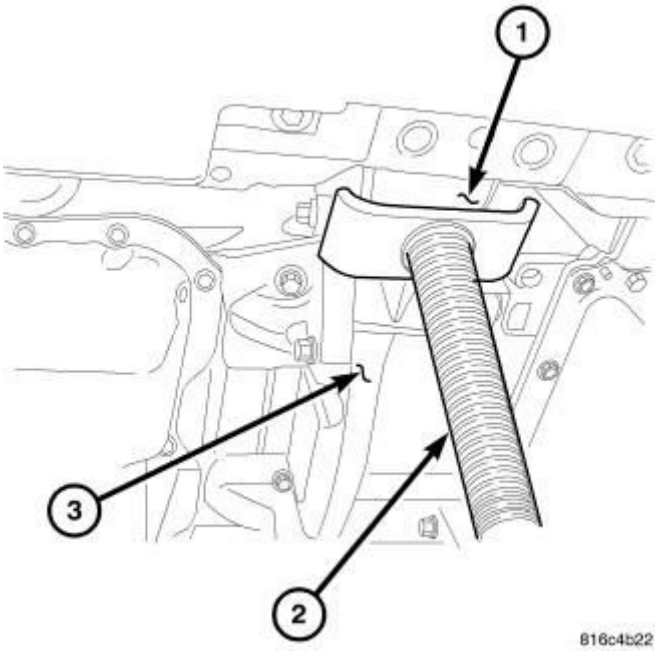

Fig. 9: Supporting Engine With Screw Jack
Courtesy of CHRYSLER GROUP, LLC

21. Install a screw jack (2) on front engine mount bracket (1).

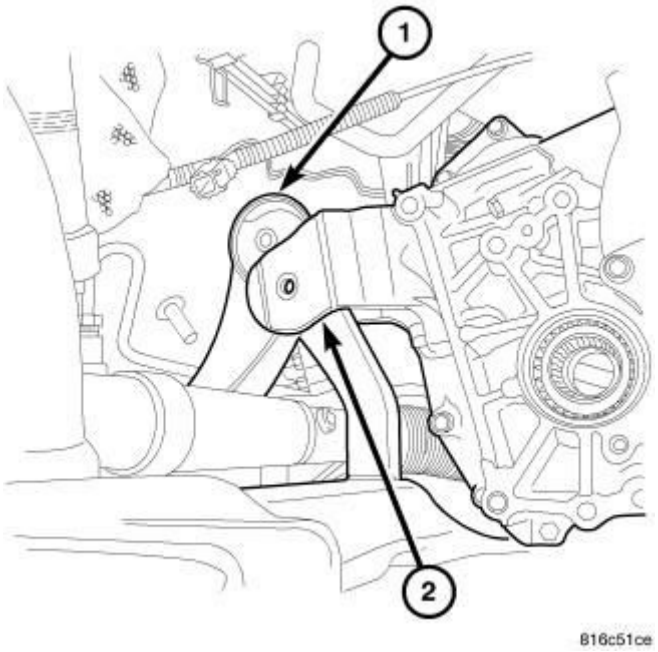

Fig. 10: Rear Mount No Bolts
Courtesy of CHRYSLER GROUP, LLC

22. Raise the front of the engine until the rear mount has dropped (1 and 2).
23. Separate the PTU from the transaxle.

Fig. 11: Removing/Installing PTU
Courtesy of CHRYSLER GROUP, LLC

24. Roll the PTU (1) forward and down to remove.

DISASSEMBLY

DISASSEMBLY

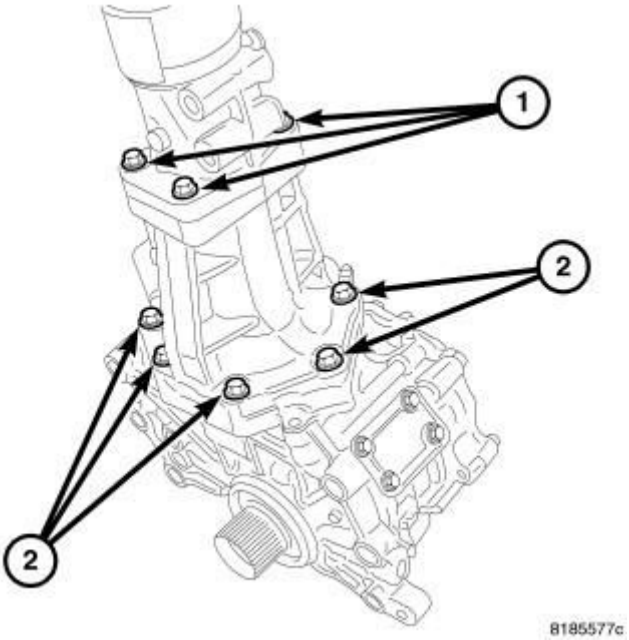

Fig. 12: Extension And Pinion Housing Bolts
Courtesy of CHRYSLER GROUP, LLC

1. Remove extension housing bolts.

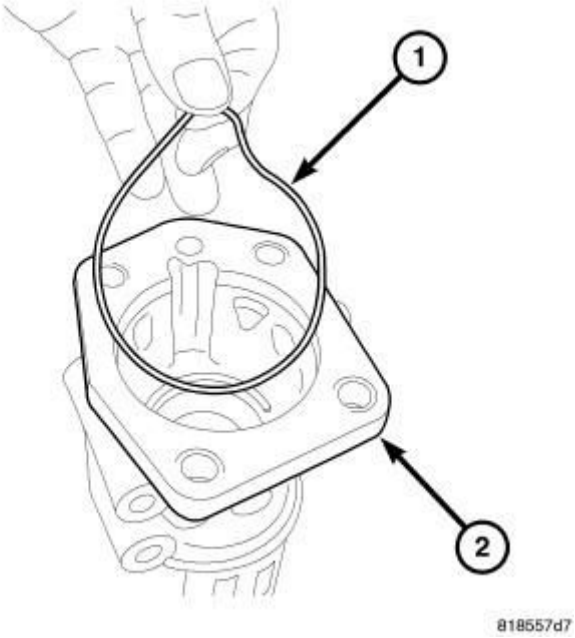

Fig. 13: Extension Housing O-Ring
Courtesy of CHRYSLER GROUP, LLC

2. Remove the extension housing.
3. Remove the extension housing O-ring.

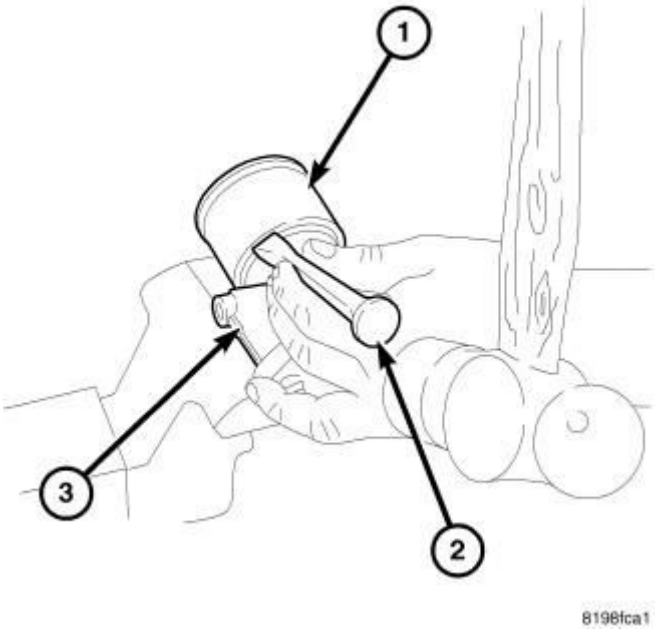

Fig. 14: Removing Dust Shield From Extension Housing
Courtesy of CHRYSLER GROUP, LLC

4. Using a chisel (2) remove the dust shield (1) from the extension housing (3).

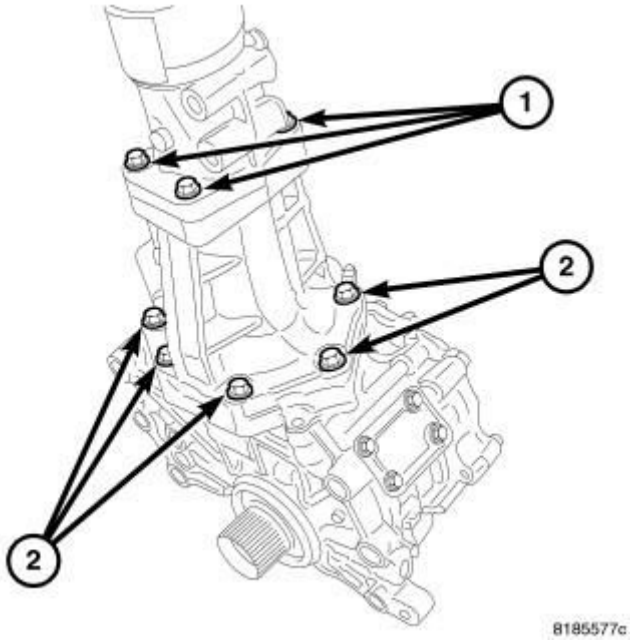

Fig. 15: Extension And Pinion Housing Bolts
Courtesy of CHRYSLER GROUP, LLC

5. Remove the pinion housing bolts.

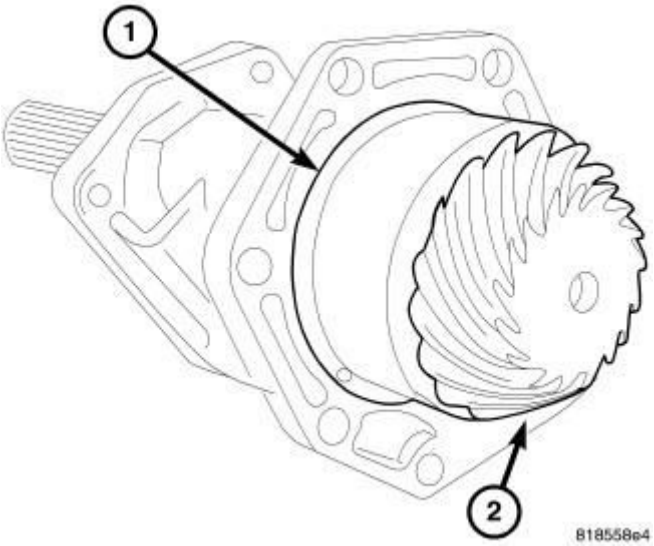

Fig. 16: Pinion Housing
Courtesy of CHRYSLER GROUP, LLC

6. Remove the pinion housing.

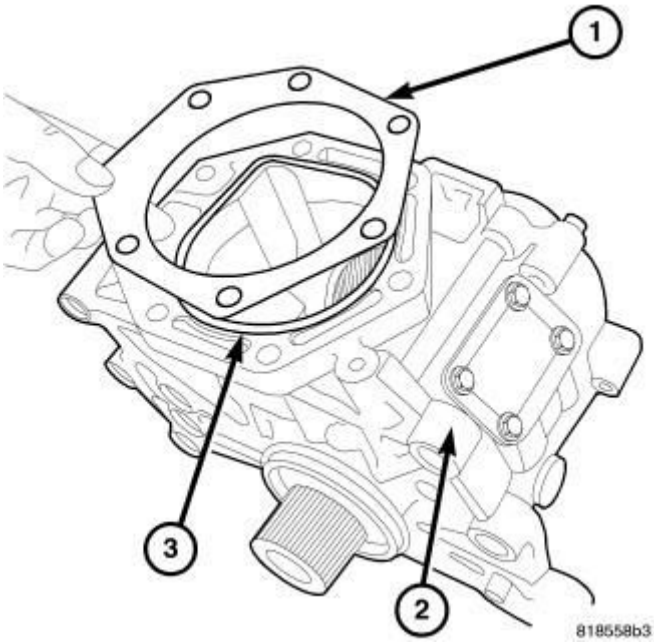

Fig. 17: Pinion Housing Shim
Courtesy of CHRYSLER GROUP, LLC

7. Remove the pinion housing shim.
8. Remove the pinion housing O-ring.

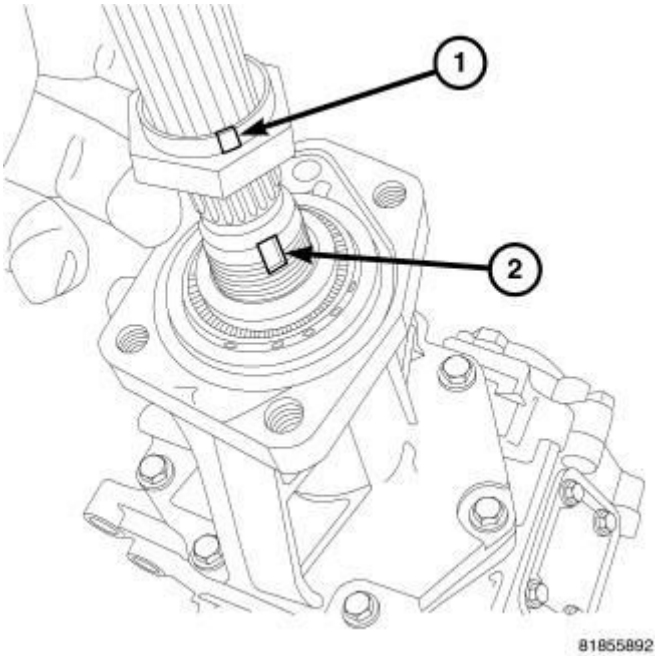

Fig. 18: Pinion Shaft Nut
Courtesy of CHRYSLER GROUP, LLC

NOTE: The pinion nut is a staked type nut.

9. Using a chisel or a grinder, remove the staked depression in the pinion nut.

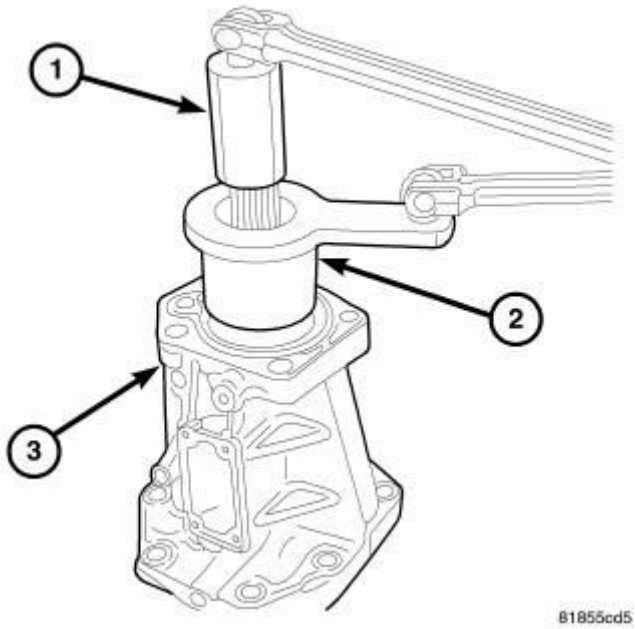

Fig. 19: Removing Pinion Nut
Courtesy of CHRYSLER GROUP, LLC

10. Remove the output shaft nut, using the Output Shaft Nut Socket (special tool #9921, Wrench, Pinion Nut) and Spline Socket (special tool #9922, Socket, Splined).

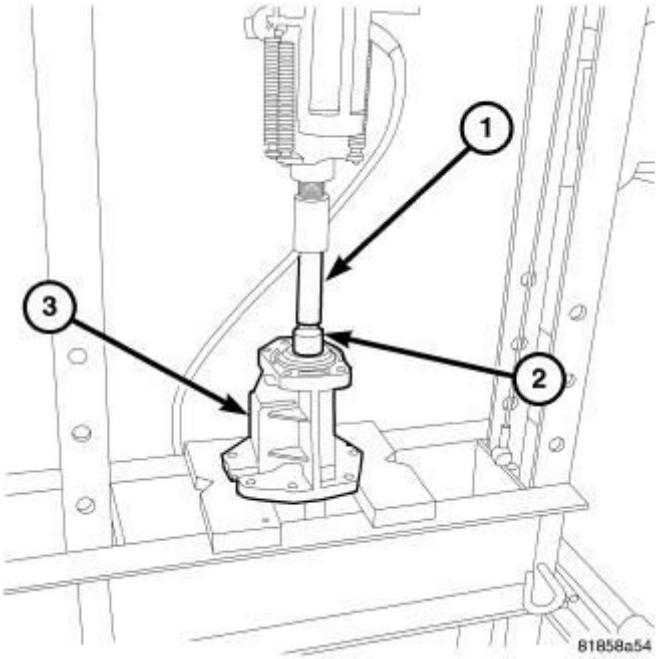

Fig. 20: Removing Output Shaft
Courtesy of CHRYSLER GROUP, LLC

11. Press the output shaft from the housing using a press.

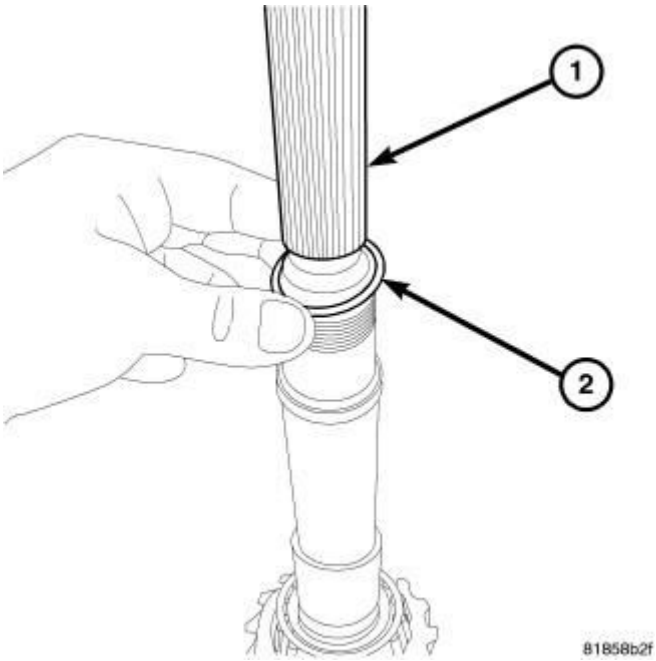

Fig. 21: Pinion Shaft Spacer
Courtesy of CHRYSLER GROUP, LLC

12. Remove the output shaft spacer.

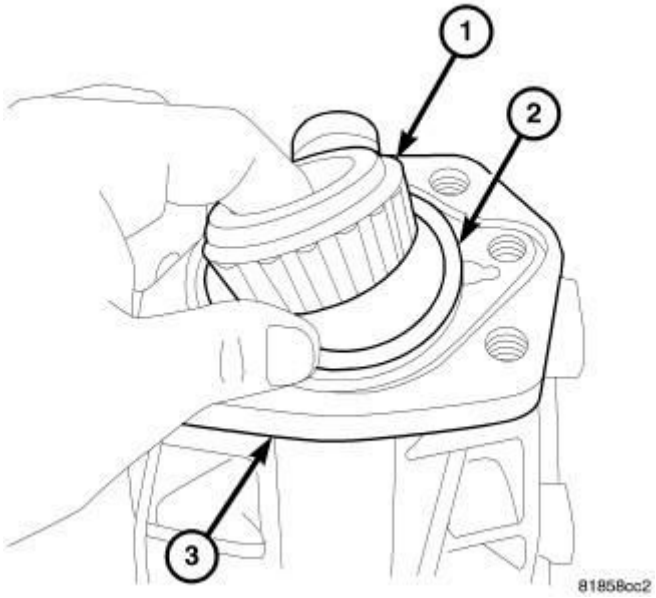

Fig. 22: Output Shaft Bearing
Courtesy of CHRYSLER GROUP, LLC

13. Remove the output shaft bearing.

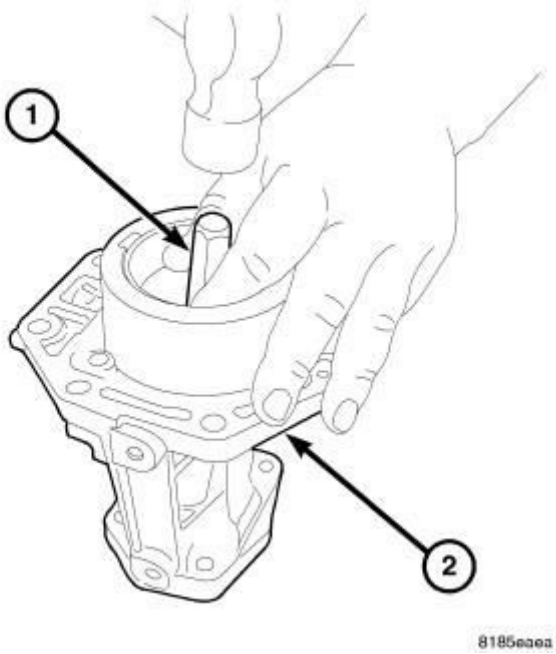

Fig. 23: Removing Small Side Bearing Cup
Courtesy of CHRYSLER GROUP, LLC

14. Remove the output shaft housing small side bearing cup using a brass drift.

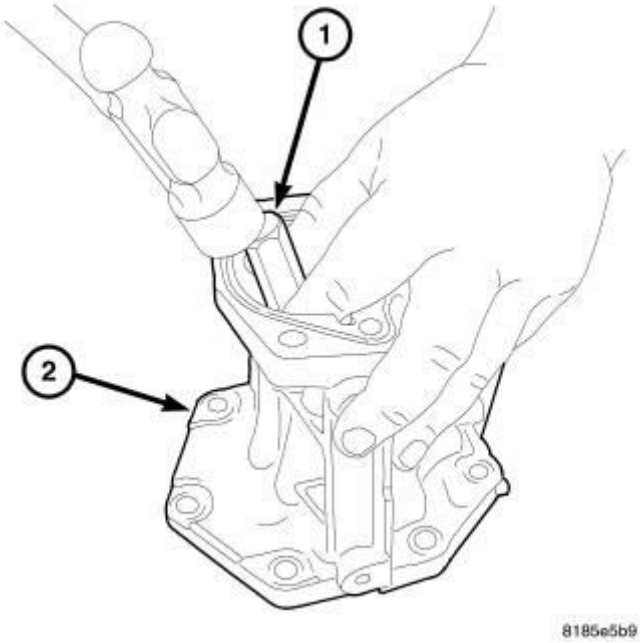

Fig. 24: Removing Large Side Bearing Cup
Courtesy of CHRYSLER GROUP, LLC

15. Remove the output shaft housing large side bearing cup using a brass drift.

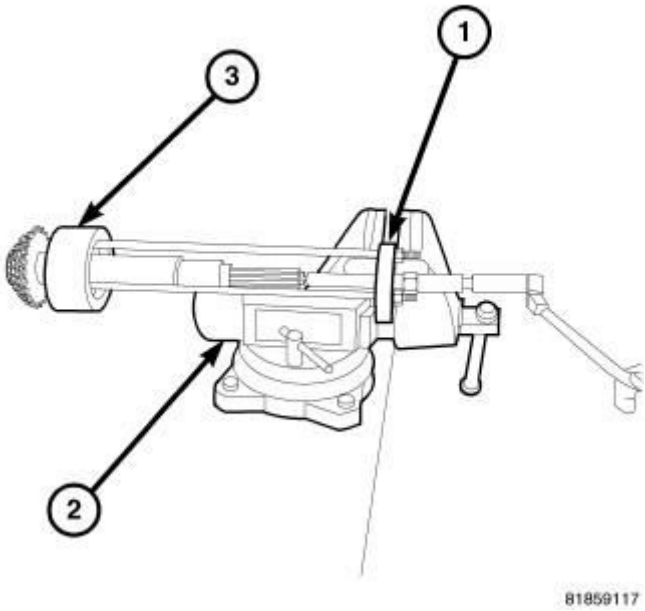

Fig. 25: Removing Output Shaft Head Bearing
Courtesy of CHRYSLER GROUP, LLC

16. Install Puller (special tool #6444, Puller, Bearing/Gear) and Jaws (special tool #6451, Jaws, Puller) onto output shaft head bearing.
17. Place Puller in a vice and remove the bearing.

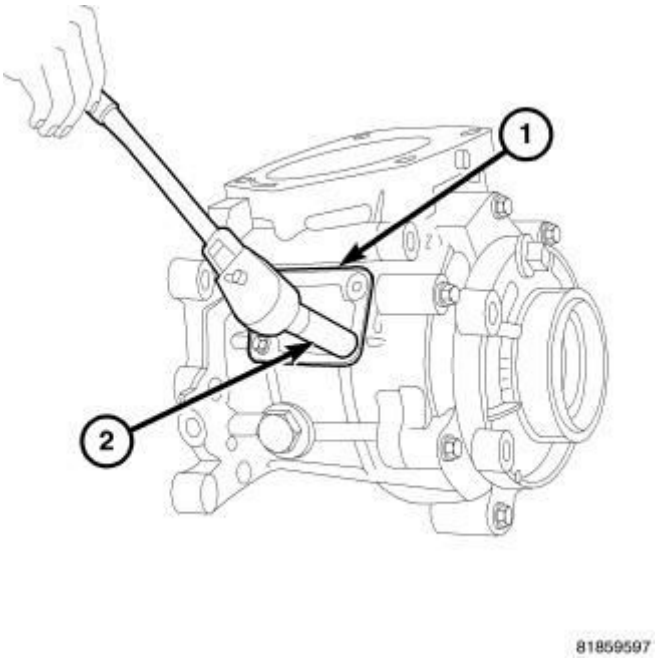

Fig. 26: Inspection Cover
Courtesy of CHRYSLER GROUP, LLC

18. Remove the inspection cover bolts (1).

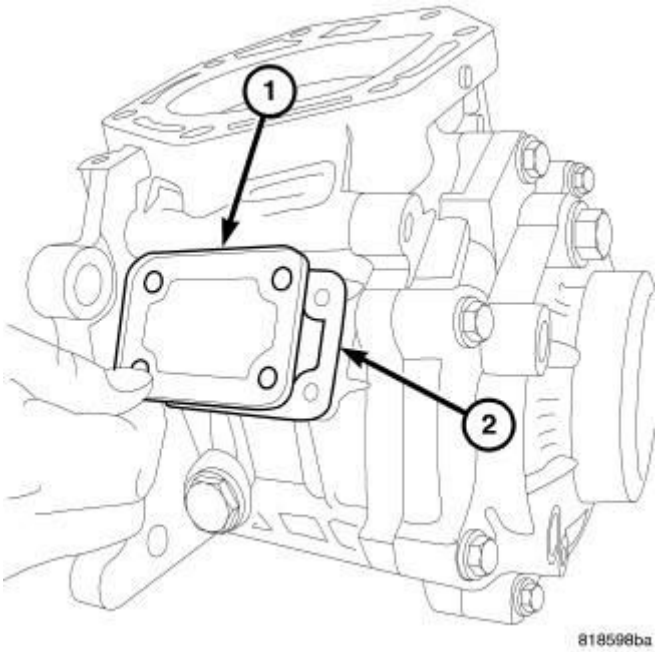

Fig. 27: Removing Inspection Cover
Courtesy of CHRYSLER GROUP, LLC

19. Remove the inspection cover.

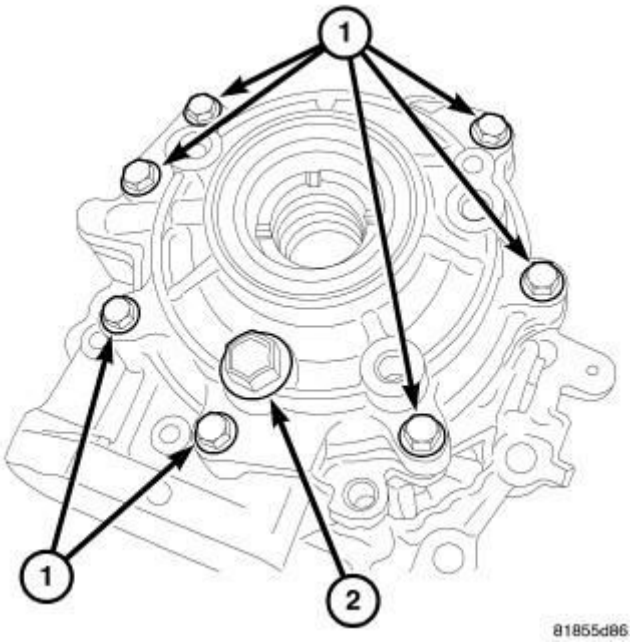

Fig. 28: Side Cover Bolts
Courtesy of CHRYSLER GROUP, LLC

20. Remove the side cover bolts (1).

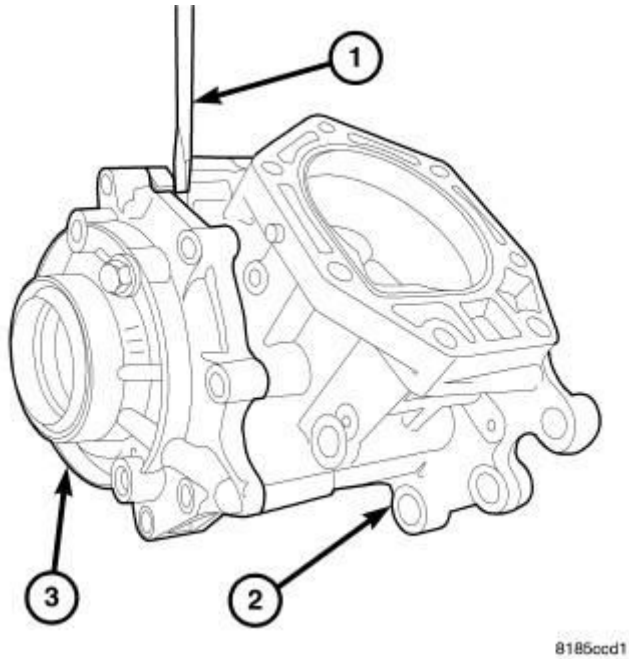

Fig. 29: Removing Side Cover
Courtesy of CHRYSLER GROUP, LLC

21. Remove the side cover from case.

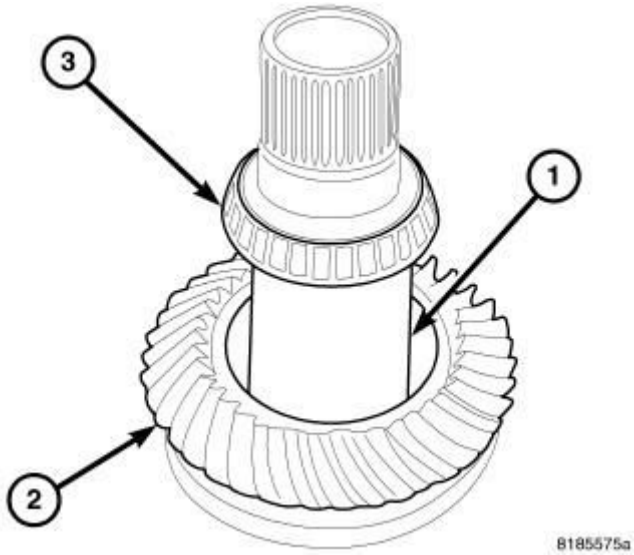

Fig. 30: Carrier Assembly
Courtesy of CHRYSLER GROUP, LLC

22. Remove the carrier assembly.

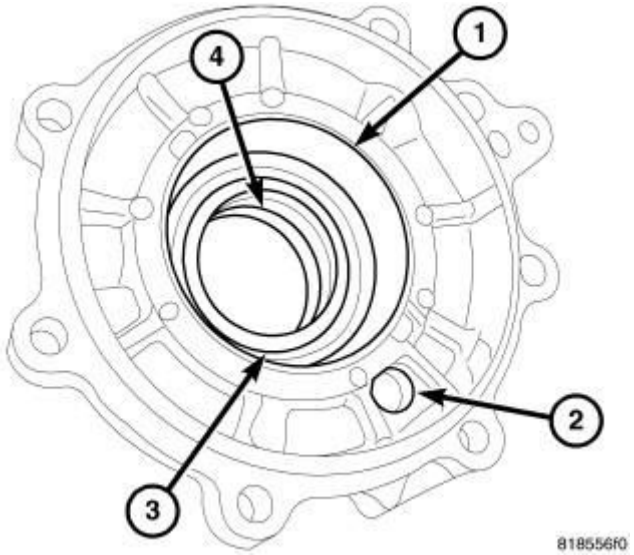

Fig. 31: Carrier Bearing Cup And Seal
Courtesy of CHRYSLER GROUP, LLC

NOTE: Bearing cup is a slip fit.

23. Remove bearing cup by hand (1) or by using a pick.

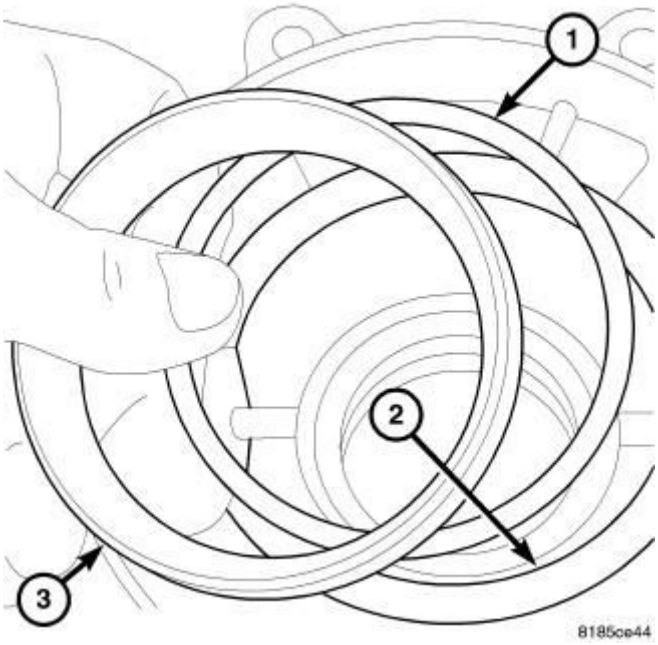

Fig. 32: Bearing Cup And Shim
Courtesy of CHRYSLER GROUP, LLC

24. Remove the shim (1) under the bearing cup (3). Measure and record the size of the shim.

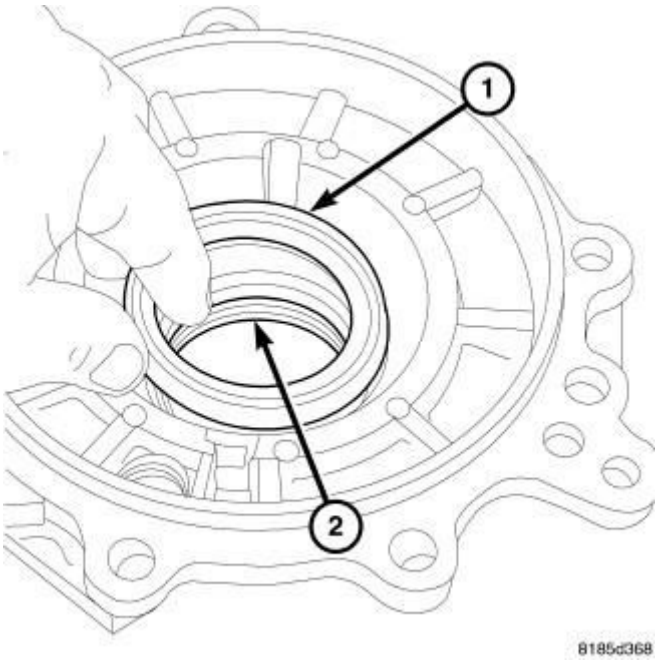

Fig. 33: Inner Cover Seal
Courtesy of CHRYSLER GROUP, LLC

25. Remove the inner seal from the PTU cover.
26. Remove the outer seal from the PTU cover.

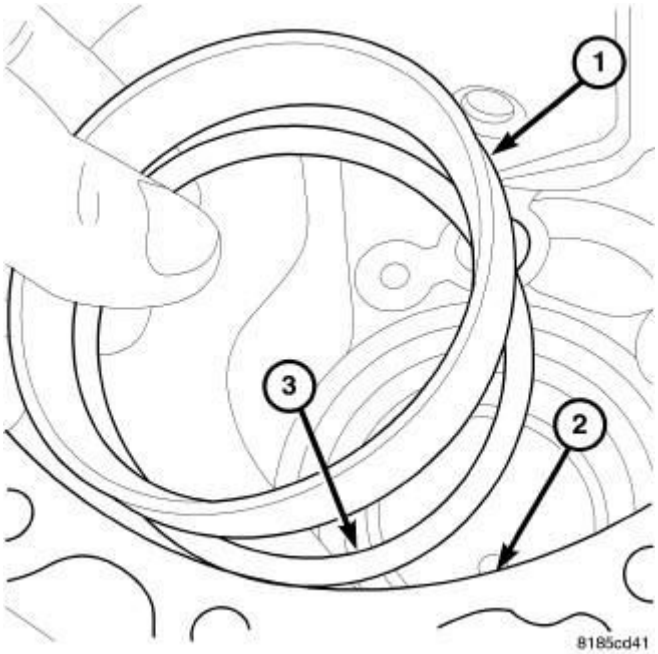

Fig. 34: Shim Under Bearing Cup
Courtesy of CHRYSLER GROUP, LLC

27. Remove bearing cup by hand (1) or by using a pick.
28. Remove the shim (3) under the bearing cup (1). Measure and record the size

of the shim.

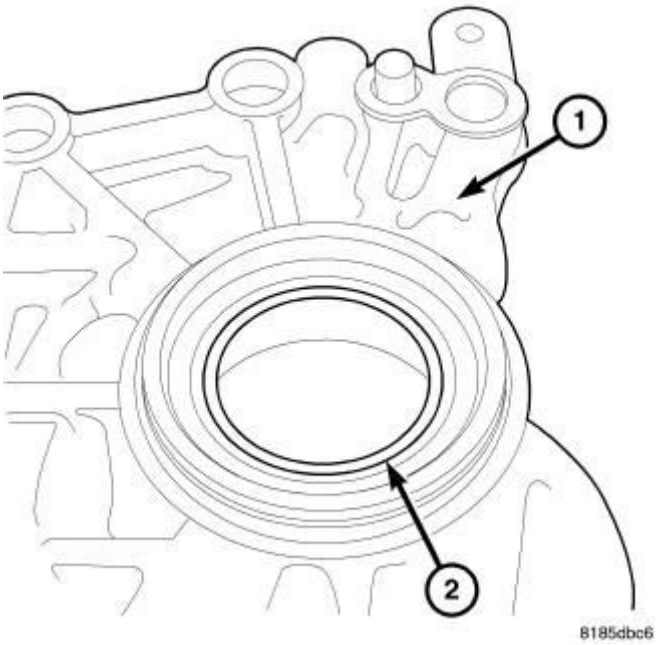

Fig. 35: Carrier Case Seal
Courtesy of CHRYSLER GROUP, LLC

29. Remove the carrier case seal.

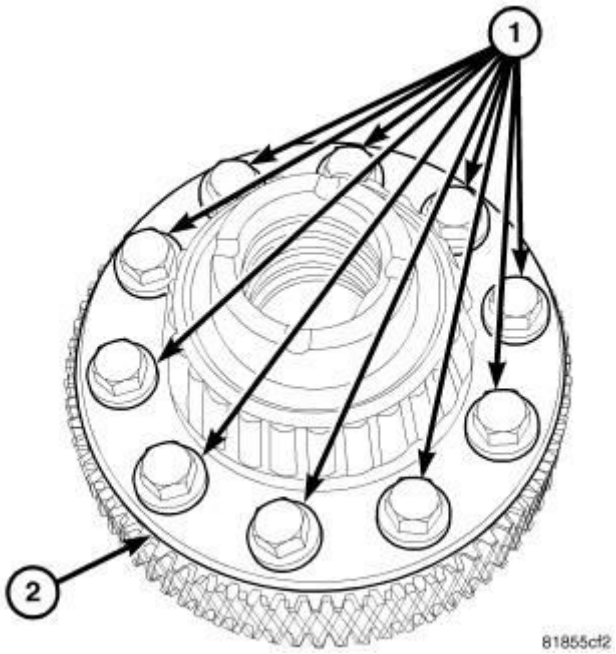

Fig. 36: Ring Gear Bolts
Courtesy of CHRYSLER GROUP, LLC

30. Remove the ring gear bolts.

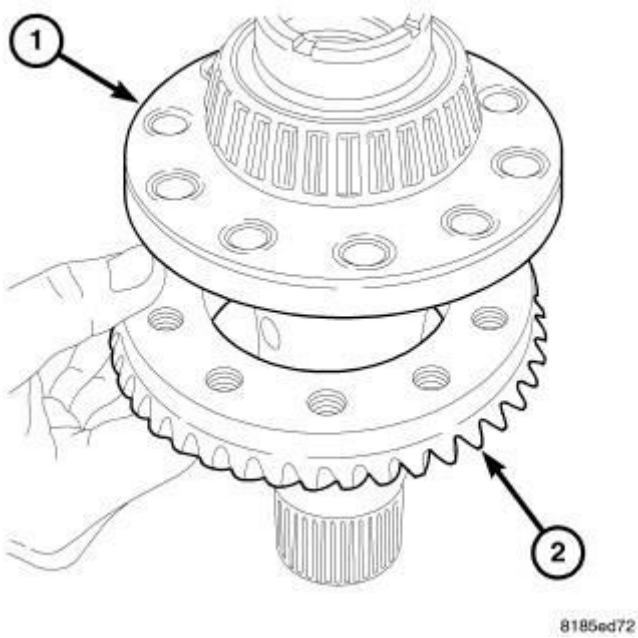

Fig. 37: Ring Gear
Courtesy of CHRYSLER GROUP, LLC

31. Remove the ring gear.

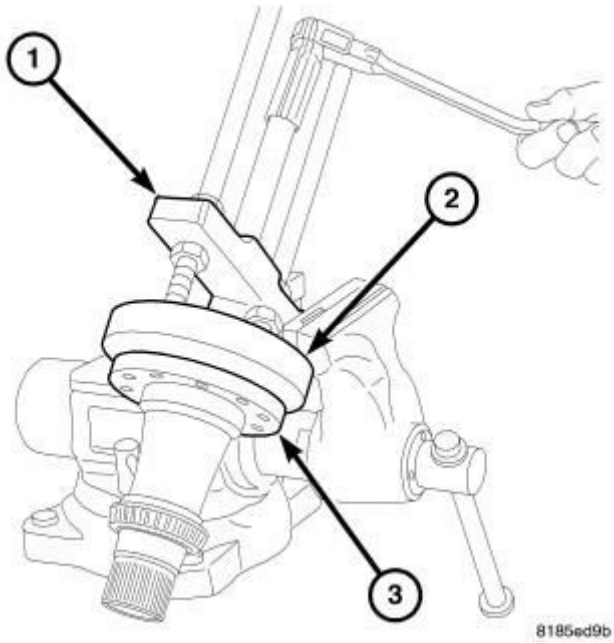

Fig. 38: Removing Ring Gear Side Bearing
Courtesy of CHRYSLER GROUP, LLC

32. Remove ring gear side bearing using Puller (special tool #C-293-PA, Puller, Press), Inserts (special tool #C-293-37, Block Set, Puller) and Insert (special tool #C-4487-1, Adapter).

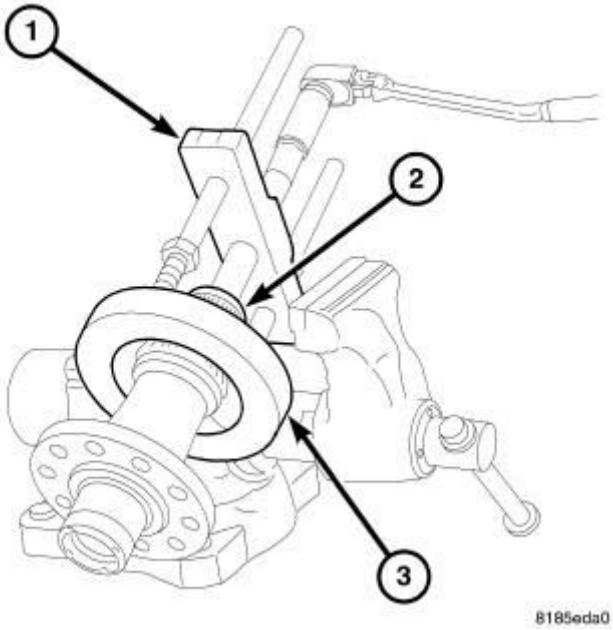

Fig. 39: Removing Output Side Bearing
Courtesy of CHRYSLER GROUP, LLC

33. Remove output side bearing using Puller (special tool #C-293-PA, Puller, Press), Inserts (special tool #C-293-37, Block Set, Puller) and Insert (special tool #C-4487-1, Adapter).

ASSEMBLY

ASSEMBLY

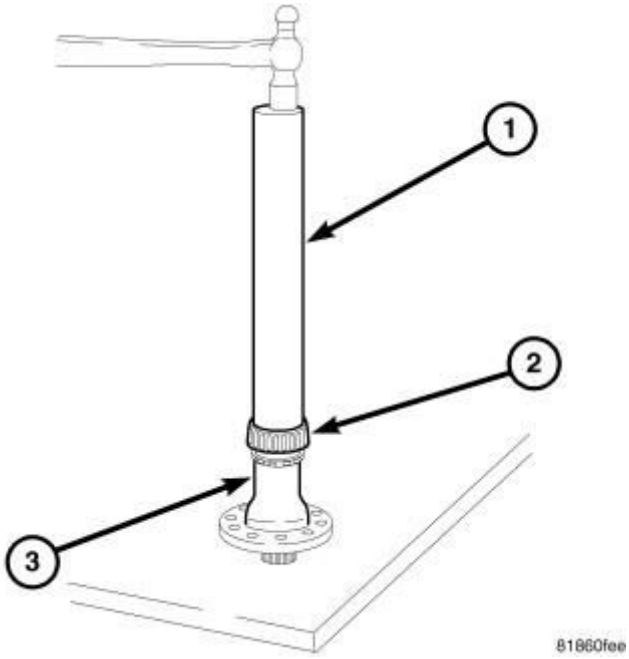

Fig. 40: Installing Output Side Spool Shaft Bearing

Courtesy of CHRYSLER GROUP, LLC

1. Install output side spool shaft bearing using Installer (special tool #C-3095-A, Installer, Bearing).

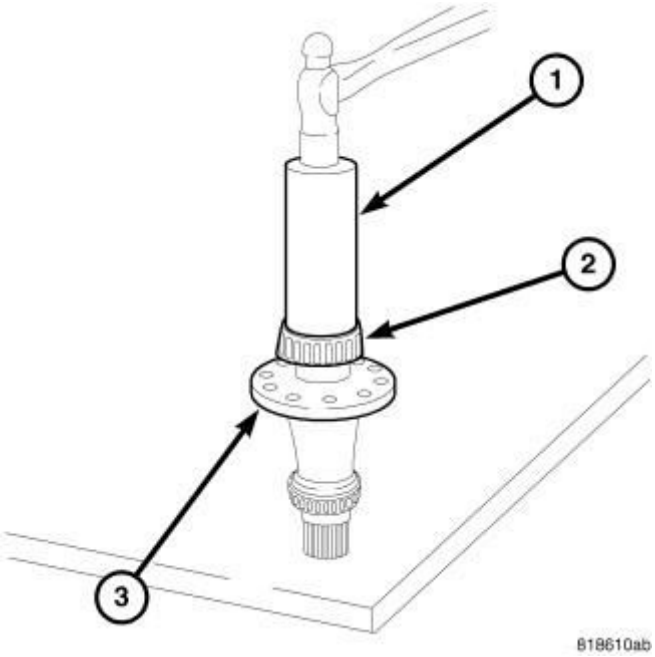

Fig. 41: Installing Ring Gear Side Bearing
Courtesy of CHRYSLER GROUP, LLC

2. Install ring gear side bearing using Installer (special tool #8148, Cup).

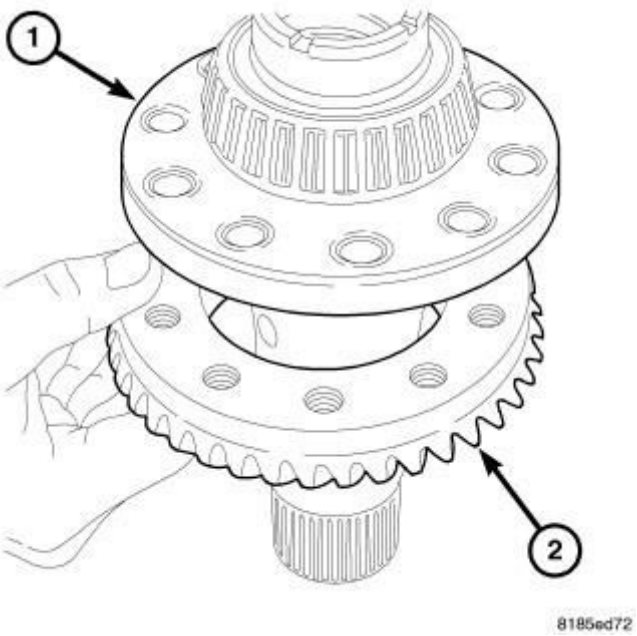

Fig. 42: Ring Gear

Courtesy of CHRYSLER GROUP, LLC

3. Install the ring gear.

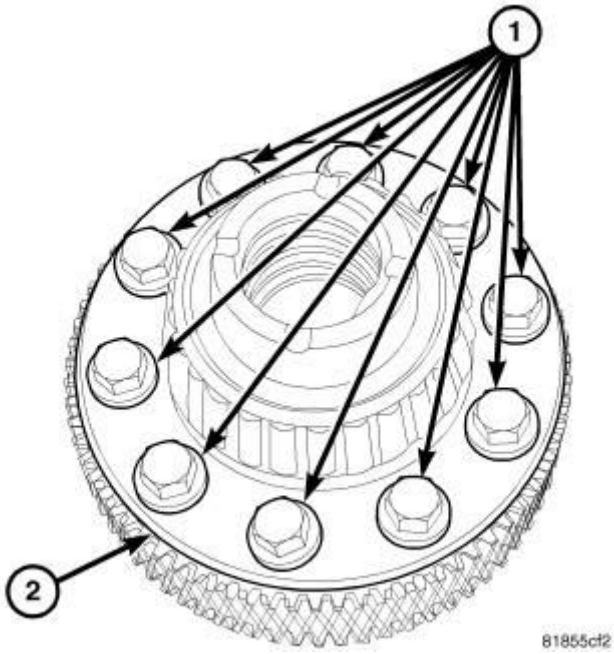

Fig. 43: Ring Gear Bolts
Courtesy of CHRYSLER GROUP, LLC

4. Install the **new** ring gear bolts and tighten to 74 N.m (55 ft. lbs.).

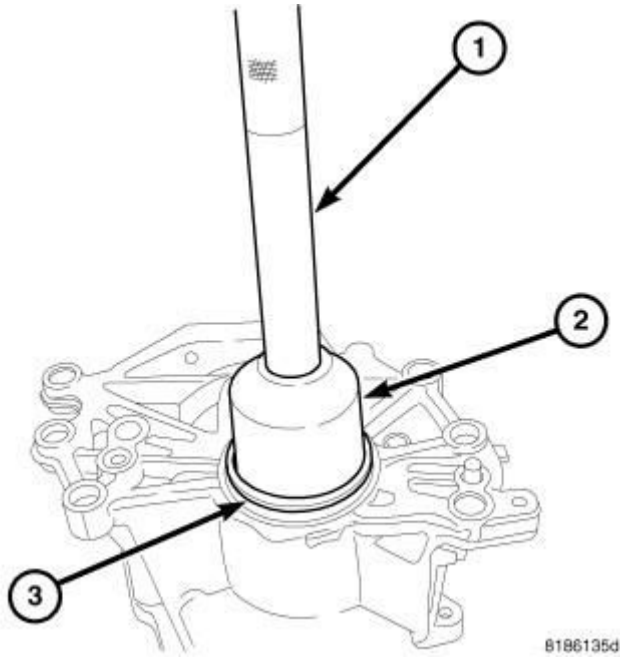

Fig. 44: Installing Carrier Case Seal
Courtesy of CHRYSLER GROUP, LLC

5. Install the carrier case seal using Installer (special tool #9851, Installer, Seal) and Handle (special tool #C-4171, Driver Handle, Universal).

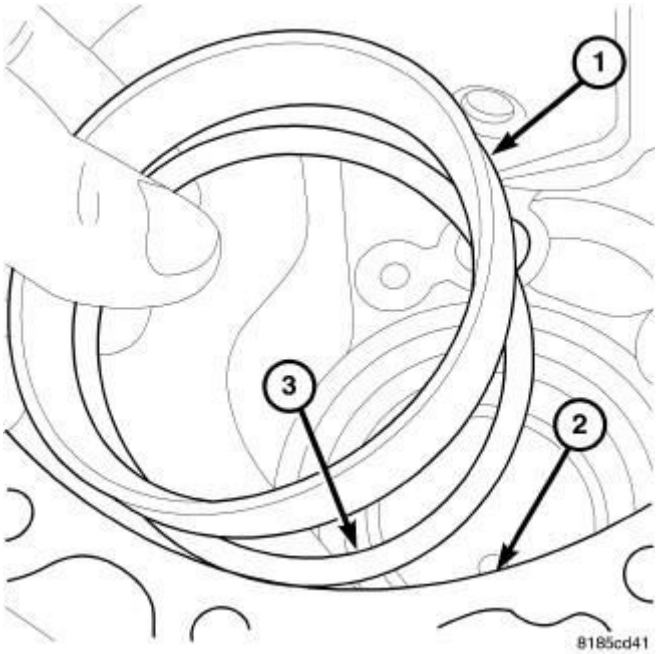

Fig. 45: Shim Under Bearing Cup
Courtesy of CHRYSLER GROUP, LLC

6. Install the shim (3) under the bearing cup (1) in the case side.
7. Install the bearing cup by hand.

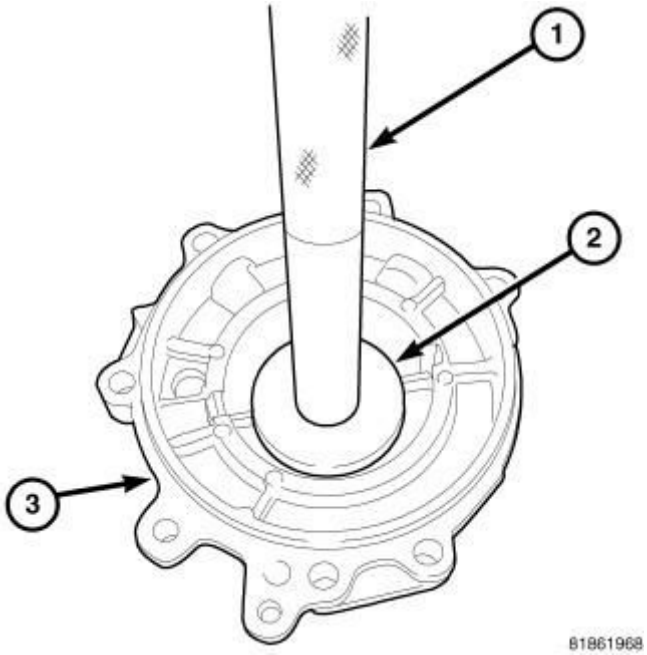

Fig. 46: Installing Carrier Cover Inner Seal
Courtesy of CHRYSLER GROUP, LLC

8. Install the inner seal into the PTU cover using Installer (special tool #9852, Installer, Seal) and Handle (special tool #C-4171, Driver Handle, Universal).

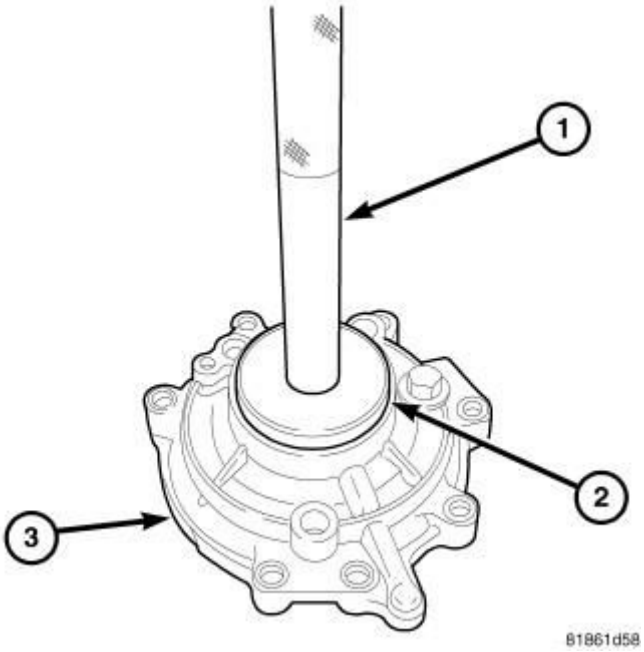

Fig. 47: Installing Carrier Cover Outer Seal
Courtesy of CHRYSLER GROUP, LLC

9. Install the outer seal into the PTU cover using Installer (special tool #9853, Installer, Seal) and Handle (special tool #C-4171, Driver Handle, Universal).

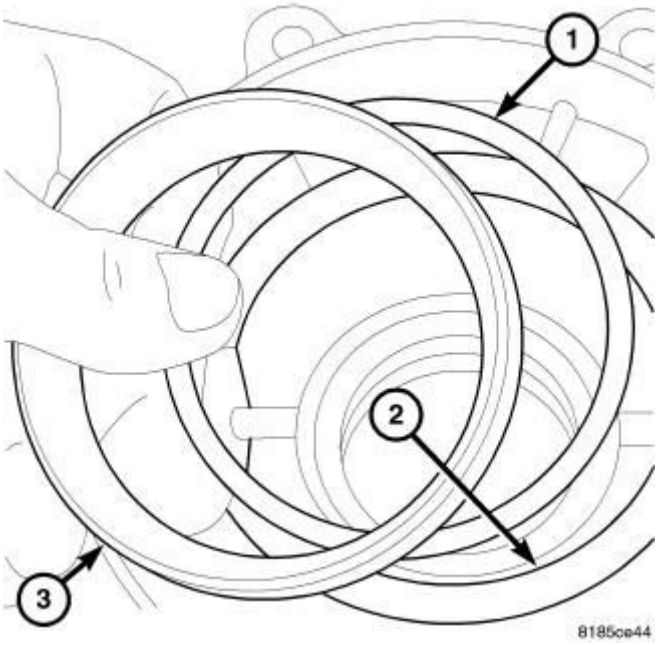

Fig. 48: Bearing Cup And Shim
Courtesy of CHRYSLER GROUP, LLC

10. Install the shim (1) under the bearing cup (3).
11. Install bearing cup by hand (3).

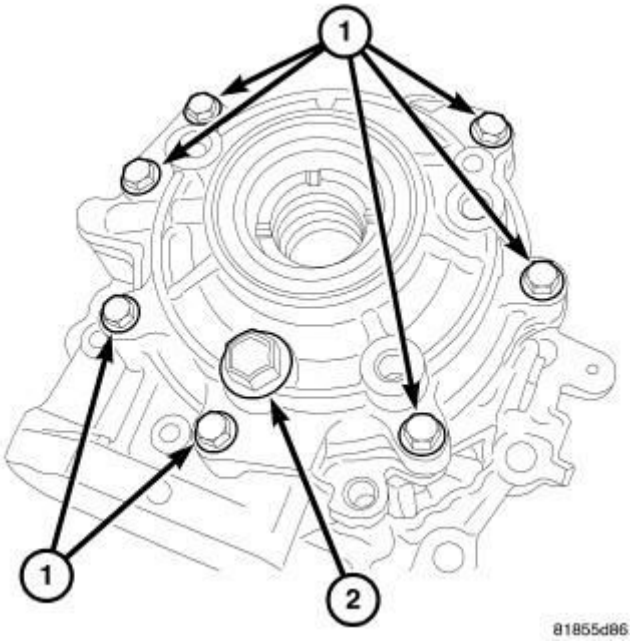

Fig. 49: Side Cover Bolts
Courtesy of CHRYSLER GROUP, LLC

12. Install the carrier assembly into the case
13. Install the side cover
14. Tighten side cover bolts (1) to 23 N.m (17 ft. lbs.).

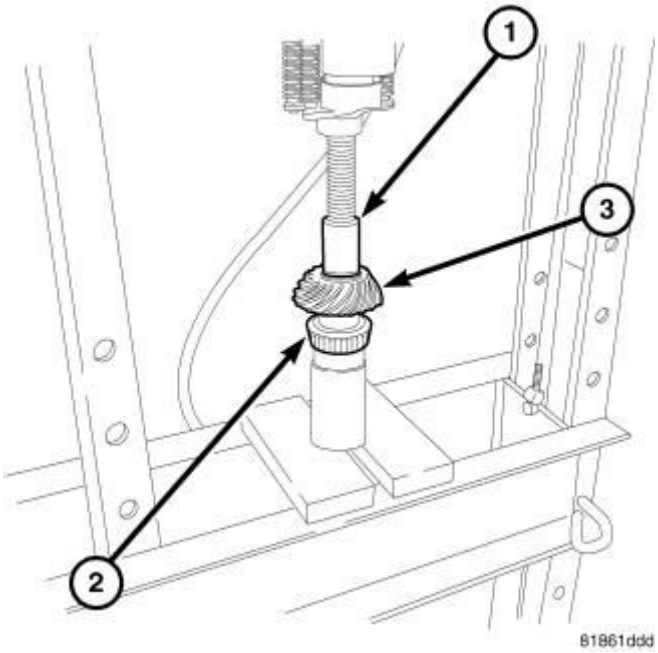

Fig. 50: Installing Output Shaft Head Bearing
Courtesy of CHRYSLER GROUP, LLC

15. Install the output shaft head bearing on to the pinion shaft using Installer (special tool #9714, Installer, Bearing) and a Press.

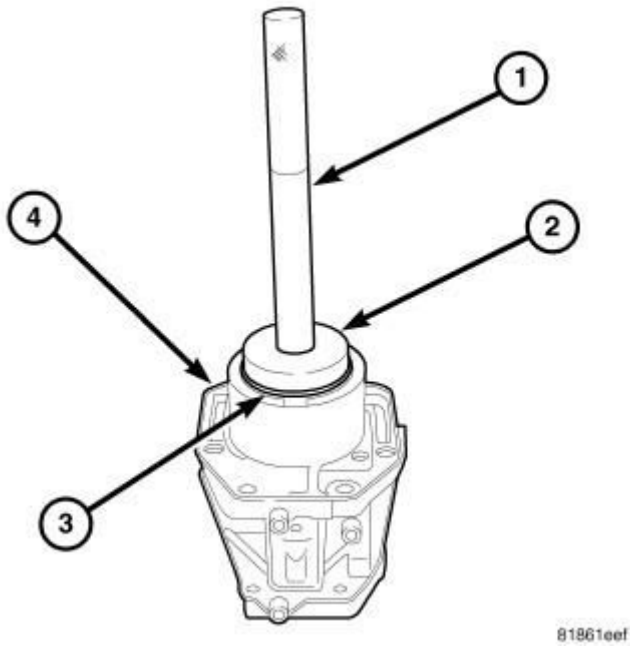

Fig. 51: Installing Output Shaft Head Bearing Cup
Courtesy of CHRYSLER GROUP, LLC

16. Install the output shaft head bearing cup using Installer (special tool #6061, Installer, Cup) and Handle (special tool #C-4171, Driver Handle, Universal).

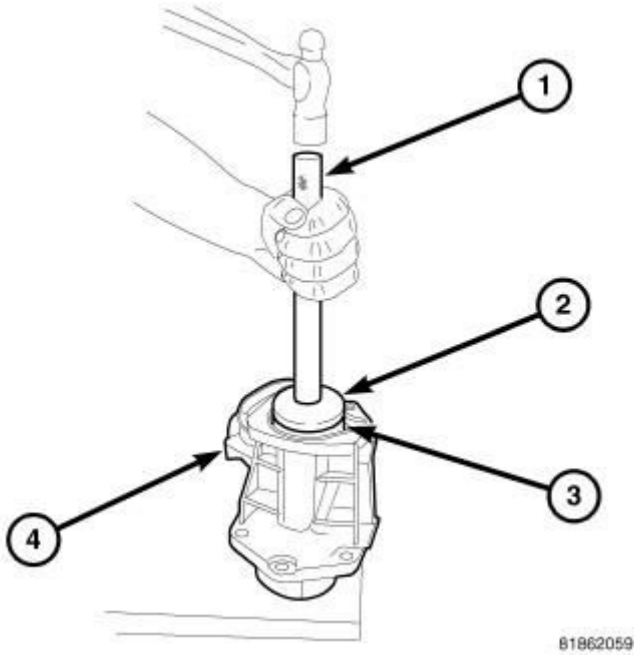

Fig. 52: Installing Output Shaft Tail Bearing Cup
Courtesy of CHRYSLER GROUP, LLC

17. Install the output shaft tail bearing cup using Installer (special tool #9855, Installer, Bearing Cup) and Handle (special tool #C-4171, Driver Handle, Universal).

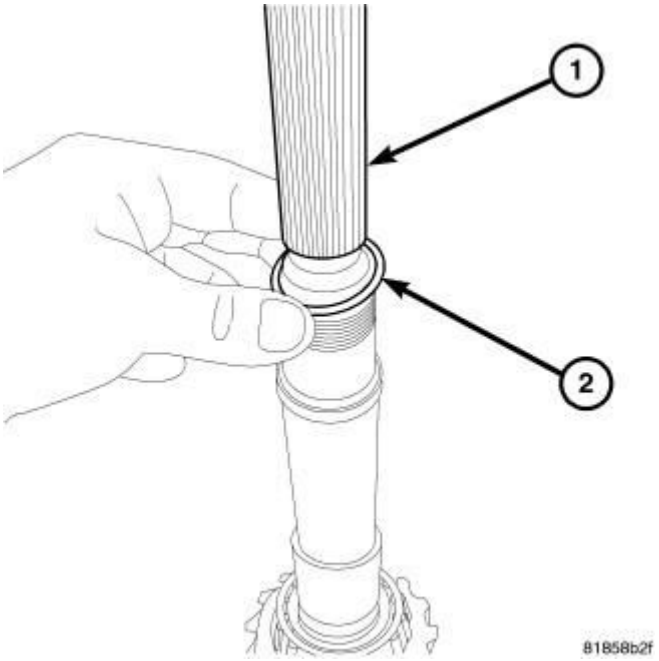

Fig. 53: Pinion Shaft Spacer
Courtesy of CHRYSLER GROUP, LLC

18. Install the output shaft spacer onto the output shaft.

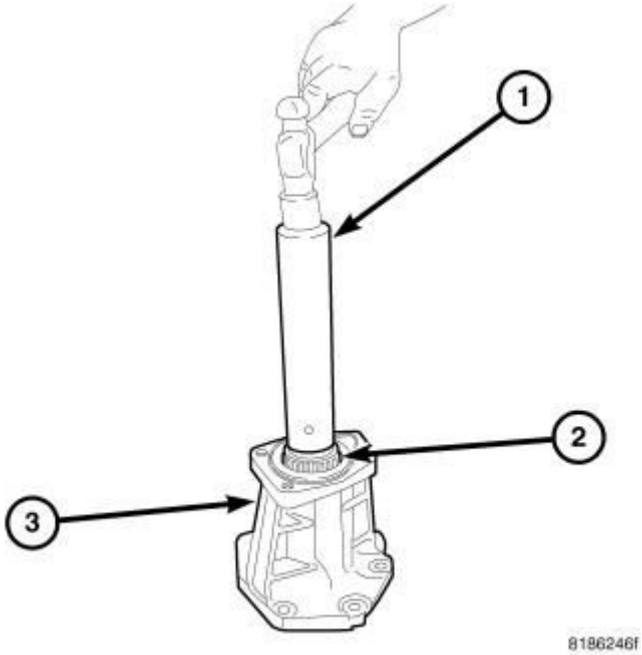

Fig. 54: Installing Output Shaft Tail Bearing
Courtesy of CHRYSLER GROUP, LLC

19. Install output shaft into output shaft housing.
20. Install output shaft tail bearing on to out put shaft using Installer (special tool #L-4411, Installer, Bearing).

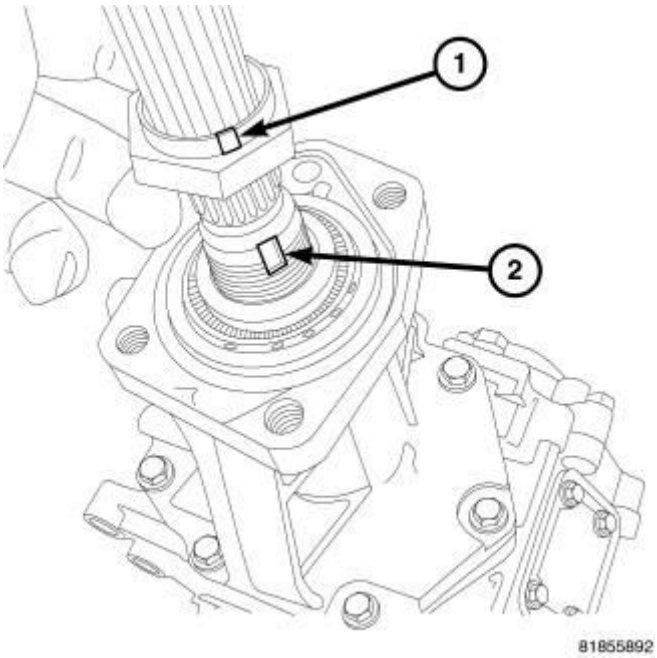

Fig. 55: Pinion Shaft Nut
Courtesy of CHRYSLER GROUP, LLC

NOTE: The output shaft nut is a staked type nut.

21. Install the output shaft nut (1) onto the output shaft (2).

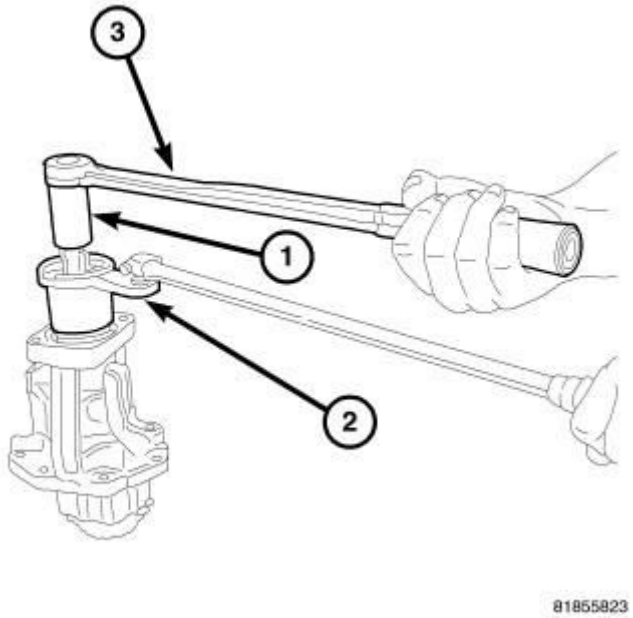

Fig. 56: Installing Pinion Nut
Courtesy of CHRYSLER GROUP, LLC

22. Tighten the output shaft nut using Pinion Nut Socket (special tool #9921, Wrench, Pinion Nut) to 150 N.m (111 ft. lbs.).
23. Using an inch pound torque wrench check and Pinion Nut Socket (special tool #9921, Wrench, Pinion Nut) (1) check the rotating torque, it should be 30 in. lbs. Add 0.002 in. larger shim to increase rotating torque and add 0.002 in. smaller shim to decrease rotating torque. Repeat until proper turning torque is obtained.
24. Using a punch stake the output shaft nut.

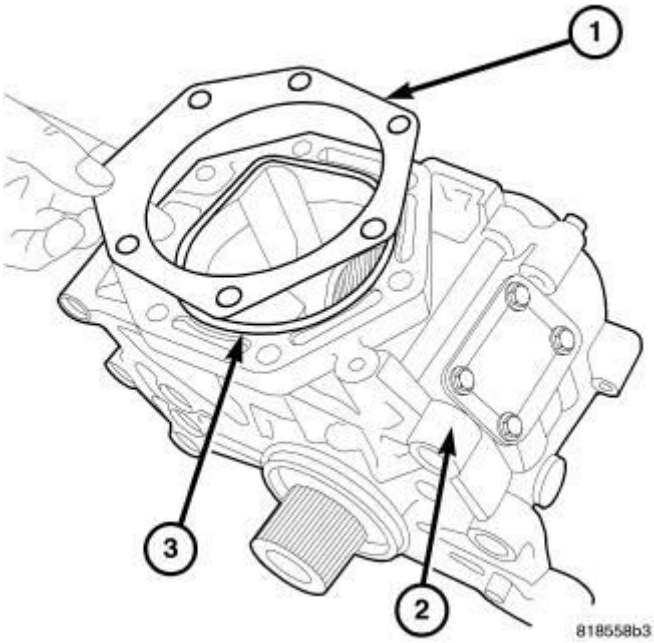

Fig. 57: Pinion Housing Shim
Courtesy of CHRYSLER GROUP, LLC

25. Install the pinion housing O-ring (3).
26. Install the pinion housing shim (1).

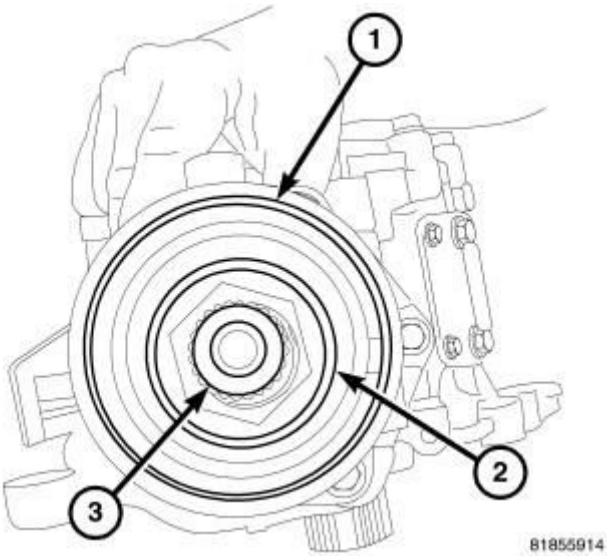

Fig. 58: Pinion Shaft Seal
Courtesy of CHRYSLER GROUP, LLC

27. Install the output shaft seal using Installer (special tool #9851, Installer, Seal) and Handle (special tool #C-4171, Driver Handle, Universal).

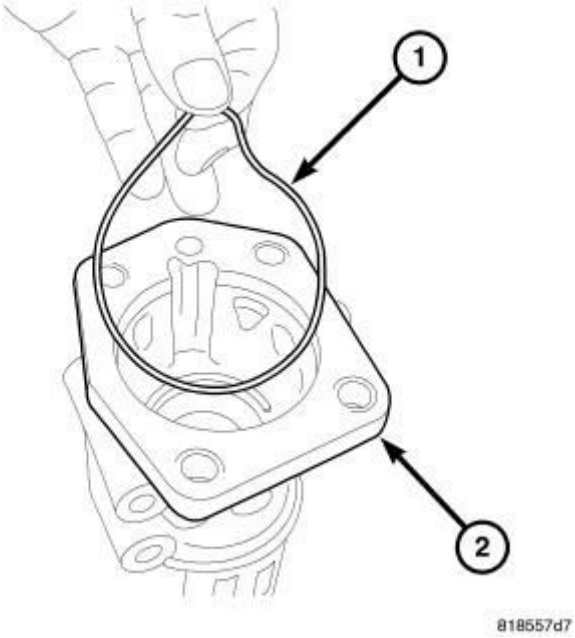

Fig. 59: Extension Housing O-Ring
Courtesy of CHRYSLER GROUP, LLC

28. Install a **new** extension housing O-ring.

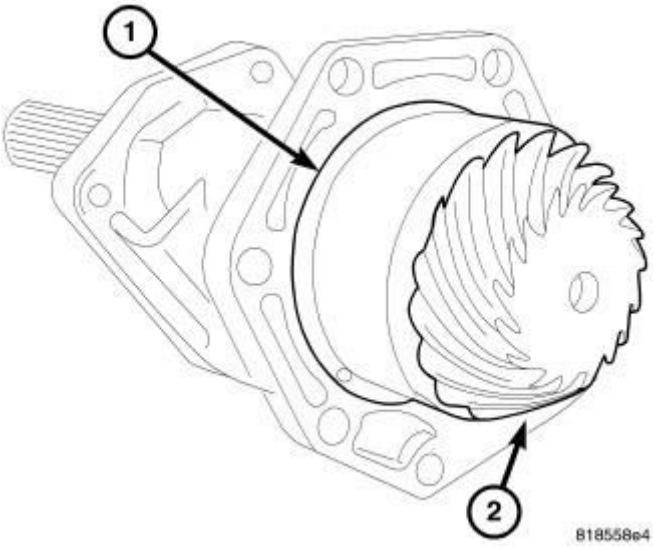

Fig. 60: Pinion Housing
Courtesy of CHRYSLER GROUP, LLC

29. Install the output shaft housing and bolts onto the carrier housing.
30. Apply pattern check grease to the ring gear.

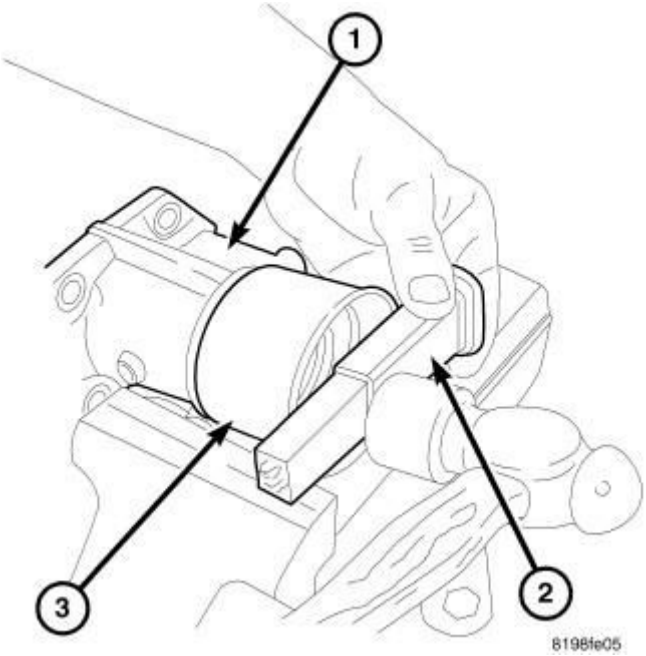

Fig. 61: Installing Dust Shield
Courtesy of CHRYSLER GROUP, LLC

31. Using a block of wood (2) install the dust shield (3) onto the extension housing (1).

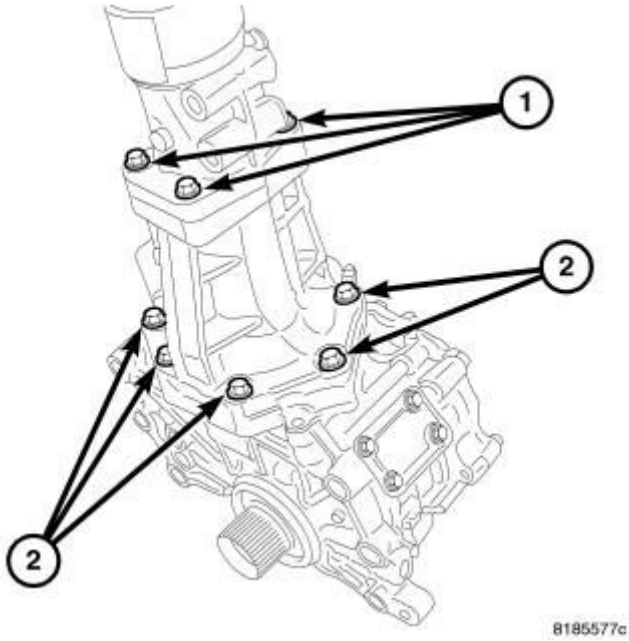

Fig. 62: Extension And Pinion Housing Bolts
Courtesy of CHRYSLER GROUP, LLC

32. Install the extension housing and bolts.
33. Tighten output shaft housing bolts to 38 N.m (28 ft. lbs.).

34. Tighten the extension housing bolts to 38 N.m (28 ft. lbs.).

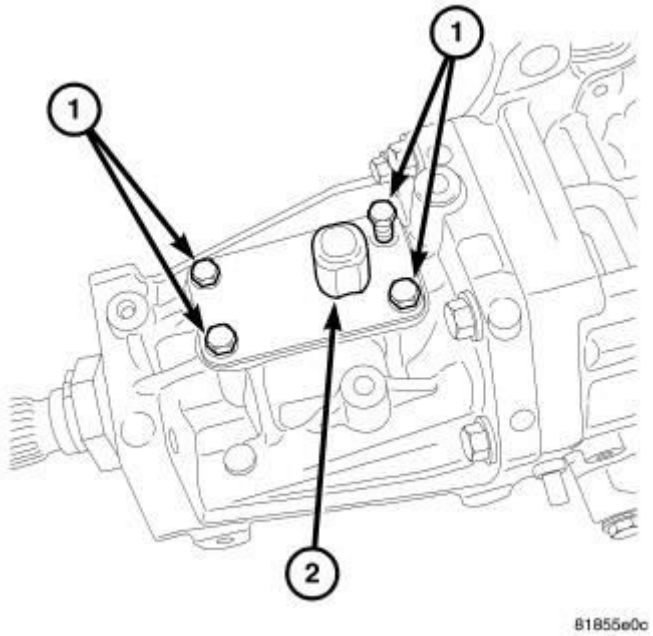

Fig. 63: Vent
Courtesy of CHRYSLER GROUP, LLC

35. Clean cover and apply MOPAR® axle RTV or equivalent.
36. Install the vent and bolts, tighten the bolts to 23 N.m (17 ft. lbs.).

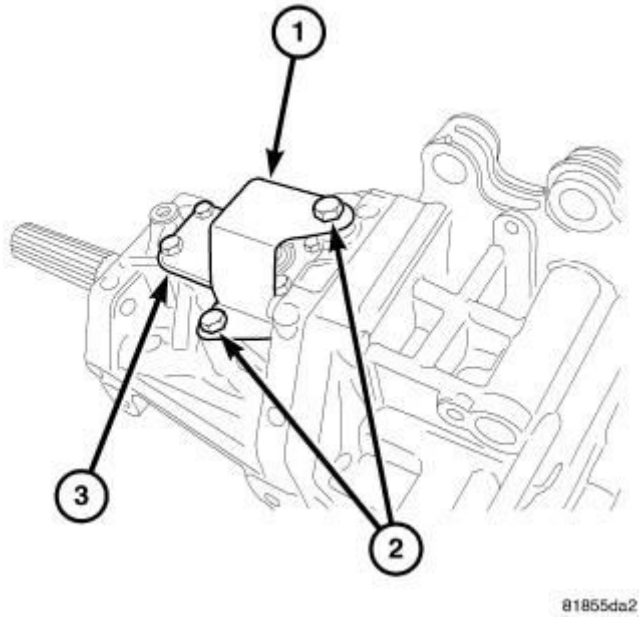

Fig. 64: Vent Shield
Courtesy of CHRYSLER GROUP, LLC

37. Install the vent shield and bolts. tighten the bolts to 23 N.m (17 ft. lbs.).

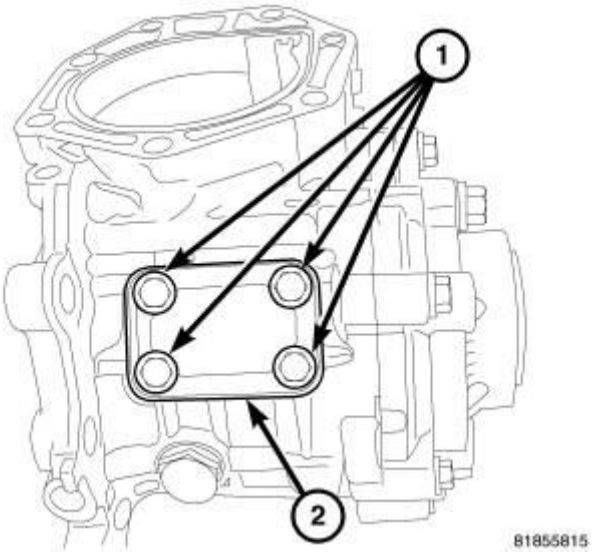

Fig. 65: Inspection Cover
Courtesy of CHRYSLER GROUP, LLC

38. Clean cover and apply MOPAR® axle RTV.
39. Apply MOPAR® lock AND seal adhesive or equivalent to bolts.
40. Install the inspection cover and bolts. tighten the bolts to 23 N.m (17 ft. lbs.).
41. Fill the PTU. Refer to **STANDARD PROCEDURE**.

INSTALLATION

INSTALLATION

Fig. 66: Removing/Installing PTU
Courtesy of CHRYSLER GROUP, LLC

1. Roll the PTU (1) rearward and up to install.
2. Place the PTU in position on the transaxle.

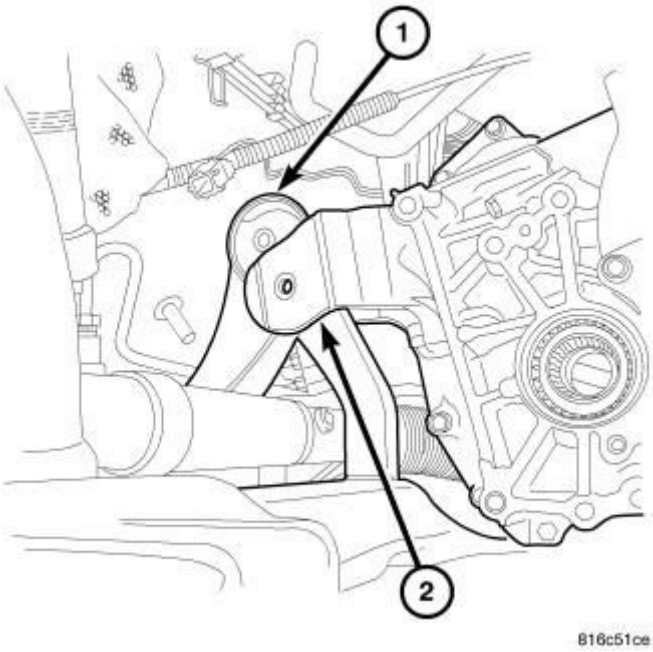

Fig. 67: Rear Mount No Bolts
Courtesy of CHRYSLER GROUP, LLC

3. Lower the front of the engine until the rear mount has aligned (1 and 2).

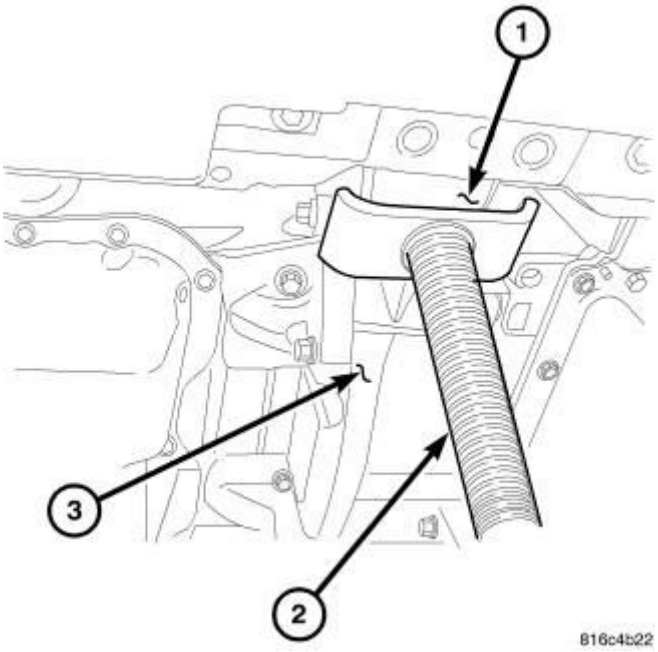

Fig. 68: Supporting Engine With Screw Jack
Courtesy of CHRYSLER GROUP, LLC

4. Remove a screw jack (2) from under the engine mount bracket (1)

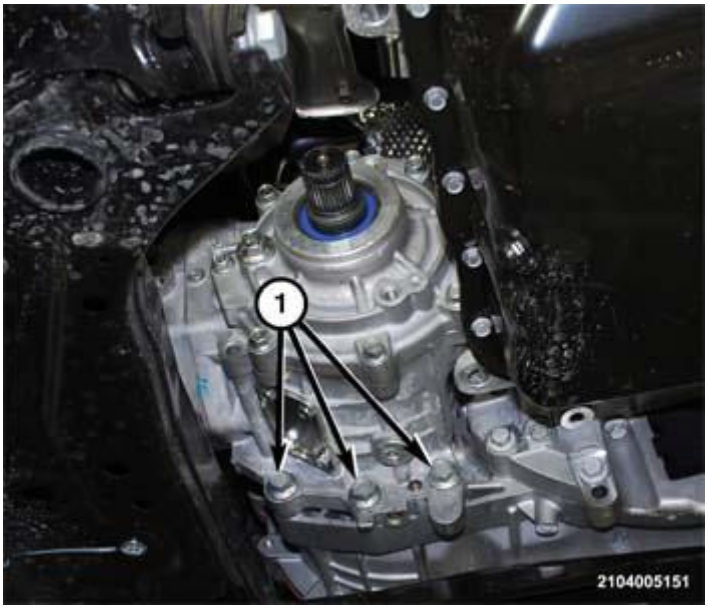

Fig. 69: Lower PTU Mounting Bolts
Courtesy of CHRYSLER GROUP, LLC

5. Install the bolts (1) to hold the lower PTU to the transaxle. Refer to **SPECIFICATIONS**.

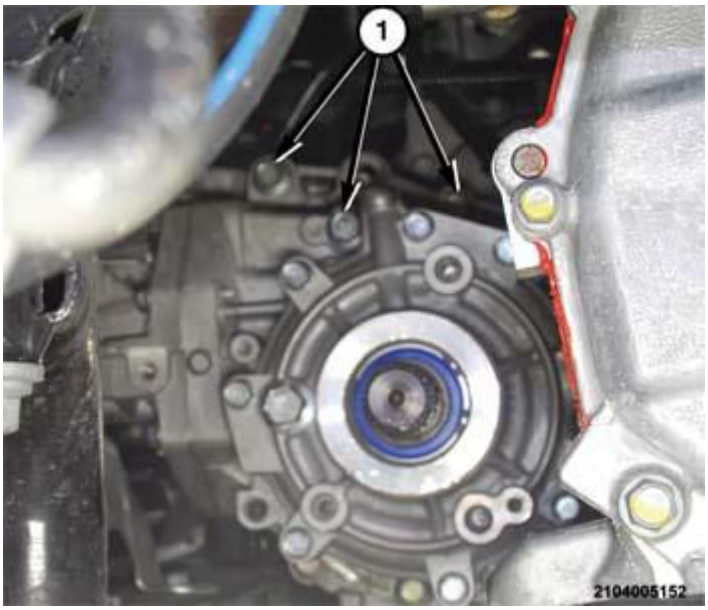

Fig. 70: Upper PTU Mounting Bolts
Courtesy of CHRYSLER GROUP, LLC

6. Install the bolts (1) to hold the upper PTU to the transaxle. Refer to **SPECIFICATIONS**.

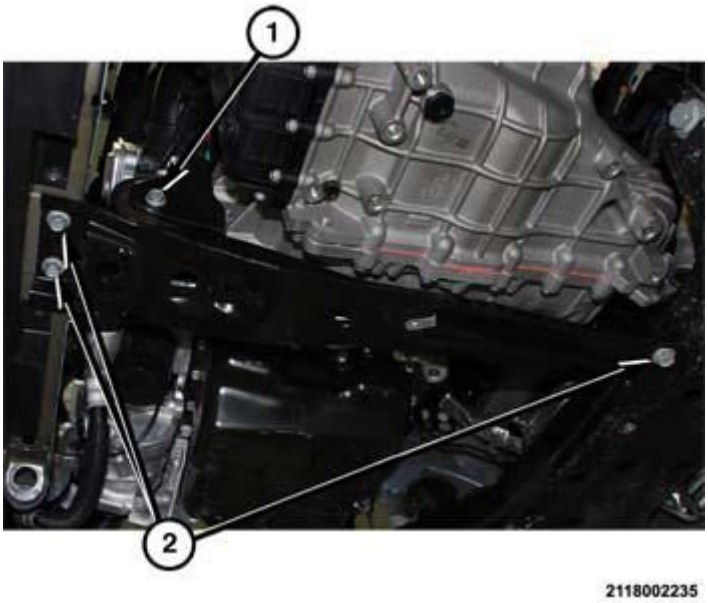

Fig. 71: Front-To-Rear Support Bolts
Courtesy of CHRYSLER GROUP, LLC

7. Place the front-to-rear support in position on the vehicle.
8. Install the bolts (2) to hold the front-to-rear support to the front and rear crossmembers. Refer to **SPECIFICATIONS**.
9. Install the trough bolt (1) to hold the front-to-rear support rubber isolator to

the front crossmember. Refer to **SPECIFICATIONS**.

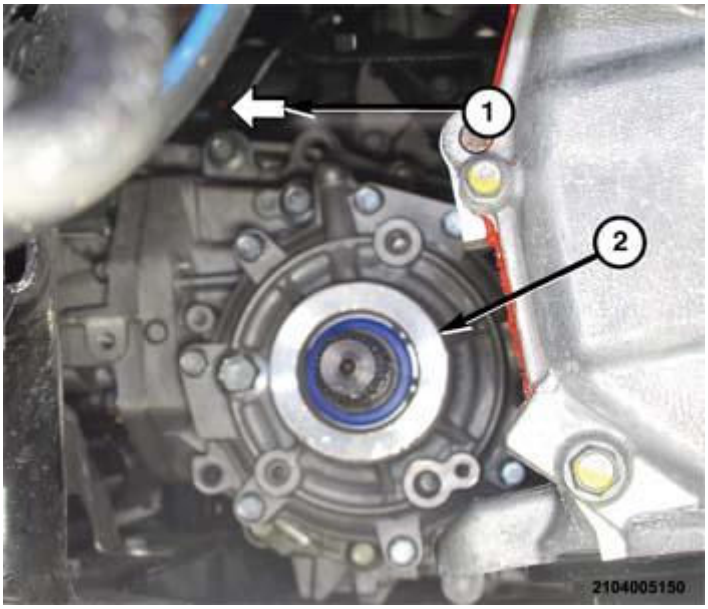

Fig. 72: Hidden Trough Bolt & PTU
Courtesy of CHRYSLER GROUP, LLC

10. Install the hidden trough bolt (1) to hold the engine mount to the engine cradle above the PTU (2). Refer to **SPECIFICATIONS**.
11. Lower the vehicle.

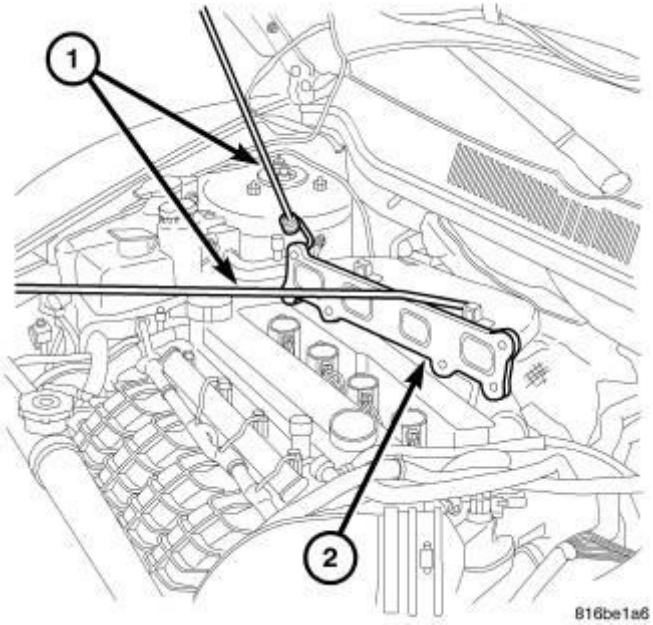

Fig. 73: Maniverter & Bungie Cord
Courtesy of CHRYSLER GROUP, LLC

12. Remove the bungie cord and slide the maniverter down and to the left into position on the engine.
13. Install the exhaust maniverter. Refer to **MANIFOLD, EXHAUST, INSTALLATION 2.0L** , or **MANIFOLD, EXHAUST, INSTALLATION 2.2L** , or **MANIFOLD, EXHAUST, INSTALLATION 2.4L** .
14. Raise the vehicle.

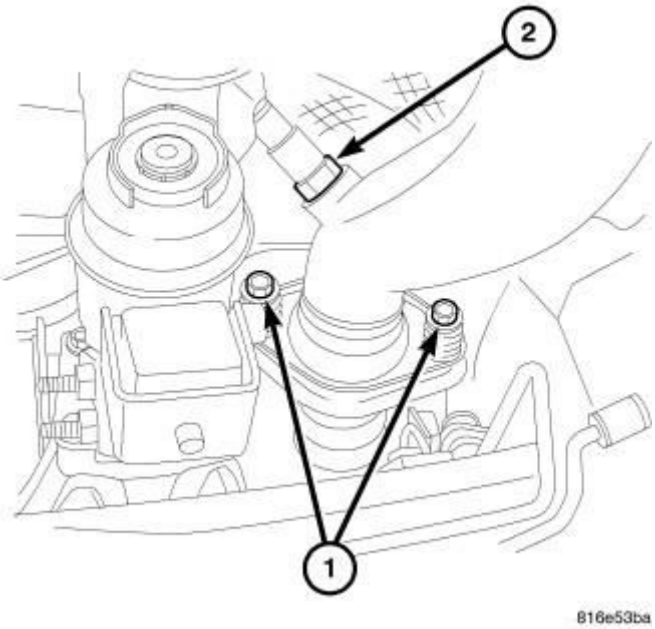

Fig. 74: Exhaust To Maniverter Bolts
Courtesy of CHRYSLER GROUP, LLC

15. Install the bolts (1) to hold the exhaust pipe to the maniverter. Refer to **SPECIFICATIONS** .
16. Install the rear prop shaft. Refer to **INSTALLATION** .
17. Install right front halfshaft. Refer to **INSTALLATION** .

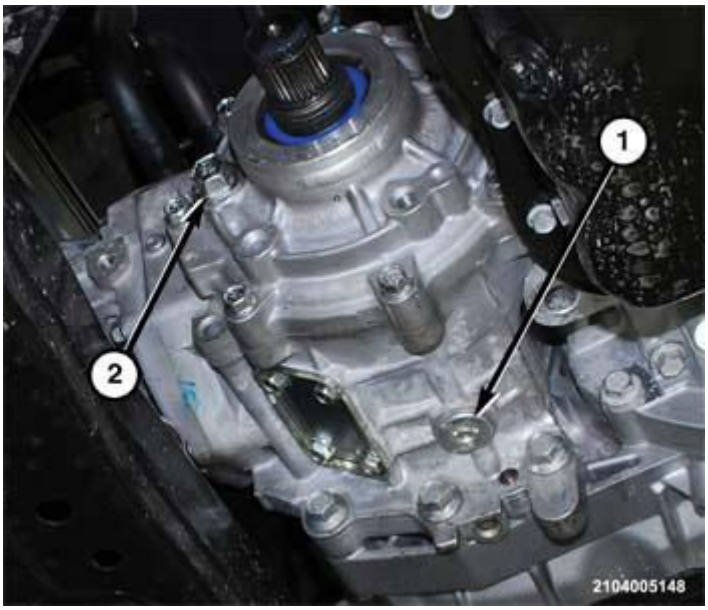

Fig. 75: PTU Drain & Fill Plugs
Courtesy of CHRYSLER GROUP, LLC

18. Remove the fill plug (2) and add fluid to the proper level. Refer to **SPECIFICATIONS**.
19. Lower the vehicle.
20. Install the air cleaner. Refer to **BODY, AIR CLEANER, INSTALLATION 2.0L** , or **BODY, AIR CLEANER, INSTALLATION 2.2L** , or **BODY, AIR CLEANER, INSTALLATION 2.4L** .
21. Install the engine cover.
22. Connect the battery negative cable. Refer to **CABLES, BATTERY, REMOVAL** .
23. Road test the vehicle to verify the repair.

SPECIAL TOOLS

SPECIAL TOOLS

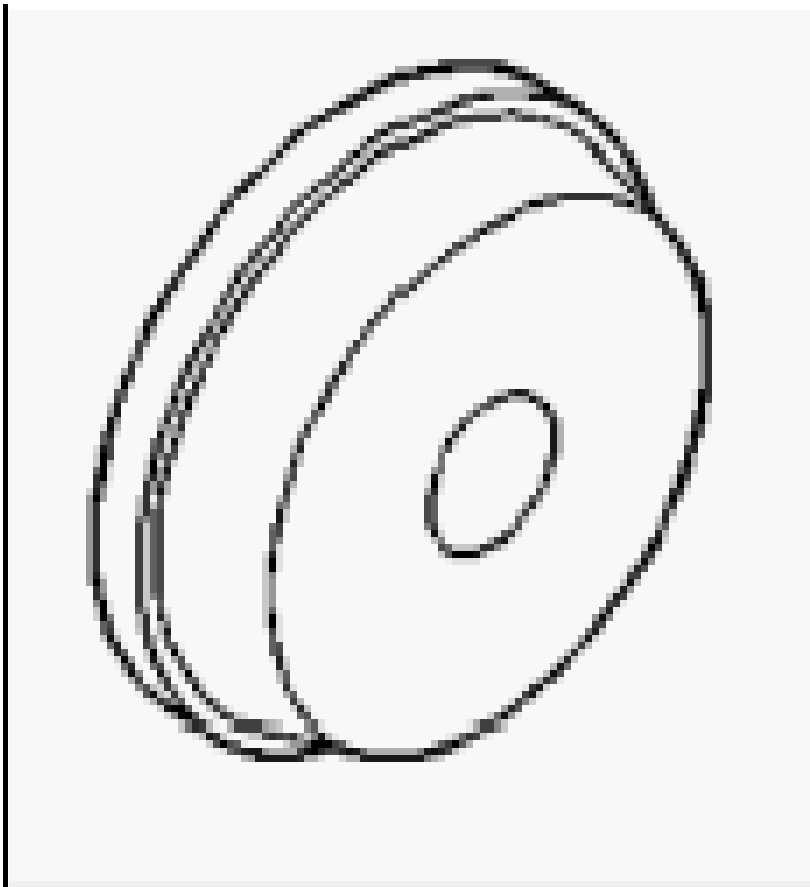	6061 - Installer, Cup (Originally Shipped In Kit Number(s) 6303, 6822.)
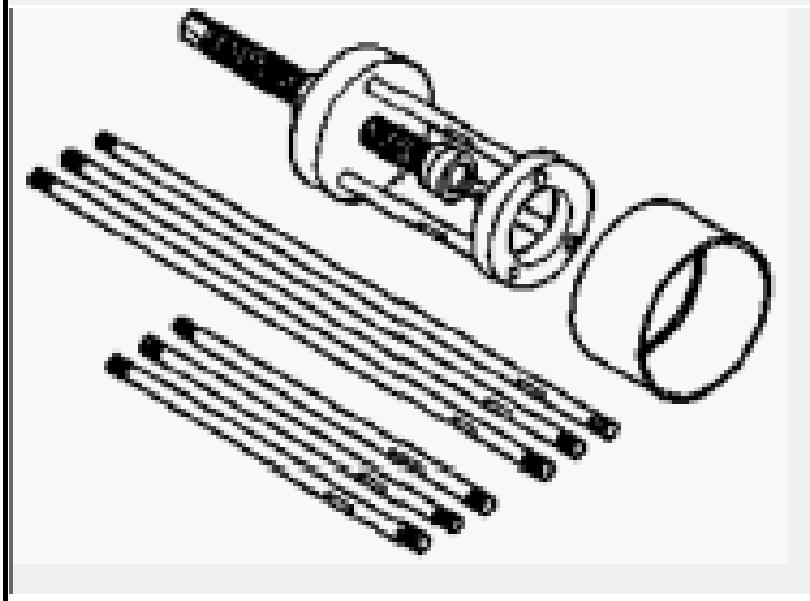	6444 - Puller, Bearing/Gear (Originally Shipped In Kit Number(s) 6440, 8847, 8854CC.)
	6451 - Jaws, Puller

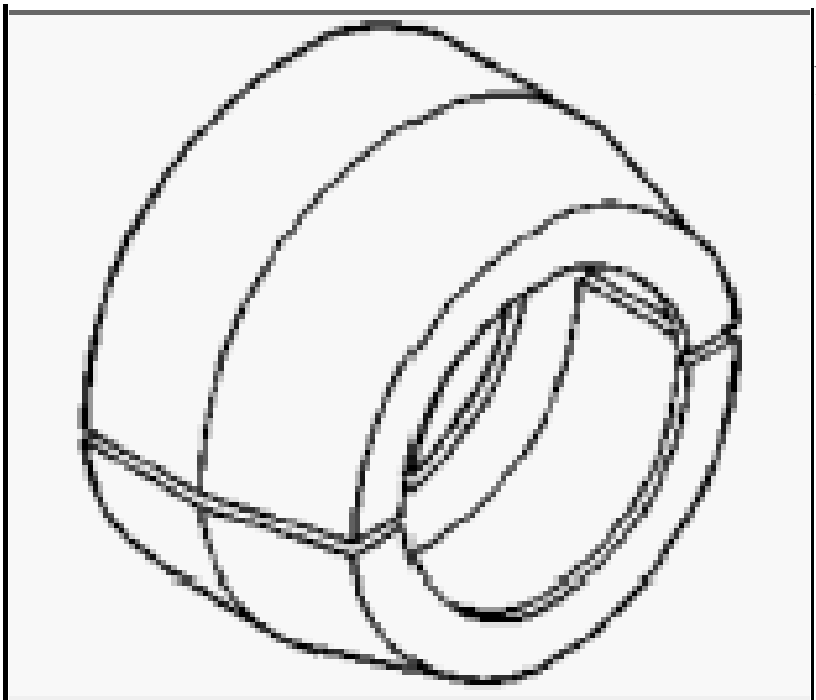

(Originally Shipped In Kit Number(s) 6440.)

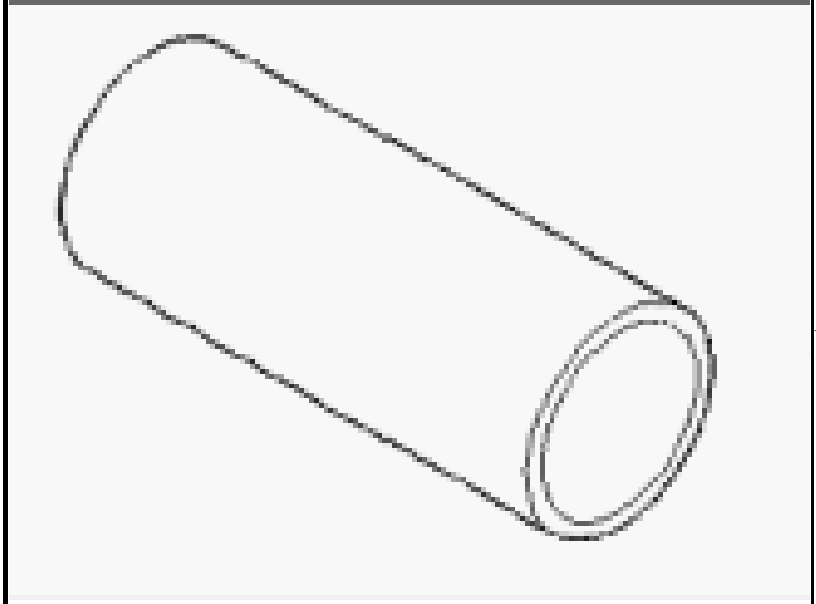

8148 - Cup
(Originally Shipped In Kit Number(s) 8104, 9975.)

8439 - O2 Sensor Wrench
(Originally Shipped In Kit

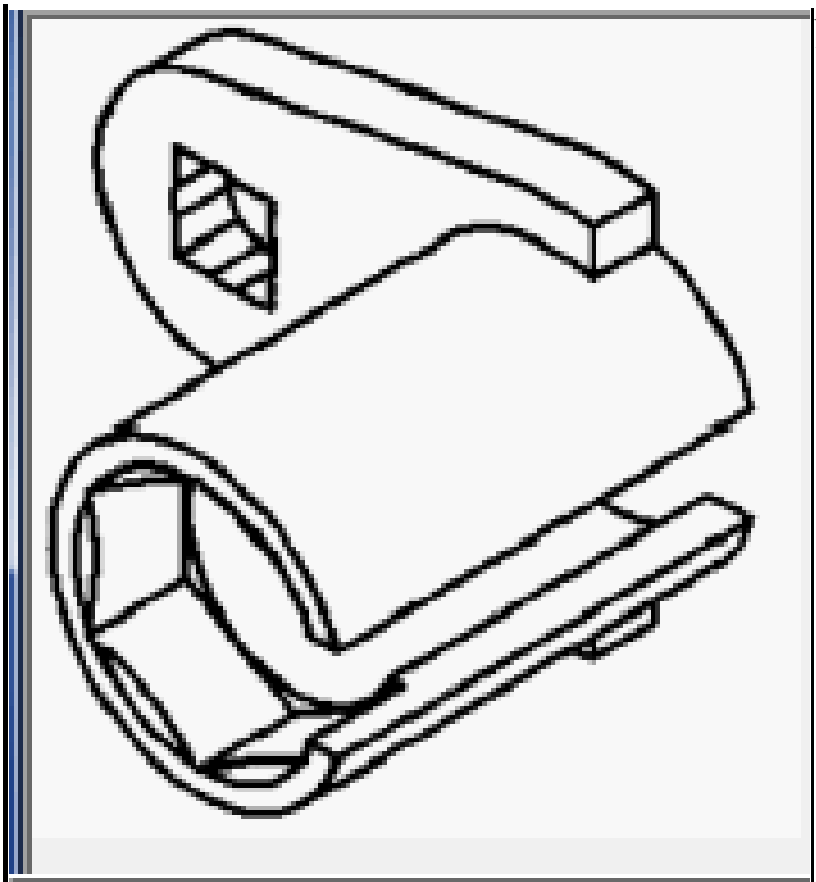

Number(s) 8664, 8665, 8665CC, 8702.)

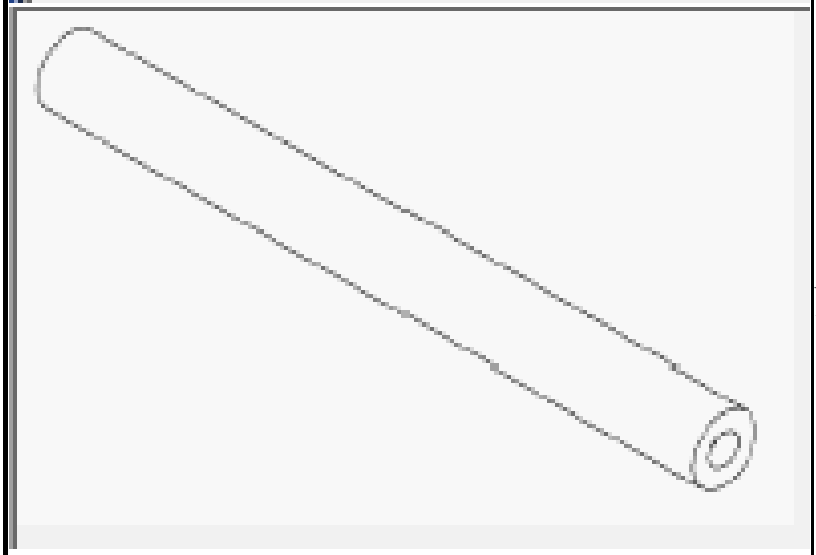

9020 - Insert, Crankshaft (Originally Shipped In Kit Number(s) 9076, 9090, 9090CC.)

9714 - Installer, Bearing (Originally Shipped In Kit Number(s) 9895, 9972.)

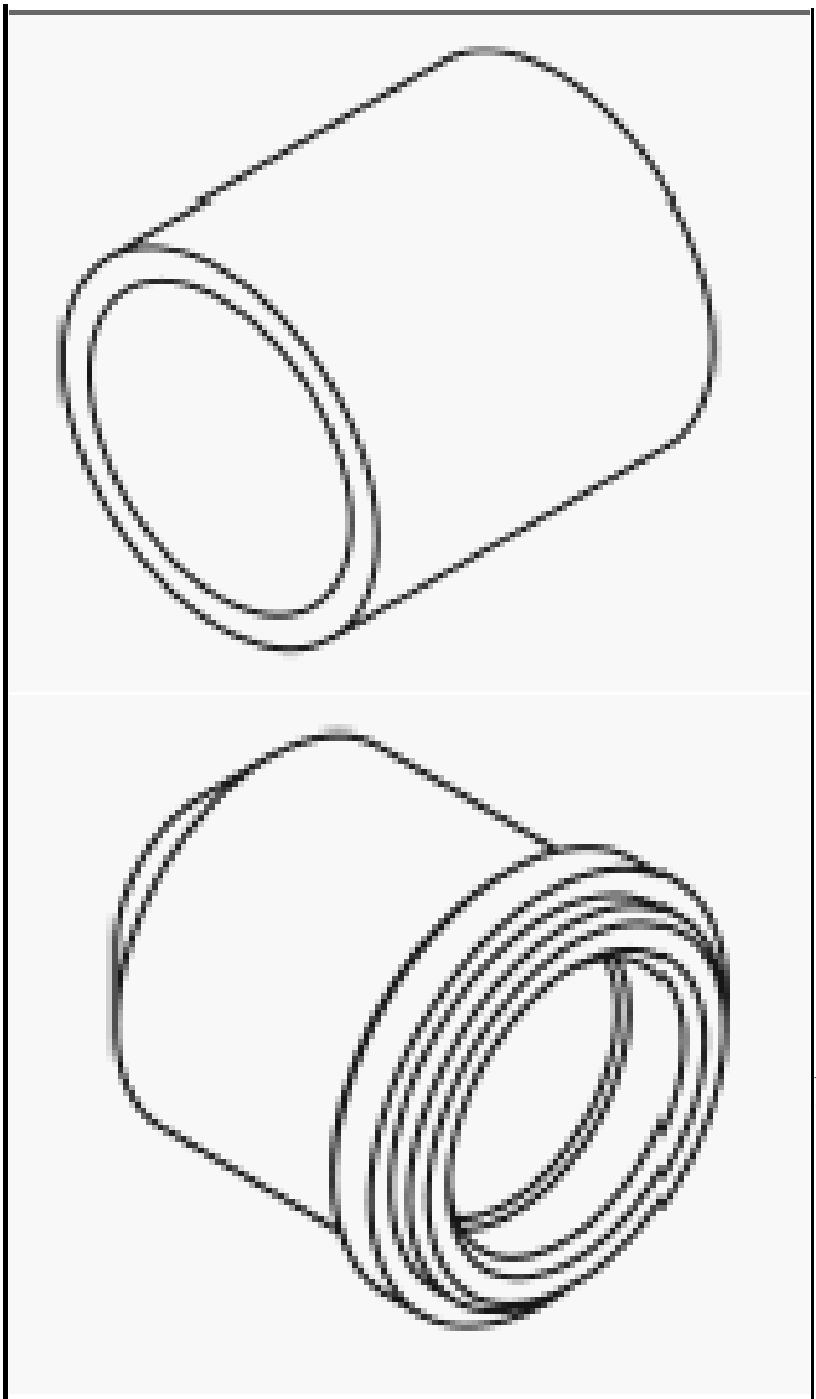

9851 - Installer, Seal (Originally Shipped In Kit Number(s) 9895, 9972.)

9852 - Installer, Seal

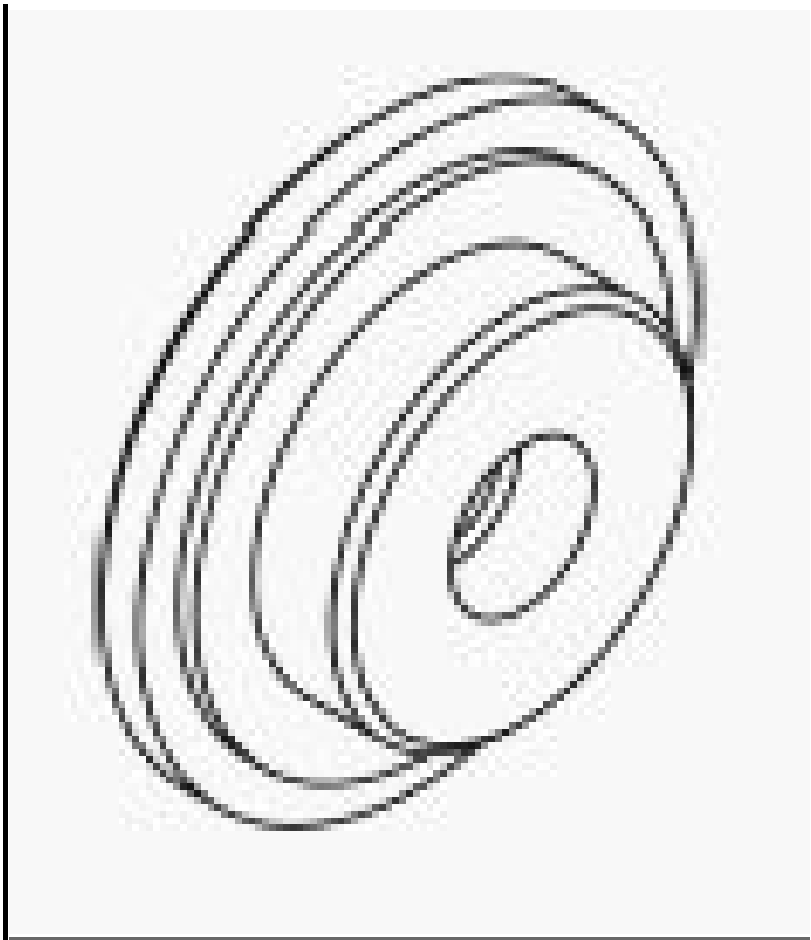	(Originally Shipped In Kit Number(s) 9895, 9972.)
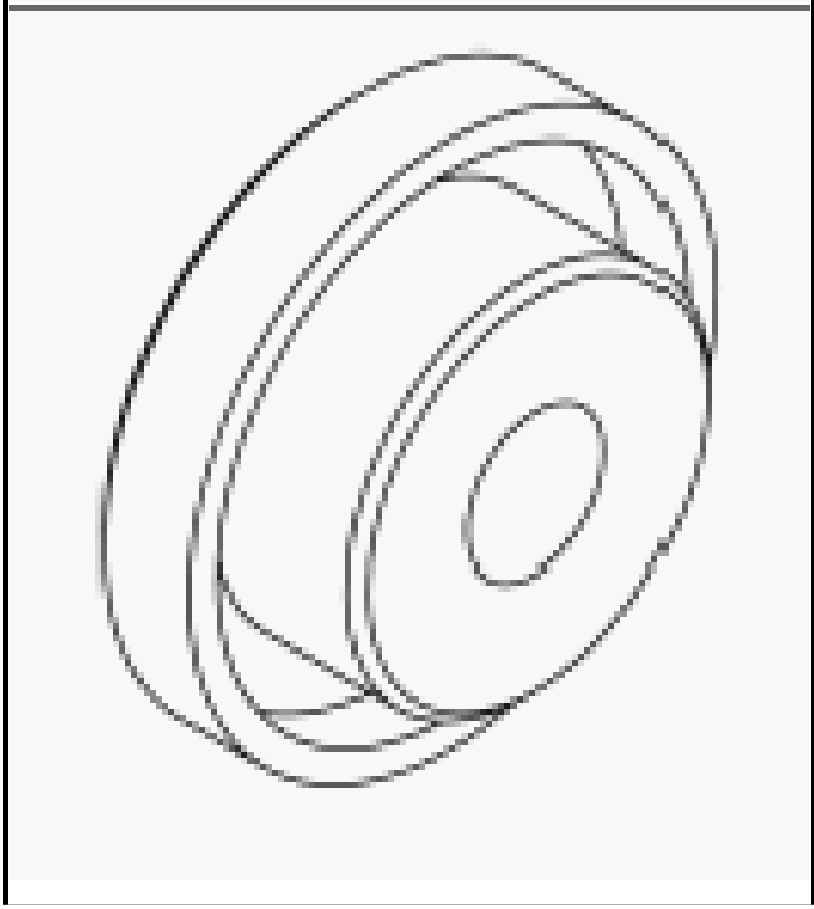	9853 - Installer, Seal (Originally Shipped In Kit Number(s) 9895, 9972.)

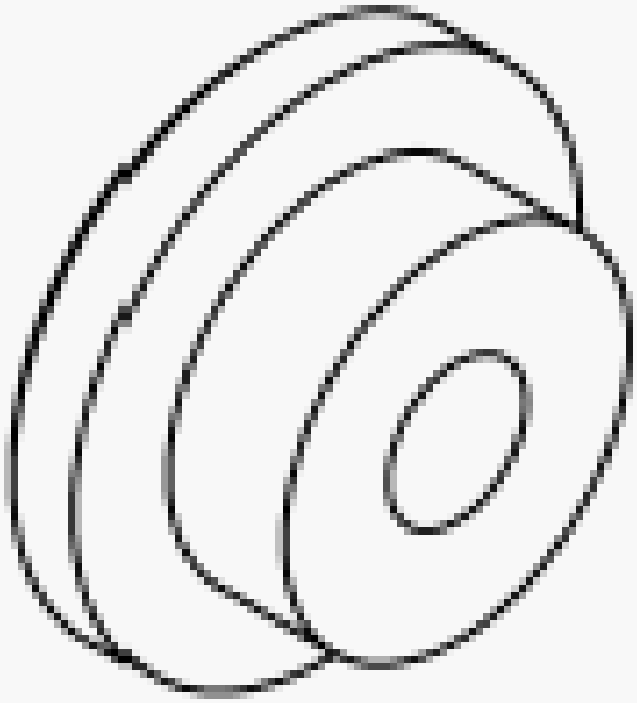	9855 - Installer, Bearing Cup (Originally Shipped In Kit Number(s) 9895, 9972.)
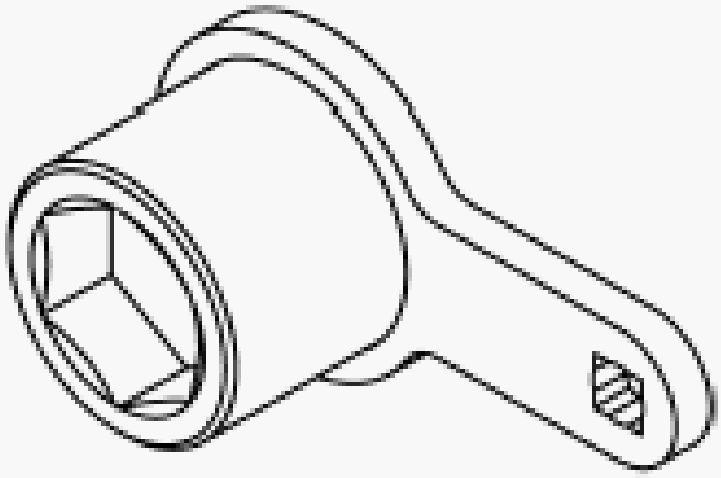	9921 - Wrench, Pinion Nut (Originally Shipped In Kit Number(s) 9895, 9972.)

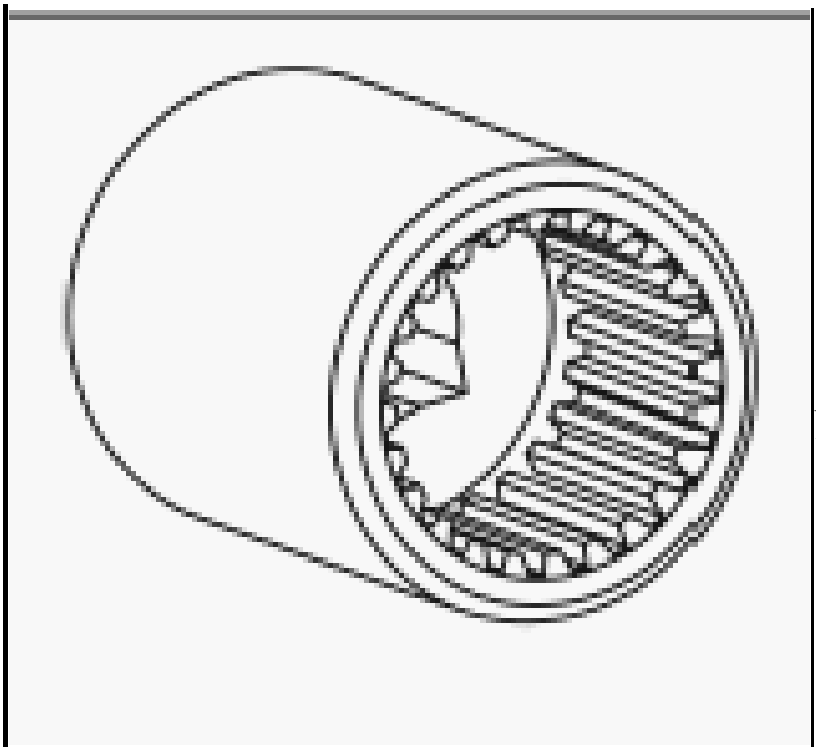	9922 - Socket, Splined (Originally Shipped In Kit Number(s) 9895-SUP, 9972.)
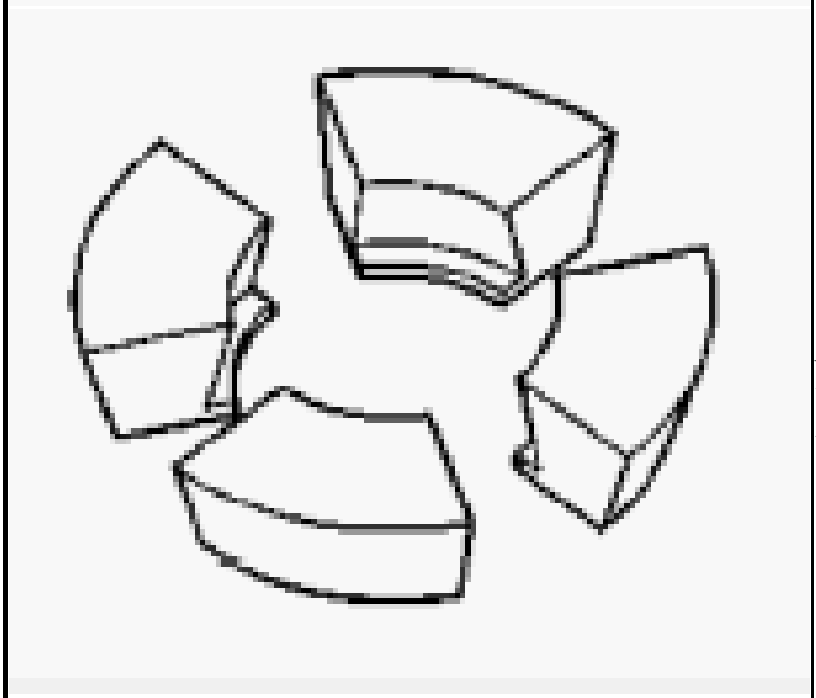	C-293-37 - Block Set, Puller (Originally Shipped In Kit Number(s) 8418, 8562, C-293-M, DD-914-CLT-L.)
	C-293-PA - Puller, Press (Originally Shipped In Kit Number(s) 8418, 8837, C-293-M.)

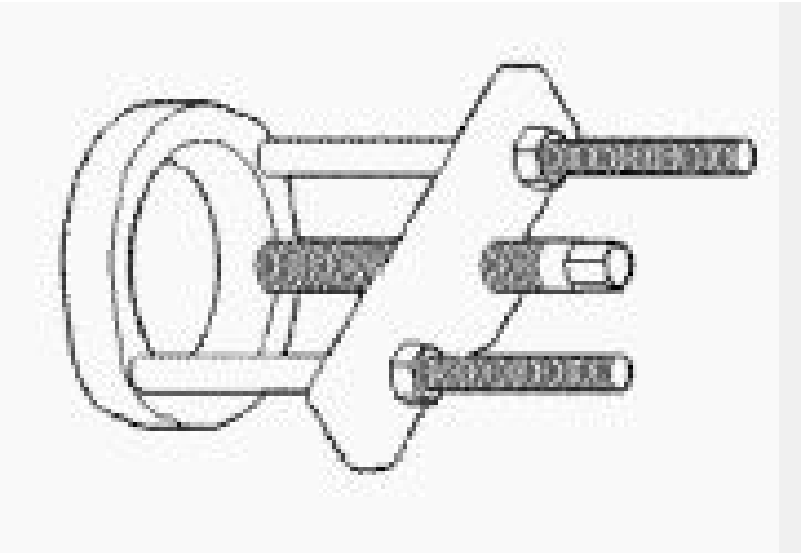	
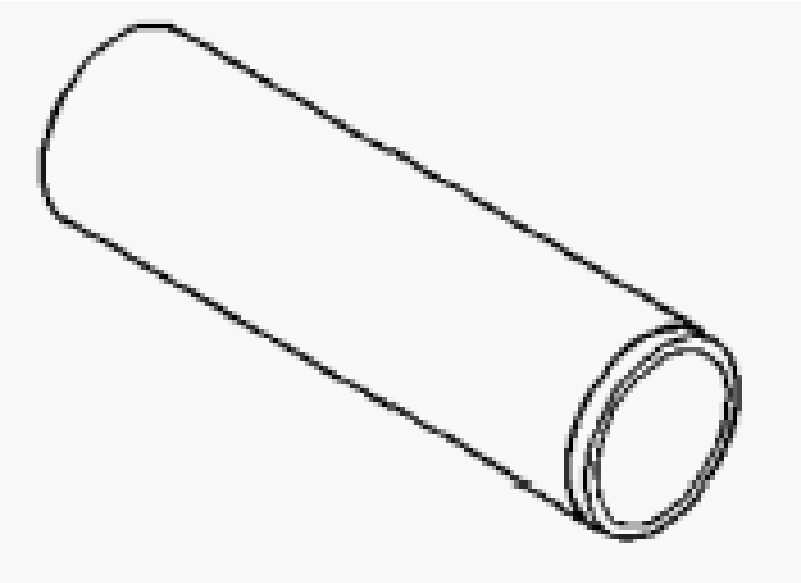	C-3095-A - Installer, Bearing
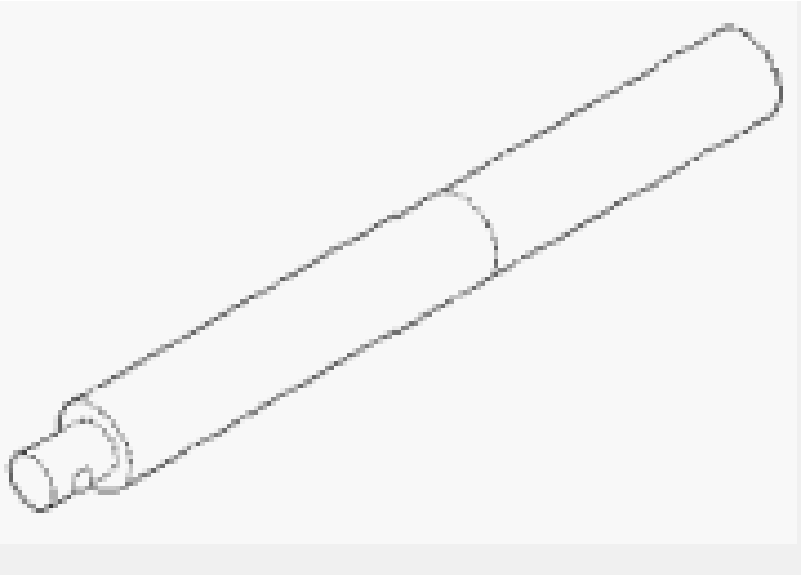	C-4171 - Driver Handle, Universal (Originally Shipped In Kit Number(s) 9202, 9202A-CAN, 9202CC, 9299, 9299CC, 9299CC, 9300A-CAN.)

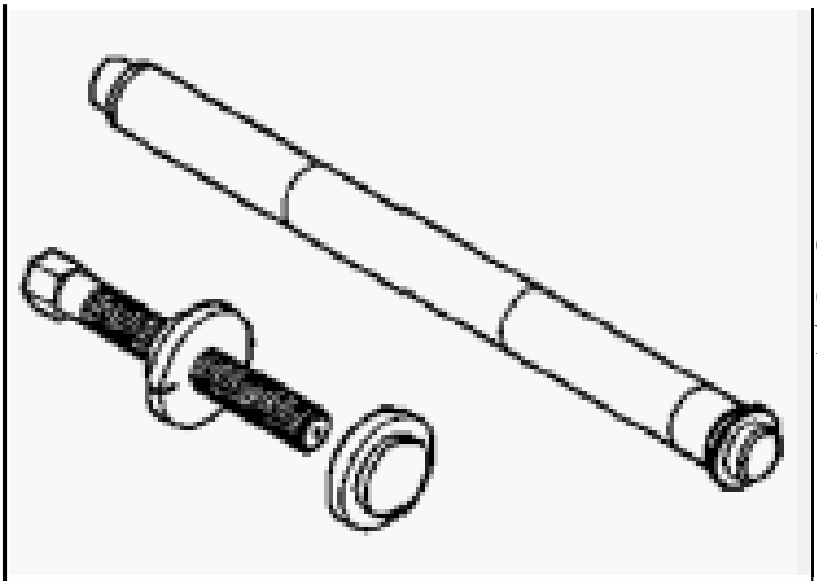	C-4487-1 - Adapter (Originally Shipped In Kit Number(s) 8667.)
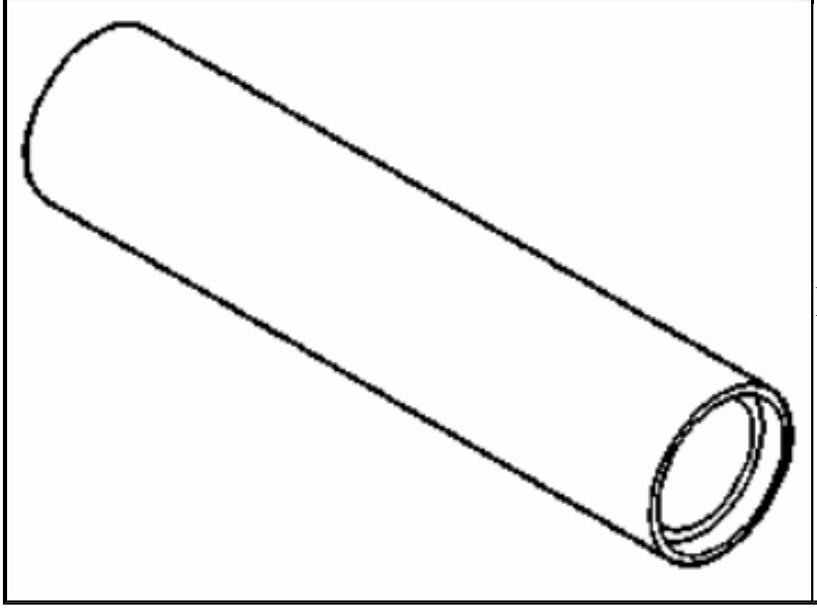	L-4411 - Installer, Bearing

SEAL, DIFFERENTIAL CARRIER

REMOVAL

REMOVAL

1. Remove PTU from transaxle. Refer to **REMOVAL**.
2. Use a screw mounted in a slide hammer to remove seal. Be careful not to damage seal journal when removing seal.

INSTALLATION

INSTALLATION

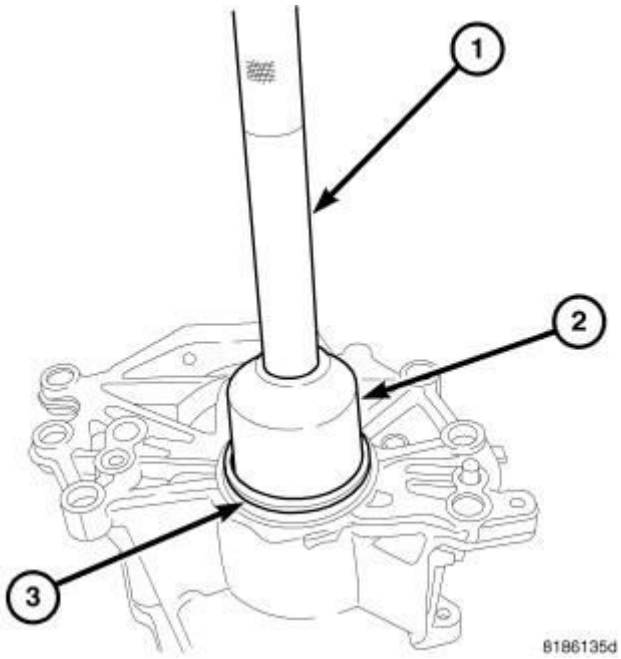

Fig. 76: Installing Carrier Case Seal
Courtesy of CHRYSLER GROUP, LLC

1. Install the carrier case seal using Installer (special tool #9851, Installer, Seal) and Handle (special tool #C-4171, Driver Handle, Universal).
2. Install the PTU. Refer to **INSTALLATION**.

SEAL, OUTPUT FLANGE

REMOVAL

REMOVAL

1. Remove the propeller shaft. Refer to **REMOVAL** .
2. Using a screwdriver remove the output seal.

INSTALLATION

INSTALLATION

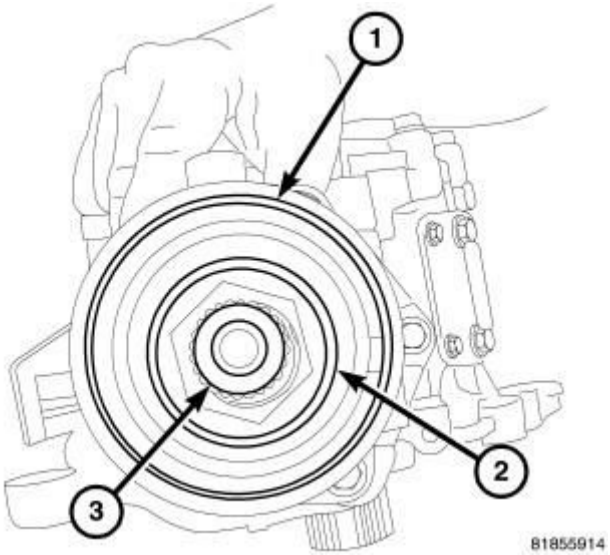

Fig. 77: Pinion Shaft Seal
Courtesy of CHRYSLER GROUP, LLC

1. Install the output shaft seal using Installer (special tool #9851, Installer, Seal) and Handle (special tool #C-4171, Driver Handle, Universal).
2. Install the propeller shaft. Refer to **INSTALLATION** .

SEALS, END COVER

REMOVAL

REMOVAL

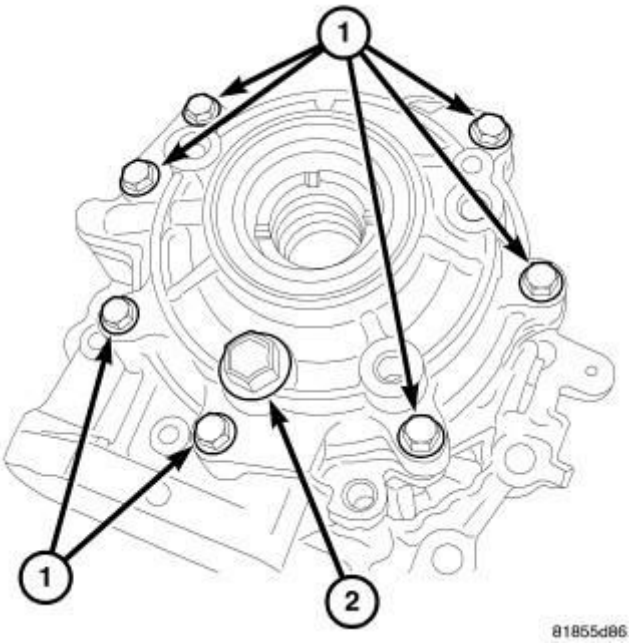

Fig. 78: Side Cover Bolts

Courtesy of CHRYSLER GROUP, LLC

1. Remove the right halfshaft. Refer to **REMOVAL** .
2. Remove the side cover bolts.
3. Remove the side cover.

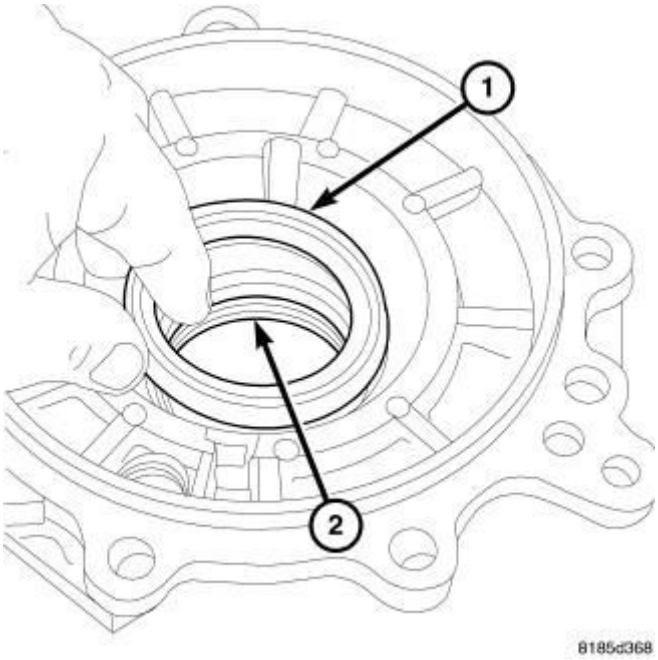

Fig. 79: Inner Cover Seal
Courtesy of CHRYSLER GROUP, LLC

4. Using a drift remove both inner and outer seals.

INSTALLATION

INSTALLATION

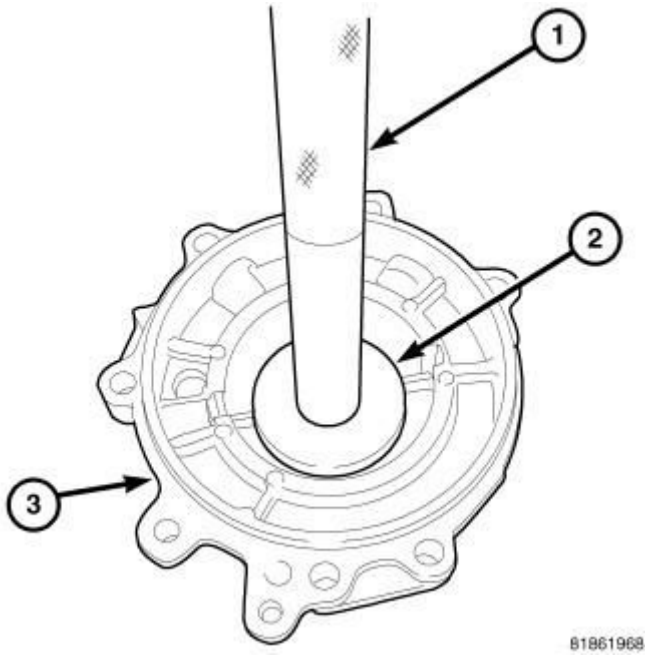

Fig. 80: Installing Carrier Cover Inner Seal
Courtesy of CHRYSLER GROUP, LLC

1. Install the inner seal into the PTU cover using Installer (special tool #9852, Installer, Seal) and Handle (special tool #C-4171, Driver Handle, Universal).

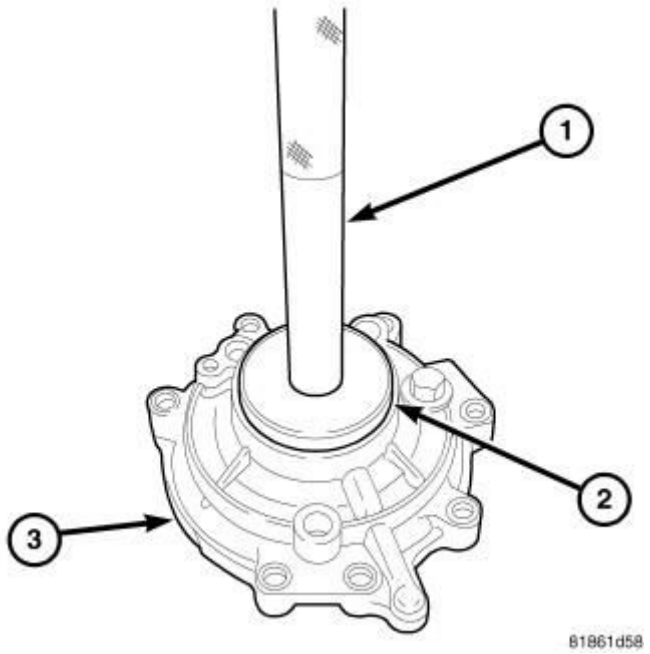

Fig. 81: Installing Carrier Cover Outer Seal
Courtesy of CHRYSLER GROUP, LLC

2. Install the outer seal into the PTU cover using Installer (special tool #9853,

Installer, Seal) and Handle (special tool #C-4171, Driver Handle, Universal).

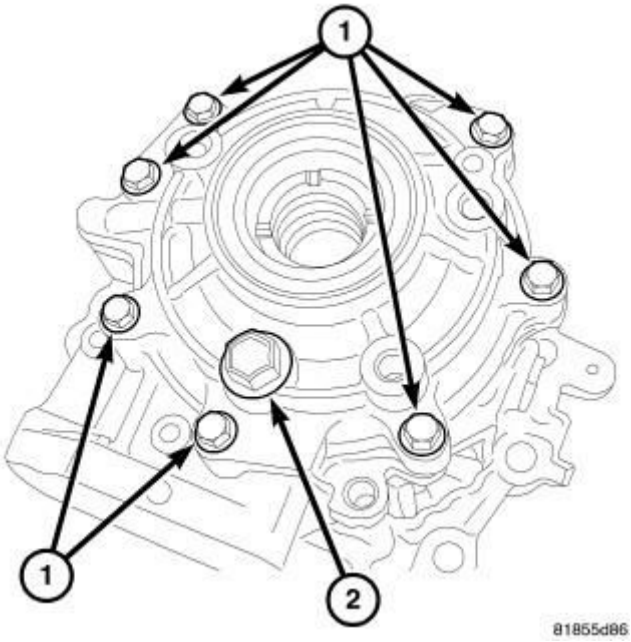

Fig. 82: Side Cover Bolts
Courtesy of CHRYSLER GROUP, LLC

3. Install the side cover.
4. Tighten side cover bolts (1) to 23 N.m (17 ft. lbs.).
5. Install the right halfshaft. Refer to **INSTALLATION** .

SHIELD, EXTENSION HOUSING DUST

REMOVAL

REMOVAL

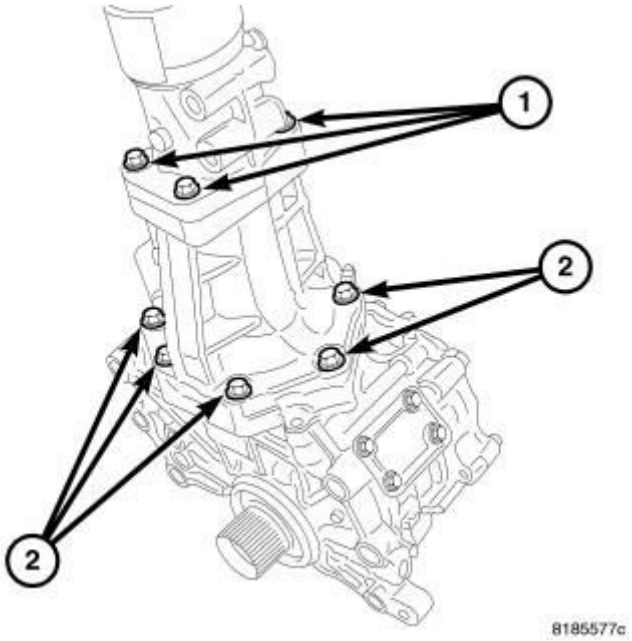

Fig. 83: Extension And Pinion Housing Bolts
Courtesy of CHRYSLER GROUP, LLC

1. Remove the propeller shaft. Refer to **REMOVAL** .
2. Remove the extension housing bolts (1).
3. Remove the extension housing.
4. Remove the extension housing O-ring and inspect.

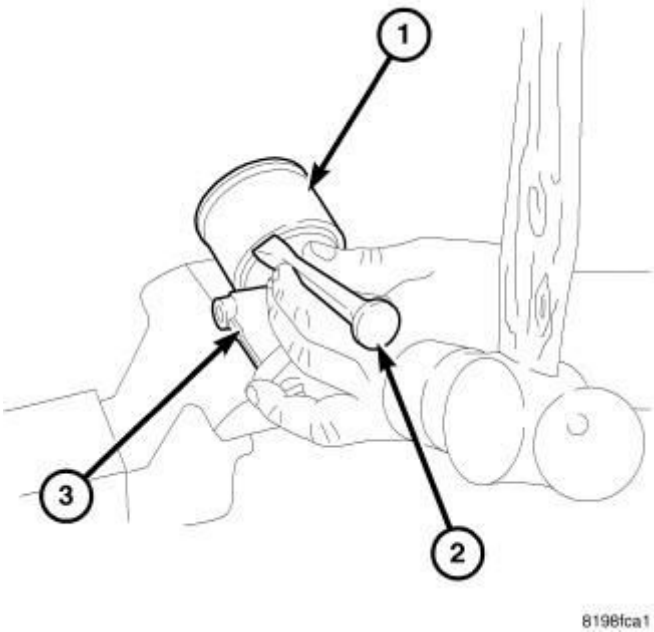

Fig. 84: Removing Dust Shield From Extension Housing
Courtesy of CHRYSLER GROUP, LLC

5. Using a chisel (2) remove the dust shield (1) from the extension housing (3).

INSTALLATION

INSTALLATION

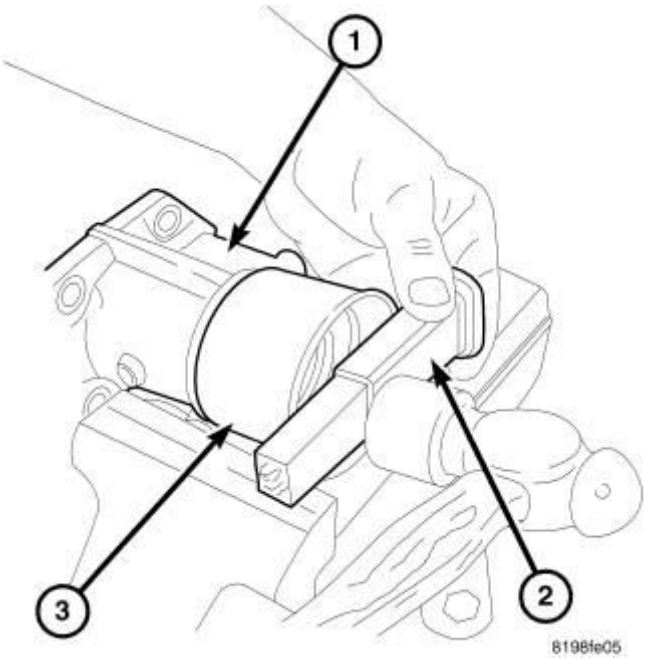

Fig. 85: Installing Dust Shield
Courtesy of CHRYSLER GROUP, LLC

1. Using a block of wood (2) install the dust shield (3) onto the extension housing (1).

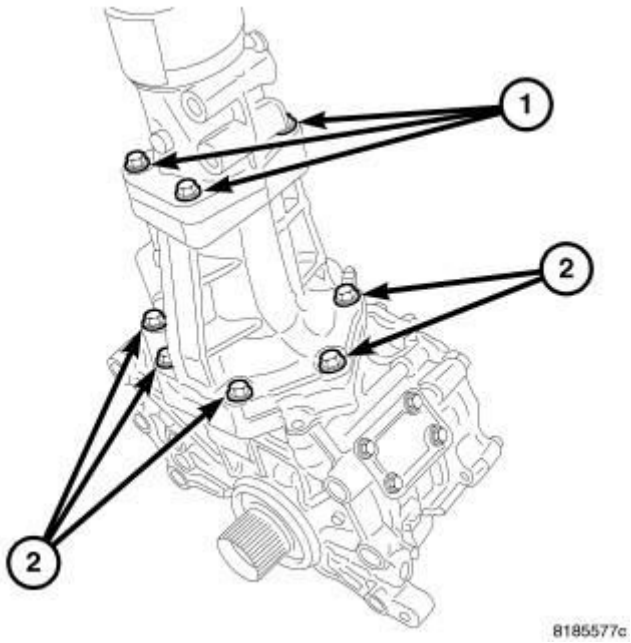

Fig. 86: Extension And Pinion Housing Bolts
Courtesy of CHRYSLER GROUP, LLC

2. Install the extension housing and bolts.
3. Tighten the extension housing bolts to 38 N.m (28 ft. lbs.).
4. Install the propeller shaft. Refer to **INSTALLATION** .

2014 TRANSMISSION

Transmission - Non-DTC Based Diagnostics - Compass & Patriot

DIAGNOSIS AND TESTING

DIAGNOSIS AND TESTING - SHIFT INTERLOCK SYSTEM

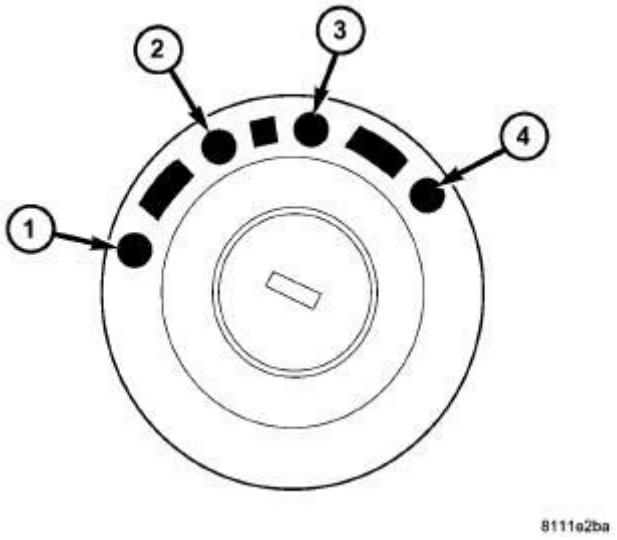

Fig. 1: Ignition Key/Switch Positions
Courtesy of CHRYSLER GROUP, LLC

1 - LOCK 2 - ACC 3 - ON 4 - START

If the shifter cannot be shifted out of Park or can be shifted out of Park without depressing the brake pedal, follow diagnostics procedure below.

Final Verification Testing:

ACTION	EXPECTED RESPONSE
1. With the Key removed, try to shift out of "PARK".	1. Shifter CANNOT be shifted out of "PARK".
2. Insert the Key into the WIN and leave it at "LOCK." Try to move the shifter out of "Park".	2. Shifter CANNOT be shifted out of "PARK".

3. Turn the Key to the "ON" position, with foot off of brake pedal.	3. Shifter CANNOT be shifted out of "PARK".
4. Turn the Key to the "ON" position and depress the brake pedal.	4. Shifter CAN be shifted out of "PARK".
5. Leave shifter in any gear other than "PARK" and try to return the Key to the "LOCK" position.	5. Key CANNOT fully return to "LOCK" and cannot be removed.
6. Return the shifter to "PARK" and try to remove the Key.	6. Key CAN be removed.

DIAGNOSTIC TEST

1. **CHECK FOR DIAGNOSTIC TROUBLE CODES (DTC)**
    1. Engage the parking brake.
    2. Connect the Wi-Tech scan tool to the vehicle.
    3. Check the PCM (Powertrain Control Module) and the ABS (Antilock Brake System) for any Brake Switch related Diagnostic Trouble Codes (DTCs).

       Are there any Brake Switch related DTCs?

       Yes

       - Refer to the appropriate engine or brake system and perform the appropriate diagnostic procedure(s).

       No

       - Go To 2
2. **BRAKE SWITCH**
    1. With the scan tool select "PCM Module" and "Data Display". Read the Brake Switch state.
    2. Check for change of state by pushing and releasing the brake pedal.

       Does the brake switch change states when the pedal is pushed and released?

       Yes

- Go To 3

No

- Trace and repair the Brake Switch circuit(s) as necessary.
- Perform the BODY VERIFICATION TEST. Refer to **STANDARD PROCEDURE** .

3. **BRAKE TRANSMISSION SHIFT INTERLOCK (BTSI) TEST**
   1. Turn the ignition off.
   2. Remove the necessary parts of the center console to visually see the BTSI Lever on the shifter.
   3. Turn the ignition on.
   4. While observing the BTSI Lever on the shifter, push and release the brake pedal several times.

      Did the BTSI Lever move when the brake pedal was pushed and released?

      Yes

      - Refer to **DIAGNOSIS AND TESTING** and check for mechanical shifter issues.

      No

      - Go To 4
4. **BRAKE TRANSMISSION SHIFT INTERLOCK (BTSI) CIRCUIT TEST**

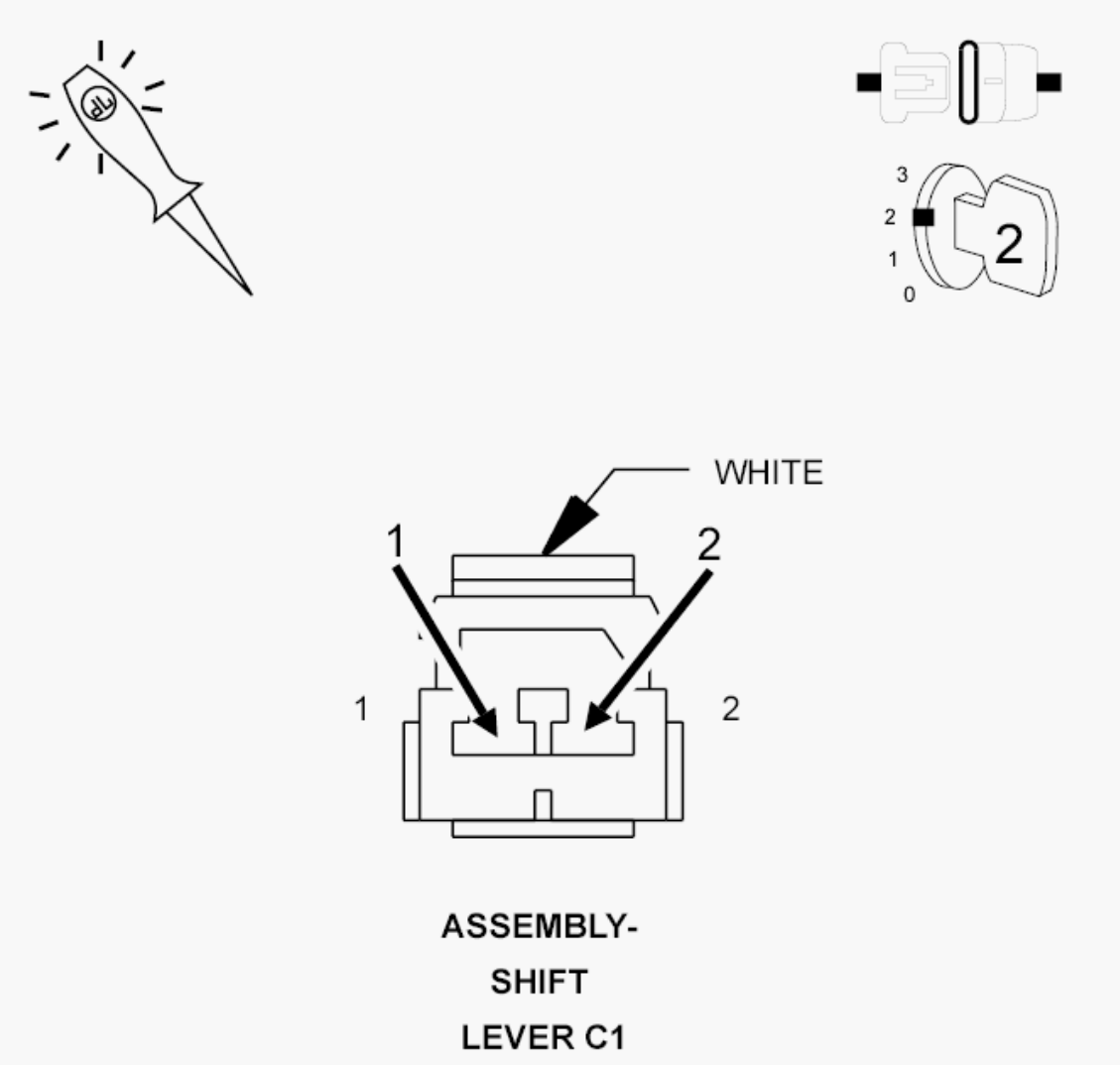

Fig. 2: Checking For Open Ground Or Open Brake Transmission Shift Interlock Solenoid Unlock Circuits
Courtesy of CHRYSLER GROUP, LLC

1. Turn the ignition off.
2. Disconnect the BTSI connector on the shifter.

NOTE: The graphic shows the JS connector. Refer to the appropriate Wiring Information for other vehicles.

3. Connect a 12 volt test light between the (Z) Ground and the (K321) Brake Transmission Shift Interlock Solenoid Unlock circuits.
4. Turn the ignition on.
5. While observing the test light, push and release the brake pedal.

Does the test light illuminate brightly when the brake pedal is pushed?

Yes

- Replace the shifter in accordance with the Service Information.
- Perform the Final Verification Test.

No

- Trace and repair the open (Z) Ground or the Open (K321) Brake Transmission Shift Interlock Solenoid Unlock circuits as necessary.
- Perform the Final Verification Test.